RUTHZIL TRATOR COMERCIAL DE PEÇAS LTDA 11 97083-6812 ROLANDO CITRANGULO

GENERAL INFORMATION

1. Whenever the terms left and right are used, it should be understood to mean from a position facing in direction of travel.
2. Throughout this manual you find common hardware not illustrated, but listed in the description column. The service part immediately preceding a hardware listing is the part using these particular items for mounting purposes. This hardware is not included with the service part or assembly when ordered as a replacement.
3. The illustrations show typical assemblies plus individual parts but in all cases may not show the exact shape or detail of parts required. However, the purpose for the illustrations is to identify parts performing like functions. Whenever possible, illustrations are located at the beginning of each section or immediately adjacent to the applicable text.
4. CNH America LLC is continually striving to improve its products. We must, therefore, reserve the right to make improvements or changes when it becomes practical and possible to do so, without incurring any obligation to make changes or additions to the equipment sold previously.

NEW HOLLAND FIAT ALLIS

ALWAYS USE GENUINE NEW HOLLAND PARTS

JUNHO 1985

CNH America LLC, Racine, WI 53404 U.S.A.

TABLE OF CONTENTS

00.500.01	01	DIA
10.001.01	01	ENGINE, L160
10.001.01	02	ENGINE, L170
10.001.02	01	CYLINDER BLOCK, L160
10.001.02	02	CYLINDER BLOCK, L170
10.101.01	01	CYLINDER HEAD
10.101.01	02	GASKET KIT
10.101.02	01	CYLINDER HEAD COVER & CRANKSHAFT PULLEY, L160
10.101.02	02	VALVE COVER & CRANKSHAFT PULLEY, L170
10.102.01		OIL PAN & GAUGE
10.103.01		CRANKSHAFT & PISTONS
10.103.02		FLYWHEEL, BELL HOUSING & STARTER
10.106.01		CAMSHAFT
10.106.03		TIMING GEAR CASE, GOVERNOR
10.106.05	01	ROCKER ARMS, L160
10.106.05	02	ROCKER ARMS, L170
10.114.10		HIGH IDLE ADJUSTMENT
10.202.01	01	AIR CLEANER, MUFFLER & FAN, L160
10.202.01	02	AIR CLEANER, MUFFLER & FAN, L170
10.202.01	03	AIR CLEANER - DONALDSON
10.202.01	04	AIR CLEANER INLET
10.214.01		FUEL INJECTION SYSTEM
10.216.01		FUEL TANK; 16 GL
10.218.01		INJECTOR
10.220.02	01	THROTTLE CONTROL
10.220.02	02	FOOT THROTTLE KIT
10.242.03		INJECTION PUMP
10.254.02		BLOCK HEATER KIT
10.254.03		MUFFLERS, ASPIRATOR & CATALYTIC
10.254.04		INTAKE MANIFOLD
10.254.05	01	EXHAUST MANIFOLD, L160
10.254.05	02	EXHAUST MANIFOLD, L170
10.304.01		OIL PUMP & SUCTION FILTER
10.402.01	01	WATER PUMP, L160
10.402.01	02	WATER PUMP, L170
10.406.01		RADIATOR - COOLER
29.200.01	01	BOOM & BUCKET FOOT CONTROL, HYDROSTATIC LEVERS
29.200.01	02	BOOM & BUCKET HAND CONTROL, HYDROSTATIC LEVERS
29.200.01	03	BOOM & BUCKET HAND CONTROL KIT
29.200.03	01	BOOM & BUCKET FOOT CONTROL, KICK PANEL, RH
29.200.03	02	BOOM & BUCKET HAND CONTROL, KICK PANEL, RH
29.200.03	04	BOOM & BUCKET FOOT CONTROL, KICK PANEL, LH (IF USED)
29.200.03	05	BOOM & BUCKET HAND CONTROL, KICK PANEL, LH
29.200.04	03	BOOM & BUCKET FOOT CONTROL, PEDALS
29.200.05	01	BOOM & BUCKET HAND CONTROL, TUNNEL COMPONENTS
29.200.05	02	HAND CONTROL - TUNNEL COMPONENTS, PILOT CONTROL
29.200.05	04	TUNNEL COMPONENTS, PILOT CONTROL
29.200.05	05	TUNNEL COMPONENTS - MODELS WITH PILOT CONTROL, EH AUX CONTROL
29.200.06	01	PEDALS - MODELS WITH PILOT CONTROL
29.200.06	02	PEDALS - MODELS WITH PILOT CONTROL, EH AUX CONTROL
29.200.07	01	HANDLES - CONTROL

TABLE OF CONTENTS

29.200.07	02	HANDLE, CONTROL
29.200.07	03	HANDLE, CONTROL
29.200.07	04	HANDLE
29.200.07	05	HANDLES, CONTROL - MODELS WITH PILOT CONTROL
29.200.07	06	HANDLES - CONTROL, MODELS WITH PILOT CONTROL, EH AUX CONTROL
29.200.07	07	HANDLES, MODELS WITH PILOT CONTROL, AUX CONTROL
29.200.07	10	MULTI-FUNCTION HANDLE, LH
29.212.01	01	HYDROSTATIC PUMP & MOTOR (IF USED, SEE REF 3)
29.212.01	02	HYDROSTATIC CASE DRAIN
29.212.02	01	HYDROSTATIC PUMP & MOTOR, MODELS WITH PILOT CONTROL
29.212.02	02	HYDROSTATIC PUMP & MOTOR, MODELS WITH PILOT CONTROL
29.212.02	03	HYDROSTATIC PUMP & MOTOR, MODELS WITH PILOT CONTROL
29.212.02	05	HYDROSTATICS - PILOT CONTROL TO PUMP
29.212.02	06	HYDROSTATICS - HAND CONTROL, PILOT CONTROLS
29.212.02	07	HYDRAULICS - HAND CONTROL RH, MODELS WITH PILOT CONTROL
29.212.02	08	MOUNTING - PUMP SUPPORT, PILOT CONTROL
29.212.03	01	HYDROSTATICS - JOYSTICK VALVE KITS, ISO PATTERN
29.212.03	02	HYDRAULICS - JOYSTICK VALVE KITS, ISO PATTERN, RIGHT HAND
29.212.03	03	HAND CONTROL - PILOT CONTROL, UPPER RH
29.212.03	04	HAND CONTROL - PILOT CONTROL, UPPER LH
29.212.05	01	HYDRAULIC GEAR PUMP
29.212.05	02	HYDRAULIC GEAR PUMP, STANDARD (L160)
29.212.05	03	HYDRAULIC GEAR PUMP (HIGH FLOW) L160
29.212.05	04	HYDRAULIC GEAR PUMP (HIGH FLOW) L170
29.212.05	05	HYDRAULIC GEAR PUMP, STANDARD - PILOT CONTROLS (L170)
29.212.05	06	HYDRAULIC GEAR PUMP, STANDARD - PILOT CONTROL; IF USED
29.212.05	07	HYDRAULIC GEAR PUMP, STANDARD - PILOT CONTROL; IF USED
29.212.06	01	VALVE - HAND CONTROL
29.212.06	02	VALVE - HAND CONTROL
29.212.07	01	REXROTH PUMP AA20
29.212.07	02	PRESSURE RELIEF VALVE
29.212.07	03	PRESSURE RELIEF VALVE
29.212.07	04	INTERNAL GEAR PUMP
29.212.07	05	ROTARY GROUP, RH ROTATION
29.212.07	06	CONTROL, HYDRAULIC
29.212.07	07	CONTROL CARTRIDGE WITH ORIFICE
29.212.07	08	VALVE SECTION - LOCKING ELEMENTS
29.212.07	09	ROTARY GROUP, LH ROTATION
29.212.09		HYDROSTATIC MOTOR
29.218.06		TRANSMISSION CENTERING
33.202.01	01	BRAKES
33.202.01	02	BRAKES, MODELS WITH PILOT CONTROL
33.202.01	03	BRAKE - ON ROAD, PILOT CONTROL
33.202.01	04	BRAKE - ON ROAD, EUROPE
35.204.04	01	CONTROL VALVE HYDRAULICS
35.204.04	02	CONTROL VALVE HYDRAULICS, MODELS WITH PILOT CONTROL, EH AUX CONTROL
35.204.04	03	CONTROL VALVE HYDRAULICS, MODELS WITH PILOT CONTROL
35.204.04	04	HYDRAULICS, PILOT CONTROL TO CONTROL VALVE
35.204.05	01	BUCKET HYDRAULICS, STANDARD - MODELS WITH PILOT CONTROL
35.204.05	02	BUCKET HYDRAULICS, HIGH FLOW

TABLE OF CONTENTS

35.204.06	01	BOOM HYDRAULICS, STANDARD/HIGH FLOW
35.204.06	02	BOOM HYDRAULICS, STANDARD/HIGH FLOW - MODELS WITH PILOT CONTROL
35.204.11	01	HYDRAULICS - MOUNTING PLATE
35.204.11	02	BOOM HYDRAULICS - MOUNTING PLATE, STANDARD FLOW (IF USED)
35.204.11	03	HYDRAULICS - MOUNTING PLATE, WITHOUT HIGH FLOW
35.204.11	04	HYDRAULICS - MOUNTING PLATE, WITHOUT HIGH FLOW, PILOT CONTROL
35.204.11	05	CYLINDER ASSY - MOUNTING PLATE
35.204.11	10	BOOM HYDRAULICS - MOUNTING PLATE, HIGH FLOW
35.204.11	11	BOOM HYDRAULICS - MOUNTING PLATE, HIGH FLOW (IF USED)
35.204.11	12	HYDRAULICS - MOUNTING PLATE, WITH HIGH FLOW
35.204.11	20	HYDRAULICS - MOUNTING PLATE, PILOT CONTROL
35.204.11	30	VALVE - MOUNTING PLATE
35.204.15	01	HIGH FLOW HYDRAULICS, PILOT CONTROL
35.204.15	02	HIGH FLOW HYDRAULICS - DELUXE CAB, IF USED
35.204.15	10	SELECTOR VALVE, HIGH FLOW
35.220.07	01	AUXILIARY HYDRAULICS, STANDARD; IF USED
35.220.07	02	AUXILIARY HYDRAULICS, HIGH FLOW
35.220.07	03	2ND FRONT AUXILIARY KIT
35.220.07	04	REAR AUXILIARY HYDRAULICS
35.220.07	05	SECONDARY AUXILIARY - VALVE ASSY
35.300.06	01	HYDRAULIC RESERVOIR & FILTER
35.300.06	02	HYDRAULIC RESERVOIR & FILTER
35.359.01	01	CONTROL VALVE HYDRAULICS
35.359.02	01	CONTROL VALVE
35.359.02	02	CONTROL VALVE, MODELS WITH PILOT CONTROL, EH AUX CONTROL
35.359.02	03	CONTROL VALVE 87653270 - SEAL REPLACEMENT KITS
35.359.02	04	CONTROL VALVE - SEAL KIT
35.359.02	05	CONTROL VALVE - MAIN RELIEF VALVE
35.359.02	06	CONTROL VALVE, PLUGS AND VALVES
35.359.02	07	CONTROL VALVE, CHECK VALVE
35.359.02	08	CONTROL VALVE, SPOOL END P. O.
35.359.02	09	CONTROL VALVE, SPOOL END P. O.
35.359.02	10	CONTROL VALVE, SPOOL END P. O.
35.359.02	11	CONTROL VALVE - CHECK VALVE
35.359.02	12	CONTROL VALVE, SPOOL END EHPV
35.359.02	13	CONTROL VALVE, SPOOL END EHPV
35.359.03	01	CONTROL VALVE, MODELS WITH PILOT CONTROL
35.359.03	02	CONTROL VALVE - SEAL REPLACEMENT KITS
35.359.03	03	CONTROL VALVE - SEAL KIT
35.359.03	04	CONTROL VALVE - MAIN RELIEF VALVE
35.359.03	05	CONTROL VALVE, PLUGS & VALVES
35.359.03	06	CONTROL VALVE, CHECK VALVE
35.359.03	07	CONTROL VALVE - SPOOL END, DETENT
35.359.03	08	CONTROL VALVE, SPOOL END P. O.
35.359.03	09	CONTROL VALVE, SPOOL END P. O.
35.359.03	10	CONTROL VALVE, SPOOL END P. O.
35.359.03	11	CONTROL VALVE - SPOOL END
35.359.03	12	CONTROL VALVE - CHECK VALVE
35.359.04	01	CONTROL VALVE 87357099, SEAL REPLACEMENT KITS
35.359.04	02	CONTROL VALVE, SPOOL END P. O.
35.359.04	03	CONTROL VALVE, SPOOL END P. O.

TABLE OF CONTENTS

35.359.04	04	CONTROL VALVE - SPOOL END, DETENT
35.359.04	05	CONTROL VALVE, CHECK VALVE
35.359.04	06	CONTROL VALVE, SPOOL END P. O.
35.359.04	07	CONTROL VALVE, SEAL KIT
35.730.09	01	BOOM CYLINDER
35.730.09	02	BOOM CYLINDER
37.140.01		COUNTERWEIGHT
39.100.01		CHASSIS
39.105.09		BOOM - DELUXE CAB
39.105.15		BOOM LOCK
44.106.01		FINAL DRIVE
44.511.01		WHEELS
50.100.01		CAB - HEATER SYSTEM, DELUXE CAB
50.100.04	01	CAB HEATER 87576281 - MODELS WITHOUT RADIO
50.100.04	02	CAB HEATER 84203948 - MODELS WITH RADIO
55.100.01	01	ELECTRIC - ENGINE
55.100.02		BATTERY - CABLES
55.100.05	01	CHASSIS ELECTRIC
55.100.05	02	CHASSIS ELECTRIC
55.100.05	03	CHASSIS ELECTRIC
55.100.16		PILOT CONTROL HARNESS
55.100.17		MAIN HARNESS - CAB
55.100.53		ELECTRIC, MOUNTING PLATE
55.100.61		HARNESS - FRONT & REAR WORK LIGHTS
55.100.62	01	HARNESS - DOOR & FRAME
55.100.62	02	HARNESS - DOOR & FRAME
55.100.62	03	HARNESS - DOOR & FRAME
55.100.62	04	HARNESS - DOOR & FRAME
55.100.64		HARNESS - HYDRAULIC MOUNTING PLATE
55.100.65	01	HARNESS - EH AUXILIARY JUMPER
55.100.65	02	HARNESS - FLASHER
55.100.66	01	HARNESS - BEACON KIT
55.100.66	02	HARNESS - EU ADAPTER
55.100.67		KIT, VOLTAGE SUPPRESSION
55.100.68		HARNESS, VOLTAGE SUPPRESSION
55.100.75		HARNESS - PROPORTIONAL AUXILIARY
55.100.76		HARNESS - START RELAY JUMPER
55.100.77		HARNESS - MULTIFUCTION CONTROL
55.100.78		HARNESS - MULTIFUCTION BOOM
55.201.03		STARTER
55.301.01		ALTERNATOR
55.301.02		ALTERNATOR MOUNTING
55.404.01	02	REAR LIGHT BAR, BRAKE AND TURN SIGNALS; IF USED (EUROPE)
55.404.01	02	REAR LIGHT BAR, ON-ROAD (EUROPE)
55.404.01	03	REAR LIGHT
55.404.02		FRONT HEADLAMP WITH TURN SIGNALS, ON ROAD (EUROPE)
55.404.03		FRONT & REAR WORK LIGHTS
55.404.11	01	ELECTRIC CAB, TURN SIGNALS
55.404.11	02	BOOM, ON ROAD WITH TURN SIGNALS
55.408.01	01	BEACON KIT & MISCELLANEOUS PARTS, ON-ROAD
55.408.01	02	BEACON KIT

TABLE OF CONTENTS

55.408.04		HORN
55.408.04	01	BACKUP ALARM
55.408.04	02	BACK UP ALARM - MODELS WITH PILOT CONTROL; IF USED
55.510.01		ELECTRIC CAB - MAIN HARNESS AND FUSE BLOCK, DELUXE CAB
55.510.06	01	ELECTRIC CAB
55.510.06	02	CAB ELECTRICAL, EUROPE - DELUXE CAB
55.512.05		ELECTRIC CAB - CONSOLE, RH, DELUXE CAB
55.512.06	01	ELECTRIC CAB - CONSOLE, LH, DELUXE CAB
55.512.06	02	ELECTRIC CAB, LH CONSOLE (EUROPE) - DELUXE CAB
55.514.03		ELECTRIC CAB - LIGHTS
82.100.06	01	MOUNTING PLATE
82.100.06	02	UNIVERSAL MOUNT
82.100.15	01	BUCKET, CUTTING EDGE KIT
82.100.15	04	BUCKETS - LOADER, DIRT / FOUNDRY
82.100.15	05	BUCKETS - LOADER, EXTENDED LOW PROFILE
82.100.15	06	BUCKETS - LOADER, UTILITY / LIGHT MATERIAL
82.100.15	07	BUCKETS - LOADER, MANURE / SLURRY
82.100.15	20	SPILL GUARD
82.100.15	21	PALLET FORK
88.100.11	01	ACOUSTICAL EQUIPMENT
88.100.11	02	ACOUSTICAL EQUIPMENT
88.100.11	03	ACOUSTICAL EQUIPMENT
88.100.11	04	ACOUSTICAL EQUIPMENT - MUFFLER WRAP (L160)
88.100.11	05	ACOUSTICAL EQUIPMENT - REAR WINDOW PANEL
88.100.11	06	ACOUSTICAL EQUIPMENT - PILOT CONTROL CONSOLE
88.100.11	07	ACOUSTICAL EQUIPMENT - PILOT CONTROL CONSOLE
88.100.11	08	NOISE CONTROL - CAB
88.120.02	02	RADIO
88.120.08		MANUAL COMPARTMENT LOCK & FIRE EXTINGUISHER
90.015.02		CAB JACK KIT
90.015.01	01	CAB
90.015.01	02	CAB, FOR OPTIONAL RADIO
90.100.02		REAR HOOD
90.100.17		DOOR, REAR
90.108.01	01	DECALS - CONTROLS
90.108.01	02	DECALS - CONTROLS (EUROPE)
90.108.01	03	DECALS, THROTTLE
90.108.02	01	DECALS - MODEL (L160)
90.108.02	02	DECALS - MODEL (L170)
90.108.02	05	DECALS
90.108.02	06	DECAL - FIAT
90.108.02	07	DECALS - BOOM AND LOAD
90.108.02	08	DECALS
90.108.03	01	DECALS - WARNING
90.108.03	02	DECALS - WARNING
90.108.03	03	DECALS - WARNING, EUROPE
90.108.04	01	DECALS
90.108.04	02	DECALS
90.108.04	03	DECALS - DB
90.108.04	04	DECALS - LOW EMISSION, LOW SULFUR FUEL
90.108.07		DECALS - MULTIFUNCTIONAL AUXILIARY ELECTRICAL

TABLE OF CONTENTS

90.114.04		FENDERS
90.120.01	01	SEAT, STANDARD
90.120.01	02	SEAT, STANDARD
90.120.01	03	SEAT, SUSPENSION
90.120.01	04	SEAT, SUSPENSION
90.120.05	01	SEAT, STANDARD
90.120.05	02	SEAT BELT, LAP BELT
90.120.05	03	SEAT BELT, SHOULDER BELT
90.124.08	01	ARMREST - MODELS WITH PILOT CONTROL; IF USED
90.124.08	05	ARMREST
90.154.01	01	CAB - DOOR & FRAME
90.154.01	02	CAB - DOOR
90.154.01	03	CAB - DOOR FRAME, DELUXE CAB
90.154.01	04	CAB - DOOR KIT
90.154.01	21	CAB - DEMOLITION DOOR KIT
90.154.01	22	CAB - DEMOLITION DOOR AND FRAME
90.154.01	23	CAB - DEMOLITION DOOR
90.156.08	02	CAB - SIDE WINDOW, LH
90.156.08	03	CAB - SIDE WINDOW, LH
90.156.08	04	CAB - SIDE WINDOW, LH
90.156.08	05	CAB - SIDE WINDOW, LH
90.156.08	06	CAB - SIDE WINDOW, RH
90.156.08	07	CAB - SIDE WINDOW, RH
90.156.08	08	CAB - SIDE WINDOW, RH
90.156.08	09	CAB - SIDE WINDOW, RH
90.156.08	10	CAB - TOP WINDOW, DELUXE CAB
90.156.08	11	CAB - WINDOWS & HEADLINER
90.156.08	12	THRESHOLD - REAR WINDOW
90.160.01	03	CAB HEADLINER, DELUXE OPEN CAB
90.160.01	06	CAB HEADLINER, OPEN CAB, FOR OPTIONAL RADIO
90.160.03	05	CAB - HEADLINER, DELUXE CAB
90.160.04	01	CAB - THRESHOLD
90.160.04	02	CAB - THRESHOLD/WASHER FLUID TANK
90.160.06	01	CAB - INTERIOR TRIM, MANUAL CONTROLS, DELUXE CAB
90.160.06	02	CAB - INTERIOR TRIM KIT, MANUAL CONTROLS, DELUXE CAB
90.160.06	03	CAB - INTERIOR TRIM, PILOT CONTROLS - MODELS WITHOUT RADIO
90.160.06	04	CAB - INTERIOR TRIM, PILOT CONTROLS - MODELS WITH RADIO

09.07	01	p1	07/99

POWER TAKE-OFF - D0200

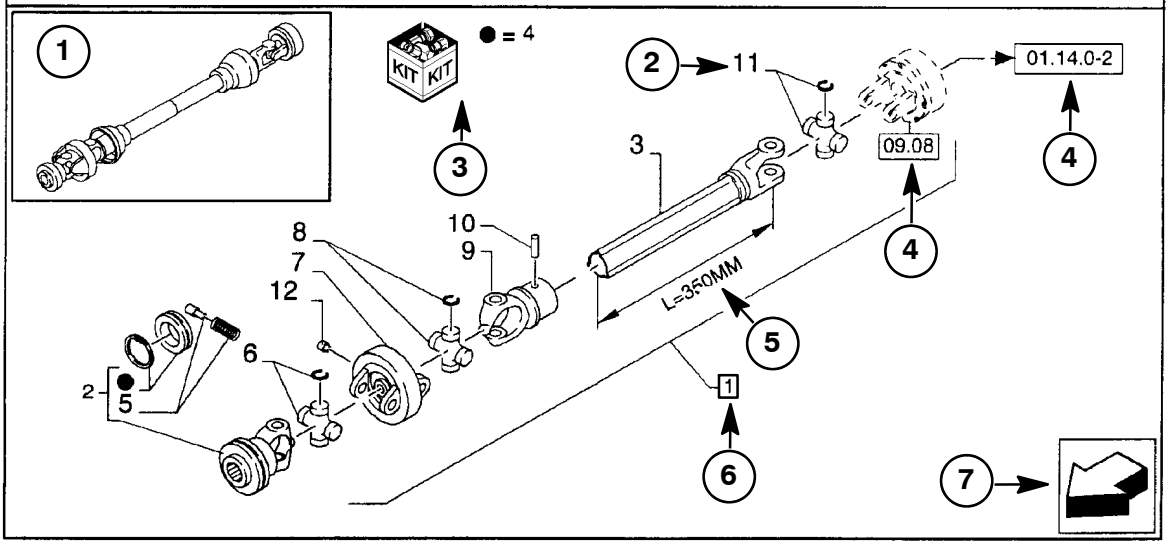

09.07	01	p1	09/00

POWER TAKE-OFF - D0200

REF	FN	PART NUMBER	YR/SN	QTY	DESCRIPTION
1	1	86529340	Before 06/85	1	SHAFT, PTO 2 to 11
2		84014007		1	YOKE Includes Ref. 4 & 5
3		NSS		1	NOT SERVICED SEPARATELY Shaft, L=350MM
4		84004292	C0204	1	KIT
4		{84058743}	D0500	1	KIT

(1) For Italy Only

STANDARD

MODELS

1 Position of the “Figure” on the machine.

2 Reference - Figure call-out of the part number.

3 Parts supplied in repair kits per symbol reference.

4 01.14.0-2 Indicates components shown in detail elsewhere in the catalog under the figure or page number shown. Some figures or pages referenced may not apply to the model in question.

5 Technical specifications relating to the Part indicated.

6 [1] Item Includes References noted in description.

7 Orientation. (Arrow indicates front of the machine.) 

8 Figure description.

9 General information of the figure.

10 Assembly code.

11 Sequence code within the assembly.

12 Page number within the sequence code.

13 Date of printing or updating of page (month-year).

14 Note - Relating to the Part Number. There is a key to symbols and abbreviations at the bottom of the text page.

15 Non-serviced parts.

16 Further description of the part to help confirm identification.

17 Not available as service part in this market.

18 Part Number.

19 Year
Before 06/85 = Part valid for production 06/85 and before
From 07/85 = Part valid for production from 07/85 and after

Serial Number
BSN 31011913 = Part valid for serial number 31011913 and below
ASN 31011914 = Part valid for serial number 31011914 and above

Modification
C 0201 = Part valid UNTIL 0201 change.
D 0300 = Part valid FROM 0300 change.
F 0202 = Part valid FROM Serial N..... to Serial N.....

Implementation of change. Serial number from which the change starts. The numbers are indicated on the identification plate of the model.

E.g.: D0300 Serial N 2503001 means that the part has been installed “From” serial number 2503001. Consequently, the parts marked by C0201, were installed “UP TO” serial number 2501999.

See code table.

20 Total Quantity of the Part referred to in the page. The quantity can be replaced by the following indications:
M = supplied in metres. AR = quantity as required.

21 Part Description.

22 Footnote references.

23 Figure notes.

24 Model number(s).

METRIC AND INCH HARDWARE

Allowances have been made in punched and drilled holes to allow interchangeability of metric and inch dimension hardware in fastening and mounting applications. However, this interchangeability does not apply to tapped holes or using metric dimension nuts on inch cap screws, studs and bolts. Likewise, inch dimension nuts cannot be used on metric cap screws, studs or bolts.

Following is a listing of Common sizes for substitution.

Inches	Millimeters
Screw Diameter	
3/16”	5 mm
1/4”	6 mm
5/16 “	8 mm
*3/8”	*10 mm
1/2”	12 mm
9/16”	14 mm
5/8”	16 mm
Screw Length	
5/8”	15 mm
3/4”	20 mm
*1”	25 mm
1-1/4”	30 mm
1-3/8”	35 mm
1-1/2”	40 mm
1-3/4”	45 mm
2”	50 mm
2-1/4”	60 mm
2-3/4”	70 mm
3”	80 mm
3-1/2”	90 mm
4”	100 mm

*EXAMPLE: For most applications a 3/8” x 1” cap screw and nut can be replaced by a 10 mm x 25 mm cap screw and nut.

For additional size information and possible substitutions, either inch to metric or metric to inch, please refer to the conversion table in this catalog.

CONVERSION CHART

Inch Fractions and Decimals to Millimeter Equivalents											
INCHES		MM	INCHES		MM	INCHES		MM	INCHES		MM
Fraction	Decimal		Fraction	Decimal		Fraction	Decimal		Fraction	Decimal	
-	.0004	.01	-	.3	7.620	-	.7874	20	-	1.969	50
-	.001	.025	5/16	.3125	7.938	51/64	.7969	20.241	2	2.000	50.8
-	.0039	.10	-	.3150	8	13/16	.8125	20.638	2-1/8	2.125	54
-	.005	.127	21/64	.3281	8.334	-	.8268	21	-	2.165	55
-	.0079	.2	-	.3346	8.5	53/64	.8281	21.034	2-1/4	2.250	57.2
-	.0098	.25	11/32	.3438	8.731	27/32	.8438	21.431	-	2.362	60
-	.01	.254	-	.3543	9	55/64	.8594	21.828	2-3/8	2.375	60.3
-	.0118	.3	23/64	.3594	9.128	-	.8662	22	2-1/2	2.500	63.5
1/64	.0156	.397	-	.3740	9.5	7/8	.8750	22.225	-	2.559	65
-	.0157	.4	3/8	.375	9.525	57/64	.8906	22.622	2-5/8	2.625	66.7
-	.0197	.5	25/64	.3906	9.922	-	.9	22.860	2-3/4	2.750	69.9
-	.0236	.6	-	.3937	10	-	.9055	23	-	2.756	70
-	.025	.635	-	.4	10.160	29/32	.9063	23.019	2-7/8	2.875	73
-	.0276	.7	13/32	.4062	10.319	59/64	.9219	23.416	-	2.953	75
-	.0295	.75	-	.4134	10.5	15/16	.9375	23.813	3	3.000	76.2
1/32	.0313	.794	27/64	.4219	10.716	-	.9449	24	-	3.150	80
-	.0315	.8	-	.4331	11	61/64	.9531	24.209	3-1/4	3.250	82.6
-	.0354	.9	7/16	.4375	11.113	31/32	.9688	24.606	-	3.346	85
-	.0394	1	29/64	.4531	11.509	-	.9843	25	3-1/2	3.500	88.9
3/64	.0469	1.191	15/32	.4688	11.906	1	1.000	25.400	-	3.543	90
-	.0472	1.20	-	.4724	12	-	1.024	26	-	3.740	95
-	.05	1.270	31/64	.4844	12.303	1-1/16	1.062	26.988	3-3/4	3.750	95.3
-	.0551	1.4	-	.4921	12.5	-	1.063	27	-	3.937	100
-	.0591	1.50	1/2	.5	12.700	-	1.102	28	4	4.000	101.6
1/16	.0625	1.588	-	.5118	13	1-1/8	1.125	28.575	-	4.331	110
-	.0669	1.70	33/64	.5156	13.097	-	1.142	29	4-1/2	4.500	114.3
-	.075	1.905	I7/32	.5326	13.494	-	1.181	30	-	4.724	120
5/64	.0781	1.984	-	.5315	13.5	1-3/16	1.188	30.16	5	5.000	127
-	.0787	2	35/64	.5469	13.891	-	1.221	31	-	5.118	130
-	.0906	2.3	-	.5512	14	1-1/4	1.250	31.75	5-1/2	5.500	139.7
3/32	.0938	2.381	9/16	.5625	14.288	-	1.260	32	-	5.512	140
-	.0984	2.5	-	.571	14.5	-	1.299	33	-	5.906	150
-	.1	2.540	37/64	.5781	14.684	1-5/16	1.312	33.34	6	6.000	152.4
-	.1024	2.6	-	.5906	15	-	1.339	34	-	6.299	160
7/64	.1093	2.776	19/32	.5938	15.081	I-3/8	1.375	34.93	6-1/2	6.500	165.1
-	.1181	3	-	.6	15.240	-	1.378	35	7	7.000	177.8
1/8	.125	3.175	39/64	.6094	15.478	-	1.417	36	-	7.087	180
-	.1378	3.5	-	.6103	15.5	1-7/16	1.438	36.51	7-1/2	7.500	190.5
9/64	.1406	3.572	5/8	.6250	15.875	-	1.457	37	-	7.874	200
5/32	.1563	3.969	-	.6299	16	-	1.496	38	8	8.000	203.2
-	.1575	4	41/64	.6406	16.272	1-1/2	1.500	38.10	8-1/2	8.500	215.9
11/64	.1719	4.366	-	.6496	16.5	-	1.535	39	-	8.661	220
-	.1772	4.5	21/32	.6563	16.669	1-9/16	1.562	39.69	9	9.000	228.6
3/l6	.1875	4.763	-	.6693	17	-	1.575	40	-	9.449	240
-	.1969	5	43/64	.6719	17.066	-	1.614	41	9-1/2	9.500	241.3
-	.2	5.080	11/16	.6875	17.463	1-5/8	1.625	41.28	-	9.843	250
13/64	.2031	5.159	-	.6890	17.5	-	1.654	42	10	10.000	254
-	.2165	5.5	-	.7	17.780	1-11/16	1.688	42.86	-	10.236	260
7/32	.2188	5.556	45/64	.7031	17.859	-	1.693	43	11	11.000	279.4
15/64	.2344	5.963	-	.7087	18	-	1.732	44	-	11.024	280
-	.2362	6	23/32	.7188	18.256	1-3/4	1.750	44.45	-	11.811	300
1/4	.25	6.350	-	.7283	18.5	-	1.772	45	12	12.000	304.8
-	.2559	6.5	47/64	.7344	18.653	-	1.811	46	13	13.000	330.2
17/64	.2656	6.747	-	.7480	19	1-13/16	1.813	46.04	-	13.780	350
-	.2756	7	3/4	.75	19.050	-	1.850	47	14	14.000	355.6
9/32	.2813	7.144	49/64	.7656	19.447	1-7/8	1.875	47.63	15	15.000	381
	.2953	7.5	-	.7677	19.5	-	1.890	48	-	15.748	400
19/64	.2969	7.541	25/32	.7813	19.844	-	1.929	49	16	16.000	406.4

SECTION INDEX
00 - Maintenance

00.500.01	01	DIA

00.500.01	01	p1	09/09

DIA

ART

NOT

AVAILABLE

DIA

REF	FN	PART NUMBER	YR/SN	QTY	DESCRIPTION
1		W0		1	ORDER WHOLEGOODS, Universal Mount {86590429}
2		86589869		1	PLATE, MOUNTING, Pallet Fork Frame and Guard
3		715101006		1	FORK, 36" Pallet Fork Set
4		715102006		1	FORK, 42" Pallet Fork Set
5		715103006		1	FORK, 48" Pallet Fork Set
6		86590372		1	BUCKET, Bucket; Dirt/Foundry; 1524 mm (60")
7		W0		1	ORDER WHOLEGOODS, Bucket; Dirt/Foundry; 1676 mm (66") {86590377}
8		W0		1	ORDER WHOLEGOODS, Bucket; Dirt/Foundry; 1829 mm (72") {86590379}
9		W0		1	ORDER WHOLEGOODS, Bucket; Low Profile Dirt/Foundry; 1524 mm (60") {87010196}
10		W0		1	ORDER WHOLEGOODS, Bucket; Low Profile Extended Dirt; 1524 mm (60") {86590375}
11		86590378		1	BUCKET, Low Profile Extended Dirt/Foundry; 1676 mm (66")
12		86590381		1	BUCKET, Low Profile Extended; 1820 mm (72")
13		W0		1	ORDER WHOLEGOODS, Bucket; Utility/Light Material; 1524 mm (60") {87010192}
14		W0		1	ORDER WHOLEGOODS, Bucket; Utility/Light Material; 1829 mm (72") {87010193}
15		W0		1	ORDER WHOLEGOODS, Bucket; Utility/Light Material; 2134 mm (84") {87010194}
16		W0		1	ORDER WHOLEGOODS, Bucket; Manure/Slurry; 1524 mm (60") {86590376}
17		W0		1	ORDER WHOLEGOODS, Bucket; Manure/Slurry; 1829 mm (72") {86590382}
18		W0		1	ORDER WHOLEGOODS, 10 x 16.5 Tire and Wheel {87036197}
19		W0		1	ORDER WHOLEGOODS, 7.00 x 15 Tire, 15 x 6 LBH Wheel, Yellow {87036198}
20		W0		1	ORDER WHOLEGOODS, 10 x 16.5 8PR Gal BB2 Tire and Wheel {87046544}

DIA

ART

NOT

AVAILABLE

DIA

REF	FN	PART NUMBER	YR/SN	QTY	DESCRIPTION
21		87047261		1	WHEEL SET, 10 x 16.5 8PR Gal XD2002 Tire and Wheel
22		W0		1	ORDER WHOLEGOODS, 10 x 16.5 GAL BB2 Tire and Wheel 66 OTW {87699777}
23		W0		1	ORDER WHOLEGOODS, 12 x 16.5 GAL BB2 Tire and Wheel 73 OTW {87699771}
24		87355492		1	WHEEL ASSY, 12 x 16.5 GAL XD2002 Tire and Wheel
25		W0		1	ORDER WHOLEGOODS, 31 x 13 x 16.5 GAL Hippo Tire and Wheel {87047277}
26		W0		1	ORDER WHOLEGOODS, 10 x 16.5 GAL Hulk Tire and Wheel {87046546}
27		87640715		1	KIT, Kit, Cab Closure - Cab Upgrade
28		87586364		1	KIT, Kit, Cab Demolition Door
29		87743612		1	KIT, Cab Jack Kit
30		87592194		1	KIT, Side Window Kit
31		86590108		1	KIT, Spill Guard Kit
32		87640695		1	KIT, Top Window Kit
33		87049627		1	DIA KIT, ADDITIONAL PROD., Counterweight Kit
34		87586363		1	KIT, Cab Door Kit
35		87375164		1	DIA, CONSTRUCTION, Kit, LH Multi-function Handle
36		87659916		1	DIA KIT, ADDITIONAL PROD., Kit, Secondary Front Auxiliary Hydraulics
37		87659915		1	DIA KIT, ADDITIONAL PROD., Kit, Secondary Rear Auxiliary Hydraulics
38		87659806		1	KIT, Kit, Turn Signals
39		87653302		1	KIT, CONVERSION, Hydraulic Mounting Plate Conversion Kit
40		87655125		1	KIT, SERVICE, Noise Abatement Kit
41		87700728		1	KIT, SERVICE, Noise Abatement Kit
42		{87435945}		1	Bolt On Edge;66"
43		87436141		1	EDGE, CUTTING, Bolt On Edge; 72"
44		87640702		1	KIT, Cab Kit, Interior
45		87640711		1	KIT, Kit, Cab Heater

SECTION INDEX
10 - Engine

10.001.01	01	ENGINE, L160
10.001.01	02	ENGINE, L170
10.001.02	01	CYLINDER BLOCK, L160
10.001.02	02	CYLINDER BLOCK, L170
10.101.01	01	CYLINDER HEAD
10.101.01	02	GASKET KIT
10.101.02	01	CYLINDER HEAD COVER & CRANKSHAFT PULLEY, L160
10.101.02	02	VALVE COVER & CRANKSHAFT PULLEY, L170
10.102.01		OIL PAN & GAUGE
10.103.01		CRANKSHAFT & PISTONS
10.103.02		FLYWHEEL, BELL HOUSING & STARTER
10.106.01		CAMSHAFT
10.106.03		TIMING GEAR CASE, GOVERNOR
10.106.05	01	ROCKER ARMS, L160
10.106.05	02	ROCKER ARMS, L170
10.114.10		HIGH IDLE ADJUSTMENT
10.202.01	01	AIR CLEANER, MUFFLER & FAN, L160
10.202.01	02	AIR CLEANER, MUFFLER & FAN, L170
10.202.01	03	AIR CLEANER - DONALDSON
10.202.01	04	AIR CLEANER INLET
10.214.01		FUEL INJECTION SYSTEM
10.216.01		FUEL TANK; 16 GL
10.218.01		INJECTOR
10.220.02	01	THROTTLE CONTROL
10.220.02	02	FOOT THROTTLE KIT
10.242.03		INJECTION PUMP
10.254.02		BLOCK HEATER KIT
10.254.03		MUFFLERS, ASPIRATOR & CATALYTIC
10.254.04		INTAKE MANIFOLD
10.254.05	01	EXHAUST MANIFOLD, L160
10.254.05	02	EXHAUST MANIFOLD, L170
10.304.01		OIL PUMP & SUCTION FILTER
10.402.01	01	WATER PUMP, L160
10.402.01	02	WATER PUMP, L170
10.406.01		RADIATOR - COOLER

10.001.01	01	p1	05/09

ENGINE, L160

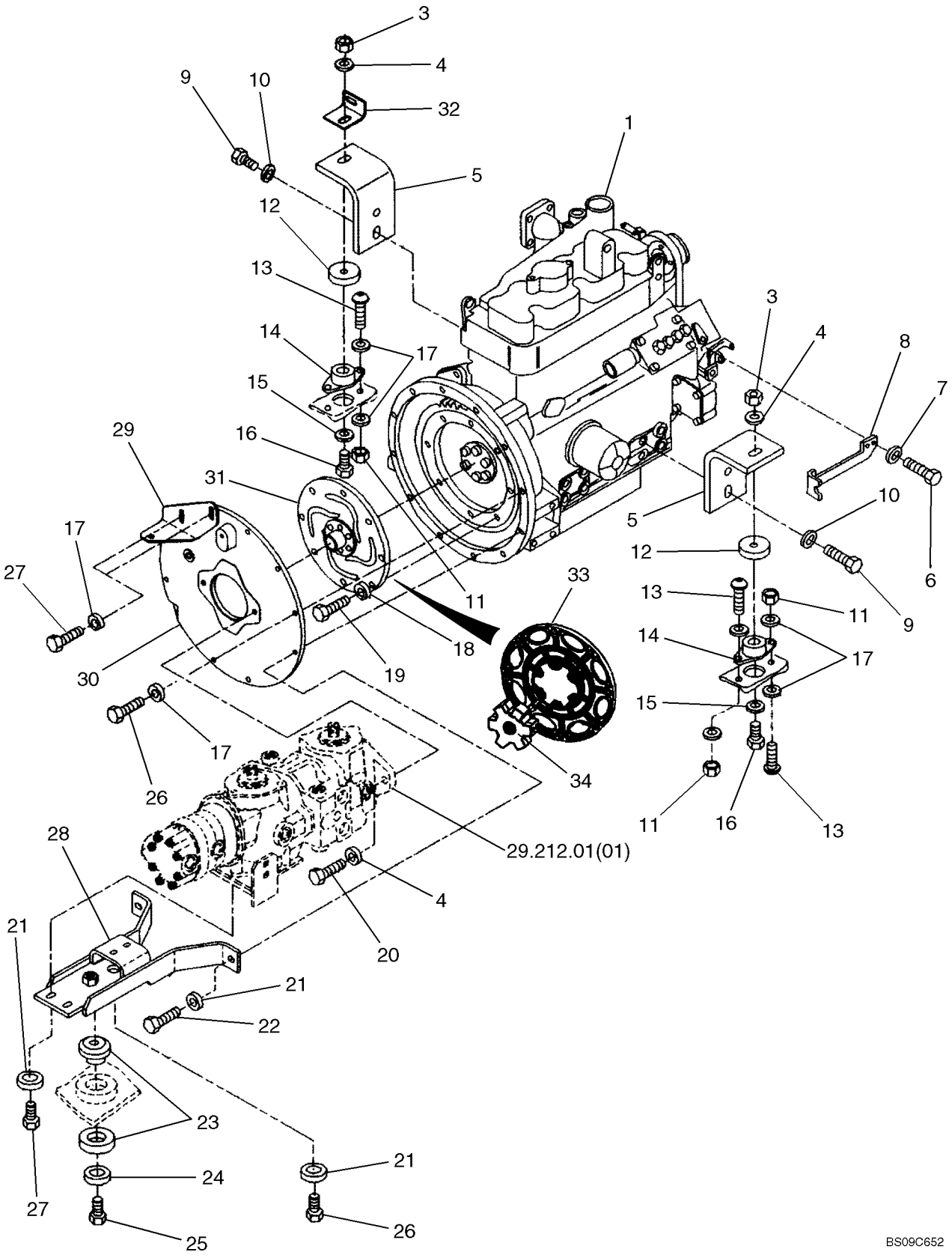

ENGINE, L160

REF	FN	PART NUMBER	YR/SN	QTY	DESCRIPTION
1		87393128		1	ENGINE, Engine N844, Tier 3; For Service Order Long Block SBA133732
2		SBA133732		1	ENGINE, Long Block Service Engine; Does Not Include Starter, Flywheel Housing, Cooling Fan, Fan Pulley, Fan Belt, Fan Holder, Altenator Or Mounting Parts, Exhaust Manifold Or Gasket
3		88871		2	NUT, LOCK, 1/2"-13, GC
4		65319		4	WASHER, M13 x 25 x 3.5, HT
5		86545777		2	ANGLE
6		86508568		2	BOLT, Hex, M6 x 16, Cl 8.8, Full Thd
7		322357		2	WASHER, BELLEVILLE, M6
8		86501115		1	MOUNT, ENGINE
9		87357989		4	SCREW
10		143479		4	WASHER, 19/32" x 1 1/4" x .135" Thk, HT
11		9628503		4	NUT, 3/8"-16, G5
12		9844141		2	CUP
13		87499		4	SCREW, Hex Soc But Hd, 3/8"-16 x 7/8"
14		9616607		2	INSULATOR
15		694478		2	WASHER
16		87339		2	BOLT, Hex, 1/2"-13 x 3", G5
17		140045		18	WASHER, BELLEVILLE, M10
18		322358		8	WASHER, BELLEVILLE, M8
19		87872		8	BOLT, Hex, 5/16"-18 x 3/4", G5, Full Thd
20		87689		2	BOLT, Hex, 1/2"-13 x 1 1/2", G5, Full Thd
21		285072		6	WASHER, M10 x 22.2 x 2.87 Thk, HT
22		280589		2	BOLT, Hex, 3/8"-16 x 1 3/4", G8
23		9844553		1	INSULATOR
24		719922		1	WASHER, M17 x 63 x 1/4" Thk
25		16445		1	BOLT, Hex, 5/8"-11 x 3 3/4", G5
26		88206		10	BOLT, Hex, 3/8"-16 x 1", G5, Full Thd
27		88011		4	BOLT, Hex, 3/8"-16 x 1 1/4", G5, Full Thd
28		86567313		1	SUPPORT
29		86567198		1	BRACKET
30		87014569		1	COVER
31		86521866		1	DISC

ENGINE, L160

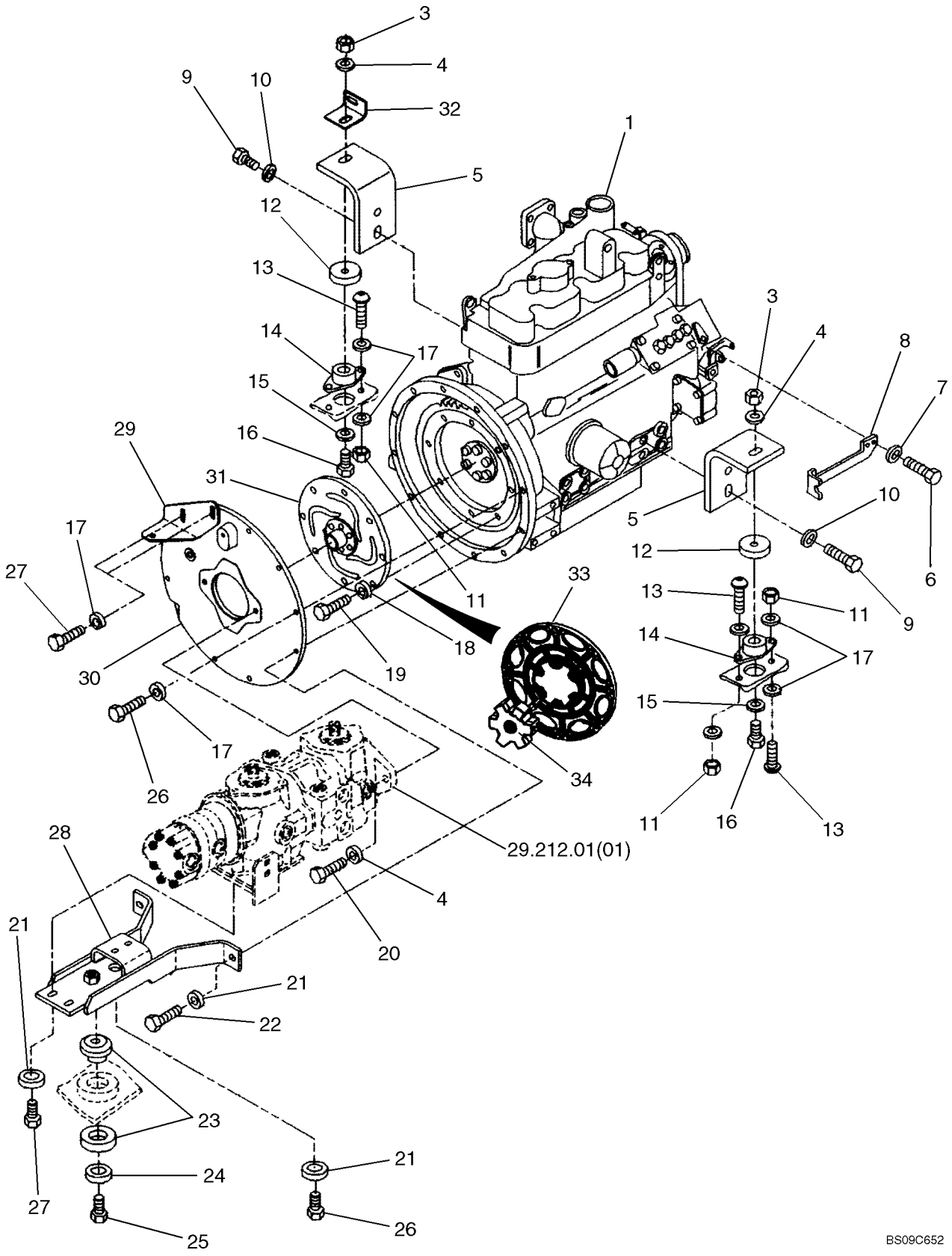
3
4
9
10
32
1
5
12
13
14
17
15
16
29
31
17
27
30
26
17
18
19
11
33
34
29.212.01(01)
28
4
20
21
21
22
23
24
25
27
21
26
3
4
8
7
5
10
12
6
9
13
11
14
17
15
11
16
13
BS09C652

ENGINE, L160

REF	FN	PART NUMBER	YR/SN	QTY	DESCRIPTION
32		86606008		1	ANGLE
		87686710		1	KIT, SERVICE, Flex Plate Replacement Kit; Incl Ref 33, 34 And Instructions
33		87670983		1	DISC, Includes Hub And Plate
34		9635884		8	BOLT, Hex, 5/16"-18 x 1", G5, Full Thd

10.001.01	02	p1	03/09

ENGINE, L170

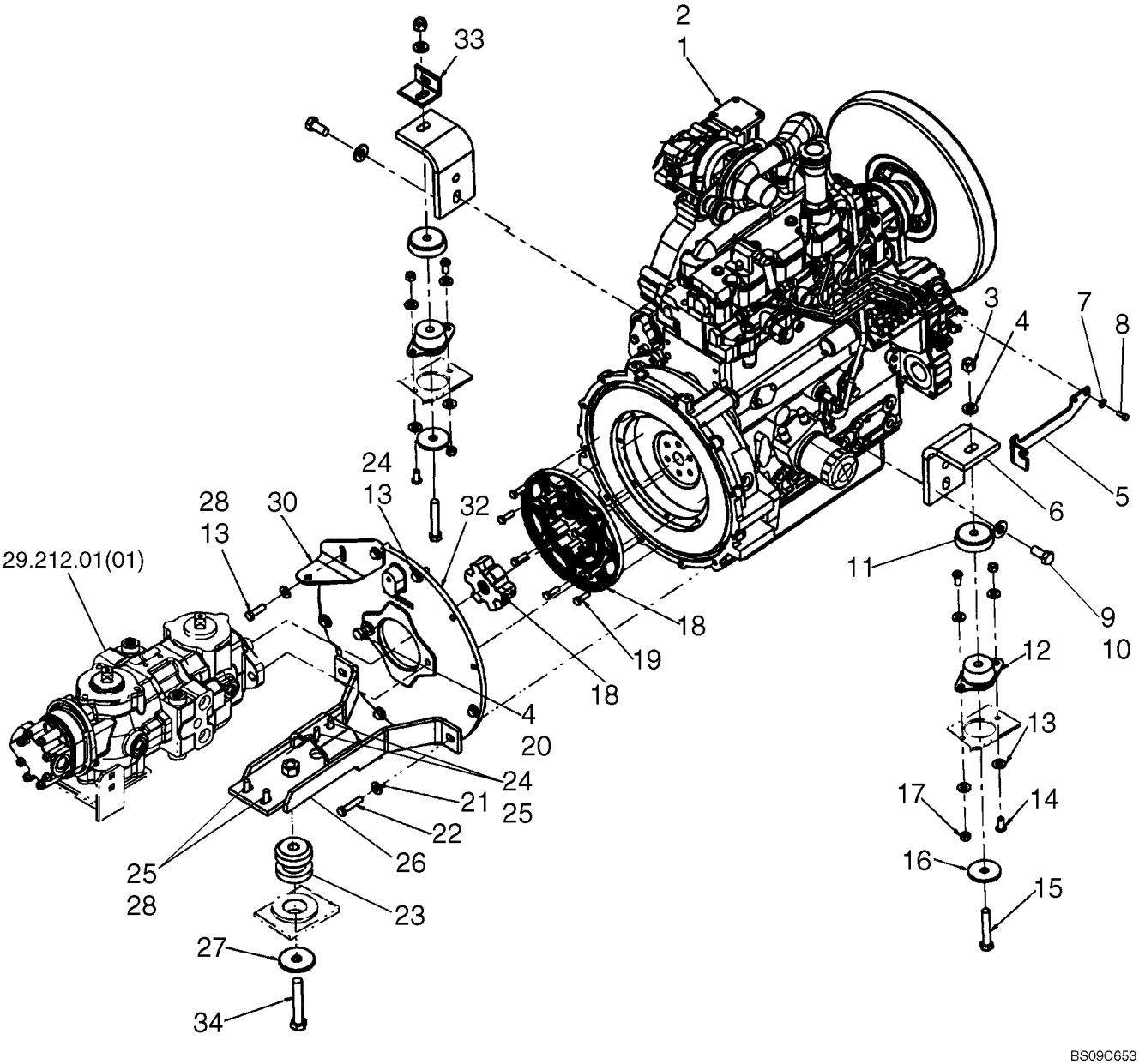

ENGINE, L170

REF	FN	PART NUMBER	YR/SN	QTY	DESCRIPTION
1		87393129		1	ENGINE, Engine N844T, Tier 3; For Service Order Long Block SBA133733
2		SBA133733		1	ENGINE, Long Block, Tier 3 Engine
3		88871		2	NUT, LOCK, 1/2"-13, GC
4		65319		4	WASHER, M13 x 25 x 3.5, HT
5		86501115		1	MOUNT, ENGINE
6		86545777		2	ANGLE
7		322357		2	WASHER, BELLEVILLE, M6
8		86508568		2	BOLT, Hex, M6 x 16, Cl 8.8, Full Thd
9		87357989		4	SCREW
10		143479		4	WASHER, 19/32" x 1 1/4" x .135" Thk, HT
11		9844141		2	CUP
12		9616607		2	INSULATOR, Isolation Mount
13		140045		16	WASHER, BELLEVILLE, M10
14		87499		4	SCREW, Hex Soc But Hd, 3/8"-16 x 7/8"
15		87339		2	BOLT, Hex, 1/2"-13 x 3", G5
16		694478		2	WASHER
17		9628503		4	NUT, 3/8"-16, G5
		87686710		1	KIT, SERVICE, Flex Plate Replacement Kit; Incl Ref 18, 19 And Instructions
18		87670983		1	DISC, Includes Hub And Plate
19		9635884		8	BOLT, Hex, 5/16"-18 x 1", G5, Full Thd
20		87689		2	BOLT, Hex, 1/2"-13 x 1 1/2", G5, Full Thd
21		285072		2	WASHER, M10 x 22.2 x 2.87 Thk, HT
22		280589		2	BOLT, Hex, 3/8"-16 x 1 3/4", G8
23		9844553		1	INSULATOR, Mount
24		88206		8	BOLT, Hex, 3/8"-16 x 1", G5, Full Thd
25		285072		4	WASHER, M10 x 22.2 x 2.87 Thk, HT
26		86567313		1	SUPPORT
27		719922		1	WASHER, M17 x 63 x 1/4" Thk
28		88011		4	BOLT, Hex, 3/8"-16 x 1 1/4", G5, Full Thd
30		86567198		1	BRACKET
32		86567000		1	COVER, Housing Cover
33		86606008		1	ANGLE
34		16445		1	BOLT, Hex, 5/8"-11 x 3 3/4", G5

10.001.02	01	p1	05/09

CYLINDER BLOCK, L160

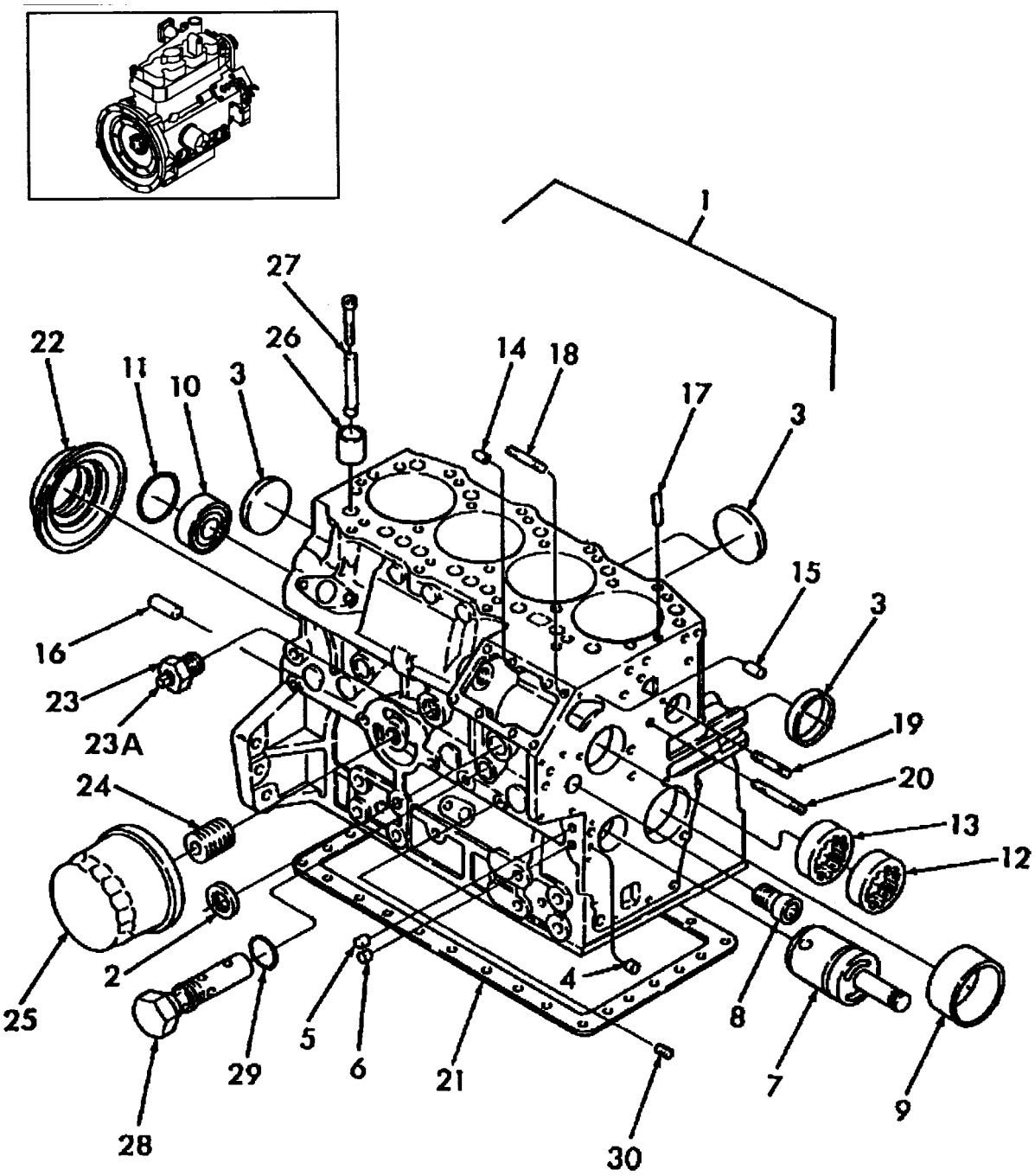

BS09B005

CYLINDER BLOCK, L160

REF	FN	PART NUMBER	YR/SN	QTY	DESCRIPTION
1		{}			See Figure 10.001.01 [01] Ref 2, SBA133732
		SBA195906990		1	KIT, Gasket
2		SBA064200025		2	PLUG
3		SBA064210040		5	CAP
4		SBA198466010		3	PLUG, Blank 8.4mm
5		SBA198466020		4	PLUG, Blank 10.4mm
6		SBA198466030		4	PLUG, Blank 6.5 x 7mm
7		SBA165296220		1	SHAFT, Idler Gear
8		SBA198517090		1	BUSHING
9		SBA198517222		1	BUSHING, Std
9		SBA198517226		1	BUSHING, .1" (.25mm), U/S
9		SBA198517229		1	BUSHING, .2" (.5mm), U/S
10		SBA040106203		1	BEARING, BALL
11		SBA064100045		1	PLUG, Expansion
12		SBA042309018		1	BEARING, NEEDLE
13		SBA042309017		1	BEARING, NEEDLE
14		SBA030500612		2	DOWEL
15		SBA030500616		2	DOWEL, M6 x 16
16		SBA030501025		2	PIN, BALL, M10 x 25 L
17		SBA030309005		2	PIN, Spring
18		SBA012110820		3	STUD
19		SBA012110635		1	STUD
20		SBA012110660		1	STUD
21		SBA110996860		1	GASKET, Oil Pan Gasket
22		SBA198636170		1	SEAL, Rear Main
23		SBA064500060		1	PLUG, Plug
24		SBA140546020		1	ADAPTER, Joint
25		87415600		1	FILTER, ENGINE OIL, Replaces 86546618
26		SBA120116100		8	TAPPET
27		SBA120456250		8	ROD, PUSH
28		SBA140036220		1	VALVE, PRESSURE RELIEF
29		SBA052109078		1	O-RING
30		SBA064409006		1	PLUG, 1/8" NPT

10.001.02	02	p1	05/09

CYLINDER BLOCK, L170

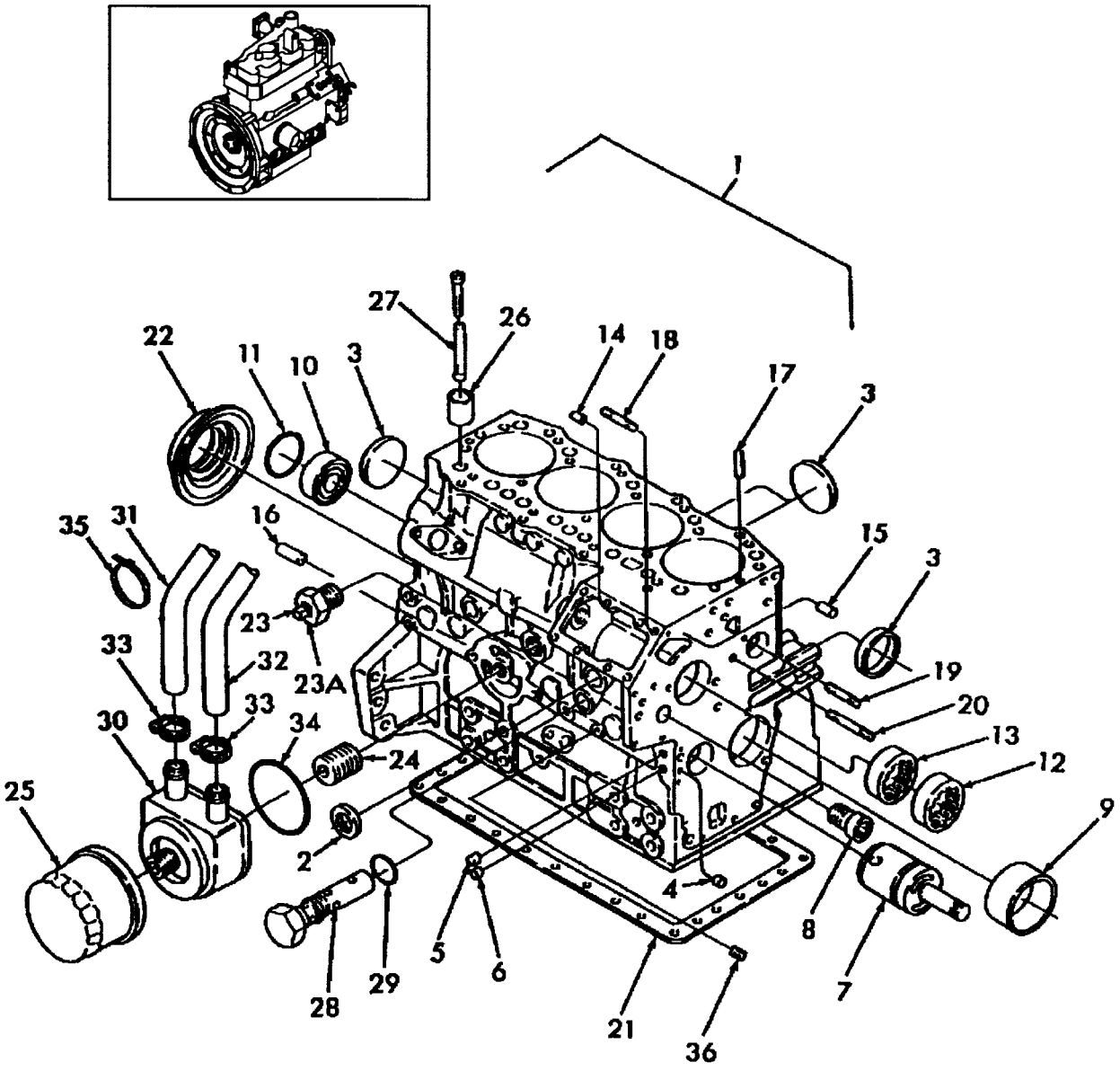

CYLINDER BLOCK, L170

REF	FN	PART NUMBER	YR/SN	QTY	DESCRIPTION
1		SBA195907000		1	KIT, Full Overhaul Gasket Kit; See Figure 10.101.01 [02]
2		SBA064200025		2	PLUG, Sealing
3		SBA064210040		5	CAP
4		SBA198466010		3	PLUG, 8.4mm
5		SBA198466020		4	PLUG, 10.4mm
6		SBA198466030		4	PLUG, 6.5 x 7mm
7		SBA165296220		1	SHAFT, Idler Gear
8		SBA198517090		1	BUSHING
9		SBA198517222		1	BUSHING, Std
9		SBA198517226		1	BUSHING, .1" (.25mm), U/S
9		SBA198517229		1	BUSHING, .2" (.5mm), U/S
10		SBA040106203		1	BEARING, BALL
11		SBA064100045		1	PLUG, Expansion
12		SBA042309018		1	BEARING, NEEDLE
13		SBA042309017		1	BEARING, NEEDLE
14		SBA030500612		2	DOWEL
15		SBA030500616		2	DOWEL, M6 x 16
16		SBA030501025		2	PIN, BALL, M10 x 25 L
17		SBA030309005		2	PIN, Spring
18		SBA012110820		3	STUD
19		SBA012110635		1	STUD
20		SBA012110660		1	STUD
21		SBA110996860		1	GASKET, Oil Pan
22		SBA198636170		1	SEAL, Rear Main
23		SBA064500060		1	PLUG, Draincock
24		SBA140546020		1	ADAPTER, Joint
25		87415600		1	FILTER, ENGINE OIL
26		SBA120116160		8	TAPPET
27		SBA120456250		8	ROD, PUSH, Complete
28		SBA140036220		1	VALVE, PRESSURE RELIEF
29		SBA052109078		1	O-RING
30		SBA140656120		1	COOLER, OIL
31		SBA068209260		1	HOSE
32		SBA068209264		1	HOSE

CYLINDER BLOCK, L170

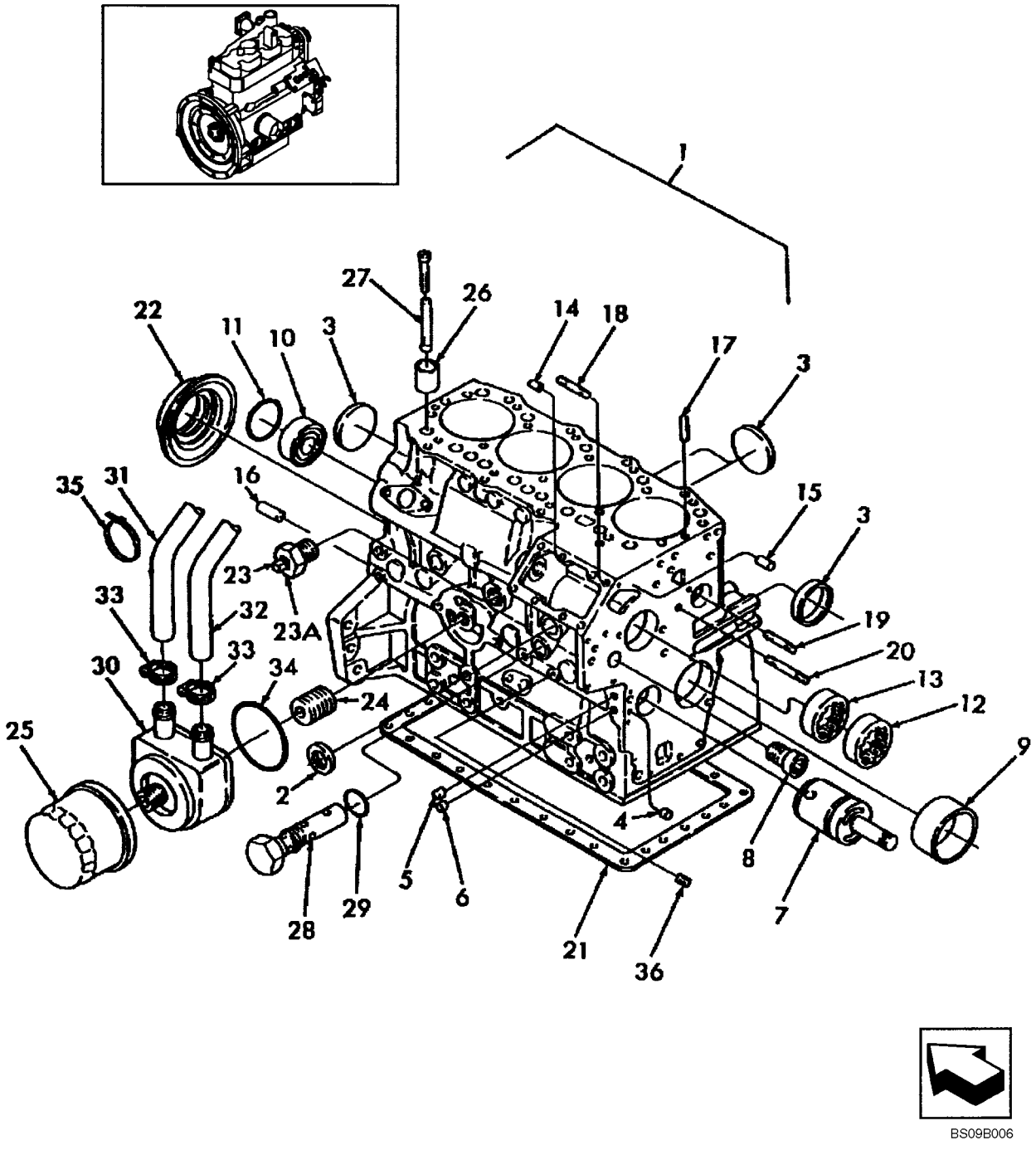

BS09B006

CYLINDER BLOCK, L170

REF	FN	PART NUMBER	YR/SN	QTY	DESCRIPTION
33		SBA067100025		4	CLAMP, HOSE
34		SBA140996240		1	GASKET
35		529070		1	STRAP, CABLE, .30" x 14.5"
36		SBA064409006		1	PLUG, 1/8" NPT

CYLINDER HEAD

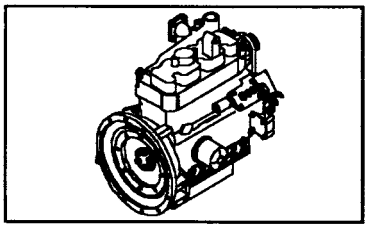

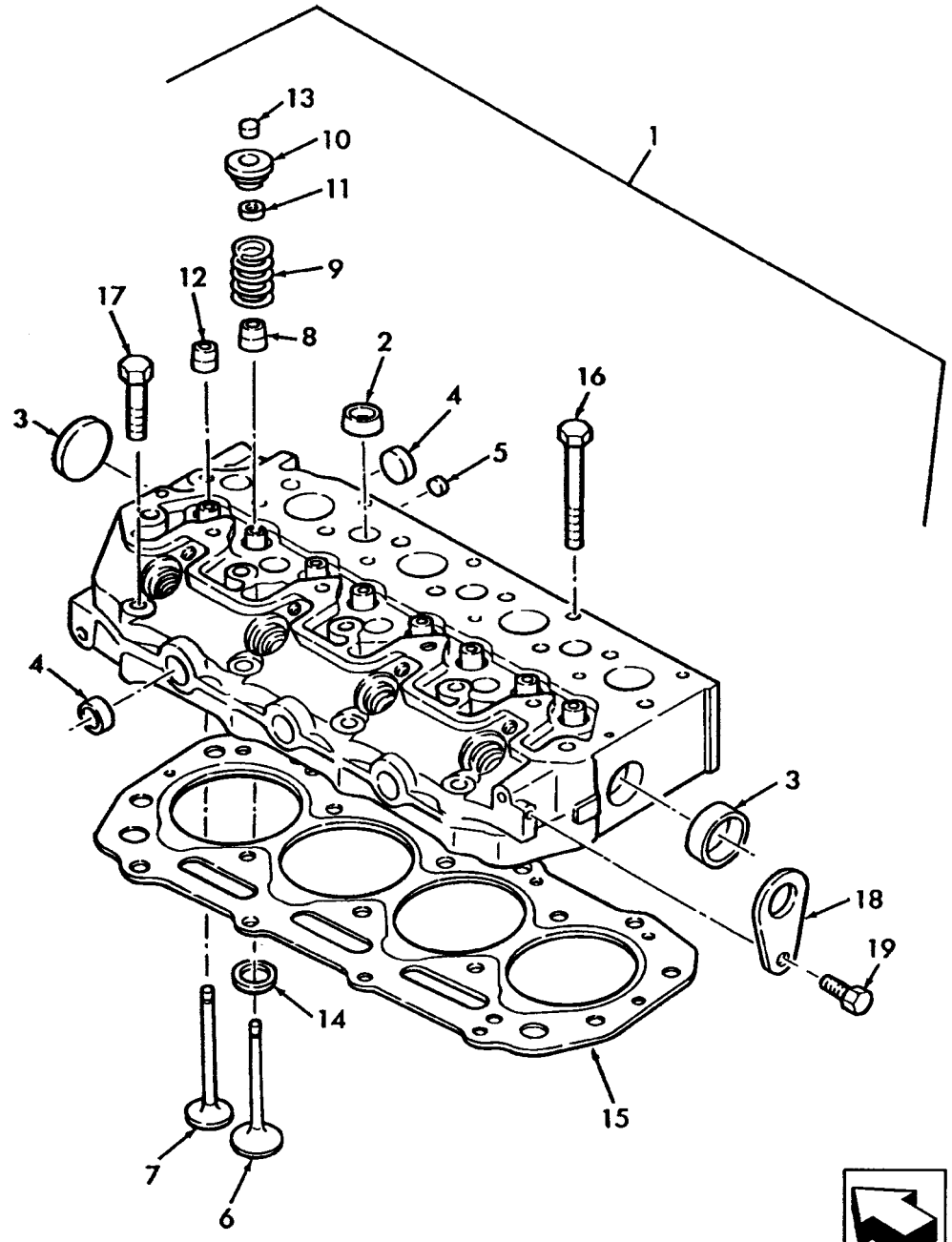

BS09B007

CYLINDER HEAD

REF	FN	PART NUMBER	YR/SN	QTY	DESCRIPTION
1		SBA111011400		1	CYLINDER HEAD, L160, Incl. Ref. 2 - 14
1		SBA111011380		1	CYLINDER HEAD, L170, Incl. Ref. 2 - 14
2		SBA064200018		7	CAP, Sealing
3		SBA064200030		2	PLUG, Sealing
4		SBA064200025		6	PLUG, Sealing
5		SBA064200010		3	PLUG, Sealing
6		SBA120166350		4	VALVE, ENGINE, INLET, STD
7		SBA120176360		4	VALVE, ENG EXHAUST, STD
8		SBA120406070		4	SEAL, Valve Guide, Intake
9		SBA198216700		8	SPRING
10		SBA120186080		8	RETAINER
11		SBA120226070		16	RETAINER, Cotter
12		SBA120406050		4	SEAL, Valve Guide, Exhaust
13		SBA120216040		8	CAP, If Used
13		SBA120216041		8	CAP, If Used
14		SBA110136300		4	VALVE SEAT, Intake
15		SBA111147520		1	GASKET, CYLINDER HEAD, 1.3mm Thick
15		SBA111147510		1	GASKET, CYLINDER HEAD, 1.2mm Thick
16		SBA111136480		14	BOLT, Head
17		SBA111136490		4	BOLT, Head
18		SBA195816370		2	HANGER, L160
18		SBA195816200		2	HANGER, L170
19		SBA011510816		2	BOLT, M8 x 16
20		SBA198487901		1	CONNECTION, L170

10.101.01	02	p1	03/09

GASKET KIT

ART

NOT

AVAILABLE

GASKET KIT

REF	FN	PART NUMBER	YR/SN	QTY	DESCRIPTION
1		SBA195907000		1	KIT, Full Overhaul Gasket Kit; Incl. 2 - 49
2		SBA025100006		2	WASHER
3		SBA025100010		4	WASHER, SEALING
4		SBA025100012		2	WASHER, M12
5		SBA025100016		1	WASHER
6		SBA052100030		1	O-RING
7		SBA052100050		1	O-RING
8		SBA052100070		1	O-RING
9		SBA052100100		2	O-RING
10		SBA052100400		1	O-RING
11		SBA052100420		1	O-RING
12		SBA052109072		1	O-RING
13		SBA052109074		1	O-RING
14		SBA052109076		2	O-RING
15		SBA052109078		1	O-RING
16		SBA052300600		1	O-RING, G60
17		SBA054109025		5	GASKET
18		SBA110996860		1	GASKET
19		SBA111147510		1	GASKET, CYLINDER HEAD
20		SBA111147520		1	GASKET, CYLINDER HEAD
21		SBA120406050		4	SEAL
22		SBA120406070		4	SEAL
23		SBA120996120		1	GASKET
24		SBA130996130		1	GASKET
25		SBA131426200		4	GASKET
26		SBA131437490		1	SHIM
27		SBA131437500		1	SHIM
28		SBA131437510		1	SHIM
29		SBA131437520		1	SHIM
30		SBA131437530		1	SHIM
31		SBA131996200		1	GASKET
32		SBA131996210		3	GASKET
33		SBA135996340		1	GASKET
34		SBA135996361		1	GASKET
35		SBA135996780		1	GASKET, MANIFOLD

GASKET KIT

ART

NOT

AVAILABLE

GASKET KIT

REF	FN	PART NUMBER	YR/SN	QTY	DESCRIPTION
36		SBA135996870		1	GASKET
37		SBA135996880		1	GASKET, MANIFOLD
38		SBA140996240		1	GASKET
39		SBA140996280		1	GASKET
40		SBA145996051		1	GASKET
41		SBA145996670		1	GASKET
42		SBA145996680		1	GASKET
43		SBA145996710		1	GASKET
44		SBA165996110		1	GASKET
45		SBA165996540		1	GASKET
46		SBA165996550		1	GASKET
47		SBA198636160		1	SEAL, M33.8 x 55
48		SBA198636170		1	SEAL
49		SBA314990012		1	GASKET

10.101.02	01	p1	02/09

CYLINDER HEAD COVER & CRANKSHAFT PULLEY, L160

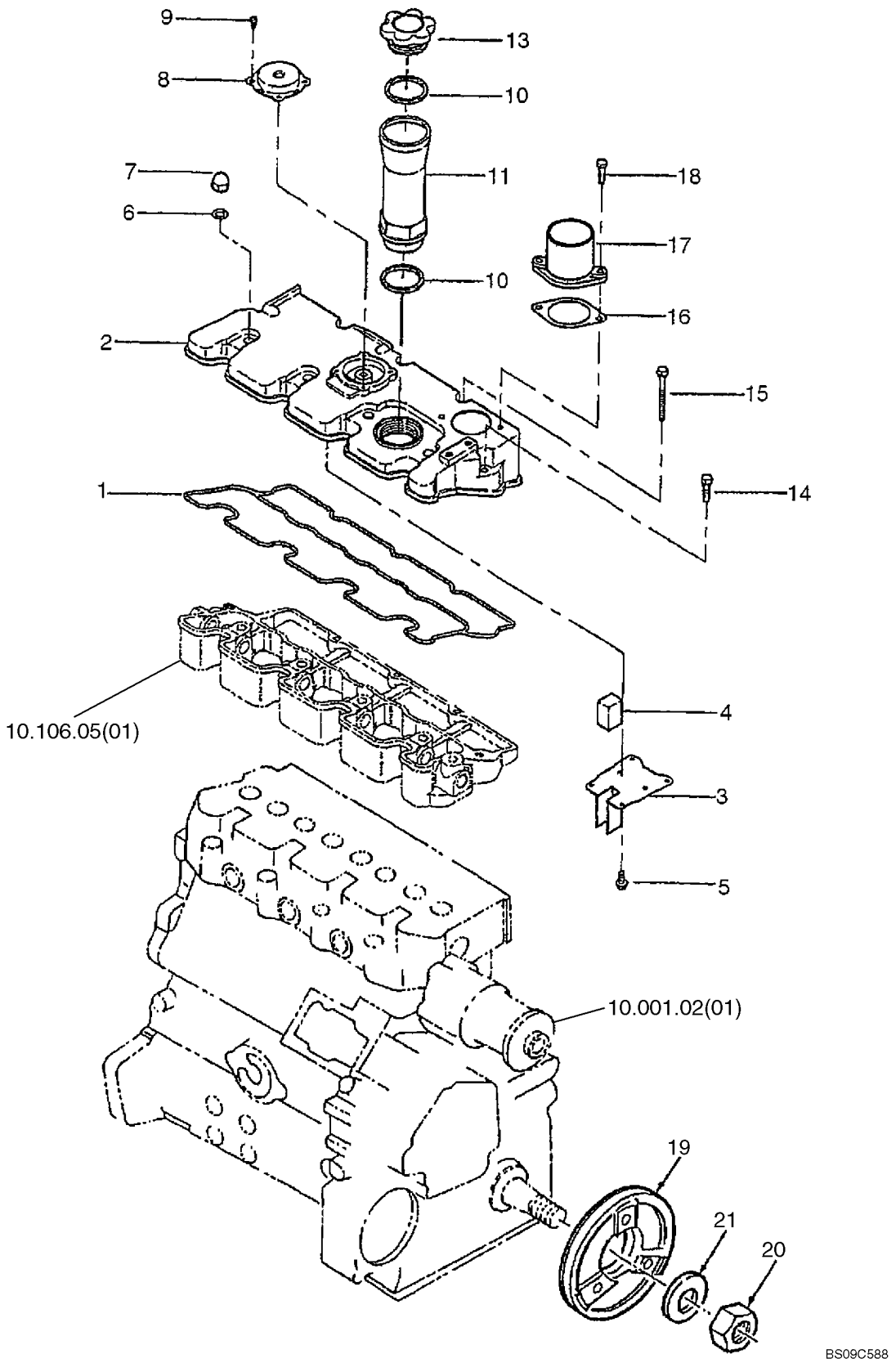

CYLINDER HEAD COVER & CRANKSHAFT PULLEY, L160

REF	FN	PART NUMBER	YR/SN	QTY	DESCRIPTION
1		SBA111996401		1	GASKET
2		SBA111217620		1	COVER
3		SBA110666210		1	COVER, Oil
4		SBA110666060		1	SCREEN, FILTER
5		SBA015600406		6	SCREW
6		SBA140996270		4	GASKET
7		SBA024600010		4	NUT, Cap
8		SBA110566080		1	BREATHER
9		SBA011100408		4	BOLT
10		SBA052100400		2	O-RING
11		SBA110466031		1	PIPE
13		SBA198436010		1	CAP, FILLER
14		SBA011310640		2	SCREW, CAPTIVE WASHER, Hex, M6 x 40, Cl 8.8
15		SBA011310660		3	BOLT
16		SBA135996950		1	GASKET, MANIFOLD
17		SBA135566470		1	TUBE, AIR INTAKE
18		SBA011300625		2	BOLT
19		SBA115396860		1	PULLEY, Crankshaft
20		SBA020109086		1	NUT
21		86511328		1	WASHER, M24 x 34 x 4

10.101.02	02	p1	04/09

VALVE COVER & CRANKSHAFT PULLEY, L170

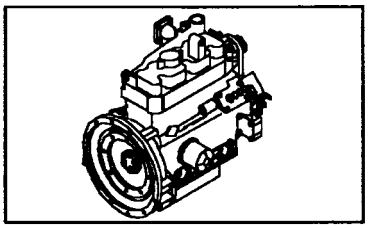

VALVE COVER & CRANKSHAFT PULLEY, L170

REF	FN	PART NUMBER	YR/SN	QTY	DESCRIPTION
1		SBA052109072		1	O-RING
2		SBA111026150		1	COVER, VALVE, Head, Incl. Ref. 3 - 5, 10
3		SBA110666050		1	DEFLECTOR, Oil
4		SBA110666090		1	FILTER
5		SBA011310612		2	SCREW, CAPTIVE WASHER, Hex, M6 x 12, Cl 8.8
6		SBA131996200		4	GASKET
7		SBA024600010		4	NUT, Cap
8		SBA198436010		1	CAP, FILLER
9		SBA052100400		1	O-RING
10		SBA140986581		1	ELBOW
11		SBA068209092		1	TUBE, L170
12		SBA052100420		1	O-RING
13		SBA110466031		1	PIPE
14		SBA115391060		1	PULLEY, Crankshaft Pulley
15		SBA020109086		1	NUT
16		86511328		1	WASHER, M24 x 34 x 4
17		SBA190297900		1	DECAL

OIL PAN & GAUGE

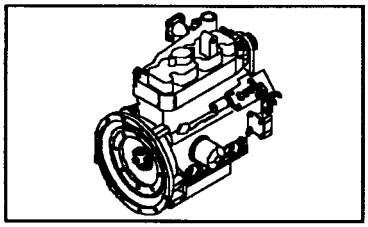

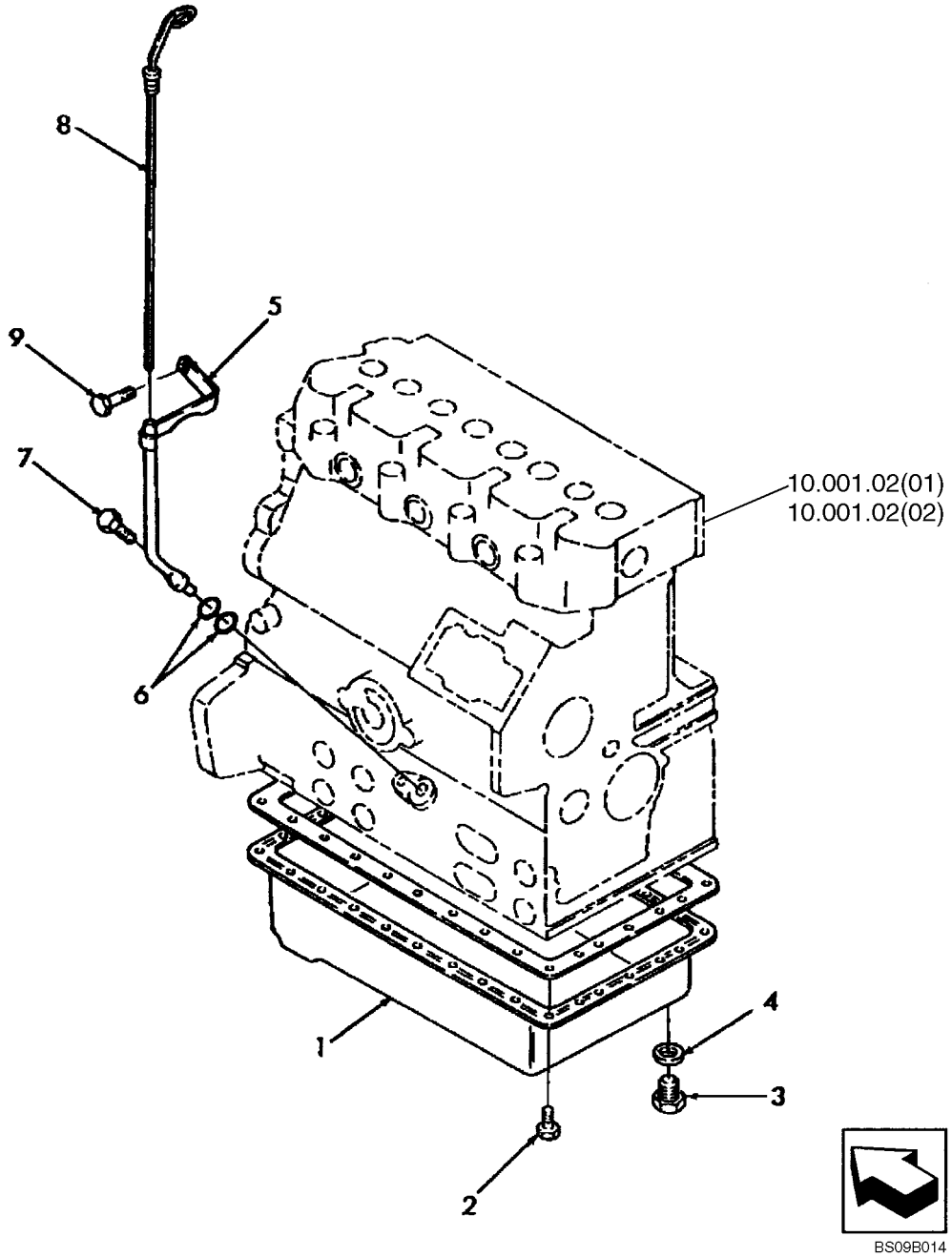

OIL PAN & GAUGE

REF	FN	PART NUMBER	YR/SN	QTY	DESCRIPTION
1		SBA110708030		1	PAN, ENGINE OIL
2		SBA010109235		30	BOLT
3		SBA010411212		2	PLUG, DRAIN, M12 x 1.25
4		SBA025100012		2	WASHER, M12, Seal
5		SBA110756371		1	TUBE, Gauge, Complete
6		SBA052100100		2	O-RING
7		SBA011310612		1	SCREW, CAPTIVE WASHER, Hex, M6 x 12, Cl 8.8
8		SBA198416570		1	DIPSTICK, Complete
9		SBA011510812		1	SCREW, CAPTIVE WASHER, Hex, M8 x 12, G5

CRANKSHAFT & PISTONS

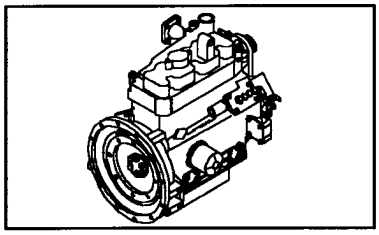

BS09D253

CRANKSHAFT & PISTONS

REF	FN	PART NUMBER	YR/SN	QTY	DESCRIPTION
1		SBA115256630		1	CRANKSHAFT
2		SBA115276200		1	GEAR, Crankshaft
3		SBA034100508		1	KEY
4		SBA030509020		1	PIN, Dowel
5		SBA110156250		1	HOLDER, Bearing, Incl. Ref. 6, 7
6		SBA010109406		8	BOLT
7		SBA030500612		8	DOWEL
8		SBA110156171		1	HOLDER, Bearing, Incl. Ref. 6, 7
9		SBA110156181		1	HOLDER, Bearing, Incl. Ref. 6, 7
10		SBA110156191		1	HOLDER, Bearing
11		NSS		4	NOT SERVICED SEPARATELY, Bearing, Upper Journal
12		NSS		4	NOT SERVICED SEPARATELY, Bearing, Lower Journal
13		SBA199266200		2	WASHER, THRUST
14		SBA011511075		3	BOLT
15		SBA010700865		2	BOLT, M8 x 65
16		SBA115107970		4	KIT, PISTON RINGS, Standard, L160, Contains a 3 MM width oil ring
16		SBA115104020		4	KIT, PISTON RINGS, Standard, L170
17		SBA115017540		4	KIT, PISTON & RINGS, Standard, L160
17		SBA115017541		4	KIT, PISTON & RINGS, Replaces SBA115017540
17		SBA115017550		4	KIT, PISTON & RINGS, Standard, L170
18		SBA115326220		4	PIN, PISTON
19		301642		8	RING, SNAP, M28, Int
20		SBA115026251		4	ROD, CONNECTING
21		SBA198517260		4	BUSHING
22		SBA115176140		8	BOLT, Connecting Rod
23		SBA020109120		8	NUT
24		SBA198517252		8	BEARING LINER, Std.
24		SBA198517256		8	BEARING LINER, .25mm, U/S
24		SBA198517259		8	BEARING LINER, .50mm, U/S
25		SBA199266210		1	WASHER, THRUST
26		SBA198517232		4	BEARING LINER, Std., Upper
26		SBA198517242		4	BEARING LINER, Std., Lower

CRANKSHAFT & PISTONS

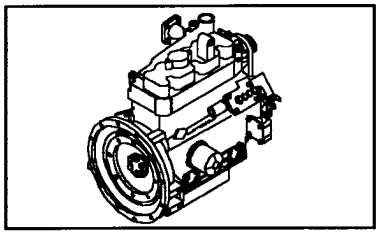

BS09D253

CRANKSHAFT & PISTONS

REF	FN	PART NUMBER	YR/SN	QTY	DESCRIPTION
26		SBA198517236		4	BEARING LINER, .010" U/S, Upper, (0.25mm)
26		SBA198517246		4	BEARING LINER, .010" U/S, Lower, (0.25mm)
26		SBA198517239		4	BEARING LINER, .020" U/S, Upper, (0.50mm)
26		SBA198517249		4	BEARING LINER, .020" U/S, Lower, (0.50mm)

FLYWHEEL, BELL HOUSING & STARTER

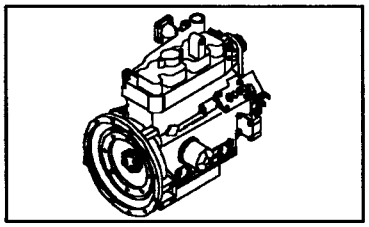

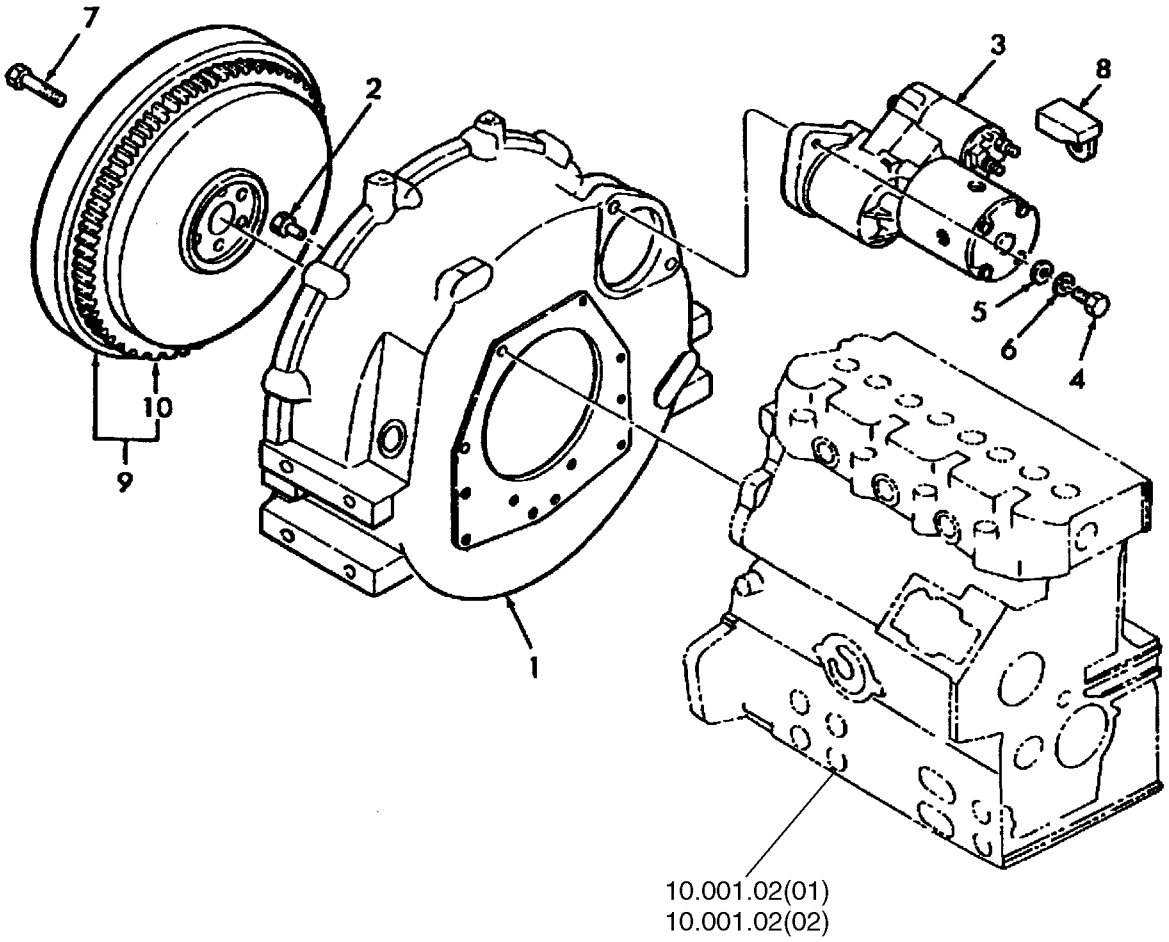

BS09B019

FLYWHEEL, BELL HOUSING & STARTER

REF	FN	PART NUMBER	YR/SN	QTY	DESCRIPTION
1		SBA110447130		1	BELL HOUSING, Cover
2		SBA011510820		10	SCREW, CAPTIVE WASHER, Hex, M8 x 20, G5
3		SBA185086530		1	MOTOR, STARTER
4		43140		2	BOLT, Hex, M10 x 30, 8.8, Full Thd
5		SBA026200010		2	WASHER
6		140028		2	WASHER, LOCK, M10
7		SBA010109341		6	BOLT
8		SBA185736260		1	COVER
9		SBA115357570		1	FLYWHEEL, ENGINE, Incl. 10
10		SBA115376040		1	GEAR, RING

CAMSHAFT

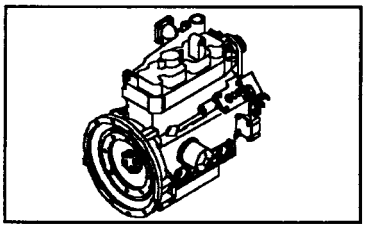

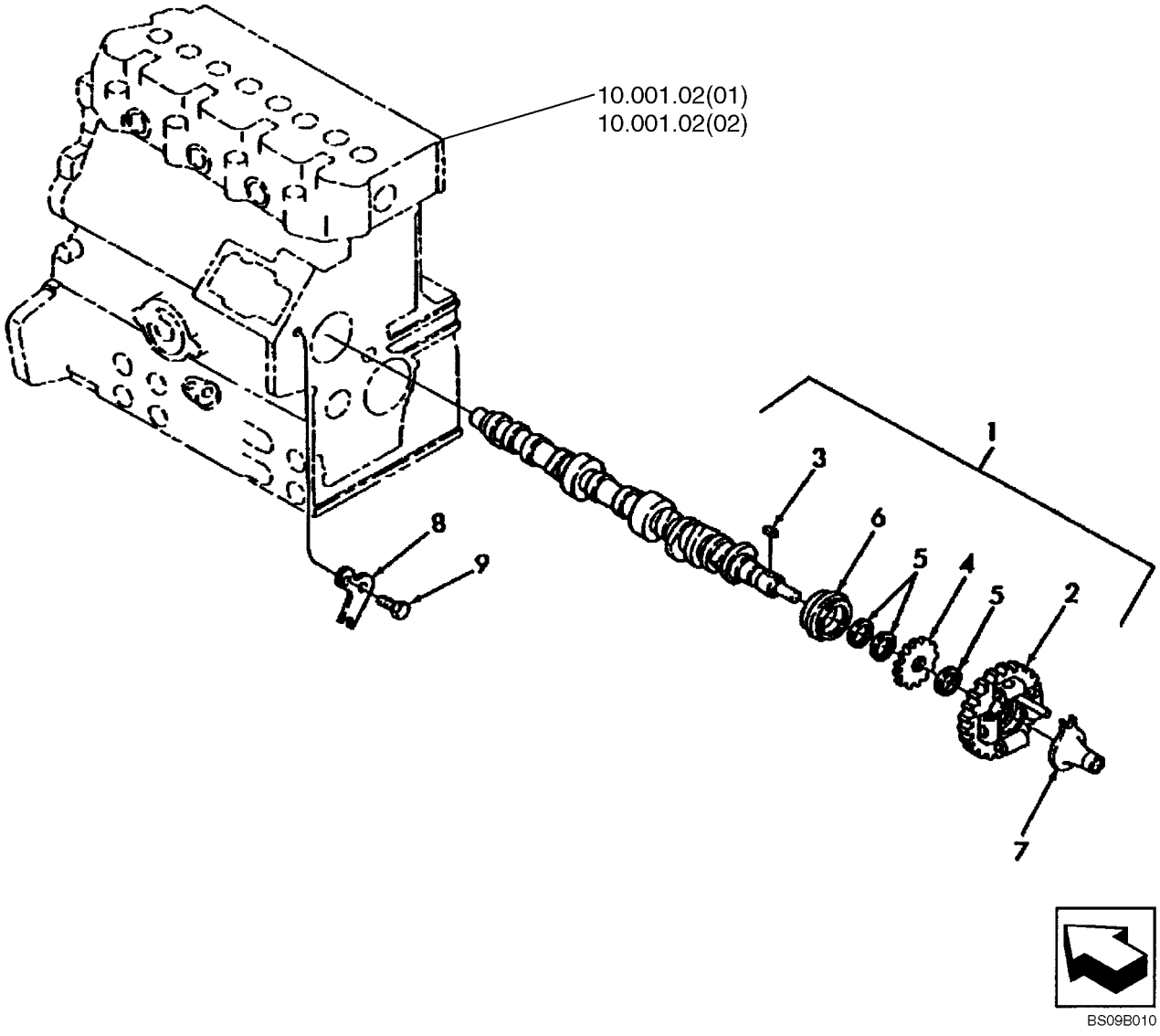

BS09B010

CAMSHAFT

REF	FN	PART NUMBER	YR/SN	QTY	DESCRIPTION
1		SBA120026320		1	CAMSHAFT, Incl. Ref 2 - 6; L160
1		SBA120026970		1	CAMSHAFT, Incl. Ref 2 - 6; L170
2		SBA120016050		1	GEAR, Cam, Complete
3		SBA034100508		1	KEY
4		SBA120736081		1	GEAR
5		SBA199216230		3	SPACER
6		SBA040109057		1	BEARING
7		SBA125256120		1	GUIDE, SLIDE
8		SBA199566750		1	BRACKET
9		SBA011310612		2	SCREW, CAPTIVE WASHER, Hex, M6 x 12, Cl 8.8

10.106.03		p1	05/09

TIMING GEAR CASE, GOVERNOR

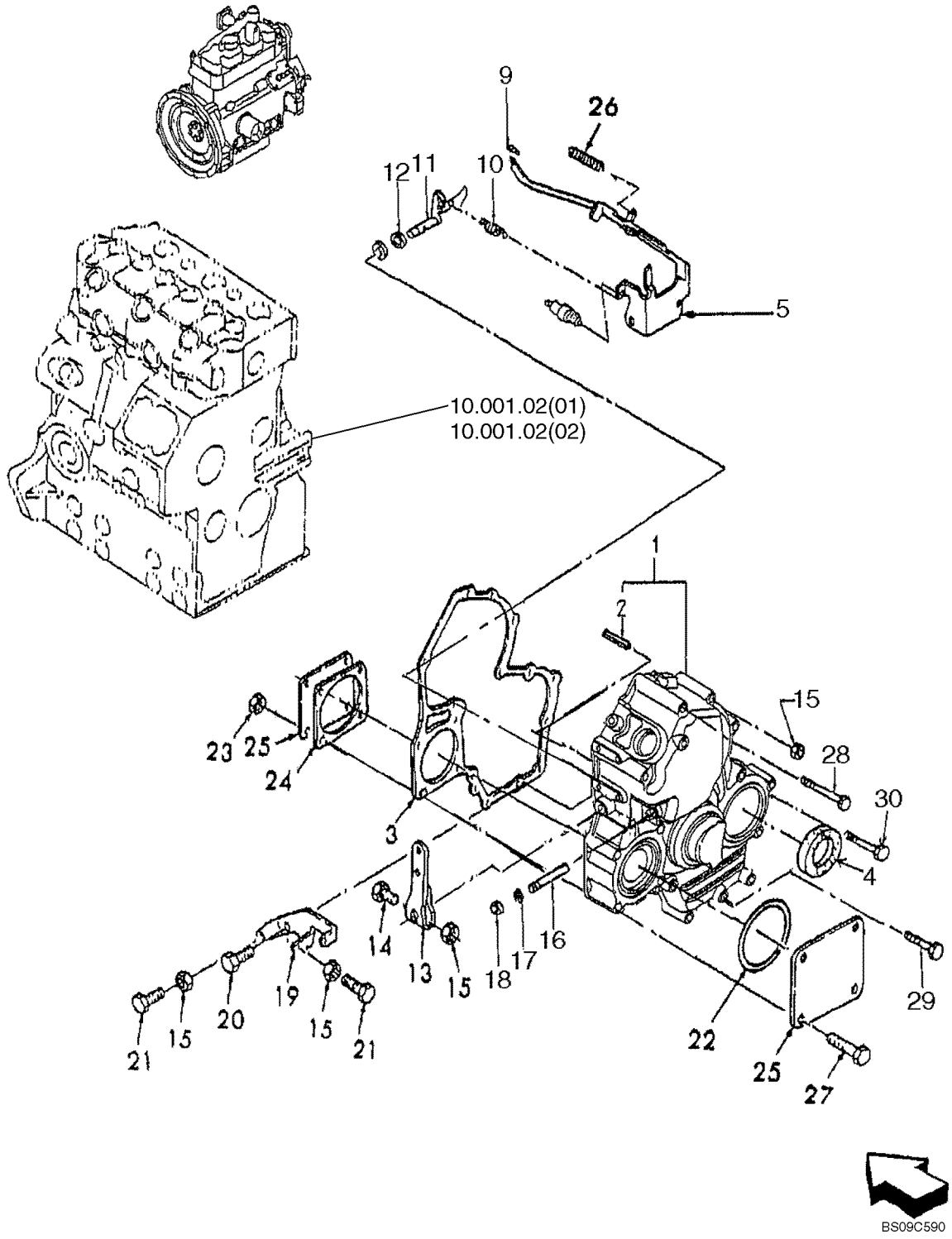

TIMING GEAR CASE, GOVERNOR

REF	FN	PART NUMBER	YR/SN	QTY	DESCRIPTION
1		SBA165106840		1	GEAR, Timing Gear, Incl. Ref 2
2		SBA030300414		1	PIN, Spring
3		SBA165996550		1	GASKET
4		SBA198636160		1	SEAL, M33.8 x 55, Oil
5		SBA125046510		1	LEVER, Governor; L160
5		SBA125046520		1	LEVER, Governor; L170
9		SBA031100004		1	PIN, Snap
10		SBA198217380		1	SPRING, Main
11		SBA125156170		1	ARM
12		SBA052109110		1	O-RING
13		SBA125416300		1	LEVER, Speed
14		43117		1	BOLT, Hex, M6 x 30, 8.8
15		9804276		4	NUT, M6 x 1, Flg, Cl 8
16		SBA125116141		1	ROD
17		SBA052109108		1	O-RING
18		SBA036800005		1	RING, SNAP
19		SBA125976120		1	BRACKET
20		SBA011310614		2	BOLT, CL 8.8, M6 x 1 x 14
21		SBA010109264		2	BOLT
22		SBA052300600		1	O-RING, G60
23		9804277		4	NUT, M8 x 1.25, Flg, Cl 8
24		SBA165996610		1	GASKET
25		SBA165206010		2	COVER
26		SBA198217560		1	SPRING, Start
27		SBA011510865		4	BOLT
28		SBA011310680		2	BOLT
29		SBA011310645		7	SCREW, CAPTIVE WASHER, Hex, M6 x 45, Cl 8.8
30		SBA011310660		3	BOLT

10.106.05	01	p1	02/09

ROCKER ARMS, L160

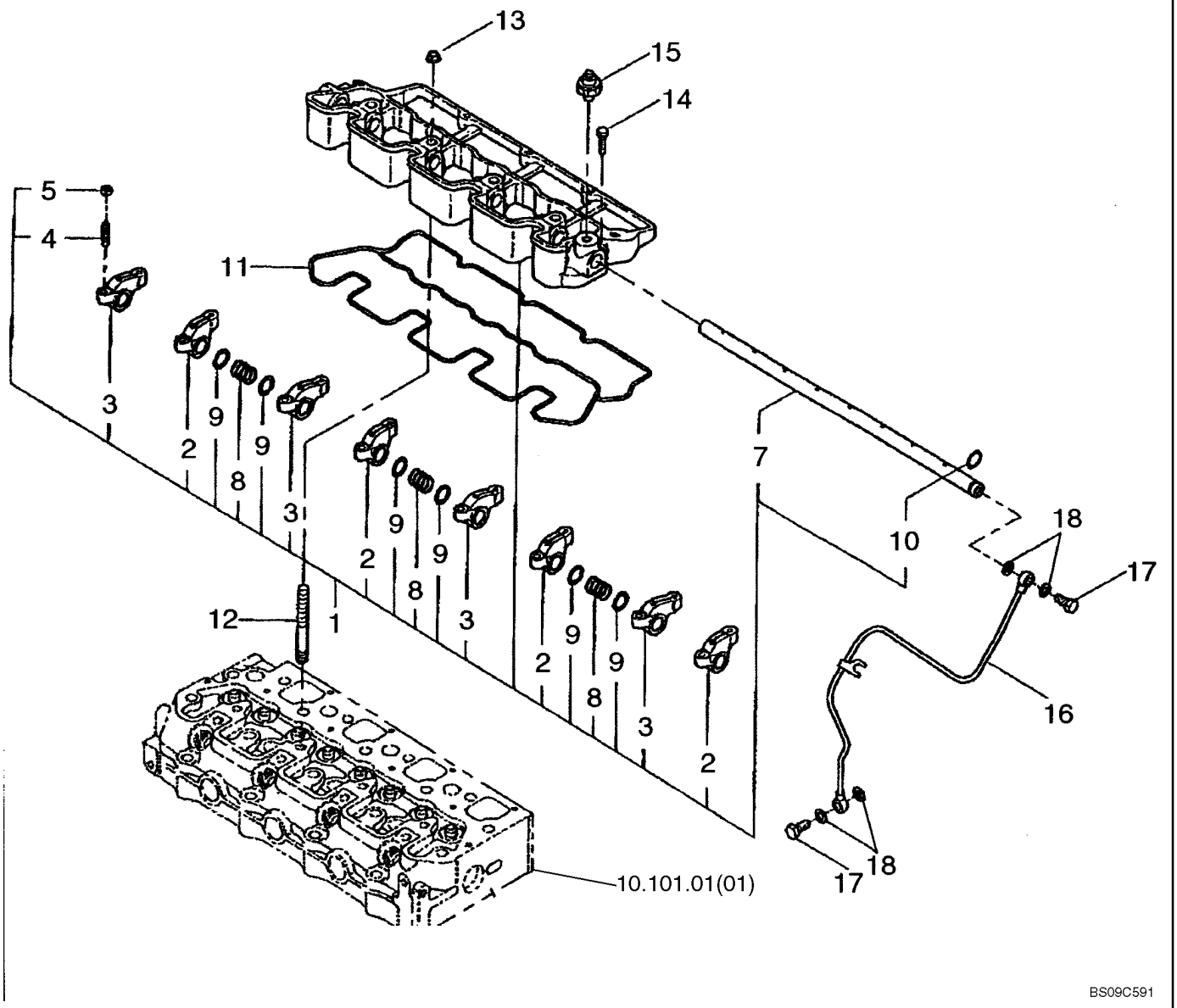

ROCKER ARMS, L160

REF	FN	PART NUMBER	YR/SN	QTY	DESCRIPTION
1		SBA120036830		1	ROCKER ARM, L160
2		SBA120356131		4	ROCKER ARM, Intake, Complete
3		SBA120356141		4	ROCKER ARM, Exhaust, Complete
4		SBA199486220		8	SCREW, ADJUSTMENT
5		SBA020109076		8	NUT
7		SBA120316201		1	SHAFT, Rocker Arm
8		SBA198217170		3	SPRING
9		SBA199280300		6	SHIM, 0.5mm Thk
10		SBA052109076		1	O-RING
11		SBA120996130		1	GASKET
12		SBA012109044		4	STUD
13		9804278		4	NUT, M10 x 1.5, Flg, Cl 8
14		SBA011310635		2	SCREW, CAPTIVE WASHER, Hex, M6 x 35, Cl 8.8
15		SBA185246060		1	SENDER UNIT, Oil Pressure Switch
16		SBA140606720		1	TUBE, TC40D
		SBA140607020		1	TUBE, RIGID, TC45D
17		SBA198486780		2	BOLT, BANJO
18		SBA140996260		4	GASKET

ROCKER ARMS, L170

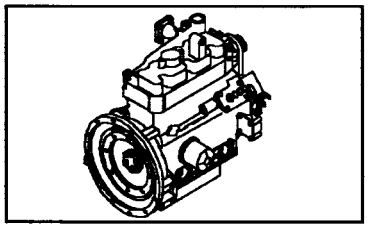

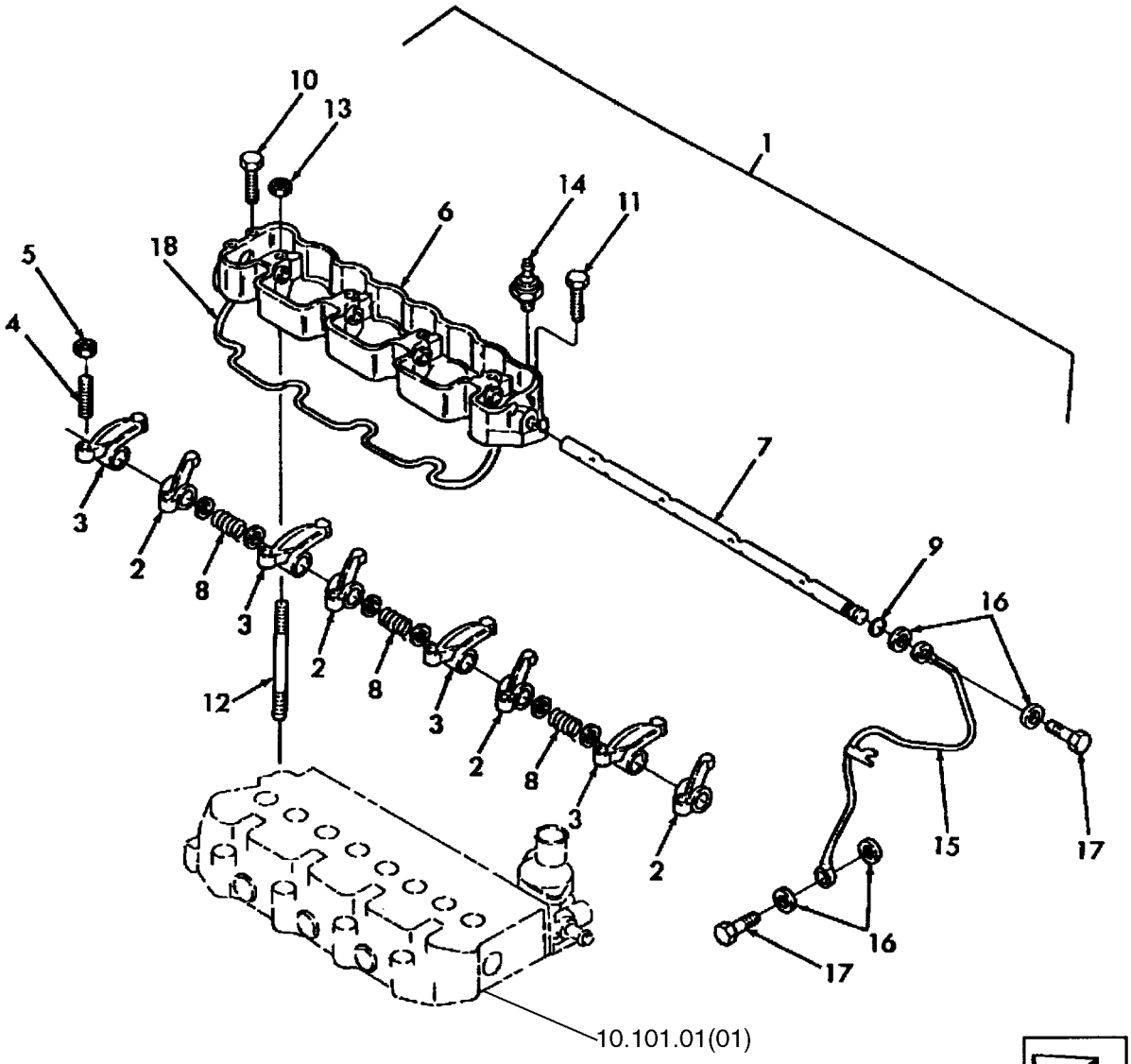

BS09B009

ROCKER ARMS, L170

REF	FN	PART NUMBER	YR/SN	QTY	DESCRIPTION
1		SBA120036393		1	ROCKER ARM, Incl. Ref 2 - 9
2		SBA120356131		4	ROCKER ARM, Intake, Complete
3		SBA120356141		4	ROCKER ARM, Exhaust, Complete
4		SBA199486220		8	SCREW, ADJUSTMENT
5		SBA020109076		8	NUT
6		SBA120346341		1	BRACKET, Rocker Arm
7		SBA120316200		1	SHAFT, Rocker Arm
8		SBA198217170		3	SPRING
9		SBA052109076		1	O-RING
10		SBA011310650		1	BOLT
11		SBA011310625		1	SCREW, CAPTIVE WASHER, Hex, M6 x 25, Cl 8.8
12		SBA012109044		4	STUD
13		SBA023109002		4	NUT
14		SBA185246060		1	SENDER UNIT, Oil Pressure Switch
15		SBA140606720		1	TUBE, Oil
16		SBA140996260		4	GASKET
17		SBA198486780		2	BOLT, BANJO
18		SBA052109074		1	O-RING

HIGH IDLE ADJUSTMENT

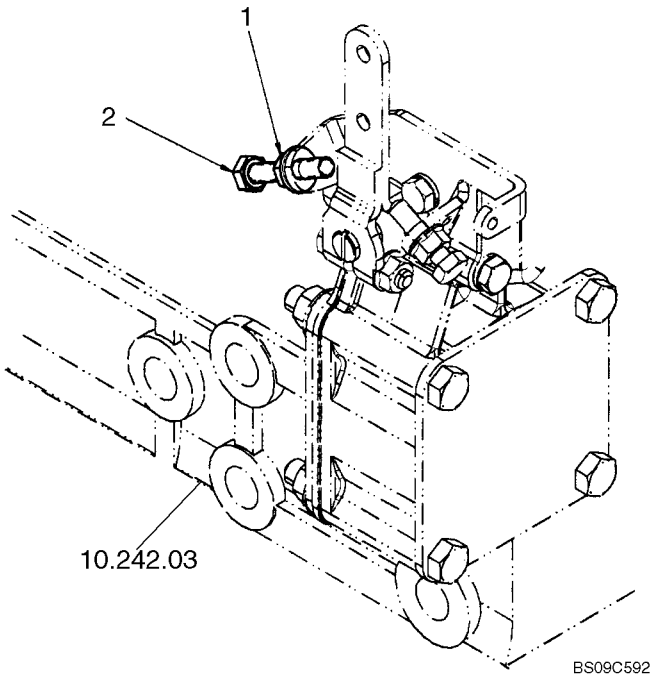

HIGH IDLE ADJUSTMENT

REF	FN	PART NUMBER	YR/SN	QTY	DESCRIPTION
1		86511444		1	NUT, M6, Flg Ser
2		15212521		1	BOLT, Hex, M6 x 35, 8.8, Full Thd
		{}		X	Injection Pump; See Figure 10.242.03

10.202.01	01	p1	06/09

AIR CLEANER, MUFFLER & FAN, L160

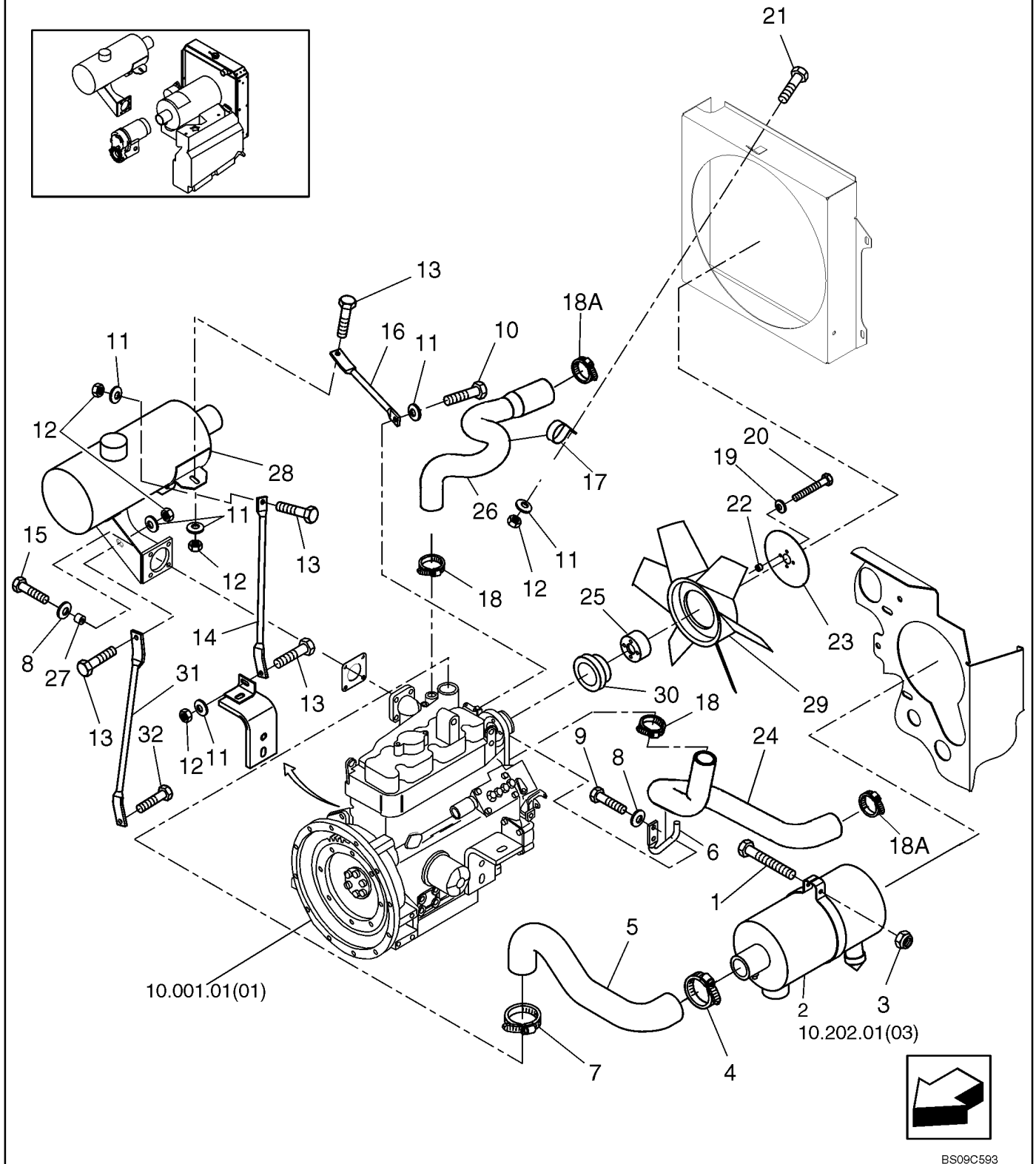

AIR CLEANER, MUFFLER & FAN, L160

REF	FN	PART NUMBER	YR/SN	QTY	DESCRIPTION
1		88346		1	BOLT, Hex, 5/16"-18 x 2 1/2", G5
2		87033035		1	AIR CLEANER, DONALDSON, See Figure 10.202.01 [03]
3		280736		1	NUT, LOCK, 5/16"-18, GC
4		82012728		1	CLAMP, HOSE
5		87028326	ASN LMU013613	1	HOSE, L160
6		86550180		1	SUPPORT, Rod
7		86050202		1	CLAMP, HOSE, #32, 1.56/2.50 Type F Worm
8		322358		6	WASHER, BELLEVILLE, M8
9		120104		2	BOLT, Hex, M8 x 20, 8.8
10		43138		1	BOLT, Hex, M10 x 20, 8.8, Full Thd
11		140045		6	WASHER, BELLEVILLE, M10
12		9628503		5	NUT, 3/8"-16, G5
13		88206		4	BOLT, Hex, 3/8"-16 x 1", G5, Full Thd
14		9844488		1	SUPPORT
15		43129		4	BOLT, Hex, M8 x 40, 8.8
16		86640738		1	SUPPORT
17		603022		1	CLAMP, 1 3/4", Insul, 3/8" Bolt
18		82012725		2	CLAMP, HOSE, #44, M32-44
18A		84674		2	CLAMP, HOSE, #28, 1.31/2.25 Type F Worm
19		322357		2	WASHER, BELLEVILLE, M6
20		86508570		2	BOLT, Hex, M6 x 80, 8.8
21		88434		1	BOLT, Hex, 3/8"-16 x 3/4", G5, Full Thd
22		86526695		2	SPACER, Split
23		9828668		1	COVER
24		87044193		1	HOSE, Radiator, Bottom
25		SBA145386540		1	HOLDER
26		87048357		1	HOSE, Radiator, Top
26		87048491		1	HOSE, Radiator, Top; Replaces 87048357
27		86534692		4	SPACER
28		86537593		1	MUFFLER, Standard; For Gasket SBA314990013 See Figure 10.254.05 [01], Ref 6
28		87049554		1	MUFFLER, Spark Arrestor
28		86527336		1	MUFFLER, Spark Arrestor Aspirated, See Figure 10.254.03, For Dusty Conditions, Body Length 14.3"

AIR CLEANER, MUFFLER & FAN, L160

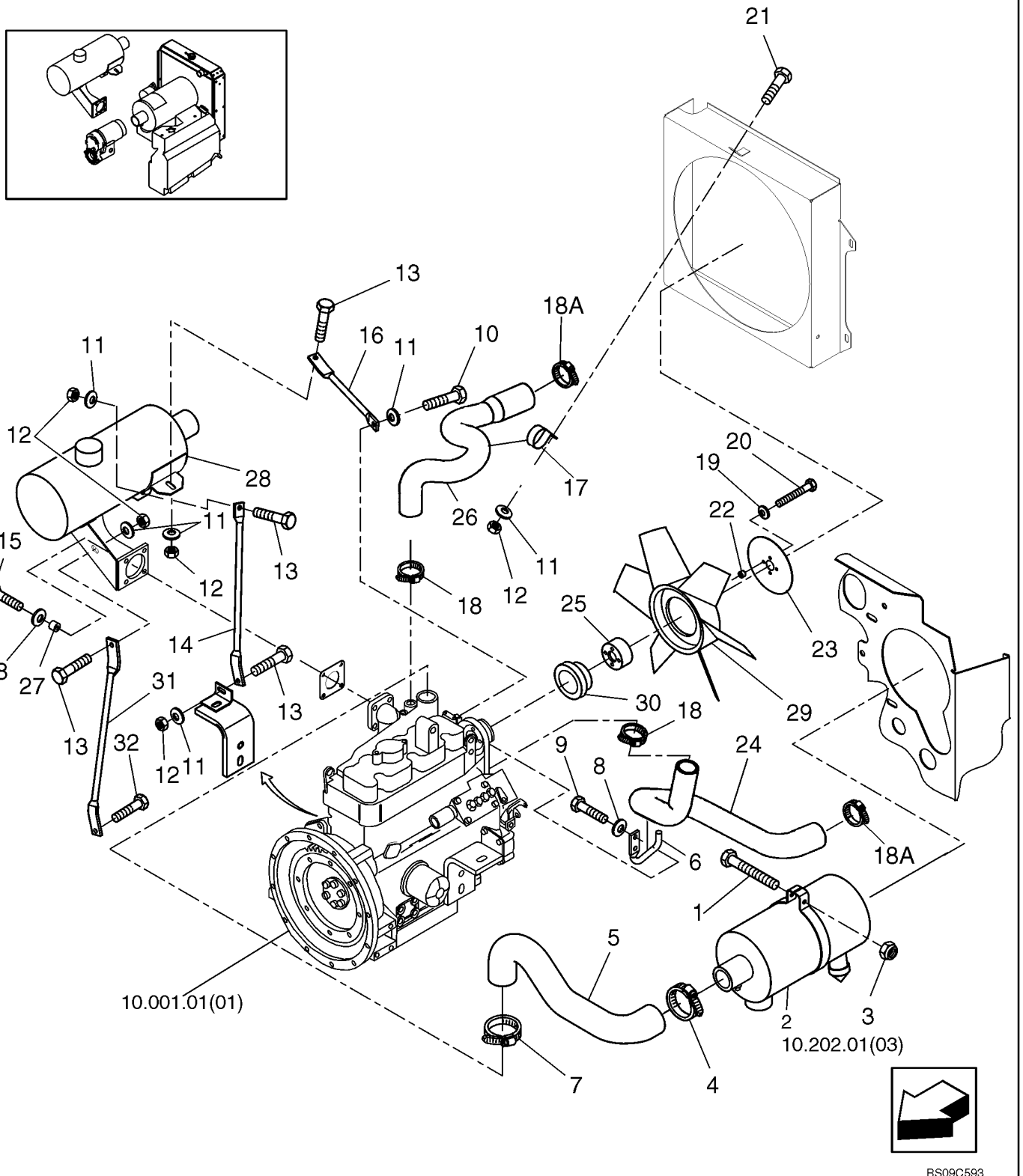

AIR CLEANER, MUFFLER & FAN, L160

REF	FN	PART NUMBER	YR/SN	QTY	DESCRIPTION
28		87045811		1	MUFFLER, Aspirated
28		9861707		1	MUFFLER, Catalytic, See Figure 10.254.03, For Indoor Use, Body Length 15.3"
29		SBA145306730		1	FAN
30		SBA145337030		1	PULLEY
31		86595677		1	SUPPORT
32		9706704		1	BOLT, Hex, M10 x 35, 8.8, Full Thd

AIR CLEANER, MUFFLER & FAN, L170

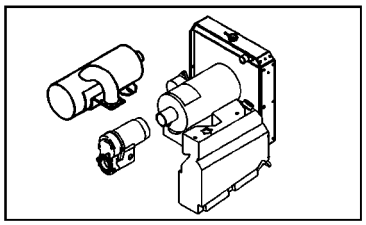

AIR CLEANER, MUFFLER & FAN, L170

REF	FN	PART NUMBER	YR/SN	QTY	DESCRIPTION
1		88346		1	BOLT, Hex, 5/16"-18 x 2 1/2", G5
2		87033035		1	AIR CLEANER, DONALDSON, See Figure 10.202.01 [03]
3		280736		1	NUT, LOCK, 5/16"-18, GC
4		82012728		1	CLAMP, HOSE
5		86637086		1	HOSE, 46 mm ID
6		86550180		1	SUPPORT, Rod
7		86050202		1	CLAMP, HOSE, #32, 1.56/2.50 Type F Worm
8		322358		6	WASHER, BELLEVILLE, M8
9		120104		2	BOLT, Hex, M8 x 20, 8.8
10		43138		1	BOLT, Hex, M10 x 20, 8.8, Full Thd
11		140045		5	WASHER, BELLEVILLE, M10
12		9628503		4	NUT, 3/8"-16, G5
13		88206		3	BOLT, Hex, 3/8"-16 x 1", G5, Full Thd
14		9844488		1	SUPPORT
15		43129		4	BOLT, Hex, M8 x 40, 8.8
16		86640738		1	SUPPORT
17		603022		1	CLAMP, 1 3/4", Insul, 3/8" Bolt
18		513309		2	CLAMP, HOSE, #24, 1.06/2.00 Type F Worm
18		84674		2	CLAMP, HOSE, #28, 1.31/2.25 Type F Worm
19		322357		2	WASHER, BELLEVILLE, M6
20		86508570		2	BOLT, Hex, M6 x 80, 8.8
21		88434		1	BOLT, Hex, 3/8"-16 x 3/4", G5, Full Thd
22		86526695		2	SPACER, Split
23		9828668		1	COVER
24		87044193		1	HOSE, Radiator, Bottom
25		SBA145386540		1	HOLDER
26		87048357		1	HOSE, Radiator, Top
26		87048491		1	HOSE, Radiator, Top; Replaces 87048357
27		86534692		4	SPACER
28		86536334		1	MUFFLER, Standard, 12.3" Tailpipe
28		86504526		1	MUFFLER, Aspirated, See Figure 10.254.03, For Dusty Conditions, Body Length 14.3"
28		87045810		1	MUFFLER, Aspirated, 13" Tailpipe

AIR CLEANER, MUFFLER & FAN, L170

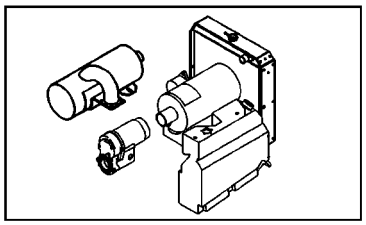

AIR CLEANER, MUFFLER & FAN, L170

REF	FN	PART NUMBER	YR/SN	QTY	DESCRIPTION
28		9861706		1	MUFFLER, Catalytic, See Figure 10.254.03, For Indoor Use, Body Length 15.3"
28		87045239		1	MUFFLER, Spark Arrest Muffler; If Used, 13" Tailpipe
28		84189393		1	MUFFLER, Spark Arrest Muffler; If Used; Replaces 87045239 in Production 04/2009
29		SBA145306730		1	FAN
30		SBA145337030		1	PULLEY

AIR CLEANER - DONALDSON

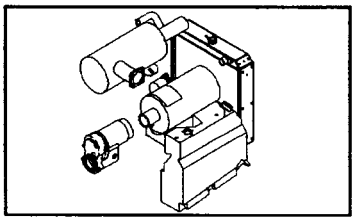

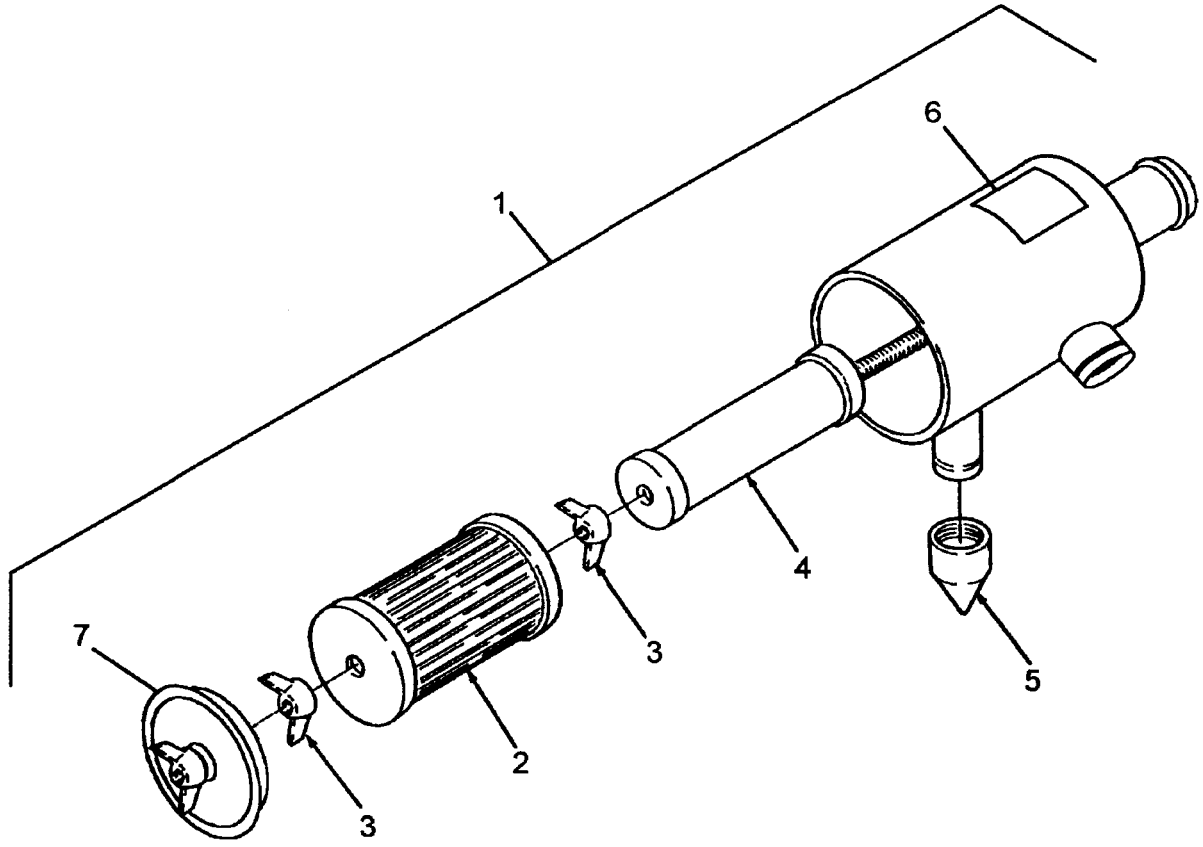

BS09B023

AIR CLEANER - DONALDSON

REF	FN	PART NUMBER	YR/SN	QTY	DESCRIPTION
1		87033035		1	AIR CLEANER, Donaldson G065561; Incl. 2 - 7; Refer to drawing for Inlet Tube location; LS160 ASN LMU018714; LS170 ASN LMU 019319; Donaldson Has No Flutes On End Cap
2		87035488		1	FILTER, AIR, Primary
3		221407		3	NUT, WING, 7/16"-20
4		87035489		1	FILTER, AIR, Safety
5		87033038		1	VALVE, DUST, Ejector
6		629086		1	DECAL, DANGER, DANGER
7		221410		1	COVER

AIR CLEANER INLET

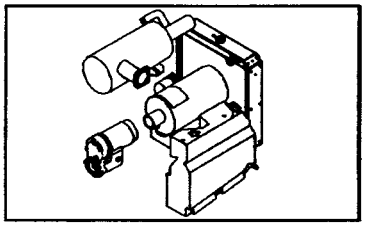

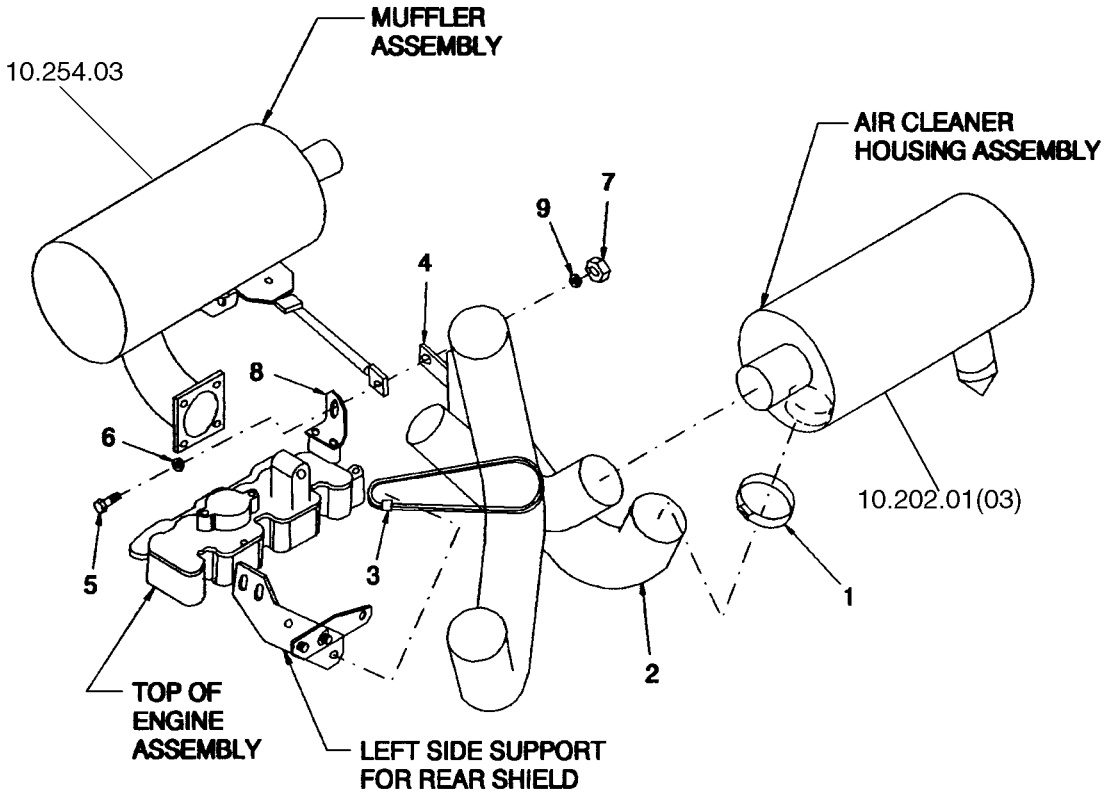

BS09B024

AIR CLEANER INLET

REF	FN	PART NUMBER	YR/SN	QTY	DESCRIPTION
1		82012728		1	CLAMP, HOSE
2		86515783		1	HOSE, 48.34" Long
2		86557319		1	HOSE, 41.35" Long
3		801895		1	STRAP, CABLE, 30.63", Cable Tie
4		86522009		1	CLAMP, Hose, 3"
5		9706689		1	BOLT, Hex, 3/8"-16 x 1 3/4", G5, If Used
5		88206		1	BOLT, Hex, 3/8"-16 x 1", G5, Full Thd, If Used
6		80702		1-3	WASHER, 3/8"
7		9628503		1	NUT, 3/8"-16, G5
8		86597134		1	BRACKET, If Used
8		87032047	ASN LMU013613	1	BRACKET, If Used
8		86501211		1	BRACKET, If Used
8A		120104		2	BOLT, Hex, M8 x 20, 8.8, Hardware For Mounting Bracket, Ref 8
8B		80681		4	WASHER, LOCK, 5/16", Hardware For Mounting Bracket, Ref 8
9		140045		1	WASHER, BELLEVILLE, M10

FUEL INJECTION SYSTEM

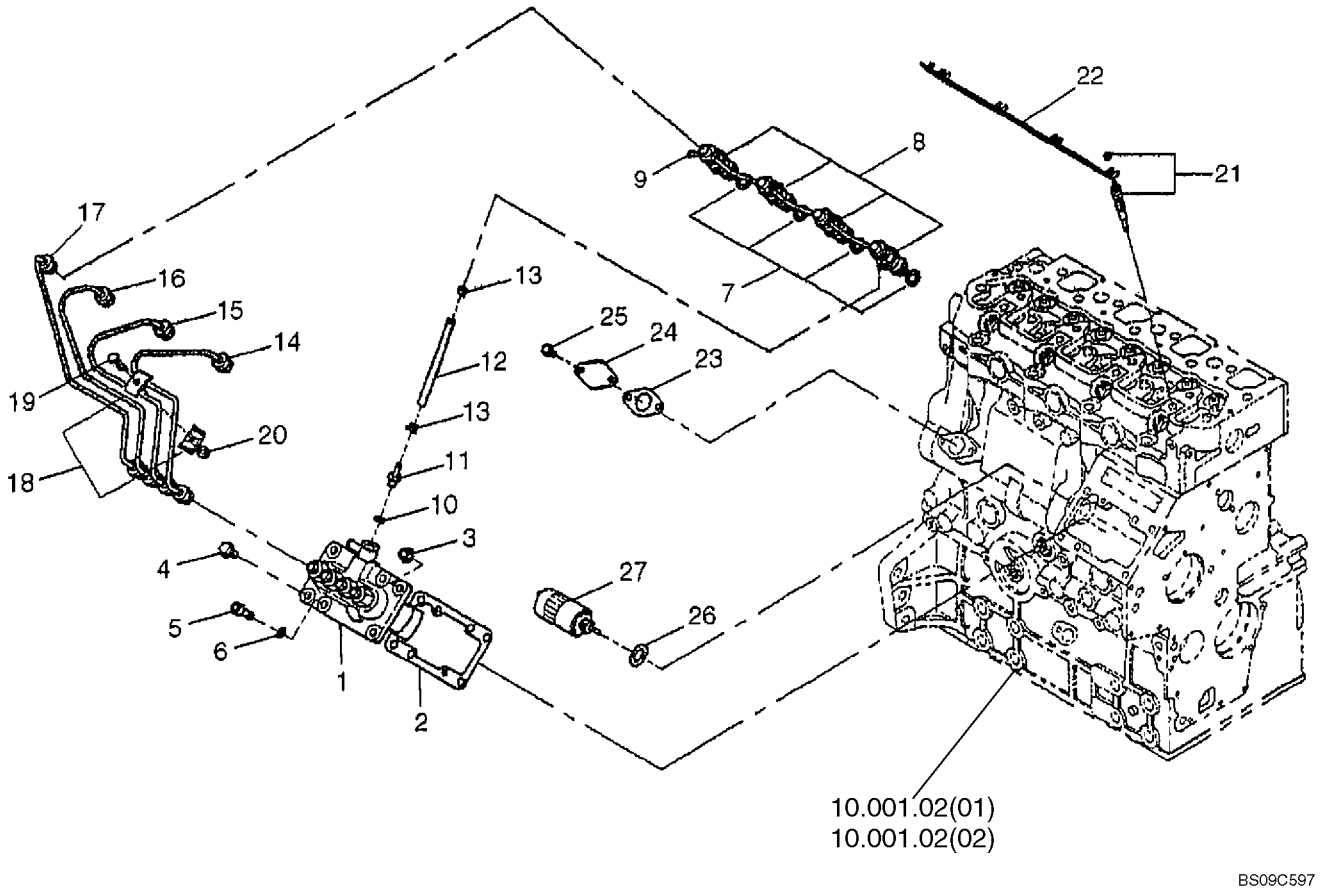

FUEL INJECTION SYSTEM

REF	FN	PART NUMBER	YR/SN	QTY	DESCRIPTION
1		SBA131011100		1	PUMP, FUEL INJECTION, Components Not Serviced Separately
2		SBA131426320		1	KIT, SHIM
3		SBA023100008		3	NUT
4		SBA010800820		3	BOLT
5		SBA010700820		1	BOLT
6		SBA026100008		1	WASHER
7		SBA131426200		4	GASKET
8		SBA131406520		4	INJECTOR, FUEL SYSTEM
9		SBA131606690		1	TUBE
10		SBA140996350		1	WASHER, COPPER
11		SBA198487920		1	CONNECTOR, HYD.
12		SBA068204112		1	HOSE
13		SBA067200078		2	CLAMP, HOSE
14		SBA131507700		1	TUBE, RIGID, Injection
15		SBA131507710		1	TUBE, RIGID, Injection
16		SBA131507720		1	TUBE, RIGID, Injection
17		SBA131507730		1	TUBE, RIGID, Injection
18		SBA199106021		6	CLAMP
19		SBA010110625		3	SCREW
20		SBA023100006		3	NUT
21		SBA185366190		4	GLOW PLUG
22		SBA185376150		1	BRACKET
23		SBA130996130		1	GASKET
24		SBA165206640		1	COVER
25		SBA011310612		2	SCREW, CAPTIVE WASHER, Hex, M6 x 12, Cl 8.8
26		SBA025100016		2	WASHER
27		SBA185206083		1	SOLENOID

10.216.01		p1	03/09

FUEL TANK; 16 GL

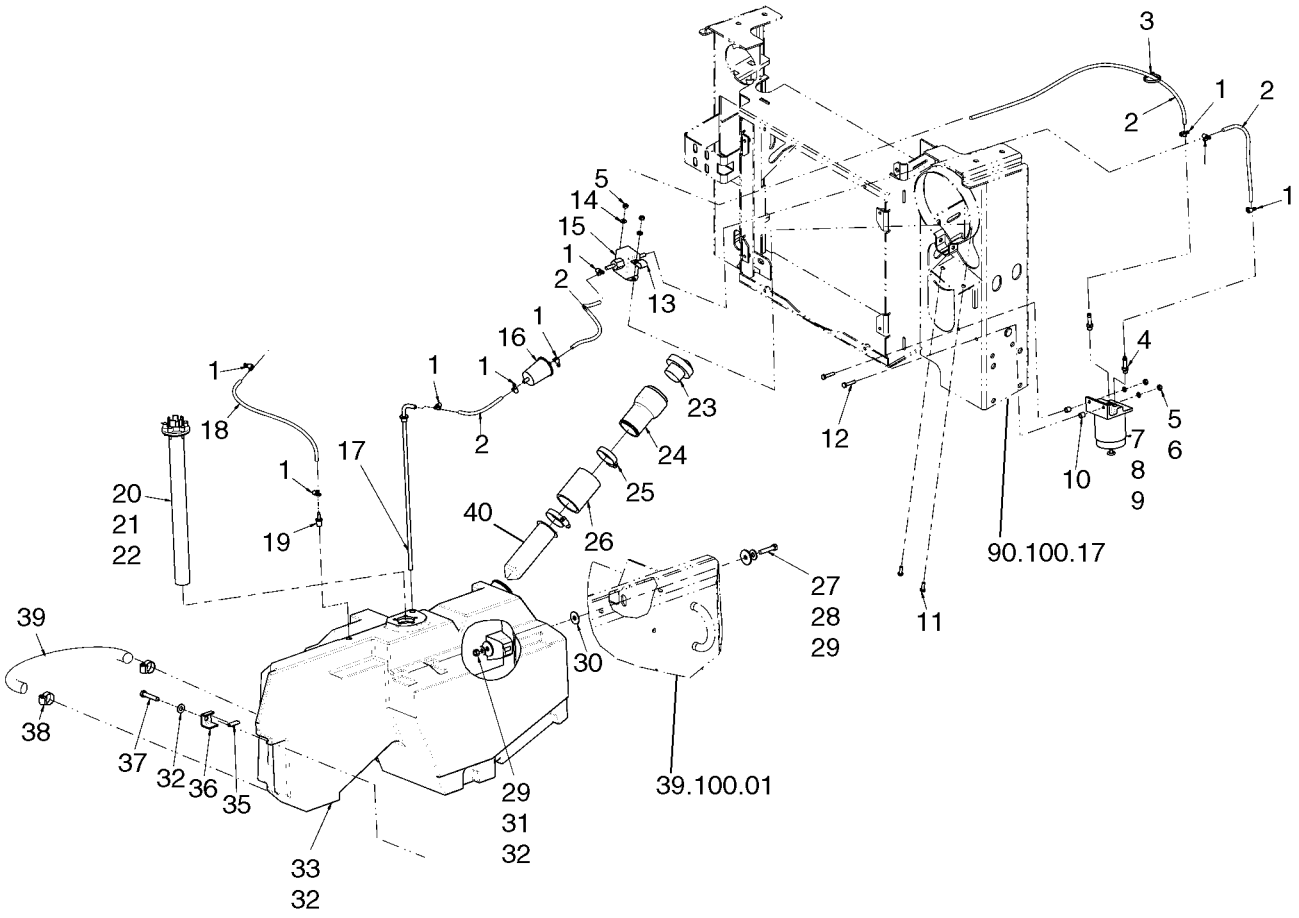

FUEL TANK; 16 GL

REF	FN	PART NUMBER	YR/SN	QTY	DESCRIPTION
1		574518		9	CLAMP, HOSE, #4, 0.25/0.62 Type M Worm
2		290323		X	HOSE, FLEXIBLE, 3.9 Ft; 5/16 ID
3		87000312		1	STRAP, CABLE
4		9844342		2	FITTING, Incl 4A
4A		165202		1	O-RING, 4-1, 90 Duro, .351" ID x .072" Thk, Not Illustrated Separately
5		7770		4	NUT, 1/4"-20, G5
6		80682		2	WASHER, LOCK, 1/4"
7		87036043		1	FILTER, FUEL, Incl. 8, 9
8		87036044		1	FILTER, FUEL, Element; Not Illustrated Separately
9		87042231		1	HEAD, FILTER, Not Illustrated Separately
10		696365		2	SPACER
11		9707580		2	BOLT, Hex, 1/4"-20 x 3/4", G5, Full Thd
12		87716		2	BOLT, Hex, 1/4"-20 x 1 1/4", G5
13		134579		1	CLAMP, WIRE, J
14		322357		2	WASHER, BELLEVILLE, M6
15		87024903		1	PUMP, FUEL, Square; If Used
15		84130988		1	PUMP, FUEL, Electric Lift; If Used
16		9611973		1	FILTER, FUEL
17		9844697		1	TUBE, Drop; If Used
17		87475782		1	LINE, Fuel Tank Drop Tube; If Used
17A		86557152		1	END ASSY., Apply Adhesive To Threads Of Drop Tube
18		291260		X	HOOK, Hose; 1.25 Ft; 5/32 ID
19		223593		1	FITTING, 3/16" Hose x 1/4" NPTF, Barbed
20		9860032		1	SENDER UNIT, Fuel, Incl 21, 22
21		84464		5	SCREW, Slotted Truss Hd, #10-24 x 1", Not Illustrated Separately
22		48751		1	GASKET, Not Illustrated Separately
23		87021178		1	CAP, Fuel
24		86837075		1	NECK FILLER, Filler
25		45014		2	CLAMP, HOSE, #40, 2.06/3.00 Type F Worm
26		45013		1	HOSE, Fuel Tank
27		9706689		1	BOLT, Hex, 3/8"-16 x 1 3/4", G5
28		80702		1	WASHER, 3/8"

10.216.01		p2	03/09

FUEL TANK; 16 GL

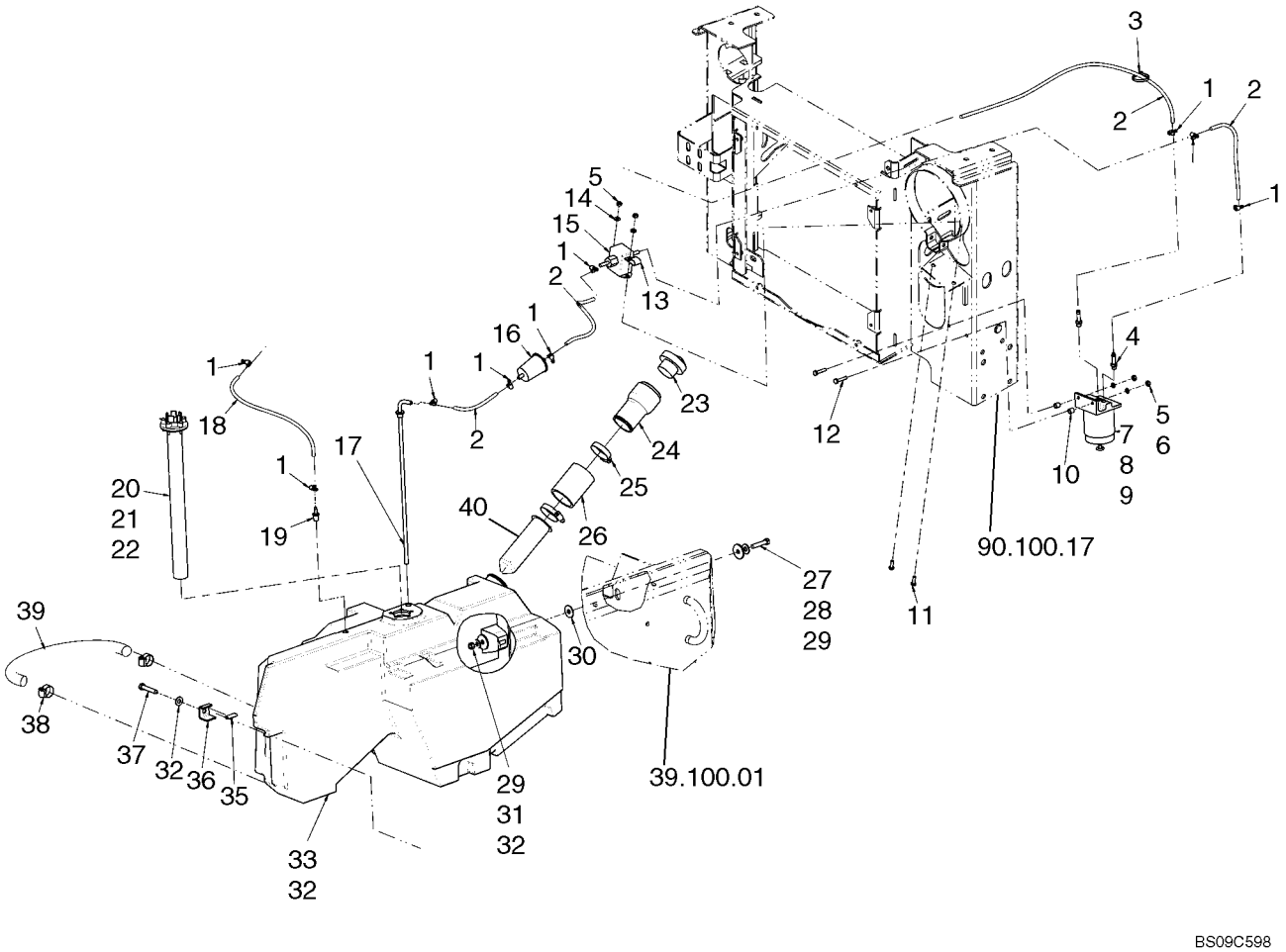

FUEL TANK; 16 GL

REF	FN	PART NUMBER	YR/SN	QTY	DESCRIPTION
29		86637594		1	WASHER, 13/32" x 1 1/2" x .120", If Used
30		86900237		1	WASHER, 13/32" x 1 1/4" x .060"
31		9628503		1	NUT, 3/8"-16, G5
32		140045		2	WASHER, BELLEVILLE, M10
33		87755351		1	FUEL TANK, 16 Gallon; Incl 34; Started Use in Production March of 2008; Width of Filler End Including Extension Apr. 29.5 in
34		9844772		1	RING
35		87590346		1	SEAL, DOOR
36		86504489		1	STRAP
37		88436		1	BOLT, Hex, 3/8"-16 x 2", G5
38		58948		2	CLAMP, Type F Size S10
39		9616376		X	HOSE, 1.73 Ft; .75 ID x 1.06 OD
40		87471366		1	FILTER, FUEL, Strainer

INJECTOR

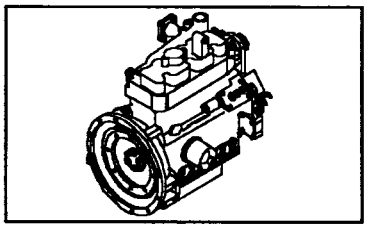

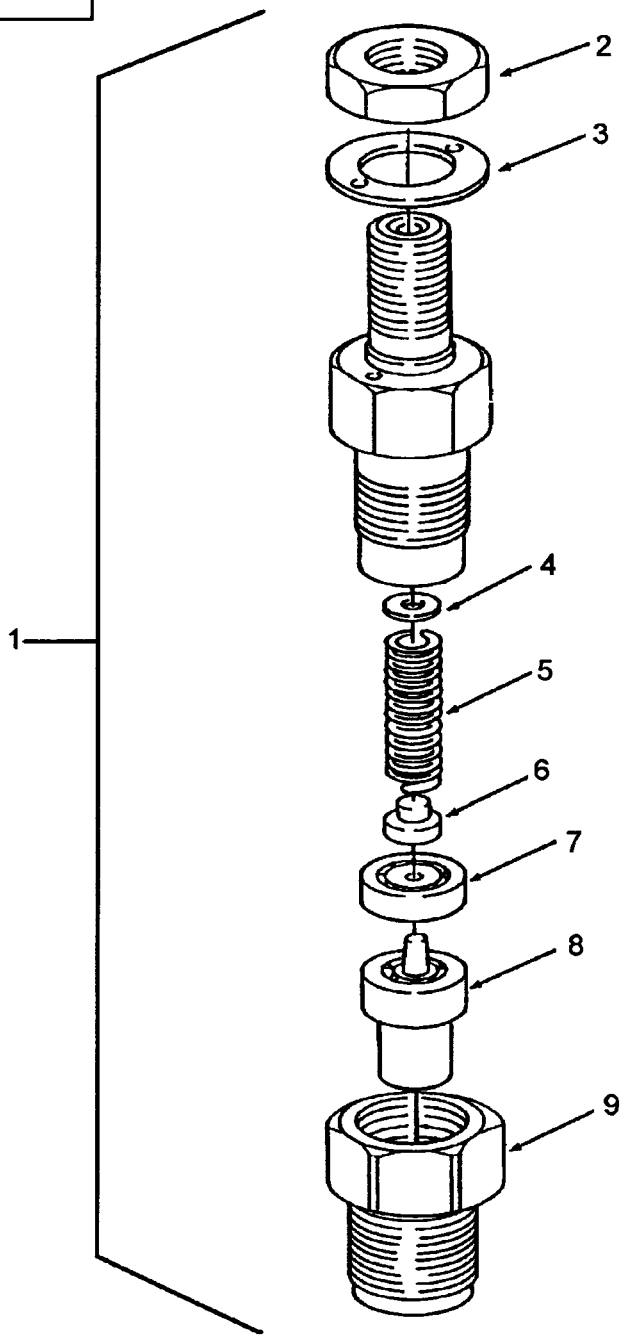

BS09B015

INJECTOR

REF	FN	PART NUMBER	YR/SN	QTY	DESCRIPTION
1		SBA131406360		1	INJECTOR, FUEL SYSTEM, Incl. 2 - 9
2		SBA131446006		1	NUT
3		SBA131426230		1	GASKET
4		SBA131437360		1	KIT, SHIM
5		SBA131446074		1	SPRING
6		SBA131446075		1	SEAT/SLOT
7		SBA131446076		1	SPACER
8		SBA131416170		1	NOZZLE, Nozzle
9		SBA131446077		1	NUT

10.220.02	01	p1	02/09

THROTTLE CONTROL

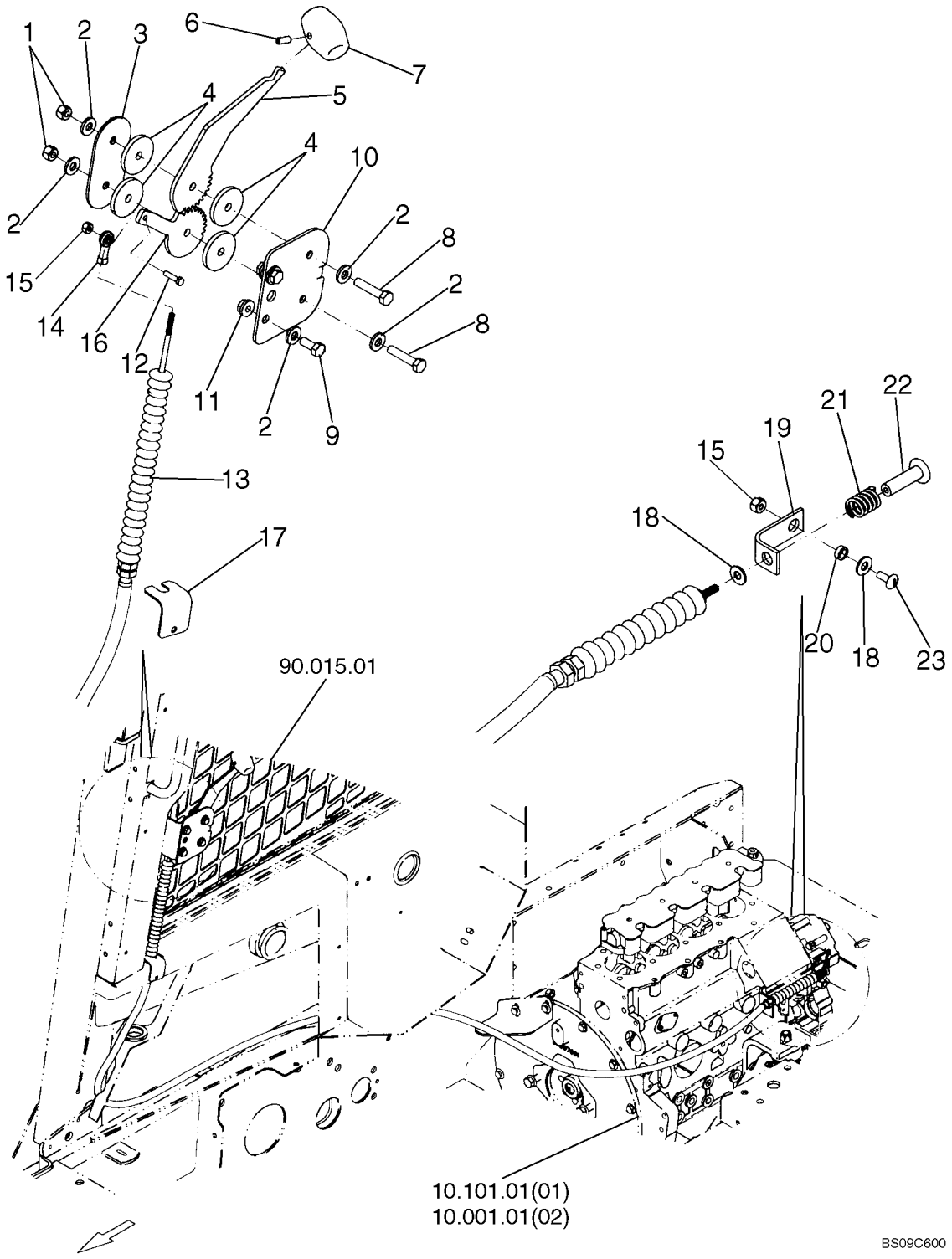

THROTTLE CONTROL

REF	FN	PART NUMBER	YR/SN	QTY	DESCRIPTION
1		87034527		2	NUT, Nut, 5/16 UNF
2		252687		4-6	WASHER, .344" x 1" x .098", HDN, If Used
2		322358		5	WASHER, BELLEVILLE, M8, If Used
3		87647017		1	PLATE, COVER, Cover Plate
4		87722431		8	WASHER, Friction Disc, Nylon; Replaces 87647007
5		87647008		1	THROTTLE, Throttle Handle
6		87836		1	SET SCREW, Hex Soc, 1/4"-20 x 5/8"
7		3916679		1	KNOB
8		280252		2	BOLT, Hex, 5/16"-24 x 1 1/2", G5
9		87872		2	BOLT, Hex, 5/16"-18 x 3/4", G5, Full Thd
10		87653763		1	BRACKET, Throttle Lever Bracket
11		145458		2	NUT, Flg, USR, 5/16"-18
12		86625179		1	SCREW, Hex Hd, #10-24 x 3/4"
13		87629236		1	CABLE, Throttle Cable
14		87647009		1	ROD, Spherical Rod End, #10-32
15		88826		2	NUT, LOCK, #10-24, GA
16		87647005		1	GEARSHIFT, Throttle Reversing Gear
17		86522338		1	COVER
18		80707		2	WASHER, 3/16"
19		9844532		1	BRACKET
20		13734		1	SPACER, Bushing
21		11104		1	SPRING
22		9860169		1	RIVET
23		84821		1	SCREW, Slotted Truss Hd, #10-24 x 1/2"

10.220.02	02	p1	05/09

FOOT THROTTLE KIT

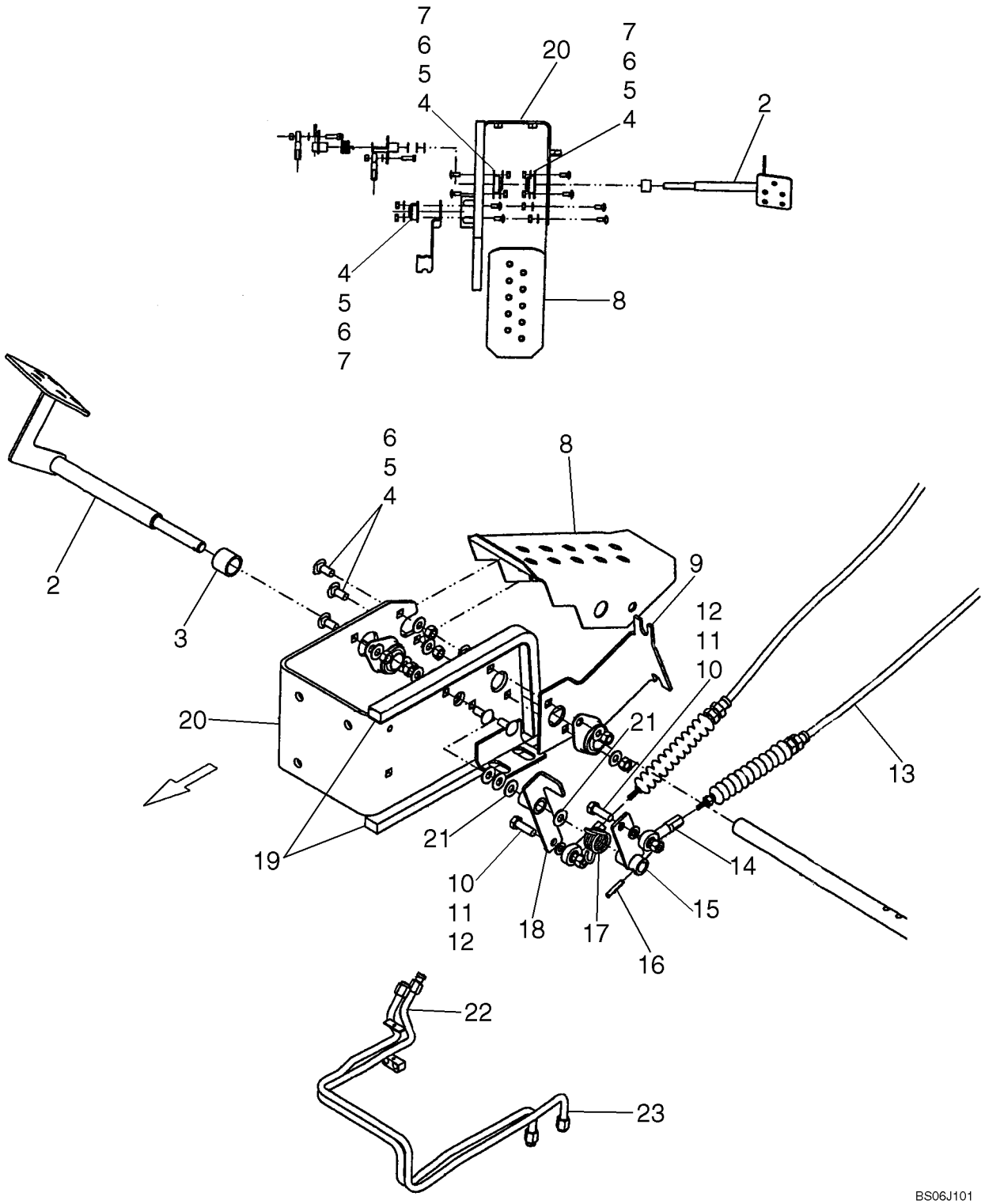

FOOT THROTTLE KIT

REF	FN	PART NUMBER	YR/SN	QTY	DESCRIPTION
1		87576179		1	DIA KIT, ADDITIONAL PROD., Foot Throttle Kit; Incl. 2 - 23 and Instructions
2		87535988		1	PEDAL, Foot Throttle; Replaces 87397667
3		87578956		1	TUBE SPACER
4		9635082		8	NUT, 5/16"-18, G5
5		322358		8	WASHER, BELLEVILLE, M8
6		280327		8	BOLT, CARRIAGE, Short NK, 5/16"-18 x 3/4", G5
7		86567251		3	BEARING, FLANGED, Side
8		87550553		1	PEDAL
9		87584298		1	BRACKET, Cable Mount; Replaces 87550552
10		80681		2	WASHER, LOCK, 5/16"
11		{87343998}		2	Nut
12		9635884		2	BOLT, Hex, 5/16"-18 x 1", G5, Full Thd
13		87548418		1	CABLE, Foot Throttle
14		86603720		2	ROD
15		87548416		1	PEDAL, Linkage, Foot Throttle
16		38-11216		1	PIN, LOCK, Pin
17		87550545		1	SPRING, Foot Throttle
18		87550544		1	PEDAL, Link, Foot Throttle
19		291308		1	STRIP, SEALING, 12 in. Required
20		87557968		1	BRACKET, RH
21		86625263		4	WASHER, M8 x 20 x 1.6
22		87550550		1	TUBE, RIGID, Tube, Bucket; Replaces 87050213 On Fig. 35.204.04, Ref. 20
23		87550551		1	TUBE, RIGID, Tube, Bucket; Replaces 87050214 On Fig. 35.204.04, Ref. 18

INJECTION PUMP

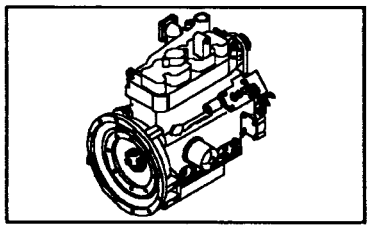

INJECTION PUMP

REF	FN	PART NUMBER	YR/SN	QTY	DESCRIPTION
		SBA131017801		1	PUMP, FUEL INJECTION, L160
		{SBA131011101}		1	Fuel Injection Pump; L170
1		SBA131196060		4	HOLDER, L160
1		SBA131196200		4	HOLDER, L170
2		SBA052109078		4	O-RING, L160
2		SBA131227310		4	O-RING, L170
3		SBA131176450		4	SPRING, L160
3		SBA131176510		4	SPRING, L170
4		SBA131186110		4	GASKET
5		SBA131156150		4	VALVE, RESTRICTOR, Fuel; L160
5		SBA131156260		4	VALVE, HYDRAULIC, Fuel; L170
6		NSS		4	NOT SERVICED SEPARATELY, Element
7		NSS		4	NOT SERVICED SEPARATELY, Sleeve
8		NSS		4	NOT SERVICED SEPARATELY, Seat, Spring
9		NSS		4	NOT SERVICED SEPARATELY, Spring
10		NSS		4	NOT SERVICED SEPARATELY, Seat, Spring
11		NSS		AR	NOT SERVICED SEPARATELY, Plate
12		NSS		4	NOT SERVICED SEPARATELY, Tappet
13		NSS		4	NOT SERVICED SEPARATELY, Pin
14		NSS		2	NOT SERVICED SEPARATELY, Pin
15		NSS		1	NOT SERVICED SEPARATELY, Rack
16		NSS		3	NOT SERVICED SEPARATELY, Pin
17		NSS		3	NOT SERVICED SEPARATELY, Washer, Spring
18		NSS		1	NOT SERVICED SEPARATELY, Cover
19		NSS		3	NOT SERVICED SEPARATELY, Screw
20		SBA131246010		1	FITTING, Banjo
21		SBA131296255		2	GASKET
22		SBA131246140		1	FITTING, Eye; L160
22		SBA131246170		1	BOLT, Eye; L170

BLOCK HEATER KIT

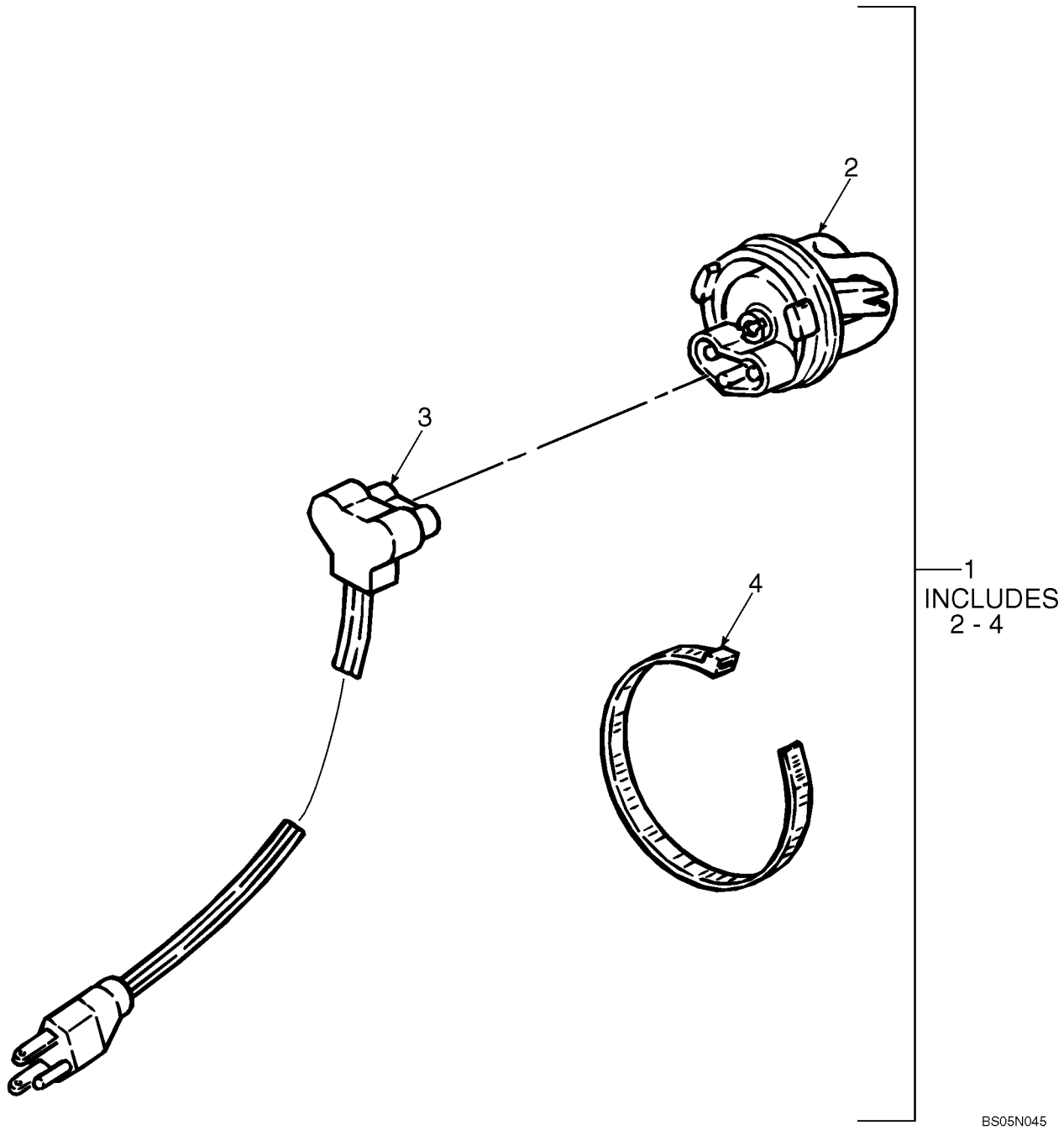

BLOCK HEATER KIT

REF	FN	PART NUMBER	YR/SN	QTY	DESCRIPTION
1		86590117		1	KIT, Block Heater, Incl. Ref. 2 - 4
2		NSS		1	NOT SERVICED SEPARATELY, Heater, Block
3		86539137		1	CABLE, ELECTRIC, 5 Ft (1.52M)
4		263117		1	STRAP, CABLE, .14" x 11 1/2"

MUFFLERS, ASPIRATOR & CATALYTIC

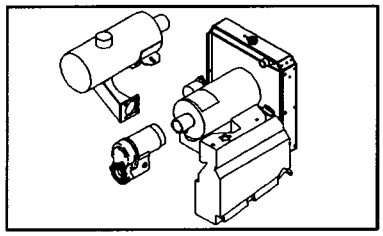

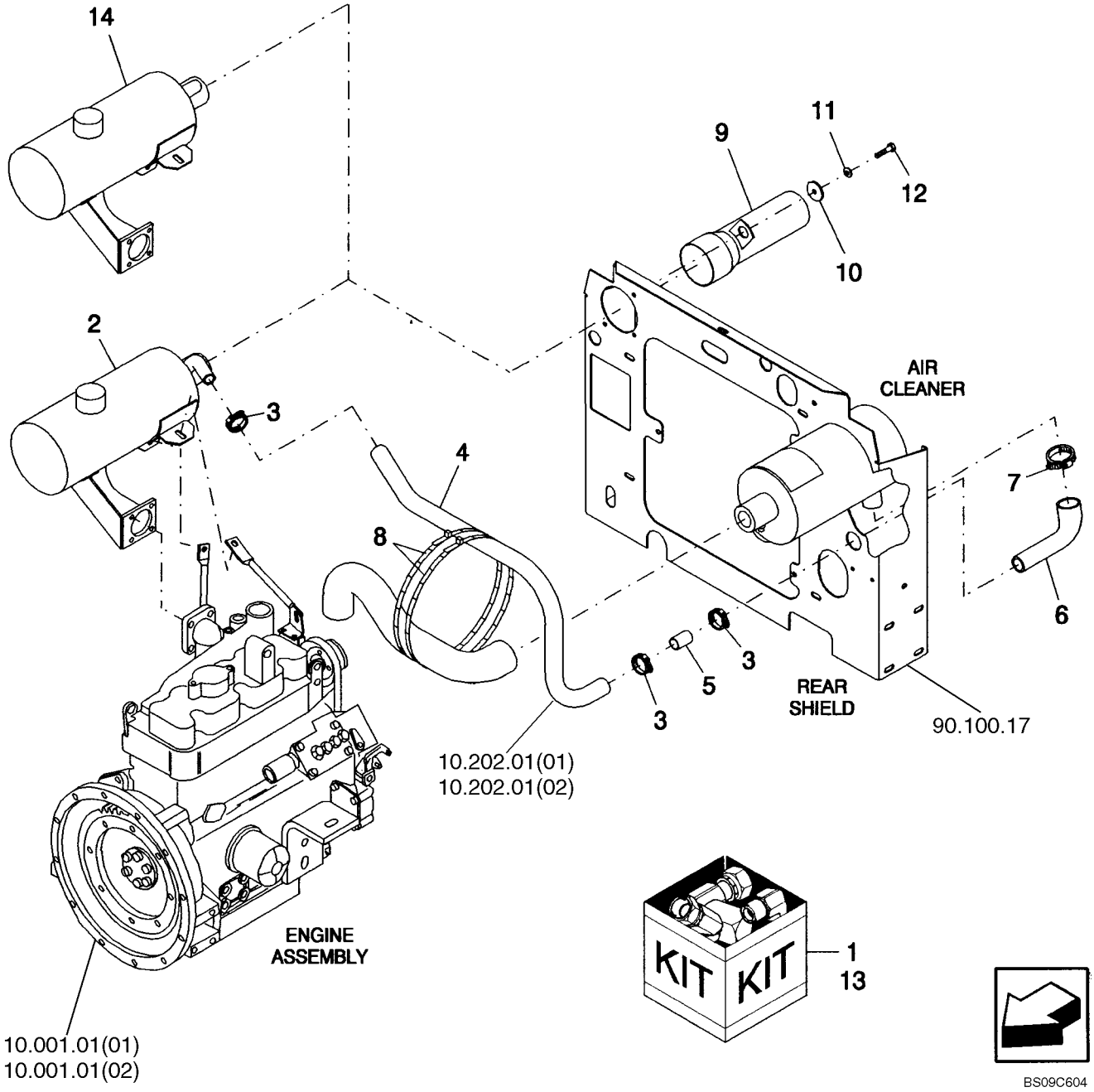

MUFFLERS, ASPIRATOR & CATALYTIC

REF	FN	PART NUMBER	YR/SN	QTY	DESCRIPTION
1		86590100		1	KIT, Pre-cleaner Aspirator, Dusty Conditions, L160, Incl. Ref. 2 thru 12
1		86590101		1	KIT, Pre-cleaner Aspirator, Dusty Conditions, L170, Incl. Ref. 2 thru 12
2		86527336		1	MUFFLER, Aspirator, L160, For Dusty Conditions, Body Length 14.3"
2		86504526		1	MUFFLER, Aspirator, L170, For Dusty Conditions, Body Length 14.3"
3		9706921		3	CLAMP, HOSE, #10, 0.56/1.06 Type F Worm
4		86506399		1	HOSE, Surge Tank Outlet, 1" x 24"
5		86504507		1	TUBE, Tube, 1" OD x 1-1/2" Long
6		86504506		1	HOSE, Air Cleaner Adapter
6		87032778		1	HOSE, Use with DONALDSON Air Cleaner
7		82012725		1	CLAMP, HOSE, #44, M32-44
7		45014		1	CLAMP, HOSE, #40, 2.06/3.00 Type F Worm, Use with DONALDSON Air Cleaner
8		263117		1	STRAP, CABLE, .14" x 11 1/2"
9		9829757		1	EXTENSION
10		322		2	WASHER, 11/32" x 1 21/32" x .135" Thk
11		322358		2	WASHER, BELLEVILLE, M8
12		87872		2	BOLT, Hex, 5/16"-18 x 3/4", G5, Full Thd
13		86590086		1	KIT, Catalytic Muffler, Purifies Exhaust, L160, Incl. Ref. 9 thru 12 & 14
13		86590087		1	KIT, Catalytic Muffler, Purifies Exhaust, L170, Incl. Ref. 9 thru 12 & 14
14		9861707		1	MUFFLER, Catalytic, L160, For Indoor Use, Body Length 15.3"
14		9861706		1	MUFFLER, Catalytic, L170, For Indoor Use, Body Length 15.3"

INTAKE MANIFOLD

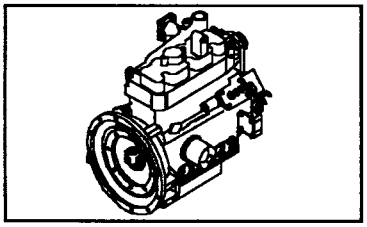

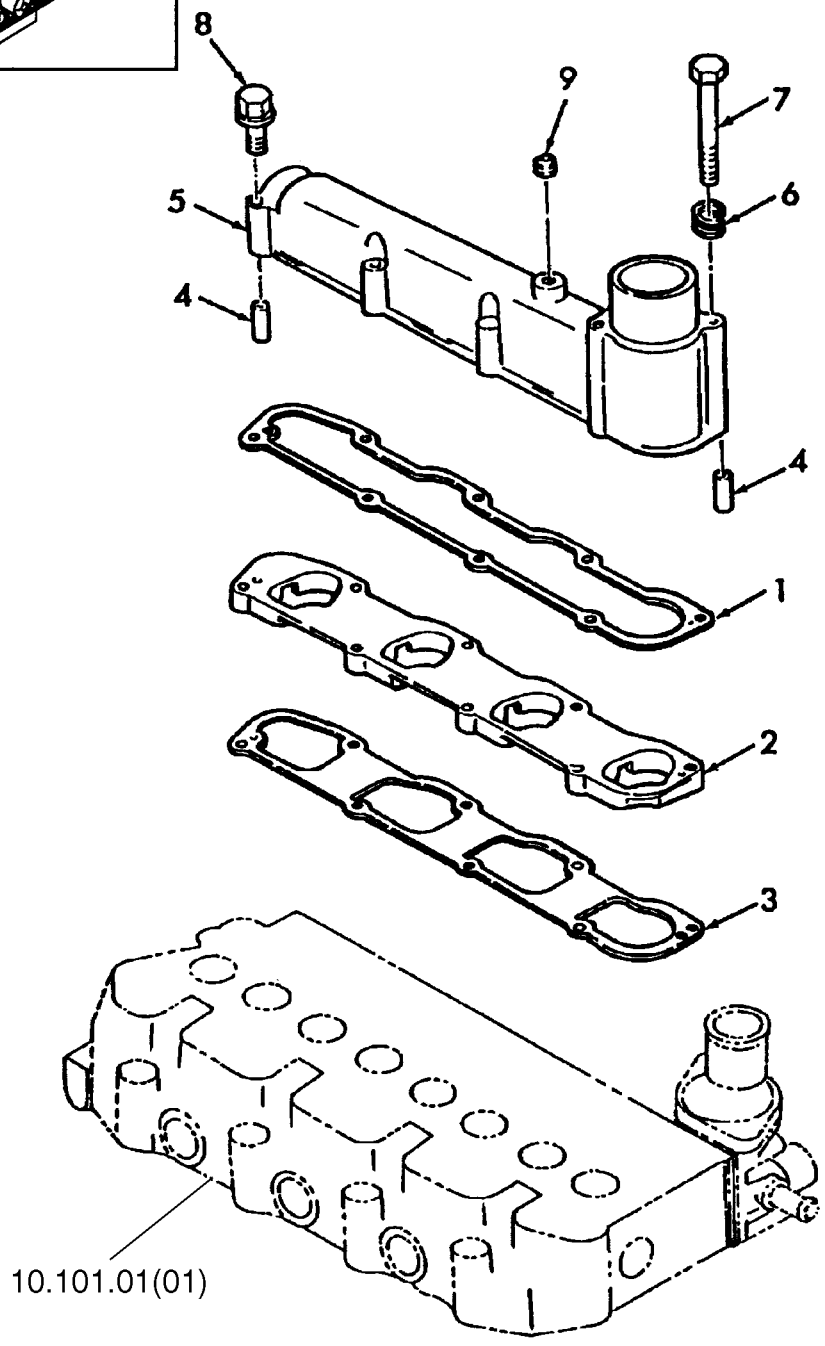

BS09B012

INTAKE MANIFOLD

REF	FN	PART NUMBER	YR/SN	QTY	DESCRIPTION
1		SBA135996880		1	GASKET, MANIFOLD, Intake
2		SBA135596920		1	SPACER
3		SBA135996870		1	GASKET, Spacer
4		SBA030300414		2	PIN, Spring
5		SBA135596710		1	MANIFOLD, INLET
6		86517328		2	WASHER, LOCK, M6
7		SBA010109119		2	BOLT
8		SBA011310660		6	BOLT
9		SBA064500010		1	PLUG

EXHAUST MANIFOLD, L160

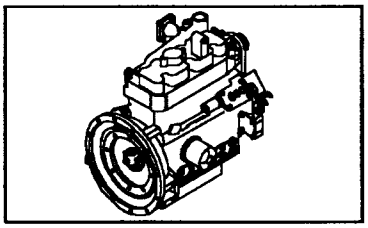

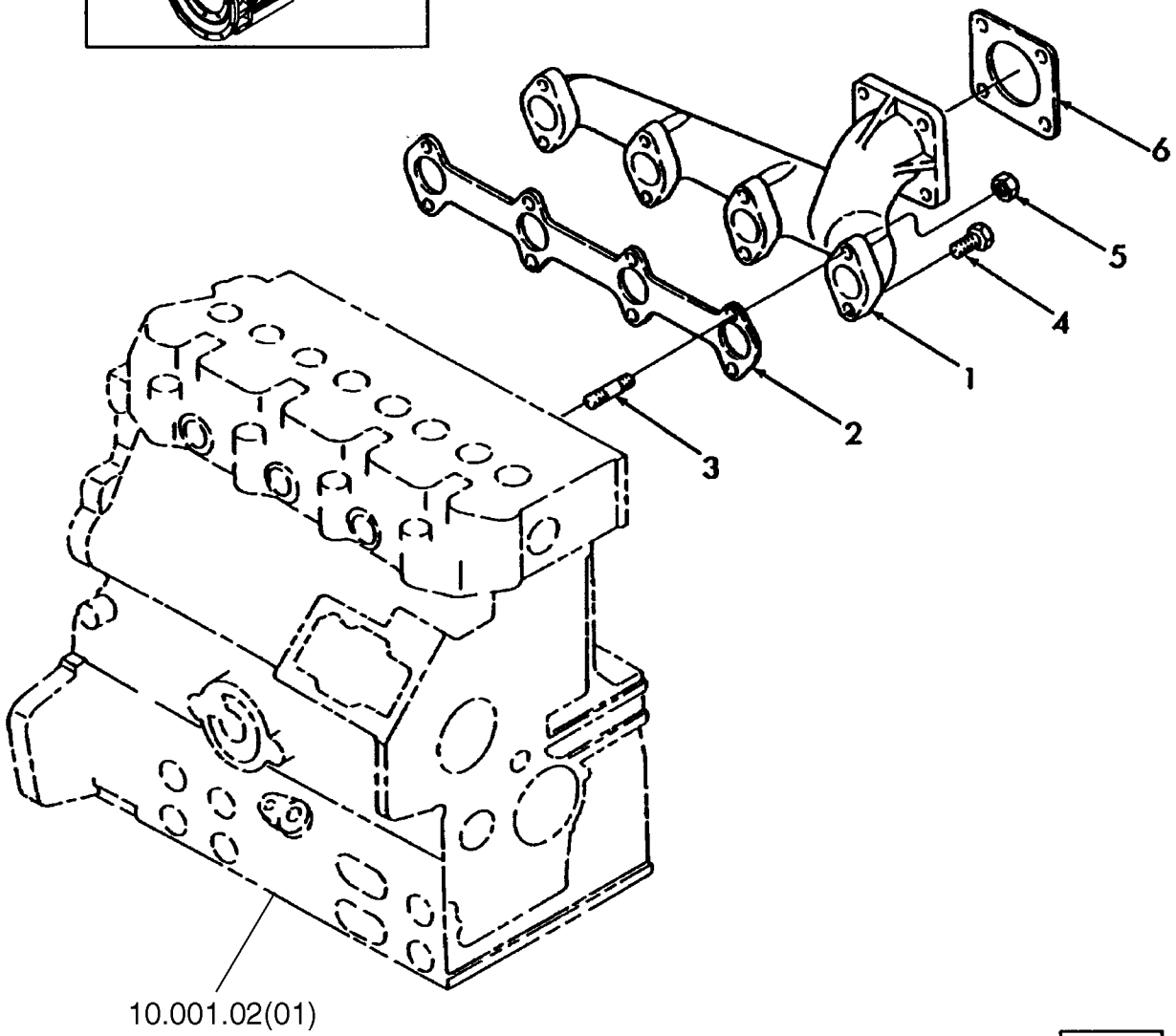

BS09B013

EXHAUST MANIFOLD, L160

REF	FN	PART NUMBER	YR/SN	QTY	DESCRIPTION
1		SBA135617370		1	MANIFOLD, EXHAUST, Exhaust Manifold
2		SBA135996780		1	GASKET, MANIFOLD
3		SBA012110860		2	STUD
4		SBA011510860		6	SCREW, CAPTIVE WASHER, Hex, M8 x 60, G5
5		9804277		2	NUT, M8 x 1.25, Flg, Cl 8
6		SBA314990013		1	GASKET

10.254.05	02	p1	04/09

EXHAUST MANIFOLD, L170

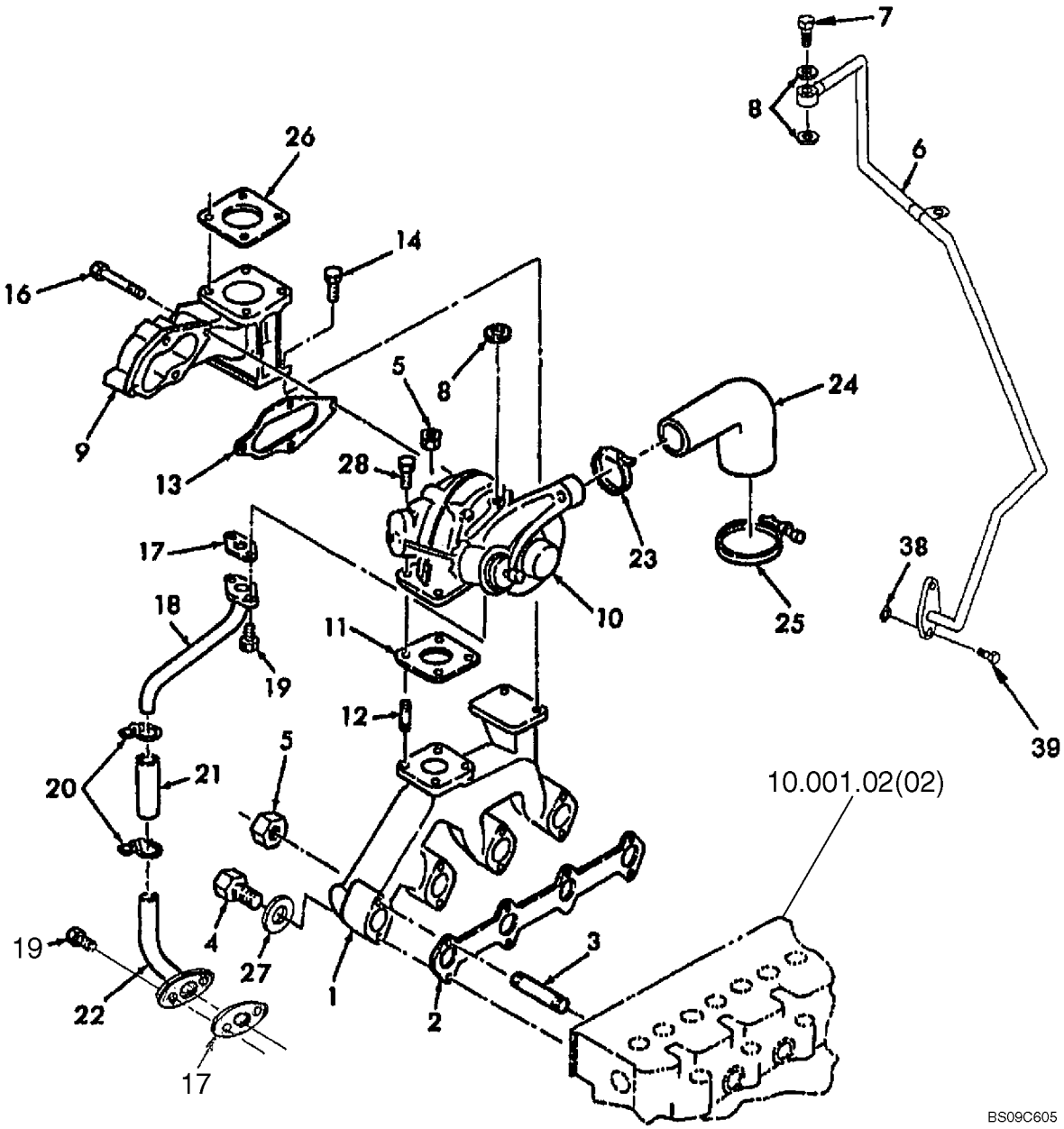

EXHAUST MANIFOLD, L170

REF	FN	PART NUMBER	YR/SN	QTY	DESCRIPTION
1		SBA135617240		1	MANIFOLD, EXHAUST, Exhaust
2		SBA135996780		1	GASKET, MANIFOLD
3		SBA012110875		2	STUD
4		331175		6	BOLT, Hex, M8 x 75, 8.8
5		9804277		2	NUT, M8 x 1.25, Flg, Cl 8
6		SBA140607310		1	TUBE
7		SBA198487840		1	SCREW
8		SBA054109025		2	GASKET
9		SBA135617440		1	ELBOW
10		SBA135756171		1	TURBOCHARGER, 5 Bolt Mounting; Components Not Serviced
11		SBA135997020		1	GASKET
12		SBA012109235		2	STUD, Stainless Steel
13		SBA135997030		1	GASKET
14		SBA011510820		2	SCREW, CAPTIVE WASHER, Hex, M8 x 20, G5
16		SBA010109466		5	SCREW, Stainless Steel
17		SBA140996280		2	GASKET
18		SBA140607320		1	TUBE
19		SBA011140616		4	BOLT
20		SBA198756230		2	CLAMP, HOSE
21		SBA068209121		1	HOSE
22		SBA140987370		1	TUBE, RIGID
23		SBA067100046		1	CLAMP, HOSE
24		SBA135596570		1	ELBOW, Hose, Rubber
25		SBA398750410		1	BAND
26		SBA314990013		1	GASKET
27		80681		6	WASHER, LOCK, 5/16"
28		SBA010109465		2	SCREW, Stainless Steel
29		SBA140996260		1	GASKET, Sealing, White
30		SBA198487650		1	ADAPTER, Engine Block Adapter
31		SBA025100010		2	WASHER, SEALING, Sealing
32		SBA024600010		1	NUT
33		SBA140356050		1	VALVE, CHECK, Check
34		SBA140607140		1	TUBE, Lower Oil
35		SBA140607180		1	KIT, Upper Oil Line

EXHAUST MANIFOLD, L170

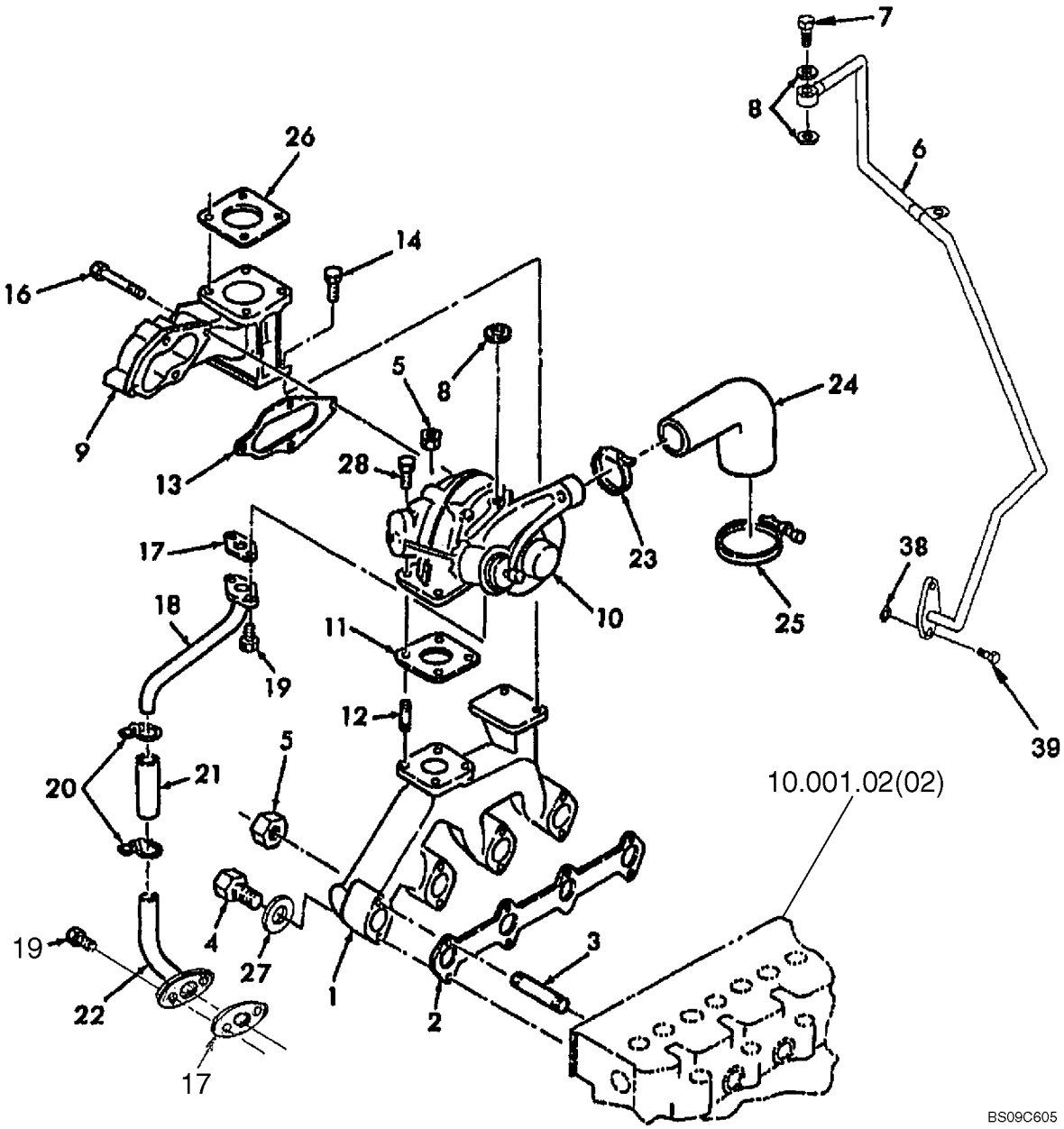

EXHAUST MANIFOLD, L170

REF	FN	PART NUMBER	YR/SN	QTY	DESCRIPTION
36		SBA199106120		1	CLAMP
37		336199		1	BOLT, Hex, M8 x 12, 8.8, Full Thd
38		SBA052109078		1	O-RING
39		SBA011310616		2	BOLT, M6 x 1 x 16, Cl 8.8

OIL PUMP & SUCTION FILTER

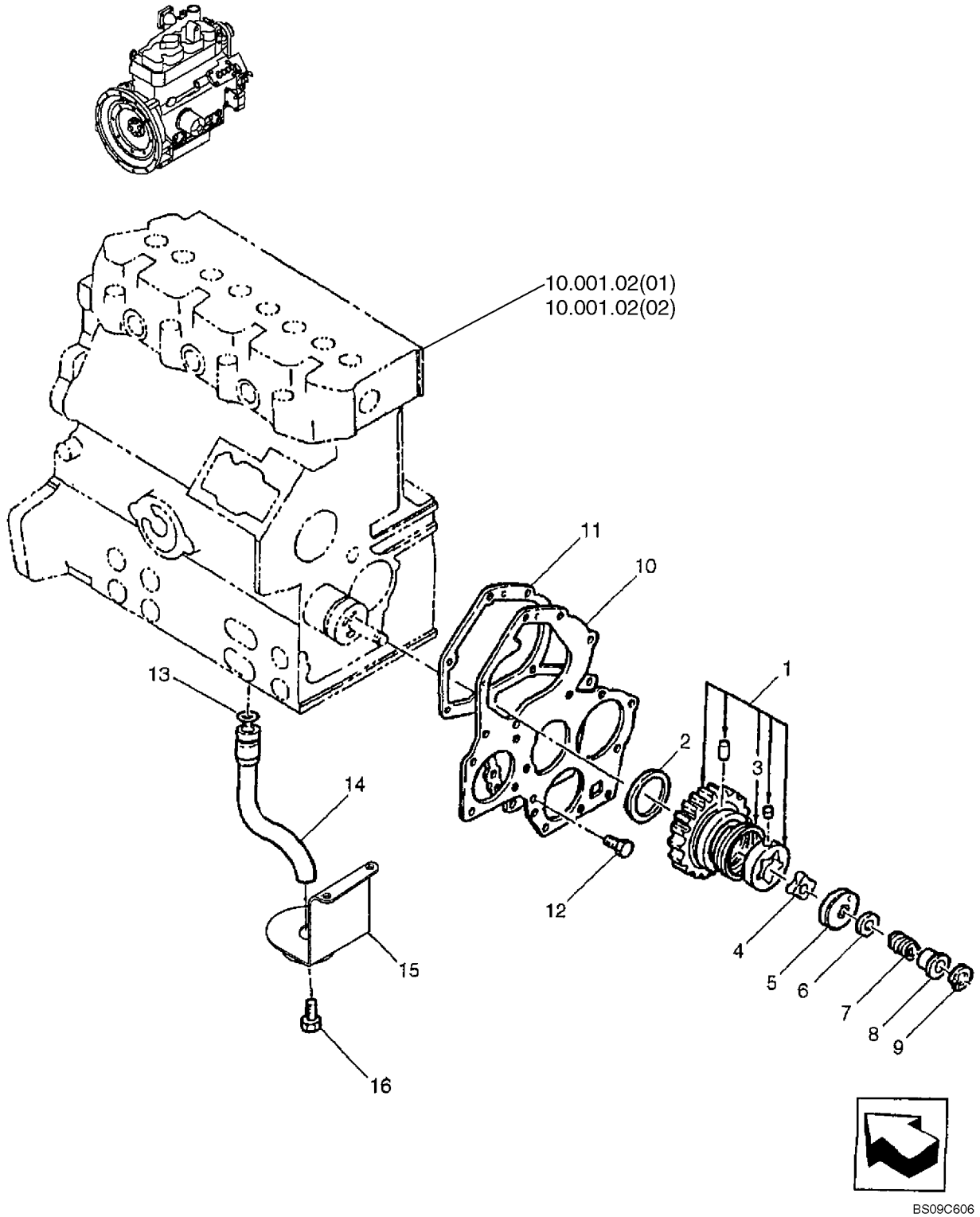

OIL PUMP & SUCTION FILTER

REF	FN	PART NUMBER	YR/SN	QTY	DESCRIPTION
1		SBA165026230		1	GEAR, IDLER, Incl. Ref. 3
2		SBA199266270		1	WASHER, THRUST
3		SBA198216821		1	SPRING
4		SBA140166250		1	GEROTOR
5		SBA140116220		1	COVER, Oil Pump
6		SBA199286150		1	SHIM, 0.1mm Thk
6		SBA199286160		1	SHIM, 0.15mm Thk
6		SBA199286170		1	SHIM, 0.2mm Thk
6		SBA199286180		1	SHIM, 0.5mm Thk
7		SBA198216720		1	SPRING
8		SBA199236540		1	COLLAR
9		SBA036800010		1	RING, SNAP
10		SBA165166650		1	PLATE, PLATE, Front
11		SBA165996540		1	GASKET
12		SBA011310612		2	SCREW, CAPTIVE WASHER, Hex, M6 x 12, Cl 8.8
13		SBA052109076		1	O-RING
14		SBA140986820		1	TUBE, Oil Pickup
15		SBA140406490		1	SCREEN, FILTER, Suction
16		SBA011310612		2	SCREW, CAPTIVE WASHER, Hex, M6 x 12, Cl 8.8

WATER PUMP, L160

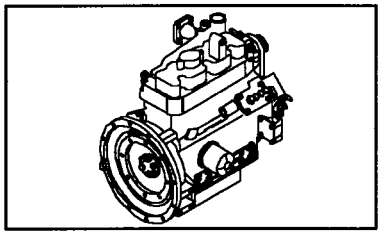

BS09C607

WATER PUMP, L160

REF	FN	PART NUMBER	YR/SN	QTY	DESCRIPTION
1		SBA145017730		1	PUMP, WATER, Incl. 2 - 5
2		SBA145146320		1	PLATE, Set
3		SBA145996680		1	GASKET
4		SBA064500030		4	PLUG, 3/8"
5		SBA015300614		5	SCREW
6		SBA145996670		1	GASKET
7		SBA011310635		4	SCREW, CAPTIVE WASHER, Hex, M6 x 35, Cl 8.8
8		9804276		3	NUT, M6 x 1, Flg, Cl 8
9		SBA011310655		2	BOLT, Hex, M6 x 55, Cl 8.8
10		SBA145996710		1	GASKET
11		SBA145206220		1	THERMOSTAT, 71° C (160° F), 1.875" OD x 2.2" H
12		SBA145216640		1	HOUSING, Thermostat
13		SBA012100655		2	STUD
14		SBA145536050		1	HOSE, Rubber
15		SBA067100022		2	CLAMP, HOSE
16		SBA145226340		1	COVER
17		SBA145996051		1	GASKET
18		SBA011510820		2	SCREW, CAPTIVE WASHER, Hex, M8 x 20, G5

WATER PUMP, L170

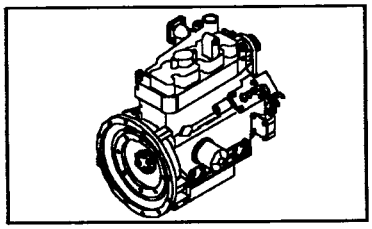

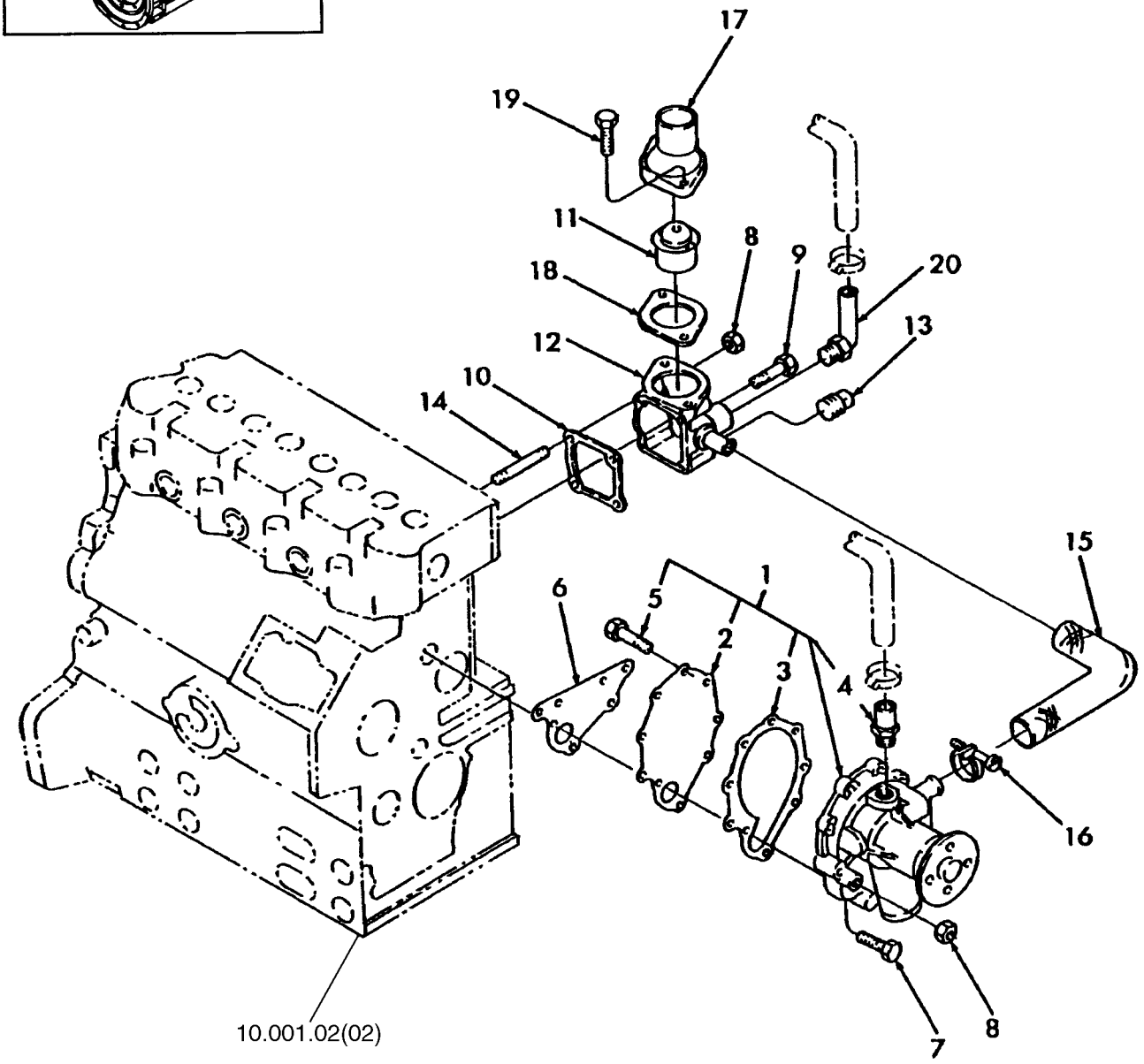

BS09B018

WATER PUMP, L170

REF	FN	PART NUMBER	YR/SN	QTY	DESCRIPTION
1		SBA145017730		1	PUMP, WATER, Incl. 2, 3, 5, 13
2		SBA145146320		1	PLATE, Set
3		SBA145996680		1	GASKET
4		SBA198486940		1	FITTING
5		SBA015300614		5	SCREW
6		SBA145996670		1	GASKET
7		SBA011310635		4	SCREW, CAPTIVE WASHER, Hex, M6 x 35, Cl 8.8
8		9804276		3	NUT, M6 x 1, Flg, Cl 8
9		SBA011310655			BOLT, Hex, M6 x 55, Cl 8.8
10		SBA145996710		1	GASKET
11		SBA145206220		1	THERMOSTAT, 71° C (160° F), 1.875" OD x 2.2" H
12		SBA145216640		1	HOUSING, Thermostat
13		SBA064500030		2	PLUG, 3/8"
14		SBA012100655		2	STUD
15		SBA145536050		1	HOSE, Rubber
16		SBA067100022		2	CLAMP, HOSE
17		SBA145226340		1	COVER
18		SBA145996051		1	GASKET
19		SBA011510820		2	SCREW, CAPTIVE WASHER, Hex, M8 x 20, G5
20		SBA140986581		1	ELBOW

10.406.01		p1	04/09

RADIATOR - COOLER

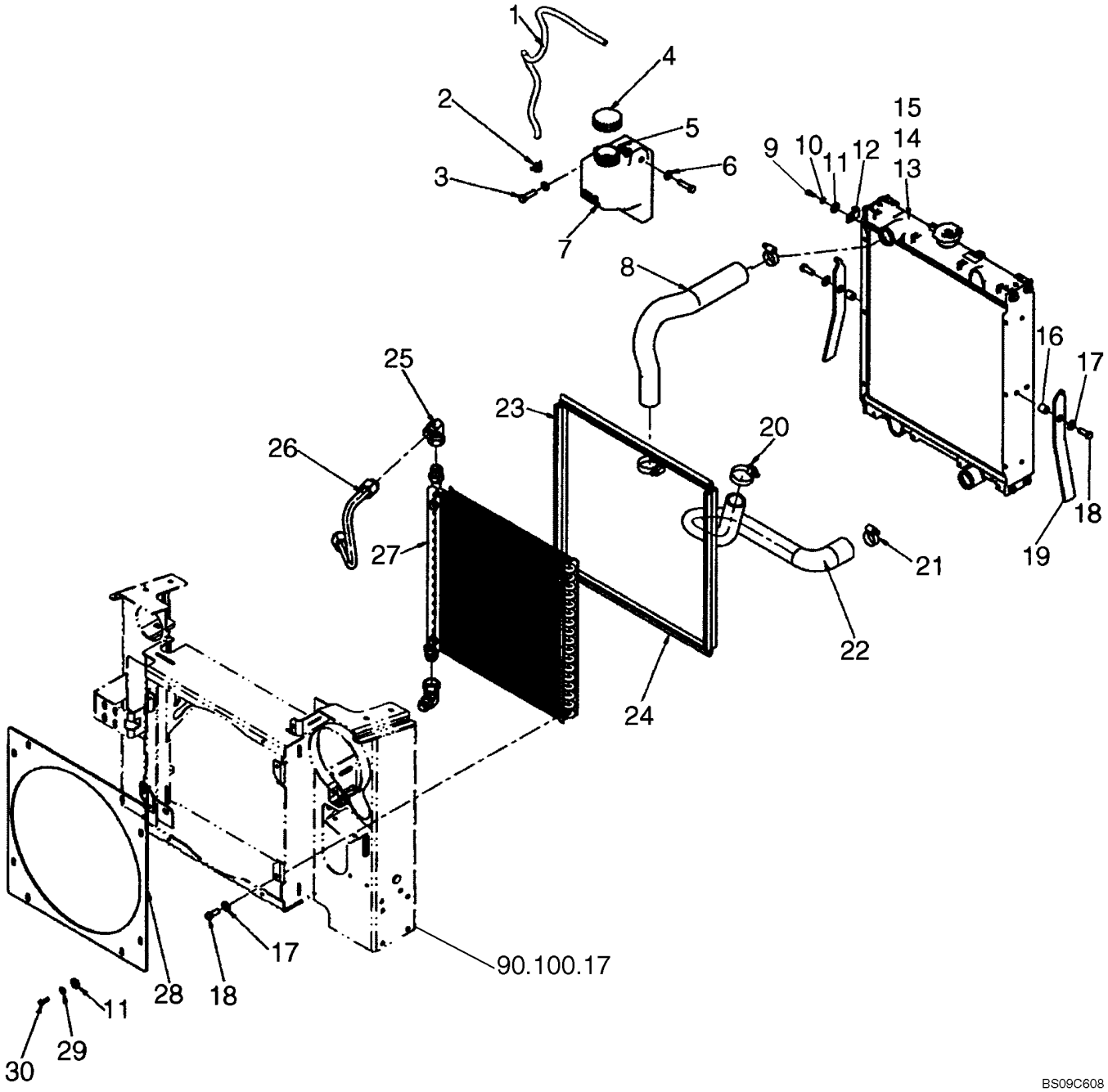

RADIATOR - COOLER

REF	FN	PART NUMBER	YR/SN	QTY	DESCRIPTION
1		290323		1	HOSE, FLEXIBLE, 2.7 Ft
2		{87436932}		1	Clamp; 15 mm
3		280206		2	BOLT, Hex, 3/8"-16 x 1 3/8", G5
4		86507190		1	CAP, Coolant Recovery Bottle
5		9637692		1	NUT, LOCK, 3/8"-16, GB
6		86624144		3	WASHER, 13/32" x 3/4" x .120"
7		87042633		1	RESERVOIR, COOLANT EXPANSION
8		87730362		1	HOSE, Upper Radiator
9		86508568		1	BOLT, Hex, M6 x 16, Cl 8.8, Full Thd
10		86588450		1	WASHER, M6 x 12 x 1.6 Thk
11		140040		9	WASHER, M6 x 22 x 2
12		86010402		1	CLAMP, 1/2", Insul, 3/8" Bolt
13		87033479		1	RADIATOR, Incl. 14, 15
14		3957211		1	CAP, RADIATOR
15		87032485		1	DRAINCOCK/TAP, SUPPLY
16		86511237		2	SPACER
17		140045		6	WASHER, BELLEVILLE, M10
18		88206		6	BOLT, Hex, 3/8"-16 x 1", G5, Full Thd
19		86538662		2	HANDLE
20		513309		2	CLAMP, HOSE, #24, 1.06/2.00 Type F Worm
21		84674		2	CLAMP, HOSE, #28, 1.31/2.25 Type F Worm
22		87044193		1	HOSE, Lower Radiator
23		87034579		2	SEAL
24		87020906		2	SEAL
25		219603		2	ELBOW, 90º, 1 1/16"-12, 37º x 1 1/16"-12, 37º Fem Sw
26		87050095		1	TUBE, HYD, Upper Oil Cooler
27		87014828		1	COOLER, OIL
28		87376698		1	SHROUD
29		322357		8	WASHER, BELLEVILLE, M6
30		9707580		8	BOLT, Hex, 1/4"-20 x 3/4", G5, Full Thd

SECTION INDEX

29 - Hydrostatic transmission

29.200.01	01	BOOM & BUCKET FOOT CONTROL, HYDROSTATIC LEVERS
29.200.01	02	BOOM & BUCKET HAND CONTROL, HYDROSTATIC LEVERS
29.200.01	03	BOOM & BUCKET HAND CONTROL KIT
29.200.03	01	BOOM & BUCKET FOOT CONTROL, KICK PANEL, RH
29.200.03	02	BOOM & BUCKET HAND CONTROL, KICK PANEL, RH
29.200.03	04	BOOM & BUCKET FOOT CONTROL, KICK PANEL, LH (IF USED)
29.200.03	05	BOOM & BUCKET HAND CONTROL, KICK PANEL, LH
29.200.04	03	BOOM & BUCKET FOOT CONTROL, PEDALS
29.200.05	01	BOOM & BUCKET HAND CONTROL, TUNNEL COMPONENTS
29.200.05	02	HAND CONTROL - TUNNEL COMPONENTS, PILOT CONTROL
29.200.05	04	TUNNEL COMPONENTS, PILOT CONTROL
29.200.05	05	TUNNEL COMPONENTS - MODELS WITH PILOT CONTROL, EH AUX CONTROL
29.200.06	01	PEDALS - MODELS WITH PILOT CONTROL
29.200.06	02	PEDALS - MODELS WITH PILOT CONTROL, EH AUX CONTROL
29.200.07	01	HANDLES - CONTROL
29.200.07	02	HANDLE, CONTROL
29.200.07	03	HANDLE, CONTROL
29.200.07	04	HANDLE
29.200.07	05	HANDLES, CONTROL - MODELS WITH PILOT CONTROL
29.200.07	06	HANDLES - CONTROL, MODELS WITH PILOT CONTROL, EH AUX CONTROL
29.200.07	07	HANDLES, MODELS WITH PILOT CONTROL, AUX CONTROL
29.200.07	10	MULTI-FUNCTION HANDLE, LH
29.212.01	01	HYDROSTATIC PUMP & MOTOR (IF USED, SEE REF 3)
29.212.01	02	HYDROSTATIC CASE DRAIN
29.212.02	01	HYDROSTATIC PUMP & MOTOR, MODELS WITH PILOT CONTROL
29.212.02	02	HYDROSTATIC PUMP & MOTOR, MODELS WITH PILOT CONTROL
29.212.02	03	HYDROSTATIC PUMP & MOTOR, MODELS WITH PILOT CONTROL
29.212.02	05	HYDROSTATICS - PILOT CONTROL TO PUMP
29.212.02	06	HYDROSTATICS - HAND CONTROL, PILOT CONTROLS
29.212.02	07	HYDRAULICS - HAND CONTROL RH, MODELS WITH PILOT CONTROL
29.212.02	08	MOUNTING - PUMP SUPPORT, PILOT CONTROL
29.212.03	01	HYDROSTATICS - JOYSTICK VALVE KITS, ISO PATTERN
29.212.03	02	HYDRAULICS - JOYSTICK VALVE KITS, ISO PATTERN, RIGHT HAND
29.212.03	03	HAND CONTROL - PILOT CONTROL, UPPER RH
29.212.03	04	HAND CONTROL - PILOT CONTROL, UPPER LH
29.212.05	01	HYDRAULIC GEAR PUMP
29.212.05	02	HYDRAULIC GEAR PUMP, STANDARD (L160)
29.212.05	03	HYDRAULIC GEAR PUMP (HIGH FLOW) L160
29.212.05	04	HYDRAULIC GEAR PUMP (HIGH FLOW) L170
29.212.05	05	HYDRAULIC GEAR PUMP, STANDARD - PILOT CONTROLS (L170)
29.212.05	06	HYDRAULIC GEAR PUMP, STANDARD - PILOT CONTROL; IF USED
29.212.05	07	HYDRAULIC GEAR PUMP, STANDARD - PILOT CONTROL; IF USED
29.212.06	01	VALVE - HAND CONTROL
29.212.06	02	VALVE - HAND CONTROL
29.212.07	01	REXROTH PUMP AA20
29.212.07	02	PRESSURE RELIEF VALVE
29.212.07	03	PRESSURE RELIEF VALVE
29.212.07	04	INTERNAL GEAR PUMP
29.212.07	05	ROTARY GROUP, RH ROTATION
29.212.07	06	CONTROL, HYDRAULIC
29.212.07	07	CONTROL CARTRIDGE WITH ORIFICE

SECTION INDEX

29 - Hydrostatic transmission

29.212.07	08	VALVE SECTION - LOCKING ELEMENTS
29.212.07	09	ROTARY GROUP, LH ROTATION
29.212.09		HYDROSTATIC MOTOR
29.218.06		TRANSMISSION CENTERING

29.200.01	01	p1	05/09

BOOM & BUCKET FOOT CONTROL, HYDROSTATIC LEVERS

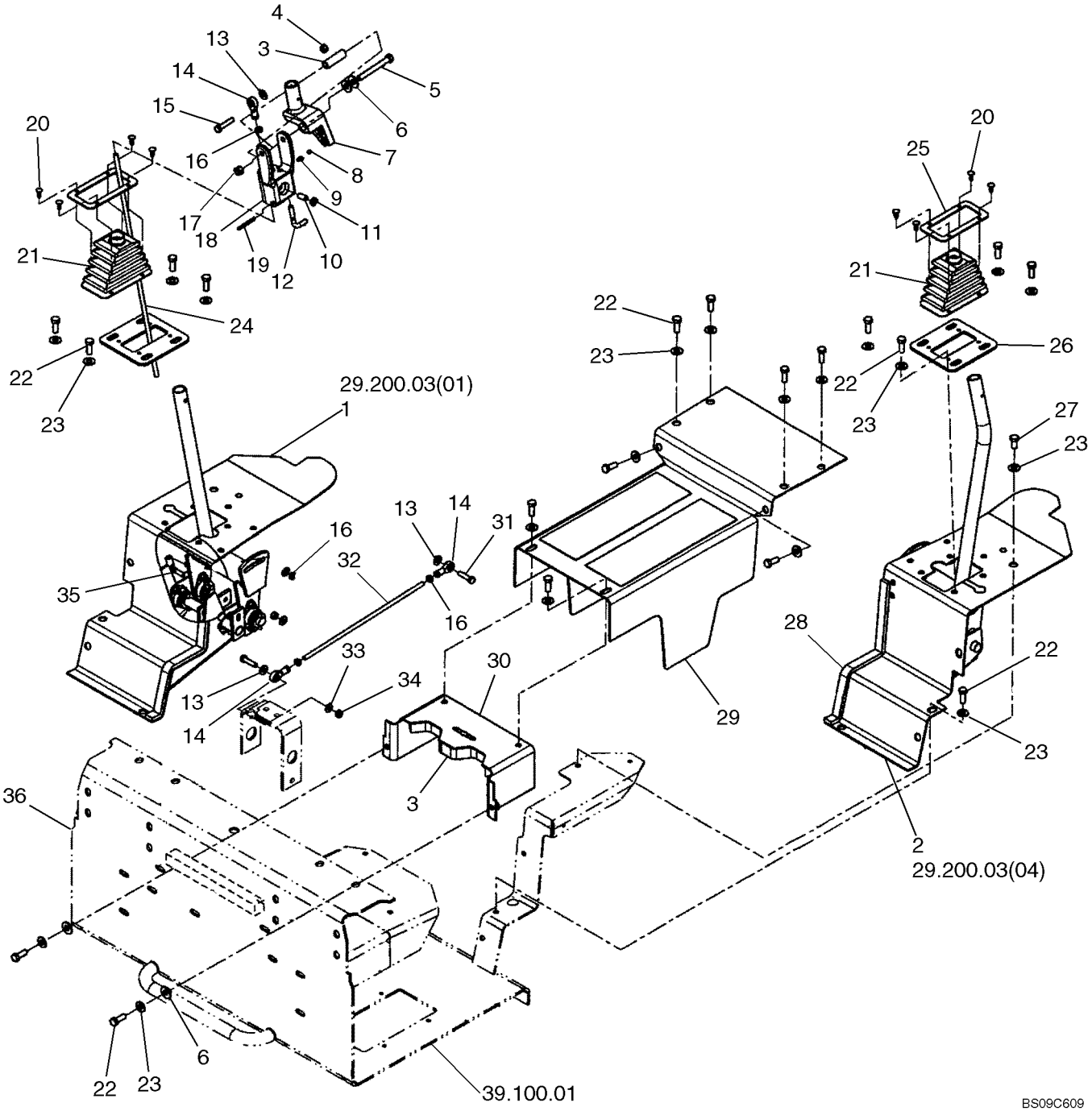

BOOM & BUCKET FOOT CONTROL, HYDROSTATIC LEVERS

REF	FN	PART NUMBER	YR/SN	QTY	DESCRIPTION
		{}			See Control Handles, Figures 29.200.07 [02], 29.200.07 [03]
1		{}		1	Panel, Kick, Right Hand, See Figure 29.200.03 [01]
2		{}		1	Panel, Kick, Left Hand, See Figure 29.200.03 [04]
3		9615841		1	SPACER
4		280736		1	NUT, LOCK, 5/16"-18, GC
5		9637240		1	BOLT, Hex, 3/8"-16 x 3 1/4", G5
6		80702		4	WASHER, 3/8"
7		87360182		1	PIVOT, Pivot Stalk
8		86628554		1	BALL, Steel
9		86628555		1	SPRING
10		87030398		1	SCREW, Set, HS, Cone Pt, 3/8"-16 x 1"
11		86509499		1	NUT, Jam, 3/8"-16, G2
12		9846536		1	PIN
13		252687		3	WASHER, .344" x 1" x .098", HDN
14		221665		3	ROD, ADJUSTMENT, End
15		88275		1	BOLT, Hex, 5/16"-18 x 1 1/2", G5
16		87307		5	NUT, Jam, 5/16"-24, G2
17		9637692		1	NUT, LOCK, 3/8"-16, GB
18		9842506		1	SUPPORT, RH
19		80628		1	PIN, GROOVED, 3/16" x 1 3/4", Type A
20		86729477		8	FASTENER
21		9827590		2	BOOT
22		88206		24	BOLT, Hex, 3/8"-16 x 1", G5, Full Thd
23		140045		26	WASHER, BELLEVILLE, M10
24		9803275		1	ROD, 5/16"-24 x 20.669"
25		9844042		2	RING
26		9827335		2	PLATE
27		88434		2	BOLT, Hex, 3/8"-16 x 3/4", G5, Full Thd
28		291308		X	STRIP, SEALING, 2.6 ft
29		86633166		1	COVER, Incl Anti Skid Strip 263636
29A		263636		AR	STRIP, ANTI-SKID, 4 x 55"; (2) Strips 4 x 13 Required
30		86634711		1	BRACKET
31		87657		2	BOLT, Hex, 5/16"-18 x 1 1/4", G5
32		86580984		1	ROD, 5/16"-24 x 13"

29.200.01	01	p2	05/09

BOOM & BUCKET FOOT CONTROL, HYDROSTATIC LEVERS

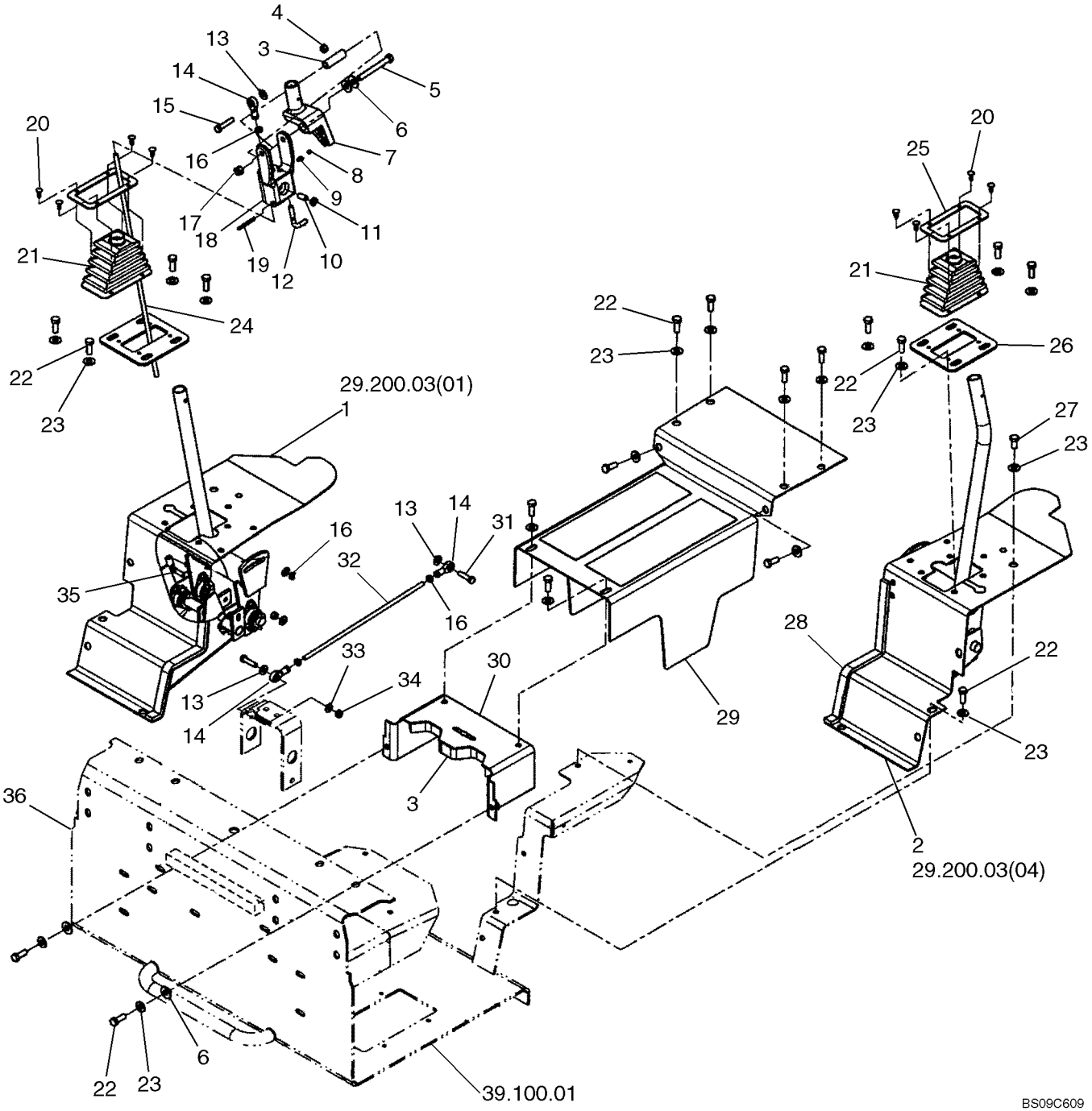

BOOM & BUCKET FOOT CONTROL, HYDROSTATIC LEVERS

REF	FN	PART NUMBER	YR/SN	QTY	DESCRIPTION
33		322358		3	WASHER, BELLEVILLE, M8
34		9635082		2	NUT, 5/16"-18, G5
35		86548493		1	BALL, -end
36		291355		X	PAD, 2 ft

29.200.01	02	p1	05/09

BOOM & BUCKET HAND CONTROL, HYDROSTATIC LEVERS

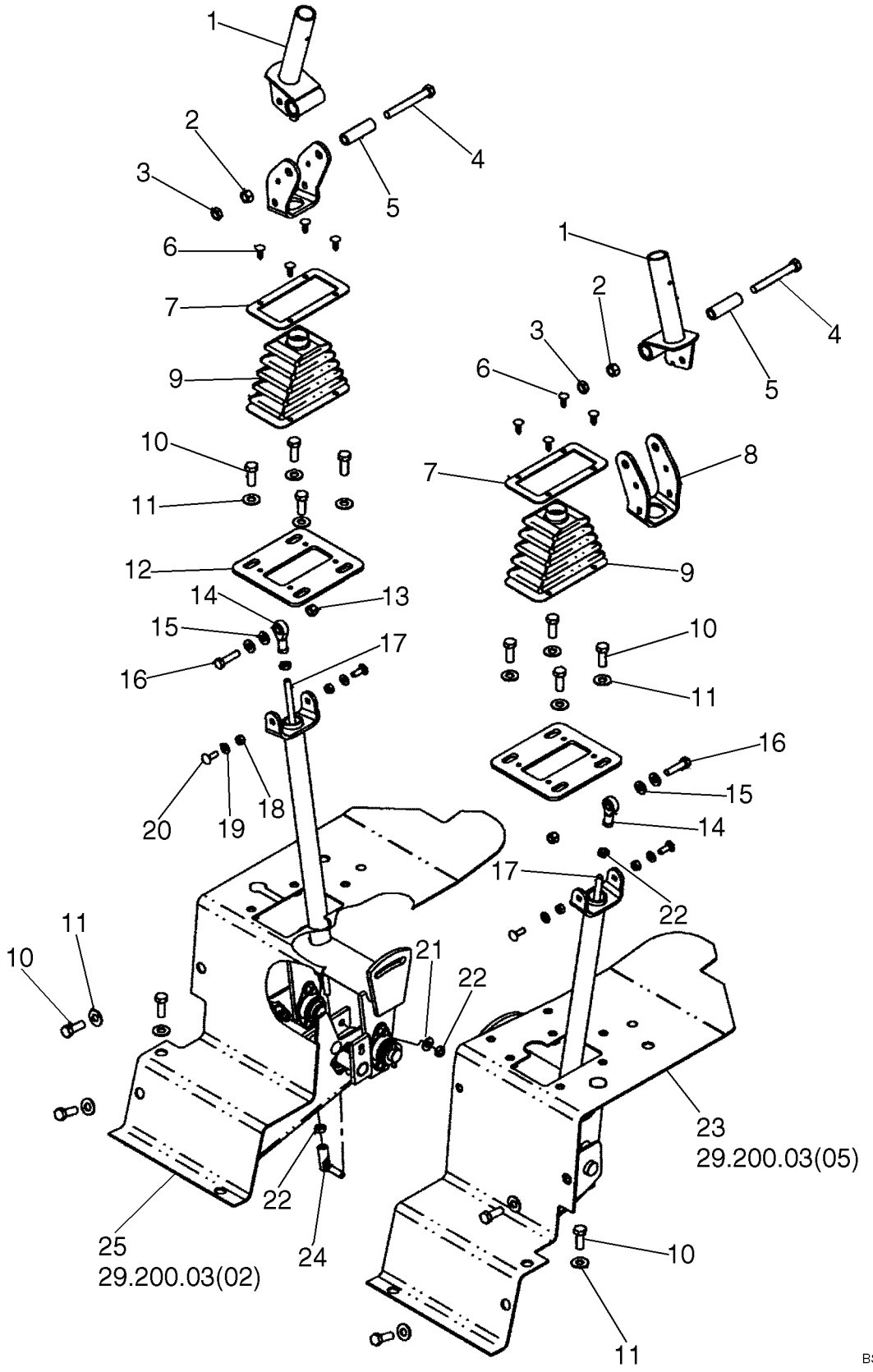

BOOM & BUCKET HAND CONTROL, HYDROSTATIC LEVERS

REF	FN	PART NUMBER	YR/SN	QTY	DESCRIPTION
		{}			See Control Handles, Figures 29.200.07 [02], 29.200.07 [03]
1		87365734		2	HANDLE, Handle, Control; Gray; Incl. Bushings 86577614
		86577614		2	BUSHING
2		9628503		2	NUT, 3/8"-16, G5
3		86509499		2	NUT, Jam, 3/8"-16, G2
4		280161		2	BOLT, Hex, 3/8"-16 x 3", G5
5		9615841		2	SPACER
6		86729477		8	FASTENER, Plastic, Black
7		9844042		2	RING, Gray
8		86573132		2	CHANNEL
9		9827590		2	BOOT
10		88206		14	BOLT, Hex, 3/8"-16 x 1", G5, Full Thd
11		140045		14	WASHER, BELLEVILLE, M10
12		9827335		2	PLATE, Gray
13		280736		2	NUT, LOCK, 5/16"-18, GC
14		221665		2	ROD, ADJUSTMENT, End
15		87362		4	WASHER, 5/16" SAE
16		87657		2	BOLT, Hex, 5/16"-18 x 1 1/4", G5
17		86573256		2	ROD, 5/16"-24 x 19"
18		7770		4	NUT, 1/4"-20, G5
19		322357		4	WASHER, BELLEVILLE, M6
20		88832		4	BOLT, CARRIAGE, Short NK, 1/4"-20 x 3/4", G5
21		322358		2	WASHER, BELLEVILLE, M8
22		87307		6	NUT, Jam, 5/16"-24, G2
23		{}		1	Panel, Kick, Left Hand; See Figure 29.200.03 [05]
24		86548493		2	BALL, -end
25		{}		1	Panel, Kick, Right Hand; See Figure 29.200.03 [02]
		86505650		1	DECAL, Handle Control, Right Hand; Not Illustrated
		86505651		1	DECAL, Handle Control, Left Hand; Not Illustrated

29.200.01	03	p1	08/09

BOOM & BUCKET HAND CONTROL KIT

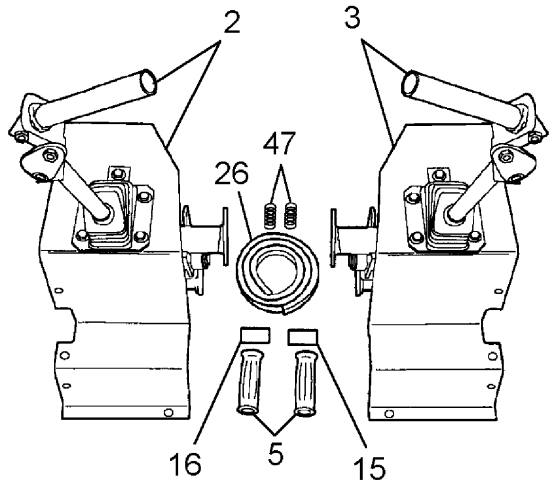

HAND CONTROLS

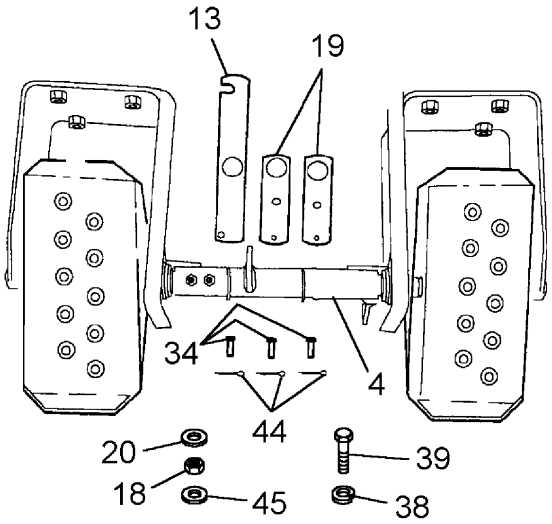

FOOT CONTROLS

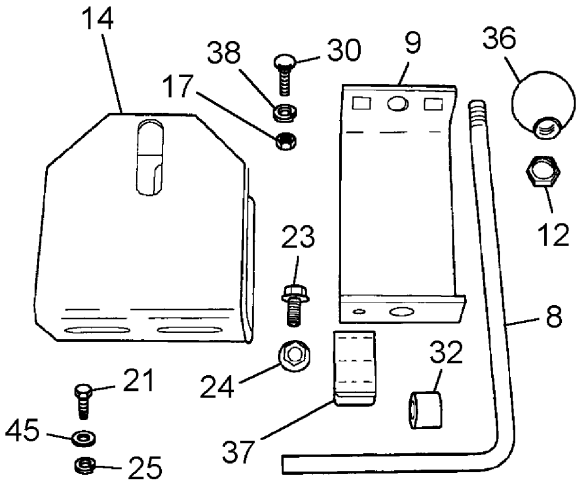

LEFT PEDAL LOCKOUT

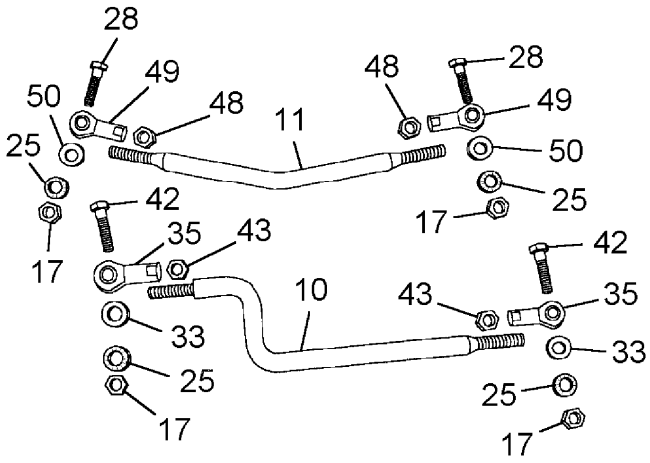

CONTROL RODS

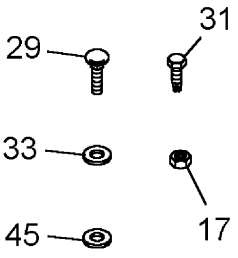

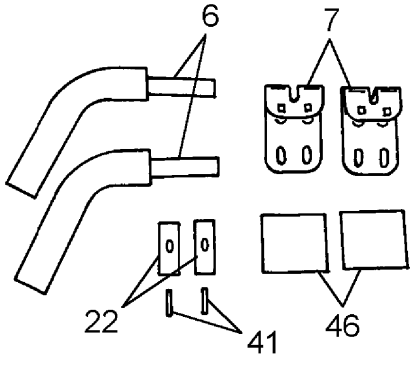

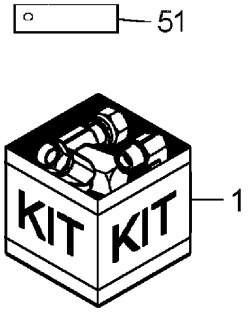

FOREARM RESTS

BOOM & BUCKET HAND CONTROL KIT

REF	FN	PART NUMBER	YR/SN	QTY	DESCRIPTION
1		87519830			KIT, SERVICE, Conversion; Handle Control, Incl. Ref. 2, 3 - 50
2		0C		1	ORDER COMPONENTS, Control Handle, RH, See Figure 29.200.03(02)
3		0C		1	ORDER COMPONENTS, Control Handle, LH, See Figure 29.200.03(05)
4		0C		1	ORDER COMPONENTS, Control Pedals, See Figure 10.15.02
5		86584202		2	HANDLE GRIP, Soft-touch
6		86580786		2	ARM
7		86602768		2	SUPPORT
8		86526525		1	ROD, Bent, 3/8"-16 x 191.5mm
8		87030899		1	ROD, Bent, 3/8"-16 x 226mm
8		87536437		1	ROD, Replaces 87030899
9		86526523		1	BRACKET, 115mm Wide
9		87030898		1	BRACKET, 143mm Wide
10		86522448		1	ROD, 5/16" Thread
11		86522447		1	ROD, 5/16" Thread
11		86582885		1	ROD, 1/2" Threaded Ends
12		86509499		1	NUT, Jam, 3/8"-16, G2
13		86506174		1	LINK, 226mm Long, See Service Bulletin 2/00-I1
14		86506171		1	BRACKET
14		87536436		1	BRACKET, Replaces 86506171
15		86505651		1	DECAL, Hand Control, LH
16		86505650		1	DECAL, Hand Control, RH
17		9635082		6	NUT, 5/16"-18, G5
18		9628503		3	NUT, 3/8"-16, G5
19		9622464		2	LINK, Control Valve
20		641419		3	WASHER, .406" x .875" x .185", HT
21		637964		4	SCREW, SELF TAPPING, HS, 3/8"-16 x 3/4"
22		621326		2	PAD, Mounting, Rubber
23		523291		1	BOLT, Hex Flg, 1/4"-20 x 1/2", Serr
24		523282		1	NUT, Flg, USR, 1/4"-20
25		80681		10	WASHER, LOCK, 5/16"
26		768715		4	SEAL, 1/2" x 3/4" x 144"

29.200.01	03	p2	08/09

BOOM & BUCKET HAND CONTROL KIT

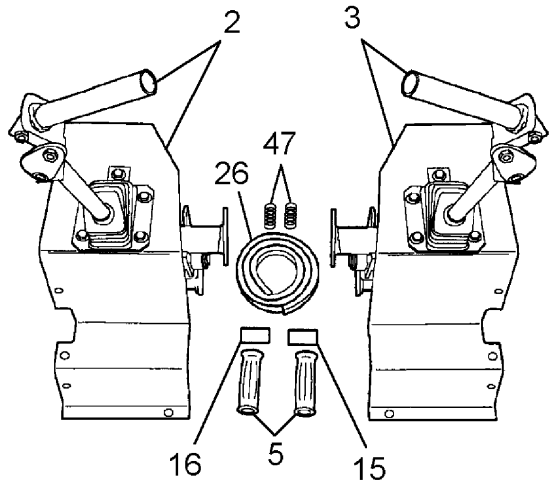

HAND CONTROLS

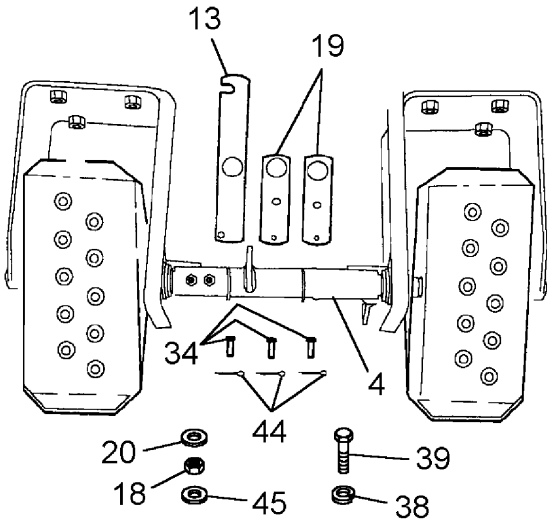

FOOT CONTROLS

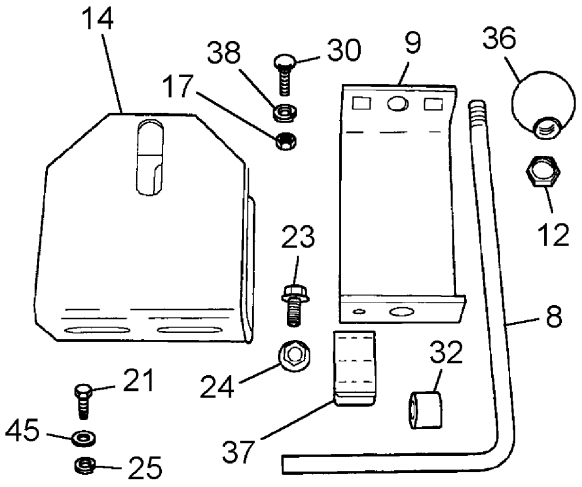

LEFT PEDAL LOCKOUT

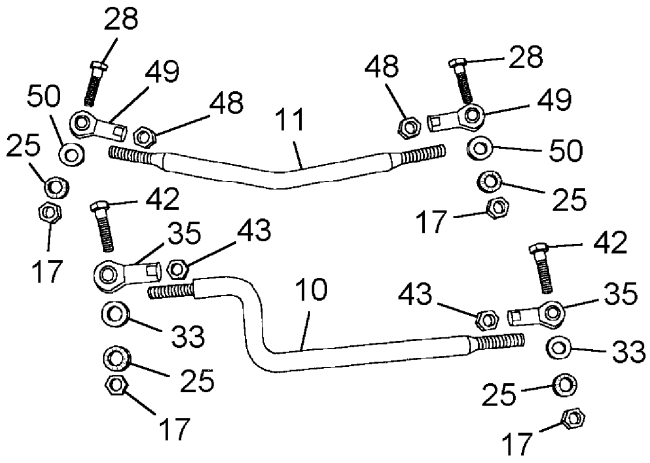

CONTROL RODS

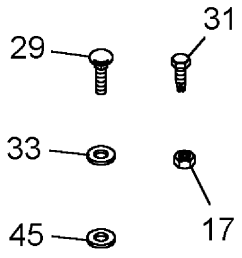

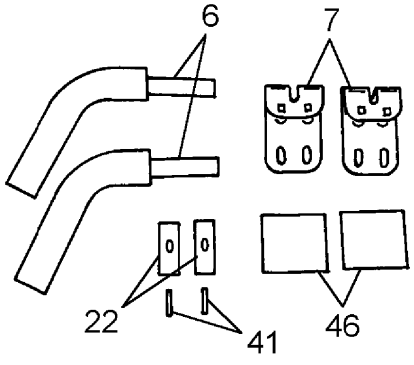

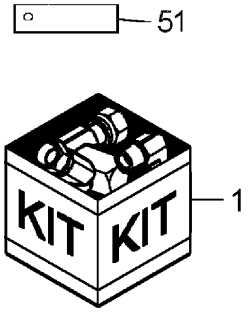

FOREARM RESTS

BOOM & BUCKET HAND CONTROL KIT

REF	FN	PART NUMBER	YR/SN	QTY	DESCRIPTION
28		9707515		2	BOLT, Hex, 5/16"-18 x 1 3/4", G5
29		280618		4	SCREW, Short NK, 5/16"-18 x 2", G5
30		280497		2	BOLT, CARRIAGE, Short NK, 5/16"-18 x 3/4", G5, Full Thd
31		280476		2	SCREW, SELF TAPPING, Hex Wash Hd, 3/8" x 1"
32		254146		1	SPACER
33		252687		8	WASHER, .344" x 1" x .098", HDN
34		9672307		3	PIN, CLEVIS, 1/4" x 3/4"
35		221665		2	ROD, ADJUSTMENT, End, Ball Joint, 5/16"
36		168982		1	KNOB
37		163902		1	CLIP, SPRING
38		140045		6	WASHER, BELLEVILLE, M10
39		88206		5	BOLT, Hex, 3/8"-16 x 1", G5, Full Thd
41		87721		2	PIN, LOCK, 5/16" x 1 1/4", Slotted
40		280736		4	NUT, LOCK, 5/16"-18, GC
42		87657		2	BOLT, Hex, 5/16"-18 x 1 1/4", G5
43		87307		2	NUT, Jam, 5/16"-24, G2
44		280236		3	PIN, SPLIT (COTTER), 1/16" x 1/2"
45		80702		10	WASHER, 3/8"
46		86589362		2	PAD, RUBBER, 3" x 3" Adhesive Backing
47		86578867		2	SPRING, Control Valve
48		87309		2	NUT, Jam, 1/2"-20, G2
49		86582884		2	BEARING, SPHERICAL, Ball Joint, 1/2"
50		86582886		2	SPACER
51		87034265		1	HANDLE

29.200.03	01	p1	03/09

BOOM & BUCKET FOOT CONTROL, KICK PANEL, RH

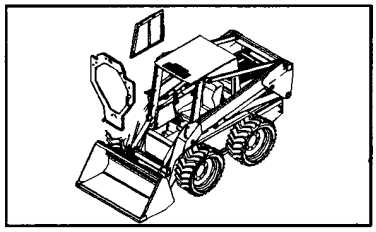

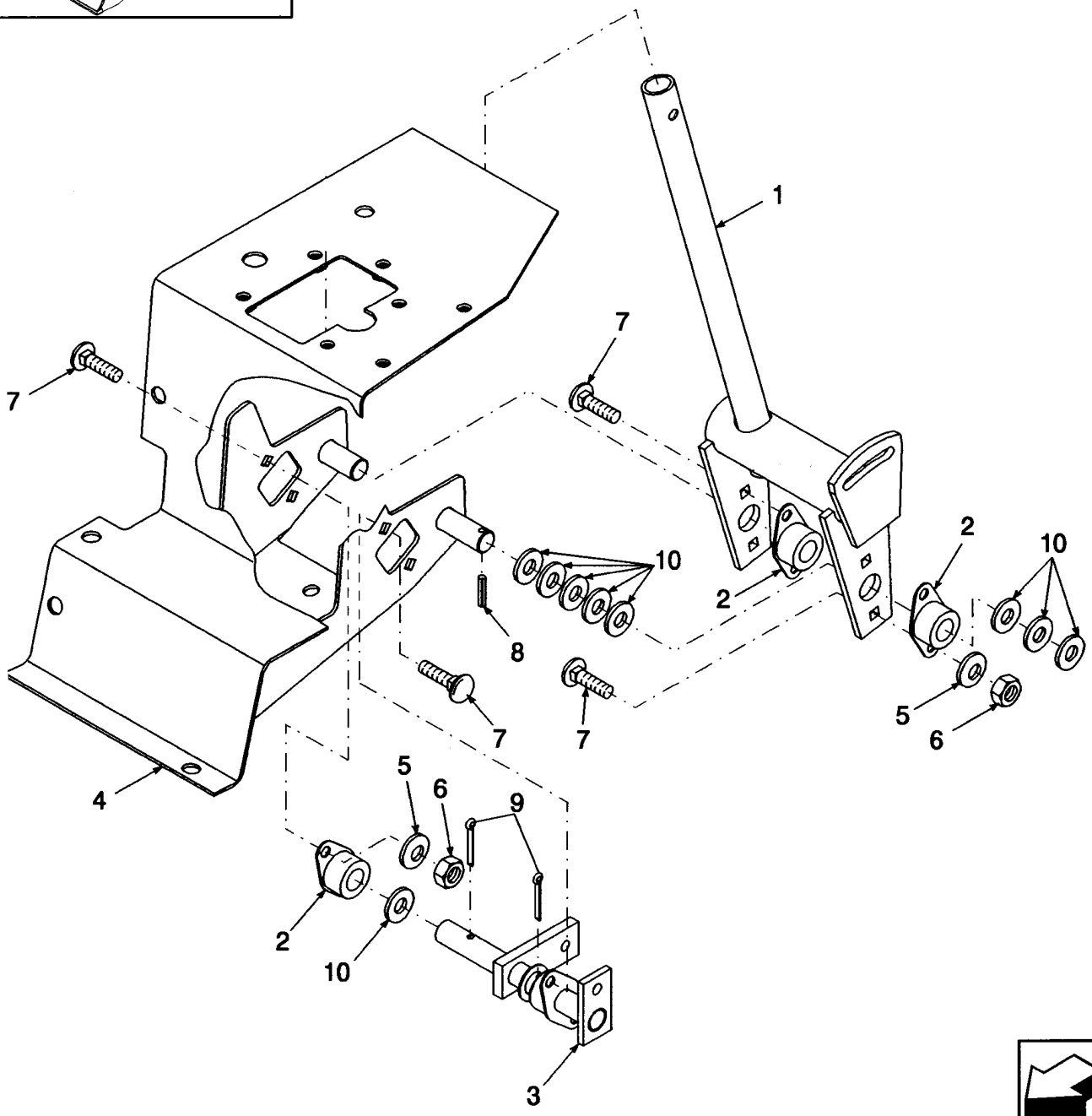

BS09D254

BOOM & BUCKET FOOT CONTROL, KICK PANEL, RH

REF	FN	PART NUMBER	YR/SN	QTY	DESCRIPTION
1		9615867		1	HANDLE
2		86567251		3	BEARING, FLANGED
3		87015330		1	SHAFT, RH
4		86591348		1	PANEL, SIDE, RH
5		322358		8	WASHER, BELLEVILLE, M8
6		9635082		8	NUT, 5/16"-18, G5
7		280327		8	BOLT, CARRIAGE, Short NK, 5/16"-18 x 3/4", G5
8		86977792		1	PIN, SLOTTED, M5 x 40
9		87398		2	PIN, SPLIT (COTTER), 3/16" x 1 1/4"
10		249100		9	WASHER, 25/32" x 1 1/4" x .06" Thk

29.200.03	02	p1	03/09

BOOM & BUCKET HAND CONTROL, KICK PANEL, RH

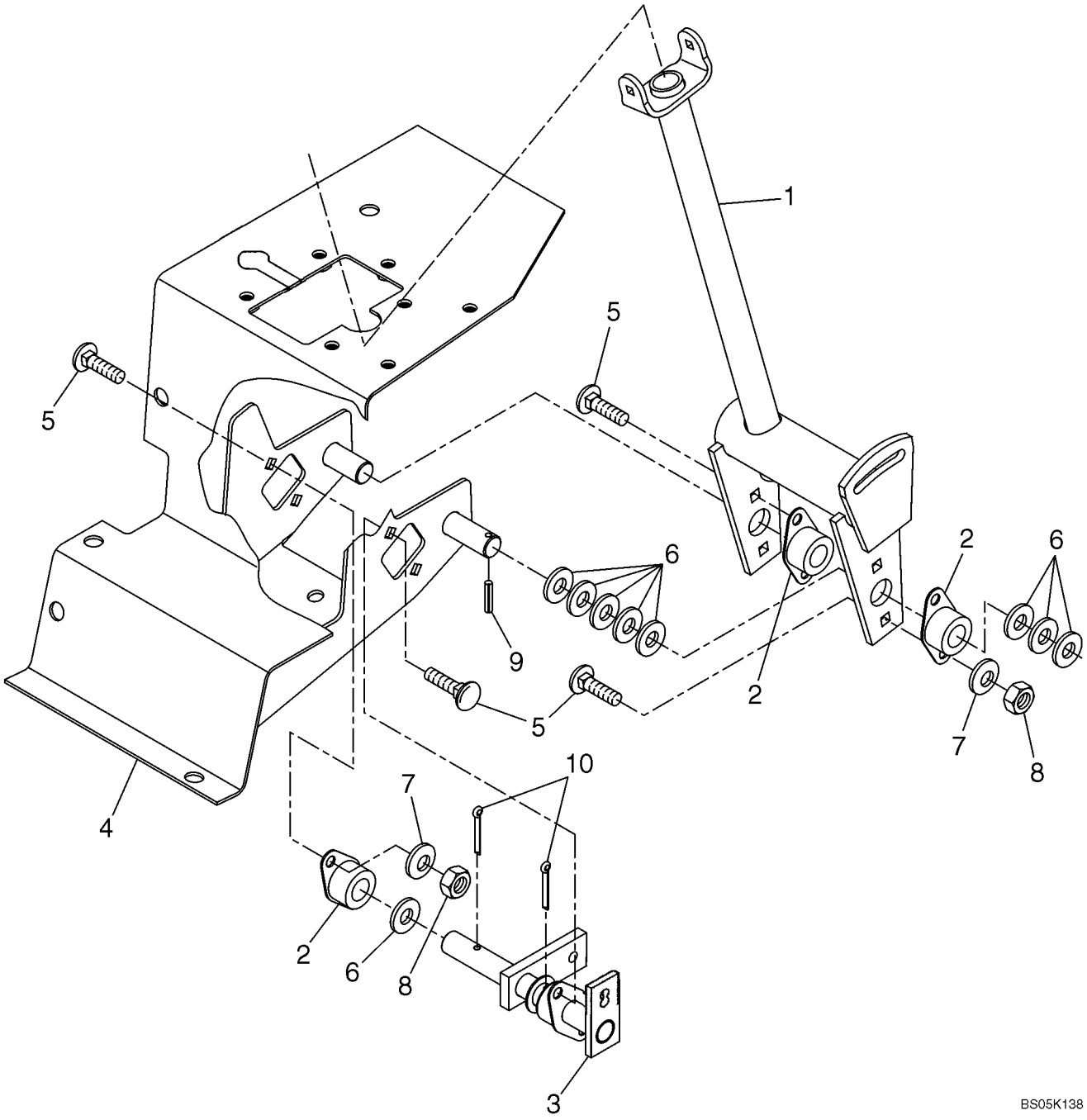

BOOM & BUCKET HAND CONTROL, KICK PANEL, RH

REF	FN	PART NUMBER	YR/SN	QTY	DESCRIPTION
1		86573243		1	HANDLE
2		86567251		3	BEARING, FLANGED
3		87015330		1	SHAFT, RH
4		87016375		1	PANEL, RH
5		280327		8	BOLT, CARRIAGE, Short NK, 5/16"-18 x 3/4", G5
6		249100		9	WASHER, 25/32" x 1 1/4" x .06" Thk
7		322358		8	WASHER, BELLEVILLE, M8
8		9635082		8	NUT, 5/16"-18, G5
9		86977792		1	PIN, SLOTTED, M5 x 40
10		87398		2	PIN, SPLIT (COTTER), 3/16" x 1 1/4"

29.200.03	04	p1	03/09

BOOM & BUCKET FOOT CONTROL, KICK PANEL, LH (IF USED)

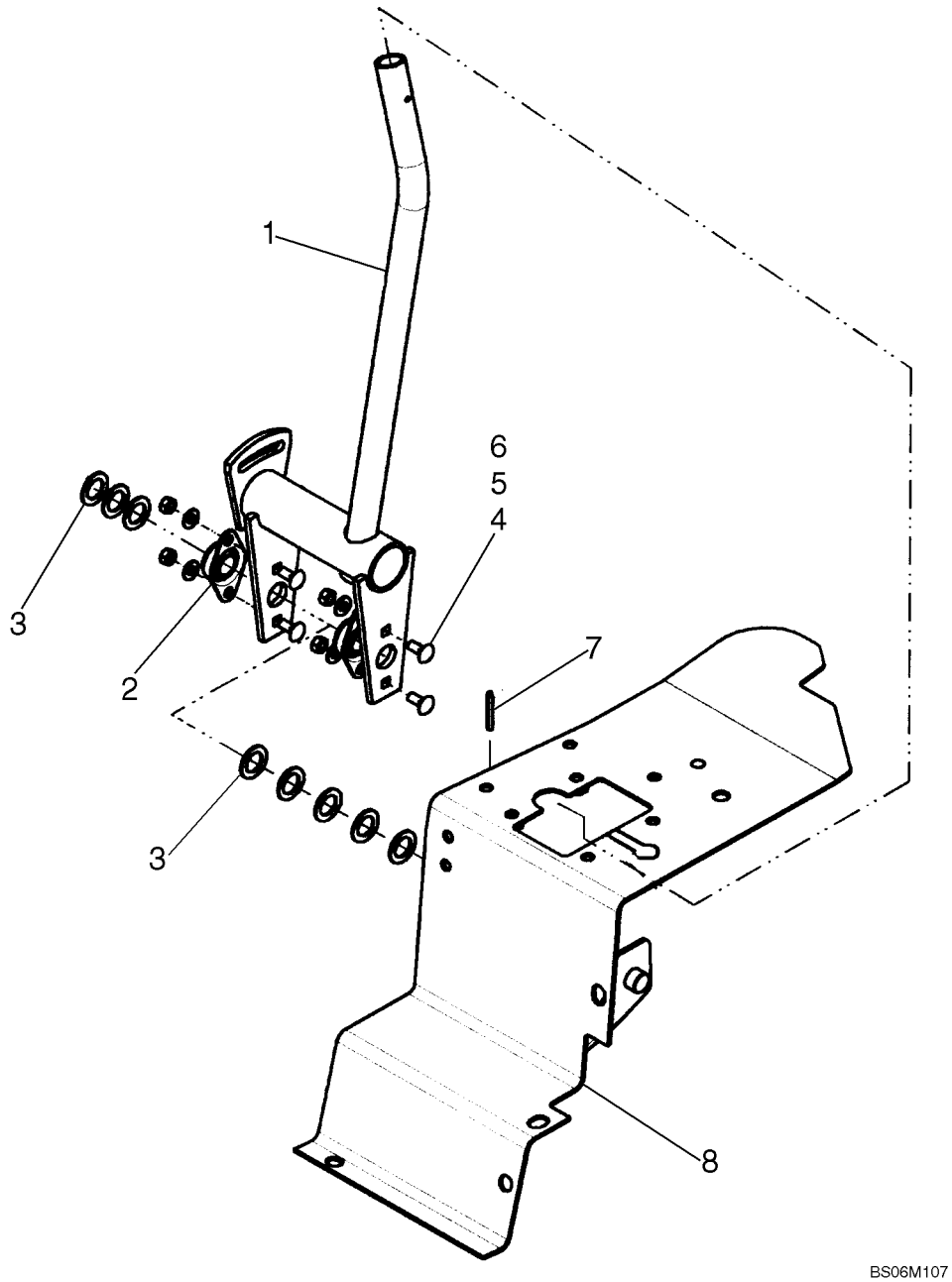

BOOM & BUCKET FOOT CONTROL, KICK PANEL, LH (IF USED)

REF	FN	PART NUMBER	YR/SN	QTY	DESCRIPTION
1		86590806		1	HANDLE
2		86567251		2	BEARING, FLANGED
3		249100		8	WASHER, 25/32" x 1 1/4" x .06" Thk
4		9635082		4	NUT, 5/16"-18, G5
5		322358		4	WASHER, BELLEVILLE, M8
6		280327		4	BOLT, CARRIAGE, Short NK, 5/16"-18 x 3/4", G5
7		86977792		1	PIN, SLOTTED, M5 x 40
8		86591347		1	PANEL, SIDE

29.200.03	05	p1	03/09

BOOM & BUCKET HAND CONTROL, KICK PANEL, LH

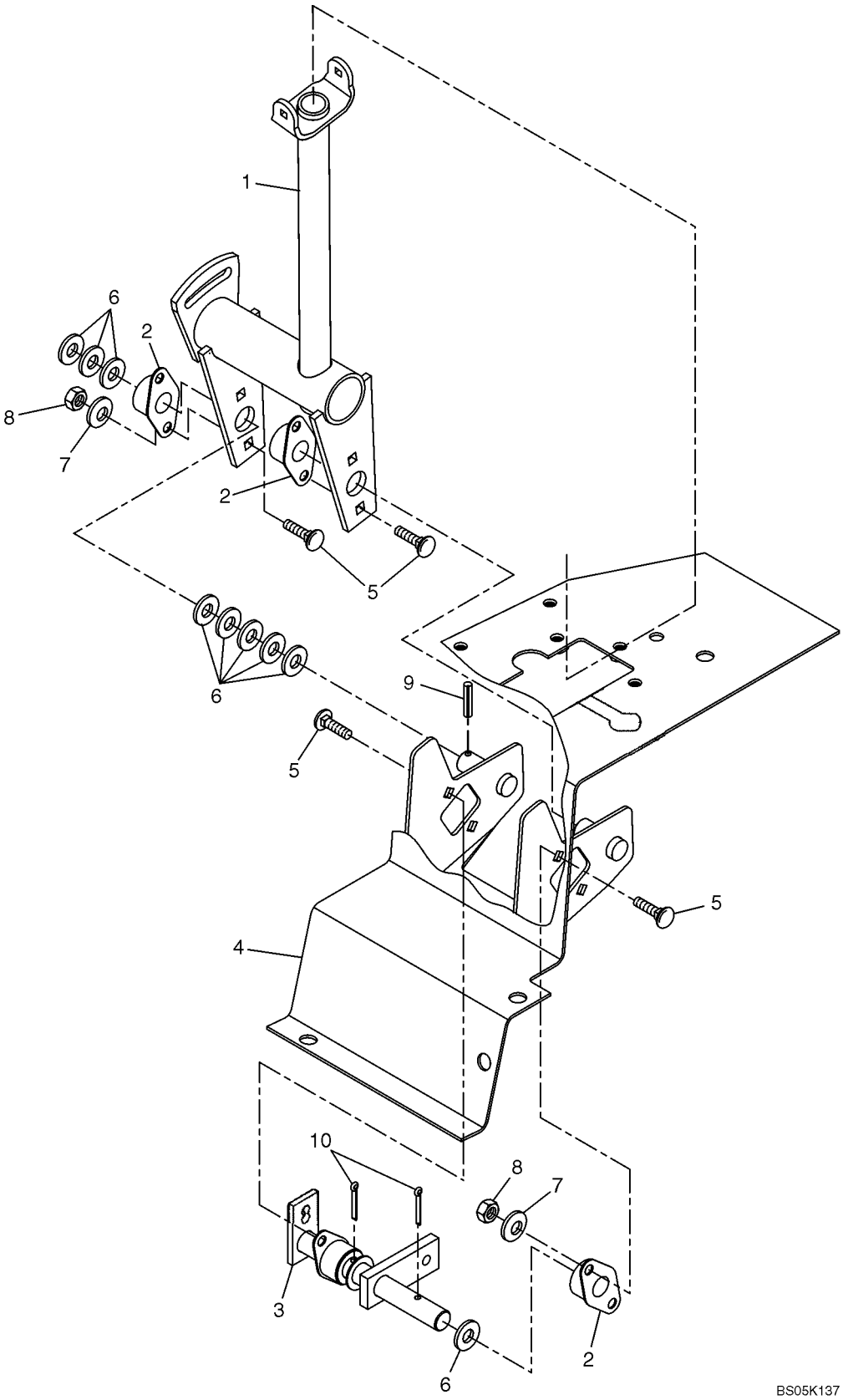

BOOM & BUCKET HAND CONTROL, KICK PANEL, LH

REF	FN	PART NUMBER	YR/SN	QTY	DESCRIPTION
1		86573243		1	HANDLE
2		86567251		3	BEARING, FLANGED
3		86573114		1	SHAFT, LH
4		87016376		1	PANEL, LH
5		280327		8	BOLT, CARRIAGE, Short NK, 5/16"-18 x 3/4", G5
6		249100		9	WASHER, 25/32" x 1 1/4" x .06" Thk
7		322358		8	WASHER, BELLEVILLE, M8
8		9635082		8	NUT, 5/16"-18, G5
9		86977792		1	PIN, SLOTTED, M5 x 40
10		87398		2	PIN, SPLIT (COTTER), 3/16" x 1 1/4"

29.200.04	03	p1	07/09

BOOM & BUCKET FOOT CONTROL, PEDALS

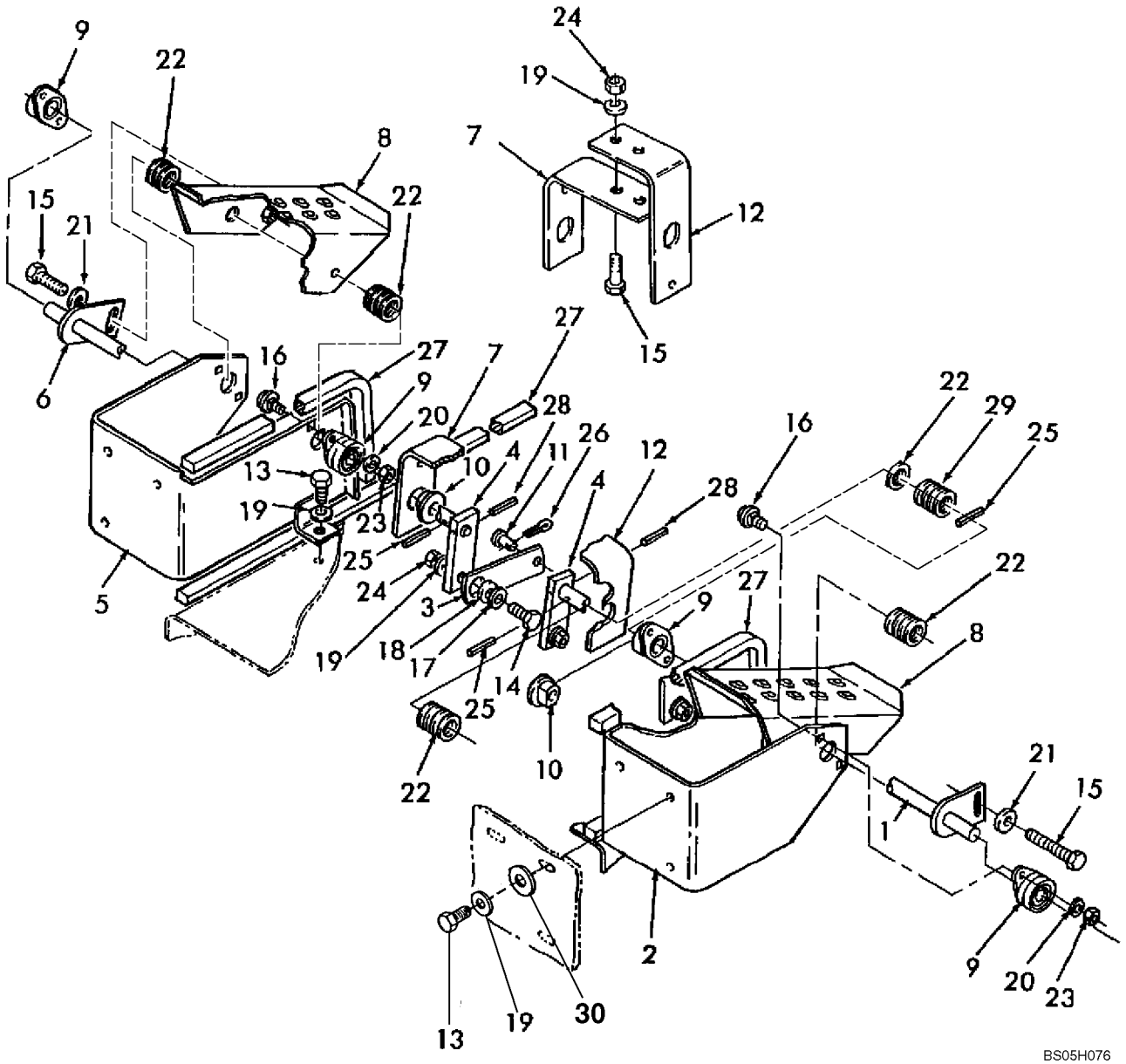

BOOM & BUCKET FOOT CONTROL, PEDALS

REF	FN	PART NUMBER	YR/SN	QTY	DESCRIPTION
1		9622465		1	SHAFT, Pedal
2		86639936		1	BRACKET, LH, Gray
3		9622464		AR	LINK, Link, (2) Std, (3) Deluxe
4		86639398		2	ARM
5		9826786		1	BRACKET, RH, Gray
5		87557968		1	BRACKET, RH, Gray; Replaces 9826786, 86639934
6		9826797		1	SHAFT, Pedal; Shaft Length - 262 mm; Can Be Used With Angle 86506569 Or 87376949
6		87039493		1	SHAFT ASSY., Pedal; Shaft Length - 260.6 mm; Must Be Used With Angle 87376949
7		86506568		1	SUPPORT
8		87550553		2	PEDAL, Pedal, Gray
9		86567251		4	BEARING, FLANGED, Side
10		228500		2	BUSHING, Deluxe
11		9672307		AR	PIN, CLEVIS, 1/4" x 3/4", (2) Std, (3) Deluxe
12		86506569		1	SUPPORT, 2 Round Holes On Shorter (89.5 mm) Side; Must Be Used With Pedal Shaft 9826797
12		87376949		1	ANGLE, Angle; 2 Slotted Holes On Shorter (109.5 mm) Side
13		88206		AR	BOLT, Hex, 3/8"-16 x 1", G5, Full Thd
14		88011		AR	BOLT, Hex, 3/8"-16 x 1 1/4", G5, Full Thd, (2) Std, (3) Deluxe, Incl Ref 11
15		88682		2	BOLT, CARRIAGE, Short NK, 3/8"-16 x 1", G5
16		280327		8	BOLT, CARRIAGE, Short NK, 5/16"-18 x 3/4", G5
17		80702		AR	WASHER, 3/8", (2) Std, (3) Deluxe
18		641419		AR	WASHER, .406" x .875" x .185", HT, (2) Std, (3) Deluxe
19		140045		AR	WASHER, BELLEVILLE, M10, (10) Std, (11) Deluxe
20		80681		8	WASHER, LOCK, 5/16", If Used
20		322358		8	WASHER, BELLEVILLE, M8, If Used
21		285072		2	WASHER, M10 x 22.2 x 2.87 Thk, HT, (3/8")
22		249100		AR	WASHER, 25/32" x 1 1/4" x .06" Thk
23		9635082		8	NUT, 5/16"-18, G5
24		9628503		AR	NUT, 3/8"-16, G5, (2) Std, (3) Deluxe
25		86977792		3	PIN, SLOTTED, M5 x 40

BOOM & BUCKET FOOT CONTROL, PEDALS

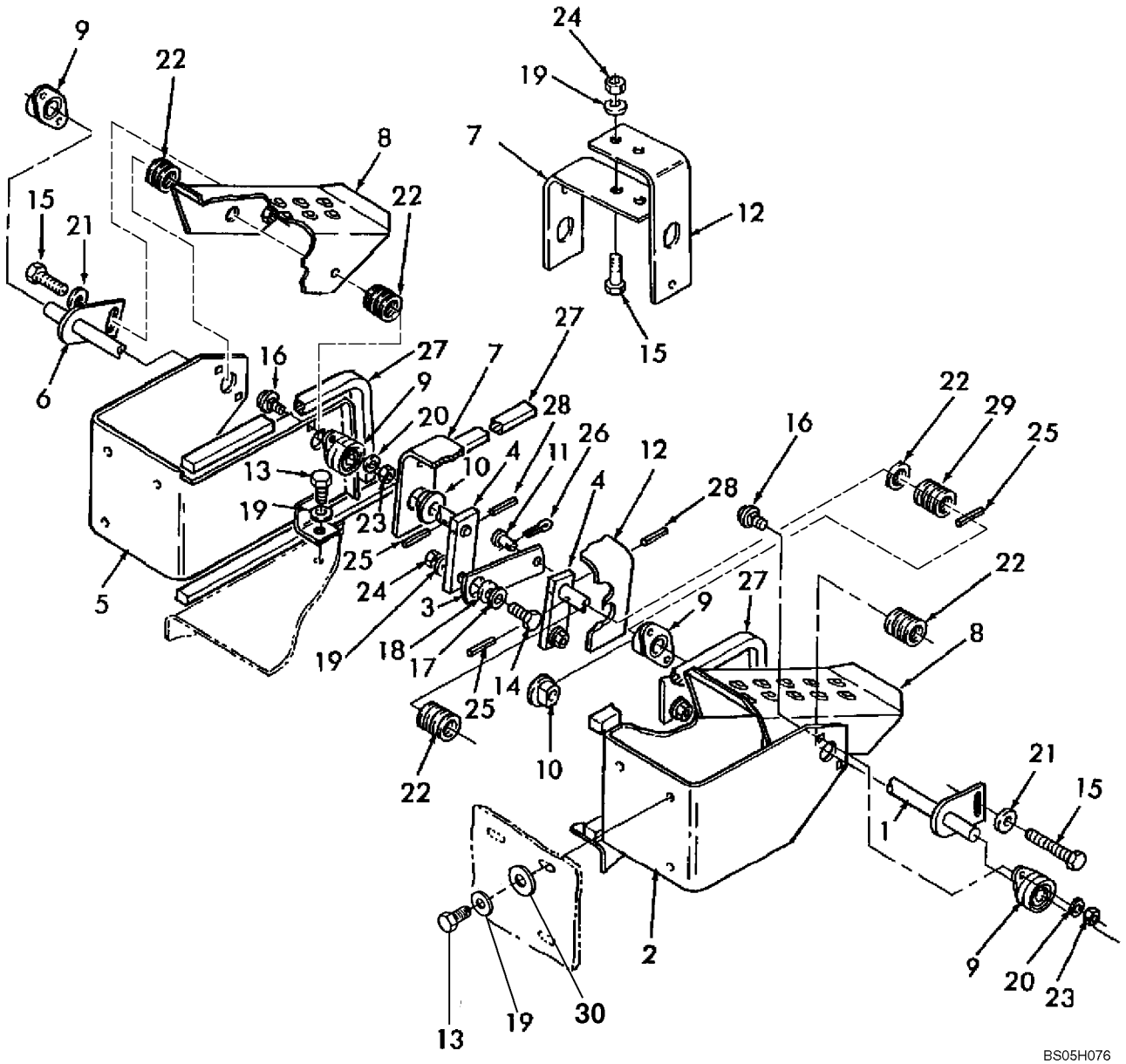

BOOM & BUCKET FOOT CONTROL, PEDALS

REF	FN	PART NUMBER	YR/SN	QTY	DESCRIPTION
26		280236		AR	PIN, SPLIT (COTTER), 1/16" x 1/2", (2) Std, (3) Deluxe
27		768715		AR	SEAL, 1/2" x 3/4" x 144" Long
28		856800		2	PIN, GROOVED, 3/16" x 1 1/2", Type E, Hardened
29		9706679		3	WASHER, .798" x 1.25" x .135" Thk, HDN
30		80702		6	WASHER, 3/8"

29.200.05	01	p1	05/09

BOOM & BUCKET HAND CONTROL, TUNNEL COMPONENTS

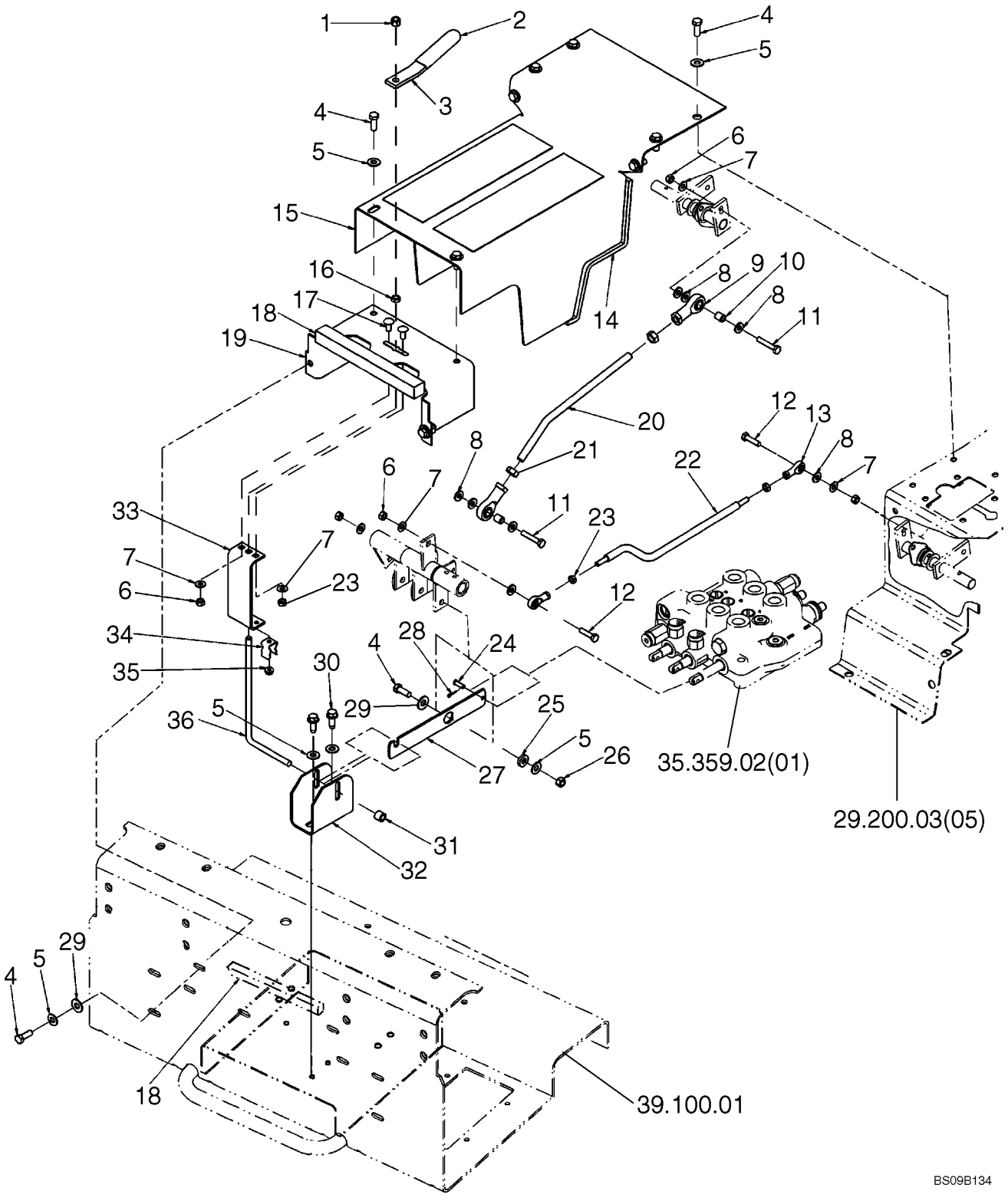

BOOM & BUCKET HAND CONTROL, TUNNEL COMPONENTS

REF	FN	PART NUMBER	YR/SN	QTY	DESCRIPTION
1		88902		1	NUT, LOCK, 3/8"-16, GC
2		219838		1	HANDLE GRIP
3		87458277		1	HANDLE
4		88206		11	BOLT, Hex, 3/8"-16 x 1", G5, Full Thd
5		140045		13	WASHER, BELLEVILLE, M10
6		9635082		6	NUT, 5/16"-18, G5
7		322358		6	WASHER, BELLEVILLE, M8
8		252687		8	WASHER, .344" x 1" x .098", HDN
9		86582884		2	BEARING, SPHERICAL, 1/2" Threads
10		86582886		2	SPACER
11		9707515		2	BOLT, Hex, 5/16"-18 x 1 3/4", G5
12		87657		2	BOLT, Hex, 5/16"-18 x 1 1/4", G5
13		221665		2	ROD, ADJUSTMENT, End, 5/16" Threads
14		291308		AR	STRIP, SEALING, 2.6 ft Required
15		86633166		1	COVER
16		86509499		1	NUT, Jam, 3/8"-16, G2
17		280497		2	BOLT, CARRIAGE, Short NK, 5/16"-18 x 3/4", G5, Full Thd
18		291355		AR	PAD, Strip, Foam
19		86634711		1	BRACKET
20		86582885		1	ROD, 1/2" Threaded Ends
21		87309		2	NUT, Jam, 1/2"-20, G2
22		86522448		1	ROD
23		87307		2	NUT, Jam, 5/16"-24, G2
24		234726		1	PIN, CLEVIS, 1/4" x .770"
25		641419		1	WASHER, .406" x .875" x .185", HT
26		9628503		1	NUT, 3/8"-16, G5
27		86506174		1	LINK
28		81858		1	PIN, SPLIT (COTTER), 1/16" x 1/2"
29		80702		3	WASHER, 3/8"
30		280476		2	SCREW, SELF TAPPING, Hex Wash Hd, 3/8" x 1"
31		254146		1	SPACER
32		87591081		1	BRACKET, One Angled Side, One Rounded Side
33		87030898		1	BRACKET, 143 mm Wide
34		163902		1	CLIP, SPRING

29.200.05	01	p2	05/09

BOOM & BUCKET HAND CONTROL, TUNNEL COMPONENTS

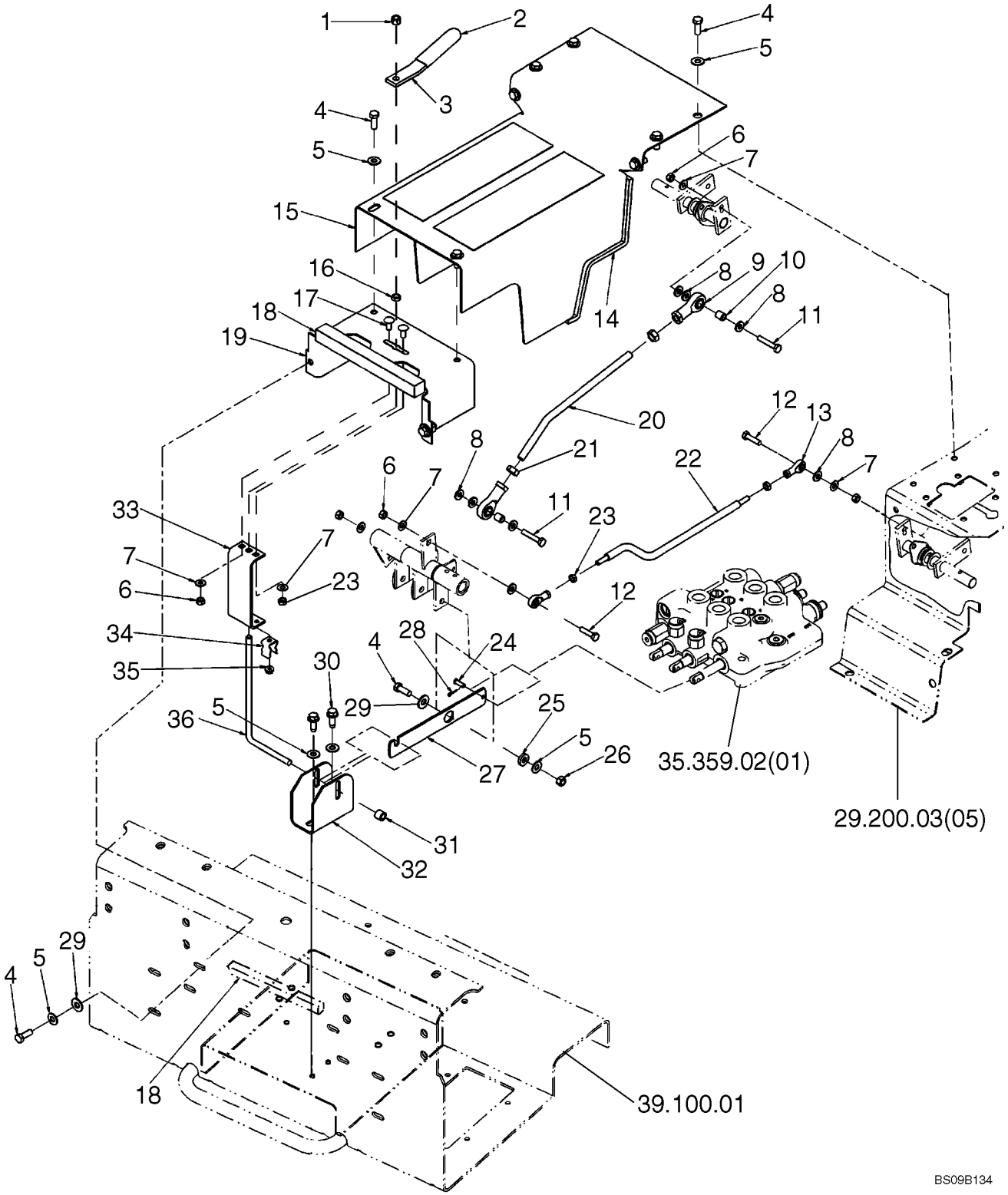

BOOM & BUCKET HAND CONTROL, TUNNEL COMPONENTS

REF	FN	PART NUMBER	YR/SN	QTY	DESCRIPTION
35		523282		1	NUT, Flg, USR, 1/4"-20
36		87536437		1	ROD

29.200.05	02	p1	03/09

HAND CONTROL - TUNNEL COMPONENTS, PILOT CONTROL

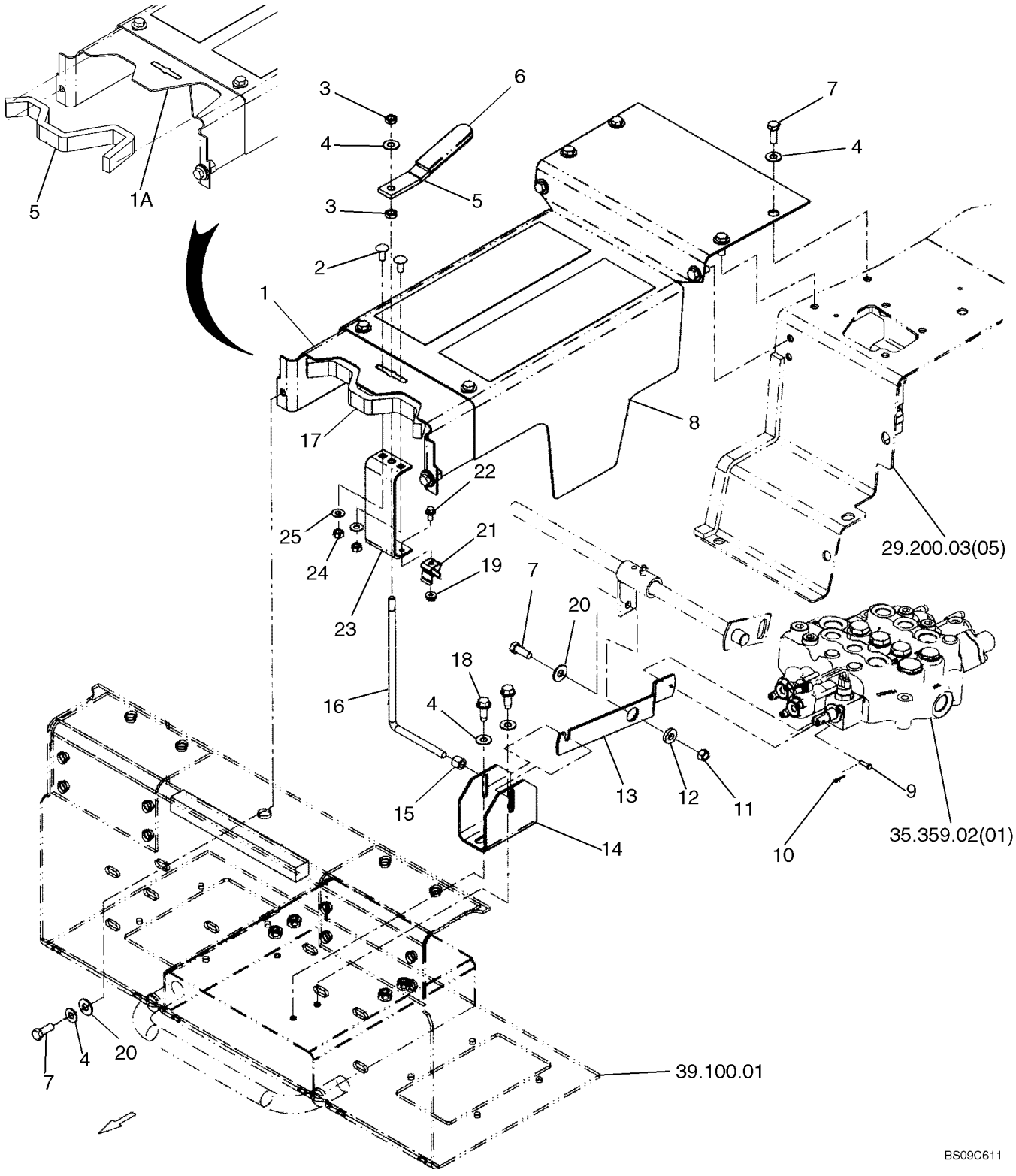

HAND CONTROL - TUNNEL COMPONENTS, PILOT CONTROL

REF	FN	PART NUMBER	YR/SN	QTY	DESCRIPTION
1		86634711		1	BRACKET, If Used
1A		87708382		1	BRACKET, If Used
2		280497		2	BOLT, CARRIAGE, Short NK, 5/16"-18 x 3/4", G5, Full Thd
3		86509499		2	NUT, Jam, 3/8"-16, G2
4		140045		13	WASHER, BELLEVILLE, M10
5		87458277		1	HANDLE
6		219838		1	HANDLE GRIP
7		88206		11	BOLT, Hex, 3/8"-16 x 1", G5, Full Thd
8		86633166		1	COVER, Incl Anti Skid Strip 263636
8A		263636		AR	STRIP, ANTI-SKID, 4 x 55"; (2) Strips 4 x 13 Required
9		87033644		1	PIN, CLEVIS, 3/16" x .719"
10		280236		1	PIN, SPLIT (COTTER), 1/16" x 1/2"
11		9628503		1	NUT, 3/8"-16, G5
12		641419		1	WASHER, .406" x .875" x .185", HT
13		87536438		1	VALVE
14		87536436		1	BRACKET, Two Angled Sides; If Used
14		87591081		1	BRACKET, One Angled Side, One Rounded Side; If Used
15		254146		1	SPACER
16		87536437		1	ROD
17		291355		1	PAD, 2.0 Ft., Cut to Length
18		280476		2	SCREW, SELF TAPPING, Hex Wash Hd, 3/8" x 1"
19		523282		1	NUT, Flg, USR, 1/4"-20
20		80702		3	WASHER, 3/8"
21		163902		1	CLIP, SPRING
22		523291		1	BOLT, Hex Flg, 1/4"-20 x 1/2", Serr
23		87030898		1	BRACKET
24		9635082		2	NUT, 5/16"-18, G5
25		322358		2	WASHER, BELLEVILLE, M8

29.200.05	04	p1	03/09

TUNNEL COMPONENTS, PILOT CONTROL

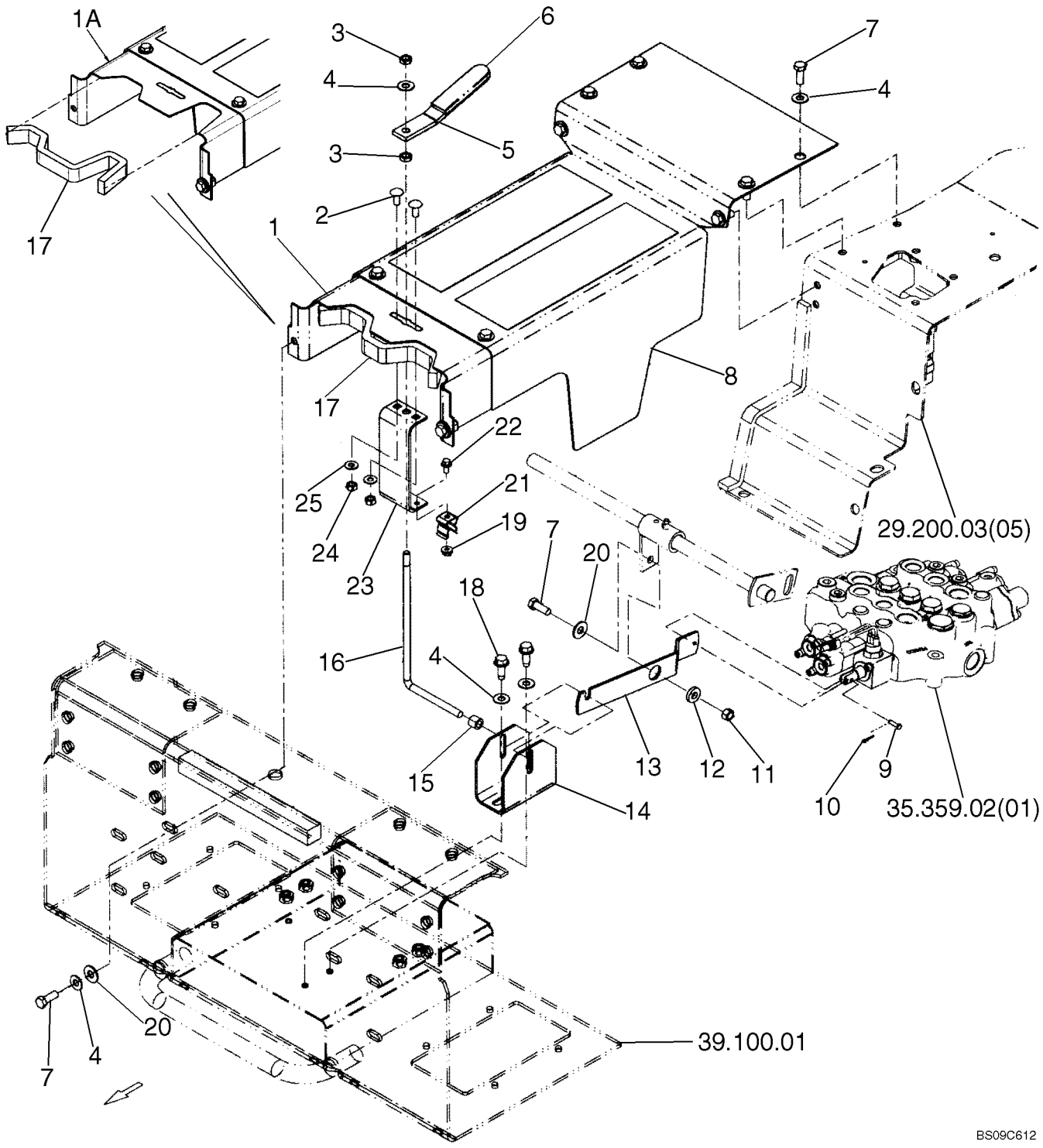

TUNNEL COMPONENTS, PILOT CONTROL

REF	FN	PART NUMBER	YR/SN	QTY	DESCRIPTION
1		86634711		1	BRACKET, If Used
1A		87708382		1	BRACKET, If Used
2		280497		2	BOLT, CARRIAGE, Short NK, 5/16"-18 x 3/4", G5, Full Thd
3		86509499		2	NUT, Jam, 3/8"-16, G2
4		140045		13	WASHER, BELLEVILLE, M10
5		87458277		1	HANDLE
6		219838		1	HANDLE GRIP
7		88206		11	BOLT, Hex, 3/8"-16 x 1", G5, Full Thd
8		86633166		1	COVER, Incl Anti Skid Strip 263636
8A		263636		AR	STRIP, ANTI-SKID, 4 x 55"; (2) Strips 4 x 13 Required
9		87033644		1	PIN, CLEVIS, 3/16" x .719"
10		280236		1	PIN, SPLIT (COTTER), 1/16" x 1/2"
11		9628503		1	NUT, 3/8"-16, G5
12		641419		1	WASHER, .406" x .875" x .185", HT
13		87536438		1	VALVE
14		87536436		1	BRACKET, Replaces 86506171; Two Angled Sides; If Used
14		87591081		1	BRACKET, One Angled Side, One Rounded Side; If Used
15		254146		1	SPACER
16		87536437		1	ROD
17		291355		1	PAD, 2.0 Ft., Cut to Length
18		280476		2	SCREW, SELF TAPPING, Hex Wash Hd, 3/8" x 1"
19		523282		1	NUT, Flg, USR, 1/4"-20
20		80702		3	WASHER, 3/8"
21		163902		1	CLIP, SPRING
22		523291		1	BOLT, Hex Flg, 1/4"-20 x 1/2", Serr
23		87030898		1	BRACKET
24		9635082		2	NUT, 5/16"-18, G5
25		322358		2	WASHER, BELLEVILLE, M8

29.200.05	05	p1	03/09

TUNNEL COMPONENTS - MODELS WITH PILOT CONTROL, EH AUX CONTROL

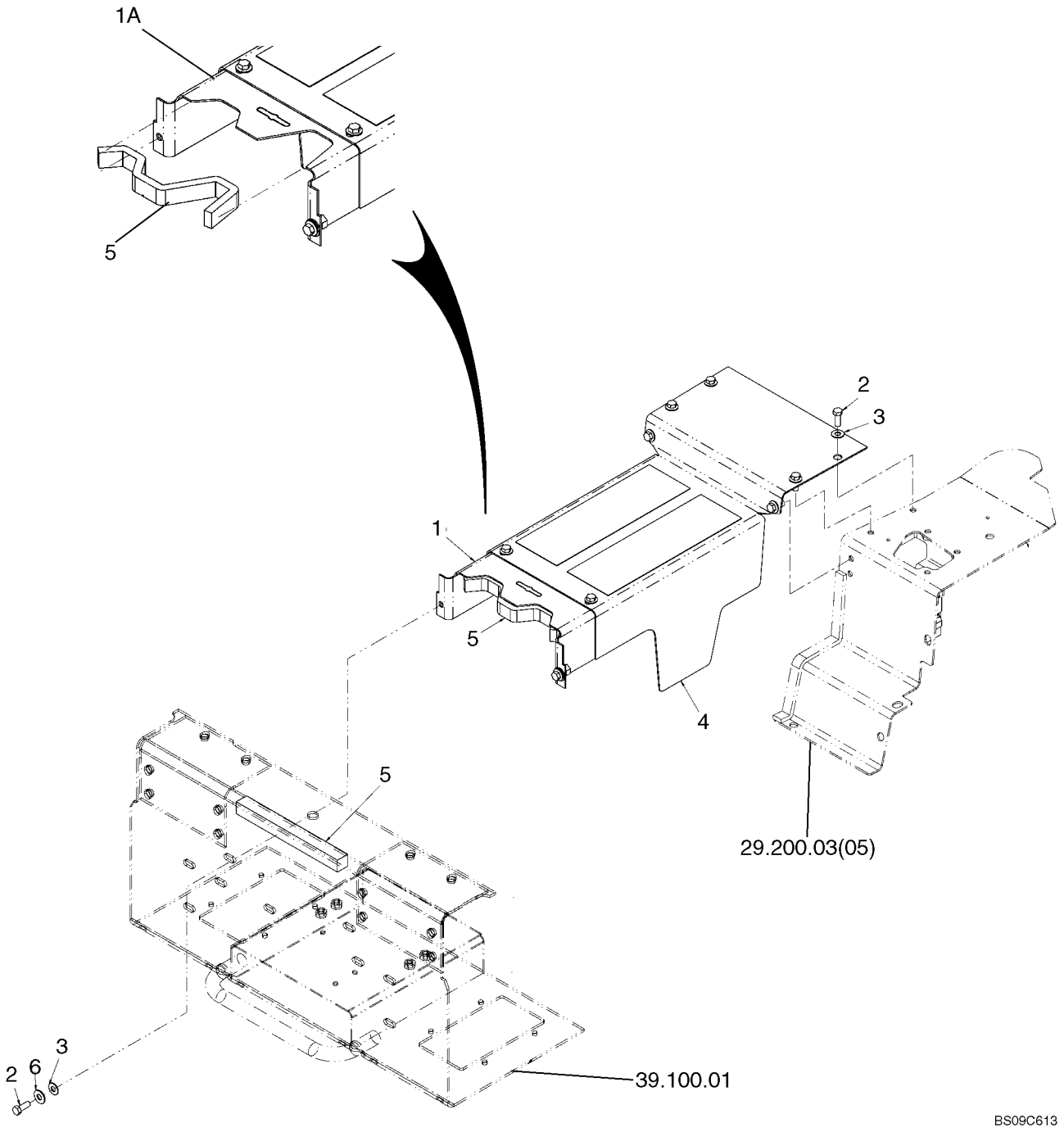

TUNNEL COMPONENTS - MODELS WITH PILOT CONTROL, EH AUX CONTROL

REF	FN	PART NUMBER	YR/SN	QTY	DESCRIPTION
1		86634711		1	BRACKET, If Used
1A		87708382		1	BRACKET, If Used
2		88206		10	BOLT, Hex, 3/8"-16 x 1", G5, Full Thd
3		140045		10	WASHER, BELLEVILLE, M10
4		86633166		1	COVER, Incl Anti Skid Strip 263636
4A		263636		AR	STRIP, ANTI-SKID, 4 x 55"; (2) Strips 4 x 13 Required
5		291355		AR	PAD, 2 FT Required
6		80702		2	WASHER, 3/8"

29.200.06	01	p1	03/09

PEDALS - MODELS WITH PILOT CONTROL

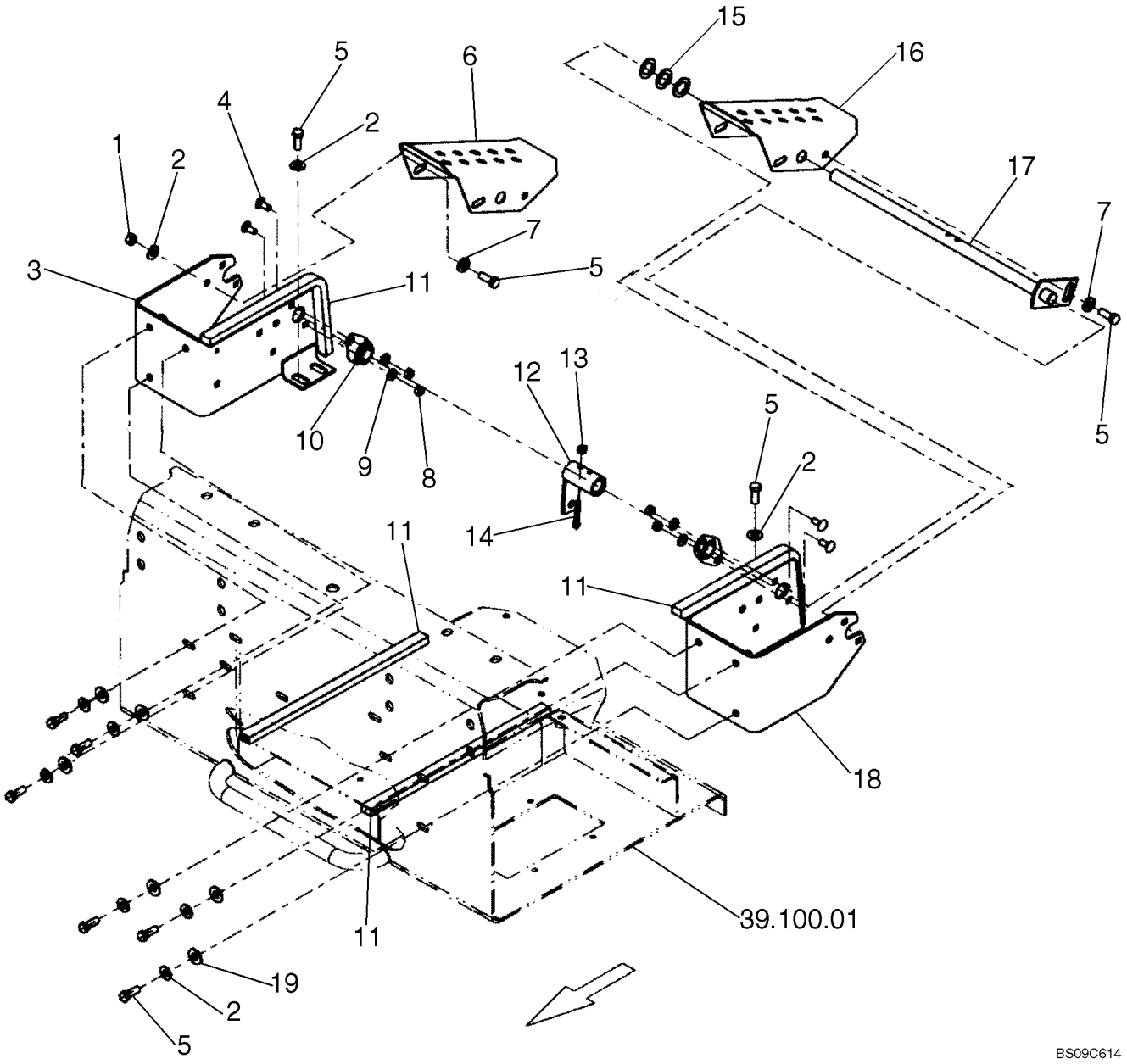

PEDALS - MODELS WITH PILOT CONTROL

REF	FN	PART NUMBER	YR/SN	QTY	DESCRIPTION
1		9628503		1	NUT, 3/8"-16, G5
2		140045		9	WASHER, BELLEVILLE, M10
3		86639934		1	BRACKET, RH
4		280327		4	BOLT, CARRIAGE, Short NK, 5/16"-18 x 3/4", G5
5		88206		10	BOLT, Hex, 3/8"-16 x 1", G5, Full Thd
6		86573062		1	PEDAL
7		285072		2	WASHER, M10 x 22.2 x 2.87 Thk, HT
8		9635082		4	NUT, 5/16"-18, G5
9		322358		4	WASHER, BELLEVILLE, M8
10		86567251		2	BEARING, FLANGED
11		291308		1	STRIP, SEALING, Cut To Length, 5 ft. Required
12		86522404		1	HUB
13		20356		1	NUT, LOCK, 1/4"-20, GB
14		86979755		1	SCREW, Hex Soc Hd, 1/4"-20 x 1 1/2"
15		249100		3	WASHER, 25/32" x 1 1/4" x .06" Thk
16		9622462		1	PEDAL
17		86573063		1	SHAFT
18		86639936		1	BRACKET, LH
19		80702		6	WASHER, 3/8"

29.200.06	02	p1	05/09

PEDALS - MODELS WITH PILOT CONTROL, EH AUX CONTROL

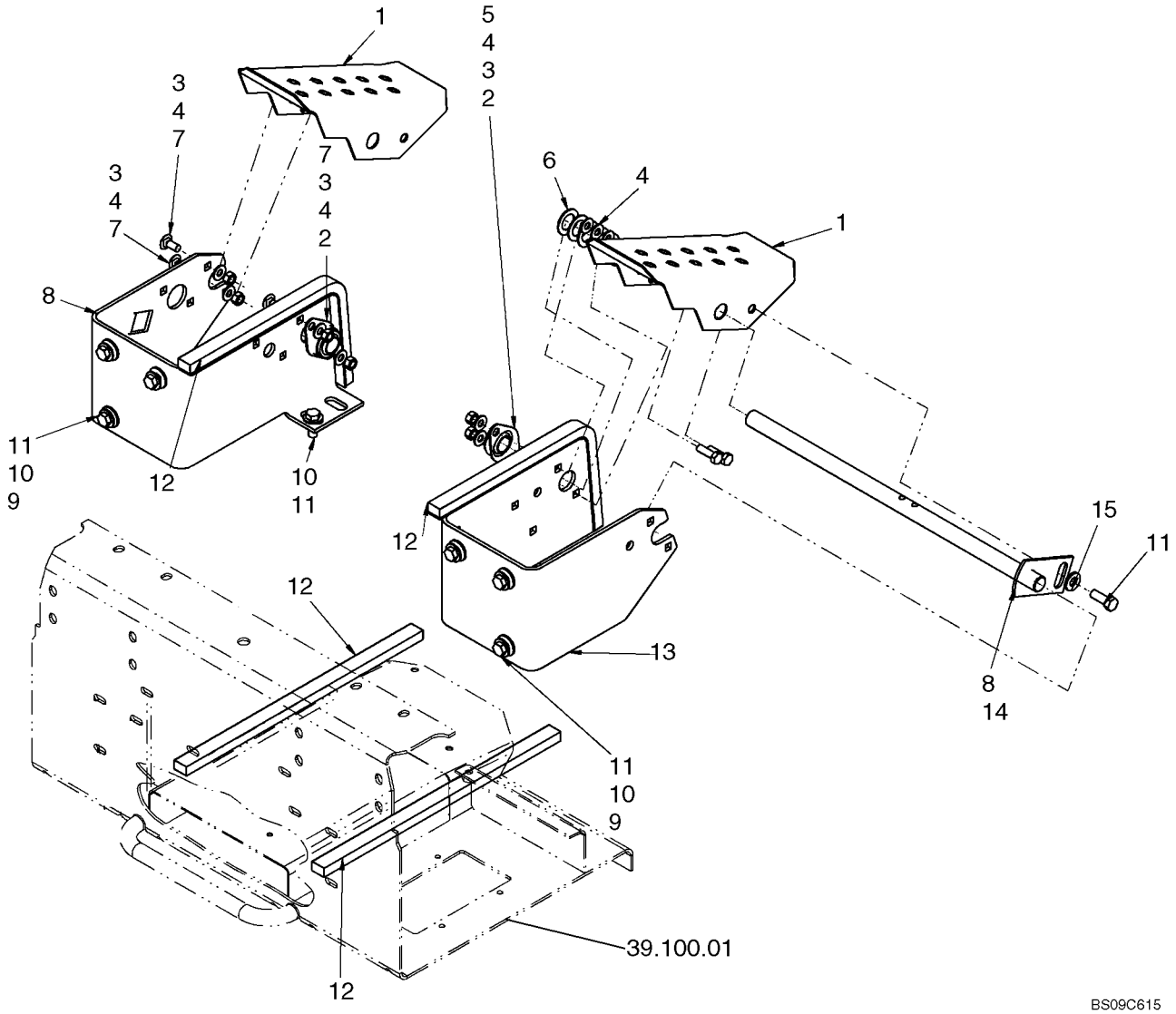

PEDALS - MODELS WITH PILOT CONTROL, EH AUX CONTROL

REF	FN	PART NUMBER	YR/SN	QTY	DESCRIPTION
1		87550553		2	PEDAL
2		86567251		2	BEARING, FLANGED, Side
3		9635082		6	NUT, 5/16"-18, G5
4		322358		12	WASHER, BELLEVILLE, M8
5		9635884		2	BOLT, Hex, 5/16"-18 x 1", G5, Full Thd
6		249100		5	WASHER, 25/32" x 1 1/4" x .06" Thk
7		280327		4	BOLT, CARRIAGE, Short NK, 5/16"-18 x 3/4", G5
8		87557968		1	BRACKET, RH
9		80702		6	WASHER, 3/8"
10		140045		8	WASHER, BELLEVILLE, M10
11		88206		9	BOLT, Hex, 3/8"-16 x 1", G5, Full Thd
12		291308		AR	STRIP, SEALING, 5 Ft Required
13		86639936		1	BRACKET, Bracket, LH
14		86573063		1	SHAFT
15		285072		1	WASHER, M10 x 22.2 x 2.87 Thk, HT

29.200.07	01	p1	05/09

HANDLES - CONTROL

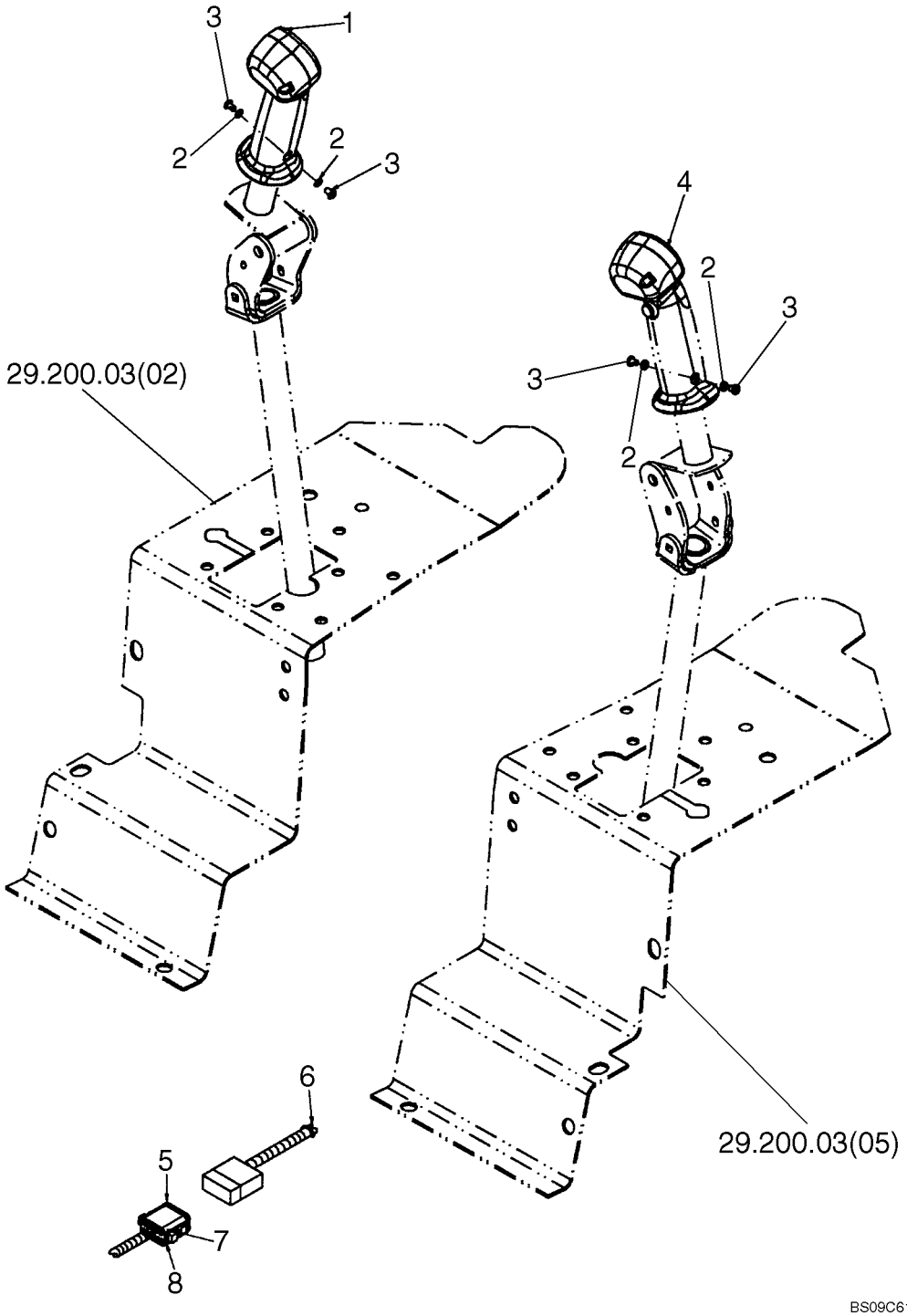

HANDLES - CONTROL

REF	FN	PART NUMBER	YR/SN	QTY	DESCRIPTION
1		87353688		1	HANDLE, No Switches
2		80684		4	WASHER, LOCK, #10
3		87365342		4	SCREW, HEX SOC #10-32 x 5/16 BH AST ZND; If Used
3		87742596		4	SCREW, HEX SOC, Locking, #10-32 x 5/16", ScotchGrip; If Used
4		{}		1	See Fig. 29.200.07 [02]
5		86593899		1	WEDGE
6		263117		6	STRAP, CABLE, .14" x 11 1/2", Fastened to Chassis Harness
7		900367		10	TERMINAL
8		86593898		1	CONNECTOR, ELEC

29.200.07	02	p1	05/09

HANDLE, CONTROL

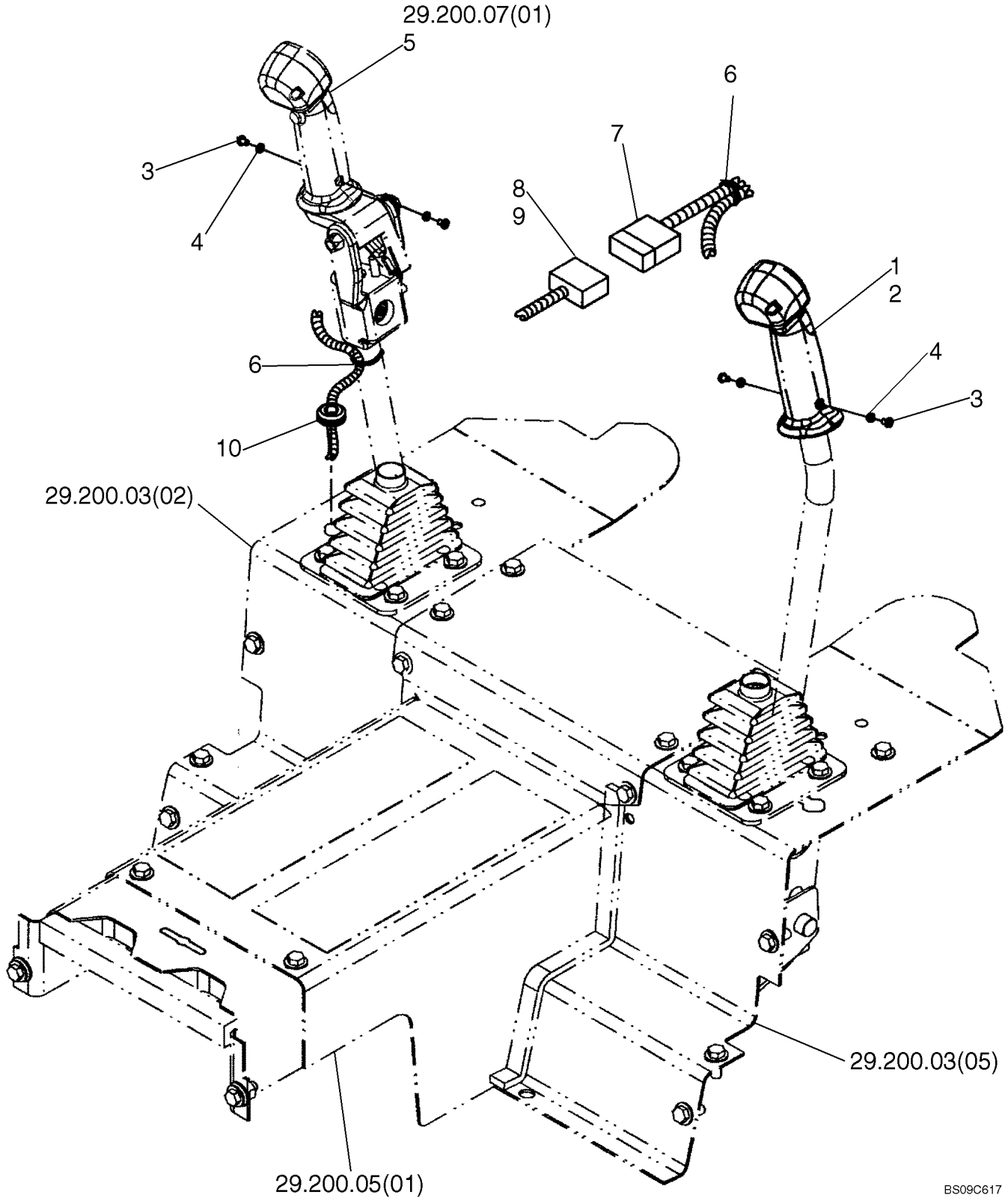

HANDLE, CONTROL

REF	FN	PART NUMBER	YR/SN	QTY	DESCRIPTION
		{}			See Figures 29.200.01, 29.200.01 [02]
1		87353688		1	HANDLE, Control Handle, No Switches; Incl. Screws 86837247
2		86837247		2	SCREW, #4-40 x 1 1/2", w/LW, Faceplate
3		87365342		4	SCREW, Hex Hd #10 x .312
4		80684		4	WASHER, LOCK, #10
5		{}			See Figure 29.200.07 [01]
6		263117		6	STRAP, CABLE, .14" x 11 1/2"
7		86588791		1	HARNESS, WIRE
8		86593899		1	WEDGE, Switch Hole
9		86593898		1	CONNECTOR, ELEC
9A		900367		1	TERMINAL, Use with Ref 8, 9; Not Illustrated
10		174266		1	GROMMET

29.200.07	03	p1	05/09

HANDLE, CONTROL

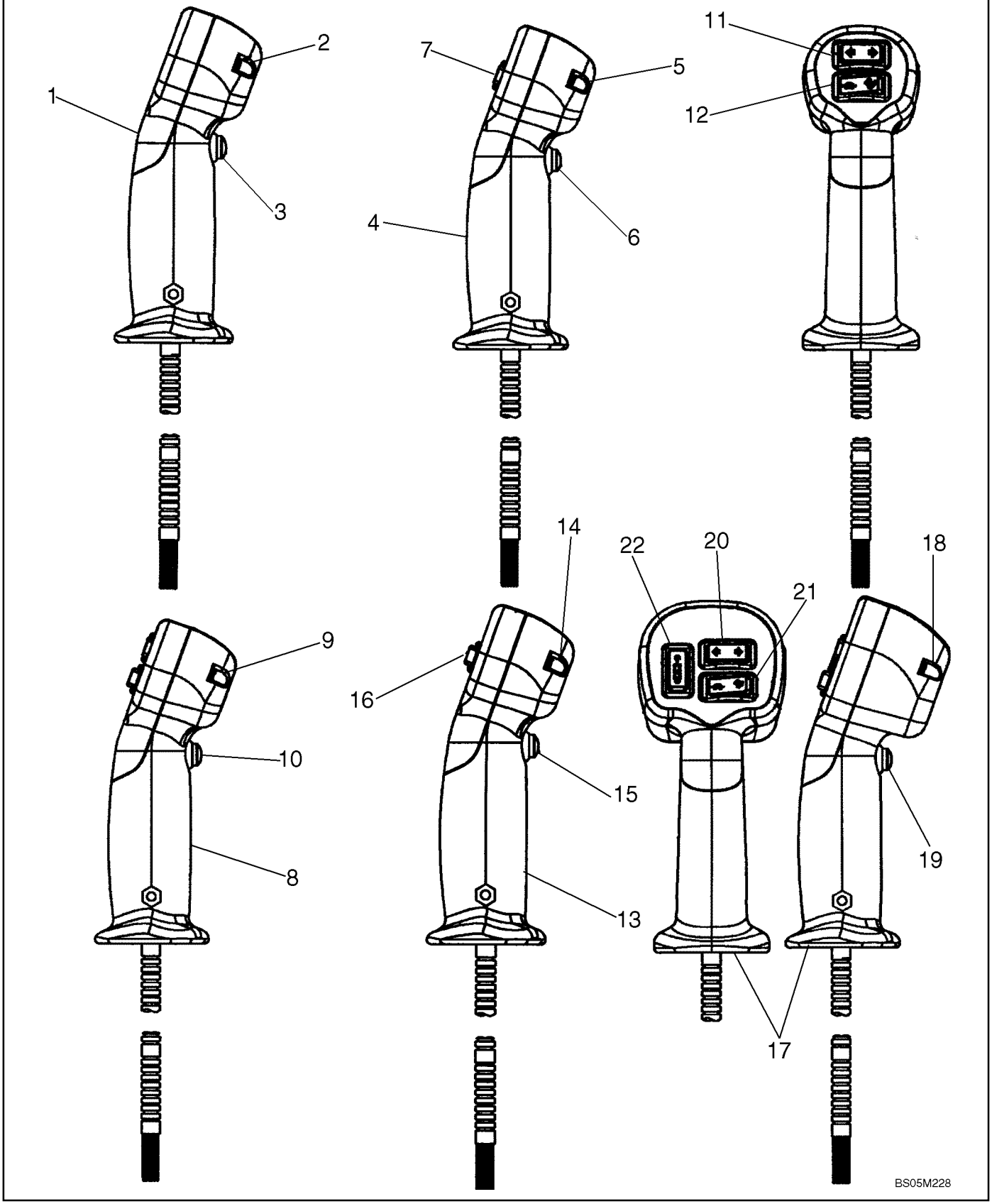

HANDLE, CONTROL

REF	FN	PART NUMBER	YR/SN	QTY	DESCRIPTION
1		87353708		1	HANDLE, Control, Horn; Incl. 2, 3
2		86837247		2	SCREW, #4-40 x 1 1/2", w/LW, Faceplate
3		87427352		1	SWITCH, Horn
4		87353710		1	HANDLE, Control, Horn, Turn Signal; Incl. 5 - 7
5		86837247		2	SCREW, #4-40 x 1 1/2", w/LW, Faceplate
6		87427352		1	SWITCH, Horn
7		87427353		1	SWITCH, Turn Signal
8		87353711		1	HANDLE, Control, RH; Horn, Turn Signal, Two Speed; Incl. 9 - 16
9		86837247		2	SCREW, #4-40 x 1 1/2", w/LW, Faceplate
10		87427352		1	SWITCH, Horn
11		87427353		1	SWITCH, Turn Signal
12		87447407		1	SWITCH, Two Speed
13		87353709		1	HANDLE, Control, Two Speed; Incl. 14 - 16
14		86837247		2	SCREW, #4-40 x 1 1/2", w/LW, Faceplate
15		87427352		1	SWITCH, Horn
16		87447407		1	SWITCH, Two Speed
17		87353712		1	HANDLE, Control, RH; Horn, Turn Signal, Two Speed; Secondary Auxiliary; Incl. 18 - 22
18		86837247		2	SCREW, #4-40 x 1 1/2", w/LW, Faceplate
19		87427352		2	SWITCH, Horn
20		87427353		1	SWITCH, Turn Signal
21		87447407		1	SWITCH, Two Speed
22		87427686		1	SWITCH, Rocker, M-O-M 2; Secondary Auxiliary

29.200.07	04	p1	05/09

HANDLE

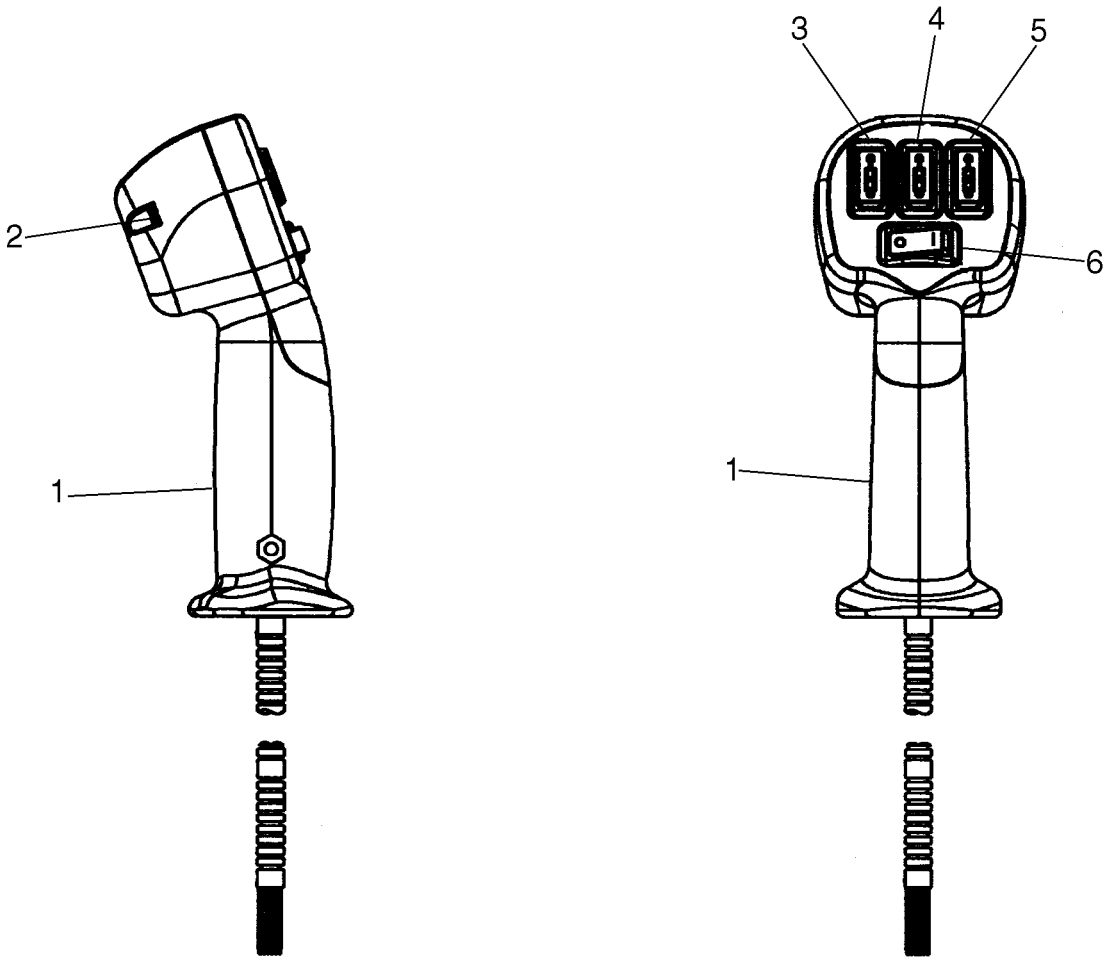

HANDLE

REF	FN	PART NUMBER	YR/SN	QTY	DESCRIPTION
1		87353713		1	HANDLE, Control, Incl. 2 - 6
2		86837247		2	SCREW, #4-40 x 1 1/2", w/LW, Faceplate
3		87427685		1	SWITCH, Hyd M-O-M
4		87427686		1	SWITCH, Hyd M-O-M
5		87427687		1	SWITCH, Hyd M-O-M
6		87427688		1	SWITCH, Hyd O-D
		{}			See Figure 29.200.07 [02] For Connector

29.200.07	05	p1	05/09

HANDLES, CONTROL - MODELS WITH PILOT CONTROL

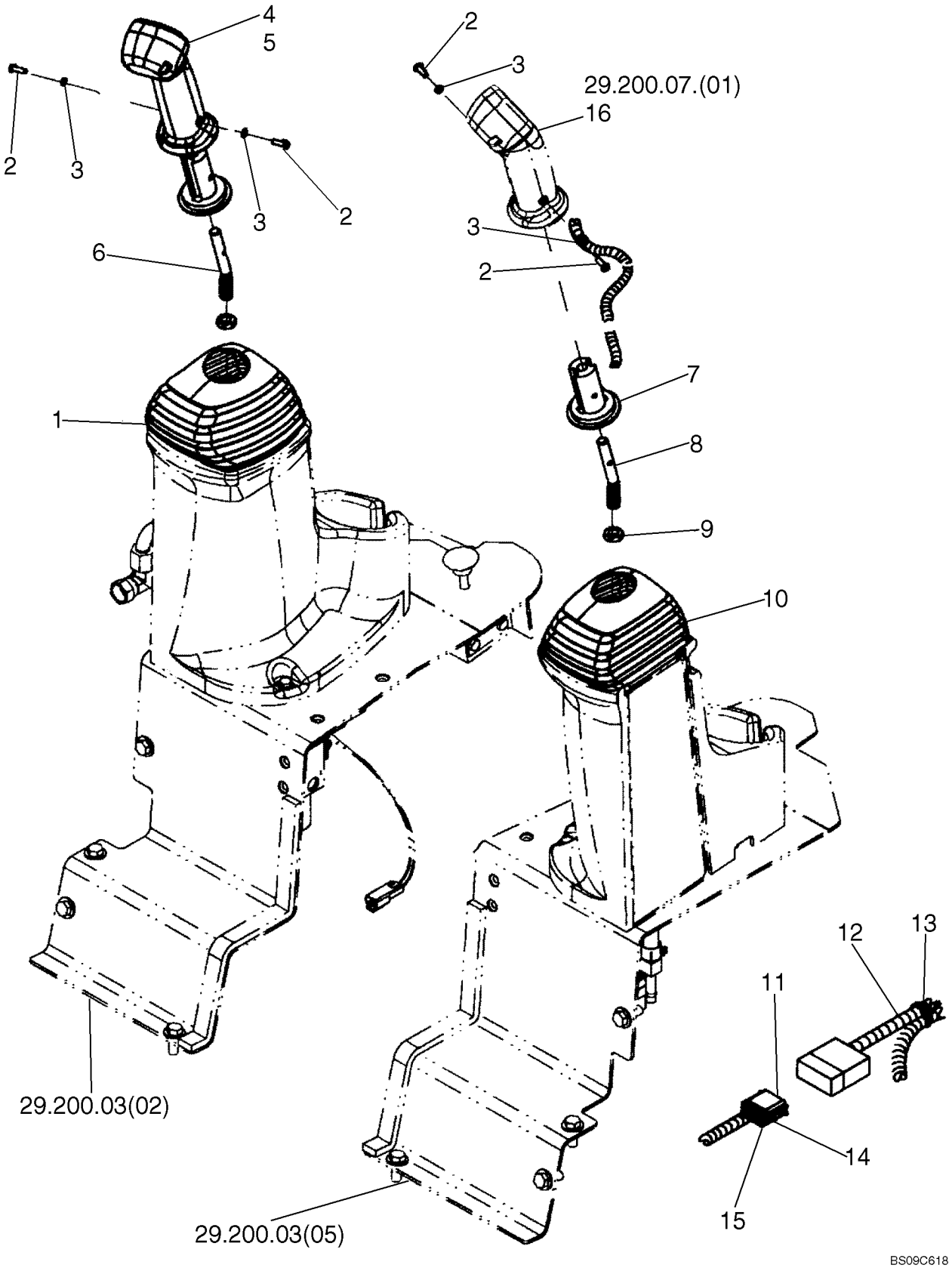

HANDLES, CONTROL - MODELS WITH PILOT CONTROL

REF	FN	PART NUMBER	YR/SN	QTY	DESCRIPTION
1		87357221		1	BOOT, RH Pilot
2		87534744		4	FASTENER, Hex Soc #10-32 x 5/8 BH AST ZND; If Used
2		87742597		4	SCREW, HEX SOC, Locking, #10-32 x 5/8", Scotchgrip; If Used
3		80684		4	WASHER, LOCK, #10
4		87353688		1	HANDLE, No Switches
5		86837247		1	SCREW, #4-40 x 1 1/2", w/LW
6		87527963		1	ROD, 15 Deg. Bend; If Used
6		87619017		1	ROD, 20 Deg. Bend; If Used
7		87527964		2	ADAPTER
8		87527962		1	ROD, 15 Deg. Bend; If Used
8		87619016		1	ROD, 20 Deg. Bend; If Used
9		323238		2	NUT, Thin, M12 x 1.75, Cl 05
10		87357222		1	BOOT, LH Pilot
11		86593898		1	CONNECTOR, ELEC
12		87525075		1	HARNESS, WIRE, Control Handle Adapter
13		263117		6	STRAP, CABLE, .14" x 11 1/2"
14		900367		10	TERMINAL
15		86593899		1	WEDGE
16		87353688		1	HANDLE, See Fig. 29.200.07 [01] - Ref. 1

29.200.07	06	p1	05/09

HANDLES - CONTROL, MODELS WITH PILOT CONTROL, EH AUX CONTROL

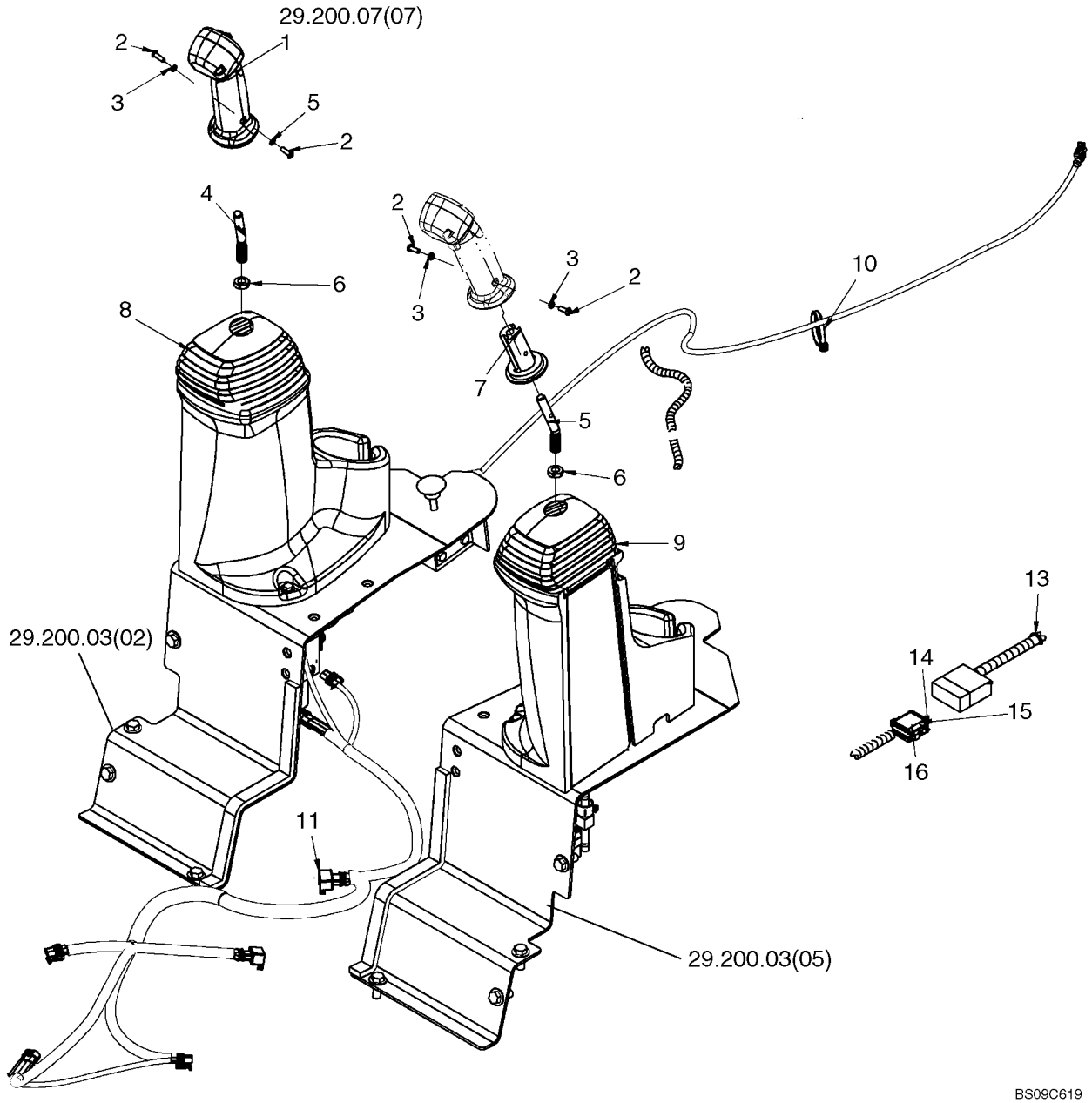

HANDLES - CONTROL, MODELS WITH PILOT CONTROL, EH AUX CONTROL

REF	FN	PART NUMBER	YR/SN	QTY	DESCRIPTION
1		87663138		1	HANDLE, See Fig. 29.200.07 [07]
2		87534744		4	FASTENER, Hex Soc #10-32 x 5/8 BH AST ZND; If Used
2		87742597		4	SCREW, HEX SOC, Locking, #10-32 x 5/8", Scotchgrip; If Used
3		80684		4	WASHER, LOCK, #10
4		87619016		1	ROD, 20 Deg. Bend
5		87619017		1	ROD, 20 Deg. Bend
6		323238		2	NUT, Thin, M12 x 1.75, Cl 05
7		87527964		2	ADAPTER, Adapter, Handle
8		87357221		1	BOOT, RH Pilot
9		87357222		1	BOOT, LH Pilot
10		529070		8	STRAP, CABLE, .30" x 14.5"
11		87674842		1	HARNESS, EH Aux
12		{}			Tunnel Components; See Figure 29.200.05 [02]
13		14560287		6	STRAP, 289mm lg, (Cable Tie)
14		86593898		1	CONNECTOR, ELEC, 12 Cavity Plug
15		900367		10	TERMINAL
16		86593899		1	WEDGE

HANDLES, MODELS WITH PILOT CONTROL, AUX CONTROL

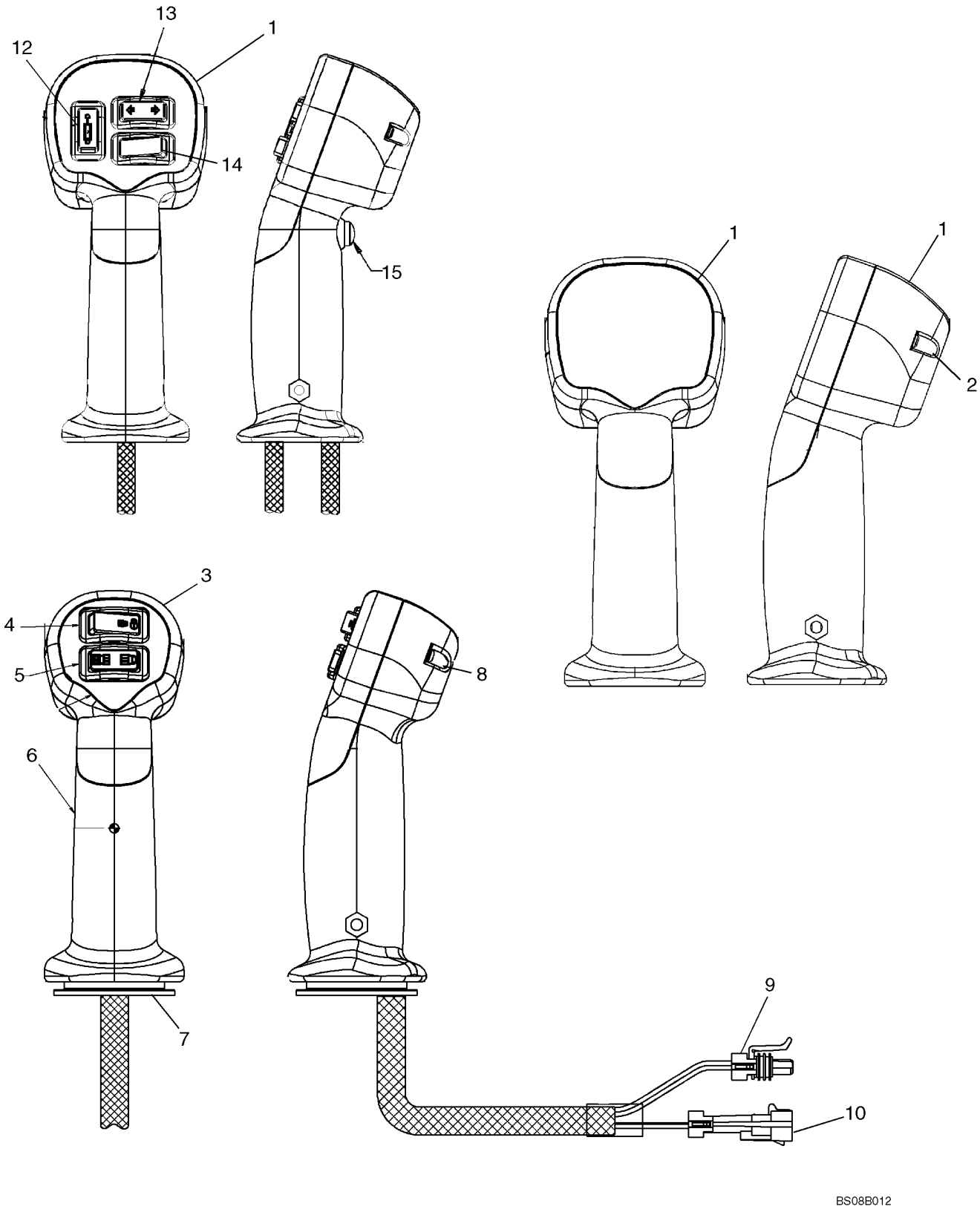

HANDLES, MODELS WITH PILOT CONTROL, AUX CONTROL

REF	FN	PART NUMBER	YR/SN	QTY	DESCRIPTION
1		87365501		1	HANDLE, Medium Universal Grip; Incl 2
2		86837247		2	SCREW, #4-40 x 1 1/2", w/LW
3		87663138		1	HANDLE, RH; Incl. 4- 10
4		87458601		1	SWITCH, Switch; Hydrodraulic Attachment On/Off
5		87440121		1	SWITCH, Switch; Hydrodraulic Attachment M-O-M
6		87582391		1	HANDLE, Base Handle
7		87527964		1	ADAPTER
8		86837247		2	SCREW, #4-40 x 1 1/2", w/LW
9		256342A1		1	CONNECTOR, ELEC
10		256341A1		1	CONNECTOR, ELEC
11		87353712		1	HANDLE, Incl 12 - 15
12		87427686		1	SWITCH, Secondary Aux Hyd Switch
13		87427353		1	SWITCH, Turn Signal
14		87447407		1	SWITCH, Two Speed
15		86837247		2	SCREW, #4-40 x 1 1/2", w/LW

29.200.07	10	p1	05/09

MULTI-FUNCTION HANDLE, LH

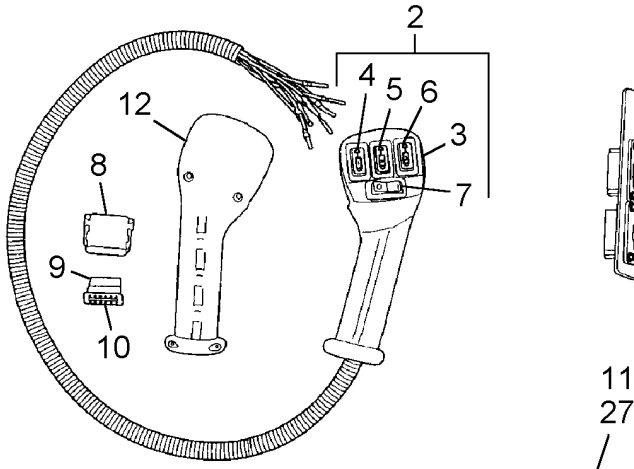

HANDLE

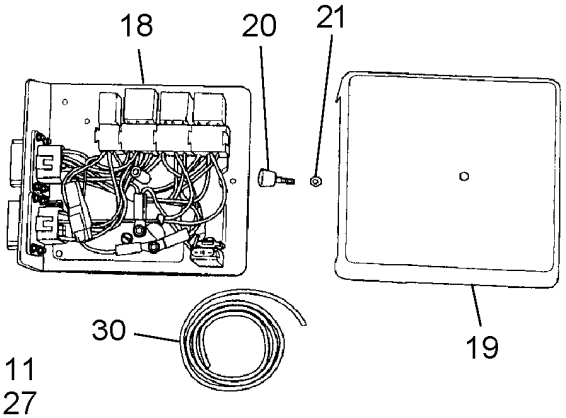

ELECTRICAL BOX

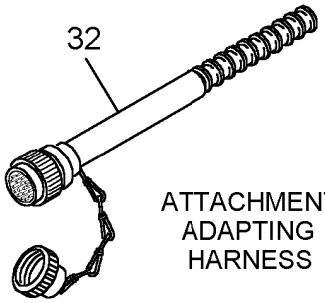

ATTACHMENT
ADAPTING
HARNESS

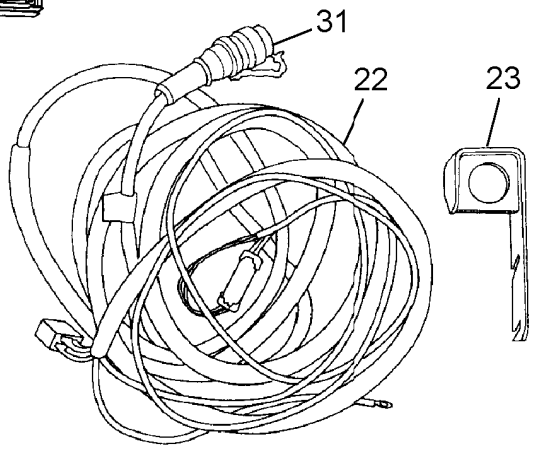

BOOM

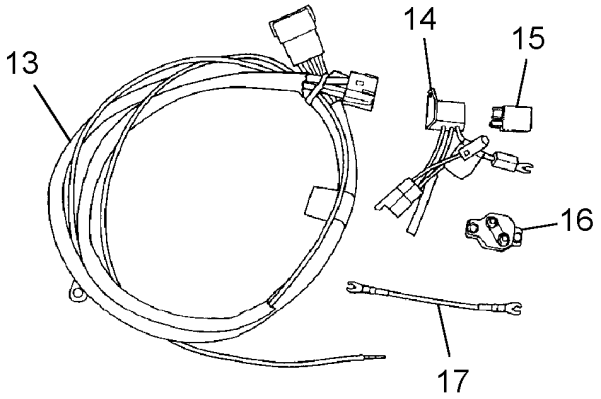

FUSE AND RELAY PANEL

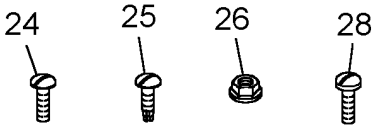



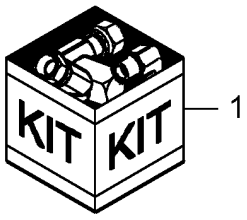

MULTI-FUNCTION HANDLE, LH

REF	FN	PART NUMBER	YR/SN	QTY	DESCRIPTION
1		87051252		1	KIT, LH Multi-function Handle, Incl. Ref. 2 - 31, 33
1		87375164		1	DIA, CONSTRUCTION, Kit; Left Hand Multi -function Handle; Incl. 2 - 11, 13 - 30, 33 - 38
		87051184		1	WIRE
2		86592190		1	HANDLE, Incl. Ref. 3 thru 11; No Longer Included In Kit; See Ref 36
3		86705679		1	HANDLE, Housing, Rear, LH; Uses #6-32 Screw 86511908
4		86592182		1	SWITCH, Double-acting Cylinder
5		86592183		1	SWITCH, Double-acting Cylinder
6		86592184		1	SWITCH, Cylinder or Motor Control
7		86592185		1	SWITCH, 2 Position, Double-Pole
8		86593897		1	CONNECTOR, WIRE, Green
9		86593899		1	WEDGE, Switch Hole
10		900367		1	TERMINAL, 12 Gauge
11		263117		1	STRAP, CABLE, .14" x 11 1/2"
12		86705680		1	HANDLE, Housing, Front, LH
13		86588788		1	HARNESS, WIRE
14		86589051		1	HARNESS, WIRE
15		86509590		1	RELAY, 20 Amp
16		9828493		1	CIRCUIT BREAKER, 20 Amp
17		86589222		1	HARNESS, WIRE
18		86595169		1	CONTROL UNIT, See Figure 29.200.05 [02]
19		9822597		1	COVER
20		273890		1	KNOB, Thumb
21		20332		1	NUT, LOCK, #10-32, GB
22		86588792		1	HARNESS, WIRE, Boom, Incl. Ref. 31
23		86593887		1	BRACKET
24		86511904		4	SCREW, Cross Pan Hd, #4-40 x 3/4"
24		86511908		4	SCREW, Cross Pan Hd, #6-32 x 3/4"
25		86500940		2	SCREW, SELF TAPPING, Hex Wash Hd, #10 x 3/4"
26		523282		3	NUT, Flg, USR, 1/4"-20
27		263117		24	STRAP, CABLE, .14" x 11 1/2"
28		84909		3	SCREW, Slotted Truss Hd, 1/4"-20 x 3/4"
29		174266		1	GROMMET

29.200.07	10	p2	05/09

MULTI-FUNCTION HANDLE, LH

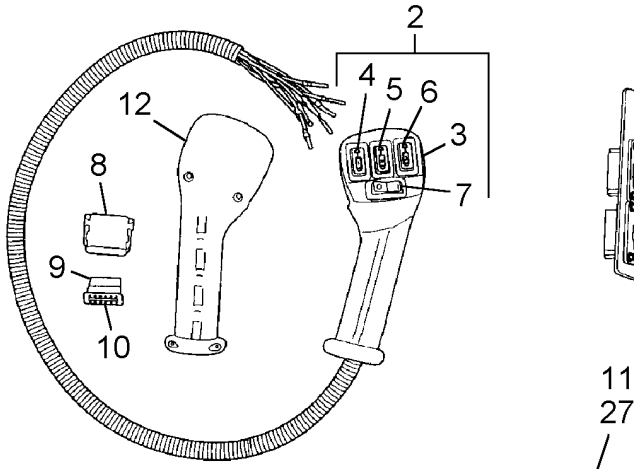

HANDLE

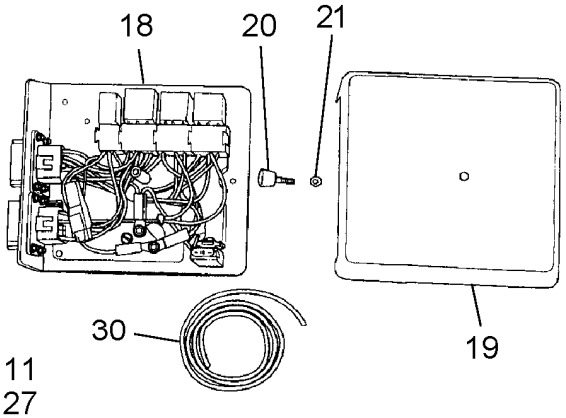

ELECTRICAL BOX

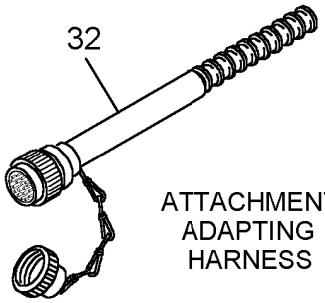

ATTACHMENT
ADAPTING
HARNESS

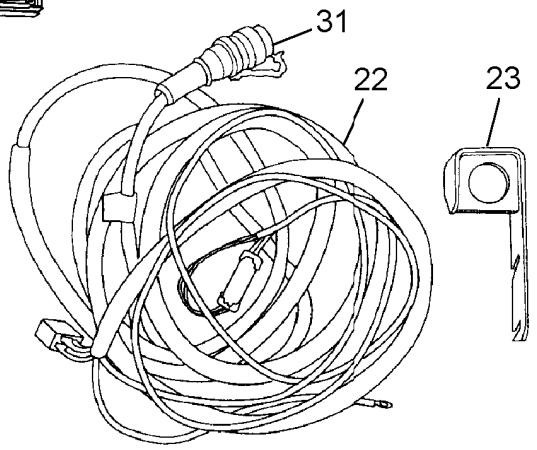

BOOM

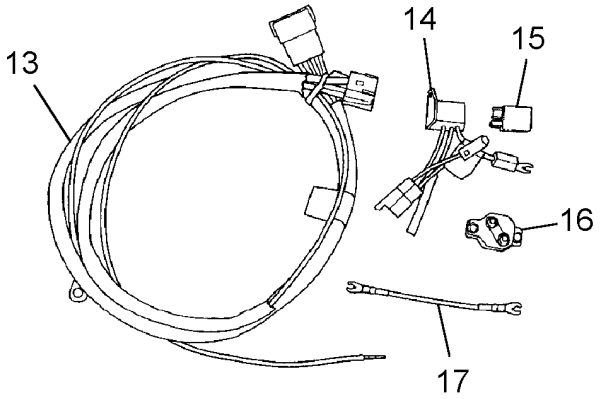

FUSE AND RELAY PANEL

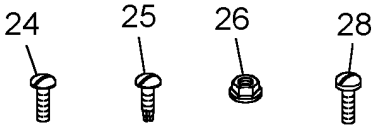



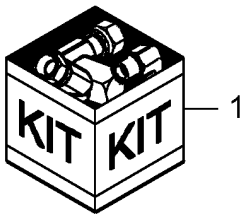

MULTI-FUNCTION HANDLE, LH

REF	FN	PART NUMBER	YR/SN	QTY	DESCRIPTION
30		291966		1	SUPPORT, Sealing Strip
31		86621909		1	CAP, Connector
32		86598366		1	HARNESS, WIRE, Attachment Adapting
33		87051184		1	WIRE, Not Illustrated
34		86593899		1	WEDGE, Not Illustrated
35		86593898		1	CONNECTOR, ELEC, Brown; Not Illustrated
36		87353713		1	HANDLE, Control; See Figure 29.200.07 [04]
37		87353712		1	HANDLE, Control; See Figure 29.200.07 [03]; No Longer Included In Kit
38		130235		1	GROMMET
		87051249		1	CONNECTOR, ELEC
		87051250		1	KIT, REPAIR, Electrical Connection Repair; Incl. Ref 31, 87051249, Terminals, Tool, and Instruction 787308

29.212.01	01	p1	07/09

HYDROSTATIC PUMP & MOTOR (IF USED, SEE REF 3)

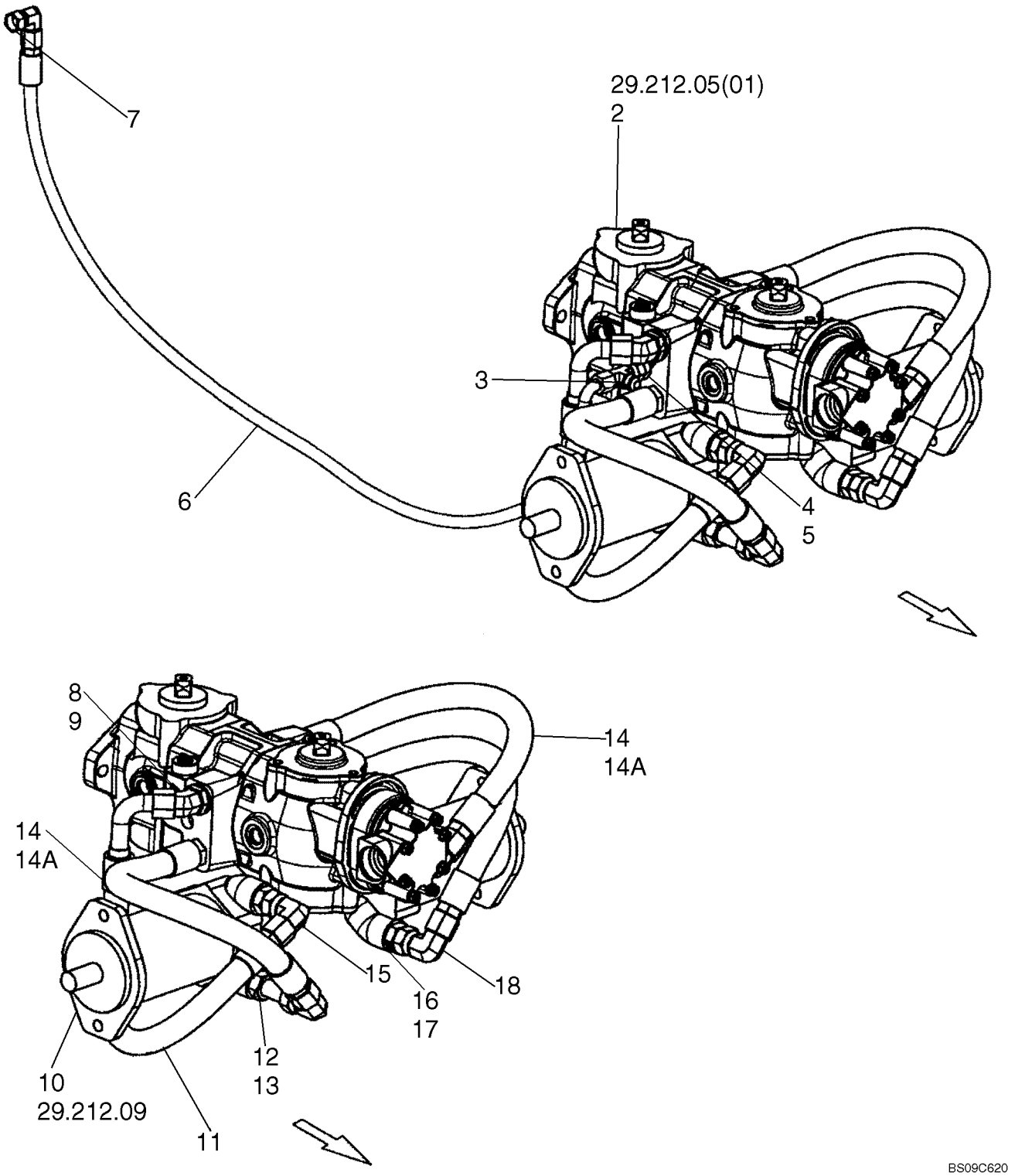

HYDROSTATIC PUMP & MOTOR (IF USED, SEE REF 3)

REF	FN	PART NUMBER	YR/SN	QTY	DESCRIPTION
1		86590563		1	PUMP, HYDRAULIC, Pump, Piston, B2B, Eaton p/n 78364-RBK-02; Also order Ref. 1B, 2 to complete Pump
		86567390		1	SUPPORT, Incl. In Ref. 1; Not Illustrated
1B		272310		1	O-RING, -042, 70 Duro, 3.239" ID x .070" Thk, Located Between Gear Pump And Piston Pump, Not Illustrated
2		86566182		1	PUMP, HYDRAULIC, Gear, Single, Eaton p/n 26000-917; L160, See Figure 29.212.05 [01]
2		86566183		1	PUMP, HYDRAULIC, Gear, Single, Eaton p/n 26000-918; L170, See Figure 29.212.05 [01]
2		86566184		1	PUMP, HYDRAULIC, Gear, Double, Hi-flow, Eaton p/n 26000-924; L160, See Figure 29.212.05 [01]
2		86566185		1	PUMP, HYDRAULIC, Gear, Double, Hi-flow, Eaton p/n 26000-916; L170, See Figure 29.212.05 [01]
3		86511870		1	TEE, 37º, 3/4"-16 x 3/4"-16, Fem Sw Run, If Used; Used With Ref 4, 128818
4		128818		1	CONNECTOR, HYD., 3/4"-16, 37º x 3/4"-16, O-Ring, Incl 5; If Used
4		265808		1	TEE, 3/4"-16, 37º x 3/4"-18, O-Ring Run, Incl 5; If Used; Replaces 86511870 And 128818 In This Application
5		128825		1	O-RING, 8-1, 90 Duro, .644" ID x .087" Thk
6		9804686		1	HOSE, Standard
7		248974		1	ELBOW, 90º, 3/4"-16, 37º x 3/4"-16, 37º Fem Sw
8		330344		1	ELBOW, 45º, 1 1/16"-12 x 1 1/16"-12, O-Ring, Incl. Ref 9; If Used
8		219605		1	ELBOW, 45º, 1 1/16"-12, 37º x 1 1/16"-12, 37º Fem Sw, If Used
9		167266		1	O-RING, 12-1, 90 Duro, .924 ID x .116" Thk
10		9842194		2	MOTOR, HYDRAULIC, See Figure 29.212.09
11		9846473		1	HOSE
12		86513067		1	CONNECTOR, HYD., 1 1/16"-12, 37º x 1 1/16"-12, Pipe, Incl. Ref. 13
13		167266		1	O-RING, 12-1, 90 Duro, .924 ID x .116" Thk

HYDROSTATIC PUMP & MOTOR (IF USED, SEE REF 3)

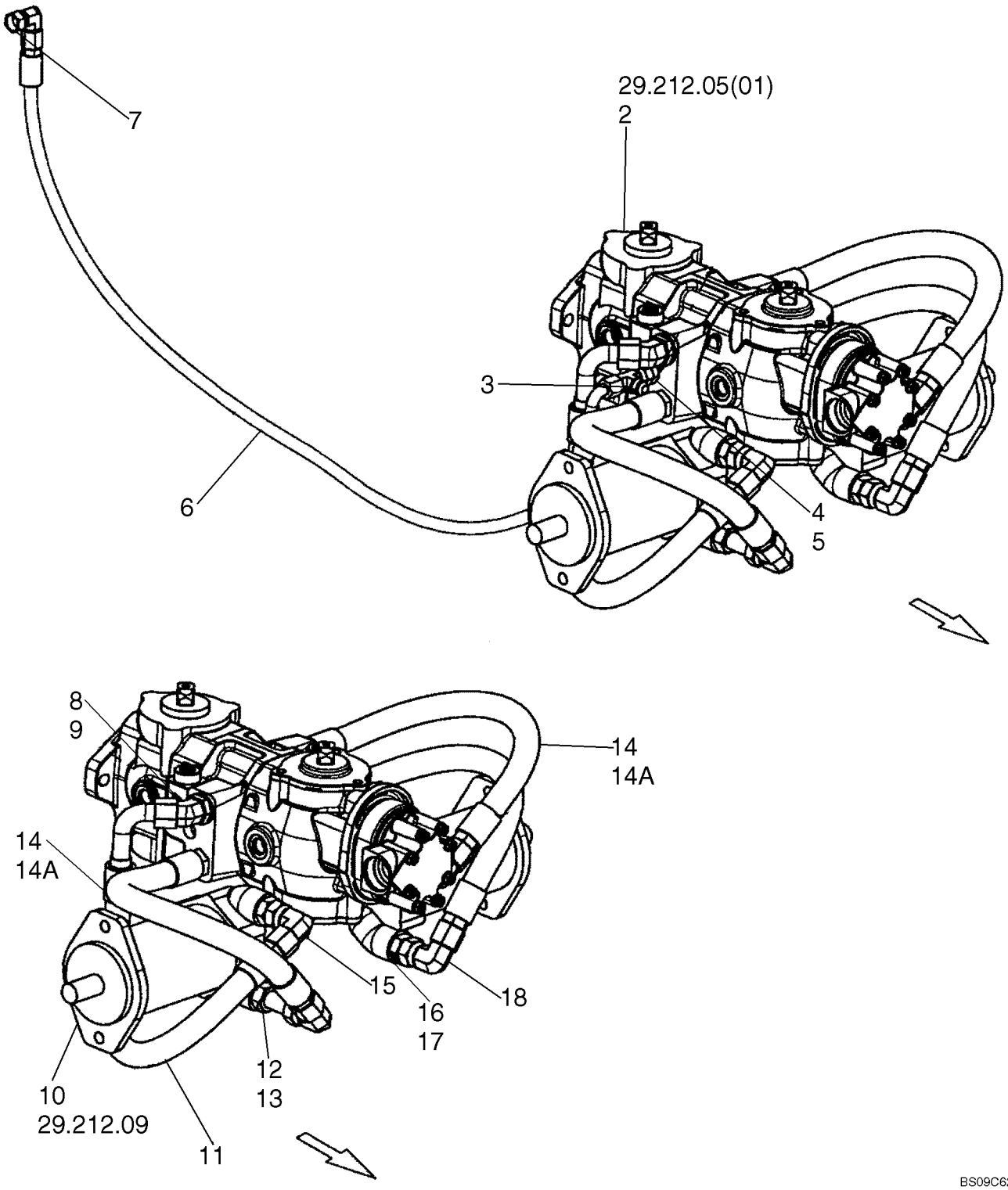

HYDROSTATIC PUMP & MOTOR (IF USED, SEE REF 3)

REF	FN	PART NUMBER	YR/SN	QTY	DESCRIPTION
14		86508788		3	HOSE, 23" Long, Incl. Ref. 14A
14A		167266		1	O-RING, 12-1, 90 Duro, .924 ID x .116" Thk
15		86988875		1	CONNECTOR, HYD., Elbow, 90°-12; Forged Fitting; If Used On Lower Port Of Right Hand Drive Motor
16		322896		3-4	CONNECTOR, HYD., 1 1/16"-12, 37° x 1 1/16"-12, O-Ring, Incl Ref 17
		219605		1	ELBOW, 45°, 1 1/16"-12, 37° x 1 1/16"-12, 37° Fem Sw
17		167266		1	O-RING, 12-1, 90 Duro, .924 ID x .116" Thk
18		219603		3	ELBOW, 90°, 1 1/16"-12, 37° x 1 1/16"-12, 37° Fem Sw

29.212.01	02	p1	04/09

HYDROSTATIC CASE DRAIN

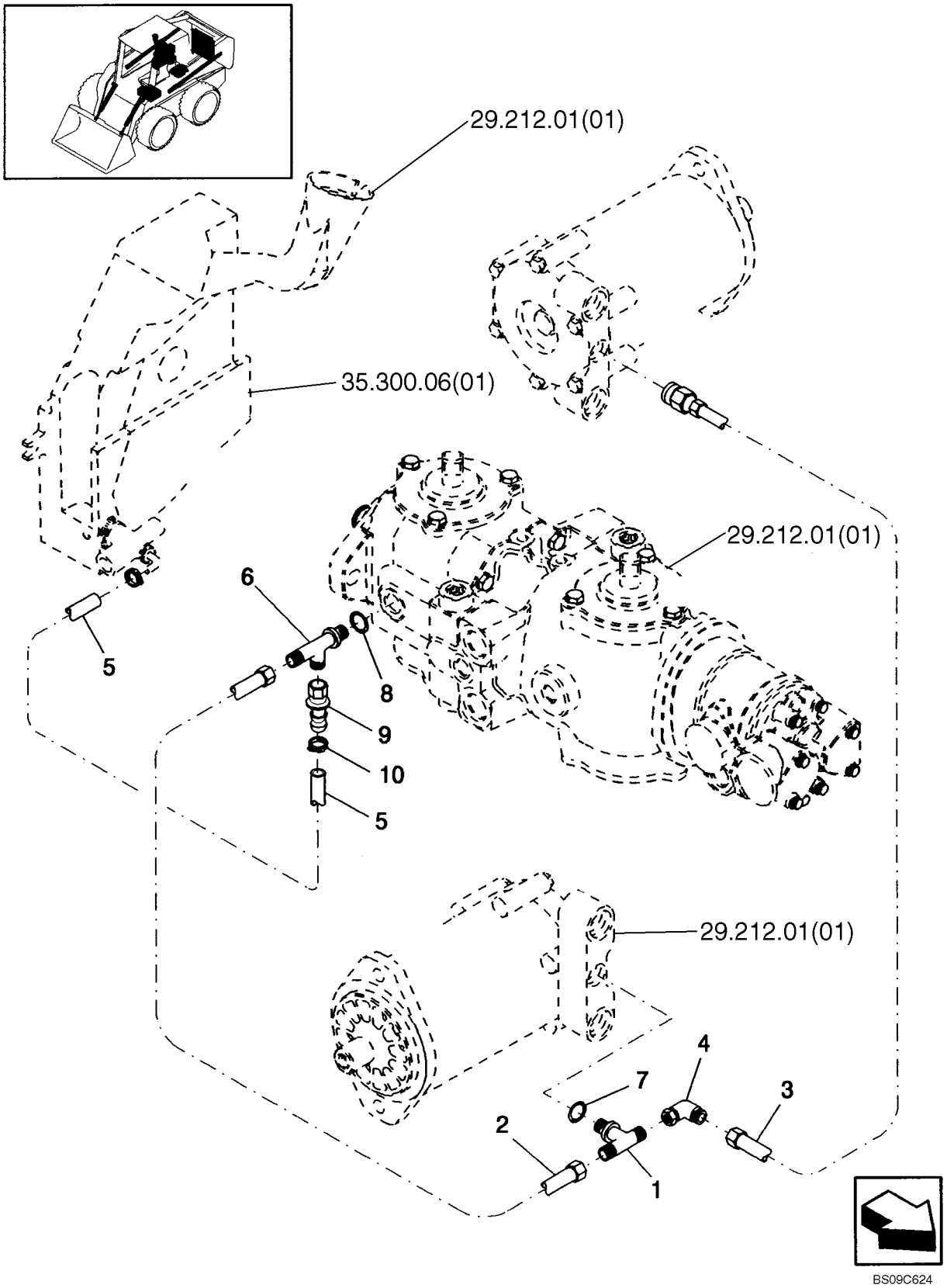

HYDROSTATIC CASE DRAIN

REF	FN	PART NUMBER	YR/SN	QTY	DESCRIPTION
1		163335		1	TEE, 9/16"-18, 37º x 9/16"-18, O-Ring Br, Incl. Ref. 7
2		86575350		1	HOSE, 19" Lg.
3		86575349		1	HOSE, 15" Lg.
4		86629586		1	ELBOW, 90º, 9/16"-18, 37º x 9/16"-18, 37º Fem Sw
5		86977967		1	HOSE, 8-1/2" Lg.
6		265808		1	TEE, 3/4"-16, 37º x 3/4"-18, O-Ring Run, Incl. Ref. 8
7		9617873		1	O-RING, 6-1, 90 Duro, .468" ID x .078" Thk
8		128825		1	O-RING, 8-1, 90 Duro, .644" ID x .087" Thk
9		86553251		1	CONNECTOR, HYD.
10		214-1408		2	CLAMP, HOSE, #08, 0.50/0.91 Type F Worm

29.212.02	01	p1	07/09

HYDROSTATIC PUMP & MOTOR, MODELS WITH PILOT CONTROL

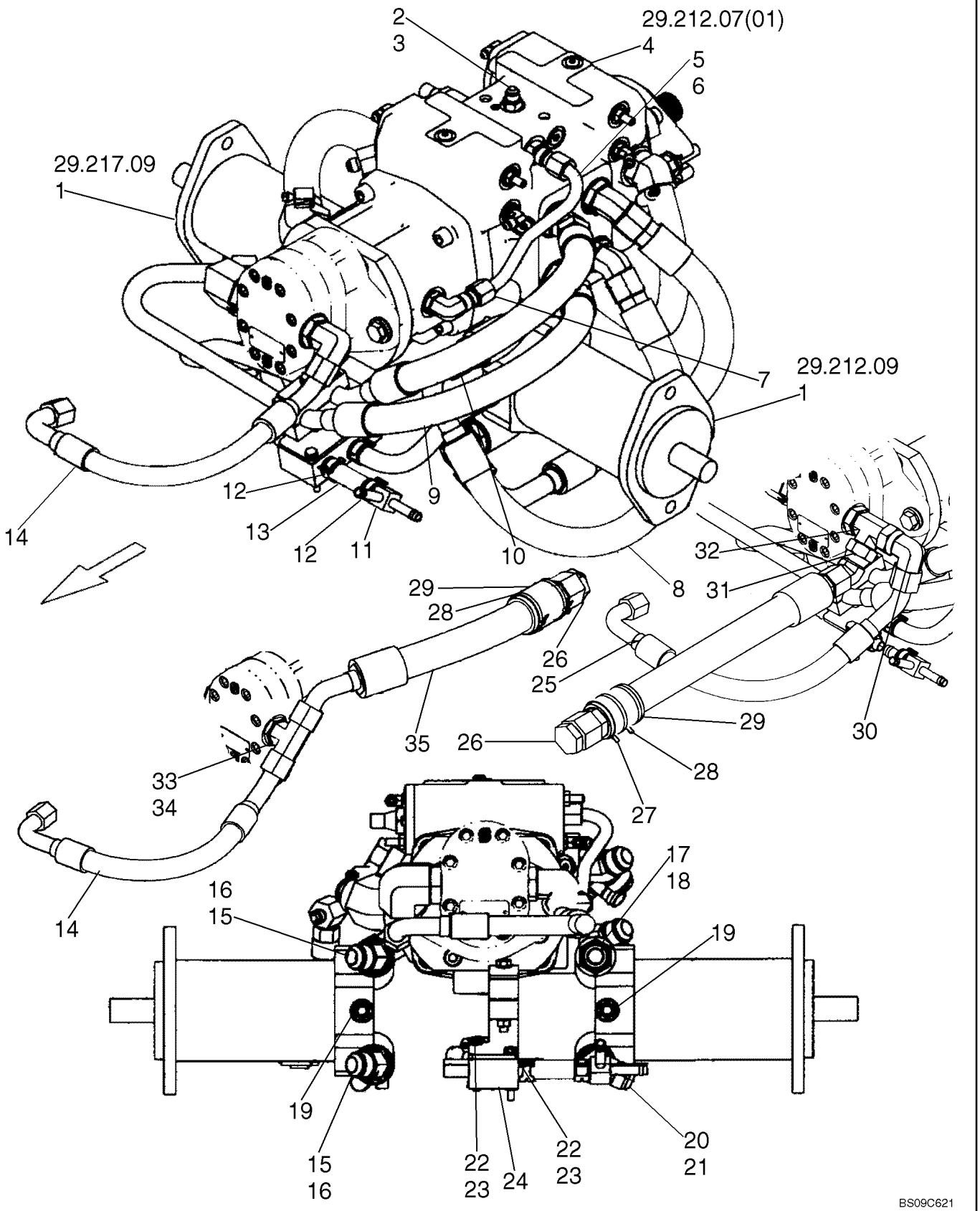

HYDROSTATIC PUMP & MOTOR, MODELS WITH PILOT CONTROL

REF	FN	PART NUMBER	YR/SN	QTY	DESCRIPTION
1		9842194		2	MOTOR, HYDRAULIC, See Figure 29.212.09
2		76350		1	CONNECTOR, HYD., 9/16"-18, 37º x 9/16"-18, O-Ring, Incl 3
3		9617873		1	O-RING, 6-1, 90 Duro, .468" ID x .078" Thk
4		87357097		1	PUMP, A20 Dbl Piston Pilot Control; See Fig. 29.212.07 [01]
5		86512993		1	ELBOW, 45º, 7/16"-20, 37º x 7/16"-20, O-Ring, Incl. 6
6		165202		1	O-RING, 4-1, 90 Duro, .351" ID x .072" Thk
7		87554297		1	TUBE, HYD, Tandem Pump Supply
8		87357147		1	HOSE, 625 mm, 24.61 in.
9		87522278		1	TUBE, HYD, 459 mm, 18.07 in., Hose
10		87522277		1	TUBE, HYD, Pump/Motor Loop, Hose
11		87357165		1	TEE, Bead, 1/2 ID X 3/8 ID X 3/8 ID
12		87443510		6	CLAMP, HOSE, M20
13		87397690		1	HOSE, 70 mm, 2.75 in.
14		87357220		1	HOSE, 425 mm, 16.73 in.; If Used
15		330344		6	ELBOW, 45º, 1 1/16"-12 x 1 1/16"-12, O-Ring, Incl. 16
16		167266		6	O-RING, 12-1, 90 Duro, .924 ID x .116" Thk
17		322896		1	CONNECTOR, HYD., 1 1/16"-12, 37º x 1 1/16"-12, O-Ring, Incl 18
18		167266		1	O-RING, 12-1, 90 Duro, .924 ID x .116" Thk
19		86705988		2	FITTING, 1/2" Hose x 9/16"-18 ORB, Beaded, Stem
20		322894		1	ELBOW, 90º, 1 1/16"-12, 37º x 1 1/16"-12, O-Ring, Incl. 21
21		167266		1	O-RING, 12-1, 90 Duro, .924 ID x .116" Thk
22		87404		2	BOLT, Hex, 1/4"-20 x 2", G5
23		80682		4	WASHER, LOCK, 1/4"
24		87369712		1	MANIFOLD, Return Oil
25		87595013		1	HOSE, 465 mm (18.30 in), Implement Valve Supply; If Used
26		9790527		1	PLUG, 1 5/16"-12, 37º, If Used
27		87351645		1	HOSE ASSY., Resonator; If Used
28		263117		2	STRAP, CABLE, .14" x 11 1/2", If Used
29		87595771		1	ISOLATOR, If Used

29.212.02	01	p2	07/09

HYDROSTATIC PUMP & MOTOR, MODELS WITH PILOT CONTROL

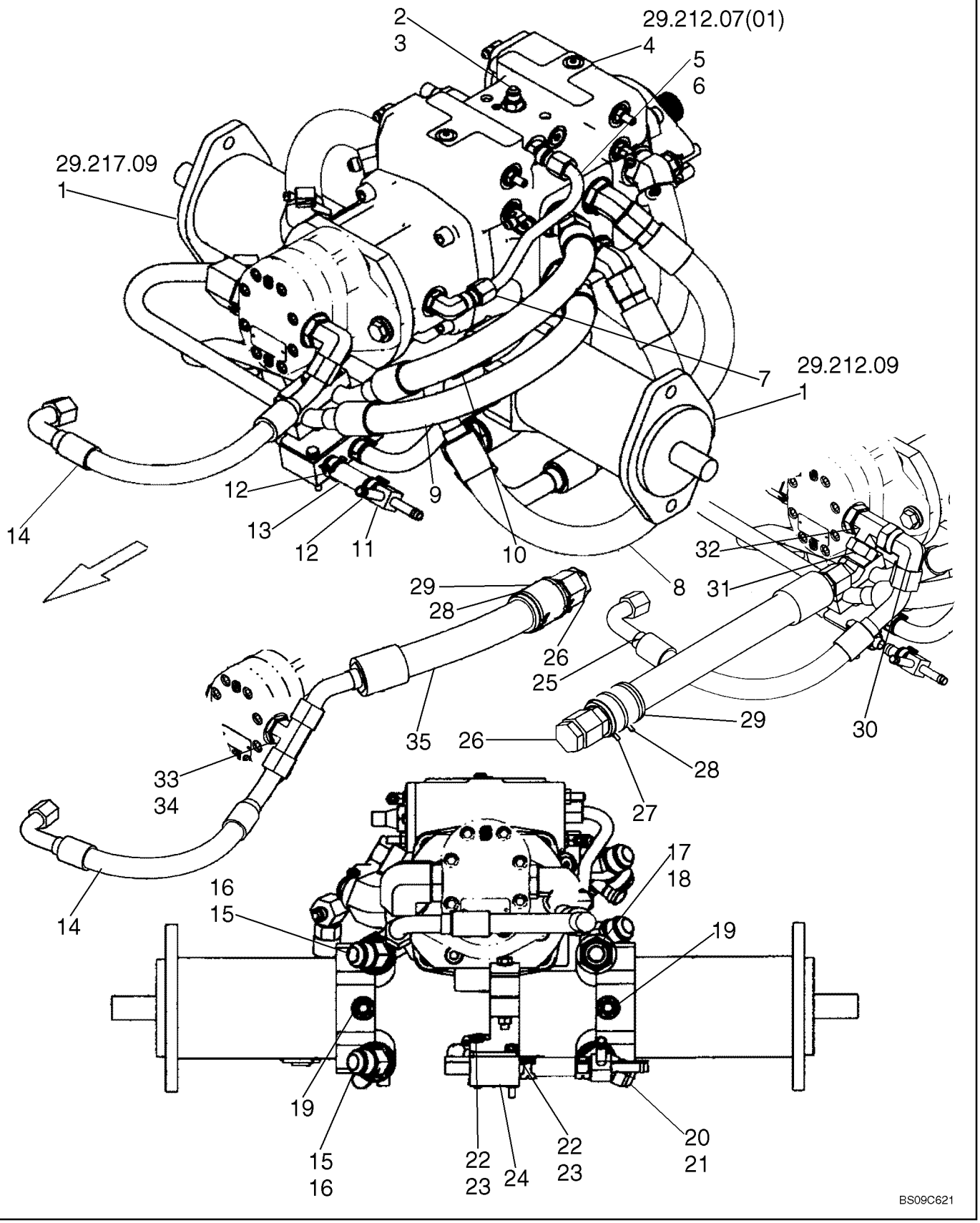

HYDROSTATIC PUMP & MOTOR, MODELS WITH PILOT CONTROL

REF	FN	PART NUMBER	YR/SN	QTY	DESCRIPTION
30		219603		1	ELBOW, 90º, 1 1/16"-12, 37º x 1 1/16"-12, 37º Fem Sw, If Used
31		219605		1	ELBOW, 45º, 1 1/16"-12, 37º x 1 1/16"-12, 37º Fem Sw, If Used
32		219604		1	TEE, 1 1/16"-12, 37º x 1 1/16"-12, O-Ring run, If Used
33		322896		1	CONNECTOR, HYD., 1 1/16"-12, 37º x 1 1/16"-12, O-Ring, Incl 34; Used with Tee 86513017, If Used; Not Illustrated
33		86513017		1	TEE, 37º, 1 1/16"-12 x 1 1/16"-12, Fem Sw Br, Used With Connector 322896, If Used; Not Illustrated
33		87622774		1	FITTING, Tee 3/4 Tube 1-1/16-12 37FL; Incl. 34; If Used
34		167266		1	O-RING, 12-1, 90 Duro, .924 ID x .116" Thk
35		87595764		1	HOSE, Resonator; 417 mm (16.41 in)

HYDROSTATIC PUMP & MOTOR, MODELS WITH PILOT CONTROL

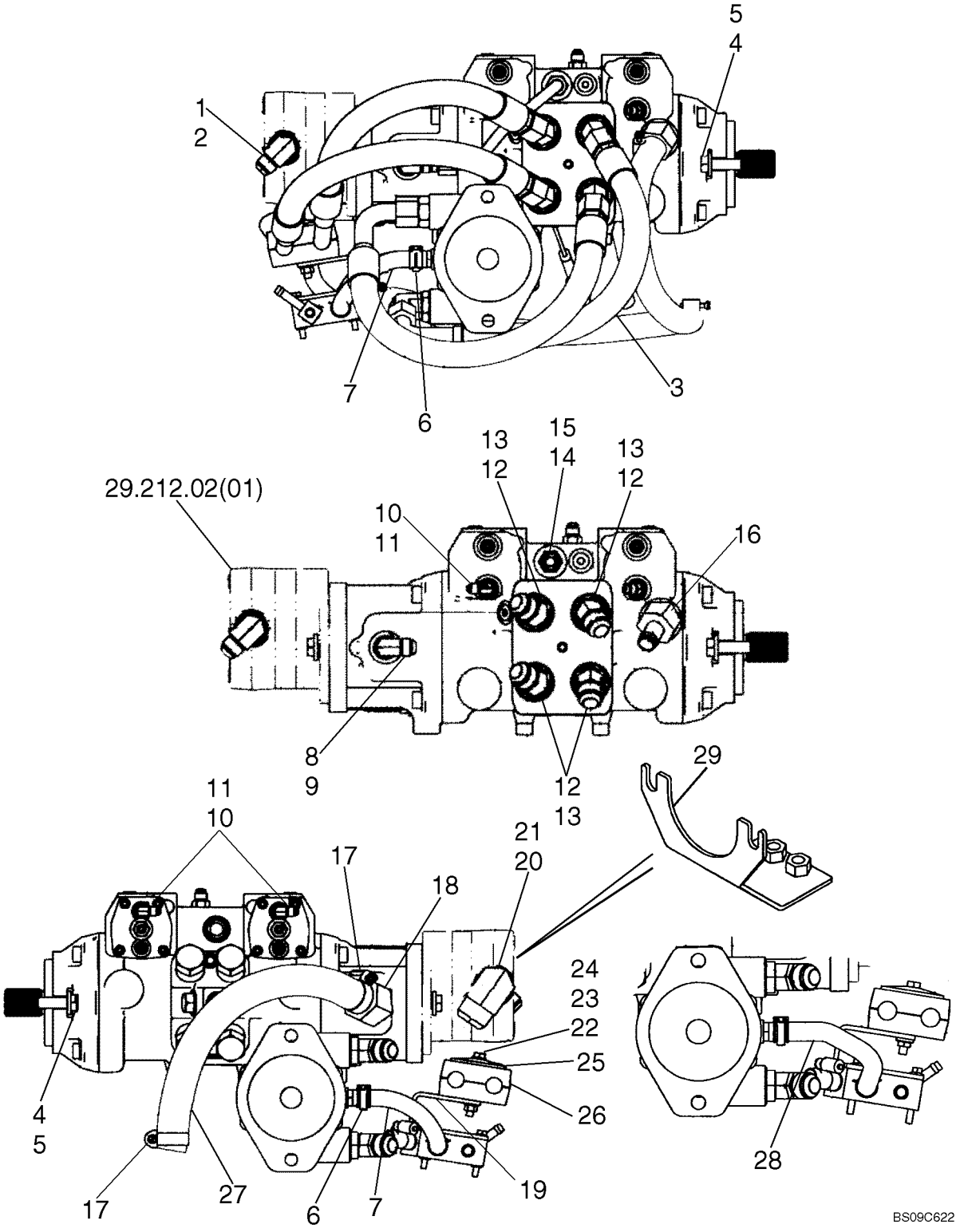

HYDROSTATIC PUMP & MOTOR, MODELS WITH PILOT CONTROL

REF	FN	PART NUMBER	YR/SN	QTY	DESCRIPTION
1		84570		1	ELBOW, 90º, 7/8"-14, 37º x 1 1/16"-12, O-Ring, Incl. 2
2		167266		1	O-RING, 12-1, 90 Duro, .924 ID x .116" Thk
3		87357146		1	HOSE, 506 mm, 19.92 in.
4		87689		2	BOLT, Hex, 1/2"-13 x 1 1/2", G5, Full Thd
5		86625256		4	WASHER, M12 x 28.5 x 4, HT, If Used
5		86625255		2	WASHER, M13.5 x 24.5 x 3, HT
6		87443510		4	CLAMP, HOSE, M20
7		87522279		2-1	HOSE, 185 mm, 7.28 in.
8		128830		1	ELBOW, 90º, 3/4"-16, 37º x 3/4"-16, O-Ring, Incl. 9
9		128825		1	O-RING, 8-1, 90 Duro, .644" ID x .087" Thk
10		216773		3	ELBOW, 90º, 7/16"-20, 37º x 7/16"-20, O-Ring, Incl. 11
11		165202		3	O-RING, 4-1, 90 Duro, .351" ID x .072" Thk
12		330344		6	ELBOW, 45º, 1 1/16"-12 x 1 1/16"-12, O-Ring, Incl. 13
13		167266		6	O-RING, 12-1, 90 Duro, .924 ID x .116" Thk
14		128818		1	CONNECTOR, HYD., 3/4"-16, 37º x 3/4"-16, O-Ring, Incl. 15, If Used
14		81827427		1	CONNECTOR, HYD., 1/2", 37FL - ORB 1/2"
15		128825		1	O-RING, 8-1, 90 Duro, .644" ID x .087" Thk
16		86705987		1	FITTING, Stem 45 Bead Hose 3/4 ID X 1-1/16 - 12
17		514920		2	CLAMP, HOSE, #16, 0.81/1.50 Type F Worm
18		87029968		1	CONNECTOR, HYD., Stem 45 Bead Hose 1.00 ID X 1-5/16 - 12
19		87541387		1	BRACKET, Tube Clamp
20		87010672		1	ELBOW, 90º, 1 5/8"-12, 37º x 1 5/16"-12, O-Ring, Incl. 21
21		167268		1	O-RING, 16-1, 90 Duro, 1.171" ID x .116" Thk
22		87626		1	BOLT, Hex, 5/16"-18 x 2 3/4", G5
23		145458		1	NUT, Flg, USR, 5/16"-18
24		86624184		2	WASHER, M8 x 16 x 1.6
25		87000230		1	PLATE
26		87000151		1	CLAMP, Hydraulic Tube
27		87357201		1	HOSE, 385 mm, 15.16 in.; If Used
27		87694585		1	HOSE, 350 mm, 13.77 in.; If Used
28		87557970		1	HOSE, Formed Hose, Case Drain

HYDROSTATIC PUMP & MOTOR, MODELS WITH PILOT CONTROL

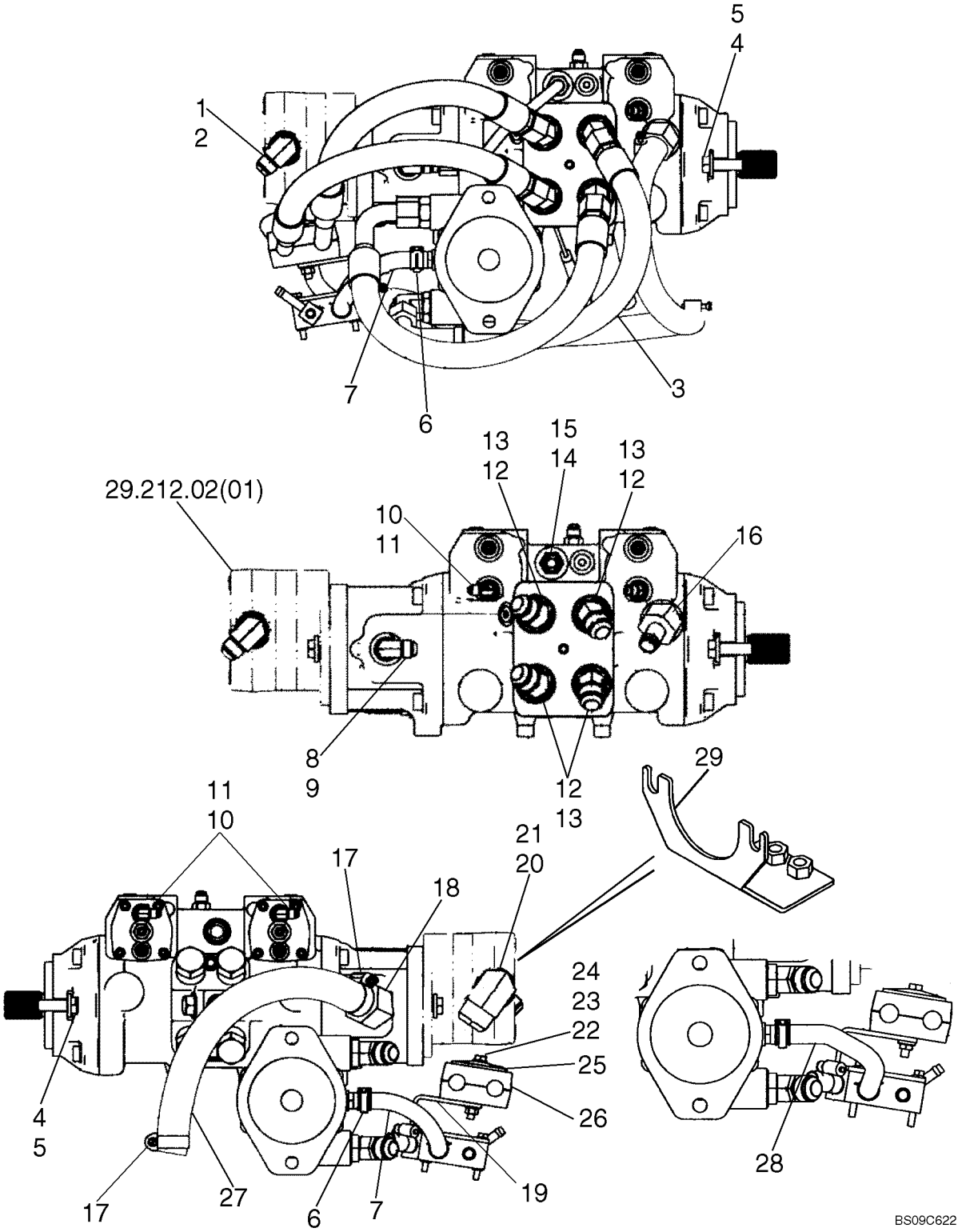

HYDROSTATIC PUMP & MOTOR, MODELS WITH PILOT CONTROL

REF	FN	PART NUMBER	YR/SN	QTY	DESCRIPTION
29		87676979		1	BRACKET, If Used

HYDROSTATIC PUMP & MOTOR, MODELS WITH PILOT CONTROL

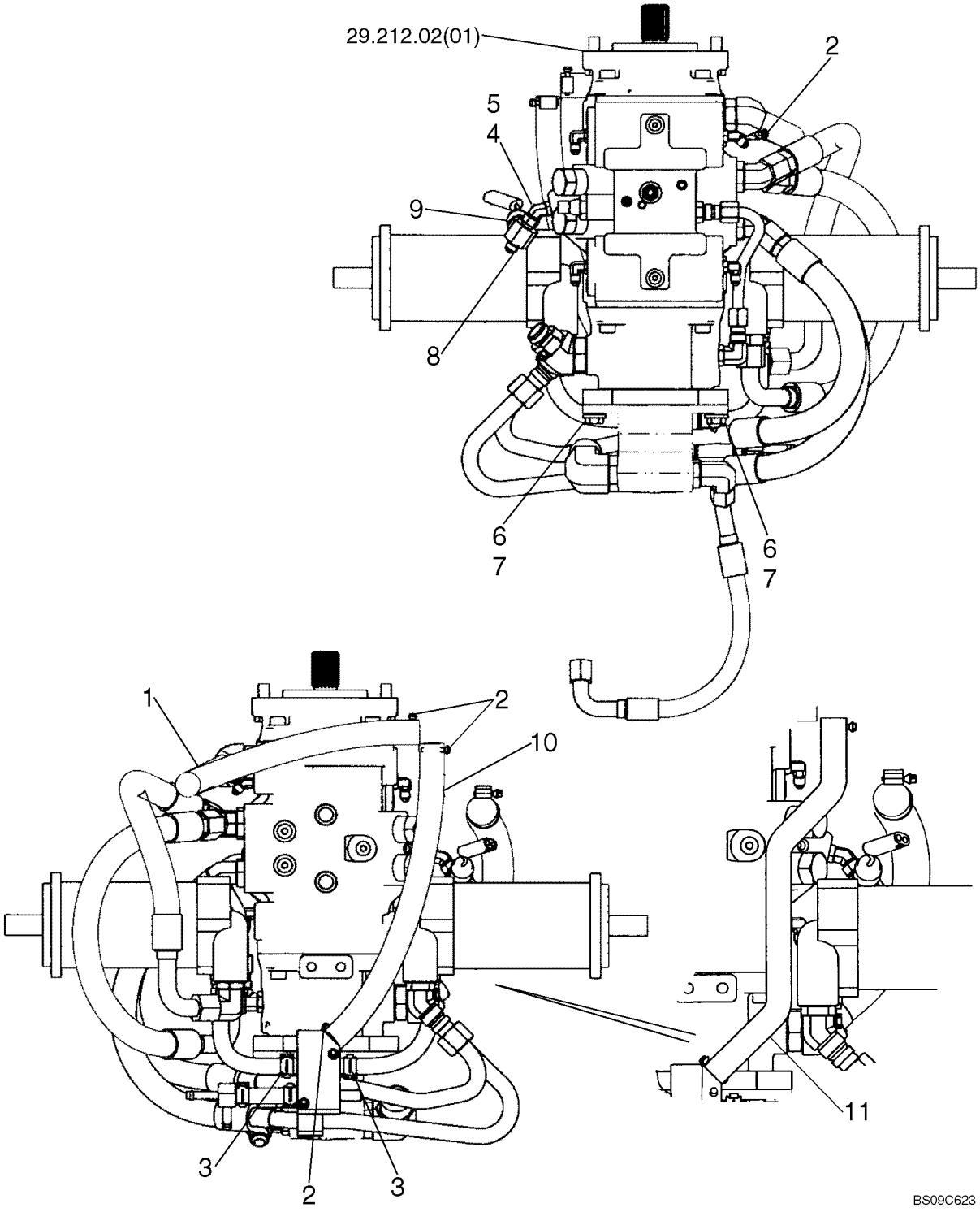

HYDROSTATIC PUMP & MOTOR, MODELS WITH PILOT CONTROL

REF	FN	PART NUMBER	YR/SN	QTY	DESCRIPTION
1		87357202		1	HOSE, 470 mm, 18.50 in.
2		86625021		4	CLAMP, HOSE, #12, 0.69/1.25 Type F Worm
3		87443510		2	CLAMP, HOSE, M20
4		330346		1	ELBOW, 45º, 9/16"-18, 37º x 9/16"-18, O-Ring, Incl. 5
5		9617873		1	O-RING, 6-1, 90 Duro, .468" ID x .078" Thk
6		87670		2	BOLT, Hex, 1/2"-13 x 1 1/4", G5, Full Thd
7		86625256		4	WASHER, M12 x 28.5 x 4, HT
8		87397698		1	TEE, Swivel Run 37FL
9		87458061		1	SWITCH, PRESSURE, Brake Valve; Incl. O-Ring Which Is Not Serviced Separately
10		87372533		1	HOSE, 3/4" ID x 400mm L, (15.75"), If Used
11		87557969		1	HOSE, Formed Hose, Case Drain; If Used

HYDROSTATICS - PILOT CONTROL TO PUMP

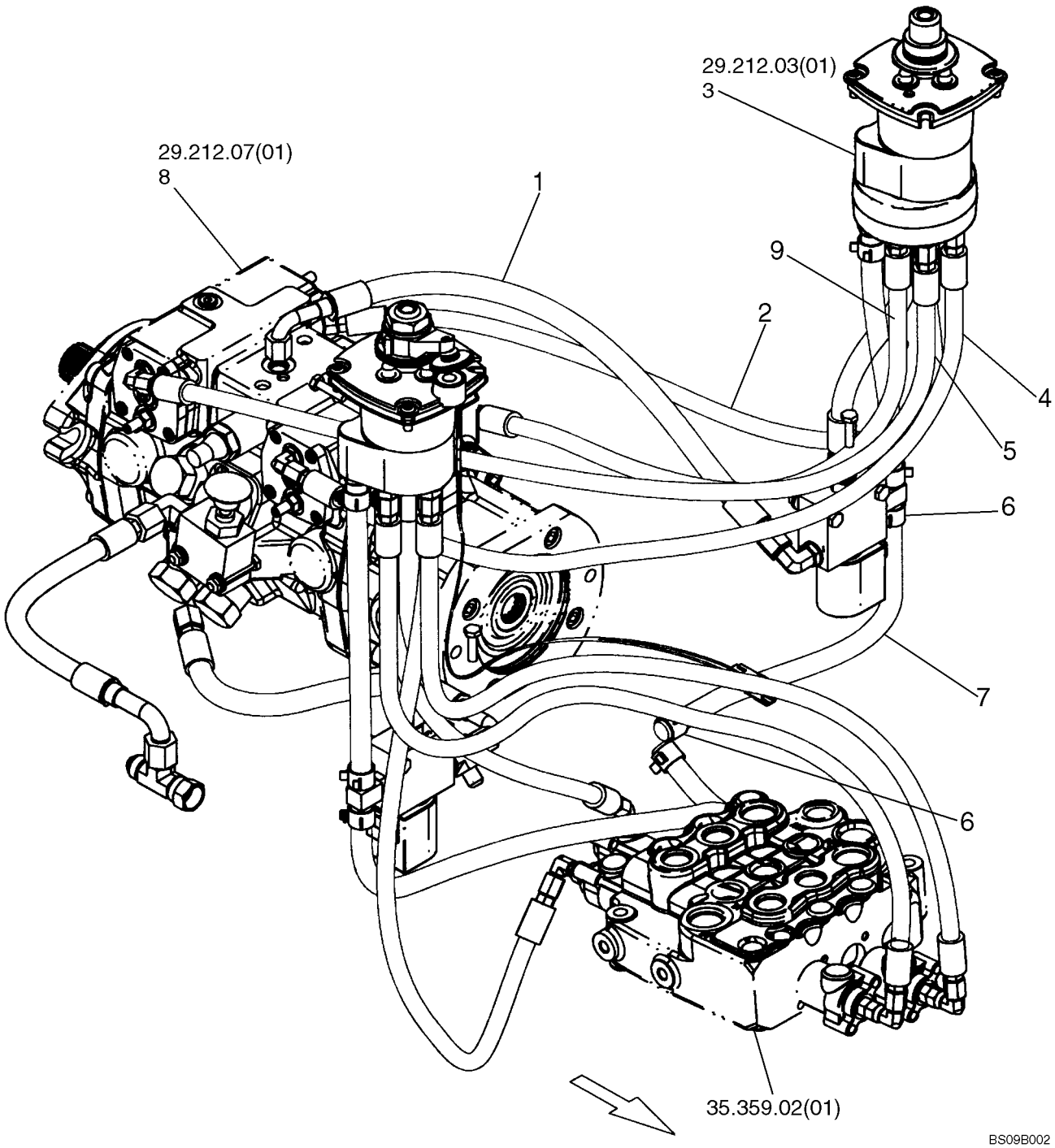

HYDROSTATICS - PILOT CONTROL TO PUMP

REF	FN	PART NUMBER	YR/SN	QTY	DESCRIPTION
1		87578585		1	HOSE, Interlock Supply, 900 mm (35.43 in); Replaces 87357215
2		87540693		1	HOSE, Pump Control, 745 mm (29.33 in)
3		87565841		1	VALVE, CONTROL, Pilot; See Fig. 29.212.03[01]
4		87551728		1	HOSE, Pump Control, 745 mm (29.33 in)
5		87540695		1	HOSE, Pump Control, 825 mm (32.48 in)
6		87584302		4	CLAMP, 18mm; Replaces 87019540
7		87357216		1	HOSE, Joystick Drain, 340 mm (13.38 in)
8		87357097		1	PUMP, A20 Dbl Piston Pilot Controls; See Fig. 29.212.07[01]
9		87540707		1	HOSE, Implement Control, 570 mm (22.44 in)

29.212.02	06	p1	03/09

HYDROSTATICS - HAND CONTROL, PILOT CONTROLS

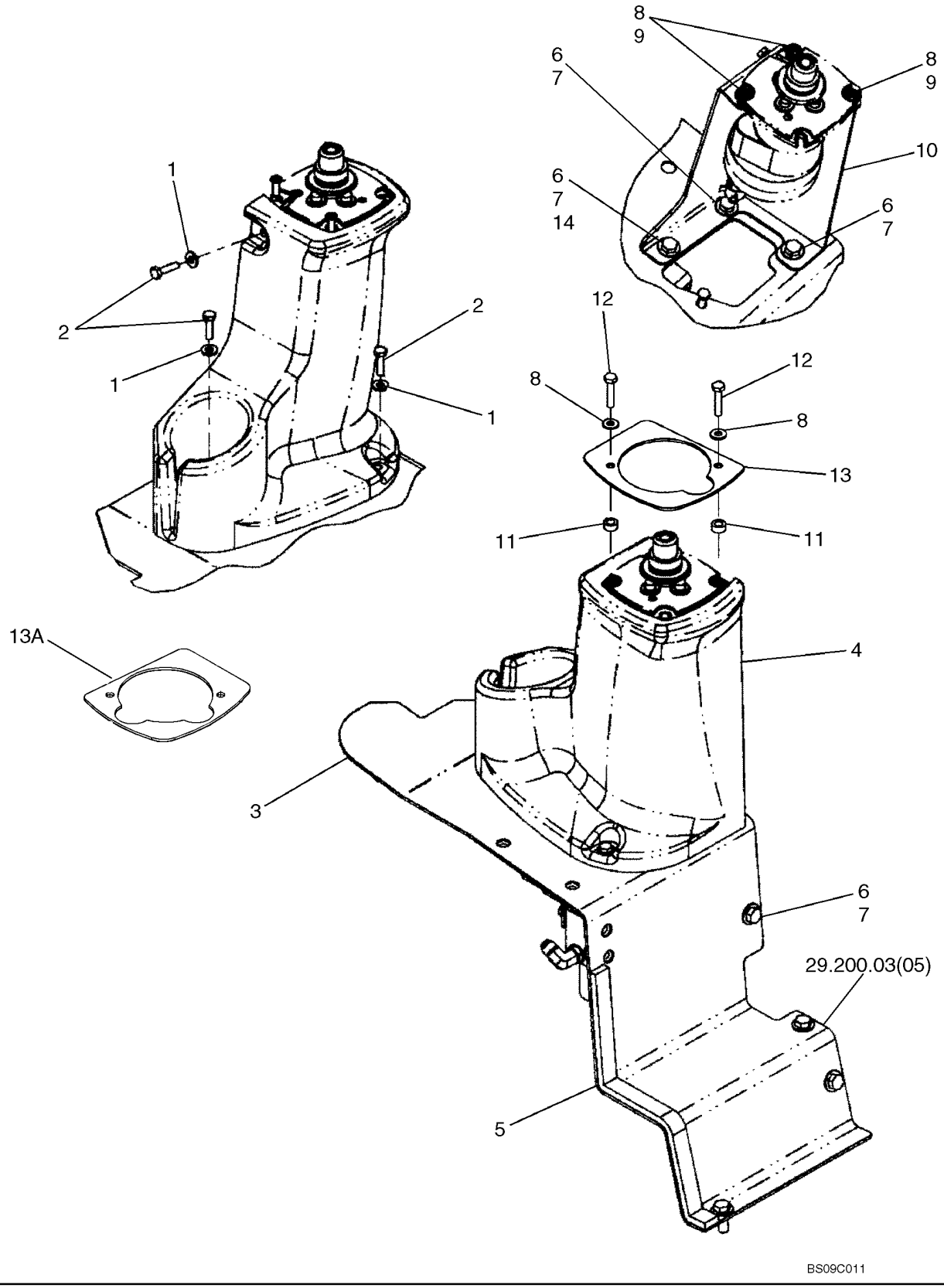

HYDROSTATICS - HAND CONTROL, PILOT CONTROLS

REF	FN	PART NUMBER	YR/SN	QTY	DESCRIPTION
1		87361		3	WASHER, 1/4", SAE
2		88146		3	BOLT, Hex, 1/4"-20 x 1", G5
3		87357136		1	PANEL, Kick Panel, LH
4		87357145		1	SHROUD, Pilot Control, LH
5		291308		X	STRIP, SEALING, 2.6 Ft. Required
6		140045		7	WASHER, BELLEVILLE, M10
7		88206		7	BOLT, Hex, 3/8"-16 x 1", G5, Full Thd
8		87318948		3	FASTENER, Washer, .281 x .625 x .075 HDN ZND
9		87557478		1-3	FASTENER, Screw; Only (1) Used When Boot Retainer Plate Is Used
10		87357140		1	PANEL, Control Tower LH
11		87610699		2	FASTENER, Spacer; 1/4 Pipe x 6.4 mm
12		87716		2	BOLT, Hex, 1/4"-20 x 1 1/4", G5
13		87557965		1	PLATE, Boot Retainer; If Used
13A		84177615		1	PLATE, Boot Retainer Plate
14		86639325		1	WASHER, M10 x 24.5 x 3, HT, If Used
		87609685		1	KIT, SERVICE, Boot Retainer Kit; Incl. 11 - 13 And Instructions

HYDRAULICS - HAND CONTROL RH, MODELS WITH PILOT CONTROL

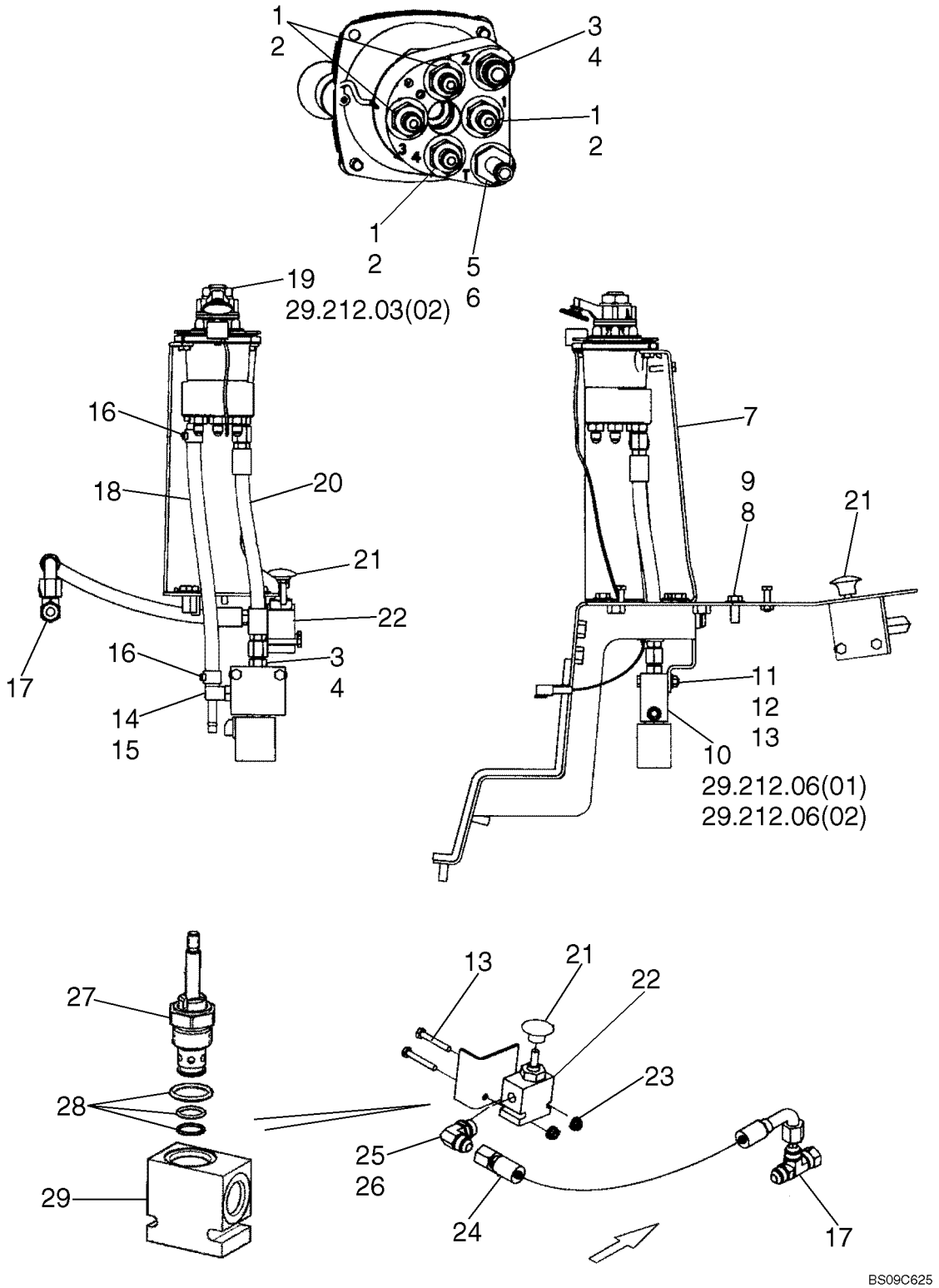

HYDRAULICS - HAND CONTROL RH, MODELS WITH PILOT CONTROL

REF	FN	PART NUMBER	YR/SN	QTY	DESCRIPTION
1		139398		4	CONNECTOR, HYD., 7/16"-20, 37° x 9/16"-18, O-Ring, Incl. 2
2		9617873		1	O-RING, 6-1, 90 Duro, .468" ID x .078" Thk
3		76350		2	CONNECTOR, HYD., 9/16"-18, 37° x 9/16"-18, O-Ring, Incl 4
4		9617873		1	O-RING, 6-1, 90 Duro, .468" ID x .078" Thk
5		87360975		1	CONNECTOR, HYD., 3/8" Barb x 9/16"-18 x 2 3/16" L, Incl. 6
6		9617873		1	O-RING, 6-1, 90 Duro, .468" ID x .078" Thk
7		87357132		1	PANEL, CONTROL
8		88206		1	BOLT, Hex, 3/8"-16 x 1", G5, Full Thd
9		140045		1	WASHER, BELLEVILLE, M10
10		87357112		1	VALVE, HYDRAULIC, Service With Kit 87599278 Ref. 10A; See Fig 29.212.06 [01]; If Used
10A		87599278		1	KIT, SERVICE, Use To Service 87357112; Not Illustrated
10B		84128135		1	VALVE, PILOT, See Fig 29.212.06 [02]; If Used
11		7770		2	NUT, 1/4"-20, G5, If Used
12		87361		5	WASHER, 1/4", SAE, If Used; Used With Bolt 88146
13		280164		4	BOLT, Hex, 1/4"-20 x 1 3/4", G5
14		87357113		1	ADAPTER, Incl. 15
15		9617873		1	O-RING, 6-1, 90 Duro, .468" ID x .078" Thk
16		87584302		2	CLAMP, 18mm; Replaces 87019540
17		86511870		1	TEE, 37°, 3/4"-16 x 3/4"-16, Fem Sw Run
18		87357177		1	HOSE, 314 mm, 12.36 in.
19		87578504		1	VALVE, PILOT, See Figure 29.212.03 [02]
20		87397694		1	HOSE, 275 mm, 10.83 in.
21		87522292		1	KNOB
22		87584305		1	VALVE, HYDRAULIC, Incl. 27, 28, 29, 30; Replaces 87535979
23		523282		2-4	NUT, Flg, USR, 1/4"-20
24		87522288		1	HOSE
25		128830		1	ELBOW, 90°, 3/4"-16, 37° x 3/4"-16, O-Ring, Incl. 26
26		128825		1	O-RING, 8-1, 90 Duro, .644" ID x .087" Thk
27		87584306		1	VALVE, HYDRAULIC, Cartridge; Replaces 87522297

HYDRAULICS - HAND CONTROL RH, MODELS WITH PILOT CONTROL

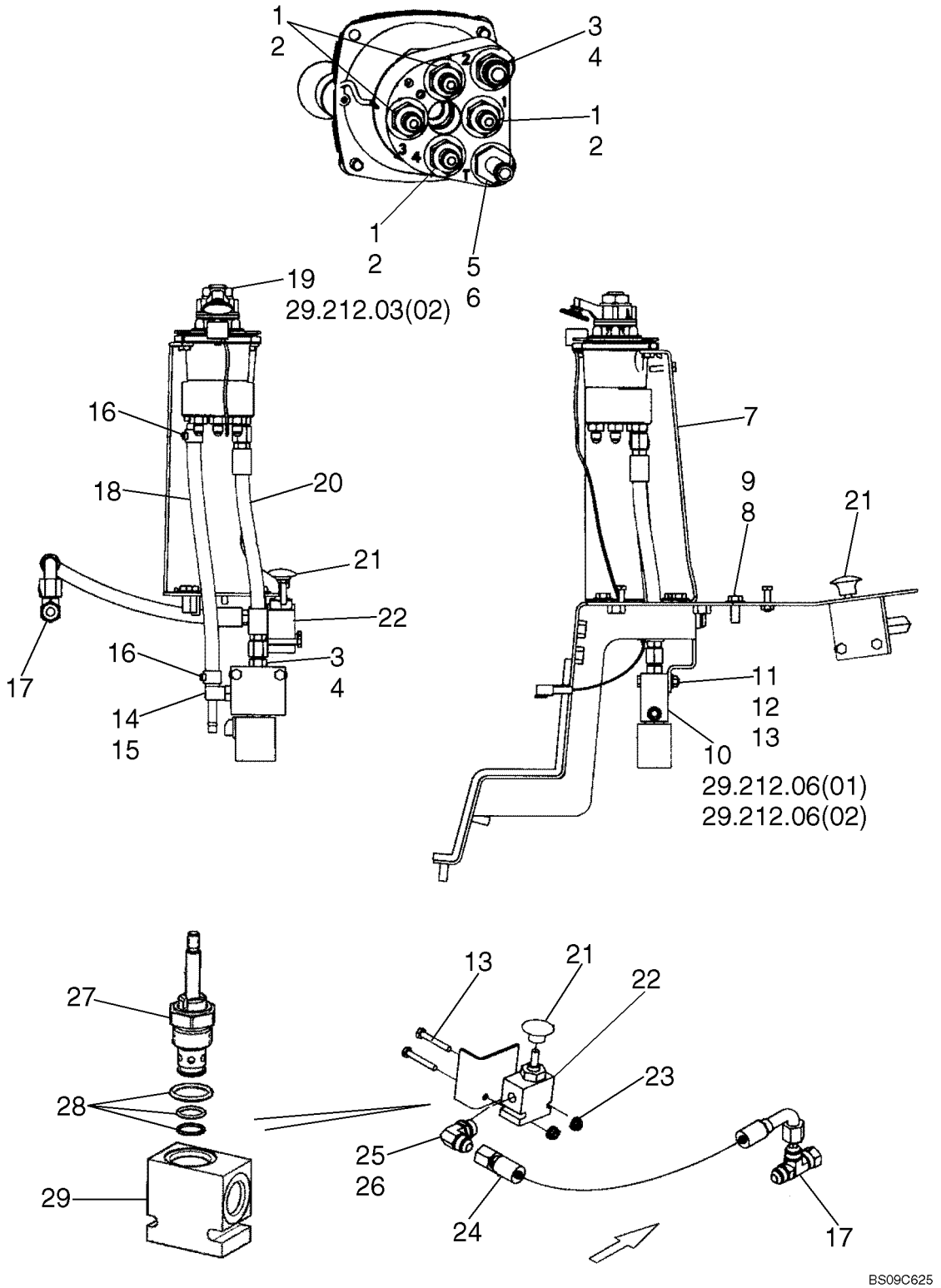

HYDRAULICS - HAND CONTROL RH, MODELS WITH PILOT CONTROL

REF	FN	PART NUMBER	YR/SN	QTY	DESCRIPTION
28		87584307		1	VALVE, HYDRAULIC, Seal Kit; Replaces 87522298
29		NSS		1	NOT SERVICED SEPARATELY, Valve Body
30		87550546		1	ORIFICE, Not Illustrated

29.212.02	08	p1	03/09

MOUNTING - PUMP SUPPORT, PILOT CONTROL

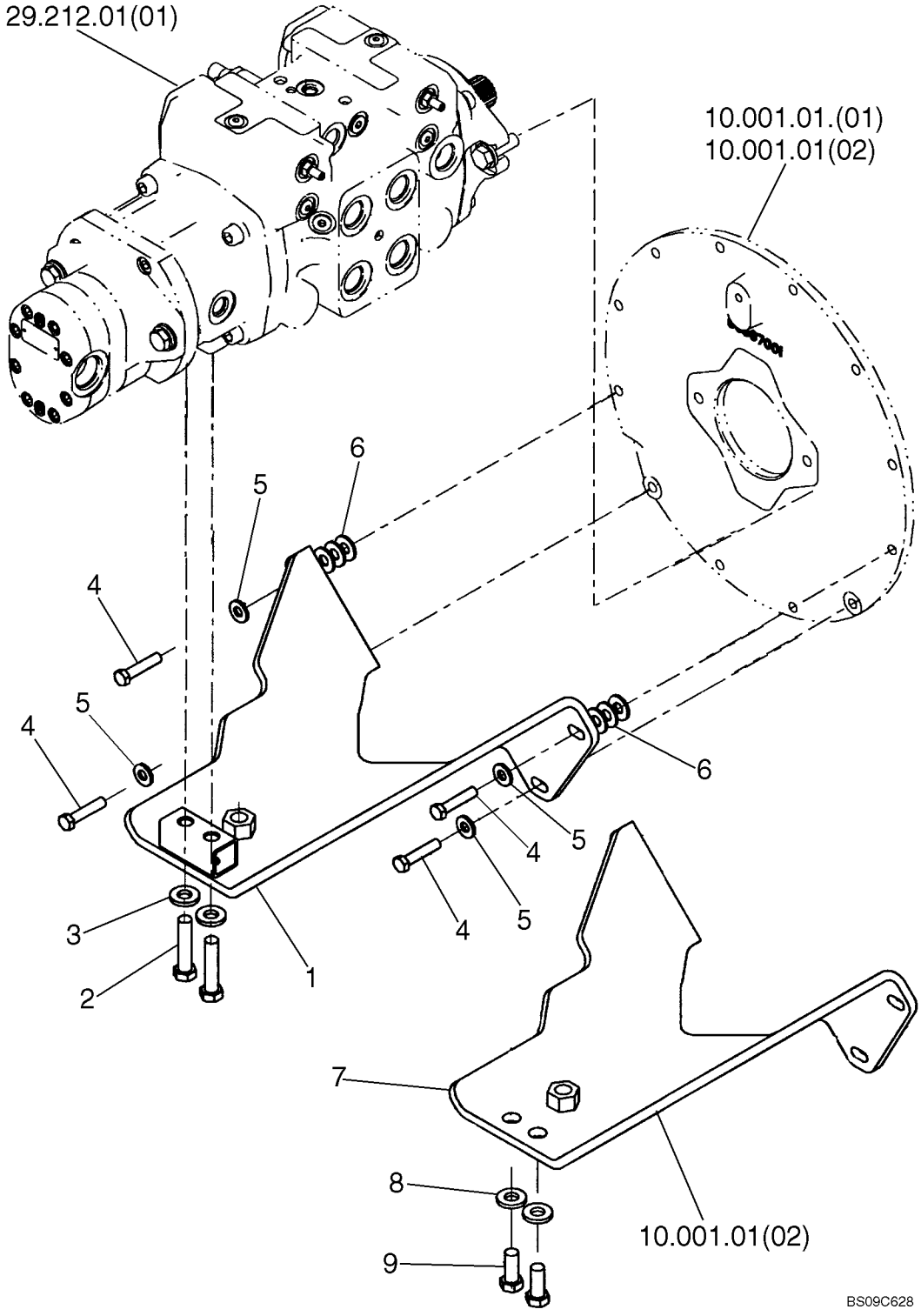

MOUNTING - PUMP SUPPORT, PILOT CONTROL

REF	FN	PART NUMBER	YR/SN	QTY	DESCRIPTION
1		87551798		1	BRACKET, Bracket, Pump Support; If Used
2		50032		2	BOLT, Hex, 1/2"-13 x 2 1/4", G8
3		86625256		2	WASHER, M12 x 28.5 x 4, HT
4		280589		4	BOLT, Hex, 3/8"-16 x 1 3/4", G8
5		285072		4	WASHER, M10 x 22.2 x 2.87 Thk, HT
6		80702		6	WASHER, 3/8"
7		87594375		1	BRACKET, Bracket, Pump Support; If Used
8		86625256		2	WASHER, M12 x 28.5 x 4, HT
9		280853		2	BOLT, Hex, 1/2"-13 x 1 1/4", G8, Full Thd

29.212.03	01	p1	03/09

HYDROSTATICS - JOYSTICK VALVE KITS, ISO PATTERN

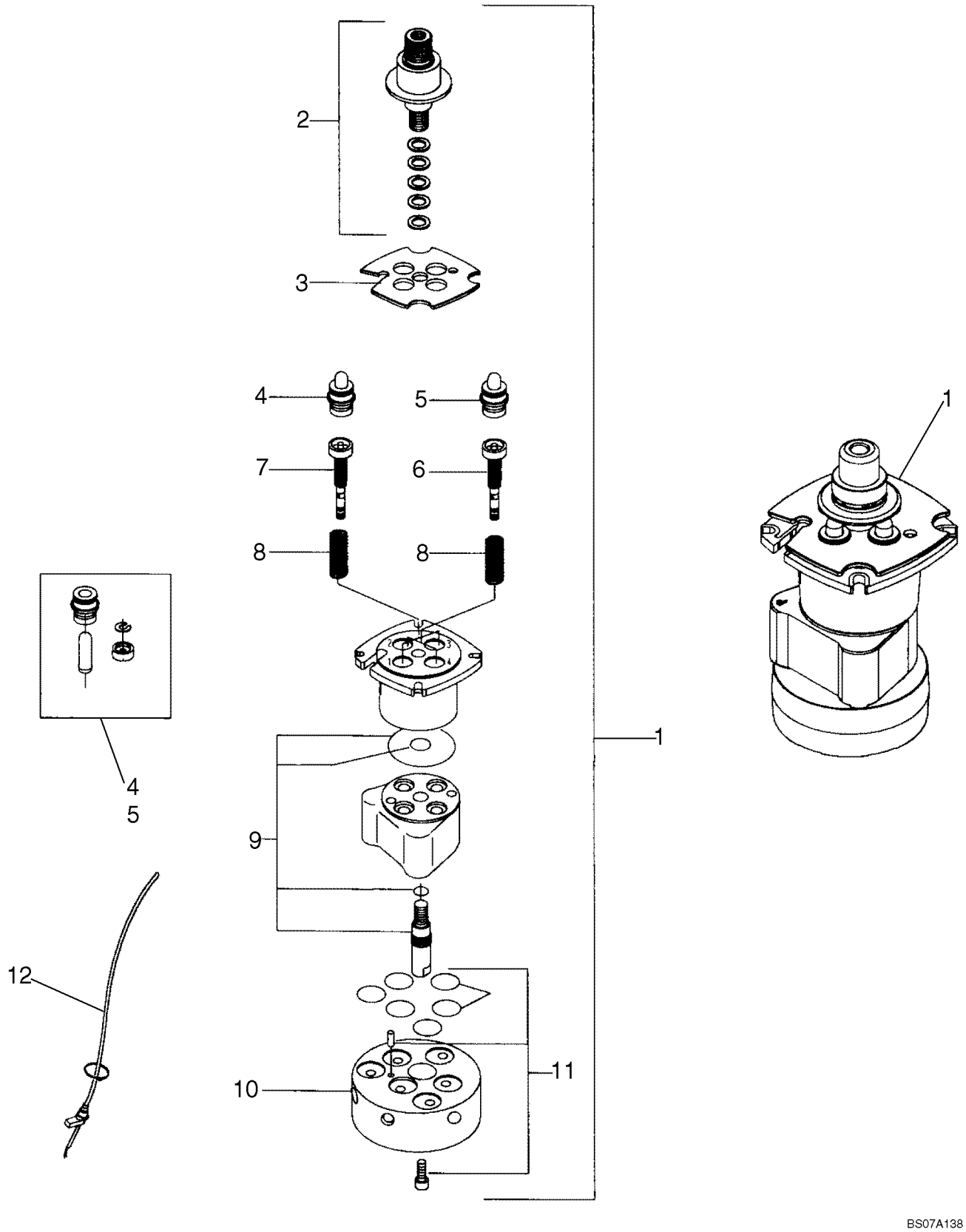

HYDROSTATICS - JOYSTICK VALVE KITS, ISO PATTERN

REF	FN	PART NUMBER	YR/SN	QTY	DESCRIPTION
1		87565841		1	VALVE, CONTROL, Joystick Valve, ISO Pattern
2		87594867		1	KIT, SERVICE, Kit, Cardan Special Detent
3		87548835		1	PLATE, Kit,Retaining Plate, Standard
4		87548837		2	KIT, SERVICE, Kit, Hollow Plunger, Use On Ports 1, 3
5		87548838		2	KIT, SERVICE, Kit, Full Plunger, Use On Ports 2, 4
6		87548840		2	KIT, SERVICE, Kit, Reg Unit PP C224, Use On Ports 2, 4
7		87594866		2	KIT, SERVICE, Kit, Reg Unit PP C223, Use On Ports 1, 3
8		87548844		1	KIT, SERVICE, Kit, Heavy Spring
9		87548871		1	KIT, SERVICE, Kit, Seal
10		87548872		1	FLANGE
11		87548873		1	KIT, SERVICE, Kit, Flange Seal
12		87548874		1	KIT, SERVICE, Kit, Cable

29.212.03	02	p1	03/09

HYDRAULICS - JOYSTICK VALVE KITS, ISO PATTERN, RIGHT HAND

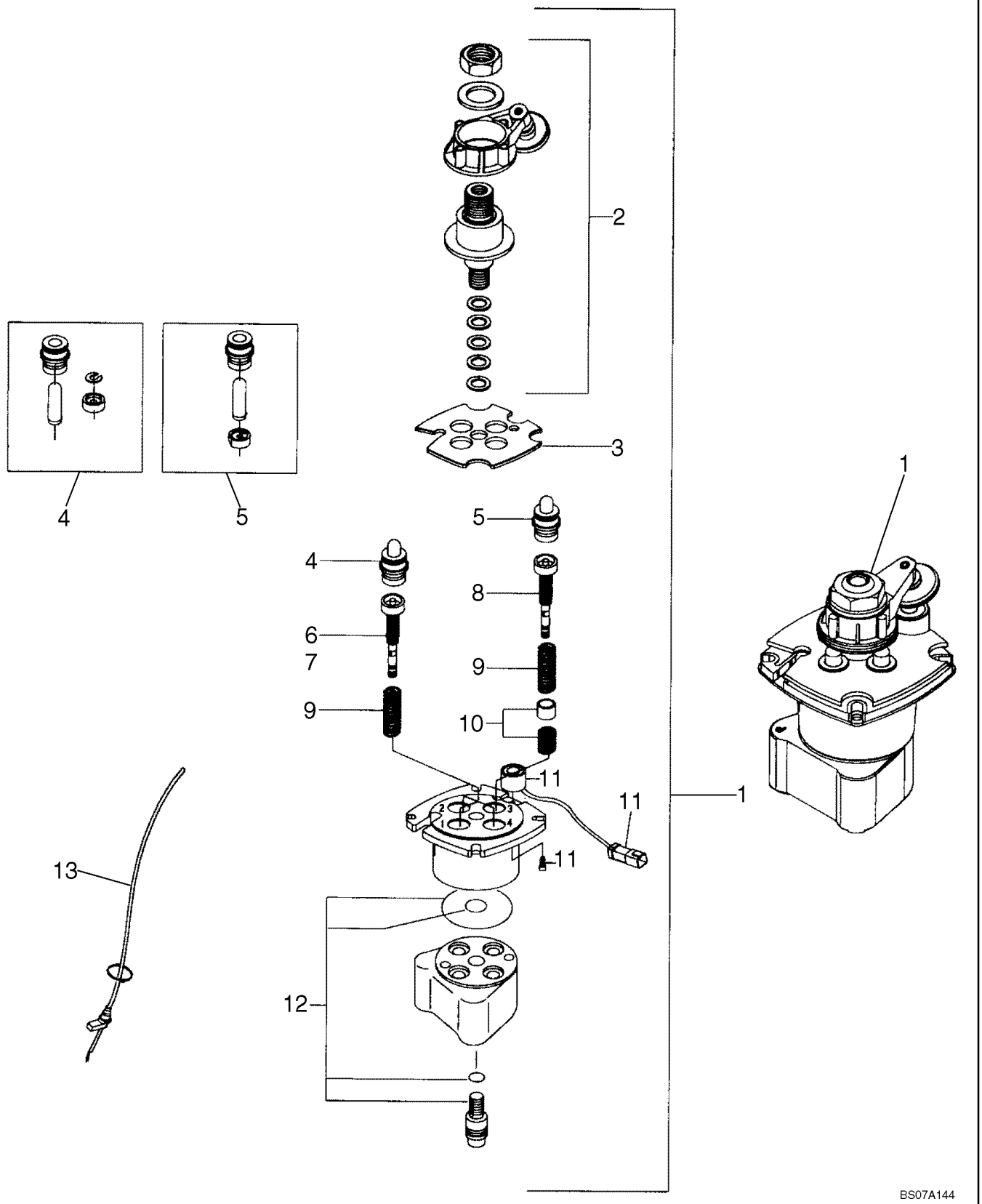

HYDRAULICS - JOYSTICK VALVE KITS, ISO PATTERN, RIGHT HAND

REF	FN	PART NUMBER	YR/SN	QTY	DESCRIPTION
1		87578504		1	VALVE, PILOT, Joystick Valve, ISO Pattern, RH
2		87548834		1	KIT, SERVICE, Kit, Cardan With Detent
3		87548836		1	KIT, SERVICE, Kit, Retaining Plate With Detent
4		87548838		3	KIT, SERVICE, Kit, Hollow Plunger, Use On Ports 1, 2, 4
5		87548839		1	KIT, SERVICE, Kit, Full Plunger Prefeeling, Use On Port 3
6		87548840		1	KIT, SERVICE, Kit, Reg Unit PP C224, Use On Port 1
7		87594866		2	KIT, SERVICE, Kit, Reg Unit PP C 223, Use On Ports 2,4
8		87548843		1	KIT, SERVICE, Kit, Reg Unit Prefeeling Point
9		87548844		1	KIT, SERVICE, Kit, Heavy Spring
10		87548846		1	KIT, SERVICE, Kit, Prefeeling Point, Use on Port 3
11		87548847		1	KIT, SERVICE, Kit, Solenoid, Use On Port 3
12		87548848		1	KIT, SERVICE, Kit, Standard Seal
13		87548874		1	KIT, SERVICE, Kit, Cable

29.212.03	03	p1	03/09

HAND CONTROL - PILOT CONTROL, UPPER RH

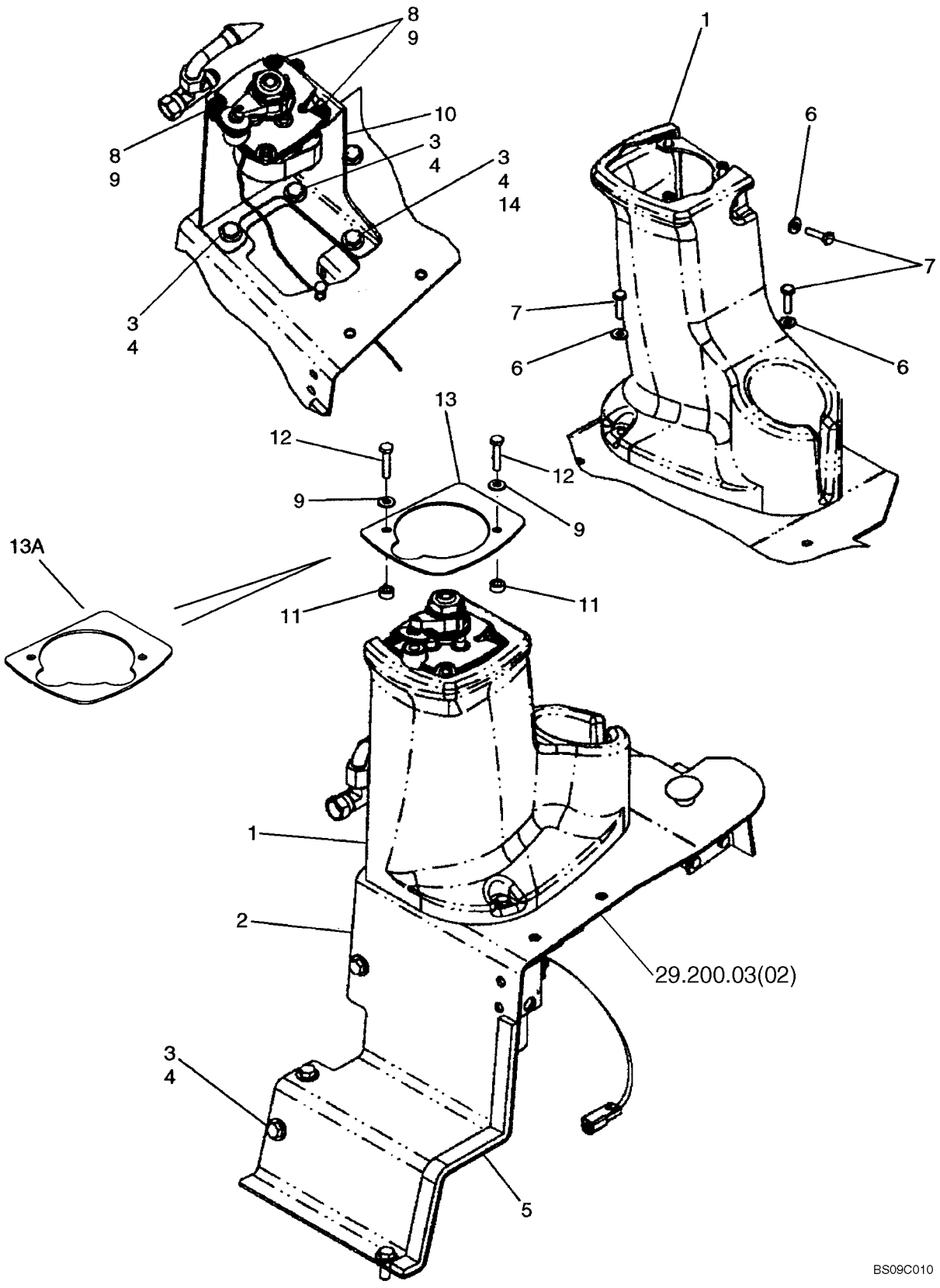

HAND CONTROL - PILOT CONTROL, UPPER RH

REF	FN	PART NUMBER	YR/SN	QTY	DESCRIPTION
1		87357144		1	SHROUD, Pilot Control, RH
2		87357127		1	PANEL, CONTROL, Kick Panel, RH
3		140045		7	WASHER, BELLEVILLE, M10
4		88206		7	BOLT, Hex, 3/8"-16 x 1", G5, Full Thd
5		291308		X	STRIP, SEALING, 2.6 Ft. Required
6		87361		3	WASHER, 1/4", SAE
7		88146		3	BOLT, Hex, 1/4"-20 x 1", G5
8		87557478		1-3	FASTENER, Screw; Only (1) Used When Boot Retainer Plate Is Used
9		87318948		3	FASTENER, Washer, .281 x .625 x .075 HDN ZND
10		87357132		1	PANEL, CONTROL, Control Tower RH
11		87610699		2	FASTENER, Spacer; 1/4 Pipe x 6.4 mm
12		87716		2	BOLT, Hex, 1/4"-20 x 1 1/4", G5
13		87557965		1	PLATE, Boot Retainer; If Used
13A		84177615		1	PLATE, Boot Retainer Plate
14		86639325		1	WASHER, M10 x 24.5 x 3, HT, If Used
		87609685		1	KIT, SERVICE, Boot Retainer Kit; Incl. 11 - 13 And Instructions

29.212.03	04	p1	07/09

HAND CONTROL - PILOT CONTROL, UPPER LH

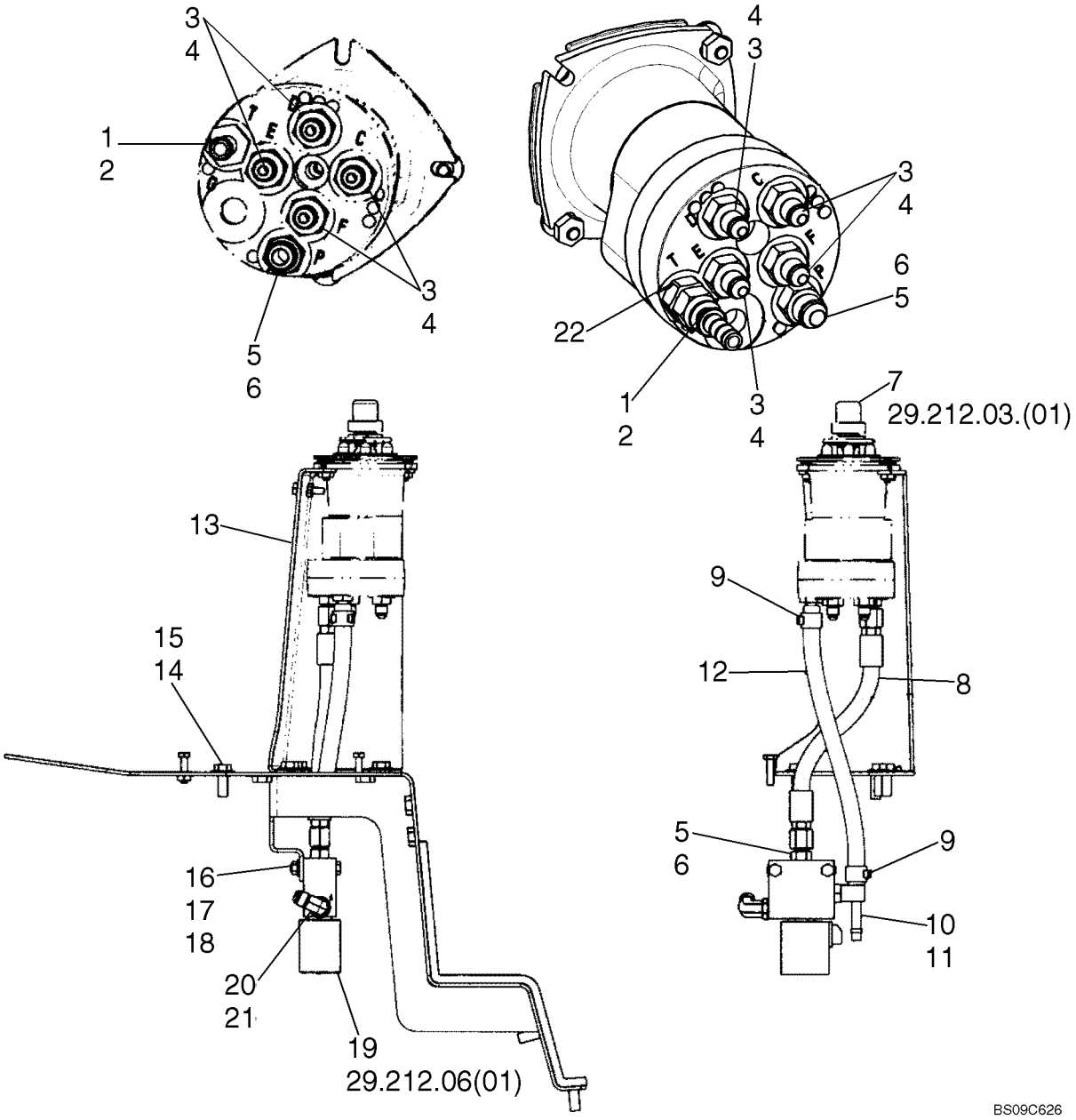

HAND CONTROL - PILOT CONTROL, UPPER LH

REF	FN	PART NUMBER	YR/SN	QTY	DESCRIPTION
1		87360975		1	CONNECTOR, HYD., 3/8" Barb x 9/16"-18 x 2 3/16" L, Incl. 2; No Longer Used
1		87580812		1	ADAPTER, Fitting, Female 37 Deg SW; Replaces 87360975
2		9617873		1	O-RING, 6-1, 90 Duro, .468" ID x .078" Thk
3		139398		4	CONNECTOR, HYD., 7/16"-20, 37º x 9/16"-18, O-Ring, Incl. 4
4		9617873		1	O-RING, 6-1, 90 Duro, .468" ID x .078" Thk
5		76350		2	CONNECTOR, HYD., 9/16"-18, 37º x 9/16"-18, O-Ring, Replaces 76344; Incl 6
6		9617873		1	O-RING, 6-1, 90 Duro, .468" ID x .078" Thk
7		87565841		1	VALVE, CONTROL, Joystick Valve, LH; See Fig. 29.212.03[01]
8		87357176		1	HOSE
9		87584302		2	CLAMP, Clamp, 18mm; Replaces 87019540
10		87357113		1	ADAPTER, Incl. 11
11		237-6006		1	O-RING, 6-1, 90 Duro, .468" ID x .078" Thk
12		87580068		1	HOSE, Hose 260 mm, 10.24 in.; If Used
12		87397695		1	HOSE, 285 mm, 11.22 in.; If Used
13		87357140		1	PANEL, Control Tower, LH
14		140045		1	WASHER, BELLEVILLE, M10
15		88206		1	BOLT, Hex, 3/8"-16 x 1", G5, Full Thd
16		280164		2	BOLT, Hex, 1/4"-20 x 1 3/4", G5
17		87361		2	WASHER, 1/4", SAE, If Used; Used With Bolt 88146
18		7770		2	NUT, 1/4"-20, G5, If Used
18		523282		2	NUT, Flg, USR, 1/4"-20
19		87357112		1	VALVE, HYDRAULIC, Component Parts; See Fig 29.212.03[01]
20		76344		1	ELBOW, 90º, 9/16"-18, 37º x 9/16"-18, O-Ring, Incl. 21
21		9617873		1	O-RING, 6-1, 90 Duro, .468" ID x .078" Thk
22		87579746		1	VALVE, HYDRAULIC, Check Valve, 15 PSI Crack Pressure

HYDRAULIC GEAR PUMP

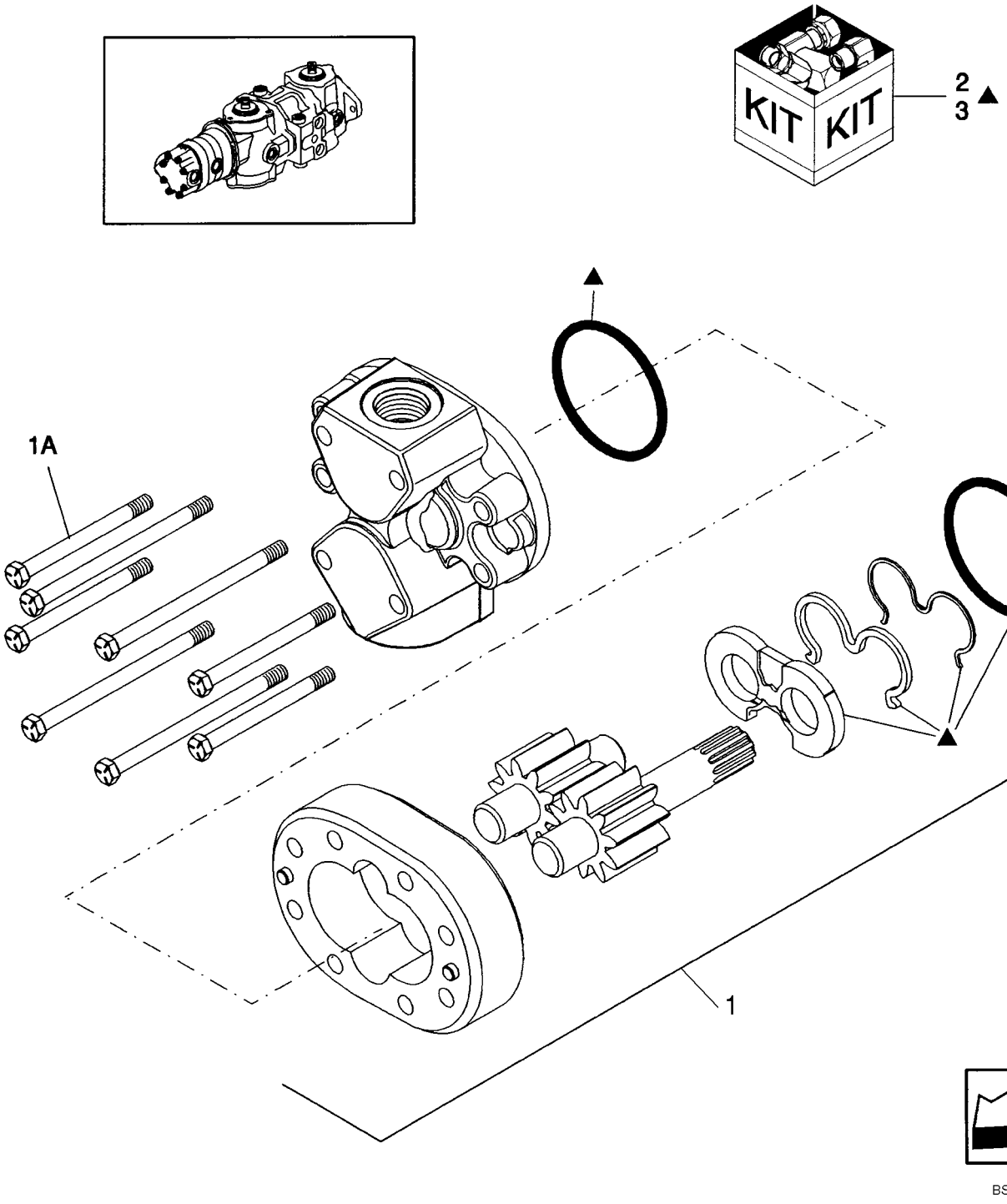

HYDRAULIC GEAR PUMP

REF	FN	PART NUMBER	YR/SN	QTY	DESCRIPTION
1		86566182		1	PUMP, HYDRAULIC, Single, 1.20, Eaton p/n 26000-917; L160; Components Not Serviced Separately
1A		86590564		8	SCREW, Cap, 12-pt Hd, G5, 5/16"-18 x 3-3/4"
1		86566183		1	PUMP, HYDRAULIC, Single, 1.37, Eaton p/n 26000-918, L170; Components Not Serviced Separately
1A		86590565		8	SCREW, Cap, 12-pt Hd, G5, 5/16"-18 x 4"
1		86566184		1	PUMP, HYDRAULIC, Double, 1.86, Eaton p/n 26000-924; L160, High Flow; Components Not Serviced Separately
1A		86591905		8	SCREW, Cap, 12-pt Hd, G5, 5/16"-18 x 6-1/2"
1		86566185		1	PUMP, HYDRAULIC, Double, 2.03, Eaton p/n 26000-916; L170, High Flow; Components Not Serviced Separately
1A		86591906		8	SCREW, Cap, 12-pt Hd, G5, 5/16"-18 x 6-3/4"
2		87042710		1	KIT, SEALS, Single Gear Pump
2		86615177		1	KIT, SEALS, Single Gear Pump, High-Temperature
3		87042711		1	KIT, SEALS, Double Gear Pump
3		86615178		1	KIT, SEALS, Double Gear Pump, High-Temperature

29.212.05	02	p1	04/09

HYDRAULIC GEAR PUMP, STANDARD (L160)

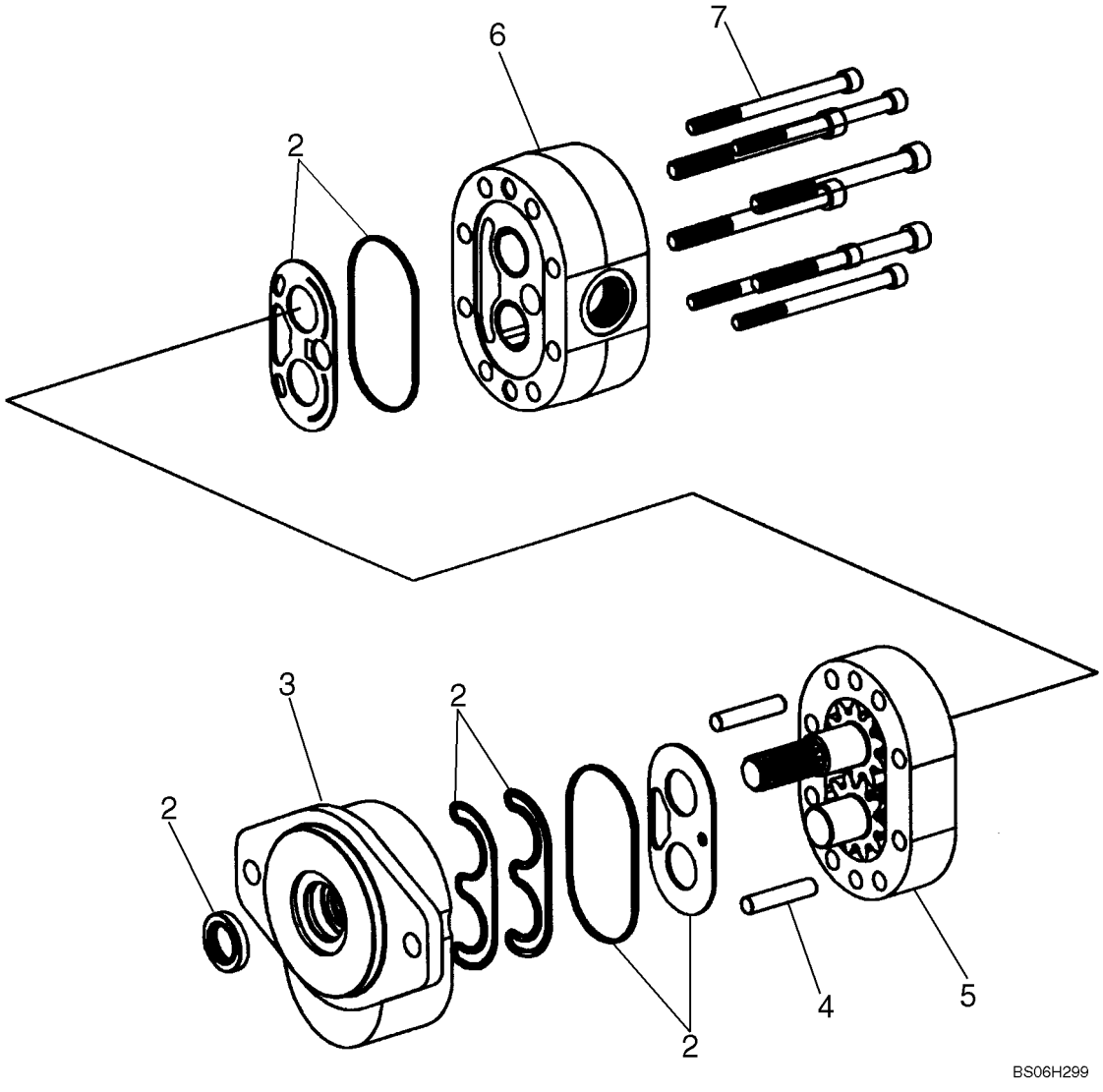

HYDRAULIC GEAR PUMP, STANDARD (L160)

REF	FN	PART NUMBER	YR/SN	QTY	DESCRIPTION
		87542671		1	PUMP, Gear, Standard; Incl. 2 - 7
2		87042214		1	KIT, SEALS, Seal
3		NSS		1	NOT SERVICED SEPARATELY, Housing
4		NSS		2	NOT SERVICED SEPARATELY, Dowel Pin
5		NSS		1	NOT SERVICED SEPARATELY, Housing, Gear
6		NSS		1	NOT SERVICED SEPARATELY, Housing
7		NSS		8	NOT SERVICED SEPARATELY, Bolt

29.212.05	03	p1	04/09

HYDRAULIC GEAR PUMP (HIGH FLOW) L160

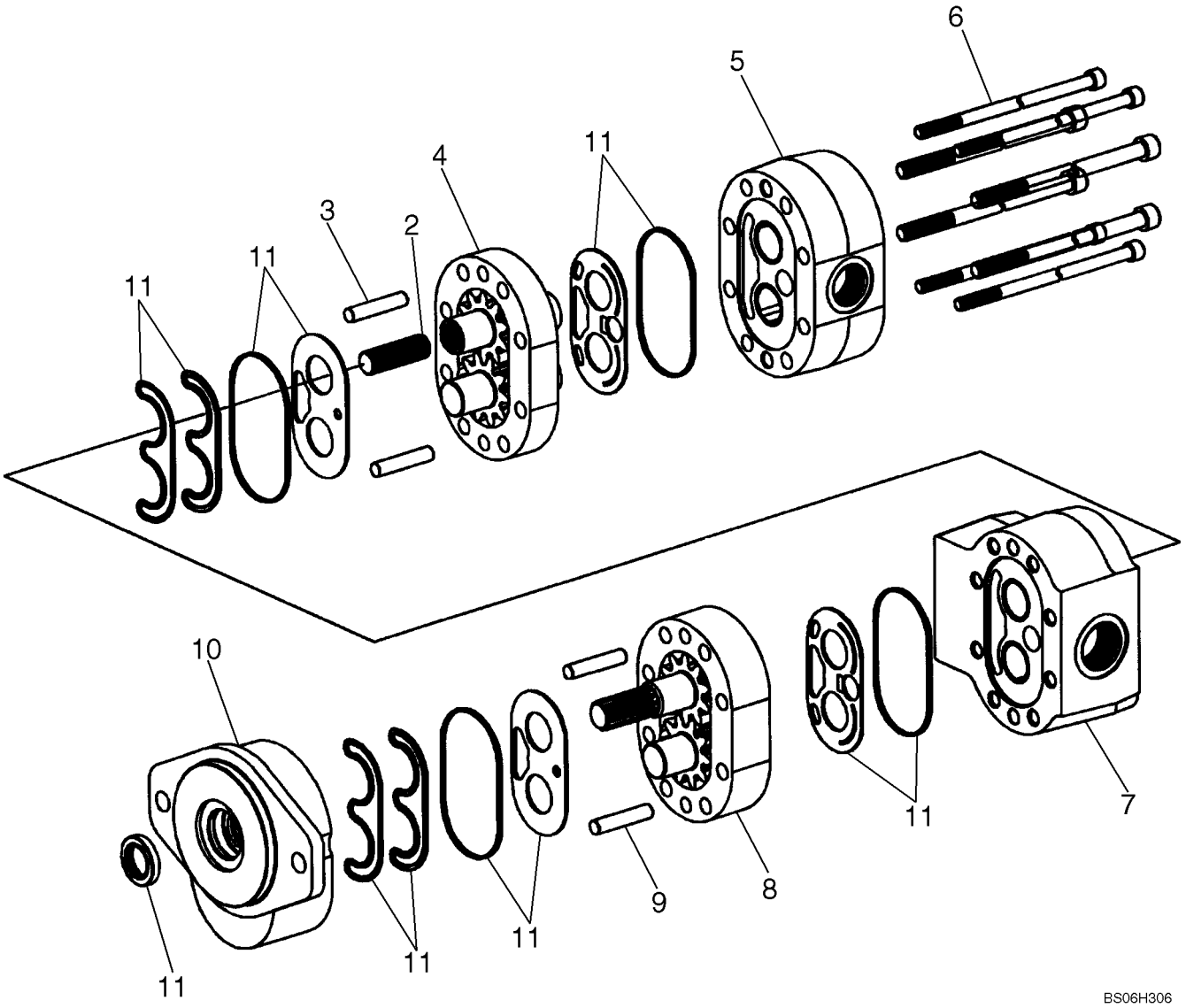

HYDRAULIC GEAR PUMP (HIGH FLOW) L160

REF	FN	PART NUMBER	YR/SN	QTY	DESCRIPTION
		87542672		1	PUMP, Tandem Gear; Incl. 2 - 11
2		NSS		1	NOT SERVICED SEPARATELY, Shaft
3		NSS		2	NOT SERVICED SEPARATELY, Dowel Pin
4		NSS		1	NOT SERVICED SEPARATELY, Housing, Gear
5		NSS		1	NOT SERVICED SEPARATELY, Housing
6		NSS		8	NOT SERVICED SEPARATELY, Bolt
7		NSS		1	NOT SERVICED SEPARATELY, Housing
8		NSS		1	NOT SERVICED SEPARATELY, Housing, Gear
9		NSS		2	NOT SERVICED SEPARATELY, Dowel Pin
10		NSS		1	NOT SERVICED SEPARATELY, Housing, Shaft End
11		87042215		1	KIT, SEALS, Seal Gear Pump

29.212.05	04	p1	04/09

HYDRAULIC GEAR PUMP (HIGH FLOW) L170

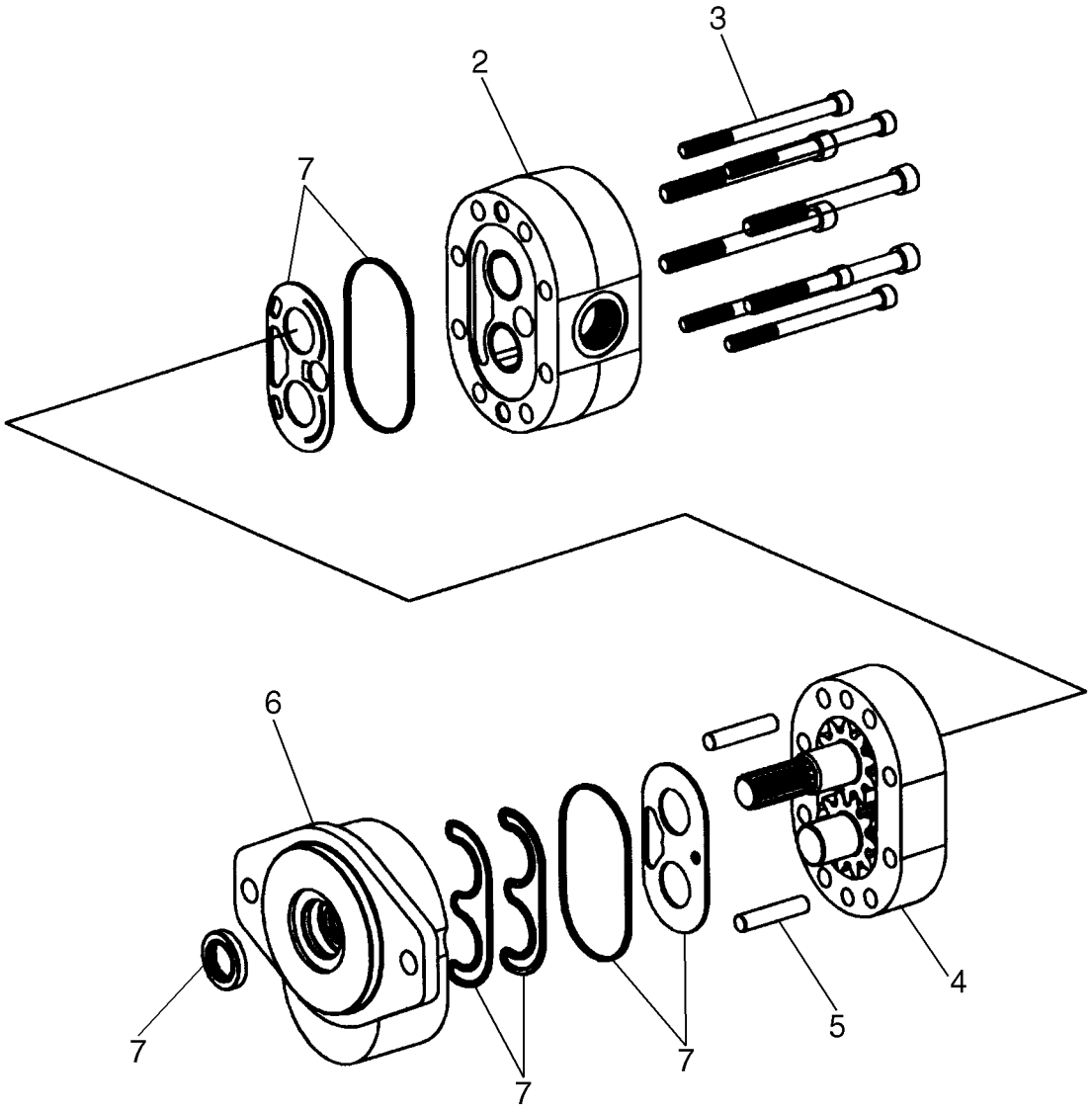

HYDRAULIC GEAR PUMP (HIGH FLOW) L170

REF	FN	PART NUMBER	YR/SN	QTY	DESCRIPTION
		87368988		1	PUMP, Tandem Gear Pump; 3 Ports (1 Inlet/2 Outlet), Incl. 2 - 7
2		NSS		1	NOT SERVICED SEPARATELY, Housing
3		NSS		8	NOT SERVICED SEPARATELY, Bolt
4		NSS		1	NOT SERVICED SEPARATELY, Housing, Gear
5		NSS		2	NOT SERVICED SEPARATELY, Dowel Pin
6		NSS		1	NOT SERVICED SEPARATELY, Housing, Shaftend
7		87042215		1	KIT, SEALS, Gear Pump Seal

HYDRAULIC GEAR PUMP, STANDARD - PILOT CONTROLS (L170)

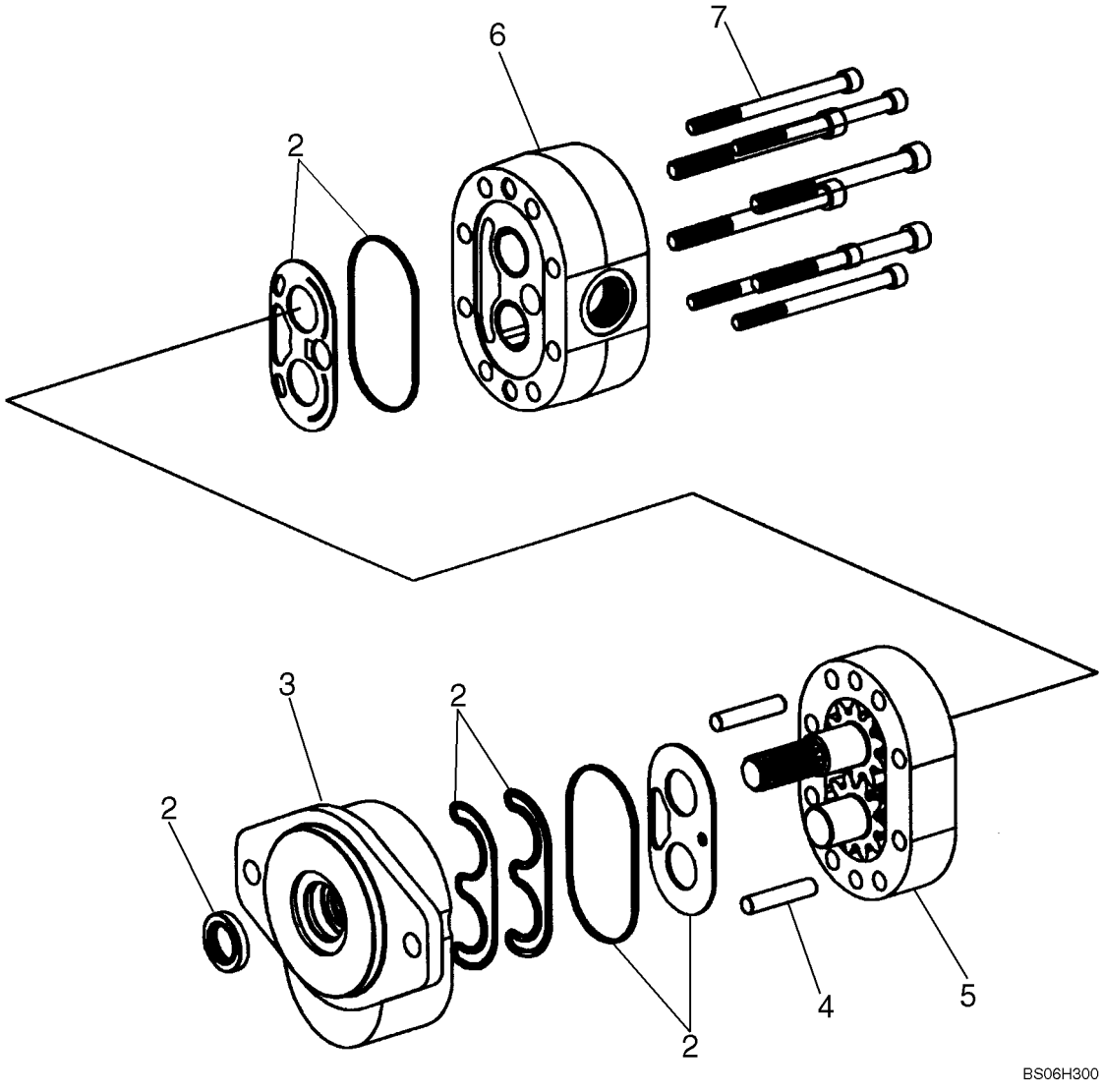

HYDRAULIC GEAR PUMP, STANDARD - PILOT CONTROLS (L170)

REF	FN	PART NUMBER	YR/SN	QTY	DESCRIPTION
		87368980		1	PUMP, Gear; 2 Ports (1 Inlet /1 Outlet); Incl. 2 - 7
2		87042214		1	KIT, SEALS, Seal
3		NSS		1	NOT SERVICED SEPARATELY, Housing
4		NSS		2	NOT SERVICED SEPARATELY, Dowel Pin
5		NSS		1	NOT SERVICED SEPARATELY, Housing, Gear
6		NSS		1	NOT SERVICED SEPARATELY, Housing
7		NSS		8	NOT SERVICED SEPARATELY, Bolt
		87013729		1	O-RING, -044, 70 Duro, 3.739" ID x .070" Thk, Gear Pump Mounting; Incl With Pump 87357097, See Figure 29.212.02 [01]

29.212.05	06	p1	07/09

HYDRAULIC GEAR PUMP, STANDARD - PILOT CONTROL; IF USED

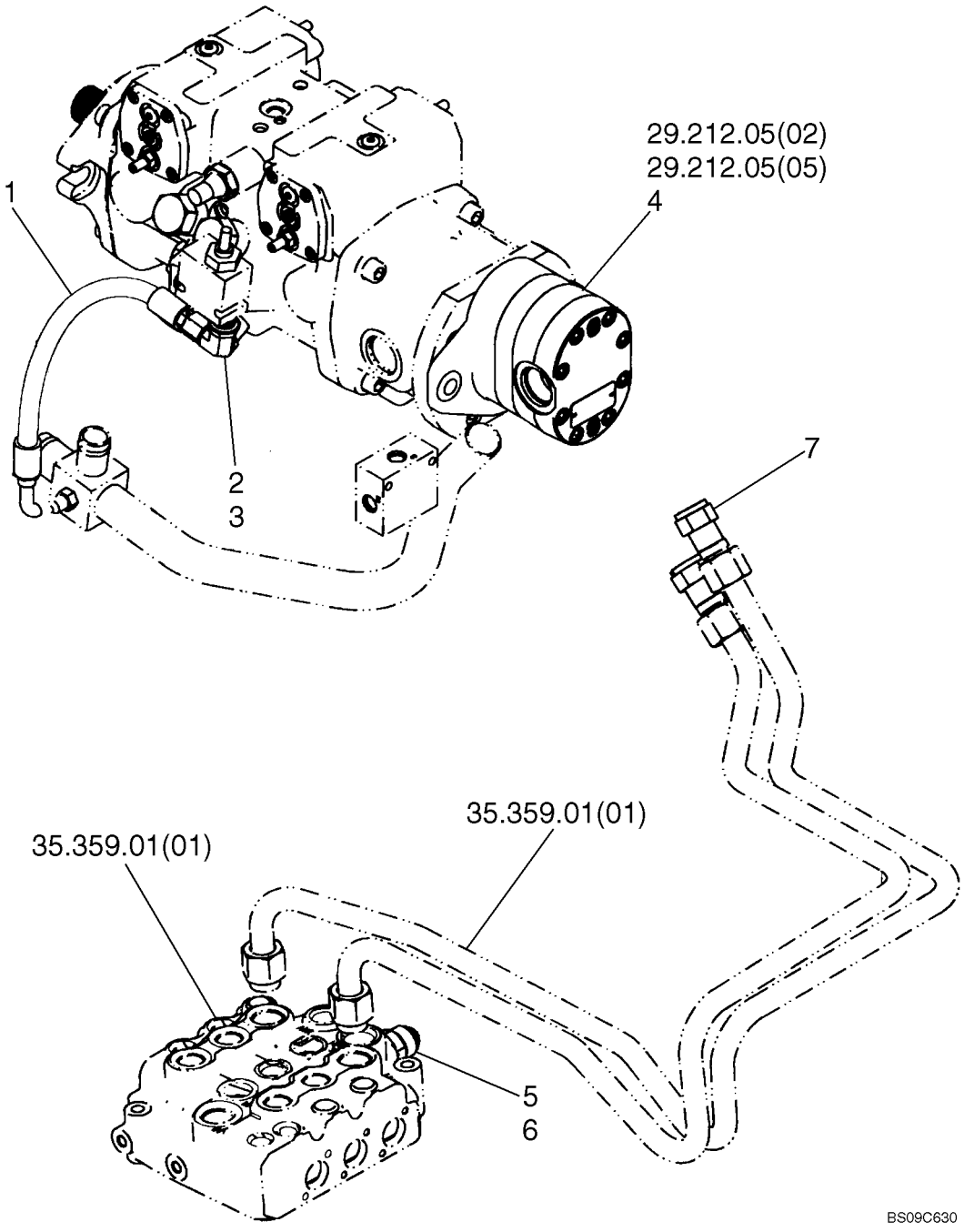

HYDRAULIC GEAR PUMP, STANDARD - PILOT CONTROL; IF USED

REF	FN	PART NUMBER	YR/SN	QTY	DESCRIPTION
1		87357208		1	HOSE, Replaces 87548410; Overide Valve Drain; 360 mm (14.17 in); If Used, Used With Ref 2, 76347
1		87586523		1	HOSE, Interlock Supply; 375 mm (14.76 in); If Used, Used With Ref 2, 128817
2		76347		1	ELBOW, 90º, 9/16"-18, 37º x 3/4"-16, O-Ring, Incl. 3
2		128817		1	CONNECTOR, HYD., 9/16"-18, 37º x 3/4"-18, O-Ring, Incl. 3
3		128825		1	O-RING, 8-1, 90 Duro, .644" ID x .087" Thk
4		87542671		1	PUMP, Gear; Standard - See Fig. 29.212.05 [02]; L160
4		87368980		1	PUMP, Gear; Standard - See Fig. 29.212.05 [05]; L170
5		322896		1	CONNECTOR, HYD., 1 1/16"-12, 37º x 1 1/16"-12, O-Ring, Incl 6
6		167266		1	O-RING, 12-1, 90 Duro, .924 ID x .116" Thk
7		9845877		2	ADAPTER, 1 1/16"-12 Male x 7/8"-14 Fem, 37º Fl

29.212.05	07	p1	07/09

HYDRAULIC GEAR PUMP, STANDARD - PILOT CONTROL; IF USED

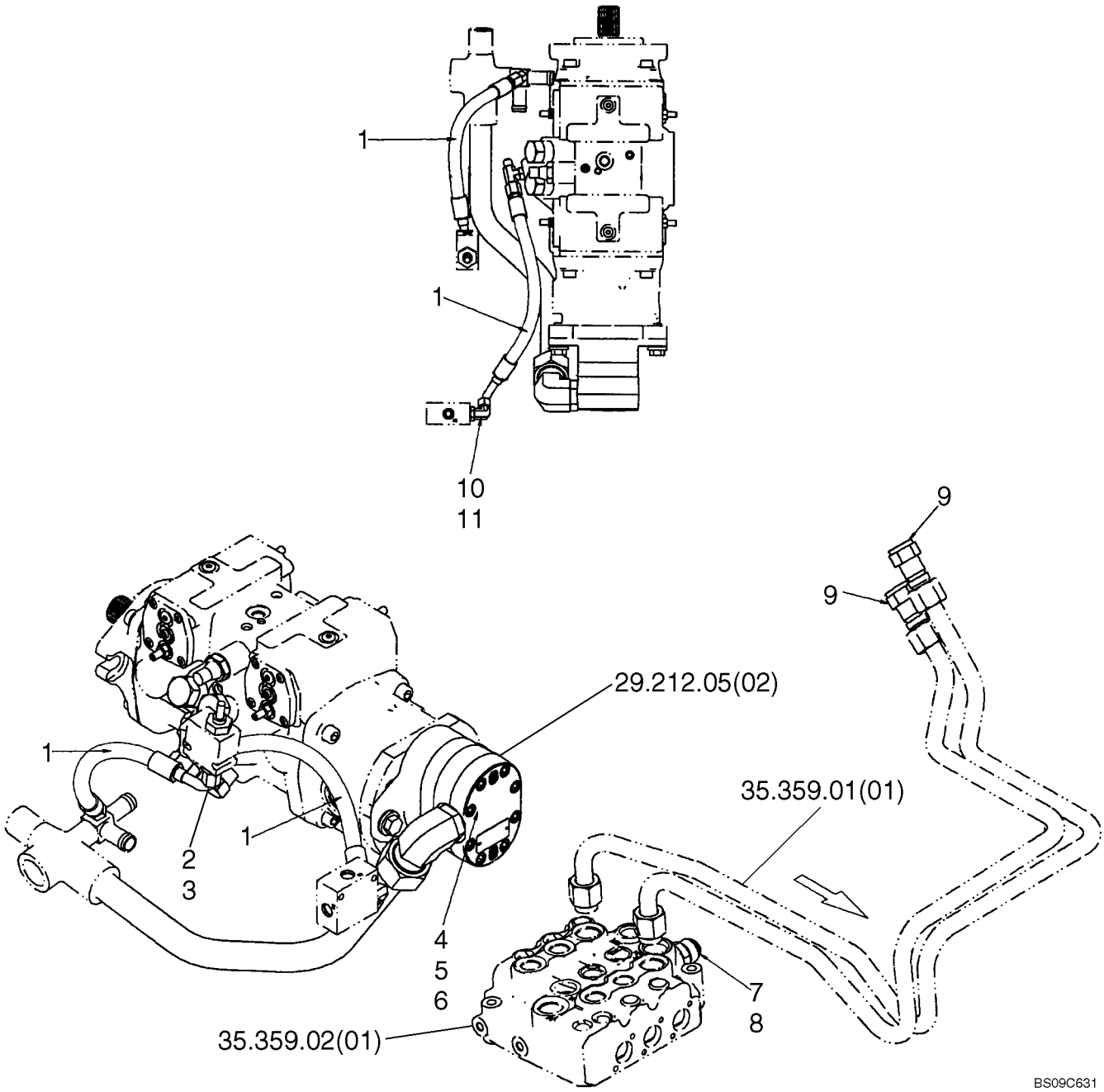

HYDRAULIC GEAR PUMP, STANDARD - PILOT CONTROL; IF USED

REF	FN	PART NUMBER	YR/SN	QTY	DESCRIPTION
1		87586523		2	HOSE, Interlock Supply; 375 mm (14.76 in)
2		128817		1	CONNECTOR, HYD., 9/16"-18, 37º x 3/4"-18, O-Ring, Incl. 3
3		128825		1	O-RING, 8-1, 90 Duro, .644" ID x .087" Thk
4		87689		2	BOLT, Hex, 1/2"-13 x 1 1/2", G5, Full Thd
5		86625256		2	WASHER, M12 x 28.5 x 4, HT
6		87542671		1	PUMP, Gear; Standard - See Fig 29.212.05 [02]; L160
7		322896		1	CONNECTOR, HYD., 1 1/16"-12, 37º x 1 1/16"-12, O-Ring, Incl 8
8		167266		1	O-RING, 12-1, 90 Duro, .924 ID x .116" Thk
9		9845877		2	ADAPTER, 1 1/16"-12 Male x 7/8"-14 Fem, 37º Fl

VALVE - HAND CONTROL

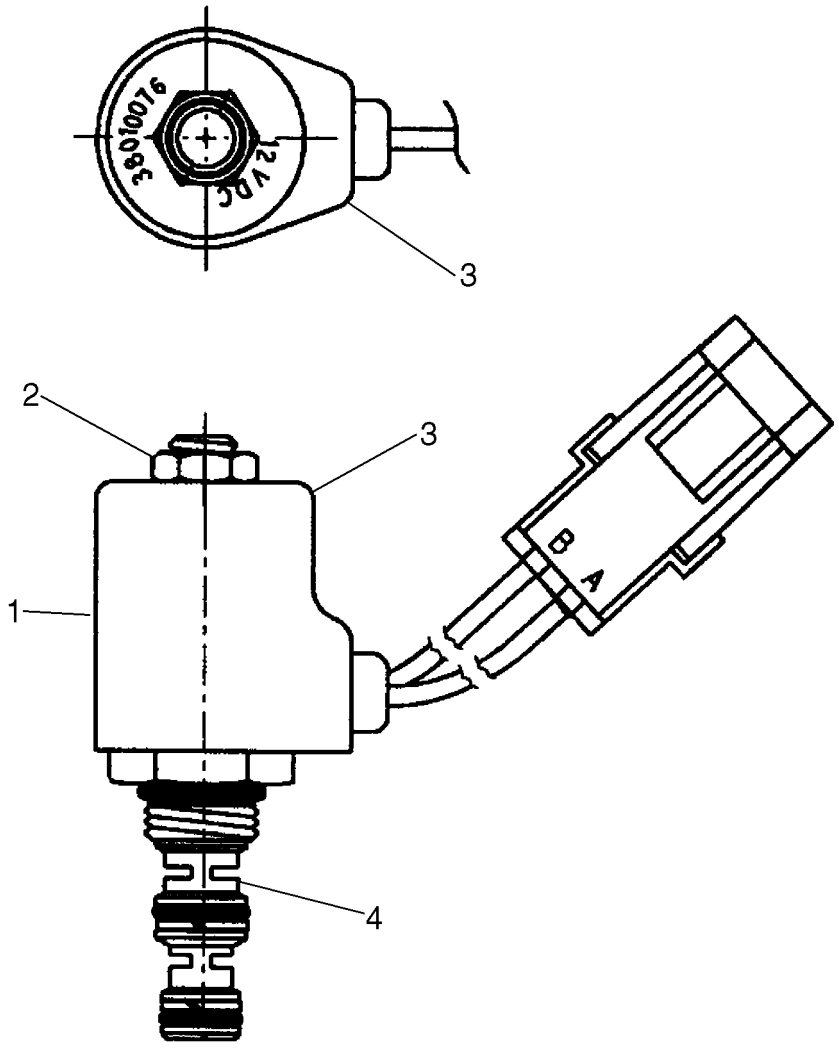

BS08N150

VALVE - HAND CONTROL

REF	FN	PART NUMBER	YR/SN	QTY	DESCRIPTION
		87357112		1	VALVE, HYDRAULIC, Incl 1 - 4 And Seal Kit 87599278
1		NSS		1	NOT SERVICED SEPARATELY, Valve Body
2		NSS		1	NOT SERVICED SEPARATELY, Nut, Hex
3		NSS		1	NOT SERVICED SEPARATELY, 12 VDC Coil; p/n 38010076
4		NSS		1	NOT SERVICED SEPARATELY, MC - S3A-00
5		87599278		1	KIT, SERVICE, Seal Interlock Valve

29.212.06	02	p1	09/09

VALVE - HAND CONTROL

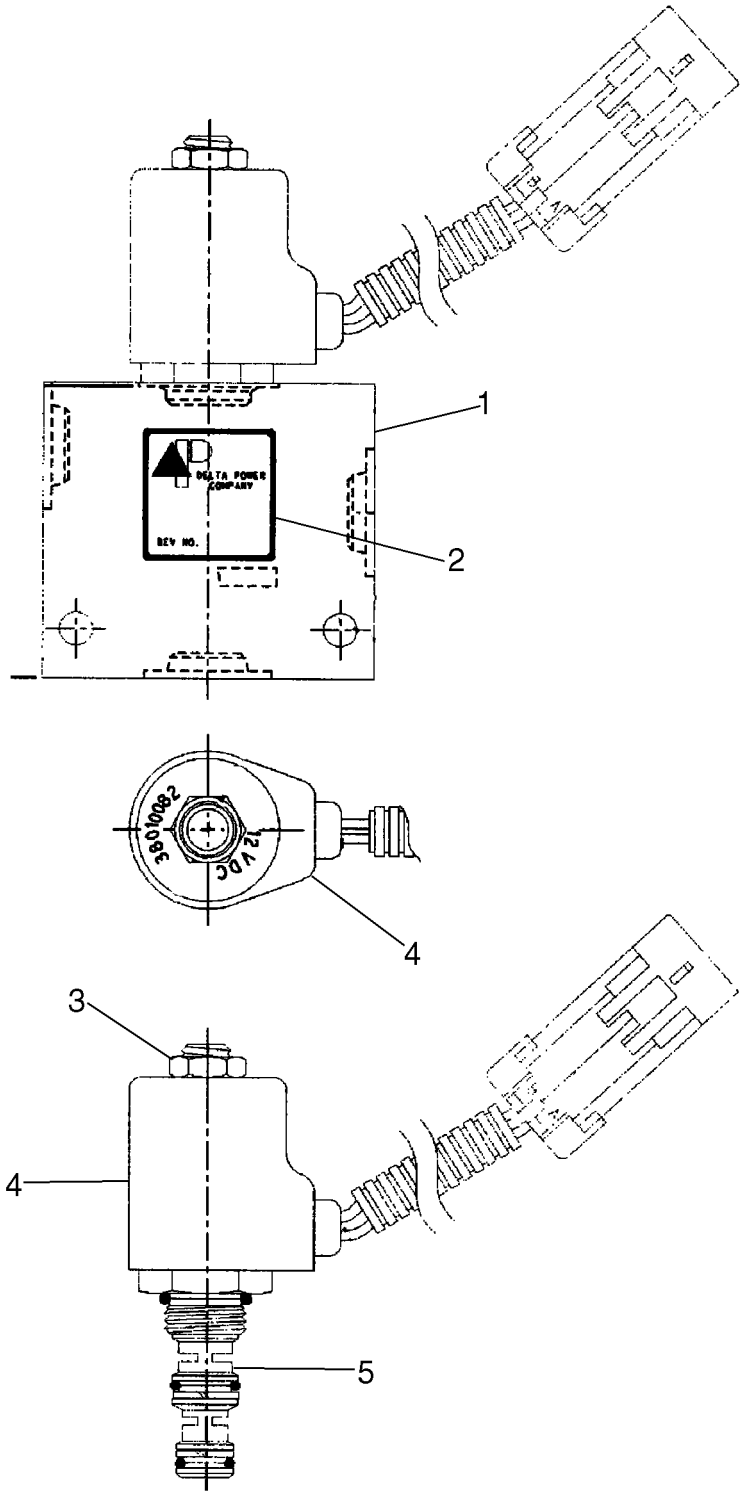

VALVE - HAND CONTROL

REF	FN	PART NUMBER	YR/SN	QTY	DESCRIPTION
		84128135		1	VALVE, PILOT, Incl 1 - 6
1		NSS		1	NOT SERVICED SEPARATELY, Valve Body
2		NSS		2	NOT SERVICED SEPARATELY, Body Tag
3		NSS		1	NOT SERVICED SEPARATELY, Nut, Hex
4		NSS		1	NOT SERVICED SEPARATELY, 12 VDC Coil; p/n 38010082
5		NSS		1	NOT SERVICED SEPARATELY, MC - S3A-00
6		NSS		1	NOT SERVICED SEPARATELY, #6 SAE Plug, Plastic; Not illustrated

REXROTH PUMP AA20

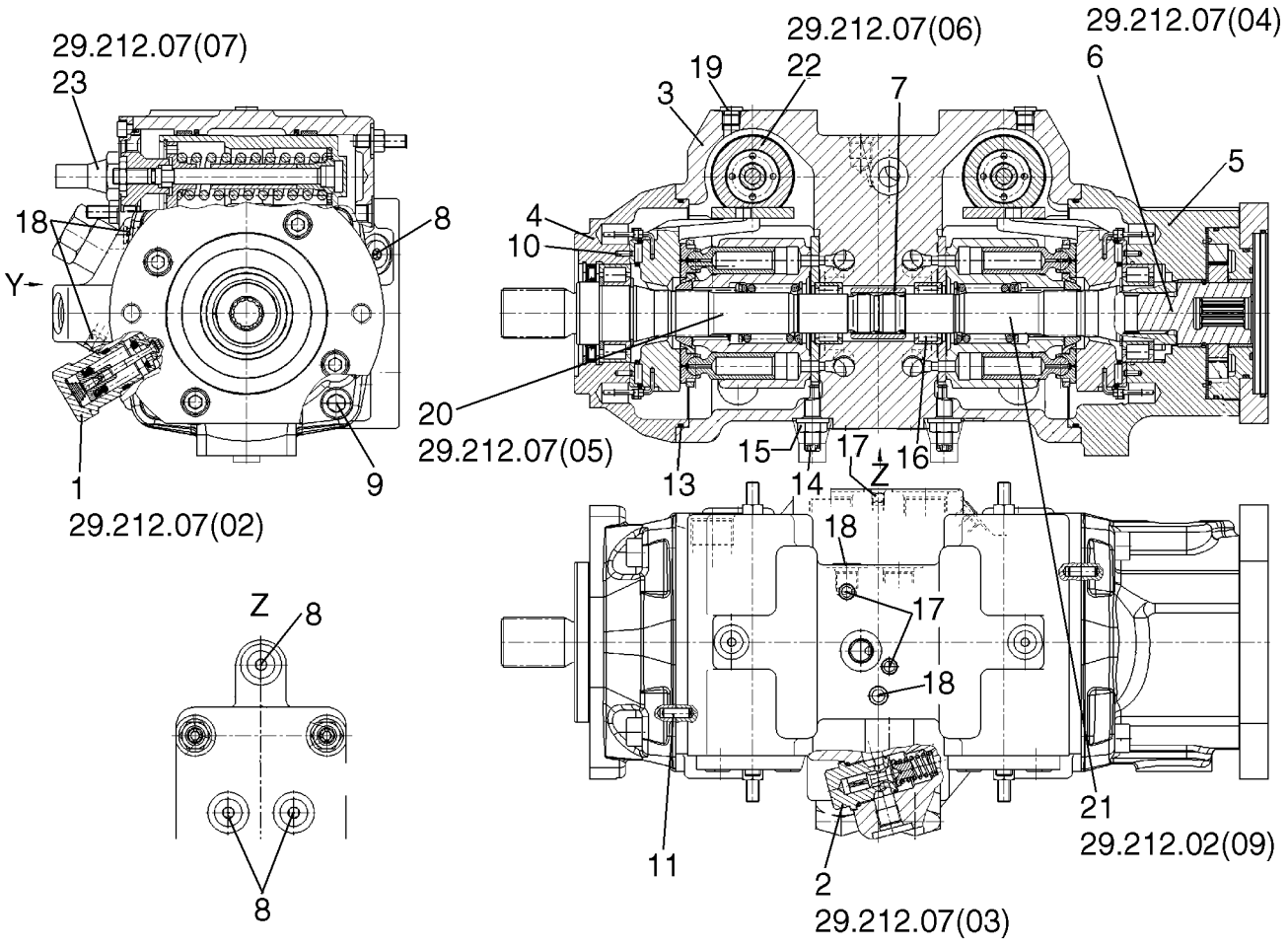

REXROTH PUMP AA20

REF	FN	PART NUMBER	YR/SN	QTY	DESCRIPTION
		87357097			PUMP, Rexroth Pump A20 (R902103498); Incl 1 - 25 And O-Ring 87013729
		87013729		1	O-RING, -044, 70 Duro, 3.739" ID x .070" Thk, Gear Pump Mounting
1		87553603		4	VALVE, PRESSURE RELIEF, Pressure Relief Valve, HD 250 - 530 Bar; See Fig. 29.212.07 [02]
2		87553604		1	VALVE, PRESSURE RELIEF, Pressure Relief Valve, 15 - 30 Bar R-Ring Viton; See Fig. 29.212.07 [03]
3		87553605		1	HOUSING, Pump Housing
4		87553606		1	FLANGE, Bearing, Flange
5		87553607		1	FLANGE, Bearing, Flange With Bushing
6		87553608		1	PUMP, Internal Gear Pump; See Fig. 29.212.07 [04]
7		87553609		1	COUPLING, Through Drive Coupling
8		87553611		5	SCREW, LOCK, Locking Screw, 9/16 - 18UNF
9		87553613		8	SCREW, Socket Head Screw
10		87553614		4	PIN, Clamping Pin
11		87553615		2	PIN, Cylinder Pin
12		87553616		1	O-RING, O-ring; Not Illustrated
13		87553617		2	O-RING, O-ring
14		87553618		2	SCREW, Eccentric Screw
15		87553619		2	NUT, LOCK, Seal, Lock Nut
16		87553620		2	BEARING, ROLLER, Plain Roller Bearing
17		87553621		2	PIN, Double Break Off Pin
18		87553622		2	PIN, Double Break Off Pin
19		87553612		2	SCREW, LOCK, Locking Screw, 7/16 - 20UNF
20		87597298		1	KIT, SERVICE, Rotary Group, RH Rotation; See Fig. 29.212.07 [05]
21		87597302		1	KIT, SERVICE, Rotary Group, LH Rotation; See Fig. 29.212.07 [09]
22		87597305		2	KIT, SERVICE, Control, Hydraulic; See Fig. 29.212.07 [06]
23		87553602		1	CONTROL, Control Cartridge With Orfice; See Fig. 29.212.07 [07], Used w/ 1 Speed Pump
24		87553623		1	VALVE SECTION, Locking Elements; See Fig. 29.212.07 [08]

REXROTH PUMP AA20

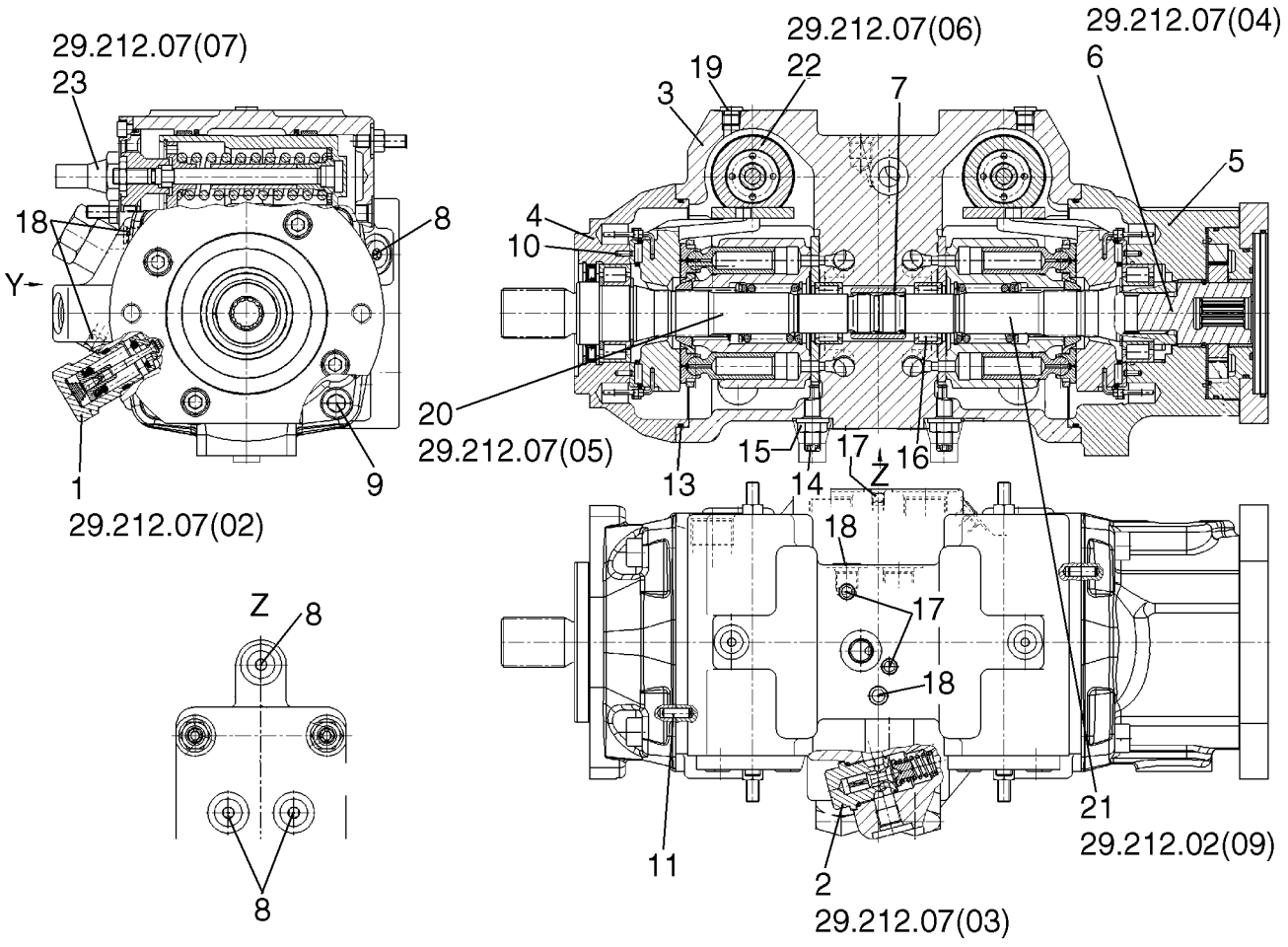

REXROTH PUMP AA20

REF	FN	PART NUMBER	YR/SN	QTY	DESCRIPTION
25		87553610		1	BEARING, Bearing, Bushing; Not Illustrated

PRESSURE RELIEF VALVE

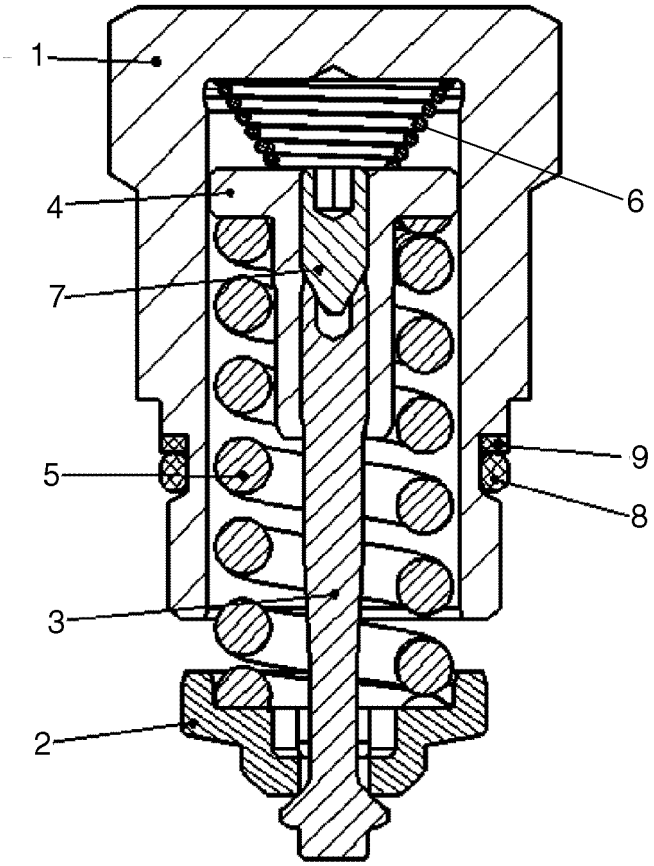

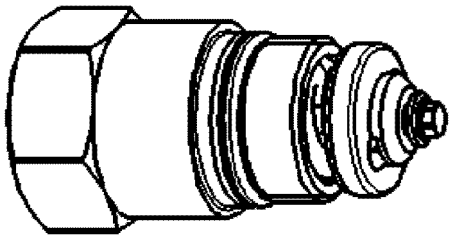

BS06J085

PRESSURE RELIEF VALVE

REF	FN	PART NUMBER	YR/SN	QTY	DESCRIPTION
		87553603		1	VALVE, PRESSURE RELIEF, Pressure Relief Valve; Incl. 1 - 9
1		NSS		1	NOT SERVICED SEPARATELY, Locking Screw
2		NSS		1	NOT SERVICED SEPARATELY, Valve Collar
3		NSS		1	NOT SERVICED SEPARATELY, Valve Spindle
4		NSS		1	NOT SERVICED SEPARATELY, Spring Loading Nut
5		NSS		1	NOT SERVICED SEPARATELY, Pressure Spring
6		NSS		1	NOT SERVICED SEPARATELY, Spring, Cone Shaped
7		NSS		1	NOT SERVICED SEPARATELY, Threaded Pin
8		87597284		1	O-RING, O-ring
9		87597285		1	RING, Back Up Ring

PRESSURE RELIEF VALVE

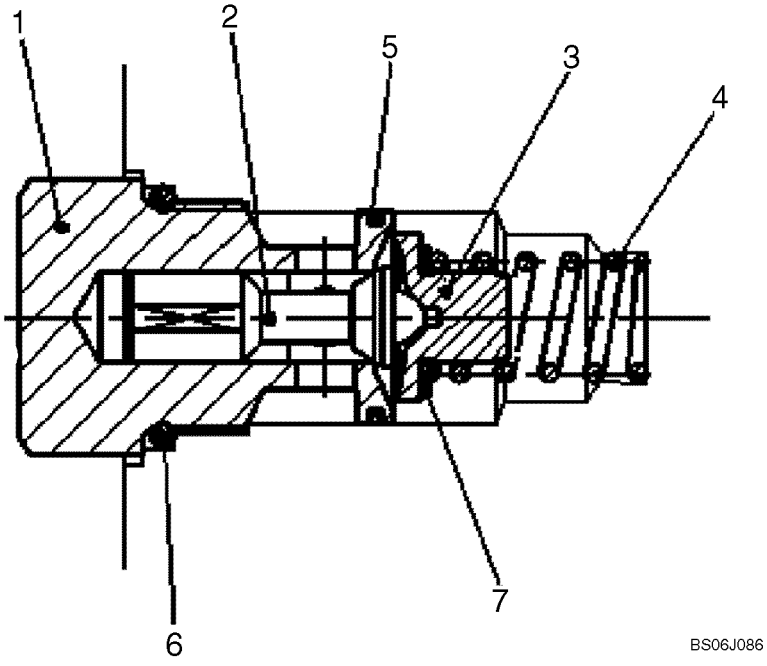

PRESSURE RELIEF VALVE

REF	FN	PART NUMBER	YR/SN	QTY	DESCRIPTION
		87553604		1	VALVE, PRESSURE RELIEF, Pressure Relief Valve; Incl. 1 - 7
1		NSS		1	NOT SERVICED SEPARATELY, Locking Screw
2		NSS		1	NOT SERVICED SEPARATELY, Valve Piston
3		NSS		1	NOT SERVICED SEPARATELY, Spring Collar
4		NSS		1	NOT SERVICED SEPARATELY, Pressure Spring
5		NSS		1	NOT SERVICED SEPARATELY, Steel Sealing Spring
6		87597286		1	O-RING, O-ring
7		NSS		1	NOT SERVICED SEPARATELY, Shim

INTERNAL GEAR PUMP

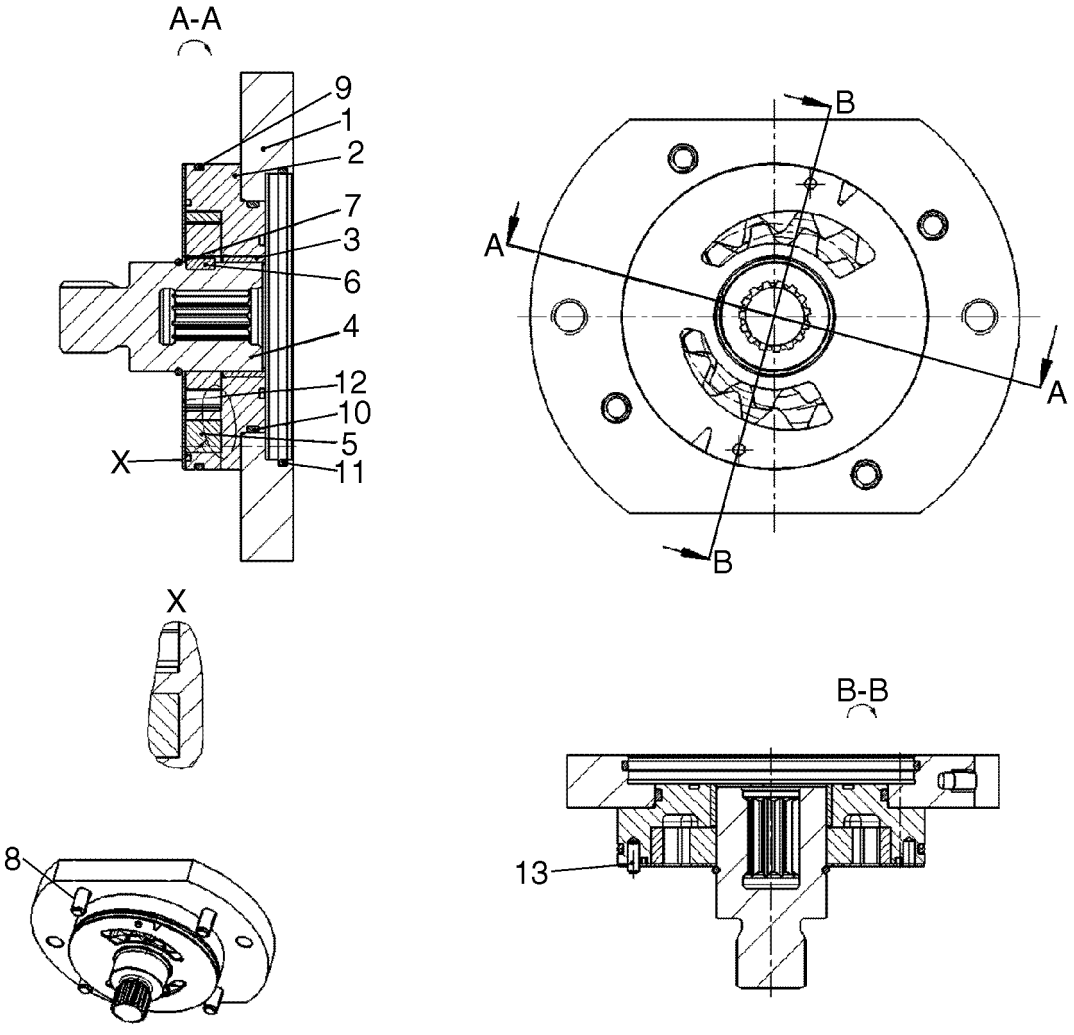

INTERNAL GEAR PUMP

REF	FN	PART NUMBER	YR/SN	QTY	DESCRIPTION
		87553608		1	PUMP, Internal Gear Pump; Incl. 1 - 13
1		87597287		1	FLANGE, Intermediate Flange
2		87597288		1	HOUSING, IZP Housing
3		87553610		1	BEARING, Bearing Bushing
4		87597289		1	COUPLING, Through Drive Coupling
5		87597290		1	WHEEL SET, Wheel Set
6		87597291		1	KEY, Shaft Key
7		87597292		1	RING, SNAP, Snap Ring
8		87597293		4	SCREW, Socket Head Screw
9		87597294		1	O-RING, O-ring
10		87597295		1	O-RING, O-ring
11		87553616		1	O-RING, O-ring
12		87597296		1	PLATE, Wear Plate
13		87597297		1	PIN, Cylinder Pin

29.212.07	05	p1	09/09

ROTARY GROUP, RH ROTATION

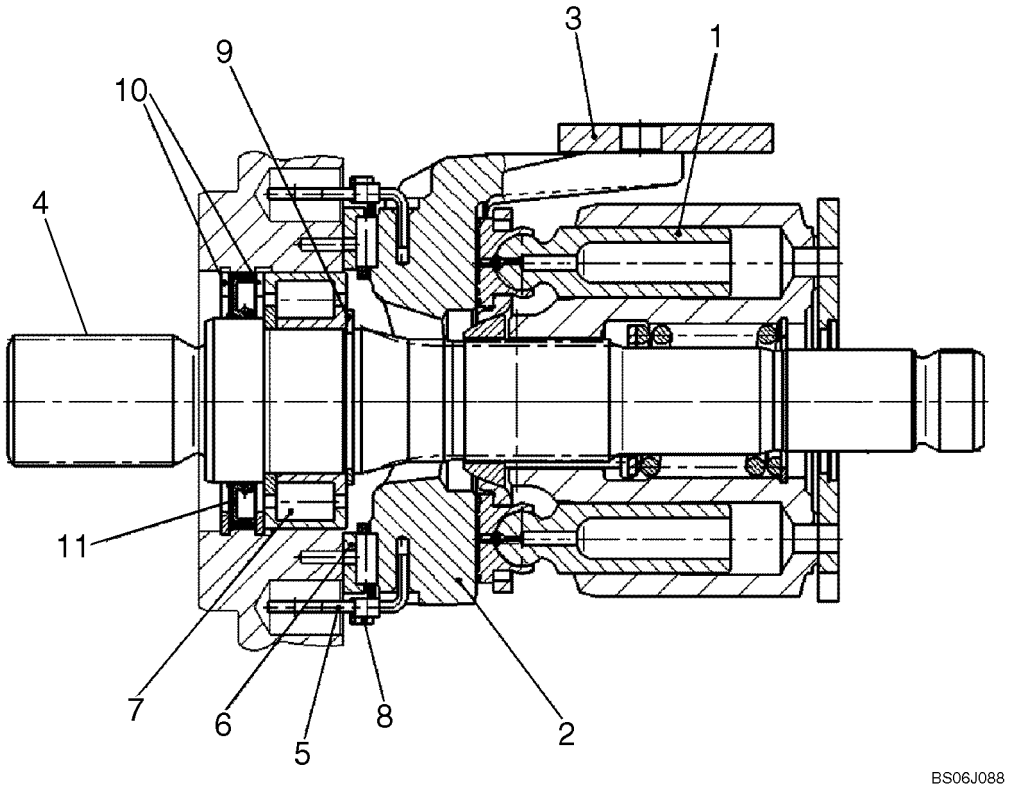

BS06J088

ROTARY GROUP, RH ROTATION

REF	FN	PART NUMBER	YR/SN	QTY	DESCRIPTION
		87597298		1	KIT, SERVICE, Rotary Group, Right Hand Rotation
1		87597299		1	VALVE SECTION, HYD, Rotary Group, Hydraulic Section A20VG
2		87597259		1	CRADLE, Cradle
3		87597260		1	SLIDE, Slide Ring
4		87597301		1	SHAFT, DRIVE, Drive Shaft
5		87597262		2	WIRE, Wire With Coil
6		87597263		1	BEARING LINER, Bearing Liner (pair)
7		87597264		1	BEARING, Plain Roller Bearing
8		87597265		1	CRADLE, Cradle Bearing Assembly (set)
9		87597266		1	RING, Retaining Ring
10		87597267		2	RING, Seeger V-ring
11		87597268		1	RING, Shaft Seal Ring

CONTROL, HYDRAULIC

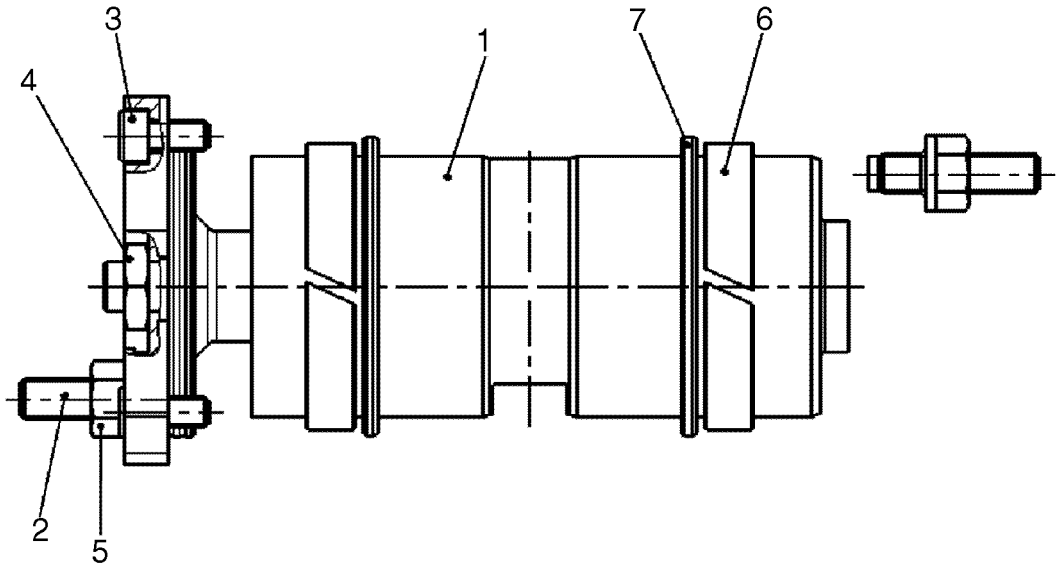

BS06J083

CONTROL, HYDRAULIC

REF	FN	PART NUMBER	YR/SN	QTY	DESCRIPTION
		87597305		1	KIT, SERVICE, Control, Hydraulic; Incl. 1 - 7
1		87597314		1	PISTON, Positioning Piston, Complete
2		87597274		2	PIN, Threaded Pin
3		87597275		4	SCREW, Socket Head Screw
4		87597276		1	NUT, Hexagon Nut
5		87597277		2	NUT, Seal, Lock Nut
6		87597281		2	RING, GUIDE, Guide Ring
7		87597282		2	KIT, SERVICE, Rod, Seal Kit

CONTROL CARTRIDGE WITH ORIFICE

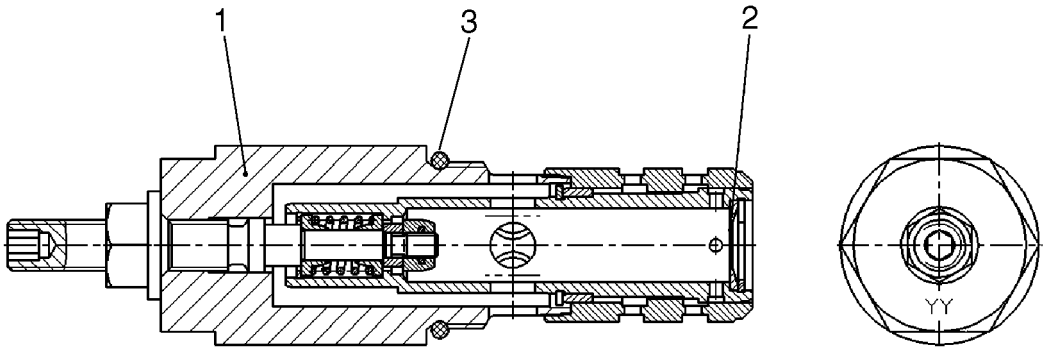

BS07A093

CONTROL CARTRIDGE WITH ORIFICE

REF	FN	PART NUMBER	YR/SN	QTY	DESCRIPTION
		87553602		1	CONTROL, Control Cartridge With Orifice; Incl. 1 - 3, Used w/ 1 Speed Pump
1		87597283		1	CARTRIDGE, Control Cartridge W/O Orifice
2		NSS		1	NOT SERVICED SEPARATELY, Orifice
3		87597284		1	O-RING

VALVE SECTION - LOCKING ELEMENTS

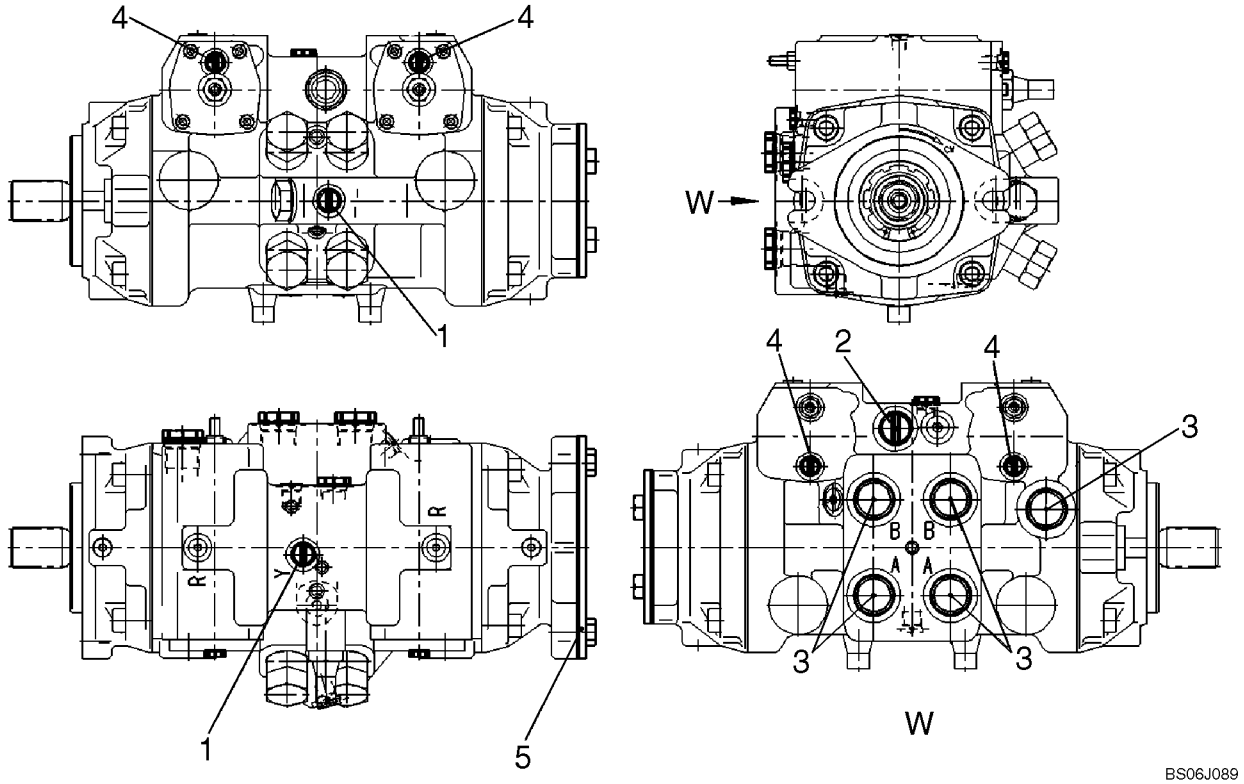

BS06J089

VALVE SECTION - LOCKING ELEMENTS

REF	FN	PART NUMBER	YR/SN	QTY	DESCRIPTION
		87553623		1	VALVE SECTION, Locking Elements; Incl. 1 - 5
1		NSS		2	NOT SERVICED SEPARATELY, Seal Screw
2		NSS		1	NOT SERVICED SEPARATELY, Seal Screw
3		NSS		5	NOT SERVICED SEPARATELY, Seal Screw
4		NSS		4	NOT SERVICED SEPARATELY, Seal Screw
5		NSS		1	NOT SERVICED SEPARATELY, Flange Cover, Complete

ROTARY GROUP, LH ROTATION

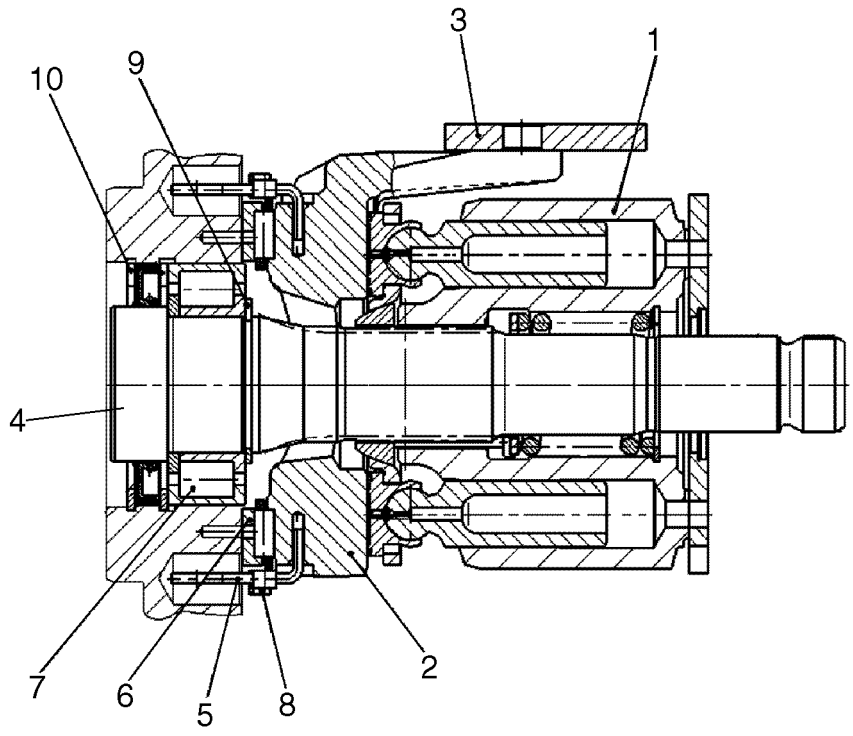

ROTARY GROUP, LH ROTATION

REF	FN	PART NUMBER	YR/SN	QTY	DESCRIPTION
		87597302		1	KIT, SERVICE, Rotary Group, LH Rotation; Incl. 1 - 10
1		87597303		1	VALVE SECTION, HYD, Rotary Group, Hydraulic Section A20VG
2		87597259		1	CRADLE, Cradle
3		87597260		1	SLIDE, Slide Ring
4		87597271		1	SHAFT, DRIVE, Drive Shaft
5		87597262		2	WIRE, Wire With Coil
6		87597263		1	BEARING LINER, Bearing Liner (Pair)
7		87597264		1	BEARING, Plain Roller Bearing
8		87597265		1	CRADLE, Cradle Bearing Assembly (Set)
9		87597266		1	RING, Retaining Ring
10		87597267		1	RING, Seeger V-Ring

29.212.09		p1	04/09

HYDROSTATIC MOTOR

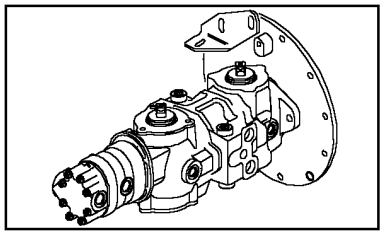

HYDROSTATIC MOTOR

REF	FN	PART NUMBER	YR/SN	QTY	DESCRIPTION
		9842194		2	MOTOR, HYDRAULIC, High-torque; Includes 1 - 29
1		271429		1	RING, SNAP, 1.625", Int, #162
2		274352		1	SEAL, Shaft Seal
3		277062		2	BEARING, ROLLER
4		9848752		1	HOUSING, Incl. Ref. 3
5		271403		1	RACE, Bearing
6		271404		1	BEARING, THRUST
7		86508442		1	PISTON, Race
8		271401		2	PIVOT, Pivot
9		271400		1	SPACER
10		274353		1	PISTON, Incl. (9) Pistons
11		86516483		1	PISTON, Block, Piston
12		271395		1	KEY, 1/4" x 3/16" x 2"
13		86508439		1	SHAFT, CONTROL, Drive
14		271415		1	RING, SNAP, Ext, 1.1250"
15		274882		1	SPRING, Collar
16		NSS		AR	NOT SERVICED SEPARATELY, Washer, .075" (1.9mm)
16		NSS		AR	NOT SERVICED SEPARATELY, Washer, .015" (.38mm)
17		276725		1	SPRING
18		277802		1-2	COLLAR, RETAINER, Second Retainer, If Used, Is Placed Between Ref 8 And 19
19		271407		1	SPIDER
20		271396		1	PISTON ASSY., Incl. (9) Pistons
21		274366		1	PLATE, Connector
22		86977780		1	O-RING, -157, 70 Duro, 4.487" ID x .103" Thk
23		86508440		1	PLATE, Back, Incl. Ref. 3
24		88275		4	BOLT, Hex, 5/16"-18 x 1 1/2", G5
25		9636711		2	BOLT, Hex, 5/16"-18 x 2", G5
26		86508443		2	TOOL, SPECIAL, Thrust; Europe
26		9848755		2	RACE, Thrust; N.A.
27		86837123		1	BEARING, THRUST
28		86628568		1	RACE, RING, Thrust
29		86508431		1	KIT, SEALS, Incl. Ref. 1, 2, 14, 16, 17, 22 & 28

29.212.09		p2	04/09

HYDROSTATIC MOTOR

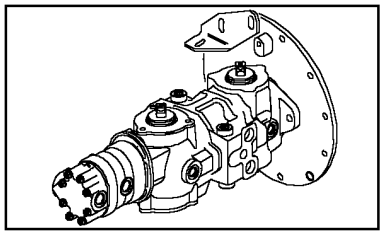

HYDROSTATIC MOTOR

REF	FN	PART NUMBER	YR/SN	QTY	DESCRIPTION
29		86599291		1	KIT, SEALS, High Temperature

29.218.06		p1	05/09

TRANSMISSION CENTERING

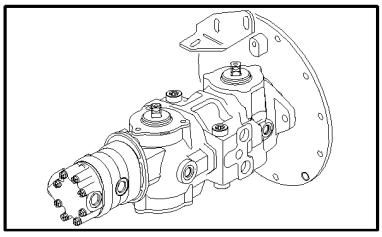

TRANSMISSION CENTERING

REF	FN	PART NUMBER	YR/SN	QTY	DESCRIPTION
1		86535238		1	HUB
2		86500990		1	SPRING
3		9827779		1	BUSHING
4		87012267		1	SUPPORT
5		87541049		2	BLOCK, Block; Replaces 87039346
6		9627879		4	BOLT, Hex, 1/2"-13 x 3/4", G5, Full Thd
7		626698		2	SPACER
8		65319		4	WASHER, M13 x 25 x 3.5, HT
9		87364		1	WASHER, 1/2", SAE
10		87533223		1	PIN, Cap, Shoulder, 12PT PH .5 X 4.0; If Used
10		86506112		1	BOLT, Cap, 12-pt Hd, Shoulder, G8, 3/8"-16 x 5"; If Used
11		9826723		2	SHOCK ABSORBER
12		86590883		2	BOLT, Shoulder, HS, 3/8"-16 x 3-3/4"
13		88044		1	BOLT, Hex, 3/8"-16 x 1 1/2", G5
14		86540327		2	GUIDE, If Used
14		84181774		2	GUIDE, Guide
15		86567393		1	SUPPORT
16		88902		4-12	NUT, LOCK, 3/8"-16, GC
17		285072		7	WASHER, M10 x 22.2 x 2.87 Thk, HT, (3/8")
18		86571511		1	LINK CONROD
19		9706689		2	BOLT, Hex, 3/8"-16 x 1 3/4", G5, If Used
19		88436		2	BOLT, Hex, 3/8"-16 x 2", G5, If Used
20		9628503		8	NUT, 3/8"-16, G5, If Used; Use Ref 16
21		140045		8	WASHER, BELLEVILLE, M10, If Used
21		87016		8	WASHER, 3/8", SAE
22		87012265		1	ARM, Pintle, Rear, Incl. (1) Ref 24, (2) Ref 25; Pressed-In Pin Is Not Serviced Separately; If Used
22		87545502		1	ARM, Pintle, Rear, Incl. (1) Ref 24, (2) Ref 25, 25A; Threaded Pin Is Serviced Separately 87523716; If Used
24		86508667		2	BUSHING
25		9808450		4	BEARING, BALL
25A		87523716		2	SCREW, Threaded Pin For Pintle Arm 87545502
26		280259		2	BOLT, Hex, 3/8"-16 x 2 1/2", G8, If Used

29.218.06		p2	05/09

TRANSMISSION CENTERING

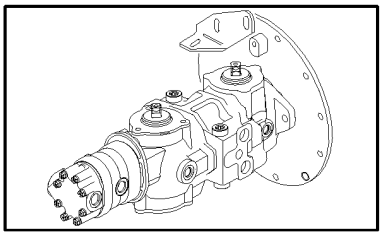

TRANSMISSION CENTERING

REF	FN	PART NUMBER	YR/SN	QTY	DESCRIPTION
26		86575418		2	BOLT, Hex, 3/8"-16 x 2 1/4", G8
27		88682		2	BOLT, CARRIAGE, Short NK, 3/8"-16 x 1", G5
28		9824050		2	O-RING, -021, 90 Duro, .926" ID x .070" Thk
29		86567155		2	SHIELD
30		87012264		1	ARM, Pintle, Front, Incl. (1) Ref 24, (2) Ref 25; Pressed In Pin Is Not Serviced Separately; If Used
30		87545501		1	ARM, Pintle, Front, Incl. (1) Ref 24, (2) Ref 25, 30A; Threaded Pin Is Serviced Separately 87523716; If Used
30A		87523716		2	SCREW, Threaded Pin For Pintle Arm 87545501
34		86567199		1	LINK, CONNECTING
35		280161		2	BOLT, Hex, 3/8"-16 x 3", G5
36		280514		2	BOLT, CARRIAGE, Short NK, 3/8"-16 x 2 1/4", G5
37		86500348		2	BALL JOINT
38		87308		2	NUT, Jam, 3/8"-24, G2

SECTION INDEX
33 - Brakes & controls

33.202.01	01	BRAKES
33.202.01	02	BRAKES, MODELS WITH PILOT CONTROL
33.202.01	03	BRAKE - ON ROAD, PILOT CONTROL
33.202.01	04	BRAKE - ON ROAD, EUROPE

33.202.01	01	p1	05/09

BRAKES

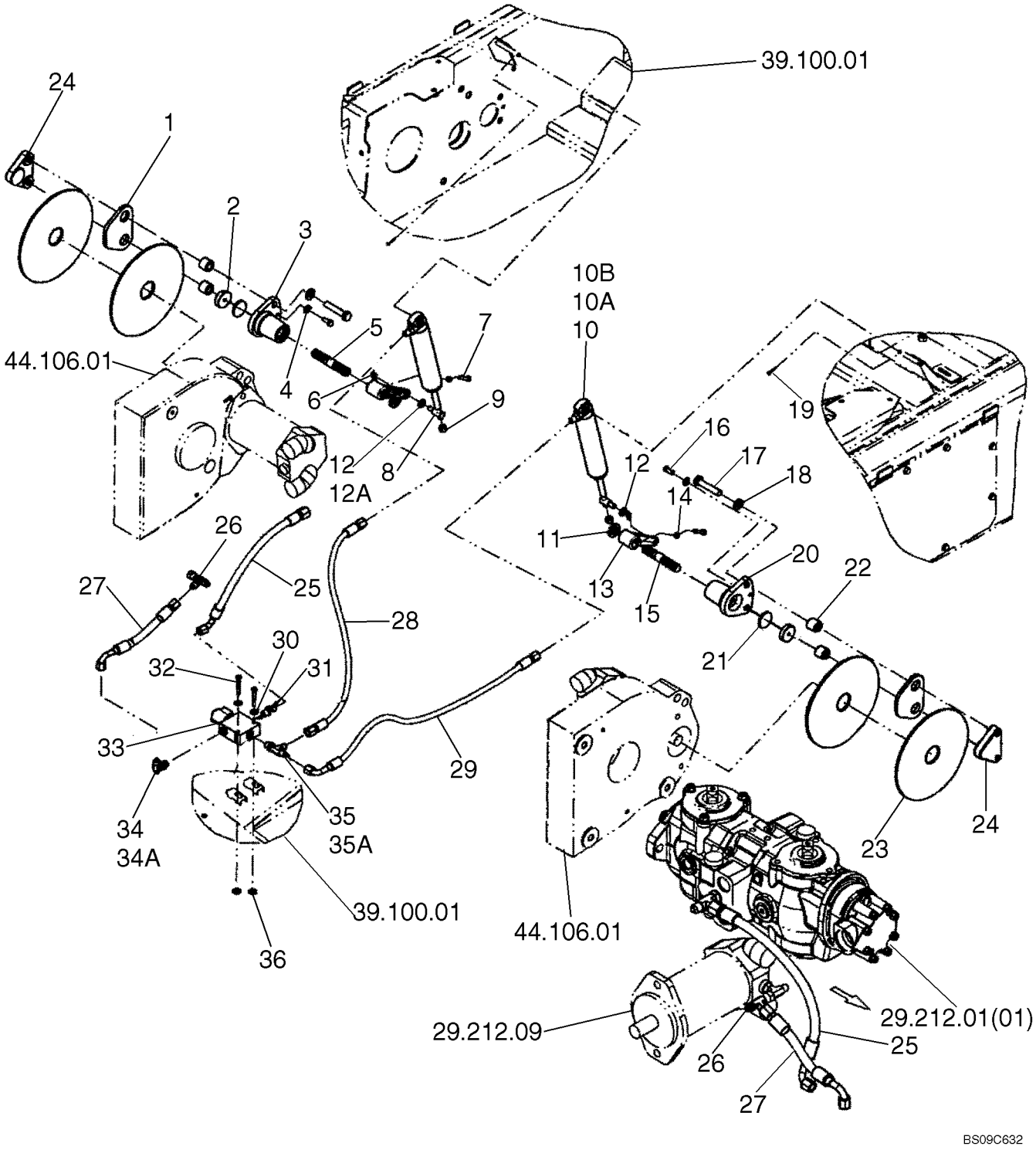

BRAKES

REF	FN	PART NUMBER	YR/SN	QTY	DESCRIPTION
		87384896		1	HARNESS, WIRE, Brake
1		9829925		2	SEPARATOR
2		9829942		2	BRAKE, PAD
3		9844564		1	SUPPORT, LH (LH Thread)
4		322358		2	WASHER, BELLEVILLE, M8
5		9829944		1	SHAFT, LH
6		86617977		2	PIN, SPLIT (COTTER)
7		87716		2	BOLT, Hex, 1/4"-20 x 1 1/4", G5
8		87360153		2	SWIVEL, HYDRAULIC, Swivel
9		87034524		2	NUT, LOCK, 3/8-16 P-T Lock GRD A ZND; If Used
9		9628503		2	NUT, 3/8"-16, G5, If Used
10		87649289		2	CYLINDER, Brake Cylinder; Incl. 10A, 10B; Replaces 87360150
10A		87655022		1	O-RING, Brake Cylinder
10B		87655021		1	BACK-UP RING, Brake Cylinder
11		764135		2	SEAL
12		87016		1-2	WASHER, 3/8", SAE, .406 x 0.812 x 0.065; If Used
12A		285072		1	WASHER, M10 x 22.2 x 2.87 Thk, HT, If Used
13		9841439		2	LEVER, Brake Arm
14		87305		2	NUT, Jam, 1/4"-20, G2
15		9822468		1	SHAFT, RH
16		87872		2	BOLT, Hex, 5/16"-18 x 3/4", G5, Full Thd
17		20987		4	BOLT, Hex, 1/2"-13 x 2 1/2", G8
18		65319		4	WASHER, M13 x 25 x 3.5, HT
19		86617977		2	PIN, SPLIT (COTTER)
20		9844565		1	SUPPORT, RH (RH Thread)
21		9614257		2	PLUG
22		9844995		4	SPACER
23		86534936		4	BRAKE DISC
24		9829910		2	CAP
25		87360286		1	HOSE, Pump
26		129274		1	TEE, 37º, 9/16"-18, x 9/16"-18, Fem Sw Run
27		87360290		1	HOSE, Tank
28		87360264		1	HOSE, Cylinder, RH
29		87360283		1	HOSE, Cylinder, LH

BRAKES

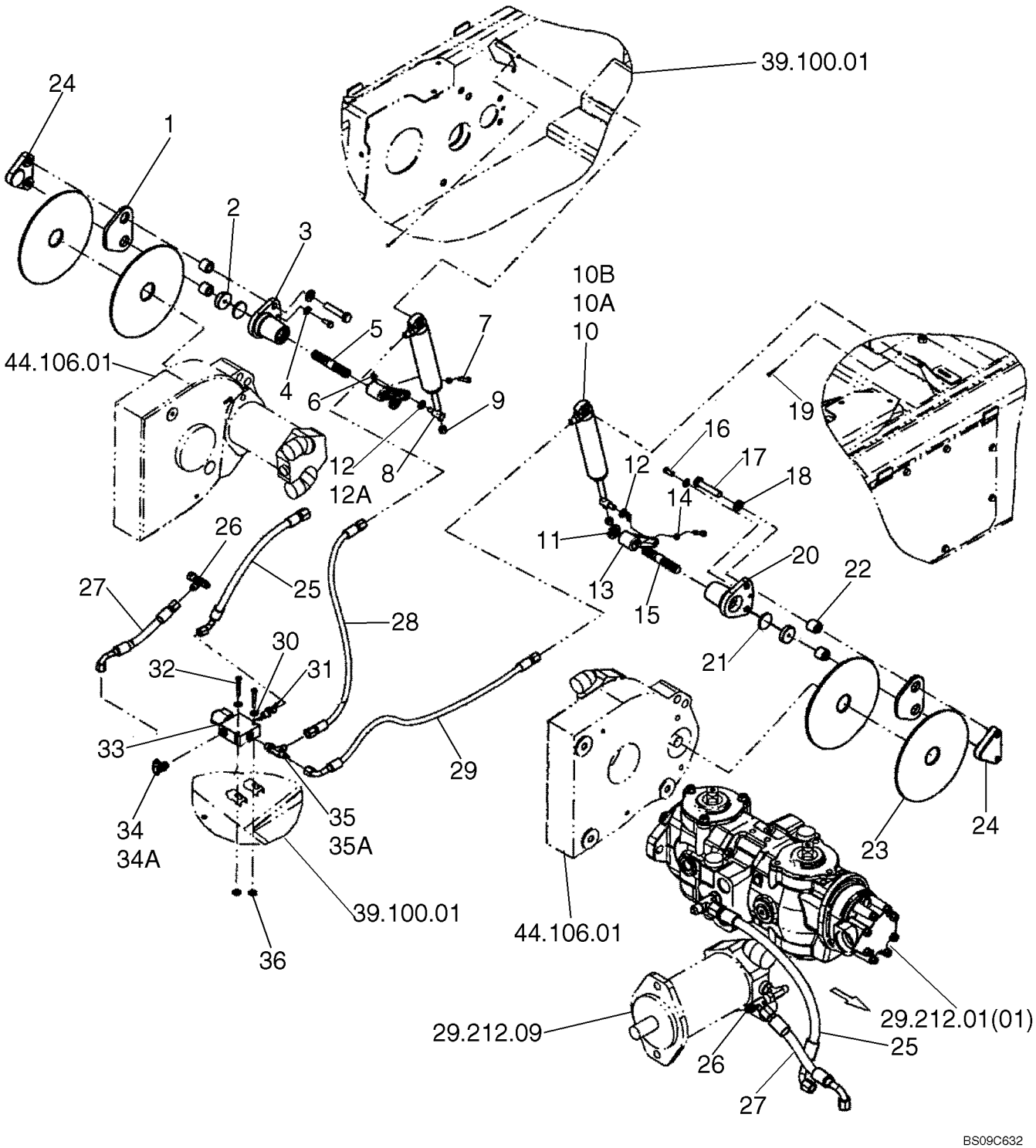
39.100.01
24
1
2
3
44.106.01
4
5
6
7
8
9
10B
10A
10
12
12A
16
17
18
19
14
11
13
15
20
22
21
26
27
25
28
30
32
31
33
34
34A
35
35A
29
36
39.100.01
44.106.01
23
24
29.212.09
26
27
25
29.212.01(01)
BS09C632

BRAKES

REF	FN	PART NUMBER	YR/SN	QTY	DESCRIPTION
30		87361		2	WASHER, 1/4", SAE
31		87648321		1	VALVE, CHECK, 10 PSI Crack Pressure; Replaces 87361240 Check Valve, 65 PSI Crack Pressure
32		86977790		2	SCREW, Hex, M6 x 45, 8.8, If Used
32		43118		2	BOLT, Hex, M6 x 40, 8.8, If Used
33		87360222		1	CARTRIDGE, Valve; Components Not Serviced Separately
34		76344		1	ELBOW, 90º, 9/16"-18, 37º x 9/16"-18, O-Ring, Incl. 34A
34A		9617873		1	O-RING, 6-1, 90 Duro, .468" ID x .078" Thk
35		86513020		1	TEE, 9/16"-18, 37º x 9/16"-18, O-Ring Run, Incl. 35A
35A		9617873		1	O-RING, 6-1, 90 Duro, .468" ID x .078" Thk
36		87404992		2	NUT, Square; M6 x 1

33.202.01	02	p1	03/09

BRAKES, MODELS WITH PILOT CONTROL

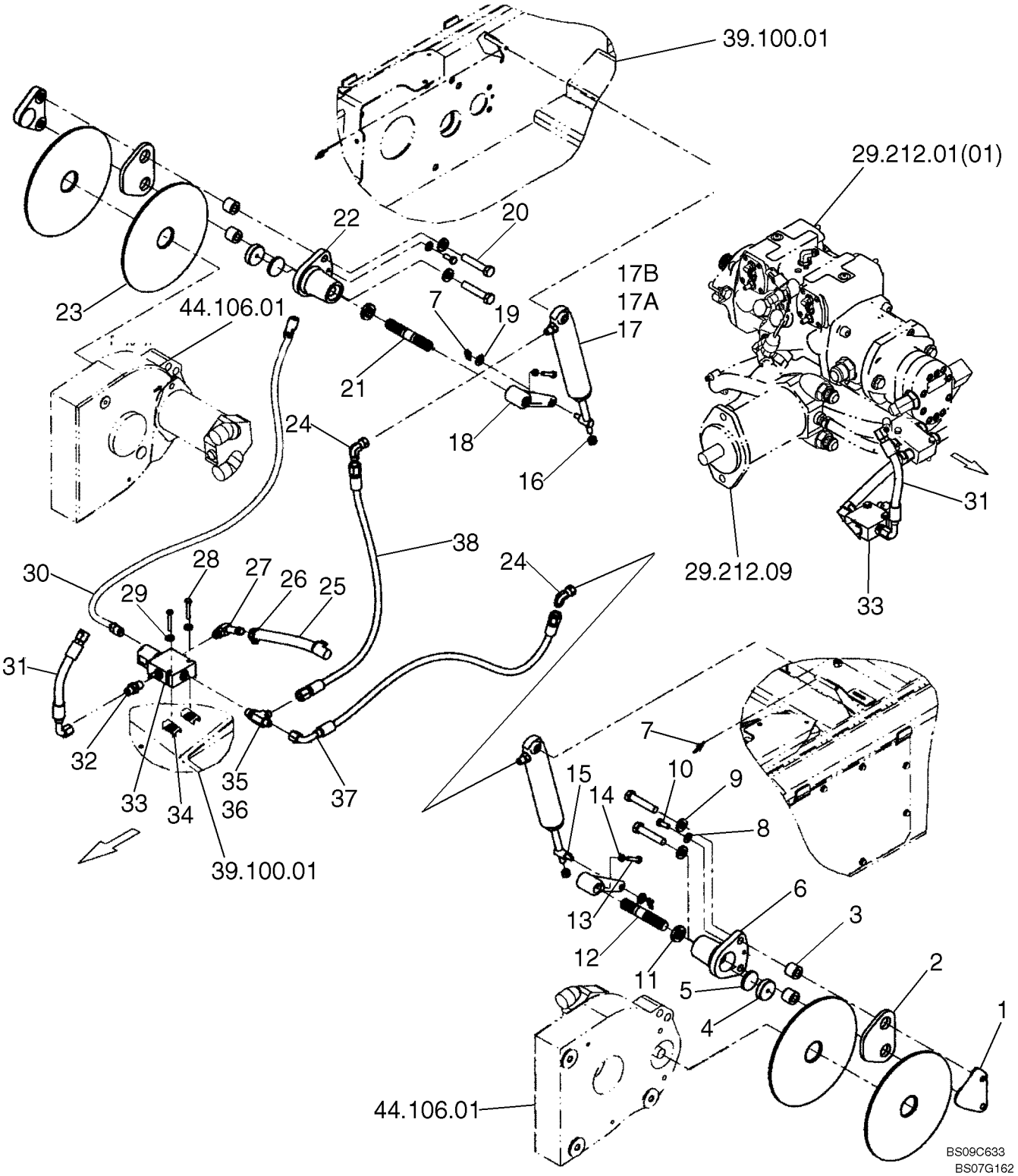

BRAKES, MODELS WITH PILOT CONTROL

REF	FN	PART NUMBER	YR/SN	QTY	DESCRIPTION
1		9829910		2	CAP
2		9829925		2	SEPARATOR
3		9844995		4	SPACER
4		9829942		2	BRAKE, PAD
5		9614257		2	PLUG
6		9844565		1	SUPPORT, RH Thread
7		86617977		4	PIN, SPLIT (COTTER)
8		322358		2	WASHER, BELLEVILLE, M8
9		65319		4	WASHER, M13 x 25 x 3.5, HT
10		87872		2	BOLT, Hex, 5/16"-18 x 3/4", G5, Full Thd
11		764135		2	SEAL
12		9822468		1	SHAFT
13		87716		2	BOLT, Hex, 1/4"-20 x 1 1/4", G5
14		87305		2	NUT, Jam, 1/4"-20, G2
15		87360153		2	SWIVEL, HYDRAULIC
16		9628503		2	NUT, 3/8"-16, G5
17		87649289		2	CYLINDER, Brake Cylinder; Incl. 17A, 17B; Replaces 87360150
17A		87655022		1	O-RING, O-ring, Brake Cylinder
17B		87655021		1	BACK-UP RING, Back Up Ring, Brake Cylinder
18		9841439		2	LEVER
19		87016		2	WASHER, 3/8", SAE
20		20987		4	BOLT, Hex, 1/2"-13 x 2 1/2", G8
21		9829944		1	SHAFT
22		9844564		1	SUPPORT, LH Thread
23		86534936		4	BRAKE DISC
24		86629586		2	ELBOW, 90º, 9/16"-18, 37º x 9/16"-18, 37º Fem Sw
25		87522279		1	HOSE, 185 mm, 7.28 in.
26		87443510		2	CLAMP, HOSE, M20
27		86705580		1	FITTING, 90º, 1/2" Hose x 9/16"-18 ORB Beaded, Incl. Nut, Washer, O-ring
28		43118		2	BOLT, Hex, M6 x 40, 8.8
29		87361		2	WASHER, 1/4", SAE
30		87384896		1	HARNESS, WIRE
31		87522281		1	HOSE, 245 mm, 9.64 in.

BRAKES, MODELS WITH PILOT CONTROL

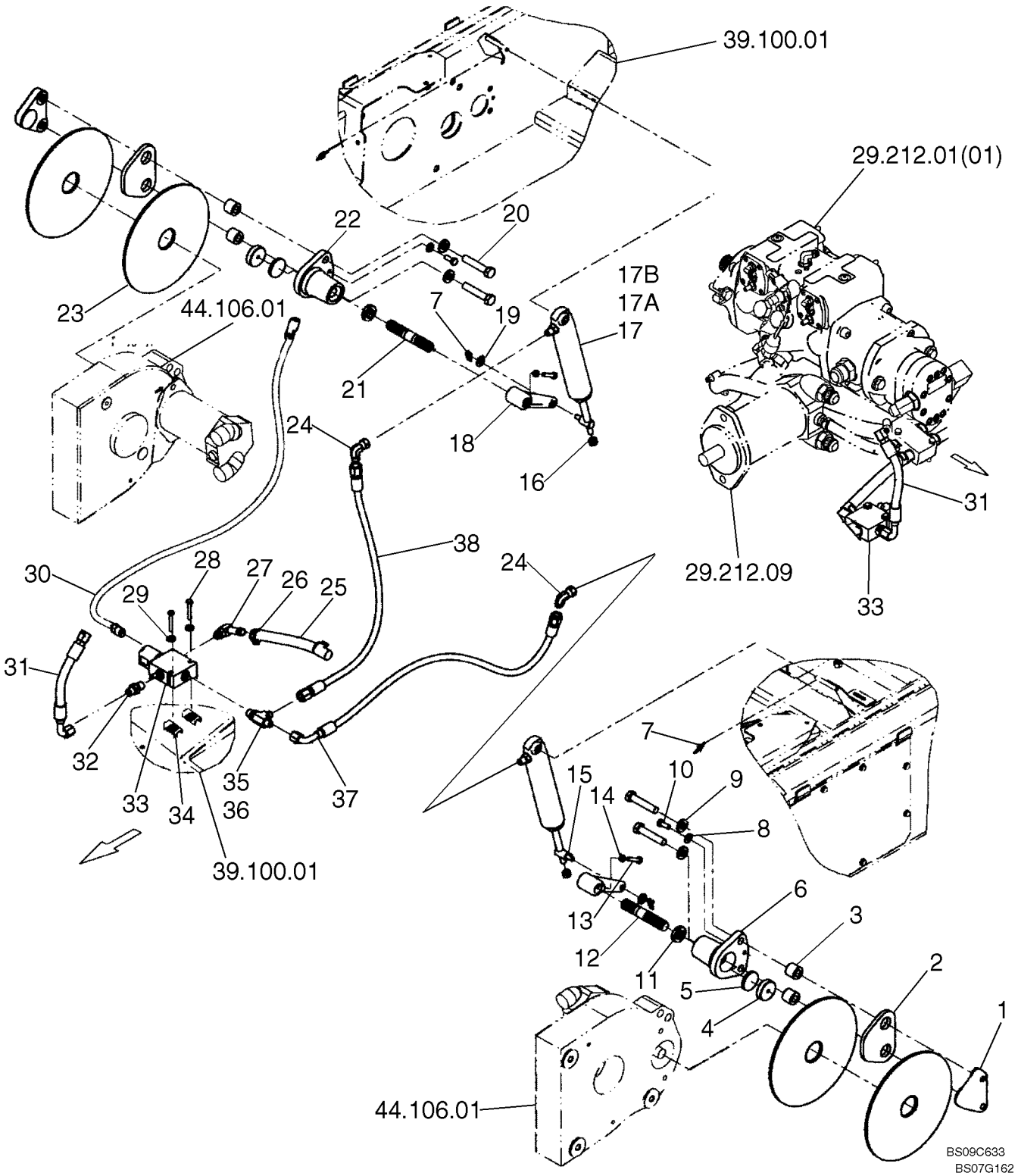

BRAKES, MODELS WITH PILOT CONTROL

REF	FN	PART NUMBER	YR/SN	QTY	DESCRIPTION
32		87648321		1	VALVE, CHECK, Check Valve, 10 PSI Crack Pressure; Replaces 87361240 Check Valve, 65 Crack Pressure
33		87360222		1	CARTRIDGE, Valve, Components Not Serviced At This Time
34		87404992		2	NUT
35		86513020		1	TEE, 9/16"-18, 37º x 9/16"-18, O-Ring Run, Incl. 26
36		9617873		1	O-RING, 6-1, 90 Duro, .468" ID x .078" Thk
37		87360283		1	HOSE, 838 mm, 33.00 in.
38		87360264		1	HOSE, 620 mm, 24.41 in.

BRAKE - ON ROAD, PILOT CONTROL

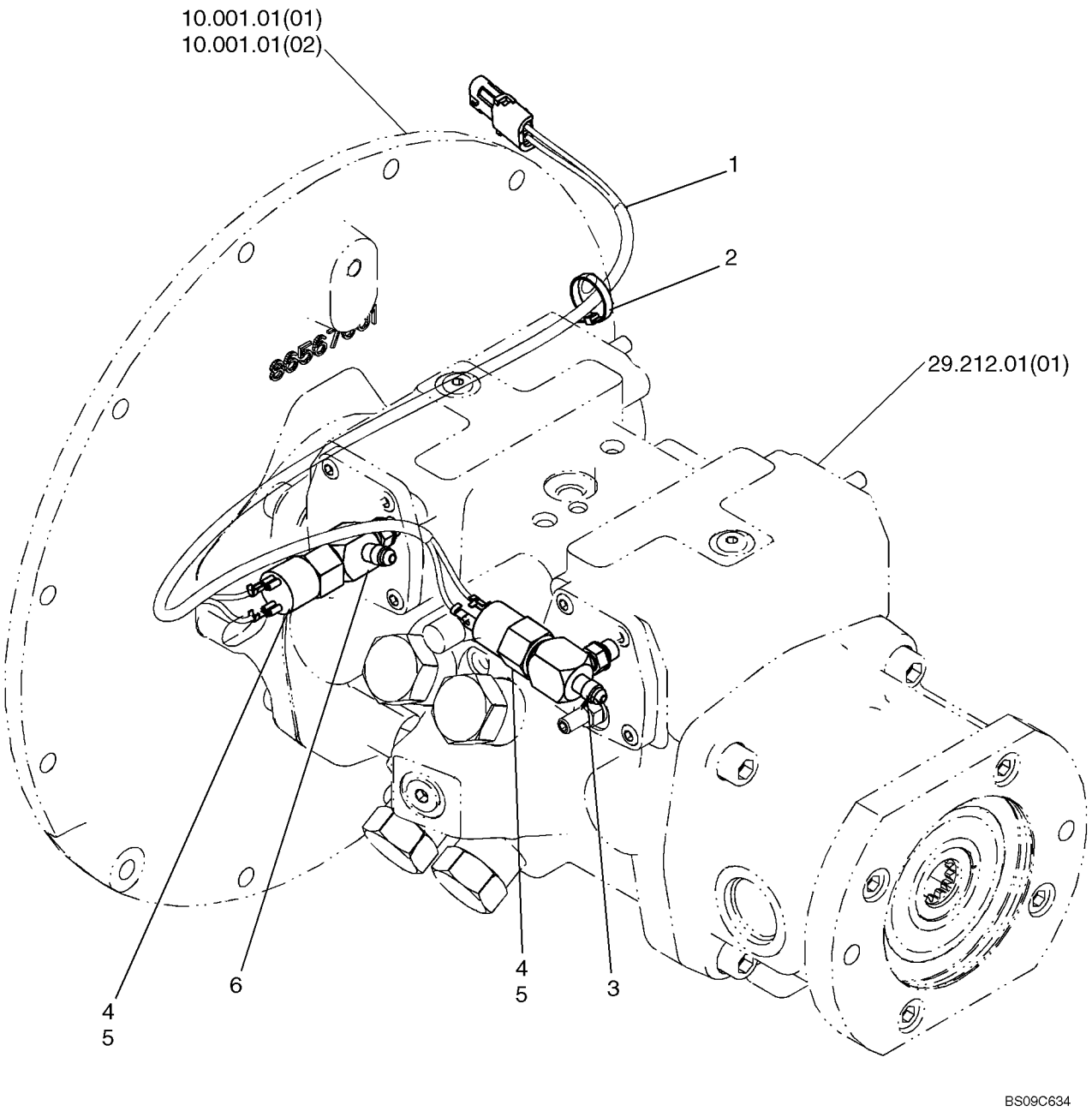

BRAKE - ON ROAD, PILOT CONTROL

REF	FN	PART NUMBER	YR/SN	QTY	DESCRIPTION
1		87548412		1	HARNESS, Brake Harness, Pilot Control - Europe; Incl Connector 245483C1
		245483C1		1	CONNECTOR, ELEC, Brake Harness
2		14560287		3	STRAP, 289mm lg
3		87576182		1	ADAPTER
4		87047034		2	SWITCH, PRESSURE, Brake; Incl. 5
5		167269		2	O-RING, 10-1, 90 Duro, .755" ID x .097" Thk
6		87576183		1	ADAPTER

BRAKE - ON ROAD, EUROPE

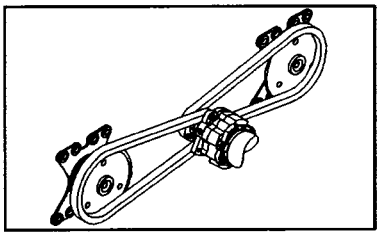

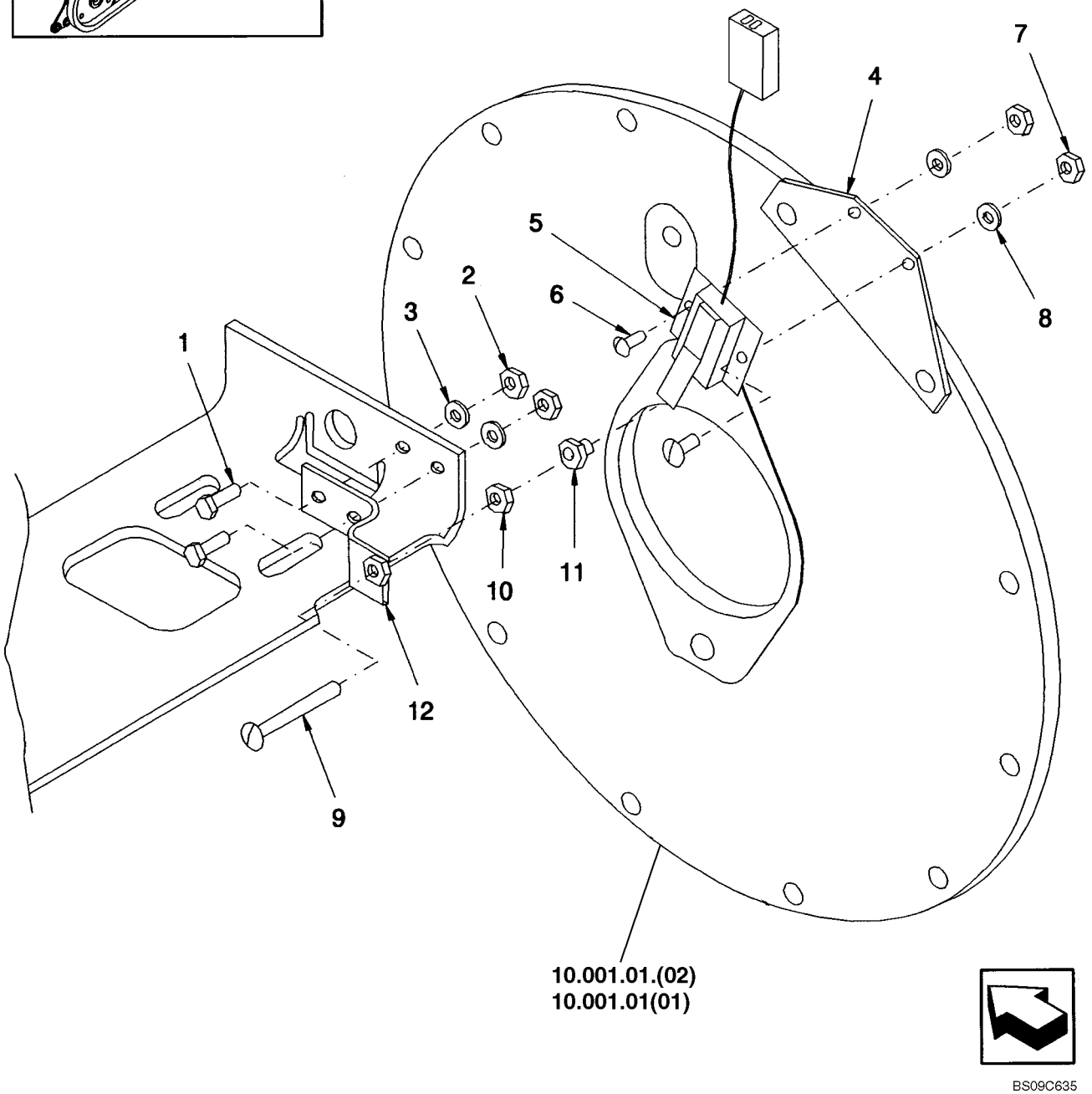

BRAKE - ON ROAD, EUROPE

REF	FN	PART NUMBER	YR/SN	QTY	DESCRIPTION
1		9707580		2	BOLT, Hex, 1/4"-20 x 3/4", G5, Full Thd
2		7770		2	NUT, 1/4"-20, G5
3		322357		2	WASHER, BELLEVILLE, M6
4		86515966		1	SUPPORT
5		86518733		1	SWITCH
6		86511920		2	SCREW, Cross Pan Hd, #10-24 x 1/2"
7		87304		2	NUT, #10-24
8		80684		2	WASHER, LOCK, #10
9		9707580		1	BOLT, Hex, 1/4"-20 x 3/4", G5, Full Thd
10		87305		1	NUT, Jam, 1/4"-20, G2
11		86519194		1	NUT, Plastic, Cap, 1/4"-20
12		86519153		1	BRACKET

SECTION INDEX
35 - Hydraulic systems

35.204.04	01	CONTROL VALVE HYDRAULICS
35.204.04	02	CONTROL VALVE HYDRAULICS, MODELS WITH PILOT CONTROL, EH AUX CONTROL
35.204.04	03	CONTROL VALVE HYDRAULICS, MODELS WITH PILOT CONTROL
35.204.04	04	HYDRAULICS, PILOT CONTROL TO CONTROL VALVE
35.204.05	01	BUCKET HYDRAULICS, STANDARD - MODELS WITH PILOT CONTROL
35.204.05	02	BUCKET HYDRAULICS, HIGH FLOW
35.204.06	01	BOOM HYDRAULICS, STANDARD/HIGH FLOW
35.204.06	02	BOOM HYDRAULICS, STANDARD/HIGH FLOW - MODELS WITH PILOT CONTROL
35.204.11	01	HYDRAULICS - MOUNTING PLATE
35.204.11	02	BOOM HYDRAULICS - MOUNTING PLATE, STANDARD FLOW (IF USED)
35.204.11	03	HYDRAULICS - MOUNTING PLATE, WITHOUT HIGH FLOW
35.204.11	04	HYDRAULICS - MOUNTING PLATE, WITHOUT HIGH FLOW, PILOT CONTROL
35.204.11	05	CYLINDER ASSY - MOUNTING PLATE
35.204.11	10	BOOM HYDRAULICS - MOUNTING PLATE, HIGH FLOW
35.204.11	11	BOOM HYDRAULICS - MOUNTING PLATE, HIGH FLOW (IF USED)
35.204.11	12	HYDRAULICS - MOUNTING PLATE, WITH HIGH FLOW
35.204.11	20	HYDRAULICS - MOUNTING PLATE, PILOT CONTROL
35.204.11	30	VALVE - MOUNTING PLATE
35.204.15	01	HIGH FLOW HYDRAULICS, PILOT CONTROL
35.204.15	02	HIGH FLOW HYDRAULICS - DELUXE CAB, IF USED
35.204.15	10	SELECTOR VALVE, HIGH FLOW
35.220.07	01	AUXILIARY HYDRAULICS, STANDARD; IF USED
35.220.07	02	AUXILIARY HYDRAULICS, HIGH FLOW
35.220.07	03	2ND FRONT AUXILIARY KIT
35.220.07	04	REAR AUXILIARY HYDRAULICS
35.220.07	05	SECONDARY AUXILIARY - VALVE ASSY
35.300.06	01	HYDRAULIC RESERVOIR & FILTER
35.300.06	02	HYDRAULIC RESERVOIR & FILTER
35.359.01	01	CONTROL VALVE HYDRAULICS
35.359.02	01	CONTROL VALVE
35.359.02	02	CONTROL VALVE, MODELS WITH PILOT CONTROL, EH AUX CONTROL
35.359.02	03	CONTROL VALVE 87653270 - SEAL REPLACEMENT KITS
35.359.02	04	CONTROL VALVE - SEAL KIT
35.359.02	05	CONTROL VALVE - MAIN RELIEF VALVE
35.359.02	06	CONTROL VALVE, PLUGS AND VALVES
35.359.02	07	CONTROL VALVE, CHECK VALVE
35.359.02	08	CONTROL VALVE, SPOOL END P. O.
35.359.02	09	CONTROL VALVE, SPOOL END P. O.
35.359.02	10	CONTROL VALVE, SPOOL END P. O.
35.359.02	11	CONTROL VALVE - CHECK VALVE
35.359.02	12	CONTROL VALVE, SPOOL END EHPV
35.359.02	13	CONTROL VALVE, SPOOL END EHPV
35.359.03	01	CONTROL VALVE, MODELS WITH PILOT CONTROL
35.359.03	02	CONTROL VALVE - SEAL REPLACEMENT KITS
35.359.03	03	CONTROL VALVE - SEAL KIT
35.359.03	04	CONTROL VALVE - MAIN RELIEF VALVE
35.359.03	05	CONTROL VALVE, PLUGS & VALVES
35.359.03	06	CONTROL VALVE, CHECK VALVE
35.359.03	07	CONTROL VALVE - SPOOL END, DETENT
35.359.03	08	CONTROL VALVE, SPOOL END P. O.

SECTION INDEX
35 - Hydraulic systems

35.359.03	09	CONTROL VALVE, SPOOL END P. O.
35.359.03	10	CONTROL VALVE, SPOOL END P. O.
35.359.03	11	CONTROL VALVE - SPOOL END
35.359.03	12	CONTROL VALVE - CHECK VALVE
35.359.04	01	CONTROL VALVE 87357099, SEAL REPLACEMENT KITS
35.359.04	02	CONTROL VALVE, SPOOL END P. O.
35.359.04	03	CONTROL VALVE, SPOOL END P. O.
35.359.04	04	CONTROL VALVE - SPOOL END, DETENT
35.359.04	05	CONTROL VALVE, CHECK VALVE
35.359.04	06	CONTROL VALVE, SPOOL END P. O.
35.359.04	07	CONTROL VALVE, SEAL KIT
35.730.09	01	BOOM CYLINDER
35.730.09	02	BOOM CYLINDER

CONTROL VALVE HYDRAULICS

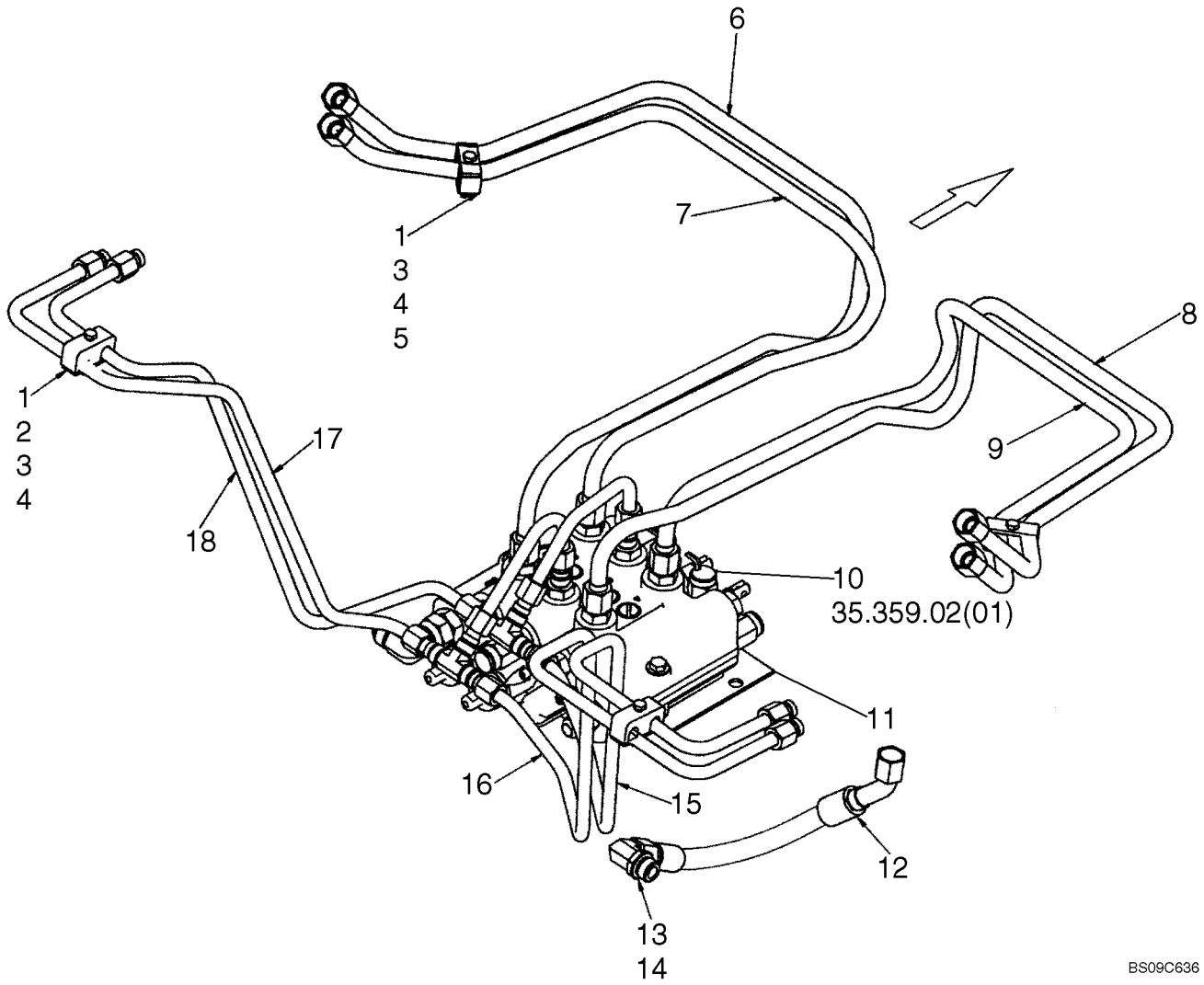

CONTROL VALVE HYDRAULICS

REF	FN	PART NUMBER	YR/SN	QTY	DESCRIPTION
1		86509354		4	PLATE
2		625822		2	CLAMP
3		280164		4	BOLT, Hex, 1/4"-20 x 1 3/4", G5
4		280129		4	NUT, LOCK, 1/4"-20, GC
5		781221		2	CLAMP
6		86555029		1	TUBE, HYD, Calculated Length 1373.2
7		86555028		1	TUBE, HYD, Calculated Length 1209.7
8		86555027		1	TUBE, HYD, Calculated Length 1372.4
9		86555026		1	TUBE, HYD, Calculated Length 1206.1
10		86604770		1	VALVE, CONTROL, Foot Controls; See Figure 35.359.02 [01]
10		86604769		1	VALVE, CONTROL, Hand Controls; See Figure 35.359.02 [01]
11		86632961		1	ISOLATOR
12		86571714		1	HOSE, 355.6 mm (14 in)
13		164910		1	ELBOW, 90º, 7/8"-14, 37º x 7/8"-14, O-Ring, Incl 14
14		167269		1	O-RING, 10-1, 90 Duro, .755" ID x .097" Thk
15		9804363		1	TUBE, HYD, Calculated Length 877.1
16		86578699		1	TUBE, HYD, Calculated Length 966.9
17		86578698		1	TUBE, HYD, Calculated Length 762.9
18		9804362		1	TUBE, HYD, Calculated Length 790.01

CONTROL VALVE HYDRAULICS, MODELS WITH PILOT CONTROL, EH AUX CONTROL

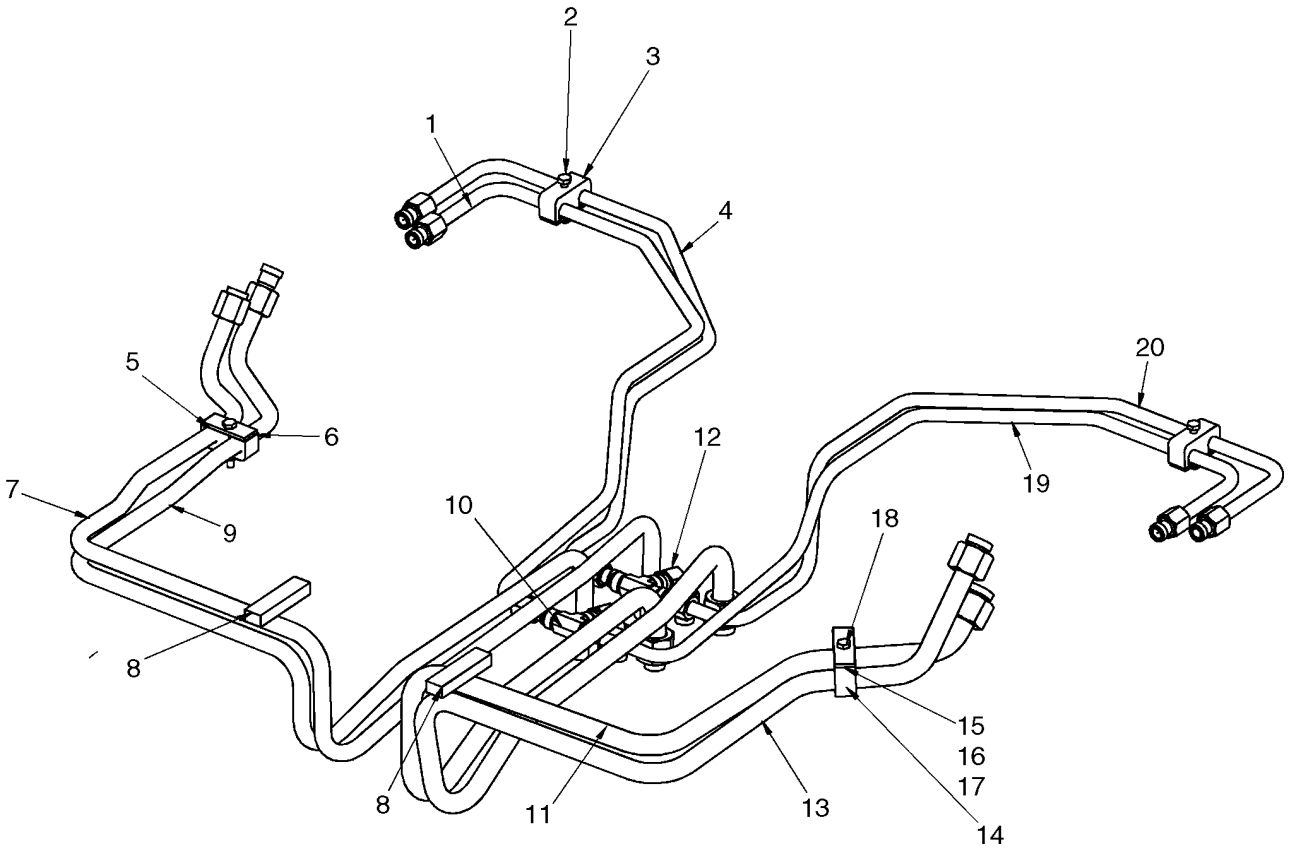

BS08A318

CONTROL VALVE HYDRAULICS, MODELS WITH PILOT CONTROL, EH AUX CONTROL

REF	FN	PART NUMBER	YR/SN	QTY	DESCRIPTION
1		87357185		1	TUBE, HYD, Boom Down, RH
2		280164		3	BOLT, Hex, 1/4"-20 x 1 3/4", G5
3		625822		2	CLAMP
4		87357186		1	TUBE, HYD, Boom Up, RH
5		86509354		3	PLATE
6		781221		1	CLAMP
7		87550551		1	TUBE, RIGID, Bucket
8		291308		AR	STRIP, SEALING, 6 in. Required
9		87550550		1	TUBE, RIGID, Bucket
10		128996		2	TEE, 3/4"-16, 37º
11		87050212		1	TUBE, HYD
12		87357191		2	TUBE, HYD, Boom Up, Center
13		87535989		1	TUBE, HYD
14		280129		4	NUT, LOCK, 1/4"-20, GC
15		627723		1	BLANK-OFF PLUG
16		80701		2	WASHER, 1/4"
17		86643219		1	CLAMP
18		87404		1	BOLT, Hex, 1/4"-20 x 2", G5
19		87357182		1	TUBE, HYD, Boom Down, LH
20		87357184		1	TUBE, HYD, Boom Up, LH

CONTROL VALVE HYDRAULICS, MODELS WITH PILOT CONTROL

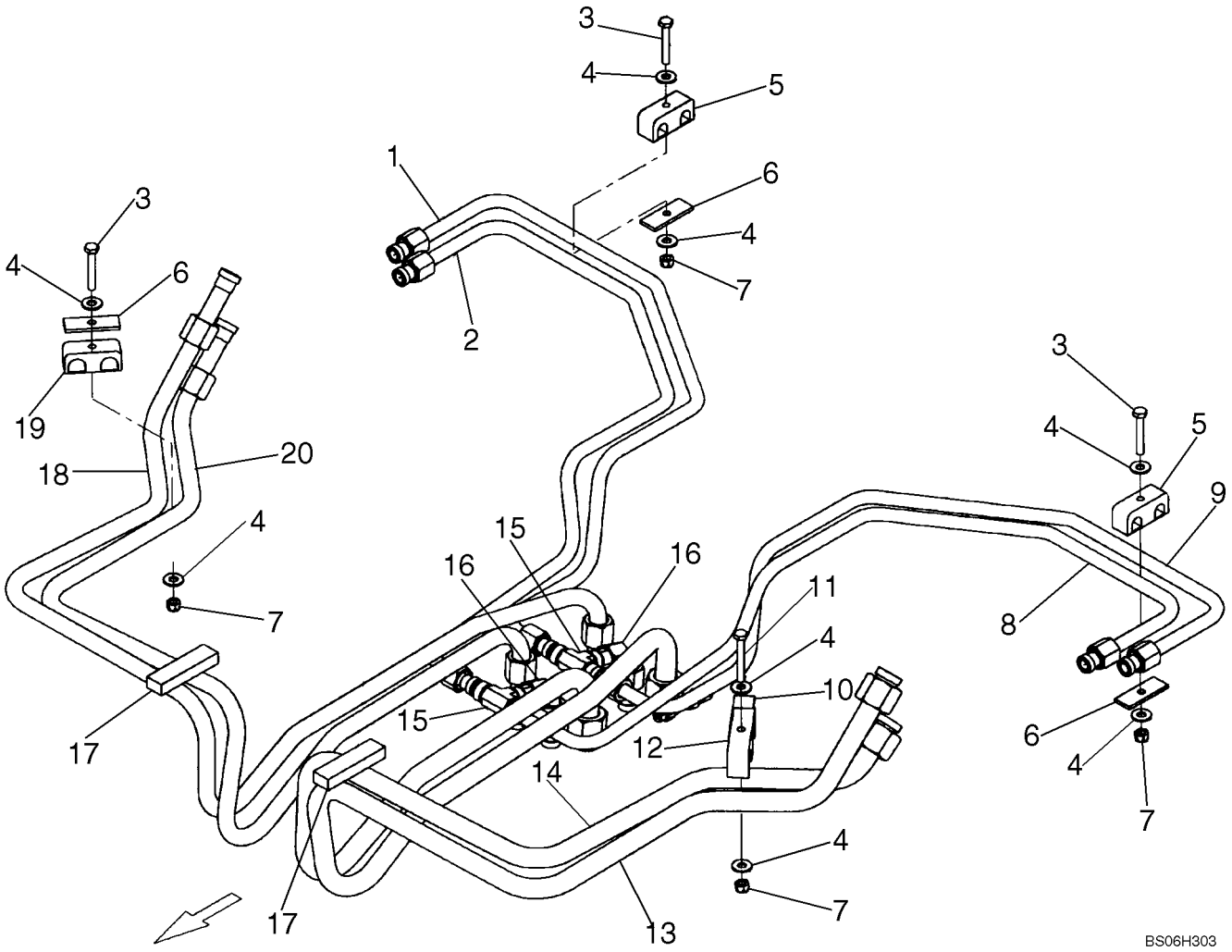

CONTROL VALVE HYDRAULICS, MODELS WITH PILOT CONTROL

REF	FN	PART NUMBER	YR/SN	QTY	DESCRIPTION
1		87357186		1	TUBE, HYD
2		87357185		1	TUBE, HYD
3		280164		3	BOLT, Hex, 1/4"-20 x 1 3/4", G5
4		80701		8	WASHER, 1/4"
5		625822		2	CLAMP
6		86509354		3	PLATE
7		280129		4	NUT, LOCK, 1/4"-20, GC
8		87357182		1	TUBE, HYD
9		87357184		1	TUBE, HYD
10		627723		1	BLANK-OFF PLUG
11		87404		1	BOLT, Hex, 1/4"-20 x 2", G5
12		86643219		1	CLAMP
13		87535989		1	TUBE, HYD
14		87050212		1	TUBE, HYD
15		128996		2	TEE, 3/4"-16, 37º
16		87357191		2	TUBE, HYD
17		291308		1	STRIP, SEALING, 6 in. Required
18		87550551		1	TUBE, RIGID, Replaces 87050214
19		781221		1	CLAMP
20		87550550		1	TUBE, RIGID, Replaces 87050213

HYDRAULICS, PILOT CONTROL TO CONTROL VALVE

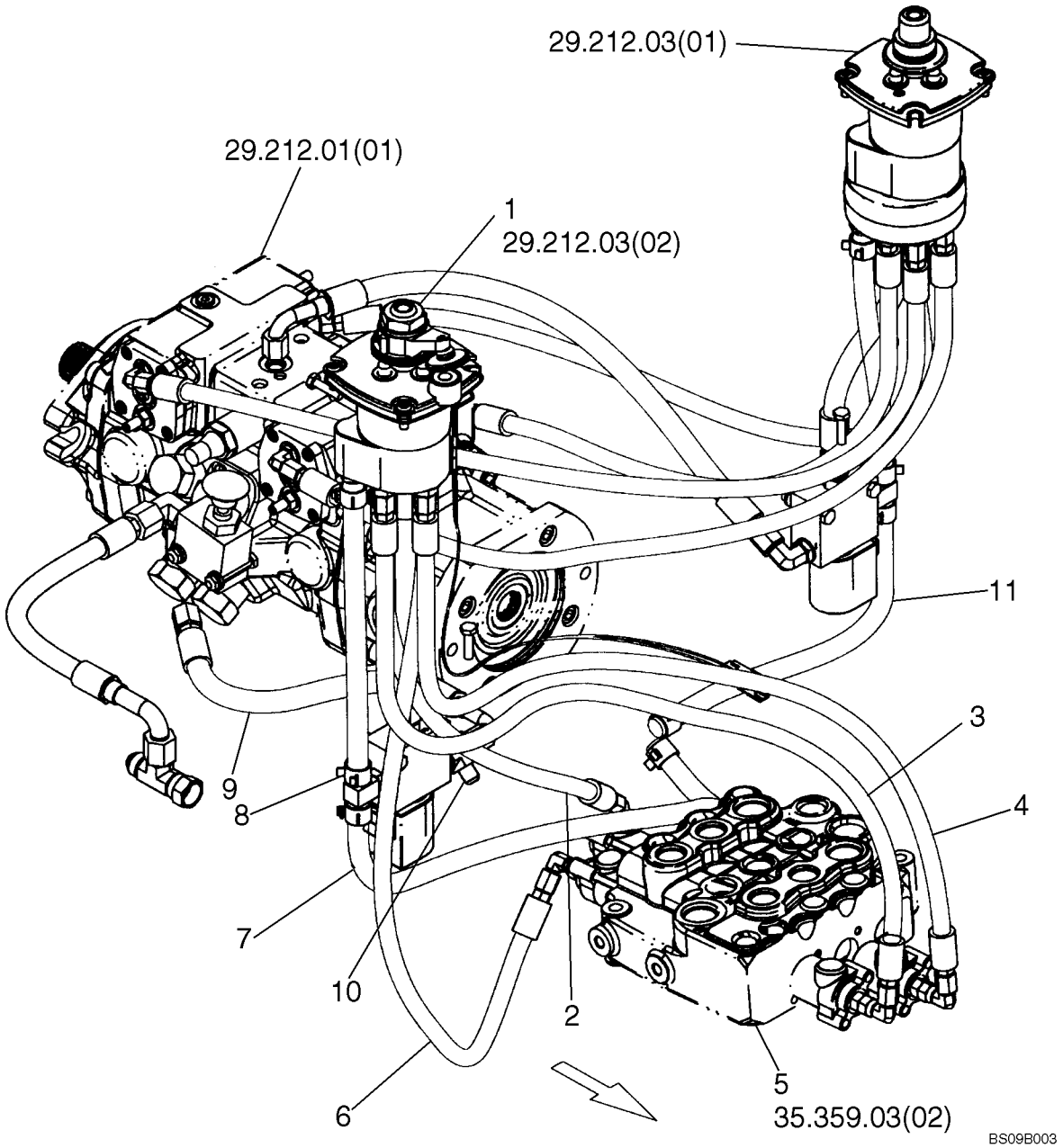

HYDRAULICS, PILOT CONTROL TO CONTROL VALVE

REF	FN	PART NUMBER	YR/SN	QTY	DESCRIPTION
1		87578504		1	VALVE, PILOT, Valve, Pilot RH; See Fig. 29.212.036 [02]
2		87357171		1	HOSE, Implement Control - 685 mm (26.97 in)
3		87357167		1	HOSE, Implement Control - 900 mm (35.44 in)
4		87550245		1	HOSE, Implement Control - 900 mm (35.44 in)
5		87357099		1	VALVE, HYDRAULIC, See Figure 35.359.04 [01]
6		87561757		1	HOSE, Hose, Implement Control - 760 mm (29.92 in)
5		87583689		1	VALVE, Replaces 87357099; See Figure 35.359.03 [02]
7		87357117		1	HOSE, Joystick Drain
8		87584302		2	CLAMP, 18 mm; Replaces 87019540
9		87357208		1	HOSE, Interlock Supply, 360 mm (14.17 in)
10		86513020		1	TEE, 9/16"-18, 37° x 9/16"-18, O-Ring Run
11		87357216		1	HOSE, Interlock Drain, 340 mm (13.38 in)

35.204.05	01	p1	03/09

BUCKET HYDRAULICS, STANDARD - MODELS WITH PILOT CONTROL

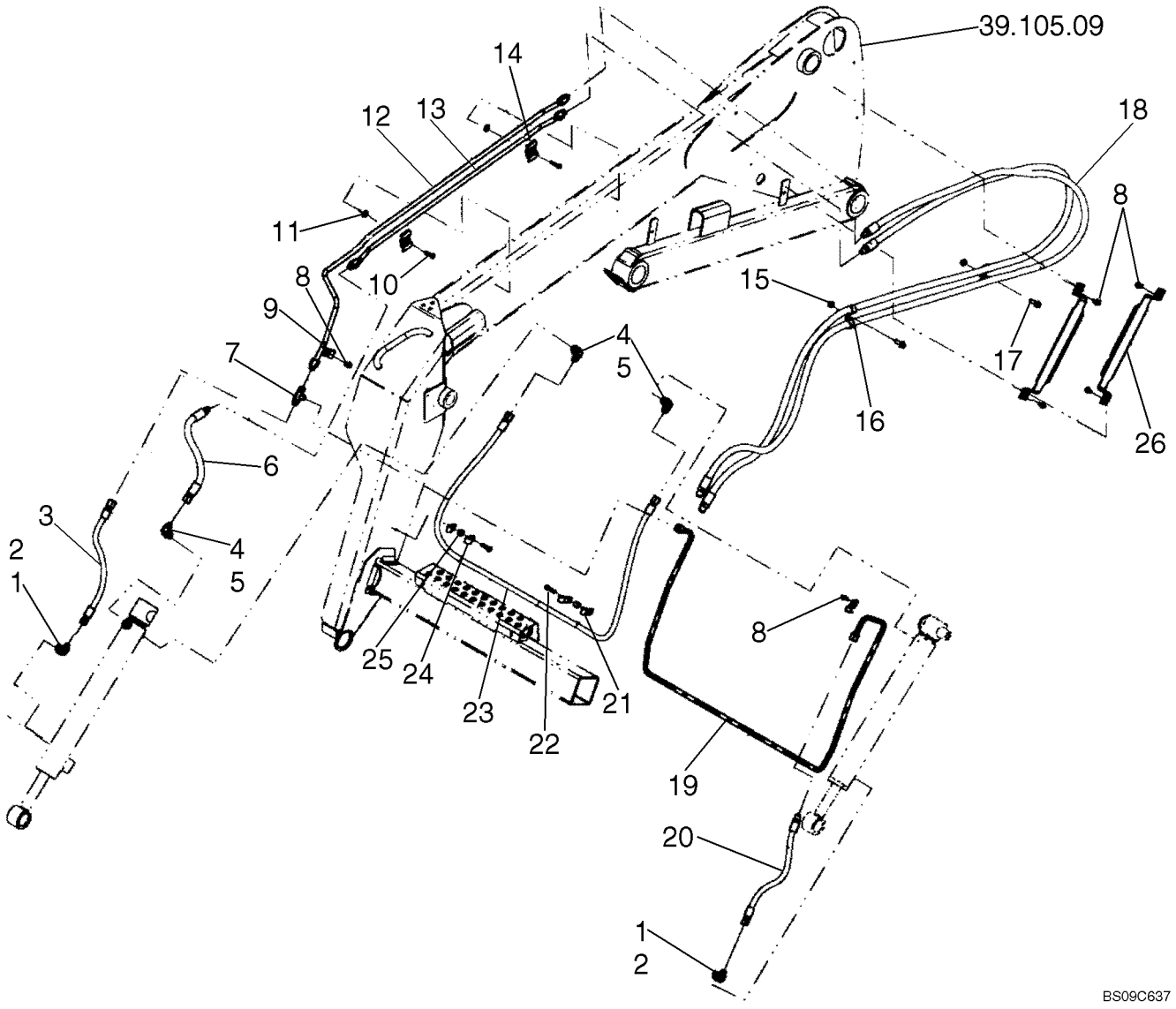

BUCKET HYDRAULICS, STANDARD - MODELS WITH PILOT CONTROL

REF	FN	PART NUMBER	YR/SN	QTY	DESCRIPTION
1		76347		2	ELBOW, 90º, 9/16"-18, 37º x 3/4"-16, O-Ring, Incl. 2
2		128825		1	O-RING, 8-1, 90 Duro, .644" ID x .087" Thk
3		86504723		1	HOSE
4		128830		3	ELBOW, 90º, 3/4"-16, 37º x 3/4"-16, O-Ring, Incl. 5
5		128825		1	O-RING, 8-1, 90 Duro, .644" ID x .087" Thk
6		9843303		1	HOSE
7		128996		1	TEE, 3/4"-16, 37º
8		86545825		6	SCREW, SELF TAPPING, Hex Wash Hd, 5/16" x 5/8"
8		87029930		4	SCREW, Used With Bracket 87612766, Ref 26; If Used
9		184064		2	CLIP
10		88825		2	SCREW, SELF TAPPING, Hex Hd, 5/16" x 1 1/4"
11		80664		2	WASHER, 5/16"
12		87522946		1	TUBE, HYD, Tube Assy, Incl. 12A, 12B
12A		235671		1	SLEEVE, 37º, 1/2" Tube, Not Illustrated Separately
12B		129428		2	NUT, TUBE, 37º, 3/4"-16, Type B, Not Illustrated Separately
13		87522947		1	TUBE, HYD, Tube Assy, Incl. 13A, 13B
13A		235671		1	SLEEVE, 37º, 1/2" Tube, Not Illustrated Separately
13B		129428		2	NUT, TUBE, 37º, 3/4"-16, Type B, Not Illustrated Separately
14		86501706		2	CLAMP
15		247780		2	NUT, FLANGE, Flg, USR, 3/8"-16
16		700514		4	CLAMP
17		9706726		2	BOLT, Hex Flg, 3/8"-16 x 1", Serr
18		9825803		2	HOSE, FLEXIBLE
19		87462308		1	TUBE, HYD, Incl. 19A, 19B
19A		235671		1	SLEEVE, 37º, 1/2" Tube, Not Illustrated Separately
19B		129428		2	NUT, TUBE, 37º, 3/4"-16, Type B, Not Illustrated Separately
20		86504722		1	HOSE, FLEXIBLE
21		86010402		1	CLAMP, 1/2", Insul, 3/8" Bolt
22		87657		2	BOLT, Hex, 5/16"-18 x 1 1/4", G5
23		86504721		1	HOSE, FLEXIBLE
24		239859		4	CLAMP

35.204.05	01	p2	03/09

BUCKET HYDRAULICS, STANDARD - MODELS WITH PILOT CONTROL

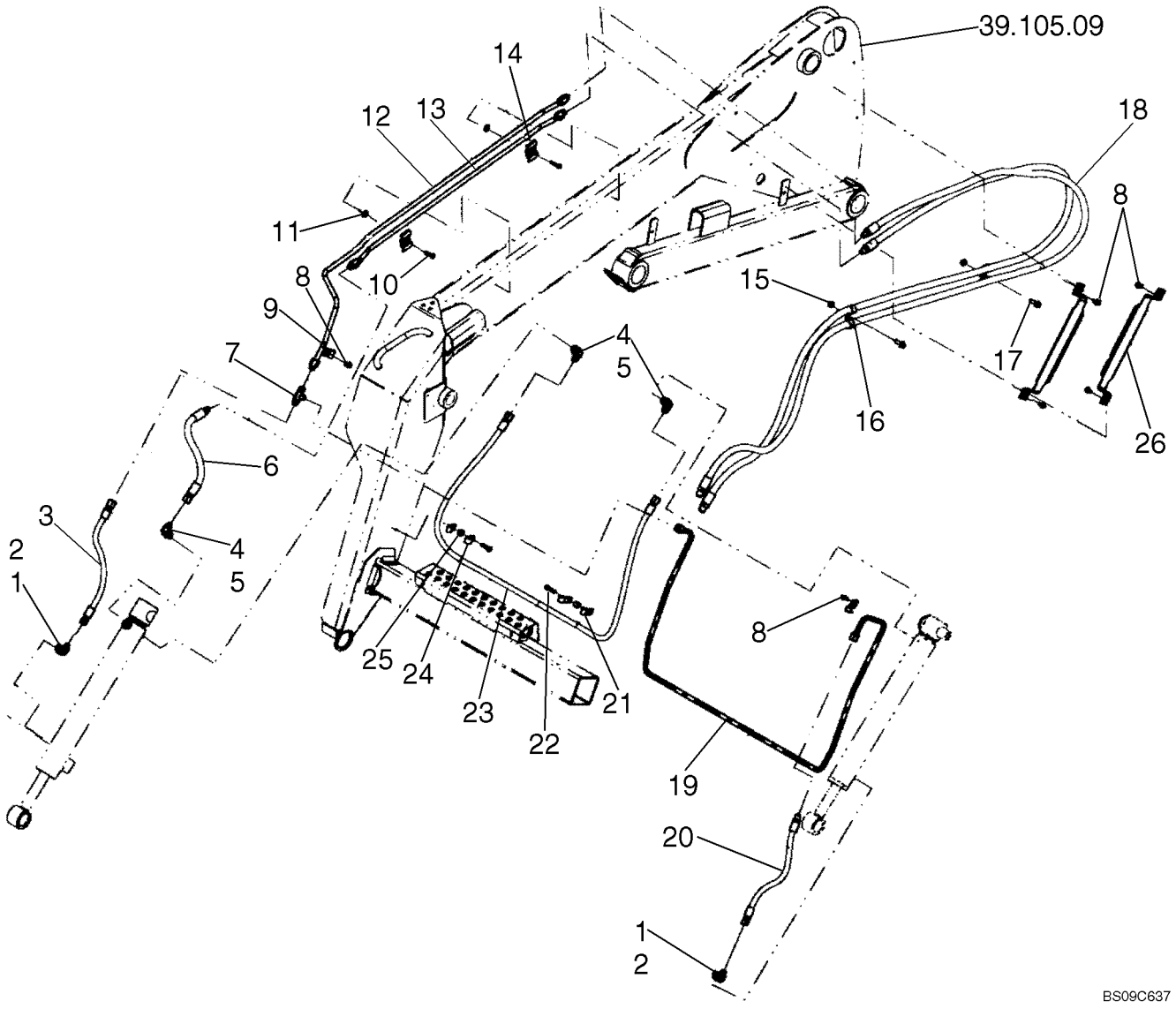

BUCKET HYDRAULICS, STANDARD - MODELS WITH PILOT CONTROL

REF	FN	PART NUMBER	YR/SN	QTY	DESCRIPTION
25		86589143		2	SPACER
26		86557328		2	BRACKET, Straight Edges; If Used
26		87612766		2	BRACKET, Rounded Edges; If Used, Used With Screw 87029930, Ref 8

35.204.05	02	p1	03/09

BUCKET HYDRAULICS, HIGH FLOW

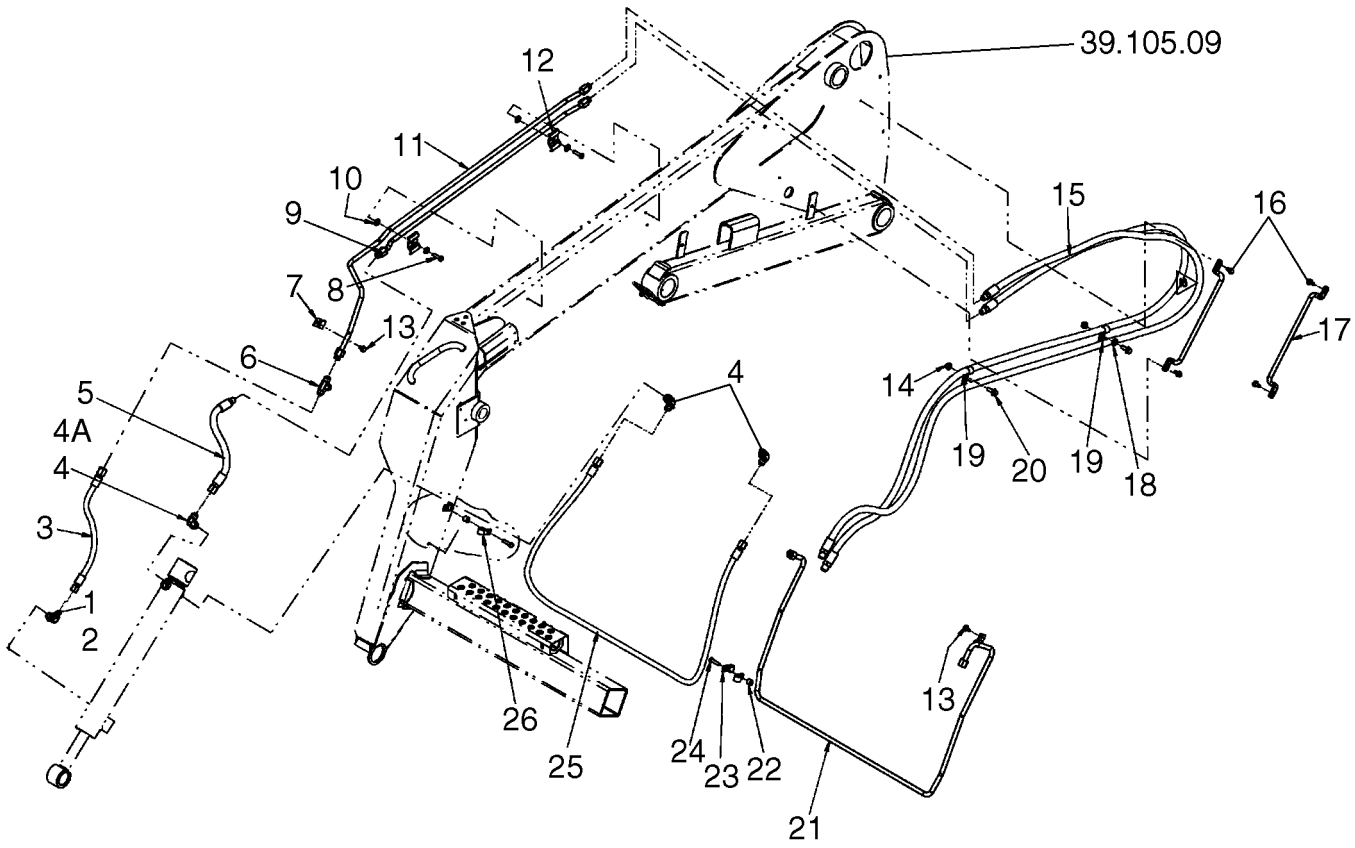

BUCKET HYDRAULICS, HIGH FLOW

REF	FN	PART NUMBER	YR/SN	QTY	DESCRIPTION
1		76347		1	ELBOW, 90º, 9/16"-18, 37º x 3/4"-16, O-Ring, Incl. 2
2		128825		1	O-RING, 8-1, 90 Duro, .644" ID x .087" Thk
3		86504723		1	HOSE
4		128830		3	ELBOW, 90º, 3/4"-16, 37º x 3/4"-16, O-Ring, Incl 4A
4A		128825		1	O-RING, 8-1, 90 Duro, .644" ID x .087" Thk
5		9843303		1	HOSE
6		128996		1	TEE, 3/4"-16, 37º
7		184064		2	CLIP
8		88825		2	SCREW, SELF TAPPING, Hex Hd, 5/16" x 1 1/4"
9		87522947		1	TUBE, HYD, 956.4mm (37.65in)
10		87016		4	WASHER, 3/8", SAE
11		87522946		1	TUBE, HYD, 1283mm (50.51in)
12		86501706		3	CLAMP
13		87385021		2	FASTENER, Screw, 5/16-18 X 1/2 ZND
14		247780		2	NUT, FLANGE, Flg, USR, 3/8"-16
15		9825803		2	HOSE, FLEXIBLE
16		87029930		4	SCREW, Hex 5/16 x .62 End
17		87612766		2	BRACKET, Hose Guide
18		140045		2	WASHER, BELLEVILLE, M10
19		86637979		4	CLAMP, 13/16", Insul, 3/8" Bolt
20		9706726		2	BOLT, Hex Flg, 3/8"-16 x 1", Serr
21		87462308		1	TUBE, HYD
22		86589143		2	SPACER
23		86010402		2	CLAMP, 1/2", Insul, 3/8" Bolt
24		87657		2	BOLT, Hex, 5/16"-18 x 1 1/4", G5
25		86504721		1	HOSE, FLEXIBLE
26		239859		2	CLAMP, .75 x .31

35.204.06	01	p1	03/09

BOOM HYDRAULICS, STANDARD/HIGH FLOW

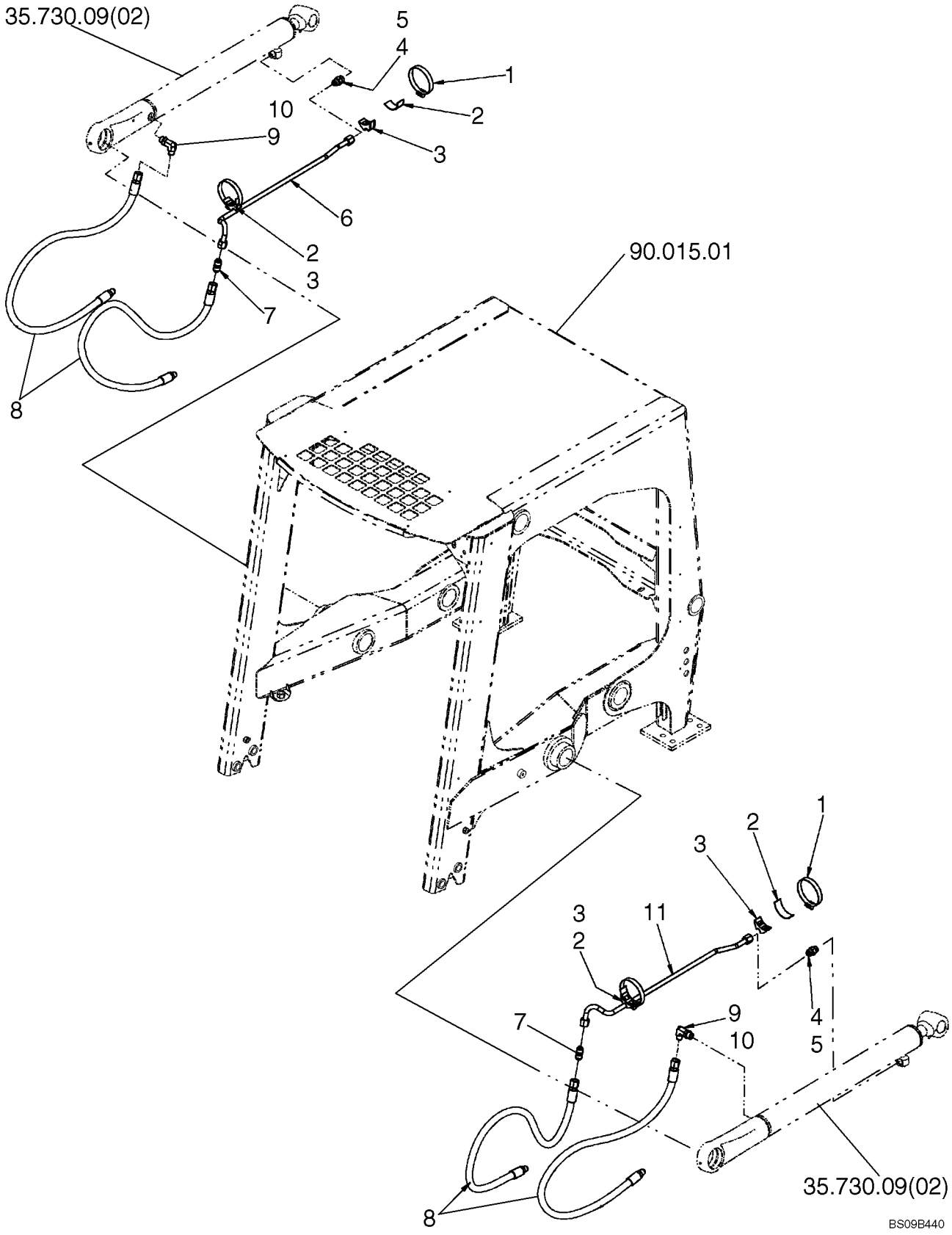

BOOM HYDRAULICS, STANDARD/HIGH FLOW

REF	FN	PART NUMBER	YR/SN	QTY	DESCRIPTION
1		513307		4	CLAMP
2		782673		4	STRIP, ANTI-SKID
3		640682		4	SPACER
4		128818		2	CONNECTOR, HYD., 3/4"-16, 37° x 3/4"-16, O-Ring, Incl. 5
5		128825		1	O-RING, 8-1, 90 Duro, .644" ID x .087" Thk
6		87736425		1	TUBE, RIGID, RH
7		128822		2	UNION, 3/4"-16, 37° x 3/4"-16, 37°
8		86570153		4	HOSE
9		87012268		2	ELBOW, Incl 10
10		128825		1	O-RING, 8-1, 90 Duro, .644" ID x .087" Thk
11		87736420		1	TUBE, RIGID, LH

BOOM HYDRAULICS, STANDARD/HIGH FLOW - MODELS WITH PILOT CONTROL

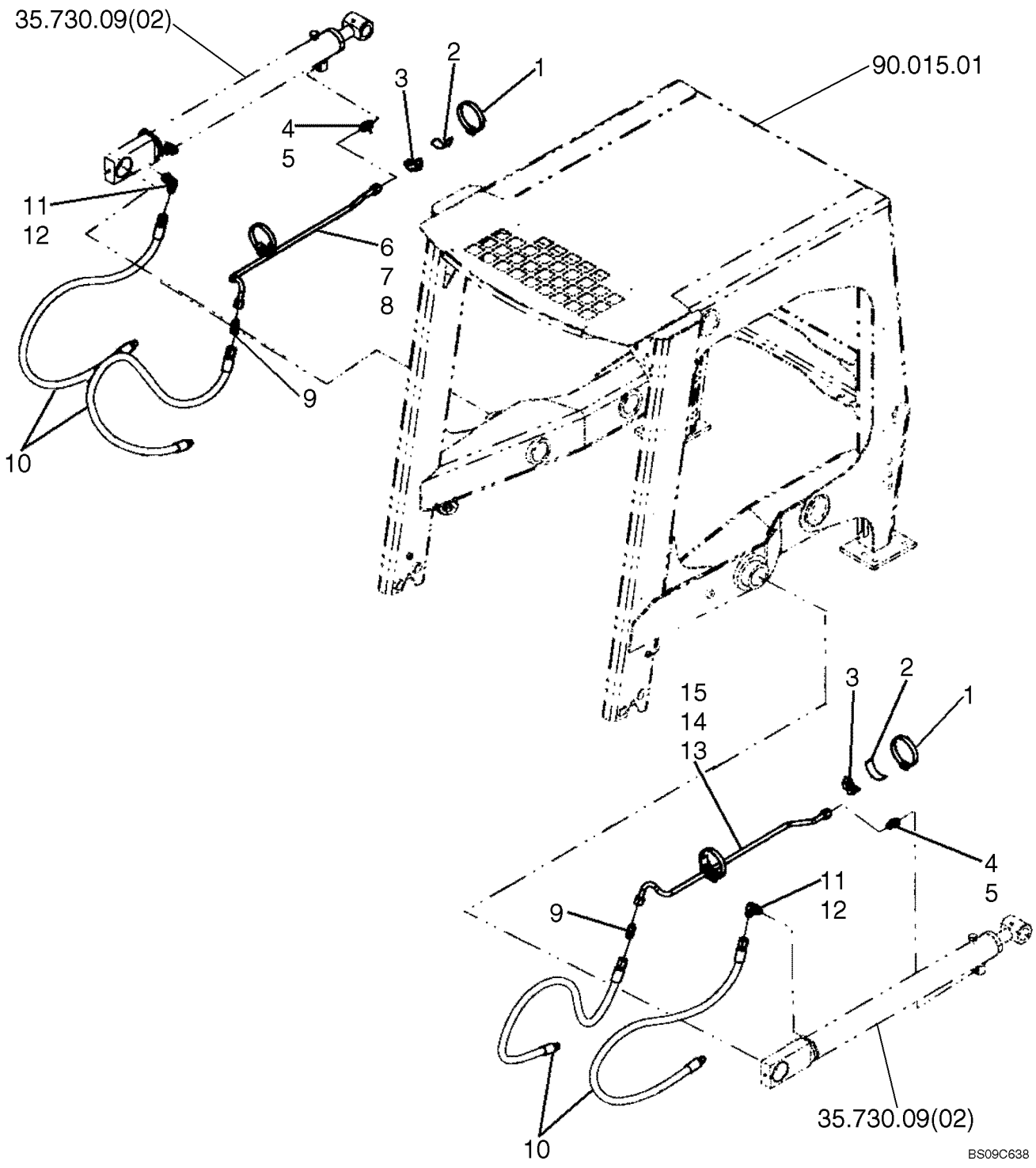

BOOM HYDRAULICS, STANDARD/HIGH FLOW - MODELS WITH PILOT CONTROL

REF	FN	PART NUMBER	YR/SN	QTY	DESCRIPTION
1		513307		4	CLAMP
2		782673		4	STRIP, ANTI-SKID
3		640682		4	SPACER
4		128818		2	CONNECTOR, HYD., 3/4"-16, 37° x 3/4"-16, O-Ring, Incl. 5
5		128825		1	O-RING, 8-1, 90 Duro, .644" ID x .087" Thk
6		87584239		1	TUBE, RIGID, Tube RH; Incl. 7, 8; Used With Cylinder 87038977
6		87736425		1	TUBE, RIGID, Tube RH; Incl. 7, 8; Used With Cylinder 87701856
7		235671		1	SLEEVE, 37°, 1/2" Tube
8		129428		2	NUT, TUBE, 37°, 3/4"-16, Type B
9		128822		2	UNION, 3/4"-16, 37° x 3/4"-16, 37°
10		86570153		4	HOSE
11		128830		2	ELBOW, 90°, 3/4"-16, 37° x 3/4"-16, O-Ring, Incl. 12; Used With Cylinder 87038977
11		87012268		2	ELBOW, 90 37FL X ORB LONG -6; Incl. 12; Used With Cylinder 87701856, 87701857
12		128825		1	O-RING, 8-1, 90 Duro, .644" ID x .087" Thk
13		87584238		1	TUBE, RIGID, Tube LH; Incl. 14, 15; Used With Cylinder 87038977
13		87736420		1	TUBE, RIGID, Tube LH; Incl. 14, 15; Used With Cylinder 87701857
14		235671		1	SLEEVE, 37°, 1/2" Tube
15		129428		2	NUT, TUBE, 37°, 3/4"-16, Type B
		87038977		2	HYDRAULIC CYLINDER, Boom, See Figure 35.730.09 [01]
		87701856		1	CYLINDER, RH Boom Cylinder, See Figure 35.730.09 [02]; If Used
		87701857		1	CYLINDER, LH Boom Cylinder, See Figure 35.730.09 [02]; If Used

35.204.11	01	p1	07/09

HYDRAULICS - MOUNTING PLATE

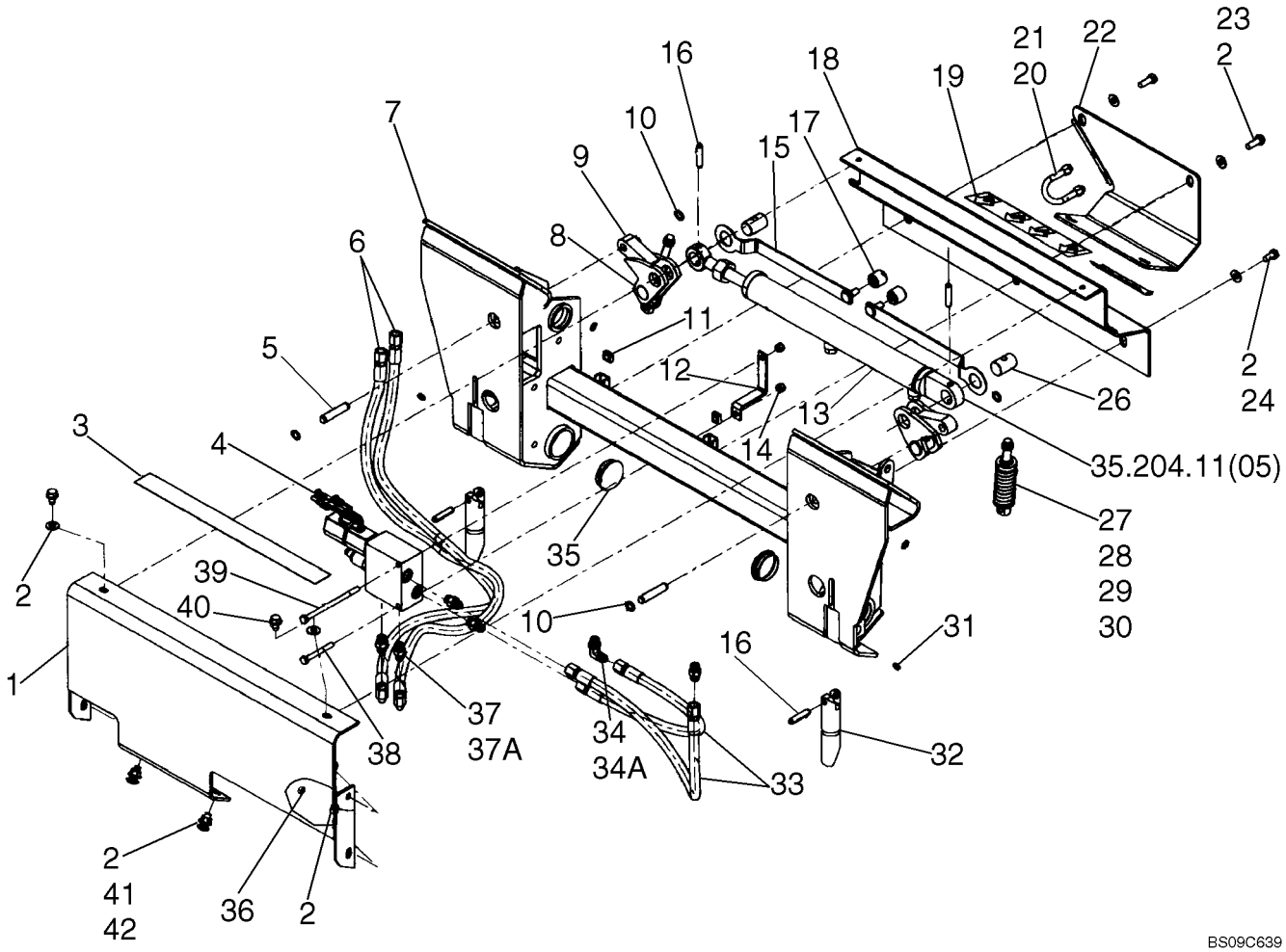

HYDRAULICS - MOUNTING PLATE

REF	FN	PART NUMBER	YR/SN	QTY	DESCRIPTION
		87653302		1	KIT, CONVERSION, Incl Fig 55.100.54, Fig 35.204.11 [03]
1		87608816		1	SHIELD, Front Shield
2		140045		11	WASHER, BELLEVILLE, M10
3		86512583		1	STEP
4		86635833		1	VALVE, CONTROL
5		86538563		2	PIN
6		86635021		2	HOSE, 1070 mm (42 in); If Used
6		87743069		2	HOSE, 1070 mm (42 in); If Used
7		87610761		1	PLATE, Mount Plate, Gray
8		9829733		2	PIN
9		86627877		2	LEVER, CONTROL, If Used
9		87566709		2	LEVER, Lever; If Used
10		86571009		4	CIRCLIP
11		84899		3	NUT, Sq, 3/8"-16, G2
12		86636678		1	BRACKET
13		87442336		1	HYDRAULIC CYLINDER, See Fig. 35.204.11[05]
14		280736		2	NUT, LOCK, 5/16"-18, GC
15		87641744		2	PLATE, MOUNTING, Mount Plate Link Indicator
16		86616372		4	PIN, LOCK, 3/8" x 1 3/4", Slotted
17		87557403		2	KNOB
18		87603533		1	SHIELD, Back Shield
19		87611906		1	DECAL, Indicator
20		87597201		1	FASTENER, U-Bolt
21		87034524		2	NUT, LOCK
22		87608817		1	SHIELD, Back Shield
23		88206		2	BOLT, Hex, 3/8"-16 x 1", G5, Full Thd
24		88434		1	BOLT, Hex, 3/8"-16 x 3/4", G5, Full Thd
25		D137186		1	DECAL, Caution Inspect Coupler
26		86627878		2	PIN
27		86610166		2	GUIDE, Spring Guide
28		87579303		2	PIN
29		87533223		2	PIN
30		86610167		2	SPRING, Compression Spring
31		87414		4	NIPPLE, LUBE, 1/4"-28 x .56" lg, Drive

HYDRAULICS - MOUNTING PLATE

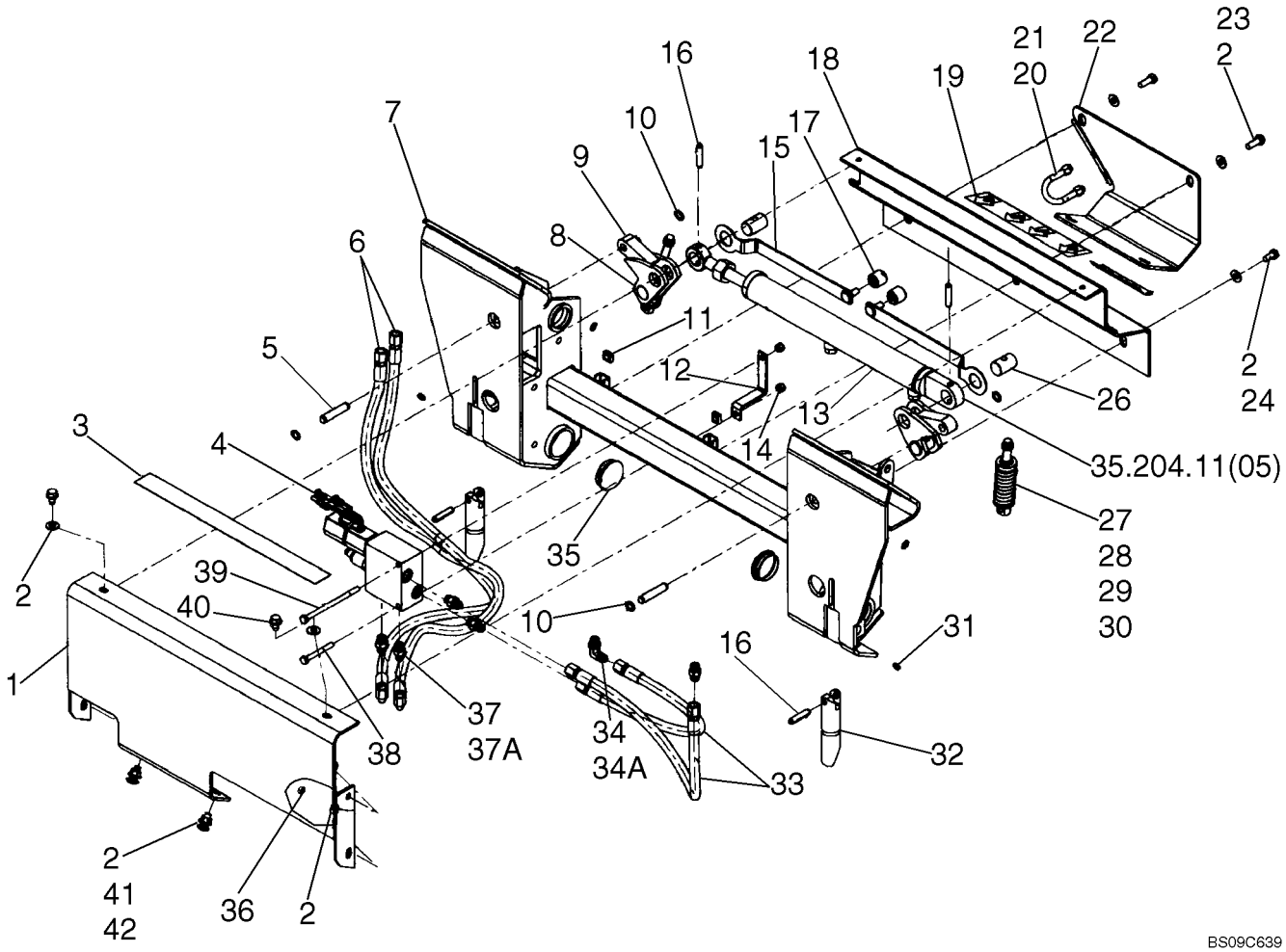

HYDRAULICS - MOUNTING PLATE

REF	FN	PART NUMBER	YR/SN	QTY	DESCRIPTION
32		86575348		2	PIN, Latch; Zinc Plated; If Used
32		87758365		2	PIN, Latch; Heat Treated
33		86635020		2	HOSE, 470 mm (18 1/2 in.)
34		76344		1	ELBOW, 90º, 9/16"-18, 37º x 9/16"-18, O-Ring, Incl. 34A
34A		9617873		1	O-RING, 6-1, 90 Duro, .468" ID x .078" Thk
35		86561087		2	DUST CAP
36		88011		4	BOLT, Hex, 3/8"-16 x 1 1/4", G5, Full Thd
37		76350		5	CONNECTOR, HYD., 9/16"-18, 37º x 9/16"-18, O-Ring, Incl 37A
37A		9617873		5	O-RING, 6-1, 90 Duro, .468" ID x .078" Thk
38		88346		1	BOLT, Hex, 5/16"-18 x 2 1/2", G5
39		88575		1	BOLT, Hex, 5/16"-18 x 5", G5
40		87034819		2	SCREW, SELF TAPPING, Hex Wash Hd, 3/8"-16 x 5/8"
41		80280503		2	BOLT, CARRIAGE, Short NK, 3/8"-16 x 1", G5, Full Thd
42		9628503		2	NUT, 3/8"-16, G5

BOOM HYDRAULICS - MOUNTING PLATE, STANDARD FLOW (IF USED)

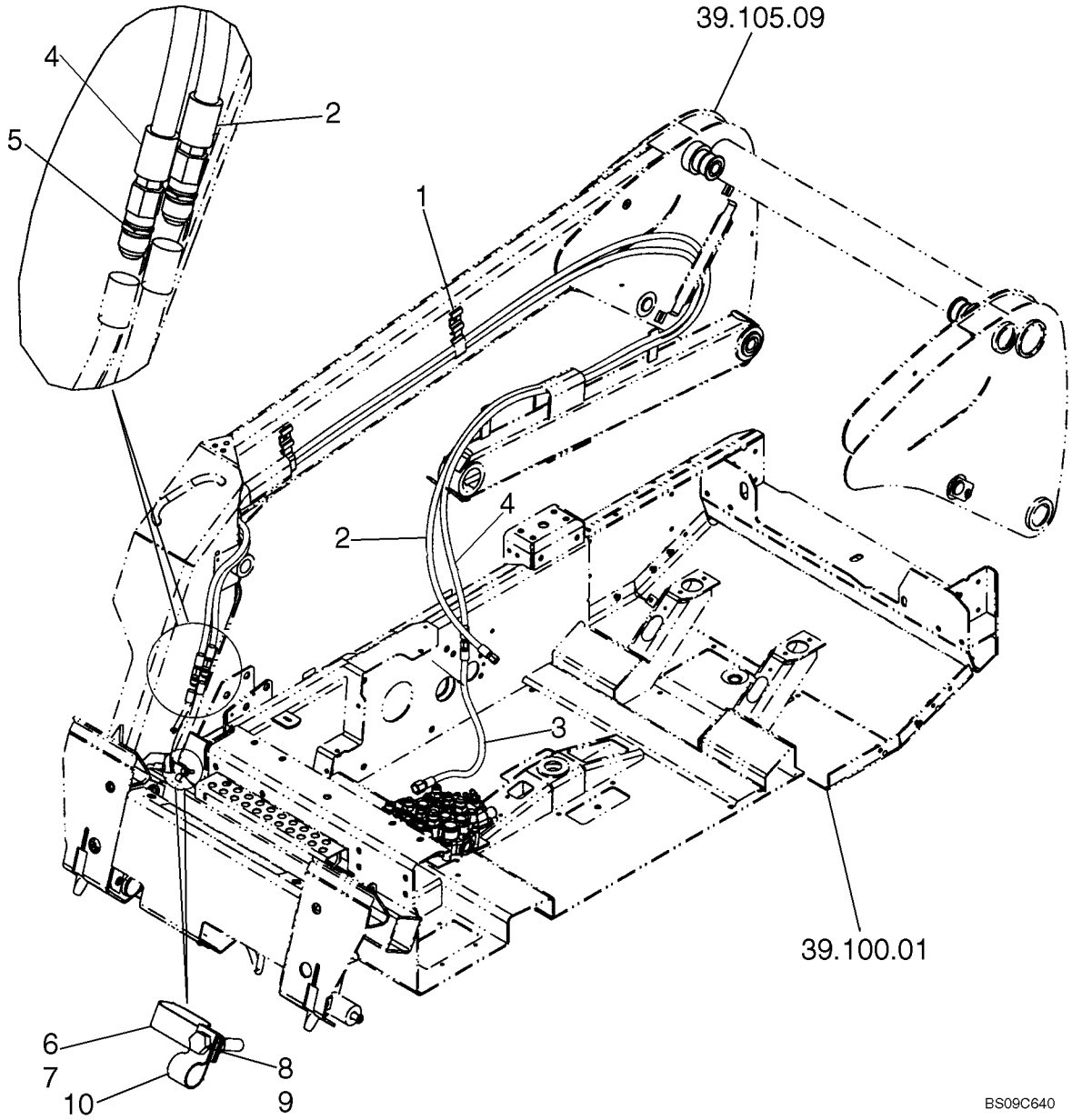

BOOM HYDRAULICS - MOUNTING PLATE, STANDARD FLOW (IF USED)

REF	FN	PART NUMBER	YR/SN	QTY	DESCRIPTION
1		87614881		2	CLAMP
2		86635025		1	HOSE, Hydraulic Mount Plate, 5537.2 mm (218 in)
3		87376136		1	HOSE, Hydraulic Mount Plate, 870 mm (34 1/4 in.)
4		87586301		1	HOSE, Hydraulic Mount Plate, 5234 mm (206 in.)
5		128822		2	UNION, 3/4"-16, 37° x 3/4"-16, 37°
6		86580556		1	PROTECTING COVER
7		578070		1	CLAMP
8		88275		1	BOLT, Hex, 5/16"-18 x 1 1/2", G5
9		86629544		1	NUT, LOCK, 5/16"-18, GB
10		9706748		1	CLAMP, 5/8", Insul, 5/16" Bolt
11		87438046		10	STRAP, CABLE

35.204.11	03	p1	05/09

HYDRAULICS - MOUNTING PLATE, WITHOUT HIGH FLOW

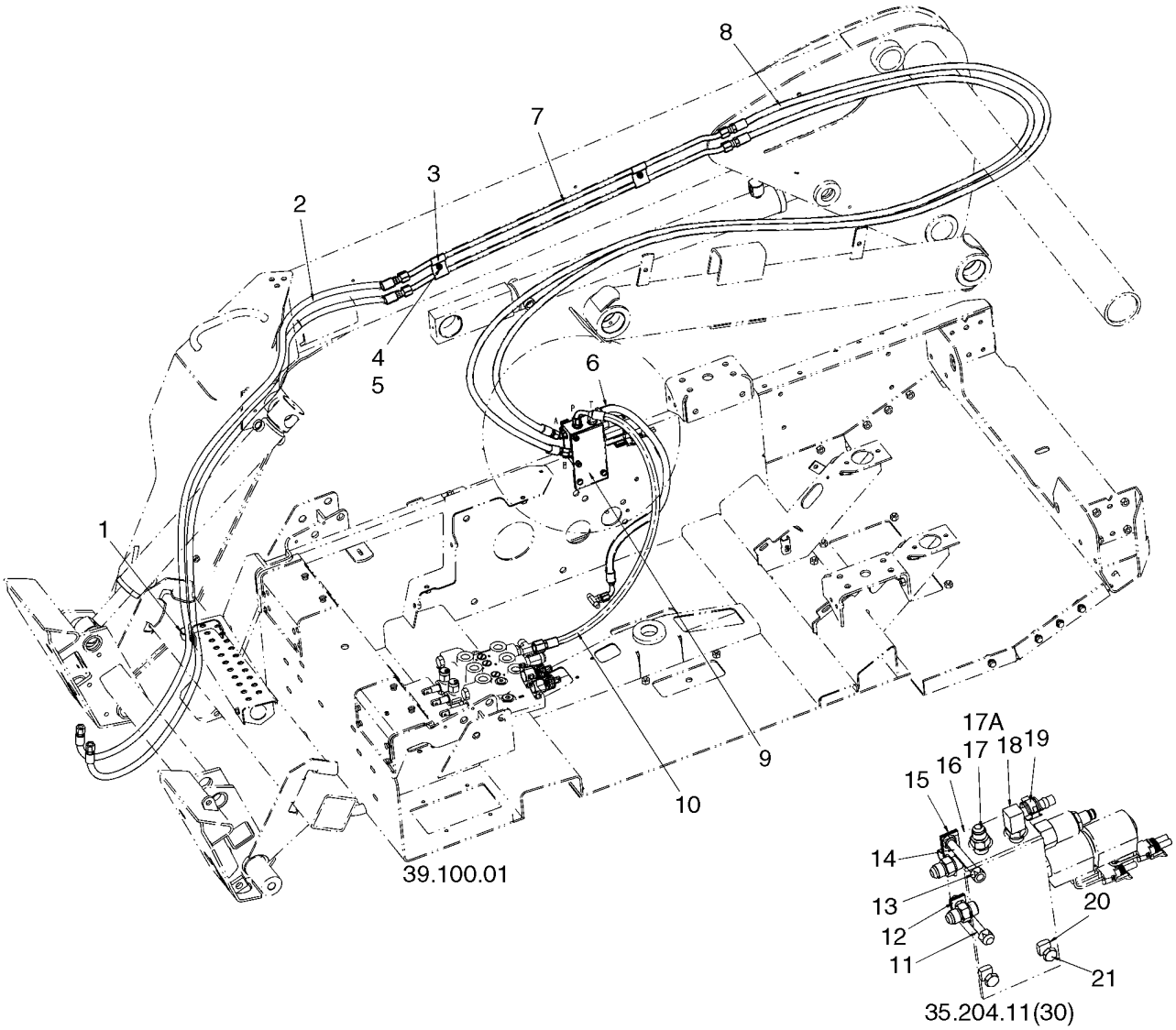

BS09B430

HYDRAULICS - MOUNTING PLATE, WITHOUT HIGH FLOW

REF	FN	PART NUMBER	YR/SN	QTY	DESCRIPTION
1		578070		1	CLAMP
2		84173510		2	HOSE, Hose, Hyd Cylinder HMP
3		86501706		2	CLAMP, Double Tube Clamp
4		80664		2	WASHER, 5/16"
5		88825		2	SCREW, SELF TAPPING, Hex Hd, 5/16" x 1 1/4"
6		84172894		1	HOSE, Hose, Return-Hyd Mounting Plate
7		87522947		2	TUBE, HYD
8		87480066		2	HOSE, Hyd Mount Plate
9		87756214		1	BRACKET, SUPPORTING, Bracket, Yellow
10		84172895		1	HOSE, Hose, Pres-Hyd Mounting Plate
11		87626		1	BOLT, Hex, 5/16"-18 x 2 3/4", G5
12		853764		1	CLAMP, 5/16", Insul, 5/16" Bolt
13		86629544		2	NUT, LOCK, 5/16"-18, GB
14		88346		1	BOLT, Hex, 5/16"-18 x 2 1/2", G5
15		86010402		1	CLAMP, 1/2", Insul, 3/8" Bolt
16		86635833		1	VALVE, CONTROL, See Fig 35.204.11 [30]
17		76350		3	CONNECTOR, HYD., 9/16"-18, 37° x 9/16"-18, O-Ring, Incl 17A
17A		9617873		1	O-RING, 6-1, 90 Duro, .468" ID x .078" Thk
18		86625228		1	CONNECTOR, HYD., Stem 90 Bead Hose 3/8 ID X 9/16
19		87584302		1	CLAMP, 18mm
20		229197A1		2	NUT, Square M8-1.25 Cl 8
21		120103		2	BOLT, Hex, M8 x 16, 8.8

HYDRAULICS - MOUNTING PLATE, WITHOUT HIGH FLOW, PILOT CONTROL

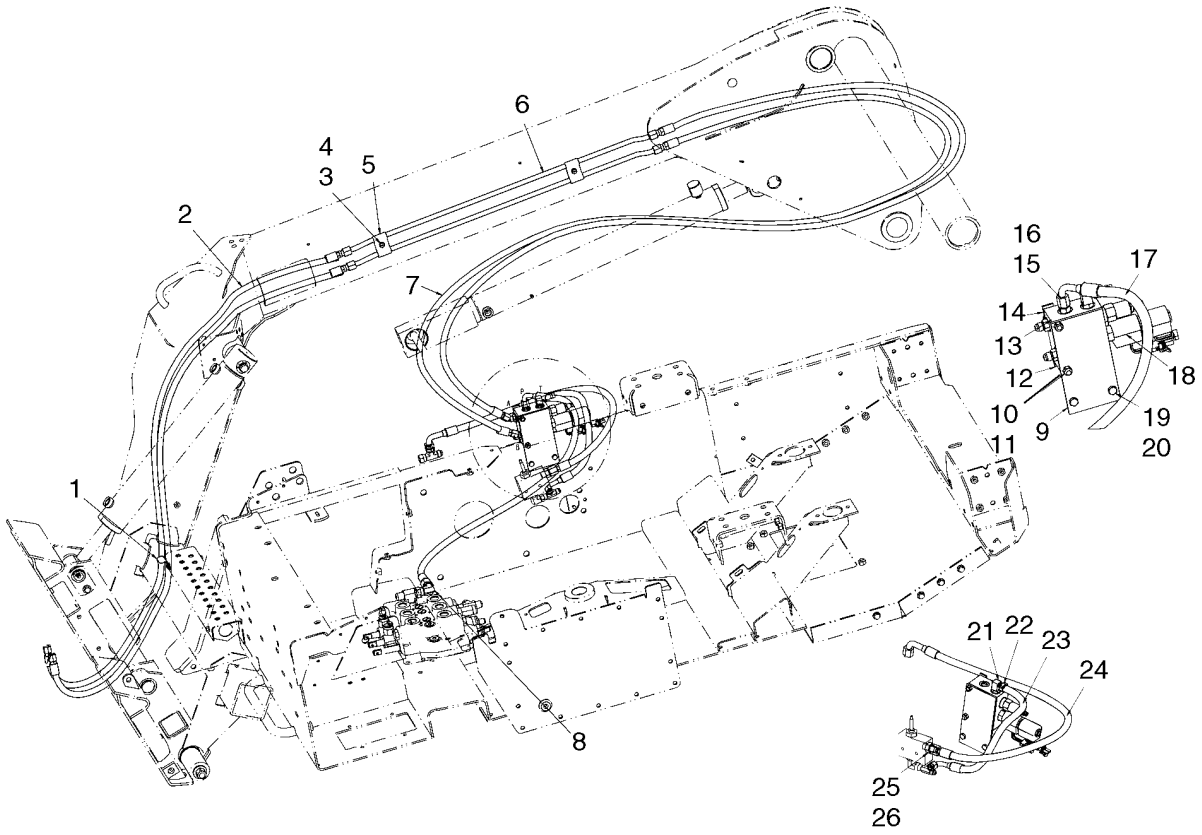

BS09B435

HYDRAULICS - MOUNTING PLATE, WITHOUT HIGH FLOW, PILOT CONTROL

REF	FN	PART NUMBER	YR/SN	QTY	DESCRIPTION
1		578070		1	CLAMP
2		84173510		2	HOSE, Hose, Hyd Cylinder HMP
3		80664		2	WASHER, 5/16"
4		88825		2	SCREW, SELF TAPPING, Hex Hd, 5/16" x 1 1/4"
5		86501706		2	CLAMP, Double Tube Clamp
6		87522947		2	TUBE, HYD
7		87480066		2	HOSE, Hyd Mount Plate
8		182977		1	ELBOW, 90º, 7/8"-14, 37º x 7/8"-14, 37º Fem Sw
9		87756214		1	BRACKET, SUPPORTING, Bracket, Yellow
10		87626		1	BOLT, Hex, 5/16"-18 x 2 3/4", G5
11		86629544		2	NUT, LOCK, 5/16"-18, GB
12		853764		1	CLAMP, 5/16", Insul, 5/16" Bolt
13		88346		1	BOLT, Hex, 5/16"-18 x 2 1/2", G5
14		86010402		1	CLAMP, 1/2", Insul, 3/8" Bolt
15		76350		3	CONNECTOR, HYD., 9/16"-18, 37º x 9/16"-18, O-Ring, Incl 16
16		9617873		1	O-RING, 6-1, 90 Duro, .468" ID x .078" Thk
17		84172895		1	HOSE, Hose, Pres-Hyd Mounting Plate
18		86635833		1	VALVE, CONTROL, See Fig 35.204.11 [30]
19		120103		2	BOLT, Hex, M8 x 16, 8.8
20		229197A1		2	NUT, Square M8-1.25 Cl 8
21		86625228		1	CONNECTOR, HYD., Stem 90 Bead Hose 3/8 ID X 9/16
22		87584302		1	CLAMP, 18mm
23		84172891		1	HOSE, Hose, Return-Hyd Mounting Plate
24		84172898		1	HOSE, Hose, Cylinder
25		81827427		1	CONNECTOR, HYD., Incl 26
26		128825		1	O-RING, 8-1, 90 Duro, .644" ID x .087" Thk

35.204.11	05	p1	03/09

CYLINDER ASSY - MOUNTING PLATE

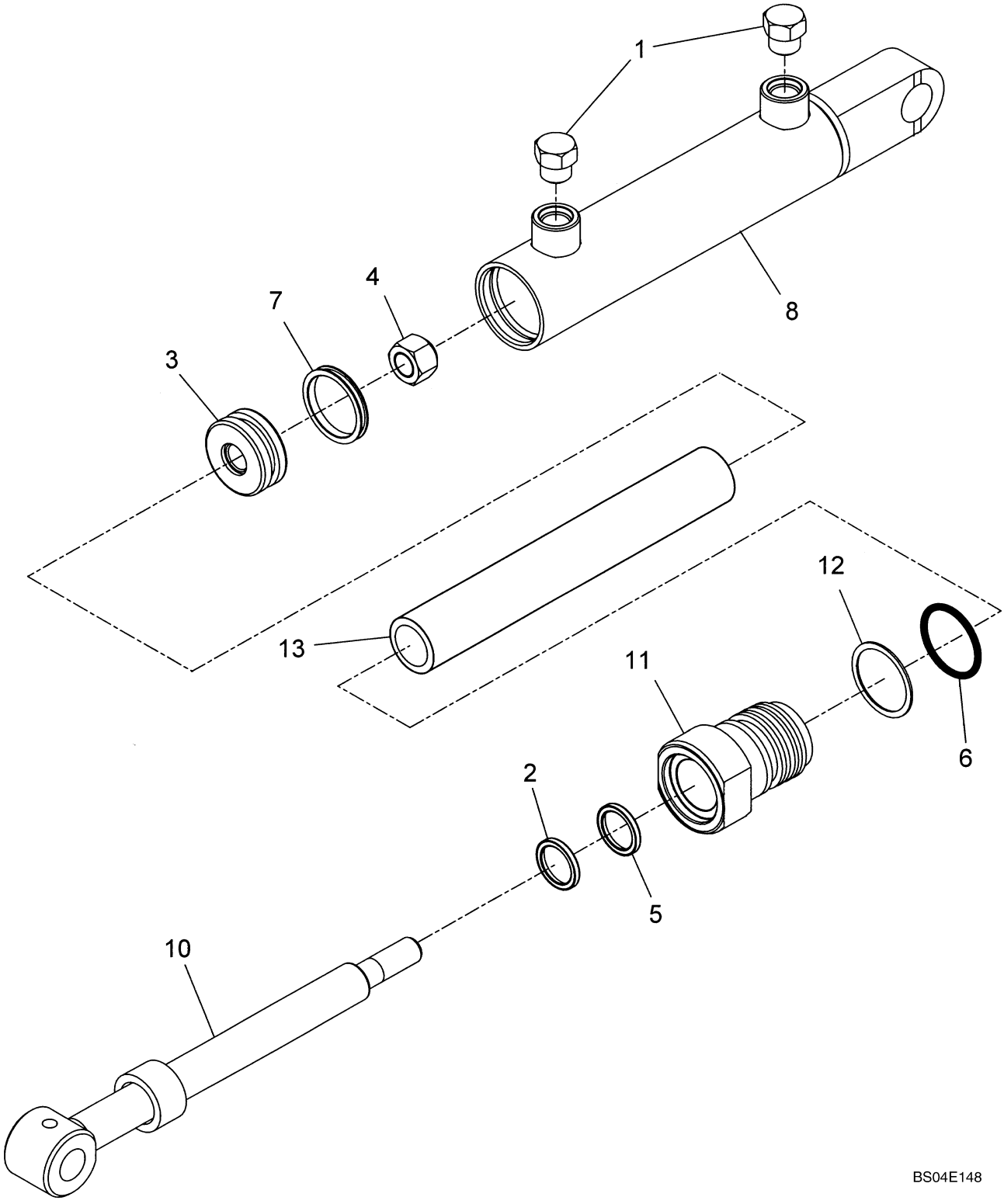

CYLINDER ASSY - MOUNTING PLATE

REF	FN	PART NUMBER	YR/SN	QTY	DESCRIPTION
		87442336			HYDRAULIC CYLINDER, Mounting Plate, Incl. Ref. 1 - 13
1		76349		2	PLUG, Hex Hd, 9/16"-18 ORB, Shipping
2		272471		1	SEAL
3		596215		1	PISTON
4		88130		1	NUT, LOCK, 1/2"-20, GC
5		9826108		1	SEAL
6		274754		1	O-RING, -220, 70 Duro, 1.359" ID x .139" Thk
7		86605608		1	SEAL, Piston
8		NSS		1	NOT SERVICED SEPARATELY, Barrel
9		86627859		1	KIT, SEALS, Incl. Ref. 2, 5, 6, 7, 12
10		86627862		1	ROD, PISTON
11		86627864		1	CYLINDER HEAD
12		86628423		1	BACK-UP RING
13		86637408		1	SPACER

35.204.11	10	p1	03/09

BOOM HYDRAULICS - MOUNTING PLATE, HIGH FLOW

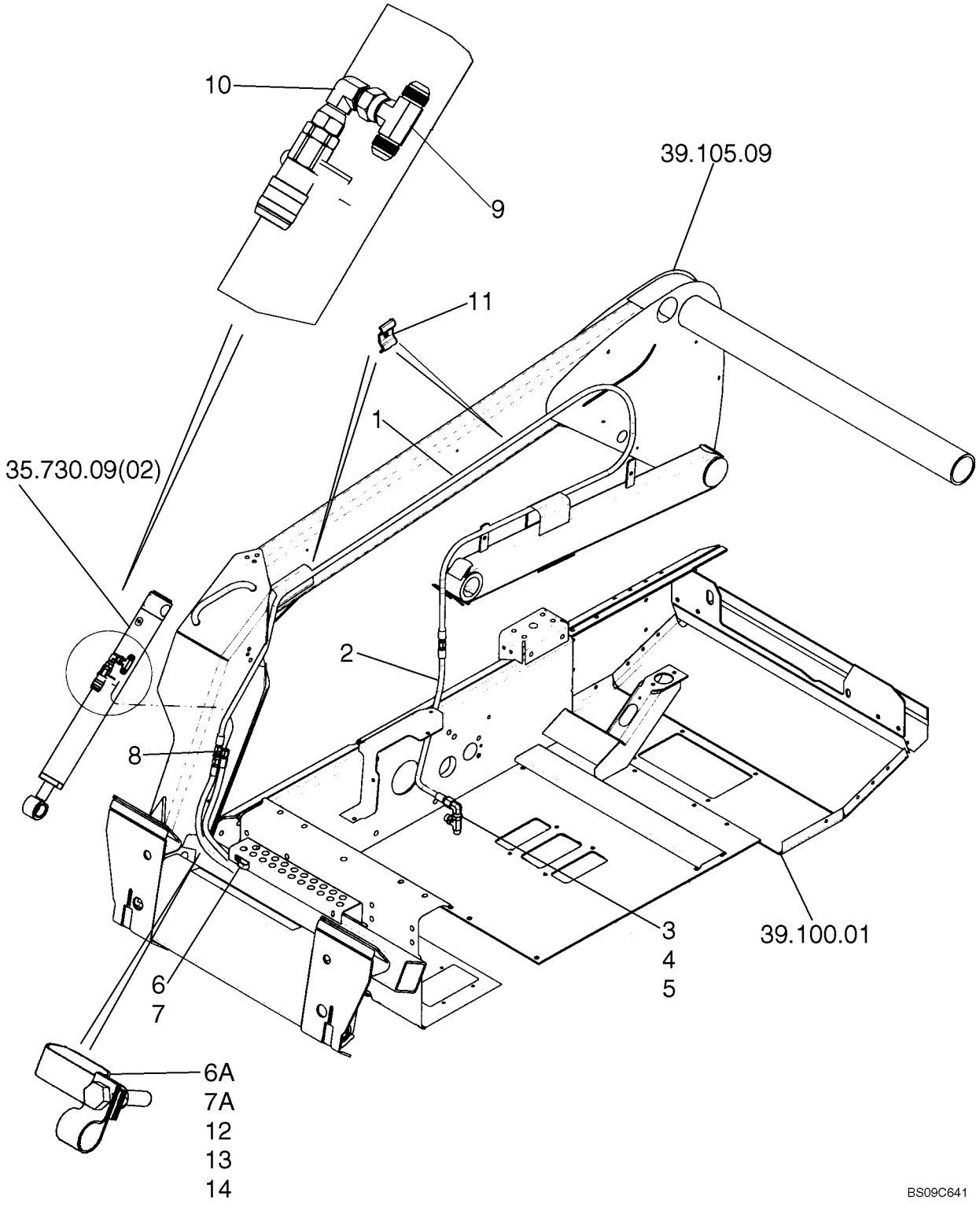

BOOM HYDRAULICS - MOUNTING PLATE, HIGH FLOW

REF	FN	PART NUMBER	YR/SN	QTY	DESCRIPTION
		87388082		1	KIT, CONVERSION, Hydraulic Mount Plate Conversion Kit; Incl. 1 - 3, 5, 8, 11
1		87586300		1	HOSE, Hydraulic Mounting Plate, 5640 mm (222 in.)
2		87376136		1	HOSE, Hydraulic Mounting Plate, 870 mm (34 1/4 in.)
3		86513026		1	TEE, 7/8"-14, 37º x 7/8"-14, O-Ring Br, Incl. 4
4		167269		1	O-RING, 10-1, 90 Duro, .755" ID x .097" Thk
5		182977		1	ELBOW, 90º, 7/8"-14, 37º x 7/8"-14, 37º Fem Sw
6		578070		1	CLAMP, If Used In This Location
6A		578070		1	CLAMP, If Used In This Location
7		86580556		1	PROTECTING COVER, If Used In This Location
7A		86580556		1	PROTECTING COVER, If Used In This Location
8		128822		1	UNION, 3/4"-16, 37º x 3/4"-16, 37º
9		86513015		1	TEE, 37º, 3/4"-16 x 3/4"-16, Fem Sw Br
10		248974		1	ELBOW, 90º, 3/4"-16, 37º x 3/4"-16, 37º Fem Sw
		87438046		10	STRAP, CABLE, Wire Tie; As Needed
11		87614881		2	CLAMP
12		88275		1	BOLT, Hex, 5/16"-18 x 1 1/2", G5
13		9706748		1	CLAMP, 5/8", Insul, 5/16" Bolt
14		86629544		1	NUT, LOCK, 5/16"-18, GB

35.204.11	11	p1	03/09

BOOM HYDRAULICS - MOUNTING PLATE, HIGH FLOW (IF USED)

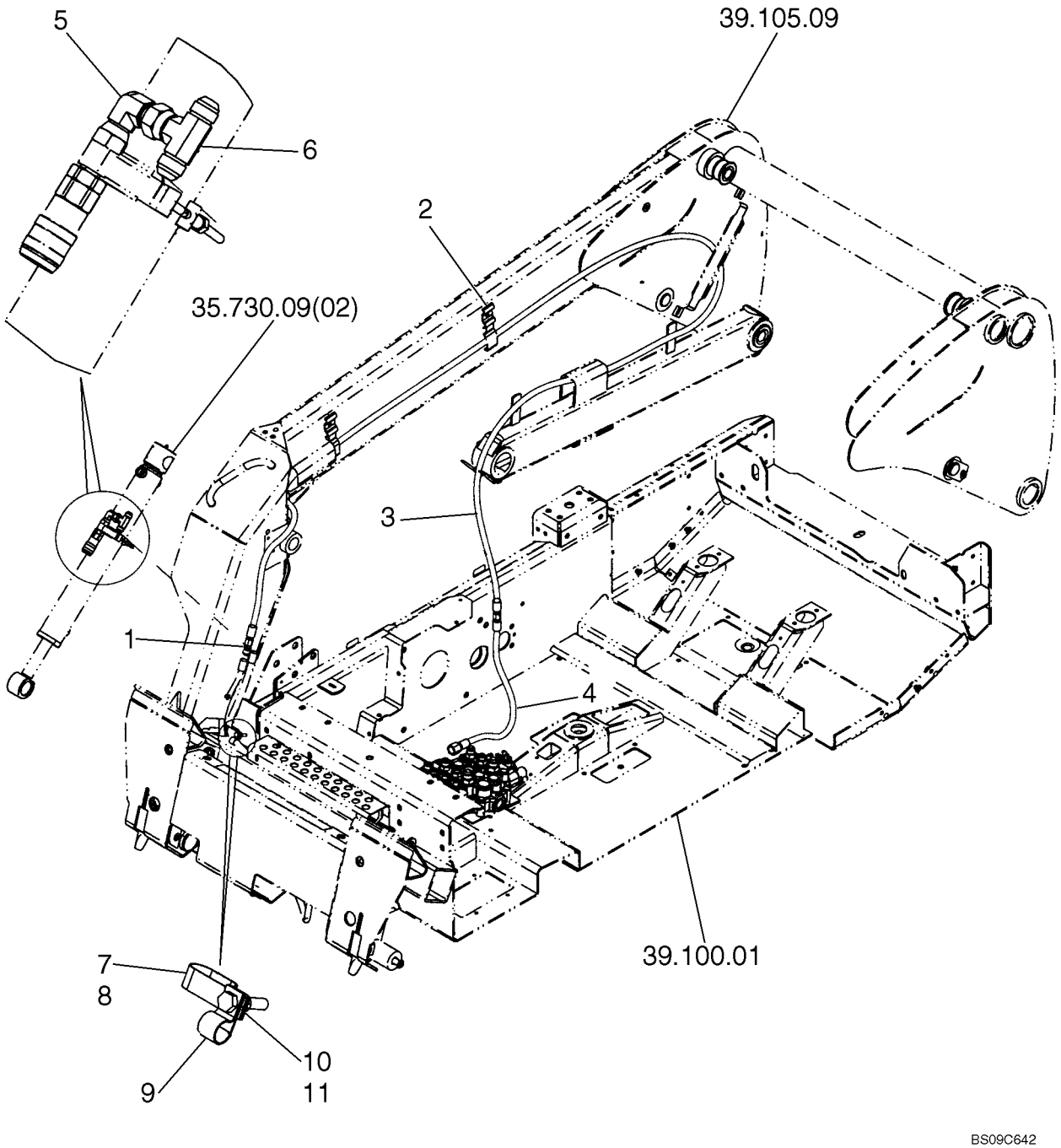

BOOM HYDRAULICS - MOUNTING PLATE, HIGH FLOW (IF USED)

REF	FN	PART NUMBER	YR/SN	QTY	DESCRIPTION
1		128822		1	UNION, 3/4"-16, 37º x 3/4"-16, 37º
2		87614881		2	CLAMP
3		87586301		1	HOSE, Hydraulic Mount Plate, 5234 mm (206 in.)
4		87376136		1	HOSE, Hydraulic Mount Plate, 870 mm (34 1/4 in.)
5		248974		1	ELBOW, 90º, 3/4"-16, 37º x 3/4"-16, 37º Fem Sw
6		86513015		1	TEE, 37º, 3/4"-16 x 3/4"-16, Fem Sw Br
7		86580556		1	PROTECTING COVER
8		578070		1	CLAMP
9		9706748		1	CLAMP, 5/8", Insul, 5/16" Bolt
10		88275		1	BOLT, Hex, 5/16"-18 x 1 1/2", G5
11		86629544		1	NUT, LOCK, 5/16"-18, GB
12		87438046		10	STRAP, CABLE, Not Illustrated

HYDRAULICS - MOUNTING PLATE, WITH HIGH FLOW

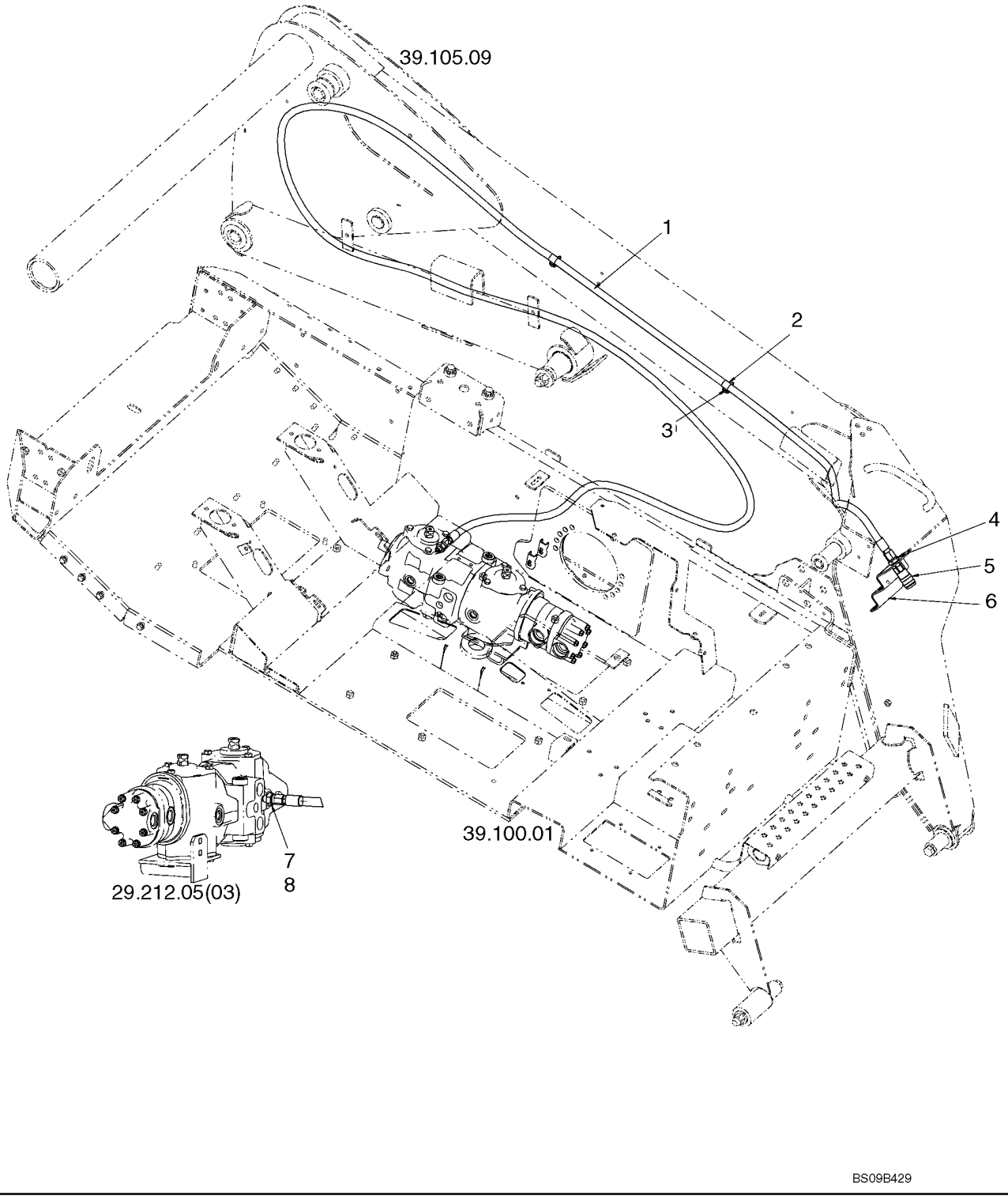

HYDRAULICS - MOUNTING PLATE, WITH HIGH FLOW

REF	FN	PART NUMBER	YR/SN	QTY	DESCRIPTION
1		86635025		1	HOSE, High Flow Case Drain
2		87010656		2	CLAMP, 11/16", Insul, 3/8" Bolt
3		88825		1	SCREW, SELF TAPPING, Hex Hd, 5/16" x 1 1/4"
4		524036		1	NUT, LOCK, Blkhd, 3/4"-16
5		87573050		1	ADAPTER, FF Cplr .38 Female -8 BMJ
6		84121758		1	BRACKET, SUPPORTING, Gray
7		128817		1	CONNECTOR, HYD., 9/16"-18, 37° x 3/4"-18, O-Ring, Incl 8
8		128825		1	O-RING, 8-1, 90 Duro, .644" ID x .087" Thk

HYDRAULICS - MOUNTING PLATE, PILOT CONTROL

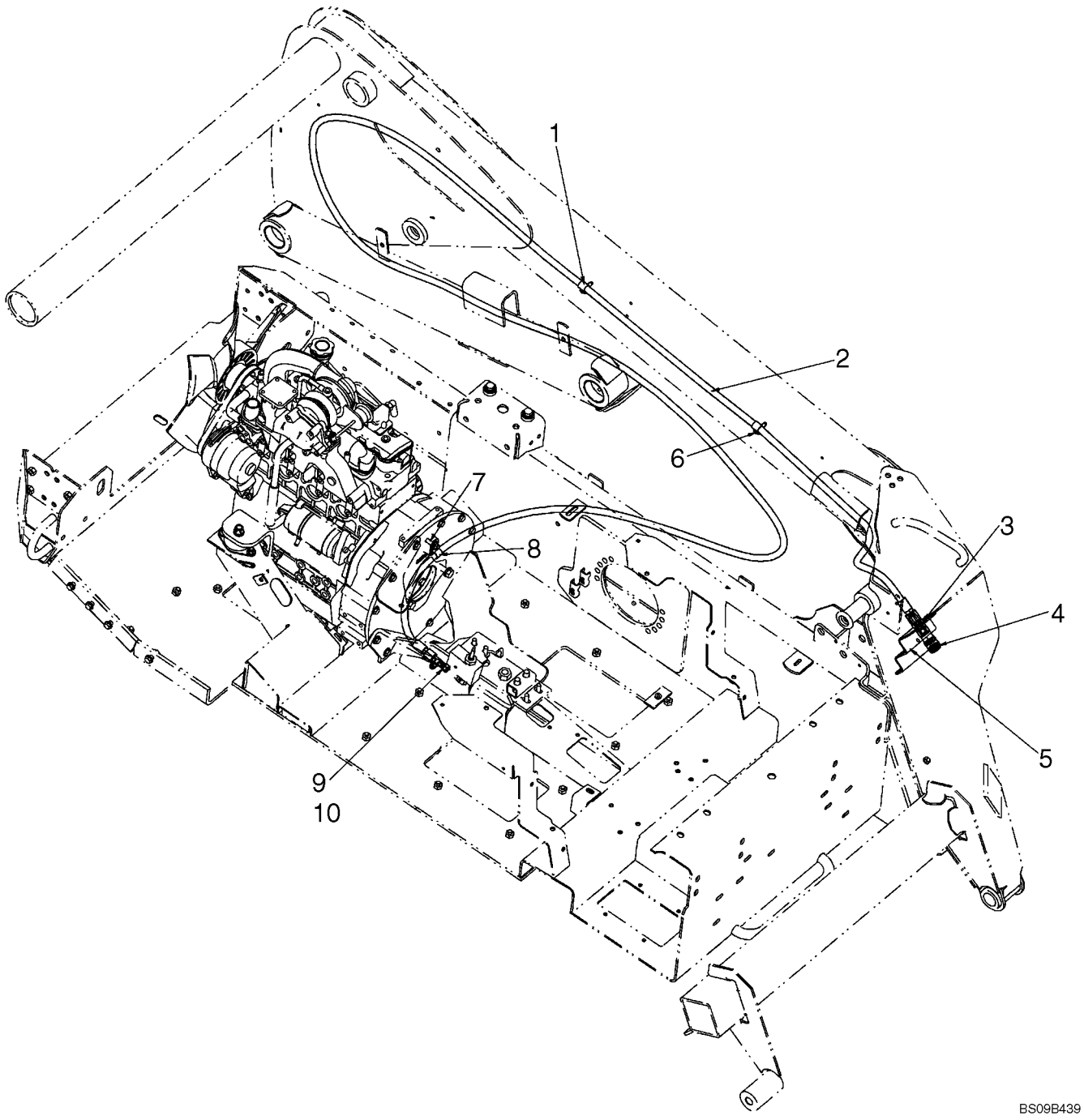

HYDRAULICS - MOUNTING PLATE, PILOT CONTROL

REF	FN	PART NUMBER	YR/SN	QTY	DESCRIPTION
1		87010656		2	CLAMP, 11/16", Insul, 3/8" Bolt
2		86635025		1	HOSE, High Flow Case Drain
3		524036		1	NUT, LOCK, Blkhd, 3/4"-16
5		84121758		1	BRACKET, SUPPORTING, Gray
6		88825		2	SCREW, SELF TAPPING, Hex Hd, 5/16" x 1 1/4"
7		9706726		1	BOLT, Hex Flg, 3/8"-16 x 1", Serr
8		86624005		1	CLAMP, 3/4", Insul, 3/8" Bolt
9		129274		1	TEE, 37°, 9/16"-18, x 9/16"-18, Fem Sw Run, Incl 10
10		9617873		2	O-RING, 6-1, 90 Duro, .468" ID x .078" Thk

35.204.11	30	p1	09/09

VALVE - MOUNTING PLATE

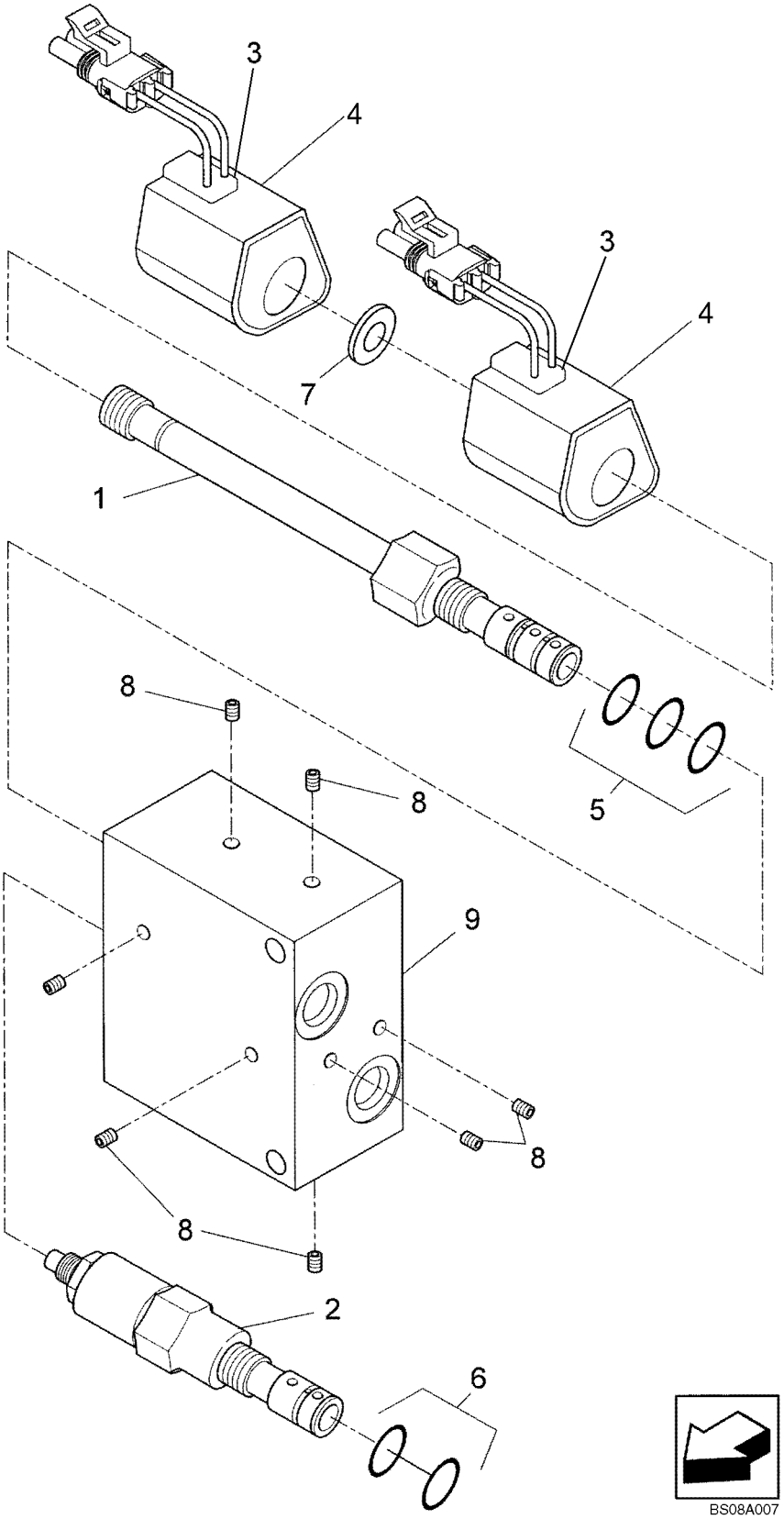

VALVE - MOUNTING PLATE

REF	FN	PART NUMBER	YR/SN	QTY	DESCRIPTION
		86635833		1	VALVE, CONTROL, Incl. Ref. 1 - 9
1		86629792		1	VALVE, SOLENOID
2		87027734		1	VALVE, SOLENOID, Sequencing
3		86634904		2	COIL
4		86643552		2	KIT, Housing
5		86976100		1	KIT, SEALS, Valve Spool
6		86509023		1	KIT, SEALS, Sequencing Valve
7		86635834		1	SPACER
8		NSS		8	NOT SERVICED SEPARATELY, Expander Plugs
9		NSS		1	NOT SERVICED SEPARATELY, Manifold Housing

35.204.15	01	p1	03/09

HIGH FLOW HYDRAULICS, PILOT CONTROL

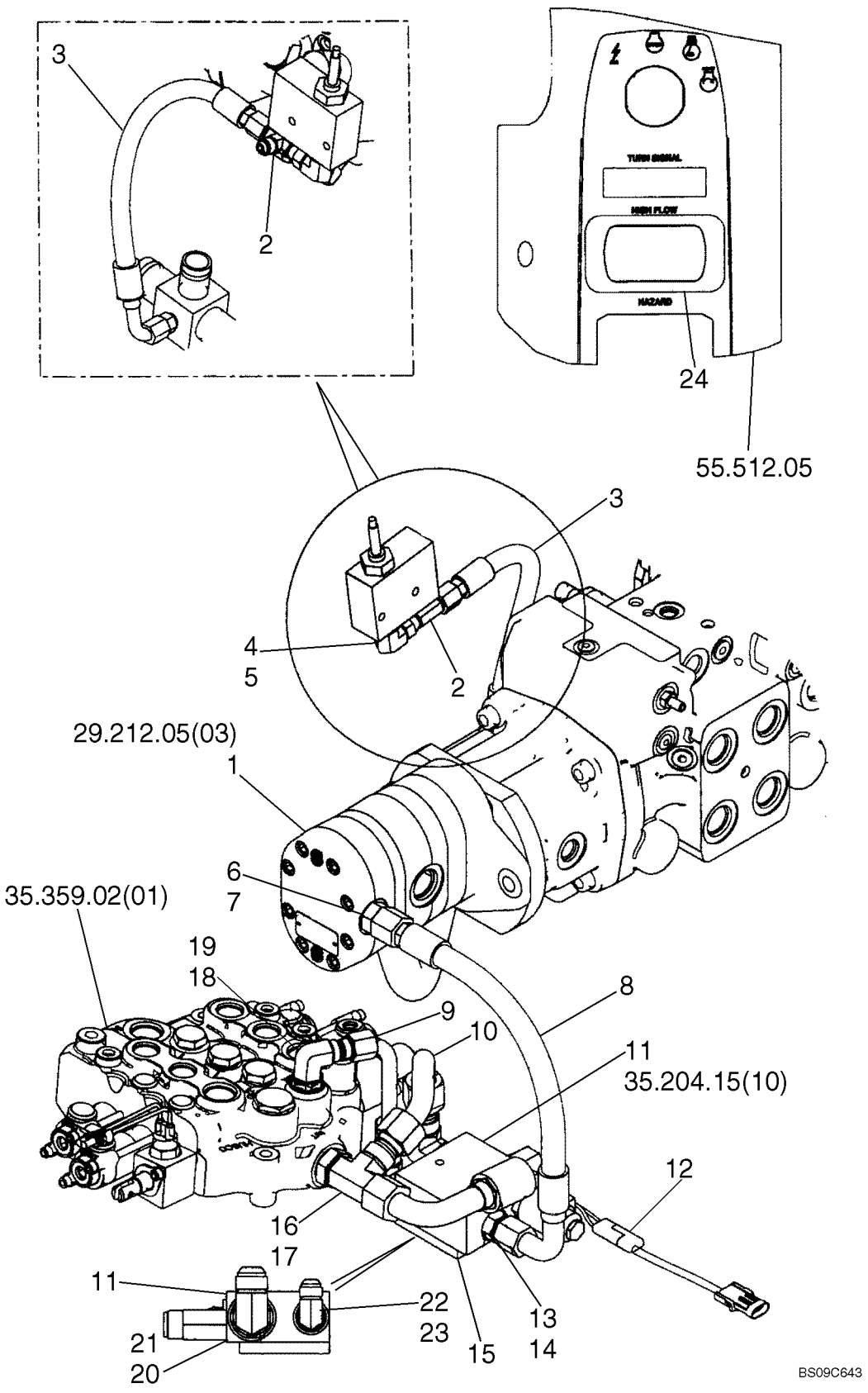

HIGH FLOW HYDRAULICS, PILOT CONTROL

REF	FN	PART NUMBER	YR/SN	QTY	DESCRIPTION
1		87542672		1	PUMP, High Flow Gear Pump (L160); See Fig. 29.212.05 [03]
1		87368988		1	PUMP, High Flow Gear Pump (L170); 3 Ports (1 Inlet/2 Outlet); See Fig. 29.212.05 [03]
2		129274		1	TEE, 37º, 9/16"-18, x 9/16"-18, Fem Sw Run
3		87357208		1	HOSE, Overide Valve Drain
4		76347		1	ELBOW, 90º, 9/16"-18, 37º x 3/4"-16, O-Ring, Incl. 5
5		128825		1	O-RING, 8-1, 90 Duro, .644" ID x .087" Thk
6		87301330		1	CONNECTOR, HYD., Includes 7
7		167269		1	O-RING, 10-1, 90 Duro, .755" ID x .097" Thk
8		87357210		1	HOSE
9		87357188		1	TUBE, HYD, High Flow Valve To Implement Valve
10		87357187		1	TUBE, HYD, Implement Valve To High Flow Valve Return
11		86579010		1	VALVE, HYDRAULIC, See Figure 35.204.15 [10]
12		87572870		1	HARNESS, High Flow Adapter
13		86071		1	CONNECTOR, HYD., 7/8"-14, 37º x 3/4"-16, O-Ring, Incl. 14
14		128825		1	O-RING, 8-1, 90 Duro, .644" ID x .087" Thk
15		86589446		1	PAD, RUBBER
16		219604		1	TEE, 1 1/16"-12, 37º x 1 1/16"-12, O-Ring run, Incl. 17
17		167266		1	O-RING, 12-1, 90 Duro, .924 ID x .116" Thk
18		9617891		1	ELBOW, 90º, 3/4"-16, 37º x 7/8"-14, O-Ring, Incl. 19
19		167269		1	O-RING, 10-1, 90 Duro, .755" ID x .097" Thk
20		322894		1	ELBOW, 90º, 1 1/16"-12, 37º x 1 1/16"-12, O-Ring, Incl. 21
21		167266		1	O-RING, 12-1, 90 Duro, .924 ID x .116" Thk
22		128830		1	ELBOW, 90º, 3/4"-16, 37º x 3/4"-16, O-Ring, Incl. 23
23		128825		1	O-RING, 8-1, 90 Duro, .644" ID x .087" Thk
24		87572862		1	SWITCH, High Flow Switch, Enhanced Cab
25		263117		7	STRAP, CABLE, .14" x 11 1/2", Not Illustrated

35.204.15	02	p1	04/09

HIGH FLOW HYDRAULICS - DELUXE CAB, IF USED

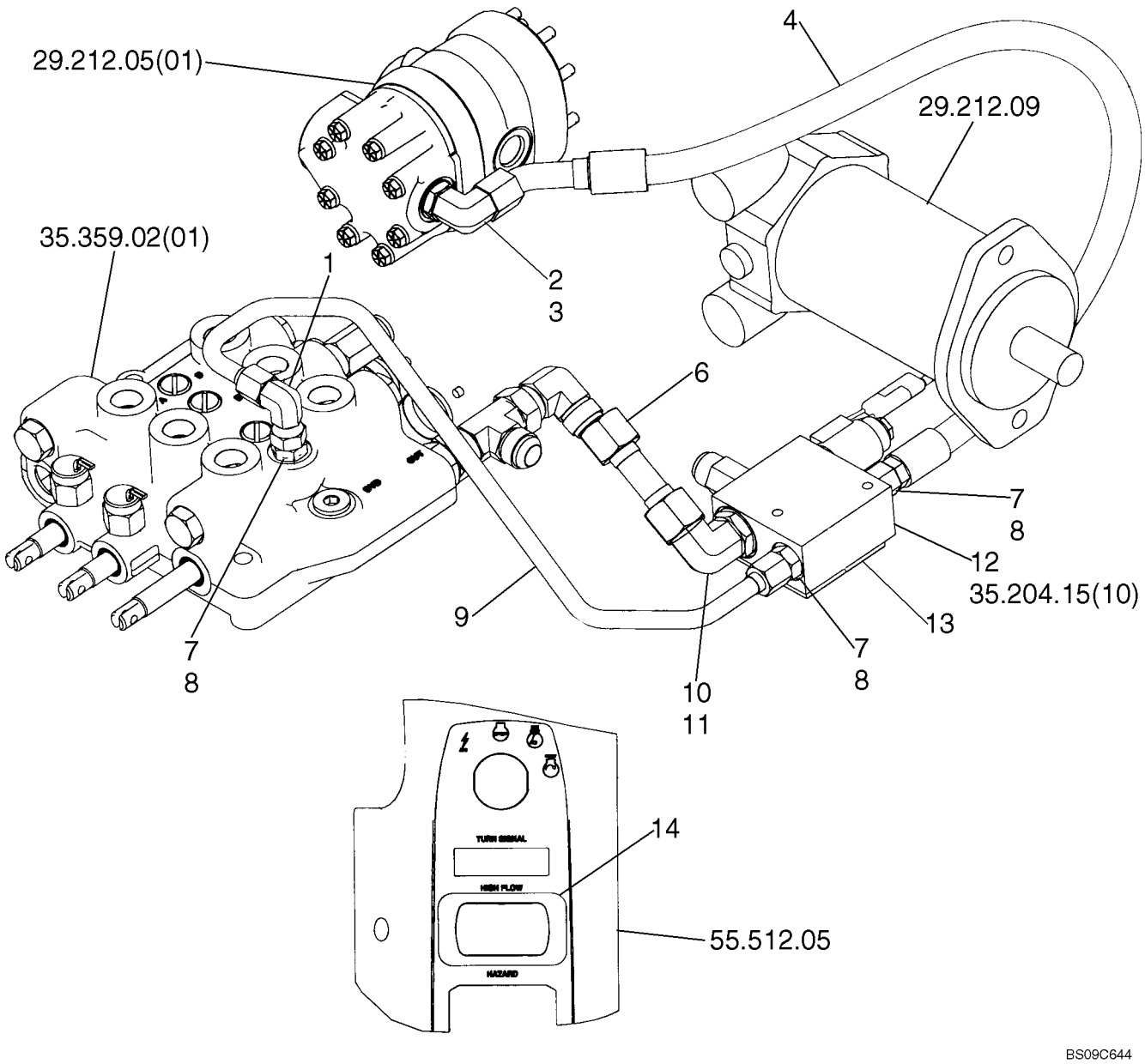

HIGH FLOW HYDRAULICS - DELUXE CAB, IF USED

REF	FN	PART NUMBER	YR/SN	QTY	DESCRIPTION
1		87562343		1	ADAPTER, Elbow, 90
2		164910		1	ELBOW, 90º, 7/8"-14, 37º x 7/8"-14, O-Ring, Incl. 3
3		167269		1	O-RING, 10-1, 90 Duro, .755" ID x .097" Thk
4		86578907		1	HOSE
5		87572870		1	HARNESS, High Flow Adapter
6		86578853		1	TUBE, HYD
7		128818		1	CONNECTOR, HYD., 3/4"-16, 37º x 3/4"-16, O-Ring, Incl. 8
8		128825		1	O-RING, 8-1, 90 Duro, .644" ID x .087" Thk
9		86578700		1	TUBE, HYD
10		322894		1	ELBOW, 90º, 1 1/16"-12, 37º x 1 1/16"-12, O-Ring, Incl. 11
11		167266		1	O-RING, 12-1, 90 Duro, .924 ID x .116" Thk
12		86579010		1	VALVE, HYDRAULIC, See Figure 35.204.15 [10]
13		86589446		1	PAD, RUBBER
14		87572862		1	SWITCH, High Flow Switch
15		263117		7	STRAP, CABLE, .14" x 11 1/2", Not Illustrated

35.204.15	10	p1	03/09

SELECTOR VALVE, HIGH FLOW

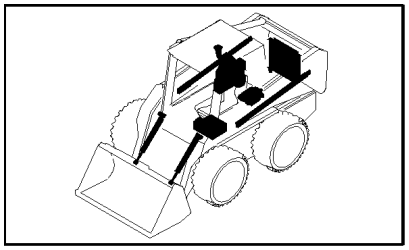

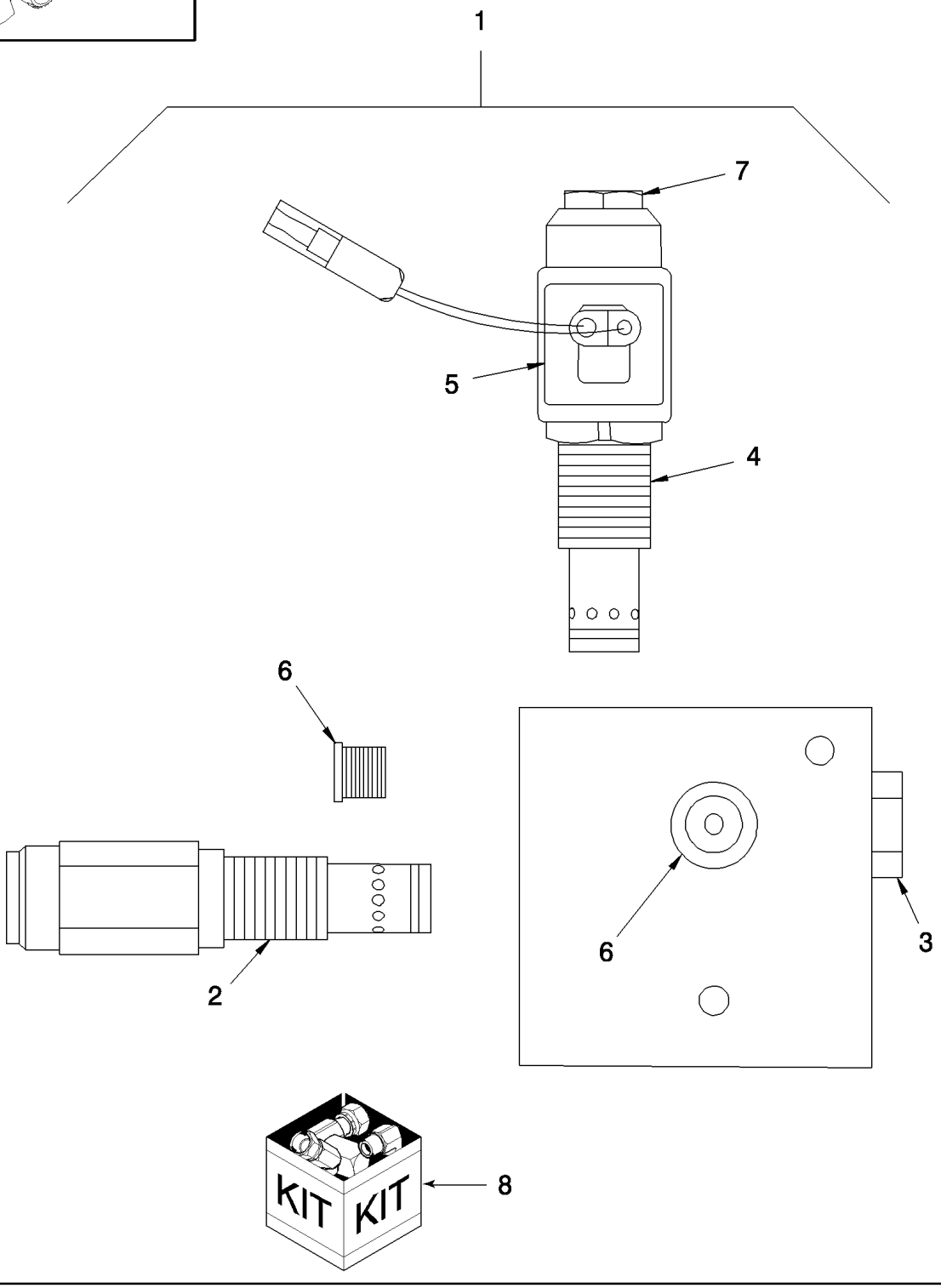

SELECTOR VALVE, HIGH FLOW

REF	FN	PART NUMBER	YR/SN	QTY	DESCRIPTION
1		86579010		1	VALVE, HYDRAULIC
1		87021067		1	VALVE, HYDRAULIC, Replaces 86579010
2		86527862		1	VALVE, PRESSURE RELIEF, Relief; 3250 psi
2		87021069		1	VALVE, HYDRAULIC, Relief; 2950-3000 psi; Replaced 86527862
3		857989		1	VALVE, CHECK, Check
4		86514094		1	CARTRIDGE, Cartridge
4		86511441		AR	KIT, SEALS, Services 86514094
5		86511299		1	SOLENOID
6		278548		2	PLUG, Hex Soc, 7/16"-20 ORB
7		86514098		1	RETAINER
8		86514097		AR	KIT, SEALS, Incl. (7) Seals

35.220.07	01	p1	03/09

AUXILIARY HYDRAULICS, STANDARD; IF USED

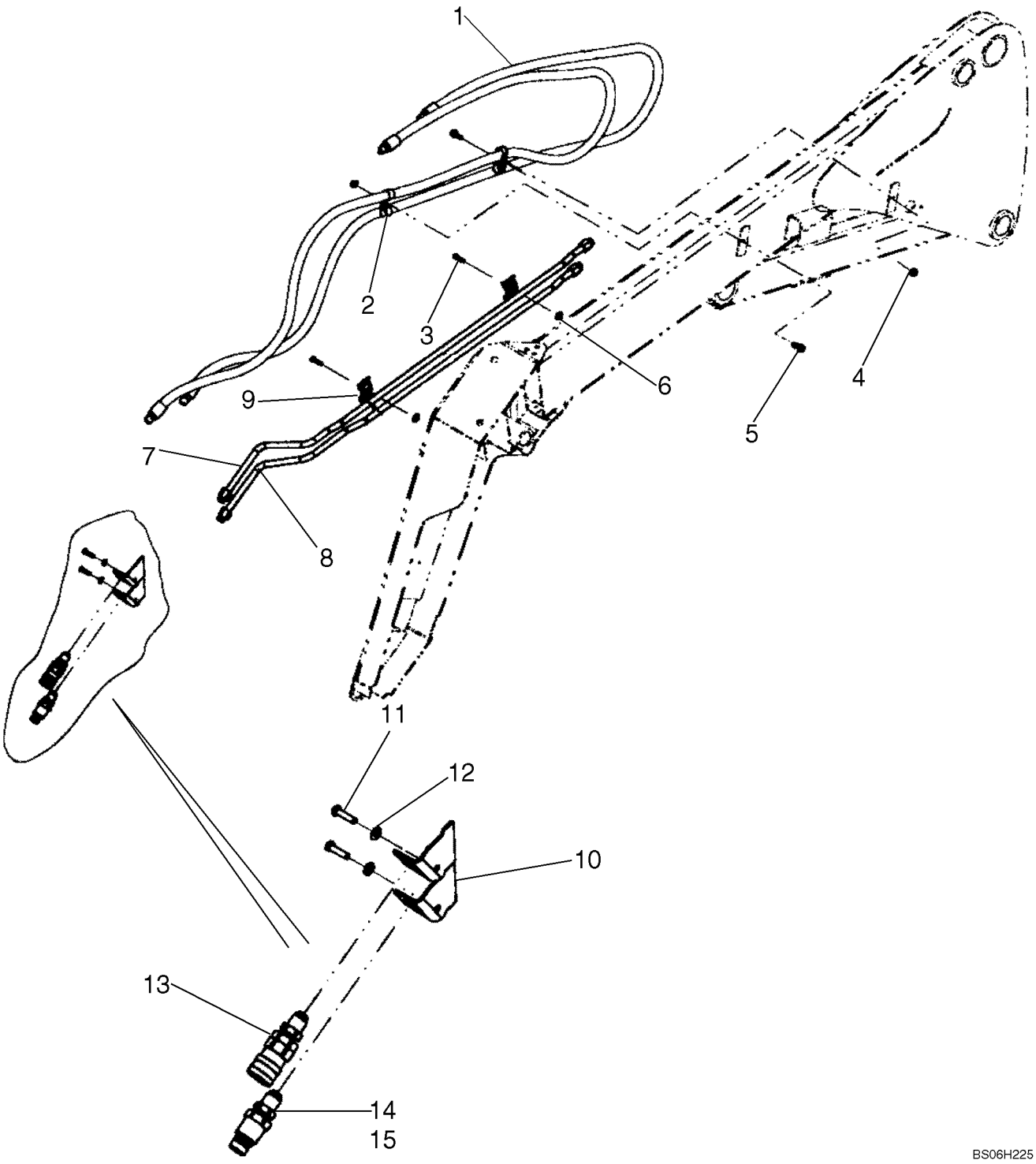

AUXILIARY HYDRAULICS, STANDARD; IF USED

REF	FN	PART NUMBER	YR/SN	QTY	DESCRIPTION
1		9826542		2	HOSE
2		9827902		2	CLAMP, 1", Insul, 3/8" Bolt
3		88825		2	SCREW, SELF TAPPING, Hex Hd, 5/16" x 1 1/4"
4		247780		2	NUT, FLANGE, Flg, USR, 3/8"-16
5		9706726		2	BOLT, Hex Flg, 3/8"-16 x 1", Serr
6		80664		2	WASHER, 5/16"
7		87529378		1	TUBE, HYD
8		87529370		1	TUBE, HYD
9		86501706		2	CLAMP
10		86540356		2	BRACKET
11		87657		2	BOLT, Hex, 5/16"-18 x 1 1/4", G5
12		322358		2	WASHER, BELLEVILLE, M8
13		87568388		1	ADAPTER, FF Cplr 0.5 Female -10 BMJ; Replaces 86613116
14		87417308		1	COUPLING, BREAK AWAY, FF Cplr 0.5 Male -10 BMJ ; Incl. 15; Replaces 86613115
15		87426762		1	RING
		86539389		X	DUST CAP, For 87417308
		86539403		X	ADAPTER, Coupler From 3/4" FF Female to 1/2" ISO-A Male (Mates to Male FF Coupler 87417308)
		86539430		X	KIT, REPAIR, For Male FF Coupler 87417308
		86537647		1	COUPLING, QUICK, FEMALE, Attaches To 1/2" Pipe Thread Hose Ends

35.220.07	02	p1	03/09

AUXILIARY HYDRAULICS, HIGH FLOW

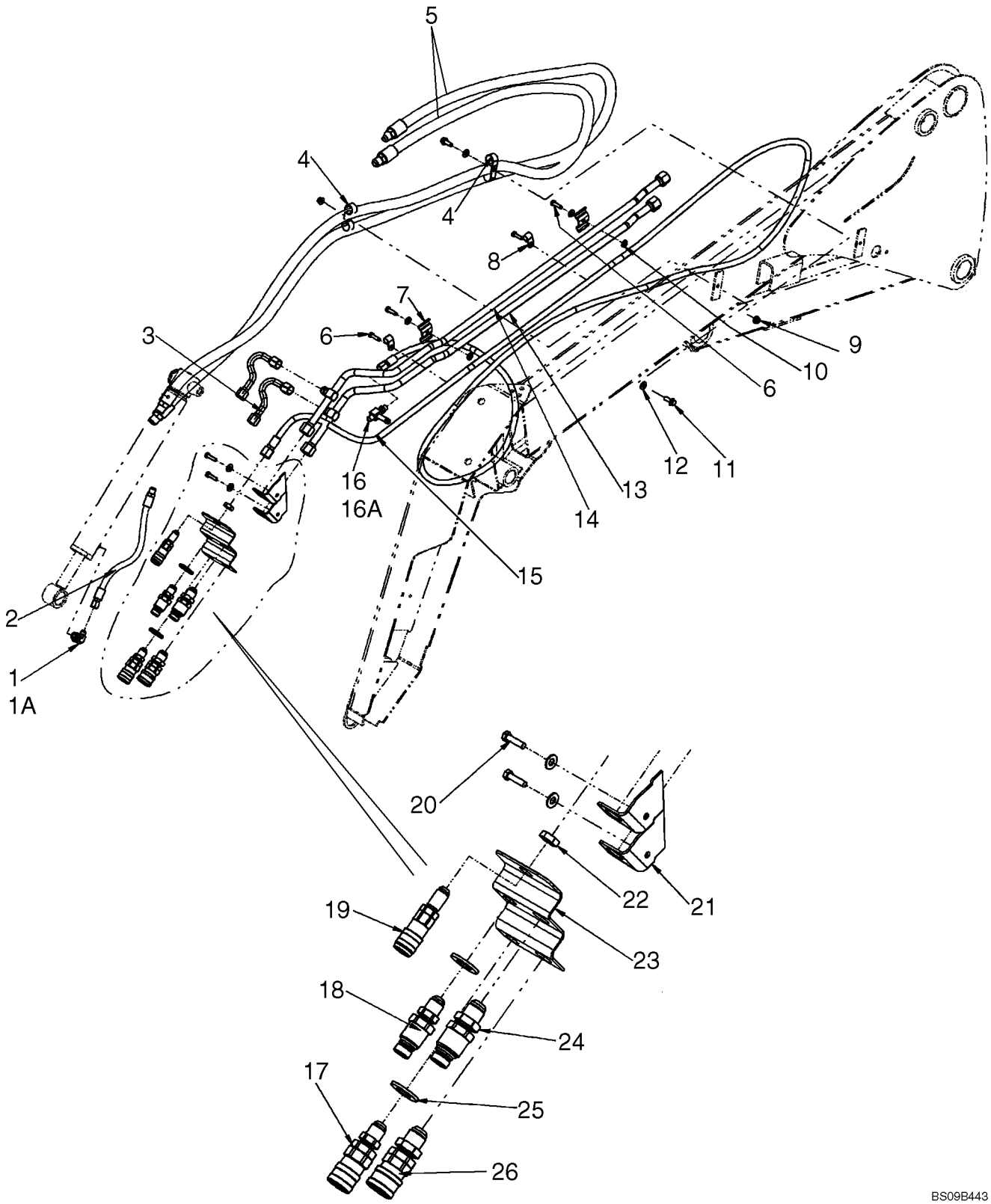

AUXILIARY HYDRAULICS, HIGH FLOW

REF	FN	PART NUMBER	YR/SN	QTY	DESCRIPTION
1		76347		1	ELBOW, 90º, 9/16"-18, 37º x 3/4"-16, O-Ring, Incl 1A
1A		128825		1	O-RING, 8-1, 90 Duro, .644" ID x .087" Thk
2		86504722		1	HOSE, FLEXIBLE
3		86615331		2	TUBE, HYD
4		86637995		1	CLAMP, 1 1/16", Insul, 3/8" Bolt
5		86502497		2	HOSE, 3073.4mm (121in)
6		88825		4	SCREW, SELF TAPPING, Hex Hd, 5/16" x 1 1/4"
7		86501706		1	CLAMP
8		87010656		2	CLAMP, 11/16", Insul, 3/8" Bolt
9		247780		2	NUT, FLANGE, Flg, USR, 3/8"-16
10		87016		4	WASHER, 3/8", SAE
11		9706726		2	BOLT, Hex Flg, 3/8"-16 x 1", Serr
12		140045		4	WASHER, BELLEVILLE, M10
13		87522944		1	TUBE, HYD, 1289.7mm (50.78in)
14		87522945		1	TUBE, HYD, 1333.2mm (52.49in)
15		86635025		1	HOSE, 5537.2 mm (218 in)
16		84170608		1	TEE, Tee, 37Fl x ORB X Bead 6-8-8; Incl 16A
16A		128825		1	O-RING, 8-1, 90 Duro, .644" ID x .087" Thk
17		87568388		1	ADAPTER, FF Coupler 0.5 Female -10 BMJ
18		87568386		1	ADAPTER, FF Coupler 0.5 Male -10 BMJ
19		87573050		1	ADAPTER, FF Coupler .38 Female -8BMJ
20		87657		2	BOLT, Hex, 5/16"-18 x 1 1/4", G5
21		86540358		2	BRACKET
22		524036		1	NUT, LOCK, Blkhd, 3/4"-16
23		84121758		1	BRACKET, SUPPORTING, Gray
24		87568390		1	ADAPTER, FF Coupler 0.62 Male -12 BMJ
25		87366		2	WASHER, 7/8", SAE
26		87568391		1	ADAPTER, FF Coupler .62 Female -12 BMJ

35.220.07	03	p1	04/09

2ND FRONT AUXILIARY KIT

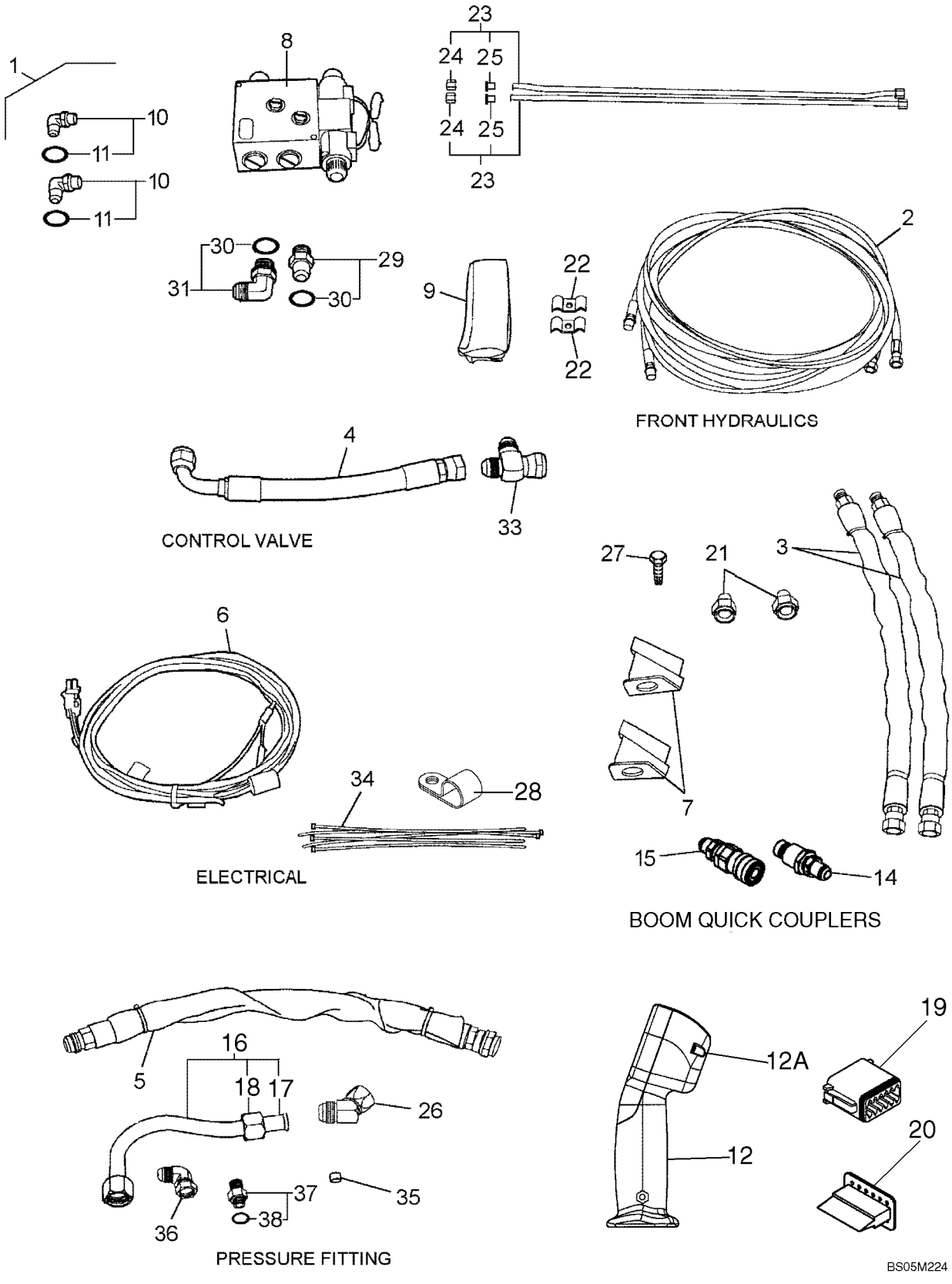

2ND FRONT AUXILIARY KIT

REF	FN	PART NUMBER	YR/SN	QTY	DESCRIPTION
1		87376174		1	DIA, CONSTRUCTION, Kit, Secondary Front Auxiliary; Incl. 2 - 38
1		87659916		1	DIA KIT, ADDITIONAL PROD., Kit, Secondary Front Auxiliary, Enhanced Cab; Incl. 2 - 39
2		86579898		2	HOSE, Boom, 172" Long
3		86578725		2	HOSE, Quick-coupler, 21" Long
4		86578723		1	HOSE, Return, 15.6" Long
5		86595923		1	HOSE, FLEXIBLE, Pressure, 23.6" Long
6		86578721		1	HARNESS, WIRE
7		86574910		2	BRACKET, Coupler Supports
8		86600833		1	VALVE, CONTROL, Eaton/Vickers, See Figure 35.220.07 [05]
9		86579899		1	SLEEVE, Protective, Nylon, 2-3/4" ID x 13' Long; Cut to Required Length
10		128830		2	ELBOW, 90º, 3/4"-16, 37º x 3/4"-16, O-Ring
11		128825		2	O-RING, 8-1, 90 Duro, .644" ID x .087" Thk
12		87365501		1	HANDLE, Control; Incl. 12A
12A		86837247		2	SCREW, #4-40 x 1 1/2", w/LW, Faceplate
13		87353712		1	HANDLE, Control; Not Illustrated; See Figure 29.200.07 [03]
14		86641462		1	COUPLING, QUICK, MALE, 1/2", Male, Snap-Tite, Connect Under Pressure; Used with Support Bracket, Ref. 46
15		86641463		1	COUPLING, QUICK, FEMALE, 1/2", Female, Snap-Tite, Connect Under Pressure; Used with Support Bracket, Ref. 46
16		86595922		1	TUBE, HYD, Pressure
17		164912		2	SLEEVE, 37º, 3/4" Tube
18		86513085		2	NUT, TUBE, 37º, 1 1/16"-12, Type B
19		86593898		1	CONNECTOR, ELEC, Brown
20		86593899		1	WEDGE, Switch Hole
21		9848041		2	REDUCER, 7/8"-14 x 3/4"-16
22		86501706		2	CLAMP
23		9805004		2	TUBE, HYD
24		235671		2	SLEEVE, 37º, 1/2" Tube

35.220.07	03	p2	04/09

2ND FRONT AUXILIARY KIT

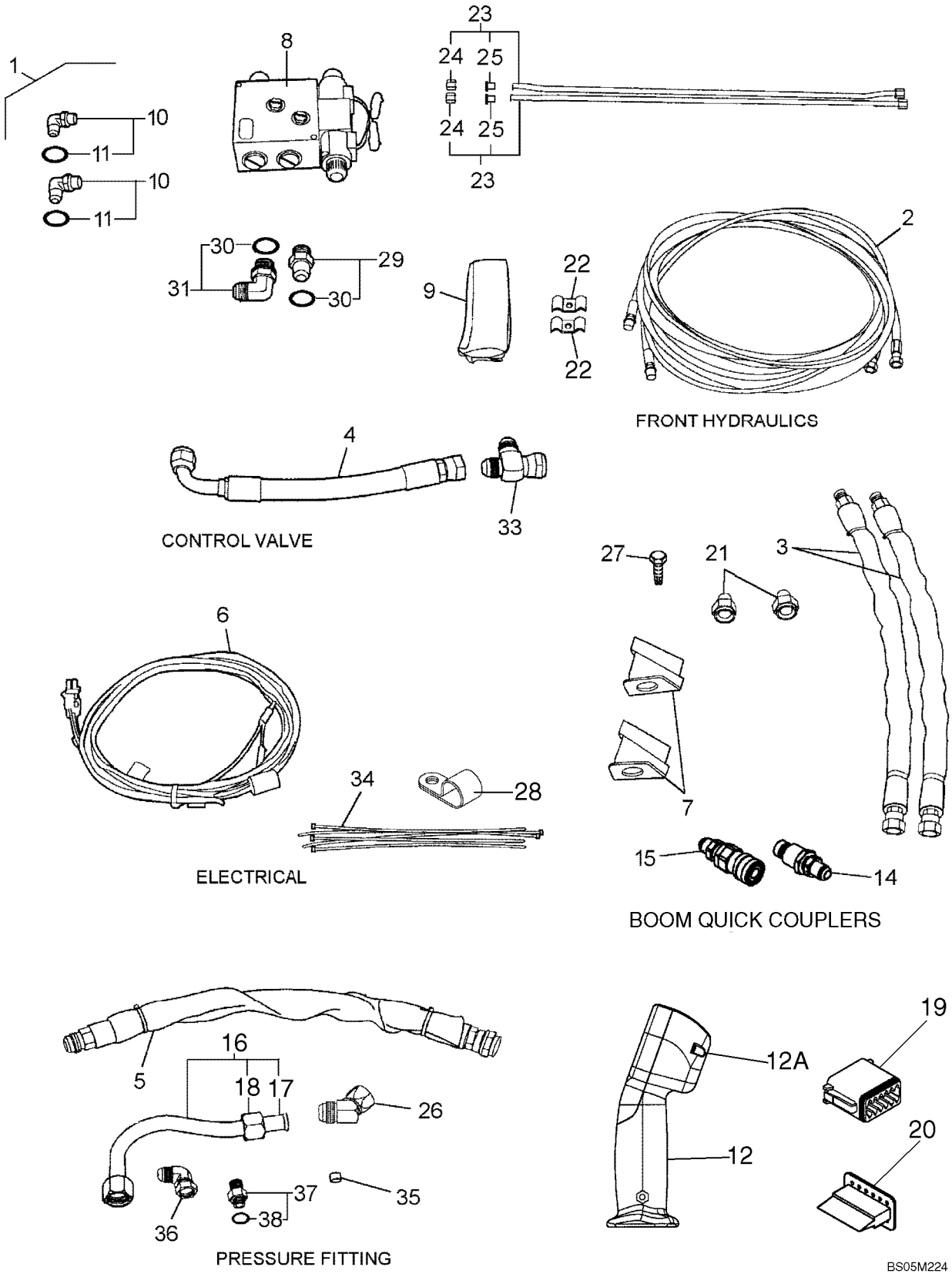

2ND FRONT AUXILIARY KIT

REF	FN	PART NUMBER	YR/SN	QTY	DESCRIPTION
25		129428		2	NUT, TUBE, 37º, 3/4"-16, Type B
26		219605		1	ELBOW, 45º, 1 1/16"-12, 37º x 1 1/16"-12, 37º Fem Sw
27		9840344		4	SCREW, Self-Tapping, Sealing, WH, 5/16"-18 x 11/16"
28		603022		1	CLAMP, 1 3/4", Insul, 3/8" Bolt
29		322896		1	CONNECTOR, HYD., 1 1/16"-12, 37º x 1 1/16"-12, O-Ring
30		167266		2	O-RING, 12-1, 90 Duro, .924 ID x .116" Thk
31		322894		1	ELBOW, 90º, 1 1/16"-12, 37º x 1 1/16"-12, O-Ring
32		86705482		1	BRACKET, Coupler Support; Not Illustrated
33		265978		1	TEE, 37º, 1 1/16"-12 x 1 1/16"-12, Fem Sw Run
34		263117		15	STRAP, CABLE, .14" x 11 1/2"
35		236622		1	PLUG, Power Beyond
36		219603		1	ELBOW, 90º, 1 1/16"-12, 37º x 1 1/16"-12, 37º Fem Sw
37		144124		1	CONNECTOR, HYD., 1 1/16"-12, 37º x 7/8"-14, O-Ring, Incl. Ref. 38
38		167269		1	O-RING, 10-1, 90 Duro, .755" ID x .097" Thk
39		87659828		1	HARNESS, Harness, Secondary Auxiliary

35.220.07	04	p1	04/09

REAR AUXILIARY HYDRAULICS

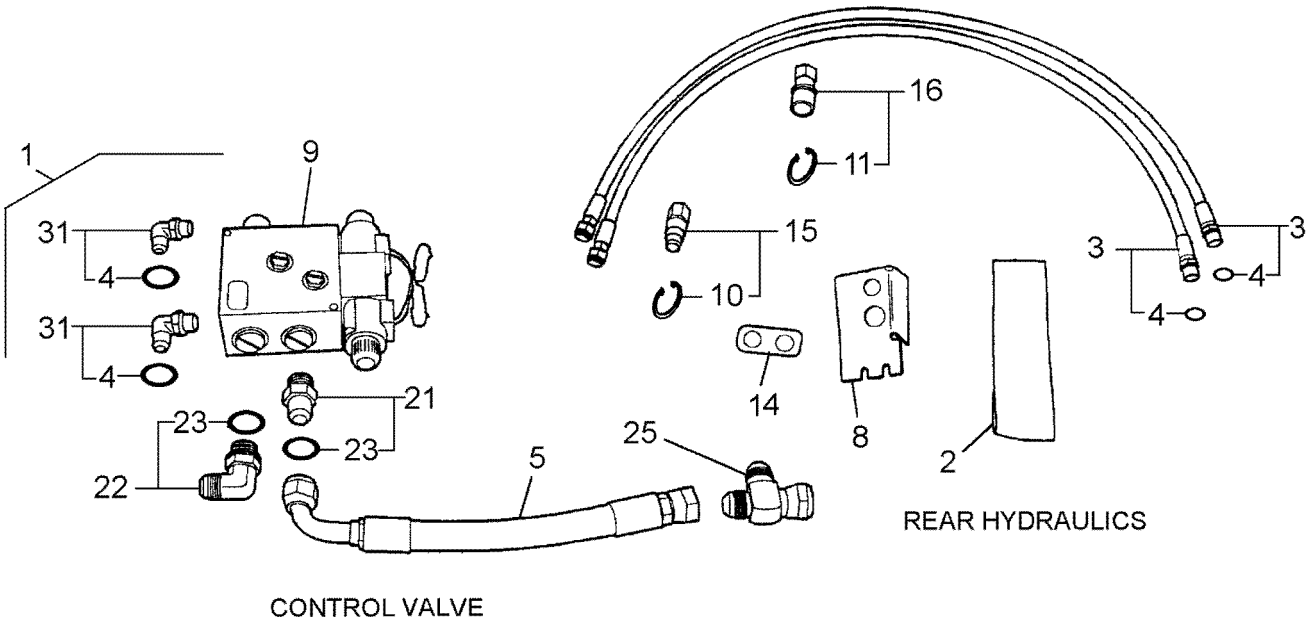

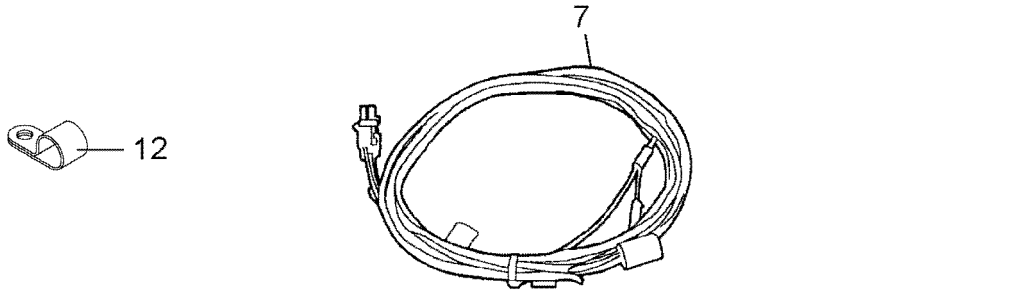

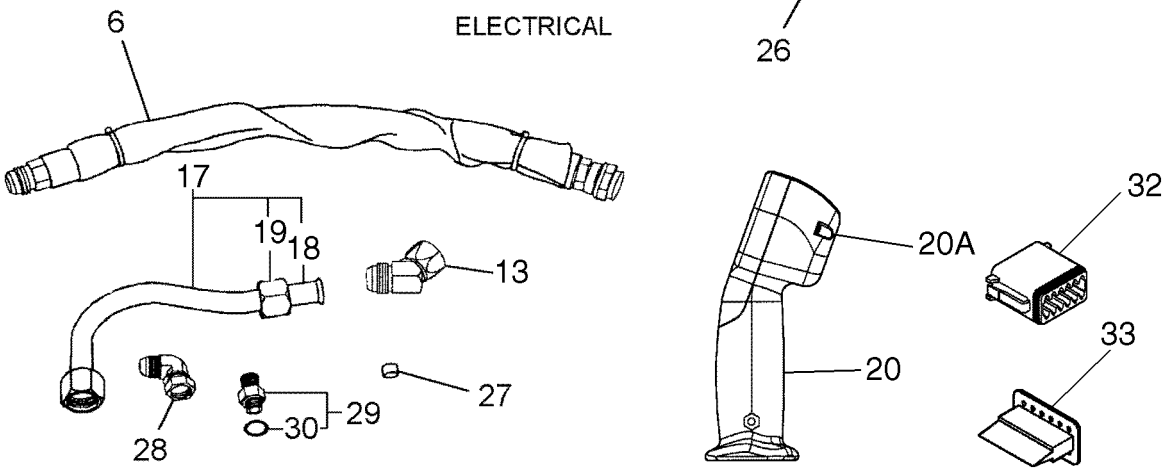

BS05M225

REAR AUXILIARY HYDRAULICS

REF	FN	PART NUMBER	YR/SN	QTY	DESCRIPTION
1		87376172		1	DIA, CONSTRUCTION, Kit, Rear Auxiliary Hydraulics; Incl. 2 - 33
1		87659915		1	DIA KIT, ADDITIONAL PROD., Kit, Rear Auxiliary Hydraulics, Enhanced Cab; Incl. 2 - 34
2		86578780		1	PROTECTING COVER
3		86578779		2	HOSE, 54" Long
4		128825		2	O-RING, 8-1, 90 Duro, .644" ID x .087" Thk
5		86578723		1	HOSE, Return, 15.6" Long
6		86595923		1	HOSE, FLEXIBLE, Pressure, 23.6" Long
7		86578721		1	HARNESS, WIRE
8		86594738		1	CAP, Yellow
9		86600833		1	VALVE, CONTROL, Eaton/Vickers, See Figure 35.220.07 [05]
10		167080		1	RING, SNAP, #118, Ext
11		271877		1	RING, SNAP, #93, Ext
12		603022		1	CLAMP, 1 3/4", Insul, 3/8" Bolt
13		219605		1	ELBOW, 45º, 1 1/16"-12, 37º x 1 1/16"-12, 37º Fem Sw
14		86584755		1	PLATE, Retaining, Quick Couplers
15		86570851		1	COUPLING, 3/8" Male, Bulkhead
16		86570850		1	COUPLING, 3/8" Female, Bulkhead
17		86595922		1	TUBE, HYD
18		164912		2	SLEEVE, 37º, 3/4" Tube
19		86513085		2	NUT, TUBE, 37º, 1 1/16"-12, Type B
20		87365501		1	HANDLE, Control; Left Hand; Incl. 20A
20A		86837247		2	SCREW, #4-40 x 1 1/2", w/LW, Faceplate
21		322896		1	CONNECTOR, HYD., 1 1/16"-12, 37º x 1 1/16"-12, O-Ring
22		322894		1	ELBOW, 90º, 1 1/16"-12, 37º x 1 1/16"-12, O-Ring
23		167266		1	O-RING, 12-1, 90 Duro, .924 ID x .116" Thk
24		87353712		1	HANDLE, Control; Right Hand; Not Illustrated; See Figure 29.200.07 [03]
25		265978		1	TEE, 37º, 1 1/16"-12 x 1 1/16"-12, Fem Sw Run
26		263117		5	STRAP, CABLE, .14" x 11 1/2"
27		236622		1	PLUG, Power Beyond

35.220.07	04	p2	04/09

REAR AUXILIARY HYDRAULICS

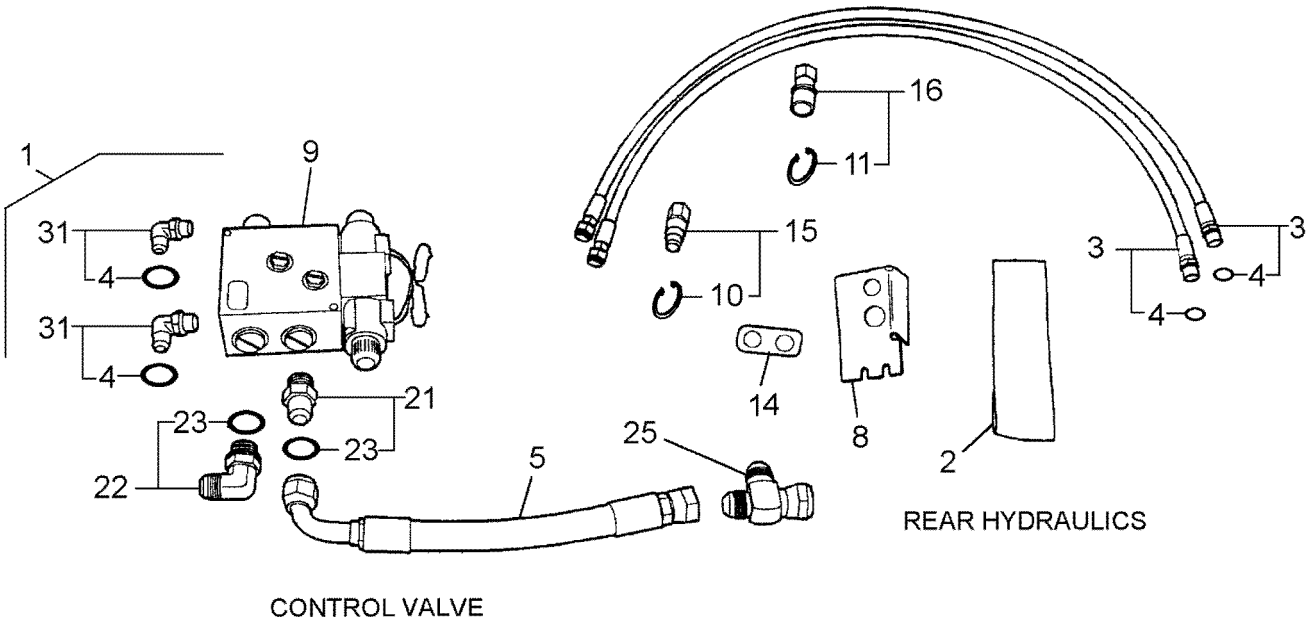

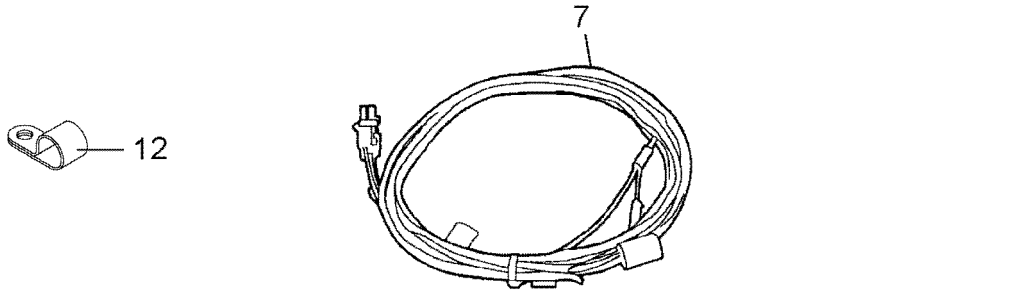

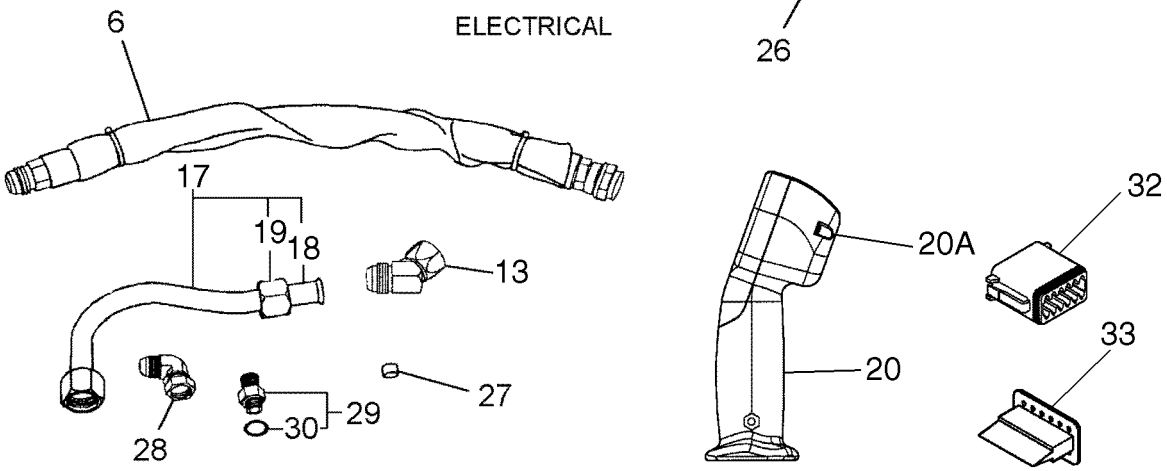

BS05M225

REAR AUXILIARY HYDRAULICS

REF	FN	PART NUMBER	YR/SN	QTY	DESCRIPTION
28		219603		1	ELBOW, 90º, 1 1/16"-12, 37º x 1 1/16"-12, 37º Fem Sw
29		144124		1	CONNECTOR, HYD., 1 1/16"-12, 37º x 7/8"-14, O-Ring
30		167269		1	O-RING, 10-1, 90 Duro, .755" ID x .097" Thk
31		128830		2	ELBOW, 90º, 3/4"-16, 37º x 3/4"-16, O-Ring
32		86593898		1	CONNECTOR, ELEC
33		86593899		1	WEDGE, Switch Hole
34		87659828		1	HARNESS, Harness, Secondary Auxiliary; Not Illustrated

SECONDARY AUXILIARY - VALVE ASSY

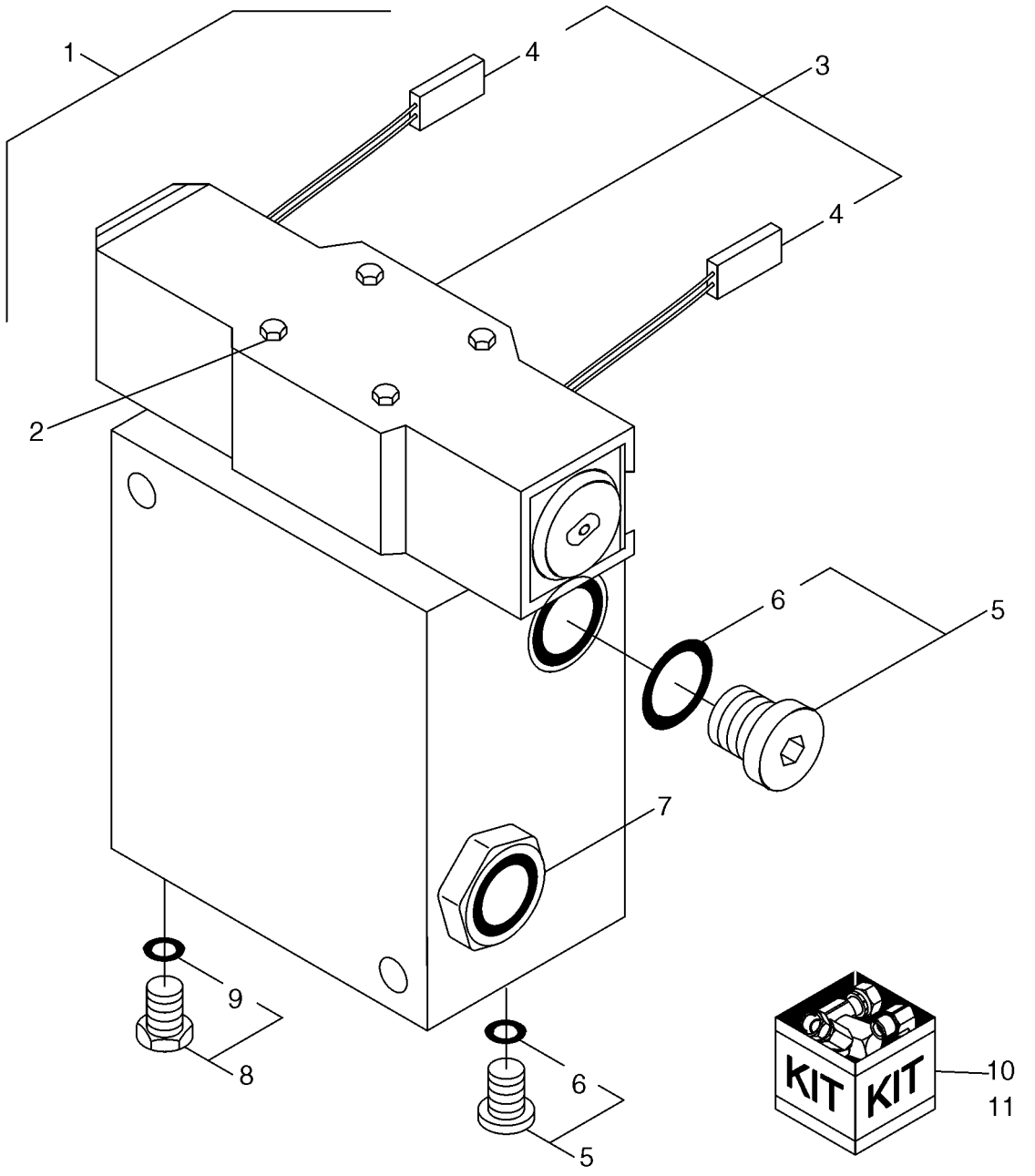

SECONDARY AUXILIARY - VALVE ASSY

REF	FN	PART NUMBER	YR/SN	QTY	DESCRIPTION
1		86600833		1	VALVE, CONTROL, Secondary Hydraulics; Incl. 2 - 11
2		86602560		1	KIT, Bolt
3		86600836		1	VALVE, CONTROL, Directional Control
4		86602561		2	COIL
5		9625178		2	PLUG, Hex Soc, 9/16"-18 ORB, Incl. 6
6		9617873		2	O-RING, 6-1, 90 Duro, .468" ID x .078" Thk
7		86600835		1	REGULATOR, Flow Regulator
8		214389		1	PLUG, Hex Hd, 3/4"-16 ORB, Includes Ref. 9
9		128825		1	O-RING, 8-1, 90 Duro, .644" ID x .087" Thk
10		86600834		X	KIT, SEALS, Valve
11		86607646		X	KIT, SEALS, Flow Regulator

35.300.06	01	p1	09/09

HYDRAULIC RESERVOIR & FILTER

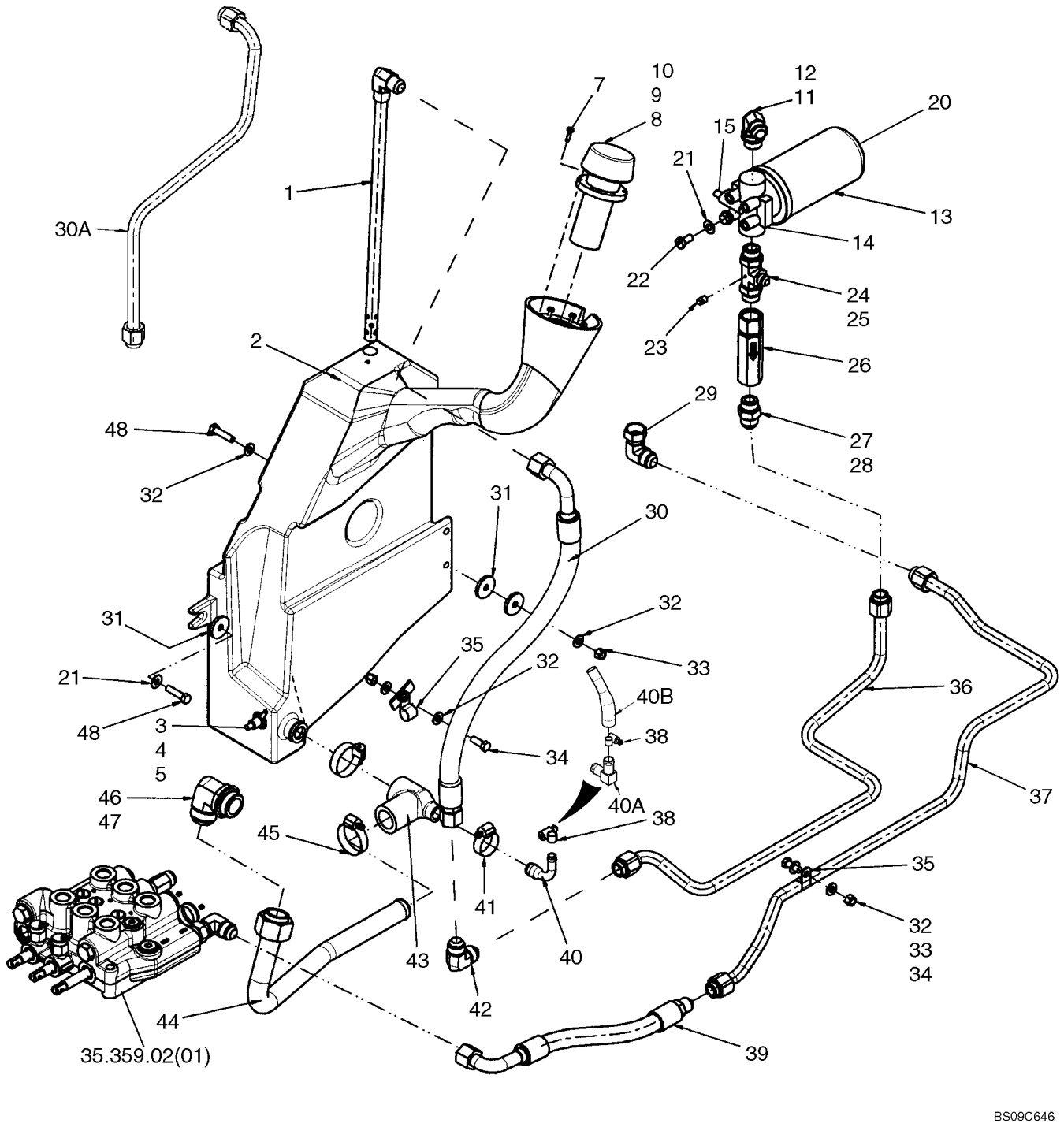

HYDRAULIC RESERVOIR & FILTER

REF	FN	PART NUMBER	YR/SN	QTY	DESCRIPTION
1		87688606		1	TUBE, HYD, Return Drop
2		87649518		1	FUEL TANK, Hydraulic Oil; Incl 3 - 6
3		34821		1	WASHER, 45/64" x 1 1/8" x 16 Ga.
4		3917490		1	SENDER, TEMPERATURE, Hydraulic Oil
5		9804960		1	RING, Ground
6		86506626		1	DECAL, Hydraulic Level; Not Illustrated
7		86500940		6	SCREW, SELF TAPPING, Hex Wash Hd, #10 x 3/4"
8		86631374		1	BREATHER, Tank Filler Breather Assy; Incl Cap And Gasket Ref 9, 10
9		86628700		1	BREATHER, Cap
10		86625390		2	GASKET
11		322894		1	ELBOW, 90º, 1 1/16"-12, 37º x 1 1/16"-12, O-Ring, Incl Ref 12
12		167266		1	O-RING, 12-1, 90 Duro, .924 ID x .116" Thk
13		87014886		1	FILTER, Hydraulic Oil; Incl 14 - 20
14		87036104		1	HEAD, FILTER, Hydraulic Oil
15		8604802		1	SWITCH, PRESSURE, Hydraulic Oil Filter; Incl 16 - 19
16		86625058		2	NUT, #10-32, LH
17		493-21020		1	WASHER, LOCK, Int Tooth, #10
18		237-6006		1	O-RING, 6-1, 90 Duro, .468" ID x .078" Thk
19		9672548		1	O-RING, -011, 70 Duro, .301" ID x .070" Thk
20		9842392		1	FILTER ASSY, Hydraulic Oil
21		140045		3	WASHER, BELLEVILLE, M10
22		43138		2	BOLT, Hex, M10 x 20, 8.8, Full Thd
23		86539484		1	PLUG, PIPE, Sq Hd, 1/8"-27, NTPF
24		9840727		1	CONNECTION, 3 WAY, Incl Ref 25
25		167266		1	O-RING, 12-1, 90 Duro, .924 ID x .116" Thk
26		86589413		1	COUPLING, Check Valve 160 PSI
27		322896		1	CONNECTOR, HYD., 1 1/16"-12, 37º x 1 1/16"-12, O-Ring, Incl Ref 28
28		167266		1	O-RING, 12-1, 90 Duro, .924 ID x .116" Thk
29		219603		1	ELBOW, 90º, 1 1/16"-12, 37º x 1 1/16"-12, 37º Fem Sw, Oil Cooler Fitting
30		87688609		1	HOSE, 658 mm (25.9 in), Hose; Drop Tube; If Used

HYDRAULIC RESERVOIR & FILTER

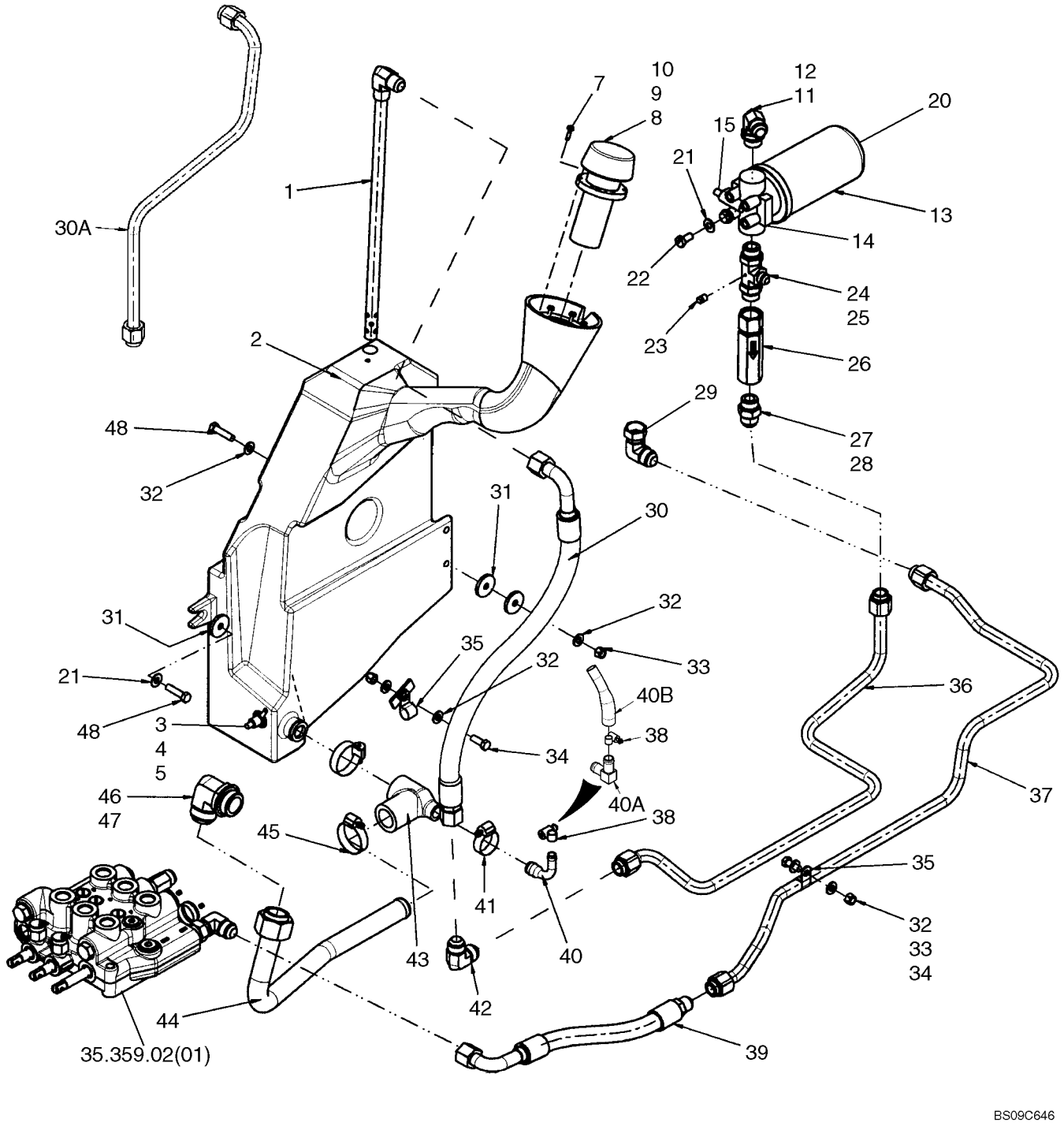

HYDRAULIC RESERVOIR & FILTER

REF	FN	PART NUMBER	YR/SN	QTY	DESCRIPTION
30A		87743308		1	TUBE, HYD, Drop Tube; Formed Tube; If Used
31		213404		2	SPACER
32		87016		6	WASHER, 3/8", SAE
33		9637692		3	NUT, LOCK, 3/8"-16, GB
34		88206		2	BOLT, Hex, 3/8"-16 x 1", G5, Full Thd
35		86624005		2	CLAMP, 3/4", Insul, 3/8" Bolt
36		87688797		1	TUBE, Return
37		84142374		1	TUBE, RIGID, Return; Replaces 87732280
38		13021		1	CLAMP, HOSE, #08, 0.50/0.91 Type F Worm
39		87732882		1	HOSE, 460 mm (18.11 in), Return
40		87736376		1	TUBE, RIGID, If Used
40A		87372552		1	ELBOW, 90, 12 Bead x 12 Bead, If Used
40B		86500111		1	HOSE, 5" Length, 1/2" to 3/4"; If Used
41		86534969		1	CLAMP
42		144120		1	ELBOW, 90º, 1 1/16"-12, 37º x 1 1/16"-12, 37º
43		87733429		1	FITTING
44		86597572		1	TUBE, HYD
45		86598096		2	CLIP, HOSE
46		84530		1	ELBOW, 90º, 1 5/8"-12, 37º x 1 5/8"-12, O-Ring, Incl 47
47		570186		1	O-RING, 20-1, 90 Duro, 1.475" ID x .116" Thk
48		88044		2	BOLT, Hex, 3/8"-16 x 1 1/2", G5

35.300.06	02	p1	09/09

HYDRAULIC RESERVOIR & FILTER

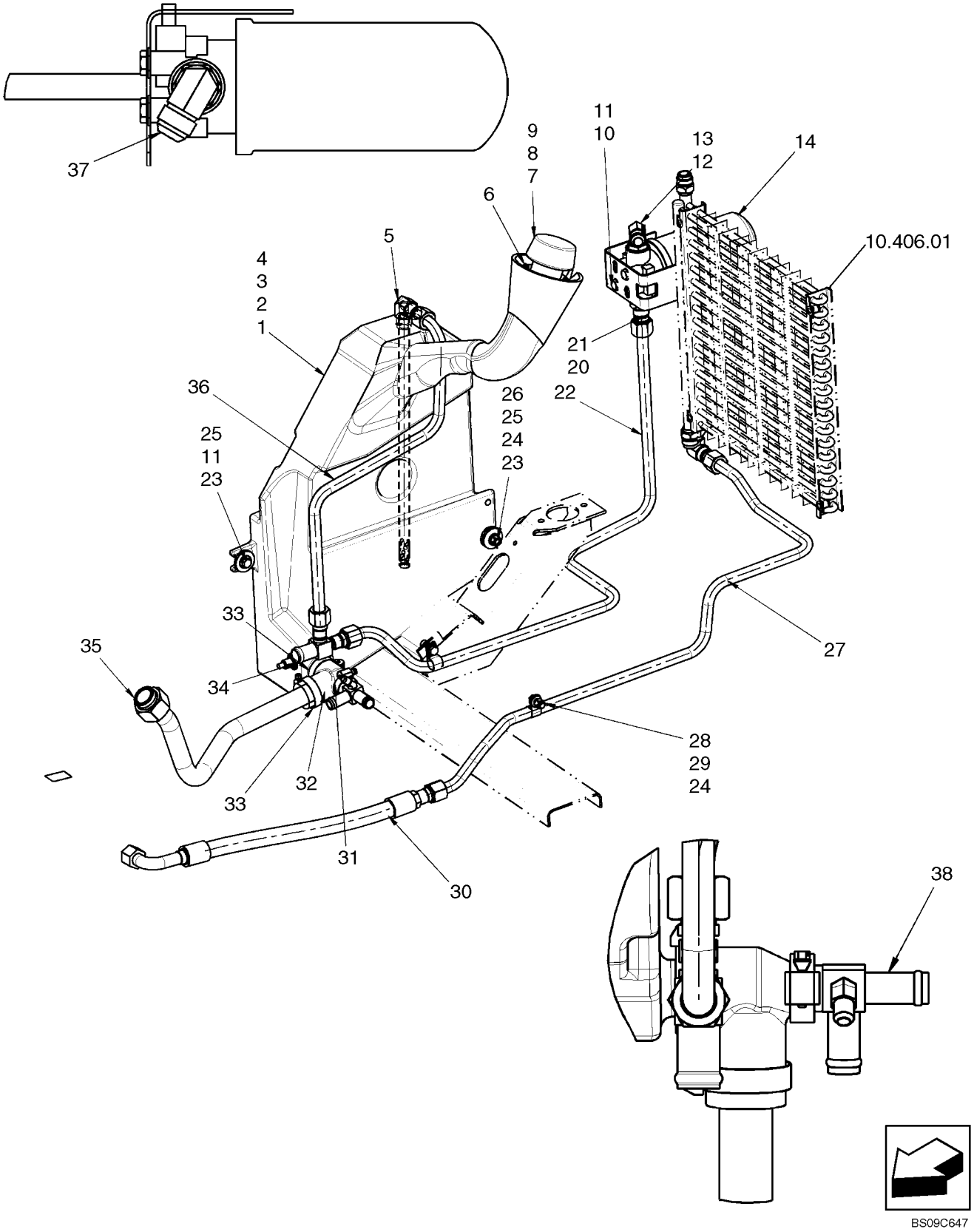

HYDRAULIC RESERVOIR & FILTER

REF	FN	PART NUMBER	YR/SN	QTY	DESCRIPTION
1		87649518		1	FUEL TANK, Hydraulic Oil; Incl 2 - 4 and Decal 86506626
2		34821		1	WASHER, 45/64" x 1 1/8" x 16 Ga.
3		3917490		1	SENDER, TEMPERATURE, Hydraulic Oil
4		9804960		1	RING, Ground
		86506626		1	DECAL, Hydraulic Level; Not Illustrated
5		87688606		1	TUBE, HYD, Return Drop
6		86500940		6	SCREW, SELF TAPPING, Hex Wash Hd, #10 x 3/4"
7		86631374		1	BREATHER, Tank Filler Breather Assy; Incl Cap And Gasket Ref 8, 9
8		86628700		1	BREATHER, Cap
9		86625390		2	GASKET
10		43138		2	BOLT, Hex, M10 x 20, 8.8, Full Thd
11		140045		3	WASHER, BELLEVILLE, M10
12		322894		1	ELBOW, 90º, 1 1/16"-12, 37º x 1 1/16"-12, O-Ring, Incl 13
13		167266		1	O-RING, 12-1, 90 Duro, .924 ID x .116" Thk
14		87014886		1	FILTER, Hydraulic Oil; Incl 14A - 19
14A		87036104		1	HEAD, FILTER, Hydraulic Oil
14B		9842392		1	FILTER ASSY, Hydraulic Oil
15		8604802		1	SWITCH, PRESSURE, Hydraulic Oil Filter; Incl 16 - 19
16		86625058		2	NUT, #10-32, LH
17		493-21020		1	WASHER, LOCK, Int Tooth, #10
18		237-6006		1	O-RING, 6-1, 90 Duro, .468" ID x .078" Thk
19		9672548		1	O-RING, -011, 70 Duro, .301" ID x .070" Thk
20		322896		1	CONNECTOR, HYD., 1 1/16"-12, 37º x 1 1/16"-12, O-Ring, Incl 21
21		167266		1	O-RING, 12-1, 90 Duro, .924 ID x .116" Thk
22		87688799		1	TUBE, Return, Pilot
23		88044		2	BOLT, Hex, 3/8"-16 x 1 1/2", G5
25		213404		2	SPACER
24		87016		6	WASHER, 3/8", SAE
26		9637692		3	NUT, LOCK, 3/8"-16, GB
27		84142374		1	TUBE, RIGID, Return; Replaces 87732280

35.300.06	02	p2	09/09

HYDRAULIC RESERVOIR & FILTER

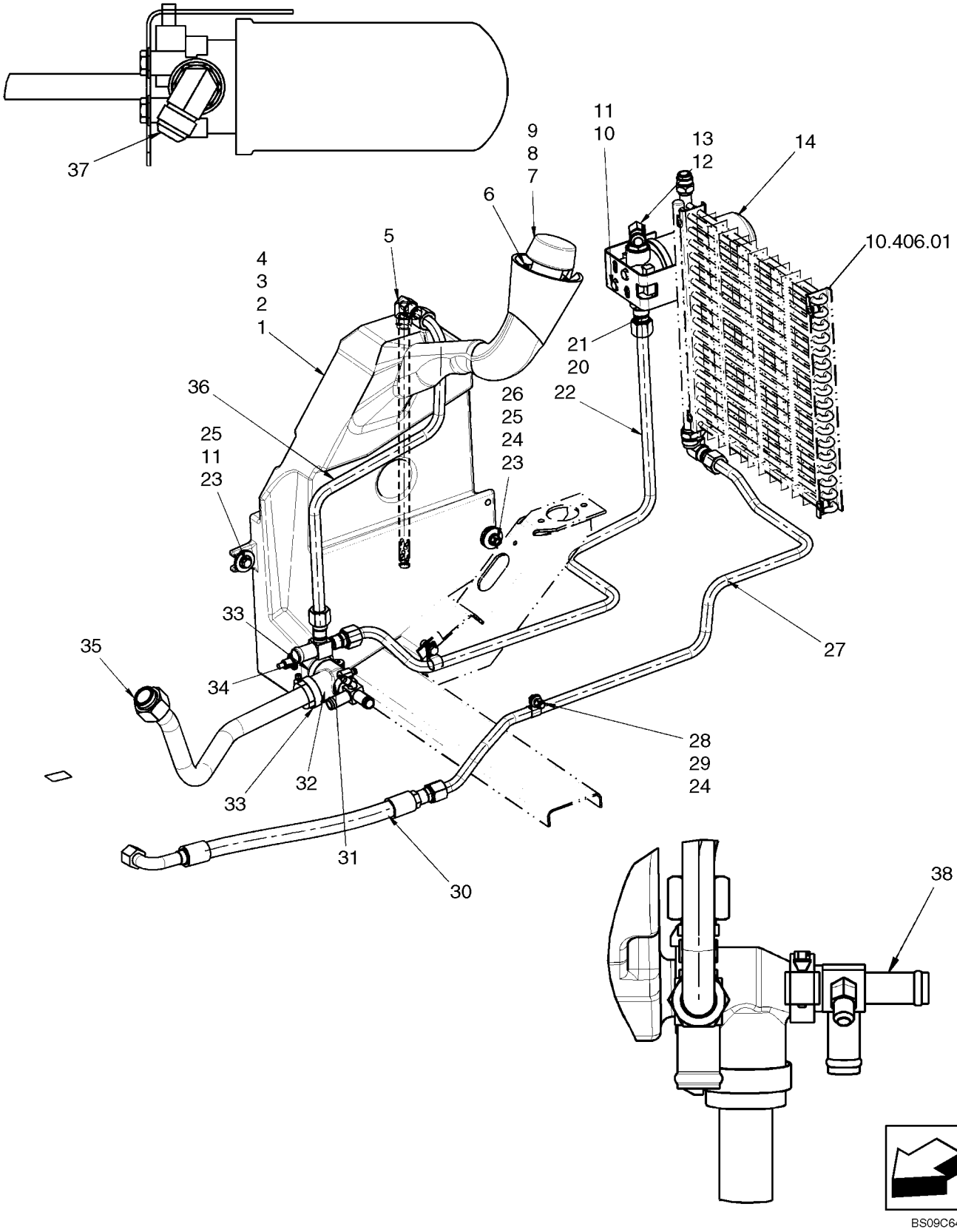

HYDRAULIC RESERVOIR & FILTER

REF	FN	PART NUMBER	YR/SN	QTY	DESCRIPTION
28		88206		2	BOLT, Hex, 3/8"-16 x 1", G5, Full Thd
29		86624005		2	CLAMP, 3/4", Insul, 3/8" Bolt
30		87732442		1	HOSE, 592 mm (23.30 in) Return, Pilot
31		86534969		1	CLAMP
32		87733429		1	FITTING
33		86598096		2	CLIP, HOSE
34		87688612		1	CONNECTOR, HYD., Tee; 16 Bead 12 x 12 x 12
35		87694460		1	TUBE, Pump Supply
36		87688609		1	HOSE, 658 mm (25.9 in), Hose; Drop Tube; If Used; Not Illustrated
36A		87743308		1	TUBE, HYD, Drop Tube; Formed Tube; If Used
37		9617966		1	ELBOW, 45º, 9/16-18" 37º x 1/4"-18, NPTF
38		87357255		1	HOSE, Tee; 12 x 12 x 12 Bead

35.359.01	01	p1	03/09

CONTROL VALVE HYDRAULICS

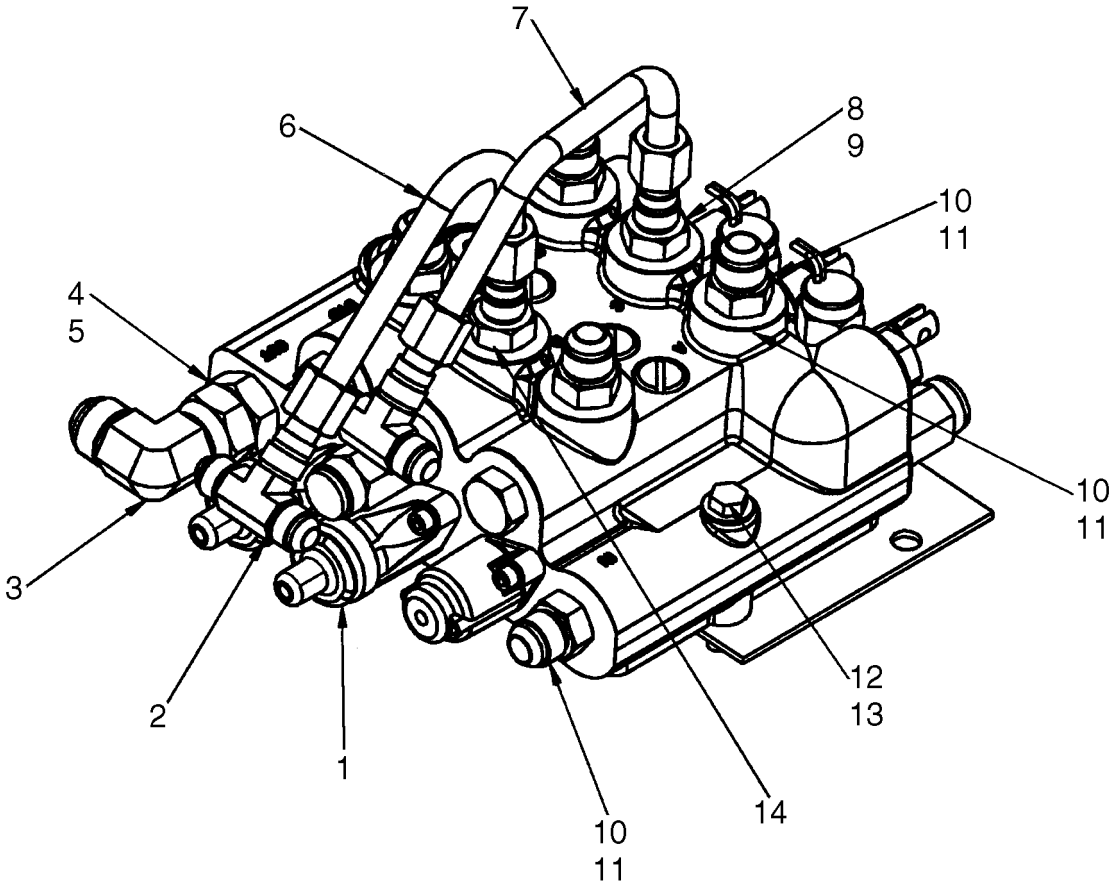

CONTROL VALVE HYDRAULICS

REF	FN	PART NUMBER	YR/SN	QTY	DESCRIPTION
1		86604770		1	VALVE, CONTROL, Foot Controls; See Fig. 35.359.02 [01]
1		86604769		1	VALVE, CONTROL, Hand Controls; See Figure 35.359.02 [01]
2		128996		1	TEE, 3/4"-16, 37º
3		219603		1	ELBOW, 90º, 1 1/16"-12, 37º x 1 1/16"-12, 37º Fem Sw
4		322896		1	CONNECTOR, HYD., 1 1/16"-12, 37º x 1 1/16"-12, O-Ring, Incl 5
5		167266		1	O-RING, 12-1, 90 Duro, .924 ID x .116" Thk
6		86578697		1	TUBE, HYD, Calculated Length 233 mm
7		86578696		1	TUBE, HYD, Calculated Length 266 mm
8		128819		2	CONNECTOR, HYD., 3/4"-16, 37º x 7/8"-14, O-Ring, Incl 9
9		167269		1	O-RING, 10-1, 90 Duro, .755" ID x .097" Thk
10		325059		5	CONNECTOR, HYD., 7/8"-14, 37º x 7/8"-14, O-Ring, Incl 11
11		167269		1	O-RING, 10-1, 90 Duro, .755" ID x .097" Thk
12		280161		2	BOLT, Hex, 3/8"-16 x 3", G5
13		140045		2	WASHER, BELLEVILLE, M10
14		9849595		1	ORIFICE

35.359.02	01	p1	04/09

CONTROL VALVE

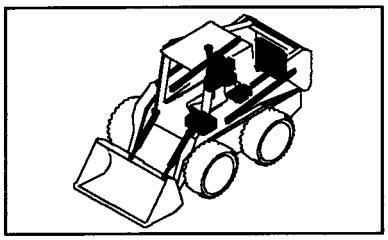

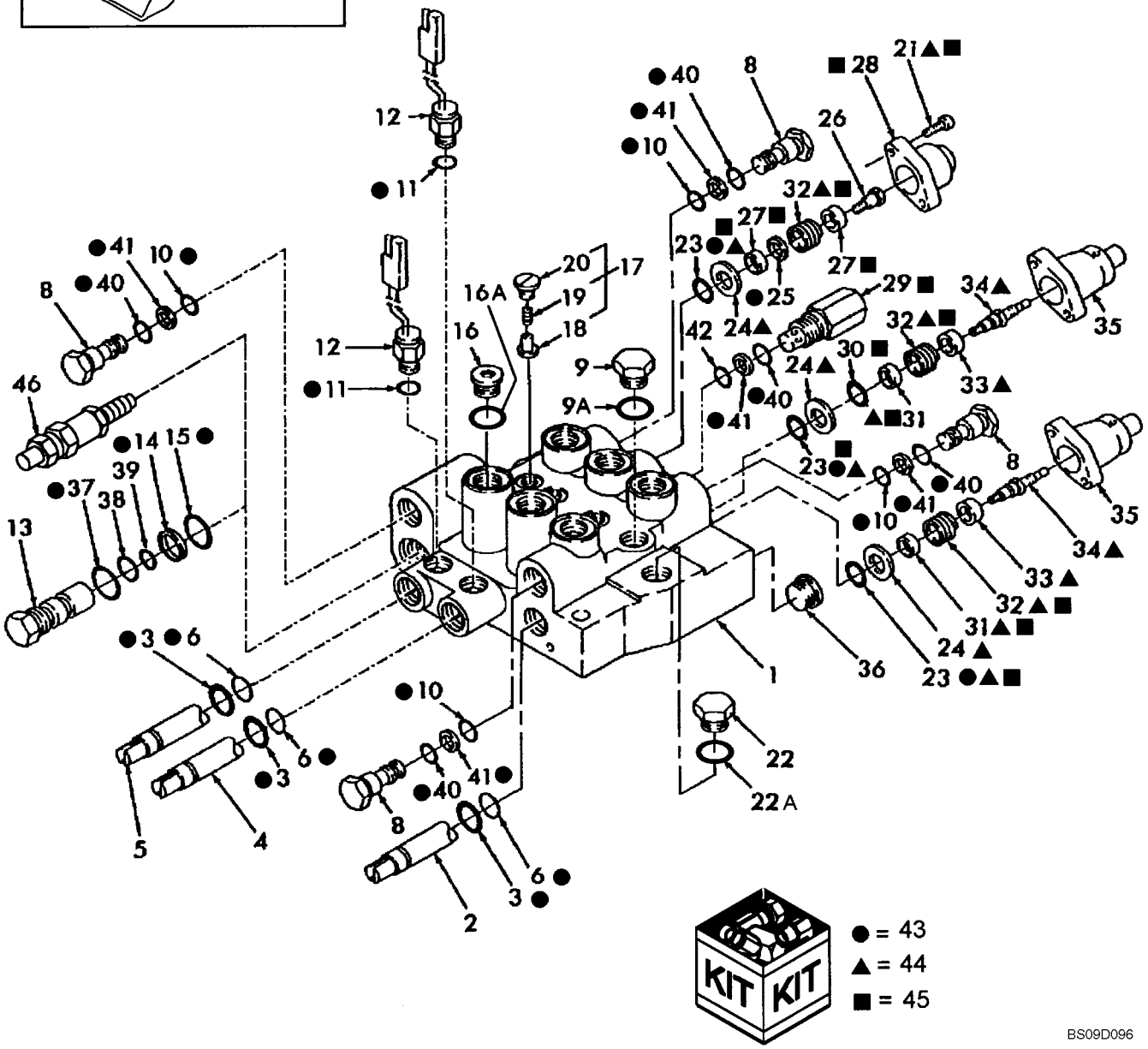

CONTROL VALVE

REF	FN	PART NUMBER	YR/SN	QTY	DESCRIPTION
		86604770		1	VALVE, CONTROL, Foot Control, Yellow
		86604769		1	VALVE, CONTROL, Hand Control, Blue
1		NSS		1	NOT SERVICED SEPARATELY, Body
2		NSS		1	NOT SERVICED SEPARATELY, Spool
3		325142		3	SEAL, SHAFT, Seal, Wiper
4		NSS		1	NOT SERVICED SEPARATELY, Spool
5		NSS		1	NOT SERVICED SEPARATELY, Spool
6		274506		3	O-RING, -208, 70 Duro, .609" ID x .139" Thk
8		86507507		5	PLUG, Incl. Ref. 10, 40 & 41
9		NSS		1	NOT SERVICED SEPARATELY, Plug, 3/4"-16, High Flow Auxillary Port
9A		128825		1	O-RING, 8-1, 90 Duro, .644" ID x .087" Thk
10		130282		6	O-RING, -014, 70 Duro, .489" ID x .070" Thk
11		9617873		2	O-RING, 6-1, 90 Duro, .468" ID x .078" Thk
12		86575596		2	SOLENOID
13		86507522		1	VALVE, PRESSURE RELIEF, Main, 2,475 PSI, Incl. Refs. 37 - 39; Use with Prior Control Valves 86584587 & 86578866
14		217114		1	BACK-UP RING, Backup, .948" ID x .043" Thick; Use with Prior Control Valves 86584587 & 86578866
15		164380		1	O-RING, -119, 70 Duro, .924" ID x .103" Thk, Use with Prior Control Valves 86584587 & 86578866
16		NSS		6	NOT SERVICED SEPARATELY, Plug, Shipping, 7/8"-14, Incl. Ref. 16A
16A		86629585		6	O-RING, -118, 70 Duro, .862" ID x .103" Thk
17		86508610		1	KIT, Lift Check, Incl. Ref. 18 - 20
18		NSS		1	NOT SERVICED SEPARATELY, Plunger
19		NSS		1	NOT SERVICED SEPARATELY, Spring
20		NSS		1	NOT SERVICED SEPARATELY, Plug
21		NSS		6	NOT SERVICED SEPARATELY, Screw, Cap
22		86512512		1	PLUG, Hex Hd, 7/8"-14 ORB, Incl. Ref. 22A
22A		167269		1	O-RING, 10-1, 90 Duro, .755" ID x .097" Thk
23		14457281		3	O-RING, -114, Cl 7, .612" ID x .103" Thk
24		NSS		3	NOT SERVICED SEPARATELY, Retainer, O Ring
25		NSS		1	NOT SERVICED SEPARATELY, Washer

CONTROL VALVE

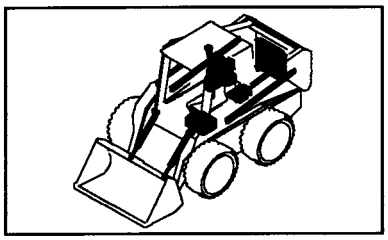

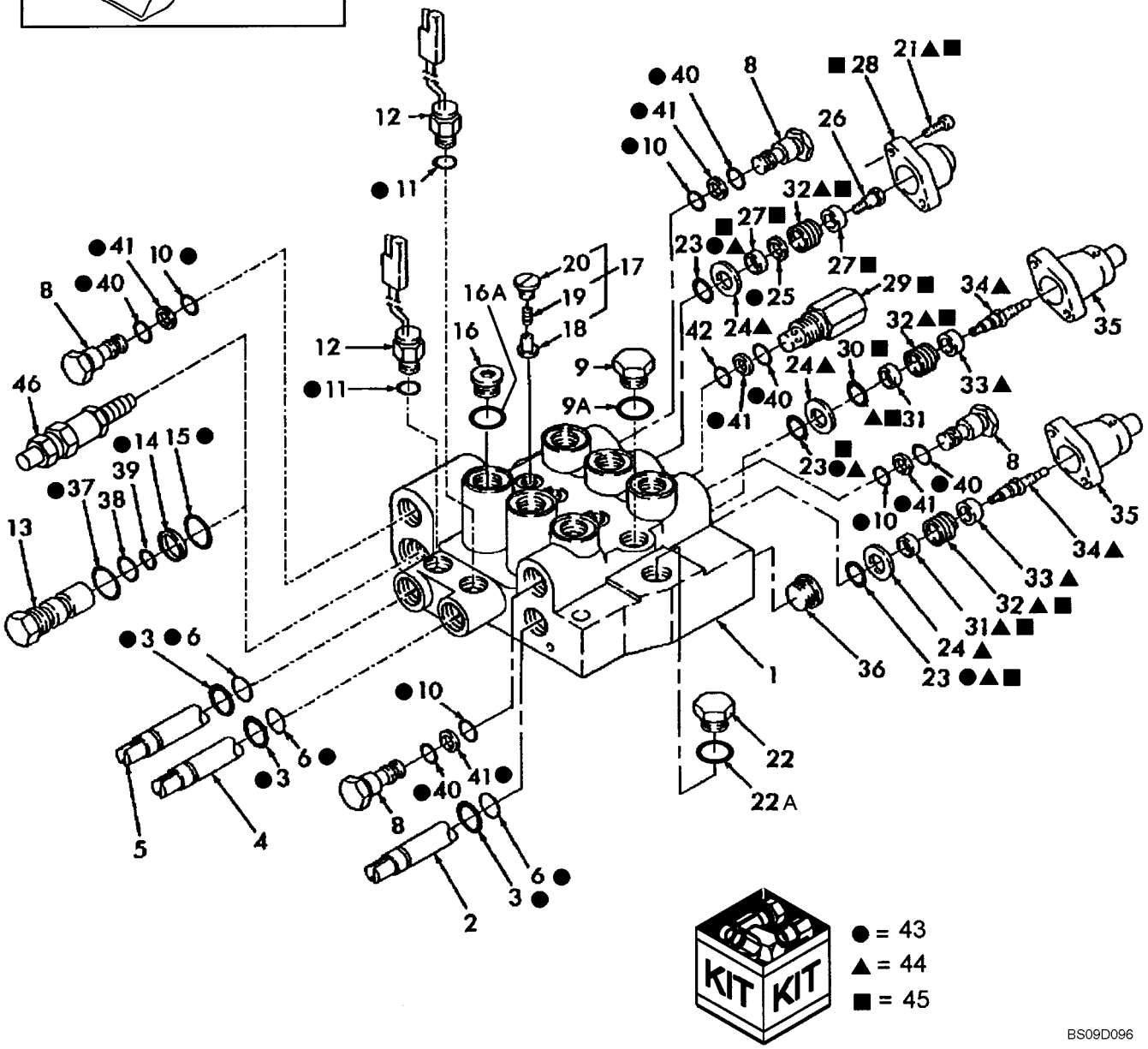

CONTROL VALVE

REF	FN	PART NUMBER	YR/SN	QTY	DESCRIPTION
26		NSS		1	NOT SERVICED SEPARATELY, Screw, Spool
27		NSS		2	NOT SERVICED SEPARATELY, Washer, Deep
28		86507519		1	CAP
29		86529091		1	VALVE, PRESSURE RELIEF, Boom, 3,500 PSI, Incl. Ref. 40 - 42
30		511836		1	O-RING, -009, 70 Duro, .208" ID x .070" Thk
31		NSS		2	NOT SERVICED SEPARATELY, Washer, Deep
32		86578867		3	SPRING, Hand Control Valve
32		NSS		3	NOT SERVICED SEPARATELY, Spring, Foot Control Valve
33		NSS		2	NOT SERVICED SEPARATELY, Washer, Deep
34		NSS		2	NOT SERVICED SEPARATELY, Spool
35		86507518		2	CAP
36		NSS		1	NOT SERVICED SEPARATELY, Plug, Shipping
37		86629585		1	O-RING, -118, 70 Duro, .862" ID x .103" Thk, Use with Prior Control Valves 86584587 & 86578866
38		89827059		1	O-RING, 70 Duro, .551" ID x .070" Thk, Use with Prior Control Valves 86584587 & 86578866
39		128359		1	O-RING, -016, 70 Duro, .614" ID x .070" Thk, Use with Prior Control Valves 86584587 & 86578866
40		167269		6	O-RING, 10-1, 90 Duro, .755" ID x .097" Thk
41		86508823		6	WASHER, Backup, .530" ID x .097" Thick
42		9992298		1	O-RING, -014, 90 Duro, .489" ID x .070" Thk
43		86560588		1	KIT, SEALS, Incl. Ref. 3, 6, 10, 11, 14, 15, 23, 25, 37. 40 & 41
44		86595015		1	KIT, SERVICE, Spool-Centering, Foot Control, Includes: Ref. 21, 23 - 27 and 32
44		86578869		2	KIT, SERVICE, Spool-Centering, Hand Control Valve, Incl. Ref. 21, 23, 24 & 31 - 34
45		86595016		2	KIT, SERVICE, Spool-Centering, Foot Control, Includes: Ref. 21, 23, 24 And 31 - 34
45		86578868		1	KIT, SERVICE, Spool-Centering, Hand Control Valve, Incl. Ref. 21, 23 - 27, 30 & 32
46		86624572		1	VALVE, PRESSURE RELIEF, Main, 2,500-2,600 PSI

CONTROL VALVE, MODELS WITH PILOT CONTROL, EH AUX CONTROL

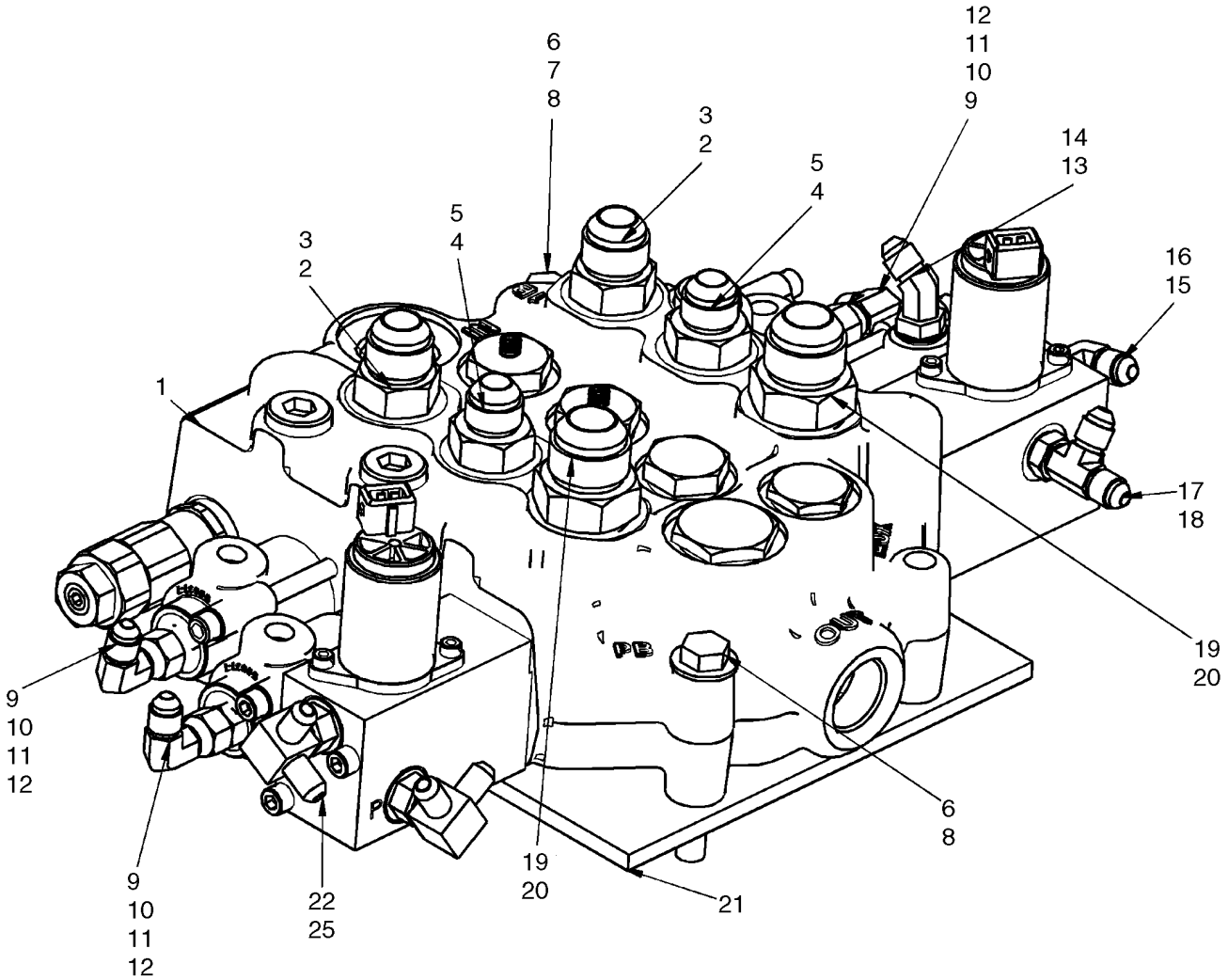

CONTROL VALVE, MODELS WITH PILOT CONTROL, EH AUX CONTROL

REF	FN	PART NUMBER	YR/SN	QTY	DESCRIPTION
1		87653270		1	VALVE, HYDRAULIC, See Figure 35.359.02 [03]
2		325059		2	CONNECTOR, HYD., 7/8"-14, 37º x 7/8"-14, O-Ring, Incl. 3
3		167269		2	O-RING, 10-1, 90 Duro, .755" ID x .097" Thk
4		128819		2	CONNECTOR, HYD., 3/4"-16, 37º x 7/8"-14, O-Ring, Incl. 5
5		167269		2	O-RING, 10-1, 90 Duro, .755" ID x .097" Thk
6		140045		3	WASHER, BELLEVILLE, M10
7		9628503		1	NUT, 3/8"-16, G5
8		280161		2	BOLT, Hex, 3/8"-16 x 3", G5
9		265235		3	CONNECTOR, HYD., 7/16"-20, 37º x 7/16"-20, O-Ring, Incl. 10
10		165202		3	O-RING, 4-1, 90 Duro, .351" ID x .072" Thk
11		86512933		3	ELBOW, 90º, 7/16"-20, 37º x 7/16"-20, 37º Fem Sw, Incl 12
12		165202		1	O-RING, 4-1, 90 Duro, .351" ID x .072" Thk
13		86512993		1	ELBOW, 45º, 7/16"-20, 37º x 7/16"-20, O-Ring, Incl. 14
14		165202		1	O-RING, 4-1, 90 Duro, .351" ID x .072" Thk
15		216773		1	ELBOW, 90º, 7/16"-20, 37º x 7/16"-20, O-Ring, Incl 16
16		165202		1	O-RING, 4-1, 90 Duro, .351" ID x .072" Thk
17		86513019		1	TEE, 7/16"-20, 37º x 7/16"-20, O-Ring Run, Incl 18
18		165202		1	O-RING, 4-1, 90 Duro, .351" ID x .072" Thk
19		322896		1	CONNECTOR, HYD., 1 1/16"-12, 37º x 1 1/16"-12, O-Ring, Incl 20
20		167266		1	O-RING, 12-1, 90 Duro, .924 ID x .116" Thk
21		87462101		1	PAD, 6.4 mm Thick
22		87443051		2	ELBOW, Elbow, 90 1/4 Tube; Incl 23
23		570186		1	O-RING, 20-1, 90 Duro, 1.475" ID x .116" Thk

CONTROL VALVE 87653270 - SEAL REPLACEMENT KITS

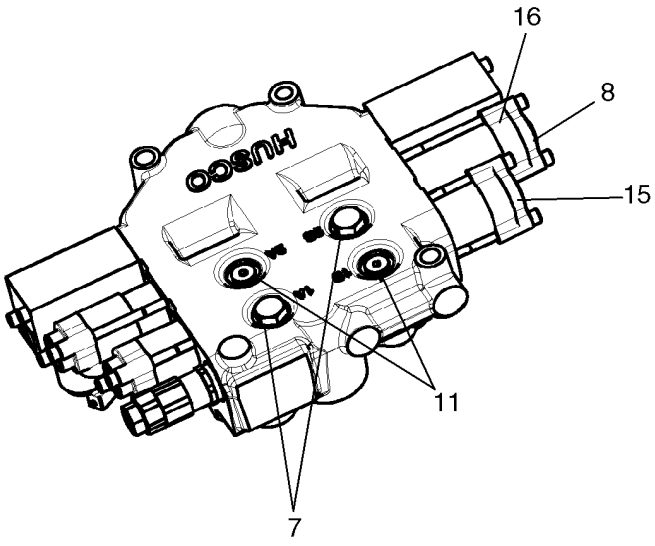

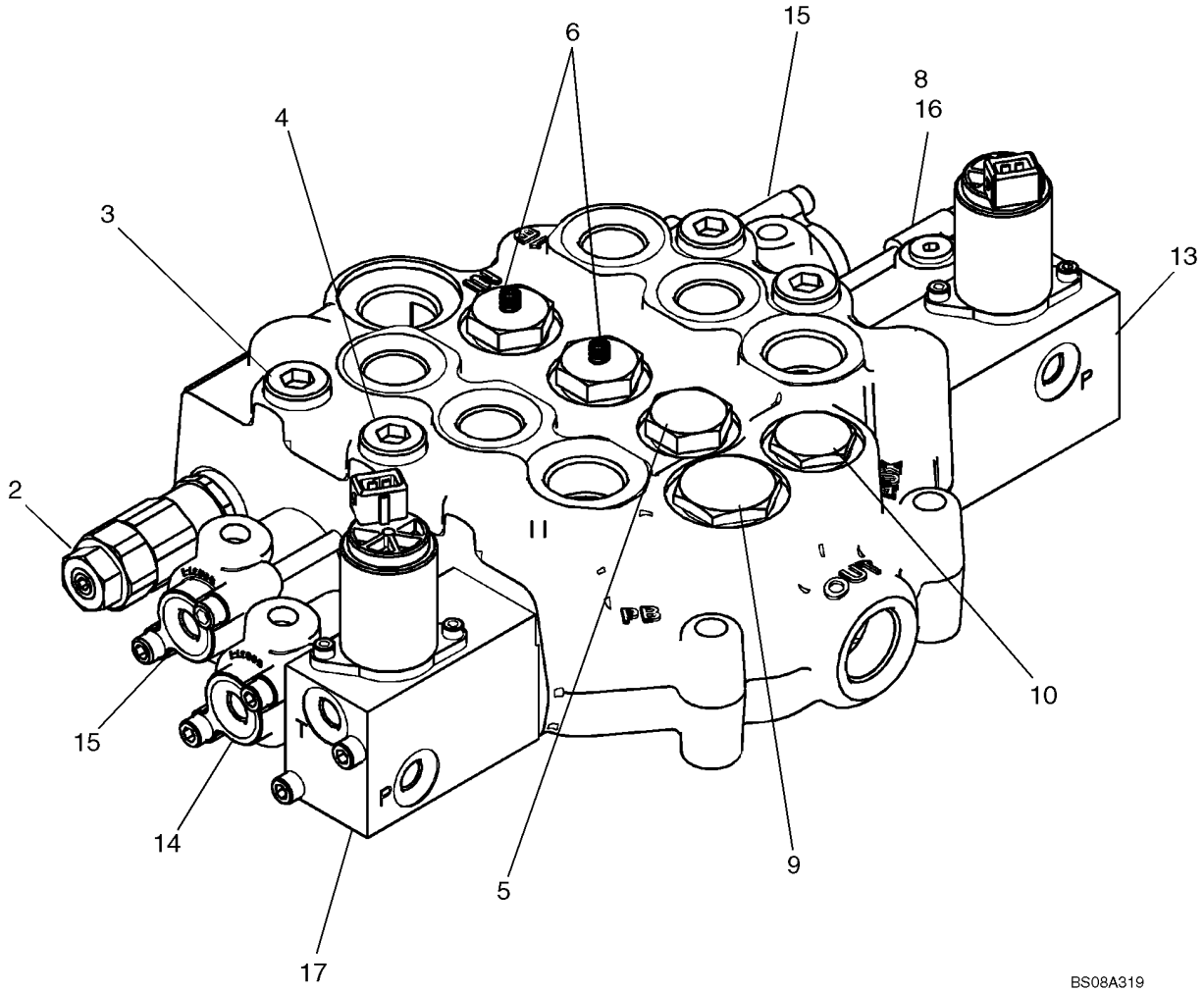

CONTROL VALVE 87653270 - SEAL REPLACEMENT KITS

REF	FN	PART NUMBER	YR/SN	QTY	DESCRIPTION
		87653270		1	VALVE, HYDRAULIC, Control Valve, Pilot Control With EH Aux; Incl. 1 - 17
1		87610517		1	KIT, SEALS, Seal Replacement Kit; See Fig. 35.359.02 [04]
2		87610521		1	VALVE, Main Relief Valve; See Fig. 35.359.02 [05]
3		87445939		3	VALVE, Workport Relief Valve; See Fig. 35.359.02 [06]
4		87445932		1	VALVE, Workport Anti Cavitation Valve; See Fig. 35.359.02 [06]
5		87576161		1	PLUG, Plug Assy
6		87576157		2	VALVE, DAMPING, Check Valve Group; See Fig. 35.359.02 [07]
7		87610351		2	VALVE, Check Valve Group; See Fig. 35.359.02 [11]
8		87610530		1	PLUG, Plug Assembly; See Fig. 35.359.02 [06]
9		87576158		1	PLUG, Plug Assembly; See Fig. 35.359.02 [06]
10		87576160		1	PLUG, Plug Assembly; See Fig. 35.359.02 [06]
11		87610352		2	PLUG, Plug Assembly
12		87576162		2	PLUG, Plug Assembly, Metric; See Fig. 35.359.02 [06]
13		87611845		1	SPOOL, Spool End Group, EHPV; See Fig. 35.359.02 [13]
14		87610531		1	SPOOL, Spool End Group P. O.; See Fig. 35.359.02 [08]
15		87610532		2	SPOOL, Spool End Group P. O.; See Fig. 35.359.02 [09]
16		87610533		1	SPOOL, Spool End Group P. O.; See Fig. 35.359.02 [10]
17		87611846		1	SPOOL, Spool End Group EHPV; See Fig. 35.359.02 [12]

35.359.02	04	p1	03/09

CONTROL VALVE - SEAL KIT

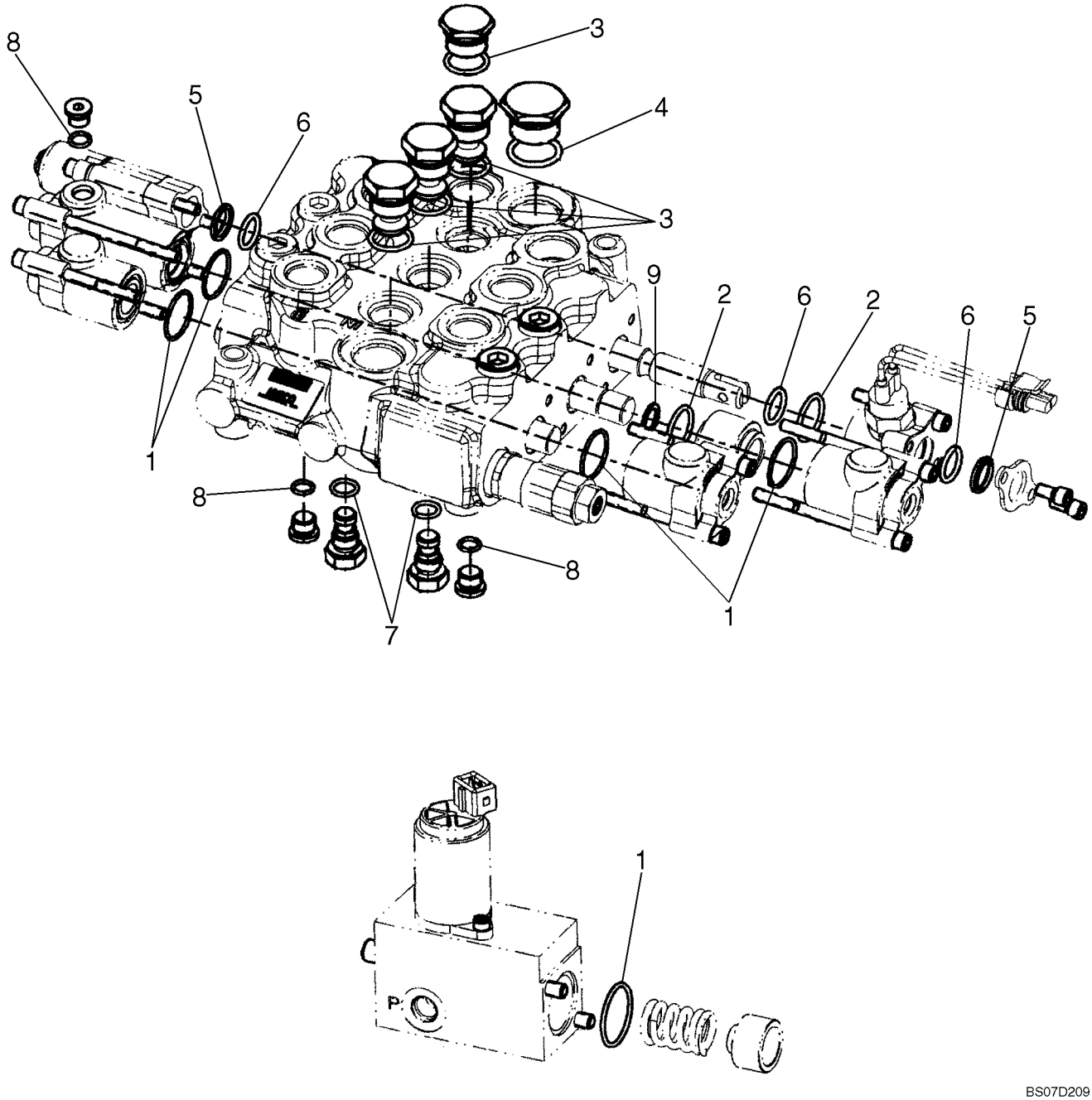

CONTROL VALVE - SEAL KIT

REF	FN	PART NUMBER	YR/SN	QTY	DESCRIPTION
		87610517		1	KIT, SEALS, Seal Replacement Kits; Incl. 1 - 9
1		NSS		6	NOT SERVICED SEPARATELY, O-Ring, 1.129 OD.
2		NSS		2	NOT SERVICED SEPARATELY, O-Ring, 1.063 OD.
3		NSS		4	NOT SERVICED SEPARATELY, O-Ring, .949 OD.
4		NSS		1	NOT SERVICED SEPARATELY, O-Ring, 1.156 OD.
5		NSS		2	NOT SERVICED SEPARATELY, O-Ring, .796 OD.
6		NSS		3	NOT SERVICED SEPARATELY, O-Ring, .818 OD.
7		NSS		2	NOT SERVICED SEPARATELY, O-Ring, .614 OD.
8		NSS		3	NOT SERVICED SEPARATELY, O-Ring, .498 OD.
9		NSS		1	NOT SERVICED SEPARATELY, Back Up O-Ring, .673 OD.

CONTROL VALVE - MAIN RELIEF VALVE

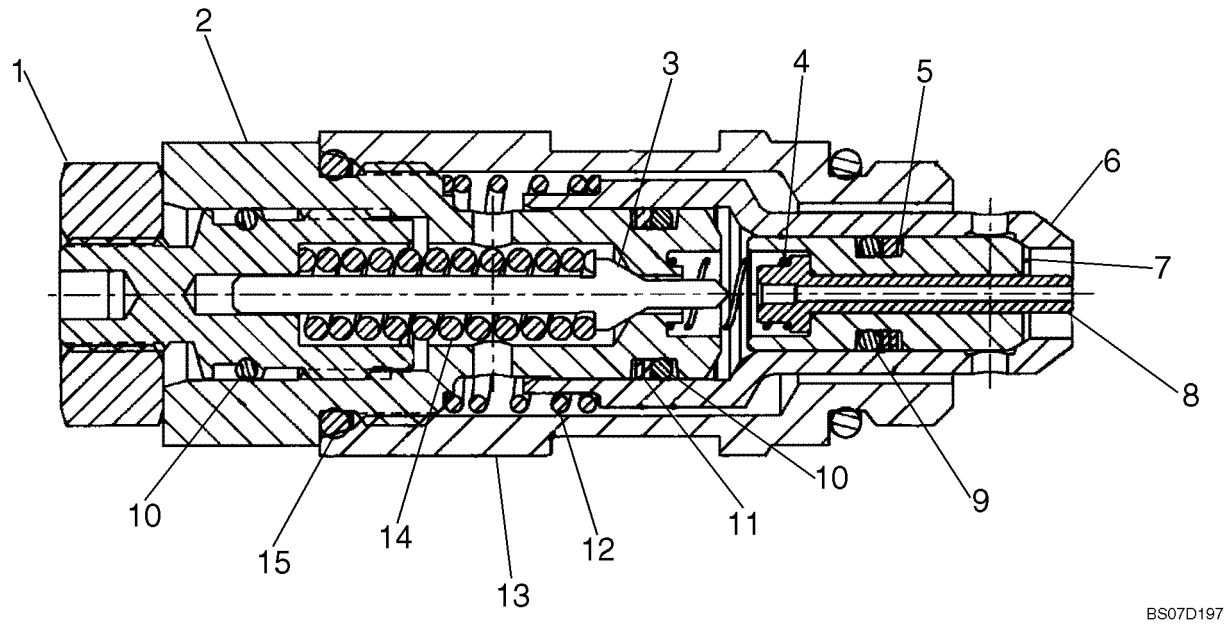

CONTROL VALVE - MAIN RELIEF VALVE

REF	FN	PART NUMBER	YR/SN	QTY	DESCRIPTION
		87610521		1	VALVE, Main Relief Valve, 2750 PSI; Incl. 1 - 16
1		NSS		1	NOT SERVICED SEPARATELY, Nut
2		NSS		1	NOT SERVICED SEPARATELY, Plug
3		NSS		1	NOT SERVICED SEPARATELY, Poppet
4		NSS		1	NOT SERVICED SEPARATELY, Spring
5		NSS		1	NOT SERVICED SEPARATELY, Back-Up Ring
6		NSS		1	NOT SERVICED SEPARATELY, Poppet
7		NSS		1	NOT SERVICED SEPARATELY, Poppet
8		NSS		1	NOT SERVICED SEPARATELY, Piston
9		NSS		1	NOT SERVICED SEPARATELY, O-Ring
10		NSS		2	NOT SERVICED SEPARATELY, O-Ring
11		NSS		1	NOT SERVICED SEPARATELY, Back-Up Ring
12		NSS		1	NOT SERVICED SEPARATELY, Spring
13		NSS		1	NOT SERVICED SEPARATELY, Body
14		NSS		1	NOT SERVICED SEPARATELY, Spring
15		NSS		2	NOT SERVICED SEPARATELY, O-Ring
16		NSS		1	NOT SERVICED SEPARATELY, Adjust Screw

CONTROL VALVE, PLUGS AND VALVES

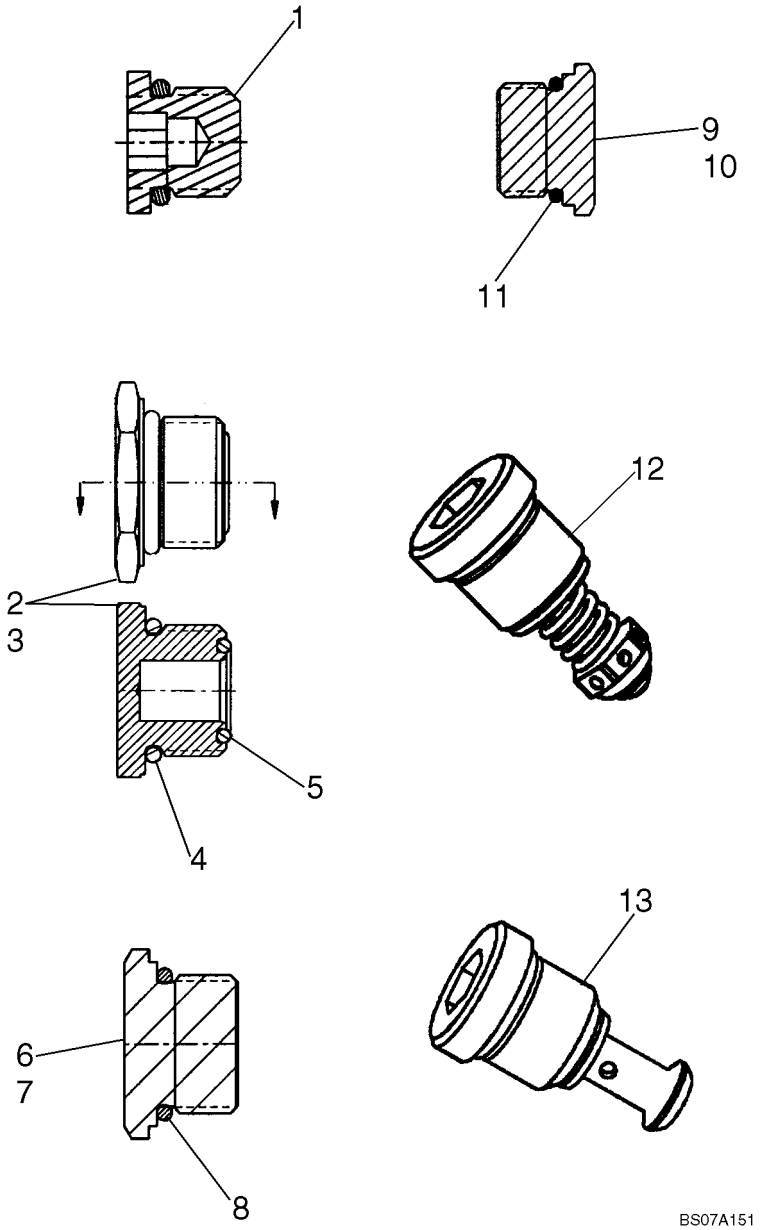

CONTROL VALVE, PLUGS AND VALVES

REF	FN	PART NUMBER	YR/SN	QTY	DESCRIPTION
1		87610530		1	PLUG, Plug Assy, 7/16 - 20 UNF Thd; Incl. Plug And O-ring
2		87576162		1	PLUG, Plug Assy, Metric - M18 X 1.5 - 6H; Incl. 3 - 5
3		NSS		1	NOT SERVICED SEPARATELY, Plug, Metric
4		NSS		1	NOT SERVICED SEPARATELY, O-Ring
5		NSS		1	NOT SERVICED SEPARATELY, O-Ring
6		87576158		1	PLUG, Plug Assy, 1 - 1/16 - 12 UN Thd; Incl. 7, 8
7		NSS		1	NOT SERVICED SEPARATELY, Plug, SAE
8		NSS		1	NOT SERVICED SEPARATELY, O-Ring
9		87576160		1	PLUG, Plug Assy, 7/8 - 14 UNF Thd; Incl. 10, 11
10		NSS		1	NOT SERVICED SEPARATELY, Plug, SAE
11		NSS		1	NOT SERVICED SEPARATELY, O-Ring
12		87445939		1	VALVE, Workport Relief Valve, Non Adjustable 245 Bar Stamped On Valve
13		87445932		1	VALVE, Workport Anti-void Valve

CONTROL VALVE, CHECK VALVE

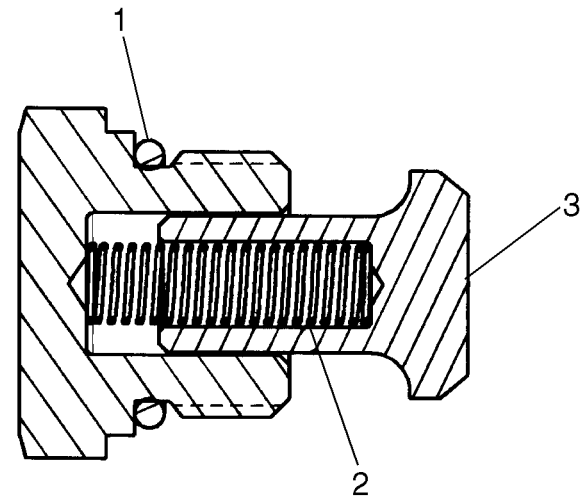

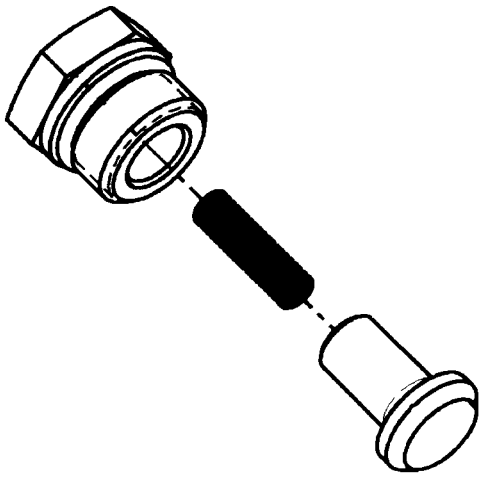

BS07A148

CONTROL VALVE, CHECK VALVE

REF	FN	PART NUMBER	YR/SN	QTY	DESCRIPTION
		87576157		1	VALVE, DAMPING, Check Valve Group; Incl. 1 - 3
1		NSS		1	NOT SERVICED SEPARATELY, Plug Assy
2		NSS		1	NOT SERVICED SEPARATELY, Spring
3		NSS		1	NOT SERVICED SEPARATELY, Poppet - C.V.

CONTROL VALVE, SPOOL END P. O.

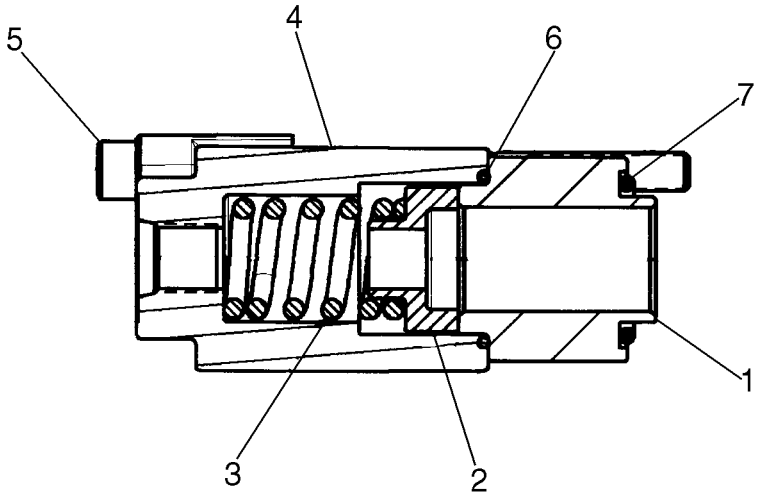

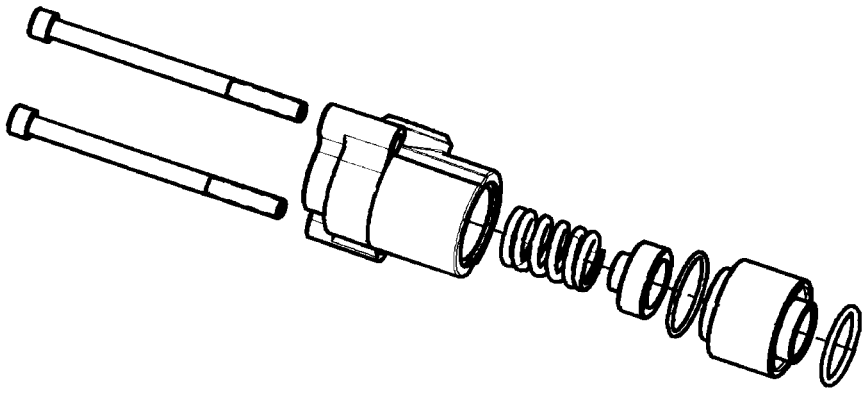

CONTROL VALVE, SPOOL END P. O.

REF	FN	PART NUMBER	YR/SN	QTY	DESCRIPTION
		87610531		1	SPOOL, Spool End Group; Incl. 1 - 7
1		NSS		1	NOT SERVICED SEPARATELY, Retainer
2		NSS		1	NOT SERVICED SEPARATELY, Spring Seat
3		NSS		1	NOT SERVICED SEPARATELY, Spring
4		NSS		1	NOT SERVICED SEPARATELY, Cap, Spool P.O.
5		NSS		2	NOT SERVICED SEPARATELY, Socket Head Cap Screw
6		NSS		1	NOT SERVICED SEPARATELY, O-Ring
7		NSS		1	NOT SERVICED SEPARATELY, O-Ring

35.359.02	09	p1	09/09

CONTROL VALVE, SPOOL END P. O.

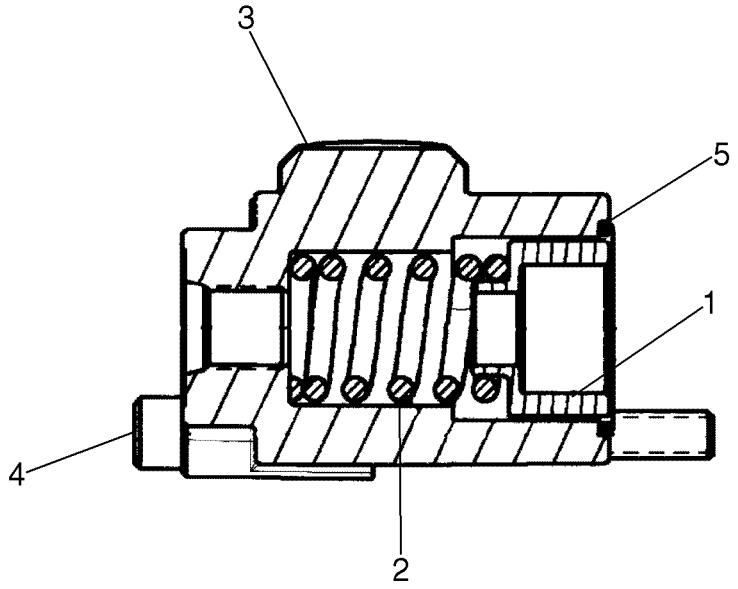

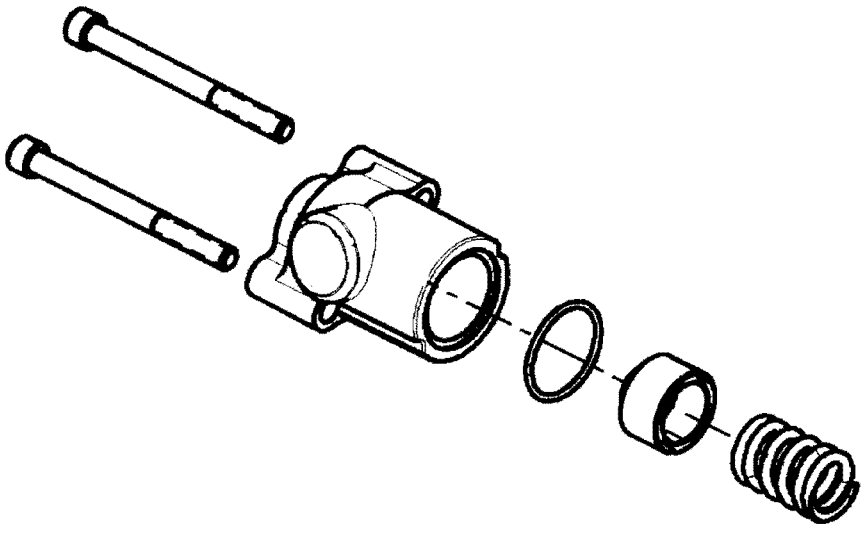

BS07A145

CONTROL VALVE, SPOOL END P. O.

REF	FN	PART NUMBER	YR/SN	QTY	DESCRIPTION
		87610532		1	SPOOL, Spool End Group; Incl. 1 - 5
1		NSS		1	NOT SERVICED SEPARATELY, Spring Seat
2		NSS		1	NOT SERVICED SEPARATELY, Spring
3		NSS		1	NOT SERVICED SEPARATELY, Cap - Spool, P. O.
4		NSS		2	NOT SERVICED SEPARATELY, Socket Head Cap Screw
5		NSS		1	NOT SERVICED SEPARATELY, O-Ring

35.359.02	10	p1	09/09

CONTROL VALVE, SPOOL END P. O.

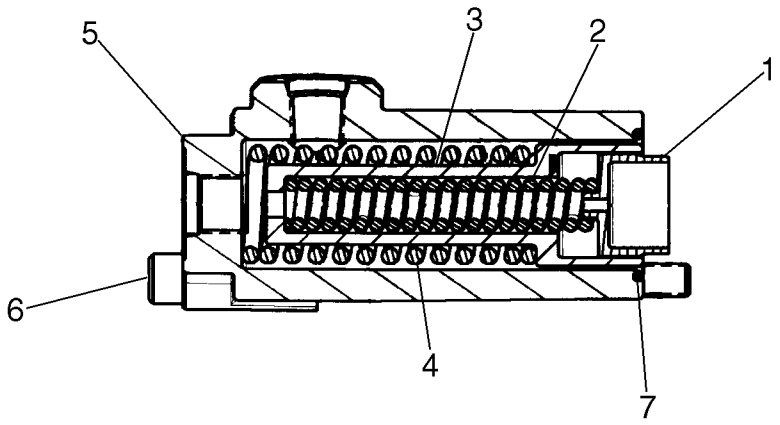

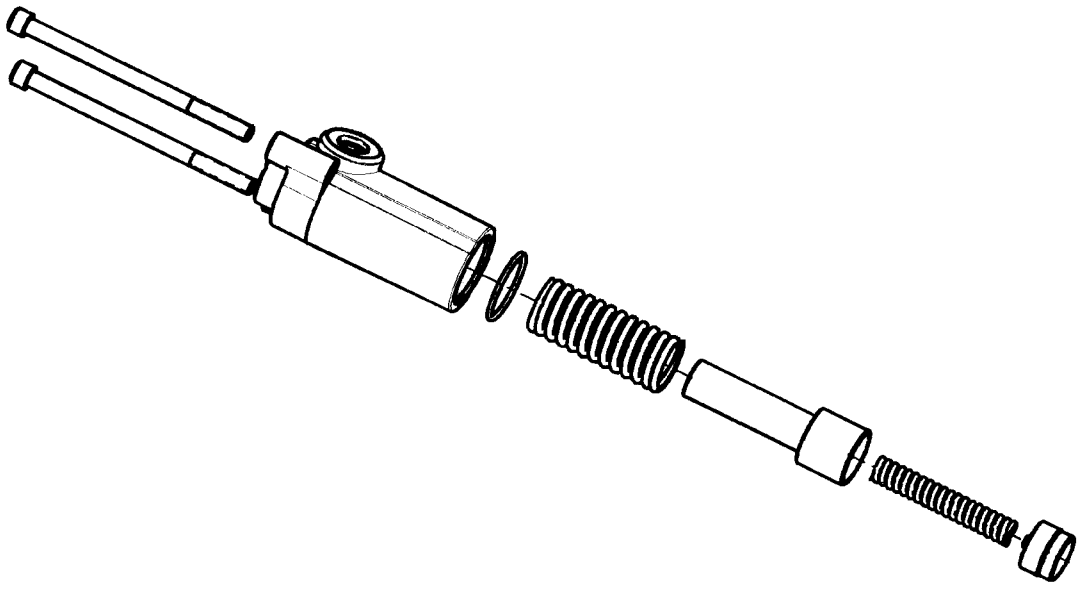

CONTROL VALVE, SPOOL END P. O.

REF	FN	PART NUMBER	YR/SN	QTY	DESCRIPTION
		87610533		1	SPOOL, Spool End Group; Incl. 1 - 7
1		NSS		1	NOT SERVICED SEPARATELY, Spring Seat
2		NSS		1	NOT SERVICED SEPARATELY, Spring
3		NSS		1	NOT SERVICED SEPARATELY, Spring Seat
4		NSS		1	NOT SERVICED SEPARATELY, Spring
5		NSS		1	NOT SERVICED SEPARATELY, Cap - Spool, P. O.
6		NSS		2	NOT SERVICED SEPARATELY, Socket Head Cap Screw
7		NSS		1	NOT SERVICED SEPARATELY, O-Ring

CONTROL VALVE - CHECK VALVE

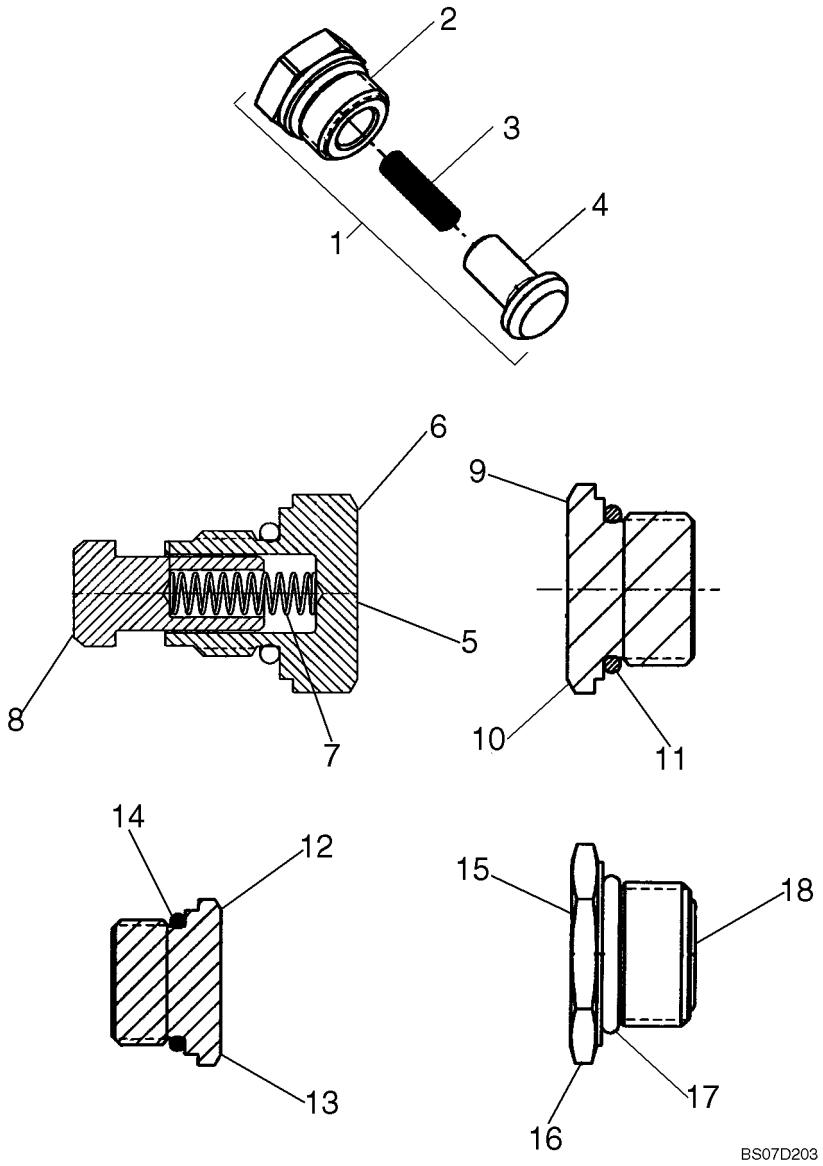

CONTROL VALVE - CHECK VALVE

REF	FN	PART NUMBER	YR/SN	QTY	DESCRIPTION
1		87576157		1	VALVE, DAMPING, Check Valve; Incl. 2 - 4
2		NSS		1	NOT SERVICED SEPARATELY, Plug
3		NSS		1	NOT SERVICED SEPARATELY, Spring
4		NSS		1	NOT SERVICED SEPARATELY, Poppet
5		87610351		1	VALVE, Check Valve; Incl. 6 - 8
6		NSS		1	NOT SERVICED SEPARATELY, Plug, M14 X 1.5-6G Thd.
7		NSS		1	NOT SERVICED SEPARATELY, Spring
8		NSS		1	NOT SERVICED SEPARATELY, Poppet
9		87576158		1	PLUG, Plug Assembly, 1-1/16 - 12UN-2A Thd.; Incl. 10, 11
10		NSS		1	NOT SERVICED SEPARATELY, Plug, 1-1/16 - 12UN-2A Thd.
11		NSS		1	NOT SERVICED SEPARATELY, O-Ring
12		87576160		1	PLUG, Plug Assembly, 7/8 - 14UNF - 2A Thd.; Incl. 13, 14
13		NSS		1	NOT SERVICED SEPARATELY, Plug, 7/8 - 14UNF - 2A Thd.
14		NSS		1	NOT SERVICED SEPARATELY, O-Ring
15		87576162		1	PLUG, Plug Assembly, M18 X 1.5-6H Thd.; Incl. 16 - 18
16		NSS		1	NOT SERVICED SEPARATELY, Plug, M18 X 1.5-6H Thd.
17		NSS		1	NOT SERVICED SEPARATELY, O-Ring
18		NSS		1	NOT SERVICED SEPARATELY, O-Ring

CONTROL VALVE, SPOOL END EHPV

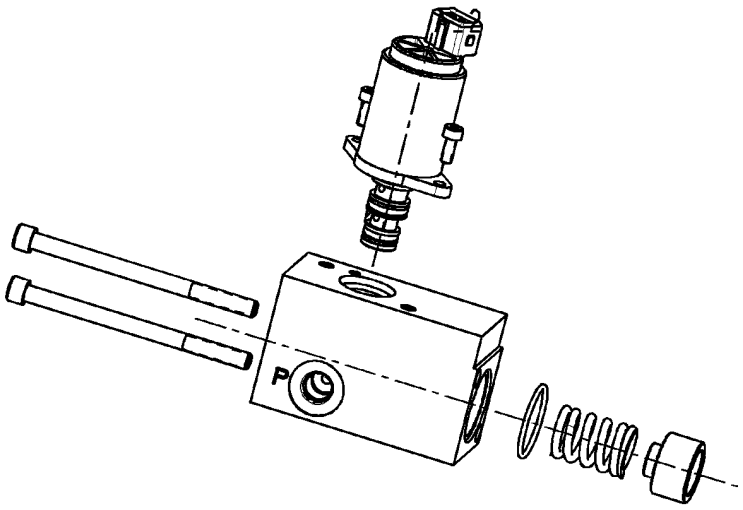

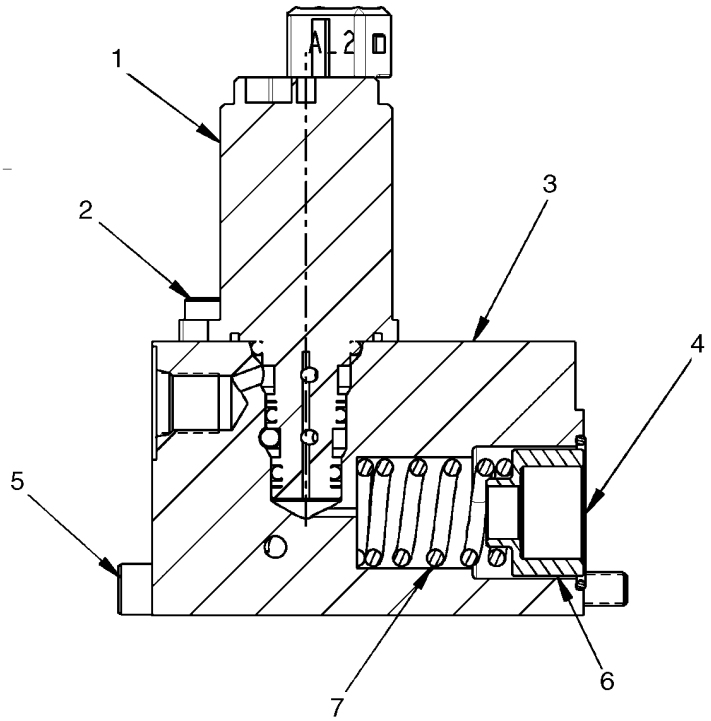

BS08A485

CONTROL VALVE, SPOOL END EHPV

REF	FN	PART NUMBER	YR/SN	QTY	DESCRIPTION
		87611846		1	SPOOL, Spool End Group EHPV; Incl. 1 - 7
1		NSS		1	NOT SERVICED SEPARATELY, Solenoid - Cartridge Valve
2		NSS		2	NOT SERVICED SEPARATELY, Socket Head Cap Screw
3		NSS		1	NOT SERVICED SEPARATELY, End Cap Assy - Solenoid
4		NSS		1	NOT SERVICED SEPARATELY, O-Ring - 022
5		NSS		1	NOT SERVICED SEPARATELY, Cap Screw Socket Head
6		NSS		1	NOT SERVICED SEPARATELY, Spring Seat
7		NSS		1	NOT SERVICED SEPARATELY, Spring

CONTROL VALVE, SPOOL END EHPV

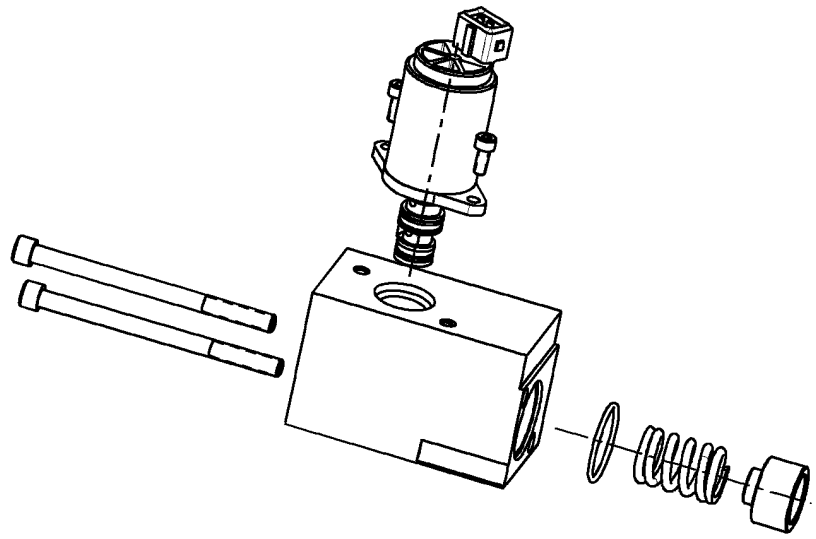

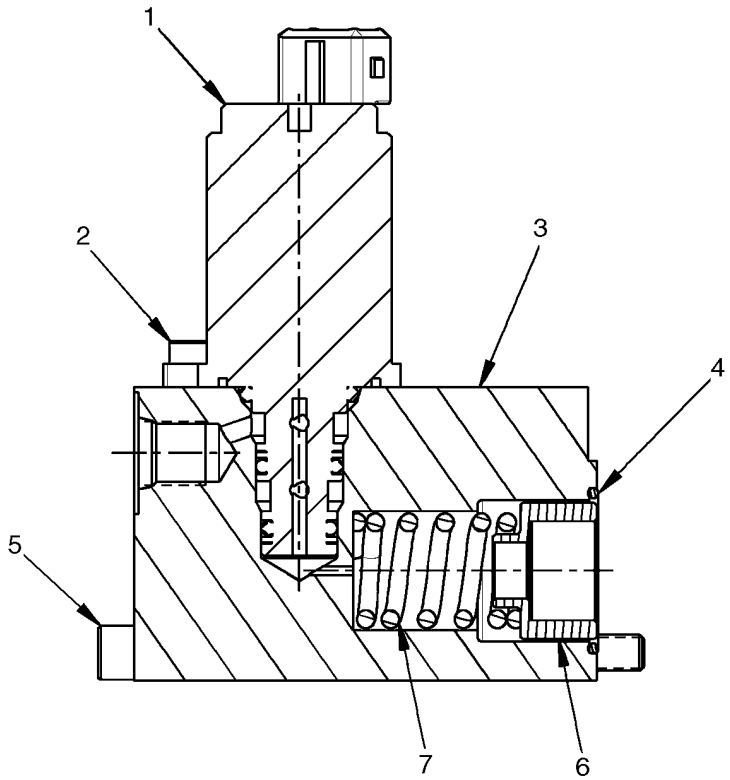

BS08A320

CONTROL VALVE, SPOOL END EHPV

REF	FN	PART NUMBER	YR/SN	QTY	DESCRIPTION
		87611845		1	SPOOL, Spool End Group EHPV; Incl. 1 - 7
1		NSS		1	NOT SERVICED SEPARATELY, Solenoid - Cartridge Valve
2		NSS		2	NOT SERVICED SEPARATELY, Socket Head Cap Screw
3		NSS		1	NOT SERVICED SEPARATELY, End Cap Assy - Solenoid
4		NSS		1	NOT SERVICED SEPARATELY, O-Ring - 022
5		NSS		1	NOT SERVICED SEPARATELY, Cap Screw Socket Head
6		NSS		1	NOT SERVICED SEPARATELY, Spring Seat
7		NSS		1	NOT SERVICED SEPARATELY, Spring

35.359.03	01	p1	07/09

CONTROL VALVE, MODELS WITH PILOT CONTROL

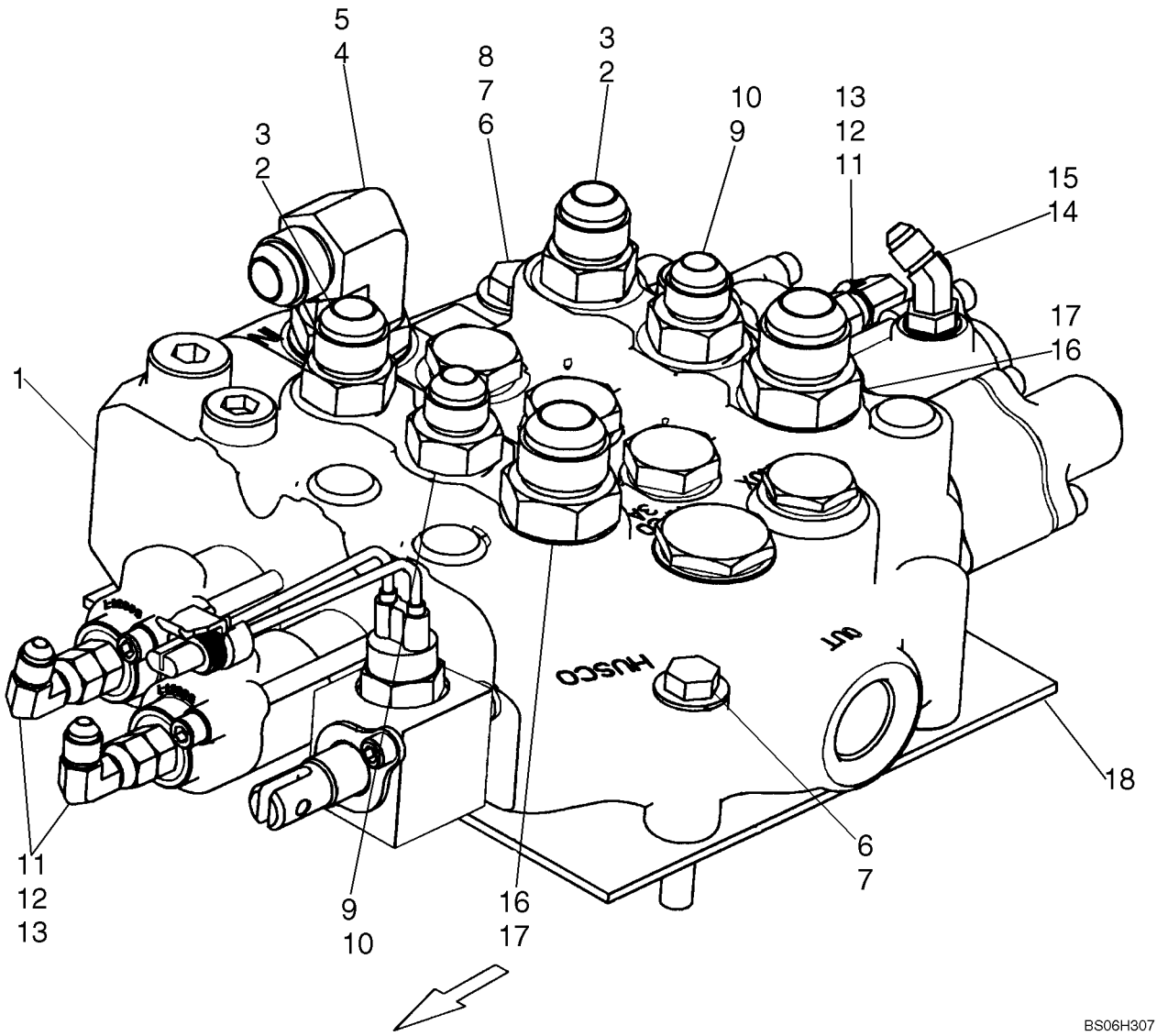

CONTROL VALVE, MODELS WITH PILOT CONTROL

REF	FN	PART NUMBER	YR/SN	QTY	DESCRIPTION
1		87583689		1	VALVE, Replaces 87357099; See Figure 35.359.03 [02]
2		325059		2	CONNECTOR, HYD., 7/8"-14, 37º x 7/8"-14, O-Ring, Incl. 3
3		167269		2	O-RING, 10-1, 90 Duro, .755" ID x .097" Thk
4		84570		1	ELBOW, 90º, 7/8"-14, 37º x 1 1/16"-12, O-Ring, Incl. 5; If Used
5		167266		1	O-RING, 12-1, 90 Duro, .924 ID x .116" Thk
6		280161		2	BOLT, Hex, 3/8"-16 x 3", G5
7		140045		3	WASHER, BELLEVILLE, M10
8		9635082		1	NUT, 5/16"-18, G5
9		128819		2	CONNECTOR, HYD., 3/4"-16, 37º x 7/8"-14, O-Ring, Incl. 10
10		167269		2	O-RING, 10-1, 90 Duro, .755" ID x .097" Thk
11		86512933		3	ELBOW, 90º, 7/16"-20, 37º x 7/16"-20, 37º Fem Sw
12		265235		3	CONNECTOR, HYD., 7/16"-20, 37º x 7/16"-20, O-Ring, Incl. 13
13		165202		3	O-RING, 4-1, 90 Duro, .351" ID x .072" Thk
14		86512993		1	ELBOW, 45º, 7/16"-20, 37º x 7/16"-20, O-Ring, Incl. 15
15		165202		1	O-RING, 4-1, 90 Duro, .351" ID x .072" Thk
16		322896		1	CONNECTOR, HYD., 1 1/16"-12, 37º x 1 1/16"-12, O-Ring, Incl 17
17		167266		1	O-RING, 12-1, 90 Duro, .924 ID x .116" Thk
18		87462101		1	PAD, 3.2 mm Thick; If Used
18		87615827		1	PAD, 6.4 mm Thick; If Used

CONTROL VALVE - SEAL REPLACEMENT KITS

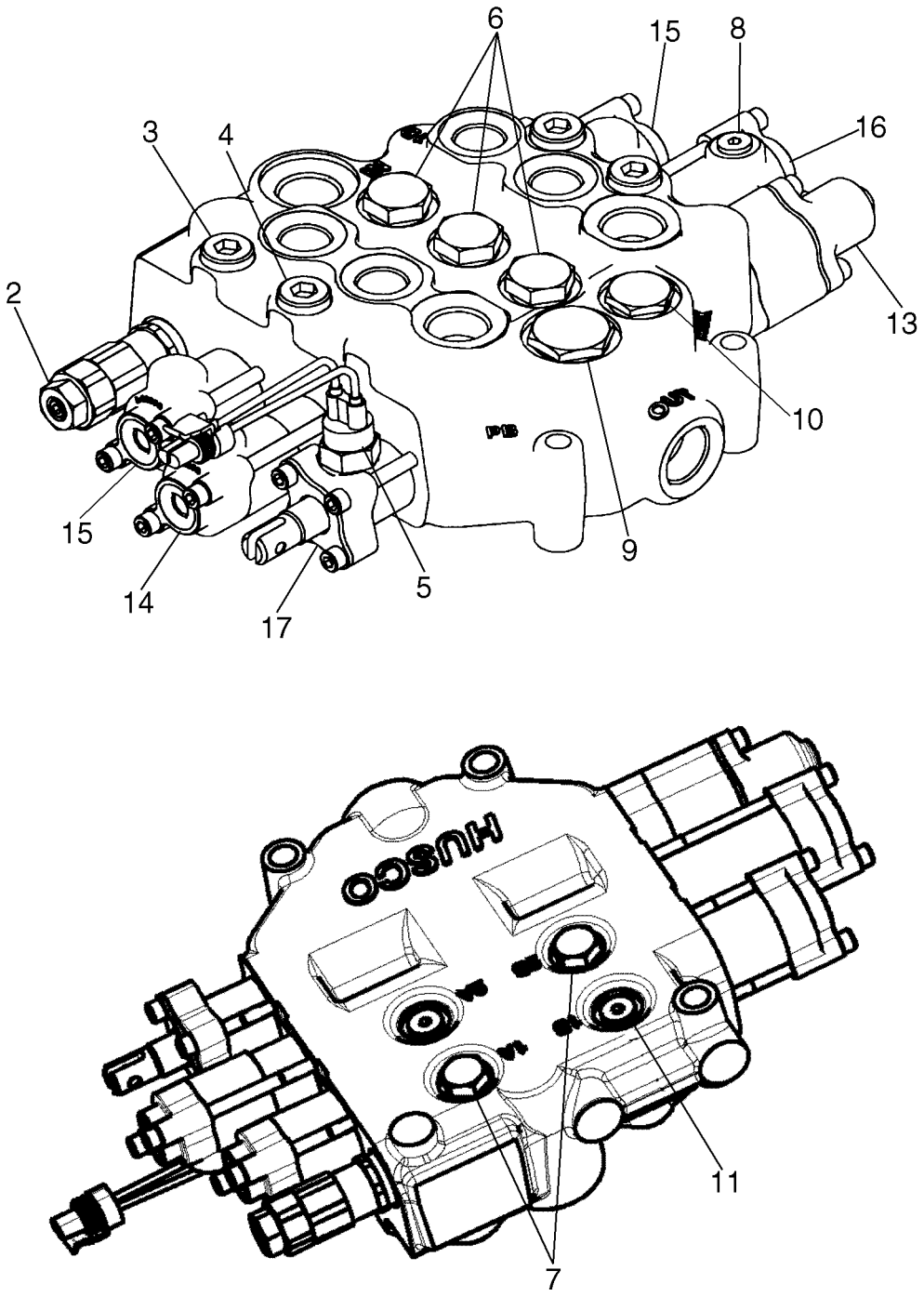

CONTROL VALVE - SEAL REPLACEMENT KITS

REF	FN	PART NUMBER	YR/SN	QTY	DESCRIPTION
		87583689		1	VALVE, Control Valve, Pilot Control .143 Orifice; Incl. 1 - 17
1		87610517		1	KIT, SEALS, Seal Replacement Kit; See Fig. 35.359.03 [03]
2		87610521		1	VALVE, Main Relief Valve; See Fig. 35.359.03 [04]
3		87445939		3	VALVE, Workport Relief Valve; See Fig. 35.359.03 [05]
4		87445932		1	VALVE, Workport Anti Cavitation Valve; See Fig. 35.359.03 [05]
5		87446617		1	SWITCH, Auxiliary Spool Interlock Switch; See Fig. 35.359.03 [11]
6		87576157		3	VALVE, DAMPING, Check Valve Group; See Fig. 35.359.03 [06]
7		87610351		2	VALVE, Check Valve Group; See Fig. 35.359.03 [12]
8		87610530		1	PLUG, Plug Assembly; See Fig. 35.359.03 [05]
9		87576158		1	PLUG, Plug Assembly; See Fig. 35.359.03 [05]
10		87576160		1	PLUG, Plug Assembly; See Fig. 35.359.03 [05]
11		87610352		2	PLUG, Plug Assembly
12		87576162		2	PLUG, Plug Assembly, Metric; See Fig. 35.359.03 [05]
13		87643790		1	SPOOL, Spool End Group, Detent; See Fig. 35.359.03 [07]
14		87610531		1	SPOOL, Spool End Group P. O.; See Fig. 35.359.03 [08]
15		87610532		2	SPOOL, Spool End Group P. O.; See Fig. 35.359.03 [09]
16		87610533		1	SPOOL, Spool End Group P. O.; See Fig. 35.359.03 [10]
17		87611850		1	SPOOL, Spool End Group P. O.; See Fig. 35.359.03 [11]

35.359.03	03	p1	03/09

CONTROL VALVE - SEAL KIT

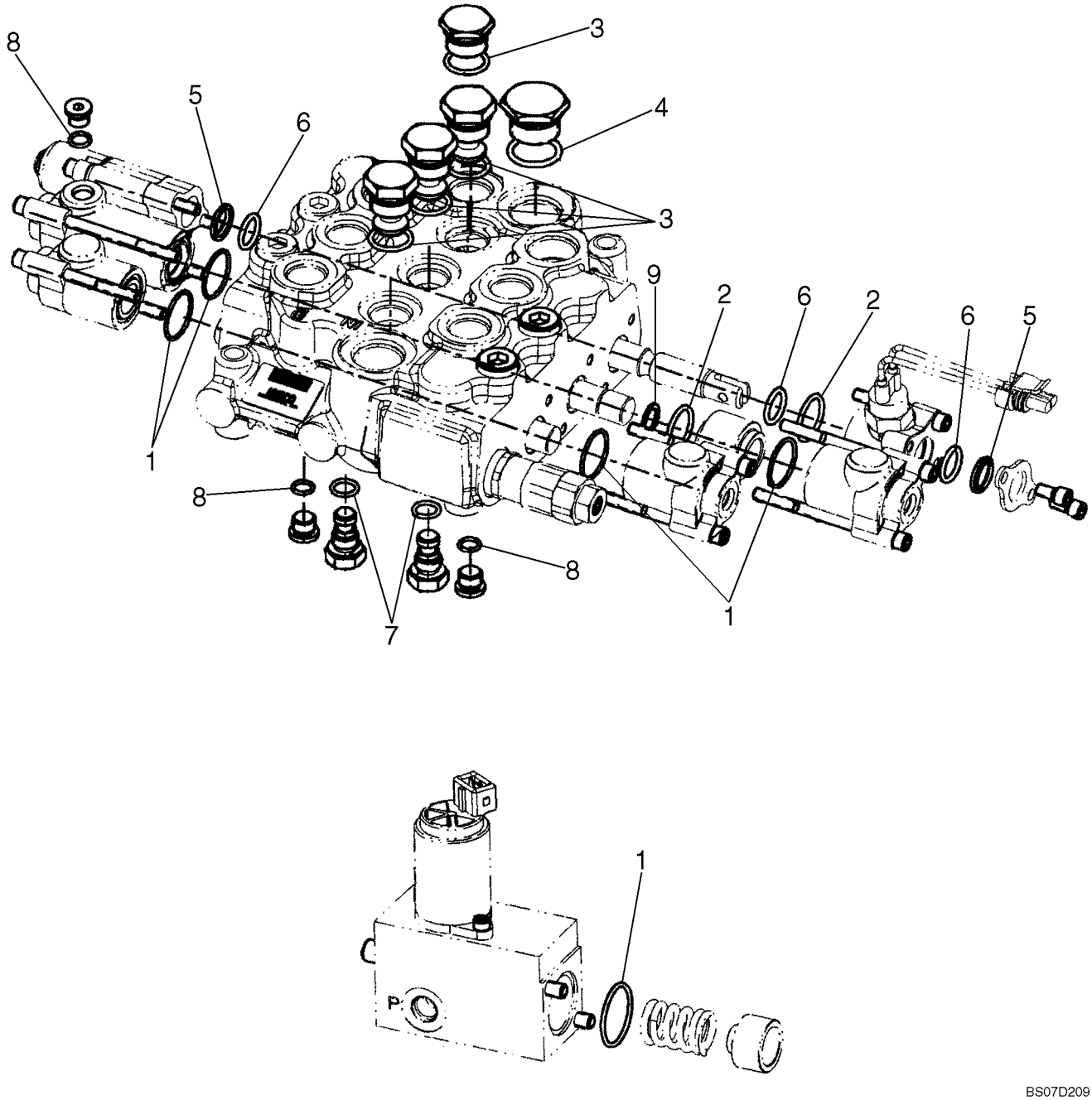

CONTROL VALVE - SEAL KIT

REF	FN	PART NUMBER	YR/SN	QTY	DESCRIPTION
		87610517		1	KIT, SEALS, Seal Replacement Kits; Incl. 1 - 9
1		NSS		6	NOT SERVICED SEPARATELY, O-Ring, 1.129 OD.
2		NSS		2	NOT SERVICED SEPARATELY, O-Ring, 1.063 OD.
3		NSS		4	NOT SERVICED SEPARATELY, O-Ring, .949 OD.
4		NSS		1	NOT SERVICED SEPARATELY, O-Ring, 1.156 OD.
5		NSS		2	NOT SERVICED SEPARATELY, O-Ring, .796 OD.
6		NSS		3	NOT SERVICED SEPARATELY, O-Ring, .818 OD.
7		NSS		2	NOT SERVICED SEPARATELY, O-Ring, .614 OD.
8		NSS		3	NOT SERVICED SEPARATELY, O-Ring, .498 OD.
9		NSS		1	NOT SERVICED SEPARATELY, Back Up O-Ring, .673 OD.

CONTROL VALVE - MAIN RELIEF VALVE

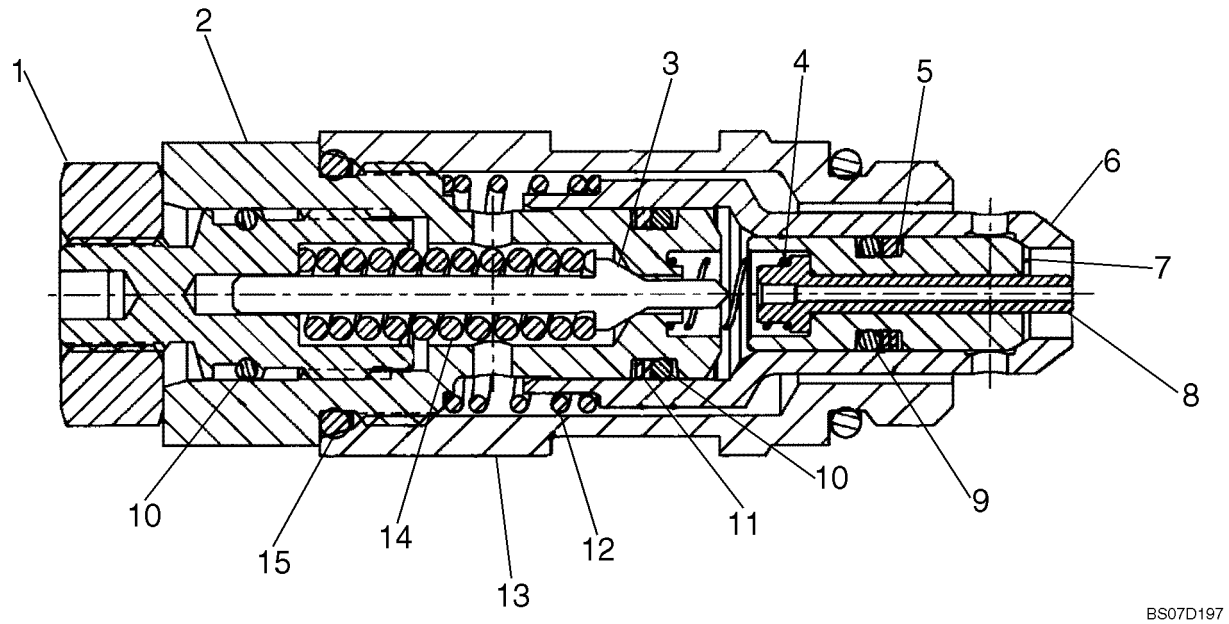

CONTROL VALVE - MAIN RELIEF VALVE

REF	FN	PART NUMBER	YR/SN	QTY	DESCRIPTION
		87610521		1	VALVE, Main Relief Valve, 2750 PSI; Incl. 1 - 16
1		NSS		1	NOT SERVICED SEPARATELY, Nut
2		NSS		1	NOT SERVICED SEPARATELY, Plug
3		NSS		1	NOT SERVICED SEPARATELY, Poppet
4		NSS		1	NOT SERVICED SEPARATELY, Spring
5		NSS		1	NOT SERVICED SEPARATELY, Back-Up Ring
6		NSS		1	NOT SERVICED SEPARATELY, Poppet
7		NSS		1	NOT SERVICED SEPARATELY, Poppet
8		NSS		1	NOT SERVICED SEPARATELY, Piston
9		NSS		1	NOT SERVICED SEPARATELY, O-Ring
10		NSS		2	NOT SERVICED SEPARATELY, O-Ring
11		NSS		1	NOT SERVICED SEPARATELY, Back-Up Ring
12		NSS		1	NOT SERVICED SEPARATELY, Spring
13		NSS		1	NOT SERVICED SEPARATELY, Body
14		NSS		1	NOT SERVICED SEPARATELY, Spring
15		NSS		2	NOT SERVICED SEPARATELY, O-Ring
16		NSS		1	NOT SERVICED SEPARATELY, Adjust Screw

CONTROL VALVE, PLUGS & VALVES

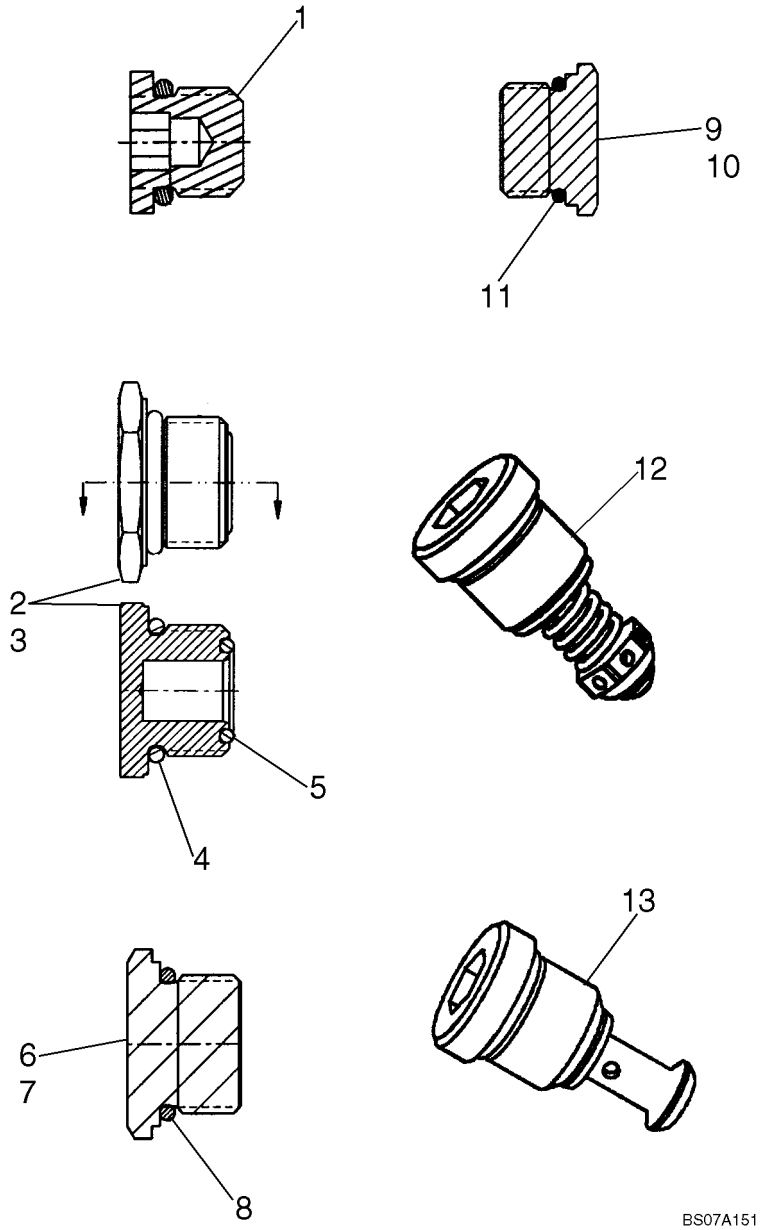

CONTROL VALVE, PLUGS & VALVES

REF	FN	PART NUMBER	YR/SN	QTY	DESCRIPTION
1		87610530		1	PLUG, Plug Assy, 7/16 - 20 UNF Thd; Incl. Plug And O-ring
2		87576162		1	PLUG, Plug Assy, Metric - M18 X 1.5 - 6H; Incl. 3 - 5
3		NSS		1	NOT SERVICED SEPARATELY, Plug, Metric
4		NSS		1	NOT SERVICED SEPARATELY, O-Ring
5		NSS		1	NOT SERVICED SEPARATELY, O-Ring
6		87576158		1	PLUG, Plug Assy, 1 - 1/16 - 12 UN Thd; Incl. 7, 8
7		NSS		1	NOT SERVICED SEPARATELY, Plug, SAE
8		NSS		1	NOT SERVICED SEPARATELY, O-Ring
9		87576160		1	PLUG, Plug Assy, 7/8 - 14 UNF Thd; Incl. 10, 11
10		NSS		1	NOT SERVICED SEPARATELY, Plug, SAE
11		NSS		1	NOT SERVICED SEPARATELY, O-Ring
12		87445939		1	VALVE, Workport Relief Valve, Non Adjustable 245 Bar Stamped On Valve
13		87445932		1	VALVE, Workport Anti-void Valve

CONTROL VALVE, CHECK VALVE

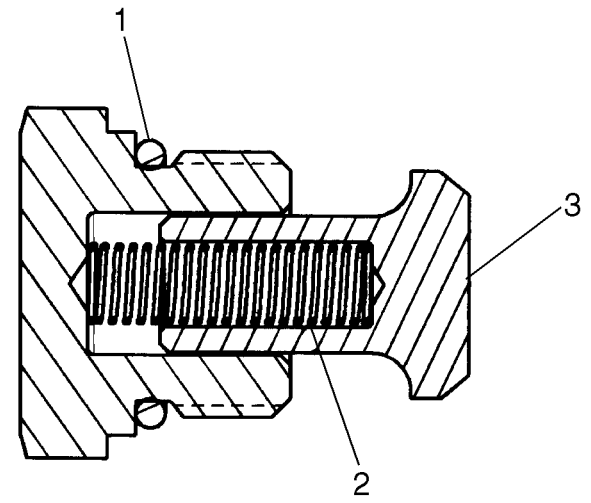

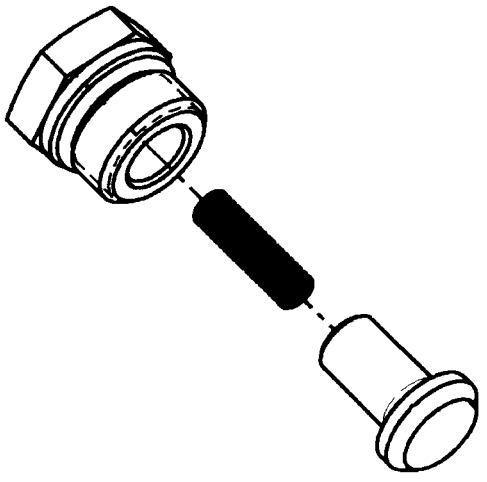

BS07A148

CONTROL VALVE, CHECK VALVE

REF	FN	PART NUMBER	YR/SN	QTY	DESCRIPTION
		87576157		1	VALVE, DAMPING, Check Valve Group; Incl. 1 - 3
1		NSS		1	NOT SERVICED SEPARATELY, Plug Assy
2		NSS		1	NOT SERVICED SEPARATELY, Spring
3		NSS		1	NOT SERVICED SEPARATELY, Poppet - C.V.

CONTROL VALVE - SPOOL END, DETENT

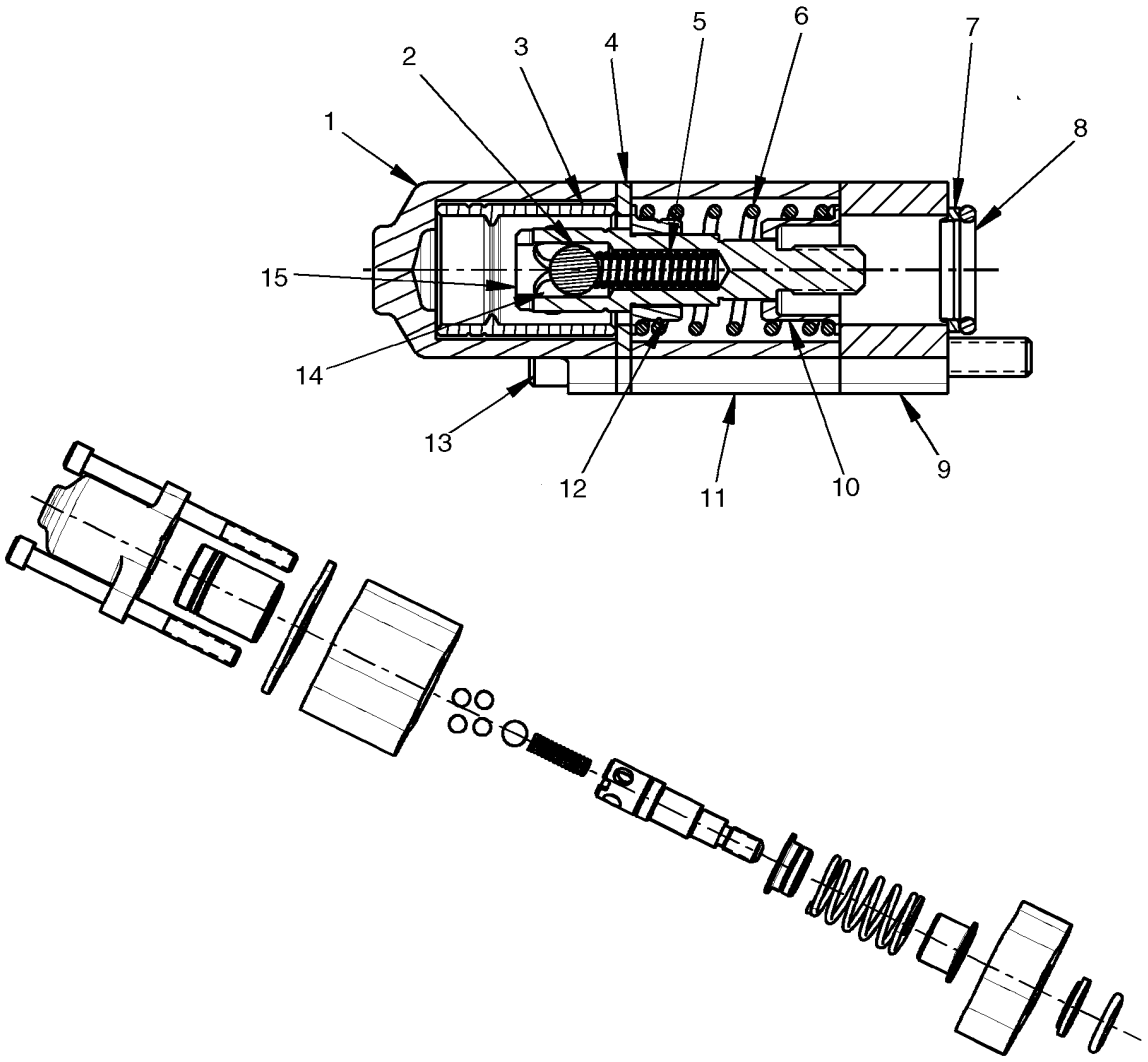

CONTROL VALVE - SPOOL END, DETENT

REF	FN	PART NUMBER	YR/SN	QTY	DESCRIPTION
		87643790		1	SPOOL, Spool End Group - Detent; Incl. 1 - 15
1		NSS		1	NOT SERVICED SEPARATELY, Cap, Spool
2		NSS		4	NOT SERVICED SEPARATELY, Ball
3		NSS		1	NOT SERVICED SEPARATELY, Sleeve, Detent
4		NSS		1	NOT SERVICED SEPARATELY, Plate, Seal
5		NSS		1	NOT SERVICED SEPARATELY, Spring
6		NSS		1	NOT SERVICED SEPARATELY, Spring
7		NSS		1	NOT SERVICED SEPARATELY, Wiper
8		NSS		1	NOT SERVICED SEPARATELY, O-Ring
9		NSS		1	NOT SERVICED SEPARATELY, Plate, Seal
10		NSS		1	NOT SERVICED SEPARATELY, Spring Seat
11		NSS		1	NOT SERVICED SEPARATELY, Spacer
12		NSS		1	NOT SERVICED SEPARATELY, Spring Seat
13		NSS		2	NOT SERVICED SEPARATELY, Socket Head Cap Screw
14		NSS		1	NOT SERVICED SEPARATELY, Ball
15		NSS		1	NOT SERVICED SEPARATELY, Spool End, Detent Pin

CONTROL VALVE, SPOOL END P. O.

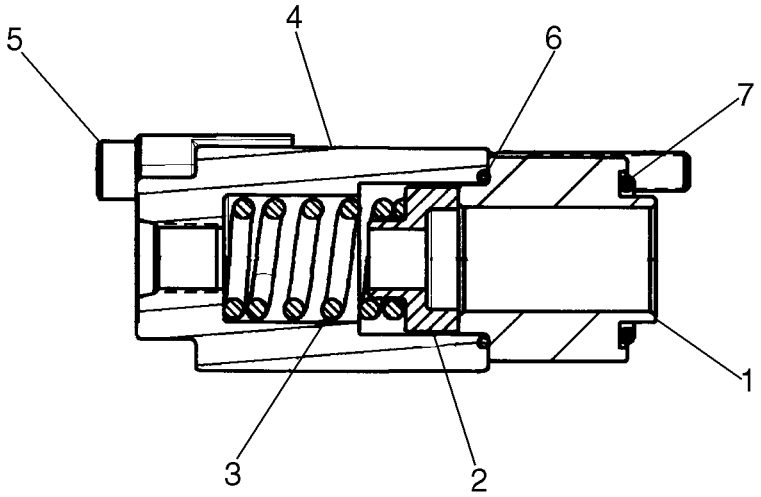

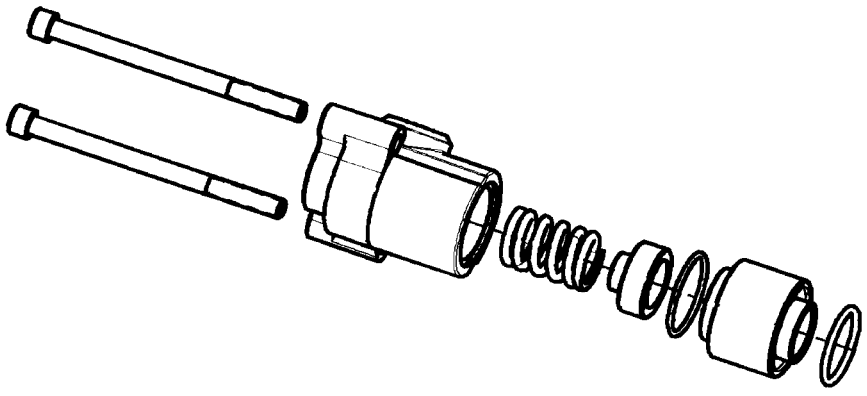

BS07A149

CONTROL VALVE, SPOOL END P. O.

REF	FN	PART NUMBER	YR/SN	QTY	DESCRIPTION
		87610531		1	SPOOL, Spool End Group; Incl. 1 - 7
1		NSS		1	NOT SERVICED SEPARATELY, Retainer
2		NSS		1	NOT SERVICED SEPARATELY, Spring Seat
3		NSS		1	NOT SERVICED SEPARATELY, Spring
4		NSS		1	NOT SERVICED SEPARATELY, Cap, Spool P.O.
5		NSS		2	NOT SERVICED SEPARATELY, Socket Head Cap Screw
6		NSS		1	NOT SERVICED SEPARATELY, O-Ring
7		NSS		1	NOT SERVICED SEPARATELY, O-Ring

CONTROL VALVE, SPOOL END P. O.

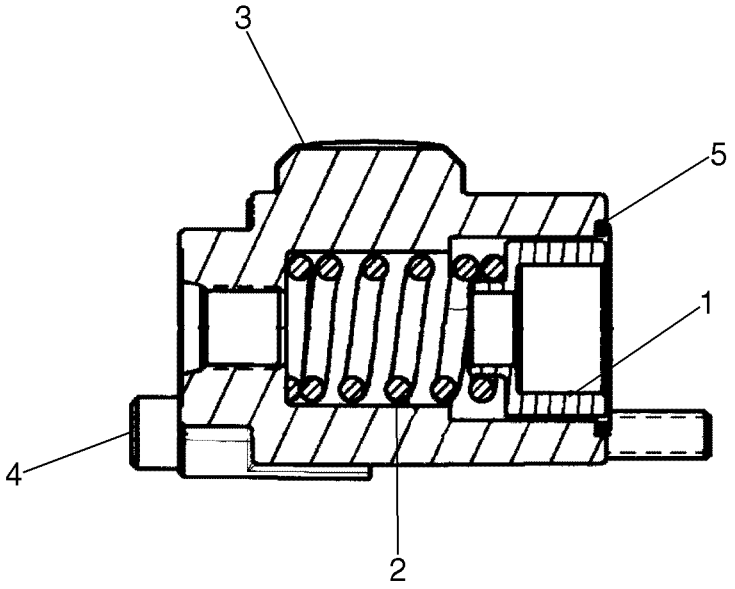

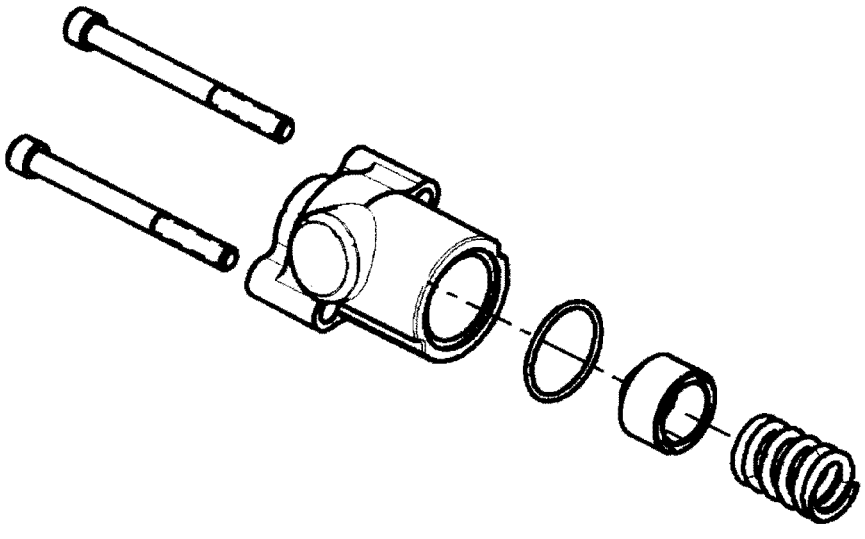

BS07A145

CONTROL VALVE, SPOOL END P. O.

REF	FN	PART NUMBER	YR/SN	QTY	DESCRIPTION
		87610532		1	SPOOL, Spool End Group; Incl. 1 - 5
1		NSS		1	NOT SERVICED SEPARATELY, Spring Seat
2		NSS		1	NOT SERVICED SEPARATELY, Spring
3		NSS		1	NOT SERVICED SEPARATELY, Cap - Spool, P. O.
4		NSS		2	NOT SERVICED SEPARATELY, Socket Head Cap Screw
5		NSS		1	NOT SERVICED SEPARATELY, O-Ring

35.359.03	10	p1	09/09

CONTROL VALVE, SPOOL END P. O.

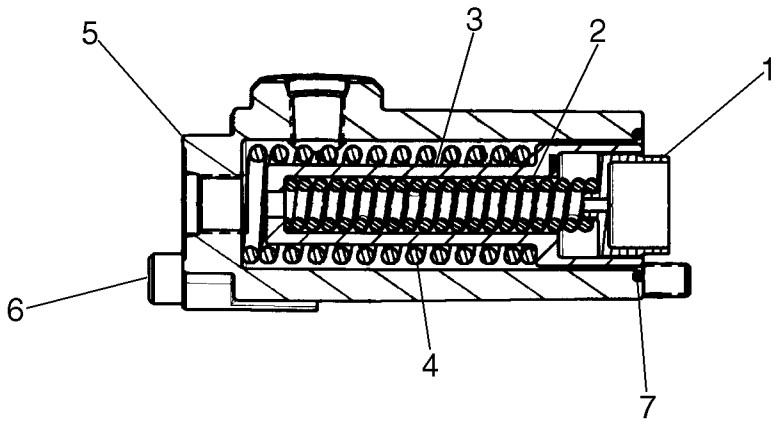

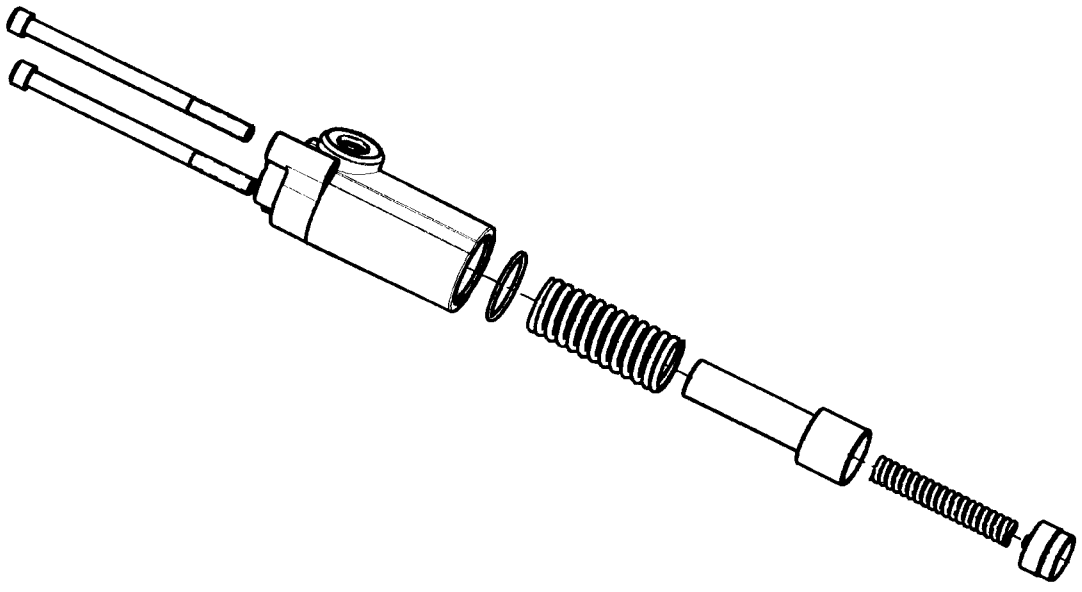

CONTROL VALVE, SPOOL END P. O.

REF	FN	PART NUMBER	YR/SN	QTY	DESCRIPTION
		87610533		1	SPOOL, Spool End Group; Incl. 1 - 7
1		NSS		1	NOT SERVICED SEPARATELY, Spring Seat
2		NSS		1	NOT SERVICED SEPARATELY, Spring
3		NSS		1	NOT SERVICED SEPARATELY, Spring Seat
4		NSS		1	NOT SERVICED SEPARATELY, Spring
5		NSS		1	NOT SERVICED SEPARATELY, Cap - Spool, P. O.
6		NSS		2	NOT SERVICED SEPARATELY, Socket Head Cap Screw
7		NSS		1	NOT SERVICED SEPARATELY, O-Ring

35.359.03	11	p1	09/09

CONTROL VALVE - SPOOL END

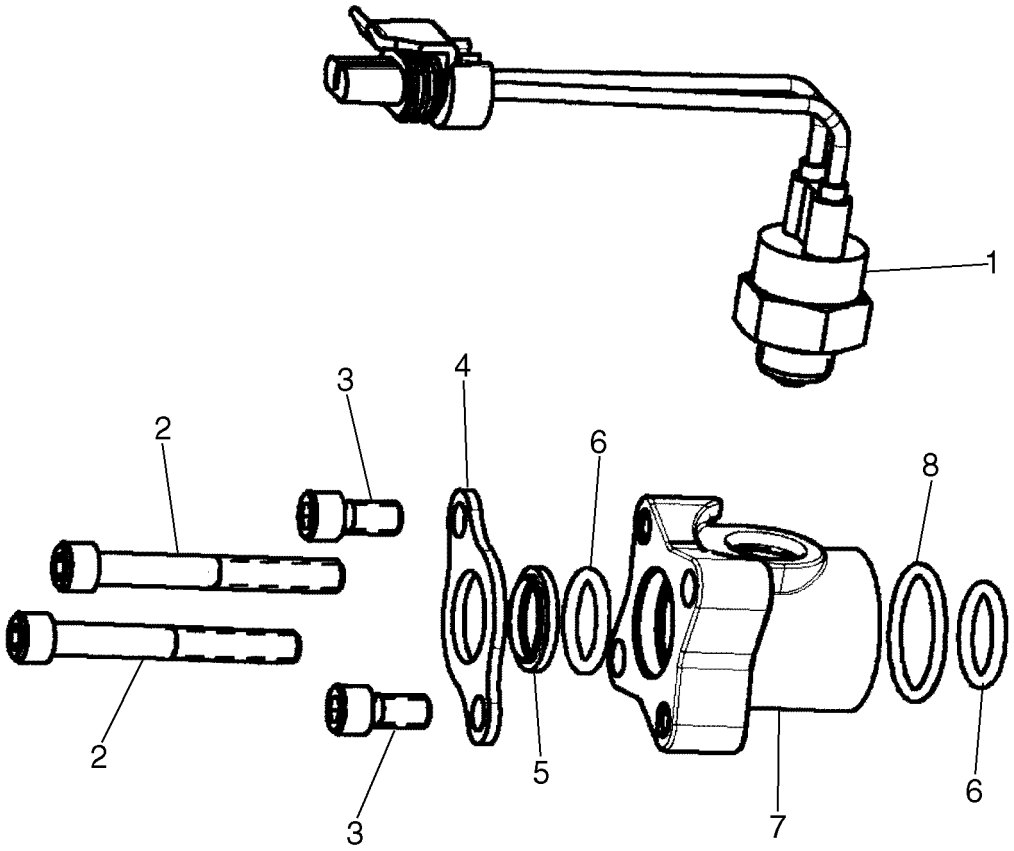

BS07D210

CONTROL VALVE - SPOOL END

REF	FN	PART NUMBER	YR/SN	QTY	DESCRIPTION
		87611850		1	SPOOL, Spool End Group; Incl. 1 - 8
1		87446617		1	SWITCH, Auxiliary Spool Ball Switch
2		NSS		2	NOT SERVICED SEPARATELY, Cap Screw
3		NSS		2	NOT SERVICED SEPARATELY, Cap Screw
4		NSS		1	NOT SERVICED SEPARATELY, Seal Plate
5		NSS		1	NOT SERVICED SEPARATELY, Wiper
6		NSS		2	NOT SERVICED SEPARATELY, O-Ring
7		NSS		1	NOT SERVICED SEPARATELY, Spool Cap
8		NSS		1	NOT SERVICED SEPARATELY, O-Ring

CONTROL VALVE - CHECK VALVE

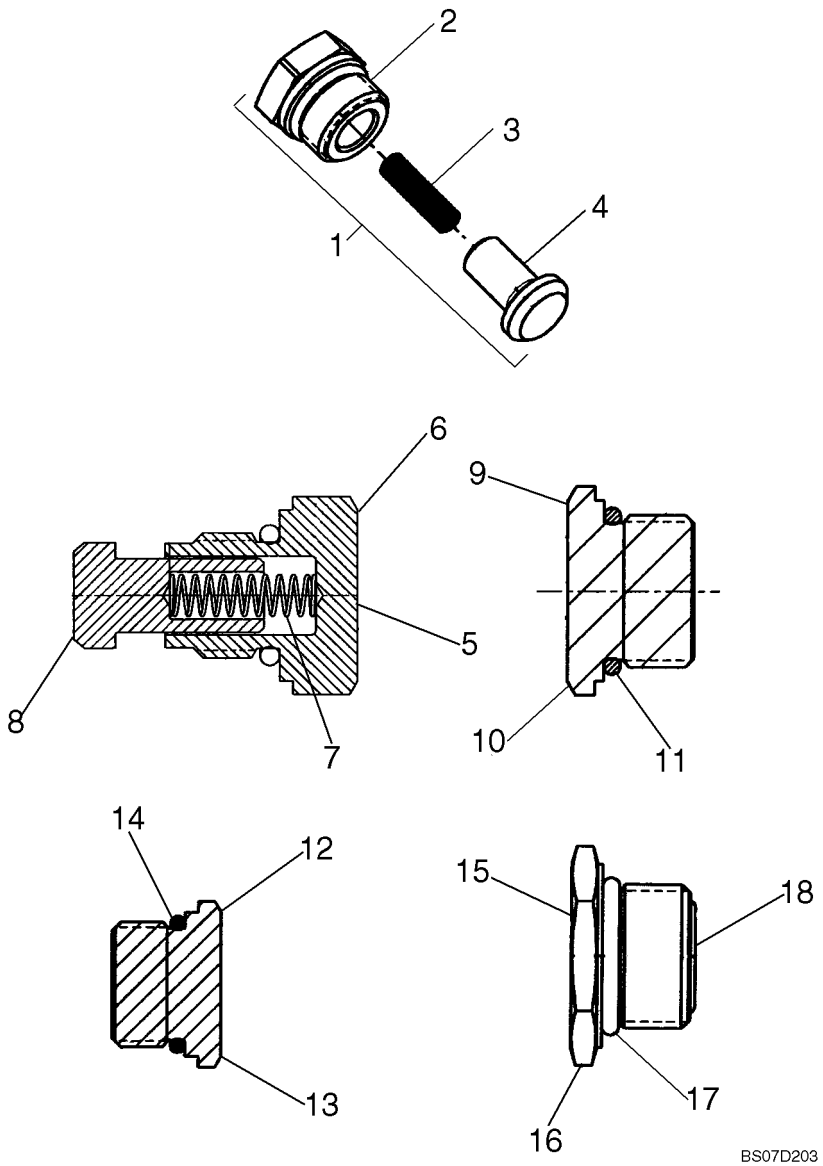

CONTROL VALVE - CHECK VALVE

REF	FN	PART NUMBER	YR/SN	QTY	DESCRIPTION
1		87576157		1	VALVE, DAMPING, Check Valve; Incl. 2 - 4
2		NSS		1	NOT SERVICED SEPARATELY, Plug
3		NSS		1	NOT SERVICED SEPARATELY, Spring
4		NSS		1	NOT SERVICED SEPARATELY, Poppet
5		87610351		1	VALVE, Check Valve; Incl. 6 - 8
6		NSS		1	NOT SERVICED SEPARATELY, Plug, M14 X 1.5-6G Thd.
7		NSS		1	NOT SERVICED SEPARATELY, Spring
8		NSS		1	NOT SERVICED SEPARATELY, Poppet
9		87576158		1	PLUG, Plug Assembly, 1-1/16 - 12UN-2A Thd.; Incl. 10, 11
10		NSS		1	NOT SERVICED SEPARATELY, Plug, 1-1/16 - 12UN-2A Thd.
11		NSS		1	NOT SERVICED SEPARATELY, O-Ring
12		87576160		1	PLUG, Plug Assembly, 7/8 - 14UNF - 2A Thd.; Incl. 13, 14
13		NSS		1	NOT SERVICED SEPARATELY, Plug, 7/8 - 14UNF - 2A Thd.
14		NSS		1	NOT SERVICED SEPARATELY, O-Ring
15		87576162		1	PLUG, Plug Assembly, M18 X 1.5-6H Thd.; Incl. 16 - 18
16		NSS		1	NOT SERVICED SEPARATELY, Plug, M18 X 1.5-6H Thd.
17		NSS		1	NOT SERVICED SEPARATELY, O-Ring
18		NSS		1	NOT SERVICED SEPARATELY, O-Ring

CONTROL VALVE 87357099, SEAL REPLACEMENT KITS

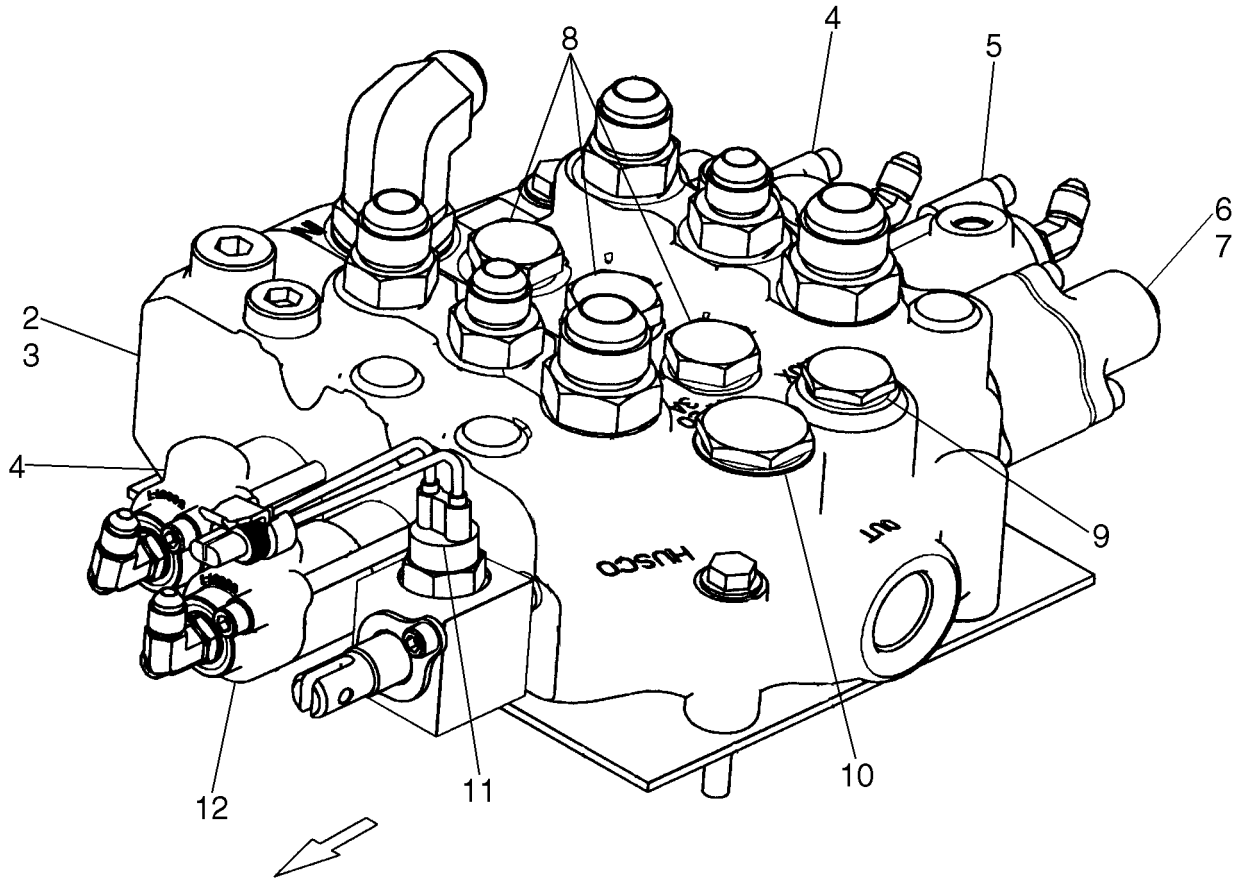

CONTROL VALVE 87357099, SEAL REPLACEMENT KITS

REF	FN	PART NUMBER	YR/SN	QTY	DESCRIPTION
		87357099		1	VALVE, HYDRAULIC, Incl. 2 - 12
2		NSS		1	NOT SERVICED SEPARATELY, Valve Body
3		87576151		1	KIT, SEALS, Seal Replacement Kit; Incl. 14 Replacement O-rings, (Qty 3) For Check Valves, (Qty 3) For Plugs, (Qty 8) For Spool Ends; See Fig. 35.359.04 [07]
4		87576166		2	SPOOL, Spool End Group; Complete Spool Assy; See Fig. 35.359.04 [02]
5		87576167		1	SPOOL, Spool End Group; Complete Spool Assy; See Fig. 35.359.04 [03]
6		87576164		1	SPOOL, Spool End Group - Detent; Complete Spool Assy; See Fig. 35.359.04 [04]
7		87576170		1	PLUG, Plug Assy; Incl. Plug (1), O-ring (1)
8		87576157		3	VALVE, DAMPING, Check Valve Group; Incl. Plug (1), O-ring (1), Spring (1), Poppet (1); See Fig. 35.359.04 [05]
9		87576160		1	PLUG, Plug Assy; Incl. Plug (1), O-ring (1)
10		87576158		1	PLUG, Plug Assy; Incl. Plug (1), O-ring (1)
11		87446617		1	SWITCH, Auxillary Spool Ball Switch
12		87576165		1	SPOOL, Spool End Group; Complete Spool Assy; See Fig. 35.359.04 [06]

CONTROL VALVE, SPOOL END P. O.

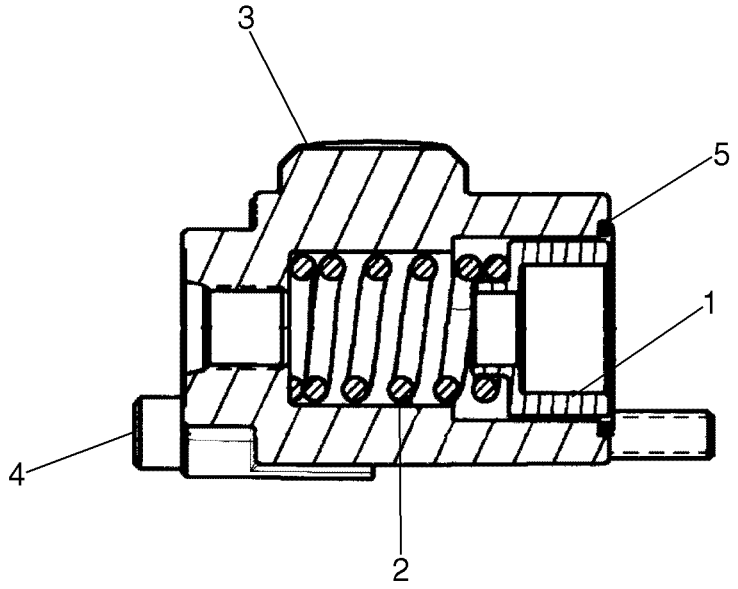

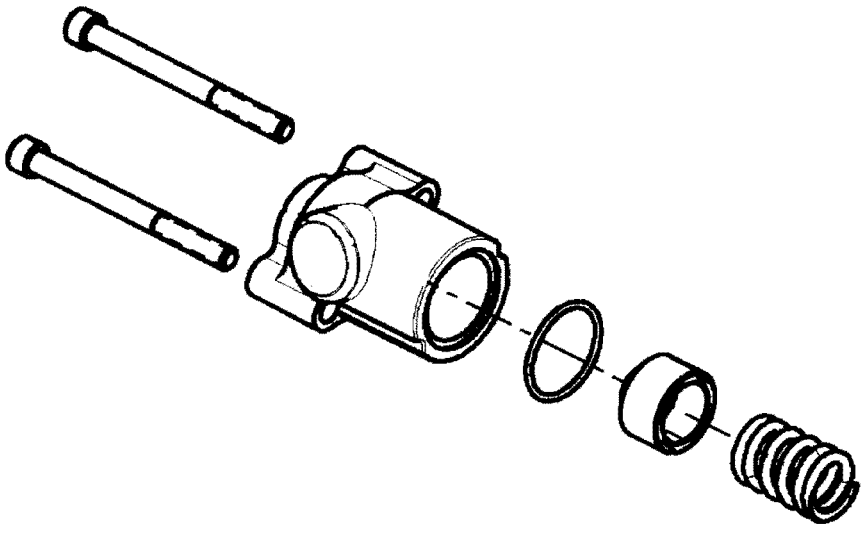

BS07A145

CONTROL VALVE, SPOOL END P. O.

REF	FN	PART NUMBER	YR/SN	QTY	DESCRIPTION
		87576166		1	SPOOL, Spool End Group; Incl. 1 - 5
1		NSS		1	NOT SERVICED SEPARATELY, Spring Seat
2		NSS		1	NOT SERVICED SEPARATELY, Spring
3		NSS		1	NOT SERVICED SEPARATELY, Cap - Spool, P. O.
4		NSS		2	NOT SERVICED SEPARATELY, Socket Head Cap Screw
5		NSS		1	NOT SERVICED SEPARATELY, O-Ring

CONTROL VALVE, SPOOL END P. O.

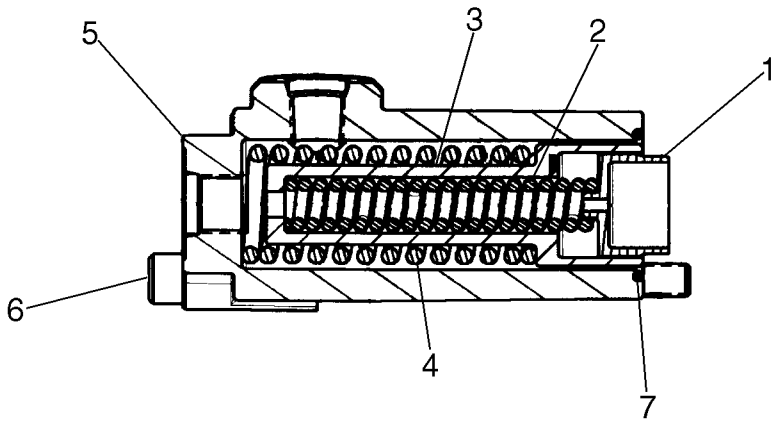

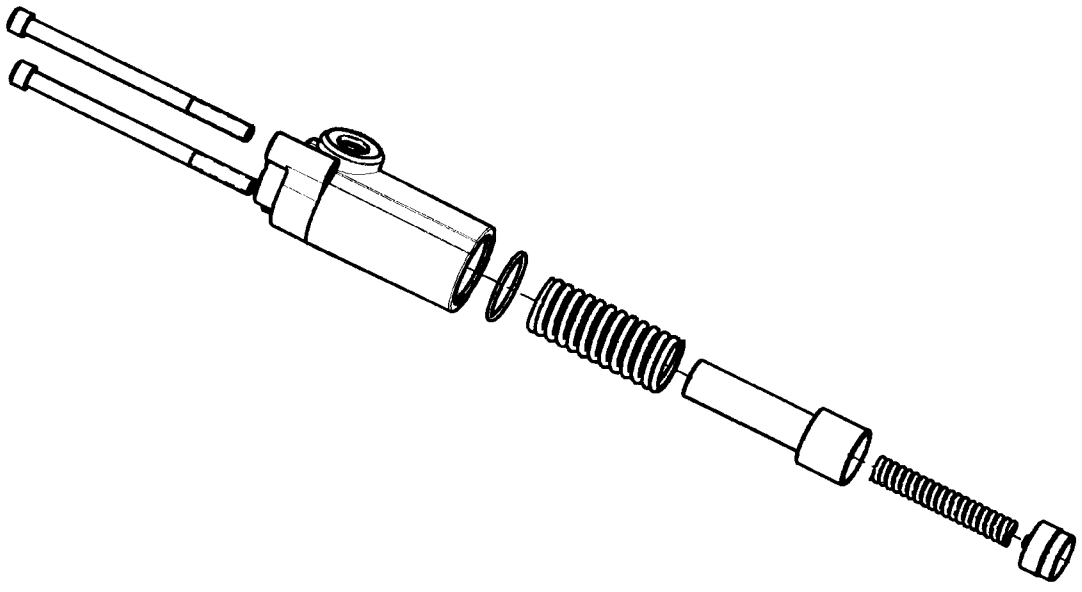

CONTROL VALVE, SPOOL END P. O.

REF	FN	PART NUMBER	YR/SN	QTY	DESCRIPTION
		87576167		1	SPOOL, Spool End Group; Incl. 1 - 7
1		NSS		1	NOT SERVICED SEPARATELY, Spring Seat
2		NSS		1	NOT SERVICED SEPARATELY, Spring
3		NSS		1	NOT SERVICED SEPARATELY, Spring Seat
4		NSS		1	NOT SERVICED SEPARATELY, Spring
5		NSS		1	NOT SERVICED SEPARATELY, Cap - Spool, P. O.
6		NSS		2	NOT SERVICED SEPARATELY, Socket Head Cap Screw
7		NSS		1	NOT SERVICED SEPARATELY, O-Ring

CONTROL VALVE - SPOOL END, DETENT

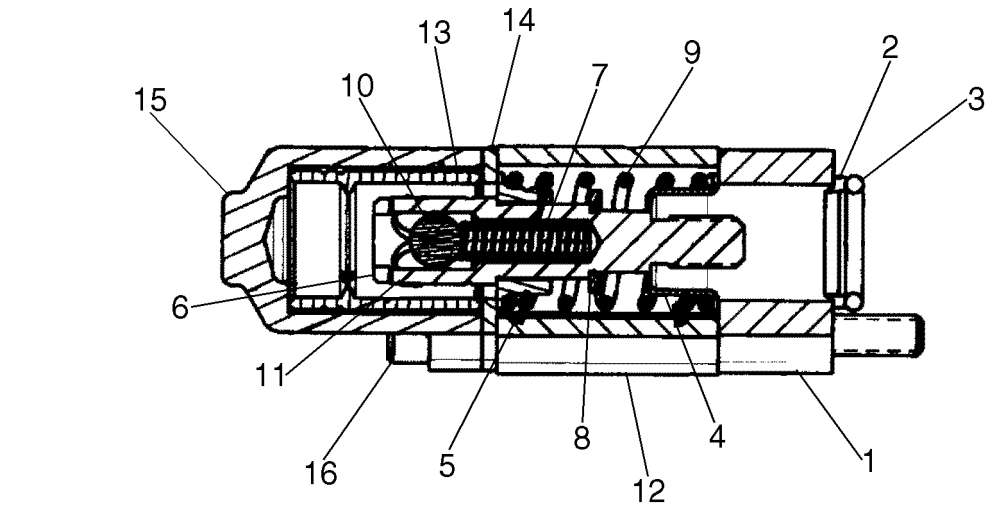

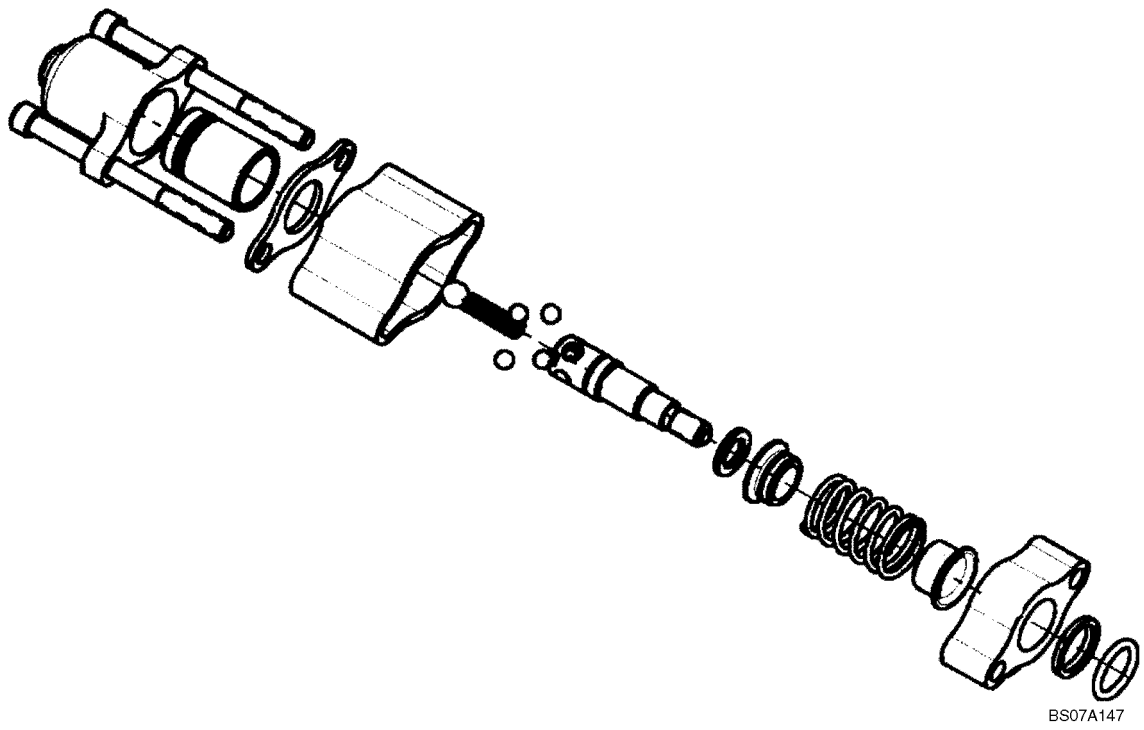

BS07A147

CONTROL VALVE - SPOOL END, DETENT

REF	FN	PART NUMBER	YR/SN	QTY	DESCRIPTION
		87576164		1	SPOOL, Spool End Group - Detent; Incl. 1 - 16
1		NSS		1	NOT SERVICED SEPARATELY, Plate, Seal
2		NSS		1	NOT SERVICED SEPARATELY, Wiper
3		NSS		1	NOT SERVICED SEPARATELY, O-Ring
4		NSS		1	NOT SERVICED SEPARATELY, Spring Seat
5		NSS		1	NOT SERVICED SEPARATELY, Spring Seat
6		NSS		1	NOT SERVICED SEPARATELY, Spool End, Detent Pin
7		NSS		1	NOT SERVICED SEPARATELY, Spring
8		NSS		1	NOT SERVICED SEPARATELY, Washer, Flat
9		NSS		1	NOT SERVICED SEPARATELY, Spring
10		NSS		1	NOT SERVICED SEPARATELY, Ball
11		NSS		4	NOT SERVICED SEPARATELY, Ball
12		NSS		1	NOT SERVICED SEPARATELY, Spacer
13		NSS		1	NOT SERVICED SEPARATELY, Sleeve, Detent
14		NSS		1	NOT SERVICED SEPARATELY, Plate, Seal
15		NSS		1	NOT SERVICED SEPARATELY, Cap, Spool
16		NSS		2	NOT SERVICED SEPARATELY, Socket Head Cap Screw

CONTROL VALVE, CHECK VALVE

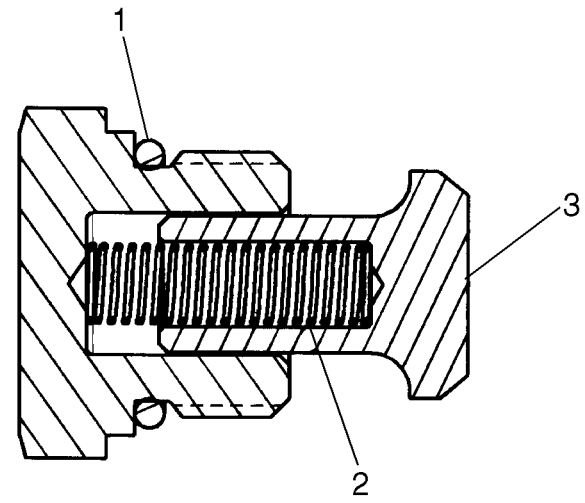

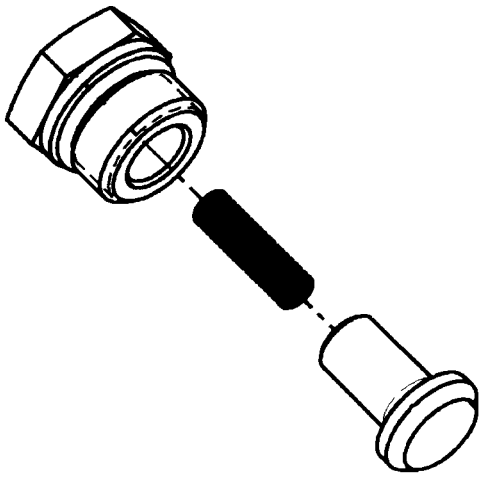

BS07A148

CONTROL VALVE, CHECK VALVE

REF	FN	PART NUMBER	YR/SN	QTY	DESCRIPTION
		87576157		1	VALVE, DAMPING, Check Valve Group; Incl. 1 - 3
1		NSS		1	NOT SERVICED SEPARATELY, Plug Assy
2		NSS		1	NOT SERVICED SEPARATELY, Spring
3		NSS		1	NOT SERVICED SEPARATELY, Poppet - C.V.

CONTROL VALVE, SPOOL END P. O.

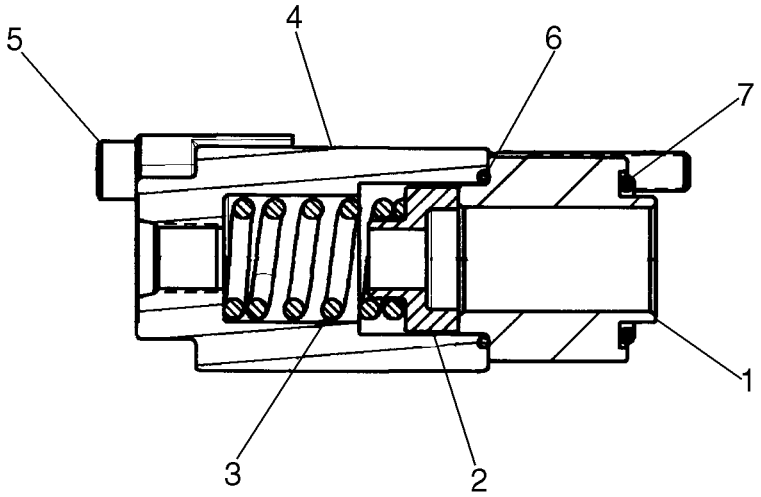

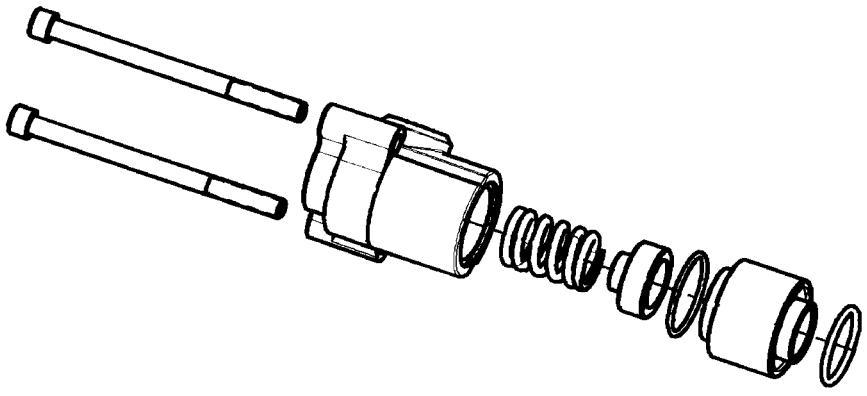

CONTROL VALVE, SPOOL END P. O.

REF	FN	PART NUMBER	YR/SN	QTY	DESCRIPTION
		87576165		1	SPOOL, Spool End Group; Incl. 1 - 7
1		NSS		1	NOT SERVICED SEPARATELY, Retainer
2		NSS		1	NOT SERVICED SEPARATELY, Spring Seat
3		NSS		1	NOT SERVICED SEPARATELY, Spring
4		NSS		1	NOT SERVICED SEPARATELY, Cap, Spool P.O.
5		NSS		2	NOT SERVICED SEPARATELY, Socket Head Cap Screw
6		NSS		1	NOT SERVICED SEPARATELY, O-Ring
7		NSS		1	NOT SERVICED SEPARATELY, O-Ring

35.359.04	07	p1	03/09

CONTROL VALVE, SEAL KIT

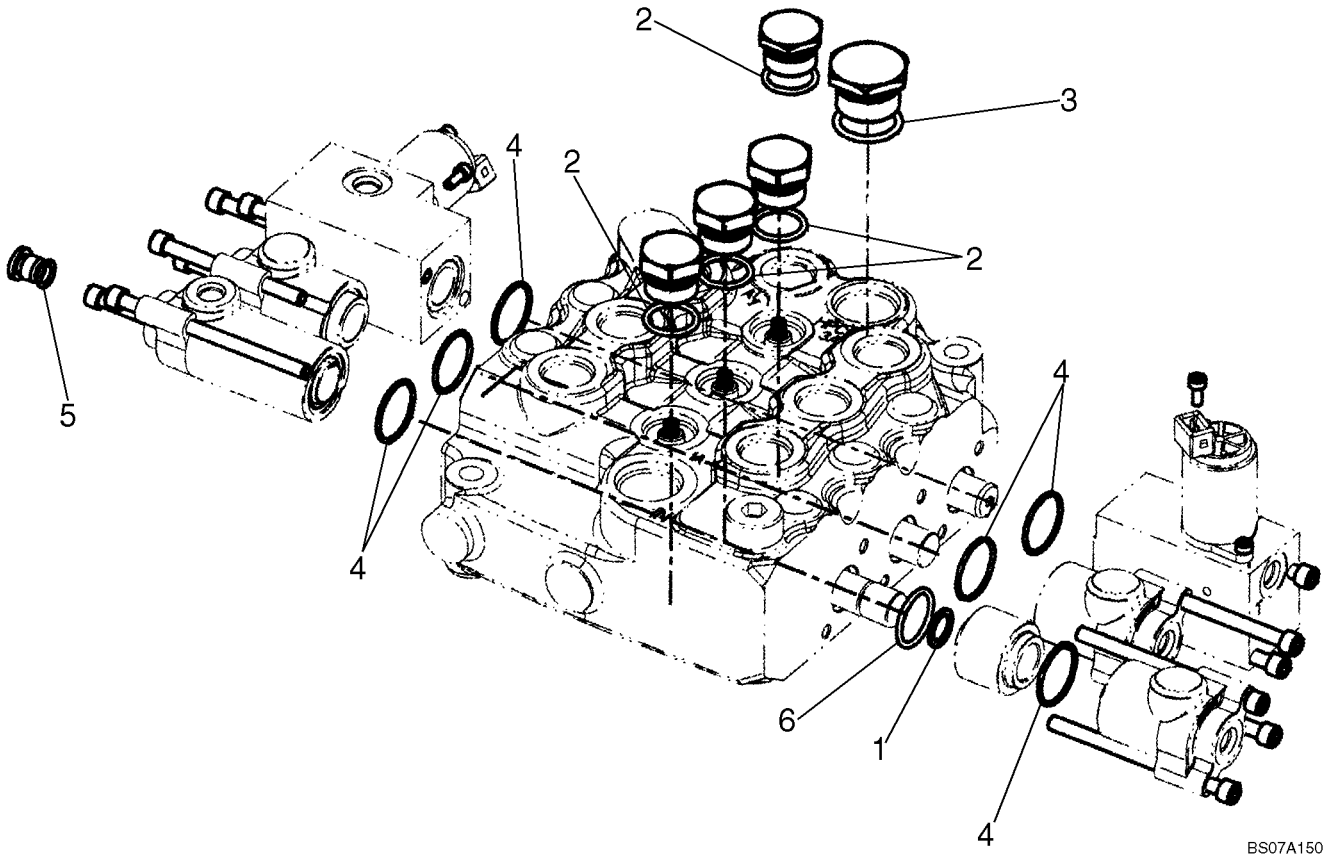

CONTROL VALVE, SEAL KIT

REF	FN	PART NUMBER	YR/SN	QTY	DESCRIPTION
		87576151		1	KIT, SEALS, Seal Kit, Incl. 1 - 6
1		NSS		1	NOT SERVICED SEPARATELY, Back Up Ring, .673 Dia.
2		NSS		4	NOT SERVICED SEPARATELY, O-Ring, .949 Dia.
3		NSS		1	NOT SERVICED SEPARATELY, O-Ring, 1.156 Dia.
4		NSS		6	NOT SERVICED SEPARATELY, O-Ring, 1.129 Dia.
5		NSS		1	NOT SERVICED SEPARATELY, O-Ring, .498 Dia.
6		NSS		1	NOT SERVICED SEPARATELY, O-Ring, 1.063 Dia.

35.730.09	01	p1	02/09

BOOM CYLINDER LEVANTAMENTO 1.3/8 X 2.1/2

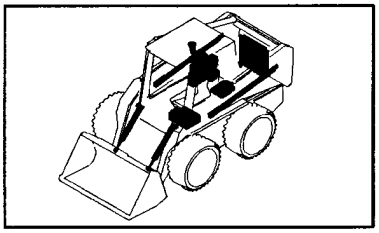

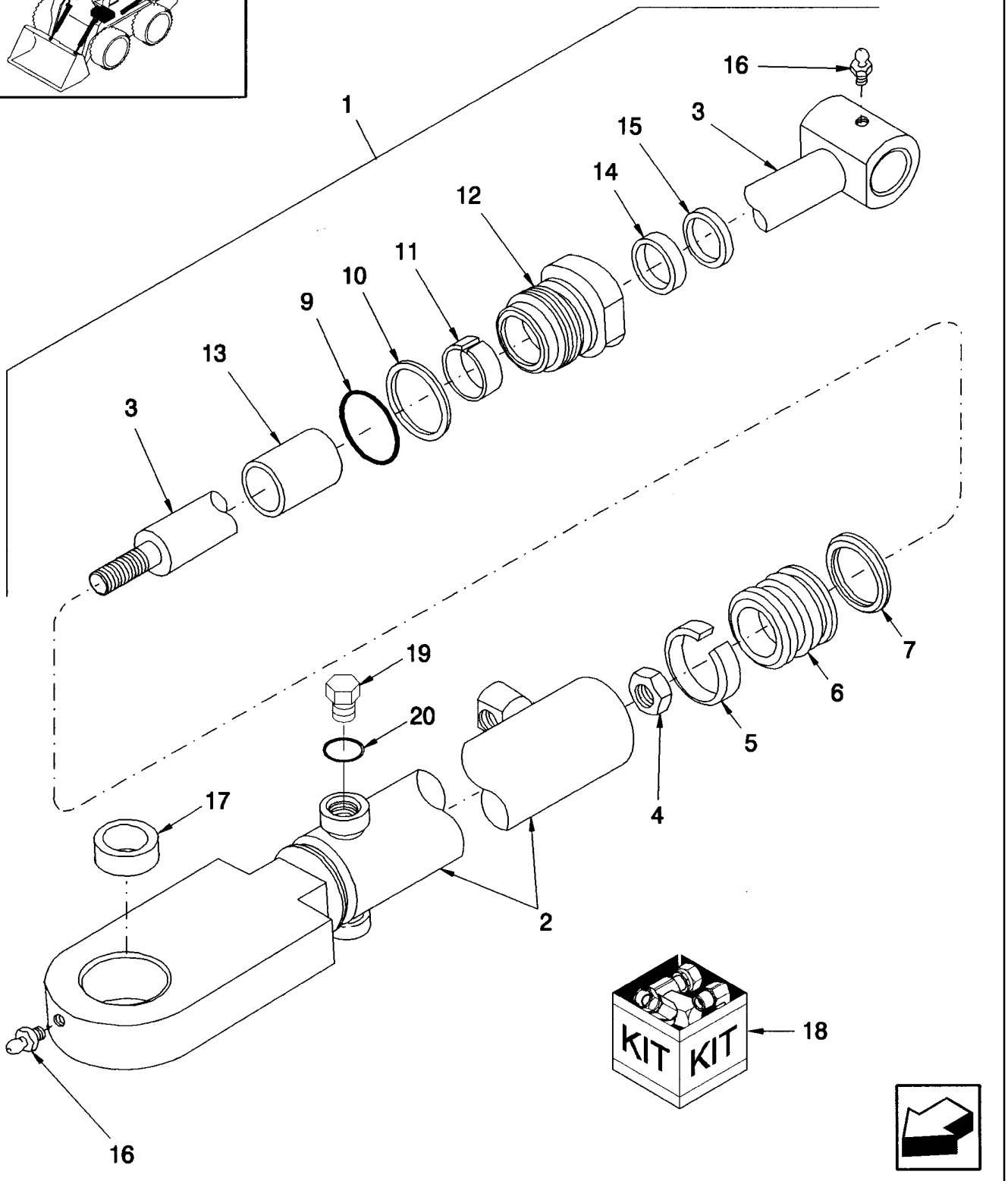

BS09D255

BOOM CYLINDER LEVANTAMENTO 1.3/8 X 2.1/2

REF	FN	PART NUMBER	YR/SN	QTY	DESCRIPTION
1		86633432		1	HYDRAULIC CYLINDER, Boom; Incl. 2 - 20
1		87038977		1	HYDRAULIC CYLINDER, Boom; Incl. 2 - 20; Replaces 86633432
2		NSS		1	NOT SERVICED SEPARATELY, Barrel
3		9800963		1	ROD, Without Bushings
4		280724		1	NUT, LOCK, 3/4"-16, GC
5		783874		1	RING, WEAR, Wear, 2.252" ID x .375" Thick
6		848220		1	PISTON
7		86563839		1	SEAL
9		9848676		1	O-RING, -229, 90 Duro, 2.359" ID x .139" Thk
10		86512008		1	BACK-UP RING, Backup, 2.397" ID x .04" Thick
11		9842390		1	RING, WEAR, Wear, 1.374" ID x 3/4" Thick
12		86521396		1	CYLINDER HEAD
13		86521404		1	SPACER
14		9600664		1	SEAL
15		46886		1	SEAL
16		87414		2	NIPPLE, LUBE, 1/4"-28 x .56" lg, Drive
17		86521725		1	BUSHING, 2.38" ID x 2.56" OD
18		86570922		1	KIT, SEALS, Incl. Ref. 5, 7, 9, 10, 11, 14 & 15
19		214389		3	PLUG, Hex Hd, 3/4"-16 ORB, Shipping, Includes Ref. 20
20		128825		3	O-RING, 8-1, 90 Duro, .644" ID x .087" Thk

35.730.09	02	p1	03/09

BOOM CYLINDER LEVANTAMENTO 1.3/8 X 2.1/2

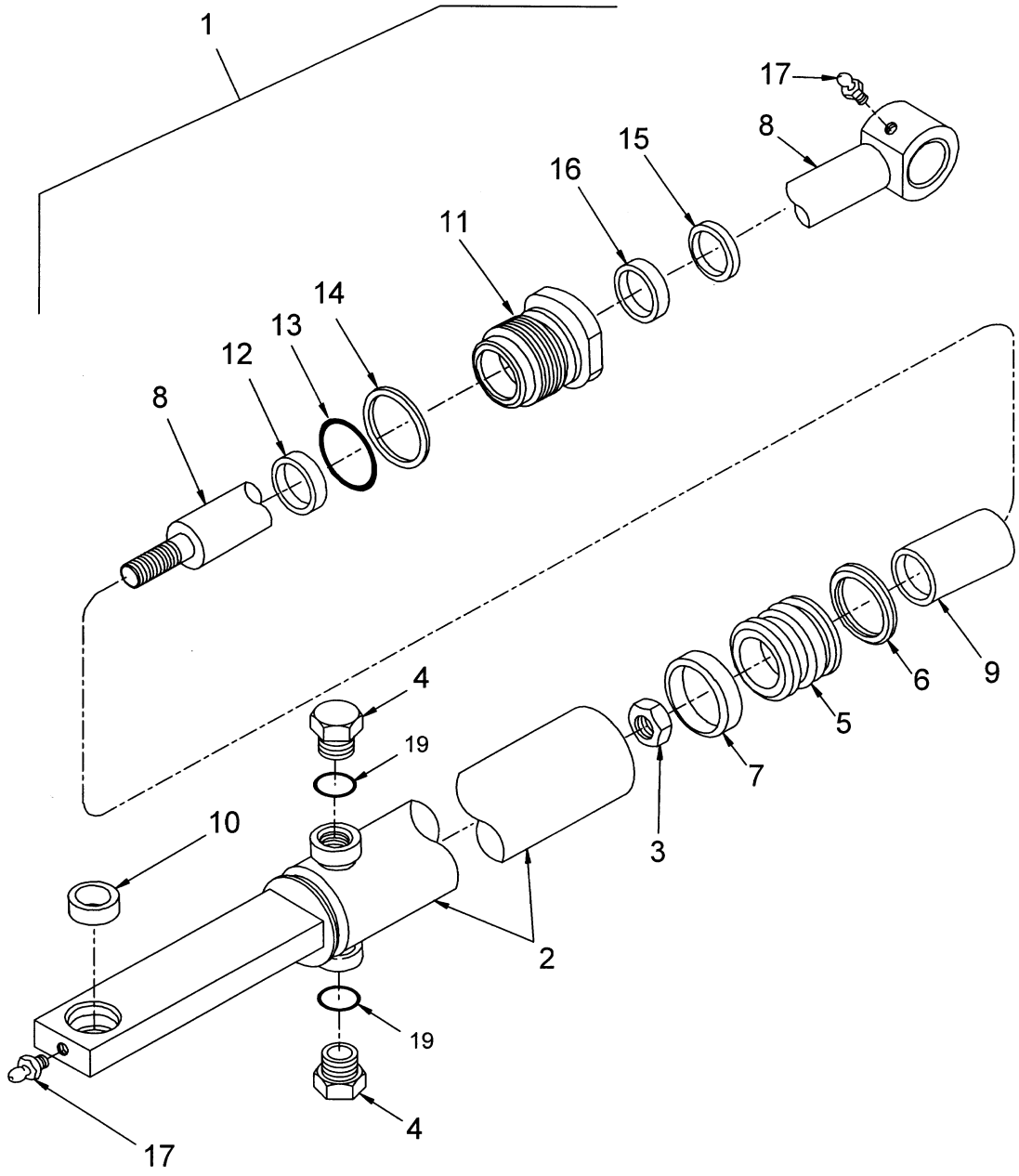

BS04E146

BOOM CYLINDER LEVANTAMENTO 1.3/8 X 2.1/2

REF	FN	PART NUMBER	YR/SN	QTY	DESCRIPTION
1		87701856		1	CYLINDER, Cylinder Assy; RH Lift 63.5 x 34.9; Incl 2 - 17
1A		87701857		1	CYLINDER, Cylinder Assy; LH Lift 63.5 x 34.9; Incl 2 - 17
2		87414		2	NIPPLE, LUBE, 1/4"-28 x .56" lg, Drive
3		{87679796}		1	Piston, 63.5 Bore, 34.9 Rod
4		G100713		1	SEAL, Ring Loader, 63.5 Dia
5		G100714		1	RING, Ring Wear, 63.5 Dia
6		G102289		1	SEAL, Seal Piston, 63.5 Dia, Service For G100712 Used In Production
7		{87679798}		1	Gland, 63.5 Bore, 34.9 Rod
8		52419		1	O-RING, -229, 70 Duro, 2.359" ID x .139" Thk
9		279532A1		1	PACKAGE, SEALS, Rod Seal And Buffer, 34.9 mm Dia
10		86512008		1	BACK-UP RING
11		226847A1		1	SEAL, HYD-CYLINDER, Wiper Rod, 34.9
12		{87701844}		1	Tube, RH 63.5 Bore, 4.7 Wall; Incl 13; Part Of Ref 1
12A		{87701845}		1	Tube, LH 63.5 Bore, 4.7 Wall; Incl 13; Part Of Ref 1A
13		86521725		1	BUSHING
14		{87633195}		1	Stop Tube
15		G109395		1	SCREW, SELF TAPPING
16		{87520984}		1	Rod, 34.9 Dia
		87644127		AR	KIT, SERVICE, SEAL KIT - 63.5 X 34.9; Incl 4 - 11 And Instructions

SECTION INDEX
37 - Towing hooks and ballasting

37.140.01 COUNTERWEIGHT

37.140.01		p1	02/09

COUNTERWEIGHT

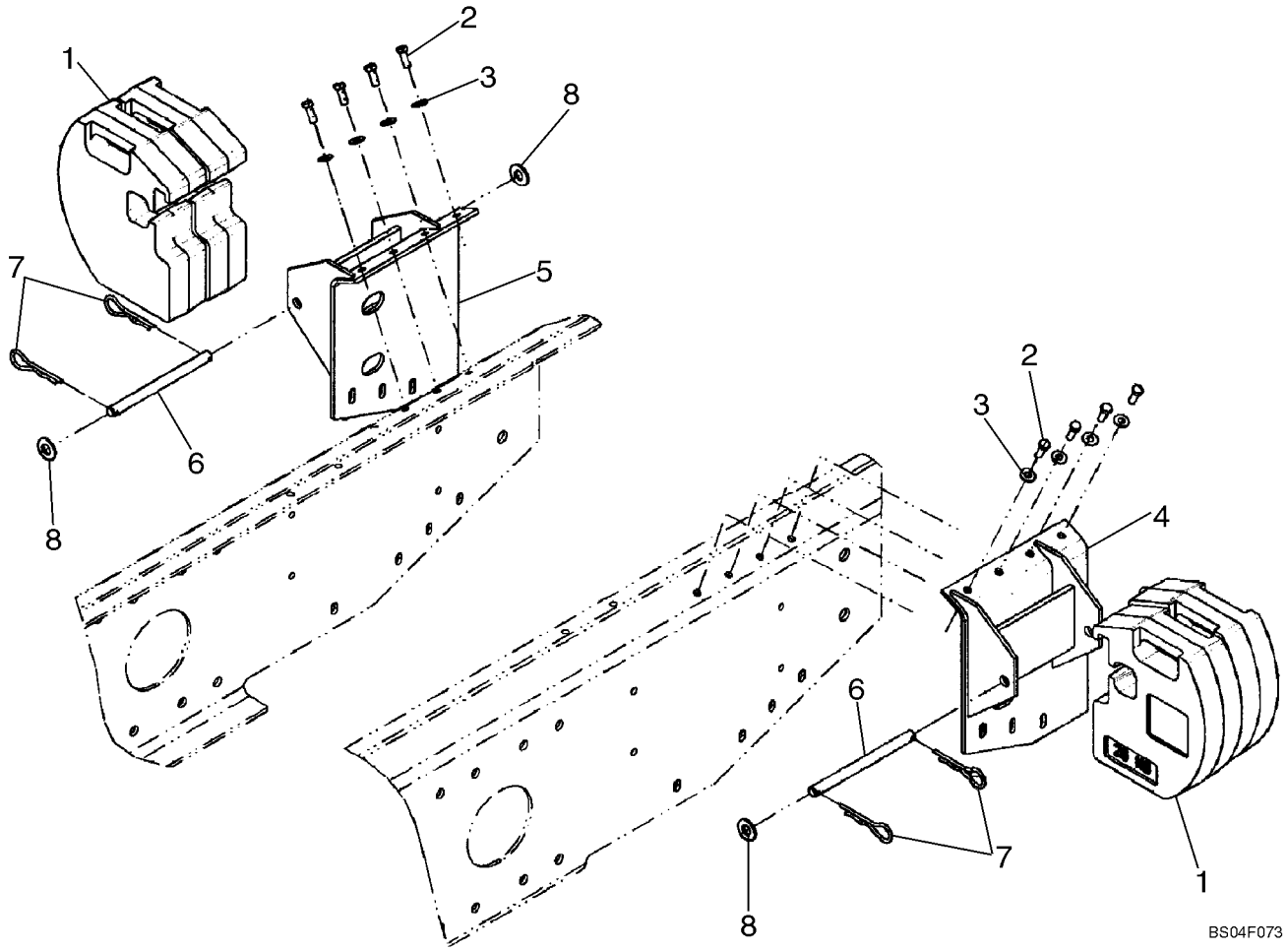

COUNTERWEIGHT

REF	FN	PART NUMBER	YR/SN	QTY	DESCRIPTION
		87049627		1	DIA KIT, ADDITIONAL PROD., Counterweight Kit; Yellow; Incl 1 - 8
1		87440222		4	WEIGHT, Counterweight; Yellow
2		9670285		8	BOLT, Hex, 3/8"-16 x 1", G8, Full Thd
3		140045		8	WASHER, BELLEVILLE, M10
4		87043475		1	SUPPORT, Mount; Right Hand, Yellow
5		87043472		1	SUPPORT, Mount; Left Hand, Yellow
6		634233		2	ROD
7		86000109		4	PIN, SPLIT (COTTER), 1/8" Thk x 3-1/4" Lg
8		87365		4	WASHER, 5/8", SAE

SECTION INDEX
39 - Frames

39.100.01	CHASSIS
39.105.09	BOOM - DELUXE CAB
39.105.15	BOOM LOCK

39.100.01		p1	02/09

CHASSIS

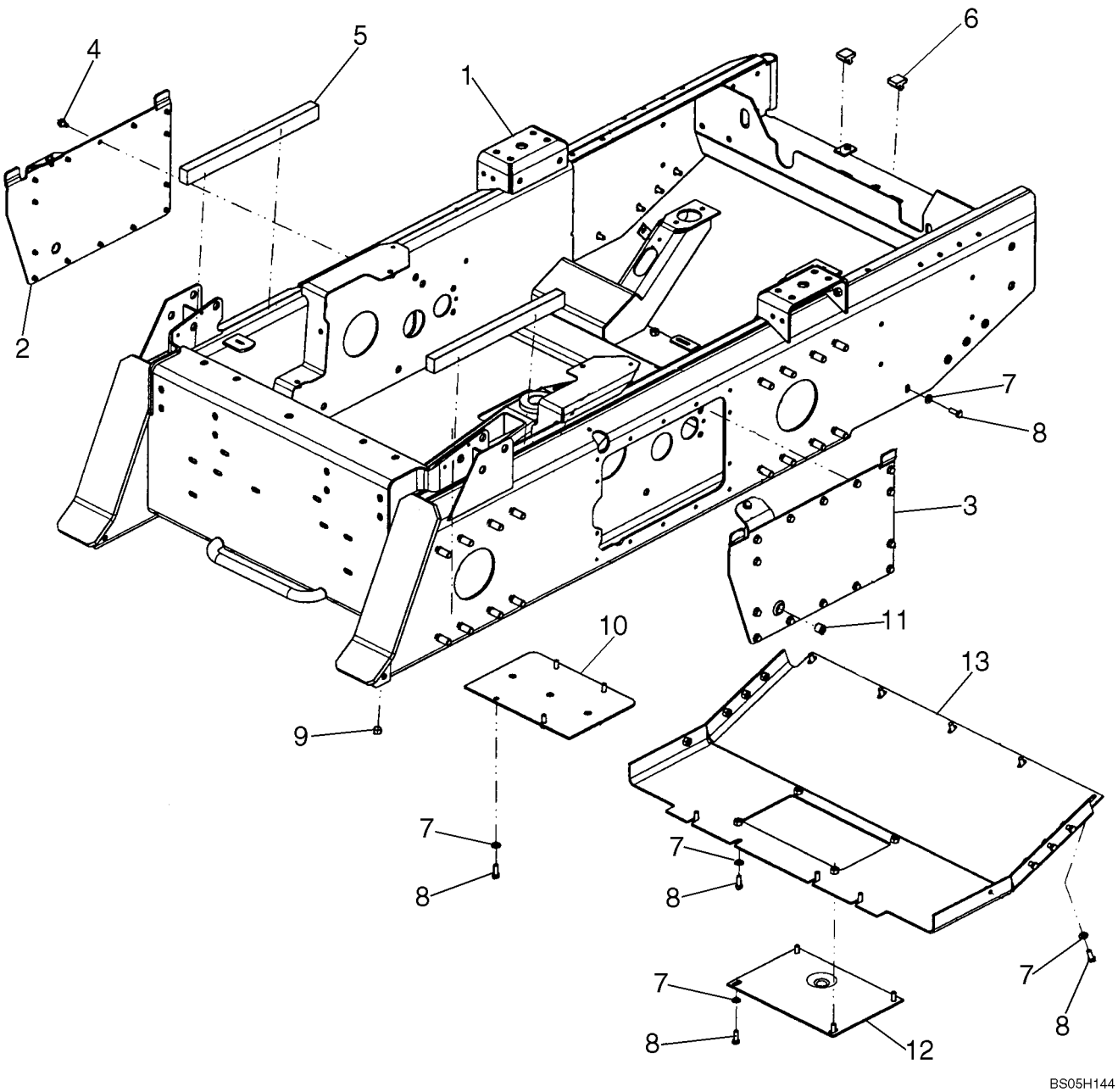

CHASSIS

REF	FN	PART NUMBER	YR/SN	QTY	DESCRIPTION
		87553415		1	FRAME, Chassis, Yellow; Includes Complete Chassis On Pallet
1		{87056390}		1	Frame, Yellow; Order From Wholegoods
2		87055192		1	COVER, RH
3		87055193		1	COVER, LH
4		87034819		30	SCREW, SELF TAPPING, Hex Wash Hd, 3/8"-16 x 5/8"
5		87048885		2	FOAM
6		216328		2	BUMPER
7		88206		25	BOLT, Hex, 3/8"-16 x 1", G5, Full Thd
8		86625241		25	WASHER, 13/32" x 13/16" x .089", HDN
9		236622		2	PLUG
10		86597101		1	COVER, Bright Yellow
11		647429		2	PLUG, DRAIN, Sq Soc, 1/2"-14, NTPF
12		86563772		1	COVER
13		86609019		1	PLATE, Rear, Yellow

39.105.09		p1	06/09

BOOM - DELUXE CAB

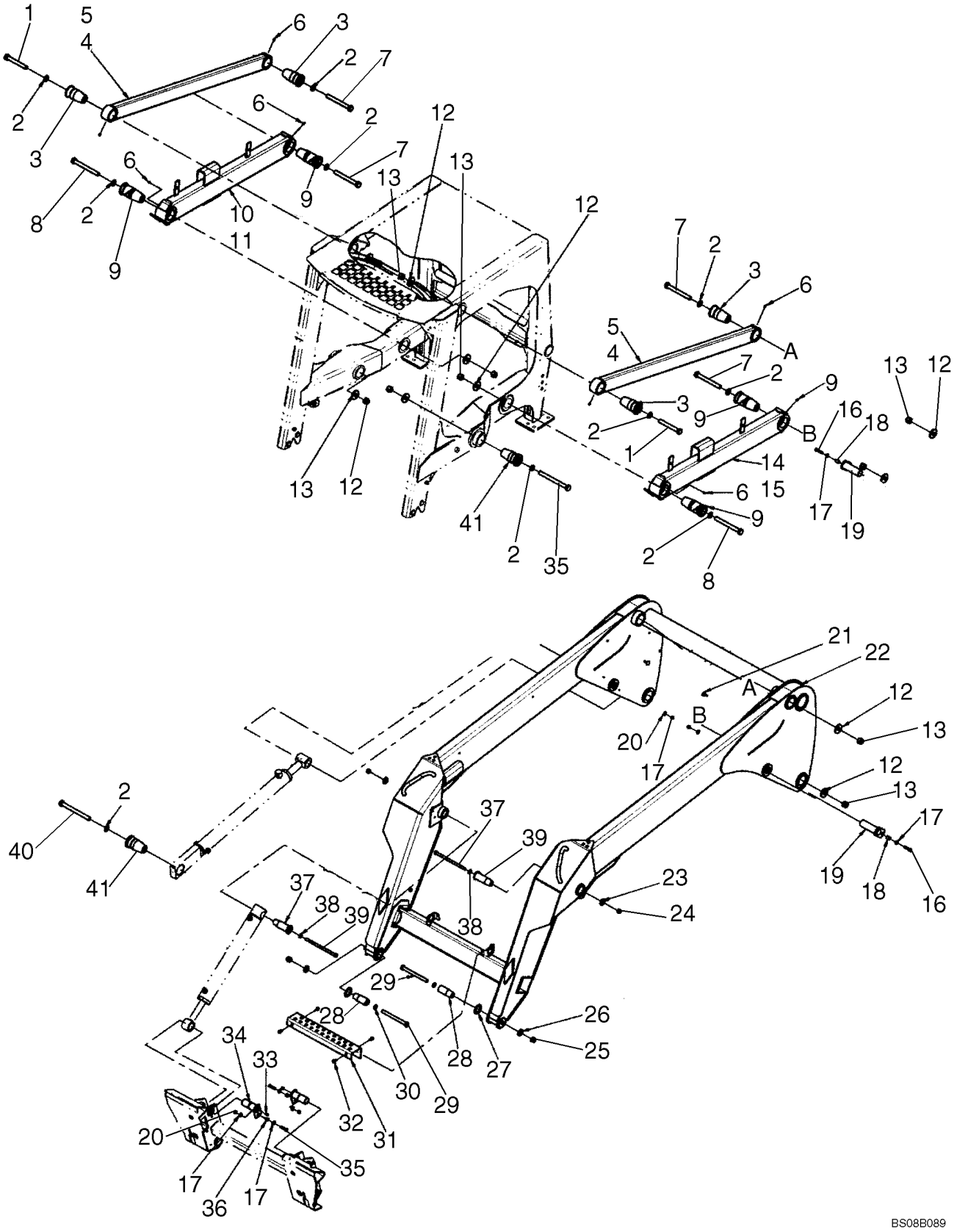

BOOM - DELUXE CAB

REF	FN	PART NUMBER	YR/SN	QTY	DESCRIPTION
1		86507002		2	BOLT, Hex, 3/4"-10 x 5 1/2", G5
2		86512328		10	WASHER, .766" x 1.38" x .135" Thk, HT
3		86501420		4	PIN
4		9844573		2	LINK, UPPER, Incl 5
5		9846561		2	BUSHING, 2.38" ID x 1.75" L
6		87414		8	NIPPLE, LUBE, 1/4"-28 x .56" lg, Drive
7		280223		4	SCREW, Hex, 3/4"-10 x 6 1/2", G5
8		280316		2	BOLT, Hex, 3/4"-10 x 7", G5
9		86501422		4	PIN
10		87043355		1	LINK, LOWER, Lower Link; RH; Incl 11
11		9846562		4	BUSHING, 2.38" ID x 1.01" L
12		86509507		10	WASHER, .75 x 2.12 x .25
13		9626598		10	NUT, LOCK, 3/4"-10, GB
14		87043354		1	LINK, LOWER, Lower Link; LH; Incl 15
15		9846562		4	BUSHING, 2.38" ID x 1.01" L
16		9706689		2	BOLT, Hex, 3/8"-16 x 1 3/4", G5
17		285072		8	WASHER, M10 x 22.2 x 2.87 Thk, HT, (3/8")
18		229398		2	SPACER
19		86521982		2	PIN, Upper Boom Cylinder
20		9637692		4	NUT, LOCK, 3/8"-16, GB
21		86620930		2-4	FASTENER
22		87051421		1	BOOM, Assy, Incl. Boom 87663989, Step 86574567, (2) Bracket 87612766, (4) Screw 87029930, (4) Screw 9840344
22A		87663989		1	BOOM, Arm Assy; Gray
23		695335		2	WASHER
24		9636698		2	NUT, LOCK, 1/2"-13, GB
25		19670		2	NUT, LOCK, 5/8"-11, GB
26		86624156		2	WASHER, 21/32" x 1 1/2" x .188", HDN
27		191823		2	WASHER, 1.515" ID x 2-1/4" OD
28		87584328		2	PIN, Pin
29		280293		2	BOLT, Hex, 5/8"-11 x 7", G5
30		87023159		2	WASHER, .640 x 1.047 x .134 in
31		86574567		1	FOOT REST, Gray

39.105.09		p2	06/09

BOOM - DELUXE CAB

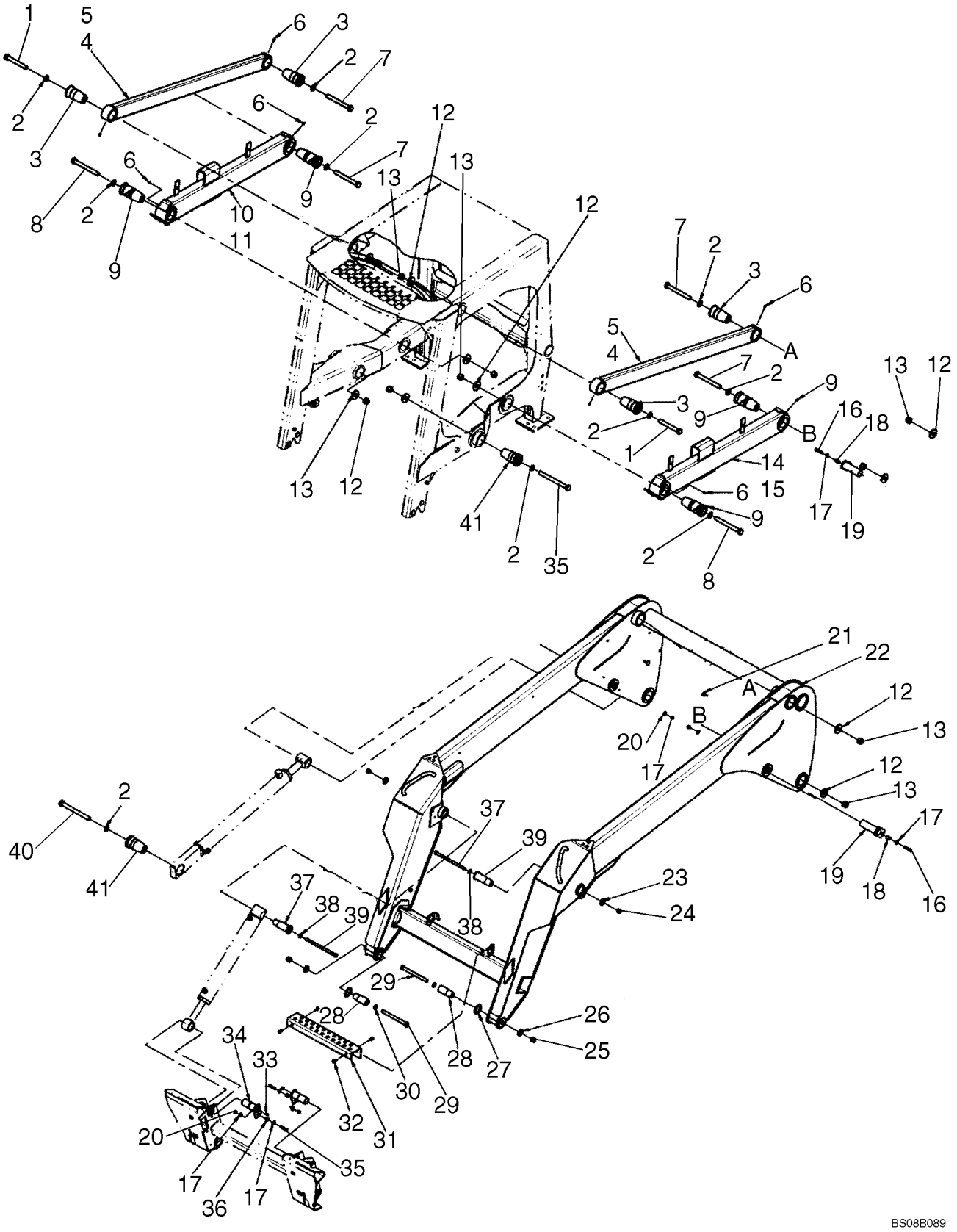

BOOM - DELUXE CAB

REF	FN	PART NUMBER	YR/SN	QTY	DESCRIPTION
32		9840344		4	SCREW, Self-Tapping, Sealing, WH, 5/16"-18 x 11/16"
33		80710		2	NIPPLE, LUBE, 1/8"-27 x .66 lg
34		9614349		2	PIN, Lower Bucket Cylinder Pin
35		88044		2	BOLT, Hex, 3/8"-16 x 1 1/2", G5
36		86589143		2	SPACER, 5/8" OD x 1/2" Lg.
37		86501430		2	PIN
38		65319		2	WASHER, M13 x 25 x 3.5, HT
39		280214		2	BOLT, Hex, 1/2"-13 x 8 1/2", G5
40		88945		2	BOLT, Hex, 3/4"-10 x 8", G5
41		86504316		2	PIN

39.105.15		p1	02/09

BOOM LOCK

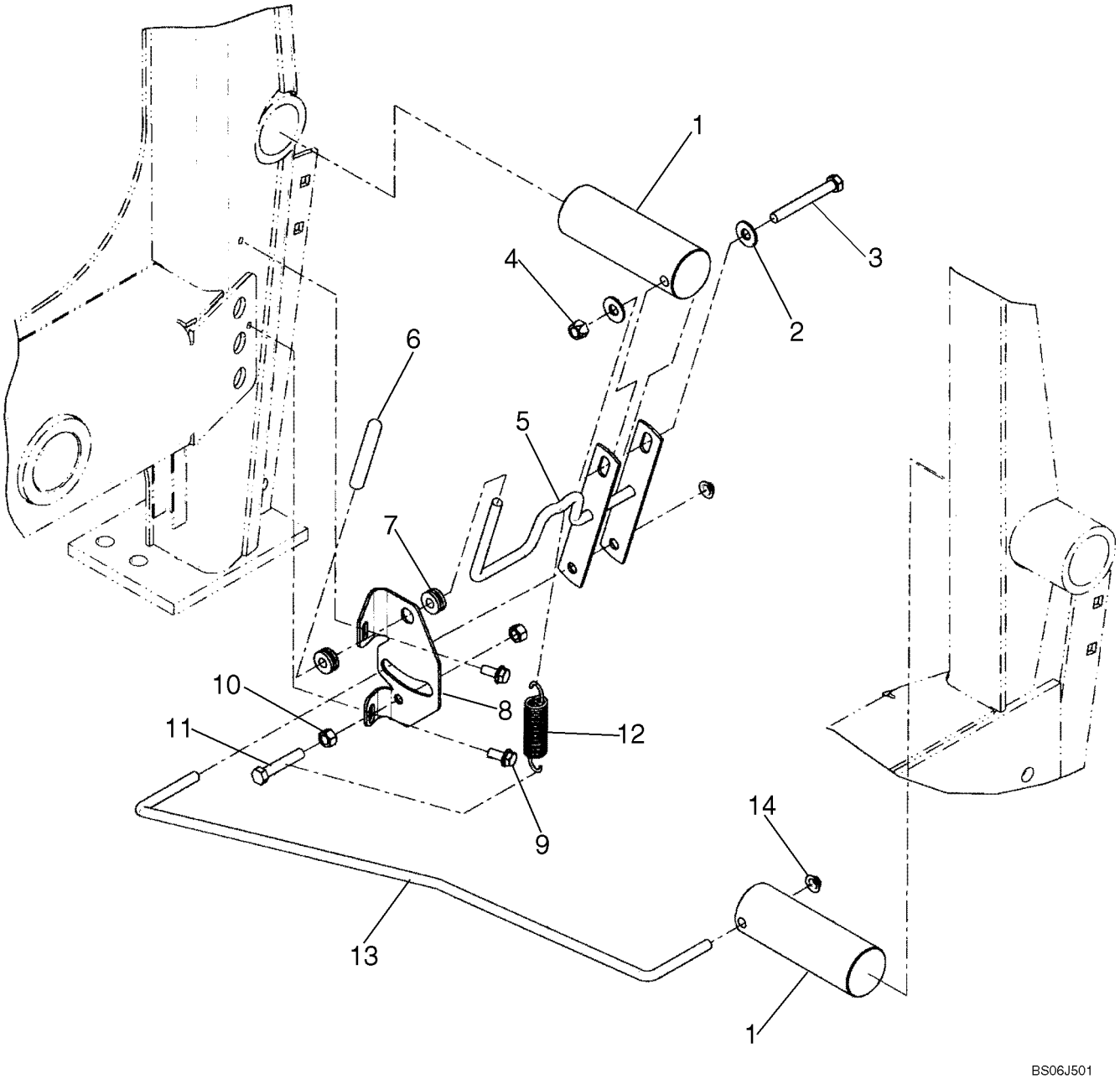

BOOM LOCK

REF	FN	PART NUMBER	YR/SN	QTY	DESCRIPTION
1		9622479		2	PIN
2		80702		2	WASHER, 3/8"
3		280161		1	BOLT, Hex, 3/8"-16 x 3", G5
4		9637692		1	NUT, LOCK, 3/8"-16, GB
5		86506368		1	HANDLE
6		847165		1	GRIP
7		46288		2	GROMMET
8		86501117		1	BRACKET
9		9840344		2	SCREW
10		9628503		2	NUT, 3/8"-16, G5
11		88436		1	BOLT, Hex, 3/8"-16 x 2", G5
12		86539120		1	SPRING
13		9622493		1	ROD
14		595787		2	NUT

SECTION INDEX
44 - Axle and wheels

44.106.01	FINAL DRIVE
44.511.01	WHEELS

FINAL DRIVE

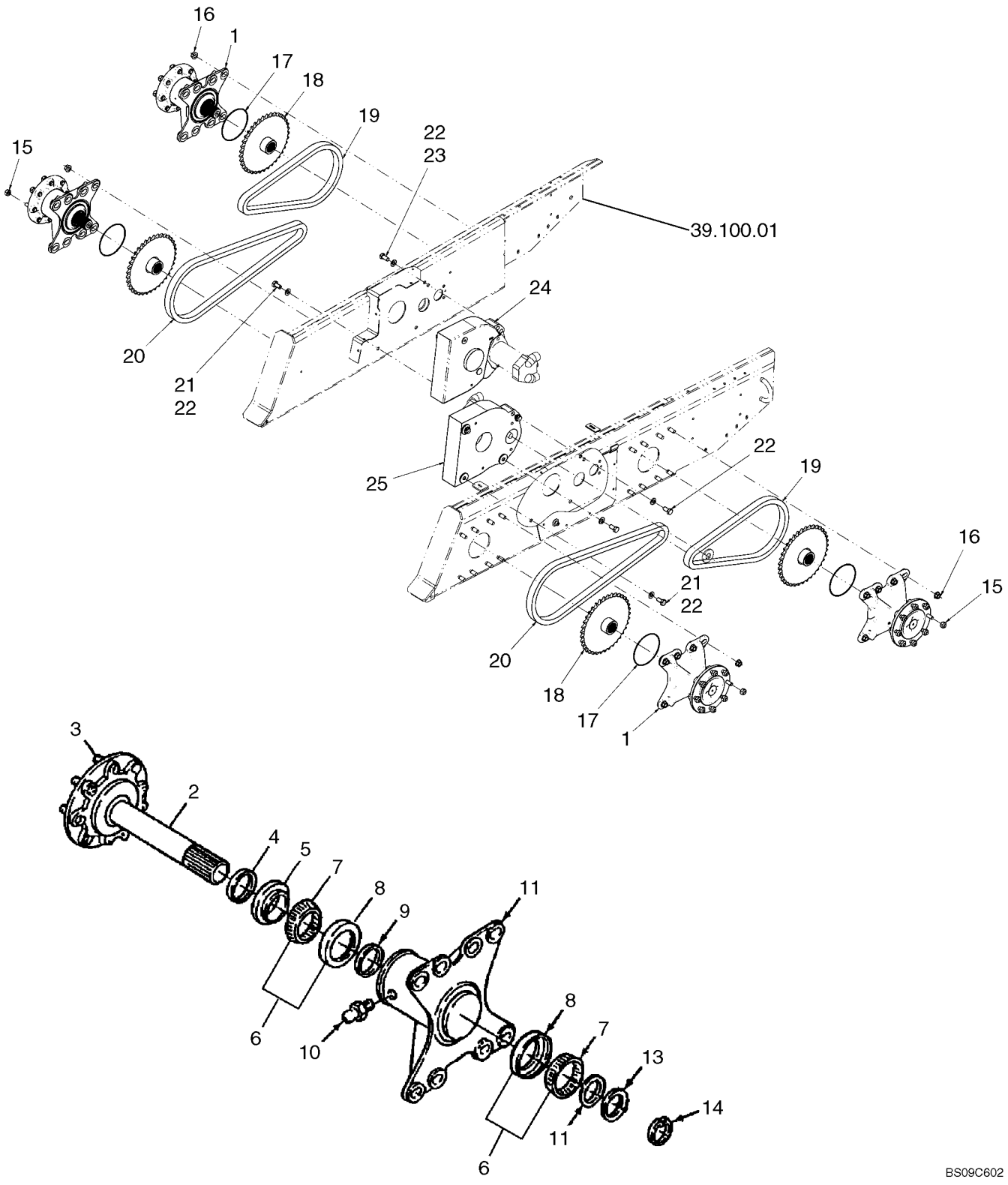
16
1
17
18
19
22
23
15
39.100.01
24
20
21
22
25
22
19
16
15
21
22
20
18
17
1
3
2
4
5
7
8
9
11
6
10
8
7
13
14
11
6
BS09C602

FINAL DRIVE

REF	FN	PART NUMBER	YR/SN	QTY	DESCRIPTION
1		87043028		4	AXLE DRIVE, Includes: Ref. 2 - 14
2		86546633		4	AXLE, FRONT, Includes: Ref 3
3		175617		32	BOLT
4		9829877		4	SEAL
5		9829882		4	SLEEVE
6		679394		8	BEARING, ROLLER
7		287902		8	BEARING, CONE
8		287066		8	BEARING, CUP
9		603916		4	SEAL
10		87414		4	NIPPLE, LUBE, 1/4"-28 x .56" lg, Drive
11		86594882		4	SUPPORT
12		9841237		AR	SHIM, .254mm Thk
13		612778		AR	SHIM, .020" Thk
14		86501184		4	RING, SNAP, #200, Ext
15		86979742		32	NUT, Hub
16		408		32	NUT, 5/8"-18, G5, If Used
16		87010568		32	NUT, Flg, 5/8"-18, G5, Flange; Used Without Washer; If Used
16A		86528652		32	WASHER, 5/8" ID x 1-1/2" OD; Used With Nut 408; Not Illustrated
17		86504449		4	O-RING
18		9841242		4	SPROCKET, Driven, 32T
19		86629728		2	CHAIN, RC80, 58 Pitches
20		9829928		2	CHAIN, RC80, 76 Pitches
21		86518704		2	SCREW
22		140048		10	WASHER, BELLEVILLE, M16
23		281047		8	BOLT, Hex, 5/8"-11 x 1 1/4", G8, Full Thd
24		9829927		1	GEARBOX, RH
25		9829926		1	GEARBOX, LH

WHEELS

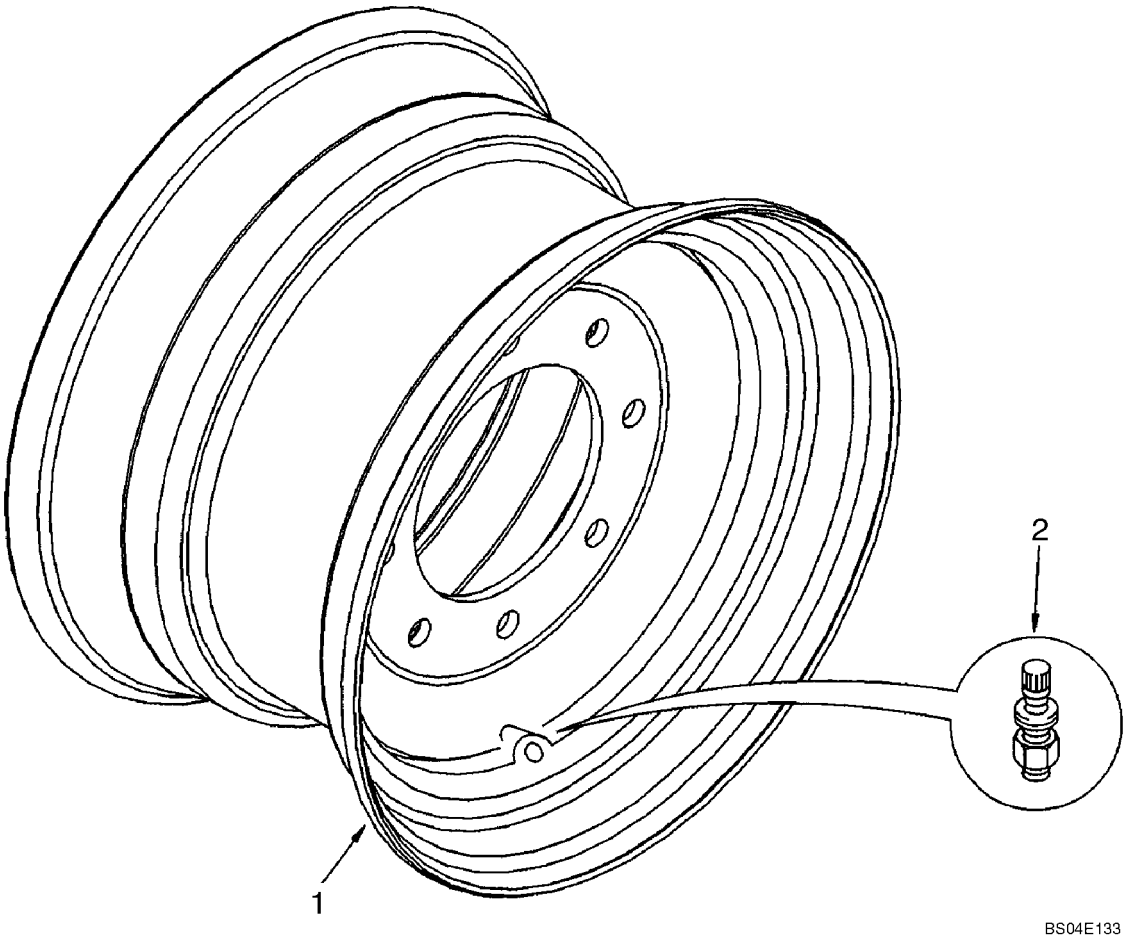

WHEELS

REF	FN	PART NUMBER	YR/SN	QTY	DESCRIPTION
1		86590969		4	WHEEL, 16.5 X 8.25 Yellow; Recommended Tire Sizes 10 X 16.5, 10 X 16.5 Lined; Purchase Local
1		87047278		4	RIM, 16.5 X 9.75 Yellow; Recommended Tire Sizes 12 X 16.5 8 Ply, 12 X 16.5 Lined, 31.5 X 13 X 16.5; Purchase Local
1		86591017		4	WHEEL, 15 x 6 LBH Yellow; Recommended Tire Sizes 7 X 15; Purchase Local; Use With Stem 512083
2		512083		4	VALVE STEM
2		196033		4	VALVE STEM

SECTION INDEX
50 - Cab climate control

50.100.01		CAB - HEATER SYSTEM, DELUXE CAB
50.100.04	01	CAB HEATER 87576281 - MODELS WITHOUT RADIO
50.100.04	02	CAB HEATER 84203948 - MODELS WITH RADIO

CAB - HEATER SYSTEM, DELUXE CAB

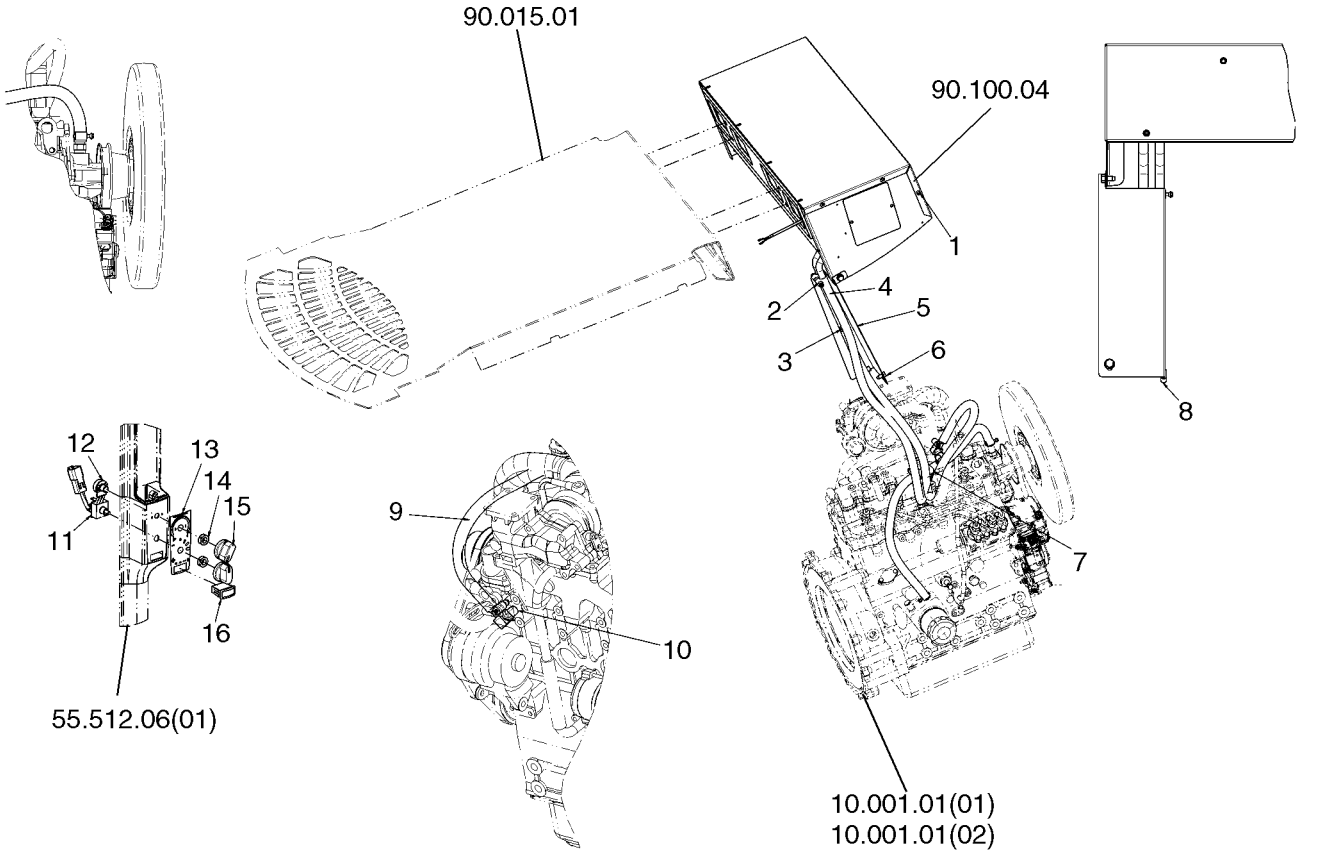

CAB - HEATER SYSTEM, DELUXE CAB

REF	FN	PART NUMBER	YR/SN	QTY	DESCRIPTION
		87640711		1	KIT, Cab Heater Kit; Incl. 1 - 4, 7, 9 - 16 And Headliner; Does Not Include Shield, Ref 5 And Mounting Hardware
1		87576281		1	HEATER, Heater Assembly; See Figure 50.100.04
2		13021		8	CLAMP, HOSE, #08, 0.50/0.91 Type F Worm
3		263117		5	STRAP, CABLE, .14" x 11 1/2"
4		86592866		1	HOSE, 127 cm, 50 in.; Heater
5		86592134		1	SHIELD
6		86545825		2	SCREW, SELF TAPPING, Hex Wash Hd, 5/16" x 5/8"
7		86530043		1	FITTING, Y Fitting
8		291186		AR	PROTECTION, Edge Channel; .26 Ft Required
9		86592867		1	HOSE, 165.1 cm, 65 in.; Heater
10		287644		1	FITTING, 90º, 5/8" Hose x 3/8" NPTF Beaded, If Used
10		642560		1	FITTING, 5/8" Hose X 3/8" NPTF Beaded, If Used
11		86729669		1	SWITCH, Blower Switch
12		87576975		1	POTENTIOMETER, Temperature Control Switch
13		87586497		1	DECAL, Temperature Controls
14		125-11006		1	NUT, Jam Nut For Control Switches; 3/8-32 UNEF THD GR 2 ZND
14		87310592		1	NUT, Jam Nut For Control Switches; 7/16-28 GR 5 ZND ; Not Illustrated
15		86729670		2	KNOB
16		87555250		1	PLUG, A/C Switch Plug

50.100.04	01	p1	04/09

CAB HEATER 87576281 - MODELS WITHOUT RADIO

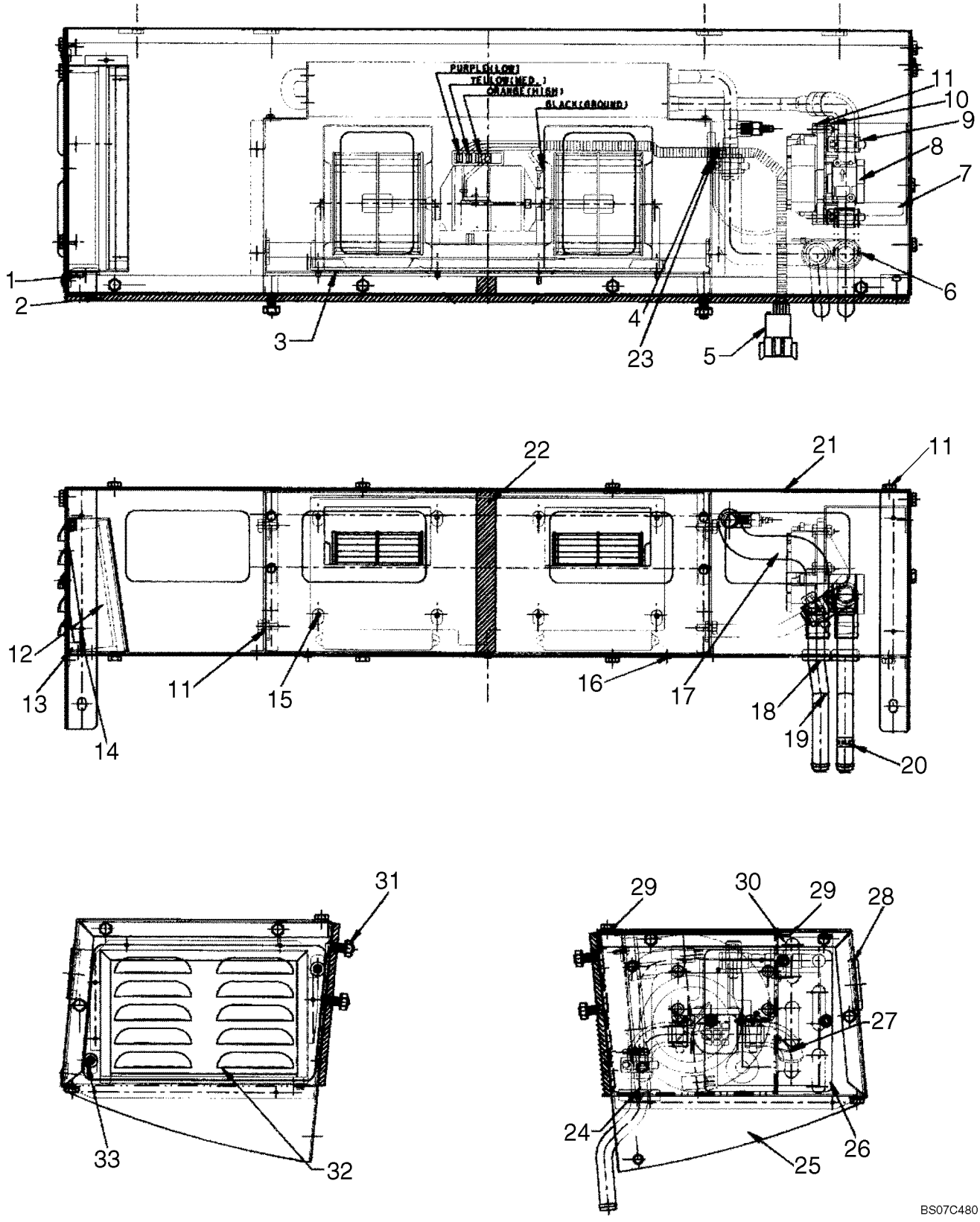

CAB HEATER 87576281 - MODELS WITHOUT RADIO

REF	FN	PART NUMBER	YR/SN	QTY	DESCRIPTION
		87576281			HEATER, Heater Assembly
1		NSS		1	NOT SERVICED SEPARATELY, Caplug
2		86615286		1	GASKET
3		86592107		1	BLOWER, ELECTRIC
4		274568		1	GROMMET
5		{87572852}		1	Wire Harness
6		NSS		1	NOT SERVICED SEPARATELY, Wire Tie
7		NSS		1	NOT SERVICED SEPARATELY, Data Decal
8		87520839		1	VALVE, Water Valve Assembly; 4 Pins In A Square Configuration
9		NSS		6	NOT SERVICED SEPARATELY, Hose Clamp
10		NSS		4	NOT SERVICED SEPARATELY, Hex Nut, 1/4 - 20
11		NSS		22	NOT SERVICED SEPARATELY, Screw, 1/4 - 20 X 5/8
12		86504784		1	FILTER, AIR, Pleated 8.07 x 5.26 x 1.65
13		NSS		AR	NOT SERVICED SEPARATELY, Foam
14		87350483		1	FILTER, AIR, Foam 8.062 x 5.25 x 0.375
15		NSS		8	NOT SERVICED SEPARATELY, Screw
16		NSS		7	NOT SERVICED SEPARATELY, Screw
17		87461906		1	HOSE, Formed Hose
18		86615285		2	GROMMET
19		86615282		2	TUBE
20		NSS		AR	NOT SERVICED SEPARATELY, Tape
21		87601443		1	CASE, Case Assembly
22		NSS		AR	NOT SERVICED SEPARATELY, Foam Tape
23		NSS		1	NOT SERVICED SEPARATELY, Self-Tapping Screw
24		86615276		1	PANEL, Blower Panel
25		87604838		1	COVER, Main Cover Assembly
26		86615281		1	COVER, Bleeder Cover
27		87043850		2	HOSE, Hose Elbow
28		86615283		1	GROMMET
29		NSS		AR	NOT SERVICED SEPARATELY, Foam Tape
30		87023392		1	HEATER, Heater Core
31		NSS		4	NOT SERVICED SEPARATELY, Hex Nut, 5/16 - 18
32		86592111		1	COVER, Filter Cover

CAB HEATER 87576281 - MODELS WITHOUT RADIO

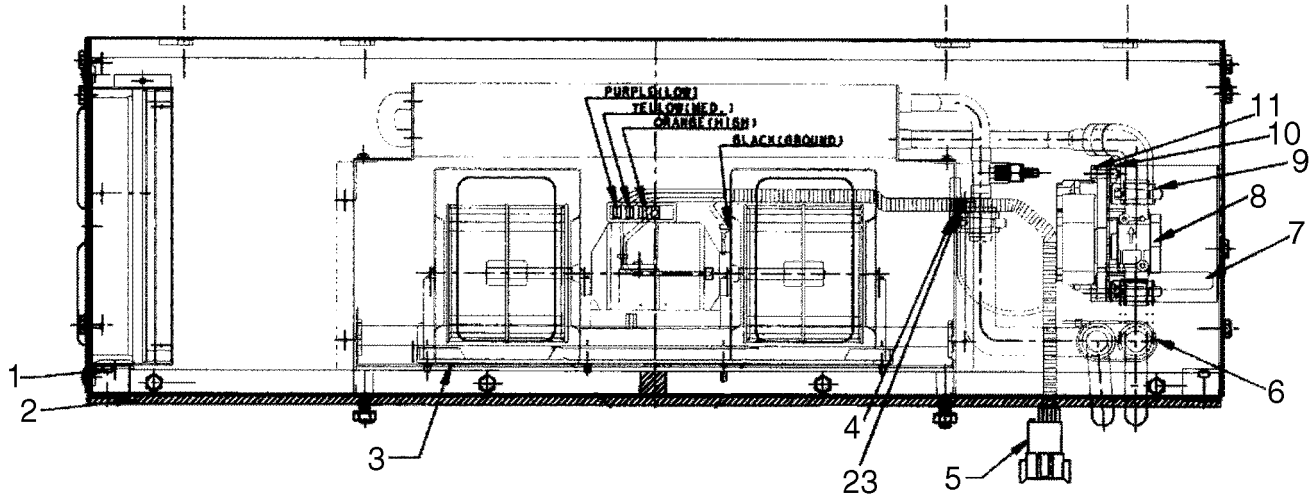

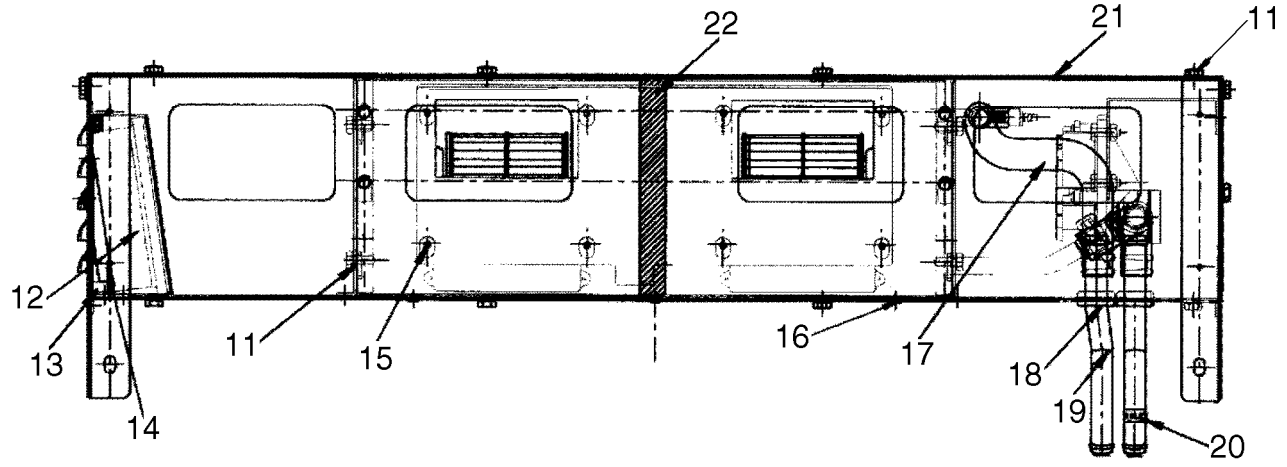

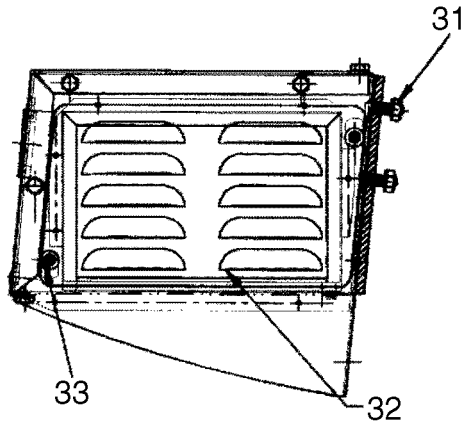

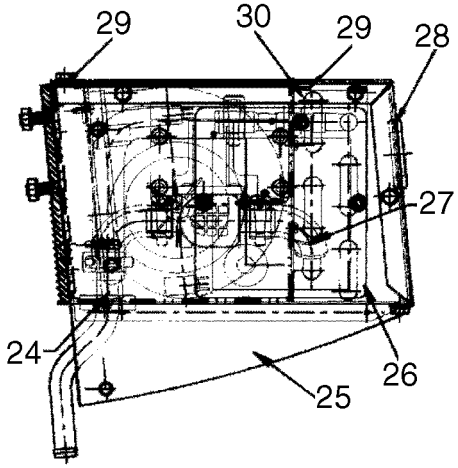

BS07C480

CAB HEATER 87576281 - MODELS WITHOUT RADIO

REF	FN	PART NUMBER	YR/SN	QTY	DESCRIPTION
33		NSS		2	NOT SERVICED SEPARATELY, Screw, 1/4 - 20

CAB HEATER 84203948 - MODELS WITH RADIO

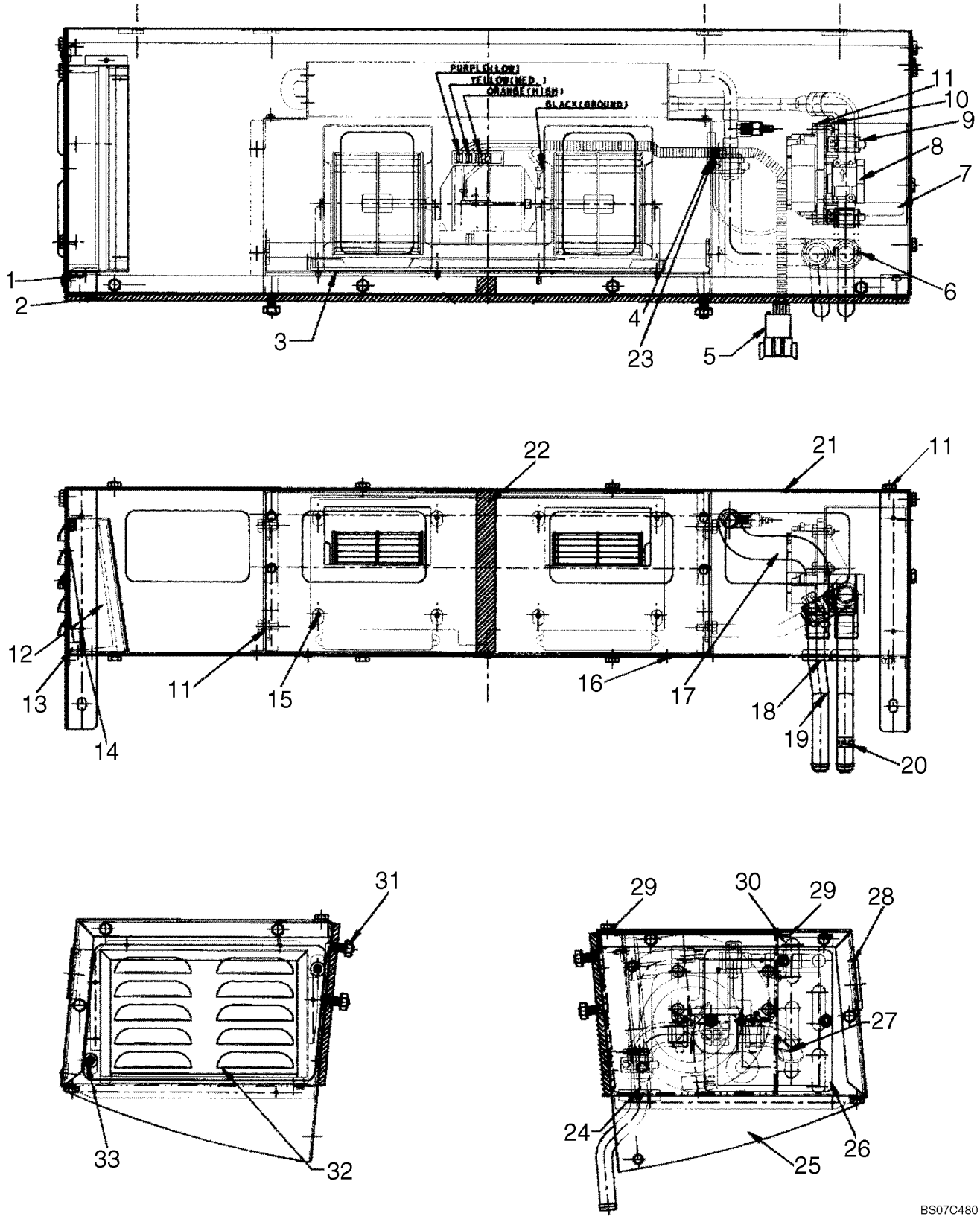

CAB HEATER 84203948 - MODELS WITH RADIO

REF	FN	PART NUMBER	YR/SN	QTY	DESCRIPTION
		84203948			HEATER, Heater Assembly; Models With Radio
1		NSS		1	NOT SERVICED SEPARATELY, Caplug
2		86615286		1	GASKET
3		86592107		1	BLOWER, ELECTRIC
4		274568		1	GROMMET
5		{87572852}		1	Wire Harness
6		NSS		1	NOT SERVICED SEPARATELY, Wire Tie
7		NSS		1	NOT SERVICED SEPARATELY, Data Decal
8		87520839		1	VALVE, Water Valve Assembly; This Valve's Wiring Has 4 Pins In A Square Configuration
9		NSS		6	NOT SERVICED SEPARATELY, Hose Clamp
10		NSS		4	NOT SERVICED SEPARATELY, Hex Nut, 1/4 - 20
11		NSS		22	NOT SERVICED SEPARATELY, Screw, 1/4 - 20 X 5/8
12		86504784		1	FILTER, AIR, Pleated 8.07 x 5.26 x 1.65
13		NSS		AR	NOT SERVICED SEPARATELY, Foam
14		87350483		1	FILTER, AIR, Foam 8.062 x 5.25 x 0.375
15		NSS		8	NOT SERVICED SEPARATELY, Screw
16		NSS		7	NOT SERVICED SEPARATELY, Screw
17		87461906		1	HOSE, Formed Hose
18		86615285		2	GROMMET
19		86615282		2	TUBE
20		NSS		AR	NOT SERVICED SEPARATELY, Tape
21		{84208575}		1	Case; Models With Radio
22		NSS		AR	NOT SERVICED SEPARATELY, Foam Tape
23		NSS		1	NOT SERVICED SEPARATELY, Self-Tapping Screw
24		86615276		1	PANEL, Blower Panel
25		87604838		1	COVER, Main Cover Assembly
26		86615281		1	COVER, Bleeder Cover
27		87043850		2	HOSE, Hose Elbow
28		86615283		1	GROMMET
29		NSS		AR	NOT SERVICED SEPARATELY, Foam Tape
30		87023392		1	HEATER, Heater Core
31		NSS		4	NOT SERVICED SEPARATELY, Hex Nut, 5/16 - 18
32		86592111		1	COVER, Filter Cover

CAB HEATER 84203948 - MODELS WITH RADIO

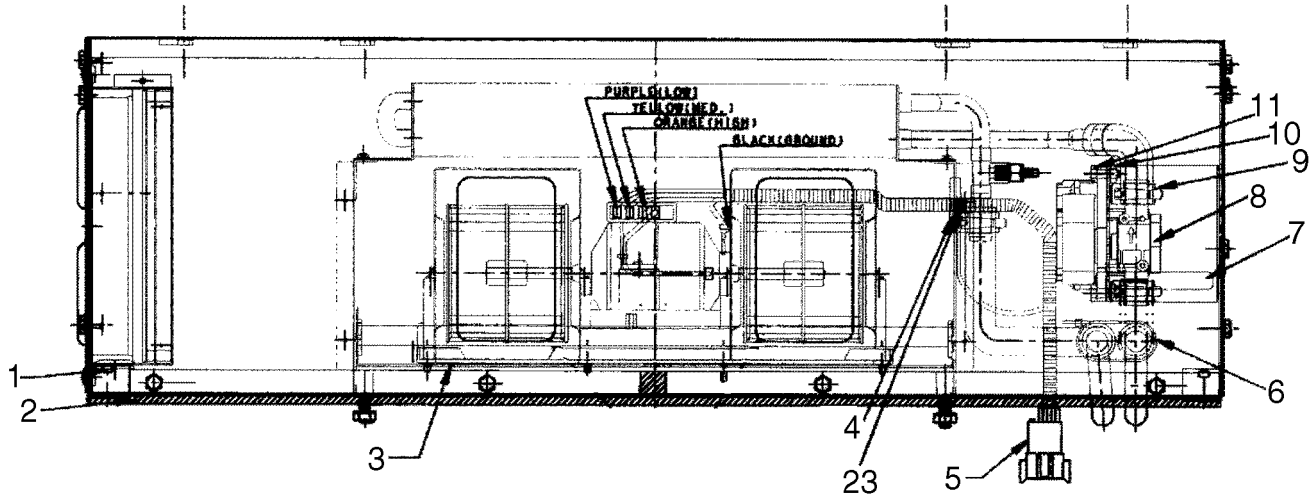

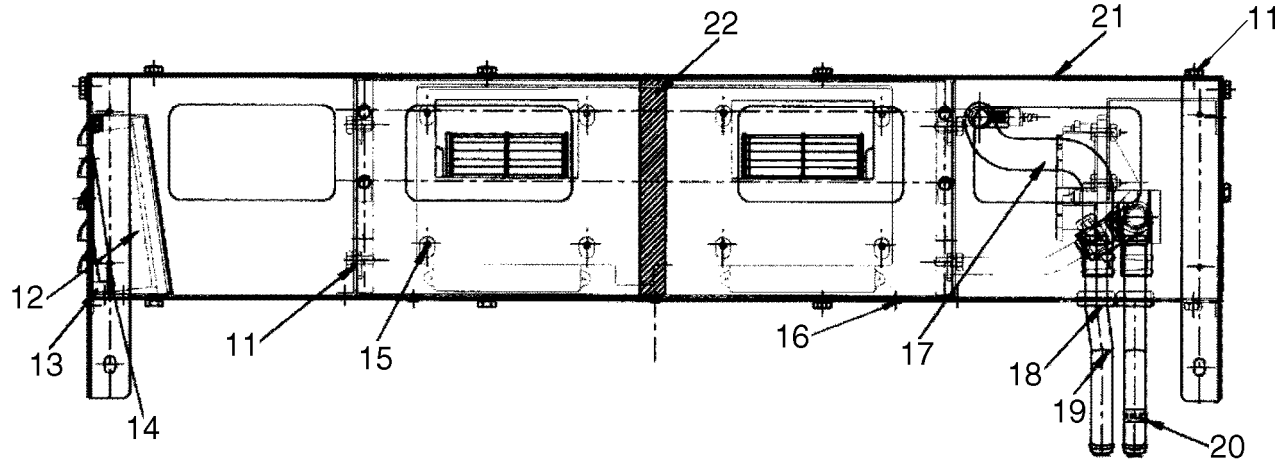

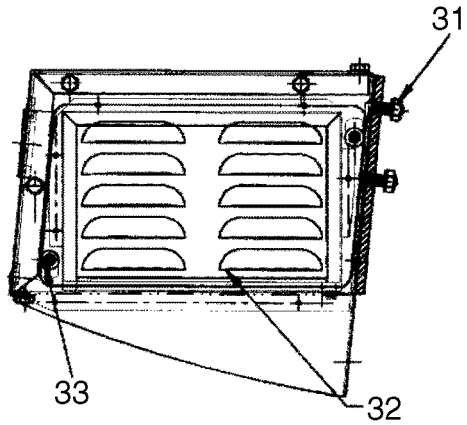

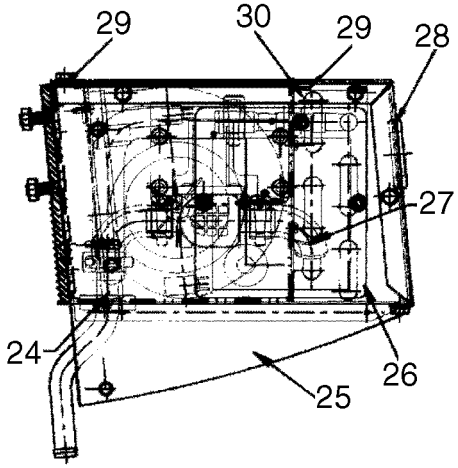

BS07C480

CAB HEATER 84203948 - MODELS WITH RADIO

REF	FN	PART NUMBER	YR/SN	QTY	DESCRIPTION
33		NSS		2	NOT SERVICED SEPARATELY, Screw, 1/4 - 20

SECTION INDEX
55 - Electrical systems

55.100.01	01	ELECTRIC - ENGINE
55.100.02		BATTERY - CABLES
55.100.05	01	CHASSIS ELECTRIC
55.100.05	02	CHASSIS ELECTRIC
55.100.05	03	CHASSIS ELECTRIC
55.100.16		PILOT CONTROL HARNESS
55.100.17		MAIN HARNESS - CAB
55.100.53		ELECTRIC, MOUNTING PLATE
55.100.61		HARNESS - FRONT & REAR WORK LIGHTS
55.100.62	01	HARNESS - DOOR & FRAME
55.100.62	02	HARNESS - DOOR & FRAME
55.100.62	03	HARNESS - DOOR & FRAME
55.100.62	04	HARNESS - DOOR & FRAME
55.100.64		HARNESS - HYDRAULIC MOUNTING PLATE
55.100.65	01	HARNESS - EH AUXILIARY JUMPER
55.100.65	02	HARNESS - FLASHER
55.100.66	01	HARNESS - BEACON KIT
55.100.66	02	HARNESS - EU ADAPTER
55.100.67		KIT, VOLTAGE SUPPRESSION
55.100.68		HARNESS, VOLTAGE SUPPRESSION
55.100.75		HARNESS - PROPORTIONAL AUXILIARY
55.100.76		HARNESS - START RELAY JUMPER
55.100.77		HARNESS - MULTIFUCTION CONTROL
55.100.78		HARNESS - MULTIFUCTION BOOM
55.201.03		STARTER
55.301.01		ALTERNATOR
55.301.02		ALTERNATOR MOUNTING
55.404.01	02	REAR LIGHT BAR, BRAKE AND TURN SIGNALS; IF USED (EUROPE)
55.404.01	02	REAR LIGHT BAR, ON-ROAD (EUROPE)
55.404.01	03	REAR LIGHT
55.404.02		FRONT HEADLAMP WITH TURN SIGNALS, ON ROAD (EUROPE)
55.404.03		FRONT & REAR WORK LIGHTS
55.404.11	01	ELECTRIC CAB, TURN SIGNALS
55.404.11	02	BOOM, ON ROAD WITH TURN SIGNALS
55.408.01	01	BEACON KIT & MISCELLANEOUS PARTS, ON-ROAD
55.408.01	02	BEACON KIT
55.408.04		HORN
55.408.04	01	BACKUP ALARM
55.408.04	02	BACK UP ALARM - MODELS WITH PILOT CONTROL; IF USED
55.510.01		ELECTRIC CAB - MAIN HARNESS AND FUSE BLOCK, DELUXE CAB
55.510.06	01	ELECTRIC CAB
55.510.06	02	CAB ELECTRICAL, EUROPE - DELUXE CAB
55.512.05		ELECTRIC CAB - CONSOLE, RH, DELUXE CAB
55.512.06	01	ELECTRIC CAB - CONSOLE, LH, DELUXE CAB
55.512.06	02	ELECTRIC CAB, LH CONSOLE (EUROPE) - DELUXE CAB
55.514.03		ELECTRIC CAB - LIGHTS

55.100.01	01	p1	02/09

ELECTRIC - ENGINE

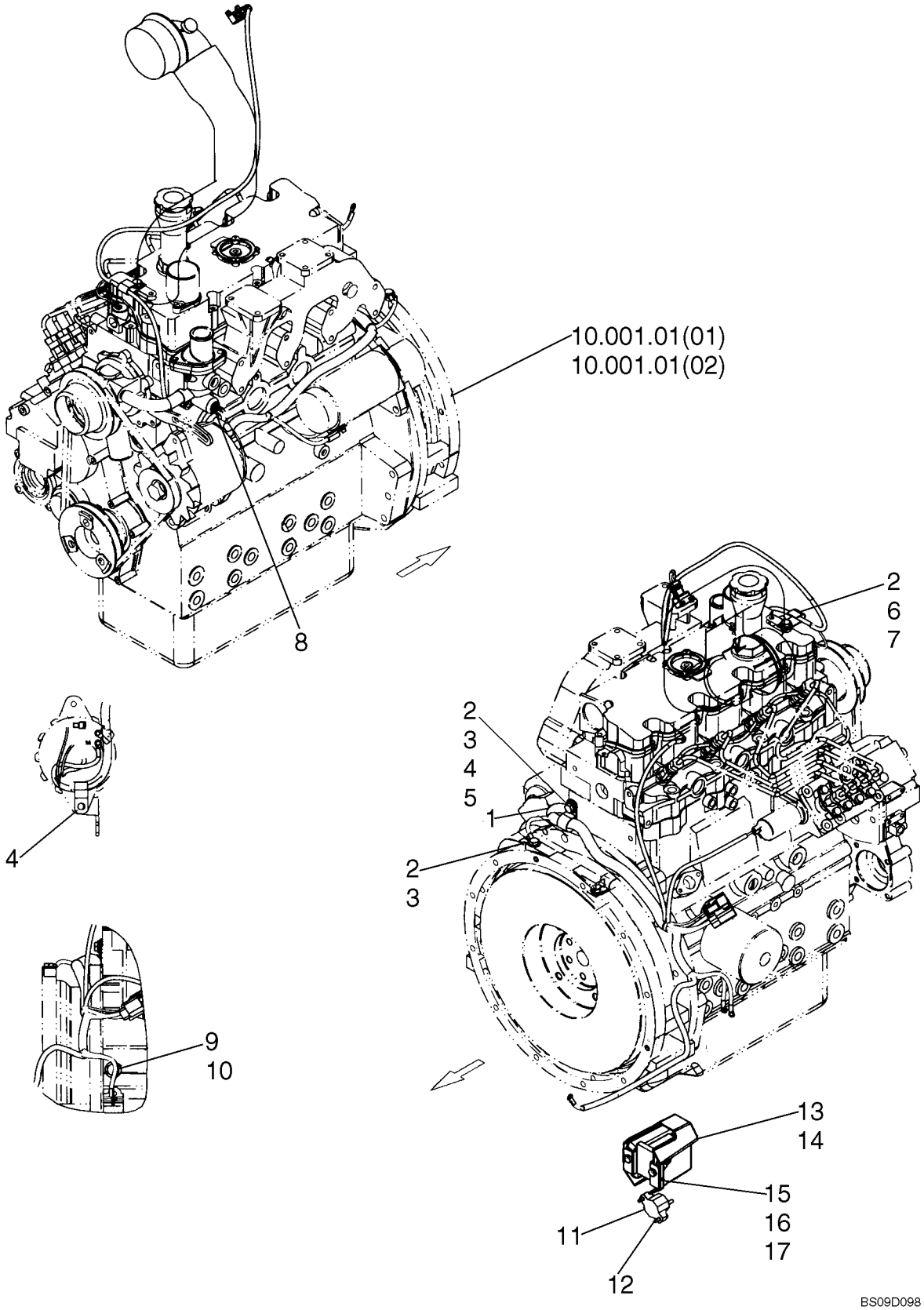

ELECTRIC - ENGINE

REF	FN	PART NUMBER	YR/SN	QTY	DESCRIPTION
1		87462056		1	HARNESS, ISM Engine
2		322358		3	WASHER, BELLEVILLE, M8
3		120103		2	BOLT, Hex, M8 x 16, 8.8
4		87029955		2	CLAMP, Clamp; Insulated 22.2 mm, 3/8 in. Bolt ZND
5		80701		1	WASHER, 1/4"
6		134579		1	CLAMP, WIRE, J
7		120104		1	BOLT, Hex, M8 x 20, 8.8
8		87307746		1	SENDER, TEMPERATURE, Hyd Oil And Engine Coolant Temp Sensor
9		43138		1	BOLT, Hex, M10 x 20, 8.8, Full Thd
10		86639325		1	WASHER, M10 x 24.5 x 3, HT
11		9843910		1	CIRCUIT BREAKER
12		86500940		2	SCREW, SELF TAPPING, Hex Wash Hd, #10 x 3/4"
13		9612631		1	COVER
14		9612633		1	SHIELD
15		9601073		1	RELAY
16		88146		2	BOLT, Hex, 1/4"-20 x 1", G5
17		523282		4	NUT, Flg, USR, 1/4"-20

BATTERY - CABLES

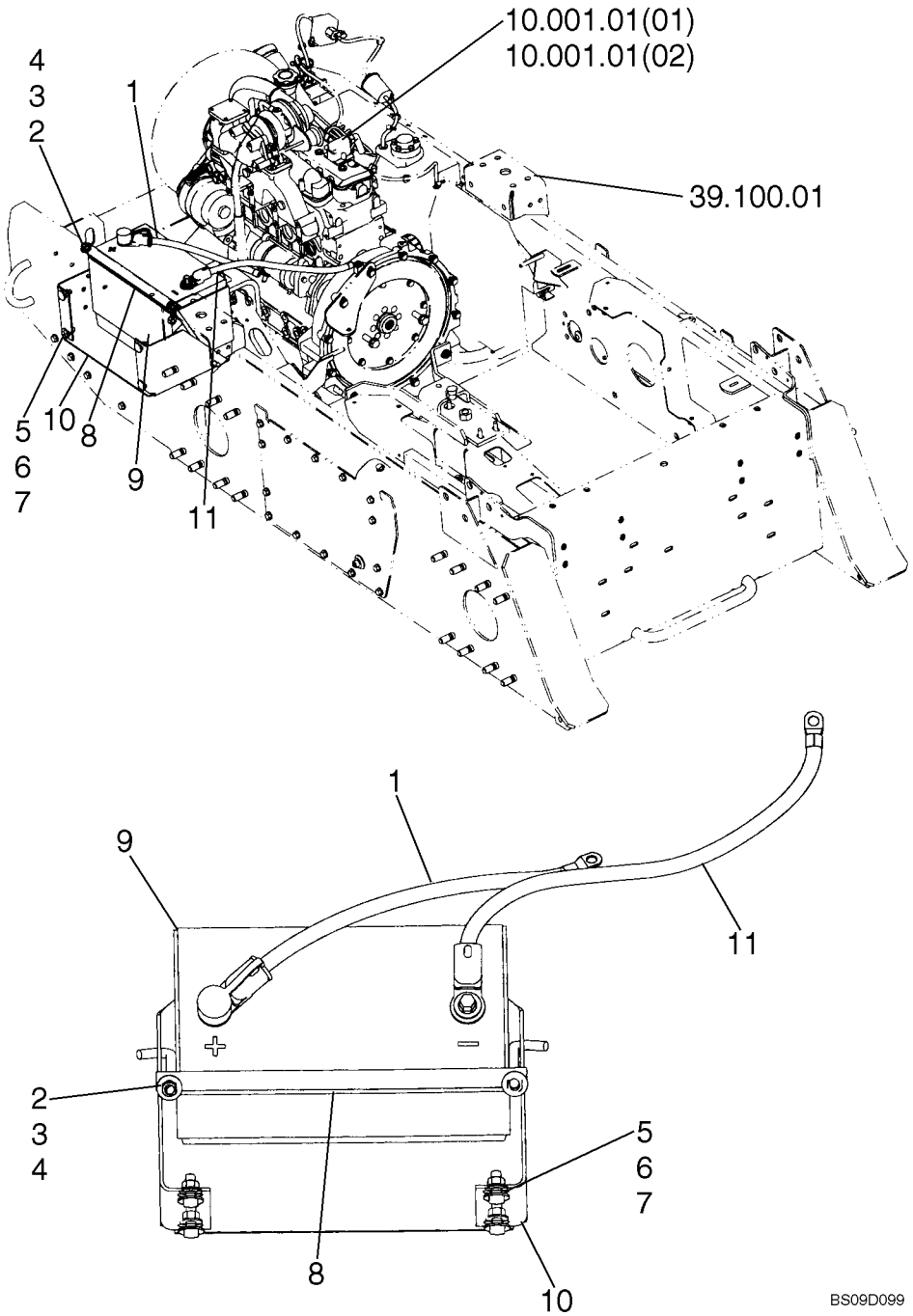

BATTERY - CABLES

REF	FN	PART NUMBER	YR/SN	QTY	DESCRIPTION
1		9828791		1	CABLE, Battery Cable, Positive; 514.4 mm (20 1/4 in.) Length
2		80702		2	WASHER, 3/8"
3		9637692		2	NUT, LOCK, 3/8"-16, GB
4		103807		2	HOOK
5		88206		4	BOLT, Hex, 3/8"-16 x 1", G5, Full Thd
6		140045		4	WASHER, BELLEVILLE, M10
7		9628503		4	NUT, 3/8"-16, G5
8		87582409		1	STRAP, Battery Hold Down Strap
9		643283		1	BATTERY, Exide; If Used
9		{87473171}		1	Exide; If Used; Implemented in Production 04/2009
10		9842368		1	SUPPORT
11		9828790		1	CABLE, Battery Cable, Negative; 558.8mm (20 in.) Length

CHASSIS ELECTRIC

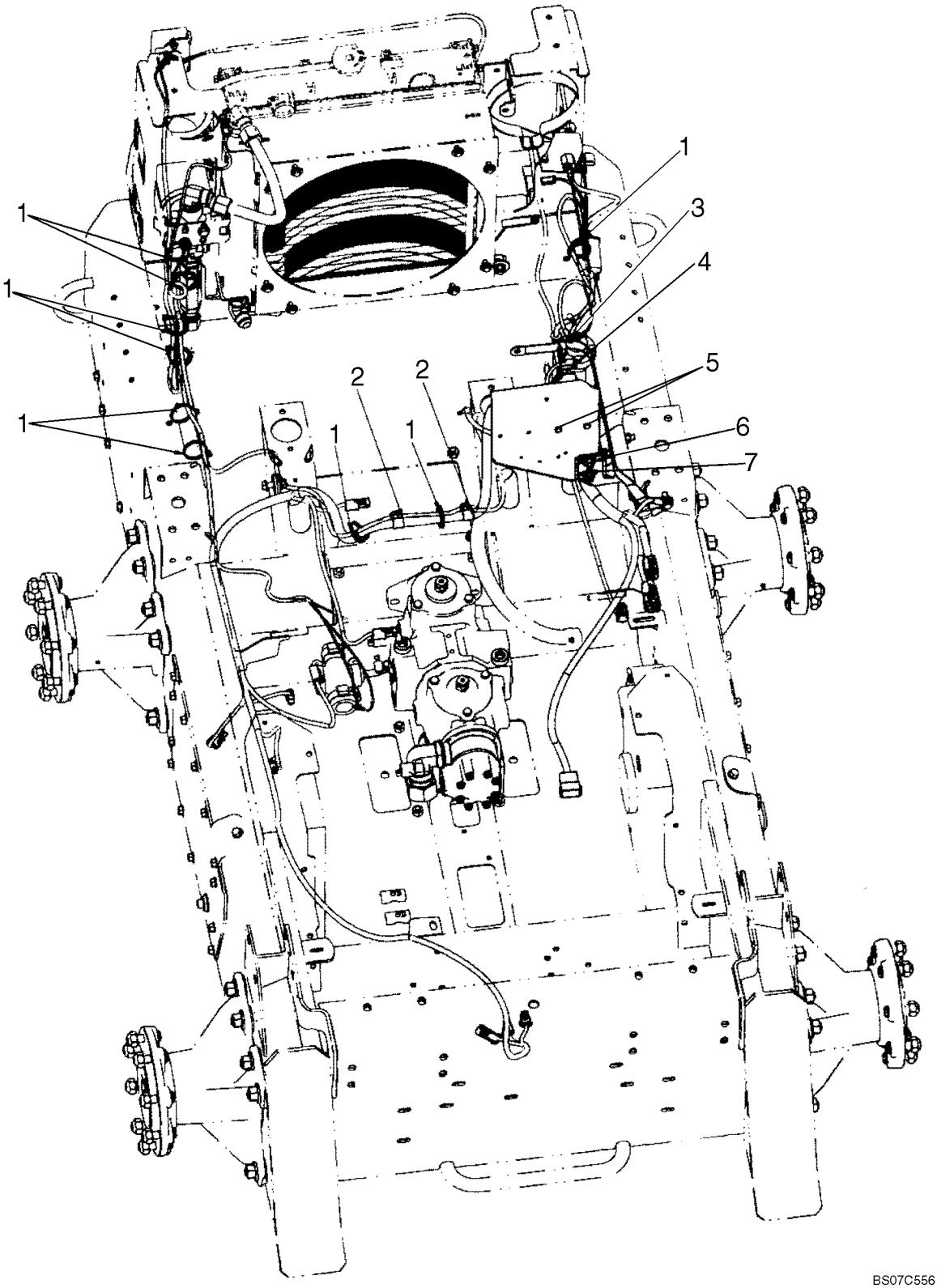

CHASSIS ELECTRIC

REF	FN	PART NUMBER	YR/SN	QTY	DESCRIPTION
1		529070		9	STRAP, CABLE, .30" x 14.5"
2		87010656		2	CLAMP, 11/16", Insul, 3/8" Bolt
3		799681		1	Strap, Ground
4		87594965		1	ELECTRIC PANEL, Panel, Electrical
5		88146		2	BOLT, Hex, 1/4"-20 x 1", G5
6		140045		8	WASHER, BELLEVILLE, M10
7		88206		6	BOLT, Hex, 3/8"-16 x 1", G5, Full Thd

CHASSIS ELECTRIC

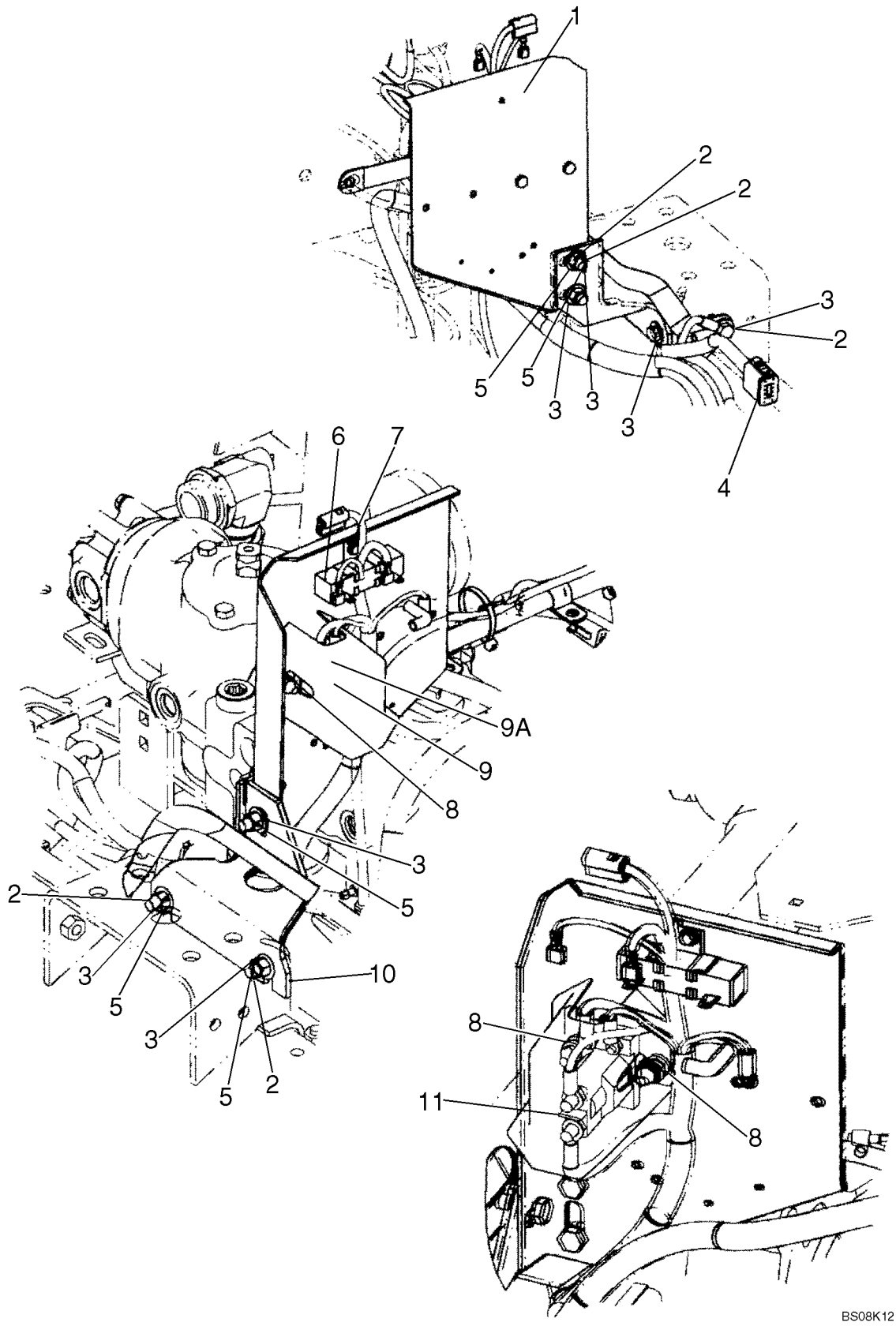

CHASSIS ELECTRIC

REF	FN	PART NUMBER	YR/SN	QTY	DESCRIPTION
1		87594965		1	ELECTRIC PANEL, Electrical Gray; One Slotted Hole In Large Flat Side Of Panel, Replaced by 87687040 In Production Aug 2007
1		87687040		1	ELECTRIC PANEL, Electrical Gray; Two Slotted Holes In Large Flat Side Of Panel, Replaces 87666097 In Production Aug 2007; See Figure 06.04.02(01)
2		88206		6	BOLT, Hex, 3/8"-16 x 1", G5, Full Thd
3		140045		8	WASHER, BELLEVILLE, M10
4		87599256		1	HARNESS, Harness, Chassis; If Used
4		87687995		1	HARNESS, Chassis
5		9628503		5	NUT, 3/8"-16, G5
6		86705351		1	RESISTOR
7		86500939		1	SCREW, SELF TAPPING, Hex Wash Hd, #10 x 3/8"
8		523282		4	NUT, Flg, USR, 1/4"-20
9		9601073		1	RELAY, Starter
9A		9612631		1	COVER, Starter Relay
10		86603659		1	SUPPORT ASSY.
11		9612633		1	SHIELD, If Used

55.100.05	03	p1	09/09

CHASSIS ELECTRIC

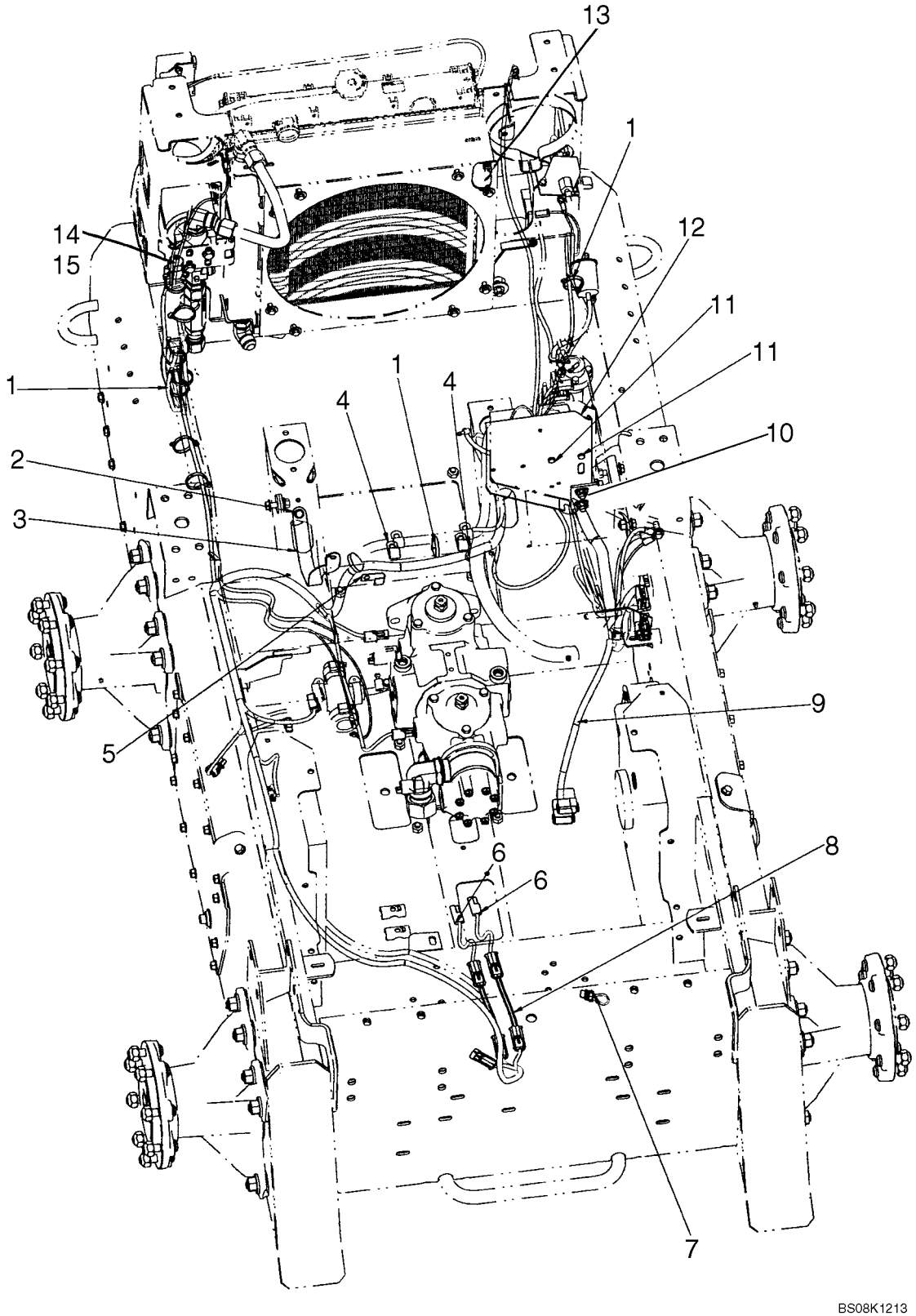

CHASSIS ELECTRIC

REF	FN	PART NUMBER	YR/SN	QTY	DESCRIPTION
1		263117		9	STRAP, CABLE, .14" x 11 1/2"
2		9840344		1	SCREW
3		512306		1	CABLE, GROUND
4		86624005		2	CLAMP, 3/4", Insul, 3/8" Bolt
5		134579		1	CLAMP, WIRE, J
6		87048133		2	HARNESS, WIRE, Jumper Valve; If Used
7		87048202		1	HARNESS, WIRE, Jumper Aux Switch
8		87752575		2	HARNESS, Transient Voltage Suppression; See Figure 55.100.67; If Used
9		87687995		1	HARNESS, Main Chassis Harness; Replaced 87599256 In Production Aug 2007
10		87051100		1	SUPPORT, Replaced 86603659 In Production Aug 2007
11		88146		2	BOLT, Hex, 1/4"-20 x 1", G5
12		87687040		1	ELECTRIC PANEL, Electrical Gray; Two Slotted Holes In Large Flat Side Of Panel, Replaces 87666097 In Production Aug 2007
13		293797A1		1	SWITCH, RESTRICTION, Air; Male Thread
14		87036787		1	SWITCH, PRESSURE, Hydraulic Oil Pressure Sensor
15		87369396		1	HARNESS, WIRE, Jumper Hyd Pressure

PILOT CONTROL HARNESS

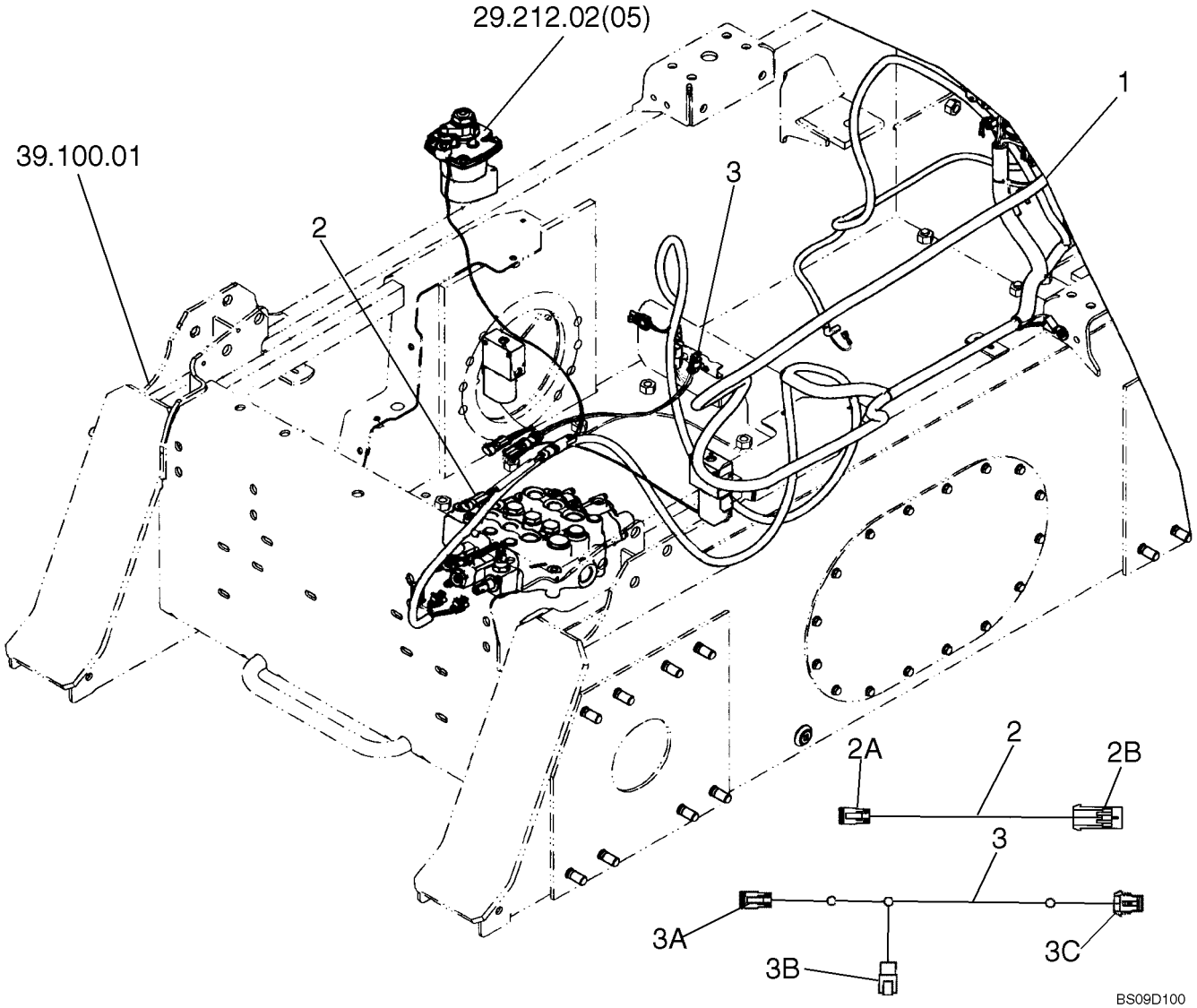

PILOT CONTROL HARNESS

REF	FN	PART NUMBER	YR/SN	QTY	DESCRIPTION
1		{}			Main Harness
2		87527219		1	HARNESS, WIRE, Mag Detent Jumper
2A		225316C1		1	CONNECTOR, ELEC, Solenoid, Ground
2B		256341A1		1	CONNECTOR, ELEC, Solenoid, Power
3		87397834		1	HARNESS, Harness, Brake Jumper
3A		225316C1		1	CONNECTOR, ELEC
3B		225315C1		1	CONNECTOR, ELEC
3C		256340A1		1	CONNECTOR
4		263117		10	STRAP, CABLE, .14" x 11 1/2"
5		87527219		1	HARNESS, WIRE, Electrical

MAIN HARNESS - CAB

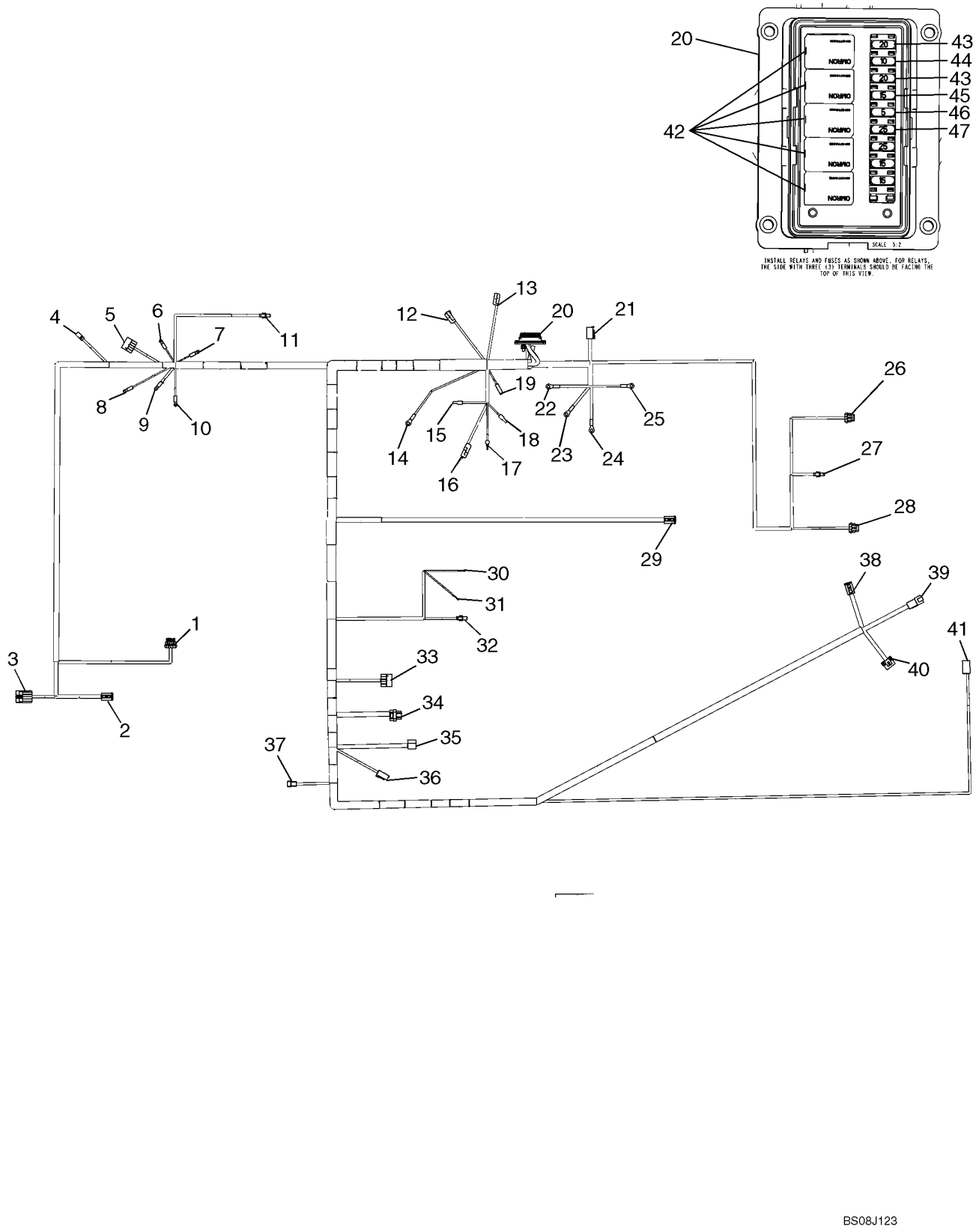

BS08J123

MAIN HARNESS - CAB

REF	FN	PART NUMBER	YR/SN	QTY	DESCRIPTION
		87599254		1	HARNESS, Cab Main; Incl 1 - 47
1		NSS		1	NOT SERVICED SEPARATELY, 12162144; Mate to Diode 1A; Door Harness Conn
1A		87618013		1	DIODE, 6A; 4 Pin
2		225319C1		1	CONNECTOR, ELEC, Global TRCS
3		NSS		1	NOT SERVICED SEPARATELY, 12162102; Hyd Coupler Interface
4		877291R1		1	CONNECTION, Elec Acc Outlet
5		NSS		1	NOT SERVICED SEPARATELY, EAT_25-13936; Opt High Flow
6		NSS		1	NOT SERVICED SEPARATELY, 200009; Ignition SW Start
7		446658		1	TERMINAL CONNECTOR, Ignition SW Acc
8		446658		1	TERMINAL CONNECTOR, Ignition SW Batt
9		446658		1	TERMINAL CONNECTOR, Ignition SW Run
10		NSS		1	NOT SERVICED SEPARATELY, 200009; Ignition SW Batt
11		237661A1		1	CONNECTOR, ELEC, RF Hal Work Lamp
12		NSS		1	NOT SERVICED SEPARATELY, CNH_STYLE24; To Diode 12A
12A		L71879		1	DIODE-ELEMENT, Isolation
13		NSS		1	NOT SERVICED SEPARATELY, CNH_STYLE24; To Diode 13A
13A		L71879		1	DIODE-ELEMENT, Isolation
14		NSS		1	NOT SERVICED SEPARATELY, 200009; Bussman Ground
15		NSS		1	NOT SERVICED SEPARATELY, CNH_STYLE12; Euro Road Lights
16		NSS		1	NOT SERVICED SEPARATELY, CNH_STYLE24; To Diode 16A
16A		L71879		1	DIODE-ELEMENT, Isolation
17		NSS		1	NOT SERVICED SEPARATELY, CNH_STYLE11; Euro Road Lights
18		NSS		1	NOT SERVICED SEPARATELY, CNH_STYLE12; Euro Road Lights

MAIN HARNESS - CAB

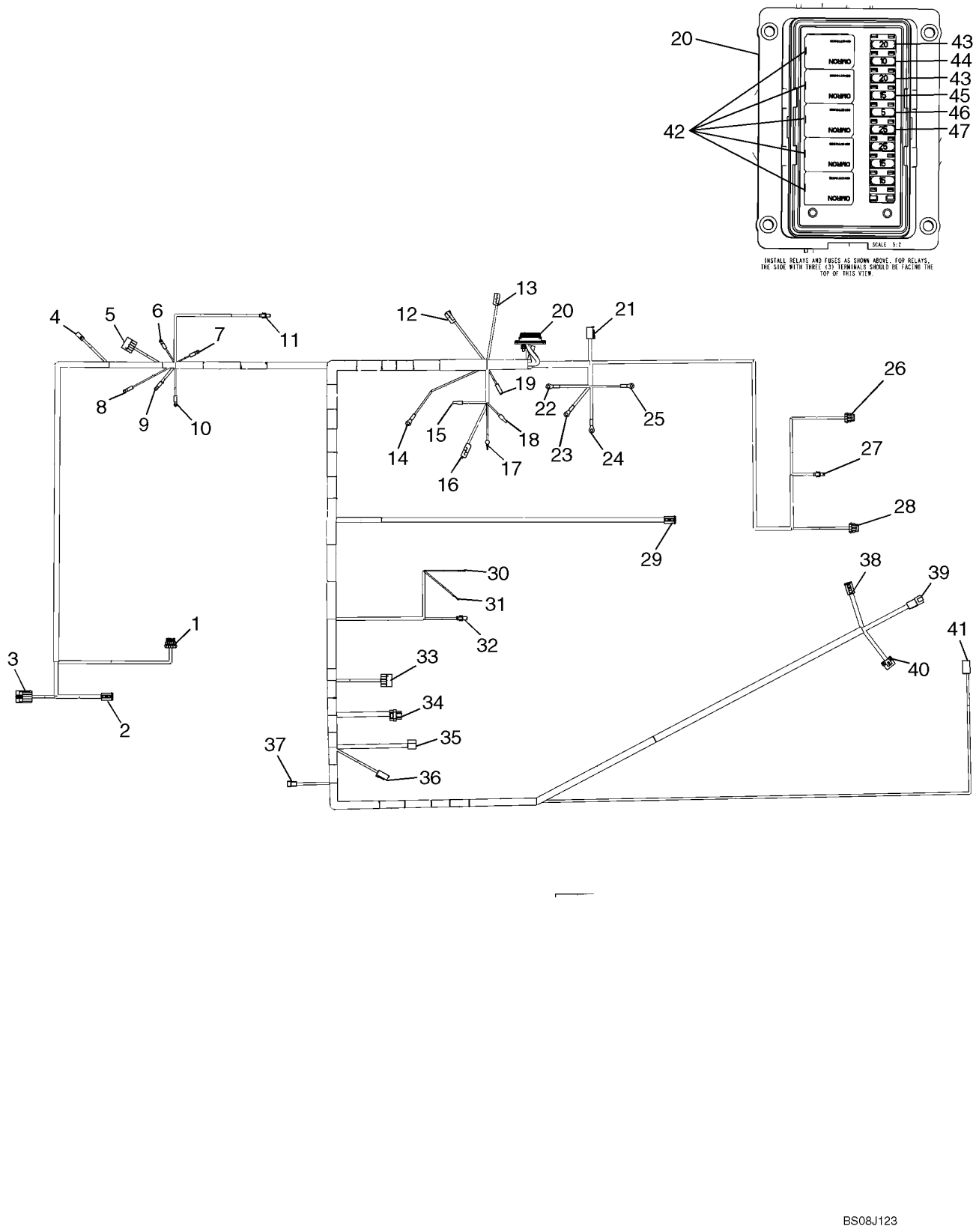

BS08J123

MAIN HARNESS - CAB

REF	FN	PART NUMBER	YR/SN	QTY	DESCRIPTION
19		NSS		1	NOT SERVICED SEPARATELY, CNH_STYLE10; Opt Euro Lights
20		{87574730}		1	Bussman Fuse Block
21		NSS		1	NOT SERVICED SEPARATELY, 225535C1; Turn Signal Interface
22		NSS		1	NOT SERVICED SEPARATELY, 200013; Ground
23		NSS		1	NOT SERVICED SEPARATELY, 200013; Ground
24		NSS		1	NOT SERVICED SEPARATELY, 200019; Ground
25		NSS		1	NOT SERVICED SEPARATELY, 200013; Bussman Ground
26		NSS		1	NOT SERVICED SEPARATELY, PAC12059595; LH Rear Pos Lamp
27		237661A1		1	CONNECTOR, ELEC, Rear Hal Work Lamp
28		NSS		1	NOT SERVICED SEPARATELY, PAC12059595; RH Rear Pos Lamp
29		225319C1		1	CONNECTOR, ELEC, HVAC Interface
30		225312C1		1	CONNECTOR, TERMINAL, Horn
31		225312C1		1	CONNECTOR, TERMINAL, Horn
32		237661A1		1	CONNECTOR, ELEC, LH Hal Work Lamp
33		NSS		1	NOT SERVICED SEPARATELY, EAT_25-13936; Opt Hyd Coupler Sw
34		87057841		1	TERMINAL, AMP_1437290-8; Instrument Cluster
35		NSS		1	NOT SERVICED SEPARATELY, ME_UN734C3; Blower Sw
36		239451A1		1	CONNECTOR, ELEC, Heat Control Sw
37		NSS		1	NOT SERVICED SEPARATELY, PAC_02973386; Heat Control Sw
38		225389C1		1	CONNECTOR, Cab Chassis Interface Conn
39		225388C1		1	CONNECTOR, ELEC, Cab Chassis Interface Conn
40		NSS		1	NOT SERVICED SEPARATELY, 12015664; Cab Chassis Interface Conn
41		NSS		1	NOT SERVICED SEPARATELY, CNH_STYLE42; Safety Interlock
42		87582879		5	RELAY, 20A; N.O. ISO280 Micro
43		121414A1		2	FUSE, 20 Amp, Mini, ATM20

MAIN HARNESS - CAB

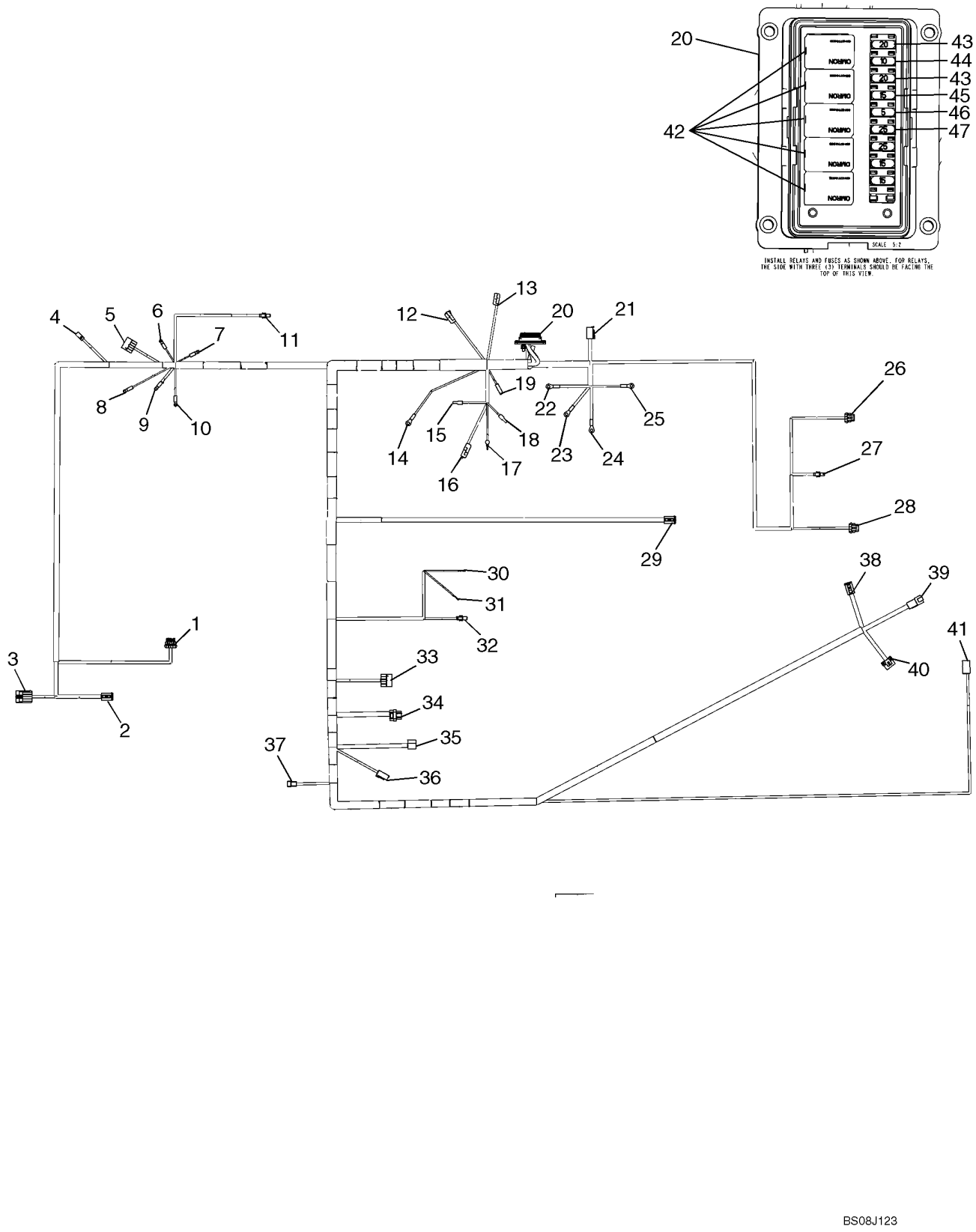

BS08J123

MAIN HARNESS - CAB

REF	FN	PART NUMBER	YR/SN	QTY	DESCRIPTION
44		121412A1		1	FUSE, 10 Amp, Mini, ATM10
45		121413A1		3	FUSE, 15 Amp, Mini, ATM15
46		121410A1		1	FUSE, 5 Amp, Mini, ATM5
47		121415A1		2	FUSE, 25 Amp, Mini, ATM25

55.100.53		p1	03/09

ELECTRIC, MOUNTING PLATE

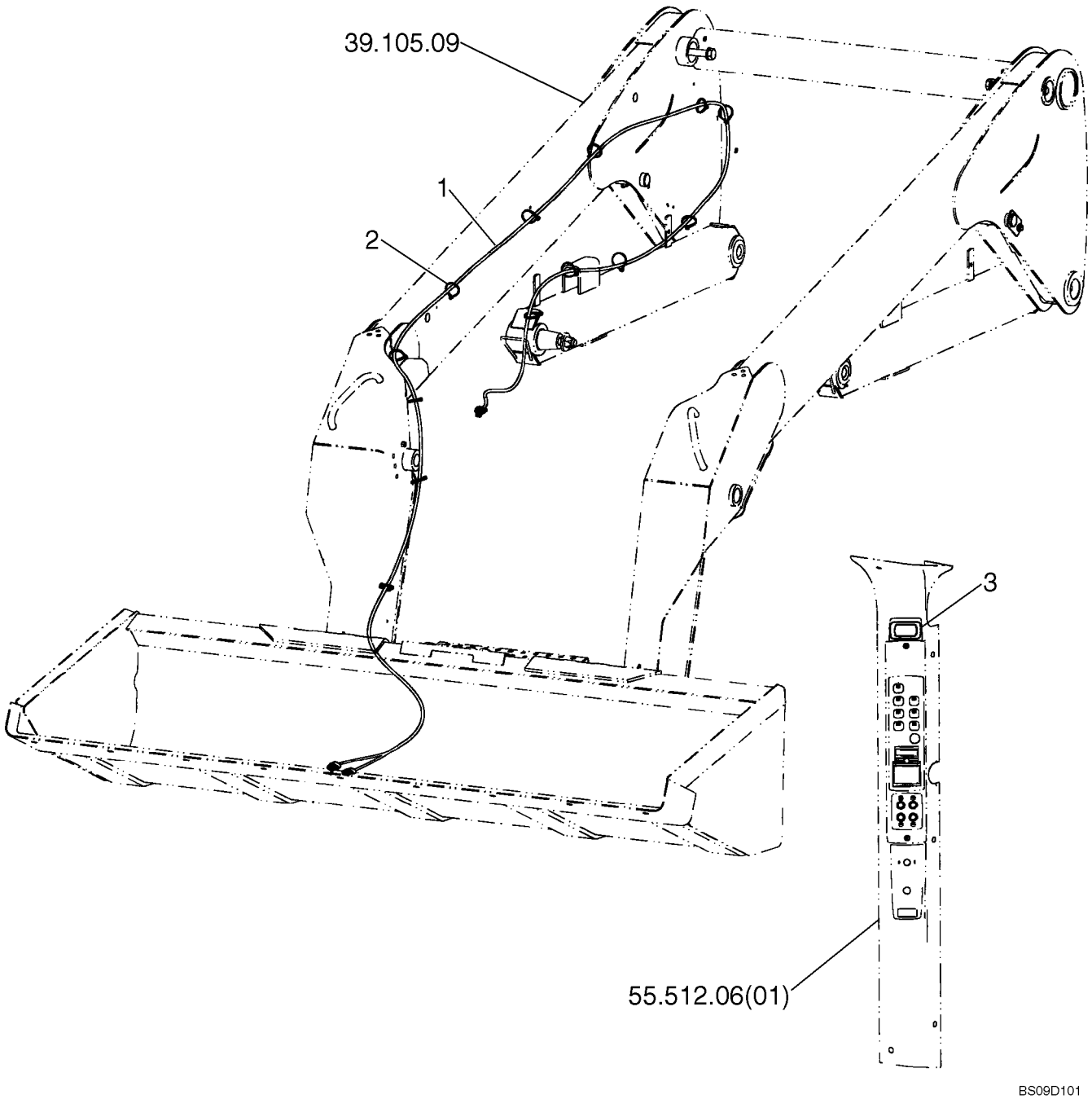

ELECTRIC, MOUNTING PLATE

REF	FN	PART NUMBER	YR/SN	QTY	DESCRIPTION
1		87618186		1	HARNESS, Harness, Hydraulic Mounting Plate; See Figure 55.100.64
2		263117		13	STRAP, CABLE, .14" x 11 1/2"
3		87572861		1	SWITCH, Rocker Switch, Hydraulic Mount Plate

55.100.61		p1	09/09

HARNESS - FRONT & REAR WORK LIGHTS

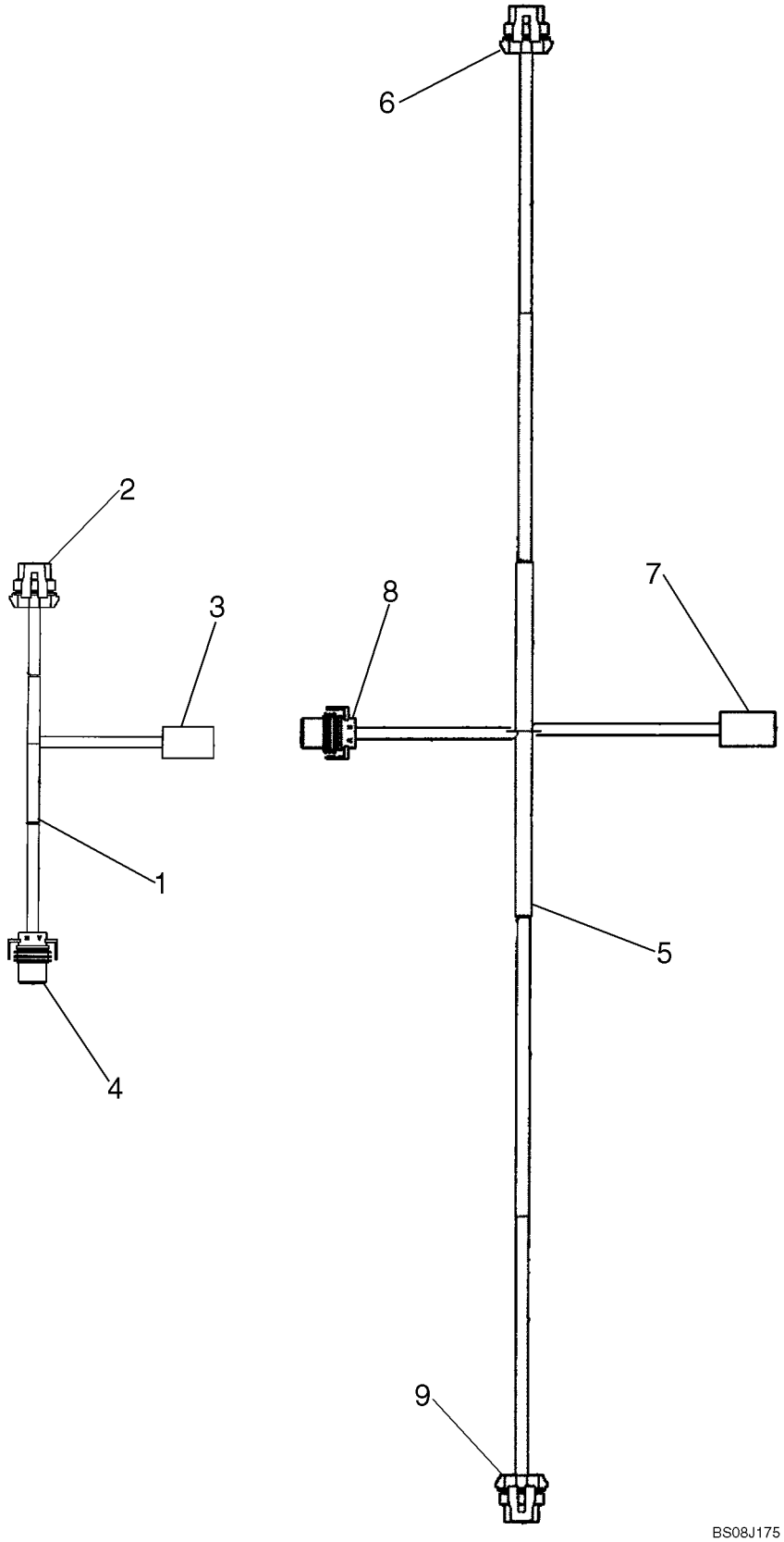

HARNESS - FRONT & REAR WORK LIGHTS

REF	FN	PART NUMBER	YR/SN	QTY	DESCRIPTION
1		87572872		1	HARNESS, Opt Front Work Light; Incl 2 - 4
2		NSS		1	NOT SERVICED SEPARATELY, PAC12059595; Opt Front Work Light
3		NSS		1	NOT SERVICED SEPARATELY, 12059450; Opt Front Work Light Conn
4		237661A1		1	CONNECTOR, ELEC, Opt Front Work Lamp
5		87599259		1	HARNESS, Opt Rear Work Light; Incl 6 - 9
6		NSS		1	NOT SERVICED SEPARATELY, PAC12059595; Opt Rear Work Lamp
7		NSS		1	NOT SERVICED SEPARATELY, 12059450; Opt Right Rear Work Light Conn
8		237661A1		1	CONNECTOR, ELEC, Opt Rear Work Lamp
9		NSS		1	NOT SERVICED SEPARATELY, PAC12059595; Opt Left Rear Work Light

55.100.62	01	p1	09/09

HARNESS - DOOR & FRAME

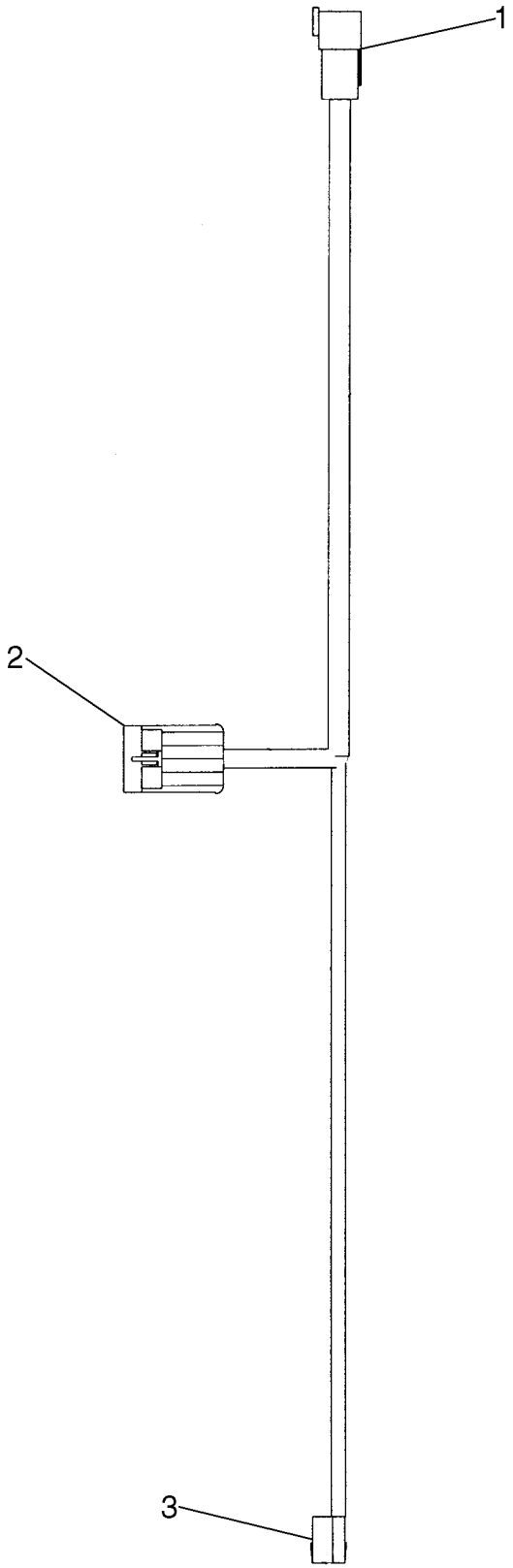

HARNESS - DOOR & FRAME

REF	FN	PART NUMBER	YR/SN	QTY	DESCRIPTION
		87660792		1	HARNESS, Door Frame; Incl 1 - 3
1		225350C1		1	CONNECTOR, ELEC, Door Harness
2		NSS		1	NOT SERVICED SEPARATELY, 12162102; Jumper, Harness
3		364419A1		1	CONNECTION, Washer Pump

55.100.62	02	p1	09/09

HARNESS - DOOR & FRAME

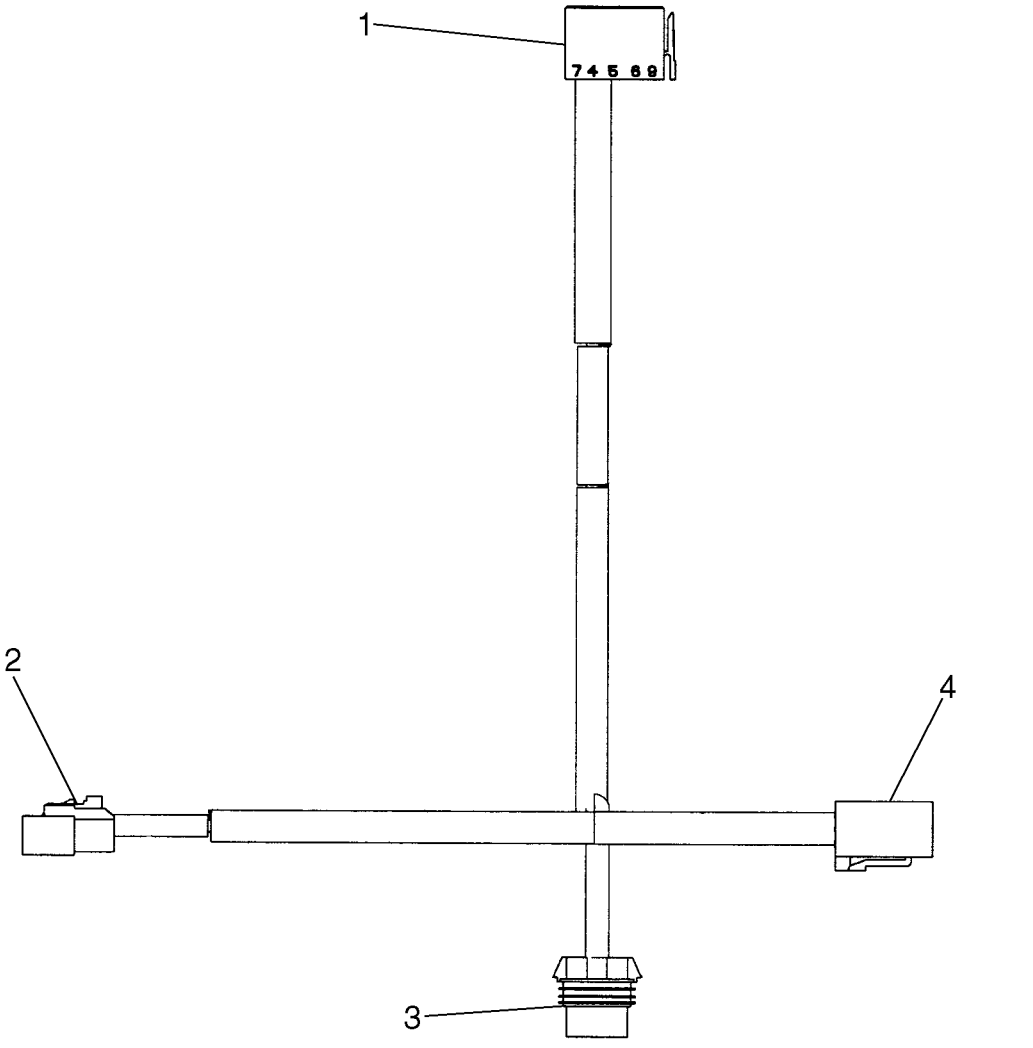

HARNESS - DOOR & FRAME

REF	FN	PART NUMBER	YR/SN	QTY	DESCRIPTION
		87660793		1	HARNESS, Door; Incl 1 - 4
1		382391A1		1	SWITCH, Wiper/Washer
2		225295C1		1	CONNECTOR, ELEC, Door Switch
3		256344A1		1	CONNECTOR, Wiper Motor
4		225351C1		1	CONNECTOR, ELEC, Door Harness Conn

55.100.62	03	p1	09/09

HARNESS - DOOR & FRAME

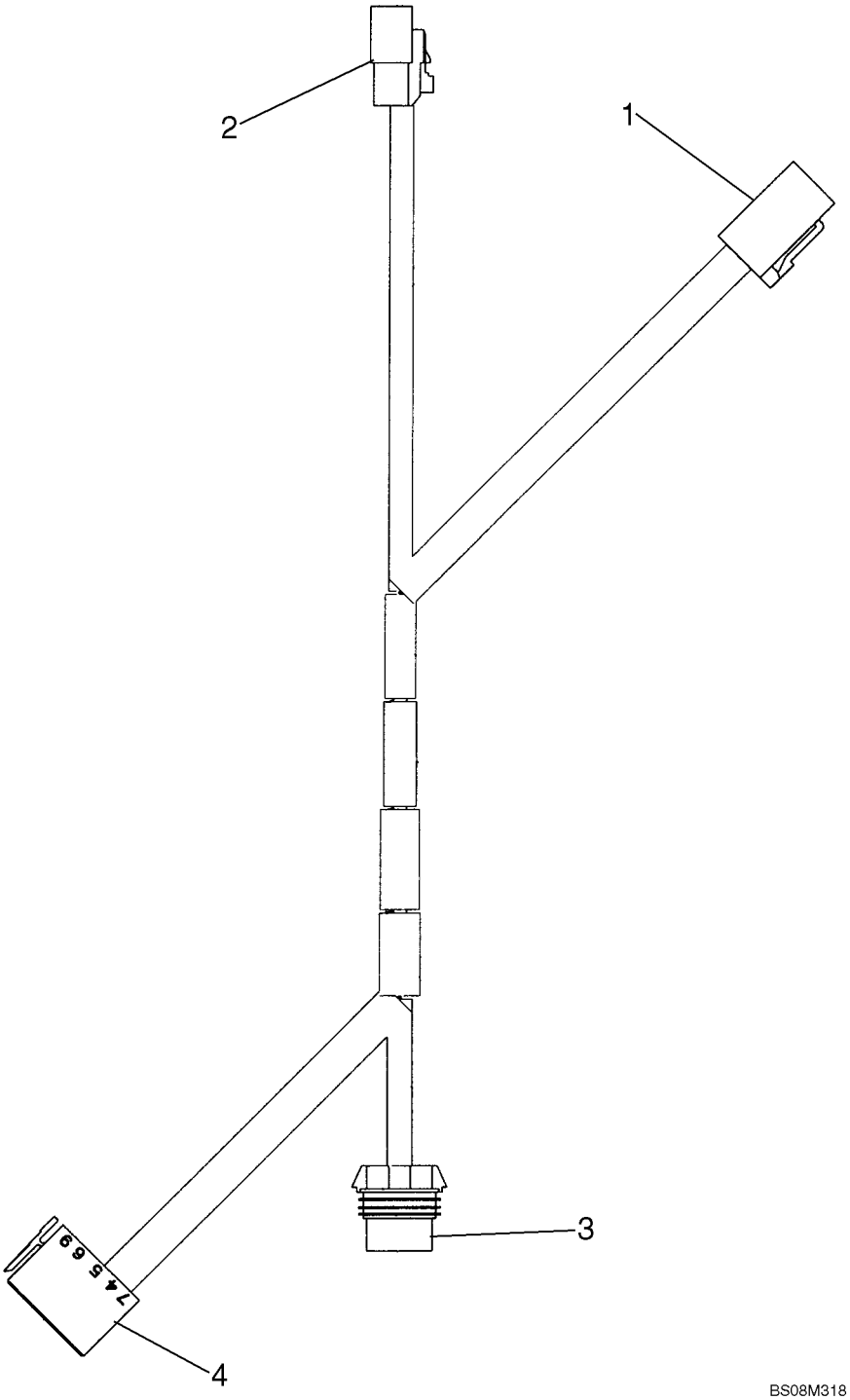

HARNESS - DOOR & FRAME

REF	FN	PART NUMBER	YR/SN	QTY	DESCRIPTION
		87714906		1	HARNESS, Door; Incl 1 - 4
1		225351C1		1	CONNECTOR, ELEC, Door Harness Conn
2		225295C1		1	CONNECTOR, ELEC, Door Switch
3		256344A1		1	CONNECTOR, Wiper Motor
4		382391A1		1	SWITCH, Wiper/Washer

55.100.62	04	p1	09/09

HARNESS - DOOR & FRAME

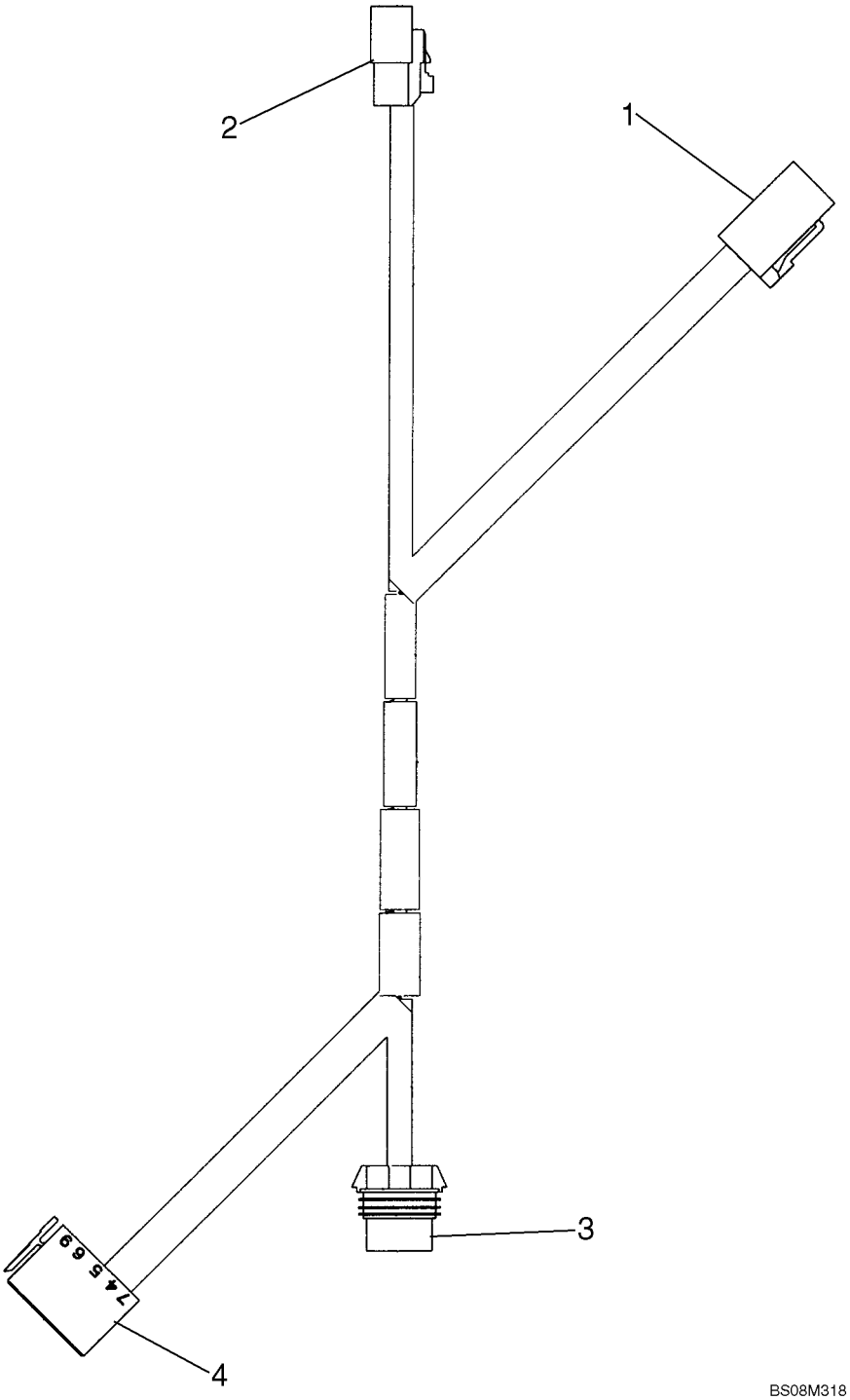

HARNESS - DOOR & FRAME

REF	FN	PART NUMBER	YR/SN	QTY	DESCRIPTION
		87714906		1	HARNESS, Door; Incl 1 - 4
1		225351C1		1	CONNECTOR, ELEC, Door Harness Conn
2		225295C1		1	CONNECTOR, ELEC, Door Switch
3		256344A1		1	CONNECTOR, Wiper Motor
4		382391A1		1	SWITCH, Wiper/Washer

HARNESS - HYDRAULIC MOUNTING PLATE

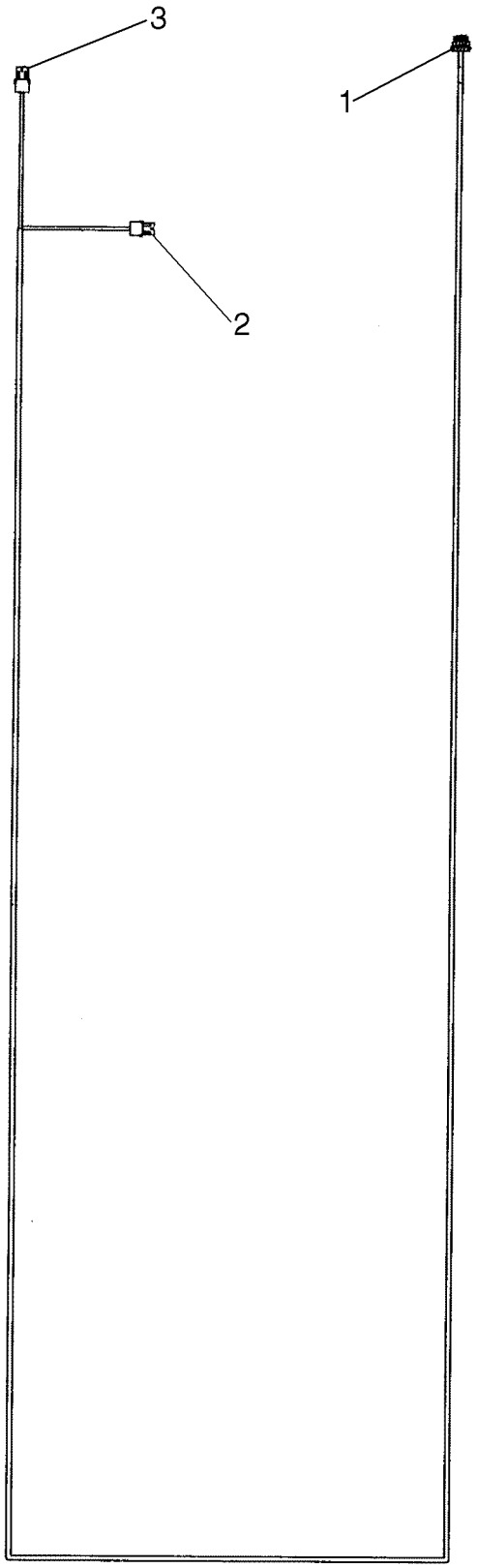

BS08J149

HARNESS - HYDRAULIC MOUNTING PLATE

REF	FN	PART NUMBER	YR/SN	QTY	DESCRIPTION
		87618186		1	HARNESS, Hydraulic Mounting Plate; Incl 1 - 3
1		NSS		1	NOT SERVICED SEPARATELY, 12162144; From Cab Conn
2		245483C1		1	CONNECTOR, ELEC, To Release Solenoid
3		245483C1		1	CONNECTOR, ELEC, To Engage Solenoid

55.100.65	01	p1	03/09

HARNESS - EH AUXILIARY JUMPER

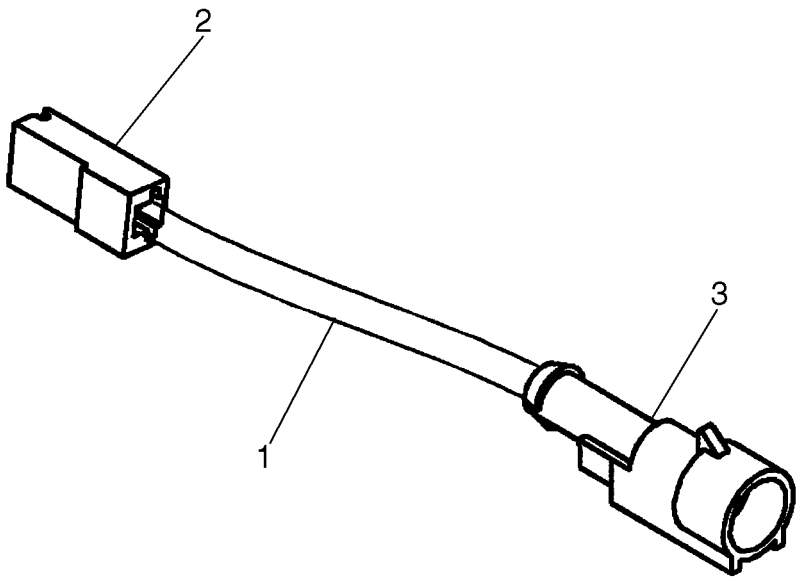

BS08G072

HARNESS - EH AUXILIARY JUMPER

REF	FN	PART NUMBER	YR/SN	QTY	DESCRIPTION
1		87666252		1	HARNESS, Fuel Sol Excite; Incl 2, 3; EH - Aux Jumper; For EH Aux Harness 87674842, See Figure 29.200.07 [06]
2		279658A1		1	CONNECTOR, AMP 1-480416-1
3		{8602418}		1	CONNECTOR AMP SUPERSEAL 1.5 1-CAV RECP C-282103

55.100.65	02	p1	09/09

HARNESS - FLASHER

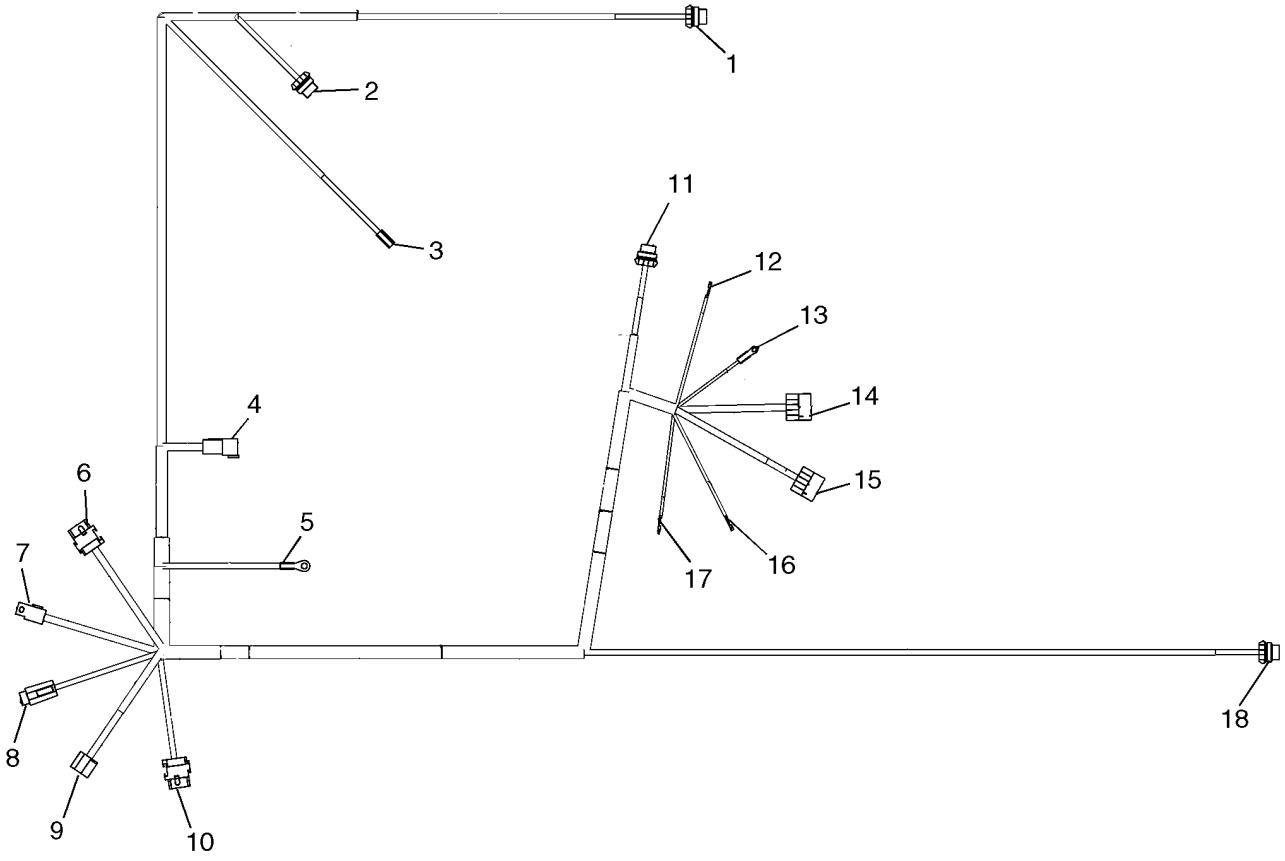

BS08J122

HARNESS - FLASHER

REF	FN	PART NUMBER	YR/SN	QTY	DESCRIPTION
		87650823		1	HARNESS, Flasher Harness; Incl 1 - 18; Does Not Include Fuse In Ref 8
		87687996		1	HARNESS, Flasher Harness; Incl 1 - 18; Includes 7.5 A Fuse In Ref 8
1		NSS		1	NOT SERVICED SEPARATELY, 12059595; Left Rear Turn Signal
2		NSS		1	NOT SERVICED SEPARATELY, 12059595; Right Rear Turn Signal
3		NSS		1	NOT SERVICED SEPARATELY, 480115-1; Beacon Lamp
4		225350C1		1	CONNECTOR, ELEC, Cab Interface Conn
5		NSS		1	NOT SERVICED SEPARATELY, 200011; Ground
6		245731C1		1	CONNECTOR, TS Conv Module
7		194797A1		1	CONNECTOR, Hazard Turn Relay
8		247676A1		1	CONNECTOR, ELEC, Inline Fuse, 7.5A
		121411A1		1	FUSE, 7.5 Amp, Mini, Included in Harness 87687996
9		NSS		1	NOT SERVICED SEPARATELY, 3334485-007; TS Conv Module
10		245731C1		1	CONNECTOR, Flasher Module
11		NSS		1	NOT SERVICED SEPARATELY, 12059595; Right Front Turn Signal
12		282459A1		1	TERMINAL CONNECTOR, Turn Signal Indicator
13		446658		1	TERMINAL CONNECTOR, Ignition Acc Power
14		NSS		1	NOT SERVICED SEPARATELY, 25-13936; Hazard Sw
15		NSS		1	NOT SERVICED SEPARATELY, 25-13936; Beacon Sw
16		282459A1		1	TERMINAL CONNECTOR, Right TS Indicator
17		282459A1		1	TERMINAL CONNECTOR, Left TS Indicator
18		NSS		1	NOT SERVICED SEPARATELY, 12059595; Left Front Turn Signal

55.100.66	01	p1	09/09

HARNESS - BEACON KIT

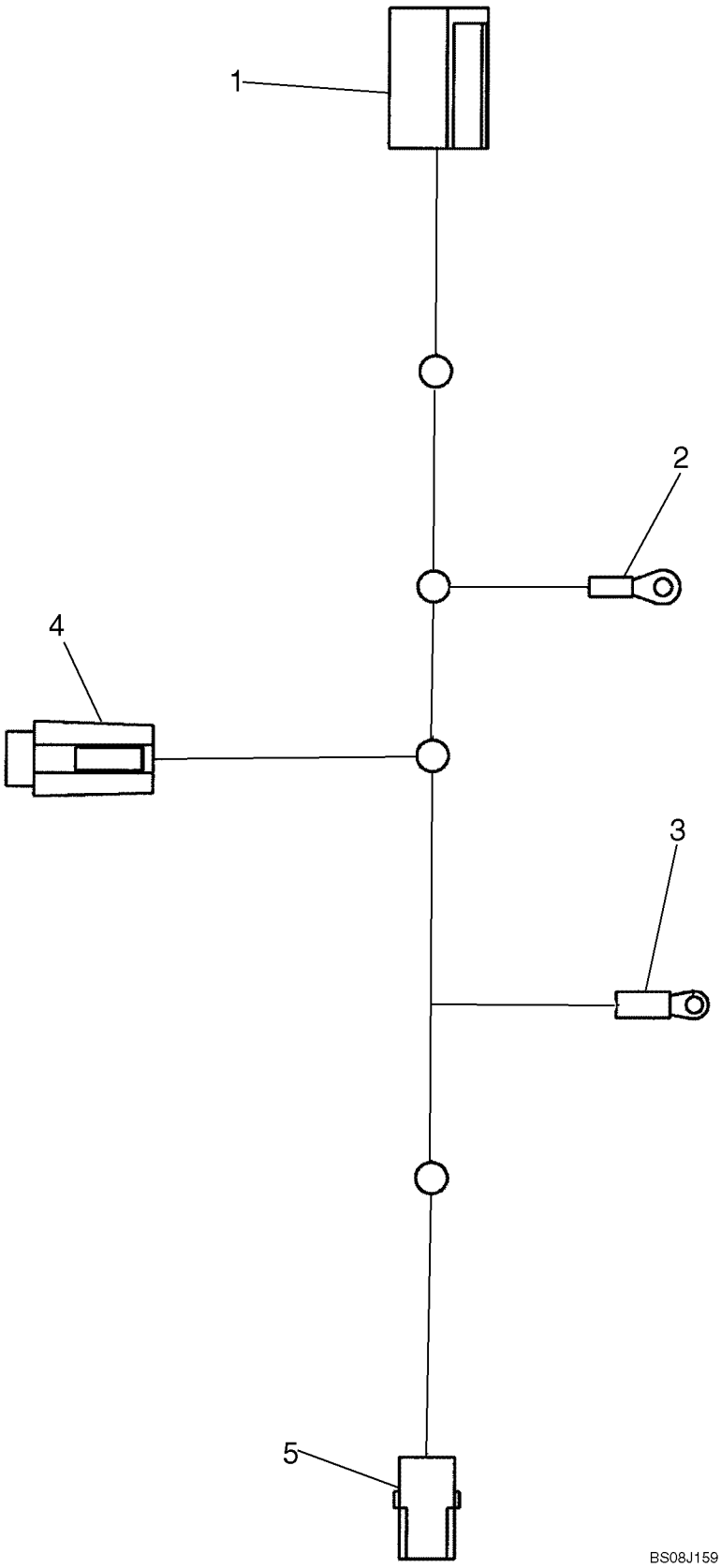

HARNESS - BEACON KIT

REF	FN	PART NUMBER	YR/SN	QTY	DESCRIPTION
		87609682		1	HARNESS, Beacon; Incl 1 - 5
1		NSS		1	NOT SERVICED SEPARATELY, 480115-1; Beacon, Lamp
2		NSS		1	NOT SERVICED SEPARATELY, 200011; Ground
3		446658		1	TERMINAL CONNECTOR
4		247676A1		1	CONNECTOR, ELEC, Ignition; Inline Fuse; Install 7.5A
5		NSS		1	NOT SERVICED SEPARATELY, 25-13936; Switch, Beacon

55.100.66	02	p1	09/09

HARNESS - EU ADAPTER

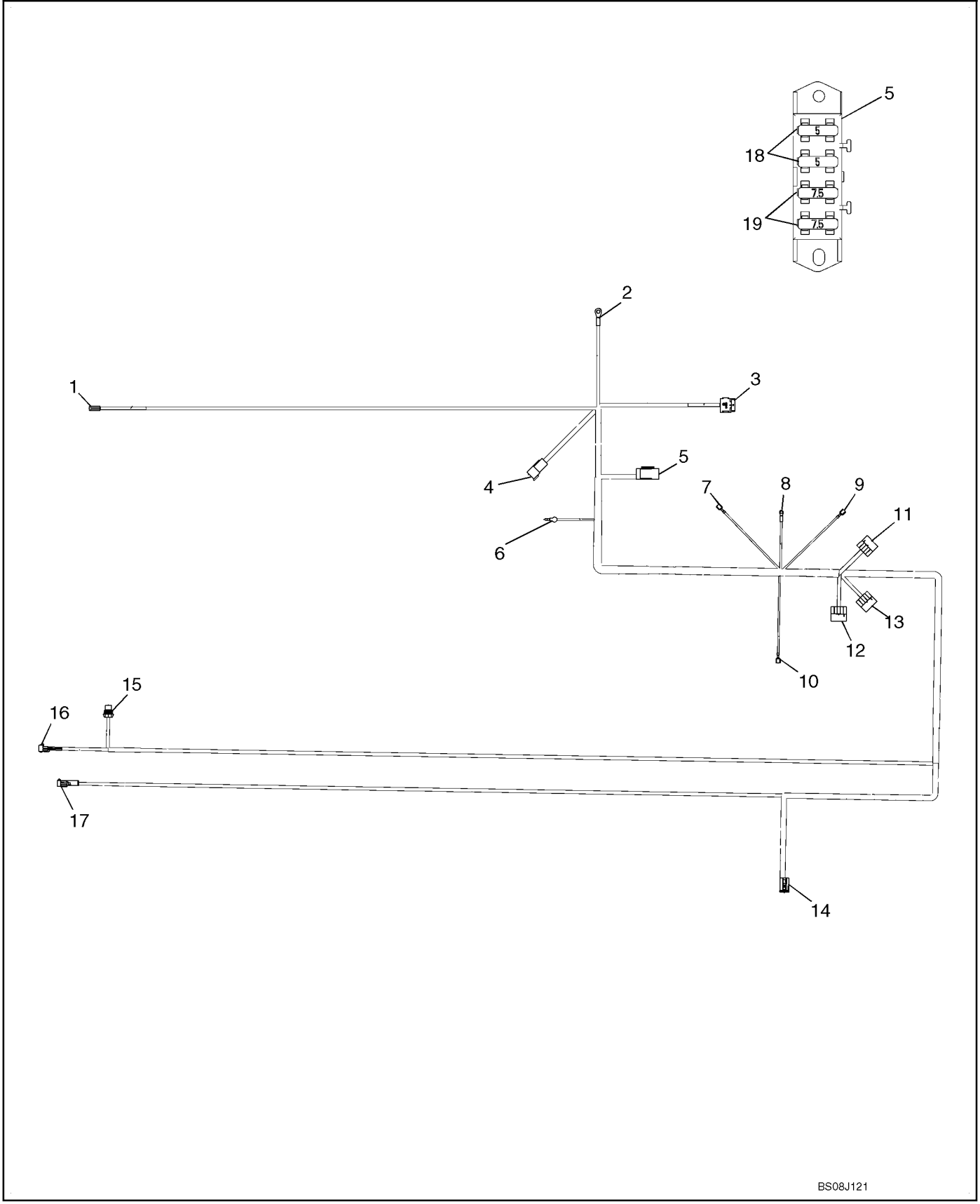

HARNESS - EU ADAPTER

REF	FN	PART NUMBER	YR/SN	QTY	DESCRIPTION
		87668163		1	HARNESS, EU Adapter; Incl 1 - 19
		87705559		1	HARNESS, EU Adapter; Incl 1 - 19
1		NSS		1	NOT SERVICED SEPARATELY, AMP_480115-1; Beacon Lamp
2		225064C1		1	CONNECTOR, Ground
3		245731C1		1	CONNECTOR, Flasher Module
4		225350C1		1	CONNECTOR, ELEC, Cab Interface Conn
5		245465C1		1	CONNECTOR, EU Fuse Block
6		NSS		1	NOT SERVICED SEPARATELY, CNH_STYLE_9; Road Light Conn
7		282459A1		1	TERMINAL CONNECTOR, Turn Signal Indicator
8		446658		1	TERMINAL CONNECTOR, Ignition Acc Power
9		282459A1		1	TERMINAL CONNECTOR, Turn Signal Indicator
10		282459A1		1	TERMINAL CONNECTOR, Turn Signal Indicator
11		NSS		1	NOT SERVICED SEPARATELY, EAT_25-13936; Hazard Sw
12		NSS		1	NOT SERVICED SEPARATELY, EAT_25-13936; Beacon Sw
13		NSS		1	NOT SERVICED SEPARATELY, EAT_25-13936; EU Loader Lockout Sw
14		225319C1		1	CONNECTOR, ELEC, EU Boom Interface
15		256341A1		1	CONNECTOR, ELEC, Loader Lockout
16		256340A1		1	CONNECTOR, Loader Valve Sol
17		245482C1		1	CONNECTOR, ELEC, Break Lamp Interface

KIT, VOLTAGE SUPPRESSION

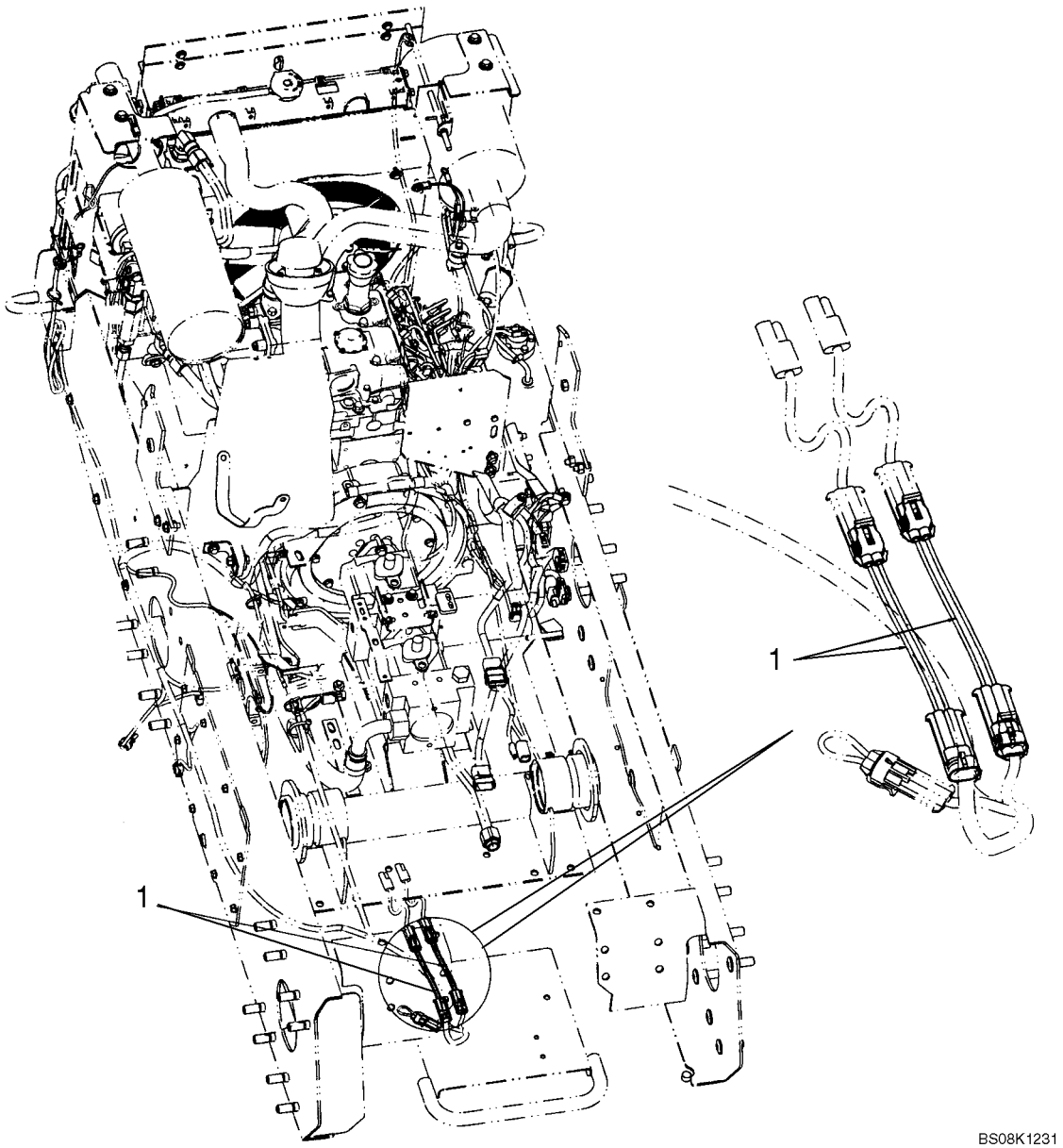

KIT, VOLTAGE SUPPRESSION

REF	FN	PART NUMBER	YR/SN	QTY	DESCRIPTION
		84131682		1	KIT, SERVICE, Transient Voltage Suppression; From Loader Valve Adapter Harness To Chassis Harness; Incl 1 and Instructions
1		87752575		2	HARNESS, Transient Voltage Suppression; See Figure 55.100.68

HARNESS, VOLTAGE SUPPRESSION

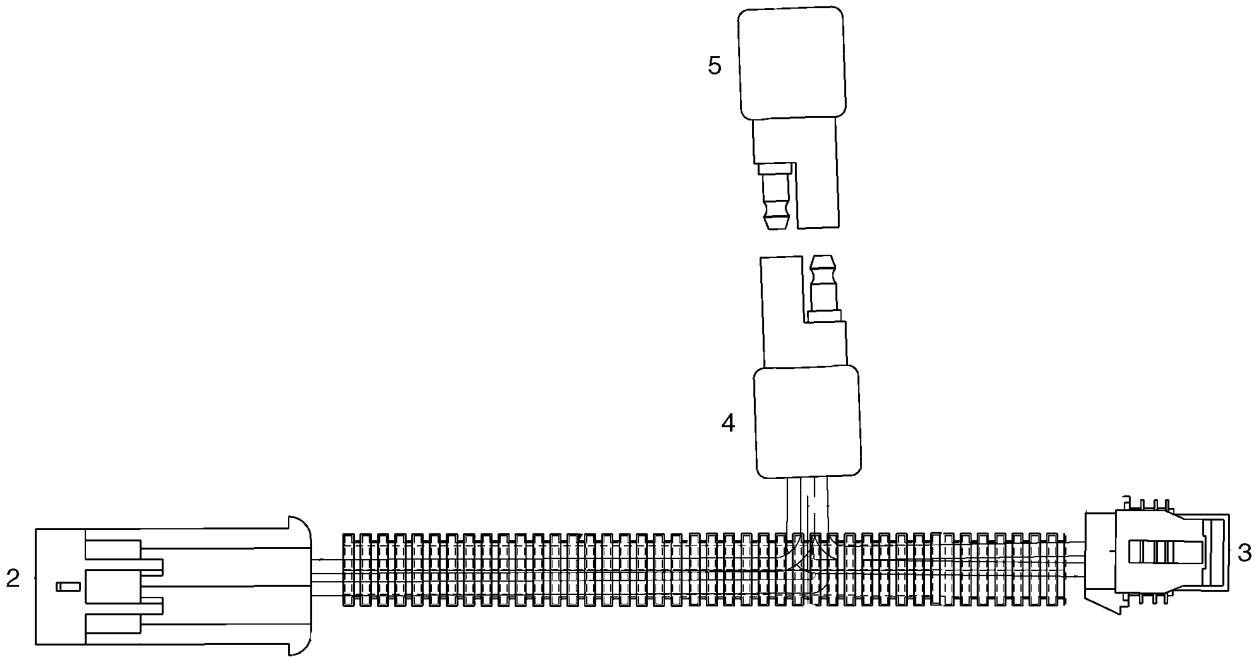

BS08J017

HARNESS, VOLTAGE SUPPRESSION

REF	FN	PART NUMBER	YR/SN	QTY	DESCRIPTION
1		87752575		2	HARNESS, Transient Voltage Suppression; Incl 2 - 5
2		256341A1		1	CONNECTOR, ELEC
3		256340A1		1	CONNECTOR
4		NSS		1	NOT SERVICED SEPARATELY
5		NSS		1	NOT SERVICED SEPARATELY, Bidirectional Transient Suppression Diode

55.100.75		p1	09/09

HARNESS - PROPORTIONAL AUXILIARY

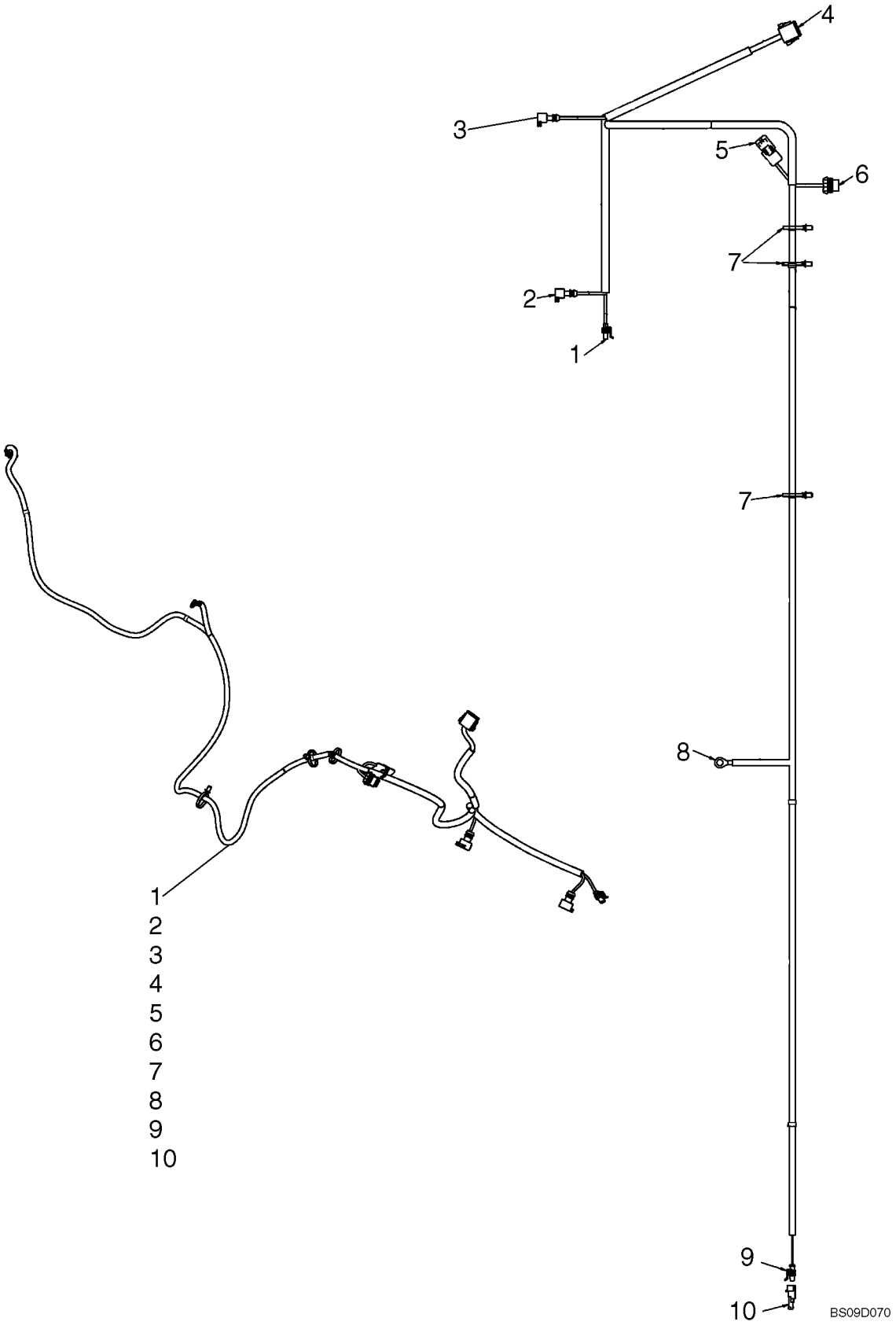

HARNESS - PROPORTIONAL AUXILIARY

REF	FN	PART NUMBER	YR/SN	QTY	DESCRIPTION
		84152140		1	HARNESS, Harness, Proportional Aux; Incl 1 - 10
1		256340A1		1	CONNECTOR, Power To Pump
2		291718A1		1	CONNECTOR, ELEC, Forward Valve
3		291718A1		1	CONNECTOR, ELEC, Reverse Valve
4		225319C1		1	CONNECTOR, ELEC, Powr Width Modulation Contoller Module
5		774735		1	DIODE, 6A
6		256344A1		1	CONNECTOR, Control Handle
7		87668737		3	STRAP, Fir Tree Assy
8		225075C1		1	CONNECTOR, Frame Ground
9		8602417		1	CONNECTOR, WIRE, Fuel Solenoid Jumper
10		225319C1		1	CONNECTOR, ELEC

HARNESS - START RELAY JUMPER

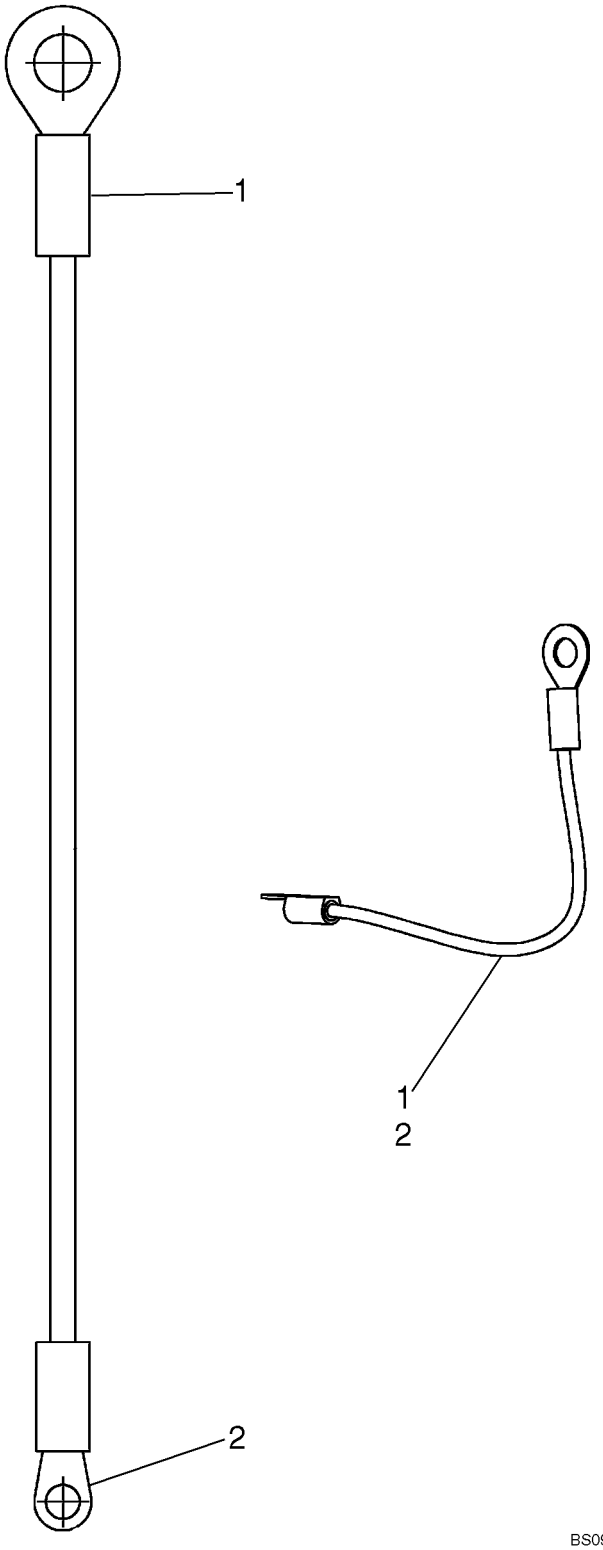

HARNESS - START RELAY JUMPER

REF	FN	PART NUMBER	YR/SN	QTY	DESCRIPTION
		84203238		1	HARNESS, Start Relay Jumper
1		200319		1	CONNECTOR, Start Relay
2		200312		1	CONNECTOR, 20A Circuit Breaker

55.100.77		p1	09/09

HARNESS - MULTIFUCTION CONTROL

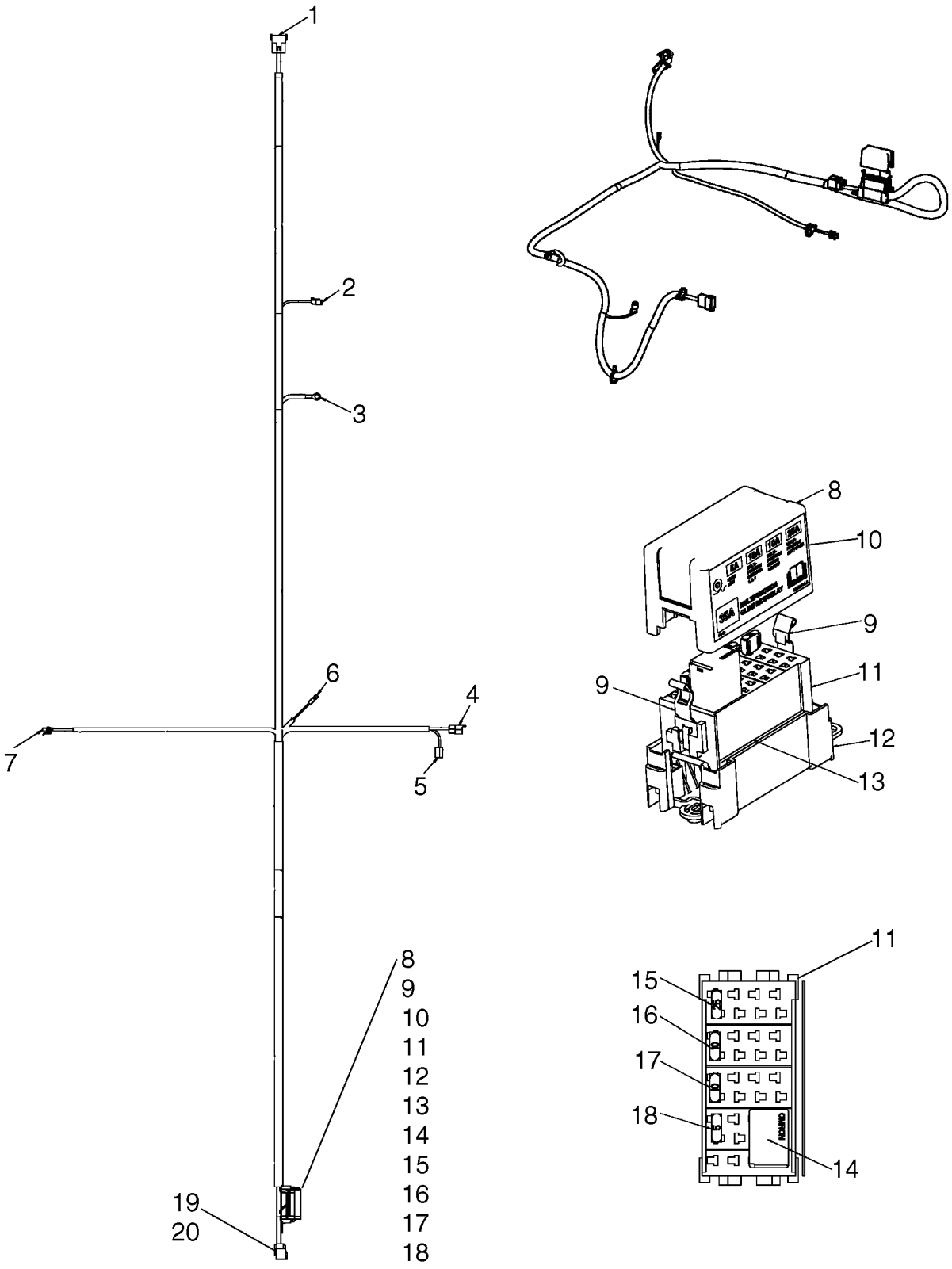

HARNESS - MULTIFUCTION CONTROL

REF	FN	PART NUMBER	YR/SN	QTY	DESCRIPTION
		84206528		1	HARNESS, WIRE, Harness, Multifuction Control; Incl 1 - 20
1		225401C1		1	CONNECTOR, RH Handle
2		225316C1		1	CONNECTOR, ELEC, Glide Ride Valve
3		225065C1		1	CONNECTOR, Chassis Ground
4		872290R1		1	CONNECTOR, ELEC, Ignition Switch Signal
5		877291R1		1	CONNECTION, Optional Ignition Switch
6		200312		1	CONNECTOR, Input Circuit Breaker Power
7		256340A1		1	CONNECTOR, LH Handle
8		279106A1		1	CONNECTOR, Cover Module
9		NSS		1	NOT SERVICED SEPARATELY, PAC_15495959, Latch Cover
10		{84212784}		1	Decal, Multifunction Fuse
11		182164A1		1	CONNECTOR, Fuse Module
12		182163A1		1	CONNECTOR, ELEC, Base Module
13		182166A1		1	CONNECTOR, Secondary
14		87655334		1	RELAY, 35A; Multifunction Glide Ride Relay
15		121415A1		1	FUSE, 25 Amp, Mini, Multifunction Key Power
16		121412A1		1	FUSE, 10 Amp, Mini, Multifunction Switches On, Off
17		121412A1		1	FUSE, 10 Amp, Mini, Multifunction Switches 1, 2, 3
18		121410A1		1	FUSE, 5 Amp, Mini, Glide Ride
20		NSS		1	NOT SERVICED SEPARATELY, FRA_54201009, Boom Connector
21		NSS		1	NOT SERVICED SEPARATELY, FRA_15-002775; X-Mas Tree Clip

55.100.78		p1	09/09

HARNESS - MULTIFUCTION BOOM

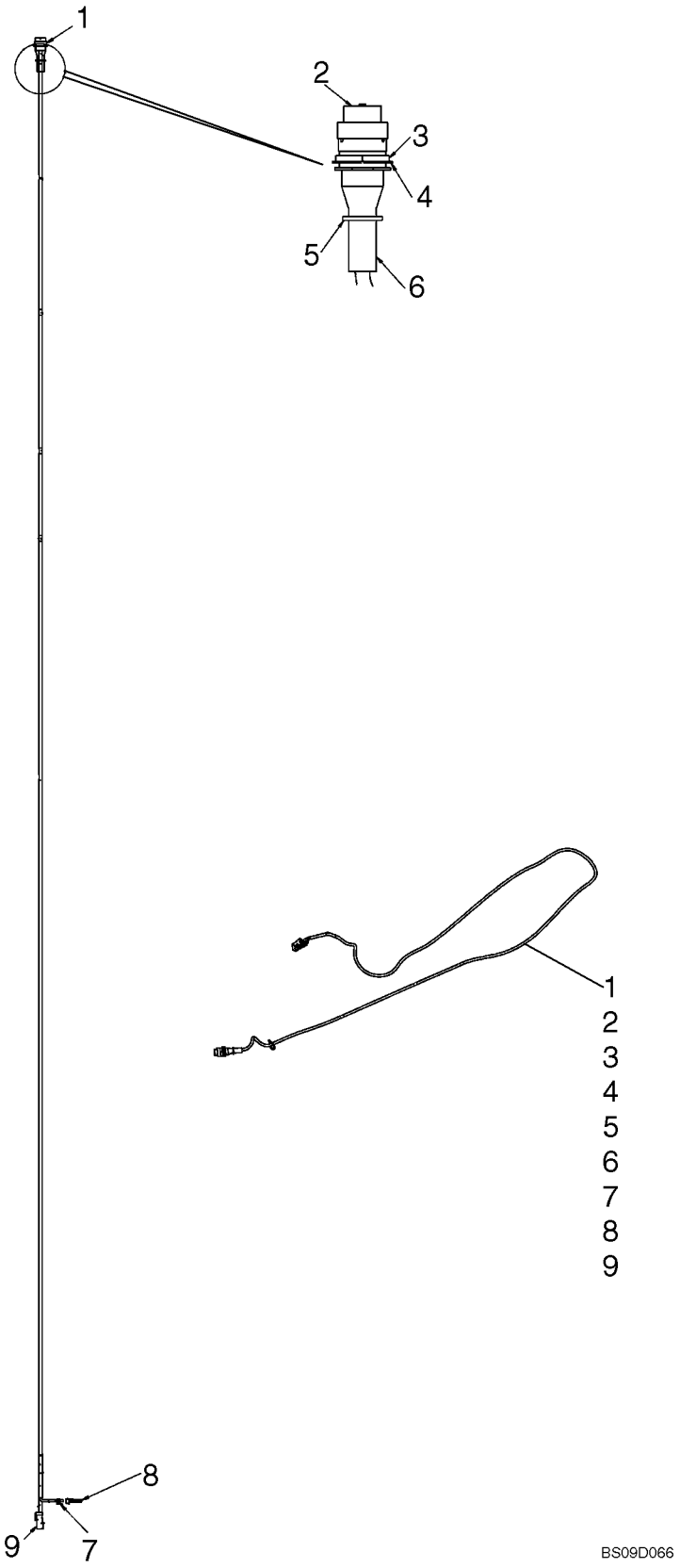

HARNESS - MULTIFUCTION BOOM

REF	FN	PART NUMBER	YR/SN	QTY	DESCRIPTION
		84195028		1	HARNESS, WIRE, Harness, Multifuction Boom; Incl 1 - 9
1		225233C1		1	CONNECTOR, Boom Connector
7		256340A1		1	CONNECTOR, Water Pump
2		225050C1		1	CONNECTOR, Dust Cover
3		490692C1		1	NUT
4		490691C1		1	WASHER
5		792026		1	RING, LOCKING
6		NSS		1	NOT SERVICED SEPARATELY, HD30-18BT-BK; Protective Boot
8		256341A1		1	CONNECTOR, ELEC, Packard Metri Pack 2 Cavity
9		NSS		1	NOT SERVICED SEPARATELY, FRA_54201016; Connector 8 Cavity; Module Connector
10		87668737		1	STRAP

55.201.03		p1	02/09

STARTER

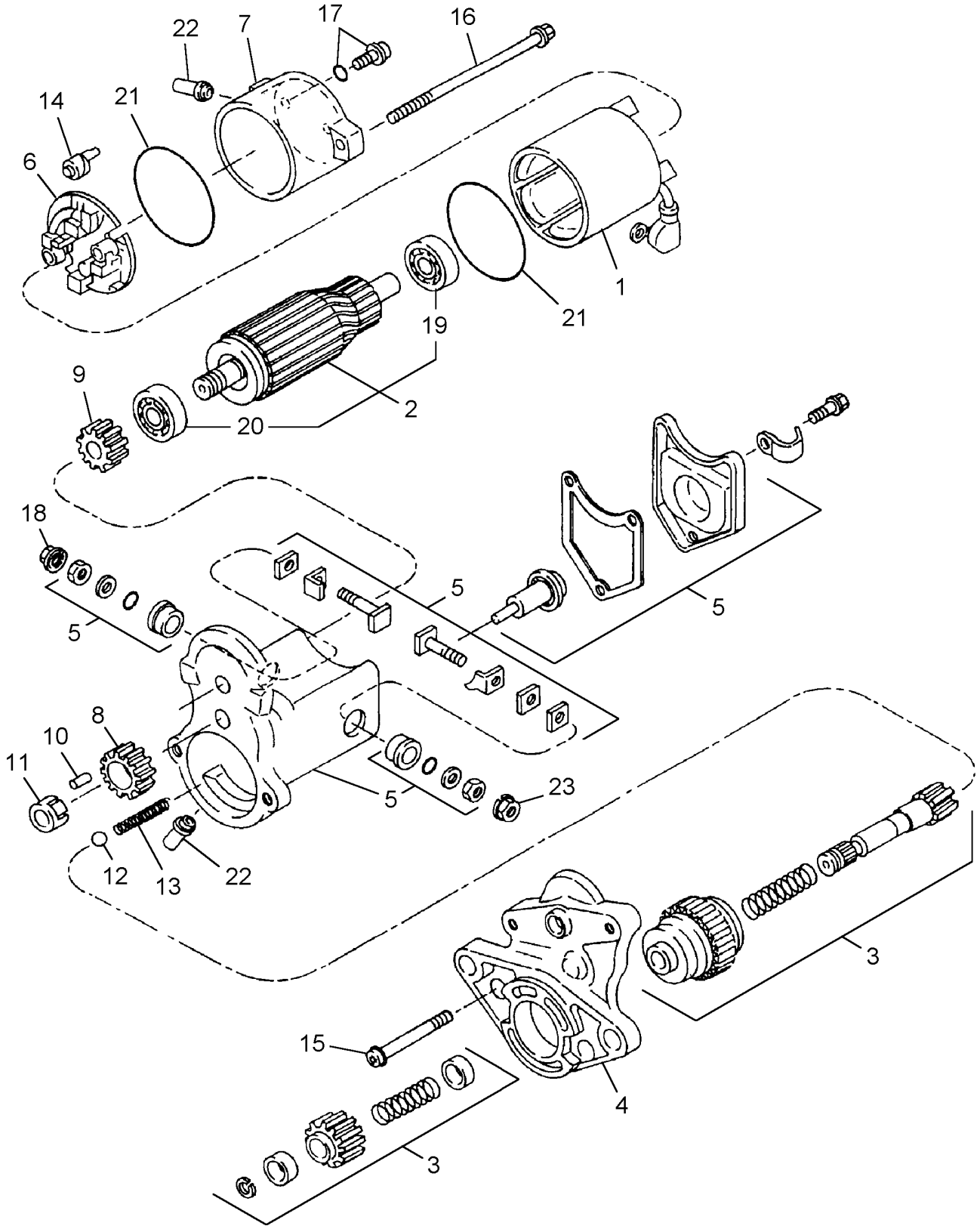

STARTER

REF	FN	PART NUMBER	YR/SN	QTY	DESCRIPTION
		SBA185086530		1	MOTOR, STARTER, Incl. 1 - 23
1		SBA185846570		1	STATOR, Yoke
2		SBA185846571		1	ARMATURE, Incl. 19, 20
3		SBA185866370		1	CLUTCH
4		SBA185846572		1	HOUSING
5		SBA185816360		1	SWITCH, SOLENOID
6		SBA185846573		1	HOLDER, Incl. 14, Brushes (Brushes NSS)
7		SBA185846574		1	FRAME, Cover
8		SBA185846552		1	PINION
9		SBA185846576		1	PINION
10		SBA185846283		5	ROLLER, Clutch
11		SBA185846551		1	RETAINER
12		SBA185846286		1	BALL, Steel
13		SBA185846560		1	SPRING, Return
14		SBA185846579		4	SPRING, Starter
15		SBA185846580		2	SCREW
16		SBA185846581		2	BOLT
17		SBA185846582		2	SCREW, Incl. O-Ring
18		SBA185846378		1	NUT
19		SBA185846583		1	BEARING, BALL
20		SBA185846549		1	BEARING, BALL, Ball
21		SBA185846561		2	O-RING
22		SBA185846562		2	PLUG, DRAIN, Drain
23		SBA185846563		1	NUT

ALTERNATOR

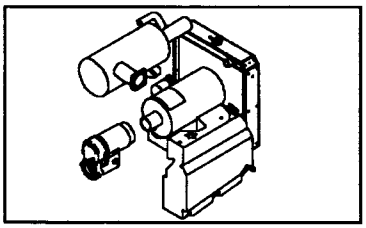

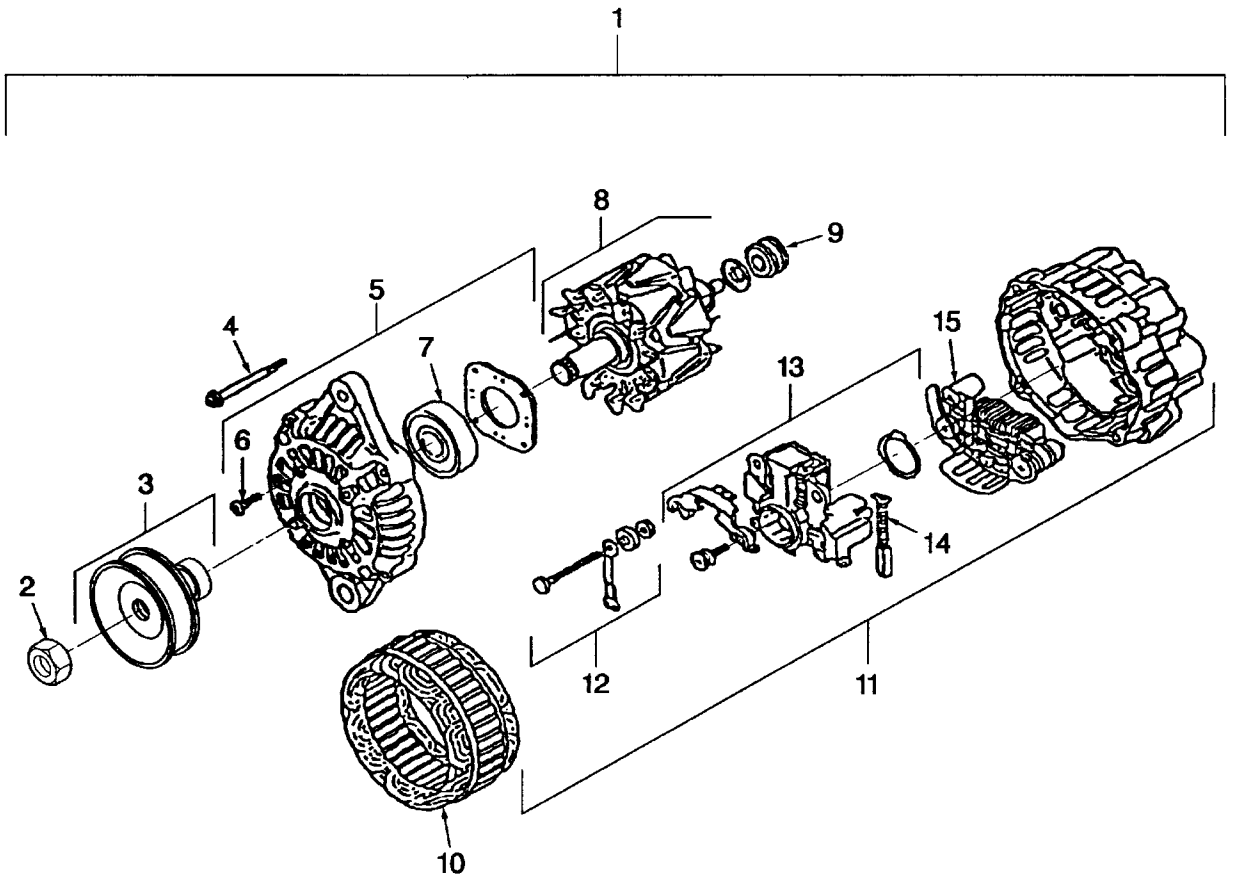

BS09B022

ALTERNATOR

REF	FN	PART NUMBER	YR/SN	QTY	DESCRIPTION
1		SBA185046320		1	ALTERNATOR 12 VOLTS
2		SBA185446269		1	NUT
3		SBA185436180		1	PULLEY
4		SBA185446270		1	SCREW
5		SBA185426210		1	COVER, Front
6		SBA185446271		1	SET OF SCREW
7		SBA185446272		1	BEARING, BALL
8		SBA185446273		1	ARMATURE, Rotor
9		SBA185446274		1	BEARING, BALL
10		SBA185446275		1	STATOR, ALTERNATOR
11		SBA185426220		1	COVER, Rear
12		SBA185446278		1	TERMINAL, Set
13		SBA185446277		1	REGULATOR, VOLTAGE
14		SBA185416480		2	BRUSH, Spring
15		SBA185446276		1	RECTIFIER

ALTERNATOR MOUNTING

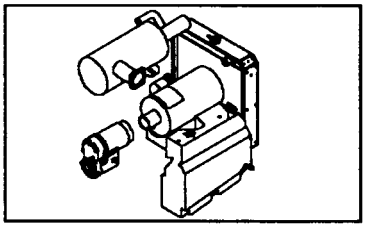

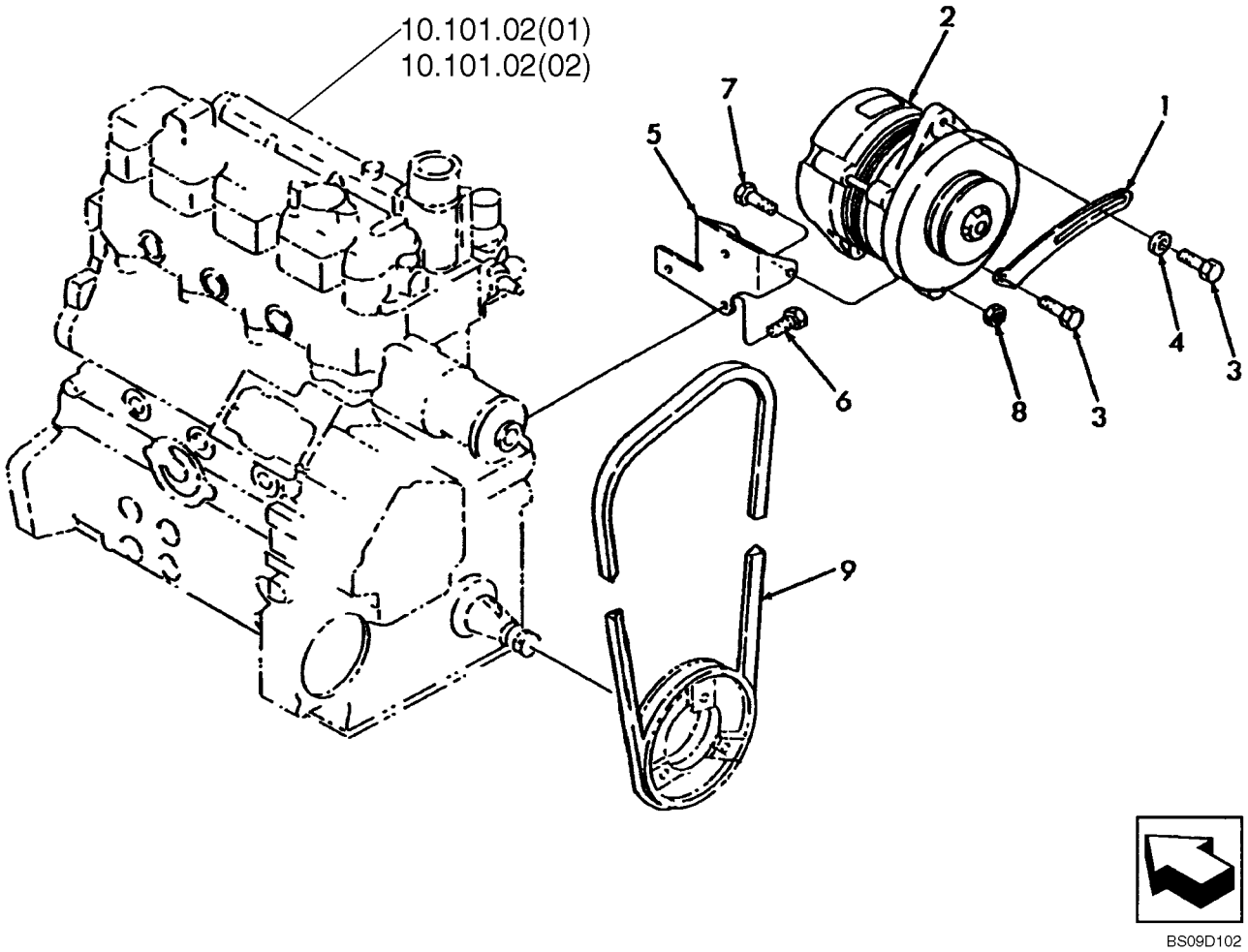

ALTERNATOR MOUNTING

REF	FN	PART NUMBER	YR/SN	QTY	DESCRIPTION
1		SBA185727000		1	PLATE, Adjusting
2		SBA185046320		1	ALTERNATOR, See Figure 55.301.01 12 VOLTS
3		SBA011510820		2	SCREW, CAPTIVE WASHER, Hex, M8 x 20, G5
4		86511315		1	WASHER, M8 x 16 x 1.6
5		SBA185976510		1	BRACKET, 4.5 mm Thick; If Used
5		SBA185976900		1	BRACKET, 6 mm Thick; If Used
6		SBA011510820		3	SCREW, CAPTIVE WASHER, Hex, M8 x 20, G5
7		9706704		2	BOLT, Hex, M10 x 35, 8.8, Full Thd
8		9804278		2	NUT, M10 x 1.5, Flg, Cl 8
9		86517954		1	BELT, .49" W x 37.54" L

55.404.01	02	p1	02/09

REAR LIGHT BAR, BRAKE AND TURN SIGNALS; IF USED (EUROPE)

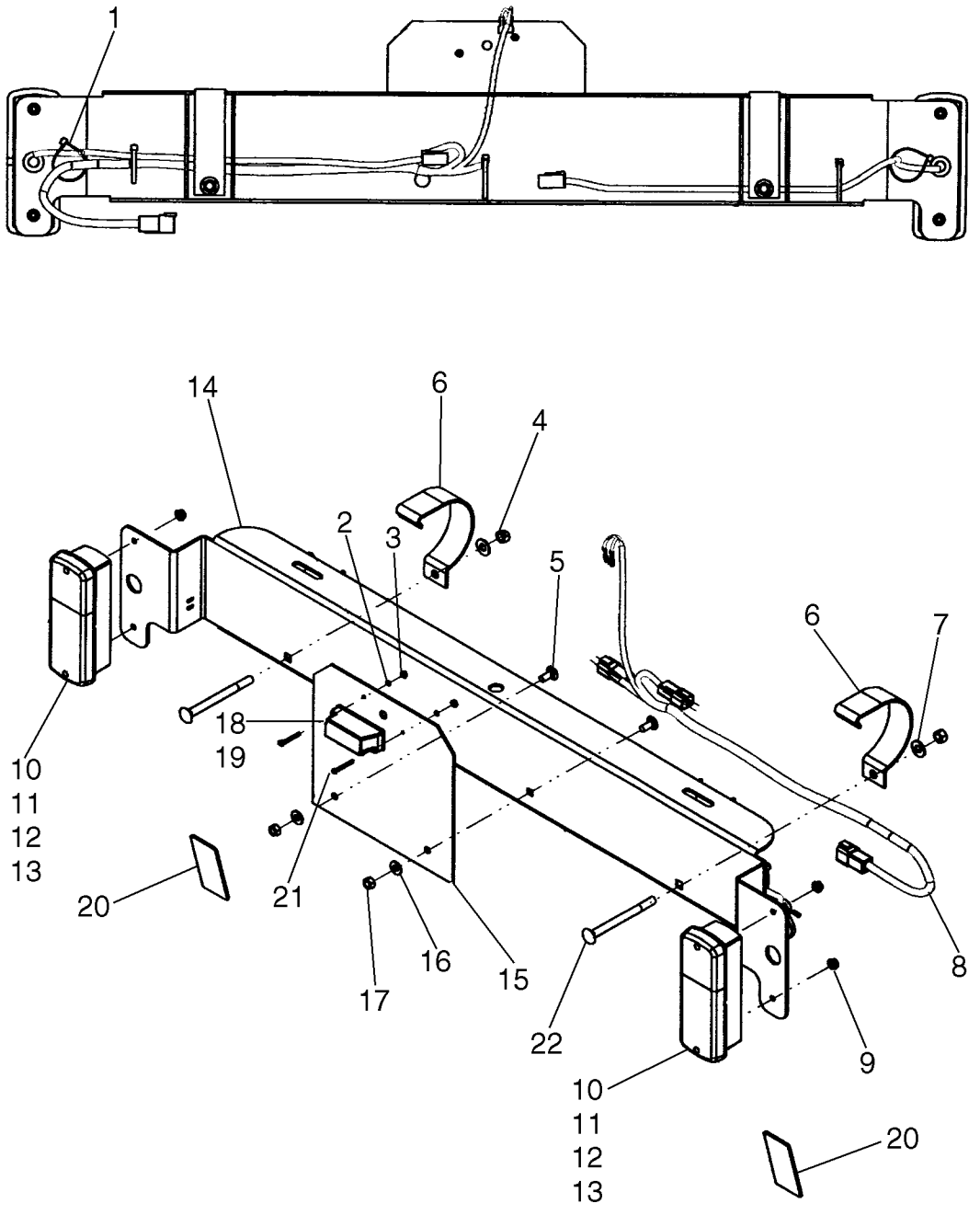

REAR LIGHT BAR, BRAKE AND TURN SIGNALS; IF USED (EUROPE)

REF	FN	PART NUMBER	YR/SN	QTY	DESCRIPTION
1		L11541		5	STRAP, CABLE, Cable Tie, Black
2		87276		2	WASHER, LOCK, #6
3		88458		2	NUT, #6-32
4		9628503		2	NUT, 3/8"-16, G5
5		280497		2	BOLT, CARRIAGE, Short NK, 5/16"-18 x 3/4", G5, Full Thd
6		87647540		2	BRACKET, Bracket, Gray
7		140045		2	WASHER, BELLEVILLE, M10
8		87628439		1	HARNESS, Rear Light Bar Harness, Europe; If Used
8		87738587		1	HARNESS, Rear Light Bar Harness, Europe; If Used
9		86511444		4	NUT, M6, Flg Ser
10		177239A2		2	LIGHT, TAIL, Tail Light, Europe; Incl. 11 - 13
11		187140A1		2	LENS
12		3131227R1		2	BULB, P25-1, 12V, 21W, Turn Signal
13		3131234R1		2	BULB, P25-2, 12V, 5W, Stop/Tail
14		87647537		1	CHANNEL, Rear Light Bar, Gray
15		86504514		1	PLATE
16		322358		2	WASHER, BELLEVILLE, M8
17		9635082		2	NUT, 5/16"-18, G5
18		445502		1	LAMP, License Plate Light; Incl. 19
19		470017		1	BULB
20		121573A1		2	REFLECTOR, Red
21		9635014		2	SCREW, Cross Pan Hd, #6-32 x 1 1/4"
22		280825		2	BOLT, CARRIAGE, Short NK, 3/8"-16 x 4 1/2", G5

55.404.01	02	p1	03/09

REAR LIGHT BAR, ON-ROAD (EUROPE)

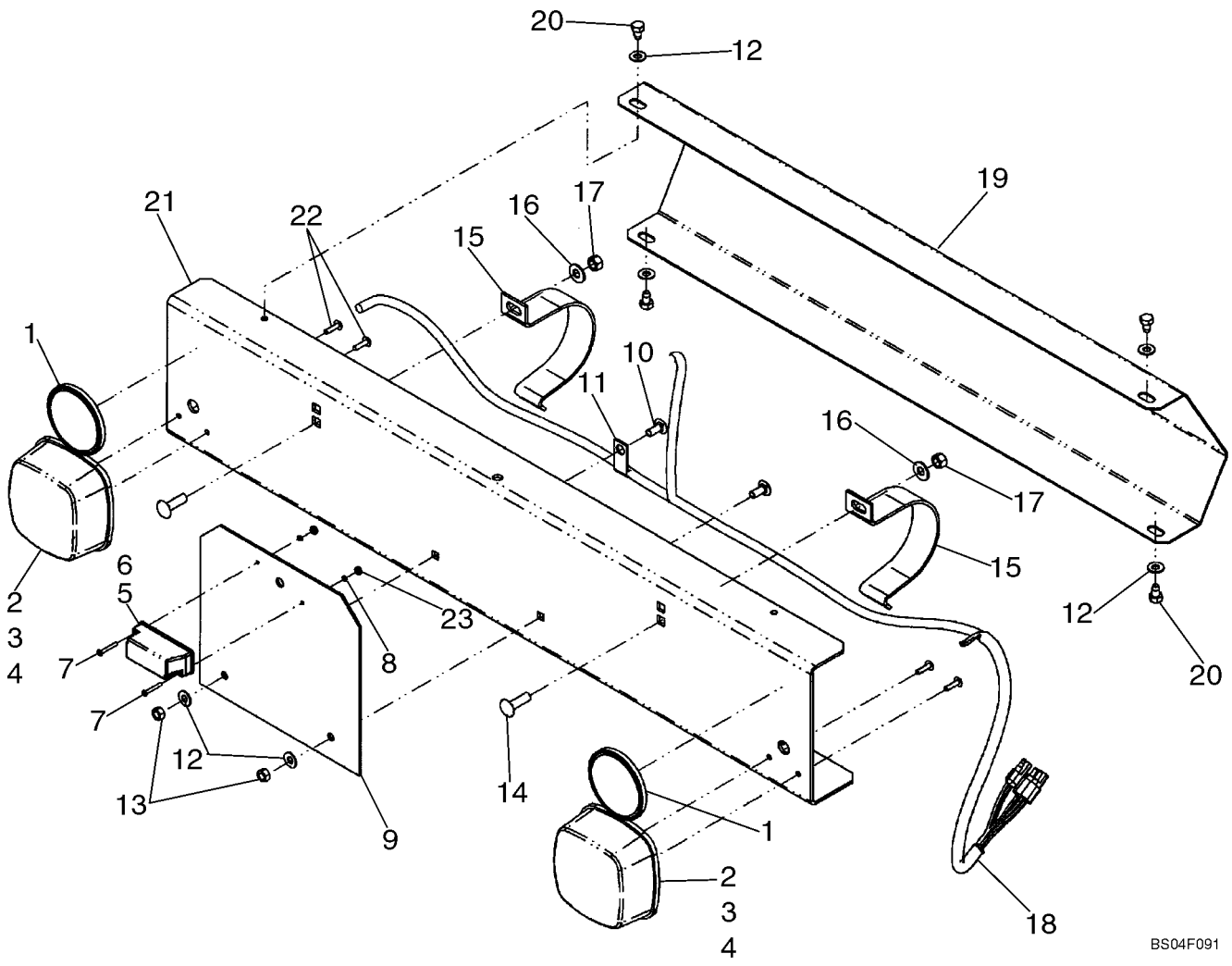

REAR LIGHT BAR, ON-ROAD (EUROPE)

REF	FN	PART NUMBER	YR/SN	QTY	DESCRIPTION
1		437024		2	REFLECTOR, Red
2		84037090		2	LAMP, TAIL
3		398877		4	BULB, 12V, 21W
4		418870		2	BULB, 12V 10W
5		445502		1	LAMP, License Plate Light
6		470017		1	BULB, 12V 5W
7		9635014		2	SCREW, Cross Pan Hd, #6-32 x 1 1/4"
8		87276		2	WASHER, LOCK, #6
9		86504514		1	PLATE
10		280497		2	BOLT, CARRIAGE, Short NK, 5/16"-18 x 3/4", G5, Full Thd
11		167509		1	CLIP, .25 x .44
12		322358		6	WASHER, BELLEVILLE, M8
13		9635082		2	NUT, 5/16"-18, G5
14		86508749		2	BOLT, CARRIAGE, Short NK, 3/8"-16 x 1 1/4", G5, Full Thd
15		87045554		2	BRACKET, Bracket
16		140045		2	WASHER, BELLEVILLE, M10
17		9628503		2	NUT, 3/8"-16, G5
18		86536917		1	HARNESS, WIRE
19		87046760		1	SHIELD, Shield
20		87346		4	SCREW, SELF TAPPING, Hex Hd, 5/16" x 1/2"
21		87459839		1	CHANNEL, Channel
22		60485		4	SCREW, Slotted Truss Hd, #10-24 x 3/4"
23		88458		2	NUT, #6-32

55.404.01	03	p1	09/09

REAR LIGHT

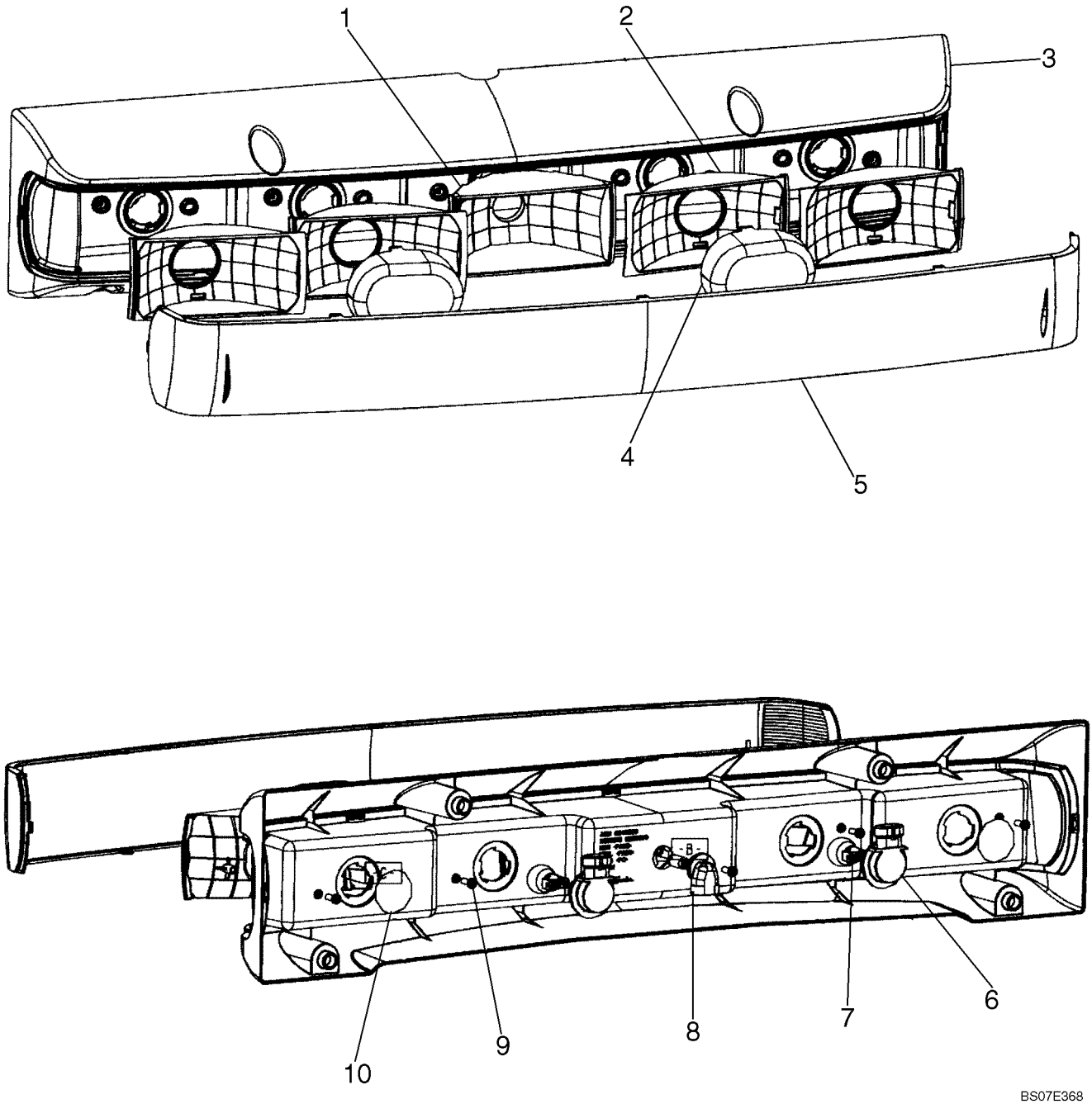

REAR LIGHT

REF	FN	PART NUMBER	YR/SN	QTY	DESCRIPTION
		87569827		1	LIGHT, Rear Light Assembly; Incl. 1 - 10
1		NSS		1	NOT SERVICED SEPARATELY, Reflector
2		NSS		4	NOT SERVICED SEPARATELY, Reflector
3		NSS		1	NOT SERVICED SEPARATELY, Rear Light Bar Housing
4		NSS		2	NOT SERVICED SEPARATELY, Lens, Red
5		NSS		1	NOT SERVICED SEPARATELY, Lens, Clear
6		87642986		2	SOCKET, LAMP, Socket, 3157 - 12V
7		87642985		2	BULB, Bulb, 3157 - 12V
8		9847312		1	BULB, Bulb, 886 - 12.8 Volt, 50 Watt Halogen
9		NSS		5	NOT SERVICED SEPARATELY, Screw
10		NSS		2	NOT SERVICED SEPARATELY, Tape, Metalized Film

55.404.02		p1	02/09

FRONT HEADLAMP WITH TURN SIGNALS, ON ROAD (EUROPE)

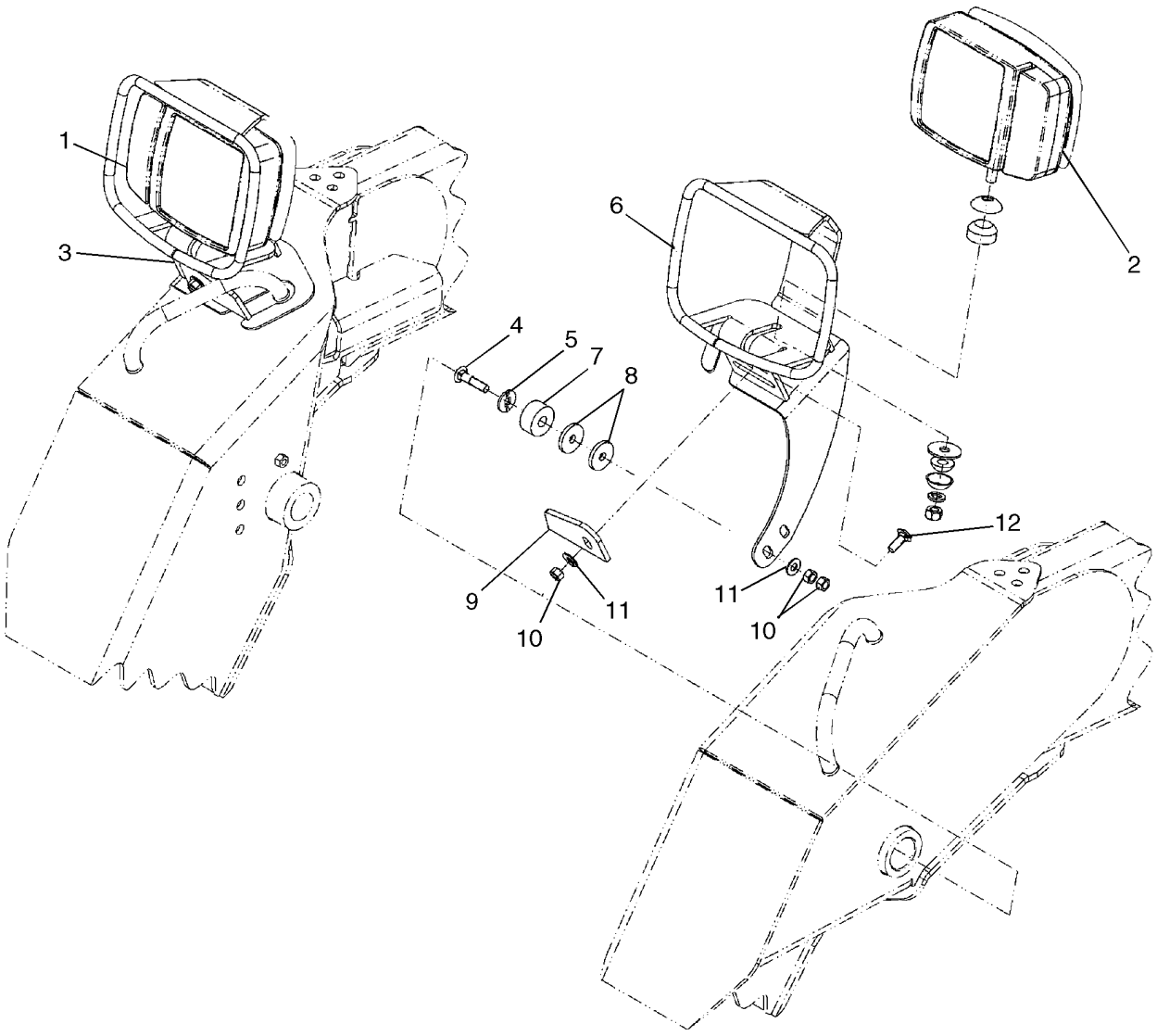

FRONT HEADLAMP WITH TURN SIGNALS, ON ROAD (EUROPE)

REF	FN	PART NUMBER	YR/SN	QTY	DESCRIPTION
1		87572859		1	LAMP, Right Headlamp With Turn Signal
2		87572860		1	LAMP, Left Headlamp With Turn Signal
3		87569749		1	MOUNTING PARTS, Mount, Right Hand - Gray
4		86508775		2	BOLT, CARRIAGE, Short NK, 3/8"-16 x 1 3/4", G5
5		86504605		2	WASHER
6		87569748		1	MOUNTING PARTS, Mount, Left Hand - Gray
7		86504606		2	BUSHING
8		213404		4	SPACER
9		86504502		2	PLATE
10		9628503		6	NUT, 3/8"-16, G5
11		140045		4	WASHER, BELLEVILLE, M10
12		80280503		2	BOLT, CARRIAGE, Short NK, 3/8"-16 x 1", G5, Full Thd

FRONT & REAR WORK LIGHTS

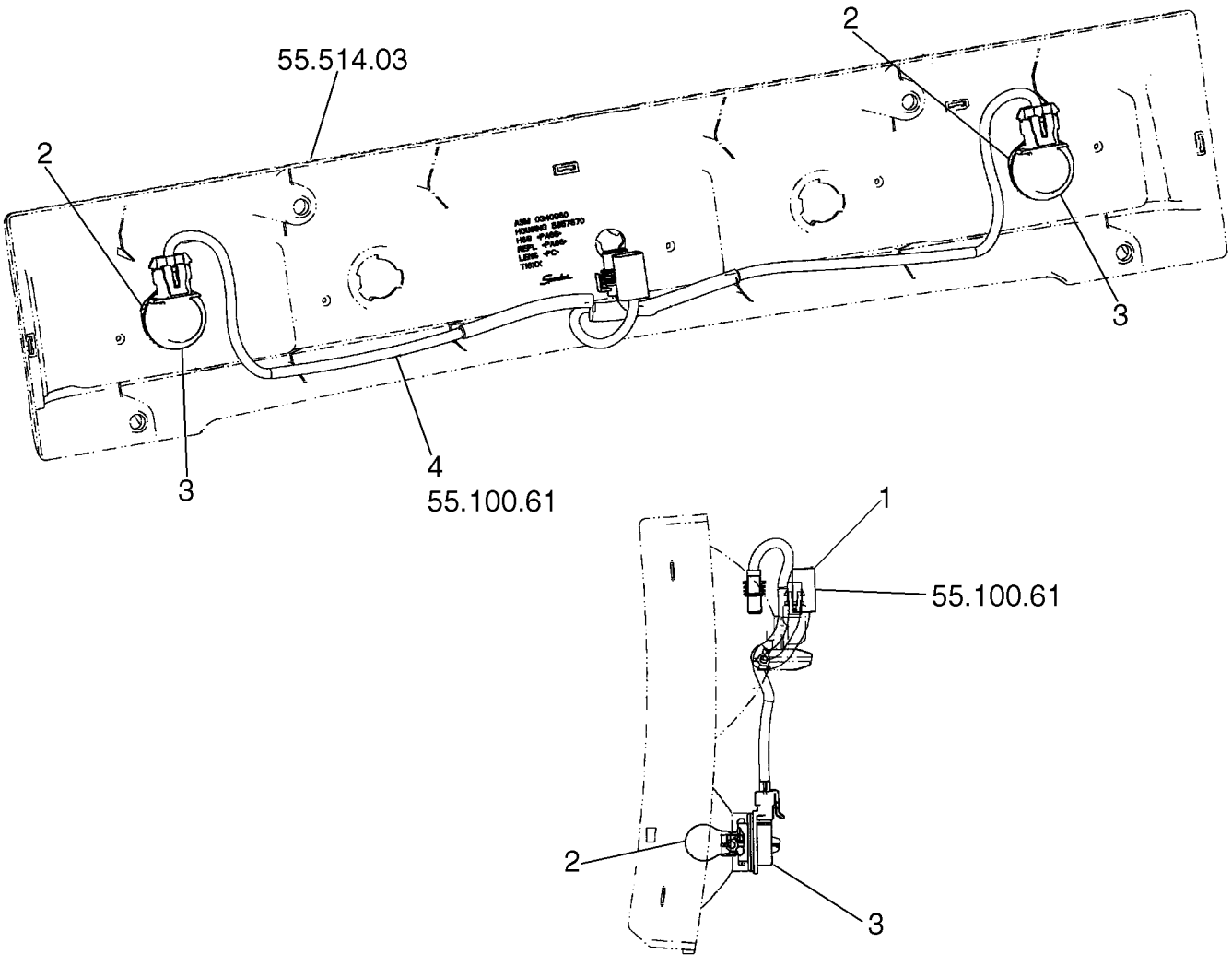

FRONT & REAR WORK LIGHTS

REF	FN	PART NUMBER	YR/SN	QTY	DESCRIPTION
1		87572872		2	HARNESS, Optional Front Work Light; See Figure 55.100.61
2		87642985		4	BULB, Bulb, Clear (12V/28W)
3		87642986		4	SOCKET, LAMP, Socket
4		87599259		1	HARNESS, Optional Rear Work Light; See Figure 55.100.61

55.404.11	01	p1	03/09

ELECTRIC CAB, TURN SIGNALS

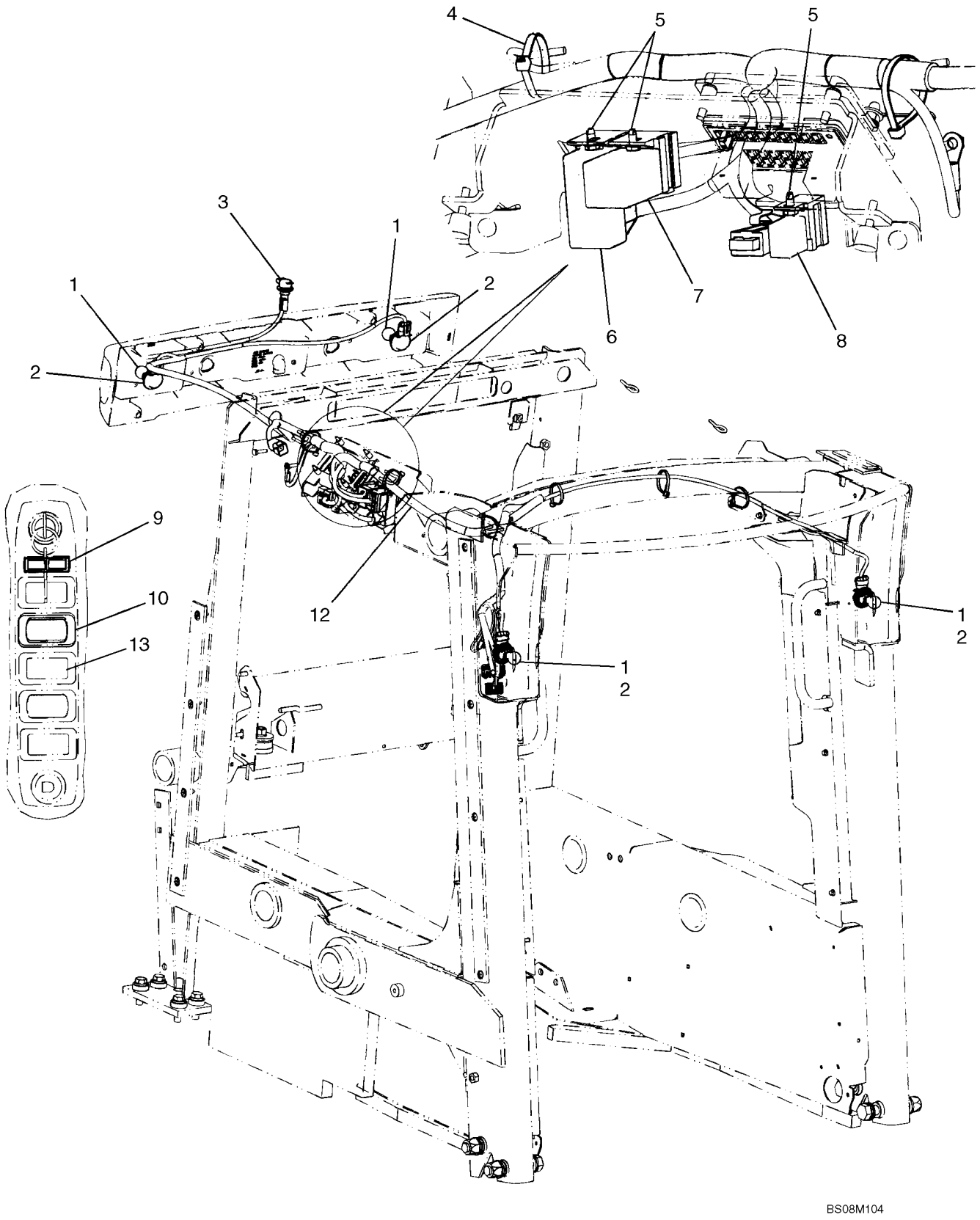

ELECTRIC CAB, TURN SIGNALS

REF	FN	PART NUMBER	YR/SN	QTY	DESCRIPTION
		87659806		1	KIT, Kit, Turn Signals; Incl. 1 - 12
1		87642984		4	BULB, Amber Bulb 12V/28W
2		87642986		4	SOCKET, LAMP, Bulb Socket
3		82002966		1	SOCKET, POWER
4		263117		6	STRAP, CABLE, .14" x 11 1/2"
5		86500939		3	SCREW, SELF TAPPING, Hex Wash Hd, #10 x 3/8"
6		83982664		1	RELAY, Turn Signal Relay
7		9821783		1	FLASHER UNIT
8		86509590		1	RELAY
9		86604657		1	INDICATOR,TURN SIGNAL
10		87641189		1	SWITCH, FLASHER, Hazard
11		87586469		1	DECAL, Rotating Beacon; Not Illustrated
12		87650823		1	HARNESS, North American Flasher; See Figure 55.100.65 [02]; If Used Does Not Include Fuse
12		87687996		1	HARNESS, North American Flasher; See Figure 55.100.65 [02]; If Used Includes 7.5 A Fuse
13		87641191		1	SWITCH, BEACON

55.404.11	02	p1	04/09

BOOM, ON ROAD WITH TURN SIGNALS

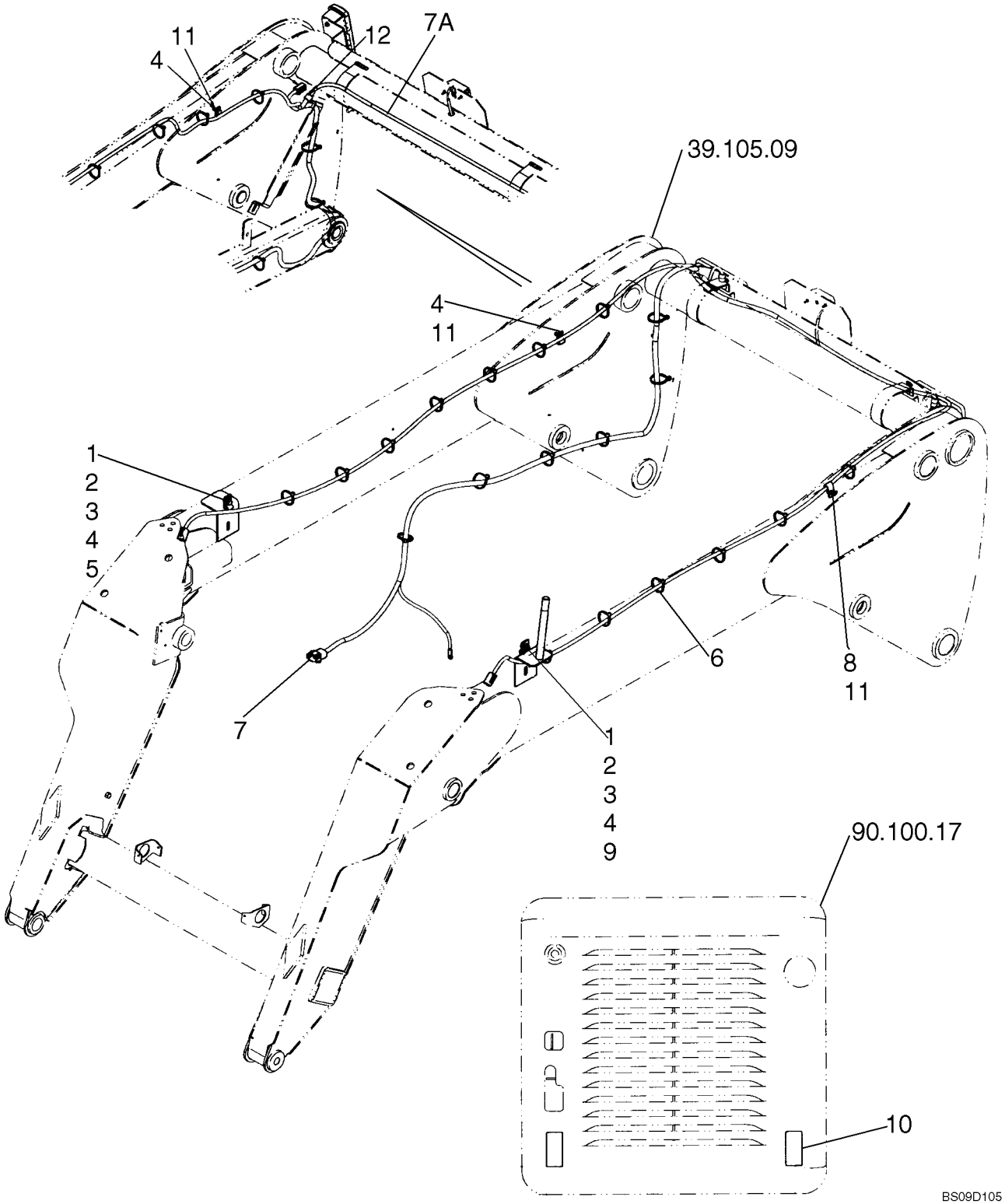

BOOM, ON ROAD WITH TURN SIGNALS

REF	FN	PART NUMBER	YR/SN	QTY	DESCRIPTION
1		87872		2	BOLT, Hex, 5/16"-18 x 3/4", G5, Full Thd
2		322358		2	WASHER, BELLEVILLE, M8
3		9635082		2	NUT, 5/16"-18, G5
4		853765		3-4	CLAMP, 5/16", Insul, 3/8" Bolt
5		86529244		1	SUPPORT
6		263117		19	STRAP, CABLE, .14" x 11 1/2"
7		87653077		1	HARNESS, Boom Lights; Replaces 87573548; If Used
8		86010402		1	CLAMP, 1/2", Insul, 3/8" Bolt
7A		87705782		1	HARNESS, Harness; Boom Lights; If Used
9		86522442		1	SUPPORT
10		121573A1		2	REFLECTOR
11		9840344		2	SCREW
12		9706748		1	CLAMP, 5/8", Insul, 5/16" Bolt

BEACON KIT & MISCELLANEOUS PARTS, ON-ROAD

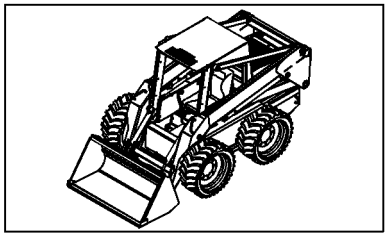

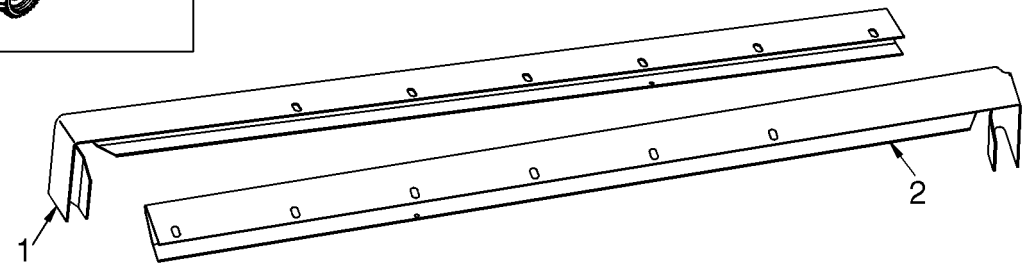

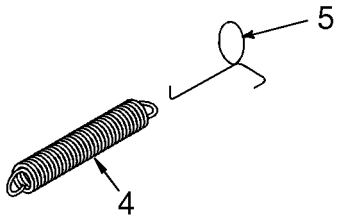

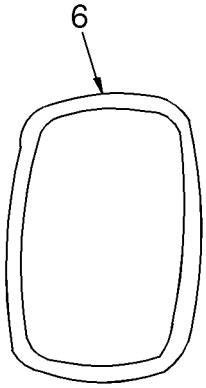

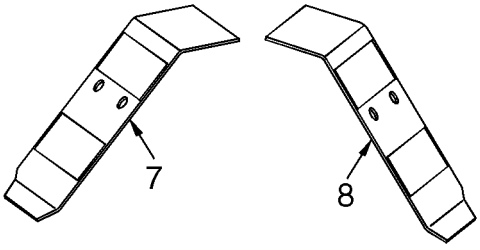

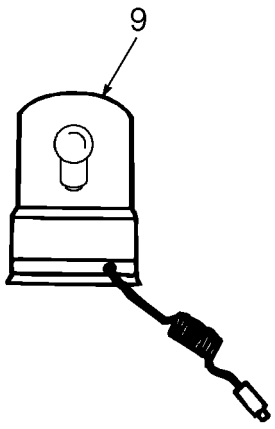

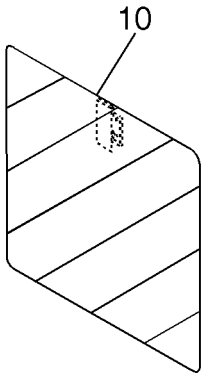

BS09A482

BEACON KIT & MISCELLANEOUS PARTS, ON-ROAD

REF	FN	PART NUMBER	YR/SN	QTY	DESCRIPTION
		{86571916}		1	Kit, Italian Loose Parts; Incl Ref 2, 4 - 9, 14
1		86565641		1	GUARD, Bucket, LH, Incl. Ref. 3
2		86565640		1	GUARD, Bucket, RH, Incl. Ref. 3
4		180033		2	SPRING
5		180007		AR	HOOK
6		81871843		1	MIRROR, LH
7		86568101		1	GUARD, LH, Incl. Safety Traction Tape
8		86568102		1	GUARD, RH, Incl. Safety Traction Tape
8		9840158		AR	KIT, Safety Traction Tape, (3) pcs 3" x 44"
9		9840716		1	BEACON
10		86530079		2	GUARD, Included in Italian Loose Parts, Not Shown
11		86529536		1	CABLE, Included in Italian Loose Parts, Not Shown
12		631816		2	SCREW, Wingscrew, 3/8"-16 x 1", Included in Italian Loose Parts, Not Shown
13		517372		1	PIN, CLEVIS, Pin, Clevis, 3/8" x 1-7/8", Included in Italian Loose Parts, Not Shown
14		280616		2	BOLT, CARRIAGE, Short NK, 5/16"-18 x 1/2", G5, Full Thd, Included in Italian Loose Parts, Not Shown
15		216698		1	HAIR PIN COTTER, Int, 5/16" x 1.75" x 0.125", Included in Italian Loose Parts, Not Shown

55.408.01	02	p1	03/09

BEACON KIT

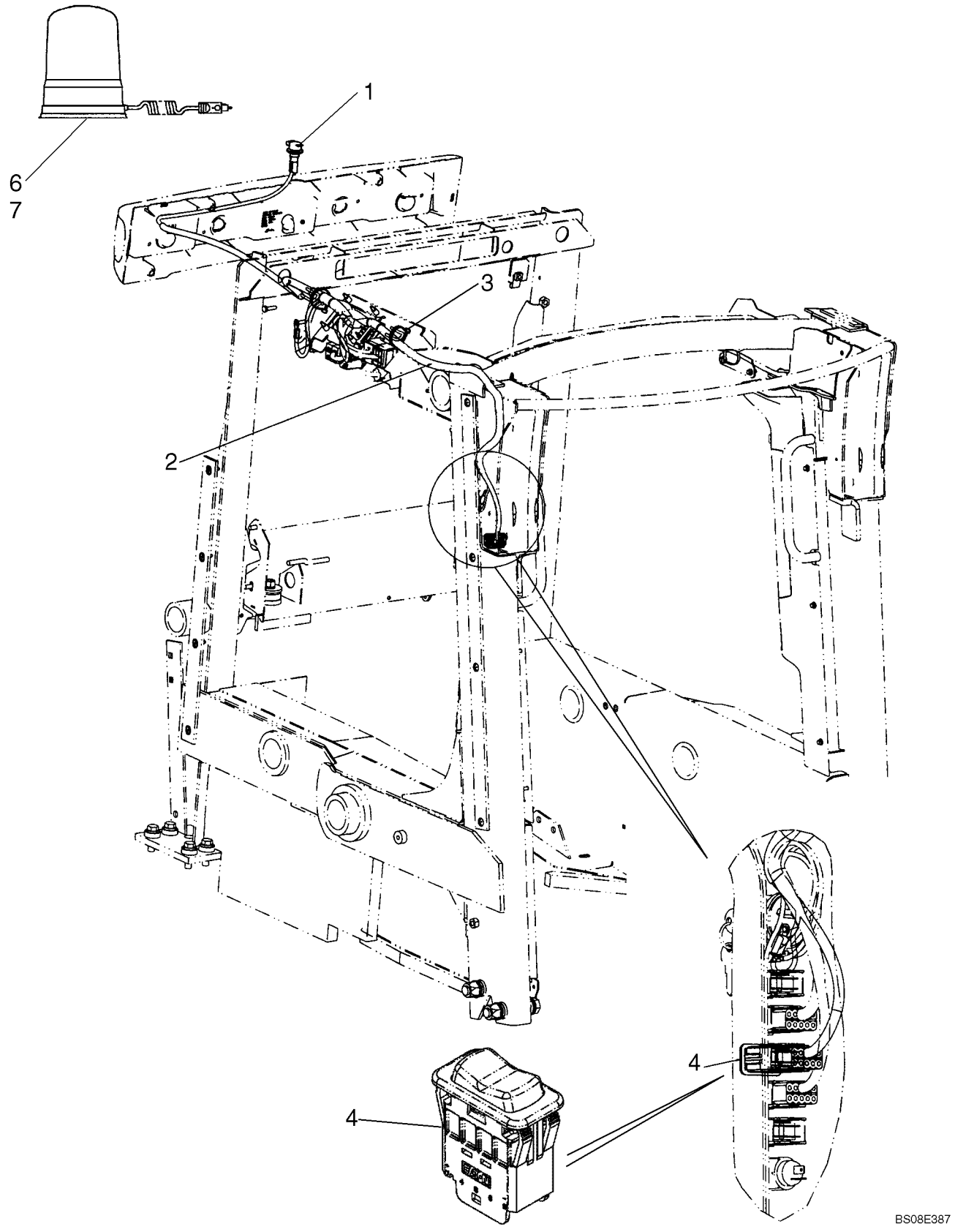

BEACON KIT

REF	FN	PART NUMBER	YR/SN	QTY	DESCRIPTION
		87629763		1	KIT, SERVICE, Rotating Beacon Kit; Incl. 1 - 7 And Instructions
1		82002966		1	SOCKET, POWER, Plug In for Rotating Beacon
2		87609682		1	HARNESS, Beacon Harness; See Figure 55.100.66 [01]
3		263117		2	STRAP, CABLE, .14" x 11 1/2"
4		87641191		1	SWITCH, BEACON, Rotating Beacon Switch
5		87586496		1	DECAL, Rotating Beacon
6		9840716		1	BEACON, Rotating Beacon; Incl. 7
7		86616248		1	BULB, #HI, 55w

HORN

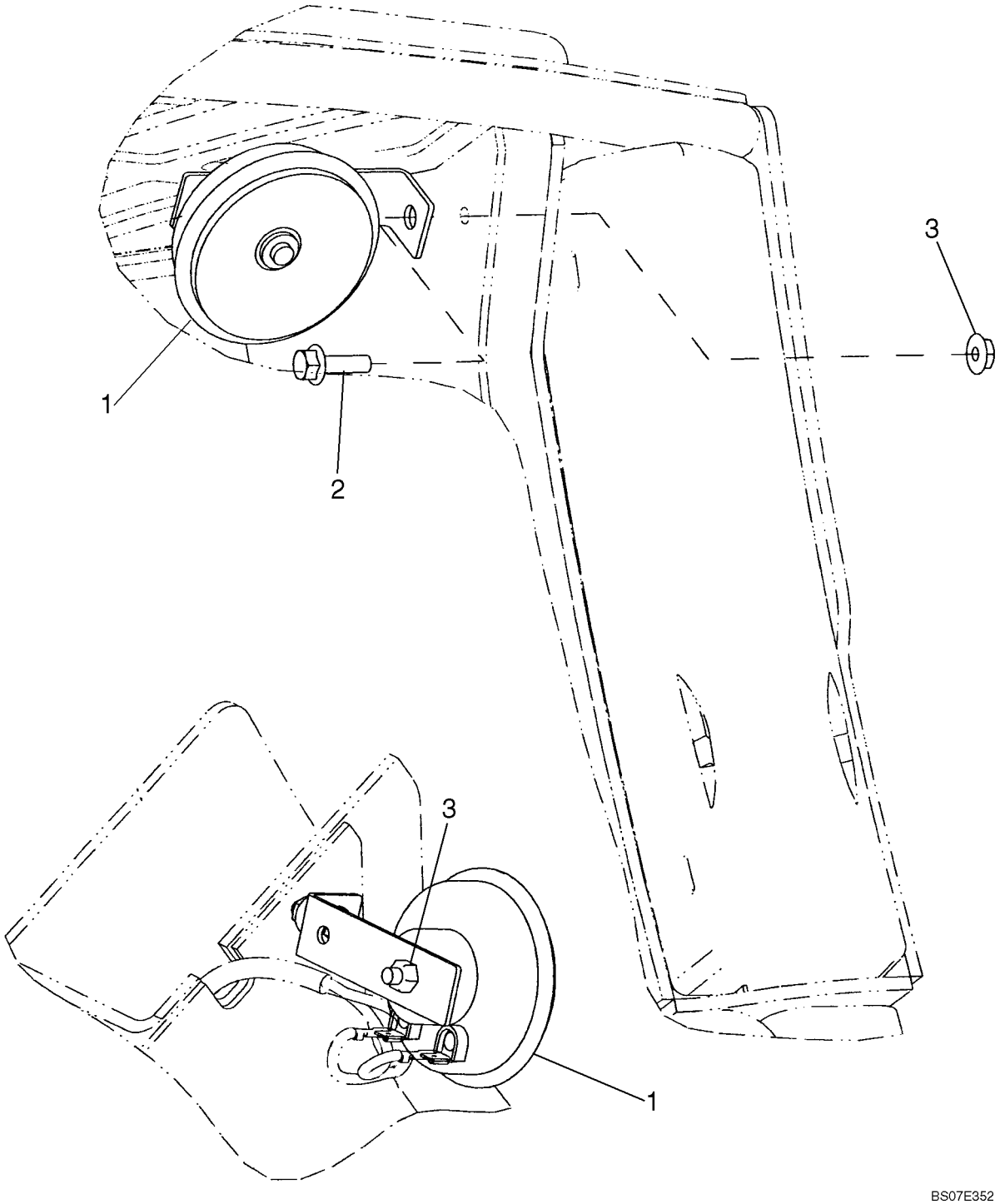

HORN

REF	FN	PART NUMBER	YR/SN	QTY	DESCRIPTION
1		87599754		1	HORN, If Used
1		87702213		1	HORN, If Used
2		87015862		1	BOLT, Hex Flg, M6 x 20, 8.8, Full Thd
3		86981460		1	NUT, Hex Nut, M6
		87659800		1	BRACKET, Horn Mounting

55.408.04	01	p1	02/09

BACKUP ALARM

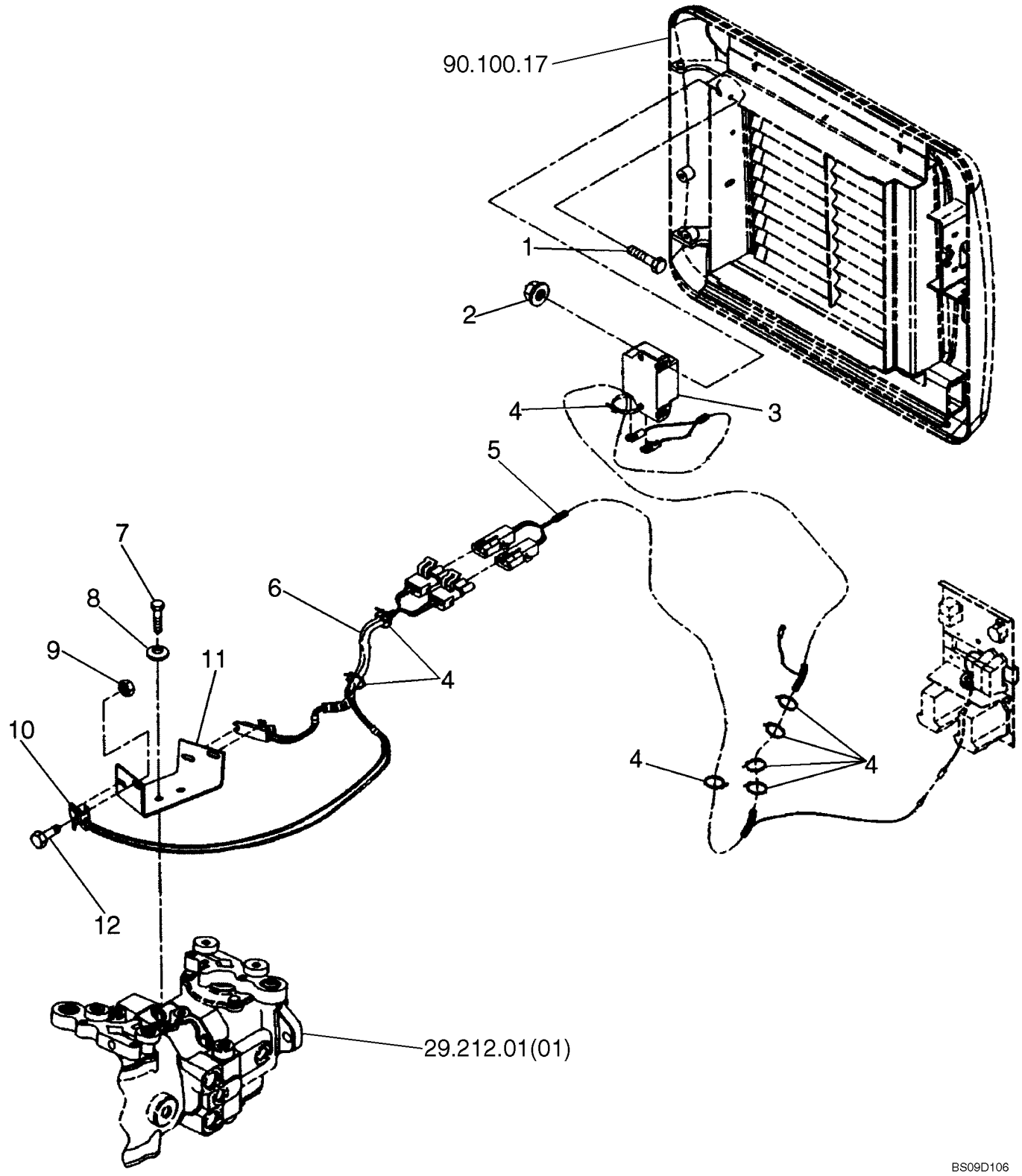

BACKUP ALARM

REF	FN	PART NUMBER	YR/SN	QTY	DESCRIPTION
1		87872		2	BOLT, Hex, 5/16"-18 x 3/4", G5, Full Thd
2		145458		2	NUT, Flg, USR, 5/16"-18
3		9807283		1	ALARM
4		263117		8	STRAP, CABLE, .14" x 11 1/2"
5		9827602		1	HARNESS, WIRE, Backup Alarm
6		93867		X	TUBE, .594 x .088, 1ft Required
7		88434		2	BOLT, Hex, 3/8"-16 x 3/4", G5, Full Thd
8		140045		2	WASHER, BELLEVILLE, M10
9		523282		4	NUT, Flg, USR, 1/4"-20
10		86542673		2	SWITCH, Backup Alarm; 14.5 in Wire Length Between Connectors; Incl NSS Bracket
11		86729243		1	BRACKET
12		9707580		4	BOLT, Hex, 1/4"-20 x 3/4", G5, Full Thd

55.408.04	02	p1	03/09

BACK UP ALARM - MODELS WITH PILOT CONTROL; IF USED

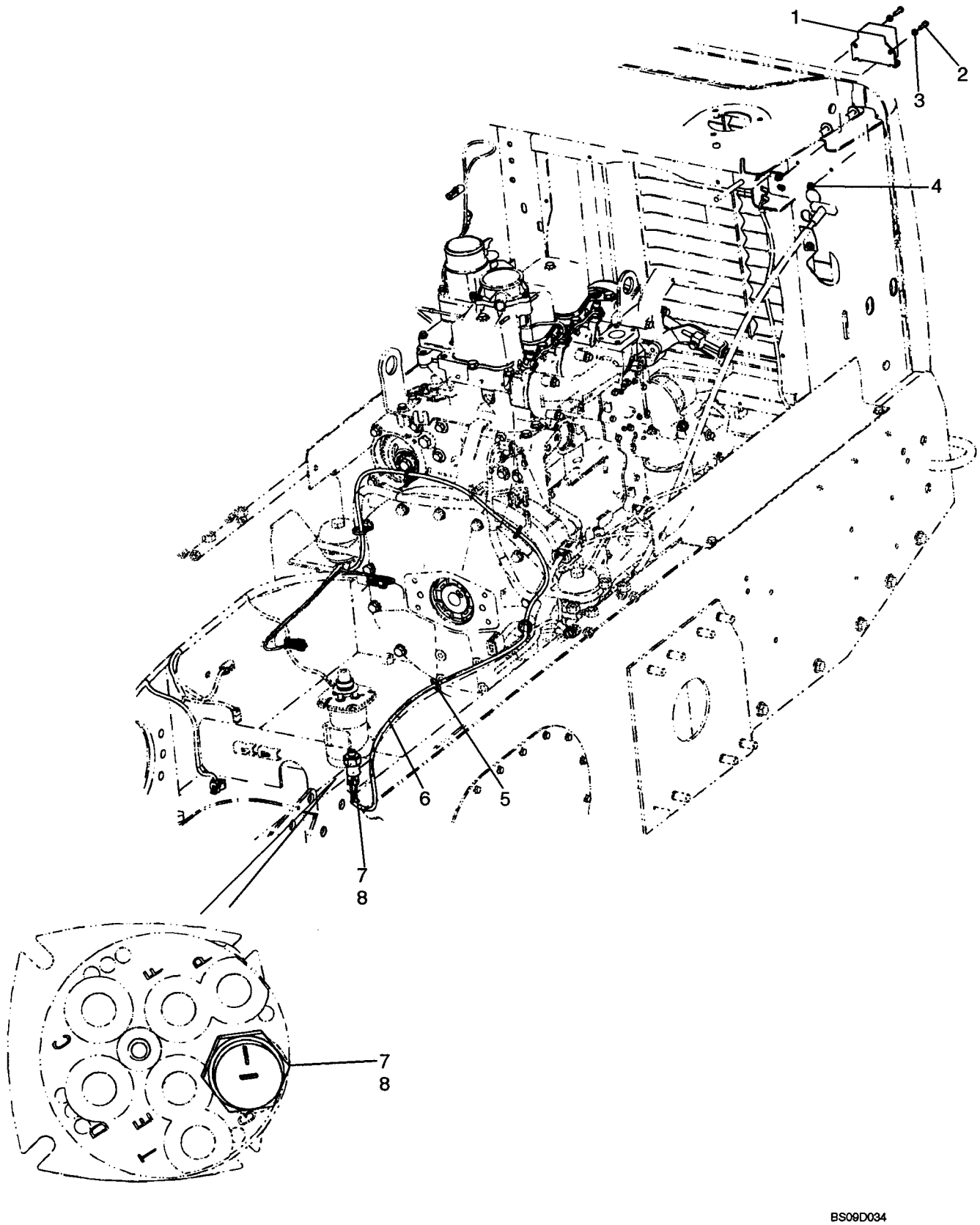

BACK UP ALARM - MODELS WITH PILOT CONTROL; IF USED

REF	FN	PART NUMBER	YR/SN	QTY	DESCRIPTION
1		9807283		1	ALARM
2		120100		2	BOLT, Hex, M6 x 20, 8.8
3		86588450		2	WASHER, M6 x 12 x 1.6 Thk
4		86511444		2	NUT, M6, Flg Ser
5		263117		5	STRAP, CABLE, .14" x 11 1/2"
6		87572868		1	HARNESS, Back Up Alarm Adapter
7		84155533		1	SWITCH, PRESSURE, Incl 8; 2000 PSI; Backup Alarm Control; Replaces 87370805 And 87752556
8		9617873		1	O-RING, 6-1, 90 Duro, .468" ID x .078" Thk

ELECTRIC CAB - MAIN HARNESS AND FUSE BLOCK, DELUXE CAB

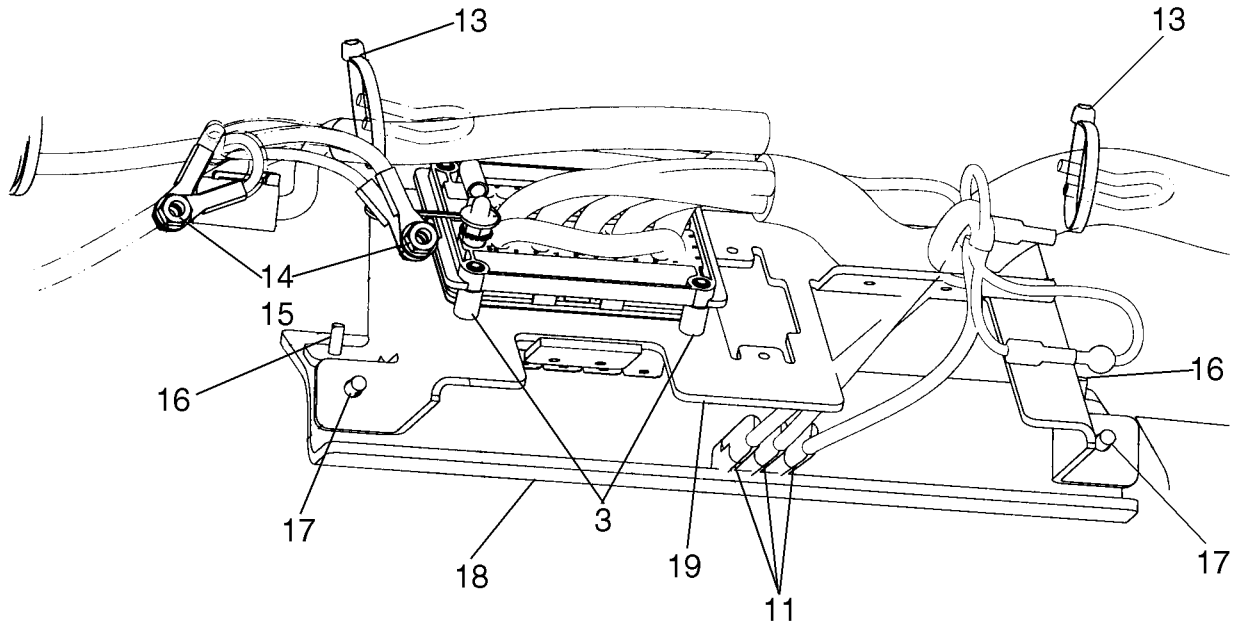

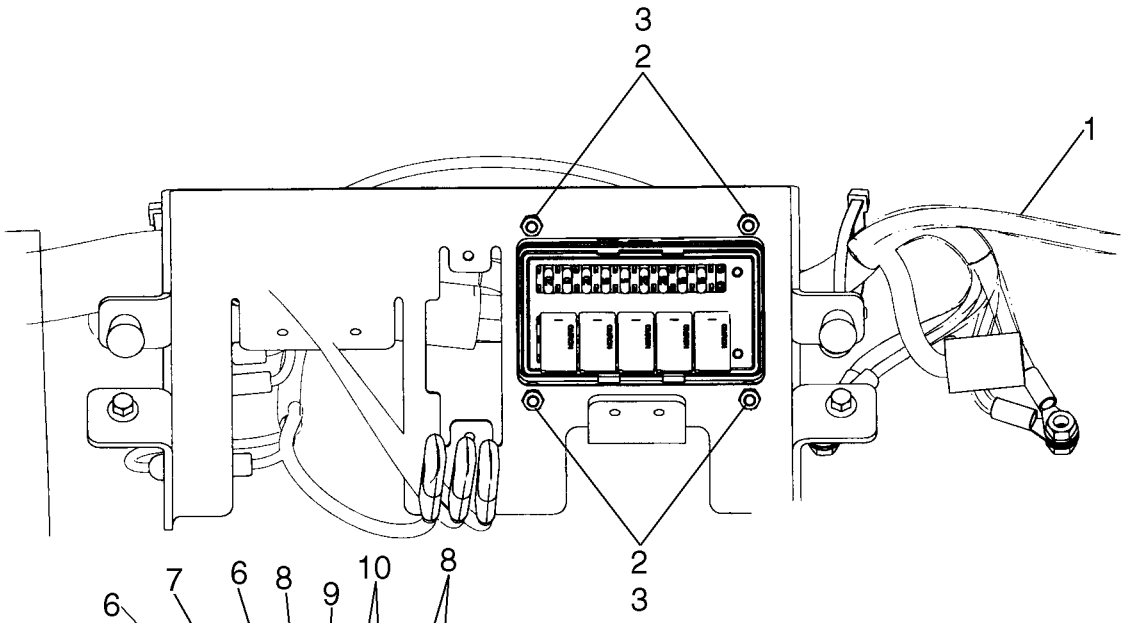

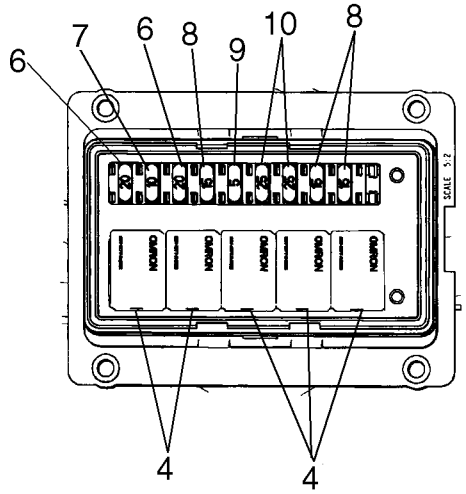

BS07E362

ELECTRIC CAB - MAIN HARNESS AND FUSE BLOCK, DELUXE CAB

REF	FN	PART NUMBER	YR/SN	QTY	DESCRIPTION
1		87599254		1	HARNESS, Main Cab Harness; See Figure 55.100.17
2		86977693		4	NUT
3		87619421		4	MOUNTING PARTS, Sandwich Isolator
4		87582879		5	RELAY, Relay 20A N.O. ISO280 Micro
6		121414A1		2	FUSE, 20 Amp, Mini
7		121412A1		1	FUSE, 10 Amp, Mini
8		121413A1		3	FUSE, 15 Amp, Mini
9		121410A1		1	FUSE, 5 Amp, Mini
10		121415A1		2	FUSE, 25 Amp, Mini
11		L71879		3	DIODE-ELEMENT, Diode, 3A Diode Connector
12		87618013		1	DIODE, Diode, 6A
13		263117		9	STRAP, CABLE, .14" x 11 1/2"
14		7770		4	NUT, 1/4"-20, G5
15		322357		2	WASHER, BELLEVILLE, M6
16		273890		2	KNOB
17		86625199		8	SCREW, SELF TAPPING, Hex Flg Hd, M6 x 13
18		87569821		1	INSULATION, FOAM, Fuse Block Cover
19		87590186		1	BRACKET

55.510.06	01	p1	03/09

ELECTRIC CAB

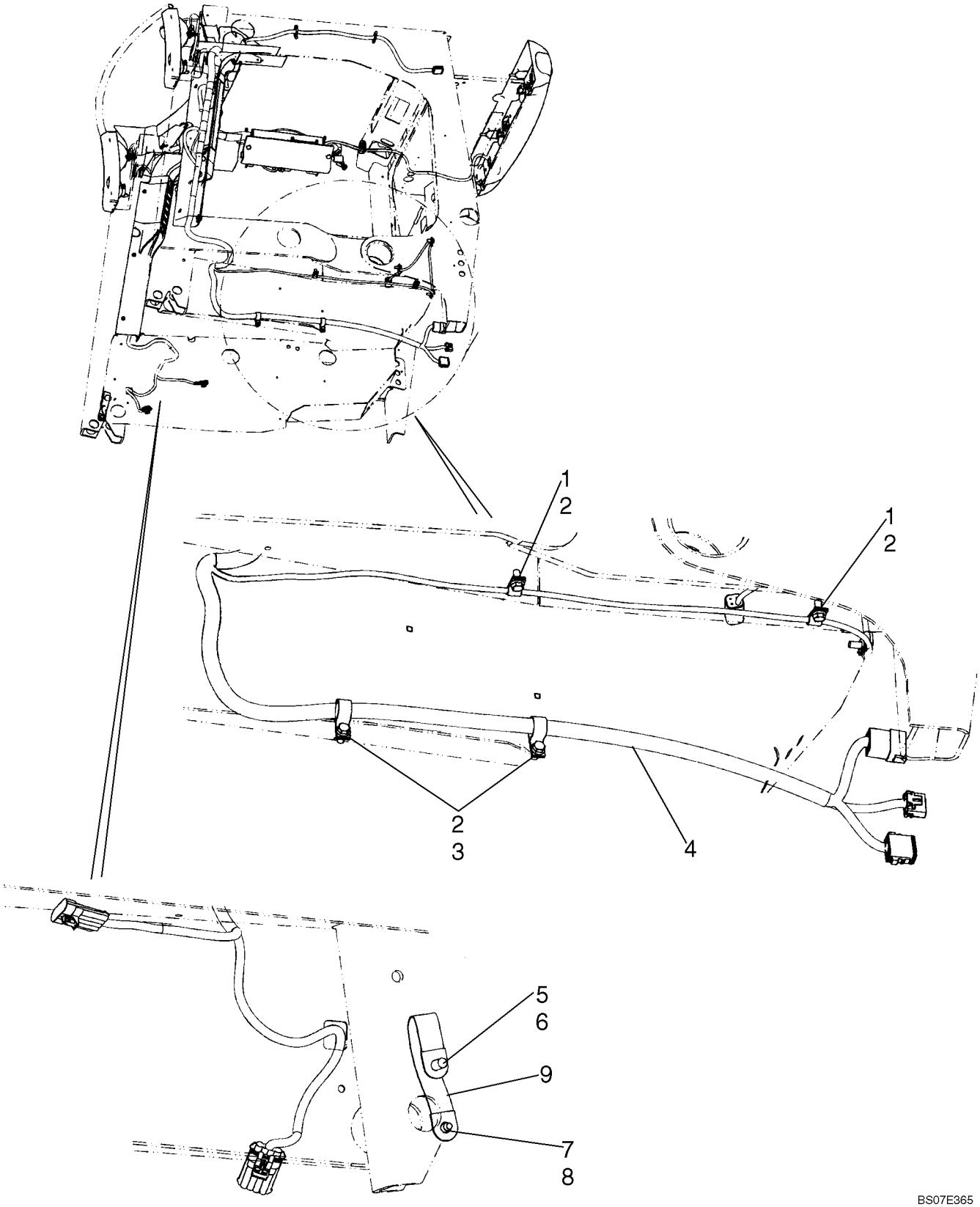

ELECTRIC CAB

REF	FN	PART NUMBER	YR/SN	QTY	DESCRIPTION
1		853764		5	CLAMP, 5/16", Insul, 5/16" Bolt
2		9840344		7	SCREW
3		700514		2	CLAMP
4		87599254		1	HARNESS, Main Cab Harness; See Figure 55.100.17
5		88434		1	BOLT, Hex, 3/8"-16 x 3/4", G5, Full Thd
6		140045		1	WASHER, BELLEVILLE, M10
7		87346		1	SCREW, SELF TAPPING, Hex Hd, 5/16" x 1/2"
8		322358		1	WASHER, BELLEVILLE, M8
9		512306		1	CABLE, GROUND

CAB ELECTRICAL, EUROPE - DELUXE CAB

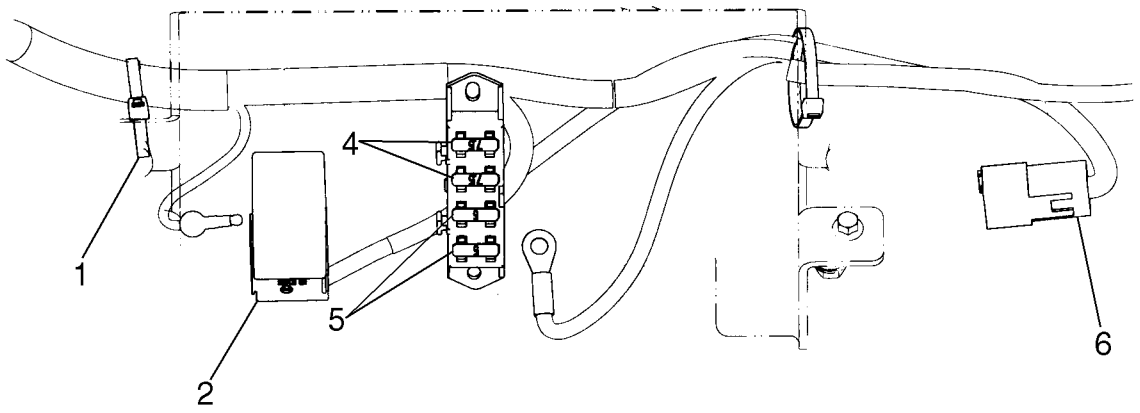

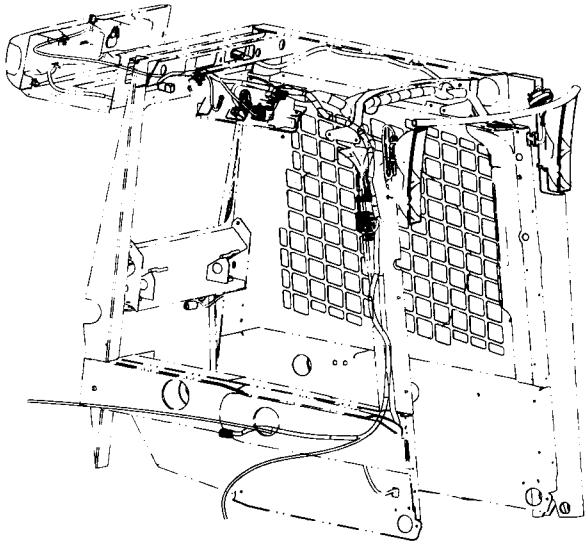

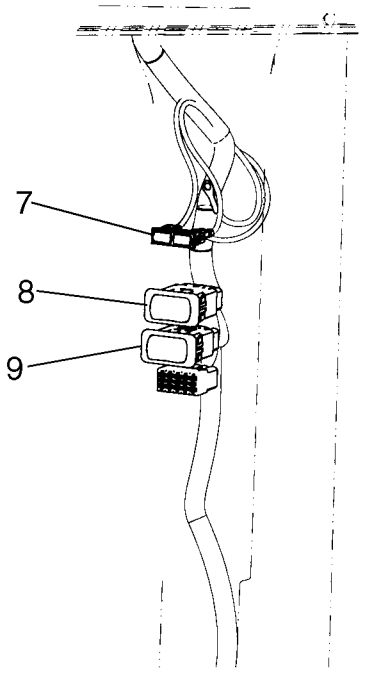

BS07E359

CAB ELECTRICAL, EUROPE - DELUXE CAB

REF	FN	PART NUMBER	YR/SN	QTY	DESCRIPTION
1		263117		2	STRAP, CABLE, .14" x 11 1/2"
2		9821783		1	FLASHER UNIT
3		86500939		1-3	SCREW, SELF TAPPING, Hex Wash Hd, #10 x 3/8"
4		A149799		2	FUSE, Fuse 7.5A
5		A149798		2	FUSE, Fuse 5A
6		87668163		1	HARNESS, Harness, Adapter - Europe; If Used; See Figure 55.100.66 [02]
6		87705559		1	HARNESS, Harness, Adapter - Europe; If Used; See Figure 55.100.66 [02]
7		86604657		1	INDICATOR,TURN SIGNAL
8		87641189		1	SWITCH, FLASHER, Hazard Switch
9		87641191		1	SWITCH, BEACON, Rotating Beacon Switch

55.512.05		p1	09/09

ELECTRIC CAB - CONSOLE, RH, DELUXE CAB

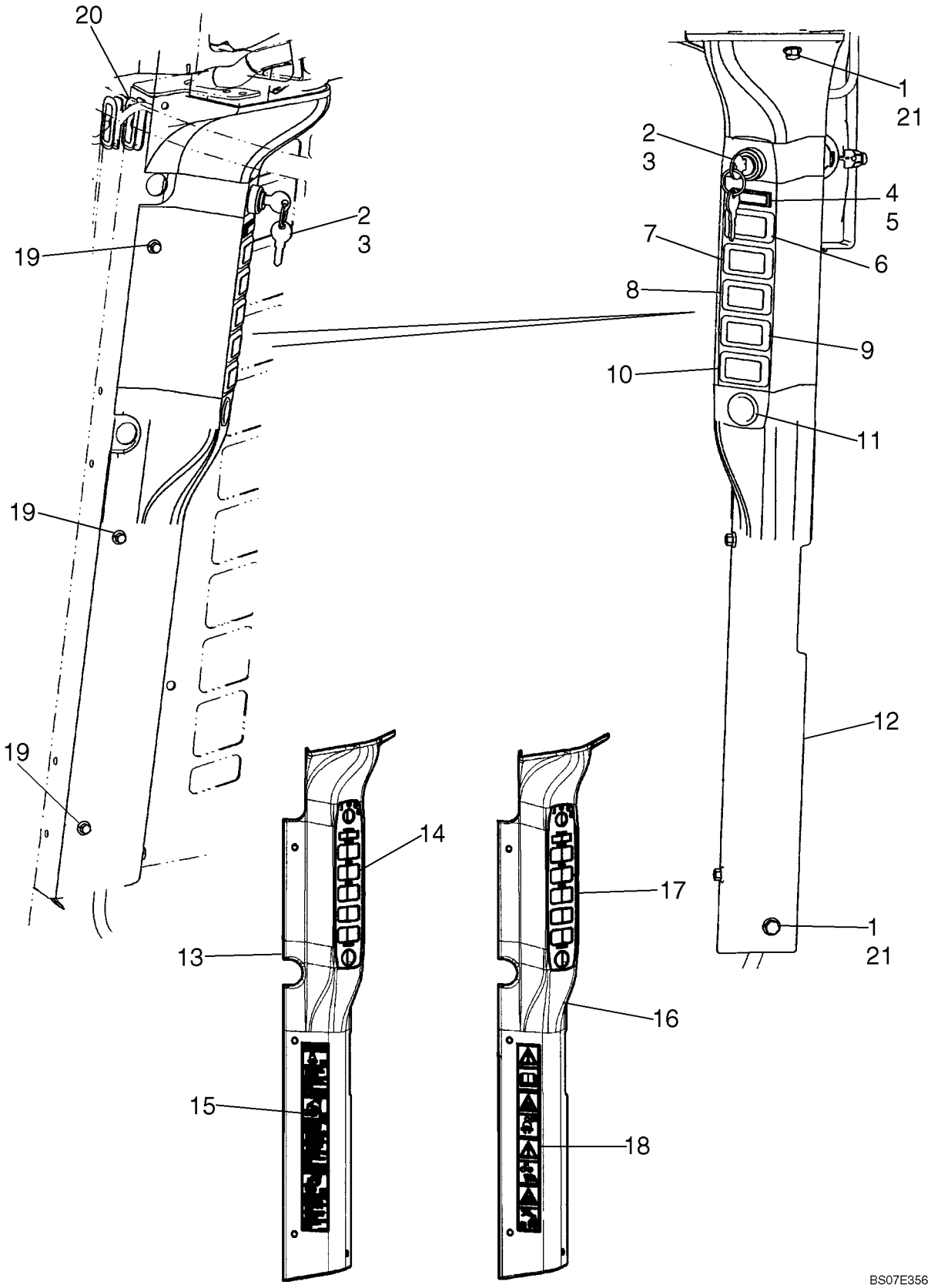

ELECTRIC CAB - CONSOLE, RH, DELUXE CAB

REF	FN	PART NUMBER	YR/SN	QTY	DESCRIPTION
1		86050272		4	BOLT, Hex Flg, M6 x 12, 8.8
2		641833		1	SWITCH, IGNITION, Incl. 3
3		642628		1	SET OF 2 KEYS
4		86604657		1	INDICATOR,TURN SIGNAL, Turn Signal Indicator; If Used
5		86627432		1	PLUG, PLASTIC, Plastic Cover; If Used
6		87572862		1	SWITCH, High Flow Switch
7		87641189		1	SWITCH, FLASHER, Hazard Switch
8		87641191		1	SWITCH, BEACON, Rotating Beacon Switch
9		87641188		1	SWITCH, Loader Lock Switch
10		126844A1		1	PLUG, Switch Hole Cover
11		283779A1		1	SOCKET, POWER, Power Plug Outlet
12		87652503		1	CONSOLE, Console, RH; If Used
12		87704182		1	MOLDING, Console, RH; If Used
13		87658794		1	KIT, SERVICE, RH Console Service Kit, North American; Incl. 12, 14, 15
14		87586495		1	DECAL, Decal, RH Controls
15		87586463		1	DECAL, North American Combination Warning, Danger, Caution
16		87658795		1	KIT, SERVICE, RH Console Service Kit, Europe; Incl. 12, 17, 18
17		87586495		1	DECAL, Decal, RH Controls
18		87586453		1	DECAL, Europe Combination Warning
19		86625199		3	SCREW, SELF TAPPING, Hex Flg Hd, M6 x 13
20		87650571		2	GROMMET, Grommet
21		87594976		2	FASTENER, U-Nut

55.512.06	01	p1	09/09

ELECTRIC CAB - CONSOLE, LH, DELUXE CAB

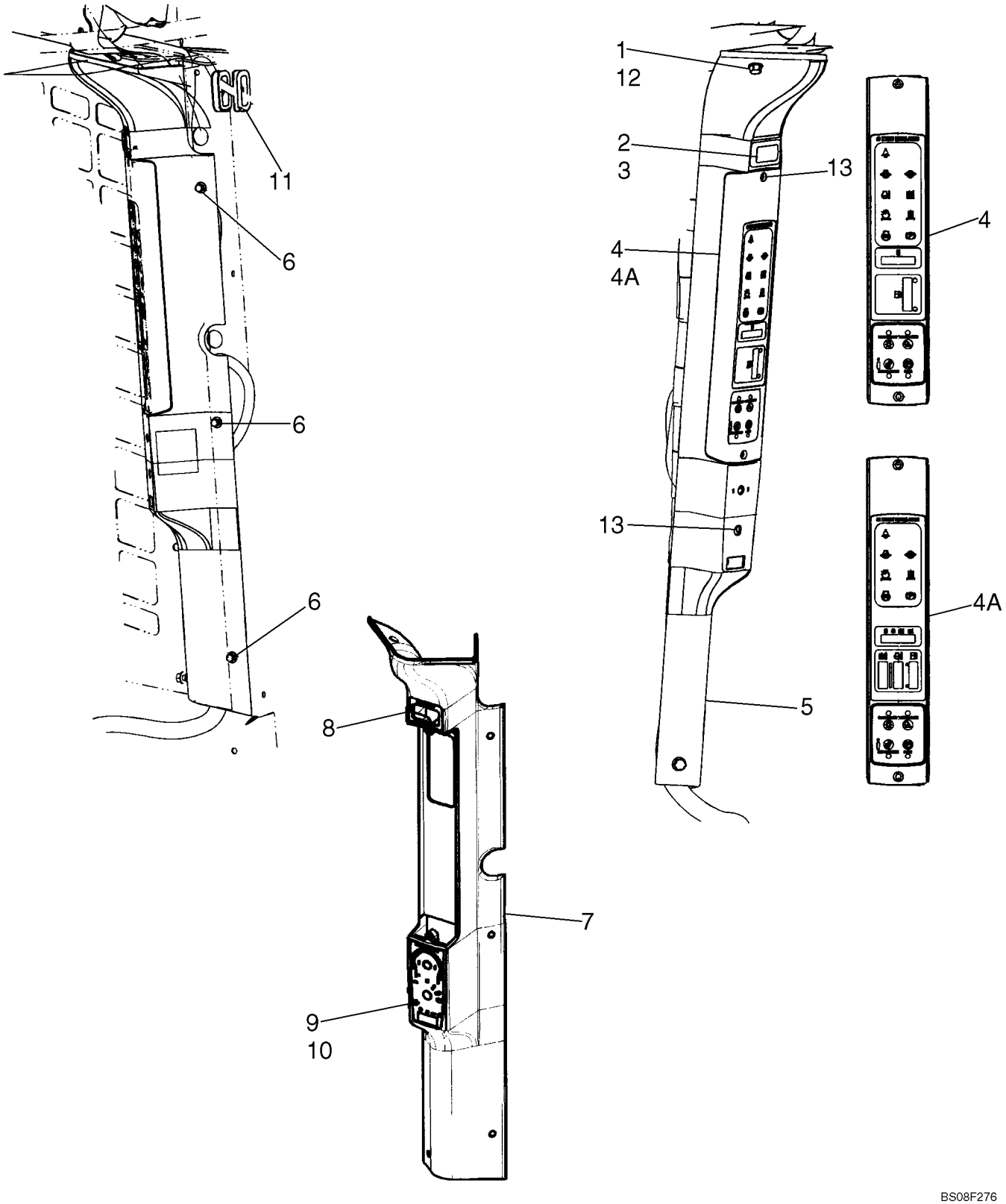

ELECTRIC CAB - CONSOLE, LH, DELUXE CAB

REF	FN	PART NUMBER	YR/SN	QTY	DESCRIPTION
1		86050272		4	BOLT, Hex Flg, M6 x 12, 8.8
2		126844A1		1	PLUG, Switch Hole Cover; Models Without Hydraulic Mount Plate
3		87572861		1	SWITCH, Hydraulic Mount Plate Switch
4		87484636		1	INSTRUMENT CLUSTER, New Holland Standard; If Used; Replaces 87654912, 87706368
4A		87654922		1	INSTRUMENT CLUSTER, New Holland Advanced
4A		87484639		1	CLUSTER, New Holland Advanced; If Used; Replaces 87654922
5		87652504		1	CONSOLE, Console, LH; If Used
5		87704181		1	MOLDING, Console, LH; If Used
6		86625199		3	SCREW, SELF TAPPING, Hex Flg Hd, M6 x 13
7		87658796		1	KIT, SERVICE, LH Console Service Kit; Incl. 5, 8, 9
8		87586496		1	DECAL, Hydraulic Mount Plate
9		87586498		1	DECAL, Without Heater Or Air Conditioning; Not Illustrated
10		87586497		1	DECAL, Temperature Controls; Illustrated
11		87650571		2	GROMMET
12		87594976		2	FASTENER, U-Nut
13		190003820001		2	SCREW, Mounting Screws For Instrument Cluster

55.512.06	02	p1	09/09

ELECTRIC CAB, LH CONSOLE (EUROPE) - DELUXE CAB

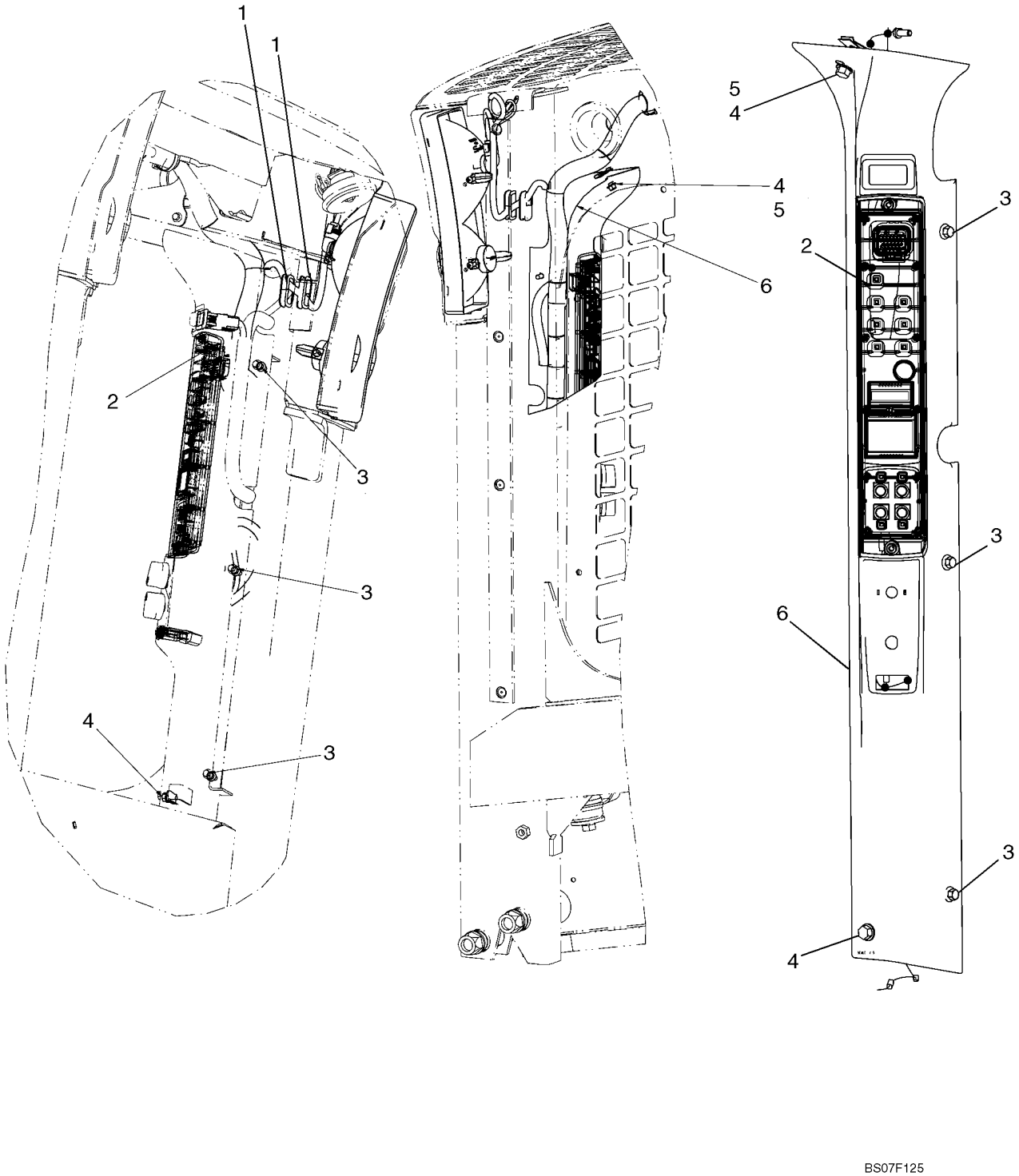

ELECTRIC CAB, LH CONSOLE (EUROPE) - DELUXE CAB

REF	FN	PART NUMBER	YR/SN	QTY	DESCRIPTION
1		{87592147}		2	Grommet
2		87484636		1	INSTRUMENT CLUSTER, New Holland Standard; If Used; Replaces 87654912, 87706368
3		86625199		3	SCREW, SELF TAPPING, Hex Flg Hd, M6 x 13
4		86050272		2	BOLT, Hex Flg, M6 x 12, 8.8
5		87594976		4	FASTENER
6		87569885		1	CONSOLE, Left Hand Console

ELECTRIC CAB - LIGHTS

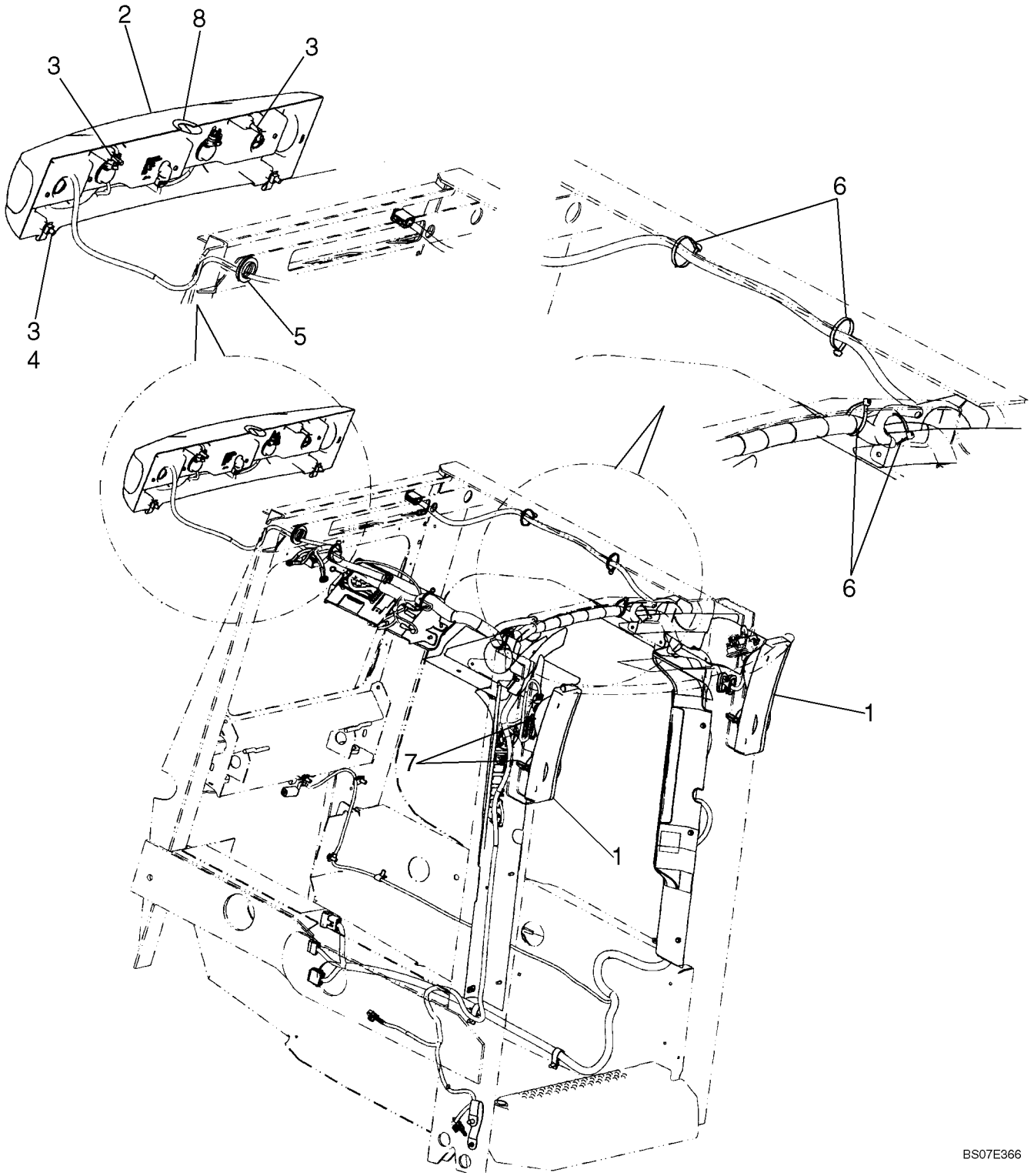

ELECTRIC CAB - LIGHTS

REF	FN	PART NUMBER	YR/SN	QTY	DESCRIPTION
1		87480528		2	LIGHT, Replaces 87569828
2		87569827		1	LIGHT, Rear Light; See Fig. 55.404.01 [03]
3		86521612		4	BOLT, Hex Flg, 5/16"-18 x 1 1/4", G5
4		87594975		2	NUT, J-Nut Speed Clip With Nut
5		87652292		1	GROMMET, Grommet
6		263117		9	STRAP, CABLE, .14" x 11 1/2"
7		87614446		4	SCREW, Plastic Screw
8		87644664		1	DECAL, Decal, Light Bar Cover

SECTION INDEX
82 - Front loader

82.100.06	01	MOUNTING PLATE
82.100.06	02	UNIVERSAL MOUNT
82.100.15	01	BUCKET, CUTTING EDGE KIT
82.100.15	04	BUCKETS - LOADER, DIRT / FOUNDRY
82.100.15	05	BUCKETS - LOADER, EXTENDED LOW PROFILE
82.100.15	06	BUCKETS - LOADER, UTILITY / LIGHT MATERIAL
82.100.15	07	BUCKETS - LOADER, MANURE / SLURRY
82.100.15	20	SPILL GUARD
82.100.15	21	PALLET FORK

82.100.06	01	p1	05/09

MOUNTING PLATE

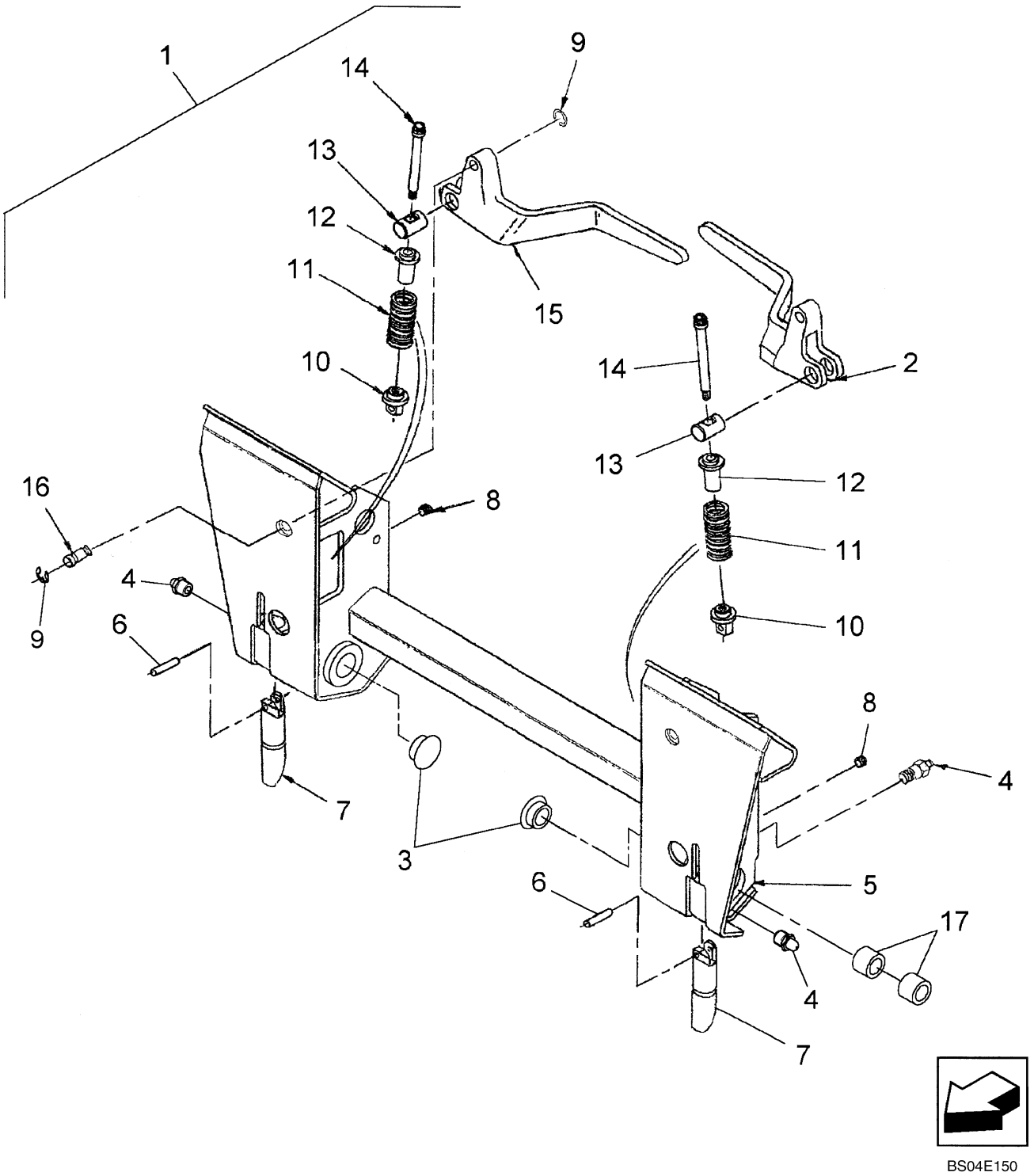

BS04E150

MOUNTING PLATE

REF	FN	PART NUMBER	YR/SN	QTY	DESCRIPTION
1		{}		1	Manual Mounting Plate Assy; Not Serviced As Assembly, Order Components; Incl. 2 - 17
2		86633195		1	HANDLE, Left Hand
3		86561087		2	DUST CAP
4		87414		4	NIPPLE, LUBE, 1/4"-28 x .56" lg, Drive
5		86633259		1	PLATE, MOUNTING, Incl. Ref 8, 17
6		86616372		2	PIN, LOCK, 3/8" x 1 3/4", Slotted
7		87413030		2	PIN, Latch
8		9617020		2	PLUG, Hex Soc, 1/4"-18
9		86571009		4	CIRCLIP
10		86510869		2	PIN, If Used
10		87579303		2	PIN, If Used
11		86610167		2	SPRING, 1.38" OD
12		86610166		2	GUIDE
13		9829733		2	PIN
14		86506112		2	BOLT, Screw, Cap, 12-pt Hd, Shoulder, G8, 3/8"-16 x 5"; If Used
14		87533223		2	PIN, Screw, Cap, 12-pt Hd, Shoulder, 1/2" X 4.0; If Used
15		86633196		1	HANDLE, Right Hand
16		86538563		2	PIN
17		9845313		2	BUSHING

UNIVERSAL MOUNT

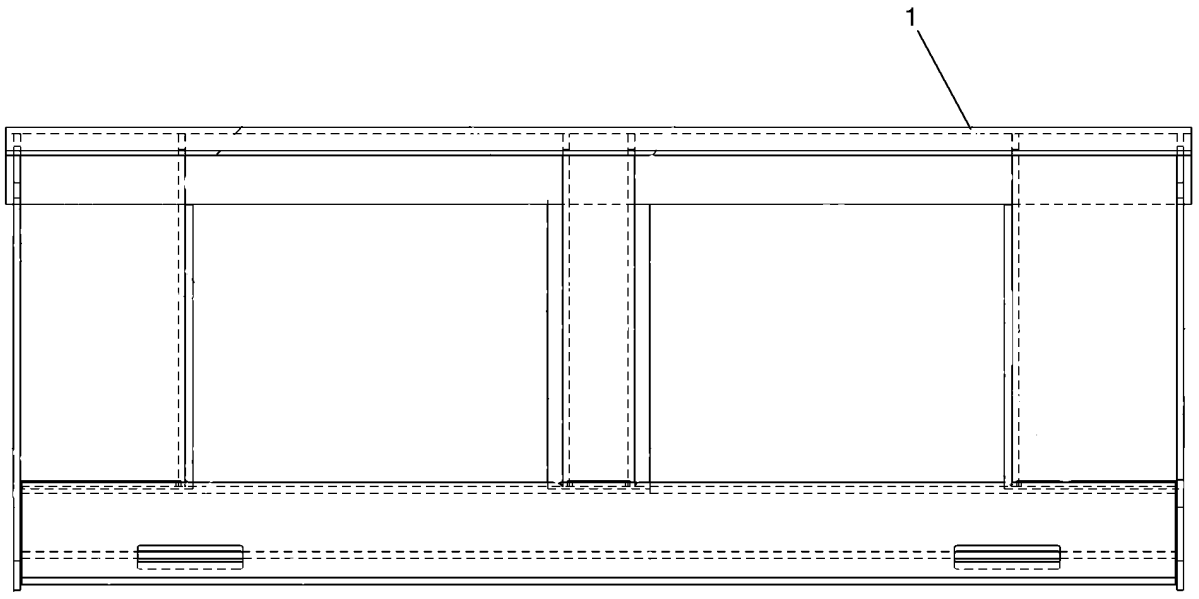

BS08J021

UNIVERSAL MOUNT

REF	FN	PART NUMBER	YR/SN	QTY	DESCRIPTION
1		{86590429}		1	Universal Mount; Order Form WholeGoods

82.100.15	01	p1	03/09

BUCKET, CUTTING EDGE KIT

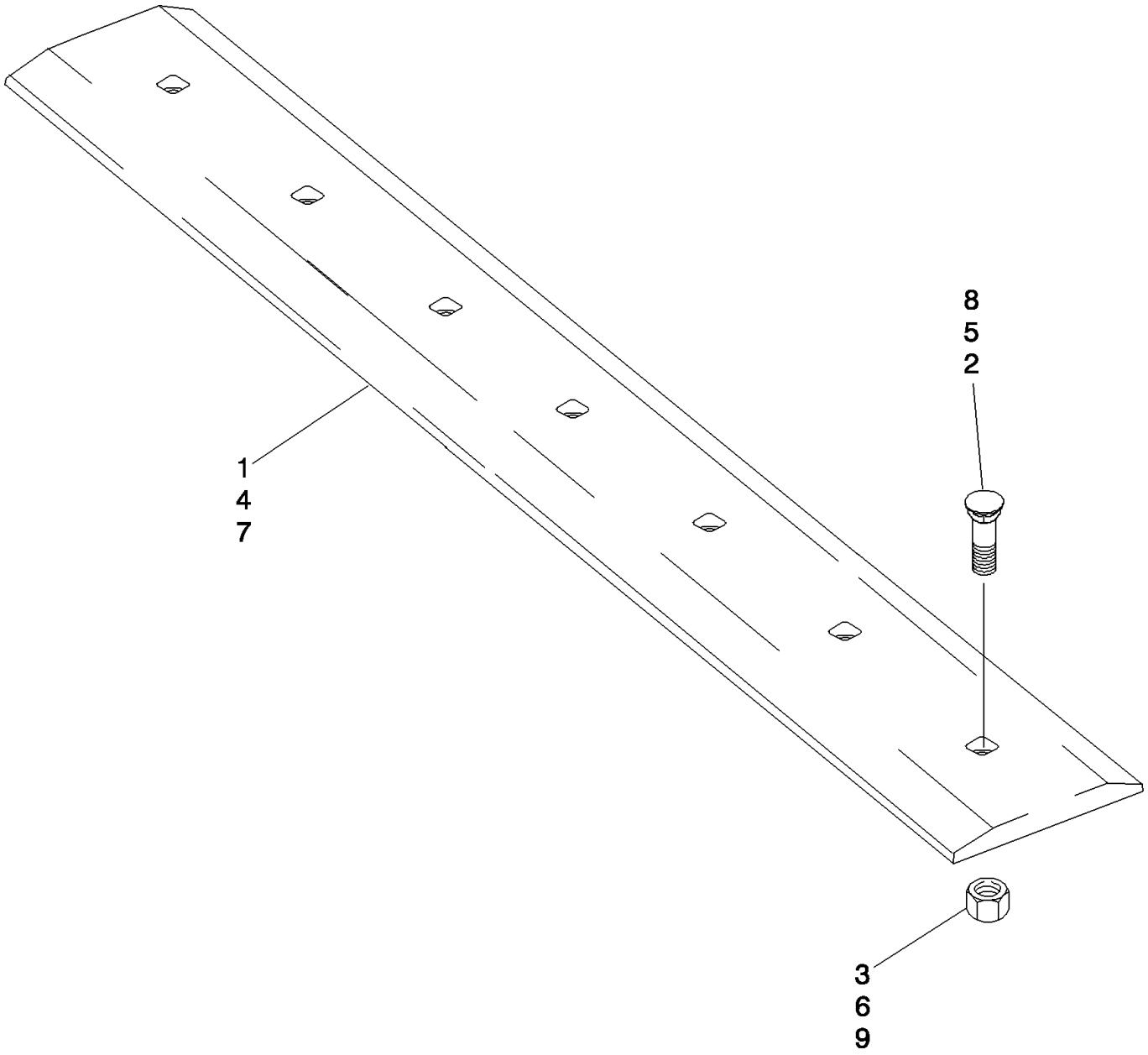

BS04A101

BUCKET, CUTTING EDGE KIT

REF	FN	PART NUMBER	YR/SN	QTY	DESCRIPTION
		430497A1		1	EDGE, CUTTING, Kit; 60 Inch; Incl. Ref 1 - 3; Order Components
1		87454489		1	EDGE, CUTTING, 1524 mm (60 inch); Power Tan
1		86577165		1	EDGE, CUTTING, 1524 mm (60 inch); Gray
2		86548338		7	BOLT, PLOW, 5/8"-11 x 2", G5
3		425-1010		7	NUT, 5/8"-11, G5
		430498A1		1	EDGE, CUTTING, Kit; 66 Inch; Incl. Ref 4 - 6; Order Components
4		87454483		1	EDGE, CUTTING, 1676 mm (66 inch); Power Tan
4		86577167		1	EDGE, CUTTING, 1676 mm (66 inch); Gray
5		86548338		7	BOLT, PLOW, 5/8"-11 x 2", G5
6		425-1010		7	NUT, 5/8"-11, G5
		430499A1		1	EDGE, CUTTING, Kit; 72 Inch; Incl. Ref 7 - 9; Order Components
7		87454488		1	EDGE, CUTTING, 1829 mm (72 inch); Power Tan
7		86577169		1	EDGE, CUTTING, 1829 mm (72 inch); Gray
8		86548338		7	BOLT, PLOW, 5/8"-11 x 2", G5
9		425-1010		7	NUT, 5/8"-11, G5
		430500A1		1	EDGE, CUTTING, Kit; 84 Inch; Incl. Ref 7 - 9; Order Components
7		86577173		1	EDGE, CUTTING, 2134 mm (84 inch); Gray
8		420-21032		9	BOLT, CARRIAGE
9		329-1010		9	NUT

82.100.15	04	p1	03/09

BUCKETS - LOADER, DIRT / FOUNDRY

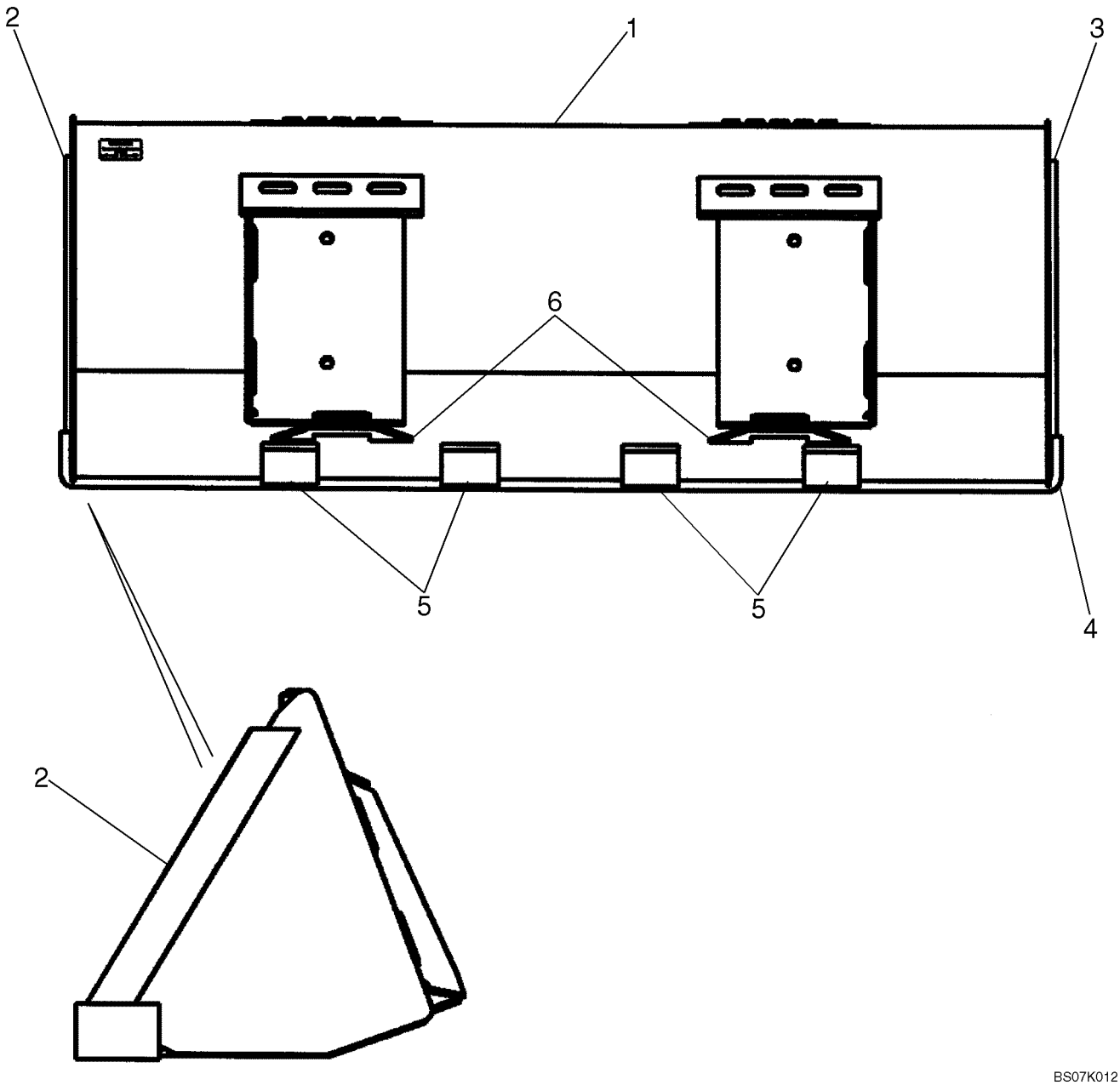

BUCKETS - LOADER, DIRT / FOUNDRY

REF	FN	PART NUMBER	YR/SN	QTY	DESCRIPTION
1		{86590377}		1	BUCKET, Dirt/Foundry; 1676 mm, 66 in.; Incl. 86592024, 2 - 6; Order from Whole Goods
		86592024		1	DECAL, Not Illustrated
2		9829813		1	EDGE, CUTTING, LH Cutter
3		9829812		1	EDGE, CUTTING, RH Cutter
4		86577166		1	EDGE, CUTTING, Weld On Blade 66 in
5		9829816		3	BAR, Skid Bar
6		9822175		2	PLATE
1A		86590372		1	BUCKET, BUCKET, Dirt/Foundry; 1524 mm, 60 in.; Incl. 86592019, 2 - 6; Order from Whole Goods
		86592019		1	DECAL, Not Illustrated
2A		9841636		1	EDGE, CUTTING, LH Cutter
3A		9841637		1	EDGE, CUTTING, RH Cutter
4A		86577164		1	EDGE, CUTTING, Weld On Blade 60 in
5A		86501841		3	BAR, Skid Bar
6A		9822175		2	PLATE
1B		{86590379}		1	BUCKET, Dirt/Foundry; 1829 mm, 72 in.; Incl. 86592026, 2 - 6; Order from Whole Goods
		86592026		1	DECAL, Not Illustrated
2B		87014505		1	CUTTING BLADE, LH Cutter
3B		87014504		1	CUTTING BLADE, RH Cutter
4B		86577168		1	EDGE, CUTTING, Weld On Blade 72 in
5B		87016983		4	BAR, Skid Bar
6B		87015460		2	PLATE

82.100.15	05	p1	03/09

BUCKETS - LOADER, EXTENDED LOW PROFILE

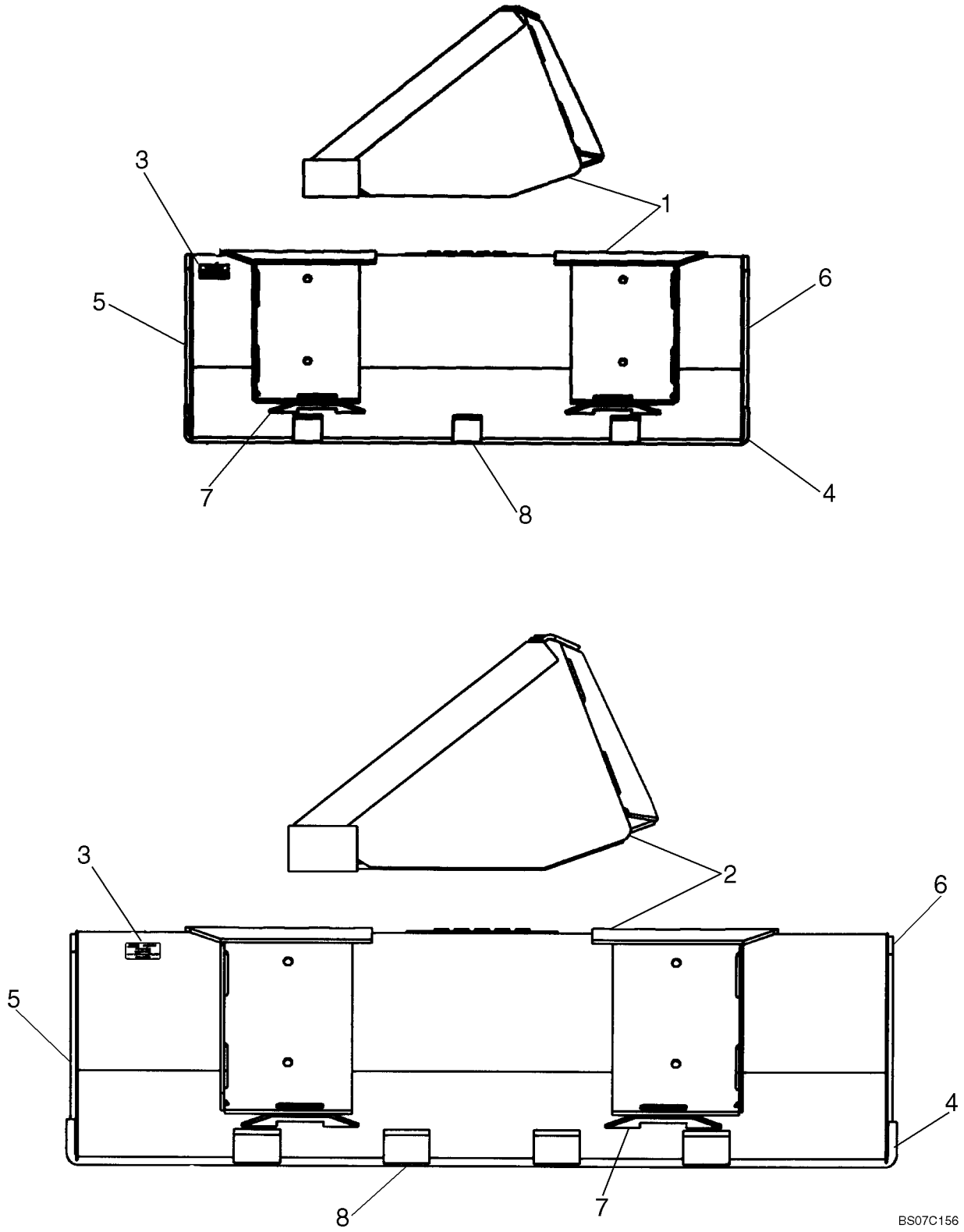

BUCKETS - LOADER, EXTENDED LOW PROFILE

REF	FN	PART NUMBER	YR/SN	QTY	DESCRIPTION
1		{87010196}		1	BUCKET, Low Profile Dirt/Foundry; 1524 mm, 60 in.; Incl. 87010186, 3 - 8; Order from Whole Goods
3		87010186		1	DECAL, Not Illustrated
4		86577164		1	EDGE, CUTTING, Weld On Blade 60 in
5		9829784		1	EDGE, CUTTING, LH Cutter
6		9829783		1	EDGE, CUTTING, RH Cutter
7		9822175		2	PLATE
8		86501840		3	BAR, Skid Bar
1A		{86590375}		1	BUCKET, Low Profile Extended Dirt; 1524 mm, 60 in.; Incl. 86592022, 3A - 8A; Order from Whole Goods
3A		86592022		1	DECAL, Not Illustrated
4A		86577164		1	EDGE, CUTTING, Weld On Blade 60 in
5A		86510316		1	EDGE, CUTTING, LH Cutter
6A		86510315		1	EDGE, CUTTING, RH Cutter
7A		9822175		2	PLATE
8A		86510313		3	BAR, Skid Bar
1B		86590378		1	BUCKET, BUCKET, Low Profile Extended Dirt/Foundry; 1676 mm, 66 in.; Incl. 86592025, 3B - 8B; Order from Whole Goods
3B		86592025		1	DECAL, Not Illustrated
4B		86577166		1	EDGE, CUTTING, Weld On Blade 66 in
5B		86510316		1	EDGE, CUTTING, LH Cutter
6B		86510315		1	EDGE, CUTTING, RH Cutter
7B		87015460		2	PLATE
8B		86510314		3	BAR, Skid Bar
2C		86590381		1	BUCKET, Low Profile Extended; 1820 mm (72 Inch); Order From Machinery Price List; Incl. 3C - 8C
3C		86592028		1	DECAL
4C		86577168		1	EDGE, CUTTING, Weld On Blade
5C		87015312		1	EDGE, CUTTING, Cutter Left Hand
6C		87015311		1	EDGE, CUTTING, Cutter Right Hand
7C		9822175		2	PLATE
8C		87015310		4	BAR, Skid

BUCKETS - LOADER, UTILITY / LIGHT MATERIAL

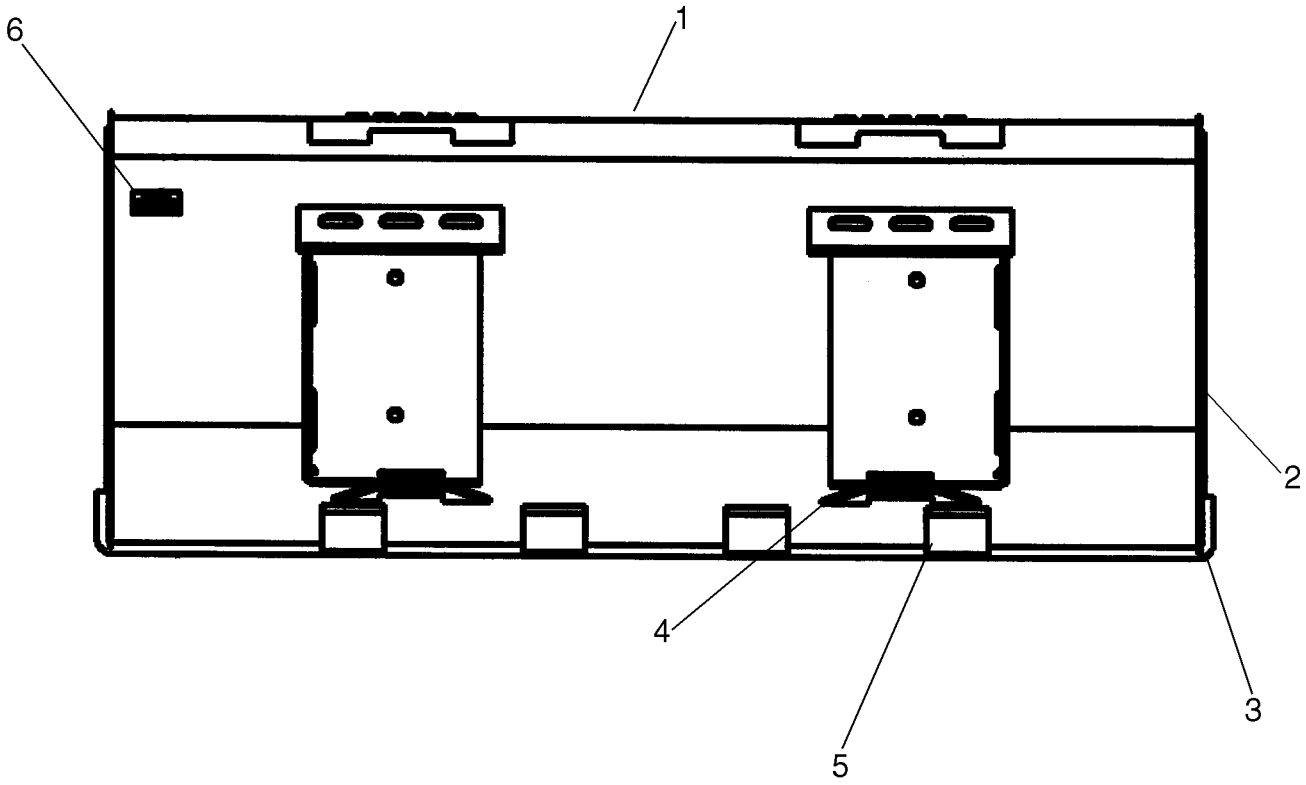

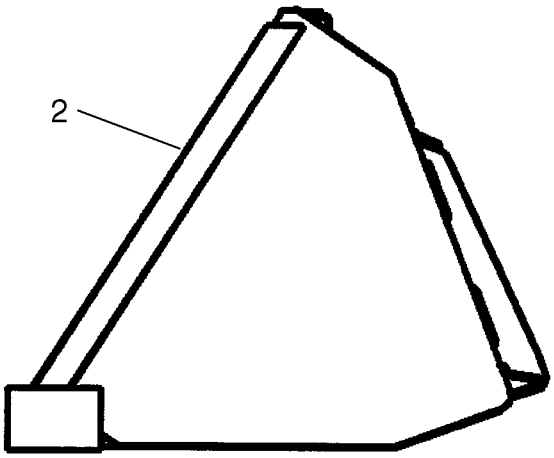

BS07K013

BUCKETS - LOADER, UTILITY / LIGHT MATERIAL

REF	FN	PART NUMBER	YR/SN	QTY	DESCRIPTION
1		{87010192}		1	BUCKET, Utility/Light Material; 1524 mm, 60 in.; Incl. 2- 6; Order from Whole Goods
2		86501801		2	EDGE, CUTTING
3		86577164		1	EDGE, CUTTING, 60 in
4		9822175		2	PLATE
5		86501839		4	BAR, Skid Bar
6		87010183		1	DECAL, Decal
1A		{87010193}		1	BUCKET, Utility/Light Material; 1829 mm, 72 in.; Incl. 2A- 6A; Order from Whole Goods
2A		86501801		2	EDGE, CUTTING
3A		86577168		1	EDGE, CUTTING, 72 in
4A		87015460		2	PLATE
5A		86501815		4	BAR, Skid Bar
6A		87010183		1	DECAL, Decal
1B		{87010194}		1	BUCKET, Utility/Light Material; 2134 mm, 84 in.; Incl. 2B- 6B; Order from Whole Goods
2B		86501801		2	EDGE, CUTTING
3B		86900574		1	EDGE, CUTTING, 84 in
4B		87015460		2	PLATE
5B		86501815		5	BAR, Skid Bar
6B		87010184		1	DECAL, Decal

BUCKETS - LOADER, MANURE / SLURRY

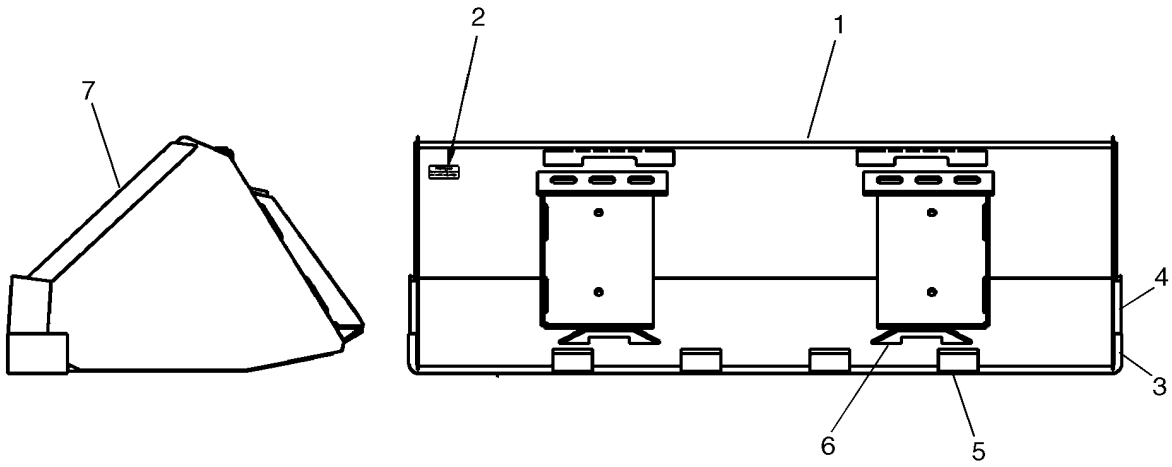

BS08J022

BUCKETS - LOADER, MANURE / SLURRY

REF	FN	PART NUMBER	YR/SN	QTY	DESCRIPTION
1		{86590376}		1	BUCKET, Manure/Slurry; 1524 mm, 60 in.; Incl. 2 - 7, Order from Whole Goods
2		86592023		1	DECAL
3		9841618		1	EDGE, CUTTING, 60 in
4		86501834		2	EDGE, CUTTING
5		87016955		4	BAR, Skid
6		9822175		2	PLATE
7		86501789		2	EDGE, CUTTING
1A		{86590382}		1	BUCKET, Manure/Slurry; 1829 mm, 72 in.; Incl. 2A - 7A, Order from Whole Goods
2A		86592029		1	DECAL
3A		9841590		1	EDGE, CUTTING, 72 in
4A		86501788		2	EDGE, CUTTING
5A		87016955		4	BAR, Skid
6A		87015460		2	PLATE
7A		86501789		2	EDGE, CUTTING

82.100.15	20	p1	03/09

SPILL GUARD

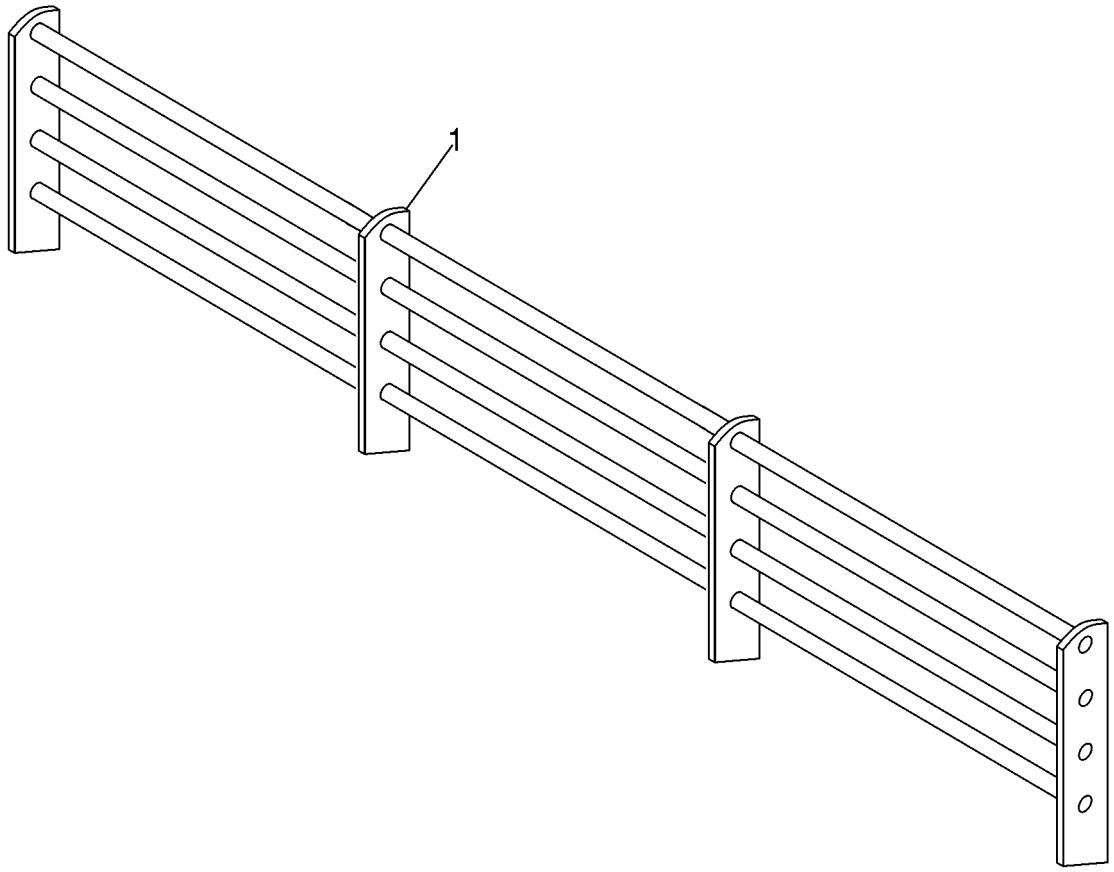

SPILL GUARD

REF	FN	PART NUMBER	YR/SN	QTY	DESCRIPTION
		86590108		1	KIT, Spill Guard Kit; Incl. 86515327 and Instructions
1		86515327		1	GUARD, Spill Guard; Gray

82.100.15	21	p1	03/09

PALLET FORK

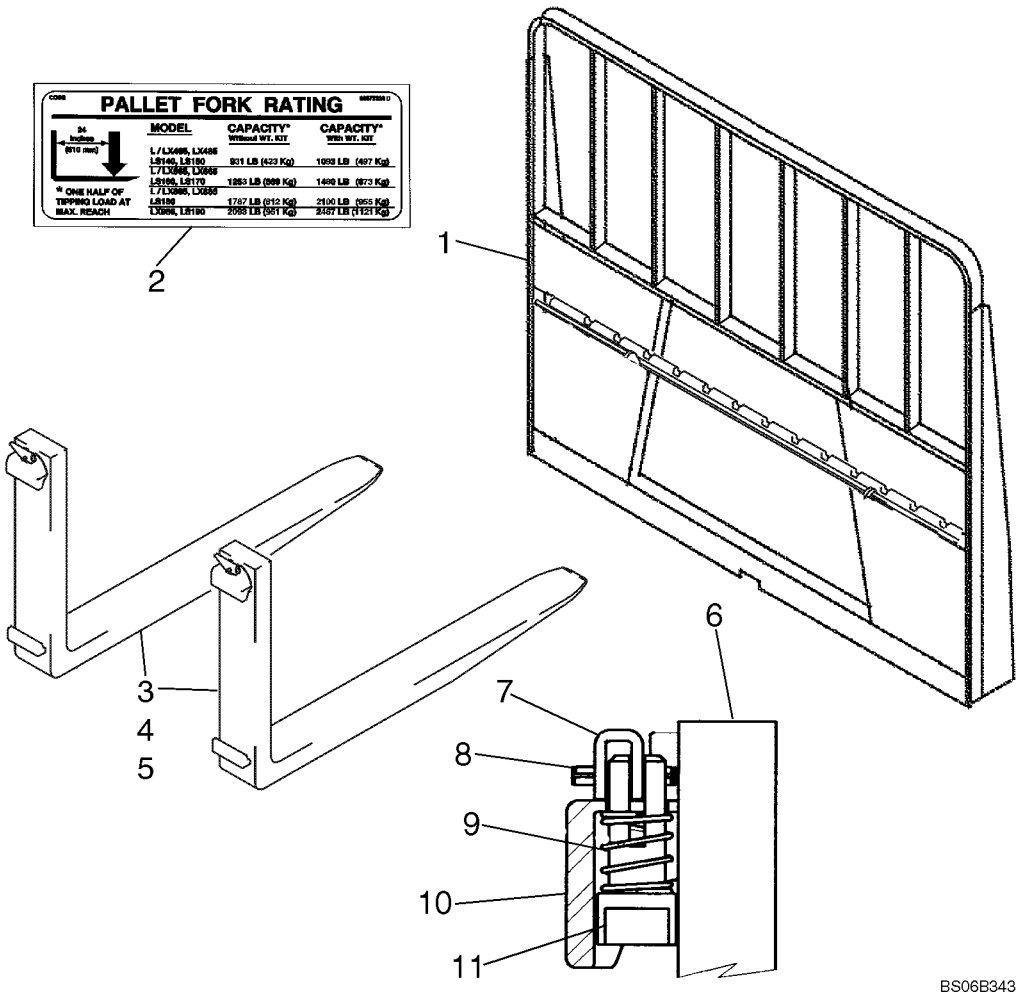

PALLET FORK

REF	FN	PART NUMBER	YR/SN	QTY	DESCRIPTION
1		86589869		1	PLATE, MOUNTING, Pallet Fork; Incl. 2
2		86577330		1	DECAL, Pallet Fork Rating
3		86589763		1	FORK, 36 in. Pallet Fork Set; Incl. 86574053
		86574053		2	FORK, BUCKET, Fork Assy; 36 in.; Incl. 6 - 11
4		86589764		1	FORK, 42 in. Pallet Fork Set; Incl. 86574054
		86574054		2	FORK, BUCKET, Fork Assy; 42 in.; Incl. 6 - 11
5		86589765		1	DIA, CONSTRUCTION, 48 in. Pallet Fork Set; Incl. 86574055
		86574055		2	FORK, BUCKET, Fork Assy; 48 in.; Incl. 6 - 11
6		NSS		1	NOT SERVICED SEPARATELY, Fork Arm
7		226129		1	HANDLE
8		118827		1	PIN, 3/16" x 1", Slotted
9		9800081		1	SPRING
10		NSS		1	NOT SERVICED SEPARATELY, Top Hook
11		226130		1	PIN

SECTION INDEX
88 - Accessories

88.100.11	01	ACOUSTICAL EQUIPMENT
88.100.11	02	ACOUSTICAL EQUIPMENT
88.100.11	03	ACOUSTICAL EQUIPMENT
88.100.11	04	ACOUSTICAL EQUIPMENT - MUFFLER WRAP (L160)
88.100.11	05	ACOUSTICAL EQUIPMENT - REAR WINDOW PANEL
88.100.11	06	ACOUSTICAL EQUIPMENT - PILOT CONTROL CONSOLE
88.100.11	07	ACOUSTICAL EQUIPMENT - PILOT CONTROL CONSOLE
88.100.11	08	NOISE CONTROL - CAB
88.120.02	02	RADIO
88.120.08		MANUAL COMPARTMENT LOCK & FIRE EXTINGUISHER
90.015.02		CAB JACK KIT

ACOUSTICAL EQUIPMENT

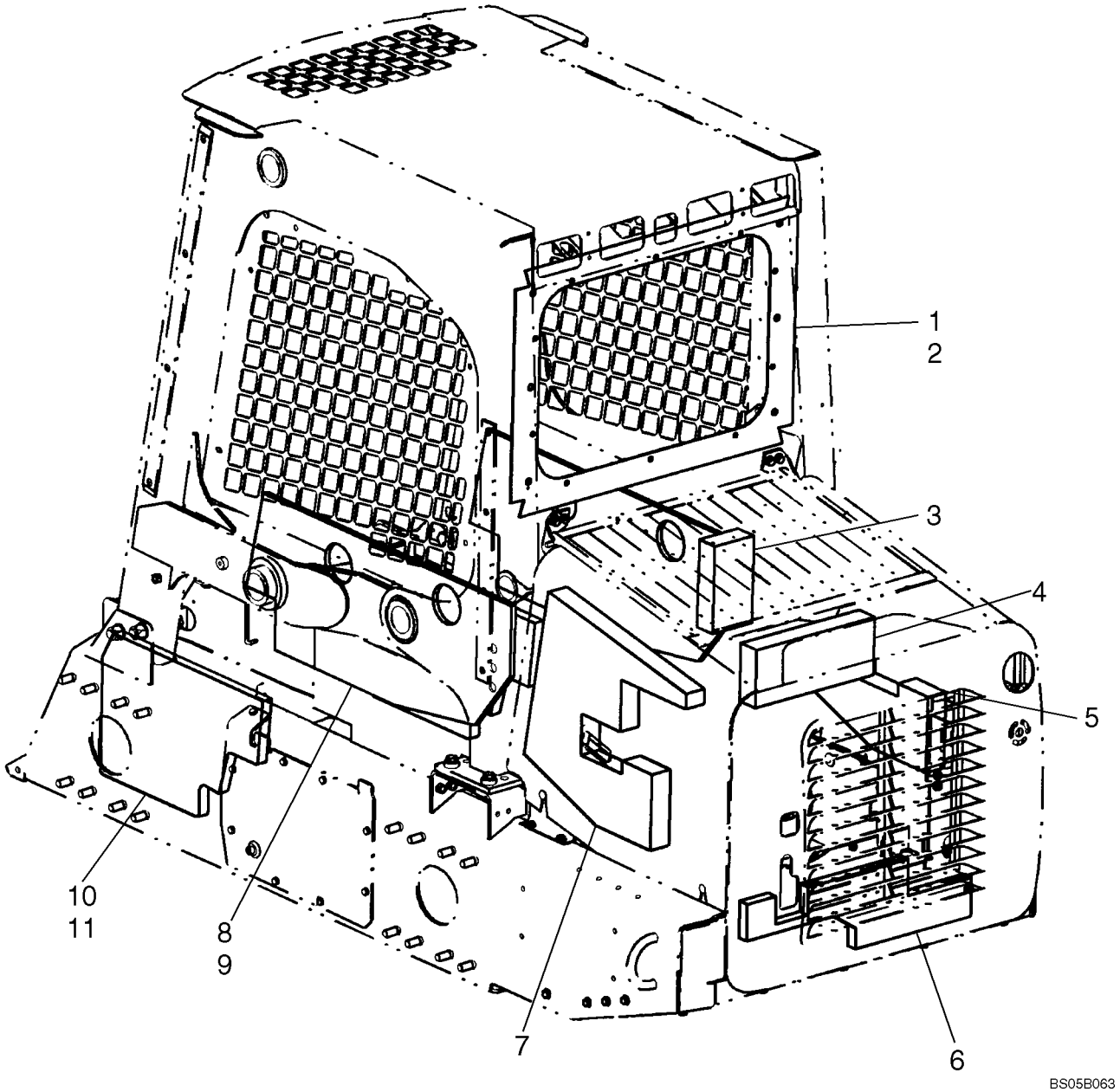

ACOUSTICAL EQUIPMENT

REF	FN	PART NUMBER	YR/SN	QTY	DESCRIPTION
		87654488		1	KIT, SERVICE, Noise Abatement Kit, North American (L170); Incl. 1 - 11, Items On Fig. 88.100.11 [01], Fig 10.202.01 [04], Fig. 88.100.11 [02], And Decals
		87655125		1	KIT, SERVICE, Noise Abatement Kit, North American (L160); Incl. 1 - 11, Items On Fig. 88.100.11 [01], Fig 10.202.01 [04],Fig. 88.100.11 [02], And Decals
		87700728		1	KIT, SERVICE, Noise Abatement Kit, North American (L170); Incl. 1 - 11, Items On Fig. 88.100.11 [01], Fig 10.202.01 [04],Fig. 88.100.11 [02], And Decals; Does Not Include Muffler Wrap
1		86506562		1	PANEL, Rear Window
2		86520136		10	RIVET
3		86518697		1	PANEL, Engine Front
4		87050205		1	PANEL, Rear Engine Upper
5		86518694		1	PANEL, Engine RH
6		87050204		1	PANEL, Rear Engine Lower
6		87483417		1	PANEL, INSULATING, Rear Engine Lower
7		87051219		1	PANEL, Engine LH
8		86506559		1	PANEL, INSULATING, Liner, LH
9		86506560		1	PANEL, INSULATING, Liner, RH
10		86506571		1	PANEL, Kick, LH
11		86506570		1	PANEL, Kick, RH

ACOUSTICAL EQUIPMENT

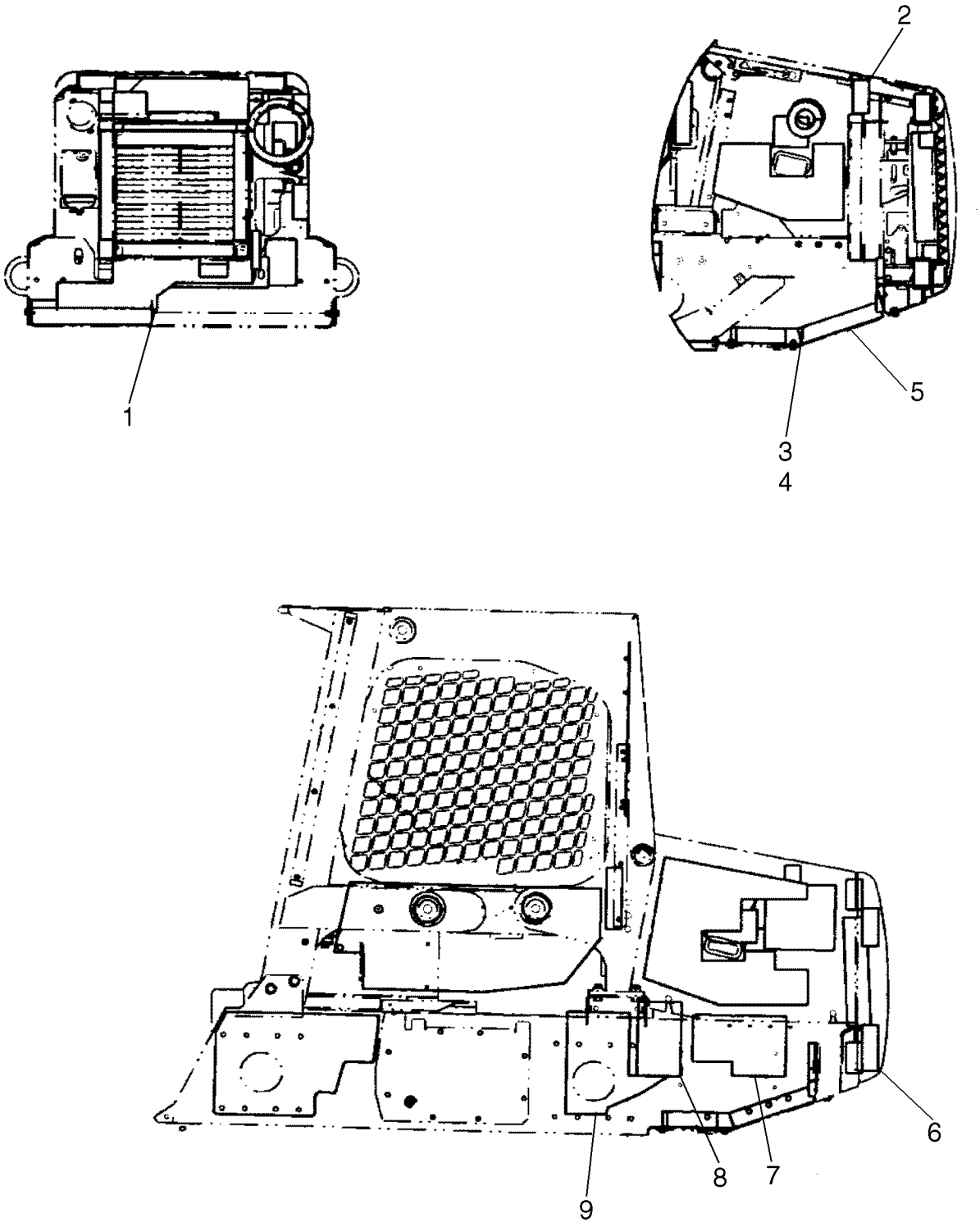

ACOUSTICAL EQUIPMENT

REF	FN	PART NUMBER	YR/SN	QTY	DESCRIPTION
1		87050204		1	PANEL, Rear Engine Lower; Attaches To Gas Tank; If Used
1		87483417		1	PANEL, INSULATING, If Used
2		87462496		1	PAD, Sound Pad; 135mm X 430mm; If Used
3		87462499		1	PAD
4		87351586		1	PAD
5		87462500		1	PAD, If Used
5		87483418		1	INSULATION, FOAM, If Used
6		87351664		1	PAD
7		87462525		1	PAD, Attaches To Gas Tank
8		87462527		1	PAD, Attaches To Gas Tank
9		87462528		1	PAD, Attaches To Gas Tank

ACOUSTICAL EQUIPMENT

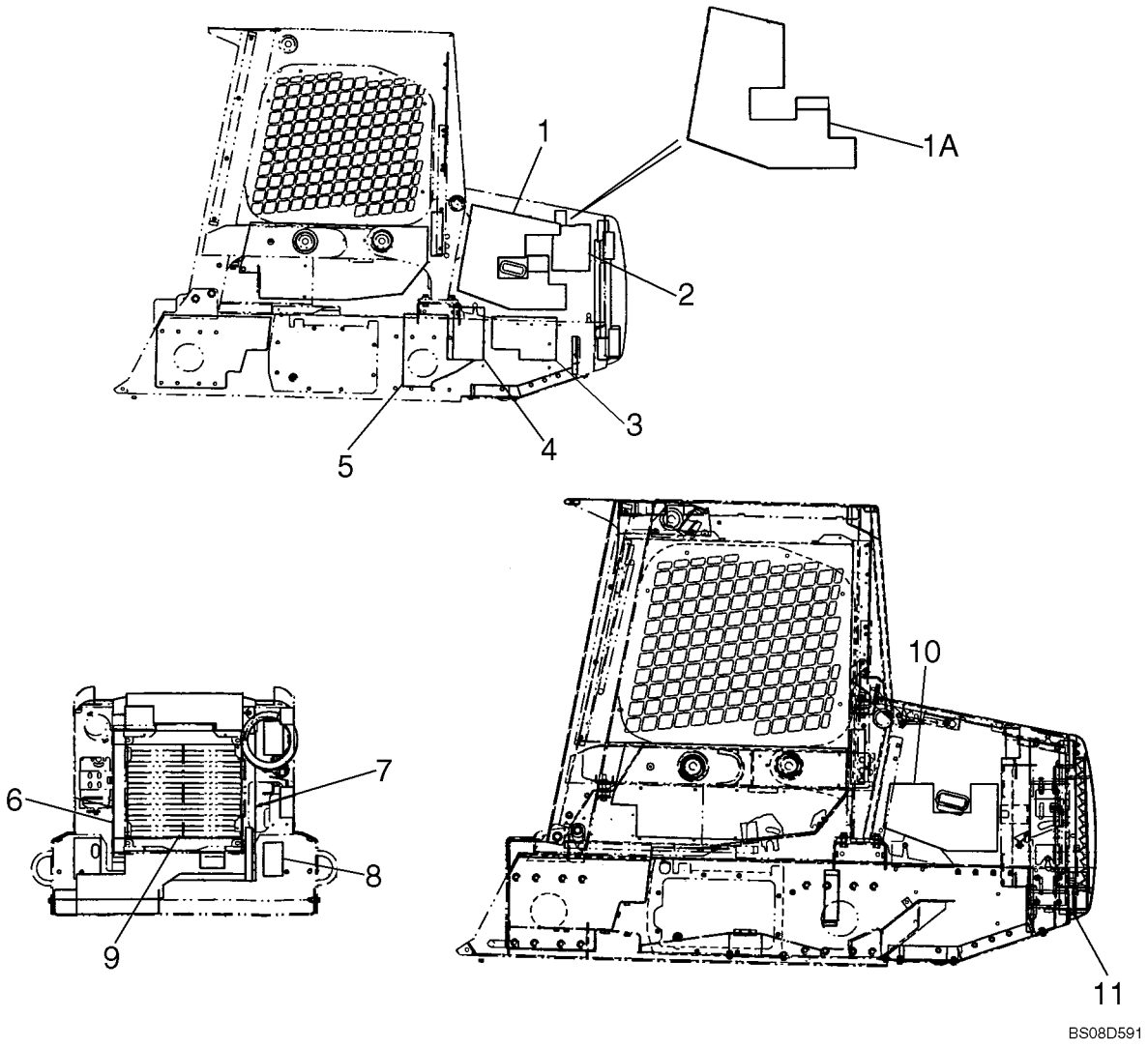

ACOUSTICAL EQUIPMENT

REF	FN	PART NUMBER	YR/SN	QTY	DESCRIPTION
1		87371057		1	PANEL, Foam, Pad; If Used
1A		87731891		1	INSULATION, FOAM, Foam, Pad; If Used
2		87371061		1	PAD, Foam, Pad
3		87462525		1	PAD, Foam, Pad; Attaches To Gas Tank
4		87462527		1	PAD, Foam, Pad; Attaches To Gas Tank
5		87462528		1	PAD, Foam, Pad; Attaches To Gas Tank
6		87371060		1	PAD, Foam, Pad
7		87370826		2	PAD, Foam, Pad
8		87351663		2	PAD, Foam, Pad
9		87371059		2	PAD, Foam, Pad
10		87462494		1	PAD, Foam, Pad; Depth Of Rectangular Notch 107 mm (4.21 in); If Used
10		87731892		1	INSULATION, FOAM, Foam, Pad; Depth Of Rectangular Notch 69 mm (2.71 in); If Used
11		87371134		2	PAD, Foam, Pad; 481 mm (19 in) x 100 mm (4 in)
11		87539238		1	FOAM, Foam, Pad; 481 mm (19 in) x 50 mm (2 in); Replaces (1) 87371134, If Used

ACOUSTICAL EQUIPMENT - MUFFLER WRAP (L160)

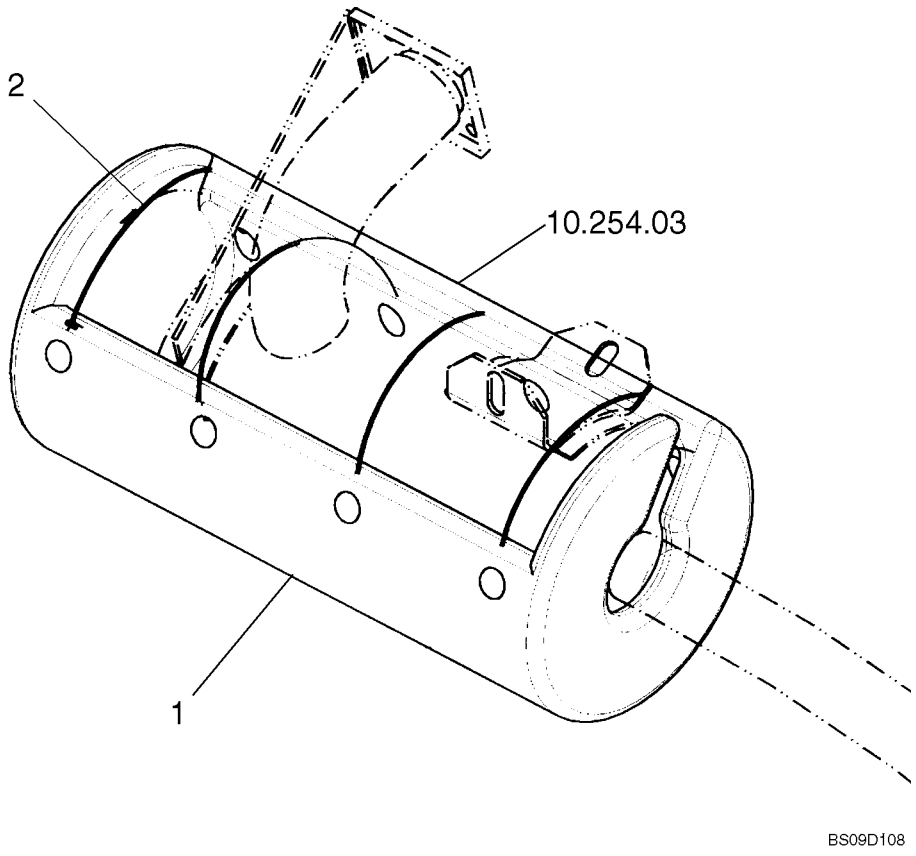

ACOUSTICAL EQUIPMENT - MUFFLER WRAP (L160)

REF	FN	PART NUMBER	YR/SN	QTY	DESCRIPTION
1		87361630		1	GUARD, Muffler Wrap, Sound Control; Closed Front End; If Used
1		87731990		1	INSULATION, FOAM, Muffler Wrap, Sound Control; Open Front End; If Used
2		87393399		4	SPRING

88.100.11	05	p1	02/09

ACOUSTICAL EQUIPMENT - REAR WINDOW PANEL

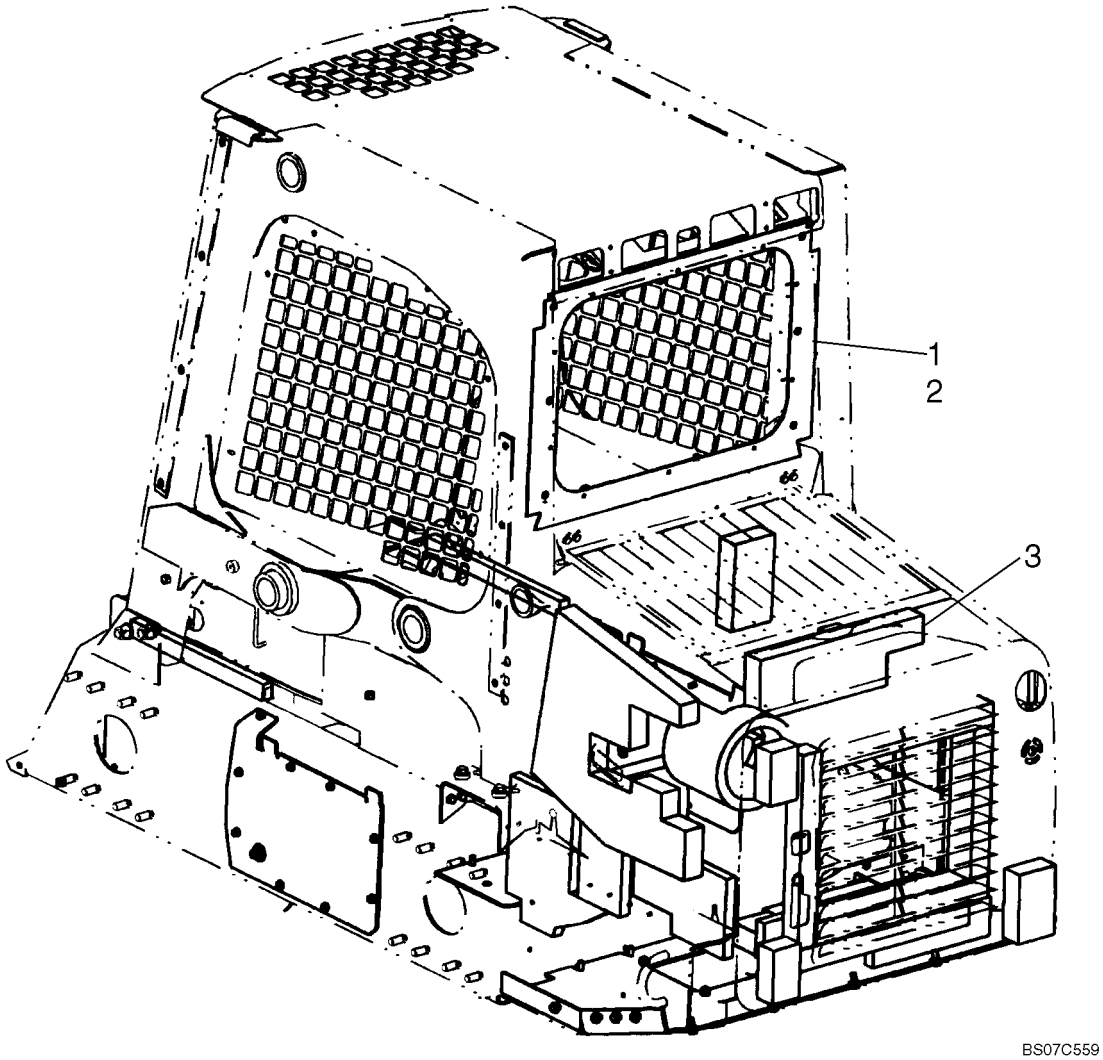

ACOUSTICAL EQUIPMENT - REAR WINDOW PANEL

REF	FN	PART NUMBER	YR/SN	QTY	DESCRIPTION
1		87649532		1	FOAM, Sound Panel, Rear Window
2		86520136		10	RIVET
3		87462505		1	PAD, Sound Pad

88.100.11	06	p1	04/09

ACOUSTICAL EQUIPMENT - PILOT CONTROL CONSOLE

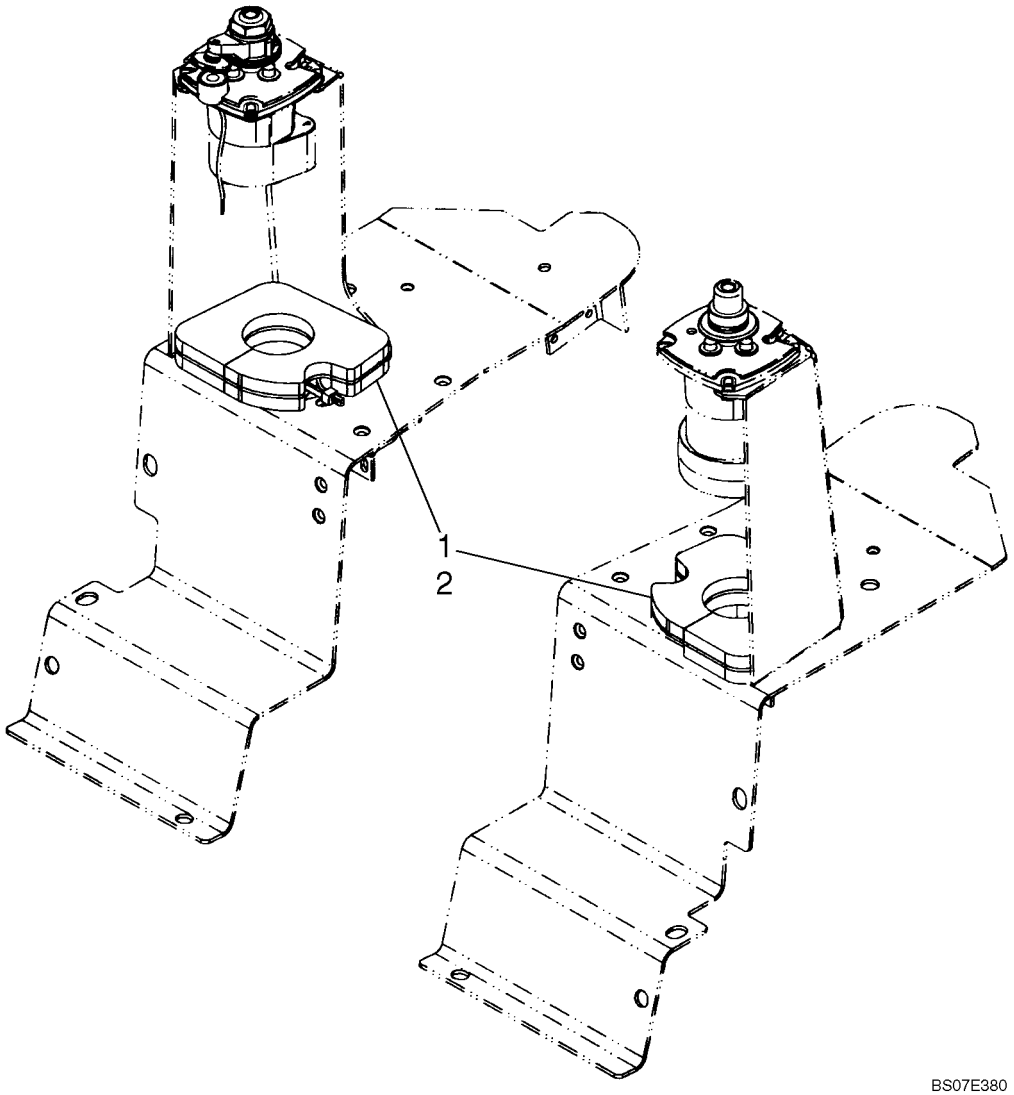

ACOUSTICAL EQUIPMENT - PILOT CONTROL CONSOLE

REF	FN	PART NUMBER	YR/SN	QTY	DESCRIPTION
1		87626794		2	FOAM, Sound Barrier, Pilot Console
2		529070		2	STRAP, CABLE, .30" x 14.5"

88.100.11	07	p1	04/09

ACOUSTICAL EQUIPMENT - PILOT CONTROL CONSOLE

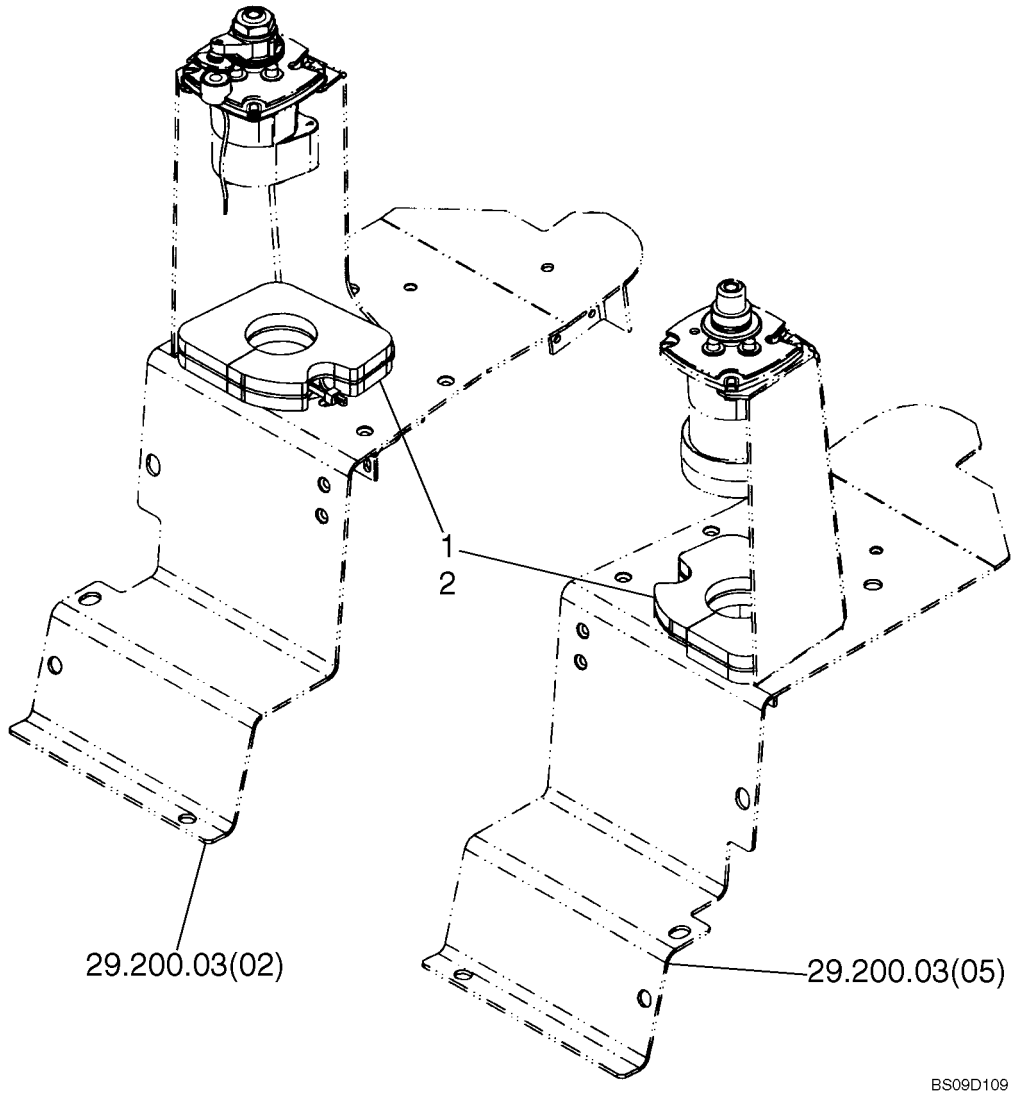

ACOUSTICAL EQUIPMENT - PILOT CONTROL CONSOLE

REF	FN	PART NUMBER	YR/SN	QTY	DESCRIPTION
1		87626794		2	FOAM, Sound Barrier, Pilot Console
2		L18331		2	STRAP, CABLE

NOISE CONTROL - CAB

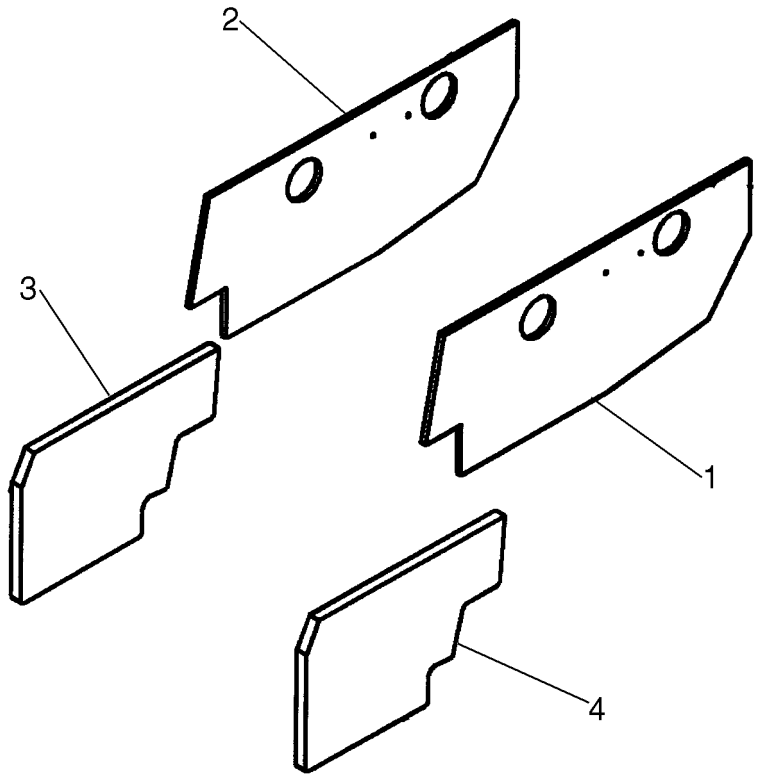

BS08H489

NOISE CONTROL - CAB

REF	FN	PART NUMBER	YR/SN	QTY	DESCRIPTION
1		86506559		1	PANEL, INSULATING, LH Liner
2		86506560		1	PANEL, INSULATING, RH Liner
3		86506570		1	PANEL, RH Kick Panel
4		86506571		1	PANEL, LH Kick Panel

88.120.02	02	p1	07/09

RADIO

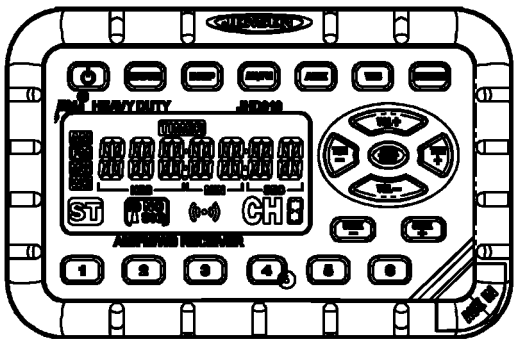

1

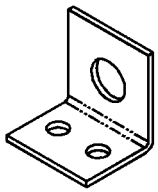

2



3



4



5



6

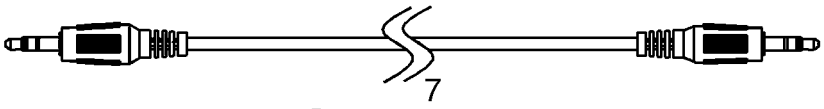

7

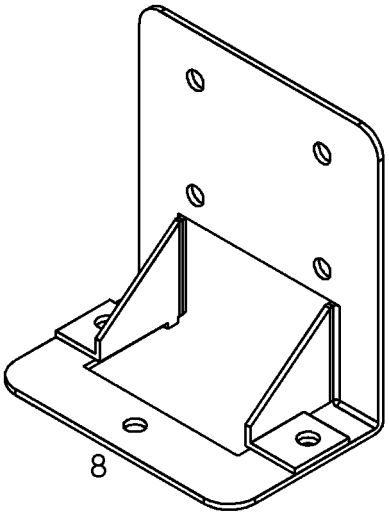

8

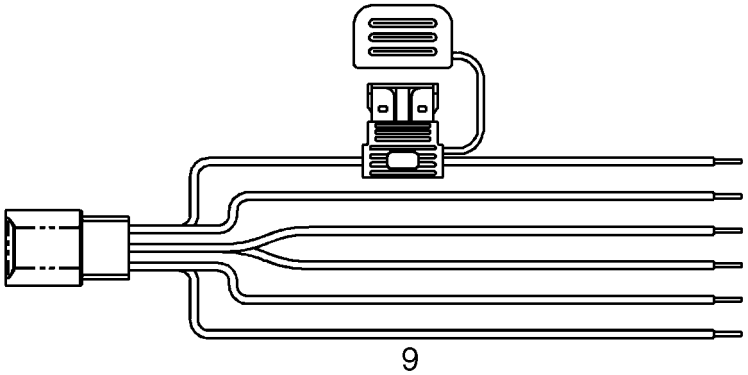

9

BS09D091

RADIO

REF	FN	PART NUMBER	YR/SN	QTY	DESCRIPTION
1		87672223		1	RADIO, Radio; JHD910; Mini Wp AM/FM/WX Band; For Installation, See Figure 88.120.02[01]; Incl 2 - 10
2		NSS		1	NOT SERVICED SEPARATELY, Bracket, Radio
3		NSS		5	NOT SERVICED SEPARATELY, Screw, 10-16 x 3/4 in Stainless Steel PPH
4		NSS		4	NOT SERVICED SEPARATELY, Screw, M4 x x.7 x 8mm Stainless Steel PPH With Washer
5		NSS		5	NOT SERVICED SEPARATELY, Screw, 10-32 x 5/8 in Stainless Steel PPH
6		NSS		5	NOT SERVICED SEPARATELY, Nut, 10-32 Stainless Steel Hex
7		NSS		1	NOT SERVICED SEPARATELY, 4 ft 1/8 in Stereo Male To Male Patch Cord
8		NSS		1	NOT SERVICED SEPARATELY, Bracket, Radio
9		NSS		1	NOT SERVICED SEPARATELY, Pigtail Adapter
10		NSS		1	NOT SERVICED SEPARATELY, Owner's Manual; Not Shown

88.120.08		p1	03/09

MANUAL COMPARTMENT LOCK & FIRE EXTINGUISHER

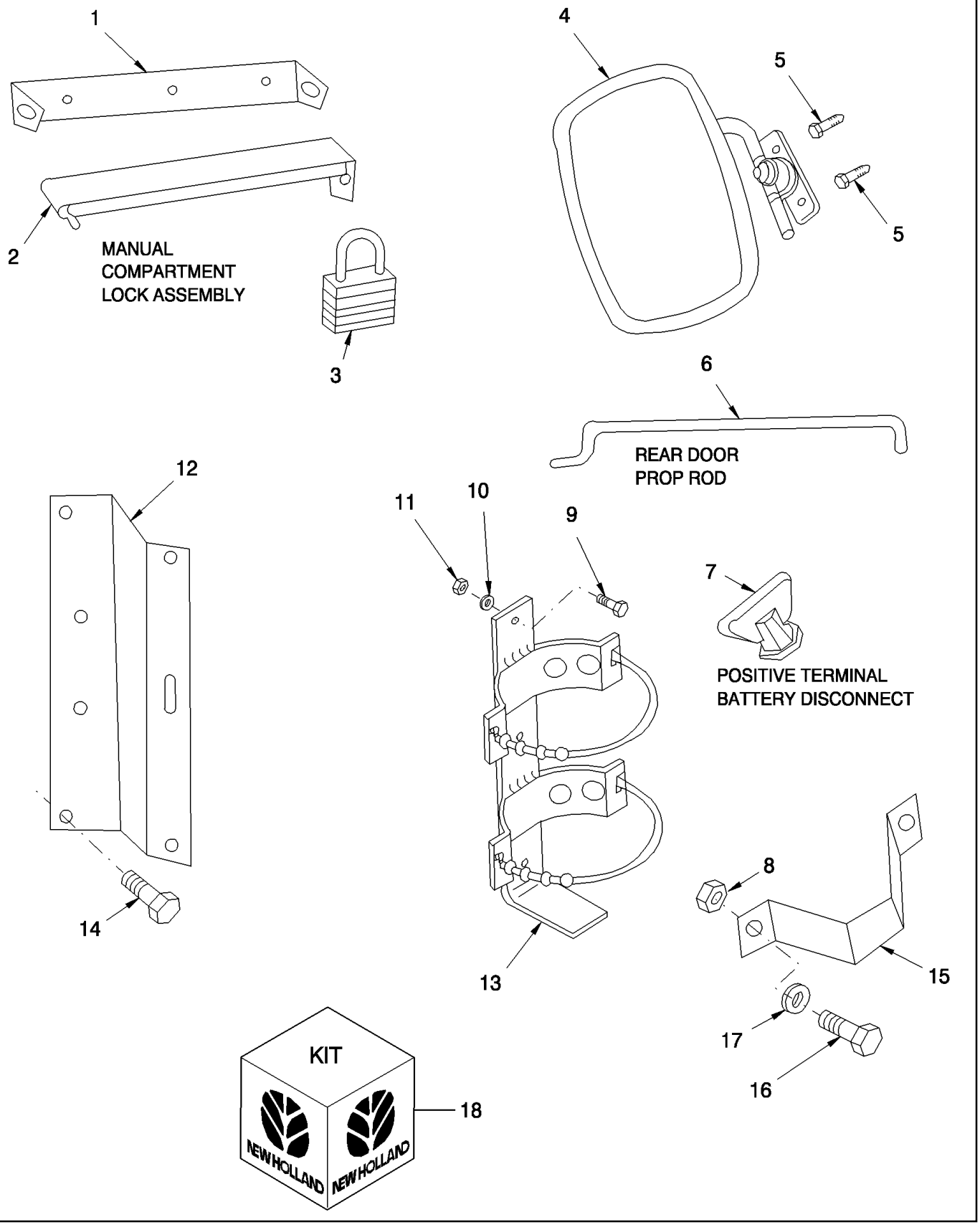

MANUAL COMPARTMENT LOCK & FIRE EXTINGUISHER

REF	FN	PART NUMBER	YR/SN	QTY	DESCRIPTION
1		86515873		1	SUPPORT, Manual Compartment Lock
2		86515872		1	ANGLE, Manual Compartment Lock
3		86518576		1	PADLOCK, Manual Compartment Lock
3		86575297		1	KEY, Set Of Keys For 86518576 Padlock
4		E7NN17700AA		1	MIRROR, REAR-VIEW, Inside
5		9990936		2	SCREW, Self-Tapping, Oval Hd, #8 x 13
6		86506234		1	ROD, Rear Door
7		86518650		1	NUT, WING, Stainless Steel, 3/8"-16
8		280129		1	NUT, LOCK, 1/4"-20, GC
9		87872		3	BOLT, Hex, 5/16"-18 x 3/4", G5, Full Thd
10		80681		3	WASHER, LOCK, 5/16"
11		9635082		3	NUT, 5/16"-18, G5
12		86592983		1	SUPPORT, Angle, Fire Extinguisher Bracket
13		86506455		1	BRACKET, Fire Extinguisher
14		570821		4	SCREW, SELF TAPPING, Flg, USR, 5/16"-18 x 5/8"
15		86519774		1	GUARD, Guard
16		9707580		2	BOLT, Hex, 1/4"-20 x 3/4", G5, Full Thd
17		9824259		2	WASHER, M6 x 12 x 1.6
18		86590083		1	KIT, Inside Rear-View Mirror, Includes: Ref. 4 & 5

90.015.02		p1	04/09

CAB JACK KIT

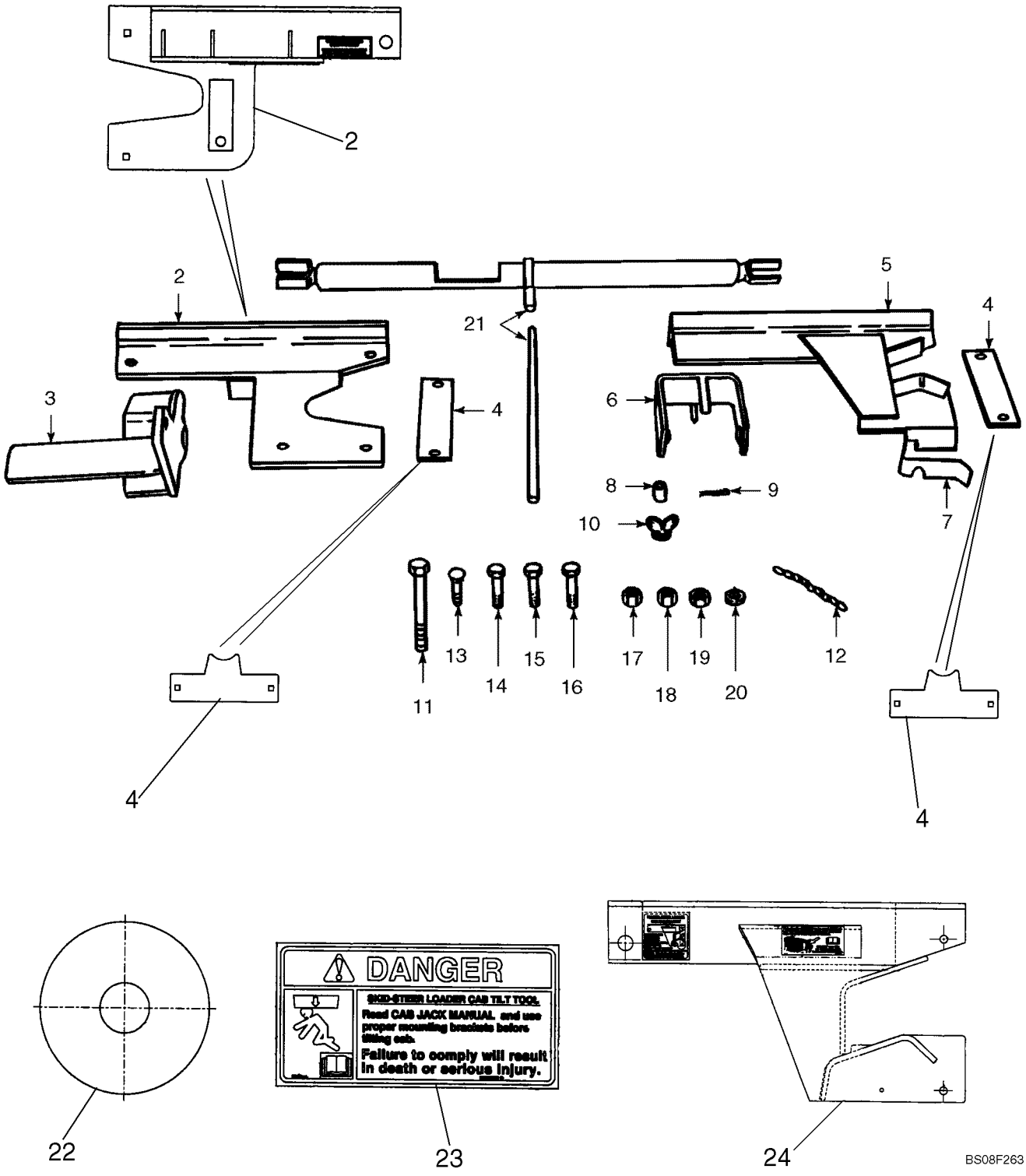

CAB JACK KIT

REF	FN	PART NUMBER	YR/SN	QTY	DESCRIPTION
1		87743612		1	KIT, Kit, Cab Jack, Incl. Ref. 2 - 24; Replaces 87587350, 86590084
2		87587456		1	JACK, Mounting Plate; Replaces 86504388
3		86504391		1	ANCHOR
4		87587352		2	STRAP, L160 - L190 Used On Units After July 2007
4		86504124		2	STRAP, Strap, Rectangular; L160 - L190 Used On Units Before July 2007
5		86504116		1	JACK, L160 - L190 Used On Units Before July 2007
6		86504113		1	SUPPORT
7		86504125		1	CHANNEL, Filler
8		641787		2	SPACER
9		80756		2	PIN, SPLIT (COTTER), 1/8" x 3/4"
10		88022		3	NUT, WING, 1/2"-13, Steel Carbon; If Used
10		129-400		3	NUT, WING, 1/2"-13, Zinc Plate; If Used
11		280831		1	BOLT, Hex, 1/2"-13 x 8", G5
12		197559		1	CHAIN
13		87868		4	SCREW, Short NK, 1/2"-13 x 1 1/4", G5
14		87972		1	BOLT, Hex, 1/2"-13 x 2 1/2", G5
15		88062		1	BOLT, Hex, 5/8"-11 x 1 1/2", G5, Full Thd
16		88556		1	BOLT, Hex, 5/8"-11 x 2 1/4", G5
17		280374		2	NUT, 5/8"-11, G5
18		280431		1	NUT, 1/2"-13, G5
19		9636698		1	NUT, LOCK, 1/2"-13, GB
20		86629511		1	WASHER, 1/2"
21		86508512		1	RATCHET, Replaces 86504211
22		87587463		1	SPACER
23		86508506		1	DECAL
24		87743359		1	JACK, Jack Mount; L160 - L190 Used On Units After July 2007

SECTION INDEX

90 - Platform, cab, bodywork and decals

90.015.01	01	CAB
90.015.01	02	CAB, FOR OPTIONAL RADIO
90.100.02		REAR HOOD
90.100.17		DOOR, REAR
90.108.01	01	DECALS - CONTROLS
90.108.01	02	DECALS - CONTROLS (EUROPE)
90.108.01	03	DECALS, THROTTLE
90.108.02	01	DECALS - MODEL (L160)
90.108.02	02	DECALS - MODEL (L170)
90.108.02	05	DECALS
90.108.02	06	DECAL - FIAT
90.108.02	07	DECALS - BOOM AND LOAD
90.108.02	08	DECALS
90.108.03	01	DECALS - WARNING
90.108.03	02	DECALS - WARNING
90.108.03	03	DECALS - WARNING, EUROPE
90.108.04	01	DECALS
90.108.04	02	DECALS
90.108.04	03	DECALS - DB
90.108.04	04	DECALS - LOW EMISSION, LOW SULFUR FUEL
90.108.07		DECALS - MULTIFUNCTIONAL AUXILIARY ELECTRICAL
90.114.04		FENDERS
90.120.01	01	SEAT, STANDARD
90.120.01	02	SEAT, STANDARD
90.120.01	03	SEAT, SUSPENSION
90.120.01	04	SEAT, SUSPENSION
90.120.05	01	SEAT, STANDARD
90.120.05	02	SEAT BELT, LAP BELT
90.120.05	03	SEAT BELT, SHOULDER BELT
90.124.08	01	ARMREST - MODELS WITH PILOT CONTROL; IF USED
90.124.08	05	ARMREST
90.154.01	01	CAB - DOOR & FRAME
90.154.01	02	CAB - DOOR
90.154.01	03	CAB - DOOR FRAME, DELUXE CAB
90.154.01	04	CAB - DOOR KIT
90.154.01	21	CAB - DEMOLITION DOOR KIT
90.154.01	22	CAB - DEMOLITION DOOR AND FRAME
90.154.01	23	CAB - DEMOLITION DOOR
90.156.08	02	CAB - SIDE WINDOW, LH
90.156.08	03	CAB - SIDE WINDOW, LH
90.156.08	04	CAB - SIDE WINDOW, LH
90.156.08	05	CAB - SIDE WINDOW, LH
90.156.08	06	CAB - SIDE WINDOW, RH
90.156.08	07	CAB - SIDE WINDOW, RH
90.156.08	08	CAB - SIDE WINDOW, RH
90.156.08	09	CAB - SIDE WINDOW, RH
90.156.08	10	CAB - TOP WINDOW, DELUXE CAB
90.156.08	11	CAB - WINDOWS & HEADLINER
90.156.08	12	THRESHOLD - REAR WINDOW
90.160.01	03	CAB HEADLINER, DELUXE OPEN CAB
90.160.01	06	CAB HEADLINER, OPEN CAB, FOR OPTIONAL RADIO

SECTION INDEX

90 - Platform, cab, bodywork and decals

90.160.03	05	CAB - HEADLINER, DELUXE CAB
90.160.04	01	CAB - THRESHOLD
90.160.04	02	CAB - THRESHOLD/WASHER FLUID TANK
90.160.06	01	CAB - INTERIOR TRIM, MANUAL CONTROLS, DELUXE CAB
90.160.06	02	CAB - INTERIOR TRIM KIT, MANUAL CONTROLS, DELUXE CAB
90.160.06	03	CAB - INTERIOR TRIM, PILOT CONTROLS - MODELS WITHOUT RADIO
90.160.06	04	CAB - INTERIOR TRIM, PILOT CONTROLS - MODELS WITH RADIO

90.015.01	01	p1	04/09

CAB

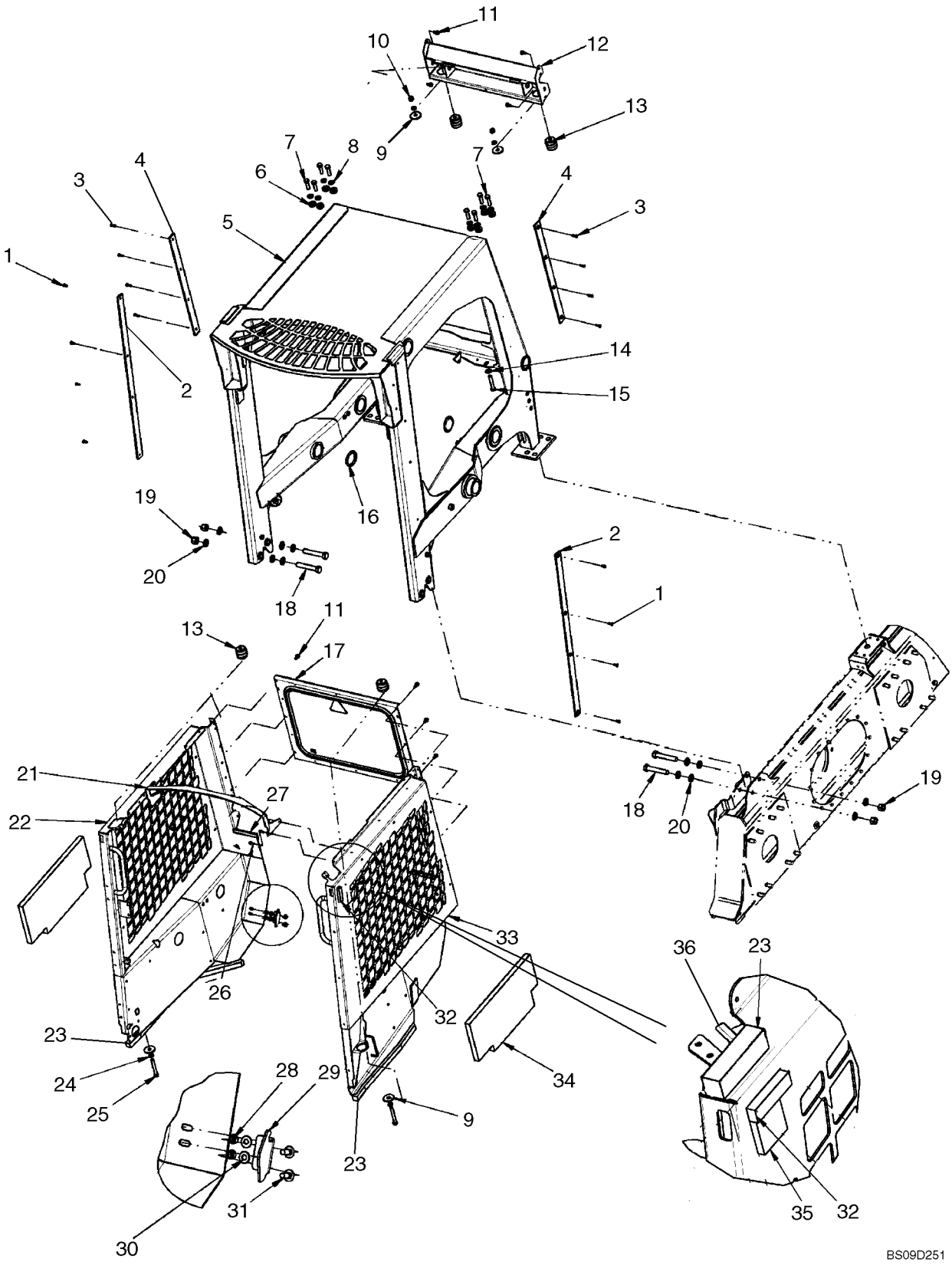

CAB

REF	FN	PART NUMBER	YR/SN	QTY	DESCRIPTION
1		86534250		8	RIVET
2		87645655		2	WEAR STRIP, Wear Strip
3		86616032		8	SCREW, SELF TAPPING, Cross Flat Hd, 1/4" x 1", If Used
3		87577017		8	FASTENER, Screw, Torx 1/4-20 x 1.00; If Used
4		87647989		2	WEAR STRIP, Wear Strip
5		87658800		1	KIT, SERVICE, Cab Service Kit; Incl. Cab Assy (Gray), And Decals (1) 87626170, (1) 86521713
5		87658802		1	KIT, SERVICE, Cab Service Kit, Europe; Incl. Cab Assy (Gray), And Decal (1) 87626170
6		517015		8	SPACER
7		9790095		8	BOLT, Hex, 1/2"-13 x 1 3/4", G8
8		65319		8	WASHER, M13 x 25 x 3.5, HT
9		29684		4	WASHER
10		280431		2	NUT, 1/2"-13, G5
11		9840344		10	SCREW
12		87029352		1	SUPPORT
13		612882		4	ISOLATOR
14		87364		2	WASHER, 1/2", SAE
15		87339		2	BOLT, Hex, 1/2"-13 x 3", G5, If Used
15		9637417		2	BOLT, Hex, 1/2"-13 x 3 1/2", G5, If Used
16		9822583		4	PLUG
17		86506354		1	GLASS, CAB, See Fig. 90.156.08 [12]
18		88007		4	BOLT, Hex, 3/4"-10 x 4 1/2", G5
19		9626598		4	NUT, LOCK, 3/4"-10, GB
20		86512328		12	WASHER, .766" x 1.38" x .135" Thk, HT
21		87677737		1	TIE-ROD, Side Screen Tie
		87658799		1	KIT, SERVICE, Right Hand Sidescreen Kit; Incl. Ref. 22 And Decal (1) 87586465
22		87562878		1	SHEET METAL, Side Sheet, RH
23		86508457		AR	PAD, Foam, Closed Cell; 6.04 Ft. Required
24		86512328		12	WASHER, .766" x 1.38" x .135" Thk, HT
25		9637417		2	BOLT, Hex, 1/2"-13 x 3 1/2", G5
26		86625199		4	SCREW, SELF TAPPING, Hex Flg Hd, M6 x 13
27		291809		AR	SEAL, Sealing Strip; 9.50 in. Required

90.015.01	01	p2	04/09

CAB

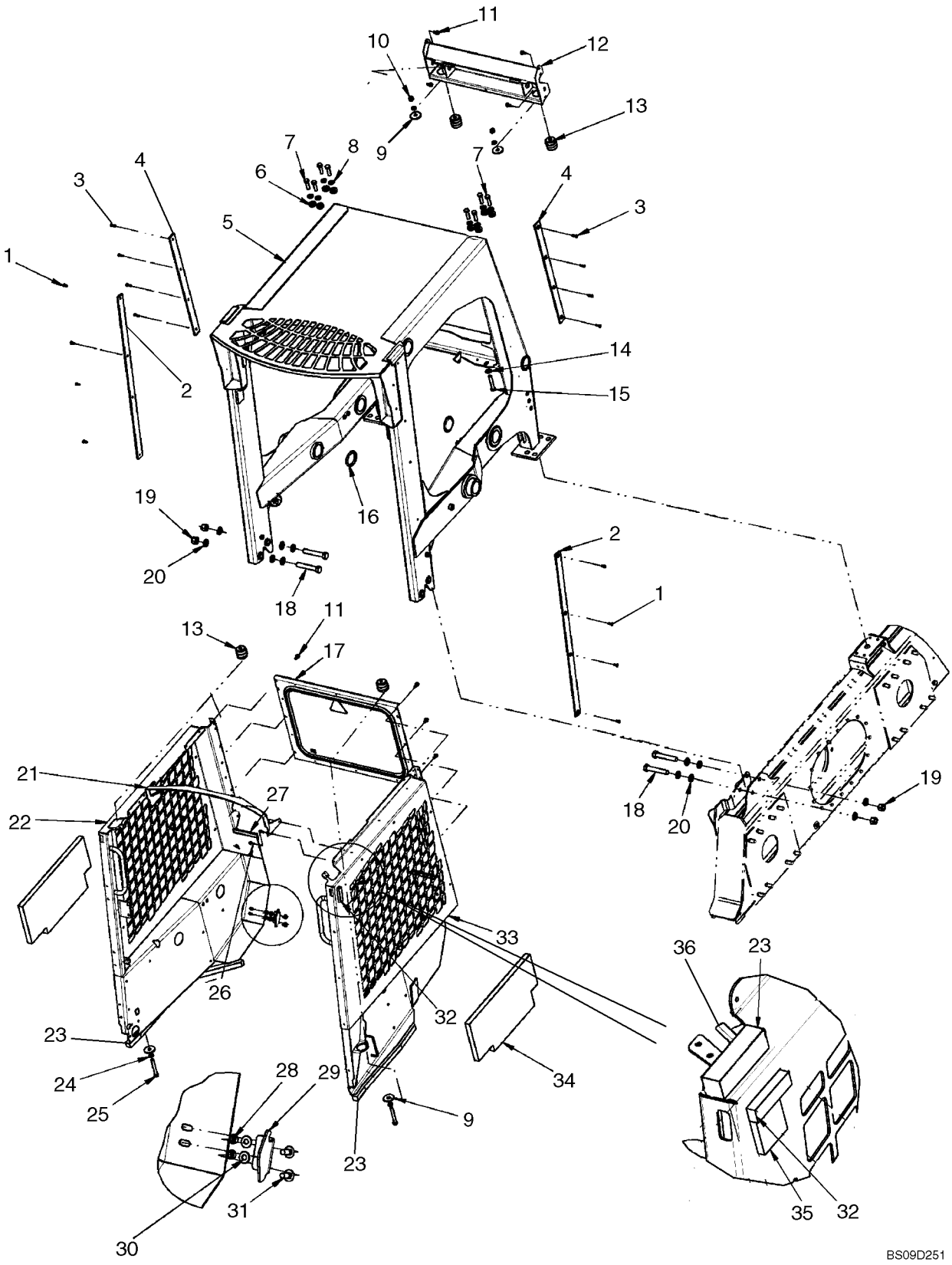

CAB

REF	FN	PART NUMBER	YR/SN	QTY	DESCRIPTION
28		9635082		4	NUT, 5/16"-18, G5
29		86613407		2	PLATE, STRIKER
30		322358		4	WASHER, BELLEVILLE, M8
31		280327		4	BOLT, CARRIAGE, Short NK, 5/16"-18 x 3/4", G5
32		291308		AR	STRIP, SEALING, 2.0 Ft. Required
33		87676418		1	SHEET METAL, Side Sheet, LH
34		9829527		2	INSULATOR
35		87752551		2	SILENTBLOC, If Used
36		{87702286}		AR	400 mm (15.74 in) Total Required Used in (3) Places

90.015.01	02	p1	05/09

CAB, FOR OPTIONAL RADIO

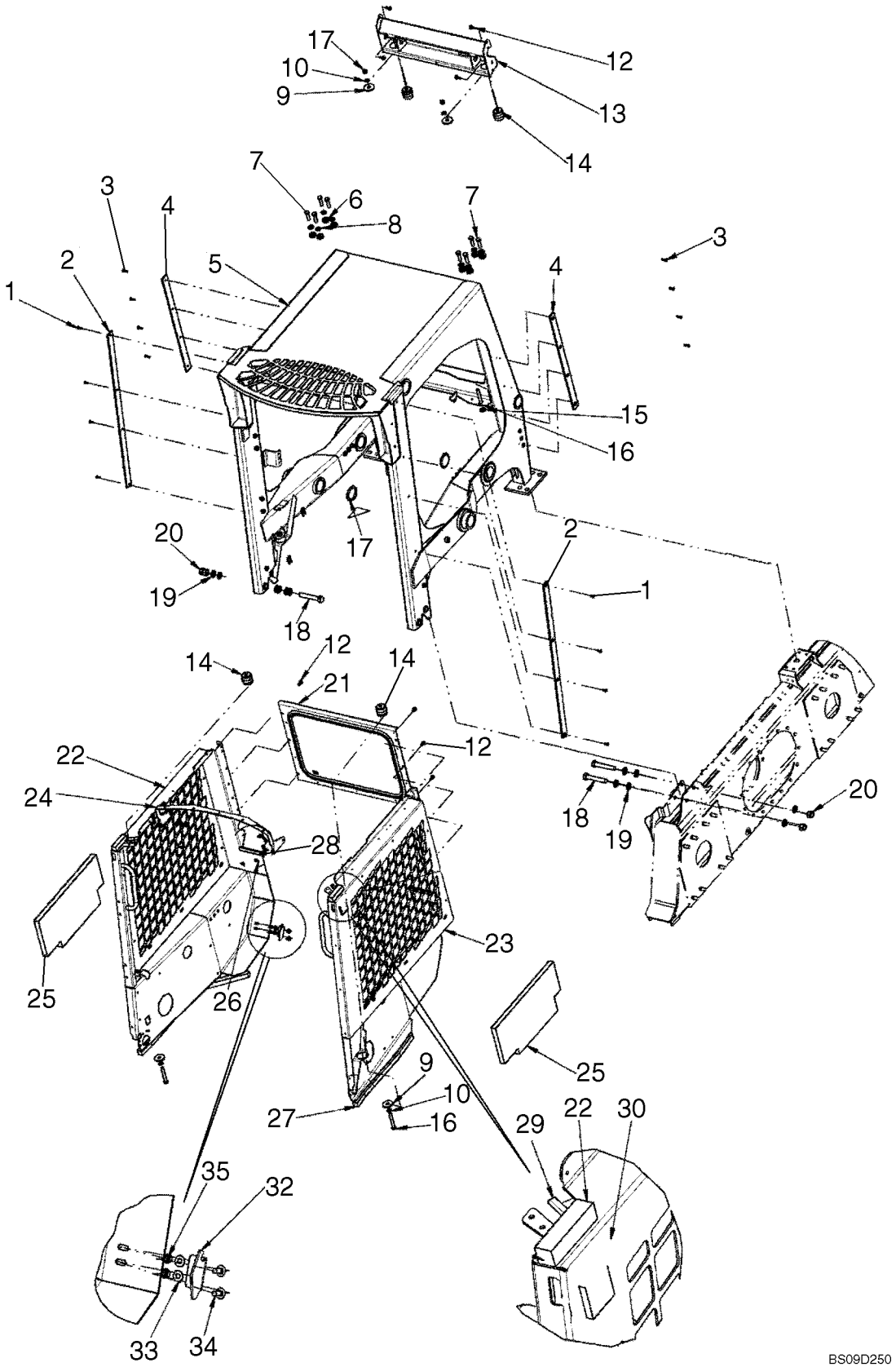

CAB, FOR OPTIONAL RADIO

REF	FN	PART NUMBER	YR/SN	QTY	DESCRIPTION
1		86534250		8	RIVET
2		87645655		2	WEAR STRIP, Wear Strip
3		87577017		8	FASTENER, Screw, Torx 1/4-20 x 1.00
4		87647989		2	WEAR STRIP, Wear Strip
5		87658800		1	KIT, SERVICE, Cab Service Kit; Incl. Cab Assy (Gray), And Decals (1) 87626170, (1) 86521713
5		87658802		1	KIT, SERVICE, Cab Service Kit, Europe; Incl. Cab Assy (Gray), And Decal (1) 87626170
6		517015		8	SPACER
7		9790095		8	BOLT, Hex, 1/2"-13 x 1 3/4", G8
8		65319		8	WASHER, M13 x 25 x 3.5, HT
9		29684		4	WASHER
10		80679		4	WASHER, LOCK, 1/2"
11		280431		2	NUT, 1/2"-13, G5
12		9840344		10	SCREW
13		87029352		1	SUPPORT
14		612882		4	ISOLATOR
15		87364		2	WASHER, 1/2", SAE
16		9637417		2	BOLT, Hex, 1/2"-13 x 3 1/2", G5
17		9822583		4	PLUG
18		88007		4	BOLT, Hex, 3/4"-10 x 4 1/2", G5
19		86512328		12	WASHER, .766" x 1.38" x .135" Thk, HT
20		9626598		4	NUT, LOCK, 3/4"-10, GB
21		86506354		1	GLASS, CAB, See Fig. 90.156.08 [12]
22		84205639		1	SHEET METAL, Side Sheet, RH, With Speaker Holes
23		84205635		1	SHEET METAL, Side Sheet, LH, With Speaker Holes
24		87677737		1	TIE-ROD, Side Screen Tie
25		9829527		2	INSULATOR
26		86625199		4	SCREW, SELF TAPPING, Hex Flg Hd, M6 x 13
27		86508457		AR	PAD, Foam, Closed Cell; 6.04 Ft. Required
28		291809		AR	SEAL, Sealing Strip; 9.50 in. Required
29		{87702286}		AR	400 mm (15.74 in) Total Required Used in (3) Places
30		291308		AR	STRIP, SEALING, 2.0 Ft. Required
31		87752551		2	SILENTBLOC
32		86613407		2	PLATE, STRIKER

90.015.01	02	p2	05/09

CAB, FOR OPTIONAL RADIO

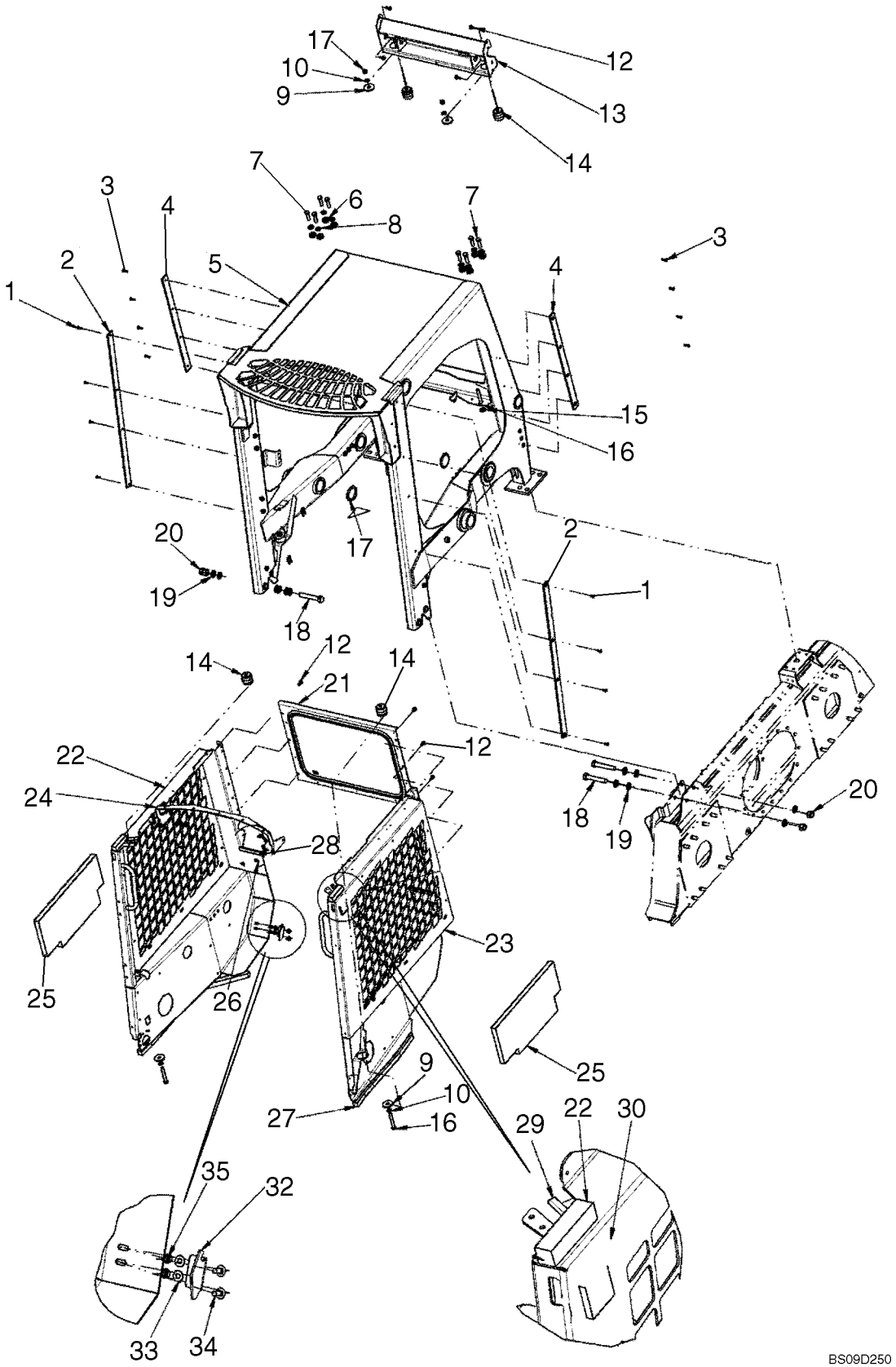

CAB, FOR OPTIONAL RADIO

REF	FN	PART NUMBER	YR/SN	QTY	DESCRIPTION
33		322358		4	WASHER, BELLEVILLE, M8
34		280327		4	BOLT, CARRIAGE, Short NK, 5/16"-18 x 3/4", G5
35		9635082		4	NUT, 5/16"-18, G5

90.100.02		p1	02/09

REAR HOOD

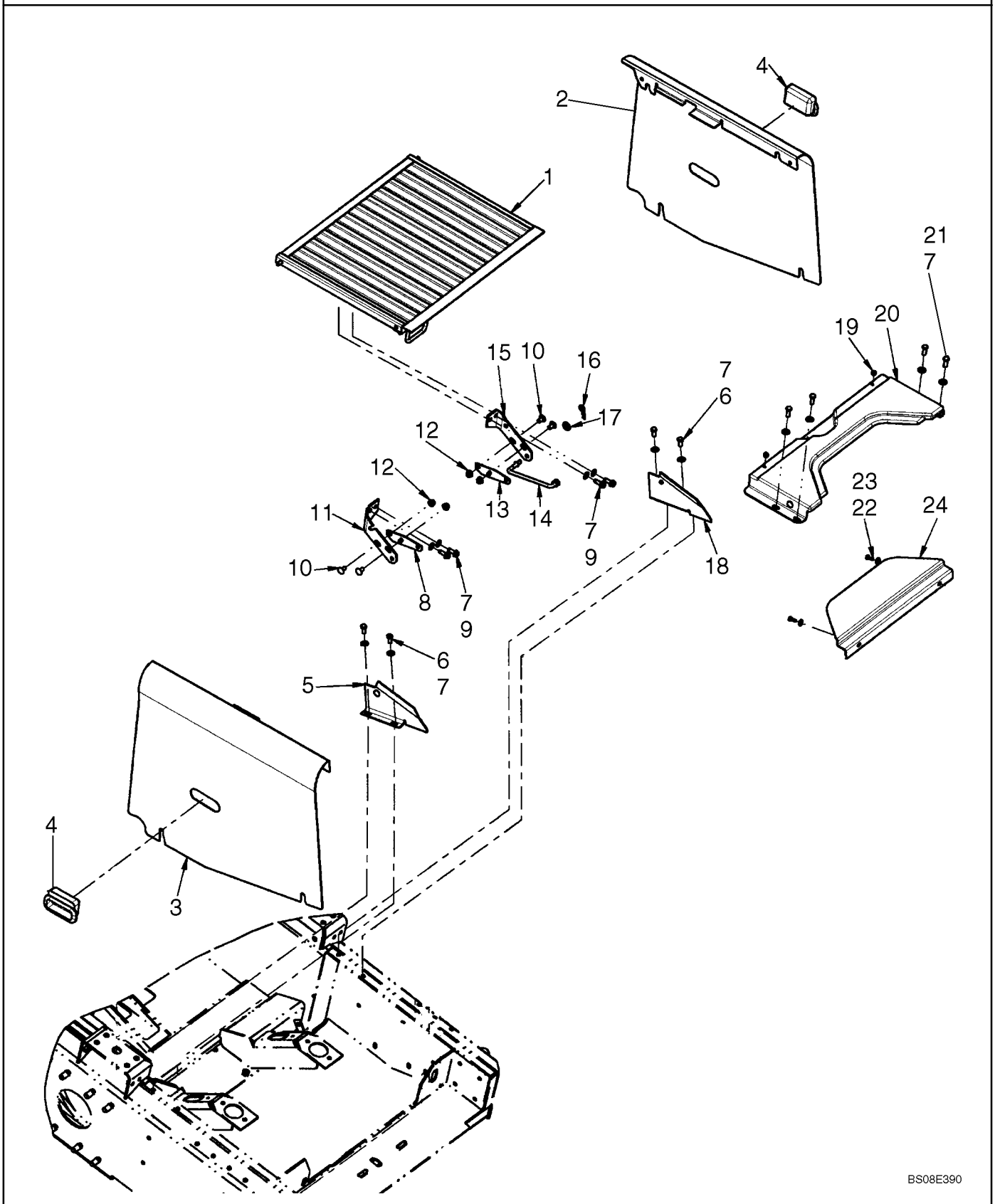

REAR HOOD

REF	FN	PART NUMBER	YR/SN	QTY	DESCRIPTION
1		87431194		1	LID, Yellow
2		87750721		1	SHEET METAL, RH Side Sheet; Yellow
3		87750719		1	SHEET METAL, LH Side Sheet; Yellow
4		3962571		2	HANDLE
5		{87640933}		1	LH; Yellow
6		88434		4	BOLT, Hex, 3/8"-16 x 3/4", G5, Full Thd
7		140045		12	WASHER, BELLEVILLE, M10
8		9844538		1	GUIDE, LH; Gray
9		280476		4	SCREW, SELF TAPPING, Hex Wash Hd, 3/8" x 1"
10		86508748		4	BOLT, CARRIAGE, Short NK, 3/8"-16 x 3/4", G5, Full Thd
11		86527175		1	BRACKET, LH; Gray
12		247780		4	NUT, FLANGE, Flg, USR, 3/8"-16
13		9844539		1	GUIDE, RH; Gray
14		87603956		1	ROD
15		86527176		1	BRACKET, RH; Gray
16		216698		1	HAIR PIN COTTER, Int, 5/16" x 1.75" x 0.125"
17		80702		1	WASHER, 3/8"
18		{87640934}		1	RH; Yellow
19		523275		2	BUMPER
		87054088		1	LID, Assy; Incl. Plate 87431190 And Decals 86509972, 9828825
20		87431190		1	PLATE, Transition; Yellow
21		88206		4	BOLT, Hex, 3/8"-16 x 1", G5, Full Thd
22		80701		2	WASHER, 1/4"
23		9707580		2	BOLT, Hex, 1/4"-20 x 3/4", G5, Full Thd
24		87461406		1	COVER, Door, Top Cover; Yellow; Slotted Holes Parallel To Long Flat Edge

90.100.17		p1	04/09

DOOR, REAR

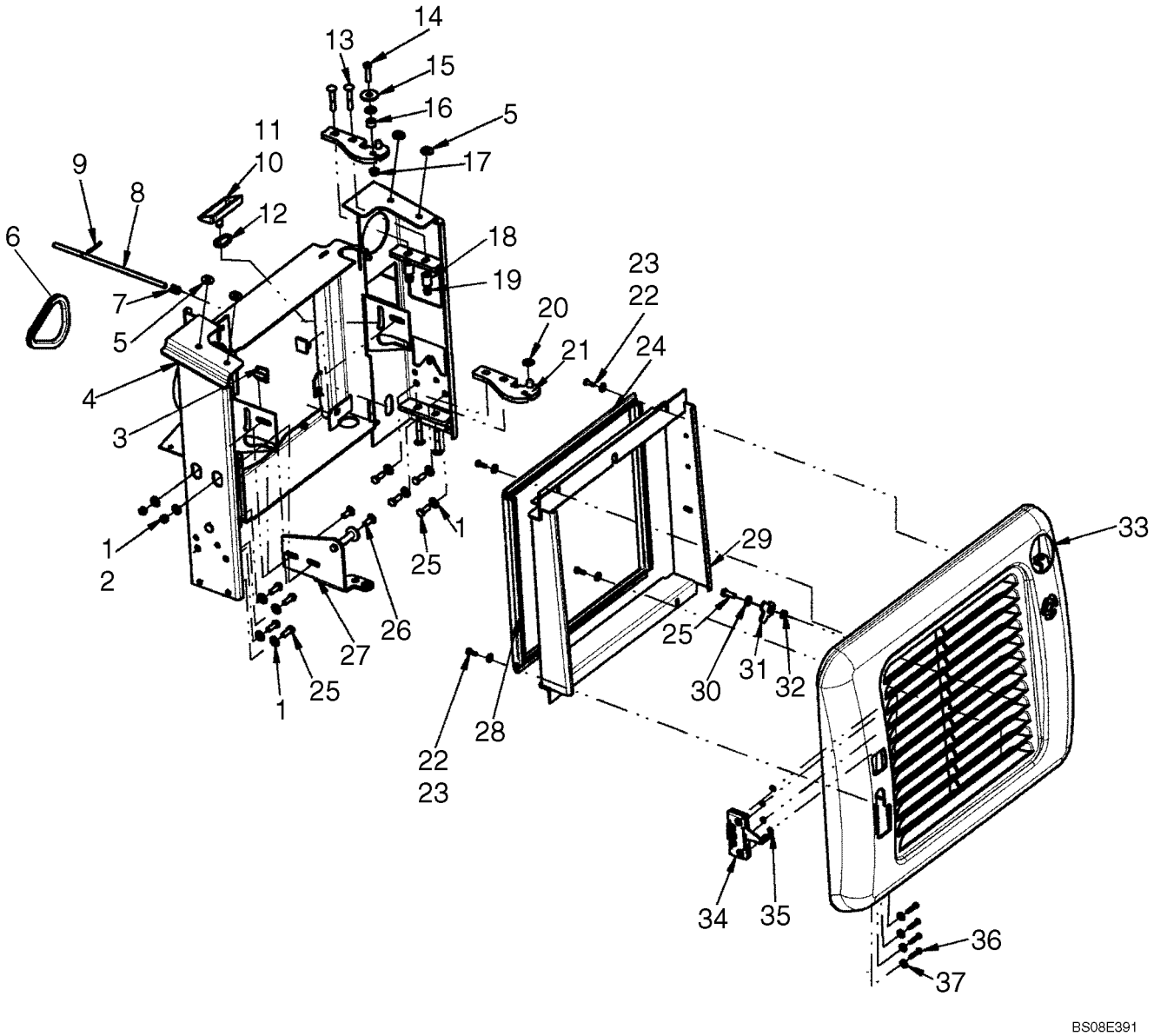

DOOR, REAR

REF	FN	PART NUMBER	YR/SN	QTY	DESCRIPTION
1		140045		10	WASHER, BELLEVILLE, M10
2		9628503		2	NUT, 3/8"-16, G5
3		9617869		2	BUMPER
4		87663843		1	SUPPORT, Support, Radiator
5		80702		4	WASHER, 3/8"
6		291186		AR	PROTECTION, Edge Channel. 1.2 Ft Required
7		86539686		1	SPRING
8		87398927		1	ROD, ADJUSTMENT
9		87578		1	PIN, LOCK, 3/16" x 1 3/4", Slotted
10		93963		AR	TUBE, PLASTIC-RUBBER, 3/4 x 125; 1.2 Ft
11		86501330		1	FUNNEL, Oil Filter
12		646223		1	STRAP, .19" x 8 1/2", (Cable Tie)
13		280514		4	BOLT, CARRIAGE, Short NK, 3/8"-16 x 2 1/4", G5
14		88044		1	BOLT, Hex, 3/8"-16 x 1 1/2", G5
15		225930		1	WASHER, 15/32" x 1 1/2" x 1/8" Thk
16		103789		1	SPACER, .386 ID .749 OD .5 LG ZND
17		247780		2	NUT, FLANGE, Flg, USR, 3/8"-16
18		87047451		2	SPACER, Hose Clamp
19		9637692		2	NUT, LOCK, 3/8"-16, GB
20		86611853		2	WASHER
21		87352574		2	HINGE
22		9707580		4	BOLT, Hex, 1/4"-20 x 3/4", G5, Full Thd
23		80701		4	WASHER, 1/4"
24		87020906		2	SEAL, Bulb Seal
25		88206		9	BOLT, Hex, 3/8"-16 x 1", G5, Full Thd
26		88682		2	BOLT, CARRIAGE, Short NK, 3/8"-16 x 1", G5
27		87460013		1	BRACKET, Striker Bracket
28		87034579		2	SEAL
29		87459473		1	FRAME, Door Seal; Gray
30		87016		4	WASHER, 3/8", SAE
31		87455317		1	ARM, Door Lock
32		87352559		1	SPACER, .516 ID x .625 OD x .251
33		87383585		1	DOOR, Rear Door, Gray
34		87456359		1	LATCH
35		86588450		4	WASHER, M6 x 12 x 1.6 Thk

90.100.17		p2	04/09

DOOR, REAR

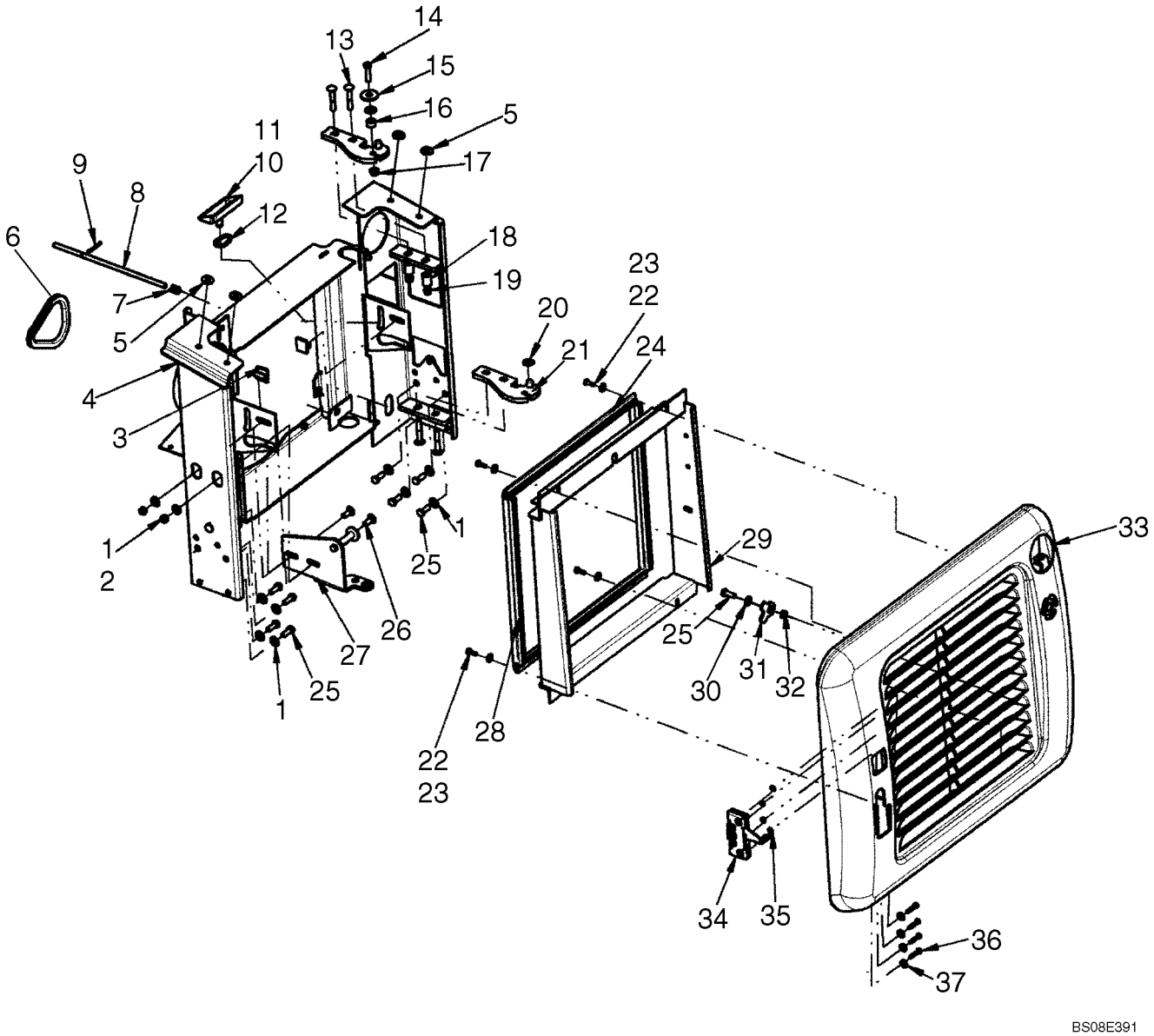

DOOR, REAR

REF	FN	PART NUMBER	YR/SN	QTY	DESCRIPTION
36		43117		4	BOLT, Hex, M6 x 30, 8.8
37		86624182		4	WASHER, M6 x 18 x 1.6

DECALS - CONTROLS

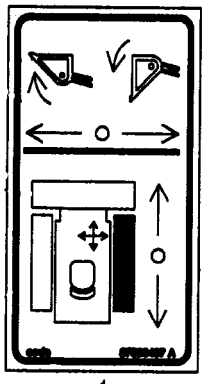
1

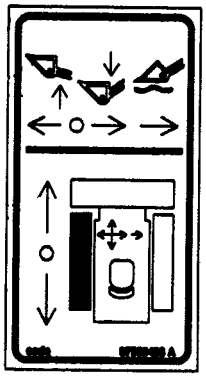
2

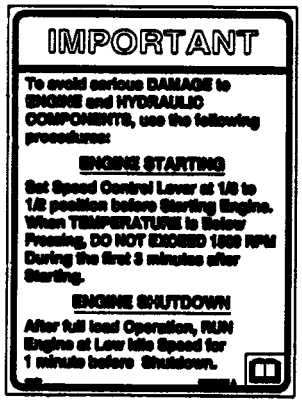

3

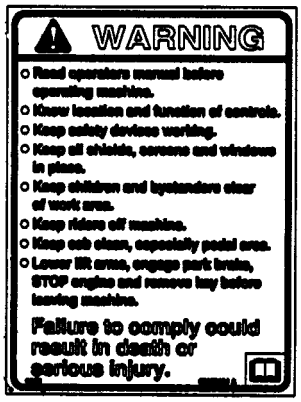

4

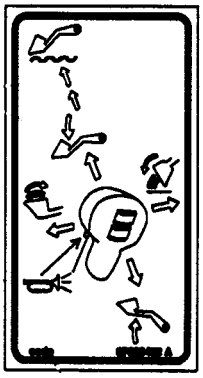
5

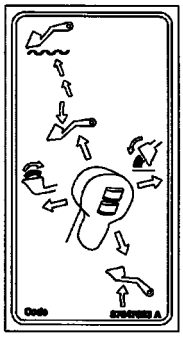
5A

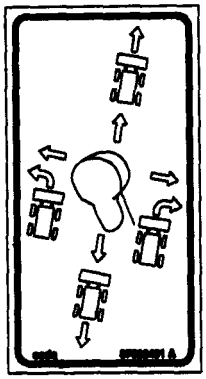
6

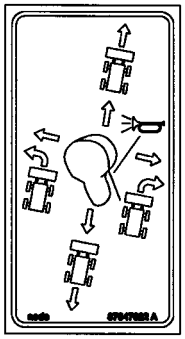
6A

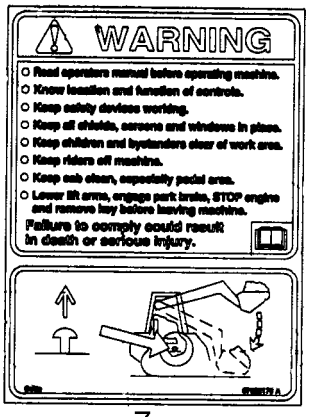

7

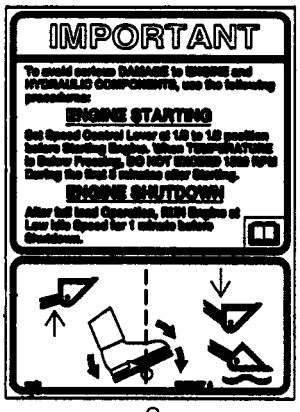

8

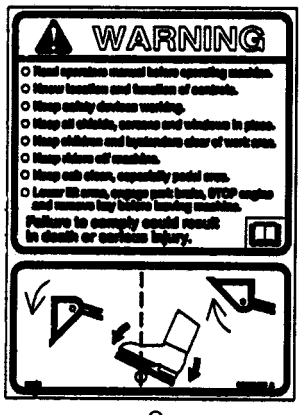

9

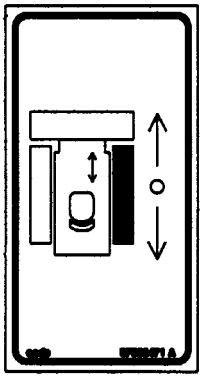
10

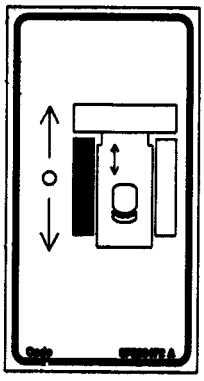
11

BS08A153

DECALS - CONTROLS

REF	FN	PART NUMBER	YR/SN	QTY	DESCRIPTION
1		87586467		1	DECAL, Hand Controls, RH
2		87586466		1	DECAL, Hand Controls, LH
3		87586456		1	DECAL, CAUTION, Important Avoid Engine Damage
4		87586454		1	DECAL, WARNING, Decal, Warning Read Manual, Know Controls
5		87586462		1	DECAL, Pilot Controls, RH
5A		87647023		1	DECAL, Pilot Controls, RH; Replaces 87586462
6		87586461		1	DECAL, Pilot Controls, LH
6A		87647022		1	DECAL, Pilot Controls, LH; Replaces 87586461
7		87626176		1	DECAL, WARNING, Decal, Pilot Control Warning
8		87586457		1	DECAL, CAUTION, Foot Controls
9		87586455		1	DECAL, WARNING, Foot Controls
10		87586471		1	DECAL, Foot Controls, RH
11		87586472		1	DECAL, Foot Controls, LH

DECALS - CONTROLS (EUROPE)

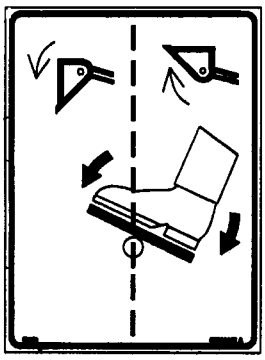

1

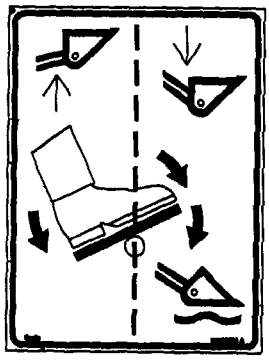

2

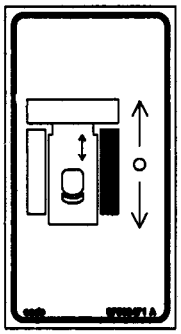

3

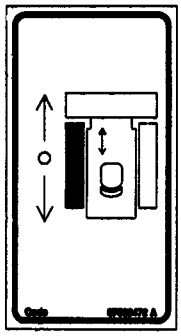

4

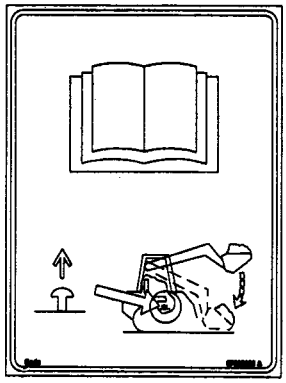

5

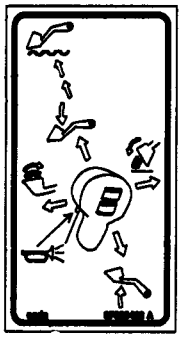

6

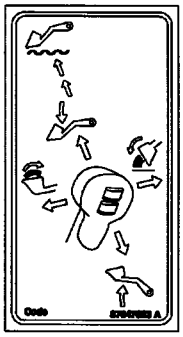

6A

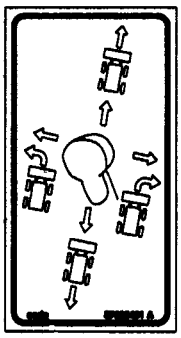

7

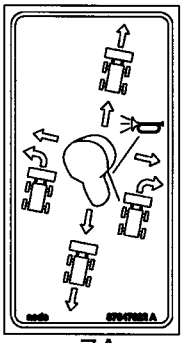

7A

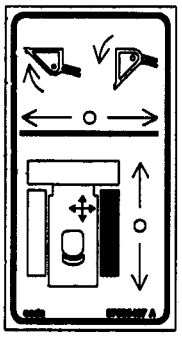

8

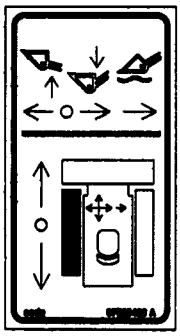

9

BS08A152

DECALS - CONTROLS (EUROPE)

REF	FN	PART NUMBER	YR/SN	QTY	DESCRIPTION
1		87586485		1	DECAL, Foot Controls, RH (Europe)
2		87586484		1	DECAL, Foot Controls, LH (Europe)
3		87586471		1	DECAL, Foot Controls, RH
4		87586472		1	DECAL, Foot Controls, LH
5		87629920		1	DECAL, Decal, Boom Overide
6		87586462		1	DECAL, Pilot Controls, RH
6A		87647023		1	DECAL, Pilot Controls, RH; Replaces 87586462
7		87586461		1	DECAL, Pilot Controls, LH
7A		87647022		1	DECAL, Pilot Controls, LH; Replaces 87586461
8		87586467		1	DECAL, Hand Controls, RH
9		87586466		1	DECAL, Hand Controls, LH

DECALS, THROTTLE

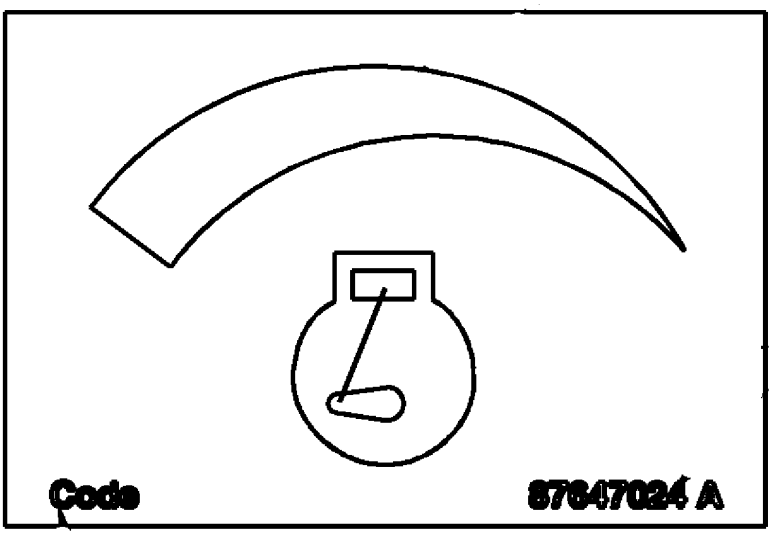

1

BS08J126

DECALS, THROTTLE

REF	FN	PART NUMBER	YR/SN	QTY	DESCRIPTION
1		87647024		1	DECAL, Throttle Located on Right; 37.7 mm High x 56.8 mm Wide (1.48 in High x 2.23 in Wide)

DECALS - MODEL (L160)



1

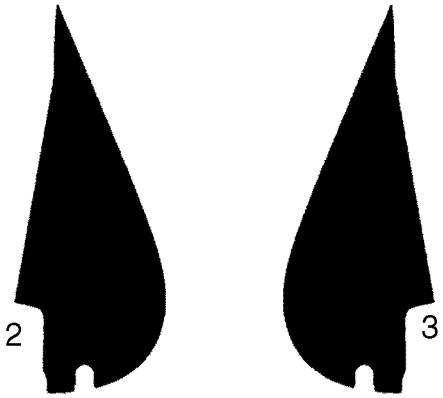

2 3

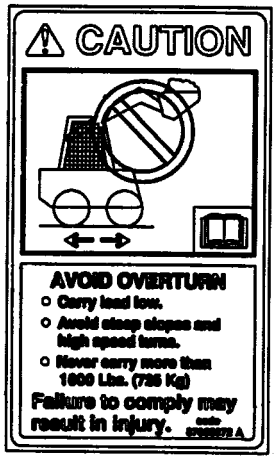

4



5

BS05K112

DECALS - MODEL (L160)

REF	FN	PART NUMBER	YR/SN	QTY	DESCRIPTION
1		87351787		2	DECAL, L160
2		87459298		1	DECAL, Left Hand Side Panel
3		87459299		1	DECAL, Right Hand Side Panel
4		87355272		1	DECAL, Caution; Rating
5		86509223		1	DECAL, Leaf, New Holland

DECALS - MODEL (L170)

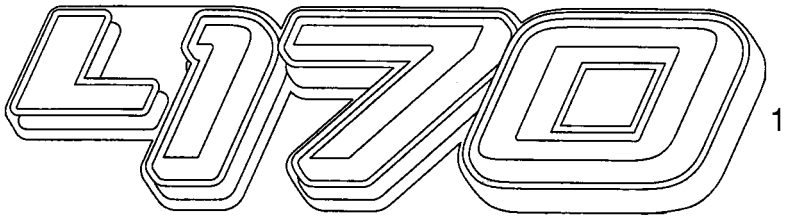

1

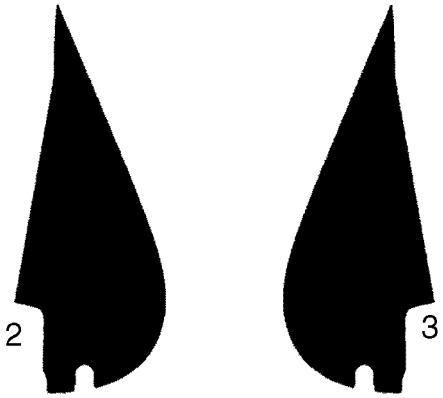

2 3

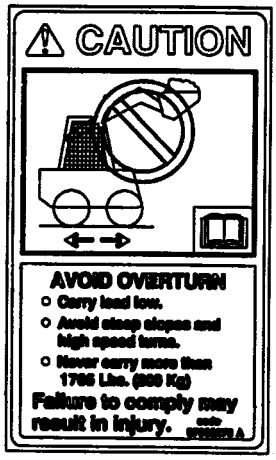

4



5

BS05K111

DECALS - MODEL (L170)

REF	FN	PART NUMBER	YR/SN	QTY	DESCRIPTION
1		87351788		2	DECAL, L170
2		87459298		1	DECAL, Left Hand Side Panel
3		87459299		1	DECAL, Right Hand Side Panel
4		87355273		1	DECAL, Caution; Rating
5		86509223		1	DECAL, Leaf, New Holland

DECALS

NEW HOLLAND

1

NEW HOLLAND

2

SUPER BOOM

3

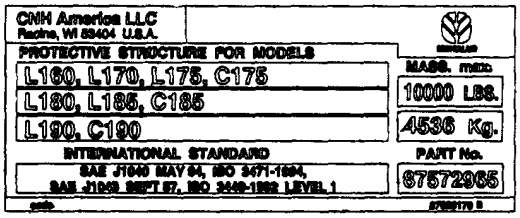

4



5

BS08J128

DECALS

REF	FN	PART NUMBER	YR/SN	QTY	DESCRIPTION
1		87586886		1	DECAL, Decal, New Holland, Black; 64mm (2.5 in.) x 559.5mm (22.03 in.)
2		87361358		1	DECAL, New Holland; Yellow; 57 mm Wide 416.01 mm Long
3		86589510		1	DECAL, Window, Super Boom
4		87626170		1	DECAL, Decal, ROPS
5		86521691		1	DECAL, Attention, Operator's Manual

DECAL - FIAT

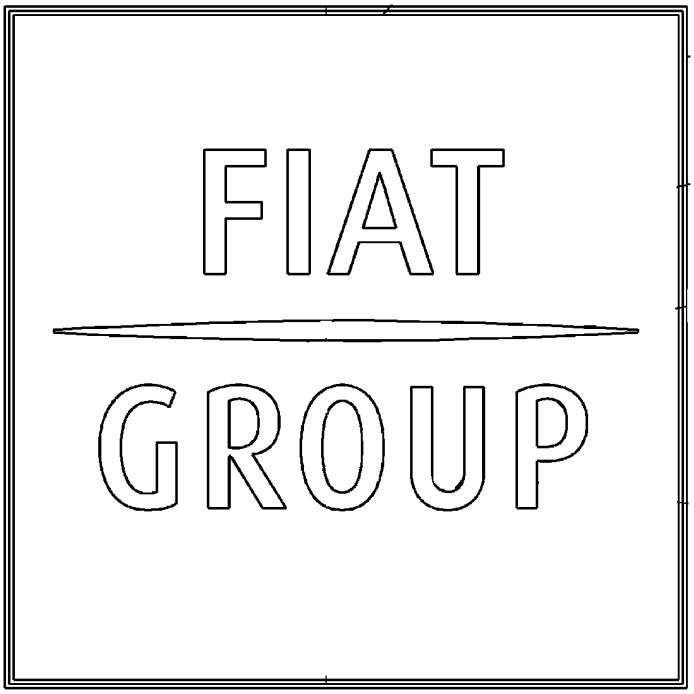

1

BS08B018

DECAL - FIAT

REF	FN	PART NUMBER	YR/SN	QTY	DESCRIPTION
1		87669418		2	DECAL, Fiat Group

DECALS - BOOM AND LOAD

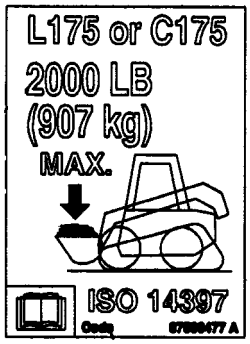

1

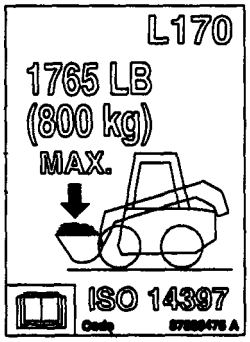

2

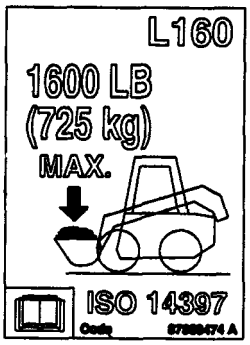

3



4



5



6



7

BS07C531

DECALS - BOOM AND LOAD

REF	FN	PART NUMBER	YR/SN	QTY	DESCRIPTION
1		87586477		1	DECAL, Load, L175/C175
2		87586475		1	DECAL, Load, L170
3		87586474		1	DECAL, Load, L160
4		87586489		1	DECAL, Boom, LH (L160/L170)
5		87586490		1	DECAL, Boom, RH (L160/L170)
6		87586491		1	DECAL, Boom, LH (L175)
7		87586492		1	DECAL, Boom, RH (L175)

DECALS



1



2



3



4



5



6

BS05K108

DECALS

REF	FN	PART NUMBER	YR/SN	QTY	DESCRIPTION
1		87460381		1	DECAL, Boom, Right Hand
2		87460382		1	DECAL, Boom, Left Hand
3		87361356		1	DECAL, New Holland; Yellow; 46 mm
4		86594346		1	EMBLEM, Leaf Logo, Black, 36 mm
5		86589510		1	DECAL, Window, Super Boom
6		86521691		1	DECAL, Attention, Operator's Manual
		87459408		1	DECAL, ROPS; Not Illustrated

DECALS - WARNING

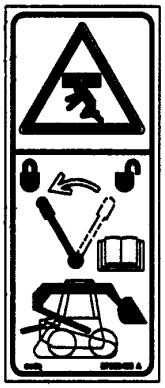

1

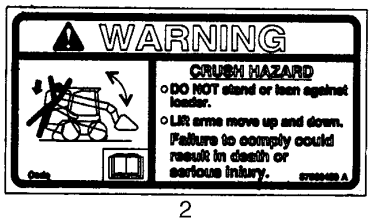

2

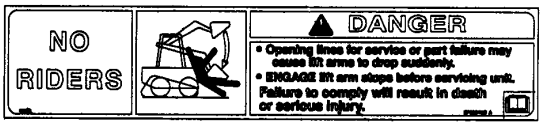

3

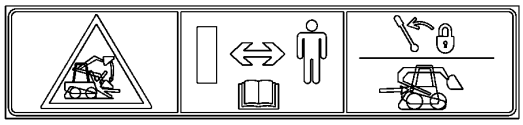

4

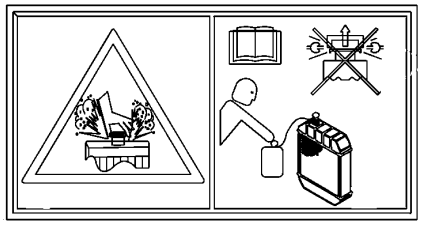

5

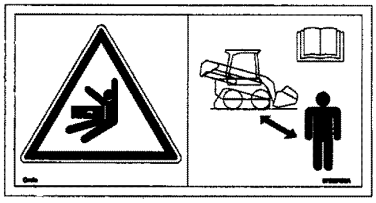

6

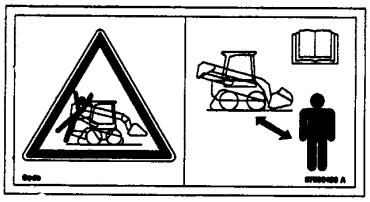

7

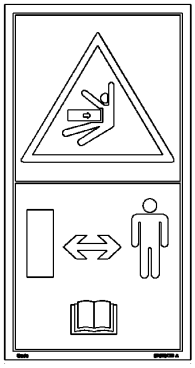

6A

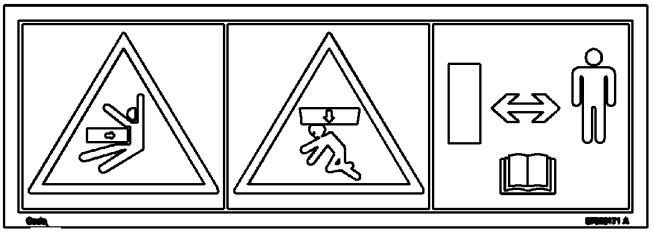

7A

BS08A054

DECALS - WARNING

REF	FN	PART NUMBER	YR/SN	QTY	DESCRIPTION
1		87586465		1	DECAL, Lift Arm Stops
2		87586459		1	DECAL, Lift Arms Move Up And Down, North America
3		87586452		1	DECAL, Danger, No Riders
4		87658003		1	DECAL, Threshold
5		87658005		1	DECAL, Radiator Warning
6		87586460		1	DECAL, Stay Away
6A		87626172		1	DECAL, Keep Distance; Replaces Ref 6 87586460
7		{87586458}		1	Lift Arms Move Up And Down, Europe
7A		87626171		1	DECAL, Crush Warning; Replaces Ref 7 87586468

DECALS - WARNING



1



2

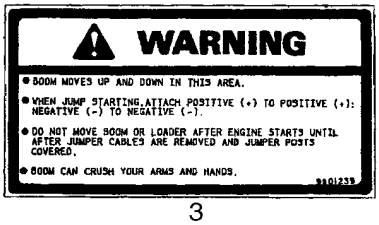

3

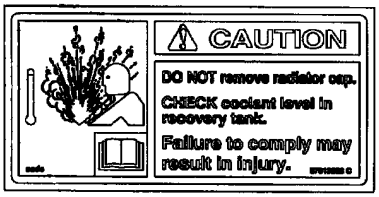

4

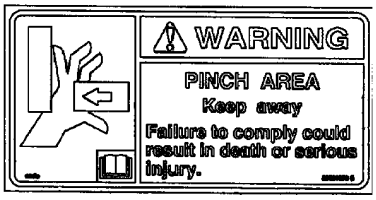

5



6

BS08J124

DECALS - WARNING

REF	FN	PART NUMBER	YR/SN	QTY	DESCRIPTION
1		87586459		1	DECAL, Warning, Crush Hazard
2		9828825		1	DECAL, WARNING, Warning, Fan
3		9801239		1	DECAL, WARNING, Warning, Jump Start
4		87013363		1	DECAL, Caution, Radiator Cap
5		86521673		1	DECAL, WARNING, Pinch Area
6		629086		1	DECAL, DANGER, Danger, Do Not Use Ether
7		86521713		1	DECAL, WARNING, Danger, Tilt Cab

DECALS - WARNING, EUROPE

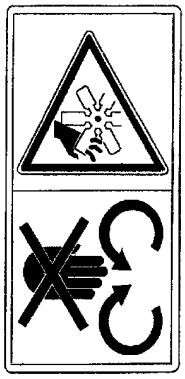

1

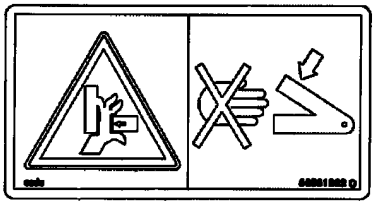

2

BS09B273

DECALS - WARNING, EUROPE

REF	FN	PART NUMBER	YR/SN	QTY	DESCRIPTION
1		84015359		1	DECAL, Warning, Fan
2		86531262		4	DECAL, Warning, Pinch

DECALS

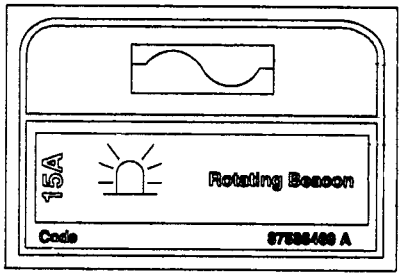

1

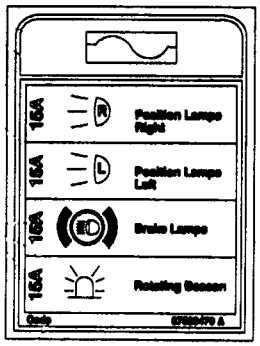

2

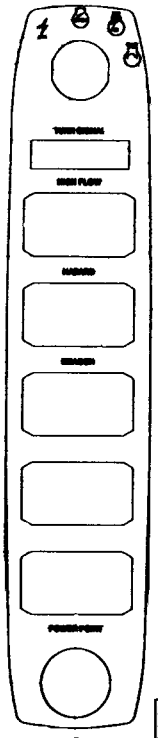

3

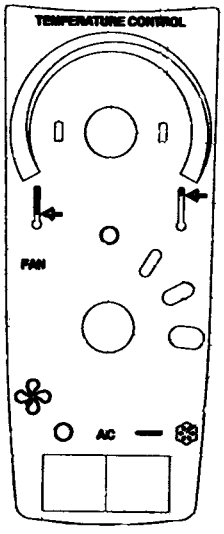

4

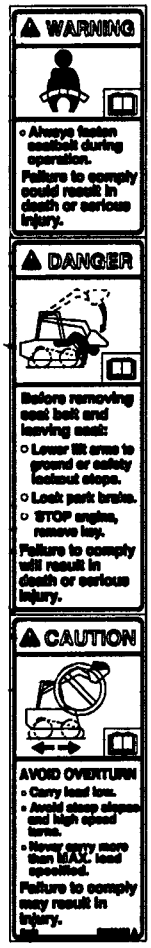

5

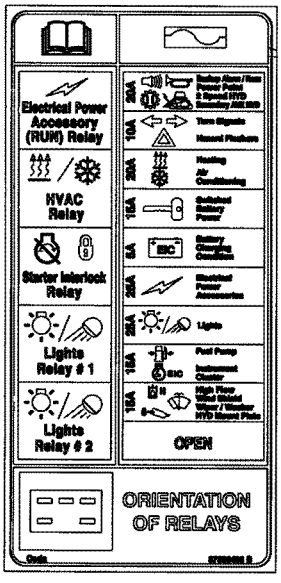

6

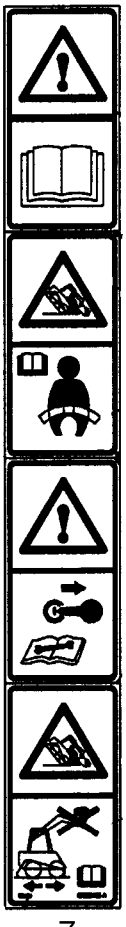

7

BS08A151

DECALS

REF	FN	PART NUMBER	YR/SN	QTY	DESCRIPTION
1		87586469		1	DECAL, Rotating Beacon
2		87586470		1	DECAL, On Road Lights, Europe
3		87586495		1	DECAL, Decal, Right Hand Controls
4		87586497		1	DECAL, Decal, Temperature Controls
5		87586463		1	DECAL, Combination, North America
6		87586468		1	DECAL, Fuse Panel
7		87586453		1	DECAL, Combination Warning, Europe

DECALS

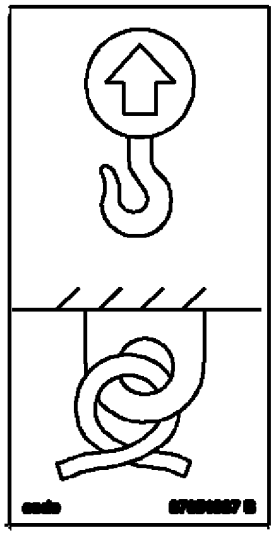

1

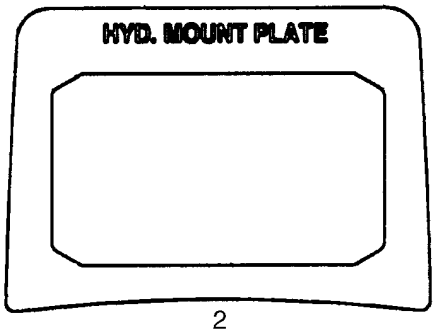

2

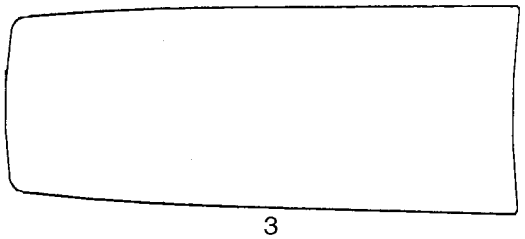

3

BS08J127

DECALS

REF	FN	PART NUMBER	YR/SN	QTY	DESCRIPTION
1		87051987		3	DECAL, Lift Point/Tie Down
2		87586496		1	DECAL, Decal, Hydraulic Mount Plate
3		87586498		1	DECAL, Decal, Without Heater Or A/C

DECALS - DB

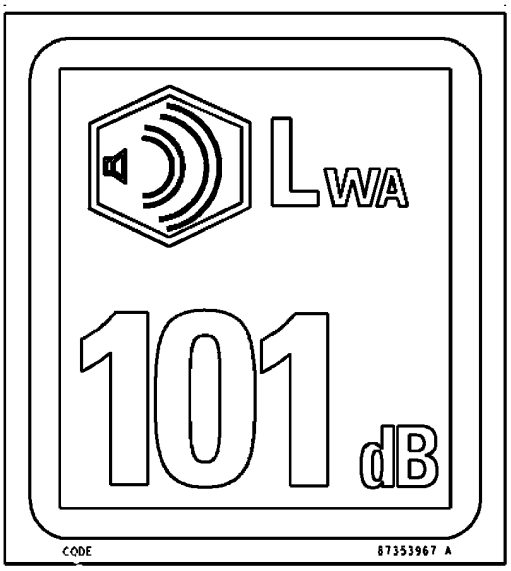

1

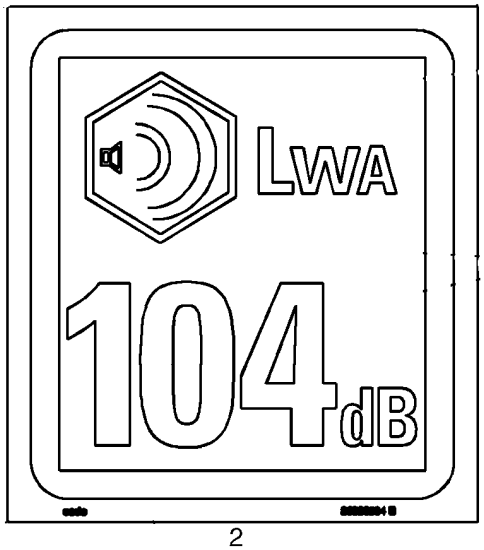

2

BS08M286

DECALS - DB

REF	FN	PART NUMBER	YR/SN	QTY	DESCRIPTION
1		87353967		1	DECAL, Sign; LWA 101
2		86836504		1	DECAL, Sign; LWA 104; If Used

DECALS - LOW EMISSION, LOW SULFUR FUEL

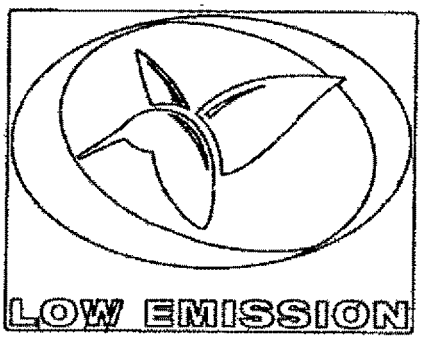

1

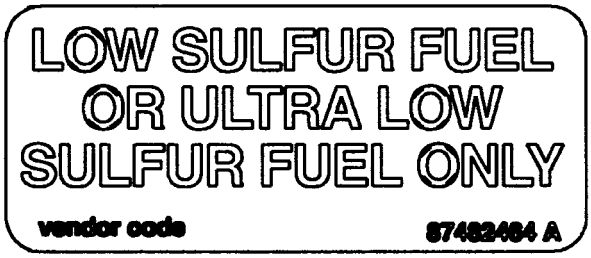

2

BS09A500

DECALS - LOW EMISSION, LOW SULFUR FUEL

REF	FN	PART NUMBER	YR/SN	QTY	DESCRIPTION
1		87701340		2	DECAL, Low Emission
2		87482464		1	DECAL, Low Sulfur Fuel

DECALS - MULTIFUNCTIONAL AUXILIARY ELECTRICAL

1

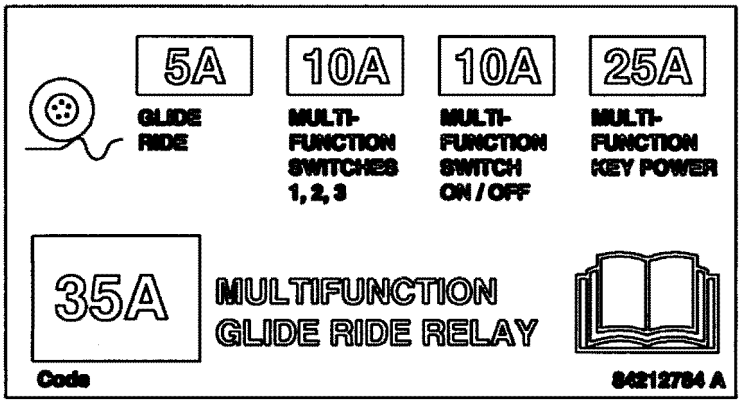

BS09D063

DECALS - MULTIFUNCTIONAL AUXILIARY ELECTRICAL

REF	FN	PART NUMBER	YR/SN	QTY	DESCRIPTION
1		{84212784}		1	Decal; Multifunction Fuse Box

90.114.04		p1	02/09

FENDERS

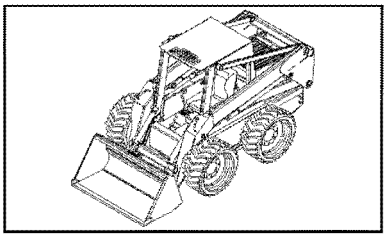

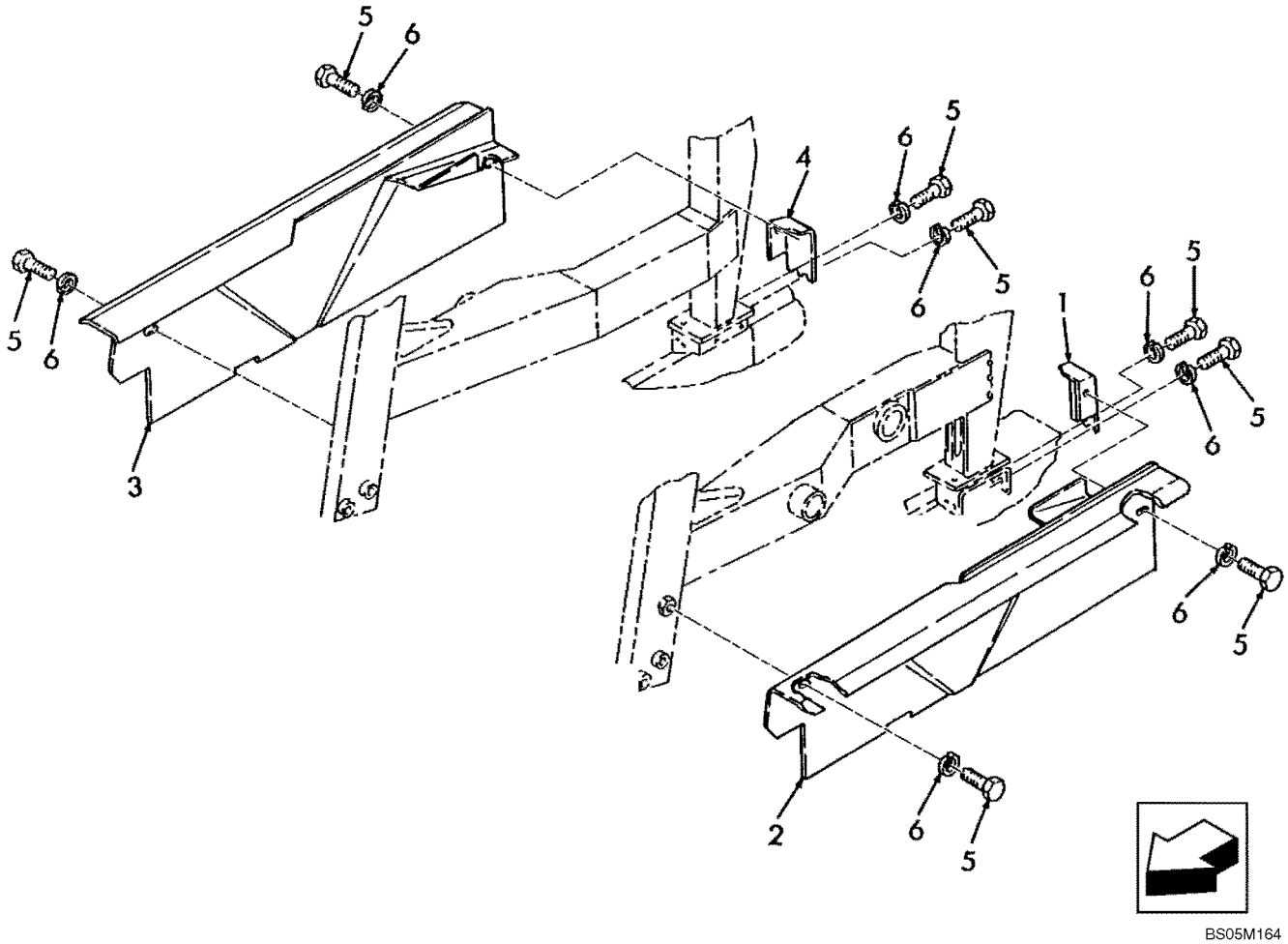

FENDERS

REF	FN	PART NUMBER	YR/SN	QTY	DESCRIPTION
1		87043287		1	COVER, LH, Gray
2		87058957		1	EXTENSION, FENDER, Fender LH, Gray
3		87058956		1	EXTENSION, FENDER, Fender RH, Gray
4		87043288		1	COVER, RH, Gray
5		88434		8	BOLT, Hex, 3/8"-16 x 3/4", G5, Full Thd
6		140045		8	WASHER, BELLEVILLE, M10

90.120.01	01	p1	09/09

SEAT, STANDARD

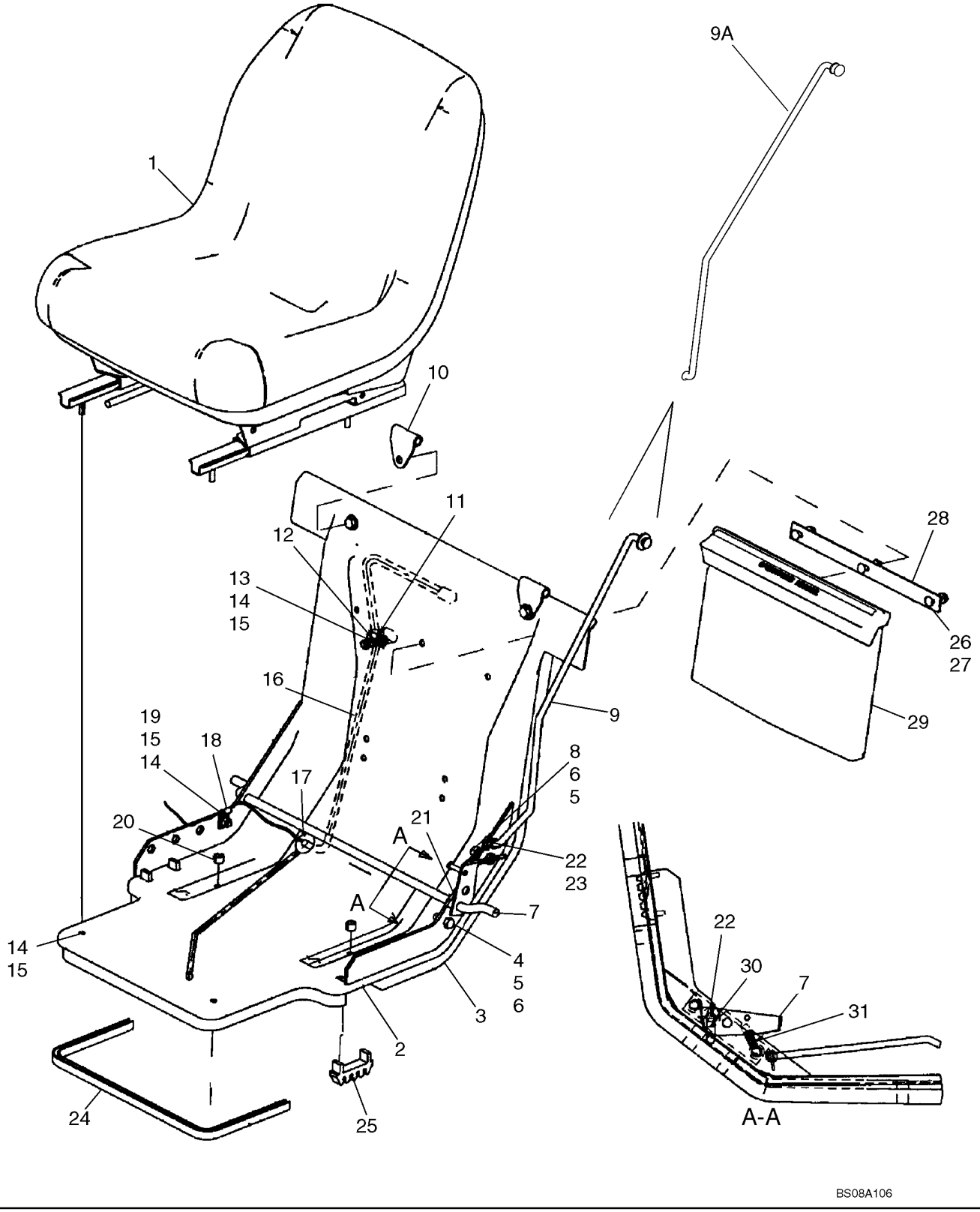

SEAT, STANDARD

REF	FN	PART NUMBER	YR/SN	QTY	DESCRIPTION
		{}			Seat Assy 86579884, Used In Production; Incl. 1 - 31
1		87019258		1	SEAT, DRIVER, With Logo, 1 Switch; See Figure 90.120.01 [02]
2		87029353		1	SUPPORT
3		87029454		1	INSULATOR, Sound Barrier
4		88206		3	BOLT, Hex, 3/8"-16 x 1", G5, Full Thd
5		140045		4	WASHER, BELLEVILLE, M10
6		9628503		3	NUT, 3/8"-16, G5
7		86501739		1	LATCH
8		88011		1	BOLT, Hex, 3/8"-16 x 1 1/4", G5, Full Thd
9		86522000		1	ROD, If Used
9A		87628301		1	ROD, Rod; If Used
10		9622416		2	HINGE
11		858956		1	CLAMP, 7/16", Insul, 5/16" Bolt
12		86526695		1	SPACER
13		88275		1	BOLT, Hex, 5/16"-18 x 1 1/2", G5
14		322358		6	WASHER, BELLEVILLE, M8
15		9635082		6	NUT, 5/16"-18, G5
16		9828011		1	HARNESS, WIRE, Seat; If Used; 1092.2 mm (43 in)
16		84129176		1	HARNESS, Seat; If Used; 1294 mm (50.9 in)
17		274569		1	GROMMET
18		675162		1	CLAMP, WIRE, M6.3, Insul, 3/8" Bolt
19		87872		1	BOLT, Hex, 5/16"-18 x 3/4", G5, Full Thd
20		86546788		2	SPACER
21		86504473		1	STRIP
22		80755		2	PIN, SPLIT (COTTER), 1/8" x 1" L, If Used
22		86617977		2	PIN, SPLIT (COTTER), If Used
23		9790712		2	WASHER
24		617215		X	MOLDING
25		52367		2	HOLDER, Shear Bolt
24		{87702286}		AR	686 mm (27 in); Edge Trim
26		280638		3	BOLT, CARRIAGE, Short NK, 1/4"-20 x 3/4", G5, Full Thd
27		523282		3	NUT, Flg, USR, 1/4"-20
28		86506829		1	STRIP

90.120.01	01	p2	09/09

SEAT, STANDARD

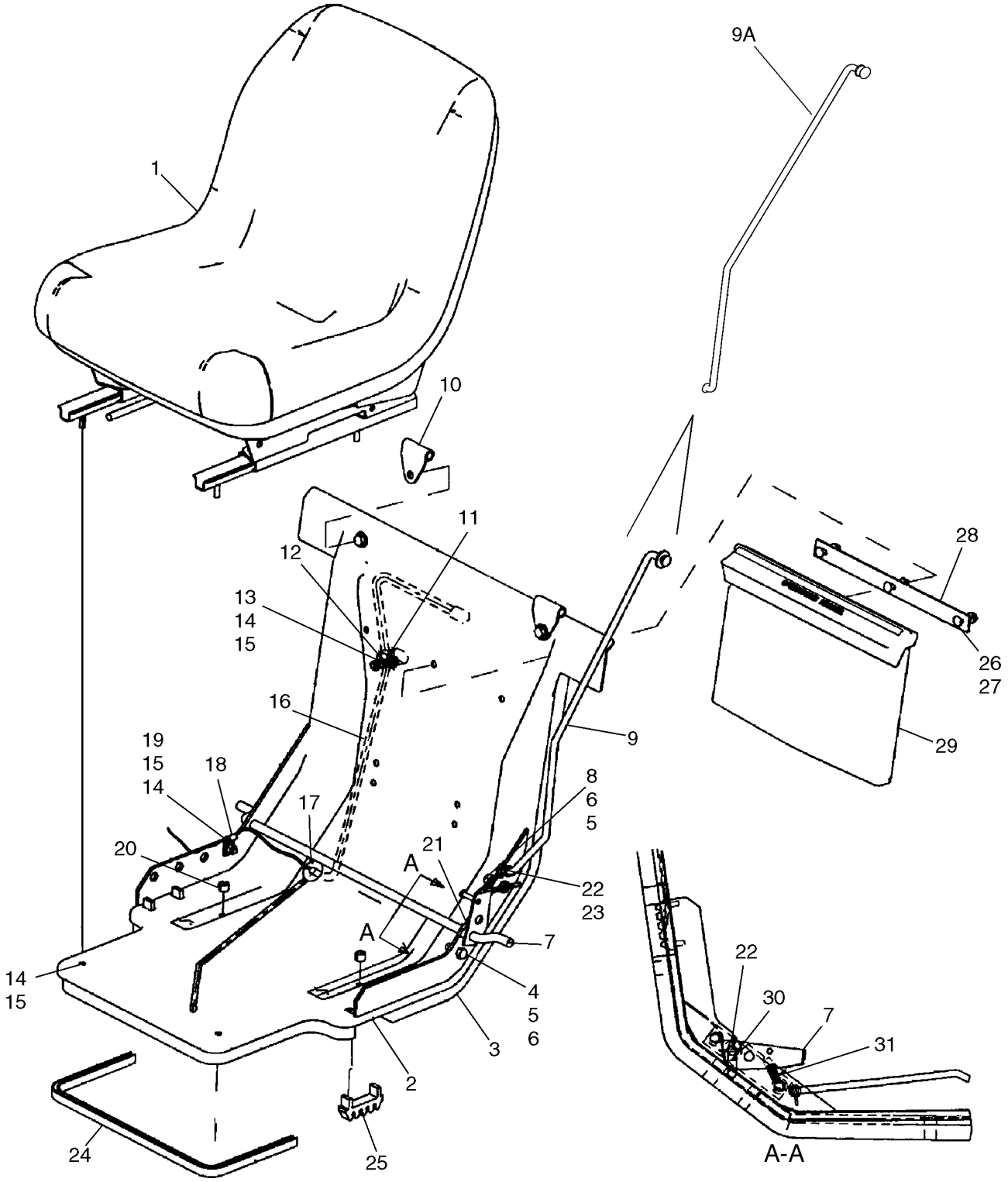

SEAT, STANDARD

REF	FN	PART NUMBER	YR/SN	QTY	DESCRIPTION
29		86504874		1	BOX, Manual Compartment
30		87364		1	WASHER, 1/2", SAE
31		283373		1	SPRING
		9847458		1	SWITCH, Not Illustrated

SEAT, STANDARD

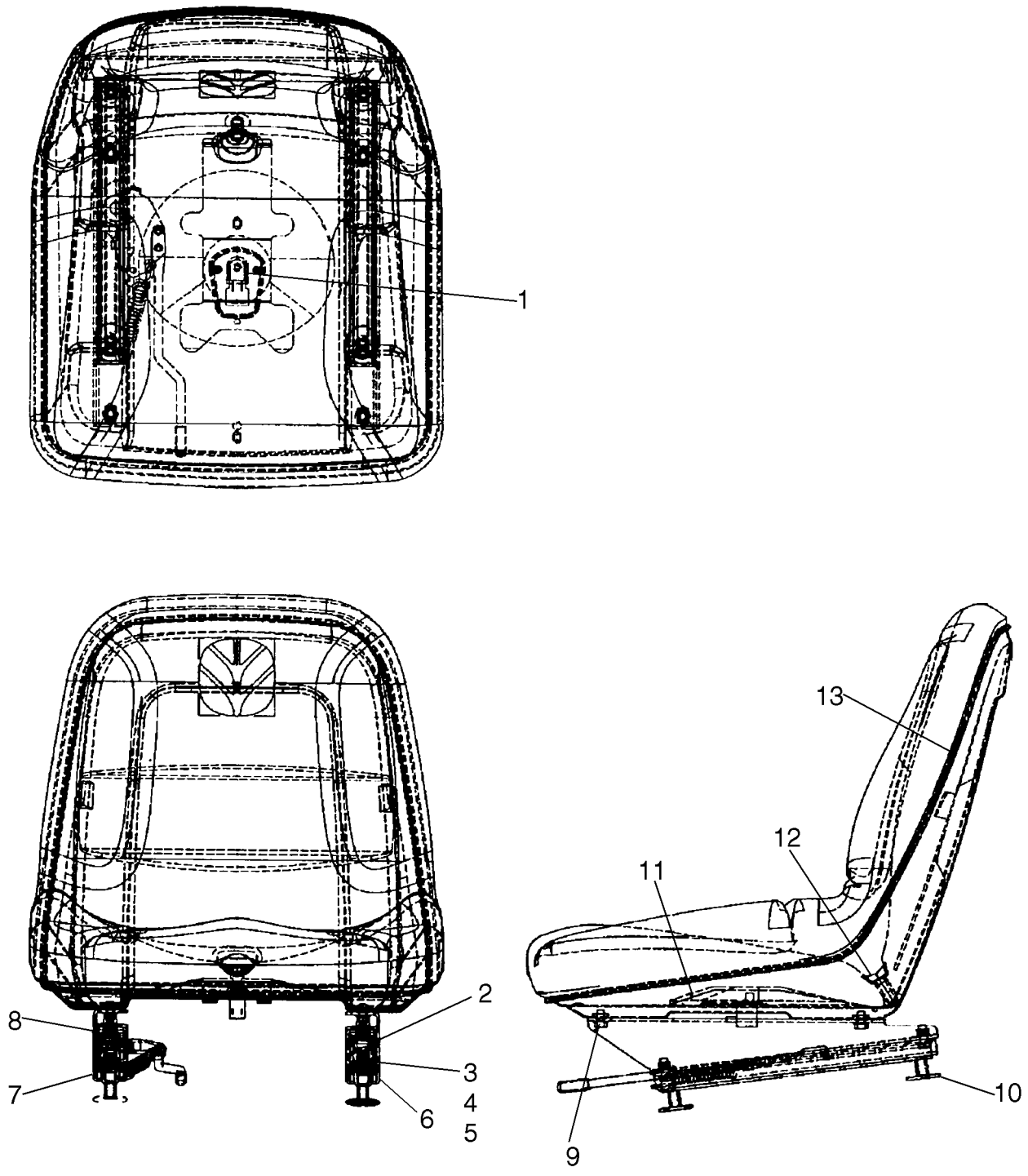

SEAT, STANDARD

REF	FN	PART NUMBER	YR/SN	QTY	DESCRIPTION
		87019258		1	SEAT, DRIVER, Incl. 1 - 13
1		86400227		1	SWITCH
2		87019262		1	BRACKET, Riser Left Hand
3		NSS		4	NOT SERVICED SEPARATELY, Washer
4		NSS		4	NOT SERVICED SEPARATELY, Taptite, 5/16-18 x .75
5		NSS		4	NOT SERVICED SEPARATELY, Nut, 5/16-18
6		86520670		1	SEAT BACK ADJUST. DEVICE
7		86520671		1	HANDLE, Adjuster Assy
8		87019263		1	BRACKET, Riser Right Hand
9		NSS		4	NOT SERVICED SEPARATELY, Taptite, 5/16-18 x .5
10		NSS		4	NOT SERVICED SEPARATELY, Thread Protector
11		NSS		1	NOT SERVICED SEPARATELY, Switch Actuator
12		NSS		1	NOT SERVICED SEPARATELY, Water Drain
13		NSS		1	NOT SERVICED SEPARATELY, Seat Pan Assy

90.120.01	03	p1	09/09

SEAT, SUSPENSION

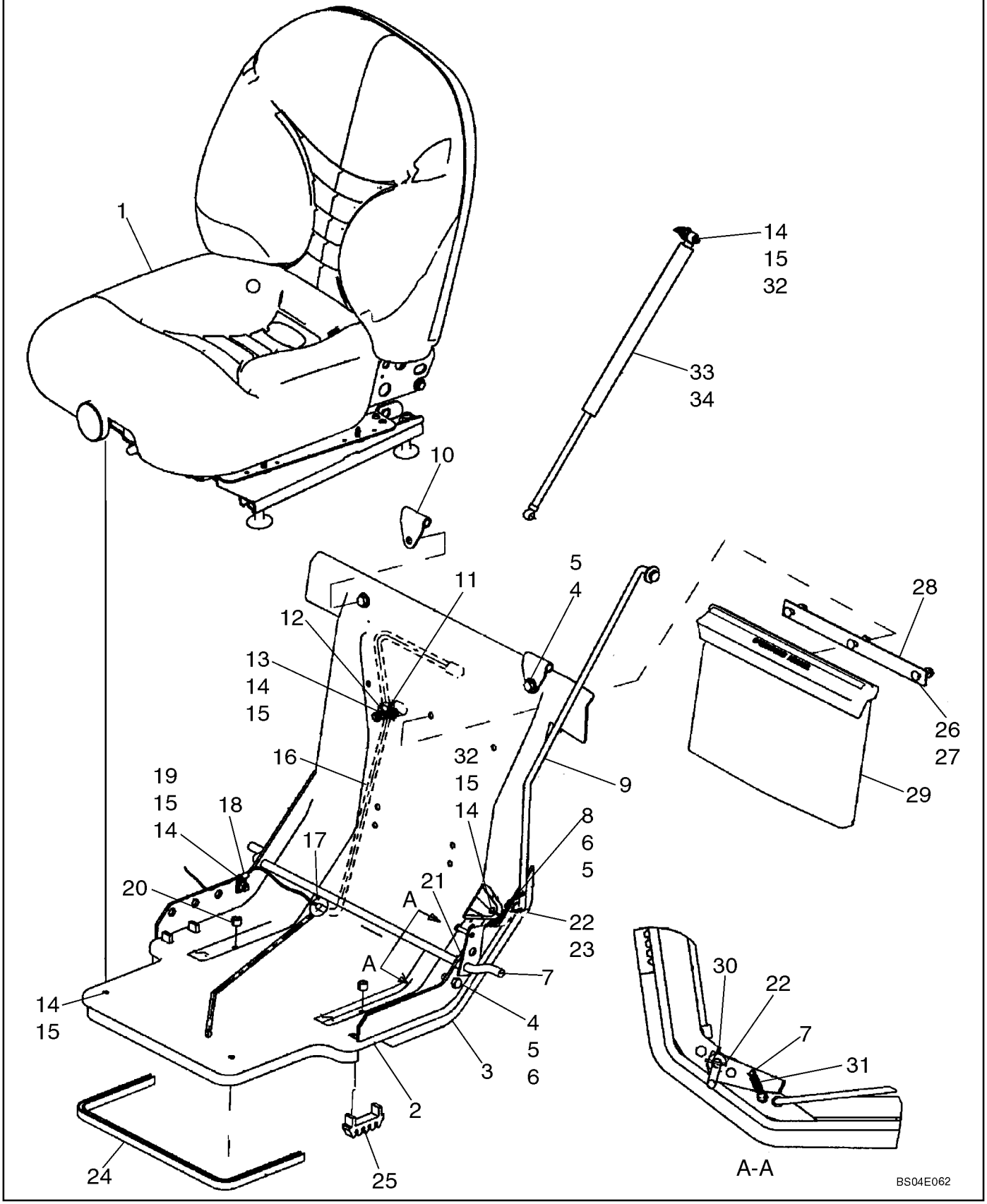

SEAT, SUSPENSION

REF	FN	PART NUMBER	YR/SN	QTY	DESCRIPTION
1		87019264		1	SEAT, DRIVER, Suspension, With Logo; See Figure 90.120.01 [04]
1		87542391		1	SEAT, DRIVER, Suspension, With Logo; See Figure 90.120.01 [04]; Replaces 87019264
2		87029353		1	SUPPORT
3		87029454		1	INSULATOR, Sound Barrier
4		88206		3	BOLT, Hex, 3/8"-16 x 1", G5, Full Thd
5		140045		4	WASHER, BELLEVILLE, M10
6		9628503		3	NUT, 3/8"-16, G5
7		86501739		1	LATCH
8		88011		1	BOLT, Hex, 3/8"-16 x 1 1/4", G5, Full Thd
9		87628301		1	ROD, Rod; Replaces 87603106, 86837275
		263117		X	STRAP, CABLE, .14" x 11 1/2", Secure Seat Harness To Seat
10		9622416		2	HINGE
11		858956		1	CLAMP, 7/16", Insul, 5/16" Bolt
12		86526695		1	SPACER
13		88275		1	BOLT, Hex, 5/16"-18 x 1 1/2", G5
14		322358		8	WASHER, BELLEVILLE, M8
15		9635082		8	NUT, 5/16"-18, G5
16		9828011		1	HARNESS, WIRE, Seat; If Used; 1092.2 mm (43 in)
16		84129176		1	HARNESS, Seat; If Used; 1294 mm (50.9 in)
17		274569		1	GROMMET
18		675162		1	CLAMP, WIRE, M6.3, Insul, 3/8" Bolt
19		87872		1	BOLT, Hex, 5/16"-18 x 3/4", G5, Full Thd
20		86546788		2	SPACER
21		86504473		1	STRIP
22		80755		2	PIN, SPLIT (COTTER), 1/8" x 1" L, If Used
22		86617977		2	PIN, SPLIT (COTTER), If Used
23		9790712		2	WASHER
24		617215		X	MOLDING
25		52367		2	HOLDER, Shear Bolt
26		280638		3	BOLT, CARRIAGE, Short NK, 1/4"-20 x 3/4", G5, Full Thd
27		523282		3	NUT, Flg, USR, 1/4"-20

SEAT, SUSPENSION

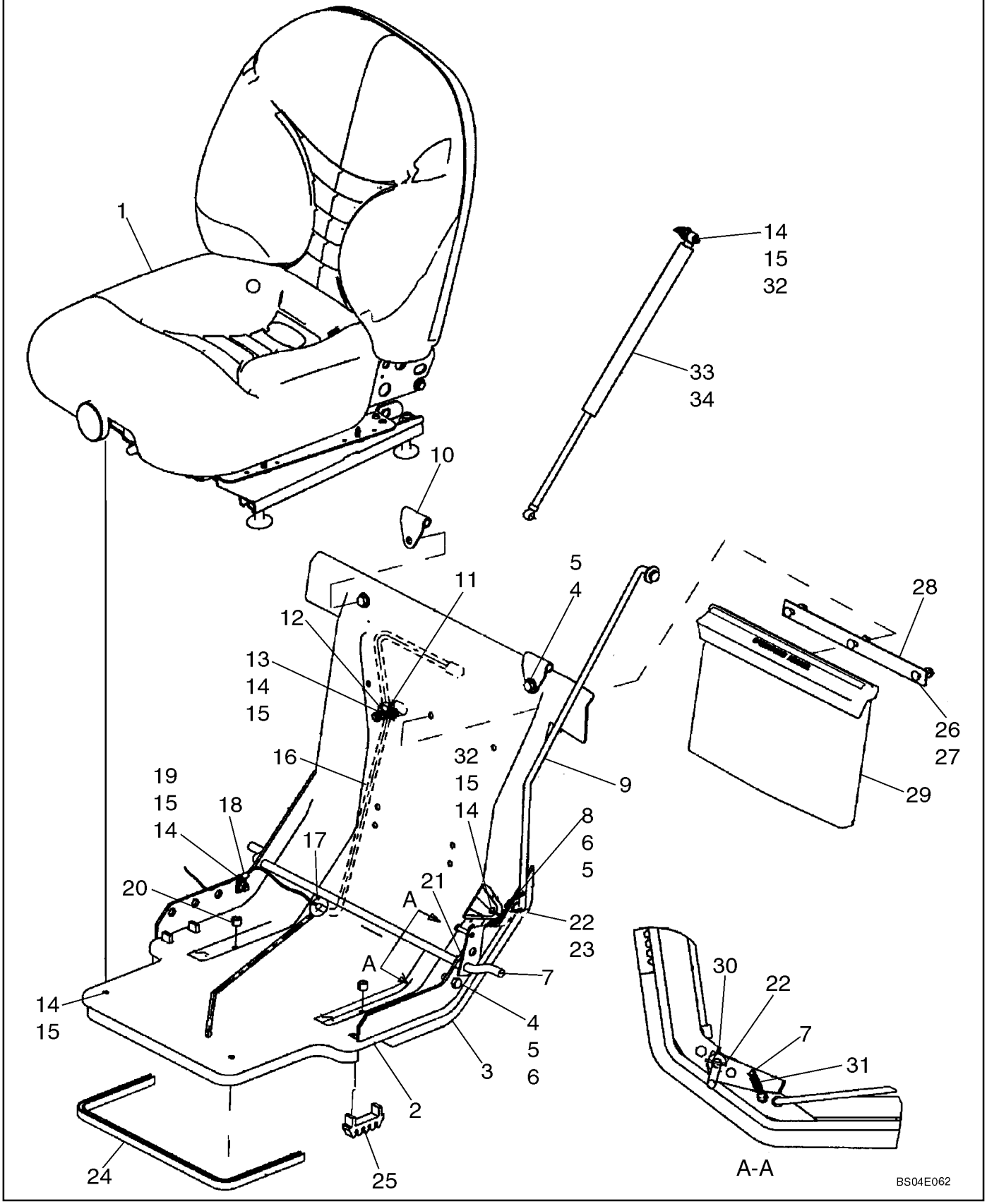

SEAT, SUSPENSION

REF	FN	PART NUMBER	YR/SN	QTY	DESCRIPTION
28		86506829		1	STRIP
29		86504874		1	BOX, Manual Compartment
30		87364		1	WASHER, 1/2", SAE
31		283373		1	SPRING
32		9803209		2	STUD
33		87050852		1	SPRING, Gas Spring; Incl. 33A
33A		87051003		2	CONNECTOR, HYD.

90.120.01	04	p1	09/09

SEAT, SUSPENSION

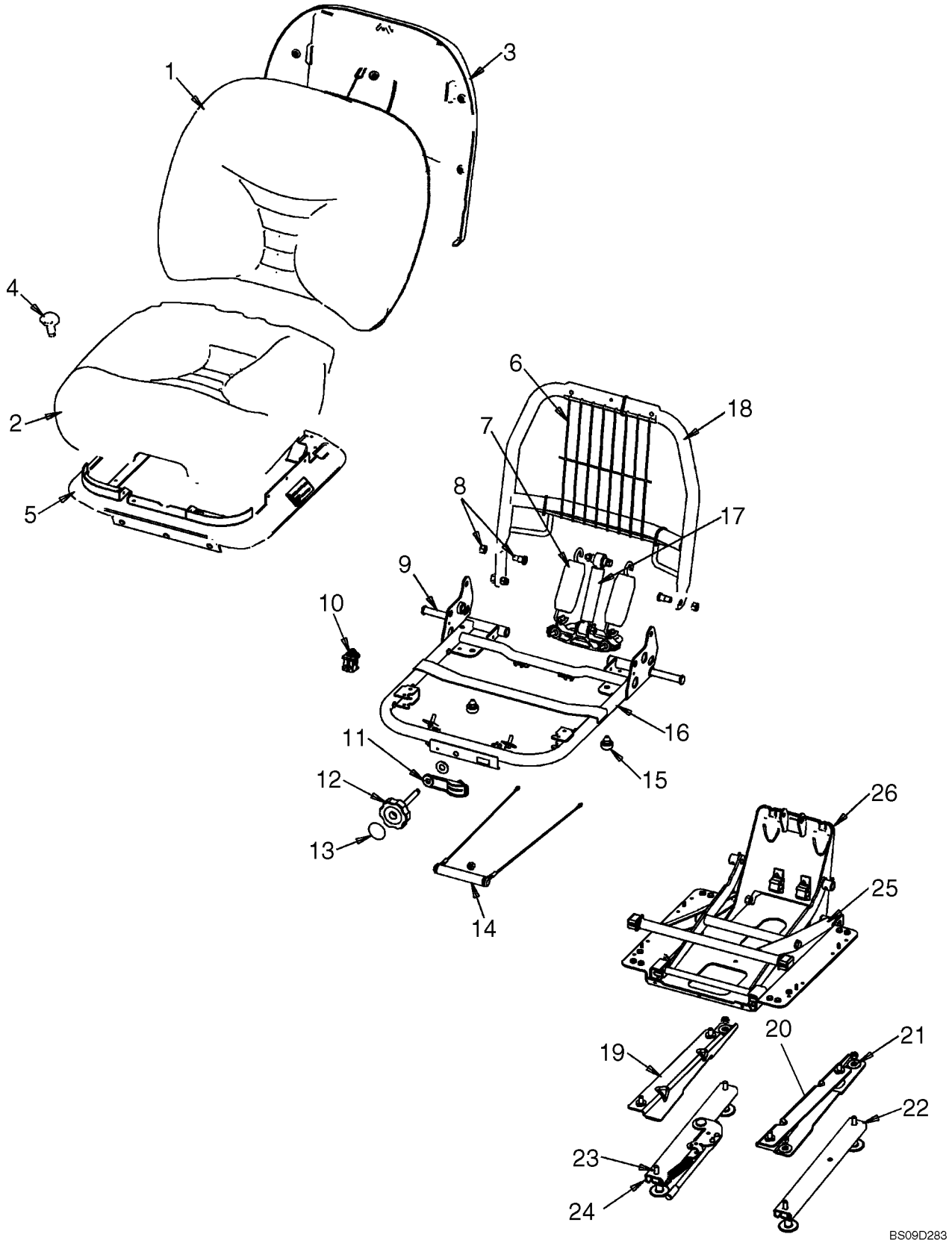

SEAT, SUSPENSION

REF	FN	PART NUMBER	YR/SN	QTY	DESCRIPTION
		87542391		1	SEAT, DRIVER, Suspension, With Logo; Incl 1 - 26
1		87741863		1	CUSHION, SEAT, Back Cushion Assy
1A		NSS		1	NOT SERVICED SEPARATELY, Back Cushion
1B		NSS		6	NOT SERVICED SEPARATELY, Clips, Xmas
2		87741862		1	CUSHION, SEAT, Seat Cushion Assy, Incl 2A, 2B
2A		NSS		1	NOT SERVICED SEPARATELY, Seat Cushion
2B		NSS		2	NOT SERVICED SEPARATELY, Taptite, 1/4-20 x 3/8
3		87051678		1	SEAT, BACK, Back Panel
3A		NSS		1	NOT SERVICED SEPARATELY, Back Panel
3B		NSS		5	NOT SERVICED SEPARATELY, Screw, 8-18
4		NSS		1	NOT SERVICED SEPARATELY, Water Drain Kit
5		84211625		1	KIT, Boot Kit; Incl 5A, 5B
5A		NSS		1	NOT SERVICED SEPARATELY, Boot
5B		NSS		25	NOT SERVICED SEPARATELY, Clip, Xmas
6		84211636		1	KIT, Flexolator Kit; Incl 6A, 6B
6A		NSS		1	NOT SERVICED SEPARATELY, Flexolator
6B		NSS		3	NOT SERVICED SEPARATELY, Tie Strap
7		84211616		1	KIT, Spring And Saddle Kit; Incl 7A - 7I
7A		NSS		2	NOT SERVICED SEPARATELY, Taptite, 1/4-20 x .5
7B		NSS		1	NOT SERVICED SEPARATELY, Spring Arm
7C		NSS		2	NOT SERVICED SEPARATELY, Pivot Block Strap
7D		NSS		2	NOT SERVICED SEPARATELY, Pivot Block
7E		NSS		1	NOT SERVICED SEPARATELY, Spring Saddle
7F		NSS		2	NOT SERVICED SEPARATELY, Saddle Bushing
7G		NSS		2	NOT SERVICED SEPARATELY, Susp. Spring
7H		NSS		2	NOT SERVICED SEPARATELY, Spring Arm Bearing
7I		NSS		2	NOT SERVICED SEPARATELY, Screw, 8-18 PH HD
8		84211628		1	KIT, Pivot Bolt Kit; Incl 8A, 8B
8A		NSS		3	NOT SERVICED SEPARATELY, Shoulder Bolt, 3/8-16
8B		NSS		2	NOT SERVICED SEPARATELY, Hex Nut, 3/8-16
9		84211618		1	KIT, Bearing/Shaft Kit, Incl 9A - 9D
9A		NSS		8	NOT SERVICED SEPARATELY, Bearing
9B		NSS		2	NOT SERVICED SEPARATELY, Bearing Shaft
9C		NSS		2	NOT SERVICED SEPARATELY, Bearing Shaft

90.120.01	04	p2	09/09

SEAT, SUSPENSION

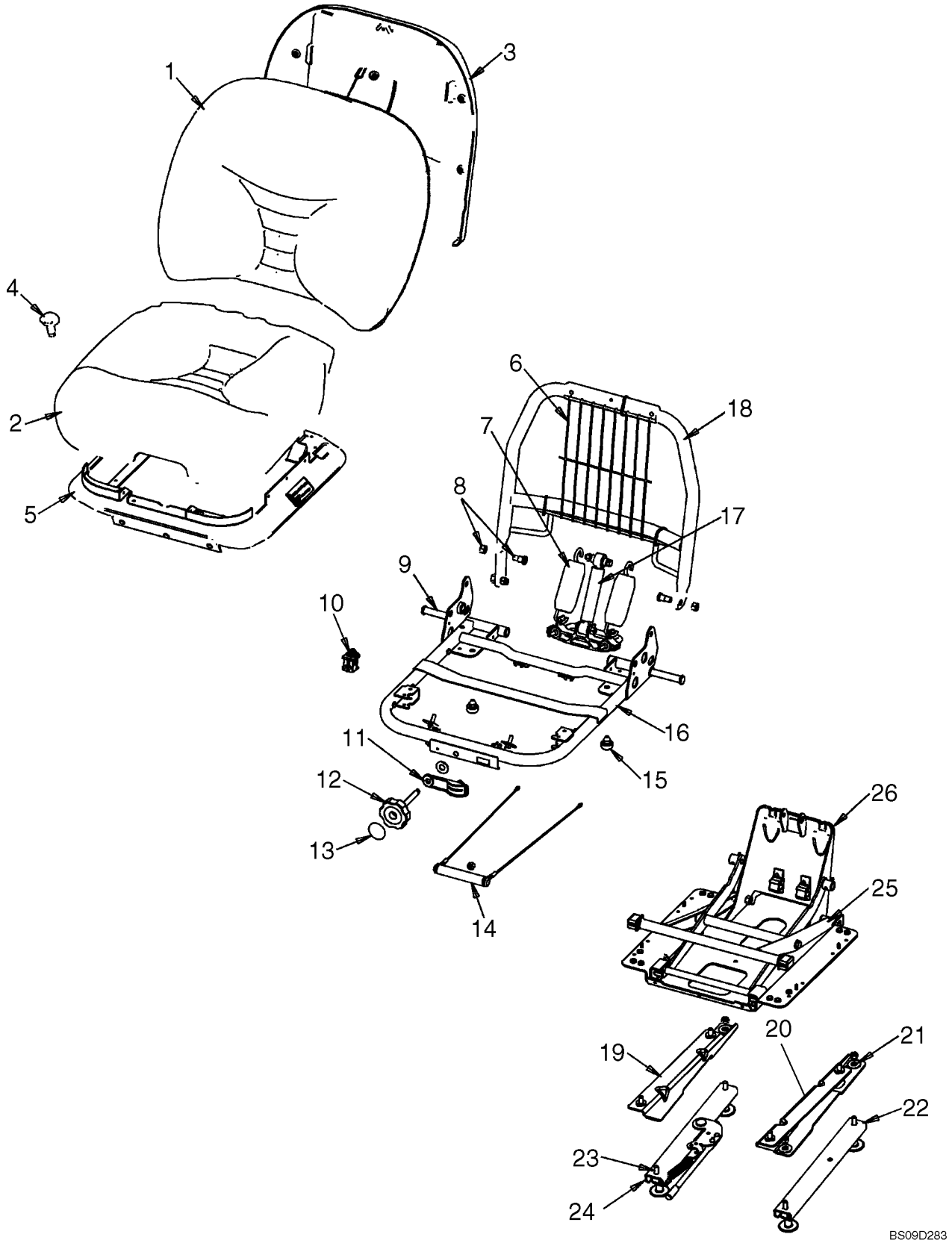

SEAT, SUSPENSION

REF	FN	PART NUMBER	YR/SN	QTY	DESCRIPTION
9D		NSS		2	NOT SERVICED SEPARATELY, Roll Pin
10		86603490		1	SWITCH, Seat, Snap Mount
11		NSS		1	NOT SERVICED SEPARATELY, Weight Indicator Assy
12		84211620		1	KIT, Knob Kit, Weight Adjustment, Incl 12A - 12C
12A		NSS		1	NOT SERVICED SEPARATELY, Hex Nut, 5/16-18
12B		NSS		1	NOT SERVICED SEPARATELY, Knob, Weight Adjust
12C		NSS		1	NOT SERVICED SEPARATELY, Label, Weight Adjust
13		84211623		1	KIT, Label Kit, Incl 13A - 13C
13A		NSS			NOT SERVICED SEPARATELY, Weight Adjust
13B		NSS			NOT SERVICED SEPARATELY, Lumbar Adjust
13C		NSS			NOT SERVICED SEPARATELY, Recliner Label
14		84211643		1	KIT, Weight Adjust Kit; Incl 14A - 14C
14A		NSS		1	NOT SERVICED SEPARATELY, Weight Adjust Bar
14B		NSS		2	NOT SERVICED SEPARATELY, Cable Assy
14C		NSS		1	NOT SERVICED SEPARATELY, Hex Nut, 5/16-18
15		NSS		1	NOT SERVICED SEPARATELY, Bumper Kit, Incl (2) Rubber Bumpers
16		NSS		1	NOT SERVICED SEPARATELY, Seat Frame Weldment
17		84208530		1	KIT, Shock Absorber Kit; Incl 17A - 17D
17A		NSS		1	NOT SERVICED SEPARATELY, Shock Absober
17B		NSS		1	NOT SERVICED SEPARATELY, Shock Pin
17C		NSS		1	NOT SERVICED SEPARATELY, Shock Pin
17D		NSS		2	NOT SERVICED SEPARATELY, Hex Nut, 5/16-18
18		NSS		1	NOT SERVICED SEPARATELY, Back Frame Weldment Kit
19		87542387		1	RISER, Riser Left Hand
20		87542390		1	RISER, Riser Right Hand
21		NSS		1	NOT SERVICED SEPARATELY, Washer
22		86520670		1	SEAT BACK ADJUST. DEVICE
23		NSS		4	NOT SERVICED SEPARATELY, Taptite, 5/16-18
24		86520671		1	HANDLE, Adjuster Assy

90.120.01	04	p3	09/09

SEAT, SUSPENSION

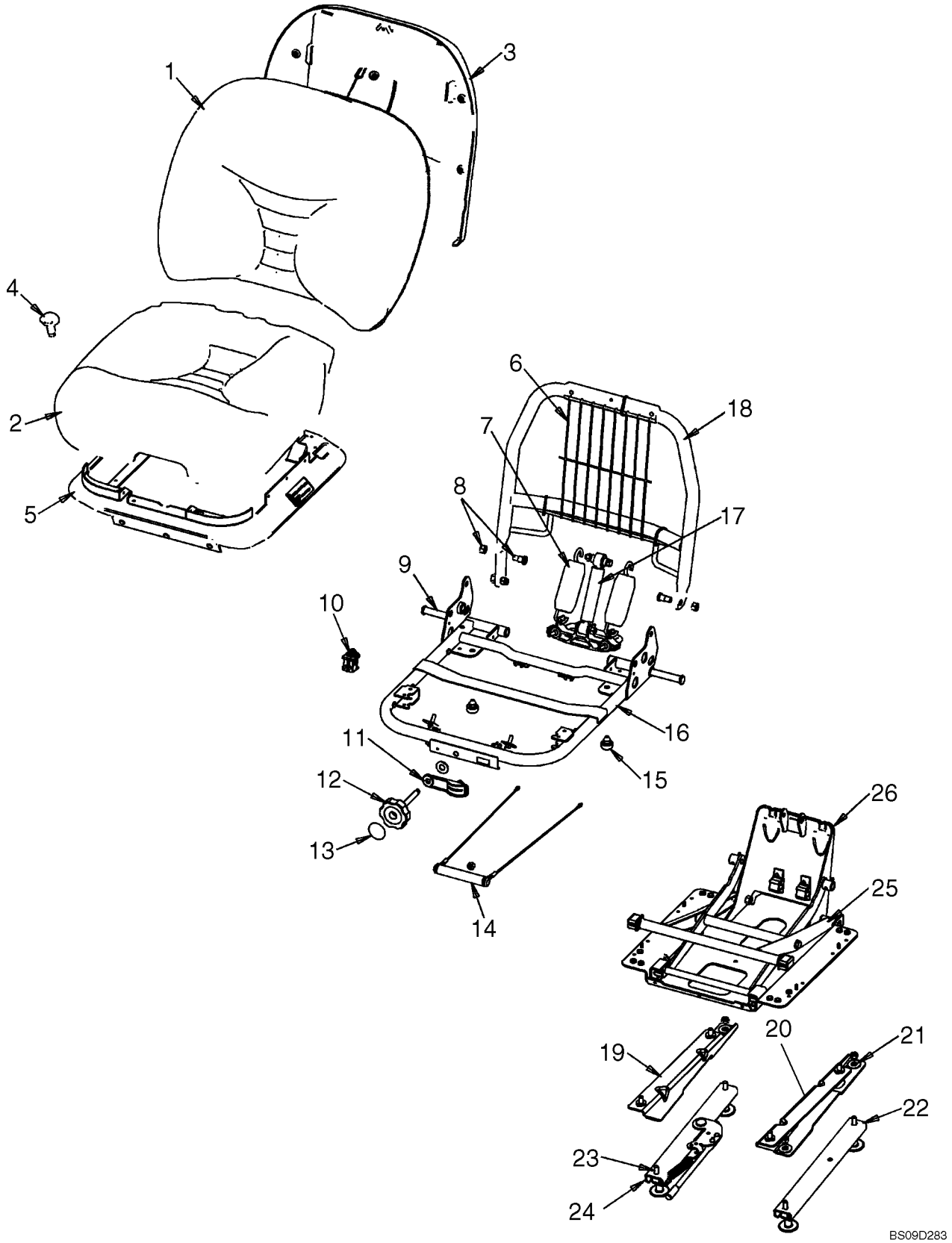

SEAT, SUSPENSION

REF	FN	PART NUMBER	YR/SN	QTY	DESCRIPTION
25		84211650		1	KIT, Linkage Assy Kit; Incl 25A - 25E
25A		NSS		1	NOT SERVICED SEPARATELY, Linkage Weldment
25B		NSS		1	NOT SERVICED SEPARATELY, Linkage Weldment, Inside
25C		NSS		10	NOT SERVICED SEPARATELY, Bearing
25D		NSS		1	NOT SERVICED SEPARATELY, Linkage Shaft
25E		NSS		2	NOT SERVICED SEPARATELY, Taptite, 5/16-18
26		87373988		1	SUSPENSION, Suspension Base Assy

90.120.05	01	p1	09/09

SEAT, STANDARD

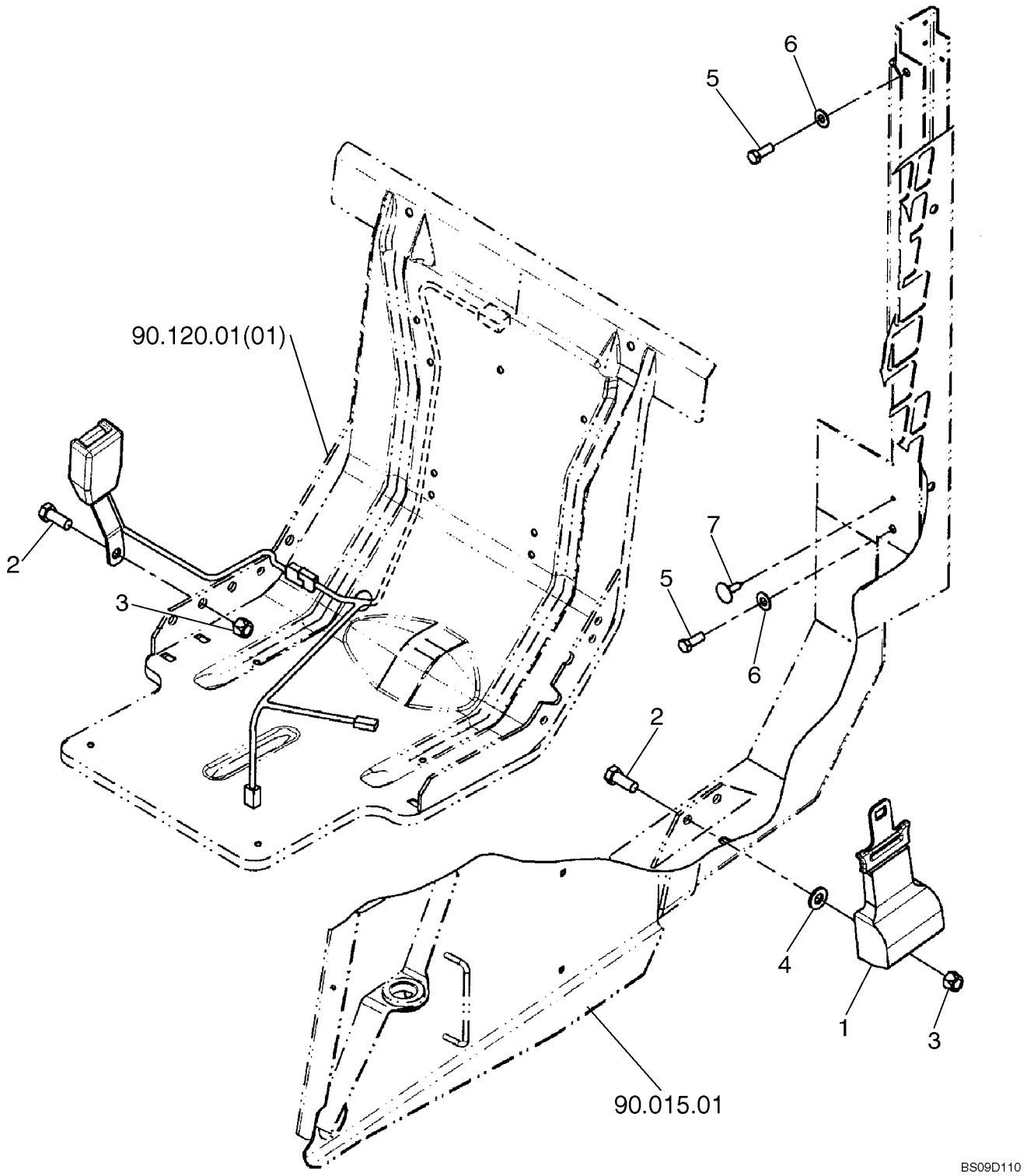

SEAT, STANDARD

REF	FN	PART NUMBER	YR/SN	QTY	DESCRIPTION
1		9820622		1	SEAT BELT, Component Parts Not Serviced Separately
2		87670		2	BOLT, Hex, 1/2"-13 x 1 1/4", G5, Full Thd
3		88871		2	NUT, LOCK, 1/2"-13, GC
4		87364		1	WASHER, 1/2", SAE
5		88206		2	BOLT, Hex, 3/8"-16 x 1", G5, Full Thd
6		140045		2	WASHER, BELLEVILLE, M10
7		86620930		1	FASTENER

90.120.05	02	p1	02/09

SEAT BELT, LAP BELT

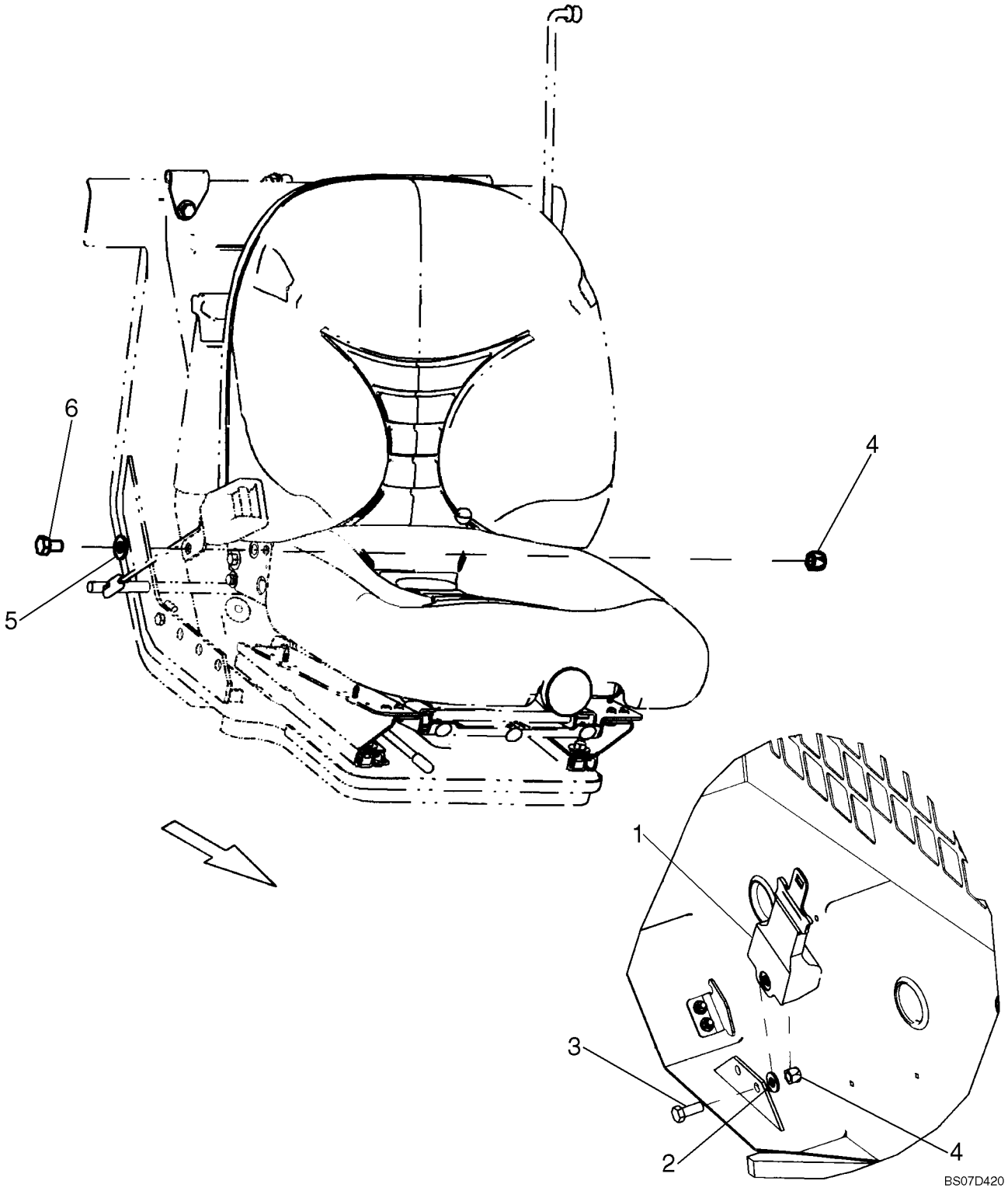

SEAT BELT, LAP BELT

REF	FN	PART NUMBER	YR/SN	QTY	DESCRIPTION
1		87652259		1	SEAT BELT, Seat Belt, Lap Belt; Component Parts Not Serviced Separately
2		87364		1	WASHER, 1/2", SAE
3		87670		1	BOLT, Hex, 1/2"-13 x 1 1/4", G5, Full Thd
4		88871		2	NUT, LOCK, 1/2"-13, GC
5		140046		1	WASHER, SPRING, Belleville, M12
6		9627879		1	BOLT, Hex, 1/2"-13 x 3/4", G5, Full Thd

SEAT BELT, SHOULDER BELT

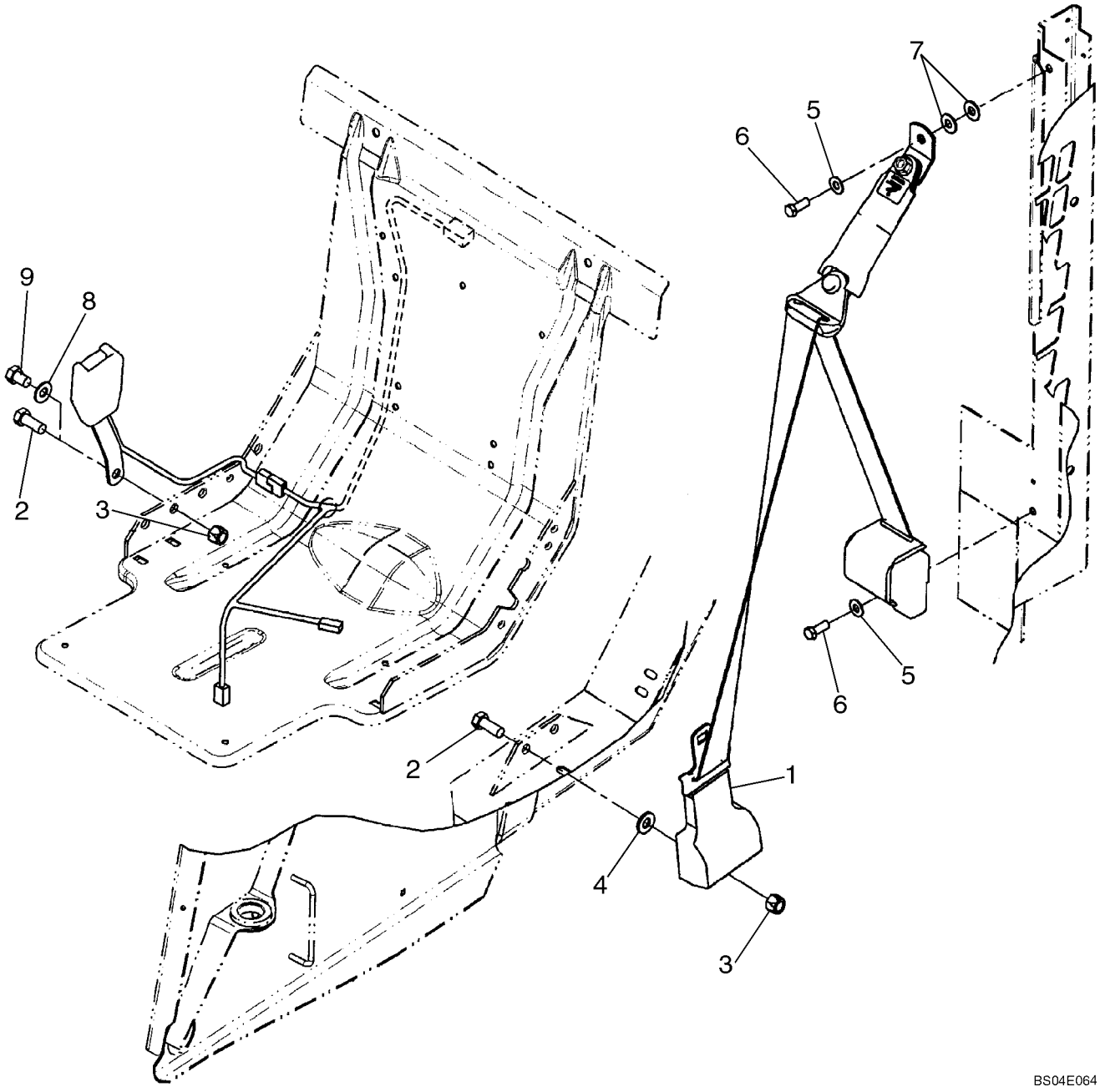

SEAT BELT, SHOULDER BELT

REF	FN	PART NUMBER	YR/SN	QTY	DESCRIPTION
		87492657		1	KIT, SERVICE, 2 in Shoulder Belt; Incl 1, 5 - 9
1		86606079		1	SEAT BELT, Shoulder/Lap Belt Assy; Component Parts Not Serviced Separately
2		87670		2	BOLT, Hex, 1/2"-13 x 1 1/4", G5, Full Thd
3		88871		2	NUT, LOCK, 1/2"-13, GC
4		87364		1	WASHER, 1/2", SAE
5		140045		2	WASHER, BELLEVILLE, M10
6		9670285		2	BOLT, Hex, 3/8"-16 x 1", G8, Full Thd
7		80702		2	WASHER, 3/8"
		9637692		1	NUT, LOCK, 3/8"-16, GB
8		140046		1	WASHER, SPRING, Belleville, M12
9		9627879		1	BOLT, Hex, 1/2"-13 x 3/4", G5, Full Thd

90.124.08	01	p1	04/09

ARMREST - MODELS WITH PILOT CONTROL; IF USED

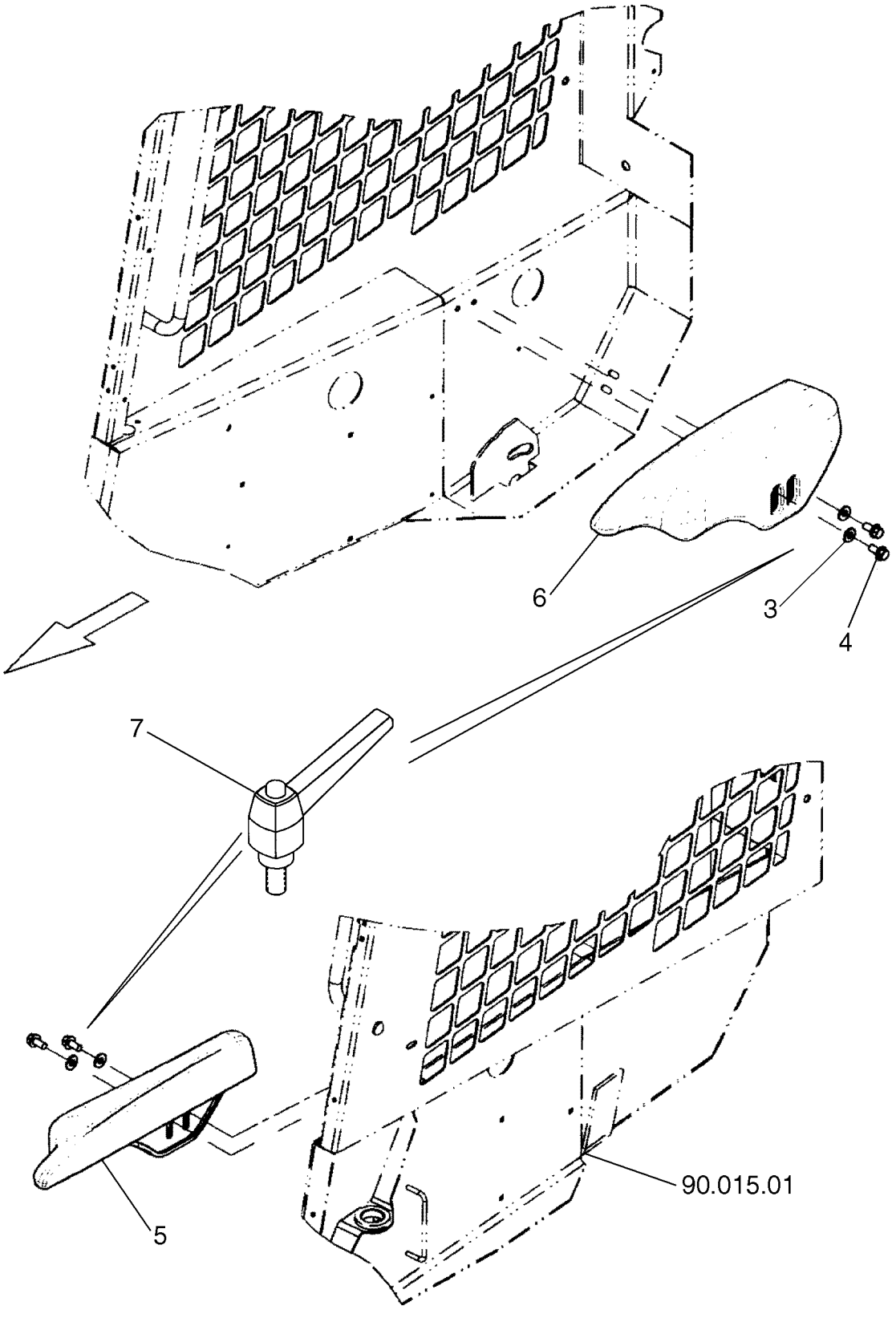

ARMREST - MODELS WITH PILOT CONTROL; IF USED

REF	FN	PART NUMBER	YR/SN	QTY	DESCRIPTION
1		87357236		1	KIT, SERVICE, Pilot Control Armrest Kit, Incl. 3 - 6
3		80664		4	WASHER, 5/16"
4		9628510		4	BOLT, Hex Flg, 3/8"-16 x 3/4", G5, Full Thd, If Used
4		86521613		4	BOLT, Hex Flg, 3/8"-16 x 1", G5, Full Thd, If Used
5		87357152		1	ARMREST, Armrest LH, Incl. 5A - 5B
5A		87357153		1	BRACKET, Bracket LH, Not Illustrated Separately
5B		{87357154}		1	Foam Armrest LH, Not Illustrated Separately
6		87357149		1	ARMREST, Armrest RH, Incl. 6A - 6B
6A		{87357150}		1	Bracket RH, Not Illustrated Separately
6B		{87357151}		1	Foam Armrest RH, Not Illustrated Separately
7		87522299		4	LEVER, Handle, Adjustable Lever; Replaces 9628510 If Used

90.124.08	05	p1	04/09

ARMREST

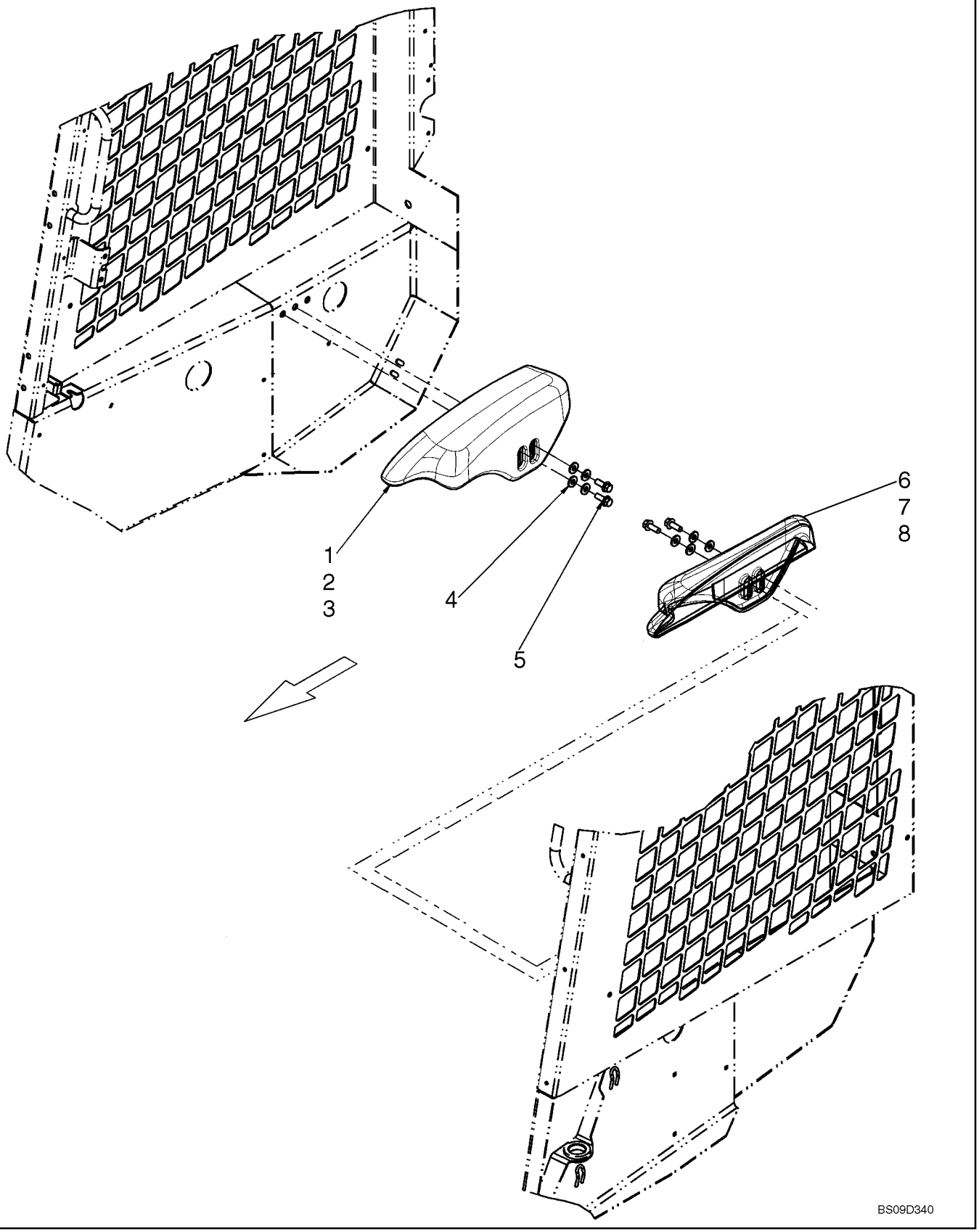

ARMREST

REF	FN	PART NUMBER	YR/SN	QTY	DESCRIPTION
1		87357149		1	ARMREST, Armrest RH, Incl. 2, 3
2		{87357150}		1	Bracket RH, Not Illustrated Separately
3		{87357151}		1	Foam Armrest RH, Not Illustrated Separately
4		80664		8	WASHER, 5/16"
5		86521613		4	BOLT, Hex Flg, 3/8"-16 x 1", G5, Full Thd
6		87357152		1	ARMREST, Armrest LH, Incl. 7, 8
7		87357153		1	BRACKET, Bracket LH, Not Illustrated Separately
8		{87357154}		1	Foam Armrest LH, Not Illustrated Separately

CAB - DOOR & FRAME

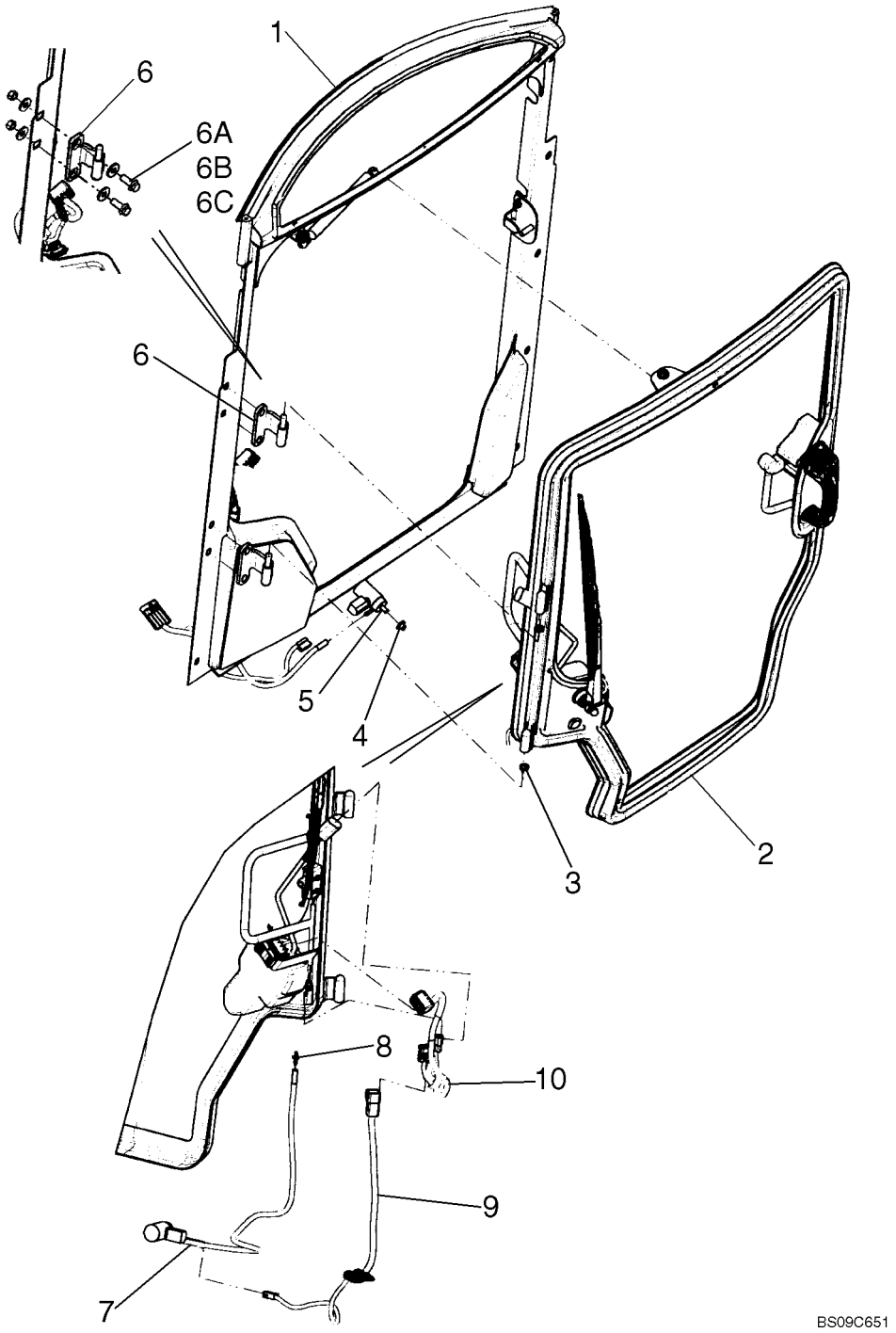

CAB - DOOR & FRAME

REF	FN	PART NUMBER	YR/SN	QTY	DESCRIPTION
		87690540		1	DOOR, Incl 1 - 11
1		{}		1	Door Frame; See Fig. 90.154.01 [01]
2		{}		1	Door; See Fig. 90.154.01 [02]
3		87599753		2	BUSHING
4		87658782		1	GROMMET, Grommet
5		87581786		1	PUMP, Washer Pump
6		87635960		2	HINGE, Slotted Holes; If Used
6		87688534		2	HINGE, Squared Holes; If Used; Secured With 6A, 6B, 6C, Not Illustrated
6A		87327171		4	BOLT, Bolt, Serrated 3/8-16 X 1 GR8
6B		9827956		8	WASHER
6C		9628503		4	NUT, 3/8"-16, G5
7		87658793		1	HOSE, Windshield Washer Tubing
8		87658798		1	FITTING, 1/8 x 5/32 Reducing Connector
9		87660792		1	HARNESS, Door Frame Harness; See Figure 55.100.62 [01]
10		87660793		1	HARNESS, Door Harness; See Figure 55.100.62 [02]; If Used
10		84142495		1	HARNESS, Door Harness; See Figure 55.100.62 [02];Implemented Jan 09
11		263117		2	STRAP, CABLE, .14" x 11 1/2", As Needed To Secure Hose And Harness

90.154.01	02	p1	09/09

CAB - DOOR

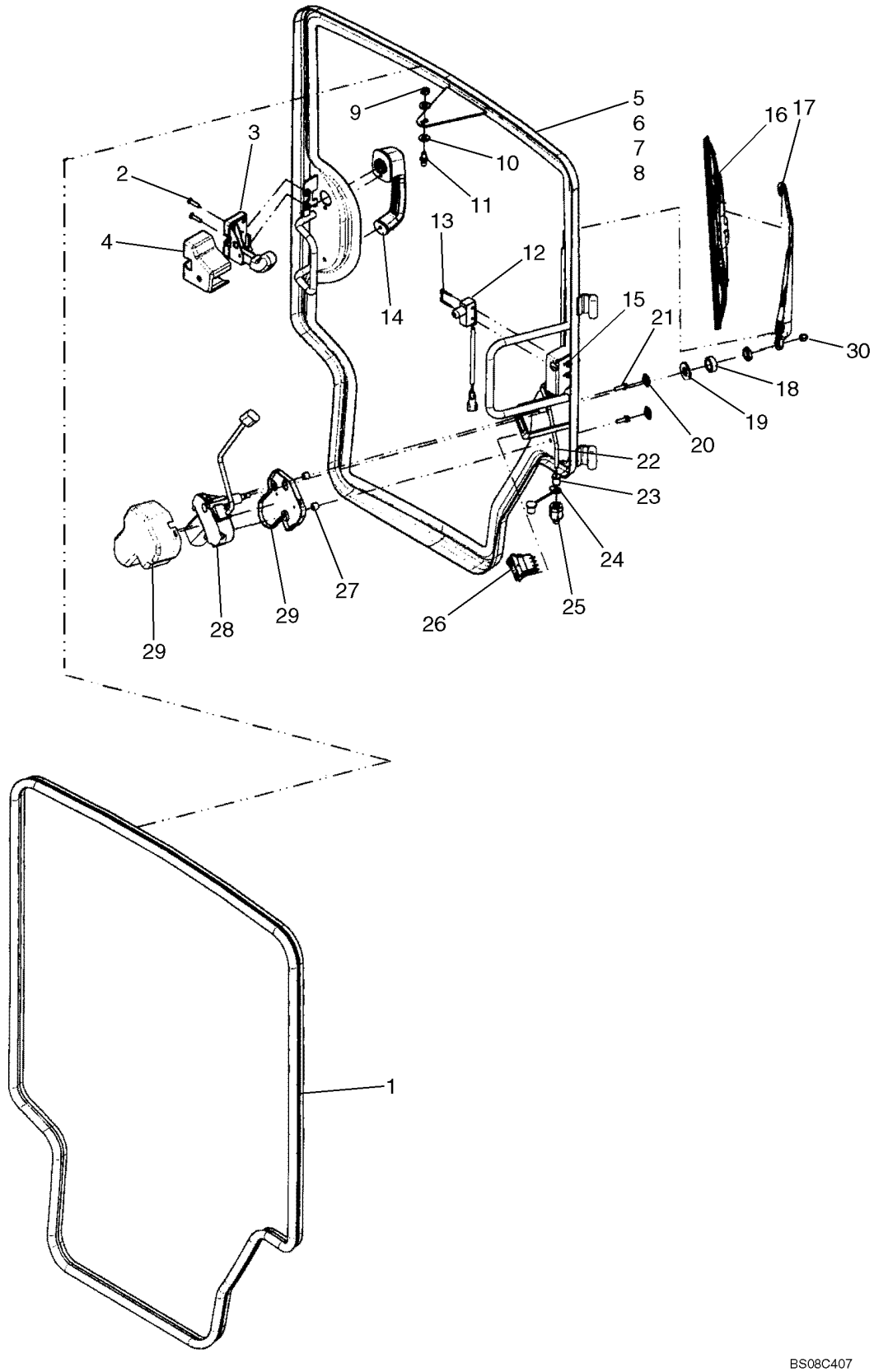

CAB - DOOR

REF	FN	PART NUMBER	YR/SN	QTY	DESCRIPTION
1		87688732		1	SEAL, DOOR, Bulb Seal, Door; Replaces 87659265
2		86512463		2	SCREW, Hex Flat Hd, M6 x 25, 4.8
3		87544288		1	LATCH, Rotary Latch With Cover; Incl. 4
4		NSS		1	NOT SERVICED SEPARATELY, Latch Cover
5		87691908		1	DOOR, With Glass; Incl. 6 - 8; Replaces 87652748
6		87600221		8	SPACER, Not Illustrated
7		87635930		1	GLASS, Door; Replaces 87605330
8		NSS		1	NOT SERVICED SEPARATELY, Door Frame
9		43362		1	NUT, M8, Cl 10
10		86625263		2	WASHER, M8 x 20 x 1.6
11		87581669		1	STUD, Ball
12		87051110		1	SWITCH, DOOR, Incl. Harness
13		H435814		1	U-BOLT
14		87581681		1	HANDLE, Door Handle, Locking
14A		642628		1	SET OF 2 KEYS, Not Illustrated
15		87622767		2	NUT
16		87629614		1	WIPER BLADE, Replaces 87581671
17		87659082		1	WIPER ARM, For Spray Nozzle & Hose Kit Order 84204816
18		87607506		1	SPACER
19		87602688		1	WASHER
20		87601294		2	PLUG, PLASTIC
21		87017606		2	SCREW, SELF TAPPING, Hex Flg Hd, M6 x 20
22		87581672		1	HOSE
23		87616981		1	FITTING
24		87616984		1	DUST CAP
25		87615807		1	FITTING, Male Coupler, Dry Break
26		87335499		1	SWITCH, Windshield Wiper/Washer
27		87588635		2	SPACER, Door Motor
28		87581673		1	MOTOR, Wiper; Replaces 87581673
29		87581666		1	COVER, Wiper Motor
30		412326		1	NUT

90.154.01	03	p1	03/09

CAB - DOOR FRAME, DELUXE CAB

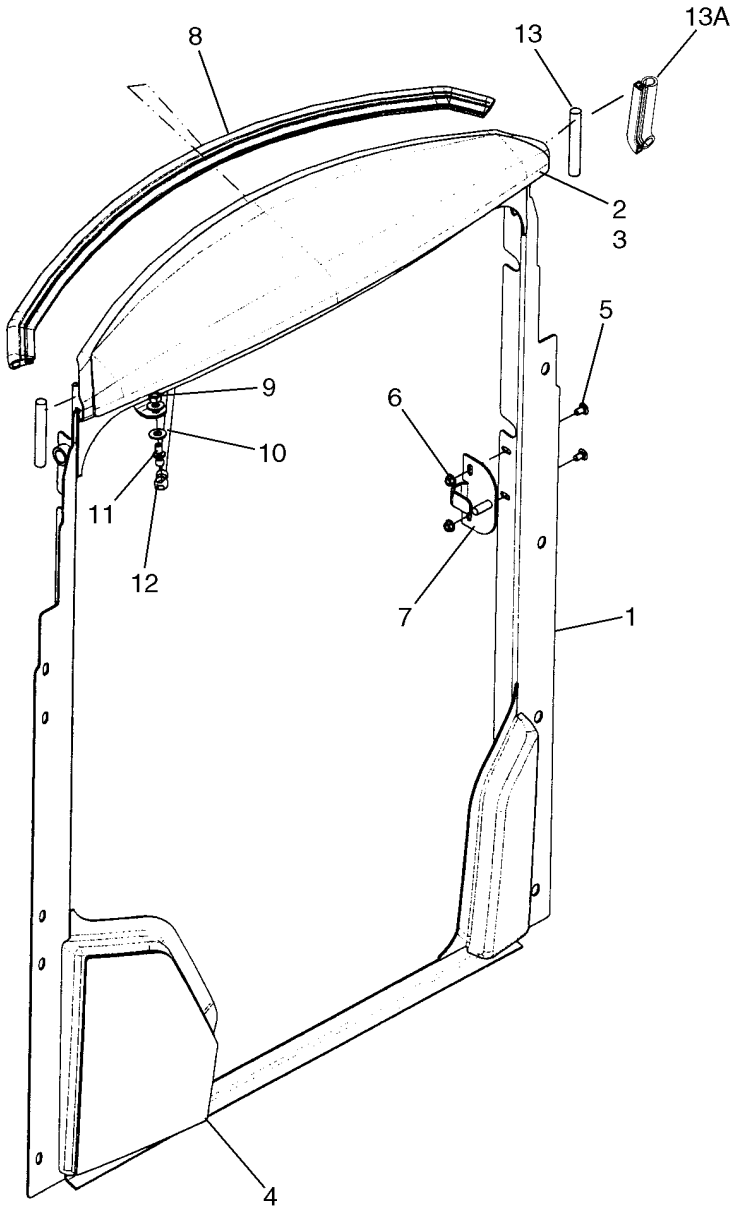

BS08C408

CAB - DOOR FRAME, DELUXE CAB

REF	FN	PART NUMBER	YR/SN	QTY	DESCRIPTION
1		87652757		1	FRAME, Door Frame, Black; Frame Has Slotted Holes On Sides; If Used
1		87690544		1	DOOR, Door Frame, Black; Frame Has Square Holes On Sides; If Used
2		87642009		1	WINDOW, Top
3		87600221		11	SPACER, Glue Spacer
4		87642008		1	WINDOW, Lower Window, RH
5		{87622768}		2	Bolt, M6 X 12
6		9804276		2	NUT, M6 x 1, Flg, Cl 8
7		87657601		1	LATCH, Latch; Used With Frame 87652757; Pin Length 26.6 mm (1.04 in)
7		87687979		1	LATCH, Latch; Used With Frame 87690544; Pin Length 23.6 mm (.93 in)
8		87659267		1	SEAL, RUBBER, Bulb Seal; Used With Frame 87652757
8		87691320		1	SEAL, Bulb Seal; Used With Frame 87690544
9		43362		1	NUT, M8, Cl 10
10		86625263		2	WASHER, M8 x 20 x 1.6
11		87581669		1	STUD, Ball Stud
12		87581689		1	SPRING, Gas Spring
13		87658816		2	SEAL, RUBBER, Round Seal; Used With Frame 87652757
13A		87688733		1	SEAL, Used With Frame 87690544

90.154.01	04	p1	05/09

CAB - DOOR KIT

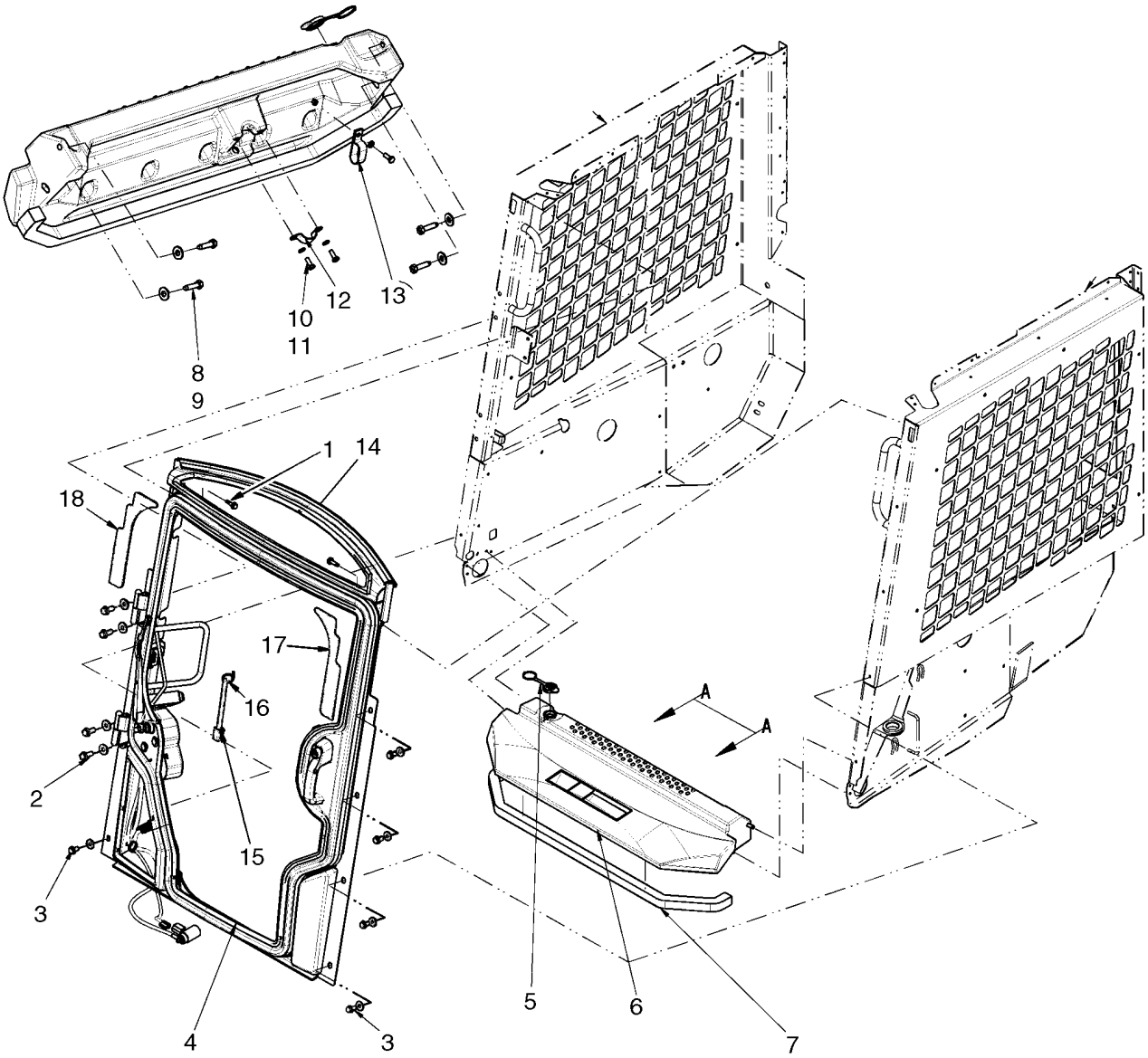

CAB - DOOR KIT

REF	FN	PART NUMBER	YR/SN	QTY	DESCRIPTION
		87586363		1	KIT, Cab Door Kit; Incl. 1 - 18 And Kit 87492657
1		87029931		2	SCREW, Screw, 5/16-18 X 1.00
2		87327171		4	BOLT, Flange Bolt, 3/8 X 1.00 Grade 8
3		9840344		5	SCREW, Sealing Screw
4		{}		1	Door; See Fig. 90.154.01 [02]
5		87645152		1	CAP, Washer Fluid Cap
6		87644259		1	PLASTIC, Threshold/Washer Fluid Tank; NA
6		87644260		1	PLASTIC, Threshold/Washer Fluid Tank; Europe
7		86508457		1	PAD, Closed Cell Foam, 100.6 cm (39 5/8 in.)
8		88825		4	SCREW, SELF TAPPING, Hex Hd, 5/16" x 1 1/4"
9		80664		4-9	WASHER, 5/16"
10		9824259		3	WASHER, M6 x 12 x 1.6
11		86508568		3	BOLT, Hex, M6 x 16, Cl 8.8, Full Thd
12		87653007		1	STRAP
13		578070		1	CLAMP, If Used
13		86010402		1	CLAMP, 1/2", Insul, 3/8" Bolt, If Used
14		{}		1	Door Frame; See Fig. 90.154.01 [01]
15		87685436		1	SWITCH, DOOR, Door Switch
16		14560287		1	STRAP, 289mm lg
17		87695867		1	COVER, DOOR, LH Cab Door Sealing; Black Decal
18		87695868		1	COVER, DOOR, RH Cab Door Sealing; Black Decal
		87301340		AR	SEALANT, 1 mL. Hitachi Gray Poly Sealant; 5 mL Applied To L Cut Out On Door (2 Places)
		87492657		1	KIT, SERVICE, 2 in Shoulder Belt; See Fig 90.120.05 [03]

90.154.01	21	p1	05/09

CAB - DEMOLITION DOOR KIT

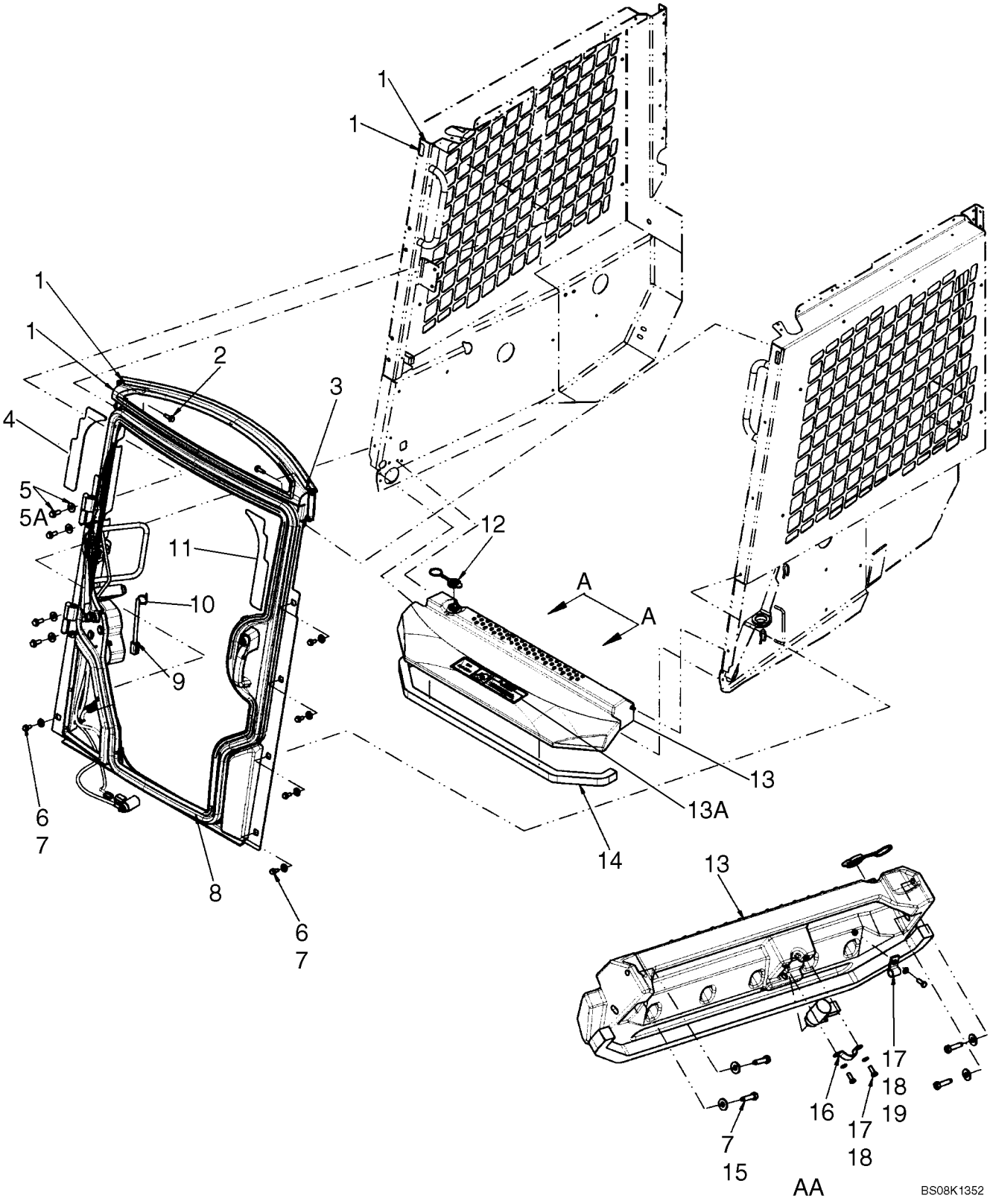

CAB - DEMOLITION DOOR KIT

REF	FN	PART NUMBER	YR/SN	QTY	DESCRIPTION
		87586364		1	KIT, Demolition Door Kit; Incl. 1 - 19
1		87301341		X	ADHESIVE, Seal Butyl Rubber Rope; 1700.72 mm (66.95 in) Required
2		87029931		2	SCREW, Screw, 5/16 X 1.00
3		87066325		X	ADHESIVE, Seal Butyl 1/4 Rubber Rope; 101.6 mm (4 in) Required
4		87695868		1	COVER, DOOR, Decal, RH Cab Door Sealing
5		87327171		4	BOLT, Bolt, 3/8 X 1.00 Gr 8 ZND
5A		9827956		4	WASHER
6		9840344		5	SCREW, Sealing Screw
7		80664		4	WASHER, 5/16"
8		{}		1	Demolition Door; See Fig. 90.154.08 [23]
9		87685436		1	SWITCH, DOOR, Connector, 6 Pin
10		263117		1	STRAP, CABLE, .14" x 11 1/2"
11		87695867		1	COVER, DOOR, Decal, LH Cab Door Sealing
12		87645152		1	CAP, Washer Fluid Cap
13		9824259		3	WASHER, M6 x 12 x 1.6
13A		86568265		1	DECAL, Danger No Riders
14		86508457		1	PAD, Closed Cell Foam, 101.6 cm (39 5/8 in.)
15		88825		4	SCREW, SELF TAPPING, Hex Hd, 5/16" x 1 1/4"
16		87653007		1	STRAP
17		86508568		3	BOLT, Hex, M6 x 16, Cl 8.8, Full Thd
18		87644259		1	PLASTIC, Threshold/Washer Fluid Tank
19		578070		1	CLAMP, If Used
19		86010402		1	CLAMP, 1/2", Insul, 3/8" Bolt, If Used
		87492657		1	KIT, SERVICE, 2 In Shoulder Belt; See Figure 90.120.05 [03]

90.154.01	22	p1	05/09

CAB - DEMOLITION DOOR AND FRAME

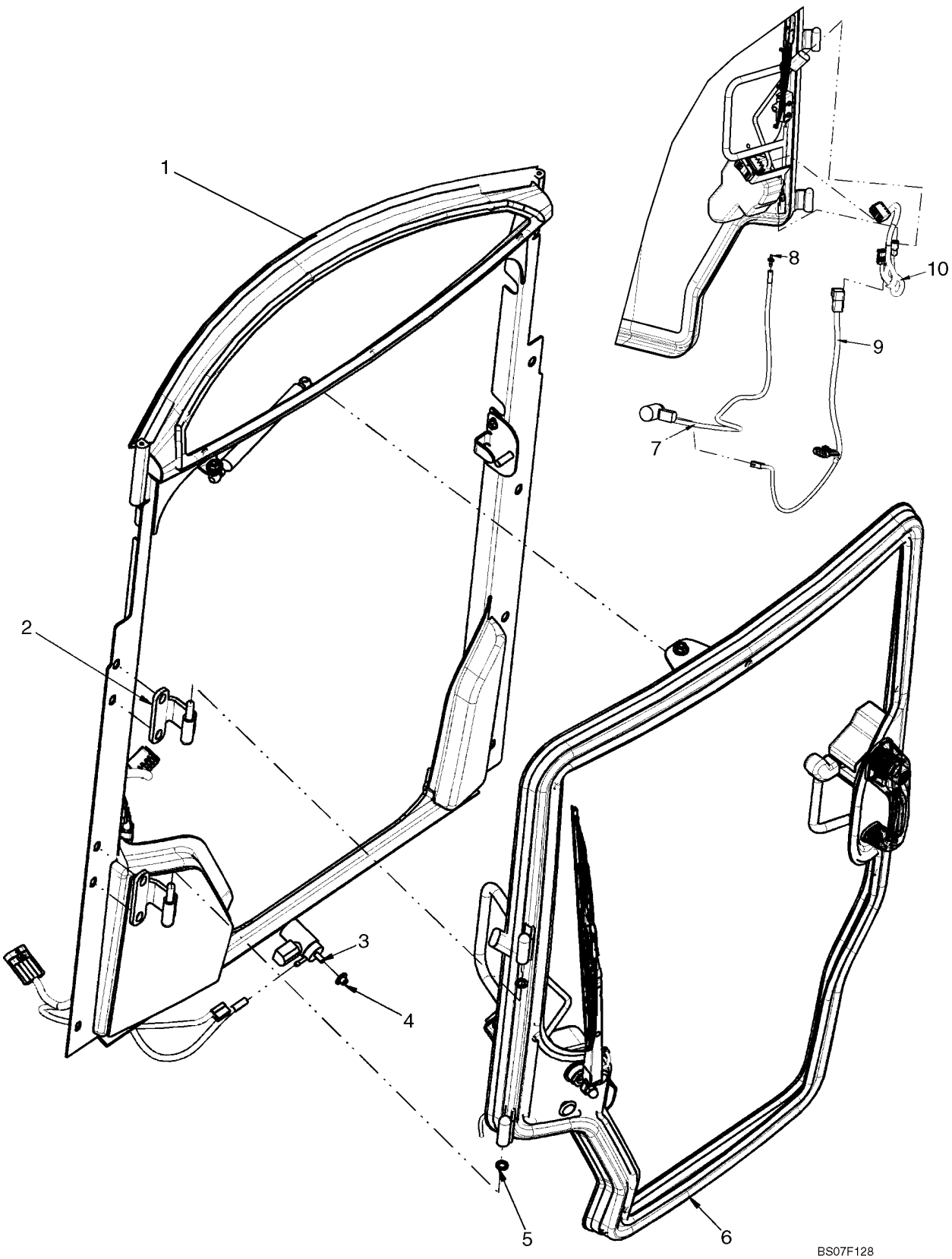

CAB - DEMOLITION DOOR AND FRAME

REF	FN	PART NUMBER	YR/SN	QTY	DESCRIPTION
1		{}		1	Door Frame; See Fig. 90.154.01 [03]
2		87635960		2	HINGE, Door Hinge; If Used
2		87688534		2	HINGE, If Used
3		87581786		1	PUMP, Washer Pump
4		87658782		1	GROMMET
5		87599753		2	BUSHING
6		{}		1	Demolition Door; See Fig. 90.154.01 [23]
7		87658793		1	HOSE, Windshield Washer Tubing
8		87658798		1	FITTING, 1/8 x 5/32 Reducing Connector
9		87660792		1	HARNESS, Door Frame Harness; See Figure 55.100.62[01]
10		87660793		1	HARNESS, Door Harness; See Fig 55.100.62 [02]; If Used
10		87714906		1	HARNESS, Door Harness; See Fig 55.100.62 [03]; If Used
11		263117		2	STRAP, CABLE, .14" x 11 1/2", Not Illustrated
11		{87642915}		3	Cable Tie; Not Illustrated; if Used
12		9628503		4	NUT, 3/8"-16, G5
13		9827956		8	WASHER
14		87327171		4	BOLT, 3/8 x 1.00

90.154.01	23	p1	09/09

CAB - DEMOLITION DOOR

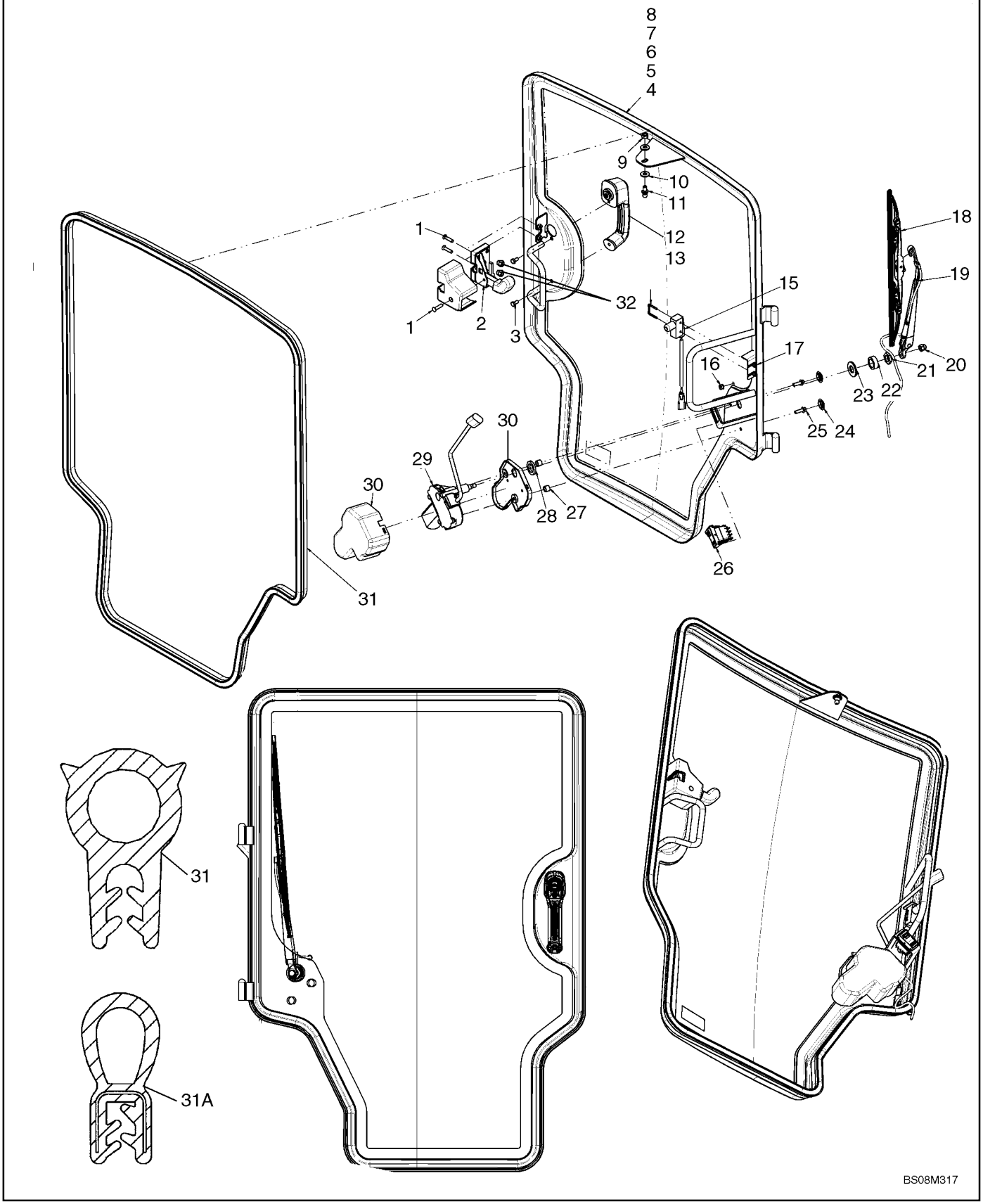

CAB - DEMOLITION DOOR

REF	FN	PART NUMBER	YR/SN	QTY	DESCRIPTION
1		86512463		3	SCREW, Hex Flat Hd, M6 x 25, 4.8, If Used
1		{87654455}		3	Hex Flat SC M6 x 25, 8.8; If Used
2		87544288		1	LATCH, Allegis Corp P/N 9/01830; If Used
2		{87678399}		1	Latch; Allegis Corp P/N 9/01830; If Used
3		86977726		2	BOLT, Hex, M6 x 12, 8.8, If Used
3		86050272		2	BOLT, Hex Flg, M6 x 12, 8.8, If Used
4		87639937		1	DOOR, Demolition Door; Incl. 5 - 8
5		87600221		8	SPACER
6		87639938		1	PLASTIC, Window
7		NSS		1	NOT SERVICED SEPARATELY, Door
8		87660180		1	ADHESIVE, Window Adhesive
9		43362		1	NUT, M8, Cl 10
9		86619801		1	NUT, LOCK, M8 x 1.25, Flg, Cl 8
10		86625263		1-2	WASHER, M8 x 20 x 1.6
11		87581669		1	STUD, Ball Stud
12		87581681		1	HANDLE
13		642628		1	SET OF 2 KEYS
14		H435814		1	U-BOLT
15		87051110		1	SWITCH, DOOR, Door Open Switch
16		87635968		1	GROMMET, If Used
17		87622767		2	NUT, #6-32
18		87629614		1	WIPER BLADE
19		87659082		1	WIPER ARM, For Spray Nozzle & Hose Kit Order 84204816
20		412326		1	NUT
21		87607505		1	NUT
22		87607506		1	SPACER
23		87602688		1	WASHER
24		87601294		2	PLUG, PLASTIC
25		87017606		2	SCREW, SELF TAPPING, Hex Flg Hd, M6 x 20, If Used
25		87016558		2	SCREW, SELF TAPPING, Hex Flg Hd, M6 x 25, If Used
26		87335499		1	SWITCH, Windshield Wiper/Washer Switch
27		87588635		2	SPACER, Door Motor Spacer

CAB - DEMOLITION DOOR

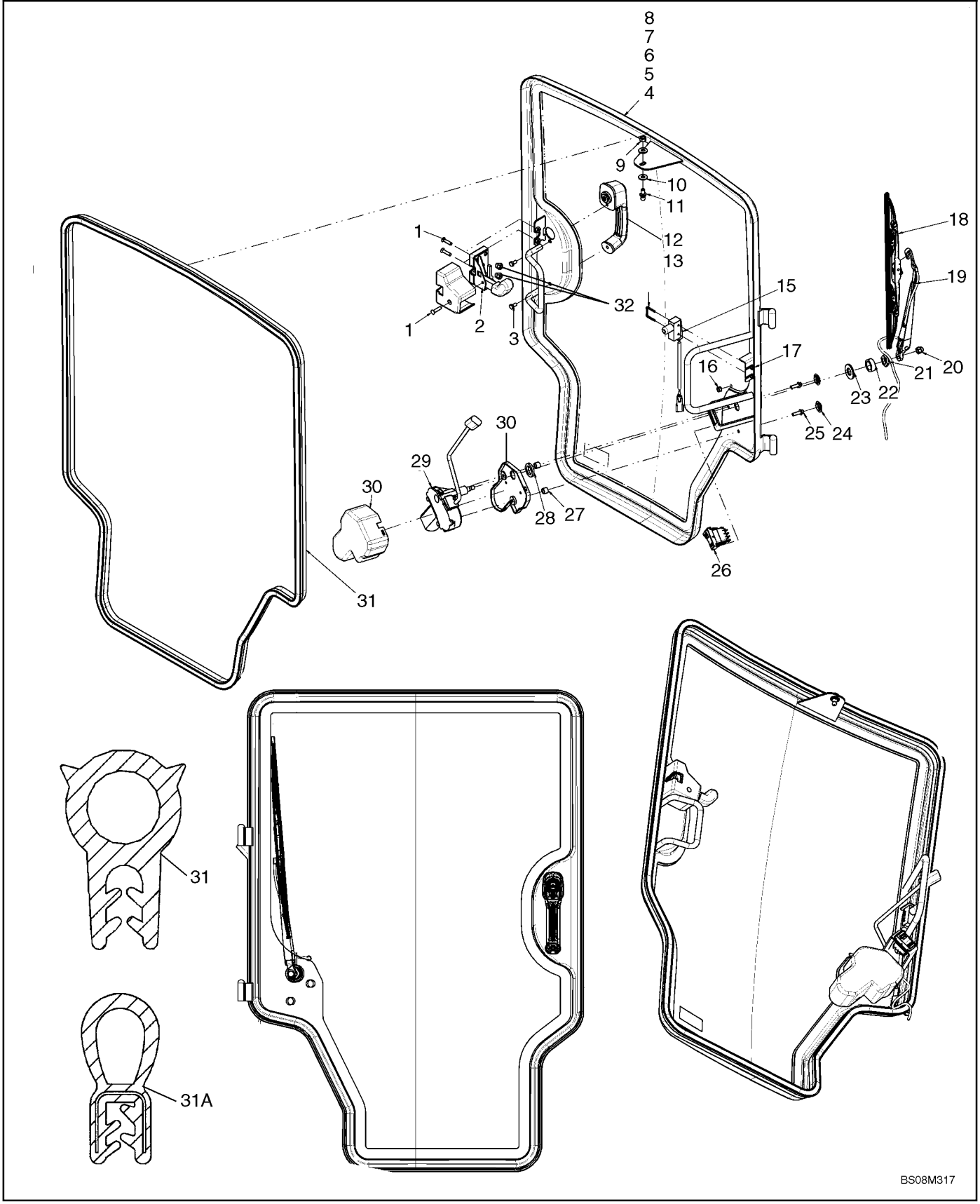

CAB - DEMOLITION DOOR

REF	FN	PART NUMBER	YR/SN	QTY	DESCRIPTION
28		86588504		1	WASHER, 21 X 32 X 4 mm; If Used
28		86511327		1	WASHER, M20 x 37 x 3, If Used
29		87635942		1	MOTOR, Wiper Motor; Is Used With Harness 87660793, See Fig 90.154.01 [01]
29		87724452		1	WIPER MOTOR, Wiper Motor; Is Used With Harness 87714906, See Fig 90.154.01 [01]
30		87581666		1	COVER, Wiper Motor Cover
31		87659265		1	SEAL, RUBBER, If Used
31A		87688732		1	SEAL, DOOR, If Used
32		86619800		2	NUT, LOCK, M6 x 1, Flg, Cl 8, If Used

CAB - SIDE WINDOW, LH

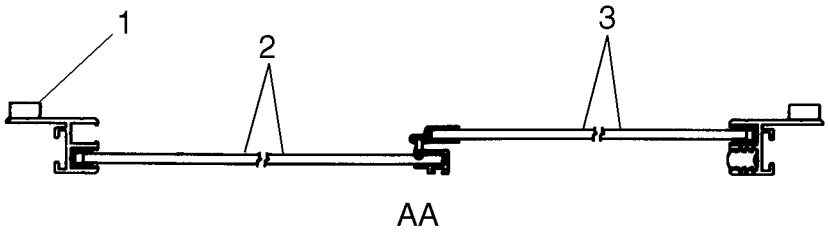

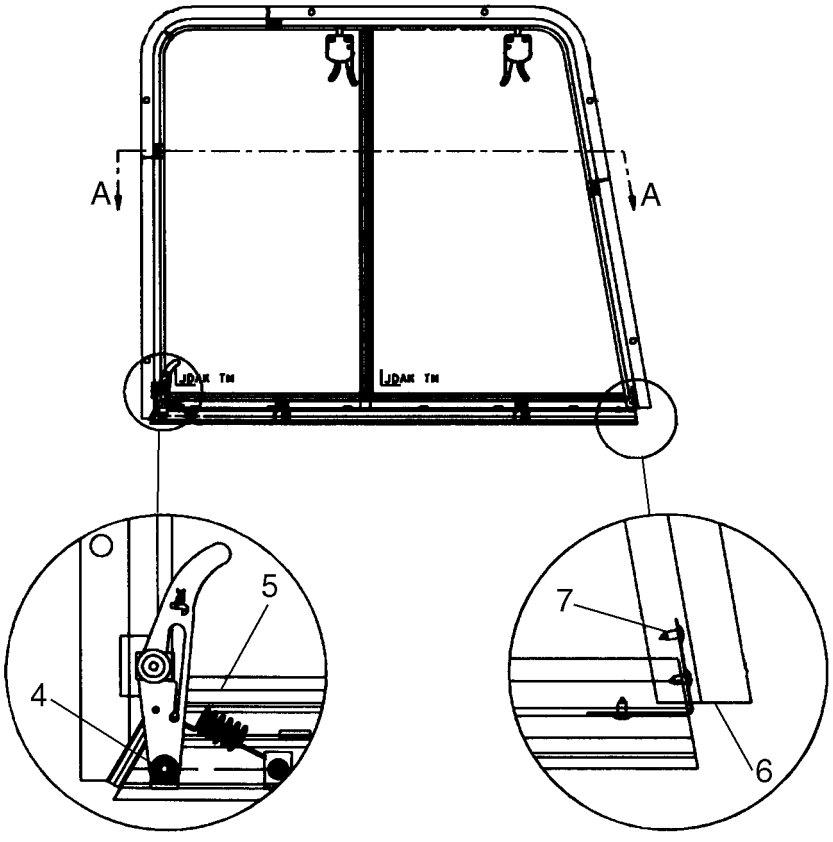

CAB - SIDE WINDOW, LH

REF	FN	PART NUMBER	YR/SN	QTY	DESCRIPTION
		87651304		1	GLASS, Side Window, LH; Incl. 1 - 7
1		NSS		1	NOT SERVICED SEPARATELY, Foam Tape
2		87660656		1	GLASS, See Figure 90.156.08 [03]
3		87660657		1	GLASS, See Figure 90.156.08 [04]
4		87620981		1	BOLT, Shoulder Bolt
5		87660662		1	BAR, See Figure 90.156.08 [05]
6		NSS		1	NOT SERVICED SEPARATELY, Frame
7		{86634392}		2	Screw

90.156.08	03	p1	09/09

CAB - SIDE WINDOW, LH

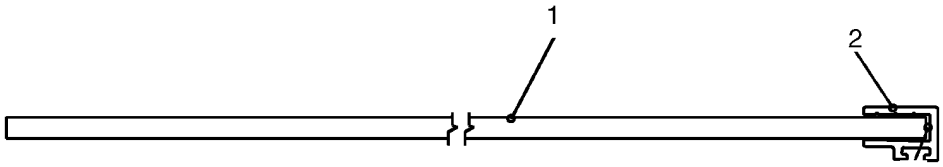

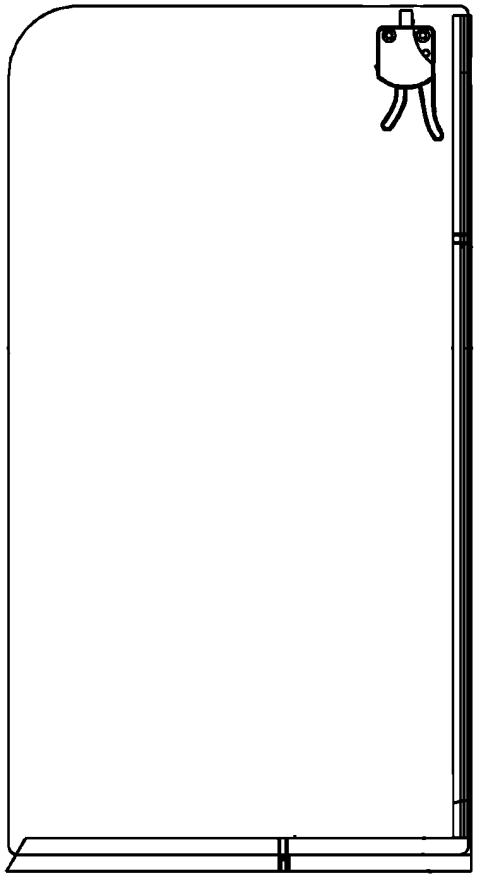

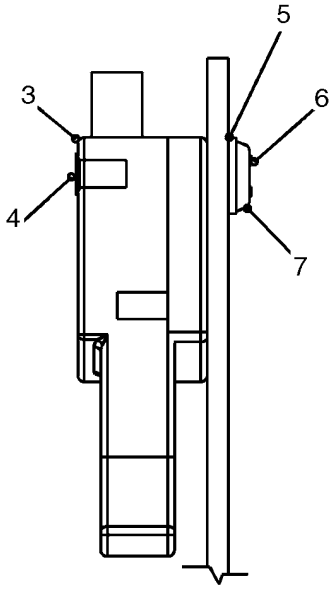

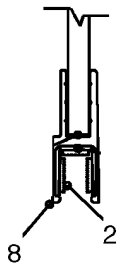

BS08B024

CAB - SIDE WINDOW, LH

REF	FN	PART NUMBER	YR/SN	QTY	DESCRIPTION
		87660656		1	GLASS, Side Window, LH; Incl. 1 - 8
1		NSS		1	NOT SERVICED SEPARATELY, Glass
2		NSS		1	NOT SERVICED SEPARATELY, Vertical Bar
3		87620986		1	LATCH
4		87670693		2	NUT, 8-32 x .375
5		87653402		2	BUSHING, .375
6		87670692		2	SCREW, 8-32 x 1.250
7		87653400		2	WASHER, #8 CTSK
8		NSS		1	NOT SERVICED SEPARATELY

90.156.08	04	p1	09/09

CAB - SIDE WINDOW, LH

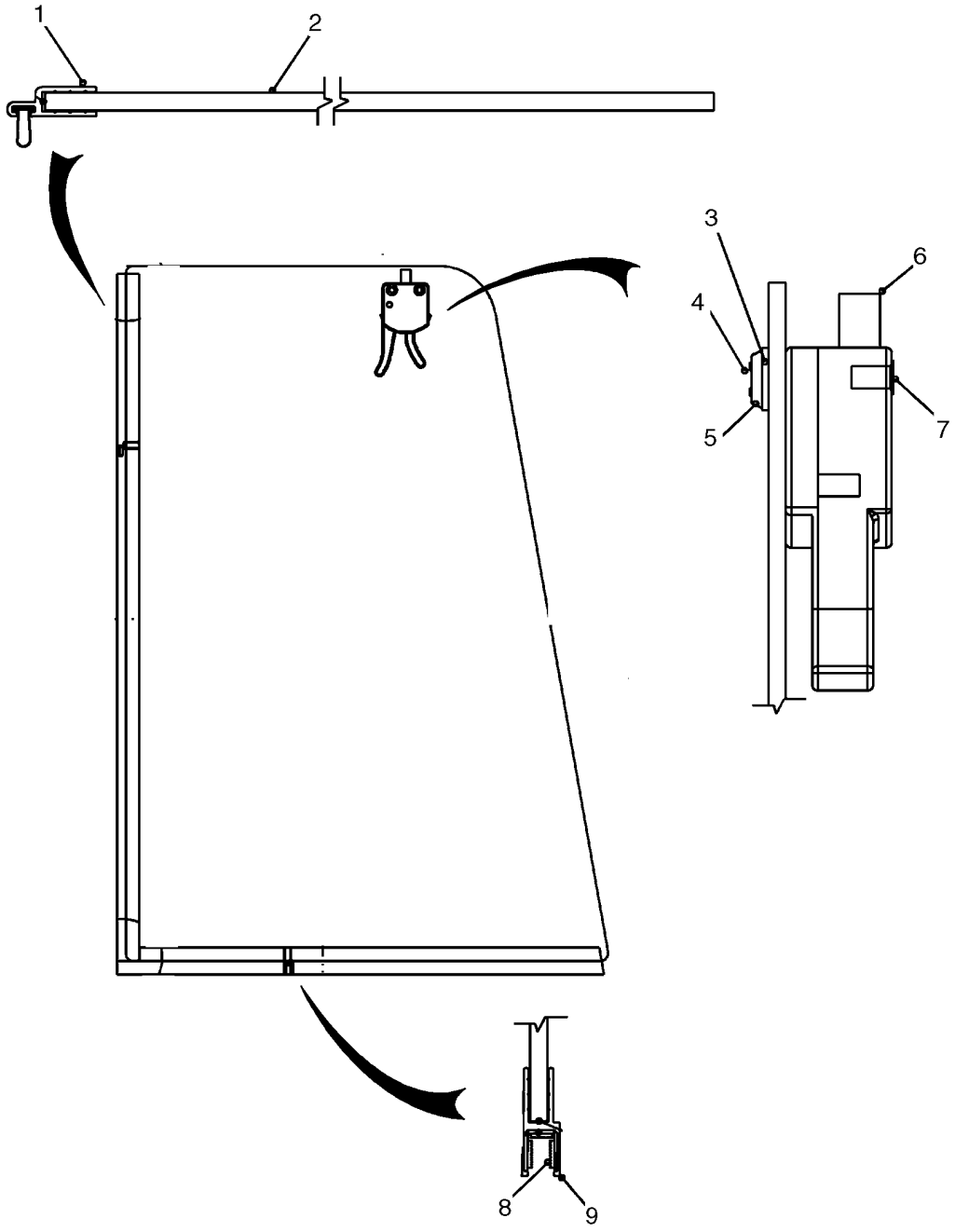

BS08B023

CAB - SIDE WINDOW, LH

REF	FN	PART NUMBER	YR/SN	QTY	DESCRIPTION
		87660657		1	GLASS, Side Window, LH; Incl. 1 - 9
1		NSS		1	NOT SERVICED SEPARATELY, Vertical Bar
2		NSS		1	NOT SERVICED SEPARATELY, Glass
3		87653402		2	BUSHING, .375
4		87670692		2	SCREW, 8-32 x 1.250
5		87653400		2	WASHER, #8
6		87620986		1	LATCH
7		87670693		2	NUT, 8-32 x .375
8		NSS		1	NOT SERVICED SEPARATELY
9		NSS		1	NOT SERVICED SEPARATELY

CAB - SIDE WINDOW, LH



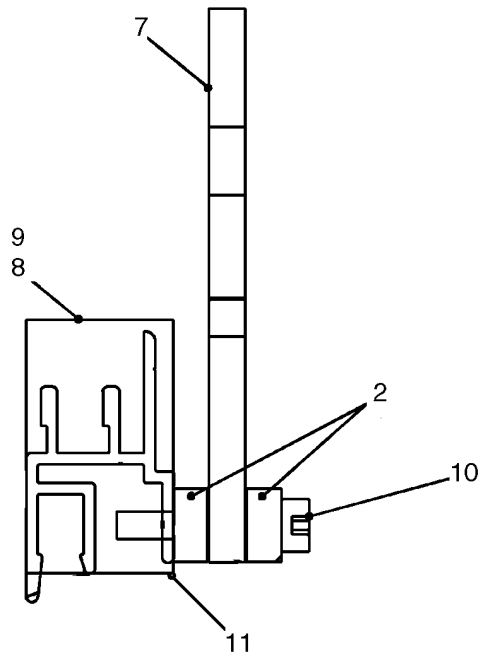

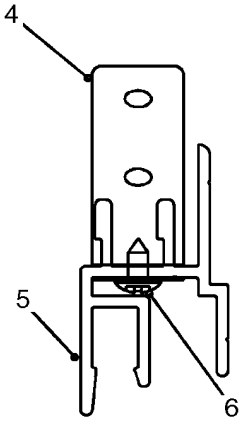

BS08B022

CAB - SIDE WINDOW, LH

REF	FN	PART NUMBER	YR/SN	QTY	DESCRIPTION
		87660662		1	BAR, Side Window, LH; Incl. 1 - 11
1		87620989		1	SPRING
2		87660654		2	WASHER, .433 OD x .220
3		86511920		1	SCREW, Cross Pan Hd, #10-24 x 1/2"
4		87670653		1	HINGE
5		NSS		1	NOT SERVICED SEPARATELY, Bar, Mull
6		{86634392}		2	Screw, #8 x .375
7		87620990		1	HANDLE
8		NSS		1	NOT SERVICED SEPARATELY, Foam, Tape
9		NSS		1	NOT SERVICED SEPARATELY, Gasket, Plate
10		87673555		1	BOLT
11		87670654		2	CLIP

CAB - SIDE WINDOW, RH

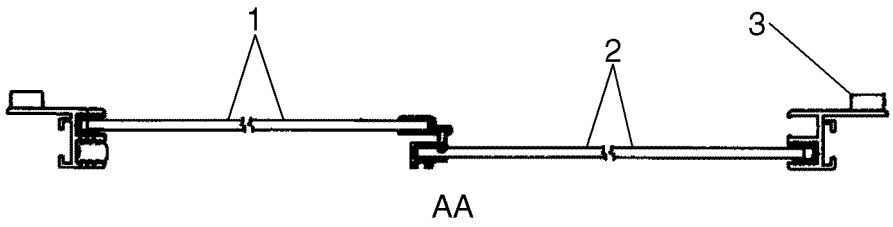

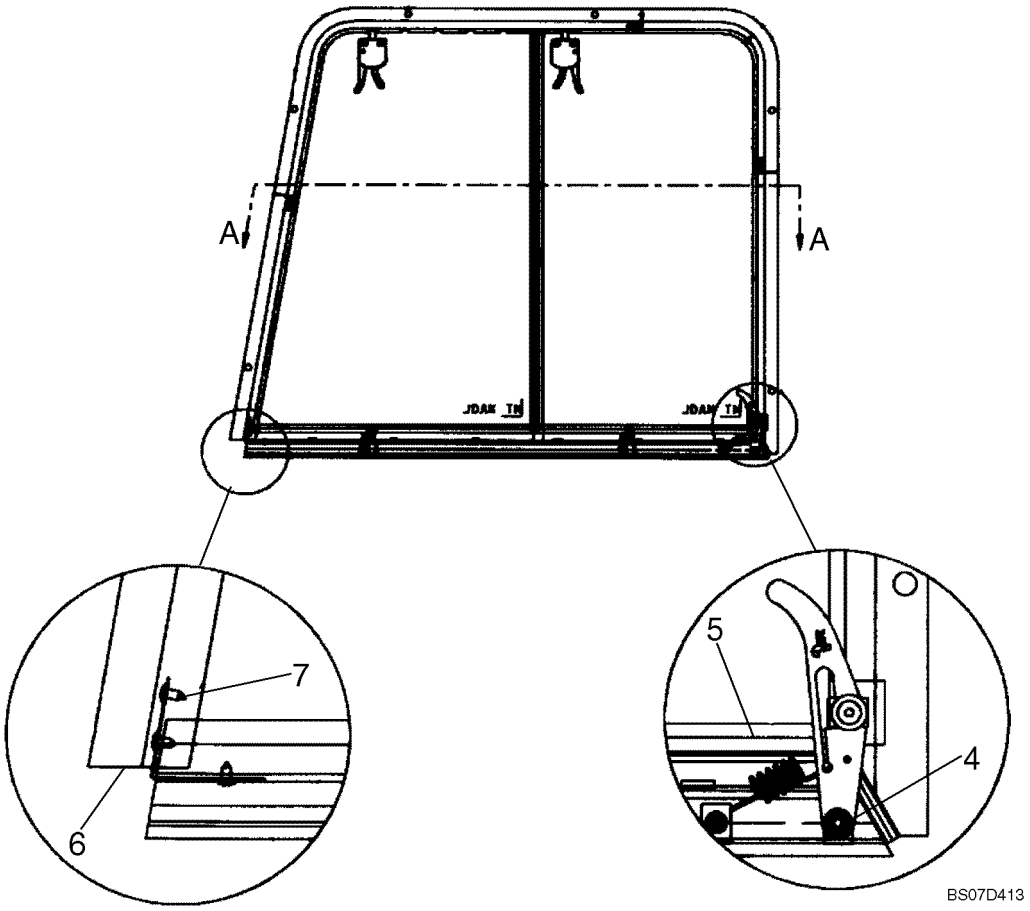

CAB - SIDE WINDOW, RH

REF	FN	PART NUMBER	YR/SN	QTY	DESCRIPTION
		87651306		1	GLASS, Side Window, RH; Incl. 1 - 7
1		87660660		1	GLASS, See Figure 90.156.08 [07]
2		87671506		1	GLASS, See Figure 90.156.08 [08]
3		NSS		1	NOT SERVICED SEPARATELY, Foam Tape
4		87620981		1	BOLT, Shoulder Bolt
5		87660664		1	BAR, See Figure 90.156.08 [09]
6		NSS		1	NOT SERVICED SEPARATELY, Frame
7		{86634392}		2	Screw

90.156.08	07	p1	09/09

CAB - SIDE WINDOW, RH

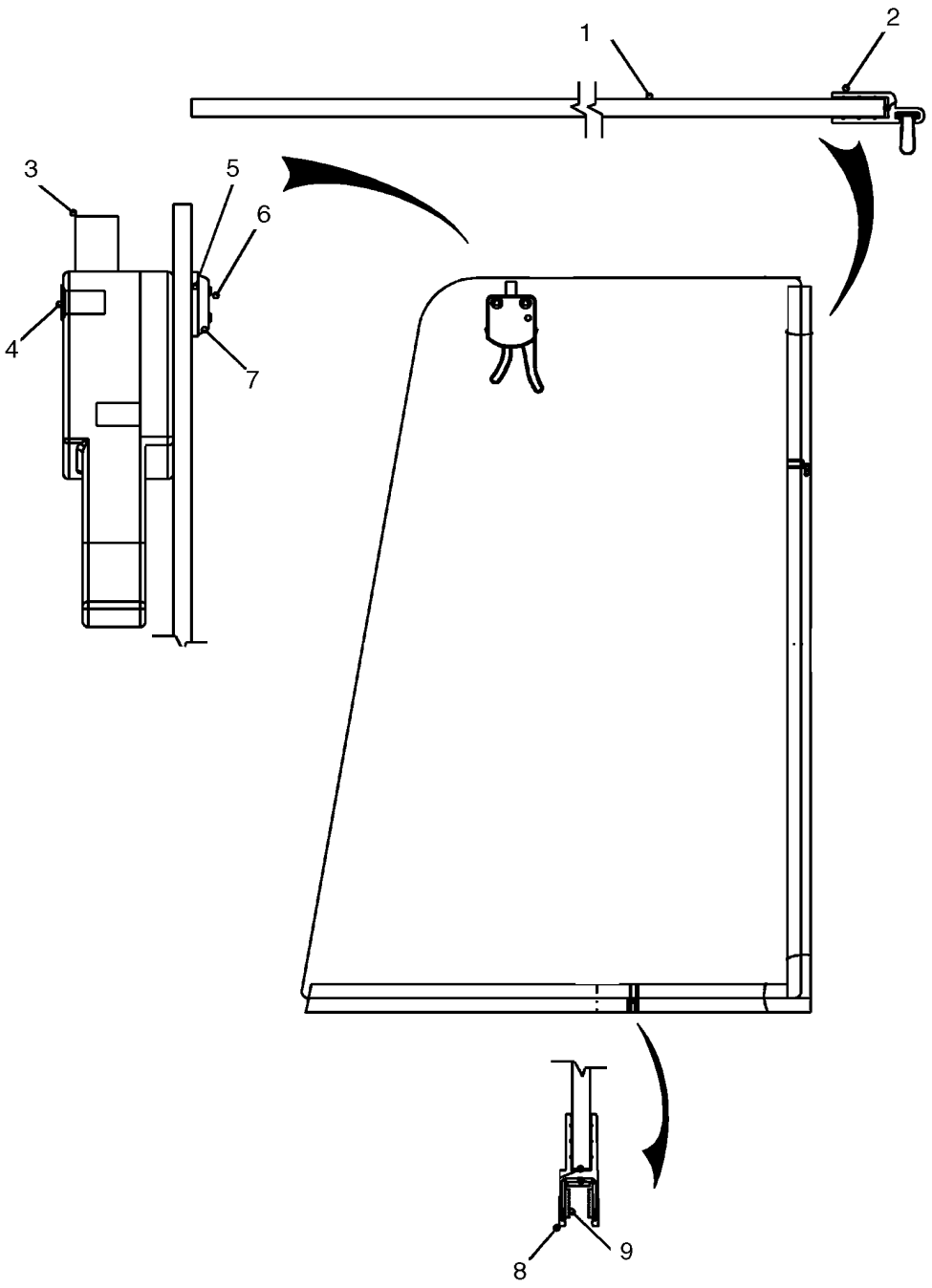

BS08B019

CAB - SIDE WINDOW, RH

REF	FN	PART NUMBER	YR/SN	QTY	DESCRIPTION
		87660660		1	GLASS, Side Window, RH; Incl. 1 - 9
1		NSS		1	NOT SERVICED SEPARATELY, Glass
2		NSS		1	NOT SERVICED SEPARATELY, Vertical Bar
3		87620986		1	LATCH
4		87670693		2	NUT, 8-32 x .375
5		87653402		2	BUSHING, .375
6		87670692		2	SCREW, 8-32 x 1.250
7		87653400		2	WASHER, #8 CTSK
8		NSS		1	NOT SERVICED SEPARATELY
9		NSS		1	NOT SERVICED SEPARATELY

CAB - SIDE WINDOW, RH

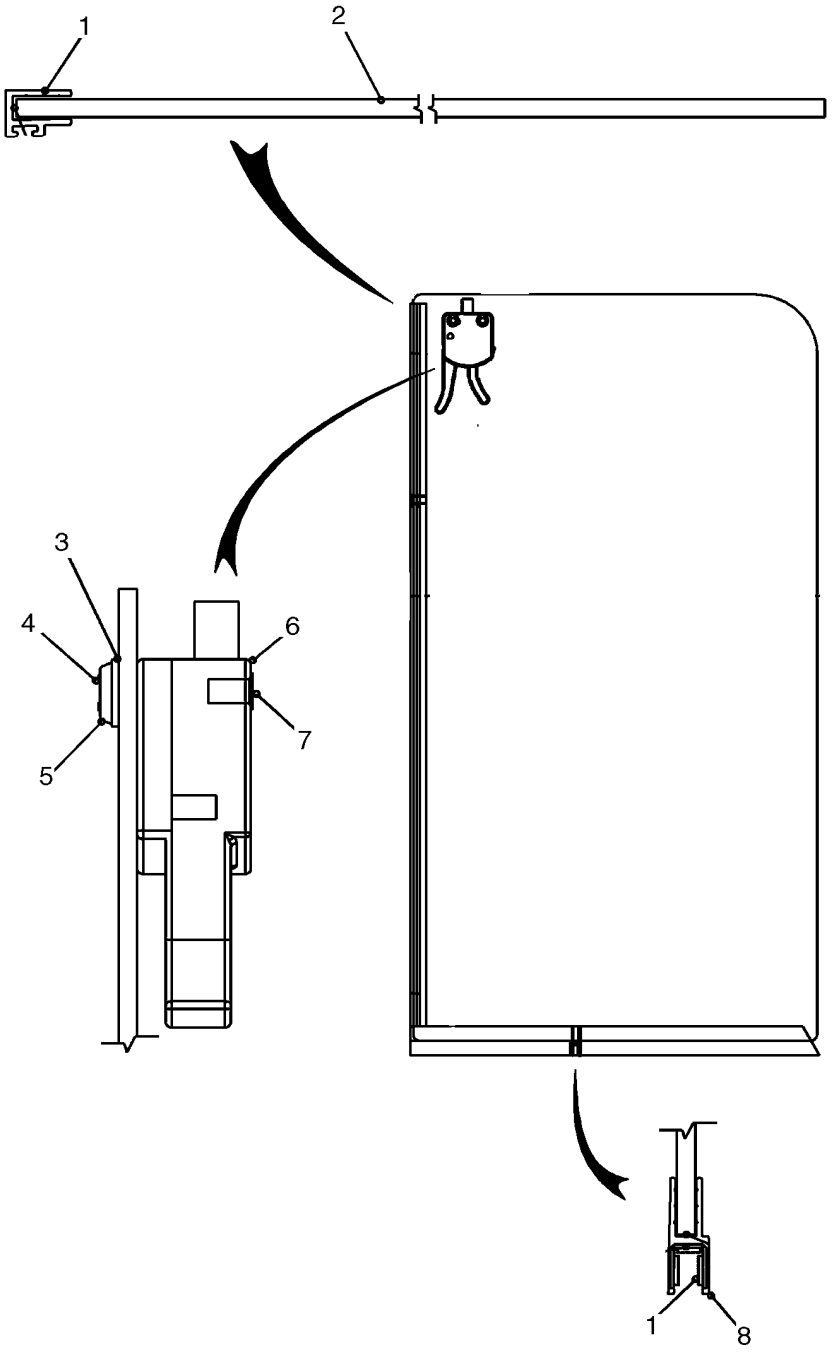

CAB - SIDE WINDOW, RH

REF	FN	PART NUMBER	YR/SN	QTY	DESCRIPTION
		87671506		1	GLASS, Side Window, RH; Incl. 1 - 8
1		NSS		1	NOT SERVICED SEPARATELY, Vertical Bar
2		NSS		1	NOT SERVICED SEPARATELY, Glass
3		87653402		2	BUSHING, .375
4		87670692		2	SCREW, 8-32 x 1.250
5		87653400		2	WASHER, #8
6		87620986		1	LATCH
7		87670693		2	NUT, 8-32 x .375
8		NSS		1	NOT SERVICED SEPARATELY

CAB - SIDE WINDOW, RH

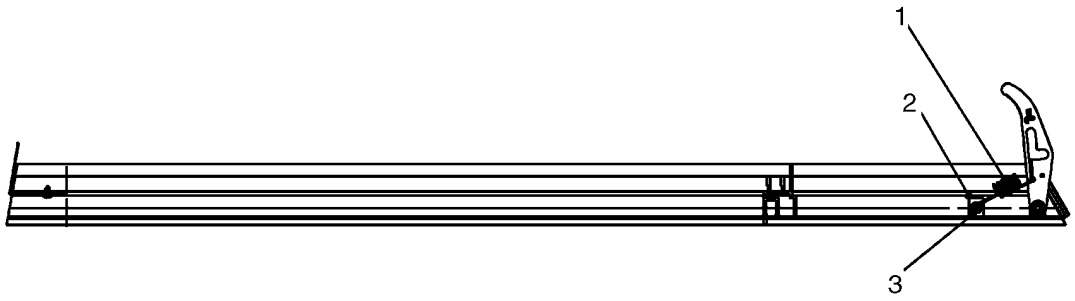

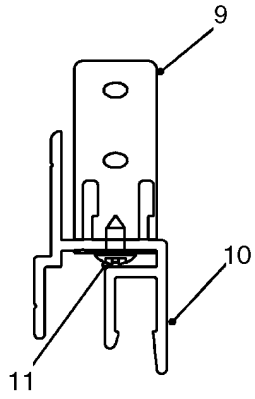

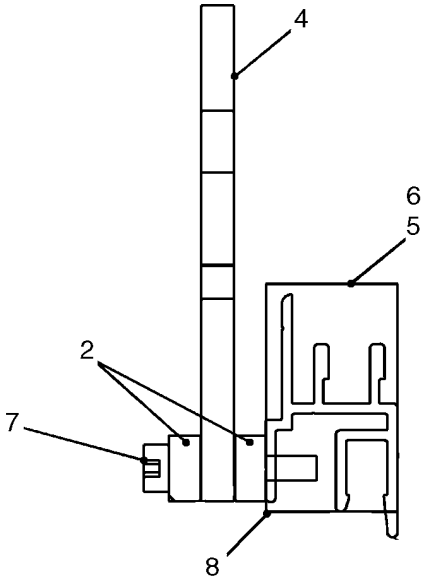

BS08B021

CAB - SIDE WINDOW, RH

REF	FN	PART NUMBER	YR/SN	QTY	DESCRIPTION
		87660664		1	BAR, Side Window, RH; Incl. 1 - 11
1		87620989		1	SPRING
2		87660654		2	WASHER, .433 OD x .220
3		86511920		1	SCREW, Cross Pan Hd, #10-24 x 1/2"
4		87620990		1	HANDLE
5		NSS		1	NOT SERVICED SEPARATELY, Gasket, Plate
6		NSS		1	NOT SERVICED SEPARATELY, Foam, Tape
7		87673555		1	BOLT
8		87670654		2	CLIP
9		87670653		1	HINGE
10		NSS		1	NOT SERVICED SEPARATELY, Bar, Mull
11		{86634392}		2	Screw, #8 x .375

90.156.08	10	p1	02/09

CAB - TOP WINDOW, DELUXE CAB

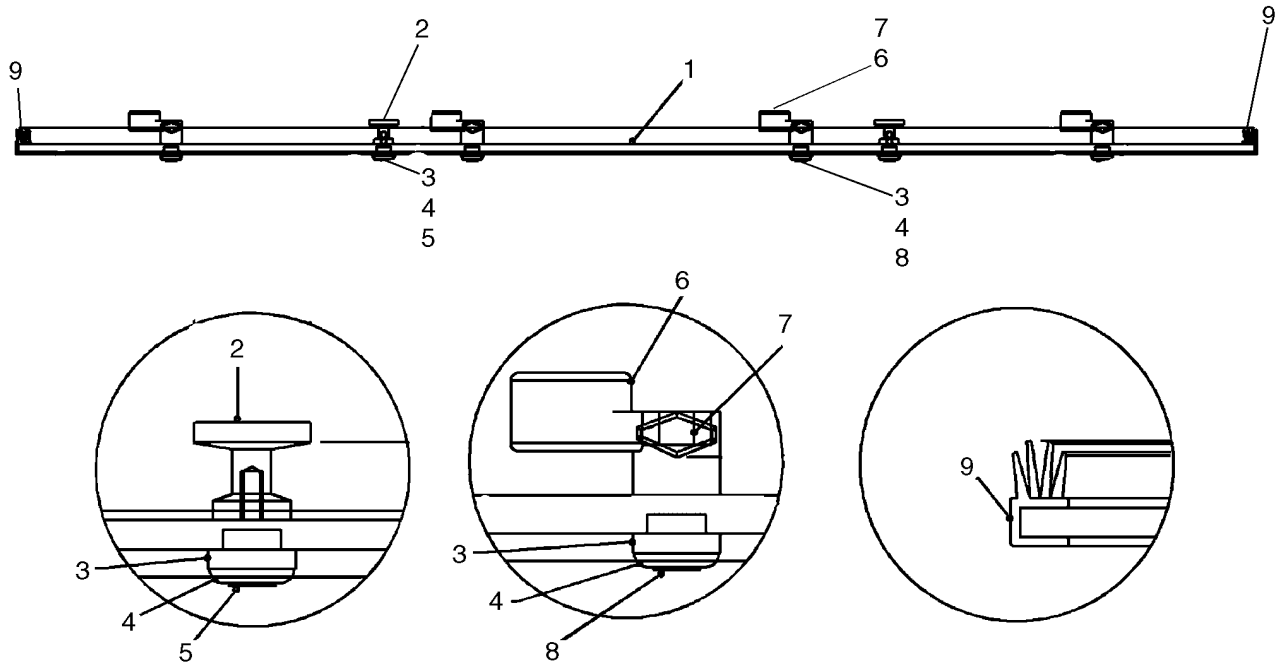

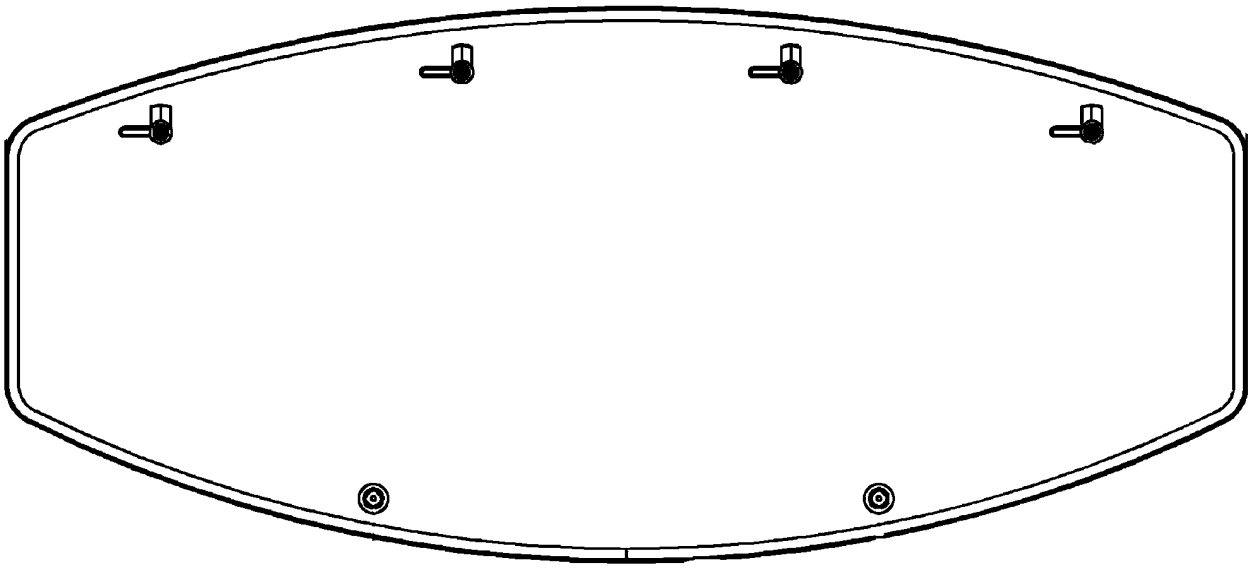

BS07F138

CAB - TOP WINDOW, DELUXE CAB

REF	FN	PART NUMBER	YR/SN	QTY	DESCRIPTION
		87640695		1	KIT, Top Window Kit; Incl. 1 - 9 And Instructions
		87665686		1	GLASS, Top Window; Incl. 1 - 9
		87682304		1	GLASS, Top Window; Incl. 1 - 9; Replaced 87665686 in Kit 87640965
1		NSS		1	NOT SERVICED SEPARATELY, Polycarbonate Top Window
2		87653403		2	RETAINER
3		87653402		8	BUSHING, Step Bushing .375
4		87653400		8	WASHER, Countersink #8
5		87653401		2	SCREW, 8-32 X .625
6		87653404		6	LATCH, 1/4 Turn
7		87304		6	NUT, #10-24, Hex
8		87671901		6	SCREW, 10-24 X 1.125
9		87673441		1	SEAL, Weather Seal

90.156.08	11	p1	09/09

CAB - WINDOWS & HEADLINER

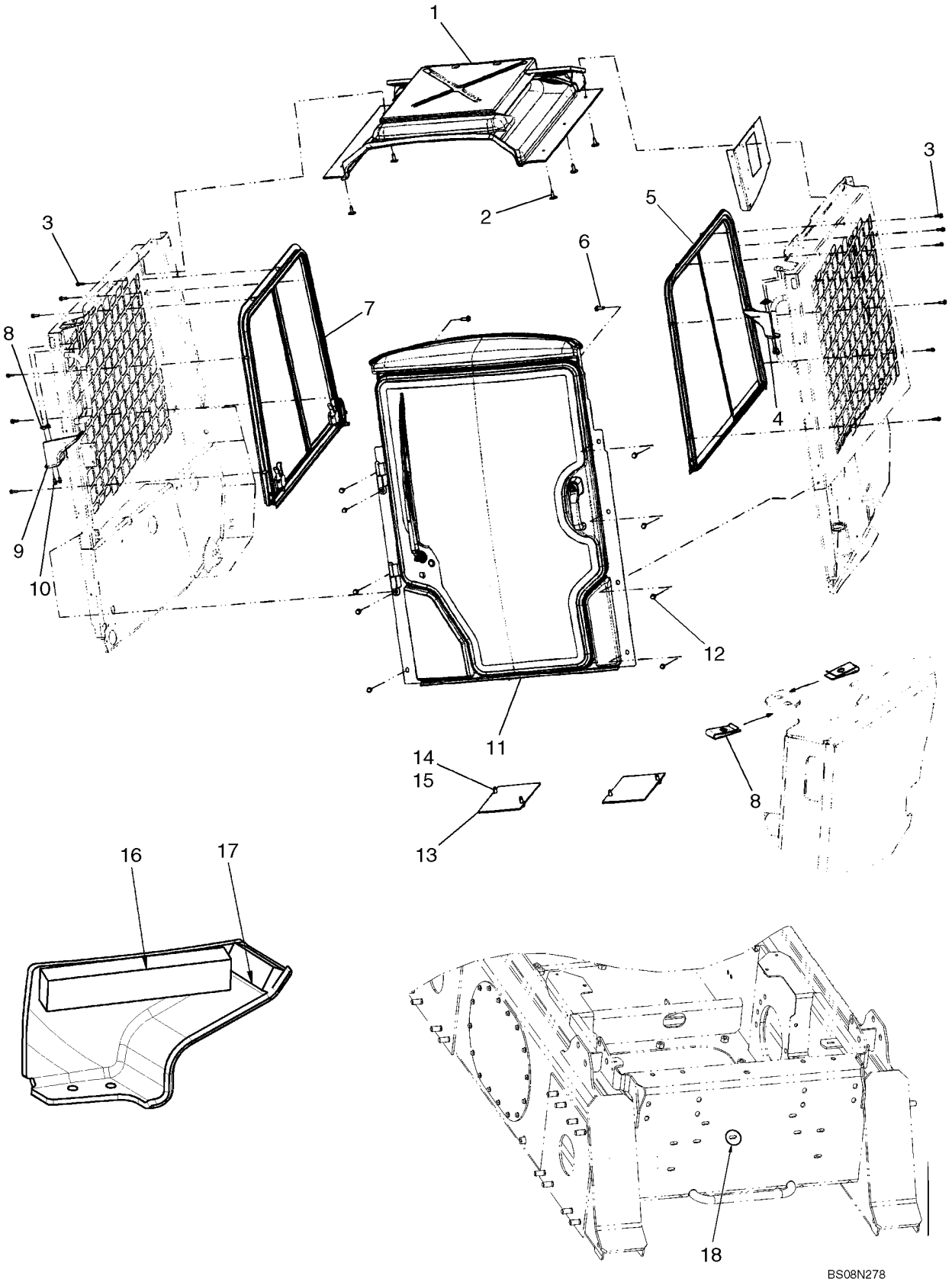

CAB - WINDOWS & HEADLINER

REF	FN	PART NUMBER	YR/SN	QTY	DESCRIPTION
		87640715		1	KIT, Cab Enclosure Kit; Incl. (1) Door Kit Figure 09-17D, (1) Floor Plate Kit 87597944, (1) Side Windows Kit Figure 09-14A
1		87593952		1	LINER, METAL, Headliner; See Fig. 90.160.03 (05)
2		86620930		5-6	FASTENER
3		9804256		12	BOLT, Hex Flg, M6 x 20, 8.8
4		87632391		1	LINER, Cap, Console LH; If Used
4		84130999		1	CONSOLE, Cap, Console LH; If Used
		87592194		1	KIT, Side Windows Kit; Incl. (1) RH Window, (1) LH Window, And (12) Bolts; If Used
		{87586355}		1	Side Windows Kit; Incl. (1) RH Window, (1) LH Window, And (12) Bolts; If Used
5		87651304		1	GLASS, Side Window, LH; See Fig. 90.156.08 [02]
6		87029931		2	SCREW, Screw, Hex Wash Hd, 5/16"-18 X 1"
7		87651306		1	GLASS, Side Window, RH; See Fig. 90.156.08 [06]
8		87594976		4	FASTENER, U-Nut
9		87632390		1	LINER, Cap, Console RH; If Used
9		84130998		1	CONSOLE, Cap, Console RH; If Used
10		86050272		4	BOLT, Hex Flg, M6 x 12, 8.8
11		{}		1	Door With Door Frame; See Fig. 90.154.01 [01]
12		9840344		9	SCREW
		87597944		1	KIT, SERVICE, Floor Plate Kit; Incl 13, 14, 15; If Used
		{86588267}		1	Floor Plate Kit; Incl 13, 14, 15; If Used
13		87538914		2	PLATE, COVER
14		280476		4	SCREW, SELF TAPPING, Hex Wash Hd, 3/8" x 1"
15		140045		4	WASHER, BELLEVILLE, M10
16		87661758		2	INSULATION, FOAM, Console Cap; Used With Ref 4 And 9
17		87661759		2	INSULATION, FOAM, Console Cap; Used With Ref 4 And 9
18		87644665		8	DECAL, Cover Front Holes

90.156.08	12	p1	04/09

THRESHOLD - REAR WINDOW

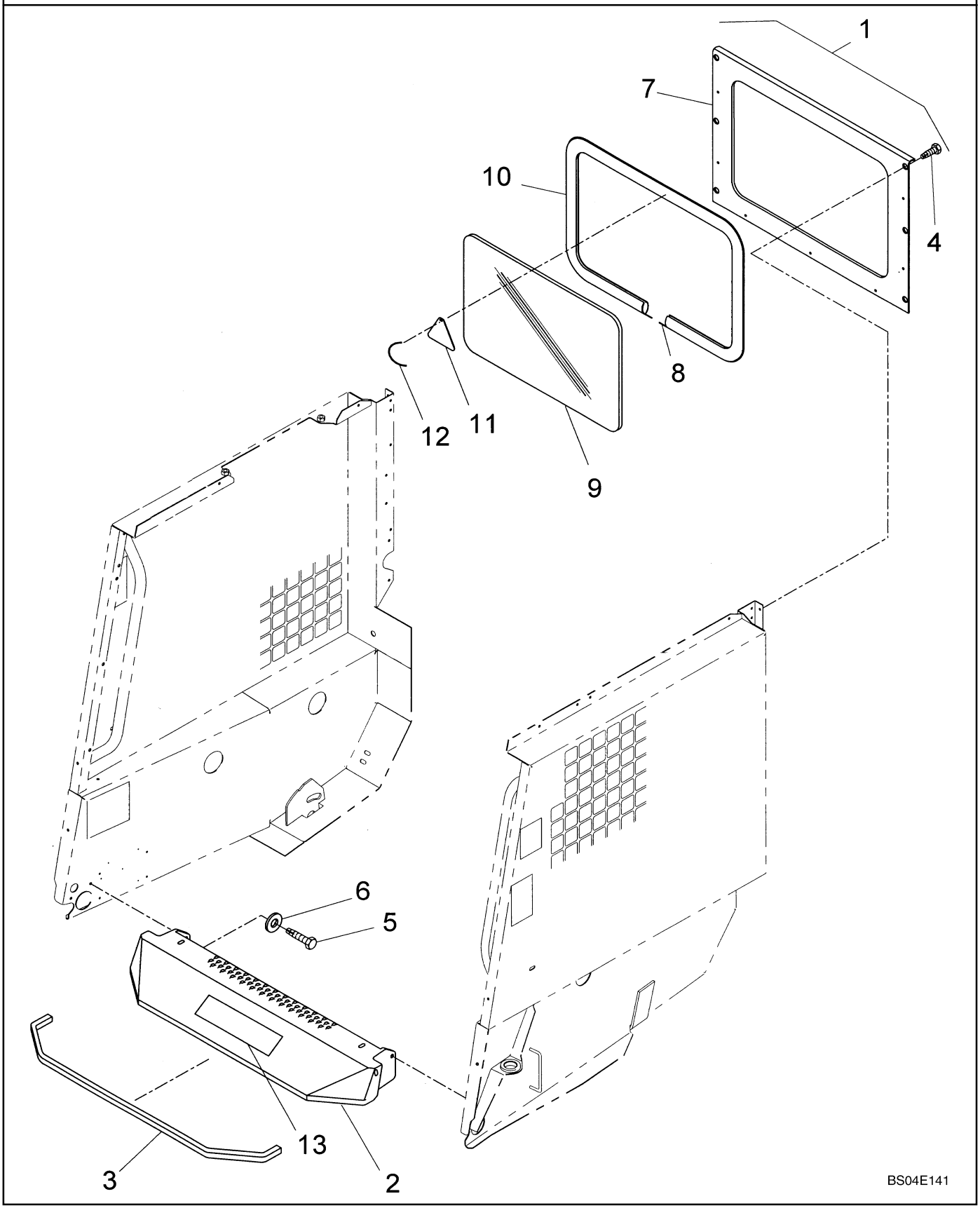

THRESHOLD - REAR WINDOW

REF	FN	PART NUMBER	YR/SN	QTY	DESCRIPTION
1		86506354		1	GLASS, CAB, Rear, Incl. 7 - 12
2		86530077		1	STEP
3		86508457		1	PAD, Foam, Closed Cell; 1006 mm, 39.60 in. Required
4		9840344		14	SCREW, 5/16"-18 x 11/16"
5		88825		4	SCREW, SELF TAPPING, Hex Hd, 5/16" x 1 1/4"
6		80664		4	WASHER, 5/16"
7		9841234		1	SUPPORT, Rear Window; With Extra Upper And Lower Holes; If Used
7		87669244		1	SHEET METAL, Rear Window; Without Extra Upper And Lower Holes; If Used
8		92626		1	STRIP, FILLING, Filler Strip; 200' Bulk; Cut To Length
9		9622411		1	GLASS, CAB, Rear
10		92625		1	MOLDING, Glass Setting; 100' Bulk; Cut To Length
11		87026871		1	PLASTIC SIGN, Tab, Exit
12		263117		1	STRAP, CABLE, .14" x 11 1/2"

90.160.01	03	p1	07/09

CAB HEADLINER, DELUXE OPEN CAB

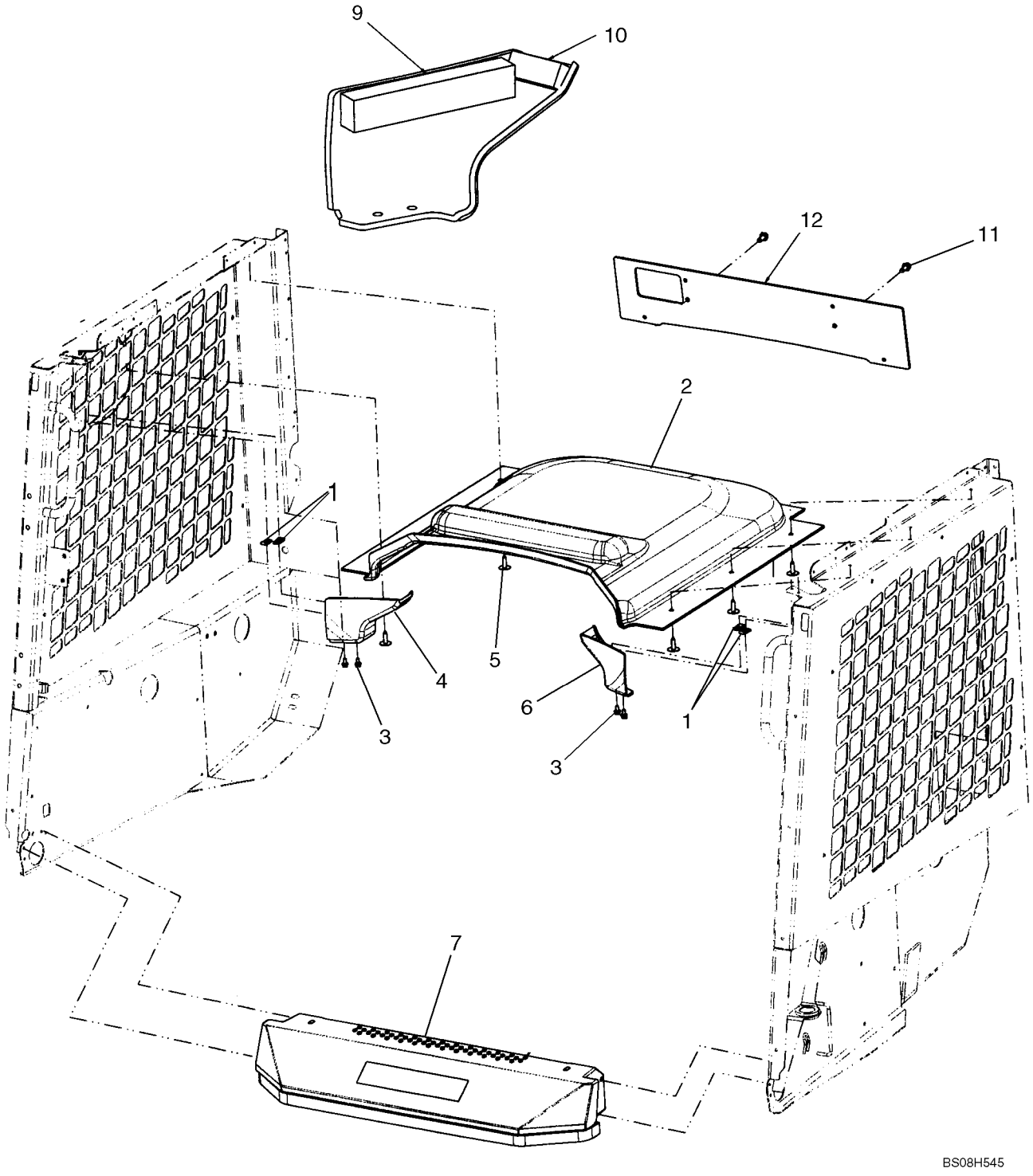

CAB HEADLINER, DELUXE OPEN CAB

REF	FN	PART NUMBER	YR/SN	QTY	DESCRIPTION
1		87594976		4	FASTENER
2		87568372		1	LINER, Headliner
3		86050272		4	BOLT, Hex Flg, M6 x 12, 8.8
4		87632390		1	LINER, Console Cap, RH; If Used
5		86620930		5-6	FASTENER
6		87632391		1	LINER, Console Cap, LH; If Used
7		{}		1	Threshold, Standard; See Figure 90.160.04 [01]
8		87586498		1	DECAL, Decal, Without Air Conditioning or Heater
9		87661758		2	INSULATION, FOAM, Console Cap; Used With 4 And 6
10		87661759		2	INSULATION, FOAM, Console Cap; Used With 4 And 6
11		87030529		2	SCREW, SELF TAPPING, Screw Hex Washer Head 3/8 x .88
12		87678518		1	PANEL, Rear Light Panel; Black

90.160.01	06	p1	06/09

CAB HEADLINER, OPEN CAB, FOR OPTIONAL RADIO

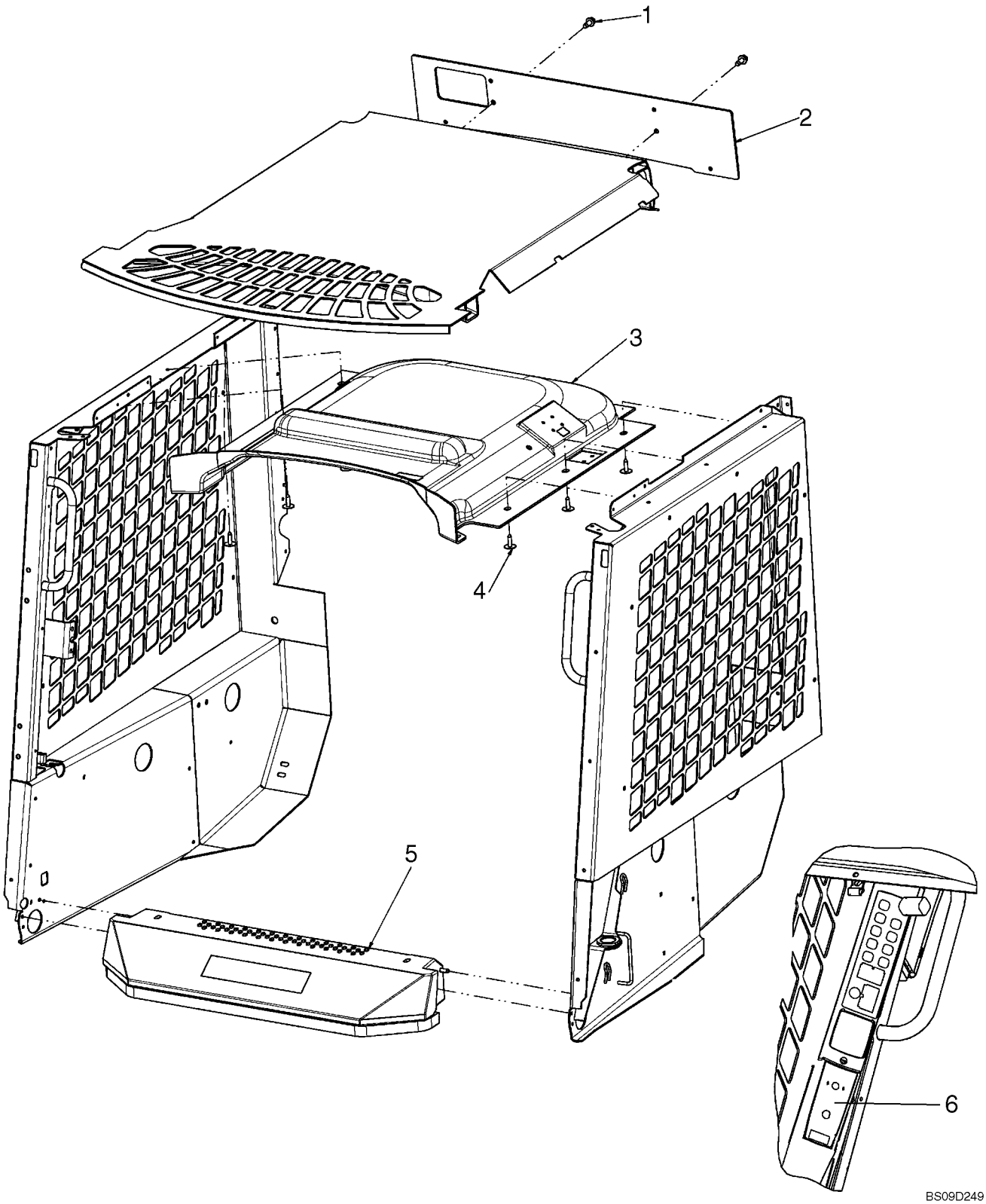

CAB HEADLINER, OPEN CAB, FOR OPTIONAL RADIO

REF	FN	PART NUMBER	YR/SN	QTY	DESCRIPTION
1		87030529		2	SCREW, SELF TAPPING, Screw Hex Washer Head 3/8 x .88
2		87678518		1	PANEL, Rear Light Panel; Black
3		84175119		1	HEADLINER, Headliner
4		86620930		6	FASTENER
5		{}		1	Threshold, Standard; See Figure 90.160.04[01]
6		87586498		1	DECAL, Decal, Without Air Conditioning or Heater

CAB - HEADLINER, DELUXE CAB

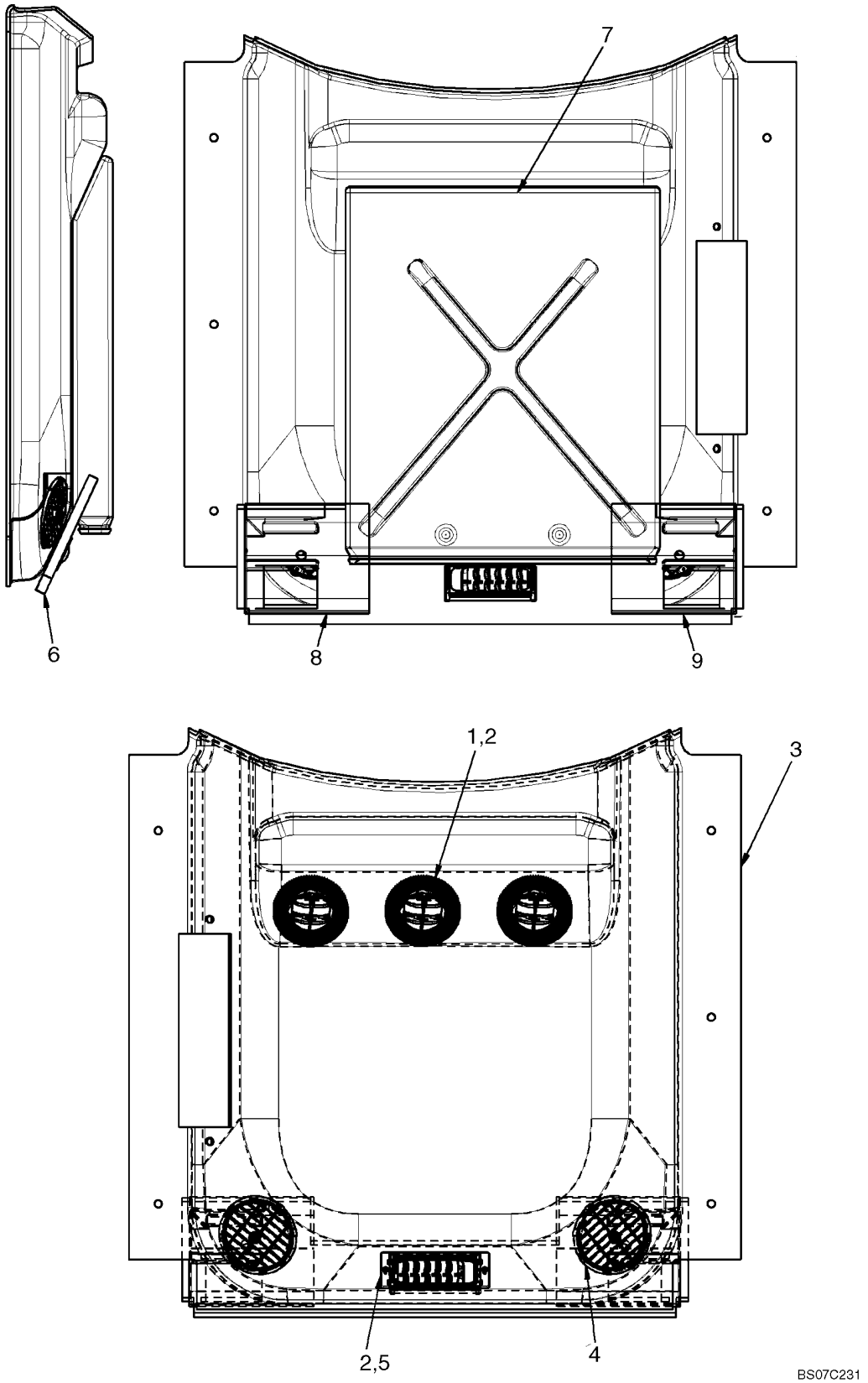

CAB - HEADLINER, DELUXE CAB

REF	FN	PART NUMBER	YR/SN	QTY	DESCRIPTION
		87593952		1	LINER, METAL, Headliner Assembly; Incl. 1 -9
1		9994146		3	ADAPTER
2		281076		14	SCREW, SELF TAPPING, Cross Oval Hd, #6 x 5/8"
3		87568370		1	LINER, METAL, Headliner
4		86642944		2	VENT
5		86620864		1	VENT
6		87615381		1	LINER, METAL, Seal, Headliner
7		86501203		1	DUCT, AIR
8		NSS		1	NOT SERVICED SEPARATELY, Plenum, LH
9		NSS		1	NOT SERVICED SEPARATELY, Plenum, RH

90.160.04	01	p1	03/09

CAB - THRESHOLD

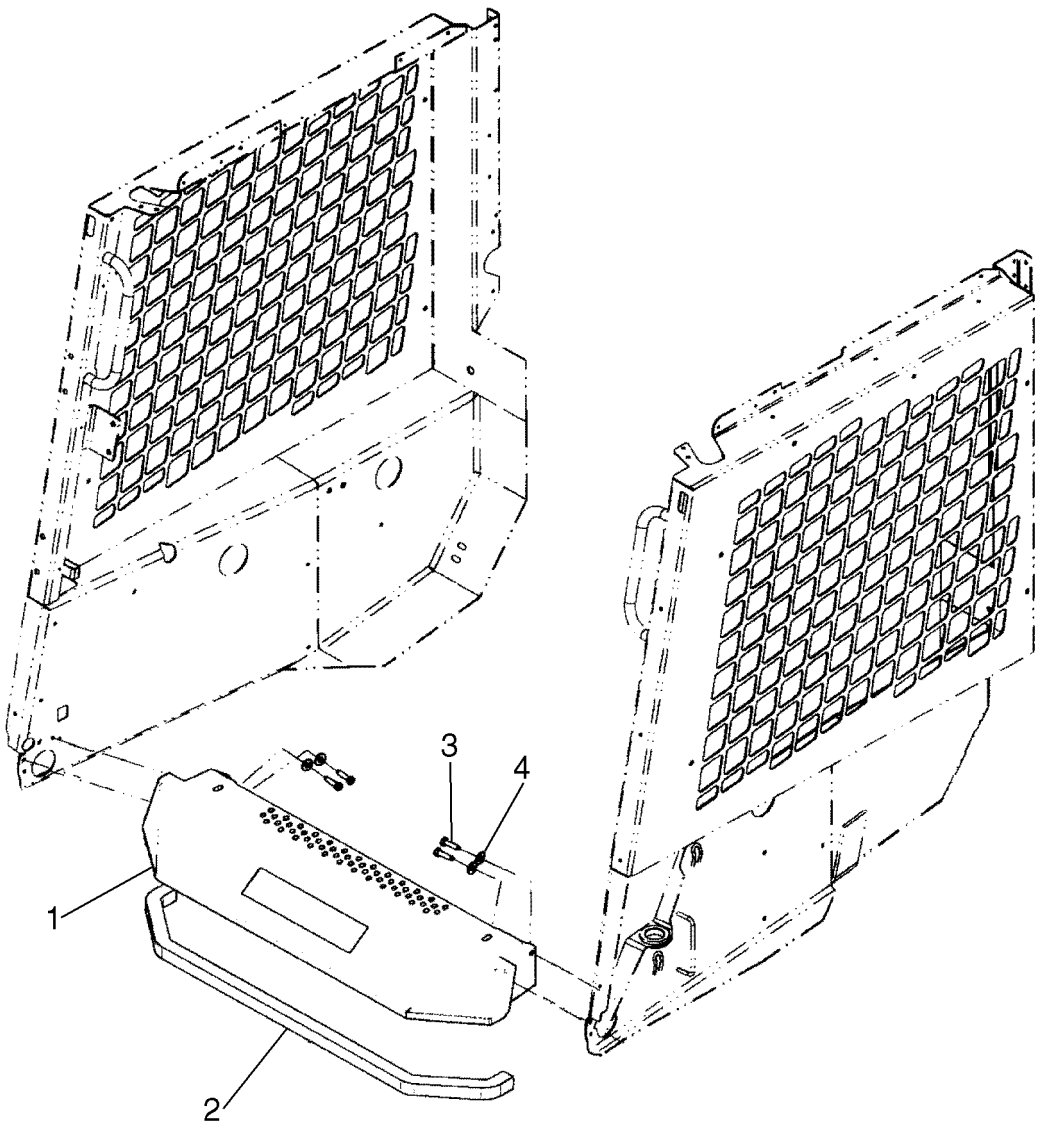

BS07D410

CAB - THRESHOLD

REF	FN	PART NUMBER	YR/SN	QTY	DESCRIPTION
1		86530077		1	STEP, Standard Threshold
2		86508457		AR	PAD, Closed Cell Foam, 100.6cm (39 5/8 in.)
3		88825		4	SCREW, SELF TAPPING, Hex Hd, 5/16" x 1 1/4"
4		80664		4	WASHER, 5/16"

90.160.04	02	p1	02/09

CAB - THRESHOLD/WASHER FLUID TANK

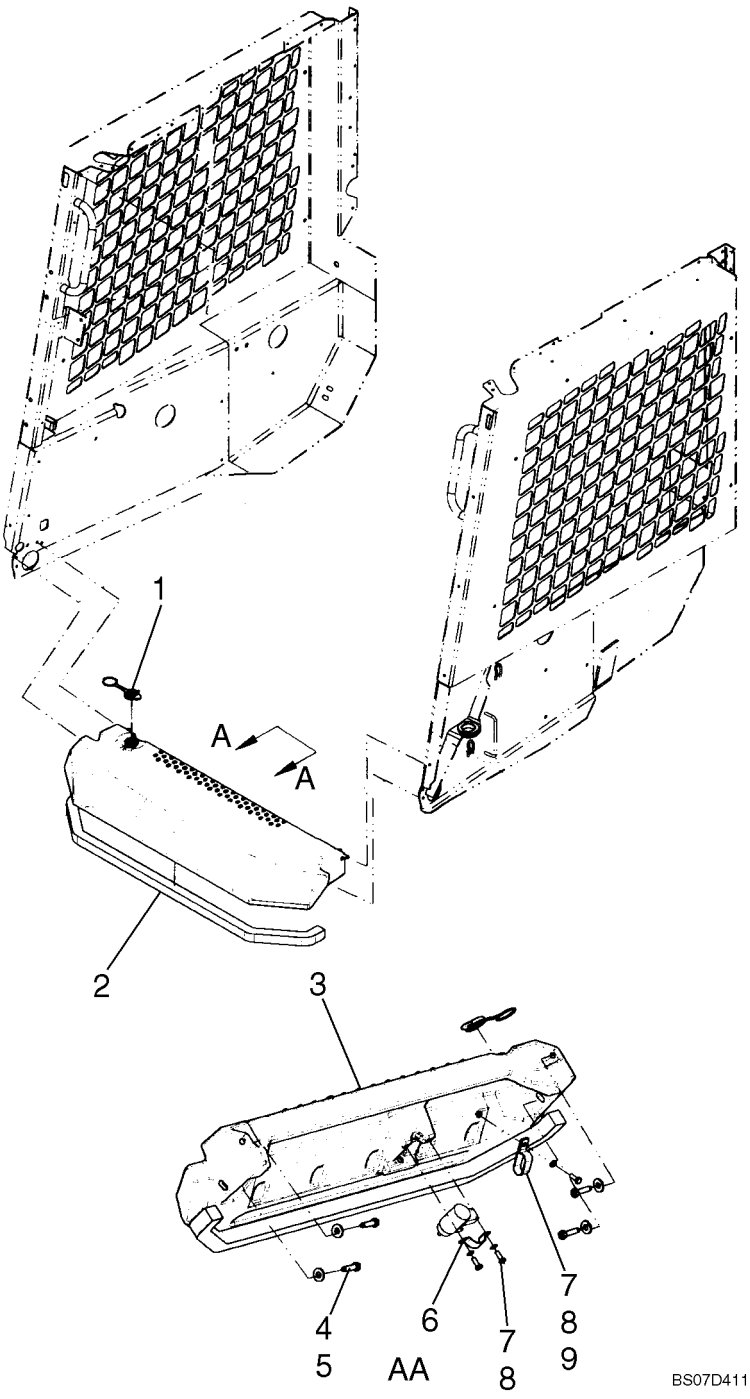

CAB - THRESHOLD/WASHER FLUID TANK

REF	FN	PART NUMBER	YR/SN	QTY	DESCRIPTION
1		87645152		1	CAP, Cap, Threshold
2		86508457		AR	PAD, Closed Cell Foam, 100.6cm (39 5/8in.)
3		87644260		1	PLASTIC, Threshold Sill, Europe
3		87644259		1	PLASTIC, Threshold Sill, North American
4		80664		4	WASHER, 5/16"
5		88825		4	SCREW, SELF TAPPING, Hex Hd, 5/16" x 1 1/4"
6		87653007		1	STRAP, Strap, Pump
7		86508568		3	BOLT, Hex, M6 x 16, Cl 8.8, Full Thd
8		9824259		3	WASHER, M6 x 12 x 1.6
9		578070		1	CLAMP, If Used
9		86010402		1	CLAMP, 1/2", Insul, 3/8" Bolt, If Used

90.160.06	01	p1	07/09

CAB - INTERIOR TRIM, MANUAL CONTROLS, DELUXE CAB

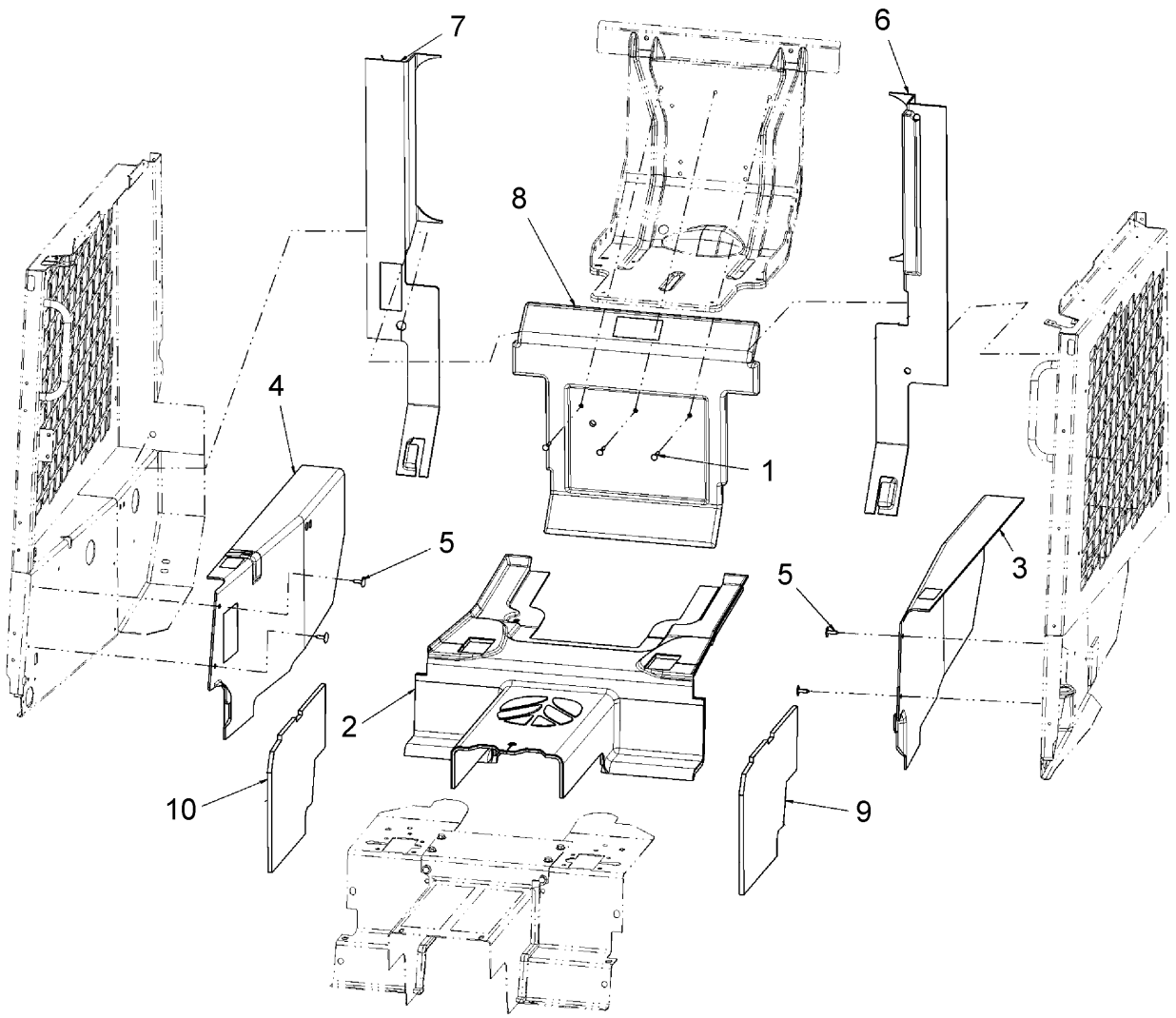

CAB - INTERIOR TRIM, MANUAL CONTROLS, DELUXE CAB

REF	FN	PART NUMBER	YR/SN	QTY	DESCRIPTION
1		9849641		3	BOLT, CARRIAGE, Short NK, 1/4"-20 x 1 1/2", G5
2		84143752		1	INSULATION, FOAM, Floor Mat, Manual Control
3		87604083		1	PANEL, SIDE, LH
4		87654420		1	PANEL, SIDE, RH
5		86620930		4	FASTENER
6		87604087		1	PANEL, TRIM, Rear Side, LH
7		87604090		1	PANEL, TRIM, Rear Side, RH
8		87604107		1	TRIM, Seat Pan
9		87604118		1	SOFT TRIM, Foot Well Side, LH
10		87604119		1	SOFT TRIM, Foot Well Side, RH

90.160.06	02	p1	07/09

CAB - INTERIOR TRIM KIT, MANUAL CONTROLS, DELUXE CAB

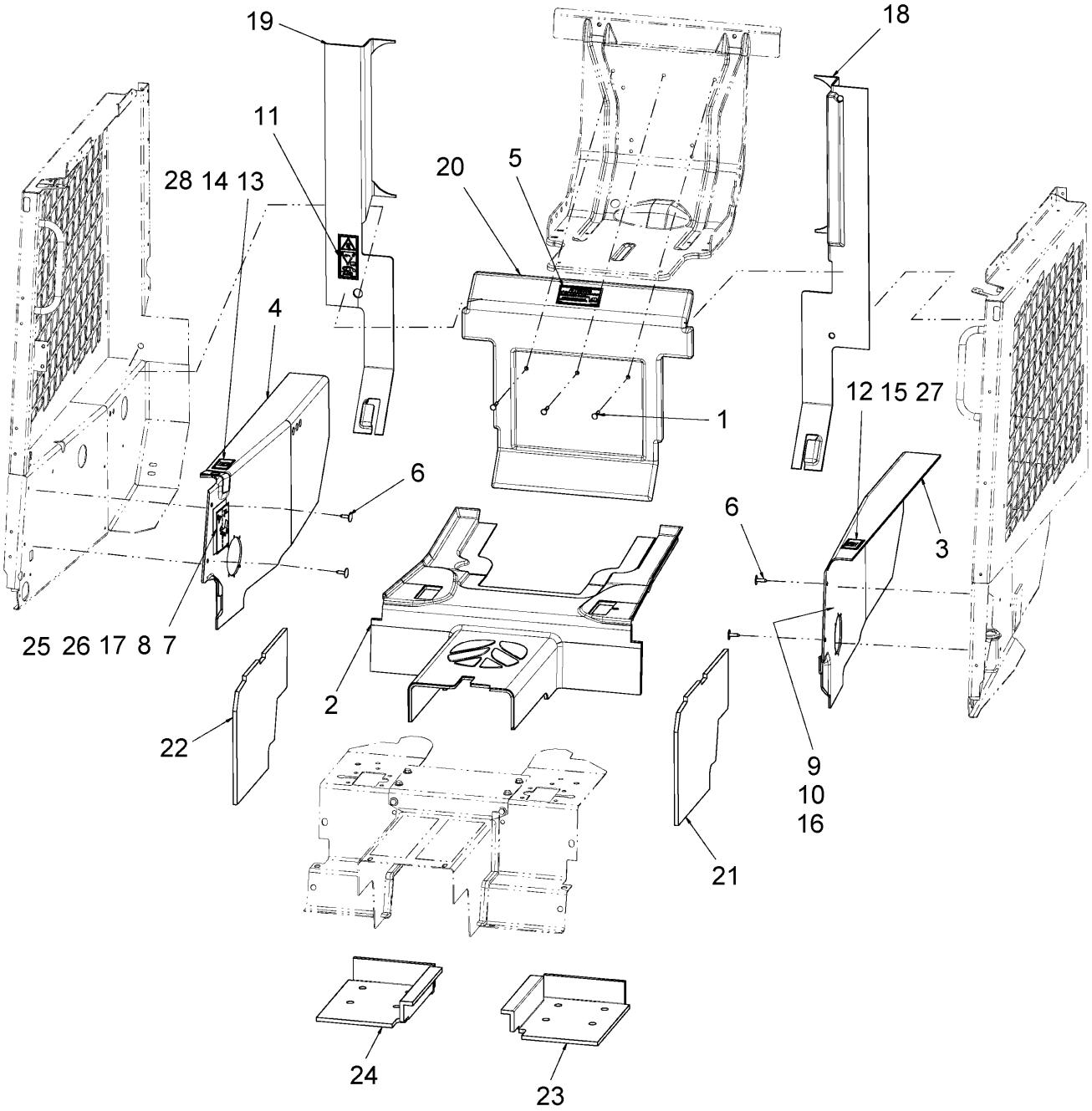

CAB - INTERIOR TRIM KIT, MANUAL CONTROLS, DELUXE CAB

REF	FN	PART NUMBER	YR/SN	QTY	DESCRIPTION
	1	87640702		1	KIT, Cab Interior Trim, Incudes: Ref. 1 - 28 & Installation Instructions
1		9849641		3	BOLT, CARRIAGE, Short NK, 1/4"-20 x 1 1/2", G5
2		84143752		1	INSULATION, FOAM, Floor Mat, Manual Control
3		87604083		1	PANEL, SIDE, LH
4		87654420		1	PANEL, SIDE, RH
5		86521691		1	DECAL
6		86620930		4	FASTENER
7		87586454		1	DECAL, WARNING, Read Manual
8		87586455		1	DECAL, WARNING, Foot Controls
9		87586456		1	DECAL, CAUTION, Avoid Engine Damage
10		87586457		1	DECAL, CAUTION, Foot Controls
11		87586465		1	DECAL, Lift Arm Stops
12		87586466		1	DECAL, Hand Controls, LH
13		87586467		1	DECAL, Hand Controls, RH
14		87586471		1	DECAL, Foot Controls, RH
15		87586472		1	DECAL, Foot Controls, LH
16		87586484		1	DECAL, Foot Controls, LH, Europe Only
17		87586485		1	DECAL, Foot Controls, RH, Europe Only
18		87604087		1	PANEL, TRIM, Rear Side, LH
19		87604090		1	PANEL, TRIM, Rear Side, RH
20		87604107		1	TRIM, Seat Pan
21		87604118		1	SOFT TRIM, Foot Well Side, LH
22		87604119		1	SOFT TRIM, Foot Well Side, RH
23		87604120		1	SOFT TRIM, Foot Well Floor, LH
24		87604121		1	SOFT TRIM, Foot Well Floor, RH
25		87626176		1	DECAL, WARNING, Pilot Control
26		87629920		1	DECAL, Boom Override
27		87647022		1	DECAL, Control
28		87647023		1	DECAL, Control

(1) Refer to Installation Instructions for Correct Assembly Procedure

CAB - INTERIOR TRIM, PILOT CONTROLS - MODELS WITHOUT RADIO

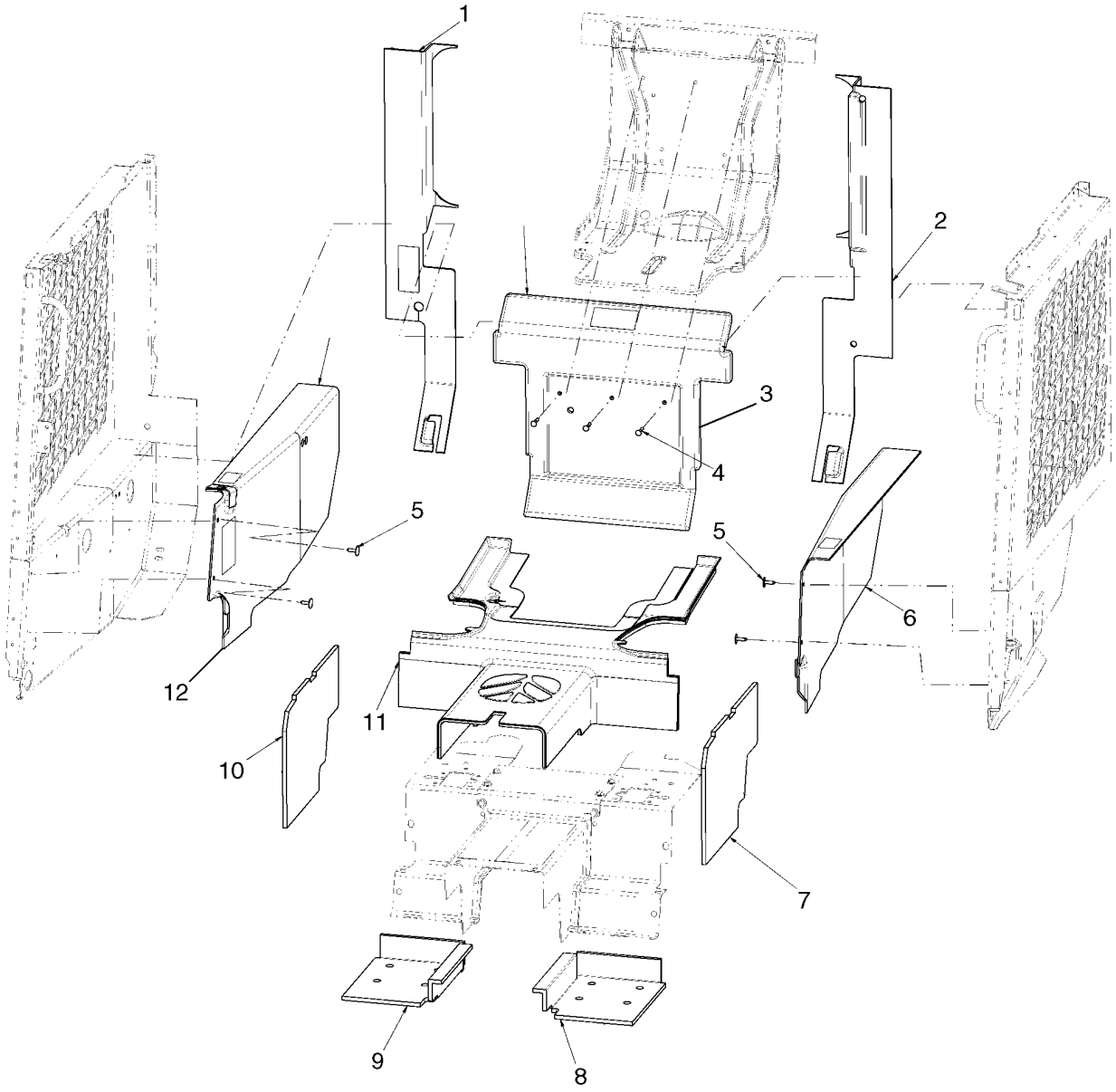

CAB - INTERIOR TRIM, PILOT CONTROLS - MODELS WITHOUT RADIO

REF	FN	PART NUMBER	YR/SN	QTY	DESCRIPTION
1		87604090		1	PANEL, TRIM, Rear Side, RH
2		87604087		1	PANEL, TRIM, Rear Side, LH
3		87604107		1	TRIM, Seat Pan
4		9849641		3	BOLT, CARRIAGE, Short NK, 1/4"-20 x 1 1/2", G5
5		86620930		4	FASTENER
6		87604083		1	PANEL, SIDE, Side Trim Panel, LH
7		87604118		1	SOFT TRIM, Foot Well Side, LH
8		87604120		1	SOFT TRIM, Foot Well Floor, LH
9		87604115		1	SOFT TRIM, Foot Well Floor, LH
10		87604117		1	SOFT TRIM, Foot Well Floor, RH
11		87654421		1	FOAM, RH; Floor Mat Trim, Pilot Control
11		84143751		1	MAT, FLOOR
11		87654420		1	PANEL, SIDE, LH; Floor Mat Trim, Pilot Control
12		87654420		1	PANEL, SIDE, Side Trim Panel, RH

90.160.06	04	p1	07/09

CAB - INTERIOR TRIM, PILOT CONTROLS - MODELS WITH RADIO

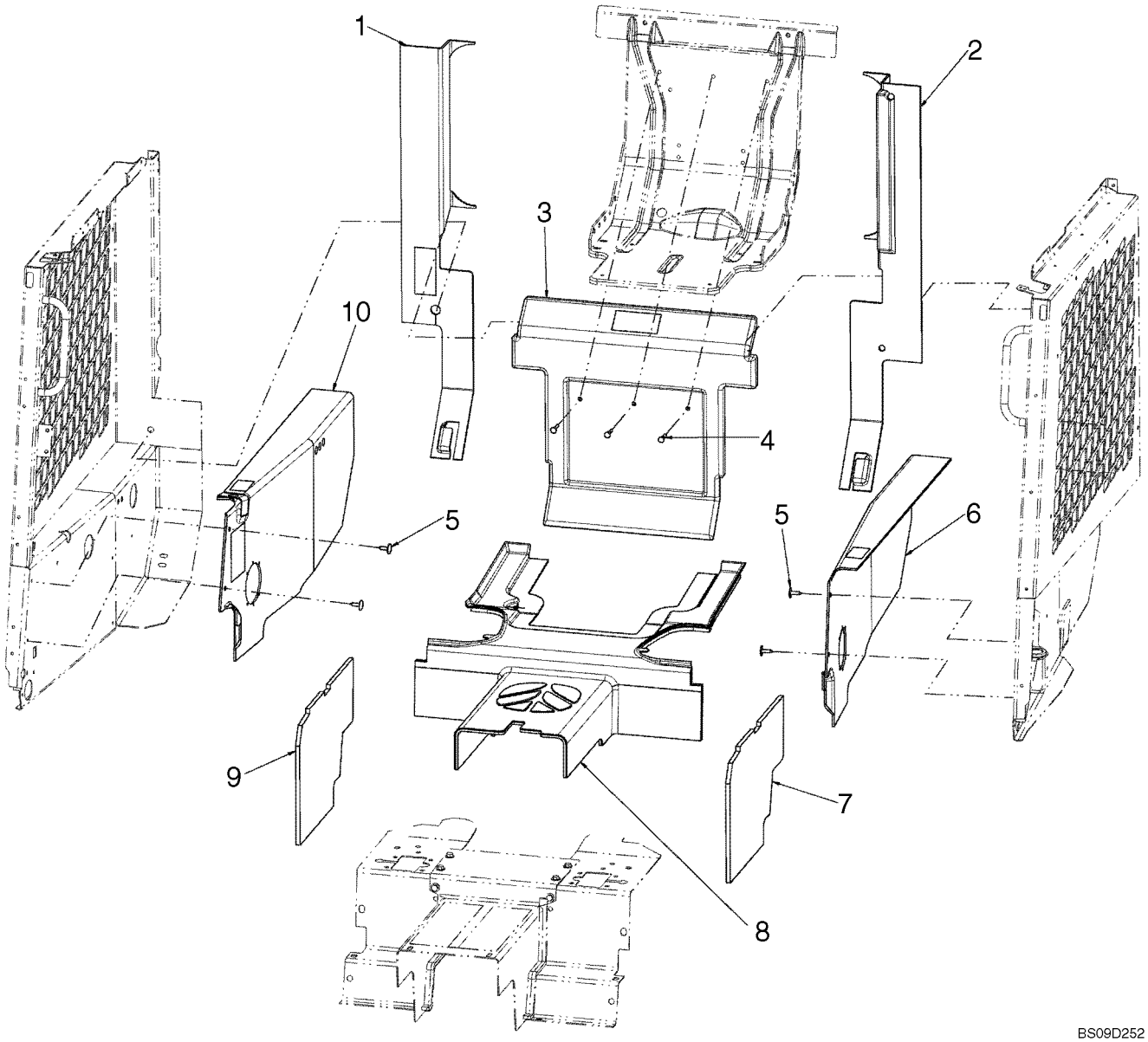

CAB - INTERIOR TRIM, PILOT CONTROLS - MODELS WITH RADIO

REF	FN	PART NUMBER	YR/SN	QTY	DESCRIPTION
1		87604090		1	PANEL, TRIM, Rear Side, RH
2		87604087		1	PANEL, TRIM, Rear Side, LH
3		87604107		1	TRIM, Seat Pan
4		9849641		3	BOLT, CARRIAGE, Short NK, 1/4"-20 x 1 1/2", G5
5		86620930		4	FASTENER
6		87604083		1	PANEL, SIDE, Trim, LH, With Holes For Speakers
7		87604118		1	SOFT TRIM, Foot Well Side, LH
8		84143751		1	MAT, FLOOR
9		87604119		1	SOFT TRIM, Foot Well Side, RH
10		87654420		1	PANEL, SIDE, Trim, RH, With Holes For Speakers

Number	Figure	Sequence	Ref.	Number	Figure	Sequence	Ref.
{}	10.001.02	01	1	{SBA131011101}	10.242.03		
	10.114.10			0C	29.200.01	03	2
	29.200.01	01			29.200.01	03	3
	29.200.01	01	1		29.200.01	03	4
	29.200.01	01	2	103789	90.100.17		16
	29.200.01	02		103807	55.100.02		4
	29.200.01	02	23	11104	10.220.02	01	21
	29.200.01	02	25	118827	82.100.15	21	8
	29.200.07	01	4	120100	55.408.04	02	2
	29.200.07	02		120103	35.204.11	03	21
	29.200.07	02	5		35.204.11	04	19
	29.200.07	04			55.100.01	01	3
	29.200.07	06	12	120104	10.202.01	01	9
	55.100.16		1		10.202.01	02	9
	82.100.06	01	1		10.202.01	04	8A
	90.120.01	01			55.100.01	01	7
	90.154.01	01	1	121410A1	55.100.17		46
	90.154.01	01	2		55.100.77		18
	90.154.01	04	14		55.510.01		9
	90.154.01	04	4	121411A1	55.100.65	02	
	90.154.01	21	8	121412A1	55.100.17		44
	90.154.01	22	1		55.100.77		16
	90.154.01	22	6		55.100.77		17
	90.156.08	11	11		55.510.01		7
	90.160.01	03	7	121413A1	55.100.17		45
	90.160.01	06	5		55.510.01		8
{84208575}	50.100.04	02	21	121414A1	55.100.17		43
{84212784}	55.100.77		10		55.510.01		6
	90.108.07		1	121415A1	55.100.17		47
{8602418}	55.100.65	01	3		55.100.77		15
{86571916}	55.408.01	01			55.510.01		10
{86588267}	90.156.08	11		121573A1	55.404.01	02	20
{86590375}	82.100.15	05	1A		55.404.11	02	10
{86590376}	82.100.15	07	1	125-11006	50.100.01		14
{86590377}	82.100.15	04	1	126844A1	55.512.05		10
{86590379}	82.100.15	04	1B		55.512.06	01	2
{86590382}	82.100.15	07	1A	128359	35.359.02	01	39
{86590429}	82.100.06	02	1	128817	29.212.05	06	2
{86634392}	90.156.08	02	7		29.212.05	07	2
	90.156.08	05	6		35.204.11	12	7
	90.156.08	06	7	128818	29.212.01	01	4
	90.156.08	09	11		29.212.02	02	14
{87010192}	82.100.15	06	1		35.204.06	01	4
{87010193}	82.100.15	06	1A		35.204.06	02	4
{87010194}	82.100.15	06	1B		35.204.15	02	7
{87010196}	82.100.15	05	1	128819	35.359.01	01	8
{87056390}	39.100.01		1		35.359.02	02	4
{87343998}	10.220.02	02	11		35.359.03	01	9
{87357150}	90.124.08	01	6A	128822	35.204.06	01	7
	90.124.08	05	2		35.204.06	02	9
{87357151}	90.124.08	01	6B		35.204.11	02	5
	90.124.08	05	3		35.204.11	10	8
{87357154}	90.124.08	01	5B		35.204.11	11	1
	90.124.08	05	8	128825	29.212.01	01	5
{87435945}	00.500.01	01	42		29.212.01	02	8
{87436932}	10.406.01		2		29.212.02	02	15
{87473171}	55.100.02		9		29.212.02	02	9
{87520984}	35.730.09	02	16		29.212.02	07	26
{87572852}	50.100.04	01	5		29.212.05	06	3
	50.100.04	02	5		29.212.05	07	3
{87574730}	55.100.17		20		35.204.05	01	2
{87586355}	90.156.08	11			35.204.05	01	5
{87586458}	90.108.03	01	7		35.204.05	02	2
{87592147}	55.512.06	02	1		35.204.05	02	4A
{87622768}	90.154.01	03	5		35.204.06	01	10
{87633195}	35.730.09	02	14		35.204.06	01	5
{87640933}	90.100.02		5		35.204.06	02	12
{87640934}	90.100.02		18		35.204.06	02	5
{87642915}	90.154.01	22	11		35.204.11	04	26
{87654455}	90.154.01	23	1		35.204.11	12	8
{87678399}	90.154.01	23	2		35.204.15	01	14
{87679796}	35.730.09	02	3		35.204.15	01	23
{87679798}	35.730.09	02	7		35.204.15	01	5
{87701844}	35.730.09	02	12		35.204.15	02	8
{87701845}	35.730.09	02	12A		35.220.07	02	16A
{87702286}	90.015.01	01	36		35.220.07	02	1A
	90.015.01	02	29		35.220.07	03	11
	90.120.01	01	24		35.220.07	04	4

Number	Figure	Sequence	Ref.
128825	35.220.07	05	9
	35.359.02	01	9A
	35.730.09	01	20
128830	29.212.02	02	8
	29.212.02	07	25
	35.204.05	01	4
	35.204.05	02	4
	35.204.06	02	11
	35.204.15	01	22
	35.220.07	03	10
	35.220.07	04	31
128996	35.204.04	02	10
	35.204.04	03	15
	35.204.05	01	7
	35.204.05	02	6
	35.359.01	01	2
129-400	90.015.02		10
129274	33.202.01	01	26
	35.204.11	20	9
	35.204.15	01	2
129428	35.204.05	01	12B
	35.204.05	01	13B
	35.204.05	01	19B
	35.204.06	02	15
	35.204.06	02	8
	35.220.07	03	25
13021	35.300.06	01	38
	50.100.01		2
130235	29.200.07	10	38
130282	35.359.02	01	10
134579	10.216.01		13
	55.100.01	01	6
	55.100.05	03	5
13734	10.220.02	01	20
139398	29.212.02	07	1
	29.212.03	04	3
140028	10.103.02		6
140040	10.406.01		11
140045	10.001.01	01	17
	10.001.01	02	13
	10.202.01	01	11
	10.202.01	02	11
	10.202.01	04	9
	10.216.01		32
	10.406.01		17
	29.200.01	01	23
	29.200.01	02	11
	29.200.01	03	38
	29.200.04	03	19
	29.200.05	01	5
	29.200.05	02	4
	29.200.05	04	4
	29.200.05	05	3
	29.200.06	01	2
	29.200.06	02	10
	29.212.02	06	6
	29.212.02	07	9
	29.212.03	03	3
	29.212.03	04	14
	29.218.06		21
	35.204.05	02	18
	35.204.11	01	2
	35.220.07	02	12
	35.300.06	01	21
	35.300.06	02	11
	35.359.01	01	13
	35.359.02	02	6
	35.359.03	01	7
	37.140.01		3
	55.100.02		6
	55.100.05	01	6
	55.100.05	02	3
	55.404.01	02	16
	55.404.01	02	7
	55.404.02		11
	55.408.04	01	8
	55.510.06	01	6
	90.100.02		7
140045	90.100.17		1
	90.114.04		6
	90.120.01	01	5
	90.120.01	03	5
	90.120.05	01	6
	90.120.05	03	5
	90.156.08	11	15
140046	90.120.05	02	5
	90.120.05	03	8
140048	44.106.01		22
143479	10.001.01	01	10
	10.001.01	02	10
144120	35.300.06	01	42
144124	35.220.07	03	37
	35.220.07	04	29
14457281	35.359.02	01	23
145458	10.220.02	01	11
	29.212.02	02	23
	55.408.04	01	2
14560287	29.200.07	06	13
	33.202.01	03	2
	90.154.01	04	16
15212521	10.114.10		2
163335	29.212.01	02	1
163902	29.200.01	03	37
	29.200.05	01	34
	29.200.05	02	21
	29.200.05	04	21
164380	35.359.02	01	15
16445	10.001.01	01	25
	10.001.01	02	34
164910	35.204.04	01	13
	35.204.15	02	2
164912	35.220.07	03	17
	35.220.07	04	18
165202	10.216.01		4A
	29.212.02	01	6
	29.212.02	02	11
	35.359.02	02	10
	35.359.02	02	12
	35.359.02	02	14
	35.359.02	02	16
	35.359.02	02	18
	35.359.03	01	13
	35.359.03	01	15
167080	35.220.07	04	10
167266	29.212.01	01	13
	29.212.01	01	14A
	29.212.01	01	17
	29.212.01	01	9
	29.212.02	01	16
	29.212.02	01	18
	29.212.02	01	21
	29.212.02	01	34
	29.212.02	02	13
	29.212.02	02	2
	29.212.05	06	6
	29.212.05	07	8
	35.204.15	01	17
	35.204.15	01	21
	35.204.15	02	11
	35.220.07	03	30
	35.220.07	04	23
	35.300.06	01	12
	35.300.06	01	25
	35.300.06	01	28
	35.300.06	02	13
	35.300.06	02	21
	35.359.01	01	5
	35.359.02	02	20
	35.359.03	01	17
	35.359.03	01	5
167268	29.212.02	02	21
167269	33.202.01	03	5
	35.204.04	01	14
	35.204.11	10	4
	35.204.15	01	19
	35.204.15	01	7

Number	Figure	Sequence	Ref.	Number	Figure	Sequence	Ref.
167269	35.204.15	02	3	225065C1	55.100.77		3
	35.220.07	03	38	225075C1	55.100.75		8
	35.220.07	04	30	225233C1	55.100.78		1
	35.359.01	01	11	225295C1	55.100.62	02	2
	35.359.01	01	9		55.100.62	03	2
	35.359.02	01	22A		55.100.62	04	2
	35.359.02	01	40	225312C1	55.100.17		30
	35.359.02	02	3		55.100.17		31
	35.359.02	02	5	225315C1	55.100.16		3B
	35.359.03	01	10	225316C1	55.100.16		2A
	35.359.03	01	3		55.100.16		3A
167509	55.404.01	02	11		55.100.77		2
168982	29.200.01	03	36	225319C1	55.100.17		2
174266	29.200.07	02	10		55.100.17		29
	29.200.07	10	29		55.100.66	02	14
175617	44.106.01		3		55.100.75		10
177239A2	55.404.01	02	10		55.100.75		4
180007	55.408.01	01	5	225350C1	55.100.62	01	1
180033	55.408.01	01	4		55.100.65	02	4
182163A1	55.100.77		12		55.100.66	02	4
182164A1	55.100.77		11	225351C1	55.100.62	02	4
182166A1	55.100.77		13		55.100.62	03	1
182977	35.204.11	04	8		55.100.62	04	1
	35.204.11	10	5	225388C1	55.100.17		39
184064	35.204.05	01	9	225389C1	55.100.17		38
	35.204.05	02	7	225401C1	55.100.77		1
187140A1	55.404.01	02	11	225930	90.100.17		15
190003820001	55.512.06	01	13	226129	82.100.15	21	7
191823	39.105.09		27	226130	82.100.15	21	11
194797A1	55.100.65	02	7	226847A1	35.730.09	02	11
196033	44.511.01		2	228500	29.200.04	03	10
19670	39.105.09		25	229197A1	35.204.11	03	20
197559	90.015.02		12		35.204.11	04	20
200312	55.100.76		2	229398	39.105.09		18
	55.100.77		6	234726	29.200.05	01	24
200319	55.100.76		1	235671	35.204.05	01	12A
20332	29.200.07	10	21		35.204.05	01	13A
20356	29.200.06	01	13		35.204.05	01	19A
20987	33.202.01	01	17		35.204.06	02	14
	33.202.01	02	20		35.204.06	02	7
213404	35.300.06	01	31		35.220.07	03	24
	35.300.06	02	25	236622	35.220.07	03	35
	55.404.02		8		35.220.07	04	27
214-1408	29.212.01	02	10		39.100.01		9
214389	35.220.07	05	8	237-6006	29.212.03	04	11
	35.730.09	01	19		35.300.06	01	18
216328	39.100.01		6		35.300.06	02	18
216698	55.408.01	01	15	237661A1	55.100.17		11
	90.100.02		16		55.100.17		27
216773	29.212.02	02	10		55.100.17		32
	35.359.02	02	15		55.100.61		4
217114	35.359.02	01	14		55.100.61		8
219603	10.406.01		25	239451A1	55.100.17		36
	29.212.01	01	18	239859	35.204.05	01	24
	29.212.02	01	30		35.204.05	02	26
	35.220.07	03	36	245465C1	55.100.66	02	5
	35.220.07	04	28	245482C1	55.100.66	02	17
	35.300.06	01	29	245483C1	33.202.01	03	
	35.359.01	01	3		55.100.64		2
219604	29.212.02	01	32		55.100.64		3
	35.204.15	01	16	245731C1	55.100.65	02	10
219605	29.212.01	01			55.100.65	02	6
	29.212.01	01	8		55.100.66	02	3
	29.212.02	01	31	247676A1	55.100.65	02	8
	35.220.07	03	26		55.100.66	01	4
	35.220.07	04	13	247780	35.204.05	01	15
219838	29.200.05	01	2		35.204.05	02	14
	29.200.05	02	6		35.220.07	01	4
	29.200.05	04	6		35.220.07	02	9
221407	10.202.01	03	3		90.100.02		12
221410	10.202.01	03	7		90.100.17		17
221665	29.200.01	01	14	248974	29.212.01	01	7
	29.200.01	02	14		35.204.11	10	10
	29.200.01	03	35		35.204.11	11	5
	29.200.05	01	13	249100	29.200.03	01	10
223593	10.216.01		19		29.200.03	02	6
225050C1	55.100.78		2		29.200.03	04	3
225064C1	55.100.66	02	2		29.200.03	05	6

Number	Figure	Sequence	Ref.	Number	Figure	Sequence	Ref.
249100	29.200.04	03	22	273890	29.200.07	10	20
	29.200.06	01	15		55.510.01		16
	29.200.06	02	6	274352	29.212.09		2
252687	10.220.02	01	2	274353	29.212.09		10
	29.200.01	01	13	274366	29.212.09		21
	29.200.01	03	33	274506	35.359.02	01	6
	29.200.05	01	8	274568	50.100.04	01	4
254146	29.200.01	03	32		50.100.04	02	4
	29.200.05	01	31	274569	90.120.01	01	17
	29.200.05	02	15		90.120.01	03	17
	29.200.05	04	15	274754	35.204.11	05	6
256340A1	55.100.16		3C	274882	29.212.09		15
	55.100.66	02	16	276725	29.212.09		17
	55.100.68		3	277062	29.212.09		3
	55.100.75		1	277802	29.212.09		18
	55.100.77		7	278548	35.204.15	10	6
	55.100.78		7	279106A1	55.100.77		8
256341A1	29.200.07	07	10	279532A1	35.730.09	02	9
	55.100.16		2B	279658A1	55.100.65	01	2
	55.100.66	02	15	280129	35.204.04	01	4
	55.100.68		2		35.204.04	02	14
	55.100.78		8		35.204.04	03	7
256342A1	29.200.07	07	9		88.120.08		8
256344A1	55.100.62	02	3	280161	29.200.01	02	4
	55.100.62	03	3		29.218.06		35
	55.100.62	04	3		35.359.01	01	12
	55.100.75		6		35.359.02	02	8
263117	10.254.02		4		35.359.03	01	6
	10.254.03		8		39.105.15		3
	29.200.07	01	6	280164	29.212.02	07	13
	29.200.07	02	6		29.212.03	04	16
	29.200.07	05	13		35.204.04	01	3
	29.200.07	10	11		35.204.04	02	2
	29.200.07	10	27		35.204.04	03	3
	29.212.02	01	28	280206	10.406.01		3
	35.204.15	01	25	280214	39.105.09		39
	35.204.15	02	15	280223	39.105.09		7
	35.220.07	03	34	280236	29.200.01	03	44
	35.220.07	04	26		29.200.04	03	26
	50.100.01		3		29.200.05	02	10
	55.100.05	03	1		29.200.05	04	10
	55.100.16		4	280252	10.220.02	01	8
	55.100.53		2	280259	29.218.06		26
	55.404.11	01	4	280293	39.105.09		29
	55.404.11	02	6	280316	39.105.09		8
	55.408.01	02	3	280327	10.220.02	02	6
	55.408.04	01	4		29.200.03	01	7
	55.408.04	02	5		29.200.03	02	5
	55.510.01		13		29.200.03	04	6
	55.510.06	02	1		29.200.03	05	5
	55.514.03		6		29.200.04	03	16
	90.120.01	03			29.200.06	01	4
	90.154.01	01	11		29.200.06	02	7
	90.154.01	21	10		90.015.01	01	31
	90.154.01	22	11		90.015.01	02	34
	90.156.08	12	12	280374	90.015.02		17
263636	29.200.01	01	29A	280431	90.015.01	01	10
	29.200.05	02	8A		90.015.01	02	11
	29.200.05	04	8A		90.015.02		18
	29.200.05	05	4A	280476	29.200.01	03	31
265235	35.359.02	02	9		29.200.05	01	30
	35.359.03	01	12		29.200.05	02	18
265808	29.212.01	01	4		29.200.05	04	18
	29.212.01	02	6		90.100.02		9
265978	35.220.07	03	33		90.156.08	11	14
	35.220.07	04	25	280497	29.200.01	03	30
271395	29.212.09		12		29.200.05	01	17
271396	29.212.09		20		29.200.05	02	2
271400	29.212.09		9		29.200.05	04	2
271401	29.212.09		8		55.404.01	02	10
271403	29.212.09		5		55.404.01	02	5
271404	29.212.09		6	280514	29.218.06		36
271407	29.212.09		19		90.100.17		13
271415	29.212.09		14	280589	10.001.01	01	22
271429	29.212.09		1		10.001.01	02	22
271877	35.220.07	04	11		29.212.02	08	4
272310	29.212.01	01	1B	280616	55.408.01	01	14
272471	35.204.11	05	2	280618	29.200.01	03	29

Number	Figure	Sequence	Ref.
280638	90.120.01	01	26
	90.120.01	03	26
280724	35.730.09	01	4
280736	10.202.01	01	3
	10.202.01	02	3
	29.200.01	01	4
	29.200.01	02	13
	29.200.01	03	40
	35.204.11	01	14
280825	55.404.01	02	22
280831	90.015.02		11
280853	29.212.02	08	9
281047	44.106.01		23
281076	90.160.03	05	2
282459A1	55.100.65	02	12
	55.100.65	02	16
	55.100.65	02	17
	55.100.66	02	10
	55.100.66	02	7
	55.100.66	02	9
283373	90.120.01	01	31
	90.120.01	03	31
283779A1	55.512.05		11
285072	10.001.01	01	21
	10.001.01	02	21
	10.001.01	02	25
	29.200.04	03	21
	29.200.06	01	7
	29.200.06	02	15
	29.212.02	08	5
	29.218.06		17
	33.202.01	01	12A
	39.105.09		17
287066	44.106.01		8
287644	50.100.01		10
287902	44.106.01		7
290323	10.216.01		2
	10.406.01		1
291186	50.100.01		8
	90.100.17		6
291260	10.216.01		18
291308	10.220.02	02	19
	29.200.01	01	28
	29.200.05	01	14
	29.200.06	01	11
	29.200.06	02	12
	29.212.02	06	5
	29.212.03	03	5
	35.204.04	02	8
	35.204.04	03	17
	90.015.01	01	32
	90.015.01	02	30
291355	29.200.01	01	36
	29.200.05	01	18
	29.200.05	02	17
	29.200.05	04	17
	29.200.05	05	5
291718A1	55.100.75		2
	55.100.75		3
291809	90.015.01	01	27
	90.015.01	02	28
291966	29.200.07	10	30
293797A1	55.100.05	03	13
29684	90.015.01	01	9
	90.015.01	02	9
301642	10.103.01		19
3131227R1	55.404.01	02	12
3131234R1	55.404.01	02	13
322	10.254.03		10
322357	10.001.01	01	7
	10.001.01	02	7
	10.202.01	01	19
	10.202.01	02	19
	10.216.01		14
	10.406.01		29
	29.200.01	02	19
	33.202.01	04	3
	55.510.01		15
322358	10.001.01	01	18
	10.202.01	01	8
	10.202.01	02	8
	10.220.02	01	2
	10.220.02	02	5
	10.254.03		11
	29.200.01	01	33
	29.200.01	02	21
	29.200.03	01	5
	29.200.03	02	7
	29.200.03	04	5
	29.200.03	05	7
	29.200.04	03	20
	29.200.05	01	7
	29.200.05	02	25
	29.200.05	04	25
	29.200.06	01	9
	29.200.06	02	4
	33.202.01	01	4
	33.202.01	02	8
	35.220.07	01	12
	55.100.01	01	2
	55.404.01	02	12
	55.404.01	02	16
	55.404.11	02	2
	55.510.06	01	8
	90.015.01	01	30
	90.015.01	02	33
	90.120.01	01	14
	90.120.01	03	14
322894	29.212.02	01	20
	35.204.15	01	20
	35.204.15	02	10
	35.220.07	03	31
	35.220.07	04	22
	35.300.06	01	11
	35.300.06	02	12
322896	29.212.01	01	16
	29.212.02	01	17
	29.212.02	01	33
	29.212.05	06	5
	29.212.05	07	7
	35.220.07	03	29
	35.220.07	04	21
	35.300.06	01	27
	35.300.06	02	20
	35.359.01	01	4
	35.359.02	02	19
	35.359.03	01	16
323238	29.200.07	05	9
	29.200.07	06	6
325059	35.359.01	01	10
	35.359.02	02	2
	35.359.03	01	2
325142	35.359.02	01	3
329-1010	82.100.15	01	9
330344	29.212.01	01	8
	29.212.02	01	15
	29.212.02	02	12
330346	29.212.02	03	4
331175	10.254.05	02	4
336199	10.254.05	02	37
34821	35.300.06	01	3
	35.300.06	02	2
364419A1	55.100.62	01	3
38-11216	10.220.02	02	16
382391A1	55.100.62	02	1
	55.100.62	03	4
	55.100.62	04	4
3916679	10.220.02	01	7
3917490	35.300.06	01	4
	35.300.06	02	3
3957211	10.406.01		14
3962571	90.100.02		4
398877	55.404.01	02	3
408	44.106.01		16
412326	90.154.01	02	30
	90.154.01	23	20

Number	Figure	Sequence	Ref.
418870	55.404.01	02	4
420-21032	82.100.15	01	8
425-1010	82.100.15	01	3
	82.100.15	01	6
	82.100.15	01	9
430497A1	82.100.15	01	
430498A1	82.100.15	01	
430499A1	82.100.15	01	
430500A1	82.100.15	01	
43117	10.106.03		14
	90.100.17		36
43118	33.202.01	01	32
	33.202.01	02	28
43129	10.202.01	01	15
	10.202.01	02	15
43138	10.202.01	01	10
	10.202.01	02	10
	35.300.06	01	22
	35.300.06	02	10
	55.100.01	01	9
43140	10.103.02		4
43362	90.154.01	02	9
	90.154.01	03	9
	90.154.01	23	9
437024	55.404.01	02	1
445502	55.404.01	02	18
	55.404.01	02	5
446658	55.100.17		7
	55.100.17		8
	55.100.17		9
	55.100.65	02	13
	55.100.66	01	3
	55.100.66	02	8
45013	10.216.01		26
45014	10.216.01		25
	10.254.03		7
46288	39.105.15		7
46886	35.730.09	01	15
470017	55.404.01	02	19
	55.404.01	02	6
48751	10.216.01		22
490691C1	55.100.78		4
490692C1	55.100.78		3
493-21020	35.300.06	01	17
	35.300.06	02	17
50032	29.212.02	08	2
511836	35.359.02	01	30
512083	44.511.01		2
512306	55.100.05	03	3
	55.510.06	01	9
513307	35.204.06	01	1
	35.204.06	02	1
513309	10.202.01	02	18
	10.406.01		20
514920	29.212.02	02	17
517015	90.015.01	01	6
	90.015.01	02	6
517372	55.408.01	01	13
523275	90.100.02		19
523282	29.200.01	03	24
	29.200.05	01	35
	29.200.05	02	19
	29.200.05	04	19
	29.200.07	10	26
	29.212.02	07	23
	29.212.03	04	18
	55.100.01	01	17
	55.100.05	02	8
	55.408.04	01	9
	90.120.01	01	27
	90.120.01	03	27
523291	29.200.01	03	23
	29.200.05	02	22
	29.200.05	04	22
52367	90.120.01	01	25
	90.120.01	03	25
524036	35.204.11	12	4
	35.204.11	20	3
524036	35.220.07	02	22
52419	35.730.09	02	8
529070	10.001.02	02	35
	29.200.07	06	10
	55.100.05	01	1
	88.100.11	06	2
570186	35.300.06	01	47
	35.359.02	02	23
570821	88.120.08		14
574518	10.216.01		1
578070	35.204.11	02	7
	35.204.11	03	1
	35.204.11	04	1
	35.204.11	10	6
	35.204.11	10	6A
	35.204.11	11	8
	90.154.01	04	13
	90.154.01	21	19
	90.160.04	02	9
58948	10.216.01		38
595787	39.105.15		14
596215	35.204.11	05	3
603022	10.202.01	01	17
	10.202.01	02	17
	35.220.07	03	28
	35.220.07	04	12
603916	44.106.01		9
60485	55.404.01	02	22
612778	44.106.01		13
612882	90.015.01	01	13
	90.015.01	02	14
617215	90.120.01	01	24
	90.120.01	03	24
621326	29.200.01	03	22
625822	35.204.04	01	2
	35.204.04	02	3
	35.204.04	03	5
626698	29.218.06		7
627723	35.204.04	02	15
	35.204.04	03	10
629086	10.202.01	03	6
	90.108.03	02	6
631816	55.408.01	01	12
634233	37.140.01		6
637964	29.200.01	03	21
640682	35.204.06	01	3
	35.204.06	02	3
641419	29.200.01	03	20
	29.200.04	03	18
	29.200.05	01	25
	29.200.05	02	12
	29.200.05	04	12
641787	90.015.02		8
641833	55.512.05		2
642560	50.100.01		10
642628	55.512.05		3
	90.154.01	02	14A
	90.154.01	23	13
643283	55.100.02		9
646223	90.100.17		12
647429	39.100.01		11
65319	10.001.01	01	4
	10.001.01	02	4
	29.218.06		8
	33.202.01	01	18
	33.202.01	02	9
	39.105.09		38
	90.015.01	01	8
	90.015.01	02	8
675162	90.120.01	01	18
	90.120.01	03	18
679394	44.106.01		6
694478	10.001.01	01	15
	10.001.01	02	16
695335	39.105.09		23
696365	10.216.01		10
700514	35.204.05	01	16
	55.510.06	01	3

Number	Figure	Sequence	Ref.
715101006	00.500.01	01	3
715102006	00.500.01	01	4
715103006	00.500.01	01	5
719922	10.001.01	01	24
	10.001.01	02	27
76344	29.212.03	04	20
	33.202.01	01	34
	35.204.11	01	34
76347	29.212.05	06	2
	35.204.05	01	1
	35.204.05	02	1
	35.204.15	01	4
	35.220.07	02	1
76349	35.204.11	05	1
76350	29.212.02	01	2
	29.212.02	07	3
	29.212.03	04	5
	35.204.11	01	37
	35.204.11	03	17
	35.204.11	04	15
764135	33.202.01	01	11
	33.202.01	02	11
768715	29.200.01	03	26
	29.200.04	03	27
774735	55.100.75		5
7770	10.216.01		5
	29.200.01	02	18
	29.212.02	07	11
	29.212.03	04	18
	33.202.01	04	2
	55.510.01		14
781221	35.204.04	01	5
	35.204.04	02	6
	35.204.04	03	19
782673	35.204.06	01	2
	35.204.06	02	2
783874	35.730.09	01	5
792026	55.100.78		5
799681	55.100.05	01	3
801895	10.202.01	04	3
80280503	35.204.11	01	41
	55.404.02		12
80628	29.200.01	01	19
80664	35.204.05	01	11
	35.204.11	03	4
	35.204.11	04	3
	35.220.07	01	6
	90.124.08	01	3
	90.124.08	05	4
	90.154.01	04	9
	90.154.01	21	7
	90.156.08	12	6
	90.160.04	01	4
	90.160.04	02	4
80679	90.015.01	02	10
80681	10.202.01	04	8B
	10.220.02	02	10
	10.254.05	02	27
	29.200.01	03	25
	29.200.04	03	20
	88.120.08		10
80682	10.216.01		6
	29.212.02	01	23
80684	29.200.07	01	2
	29.200.07	02	4
	29.200.07	05	3
	29.200.07	06	3
	33.202.01	04	8
80701	35.204.04	02	16
	35.204.04	03	4
	55.100.01	01	5
	90.100.02		22
	90.100.17		23
80702	10.202.01	04	6
	10.216.01		28
	29.200.01	01	6
	29.200.01	03	45
	29.200.04	03	17
80702	29.200.04	03	30
	29.200.05	01	29
	29.200.05	02	20
	29.200.05	04	20
	29.200.05	05	6
	29.200.06	01	19
	29.200.06	02	9
	29.212.02	08	6
	39.105.15		2
	55.100.02		2
	90.100.02		17
	90.100.17		5
	90.120.05	03	7
80707	10.220.02	01	18
80710	39.105.09		33
80755	90.120.01	01	22
	90.120.01	03	22
80756	90.015.02		9
81827427	29.212.02	02	14
	35.204.11	04	25
81858	29.200.05	01	28
81871843	55.408.01	01	6
82002966	55.404.11	01	3
	55.408.01	02	1
82012725	10.202.01	01	18
	10.254.03		7
82012728	10.202.01	01	4
	10.202.01	02	4
	10.202.01	04	1
83982664	55.404.11	01	6
84015359	90.108.03	03	1
84037090	55.404.01	02	2
84121758	35.204.11	12	6
	35.204.11	20	5
	35.220.07	02	23
84128135	29.212.02	07	10B
	29.212.06	02	
84129176	90.120.01	01	16
	90.120.01	03	16
84130988	10.216.01		15
84130998	90.156.08	11	9
84130999	90.156.08	11	4
84131682	55.100.67		
84142374	35.300.06	01	37
	35.300.06	02	27
84142495	90.154.01	01	10
84143751	90.160.06	03	11
	90.160.06	04	8
84143752	90.160.06	01	2
	90.160.06	02	2
84152140	55.100.75		
84155533	55.408.04	02	7
84170608	35.220.07	02	16
84172891	35.204.11	04	23
84172894	35.204.11	03	6
84172895	35.204.11	03	10
	35.204.11	04	17
84172898	35.204.11	04	24
84173510	35.204.11	03	2
	35.204.11	04	2
84175119	90.160.01	06	3
84177615	29.212.02	06	13A
	29.212.03	03	13A
84181774	29.218.06		14
84189393	10.202.01	02	28
84195028	55.100.78		
84203238	55.100.76		
84203948	50.100.04	02	
84205635	90.015.01	02	23
84205639	90.015.01	02	22
84206528	55.100.77		
84208530	90.120.01	04	17
84211616	90.120.01	04	7
84211618	90.120.01	04	9
84211620	90.120.01	04	12
84211623	90.120.01	04	13
84211625	90.120.01	04	5
84211628	90.120.01	04	8

Number	Figure	Sequence	Ref.	Number	Figure	Sequence	Ref.
84211636	90.120.01	04	6	86501801	82.100.15	06	2
84211643	90.120.01	04	14		82.100.15	06	2A
84211650	90.120.01	04	25		82.100.15	06	2B
84464	10.216.01		21	86501815	82.100.15	06	5A
84530	35.300.06	01	46		82.100.15	06	5B
84570	29.212.02	02	1	86501834	82.100.15	07	4
	35.359.03	01	4	86501839	82.100.15	06	5
84674	10.202.01	01	18A	86501840	82.100.15	05	8
	10.202.01	02	18	86501841	82.100.15	04	5A
	10.406.01		21	86502497	35.220.07	02	5
847165	39.105.15		6	86504113	90.015.02		6
84821	10.220.02	01	23	86504116	90.015.02		5
848220	35.730.09	01	6	86504124	90.015.02		4
84899	35.204.11	01	11	86504125	90.015.02		7
84909	29.200.07	10	28	86504316	39.105.09		41
853764	35.204.11	03	12	86504391	90.015.02		3
	35.204.11	04	12	86504449	44.106.01		17
	55.510.06	01	1	86504473	90.120.01	01	21
853765	55.404.11	02	4		90.120.01	03	21
856800	29.200.04	03	28	86504489	10.216.01		36
857989	35.204.15	10	3	86504502	55.404.02		9
858956	90.120.01	01	11	86504506	10.254.03		6
	90.120.01	03	11	86504507	10.254.03		5
86000109	37.140.01		7	86504514	55.404.01	02	15
86010402	10.406.01		12		55.404.01	02	9
	35.204.05	01	21	86504526	10.202.01	02	28
	35.204.05	02	23		10.254.03		2
	35.204.11	03	15	86504605	55.404.02		5
	35.204.11	04	14	86504606	55.404.02		7
	55.404.11	02	8	86504721	35.204.05	01	23
	90.154.01	04	13		35.204.05	02	25
	90.154.01	21	19	86504722	35.204.05	01	20
	90.160.04	02	9		35.220.07	02	2
8602417	55.100.75		9	86504723	35.204.05	01	3
8604802	35.300.06	01	15		35.204.05	02	3
	35.300.06	02	15	86504784	50.100.04	01	12
86050202	10.202.01	01	7		50.100.04	02	12
	10.202.01	02	7	86504874	90.120.01	01	29
86050272	55.512.05		1		90.120.01	03	29
	55.512.06	01	1	86505650	29.200.01	02	
	55.512.06	02	4		29.200.01	03	16
	90.154.01	23	3	86505651	29.200.01	02	
	90.156.08	11	10		29.200.01	03	15
	90.160.01	03	3	86506112	29.218.06		10
86071	35.204.15	01	13		82.100.06	01	14
86400227	90.120.01	02	1	86506171	29.200.01	03	14
86500111	35.300.06	01	40B	86506174	29.200.01	03	13
86500348	29.218.06		37		29.200.05	01	27
86500939	55.100.05	02	7	86506234	88.120.08		6
	55.404.11	01	5	86506354	90.015.01	01	17
	55.510.06	02	3		90.015.01	02	21
86500940	29.200.07	10	25		90.156.08	12	1
	35.300.06	01	7	86506368	39.105.15		5
	35.300.06	02	6	86506399	10.254.03		4
	55.100.01	01	12	86506455	88.120.08		13
86500990	29.218.06		2	86506559	88.100.11	01	8
86501115	10.001.01	01	8		88.100.11	08	1
	10.001.01	02	5	86506560	88.100.11	01	9
86501117	39.105.15		8		88.100.11	08	2
86501184	44.106.01		14	86506562	88.100.11	01	1
86501203	90.160.03	05	7	86506568	29.200.04	03	7
86501211	10.202.01	04	8	86506569	29.200.04	03	12
86501330	90.100.17		11	86506570	88.100.11	01	11
86501420	39.105.09		3		88.100.11	08	3
86501422	39.105.09		9	86506571	88.100.11	01	10
86501430	39.105.09		37		88.100.11	08	4
86501706	35.204.05	01	14	86506626	35.300.06	01	6
	35.204.05	02	12		35.300.06	02	
	35.204.11	03	3	86506829	90.120.01	01	28
	35.204.11	04	5		90.120.01	03	28
	35.220.07	01	9	86507002	39.105.09		1
	35.220.07	02	7	86507190	10.406.01		4
	35.220.07	03	22	86507507	35.359.02	01	8
86501739	90.120.01	01	7	86507518	35.359.02	01	35
	90.120.01	03	7	86507519	35.359.02	01	28
86501788	82.100.15	07	4A	86507522	35.359.02	01	13
86501789	82.100.15	07	7	86508431	29.212.09		29
	82.100.15	07	7A	86508439	29.212.09		13

Number	Figure	Sequence	Ref.	Number	Figure	Sequence	Ref.
86508440	29.212.09		23	86512993	29.212.02	01	5
86508442	29.212.09		7		35.359.02	02	13
86508443	29.212.09		26		35.359.03	01	14
86508457	90.015.01	01	23	86513015	35.204.11	10	9
	90.015.01	02	27		35.204.11	11	6
	90.154.01	04	7	86513017	29.212.02	01	33
	90.154.01	21	14	86513019	35.359.02	02	17
	90.156.08	12	3	86513020	33.202.01	01	35
	90.160.04	01	2		33.202.01	02	35
	90.160.04	02	2		35.204.04	04	10
86508506	90.015.02		23	86513026	35.204.11	10	3
86508512	90.015.02		21	86513067	29.212.01	01	12
86508568	10.001.01	01	6	86513085	35.220.07	03	18
	10.001.01	02	8		35.220.07	04	19
	10.406.01		9	86514094	35.204.15	10	4
	90.154.01	04	11	86514097	35.204.15	10	8
	90.154.01	21	17	86514098	35.204.15	10	7
	90.160.04	02	7	86515327	82.100.15	20	1
86508570	10.202.01	01	20	86515783	10.202.01	04	2
	10.202.01	02	20	86515872	88.120.08		2
86508610	35.359.02	01	17	86515873	88.120.08		1
86508667	29.218.06		24	86515966	33.202.01	04	4
86508748	90.100.02		10	86516483	29.212.09		11
86508749	55.404.01	02	14	86517328	10.254.04		6
86508775	55.404.02		4	86517954	55.301.02		9
86508788	29.212.01	01	14	86518576	88.120.08		3
86508823	35.359.02	01	41	86518650	88.120.08		7
86509023	35.204.11	30	6	86518694	88.100.11	01	5
86509223	90.108.02	01	5	86518697	88.100.11	01	3
	90.108.02	02	5	86518704	44.106.01		21
86509354	35.204.04	01	1	86518733	33.202.01	04	5
	35.204.04	02	5	86519153	33.202.01	04	12
	35.204.04	03	6	86519194	33.202.01	04	11
86509499	29.200.01	01	11	86519774	88.120.08		15
	29.200.01	02	3	86520136	88.100.11	01	2
	29.200.01	03	12		88.100.11	05	2
	29.200.05	01	16	86520670	90.120.01	02	6
	29.200.05	02	3		90.120.01	04	22
	29.200.05	04	3	86520671	90.120.01	02	7
86509507	39.105.09		12		90.120.01	04	24
86509590	29.200.07	10	15	86521396	35.730.09	01	12
	55.404.11	01	8	86521404	35.730.09	01	13
86510313	82.100.15	05	8A	86521612	55.514.03		3
86510314	82.100.15	05	8B	86521613	90.124.08	01	4
86510315	82.100.15	05	6A		90.124.08	05	5
	82.100.15	05	6B	86521673	90.108.03	02	5
86510316	82.100.15	05	5A	86521691	90.108.02	05	5
	82.100.15	05	5B		90.108.02	08	6
86510869	82.100.06	01	10		90.160.06	02	5
86511237	10.406.01		16	86521713	90.108.03	02	7
86511299	35.204.15	10	5	86521725	35.730.09	01	17
86511315	55.301.02		4		35.730.09	02	13
86511327	90.154.01	23	28	86521866	10.001.01	01	31
86511328	10.101.02	01	21	86521982	39.105.09		19
	10.101.02	02	16	86522000	90.120.01	01	9
86511441	35.204.15	10	4	86522009	10.202.01	04	4
86511444	10.114.10		1	86522338	10.220.02	01	17
	55.404.01	02	9	86522404	29.200.06	01	12
	55.408.04	02	4	86522442	55.404.11	02	9
86511870	29.212.01	01	3	86522447	29.200.01	03	11
	29.212.02	07	17	86522448	29.200.01	03	10
86511904	29.200.07	10	24		29.200.05	01	22
86511908	29.200.07	10	24	86526523	29.200.01	03	9
86511920	33.202.01	04	6	86526525	29.200.01	03	8
	90.156.08	05	3	86526695	10.202.01	01	22
	90.156.08	09	3		10.202.01	02	22
86512008	35.730.09	01	10		90.120.01	01	12
	35.730.09	02	10		90.120.01	03	12
86512328	39.105.09		2	86527175	90.100.02		11
	90.015.01	01	20	86527176	90.100.02		15
	90.015.01	01	24	86527336	10.202.01	01	28
	90.015.01	02	19		10.254.03		2
86512463	90.154.01	02	2	86527862	35.204.15	10	2
	90.154.01	23	1	86528652	44.106.01		16A
86512512	35.359.02	01	22	86529091	35.359.02	01	29
86512583	35.204.11	01	3	86529244	55.404.11	02	5
86512933	35.359.02	02	11	86529536	55.408.01	01	11
	35.359.03	01	11	86530043	50.100.01		7

Number	Figure	Sequence	Ref.	Number	Figure	Sequence	Ref.
86530077	90.156.08	12	2	86567251	29.200.04	03	9
	90.160.04	01	1		29.200.06	01	10
86530079	55.408.01	01	10		29.200.06	02	2
86531262	90.108.03	03	2	86567313	10.001.01	01	28
86534250	90.015.01	01	1		10.001.01	02	26
	90.015.01	02	1	86567390	29.212.01	01	
86534692	10.202.01	01	27	86567393	29.218.06		15
	10.202.01	02	27	86568101	55.408.01	01	7
86534936	33.202.01	01	23	86568102	55.408.01	01	8
	33.202.01	02	23	86568265	90.154.01	21	13A
86534969	35.300.06	01	41	86570153	35.204.06	01	8
	35.300.06	02	31		35.204.06	02	10
86535238	29.218.06		1	86570850	35.220.07	04	16
86536334	10.202.01	02	28	86570851	35.220.07	04	15
86536917	55.404.01	02	18	86570922	35.730.09	01	18
86537593	10.202.01	01	28	86571009	35.204.11	01	10
86537647	35.220.07	01			82.100.06	01	9
86538563	35.204.11	01	5	86571511	29.218.06		18
	82.100.06	01	16	86571714	35.204.04	01	12
86538662	10.406.01		19	86573062	29.200.06	01	6
86539120	39.105.15		12	86573063	29.200.06	01	17
86539137	10.254.02		3		29.200.06	02	14
86539389	35.220.07	01		86573114	29.200.03	05	3
86539403	35.220.07	01		86573132	29.200.01	02	8
86539430	35.220.07	01		86573243	29.200.03	02	1
86539484	35.300.06	01	23		29.200.03	05	1
86539686	90.100.17		7	86573256	29.200.01	02	17
86540327	29.218.06		14	86574053	82.100.15	21	
86540356	35.220.07	01	10	86574054	82.100.15	21	
86540358	35.220.07	02	21	86574055	82.100.15	21	
86542673	55.408.04	01	10	86574567	39.105.09		31
86545777	10.001.01	01	5	86574910	35.220.07	03	7
	10.001.01	02	6	86575297	88.120.08		3
86545825	35.204.05	01	8	86575348	35.204.11	01	32
	50.100.01		6	86575349	29.212.01	02	3
86546633	44.106.01		2	86575350	29.212.01	02	2
86546788	90.120.01	01	20	86575418	29.218.06		26
	90.120.01	03	20	86575596	35.359.02	01	12
86548338	82.100.15	01	2	86577164	82.100.15	04	4A
	82.100.15	01	5		82.100.15	05	4
	82.100.15	01	8		82.100.15	05	4A
86548493	29.200.01	01	35		82.100.15	06	3
	29.200.01	02	24	86577165	82.100.15	01	1
86550180	10.202.01	01	6	86577166	82.100.15	04	4
	10.202.01	02	6		82.100.15	05	4B
86553251	29.212.01	02	9	86577167	82.100.15	01	4
86555026	35.204.04	01	9	86577168	82.100.15	04	4B
86555027	35.204.04	01	8		82.100.15	05	4C
86555028	35.204.04	01	7		82.100.15	06	3A
86555029	35.204.04	01	6	86577169	82.100.15	01	7
86557152	10.216.01		17A	86577173	82.100.15	01	7
86557319	10.202.01	04	2	86577330	82.100.15	21	2
86557328	35.204.05	01	26	86577614	29.200.01	02	
86560588	35.359.02	01	43	86578696	35.359.01	01	7
86561087	35.204.11	01	35	86578697	35.359.01	01	6
	82.100.06	01	3	86578698	35.204.04	01	17
86563772	39.100.01		12	86578699	35.204.04	01	16
86563839	35.730.09	01	7	86578700	35.204.15	02	9
86565640	55.408.01	01	2	86578721	35.220.07	03	6
86565641	55.408.01	01	1		35.220.07	04	7
86566182	29.212.01	01	2	86578723	35.220.07	03	4
	29.212.05	01	1		35.220.07	04	5
86566183	29.212.01	01	2	86578725	35.220.07	03	3
	29.212.05	01	1	86578779	35.220.07	04	3
86566184	29.212.01	01	2	86578780	35.220.07	04	2
	29.212.05	01	1	86578853	35.204.15	02	6
86566185	29.212.01	01	2	86578867	29.200.01	03	47
	29.212.05	01	1		35.359.02	01	32
86567000	10.001.01	02	32	86578868	35.359.02	01	45
86567155	29.218.06		29	86578869	35.359.02	01	44
86567198	10.001.01	01	29	86578907	35.204.15	02	4
	10.001.01	02	30	86579010	35.204.15	01	11
86567199	29.218.06		34		35.204.15	02	12
86567251	10.220.02	02	7		35.204.15	10	1
	29.200.03	01	2	86579898	35.220.07	03	2
	29.200.03	02	2	86579899	35.220.07	03	9
	29.200.03	04	2	86580556	35.204.11	02	6
	29.200.03	05	2		35.204.11	10	7

Number	Figure	Sequence	Ref.	Number	Figure	Sequence	Ref.
86580556	35.204.11	10	7A	86592866	50.100.01		4
	35.204.11	11	7	86592867	50.100.01		9
86580786	29.200.01	03	6	86592983	88.120.08		12
86580984	29.200.01	01	32	86593887	29.200.07	10	23
86582884	29.200.01	03	49	86593897	29.200.07	10	8
	29.200.05	01	9	86593898	29.200.07	01	8
86582885	29.200.01	03	11		29.200.07	02	9
	29.200.05	01	20		29.200.07	05	11
86582886	29.200.01	03	50		29.200.07	06	14
	29.200.05	01	10		29.200.07	10	35
86584202	29.200.01	03	5		35.220.07	03	19
86584755	35.220.07	04	14		35.220.07	04	32
86588450	10.406.01		10	86593899	29.200.07	01	5
	55.408.04	02	3		29.200.07	02	8
	90.100.17		35		29.200.07	05	15
86588504	90.154.01	23	28		29.200.07	06	16
86588788	29.200.07	10	13		29.200.07	10	34
86588791	29.200.07	02	7		29.200.07	10	9
86588792	29.200.07	10	22		35.220.07	03	20
86589051	29.200.07	10	14		35.220.07	04	33
86589143	35.204.05	01	25	86594346	90.108.02	08	4
	35.204.05	02	22	86594738	35.220.07	04	8
	39.105.09		36	86594882	44.106.01		11
86589222	29.200.07	10	17	86595015	35.359.02	01	44
86589362	29.200.01	03	46	86595016	35.359.02	01	45
86589413	35.300.06	01	26	86595169	29.200.07	10	18
86589446	35.204.15	01	15	86595677	10.202.01	01	31
	35.204.15	02	13	86595922	35.220.07	03	16
86589510	90.108.02	05	3		35.220.07	04	17
	90.108.02	08	5	86595923	35.220.07	03	5
86589763	82.100.15	21	3		35.220.07	04	6
86589764	82.100.15	21	4	86597101	39.100.01		10
86589765	82.100.15	21	5	86597134	10.202.01	04	8
86589869	00.500.01	01	2	86597572	35.300.06	01	44
	82.100.15	21	1	86598096	35.300.06	01	45
86590083	88.120.08		18		35.300.06	02	33
86590086	10.254.03		13	86598366	29.200.07	10	32
86590087	10.254.03		13	86599291	29.212.09		29
86590100	10.254.03		1	86600833	35.220.07	03	8
86590101	10.254.03		1		35.220.07	04	9
86590108	00.500.01	01	31		35.220.07	05	1
	82.100.15	20		86600834	35.220.07	05	10
86590117	10.254.02		1	86600835	35.220.07	05	7
86590372	00.500.01	01	6	86600836	35.220.07	05	3
	82.100.15	04	1A	86602560	35.220.07	05	2
86590378	00.500.01	01	11	86602561	35.220.07	05	4
	82.100.15	05	1B	86602768	29.200.01	03	7
86590381	00.500.01	01	12	86603490	90.120.01	04	10
	82.100.15	05	2C	86603659	55.100.05	02	10
86590563	29.212.01	01	1	86603720	10.220.02	02	14
86590564	29.212.05	01	1A	86604657	55.404.11	01	9
86590565	29.212.05	01	1A		55.510.06	02	7
86590806	29.200.03	04	1		55.512.05		4
86590883	29.218.06		12	86604769	35.204.04	01	10
86590969	44.511.01		1		35.359.01	01	1
86591017	44.511.01		1		35.359.02	01	
86591347	29.200.03	04	8	86604770	35.204.04	01	10
86591348	29.200.03	01	4		35.359.01	01	1
86591905	29.212.05	01	1A		35.359.02	01	
86591906	29.212.05	01	1A	86605608	35.204.11	05	7
86592019	82.100.15	04		86606008	10.001.01	01	32
86592022	82.100.15	05	3A		10.001.01	02	33
86592023	82.100.15	07	2	86606079	90.120.05	03	1
86592024	82.100.15	04		86607646	35.220.07	05	11
86592025	82.100.15	05	3B	86609019	39.100.01		13
86592026	82.100.15	04		86610166	35.204.11	01	27
86592028	82.100.15	05	3C		82.100.06	01	12
86592029	82.100.15	07	2A	86610167	35.204.11	01	30
86592107	50.100.04	01	3		82.100.06	01	11
	50.100.04	02	3	86611853	90.100.17		20
86592111	50.100.04	01	32	86613407	90.015.01	01	29
	50.100.04	02	32		90.015.01	02	32
86592134	50.100.01		5	86615177	29.212.05	01	2
86592182	29.200.07	10	4	86615178	29.212.05	01	3
86592183	29.200.07	10	5	86615276	50.100.04	01	24
86592184	29.200.07	10	6		50.100.04	02	24
86592185	29.200.07	10	7	86615281	50.100.04	01	26
86592190	29.200.07	10	2		50.100.04	02	26

Number	Figure	Sequence	Ref.	Number	Figure	Sequence	Ref.
86615282	50.100.04	01	19	86629544	35.204.11	02	9
	50.100.04	02	19		35.204.11	03	13
86615283	50.100.04	01	28		35.204.11	04	11
	50.100.04	02	28		35.204.11	10	14
86615285	50.100.04	01	18		35.204.11	11	11
	50.100.04	02	18	86629585	35.359.02	01	16A
86615286	50.100.04	01	2		35.359.02	01	37
	50.100.04	02	2	86629586	29.212.01	02	4
86615331	35.220.07	02	3		33.202.01	02	24
86616032	90.015.01	01	3	86629728	44.106.01		19
86616248	55.408.01	02	7	86629792	35.204.11	30	1
86616372	35.204.11	01	16	86631374	35.300.06	01	8
	82.100.06	01	6		35.300.06	02	7
86617977	33.202.01	01	19	86632961	35.204.04	01	11
	33.202.01	01	6	86633166	29.200.01	01	29
	33.202.01	02	7		29.200.05	01	15
	90.120.01	01	22		29.200.05	02	8
	90.120.01	03	22		29.200.05	04	8
86619800	90.154.01	23	32		29.200.05	05	4
86619801	90.154.01	23	9	86633195	82.100.06	01	2
86620864	90.160.03	05	5	86633196	82.100.06	01	15
86620930	39.105.09		21	86633259	82.100.06	01	5
	90.120.05	01	7	86633432	35.730.09	01	1
	90.156.08	11	2	86634711	29.200.01	01	30
	90.160.01	03	5		29.200.05	01	19
	90.160.01	06	4		29.200.05	02	1
	90.160.06	01	5		29.200.05	04	1
	90.160.06	02	6		29.200.05	05	1
	90.160.06	03	5	86634904	35.204.11	30	3
	90.160.06	04	5	86635020	35.204.11	01	33
86621909	29.200.07	10	31	86635021	35.204.11	01	6
86624005	35.204.11	20	8	86635025	35.204.11	02	2
	35.300.06	01	35		35.204.11	12	1
	35.300.06	02	29		35.204.11	20	2
	55.100.05	03	4		35.220.07	02	15
86624144	10.406.01		6	86635833	35.204.11	01	4
86624156	39.105.09		26		35.204.11	03	16
86624182	90.100.17		37		35.204.11	04	18
86624184	29.212.02	02	24		35.204.11	30	
86624572	35.359.02	01	46	86635834	35.204.11	30	7
86625021	29.212.02	03	2	86636678	35.204.11	01	12
86625058	35.300.06	01	16	86637086	10.202.01	02	5
	35.300.06	02	16	86637408	35.204.11	05	13
86625179	10.220.02	01	12	86637594	10.216.01		29
86625199	55.510.01		17	86637979	35.204.05	02	19
	55.512.05		19	86637995	35.220.07	02	4
	55.512.06	01	6	86639325	29.212.02	06	14
	55.512.06	02	3		29.212.03	03	14
	90.015.01	01	26		55.100.01	01	10
	90.015.01	02	26	86639398	29.200.04	03	4
86625228	35.204.11	03	18	86639934	29.200.06	01	3
	35.204.11	04	21	86639936	29.200.04	03	2
86625241	39.100.01		8		29.200.06	01	18
86625255	29.212.02	02	5		29.200.06	02	13
86625256	29.212.02	02	5	86640738	10.202.01	01	16
	29.212.02	03	7		10.202.01	02	16
	29.212.02	08	3	86641462	35.220.07	03	14
	29.212.02	08	8	86641463	35.220.07	03	15
	29.212.05	07	5	86642944	90.160.03	05	4
86625263	10.220.02	02	21	86643219	35.204.04	02	17
	90.154.01	02	10		35.204.04	03	12
	90.154.01	03	10	86643552	35.204.11	30	4
	90.154.01	23	10	86705351	55.100.05	02	6
86625390	35.300.06	01	10	86705482	35.220.07	03	32
	35.300.06	02	9	86705580	33.202.01	02	27
86627432	55.512.05		5	86705679	29.200.07	10	3
86627859	35.204.11	05	9	86705680	29.200.07	10	12
86627862	35.204.11	05	10	86705987	29.212.02	02	16
86627864	35.204.11	05	11	86705988	29.212.02	01	19
86627877	35.204.11	01	9	86729243	55.408.04	01	11
86627878	35.204.11	01	26	86729477	29.200.01	01	20
86628423	35.204.11	05	12		29.200.01	02	6
86628554	29.200.01	01	8	86729669	50.100.01		11
86628555	29.200.01	01	9	86729670	50.100.01		15
86628568	29.212.09		28	86836504	90.108.04	03	2
86628700	35.300.06	01	9	86837075	10.216.01		24
	35.300.06	02	8	86837123	29.212.09		27
86629511	90.015.02		20	86837247	29.200.07	02	2

Number	Figure	Sequence	Ref.	Number	Figure	Sequence	Ref.
86837247	29.200.07	03	14	87016955	82.100.15	07	5
	29.200.07	03	18		82.100.15	07	5A
	29.200.07	03	2	87016983	82.100.15	04	5B
	29.200.07	03	5	87017606	90.154.01	02	21
	29.200.07	03	9		90.154.01	23	25
	29.200.07	04	2	87019258	90.120.01	01	1
	29.200.07	05	5		90.120.01	02	
	29.200.07	07	15	87019262	90.120.01	02	2
	29.200.07	07	2	87019263	90.120.01	02	8
	29.200.07	07	8	87019264	90.120.01	03	1
	35.220.07	03	12A	87020906	10.406.01		24
	35.220.07	04	20A		90.100.17		24
86900237	10.216.01		30	87021067	35.204.15	10	1
86900574	82.100.15	06	3B	87021069	35.204.15	10	2
86976100	35.204.11	30	5	87021178	10.216.01		23
86977693	55.510.01		2	87023159	39.105.09		30
86977726	90.154.01	23	3	87023392	50.100.04	01	30
86977780	29.212.09		22		50.100.04	02	30
86977790	33.202.01	01	32	87024903	10.216.01		15
86977792	29.200.03	01	8	87026871	90.156.08	12	11
	29.200.03	02	9	87027734	35.204.11	30	2
	29.200.03	04	7	87028326	10.202.01	01	5
	29.200.03	05	9	87029352	90.015.01	01	12
	29.200.04	03	25		90.015.01	02	13
86977967	29.212.01	02	5	87029353	90.120.01	01	2
86979742	44.106.01		15		90.120.01	03	2
86979755	29.200.06	01	14	87029454	90.120.01	01	3
86981460	55.408.04		3		90.120.01	03	3
86988875	29.212.01	01	15	87029930	35.204.05	01	8
87000151	29.212.02	02	26		35.204.05	02	16
87000230	29.212.02	02	25	87029931	90.154.01	04	1
87000312	10.216.01		3		90.154.01	21	2
87010183	82.100.15	06	6		90.156.08	11	6
	82.100.15	06	6A	87029955	55.100.01	01	4
87010184	82.100.15	06	6B	87029968	29.212.02	02	18
87010186	82.100.15	05	3	87030398	29.200.01	01	10
87010568	44.106.01		16	87030529	90.160.01	03	11
87010656	35.204.11	12	2		90.160.01	06	1
	35.204.11	20	1	87030898	29.200.01	03	9
	35.220.07	02	8		29.200.05	01	33
	55.100.05	01	2		29.200.05	02	23
87010672	29.212.02	02	20		29.200.05	04	23
87012264	29.218.06		30	87030899	29.200.01	03	8
87012265	29.218.06		22	87032047	10.202.01	04	8
87012267	29.218.06		4	87032485	10.406.01		15
87012268	35.204.06	01	9	87032778	10.254.03		6
	35.204.06	02	11	87033035	10.202.01	01	2
87013363	90.108.03	02	4		10.202.01	02	2
87013729	29.212.05	05			10.202.01	03	1
	29.212.07	01		87033038	10.202.01	03	5
87014504	82.100.15	04	3B	87033479	10.406.01		13
87014505	82.100.15	04	2B	87033644	29.200.05	02	9
87014569	10.001.01	01	30		29.200.05	04	9
87014828	10.406.01		27	87034265	29.200.01	03	51
87014886	35.300.06	01	13	87034524	33.202.01	01	9
	35.300.06	02	14		35.204.11	01	21
87015310	82.100.15	05	8C	87034527	10.220.02	01	1
87015311	82.100.15	05	6C	87034579	10.406.01		23
87015312	82.100.15	05	5C		90.100.17		28
87015330	29.200.03	01	3	87034819	35.204.11	01	40
	29.200.03	02	3		39.100.01		4
87015460	82.100.15	04	6B	87035488	10.202.01	03	2
	82.100.15	05	7B	87035489	10.202.01	03	4
	82.100.15	06	4A	87036043	10.216.01		7
	82.100.15	06	4B	87036044	10.216.01		8
	82.100.15	07	6A	87036104	35.300.06	01	14
87015862	55.408.04		2		35.300.06	02	14A
87016	29.218.06		21	87036787	55.100.05	03	14
	33.202.01	01	12	87038977	35.204.06	02	
	33.202.01	02	19		35.730.09	01	1
	35.204.05	02	10	87039493	29.200.04	03	6
	35.220.07	02	10	87042214	29.212.05	02	2
	35.300.06	01	32		29.212.05	05	2
	35.300.06	02	24	87042215	29.212.05	03	11
	90.100.17		30		29.212.05	04	7
87016375	29.200.03	02	4	87042231	10.216.01		9
87016376	29.200.03	05	4	87042633	10.406.01		7
87016558	90.154.01	23	25	87042710	29.212.05	01	2

Number	Figure	Sequence	Ref.
87042711	29.212.05	01	3
87043028	44.106.01		1
87043287	90.114.04		1
87043288	90.114.04		4
87043354	39.105.09		14
87043355	39.105.09		10
87043472	37.140.01		5
87043475	37.140.01		4
87043850	50.100.04	01	27
	50.100.04	02	27
87044193	10.202.01	01	24
	10.202.01	02	24
	10.406.01		22
87045239	10.202.01	02	28
87045554	55.404.01	02	15
87045810	10.202.01	02	28
87045811	10.202.01	01	28
87046760	55.404.01	02	19
87047034	33.202.01	03	4
87047261	00.500.01	01	21
87047278	44.511.01		1
87047451	90.100.17		18
87048133	55.100.05	03	6
87048202	55.100.05	03	7
87048357	10.202.01	01	26
	10.202.01	02	26
87048491	10.202.01	01	26
	10.202.01	02	26
87048885	39.100.01		5
87049554	10.202.01	01	28
87049627	00.500.01	01	33
	37.140.01		
87050095	10.406.01		26
87050204	88.100.11	01	6
	88.100.11	02	1
87050205	88.100.11	01	4
87050212	35.204.04	02	11
	35.204.04	03	14
87050852	90.120.01	03	33
87051003	90.120.01	03	33A
87051100	55.100.05	03	10
87051110	90.154.01	02	12
	90.154.01	23	15
87051184	29.200.07	10	
	29.200.07	10	33
87051219	88.100.11	01	7
87051249	29.200.07	10	
87051250	29.200.07	10	
87051252	29.200.07	10	1
87051421	39.105.09		22
87051678	90.120.01	04	3
87051987	90.108.04	02	1
87054088	90.100.02		
87055192	39.100.01		2
87055193	39.100.01		3
87057841	55.100.17		34
87058956	90.114.04		3
87058957	90.114.04		2
87066325	90.154.01	21	3
872290R1	55.100.77		4
87276	55.404.01	02	2
	55.404.01	02	8
87301330	35.204.15	01	6
87301340	90.154.01	04	
87301341	90.154.01	21	1
87304	33.202.01	04	7
	90.156.08	10	7
87305	33.202.01	01	14
	33.202.01	02	14
	33.202.01	04	10
87307	29.200.01	01	16
	29.200.01	02	22
	29.200.01	03	43
	29.200.05	01	23
87307746	55.100.01	01	8
87308	29.218.06		38
87309	29.200.01	03	48
	29.200.05	01	21
87310592	50.100.01		14
87318948	29.212.02	06	8
	29.212.03	03	9
87327171	90.154.01	01	6A
	90.154.01	04	2
	90.154.01	21	5
	90.154.01	22	14
87335499	90.154.01	02	26
	90.154.01	23	26
87339	10.001.01	01	16
	10.001.01	02	15
	90.015.01	01	15
87346	55.404.01	02	20
	55.510.06	01	7
87350483	50.100.04	01	14
	50.100.04	02	14
87351586	88.100.11	02	4
87351645	29.212.02	01	27
87351663	88.100.11	03	8
87351664	88.100.11	02	6
87351787	90.108.02	01	1
87351788	90.108.02	02	1
87352559	90.100.17		32
87352574	90.100.17		21
87353688	29.200.07	01	1
	29.200.07	02	1
	29.200.07	05	16
	29.200.07	05	4
87353708	29.200.07	03	1
87353709	29.200.07	03	13
87353710	29.200.07	03	4
87353711	29.200.07	03	8
87353712	29.200.07	03	17
	29.200.07	07	11
	29.200.07	10	37
	35.220.07	03	13
	35.220.07	04	24
87353713	29.200.07	04	1
	29.200.07	10	36
87353967	90.108.04	03	1
87355272	90.108.02	01	4
87355273	90.108.02	02	4
87355492	00.500.01	01	24
87357097	29.212.02	01	4
	29.212.02	05	8
	29.212.07	01	
87357099	35.204.04	04	5
	35.359.04	01	
87357112	29.212.02	07	10
	29.212.03	04	19
	29.212.06	01	
87357113	29.212.02	07	14
	29.212.03	04	10
87357117	35.204.04	04	7
87357127	29.212.03	03	2
87357132	29.212.02	07	7
	29.212.03	03	10
87357136	29.212.02	06	3
87357140	29.212.02	06	10
	29.212.03	04	13
87357144	29.212.03	03	1
87357145	29.212.02	06	4
87357146	29.212.02	02	3
87357147	29.212.02	01	8
87357149	90.124.08	01	6
	90.124.08	05	1
87357152	90.124.08	01	5
	90.124.08	05	6
87357153	90.124.08	01	5A
	90.124.08	05	7
87357165	29.212.02	01	11
87357167	35.204.04	04	3
87357171	35.204.04	04	2
87357176	29.212.03	04	8
87357177	29.212.02	07	18
87357182	35.204.04	02	19
	35.204.04	03	8
87357184	35.204.04	02	20

Number	Figure	Sequence	Ref.	Number	Figure	Sequence	Ref.
87357184	35.204.04	03	9	87372552	35.300.06	01	40A
87357185	35.204.04	02	1	87373988	90.120.01	04	26
	35.204.04	03	2	87375164	00.500.01	01	35
87357186	35.204.04	02	4		29.200.07	10	1
	35.204.04	03	1	87376136	35.204.11	02	3
87357187	35.204.15	01	10		35.204.11	10	2
87357188	35.204.15	01	9		35.204.11	11	4
87357191	35.204.04	02	12	87376172	35.220.07	04	1
	35.204.04	03	16	87376174	35.220.07	03	1
87357201	29.212.02	02	27	87376698	10.406.01		28
87357202	29.212.02	03	1	87376949	29.200.04	03	12
87357208	29.212.05	06	1	87383585	90.100.17		33
	35.204.04	04	9	87384896	33.202.01	01	
	35.204.15	01	3		33.202.01	02	30
87357210	35.204.15	01	8	87385021	35.204.05	02	13
87357216	29.212.02	05	7	87388082	35.204.11	10	
	35.204.04	04	11	87393128	10.001.01	01	1
87357220	29.212.02	01	14	87393129	10.001.01	02	1
87357221	29.200.07	05	1	87393399	88.100.11	04	2
	29.200.07	06	8	87397690	29.212.02	01	13
87357222	29.200.07	05	10	87397694	29.212.02	07	20
	29.200.07	06	9	87397695	29.212.03	04	12
87357236	90.124.08	01	1	87397698	29.212.02	03	8
87357255	35.300.06	02	38	87397834	55.100.16		3
87357989	10.001.01	01	9	87398	29.200.03	01	9
	10.001.01	02	9		29.200.03	02	10
87360153	33.202.01	01	8		29.200.03	05	10
	33.202.01	02	15	87398927	90.100.17		8
87360182	29.200.01	01	7	87404	29.212.02	01	22
87360222	33.202.01	01	33		35.204.04	02	18
	33.202.01	02	33		35.204.04	03	11
87360264	33.202.01	01	28	87404992	33.202.01	01	36
	33.202.01	02	38		33.202.01	02	34
87360283	33.202.01	01	29	87413030	82.100.06	01	7
	33.202.01	02	37	87414	35.204.11	01	31
87360286	33.202.01	01	25		35.730.09	01	16
87360290	33.202.01	01	27		35.730.09	02	2
87360975	29.212.02	07	5		39.105.09		6
	29.212.03	04	1		44.106.01		10
87361	29.212.02	06	1		82.100.06	01	4
	29.212.02	07	12	87415600	10.001.02	01	25
	29.212.03	03	6		10.001.02	02	25
	29.212.03	04	17	87417308	35.220.07	01	14
	33.202.01	01	30	87426762	35.220.07	01	15
	33.202.01	02	29	87427352	29.200.07	03	10
87361356	90.108.02	08	3		29.200.07	03	15
87361358	90.108.02	05	2		29.200.07	03	19
87361630	88.100.11	04	1		29.200.07	03	3
87362	29.200.01	02	15		29.200.07	03	6
87364	29.218.06		9	87427353	29.200.07	03	11
	90.015.01	01	14		29.200.07	03	20
	90.015.01	02	15		29.200.07	03	7
	90.120.01	01	30		29.200.07	07	13
	90.120.01	03	30	87427685	29.200.07	04	3
	90.120.05	01	4	87427686	29.200.07	03	22
	90.120.05	02	2		29.200.07	04	4
	90.120.05	03	4		29.200.07	07	12
87365	37.140.01		8	87427687	29.200.07	04	5
87365342	29.200.07	01	3	87427688	29.200.07	04	6
	29.200.07	02	3	87431190	90.100.02		20
87365501	29.200.07	07	1	87431194	90.100.02		1
	35.220.07	03	12	87436141	00.500.01	01	43
	35.220.07	04	20	87438046	35.204.11	02	11
87365734	29.200.01	02	1		35.204.11	10	
87366	35.220.07	02	25		35.204.11	11	12
87368980	29.212.05	05		87440121	29.200.07	07	5
	29.212.05	06	4	87440222	37.140.01		1
87368988	29.212.05	04		87442336	35.204.11	01	13
	35.204.15	01	1		35.204.11	05	
87369396	55.100.05	03	15	87443051	35.359.02	02	22
87369712	29.212.02	01	24	87443510	29.212.02	01	12
87370826	88.100.11	03	7		29.212.02	02	6
87371057	88.100.11	03	1		29.212.02	03	3
87371059	88.100.11	03	9		33.202.01	02	26
87371060	88.100.11	03	6	87445932	35.359.02	03	4
87371061	88.100.11	03	2		35.359.02	06	13
87371134	88.100.11	03	11		35.359.03	02	4
87372533	29.212.02	03	10		35.359.03	05	13

Number	Figure	Sequence	Ref.	Number	Figure	Sequence	Ref.
87445939	35.359.02	03	3	87522944	35.220.07	02	13
	35.359.02	06	12	87522945	35.220.07	02	14
	35.359.03	02	3	87522946	35.204.05	01	12
	35.359.03	05	12		35.204.05	02	11
87446617	35.359.03	02	5	87522947	35.204.05	01	13
	35.359.03	11	1		35.204.05	02	9
	35.359.04	01	11		35.204.11	03	7
87447407	29.200.07	03	12		35.204.11	04	6
	29.200.07	03	16	87523716	29.218.06		25A
	29.200.07	03	21		29.218.06		30A
	29.200.07	07	14	87525075	29.200.07	05	12
87454483	82.100.15	01	4	87527219	55.100.16		2
87454488	82.100.15	01	7		55.100.16		5
87454489	82.100.15	01	1	87527962	29.200.07	05	8
87455317	90.100.17		31	87527963	29.200.07	05	6
87456359	90.100.17		34	87527964	29.200.07	05	7
87458061	29.212.02	03	9		29.200.07	06	7
87458277	29.200.05	01	3		29.200.07	07	7
	29.200.05	02	5	87529370	35.220.07	01	8
	29.200.05	04	5	87529378	35.220.07	01	7
87458601	29.200.07	07	4	87533223	29.218.06		10
87459298	90.108.02	01	2		35.204.11	01	29
	90.108.02	02	2		82.100.06	01	14
87459299	90.108.02	01	3	87534744	29.200.07	05	2
	90.108.02	02	3		29.200.07	06	2
87459408	90.108.02	08		87535988	10.220.02	02	2
87459473	90.100.17		29	87535989	35.204.04	02	13
87459839	55.404.01	02	21		35.204.04	03	13
87460013	90.100.17		27	87536436	29.200.01	03	14
87460381	90.108.02	08	1		29.200.05	02	14
87460382	90.108.02	08	2		29.200.05	04	14
87461406	90.100.02		24	87536437	29.200.01	03	8
87461906	50.100.04	01	17		29.200.05	01	36
	50.100.04	02	17		29.200.05	02	16
87462056	55.100.01	01	1		29.200.05	04	16
87462101	35.359.02	02	21	87536438	29.200.05	02	13
	35.359.03	01	18		29.200.05	04	13
87462308	35.204.05	01	19	87538914	90.156.08	11	13
	35.204.05	02	21	87539238	88.100.11	03	11
87462494	88.100.11	03	10	87540693	29.212.02	05	2
87462496	88.100.11	02	2	87540695	29.212.02	05	5
87462499	88.100.11	02	3	87540707	29.212.02	05	9
87462500	88.100.11	02	5	87541049	29.218.06		5
87462505	88.100.11	05	3	87541387	29.212.02	02	19
87462525	88.100.11	02	7	87542387	90.120.01	04	19
	88.100.11	03	3	87542390	90.120.01	04	20
87462527	88.100.11	02	8	87542391	90.120.01	03	1
	88.100.11	03	4		90.120.01	04	
87462528	88.100.11	02	9	87542671	29.212.05	02	
	88.100.11	03	5		29.212.05	06	4
87471366	10.216.01		40		29.212.05	07	6
87475782	10.216.01		17	87542672	29.212.05	03	
87480066	35.204.11	03	8		35.204.15	01	1
	35.204.11	04	7	87544288	90.154.01	02	3
87480528	55.514.03		1		90.154.01	23	2
87482464	90.108.04	04	2	87545501	29.218.06		30
87483417	88.100.11	01	6	87545502	29.218.06		22
	88.100.11	02	1	87548412	33.202.01	03	1
87483418	88.100.11	02	5	87548416	10.220.02	02	15
87484636	55.512.06	01	4	87548418	10.220.02	02	13
	55.512.06	02	2	87548834	29.212.03	02	2
87484639	55.512.06	01	4A	87548835	29.212.03	01	3
87492657	90.120.05	03		87548836	29.212.03	02	3
	90.154.01	04		87548837	29.212.03	01	4
	90.154.01	21		87548838	29.212.03	01	5
87499	10.001.01	01	13		29.212.03	02	4
	10.001.01	02	14	87548839	29.212.03	02	5
87519830	29.200.01	03	1	87548840	29.212.03	01	6
87520839	50.100.04	01	8		29.212.03	02	6
	50.100.04	02	8	87548843	29.212.03	02	8
87522277	29.212.02	01	10	87548844	29.212.03	01	8
87522278	29.212.02	01	9		29.212.03	02	9
87522279	29.212.02	02	7	87548846	29.212.03	02	10
	33.202.01	02	25	87548847	29.212.03	02	11
87522281	33.202.01	02	31	87548848	29.212.03	02	12
87522288	29.212.02	07	24	87548871	29.212.03	01	9
87522292	29.212.02	07	21	87548872	29.212.03	01	10
87522299	90.124.08	01	7	87548873	29.212.03	01	11

Number	Figure	Sequence	Ref.	Number	Figure	Sequence	Ref.
87548874	29.212.03	01	12	87569885	55.512.06	02	6
	29.212.03	02	13	87572859	55.404.02		1
87550245	35.204.04	04	4	87572860	55.404.02		2
87550544	10.220.02	02	18	87572861	55.100.53		3
87550545	10.220.02	02	17		55.512.06	01	3
87550546	29.212.02	07	30	87572862	35.204.15	01	24
87550550	10.220.02	02	22		35.204.15	02	14
	35.204.04	02	9		55.512.05		6
	35.204.04	03	20	87572868	55.408.04	02	6
87550551	10.220.02	02	23	87572870	35.204.15	01	12
	35.204.04	02	7		35.204.15	02	5
	35.204.04	03	18	87572872	55.100.61		1
87550553	10.220.02	02	8		55.404.03		1
	29.200.04	03	8	87573050	35.204.11	12	5
	29.200.06	02	1		35.220.07	02	19
87551728	29.212.02	05	4	87576151	35.359.04	01	3
87551798	29.212.02	08	1		35.359.04	07	
87553415	39.100.01			87576157	35.359.02	03	6
87553602	29.212.07	01	23		35.359.02	07	
	29.212.07	07			35.359.02	11	1
87553603	29.212.07	01	1		35.359.03	02	6
	29.212.07	02			35.359.03	06	
87553604	29.212.07	01	2		35.359.03	12	1
	29.212.07	03			35.359.04	01	8
87553605	29.212.07	01	3		35.359.04	05	
87553606	29.212.07	01	4	87576158	35.359.02	03	9
87553607	29.212.07	01	5		35.359.02	06	6
87553608	29.212.07	01	6		35.359.02	11	9
	29.212.07	04			35.359.03	02	9
87553609	29.212.07	01	7		35.359.03	05	6
87553610	29.212.07	01	25		35.359.03	12	9
	29.212.07	04	3		35.359.04	01	10
87553611	29.212.07	01	8	87576160	35.359.02	03	10
87553612	29.212.07	01	19		35.359.02	06	9
87553613	29.212.07	01	9		35.359.02	11	12
87553614	29.212.07	01	10		35.359.03	02	10
87553615	29.212.07	01	11		35.359.03	05	9
87553616	29.212.07	01	12		35.359.03	12	12
	29.212.07	04	11		35.359.04	01	9
87553617	29.212.07	01	13	87576161	35.359.02	03	5
87553618	29.212.07	01	14	87576162	35.359.02	03	12
87553619	29.212.07	01	15		35.359.02	06	2
87553620	29.212.07	01	16		35.359.02	11	15
87553621	29.212.07	01	17		35.359.03	02	12
87553622	29.212.07	01	18		35.359.03	05	2
87553623	29.212.07	01	24		35.359.03	12	15
	29.212.07	08		87576164	35.359.04	01	6
87554297	29.212.02	01	7		35.359.04	04	
87555250	50.100.01		16	87576165	35.359.04	01	12
87557403	35.204.11	01	17		35.359.04	06	
87557478	29.212.02	06	9	87576166	35.359.04	01	4
	29.212.03	03	8		35.359.04	02	
87557965	29.212.02	06	13	87576167	35.359.04	01	5
	29.212.03	03	13		35.359.04	03	
87557968	10.220.02	02	20	87576170	35.359.04	01	7
	29.200.04	03	5	87576179	10.220.02	02	1
	29.200.06	02	8	87576182	33.202.01	03	3
87557969	29.212.02	03	11	87576183	33.202.01	03	6
87557970	29.212.02	02	28	87576281	50.100.01		1
87561757	35.204.04	04	6		50.100.04	01	
87562343	35.204.15	02	1	87576975	50.100.01		12
87562878	90.015.01	01	22	87577017	90.015.01	01	3
87565841	29.212.02	05	3		90.015.01	02	3
	29.212.03	01	1	87578	90.100.17		9
	29.212.03	04	7	87578504	29.212.02	07	19
87566709	35.204.11	01	9		29.212.03	02	1
87568370	90.160.03	05	3		35.204.04	04	1
87568372	90.160.01	03	2	87578585	29.212.02	05	1
87568386	35.220.07	02	18	87578956	10.220.02	02	3
87568388	35.220.07	01	13	87579303	35.204.11	01	28
	35.220.07	02	17		82.100.06	01	10
87568390	35.220.07	02	24	87579746	29.212.03	04	22
87568391	35.220.07	02	26	87580068	29.212.03	04	12
87569748	55.404.02		6	87580812	29.212.03	04	1
87569749	55.404.02		3	87581666	90.154.01	02	29
87569821	55.510.01		18		90.154.01	23	30
87569827	55.404.01	03		87581669	90.154.01	02	11
	55.514.03		2		90.154.01	03	11

Number	Figure	Sequence	Ref.	Number	Figure	Sequence	Ref.
87581669	90.154.01	23	11	87586485	90.108.01	02	1
87581672	90.154.01	02	22		90.160.06	02	17
87581673	90.154.01	02	28	87586489	90.108.02	07	4
87581681	90.154.01	02	14	87586490	90.108.02	07	5
	90.154.01	23	12	87586491	90.108.02	07	6
87581689	90.154.01	03	12	87586492	90.108.02	07	7
87581786	90.154.01	01	5	87586495	55.512.05		14
	90.154.01	22	3		55.512.05		17
87582391	29.200.07	07	6		90.108.04	01	3
87582409	55.100.02		8	87586496	55.408.01	02	5
87582879	55.100.17		42		55.512.06	01	8
	55.510.01		4		90.108.04	02	2
87583689	35.204.04	04	5	87586497	50.100.01		13
	35.359.03	01	1		55.512.06	01	10
	35.359.03	02			90.108.04	01	4
87584238	35.204.06	02	13	87586498	55.512.06	01	9
87584239	35.204.06	02	6		90.108.04	02	3
87584298	10.220.02	02	9		90.160.01	03	8
87584302	29.212.02	05	6		90.160.01	06	6
	29.212.02	07	16	87586523	29.212.05	06	1
	29.212.03	04	9		29.212.05	07	1
	35.204.04	04	8	87586886	90.108.02	05	1
	35.204.11	03	19	87587352	90.015.02		4
	35.204.11	04	22	87587456	90.015.02		2
87584305	29.212.02	07	22	87587463	90.015.02		22
87584306	29.212.02	07	27	87588635	90.154.01	02	27
87584307	29.212.02	07	28		90.154.01	23	27
87584328	39.105.09		28	87590186	55.510.01		19
87586300	35.204.11	10	1	87590346	10.216.01		35
87586301	35.204.11	02	4	87591081	29.200.05	01	32
	35.204.11	11	3		29.200.05	02	14
87586363	00.500.01	01	34		29.200.05	04	14
	90.154.01	04		87592194	00.500.01	01	30
87586364	00.500.01	01	28		90.156.08	11	
	90.154.01	21		87593952	90.156.08	11	1
87586452	90.108.03	01	3		90.160.03	05	
87586453	55.512.05		18	87594375	29.212.02	08	7
	90.108.04	01	7	87594866	29.212.03	01	7
87586454	90.108.01	01	4		29.212.03	02	7
	90.160.06	02	7	87594867	29.212.03	01	2
87586455	90.108.01	01	9	87594965	55.100.05	01	4
	90.160.06	02	8		55.100.05	02	1
87586456	90.108.01	01	3	87594975	55.514.03		4
	90.160.06	02	9	87594976	55.512.05		21
87586457	90.108.01	01	8		55.512.06	01	12
	90.160.06	02	10		55.512.06	02	5
87586459	90.108.03	01	2		90.156.08	11	8
	90.108.03	02	1		90.160.01	03	1
87586460	90.108.03	01	6	87595013	29.212.02	01	25
87586461	90.108.01	01	6	87595764	29.212.02	01	35
	90.108.01	02	7	87595771	29.212.02	01	29
87586462	90.108.01	01	5	87597201	35.204.11	01	20
	90.108.01	02	6	87597259	29.212.07	05	2
87586463	55.512.05		15		29.212.07	09	2
	90.108.04	01	5	87597260	29.212.07	05	3
87586465	90.108.03	01	1		29.212.07	09	3
	90.160.06	02	11	87597262	29.212.07	05	5
87586466	90.108.01	01	2		29.212.07	09	5
	90.108.01	02	9	87597263	29.212.07	05	6
	90.160.06	02	12		29.212.07	09	6
87586467	90.108.01	01	1	87597264	29.212.07	05	7
	90.108.01	02	8		29.212.07	09	7
	90.160.06	02	13	87597265	29.212.07	05	8
87586468	90.108.04	01	6		29.212.07	09	8
87586469	55.404.11	01	11	87597266	29.212.07	05	9
	90.108.04	01	1		29.212.07	09	9
87586470	90.108.04	01	2	87597267	29.212.07	05	10
87586471	90.108.01	01	10		29.212.07	09	10
	90.108.01	02	3	87597268	29.212.07	05	11
	90.160.06	02	14	87597271	29.212.07	09	4
87586472	90.108.01	01	11	87597274	29.212.07	06	2
	90.108.01	02	4	87597275	29.212.07	06	3
	90.160.06	02	15	87597276	29.212.07	06	4
87586474	90.108.02	07	3	87597277	29.212.07	06	5
87586475	90.108.02	07	2	87597281	29.212.07	06	6
87586477	90.108.02	07	1	87597282	29.212.07	06	7
87586484	90.108.01	02	2	87597283	29.212.07	07	1
	90.160.06	02	16	87597284	29.212.07	02	8

Number	Figure	Sequence	Ref.	Number	Figure	Sequence	Ref.
87597284	29.212.07	07	3	87607506	90.154.01	23	22
87597285	29.212.07	02	9	87608816	35.204.11	01	1
87597286	29.212.07	03	6	87608817	35.204.11	01	22
87597287	29.212.07	04	1	87609682	55.100.66	01	
87597288	29.212.07	04	2		55.408.01	02	2
87597289	29.212.07	04	4	87609685	29.212.02	06	
87597290	29.212.07	04	5		29.212.03	03	
87597291	29.212.07	04	6	87610351	35.359.02	03	7
87597292	29.212.07	04	7		35.359.02	11	5
87597293	29.212.07	04	8		35.359.03	02	7
87597294	29.212.07	04	9		35.359.03	12	5
87597295	29.212.07	04	10	87610352	35.359.02	03	11
87597296	29.212.07	04	12		35.359.03	02	11
87597297	29.212.07	04	13	87610517	35.359.02	03	1
87597298	29.212.07	01	20		35.359.02	04	
	29.212.07	05			35.359.03	02	1
87597299	29.212.07	05	1		35.359.03	03	
87597301	29.212.07	05	4	87610521	35.359.02	03	2
87597302	29.212.07	01	21		35.359.02	05	
	29.212.07	09			35.359.03	02	2
87597303	29.212.07	09	1		35.359.03	04	
87597305	29.212.07	01	22	87610530	35.359.02	03	8
	29.212.07	06			35.359.02	06	1
87597314	29.212.07	06	1		35.359.03	02	8
87597944	90.156.08	11			35.359.03	05	1
87599254	55.100.17			87610531	35.359.02	03	14
	55.510.01		1		35.359.02	08	
	55.510.06	01	4		35.359.03	02	14
87599256	55.100.05	02	4		35.359.03	08	
87599259	55.100.61		5	87610532	35.359.02	03	15
	55.404.03		4		35.359.02	09	
87599278	29.212.02	07	10A		35.359.03	02	15
	29.212.06	01	5		35.359.03	09	
87599753	90.154.01	01	3	87610533	35.359.02	03	16
	90.154.01	22	5		35.359.02	10	
87599754	55.408.04		1		35.359.03	02	16
87600221	90.154.01	02	6		35.359.03	10	
	90.154.01	03	3	87610699	29.212.02	06	11
	90.154.01	23	5		29.212.03	03	11
87601294	90.154.01	02	20	87610761	35.204.11	01	7
	90.154.01	23	24	87611845	35.359.02	03	13
87601443	50.100.04	01	21		35.359.02	13	
87602688	90.154.01	02	19	87611846	35.359.02	03	17
	90.154.01	23	23		35.359.02	12	
87603533	35.204.11	01	18	87611850	35.359.03	02	17
87603956	90.100.02		14		35.359.03	11	
87604083	90.160.06	01	3	87611906	35.204.11	01	19
	90.160.06	02	3	87612766	35.204.05	01	26
	90.160.06	03	6		35.204.05	02	17
	90.160.06	04	6	87614446	55.514.03		7
87604087	90.160.06	01	6	87614881	35.204.11	02	1
	90.160.06	02	18		35.204.11	10	11
	90.160.06	03	2		35.204.11	11	2
	90.160.06	04	2	87615381	90.160.03	05	6
87604090	90.160.06	01	7	87615807	90.154.01	02	25
	90.160.06	02	19	87615827	35.359.03	01	18
	90.160.06	03	1	87616981	90.154.01	02	23
	90.160.06	04	1	87616984	90.154.01	02	24
87604107	90.160.06	01	8	87618013	55.100.17		1A
	90.160.06	02	20		55.510.01		12
	90.160.06	03	3	87618186	55.100.53		1
	90.160.06	04	3		55.100.64		
87604115	90.160.06	03	9	87619016	29.200.07	05	8
87604117	90.160.06	03	10		29.200.07	06	4
87604118	90.160.06	01	9	87619017	29.200.07	05	6
	90.160.06	02	21		29.200.07	06	5
	90.160.06	03	7	87619421	55.510.01		3
	90.160.06	04	7	87620981	90.156.08	02	4
87604119	90.160.06	01	10		90.156.08	06	4
	90.160.06	02	22	87620986	90.156.08	03	3
	90.160.06	04	9		90.156.08	04	6
87604120	90.160.06	02	23		90.156.08	07	3
	90.160.06	03	8		90.156.08	08	6
87604121	90.160.06	02	24	87620989	90.156.08	05	1
87604838	50.100.04	01	25		90.156.08	09	1
	50.100.04	02	25	87620990	90.156.08	05	7
87607505	90.154.01	23	21		90.156.08	09	4
87607506	90.154.01	02	18	87622767	90.154.01	02	15

Number	Figure	Sequence	Ref.
87622767	90.154.01	23	17
87622774	29.212.02	01	33
87626	29.212.02	02	22
	35.204.11	03	11
	35.204.11	04	10
87626170	90.108.02	05	4
87626171	90.108.03	01	7A
87626172	90.108.03	01	6A
87626176	90.108.01	01	7
	90.160.06	02	25
87626794	88.100.11	06	1
	88.100.11	07	1
87628301	90.120.01	01	9A
	90.120.01	03	9
87628439	55.404.01	02	8
87629236	10.220.02	01	13
87629614	90.154.01	02	16
	90.154.01	23	18
87629763	55.408.01	02	
87629920	90.108.01	02	5
	90.160.06	02	26
87632390	90.156.08	11	9
	90.160.01	03	4
87632391	90.156.08	11	4
	90.160.01	03	6
87635930	90.154.01	02	7
87635942	90.154.01	23	29
87635960	90.154.01	01	6
	90.154.01	22	2
87635968	90.154.01	23	16
87639937	90.154.01	23	4
87639938	90.154.01	23	6
87640695	00.500.01	01	32
	90.156.08	10	
87640702	00.500.01	01	44
	90.160.06	02	
87640711	00.500.01	01	45
	50.100.01		
87640715	00.500.01	01	27
	90.156.08	11	
87641188	55.512.05		9
87641189	55.404.11	01	10
	55.510.06	02	8
	55.512.05		7
87641191	55.404.11	01	13
	55.408.01	02	4
	55.510.06	02	9
	55.512.05		8
87641744	35.204.11	01	15
87642008	90.154.01	03	4
87642009	90.154.01	03	2
87642984	55.404.11	01	1
87642985	55.404.01	03	7
	55.404.03		2
87642986	55.404.01	03	6
	55.404.03		3
	55.404.11	01	2
87643790	35.359.03	02	13
	35.359.03	07	
87644127	35.730.09	02	
87644259	90.154.01	04	6
	90.154.01	21	18
	90.160.04	02	3
87644260	90.154.01	04	6
	90.160.04	02	3
87644664	55.514.03		8
87644665	90.156.08	11	18
87645152	90.154.01	04	5
	90.154.01	21	12
	90.160.04	02	1
87645655	90.015.01	01	2
	90.015.01	02	2
87647005	10.220.02	01	16
87647008	10.220.02	01	5
87647009	10.220.02	01	14
87647017	10.220.02	01	3
87647022	90.108.01	01	6A
	90.108.01	02	7A
87647022	90.160.06	02	27
87647023	90.108.01	01	5A
	90.108.01	02	6A
	90.160.06	02	28
87647024	90.108.01	03	1
87647537	55.404.01	02	14
87647540	55.404.01	02	6
87647989	90.015.01	01	4
	90.015.01	02	4
87648321	33.202.01	01	31
	33.202.01	02	32
87649289	33.202.01	01	10
	33.202.01	02	17
87649518	35.300.06	01	2
	35.300.06	02	1
87649532	88.100.11	05	1
87650571	55.512.05		20
	55.512.06	01	11
87650823	55.100.65	02	
	55.404.11	01	12
87651304	90.156.08	02	
	90.156.08	11	5
87651306	90.156.08	06	
	90.156.08	11	7
87652259	90.120.05	02	1
87652292	55.514.03		5
87652503	55.512.05		12
87652504	55.512.06	01	5
87652757	90.154.01	03	1
87653007	90.154.01	04	12
	90.154.01	21	16
	90.160.04	02	6
87653077	55.404.11	02	7
87653270	35.359.02	02	1
	35.359.02	03	
87653302	00.500.01	01	39
	35.204.11	01	
87653400	90.156.08	03	7
	90.156.08	04	5
	90.156.08	07	7
	90.156.08	08	5
	90.156.08	10	4
87653401	90.156.08	10	5
87653402	90.156.08	03	5
	90.156.08	04	3
	90.156.08	07	5
	90.156.08	08	3
	90.156.08	10	3
87653403	90.156.08	10	2
87653404	90.156.08	10	6
87653763	10.220.02	01	10
87654420	90.160.06	01	4
	90.160.06	02	4
	90.160.06	03	11
	90.160.06	03	12
	90.160.06	04	10
87654421	90.160.06	03	11
87654488	88.100.11	01	
87654922	55.512.06	01	4A
87655021	33.202.01	01	10B
	33.202.01	02	17B
87655022	33.202.01	01	10A
	33.202.01	02	17A
87655125	00.500.01	01	40
	88.100.11	01	
87655334	55.100.77		14
87657	29.200.01	01	31
	29.200.01	02	16
	29.200.01	03	42
	29.200.05	01	12
	35.204.05	01	22
	35.204.05	02	24
	35.220.07	01	11
	35.220.07	02	20
87657601	90.154.01	03	7
87658003	90.108.03	01	4
87658005	90.108.03	01	5
87658782	90.154.01	01	4

Number	Figure	Sequence	Ref.
87658782	90.154.01	22	4
87658793	90.154.01	01	7
	90.154.01	22	7
87658794	55.512.05		13
87658795	55.512.05		16
87658796	55.512.06	01	7
87658798	90.154.01	01	8
	90.154.01	22	8
87658799	90.015.01	01	
87658800	90.015.01	01	5
	90.015.01	02	5
87658802	90.015.01	01	5
	90.015.01	02	5
87658816	90.154.01	03	13
87659082	90.154.01	02	17
	90.154.01	23	19
87659265	90.154.01	23	31
87659267	90.154.01	03	8
87659800	55.408.04		
87659806	00.500.01	01	38
	55.404.11	01	
87659828	35.220.07	03	39
	35.220.07	04	34
87659915	00.500.01	01	37
	35.220.07	04	1
87659916	00.500.01	01	36
	35.220.07	03	1
87660180	90.154.01	23	8
87660654	90.156.08	05	2
	90.156.08	09	2
87660656	90.156.08	02	2
	90.156.08	03	
87660657	90.156.08	02	3
	90.156.08	04	
87660660	90.156.08	06	1
	90.156.08	07	
87660662	90.156.08	02	5
	90.156.08	05	
87660664	90.156.08	06	5
	90.156.08	09	
87660792	55.100.62	01	
	90.154.01	01	9
	90.154.01	22	9
87660793	55.100.62	02	
	90.154.01	01	10
	90.154.01	22	10
87661758	90.156.08	11	16
	90.160.01	03	9
87661759	90.156.08	11	17
	90.160.01	03	10
87663138	29.200.07	06	1
	29.200.07	07	3
87663843	90.100.17		4
87663989	39.105.09		22A
87665686	90.156.08	10	
87666252	55.100.65	01	1
87668163	55.100.66	02	
	55.510.06	02	6
87668737	55.100.75		7
	55.100.78		10
87669244	90.156.08	12	7
87669418	90.108.02	06	1
87670	29.212.02	03	6
	90.120.05	01	2
	90.120.05	02	3
	90.120.05	03	2
87670653	90.156.08	05	4
	90.156.08	09	9
87670654	90.156.08	05	11
	90.156.08	09	8
87670692	90.156.08	03	6
	90.156.08	04	4
	90.156.08	07	6
	90.156.08	08	4
87670693	90.156.08	03	4
	90.156.08	04	7
	90.156.08	07	4
	90.156.08	08	7
87670983	10.001.01	01	33
	10.001.01	02	18
87671506	90.156.08	06	2
	90.156.08	08	
87671901	90.156.08	10	8
87672223	88.120.02	02	1
87673441	90.156.08	10	9
87673555	90.156.08	05	10
	90.156.08	09	7
87674842	29.200.07	06	11
87676418	90.015.01	01	33
87676979	29.212.02	02	29
87677737	90.015.01	01	21
	90.015.01	02	24
87678518	90.160.01	03	12
	90.160.01	06	2
87682304	90.156.08	10	
87685436	90.154.01	04	15
	90.154.01	21	9
87686710	10.001.01	01	
	10.001.01	02	
87687040	55.100.05	02	1
	55.100.05	03	12
87687979	90.154.01	03	7
87687995	55.100.05	02	4
	55.100.05	03	9
87687996	55.100.65	02	
	55.404.11	01	12
87688534	90.154.01	01	6
	90.154.01	22	2
87688606	35.300.06	01	1
	35.300.06	02	5
87688609	35.300.06	01	30
	35.300.06	02	36
87688612	35.300.06	02	34
87688732	90.154.01	02	1
	90.154.01	23	31A
87688733	90.154.01	03	13A
87688797	35.300.06	01	36
87688799	35.300.06	02	22
87689	10.001.01	01	20
	10.001.01	02	20
	29.212.02	02	4
	29.212.05	07	4
87690540	90.154.01	01	
87690544	90.154.01	03	1
87691320	90.154.01	03	8
87691908	90.154.01	02	5
87694460	35.300.06	02	35
87694585	29.212.02	02	27
87695867	90.154.01	04	17
	90.154.01	21	11
87695868	90.154.01	04	18
	90.154.01	21	4
87700728	00.500.01	01	41
	88.100.11	01	
87701340	90.108.04	04	1
87701856	35.204.06	02	
	35.730.09	02	1
87701857	35.204.06	02	
	35.730.09	02	1A
87702213	55.408.04		1
87704181	55.512.06	01	5
87704182	55.512.05		12
87705559	55.100.66	02	
	55.510.06	02	6
87705782	55.404.11	02	7A
87708382	29.200.05	02	1A
	29.200.05	04	1A
	29.200.05	05	1A
87714906	55.100.62	03	
	55.100.62	04	
	90.154.01	22	10
87716	10.216.01		12
	29.212.02	06	12
	29.212.03	03	12
	33.202.01	01	7
	33.202.01	02	13

Number	Figure	Sequence	Ref.
87721	29.200.01	03	41
87722431	10.220.02	01	4
87724452	90.154.01	23	29
877291R1	55.100.17		4
	55.100.77		5
87730362	10.406.01		8
87731891	88.100.11	03	1A
87731892	88.100.11	03	10
87731990	88.100.11	04	1
87732442	35.300.06	02	30
87732882	35.300.06	01	39
87733429	35.300.06	01	43
	35.300.06	02	32
87736376	35.300.06	01	40
87736420	35.204.06	01	11
	35.204.06	02	13
87736425	35.204.06	01	6
	35.204.06	02	6
87738587	55.404.01	02	8
87741862	90.120.01	04	2
87741863	90.120.01	04	1
87742596	29.200.07	01	3
87742597	29.200.07	05	2
	29.200.07	06	2
87743069	35.204.11	01	6
87743308	35.300.06	01	30A
	35.300.06	02	36A
87743359	90.015.02		24
87743612	00.500.01	01	29
	90.015.02		1
87750719	90.100.02		3
87750721	90.100.02		2
87752551	90.015.01	01	35
	90.015.01	02	31
87752575	55.100.05	03	8
	55.100.67		1
	55.100.68		1
87755351	10.216.01		33
87756214	35.204.11	03	9
	35.204.11	04	9
87758365	35.204.11	01	32
87836	10.220.02	01	6
87868	90.015.02		13
87872	10.001.01	01	19
	10.220.02	01	9
	10.254.03		12
	33.202.01	01	16
	33.202.01	02	10
	55.404.11	02	1
	55.408.04	01	1
	88.120.08		9
	90.120.01	01	19
	90.120.01	03	19
87972	90.015.02		14
88007	90.015.01	01	18
	90.015.01	02	18
88011	10.001.01	01	27
	10.001.01	02	28
	29.200.04	03	14
	35.204.11	01	36
	90.120.01	01	8
	90.120.01	03	8
88022	90.015.02		10
88044	29.218.06		13
	35.300.06	01	48
	35.300.06	02	23
	39.105.09		35
	90.100.17		14
88062	90.015.02		15
88130	35.204.11	05	4
88146	29.212.02	06	2
	29.212.03	03	7
	55.100.01	01	16
	55.100.05	01	5
	55.100.05	03	11
88206	10.001.01	01	26
	10.001.01	02	24
	10.202.01	01	13
88206	10.202.01	02	13
	10.202.01	04	5
	10.406.01		18
	29.200.01	01	22
	29.200.01	02	10
	29.200.01	03	39
	29.200.04	03	13
	29.200.05	01	4
	29.200.05	02	7
	29.200.05	04	7
	29.200.05	05	2
	29.200.06	01	5
	29.200.06	02	11
	29.212.02	06	7
	29.212.02	07	8
	29.212.03	03	4
	29.212.03	04	15
	35.204.11	01	23
	35.300.06	01	34
	35.300.06	02	28
	39.100.01		7
	55.100.02		5
	55.100.05	01	7
	55.100.05	02	2
	90.100.02		21
	90.100.17		25
	90.120.01	01	4
	90.120.01	03	4
	90.120.05	01	5
88275	29.200.01	01	15
	29.212.09		24
	35.204.11	02	8
	35.204.11	10	12
	35.204.11	11	10
	90.120.01	01	13
	90.120.01	03	13
88346	10.202.01	01	1
	10.202.01	02	1
	35.204.11	01	38
	35.204.11	03	14
	35.204.11	04	13
88434	10.202.01	01	21
	10.202.01	02	21
	29.200.01	01	27
	35.204.11	01	24
	55.408.04	01	7
	55.510.06	01	5
	90.100.02		6
	90.114.04		5
88436	10.216.01		37
	29.218.06		19
	39.105.15		11
88458	55.404.01	02	23
	55.404.01	02	3
88556	90.015.02		16
88575	35.204.11	01	39
88682	29.200.04	03	15
	29.218.06		27
	90.100.17		26
88825	35.204.05	01	10
	35.204.05	02	8
	35.204.11	03	5
	35.204.11	04	4
	35.204.11	12	3
	35.204.11	20	6
	35.220.07	01	3
	35.220.07	02	6
	90.154.01	04	8
	90.154.01	21	15
	90.156.08	12	5
	90.160.04	01	3
	90.160.04	02	5
88826	10.220.02	01	15
88832	29.200.01	02	20
88871	10.001.01	01	3
	10.001.01	02	3
	90.120.05	01	3
	90.120.05	02	4

Number	Figure	Sequence	Ref.	Number	Figure	Sequence	Ref.
88871	90.120.05	03	3	9628503	10.216.01		31
88902	29.200.05	01	1		29.200.01	02	2
	29.218.06		16		29.200.01	03	18
88945	39.105.09		40		29.200.04	03	24
89827059	35.359.02	01	38		29.200.05	01	26
900367	29.200.07	01	7		29.200.05	02	11
	29.200.07	02	9A		29.200.05	04	11
	29.200.07	05	14		29.200.06	01	1
	29.200.07	06	15		29.218.06		20
	29.200.07	10	10		33.202.01	01	9
92625	90.156.08	12	10		33.202.01	02	16
92626	90.156.08	12	8		35.204.11	01	42
93867	55.408.04	01	6		35.359.02	02	7
93963	90.100.17		10		39.105.15		10
9600664	35.730.09	01	14		55.100.02		7
9601073	55.100.01	01	15		55.100.05	02	5
	55.100.05	02	9		55.404.01	02	17
9611973	10.216.01		16		55.404.01	02	4
9612631	55.100.01	01	13		55.404.02		10
	55.100.05	02	9A		90.100.17		2
9612633	55.100.01	01	14		90.120.01	01	6
	55.100.05	02	11		90.120.01	03	6
9614257	33.202.01	01	21		90.154.01	01	6C
	33.202.01	02	5		90.154.01	22	12
9614349	39.105.09		34	9628510	90.124.08	01	4
9615841	29.200.01	01	3	9635014	55.404.01	02	21
	29.200.01	02	5		55.404.01	02	7
9615867	29.200.03	01	1	9635082	10.220.02	02	4
9616376	10.216.01		39		29.200.01	01	34
9616607	10.001.01	01	14		29.200.01	03	17
	10.001.01	02	12		29.200.03	01	6
9617020	82.100.06	01	8		29.200.03	02	8
9617869	90.100.17		3		29.200.03	04	4
9617873	29.212.01	02	7		29.200.03	05	8
	29.212.02	01	3		29.200.04	03	23
	29.212.02	03	5		29.200.05	01	6
	29.212.02	07	15		29.200.05	02	24
	29.212.02	07	2		29.200.05	04	24
	29.212.02	07	4		29.200.06	01	8
	29.212.02	07	6		29.200.06	02	3
	29.212.03	04	2		35.359.03	01	8
	29.212.03	04	21		55.404.01	02	13
	29.212.03	04	4		55.404.01	02	17
	29.212.03	04	6		55.404.11	02	3
	33.202.01	01	34A		88.120.08		11
	33.202.01	01	35A		90.015.01	01	28
	33.202.01	02	36		90.015.01	02	35
	35.204.11	01	34A		90.120.01	01	15
	35.204.11	01	37A		90.120.01	03	15
	35.204.11	03	17A	9635884	10.001.01	01	34
	35.204.11	04	16		10.001.01	02	19
	35.204.11	20	10		10.220.02	02	12
	35.220.07	05	6		29.200.06	02	5
	35.359.02	01	11	9636698	39.105.09		24
	55.408.04	02	8		90.015.02		19
9617891	35.204.15	01	18	9636711	29.212.09		25
9617966	35.300.06	02	37	9637240	29.200.01	01	5
9622411	90.156.08	12	9	9637417	90.015.01	01	15
9622416	90.120.01	01	10		90.015.01	01	25
	90.120.01	03	10		90.015.01	02	16
9622462	29.200.06	01	16	9637692	10.406.01		5
9622464	29.200.01	03	19		29.200.01	01	17
	29.200.04	03	3		35.300.06	01	33
9622465	29.200.04	03	1		35.300.06	02	26
9622479	39.105.15		1		39.105.09		20
9622493	39.105.15		13		39.105.15		4
9625178	35.220.07	05	5		55.100.02		3
9626598	39.105.09		13		90.100.17		19
	90.015.01	01	19		90.120.05	03	
	90.015.01	02	20	9670285	37.140.01		2
9627879	29.218.06		6		90.120.05	03	6
	90.120.05	02	6	9672307	29.200.01	03	34
	90.120.05	03	9		29.200.04	03	11
9628503	10.001.01	01	11	9672548	35.300.06	01	19
	10.001.01	02	17		35.300.06	02	19
	10.202.01	01	12	9706679	29.200.04	03	29
	10.202.01	02	12	9706689	10.202.01	04	5
	10.202.01	04	7		10.216.01		27

Number	Figure	Sequence	Ref.
9706689	29.218.06		19
	39.105.09		16
9706704	10.202.01	01	32
	55.301.02		7
9706726	35.204.05	01	17
	35.204.05	02	20
	35.204.11	20	7
	35.220.07	01	5
	35.220.07	02	11
9706748	35.204.11	02	10
	35.204.11	10	13
	35.204.11	11	9
	55.404.11	02	12
9706921	10.254.03		3
9707515	29.200.01	03	28
	29.200.05	01	11
9707580	10.216.01		11
	10.406.01		30
	33.202.01	04	1
	33.202.01	04	9
	55.408.04	01	12
	88.120.08		16
	90.100.02		23
	90.100.17		22
9790095	90.015.01	01	7
	90.015.01	02	7
9790527	29.212.02	01	26
9790712	90.120.01	01	23
	90.120.01	03	23
9800081	82.100.15	21	9
9800963	35.730.09	01	3
9801239	90.108.03	02	3
9803209	90.120.01	03	32
9803275	29.200.01	01	24
9804256	90.156.08	11	3
9804276	10.106.03		15
	10.402.01	01	8
	10.402.01	02	8
	90.154.01	03	6
9804277	10.106.03		23
	10.254.05	01	5
	10.254.05	02	5
9804278	10.106.05	01	13
	55.301.02		8
9804362	35.204.04	01	18
9804363	35.204.04	01	15
9804686	29.212.01	01	6
9804960	35.300.06	01	5
	35.300.06	02	4
9805004	35.220.07	03	23
9807283	55.408.04	01	3
	55.408.04	02	1
9808450	29.218.06		25
9820622	90.120.05	01	1
9821783	55.404.11	01	7
	55.510.06	02	2
9822175	82.100.15	04	6
	82.100.15	04	6A
	82.100.15	05	7
	82.100.15	05	7A
	82.100.15	05	7C
	82.100.15	06	4
	82.100.15	07	6
9822468	33.202.01	01	15
	33.202.01	02	12
9822583	90.015.01	01	16
	90.015.01	02	17
9822597	29.200.07	10	19
9824050	29.218.06		28
9824259	88.120.08		17
	90.154.01	04	10
	90.154.01	21	13
	90.160.04	02	8
9825803	35.204.05	01	18
	35.204.05	02	15
9826108	35.204.11	05	5
9826542	35.220.07	01	1
9826723	29.218.06		11
9826786	29.200.04	03	5
9826797	29.200.04	03	6
9827335	29.200.01	01	26
	29.200.01	02	12
9827590	29.200.01	01	21
	29.200.01	02	9
9827602	55.408.04	01	5
9827779	29.218.06		3
9827902	35.220.07	01	2
9827956	90.154.01	01	6B
	90.154.01	21	5A
	90.154.01	22	13
9828011	90.120.01	01	16
	90.120.01	03	16
9828493	29.200.07	10	16
9828668	10.202.01	01	23
	10.202.01	02	23
9828790	55.100.02		11
9828791	55.100.02		1
9828825	90.108.03	02	2
9829527	90.015.01	01	34
	90.015.01	02	25
9829733	35.204.11	01	8
	82.100.06	01	13
9829757	10.254.03		9
9829783	82.100.15	05	6
9829784	82.100.15	05	5
9829812	82.100.15	04	3
9829813	82.100.15	04	2
9829816	82.100.15	04	5
9829877	44.106.01		4
9829882	44.106.01		5
9829910	33.202.01	01	24
	33.202.01	02	1
9829925	33.202.01	01	1
	33.202.01	02	2
9829926	44.106.01		25
9829927	44.106.01		24
9829928	44.106.01		20
9829942	33.202.01	01	2
	33.202.01	02	4
9829944	33.202.01	01	5
	33.202.01	02	21
9840158	55.408.01	01	8
9840344	35.220.07	03	27
	39.105.09		32
	39.105.15		9
	55.100.05	03	2
	55.404.11	02	11
	55.510.06	01	2
	90.015.01	01	11
	90.015.01	02	12
	90.154.01	04	3
	90.154.01	21	6
	90.156.08	11	12
	90.156.08	12	4
9840716	55.408.01	01	9
	55.408.01	02	6
9840727	35.300.06	01	24
9841234	90.156.08	12	7
9841237	44.106.01		12
9841242	44.106.01		18
9841439	33.202.01	01	13
	33.202.01	02	18
9841590	82.100.15	07	3A
9841618	82.100.15	07	3
9841636	82.100.15	04	2A
9841637	82.100.15	04	3A
9842194	29.212.01	01	10
	29.212.02	01	1
	29.212.09		
9842368	55.100.02		10
9842390	35.730.09	01	11
9842392	35.300.06	01	20
	35.300.06	02	14B
9842506	29.200.01	01	18
9843303	35.204.05	01	6
	35.204.05	02	5

Number	Figure	Sequence	Ref.	Number	Figure	Sequence	Ref.
9843910	55.100.01	01	11	NSS	10.242.03		6
9844042	29.200.01	01	25		10.242.03		7
	29.200.01	02	7		10.242.03		8
9844141	10.001.01	01	12		10.242.03		9
	10.001.01	02	11		10.254.02		2
9844342	10.216.01		4		29.212.02	07	29
9844488	10.202.01	01	14		29.212.05	02	3
	10.202.01	02	14		29.212.05	02	4
9844532	10.220.02	01	19		29.212.05	02	5
9844538	90.100.02		8		29.212.05	02	6
9844539	90.100.02		13		29.212.05	02	7
9844553	10.001.01	01	23		29.212.05	03	10
	10.001.01	02	23		29.212.05	03	2
9844564	33.202.01	01	3		29.212.05	03	3
	33.202.01	02	22		29.212.05	03	4
9844565	33.202.01	01	20		29.212.05	03	5
	33.202.01	02	6		29.212.05	03	6
9844573	39.105.09		4		29.212.05	03	7
9844697	10.216.01		17		29.212.05	03	8
9844772	10.216.01		34		29.212.05	03	9
9844995	33.202.01	01	22		29.212.05	04	2
	33.202.01	02	3		29.212.05	04	3
9845313	82.100.06	01	17		29.212.05	04	4
9845877	29.212.05	06	7		29.212.05	04	5
	29.212.05	07	9		29.212.05	04	6
9846473	29.212.01	01	11		29.212.05	05	3
9846536	29.200.01	01	12		29.212.05	05	4
9846561	39.105.09		5		29.212.05	05	5
9846562	39.105.09		11		29.212.05	05	6
	39.105.09		15		29.212.05	05	7
9847312	55.404.01	03	8		29.212.06	01	1
9847458	90.120.01	01			29.212.06	01	2
9848041	35.220.07	03	21		29.212.06	01	3
9848676	35.730.09	01	9		29.212.06	01	4
9848752	29.212.09		4		29.212.06	02	1
9848755	29.212.09		26		29.212.06	02	2
9849595	35.359.01	01	14		29.212.06	02	3
9849641	90.160.06	01	1		29.212.06	02	4
	90.160.06	02	1		29.212.06	02	5
	90.160.06	03	4		29.212.06	02	6
	90.160.06	04	4		29.212.07	02	1
9860032	10.216.01		20		29.212.07	02	2
9860169	10.220.02	01	22		29.212.07	02	3
9861706	10.202.01	02	28		29.212.07	02	4
	10.254.03		14		29.212.07	02	5
9861707	10.202.01	01	28		29.212.07	02	6
	10.254.03		14		29.212.07	02	7
9990936	88.120.08		5		29.212.07	03	1
9992298	35.359.02	01	42		29.212.07	03	2
9994146	90.160.03	05	1		29.212.07	03	3
A149798	55.510.06	02	5		29.212.07	03	4
A149799	55.510.06	02	4		29.212.07	03	5
D137186	35.204.11	01	25		29.212.07	03	7
E7NN17700AA	88.120.08		4		29.212.07	07	2
G100713	35.730.09	02	4		29.212.07	08	1
G100714	35.730.09	02	5		29.212.07	08	2
G102289	35.730.09	02	6		29.212.07	08	3
G109395	35.730.09	02	15		29.212.07	08	4
H435814	90.154.01	02	13		29.212.07	08	5
	90.154.01	23	14		29.212.09		16
L11541	55.404.01	02	1		29.212.09		16
L18331	88.100.11	07	2		35.204.11	05	8
L71879	55.100.17		12A		35.204.11	30	8
	55.100.17		13A		35.204.11	30	9
	55.100.17		16A		35.359.02	01	1
	55.510.01		11		35.359.02	01	16
NSS	10.103.01		11		35.359.02	01	18
	10.103.01		12		35.359.02	01	19
	10.242.03		10		35.359.02	01	2
	10.242.03		11		35.359.02	01	20
	10.242.03		12		35.359.02	01	21
	10.242.03		13		35.359.02	01	24
	10.242.03		14		35.359.02	01	25
	10.242.03		15		35.359.02	01	26
	10.242.03		16		35.359.02	01	27
	10.242.03		17		35.359.02	01	31
	10.242.03		18		35.359.02	01	32
	10.242.03		19		35.359.02	01	33

Number	Figure	Sequence	Ref.	Number	Figure	Sequence	Ref.
NSS	35.359.02	01	34	NSS	35.359.02	12	7
	35.359.02	01	36		35.359.02	13	1
	35.359.02	01	4		35.359.02	13	2
	35.359.02	01	5		35.359.02	13	3
	35.359.02	01	9		35.359.02	13	4
	35.359.02	04	1		35.359.02	13	5
	35.359.02	04	2		35.359.02	13	6
	35.359.02	04	3		35.359.02	13	7
	35.359.02	04	4		35.359.03	03	1
	35.359.02	04	5		35.359.03	03	2
	35.359.02	04	6		35.359.03	03	3
	35.359.02	04	7		35.359.03	03	4
	35.359.02	04	8		35.359.03	03	5
	35.359.02	04	9		35.359.03	03	6
	35.359.02	05	1		35.359.03	03	7
	35.359.02	05	10		35.359.03	03	8
	35.359.02	05	11		35.359.03	03	9
	35.359.02	05	12		35.359.03	04	1
	35.359.02	05	13		35.359.03	04	10
	35.359.02	05	14		35.359.03	04	11
	35.359.02	05	15		35.359.03	04	12
	35.359.02	05	16		35.359.03	04	13
	35.359.02	05	2		35.359.03	04	14
	35.359.02	05	3		35.359.03	04	15
	35.359.02	05	4		35.359.03	04	16
	35.359.02	05	5		35.359.03	04	2
	35.359.02	05	6		35.359.03	04	3
	35.359.02	05	7		35.359.03	04	4
	35.359.02	05	8		35.359.03	04	5
	35.359.02	05	9		35.359.03	04	6
	35.359.02	06	10		35.359.03	04	7
	35.359.02	06	11		35.359.03	04	8
	35.359.02	06	3		35.359.03	04	9
	35.359.02	06	4		35.359.03	05	10
	35.359.02	06	5		35.359.03	05	11
	35.359.02	06	7		35.359.03	05	3
	35.359.02	06	8		35.359.03	05	4
	35.359.02	07	1		35.359.03	05	5
	35.359.02	07	2		35.359.03	05	7
	35.359.02	07	3		35.359.03	05	8
	35.359.02	08	1		35.359.03	06	1
	35.359.02	08	2		35.359.03	06	2
	35.359.02	08	3		35.359.03	06	3
	35.359.02	08	4		35.359.03	07	1
	35.359.02	08	5		35.359.03	07	10
	35.359.02	08	6		35.359.03	07	11
	35.359.02	08	7		35.359.03	07	12
	35.359.02	09	1		35.359.03	07	13
	35.359.02	09	2		35.359.03	07	14
	35.359.02	09	3		35.359.03	07	15
	35.359.02	09	4		35.359.03	07	2
	35.359.02	09	5		35.359.03	07	3
	35.359.02	10	1		35.359.03	07	4
	35.359.02	10	2		35.359.03	07	5
	35.359.02	10	3		35.359.03	07	6
	35.359.02	10	4		35.359.03	07	7
	35.359.02	10	5		35.359.03	07	8
	35.359.02	10	6		35.359.03	07	9
	35.359.02	10	7		35.359.03	08	1
	35.359.02	11	10		35.359.03	08	2
	35.359.02	11	11		35.359.03	08	3
	35.359.02	11	13		35.359.03	08	4
	35.359.02	11	14		35.359.03	08	5
	35.359.02	11	16		35.359.03	08	6
	35.359.02	11	17		35.359.03	08	7
	35.359.02	11	18		35.359.03	09	1
	35.359.02	11	2		35.359.03	09	2
	35.359.02	11	3		35.359.03	09	3
	35.359.02	11	4		35.359.03	09	4
	35.359.02	11	6		35.359.03	09	5
	35.359.02	11	7		35.359.03	10	1
	35.359.02	11	8		35.359.03	10	2
	35.359.02	12	1		35.359.03	10	3
	35.359.02	12	2		35.359.03	10	4
	35.359.02	12	3		35.359.03	10	5
	35.359.02	12	4		35.359.03	10	6
	35.359.02	12	5		35.359.03	10	7
	35.359.02	12	6		35.359.03	11	2

Number	Figure	Sequence	Ref.	Number	Figure	Sequence	Ref.
NSS	35.359.03	11	3	NSS	50.100.04	01	7
	35.359.03	11	4		50.100.04	01	9
	35.359.03	11	5		50.100.04	02	1
	35.359.03	11	6		50.100.04	02	10
	35.359.03	11	7		50.100.04	02	11
	35.359.03	11	8		50.100.04	02	13
	35.359.03	12	10		50.100.04	02	15
	35.359.03	12	11		50.100.04	02	16
	35.359.03	12	13		50.100.04	02	20
	35.359.03	12	14		50.100.04	02	22
	35.359.03	12	16		50.100.04	02	23
	35.359.03	12	17		50.100.04	02	29
	35.359.03	12	18		50.100.04	02	31
	35.359.03	12	2		50.100.04	02	33
	35.359.03	12	3		50.100.04	02	6
	35.359.03	12	4		50.100.04	02	7
	35.359.03	12	6		50.100.04	02	9
	35.359.03	12	7		55.100.17		1
	35.359.03	12	8		55.100.17		10
	35.359.04	01	2		55.100.17		12
	35.359.04	02	1		55.100.17		13
	35.359.04	02	2		55.100.17		14
	35.359.04	02	3		55.100.17		15
	35.359.04	02	4		55.100.17		16
	35.359.04	02	5		55.100.17		17
	35.359.04	03	1		55.100.17		18
	35.359.04	03	2		55.100.17		19
	35.359.04	03	3		55.100.17		21
	35.359.04	03	4		55.100.17		22
	35.359.04	03	5		55.100.17		23
	35.359.04	03	6		55.100.17		24
	35.359.04	03	7		55.100.17		25
	35.359.04	04	1		55.100.17		26
	35.359.04	04	10		55.100.17		28
	35.359.04	04	11		55.100.17		3
	35.359.04	04	12		55.100.17		33
	35.359.04	04	13		55.100.17		35
	35.359.04	04	14		55.100.17		37
	35.359.04	04	15		55.100.17		40
	35.359.04	04	16		55.100.17		41
	35.359.04	04	2		55.100.17		5
	35.359.04	04	3		55.100.17		6
	35.359.04	04	4		55.100.61		2
	35.359.04	04	5		55.100.61		3
	35.359.04	04	6		55.100.61		6
	35.359.04	04	7		55.100.61		7
	35.359.04	04	8		55.100.61		9
	35.359.04	04	9		55.100.62	01	2
	35.359.04	05	1		55.100.64		1
	35.359.04	05	2		55.100.65	02	1
	35.359.04	05	3		55.100.65	02	11
	35.359.04	06	1		55.100.65	02	14
	35.359.04	06	2		55.100.65	02	15
	35.359.04	06	3		55.100.65	02	18
	35.359.04	06	4		55.100.65	02	2
	35.359.04	06	5		55.100.65	02	3
	35.359.04	06	6		55.100.65	02	5
	35.359.04	06	7		55.100.65	02	9
	35.359.04	07	1		55.100.66	01	1
	35.359.04	07	2		55.100.66	01	2
	35.359.04	07	3		55.100.66	01	5
	35.359.04	07	4		55.100.66	02	1
	35.359.04	07	5		55.100.66	02	11
	35.359.04	07	6		55.100.66	02	12
	35.730.09	01	2		55.100.66	02	13
	50.100.04	01	1		55.100.66	02	6
	50.100.04	01	10		55.100.68		4
	50.100.04	01	11		55.100.68		5
	50.100.04	01	13		55.100.77		20
	50.100.04	01	15		55.100.77		21
	50.100.04	01	16		55.100.77		9
	50.100.04	01	20		55.100.78		6
	50.100.04	01	22		55.100.78		9
	50.100.04	01	23		55.404.01	03	1
	50.100.04	01	29		55.404.01	03	10
	50.100.04	01	31		55.404.01	03	2
	50.100.04	01	33		55.404.01	03	3
	50.100.04	01	6		55.404.01	03	4

Number	Figure	Sequence	Ref.	Number	Figure	Sequence	Ref.
NSS	55.404.01	03	5	NSS	90.156.08	03	8
	55.404.01	03	9		90.156.08	04	1
	82.100.15	21	10		90.156.08	04	2
	82.100.15	21	6		90.156.08	04	8
	88.120.02	02	10		90.156.08	04	9
	88.120.02	02	2		90.156.08	05	5
	88.120.02	02	3		90.156.08	05	8
	88.120.02	02	4		90.156.08	05	9
	88.120.02	02	5		90.156.08	06	3
	88.120.02	02	6		90.156.08	06	6
	88.120.02	02	7		90.156.08	07	1
	88.120.02	02	8		90.156.08	07	2
	88.120.02	02	9		90.156.08	07	8
	90.120.01	02	10		90.156.08	07	9
	90.120.01	02	11		90.156.08	08	1
	90.120.01	02	12		90.156.08	08	2
	90.120.01	02	13		90.156.08	08	8
	90.120.01	02	3		90.156.08	09	10
	90.120.01	02	4		90.156.08	09	5
	90.120.01	02	5		90.156.08	09	6
	90.120.01	02	9		90.156.08	10	1
	90.120.01	04	11		90.160.03	05	8
	90.120.01	04	12A		90.160.03	05	9
	90.120.01	04	12B	SBA010109119	10.254.04		7
	90.120.01	04	12C	SBA010109235	10.102.01		2
	90.120.01	04	13A	SBA010109264	10.106.03		21
	90.120.01	04	13B	SBA010109341	10.103.02		7
	90.120.01	04	13C	SBA010109406	10.103.01		6
	90.120.01	04	14A	SBA010109465	10.254.05	02	28
	90.120.01	04	14B	SBA010109466	10.254.05	02	16
	90.120.01	04	14C	SBA010110625	10.214.01		19
	90.120.01	04	15	SBA010411212	10.102.01		3
	90.120.01	04	16	SBA010700820	10.214.01		5
	90.120.01	04	17A	SBA010700865	10.103.01		15
	90.120.01	04	17B	SBA010800820	10.214.01		4
	90.120.01	04	17C	SBA011100408	10.101.02	01	9
	90.120.01	04	17D	SBA011140616	10.254.05	02	19
	90.120.01	04	18	SBA011300625	10.101.02	01	18
	90.120.01	04	1A	SBA011310612	10.101.02	02	5
	90.120.01	04	1B		10.102.01		7
	90.120.01	04	21		10.106.01		9
	90.120.01	04	23		10.214.01		25
	90.120.01	04	25A		10.304.01		12
	90.120.01	04	25B		10.304.01		16
	90.120.01	04	25C	SBA011310614	10.106.03		20
	90.120.01	04	25D	SBA011310616	10.254.05	02	39
	90.120.01	04	25E	SBA011310625	10.106.05	02	11
	90.120.01	04	2A	SBA011310635	10.106.05	01	14
	90.120.01	04	2B		10.402.01	01	7
	90.120.01	04	3A		10.402.01	02	7
	90.120.01	04	3B	SBA011310640	10.101.02	01	14
	90.120.01	04	4	SBA011310645	10.106.03		29
	90.120.01	04	5A	SBA011310650	10.106.05	02	10
	90.120.01	04	5B	SBA011310655	10.402.01	01	9
	90.120.01	04	6A		10.402.01	02	9
	90.120.01	04	6B	SBA011310660	10.101.02	01	15
	90.120.01	04	7A		10.106.03		30
	90.120.01	04	7B		10.254.04		8
	90.120.01	04	7C	SBA011310680	10.106.03		28
	90.120.01	04	7D	SBA011510812	10.102.01		9
	90.120.01	04	7E	SBA011510816	10.101.01	01	19
	90.120.01	04	7F	SBA011510820	10.103.02		2
	90.120.01	04	7G		10.254.05	02	14
	90.120.01	04	7H		10.402.01	01	18
	90.120.01	04	7I		10.402.01	02	19
	90.120.01	04	8A		55.301.02		3
	90.120.01	04	8B		55.301.02		6
	90.120.01	04	9A	SBA011510860	10.254.05	01	4
	90.120.01	04	9B	SBA011510865	10.106.03		27
	90.120.01	04	9C	SBA011511075	10.103.01		14
	90.120.01	04	9D	SBA012100655	10.402.01	01	13
	90.154.01	02	4		10.402.01	02	14
	90.154.01	02	8	SBA012109044	10.106.05	01	12
	90.154.01	23	7		10.106.05	02	12
	90.156.08	02	1	SBA012109235	10.254.05	02	12
	90.156.08	02	6	SBA012110635	10.001.02	01	19
	90.156.08	03	1		10.001.02	02	19
	90.156.08	03	2	SBA012110660	10.001.02	01	20

Number	Figure	Sequence	Ref.	Number	Figure	Sequence	Ref.
SBA012110660	10.001.02	02	20	SBA052300600	10.106.03		22
SBA012110820	10.001.02	01	18	SBA054109025	10.101.01	02	17
	10.001.02	02	18		10.254.05	02	8
SBA012110860	10.254.05	01	3	SBA064100045	10.001.02	01	11
SBA012110875	10.254.05	02	3		10.001.02	02	11
SBA015300614	10.402.01	01	5	SBA064200010	10.101.01	01	5
	10.402.01	02	5	SBA064200018	10.101.01	01	2
SBA015600406	10.101.02	01	5	SBA064200025	10.001.02	01	2
SBA020109076	10.106.05	01	5		10.001.02	02	2
	10.106.05	02	5		10.101.01	01	4
SBA020109086	10.101.02	01	20	SBA064200030	10.101.01	01	3
	10.101.02	02	15	SBA064210040	10.001.02	01	3
SBA020109120	10.103.01		23		10.001.02	02	3
SBA023100006	10.214.01		20	SBA064409006	10.001.02	01	30
SBA023100008	10.214.01		3		10.001.02	02	36
SBA023109002	10.106.05	02	13	SBA064500010	10.254.04		9
SBA024600010	10.101.02	01	7	SBA064500030	10.402.01	01	4
	10.101.02	02	7		10.402.01	02	13
	10.254.05	02	32	SBA064500060	10.001.02	01	23
SBA025100006	10.101.01	02	2		10.001.02	02	23
SBA025100010	10.101.01	02	3	SBA067100022	10.402.01	01	15
	10.254.05	02	31		10.402.01	02	16
SBA025100012	10.101.01	02	4	SBA067100025	10.001.02	02	33
	10.102.01		4	SBA067100046	10.254.05	02	23
SBA025100016	10.101.01	02	5	SBA067200078	10.214.01		13
	10.214.01		26	SBA068204112	10.214.01		12
SBA026100008	10.214.01		6	SBA068209092	10.101.02	02	11
SBA026200010	10.103.02		5	SBA068209121	10.254.05	02	21
SBA030300414	10.106.03		2	SBA068209260	10.001.02	02	31
	10.254.04		4	SBA068209264	10.001.02	02	32
SBA030309005	10.001.02	01	17	SBA110136300	10.101.01	01	14
	10.001.02	02	17	SBA110156171	10.103.01		8
SBA030500612	10.001.02	01	14	SBA110156181	10.103.01		9
	10.001.02	02	14	SBA110156191	10.103.01		10
	10.103.01		7	SBA110156250	10.103.01		5
SBA030500616	10.001.02	01	15	SBA110447130	10.103.02		1
	10.001.02	02	15	SBA110466031	10.101.02	01	11
SBA030501025	10.001.02	01	16		10.101.02	02	13
	10.001.02	02	16	SBA110566080	10.101.02	01	8
SBA030509020	10.103.01		4	SBA110666050	10.101.02	02	3
SBA031100004	10.106.03		9	SBA110666060	10.101.02	01	4
SBA034100508	10.103.01		3	SBA110666090	10.101.02	02	4
	10.106.01		3	SBA110666210	10.101.02	01	3
SBA036800005	10.106.03		18	SBA110708030	10.102.01		1
SBA036800010	10.304.01		9	SBA110756371	10.102.01		5
SBA040106203	10.001.02	01	10	SBA110996860	10.001.02	01	21
	10.001.02	02	10		10.001.02	02	21
SBA040109057	10.106.01		6		10.101.01	02	18
SBA042309017	10.001.02	01	13	SBA111011380	10.101.01	01	1
	10.001.02	02	13	SBA111011400	10.101.01	01	1
SBA042309018	10.001.02	01	12	SBA111026150	10.101.02	02	2
	10.001.02	02	12	SBA111136480	10.101.01	01	16
SBA052100030	10.101.01	02	6	SBA111136490	10.101.01	01	17
SBA052100050	10.101.01	02	7	SBA111147510	10.101.01	01	15
SBA052100070	10.101.01	02	8		10.101.01	02	19
SBA052100100	10.101.01	02	9	SBA111147520	10.101.01	01	15
	10.102.01		6		10.101.01	02	20
SBA052100400	10.101.01	02	10	SBA111217620	10.101.02	01	2
	10.101.02	01	10	SBA111996401	10.101.02	01	1
	10.101.02	02	9	SBA115017540	10.103.01		17
SBA052100420	10.101.01	02	11	SBA115017541	10.103.01		17
	10.101.02	02	12	SBA115017550	10.103.01		17
SBA052109072	10.101.01	02	12	SBA115026251	10.103.01		20
	10.101.02	02	1	SBA115104020	10.103.01		16
SBA052109074	10.101.01	02	13	SBA115107970	10.103.01		16
	10.106.05	02	18	SBA115176140	10.103.01		22
SBA052109076	10.101.01	02	14	SBA115256630	10.103.01		1
	10.106.05	01	10	SBA115276200	10.103.01		2
	10.106.05	02	9	SBA115326220	10.103.01		18
	10.304.01		13	SBA115357570	10.103.02		9
SBA052109078	10.001.02	01	29	SBA115376040	10.103.02		10
	10.001.02	02	29	SBA115391060	10.101.02	02	14
	10.101.01	02	15	SBA115396860	10.101.02	01	19
	10.242.03		2	SBA120016050	10.106.01		2
	10.254.05	02	38	SBA120026320	10.106.01		1
SBA052109108	10.106.03		17	SBA120026970	10.106.01		1
SBA052109110	10.106.03		12	SBA120036393	10.106.05	02	1
SBA052300600	10.101.01	02	16	SBA120036830	10.106.05	01	1

Number	Figure	Sequence	Ref.
SBA120116100	10.001.02	01	26
SBA120116160	10.001.02	02	26
SBA120166350	10.101.01	01	6
SBA120176360	10.101.01	01	7
SBA120186080	10.101.01	01	10
SBA120216040	10.101.01	01	13
SBA120216041	10.101.01	01	13
SBA120226070	10.101.01	01	11
SBA120316200	10.106.05	02	7
SBA120316201	10.106.05	01	7
SBA120346341	10.106.05	02	6
SBA120356131	10.106.05	01	2
	10.106.05	02	2
SBA120356141	10.106.05	01	3
	10.106.05	02	3
SBA120406050	10.101.01	01	12
	10.101.01	02	21
SBA120406070	10.101.01	01	8
	10.101.01	02	22
SBA120456250	10.001.02	01	27
	10.001.02	02	27
SBA120736081	10.106.01		4
SBA120996120	10.101.01	02	23
SBA120996130	10.106.05	01	11
SBA125046510	10.106.03		5
SBA125046520	10.106.03		5
SBA125116141	10.106.03		16
SBA125156170	10.106.03		11
SBA125256120	10.106.01		7
SBA125416300	10.106.03		13
SBA125976120	10.106.03		19
SBA130996130	10.101.01	02	24
	10.214.01		23
SBA131011100	10.214.01		1
SBA131017801	10.242.03		
SBA131156150	10.242.03		5
SBA131156260	10.242.03		5
SBA131176450	10.242.03		3
SBA131176510	10.242.03		3
SBA131186110	10.242.03		4
SBA131196060	10.242.03		1
SBA131196200	10.242.03		1
SBA131227310	10.242.03		2
SBA131246010	10.242.03		20
SBA131246140	10.242.03		22
SBA131246170	10.242.03		22
SBA131296255	10.242.03		21
SBA131406360	10.218.01		1
SBA131406520	10.214.01		8
SBA131416170	10.218.01		8
SBA131426200	10.101.01	02	25
	10.214.01		7
SBA131426230	10.218.01		3
SBA131426320	10.214.01		2
SBA131437360	10.218.01		4
SBA131437490	10.101.01	02	26
SBA131437500	10.101.01	02	27
SBA131437510	10.101.01	02	28
SBA131437520	10.101.01	02	29
SBA131437530	10.101.01	02	30
SBA131446006	10.218.01		2
SBA131446074	10.218.01		5
SBA131446075	10.218.01		6
SBA131446076	10.218.01		7
SBA131446077	10.218.01		9
SBA131507700	10.214.01		14
SBA131507710	10.214.01		15
SBA131507720	10.214.01		16
SBA131507730	10.214.01		17
SBA131606690	10.214.01		9
SBA131996200	10.101.01	02	31
	10.101.02	02	6
SBA131996210	10.101.01	02	32
SBA133732	10.001.01	01	2
SBA133733	10.001.01	02	2
SBA135566470	10.101.02	01	17
SBA135596570	10.254.05	02	24
SBA135596710	10.254.04		5
SBA135596920	10.254.04		2
SBA135617240	10.254.05	02	1
SBA135617370	10.254.05	01	1
SBA135617440	10.254.05	02	9
SBA135756171	10.254.05	02	10
SBA135996340	10.101.01	02	33
SBA135996361	10.101.01	02	34
SBA135996780	10.101.01	02	35
	10.254.05	01	2
	10.254.05	02	2
SBA135996870	10.101.01	02	36
	10.254.04		3
SBA135996880	10.101.01	02	37
	10.254.04		1
SBA135996950	10.101.02	01	16
SBA135997020	10.254.05	02	11
SBA135997030	10.254.05	02	13
SBA140036220	10.001.02	01	28
	10.001.02	02	28
SBA140116220	10.304.01		5
SBA140166250	10.304.01		4
SBA140356050	10.254.05	02	33
SBA140406490	10.304.01		15
SBA140546020	10.001.02	01	24
	10.001.02	02	24
SBA140606720	10.106.05	01	16
	10.106.05	02	15
SBA140607020	10.106.05	01	
SBA140607140	10.254.05	02	34
SBA140607180	10.254.05	02	35
SBA140607310	10.254.05	02	6
SBA140607320	10.254.05	02	18
SBA140656120	10.001.02	02	30
SBA140986581	10.101.02	02	10
	10.402.01	02	20
SBA140986820	10.304.01		14
SBA140987370	10.254.05	02	22
SBA140996240	10.001.02	02	34
	10.101.01	02	38
SBA140996260	10.106.05	01	18
	10.106.05	02	16
	10.254.05	02	29
SBA140996270	10.101.02	01	6
SBA140996280	10.101.01	02	39
	10.254.05	02	17
SBA140996350	10.214.01		10
SBA145017730	10.402.01	01	1
	10.402.01	02	1
SBA145146320	10.402.01	01	2
	10.402.01	02	2
SBA145206220	10.402.01	01	11
	10.402.01	02	11
SBA145216640	10.402.01	01	12
	10.402.01	02	12
SBA145226340	10.402.01	01	16
	10.402.01	02	17
SBA145306730	10.202.01	01	29
	10.202.01	02	29
SBA145337030	10.202.01	01	30
	10.202.01	02	30
SBA145386540	10.202.01	01	25
	10.202.01	02	25
SBA145536050	10.402.01	01	14
	10.402.01	02	15
SBA145996051	10.101.01	02	40
	10.402.01	01	17
	10.402.01	02	18
SBA145996670	10.101.01	02	41
	10.402.01	01	6
	10.402.01	02	6
SBA145996680	10.101.01	02	42
	10.402.01	01	3
	10.402.01	02	3
SBA145996710	10.101.01	02	43
	10.402.01	01	10
	10.402.01	02	10
SBA165026230	10.304.01		1
SBA165106840	10.106.03		1

Number	Figure	Sequence	Ref.
SBA165166650	10.304.01		10
SBA165206010	10.106.03		25
SBA165206640	10.214.01		24
SBA165296220	10.001.02	01	7
	10.001.02	02	7
SBA165996110	10.101.01	02	44
SBA165996540	10.101.01	02	45
	10.304.01		11
SBA165996550	10.101.01	02	46
	10.106.03		3
SBA165996610	10.106.03		24
SBA185046320	55.301.01		1
	55.301.02		2
SBA185086530	10.103.02		3
	55.201.03		
SBA185206083	10.214.01		27
SBA185246060	10.106.05	01	15
	10.106.05	02	14
SBA185366190	10.214.01		21
SBA185376150	10.214.01		22
SBA185416480	55.301.01		14
SBA185426210	55.301.01		5
SBA185426220	55.301.01		11
SBA185436180	55.301.01		3
SBA185446269	55.301.01		2
SBA185446270	55.301.01		4
SBA185446271	55.301.01		6
SBA185446272	55.301.01		7
SBA185446273	55.301.01		8
SBA185446274	55.301.01		9
SBA185446275	55.301.01		10
SBA185446276	55.301.01		15
SBA185446277	55.301.01		13
SBA185446278	55.301.01		12
SBA185727000	55.301.02		1
SBA185736260	10.103.02		8
SBA185816360	55.201.03		5
SBA185846283	55.201.03		10
SBA185846286	55.201.03		12
SBA185846378	55.201.03		18
SBA185846549	55.201.03		20
SBA185846551	55.201.03		11
SBA185846552	55.201.03		8
SBA185846560	55.201.03		13
SBA185846561	55.201.03		21
SBA185846562	55.201.03		22
SBA185846563	55.201.03		23
SBA185846570	55.201.03		1
SBA185846571	55.201.03		2
SBA185846572	55.201.03		4
SBA185846573	55.201.03		6
SBA185846574	55.201.03		7
SBA185846576	55.201.03		9
SBA185846579	55.201.03		14
SBA185846580	55.201.03		15
SBA185846581	55.201.03		16
SBA185846582	55.201.03		17
SBA185846583	55.201.03		19
SBA185866370	55.201.03		3
SBA185976510	55.301.02		5
SBA185976900	55.301.02		5
SBA190297900	10.101.02	02	17
SBA195816200	10.101.01	01	18
SBA195816370	10.101.01	01	18
SBA195906990	10.001.02	01	
SBA195907000	10.001.02	02	1
	10.101.01	02	1
SBA198216700	10.101.01	01	9
SBA198216720	10.304.01		7
SBA198216821	10.304.01		3
SBA198217170	10.106.05	01	8
	10.106.05	02	8
SBA198217380	10.106.03		10
SBA198217560	10.106.03		26
SBA198416570	10.102.01		8
SBA198436010	10.101.02	01	13
	10.101.02	02	8
SBA198466010	10.001.02	01	4
SBA198466010	10.001.02	02	4
SBA198466020	10.001.02	01	5
	10.001.02	02	5
SBA198466030	10.001.02	01	6
	10.001.02	02	6
SBA198486780	10.106.05	01	17
	10.106.05	02	17
SBA198486940	10.402.01	02	4
SBA198487650	10.254.05	02	30
SBA198487840	10.254.05	02	7
SBA198487901	10.101.01	01	20
SBA198487920	10.214.01		11
SBA198517090	10.001.02	01	8
	10.001.02	02	8
SBA198517222	10.001.02	01	9
	10.001.02	02	9
SBA198517226	10.001.02	01	9
	10.001.02	02	9
SBA198517229	10.001.02	01	9
	10.001.02	02	9
SBA198517232	10.103.01		26
SBA198517236	10.103.01		26
SBA198517239	10.103.01		26
SBA198517242	10.103.01		26
SBA198517246	10.103.01		26
SBA198517249	10.103.01		26
SBA198517252	10.103.01		24
SBA198517256	10.103.01		24
SBA198517259	10.103.01		24
SBA198517260	10.103.01		21
SBA198636160	10.101.01	02	47
	10.106.03		4
SBA198636170	10.001.02	01	22
	10.001.02	02	22
	10.101.01	02	48
SBA198756230	10.254.05	02	20
SBA199106021	10.214.01		18
SBA199106120	10.254.05	02	36
SBA199216230	10.106.01		5
SBA199236540	10.304.01		8
SBA199266200	10.103.01		13
SBA199266210	10.103.01		25
SBA199266270	10.304.01		2
SBA199280300	10.106.05	01	9
SBA199286150	10.304.01		6
SBA199286160	10.304.01		6
SBA199286170	10.304.01		6
SBA199286180	10.304.01		6
SBA199486220	10.106.05	01	4
	10.106.05	02	4
SBA199566750	10.106.01		8
SBA314990012	10.101.01	02	49
SBA314990013	10.254.05	01	6
	10.254.05	02	26
SBA398750410	10.254.05	02	25
W0	00.500.01	01	1
	00.500.01	01	10
	00.500.01	01	13
	00.500.01	01	14
	00.500.01	01	15
	00.500.01	01	16
	00.500.01	01	17
	00.500.01	01	18
	00.500.01	01	19
	00.500.01	01	20
	00.500.01	01	22
	00.500.01	01	23
	00.500.01	01	25
	00.500.01	01	26
	00.500.01	01	7
	00.500.01	01	8
	00.500.01	01	9