RUTHZIL TRATOR COMERCIAL DE PEÇAS LTDA 11 97083-6812 ROLANDO CITRANGULO

02-01	RADIADOR - SISTEMA DE RECUPERAÇÃO DO FLUIDO DE REFRIGERAÇ
02-02	FILTRO DE AR - MOTOR
02-03	ESCAPAMENTO
02-04	SILENCIADOR - ASPIRADOR
02-04A	SILENCIADOR - ASPIRADOR
02-05	SOPORTE DEL MOTOR - L175 NA BSN N7M470553, L175 EU BSN N7M468035; C175 NA BSN N7M466429, C175 EU BSN
02-05A	SOPORTE DEL MOTOR - L175 NA ASN N7M470553, L175 EU ASN N7M468035; C175 NA ASN N7M466429, C175 EU ASN
02-05B	SOPORTE DEL MOTOR - EUROPE C175 ASN N7M467968
02-06	AQUECEDOR DO BLOCO DO MOTOR
02-07	BLOCO DO CILINDRO - FILTRO DE ACEITE - L175 NA BSN N7M470553, L175 EU BSN N7M468035; C175 NA BSN N7M
02-08	CABEÇA DO CILINDRO - L175 NA BSN N7M470553, L175 EU BSN N7M468035; C175 NA BSN N7M466429, C175 EU BS
02-09	COBERTURA DO CABEÇOTE, POLIA DO VIRABREQUIM - L175 NA BSN N7M470553, L175 EU BSN N7M468035; C175 NA
02-10	CONJUNTO DO BRAÇO OSCILANTE
02-11	EIXO TRANSMISSOR - L175 NA BSN N7M470553, L175 EU BSN N7M468035; C175 NA BSN N7M466429, C175 EU BSN
02-12	CAMBOTA, PISTÃO
02-13	TUBO DE DISTRIBUIÇÃO DA ADMISSÃO
02-14	TURBOCOMPRESOR
02-15	CAIXA DA ENGRENAGEM DE DISTRIBUIÇÃO, REGULADOR - L175 NA BSN N7M470553, L175 EU BSN N7M468035; C175
02-16	RESERVATÓRIO DE ÓLEO
02-17	BOMBA DE ÓLEO E FILTRO DE SUCÇÃO - L175 NA BSN N7M470553, L175 EU BSN N7M468035; C175 NA BSN N7M4664
02-18	BOMBA DE ÁGUA
02-19	VOLANTE, COBERTURA - L175 NA BSN N7M470553, L175 EU BSN N7M468035; C175 NA BSN N7M466429, C175 EU BS
02-20	BLOCO DO CILINDRO - FILTRO DE ACEITE - L175 NA ASN N7M470553, L175 EU ASN N7M468035; C175 NA ASN N7M
02-21	CABEÇA DO CILINDRO - L175 NA ASN N7M470553, L175 EU ASN N7M468035; C175 NA ASN N7M466429, C175 EU AS
02-22	COBERTURA DO CABEÇOTE, POLIA DO VIRABREQUIM - L175 NA ASN N7M470553, L175 EU ASN N7M468035; C175 NA
02-23	EIXO TRANSMISSOR - L175 NA ASN N7M470553, L175 EU ASN N7M468035; C175 NA ASN N7M466429, C175 EU ASN
02-24	CAIXA DA ENGRENAGEM DE DISTRIBUIÇÃO, REGULADOR - L175 NA ASN N7M470553, L175 EU ASN N7M468035; C175
02-25	BOMBA DE ÓLEO E FILTRO DE SUCÇÃO - L175 NA ASN N7M470553, L175 EU ASN N7M468035; C175 NA ASN N7M4664
02-26	VOLANTE, COBERTURA - L175 NA ASN N7M470553, L175 EU ASN N7M468035; C175 NA ASN N7M466429, C175 EU AS
03-01	CONJUNTO DO TANQUE DE COMBUSTÍVEL; 14.4 GL
03-01A	CONJUNTO DO TANQUE DE COMBUSTÍVEL; 16 GL
03-02	CONTROLO DE ACELERAÇÃO - CONTROLES, DERECHA
03-02A	CONTROLES - ESTRANGULADOR
03-03	INJECTOR DA BOMBA DE INJECÇÃO - L175 NA BSN N7M470553, L175 EU BSN N7M468035; C175 NA BSN N7M466429,

TABLE OF CONTENTS

03-03A	INJECTOR DA BOMBA DE INJECÇÃO - L175 NA ASN N7M470553, L175 EU ASN N7M468035; C175 NA ASN N7M466429,
03-04	CONJUNTO DO INJECTOR - L175 NA BSN N7M470553, L175 EU BSN N7M468035; C175 NA BSN N7M466429, C175 EU
03-04A	CONJUNTO DO INJECTOR - L175 NA ASN N7M470553, L175 EU ASN N7M468035; C175 NA ASN N7M466429, C175 EU
04-01	MOTOR DE ARRANQUE
04-01A	BATERIA - CABOS
04-02	COMPONENTES DO ALTERNADOR
04-03	ALTERNADOR
04-04	SISTEMA ELÉCTRICO DA CABINA
04-04A	SISTEMA ELÉCTRICO DA CABINA, PARA EUROPA - DE LUXO CABINE
04-05	SISTEMA ELÉCTRICO DA CABINA
04-05A	SISTEMA ELÉCTRICO CABINE - CONSOLE, ESQUERDA
04-05B	SISTEMA ELÉCTRICO CABINE - CONSOLA, LADO DERECHO
04-05C	SISTEMA ELÉCTRICO DA CABINA - CONJUNTO DE FIOS, PRINCIPAIS FUSÍVEIS E RELÉS
04-05D	SISTEMA ELÉCTRICO DA CABINA - CONJUNTO DE FIOS, PRINCIPAIS FUSÍVEIS E RELÉS
04-05E	SISTEMA ELÉCTRICO DA CABINA
04-05F	SISTEMA ELÉCTRICO DA CABINA - LUCES DE TRABAJO
04-05G	SISTEMA ELÉTRICO DA CABINA, PISCA-PISCA
04-06	SISTEMA ELÉCTRICO DA CABINA - SINALIZADOR DE PERIGO
04-07	SISTEMA ELÉCTRICO DO MOTOR
04-08	SISTEMA ELÉCTRICO DO PRINCIPAL
04-09	SISTEMA ELÉCTRICO DO PRINCIPAL
04-10	SISTEMA ELÉCTRICO DO CHASSI
04-10A	SISTEMA ELÉCTRICO DO CHASSI
04-10B	SISTEMA ELÉCTRICO DO CHASSI
04-10C	SISTEMA ELÉCTRICO DO CHASSI
04-11	ALARME DE MARCHA ATRÁS
04-12	ALARME DE MARCHA ATRÁS - MODELOS COM CONTROLO AUTOMÁTICO
04-12A	ALARME DE MARCHA ATRÁS - MODELOS COM CONTROLO AUTOMÁTICO
04-12B	PARTIDA REMOTA COM BATERIA AUXILIAR
04-13	FIOS, DUAS VELOCIDADES
04-14	BUZINA CONJUNTO FIOS
04-14A	BUZINA
04-15	SISTEMA ELÉCTRICO DO CONJUNTO DA PLACA DE MONTAGEM
04-15A	SISTEMA ELÉCTRICO DO CONJUNTO DA PLACA DE MONTAGEM
04-16	CONJUNTO DA LANÇA / KIT PARA ESTRADA
04-16A	CONJUNTO DA LANÇA / KIT PARA ESTRADA
04-17	CONJUNTO DOS FARÓIS DIANTEIROS / KIT PARA ESTRADA
04-18	CONJUNTO DA BARRA DA LUZ TRASEIRA / KIT PARA ESTRADA
04-19	LANÇA - PISCA-PISCA
04-20	CONJUNTO DOS FARÓIS DIANTEIROS / KIT PARA ESTRADA, PISCA-PISCA
04-20A	DIANTEIRA FAROS
04-21	LAMPARAS TRASERAS, TRAVÃO/PISCA-PISCA - EUROPA
04-21A	LAMPARAS TRASERAS, TRAVÃO/PISCA-PISCA - EUROPA
04-21B	TRASEIRO LANTERNA DE TRABALHO
04-21C	DIANTEIRA E TRASEIRA LANTERNA DE TRABALHO
04-22	CONTROLO AUTOMÁTICO FIOS

TABLE OF CONTENTS

04-23	KIT DA FONTE DE ALIMENTAÇÃO ELÉTRICA
04-24	CONJUNTO DA BUZINA/PISCA-PISCA
04-25	KIT DO SINALIZADOR DE PERIGO
04-26	LUZ INDICADORA
04-26A	FAROL, ROTATIVO KIT, DE LUXO CABINE
04-27	LUZ DE PERIGO
04-28	TRABA, CONTROL DE LA CARGADORA, CONTROLO AUTOMÁTICO (EUROPA)
04-29	FIOS- EH AUXILIAR
04-30	CALEFACCION Y AIRE ACONDICIONADO, CONTROLES
04-31	CONJUNTO DE INSTRUMENTOS - AVANÇADO; L175 NA ASN N7M470553, L175 EU ASN N7M468035; C175 NA ASN N7M466429, C175 EU ASN N7M467968
06-01	CONJUNTO DE CENTRAGEM DA TRANSMISSÃO
06-02	SISTEMA HIDROSTÁTICO - MOTORES DA BOMBA E DE TRANSMISSÃO, UMA VELOCIDADE
06-03	SISTEMA HIDROSTÁTICO - BOMBA AO TUBO DE DISTRIBUIÇÃO, UMA VELOCIDADE
06-04	SISTEMA HIDROSTÁTICO - MOTORES DE TRACÇÃO À BOMBA, DUAS VELOCIDADES
06-05	SISTEMA HIDROSTÁTICO - BOMBA AO TUBO DE DISTRIBUIÇÃO, DUAS VELOCIDADES
06-06	SISTEMA HIDROSTÁTICO - DUAS VELOCIDADES
06-07	SISTEMA HIDROSTÁTICO - MOTORES DE TRACÇÃO À BOMBA (C175)
06-08	SISTEMA HIDROSTÁTICO - DUAS VELOCIDADES/TRAVÃO (C175)
06-09	SISTEMA HIDROSTÁTICO - DUAS VELOCIDADES, CONJUNTO DA VÁLVULA
06-10	SISTEMA HIDROSTÁTICO - DUAS VELOCIDADES, CONJUNTO DA VÁLVULA (C175)
06-11	SISTEMA DE FRENOS, TRANSMISSÃO DE DESLOCAMENTO DE DUAS VELOCIDADES - MODELOS COM CONTROLO AUTOMÁTICO
06-12	SISTEMA HIDROSTÁTICO - CONTROLO AUTOMÁTICO À BOMBA
06-12A	SISTEMA HIDROSTÁTICO - CONTROLO DA ALAVANCA DE MUDANÇAS KITS, TESTE PADRÃO ISOMETRIC
06-13	SISTEMA HIDROSTÁTICO - BOMBA AO TUBO DE DISTRIBUIÇÃO, MODELOS COM CONTROLO AUTOMÁTICO
06-14	CONJUNTO DA BOMBA HIDRÁULICA/MOTOR, MODELOS COM CONTROLO AUTOMÁTICO
06-15	CONJUNTO DA BOMBA HIDRÁULICA/MOTOR, MODELOS COM CONTROLO AUTOMÁTICO
06-16	SISTEMA HIDROSTÁTICO - MOTORES DA BOMBA E DE TRANSMISSÃO, TRANSMISSÃO DE DESLOCAMENTO DE DUAS VELOCI
06-17	SISTEMA HIDROSTÁTICO - STANDARD, TRANSMISSÃO DE DESLOCAMENTO DE DUAS VELOCIDADES
06-18	CONJUNTO DA BOMBA HIDRÁULICA/MOTOR (C175), MODELOS COM CONTROLO AUTOMÁTICO
06-19	SISTEMA HIDROSTÁTICO - BOMBA AO TUBO DE DISTRIBUIÇÃO (C175), MODELOS COM CONTROLO AUTOMÁTICO
06-20	SISTEMA HIDROSTÁTICO - BOMBA ENCAIXES (C175), MODELOS COM CONTROLO AUTOMÁTICO
06-21	SISTEMA DE FRENOS, TRANSMISSÃO DE DESLOCAMENTO DE DUAS VELOCIDADES (C175)- MODELOS COM CONTROLO AUTO
06-22	CONJUNTO DA BOMBA TANDEM - UMA VELOCIDADE
06-23	BOMBA DO PISTÃO, TRASEIRA / BOMBA DE ENGRENAGENS B2B / SIMPLES E DUPLA

TABLE OF CONTENTS

06-24	BOMBA DO PISTÃO, DIANTEIRA / BOMBA DE ENGRENAGENS B2B / SIMPLES E DUPLA
06-25	TUBO DE DISTRIBUIÇÃO CENTRAL/ BOMBA DE ENGRENAGENS B2B / SIMPLES E DUPLA
06-26	CONJUNTO DA BOMBA TANDEM - TRANSMISSÃO DE DESLOCAMENTO DE DUAS VELOCIDADES
06-27	BOMBA DO PISTÃO, DIANTEIRA / BOMBA DE ENGRENAGENS B2B / SIMPLES E DUPLA
06-28	BOMBA DO PISTÃO, TRASEIRA / BOMBA DE ENGRENAGENS B2B / SIMPLES E DUPLA
06-29	TUBO DE DISTRIBUIÇÃO CENTRAL/ BOMBA DE ENGRENAGENS B2B / SIMPLES E DUPLA
06-30	BOMBA AA20
06-30A	BOMBA, TRANSMISSÃO DE DESLOCAMENTO DE DUAS VELOCIDADES, CONTROLO AUTOMÁTICO
06-31	VALVULA DE REDUCCION DEPRESION
06-32	VALVULA DE REDUCCION DEPRESION
06-33	CONJUNTO DA BOMBA DE ENGRENAGEM
06-34	ROTATIE CONSTRUCTIE, RECHTS
06-35	CONTROL, HIDRAULICO
06-35A	CONTROL, HIDRAULICO
06-36	CONTROLO CONJUNTO
06-36A	CONTROLO CONJUNTO
06-37	ELEMENTOS FECHANDO
06-38	ROTAÇÃO CONJUNTO, ESQUERDA ROTAÇÃO
06-38A	ROTAÇÃO CONJUNTO, ESQUERDA ROTAÇÃO
06-40	CONJUNTO DO MOTOR, - REXROTH
06-41	CONJUNTO DO MOTOR, - REXROTH
06-42	CONJUNTO DO MOTOR, - REXROTH
06-43	CONJUNTO DO MOTOR, DUAS VELOCIDADES
06-44	CONJUNTO DO MOTOR, DUAS VELOCIDADES
06-45	CONJUNTO DO MOTOR, DUAS VELOCIDADES
06-46	CONJUNTO DO MOTOR, TRANSMISSÃO DE DESLOCAMENTO DE DUAS VELOCIDADES (C175)
06-49	CONJUNTO DA BOMBA DE ENGRENAGEM
06-50	BOMBA, ENGRANAJE
06-51	BOMBA, ENGRANAJE (FLUXO ALTO)
06-52	BOMBA, ENGRANAJE (FLUXO ALTO)
06-53	BOMBA, ENGRANAJE (FLUXO ALTO)
06-54	SUPORTE - BOMBA SUPORTE, CONTROLO AUTOMÁTICO
06-55	CONJUNTO DA TRANSMISSÃO FINAL (L175)
06-56	CONJUNTO DA TRANSMISSÃO FINAL (C175)
06-57	RODAS
06-58	ESTEIRAS
07-01	SISTEMA DE FRENOS - HIDRÁULICO
07-02	KIT DO TRAVÃO/ PARA ESTRADA
07-03	KIT DO TRAVÃO/ PARA ESTRADA, CONTROLO AUTOMÁTICO
07-04	SISTEMA DE FRENOS - HIDRÁULICO, MODELOS COM CONTROLO AUTOMÁTICO
08-01	VÁLVULA DE CONTROLE HIDRÁULICO
08-02	VÁLVULA DE CONTROLE HIDRÁULICO
08-03	VÁLVULA DE CONTROLO DO CIRCUITO EM SÉRIE

TABLE OF CONTENTS

08-04	CONJUNTO DA LANÇA HIDRÁULICA/BALDE
08-05	CONJUNTO DA LANÇA HIDRÁULICA/BALDE, STANDARD/FLUXO ALTO
08-06	CONJUNTO DA LANÇA / CAÇAMBA HIDRÁULICAS - FLUXO ALTO
08-07	SISTEMA HIDRÁULICO AUXILIAR, STANDARD
08-08	SISTEMA HIDRÁULICO AUXILIAR, FLUXO ALTO
08-09	SISTEMA HIDRÁULICO - CONJUNTO DA PLACA DE MONTAGEM
08-09A	SISTEMA HIDRÁULICO - CONJUNTO DA PLACA DE MONTAGEM
08-10	CONJUNTO DO CILINDRO - CONJUNTO DA PLACA DE MONTAGEM
08-11	CONJUNTO DA VÁLVULA - CONJUNTO DA PLACA DE MONTAGEM
08-12	LANÇA SISTEMA HIDRÁULICO - SUPORTE PLACA, FLUXO ALTO
08-12A	LANÇA SISTEMA HIDRÁULICO - SUPORTE PLACA, FLUXO ALTO
08-13	LANÇA SISTEMA HIDRÁULICO - SUPORTE PLACA, STANDARD
08-13A	LANÇA SISTEMA HIDRÁULICO - SUPORTE PLACA, STANDARD
08-14	FILTRO E DEPÓSITO
08-14A	RESERVATÓRIO HIDRÁULICO E CONJUNTO DO FILTRO; DELUXE CABINE
08-15	CONJUNTO DO FILTRO
08-16	RESERVATÓRIO HIDRÁULICO E CONJUNTO DO FILTRO - MODELOS COM CONTROLO AUTOMÁTICO
08-16A	RESERVATÓRIO HIDRÁULICO E CONJUNTO DO FILTRO - MODELOS COM CONTROLO AUTOMÁTICO, C175 EUROPE
08-16B	RESERVATÓRIO HIDRÁULICO E CONJUNTO DO FILTRO - MODELOS COM CONTROLO AUTOMÁTICO; DELUXE CABINE
08-18	SISTEMA HIDRÁULICO - FLUXO ALTO
08-19	CONJUNTO DA VÁLVULA, FLUXO ALTO
08-19A	CONJUNTO DA VÁLVULA, AUXILIAR SECUNDÁRIO
08-20	SISTEMA HIDRÁULICO - CONTROLE MANUAL, MODELOS COM CONTROLO AUTOMÁTICO
08-21	SISTEMA HIDRÁULICO - CONTROLO AUTOMÁTICO À VÁLVULA DE CONTROLO
08-21B	HIDRÁULICO - CONTROLO DA ALAVANCA DE MUDANÇAS KITS, TESTE PADRÃO ISOMETRIC
08-22	SISTEMA HIDRÁULICO DA VÁLVULA DE CONTROLE,
08-22A	HIDRÁULICA DA VÁLVULA DE CONTROLO, MODELOS COM CONTROLO AUTOMÁTICO, EH CONTROLE AUXILIAR
08-23	VÁLVULA DE CONTROLE -
08-23A	VÁLVULA DE CONTROLO - MODELOS COM CONTROLO AUTOMÁTICO, EH CONTROLE AUXILIAR
08-23B	VÁLVULA DE CONTROLO - MODELOS COM CONTROLO AUTOMÁTICO, EH CONTROLE AUXILIAR
08-24	VÁLVULA DE CONTROLE, KITS DE SUBSTITUIÇÃO DE VEDAÇÕES
08-25	VÁLVULA DE CONTROLE, KITS DE SUBSTITUIÇÃO DE VEDAÇÕES
08-26	VÁLVULA DE CONTROLE, KITS DE SUBSTITUIÇÃO DE VEDAÇÕES - BOBINAS
08-27	VÁLVULA DE CONTROLE, KITS DE SUBSTITUIÇÃO DE VEDAÇÕES - BOBINAS
08-28	VÁLVULA DE CONTROLE, KITS DE SUBSTITUIÇÃO DE VEDAÇÕES - BOBINAS E BATENTES
08-29	VÁLVULA DE CONTROLE, CONFIRA VÁLVULA
08-30	VÁLVULA DE CONTROLE, KITS DE SUBSTITUIÇÃO DE VEDAÇÕES - BOBINAS
08-31	VÁLVULA DE CONTROLE, TAMPE ASSEMBLÉIA, CONJUNTO DA VÁLVULA
08-37	SISTEMA HIDRÁULICO, STANDARD UMA VELOCIDADE - MODELOS COM CONTROLO AUTOMÁTICO
08-38	SISTEMA HIDRÁULICO, STANDARD TRANSMISSÃO DE DESLOCAMENTO DE DUAS VELOCIDADES - MODELOS COM CONTROLO

TABLE OF CONTENTS

08-39	SISTEMA HIDRÁULICO, FLUXO ALTO UMA VELOCIDADE - MODELOS COM CONTROLO AUTOMÁTICO; SE UTILIZADO
08-39A	SISTEMA HIDRÁULICO, FLUXO ALTO UMA VELOCIDADE - MODELOS COM CONTROLO AUTOMÁTICO, EH AUX; SE UTILIZADO
08-40	SISTEMA HIDRÁULICO, FLUXO ALTO TRANSMISSÃO DE DESLOCAMENTO DE DUAS VELOCIDADES - MODELOS COM CONTROL; SE UTILIZADO
08-40A	SISTEMA HIDRÁULICO, FLUXO ALTO TRANSMISSÃO DE DESLOCAMENTO DE DUAS VELOCIDADES - MODELOS COM CONTROL; SE UTILIZADO
08-41	VÁLVULA DE CONTROLE, KITS DE SUBSTITUIÇÃO DE VEDAÇÕES
08-41A	VÁLVULA DE CONTROLE, KITS DE SUBSTITUIÇÃO DE VEDAÇÕES
08-42	VÁLVULA DE CONTROLE, KITS DE SUBSTITUIÇÃO DE VEDAÇÕES
08-43	VÁLVULA DE CONTROLE - CIRCUITO DE ALÍVIO, PRINCIPAL
08-44	VÁLVULA DE CONTROLE, TAMPE ASSEMBLÉIA, CONJUNTO DA VÁLVULA
08-45	VÁLVULA DE CONTROLE, CONFIRA VÁLVULA
08-46	VÁLVULA DE CONTROLE, KITS DE SUBSTITUIÇÃO DE VEDAÇÕES - BOBINAS E BATENTES
08-47	VÁLVULA DE CONTROLE, KITS DE SUBSTITUIÇÃO DE VEDAÇÕES - BOBINAS
08-48	VÁLVULA DE CONTROLE, KITS DE SUBSTITUIÇÃO DE VEDAÇÕES - BOBINAS
08-49	VÁLVULA DE CONTROLE, KITS DE SUBSTITUIÇÃO DE VEDAÇÕES - BOBINAS
08-50	VÁLVULA DE CONTROLE, KITS DE SUBSTITUIÇÃO DE VEDAÇÕES - BOBINAS
08-51	VÁLVULA DE CONTROLE, CONFIRA VÁLVULA
08-52	VÁLVULA DE CONTROLE, KITS DE SUBSTITUIÇÃO DE VEDAÇÕES - BOBINAS
08-53	VÁLVULA DE CONTROLE, KITS DE SUBSTITUIÇÃO DE VEDAÇÕES - BOBINAS
09-01	CHASSI (L175)
09-01A	CHASSI (C175)
09-02	CONJUNTO DA PLACA DE MONTAGEM
09-03	BOOM
09-04	BOOM LOCK
09-04A	FOLGA, KIT
09-05	BUCKET CYLINDER
09-06	BOOM CYLINDER
09-06A	BOOM CYLINDER
09-07	BUCKETS - LOADER, DIRT / FOUNDRY
09-08	BUCKETS - LOADER, EXTENDED LOW PROFILE
09-09	BUCKETS - LOADER, UTILITY / LIGHT MATERIAL
09-10	BUCKETS - LOADER, MANURE / SLURRY
09-10A	BUCKET - CUTTING EDGE
09-10B	BUCKET, CUTTING EDGE KIT
09-11	HORQUILLA
09-12	FENDERS (L175)
09-13	FENDERS (C175)
09-14	LIMITE - JANELA TRASEIRA
09-15	CAB
09-15A	CAB - DELUXE CAB
09-15B	CAB - INTERIOR TRIM, MANUAL CONTROLS, DELUXE CAB
09-15C	CAB - INTERIOR TRIM, PILOT CONTROLS, DELUXE CAB
09-16	CAB - HEADLINER
09-17	CAB - HEADLINER, WITH HEAT AND AIR CONDITIONING
09-17A	FORRO DO TECTO DA CABINA
09-17B	FORRO DO TECTO DA CABINA
09-18	SISTEMA DE LA CALEFACCION

TABLE OF CONTENTS

09-18A	CABINE - SISTEMA DE LA CALEFACCION
09-19	AQUECEDOR DA CABINA
09-20	AQUECEDOR DA CABINA/AR CONDICIONADO
09-20A	AQUECEDOR DA CABINA/AR CONDICIONADO
09-21	AQUECEDOR DA CABINA/AR CONDICIONADO
09-21A	CALEFACCION Y AIRE ACONDICIONADO
09-22	CONDENSADOR - AR CONDICIONADO
09-23	COMPRESSOR CONJ. - AR CONDICIONADO
09-24	LIMITE & CABINE VENTANAS (EUROPA)
09-25	PORTA DA CABINA
09-26	PORTA DA CABINA - LIMPA PÁRA-BRISAS
09-27	PORTA DA CABINA
09-28	PORTA DE DEMOLIÇÃO
09-28A	KIT DA PORTA DE DEMOLIÇÃO
09-28B	CABINE - PORTA DE DEMOLIÇÃO, DE LUXO
09-28C	CABINE - PORTA DE DEMOLIÇÃO, DE LUXO
09-28D	KIT DE PORTA DE DEMOLIÇÃO / SEM PORTA
09-29	CAB - DOOR AND FRAME, DELUXE CAB
09-29A	PORTA DA CABINA KITS, DE LUXO CABINE
09-29B	PORTA DA CABINA
09-29C	CABINE - PORTA ESTRUTURA
09-30	PUERTA - CONJUNTO DEL INTERRUPTOR
09-31	CABINE - VENTANAS
09-31A	CABINE - VENTANAS/TETO
09-32	CABINE - JANELA, DIREITA
09-32A	CABINE - JANELA, DIREITA
09-32B	CABINE - JANELA, DIREITA
09-32C	CABINE - JANELA, DIREITA
09-32D	CABINE - JANELA, DIREITA
09-33	CABINE - JANELA, ESQUERDA
09-33A	CABINE - JANELA, ESQUERDA
09-33B	CABINE - SUPERIOR VENTANILLA
09-33C	CABINE - JANELA, ESQUERDA
09-33D	CABINE - JANELA, ESQUERDA
09-33E	CABINE - JANELA, ESQUERDA
09-34	PLACAS, SUELO
09-35	PUERTA, TRASERA
09-36	CONJUNTO DA CAPOTA TRASEIRA
09-37	PEGAS
09-38	ALAVANCAS
09-38A	ALAVANCAS, MODELOS COM CONTROLO AUTOMÁTICO, CONTROLE AUXILIAR
09-39	PEGAS - MODELOS COM CONTROLO AUTOMÁTICO
09-39A	PEGAS - MODELOS COM CONTROLO AUTOMÁTICO, EH CONTROLE AUXILIAR
09-40	CONTROLE MANUAL - ALAVANCAS
09-41	CONTROLE MANUAL - PAINEL DE IMPULSO, DIREITA
09-42	CONTROLE MANUAL - PAINEL DE IMPULSO, ESQUERDA
09-43	CONTROLO MANUAL - CONJUNTO DO PEDAL
09-43A	KIT DE CONTROLO MANUAL
09-43B	CONTROLE MANUAL, CONJUNTO DO PEDAL, PADRÃO, FLUXO ALTO E AUX.
09-44	CONJUNTO DO CONTROLO DA TRANSMISSÃO - PEDAIS DE CONTROLO COM FLUXO ALTO E AUXILIAR

TABLE OF CONTENTS

09-45	CONJUNTO DIREITO DO PAINEL DE AJUSTE - CONTROLE DE TRAÇÃO
09-46	CONJUNTO ESQUERDO DO PAINEL DE AJUSTE - CONTROLE DE TRAÇÃO
09-47	CONJUNTO DO PEDAL, PADRÃO E DE LUXO
09-48	LANÇA & CAÇAMBA CONTROLO, COMPONENTES DO TÚNEL
09-49	KIT DE CONTROLO MANUAL
09-50	ACELERADOR DE PEDAL KIT
09-51	COMPONENTES DO TÚNEL - MODELOS COM CONTROLO AUTOMÁTICO
09-51A	COMPONENTES DO TÚNEL - DE LUXO CABINE
09-51B	COMPONENTES DO TÚNEL - MODELOS COM CONTROLO AUTOMÁTICO, EH CONTROLE AUXILIAR
09-52	PEDAIS - MODELOS COM CONTROLO AUTOMÁTICO
09-52A	PEDAIS - MODELOS COM CONTROLO AUTOMÁTICO, EH CONTROLE AUXILIAR
09-53	CONTROLE MANUAL - CONTROLO AUTOMÁTICO, DIREITA
09-54	CONTROLE MANUAL - CONTROLO AUTOMÁTICO, DIREITA
09-55	CONTROLE MANUAL - CONTROLO AUTOMÁTICO, ESQUERDA
09-56	CONTROLE MANUAL - CONTROLO AUTOMÁTICO, ESQUERDA
09-57	CONJUNTO ACÚSTICO
09-58	CONJUNTO ACÚSTICO
09-58A	CONJUNTO ACÚSTICO
09-58B	CONJUNTO ACÚSTICO - SILENCIADOR
09-58C	CONJUNTO ACÚSTICO - JUEGO PARA EL RUIDO
09-59	CONJUNTO DO ASSENTO STANDARD
09-60	CONJUNTO DO ASSENTO STANDARD
09-61	CONJUNTO DO ASSENTO SUSPENSÃO
09-62	CONJUNTO DO ASSENTO SUSPENSÃO
09-63	CONJUNTO DO ASSENTO SUSPENSÃO
09-64	CINTOS DE SEGURANÇA, STANDARD
09-65	CINTOS DE SEGURANÇA
09-66	CINTOS DE SEGURANÇA, 3 IN. COMBINAÇÃO - SE UTILIZADO
09-66A	CINTOS DE SEGURANÇA
09-67	CINTOS DE SEGURANÇA
09-68	DESCANSO PARA O BRAÇO - MODELOS COM CONTROLO AUTOMÁTICO
09-68A	DESCANSO PARA O BRAÇO
09-69	CONJUNTO DO DESCANSO DO ANTEBRAÇO
09-70	KIT DO SUPORTE PARA O BRAÇO
09-71	EXTINTOR DE INCÊNDIO, KITS DE RETROVISOR E PLACAS DO CHÃO
09-71A	ACESSÓRIOS E KITS, PARA EUROPA
09-72	CONTRA PESO
09-72A	KIT DO MACACO DA CABINA
09-73	CONJUNTO DE ADESIVOS - AMÉRICA DO NORTE
09-74	CONJUNTO DE ADESIVOS - AMÉRICA DO NORTE
09-75	CONJUNTO DE ADESIVOS - AMÉRICA DO NORTE
09-76	ADESIVOS - EUROPA
09-77	ADESIVOS - EUROPA
09-78	ADESIVOS - EUROPA
09-79	ADESIVOS - CONTROLO AUTOMÁTICO
09-80	ADESIVOS - PORTUGUÊS DO BRASIL, FRANCÊS DO CANADÁ, ESPANHOL DA AMÉRICA LATINA
09-81	ADESIVOS - LANÇA
09-82	ADESIVOS - CONTROLES
09-83	ADESIVOS - CONTROLES

TABLE OF CONTENTS

09-84	ADESIVOS
09-85	ADESIVOS
09-86	ADESIVOS
09-87	ADESIVOS
09-88	KIT DO SÍMBOLO DE VEÍCULO LENTO
09-89	ADESIVOS

SECTION INDEX
Motor

02-01	RADIADOR - SISTEMA DE RECUPERAÇÃO DO FLUIDO DE REFRIGERAÇ
02-02	FILTRO DE AR - MOTOR
02-03	ESCAPAMENTO
02-04	SILENCIADOR - ASPIRADOR
02-04A	SILENCIADOR - ASPIRADOR
02-05	SOPORTE DEL MOTOR - L175 NA BSN N7M470553, L175 EU BSN N7M468035; C175 NA BSN N7M466429, C175 EU BSN
02-05A	SOPORTE DEL MOTOR - L175 NA ASN N7M470553, L175 EU ASN N7M468035; C175 NA ASN N7M466429, C175 EU ASN
02-05B	SOPORTE DEL MOTOR - EUROPE C175 ASN N7M467968
02-06	AQUECEDOR DO BLOCO DO MOTOR
02-07	BLOCO DO CILINDRO - FILTRO DE ACEITE - L175 NA BSN N7M470553, L175 EU BSN N7M468035; C175 NA BSN N7M
02-08	CABEÇA DO CILINDRO - L175 NA BSN N7M470553, L175 EU BSN N7M468035; C175 NA BSN N7M466429, C175 EU BS
02-09	COBERTURA DO CABEÇOTE, POLIA DO VIRABREQUIM - L175 NA BSN N7M470553, L175 EU BSN N7M468035; C175 NA
02-10	CONJUNTO DO BRAÇO OSCILANTE
02-11	EIXO TRANSMISSOR - L175 NA BSN N7M470553, L175 EU BSN N7M468035; C175 NA BSN N7M466429, C175 EU BSN
02-12	CAMBOTA, PISTÃO
02-13	TUBO DE DISTRIBUIÇÃO DA ADMISSÃO
02-14	TURBOCOMPRESOR
02-15	CAIXA DA ENGRENAGEM DE DISTRIBUIÇÃO, REGULADOR - L175 NA BSN N7M470553, L175 EU BSN N7M468035; C175
02-16	RESERVATÓRIO DE ÓLEO
02-17	BOMBA DE ÓLEO E FILTRO DE SUCÇÃO - L175 NA BSN N7M470553, L175 EU BSN N7M468035; C175 NA BSN N7M4664
02-18	BOMBA DE ÁGUA
02-19	VOLANTE, COBERTURA - L175 NA BSN N7M470553, L175 EU BSN N7M468035; C175 NA BSN N7M466429, C175 EU BS
02-20	BLOCO DO CILINDRO - FILTRO DE ACEITE - L175 NA ASN N7M470553, L175 EU ASN N7M468035; C175 NA ASN N7M
02-21	CABEÇA DO CILINDRO - L175 NA ASN N7M470553, L175 EU ASN N7M468035; C175 NA ASN N7M466429, C175 EU AS
02-22	COBERTURA DO CABEÇOTE, POLIA DO VIRABREQUIM - L175 NA ASN N7M470553, L175 EU ASN N7M468035; C175 NA
02-23	EIXO TRANSMISSOR - L175 NA ASN N7M470553, L175 EU ASN N7M468035; C175 NA ASN N7M466429, C175 EU ASN
02-24	CAIXA DA ENGRENAGEM DE DISTRIBUIÇÃO, REGULADOR - L175 NA ASN N7M470553, L175 EU ASN N7M468035; C175
02-25	BOMBA DE ÓLEO E FILTRO DE SUCÇÃO - L175 NA ASN N7M470553, L175 EU ASN N7M468035; C175 NA ASN N7M4664
02-26	VOLANTE, COBERTURA - L175 NA ASN N7M470553, L175 EU ASN N7M468035; C175 NA ASN N7M466429, C175 EU AS

02-01		p1	02/08

RADIADOR - SISTEMA DE RECUPERAÇÃO DO FLUIDO DE REFRIGERAÇ

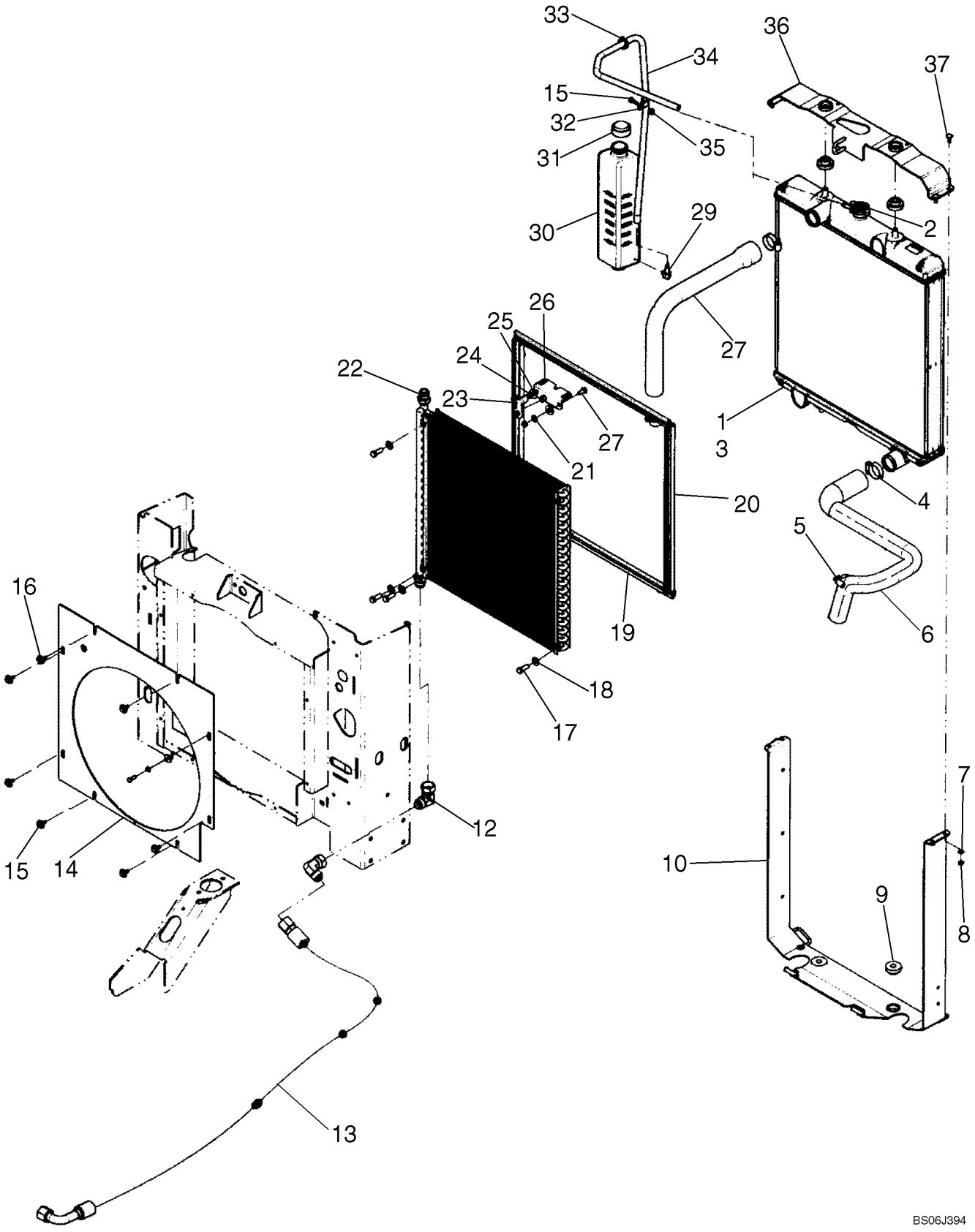

RADIADOR - SISTEMA DE RECUPERAÇÃO DO FLUIDO DE REFRIGERAÇ

REF	FN	PART NUMBER	YR/SN	QTY	DESCRIPTION
1		87013856		1	RADIADOR ARREFECIMENTO
2		87032486		1	TAMPAO
3		87032485		1	TORNEIRA, Drain Cock; Not Illustrated
4		86050202		2	BRACADEIRA MANGUEIRA, #32, 1.56/2.50 Type F Worm
5		513309		2	BRACADEIRA MANGUEIRA, #24, 1.06/2.00 Type F Worm
6		87360745		1	MANGUEIRA, Lower Radiator
7		322357		12	ARRUELA MOLA, Belleville, M6
8		7770		4	PORCA, 1/4"-20, G5
9		87017045		4	COXIM
10		87393455		1	CHASSI
12		219603		2	COTOVELO, 90º, 1 1/16"-12, 37º x 1 1/16"-12, 37º Fem Sw
13		87043921		1	MANGUEIRA, 1615 mm, 63.58 in.
14		87543378		1	COBERTURA, Fan
15		9707580		9	PARAFUSO, Hex, 1/4"-20 x 3/4", G5, Full Thd
16		140040		8	ARRUELA PLANA, M6 x 22 x 2
17		88206		4	PARAFUSO, Hex, 3/8"-16 x 1", G5, Full Thd
18		140045		4	ARRUELA MOLA, Belleville, M10
19		87016847		2	ANEL DE VEDACAO
20		87026112		2	ANEL DE VEDACAO
21		322358		2	ARRUELA MOLA, Belleville, M8
22		87014852		1	ARREFECEDOR
23		87017116		1	ALAVANCA
24		9635082		2	PORCA, 5/16"-18, G5
25		80702		2	ARRUELA PLANA, 3/8"
26		84015292		1	FECHADURA, If Used
26		87705306		1	TRINCO, If Used
27		87360744		1	MANGUEIRA, Upper Radiator
29		87013232		1	CONEXAO, Elbow, 90 Hose Stem 5/16 ID X 1/8 NPTF
30		87360734		1	GARRAFA, Bottle, Coolant Recovery
31		9807943		1	PROTETOR DE BUJÃO
32		9706748		1	PRENDEDOR, 5/8", Insul, 5/16" Bolt

2

RADIADOR - SISTEMA DE RECUPERAÇÃO DO FLUIDO DE REFRIGERAÇ

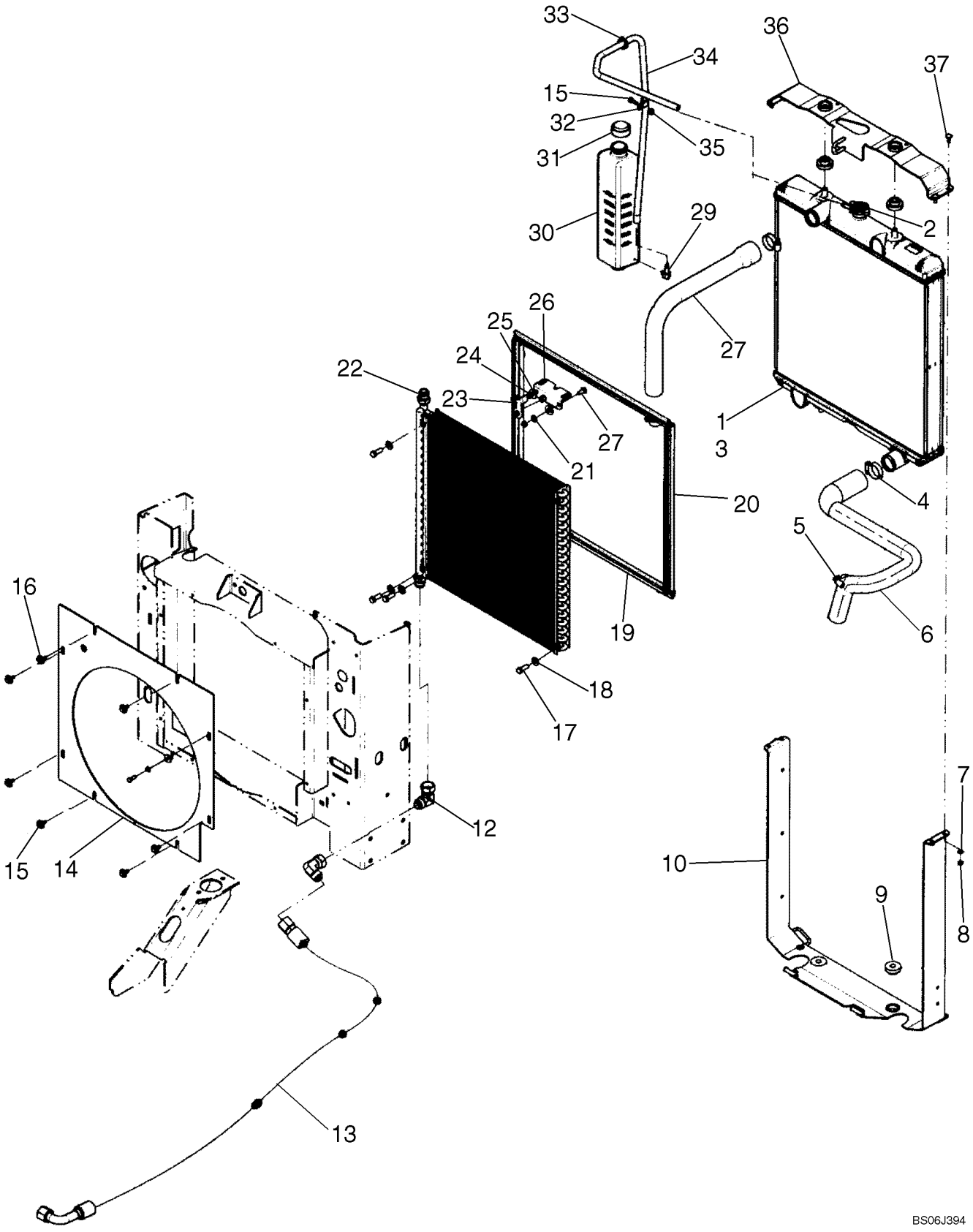

RADIADOR - SISTEMA DE RECUPERAÇÃO DO FLUIDO DE REFRIGERAÇ

REF	FN	PART NUMBER	YR/SN	QTY	DESCRIPTION
33		86502507		1	CASQUILHO ISOLADOR
34		87363097		1	MANGUEIRA, Coolant Recovery
35		9626558		1	CONTRA PORCA, Flg, 1/4"-20
36		87459340		1	ESTRUTURA
37		280638		4	PARAFUSO, Short NK, 1/4"-20 x 3/4", G5, Full Thd

FILTRO DE AR - MOTOR

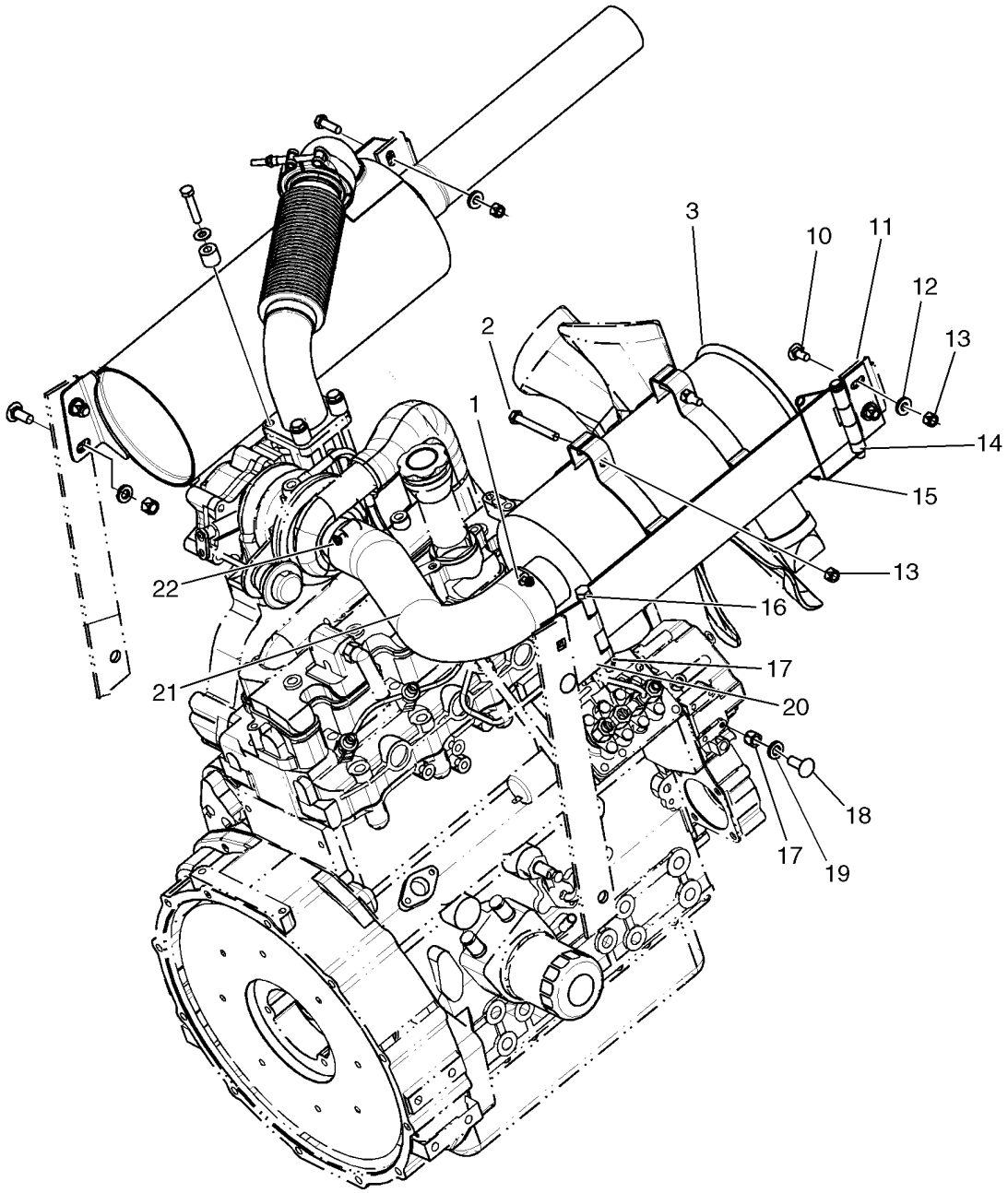

BS06M248

FILTRO DE AR - MOTOR

REF	FN	PART NUMBER	YR/SN	QTY	DESCRIPTION
1		45014		1	BRACADEIRA MANGUEIRA, #40, 2.06/3.00 Type F Worm
2		88346		2	PARAFUSO, Hex, 5/16"-18 x 2 1/2", G5
3		87033035		1	DEPURADOR, Incl. 4 - 9; Component Parts Not Illustrated Separately
4		221407		1	PORCA BORBOLETA
5		221410		1	TAMPA
6		87033038		1	VALVULA ALIVIO
7		87035488		1	FILTRO DE AR, Primary Filter
8		87035489		1	FILTRO DE AR, Safety Filter
9		629086		1	DECALCOMANIA, Danger; See Figure 09-75, Ref 11
10		280327		2	PARAFUSO, Short NK, 5/16"-18 x 3/4", G5
11		87384112		1	SUPORTE, Bracket, Gray; If Used
11		87668576		1	DOBRADIÇA, Bracket, Gray; If Used
12		86624142		4	ARRUELA PLANA, .344" x 3/4" x .120"
13		86629544		6	CONTRA PORCA, 5/16"-18, GB
14		87390667		1	PRENDEDOR, Snap Pin .375 X 3.500 GR5
15		87379064		1	SUPORTE, Air Cleaner Support
16		280796		1	PARAFUSO, Hex, 3/8"-16 x 4 1/4", G5
17		88902		4	CONTRA PORCA, 3/8"-16, GC
18		80280503		2	PARAFUSO, Short NK, 3/8"-16 x 1", G5, Full Thd
19		86624144		4	ARRUELA PLANA, 13/32" x 3/4" x .120"
20		87384114		1	SUPORTE, Hinge
21		87360743		1	MANGUEIRA
22		86050202		1	BRACADEIRA MANGUEIRA, #32, 1.56/2.50 Type F Worm

ESCAPAMENTO

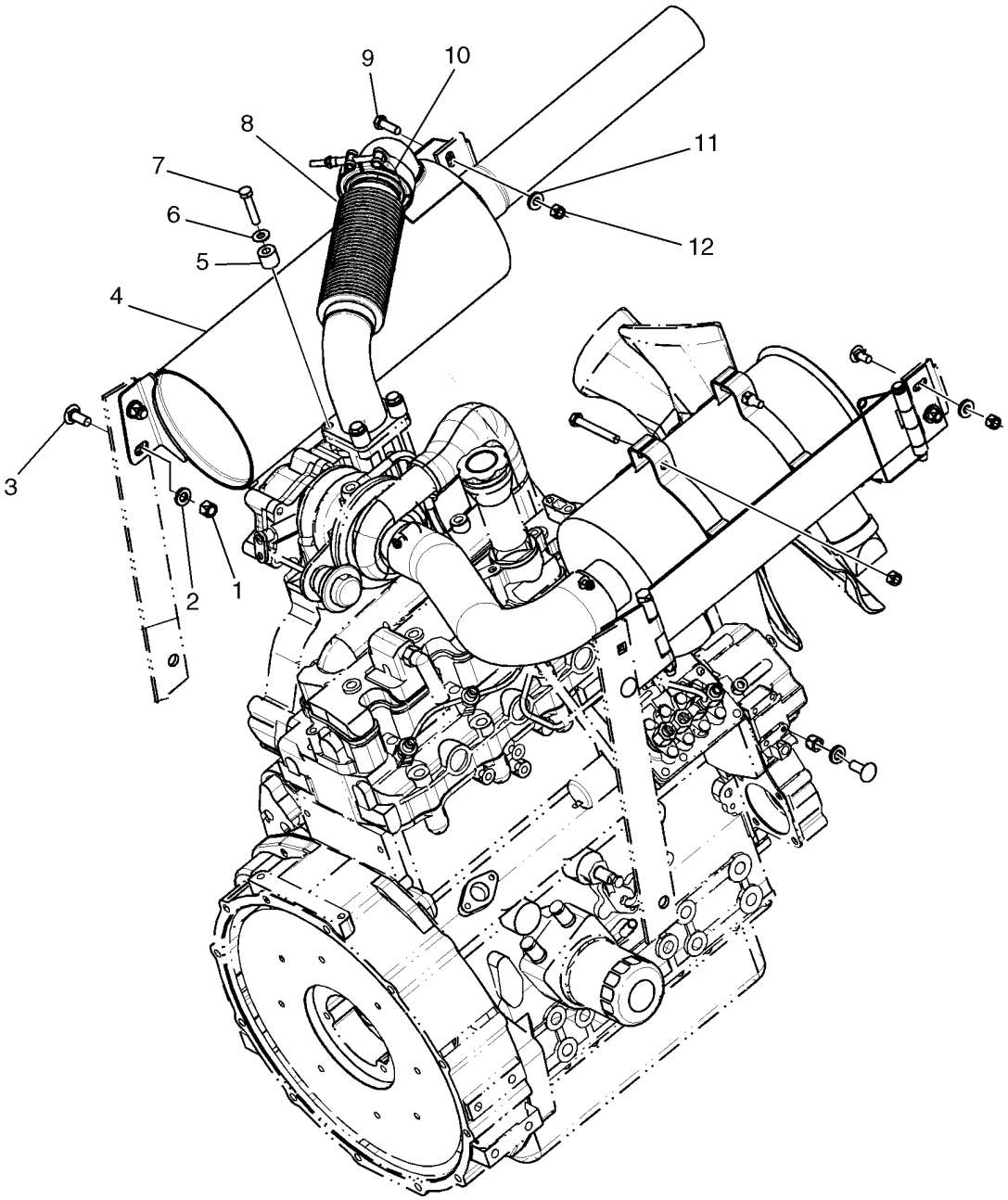

BS06M250

ESCAPAMENTO

REF	FN	PART NUMBER	YR/SN	QTY	DESCRIPTION
1		88902		1	CONTRA PORCA, 3/8"-16, GC
2		86624144		4	ARRUELA PLANA, 13/32" x 3/4" x .120"
3		80280503		2	PARAFUSO, Short NK, 3/8"-16 x 1", G5, Full Thd
4		87557929		1	SILENCIOSO, Muffler, Spark Arresting
5		86534692		4	ESPAÇADOR
6		322358		4	ARRUELA MOLA, Belleville, M8
7		43129		4	PARAFUSO, Hex, M8 x 40, 8.8
8		87619343		1	TUBO, Flex Tube, Turbo Outlet
9		9635884		2	PARAFUSO, Hex, 5/16"-18 x 1", G5, Full Thd
10		87563185		1	PRENDEDOR, V-Band Clamp
11		86624142		4	ARRUELA PLANA, .344" x 3/4" x .120"
12		86629544		6	CONTRA PORCA, 5/16"-18, GB

SILENCIADOR - ASPIRADOR

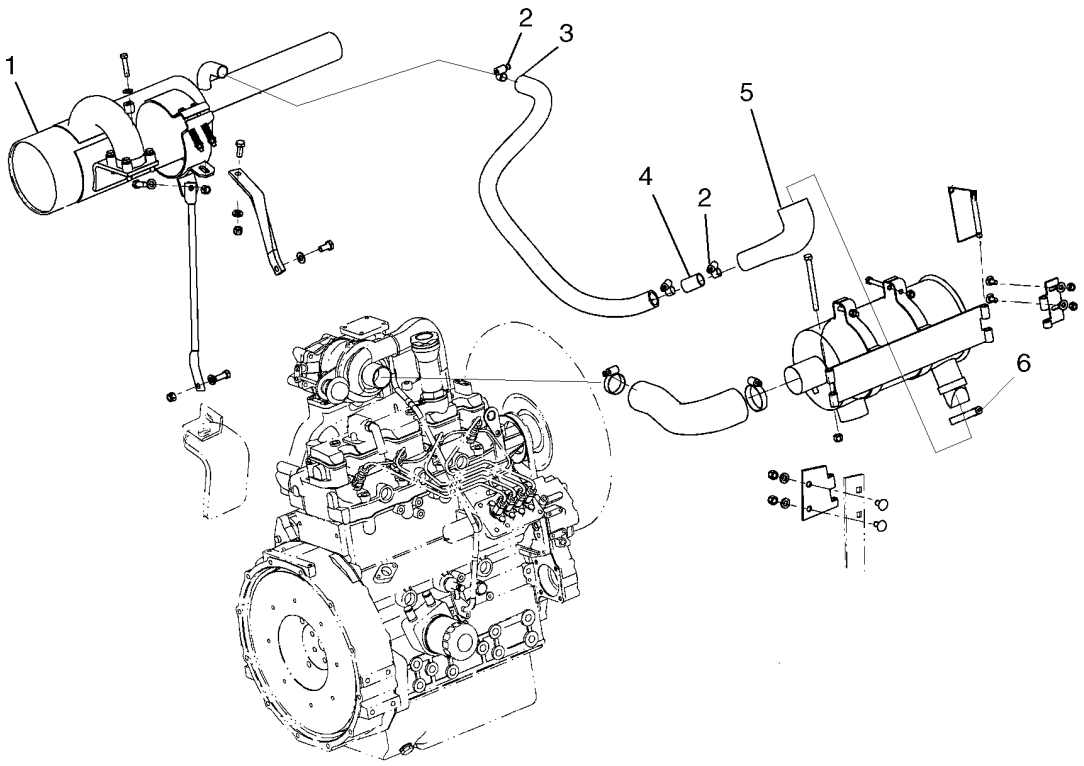

BS06M249

SILENCIADOR - ASPIRADOR

REF	FN	PART NUMBER	YR/SN	QTY	DESCRIPTION
1		{87543362}		1	Aspirated Smooth Case; No Longer Available, See Figure 02-04A
2		9706921		3	BRACADEIRA MANGUEIRA, #10, 0.56/1.06 Type F Worm
3		86506399		1	MANGUEIRA
4		86504507		1	TUBO
5		87032778		1	MANGUEIRA
6		45014		1	BRACADEIRA MANGUEIRA, #40, 2.06/3.00 Type F Worm
7		263117		2	TIRA DE CABO, .14" x 11 1/2", Use To Secure Hose 86506399

SILENCIADOR - ASPIRADOR

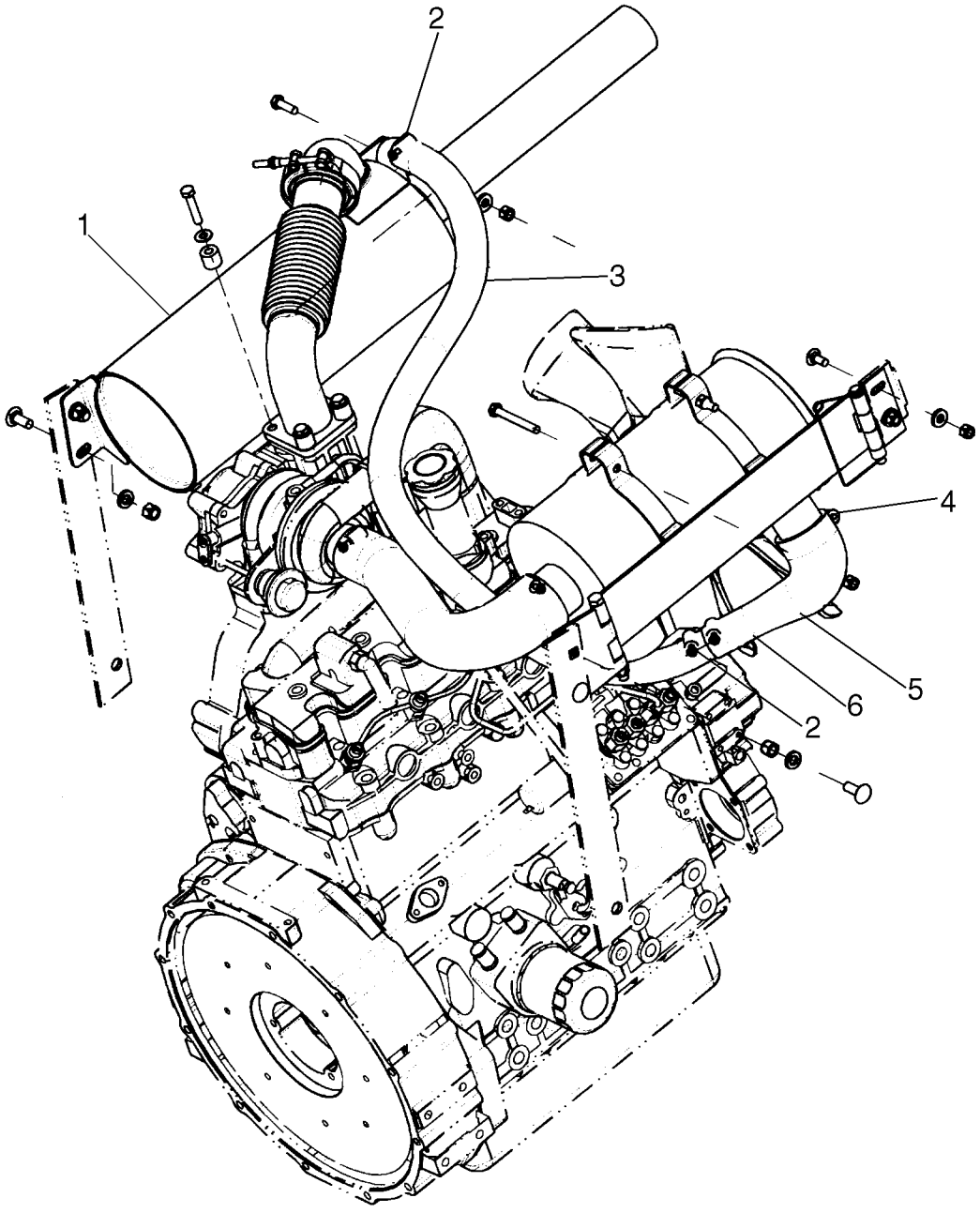

SILENCIADOR - ASPIRADOR

REF	FN	PART NUMBER	YR/SN	QTY	DESCRIPTION
		87622517		1	KIT, SERVICE, Aspirated Air Cleaner And Muffler; Incl. 1 - 7 And Instructions
1		87611475		1	SILENCIOSO, Aspirated Spark Arresting Muffler
2		9706921		3	BRACADEIRA MANGUEIRA, #10, 0.56/1.06 Type F Worm
3		86506399		1	MANGUEIRA, 940 mm (37 in.)
4		45014		1	BRACADEIRA MANGUEIRA, #40, 2.06/3.00 Type F Worm
5		87032778		1	MANGUEIRA, Formed Hose
6		86504507		1	TUBO
7		263117		2	TIRA DE CABO, .14" x 11 1/2", Cable Tie; Not Illustrated

SOPORTE DEL MOTOR - L175 NA BSN N7M470553, L175 EU BSN N7M468035; C175 NA BSN N7M466429, C175 EU BSN

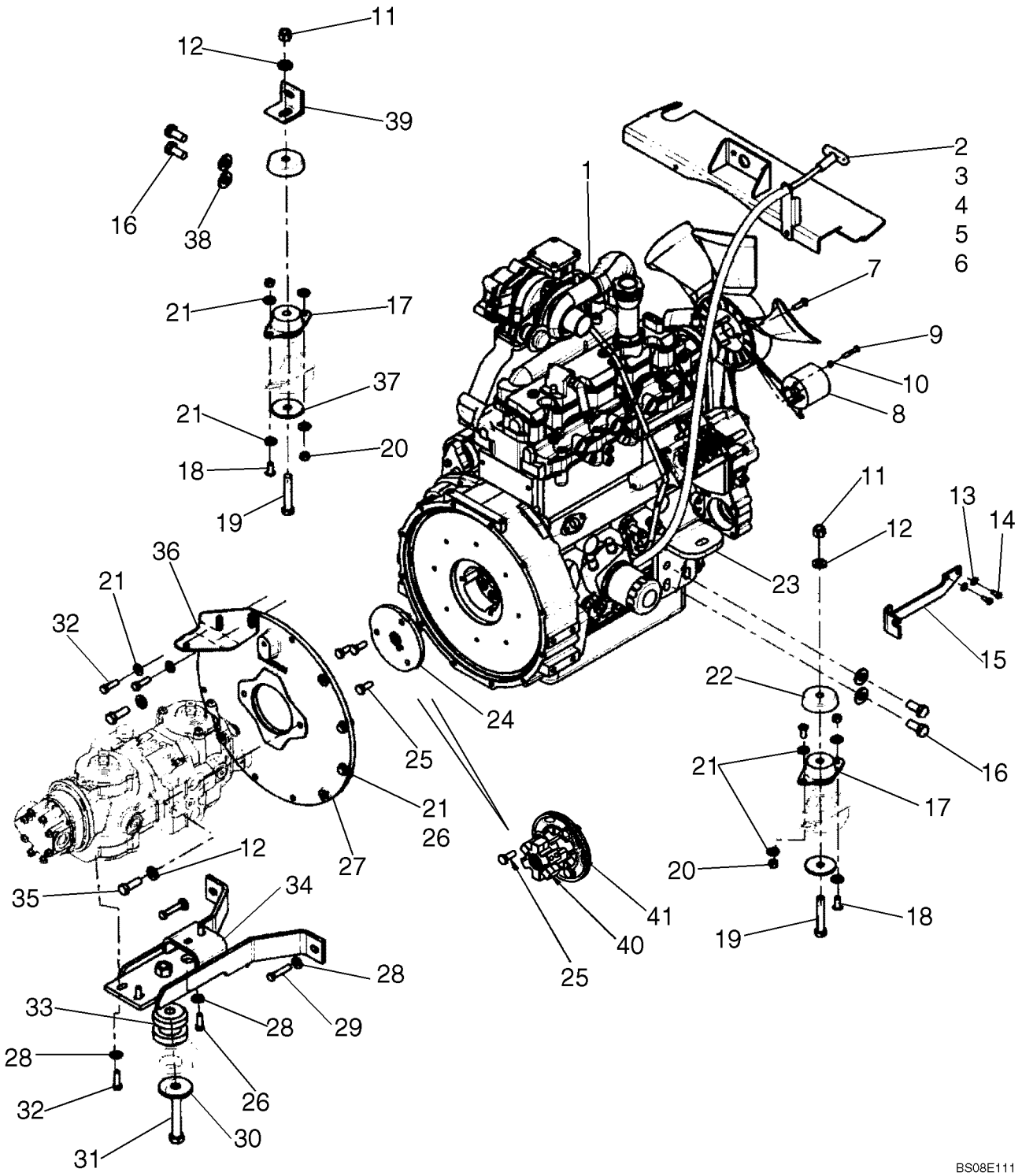

SOPORTE DEL MOTOR - L175 NA BSN N7M470553, L175 EU BSN N7M468035; C175 NA BSN N7M466429, C175 EU BSN

REF	FN	PART NUMBER	YR/SN	QTY	DESCRIPTION
					L175 NA 1 Speed BSN N7M470572, L175 NA 2 Speed BSN N7M470553, L175 EU BSN N7M468035, C175 NA BSN N7M466429, C175 EU BSN N7M467969
1		87604611		1	MOTOR, Engine, ISM N844LT; Replaces 87023184; Incl. Figures 02-07 - 02-19, 03-03, 03-04, 04-01 - 04-03
2		87527661		1	HASTE DE NÍVEL, Dipstick Assembly; Incl 3 - 6
3		574518		1	BRACADEIRA MANGUEIRA, #4, 0.25/0.62 Type M Worm
4		87527665		1	HASTE DE NÍVEL, Dipstick; Engine Oil; 1268 mm (49.92 in); If Used
5		87532182		1	HASTE DE NÍVEL, Hose, Dipstick
4		87714629		1	HASTE DE NÍVEL, Dipstick; Engine Oil; 1278 mm (50.31 in); If Used
6		87534525		1	HASTE DE NÍVEL, Bracket, Upper Dipstick
7		43127		4	PARAFUSO, Hex, M8 x 25, 8.8
8		87369335		1	VENTILADOR, Spacer, Fan
9		86977789		4	PARAFUSO, Hex, M6 x 35, 8.8, If Used
9		15212521		4	PARAFUSO, Hex, M6 x 35, 8.8, Full Thd, Used With 86511444 Nut; If Used
9A		86511444		4	PORCA, M6, Flg Ser, Used With Fully Threaded Bolt 15212521; If Used; Not Illustrated
10		9824259		4	ARRUELA PLANA, M6 x 12 x 1.6
11		88871		2	CONTRA PORCA, 1/2"-13, GC
12		65319		4	ARRUELA PLANA
13		322357		2	ARRUELA MOLA, Belleville, M6
14		86508568		2	PARAFUSO, Hex, M6 x 16, 8.8
15		86501115		1	SUPORTE DO MOTOR
16		87357989		4	PARAFUSO, Bolt, Hex Head M14 X 1.5 X 30 Full Thd 8.8 ZND
17		9616607		2	ISOLANTE, Isolation Mount
18		87499		4	PARAFUSO, Hex Soc But Hd, 3/8"-16 x 7/8"
19		87339		2	PARAFUSO, Hex, 1/2"-13 x 3", G5
20		9628503		4	PORCA, 3/8"-16, G5

SOPORTE DEL MOTOR - L175 NA BSN N7M470553, L175 EU BSN N7M468035; C175 NA BSN N7M466429, C175 EU BSN

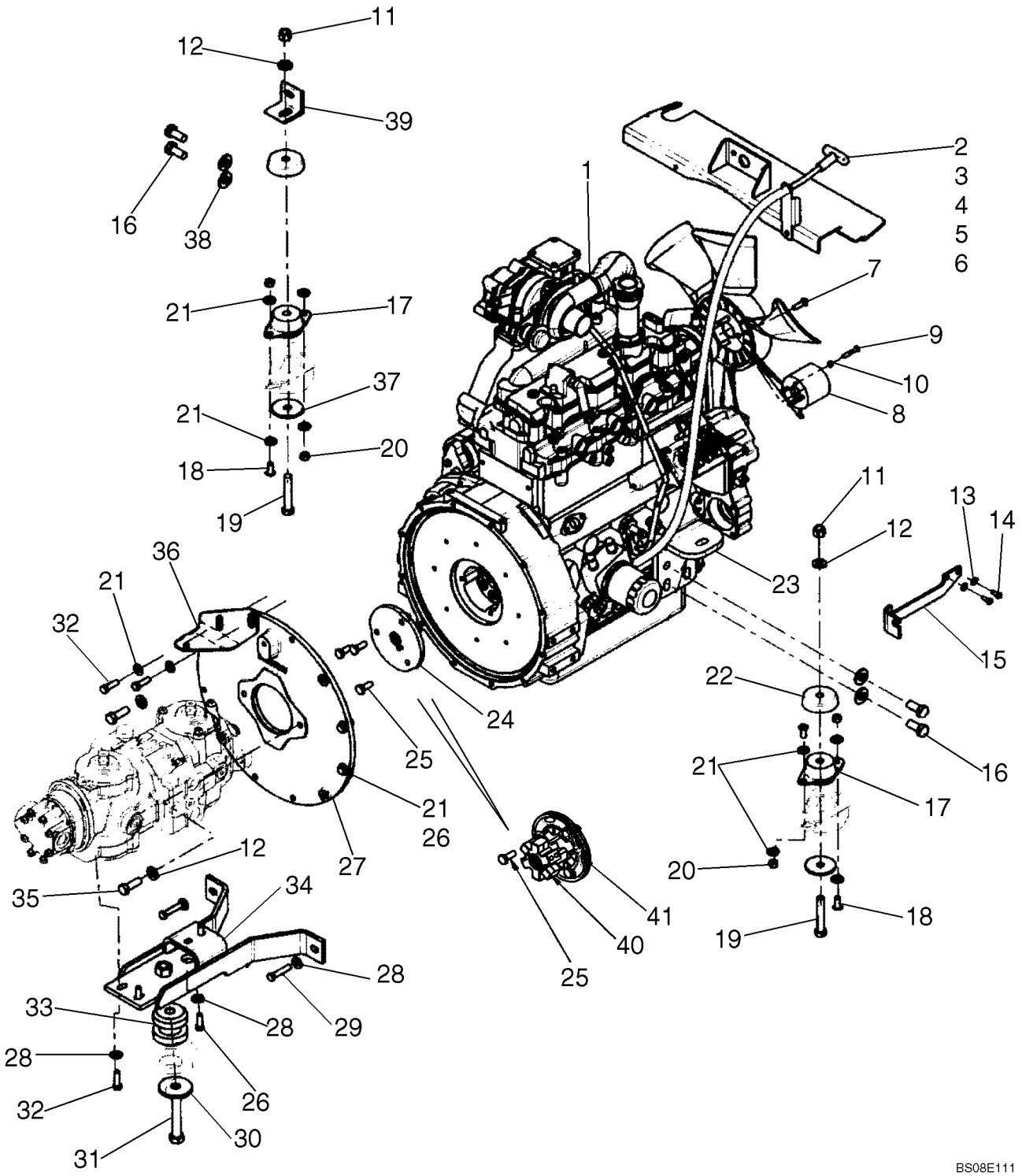

SOPORTE DEL MOTOR - L175 NA BSN N7M470553, L175 EU BSN N7M468035; C175 NA BSN N7M466429, C175 EU BSN

REF	FN	PART NUMBER	YR/SN	QTY	DESCRIPTION
21		140045		18	ARRUELA MOLA, Belleville, M10
22		9844141		2	PRATO
23		87430430		2	CANTONEIRA, Angle
24		87366818		1	EMBREAGEM, Coupler, Pump Drive; If Used
25		9846677		3	PARAFUSO, Hex, M10 x 25, 10.9, Full Thd
26		88206		10	PARAFUSO, Hex, 3/8"-16 x 1", G5, Full Thd
27		86567000		1	TAMPA
28		285072		6	ARRUELA PLANA
29		280589		2	PARAFUSO, Hex, 3/8"-16 x 1 3/4", G8
30		719922		1	ARRUELA PLANA
31		16445		1	PARAFUSO, Hex, 5/8"-11 x 3 3/4", G5
32		88011		4	PARAFUSO, Hex, 3/8"-16 x 1 1/4", G5, Full Thd
33		9844553		1	ISOLANTE
34		86567313		1	SUPORTE
35		87689		2	PARAFUSO, Hex, 1/2"-13 x 1 1/2", G5, Full Thd
36		86567198		1	SUPORTE
37		694478		2	ARRUELA PLANA
38		143479		4	ARRUELA PLANA
39		87369311		1	CANTONEIRA, Angle, Gray; If Used, See Ref 23 For Bracket Option
40		87713745		1	EMBREAGEM, Hub, Star
41		87713744		1	PLASTICO, Coupler, Flex Plate

02-05A		p1	05/08

SOPORTE DEL MOTOR - L175 NA ASN N7M470553, L175 EU ASN N7M468035; C175 NA ASN N7M466429, C175 EU ASN

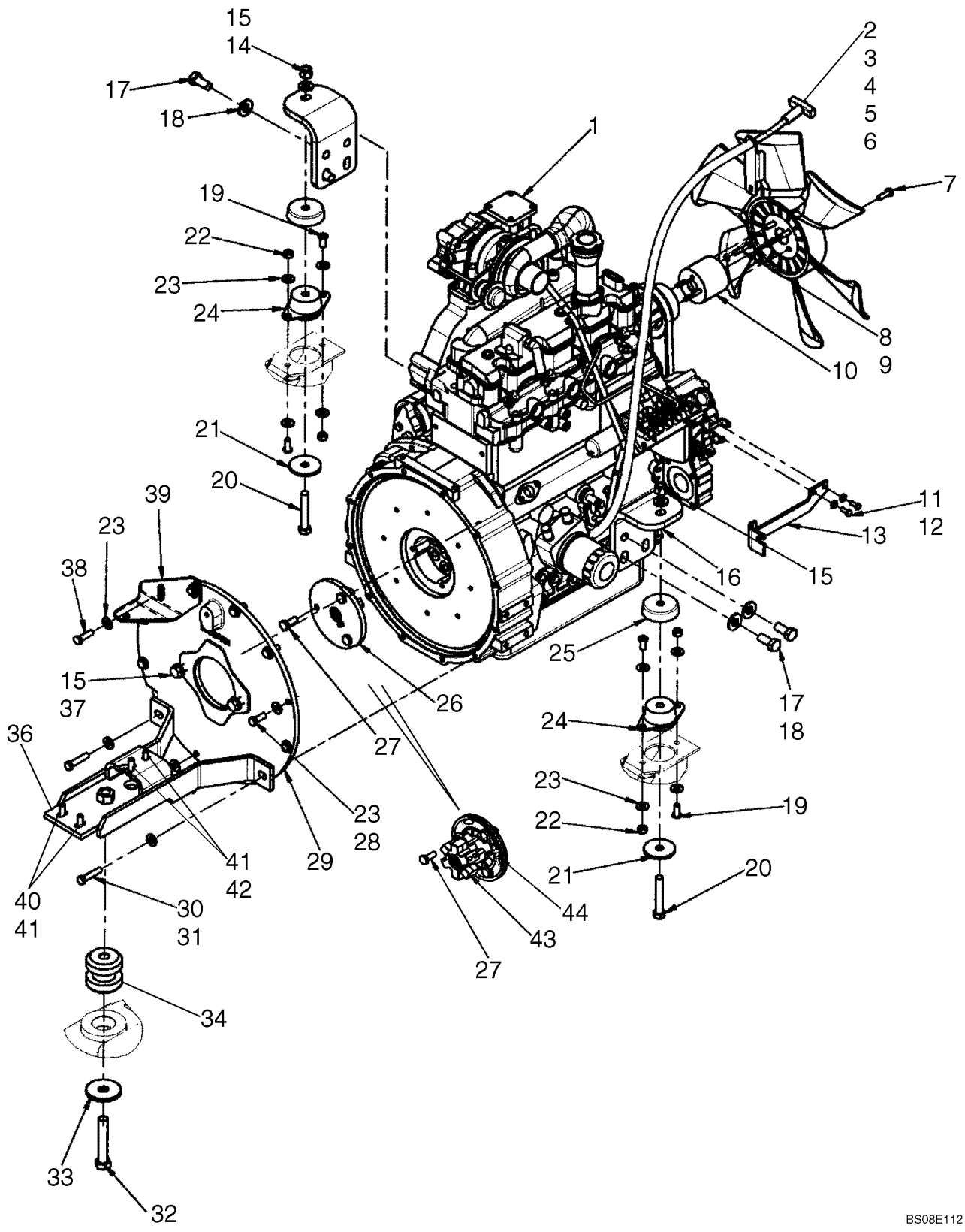

SOPORTE DEL MOTOR - L175 NA ASN N7M470553, L175 EU ASN N7M468035; C175 NA ASN N7M466429, C175 EU ASN

REF	FN	PART NUMBER	YR/SN	QTY	DESCRIPTION
					L175 NA 1 Speed ASN N7M470572, L175 NA 2 Speed ASN N7M470553, L175 EU ASN N7M468035, C175 NA ASN N7M466429, C175 EU ASN N7M467969
1		{87393130}		1	Engine, ISM N844LT - ASN
		SBA133734		1	MOTOR, Long Block, ASN
2		87527661		1	HASTE DE NÍVEL, Incl. 3 - 6
3		574518		1	BRACADEIRA MANGUEIRA, #4, 0.25/0.62 Type M Worm
4		87527665		1	HASTE DE NÍVEL, Dipstick; Engine Oil; 1268 mm (49.92 in); If Used
4		87714629		1	HASTE DE NÍVEL, Dipstick; Engine Oil; 1278 mm (50.31 in); If Used
5		87532182		1	HASTE DE NÍVEL, Dipstick Hose
6		87534525		1	HASTE DE NÍVEL, Upper Dipstick Bracket
7		43127		4	PARAFUSO, Hex, M8 x 25, 8.8
8		86977789		4	PARAFUSO, Hex, M6 x 35, 8.8
9		9824259		4	ARRUELA PLANA, M6 x 12 x 1.6
10		87369335		1	VENTILADOR, Fan Spacer
11		86508568		2	PARAFUSO, Hex, M6 x 16, 8.8
12		322357		2	ARRUELA MOLA, Belleville, M6
13		86501115		1	SUPORTE DO MOTOR
14		88871		2	CONTRA PORCA, 1/2"-13, GC
15		65319		4	ARRUELA PLANA
16		87430430		2	CANTONEIRA, Angle Bracket, Gray
17		87357989		4	PARAFUSO
18		143479		4	ARRUELA PLANA
19		87499		4	PARAFUSO, Hex Soc But Hd, 3/8"-16 x 7/8"
20		87339		2	PARAFUSO, Hex, 1/2"-13 x 3", G5
21		694478		2	ARRUELA PLANA
22		9628503		4	PORCA, 3/8"-16, G5
23		140045		16	ARRUELA MOLA, Belleville, M10
24		9616607		2	ISOLANTE, Isolation Mount
25		9844141		2	PRATO
26		87366818		1	EMBREAGEM, Pump Drive Coupler

SOPORTE DEL MOTOR - L175 NA ASN N7M470553, L175 EU ASN N7M468035; C175 NA ASN N7M466429, C175 EU ASN

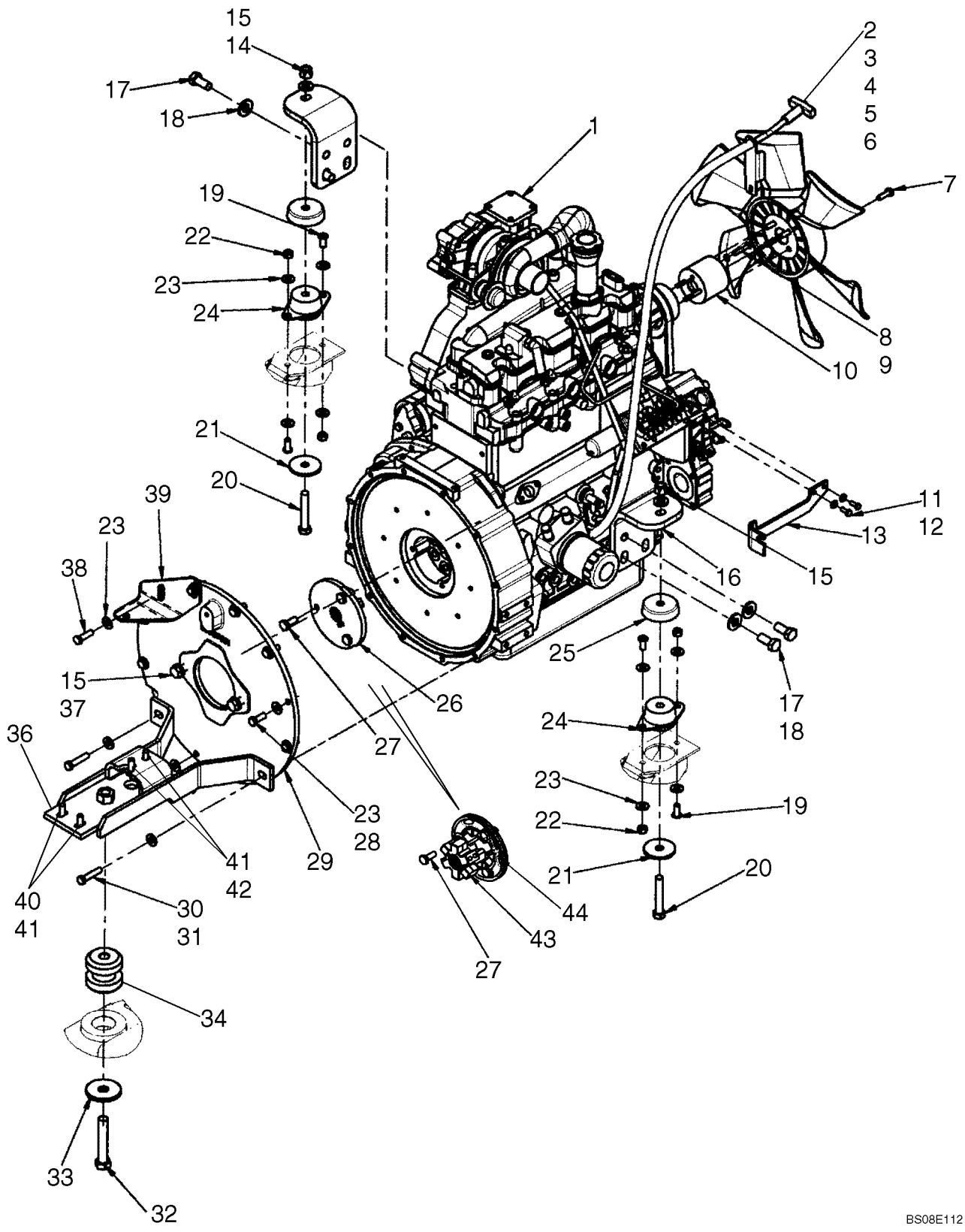

BS08E112

SOPORTE DEL MOTOR - L175 NA ASN N7M470553, L175 EU ASN N7M468035; C175 NA ASN N7M466429, C175 EU ASN

REF	FN	PART NUMBER	YR/SN	QTY	DESCRIPTION
27		9846677		3	PARAFUSO, Hex, M10 x 25, 10.9, Full Thd
28		88206		6	PARAFUSO, Hex, 3/8"-16 x 1", G5, Full Thd
29		86567000		1	TAMPA, Housing Cover
30		280589		2	PARAFUSO, Hex, 3/8"-16 x 1 3/4", G8
31		285072		2	ARRUELA PLANA
32		16445		1	PARAFUSO, Hex, 5/8"-11 x 3 3/4", G5
33		719922		1	ARRUELA PLANA
34		9844553		1	ISOLANTE, Mount
36		86567313		1	SUPORTE, Pump Support
37		87689		2	PARAFUSO, Hex, 1/2"-13 x 1 1/2", G5, Full Thd
38		88011		2	PARAFUSO, Hex, 3/8"-16 x 1 1/4", G5, Full Thd
39		86567198		1	SUPORTE, Angle Bracket, Gray
40		88011		2	PARAFUSO, Hex, 3/8"-16 x 1 1/4", G5, Full Thd
41		285072		4	ARRUELA PLANA
42		88206		4	PARAFUSO, Hex, 3/8"-16 x 1", G5, Full Thd
43		87713745		1	EMBREAGEM, Hub, Star
44		87713744		1	PLASTICO, Coupler, Flex Plate

SOPORTE DEL MOTOR - EUROPE C175 ASN N7M467968

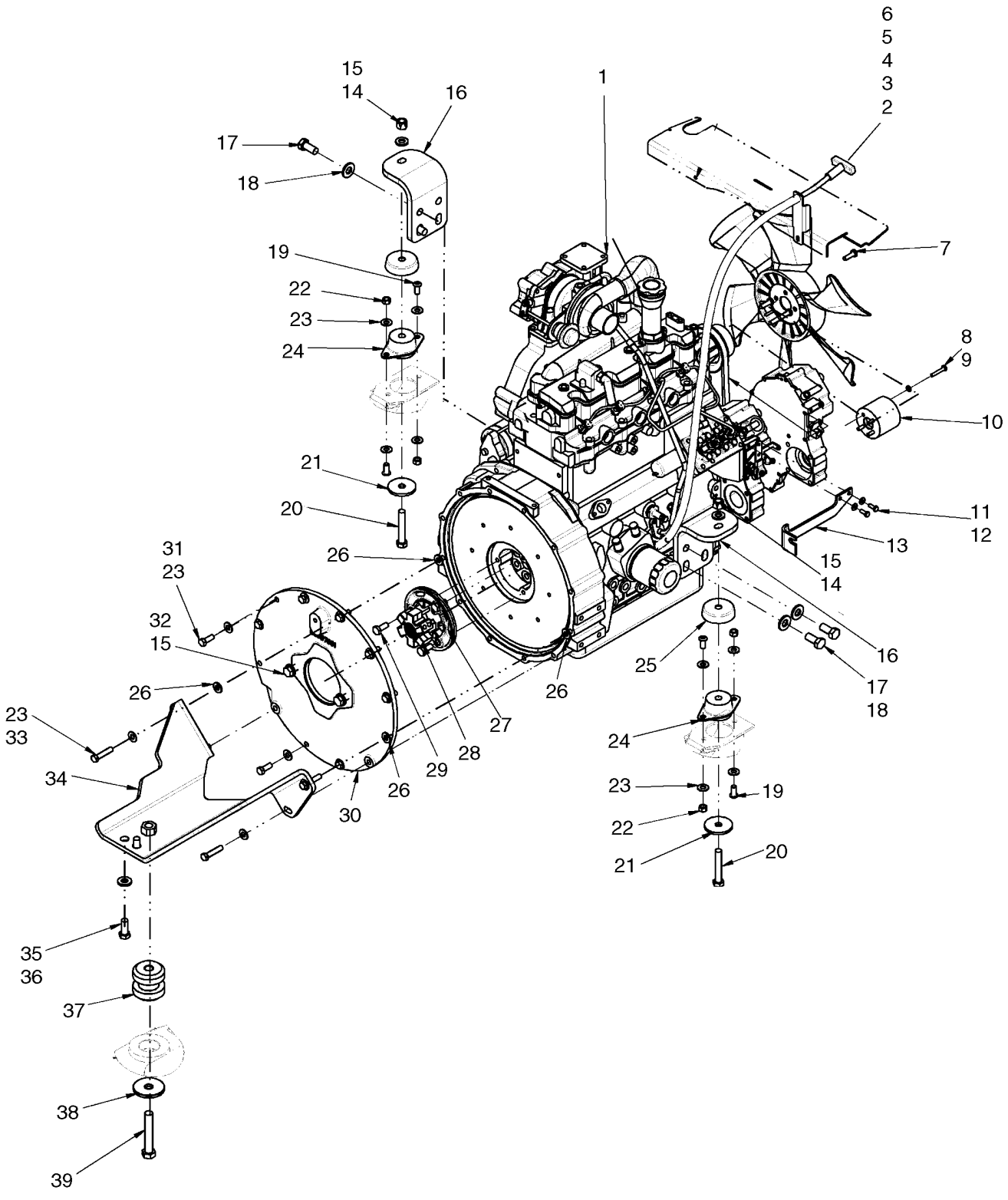

SOPORTE DEL MOTOR - EUROPE C175 ASN N7M467968

REF	FN	PART NUMBER	YR/SN	QTY	DESCRIPTION
1		{87393130}		1	Engine, ISM N844LT
		SBA133734		1	MOTOR, Long Block
2		87527661		1	HASTE DE NÍVEL, Incl. 3 - 6
3		574518		1	BRACADEIRA MANGUEIRA, #4, 0.25/0.62 Type M Worm
4		87527665		1	HASTE DE NÍVEL, Dipstick; Engine Oil; 1268 mm (49.92 in); If Used
4		87714629		1	HASTE DE NÍVEL, Dipstick; Engine Oil; 1278 mm (50.31 in); If Used
5		87532182		1	HASTE DE NÍVEL, Dipstick Hose
6		87534525		1	HASTE DE NÍVEL, Upper Dipstick Bracket
7		43127		4	PARAFUSO, Hex, M8 x 25, 8.8
8		86977789		4	PARAFUSO, Hex, M6 x 35, 8.8
9		9824259		4	ARRUELA PLANA, M6 x 12 x 1.6
10		87369335		1	VENTILADOR, Fan Spacer
11		86508568		2	PARAFUSO, Hex, M6 x 16, 8.8
12		322357		2	ARRUELA MOLA, Belleville, M6
13		86501115		1	SUPORTE DO MOTOR
14		88871		2	CONTRA PORCA, 1/2"-13, GC
15		65319		4	ARRUELA PLANA
16		87430430		2	CANTONEIRA, Angle Bracket, Gray
17		87357989		4	PARAFUSO, Hex HD M14 x 1.5 x 30
18		143479		4	ARRUELA PLANA
19		87499		4	PARAFUSO, Hex Soc But Hd, 3/8"-16 x 7/8"
20		87339		2	PARAFUSO, Hex, 1/2"-13 x 3", G5
21		694478		2	ARRUELA PLANA
22		9628503		4	PORCA, 3/8"-16, G5
23		140045		20	ARRUELA MOLA, Belleville, M10
24		9616607		2	ISOLANTE, Isolation Mount
25		9844141		2	PRATO
26		285072		2	ARRUELA PLANA
27		87713744		1	PLASTICO, Plate, Flexible Coupler
28		87713745		1	EMBREAGEM, Hub Star
29		9846677		3	PARAFUSO, Hex, M10 x 25, 10.9, Full Thd
30		86567000		1	TAMPA, Housing Cover

SOPORTE DEL MOTOR - EUROPE C175 ASN N7M467968

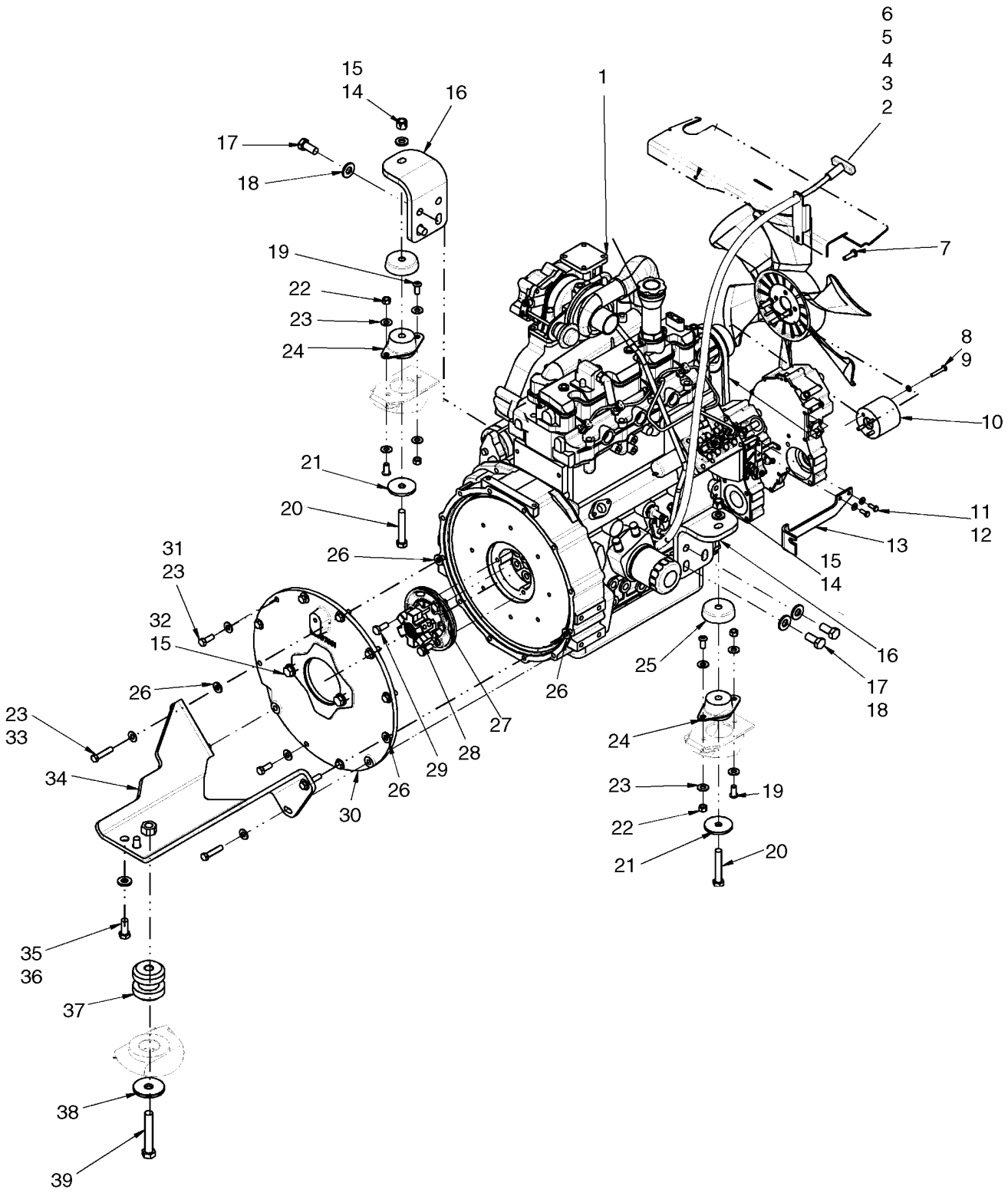

SOPORTE DEL MOTOR - EUROPE C175 ASN N7M467968

REF	FN	PART NUMBER	YR/SN	QTY	DESCRIPTION
31		88206		8	PARAFUSO, Hex, 3/8"-16 x 1", G5, Full Thd
32		87689		2	PARAFUSO, Hex, 1/2"-13 x 1 1/2", G5, Full Thd
33		280589		4	PARAFUSO, Hex, 3/8"-16 x 1 3/4", G8
34		87594375		1	SUPORTE, Pump Support
35		280853		2	PARAFUSO, Hex, 1/2"-13 x 1 1/4", G8, Full Thd
36		86625256		2	ARRUELA PLANA, M12 x 28.5 x 4, HT
37		9844553		1	ISOLANTE, Mount
38		719922		1	ARRUELA PLANA
39		16445		1	PARAFUSO, Hex, 5/8"-11 x 3 3/4", G5

AQUECEDOR DO BLOCO DO MOTOR

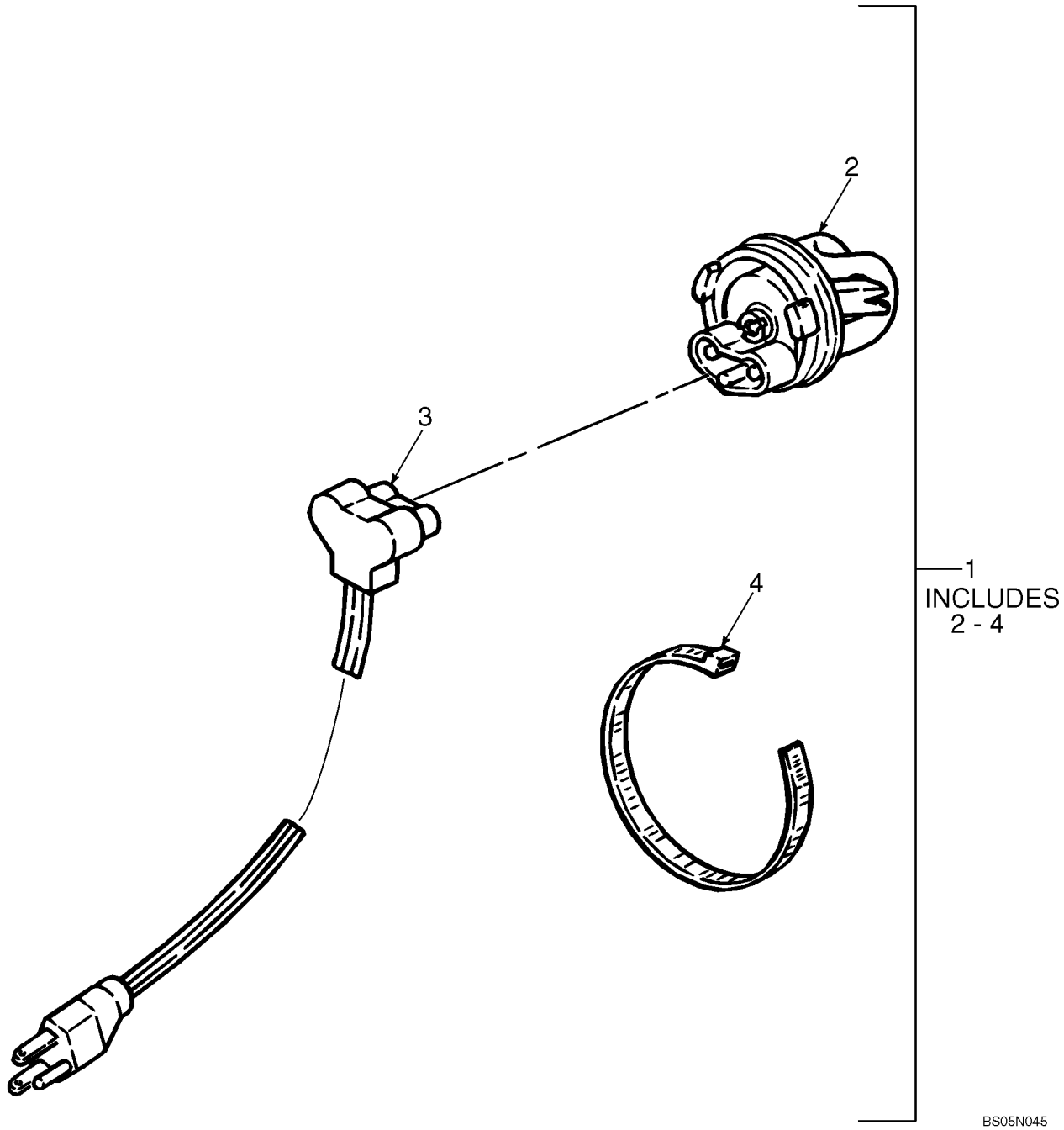

AQUECEDOR DO BLOCO DO MOTOR

REF	FN	PART NUMBER	YR/SN	QTY	DESCRIPTION
1		86590117		1	KIT, Block Heater, Incl. 2 - 4
2		NSS		1	BOLETIM INFORMATIVO, Block Heater
3		86539137		1	CABO ELÉTRICO, 5 Ft (1.52M)
4		263117		1	TIRA DE CABO, .14" x 11 1/2", 3/32" x 11-1/2" L

BLOCO DO CILINDRO - FILTRO DE ACEITE - L175 NA BSN N7M470553, L175 EU BSN N7M468035; C175 NA BSN N7M

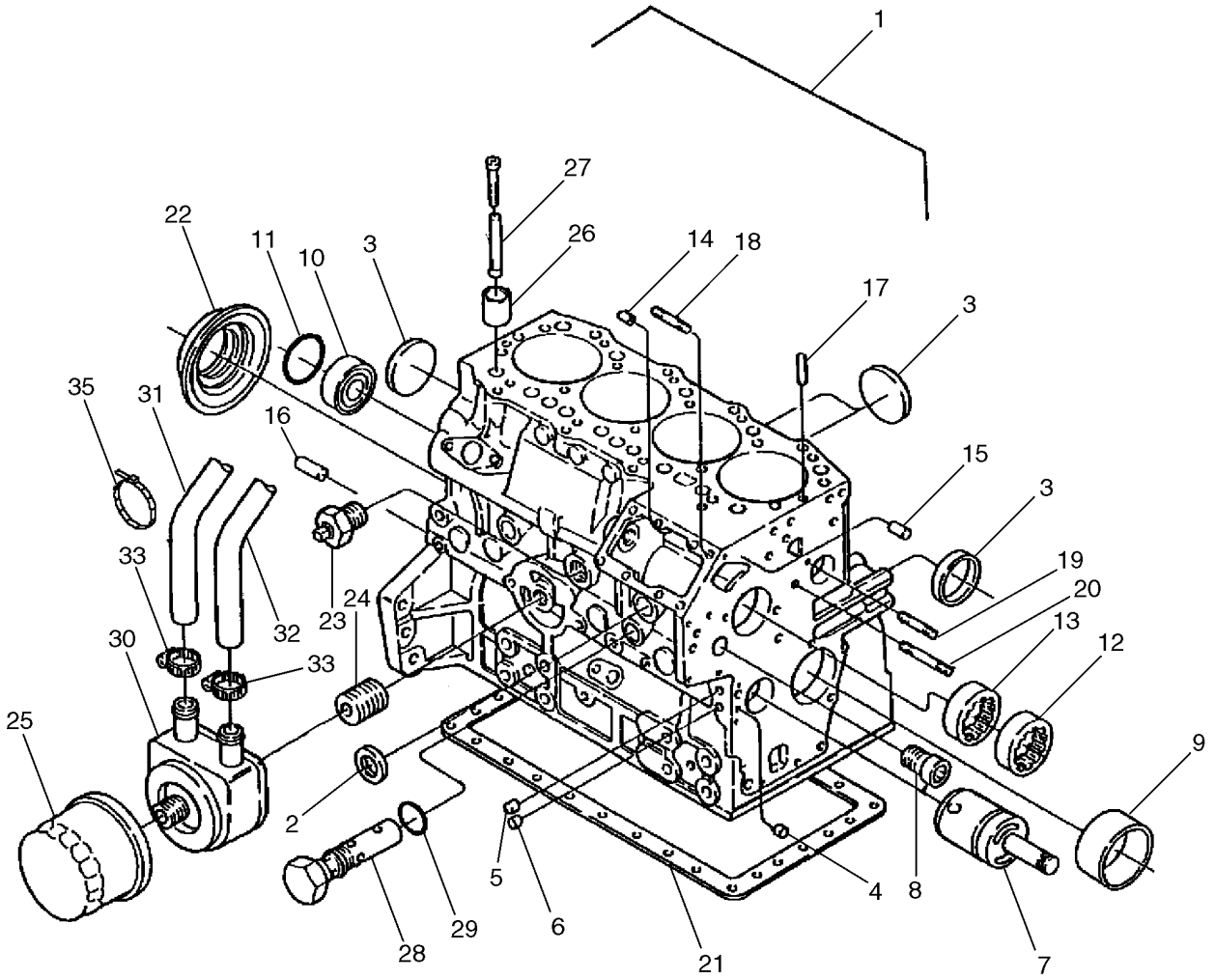

BS04M078

BLOCO DO CILINDRO - FILTRO DE ACEITE - L175 NA BSN N7M470553, L175 EU BSN N7M468035; C175 NA BSN N7M

REF	FN	PART NUMBER	YR/SN	QTY	DESCRIPTION
					L175 NA 1 Speed BSN N7M470572, L175 NA 2 Speed BSN N7M470553, L175 EU BSN N7M468035, C175 NA BSN N7M466429, C175 EU BSN N7M467969
		SBA133633		1	MOTOR, Engine, Long Block; Engine Does Not Include Flywheel, Starter, Flywheel Housing, Cooling Fan, Fan Belt, Fan Pulley, Alternator Or Mounting Parts, Oil Cooler
1		NSS		1	BOLETIM INFORMATIVO, Cylinder Block
2		SBA064210025		2	BUJÃO
3		SBA064210040		5	TAMPA DO RESERVATÓRIO
4		SBA198466010		3	BUJÃO, 8.4mm
5		SBA198466020		2	BUJÃO, 10.4mm
6		SBA198466030		4	BUJÃO, 6.5 x 7mm
7		SBA165296132		1	EIXO, Idler Gear, Uses Pin SBA140196072
8		SBA198517090		1	BUCHA
9		SBA198517221		1	BUCHA
10		SBA040106203		1	ROLAMENTO
11		SBA064100045		1	BUJÃO, Expansion
12		SBA042309018		1	ROLAMENTO, Needle
13		SBA042309017		1	ROLAMENTO, Needle
14		SBA030500612		2	PINO, Dowel
15		SBA030500616		2	PINO, Dowel
16		SBA030501025		2	PINO, Dowel
17		SBA030309005		2	PINO, Spring
18		SBA012100820		3	PRISIONEIRO
19		SBA012110660		1	PARAFUSO
20		SBA012110635		1	PRISIONEIRO
21		SBA110996860		1	JUNTA
22		SBA050209083		1	ANEL DE VEDACAO
23		SBA064500020		1	BUJÃO, Cock
24		SBA140546020		1	ADAPTADOR, Joint
25		SBA140517020		1	FILTRO DE ÓLEO
26		SBA120116160		8	TUCHO
27		SBA120456310		8	HASTE, Push

BLOCO DO CILINDRO - FILTRO DE ACEITE - L175 NA BSN N7M470553, L175 EU BSN N7M468035; C175 NA BSN N7M

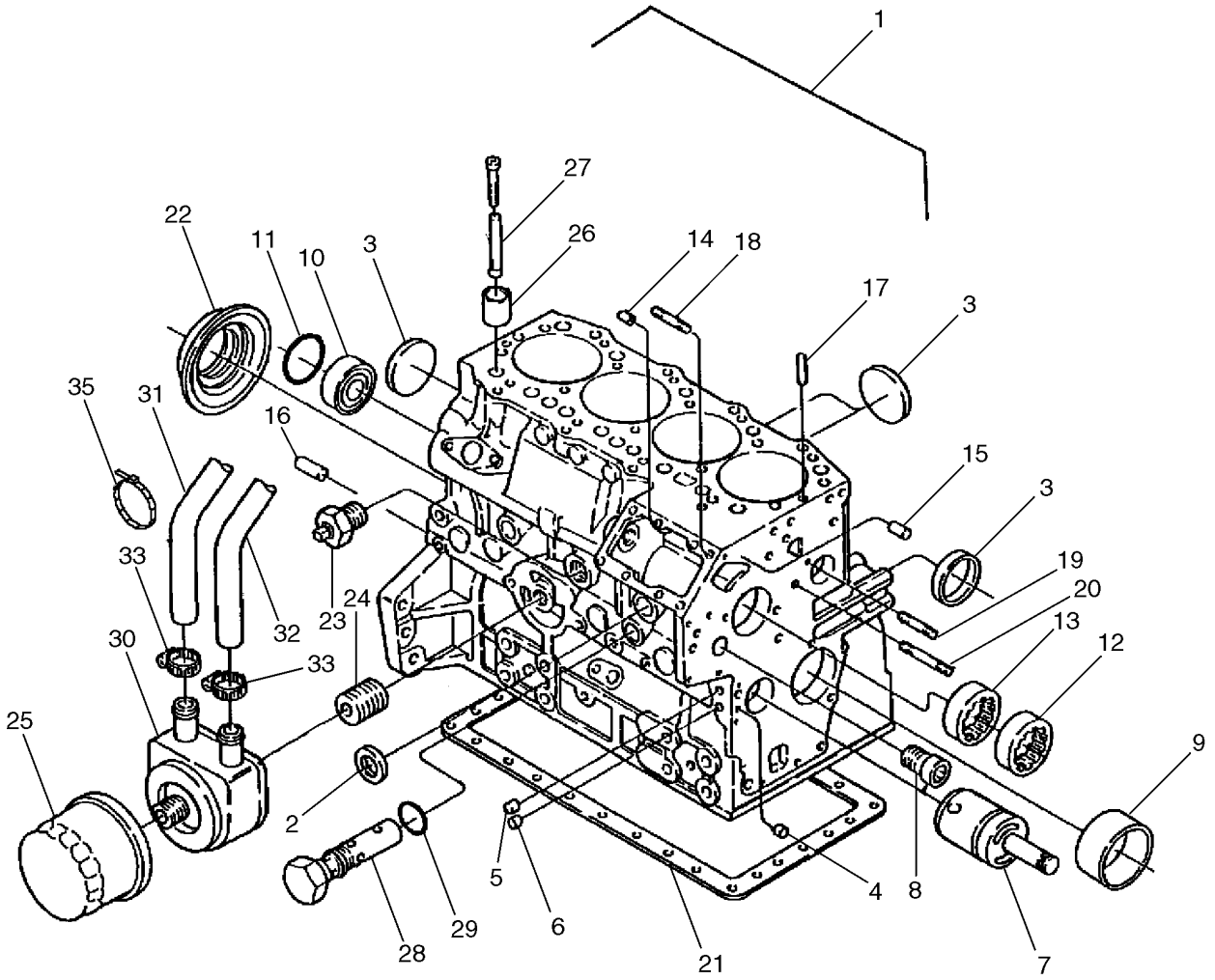

BS04M078

BLOCO DO CILINDRO - FILTRO DE ACEITE - L175 NA BSN N7M470553, L175 EU BSN N7M468035; C175 NA BSN N7M

REF	FN	PART NUMBER	YR/SN	QTY	DESCRIPTION
28		SBA140036220		1	VÁLVULA DE SOBRE-PRESSÃO
29		SBA052109113		1	ANEL "O"
30		SBA140656150		1	ARREFECEDOR, Oil Cooler Assy
31		SBA068209246		1	MANGUEIRA
32		SBA068209247		1	MANGUEIRA
33		SBA067100025		4	BRACADEIRA MANGUEIRA, Hose Band

CABEÇA DO CILINDRO - L175 NA BSN N7M470553, L175 EU BSN N7M468035; C175 NA BSN N7M466429, C175 EU BS

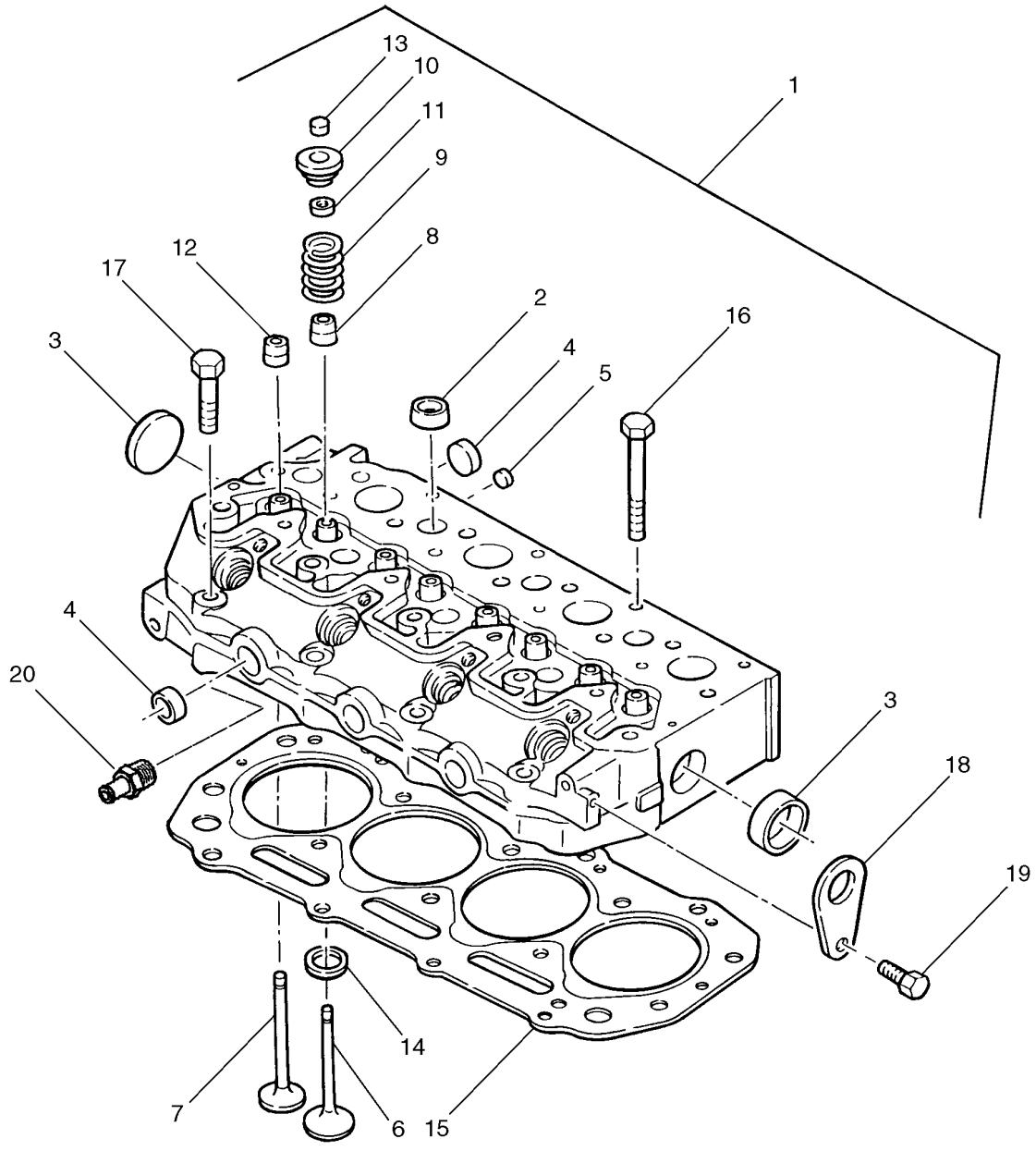

BS04M080

CABEÇA DO CILINDRO - L175 NA BSN N7M470553, L175 EU BSN N7M468035; C175 NA BSN N7M466429, C175 EU BS

REF	FN	PART NUMBER	YR/SN	QTY	DESCRIPTION
					L175 NA 1 Speed BSN N7M470572, L175 NA 2 Speed BSN N7M470553, L175 EU BSN N7M468035, C175 NA BSN N7M466429, C175 EU BSN N7M467969
1		SBA111010670		1	CABEÇOTE, Incl. Ref 2 - 14
2		SBA064210018		7	BUJÃO, Sealing
3		SBA064210030		2	BUJÃO, Sealing
4		SBA064210025		4	BUJÃO, Sealing
5		SBA064210010		3	PROTETOR DE BUJÃO, Sealing
6		SBA120166350		4	VÁLVULA DE ADMISSÃO
7		SBA120176360		4	VÁLVULA DE ESCAPE
8		SBA120406070		4	ANEL DE VEDACAO, Valve Guide, Intake
9		SBA198216700		8	MOLA
10		SBA120186080		8	PRENDEDOR
11		SBA120226070		16	PRENDEDOR, Cotter
12		SBA120406050		4	ANEL DE VEDACAO, Valve Guide, Exhaust
13		SBA120216040		8	TAMPA DO RESERVATÓRIO, If Used
13		SBA120216041		8	TAMPA DO RESERVATÓRIO, If Used
14		SBA110136400		4	SEDE DE VÁLVULA, Intake
15		SBA111147591		1	JUNTA DO CABEÇOTE, 0.5 Thickness; If Used
15		SBA111147741		1	JUNTA DO CABEÇOTE, If Used
16		SBA111136480		14	PARAFUSO, Head
17		SBA111136490		4	PARAFUSO, Head
18		SBA195816540		2	OLHAL LEVANTAMENTO
19		SBA011510816		2	PARAFUSO, M8 x 16
20		SBA198487901		1	CONECTOR, Connector

COBERTURA DO CABEÇOTE, POLIA DO VIRABREQUIM - L175 NA BSN N7M470553, L175 EU BSN N7M468035; C175 NA

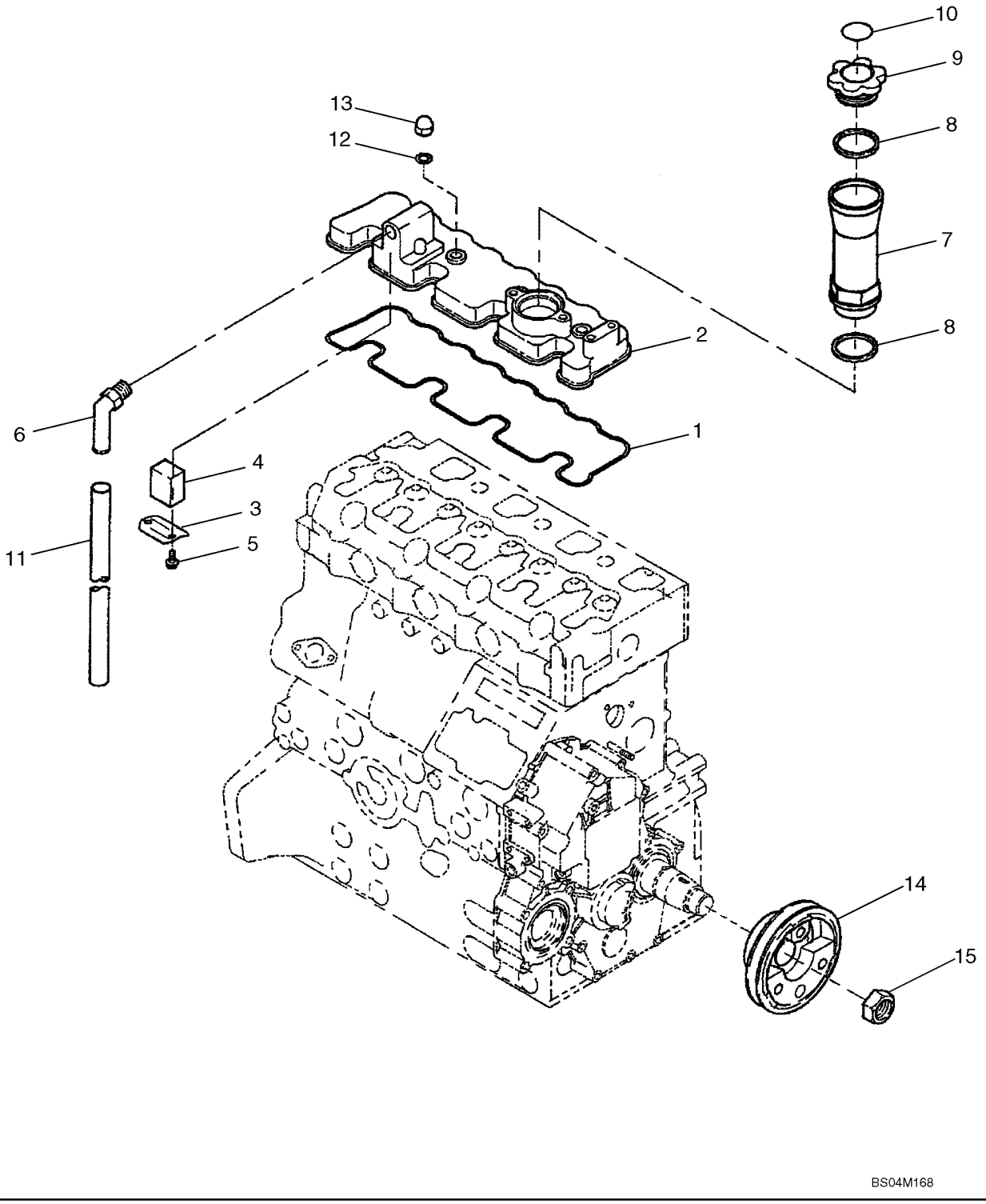

COBERTURA DO CABEÇOTE, POLIA DO VIRABREQUIM - L175 NA BSN N7M470553, L175 EU BSN N7M468035; C175 NA

REF	FN	PART NUMBER	YR/SN	QTY	DESCRIPTION
					L175 NA 1 Speed BSN N7M470572, L175 NA 2 Speed BSN N7M470553, L175 EU BSN N7M468035, C175 NA BSN N7M466429, C175 EU BSN N7M467969
1		SBA052109072		1	ANEL "O"
2		SBA111026150		1	TAMPA VALVULA, Head, Incl. Ref 3 - 5, 10
3		SBA110666050		1	DEFLETOR, Oil
4		SBA110666060		1	FILTRO TELA
5		SBA011310612		2	PARAFUSO, M6 x 12
6		SBA140986581		1	COTOVELO
7		SBA110466031		1	TUBO DE INTRODUÇÃO
8		SBA052100400		1	ANEL "O"
9		SBA198436010		1	TAMPA RESERVATORIO
10		SBA190297900		1	DECALCOMANIA
11		SBA068209179		1	MANGUEIRA
12		SBA131996200		4	JUNTA
13		SBA024600010		4	PORCA, Cap
14		SBA115396860		1	POLIA, Crankshaft
15		SBA020109086		1	PORCA

CONJUNTO DO BRAÇO OSCILANTE

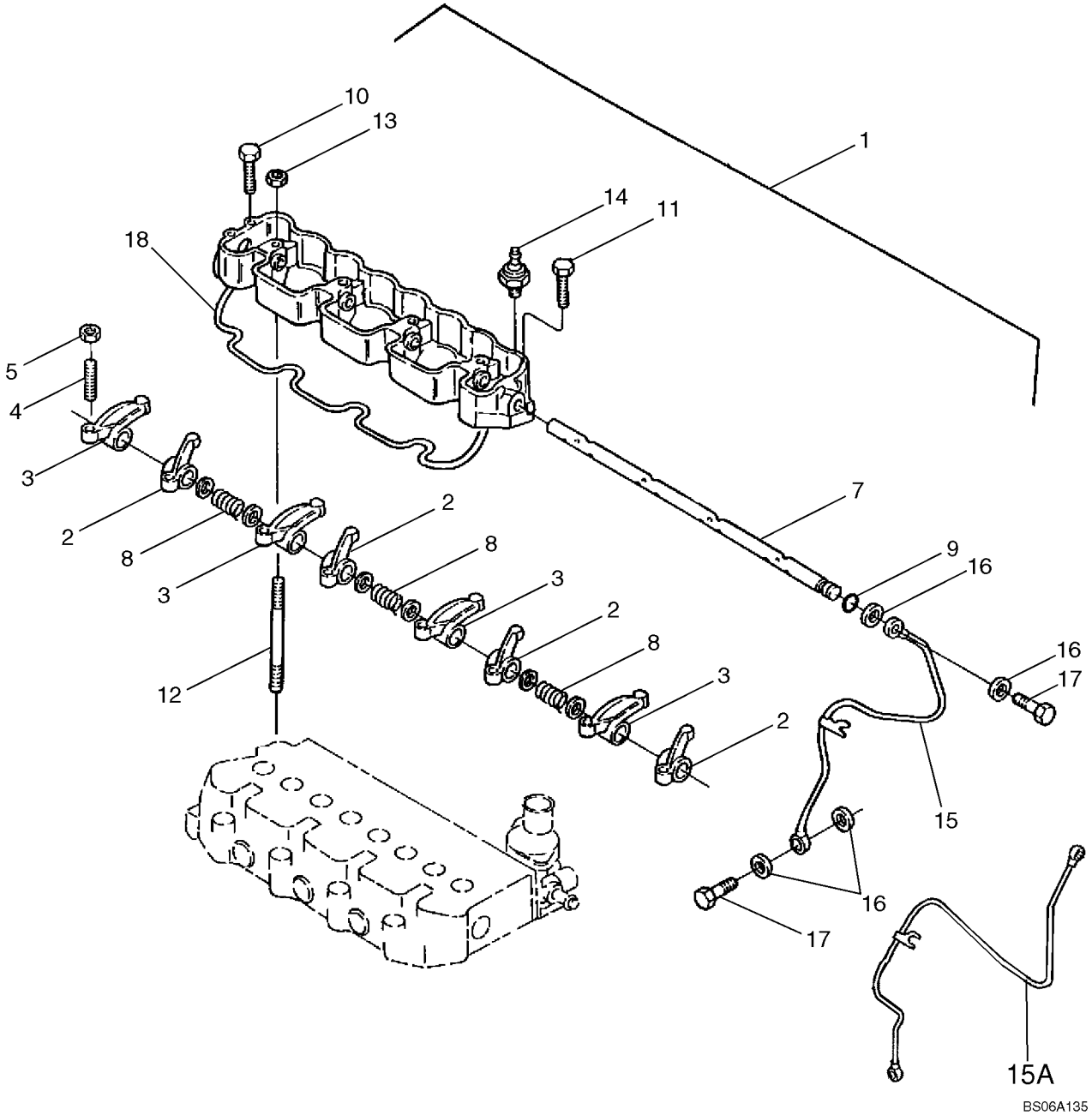

CONJUNTO DO BRAÇO OSCILANTE

REF	FN	PART NUMBER	YR/SN	QTY	DESCRIPTION
1		SBA120036393		1	BALANCIM, Incl. Ref 2 - 9
2		SBA120356131		4	BALANCIM, Intake, Complete
3		SBA120356141		4	BALANCIM, Exhaust, Complete
4		SBA199486220		8	PARAFUSO DE REGULAGEM
5		SBA020109076		8	PORCA
7		SBA120316200		1	EIXO, Rocker Arm
8		SBA198217170		3	MOLA
9		SBA052109076		1	ANEL "O"
10		SBA011310650		1	PARAFUSO
11		SBA011310625		1	PARAFUSO
12		SBA012109044		4	PRISIONEIRO, Stud
13		SBA023109002		4	PORCA
14		SBA185246060		1	TRANSMISSOR, Oil Pressure Switch
15		SBA140607090		1	TUBO, Oil; If Used
15A		SBA140607020		1	TUBO RÍGIDO, If Used
16		SBA140996260		4	JUNTA
17		SBA198486780		2	BANJO, M8 x 1.25; If Used
17		SBA198487840		2	PARAFUSO, M10 x 1.5; If Used
18		SBA052109074		1	ANEL "O"

EIXO TRANSMISSOR - L175 NA BSN N7M470553, L175 EU BSN N7M468035; C175 NA BSN N7M466429, C175 EU BSN

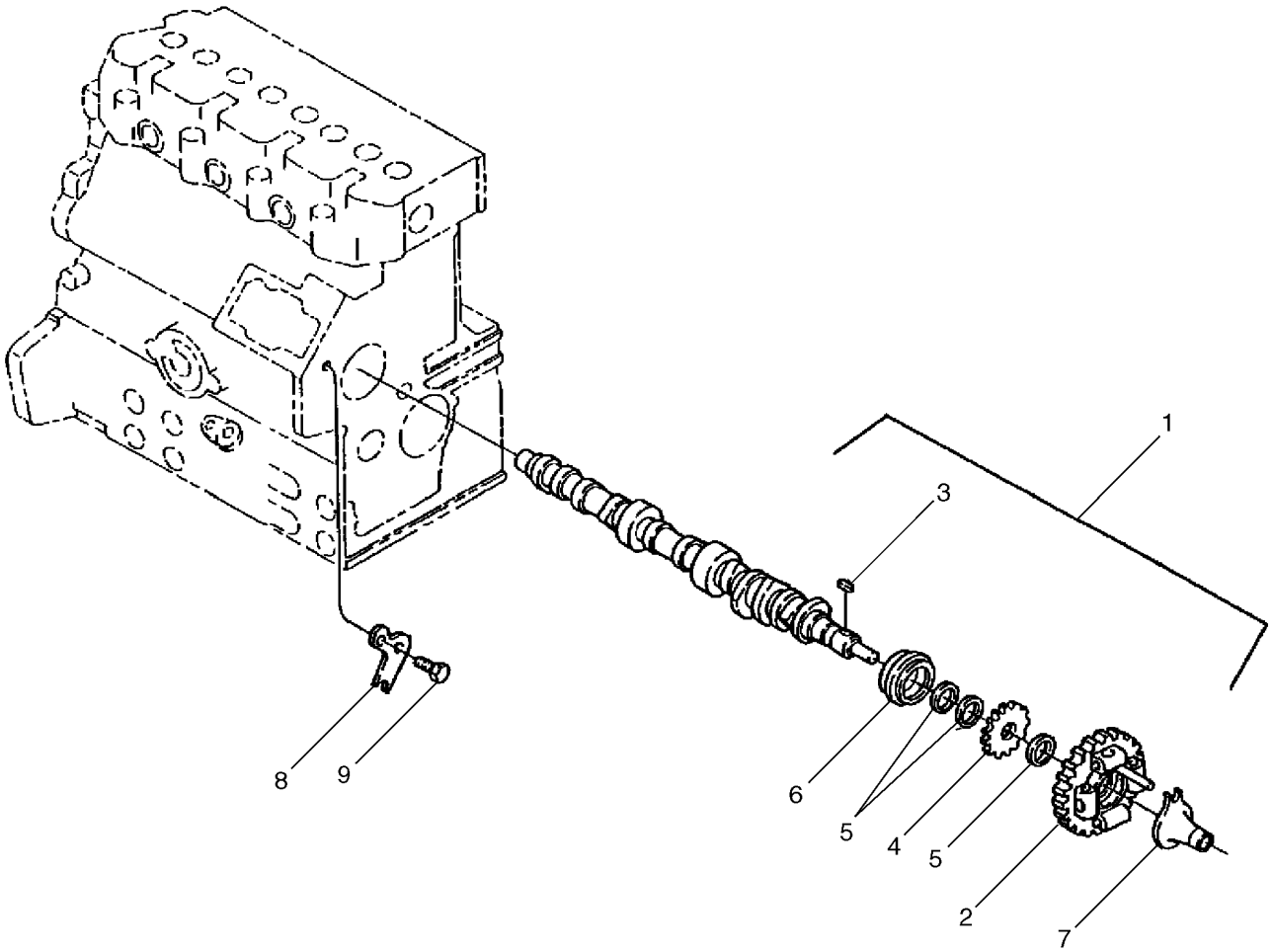

BS04M082

EIXO TRANSMISSOR - L175 NA BSN N7M470553, L175 EU BSN N7M468035; C175 NA BSN N7M466429, C175 EU BSN

REF	FN	PART NUMBER	YR/SN	QTY	DESCRIPTION
					L175 NA 1 Speed BSN N7M470572, L175 NA 2 Speed BSN N7M470553, L175 EU BSN N7M468035, C175 NA BSN N7M466429, C175 EU BSN N7M467969
1		SBA120026320		1	EIXO EXCÊNTRICO, Incl. Ref 2 - 6
2		SBA120016050		1	ENGRENAGEM, Cam, Complete
3		SBA034100508		1	CHAVETA
4		SBA120736081		1	ENGRENAGEM
5		SBA199216230		3	ESPAÇADOR
6		SBA040109057		1	ROLAMENTO
7		SBA125256120		1	GUIA DESLIZANTE
8		SBA199566750		1	SUPORTE
9		SBA011310612		2	PARAFUSO

CAMBOTA, PISTÃO

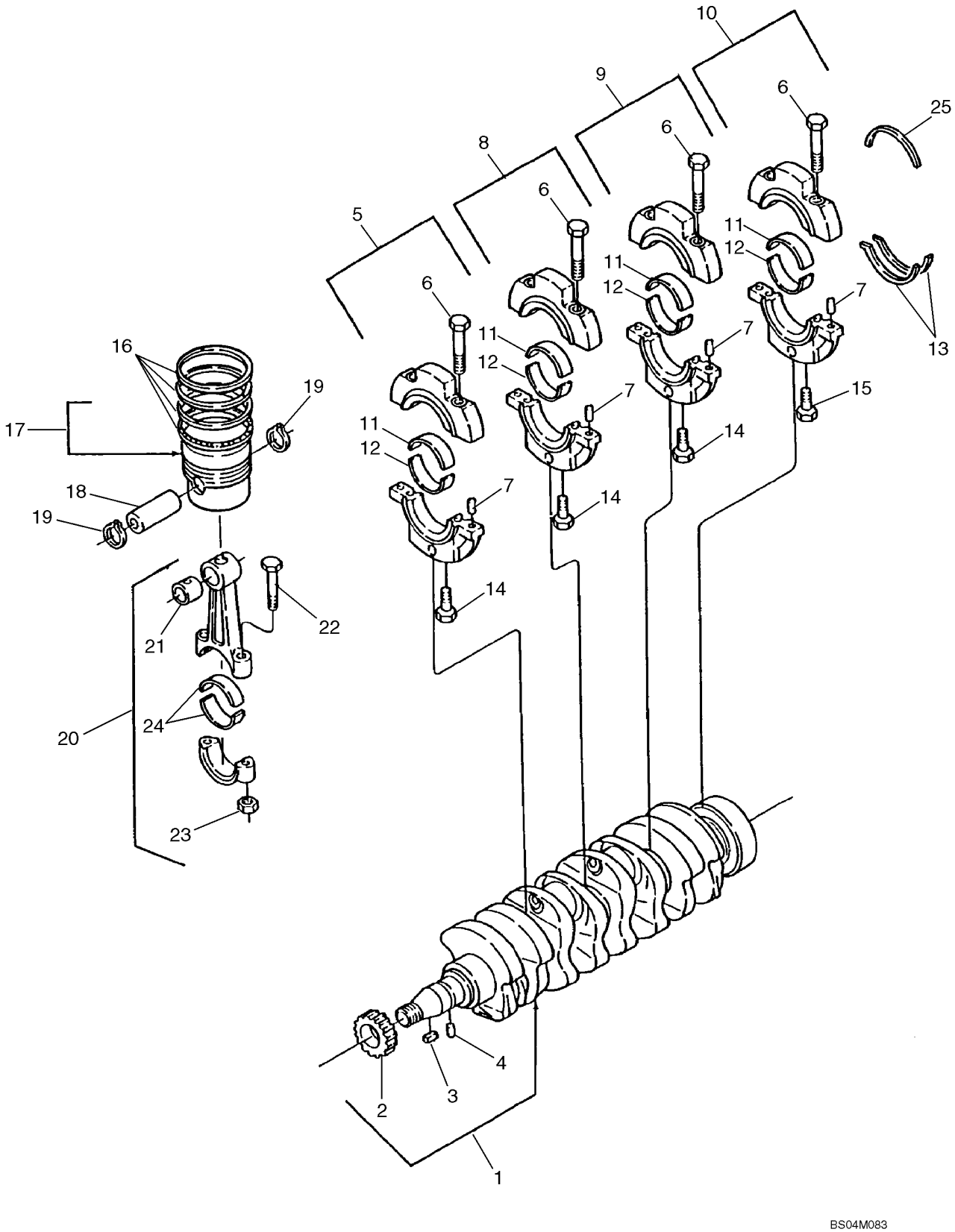

CAMBOTA, PISTÃO

REF	FN	PART NUMBER	YR/SN	QTY	DESCRIPTION
1		SBA115256750		1	VIRABREQUIM
2		SBA115276200		1	ENGRENAGEM, Crankshaft
3		SBA034100508		1	CHAVETA
4		SBA030509020		1	PINO, Dowel
5		SBA110156360		1	SUPORTE, Bearing, Incl. Ref 6, 7
6		SBA010109406		8	PARAFUSO
7		SBA030500612		8	PINO, Dowel
8		SBA110156370		1	SUPORTE, Bearing, Incl. Ref 6, 7
9		SBA110156380		1	SUPORTE, Bearing, Incl. Ref 6, 7
10		SBA110156390		1	SUPORTE, Bearing
11		SBA198517231		4	ROLAMENTO, Upper
12		SBA198517241		4	ROLAMENTO, Lower
13		SBA199266200		2	ARO
14		SBA011511070		3	PARAFUSO
15		SBA010700860		2	PARAFUSO
16		SBA115104021		4	JOGO DE ANÉIS DE PISTÃO, Kit, Piston Rings
17		SBA115017581		4	JOGO DE PISTÕES, Piston Assy
18		SBA115326220		4	PINO DE PISTÃO
19		SBA036500028		8	ANEL
20		SBA115026330		4	BIELA DE PISTÃO
21		SBA198517260		4	BUCHA
22		SBA115176140		8	PARAFUSO, Connecting Rod
23		SBA020109120		8	PORCA
24		SBA198517251		8	ROLAMENTO
25		SBA199266210		1	ARO

TUBO DE DISTRIBUIÇÃO DA ADMISSÃO

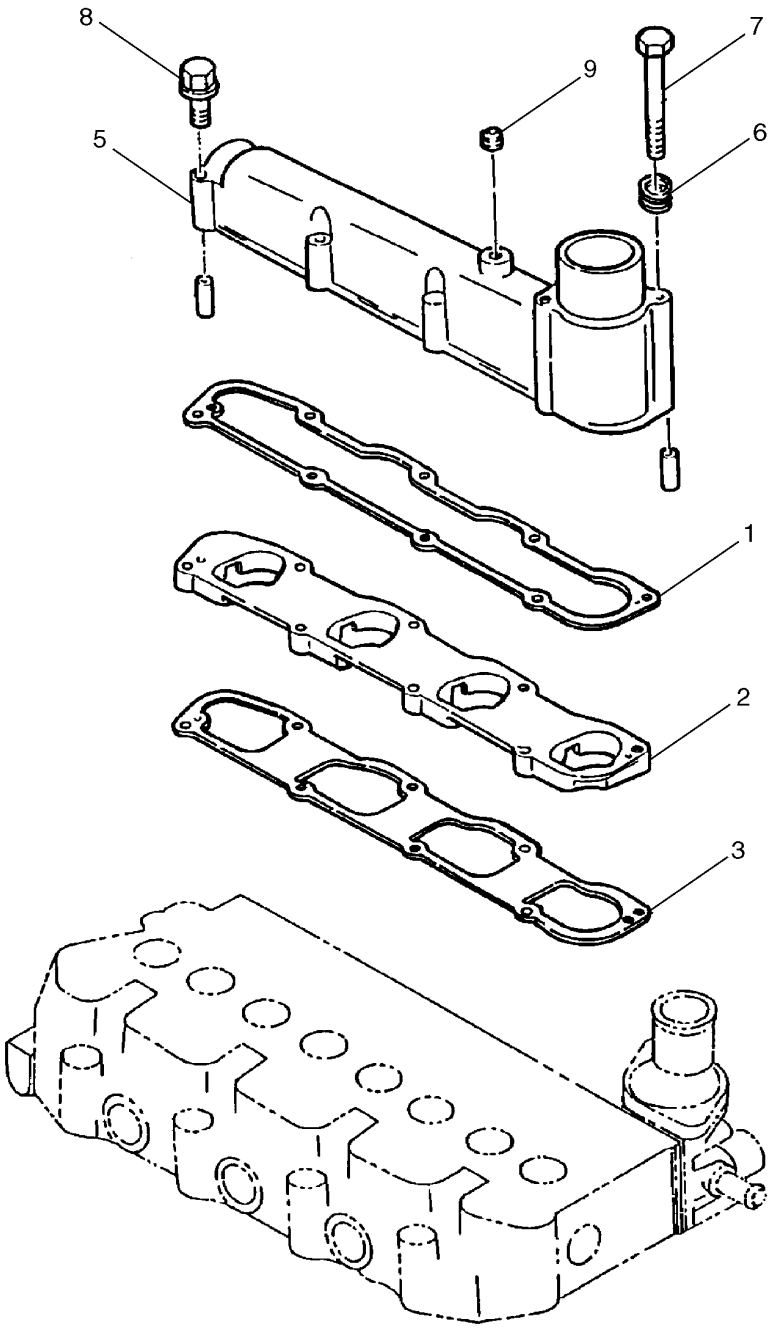

BS04M084

TUBO DE DISTRIBUIÇÃO DA ADMISSÃO

REF	FN	PART NUMBER	YR/SN	QTY	DESCRIPTION
1		SBA135996880		1	JUNTA COLECTOR, Intake
2		SBA135596920		1	ESPAÇADOR
3		SBA135996870		1	JUNTA, Spacer
4		SBA030300414		2	PINO, Spring
5		SBA135596710		1	COLETOR DE ADMISSÃO
6		SBA027100006		2	ARRUELA PLANA, M6
7		SBA010109119		2	PARAFUSO
8		SBA011310660		6	PARAFUSO
9		SBA064500010		1	BUJÃO

TURBOCOMPRESOR

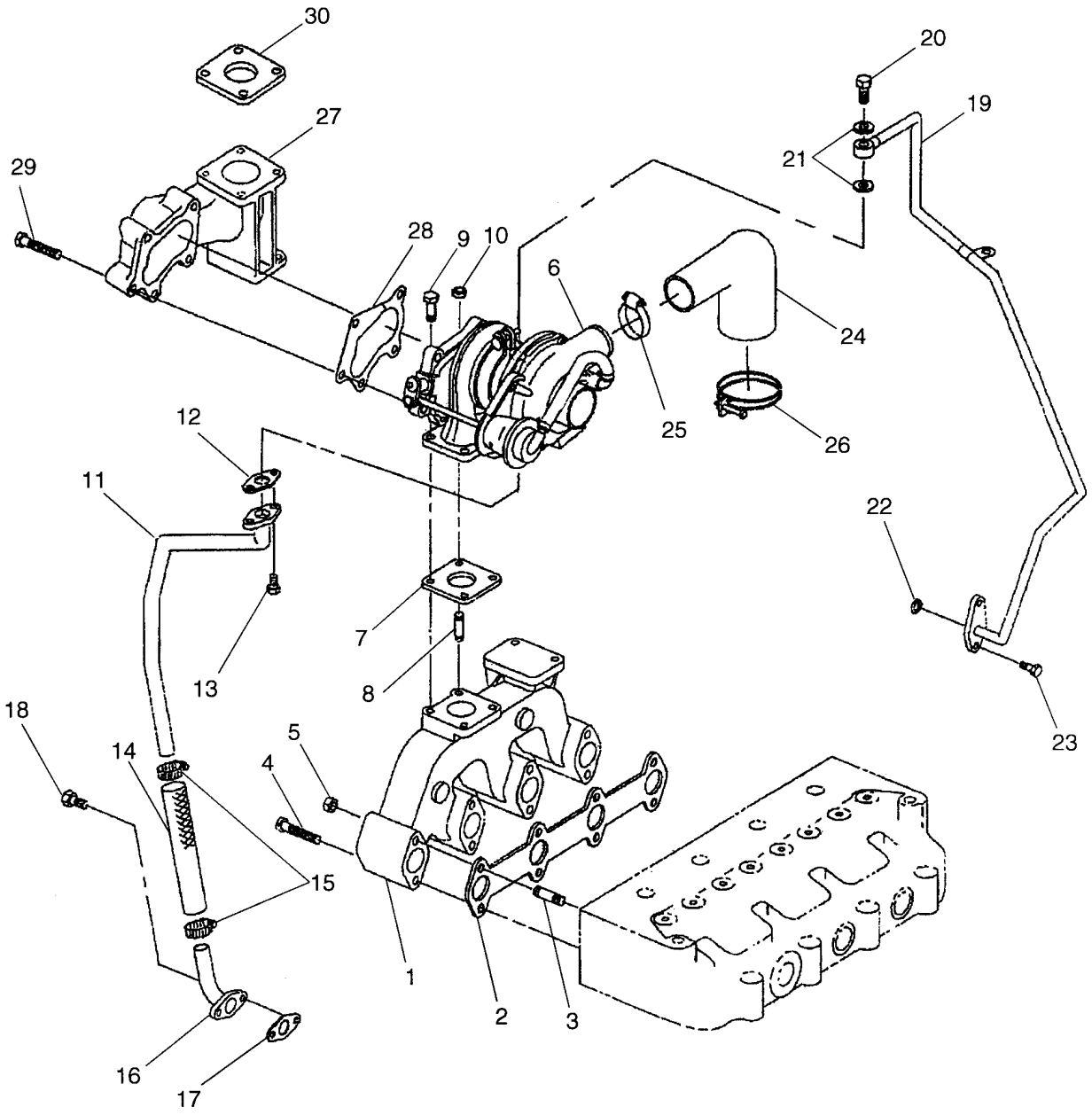

BS04M167

TURBOCOMPRESOR

REF	FN	PART NUMBER	YR/SN	QTY	DESCRIPTION
1		SBA135617240		1	COLETOR DE ESCAPE, Exhaust
2		SBA135996780		1	JUNTA COLECTOR
3		SBA012110875		2	PRISIONEIRO, Bolt
4		SBA011510875		6	PARAFUSO
5		SBA023100008		2	PORCA
6		SBA135756171		1	TURBOCOMPRESSOR
7		SBA135997020		1	JUNTA
8		SBA012109235		2	PRISIONEIRO, Stainless Steel
9		SBA010109465		2	PARAFUSO, Stainless Steel
10		SBA023100008		2	PORCA
11		SBA140607320		1	TUBO
12		SBA140996280		1	JUNTA
13		SBA011310616		2	PARAFUSO
14		SBA063209121		1	MANGUEIRA
15		SBA198756200		2	TIRA, Band
16		SBA140607370		1	TUBO DE INTRODUÇÃO
17		SBA140996280		1	JUNTA
18		SBA011310616		2	PARAFUSO
19		SBA140607360		1	TUBO DE INTRODUÇÃO
20		SBA198486780		1	BANJO, M8 x 1.25; If Used
20		SBA198487840		1	PARAFUSO, M10 x 1.5; If Used
21		SBA054109025		2	JUNTA
22		SBA052109078		1	ANEL "O"
23		SBA011310616		2	PARAFUSO
24		SBA135596570		1	COTOVELO, Hose, Rubber
25		SBA067100065		1	FIXADOR
26		SBA398750450		1	TIRA
27		SBA135617440		1	COTOVELO
28		SBA135997031		1	JUNTA, Replaces SBA135997030
29		SBA010109466		5	PARAFUSO
30		SBA314990013		1	JUNTA

CAIXA DA ENGRENAGEM DE DISTRIBUIÇÃO, REGULADOR - L175 NA BSN N7M470553, L175 EU BSN N7M468035; C175

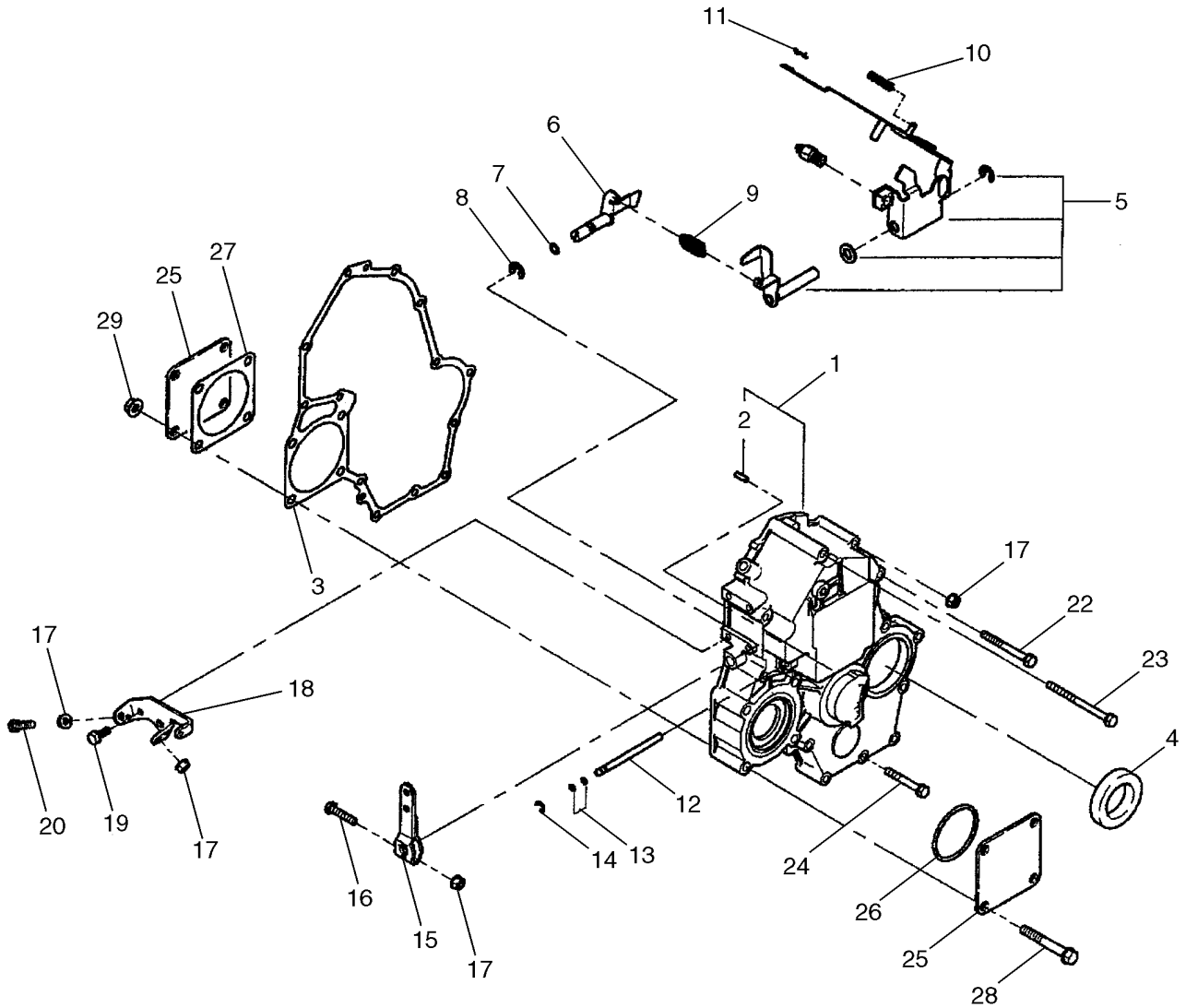

BS04M164

CAIXA DA ENGRENAGEM DE DISTRIBUIÇÃO, REGULADOR - L175 NA BSN N7M470553, L175 EU BSN N7M468035; C175

REF	FN	PART NUMBER	YR/SN	QTY	DESCRIPTION
					L175 NA 1 Speed BSN N7M470572, L175 NA 2 Speed BSN N7M470553, L175 EU BSN N7M468035, C175 NA BSN N7M466429, C175 EU BSN N7M467969
1		SBA165106480		1	ESTOJO, Timing Gear, Incl. Ref 2
2		SBA030300414		1	PINO, Spring
3		SBA165996550		1	JUNTA
4		SBA198636160		1	ANEL DE VEDACAO, Oil, O.D. 55.0 mm, I.D. 33.8 mm
5		SBA125046510		1	ALAVANCA
6		SBA125156170		1	BRAÇO
7		SBA052109110		1	ANEL "O"
8		SBA036800008		2	ANEL
9		SBA198217380		1	MOLA, Main
10		SBA198217560		1	MOLA
11		SBA031100004		1	PINO, Snap
12		SBA125116141		1	HASTE
13		SBA052109108		2	ANEL "O"
14		SBA036800005		1	ANEL
15		SBA125416300		1	ALAVANCA, Speed
16		SBA010110630		1	PARAFUSO
17		SBA02310006		3	PORCA
18		SBA125976120		1	SUPORTE
19		SBA011310616		2	PARAFUSO, CL 8.8, M6 x 1 x 16
20		SBA010109264		2	PARAFUSO
22		SBA011310660		5	PARAFUSO
23		SBA011310680		2	PARAFUSO
24		SBA011310645		6	PARAFUSO, Cap, HH, CL8.8, M6 x 1 x 45
25		SBA165206010		2	TAMPA
26		SBA052300600		1	ANEL "O"
27		SBA165996110		1	JUNTA
28		SBA010310865		4	PARAFUSO
29		SBA023100008		4	PORCA, Flg, CL 8, M8 x 1.25

RESERVATÓRIO DE ÓLEO

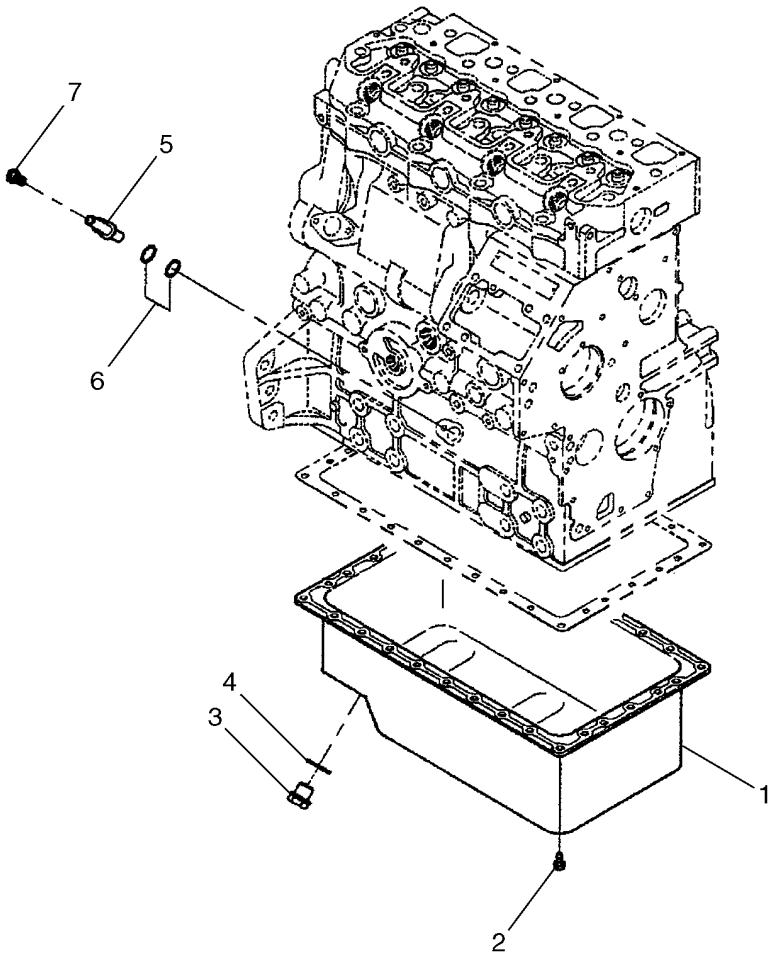

BS04M165

RESERVATÓRIO DE ÓLEO

REF	FN	PART NUMBER	YR/SN	QTY	DESCRIPTION
1		SBA110708030		1	CÁRTER DE ÓLEO
2		SBA010109235		30	PARAFUSO
3		SBA010411212		1	PARAFUSO, Drain Bolt
4		SBA025100012		1	ARRUELA PLANA
5		SBA110756660		1	GUIA, Guide
6		SBA052109113		2	ANEL "O"
7		SBA011310612		1	PARAFUSO

BOMBA DE ÓLEO E FILTRO DE SUCÇÃO - L175 NA BSN N7M470553, L175 EU BSN N7M468035; C175 NA BSN N7M4664

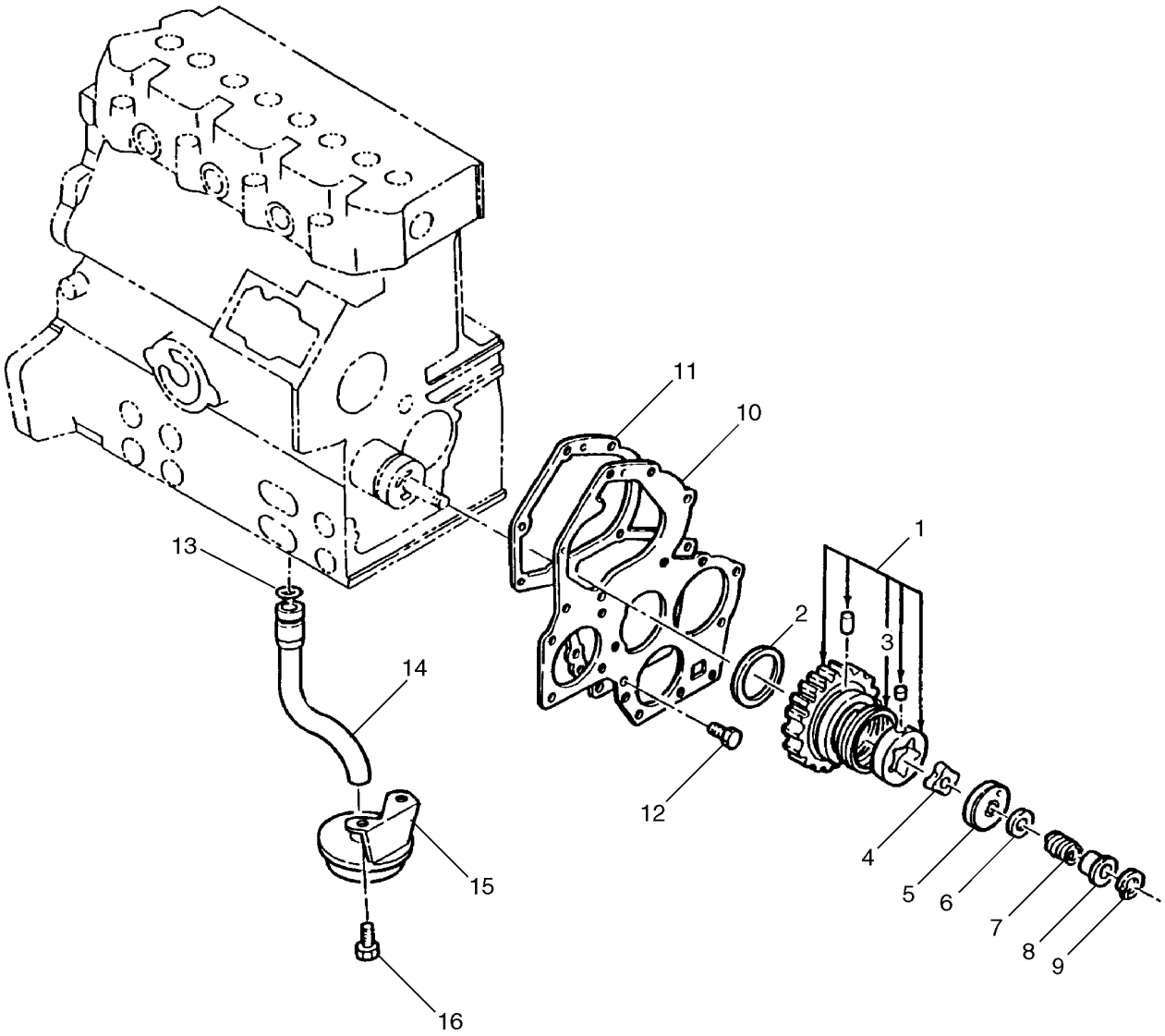

BS04M085

BOMBA DE ÓLEO E FILTRO DE SUCÇÃO - L175 NA BSN N7M470553, L175 EU BSN N7M468035; C175 NA BSN N7M4664

REF	FN	PART NUMBER	YR/SN	QTY	DESCRIPTION
					L175 NA 1 Speed BSN N7M470572, L175 NA 2 Speed BSN N7M470553, L175 EU BSN N7M468035, C175 NA BSN N7M466429, C175 EU BSN N7M467969
1		SBA165026120		1	ENGRENAGEM INTERMEDIÁRIA, Incl. Ref 3
2		SBA199266180		1	ARO
3		SBA198216821		1	MOLA
4		SBA140166140		1	ROTOR
5		SBA140116140		1	TAMPA, Oil Pump
6		SBA199286150		1	CALCO DE AFINACAO, .1mm
6		SBA199286160		1	CALCO DE AFINACAO, .15mm
6		SBA199286170		1	CALCO DE AFINACAO, .2mm
6		SBA199286180		1	CALCO DE AFINACAO, .5mm
7		SBA198216720		1	MOLA
8		SBA199236540		1	BRAÇADEIRA
9		SBA036800010		1	ANEL
10		SBA165166510		1	PLACA, Front
11		SBA165996540		1	JUNTA
12		SBA011310612		2	PARAFUSO, M6 x 12
13		SBA052109076		1	ANEL "O"
14		SBA140986820		1	TUBO, If Used With 15
14A		SBA140987020		1	TUBO DE INTRODUÇÃO, If Used With 15A; Not Illustrated
15		SBA140406490		1	FILTRO TELA, Suction; If Used With 14
15		SBA140406680		1	FILTRO, Suction; If Used With 14A; Not Illustrated
16		SBA011310612		2	PARAFUSO

BOMBA DE ÁGUA

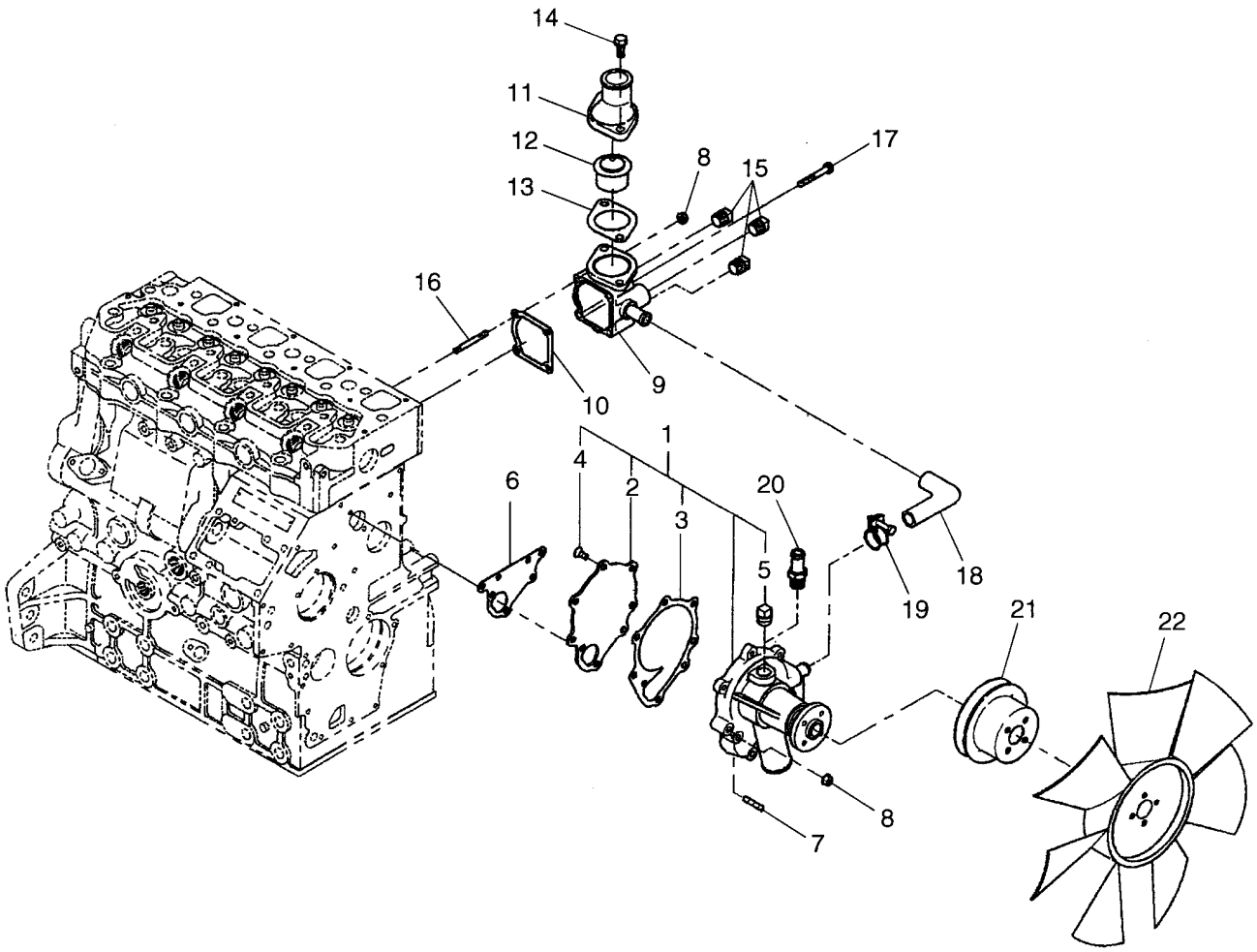

BS04M162

BOMBA DE ÁGUA

REF	FN	PART NUMBER	YR/SN	QTY	DESCRIPTION
1		SBA145017730		1	BOMBA DE ÁGUA, Incl. Ref 2 - 5
2		SBA145146320		1	PLACA, Set
3		SBA145996680		1	JUNTA
4		SBA015300614		5	PARAFUSO
5		SBA064500030		4	BUJÃO
6		SBA145996670		1	JUNTA
7		SBA011310635		4	PARAFUSO
8		SBA023100006		7	PORCA
9		SBA145216640		1	ALOJAMENTO, Thermostat
10		SBA145996710		1	JUNTA
11		SBA145226340		1	TAMPA, Thermostat
12		SBA145206220		1	TERMOSTATO, 71C- 1.875" OD x 2.2" height.
13		SBA145996051		1	JUNTA
14		SBA010800820		2	PARAFUSO
15		SBA064500030		3	BUJÃO
16		SBA012100655		2	PRISIONEIRO
17		SBA011310655		2	PARAFUSO
18		SBA145336051		1	MANGUEIRA, Hose
19		SBA067100022		2	BRACADEIRA MANGUEIRA
20		SBA198487870		1	NIPLE
21		SBA145336620		1	POLIA, North American Models
21		SBA145337040		1	POLIA, European Models
22		SBA145306740		1	VENTILADOR, Cooling

VOLANTE, COBERTURA - L175 NA BSN N7M470553, L175 EU BSN N7M468035; C175 NA BSN N7M466429, C175 EU BS

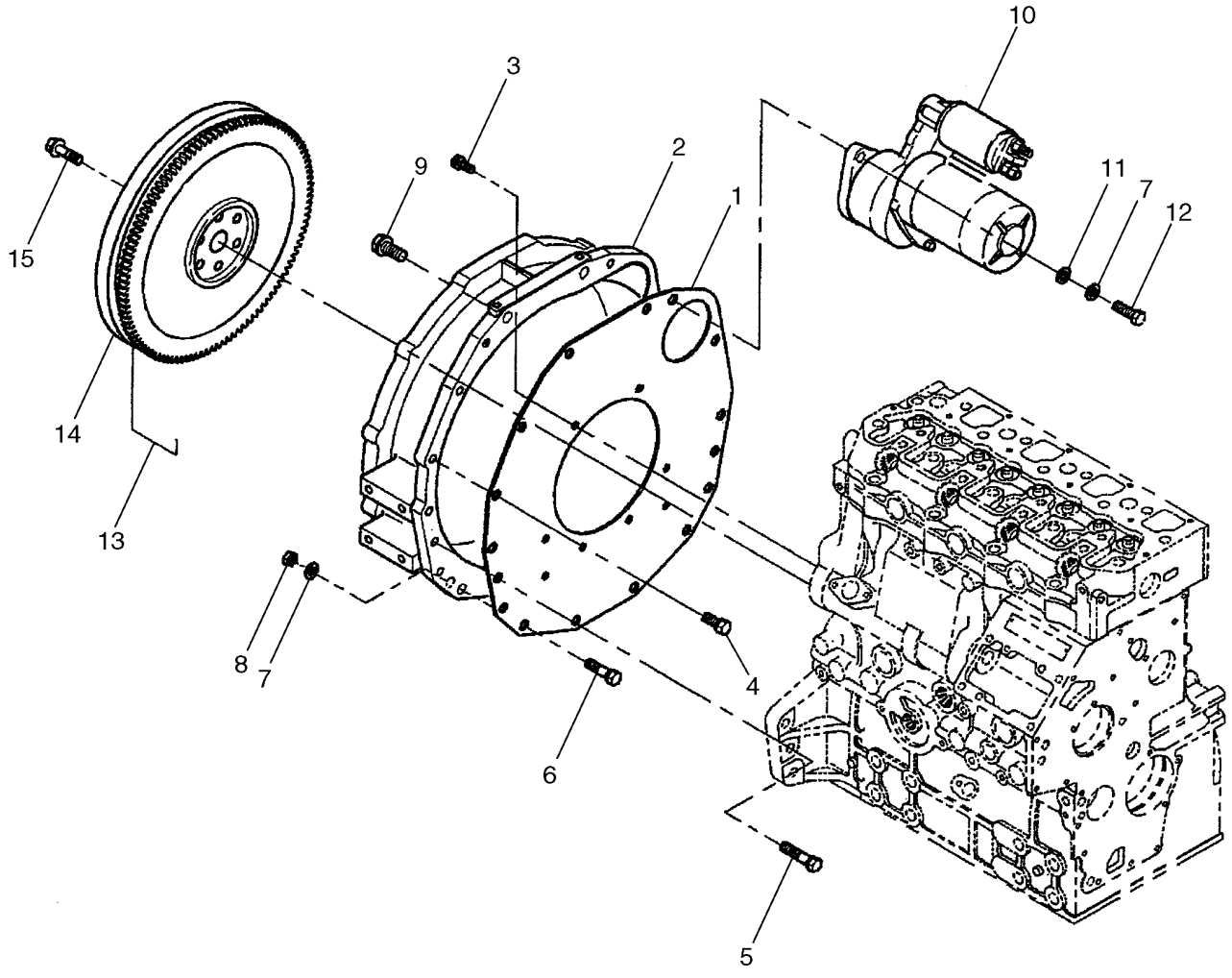

VOLANTE, COBERTURA - L175 NA BSN N7M470553, L175 EU BSN N7M468035; C175 NA BSN N7M466429, C175 EU BS

REF	FN	PART NUMBER	YR/SN	QTY	DESCRIPTION
					L175 NA 1 Speed BSN N7M470572, L175 NA 2 Speed BSN N7M470553, L175 EU BSN N7M468035, C175 NA BSN N7M466429, C175 EU BSN N7M467969
1		SBA110367580		1	PLACA, Rear
2		SBA110446980		1	ALOJAMENTO, Plate
3		SBA011510816		10	PARAFUSO
4		SBA011511020		2	PARAFUSO
5		SBA011511050		6	PARAFUSO
6		SBA011311030		4	PARAFUSO
7		SBA027100010		6	ARRUELA PLANA
8		SBA020100010		6	PORCA
9		SBA011511235		2	PARAFUSO
10		SBA185086530		1	MOTOR DE PARTIDA
11		SBA026100010		2	ARRUELA PLANA
12		SBA011311030		2	PARAFUSO
13		SBA115351030		1	VOLANTE, Flywheel
14		SBA115376160		1	COROA DENTADA
15		SBA010109341		6	PARAFUSO

BLOCO DO CILINDRO - FILTRO DE ACEITE - L175 NA ASN N7M470553, L175 EU ASN N7M468035; C175 NA ASN N7M

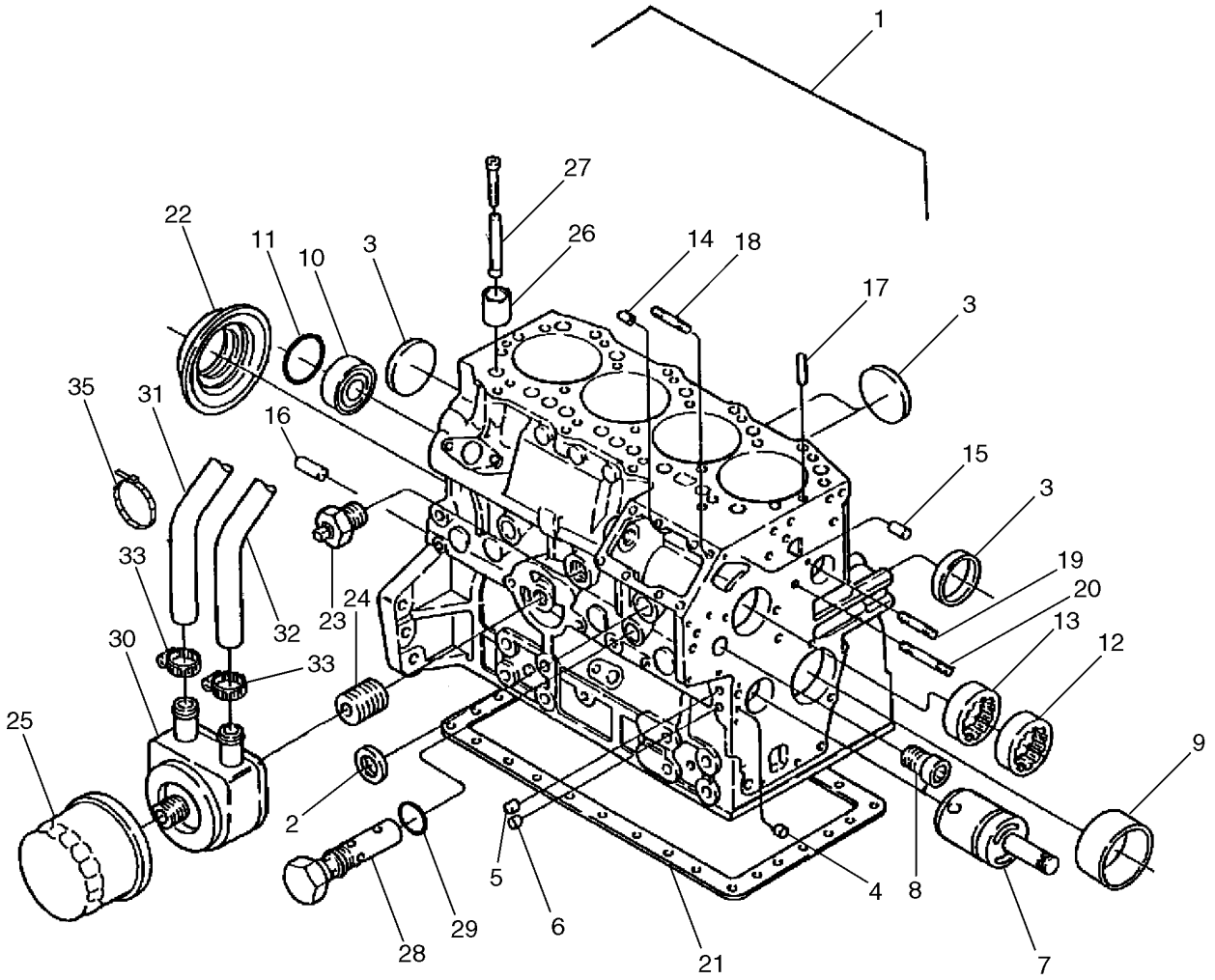

BS04M078

BLOCO DO CILINDRO - FILTRO DE ACEITE - L175 NA ASN N7M470553, L175 EU ASN N7M468035; C175 NA ASN N7M

REF	FN	PART NUMBER	YR/SN	QTY	DESCRIPTION
					L175 NA 1 Speed ASN N7M470572, L175 NA 2 Speed ASN N7M470553, L175 EU ASN N7M468035, C175 NA ASN N7M466429, C175 EU ASN N7M467969
		SBA133734		1	MOTOR, Engine, Long Block; Engine Does Not Include Flywheel, Starter, Flywheel Housing, Cooling Fan, Fan Belt, Fan Pulley, Alternator Or Mounting Parts, Oil Cooler
1		NSS		1	BOLETIM INFORMATIVO, Cylinder Block
2		SBA064210025		2	BUJÃO
3		SBA064210040		5	TAMPA DO RESERVATÓRIO
4		SBA198466010		3	BUJÃO, 8.4mm
5		SBA198466020		2	BUJÃO, 10.4mm
6		SBA198466030		4	BUJÃO, 6.5 x 7mm
7		SBA165296132		1	EIXO, Idler Gear, Uses Pin SBA140196072
8		SBA198517090		1	BUCHA
9		SBA198517222		1	BUCHA
10		SBA040106203		1	ROLAMENTO
11		SBA064100045		1	BUJÃO, Expansion
12		SBA042309018		1	ROLAMENTO, Needle
13		SBA042309017		1	ROLAMENTO, Needle
14		SBA030500612		2	PINO, Dowel
15		SBA030500616		2	PINO, Dowel
16		SBA030501025		2	PINO, Dowel
17		SBA030309005		2	PINO, Spring
18		SBA012100820		3	PRISIONEIRO
19		SBA012110660		1	PARAFUSO
20		SBA012110635		1	PRISIONEIRO
21		SBA110996860		1	JUNTA
22		SBA050209083		1	ANEL DE VEDACAO
23		SBA064500020		1	BUJÃO, Cock
24		SBA140546020		1	ADAPTADOR, Joint
25		SBA140517020		1	FILTRO DE ÓLEO
26		SBA120116160		8	TUCHO
27		SBA120456310		8	HASTE, Push

BLOCO DO CILINDRO - FILTRO DE ACEITE - L175 NA ASN N7M470553, L175 EU ASN N7M468035; C175 NA ASN N7M

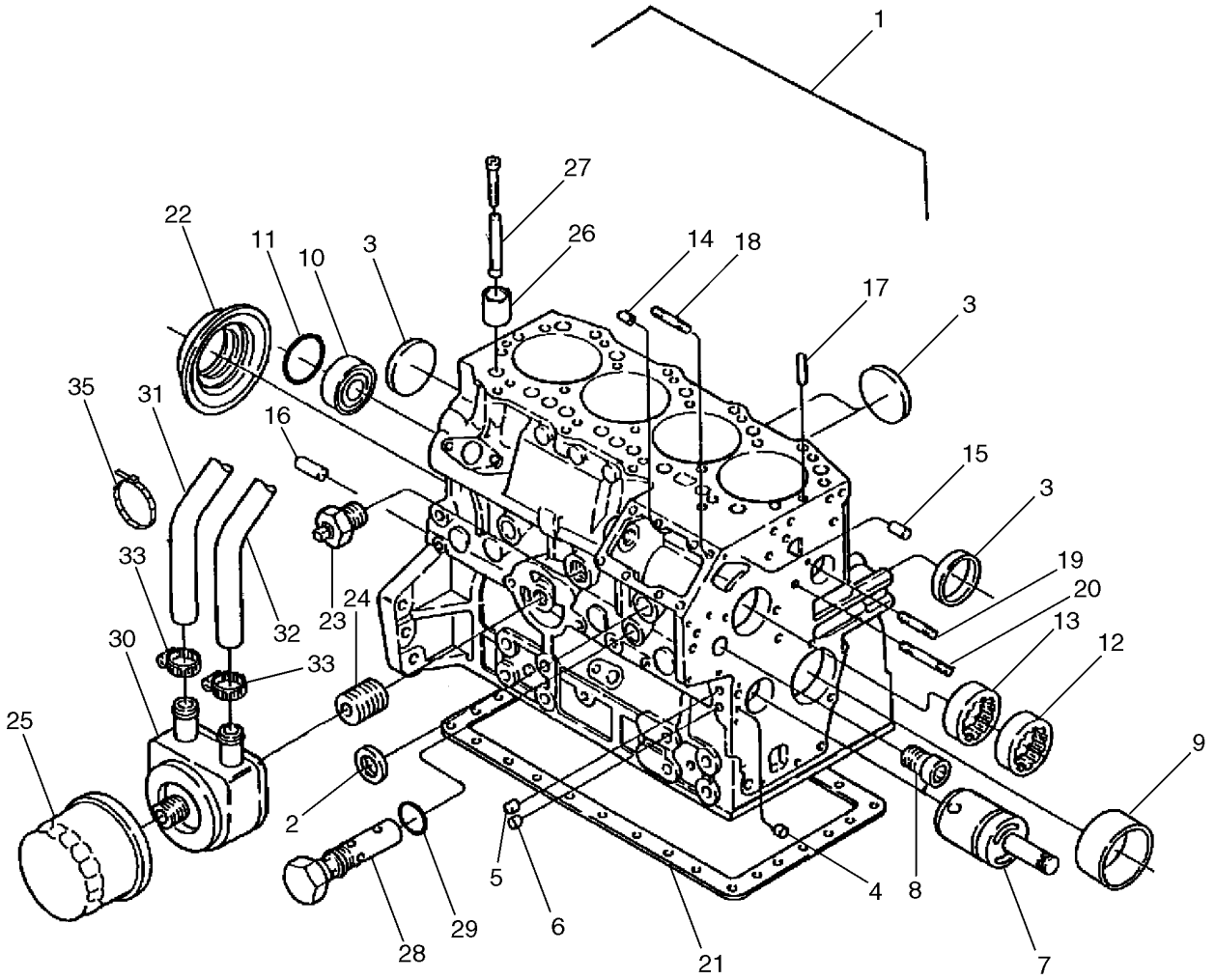

BS04M078

BLOCO DO CILINDRO - FILTRO DE ACEITE - L175 NA ASN N7M470553, L175 EU ASN N7M468035; C175 NA ASN N7M

REF	FN	PART NUMBER	YR/SN	QTY	DESCRIPTION
28		SBA140036220		1	VÁLVULA DE SOBRE-PRESSÃO
29		SBA052109113		1	ANEL "O"
30		SBA140656150		1	ARREFECEDOR, Oil Cooler Assy
31		SBA068209246		1	MANGUEIRA
32		SBA068209247		1	MANGUEIRA
33		SBA067100025		4	BRACADEIRA MANGUEIRA, Hose Band

CABEÇA DO CILINDRO - L175 NA ASN N7M470553, L175 EU ASN N7M468035; C175 NA ASN N7M466429, C175 EU AS

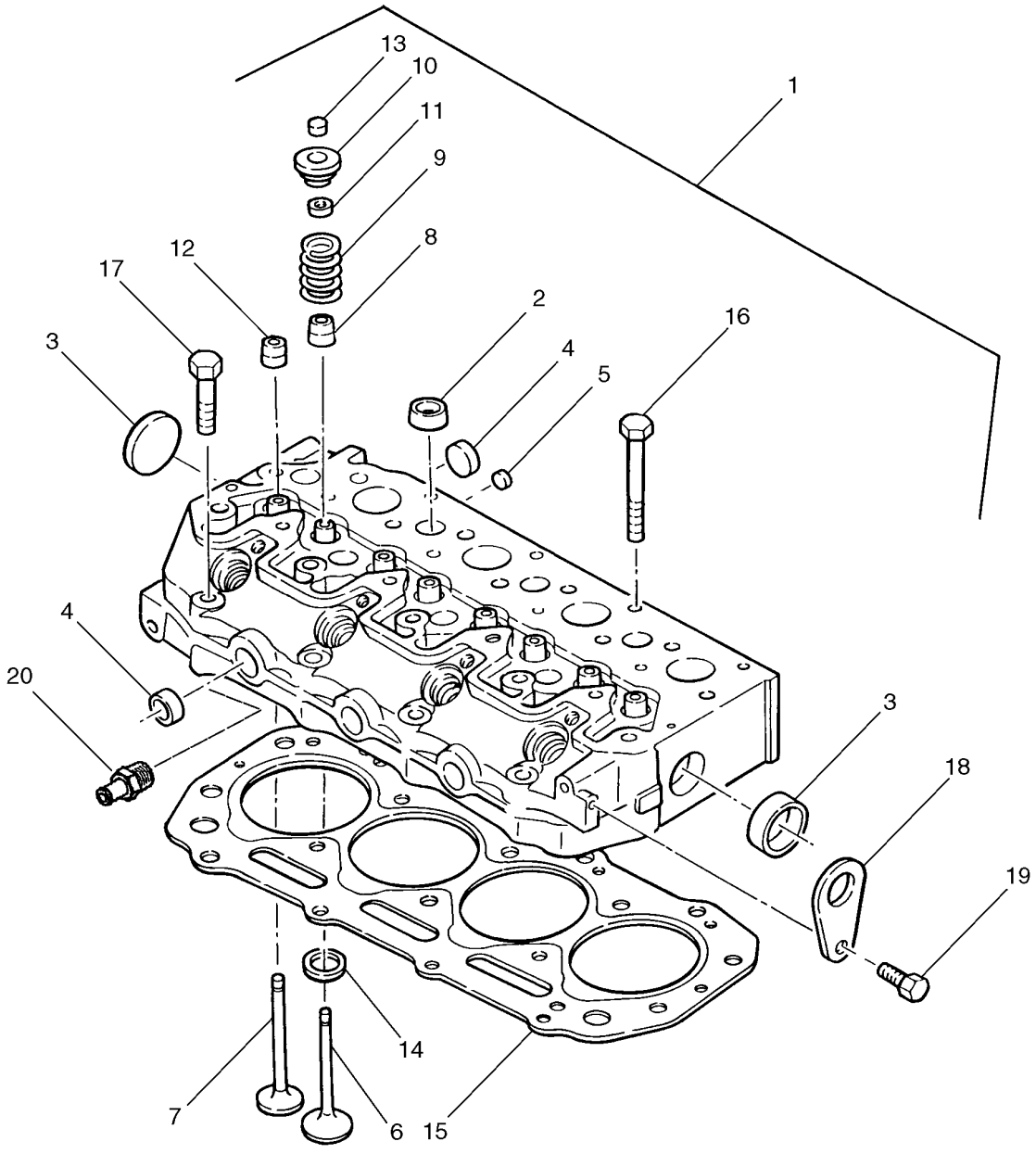

BS04M080

CABEÇA DO CILINDRO - L175 NA ASN N7M470553, L175 EU ASN N7M468035; C175 NA ASN N7M466429, C175 EU AS

REF	FN	PART NUMBER	YR/SN	QTY	DESCRIPTION
					L175 NA 1 Speed ASN N7M470572, L175 NA 2 Speed ASN N7M470553, L175 EU ASN N7M468035, C175 NA ASN N7M466429, C175 EU ASN N7M467969
1		SBA111011130		1	CABEÇOTE, Cylinder Head; Incl. Ref 2 - 14
2		SBA064210018		7	BUJÃO, Sealing
3		SBA064210030		2	BUJÃO, Sealing
4		SBA064210025		4	BUJÃO, Sealing
5		SBA064210010		3	PROTETOR DE BUJÃO, Sealing
6		SBA120166350		4	VÁLVULA DE ADMISSÃO
7		SBA120176360		4	VÁLVULA DE ESCAPE
8		SBA120406070		4	ANEL DE VEDACAO, Valve Guide, Intake
9		SBA198216700		8	MOLA
10		SBA120186080		8	PRENDEDOR
11		SBA120226070		16	PRENDEDOR, Cotter
12		SBA120406050		4	ANEL DE VEDACAO, Valve Guide, Exhaust
13		SBA120216040		8	TAMPA DO RESERVATÓRIO, If Used
13		SBA120216041		8	TAMPA DO RESERVATÓRIO, If Used
14		SBA110136400		4	SEDE DE VÁLVULA, Intake
15		SBA111147751		1	JUNTA DO CABEÇOTE, 1.1 Thickness; Metal Type
15		SBA111147711		1	JUNTA DO CABEÇOTE, 1.2 Thickness; Carbon Type
15		SBA111147761		1	JUNTA DO CABEÇOTE, 1.2 Thickness; Metal Type
15		SBA111147721		1	JUNTA DO CABEÇOTE, 1.3 Thickness; Carbon Type
15		SBA111147771		1	JUNTA DO CABEÇOTE, 1.3 Thickness; Metal Type
16		SBA111136480		14	PARAFUSO, Head
17		SBA111136490		4	PARAFUSO, Head
18		SBA195816540		2	OLHAL LEVANTAMENTO
19		SBA011510816		2	PARAFUSO, M8 x 16
20		SBA198487901		1	CONECTOR, Connector

COBERTURA DO CABEÇOTE, POLIA DO VIRABREQUIM - L175 NA ASN N7M470553, L175 EU ASN N7M468035; C175 NA

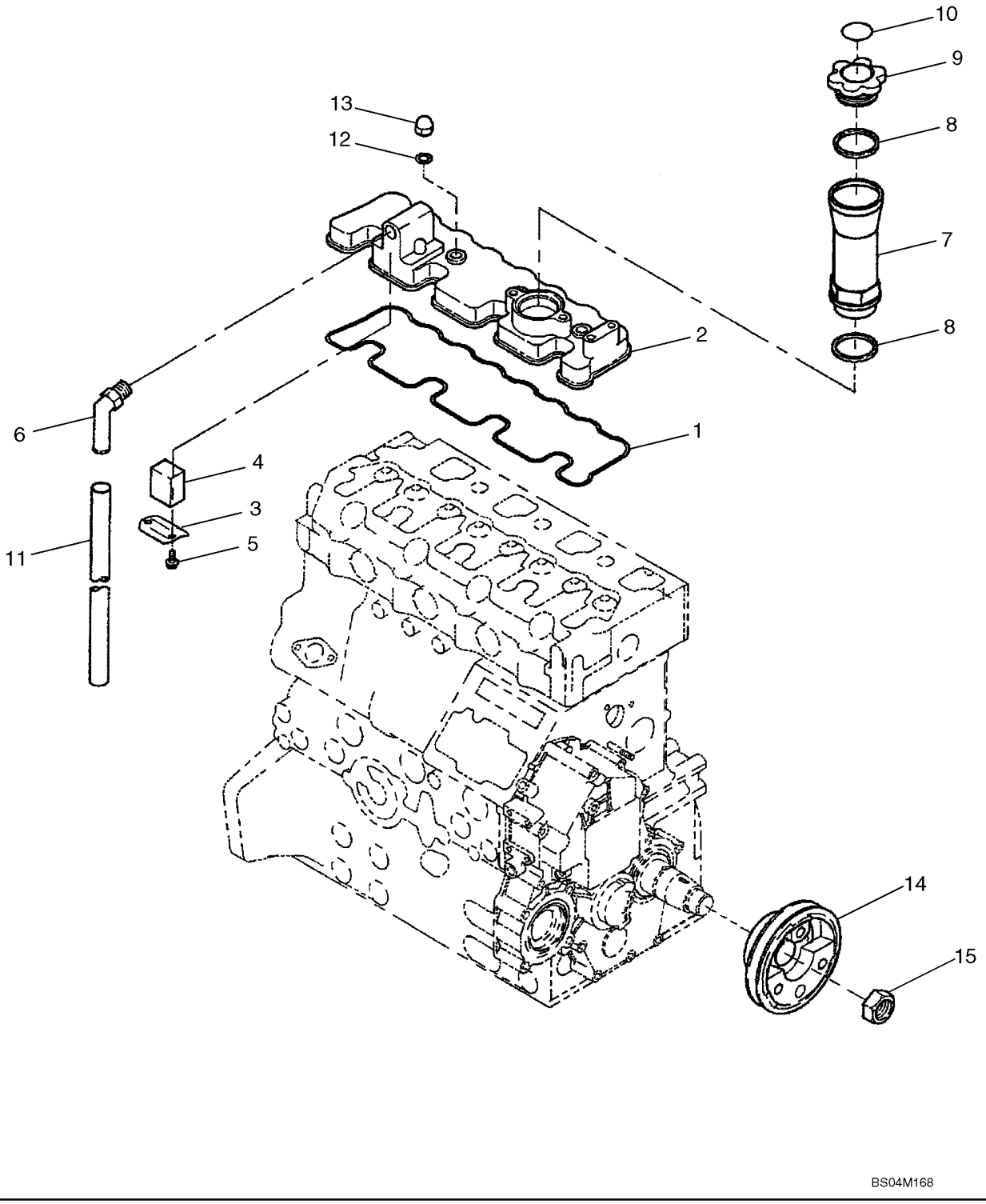

COBERTURA DO CABEÇOTE, POLIA DO VIRABREQUIM - L175 NA ASN N7M470553, L175 EU ASN N7M468035; C175 NA

REF	FN	PART NUMBER	YR/SN	QTY	DESCRIPTION
					L175 NA 1 Speed ASN N7M470572, L175 NA 2 Speed ASN N7M470553, L175 EU ASN N7M468035, C175 NA ASN N7M466429, C175 EU ASN N7M467969
1		SBA052109072		1	ANEL "O"
2		SBA111026150		1	TAMPA VALVULA, Head, Incl. Ref 3 - 5, 10
3		SBA110666050		1	DEFLETOR, Oil
4		SBA110666090		1	FILTRO
5		SBA011310612		2	PARAFUSO, M6 x 12
6		SBA140986581		1	COTOVELO
7		SBA110466031		1	TUBO DE INTRODUÇÃO
8		SBA052100400		1	ANEL "O"
9		SBA198436010		1	TAMPA RESERVATORIO
10		SBA190297900		1	DECALCOMANIA
11		SBA068209092		1	TUBO, Tube
12		SBA131996200		4	JUNTA
13		SBA024600010		4	PORCA, Cap
14		SBA115391060		1	POLIA, Pulley; Crankshaft
15		SBA020109086		1	PORCA

EIXO TRANSMISSOR - L175 NA ASN N7M470553, L175 EU ASN N7M468035; C175 NA ASN N7M466429, C175 EU ASN

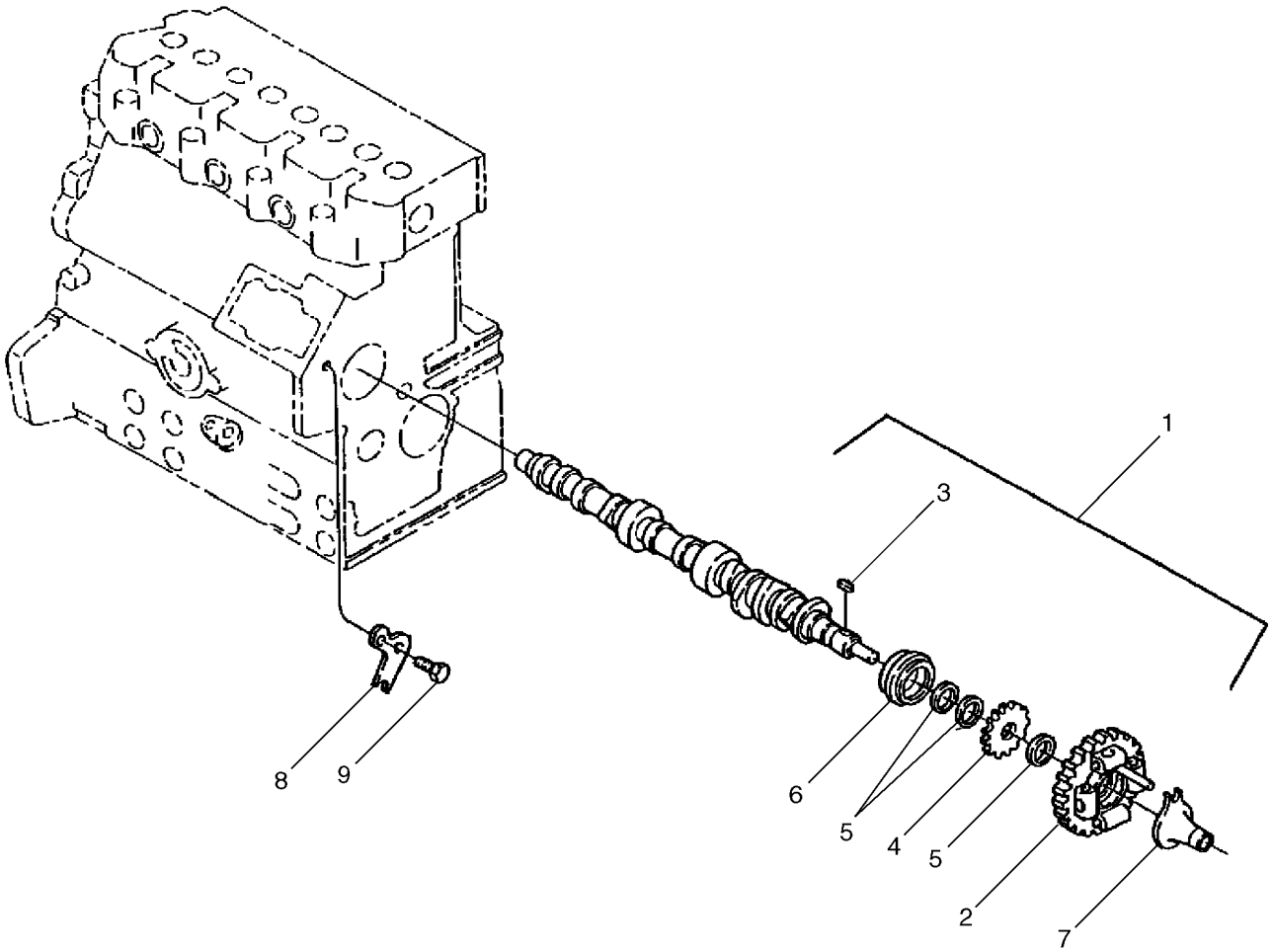

BS04M082

EIXO TRANSMISSOR - L175 NA ASN N7M470553, L175 EU ASN N7M468035; C175 NA ASN N7M466429, C175 EU ASN

REF	FN	PART NUMBER	YR/SN	QTY	DESCRIPTION
					L175 NA 1 Speed ASN N7M470572, L175 NA 2 Speed ASN N7M470553, L175 EU ASN N7M468035, C175 NA ASN N7M466429, C175 EU ASN N7M467969
1		SBA120026970		1	EIXO EXCÊNTRICO, Incl. Ref 2 - 6
2		SBA120016050		1	ENGRENAGEM, Cam, Complete
3		SBA034100508		1	CHAVETA
4		SBA120736081		1	ENGRENAGEM
5		SBA199216230		3	ESPAÇADOR
6		SBA040109057		1	ROLAMENTO
7		SBA125256120		1	GUIA DESLIZANTE
8		SBA199566750		1	SUPORTE
9		SBA011310612		2	PARAFUSO

CAIXA DA ENGRENAGEM DE DISTRIBUIÇÃO, REGULADOR - L175 NA ASN N7M470553, L175 EU ASN N7M468035; C175

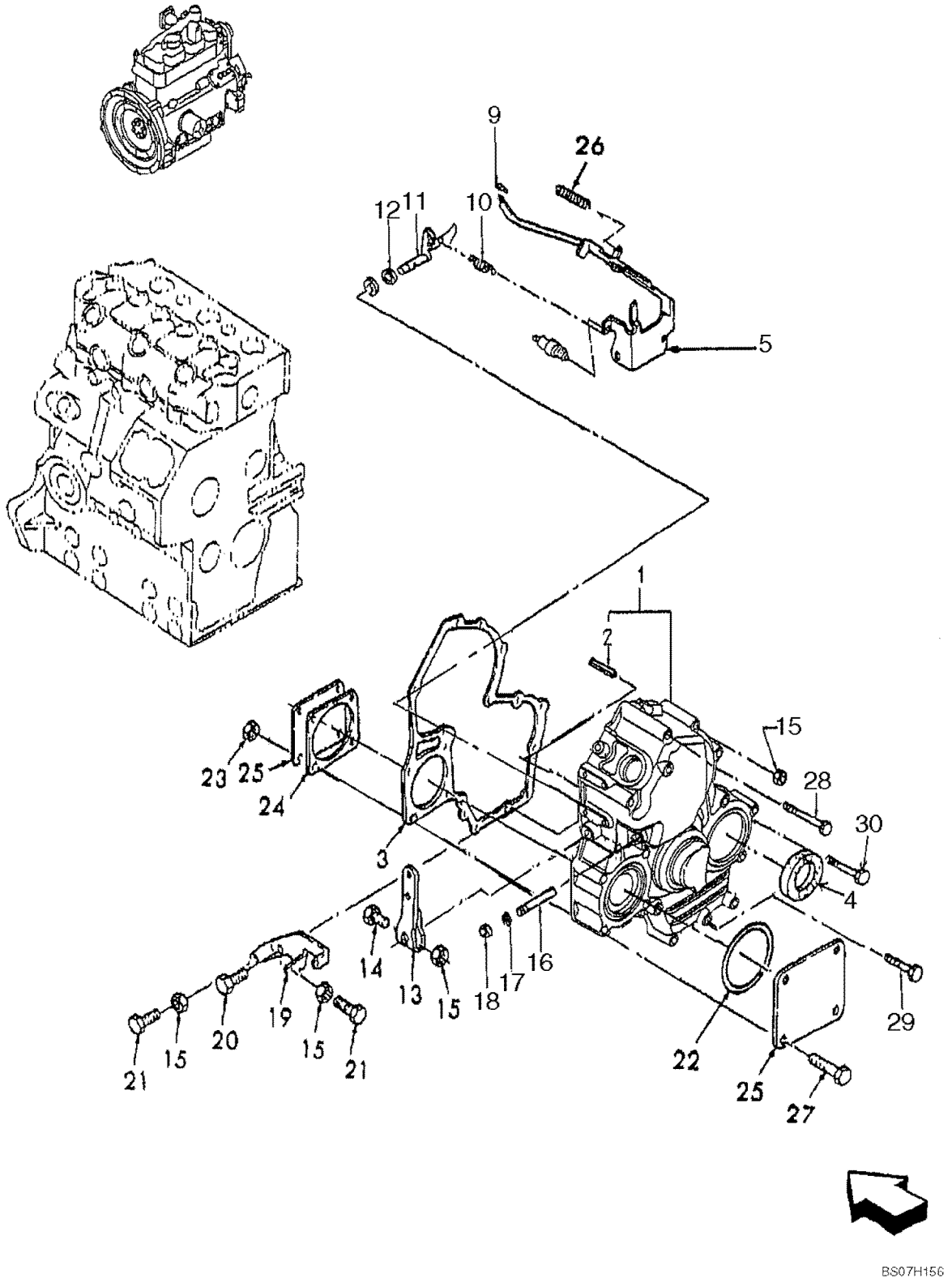

CAIXA DA ENGRENAGEM DE DISTRIBUIÇÃO, REGULADOR - L175 NA ASN N7M470553, L175 EU ASN N7M468035; C175

REF	FN	PART NUMBER	YR/SN	QTY	DESCRIPTION
					L175 NA 1 Speed ASN N7M470572, L175 NA 2 Speed ASN N7M470553, L175 EU ASN N7M468035, C175 NA ASN N7M466429, C175 EU ASN N7M467969
1		SBA165106840		1	ENGRENAGEM, Timing Gear, Incl. Ref 2
2		SBA030300414		1	PINO, Spring
3		SBA165996550		1	JUNTA
4		SBA198636160		1	ANEL DE VEDACAO, Oil, O.D. 55.0 mm, I.D. 33.8 mm
5		SBA125046510		1	ALAVANCA, Governor
9		SBA031100004		1	PINO, Snap
10		SBA198217380		1	MOLA, Main
11		SBA125156170		1	BRAÇO
12		SBA052109110		1	ANEL "O"
13		SBA125416300		1	ALAVANCA, Speed
14		43117		1	PARAFUSO, Hex, M6 x 30, 8.8
15		9804276		4	PORCA, M6 x 1, Flg, Cl 8
16		SBA125116141		1	HASTE
17		SBA052109108		1	ANEL "O"
18		SBA036800005		1	ANEL
19		SBA125976120		1	SUPORTE
20		SBA011310614		2	PARAFUSO, CL 8.8, M6 x 1 x 14
21		SBA010109264		2	PARAFUSO
22		SBA052300600		1	ANEL "O"
23		9804277		4	PORCA, M8 x 1.25, Flg, Cl 8
24		SBA165996610		1	JUNTA
25		SBA165206010		2	TAMPA
26		SBA198217560		1	MOLA, Start
27		SBA011510865		4	PARAFUSO
28		SBA011310680		2	PARAFUSO
29		SBA011310645		7	PARAFUSO, Cap, HH, CL8.8, M6 x 1 x 45
30		SBA011310660		3	PARAFUSO

BOMBA DE ÓLEO E FILTRO DE SUCÇÃO - L175 NA ASN N7M470553, L175 EU ASN N7M468035; C175 NA ASN N7M4664

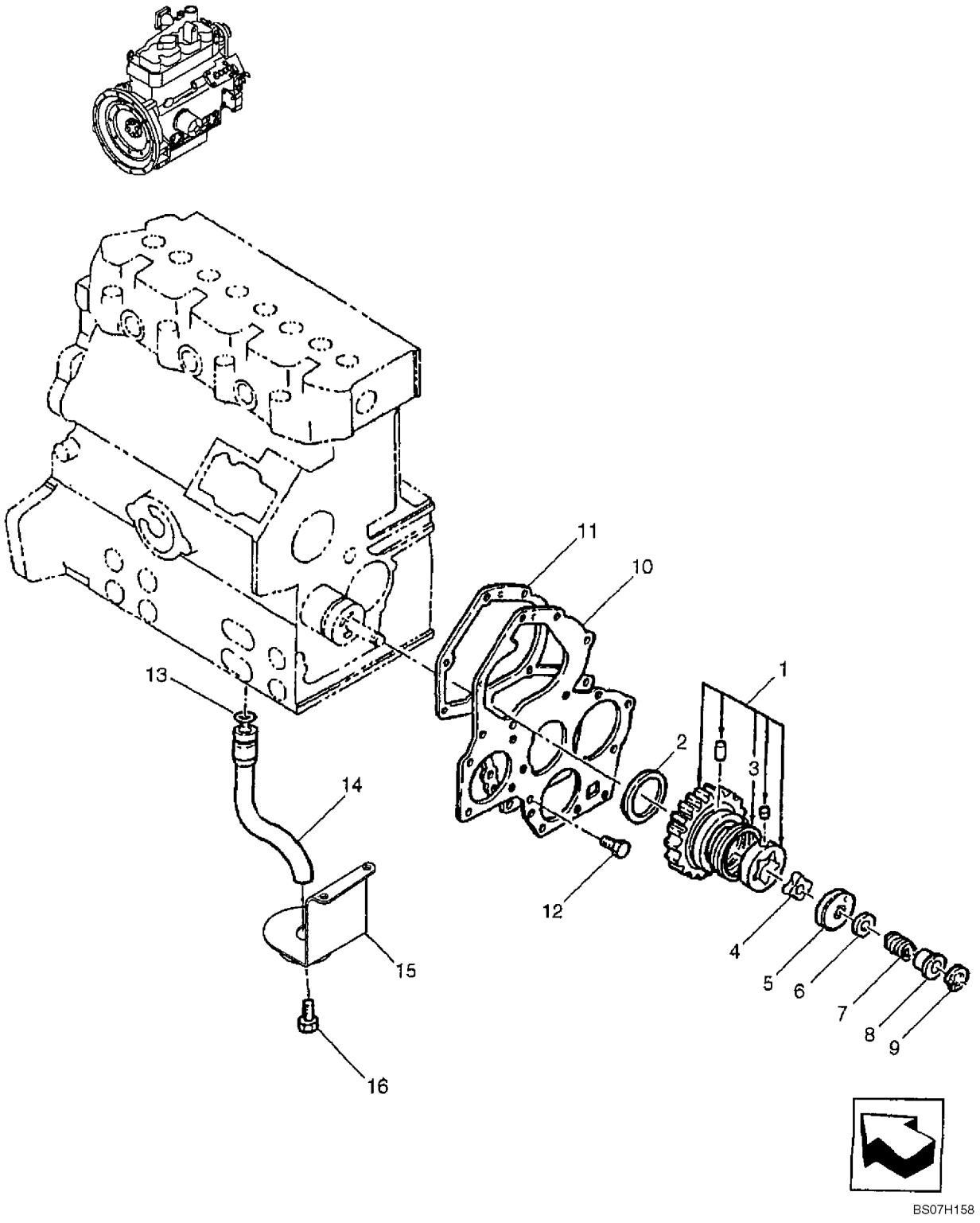

BOMBA DE ÓLEO E FILTRO DE SUCÇÃO - L175 NA ASN N7M470553, L175 EU ASN N7M468035; C175 NA ASN N7M4664

REF	FN	PART NUMBER	YR/SN	QTY	DESCRIPTION
					L175 NA 1 Speed ASN N7M470572, L175 NA 2 Speed ASN N7M470553, L175 EU ASN N7M468035, C175 NA ASN N7M466429, C175 EU ASN N7M467969
1		SBA165026230		1	ENGRENAGEM INTERMEDIÁRIA, Incl. Ref. 3
2		SBA199266270		1	ANEL DE ENCOSTO
3		SBA198216821		1	MOLA
4		SBA140166250		1	GEROTOR
5		SBA140116220		1	COBERTURA, Oil Pump
6		SBA199286150		1	CALCO DE AFINACAO, .1mm
6		SBA199286160		1	CALCO DE AFINACAO, .15mm
6		SBA199286170		1	CALCO DE AFINACAO, .2mm
6		SBA199286180		1	CALCO DE AFINACAO, .5mm
7		SBA198216720		1	MOLA
8		SBA199236540		1	BRAÇADEIRA
9		SBA036800010		1	ANEL
10		SBA165166650		1	PLACA, PLATE, Front
11		SBA165996540		1	JUNTA
12		SBA011310612		2	PARAFUSO, M6 x 12
13		SBA052109076		1	ANEL "O"
14		SBA140986820		1	TUBO, Oil Pickup
15		SBA140406490		1	FILTRO TELA, Suction
16		SBA011310612		2	PARAFUSO

VOLANTE, COBERTURA - L175 NA ASN N7M470553, L175 EU ASN N7M468035; C175 NA ASN N7M466429, C175 EU AS

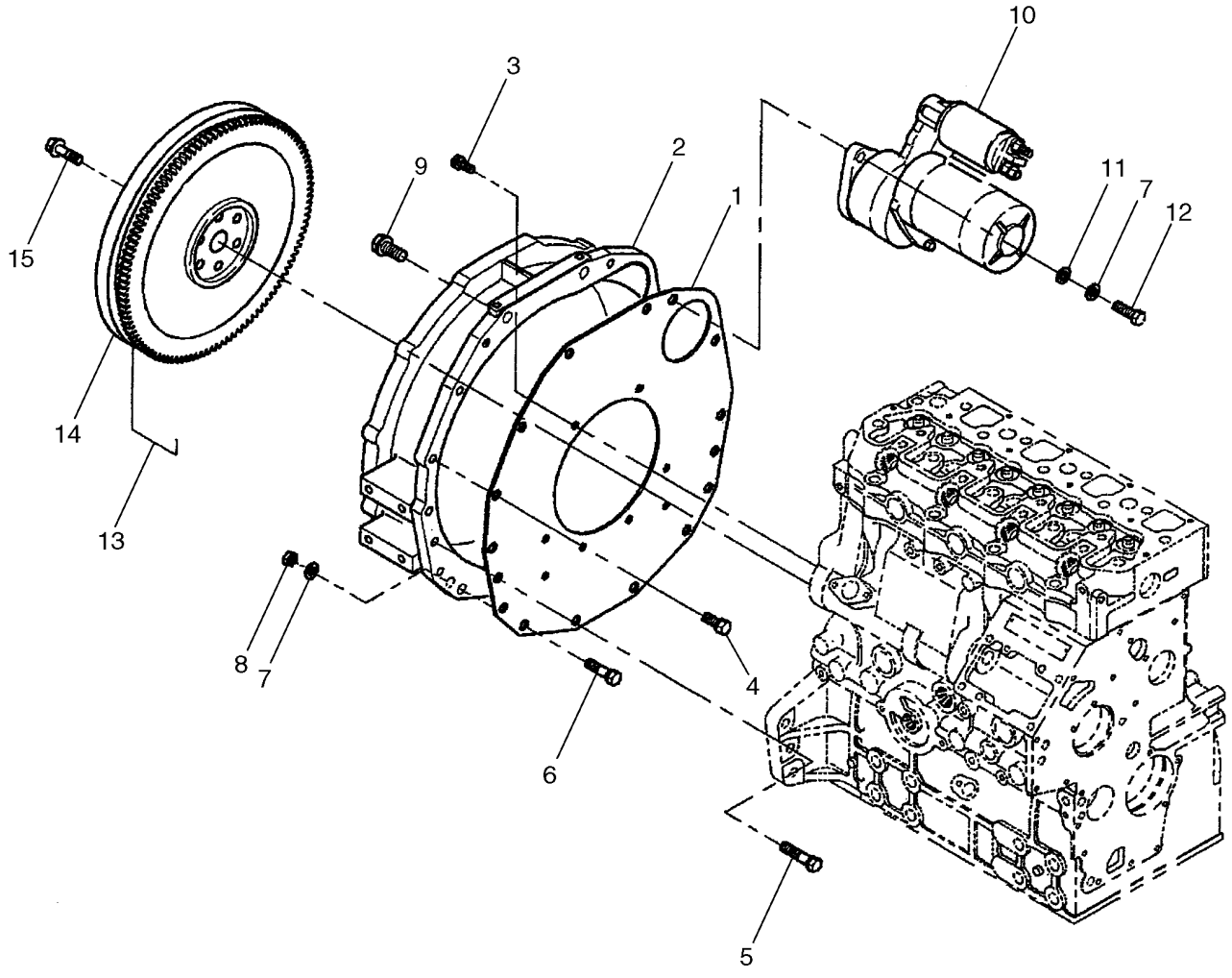

VOLANTE, COBERTURA - L175 NA ASN N7M470553, L175 EU ASN N7M468035; C175 NA ASN N7M466429, C175 EU AS

REF	FN	PART NUMBER	YR/SN	QTY	DESCRIPTION
					L175 NA 1 Speed ASN N7M470572, L175 NA 2 Speed ASN N7M470553, L175 EU ASN N7M468035, C175 NA ASN N7M466429, C175 EU ASN N7M467969
1		SBA110367580		1	PLACA, Rear
2		SBA110446980		1	ALOJAMENTO, Plate
3		SBA011510816		10	PARAFUSO
4		SBA011511020		2	PARAFUSO
5		SBA011511045		6	PARAFUSO
6		SBA011311030		4	PARAFUSO
7		SBA027100010		6	ARRUELA PLANA
8		SBA020100010		6	PORCA
9		SBA011511235		2	PARAFUSO
10		SBA185086530		1	MOTOR DE PARTIDA
11		SBA026100010		2	ARRUELA PLANA
12		SBA011311030		2	PARAFUSO
13		SBA115351030		1	VOLANTE, Complete
14		SBA115376160		1	COROA DENTADA
15		SBA010109341		6	PARAFUSO

SECTION INDEX
Sistema de Alimentação

03-01	CONJUNTO DO TANQUE DE COMBUSTÍVEL; 14.4 GL
03-01A	CONJUNTO DO TANQUE DE COMBUSTÍVEL; 16 GL
03-02	CONTROLO DE ACELERAÇÃO - CONTROLES, DERECHA
03-02A	CONTROLES - ESTRANGULADOR
03-03	INJECTOR DA BOMBA DE INJECÇÃO - L175 NA BSN N7M470553, L175 EU BSN N7M468035; C175 NA BSN N7M466429,
03-03A	INJECTOR DA BOMBA DE INJECÇÃO - L175 NA ASN N7M470553, L175 EU ASN N7M468035; C175 NA ASN N7M466429,
03-04	CONJUNTO DO INJECTOR - L175 NA BSN N7M470553, L175 EU BSN N7M468035; C175 NA BSN N7M466429, C175 EU
03-04A	CONJUNTO DO INJECTOR - L175 NA ASN N7M470553, L175 EU ASN N7M468035; C175 NA ASN N7M466429, C175 EU

CONJUNTO DO TANQUE DE COMBUSTÍVEL; 14.4 GL

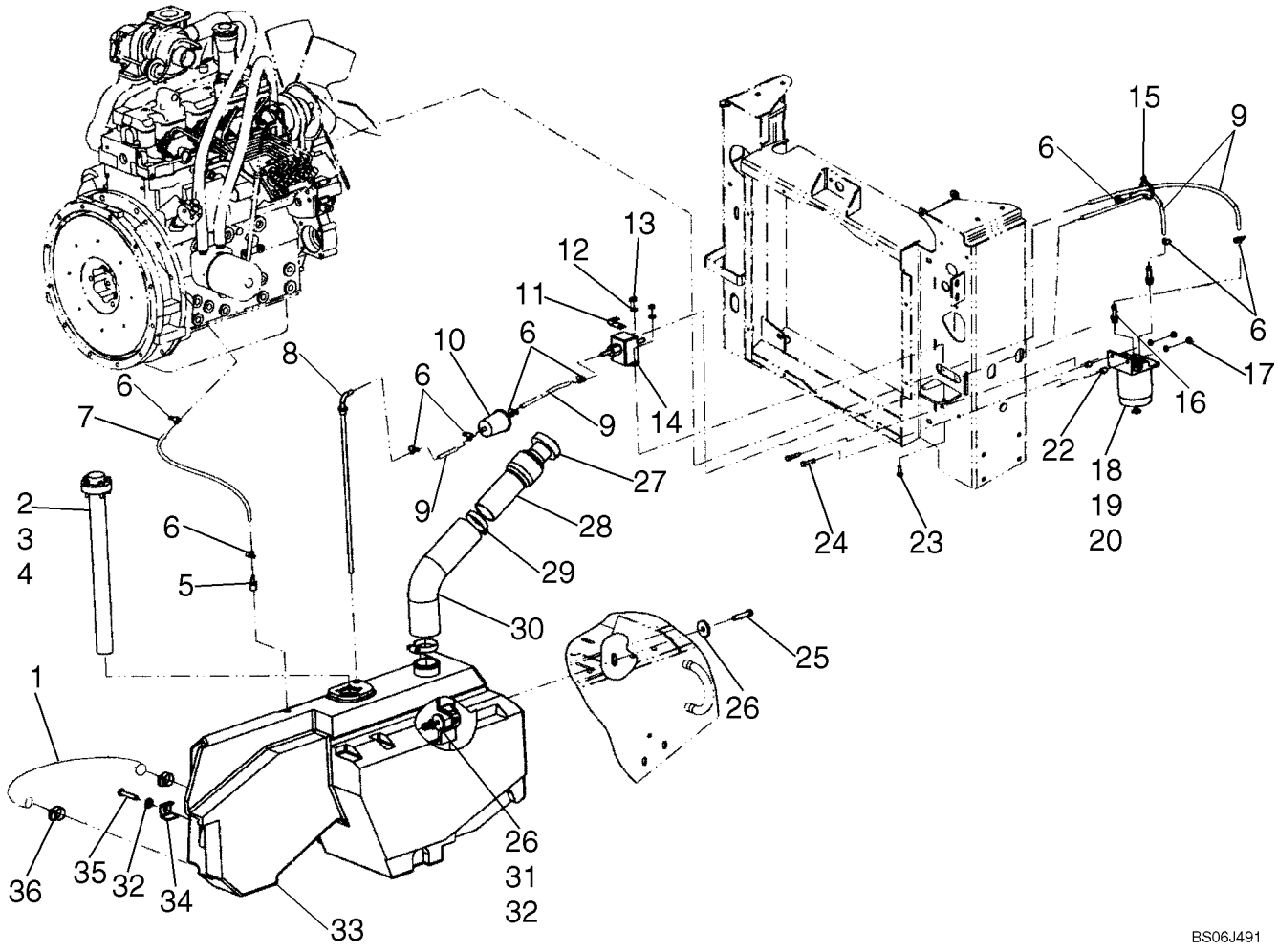

CONJUNTO DO TANQUE DE COMBUSTÍVEL; 14.4 GL

REF	FN	PART NUMBER	YR/SN	QTY	DESCRIPTION
1		9616376		1	MANGUEIRA, .75 ID x 1.06 OD x 528 mm, 20.76 in. Length
2		9860032		1	TRANSMISSOR, Incl. 3, 4
3		48751		1	JUNTA
4		84464		5	PARAFUSO, Slotted Truss Hd, #10-24 x 1"
5		223593		1	CONEXAO, 3/16" Hose x 1/4" NPTF, Barbed
6		574518		9	BRACADEIRA MANGUEIRA, #4, 0.25/0.62 Type M Worm
7		291260		1	GANCHO, 5/32 ID 405 mm, 15.96 in.
8		9844697		1	TUBO
9		290323		1	TUBO FLEXÍVEL, 5/16 ID 975 mm, 38.40 in.
10		9611973		1	FILTRO DE COMBUSTÍVEL
11		134579		1	TERMINAL
12		322357		2	ARRUELA MOLA, Belleville, M6
13		7770		4	PORCA, 1/4"-20, G5
14		87024903		1	BOMBA DE ALIMENTAÇÃO
15		87000312		1	TIRA DE CABO
16		9844342		2	CONEXAO, Incl. 16A
16A		165202		1	ANEL "O", 4-1, 90 Duro, .351" ID x .072" Thk
17		80682		2	ARRUELA-TRAVA, 1/4"
18		87036043		1	FILTRO DE COMBUSTÍVEL, Incl. 19 - 20
19		87036044		1	FILTRO DE COMBUSTÍVEL
20		87042231		1	Cabeza De Filtro
22		696365		2	ESPAÇADOR
23		9707580		2	PARAFUSO, Hex, 1/4"-20 x 3/4", G5, Full Thd
24		87716		2	PARAFUSO, Hex, 1/4"-20 x 1 1/4", G5
25		9706689		1	PARAFUSO, Hex, 3/8"-16 x 1 3/4", G5
26		86637594		2	ARRUELA PLANA, 13/32" x 1 1/2" x .120"
27		87021178		1	TAMPA DO RESERVATÓRIO
28		87361292		1	TUBO, Filler Tube
29		45014		2	BRACADEIRA MANGUEIRA, #40, 2.06/3.00 Type F Worm
30		87360746		1	MANGUEIRA, Fuel Tank Hose
31		9628503		1	PORCA, 3/8"-16, G5
32		140045		2	ARRUELA MOLA, Belleville, M10

CONJUNTO DO TANQUE DE COMBUSTÍVEL; 14.4 GL

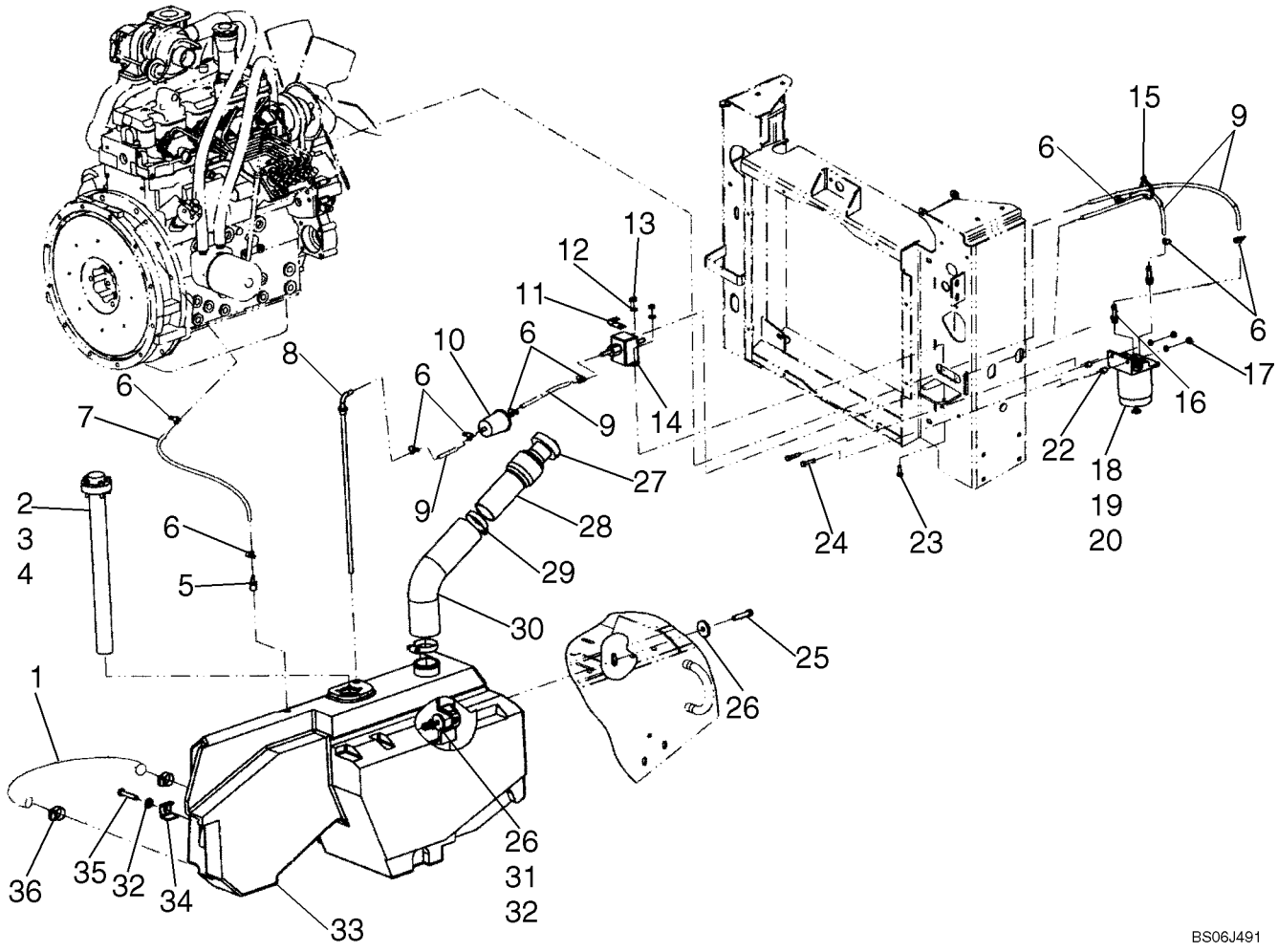

CONJUNTO DO TANQUE DE COMBUSTÍVEL; 14.4 GL

REF	FN	PART NUMBER	YR/SN	QTY	DESCRIPTION
33		87361289		1	RESERVATÓRIO COMBUSTÍVEL
34		86504489		1	TIRA, Fuel Tank Hold Down; Also Order 34A, Trim Lock
34A		87590346		1	GUARNICAO PORTA, Trim Lock
35		88436		1	PARAFUSO, Hex, 3/8"-16 x 2", G5
36		58948		2	PRENDEDOR
37		86509223		1	DECALCOMANIA, Leaf New Holland

CONJUNTO DO TANQUE DE COMBUSTÍVEL; 16 GL

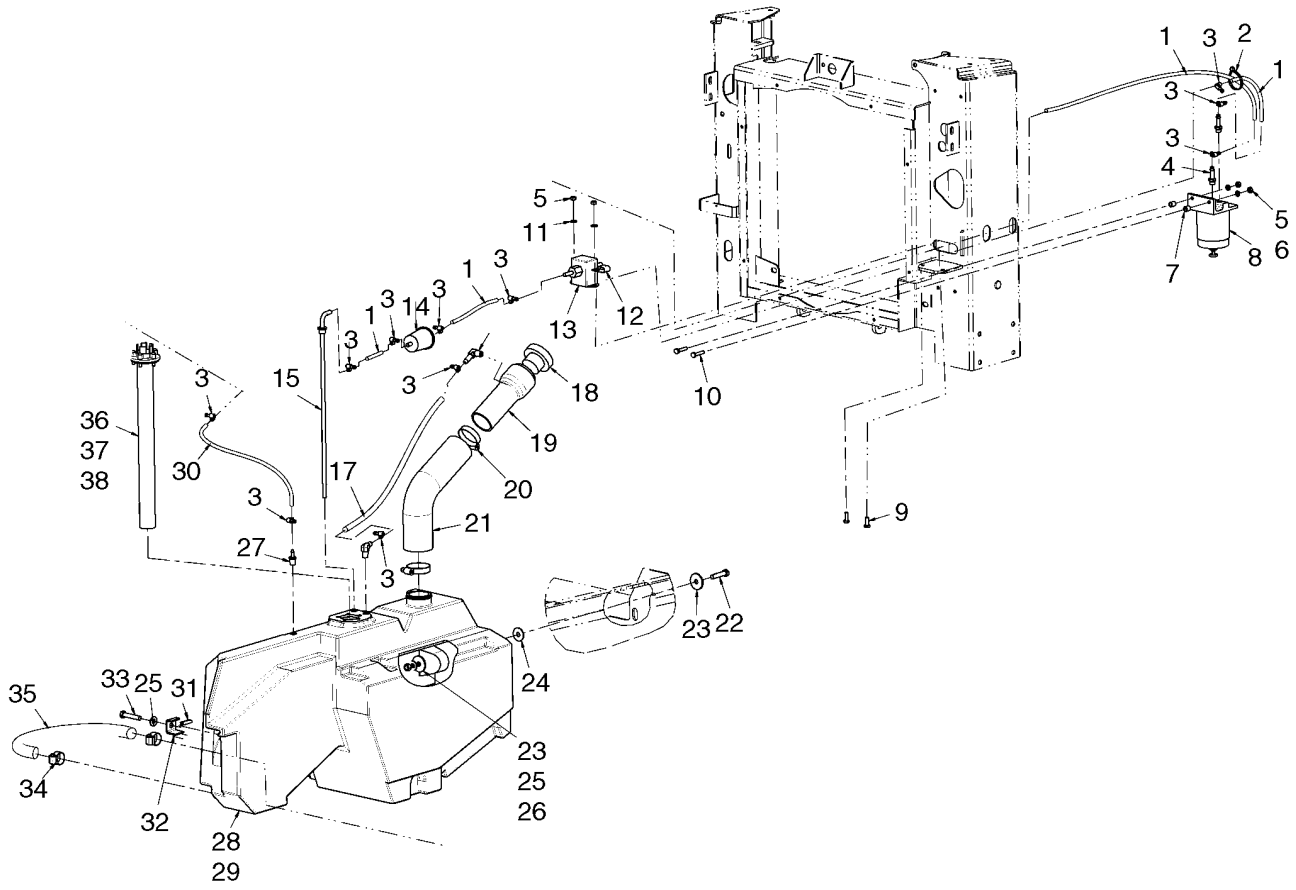

BS08D454

CONJUNTO DO TANQUE DE COMBUSTÍVEL; 16 GL

REF	FN	PART NUMBER	YR/SN	QTY	DESCRIPTION
1		290323		1	TUBO FLEXÍVEL, 5/16 ID 975 mm, 38.40 in.
2		87000312		1	TIRA DE CABO
3		574518		11	BRACADEIRA MANGUEIRA, #4, 0.25/0.62 Type M Worm
4		9844342		2	CONEXAO, Incl. 4A
4A		165202		1	ANEL "O", 4-1, 90 Duro, .351" ID x .072" Thk
5		7770		4	PORCA, 1/4"-20, G5
6		80682		2	ARRUELA-TRAVA, 1/4"
7		696365		2	ESPAÇADOR
8		87036043		1	FILTRO DE COMBUSTÍVEL, Incl. 8A, 8B
8A		87036044		1	FILTRO DE COMBUSTÍVEL
8B		87042231		1	Cabeza De Filtro
9		9707580		2	PARAFUSO, Hex, 1/4"-20 x 3/4", G5, Full Thd
10		87716		2	PARAFUSO, Hex, 1/4"-20 x 1 1/4", G5
11		322357		2	ARRUELA MOLA, Belleville, M6
12		134579		1	TERMINAL
13		87024903		1	BOMBA DE ALIMENTAÇÃO
14		9611973		1	FILTRO DE COMBUSTÍVEL
15		9844697		1	TUBO
16		87016896		2	CONEXAO, 90º, 3/8" Hose x 1/4" NPTF, Barbed
17		87657290		1	MANGUEIRA, 3/8 ID Vent Hose
18		87021178		1	TAMPA DO RESERVATÓRIO
19		87361292		1	TUBO, Filler Tube
22		9706689		1	PARAFUSO, Hex, 3/8"-16 x 1 3/4", G5
20		45014		2	BRACADEIRA MANGUEIRA, #40, 2.06/3.00 Type F Worm
23		86637594		2	ARRUELA PLANA, 13/32" x 1 1/2" x .120"
21		87360746		1	MANGUEIRA, Fuel Tank Hose
24		86900237		1	ARRUELA PLANA, 13/32" x 1 1/4" x .060"
25		140045		2	ARRUELA MOLA, Belleville, M10
26		9628503		1	PORCA, 3/8"-16, G5
27		223593		1	CONEXAO, 3/16" Hose x 1/4" NPTF, Barbed
28		87657312		1	RESERVATÓRIO COMBUSTÍVEL, Incl 29
29		9844772		1	ANEL, Mounting Ring
30		291260		1	GANCHO, Hose, 5/32 ID 405 mm, 15.96 in.

CONJUNTO DO TANQUE DE COMBUSTÍVEL; 16 GL

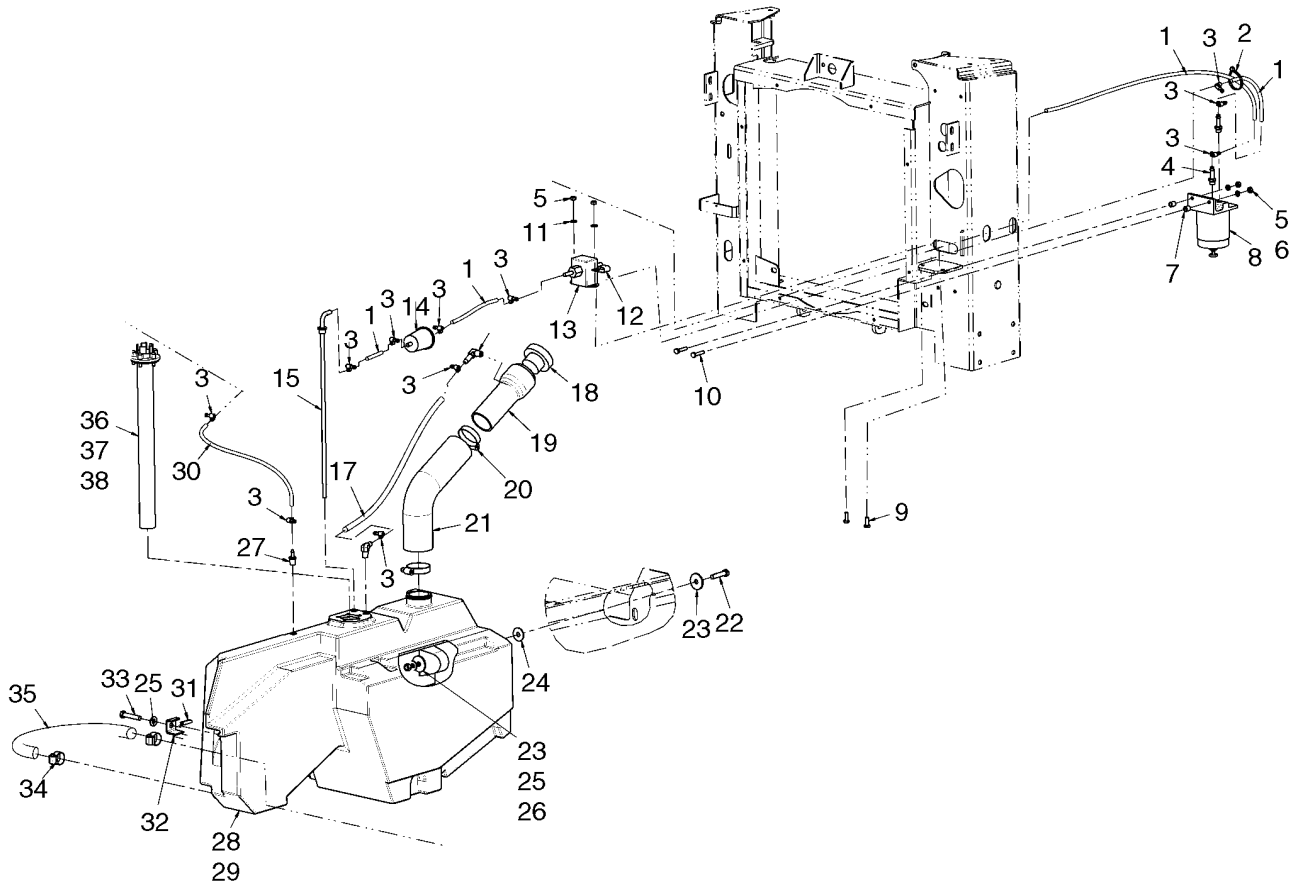

BS08D454

CONJUNTO DO TANQUE DE COMBUSTÍVEL; 16 GL

REF	FN	PART NUMBER	YR/SN	QTY	DESCRIPTION
33		88436		1	PARAFUSO, Hex, 3/8"-16 x 2", G5
31		87590346		1	GUARNICAO PORTA, Trim Lock
34		58948		2	PRENDEDOR
32		86504489		1	TIRA, Fuel Tank Hold Down
35		9616376		1	MANGUEIRA, .75 ID x 1.06 OD x 528 mm, 20.76 in. Length
36		9860032		1	TRANSMISSOR, Incl. 37, 38
37		48751		1	JUNTA
38		84464		5	PARAFUSO, Slotted Truss Hd, #10-24 x 1"

CONTROLO DE ACELERAÇÃO - CONTROLES, DERECHA

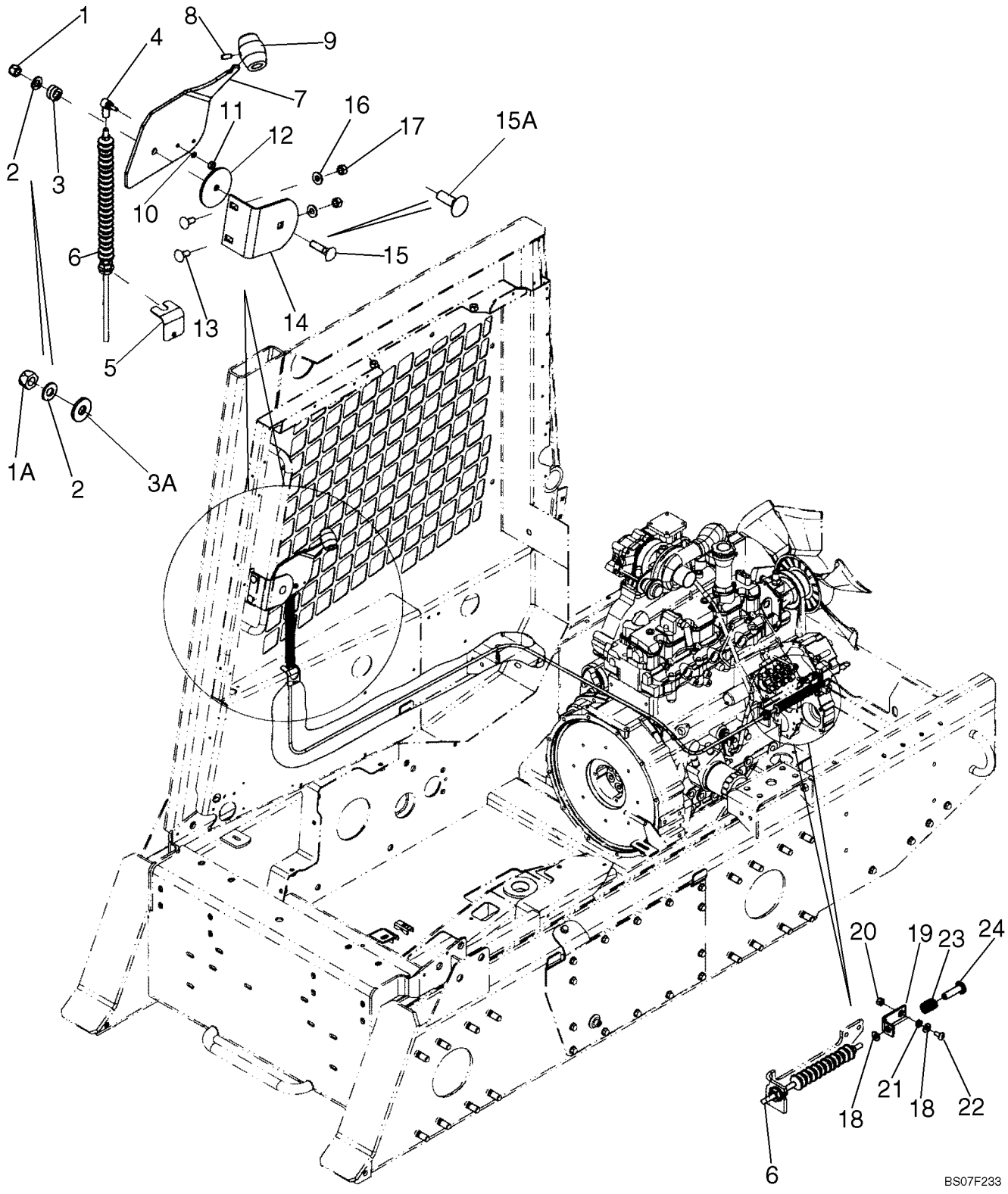

CONTROLO DE ACELERAÇÃO - CONTROLES, DERECHA

REF	FN	PART NUMBER	YR/SN	QTY	DESCRIPTION
1		9637692		1	CONTRA PORCA, 3/8"-16, GB, Used With Ref. 3, Spring
1A		86512554		1	CONTRA PORCA, M10 x 1.5, Cl 10, Used With Ref. 3A, Spring Washer
2		87016		1	ARRUELA PLANA, 3/8", SAE
3		86556581		1	MOLA, If Used
3A		11198471		1	ARRUELA MOLA, Belleville, M10.5
4		275064		1	JUNTA ESFÉRICA
5		86522338		1	TAMPA
6		87629237		1	CABO, Replaces 87018275
7		87527111		1	MANILHA
8		87836		1	JOGO PARAFUSO, Hex Soc, 1/4"-20 x 5/8"
9		3916679		1	MANÍPULO
10		80684		1	ARRUELA-TRAVA, #10
11		87825		1	PORCA, #10-32
12		76814		1	DISCO
13		280327		2	PARAFUSO, Short NK, 5/16"-18 x 3/4", G5
14		86591293		1	SUPORTE
15		280552		1	PARAFUSO, Short NK, 3/8"-16 x 1 1/2", G5, Used With Refs. 1, 3
15A		86512424		1	PARAFUSO, Short NK, M10 x 30, Cl8.8, Full Thd, Used With Refs. 1A, 3A
16		322358		2	ARRUELA MOLA, Belleville, M8
17		9635082		2	PORCA, 5/16"-18, G5, If Used
17		145458		2	PORCA, Flg, USR, 5/16"-18, Flange Nut; If Used
18		80707		2	ARRUELA PLANA, 3/16"
19		9844532		1	SUPORTE
20		88826		1	CONTRA PORCA, #10-24, GA
21		13734		1	ESPAÇADOR
22		84821		1	PARAFUSO, Slotted Truss Hd, #10-24 x 1/2"
23		11104		1	MOLA
24		9860169		1	REBITE

CONTROLES - ESTRANGULADOR

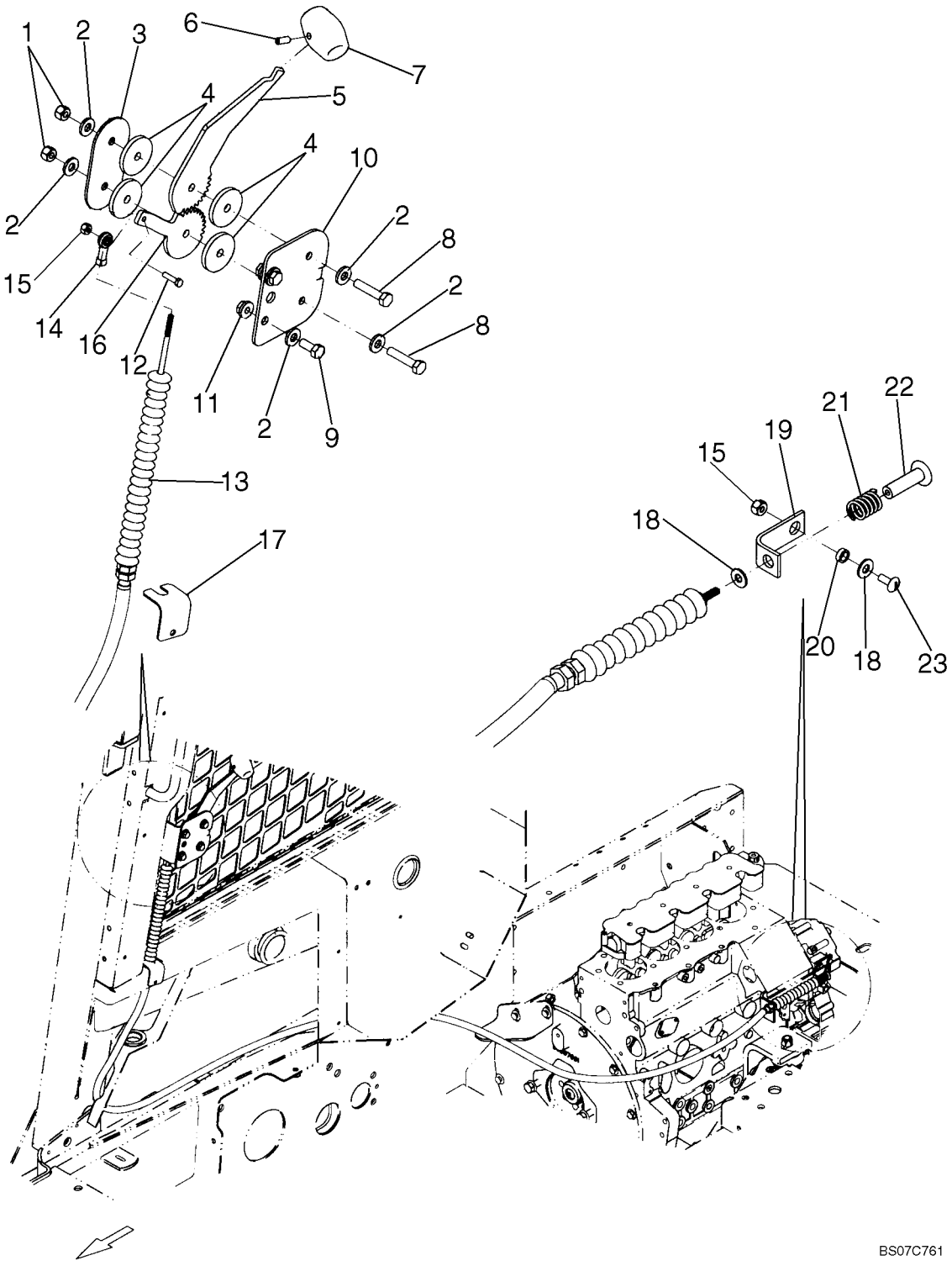

CONTROLES - ESTRANGULADOR

REF	FN	PART NUMBER	YR/SN	QTY	DESCRIPTION
1		87034527		2	PORCA, Nut, 5/16 UNF
2		252687		4-6	ARRUELA PLANA, .344" x 1" x .098", HDN, If Used
2		322358		5	ARRUELA MOLA, Belleville, M8, If Used
3		87647017		1	PLAQUETA, Cover Plate
4		87722431		8	ARRUELA PLANA, Friction Disc, Nylon; Replaces 87647007
5		87647008		1	REGULADOR PRESSAO, Throttle Handle
6		87836		1	JOGO PARAFUSO, Hex Soc, 1/4"-20 x 5/8"
7		3916679		1	MANÍPULO
8		280252		2	PARAFUSO, Hex, 5/16"-24 x 1 1/2", G5
9		87872		2	PARAFUSO, Hex, 5/16"-18 x 3/4", G5, Full Thd
10		87653763		1	SUPORTE, Throttle Lever Bracket
11		145458		2	PORCA, Flg, USR, 5/16"-18
12		86625179		1	PARAFUSO, Hex Hd, #10-24 x 3/4"
13		87629236		1	CABO, Throttle Cable
14		87647009		1	HASTE, Spherical Rod End, #10-32
15		88826		2	CONTRA PORCA, #10-24, GA
16		87647005		1	EIXO DE ENGRENAGEM, Throttle Reversing Gear
17		86522338		1	TAMPA
18		80707		2	ARRUELA PLANA, 3/16"
19		9844532		1	SUPORTE
20		13734		1	ESPAÇADOR, Bushing
21		11104		1	MOLA
22		9860169		1	REBITE
23		84821		1	PARAFUSO, Slotted Truss Hd, #10-24 x 1/2"

INJECTOR DA BOMBA DE INJECÇÃO - L175 NA BSN N7M470553, L175 EU BSN N7M468035; C175 NA BSN N7M466429,

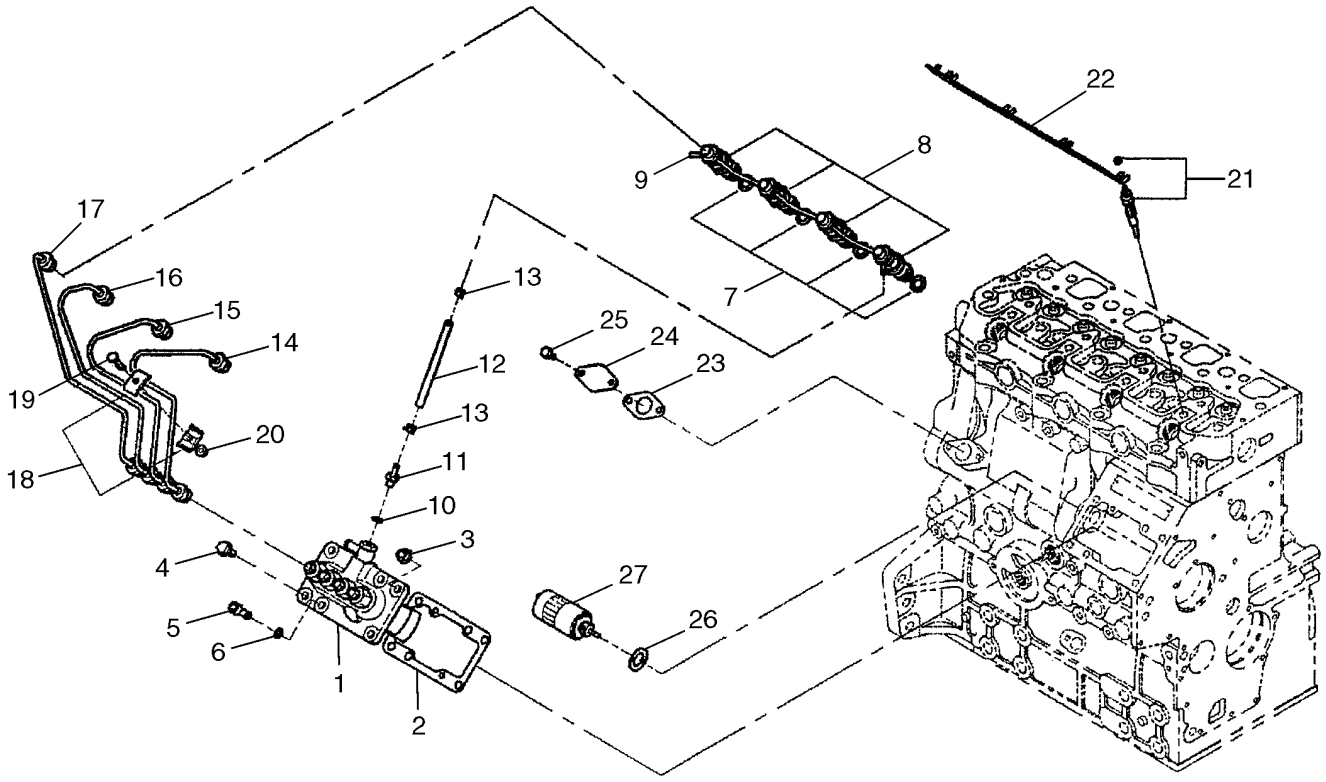

BS04M163

INJECTOR DA BOMBA DE INJECÇÃO - L175 NA BSN N7M470553, L175 EU BSN N7M468035; C175 NA BSN N7M466429,

REF	FN	PART NUMBER	YR/SN	QTY	DESCRIPTION
					L175 NA 1 Speed BSN N7M470572, L175 NA 2 Speed BSN N7M470553, L175 EU BSN N7M468035, C175 NA BSN N7M466429, C175 EU BSN N7M467969
1		SBA131017801		1	BOMBA INJETORA, Components Not Serviced
2		SBA131426320		1	JOGO DE CALCOS, Shim Set
3		SBA023100008		3	PORCA
4		SBA010800820		2	PARAFUSO
5		SBA010700820		1	PARAFUSO
6		SBA026100008		1	ARRUELA PLANA
7		SBA131426200		4	JUNTA
8		SBA131406360		4	INJETOR
9		SBA131606950		1	TUBO
10		SBA140996350		1	ARRUELA DE COBRE
11		SBA198487920		1	CONEXÃO
12		SBA068204112		1	MANGUEIRA
13		SBA067200078		2	BRACADEIRA MANGUEIRA
14		SBA131507700		1	TUBO RÍGIDO, Use With 15, 16, 17
14A		SBA131501030		1	TUBO RÍGIDO, Use With 15A, 16A, 17A; Not Illustrated; It Is Necessary To Replace All Of The New Pipes At Once Because Of The Shape Of The Old Compared To The New
15		SBA131507710		1	TUBO RÍGIDO, Use With 14, 16, 17
15A		SBA131501040		1	TUBO RÍGIDO, Use With 14A, 16A, 17A; Not Illustrated; It Is Necessary To Replace All Of The New Pipes At Once Because Of The Shape Of The Old Compared To The New
16		SBA131507720		1	TUBO RÍGIDO, Use With 14, 15, 17
16A		SBA131501050		1	TUBO RÍGIDO, Use With 14A, 15A, 17A; Not Illustrated; It Is Necessary To Replace All Of The New Pipes At Once Because Of The Shape Of The Old Compared To The New
17		SBA131507730		1	TUBO RÍGIDO, Use With 14, 15, 16

INJECTOR DA BOMBA DE INJECÇÃO - L175 NA BSN N7M470553, L175 EU BSN N7M468035; C175 NA BSN N7M466429,

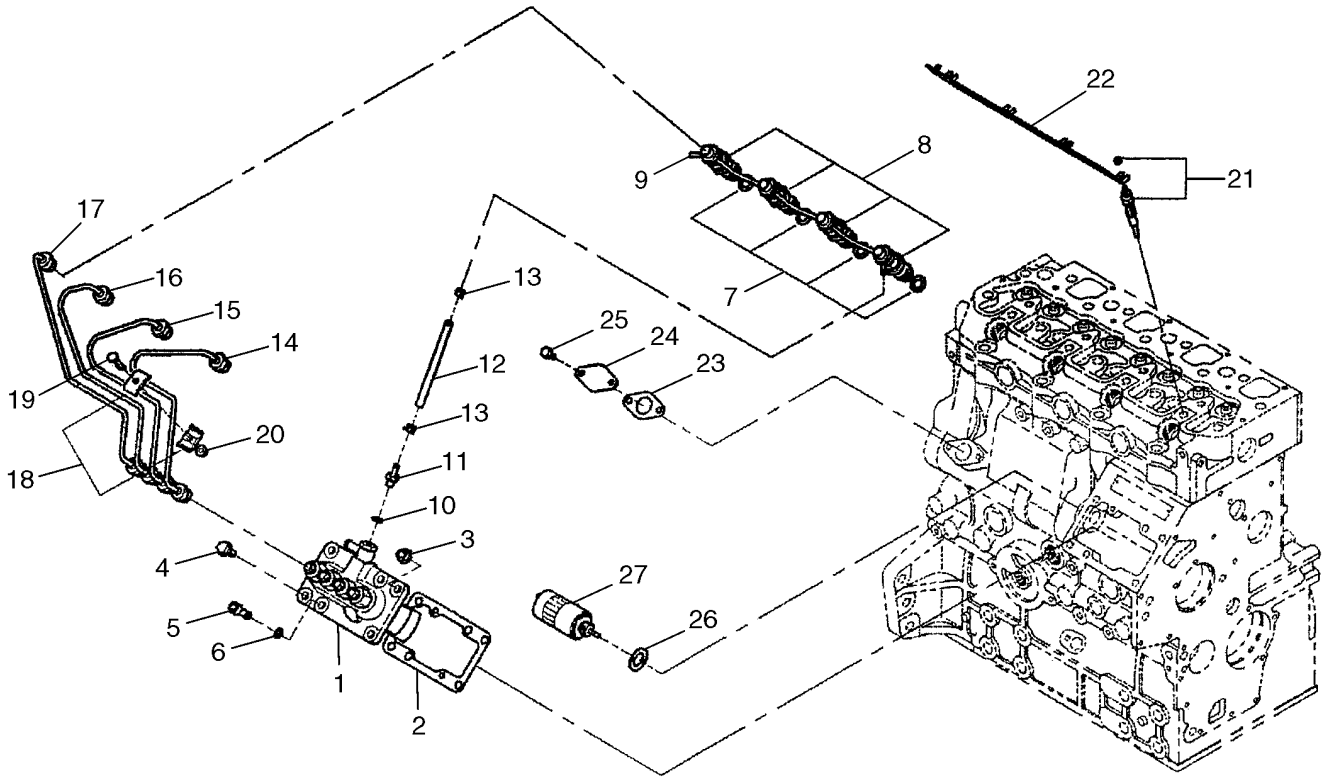

BS04M163

INJECTOR DA BOMBA DE INJECÇÃO - L175 NA BSN N7M470553, L175 EU BSN N7M468035; C175 NA BSN N7M466429,

REF	FN	PART NUMBER	YR/SN	QTY	DESCRIPTION
17A		SBA131501060		1	TUBO RÍGIDO, Use With 14A, 15A, 16A; Not Illustrated; It Is Necessary To Replace All Of The New Pipes At Once Because Of The Shape Of The Old Compared To The New
18		SBA199106020		6	PRENDEDOR
19		SBA010110625		3	PARAFUSO
20		SBA023100006		3	PORCA
21		SBA185366190		4	VELA DE PRÉ-AQUECIMENTO
22		SBA185376150		1	SUPORTE
23		SBA130996130		1	JUNTA
24		SBA165206640		1	TAMPA
25		SBA011310612		2	PARAFUSO
26		SBA025100016		1	ARRUELA PLANA
27		SBA185206083		1	SOLEMOID

INJECTOR DA BOMBA DE INJECÇÃO - L175 NA ASN N7M470553, L175 EU ASN N7M468035; C175 NA ASN N7M466429,

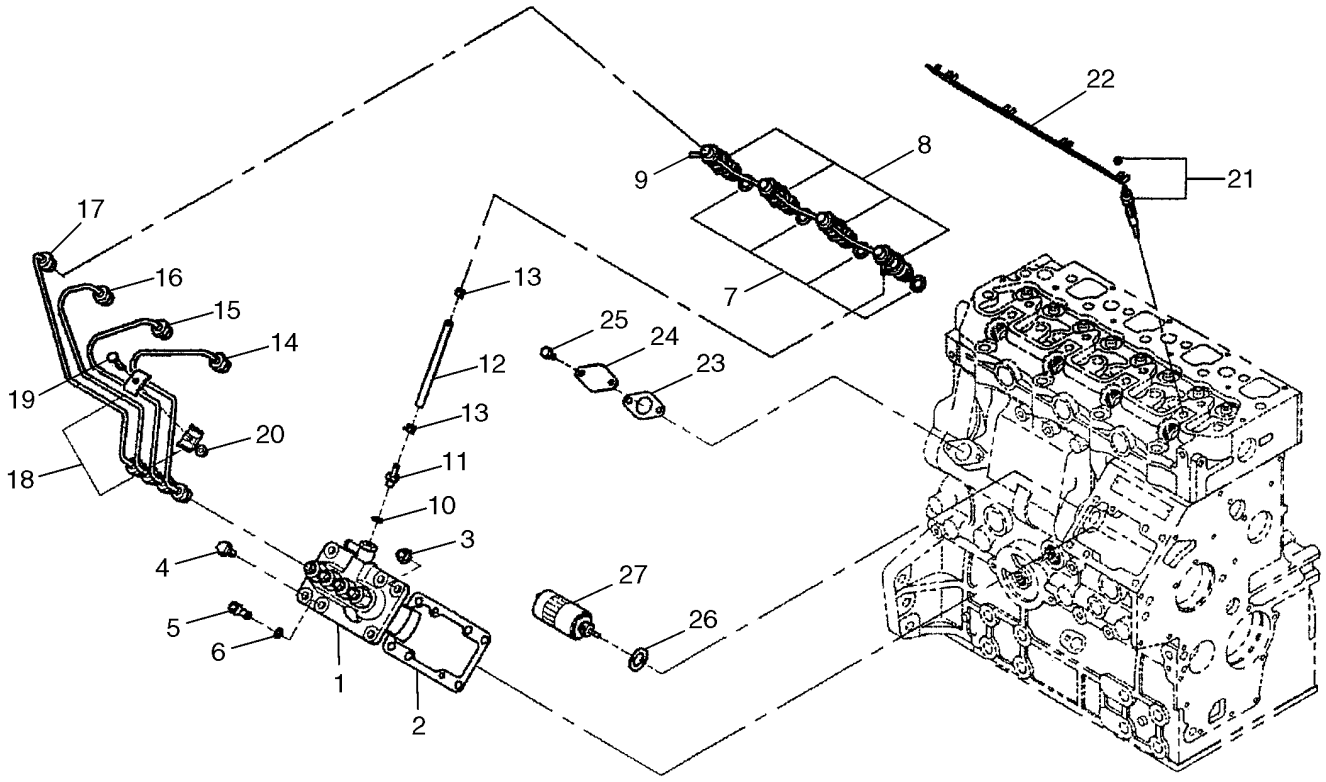

BS04M163

INJECTOR DA BOMBA DE INJECÇÃO - L175 NA ASN N7M470553, L175 EU ASN N7M468035; C175 NA ASN N7M466429,

REF	FN	PART NUMBER	YR/SN	QTY	DESCRIPTION
					L175 NA 1 Speed ASN N7M470572, L175 NA 2 Speed ASN N7M470553, L175 EU ASN N7M468035, C175 NA ASN N7M466429, C175 EU ASN N7M467969
1		SBA131011100		1	BOMBA INJETORA, Components Not Serviced
2		SBA131426320		1	JOGO DE CALCOS, Shim Set
3		SBA023100008		3	PORCA
4		SBA010800820		2	PARAFUSO
5		SBA010700820		1	PARAFUSO
6		SBA026100008		1	ARRUELA PLANA
7		SBA131426200		4	JUNTA
8		SBA131406520		4	INJETOR
9		SBA131606950		1	TUBO
10		SBA140996350		1	ARRUELA DE COBRE
11		SBA198487920		1	CONEXÃO
12		SBA068204112		1	MANGUEIRA
13		SBA067200078		2	BRACADEIRA MANGUEIRA
14		SBA131507700		1	TUBO RÍGIDO
15		SBA131507710		1	TUBO RÍGIDO
16		SBA131507720		1	TUBO RÍGIDO
17		SBA131507730		1	TUBO RÍGIDO
18		SBA199106021		6	PRENDEDOR
19		SBA010110625		3	PARAFUSO
20		SBA023100006		3	PORCA
21		SBA185366190		4	VELA DE PRÉ-AQUECIMENTO
22		SBA185376150		1	SUPORTE
23		SBA130996130		1	JUNTA
24		SBA165206640		1	TAMPA
25		SBA011310612		2	PARAFUSO
26		SBA025100016		1	ARRUELA PLANA
27		SBA185206083		1	SOLEMOID

CONJUNTO DO INJECTOR - L175 NA BSN N7M470553, L175 EU BSN N7M468035; C175 NA BSN N7M466429, C175 EU

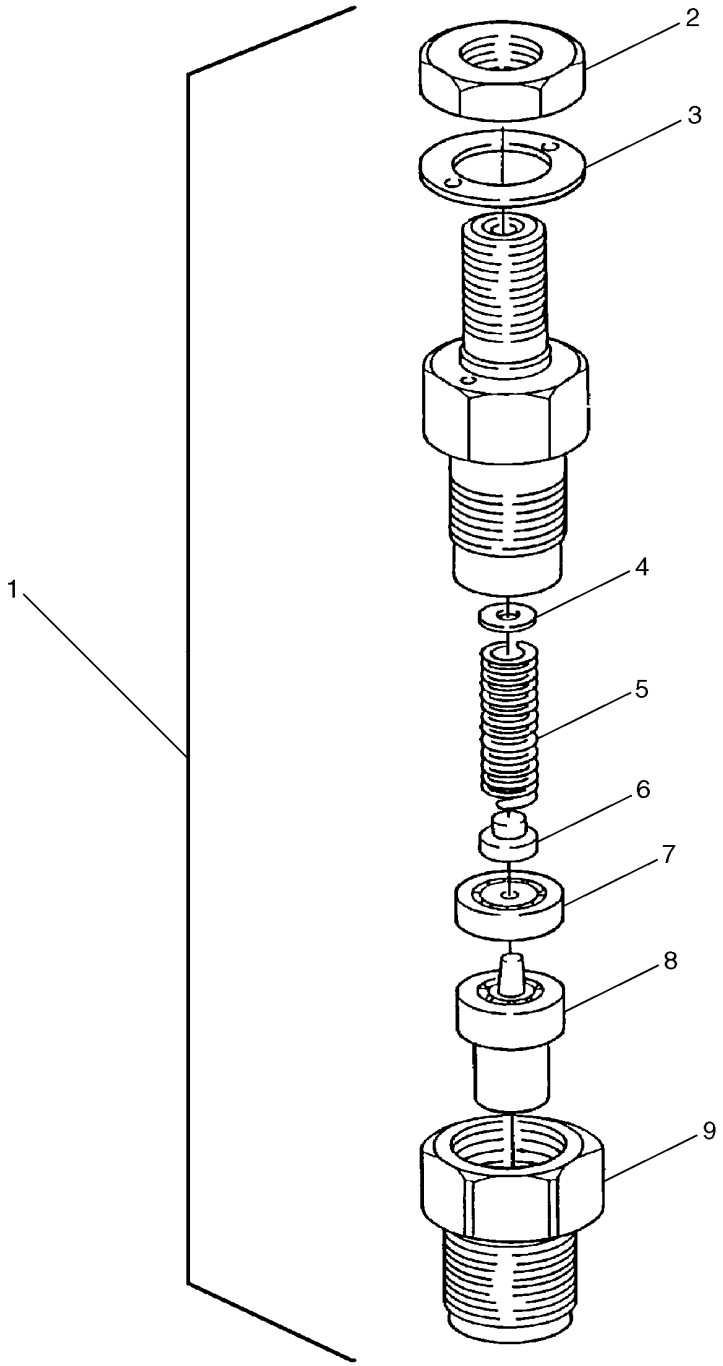

BS04M086

CONJUNTO DO INJECTOR - L175 NA BSN N7M470553, L175 EU BSN N7M468035; C175 NA BSN N7M466429, C175 EU

REF	FN	PART NUMBER	YR/SN	QTY	DESCRIPTION
					L175 NA 1 Speed BSN N7M470572, L175 NA 2 Speed BSN N7M470553, L175 EU BSN N7M468035, C175 NA BSN N7M466429, C175 EU BSN N7M467969
1		SBA131406360		4	INJETOR
2		SBA131446006		4	PORCA
3		SBA131426230		4	JUNTA
4		SBA131437360		1	JOGO DE CALCOS, Shim
5		SBA131446074		4	MOLA
6		SBA131446075		4	SEDE/ALOJAMENTO
7		SBA131446076		4	ESPAÇADOR
8		SBA131416170		4	PULVERIZADOR, Nozzle Assy
9		SBA131446077		4	PORCA

CONJUNTO DO INJECTOR - L175 NA ASN N7M470553, L175 EU ASN N7M468035; C175 NA ASN N7M466429, C175 EU

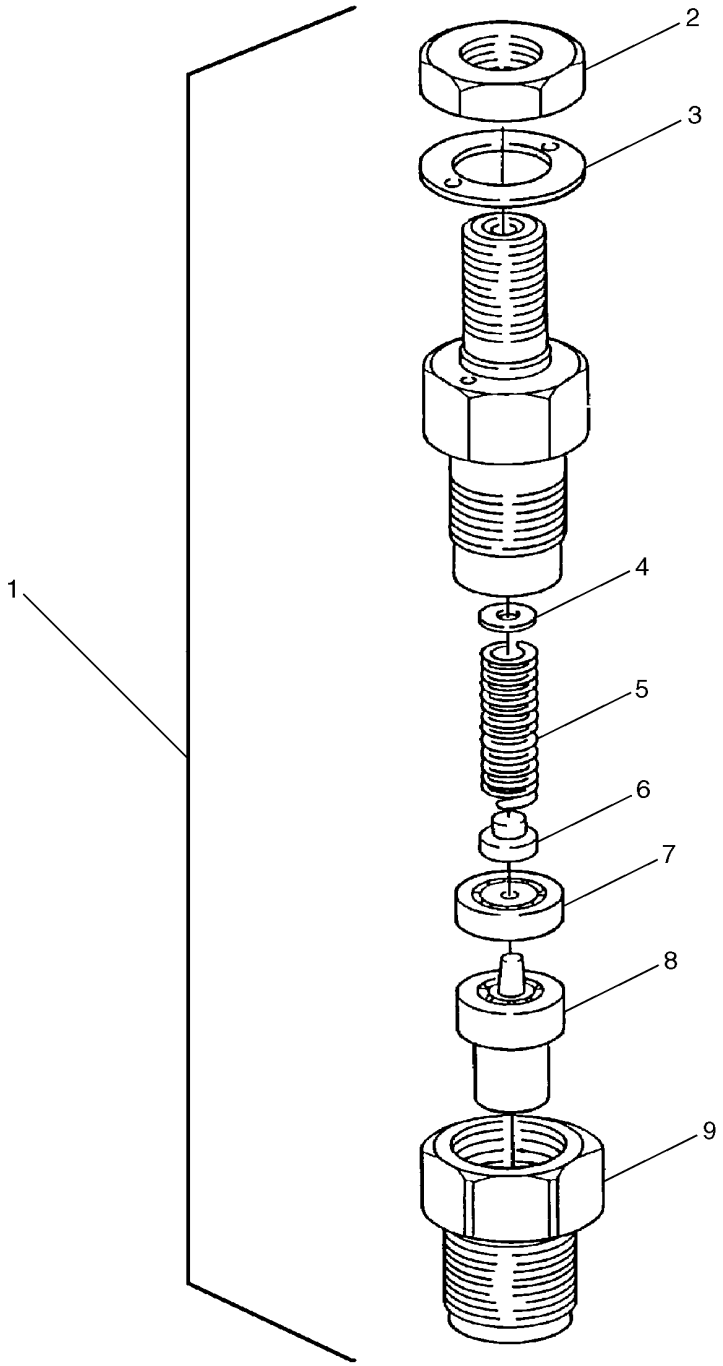

BS04M086

CONJUNTO DO INJECTOR - L175 NA ASN N7M470553, L175 EU ASN N7M468035; C175 NA ASN N7M466429, C175 EU

REF	FN	PART NUMBER	YR/SN	QTY	DESCRIPTION
					L175 NA 1 Speed ASN N7M470572, L175 NA 2 Speed ASN N7M470553, L175 EU ASN N7M468035, C175 NA ASN N7M466429, C175 EU ASN N7M467969
1		SBA131406520		4	INJETOR
2		SBA131446006		4	PORCA
3		SBA131426230		4	JUNTA
4		SBA131437360		1	JOGO DE CALCOS, Shim
5		SBA131446989		4	MOLA
6		SBA131446075		4	SEDE/ALOJAMENTO
7		SBA131446076		4	ESPAÇADOR
8		SBA131416170		4	PULVERIZADOR, Nozzle Assy
9		SBA131446077		4	PORCA

SECTION INDEX
Sistema Eléctrico

04-01	MOTOR DE ARRANQUE
04-01A	BATERIA - CABOS
04-02	COMPONENTES DO ALTERNADOR
04-03	ALTERNADOR
04-04	SISTEMA ELÉCTRICO DA CABINA
04-04A	SISTEMA ELÉCTRICO DA CABINA, PARA EUROPA - DE LUXO CABINE
04-05	SISTEMA ELÉCTRICO DA CABINA
04-05A	SISTEMA ELÉCTRICO CABINE - CONSOLE, ESQUERDA
04-05B	SISTEMA ELÉCTRICO CABINE - CONSOLA, LADO DERECHO
04-05C	SISTEMA ELÉCTRICO DA CABINA - CONJUNTO DE FIOS, PRINCIPAIS FUSÍVEIS E RELÉS
04-05D	SISTEMA ELÉCTRICO DA CABINA - CONJUNTO DE FIOS, PRINCIPAIS FUSÍVEIS E RELÉS
04-05E	SISTEMA ELÉCTRICO DA CABINA
04-05F	SISTEMA ELÉCTRICO DA CABINA - LUCES DE TRABAJO
04-05G	SISTEMA ELÉTRICO DA CABINA, PISCA-PISCA
04-06	SISTEMA ELÉCTRICO DA CABINA - SINALIZADOR DE PERIGO
04-07	SISTEMA ELÉCTRICO DO MOTOR
04-08	SISTEMA ELÉCTRICO DO PRINCIPAL
04-09	SISTEMA ELÉCTRICO DO PRINCIPAL
04-10	SISTEMA ELÉCTRICO DO CHASSI
04-10A	SISTEMA ELÉCTRICO DO CHASSI
04-10B	SISTEMA ELÉCTRICO DO CHASSI
04-10C	SISTEMA ELÉCTRICO DO CHASSI
04-11	ALARME DE MARCHA ATRÁS
04-12	ALARME DE MARCHA ATRÁS - MODELOS COM CONTROLO AUTOMÁTICO
04-12A	ALARME DE MARCHA ATRÁS - MODELOS COM CONTROLO AUTOMÁTICO
04-12B	PARTIDA REMOTA COM BATERIA AUXILIAR
04-13	FIOS, DUAS VELOCIDADES
04-14	BUZINA CONJUNTO FIOS
04-14A	BUZINA
04-15	SISTEMA ELÉCTRICO DO CONJUNTO DA PLACA DE MONTAGEM
04-15A	SISTEMA ELÉCTRICO DO CONJUNTO DA PLACA DE MONTAGEM
04-16	CONJUNTO DA LANÇA / KIT PARA ESTRADA
04-16A	CONJUNTO DA LANÇA / KIT PARA ESTRADA
04-17	CONJUNTO DOS FARÓIS DIANTEIROS / KIT PARA ESTRADA
04-18	CONJUNTO DA BARRA DA LUZ TRASEIRA / KIT PARA ESTRADA
04-19	LANÇA - PISCA-PISCA
04-20	CONJUNTO DOS FARÓIS DIANTEIROS / KIT PARA ESTRADA, PISCA-PISCA
04-20A	DIANTEIRA FAROS
04-21	LAMPARAS TRASERAS, TRAVÃO/PISCA-PISCA - EUROPA
04-21A	LAMPARAS TRASERAS, TRAVÃO/PISCA-PISCA - EUROPA
04-21B	TRASEIRO LANTERNA DE TRABALHO
04-21C	DIANTEIRA E TRASEIRA LANTERNA DE TRABALHO
04-22	CONTROLO AUTOMÁTICO FIOS
04-23	KIT DA FONTE DE ALIMENTAÇÃO ELÉTRICA
04-24	CONJUNTO DA BUZINA/PISCA-PISCA
04-25	KIT DO SINALIZADOR DE PERIGO
04-26	LUZ INDICADORA
04-26A	FAROL, ROTATIVO KIT, DE LUXO CABINE
04-27	LUZ DE PERIGO

SECTION INDEX
Sistema Eléctrico

04-28	TRABA, CONTROL DE LA CARGADORA, CONTROLO AUTOMÁTICO (EUROPA)
04-29	FIOS- EH AUXILIAR
04-30	CALEFACCION Y AIRE ACONDICIONADO, CONTROLES
04-31	CONJUNTO DE INSTRUMENTOS - AVANÇADO; L175 NA ASN N7M470553, L175 EU ASN N7M468035; C175 NA ASN N7M466429, C175 EU ASN N7M467968

MOTOR DE ARRANQUE

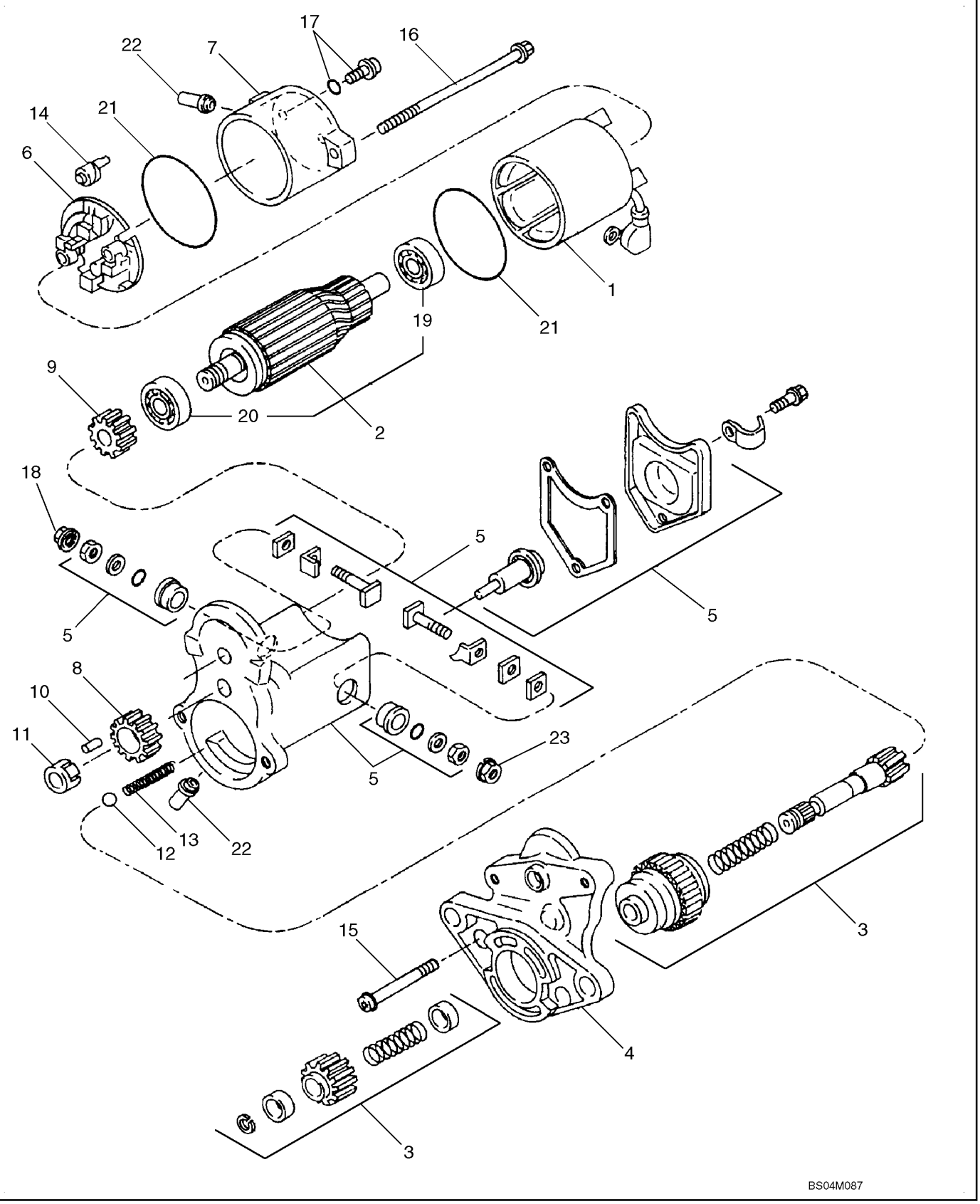

MOTOR DE ARRANQUE

REF	FN	PART NUMBER	YR/SN	QTY	DESCRIPTION
		SBA185086530		1	MOTOR DE PARTIDA, Incl. Ref 1 - 23
1		SBA185846570		1	GARFO
2		SBA185846571		1	INDUZIDO, Incl. Ref 19, 20
3		SBA185866370		1	EMBREAGEM
4		NSS		1	BOLETIM INFORMATIVO, Housing
5		SBA185816360		1	INTERRUPTOR SOLENOID
6		SBA185846573		1	SUPORTE, Incl. Ref 14, Brushes (Brushes NSS)
7		NSS		1	BOLETIM INFORMATIVO, Frame, Cover
8		SBA185846552		1	PINHAO
9		SBA185846576		1	PINHAO
10		SBA185846371		5	ROLO, Clutch
11		SBA185846551		1	PRENDEDOR
12		SBA185846286		1	ESFERA, Steel
13		SBA185846560		1	MOLA, Return
14		SBA185846579		4	MOLA, Starter
15		SBA185846580		2	PARAFUSO
16		SBA185846581		2	PARAFUSO
17		SBA185846582		2	PARAFUSO, Incl. O-Ring
18		SBA185846378		1	PORCA
19		SBA185846583		1	ROLAMENTO
20		SBA185846549		1	ROLAMENTO, Ball
21		SBA185846561		2	ANEL "O"
22		SBA185846562		2	BUJÃO DE DRENO, Drain
23		SBA185846563		1	PORCA

BATERIA - CABOS

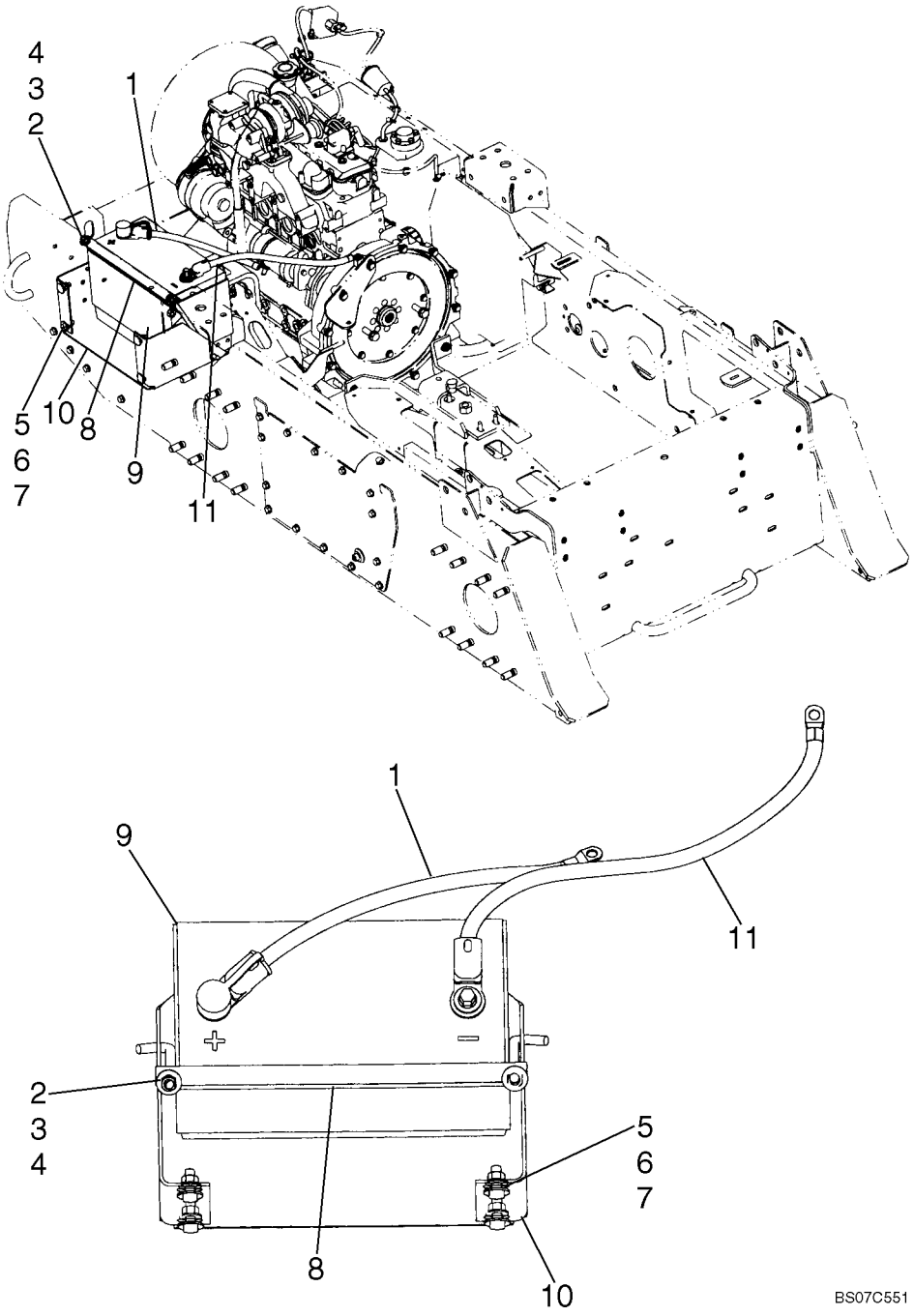

BATERIA - CABOS

REF	FN	PART NUMBER	YR/SN	QTY	DESCRIPTION
1		9828791		1	CABO, Battery Cable, Positive; 514.4 mm (20 1/4 in.) Length
2		80702		2	ARRUELA PLANA, 3/8"
3		9637692		2	CONTRA PORCA, 3/8"-16, GB
4		103807		2	GANCHO
5		88206		4	PARAFUSO, Hex, 3/8"-16 x 1", G5, Full Thd
6		140045		4	ARRUELA MOLA, Belleville, M10
7		9628503		4	PORCA, 3/8"-16, G5
8		87582409		1	TIRA, Battery Hold Down Strap
9		F775DSW		1	BATERIA T. HUMIDA, Battery, U.S.
9		9624466DS		1	BATERIA T. SECA, Battery, Canada
10		9842368		1	SUPORTE
11		9828790		1	CABO, Battery Cable, Negative; 558.8mm (20 in.) Length

COMPONENTES DO ALTERNADOR

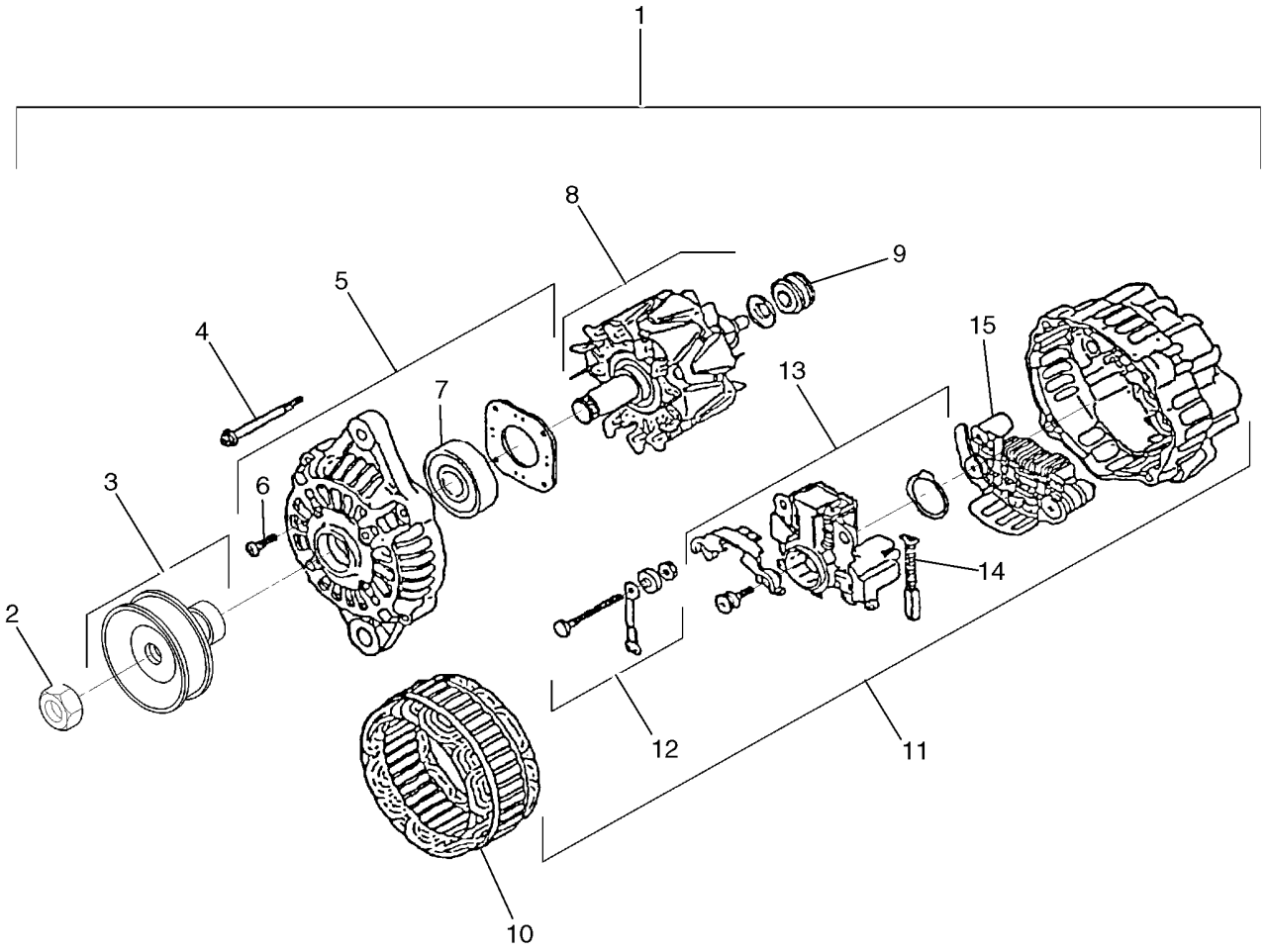

BS04M089

COMPONENTES DO ALTERNADOR

REF	FN	PART NUMBER	YR/SN	QTY	DESCRIPTION
1		SBA185046380		1	ALTERNADOR
2		SBA185446269		1	PORCA
3		SBA185436180		1	POLIA
4		SBA185446270		1	PARAFUSO
5		SBA185426210		1	TAMPA, Front
6		SBA185446271		1	PARAFUSO
7		SBA185446272		1	ROLAMENTO, Ball
8		SBA185446292		1	ROTOR
9		SBA185446274		1	ROLAMENTO
10		SBA185446293		1	ESTATOR
11		SBA185426240		1	TAMPA, Rear
12		SBA185446278		1	TERMINAL, Set
13		SBA185446277		1	REGULADOR
14		SBA185416480		2	ESCOVA, Spring
15		SBA185446294		1	RECTIFICADOR

ALTERNADOR

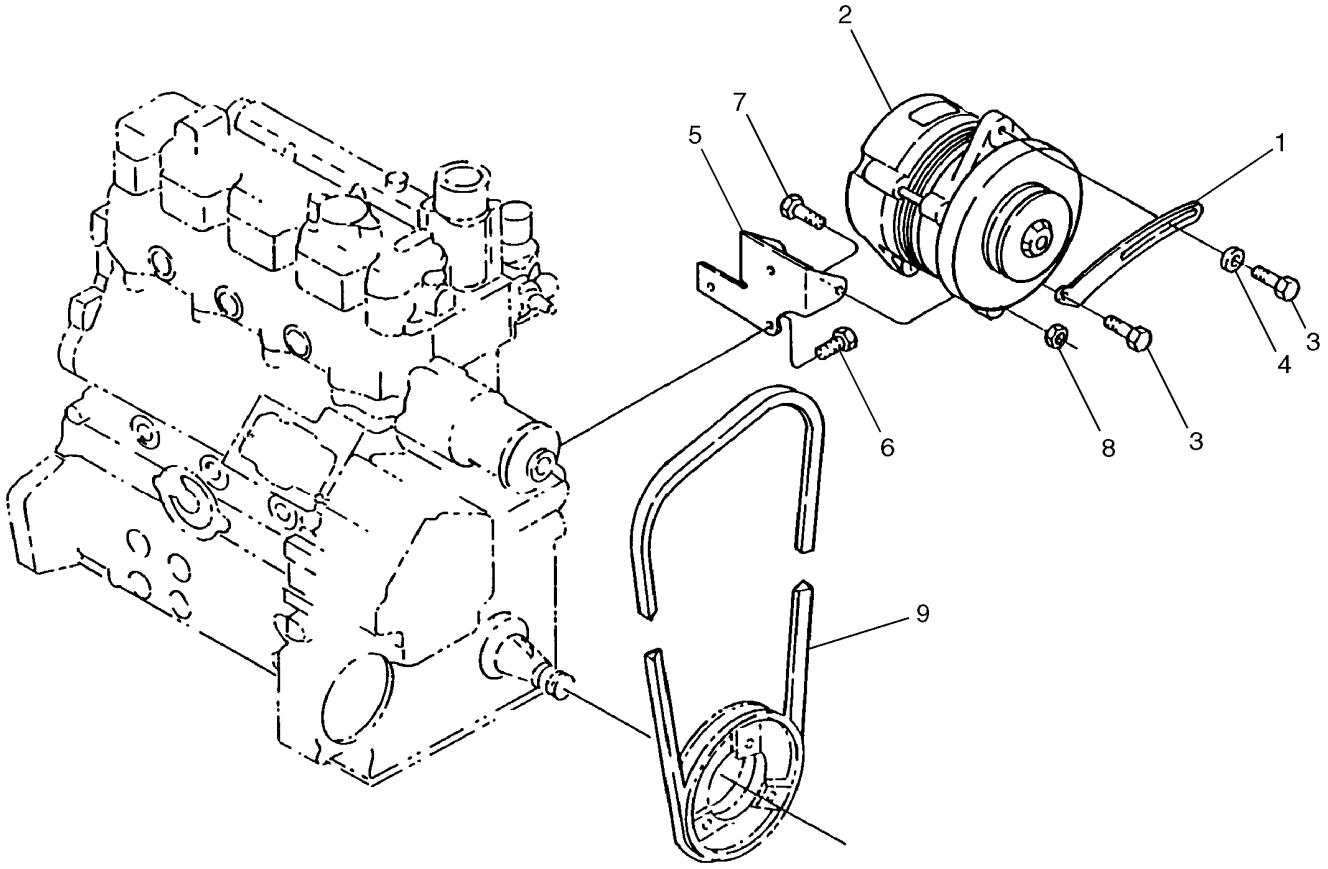

BS04M088

ALTERNADOR

REF	FN	PART NUMBER	YR/SN	QTY	DESCRIPTION
1		SBA185727000		1	PLACA, Adjusting
2		SBA185046380		1	ALTERNADOR
3		SBA011510825		2	PARAFUSO
4		SBA026109017		1	ARRUELA PLANA
5		SBA185976510		1	SUPORTE
6		SBA011510816		3	PARAFUSO
7		SBA010311035		2	PARAFUSO
8		SBA020900010		2	PORCA
9		SBA080109080		1	CORREIA DE TRANSMISSÃO

SISTEMA ELÉCTRICO DA CABINA

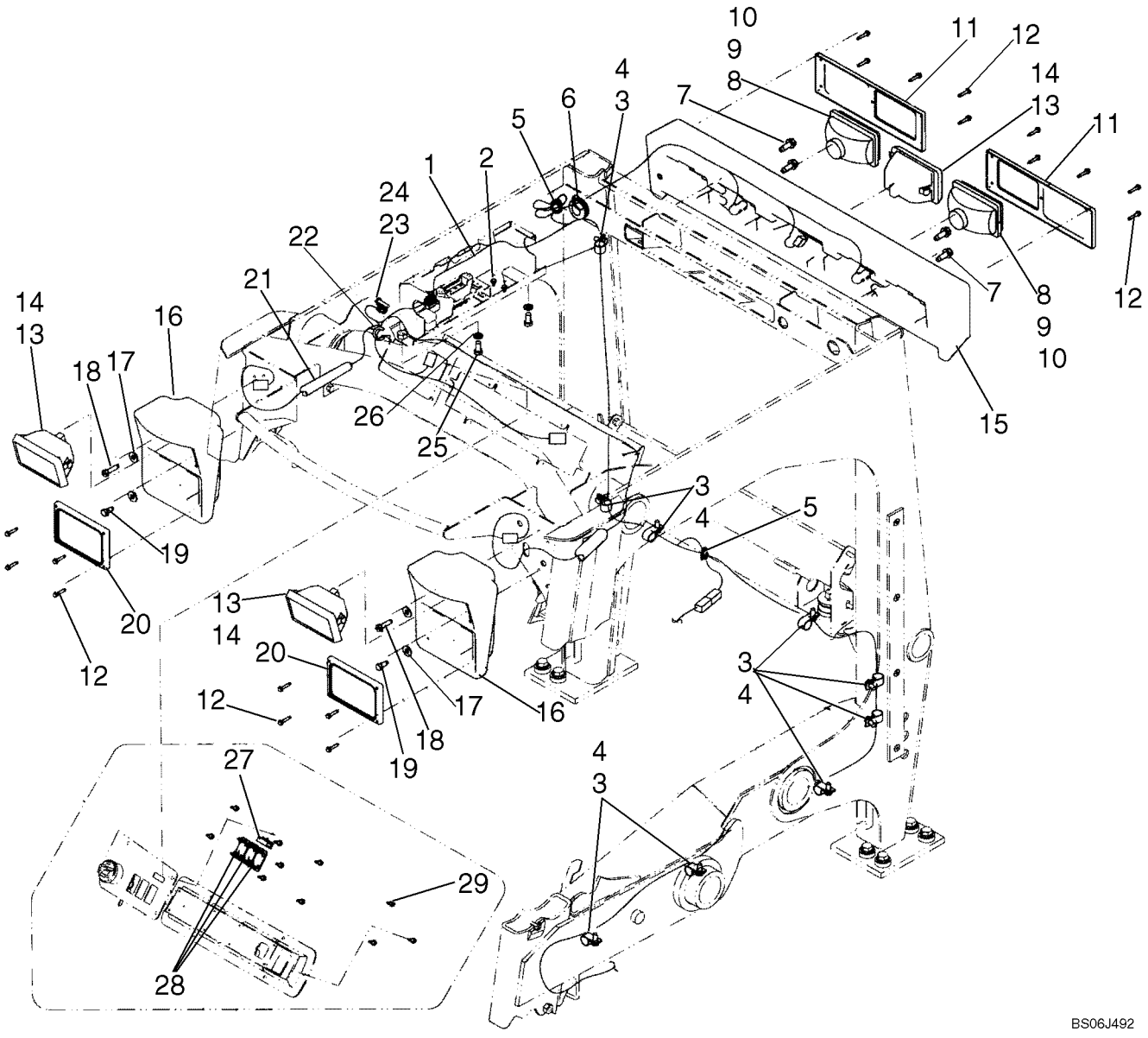

SISTEMA ELÉCTRICO DA CABINA

REF	FN	PART NUMBER	YR/SN	QTY	DESCRIPTION
1		87462084		1	CHICOTE DE FIOS
2		86500939		2	PARAFUSO, Hex Wash Hd, #10 x 3/8"
3		9840344		9	PARAFUSO
4		239859		9	PRENDEDOR
5		263117		2	TIRA DE CABO, .14" x 11 1/2"
6		237915		1	CASQUILHO ISOLADOR
7		280476		4	PARAFUSO, Hex Wash Hd, 3/8" x 1"
8		9829515		2	FAROL
9		86505510		2	LÂMPADA, Red Lamp
10		137827A1		2	PORTA-LÂMPADA
11		86542121		2	AMOSTRA (PLACA)
12		86545826		18	PARAFUSO, Hex Wash Hd, #10 x 1"
13		86533428		3	FAROL
14		86533429		3	LÂMPADA
15		86542120		1	BARRA
16		86542118		2	ALOJAMENTO
17		80664		4	ARRUELA PLANA, 5/16"
18		88825		2	PARAFUSO, Hex Hd, 5/16" x 1 1/4"
19		87887		2	PARAFUSO, Hex Hd, 5/16" x 3/4"
20		86542119		2	AMOSTRA (PLACA)
21		292141		1	DISPOSITIVO DE MEDIÇÃO, .813 X .094 Conduit Plastic Convolute Tubing; 406 mm, 16.00 in. Required
22		93867		1	TUBO, 76 mm, 3.00 in. Required
23		7770		2	PORCA, 1/4"-20, G5
24		322357		1	ARRUELA MOLA, Belleville, M6
25		88434		2	PARAFUSO, Hex, 3/8"-16 x 3/4", G5, Full Thd
26		80680		2	ARRUELA-TRAVA, 3/8"
27		86627432		1	TAPÓN PLÁSTICO
28		126844A1		3	BUJÃO
29		87546621		10	BOTÃO DE IMPULSO, Screw
		87366162		1	INSTRUMENTO COMBINAD, New Holland Standard
		87462149		1	INSTRUMENTO COMBINAD, New Holland Advanced

SISTEMA ELÉCTRICO DA CABINA, PARA EUROPA - DE LUXO CABINE

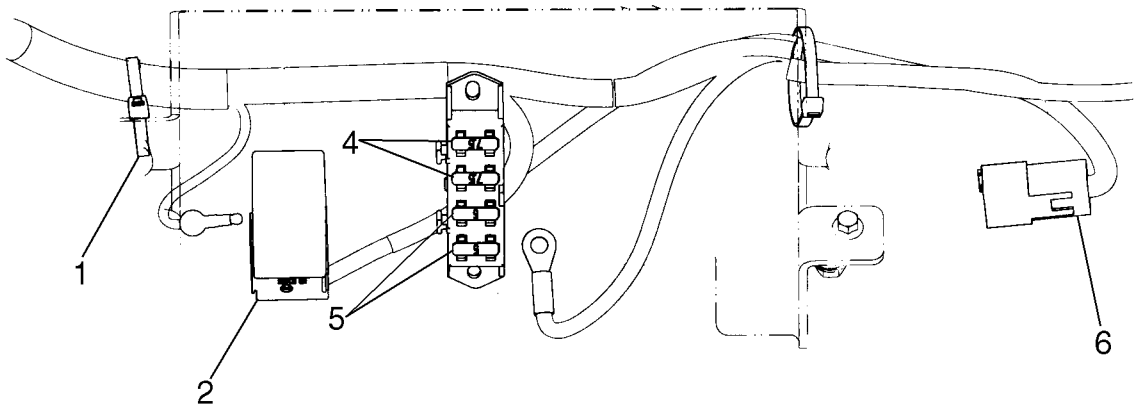

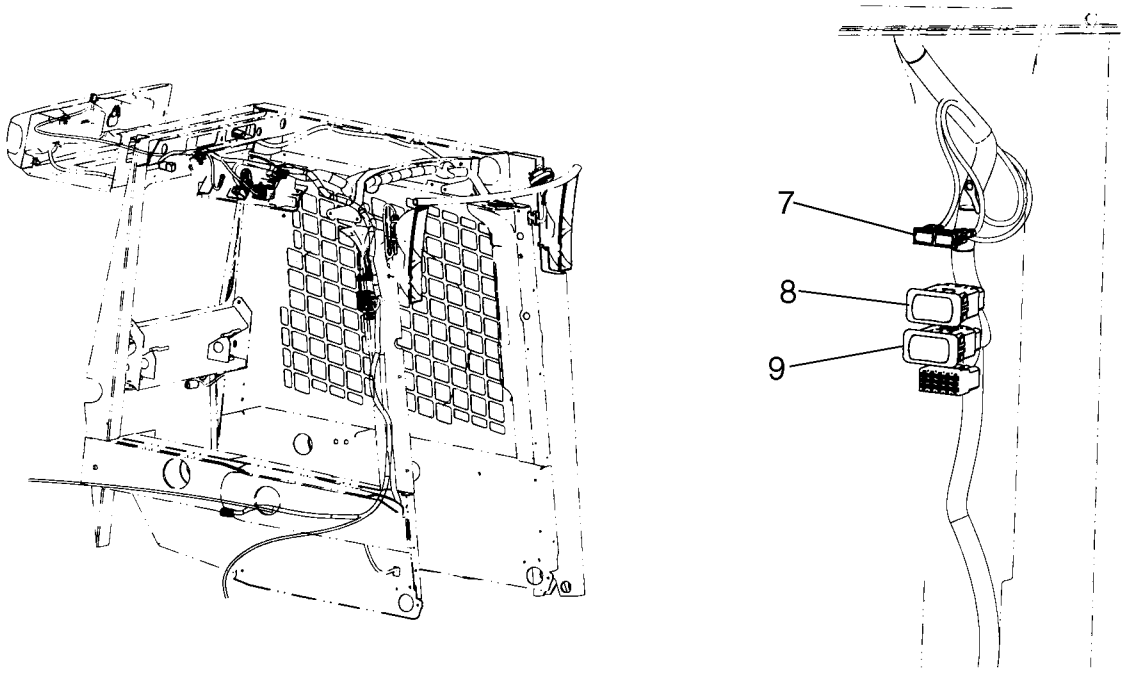

SISTEMA ELÉCTRICO DA CABINA, PARA EUROPA - DE LUXO CABINE

REF	FN	PART NUMBER	YR/SN	QTY	DESCRIPTION
1		263117		2	TIRA DE CABO, .14" x 11 1/2"
2		9821783		1	LAMPEJADOR
3		86500939		1-3	PARAFUSO, Hex Wash Hd, #10 x 3/8"
4		A149799		2	FUSÍVEL, Fuse 7.5A
5		A149798		2	FUSÍVEL, Fuse 5A
6		87668163		1	CHICOTE, Harness, Adapter - Europe; If Used
6		87705559		1	CHICOTE, Harness, Adapter - Europe; If Used
7		86604657		1	INDICADOR DE DIREÇÃO
8		87641189		1	INTERRUPTOR, Hazard Switch
9		87641191		1	INTERRUPTOR LUZ DE ALERTA, Rotating Beacon Switch

SISTEMA ELÉCTRICO DA CABINA

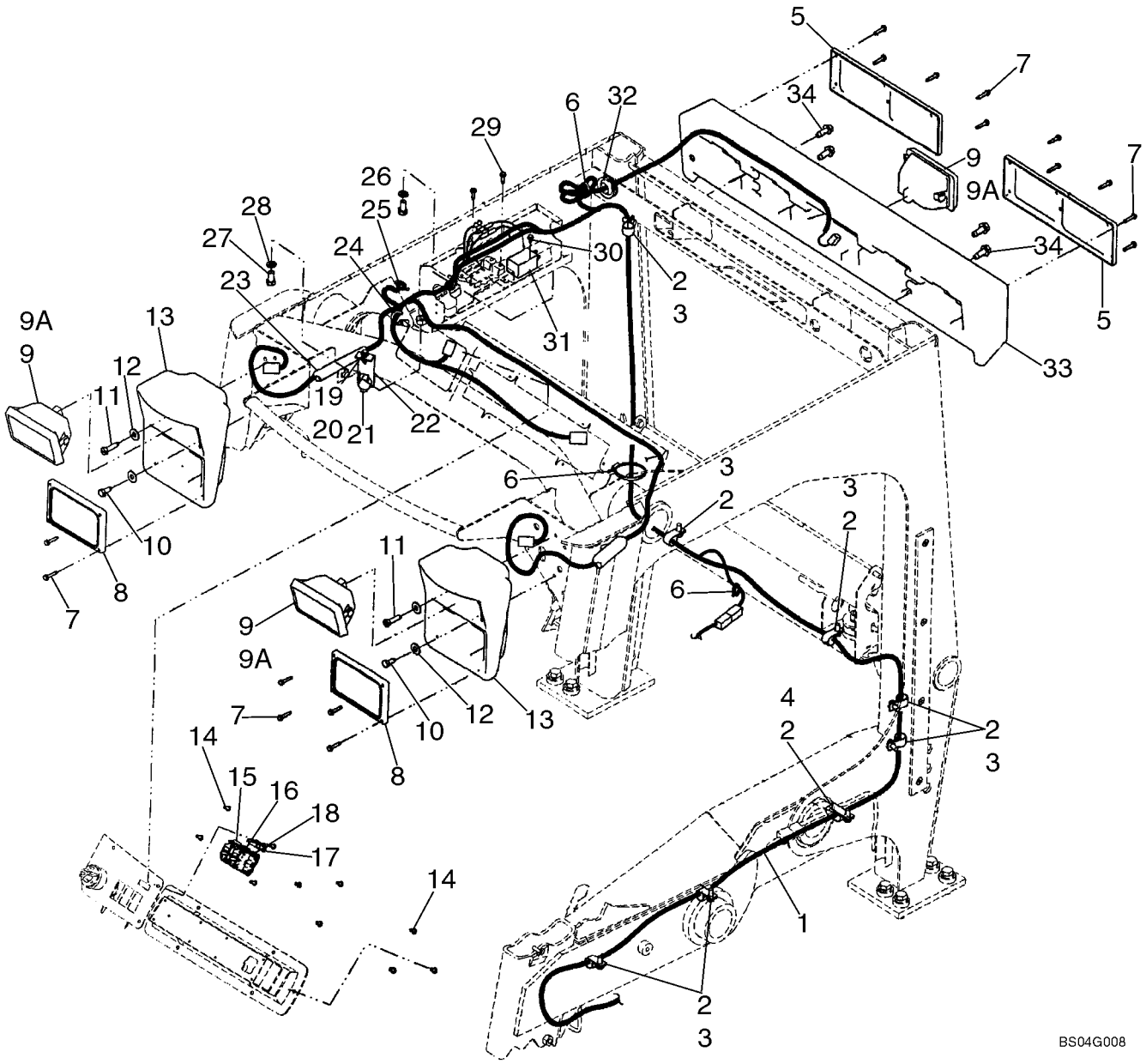

SISTEMA ELÉCTRICO DA CABINA

REF	FN	PART NUMBER	YR/SN	QTY	DESCRIPTION
					EUROPE
1		87459479		1	CHICOTE DE FIOS, Main
2		9840344		8	PARAFUSO
3		239859		7	PRENDEDOR, 3/4 x 5/16 Bolt
4		578070		1	PRENDEDOR
5		86544449		2	AMOSTRA (PLACA), Rear
6		263117		21	TIRA DE CABO, .14" x 11 1/2"
7		86545826		18	PARAFUSO, Hex Wash Hd, #10 x 1"
8		86542119		2	AMOSTRA (PLACA), Front
9		86533428		3	FAROL, Clear; Incl. Ref. 9A
9A		86533429		3	LÂMPADA
10		87887		2	PARAFUSO, Hex Hd, 5/16" x 3/4"
11		88825		2	PARAFUSO, Hex Hd, 5/16" x 1 1/4"
12		80664		4	ARRUELA PLANA, 5/16"
13		86542118		2	ALOJAMENTO, Light, Front
14		260-1358		10	PARAFUSO, Cross Pan Hd, #10 x 1/2", If Used
14		87546621		10	BOTÃO DE IMPULSO, Hex Hd; If Used
15		86000535		3	BUJÃO, 1.427" x .62", Plastic, Cover, Switch Hole
16		86604640		1	INTERRUPTOR
17		86604657		1	INDICADOR DE DIREÇÃO
18		86604639		1	INTERRUPTOR
19		523282		1	PORCA, Flg, USR, 1/4"-20
20		523292		1	PARAFUSO, Hex Flg, 1/4"-20 x 3/4", Serr
21		82002966		1	TOMADA ELÉTRICA
22		86540635		1	SUPORTE, Gray
23		292141		X	DISPOSITIVO DE MEDIÇÃO, Plastic, Split, .813" OD
24		258985		X	CONDUITE, Plastic, Split, .58" OD x 28" Long
25		7770		2	PORCA, 1/4"-20, G5
26		322357		1	ARRUELA MOLA, Belleville, M6
27		88434		2	PARAFUSO, Hex, 3/8"-16 x 3/4", G5, Full Thd
28		80680		2	ARRUELA-TRAVA, 3/8"
29		86500940		2	PARAFUSO, Hex Wash Hd, #10 x 3/4"
30		86500939		1	PARAFUSO, Hex Wash Hd, #10 x 3/8"
31		83982898		1	LAMPEJADOR
32		237915		1	CASQUILHO ISOLADOR

SISTEMA ELÉCTRICO DA CABINA

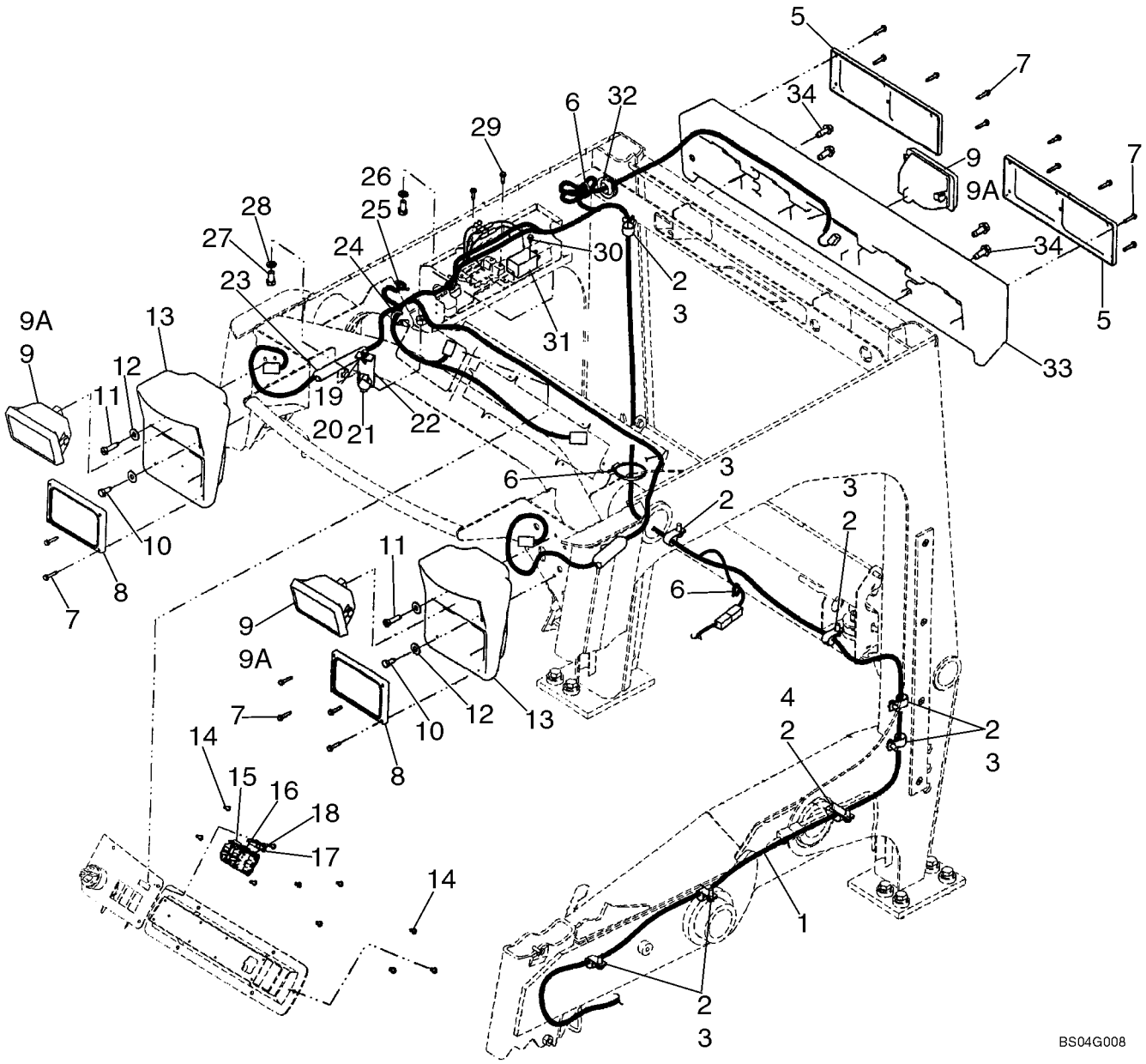

SISTEMA ELÉCTRICO DA CABINA

REF	FN	PART NUMBER	YR/SN	QTY	DESCRIPTION
33		86542120		1	BARRA, Rear Light
34		280476		4	PARAFUSO, Hex Wash Hd, 3/8" x 1"
		87366162		1	INSTRUMENTO COMBINAD, New Holland Standard
		87462149		1	INSTRUMENTO COMBINAD, New Holland Advanced

SISTEMA ELÉCTRICO CABINE - CONSOLE, ESQUERDA

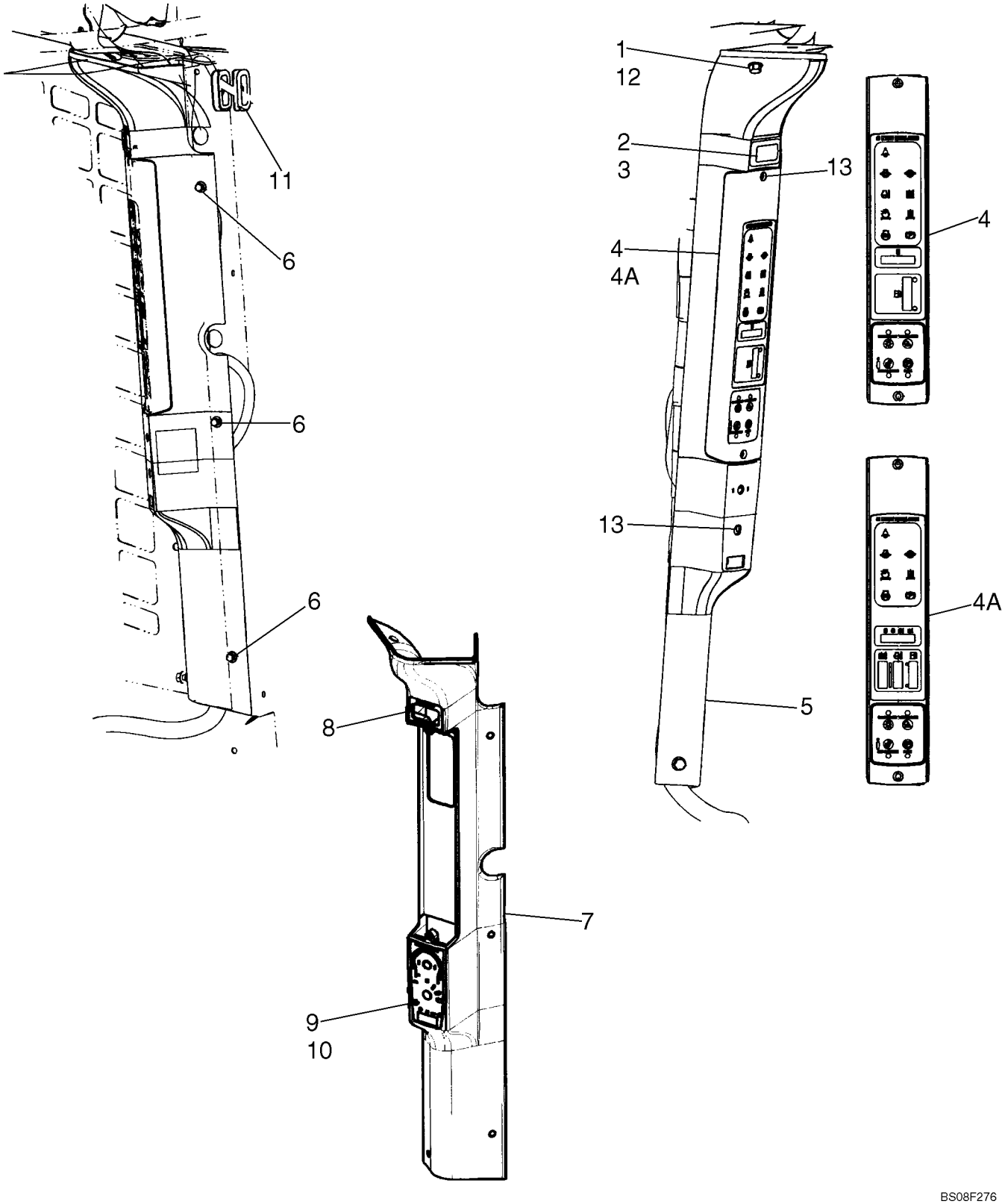

SISTEMA ELÉCTRICO CABINE - CONSOLE, ESQUERDA

REF	FN	PART NUMBER	YR/SN	QTY	DESCRIPTION
1		86050272		4	PARAFUSO, Hex Flg, M6 x 12, 8.8
2		126844A1		1	BUJÃO, Switch Hole Cover; Models Without Hydraulic Mount Plate
3		87572861		1	INTERRUPTOR, Hydraulic Mount Plate Switch
4		87654912		1	INSTRUM. INDIC. MULTIPLA, New Holland Standard; If Used
4		87706368		1	INDIC. DE MILHAS/ROTAÇÃO, New Holland Standard; If Used
4A		87654922		1	INSTRUM. INDIC. MULTIPLA, New Holland Advanced
5		87652504		1	PRATELEIRA, LH
6		86625199		3	PARAFUSO, Hex Flg Hd, M6 x 13
7		87658796		1	KIT, SERVICE, LH Console Service Kit; Incl. 5, 8, 9
8		87586496		1	DECALCOMANIA, Hydraulic Mount Plate
9		87586498		1	DECALCOMANIA, Without Heater Or Air Conditioning; Not Illustrated
10		87586497		1	DECALCOMANIA, Temperature Controls; Illustrated
11		87650571		2	CASQUILHO ISOLADOR
12		87594976		2	BOTÃO DE IMPULSO, U-Nut
13		190003820001		2	PARAFUSO, Mounting Screws For Instrument Cluster

SISTEMA ELÉCTRICO CABINE - CONSOLA, LADO DERECHO

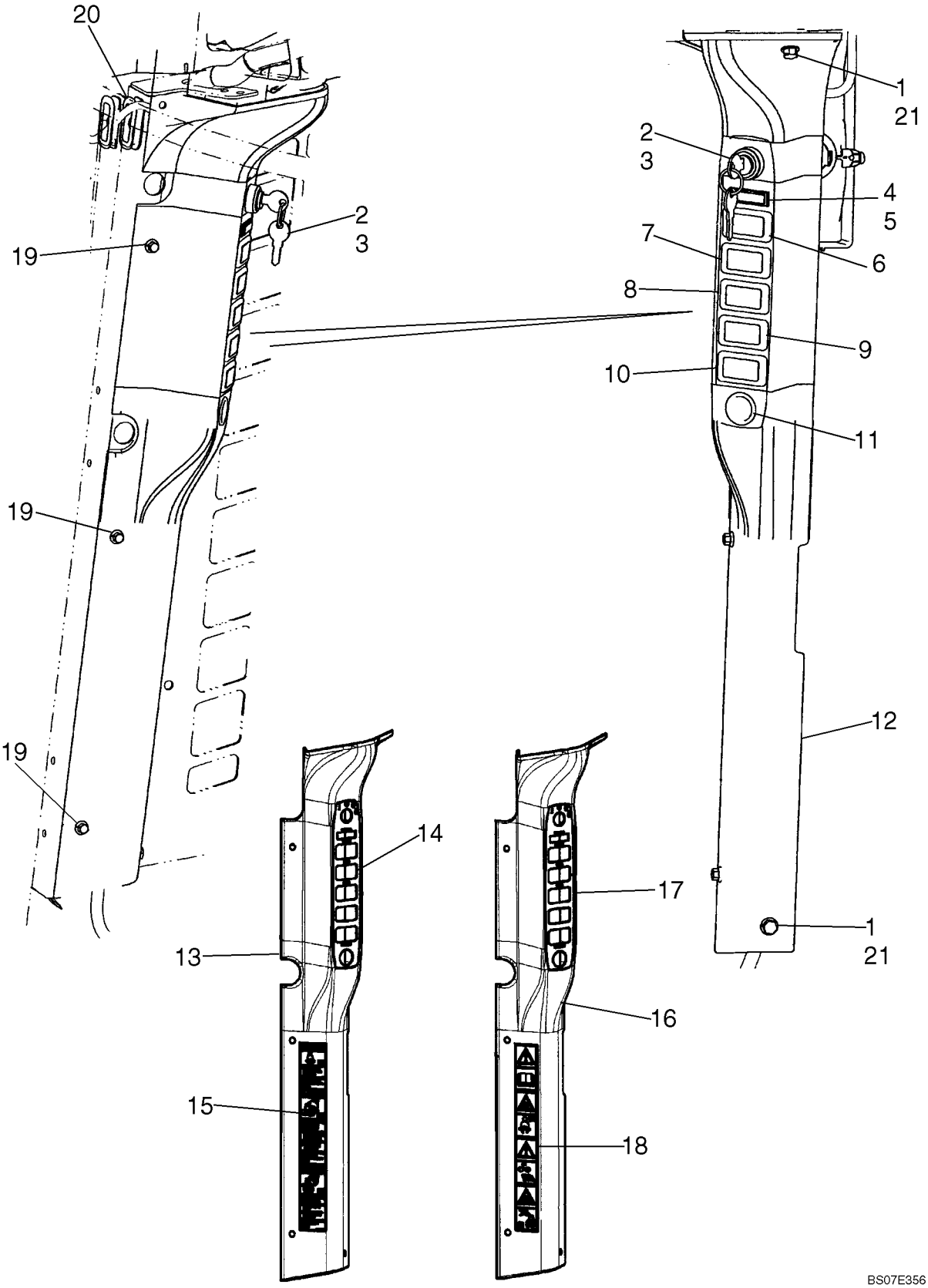

SISTEMA ELÉCTRICO CABINE - CONSOLA, LADO DERECHO

REF	FN	PART NUMBER	YR/SN	QTY	DESCRIPTION
1		86050272		4	PARAFUSO, Hex Flg, M6 x 12, 8.8
2		641833		1	COMUTADOR, Incl. 3
3		642628		1	JOGO 2 CHAVES
4		86604657		1	INDICADOR DE DIREÇÃO, Turn Signal Indicator; If Used
5		86627432		1	TAPÓN PLÁSTICO, Plastic Cover; If Used
6		87572862		1	INTERRUPTOR, High Flow Switch
7		87641189		1	INTERRUPTOR, Hazard Switch
8		87641191		1	INTERRUPTOR LUZ DE ALERTA, Rotating Beacon Switch
9		87641188		1	INTERRUPTOR, Loader Lock Switch
10		126844A1		1	BUJÃO, Switch Hole Cover
11		283779A1		1	ESCAPE, Power Plug Outlet
12		87652503		1	PRATELEIRA, Console, RH
13		87658794		1	KIT, SERVICE, RH Console Service Kit, North American; Incl. 12, 14, 15
14		87586495		1	DECALCOMANIA, Decal, RH Controls
15		87586463		1	DECALCOMANIA, North American Combination Warning, Danger, Caution
16		87658795		1	KIT, SERVICE, RH Console Service Kit, Europe; Incl. 12, 17, 18
17		87586495		1	DECALCOMANIA, Decal, RH Controls
18		87586453		1	DECALCOMANIA, Europe Combination Warning
19		86625199		3	PARAFUSO, Hex Flg Hd, M6 x 13
20		87650571		2	CASQUILHO ISOLADOR, Grommet
21		87594976		2	BOTÃO DE IMPULSO, U-Nut

SISTEMA ELÉCTRICO DA CABINA - CONJUNTO DE FIOS, PRINCIPAIS FUSÍVEIS E RELÉS

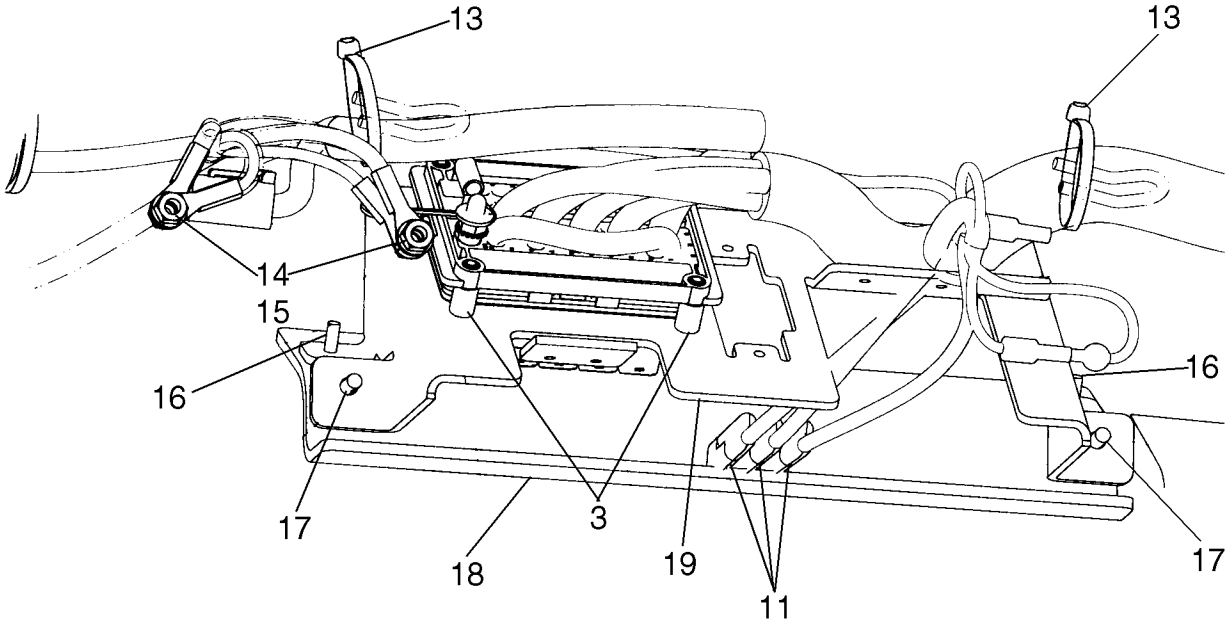

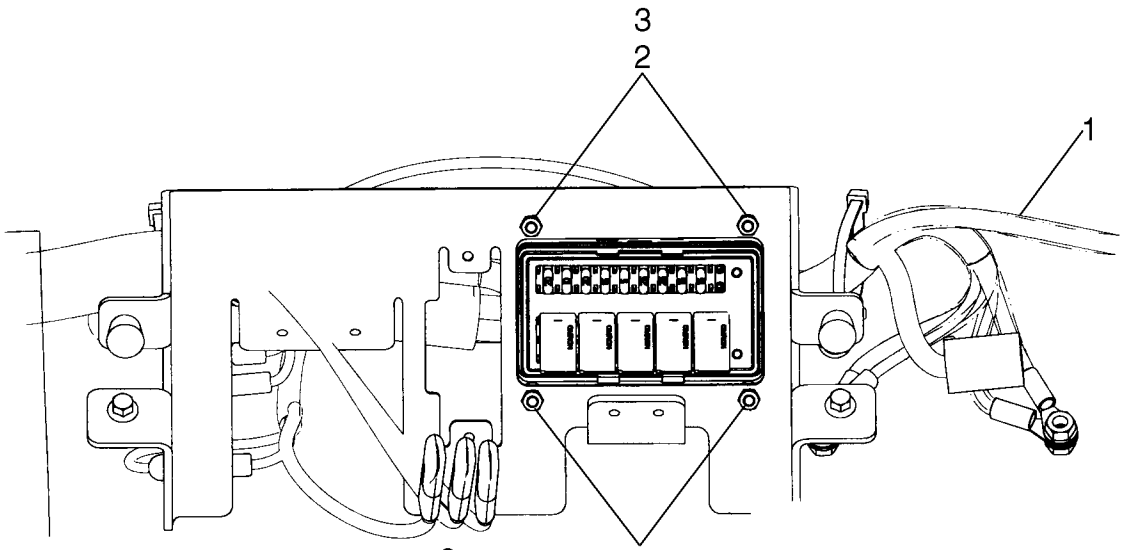

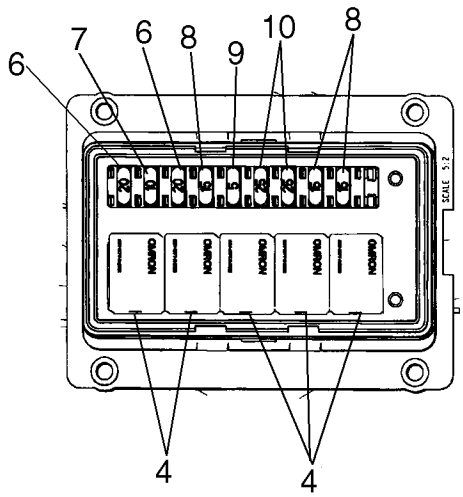

BS07E362

SISTEMA ELÉCTRICO DA CABINA - CONJUNTO DE FIOS, PRINCIPAIS FUSÍVEIS E RELÉS

REF	FN	PART NUMBER	YR/SN	QTY	DESCRIPTION
1		87599254		1	CHICOTE, Main Cab Harness
2		86977693		4	PORCA
3		87619421		4	PIEZAS DE FIJACIÓN, Sandwich Isolator
4		87582879		5	CONECTADOR, Relay 20A N.O. ISO280 Micro
6		121414A1		2	FUSÍVEL, Fuse, 20A
7		121412A1		1	FUSÍVEL, Fuse, 10A
8		121413A1		3	FUSÍVEL, Fuse, 15A
9		121410A1		1	FUSÍVEL, Fuse, 5A
10		121415A1		2	FUSÍVEL, Fuse, 25A
11		L71879		3	ELEMENTO DE DÍODO, Diode, 3A Diode Connector
12		87618013		1	DIODO, Diode, 6A
13		263117		9	TIRA DE CABO, .14" x 11 1/2", Tie, Black
14		7770		4	PORCA, 1/4"-20, G5
15		322357		2	ARRUELA MOLA, Belleville, M6
16		273890		2	MANÍPULO
17		86625199		8	PARAFUSO, Hex Flg Hd, M6 x 13
18		87569821		1	ESPUMA ISOLANTE, Fuse Block Cover
19		87590186		1	SUPORTE

SISTEMA ELÉCTRICO DA CABINA - CONJUNTO DE FIOS, PRINCIPAIS FUSÍVEIS E RELÉS

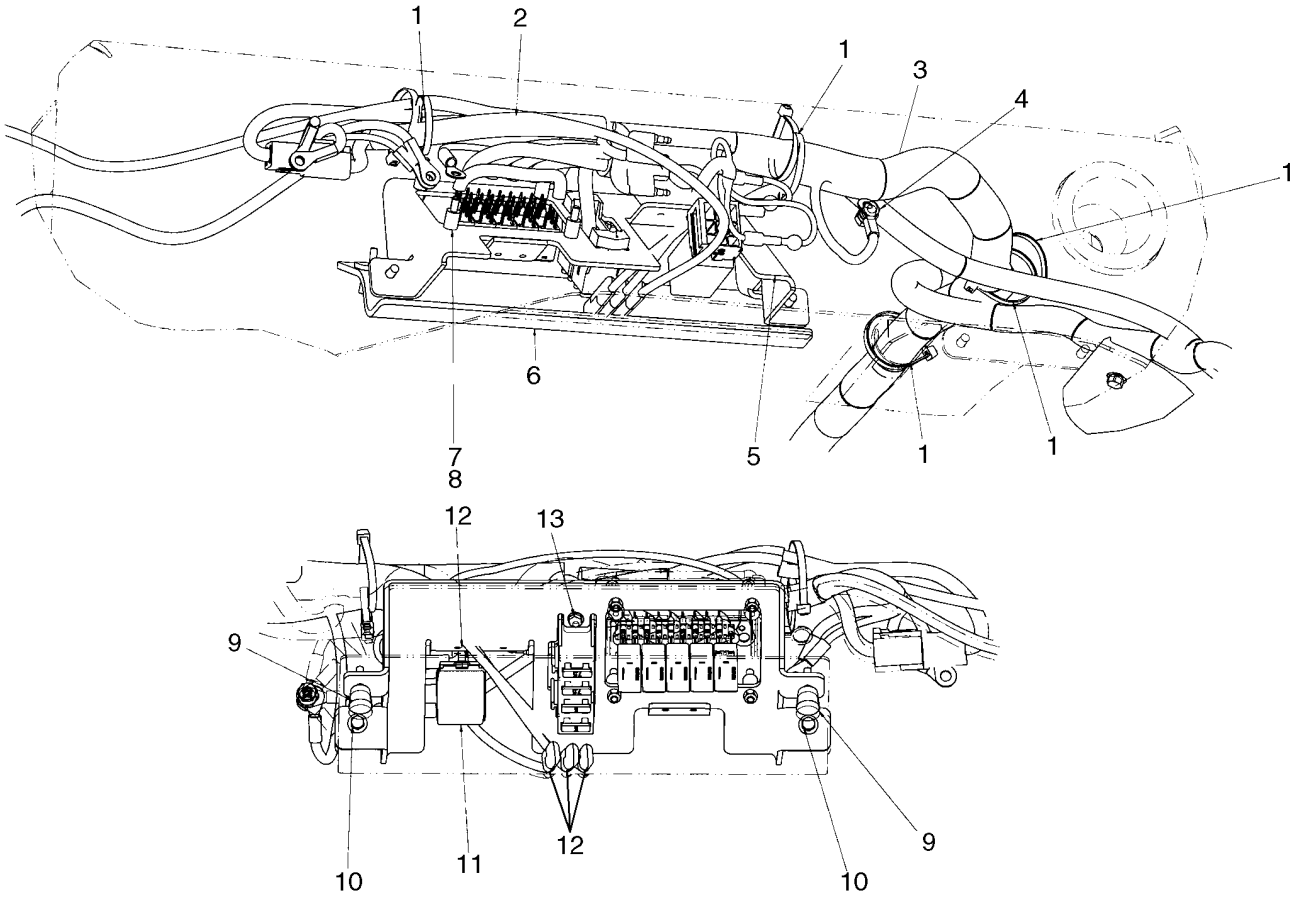

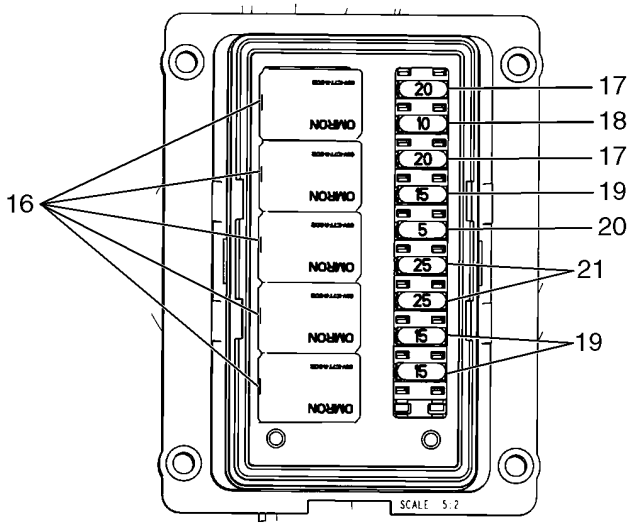

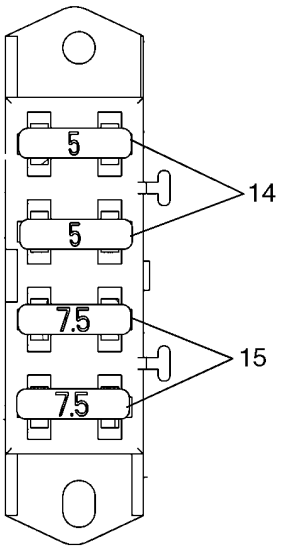

BS07F126

SISTEMA ELÉCTRICO DA CABINA - CONJUNTO DE FIOS, PRINCIPAIS FUSÍVEIS E RELÉS

REF	FN	PART NUMBER	YR/SN	QTY	DESCRIPTION
1		L11541		12	TIRA DE CABO, Cable Tie, Black
2		87572847		1	CHICOTE, Harness, Europe Adapter
3		87599254		1	CHICOTE, Harness, Main Cab
4		7770		2	PORCA, 1/4"-20, G5
5		87590186		1	SUPORTE, Electrical Bracket
6		87569821		1	ESPUMA ISOLANTE, Fuse Block Cover
7		87619421		4	PIEZAS DE FIJACIÓN, Isolator Mount
8		87319809		4	PORCA, Nut
9		273890		2	MANÍPULO, Thumb Screw
10		86625199		8	PARAFUSO, Hex Flg Hd, M6 x 13
11		9821783		1	LAMPEJADOR
12		86500939		1	PARAFUSO, Hex Wash Hd, #10 x 3/8"
13		86500940		2	PARAFUSO, Hex Wash Hd, #10 x 3/4"
14		9623775		2	FUSÍVEL, Fuse, 5A
15		9623776		2	FUSÍVEL, Fuse, 7.5A
16		87582879		5	CONECTADOR
17		121414A1		2	FUSÍVEL, Fuse, 20A
18		121412A1		1	FUSÍVEL, Fuse, 10A
19		121413A1		3	FUSÍVEL, Fuse, 15A
20		121410A1		1	FUSÍVEL, Fuse, 5A
21		121415A1		2	FUSÍVEL, Fuse, 25A
22		87618013		1	DIODO, Not Illustrated

SISTEMA ELÉCTRICO DA CABINA

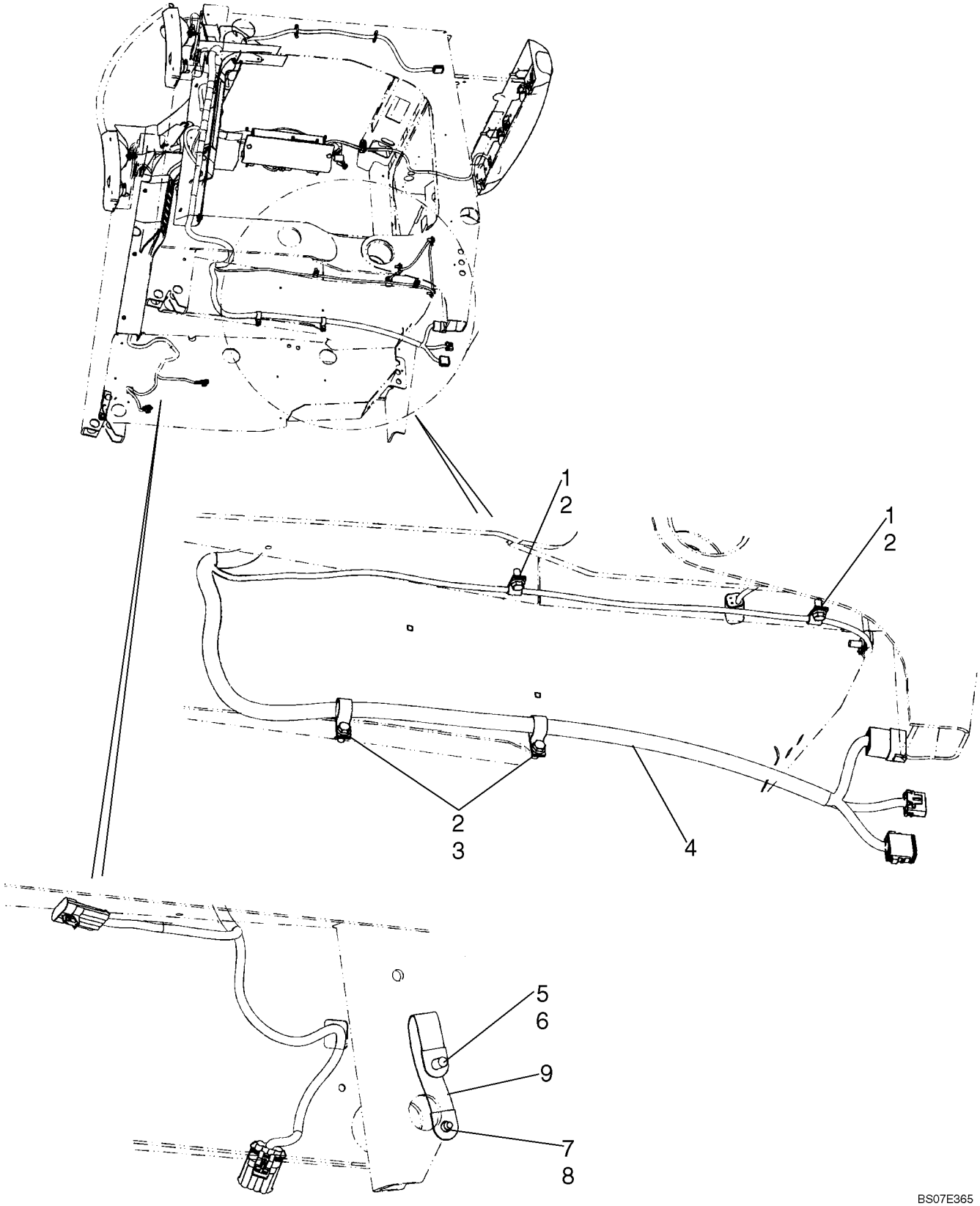

SISTEMA ELÉCTRICO DA CABINA

REF	FN	PART NUMBER	YR/SN	QTY	DESCRIPTION
1		853764		5	PRENDEDOR, 5/16", Insul, 5/16" Bolt
2		9840344		7	PARAFUSO
3		700514		2	PRENDEDOR
4		87599254		1	CHICOTE, Main Cab Harness; See Fig. 04-05C
5		88434		1	PARAFUSO, Hex, 3/8"-16 x 3/4", G5, Full Thd
6		140045		1	ARRUELA MOLA, Belleville, M10
7		87346		1	PARAFUSO, Hex Hd, 5/16" x 1/2"
8		322358		1	ARRUELA MOLA, Belleville, M8
9		512306		1	CABO, MASSA

SISTEMA ELÉCTRICO DA CABINA - LUCES DE TRABAJO

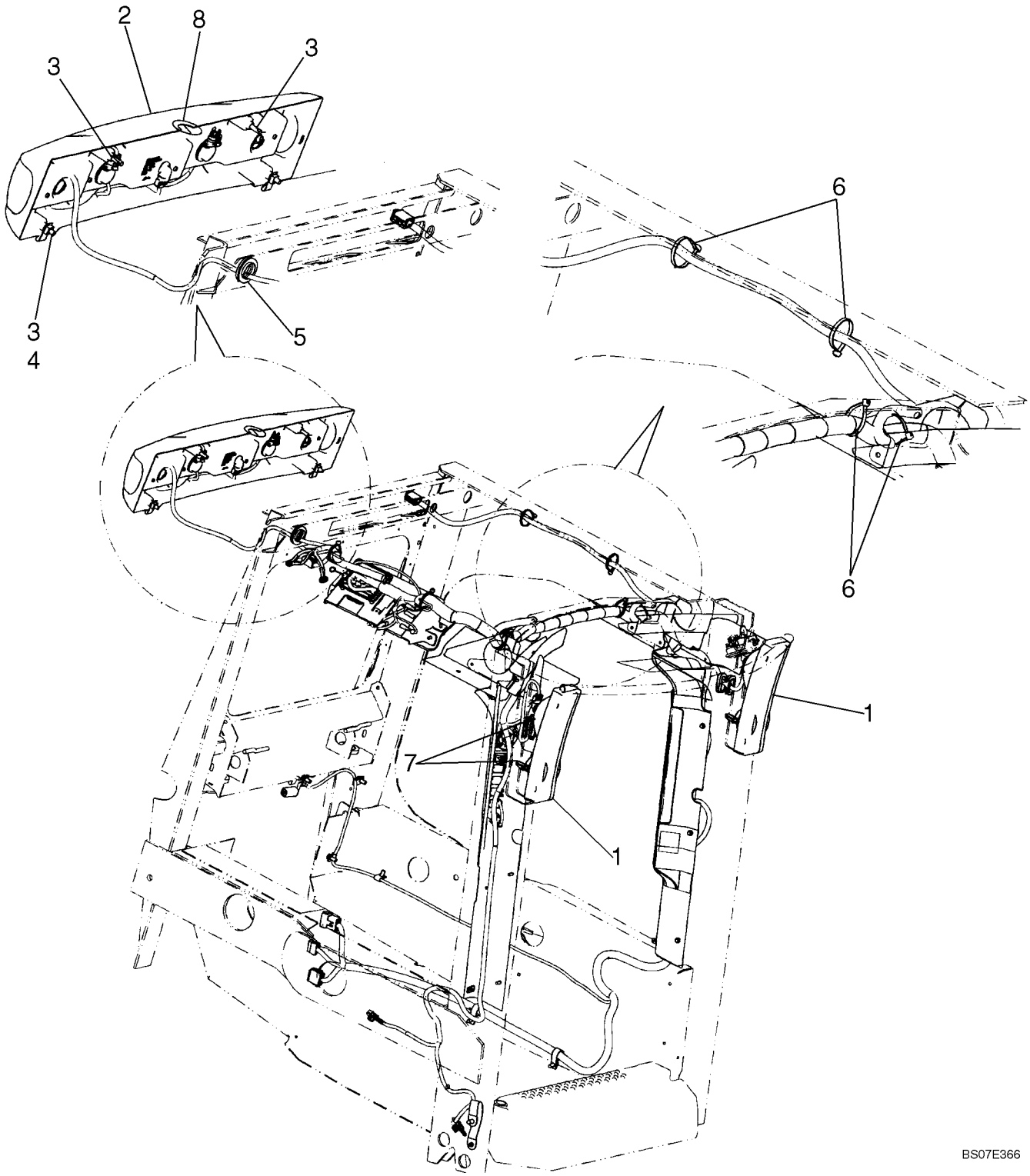

SISTEMA ELÉCTRICO DA CABINA - LUCES DE TRABAJO

REF	FN	PART NUMBER	YR/SN	QTY	DESCRIPTION
1		87569828		2	FAROL, Front Light; See Fig. 04-20A
2		87569827		1	FAROL, Rear Light; See Fig. 04-21B
3		86521612		4	PARAFUSO, Hex Flg, 5/16"-18 x 1 1/4", G5
4		87594975		2	PORCA, J-Nut Speed Clip With Nut
5		87652292		1	CASQUILHO ISOLADOR, Grommet
6		263117		9	TIRA DE CABO, .14" x 11 1/2", Tie, Black
7		87614446		4	PARAFUSO, Plastic Screw
8		87644664		1	DECALCOMANIA, Decal, Light Bar Cover

SISTEMA ELÉTRICO DA CABINA, PISCA-PISCA

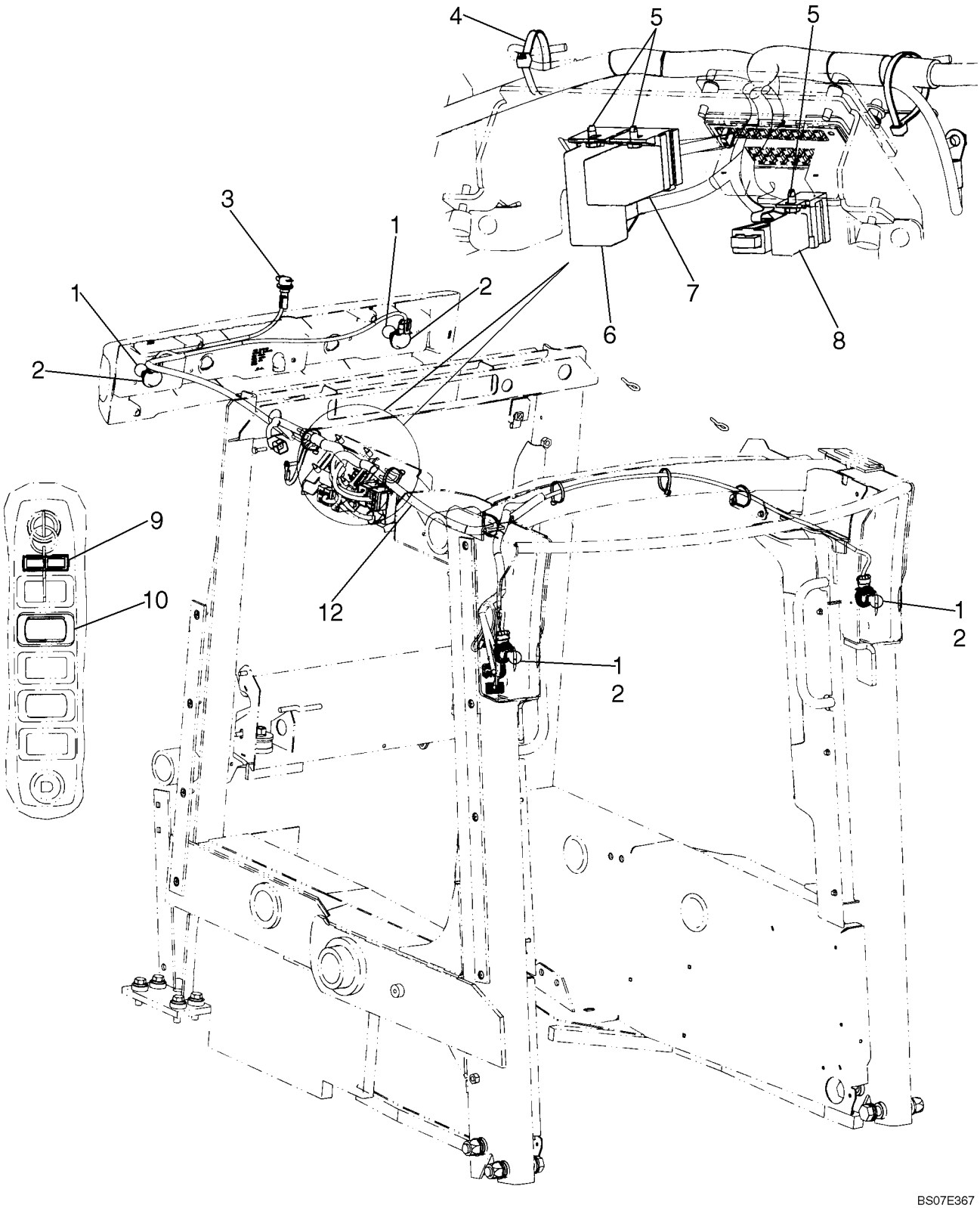

SISTEMA ELÉTRICO DA CABINA, PISCA-PISCA

REF	FN	PART NUMBER	YR/SN	QTY	DESCRIPTION
		87659806		1	DIA KIT,, Kit, Turn Signals; Incl. 1 - 12
1		87642984		4	LÂMPADA, Amber Bulb 12V/28W
2		87642986		4	PORTA-LÂMPADA, Bulb Socket
3		82002966		1	TOMADA ELÉTRICA
4		263117		6	TIRA DE CABO, .14" x 11 1/2"
5		86500939		3	PARAFUSO, Hex Wash Hd, #10 x 3/8"
6		83982664		1	CONECTADOR, Turn Signal Relay
7		9821783		1	LAMPEJADOR
8		86509590		1	CONECTADOR
9		86604657		1	INDICADOR DE DIREÇÃO
10		87641189		1	INTERRUPTOR, Hazard
11		87586469		1	DECALCOMANIA, Decal, Rotating Beacon; Not Illustrated
12		87650823		1	CHICOTE, Harness, North American Flasher

SISTEMA ELÉCTRICO DA CABINA - SINALIZADOR DE PERIGO

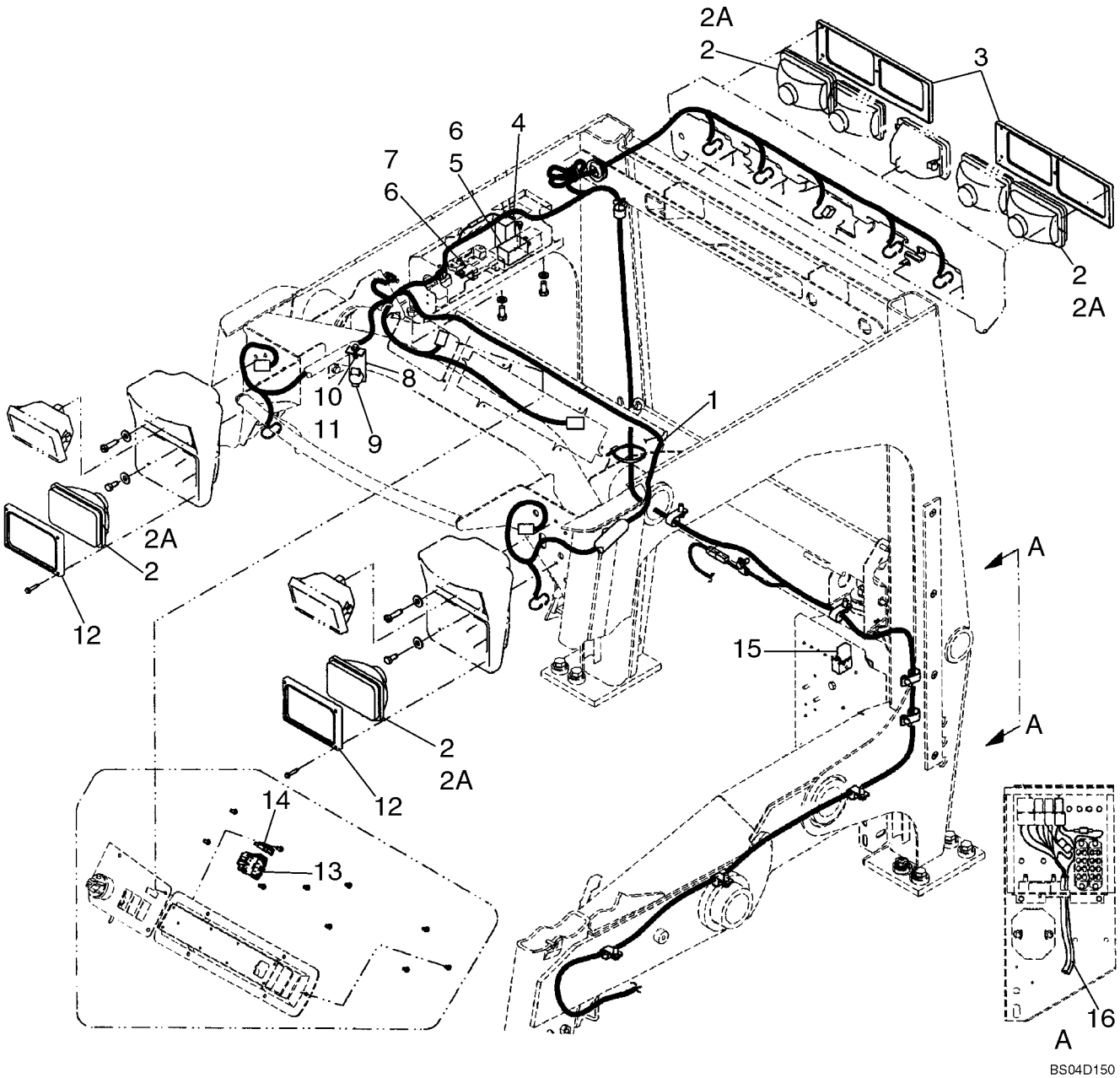

SISTEMA ELÉCTRICO DA CABINA - SINALIZADOR DE PERIGO

REF	FN	PART NUMBER	YR/SN	QTY	DESCRIPTION
1		87462084		1	CHICOTE DE FIOS, Main; Models Without Service/Run Switch in Cab
2		9841566		4	FAROL, Amber; Incl. Ref. 2A
2A		529068		1	LÂMPADA, #1156, 12V
3		86597619		2	AMOSTRA (PLACA), Rear Flashers
4		83982664		1	CONECTADOR, Turn Signal
5		83982898		1	LAMPEJADOR
6		86500939		2	PARAFUSO, Hex Wash Hd, #10 x 3/8"
7		86535636		1	SUPORTE
8		86540635		1	SUPORTE, Auxiliary Power Socket
9		82002966		1	TOMADA ELÉTRICA
10		523292		1	PARAFUSO, Hex Flg, 1/4"-20 x 3/4", Serr
11		523282		1	PORCA, Flg, USR, 1/4"-20
12		86597618		2	AMOSTRA (PLACA), Front; 4-Way Flashers
13		86604639		1	INTERRUPTOR
14		86604657		1	INDICADOR DE DIREÇÃO
15		86509590		1	CONECTADOR
16		86621721		1	CHICOTE DE FIOS, 4-Way Flashers; Incl. Diode 774735 And Fuse 9623776
16A		774735		1	DIODO, Not Illustrated Separately
16B		9623776		1	FUSÍVEL, Not Illustrated Separately

SISTEMA ELÉCTRICO DO MOTOR

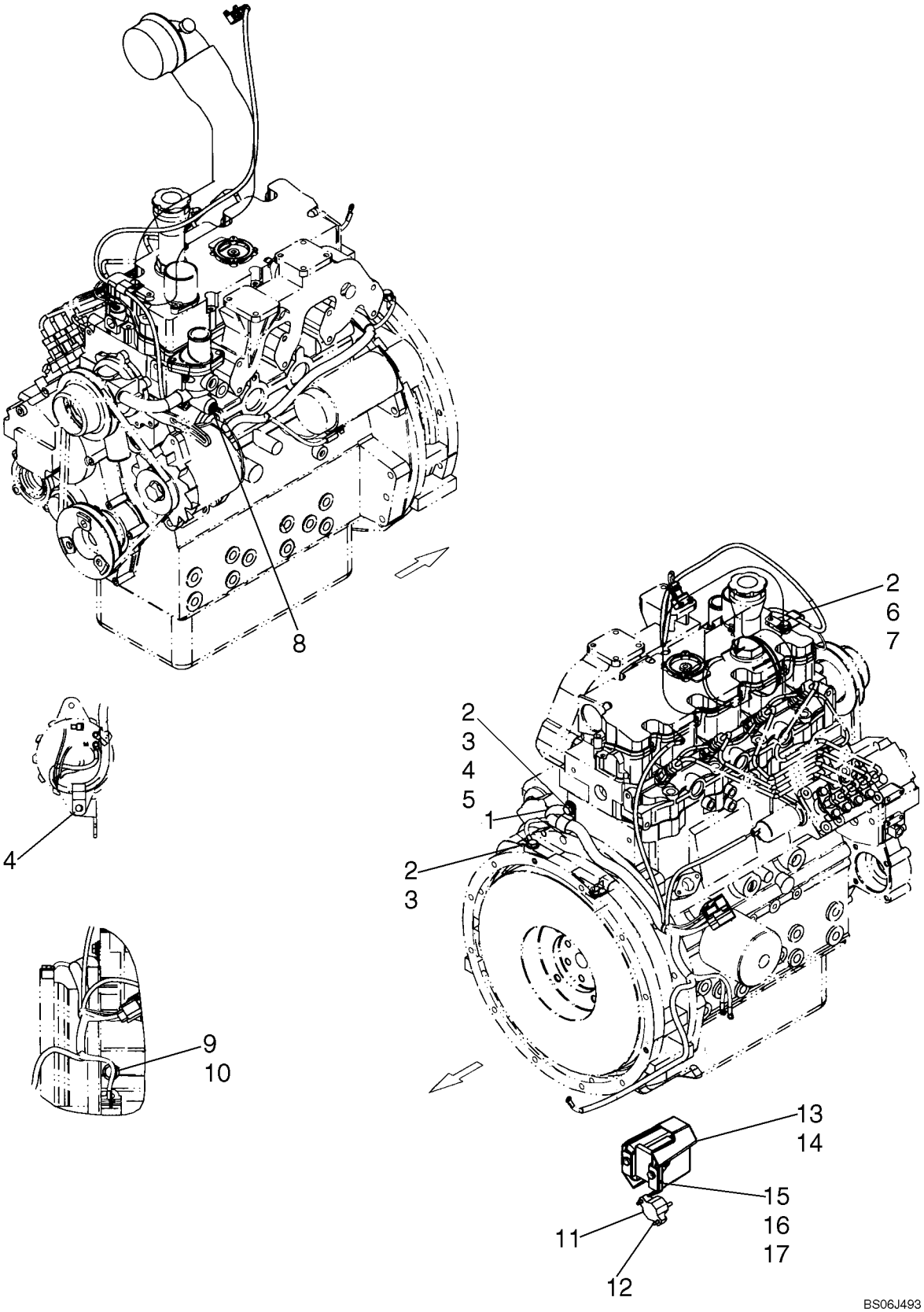

SISTEMA ELÉCTRICO DO MOTOR

REF	FN	PART NUMBER	YR/SN	QTY	DESCRIPTION
1		87462056		1	CHICOTE, ISM Engine
2		322358		3	ARRUELA MOLA, Belleville, M8
3		120103		2	PARAFUSO, Hex, M8 x 16, 8.8
4		87029955		2	PRENDEDOR, Clamp; Insulated 22.2 mm, 3/8 in. Bolt ZND
5		80701		1	ARRUELA PLANA, 1/4"
6		134579		1	TERMINAL
7		120104		1	PARAFUSO, Hex, M8 x 20, 8.8
8		87307746		1	INTERRUPTOR SONDA, Hyd Oil And Engine Coolant Temp Sensor
9		43138		1	PARAFUSO, Hex, M10 x 20, 8.8, Full Thd
10		86639325		1	ARRUELA PLANA, M10 x 24.5 x 3, HT
11		9843910		1	RUPTOR
12		86500940		2	PARAFUSO, Hex Wash Hd, #10 x 3/4"
13		9612631		1	TAMPA
14		9612633		1	PROTEÇÃO
15		9601073		1	CONECTADOR
16		88146		2	PARAFUSO, Hex, 1/4"-20 x 1", G5
17		523282		4	PORCA, Flg, USR, 1/4"-20

SISTEMA ELÉCTRICO DO PRINCIPAL

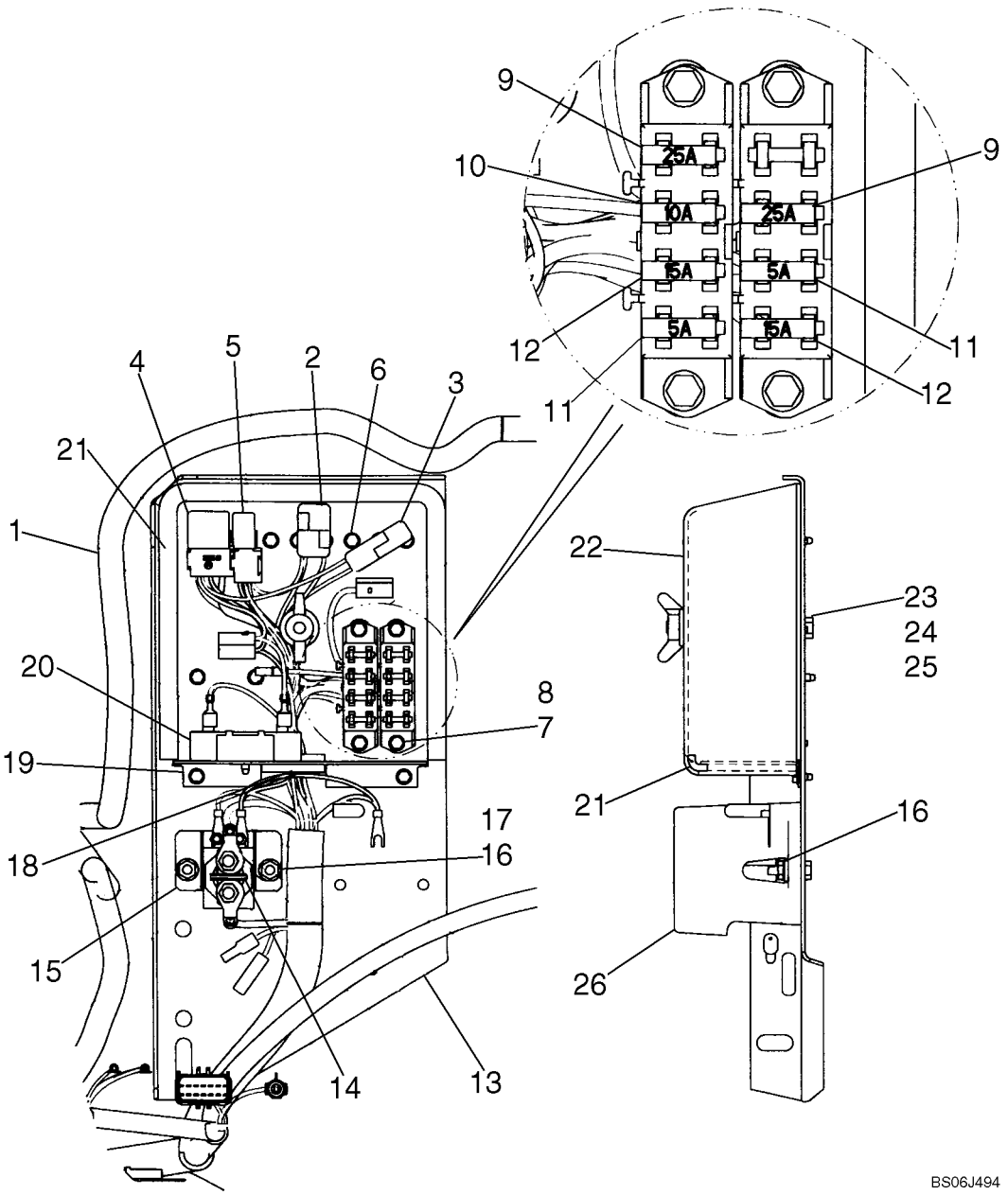

SISTEMA ELÉCTRICO DO PRINCIPAL

REF	FN	PART NUMBER	YR/SN	QTY	DESCRIPTION
1		87462084		1	CHICOTE DE FIOS
2		773464		1	DIODO, Style 30 1A; Fuel Interlock
3		L71879		1	ELEMENTO DE DÍODO, Polarity Protection
4		86529089		1	CONECTADOR
5		86509590		3	CONECTADOR
6		86500939		15	PARAFUSO, Hex Wash Hd, #10 x 3/8"
7		86545826		4	PARAFUSO, Hex Wash Hd, #10 x 1"
8		249825		4	ESPAÇADOR
9		9846342		2	FUSÍVEL, 25 Amp
10		847369		1	FUSÍVEL, 10 Amp
11		9623775		2	FUSÍVEL, 5 Amp
12		9623774		2	FUSÍVEL, 15 Amp
13		86598854		1	PAINEL
14		9612633		1	PROTEÇÃO
15		9601073		1	CONECTADOR
16		523282		4	PORCA, Flg, USR, 1/4"-20
17		88146		2	PARAFUSO, Hex, 1/4"-20 x 1", G5
18		9822595		1	CASQUILHO ISOLADOR
19		9822596		1	SUPORTE
20		86705351		1	RESISTÊNCIA
21		291966		1	SUPORTE, 915 mm, 36 in. Required
22		86607792		1	TAMPA CONJUNTO
23		86584195		1	PARAFUSO, Hex, 5/16"-18 x 3 3/4", G2, Full Thd
24		322358		1	ARRUELA MOLA, Belleville, M8
25		9635082		1	PORCA, 5/16"-18, G5
26		9612631		1	TAMPA

SISTEMA ELÉCTRICO DO PRINCIPAL

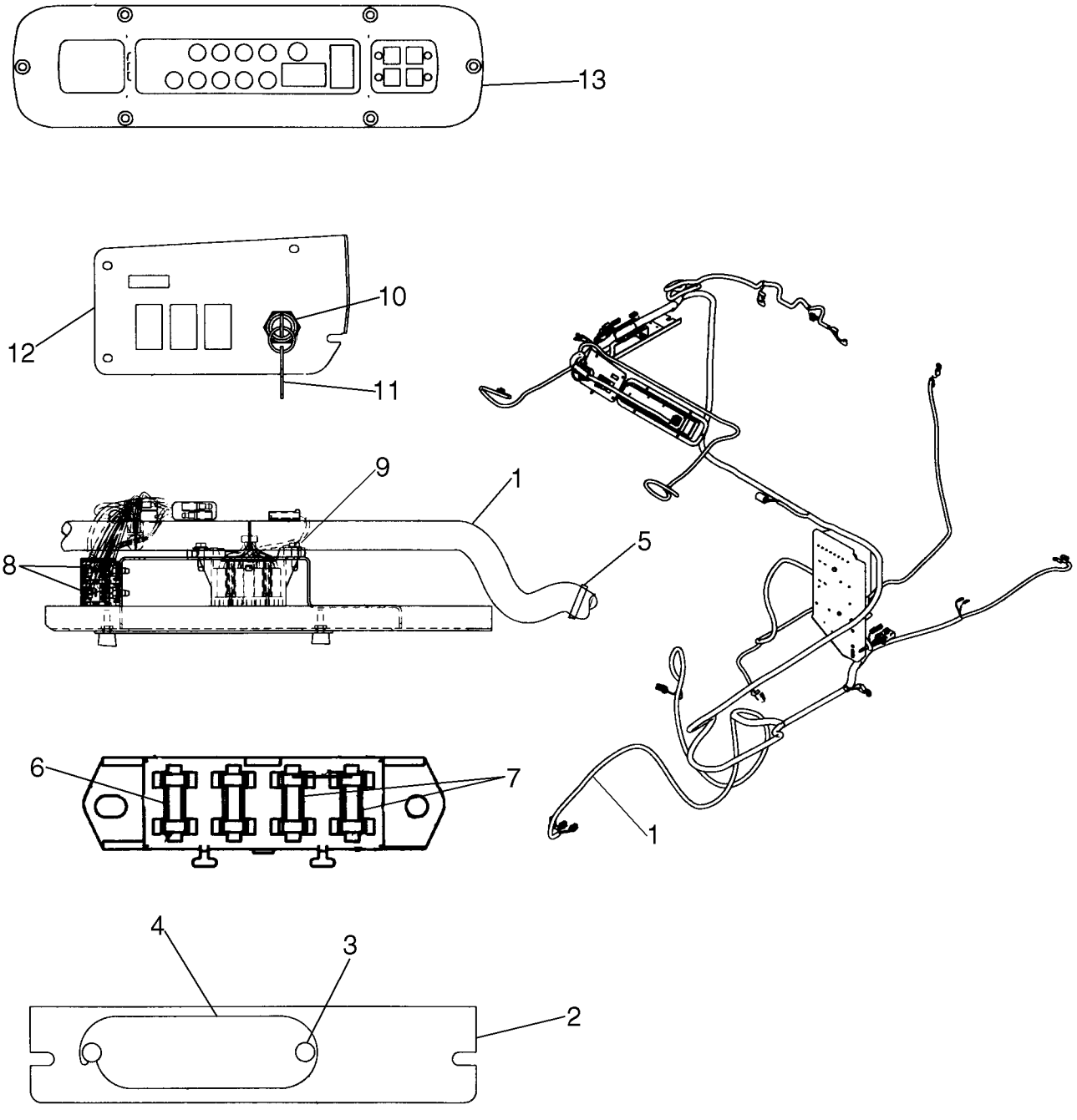

SISTEMA ELÉCTRICO DO PRINCIPAL

REF	FN	PART NUMBER	YR/SN	QTY	DESCRIPTION
1		87462084		1	CHICOTE DE FIOS
2		87537305		1	PAINEL LATERAL
3		273890		2	MANÍPULO
4		86520926		1	TAMPA
5		263117		1	TIRA DE CABO, .14" x 11 1/2"
6		9623776		1	FUSÍVEL, 7.5 Amp
7		9623774		2	FUSÍVEL, 15 Amp
8		86509590		2	CONECTADOR
9		86500940		2	PARAFUSO, Hex Wash Hd, #10 x 3/4"
10		641833		1	COMUTADOR, Incl. 11
11		642628		1	JOGO 2 CHAVES
12		86604340		1	PLACA
13		87366162		1	INSTRUMENTO COMBINAD

SISTEMA ELÉCTRICO DO CHASSI

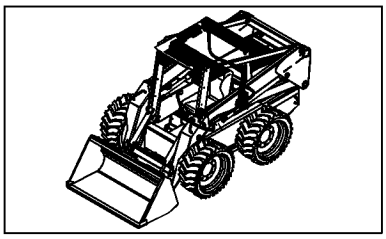

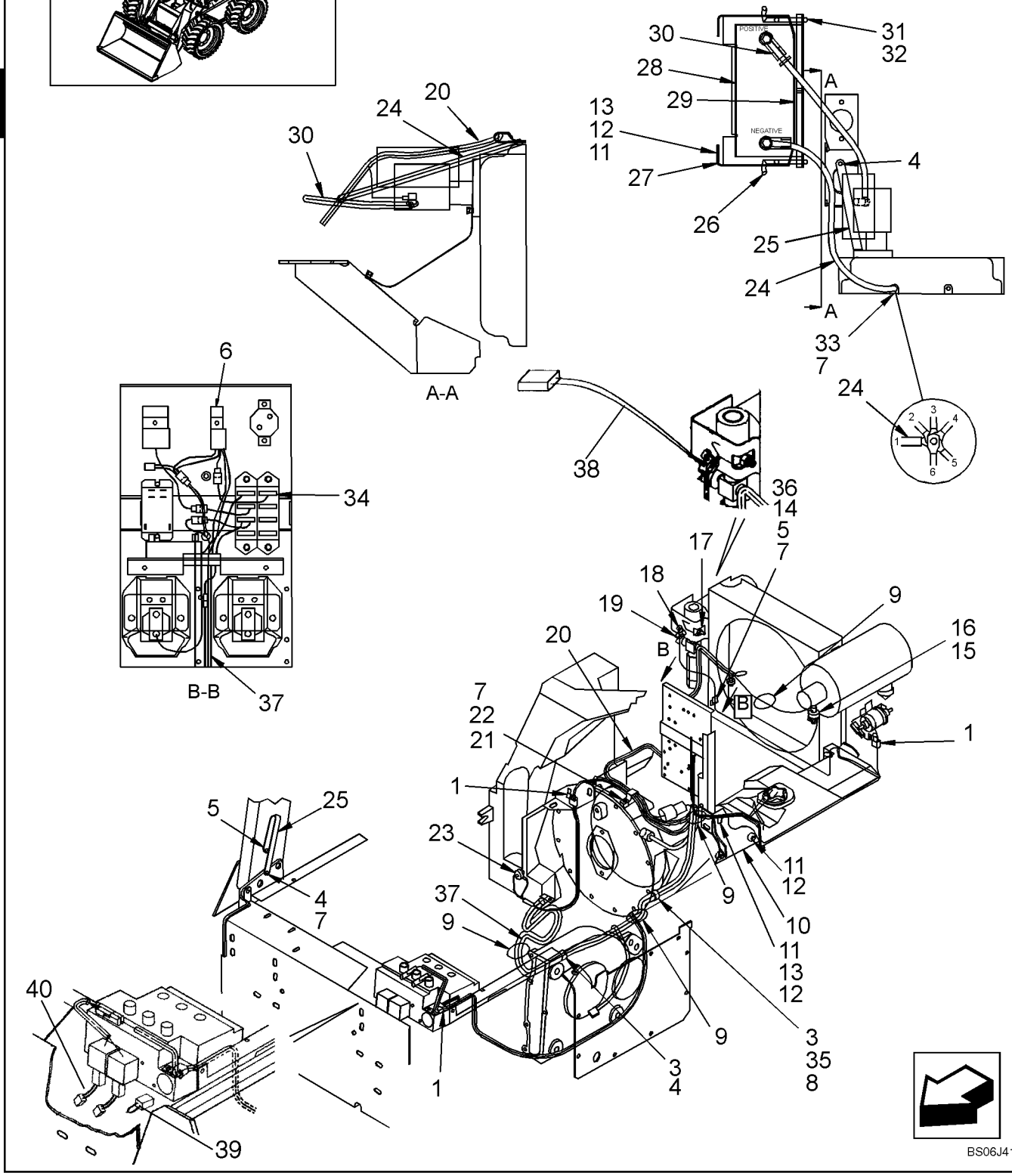

BS06J415

SISTEMA ELÉCTRICO DO CHASSI

REF	FN	PART NUMBER	YR/SN	QTY	DESCRIPTION
1		134579		5	TERMINAL, 7/16" x 3/8" Bolt
2		87045779		1	CHICOTE DE FIOS, Incl. 773464, L71879; Models With Service/Run Switch in Cab
2		87462084		1	CHICOTE DE FIOS, Main; Models Without Service/Run Switch in Cab
		773464		X	DIODO, Style 30 1A; Fuel Interlock
		L71879		X	ELEMENTO DE DÍODO, Polarity Protection
3		9706732		2	PRENDEDOR, 3/4" x 5/16" Bolt
3		87037780		2	PRENDEDOR, J, 11/16" Insul, 5/16" Bolt
4		86545825		3	PARAFUSO, Hex Wash Hd, 5/16" x 5/8"
4		9840344		3	PARAFUSO, Self-Tapping, Sealing, WH, 5/16"-18 x 11/16"
5		87872		2	PARAFUSO, Hex, 5/16"-18 x 3/4", G5, Full Thd
6		86509590		1	CONECTADOR, 20 Amp, Flashing Lights
7		322358		7	ARRUELA MOLA, Belleville, M8
8		145458		1	PORCA, Flg, USR, 5/16"-18
9		263117		18	TIRA DE CABO, .14" x 11 1/2", 3/32" x 11-1/2" L
10		87051100		1	SUPORTE, Support
11		88206		10	PARAFUSO, Hex, 3/8"-16 x 1", G5, Full Thd
12		140045		10	ARRUELA MOLA, Belleville, M10
13		9628503		7	PORCA, 3/8"-16, G5
14		853764		2	PRENDEDOR, 5/16", Insul, 5/16" Bolt
15		V100409		1	CABEÇA DE SINO, 1/8", Plated
16		87048419		1	INTERRUPTOR DE RESTRICAO, Switch
17		8604802		1	INTERRUPTOR DE PRESSÃO, Hydraulic Oil Filter Restriction
18		675162		1	TERMINAL, M6.3, Insul, 3/8" Bolt
19		87036787		1	INTERRUPTOR DE PRESSÃO, Hydrostatic Oil Pressure
20		87462056		1	CHICOTE, Harness; Engine
21		577927		1	PRENDEDOR, 3/8" x 1/2"
22		16043224		1	PARAFUSO, Hex, M8 x 16, 8.8, Full Thd
22		16043224		1	PARAFUSO, Hex, M8 x 16, 8.8, Full Thd
23		9712608		1	INTERRUPTOR SONDA, Hydraulic Oil Temperature
		34821		1	ARRUELA PLANA

SISTEMA ELÉCTRICO DO CHASSI

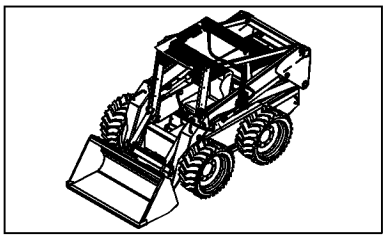

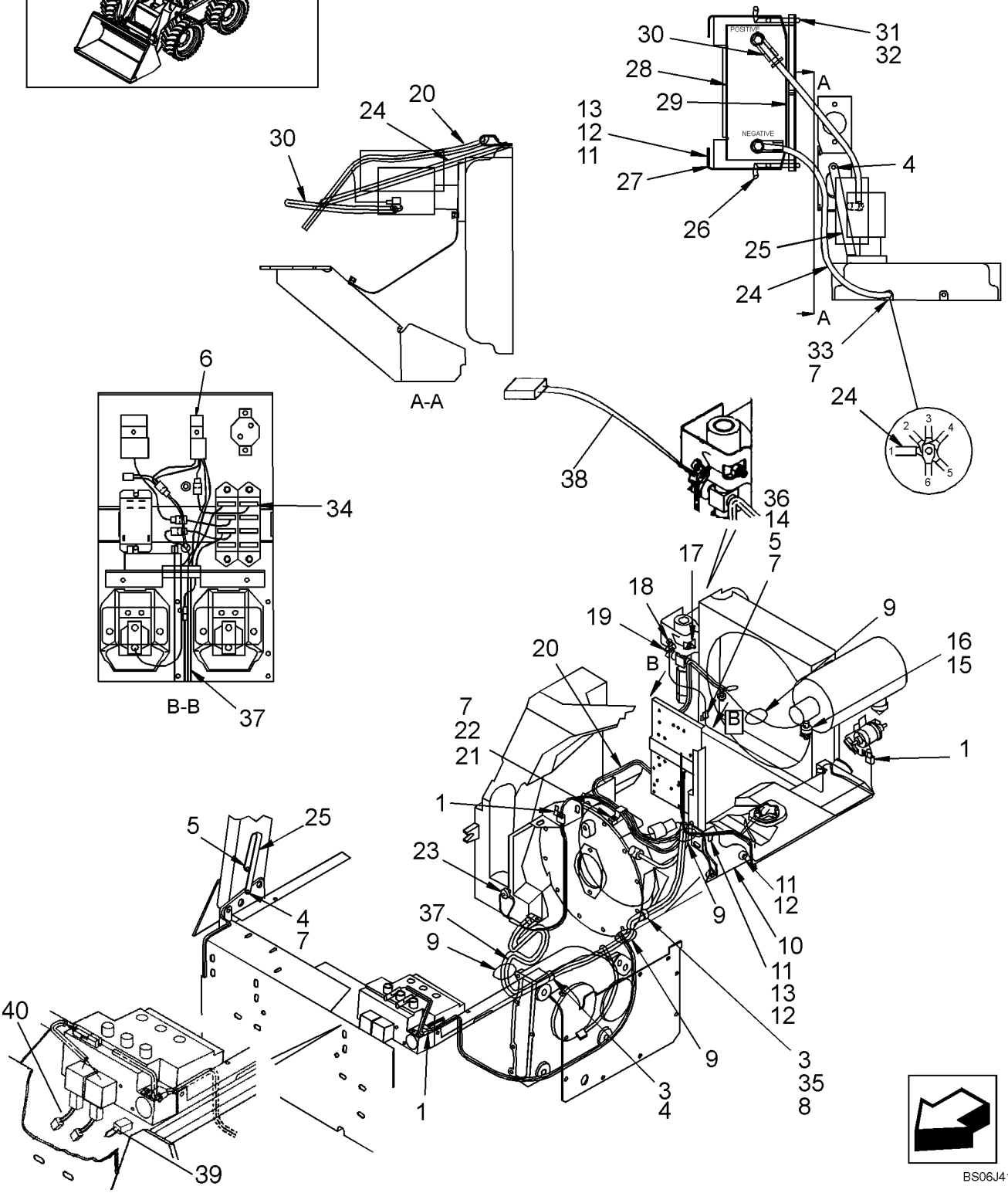

BS06J415

SISTEMA ELÉCTRICO DO CHASSI

REF	FN	PART NUMBER	YR/SN	QTY	DESCRIPTION
		9804960		1	ANEL, Grounding
24		9828790		1	CABO, Battery, Negative
25		512306		2	CABO, MASSA
26		103807		2	GANCHO, 3/8"-16 x 16
27		9842368		1	SUPORTE
28		F775DS		1	BATERIA T. SECA, U.S.
28		F775DSW		1	BATERIA T. HUMIDA, U.S.
28		9624466DS		1	BATERIA T. SECA, Canada
29		794967		1	SUPORTE, Battery
30		9828791		1	CABO, Battery, Positive
31		80702		2	ARRUELA PLANA, 3/8"
32		88902		2	CONTRA PORCA, 3/8"-16, GC
32		9637692		2	CONTRA PORCA, 3/8"-16, GB
33		120104		1	PARAFUSO, Hex, M8 x 20, 8.8
34		9811773		1	FUSÍVEL, 10 Amp, EU Only
35		280327		1	PARAFUSO, Short NK, 5/16"-18 x 3/4", G5
36		9635082		2	PORCA, 5/16"-18, G5
37		86603920		1	CHICOTE DE FIOS, Europe Only
38		87369396		1	CHICOTE DE FIOS, Jumper, Hydraulic Pressure
39		87048202		1	CHICOTE DE FIOS, Jumper, Auxilary Switch
40		87048133		2	CHICOTE DE FIOS, Jumper, Valve

SISTEMA ELÉCTRICO DO CHASSI

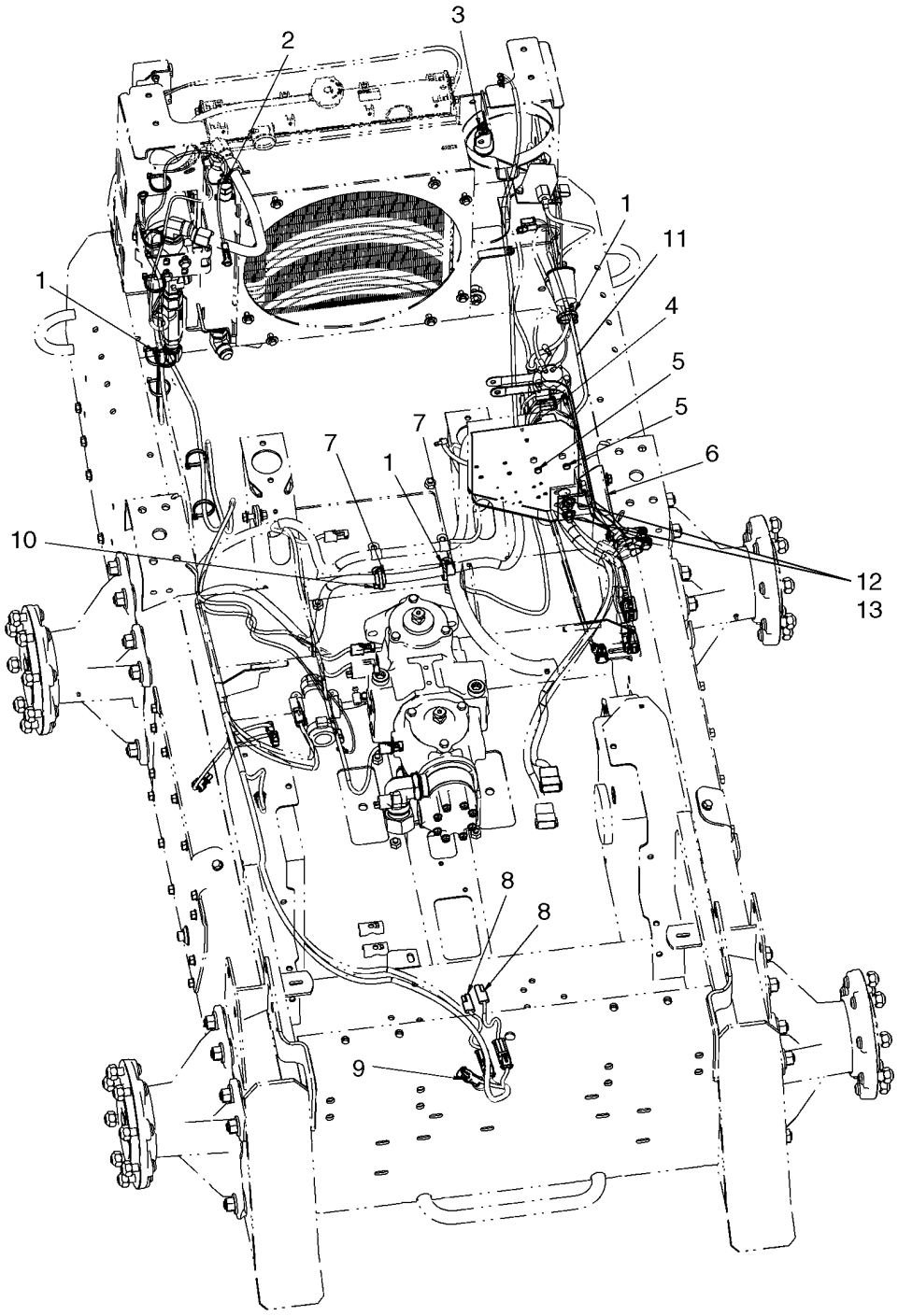

BS08A204

SISTEMA ELÉCTRICO DO CHASSI

REF	FN	PART NUMBER	YR/SN	QTY	DESCRIPTION
1		263117		9	TIRA DE CABO, .14" x 11 1/2"
2		87036787		1	INTERRUPTOR DE PRESSÃO
3		293797A1		1	INTERRUPTOR DE RESTRICAO, Air Restriction Switch
4		87594965		1	QUADRO ELÉTRICO
5		88146		2	PARAFUSO, Hex, 1/4"-20 x 1", G5
6		87051100		1	SUPORTE
7		86624005		2	PRENDEDOR, 3/4", Insul, 3/8" Bolt
8		87048133		2	CHICOTE DE FIOS, Harness, Valve Jumper
9		87048202		1	CHICOTE DE FIOS, Harness, Auxiliary Switch Jumper
10		134579		1	TERMINAL
11		87599256		1	CHICOTE, Harness, Chassis
12		9628503		3	PORCA, 3/8"-16, G5
13		140045		6	ARRUELA MOLA, Belleville, M10

SISTEMA ELÉCTRICO DO CHASSI

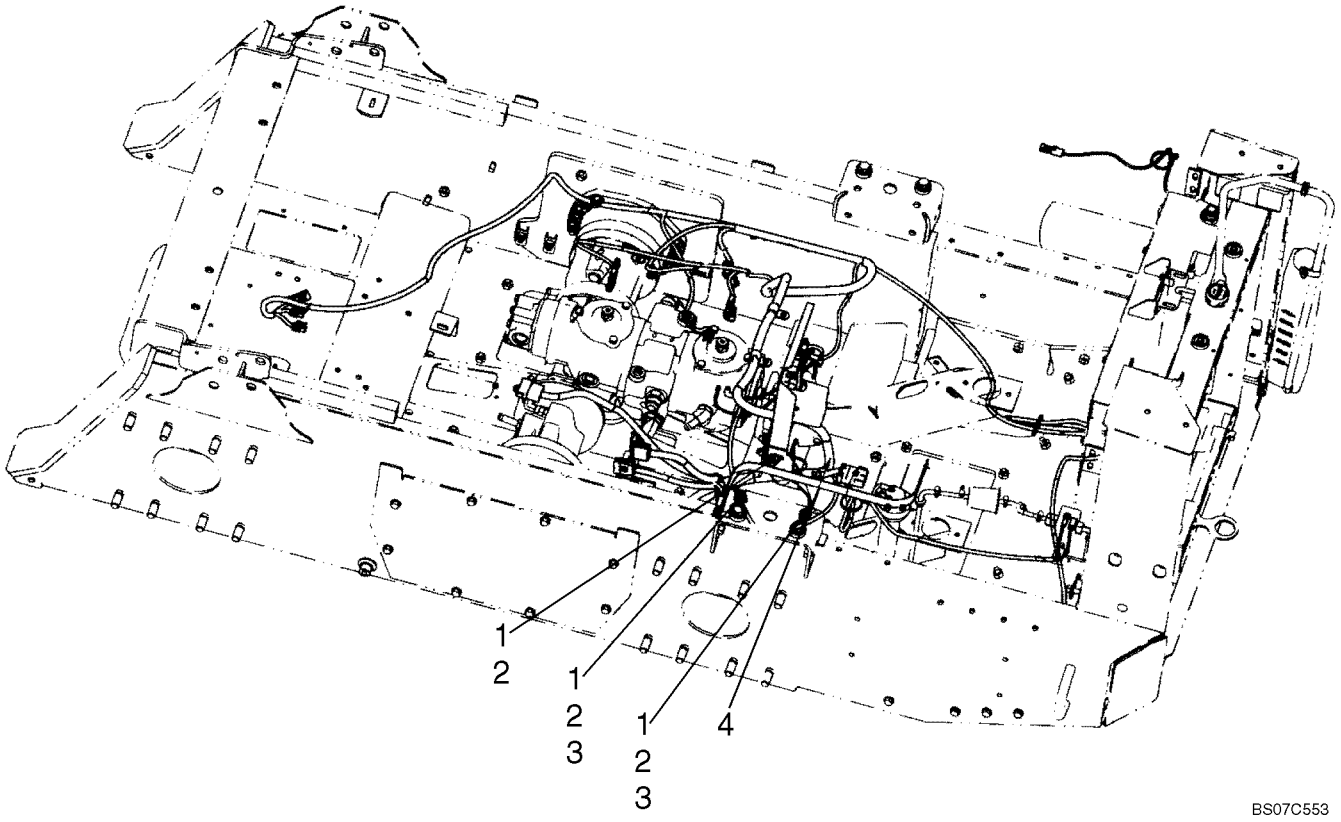

SISTEMA ELÉCTRICO DO CHASSI

REF	FN	PART NUMBER	YR/SN	QTY	DESCRIPTION
1		140045		8	ARRUELA MOLA, Belleville, M10
2		9628503		5	PORCA, 3/8"-16, G5
3		88206		6	PARAFUSO, Hex, 3/8"-16 x 1", G5, Full Thd
4		86603659		1	SUPORTE CONJUNTO

SISTEMA ELÉCTRICO DO CHASSI

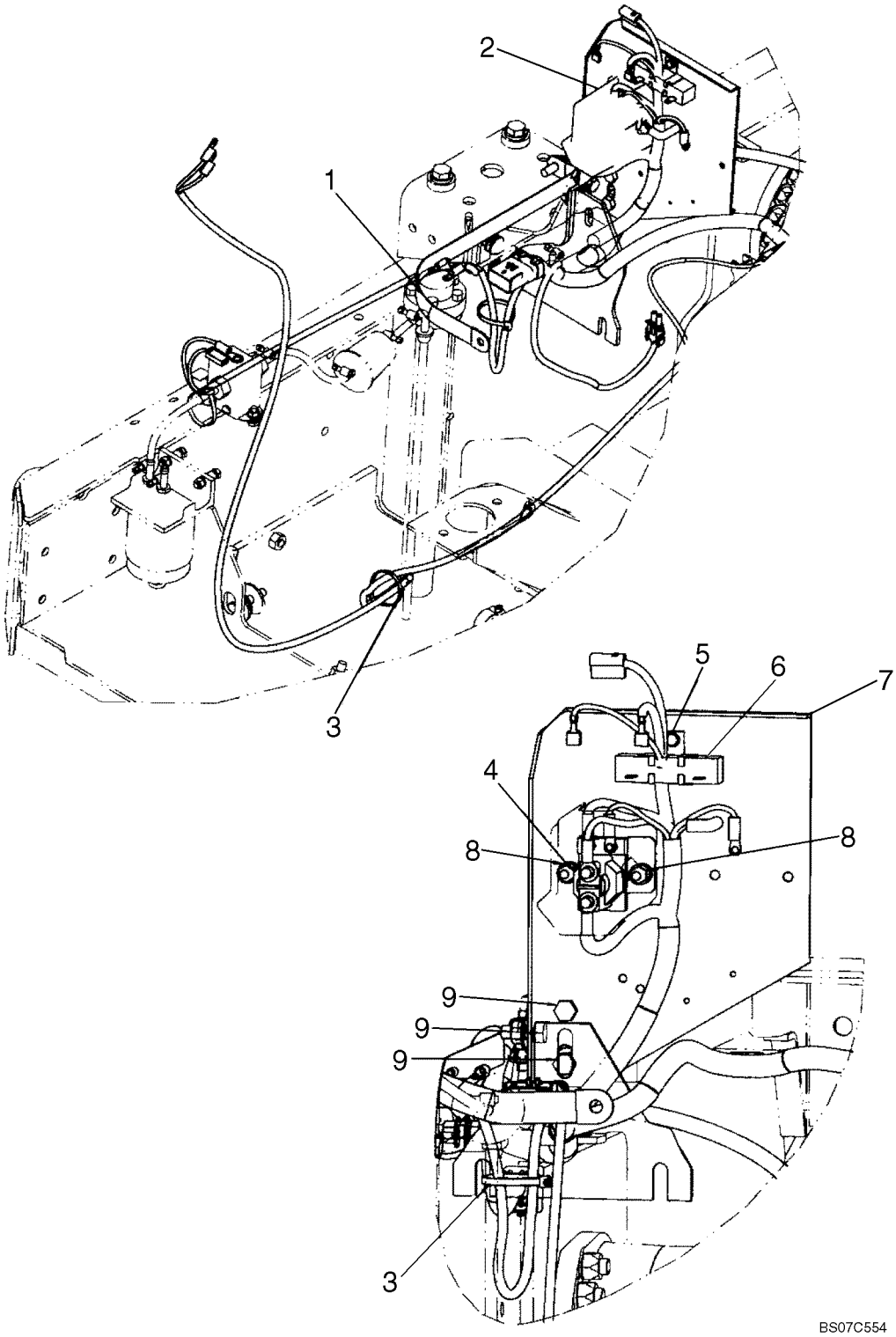

SISTEMA ELÉCTRICO DO CHASSI

REF	FN	PART NUMBER	YR/SN	QTY	DESCRIPTION
1		799681		1	Cable De Masa
2		9612631		1	TAMPA, Relay Cover
3		L11541		5	TIRA DE CABO
4		9601073		1	CONECTADOR
5		86500939		1	PARAFUSO, Hex Wash Hd, #10 x 3/8"
6		86705351		1	RESISTÊNCIA
7		87594965		1	QUADRO ELÉTRICO, Panel, Electrical
8		523282		4	PORCA, Flg, USR, 1/4"-20
9		88206		6	PARAFUSO, Hex, 3/8"-16 x 1", G5, Full Thd

04-11		p1	03/08

ALARME DE MARCHA ATRÁS

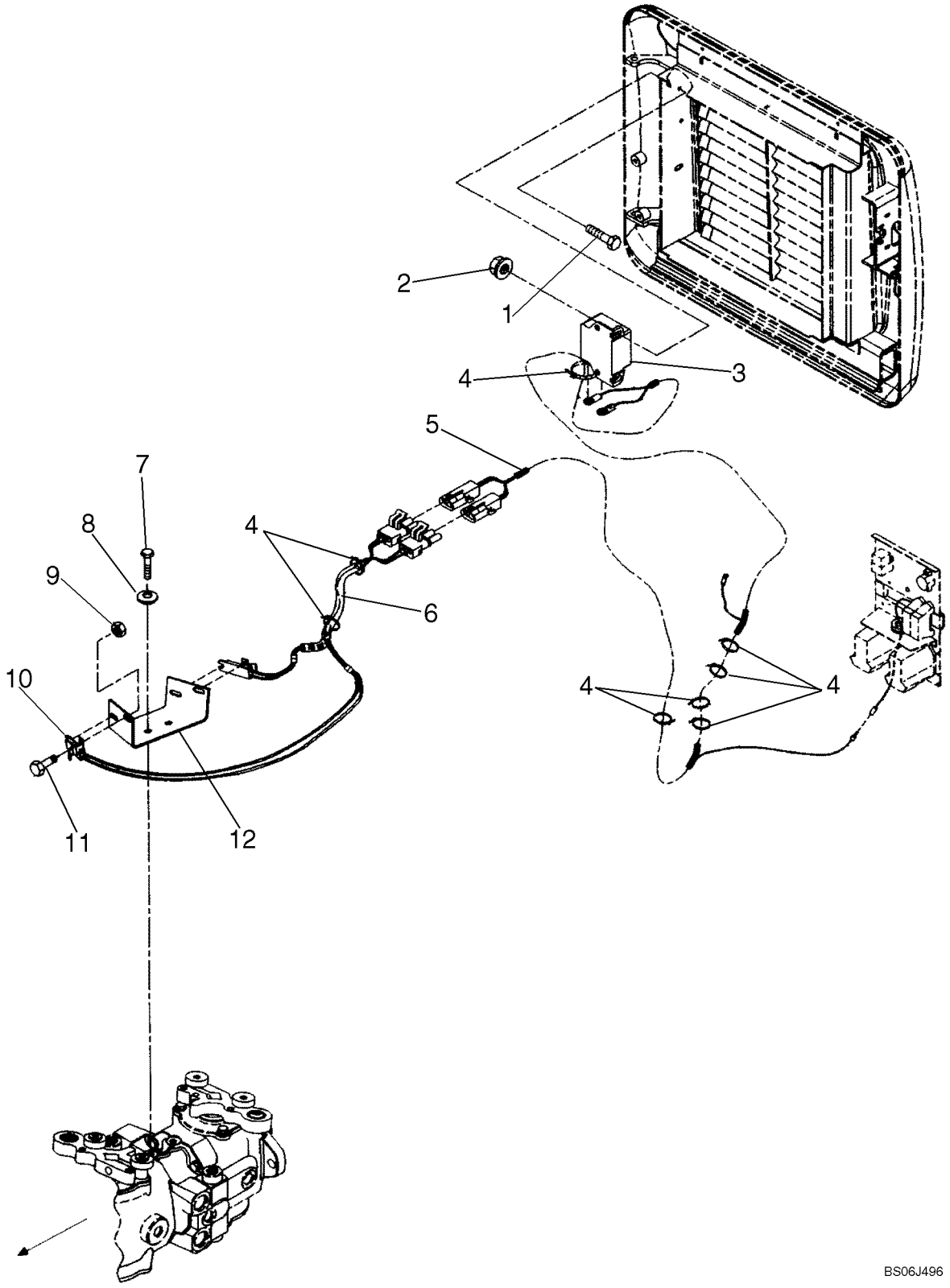

ALARME DE MARCHA ATRÁS

REF	FN	PART NUMBER	YR/SN	QTY	DESCRIPTION
1		87872		2	PARAFUSO, Hex, 5/16"-18 x 3/4", G5, Full Thd
2		145458		2	PORCA, Flg, USR, 5/16"-18
3		9807283		1	ALARME
4		263117		8	TIRA DE CABO, .14" x 11 1/2"
5		9827602		1	CHICOTE DE FIOS
6		93867		1	TUBO
7		88434		2	PARAFUSO, Hex, 3/8"-16 x 3/4", G5, Full Thd
8		140045		2	ARRUELA MOLA, Belleville, M10
9		523282		4	PORCA, Flg, USR, 1/4"-20
10		86542673		2	INTERRUPTOR
11		9707580		4	PARAFUSO, Hex, 1/4"-20 x 3/4", G5, Full Thd
12		86729243		1	SUPORTE

ALARME DE MARCHA ATRÁS - MODELOS COM CONTROLO AUTOMÁTICO

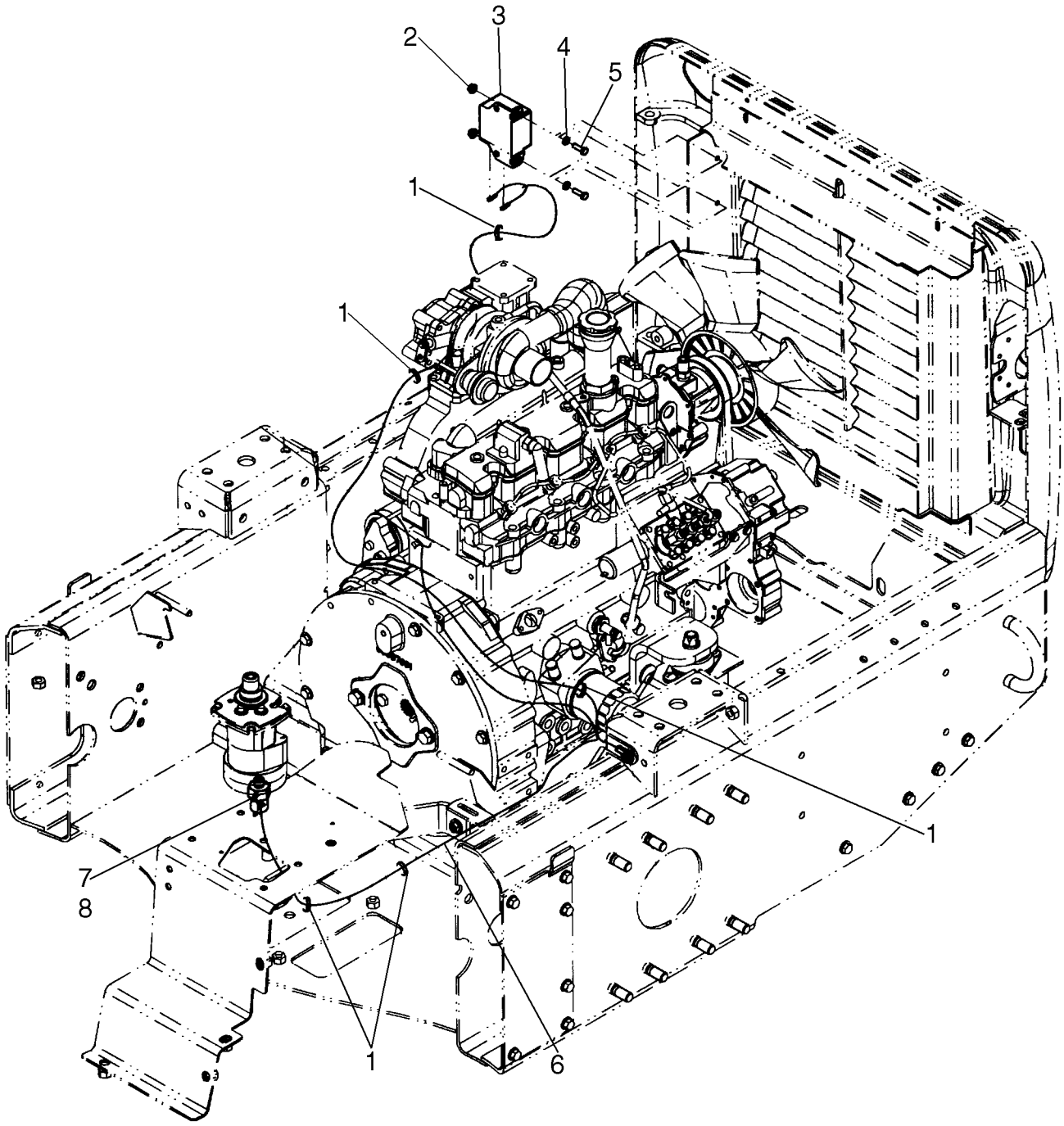

BS06G518

ALARME DE MARCHA ATRÁS - MODELOS COM CONTROLO AUTOMÁTICO

REF	FN	PART NUMBER	YR/SN	QTY	DESCRIPTION
1		263117		5	TIRA DE CABO, .14" x 11 1/2", Cable Tie .14 x 11.00
2		86511444		2	PORCA, M6, Flg Ser
3		9807283		1	ALARME
4		86588450		2	ARRUELA PLANA, M6
5		120100		2	PARAFUSO, Hex, M6 x 20, 8.8
6		87577322		1	CHICOTE, Backup Alarm
7		87370805		1	INTERRUPTOR DE PRESSÃO, 2000 PSI; Backup Alarm Control; Incl. 8
7		87752556		1	INTERRUPTOR DE PRESSÃO, 2000 PSI; Backup Alarm Control; Incl. 8; Replaces 87370805
8		9617873		1	ANEL "O", 6-1, 90 Duro, .468" ID x .078" Thk

ALARME DE MARCHA ATRÁS - MODELOS COM CONTROLO AUTOMÁTICO

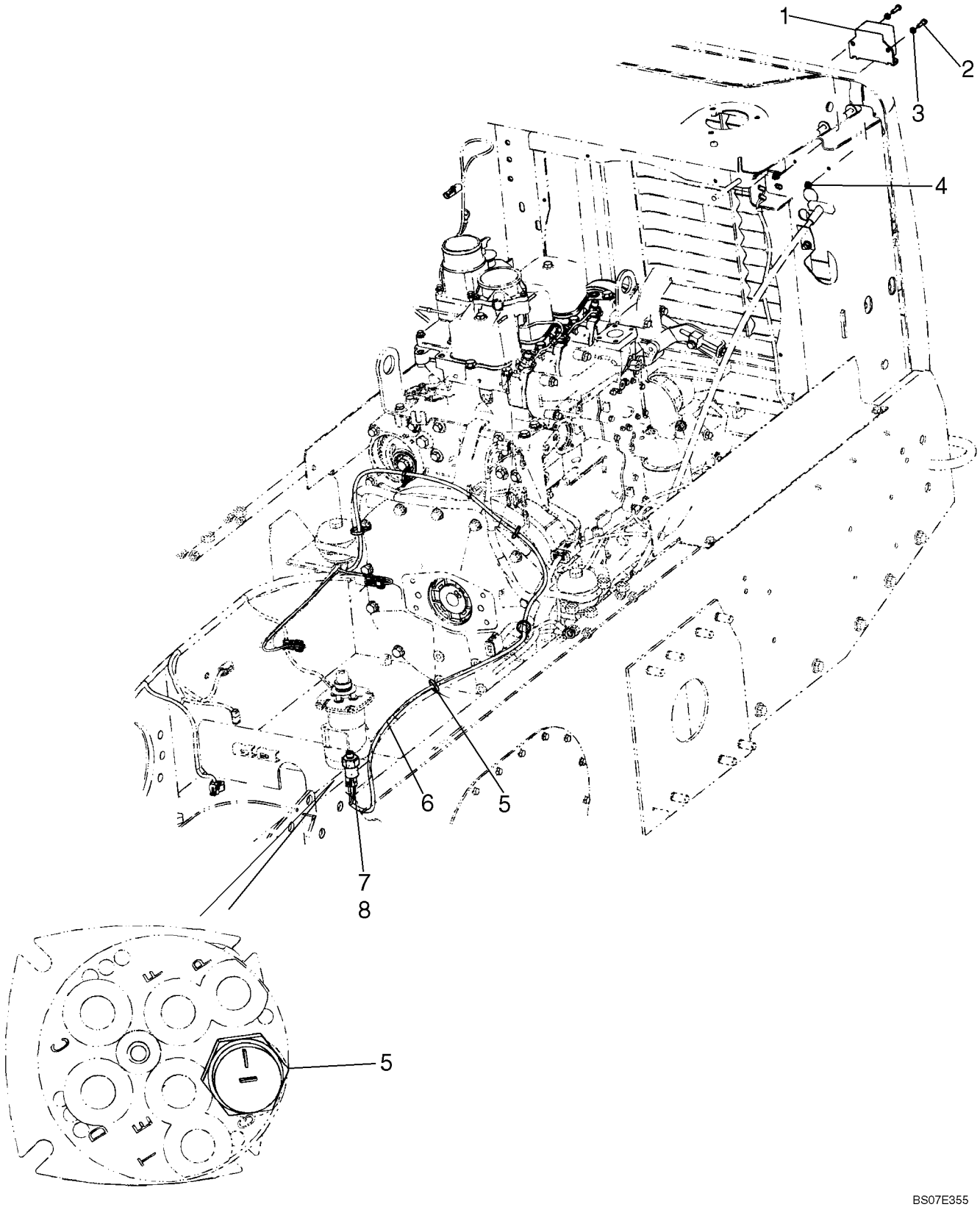

ALARME DE MARCHA ATRÁS - MODELOS COM CONTROLO AUTOMÁTICO

REF	FN	PART NUMBER	YR/SN	QTY	DESCRIPTION
1		9807283		1	ALARME
2		120100		2	PARAFUSO, Hex, M6 x 20, 8.8
3		86588450		2	ARRUELA PLANA, M6
4		86511444		2	PORCA, M6, Flg Ser
5		263117		5	TIRA DE CABO, .14" x 11 1/2"
6		87572868		1	CHICOTE, Back Up Alarm Adapter
7		87370805		1	INTERRUPTOR DE PRESSÃO, 2000 PSI; Backup Alarm Control; Incl. 8
7		87752556		1	INTERRUPTOR DE PRESSÃO, 2000 PSI; Backup Alarm Control; Incl. 8; Replaces 87370805
8		9617873		1	ANEL "O", 6-1, 90 Duro, .468" ID x .078" Thk

PARTIDA REMOTA COM BATERIA AUXILIAR

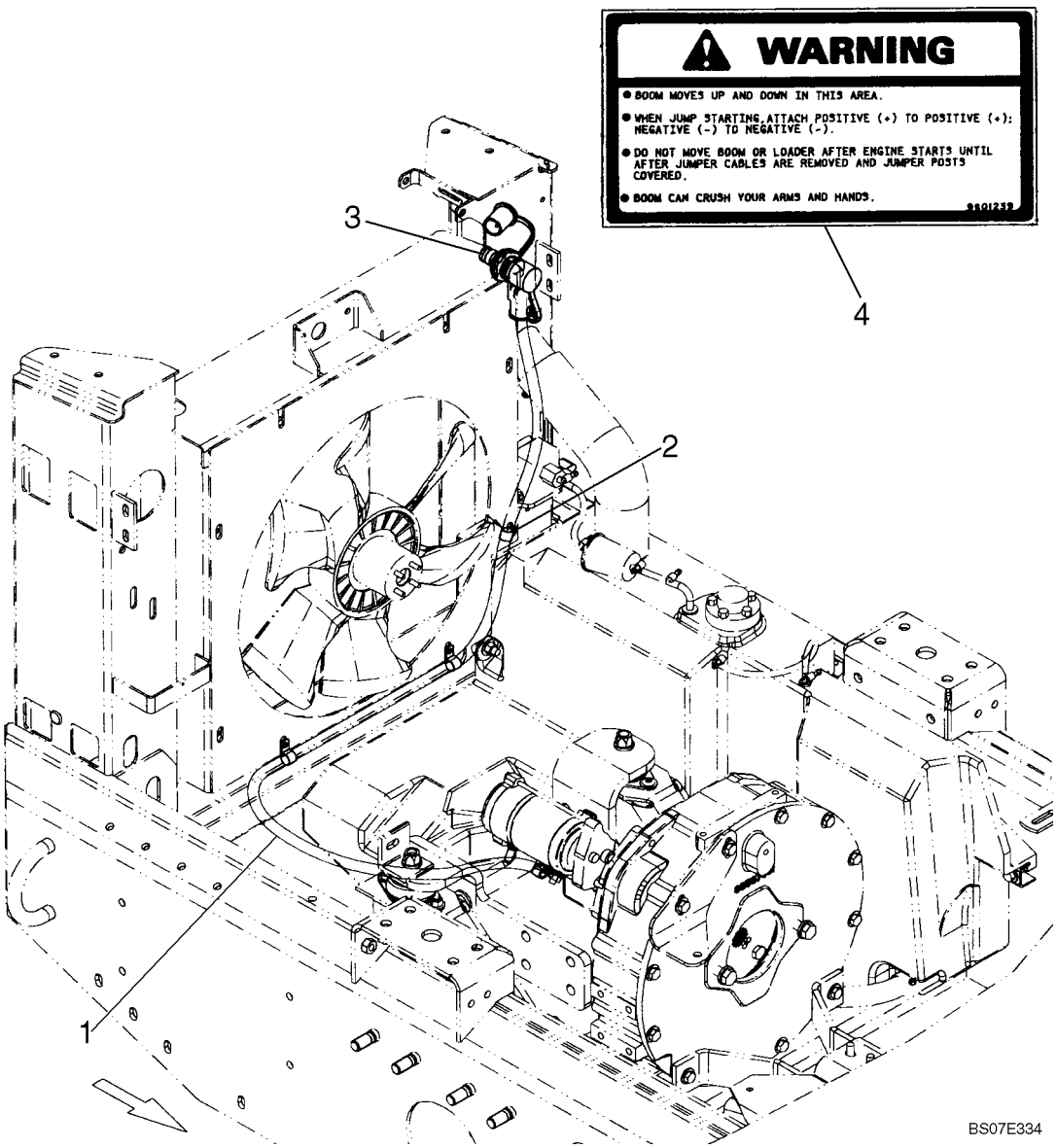

PARTIDA REMOTA COM BATERIA AUXILIAR

REF	FN	PART NUMBER	YR/SN	QTY	DESCRIPTION
		87610575		1	KIT, SERVICE, Incl. 1 - 4 And Instructions
1		87610576		1	CABO, Remote Jump
2		87564736		3	PRENDEDOR, 14.3 mm M6 Bolt
3		9801235		1	TERMINAL, Positive
4		9801239		1	DECALQUE DE AVISO, Warning Jump Start

FIOS, DUAS VELOCIDADES

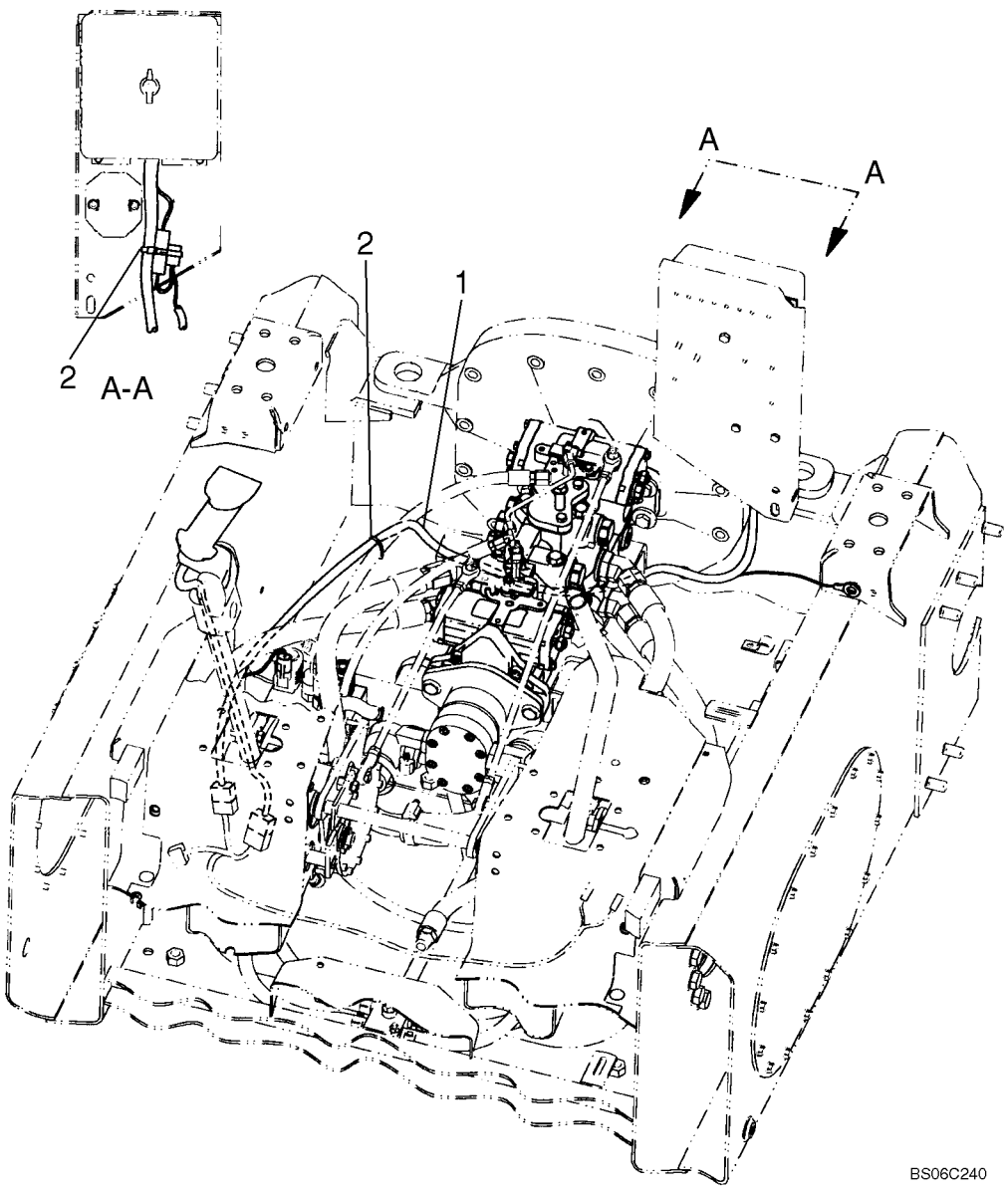

FIOS, DUAS VELOCIDADES

REF	FN	PART NUMBER	YR/SN	QTY	DESCRIPTION
1		87037906		1	CHICOTE DE FIOS, Two Speed
2		263117		10	TIRA DE CABO, .14" x 11 1/2"

04-14		p1	03/08

BUZINA CONJUNTO FIOS

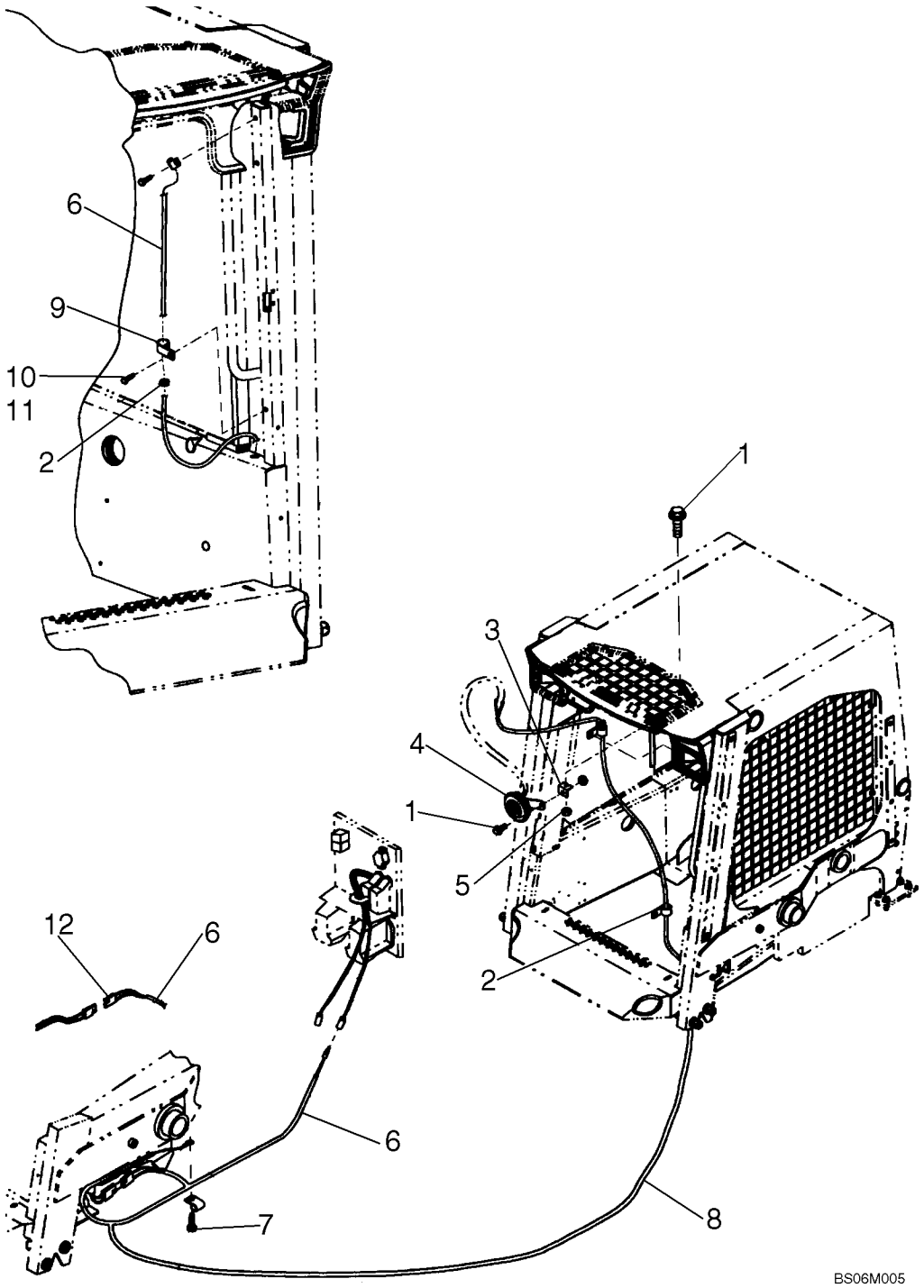

BUZINA CONJUNTO FIOS

REF	FN	PART NUMBER	YR/SN	QTY	DESCRIPTION
1		523291		1-2	PARAFUSO, Hex Flg, 1/4"-20 x 1/2", Serr
2		46288		2	CASQUILHO ISOLADOR, If Used
2		86637778		2	CASQUILHO ISOLADOR, 5/8" ID x 7/8" Groove Dia
3		86619138		1	SUPORTE
4		87049215		1	BUZINA
5		523282		2	PORCA, Flg, USR, 1/4"-20
6		86621756		1	CHICOTE DE FIOS
7		9840344		2	PARAFUSO
8		263117		10	TIRA DE CABO, .14" x 11 1/2"
9		134579		2	TERMINAL
10		145913		2	PARAFUSO, Hex Flg, 5/16"-18 x 3/4", Serr, If Used
10		523292		3	PARAFUSO, Hex Flg, 1/4"-20 x 3/4", Serr, If Used
11		145458		2	PORCA, Flg, USR, 5/16"-18, If Used
11		523282		4	PORCA, Flg, USR, 1/4"-20, If Used
12		87353710		AR	MANILHA, See Fig. 09-38, Ref. 10

BUZINA

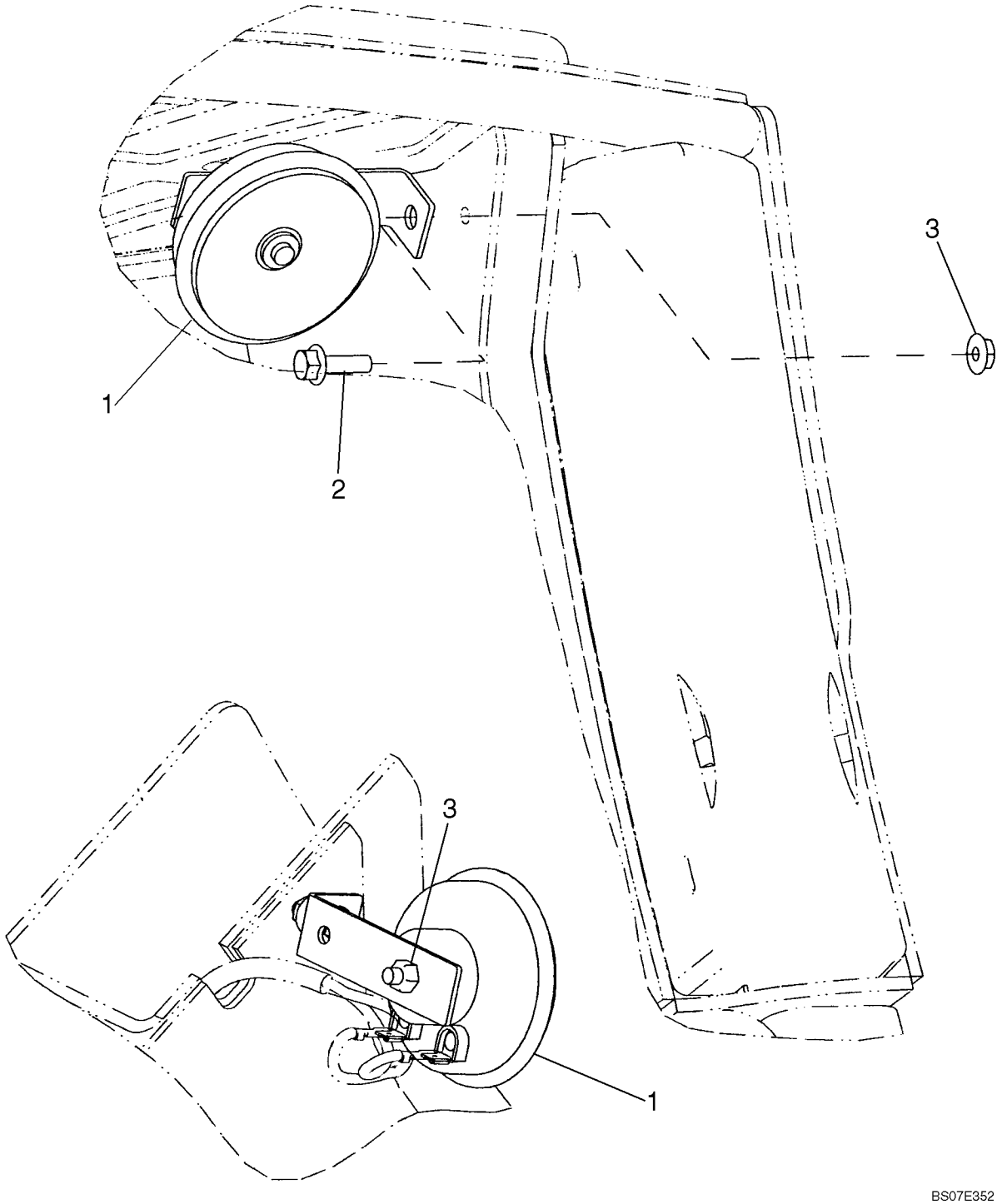

BUZINA

REF	FN	PART NUMBER	YR/SN	QTY	DESCRIPTION
1		87599754		1	BUZINA, If Used
1		87702213		1	BUZINA, If Used
2		87015862		1	PARAFUSO, Hex Flg, M6 x 20, 8.8, Full Thd
3		86981460		1	PORCA, Hex Nut, M6
		87659800		1	SUPORTE, Horn Mounting

SISTEMA ELÉCTRICO DO CONJUNTO DA PLACA DE MONTAGEM

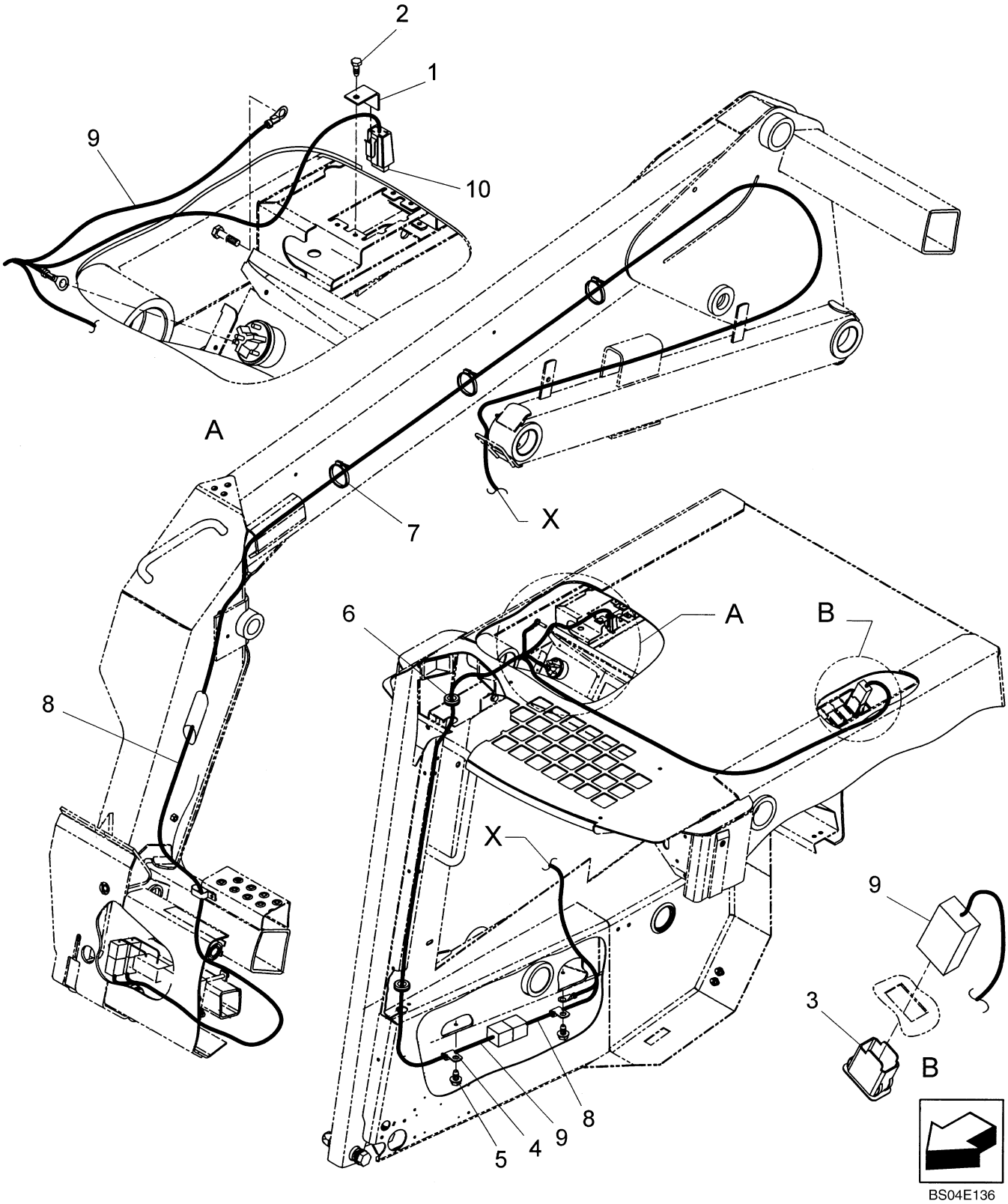

SISTEMA ELÉCTRICO DO CONJUNTO DA PLACA DE MONTAGEM

REF	FN	PART NUMBER	YR/SN	QTY	DESCRIPTION
1		86535636		1	SUPORTE
2		87824		1	PARAFUSO, Hex Hd, #10 x 1/2", If Used
2		86500939		1	PARAFUSO, Hex Wash Hd, #10 x 3/8", If Used
3		86631506		1	INTERRUPTOR, Hydraulic Mounting Plate
4		229373		2	PRENDEDOR
5		570821		2	PARAFUSO, 5/16"-18 x 5/8"
6		86637778		2	CASQUILHO ISOLADOR, 5/8" ID x 7/8" Groove Dia
7		263117		15	TIRA DE CABO, .14" x 11 1/2", .14" x 11.50" Lg
8		86636689		1	CHICOTE DE FIOS, Boom
9		86636688		1	CHICOTE DE FIOS, Cab
10		9623775		1	FUSÍVEL, 5 Amp

SISTEMA ELÉCTRICO DO CONJUNTO DA PLACA DE MONTAGEM

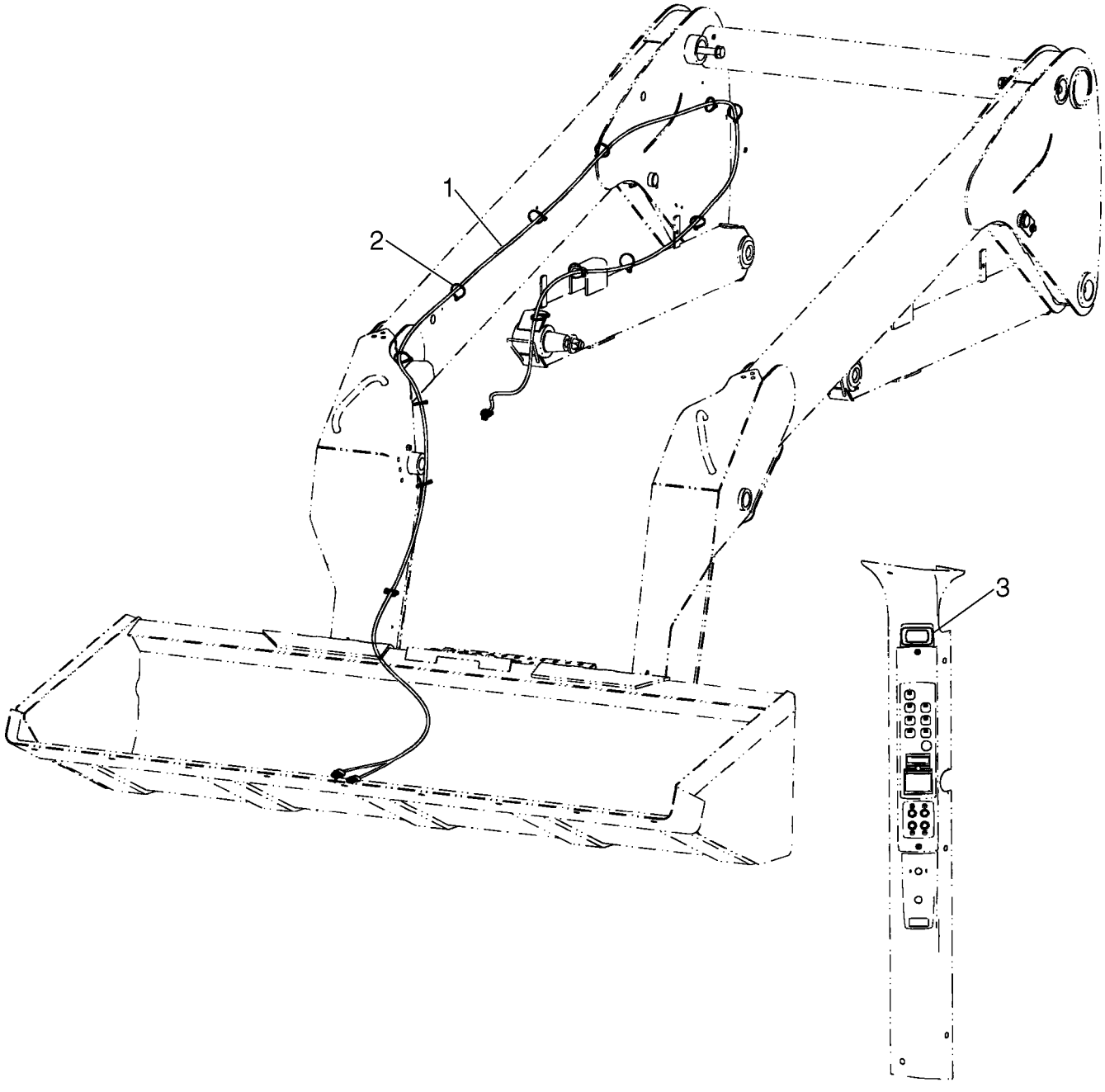

SISTEMA ELÉCTRICO DO CONJUNTO DA PLACA DE MONTAGEM

REF	FN	PART NUMBER	YR/SN	QTY	DESCRIPTION
1		87618186		1	CHICOTE, Harness, Hydraulic Mounting Plate
2		263117		13	TIRA DE CABO, .14" x 11 1/2"
3		87572861		1	INTERRUPTOR, Rocker Switch, Hydraulic Mount Plate

CONJUNTO DA LANÇA / KIT PARA ESTRADA

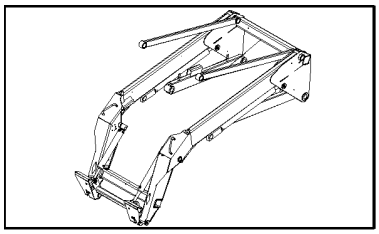

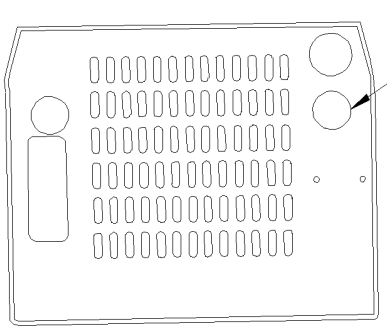

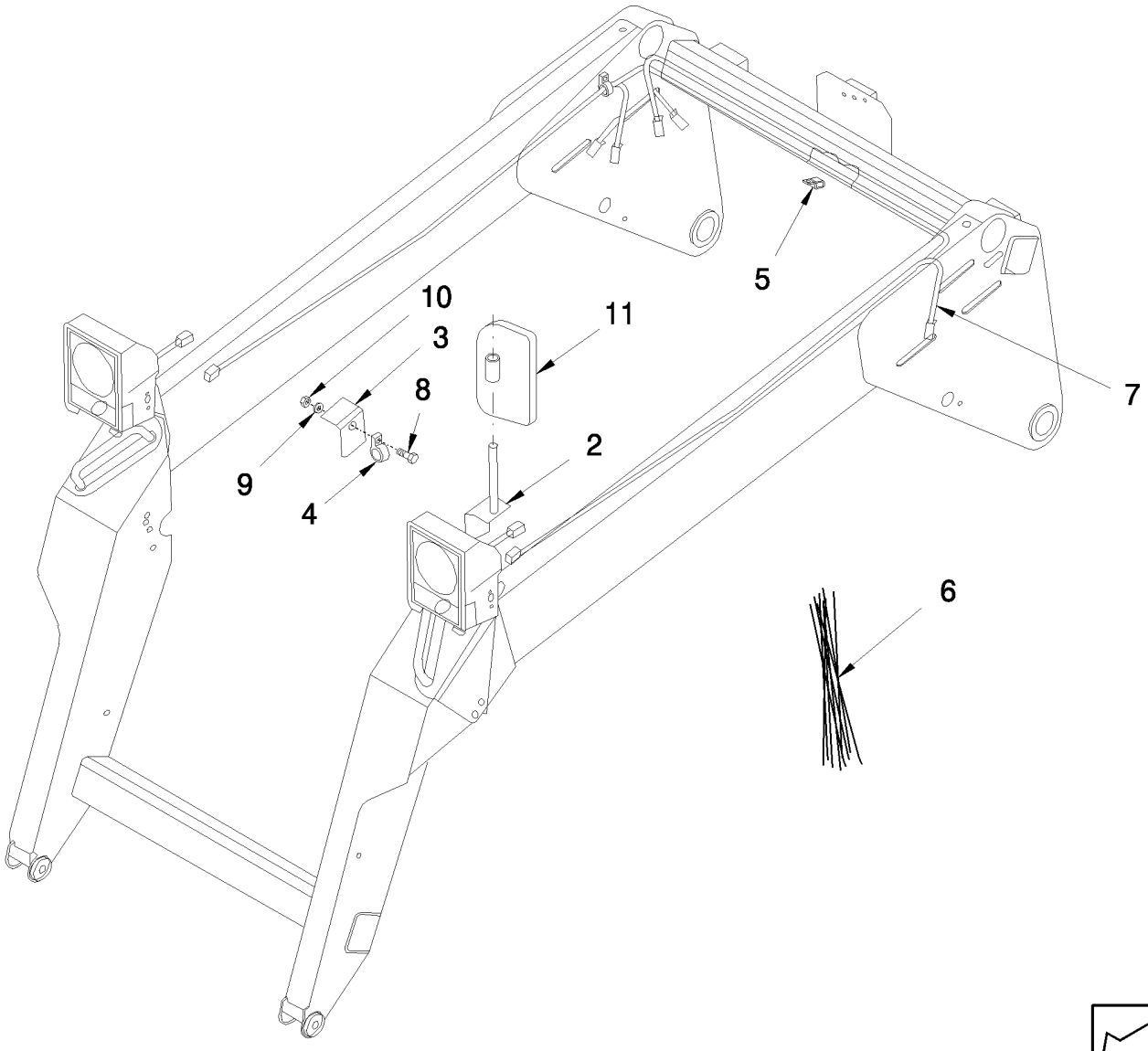

CONJUNTO DA LANÇA / KIT PARA ESTRADA

REF	FN	PART NUMBER	YR/SN	QTY	DESCRIPTION
1		437024		2	REFLETOR
2		86522442		1	SUPORTE, Mirror
3		86529244		1	SUPORTE, Mirror
4		853765		3	PRENDEDOR, 5/16", Insul, 3/8" Bolt
5		86010402		X	PRENDEDOR, 1/2", Insul, 3/8" Bolt
6		263117		20	TIRA DE CABO, .14" x 11 1/2", 3/32" x 11-1/2" L
7		86529369		1	CHICOTE DE FIOS
8		87872		2	PARAFUSO, Hex, 5/16"-18 x 3/4", G5, Full Thd
9		80681		2	ARRUELA-TRAVA, 5/16"
10		9635082		2	PORCA, 5/16"-18, G5
11		81871843		1	ESPELHO, Used on Ref. 2 Post

CONJUNTO DA LANÇA / KIT PARA ESTRADA

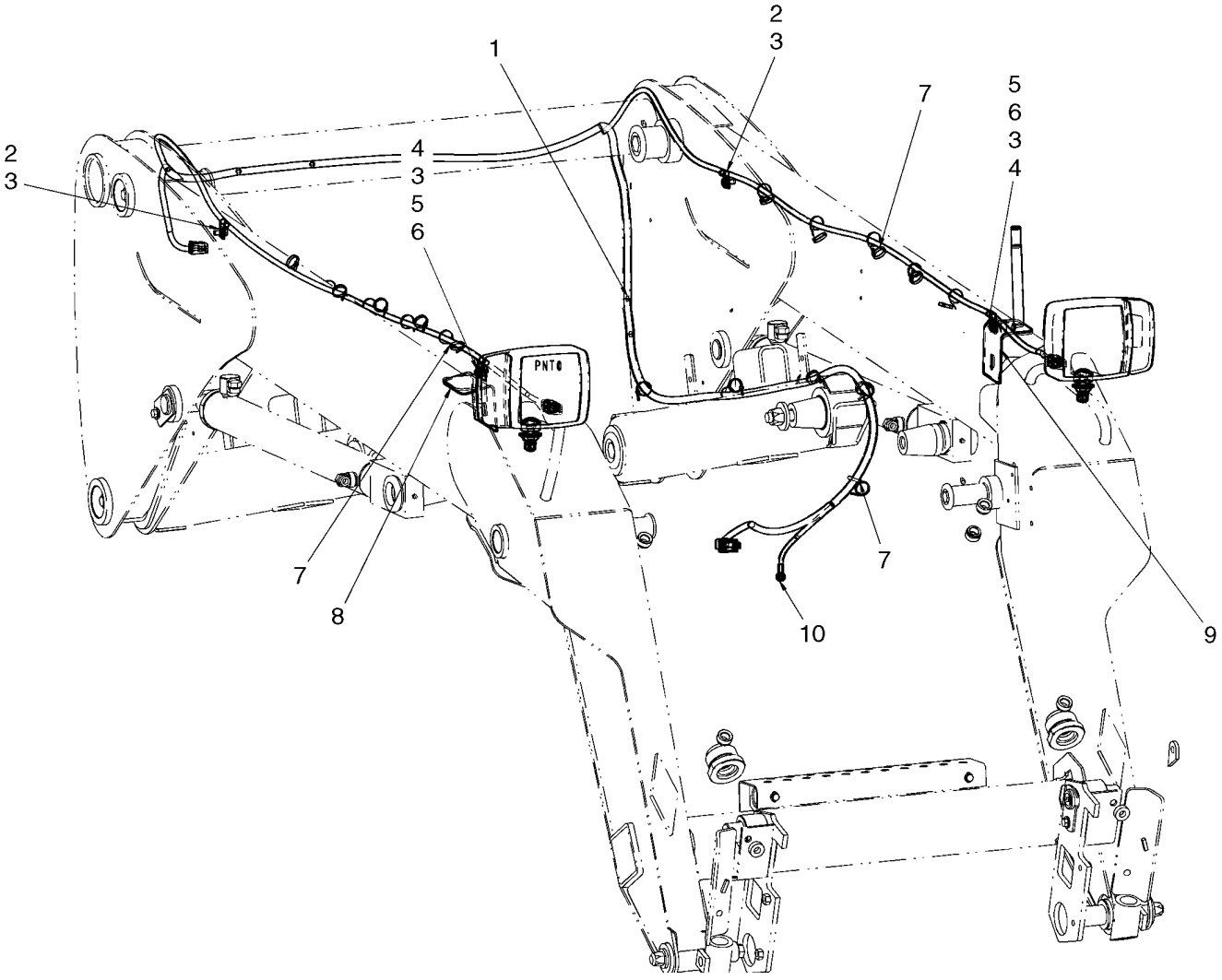

BS08A071

CONJUNTO DA LANÇA / KIT PARA ESTRADA

REF	FN	PART NUMBER	YR/SN	QTY	DESCRIPTION
1		87628436		1	CHICOTE, EU Boom Lights
2		9840344		2	PARAFUSO
3		853765		4	PRENDEDOR, 5/16", Insul, 3/8" Bolt
4		87872		2	PARAFUSO, Hex, 5/16"-18 x 3/4", G5, Full Thd
5		322358		2	ARRUELA MOLA, Belleville, M8
6		9635082		2	PORCA, 5/16"-18, G5
7		14560287		15	TIRA DE CABO, 289mm lg, Cable Tie
8		86529244		1	SUPORTE
9		86522442		1	SUPORTE
10		86545825		1	PARAFUSO, Hex Wash Hd, 5/16" x 5/8"
11		121573A1		2	REFLETOR, Red

CONJUNTO DOS FARÓIS DIANTEIROS / KIT PARA ESTRADA

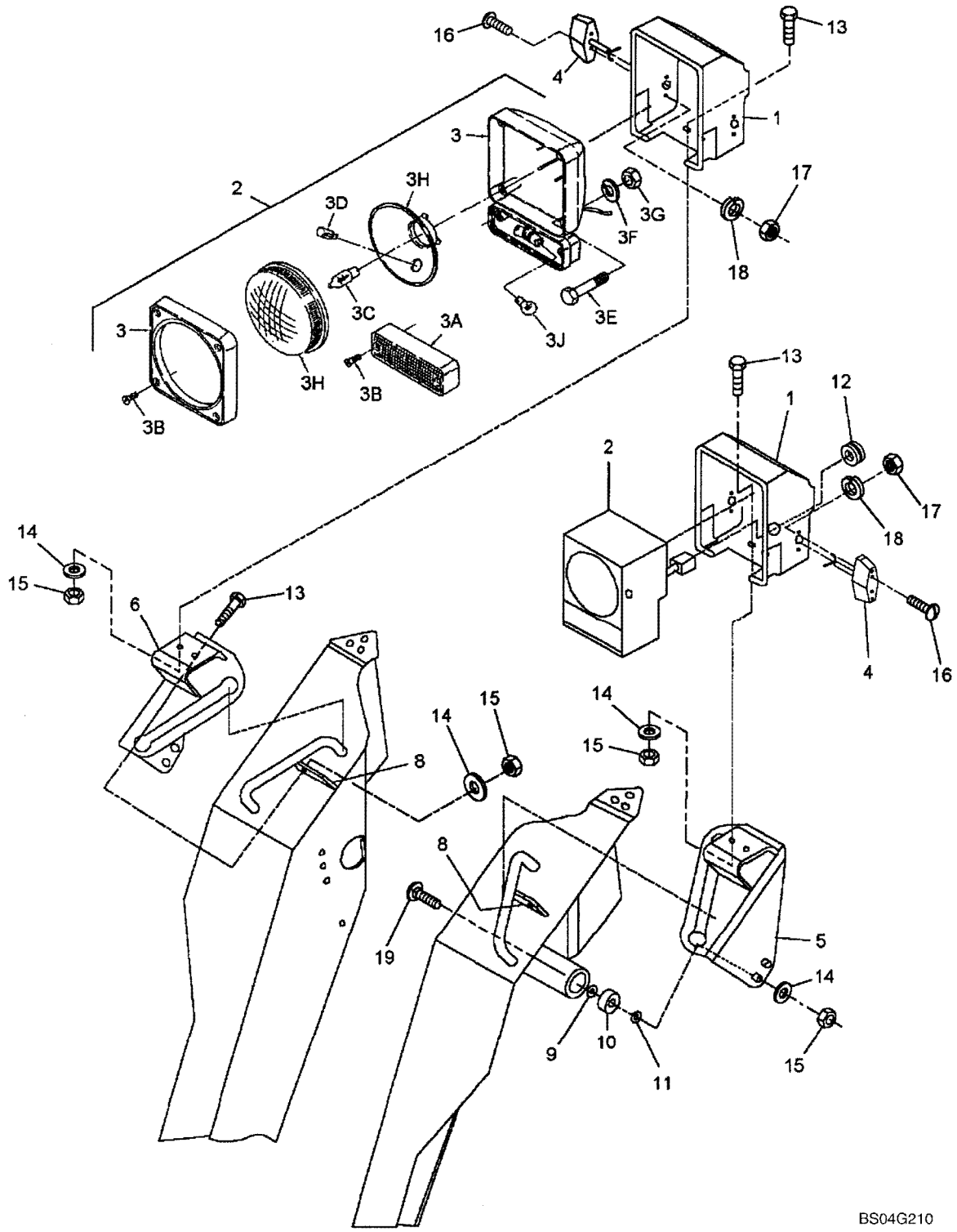

CONJUNTO DOS FARÓIS DIANTEIROS / KIT PARA ESTRADA

REF	FN	PART NUMBER	YR/SN	QTY	DESCRIPTION
1		86504493		2	CAIXA/CARCAÇA, Headlight, Housing
2		86508184		2	FAROL TRASEIRO, Includes: Ref. 3 thru 3J
3		NSS		1	BOLETIM INFORMATIVO, Housing
3A		83985935		1	TRANSPARENTE, Yellow
3B		NSS		6	BOLETIM INFORMATIVO, Screw
3C		87283179		1	LÂMPADA, H4-12V
3D		81AG13466DA		1	LÂMPADA, T4W-12V
3E		NSS		1	BOLETIM INFORMATIVO, Bolt, M12 x 70
3F		NSS		2	BOLETIM INFORMATIVO, Washer, M12
3G		NSS		1	BOLETIM INFORMATIVO, Nut, M12
3H		83989780		1	GRUPO ÓTICO, Lens & Reflector
3J		529068		2	LÂMPADA, #1156, 12V
4		86507410		2	FAROL, Flasher
5		86504496		1	SUPORTE, LH
6		86504503		1	SUPORTE, RH
8		86504502		2	PLACA
9		86504605		2	ARRUELA PLANA, Special
10		86504606		2	BUCHA, Rubber
11		213404		4	ESPAÇADOR
12		102043		2	CASQUILHO ISOLADOR
13		280503		6	PARAFUSO, Short NK, 3/8"-16 x 1", G5, Full Thd
14		140045		8	ARRUELA MOLA, Belleville, M10
15		9628503		10	PORCA, 3/8"-16, G5
16		281045		4	PARAFUSO, Cross Pan Hd, #6-32 x 1"
17		88458		4	PORCA, #6-32
18		87276		4	ARRUELA-TRAVA, #6
19		86508775		2	PARAFUSO, Short NK, 3/8"-16 x 1 3/4", G5

CONJUNTO DA BARRA DA LUZ TRASEIRA / KIT PARA ESTRADA

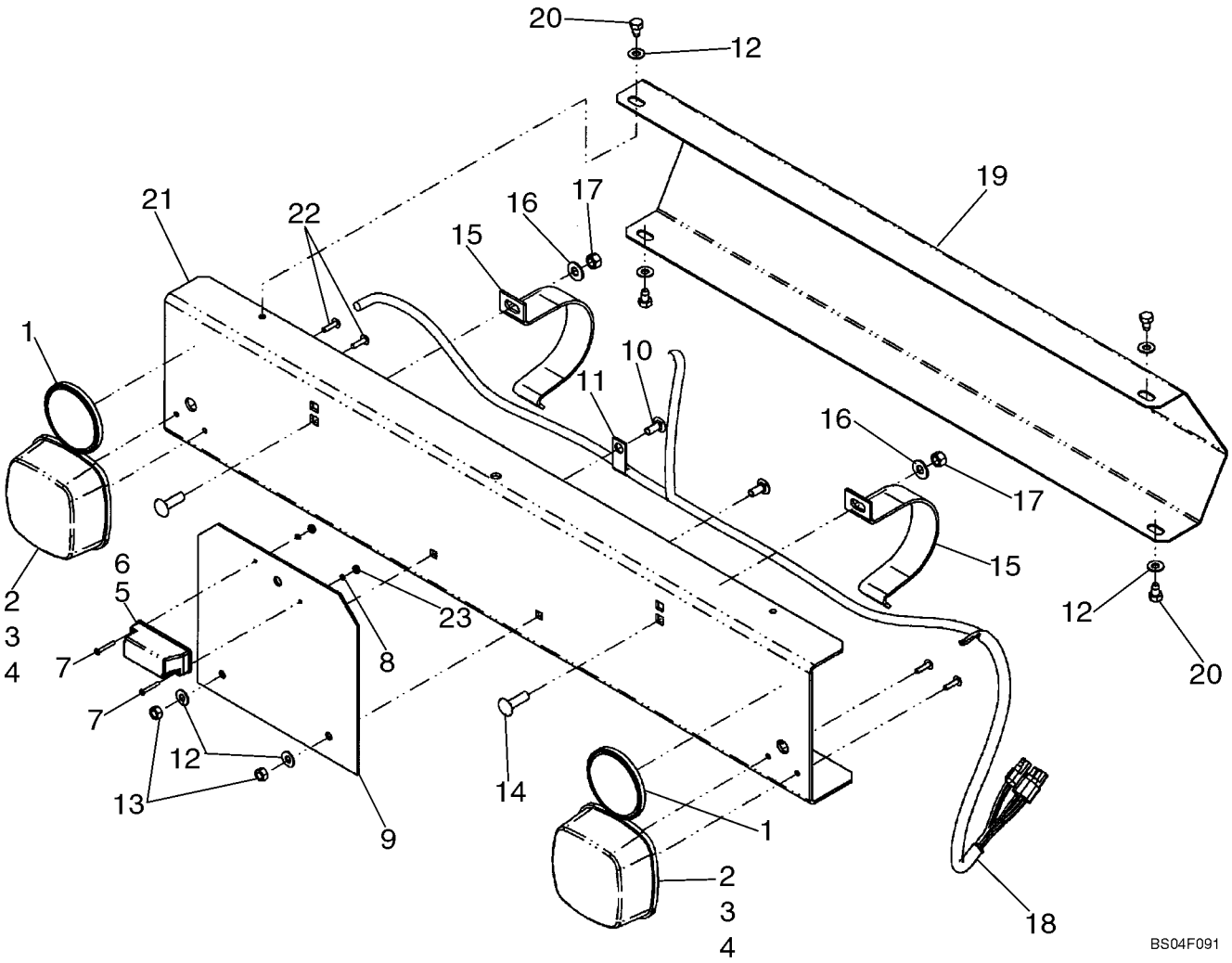

CONJUNTO DA BARRA DA LUZ TRASEIRA / KIT PARA ESTRADA

REF	FN	PART NUMBER	YR/SN	QTY	DESCRIPTION
1		437024		2	REFLETOR, Red
2		84037090		2	FAROL TRASEIRO
3		398877		4	LÂMPADA, 12V 21W
4		418870		2	LÂMPADA, 12V 10W
5		445502		1	FAROL, License Plate Light
6		470017		1	LÂMPADA, 12V 5W
7		9635014		2	PARAFUSO, Cross Pan Hd, #6-32 x 1 1/4"
8		87276		2	ARRUELA-TRAVA, #6
9		86504514		1	PLACA
10		280497		2	PARAFUSO, Short NK, 5/16"-18 x 3/4", G5, Full Thd
11		167509		1	FIXADOR, .25 x .44
12		322358		6	ARRUELA MOLA, Belleville, M8
13		9635082		2	PORCA, 5/16"-18, G5
14		86508749		2	PARAFUSO, Short NK, 3/8"-16 x 1 1/4", G5, Full Thd, 3/8 x 1-1/4
15		87045554		2	SUPORTE, Bracket
16		140045		2	ARRUELA MOLA, Belleville, M10
17		9628503		2	PORCA, 3/8"-16, G5
18		86536917		1	CHICOTE DE FIOS
19		87046760		1	PROTEÇÃO, Shield
20		87346		4	PARAFUSO, Hex Hd, 5/16" x 1/2"
21		87459839		1	CANAL, Channel
22		60485		4	PARAFUSO, Slotted Truss Hd, #10-24 x 3/4"
23		88458		2	PORCA, #6-32

LANÇA - PISCA-PISCA

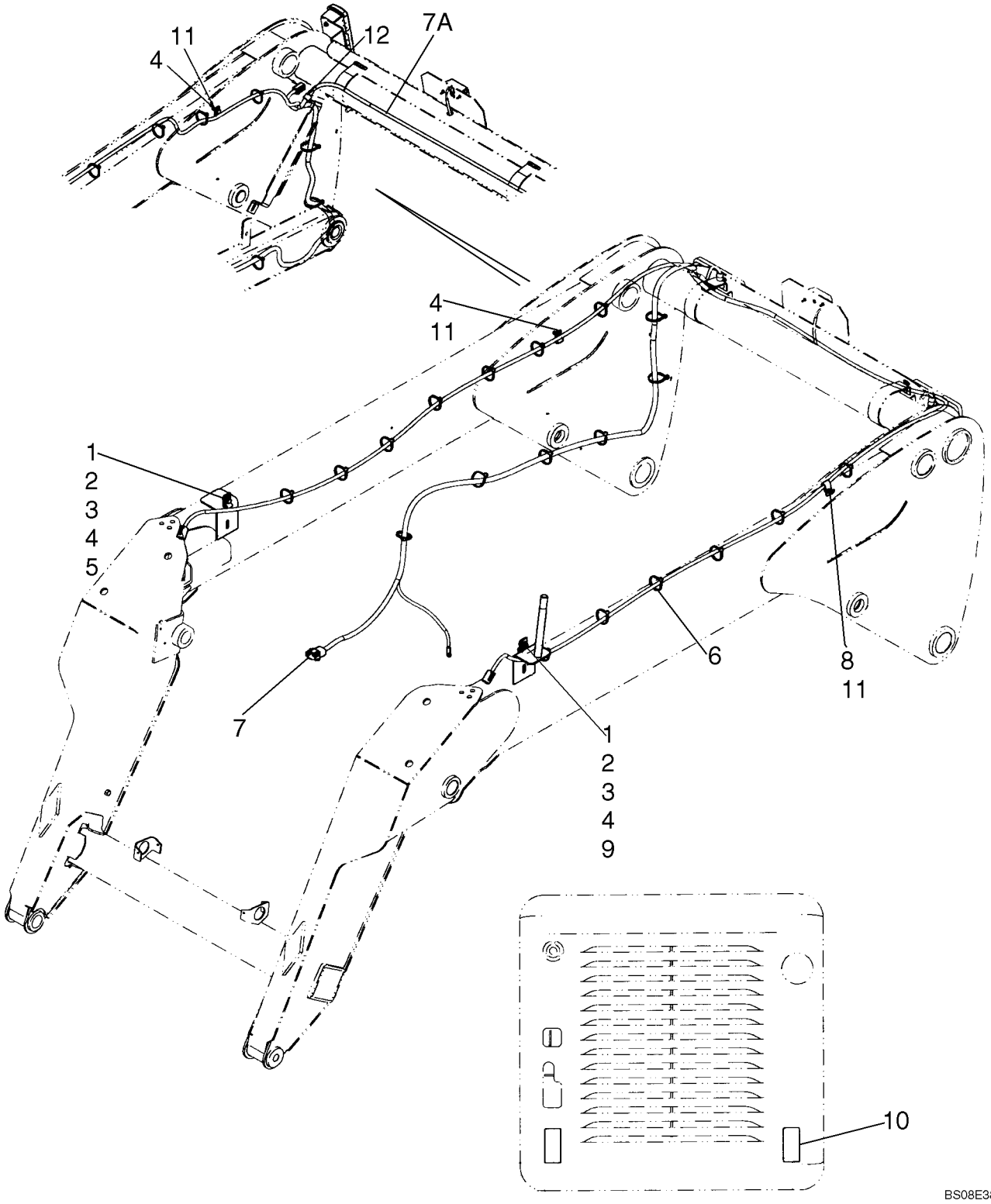

LANÇA - PISCA-PISCA

REF	FN	PART NUMBER	YR/SN	QTY	DESCRIPTION
1		87872		2	PARAFUSO, Hex, 5/16"-18 x 3/4", G5, Full Thd
2		322358		2	ARRUELA MOLA, Belleville, M8
3		9635082		2	PORCA, 5/16"-18, G5
4		853765		3-4	PRENDEDOR, 5/16", Insul, 3/8" Bolt
5		86529244		1	SUPORTE
6		646223		20	PRENDEDOR, Cable Tie
7		87573548		1	CHICOTE, Harness, Boom Lights
7A		87705782		1	CHICOTE, Harness; Boom Lights; If Used
8		86010402		1	PRENDEDOR, 1/2", Insul, 3/8" Bolt
9		86522442		1	SUPORTE
10		121573A1		2	REFLETOR
11		9840344		2	PARAFUSO
12		9706748		1	PRENDEDOR, 5/8", Insul, 5/16" Bolt

CONJUNTO DOS FARÓIS DIANTEIROS / KIT PARA ESTRADA, PISCA-PISCA

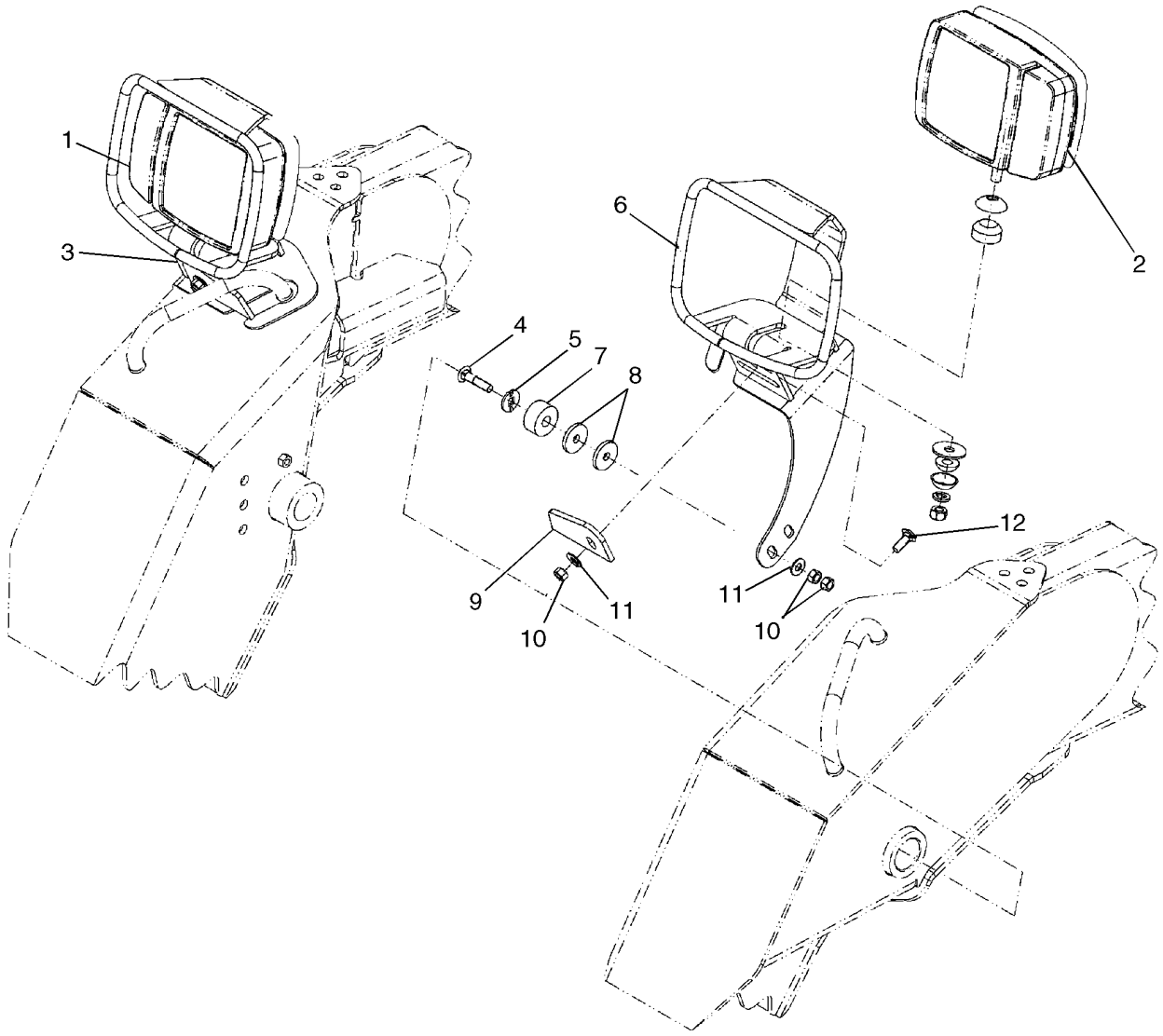

CONJUNTO DOS FARÓIS DIANTEIROS / KIT PARA ESTRADA, PISCA-PISCA

REF	FN	PART NUMBER	YR/SN	QTY	DESCRIPTION
1		87572859		1	FAROL, Right Headlamp With Turn Signal
2		87572860		1	FAROL, Left Headlamp With Turn Signal
3		87569749		1	PIEZAS DE FIJACIÓN, Mount, Right Hand - Gray
4		86508775		2	PARAFUSO, Short NK, 3/8"-16 x 1 3/4", G5
5		86504605		2	ARRUELA PLANA
6		87569748		1	PIEZAS DE FIJACIÓN, Mount, Left Hand - Gray
7		86504606		2	BUCHA
8		213404		4	ESPAÇADOR
9		86504502		2	PLACA
10		9628503		6	PORCA, 3/8"-16, G5
11		140045		4	ARRUELA MOLA, Belleville, M10
12		80280503		2	PARAFUSO, Short NK, 3/8"-16 x 1", G5, Full Thd

04-20A		p1	03/08

DIANTEIRA FAROS

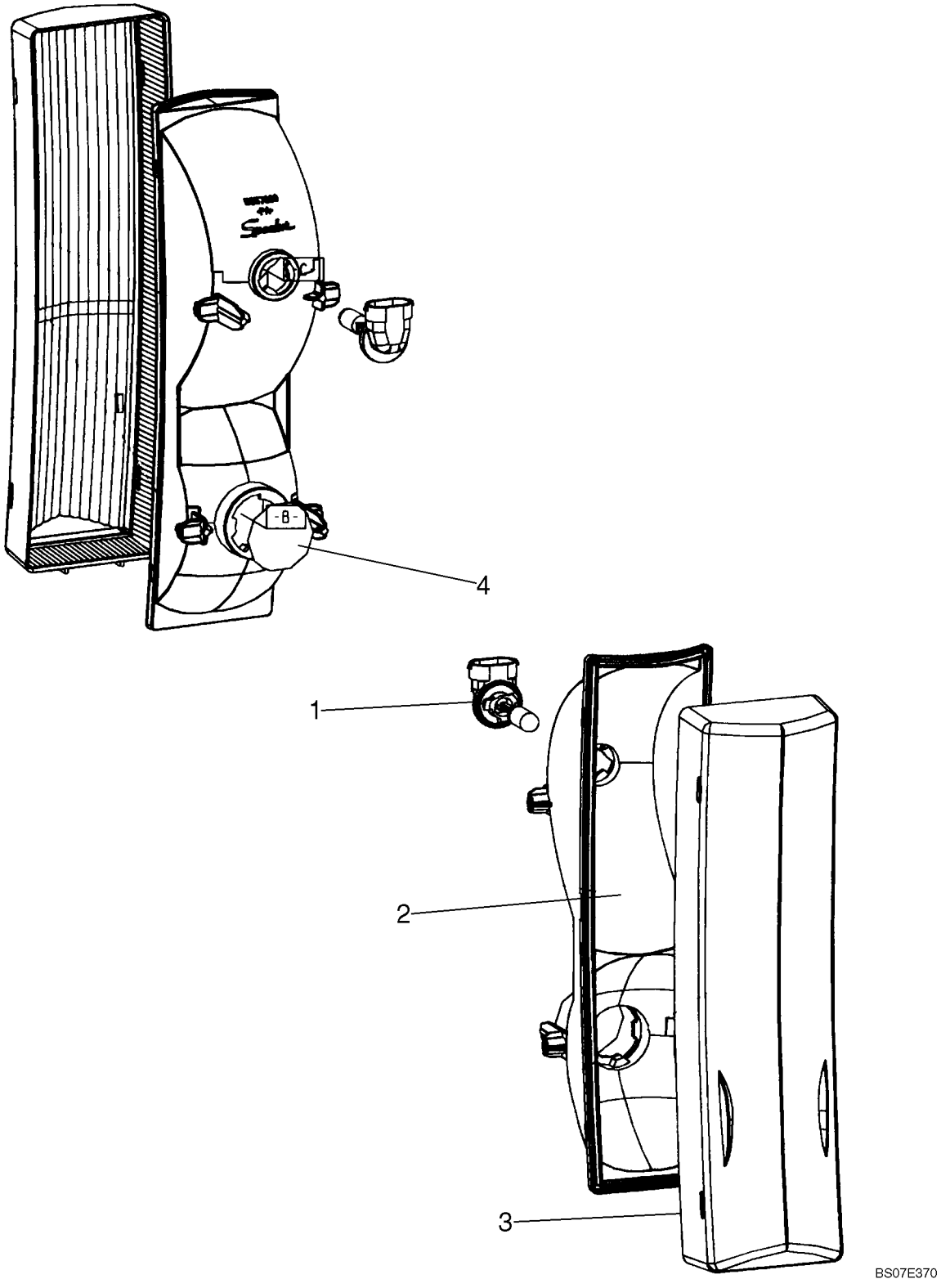

DIANTEIRA FAROS

REF	FN	PART NUMBER	YR/SN	QTY	DESCRIPTION
		87569828		1	FAROL, Front Headlamp Assembly; Incl. 1 - 4
1		9847312		1	LÂMPADA, Bulb, 12V 50W Halogen
2		NSS		1	BOLETIM INFORMATIVO, Reflector
3		NSS		1	BOLETIM INFORMATIVO, Lens, Clear
4		NSS		1	BOLETIM INFORMATIVO, Tape, Metalized Film

LAMPARAS TRASERAS, TRAVÃO/PISCA-PISCA - EUROPA

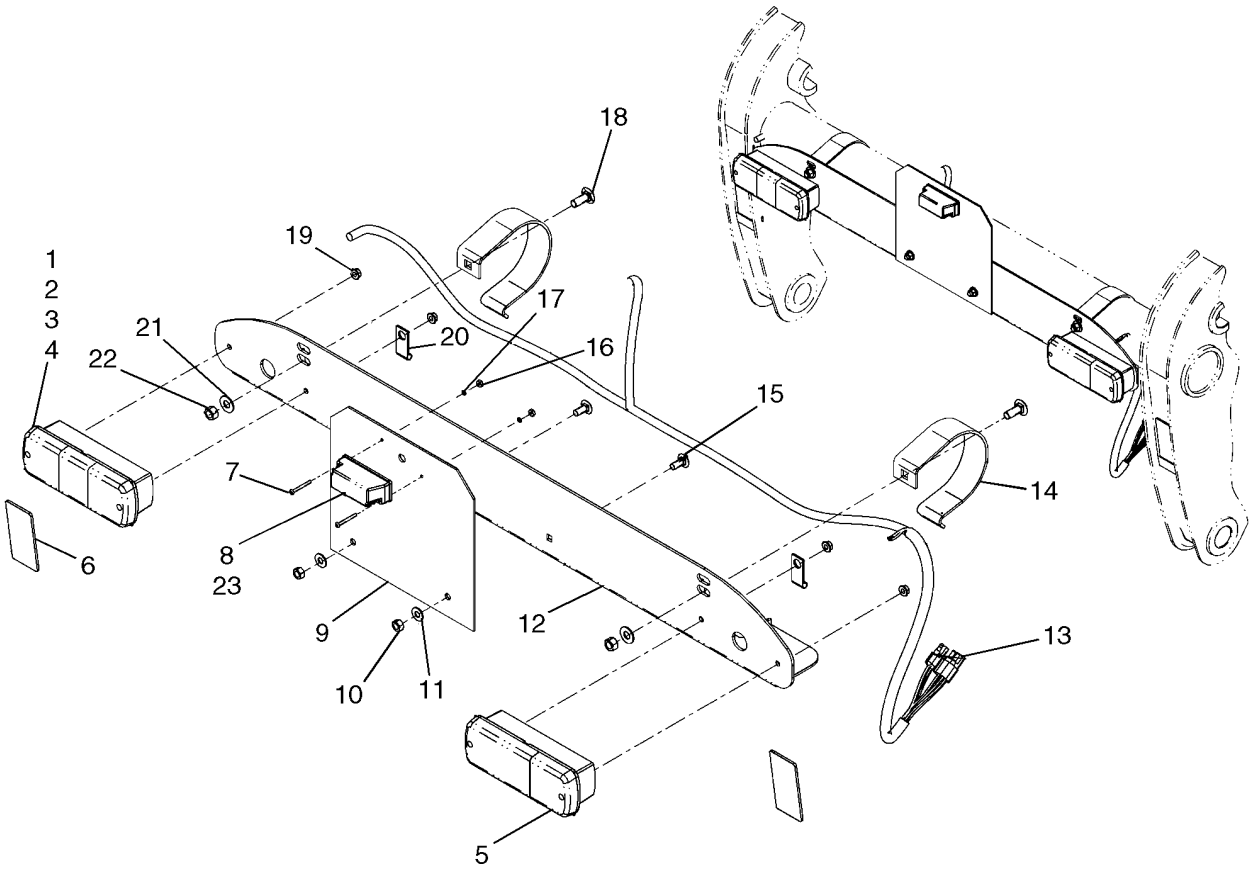

BS06M253

LAMPARAS TRASERAS, TRAVÃO/PISCA-PISCA - EUROPA

REF	FN	PART NUMBER	YR/SN	QTY	DESCRIPTION
1		177239A2		1	FAROL DIANTEIRO, Lamp, Direction - Europe; Incl. 2 - 4
2		187140A1		1	TRANSPARENTE, Lens
3		3131227R1		1	LÂMPADA, P25-1, 12V, 25W, Turn Signal Bulb
4		3131234R1		1	LÂMPADA, P25-2, 12V, 5W, Stop/Tail Bulb
5		259816A1		1	FAROL DIANTEIRO, Lamp, Direction - Europe; Incl. 2 - 4
6		121573A1		2	REFLETOR
7		9635014		2	PARAFUSO, Cross Pan Hd, #6-32 x 1 1/4"
8		445502		1	FAROL, Incl. 23
9		86504514		1	PLACA
10		9635082		2	PORCA, 5/16"-18, G5
11		322358		2	ARRUELA MOLA, Belleville, M8
12		87577418		1	CANAL, Channel, Gray
13		87572850		1	CHICOTE, Wire Harness
14		87577424		2	SUPORTE, Bracket, Gray
15		280497		2	PARAFUSO, Short NK, 5/16"-18 x 3/4", G5, Full Thd
16		88458		2	PORCA, #6-32
17		87276		2	ARRUELA-TRAVA, #6
18		80280503		2	PARAFUSO, Short NK, 3/8"-16 x 1", G5, Full Thd
19		86511444		4	PORCA, M6, Flg Ser
20		167509		2	FIXADOR
21		140045		2	ARRUELA MOLA, Belleville, M10
22		9628503		2	PORCA, 3/8"-16, G5
23		470017		1	LÂMPADA

LAMPARAS TRASERAS, TRAVÃO/PISCA-PISCA - EUROPA

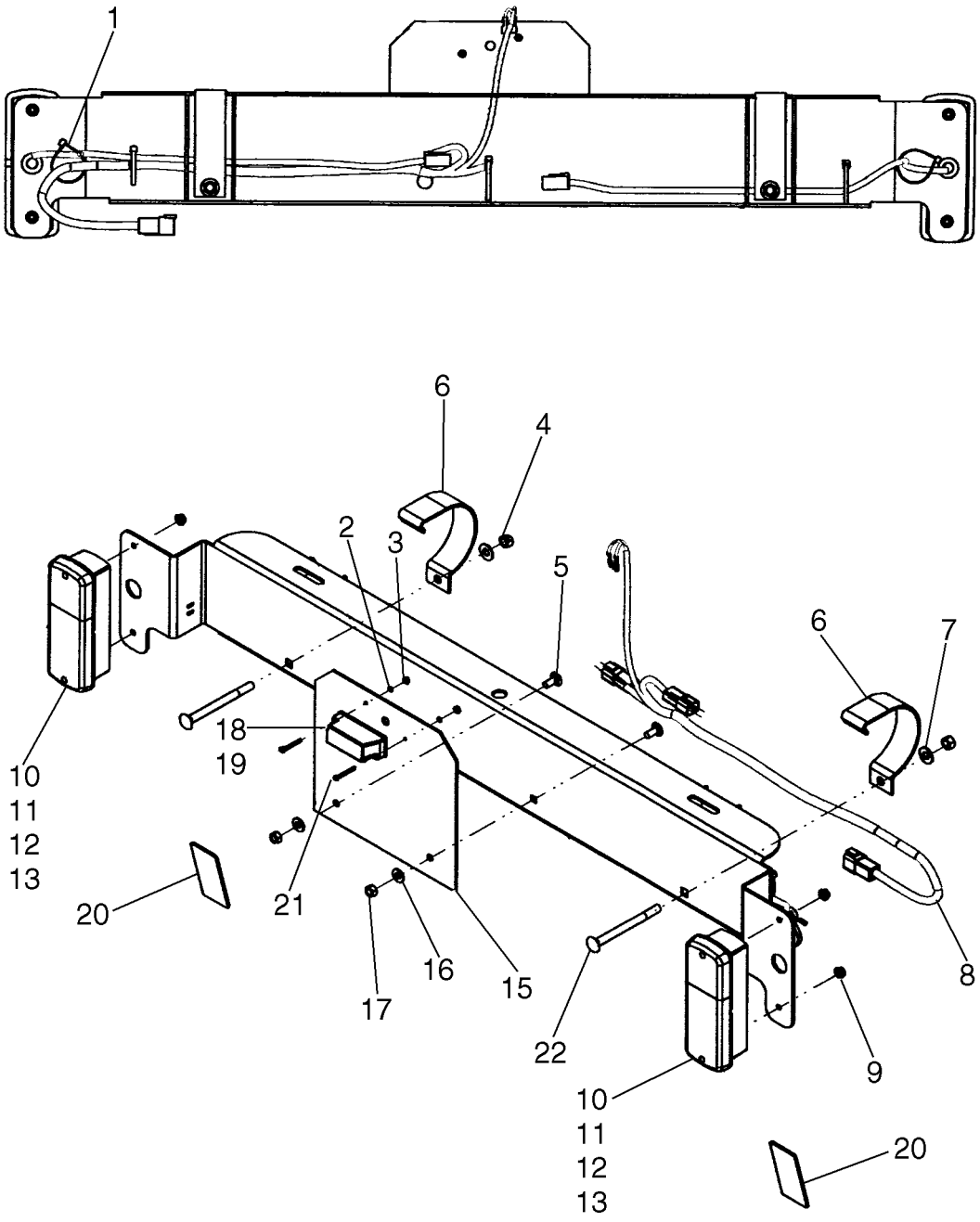

LAMPARAS TRASERAS, TRAVÃO/PISCA-PISCA - EUROPA

REF	FN	PART NUMBER	YR/SN	QTY	DESCRIPTION
1		L11541		5	TIRA DE CABO, Cable Tie, Black
2		87276		2	ARRUELA-TRAVA, #6
3		88458		2	PORCA, #6-32
4		9628503		2	PORCA, 3/8"-16, G5
5		280497		2	PARAFUSO, Short NK, 5/16"-18 x 3/4", G5, Full Thd
6		87647540		2	SUPORTE, Bracket, Gray
7		140045		2	ARRUELA MOLA, Belleville, M10
8		87628439		1	CHICOTE, Rear Light Bar Harness, Europe; If Used
8		87738587		1	CHICOTE, Rear Light Bar Harness, Europe; If Used
9		86511444		4	PORCA, M6, Flg Ser
10		177239A2		2	FAROL DIANTEIRO, Tail Light, Europe; Incl. 11 - 13
11		187140A1		2	TRANSPARENTE
12		3131227R1		2	LÂMPADA, P25-1, 12V, 25W, Turn Signal Bulb
13		3131234R1		2	LÂMPADA, P25-2, 12V, 5W, Stop/Tail Bulb
14		87647537		1	CANAL, Rear Light Bar, Gray
15		86504514		1	PLACA
16		322358		2	ARRUELA MOLA, Belleville, M8
17		9635082		2	PORCA, 5/16"-18, G5
18		445502		1	FAROL, License Plate Light; Incl. 19
19		470017		1	LÂMPADA
20		121573A1		2	REFLETOR, Red
21		9635014		2	PARAFUSO, Cross Pan Hd, #6-32 x 1 1/4"
22		280825		2	PARAFUSO, Short NK, 3/8"-16 x 4 1/2", G5

TRASEIRO LANTERNA DE TRABALHO

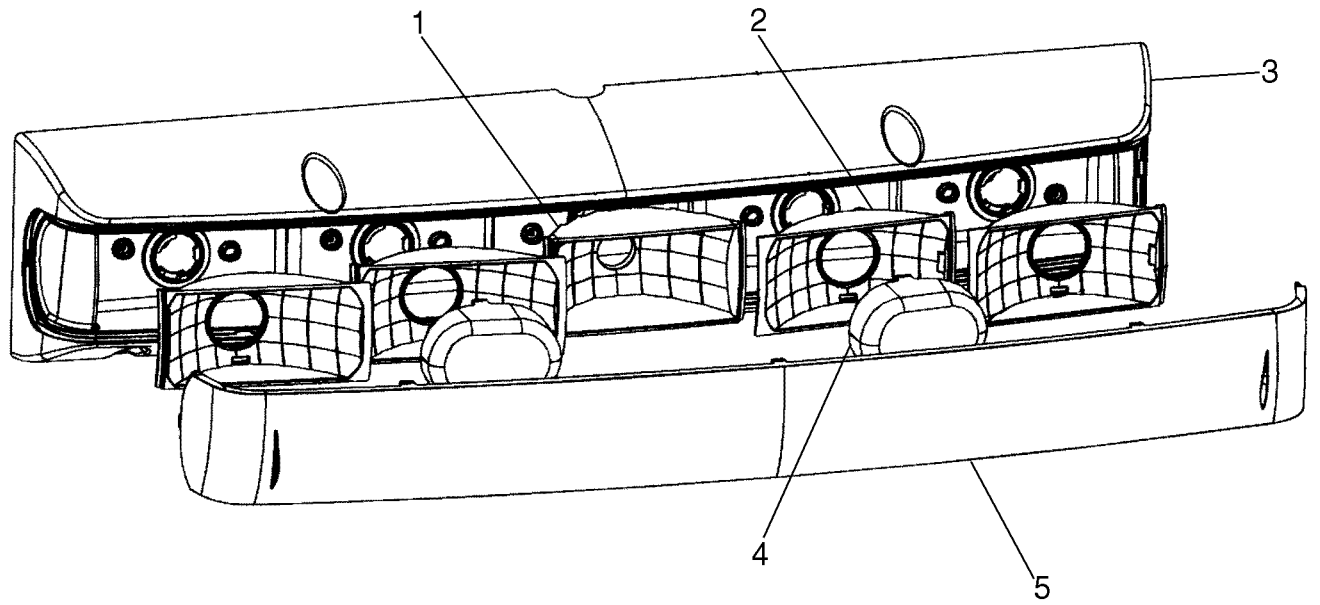

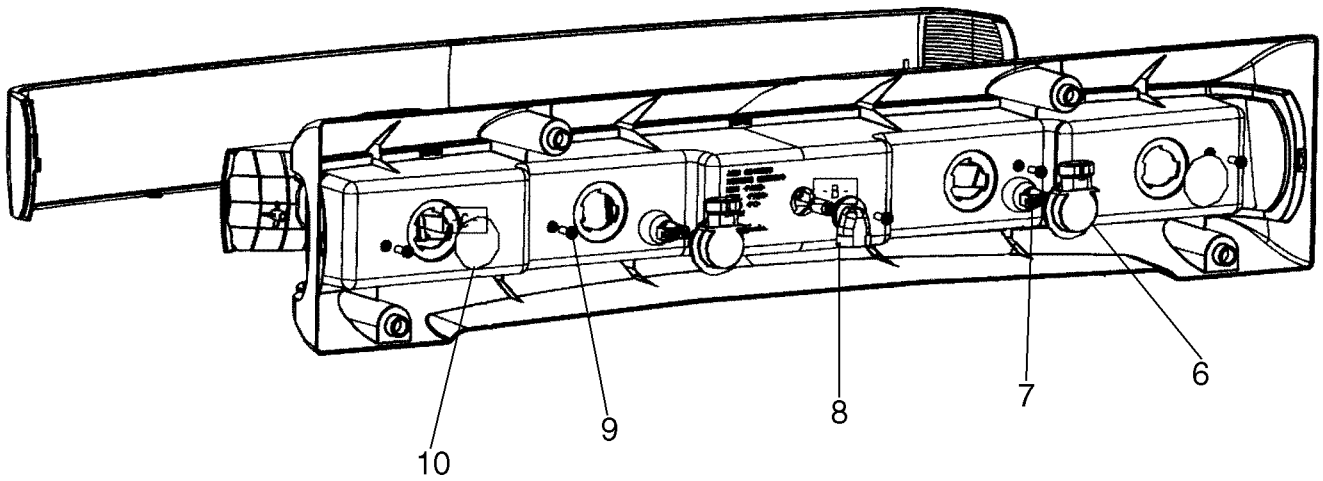

BS07E368

TRASEIRO LANTERNA DE TRABALHO

REF	FN	PART NUMBER	YR/SN	QTY	DESCRIPTION
		87569827		1	FAROL, Rear Light Assembly; Incl. 1 - 10
1		NSS		1	BOLETIM INFORMATIVO, Reflector
2		NSS		4	BOLETIM INFORMATIVO, Reflector
3		NSS		1	BOLETIM INFORMATIVO, Rear Light Bar Housing
4		NSS		2	BOLETIM INFORMATIVO, Lens, Red
5		NSS		1	BOLETIM INFORMATIVO, Lens, Clear
6		87642986		2	PORTA-LÂMPADA, Socket, 3157 - 12V
7		87642985		2	LÂMPADA, Bulb, 3157 - 12V
8		9847312		1	LÂMPADA, Bulb, 886 - 12.8 Volt, 50 Watt Halogen
9		NSS		5	BOLETIM INFORMATIVO, Screw
10		NSS		2	BOLETIM INFORMATIVO, Tape, Metalized Film

DIANTEIRA E TRASEIRA LANTERNA DE TRABALHO

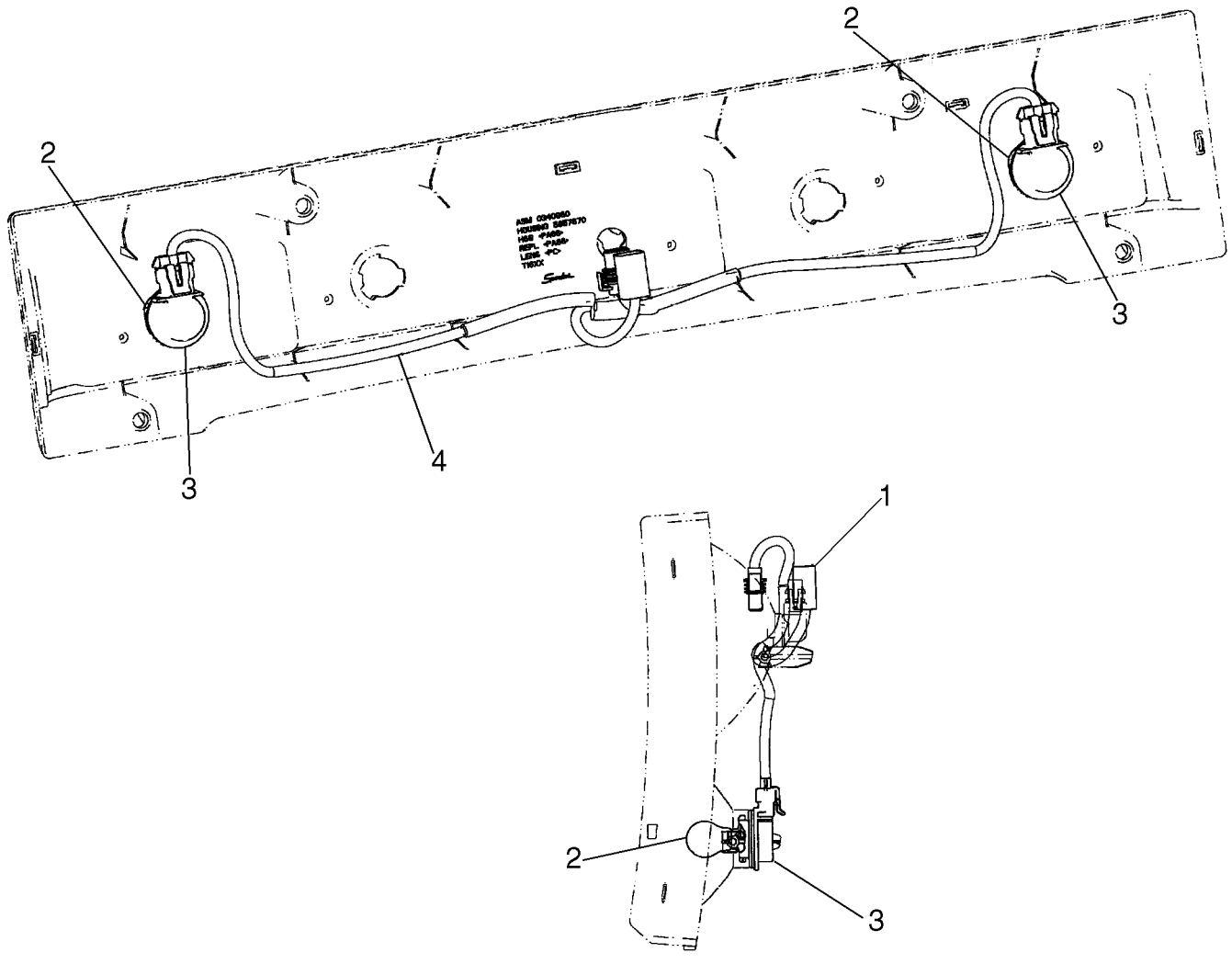

DIANTEIRA E TRASEIRA LANTERNA DE TRABALHO

REF	FN	PART NUMBER	YR/SN	QTY	DESCRIPTION
1		87572872		2	CHICOTE, Harness, Optional Front Work Light
2		87642985		4	LÂMPADA, Bulb, Clear (12V/28W)
3		87642986		4	PORTA-LÂMPADA, Socket
4		87599259		1	CHICOTE, Harness, Optional Rear Work Light

CONTROLO AUTOMÁTICO FIOS

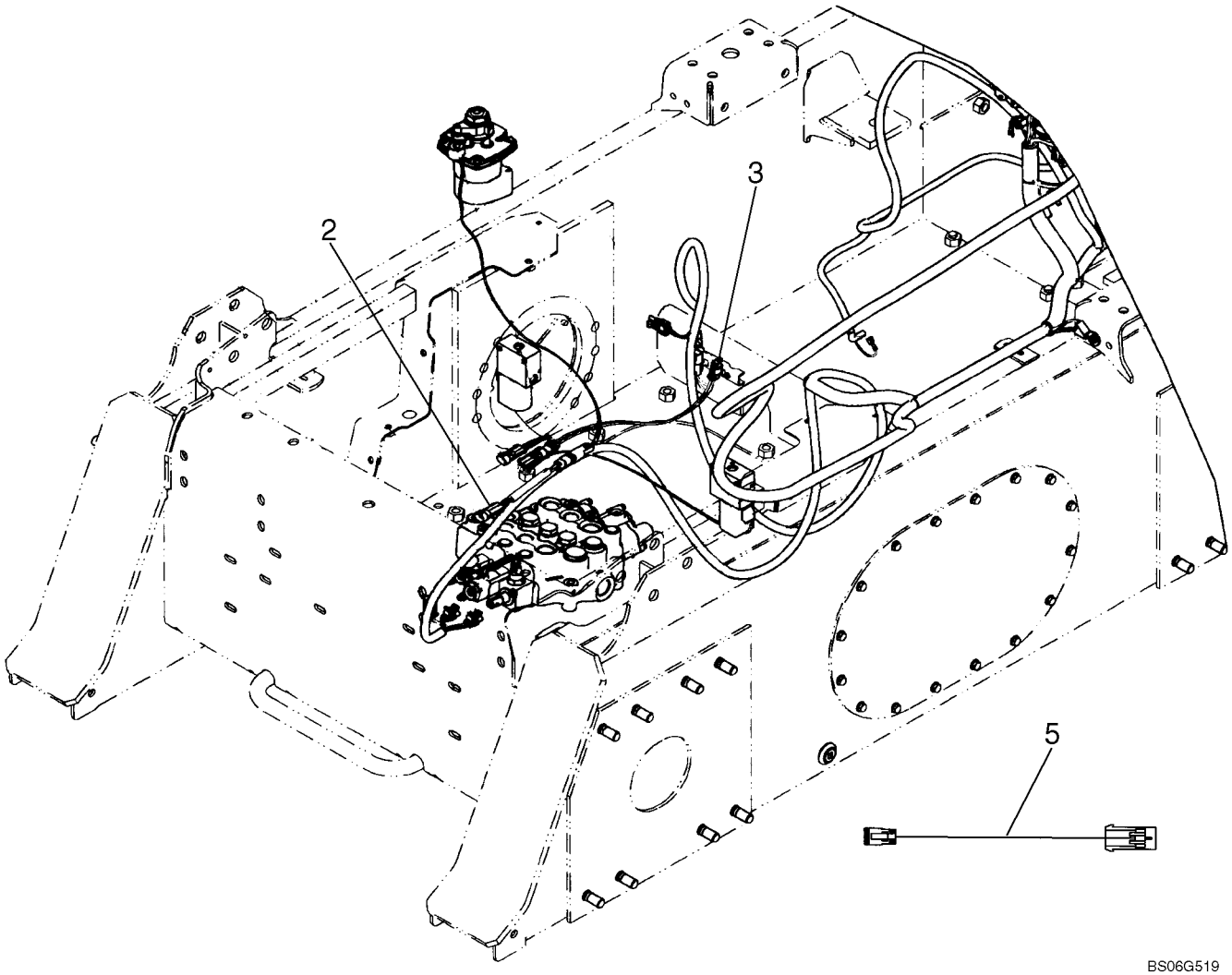

CONTROLO AUTOMÁTICO FIOS

REF	FN	PART NUMBER	YR/SN	QTY	DESCRIPTION
2		87527219		1	CHICOTE DE FIOS, Mag Detent Jumper
3		87397834		1	CHICOTE, Harness, Brake Jumper
4		263117		10	TIRA DE CABO, .14" x 11 1/2", Cable Tie
5		87527219		1	CHICOTE DE FIOS, Electrical

KIT DA FONTE DE ALIMENTAÇÃO ELÉTRICA

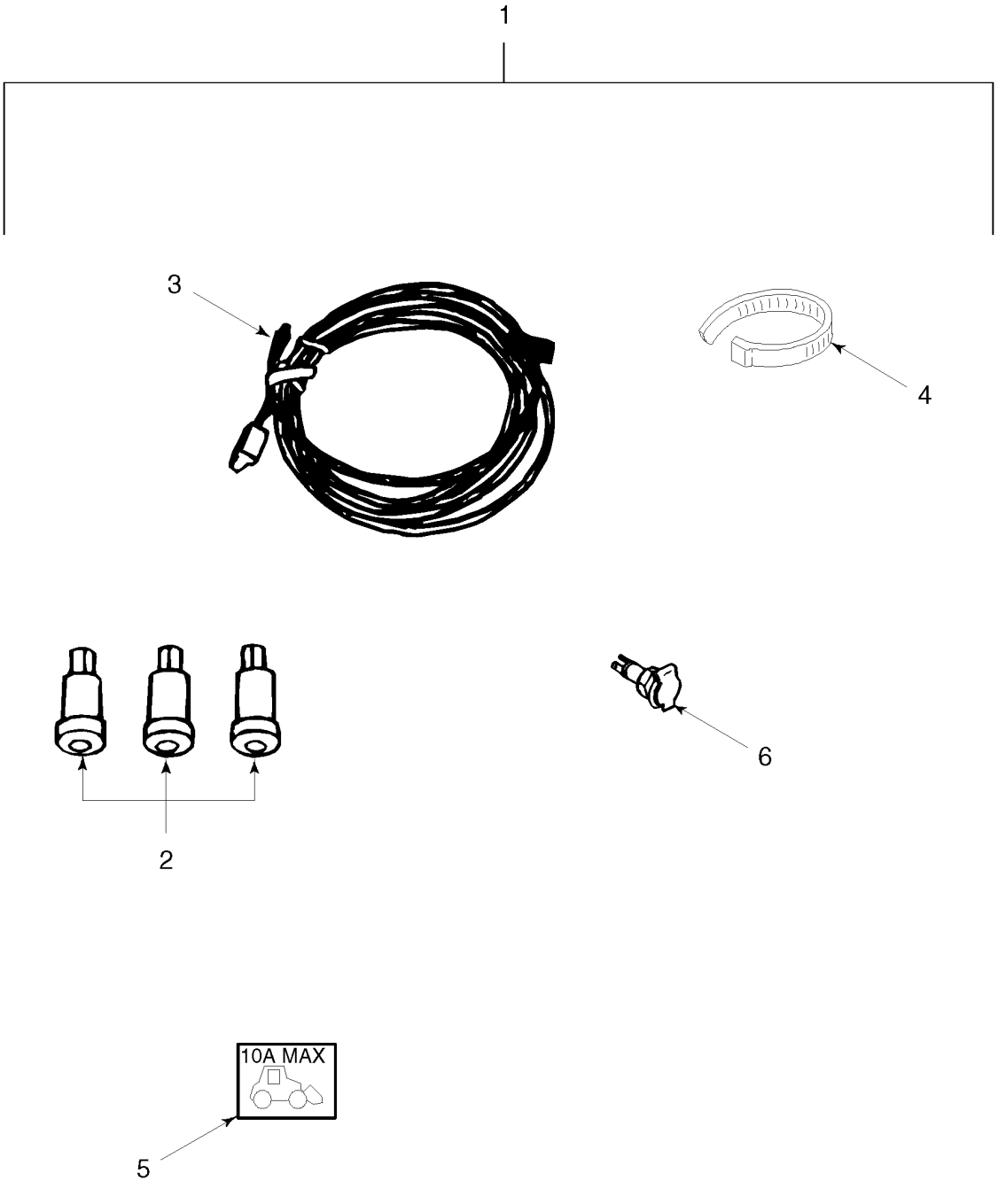

BS04M046

KIT DA FONTE DE ALIMENTAÇÃO ELÉTRICA

REF	FN	PART NUMBER	YR/SN	QTY	DESCRIPTION
1		86590115		1	KIT, Electric Power, Incl. Ref 2 - 6
2		86508819		3	CONECTOR
3		86509500		1	CHICOTE DE FIOS, Attach Power
4		263117		10	TIRA DE CABO, .14" x 11 1/2", 3/32" x 11-1/2" L
5		86511515		1	DECALCOMANIA, Attach Power
6		82002966		1	TOMADA ELÉTRICA, Auxiliary Electric Power

04-24		p1	03/08

CONJUNTO DA BUZINA/PISCA-PISCA

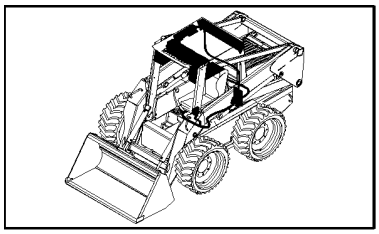

CONJUNTO DA BUZINA/PISCA-PISCA

REF	FN	PART NUMBER	YR/SN	QTY	DESCRIPTION
1		86620236		AR	KIT, Horn, Incl. Ref 2 - 21
2		280734		3	ARRUELA-TRAVA, Int Tooth, #8
3		87653		3	PORCA, #8-32
4		86515264		1	ALOJAMENTO, Horn
5		86518755		1	ALOJAMENTO
6		86518632		1	INTERRUPTOR, Momentary, Normally Open, Horn, Incl. Lockwasher, Nut
7		88203		3	PARAFUSO, Slotted Fil Hd, #8-32 x 1 1/2"
8		9827601		1	CHICOTE DE FIOS, Handle Harness, Horn
9		46288		2	CASQUILHO ISOLADOR, Grommet
10		86621756		1	CHICOTE DE FIOS, Horn Attaching
11		134579		2	TERMINAL, 7/16" x 3/8" Bolt
12		9840344		2	PARAFUSO, Self-Tapping, Sealing, WH, 5/16"-18 x 11/16"
13		523291		2	PARAFUSO, Hex Flg, 1/4"-20 x 1/2", Serr
14		87049215		1	BUZINA
15		86619138		1	SUPORTE, Horn
16		523282		2	PORCA, Flg, USR, 1/4"-20
17		263117		10	TIRA DE CABO, .14" x 11 1/2", 3/32" x 11-1/2" L
18		145913		2	PARAFUSO, Hex Flg, 5/16"-18 x 3/4", Serr
19		145458		2	PORCA, Flg, USR, 5/16"-18
20		86563024		1	DECALCOMANIA, Horn, Not Shown
21		322358		1	ARRUELA MOLA, Belleville, M8
22		86624183		2	ARRUELA PLANA, M6 x 25 x 1.6, Not Illustrated

KIT DO SINALIZADOR DE PERIGO

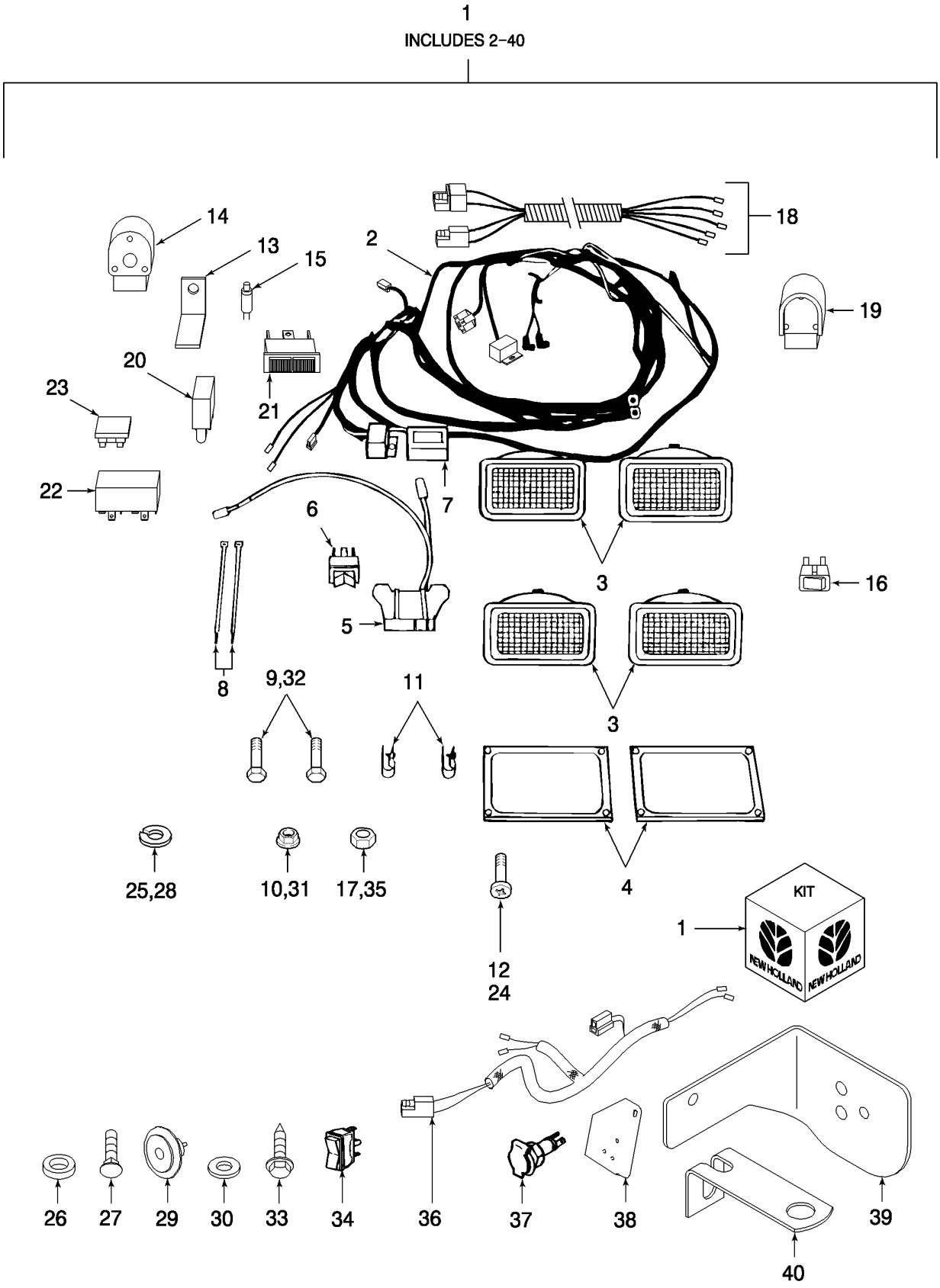

KIT DO SINALIZADOR DE PERIGO

REF	FN	PART NUMBER	YR/SN	QTY	DESCRIPTION
1		86620237		1	KIT, Kit, 4-Way Flasher, Includes: Ref. 2 thru 40
2		86539711		1	CHICOTE DE FIOS, Harness, Wire, Flasher Lights, Includes Ref. #2A thru 2E
2A		248712		1	CORPO, Connector Body
2B		852103		1	CORPO, Connector Body
2C		900793		1	TERMINAL, Terminal E18
2D		9623776		1	FUSÍVEL, Fuse, 7.5A
2E		86539335		1	CONEXÃO, Connector, 3PDT SW
3		9841566		4	FAROL, Lamp, Amber
4		86597618		2	AMOSTRA (PLACA), Bezel
5	1	9828153		1	CHICOTE DE FIOS, Harness, Wire, Front Fuse
6		9828477		1	INTERRUPTOR, Switch, Rocker, 9 Contact
7		83982898		1	LAMPEJADOR, Flasher
8		263117		22	TIRA DE CABO, .14" x 11 1/2", Cable Tie, 3/32" x 11-1/2" L
9		280342		2	PARAFUSO, Slottted Hex Hd, #10-24 x 3/4", Screw, HH, #10-24 x 3/4"
10		523310		3	PORCA, Nut, Flg, USR, #10-24
11		858956		2	PRENDEDOR, 7/16", Insul, 5/16" Bolt, Clamp, 7/16" x 5/16" Bolt
12		84893		1	PARAFUSO, Slotted Truss Hd, #10-24 x 3/8", Screw, Machine, #10 x 3/8"
13		86535636		1	SUPORTE, Angle
14		86518755		1	ALOJAMENTO, Housing, 12.9mm Hole in Cover
15		86518632		1	INTERRUPTOR, Momentary Switch, N.O.
16		86516153		1	INTERRUPTOR, Switch, Rocker, 3 Contact
17		87653		1	PORCA, #8-32, Nut, #8-32
18		86514912		1	CHICOTE DE FIOS, Wiring Harness, Handle
19		86510906		1	ALOJAMENTO, Housing, same as Ref. #14 Without Hole, Not Shown
20		86509590		1	CONECTADOR, Relay, 20 Amp
21		9827626		1	INDICADOR DE DIREÇÃO, Indicator Light
22		E9NN13R367AA		1	CONECTADOR, Relay, Turn Signal
23		9811773		1	FUSÍVEL, Fuse, 10 Amp

(1) Used in 9828280 Old Style Flasher Only

KIT DO SINALIZADOR DE PERIGO

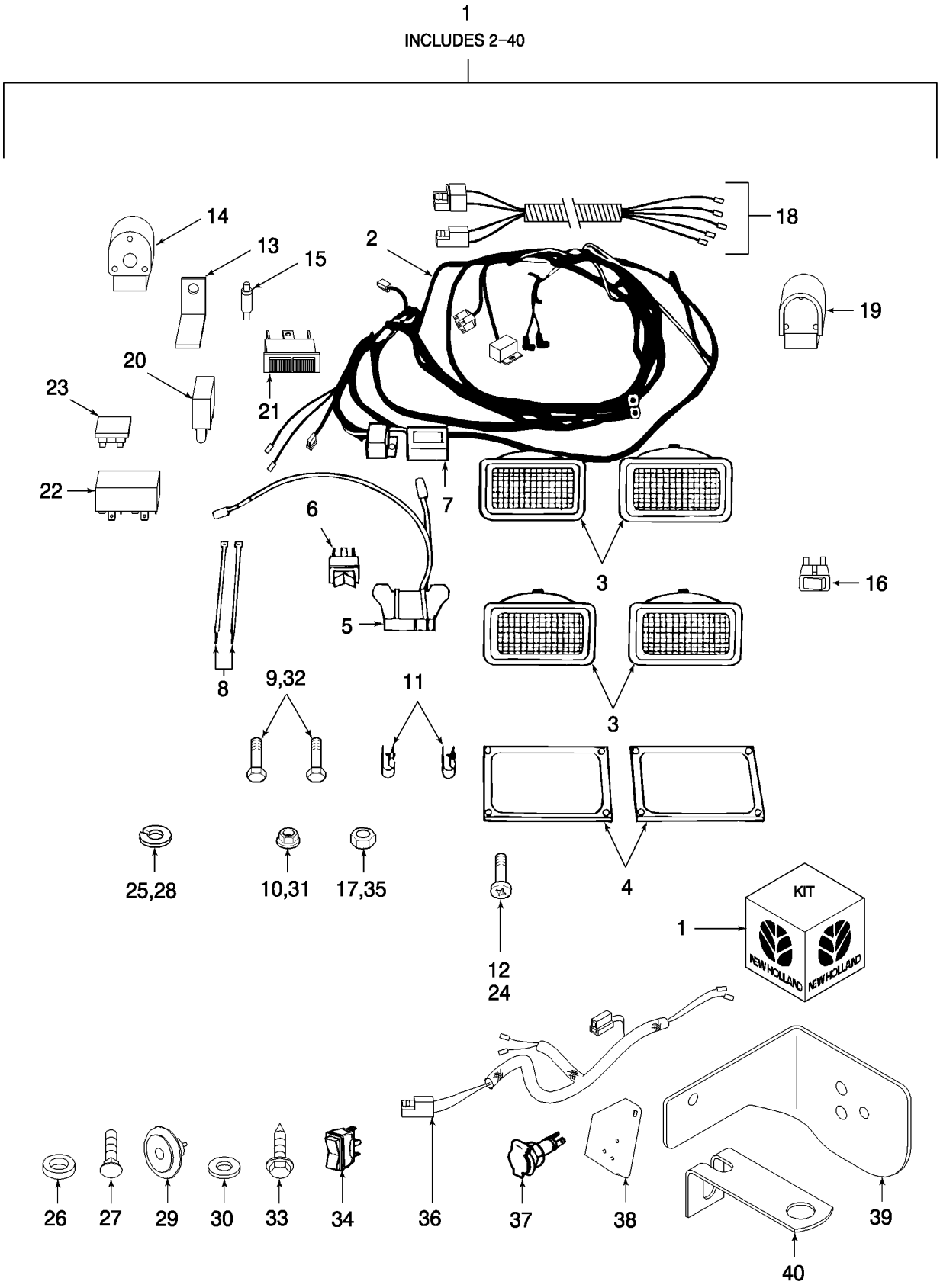

KIT DO SINALIZADOR DE PERIGO

REF	FN	PART NUMBER	YR/SN	QTY	DESCRIPTION
24		88203		3	PARAFUSO, Slotted Fil Hd, #8-32 x 1 1/2", Screw, Fillister Hd, G2, #8-32 x 1-1/2"
25		280734		3	ARRUELA-TRAVA, Int Tooth, #8
					THE FOLLOWING PARTS ARE FOR ON ROAD MODELS
26		136256		2	CASQUILHO ISOLADOR, Grommet
27		87653		3	PORCA, #8-32, Nut, #8-32
28		80681		1	ARRUELA-TRAVA, 5/16"
29		354374		1	BUZINA, Horn
30		378244		1	ARRUELA PLANA, M10
31		523282		1	PORCA, Flg, USR, 1/4"-20, Nut, Flg, USR, 1/4"-20
32		523292		1	PARAFUSO, Hex Flg, 1/4"-20 x 3/4", Serr
33		570821		1	PARAFUSO, Screw, Self-Tapping, Flg, USR, 5/16"-18 x 5/8"
34		713030		1	INTERRUPTOR, Switch, Rocker
35		9635082		1	PORCA, 5/16"-18, G5
36		86621756		1	CHICOTE DE FIOS, Wire Harness, Horn - Includes: Terminal
36		900793		1	TERMINAL, Terminal, E18
37		82002966		1	TOMADA ELÉTRICA, Socket, Aux. Electric Power
38		86592986		1	SUPORTE, Angle, Gray
39		86592988		1	CANTONEIRA, Angle, Gray
40		86592991		1	SUPORTE, Angle

LUZ INDICADORA

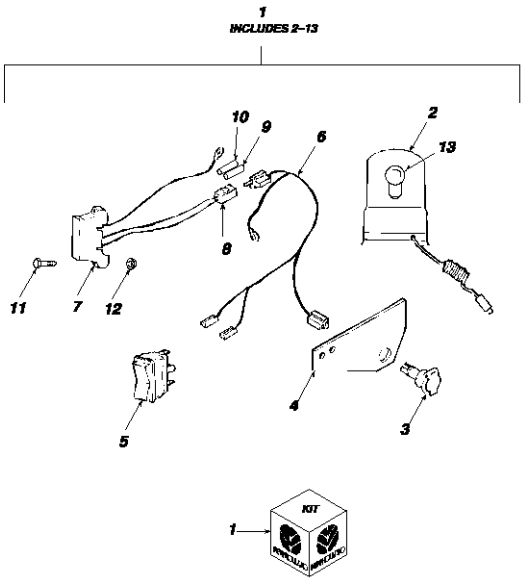

LUZ INDICADORA

REF	FN	PART NUMBER	YR/SN	QTY	DESCRIPTION
1		86590119		AR	KIT, Kit, Warning Beacon, Includes: Ref. 2 thru 13
2		2010665		1	ILUM. GIRAT. ALERTA, Incl. Ref 13, Lens 2010668
		2010668		1	TRANSPARENTE, For Beacon 2010665
3		82002966		1	TOMADA ELÉTRICA, Socket
4		86504667		1	PLACA, Plate
5		713030		1	INTERRUPTOR, Switch, Rocker
6		86505119		1	CHICOTE DE FIOS, Harness, Wire
7		9828153		1	CHICOTE DE FIOS, Wire Harness, Fuses, Includes: Ref. 8 thru 10
8		248712		1	CORPO, Body, Connector
9		9623776		AR	FUSÍVEL, Fuse, 7.5 Amp
10		9811773		AR	FUSÍVEL, Fuse, 10 Amp
11		280342		2	PARAFUSO, Slottted Hex Hd, #10-24 x 3/4", Screw, HH, #10-24 x 3/4"
12		523310		2	PORCA, Nut, Flg, USR, #10-24
13		69AG13009AA		1	LÂMPADA, Bulb, Type H1, 12V, 55 Watt

FAROL, ROTATIVO KIT, DE LUXO CABINE

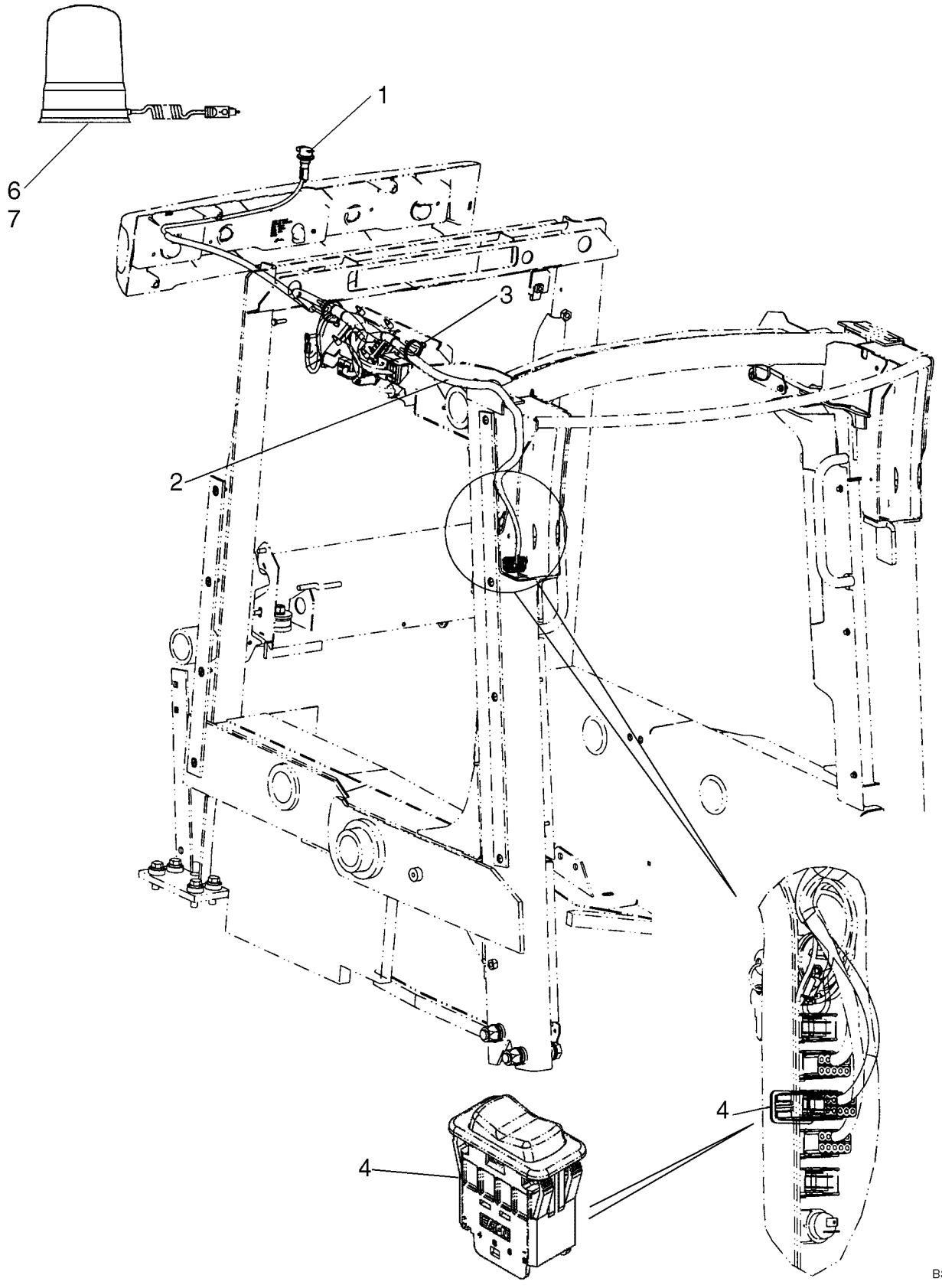

FAROL, ROTATIVO KIT, DE LUXO CABINE

REF	FN	PART NUMBER	YR/SN	QTY	DESCRIPTION
		87629763		1	KIT, SERVICE, Rotating Beacon Kit; Incl. 1 - 7 And Instructions
1		82002966		1	TOMADA ELÉTRICA, Plug In for Rotating Beacon
2		87609682		1	CHICOTE, Beacon Harness
3		263117		2	TIRA DE CABO, .14" x 11 1/2"
4		87641191		1	INTERRUPTOR LUZ DE ALERTA, Rotating Beacon Switch
5		87586496		1	DECALCOMANIA, Rotating Beacon
6		9840716		1	ILUM. GIRAT. ALERTA, Rotating Beacon; Incl. 7
7		86616248		1	LÂMPADA, #HI, 55w

LUZ DE PERIGO

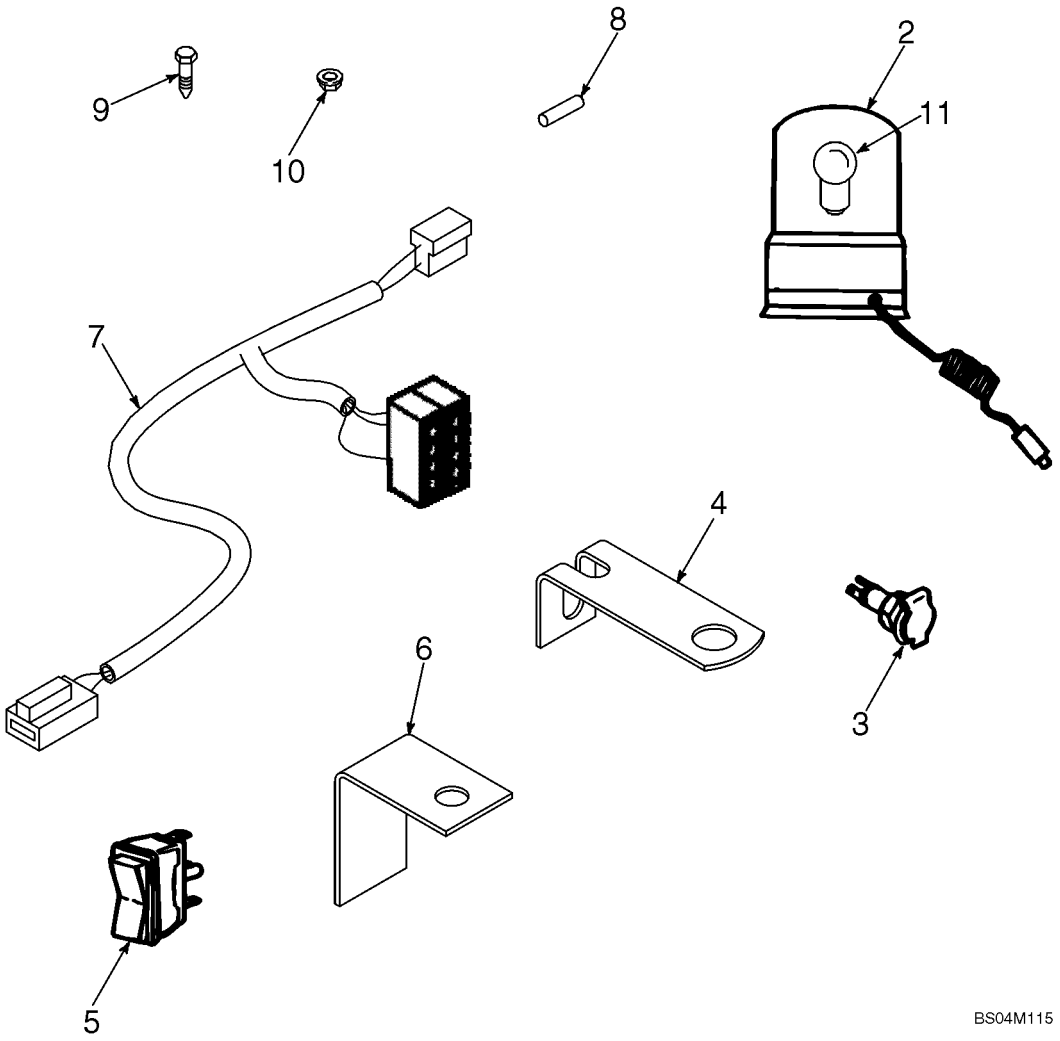

LUZ DE PERIGO

REF	FN	PART NUMBER	YR/SN	QTY	DESCRIPTION
1		86636023		1	DIA KIT,, Kit, Warning Beacon, Incl. Ref 2 - 11
2		2010665		1	ILUM. GIRAT. ALERTA, Incl. Ref 11, Lens 2010668
		2010668		1	TRANSPARENTE, For Beacon 2010665
3		82002966		1	TOMADA ELÉTRICA
4		86540635		1	SUPORTE
5		84320234		1	INTERRUPTOR LUZ DE ALERTA, Rocker
6		86535636		1	SUPORTE
7		86621875		1	CHICOTE DE FIOS, Incl. Ref 8
8		9623776		X	FUSÍVEL, 7-1/2 Amp
9		280342		2	PARAFUSO, Slottted Hex Hd, #10-24 x 3/4"
10		523310		2	PORCA, #10-24
11		69AG13009AA		1	LÂMPADA, Type H1, 12 Volt, 55 Watt

TRABA, CONTROL DE LA CARGADORA, CONTROLO AUTOMÁTICO (EUROPA)

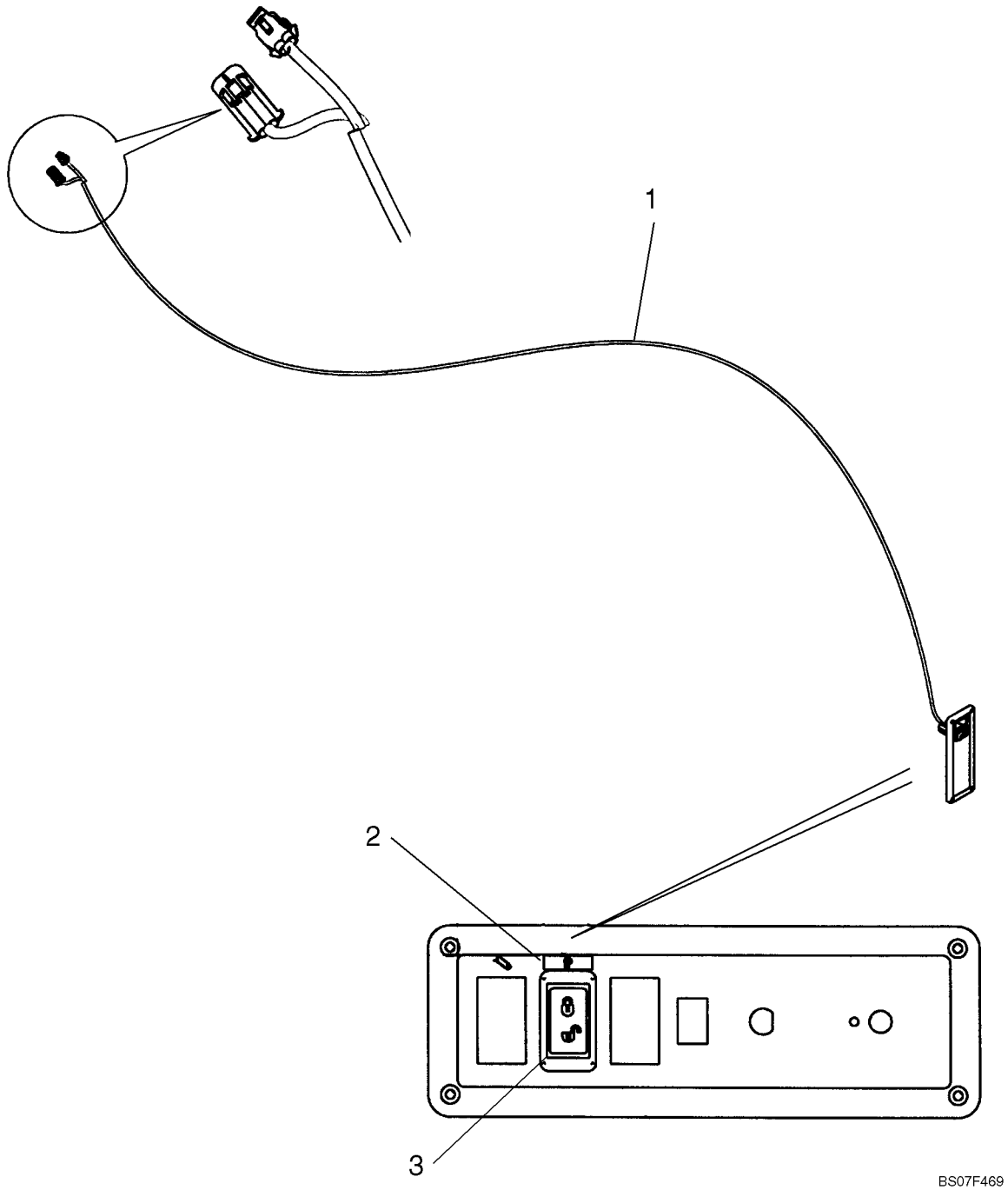

TRABA, CONTROL DE LA CARGADORA, CONTROLO AUTOMÁTICO (EUROPA)

REF	FN	PART NUMBER	YR/SN	QTY	DESCRIPTION
		87632313		1	KIT, SERVICE, Kit, Loader Lockout For Models With Pilot Control (Europe); Incl. 1 - 3 And Instructions
1		87627425		1	CHICOTE, Loader Lockout Harness
2		87627427		1	DECALCOMANIA, Loader Lockout Decal
3		373331A1		1	INTERRUPTOR, Rocker Switch, Loader Lock

FIOS- EH AUXILIAR

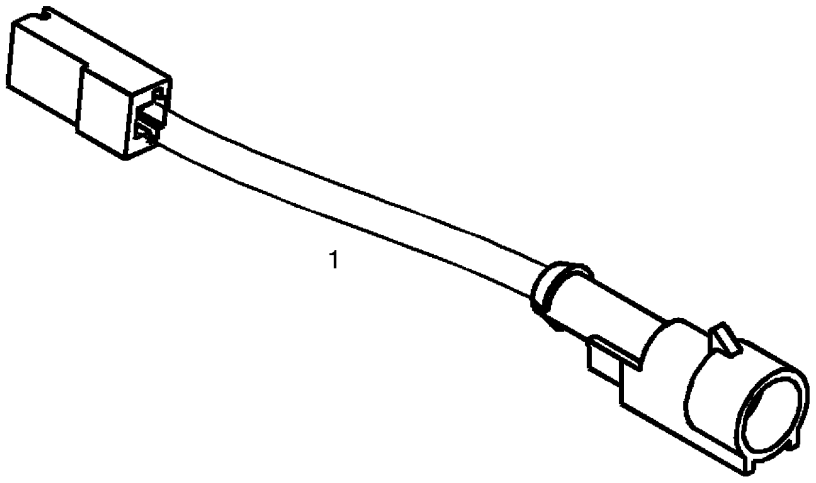

BS08A315

FIOS- EH AUXILIAR

REF	FN	PART NUMBER	YR/SN	QTY	DESCRIPTION
1		87666252		1	CHICOTE, EH - Aux Jumper; For EH Aux Harness, See Figure 09-39A

CALEFACCION Y AIRE ACONDICIONADO, CONTROLES

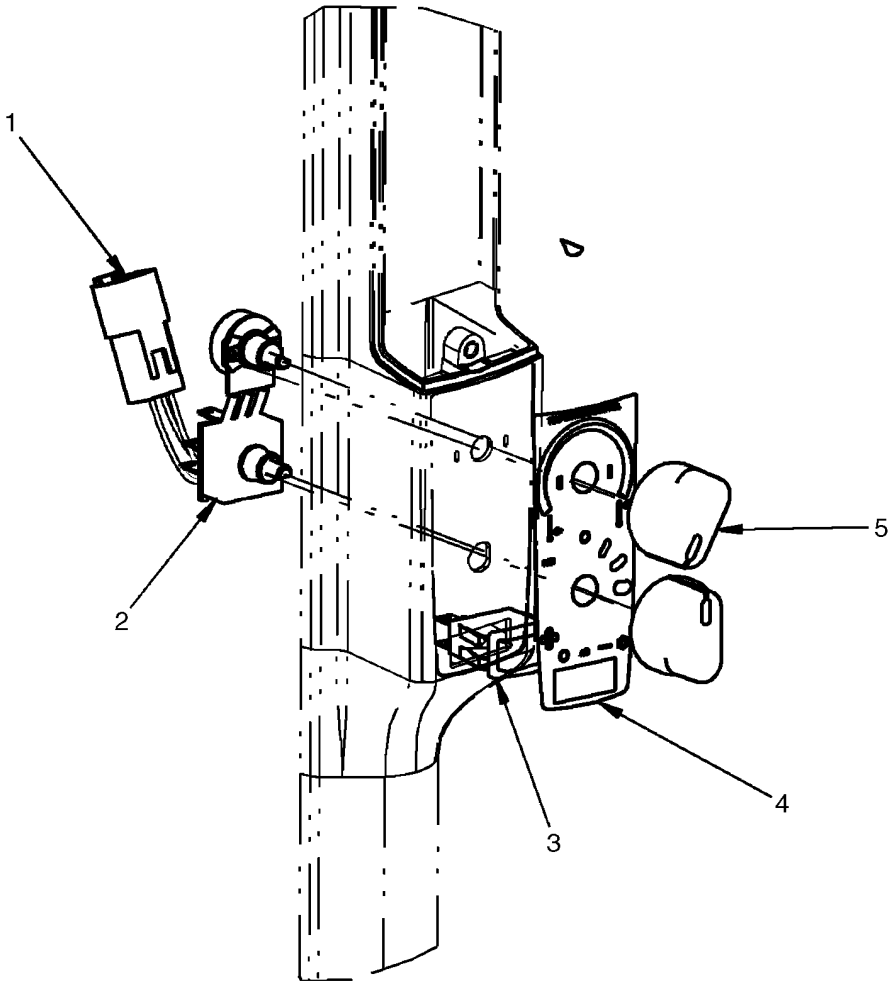

BS07N894

CALEFACCION Y AIRE ACONDICIONADO, CONTROLES

REF	FN	PART NUMBER	YR/SN	QTY	DESCRIPTION
1		87576975		1	POTENCIÔMETRO, Switch, Temp Control
2		86729669		1	INTERRUPTOR, HVAC Blower
3		87555249		1	INTERRUPTOR, AC Switch
4		87586497		1	DECALCOMANIA, Temp Controls
5		86729670		2	MANÍPULO
5A		87310592		2	PORCA, Jam Nut For Control Switches; 7/16-28 GR 5 ZND; Not Illustrated

CONJUNTO DE INSTRUMENTOS - AVANÇADO; L175 NA ASN N7M470553, L175 EU ASN N7M468035; C175 NA ASN N7M466429, C175 EU ASN

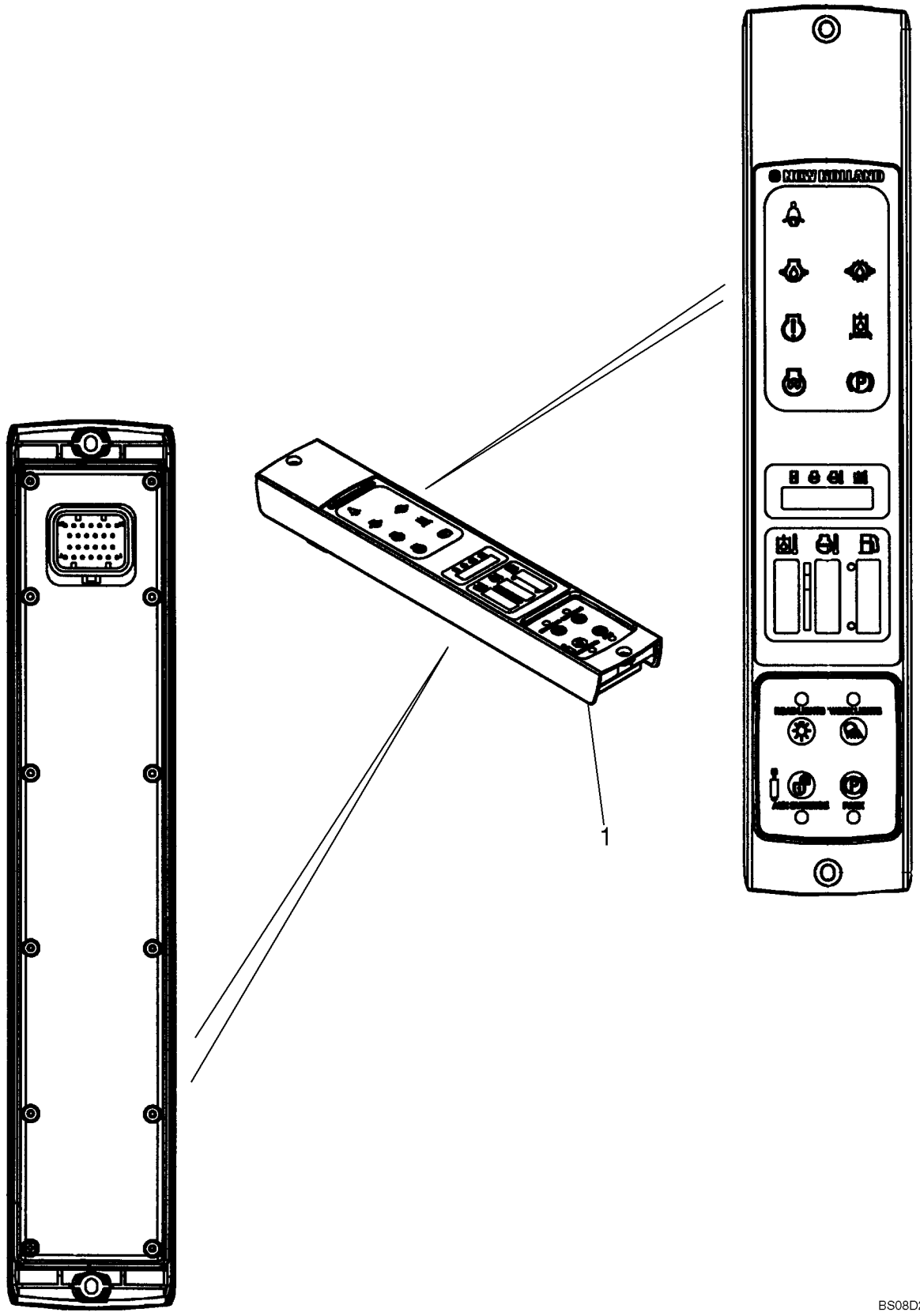

CONJUNTO DE INSTRUMENTOS - AVANÇADO; L175 NA ASN N7M470553, L175 EU ASN N7M468035; C175 NA ASN N7M466429, C175 EU AS

REF	FN	PART NUMBER	YR/SN	QTY	DESCRIPTION
1		87683458		1	INDIC. DE MILHAS/ROTAÇÃO, Advanced

SECTION INDEX
Transmissão

06-01	CONJUNTO DE CENTRAGEM DA TRANSMISSÃO
06-02	SISTEMA HIDROSTÁTICO - MOTORES DA BOMBA E DE TRANSMISSÃO, UMA VELOCIDADE
06-03	SISTEMA HIDROSTÁTICO - BOMBA AO TUBO DE DISTRIBUIÇÃO, UMA VELOCIDADE
06-04	SISTEMA HIDROSTÁTICO - MOTORES DE TRACÇÃO À BOMBA, DUAS VELOCIDADES
06-05	SISTEMA HIDROSTÁTICO - BOMBA AO TUBO DE DISTRIBUIÇÃO, DUAS VELOCIDADES
06-06	SISTEMA HIDROSTÁTICO - DUAS VELOCIDADES
06-07	SISTEMA HIDROSTÁTICO - MOTORES DE TRACÇÃO À BOMBA (C175)
06-08	SISTEMA HIDROSTÁTICO - DUAS VELOCIDADES/TRAVÃO (C175)
06-09	SISTEMA HIDROSTÁTICO - DUAS VELOCIDADES, CONJUNTO DA VÁLVULA
06-10	SISTEMA HIDROSTÁTICO - DUAS VELOCIDADES, CONJUNTO DA VÁLVULA (C175)
06-11	SISTEMA DE FRENOS, TRANSMISSÃO DE DESLOCAMENTO DE DUAS VELOCIDADES - MODELOS COM CONTROLO AUTOMÁTICO
06-12	SISTEMA HIDROSTÁTICO - CONTROLO AUTOMÁTICO À BOMBA
06-12A	SISTEMA HIDROSTÁTICO - CONTROLO DA ALAVANCA DE MUDANÇAS KITS, TESTE PADRÃO ISOMETRIC
06-13	SISTEMA HIDROSTÁTICO - BOMBA AO TUBO DE DISTRIBUIÇÃO, MODELOS COM CONTROLO AUTOMÁTICO
06-14	CONJUNTO DA BOMBA HIDRÁULICA/MOTOR, MODELOS COM CONTROLO AUTOMÁTICO
06-15	CONJUNTO DA BOMBA HIDRÁULICA/MOTOR, MODELOS COM CONTROLO AUTOMÁTICO
06-16	SISTEMA HIDROSTÁTICO - MOTORES DA BOMBA E DE TRANSMISSÃO, TRANSMISSÃO DE DESLOCAMENTO DE DUAS VELOCI
06-17	SISTEMA HIDROSTÁTICO - STANDARD, TRANSMISSÃO DE DESLOCAMENTO DE DUAS VELOCIDADES
06-18	CONJUNTO DA BOMBA HIDRÁULICA/MOTOR (C175), MODELOS COM CONTROLO AUTOMÁTICO
06-19	SISTEMA HIDROSTÁTICO - BOMBA AO TUBO DE DISTRIBUIÇÃO (C175), MODELOS COM CONTROLO AUTOMÁTICO
06-20	SISTEMA HIDROSTÁTICO - BOMBA ENCAIXES (C175), MODELOS COM CONTROLO AUTOMÁTICO
06-21	SISTEMA DE FRENOS, TRANSMISSÃO DE DESLOCAMENTO DE DUAS VELOCIDADES (C175)- MODELOS COM CONTROLO AUTO
06-22	CONJUNTO DA BOMBA TANDEM - UMA VELOCIDADE
06-23	BOMBA DO PISTÃO, TRASEIRA / BOMBA DE ENGRENAGENS B2B / SIMPLES E DUPLA
06-24	BOMBA DO PISTÃO, DIANTEIRA / BOMBA DE ENGRENAGENS B2B / SIMPLES E DUPLA
06-25	TUBO DE DISTRIBUIÇÃO CENTRAL/ BOMBA DE ENGRENAGENS B2B / SIMPLES E DUPLA
06-26	CONJUNTO DA BOMBA TANDEM - TRANSMISSÃO DE DESLOCAMENTO DE DUAS VELOCIDADES
06-27	BOMBA DO PISTÃO, DIANTEIRA / BOMBA DE ENGRENAGENS B2B / SIMPLES E DUPLA
06-28	BOMBA DO PISTÃO, TRASEIRA / BOMBA DE ENGRENAGENS B2B / SIMPLES E DUPLA
06-29	TUBO DE DISTRIBUIÇÃO CENTRAL/ BOMBA DE ENGRENAGENS B2B / SIMPLES E DUPLA

SECTION INDEX
Transmissão

06-30	BOMBA AA20
06-30A	BOMBA, TRANSMISSÃO DE DESLOCAMENTO DE DUAS VELOCIDADES, CONTROLO AUTOMÁTICO
06-31	VALVULA DE REDUCCION DEPRESION
06-32	VALVULA DE REDUCCION DEPRESION
06-33	CONJUNTO DA BOMBA DE ENGRENAGEM
06-34	ROTATIE CONSTRUCTIE, RECHTS
06-35	CONTROL, HIDRAULICO
06-35A	CONTROL, HIDRAULICO
06-36	CONTROLO CONJUNTO
06-36A	CONTROLO CONJUNTO
06-37	ELEMENTOS FECHANDO
06-38	ROTAÇÃO CONJUNTO, ESQUERDA ROTAÇÃO
06-38A	ROTAÇÃO CONJUNTO, ESQUERDA ROTAÇÃO
06-40	CONJUNTO DO MOTOR, - REXROTH
06-41	CONJUNTO DO MOTOR, - REXROTH
06-42	CONJUNTO DO MOTOR, - REXROTH
06-43	CONJUNTO DO MOTOR, DUAS VELOCIDADES
06-44	CONJUNTO DO MOTOR, DUAS VELOCIDADES
06-45	CONJUNTO DO MOTOR, DUAS VELOCIDADES
06-46	CONJUNTO DO MOTOR, TRANSMISSÃO DE DESLOCAMENTO DE DUAS VELOCIDADES (C175)
06-49	CONJUNTO DA BOMBA DE ENGRENAGEM
06-50	BOMBA, ENGRANAJE
06-51	BOMBA, ENGRANAJE (FLUXO ALTO)
06-52	BOMBA, ENGRANAJE (FLUXO ALTO)
06-53	BOMBA, ENGRANAJE (FLUXO ALTO)
06-54	SUPORTE - BOMBA SUPORTE, CONTROLO AUTOMÁTICO
06-55	CONJUNTO DA TRANSMISSÃO FINAL (L175)
06-56	CONJUNTO DA TRANSMISSÃO FINAL (C175)
06-57	RODAS
06-58	ESTEIRAS

CONJUNTO DE CENTRAGEM DA TRANSMISSÃO

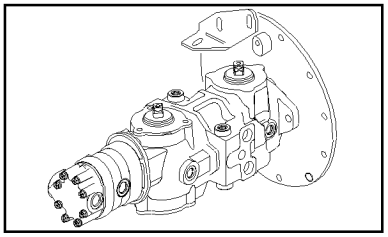

BS06M437

CONJUNTO DE CENTRAGEM DA TRANSMISSÃO

REF	FN	PART NUMBER	YR/SN	QTY	DESCRIPTION
1		86535238		1	CUBO
2		86500990		1	MOLA
3		9827779		1	BUCHA
4		87012267		1	SUPORTE
5		87541049		2	BLOCO, Block
6		9627879		4	PARAFUSO, Hex, 1/2"-13 x 3/4", G5, Full Thd
7		626698		2	ESPAÇADOR
8		65319		4	ARRUELA PLANA, 33/64" ID x 1" OD x .135"
9		87364		1	ARRUELA PLANA, 1/2", SAE
10		86506112		1	PARAFUSO, Cap, 12-pt Hd, Shoulder, G8, 3/8"-16 x 5"; If Used
10		87533223		1	PINO, Cap, Shoulder, 12PT PH .5 X 4.0; If Used
11		9826723		2	AMORTECEDOR
12		86590883		2	PARAFUSO, Shoulder, HS, 3/8"-16 x 3-3/4"
13		88044		1	PARAFUSO, Hex, 3/8"-16 x 1 1/2", G5
14		86540327		2	GUIA
15		86567393		1	SUPORTE
16		88902		4	CONTRA PORCA, 3/8"-16, GC
17		285072		7	ARRUELA PLANA, Hardened, 3/8"
18		86571511		1	BIELA
19		9706689		2	PARAFUSO, Hex, 3/8"-16 x 1 3/4", G5, If Used
19		88436		2	PARAFUSO, Hex, 3/8"-16 x 2", G5, If Used
20		88902		8	CONTRA PORCA, 3/8"-16, GC
21		87016		8	ARRUELA PLANA, 3/8", SAE
22		87545502		1	BRAÇO, Pintle Arm, Rear; One Speed Models; Incl. 24, 25, 25A
24		86508667		1	BUCHA
25		9808450		2	ROLAMENTO
25A		87523716		2	PARAFUSO, Threaded In Pins For Pintle Arm
26		86575418		2	PARAFUSO, Hex, 3/8"-16 x 2 1/4", G8
27		88682		2	PARAFUSO, Short NK, 3/8"-16 x 1", G5
28		9824050		2	ANEL "O", -021, 90 Duro, .926" ID x .070" Thk
29		86567155		2	PROTEÇÃO
30		87545501		1	BRAÇO, Pintle Arm, Front; One Speed Models; Incl. 24, 25, 25A

CONJUNTO DE CENTRAGEM DA TRANSMISSÃO

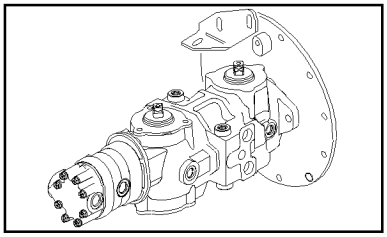

BS06M437

CONJUNTO DE CENTRAGEM DA TRANSMISSÃO

REF	FN	PART NUMBER	YR/SN	QTY	DESCRIPTION
34		86567199		1	ELO DE UNIÃO
35		280161		2	PARAFUSO, Hex, 3/8"-16 x 3", G5
36		280514		2	PARAFUSO, Short NK, 3/8"-16 x 2 1/4", G5
37		86500348		2	JUNTA ESFÉRICA
38		87308		2	PORCA, Jam, 3/8"-24, G2
39		87052745		1	BRAÇO, Pintle Arm, Front; Two Speed Models; Incl. 24, 25, 25A
40		87052747		1	BRAÇO, Pintle Arm, Rear; Two Speed Models; Incl. 24, 25, 25A

SISTEMA HIDROSTÁTICO - MOTORES DA BOMBA E DE TRANSMISSÃO, UMA VELOCIDADE

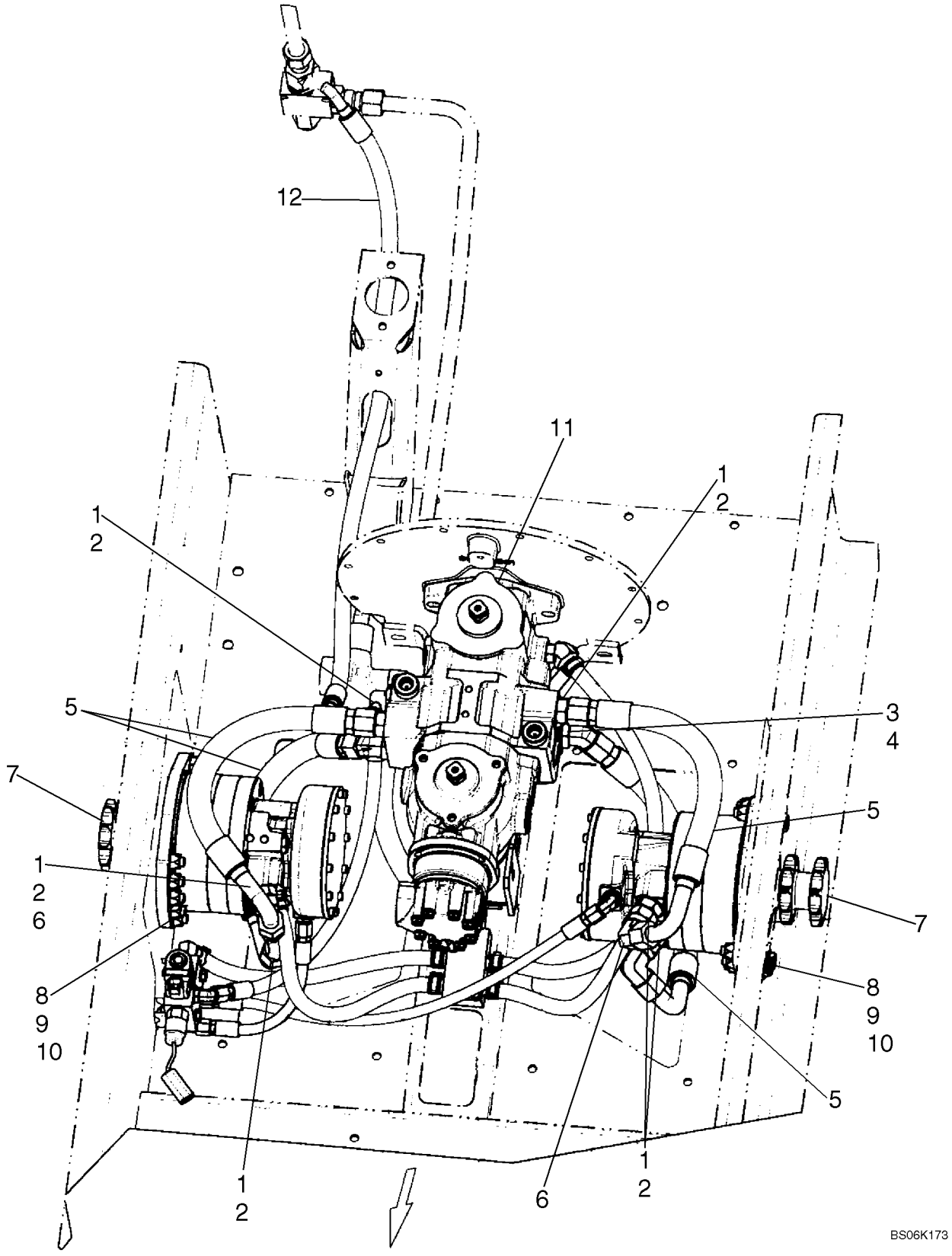

SISTEMA HIDROSTÁTICO - MOTORES DA BOMBA E DE TRANSMISSÃO, UMA VELOCIDADE

REF	FN	PART NUMBER	YR/SN	QTY	DESCRIPTION
1		322896		6	CONEXÃO, 1 1/16"-12, 37° x 1 1/16"-12, O-Ring, Incl. 2
2		167266		6	ANEL "O", 12-1, 90 Duro, .924 ID x .116" Thk
3		330344		2	COTOVELO, 45°, 1 1/16"-12 x 1 1/16"-12, O-Ring, Incl. 4
4		167266		2	ANEL "O", 12-1, 90 Duro, .924 ID x .116" Thk
5		87053323		4	MANGUEIRA, Hose, Pump To Motor; 460 mm, 18.11 in.
6		219603		4	COTOVELO, 90°, 1 1/16"-12, 37° x 1 1/16"-12, 37° Fem Sw
7		87034687		2	MOTOR, Drive Motor, MCR03 SAHR 24 CID 10T; See Fig. 06-30 - 06-32
8		337476		20	PARAFUSO, Hex, M12 x 50, 10.9
9		140046		40	ARRUELA PLANA, Belleville, M12
10		412672		20	CONTRA PORCA, M12 x 1.75, Cl 10
11		86566179		1	BOMBA HIDRÁULICA, Tandem Pump Assy; One Speed, Standard Flow; See Fig. 06-22
11		86566181		1	BOMBA HIDRÁULICA, Tandem Pump Assy; One Speed, High Flow; See Fig. 06-22
12		87433266		1	MANGUEIRA, Hose, Pump To Filter; 1080 mm, 42.52 in.

SISTEMA HIDROSTÁTICO - BOMBA AO TUBO DE DISTRIBUIÇÃO, UMA VELOCIDADE

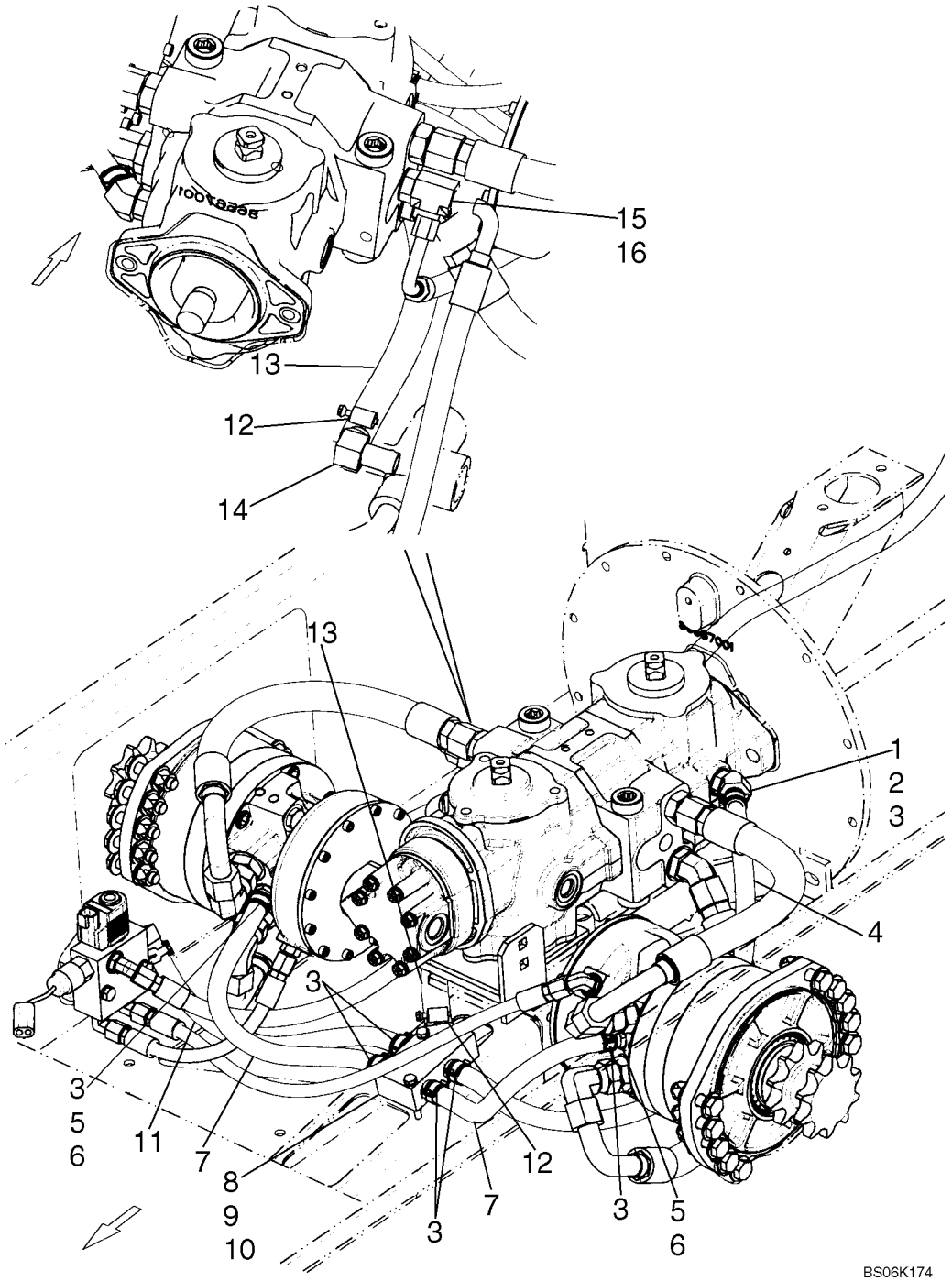

SISTEMA HIDROSTÁTICO - BOMBA AO TUBO DE DISTRIBUIÇÃO, UMA VELOCIDADE

REF	FN	PART NUMBER	YR/SN	QTY	DESCRIPTION
1		87372529		1	ADAPTADOR, Stem 45 Bead Hose 1/2 ID X 3/4-16; Incl. 2
2		128825		1	ANEL "O", 8-1, 90 Duro, .644" ID x .087" Thk
3		87443510		8	BRACADEIRA MANGUEIRA, Spring Clamp (20 mm)
4		87367436		1	MANGUEIRA, Case Drain; 630 mm, 24.80 in.
5		86705988		2	CONEXAO, Stem Str Bead Hose 1/2 ID X 9/16-18; Incl. 6
6		9617873		2	ANEL "O", 6-1, 90 Duro, .468" ID x .078" Thk
7		87434275		2	MANGUEIRA, Motor Case; 320 mm, 12.60 in
8		87369712		1	COLECTOR, Return Oil
9		80682		4	ARRUELA-TRAVA, 1/4"
10		87404		2	PARAFUSO, Hex, 1/4"-20 x 2", G5
11		87574770		1	MANGUEIRA, Shift Case; 380 mm, 14.96 in.
12		86625021		2	BRACADEIRA MANGUEIRA, #12, 0.69/1.25 Type F Worm
13		87372533		1	MANGUEIRA, Drain Tank; 400 mm, 15.75 in.
14		87372552		1	COTOVELO, 90 Deg
15		86624130		1	TEE, 37º, 3/4"-16, 7/8"-14 O-Ring Run, 3/4"-16, Incl. 16
16		167269		1	ANEL "O", 10-1, 90 Duro, .755" ID x .097" Thk

SISTEMA HIDROSTÁTICO - MOTORES DE TRACÇÃO À BOMBA, DUAS VELOCIDADES

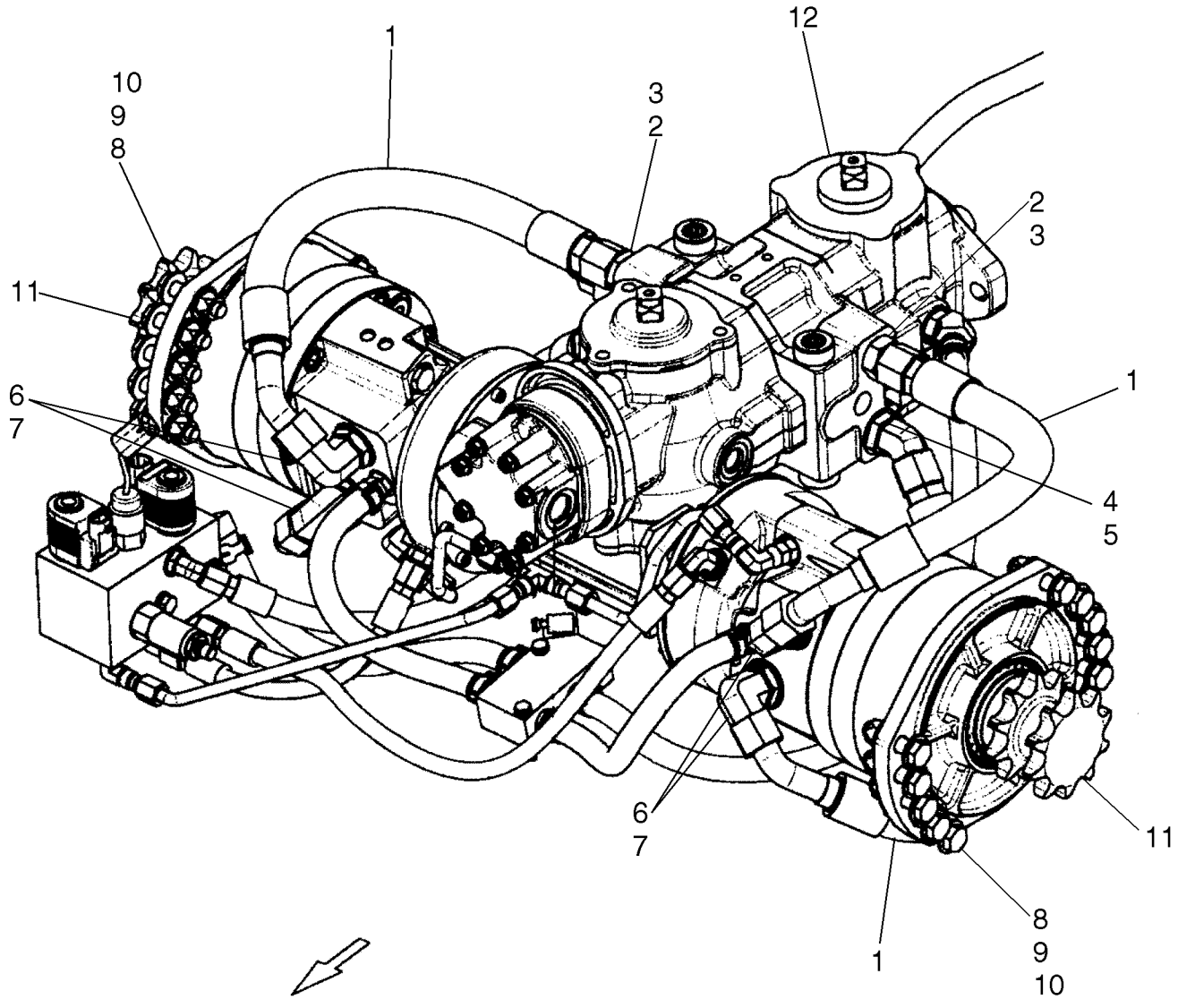

SISTEMA HIDROSTÁTICO - MOTORES DE TRACÇÃO À BOMBA, DUAS VELOCIDADES

REF	FN	PART NUMBER	YR/SN	QTY	DESCRIPTION
1		87053323		4	MANGUEIRA, Pump To Motor; 460 mm, 18.11 in.; 90 deg Hose End; If Used
1		87053353		4	MANGUEIRA, Pump To Motor; 521 mm, 20.51 in.; 45 deg Hose End; If Used
2		322896		2	CONEXÃO, 1 1/16"-12, 37° x 1 1/16"-12, O-Ring, Incl. 3
3		167266		2	ANEL "O", 12-1, 90 Duro, .924 ID x .116" Thk
4		330344		2	COTOVELO, 45º, 1 1/16"-12 x 1 1/16"-12, O-Ring, Incl. 5
5		167266		2	ANEL "O", 12-1, 90 Duro, .924 ID x .116" Thk
6		322894		4	COTOVELO, 90º, 1 1/16"-12, 37° x 1 1/16"-12, O-Ring, Incl. 7
7		167266		4	ANEL "O", 12-1, 90 Duro, .924 ID x .116" Thk
8		337476		20	PARAFUSO, Hex, M12 x 50, 10.9
9		140046		40	ARRUELA PLANA, Belleville, M12
10		412672		20	CONTRA PORCA, M12 x 1.75, Cl 10
11		87034688		2	MOTOR, Drive Motor, MCR03 SAHR 17-10 CID 10T; See Fig. 06-43 - 06-45
12		87052429		1	MOTO-BOMBA, Pump, B2B-SG-2 Spd; Standard Flow; See Fig. 06-26; If Used
12		87745224		1	BOMBA, Pump, B2B-SG-2 Spd; Standard Flow; See Fig. 06-26; If Used
12		87052430		1	MOTO-BOMBA, Pump, B2B-DG-2 Spd; High Flow; See Fig. 06-26

SISTEMA HIDROSTÁTICO - BOMBA AO TUBO DE DISTRIBUIÇÃO, DUAS VELOCIDADES

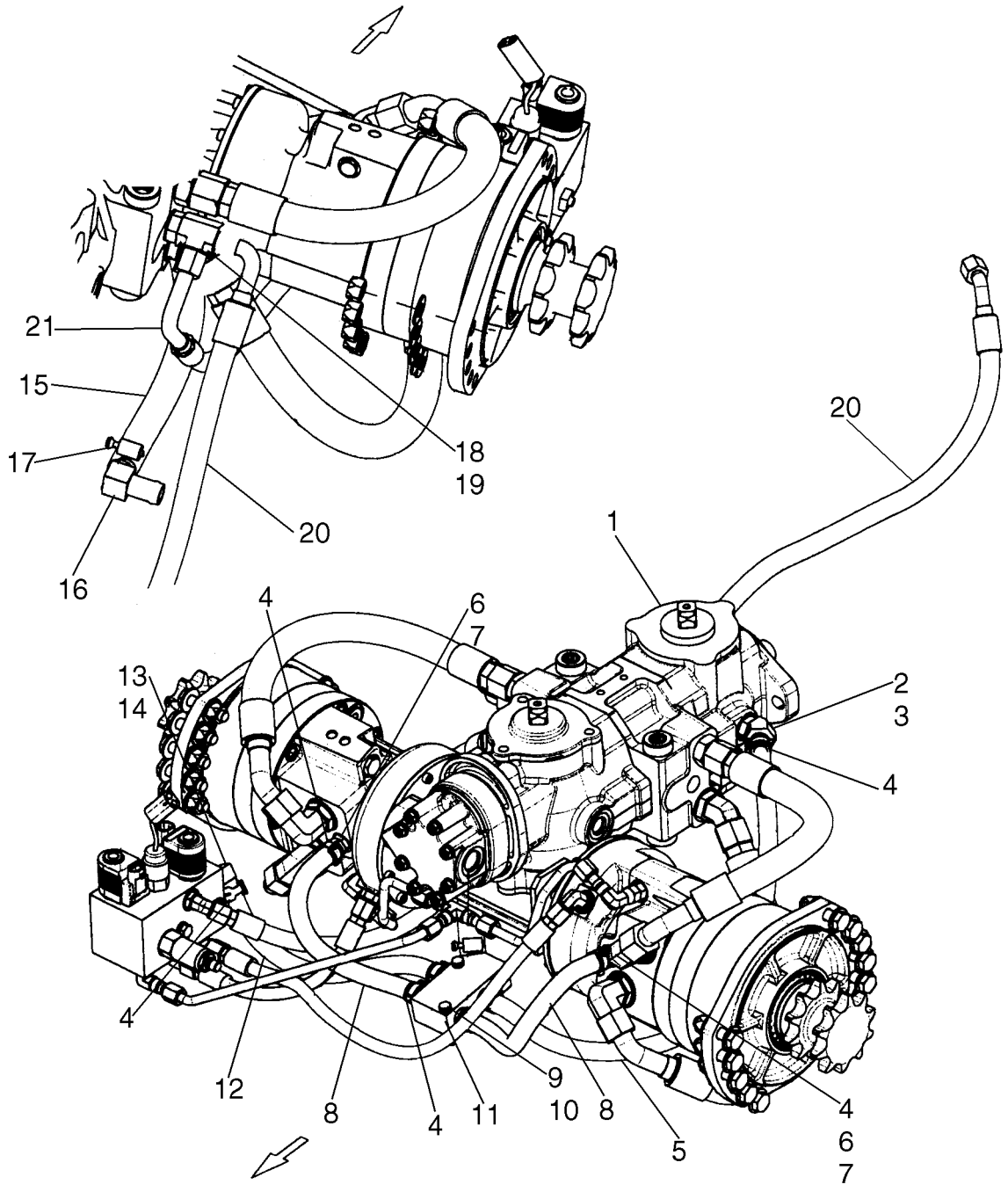

BS06M007

SISTEMA HIDROSTÁTICO - BOMBA AO TUBO DE DISTRIBUIÇÃO, DUAS VELOCIDADES

REF	FN	PART NUMBER	YR/SN	QTY	DESCRIPTION
1		87052429		1	MOTO-BOMBA, Pump, B2B-SG-2 Spd; See Fig. 06-26; If Used
1		87745224		1	BOMBA, Pump, B2B-SG-2 Spd, See Fig.06-26; If Used
2		87372529		1	ADAPTADOR, Stem 45 Deg. Bead Hose 1/2 ID X 3/4-16; Incl. 3
3		128825		1	ANEL "O", 8-1, 90 Duro, .644" ID x .087" Thk
4		87443510		8	BRACADEIRA MANGUEIRA
5		87367436		1	MANGUEIRA, Case Drain; 630 mm, 24.80 in.
6		86705988		2	CONEXAO, Incl. 7
7		9617873		2	ANEL "O", 6-1, 90 Duro, .468" ID x .078" Thk
8		87535987		2	MANGUEIRA, Motor Case; 314 mm, 12.36 in.; If Used
8		87547025		1	MANGUEIRA, Motor Case; 280 mm, 11.02 in.; If Used
8		87434275		2	MANGUEIRA, Motor Case; 320 mm, 12.60 in.; If Used
9		80682		4	ARRUELA-TRAVA, 1/4"
10		87404		2	PARAFUSO, Hex, 1/4"-20 x 2", G5
11		87369712		1	COLECTOR, Manifold, Oil Return
12		87535987		1	MANGUEIRA, Shift Case; 314 mm, 12.36 in.; If Used
12		87434276		1	MANGUEIRA, Shift Case; 350 mm, 13.78 in.; If Used
13		86705580		1	CONEXAO, 90º, 1/2" Hose x 9/16"-18 ORB Beaded, Incl. 14
14		9617873		1	ANEL "O", 6-1, 90 Duro, .468" ID x .078" Thk
15		87372533		1	MANGUEIRA, Drain Tank; 400 mm, 15.75 in.
16		87372552		1	COTOVELO, 90 Deg
17		86625021		2	BRACADEIRA MANGUEIRA, #12, 0.69/1.25 Type F Worm
18		86624130		1	TEE, 37º, 3/4"-16, 7/8"-14 O-Ring Run, 3/4"-16, Incl. 19; If Used
18		265808		1	TEE, 3/4"-16, 37º x 3/4"-18, O-Ring Run, Incl. 19A; If Used
19		167269		1	ANEL "O", 10-1, 90 Duro, .755" ID x .097" Thk
19A		128825		1	ANEL "O", 8-1, 90 Duro, .644" ID x .087" Thk
20		87433266		1	MANGUEIRA, Pump To Filter; 1080 mm, 42.52 in.
21		87433933		1	MANGUEIRA, Pump To Brake Valve; 540 mm, 21.26 in.

SISTEMA HIDROSTÁTICO - DUAS VELOCIDADES

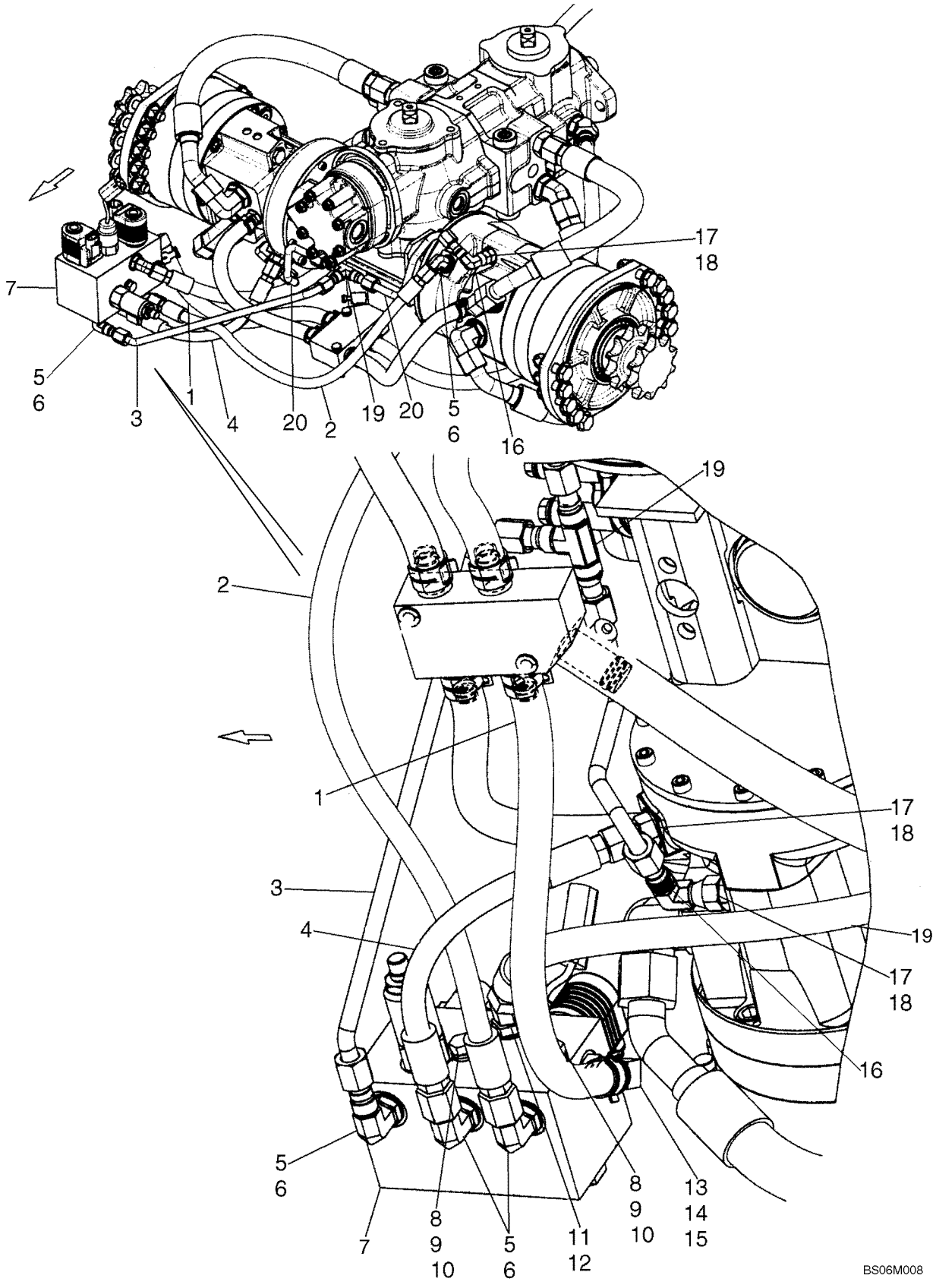

SISTEMA HIDROSTÁTICO - DUAS VELOCIDADES

REF	FN	PART NUMBER	YR/SN	QTY	DESCRIPTION
1		87434276		1	MANGUEIRA, Shift Case; 350 mm, 13.78 in.; If Used
1		87535987		1	MANGUEIRA, Shift Case; 314 mm, 12.36 in.; If Used
2		87433931		1	MANGUEIRA, Right Hand Brake; 615 mm, 24.21 in.
3		87573053		1	TUBO RÍGIDO, Brake Valve To Tee
4		87433932		1	MANGUEIRA, Left Hand Brake; 270 mm, 10.63 in.
5		76344		4	COTOVELO, 90º, 9/16"-18, 37º x 9/16"-18, O-Ring, Incl. 6
6		9617873		4	ANEL "O", 6-1, 90 Duro, .468" ID x .078" Thk
7		87429625		1	VÁLVULA HIDRAULICA, Brake, 2 Speed Valve; See Fig. 06-09
8		80681		4	ARRUELA-TRAVA, 5/16"
9		280967		2	PORCA, Sq, 5/16"-18, G2
10		86507008		2	PARAFUSO, Hex, 5/16"-18 x 3 1/2", G5
11		330346		1	COTOVELO, 45º, 9/16"-18, 37º x 9/16"-18, O-Ring, Incl. 12
12		9617873		1	ANEL "O", 6-1, 90 Duro, .468" ID x .078" Thk
13		86705580		1	CONEXAO, 90º, 1/2" Hose x 9/16"-18 ORB Beaded, Incl. 14
14		9617873		1	ANEL "O", 6-1, 90 Duro, .468" ID x .078" Thk
15		87443510		8	BRACADEIRA MANGUEIRA
16		86629586		2	COTOVELO, 90º, 9/16"-18, 37º x 9/16"-18, 37º Fem Sw
17		76350		3	CONEXÃO, 9/16"-18, 37º x 9/16"-18, O-Ring, Inc. 18
18		9617873		3	ANEL "O", 6-1, 90 Duro, .468" ID x .078" Thk
19		76355		1	TEE, 9/16"-18, 37º
20		87540697		2	TUBO RÍGIDO, Brake Valve Tee To Motor

SISTEMA HIDROSTÁTICO - MOTORES DE TRACÇÃO À BOMBA (C175)

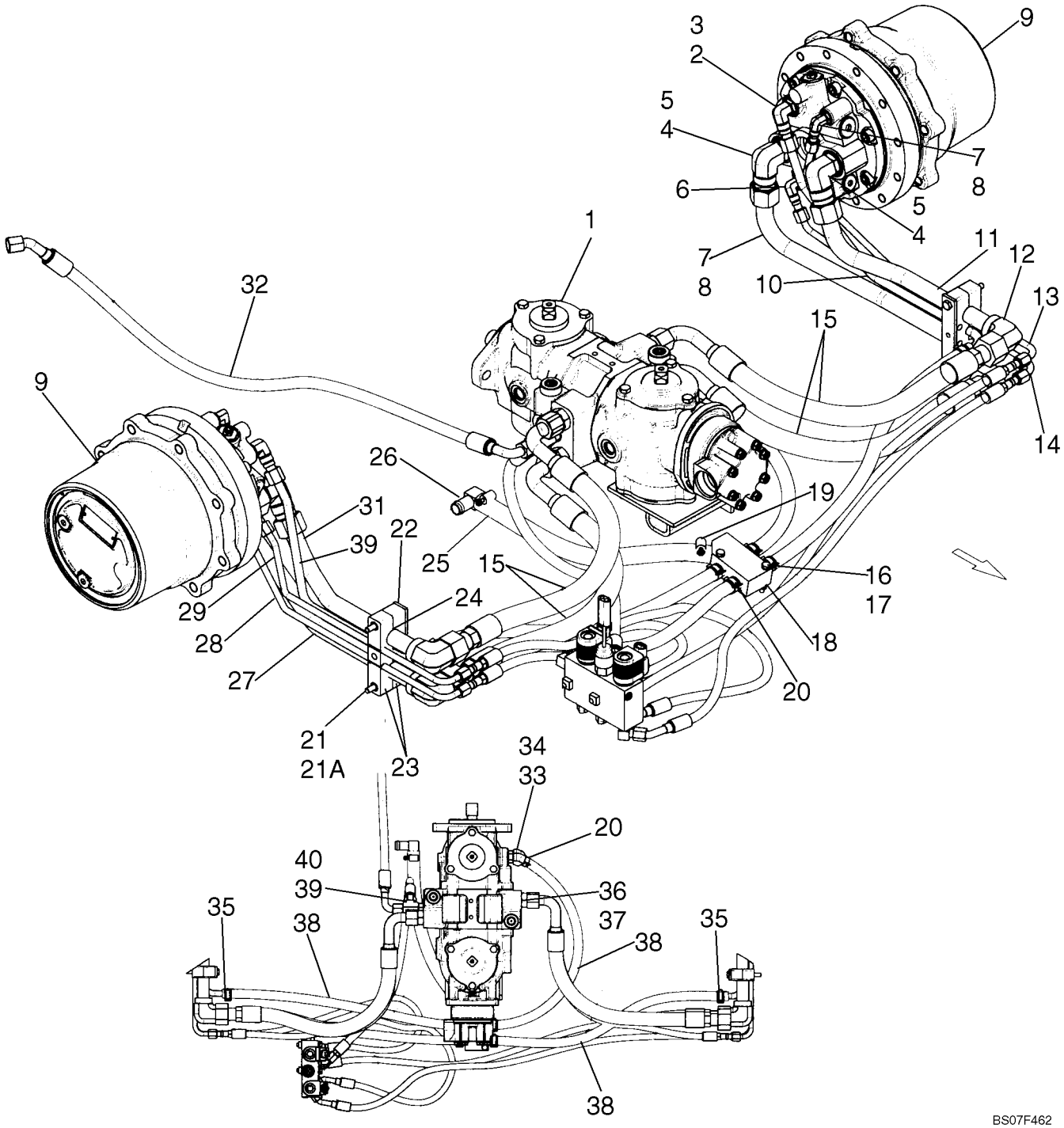

SISTEMA HIDROSTÁTICO - MOTORES DE TRACÇÃO À BOMBA (C175)

REF	FN	PART NUMBER	YR/SN	QTY	DESCRIPTION
1		86566179		1	BOMBA HIDRÁULICA, Two Speed, Standard Flow; See Fig. 06-22
1		86566181		1	BOMBA HIDRÁULICA, Two Speed, High Flow; See Fig. 06-22
2		128830		2	COTOVELO, 90º, 3/4"-16, 37º x 3/4"-16, O-Ring, Incl. 3
3		128825		2	ANEL "O", 8-1, 90 Duro, .644" ID x .087" Thk
4		286217		4	COTOVELO, 90º, 1 5/16"-12, 37º x 1 1/16"-12, O-Ring, Incl. 5
5		167266		4	ANEL "O", 12-1, 90 Duro, .924 ID x .116" Thk
6		87582945		1	TUBULAÇÃO HIDRAULICO, Tube, LH Loop, Bottom
7		76344		4	COTOVELO, 90º, 9/16"-18, 37º x 9/16"-18, O-Ring, Includes 8
8		9617873		4	ANEL "O", 6-1, 90 Duro, .468" ID x .078" Thk
9		87588897		2	MOTO-BOMBA, Drive Motor, Two Speed (C175); See Fig. 06-46
10		87582946		1	TUBO RÍGIDO, LH Case Drain
11		87582944		1	TUBULAÇÃO HIDRAULICO, LH Loop, Top
12		9824050		4	ANEL "O", -021, 90 Duro, .926" ID x .070" Thk, O-ring On Fitting From Pump Hoses To Drive Motors
13		87582951		1	TUBO RÍGIDO, LH Brake
14		87582952		1	TUBO RÍGIDO, LH, Two Speed
15		87574448		2	MANGUEIRA, Loop; 565 mm, 22.24 in.
16		80682		2	ARRUELA-TRAVA, 1/4"
17		87404		2	PARAFUSO, Hex, 1/4"-20 x 2", G5
18		87369712		1	COLECTOR, Manifold, Return Oil
19		86625021		2	BRACADEIRA MANGUEIRA, #12, 0.69/1.25 Type F Worm
20		87443510		3	BRACADEIRA MANGUEIRA
21		120040		4	PARAFUSO, Short NK, M8 x 80, Cl8.8
21		120062		4	PARAFUSO, Hex, M8 x 70, 8.8, No Longer Used, Order 120040
21A		9628098		4	CONTRA PORCA, M8 x 1.25, Cl 10
22		87452146		2	BARRA
23		87452108		4	PRENDEDOR

SISTEMA HIDROSTÁTICO - MOTORES DE TRACÇÃO À BOMBA (C175)

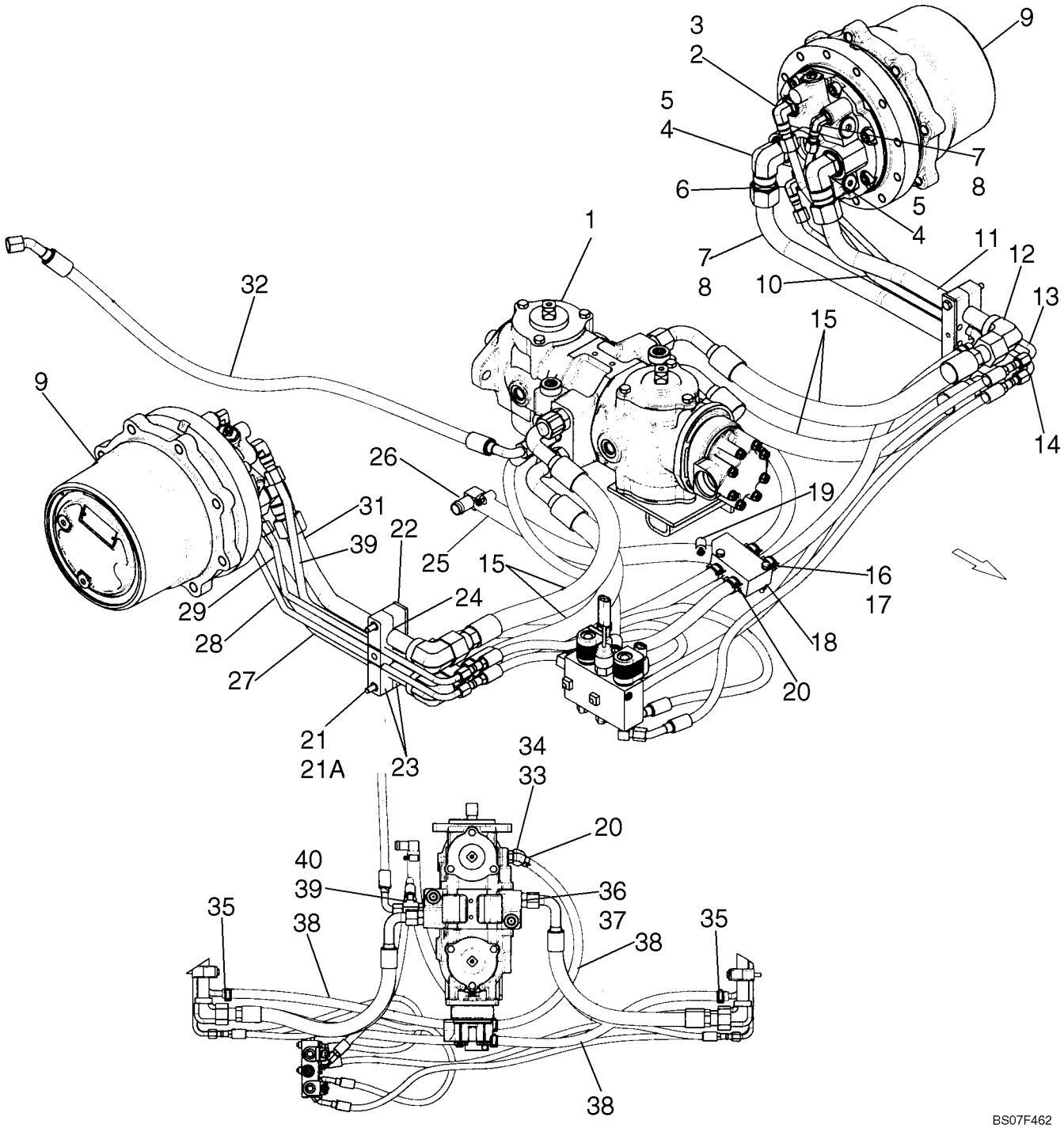

SISTEMA HIDROSTÁTICO - MOTORES DE TRACÇÃO À BOMBA (C175)

REF	FN	PART NUMBER	YR/SN	QTY	DESCRIPTION
24		87302564		4	ESPAÇADOR
25		87372533		1	MANGUEIRA, Drain Tank; 400 mm, 15.75 in.
26		87372552		1	COTOVELO, Elbow, 90 Deg
27		87582954		1	TUBO RÍGIDO, RH Loop, Bottom
28		87582957		1	TUBO RÍGIDO, RH, Two Speed
29		87582956		1	TUBO RÍGIDO, RH Brake
30		87582955		1	TUBO RÍGIDO, RH Case Drain
31		87582953		1	TUBO RÍGIDO, RH Loop, Top
32		87433266		1	MANGUEIRA, Pump To Filter; 1080 mm, 42.52 in.
33		87372529		1	ADAPTADOR, Stem 45 Bead Hose 1/2 ID X 3/4-16; Incl. 35
34		128825		1	ANEL "O", 8-1, 90 Duro, .644" ID x .087" Thk
35		87443510		2	BRACADEIRA MANGUEIRA
36		322896		4	CONEXÃO, 1 1/16"-12, 37º x 1 1/16"-12, O-Ring, Incl. 38
37		167266		4	ANEL "O", 12-1, 90 Duro, .924 ID x .116" Thk
38		87367436		3	MANGUEIRA, Pump Case Drain; 630 mm, 24.80 in.
39		86624130		1	TEE, 37º, 3/4"-16, 7/8"-14 O-Ring Run, 3/4"-16, Incl. 41
40		167269		1	ANEL "O", 10-1, 90 Duro, .755" ID x .097" Thk

SISTEMA HIDROSTÁTICO - DUAS VELOCIDADES/TRAVÃO (C175)

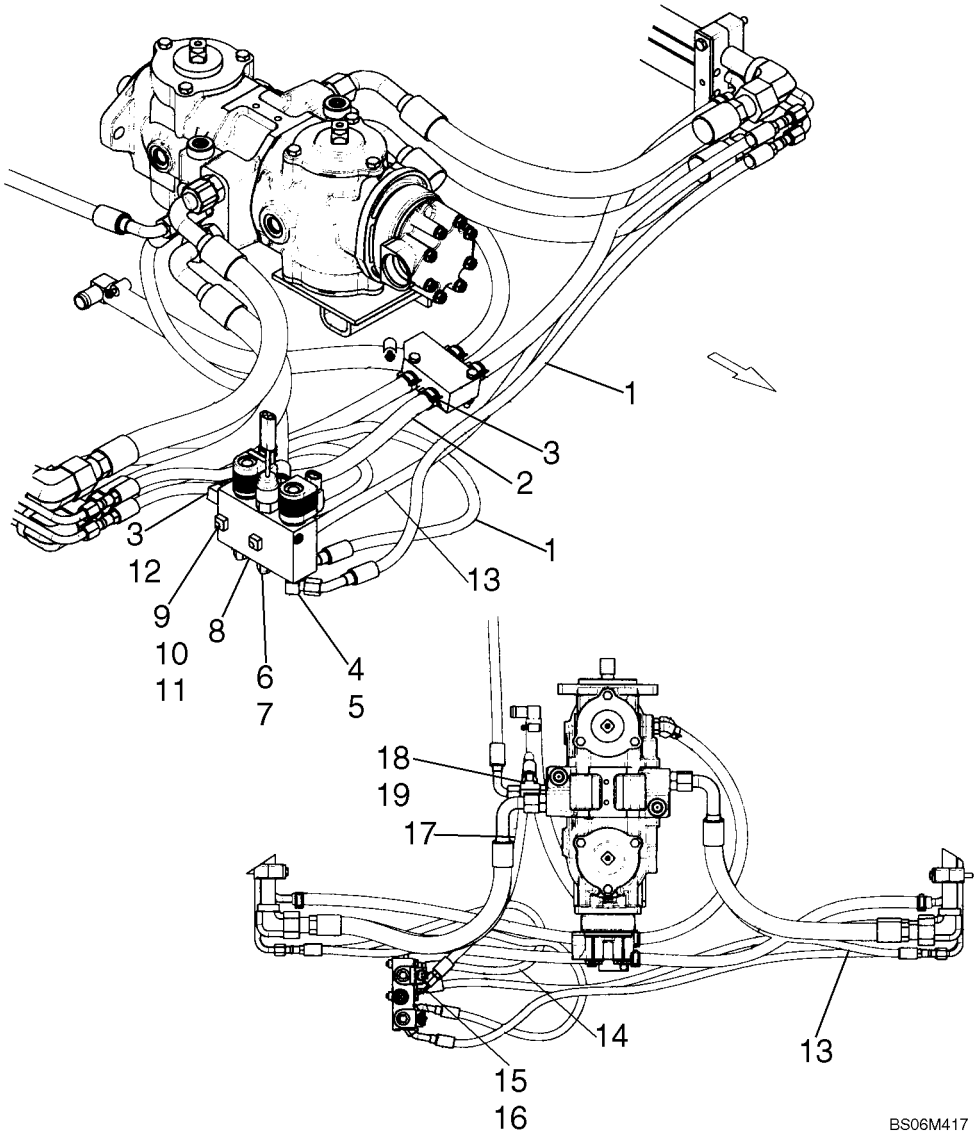

SISTEMA HIDROSTÁTICO - DUAS VELOCIDADES/TRAVÃO (C175)

REF	FN	PART NUMBER	YR/SN	QTY	DESCRIPTION
1		87380881		2	MANGUEIRA, Two Speed; 945 mm, 37.20 in.
2		87434276		1	MANGUEIRA, Shift Case; 350 mm, 13.78 in.
3		87443510		5	BRACADEIRA MANGUEIRA
4		L104616		1	TEE, Incl. 6
5		9617873		1	ANEL "O", 6-1, 90 Duro, .468" ID x .078" Thk
6		76344		2	COTOVELO, 90º, 9/16"-18, 37º x 9/16"-18, O-Ring, Incl. 8
7		9617873		2	ANEL "O", 6-1, 90 Duro, .468" ID x .078" Thk
8		87582388		1	VÁLVULA DE FREIO, Two Speed/Brake; If Used; Components Not Serviced At Time Of Print
8		87533025		1	VALVULA HYDR CONTROL, Two Speed/Brake; If Used; See Fig. 06-10
9		9636711		2	PARAFUSO, Hex, 5/16"-18 x 2", G5
10		87362		2	ARRUELA PLANA, 5/16" SAE
11		280967		2	PORCA, Sq, 5/16"-18, G2
12		86705580		1	CONEXAO, 90º, 1/2" Hose x 9/16"-18 ORB Beaded, Incl. Nut, Washer, O-ring
13		87367432		1	MANGUEIRA, Brake; 915 mm, 36.02 in.
14		87380875		1	MANGUEIRA, Brake; 750 mm, 29.53 in.
15		330346		1	COTOVELO, 45º, 9/16"-18, 37º x 9/16"-18, O-Ring, Incl. 17
16		9617873		1	ANEL "O", 6-1, 90 Duro, .468" ID x .078" Thk
17		87433933		1	MANGUEIRA, Charge; 540 mm, 21.26 in.
18		86624130		1	TEE, 37º, 3/4"-16, 7/8"-14 O-Ring Run, 3/4"-16, Incl. 20
19		167269		1	ANEL "O", 10-1, 90 Duro, .755" ID x .097" Thk

SISTEMA HIDROSTÁTICO - DUAS VELOCIDADES, CONJUNTO DA VÁLVULA

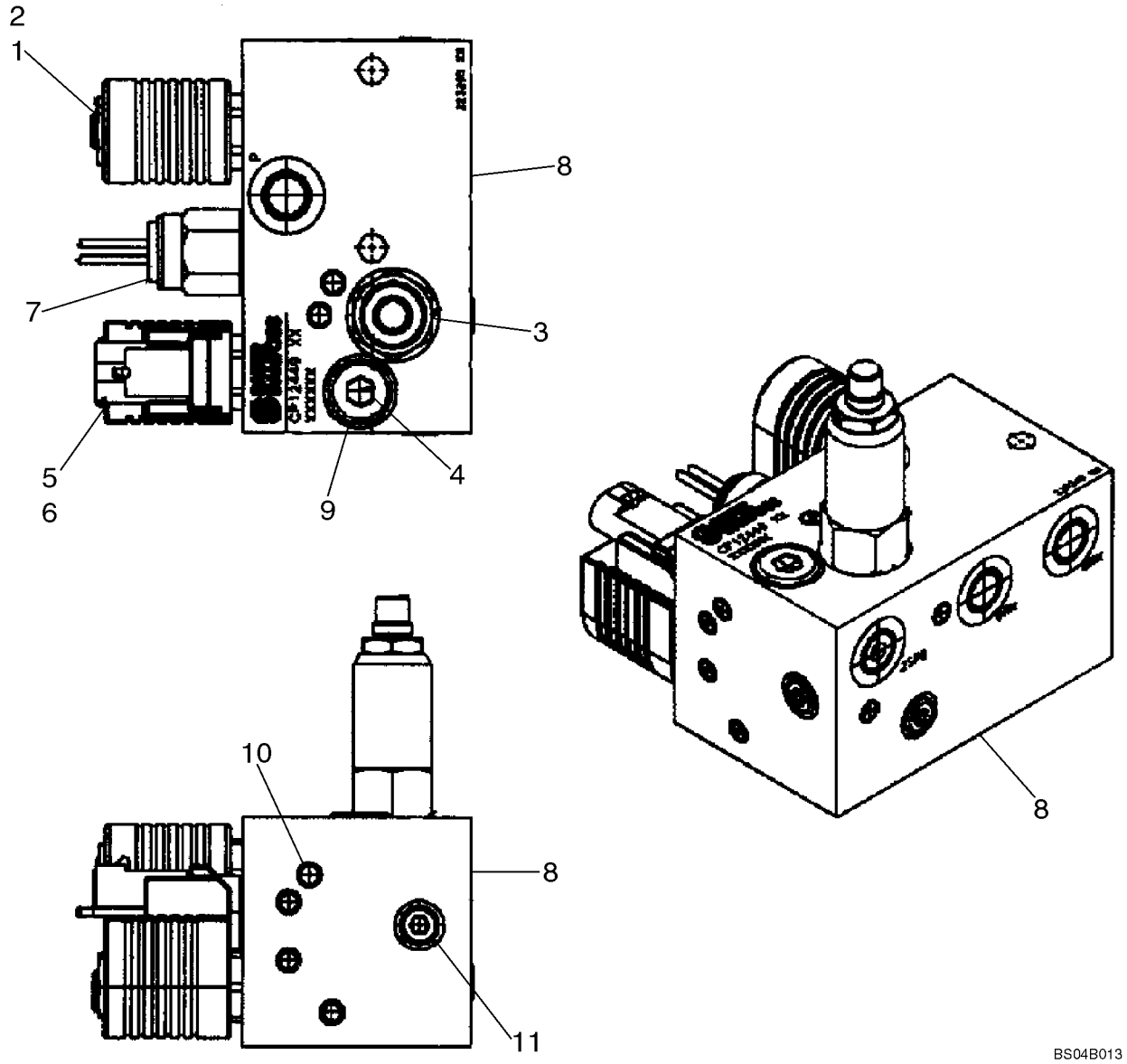

SISTEMA HIDROSTÁTICO - DUAS VELOCIDADES, CONJUNTO DA VÁLVULA

REF	FN	PART NUMBER	YR/SN	QTY	DESCRIPTION
		87429625		1	VÁLVULA HIDRAULICA, Two Speed; Incl. 1 - 11
		87352524		1	VÁLVULA DE FREIO, Brake, Two Speed; Incl. 1 - 11
1		87424182		1	VÁLVULA DE FREIO
2		87433496		X	BOBINA, Not Illustrated Separately
3		87433497		1	VALVULA, Sequence; Part of 87429625
3		87352527		1	VALVULA, Sequence; Part of 87352524
4		87426545		1	ORIFICIO, M12
5		87433495		1	ELETRO VALVULA, If Used
5		87483833		1	VALVULA, If Used
6		87433499		X	BOBINA, Not Illustrated Separately; If Used
7		87458061		1	INTERRUPTOR DE PRESSÃO, Charge Pressure; Incl. O-Ring Which Is Not Serviced Separately
8		NSS		1	BOLETIM INFORMATIVO, Body
6		87483832		X	BOBINA, Not Illustrated Separately; If Used
9		NSS		1	BOLETIM INFORMATIVO, Plug
10		NSS		11	BOLETIM INFORMATIVO, Expansion Plug
11		NSS		3	BOLETIM INFORMATIVO, Plug

SISTEMA HIDROSTÁTICO - DUAS VELOCIDADES, CONJUNTO DA VÁLVULA (C175)

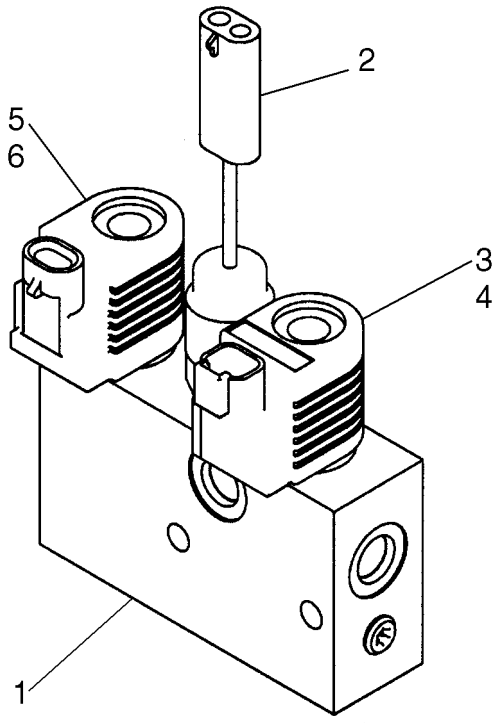

BS07E335

SISTEMA HIDROSTÁTICO - DUAS VELOCIDADES, CONJUNTO DA VÁLVULA (C175)

REF	FN	PART NUMBER	YR/SN	QTY	DESCRIPTION
1		87533025		1	VALVULA HYDR CONTROL, Valve, Solenoid; Two Speed/Brake; Incl. 2 - 6
2		87458061		1	INTERRUPTOR DE PRESSÃO, Charge Pressure; Incl. O-Ring Which Is Not Serviced Separately
3		87588579		1	ELETRO VALVULA, Two Speed Brake Solenoid Valve
4		87588596		1	SOLEMOID, Two Speed Brake Valve Coil
5		87588585		1	ELETRO VALVULA, Two Speed Brake Solenoid Valve
6		87588597		1	SOLEMOID, Two Speed Brake Valve Coil

SISTEMA DE FRENOS, TRANSMISSÃO DE DESLOCAMENTO DE DUAS VELOCIDADES - MODELOS COM CONTROLO AUTOMÁTICO

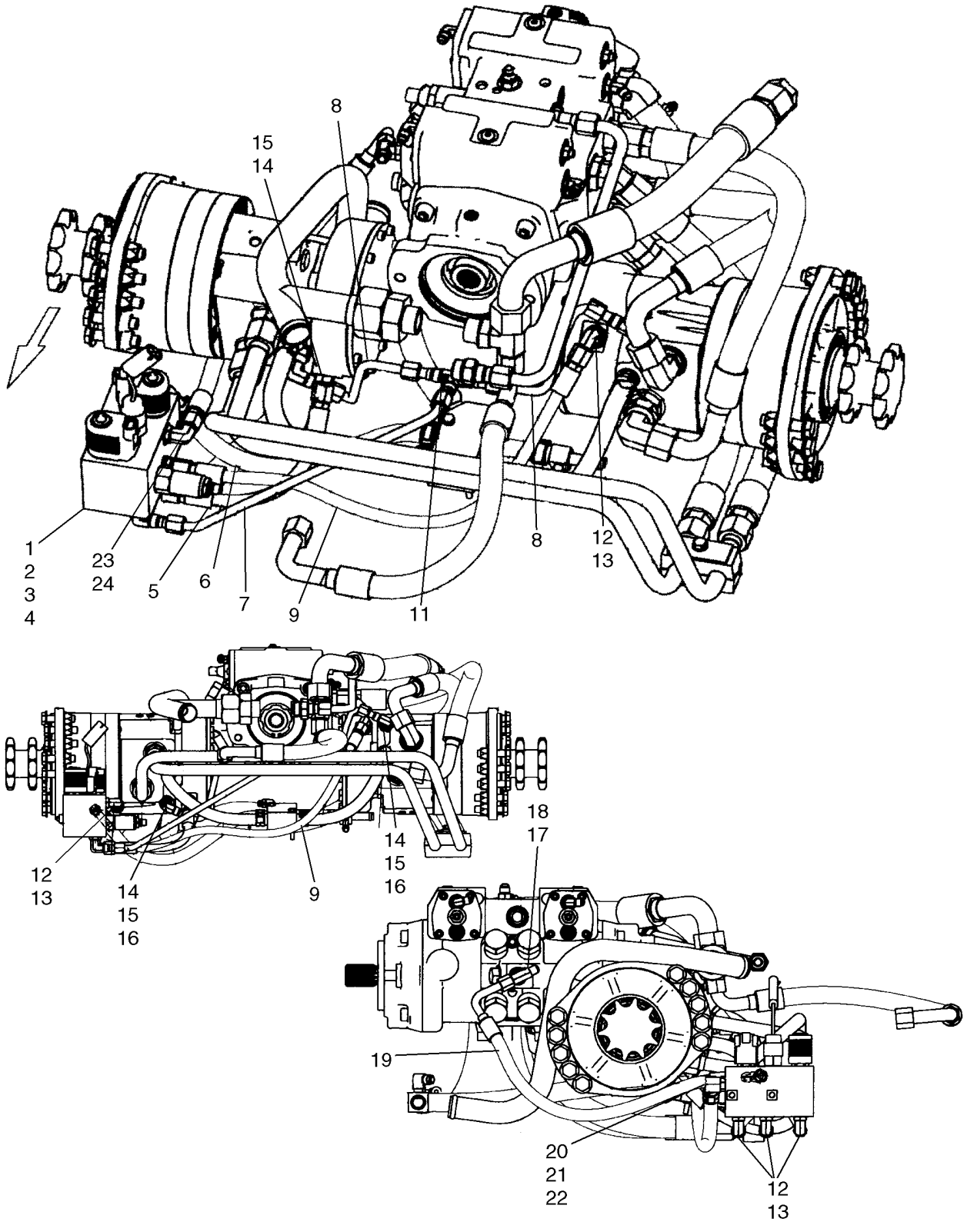

SISTEMA DE FRENOS, TRANSMISSÃO DE DESLOCAMENTO DE DUAS VELOCIDADES - MODELOS COM CONTROLO AUTOMÁTICO

REF	FN	PART NUMBER	YR/SN	QTY	DESCRIPTION
1		87429625		1	VÁLVULA HIDRAULICA, Brake, Two Speed Valve; See Fig. 06-09
2		86507008		2	PARAFUSO, Hex, 5/16"-18 x 3 1/2", G5
3		80681		4	ARRUELA-TRAVA, 5/16"
4		280967		2	PORCA, Sq, 5/16"-18, G2
5		87433932		1	MANGUEIRA, Left Hand Brake
6		87535987		1	MANGUEIRA, Shift Case; 314 mm, 12.36 in.; If Used
6		87434276		1	MANGUEIRA, Shift Case; 350 mm, 13.78 in.; If Used
7		87573053		1	TUBO RÍGIDO, Brake Valve To Tee
8		87540697		2	TUBO RÍGIDO, Tee To Motor
9		87433931		1	MANGUEIRA, Right Hand Brake; 615 mm, 24.21 in
11		76355		1	TEE, 9/16"-18, 37º
12		76344		5	COTOVELO, 90º, 9/16"-18, 37º x 9/16"-18, O-Ring, Incl. 13
13		9617873		5	ANEL "O", 6-1, 90 Duro, .468" ID x .078" Thk
14		76350		4	CONEXÃO, 9/16"-18, 37º x 9/16"-18, O-Ring, Incl. 15
15		9617873		4	ANEL "O", 6-1, 90 Duro, .468" ID x .078" Thk
16		86629586		2	COTOVELO, 90º, 9/16"-18, 37º x 9/16"-18, 37º Fem Sw
17		163335		1	TEE, 9/16"-18, 37º x 9/16"-18, O-Ring Br, Incl. 18
18		9617873		1	ANEL "O", 6-1, 90 Duro, .468" ID x .078" Thk
19		87433933		1	MANGUEIRA, Pump To Brake Valve
20		86705580		1	CONEXAO, 90º, 1/2" Hose x 9/16"-18 ORB Beaded, Incl. 21
21		9617873		1	ANEL "O", 6-1, 90 Duro, .468" ID x .078" Thk
22		87443510		2	BRACADEIRA MANGUEIRA
23		87648321		1	VALVULA CHECAGEM, 10 PSI; If Used
24		86629586		1	COTOVELO, 90º, 9/16"-18, 37º x 9/16"-18, 37º Fem Sw, If Used

SISTEMA HIDROSTÁTICO - CONTROLO AUTOMÁTICO À BOMBA

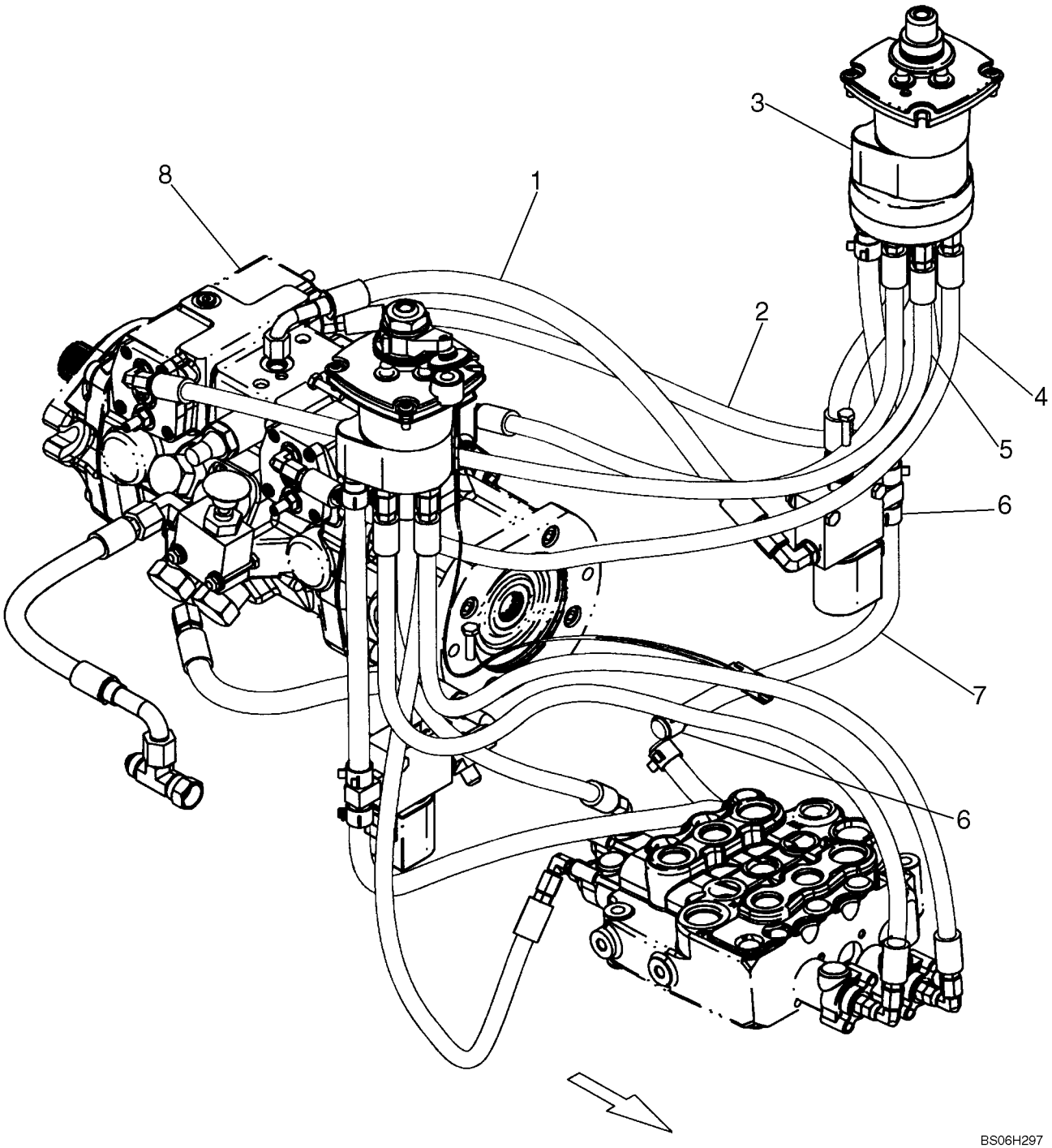

SISTEMA HIDROSTÁTICO - CONTROLO AUTOMÁTICO À BOMBA

REF	FN	PART NUMBER	YR/SN	QTY	DESCRIPTION
1		87578585		1	MANGUEIRA, 900 mm, 35.43 in.
2		87540693		1	MANGUEIRA, Pump Control
3		87565841		1	DISTRIBUIDOR, Pilot; See Fig. 06-12A
4		87551728		1	MANGUEIRA, Pump Control
5		87540695		1	MANGUEIRA, Pump Control
6		87019540		4	PRENDEDOR
7		87357216		1	MANGUEIRA, Joystick Drain
8		87357097		1	BOMBA, A20 Dbl Piston Pilot Controls; See Fig. 06-30

SISTEMA HIDROSTÁTICO - CONTROLO DA ALAVANCA DE MUDANÇAS KITS, TESTE PADRÃO ISOMETRIC

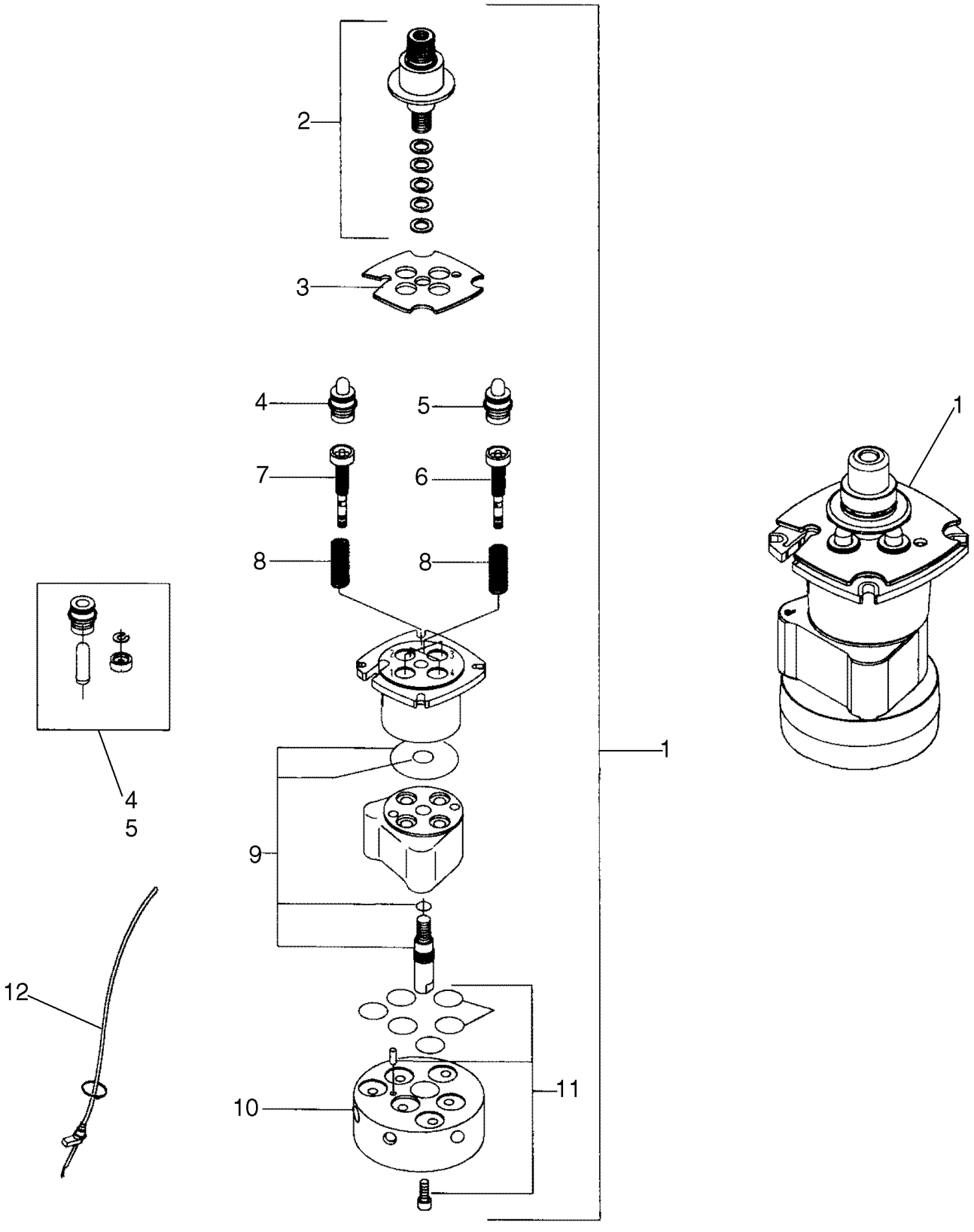

SISTEMA HIDROSTÁTICO - CONTROLO DA ALAVANCA DE MUDANÇAS KITS, TESTE PADRÃO ISOMETRIC

REF	FN	PART NUMBER	YR/SN	QTY	DESCRIPTION
1		87565841		1	DISTRIBUIDOR, Joystick Valve, ISO Pattern
2		87594867		1	KIT, SERVICE, Kit, Cardan Special Detent
3		87548835		1	PLACA, Kit,Retaining Plate, Standard
4		87548837		2	KIT, SERVICE, Kit, Hollow Plunger, Use On Ports 1, 3
5		87548838		2	KIT, SERVICE, Kit, Full Plunger, Use On Ports 2, 4
6		87548840		2	KIT, SERVICE, Kit, Reg Unit PP C224, Use On Ports 2, 4
7		87594866		2	KIT, SERVICE, Kit, Reg Unit PP C223, Use On Ports 1, 3
8		87548844		1	KIT, SERVICE, Kit, Heavy Spring
9		87548871		1	KIT, SERVICE, Kit, Seal
10		87548872		1	FLANGE
11		87548873		1	KIT, SERVICE, Kit, Flange Seal
12		87548874		1	KIT, SERVICE, Kit, Cable

SISTEMA HIDROSTÁTICO - BOMBA AO TUBO DE DISTRIBUIÇÃO, MODELOS COM CONTROLO AUTOMÁTICO

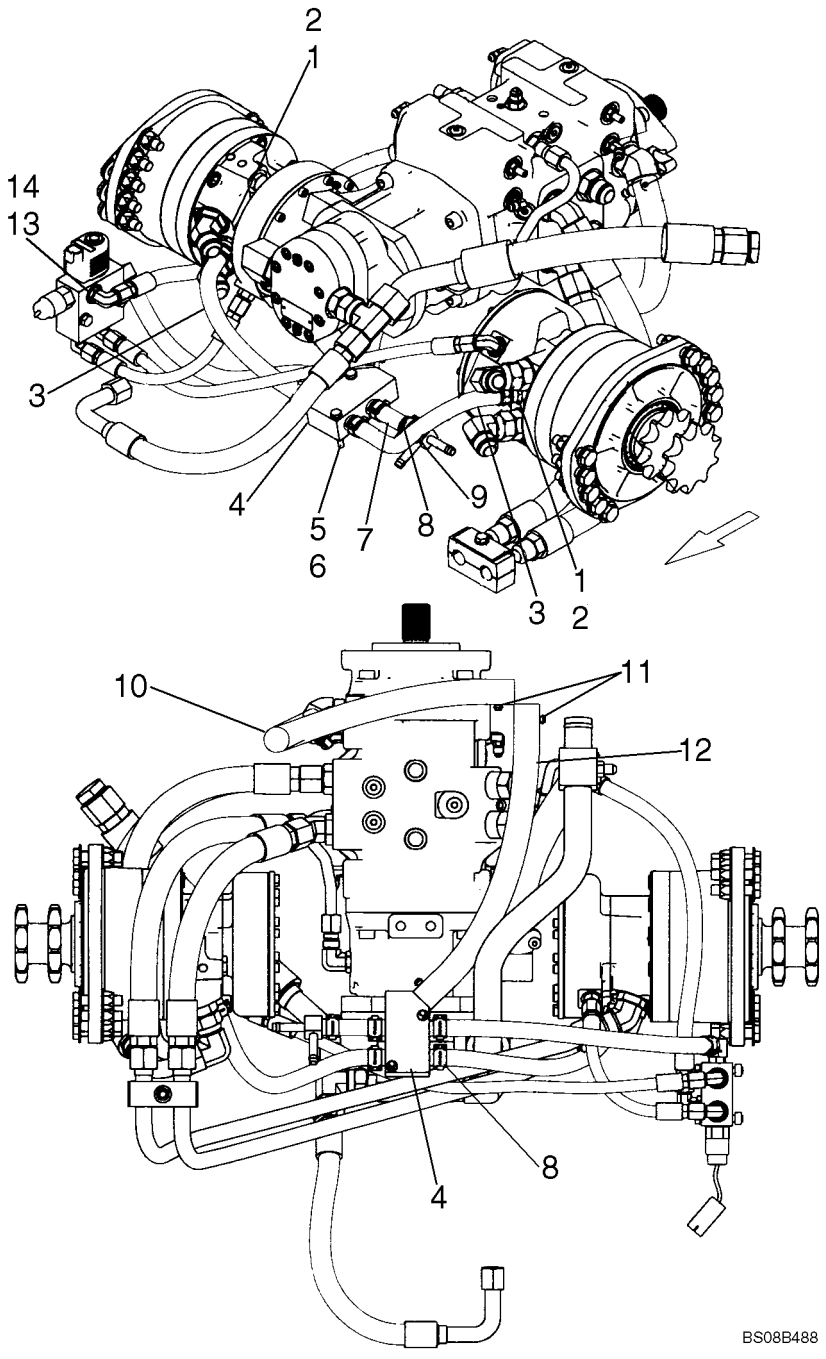

SISTEMA HIDROSTÁTICO - BOMBA AO TUBO DE DISTRIBUIÇÃO, MODELOS COM CONTROLO AUTOMÁTICO

REF	FN	PART NUMBER	YR/SN	QTY	DESCRIPTION
1		86705988		2	CONEXAO, Incl. 2
2		9617873		2	ANEL "O", 6-1, 90 Duro, .468" ID x .078" Thk
3		87434275		2	MANGUEIRA, Motor Case
4		87369712		1	COLECTOR
5		80682		4-2	ARRUELA-TRAVA, 1/4"
6		87404		2	PARAFUSO, Hex, 1/4"-20 x 2", G5
7		87397690		1	MANGUEIRA
8		87443510		8	BRACADEIRA MANGUEIRA
9		87357165		1	TEE
10		87357202		1	MANGUEIRA
11		87301358		2	BRACADEIRA MANGUEIRA, 1.00/1.875 HD Worm
12		87372533		1	MANGUEIRA, Drain Tank
13		86629586		1	COTOVELO, 90º, 9/16"-18, 37º x 9/16"-18, 37º Fem Sw, If Used
14		87648321		1	VALVULA CHECAGEM, 10 PSI; If Used

CONJUNTO DA BOMBA HIDRÁULICA/MOTOR, MODELOS COM CONTROLO AUTOMÁTICO

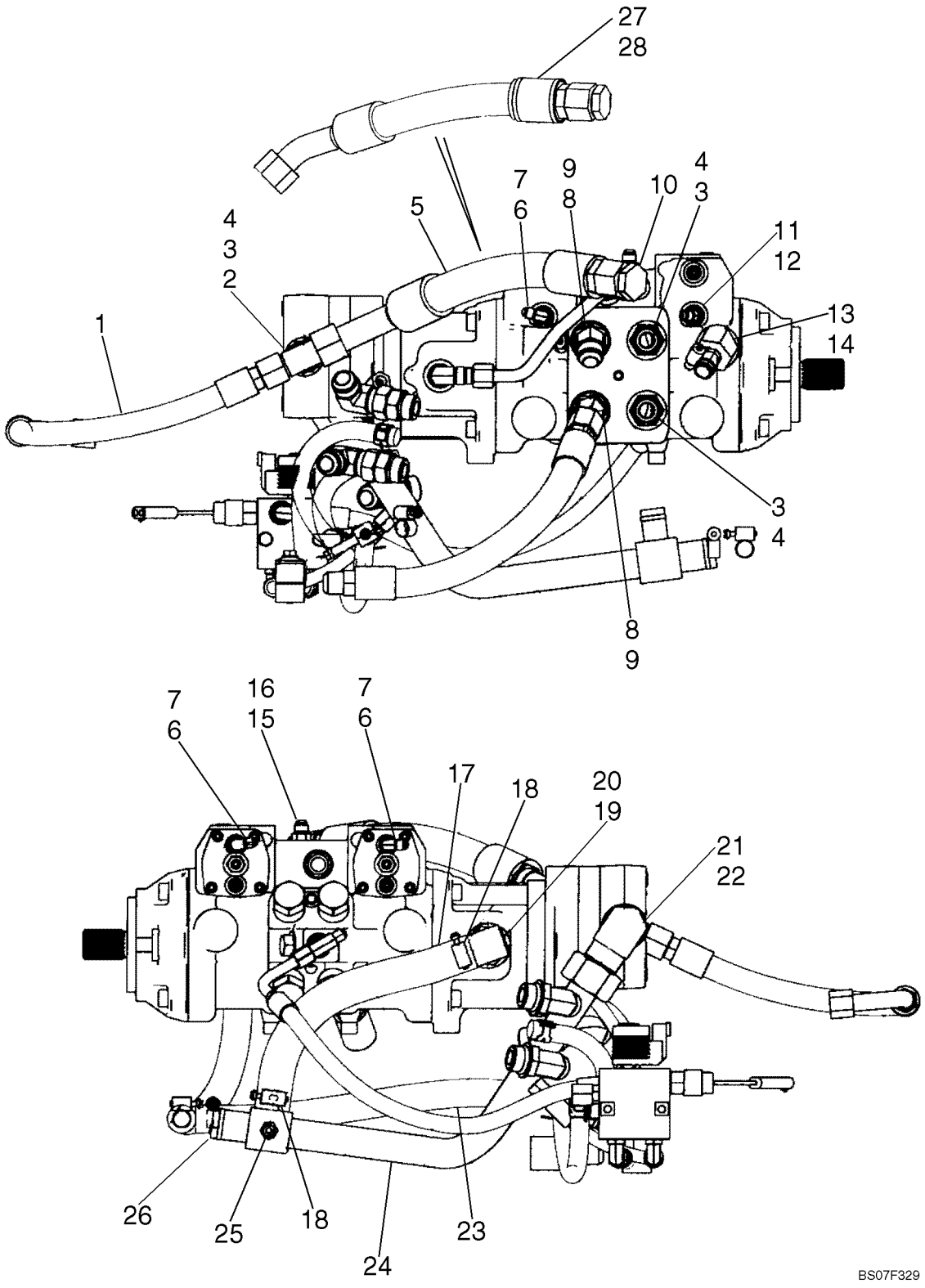

CONJUNTO DA BOMBA HIDRÁULICA/MOTOR, MODELOS COM CONTROLO AUTOMÁTICO

REF	FN	PART NUMBER	YR/SN	QTY	DESCRIPTION
1		87595013		1	MANGUEIRA, 465 mm (18.30 in), Implement Valve Supply; Replaces 87595772
2		86513017		1	TEE, 37º, 1 1/16"-12 x 1 1/16"-12, Fem Sw Br, Used With Connector 322896, If Used
2		87622774		1	CONEXAO, Tee 3/4 Tube 1-1/16-12 37FL; Incl. 4; If Used; Not Illustrated
3		322896		1	CONEXÃO, 1 1/16"-12, 37º x 1 1/16"-12, O-Ring, Incl. 4; Used With Tee 86513017, If Used
4		167266		5	ANEL "O", 12-1, 90 Duro, .924 ID x .116" Thk
5		87595764		1	MANGUEIRA, Resonator
6		216773		3	COTOVELO, 90º, 7/16"-20, 37º x 7/16"-20, O-Ring, Incl. 7
7		165202		3	ANEL "O", 4-1, 90 Duro, .351" ID x .072" Thk
8		330344		4-2	COTOVELO, 45º, 1 1/16"-12 x 1 1/16"-12, O-Ring, Incl. 9
9		167266		4-2	ANEL "O", 12-1, 90 Duro, .924 ID x .116" Thk
10		9790527		1	BUJÃO, 1 5/16"-12, 37º
11		86512993		1	COTOVELO, 45º, 7/16"-20, 37º x 7/16"-20, O-Ring, Incl. 12
12		165202		1	ANEL "O", 4-1, 90 Duro, .351" ID x .072" Thk
13		86705987		1	CONEXAO, Incl. 14
14		167266		1	ANEL "O", 12-1, 90 Duro, .924 ID x .116" Thk
15		76350		2	CONEXÃO, 9/16"-18, 37º x 9/16"-18, O-Ring, Incl. 16
16		9617873		2	ANEL "O", 6-1, 90 Duro, .468" ID x .078" Thk
17		87397649		1	MANGUEIRA, Charge Pump Supply; 315 mm (12.4 in); If Used
17A		87694585		1	MANGUEIRA, Charge Pump Supply; 350 mm (12.77 in); If Used
18		87301358		2	BRACADEIRA MANGUEIRA, 1.00/1.875 HD Worm
19		87393628		1	ADAPTADOR, Incl. 20
20		237-6016		1	ANEL "O", 16-1, 90 Duro, 1.171" ID x .118" Thk
21		87010672		1	COTOVELO, 90º, 1 5/8"-12, 37º x 1 5/16"-12, O-Ring
22		167268		1	ANEL "O", 16-1, 90 Duro, 1.171" ID x .116" Thk
23		87372533		1	MANGUEIRA

CONJUNTO DA BOMBA HIDRÁULICA/MOTOR, MODELOS COM CONTROLO AUTOMÁTICO

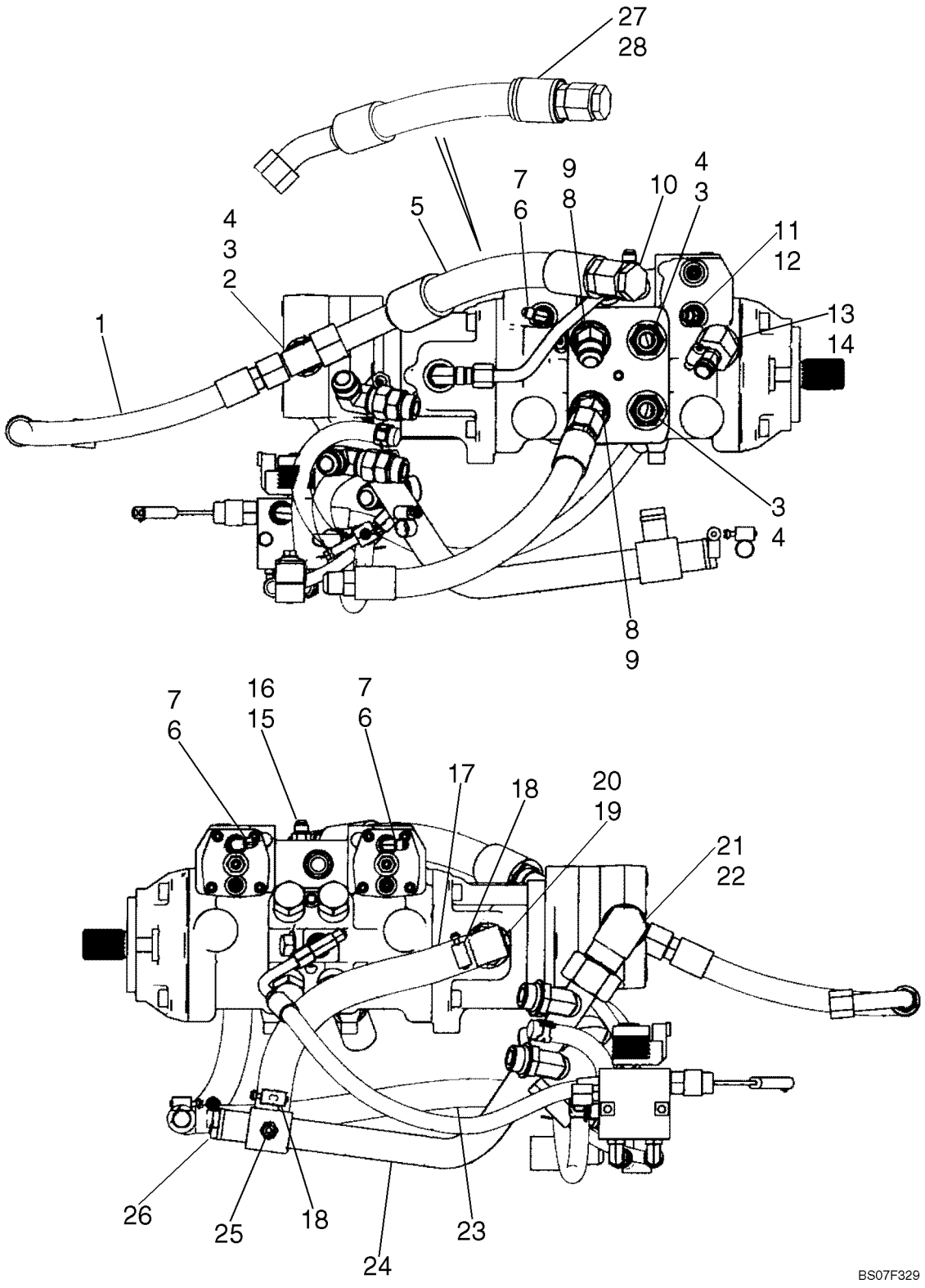

CONJUNTO DA BOMBA HIDRÁULICA/MOTOR, MODELOS COM CONTROLO AUTOMÁTICO

REF	FN	PART NUMBER	YR/SN	QTY	DESCRIPTION
24		87561765		1	TUBO RÍGIDO, Suction; With 87561765 Attached; If Used
24A		87711639		1	TUBO, Tube Suction; Without Tee Attched; If Used
25		9706918		1	CONEXÃO, 9/16"-18, 37° x 1/4"-18, NPTF
26		86625021		4	BRACADEIRA MANGUEIRA, #12, 0.69/1.25 Type F Worm
27		87595771		1	ISOLADOR
28		14560287		2	TIRA DE CABO, 289mm lg, Cable Tie

CONJUNTO DA BOMBA HIDRÁULICA/MOTOR, MODELOS COM CONTROLO AUTOMÁTICO

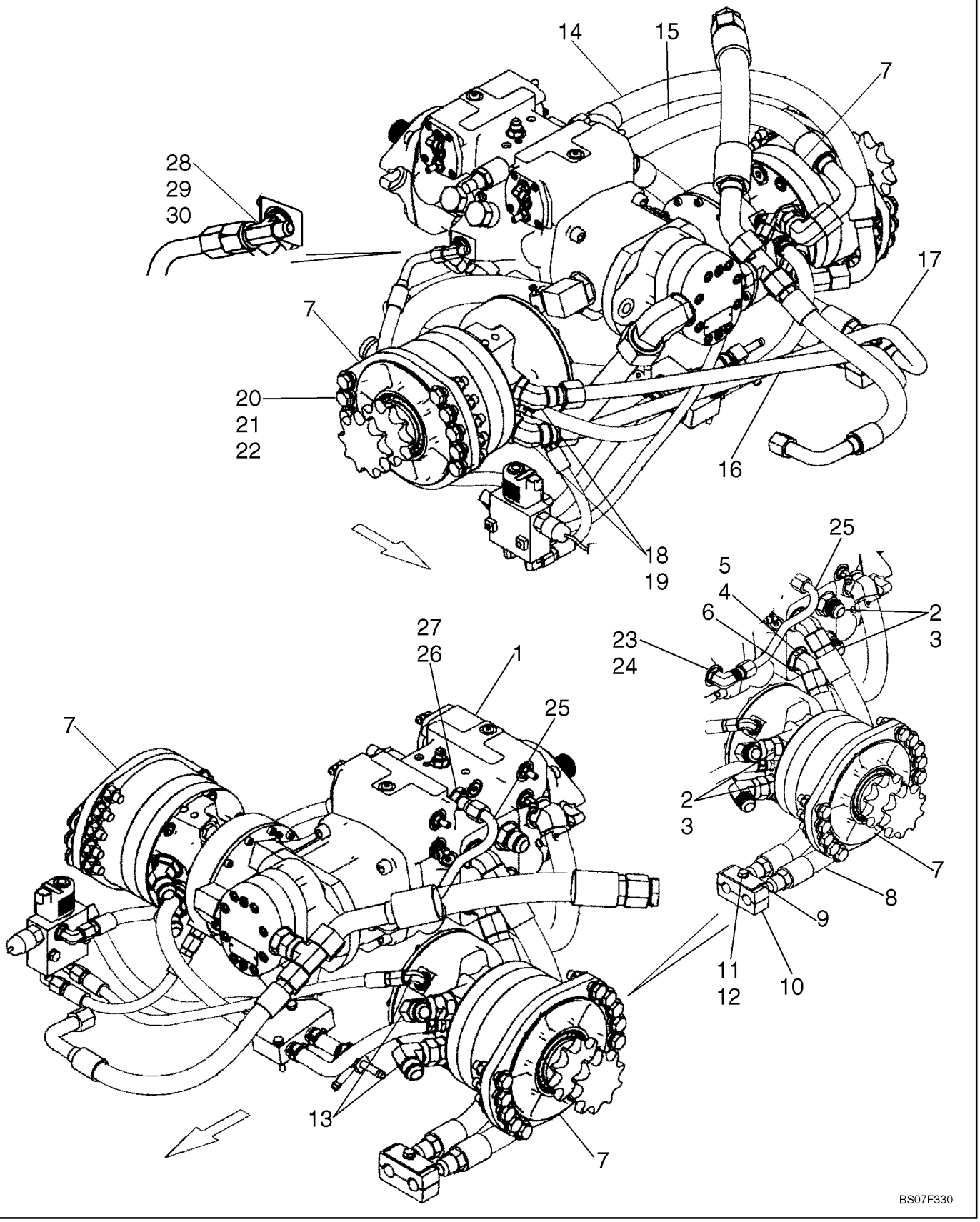

CONJUNTO DA BOMBA HIDRÁULICA/MOTOR, MODELOS COM CONTROLO AUTOMÁTICO

REF	FN	PART NUMBER	YR/SN	QTY	DESCRIPTION
1		87357097		1	BOMBA, Rexroth A20 Double Piston, Pilot Controls; See Fig. 06-30
2		322896		4-7	CONEXÃO, 1 1/16"-12, 37º x 1 1/16"-12, O-Ring, Incl. 3
3		167266		1	ANEL "O", 12-1, 90 Duro, .924 ID x .116" Thk
4		330344		4	COTOVELO, 45º, 1 1/16"-12 x 1 1/16"-12, O-Ring, Incl. 5
5		167266		1	ANEL "O", 12-1, 90 Duro, .924 ID x .116" Thk
6		87539459		1	MANGUEIRA, Right Hand Top Loop
7		87034687		2	MOTOR, MCR03 SAHR 24 CID 10 T; See Fig. 06-40 - 06-42
8		87357251		1	MANGUEIRA, Right Hand Bottom Loop
9		87000230		1	PLACA
10		87000151		1	PRENDEDOR
11		9636711		3-1	PARAFUSO, Hex, 5/16"-18 x 2", G5
12		86624184		1	ARRUELA PLANA, M8 x 16 x 1.6
13		219603		2	COTOVELO, 90º, 1 1/16"-12, 37º x 1 1/16"-12, 37º Fem Sw
14		87539460		1	MANGUEIRA, Left Hand Bottom Loop
15		87357253		1	MANGUEIRA, Left Hand Top Loop
16		87635414		1	TUBULAÇÃO HIDRAULICO, Pump To Motor Upper Loop; Replaces 87397689
17		87635413		1	TUBULAÇÃO HIDRAULICO, Lower Loop; Replaces 87357197
18		76350		2	CONEXÃO, 9/16"-18, 37º x 9/16"-18, O-Ring, Incl. 19
19		9617873		2	ANEL "O", 6-1, 90 Duro, .468" ID x .078" Thk
20		140046		40	ARRUELA PLANA, Belleville, M12
21		337476		20	PARAFUSO, Hex, M12 x 50, 10.9
22		412672		20	CONTRA PORCA, M12 x 1.75, Cl 10
23		128830		1	COTOVELO, 90º, 3/4"-16, 37º x 3/4"-16, O-Ring, Incl. 24
24		128825		1	ANEL "O", 8-1, 90 Duro, .644" ID x .087" Thk
25		87554297		1	TUBULAÇÃO HIDRAULICO, Charge Supply
26		81827427		1	CONEXÃO, Incl. 27
27		128817		1	CONEXÃO, 9/16"-18, 37º x 3/4"-18, O-Ring

CONJUNTO DA BOMBA HIDRÁULICA/MOTOR, MODELOS COM CONTROLO AUTOMÁTICO

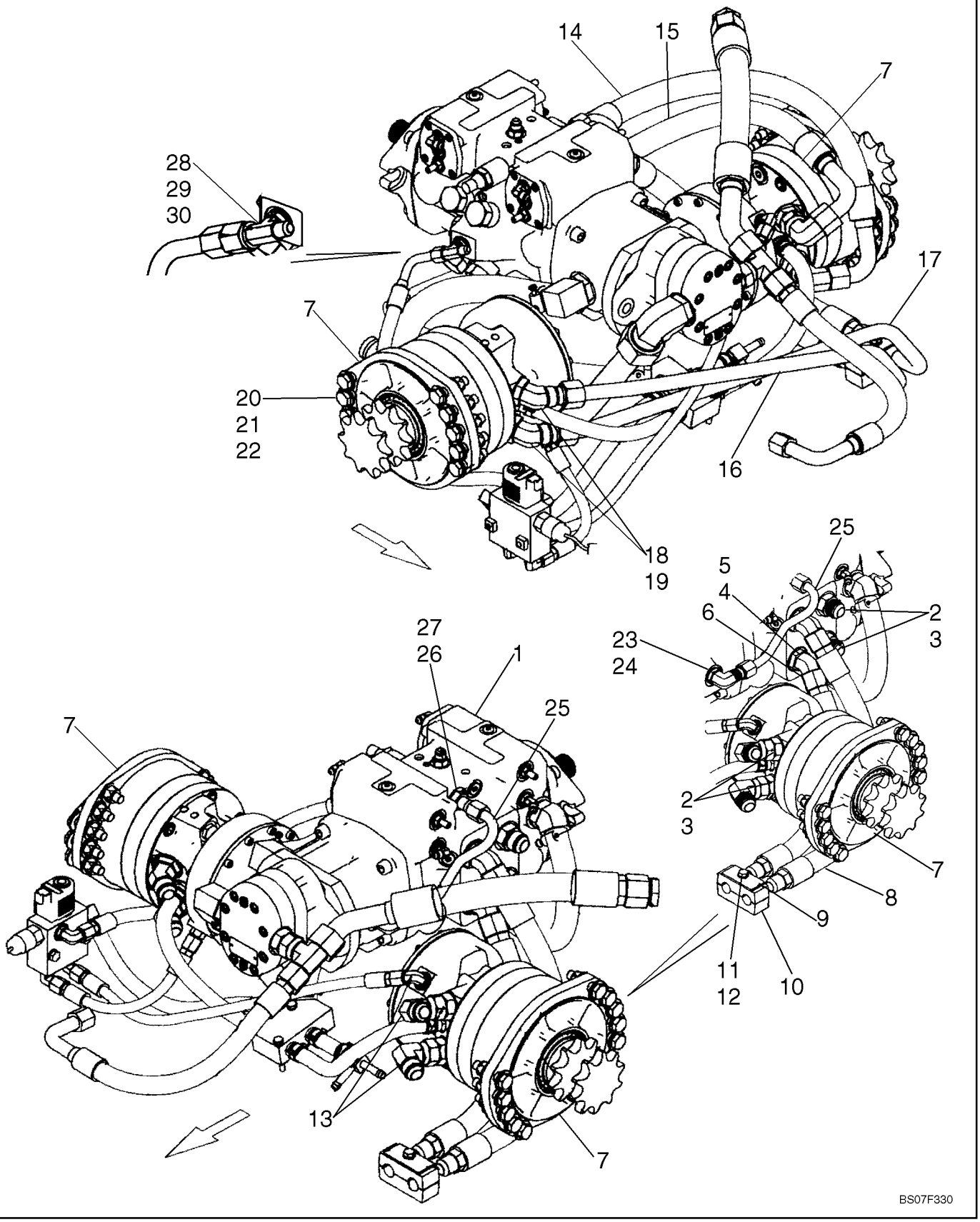

CONJUNTO DA BOMBA HIDRÁULICA/MOTOR, MODELOS COM CONTROLO AUTOMÁTICO

REF	FN	PART NUMBER	YR/SN	QTY	DESCRIPTION
28		163335		1	TEE, 9/16"-18, 37º x 9/16"-18, O-Ring Br, Incl. 29
29		9617873		1	ANEL "O", 6-1, 90 Duro, .468" ID x .078" Thk
30		87411460		1	REDUÇÃO, If Used

SISTEMA HIDROSTÁTICO - MOTORES DA BOMBA E DE TRANSMISSÃO, TRANSMISSÃO DE DESLOCAMENTO DE DUAS VELOCI

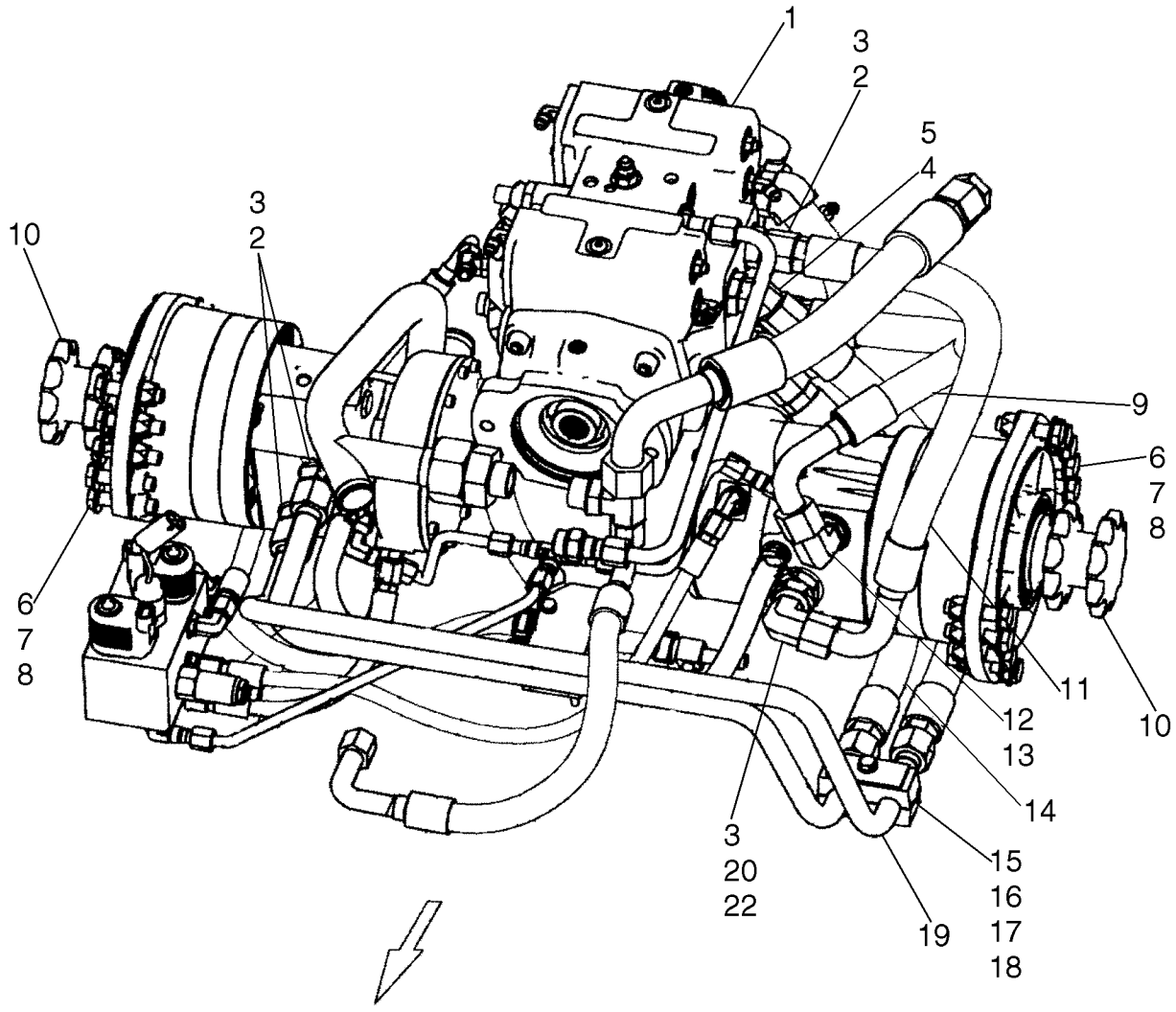

SISTEMA HIDROSTÁTICO - MOTORES DA BOMBA E DE TRANSMISSÃO, TRANSMISSÃO DE DESLOCAMENTO DE DUAS VELOCI

REF	FN	PART NUMBER	YR/SN	QTY	DESCRIPTION
1		87551775		1	BOMBA, Pump, Two Speed, Pilot Control; See Fig. 06-30A; If Used
1		87710267		1	BOMBA, Pump, Two Speed, Pilot Control; See Fig. 06-30A; If Used
2		322896		5	CONEXÃO, 1 1/16"-12, 37° x 1 1/16"-12, O-Ring, Incl. 3
3		167266		5	ANEL "O", 12-1, 90 Duro, .924 ID x .116" Thk
4		330344		2	COTOVELO, 45°, 1 1/16"-12 x 1 1/16"-12, O-Ring, Incl. 5
5		167266		2	ANEL "O", 12-1, 90 Duro, .924 ID x .116" Thk
6		337476		20	PARAFUSO, Hex, M12 x 50, 10.9
7		140046		40	ARRUELA PLANA, Belleville, M12
8		412672		20	CONTRA PORCA, M12 x 1.75, Cl 10
9		87357146		1	MANGUEIRA, Pump To Motor Loop
10		87034688		2	MOTOR, Drive Motor, MCR03 SAHR 17-10 CID 10 T; See Fig. 06-43 - 06-45
11		87539460		1	MANGUEIRA, Hose, Left Hand Bottom Loop
12		322894		1	COTOVELO, 90°, 1 1/16"-12, 37° x 1 1/16"-12, O-Ring, Incl. 13
13		167266		1	ANEL "O", 12-1, 90 Duro, .924 ID x .116" Thk
14		87365271		1	MANGUEIRA, Hose, Right Hand Top Loop
15		87000151		1	PRENDEDOR
16		87000230		1	PLACA
17		9636711		1	PARAFUSO, Hex, 5/16"-18 x 2", G5
18		86624184		1	ARRUELA PLANA, M8 x 16 x 1.6
19		87397681		1	TUBULAÇÃO HIDRAULICO, Tube, Lower Loop
20		219603		1	COTOVELO, 90°, 1 1/16"-12, 37° x 1 1/16"-12, 37° Fem Sw
21		87397682		1	TUBULAÇÃO HIDRAULICO, Tube, Upper Loop

SISTEMA HIDROSTÁTICO - STANDARD, TRANSMISSÃO DE DESLOCAMENTO DE DUAS VELOCIDADES

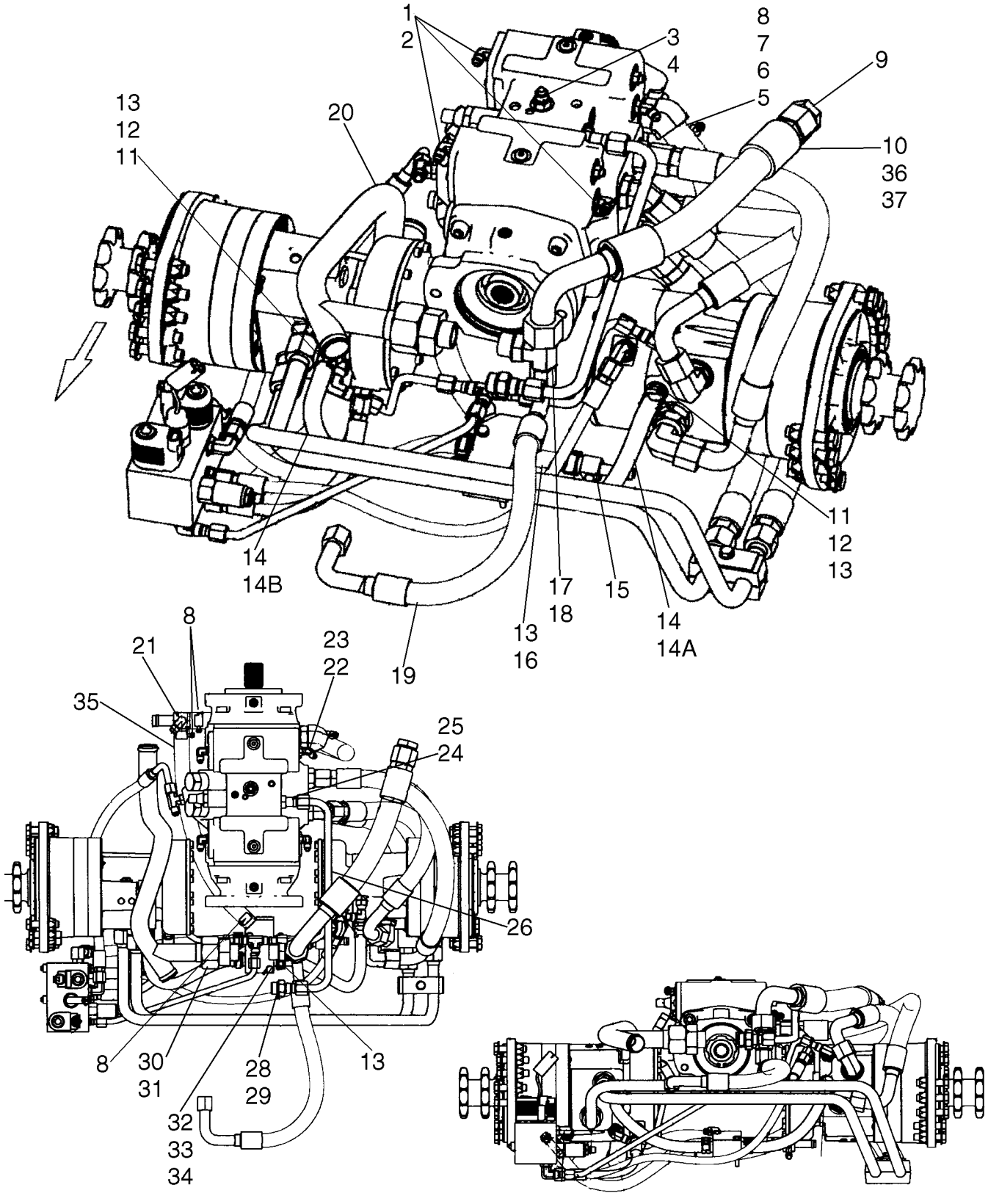

BS07E414

SISTEMA HIDROSTÁTICO - STANDARD, TRANSMISSÃO DE DESLOCAMENTO DE DUAS VELOCIDADES

REF	FN	PART NUMBER	YR/SN	QTY	DESCRIPTION
1		216773		3	COTOVELO, 90º, 7/16"-20, 37º x 7/16"-20, O-Ring, Incl. 2
1A		87707863		4	CONEXÃO, 4FJ X 4MJ W/ 0.9 Orifice; If Used
2		165202		3	ANEL "O", 4-1, 90 Duro, .351" ID x .072" Thk
3		76350		4	CONEXÃO, 9/16"-18, 37º x 9/16"-18, O-Ring, Incl. 4
4		9617873		4	ANEL "O", 6-1, 90 Duro, .468" ID x .078" Thk
5		87357202		1	MANGUEIRA, Tandem Pump Drain
6		86705987		1	CONEXAO, Incl. 7
7		9617873		1	ANEL "O", 6-1, 90 Duro, .468" ID x .078" Thk
8		86625021		4	BRACADEIRA MANGUEIRA, #12, 0.69/1.25 Type F Worm
9		9790527		1	BUJÃO, 1 5/16"-12, 37º
10		87595765		1	MANGUEIRA, Resonator, 2 Speed
10		87595764		1	MANGUEIRA, Resonator, 2 Speed; Replaces 87595765; See Ref 19, 21
11		86705988		2	CONEXAO, Incl. 12
12		9617873		2	ANEL "O", 6-1, 90 Duro, .468" ID x .078" Thk
13		87443510		8	BRACADEIRA MANGUEIRA
14		87434275		2	MANGUEIRA, Motor Case; 320 mm (12.59 in); If Used
14A		87547025		2	MANGUEIRA, Motor Case; 280 mm (11.02 in); If Used
14B		87535987		2	MANGUEIRA, Motor Case; 314 mm (12.36 in); If Used
15		87357165		1	TEE, Bead 1/2 ID X 3/8 ID X 3/8 ID
16		87397690		1	MANGUEIRA
17		87035435		1	TEE, Tee, Adj Br 37Fl 3/4 x 5/8 x 3/4; Incl. 18; If Used
17		87622774		1	CONEXAO, Tee, 3/4 Tube 1-1/16-12 37FL ADJ STR/TH ; Incl. 18; If Used
18		167266		1	ANEL "O", 12-1, 90 Duro, .924 ID x .116" Thk
19		87596211		1	MANGUEIRA, Implement Valve Supply; 500 mm (19.68 in); If Used; Used With Resonator 87595765, Ref 10, Elbow 578384, Ref 21

SISTEMA HIDROSTÁTICO - STANDARD, TRANSMISSÃO DE DESLOCAMENTO DE DUAS VELOCIDADES

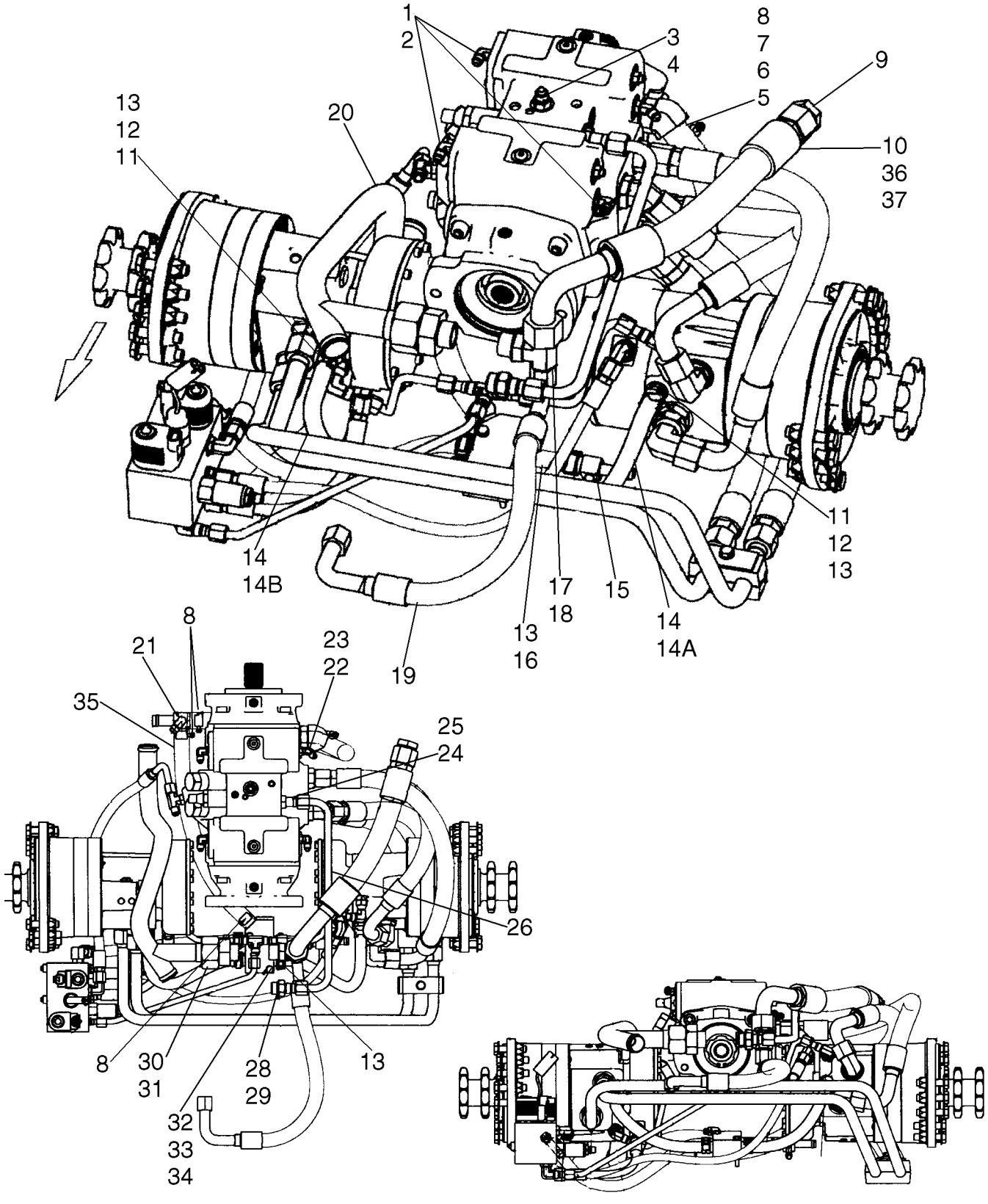

SISTEMA HIDROSTÁTICO - STANDARD, TRANSMISSÃO DE DESLOCAMENTO DE DUAS VELOCIDADES

REF	FN	PART NUMBER	YR/SN	QTY	DESCRIPTION
19		87595013		1	MANGUEIRA, Implement Valve Supply; 465 mm (18.30 in); If Used; Used With Resonator 87595764, Ref 10, Elbow 9617966, Ref 21
20		87553647		1	TUBULAÇÃO HIDRAULICO, Pump Supply; Branched Tube; If Used
20		87694599		1	TUBO, Pump Supply; Non-Branched Tube; If Used
21		578384		1	COTOVELO, 90º, 9/16"-18, 37º x 1/4"-18, NPTF, If Used; Used With Resonator 87595765, Hose 87596211, Ref 19
21		9617966		1	COTOVELO, 45º, 9/16-18" 37º x 1/4"-18, NPTF, If Used; Used With Resonator 87595764, Ref 10, Hose 87595013, Ref 19
22		86512993		1	COTOVELO, 45º, 7/16"-20, 37º x 7/16"-20, O-Ring, Incl. 23
23		165202		1	ANEL "O", 4-1, 90 Duro, .351" ID x .072" Thk
24		81827427		1	CONEXÃO, Incl. 25
25		128817		1	CONEXÃO, 9/16"-18, 37º x 3/4"-18, O-Ring
26		87540708		1	TUBO RÍGIDO, Charge Supply; If Used
28		128819		1	CONEXÃO, 3/4"-16, 37º x 7/8"-14, O-Ring, Incl. 29; If Used
29		167269		1	ANEL "O", 10-1, 90 Duro, .755" ID x .097" Thk
30		87558249		1	CONEXÃO, Connector, Str Thd 1.25 37Fl - Orb 1.0; Incl. 31
31		167268		1	ANEL "O", 16-1, 90 Duro, 1.171" ID x .116" Thk
32		87369712		1	COLECTOR
33		87404		2	PARAFUSO, Hex, 1/4"-20 x 2", G5
34		80682		4	ARRUELA-TRAVA, 1/4"
35		87372533		1	MANGUEIRA, Drain Tank
36		87595771		1	ISOLADOR, If Used
37		14560287		2	TIRA DE CABO, 289mm lg

CONJUNTO DA BOMBA HIDRÁULICA/MOTOR (C175), MODELOS COM CONTROLO AUTOMÁTICO

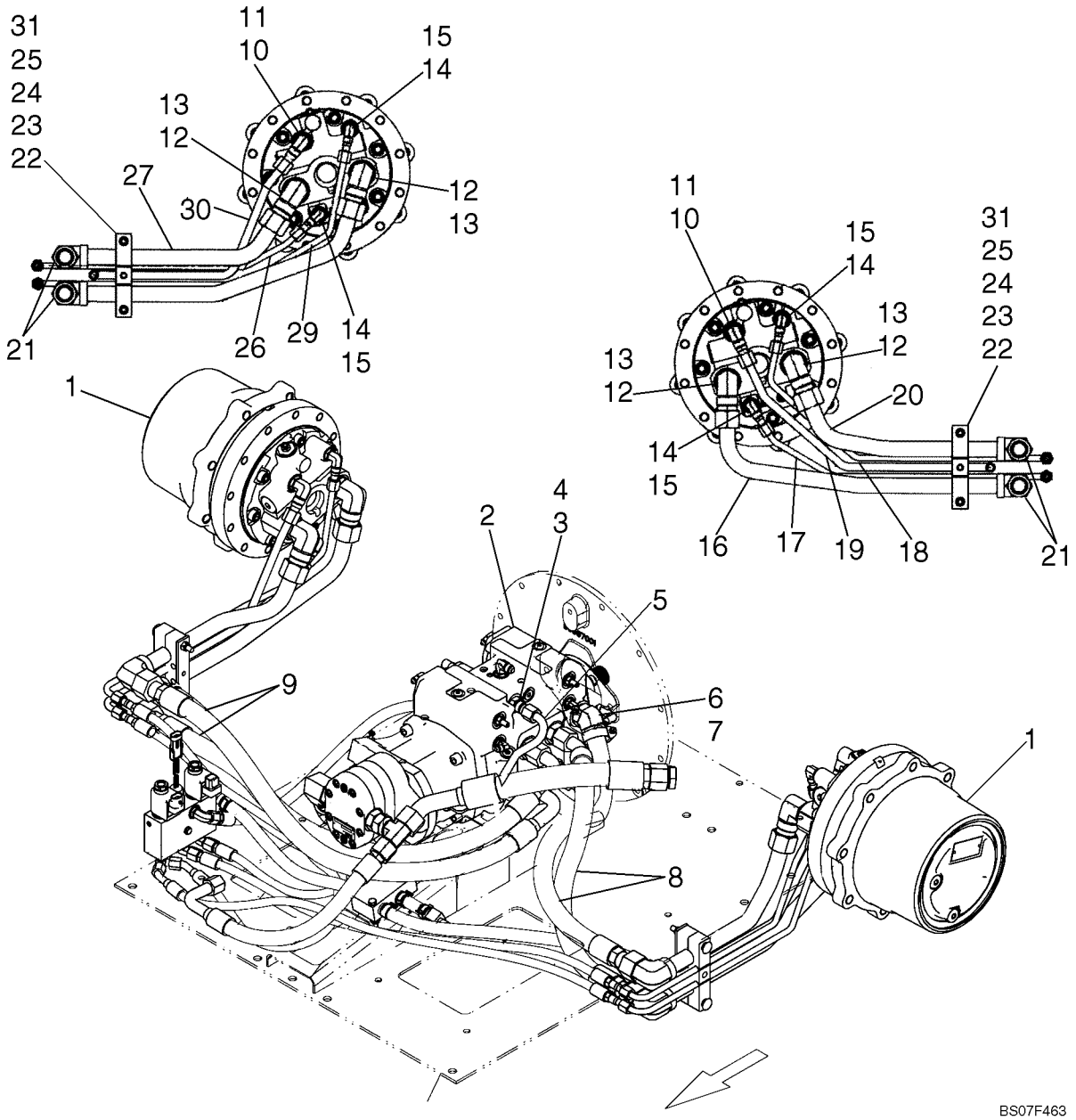

CONJUNTO DA BOMBA HIDRÁULICA/MOTOR (C175), MODELOS COM CONTROLO AUTOMÁTICO

REF	FN	PART NUMBER	YR/SN	QTY	DESCRIPTION
1		87588897		2	MOTO-BOMBA, Two Speed Motor, Bonfiglioli; See Fig. 06-46
2		87357097		1	BOMBA, A20 Double Piston, Pilot Control; See Fig. 06-30
3		128818		1	CONEXÃO, 3/4"-16, 37º x 3/4"-16, O-Ring, Incl. 4
4		128825		1	ANEL "O", 8-1, 90 Duro, .644" ID x .087" Thk
5		87554297		1	TUBULAÇÃO HIDRAULICO, Charge Supply
6		322896		4	CONEXÃO, 1 1/16"-12, 37º x 1 1/16"-12, O-Ring, Incl. 7
7		167266		4	ANEL "O", 12-1, 90 Duro, .924 ID x .116" Thk
8		87596267		2	MANGUEIRA, 617 mm, 24.29 in. Length
9		87596268		2	MANGUEIRA, 965 mm, 40.00 in. Length
10		128830		2	COTOVELO, 90º, 3/4"-16, 37º x 3/4"-16, O-Ring, Incl. 11
11		128825		2	ANEL "O", 8-1, 90 Duro, .644" ID x .087" Thk
12		286217		4	COTOVELO, 90º, 1 5/16"-12, 37º x 1 1/16"-12, O-Ring, Incl. 13
13		167266		4	ANEL "O", 12-1, 90 Duro, .924 ID x .116" Thk
14		76344		4	COTOVELO, 90º, 9/16"-18, 37º x 9/16"-18, O-Ring, Includes 15
15		9617873		4	ANEL "O", 6-1, 90 Duro, .468" ID x .078" Thk
16		87582945		1	TUBULAÇÃO HIDRAULICO, Left Hand Loop, Bottom
17		87582952		1	TUBO RÍGIDO, Left Hand Two Speed
18		87582951		1	TUBO RÍGIDO, Left Hand Brake
19		87582946		1	TUBO RÍGIDO, Left Hand Case Drain
20		87582944		1	TUBULAÇÃO HIDRAULICO, Left Hand Loop, Top
21		9824050		4	ANEL "O", -021, 90 Duro, .926" ID x .070" Thk, For Fitting Between Pump Hose And Undercarriage Plumbing
22		120040		4	PARAFUSO, Short NK, M8 x 80, Cl8.8
22		120062		4	PARAFUSO, Hex, M8 x 70, 8.8, No Longer Used, Order 120040
23		87452146		2	BARRA, Clamp, Top
24		87302564		4	ESPAÇADOR
25		87452108		4	PRENDEDOR

CONJUNTO DA BOMBA HIDRÁULICA/MOTOR (C175), MODELOS COM CONTROLO AUTOMÁTICO

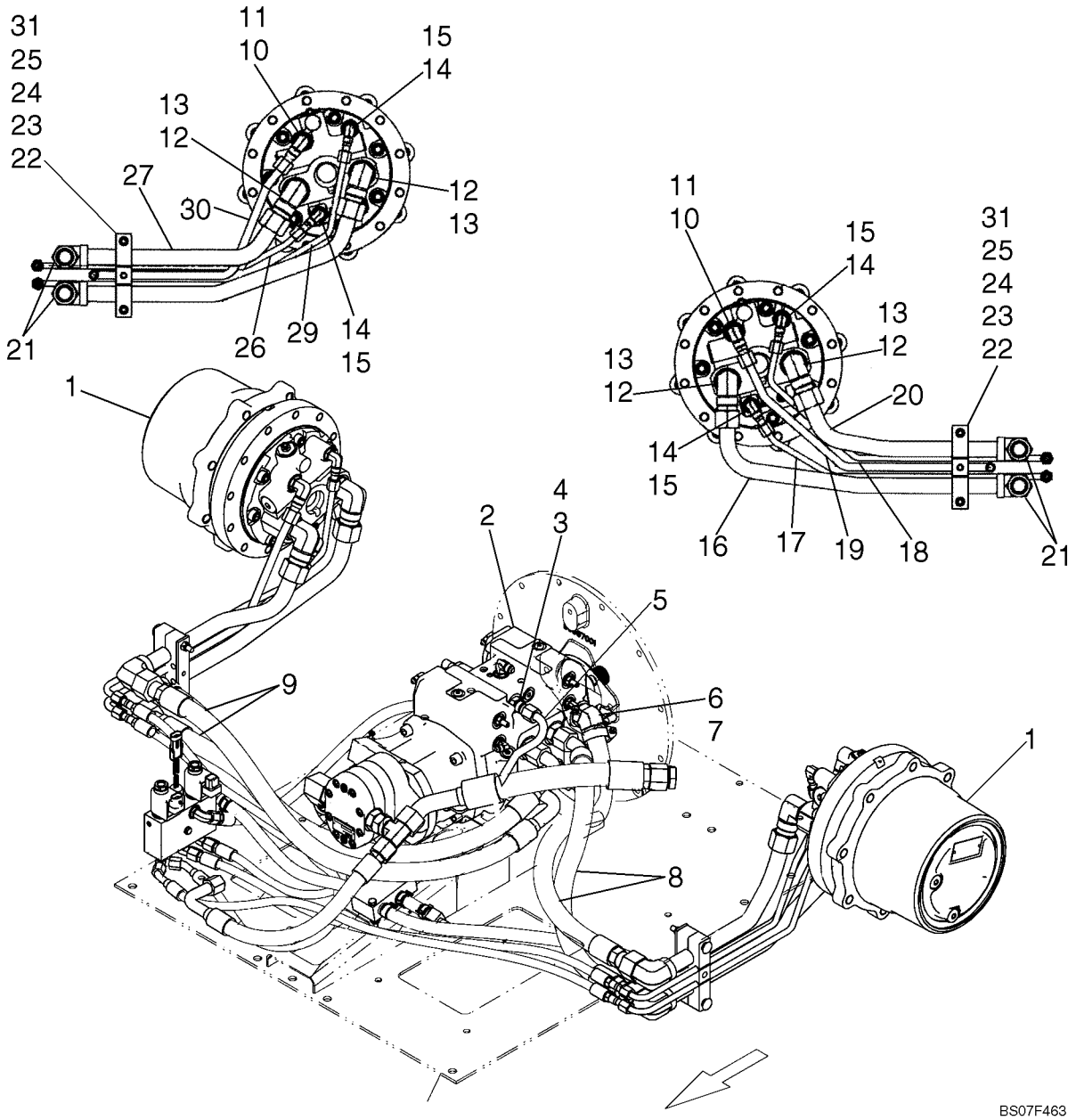

CONJUNTO DA BOMBA HIDRÁULICA/MOTOR (C175), MODELOS COM CONTROLO AUTOMÁTICO

REF	FN	PART NUMBER	YR/SN	QTY	DESCRIPTION
26		87582957		1	TUBO RÍGIDO, Tube, Right Hand Two Speed
27		87582953		1	TUBO RÍGIDO, Right Hand Loop, Top
28		87582954		1	TUBO RÍGIDO, Right Hand Loop, Bottom
29		87582956		1	TUBO RÍGIDO, Right Hand Brake
30		87582955		1	TUBO RÍGIDO, Right Hand Case Drain
31		9628098		4	CONTRA PORCA, M8 x 1.25, Cl 10

SISTEMA HIDROSTÁTICO - BOMBA AO TUBO DE DISTRIBUIÇÃO (C175), MODELOS COM CONTROLO AUTOMÁTICO

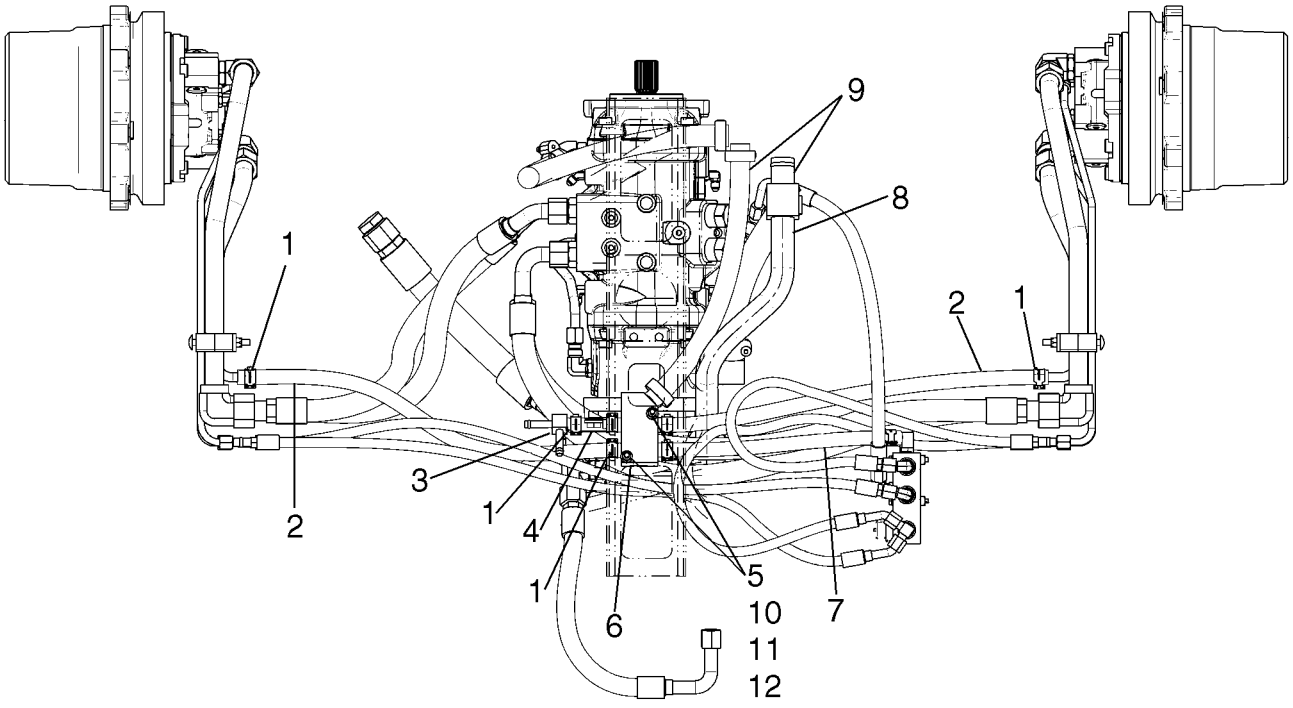

SISTEMA HIDROSTÁTICO - BOMBA AO TUBO DE DISTRIBUIÇÃO (C175), MODELOS COM CONTROLO AUTOMÁTICO

REF	FN	PART NUMBER	YR/SN	QTY	DESCRIPTION
1		87443510		8	BRACADEIRA MANGUEIRA
2		87367436		2	MANGUEIRA, Pump Case Drain
3		87357165		1	TEE, Bead, 1/2 ID X 3/8 ID X 3/8 ID
4		87397690		1	MANGUEIRA, Joystick Drain
5		87361		4	ARRUELA PLANA, 1/4", SAE, If Used
6		87369712		1	COLECTOR
7		87434276		1	MANGUEIRA, Shift Case
8		87561765		1	TUBO RÍGIDO, Suction; With 87561765 Attached; If Used
8A		87711639		1	TUBO, Tube Suction; Without Tee Attched; If Used
9		87372533		1	MANGUEIRA, Drain Tank
10		87404		2	PARAFUSO, Hex, 1/4"-20 x 2", G5
11		80682		2	ARRUELA-TRAVA, 1/4"
12		7770		2	PORCA, 1/4"-20, G5, If Used

SISTEMA HIDROSTÁTICO - BOMBA ENCAIXES (C175), MODELOS COM CONTROLO AUTOMÁTICO

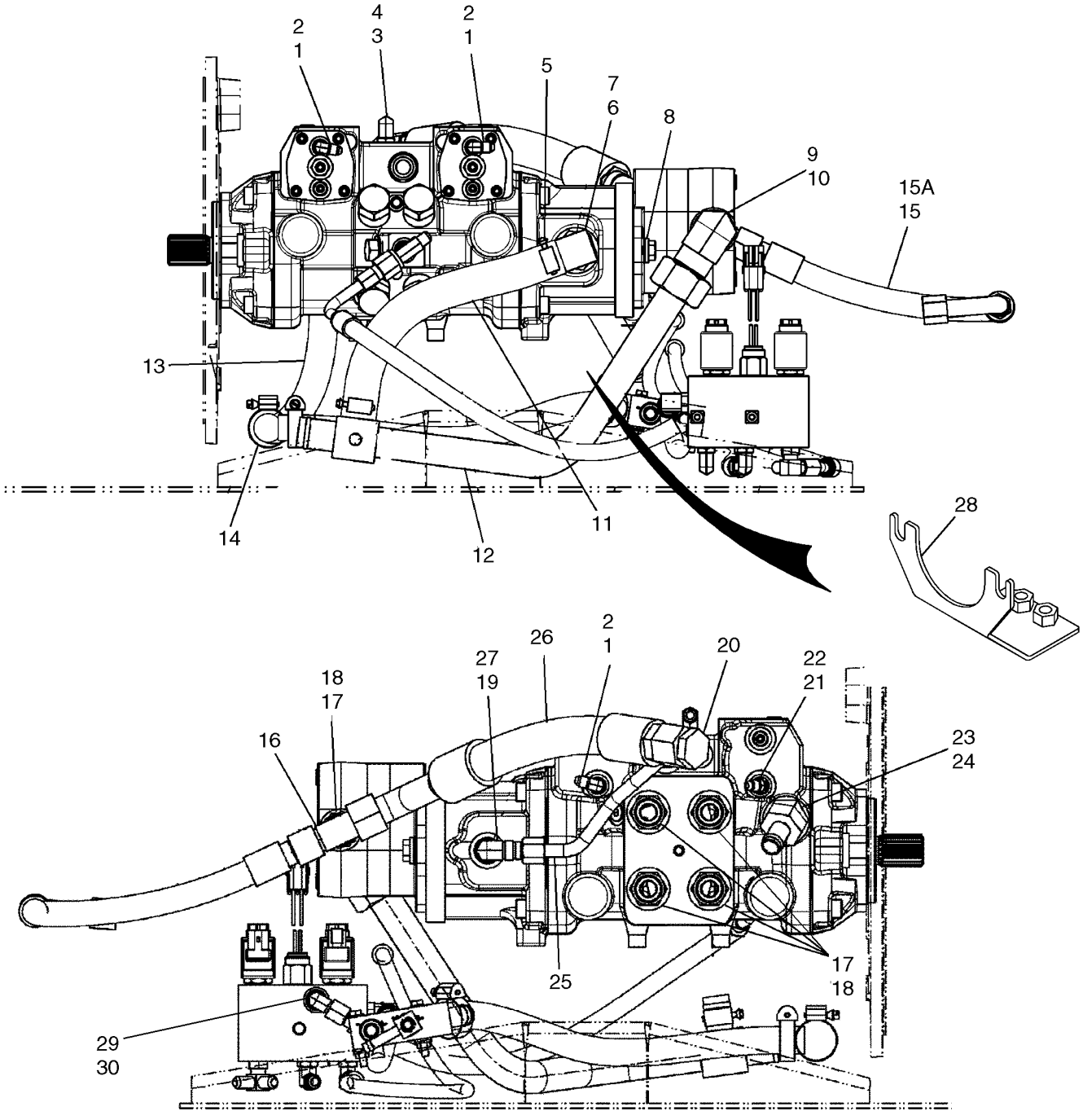

SISTEMA HIDROSTÁTICO - BOMBA ENCAIXES (C175), MODELOS COM CONTROLO AUTOMÁTICO

REF	FN	PART NUMBER	YR/SN	QTY	DESCRIPTION
1		216773		3	COTOVELO, 90º, 7/16"-20, 37º x 7/16"-20, O-Ring, Incl. 2
2		165202		3	ANEL "O", 4-1, 90 Duro, .351" ID x .072" Thk
3		76344		1	COTOVELO, 90º, 9/16"-18, 37º x 9/16"-18, O-Ring, Incl. 4; If Used
3		76350		1	CONEXÃO, 9/16"-18, 37º x 9/16"-18, O-Ring, Incl. 4; If Used
4		9617873		4	ANEL "O", 6-1, 90 Duro, .468" ID x .078" Thk
5		87301358		2	BRACADEIRA MANGUEIRA, 1.00/1.875 HD Worm
6		87393628		1	ADAPTADOR, Stem 90 Bead Hose 1.00 ID x 1 5/16-12; Incl. 7
7		167268		1	ANEL "O", 16-1, 90 Duro, 1.171" ID x .116" Thk
8		65319		2	ARRUELA PLANA
9		87010672		1	COTOVELO, 90º, 1 5/8"-12, 37º x 1 5/16"-12, O-Ring, Incl. 10
10		167268		1	ANEL "O", 16-1, 90 Duro, 1.171" ID x .116" Thk
11		87397649		1	MANGUEIRA, Charge Pump Supply; 315 mm (12.4 in); If Used
11A		87694585		1	MANGUEIRA, Charge Pump Supply; 350 mm (12.77 in); If Used
12		87561765		1	TUBO RÍGIDO, Suction; With 87561765 Attached; If Used
12A		87711639		1	TUBO, Tube Suction; Without Tee Attched; If Used
13		87357202		1	MANGUEIRA, Tandem Pump Drain
14		86534969		4	PRENDEDOR, Dual Bead
15		87595772		1	MANGUEIRA, 450 mm (17.71 in); ; One 90 Deg Swivel End, One Straight Swivel End; Implement Valve Supply; If Used
15A		87595013		1	MANGUEIRA, 465 mm (18.30 in); One 90 Deg Swivel End, One 45 Deg Swivel End; Implement Valve Supply; If Used
16		86513017		1	TEE, 37º, 1 1/16"-12 x 1 1/16"-12, Fem Sw Br, Used With Connector 322896, If Used
16		87622774		1	CONEXAO, Tee 3/4 Tube 1-1/16-12 37FL; Incl. 18; If Used; Not Illustrated

SISTEMA HIDROSTÁTICO - BOMBA ENCAIXES (C175), MODELOS COM CONTROLO AUTOMÁTICO

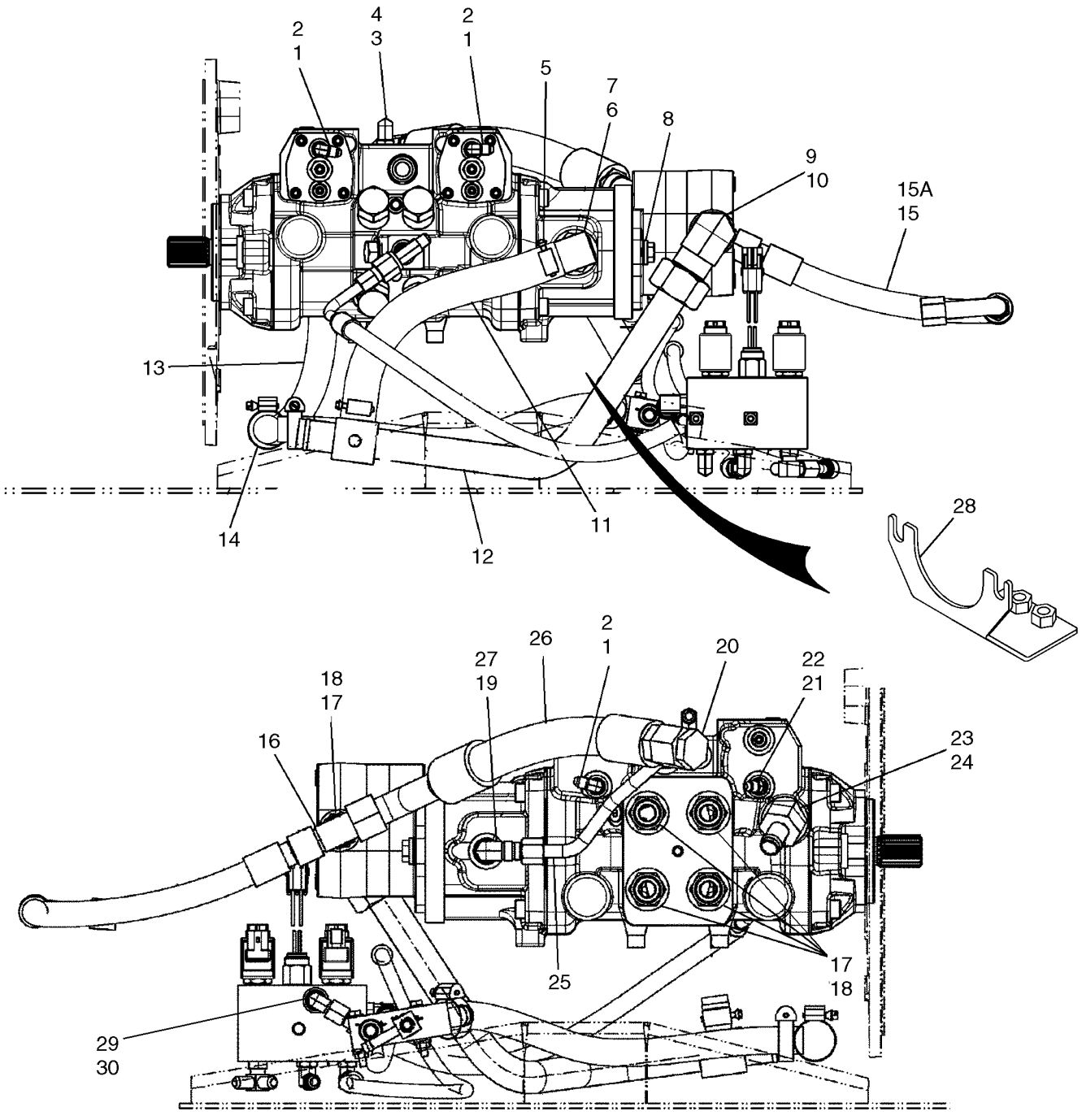

BS08A023

SISTEMA HIDROSTÁTICO - BOMBA ENCAIXES (C175), MODELOS COM CONTROLO AUTOMÁTICO

REF	FN	PART NUMBER	YR/SN	QTY	DESCRIPTION
17		322896		1	CONEXÃO, 1 1/16"-12, 37º x 1 1/16"-12, O-Ring, Incl. 18; Used With Tee 86513017, If Used
18		167266		1	ANEL "O", 12-1, 90 Duro, .924 ID x .116" Thk
19		128830		1	COTOVELO, 90º, 3/4"-16, 37º x 3/4"-16, O-Ring, Incl. 27
20		9790527		1	BUJÃO, 1 5/16"-12, 37º
21		86512993		1	COTOVELO, 45º, 7/16"-20, 37º x 7/16"-20, O-Ring, Incl. 22
22		165202		1	ANEL "O", 4-1, 90 Duro, .351" ID x .072" Thk
23		86705987		1	CONEXAO, Stem 45 Bead Hose 3/4 ID x 1 1/16-12; Incl. 24
24		167266		1	ANEL "O", 12-1, 90 Duro, .924 ID x .116" Thk
25		87554297		1	TUBULAÇÃO HIDRAULICO, Charge Supply
26		87595764		1	MANGUEIRA, Resonator
27		128825		1	ANEL "O", 8-1, 90 Duro, .644" ID x .087" Thk
28		87676979		1	SUPORTE, Pump Bracket
29		86629586		1	COTOVELO, 90º, 9/16"-18, 37º x 9/16"-18, 37º Fem Sw, If Used
30		87648321		1	VALVULA CHECAGEM, 10 PSI; If Used

SISTEMA DE FRENOS, TRANSMISSÃO DE DESLOCAMENTO DE DUAS VELOCIDADES (C175)- MODELOS COM CONTROLO AUTO

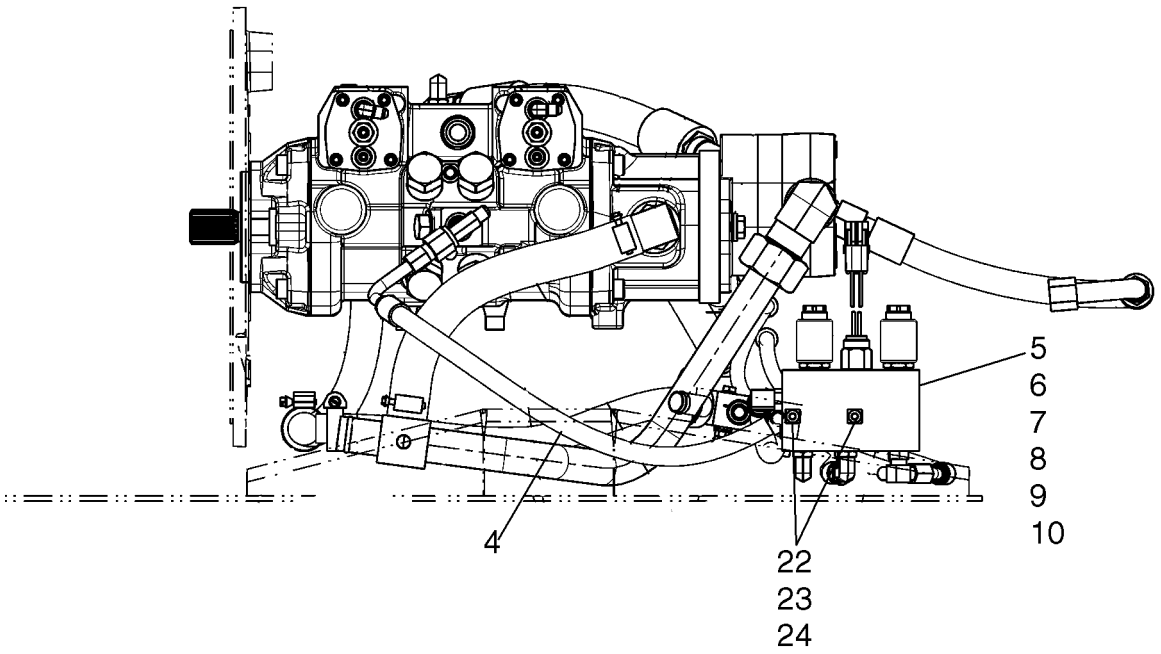

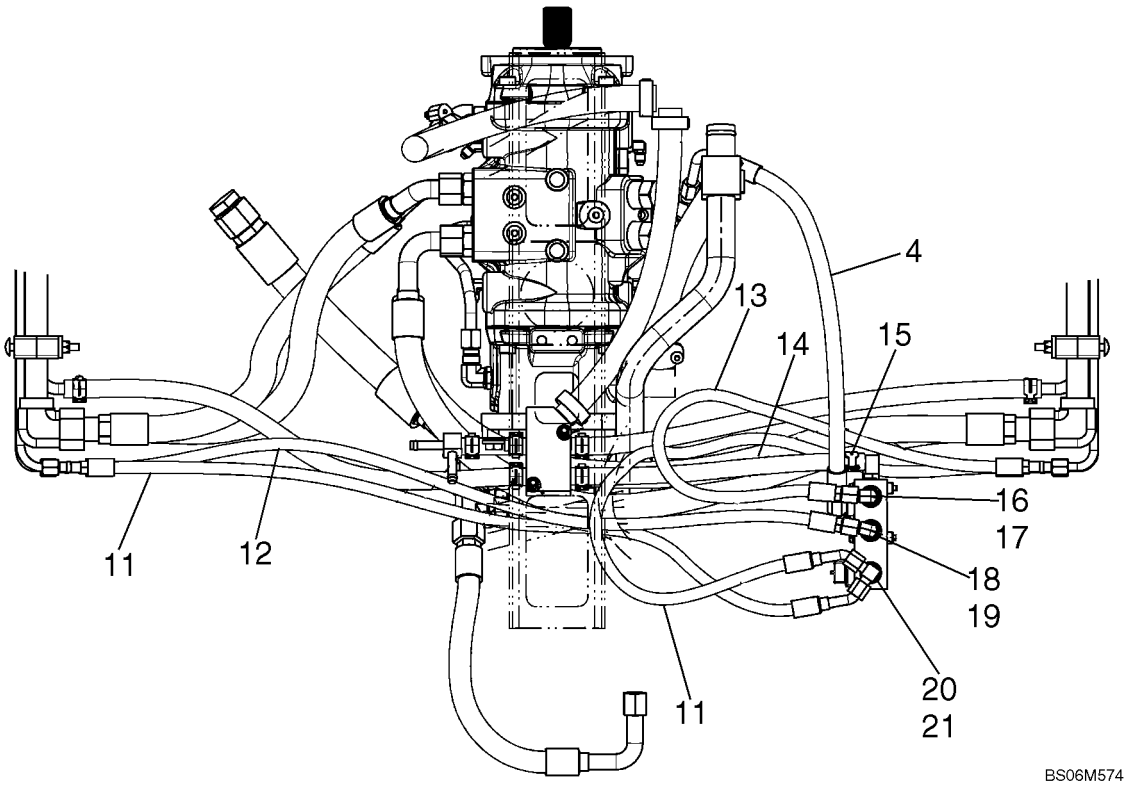

SISTEMA DE FRENOS, TRANSMISSÃO DE DESLOCAMENTO DE DUAS VELOCIDADES (C175)- MODELOS COM CONTROLO AUTO

REF	FN	PART NUMBER	YR/SN	QTY	DESCRIPTION
1		163335		1	TEE, 9/16"-18, 37º x 9/16"-18, O-Ring Br, Incl. 2
2		9617873		1	ANEL "O", 6-1, 90 Duro, .468" ID x .078" Thk
3		87411460		1	REDUÇÃO, Adapter Tube 37 FL 3/8 x 1/2
4		87433933		1	MANGUEIRA, Pump To Brake Valve
5		87533025		1	VALVULA HYDR CONTROL, Two Speed Brake; Incl. 6 - 10; See Figure 06-10
6		87458061		1	INTERRUPTOR DE PRESSÃO, Two Speed Brake; Incl. O-Ring Which Is Not Serviced Separately
7		87588579		1	ELETRO VALVULA, Two Speed Brake Solenoid Valve
8		87588585		1	ELETRO VALVULA, Two Speed Brake Solenoid Valve
9		87588596		1	SOLEMOID, Two Speed Brake Valve Coil
10		87588597		1	SOLEMOID, Two Speed Brake Valve Coil
11		87380881		2	MANGUEIRA, Left Hand Two Speed
12		87367432		1	MANGUEIRA, Brake
13		87380875		1	MANGUEIRA, Brake
14		87434276		1	MANGUEIRA, Shift Case
15		87443510		2	BRACADEIRA MANGUEIRA
16		86705580		1	CONEXAO, 90º, 1/2" Hose x 9/16"-18 ORB Beaded, Incl. 17
17		9617873		1	ANEL "O", 6-1, 90 Duro, .468" ID x .078" Thk
18		76344		3	COTOVELO, 90º, 9/16"-18, 37º x 9/16"-18, O-Ring, Incl. 19
19		9617873		1	ANEL "O", 6-1, 90 Duro, .468" ID x .078" Thk
20		L104616		1	TEE, Elbow 90 Adj 37 Fl 3/8 Tube; Incl. 21
21		9825770		1	ANEL "O", -011, 90 Duro, .301" ID x .070" Thk
22		86588450		2	ARRUELA PLANA, M6
23		120056		2	PARAFUSO, Hex, M6 x 50, 8.8
24		87404992		2	PORCA

CONJUNTO DA BOMBA TANDEM - UMA VELOCIDADE

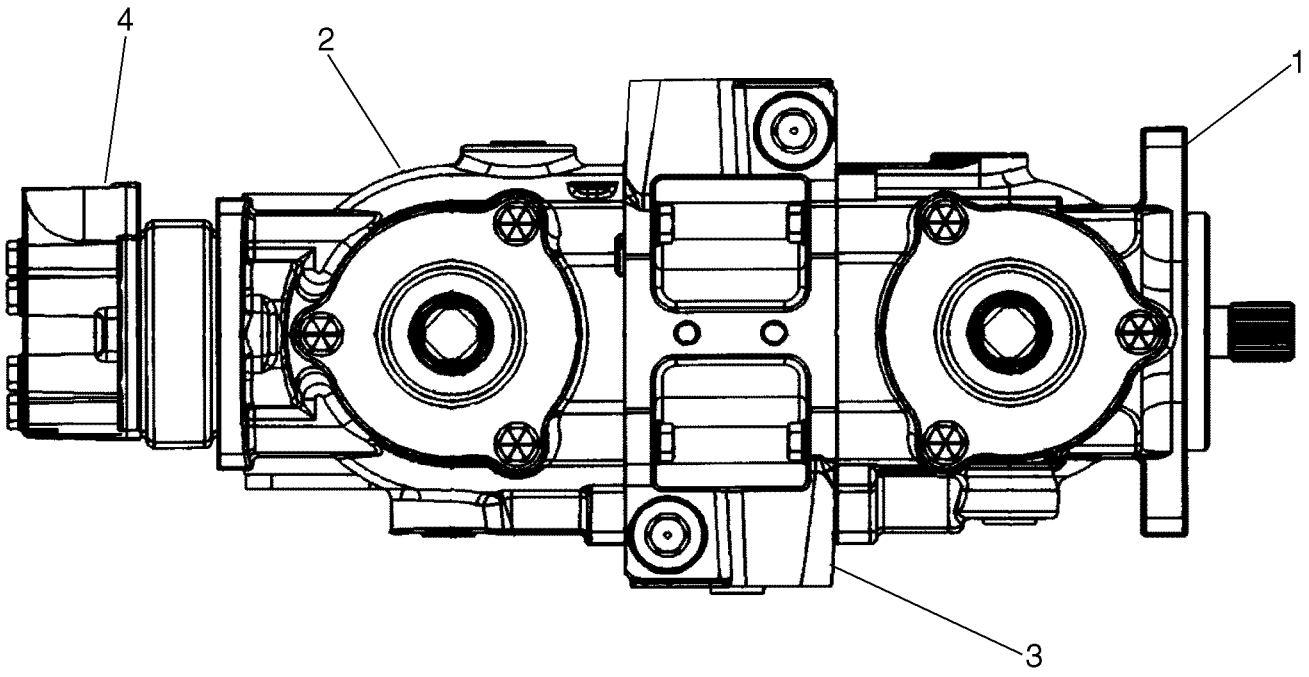

BS06M012

CONJUNTO DA BOMBA TANDEM - UMA VELOCIDADE

REF	FN	PART NUMBER	YR/SN	QTY	DESCRIPTION
		86566179		1	BOMBA HIDRÁULICA, Pump A B2B/Single Gear, Standard Flow; Incl. Ref. 1, 2, 3 And 86566183 Standard Flow Gear Pump
		86566181		1	BOMBA HIDRÁULICA, Pump A B2B/Double Gear, High Flow; Incl. Ref. 1, 2, 3 And 86566185 High Flow Gear Pump
1		86589819		1	ALOJAMENTO, See Fig. 06-23
2		86589831		1	ALOJAMENTO, See Fig. 06-24
3		86589829		1	COLECTOR, Center, Manifold; See Fig. 06-25
4		86566183		1	BOMBA HIDRÁULICA, Gear Pump, Standard Flow; See Fig. 06-49
4		86566185		1	BOMBA HIDRÁULICA, Gear Pump, High Flow; See Fig. 06-53

BOMBA DO PISTÃO, TRASEIRA / BOMBA DE ENGRENAGENS B2B / SIMPLES E DUPLA

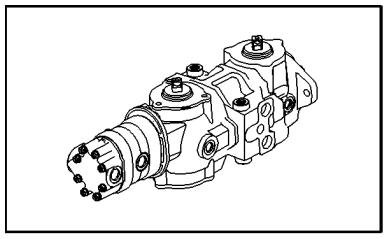

BOMBA DO PISTÃO, TRASEIRA / BOMBA DE ENGRENAGENS B2B / SIMPLES E DUPLA

REF	FN	PART NUMBER	YR/SN	QTY	DESCRIPTION
1		86589825		1	TAMPA, Incl. Ref. 11
2		86589820		1	TAMPA, Incl. Ref. 10
3		86590562		1	BUJÃO, Hex Soc, 3/4"-16 ORB, Incl. Ref. 4
4		128825		1	ANEL "O", 8-1, 90 Duro, .644" ID x .087" Thk
5		280165		6	PARAFUSO, Hex, 3/8"-16 x 1 1/4", G8, Full Thd
6		9790712		6	ARRUELA PLANA, Hardened, 3/8"
7		86589819		1	ALOJAMENTO, Incl. Ref. 8
8		272193		1	ROLAMENTO
10		86516467		1	ANEL ONDULADO
11		86589834		1	ANEL DE VEDACAO, Oil
12		86589824		1	ANEL, Crush; If Used
12		87575247		1	KIT, SERVICE, Shim Kit; If Used; Not Illustrated
13		14461080		2	ANEL "O", -152, 70 Duro, 3.237" ID x .103" Thk
14		86589823		1	CAME
15		86516468		2	CONE
16		86589826		1	EIXO, Drive Input
17		86589828		1	INSERTO
18		64780		2	GUIA, 1/4" x 1/2"
19		9605018		1	KIT REP.BOMBA HIDR., Incl. Ref. 28 - 36
20		86589813		1	PLACA, Valve, 759
21		86589838		1	JUNTA
22		66800		1	ANEL, 2", Int, #200
23		703639		1	ANEL DE VEDACAO, Shaft, 2" OD x .245" Thick
24		272223		1	ARRUELA PLANA
25		38785		2	ANEL, #112, Ext
26		272202		2	PISTA DE ROLAMENTO
27		272201		1	ROL. ENCOSTO
28		86629584		1	ANEL, 1.375", Int, #137
29		272487		2	ARRUELA PLANA
30		277633		1	MOLA
31		NSS		1	BOLETIM INFORMATIVO, Keeper, Pin
32		272488		3	CUPILHA, Clevis, 3/32" x 1-3/16"
33		NSS		1	BOLETIM INFORMATIVO, Block, Piston
34		272205		1	PINO, Spider, Pivot
35		272203		1	CRUZETA

BOMBA DO PISTÃO, TRASEIRA / BOMBA DE ENGRENAGENS B2B / SIMPLES E DUPLA

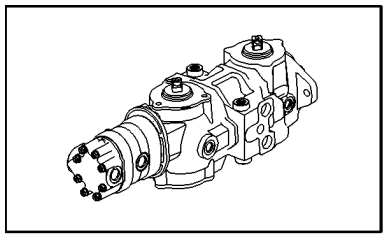

BOMBA DO PISTÃO, TRASEIRA / BOMBA DE ENGRENAGENS B2B / SIMPLES E DUPLA

REF	FN	PART NUMBER	YR/SN	QTY	DESCRIPTION
36		NSS		1	BOLETIM INFORMATIVO, Piston
37		86589837		2	JOGO DE JUNTAS, Pump Seals
37		86615179		2	JOGO DE JUNTAS, Piston Pump, High-Temperature

06-24		p1	03/08

BOMBA DO PISTÃO, DIANTEIRA / BOMBA DE ENGRENAGENS B2B / SIMPLES E DUPLA

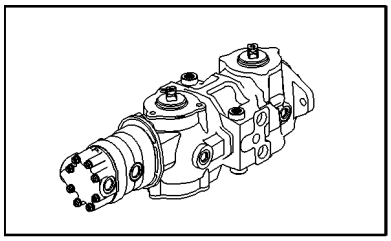

BOMBA DO PISTÃO, DIANTEIRA / BOMBA DE ENGRENAGENS B2B / SIMPLES E DUPLA

REF	FN	PART NUMBER	YR/SN	QTY	DESCRIPTION
1		86589825		1	TAMPA, Incl. Ref. 11
2		86589820		1	TAMPA, Incl. Ref. 10
3		86590562		2	BUJÃO, Hex Soc, 3/4"-16 ORB, Incl. Ref. 4
4		128825		2	ANEL "O", 8-1, 90 Duro, .644" ID x .087" Thk
5		280165		6	PARAFUSO, Hex, 3/8"-16 x 1 1/4", G8, Full Thd
6		9790712		6	ARRUELA PLANA, Hardened, 3/8"
7		86589831		1	ALOJAMENTO, Incl. Ref. 8 & 9
8		86589836		1	ROLAMENTO
9		86589835		1	ARO
10		86516467		1	ANEL ONDULADO
11		86589834		1	ANEL DE VEDACAO, Oil
12		86589824		1	ANEL, Crush; If Used
12		87575247		1	KIT, SERVICE, Shim Kit; If Used; Not Illustrated
13		14461080		2	ANEL "O", -152, 70 Duro, 3.237" ID x .103" Thk
14		86589823		1	CAME
15		86516468		2	CONE
16		86589827		1	EIXO, Drive
17		86589828		1	INSERTO
18		64780		2	GUIA, 1/4" x 1/2"
19		9605018		1	KIT REP.BOMBA HIDR., Incl. Ref. 23 thru 31
20		86589815		1	PLACA, Valve, 760
21		86589838		1	JUNTA
22		86589837		1	JOGO DE JUNTAS, Piston Pump
22		86615179		1	JOGO DE JUNTAS, Piston Pump, High-temperature
23		86629584		1	ANEL, 1.375", Int, #137
24		272487		2	ARRUELA PLANA
25		277633		1	MOLA
26		NSS		1	BOLETIM INFORMATIVO, Keeper Pin
27		272488		3	CUPILHA, Clevis, 3/32" x 1-3/16"
28		NSS		1	BOLETIM INFORMATIVO, Block, Piston
29		272205		1	PINO, Spider, Pivot
30		272203		1	CRUZETA
31		NSS		9	BOLETIM INFORMATIVO, Piston

TUBO DE DISTRIBUIÇÃO CENTRAL/ BOMBA DE ENGRENAGENS B2B / SIMPLES E DUPLA

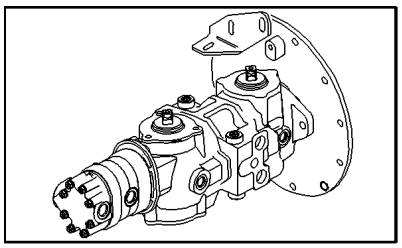

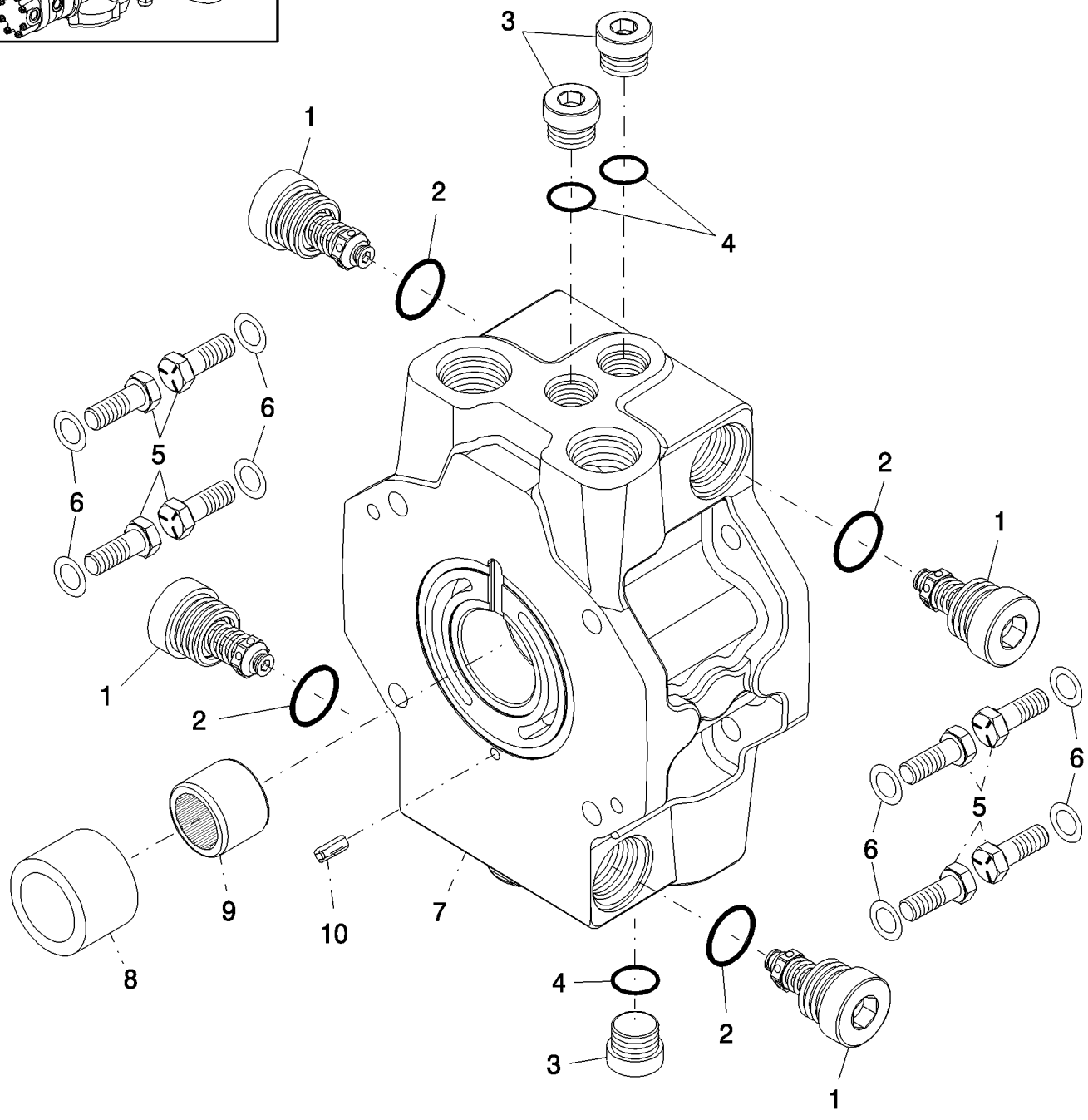

TUBO DE DISTRIBUIÇÃO CENTRAL/ BOMBA DE ENGRENAGENS B2B / SIMPLES E DUPLA

REF	FN	PART NUMBER	YR/SN	QTY	DESCRIPTION
1		86589830		4	VÁLVULA DE SOBRE-PRESSÃO, Incl. Ref. 2
2		167266		4	ANEL "O", 12-1, 90 Duro, .924 ID x .116" Thk
3		86590562		1	BUJÃO, Hex Soc, 3/4"-16 ORB, Incl. Ref. 4
4		128825		1	ANEL "O", 8-1, 90 Duro, .644" ID x .087" Thk
5		280165		8	PARAFUSO, Hex, 3/8"-16 x 1 1/4", G8, Full Thd
6		9790712		8	ARRUELA PLANA, Hardened, 3/8"
7		86589829		1	COLECTOR, Center, Incl. Ref. 8 - 10
8		86591904		1	CABEÇA DE SINO
9		272499		2	ROLAMENTO, Needle
10		88180		2	PINO DE FIXAÇÃO, 3/16" x 5/8", Slotted

CONJUNTO DA BOMBA TANDEM - TRANSMISSÃO DE DESLOCAMENTO DE DUAS VELOCIDADES

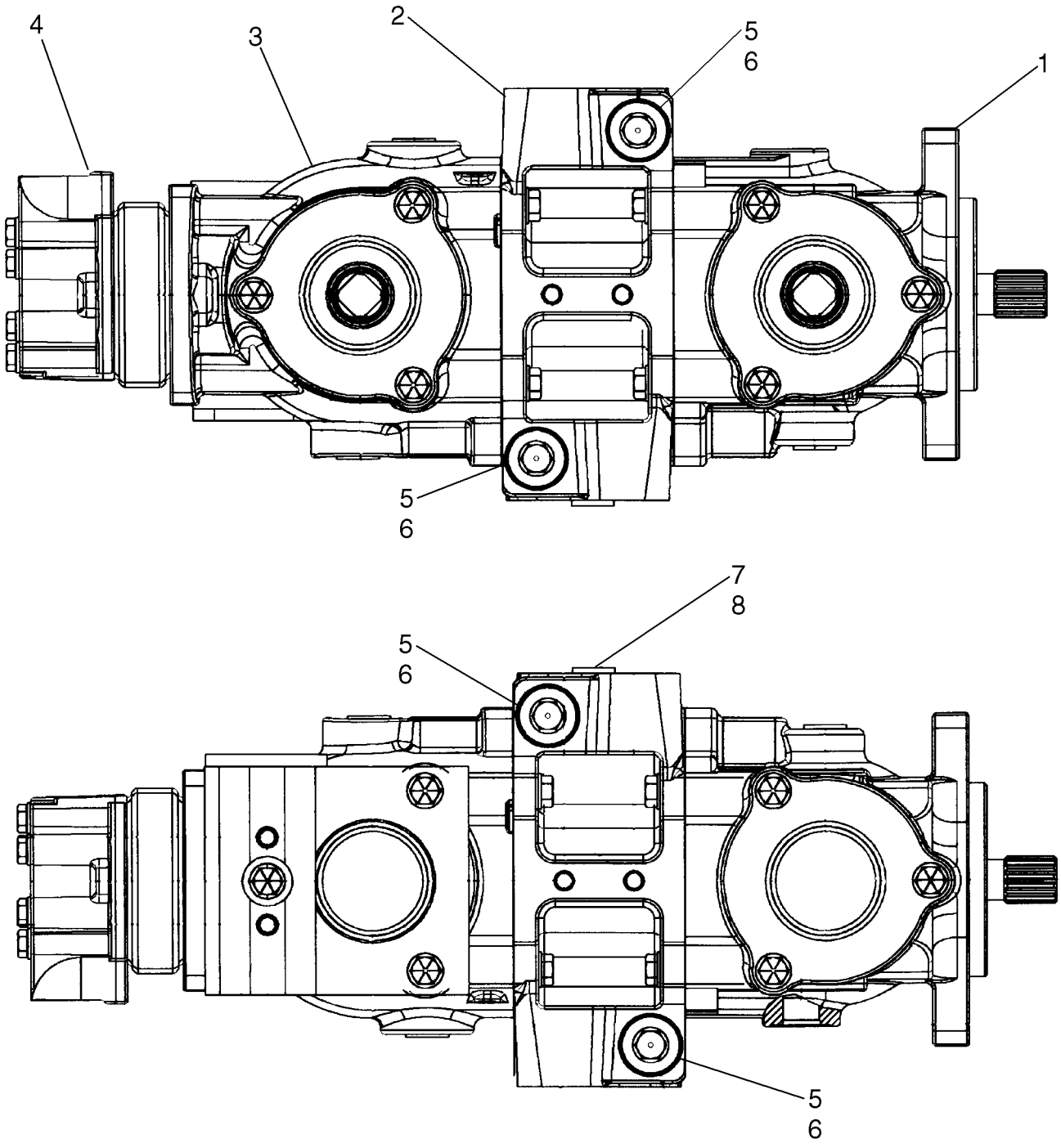

CONJUNTO DA BOMBA TANDEM - TRANSMISSÃO DE DESLOCAMENTO DE DUAS VELOCIDADES

REF	FN	PART NUMBER	YR/SN	QTY	DESCRIPTION
		87052429		1	MOTO-BOMBA, Tandem Pump, B2B - SG - 2 SPD, Two Speed, Standard Flow; Incl 86566183 Gear Pump; If Used
		87745224		1	BOMBA, Tandem Pump, B2B - SG - 2 SPD, Two Speed, Standard Flow; Incl 86566183 Gear Pump; If Used
		87052430		1	MOTO-BOMBA, Tandem Pump, B2B - DG - 2 SPD, Two Speed, High Flow; Incl 86566185 Gear Pump
1		86589819		1	ALOJAMENTO, See Fig. 06-28
2		87515026		1	BOMBA, Center Manifold; See Fig. 06-29
3		86589831		1	ALOJAMENTO, See Fig. 06-27
4		86566183		1	BOMBA HIDRÁULICA, Gear Pump, Standard Flow; See Fig. 06-49
4		86566185		1	BOMBA HIDRÁULICA, Gear Pump, High Flow ; See Fig. 06-53
5		86837874		4	VÁLVULA DE SOBRE-PRESSÃO, Incl. 6
6		167266		4	ANEL "O", 12-1, 90 Duro, .924 ID x .116" Thk
7		86590562		1	BUJÃO, Hex Soc, 3/4"-16 ORB, Incl. 8
8		128825		1	ANEL "O", 8-1, 90 Duro, .644" ID x .087" Thk

06-27		p1	03/08

BOMBA DO PISTÃO, DIANTEIRA / BOMBA DE ENGRENAGENS B2B / SIMPLES E DUPLA

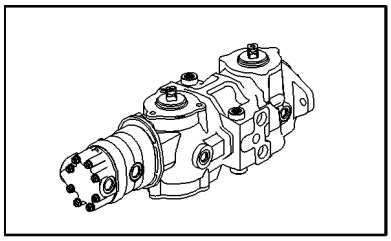

BOMBA DO PISTÃO, DIANTEIRA / BOMBA DE ENGRENAGENS B2B / SIMPLES E DUPLA

REF	FN	PART NUMBER	YR/SN	QTY	DESCRIPTION
1		86589825		1	TAMPA, Incl. Ref. 11
2		86589820		1	TAMPA, Incl. Ref. 10
3		86590562		2	BUJÃO, Hex Soc, 3/4"-16 ORB, Incl. Ref. 4
4		128825		2	ANEL "O", 8-1, 90 Duro, .644" ID x .087" Thk
5		280165		6	PARAFUSO, Hex, 3/8"-16 x 1 1/4", G8, Full Thd
6		9790712		6	ARRUELA PLANA, Hardened, 3/8"
7		86589831		1	ALOJAMENTO, Incl. Ref. 8 & 9
8		86589836		1	ROLAMENTO
9		86589835		1	ARO
10		86516467		1	ANEL ONDULADO
11		86589834		1	ANEL DE VEDACAO, Oil
12		86589824		1	ANEL, Crush; If Used
12		87575247		1	KIT, SERVICE, Shim Kit; If Used; Not Illustrated
13		14461080		2	ANEL "O", -152, 70 Duro, 3.237" ID x .103" Thk
14		87515039		1	PLACA, Camplate Assembly; Incl. 15
15		NSS		2	BOLETIM INFORMATIVO, Bearing, Cone
16		87531197		1	EIXO COMANDO, Shaft, Drive
17		86589828		1	INSERTO
18		64780		2	GUIA, 1/4" x 1/2"
19		9605018		1	KIT REP.BOMBA HIDR., Incl. Ref. 23 thru 31
20		86589815		1	PLACA, Valve, 760
21		86589838		1	JUNTA
22		87533242		1	JOGO DE ANÉIS DE PISTÃO, Seal Kit, Piston Pump
22		86615179		1	JOGO DE JUNTAS, Piston Pump, High-temperature
23		86629584		1	ANEL, 1.375", Int, #137
24		272487		2	ARRUELA PLANA
25		277633		1	MOLA
26		NSS		1	BOLETIM INFORMATIVO, Keeper Pin
27		272488		3	CUPILHA, Clevis, 3/32" x 1-3/16"
28		NSS		1	BOLETIM INFORMATIVO, Block, Piston
29		272205		1	PINO, Spider, Pivot
30		272203		1	CRUZETA
31		NSS		9	BOLETIM INFORMATIVO, Piston

BOMBA DO PISTÃO, TRASEIRA / BOMBA DE ENGRENAGENS B2B / SIMPLES E DUPLA

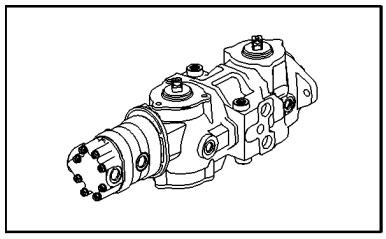

BOMBA DO PISTÃO, TRASEIRA / BOMBA DE ENGRENAGENS B2B / SIMPLES E DUPLA

REF	FN	PART NUMBER	YR/SN	QTY	DESCRIPTION
1		86589825		1	TAMPA, Incl. Ref. 11
2		86589820		1	TAMPA, Incl. Ref. 10
3		86590562		1	BUJÃO, Hex Soc, 3/4"-16 ORB, Incl. Ref. 4
4		128825		1	ANEL "O", 8-1, 90 Duro, .644" ID x .087" Thk
5		280165		6	PARAFUSO, Hex, 3/8"-16 x 1 1/4", G8, Full Thd
6		9790712		6	ARRUELA PLANA, Hardened, 3/8"
7		86589819		1	ALOJAMENTO, Incl. Ref. 8
8		272193		1	ROLAMENTO
10		86516467		1	ANEL ONDULADO
11		86589834		1	ANEL DE VEDACAO, Oil
12		86589824		1	ANEL, Crush; If Used
12		87575247		1	KIT, SERVICE, Shim Kit; If Used; Not Illustrated
13		14461080		2	ANEL "O", -152, 70 Duro, 3.237" ID x .103" Thk
14		87515039		1	PLACA, Camplate Assembly; Incl. 15
15		NSS		2	BOLETIM INFORMATIVO, Bearing, Cone
16		86589826		1	EIXO, Drive Input
17		86589828		1	INSERTO
18		64780		2	GUIA, 1/4" x 1/2"
19		9605018		1	KIT REP.BOMBA HIDR., Incl. Ref. 28 - 36
20		86589813		1	PLACA, Valve, 759
21		86589838		1	JUNTA
22		66800		1	ANEL, 2", Int, #200
23		703639		1	ANEL DE VEDACAO, Shaft, 2" OD x .245" Thick
24		272223		1	ARRUELA PLANA
25		38785		2	ANEL, #112, Ext
26		272202		2	PISTA DE ROLAMENTO
27		272201		1	ROL. ENCOSTO
28		86629584		1	ANEL, 1.375", Int, #137
29		272487		2	ARRUELA PLANA
30		277633		1	MOLA
31		NSS		1	BOLETIM INFORMATIVO, Keeper, Pin
32		272488		3	CUPILHA, Clevis, 3/32" x 1-3/16"
33		NSS		1	BOLETIM INFORMATIVO, Block, Piston
34		272205		1	PINO, Spider, Pivot
35		272203		1	CRUZETA

BOMBA DO PISTÃO, TRASEIRA / BOMBA DE ENGRENAGENS B2B / SIMPLES E DUPLA

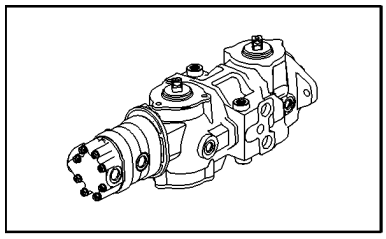

BOMBA DO PISTÃO, TRASEIRA / BOMBA DE ENGRENAGENS B2B / SIMPLES E DUPLA

REF	FN	PART NUMBER	YR/SN	QTY	DESCRIPTION
36		NSS		1	BOLETIM INFORMATIVO, Piston
37		87533242		2	JOGO DE ANÉIS DE PISTÃO, Kit, Pump Seals
37		86615179		2	JOGO DE JUNTAS, Piston Pump, High-Temperature

TUBO DE DISTRIBUIÇÃO CENTRAL/ BOMBA DE ENGRENAGENS B2B / SIMPLES E DUPLA

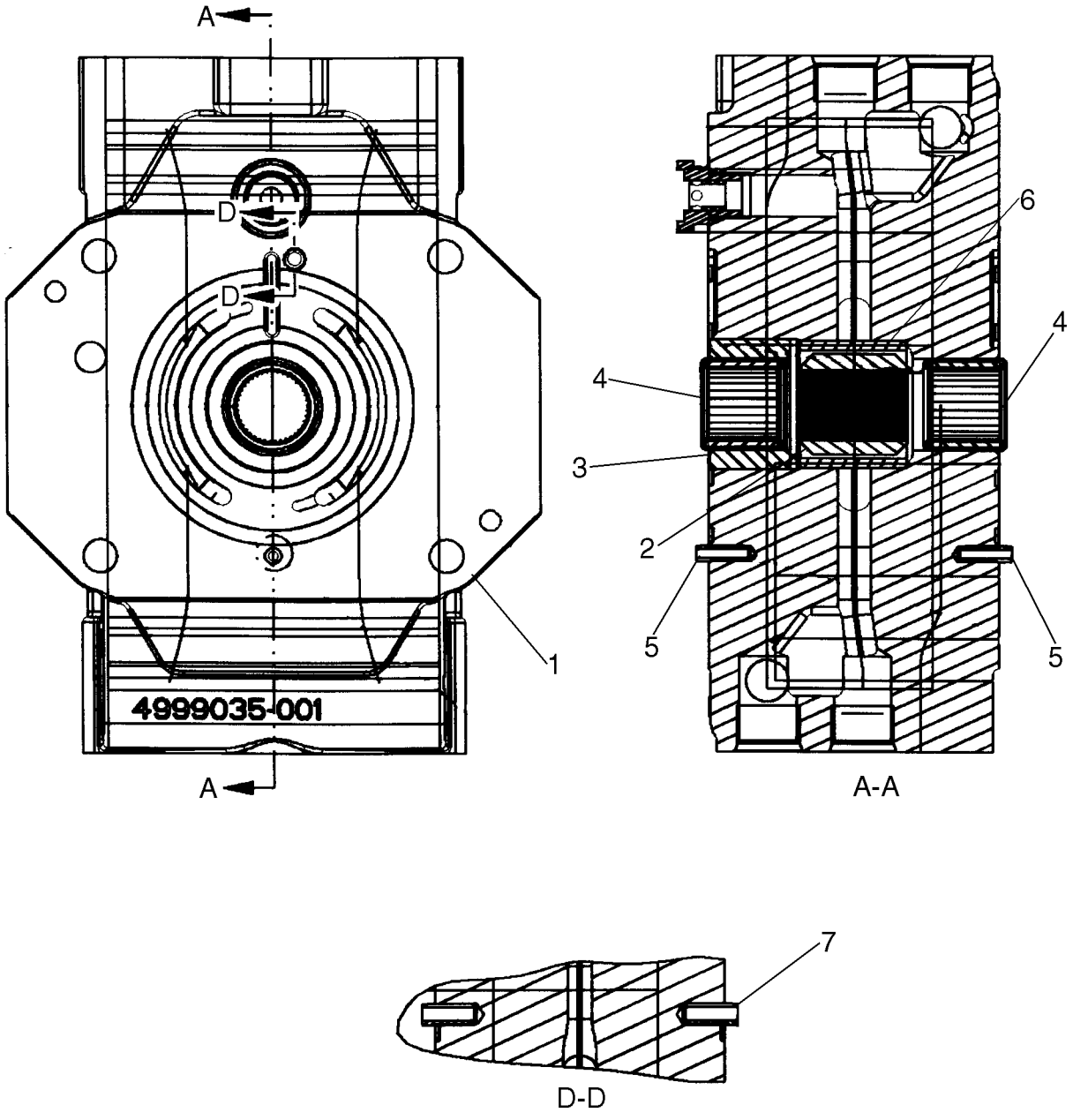

BS06M014

TUBO DE DISTRIBUIÇÃO CENTRAL/ BOMBA DE ENGRENAGENS B2B / SIMPLES E DUPLA

REF	FN	PART NUMBER	YR/SN	QTY	DESCRIPTION
		87515026		1	BOMBA, Center Manifold Block; Incl. 1 - 13
1		NSS		1	BOLETIM INFORMATIVO, Manifold, Center
2		NSS		1	BOLETIM INFORMATIVO, Coupling
3		NSS		1	BOLETIM INFORMATIVO, Spacer
4		NSS		2	BOLETIM INFORMATIVO, Bearing, Needle Roller
5		NSS		2	BOLETIM INFORMATIVO, Pin, Roll
6		NSS		1	BOLETIM INFORMATIVO, Sleeve
7		NSS		2	BOLETIM INFORMATIVO, Pin, Roll

BOMBA AA20

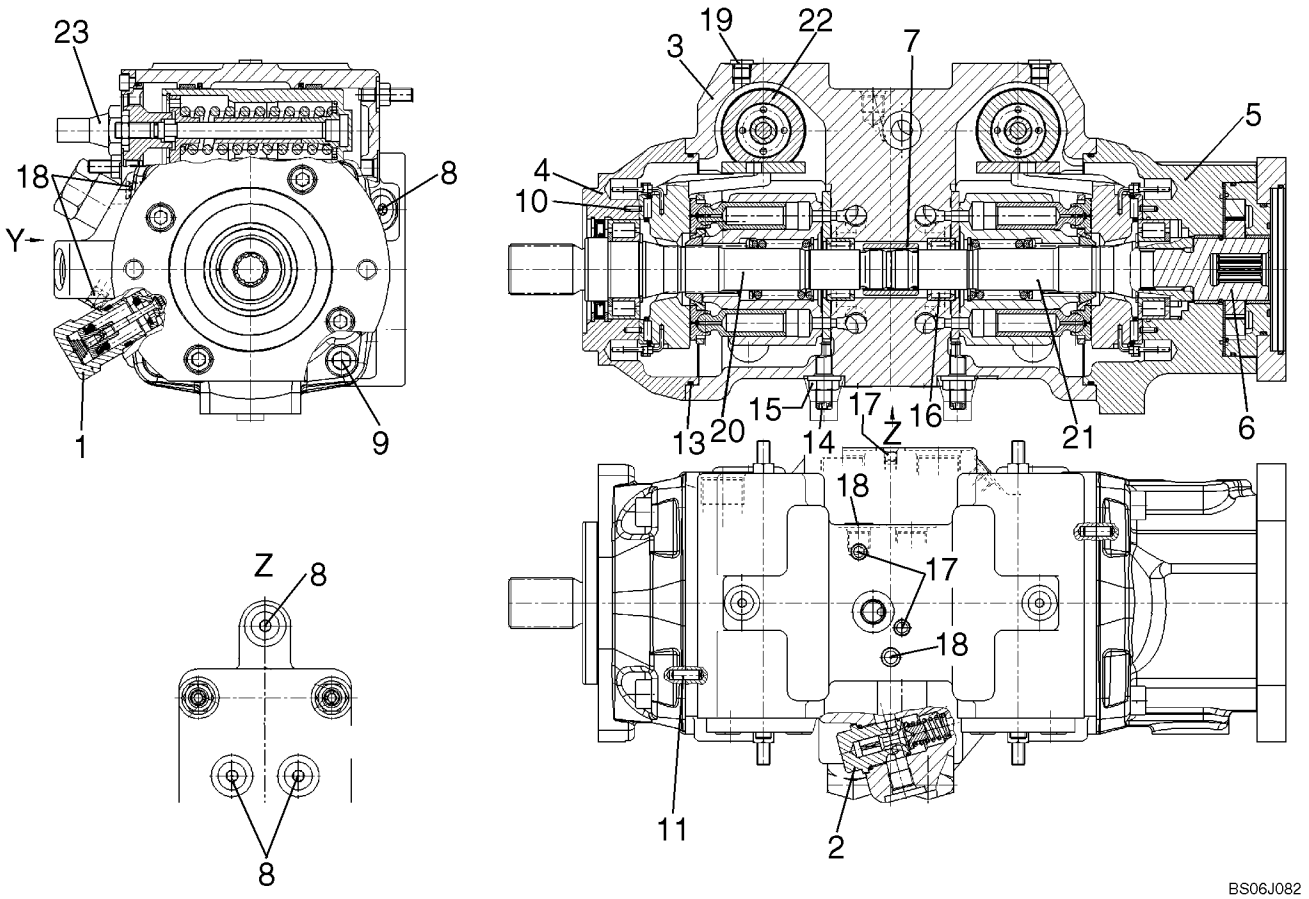
23
18
Y
8
1
9
Z
8
8
19
22
3
7
5
4
10
13
20
15
14
17
Z
16
21
6
18
17
18
11
2
BS06J082

BOMBA AA20

REF	FN	PART NUMBER	YR/SN	QTY	DESCRIPTION
		87357097			BOMBA, Rexroth Pump A20 (R902103498); Incl 1 - 25 And O-Ring 87013729
		87013729		1	ANEL "O", -044, 70 Duro, 3.739" ID x .070" Thk, Gear Pump Mounting
1		87553603		4	VÁLVULA DE SOBRE-PRESSÃO, Pressure Relief Valve, HD 250 - 530 Bar; See Fig. 06-31
2		87553604		1	VÁLVULA DE SOBRE-PRESSÃO, Pressure Relief Valve, 15 - 30 Bar R-Ring Viton; See Fig. 06-32
3		87553605		1	ALOJAMENTO, Pump Housing
4		87553606		1	FLANGE, Bearing, Flange
5		87553607		1	FLANGE, Bearing, Flange With Bushing
6		87553608		1	BOMBA, Internal Gear Pump; See Fig. 06-33
7		87553609		1	CABEÇA DE SINO, Through Drive Coupling
8		87553611		5	PORCA DE TRAVA, Locking Screw, 9/16 - 18UNF
9		87553613		8	PARAFUSO, Socket Head Screw
10		87553614		4	PINO, Clamping Pin
11		87553615		2	PINO, Cylinder Pin
12		87553616		1	ANEL "O", O-ring; Not Illustrated
13		87553617		2	ANEL "O", O-ring
14		87553618		2	PARAFUSO, Eccentric Screw
15		87553619		2	CONTRA PORCA, Seal, Lock Nut
16		87553620		2	ROLAMENTO ROLETES, Plain Roller Bearing
17		87553621		2	PINO, Double Break Off Pin
18		87553622		2	PINO, Double Break Off Pin
19		87553612		2	PORCA DE TRAVA, Locking Screw, 7/16 - 20UNF
20		87597298		1	KIT, SERVICE, Rotary Group, RH Rotation; See Fig. 06-34
21		87597302		1	KIT, SERVICE, Rotary Group, LH Rotation; See Fig. 06-38
22		87597305		2	KIT, SERVICE, Control, Hydraulic; See Fig. 06-35
23		87553602		1	COMANDO, Control Cartridge With Orfice; See Fig. 06-36
24		87553623		1	SECÇÃO DE VÁLVULAS, Locking Elements; See Fig. 06-37
25		87553610		1	ROLAMENTO, Bearing, Bushing; Not Illustrated

BOMBA, TRANSMISSÃO DE DESLOCAMENTO DE DUAS VELOCIDADES, CONTROLO AUTOMÁTICO

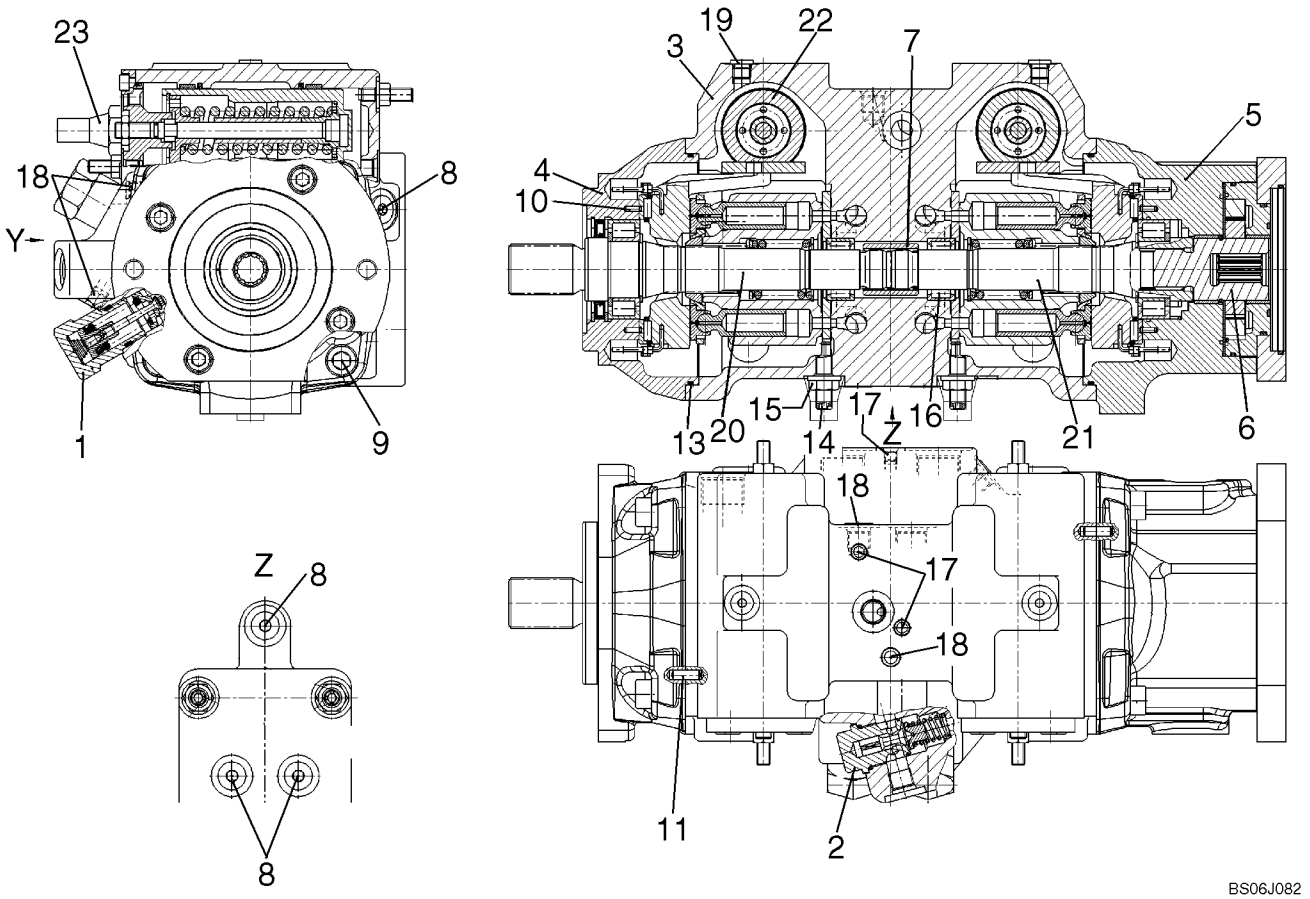

BS06J082

BOMBA, TRANSMISSÃO DE DESLOCAMENTO DE DUAS VELOCIDADES, CONTROLO AUTOMÁTICO

REF	FN	PART NUMBER	YR/SN	QTY	DESCRIPTION
		87551775			BOMBA, Rexroth Pump; Incl 1 - 25; If Used
		87710267			BOMBA, Rexroth Pump; Incl. 1- 22, 24, 25; If Used
1		87553603		4	VÁLVULA DE SOBRE-PRESSÃO, Pressure Relief Valve, HD 250 - 530 Bar; See Fig. 06-31
2		87553604		1	VÁLVULA DE SOBRE-PRESSÃO, Pressure Relief Valve, 15 - 30 Bar R-Ring Viton; See Fig. 06-32
3		87553605		1	ALOJAMENTO, Pump Housing
4		87553606		1	FLANGE, Bearing, Flange
5		87553607		1	FLANGE, Bearing, Flange With Bushing
6		87553608		1	BOMBA, Internal Gear Pump; See Fig. 06-33
7		87553609		1	CABEÇA DE SINO, Through Drive Coupling
8		87553611		5	PORCA DE TRAVA, Locking Screw, 9/16 - 18UNF
9		87553613		8	PARAFUSO, Socket Head Screw
10		87553614		4	PINO, Clamping Pin
11		87553615		2	PINO, Cylinder Pin
12		87553616		1	ANEL "O", O-ring; Not Illustrated
13		87553617		2	ANEL "O", O-ring
14		87553618		2	PARAFUSO, Eccentric Screw
15		87553619		2	CONTRA PORCA, Seal, Lock Nut
16		87553620		2	ROLAMENTO ROLETES, Plain Roller Bearing
17		87553621		2	PINO, Double Break Off Pin
18		87553622		2	PINO, Double Break Off Pin
19		87553612		2	PORCA DE TRAVA, Locking Screw, 7/16 - 20UNF
20		87597298		1	KIT, SERVICE, Rotary Group, RH Rotation; See Fig. 06-34
21		87621239		1	KIT, SERVICE, Rotary Group, LH Rotation; See Fig. 06-38A
22		87621240		2	COMANDO, Control, Hydraulic; See Fig. 06-35A
23		87621242		1	COMANDO, Control Cartridge With Orfice; Not Used In Pump 87710267; See Fig. 06-36A
24		87553623		1	SECÇÃO DE VÁLVULAS, Locking Elements; See Fig. 06-37
25		87553610		1	ROLAMENTO, Bearing, Bushing; Not Illustrated

VALVULA DE REDUCCION DEPRESION

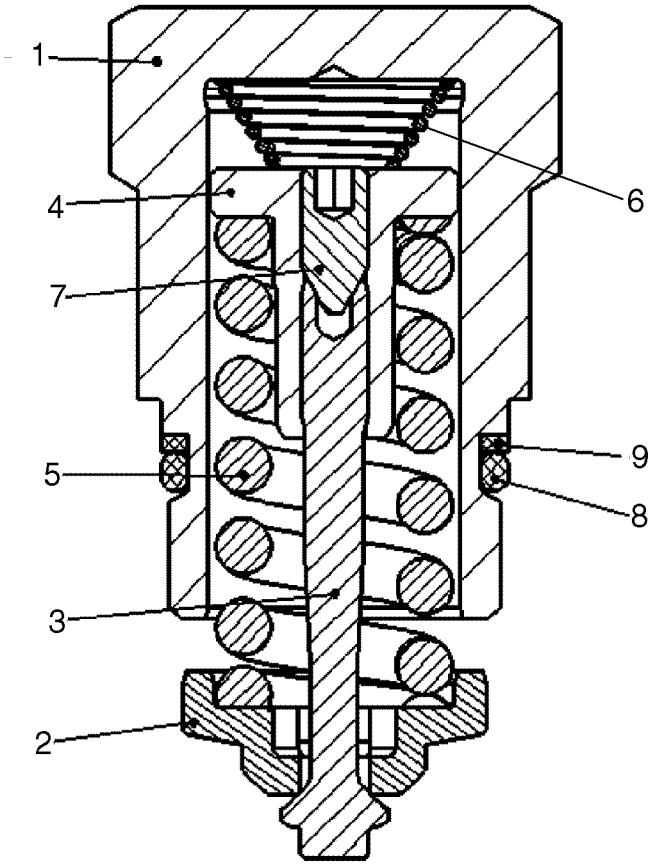

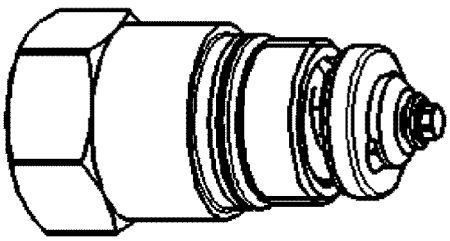

BS06J085

VALVULA DE REDUCCION DEPRESION

REF	FN	PART NUMBER	YR/SN	QTY	DESCRIPTION
		87553603		1	VÁLVULA DE SOBRE-PRESSÃO, Pressure Relief Valve; Incl. 1 - 9
1		NSS		1	BOLETIM INFORMATIVO, Locking Screw
2		NSS		1	BOLETIM INFORMATIVO, Valve Collar
3		NSS		1	BOLETIM INFORMATIVO, Valve Spindle
4		NSS		1	BOLETIM INFORMATIVO, Spring Loading Nut
5		NSS		1	BOLETIM INFORMATIVO, Pressure Spring
6		NSS		1	BOLETIM INFORMATIVO, Spring, Cone Shaped
7		NSS		1	BOLETIM INFORMATIVO, Threaded Pin
8		87597284		1	ANEL "O", O-ring
9		87597285		1	ANEL, Back Up Ring

VALVULA DE REDUCCION DEPRESION

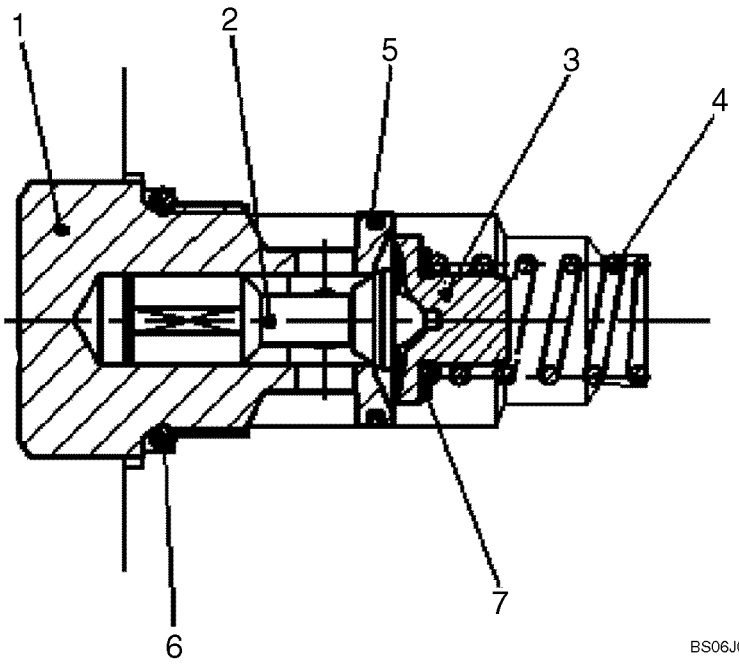

VALVULA DE REDUCCION DEPRESION

REF	FN	PART NUMBER	YR/SN	QTY	DESCRIPTION
		87553604		1	VÁLVULA DE SOBRE-PRESSÃO, Pressure Relief Valve; Incl. 1 - 7
1		NSS		1	BOLETIM INFORMATIVO, Locking Screw
2		NSS		1	BOLETIM INFORMATIVO, Valve Piston
3		NSS		1	BOLETIM INFORMATIVO, Spring Collar
4		NSS		1	BOLETIM INFORMATIVO, Pressure Spring
5		NSS		1	BOLETIM INFORMATIVO, Steel Sealing Spring
6		87597286		1	ANEL "O", O-ring
7		NSS		1	BOLETIM INFORMATIVO, Shim

CONJUNTO DA BOMBA DE ENGRENAGEM

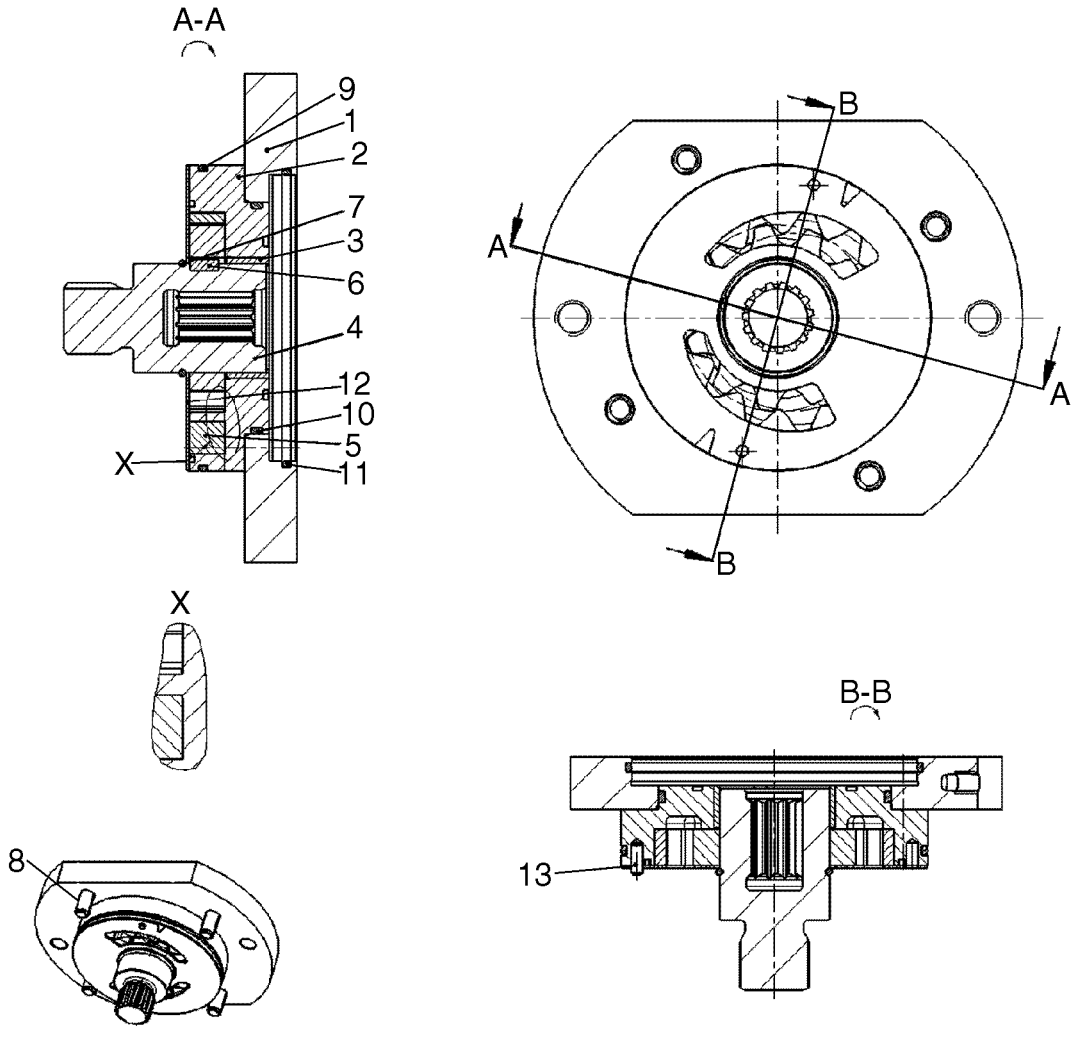

BS06J087

CONJUNTO DA BOMBA DE ENGRENAGEM

REF	FN	PART NUMBER	YR/SN	QTY	DESCRIPTION
		87553608		1	BOMBA, Internal Gear Pump; Incl. 1 - 13
1		87597287		1	FLANGE, Intermediate Flange
2		87597288		1	ALOJAMENTO, IZP Housing
3		87553610		1	ROLAMENTO, Bearing Bushing
4		87597289		1	CABEÇA DE SINO, Through Drive Coupling
5		87597290		1	JOGO DE RODAS, Wheel Set
6		87597291		1	CHAVE PORTA, Shaft Key
7		87597292		1	ANEL, Snap Ring
8		87597293		4	PARAFUSO, Socket Head Screw
9		87597294		1	ANEL "O", O-ring
10		87597295		1	ANEL "O", O-ring
11		87553616		1	ANEL "O", O-ring
12		87597296		1	PLACA, Wear Plate
13		87597297		1	PINO, Cylinder Pin

ROTATIE CONSTRUCTIE, RECHTS

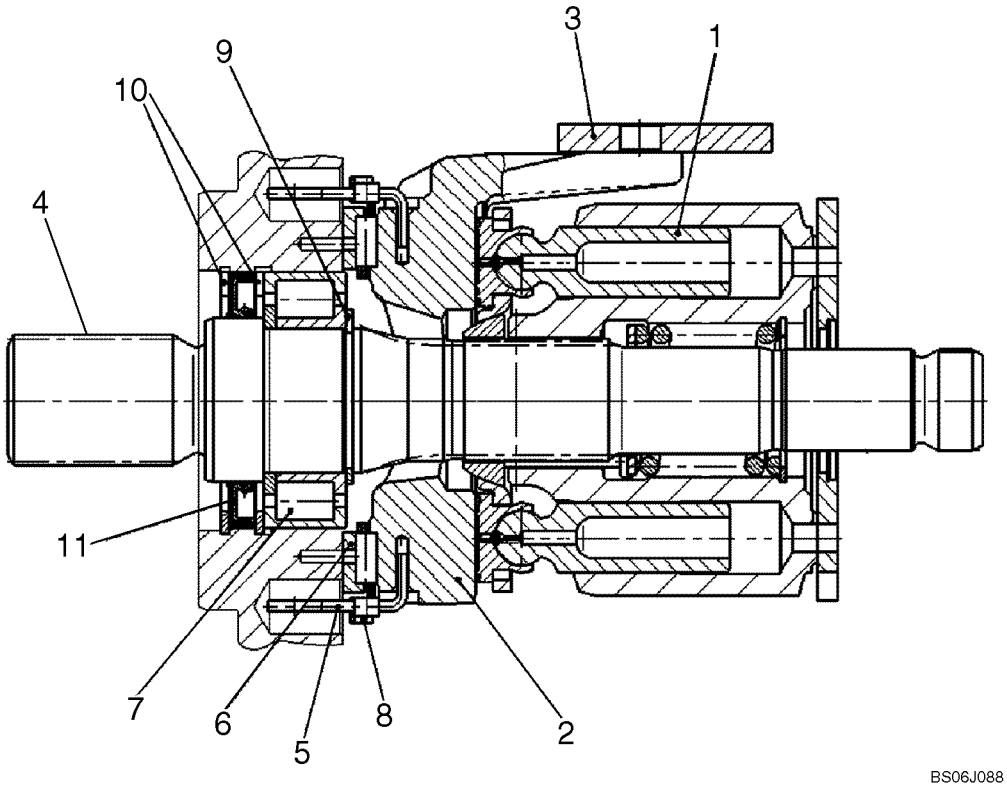

ROTATIE CONSTRUCTIE, RECHTS

REF	FN	PART NUMBER	YR/SN	QTY	DESCRIPTION
		87597298		1	KIT, SERVICE, Rotary Group, Right Hand Rotation; Incl. 1 - 11
1		87597299		1	VALVULA HYDR CONTROL, Rotary Group, Hydraulic Section A20VG
2		87597259		1	EMPACOTAR, Cradle
3		87597260		1	DESLIZADOR, Slide Ring
4		87597301		1	EIXO COMANDO, Drive Shaft
5		87597262		2	ARAME DE AÇO, Wire With Coil
6		87597263		1	ROLAMENTO, Bearing Liner (pair)
7		87597264		1	ROLAMENTO, Plain Roller Bearing
8		87597265		1	EMPACOTAR, Cradle Bearing Assembly (set)
9		87597266		1	ANEL, Retaining Ring
10		87597267		2	ANEL, Seeger V-ring
11		87597268		1	ANEL, Shaft Seal Ring

CONTROL, HIDRAULICO

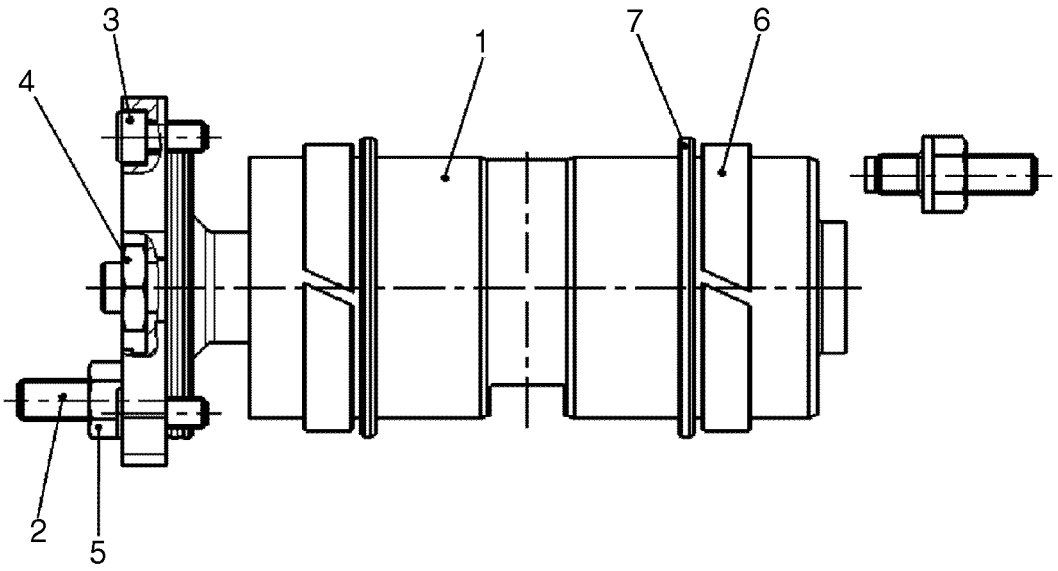

BS06J083

CONTROL, HIDRAULICO

REF	FN	PART NUMBER	YR/SN	QTY	DESCRIPTION
		87597305		1	KIT, SERVICE, Control, Hydraulic; Incl. 1 - 7
1		87597314		1	PISTÃO, Positioning Piston, Complete
2		87597274		2	PINO, Threaded Pin
3		87597275		4	PARAFUSO, Socket Head Screw
4		87597276		1	PORCA, Hexagon Nut
5		87597277		2	PORCA, Seal, Lock Nut
6		87597281		2	ANEL GUIA, Guide Ring
7		87597282		2	KIT, SERVICE, Rod, Seal Kit

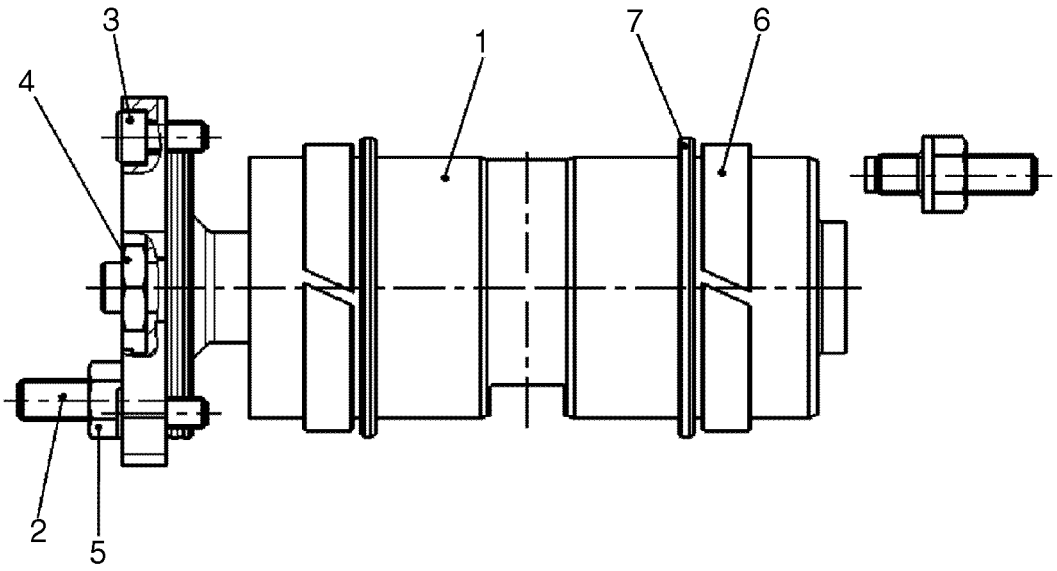

BS06J083

CONTROL, HIDRAULICO

REF	FN	PART NUMBER	YR/SN	QTY	DESCRIPTION
		87621240		1	COMANDO, Control, Hydraulic; Incl. 1 - 7
1		87622431		1	PISTÃO, Positioning Piston, Complete
2		87597274		2	PINO, Threaded Pin
3		87597275		4	PARAFUSO, Socket Head Screw
4		87597276		1	PORCA, Hexagon Nut
5		87597277		2	PORCA, Seal, Lock Nut
6		87597281		2	ANEL GUIA, Guide Ring
7		87597282		2	KIT, SERVICE, Rod, Seal Kit

CONTROLO CONJUNTO

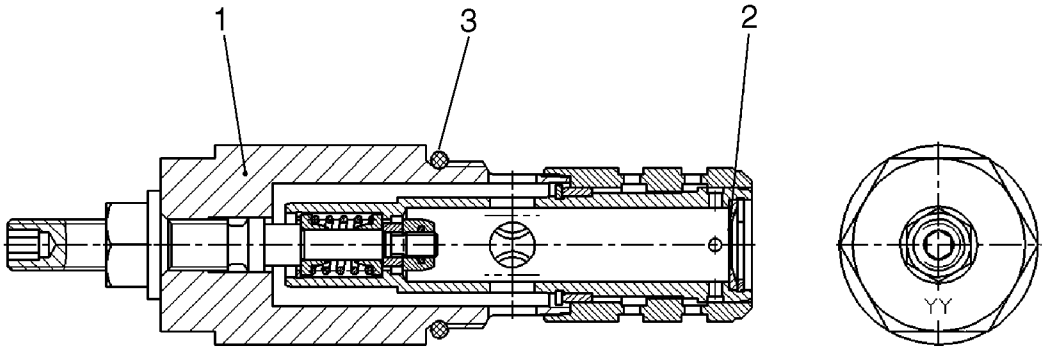

BS07A093

CONTROLO CONJUNTO

REF	FN	PART NUMBER	YR/SN	QTY	DESCRIPTION
		87553602		1	COMANDO, Control Cartridge With Orifice; Incl. 1 - 2
1		87597283		1	CARTUCHO, Control Cartridge W/O Orifice
2		NSS		1	BOLETIM INFORMATIVO, Orifice
3		87597284		1	ANEL "O"

CONTROLO CONJUNTO

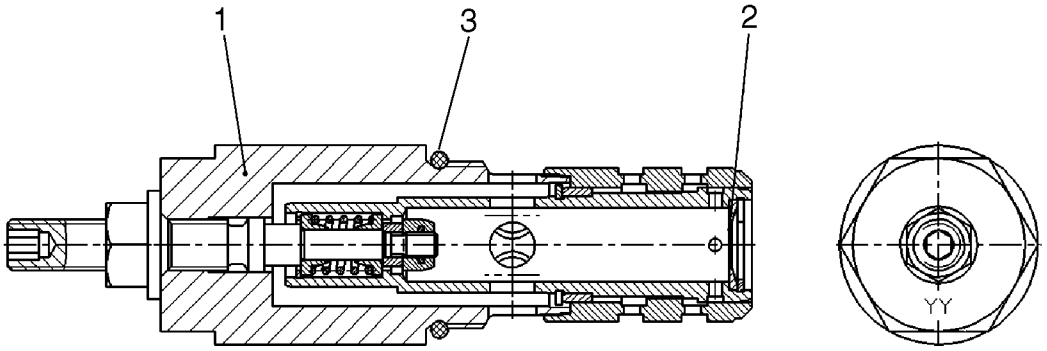

BS07A093

CONTROLO CONJUNTO

REF	FN	PART NUMBER	YR/SN	QTY	DESCRIPTION
		87621242		1	COMANDO, Control Cartridge With Orifice; Incl. 1 - 2
1		87597283		1	CARTUCHO, Control Cartridge W/O Orifice
2		87622433		1	ORIFICIO, Orifice
3		87597284		1	ANEL "O"

ELEMENTOS FECHANDO

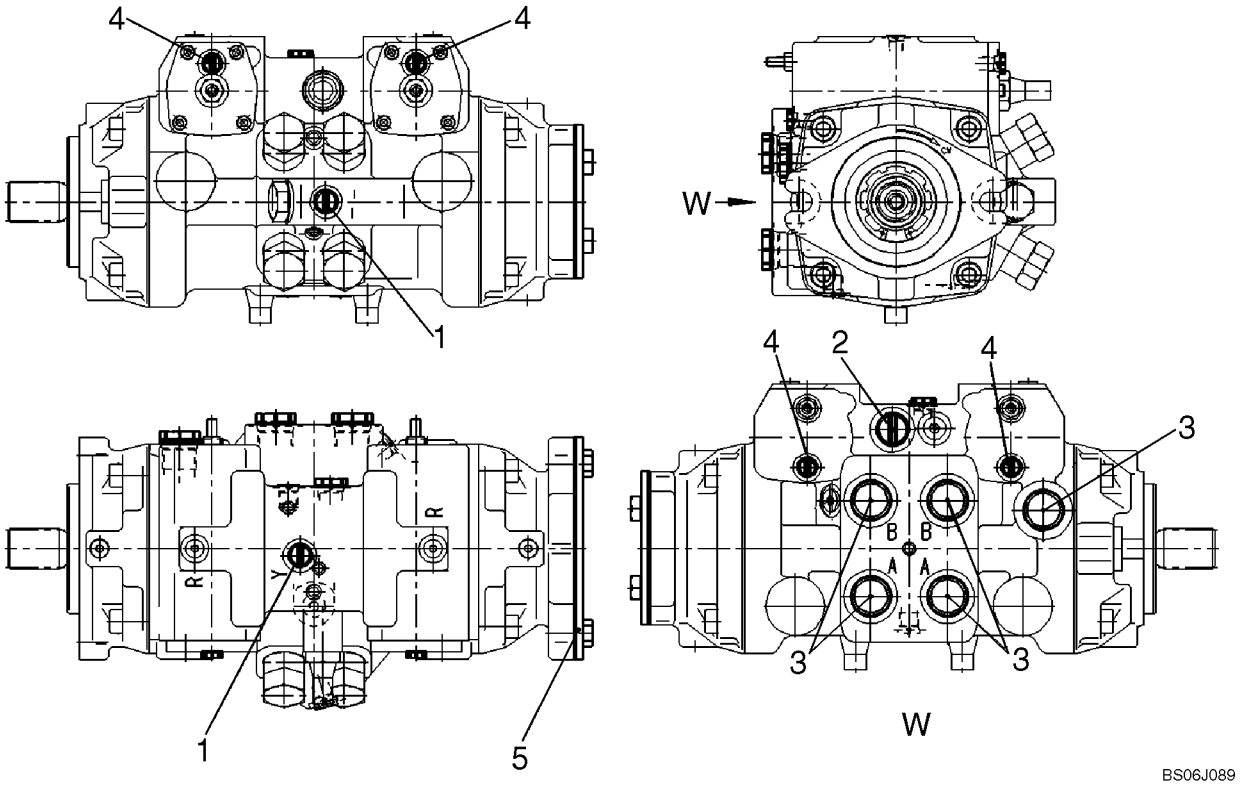

ELEMENTOS FECHANDO

REF	FN	PART NUMBER	YR/SN	QTY	DESCRIPTION
		87553623		1	SECÇÃO DE VÁLVULAS, Locking Elements; Incl. 1 - 5
1		NSS		2	BOLETIM INFORMATIVO, Seal Screw
2		NSS		1	BOLETIM INFORMATIVO, Seal Screw
3		NSS		5	BOLETIM INFORMATIVO, Seal Screw
4		NSS		4	BOLETIM INFORMATIVO, Seal Screw
5		NSS		1	BOLETIM INFORMATIVO, Flange Cover, Complete

ROTAÇÃO CONJUNTO, ESQUERDA ROTAÇÃO

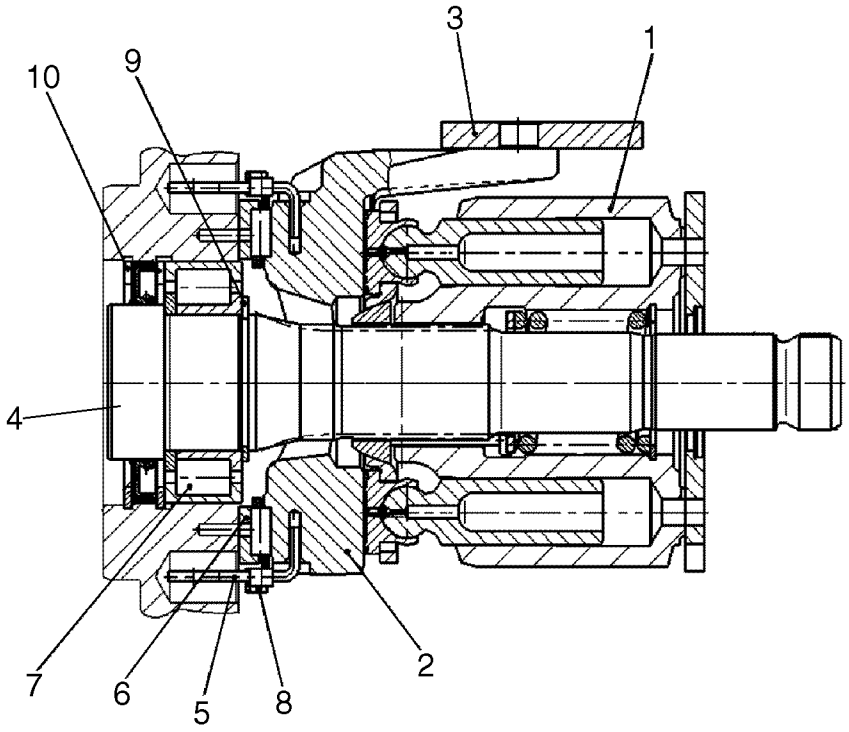

BS06J090

ROTAÇÃO CONJUNTO, ESQUERDA ROTAÇÃO

REF	FN	PART NUMBER	YR/SN	QTY	DESCRIPTION
		87597302		1	KIT, SERVICE, Rotary Group, LH Rotation; Incl. 1 - 10
1		87597303		1	VALVULA HYDR CONTROL, Rotary Group, Hydraulic Section A20VG
2		87597259		1	EMPACOTAR, Cradle
3		87597260		1	DESLIZADOR, Slide Ring
4		87597271		1	EIXO COMANDO, Drive Shaft
5		87597262		2	ARAME DE AÇO, Wire With Coil
6		87597263		1	ROLAMENTO, Bearing Liner (Pair)
7		87597264		1	ROLAMENTO, Plain Roller Bearing
8		87597265		1	EMPACOTAR, Cradle Bearing Assembly (Set)
9		87597266		1	ANEL, Retaining Ring
10		87597267		1	ANEL, Seeger V-Ring

ROTAÇÃO CONJUNTO, ESQUERDA ROTAÇÃO

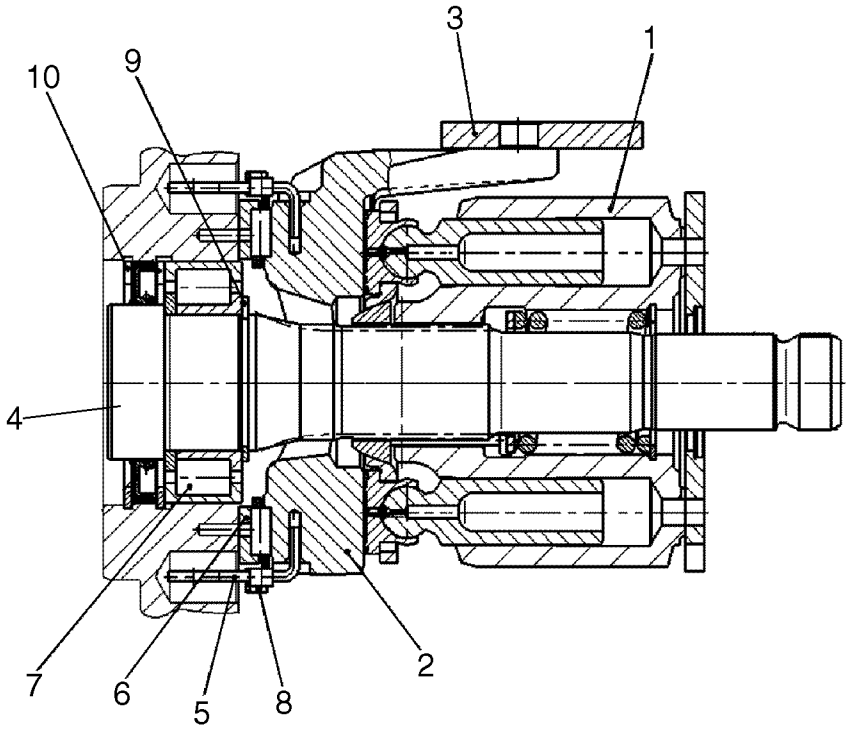

ROTAÇÃO CONJUNTO, ESQUERDA ROTAÇÃO

REF	FN	PART NUMBER	YR/SN	QTY	DESCRIPTION
		87621239		1	KIT, SERVICE, Rotary Group, LH Rotation; Incl. 1 - 10
1		87597303		1	VALVULA HYDR CONTROL, Rotary Group, Hydraulic Section A20VG
2		87597259		1	EMPACOTAR, Cradle
3		87597260		1	DESLIZADOR, Slide Ring
4		87622430		1	EIXO ACIONADO, Drive Shaft
5		87597262		2	ARAME DE AÇO, Wire With Coil
6		87597263		1	ROLAMENTO, Bearing Liner (Pair)
7		87597264		1	ROLAMENTO, Plain Roller Bearing
8		87597265		1	EMPACOTAR, Cradle Bearing Assembly (Set)
9		87597266		1	ANEL, Retaining Ring
10		87597267		1	ANEL, Seeger V-Ring

CONJUNTO DO MOTOR, - REXROTH

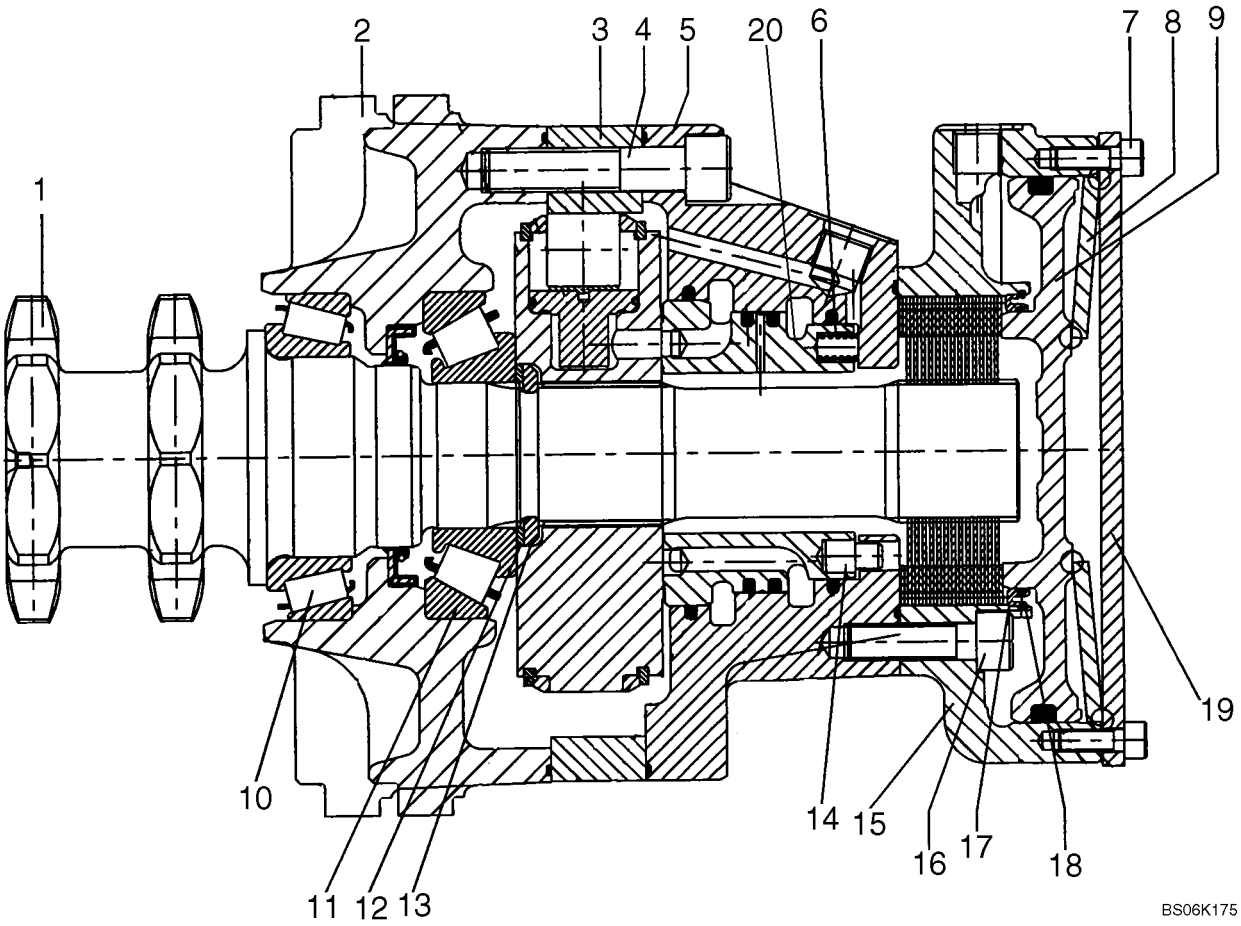

CONJUNTO DO MOTOR, - REXROTH

REF	FN	PART NUMBER	YR/SN	QTY	DESCRIPTION
		87034687		2	MOTOR, Motor, Rexroth; If Used; One Speed
1		87039374		1	KIT, Kit, Shaft
2		87043988		1	ESTOJO, Case, Front
3		87045006		1	CAME, Cam, 280/400
4		87043997		6	PARAFUSO, Screw, M12 x 55
5		87045007		1	ESTOJO, Case, Rear
6		87042912		12	MOLA
7		86512134		12	PARAFUSO, Hex Soc Hd, M6 x 16, 12.9
8		87042926		1	MOLA
9		87043999		1	PISTÃO, Piston, Brake
10		87043990		1	ROLAMENTO, Bearing, 55 x 90 x 25.25
11		87043991		1	ROLAMENTO, Bearing, 40 x 90 x 25.25
12		87043989		1	KIT, Kit, Washer
13		87043992		1	ANEL, Ring, Split
14		87042911		1	PINO
15		87045010		1	ALOJAMENTO, Housing
16		86566100		8	PARAFUSO, Hex Soc Hd, M10 x 35, 12.9, Hex Soc Hd, M6 x 16, 12.9
17		87042924		1	ANEL
18		87042925		1	FIXADOR, 87 ID
19		87042923		1	TAMPA, End
20		87045008		1	DISTRIBUIDOR DE ELEVAÇÃO, MCR3 Distributor 2WL

CONJUNTO DO MOTOR, - REXROTH

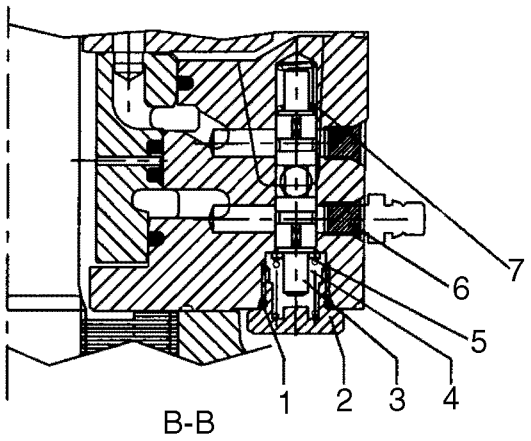

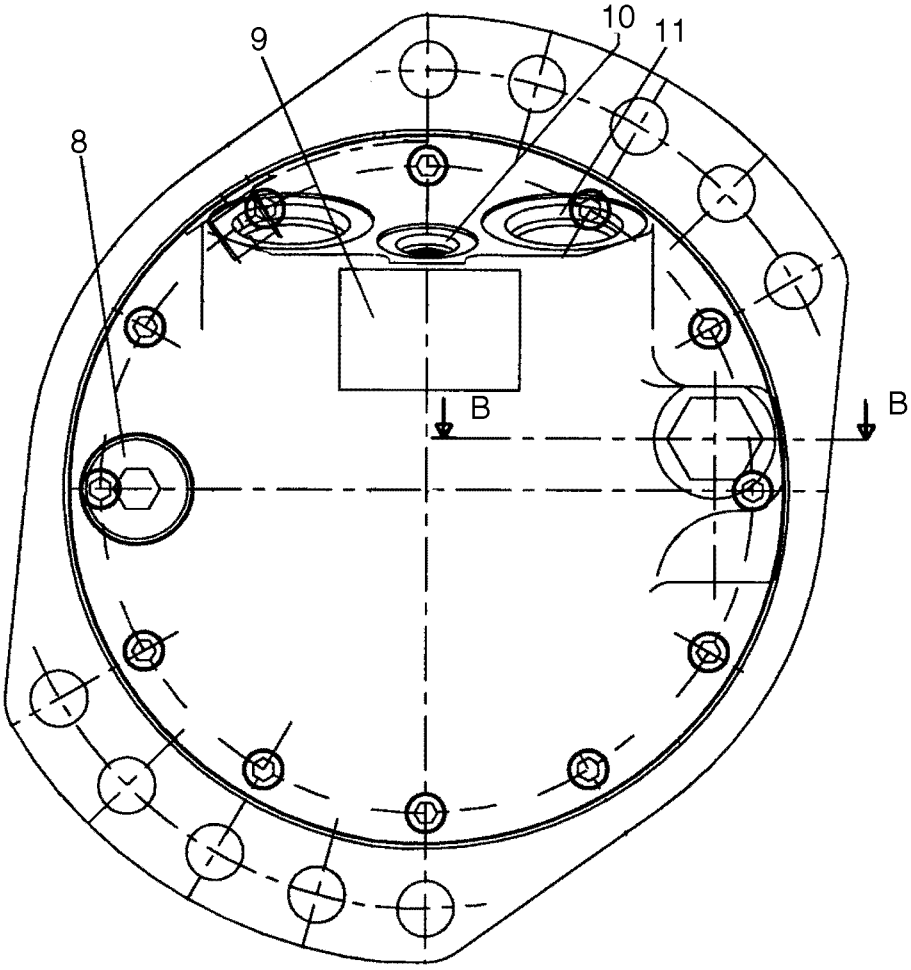

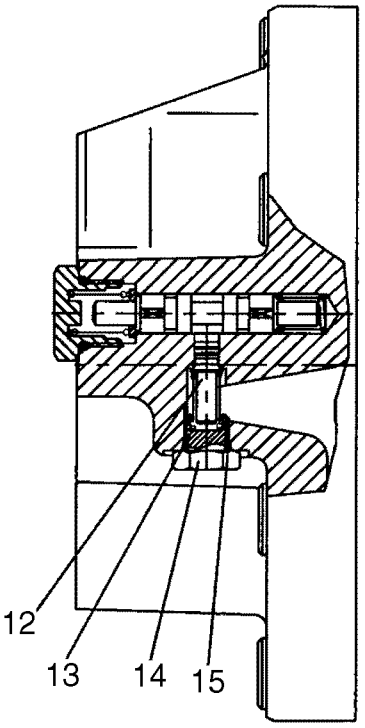

BS04M129

CONJUNTO DO MOTOR, - REXROTH

REF	FN	PART NUMBER	YR/SN	QTY	DESCRIPTION
		87034687		2	MOTOR, One Speed
1		NSS		1	BOLETIM INFORMATIVO, O-Ring, 13.6 x 2.4; Included In 87039376, Seal Kit
2		87045009		1	BUJÃO, Plug, Flushing; 3/8
3		87042928		1	CARRETO, Flushing
4		87042935		1	MOLA, Flushing Side B
5		87042929		1	ARRUELA PLANA, 1.5 Thick
6		NSS		1	BOLETIM INFORMATIVO, Spool
7		87042934		1	MOLA, Flushing Side A
8		86590562		1	BUJÃO, Hex Soc, 3/4"-16 ORB, 3/4
9		NSS		1	BOLETIM INFORMATIVO, Label
10		NSS		2	BOLETIM INFORMATIVO, Shipping Plug
11		NSS		2	BOLETIM INFORMATIVO, Shipping Plug
12		87045005		1	POPPET, Poppet, 1.5 Orifice
13		87042932		1	MOLA, Flushing
14		87042933		1	POPPET, 7/16
15		NSS		1	BOLETIM INFORMATIVO, O-Ring, 8.92 x 1.83; Included In 87039367, Seal Kit

CONJUNTO DO MOTOR, - REXROTH

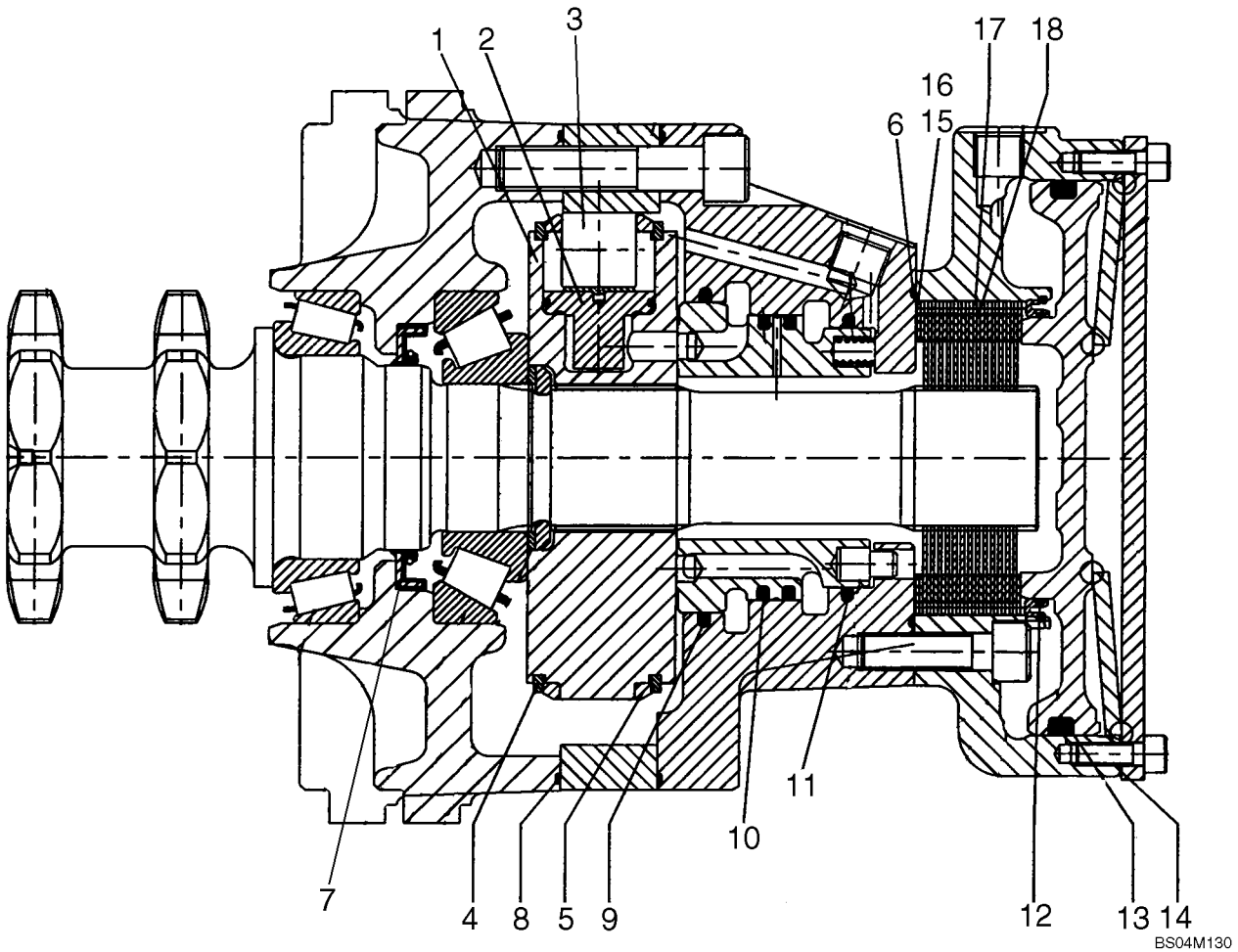

CONJUNTO DO MOTOR, - REXROTH

REF	FN	PART NUMBER	YR/SN	QTY	DESCRIPTION
		87034687		2	MOTOR, Motor, One Speed;
		87039378		1	KIT, Kit, Rotation; Incl. 1 - 5
1		NSS		1	BOLETIM INFORMATIVO, Cylinder Block
2		NSS		8	BOLETIM INFORMATIVO, Piston S/A
3		NSS		8	BOLETIM INFORMATIVO, Roller
4		NSS		2	BOLETIM INFORMATIVO, Circlip, 120 Dia
5		NSS		2	BOLETIM INFORMATIVO, Retaining Ring
		87039376		1	KIT, Kit, Seal; Incl. Ref 6 - 40 And 06-41, Ref 1, 15
6		NSS		1	BOLETIM INFORMATIVO, Ring, 88.1 x 1.68
7		NSS		1	BOLETIM INFORMATIVO, Shaft Seal, 50
8		NSS		1	BOLETIM INFORMATIVO, Ring, 171.5 x 1.68
9		NSS		1	BOLETIM INFORMATIVO, Rod Seal, 84
10		NSS		1	BOLETIM INFORMATIVO, Piston Seal, 77.225
11		NSS		1	BOLETIM INFORMATIVO, Rod Seal, 70
12		NSS		1	BOLETIM INFORMATIVO, O-Ring, 75.92 x 1.78
13		NSS		16	BOLETIM INFORMATIVO, Square Ring, 139.07 x 5.16
14		NSS		1	BOLETIM INFORMATIVO, Gasket
		87039373		1	KIT, Kit, Brake; Incl. 15 - 18
15		NSS		1	BOLETIM INFORMATIVO, Shim, 80 x 63 x 0.1
16		NSS		1	BOLETIM INFORMATIVO, Shim, 80 x 63 x 0.3
17		NSS		1	BOLETIM INFORMATIVO, Outer Plate
18		NSS		1	BOLETIM INFORMATIVO, Inner Plate

CONJUNTO DO MOTOR, DUAS VELOCIDADES

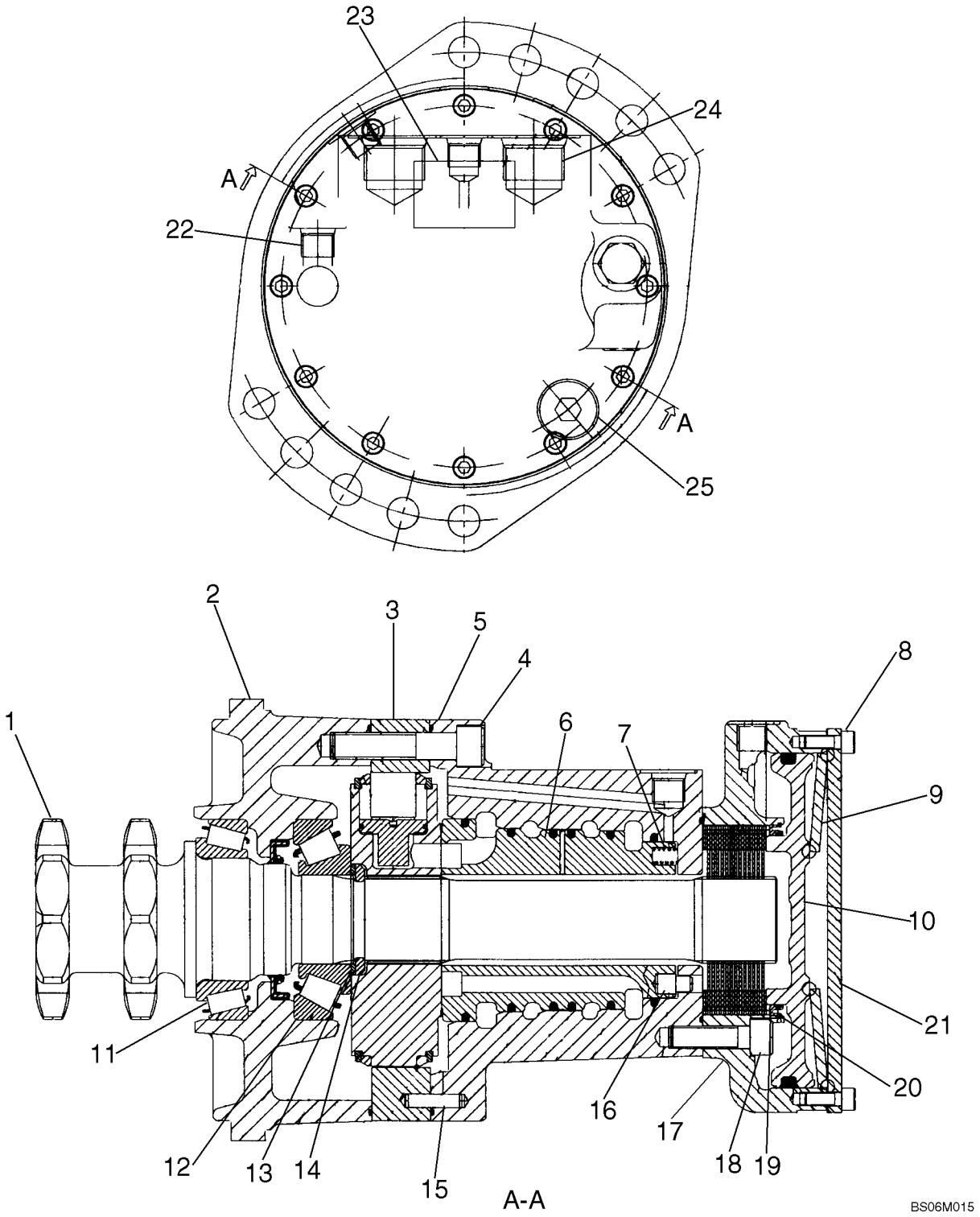

CONJUNTO DO MOTOR, DUAS VELOCIDADES

REF	FN	PART NUMBER	YR/SN	QTY	DESCRIPTION
		87034688		1	MOTOR, Drive Motor, MCR03 SAHR 17-10 CID 10T
1		87039375		1	KIT, MCR3 Shaft Kit
2		87043988		1	ESTOJO, MCR3 F/Case
3		87043993		1	CAME, MCR3 Cam 280/195 2S
4		87043997		6	PARAFUSO, Socket Head Cap Screw M12 X 55
5		87043994		1	ESTOJO, MCR3 R/Case
6		87043995		1	DISTRIBUIDOR DE ELEVAÇÃO, MCR3 Distributor 2WL
7		87042912		12	MOLA, MCR3 Spring
8		86512134		12	PARAFUSO, Hex Soc Hd, M6 x 16, 12.9
9		87042926		1	MOLA
10		87043999		1	PISTÃO, MCR3 Brake Piston
11		87043990		1	ROLAMENTO, Bearing, 55mm X 90mm X 23mm
12		87043991		1	ROLAMENTO, MCR3 Bearing, 40mm X 90mm X 25.25mm
13		87043989		1	KIT, Abutment Washer Kit
14		87043992		1	ANEL, MCR3 Split Ring
15		87043996		1	GUIA, Dowel Pin
16		87042911		1	PINO
17		87043998		1	FREIO COMPLETO, MCR3 Brake Housing
18		86566100		8	PARAFUSO, Hex Soc Hd, M10 x 35, 12.9
19		87042924		1	ANEL
20		87042925		1	FIXADOR
21		87042923		1	TAMPA
22		NSS		3	BOLETIM INFORMATIVO, Shipping Plug, 9/16-18 UNF
23		NSS		1	BOLETIM INFORMATIVO, Label Standard Motor
24		NSS		2	BOLETIM INFORMATIVO, Shipping Plug, 1 1/16-12 UNF
25		86590562		1	BUJÃO, Hex Soc, 3/4"-16 ORB
26		NSS		1	BOLETIM INFORMATIVO, Shear Plug, M7

CONJUNTO DO MOTOR, DUAS VELOCIDADES

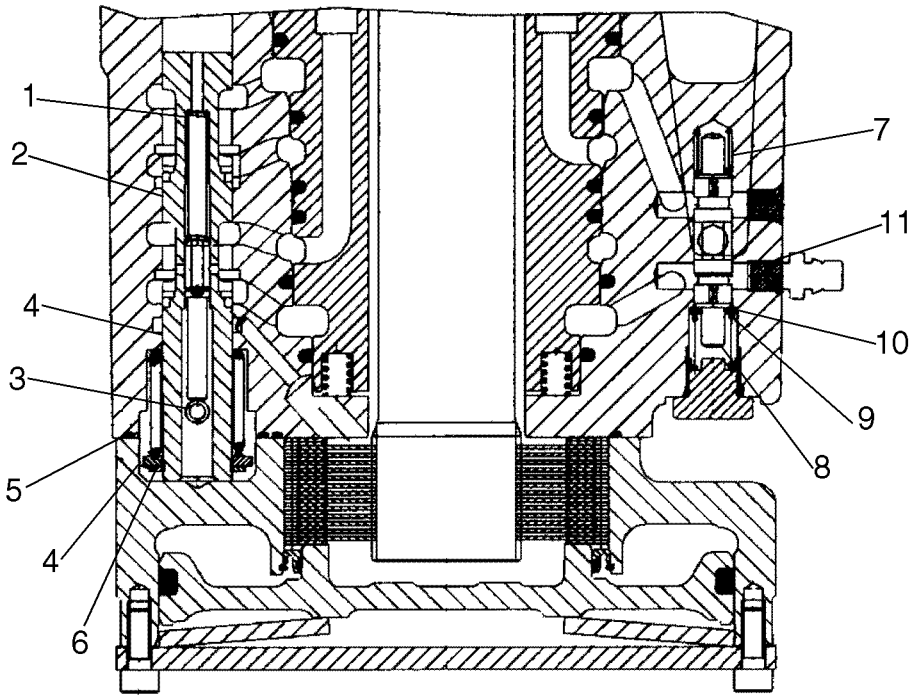

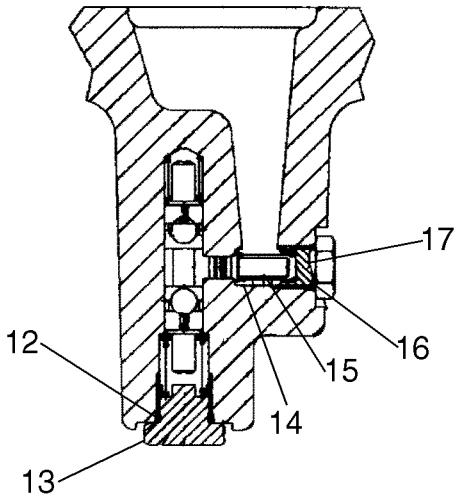

BS06M016

CONJUNTO DO MOTOR, DUAS VELOCIDADES

REF	FN	PART NUMBER	YR/SN	QTY	DESCRIPTION
		87034688		1	MOTOR, Drive Motor, MCR03 SAHR 17-10 CID 10T
1		87042918		1	MOLA, MCR5 Spring, Shut Off
2		87042913		1	CARRETO, MCR5 Two Speed Spool
3		87042917		1	MOLA
4		87042914		1	KIT, MCR5 Washer And Spring Kit
5		NSS		1	BOLETIM INFORMATIVO, Included In 87039377, MCR3 Seal Kit
6		87042915		1	FIXADOR
7		87042934		1	MOLA, Flushing Side A
8		87042928		1	CARRETO, Flushing Spool
9		87042935		1	MOLA, Flushing Side B
10		87042929		1	ARRUELA PLANA
11		NSS		1	BOLETIM INFORMATIVO, Shear Plug
12		NSS		1	BOLETIM INFORMATIVO, O-ring; Included In 87039377, MCR3 Seal Kit
13		76349		1	BUJÃO, Hex Hd, 9/16"-18 ORB
14		87042932		1	MOLA
15		87045005		1	POPPET, Poppet, RV 1.5 Orifice
16		NSS		1	BOLETIM INFORMATIVO, O-ring; Included In 87039377, MCR3 Seal Kit
17		87042933		1	POPPET

CONJUNTO DO MOTOR, DUAS VELOCIDADES

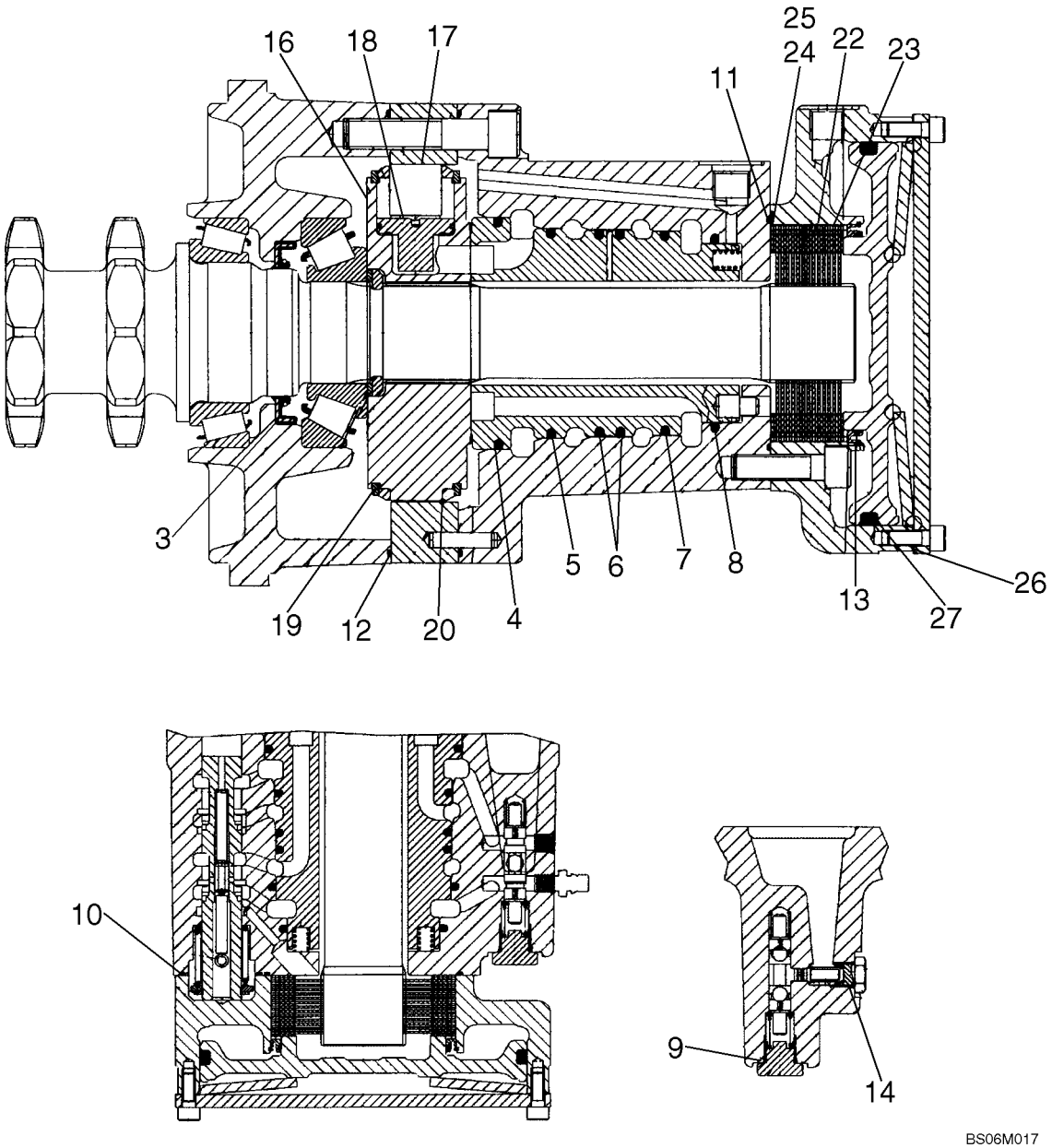

CONJUNTO DO MOTOR, DUAS VELOCIDADES

REF	FN	PART NUMBER	YR/SN	QTY	DESCRIPTION
1		87034688		1	MOTOR, Drive Motor, MCR03 SAHR 17-10 CID 10T
2		87039377		1	KIT, MCR3 Seal Kit 2W; Incl. 3 - 14
3		NSS		1	BOLETIM INFORMATIVO, MCR3 Shaft Seal 50 Viton
4		NSS		1	BOLETIM INFORMATIVO, Piston Seal 91
5		NSS		1	BOLETIM INFORMATIVO, Piston Seal 82.25
6		NSS		2	BOLETIM INFORMATIVO, Piston Seal 81.25
7		NSS		1	BOLETIM INFORMATIVO, Piston Seal 80.25
8		NSS		1	BOLETIM INFORMATIVO, Rod Seal 70
9		NSS		1	BOLETIM INFORMATIVO, O-ring, 11.90 mm X 1.98 90 SH
10		NSS		1	BOLETIM INFORMATIVO, O-ring, 34.65 mm X 1.78 Viton
11		NSS		1	BOLETIM INFORMATIVO, Sq. Ring, 88.62 mm X 1.68 Viton
12		NSS		2	BOLETIM INFORMATIVO, Sq. Ring, 171.50 mm X 1.68 Viton
13		NSS		1	BOLETIM INFORMATIVO, O-ring, 75.92 mm X 1.78 Viton
14		NSS		1	BOLETIM INFORMATIVO, O-ring, 8.92 mm X 1.83 Viton
15		87039379		1	KIT, Rotation Kit 2W; Incl. 16 - 20
16		NSS		1	BOLETIM INFORMATIVO, MCR3 Cylinder Block HD/2W/P
17		NSS		8	BOLETIM INFORMATIVO, MCR3 Roller Hd
18		NSS		8	BOLETIM INFORMATIVO, MCR3 Piston S/A Hd Hx
19		NSS		2	BOLETIM INFORMATIVO, Circlip Ext. 120 Dia.
20		NSS		2	BOLETIM INFORMATIVO, MCR3 Retaining Ring
21		87039373		1	KIT, Brake Kit; Incl. 22 - 27
22		NSS		15	BOLETIM INFORMATIVO, MCR3 Outer Plate
23		NSS		13	BOLETIM INFORMATIVO, MCR3 Inner Plate
24		NSS		1	BOLETIM INFORMATIVO, Shim
25		NSS		1	BOLETIM INFORMATIVO, Shim
26		NSS		1	BOLETIM INFORMATIVO, MCR3 Gasket
27		NSS		1	BOLETIM INFORMATIVO, Sq. Ring, 139.07 mm X 5.16 Viton

CONJUNTO DO MOTOR, TRANSMISSÃO DE DESLOCAMENTO DE DUAS VELOCIDADES (C175)

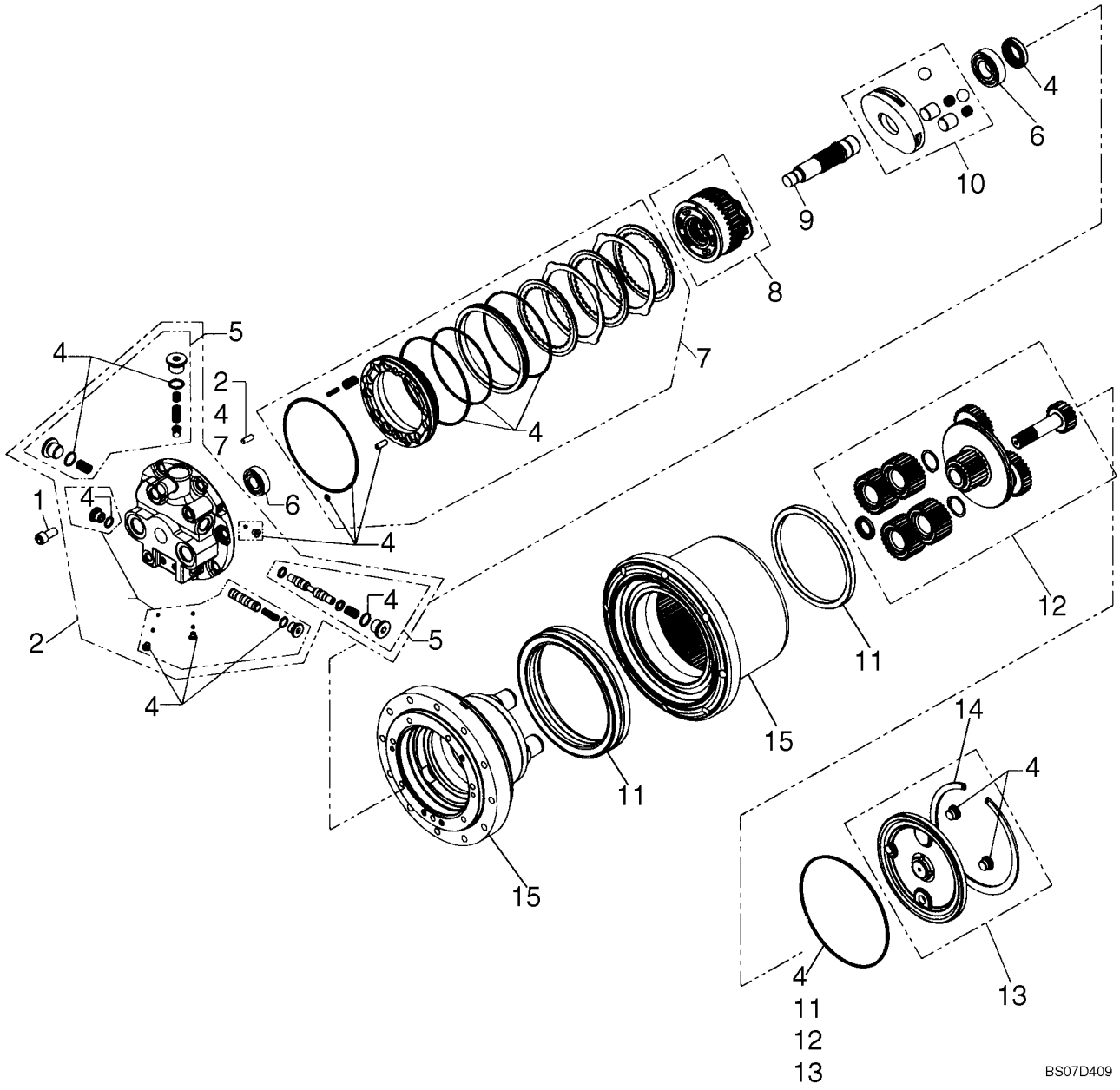

CONJUNTO DO MOTOR, TRANSMISSÃO DE DESLOCAMENTO DE DUAS VELOCIDADES (C175)

REF	FN	PART NUMBER	YR/SN	QTY	DESCRIPTION
		87588897		1	MOTO-BOMBA, Drive Motor, Two Speed Track Drive
1		87619899		1	PARAFUSO, M12
2		87619902		1	KIT, SERVICE, Kit, Base Plate Assembly; Incl. (1) 87619914 Flushing Kit, (1) 87619905 Second Speed Spool Kit, (3) Plugs, (1) Orifice, And (2) Pins
3		87619905		1	KIT, SERVICE, Kit, Second Speed Spool; Incl. (1) Spool, (1) Spring, (2) O-rings, (4) Plugs, (4) Orifices
4		87619920		1	KIT, SERVICE, Kit, Repair; Incl. (13) O-rings, (1) Motor Seal Ring, (1) Orifice, (5) Plugs, (2) Pins, (1) Quad Ring
5		87619914		1	KIT, SERVICE, Kit, Flushing; Incl. (1) Plunger, (3) Spring Seat, (3) Springs, (4) O-rings, (2) Plugs, (1) Poppet
6		87619918		1	KIT, SERVICE, Kit, Bearings; Incl. (2) Bearings
7		87619919		1	KIT, SERVICE, Kit, Parking Brake; Incl. (3) Brake Discs, (2) Steel Discs, (1) Spacer, (1) Brake Piston, (2) Pins, (24) Springs, (7) O-rings, (2) Pins
8		87619915		1	KIT, SERVICE, Kit, Cylinder Block Assembly; Incl. (9) Pistons, (1) Retainer Plate, (1) Spherical Bushing, (3) Pins, (1) Cylinder Block, (1) Spring Holder, (1) Spring, (1) Collar Washer, (1) Circlip, (1) Valve Plate
9		87619917		1	EIXO, Motor Shaft Assembly
10		87619916		1	KIT, SERVICE, Kit, Swash Plate; Incl. (2) Springs, (2) Pistons, (2) Balls, (1) Swash Plate
11		87619901		1	KIT, SERVICE, Kit, Seal Nut; Incl. (1) Nut, (1) Seal, (1) 87619896 Quad Ring
12		87619900		1	KIT, SERVICE, Kit, Reduction Assembly; Incl. (1) Gear, (1) First Reduction Assy, (4) Circlips, (4) Planetary Assy, (1) Centering Ring, (1) Quad Ring
13		87619883		1	KIT, SERVICE, Kit, Cover Assembly; Incl. (2) 87619884 Plugs, (1) 87619885 Circlips, (1) Cover, (1) Pad, (1) 87619896 Quad Ring
14		87619885		1	ANEL-ELÁSTICO
15		NSS			BOLETIM INFORMATIVO, Housing

CONJUNTO DA BOMBA DE ENGRENAGEM

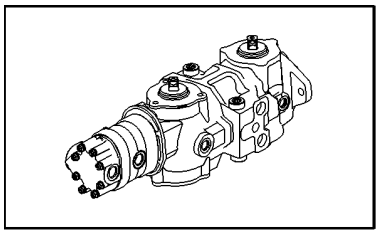

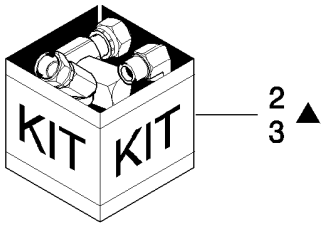

6

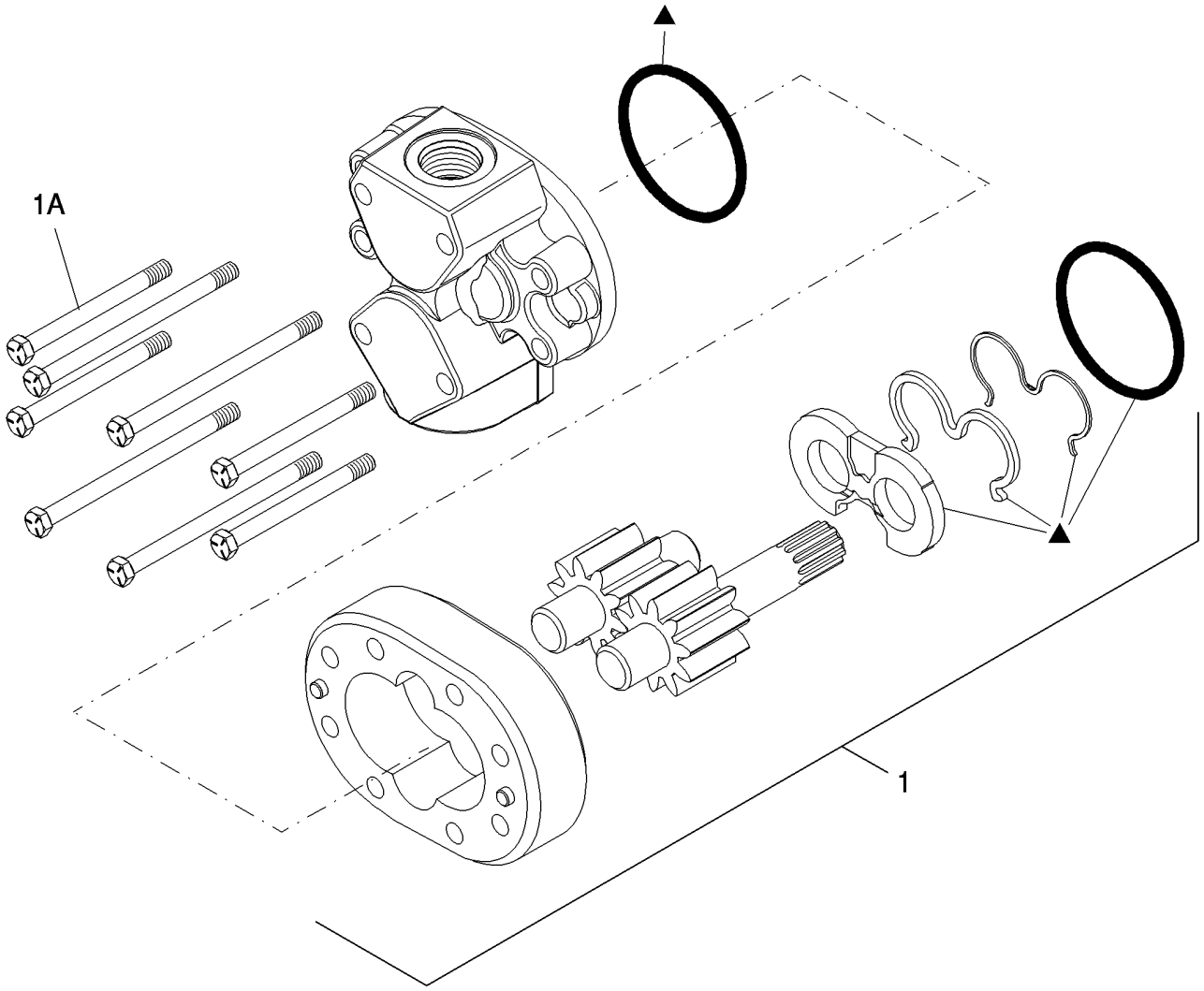

CONJUNTO DA BOMBA DE ENGRENAGEM

REF	FN	PART NUMBER	YR/SN	QTY	DESCRIPTION
1		86566183		1	BOMBA HIDRÁULICA, Single, 1.37, Eaton# 26000-918
1A		86590565		8	PARAFUSO, Cap, 12-pt Hd, G5, 5/16"-18 x 4"
2		87042710		1	JOGO DE JUNTAS, Single Gear Pump
2		86615177		1	JOGO DE JUNTAS, Single Gear Pump, High-Temperature

BOMBA, ENGRANAJE

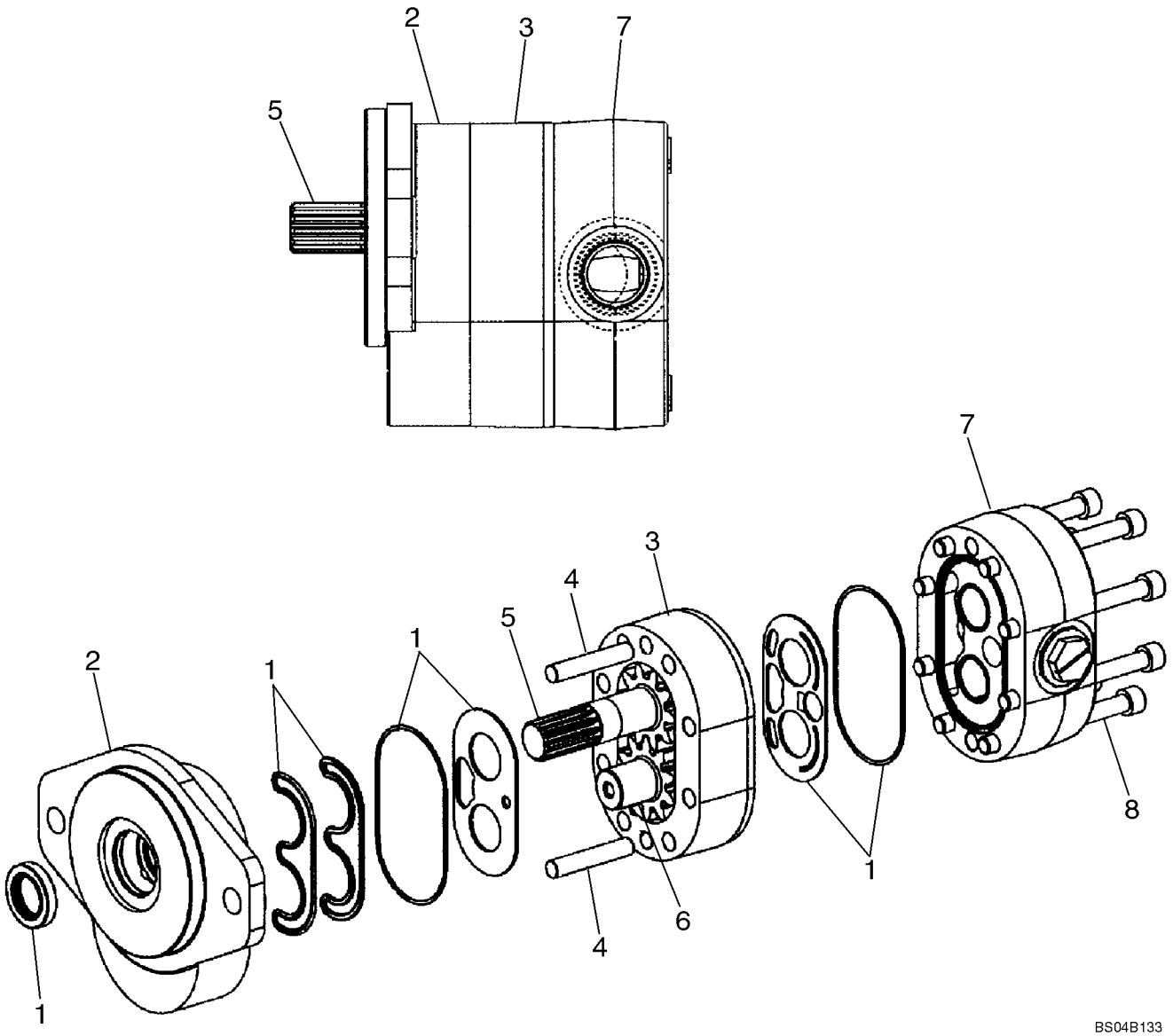

BOMBA, ENGRANAJE

REF	FN	PART NUMBER	YR/SN	QTY	DESCRIPTION
		87368980		1	BOMBA, Incl. 1 - 8; 2 Ports (1 Inlet /1 Outlet); Models Without High Flow
1		87042214		1	JOGO DE JUNTAS, Seal; Component Parts Not Serviced Separately
2		NSS		1	BOLETIM INFORMATIVO, Cover
3		NSS		1	BOLETIM INFORMATIVO, Plate, Gear
4		NSS		2	BOLETIM INFORMATIVO, Pin, Dowel
5		NSS		1	BOLETIM INFORMATIVO, Shaft, Drive
6		NSS		1	BOLETIM INFORMATIVO, Shaft, Idler
7		NSS		1	BOLETIM INFORMATIVO, Cover; Component Parts Not Serviced Separately
8		NSS		8	BOLETIM INFORMATIVO, Screw
		87013729		1	ANEL "O", -044, 70 Duro, 3.739" ID x .070" Thk, Gear Pump Mounting; Incl With Pump 87357097, See Figure 06-30

BOMBA, ENGRANAJE (FLUXO ALTO)

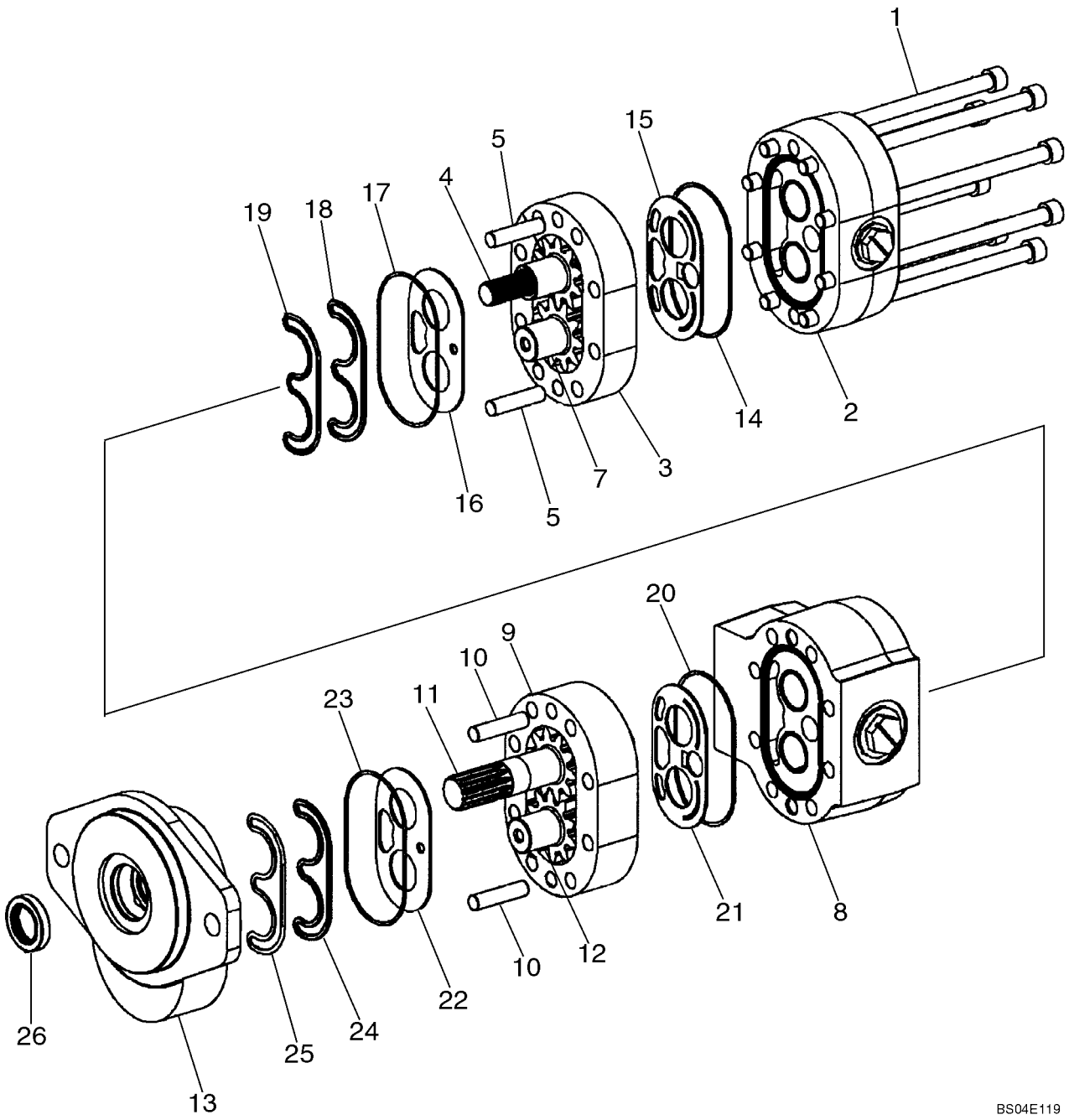

BOMBA, ENGRANAJE (FLUXO ALTO)

REF	FN	PART NUMBER	YR/SN	QTY	DESCRIPTION
		87024697		1	BOMBA, Gear Pump; High Flow; Incl. 1 - 26
		87368988		1	BOMBA, Gear Pump; High Flow; Incl. 1 - 26
1		NSS		1	BOLETIM INFORMATIVO, Cap Screws
2		NSS		1	BOLETIM INFORMATIVO, Cover Assy
3		NSS		1	BOLETIM INFORMATIVO, Gear Plate
4		NSS		1	BOLETIM INFORMATIVO, Idler Drive Shaft
5		NSS		2	BOLETIM INFORMATIVO, Dowel Pin
6		NSS		1	BOLETIM INFORMATIVO, Coupling
7		NSS		1	BOLETIM INFORMATIVO, Idler Shaft
8		NSS		1	BOLETIM INFORMATIVO, Bearing Plate Assy
9		NSS		1	BOLETIM INFORMATIVO, Gear Plate
10		NSS		2	BOLETIM INFORMATIVO, Dowel Pin
11		NSS		1	BOLETIM INFORMATIVO, Drive Shaft
12		NSS		1	BOLETIM INFORMATIVO, Idler Shaft
13		NSS		1	BOLETIM INFORMATIVO, Body Assy
		87042215		1	JOGO DE JUNTAS, Seal; Tandem Gear Pump; High Flow; Incl. 14 - 26
14		NSS		1	BOLETIM INFORMATIVO, Sealing Ring
15		NSS		1	BOLETIM INFORMATIVO, Wear Plate
16		NSS		1	BOLETIM INFORMATIVO, Wear Plate
17		NSS		1	BOLETIM INFORMATIVO, Sealing Ring
18		NSS		1	BOLETIM INFORMATIVO, Load Seal
19		NSS		1	BOLETIM INFORMATIVO, Pre-Load Seal
20		NSS		1	BOLETIM INFORMATIVO, Sealing Ring
21		NSS		1	BOLETIM INFORMATIVO, Wear Plate
22		NSS		1	BOLETIM INFORMATIVO, Wear Plate
23		NSS		1	BOLETIM INFORMATIVO, Sealing Ring
24		NSS		1	BOLETIM INFORMATIVO, Load Seal
25		NSS		1	BOLETIM INFORMATIVO, Pre-Load Seal
26		NSS		1	BOLETIM INFORMATIVO, Shaft Oil Seal

BOMBA, ENGRANAJE (FLUXO ALTO)

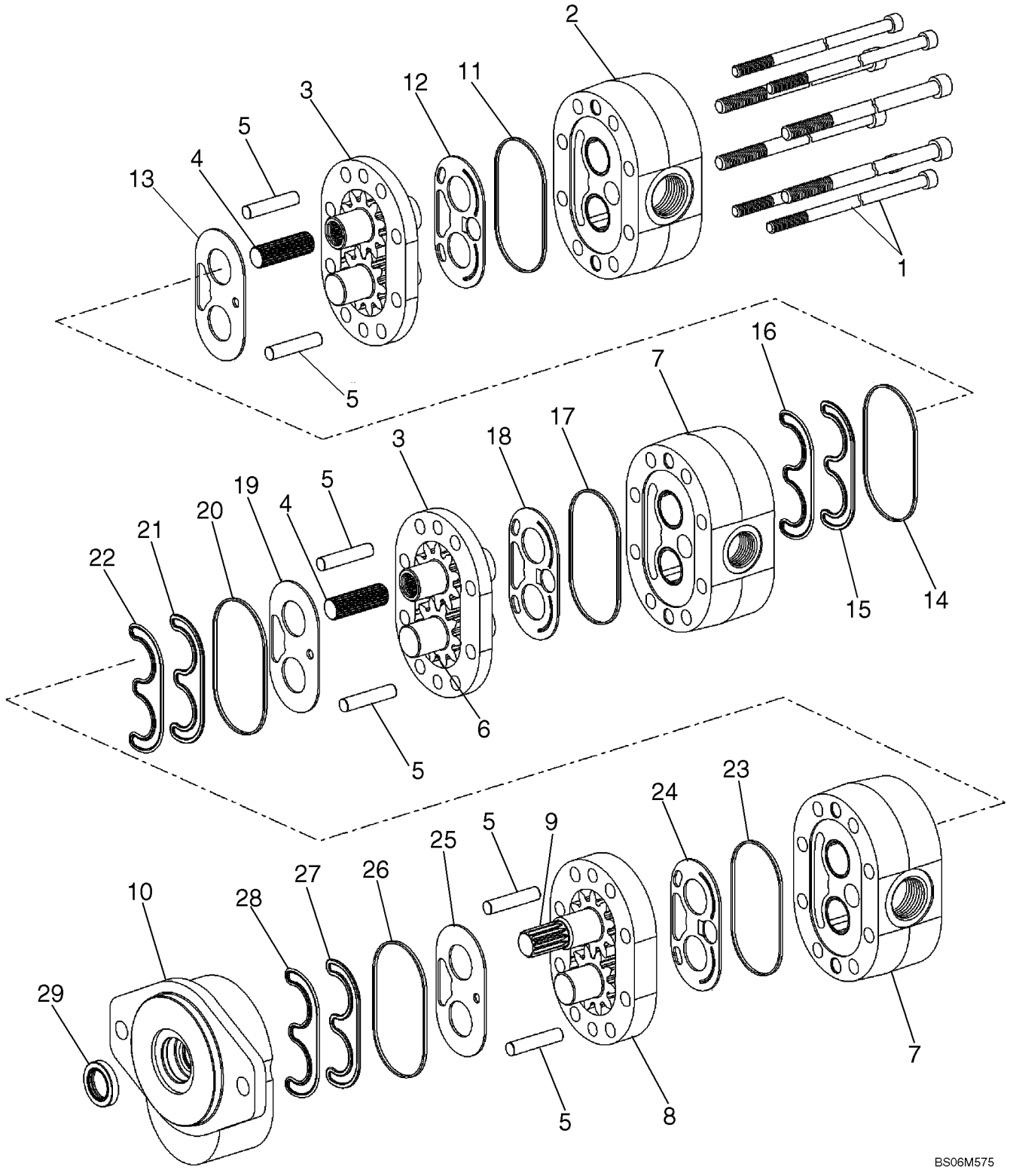

BOMBA, ENGRANAJE (FLUXO ALTO)

REF	FN	PART NUMBER	YR/SN	QTY	DESCRIPTION
		87551776		1	BOMBA, Gear Pump; High Flow; Incl. 1 - 29
1		NSS		1	BOLETIM INFORMATIVO, Cap Screws
2		NSS		1	BOLETIM INFORMATIVO, Cover Assy
3		NSS		1	BOLETIM INFORMATIVO, Gear Plate
4		NSS		1	BOLETIM INFORMATIVO, Idler Drive Shaft
5		NSS		2	BOLETIM INFORMATIVO, Dowel Pin
6		NSS		1	BOLETIM INFORMATIVO, Idler Shaft
7		NSS		1	BOLETIM INFORMATIVO, Bearing Plate Assy
8		NSS		1	BOLETIM INFORMATIVO, Gear Plate
9		NSS		1	BOLETIM INFORMATIVO, Drive Shaft
10		NSS		1	BOLETIM INFORMATIVO, Body Assy
		87567556		1	KIT, Seal; Tandem Gear Pump; High Flow; For 87551776 Pump; Incl. 11 - 29
11		NSS		1	BOLETIM INFORMATIVO, Sealing Ring
12		NSS		1	BOLETIM INFORMATIVO, Wear Plate
13		NSS		1	BOLETIM INFORMATIVO, Wear Plate
14		NSS		1	BOLETIM INFORMATIVO, Sealing Ring
15		NSS		1	BOLETIM INFORMATIVO, Load Seal
16		NSS		1	BOLETIM INFORMATIVO, Pre-Load Seal
17		NSS		1	BOLETIM INFORMATIVO, Sealing Ring
18		NSS		1	BOLETIM INFORMATIVO, Wear Plate
19		NSS		1	BOLETIM INFORMATIVO, Wear Plate
20		NSS		1	BOLETIM INFORMATIVO, Sealing Ring
21		NSS		1	BOLETIM INFORMATIVO, Load Seal
22		NSS		1	BOLETIM INFORMATIVO, Pre-Load Seal
23		NSS		1	BOLETIM INFORMATIVO, Sealing Ring
24		NSS		1	BOLETIM INFORMATIVO, Wear Plate
25		NSS		1	BOLETIM INFORMATIVO, Wear Plate
26		NSS		1	BOLETIM INFORMATIVO, Sealing Ring
27		NSS		1	BOLETIM INFORMATIVO, Load Seal
28		NSS		1	BOLETIM INFORMATIVO, Pre-Load Seal
29		NSS		1	BOLETIM INFORMATIVO, Shaft Oil Seal

BOMBA, ENGRANAJE (FLUXO ALTO)

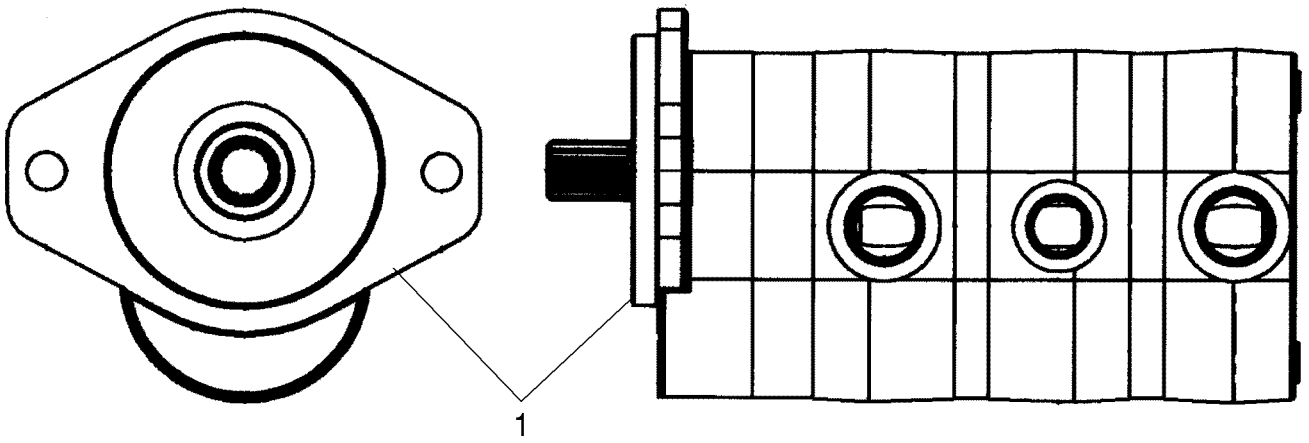

BS06M423

BOMBA, ENGRANAJE (FLUXO ALTO)

REF	FN	PART NUMBER	YR/SN	QTY	DESCRIPTION
		86566185		1	BOMBA HIDRÁULICA, Gear Pump, High Flow
1		87042711		1	JOGO DE JUNTAS, Seal Kit For 86566185 Gear Pump

SUPORTE - BOMBA SUPORTE, CONTROLO AUTOMÁTICO

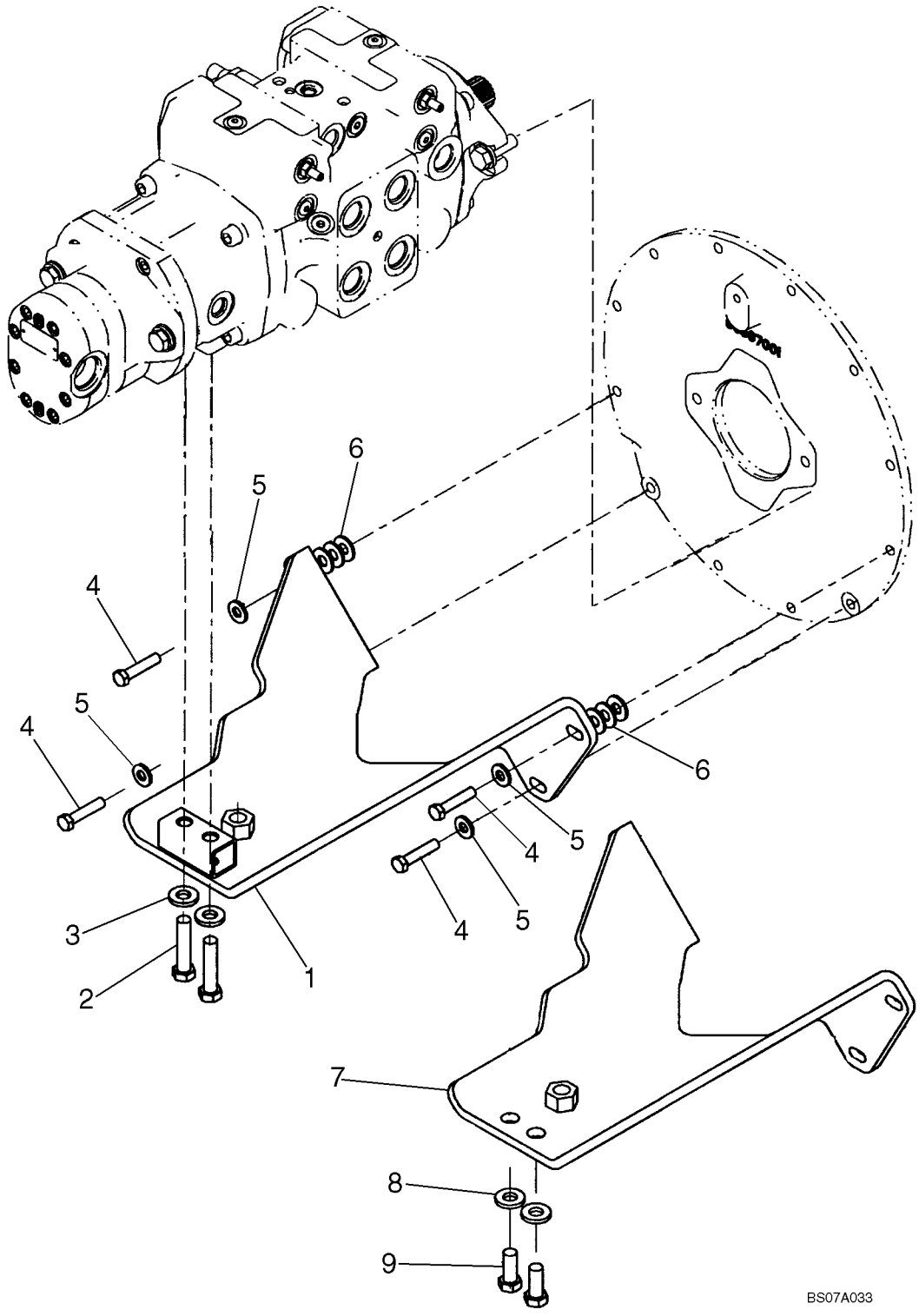

SUPORTE - BOMBA SUPORTE, CONTROLO AUTOMÁTICO

REF	FN	PART NUMBER	YR/SN	QTY	DESCRIPTION
1		87551798		1	SUPORTE, Bracket, Pump Support; If Used
2		50032		2	PARAFUSO, Hex, 1/2"-13 x 2 1/4", G8
3		86625256		2	ARRUELA PLANA, M12 x 28.5 x 4, HT
4		280589		4	PARAFUSO, Hex, 3/8"-16 x 1 3/4", G8
5		285072		4	ARRUELA PLANA
6		80702		6	ARRUELA PLANA, 3/8"
7		87594375		1	SUPORTE, Bracket, Pump Support; If Used
8		86625256		2	ARRUELA PLANA, M12 x 28.5 x 4, HT
9		280853		2	PARAFUSO, Hex, 1/2"-13 x 1 1/4", G8, Full Thd

CONJUNTO DA TRANSMISSÃO FINAL (L175)

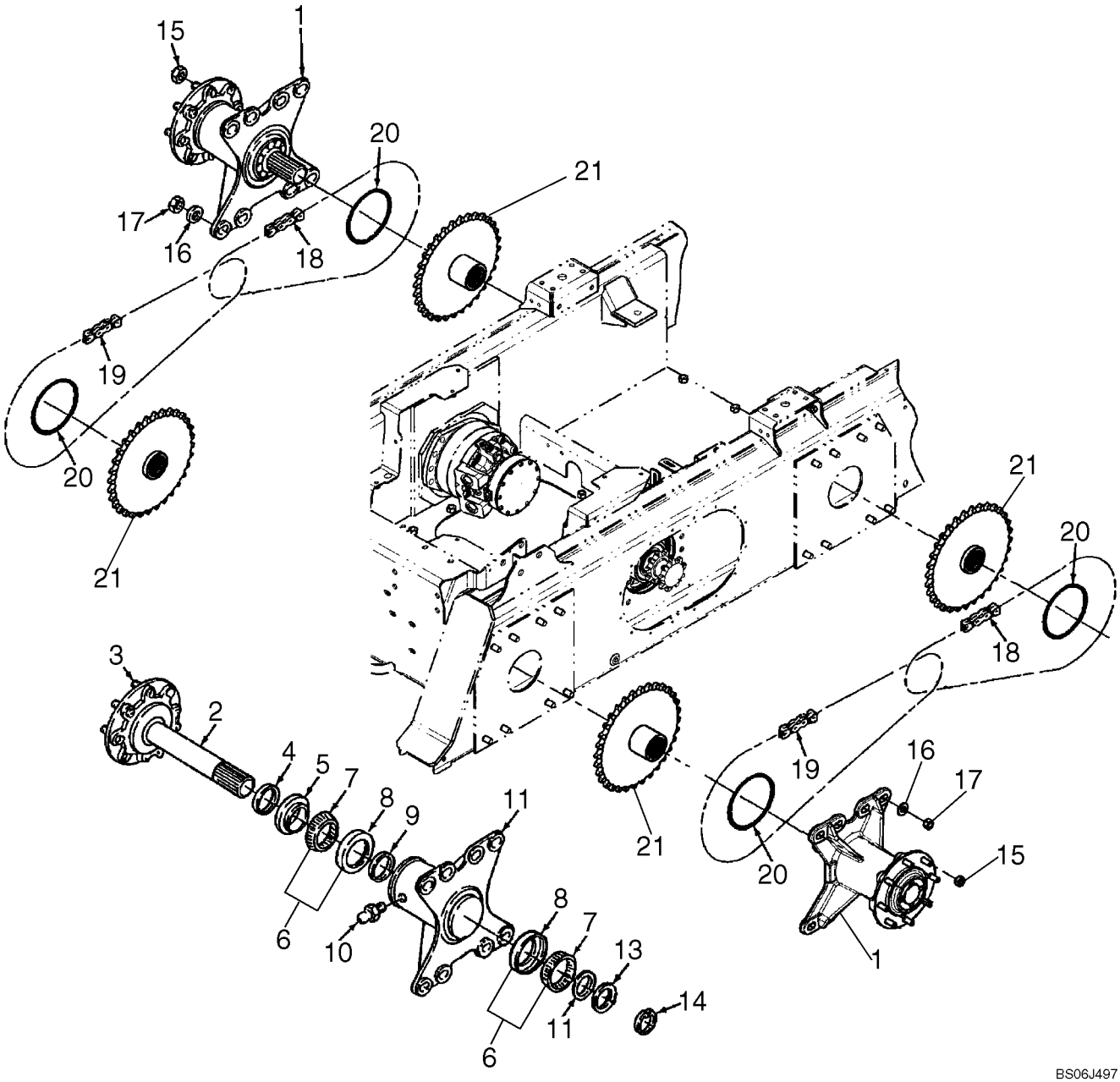

CONJUNTO DA TRANSMISSÃO FINAL (L175)

REF	FN	PART NUMBER	YR/SN	QTY	DESCRIPTION
1		87043028		4	EIXO MOTOR, Axle Assembly; Incl. 2 - 14
2		NSS		4	BOLETIM INFORMATIVO, Axle
3		175617		32	PARAFUSO
4		9829877		4	ANEL DE VEDACAO
5		9829882		4	BUCHA
6		679394		8	ROLAMENTO ROLETES
7		287902		8	CONE
8		287066		8	ANEL ONDULADO
9		603916		4	ANEL DE VEDACAO
10		87414		4	GRAXEIRA, 1/4"-28 x .56" lg, Drive
11		86594882		4	SUPORTE
12		9841237		X	CALCO DE AFINACAO, .254mm Thk, As Needed
13		612778		X	CALCO DE AFINACAO, .020" Thk, As Needed
14		86501184		4	ANEL, #200, Ext
15		86979742		32	PORCA
16		86528652		32	ARRUELA PLANA, 5/8" ID x 1-1/2" OD; Used With Nut 408
17		408		32	PORCA, 5/8"-18, G5, If Used
17		87010568		32	PORCA, Flg, 5/8"-18, G5, Flange; Used Without Washer; If Used
18		86589808		2	JOGO DE CORRENTES, Chain, RC80, 58 Pitches
19		86589809		2	JOGO DE CORRENTES, Chain, RC80, 76 Pitches
20		86504449		4	ANEL "O"
21		9841242		4	RODA DENTADA, Driven, 32T

CONJUNTO DA TRANSMISSÃO FINAL (C175)

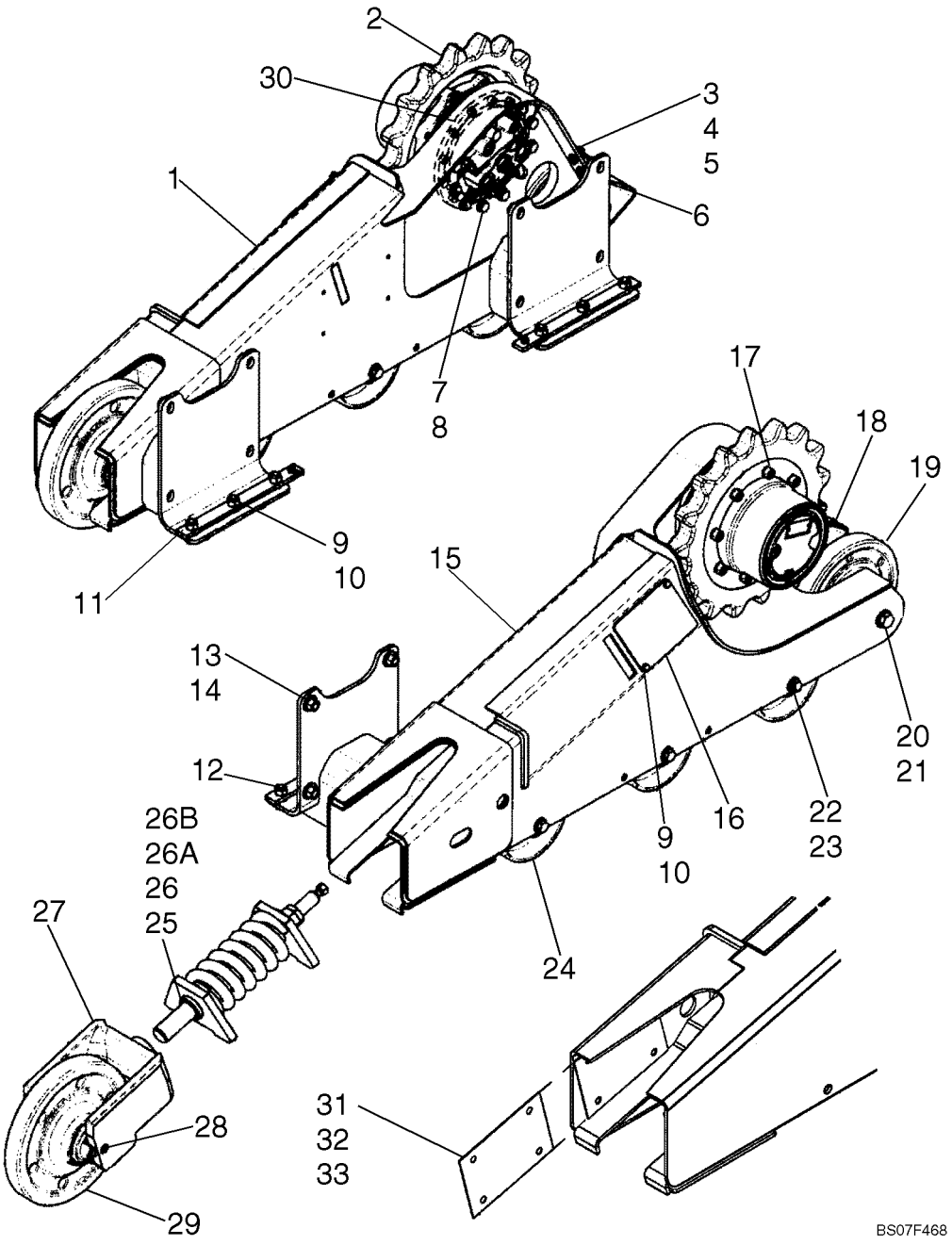

CONJUNTO DA TRANSMISSÃO FINAL (C175)

REF	FN	PART NUMBER	YR/SN	QTY	DESCRIPTION
1		87610133		1	CHASSI, Main Frame, RH; Replaces 87458285; If Used
1		87669376		1	CHASSI, Main Frame; RH; If Used
2		87460888		2	RODA DENTADA, Sprocket, 17 Tooth - 86 Pitch
3		337475		8	PORCA, M12, Cl 10
4		43260		8	PARAFUSO, Hex, M12 x 30, 10.9
5		86625255		8	ARRUELA PLANA, M13.5 x 24.5 x 3, HT
6		87459518		1	RASPADOR, Scraper Plate, RH
7		11116431		24	PARAFUSO, Hex, M14 x 60, 10.9
8		87016615		24	ARRUELA PLANA, M12 x 28.5 x 3, HT
9		43127		8	PARAFUSO, Hex, M8 x 25, 8.8
10		86511315		8	ARRUELA PLANA, M8 x 16 x 1.6
11		87364613		4	BARRA, Bar, Under Carriage Mount
12		86508624		12	PARAFUSO, Hex, M16 x 45, 10.9
13		86528652		28	ARRUELA PLANA, If Used
14		408		16	PORCA, 5/8"-18, G5, Used With Washer 86528652; If Used
14		87010568		16	PORCA, Flg, 5/8"-18, G5, Flange, Used Without Washer
15		87610134		1	CHASSI, Main Frame, LH; Replaces 87458286; If Used
15		87669384		1	CHASSI, Main Frame, LH; If Used
16		87354210		2	TAMPA
17		87619750		16	PARAFUSO, Screw, Socket Head M16 X 45 12.9 ZND
18		87459517		1	RASPADOR, Scraper Plate, RH
19		87535299		2	ADIAMENTO
20		9512573		4	PARAFUSO, Hex, M20 x 40, 10.9
21		86629891		4	ARRUELA PLANA, M18 x 41.5 x 5, HT
22		86639326		24	ARRUELA PLANA, M17.5 x 34 x 5, HT
23		374835		12	PARAFUSO, Hex, M16 x 40, 10.9
24		87535297		6	ROLETE PARA ESTEIRA
25		87602985		2	TENSIONADOR, Replaces 87458724; Incl. 26
26		87602987		1	KIT, SERVICE, Seal Kit, Incl. Scraper, Spacer And O-ring

CONJUNTO DA TRANSMISSÃO FINAL (C175)

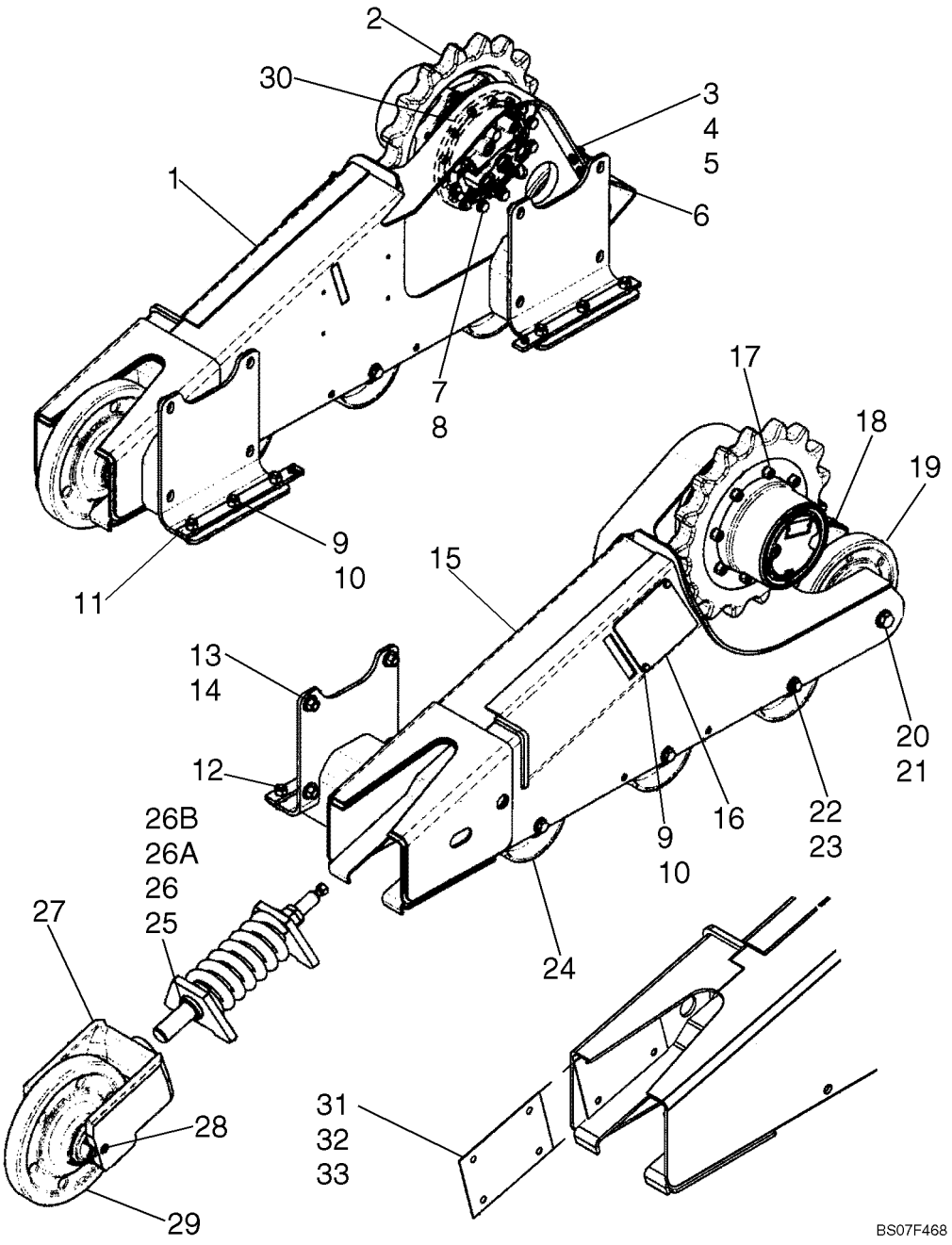

CONJUNTO DA TRANSMISSÃO FINAL (C175)

REF	FN	PART NUMBER	YR/SN	QTY	DESCRIPTION
26A		87602988		2	HASTE, Piston
26B		87356572		2	VALVULA, Grease Valve
27		87462287		2	GARFO
28		14301821		4	PARAFUSO, Hex Soc Hd, M10 x 16, 8.8
29		87535298		2	RODANA DIANTEIRA, Component Parts Not Serviced Separately
30		87583105		2	ESPAÇADOR, Spacer, Motor
31		87650011		1	KIT, SERVICE, Yoke Shim Kit; Incl. 32, 33 And Instructions
32		87650010		2	PLACA, 16 Gage Shim
33		87650009		2	PLACA, 12 Gage Shim

RODAS

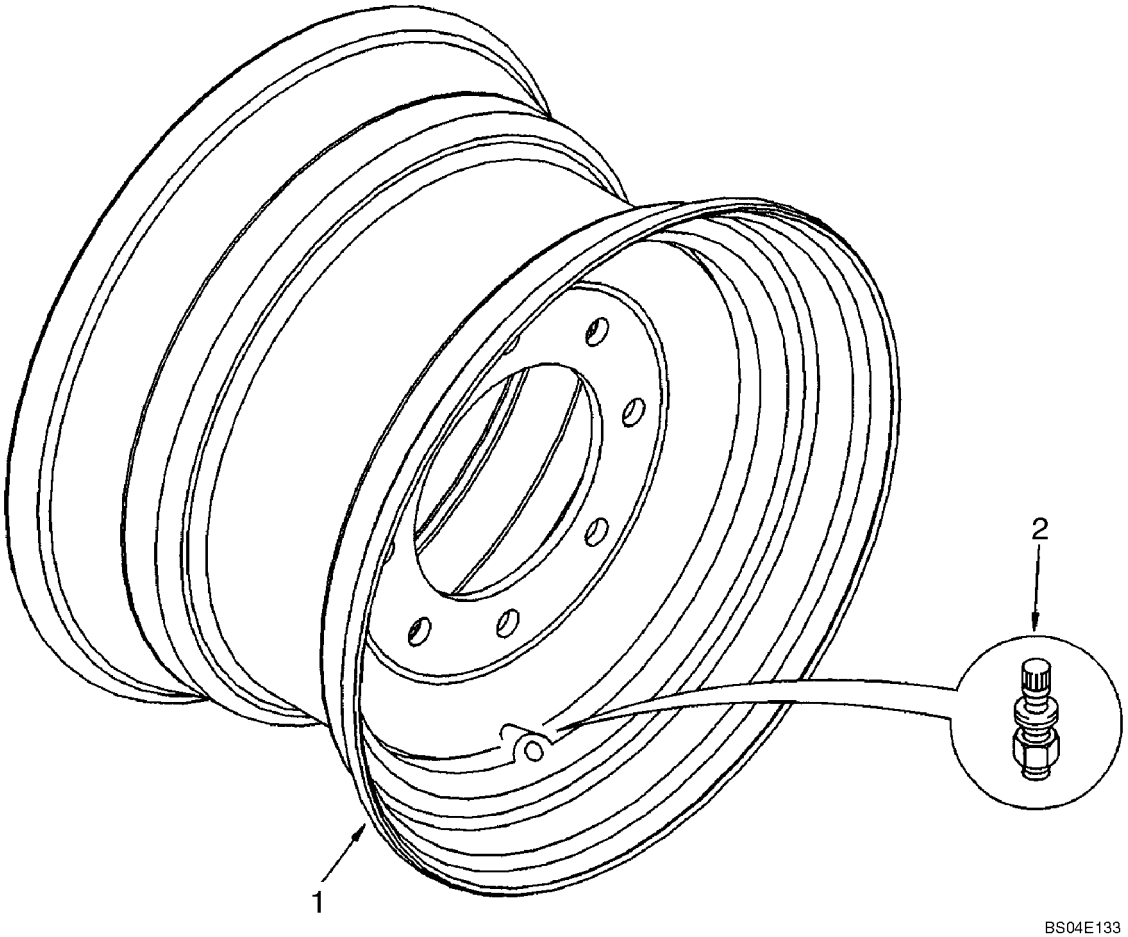

RODAS

REF	FN	PART NUMBER	YR/SN	QTY	DESCRIPTION
1		86590969		4	RODA VEICULAR, 16.5 X 8.25 Yellow; Recommended Tire Sizes 10 X 16.5, 10 X 16.5 Lined; Purchase Local
1		87047278		4	ARO, 16.5 X 9.75 Yellow; Recommended Tire Sizes 12 X 16.5 8 Ply, 12 X 16.5 Lined, 31.5 X 13 X 16.5; Purchase Local
2		512083		4	HASTE DA VALVULA
2		196033		4	HASTE DA VALVULA

ART

NOT

AVAILABLE

ESTEIRAS

REF	FN	PART NUMBER	YR/SN	QTY	DESCRIPTION
		87541113		2	DEBORRACHA TRILHA, Track, 320 Wide X 50 X 86P

SECTION INDEX
Freios

07-01	SISTEMA DE FRENOS - HIDRÁULICO
07-02	KIT DO TRAVÃO/ PARA ESTRADA
07-03	KIT DO TRAVÃO/ PARA ESTRADA, CONTROLO AUTOMÁTICO
07-04	SISTEMA DE FRENOS - HIDRÁULICO, MODELOS COM CONTROLO AUTOMÁTICO

SISTEMA DE FRENOS - HIDRÁULICO

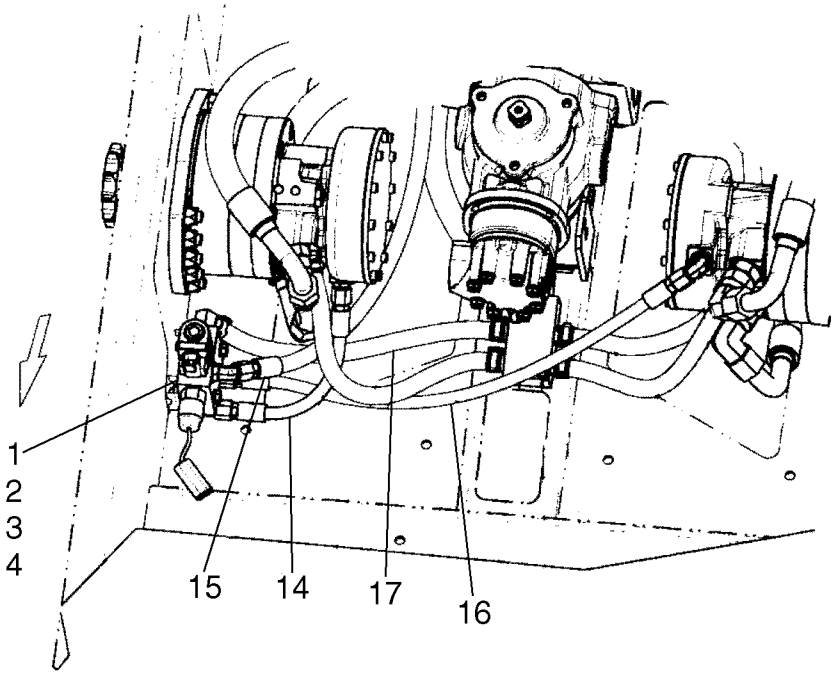

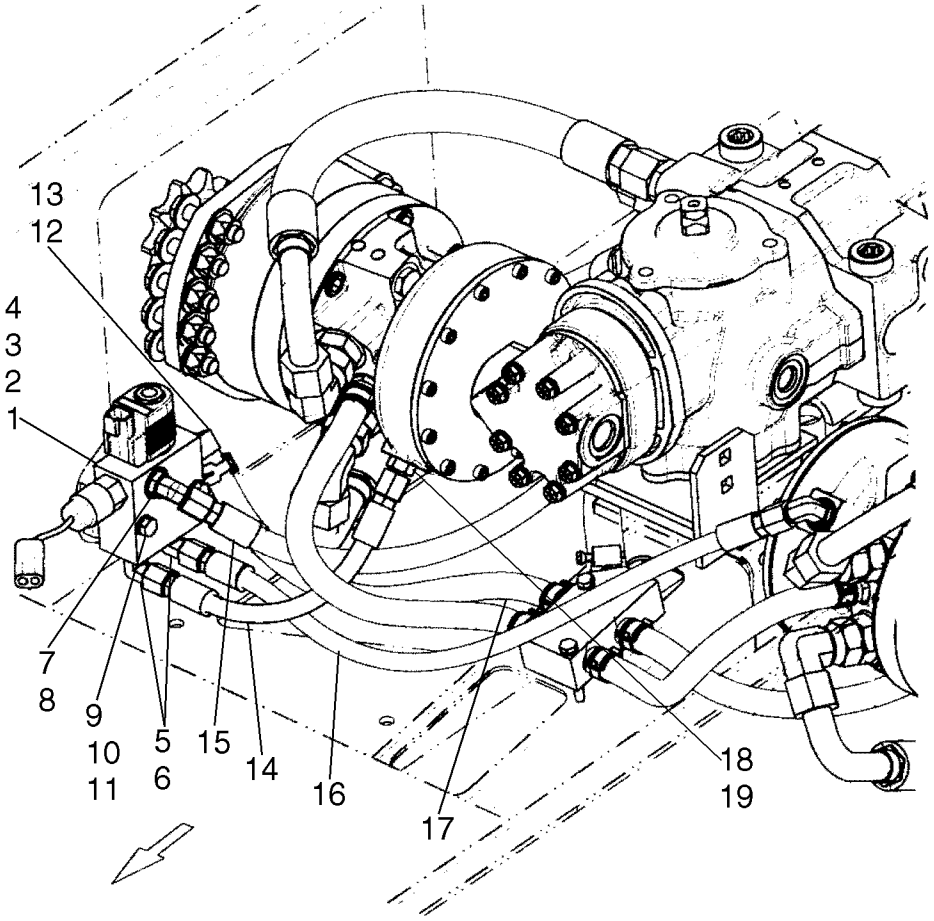

BS06K176

SISTEMA DE FRENOS - HIDRÁULICO

REF	FN	PART NUMBER	YR/SN	QTY	DESCRIPTION
1		87021047		1	VÁLVULA DE FREIO, Incl. 2 - 4
2		87424182		1	VÁLVULA DE FREIO
3		87433496		1	BOBINA
4		87458061		1	INTERRUPTOR DE PRESSÃO, Brake Valve; Incl. O-Ring Which Is Not Serviced Separately
5		76344		3	COTOVELO, 90º, 9/16"-18, 37º x 9/16"-18, O-Ring, Includes 6
6		9617873		3	ANEL "O", 6-1, 90 Duro, .468" ID x .078" Thk
7		330346		1	COTOVELO, 45º, 9/16"-18, 37º x 9/16"-18, O-Ring, Incl. 8
8		9617873		1	ANEL "O", 6-1, 90 Duro, .468" ID x .078" Thk
9		80681		2	ARRUELA-TRAVA, 5/16"
10		280967		2	PORCA, Sq, 5/16"-18, G2
11		9636711		2	PARAFUSO, Hex, 5/16"-18 x 2", G5
12		86705580		1	CONEXAO, 90º, 1/2" Hose x 9/16"-18 ORB Beaded
13		87443510		8	BRACADEIRA MANGUEIRA
14		87433932		1	MANGUEIRA, Left Hand Brake; 270 mm, 10.63 in.
15		87433933		1	MANGUEIRA, Pump To Brake Valve; 540 mm, 21.26 in.
16		87433931		1	MANGUEIRA, Right Hand Brake; 615 mm, 24.21 in.
17		87574770		1	MANGUEIRA, Shift Case; 380 mm, 14.96 in.
18		76350		1	CONEXÃO, 9/16"-18, 37º x 9/16"-18, O-Ring, Incl. 19
19		9617873		1	ANEL "O", 6-1, 90 Duro, .468" ID x .078" Thk

07-02		p1	03/08

KIT DO TRAVÃO/ PARA ESTRADA

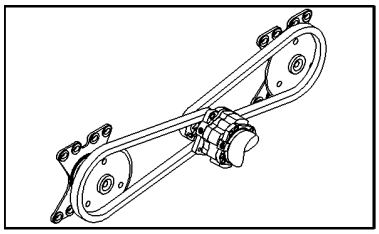

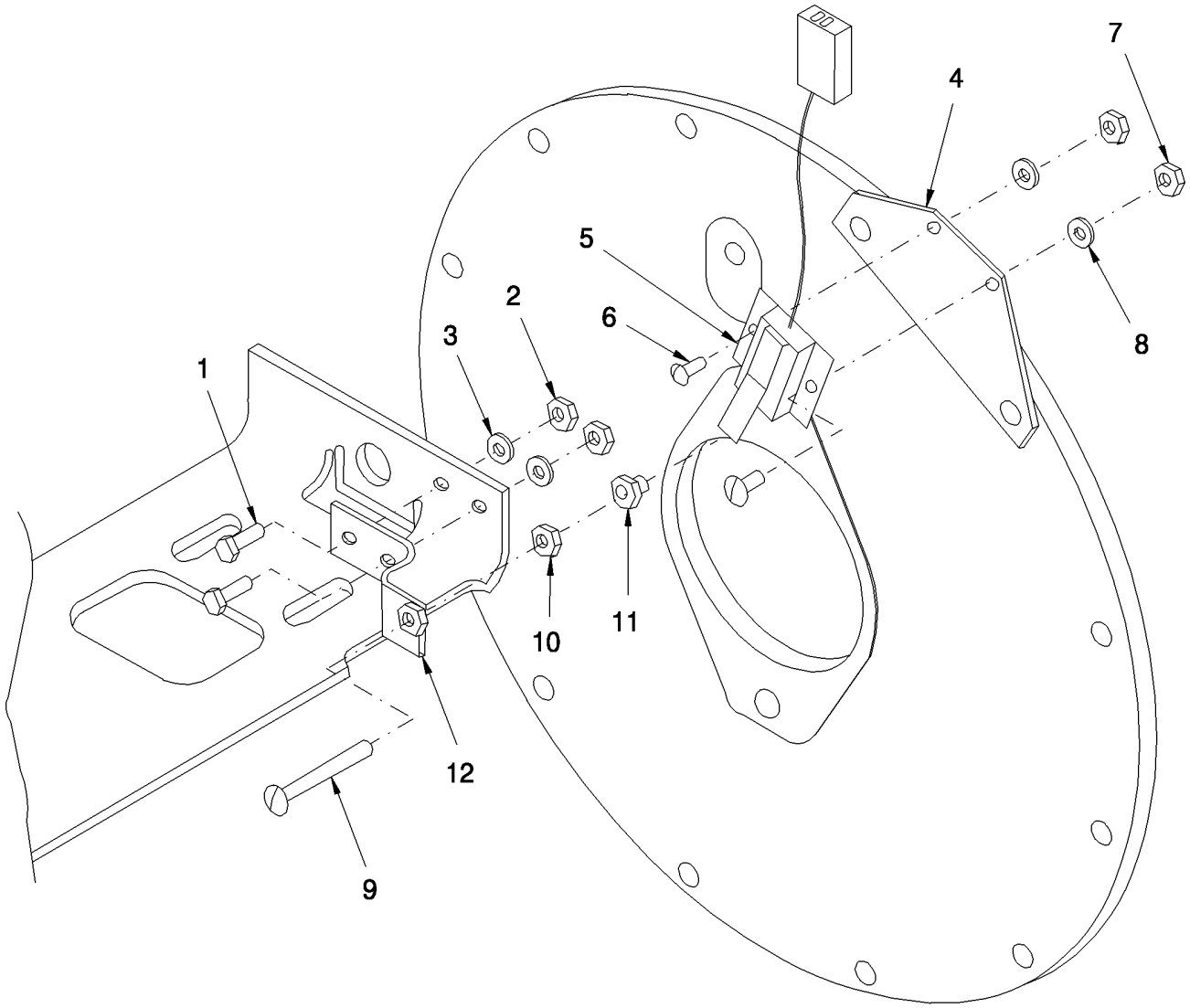

KIT DO TRAVÃO/ PARA ESTRADA

REF	FN	PART NUMBER	YR/SN	QTY	DESCRIPTION
1		9707580		2	PARAFUSO, Hex, 1/4"-20 x 3/4", G5, Full Thd
2		7770		2	PORCA, 1/4"-20, G5
3		322357		2	ARRUELA MOLA, Belleville, M6
4		86515966		1	SUPORTE
5		86518733		1	INTERRUPTOR
6		86511920		2	PARAFUSO, Cross Pan Hd, #10-24 x 1/2"
7		87304		2	PORCA, #10-24
8		80684		2	ARRUELA-TRAVA, #10
9		9707580		1	PARAFUSO, Hex, 1/4"-20 x 3/4", G5, Full Thd
10		87305		1	PORCA, Jam, 1/4"-20, G2
11		86519194		1	PORCA, Plastic, Cap, 1/4"-20
12		86519153		1	SUPORTE

KIT DO TRAVÃO/ PARA ESTRADA, CONTROLO AUTOMÁTICO

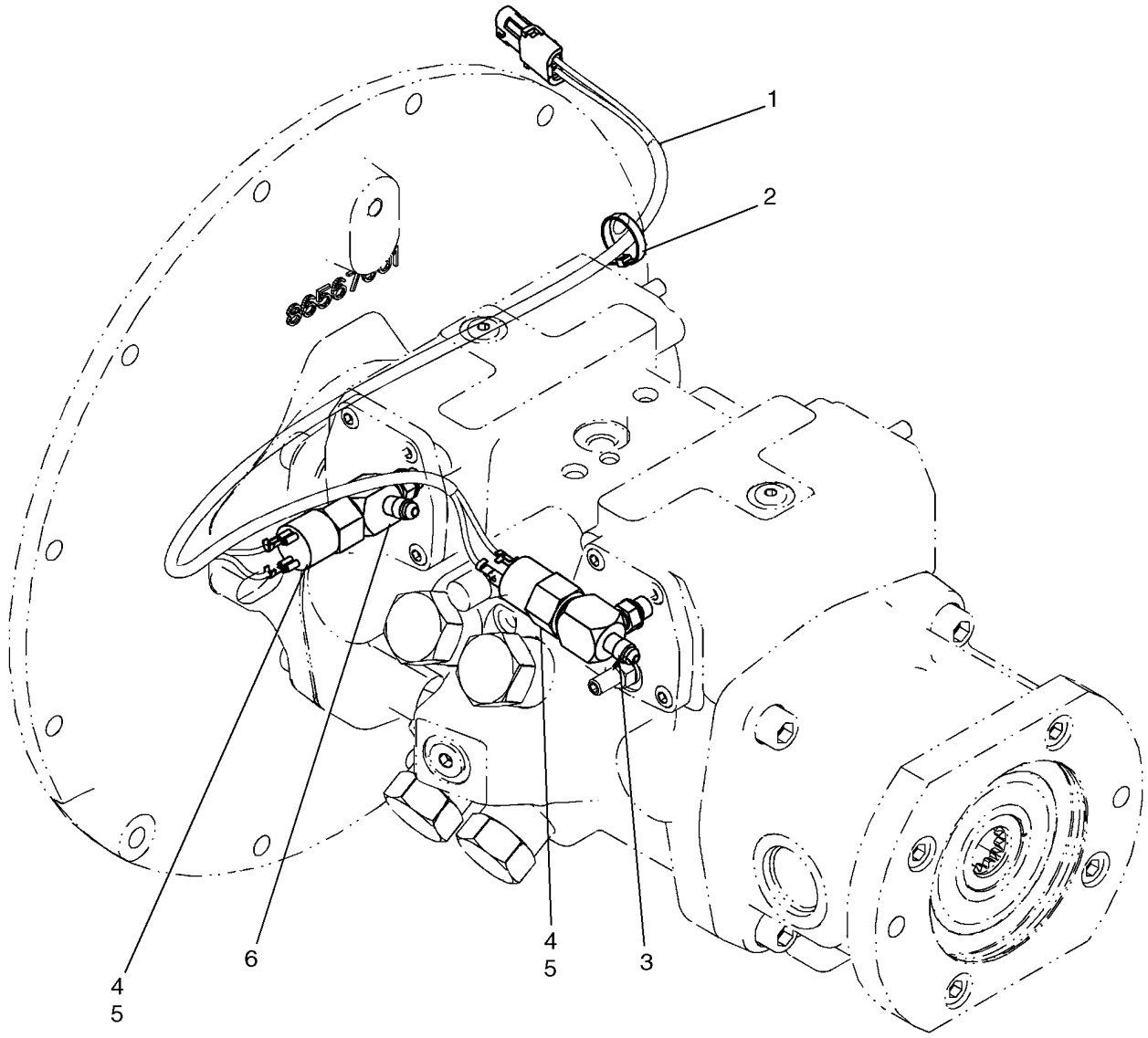

BS06M254

KIT DO TRAVÃO/ PARA ESTRADA, CONTROLO AUTOMÁTICO

REF	FN	PART NUMBER	YR/SN	QTY	DESCRIPTION
1		87548412		1	CHICOTE, Brake Harness, Pilot Control - Europe
2		14560287		3	TIRA DE CABO, 289mm lg
3		87576182		1	ADAPTADOR
4		87047034		2	INTERRUPTOR DE PRESSÃO, Brake; Incl. 5
5		167269		2	ANEL "O", 10-1, 90 Duro, .755" ID x .097" Thk
6		87576183		1	ADAPTADOR

SISTEMA DE FRENOS - HIDRÁULICO, MODELOS COM CONTROLO AUTOMÁTICO

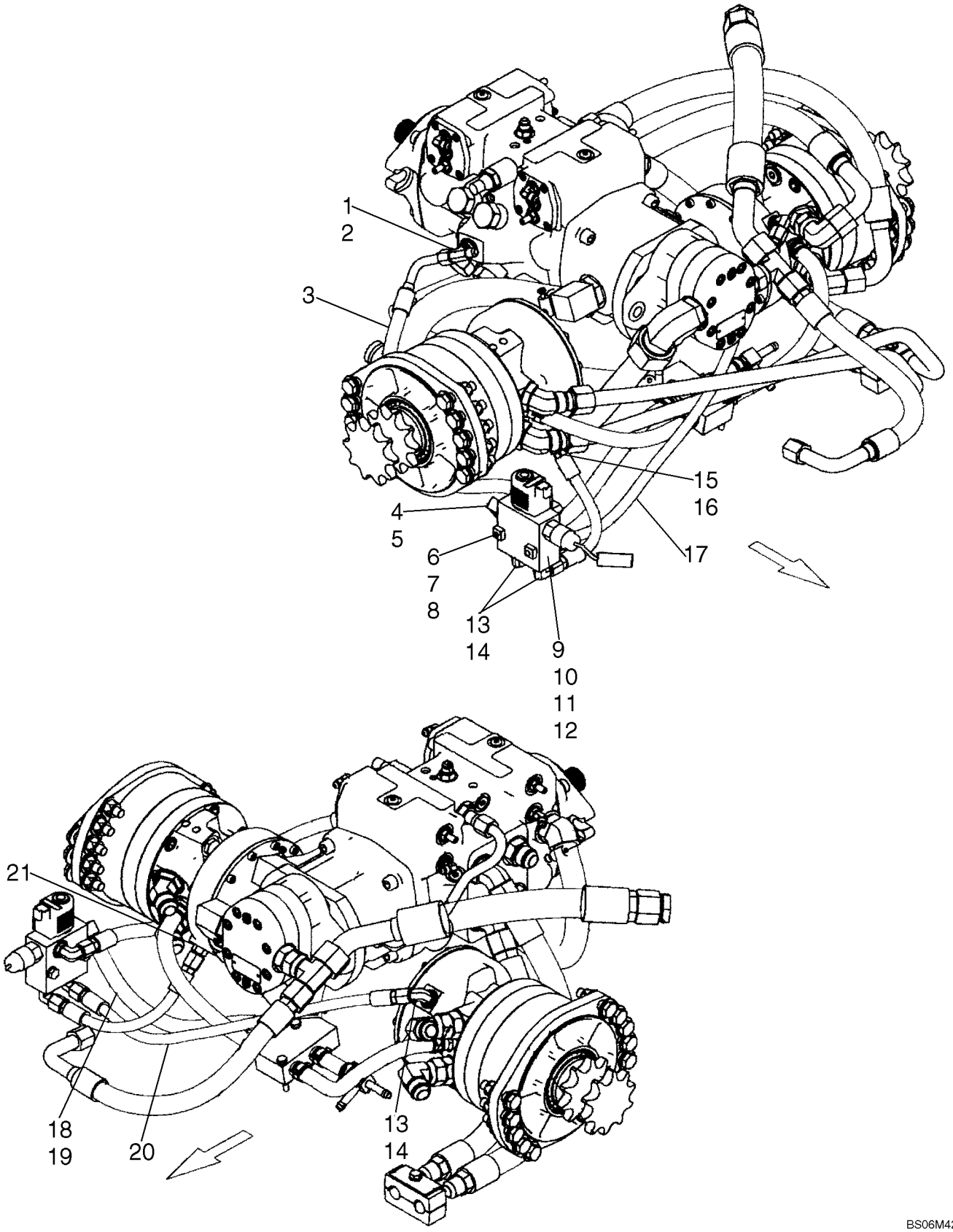

SISTEMA DE FRENOS - HIDRÁULICO, MODELOS COM CONTROLO AUTOMÁTICO

REF	FN	PART NUMBER	YR/SN	QTY	DESCRIPTION
1		163335		1	TEE, 9/16"-18, 37º x 9/16"-18, O-Ring Br, Incl 2
2		9617873		1	ANEL "O", 6-1, 90 Duro, .468" ID x .078" Thk
3		87433933		1	MANGUEIRA, Pump To Brake Valve
4		86705580		1	CONEXAO, 90º, 1/2" Hose x 9/16"-18 ORB Beaded, Incl 5
5		9617873		1	ANEL "O", 6-1, 90 Duro, .468" ID x .078" Thk
6		9636711		3	PARAFUSO, Hex, 5/16"-18 x 2", G5
7		80681		2	ARRUELA-TRAVA, 5/16"
8		280967		2	PORCA, Sq, 5/16"-18, G2
9		87021047		1	VÁLVULA DE FREIO, Incl. 10, 11, 12
10		87458061		1	INTERRUPTOR DE PRESSÃO, Brake Valve; Incl. O-Ring Which Is Not Serviced Separately
11		87433496		1	BOBINA, Brake Valve
12		87424182		1	VÁLVULA DE FREIO
13		76344		4	COTOVELO, 90º, 9/16"-18, 37º x 9/16"-18, O-Ring, Incl 14
14		9617873		4	ANEL "O", 6-1, 90 Duro, .468" ID x .078" Thk
15		76350		2	CONEXÃO, 9/16"-18, 37º x 9/16"-18, O-Ring, Incl 16
16		9617873		2	ANEL "O", 6-1, 90 Duro, .468" ID x .078" Thk
17		87433932		1	MANGUEIRA, Left Hand Brake; 270 mm, 10.63 in
18		87443510		2	BRACADEIRA MANGUEIRA
19		87574770		1	MANGUEIRA, Shift Case
20		87433931		1	MANGUEIRA, Right Hand Brake; 615 mm, 24.21 in
21		86705988		2	CONEXAO

SECTION INDEX
Sistema Hidráulico

08-01	VÁLVULA DE CONTROLE HIDRÁULICO
08-02	VÁLVULA DE CONTROLE HIDRÁULICO
08-03	VÁLVULA DE CONTROLO DO CIRCUITO EM SÉRIE
08-04	CONJUNTO DA LANÇA HIDRÁULICA/BALDE
08-05	CONJUNTO DA LANÇA HIDRÁULICA/BALDE, STANDARD/FLUXO ALTO
08-06	CONJUNTO DA LANÇA / CAÇAMBA HIDRÁULICAS - FLUXO ALTO
08-07	SISTEMA HIDRÁULICO AUXILIAR, STANDARD
08-08	SISTEMA HIDRÁULICO AUXILIAR, FLUXO ALTO
08-09	SISTEMA HIDRÁULICO - CONJUNTO DA PLACA DE MONTAGEM
08-09A	SISTEMA HIDRÁULICO - CONJUNTO DA PLACA DE MONTAGEM
08-10	CONJUNTO DO CILINDRO - CONJUNTO DA PLACA DE MONTAGEM
08-11	CONJUNTO DA VÁLVULA - CONJUNTO DA PLACA DE MONTAGEM
08-12	LANÇA SISTEMA HIDRÁULICO - SUPORTE PLACA, FLUXO ALTO
08-12A	LANÇA SISTEMA HIDRÁULICO - SUPORTE PLACA, FLUXO ALTO
08-13	LANÇA SISTEMA HIDRÁULICO - SUPORTE PLACA, STANDARD
08-13A	LANÇA SISTEMA HIDRÁULICO - SUPORTE PLACA, STANDARD
08-14	FILTRO E DEPÓSITO
08-14A	RESERVATÓRIO HIDRÁULICO E CONJUNTO DO FILTRO; DELUXE CABINE
08-15	CONJUNTO DO FILTRO
08-16	RESERVATÓRIO HIDRÁULICO E CONJUNTO DO FILTRO - MODELOS COM CONTROLO AUTOMÁTICO
08-16A	RESERVATÓRIO HIDRÁULICO E CONJUNTO DO FILTRO - MODELOS COM CONTROLO AUTOMÁTICO, C175 EUROPE
08-16B	RESERVATÓRIO HIDRÁULICO E CONJUNTO DO FILTRO - MODELOS COM CONTROLO AUTOMÁTICO; DELUXE CABINE
08-18	SISTEMA HIDRÁULICO - FLUXO ALTO
08-19	CONJUNTO DA VÁLVULA, FLUXO ALTO
08-19A	CONJUNTO DA VÁLVULA, AUXILIAR SECUNDÁRIO
08-20	SISTEMA HIDRÁULICO - CONTROLE MANUAL, MODELOS COM CONTROLO AUTOMÁTICO
08-21	SISTEMA HIDRÁULICO - CONTROLO AUTOMÁTICO À VÁLVULA DE CONTROLO
08-21B	HIDRÁULICO - CONTROLO DA ALAVANCA DE MUDANÇAS KITS, TESTE PADRÃO ISOMETRIC
08-22	SISTEMA HIDRÁULICO DA VÁLVULA DE CONTROLE,
08-22A	HIDRÁULICA DA VÁLVULA DE CONTROLO, MODELOS COM CONTROLO AUTOMÁTICO, EH CONTROLE AUXILIAR
08-23	VÁLVULA DE CONTROLE -
08-23A	VÁLVULA DE CONTROLO - MODELOS COM CONTROLO AUTOMÁTICO, EH CONTROLE AUXILIAR
08-23B	VÁLVULA DE CONTROLO - MODELOS COM CONTROLO AUTOMÁTICO, EH CONTROLE AUXILIAR
08-24	VÁLVULA DE CONTROLE, KITS DE SUBSTITUIÇÃO DE VEDAÇÕES
08-25	VÁLVULA DE CONTROLE, KITS DE SUBSTITUIÇÃO DE VEDAÇÕES
08-26	VÁLVULA DE CONTROLE, KITS DE SUBSTITUIÇÃO DE VEDAÇÕES - BOBINAS
08-27	VÁLVULA DE CONTROLE, KITS DE SUBSTITUIÇÃO DE VEDAÇÕES - BOBINAS
08-28	VÁLVULA DE CONTROLE, KITS DE SUBSTITUIÇÃO DE VEDAÇÕES - BOBINAS E BATENTES
08-29	VÁLVULA DE CONTROLE, CONFIRA VÁLVULA
08-30	VÁLVULA DE CONTROLE, KITS DE SUBSTITUIÇÃO DE VEDAÇÕES - BOBINAS
08-31	VÁLVULA DE CONTROLE, TAMPE ASSEMBLÉIA, CONJUNTO DA VÁLVULA

SECTION INDEX
Sistema Hidráulico

08-37	SISTEMA HIDRÁULICO, STANDARD UMA VELOCIDADE - MODELOS COM CONTROLO AUTOMÁTICO
08-38	SISTEMA HIDRÁULICO, STANDARD TRANSMISSÃO DE DESLOCAMENTO DE DUAS VELOCIDADES - MODELOS COM CONTROLO
08-39	SISTEMA HIDRÁULICO, FLUXO ALTO UMA VELOCIDADE - MODELOS COM CONTROLO AUTOMÁTICO; SE UTILIZADO
08-39A	SISTEMA HIDRÁULICO, FLUXO ALTO UMA VELOCIDADE - MODELOS COM CONTROLO AUTOMÁTICO, EH AUX; SE UTILIZADO
08-40	SISTEMA HIDRÁULICO, FLUXO ALTO TRANSMISSÃO DE DESLOCAMENTO DE DUAS VELOCIDADES - MODELOS COM CONTROL; SE UTILIZADO
08-40A	SISTEMA HIDRÁULICO, FLUXO ALTO TRANSMISSÃO DE DESLOCAMENTO DE DUAS VELOCIDADES - MODELOS COM CONTROL; SE UTILIZADO
08-41	VÁLVULA DE CONTROLE, KITS DE SUBSTITUIÇÃO DE VEDAÇÕES
08-41A	VÁLVULA DE CONTROLE, KITS DE SUBSTITUIÇÃO DE VEDAÇÕES
08-42	VÁLVULA DE CONTROLE, KITS DE SUBSTITUIÇÃO DE VEDAÇÕES
08-43	VÁLVULA DE CONTROLE - CIRCUITO DE ALÍVIO, PRINCIPAL
08-44	VÁLVULA DE CONTROLE, TAMPE ASSEMBLÉIA, CONJUNTO DA VÁLVULA
08-45	VÁLVULA DE CONTROLE, CONFIRA VÁLVULA
08-46	VÁLVULA DE CONTROLE, KITS DE SUBSTITUIÇÃO DE VEDAÇÕES - BOBINAS E BATENTES
08-47	VÁLVULA DE CONTROLE, KITS DE SUBSTITUIÇÃO DE VEDAÇÕES - BOBINAS
08-48	VÁLVULA DE CONTROLE, KITS DE SUBSTITUIÇÃO DE VEDAÇÕES - BOBINAS
08-49	VÁLVULA DE CONTROLE, KITS DE SUBSTITUIÇÃO DE VEDAÇÕES - BOBINAS
08-50	VÁLVULA DE CONTROLE, KITS DE SUBSTITUIÇÃO DE VEDAÇÕES - BOBINAS
08-51	VÁLVULA DE CONTROLE, CONFIRA VÁLVULA
08-52	VÁLVULA DE CONTROLE, KITS DE SUBSTITUIÇÃO DE VEDAÇÕES - BOBINAS
08-53	VÁLVULA DE CONTROLE, KITS DE SUBSTITUIÇÃO DE VEDAÇÕES - BOBINAS

VÁLVULA DE CONTROLE HIDRÁULICO

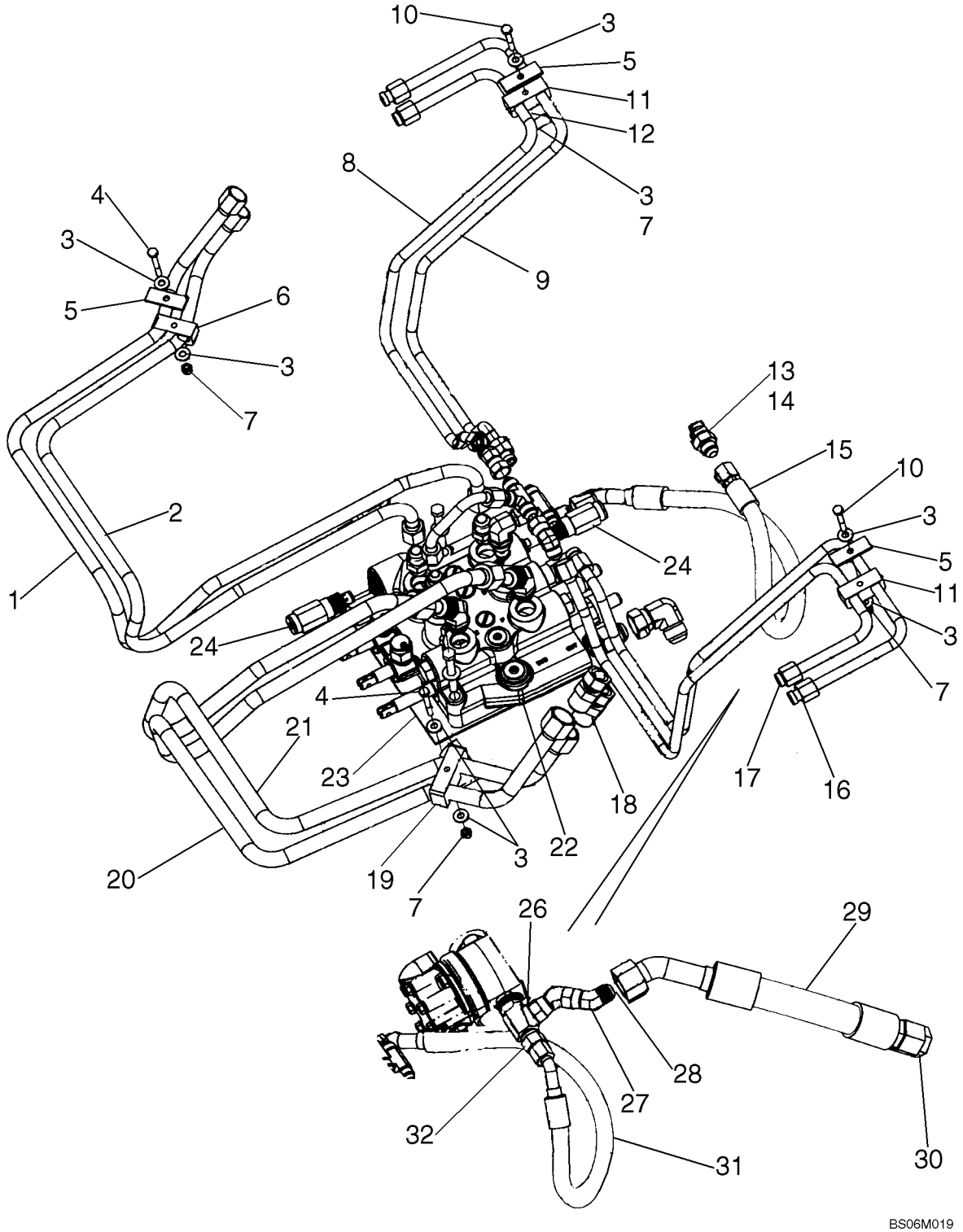

VÁLVULA DE CONTROLE HIDRÁULICO

REF	FN	PART NUMBER	YR/SN	QTY	DESCRIPTION
1		86555027		1	TUBULAÇÃO HIDRAULICO
2		86555026		1	TUBULAÇÃO HIDRAULICO
3		80701		8	ARRUELA PLANA, 1/4"
4		87404		2	PARAFUSO, Hex, 1/4"-20 x 2", G5
5		86509354		3	PLACA
6		781221		1	PRENDEDOR
7		280129		4	CONTRA PORCA, 1/4"-20, GC
8		87377751		1	TUBULAÇÃO HIDRAULICO, Tube, RH Boom Extend
9		87377750		1	TUBULAÇÃO HIDRAULICO, Tube, RH Boom Return
10		280164		2	PARAFUSO, Hex, 1/4"-20 x 1 3/4", G5
11		625822		2	PRENDEDOR
12		A37179		1	FIXADOR, Clip, Harness Support
13		128819		2	CONEXÃO, 3/4"-16, 37º x 7/8"-14, O-Ring, Incl. 14
14		167269		2	ANEL "O", 10-1, 90 Duro, .755" ID x .097" Thk
15		86578907		1	MANGUEIRA, 715 mm, 28.15 in.
16		87377752		1	TUBULAÇÃO HIDRAULICO, Tube, LH Boom Return
17		87377753		1	TUBULAÇÃO HIDRAULICO, Tube, LH Boom Extend
18		87524553		2	ADAPTADOR, Connector
19		604893		1	PRENDEDOR
20		86555030		1	TUBULAÇÃO HIDRAULICO
21		86555031		1	TUBULAÇÃO HIDRAULICO
22		86604770		1	DISTRIBUIDOR, Foot Controls; If Used
22		86604769		1	DISTRIBUIDOR, Hand Controls; If Used
23		86632961		1	ISOLADOR
24		86529091		2	VÁLVULA DE SOBRE-PRESSÃO, C175 Only, Not Used On L175
25		263117		2	TIRA DE CABO, .14" x 11 1/2", Cable Tie As Needed
26		164918		1	TEE, 7/8"-14, 37º x 7/8"-14, O-Ring Run, European Models Only
27		86512960		2	COTOVELO, 45º, 7/8"-14, 37º x 7/8"-14, 37º Fem Sw, European Models Only
28		87524553		1	ADAPTADOR, Connector; European Models Only
29		87548048		1	MANGUEIRA, Hose, Side Resonator; European Models Only
30		9790527		1	BUJÃO, 1 5/16"-12, 37º, European Models Only

VÁLVULA DE CONTROLE HIDRÁULICO

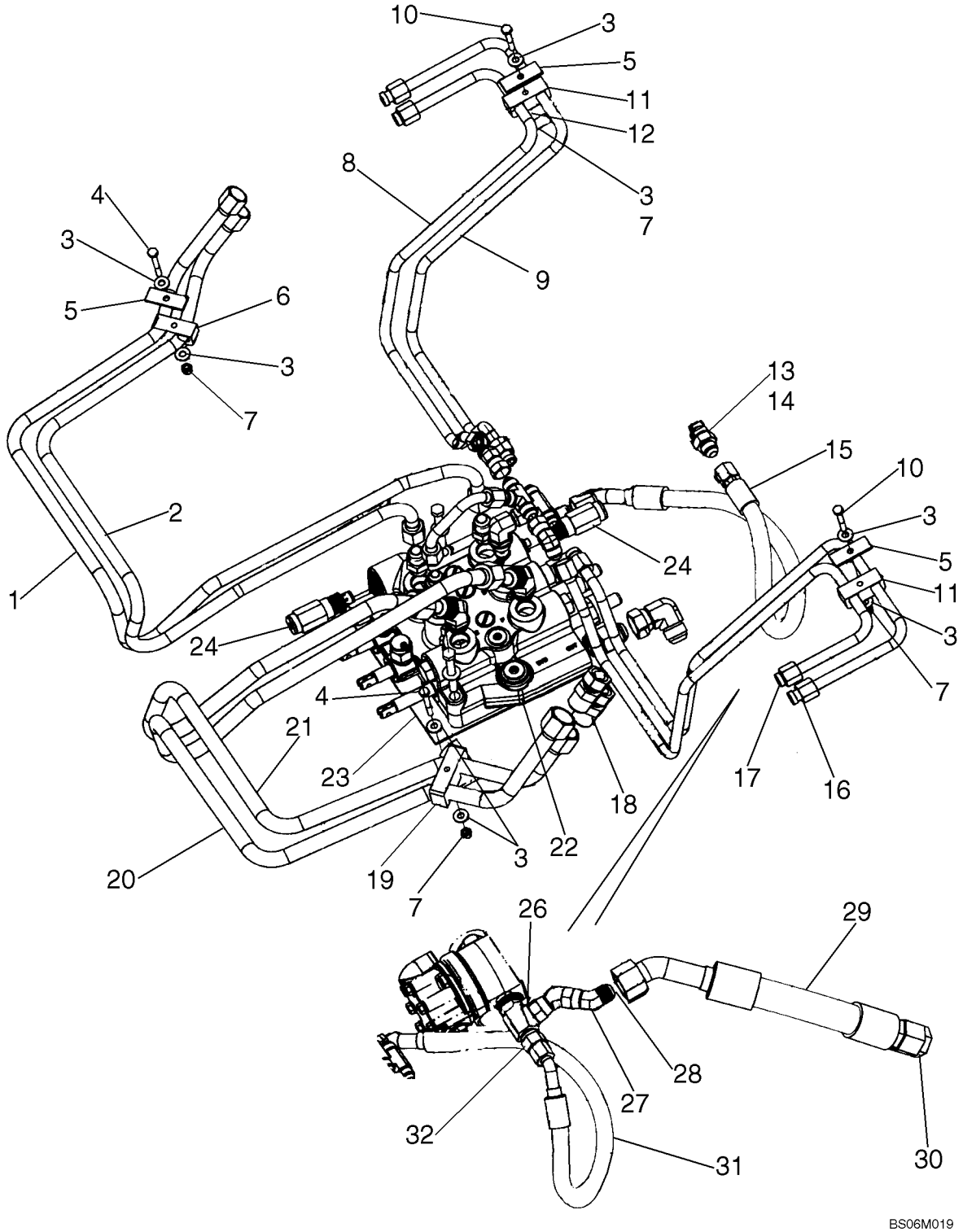

VÁLVULA DE CONTROLE HIDRÁULICO

REF	FN	PART NUMBER	YR/SN	QTY	DESCRIPTION
31		87527222		1	MANGUEIRA, Hose, Valve Supply; European Models Only
32		87029966		1	REDUÇÃO, Adapter Tube; European Models Only

VÁLVULA DE CONTROLE HIDRÁULICO

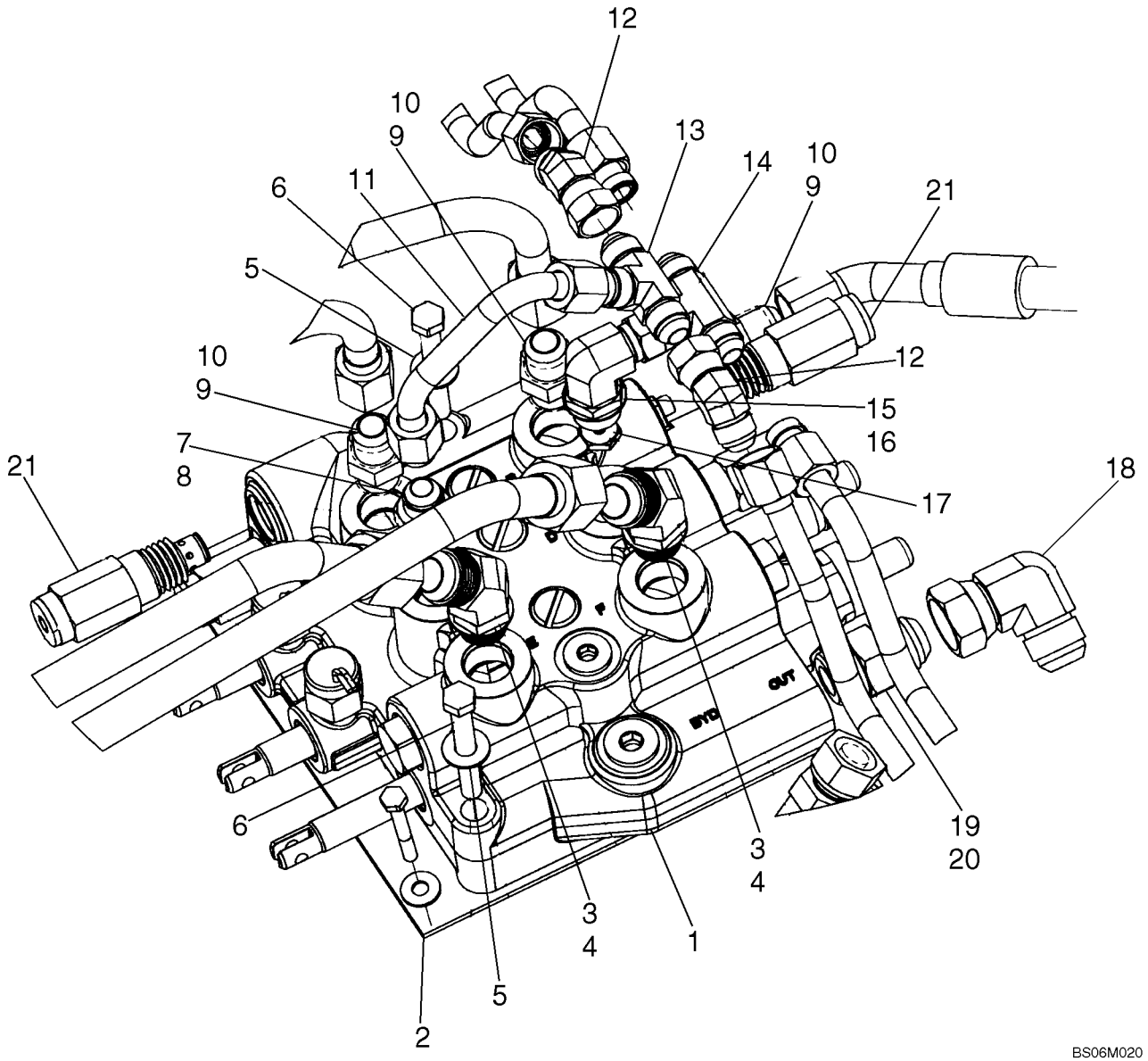

VÁLVULA DE CONTROLE HIDRÁULICO

REF	FN	PART NUMBER	YR/SN	QTY	DESCRIPTION
1		86604770		1	DISTRIBUIDOR, See Fig. 08-03
2		86632961		1	ISOLADOR
3		9610706		2	COTOVELO, 45º, 1 1/16"-12 x 7/8"-14, O-Ring, Incl. 4
4		167269		2	ANEL "O", 10-1, 90 Duro, .755" ID x .097" Thk
5		140045		2	ARRUELA MOLA, Belleville, M10
6		280161		2	PARAFUSO, Hex, 3/8"-16 x 3", G5
7		128819		2	CONEXÃO, 3/4"-16, 37º x 7/8"-14, O-Ring, Incl. 8
8		167269		2	ANEL "O", 10-1, 90 Duro, .755" ID x .097" Thk
9		87301330		3	CONEXÃO, Str Thd 5/8 37FL - ORB 5/8; Includes 10
10		167269		3	ANEL "O", 10-1, 90 Duro, .755" ID x .097" Thk
11		87377742		1	TUBULAÇÃO HIDRAULICO, Tube, Main Valve To Tee
12		248992		2	COTOVELO, 45º, 3/4"-16, 37º x 3/4"-16, 37º Fem Sw
13		128996		1	TEE, 3/4"-16, 37º
14		86513015		1	TEE, 37º, 3/4"-16 x 3/4"-16, Fem Sw Br
15		9617891		1	COTOVELO, 90º, 3/4"-16, 37º x 7/8"-14, O-Ring, Incl. 16
16		167269		1	ANEL "O", 10-1, 90 Duro, .755" ID x .097" Thk
17		9849595		1	ORIFICIO
18		219603		1	COTOVELO, 90º, 1 1/16"-12, 37º x 1 1/16"-12, 37º Fem Sw
19		322896		1	CONEXÃO, 1 1/16"-12, 37º x 1 1/16"-12, O-Ring, Incl. 20
20		167266		1	ANEL "O", 12-1, 90 Duro, .924 ID x .116" Thk
21		86529091		2	VÁLVULA DE SOBRE-PRESSÃO, C175 Only, Not Used On L175

VÁLVULA DE CONTROLO DO CIRCUITO EM SÉRIE

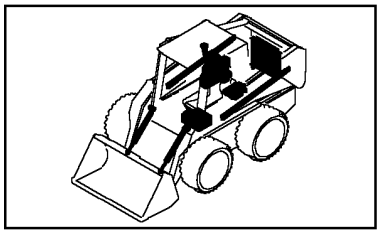

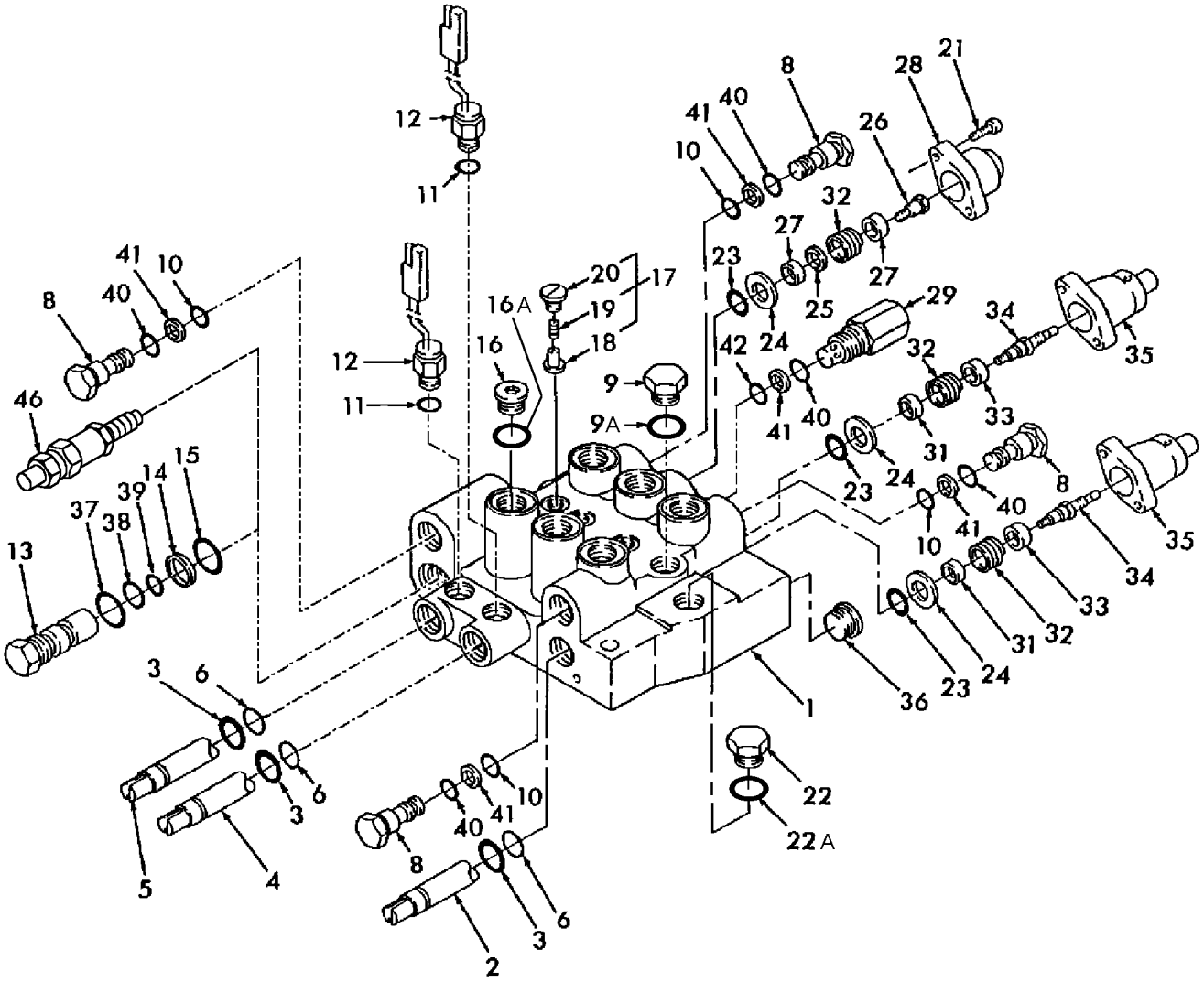

VÁLVULA DE CONTROLO DO CIRCUITO EM SÉRIE

REF	FN	PART NUMBER	YR/SN	QTY	DESCRIPTION
		86604770		1	DISTRIBUIDOR, Foot Control, Yellow
		86604769		1	DISTRIBUIDOR, Hand Control
1		NSS		1	BOLETIM INFORMATIVO, Body
2		NSS		1	BOLETIM INFORMATIVO, Spool
3		325142		3	VEDADOR EIXO, Wiper Seal
4		NSS		1	BOLETIM INFORMATIVO, Spool
5		NSS		1	BOLETIM INFORMATIVO, Spool
6		274506		3	ANEL "O", -208, 70 Duro, .609" ID x .139" Thk
8		86507507		5	BUJÃO, Includes: Ref. 10, 40 & 41
9		NSS		1	BOLETIM INFORMATIVO, Plug, 3/4"-16, High Flow Auxillary Port
9A		128825		1	ANEL "O", 8-1, 90 Duro, .644" ID x .087" Thk
10		130282		6	ANEL "O", -014, 70 Duro, .489" ID x .070" Thk
11		9617873		2	ANEL "O", 6-1, 90 Duro, .468" ID x .078" Thk
12		87030707		2	ELETRO VALVULA
13	1	86507522		1	VÁLVULA DE SOBRE-PRESSÃO, Main, 2,475 PSI, Includes: Ref. 37 thru 39
14	2	217114		1	VEDADOR ESPECIAL, Backup, .948" ID x .043" Thk
15	3	164380		1	ANEL "O", -119, 70 Duro, .924" ID x .103" Thk
16		NSS		6	BOLETIM INFORMATIVO, Plug, Shipping, 7/8"-14, Includes: 16A
16A		86629585		6	ANEL "O", -118, 70 Duro, .862" ID x .103" Thk
17		86508610		1	KIT, Lift Check, Includes: Ref. 18 thru 20
18		NSS		1	BOLETIM INFORMATIVO, Plunger
19		NSS		1	BOLETIM INFORMATIVO, Spring
20		NSS		1	BOLETIM INFORMATIVO, Plug
21		NSS		6	BOLETIM INFORMATIVO, Screw, Cap
22		86512512		1	BUJÃO, Hex Hd, 7/8"-14 ORB, Includes: Ref. 22A
22A		167269		1	ANEL "O", 10-1, 90 Duro, .755" ID x .097" Thk
23		279638		3	ANEL "O"
23		14457281		3	ANEL "O", -114, Cl 7, .612" ID x .103" Thk
24		NSS		3	BOLETIM INFORMATIVO, Retainer, O-Ring

(1) Used with Prior Control Valves 86578866 & 86584587
(2) Used with Prior Control Valves 86578866 & 86584587
(3) Used with Prior Control Valves 86578866 & 86584587

VÁLVULA DE CONTROLO DO CIRCUITO EM SÉRIE

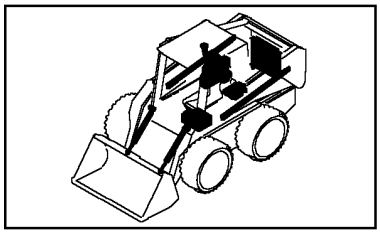

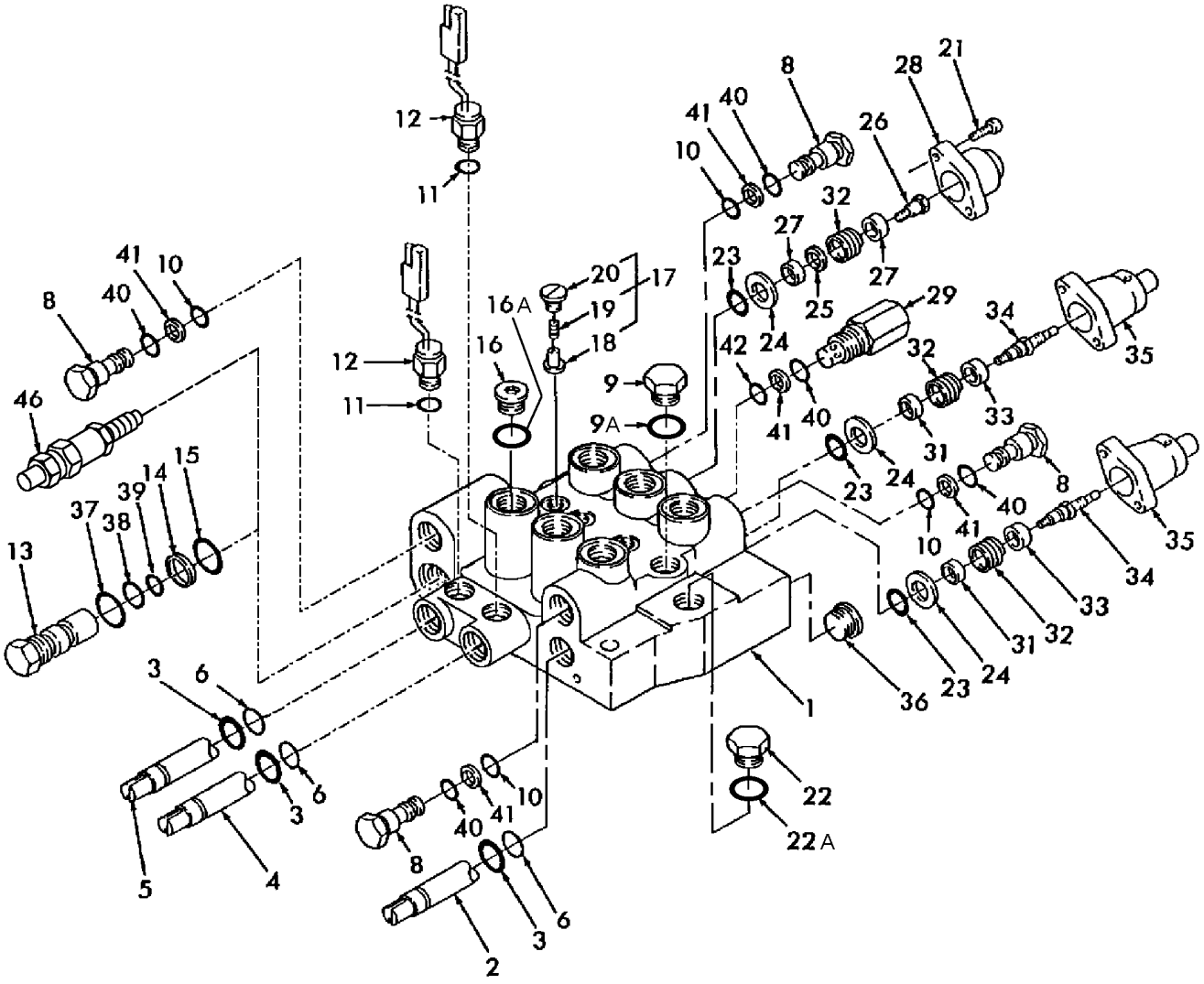

VÁLVULA DE CONTROLO DO CIRCUITO EM SÉRIE

REF	FN	PART NUMBER	YR/SN	QTY	DESCRIPTION
25		NSS		1	BOLETIM INFORMATIVO, Washer
26		NSS		1	BOLETIM INFORMATIVO, Screw, Spool
27		NSS		2	BOLETIM INFORMATIVO, Washer, Deep
28		86507519		1	TAMPA DO RESERVATÓRIO
29		86529091		1	VÁLVULA DE SOBRE-PRESSÃO, Boom, 3,500 PSI, Includes: Ref. 40 thru 42
30		511836		1	ANEL "O", -009, 70 Duro, .208" ID x .070" Thk, .219" ID x .070" Thk
31		NSS		2	BOLETIM INFORMATIVO, Washer, Deep
32		86578867		3	MOLA, Hand Control Valve
32		NSS		3	BOLETIM INFORMATIVO, Spring, Foot Control Valve
33		NSS		2	BOLETIM INFORMATIVO, Washer, Deep
34		NSS		2	BOLETIM INFORMATIVO, Spool
35		86507518		2	TAMPA DO RESERVATÓRIO
36		NSS		1	BOLETIM INFORMATIVO, Plug, Shipping
37	1	86629585		1	ANEL "O", -118, 70 Duro, .862" ID x .103" Thk
38	2	89827059		1	ANEL "O", .551" ID x .070" Thk
39	3	128359		1	ANEL "O", -016, 70 Duro, .614" ID x .070" Thk
40		167269		6	ANEL "O", 10-1, 90 Duro, .755" ID x .097" Thk
41		86508823		6	ARRUELA PLANA, Backup, .53" ID x .097" Thk
42		9992298		1	ANEL "O", -014, 90 Duro, .489" ID x .070" Thk
43		86560588		1	JOGO DE JUNTAS, Includes: Ref. 3, 6, 10, 11, 14, 15, 23, 25, 37, 40 & 41
44		86595015		1	KIT, SERVICE, Spool-Centering, Foot Control, Includes: Ref. 21, 23 - 27 and 32
44		86578868		1	KIT, SERVICE, Spool-Centering, Hand Control, Includes: Ref. 21, 23 thru 27 & 32
45		86578869		2	KIT, SERVICE, Spool-Centering, Hand Control, Includes: Ref. 21, 23, 24 & 31 thru 34
45		86595016		2	KIT, SERVICE, Spool-Centering, Foot Control, Includes: Ref. 21, 23, 24 And 31 - 34

(1) Used with Prior Control Valves 86578866 & 86584587
(2) Used with Prior Control Valves 86578866 & 86584587
(3) Used with Prior Control Valves 86578866 & 86584587

VÁLVULA DE CONTROLO DO CIRCUITO EM SÉRIE

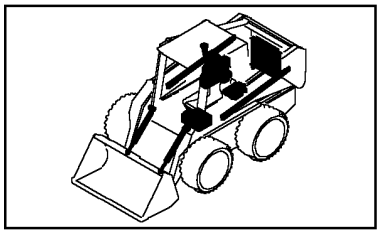

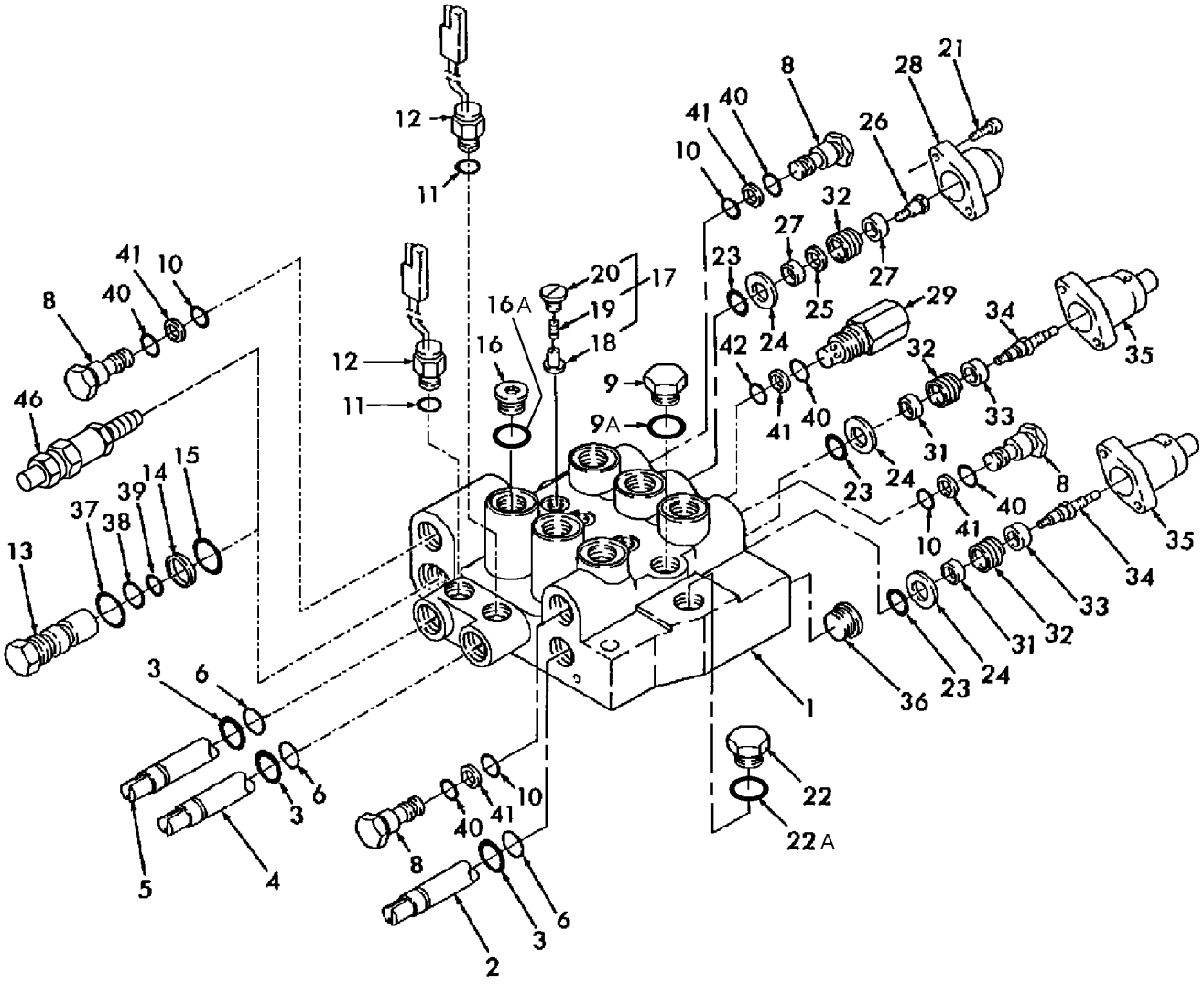

VÁLVULA DE CONTROLO DO CIRCUITO EM SÉRIE

REF	FN	PART NUMBER	YR/SN	QTY	DESCRIPTION
44		86578868		1	KIT, SERVICE, Spool-Centering, Hand Control, Includes: Ref. 21, 23 thru 27 & 32
46		86624572		1	VÁLVULA DE SOBRE-PRESSÃO, Main, 2,500-2, 600 PSI

08-04		p1	05/08

CONJUNTO DA LANÇA HIDRÁULICA/BALDE

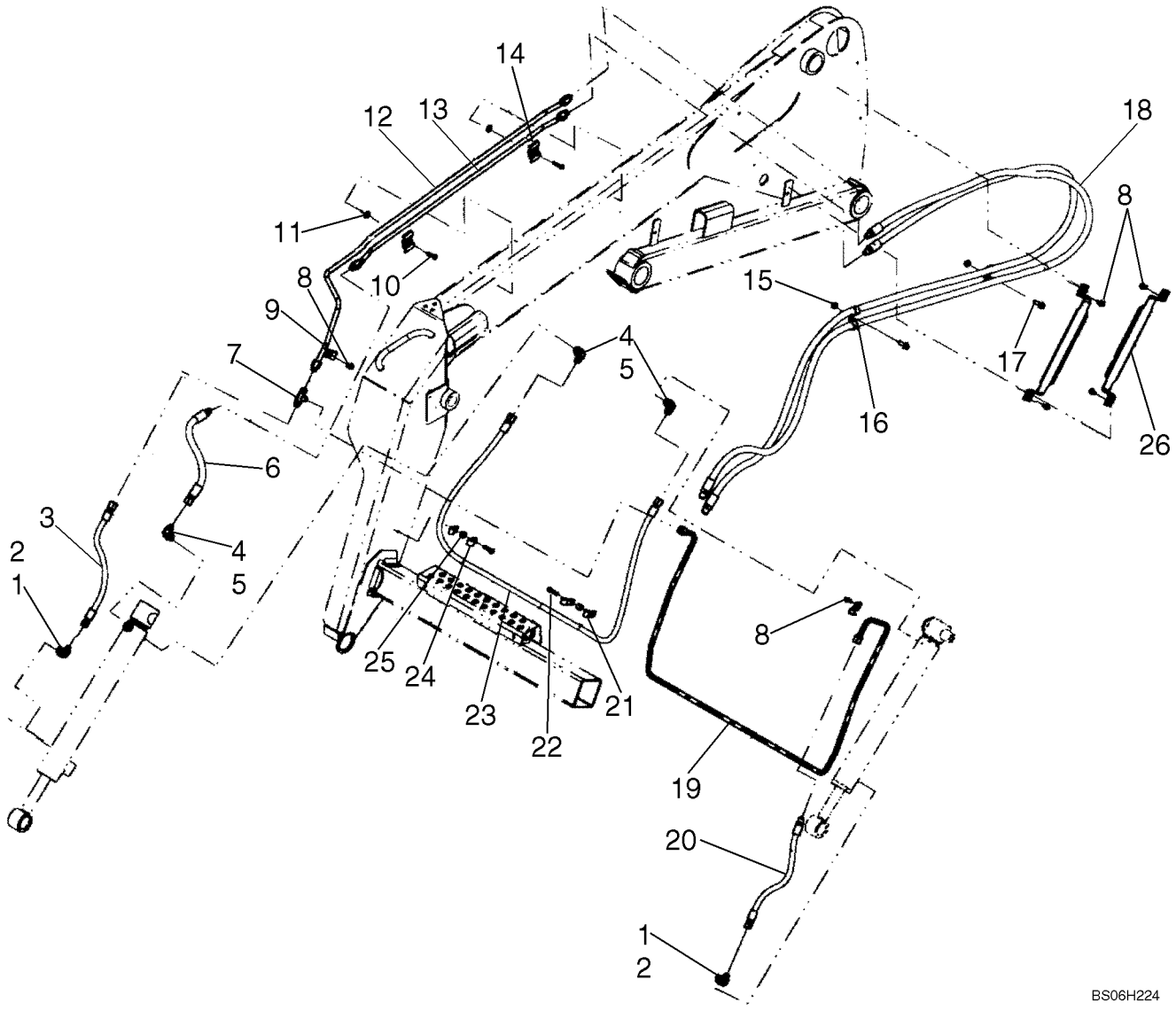

CONJUNTO DA LANÇA HIDRÁULICA/BALDE

REF	FN	PART NUMBER	YR/SN	QTY	DESCRIPTION
1		76347		2	COTOVELO, 90º, 9/16"-18, 37º x 3/4"-16, O-Ring, Incl. 2
2		128825		1	ANEL "O", 8-1, 90 Duro, .644" ID x .087" Thk
3		86504723		1	MANGUEIRA
4		128830		3	COTOVELO, 90º, 3/4"-16, 37º x 3/4"-16, O-Ring, Incl. 5
5		128825		1	ANEL "O", 8-1, 90 Duro, .644" ID x .087" Thk
6		9843303		1	MANGUEIRA
7		128996		1	TEE, 3/4"-16, 37º
8		86545825		6	PARAFUSO, Hex Wash Hd, 5/16" x 5/8", Screw, 5/16-18 X 1/2 ZND
9		184064		2	FIXADOR
8		87029930		4	PARAFUSO, Used With Bracket 87612766, Ref 26; If Used
10		88825		2	PARAFUSO, Hex Hd, 5/16" x 1 1/4"
11		80664		2	ARRUELA PLANA, 5/16"
12		87522946		1	TUBULAÇÃO HIDRAULICO
13		87522947		1	TUBULAÇÃO HIDRAULICO, Tube Assy
14		86501706		2	PRENDEDOR
15		247780		2	PORCA, Flg, USR, 3/8"-16
16		700514		4	PRENDEDOR
17		9706726		2	PARAFUSO, Hex Flg, 3/8"-16 x 1", Serr
18		9825803		2	TUBO FLEXÍVEL
19		87462308		1	TUBULAÇÃO HIDRAULICO
20		86504722		1	TUBO FLEXÍVEL
21		86010402		1	PRENDEDOR, 1/2", Insul, 3/8" Bolt
22		87657		2	PARAFUSO, Hex, 5/16"-18 x 1 1/4", G5
23		86504721		1	TUBO FLEXÍVEL
24		239859		4	PRENDEDOR
25		86589143		2	ESPAÇADOR
26		86557328		2	SUPORTE, Straight Edges; If Used
26		87612766		2	SUPORTE, Rounded Edges; If Used, Used With Screw 87029930, Ref 8

CONJUNTO DA LANÇA HIDRÁULICA/BALDE, STANDARD/FLUXO ALTO

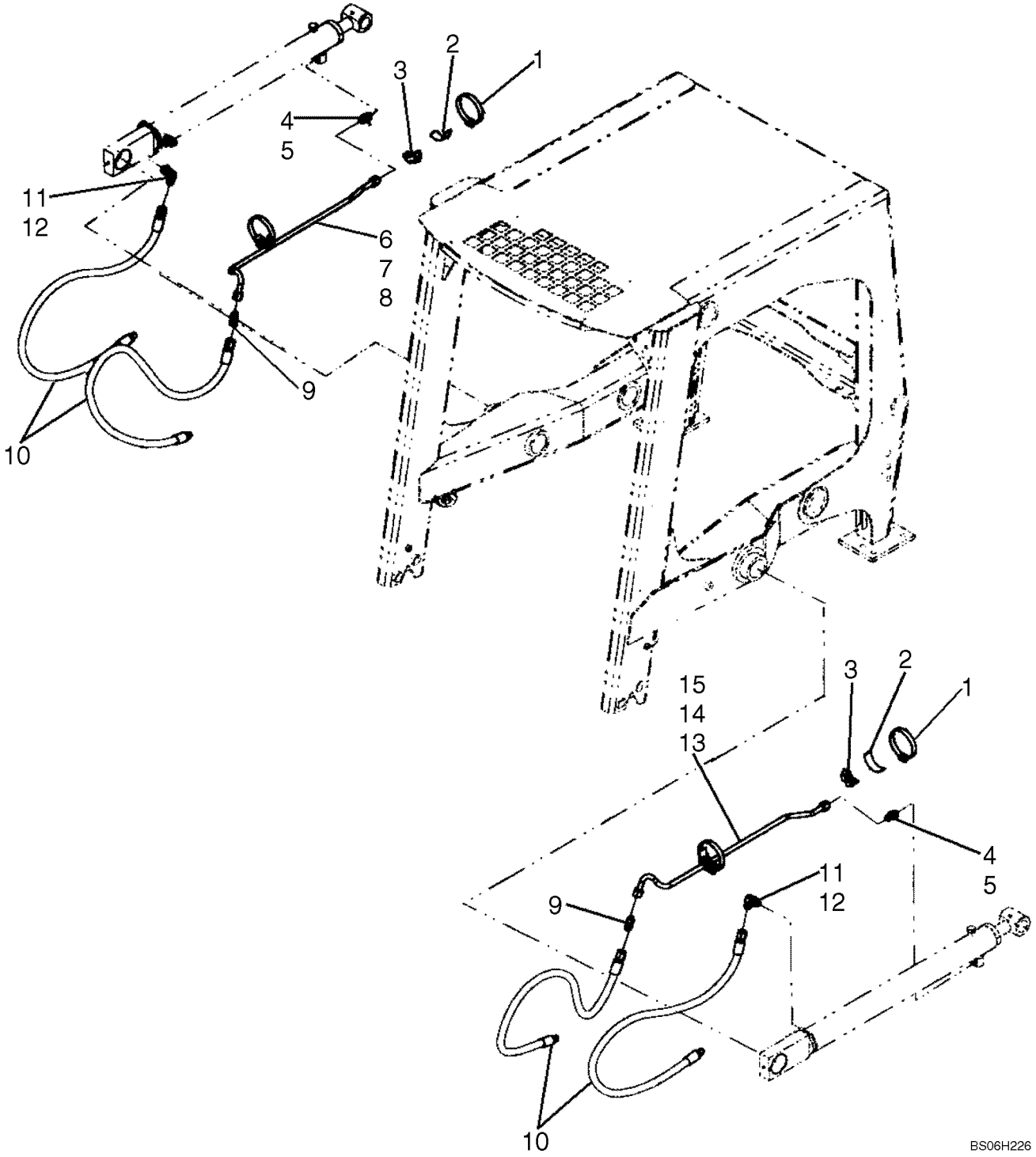

CONJUNTO DA LANÇA HIDRÁULICA/BALDE, STANDARD/FLUXO ALTO

REF	FN	PART NUMBER	YR/SN	QTY	DESCRIPTION
1		513307		4	PRENDEDOR
2		782673		4	FAIXA ANTI-DERRAPANTE
3		640682		4	ESPAÇADOR
4		128818		2	CONEXÃO, 3/4"-16, 37º x 3/4"-16, O-Ring, Incl. 5
5		128825		1	ANEL "O", 8-1, 90 Duro, .644" ID x .087" Thk
6		87584239		1	TUBO RÍGIDO, Tube RH; Incl. 7, 8
7		235671		1	LUVA DE ACOPLAMENTO, 37º, 1/2" Tube
8		129428		2	TUERCA DE TUBERÍA, 37º, 3/4"-16, Type B
9		128822		2	UNIAO, 3/4"-16, 37º x 3/4"-16, 37º
10		86570153		4	MANGUEIRA
11		128830		2	COTOVELO, 90º, 3/4"-16, 37º x 3/4"-16, O-Ring, Incl. 12
12		128825		1	ANEL "O", 8-1, 90 Duro, .644" ID x .087" Thk
13		87584238		1	TUBO RÍGIDO, Tube LH; Incl. 14, 15
14		235671		1	LUVA DE ACOPLAMENTO, 37º, 1/2" Tube
15		129428		2	TUERCA DE TUBERÍA, 37º, 3/4"-16, Type B

CONJUNTO DA LANÇA / CAÇAMBA HIDRÁULICAS - FLUXO ALTO

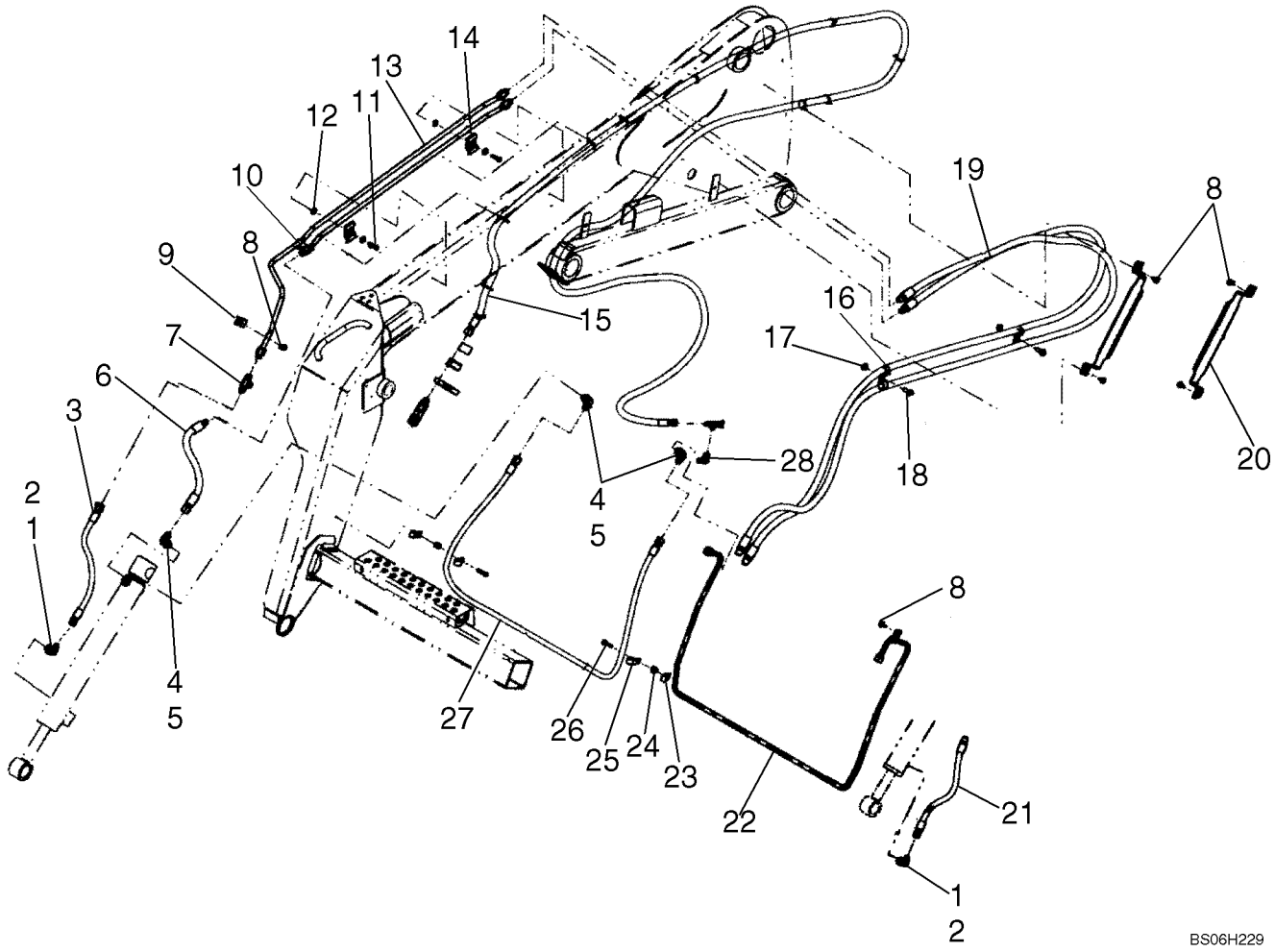

CONJUNTO DA LANÇA / CAÇAMBA HIDRÁULICAS - FLUXO ALTO

REF	FN	PART NUMBER	YR/SN	QTY	DESCRIPTION
1		76347		2	COTOVELO, 90º, 9/16"-18, 37º x 3/4"-16, O-Ring, Incl. 2
2		128825		1	ANEL "O", 8-1, 90 Duro, .644" ID x .087" Thk
3		86504723		1	MANGUEIRA
4		128830		3	COTOVELO, 90º, 3/4"-16, 37º x 3/4"-16, O-Ring, Incl. 5
5		128825		1	ANEL "O", 8-1, 90 Duro, .644" ID x .087" Thk
6		9843303		1	MANGUEIRA
7		128996		1	TEE, 3/4"-16, 37º
8		87385021		2-6	BOTÃO DE IMPULSO, Screw, 5/16-18 X 1/2 ZND
8		87029930		4	PARAFUSO, Used With Bracket 87612766, Ref 20
9		184064		2	FIXADOR
10		87522947		1	TUBULAÇÃO HIDRAULICO, Tube Assy, Incl. 10A, 10B
11		88825		4	PARAFUSO, Hex Hd, 5/16" x 1 1/4"
12		87016		1	ARRUELA PLANA, 3/8", SAE
13		87522946		1	TUBULAÇÃO HIDRAULICO, Tube Assy, Incl. 13A, 13B
14		86501706		2	PRENDEDOR
15		86635025		1	MANGUEIRA, 5537.2 mm (218 in)
16		86637979		2	PRENDEDOR, 13/16", Insul, 3/8" Bolt
17		247780		2	PORCA, Flg, USR, 3/8"-16
18		140045		2	ARRUELA MOLA, Belleville, M10
19		9825803		2	TUBO FLEXÍVEL
20		86557328		2	SUPORTE, Straight Edges; If Used
20		87612766		2	SUPORTE, Rounded Edges; If Used, Used With Screw 87029930, Ref 8
21		86504722		1	TUBO FLEXÍVEL
22		87462308		1	TUBULAÇÃO HIDRAULICO
23		86589143		2	ESPAÇADOR
24		86010402		2	PRENDEDOR, 1/2", Insul, 3/8" Bolt
25		9706732		4	PRENDEDOR
26		87657		4	PARAFUSO, Hex, 5/16"-18 x 1 1/4", G5
27		86504721		1	TUBO FLEXÍVEL

CONJUNTO DA LANÇA / CAÇAMBA HIDRÁULICAS - FLUXO ALTO

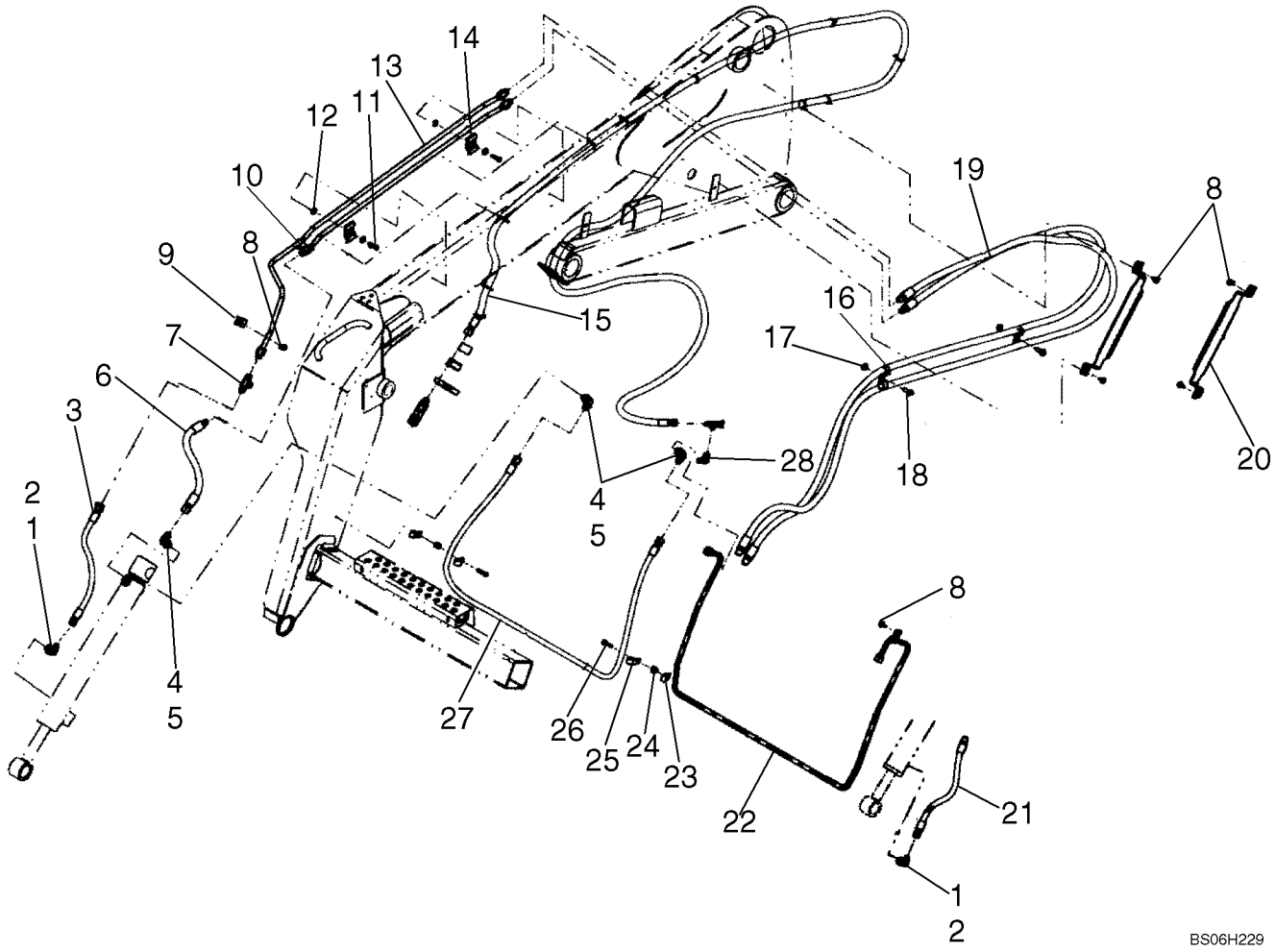

CONJUNTO DA LANÇA / CAÇAMBA HIDRÁULICAS - FLUXO ALTO

REF	FN	PART NUMBER	YR/SN	QTY	DESCRIPTION
28		86629586		1	COTOVELO, 90º, 9/16"-18, 37º x 9/16"-18, 37º Fem Sw

SISTEMA HIDRÁULICO AUXILIAR, STANDARD

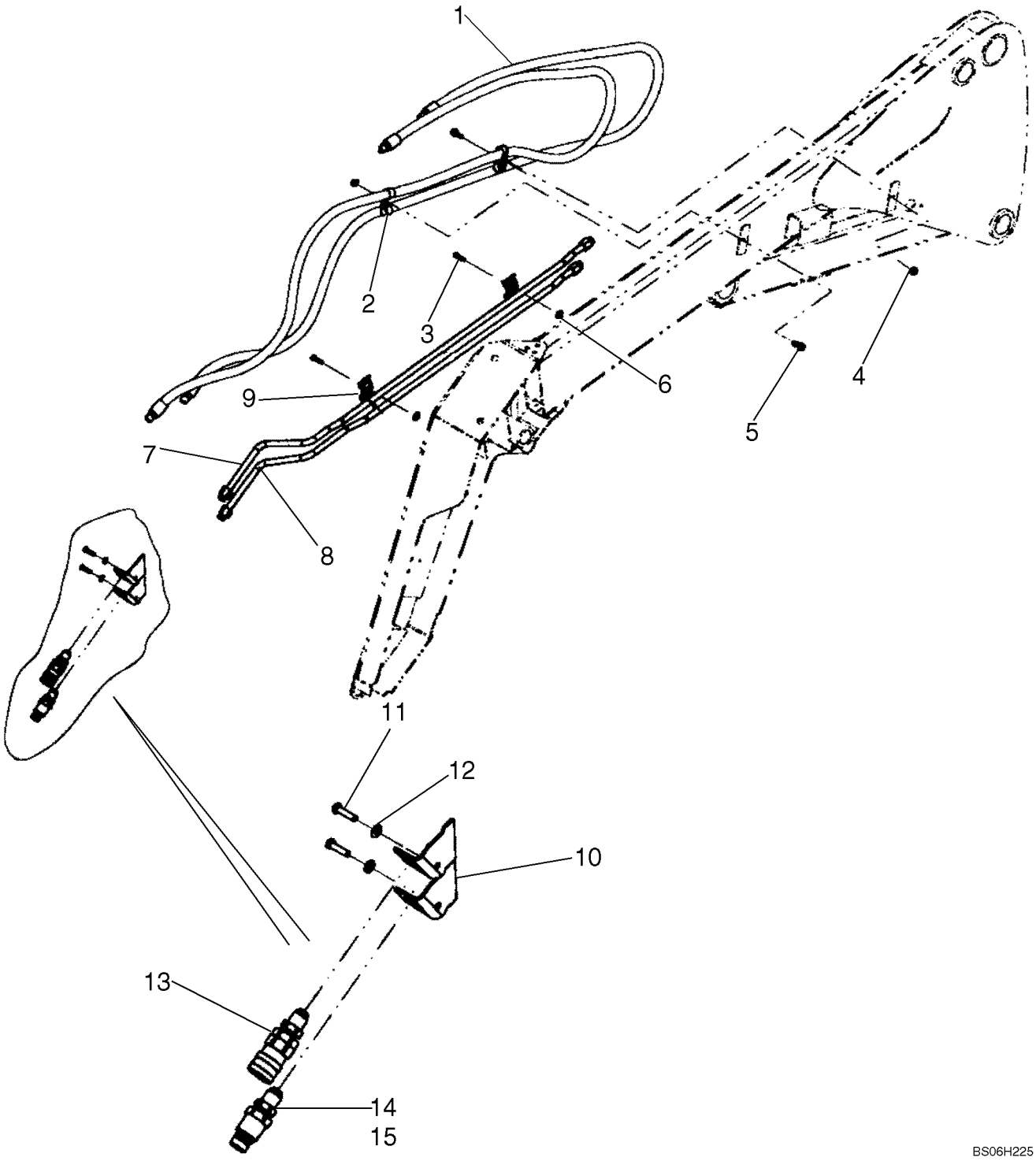

SISTEMA HIDRÁULICO AUXILIAR, STANDARD

REF	FN	PART NUMBER	YR/SN	QTY	DESCRIPTION
1		9826542		2	MANGUEIRA
2		9825803		2	TUBO FLEXÍVEL
3		88825		2	PARAFUSO, Hex Hd, 5/16" x 1 1/4"
4		247780		2	PORCA, Flg, USR, 3/8"-16
5		9706726		2	PARAFUSO, Hex Flg, 3/8"-16 x 1", Serr
6		80664		2	ARRUELA PLANA, 5/16"
7		87529378		1	TUBULAÇÃO HIDRAULICO
8		87529370		1	TUBULAÇÃO HIDRAULICO
9		86501706		2	PRENDEDOR
10		86540356		2	SUPORTE
11		87657		2	PARAFUSO, Hex, 5/16"-18 x 1 1/4", G5
12		322358		2	ARRUELA MOLA, Belleville, M8
13		87568388		1	ADAPTADOR, FF Cplr 0.5 Female -10 BMJ
14		87417308		1	ACOPLAMENTO, FF Cplr 0.5 Male -10 BMJ ; Incl. 15
15		87426762		1	ANEL, Seal Kit
		86539389		X	GUARDA-PÓ, For 87417308
		86539403		X	ADAPTADOR, Coupler From 3/4" FF Female to 1/2" ISO-A Male (Mates to Male FF Coupler 87417308)
		86539430		X	KIT DE REPARO, For Male FF Coupler 87417308
		86537647		1	ACOPLADOR, Attaches To 1/2" Pipe Thread Hose Ends

SISTEMA HIDRÁULICO AUXILIAR, FLUXO ALTO

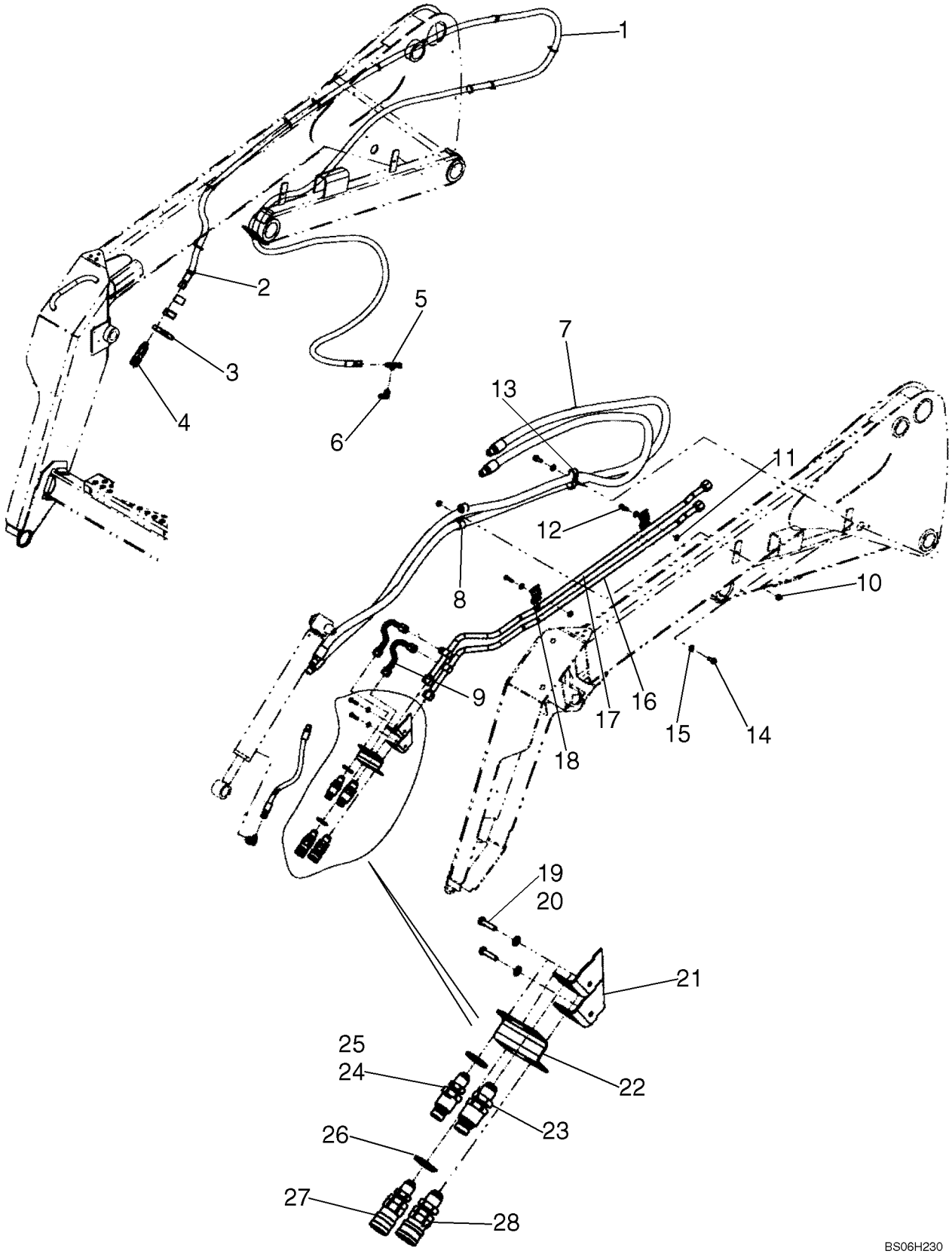

SISTEMA HIDRÁULICO AUXILIAR, FLUXO ALTO

REF	FN	PART NUMBER	YR/SN	QTY	DESCRIPTION
1		86635025		2	MANGUEIRA, 5537.2 mm (218 in)
2		263117		11	TIRA DE CABO, .14" x 11 1/2"
3		87573273		2	PRENDEDOR, T-Bolt Band Clamp
4		87573050		1	ADAPTADOR, FF Coupler .38 Female -8BMJ
5		129274		1	TEE, 37º, 9/16"-18, x 9/16"-18, Fem Sw Run
6		86629586		1	COTOVELO, 90º, 9/16"-18, 37º x 9/16"-18, 37º Fem Sw
7		86502497		2	MANGUEIRA
8		86637995		1	PRENDEDOR, 1 1/16", Insul, 3/8" Bolt
9		86615331		2	TUBULAÇÃO HIDRAULICO, Incl. 9A, 9B
10		247780		2	PORCA, Flg, USR, 3/8"-16
11		87016		4	ARRUELA PLANA, 3/8", SAE
12		88825		2	PARAFUSO, Hex Hd, 5/16" x 1 1/4"
13		86637995		1	PRENDEDOR, 1 1/16", Insul, 3/8" Bolt
14		9706726		2	PARAFUSO, Hex Flg, 3/8"-16 x 1", Serr
15		140045		2	ARRUELA MOLA, Belleville, M10
16		87522944		1	TUBULAÇÃO HIDRAULICO, Incl. 16A, 16B
17		87522945		1	TUBULAÇÃO HIDRAULICO, Incl. 17A, 17B
18		86501706		2	PRENDEDOR
19		140045		2	ARRUELA MOLA, Belleville, M10
20		87657		2	PARAFUSO, Hex, 5/16"-18 x 1 1/4", G5
21		86540358		2	SUPORTE
22		86614539		1	SUPORTE
23		87568390		1	ADAPTADOR, FF Coupler 0.62 Male -12 BMJ
24		87417308		1	ACOPLAMENTO, FF Coupler 0.50 Male -10 BMJ; Incl. 25
25		87426762		1	ANEL
		86539389		X	GUARDA-PÓ, For 87417308
		86539403		X	ADAPTADOR, Coupler From 3/4" FF Female to 1/2" ISO-A Male (Mates to Male FF Coupler 87417308)
		86539430		X	KIT DE REPARO, For Male FF Coupler 87417308
		86537647		1	ACOPLADOR, Attaches To 1/2" Pipe Thread Hose Ends
26		87366		2	ARRUELA PLANA, 7/8", SAE
27		87568388		1	ADAPTADOR, FF Coupler 0.5 Female -10 BMJ

SISTEMA HIDRÁULICO AUXILIAR, FLUXO ALTO

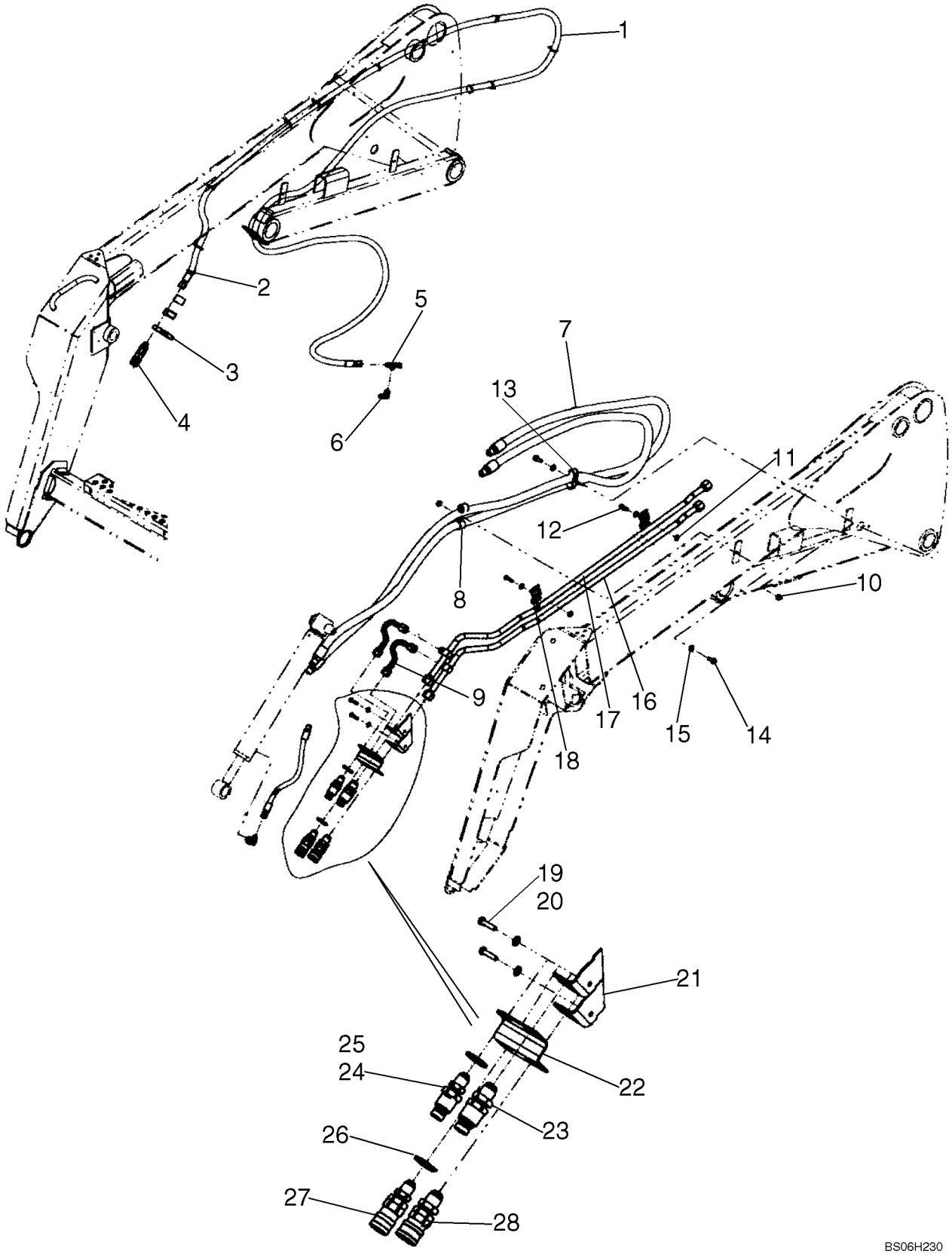

SISTEMA HIDRÁULICO AUXILIAR, FLUXO ALTO

REF	FN	PART NUMBER	YR/SN	QTY	DESCRIPTION
28		87568391		1	ADAPTADOR, FF Coupler .62 Female -12 BMJ

SISTEMA HIDRÁULICO - CONJUNTO DA PLACA DE MONTAGEM

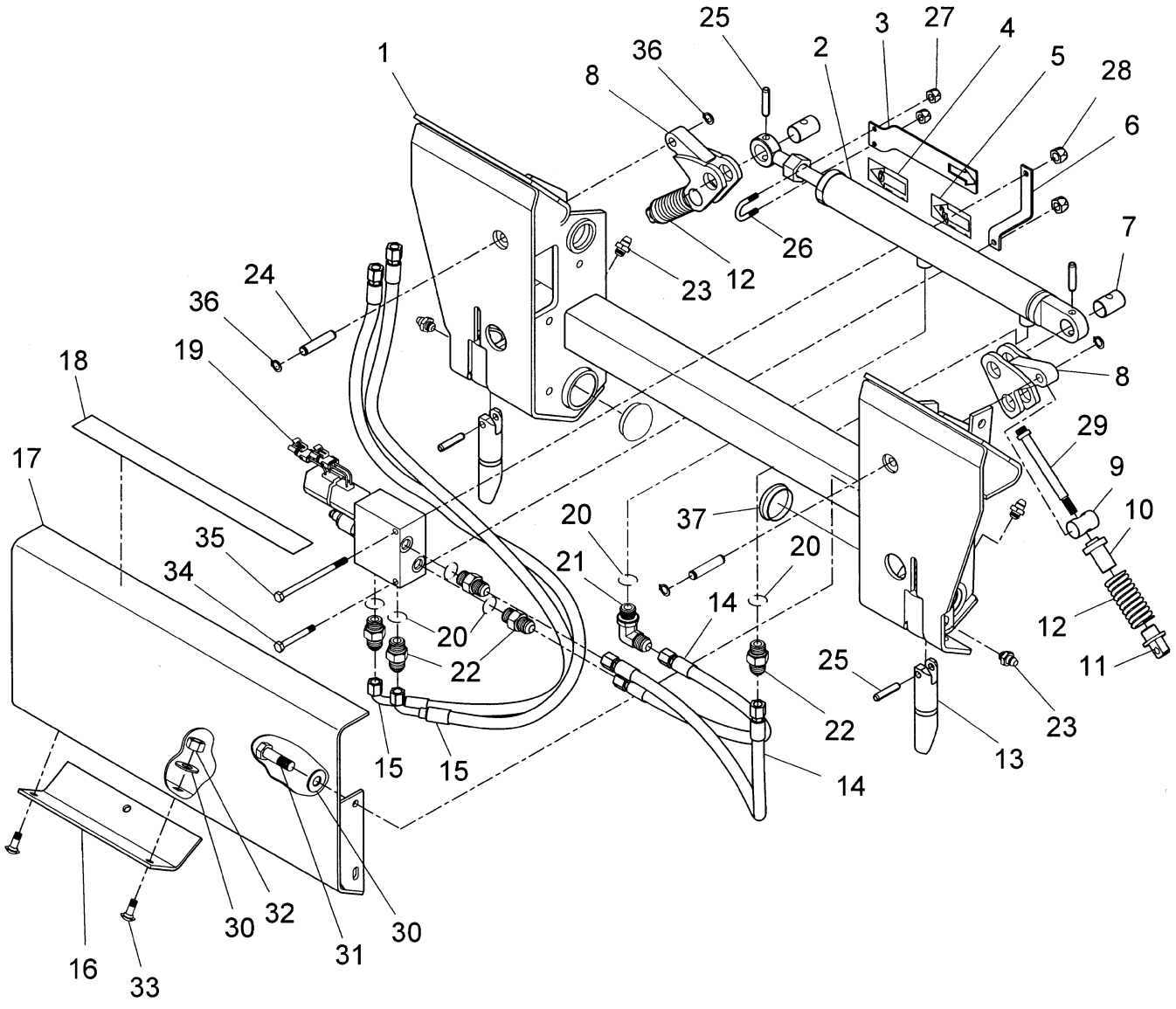

BS04E147

SISTEMA HIDRÁULICO - CONJUNTO DA PLACA DE MONTAGEM

REF	FN	PART NUMBER	YR/SN	QTY	DESCRIPTION
		{}			If Used See Ref 1; With No Cage Nuts; See 08-09A For Option With 3 Cage Nuts
		86705192		1	KIT, Hydraulic Mount Plate Kit; Incl. Ref 2 - 8, 14 - 22, 16 - 35; Items On figure 04-15; Figure 08-13, Ref 2, 10, 11; And Decals 86639223, 86643341
1		86633259		1	PLACA DE MONTAGEM, Mounting, Gray
2		87442336		1	CILINDRO HIDRÁULICO, See Figure 08-10
3		86705774		1	CANTONEIRA, Indicator
4		86729996		1	DECALCOMANIA, Lock
5		86979503		1	DECALCOMANIA, Unlock
6		86636678		1	SUPORTE, Control Valve Mounting
7		86627878		2	PINO
8		86627877		2	ALAVANCA DE CONTROLE, If Used
8		{87566709}		2	Lever; If Used
9		9829733		2	PINO
10		86610166		2	GUIA, Spring, Upper
11		86510869		2	PINO, Guide, Spring, Lower; If Used
11		87579303		2	PINO, If Used
12		86610167		2	MOLA, Compression
13		87413030		2	PINO, Latch
14		86635020		2	MANGUEIRA, 469.9 mm (18.5 in)
15		86635021		2	MANGUEIRA, 1070 mm (42 in); If Used
15		87743069		2	MANGUEIRA, 1070 mm (42 in); If Used
16		86631536		1	CANTONEIRA
17		86631532		1	PROTEÇÃO
18		86512583		1	ESTRIBO
19		86635833		1	DISTRIBUIDOR, See Figure 08-11
20		9617873		5	ANEL "O", 6-1, 90 Duro, .468" ID x .078" Thk
21		76344		1	COTOVELO, 90º, 9/16"-18, 37º x 9/16"-18, O-Ring
22		76350		5	CONEXÃO, 9/16"-18, 37º x 9/16"-18, O-Ring
23		87414		4	GRAXEIRA, 1/4"-28 x .56" lg, Drive
24		86538563		2	PINO
25		86616372		4	PINO DE FIXAÇÃO, 3/8" x 1 3/4", Slotted
26		86976101		2	MOLA-TRAVA, 1/4"-20 x M25 x M25
27		280129		2	CONTRA PORCA, 1/4"-20, GC

SISTEMA HIDRÁULICO - CONJUNTO DA PLACA DE MONTAGEM

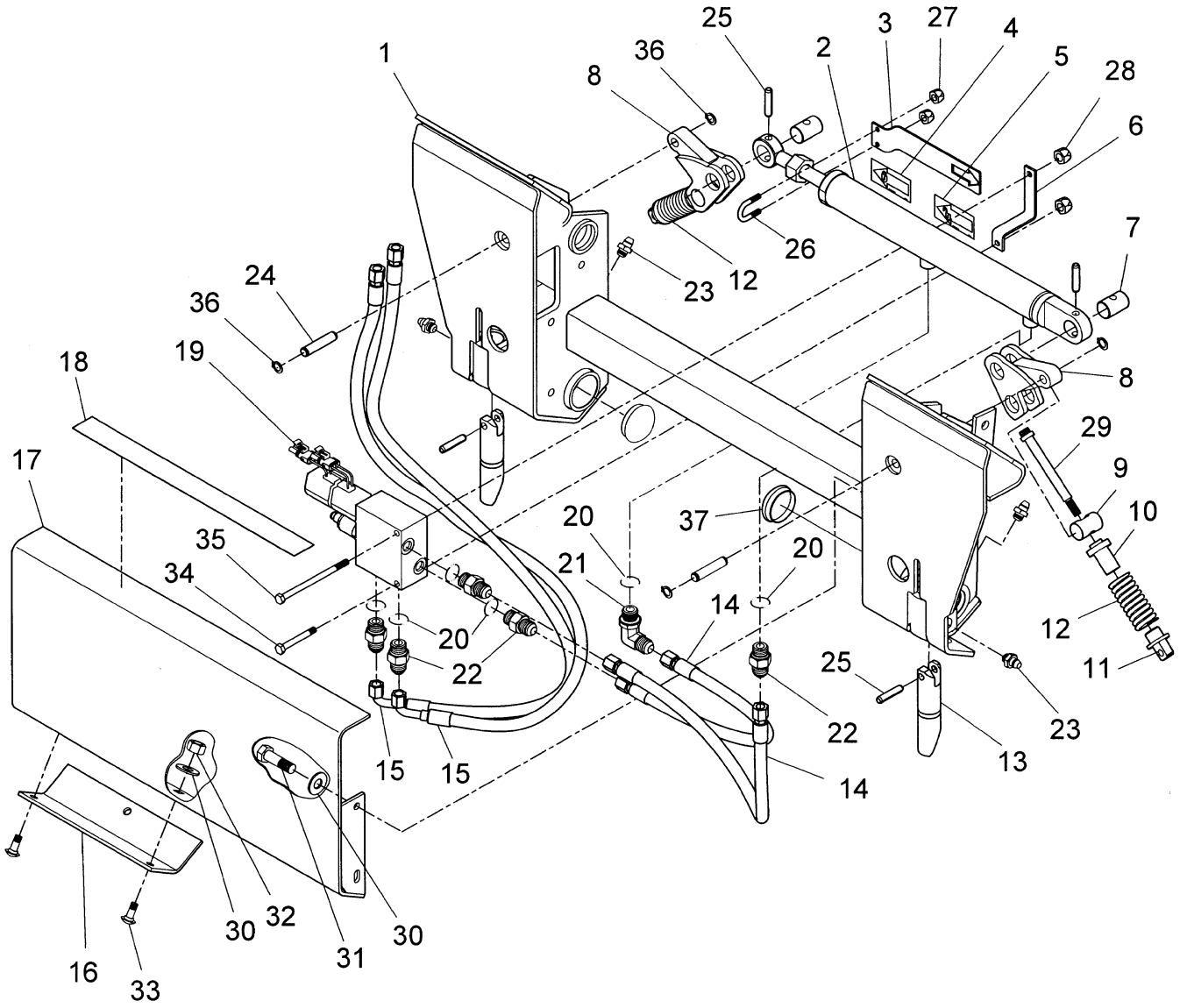

BS04E147

SISTEMA HIDRÁULICO - CONJUNTO DA PLACA DE MONTAGEM

REF	FN	PART NUMBER	YR/SN	QTY	DESCRIPTION
28		280736		2	CONTRA PORCA, 5/16"-18, GC
29		86506112		2	PARAFUSO, 3/8"-16 x 5"; If Used
29		87533223		2	PINO, Screw, Cap, 12-pt Hd, Shoulder, 1/2" X 4.0; If Used
30		140045		6	ARRUELA MOLA, Belleville, M10
31		88011		4	PARAFUSO, Hex, 3/8"-16 x 1 1/4", G5, Full Thd
32		9628503		2	PORCA, 3/8"-16, G5
33		80280503		2	PARAFUSO, Short NK, 3/8"-16 x 1", G5, Full Thd
34		88346		1	PARAFUSO, Hex, 5/16"-18 x 2 1/2", G5
35		88575		1	PARAFUSO, Hex, 5/16"-18 x 5", G5
36		86571009		4	ANEL-ELÁSTICO, Retaining
37		86561087		2	GUARDA-PÓ
		86639223		1	IDIOGRAMA, Decal Fuse Service
		86643341		1	DECALCOMANIA, Switch Att. Latch

SISTEMA HIDRÁULICO - CONJUNTO DA PLACA DE MONTAGEM

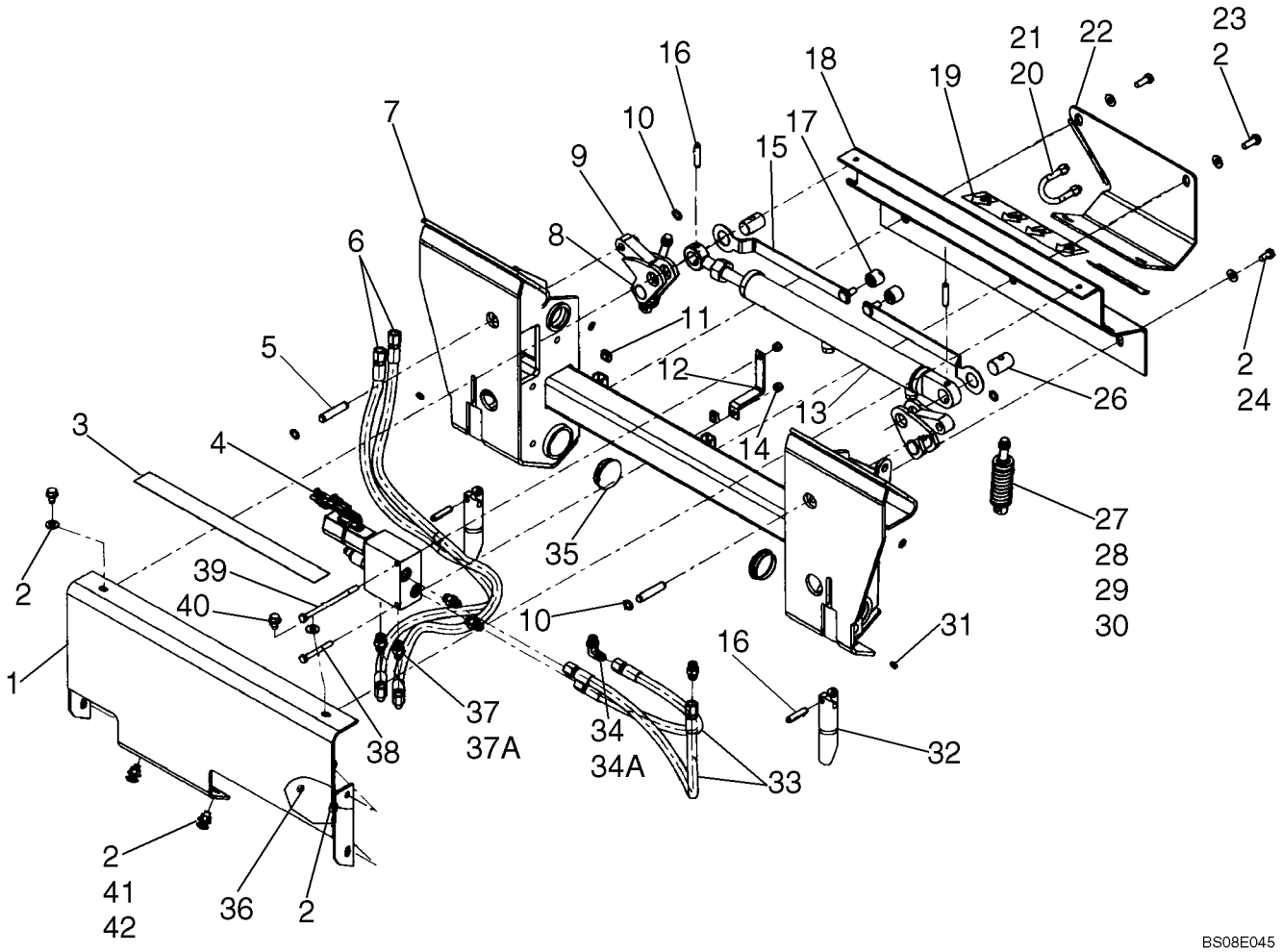

SISTEMA HIDRÁULICO - CONJUNTO DA PLACA DE MONTAGEM

REF	FN	PART NUMBER	YR/SN	QTY	DESCRIPTION
					If Used See Ref 7; With 3 Cage Nuts; See 08-09 For Option With No Cage Nuts
1		87608816		1	PROTEÇÃO, Front Shield
2		140045		11	ARRUELA MOLA, Belleville, M10
3		86512583		1	ESTRIBO
4		86635833		1	DISTRIBUIDOR
5		86538563		2	PINO
6		86635021		2	MANGUEIRA, 1070 mm (42 in); If Used
6		87743069		2	MANGUEIRA, 1070 mm (42 in); If Used
7		87610761		1	PLACA, Mount Plate, Gray
8		9829733		2	PINO
9		86627877		2	ALAVANCA DE CONTROLE, If Used
9		{87566709}		2	Lever; If Used
10		86571009		4	ANEL-ELÁSTICO
11		84899		3	PORCA, Sq, 3/8"-16, G2
12		86636678		1	SUPORTE
13		87442336		1	CILINDRO HIDRÁULICO, See Fig. 08-10
14		280736		2	CONTRA PORCA, 5/16"-18, GC
15		87641744		2	PLACA DE MONTAGEM, Mount Plate Link Indicator
16		86616372		4	PINO DE FIXAÇÃO, 3/8" x 1 3/4", Slotted
17		87557403		2	MANÍPULO
18		87603533		1	PROTEÇÃO, Back Shield
19		87611906		1	DECALCOMANIA, Indicator
20		87597201		1	BOTÃO DE IMPULSO, U-Bolt
21		87034524		2	CONTRA PORCA
22		87608817		1	PROTEÇÃO, Back Shield
23		88206		2	PARAFUSO, Hex, 3/8"-16 x 1", G5, Full Thd
24		88434		1	PARAFUSO, Hex, 3/8"-16 x 3/4", G5, Full Thd
25		D137186		1	DECALCOMANIA, Caution Inspect Coupler
26		86627878		2	PINO
27		86610166		2	GUIA, Spring Guide
28		87579303		2	PINO
29		87533223		2	PINO
30		86610167		2	MOLA, Compression Spring
31		87414		4	GRAXEIRA, 1/4"-28 x .56" lg, Drive

SISTEMA HIDRÁULICO - CONJUNTO DA PLACA DE MONTAGEM

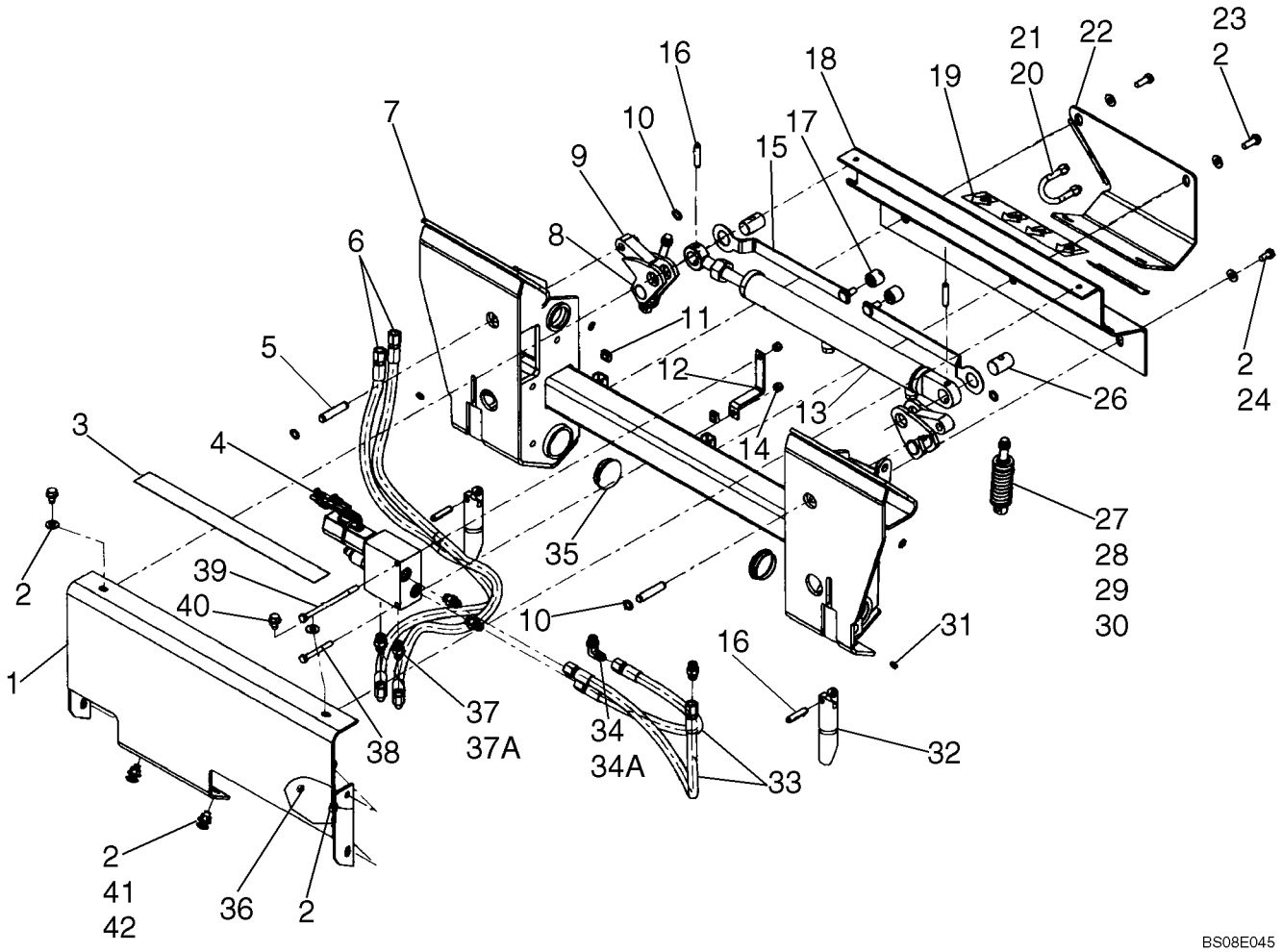

SISTEMA HIDRÁULICO - CONJUNTO DA PLACA DE MONTAGEM

REF	FN	PART NUMBER	YR/SN	QTY	DESCRIPTION
32		86575348		2	PINO, Latch Pin
33		86635020		2	MANGUEIRA, 470 mm (18 1/2 in.)
34		76344		1	COTOVELO, 90º, 9/16"-18, 37º x 9/16"-18, O-Ring, Incl 34A
34A		9617873		1	ANEL "O", 6-1, 90 Duro, .468" ID x .078" Thk
35		86561087		2	GUARDA-PÓ
36		88011		4	PARAFUSO, Hex, 3/8"-16 x 1 1/4", G5, Full Thd
37		76350		5	CONEXÃO, 9/16"-18, 37º x 9/16"-18, O-Ring, Incl 37A
37A		9617873		5	ANEL "O", 6-1, 90 Duro, .468" ID x .078" Thk
38		88346		1	PARAFUSO, Hex, 5/16"-18 x 2 1/2", G5
39		88575		1	PARAFUSO, Hex, 5/16"-18 x 5", G5
40		87034819		2	PARAFUSO, Hex Wash Hd, 3/8"-16 x 5/8"
41		80280503		2	PARAFUSO, Short NK, 3/8"-16 x 1", G5, Full Thd
42		9628503		2	PORCA, 3/8"-16, G5

CONJUNTO DO CILINDRO - CONJUNTO DA PLACA DE MONTAGEM

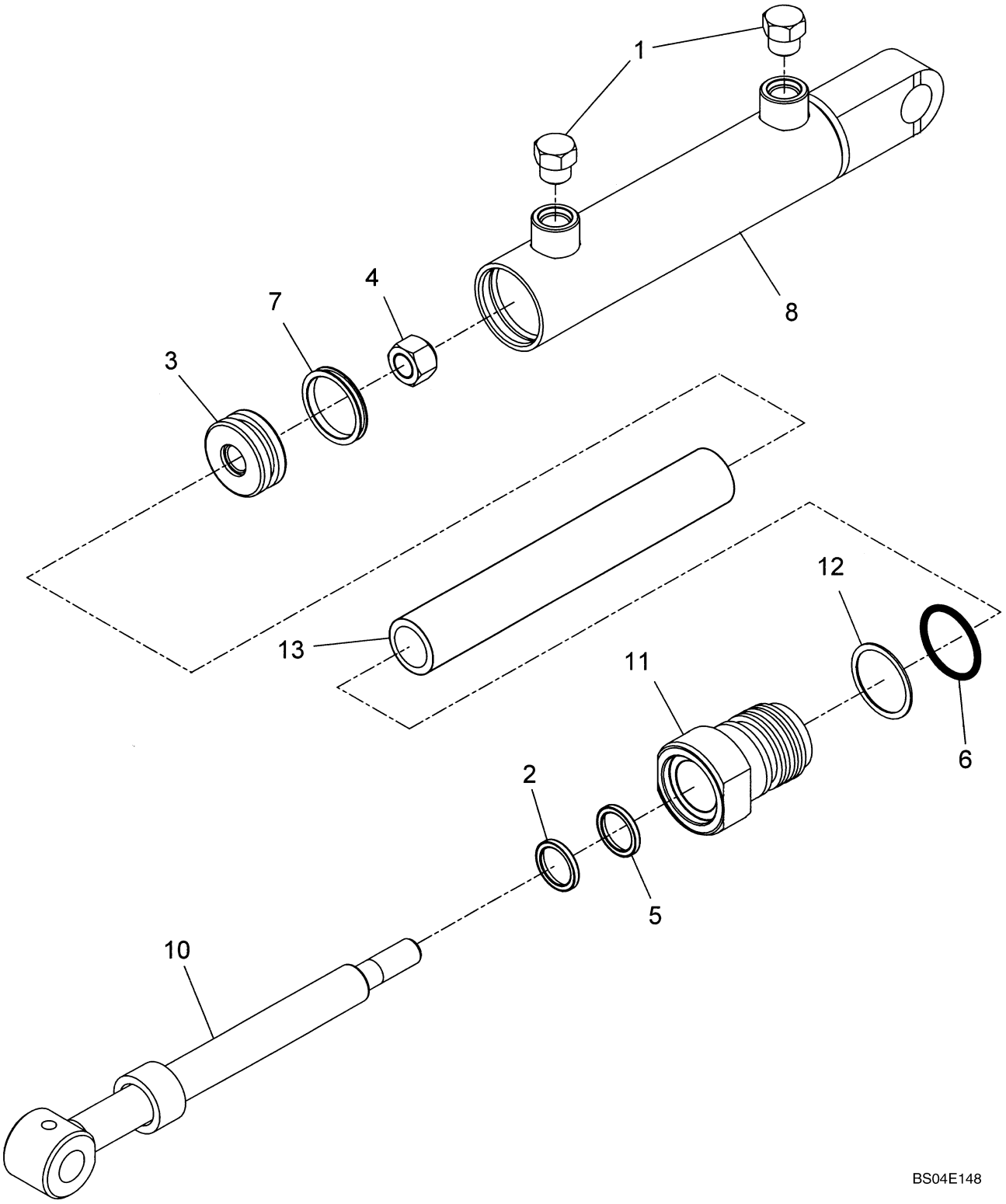

CONJUNTO DO CILINDRO - CONJUNTO DA PLACA DE MONTAGEM

REF	FN	PART NUMBER	YR/SN	QTY	DESCRIPTION
		87442336			CILINDRO HIDRÁULICO, Mounting Plate, Incl. Ref. 1 - 13
1		76349		2	BUJÃO, Hex Hd, 9/16"-18 ORB, Shipping
2		272471		1	ANEL DE VEDACAO
3		596215		1	PISTÃO
4		88130		1	CONTRA PORCA, 1/2"-20, GC
5		9826108		1	ANEL DE VEDACAO
6		274754		1	ANEL "O", -220, 70 Duro, 1.359" ID x .139" Thk
7		86605608		1	ANEL DE VEDACAO, Piston
8		NSS		1	BOLETIM INFORMATIVO, Barrel
9		86627859		1	JOGO DE JUNTAS, Incl. Ref. 2, 5, 6, 7, 12
10		86627862		1	HASTE CILINDRO
11		86627864		1	CABEÇOTE
12		86628423		1	VEDADOR ESPECIAL
13		86637408		1	ESPAÇADOR

CONJUNTO DA VÁLVULA - CONJUNTO DA PLACA DE MONTAGEM

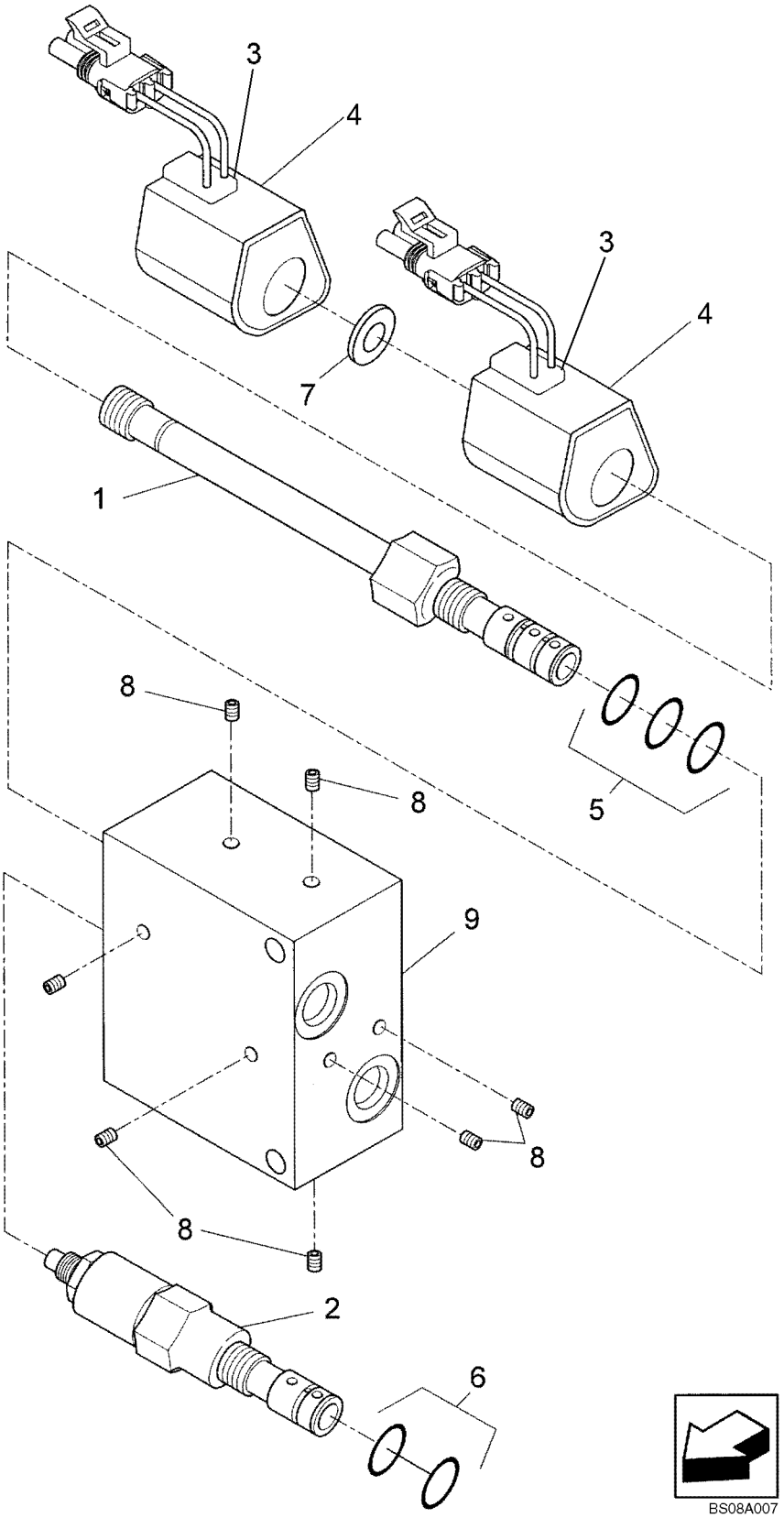

CONJUNTO DA VÁLVULA - CONJUNTO DA PLACA DE MONTAGEM

REF	FN	PART NUMBER	YR/SN	QTY	DESCRIPTION
		86635833		1	DISTRIBUIDOR, Incl. 1 - 9
1		86629792		1	ELETRO VALVULA
2		87027734		1	ELETRO VALVULA, Sequencing
3		86634904		2	BOBINA
4		86643552		2	KIT, Housing
5		86976100		1	JOGO DE JUNTAS, Valve Spool
6		86509023		1	JOGO DE JUNTAS, Sequencing Valve
7		86635834		1	ESPAÇADOR
8		NSS		8	BOLETIM INFORMATIVO, Expander Plugs
9		NSS		1	BOLETIM INFORMATIVO, Manifold Housing

LANÇA SISTEMA HIDRÁULICO - SUPORTE PLACA, FLUXO ALTO

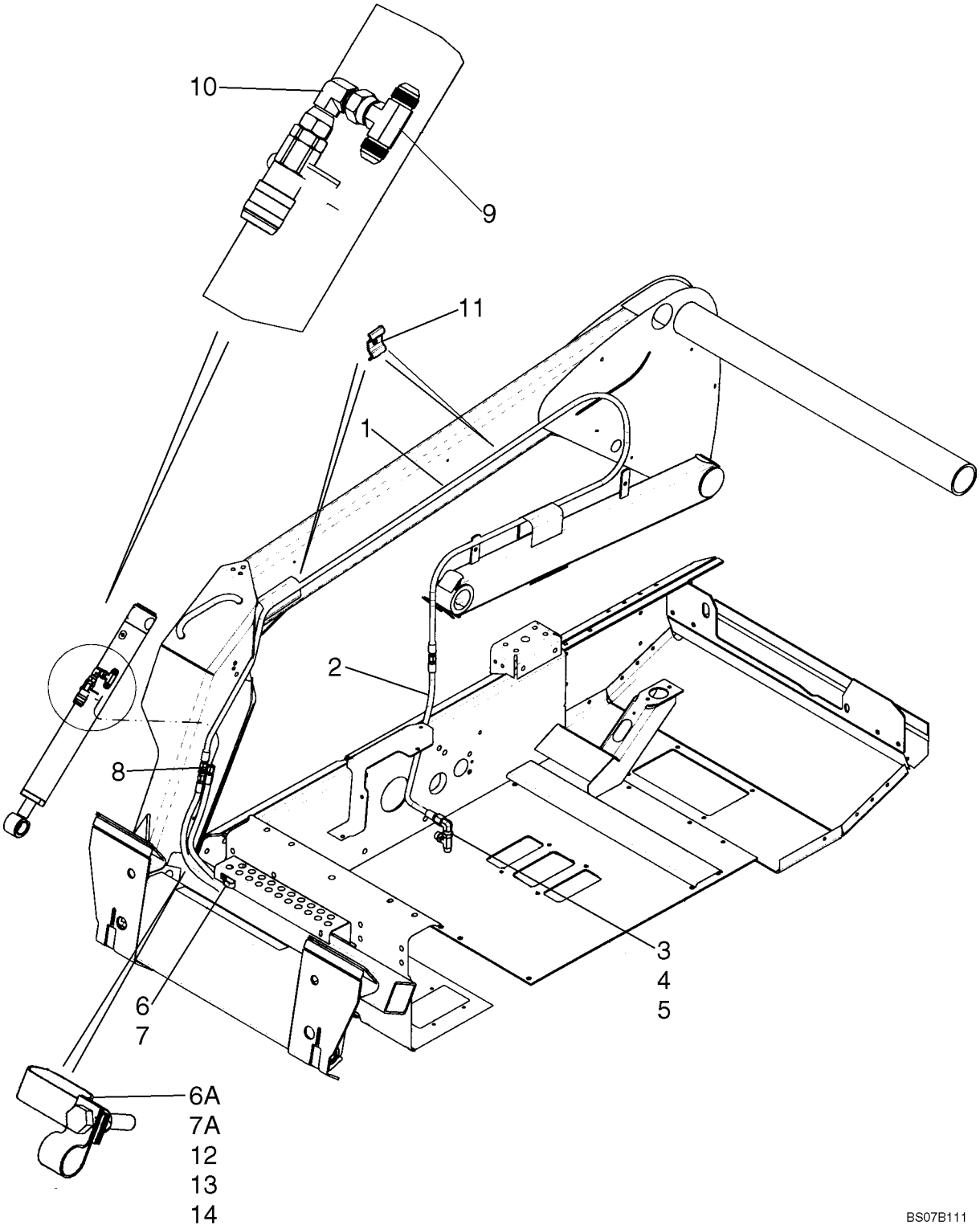

LANÇA SISTEMA HIDRÁULICO - SUPORTE PLACA, FLUXO ALTO

REF	FN	PART NUMBER	YR/SN	QTY	DESCRIPTION
		87388082		1	KIT DE TRANSFORMAÇÃO, Hydraulic Mounting Plate Conversion Kit; Incl. 1 - 3, 5, 8, 11
1		87586300		1	MANGUEIRA, Hydraulic Mounting Plate, 5640 mm (222 in.)
2		87376136		1	MANGUEIRA, Hydraulic Mounting Plate, 870 mm (34 1/4 in.)
3		86513026		1	TEE, 7/8"-14, 37º x 7/8"-14, O-Ring Br, Incl. 4
4		167269		1	ANEL "O", 10-1, 90 Duro, .755" ID x .097" Thk
5		182977		1	COTOVELO, 90º, 7/8"-14, 37º x 7/8"-14, 37º Fem Sw
6		578070		1	PRENDEDOR, If Used In This Location
6A		578070		1	PRENDEDOR, If Used In This Location
7		86580556		1	ARMADURA, If Used In This Location
7A		86580556		1	ARMADURA, If Used In This Location
8		128822		1	UNIAO, 3/4"-16, 37º x 3/4"-16, 37º
9		86513015		1	TEE, 37º, 3/4"-16 x 3/4"-16, Fem Sw Br
10		248974		1	COTOVELO, 90º, 3/4"-16, 37º x 3/4"-16, 37º Fem Sw
		87438046		10	TIRA DE CABO, Wire Tie; As Needed
11		87614881		2	PRENDEDOR
12		88275		1	PARAFUSO, Hex, 5/16"-18 x 1 1/2", G5
13		9706748		1	PRENDEDOR, 5/8", Insul, 5/16" Bolt
14		86629544		1	CONTRA PORCA, 5/16"-18, GB

08-12A		p1	03/08

LANÇA SISTEMA HIDRÁULICO - SUPORTE PLACA, FLUXO ALTO

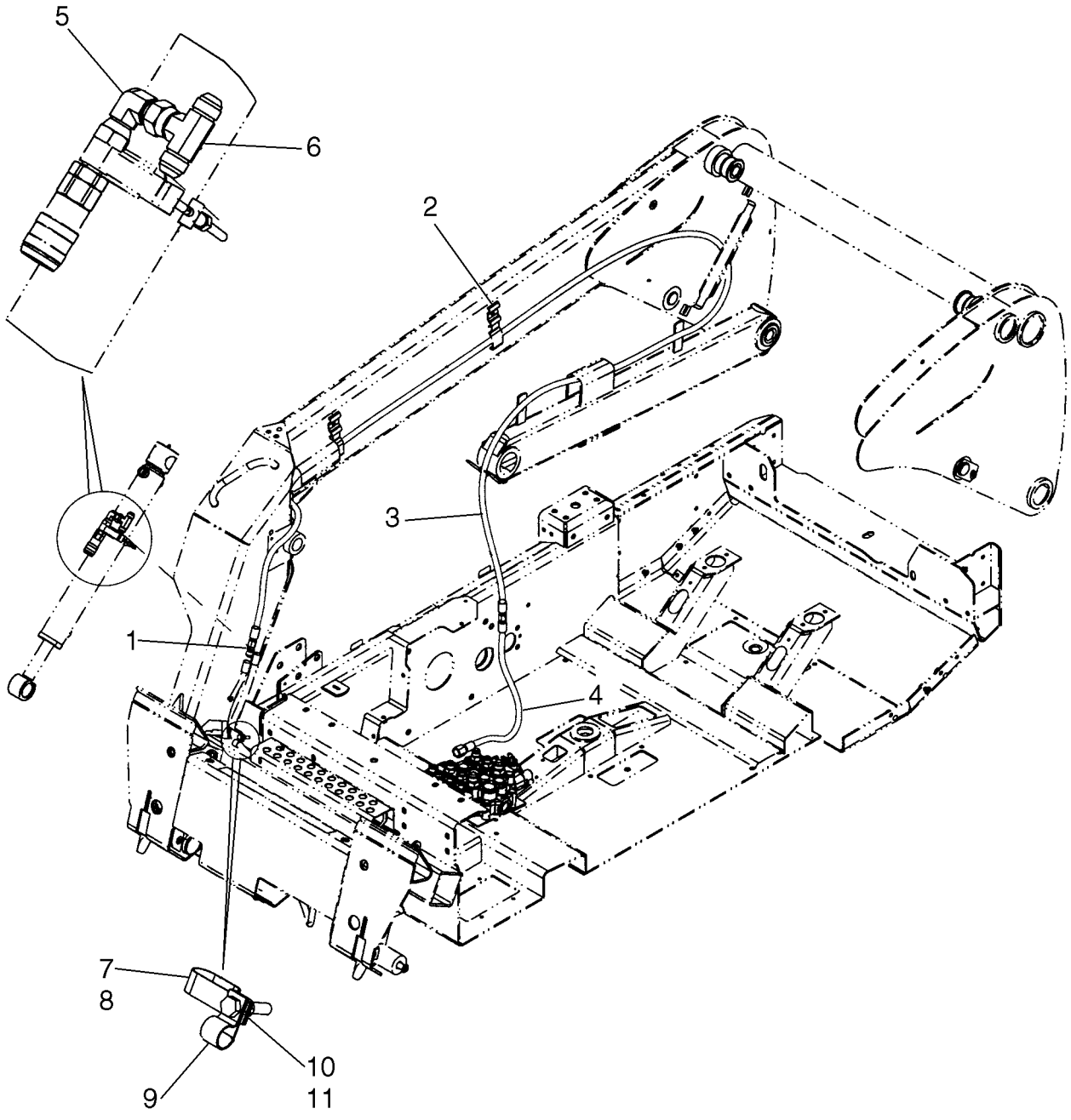

LANÇA SISTEMA HIDRÁULICO - SUPORTE PLACA, FLUXO ALTO

REF	FN	PART NUMBER	YR/SN	QTY	DESCRIPTION
1		128822		1	UNIAO, 3/4"-16, 37º x 3/4"-16, 37º
2		87614881		2	PRENDEDOR
3		87586301		1	MANGUEIRA, Hydraulic Mount Plate, 5234 mm (206 in.)
4		87376136		1	MANGUEIRA, Hydraulic Mount Plate, 870 mm (34 1/4 in.)
5		248974		1	COTOVELO, 90º, 3/4"-16, 37º x 3/4"-16, 37º Fem Sw
6		86513015		1	TEE, 37º, 3/4"-16 x 3/4"-16, Fem Sw Br
7		86580556		1	ARMADURA
8		578070		1	PRENDEDOR
9		9706748		1	PRENDEDOR, 5/8", Insul, 5/16" Bolt
10		88275		1	PARAFUSO, Hex, 5/16"-18 x 1 1/2", G5
11		86629544		1	CONTRA PORCA, 5/16"-18, GB
12		87438046		10	TIRA DE CABO, Not Illustrated

LANÇA SISTEMA HIDRÁULICO - SUPORTE PLACA, STANDARD

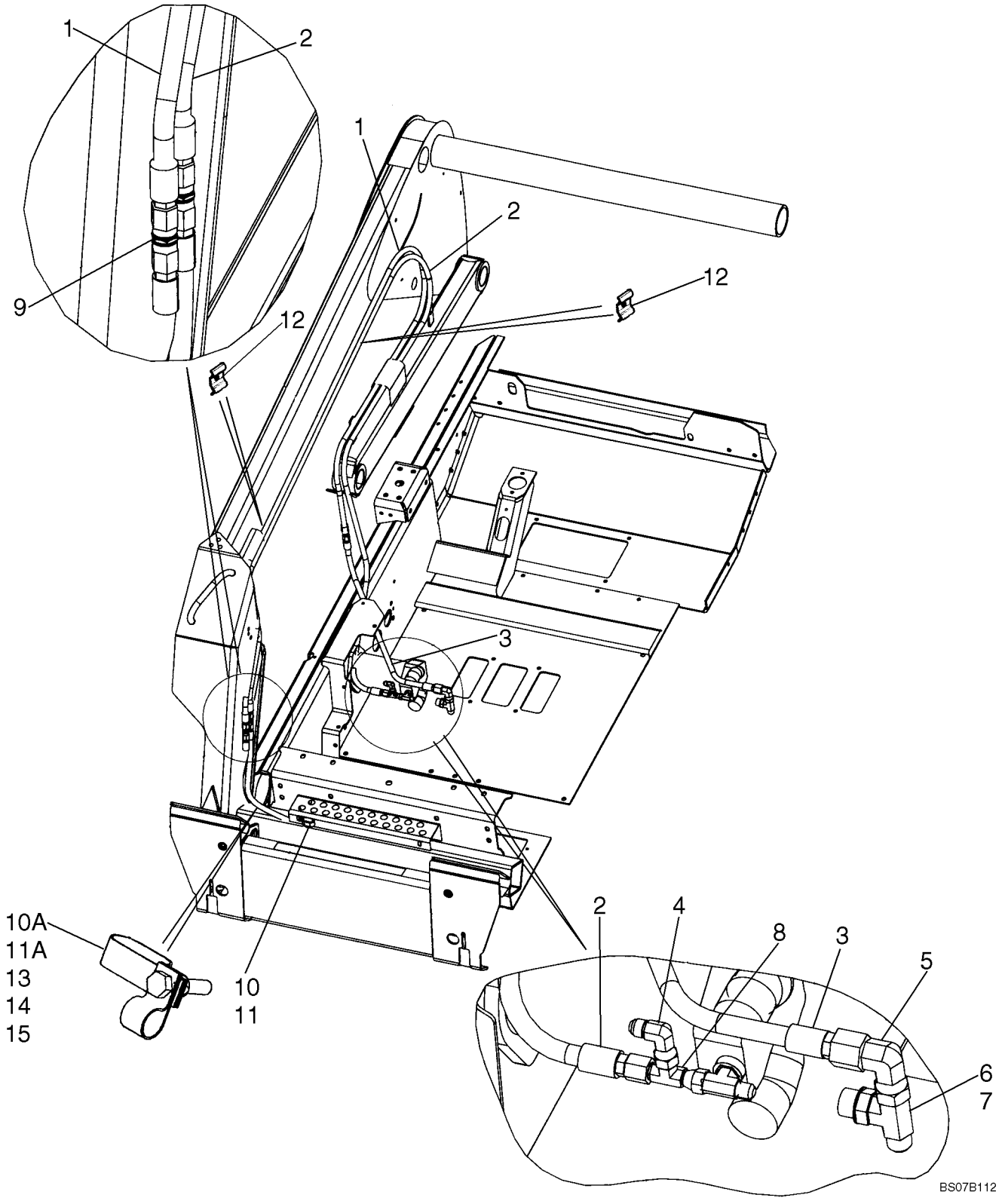

LANÇA SISTEMA HIDRÁULICO - SUPORTE PLACA, STANDARD

REF	FN	PART NUMBER	YR/SN	QTY	DESCRIPTION
1		87586300		1	MANGUEIRA, 5640 mm, 222 in.
2		86635025		1	MANGUEIRA, 5537 mm, 218 in.
3		87376136		1	MANGUEIRA, 870 mm, 34.25 in.
4		86629586		1	COTOVELO, 90º, 9/16"-18, 37º x 9/16"-18, 37º Fem Sw
5		182977		1	COTOVELO, 90º, 7/8"-14, 37º x 7/8"-14, 37º Fem Sw
6		86513026		1	TEE, 7/8"-14, 37º x 7/8"-14, O-Ring Br, Incl. 7
7		167269		1	ANEL "O", 10-1, 90 Duro, .755" ID x .097" Thk
8		129274		1	TEE, 37º, 9/16"-18, x 9/16"-18, Fem Sw Run
9		128822		2	UNIAO, 3/4"-16, 37º x 3/4"-16, 37º
10		86580556		1	ARMADURA, If Used In This Location
10A		86580556		1	ARMADURA, If Used In This Location
11		578070		1	PRENDEDOR, If Used In This Location
11A		578070		1	PRENDEDOR, If Used In This Location
		87438046		10	TIRA DE CABO, As Needed
12		87614881		2	PRENDEDOR
13		9706748		1	PRENDEDOR, 5/8", Insul, 5/16" Bolt
14		88275		1	PARAFUSO, Hex, 5/16"-18 x 1 1/2", G5
15		86629544		1	CONTRA PORCA, 5/16"-18, GB

LANÇA SISTEMA HIDRÁULICO - SUPORTE PLACA, STANDARD

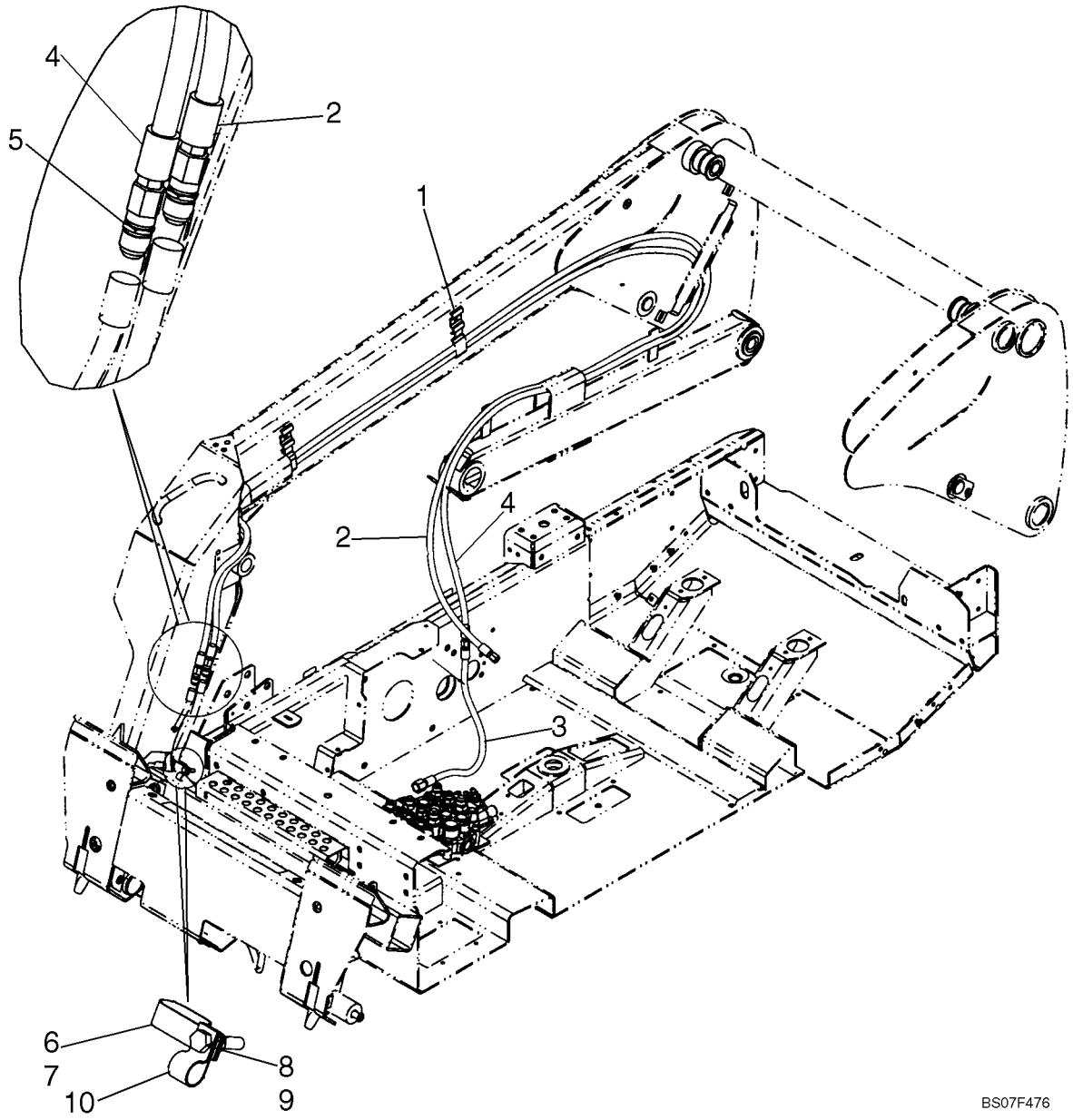

LANÇA SISTEMA HIDRÁULICO - SUPORTE PLACA, STANDARD

REF	FN	PART NUMBER	YR/SN	QTY	DESCRIPTION
1		87614881		2	PRENDEDOR
2		86635025		1	MANGUEIRA, Hydraulic Mount Plate, 5537.2 mm (218 in)
3		87376136		1	MANGUEIRA, Hydraulic Mount Plate, 870 mm (34 1/4 in.)
4		87586301		1	MANGUEIRA, Hydraulic Mount Plate, 5234 mm (206 in.)
5		128822		2	UNIAO, 3/4"-16, 37º x 3/4"-16, 37º
6		86580556		1	ARMADURA
7		578070		1	PRENDEDOR
8		88275		1	PARAFUSO, Hex, 5/16"-18 x 1 1/2", G5
9		86629544		1	CONTRA PORCA, 5/16"-18, GB
10		9706748		1	PRENDEDOR, 5/8", Insul, 5/16" Bolt
11		87438046		10	TIRA DE CABO

08-14		p1	06/08

FILTRO E DEPÓSITO

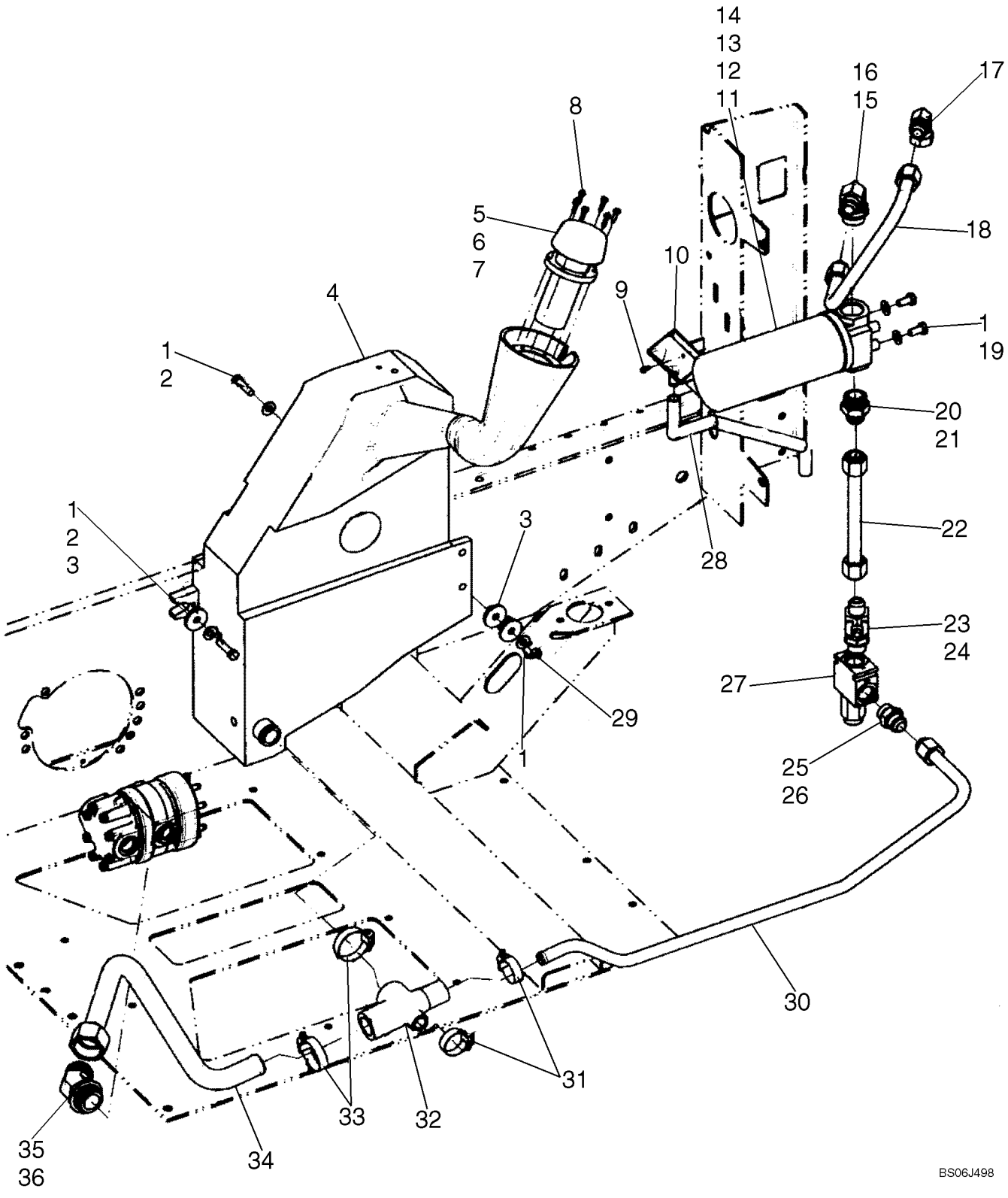

FILTRO E DEPÓSITO

REF	FN	PART NUMBER	YR/SN	QTY	DESCRIPTION
1		140045		5	ARRUELA MOLA, Belleville, M10
2		88044		2	PARAFUSO, Hex, 3/8"-16 x 1 1/2", G5
3		213404		3	ESPAÇADOR
4		87041995		1	RESERVATÓRIO
5		86631374		1	RESPIRO, Tank Filler Breather Assy; Incl. 6, 7
6		86628700		1	RESPIRO, Cap
7		86625390		2	JUNTA
8		86500940		6	PARAFUSO, Hex Wash Hd, #10 x 3/4"
9		86500939		1	PARAFUSO, Hex Wash Hd, #10 x 3/8"
10		87455867		1	FUNIL
11		87430661		1	FILTRO, Incl. 12 - 14; See Fig. 08-15
12		87439984		1	Cabeza De Filtro
13		87010592		1	ELEMENTO
14		N13268		1	INTERRUPTOR DE PRESSÃO
15		87021824		1	COTOVELO, 90º, 1 1/16"-12, 37º x 1 5/16"-12, O-Ring, Incl. 16
16		167268		1	ANEL "O", 16-1, 90 Duro, 1.171" ID x .116" Thk
17		219603		1	COTOVELO, 90º, 1 1/16"-12, 37º x 1 1/16"-12, 37º Fem Sw
18		87372004		1	TUBULAÇÃO HIDRAULICO, Oil Filter To Cooler
19		43138		2	PARAFUSO, Hex, M10 x 20, 8.8, Full Thd
20		233705		1	CONEXÃO, 1 1/16"-12, 37º x 1 5/16"-12, O-Ring, Incl. 21
21		167268		1	ANEL "O", 16-1, 90 Duro, 1.171" ID x .116" Thk
22		87370205		1	TUBULAÇÃO HIDRAULICO, Return; Filter To Valve
23		87398986		1	TERMINAL CONECTOR, Tee Adj Run 37FL 3/4 X 3/4 X 1/2; Incl. 24
24		167266		1	ANEL "O", 12-1, 90 Duro, .924 ID x .116" Thk
25		322896		1	CONEXÃO, 1 1/16"-12, 37º x 1 1/16"-12, O-Ring, Incl. 26
26		167266		1	ANEL "O", 12-1, 90 Duro, .924 ID x .116" Thk
27		87372090		1	VÁLVULA HIDRAULICA, Valve, Charge
28		93963		1	TUBO PLASTICO
29		9628503		1	PORCA, 3/8"-16, G5
30		87370209		1	TUBULAÇÃO HIDRAULICO, Tube, Return

FILTRO E DEPÓSITO

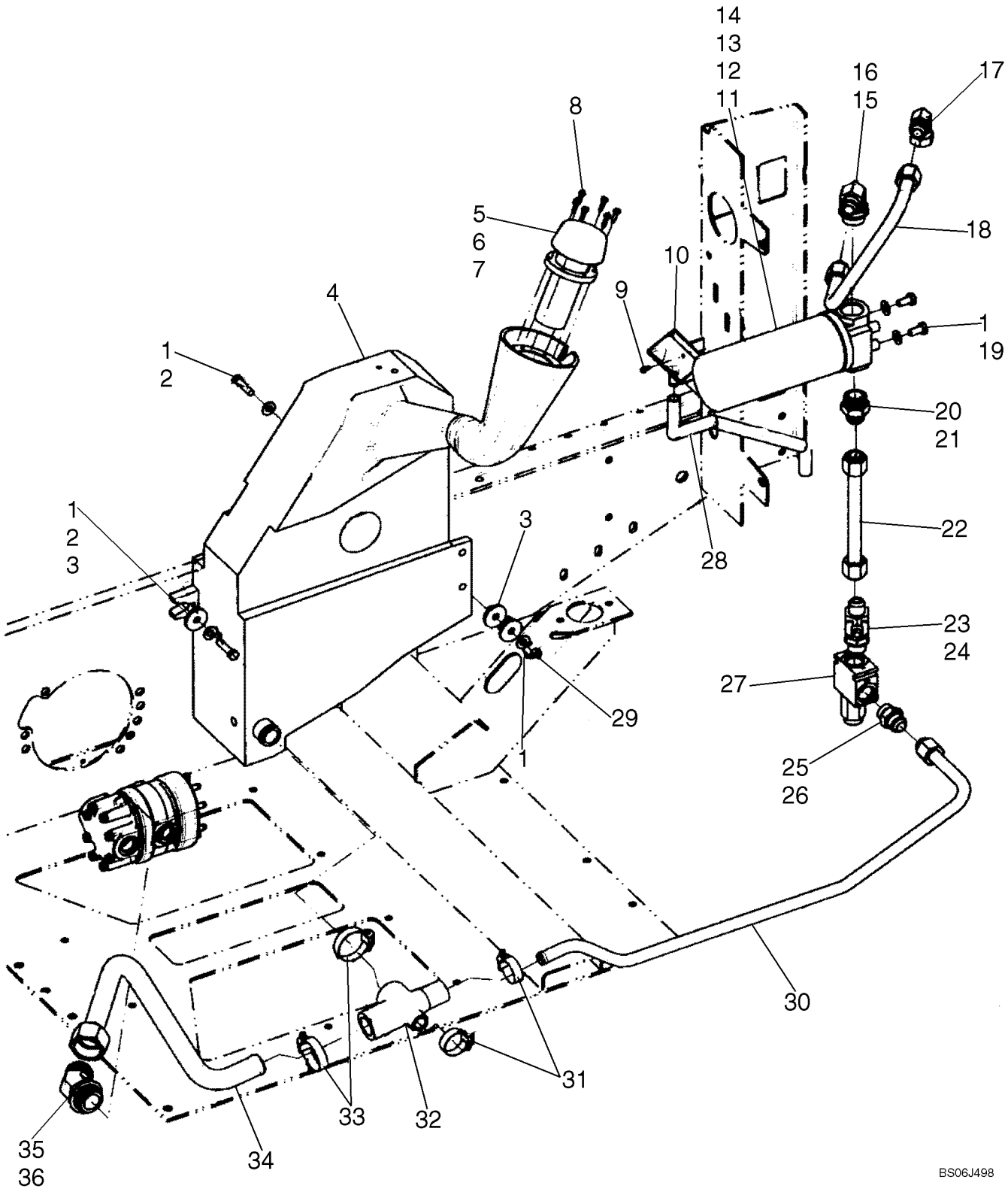

FILTRO E DEPÓSITO

REF	FN	PART NUMBER	YR/SN	QTY	DESCRIPTION
31		86534969		2	PRENDEDOR
32		87371436		1	CONEXAO, Fitting, Rubber; If Used
32		{87488573}		1	Fitting, Rubber; If Used
33		86598096		2	COLAR
34		87573682		1	TUBO RÍGIDO, Pump Supply
35		86977689		1	COTOVELO, 45º, 1 5/8"-12 x 1 5/8"-12, O-Ring, Incl. 36
36		570186		1	ANEL "O", 20-1, 90 Duro, 1.475" ID x .116" Thk

RESERVATÓRIO HIDRÁULICO E CONJUNTO DO FILTRO; DELUXE CABINE

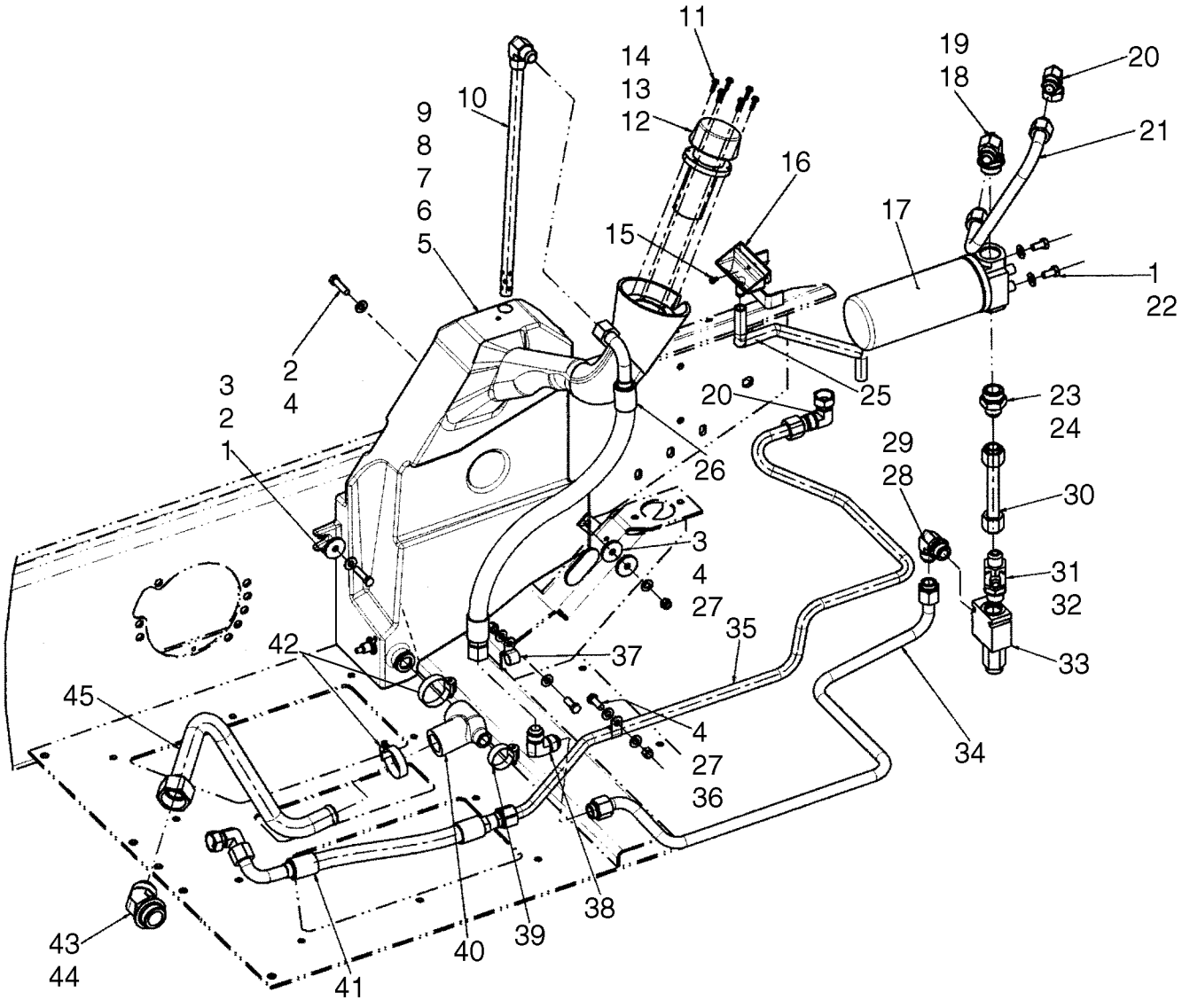

RESERVATÓRIO HIDRÁULICO E CONJUNTO DO FILTRO; DELUXE CABINE

REF	FN	PART NUMBER	YR/SN	QTY	DESCRIPTION
1		140045		3	ARRUELA MOLA, Belleville, M10
2		88044		2	PARAFUSO, Hex, 3/8"-16 x 1 1/2", G5
3		213404		3	ESPAÇADOR
4		87016		6	ARRUELA PLANA, 3/8", SAE
5		87649518		1	RESERVATÓRIO COMBUSTÍVEL, Hydraulic Oil; Incl 6 - 9
6		34821		1	ARRUELA PLANA
7		3917490		1	INTERRUPTOR SONDA, Hydraulic Oil
8		9804960		1	ANEL, Ground
9		86506626		1	DECALCOMANIA, Hydraulic Level; Not Illustrated
10		87688606		1	TUBULAÇÃO HIDRAULICO, Return Drop
11		86500940		6	PARAFUSO, Hex Wash Hd, #10 x 3/4"
12		86631374		1	RESPIRO, Tank Filler Breather Assy; Incl Cap And Gasket Ref 13, 14
13		86628700		1	RESPIRO, Cap
14		86625390		2	JUNTA
15		86500939		1	PARAFUSO, Hex Wash Hd, #10 x 3/8"
16		87455867		1	FUNIL, Oil Filter
17		87430661		1	FILTRO, Hydraulic Oil; See Figure 08-15
18		87021824		1	COTOVELO, 90º, 1 1/16"-12, 37º x 1 5/16"-12, O-Ring, Incl 19
19		167268		1	ANEL "O", 16-1, 90 Duro, 1.171" ID x .116" Thk
20		219603		1	COTOVELO, 90º, 1 1/16"-12, 37º x 1 1/16"-12, 37º Fem Sw, Oil Cooler Fitting
21		87372004		1	TUBULAÇÃO HIDRAULICO, Oil Filter To Oil Cooler
22		43138		2	PARAFUSO, Hex, M10 x 20, 8.8, Full Thd
23		233705		1	CONEXÃO, 1 1/16"-12, 37º x 1 5/16"-12, O-Ring, Incl 24
24		167268		1	ANEL "O", 16-1, 90 Duro, 1.171" ID x .116" Thk
25		93963		AR	TUBO PLASTICO, 1.9 Ft Required
26		87688609		1	MANGUEIRA, 658 mm (25.9 in), Drop Tube
27		9637692		3	CONTRA PORCA, 3/8"-16, GB
28		322894		1	COTOVELO, 90º, 1 1/16"-12, 37º x 1 1/16"-12, O-Ring, Incl Ref 29
29		167266		1	ANEL "O", 12-1, 90 Duro, .924 ID x .116" Thk

RESERVATÓRIO HIDRÁULICO E CONJUNTO DO FILTRO; DELUXE CABINE

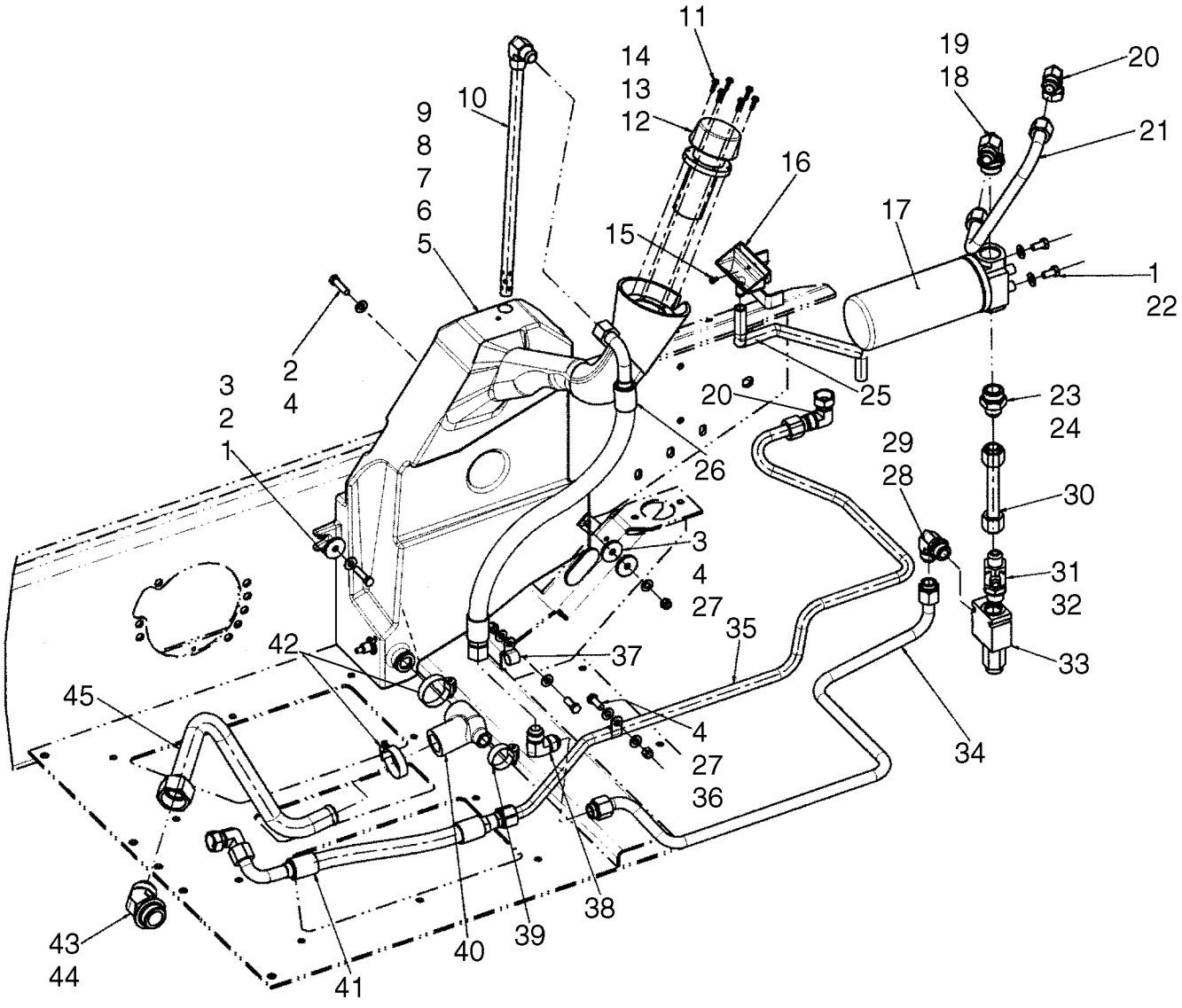

RESERVATÓRIO HIDRÁULICO E CONJUNTO DO FILTRO; DELUXE CABINE

REF	FN	PART NUMBER	YR/SN	QTY	DESCRIPTION
30		87688610		1	TUBO, Return, Filter To Valve
31		87398986		1	TERMINAL CONECTOR, 37FL 3/4 x 3/4 x 1/2; Incl 32
32		167266		1	ANEL "O", 12-1, 90 Duro, .924 ID x .116" Thk
33		87372090		1	VÁLVULA HIDRAULICA, Charge Valve
34		87688608		11	TUBO, Return
35		87732861		1	TUBO, Return
36		88206		2	PARAFUSO, Hex, 3/8"-16 x 1", G5, Full Thd
37		86624005		2	PRENDEDOR, 3/4", Insul, 3/8" Bolt
38		144120		1	COTOVELO, 90º, 1 1/16"-12, 37º x 1 1/16"-12, 37º
39		86534969		1	PRENDEDOR
40		87733429		1	BUJÃO DE BORRACHA
41		87732882		1	MANGUEIRA, 460 mm (18.11 in), Return
42		86598096		2	COLAR
43		86977689		1	COTOVELO, 45º, 1 5/8"-12 x 1 5/8"-12, O-Ring, Incl 44
44		570186		1	ANEL "O", 20-1, 90 Duro, 1.475" ID x .116" Thk
45		87573682		1	TUBO RÍGIDO, Pump Supply

CONJUNTO DO FILTRO

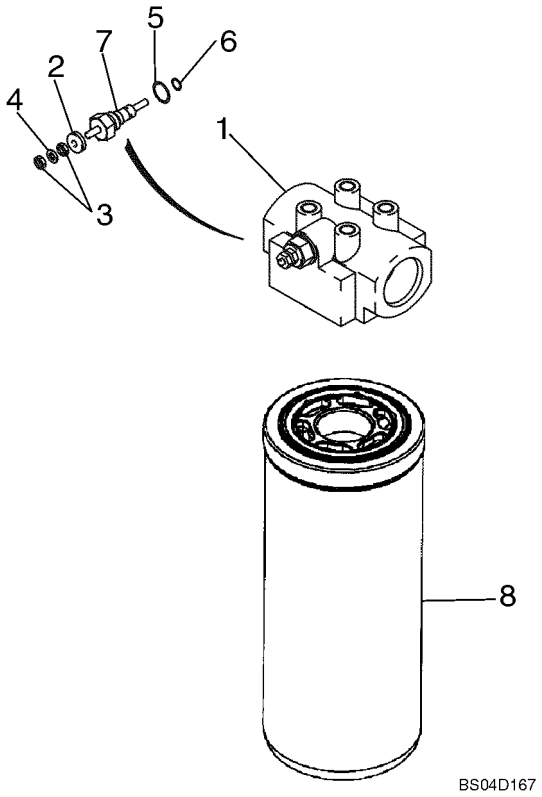

CONJUNTO DO FILTRO

REF	FN	PART NUMBER	YR/SN	QTY	DESCRIPTION
		87430661		1	FILTRO, Incl. 1 - 8
1		87439984		1	Cabeza De Filtro, Incl. N13268
		N13268		1	INTERRUPTOR DE PRESSÃO, Incl. 2 - 7
2		NSS		1	BOLETIM INFORMATIVO, Washer; Red, White
3		129-667		2	PORCA, #10-32, LH
4		493-21020		1	ARRUELA-TRAVA, Int Tooth, #10
5		9617873		1	ANEL "O", 6-1, 90 Duro, .468" ID x .078" Thk
6		238-5011		1	ANEL "O", -011, 70 Duro, .301" ID x .070" Thk
7		NSS		1	BOLETIM INFORMATIVO, Body
8		9842392		1	FILTRO CONJ, 7.88" Long
8		87010592		1	ELEMENTO, 9.44" Long

RESERVATÓRIO HIDRÁULICO E CONJUNTO DO FILTRO - MODELOS COM CONTROLO AUTOMÁTICO

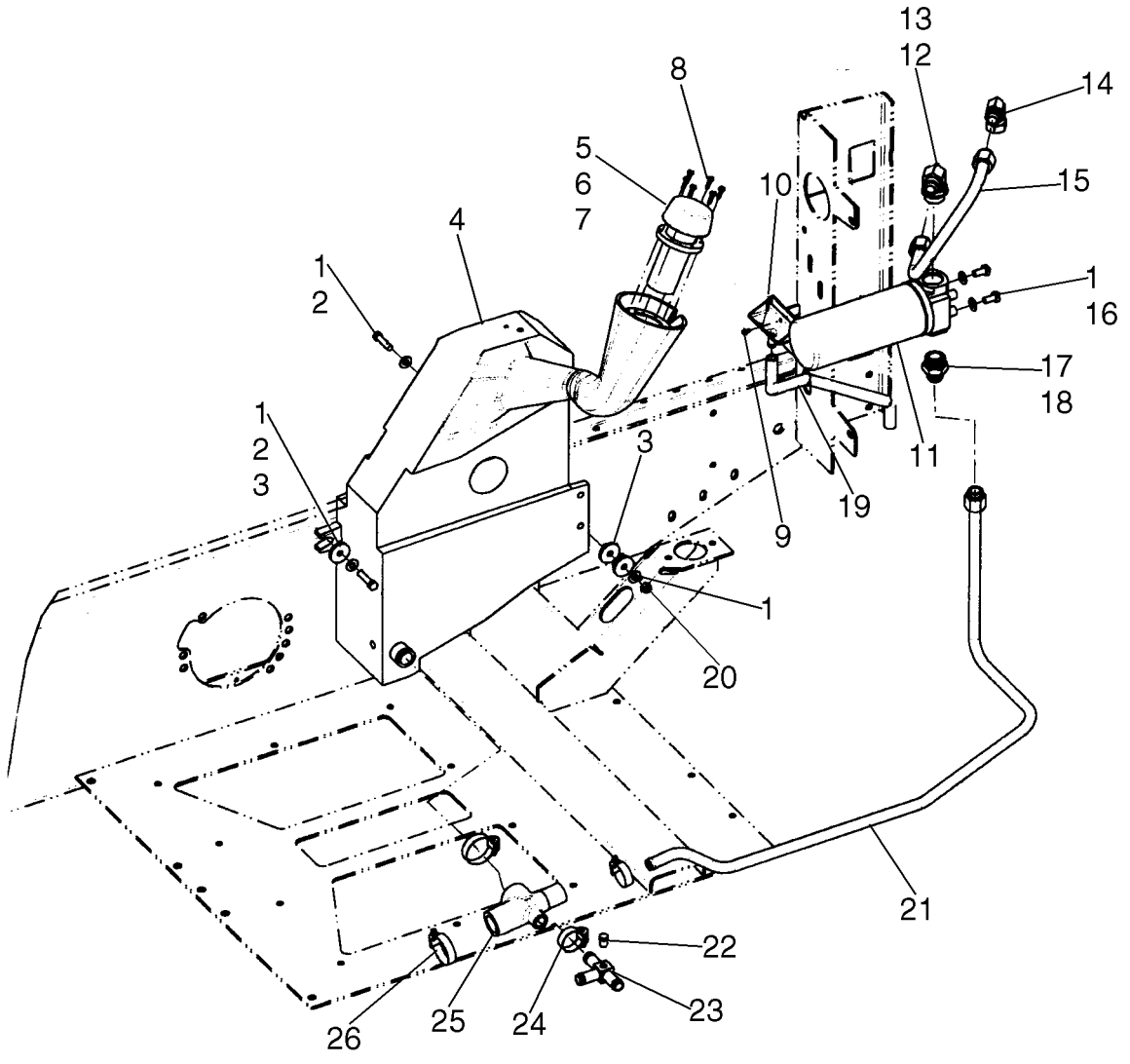

BS06M427

RESERVATÓRIO HIDRÁULICO E CONJUNTO DO FILTRO - MODELOS COM CONTROLO AUTOMÁTICO

REF	FN	PART NUMBER	YR/SN	QTY	DESCRIPTION
1		140045		5	ARRUELA MOLA, Belleville, M10
2		88044		2	PARAFUSO, Hex, 3/8"-16 x 1 1/2", G5
3		213404		3	ESPAÇADOR
4		87041995		1	RESERVATÓRIO
5		86631374		1	RESPIRO, Tank Filler Breather Assy; Incl. 6, 7
6		86625390		1	JUNTA
7		86628700		1	RESPIRO, Cap
8		86500940		6	PARAFUSO, Hex Wash Hd, #10 x 3/4"
9		86500939		1	PARAFUSO, Hex Wash Hd, #10 x 3/8"
10		87455867		1	FUNIL
11		87430661		1	FILTRO, See Fig. 08-15
12		87021824		1	COTOVELO, 90º, 1 1/16"-12, 37º x 1 5/16"-12, O-Ring, Incl. 13
13		167268		1	ANEL "O", 16-1, 90 Duro, 1.171" ID x .116" Thk
14		219603		1	COTOVELO, 90º, 1 1/16"-12, 37º x 1 1/16"-12, 37º Fem Sw
15		87372004		1	TUBULAÇÃO HIDRAULICO, Tube, Oil Filter To Cooler
16		43138		2	PARAFUSO, Hex, M10 x 20, 8.8, Full Thd
17		233705		1	CONEXÃO, 1 1/16"-12, 37º x 1 5/16"-12, O-Ring, Incl. 18
18		167268		1	ANEL "O", 16-1, 90 Duro, 1.171" ID x .116" Thk
19		93963		1	TUBO PLASTICO
20		9628503		1	PORCA, 3/8"-16, G5
21		87540709		1	TUBULAÇÃO HIDRAULICO, Tube, Return
22		86568834		1	BUJÃO, Hex Hd, 1/4"-18 NPTF
23		87357255		1	MANGUEIRA
24		86534969		2	PRENDEDOR
25		87371436		1	CONEXAO, Fitting, Rubber; If Used
25		{87488573}		1	Fitting, Rubber; If Used
26		86598096		2	COLAR

RESERVATÓRIO HIDRÁULICO E CONJUNTO DO FILTRO - MODELOS COM CONTROLO AUTOMÁTICO, C175 EUROPE

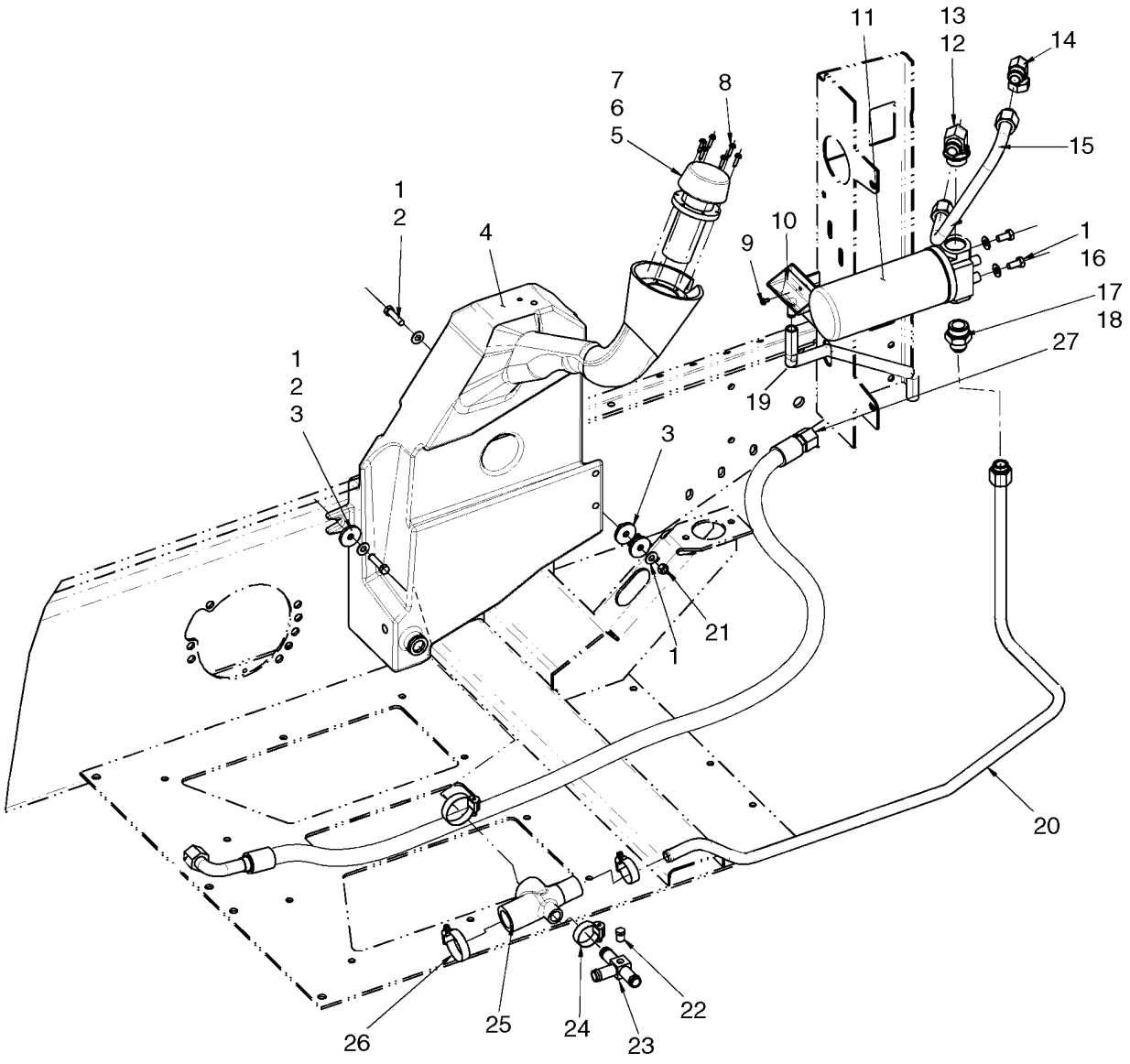

BS08B013

RESERVATÓRIO HIDRÁULICO E CONJUNTO DO FILTRO - MODELOS COM CONTROLO AUTOMÁTICO, C175 EUROPE

REF	FN	PART NUMBER	YR/SN	QTY	DESCRIPTION
1		140045		5	ARRUELA MOLA, Belleville, M10
2		88044		2	PARAFUSO, Hex, 3/8"-16 x 1 1/2", G5
3		213404		3	ESPAÇADOR
4		87041995		1	RESERVATÓRIO
5		86631374		1	RESPIRO, Tank Filler Breather Assy; Incl. 6, 7
6		86625390		1	JUNTA
7		86628700		1	RESPIRO, Cap
8		86500940		6	PARAFUSO, Hex Wash Hd, #10 x 3/4"
9		86500939		1	PARAFUSO, Hex Wash Hd, #10 x 3/8"
10		87455867		1	FUNIL
11		87430661		1	FILTRO, See Fig. 08-15
12		87021824		1	COTOVELO, 90º, 1 1/16"-12, 37º x 1 5/16"-12, O-Ring, Incl. 13
13		167268		1	ANEL "O", 16-1, 90 Duro, 1.171" ID x .116" Thk
14		219603		1	COTOVELO, 90º, 1 1/16"-12, 37º x 1 1/16"-12, 37º Fem Sw
15		87372004		1	TUBULAÇÃO HIDRAULICO, Tube, Oil Filter To Cooler
16		43138		2	PARAFUSO, Hex, M10 x 20, 8.8, Full Thd
17		233705		1	CONEXÃO, 1 1/16"-12, 37º x 1 5/16"-12, O-Ring, Incl. 18
18		167268		1	ANEL "O", 16-1, 90 Duro, 1.171" ID x .116" Thk
19		93963		1	TUBO PLASTICO
20		87540709		1	TUBULAÇÃO HIDRAULICO, Tube, Return
21		9628503		1	PORCA, 3/8"-16, G5
22		86568834		1	BUJÃO, Hex Hd, 1/4"-18 NPTF
23		87357255		1	MANGUEIRA
24		86534969		2	PRENDEDOR
25		87371436		1	CONEXAO, If Used
25		{87488573}		1	Fitting, Rubber; If Used
26		86598096		2	COLAR
27		87671806		1	MANGUEIRA, Valve Side Port To Oil Cooler Lower Fitting

08-16B		p1	04/08

RESERVATÓRIO HIDRÁULICO E CONJUNTO DO FILTRO - MODELOS COM CONTROLO AUTOMÁTICO; DELUXE CABINE

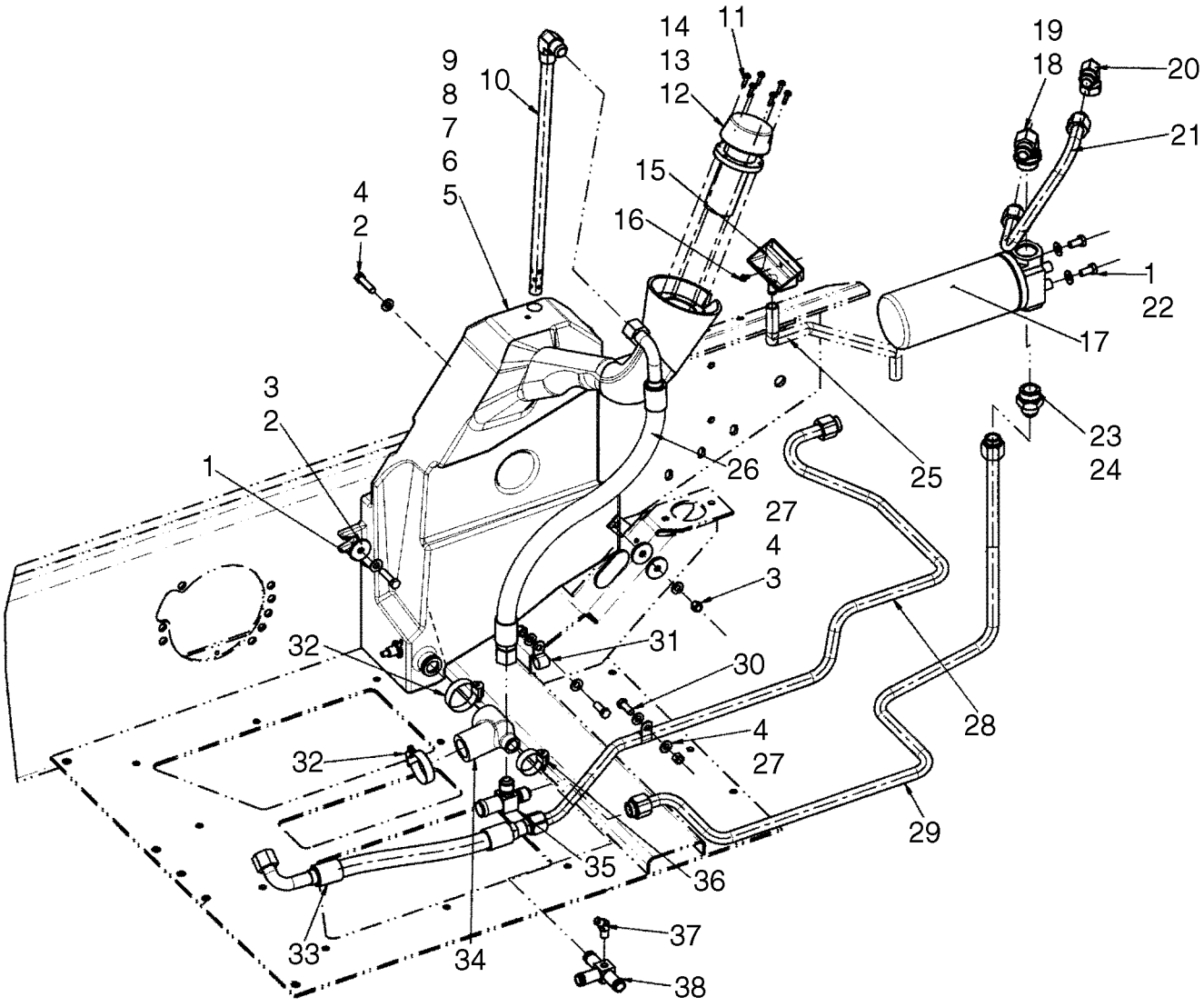

BS08D589

RESERVATÓRIO HIDRÁULICO E CONJUNTO DO FILTRO - MODELOS COM CONTROLO AUTOMÁTICO; DELUXE CABINE

REF	FN	PART NUMBER	YR/SN	QTY	DESCRIPTION
1		140045		3	ARRUELA MOLA, Belleville, M10
2		88044		2	PARAFUSO, Hex, 3/8"-16 x 1 1/2", G5
3		213404		3	ESPAÇADOR
4		87016		6	ARRUELA PLANA, 3/8", SAE
5		87649518		1	RESERVATÓRIO COMBUSTÍVEL, Hydraulic Oil; Incl 6 - 9
6		34821		1	ARRUELA PLANA
7		3917490		1	INTERRUPTOR SONDA, Hydraulic Oil
8		9804960		1	ANEL, Ground
9		86506626		1	DECALCOMANIA, Hydraulic Level; Not Illustrated
10		87688606		1	TUBULAÇÃO HIDRAULICO, Return Drop
11		86500940		6	PARAFUSO, Hex Wash Hd, #10 x 3/4"
12		86631374		1	RESPIRO, Tank Filler Breather Assy; Incl Cap And Gasket Ref 13, 14
13		86628700		1	RESPIRO, Cap
14		86625390		2	JUNTA
15		87455867		1	FUNIL, Oil Filter
16		86500939		1	PARAFUSO, Hex Wash Hd, #10 x 3/8"
17		87430661		1	FILTRO, Hydraulic Oil; See Figure 08-15
18		87021824		1	COTOVELO, 90º, 1 1/16"-12, 37º x 1 5/16"-12, O-Ring, Incl 19
19		167268		1	ANEL "O", 16-1, 90 Duro, 1.171" ID x .116" Thk
20		219603		1	COTOVELO, 90º, 1 1/16"-12, 37º x 1 1/16"-12, 37º Fem Sw, Oil Cooler Fitting
21		87372004		1	TUBULAÇÃO HIDRAULICO, Oil Filter To Oil Cooler
22		43138		2	PARAFUSO, Hex, M10 x 20, 8.8, Full Thd
23		233705		1	CONEXÃO, 1 1/16"-12, 37º x 1 5/16"-12, O-Ring, Incl 24
24		167268		1	ANEL "O", 16-1, 90 Duro, 1.171" ID x .116" Thk
25		93963		AR	TUBO PLASTICO, 1.9 Ft Required
26		87688609		1	MANGUEIRA, 658 mm (25.9 in), Drop Tube
27		9637692		3	CONTRA PORCA, 3/8"-16, GB
28		87732861		1	TUBO, Return
29		87688613		1	TUBO, Return
30		88206		2	PARAFUSO, Hex, 3/8"-16 x 1", G5, Full Thd

RESERVATÓRIO HIDRÁULICO E CONJUNTO DO FILTRO - MODELOS COM CONTROLO AUTOMÁTICO; DELUXE CABINE

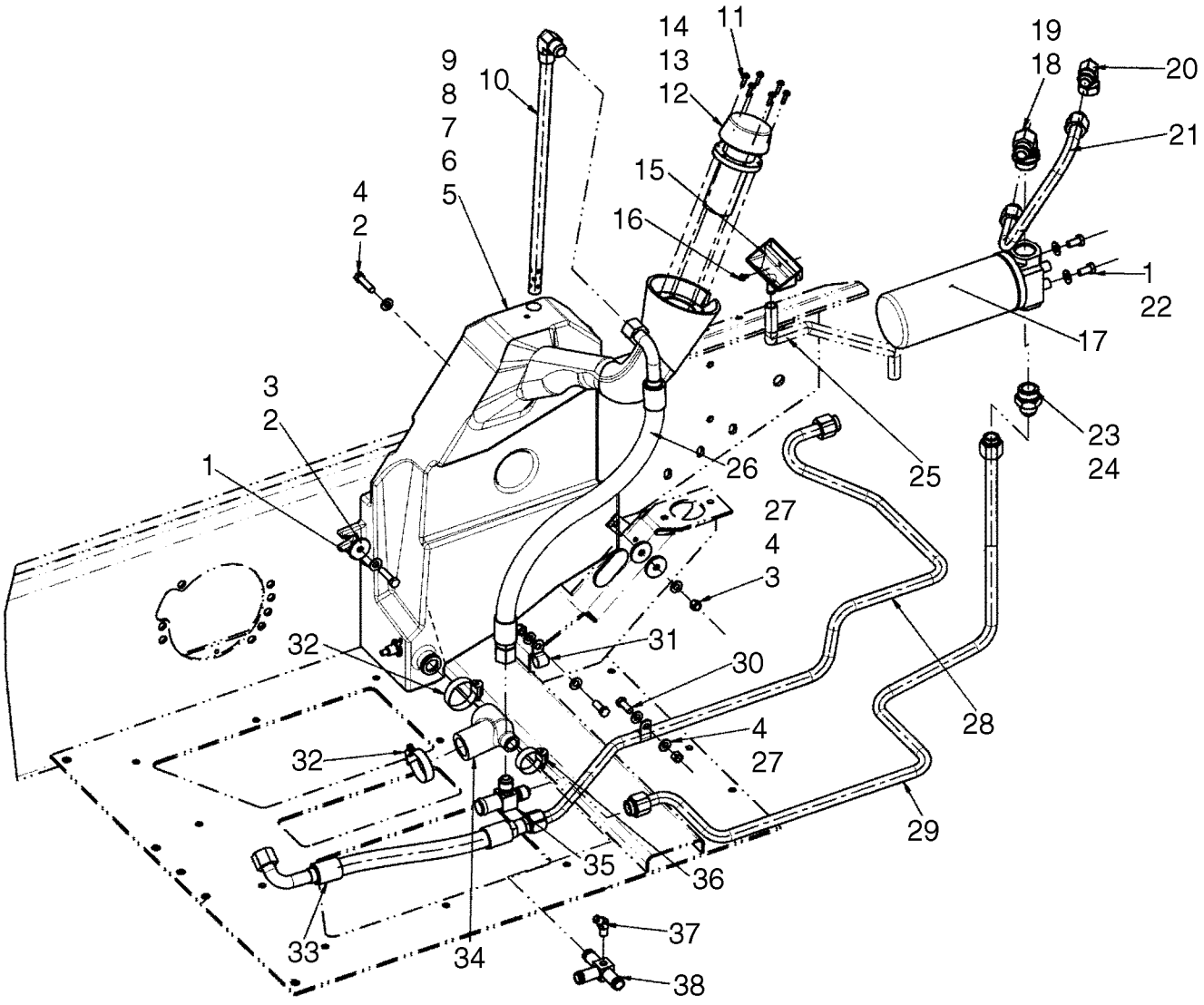

BS08D589

RESERVATÓRIO HIDRÁULICO E CONJUNTO DO FILTRO - MODELOS COM CONTROLO AUTOMÁTICO; DELUXE CABINE

REF	FN	PART NUMBER	YR/SN	QTY	DESCRIPTION
31		86624005		2	PRENDEDOR, 3/4", Insul, 3/8" Bolt
32		86598096		2	COLAR
33		87732882		1	MANGUEIRA, 460 mm (18.11 in), Return, C175 Europe
34		87733429		1	BUJÃO DE BORRACHA
35		87688612		1	CONEXÃO, Tee, 16 Bead x 12 x 12
36		86534969		1	PRENDEDOR
37		9617966		1	COTOVELO, 45º, 9/16-18" 37º x 1/4"-18, NPTF
38		87357255		1	MANGUEIRA, Tee, 12 x 12 x 12 Bead

SISTEMA HIDRÁULICO - FLUXO ALTO

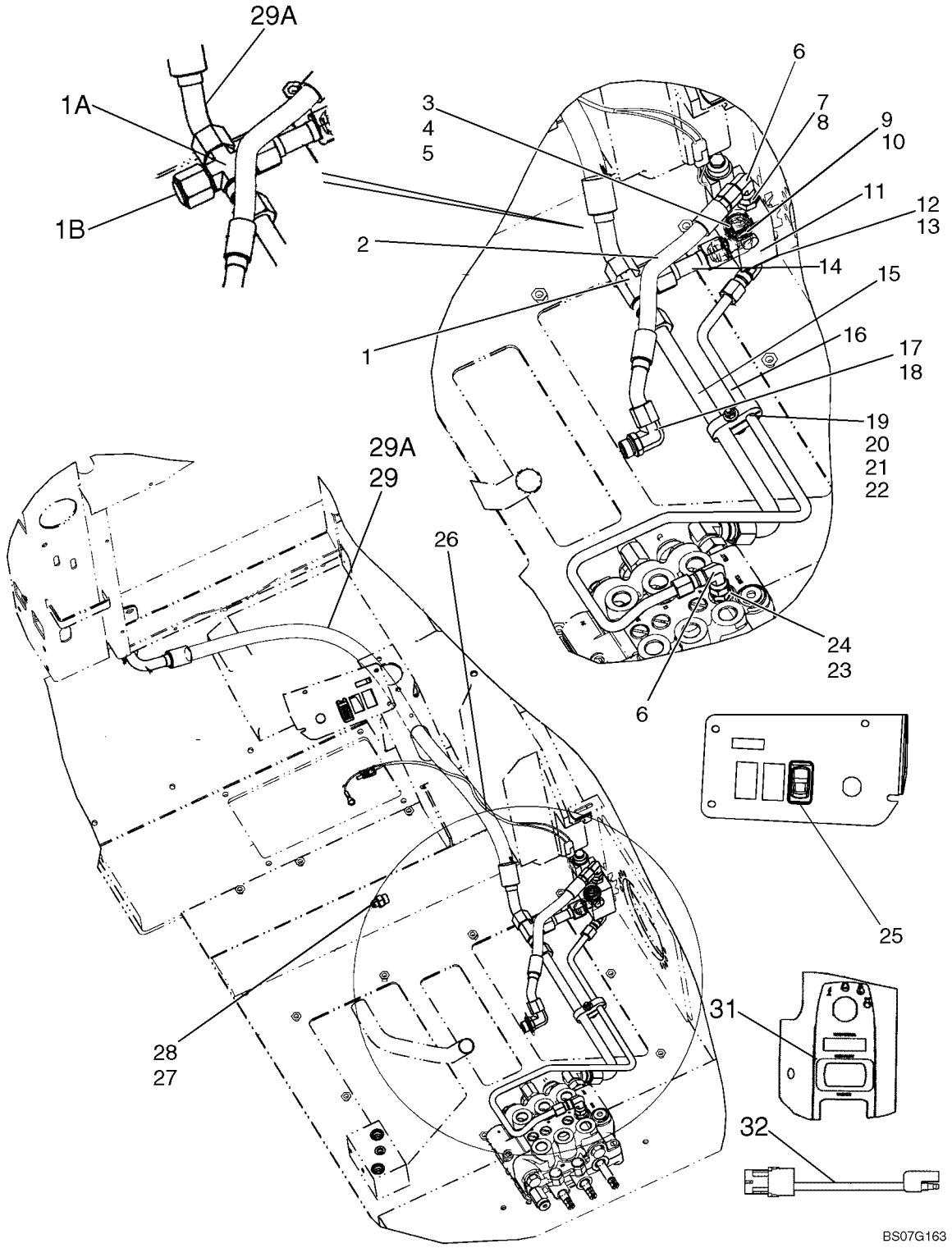

SISTEMA HIDRÁULICO - FLUXO ALTO

REF	FN	PART NUMBER	YR/SN	QTY	DESCRIPTION
1		15694		1	TEE, 1 1/16"-12 37º, If Used; Used With Hose 87365199, Ref 29
1A		86513045		1	CONEXÃO, If Used; Used With Hose 87617624, Ref 29A
1B		219606		1	TAMPA DO RESERVATÓRIO, 37º, 1 1/16"-12, If Used
2		87584234		1	MANGUEIRA, Pump To High Flow Valve
3		88994		2	PORCA, Sq, 1/4"-20
4		87845		2	PARAFUSO, Hex, 1/4"-20 x 2 1/2", G5
5		80682		2	ARRUELA-TRAVA, 1/4"
6		248974		2	COTOVELO, 90º, 3/4"-16, 37º x 3/4"-16, 37º Fem Sw
7		81827427		1	CONEXÃO, Incl O-Ring 128825
8		128817		1	CONEXÃO, 9/16"-18, 37º x 3/4"-18, O-Ring, Incl O-Ring 128825
9		322894		1	COTOVELO, 90º, 1 1/16"-12, 37º x 1 1/16"-12, O-Ring, Incl. 10
10		167266		1	ANEL "O", 12-1, 90 Duro, .924 ID x .116" Thk
11		86520550		1	VÁLVULA HIDRAULICA, See Fig. 08-19
12		128830		1	COTOVELO, 90º, 3/4"-16, 37º x 3/4"-16, O-Ring, Incl. 13
13		128825		1	ANEL "O", 8-1, 90 Duro, .644" ID x .087" Thk
14		86578853		1	TUBULAÇÃO HIDRAULICO
15		87365198		1	TUBO RÍGIDO, High Flow Valve To Main Valve
16		87377682		1	TUBULAÇÃO HIDRAULICO, High Flow
17		164910		1	COTOVELO, 90º, 7/8"-14, 37º x 7/8"-14, O-Ring, Incl. 18
18		167269		1	ANEL "O", 10-1, 90 Duro, .755" ID x .097" Thk
19		87394830		1	PRENDEDOR, Clamp
20		280164		1	PARAFUSO, Hex, 1/4"-20 x 1 3/4", G5
21		80701		2	ARRUELA PLANA, 1/4"
22		20356		1	CONTRA PORCA, 1/4"-20, GB
23		128818		1	CONEXÃO, 3/4"-16, 37º x 3/4"-16, O-Ring, Incl. 24
24		128825		1	ANEL "O", 8-1, 90 Duro, .644" ID x .087" Thk
25		87034856		1	INTERRUPTOR, Rocker, High Flow
26		86621102		1	CHICOTE DE FIOS

SISTEMA HIDRÁULICO - FLUXO ALTO

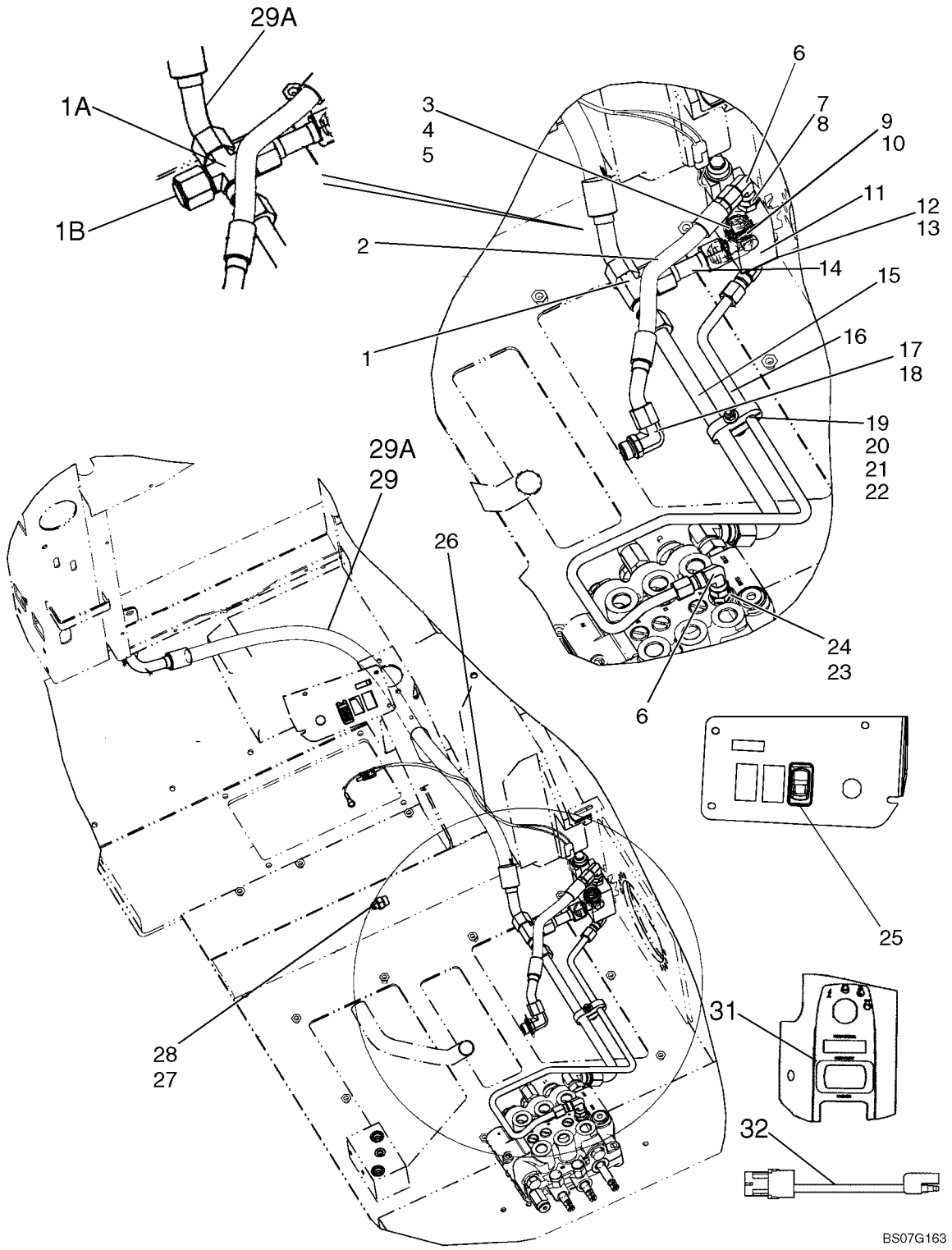

SISTEMA HIDRÁULICO - FLUXO ALTO

REF	FN	PART NUMBER	YR/SN	QTY	DESCRIPTION
27		128817		1	CONEXÃO, 9/16"-18, 37º x 3/4"-18, O-Ring, Incl. 28
28		128825		1	ANEL "O", 8-1, 90 Duro, .644" ID x .087" Thk
29		87365199		1	TUBO FLEXÍVEL, 1200 mm (47.24 in); If Used; High Flow Tee To Oil Cooler; Used With Tee 15694, Ref 1; For Two Speed Hose See Figure 08-16
29A		87617624		1	MANGUEIRA, 1200 mm (47.24 in); If Used; High Flow Tee To Oil Cooler; Used With Connector 86513045, Ref 1A
30		263117		7	TIRA DE CABO, .14" x 11 1/2", Secure As Needed
31		87572862		1	INTERRUPTOR, High Flow Switch, Deluxe Cab
32		87572870		1	CHICOTE, High Flow Adapter, Deluxe Cab

CONJUNTO DA VÁLVULA, FLUXO ALTO

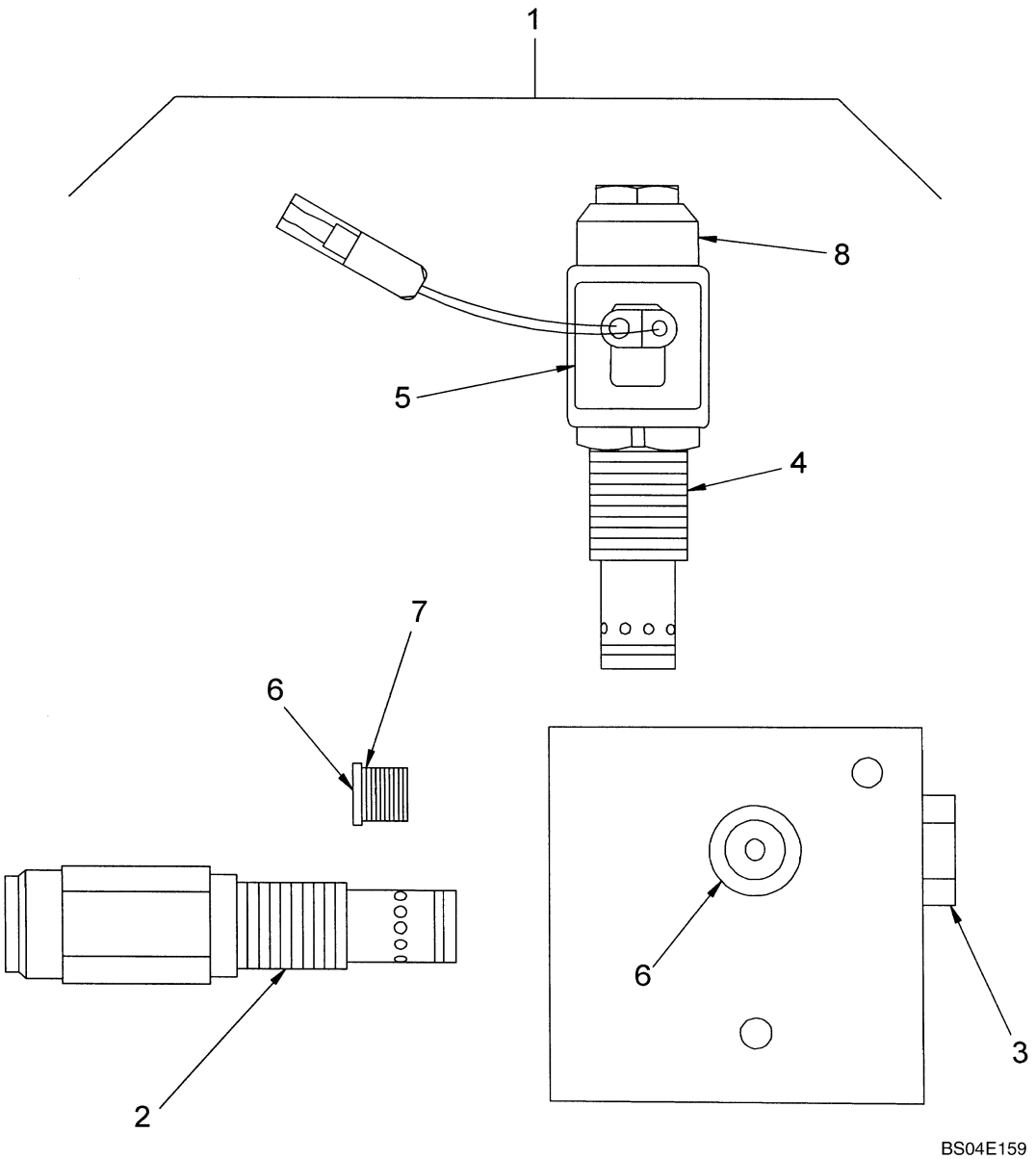

CONJUNTO DA VÁLVULA, FLUXO ALTO

REF	FN	PART NUMBER	YR/SN	QTY	DESCRIPTION
1		86520550		1	VÁLVULA HIDRAULICA, Selector
2		87021069		1	VÁLVULA HIDRAULICA, Relief Valve; 2950 - 3000 psi.
3		86527866		1	VÁLVULA HIDRAULICA, Check
4		86527861		1	VÁLVULA HIDRAULICA, Cartridge
5		86527859		1	BOBINA
6		76349		2	BUJÃO, Hex Hd, 9/16"-18 ORB, Incl. 7
7		9617873		2	ANEL "O", 6-1, 90 Duro, .468" ID x .078" Thk
8		86527865		1	PORCA
		86527863		X	JOGO DE JUNTAS, Incl. (2) Ref. 6 And Seals for Each Valve

CONJUNTO DA VÁLVULA, AUXILIAR SECUNDÁRIO

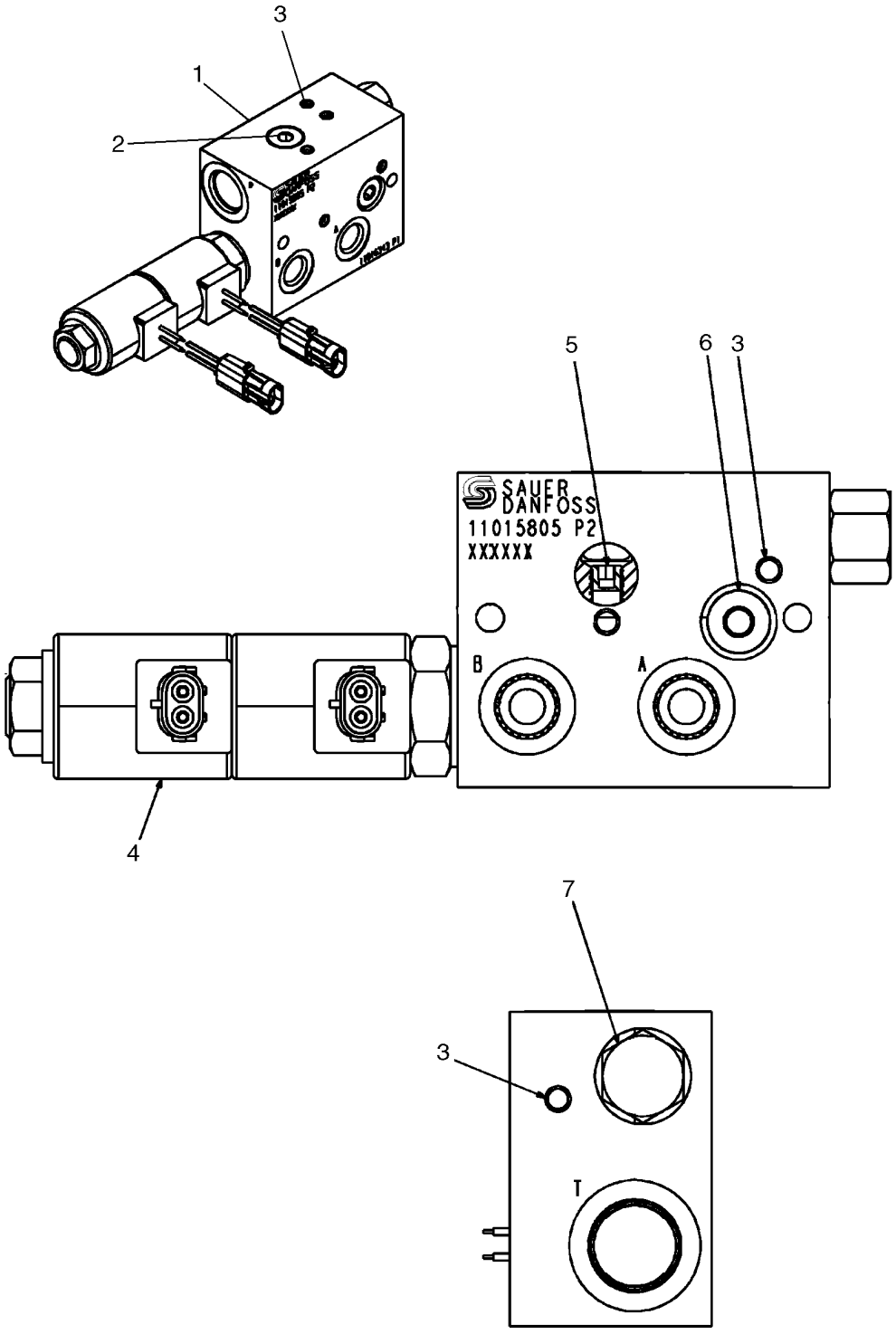

BS08B011

CONJUNTO DA VÁLVULA, AUXILIAR SECUNDÁRIO

REF	FN	PART NUMBER	YR/SN	QTY	DESCRIPTION
1		87582387		1	VÁLVULA HIDRAULICA, Secondary Auxiliary; Incl. 2 - 7
2		NSS		1	BOLETIM INFORMATIVO, Plug
3		NSS		8	BOLETIM INFORMATIVO, Plug
4		NSS		1	BOLETIM INFORMATIVO, Cartridge
5		NSS		1	BOLETIM INFORMATIVO, Plug
6		NSS		1	BOLETIM INFORMATIVO, Plug
7		NSS		1	BOLETIM INFORMATIVO, Port

SISTEMA HIDRÁULICO - CONTROLE MANUAL, MODELOS COM CONTROLO AUTOMÁTICO

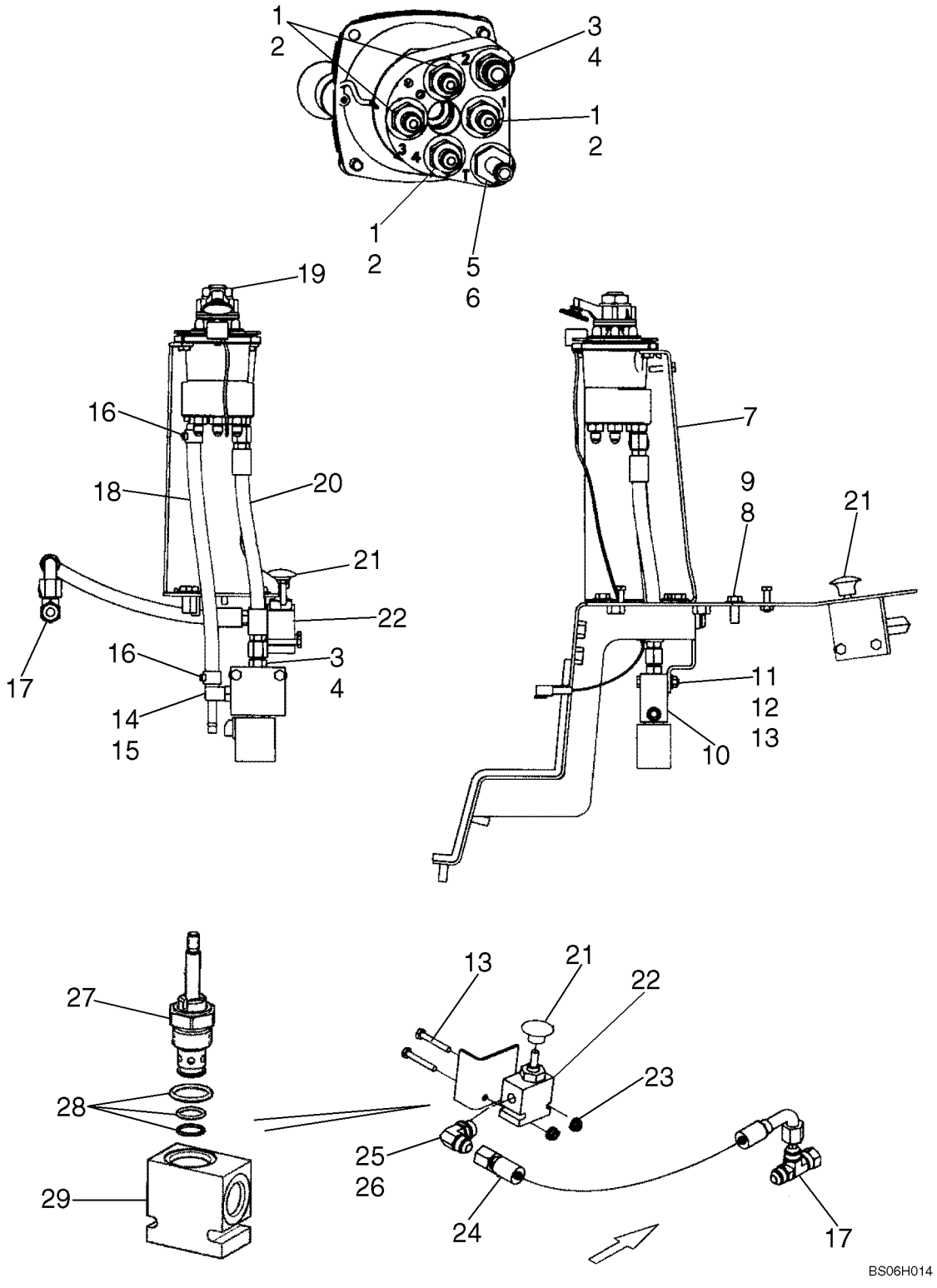

SISTEMA HIDRÁULICO - CONTROLE MANUAL, MODELOS COM CONTROLO AUTOMÁTICO

REF	FN	PART NUMBER	YR/SN	QTY	DESCRIPTION
1		139398		4	CONEXÃO, 7/16"-20, 37º x 9/16"-18, O-Ring, Incl. 2
2		9617873		4	ANEL "O", 6-1, 90 Duro, .468" ID x .078" Thk
3		76350		2	CONEXÃO, 9/16"-18, 37º x 9/16"-18, O-Ring, Incl. 4
4		9617873		2	ANEL "O", 6-1, 90 Duro, .468" ID x .078" Thk
5		87360975		1	CONEXAO, Incl. 6
6		9617873		1	ANEL "O", 6-1, 90 Duro, .468" ID x .078" Thk
7		87357132		1	PAINEL DE CONTROLE
8		88206		1	PARAFUSO, Hex, 3/8"-16 x 1", G5, Full Thd
9		140045		1	ARRUELA MOLA, Belleville, M10
10		87357112		1	VÁLVULA HIDRAULICA, Service With Kit 87599278 Ref. 10A
10A		87599278		1	KIT, SERVICE, Use To Service 87357112; Not Illustrated
11		7770		2	PORCA, 1/4"-20, G5
12		87361		5	ARRUELA PLANA, 1/4", SAE
13		280164		4	PARAFUSO, Hex, 1/4"-20 x 1 3/4", G5
14		87357113		1	ADAPTADOR, Incl. 15
15		9617873		1	ANEL "O", 6-1, 90 Duro, .468" ID x .078" Thk
16		87019540		2	PRENDEDOR
17		86511870		1	TEE, 37º, 3/4"-16 x 3/4"-16, Fem Sw Run
18		87357177		1	MANGUEIRA, 314 mm, 12.36 in.
19		87578504		1	VALVULA PILOTO, See Figure 08-21B
20		87397694		1	MANGUEIRA, 275 mm, 10.83 in.
21		87522292		1	MANÍPULO
22		87584305		1	VÁLVULA HIDRAULICA, Incl. 27, 28, 29, 30; Replaces 87535979
23		523282		2	PORCA, Flg, USR, 1/4"-20
24		87522288		1	MANGUEIRA
25		128830		1	COTOVELO, 90º, 3/4"-16, 37º x 3/4"-16, O-Ring, Incl. 26
26		128825		1	ANEL "O", 8-1, 90 Duro, .644" ID x .087" Thk
27		87584306		1	VÁLVULA HIDRAULICA, Cartridge; Replaces 87522297
28		87584307		1	VÁLVULA HIDRAULICA, Seal Kit; Replaces 87522298

SISTEMA HIDRÁULICO - CONTROLE MANUAL, MODELOS COM CONTROLO AUTOMÁTICO

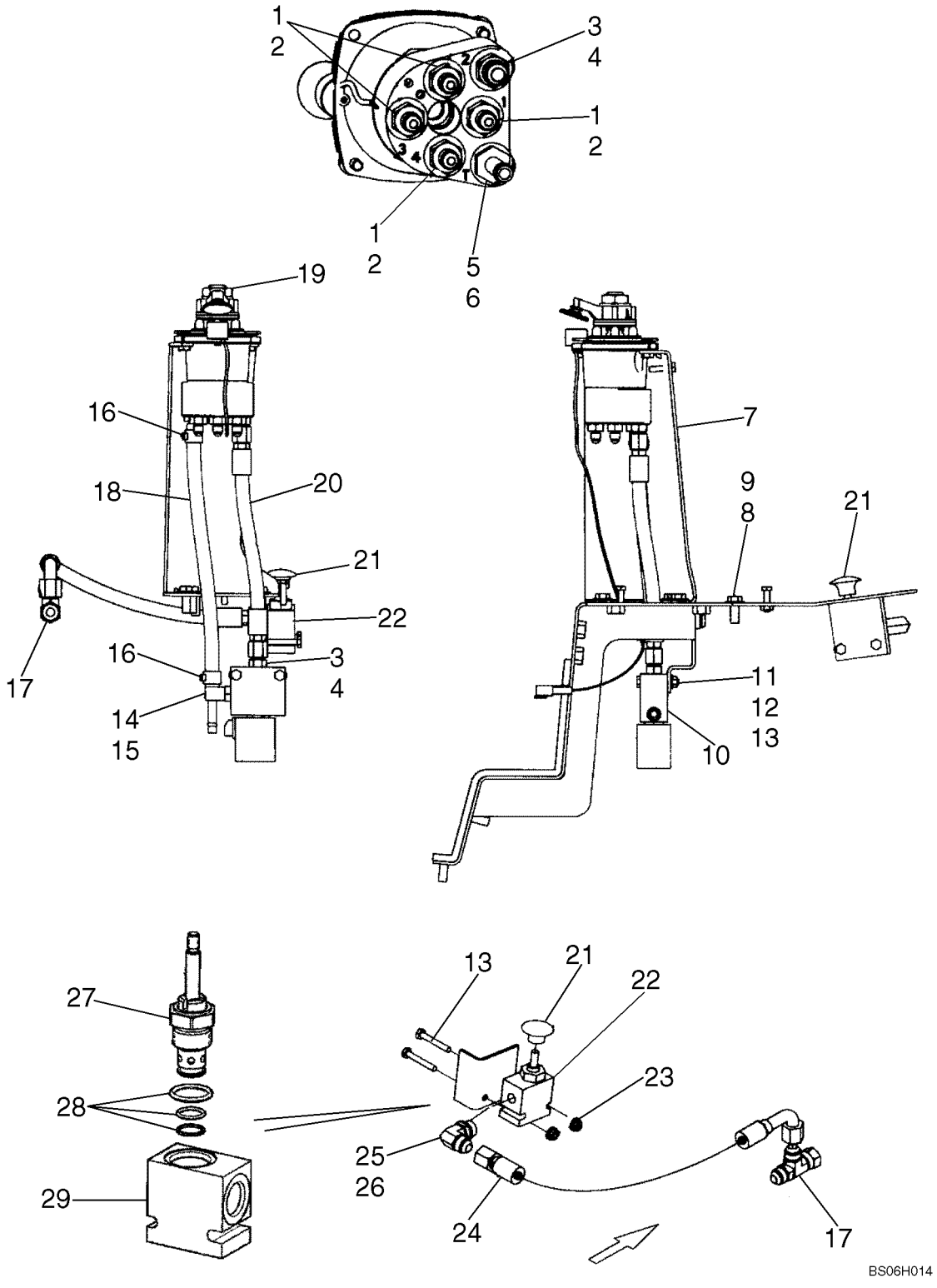

SISTEMA HIDRÁULICO - CONTROLE MANUAL, MODELOS COM CONTROLO AUTOMÁTICO

REF	FN	PART NUMBER	YR/SN	QTY	DESCRIPTION
29		NSS		1	BOLETIM INFORMATIVO, Valve Body
30		87550546		1	ORIFICIO, Not Illustrated

SISTEMA HIDRÁULICO - CONTROLO AUTOMÁTICO À VÁLVULA DE CONTROLO

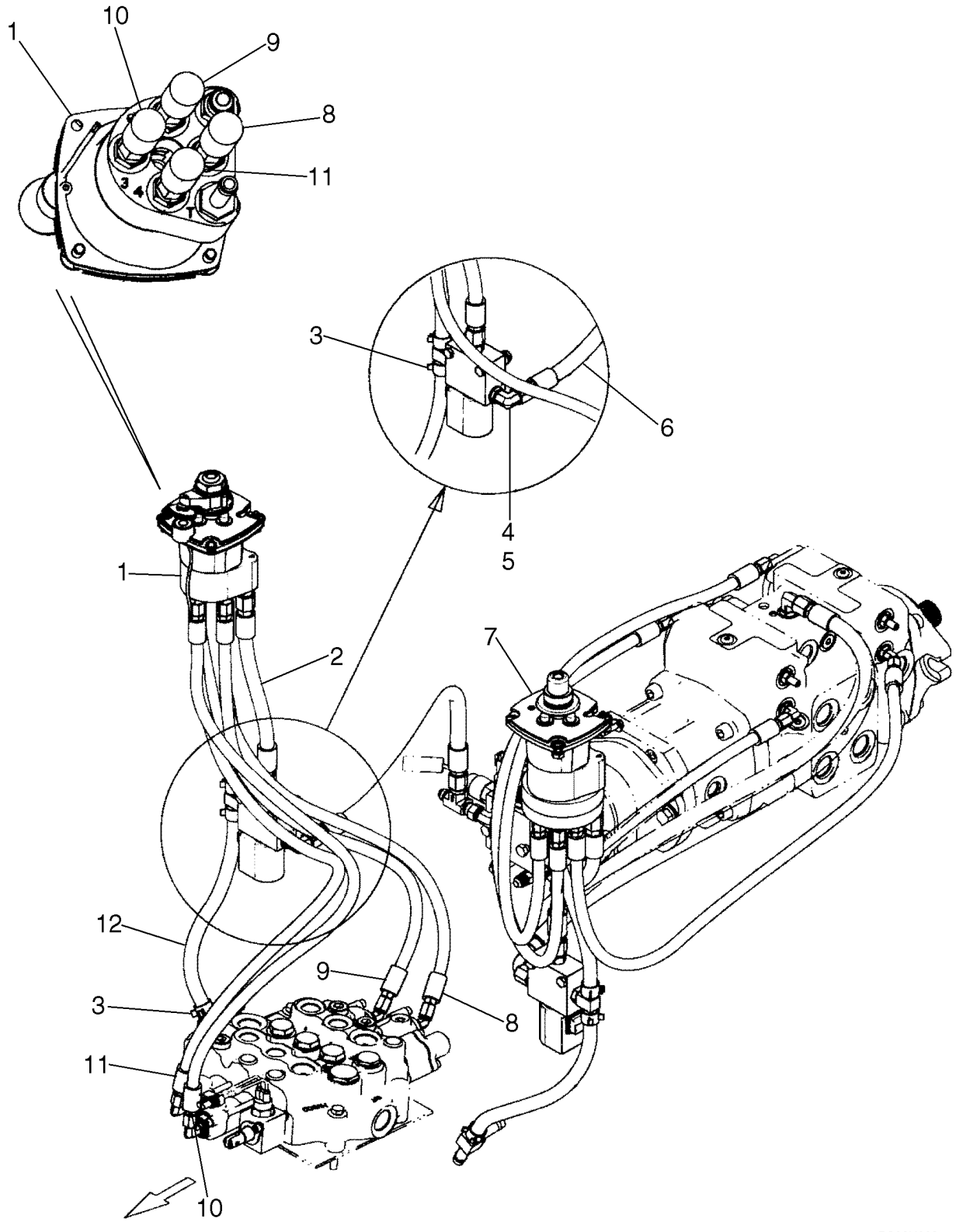

SISTEMA HIDRÁULICO - CONTROLO AUTOMÁTICO À VÁLVULA DE CONTROLO

REF	FN	PART NUMBER	YR/SN	QTY	DESCRIPTION
1		87578504		1	VALVULA PILOTO, Joystick Valve, RH; See Fig. 08-21B
2		87397694		1	MANGUEIRA, Joystick Supply
3		87019540		2	PRENDEDOR
4		76344		1	COTOVELO, 90º, 9/16"-18, 37º x 9/16"-18, O-Ring, Includes 5
5		9617873		1	ANEL "O", 6-1, 90 Duro, .468" ID x .078" Thk
6		87357179		1	MANGUEIRA, 585 mm, 23.03 in.
7		87565841		1	DISTRIBUIDOR, Joystick Valve, LH; See Fig. 06-12
8		87357171		1	MANGUEIRA, 685 mm, 26.97 in.
9		87561757		1	MANGUEIRA, Hose, 820 mm, 32.28 in.
10		87550245		1	MANGUEIRA, Hose, 900 mm, 35.44 in.
11		87357167		1	MANGUEIRA, 900 mm, 35.44 in.
12		87357117		1	MANGUEIRA, Joystick Drain

HIDRÁULICO - CONTROLO DA ALAVANCA DE MUDANÇAS KITS, TESTE PADRÃO ISOMETRIC

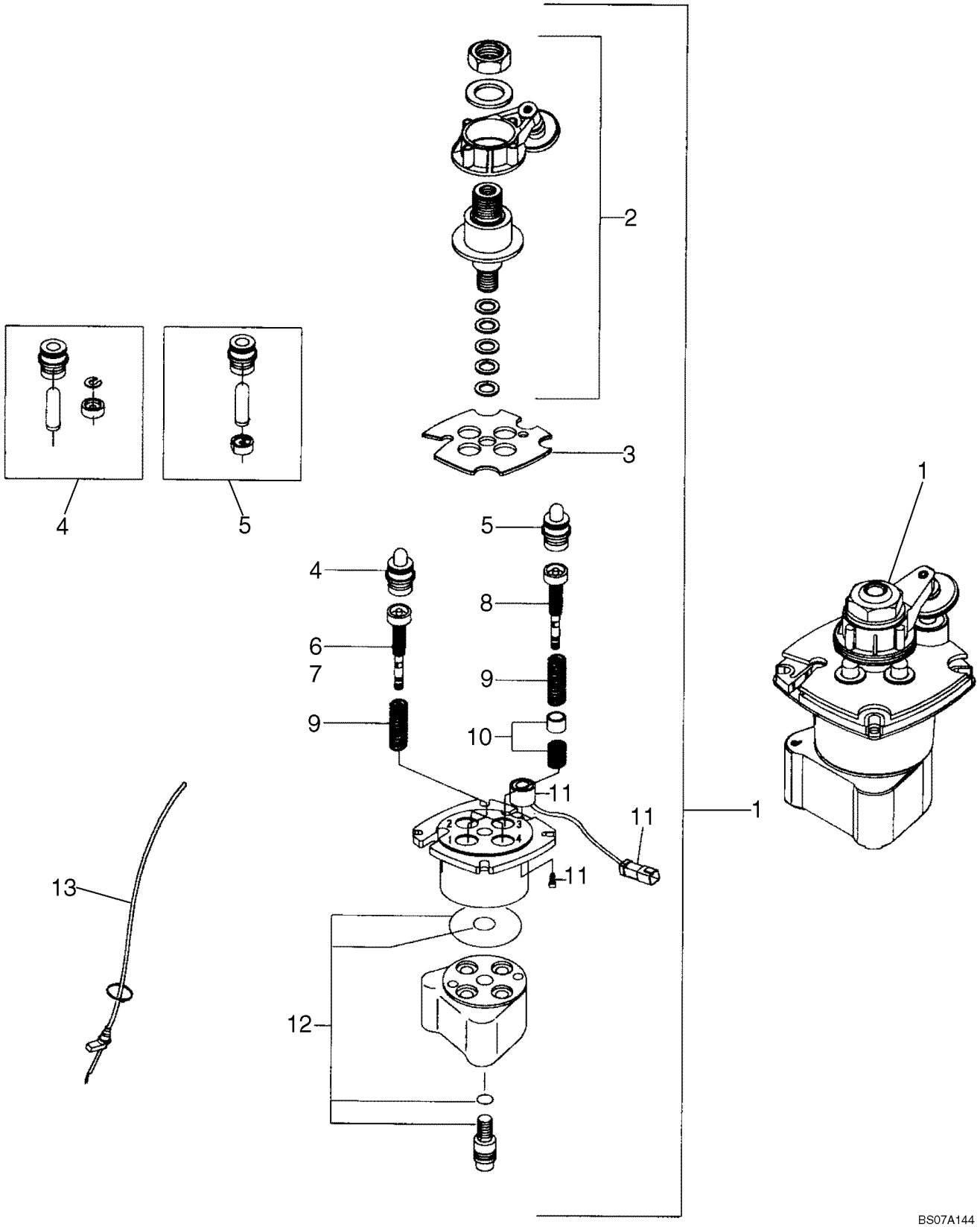

HIDRÁULICO - CONTROLO DA ALAVANCA DE MUDANÇAS KITS, TESTE PADRÃO ISOMETRIC

REF	FN	PART NUMBER	YR/SN	QTY	DESCRIPTION
1		87578504		1	VALVULA PILOTO, Joystick Valve, ISO Pattern, RH
2		87548834		1	KIT, SERVICE, Kit, Cardan With Detent
3		87548836		1	KIT, SERVICE, Kit, Retaining Plate With Detent
4		87548838		3	KIT, SERVICE, Kit, Hollow Plunger, Use On Ports 1, 2, 4
5		87548839		1	KIT, SERVICE, Kit, Full Plunger Prefeeling, Use On Port 3
6		87548840		1	KIT, SERVICE, Kit, Reg Unit PP C224, Use On Port 1
7		87594866		2	KIT, SERVICE, Kit, Reg Unit PP C 223, Use On Ports 2,4
8		87548843		1	KIT, SERVICE, Kit, Reg Unit Prefeeling Point
9		87548844		1	KIT, SERVICE, Kit, Heavy Spring
10		87548846		1	KIT, SERVICE, Kit, Prefeeling Point, Use on Port 3
11		87548847		1	KIT, SERVICE, Kit, Solenoid, Use On Port 3
12		87548848		1	KIT, SERVICE, Kit, Standard Seal
13		87548874		1	KIT, SERVICE, Kit, Cable

SISTEMA HIDRÁULICO DA VÁLVULA DE CONTROLE,

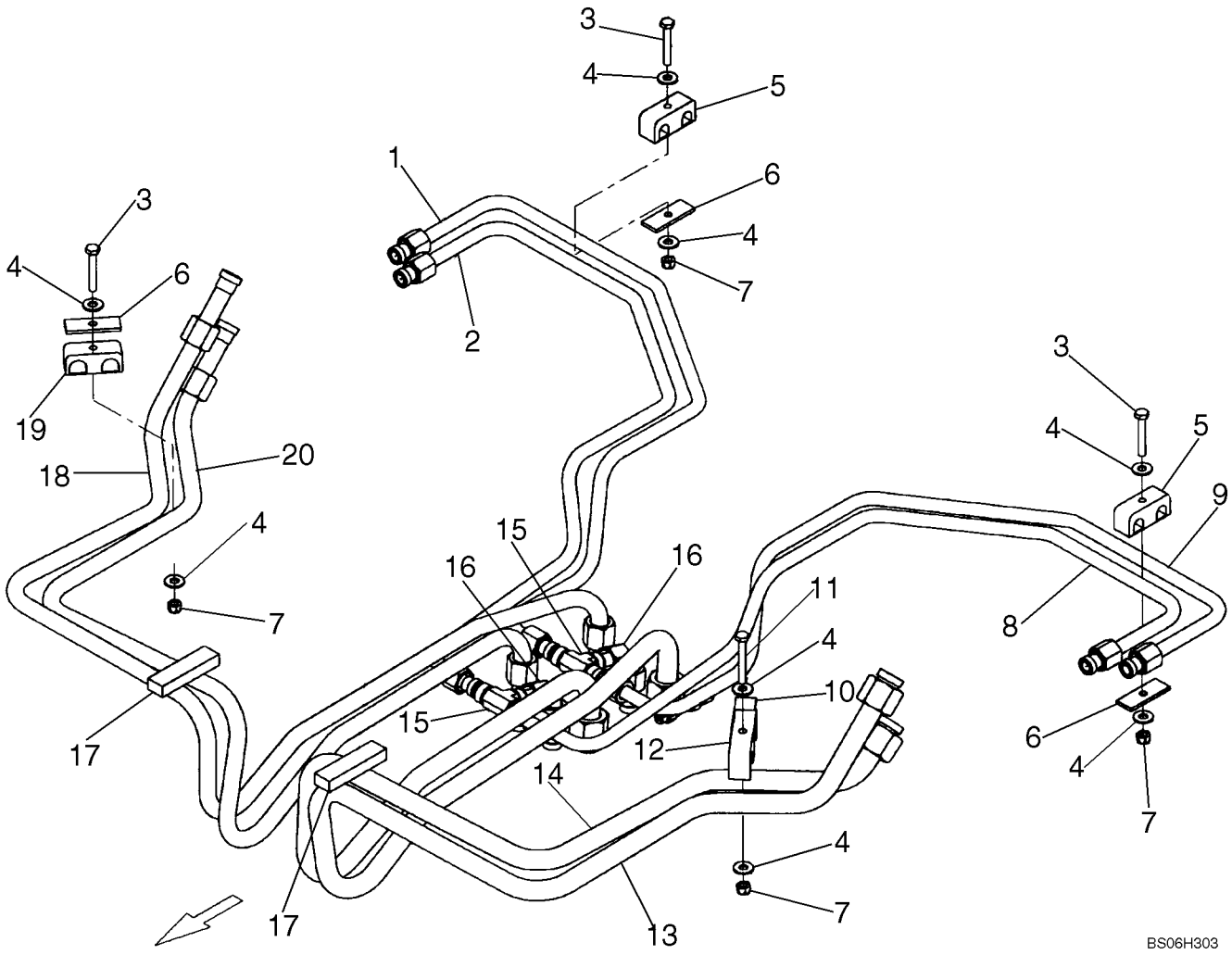

SISTEMA HIDRÁULICO DA VÁLVULA DE CONTROLE,

REF	FN	PART NUMBER	YR/SN	QTY	DESCRIPTION
1		87357186		1	TUBULAÇÃO HIDRAULICO, One Speed Models
1		87559998		1	TUBULAÇÃO HIDRAULICO, Tube, Hydraulic; Two Speed Models
2		87357185		1	TUBULAÇÃO HIDRAULICO, One Speed Models
2		87559997		1	TUBULAÇÃO HIDRAULICO, Tube, Hydraulic; Two Speed Models
3		280164		3	PARAFUSO, Hex, 1/4"-20 x 1 3/4", G5
4		80701		8	ARRUELA PLANA, 1/4"
5		625822		2	PRENDEDOR
6		86509354		3	PLACA
7		280129		4	CONTRA PORCA, 1/4"-20, GC
8		87357182		1	TUBULAÇÃO HIDRAULICO
9		87357184		1	TUBULAÇÃO HIDRAULICO
10		627723		1	OBTURADOR
11		87404		1	PARAFUSO, Hex, 1/4"-20 x 2", G5
12		86643219		1	PRENDEDOR
13		87535989		1	TUBULAÇÃO HIDRAULICO, Tube
14		87050212		1	TUBULAÇÃO HIDRAULICO
15		128996		2	TEE, 3/4"-16, 37º
16		87357191		2	TUBULAÇÃO HIDRAULICO
17		291308		1	TIRA VEDADORA, 6 in. Required
18		87550551		1	TUBO RÍGIDO, Replaces 87050214
19		781221		1	PRENDEDOR
20		87550550		1	TUBO RÍGIDO, Replaces 87050213

HIDRÁULICA DA VÁLVULA DE CONTROLO, MODELOS COM CONTROLO AUTOMÁTICO, EH CONTROLE AUXILIAR

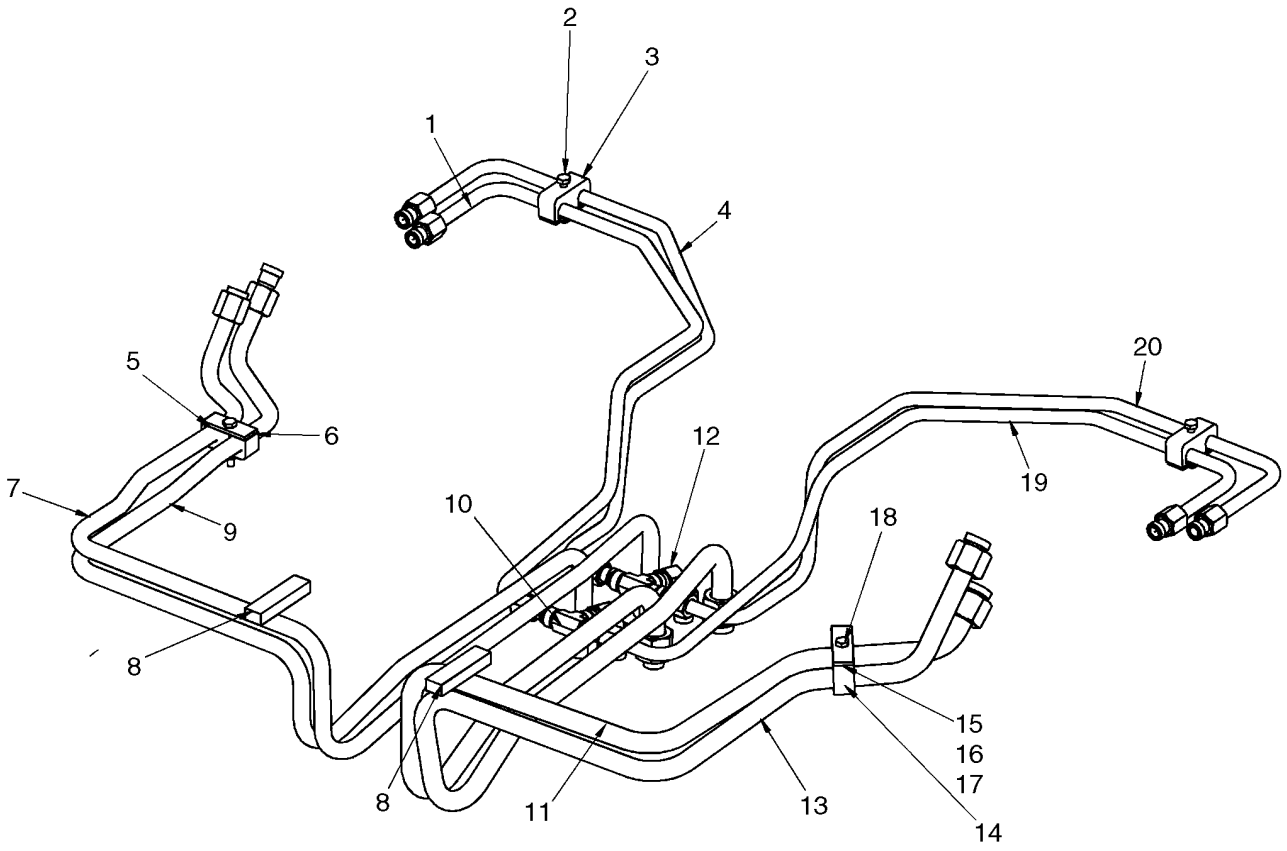

BS08A318

HIDRÁULICA DA VÁLVULA DE CONTROLO, MODELOS COM CONTROLO AUTOMÁTICO, EH CONTROLE AUXILIAR

REF	FN	PART NUMBER	YR/SN	QTY	DESCRIPTION
1		87559997		1	TUBULAÇÃO HIDRAULICO, Boom Down, RH
2		280164		3	PARAFUSO, Hex, 1/4"-20 x 1 3/4", G5
3		625822		2	PRENDEDOR
4		87559998		1	TUBULAÇÃO HIDRAULICO, Boom Up, RH
5		86509354		3	PLACA
6		781221		1	PRENDEDOR
7		87550551		1	TUBO RÍGIDO, Bucket
8		291308		AR	TIRA VEDADORA, 6 in. Required
9		87550550		1	TUBO RÍGIDO, Bucket
10		128996		2	TEE, 3/4"-16, 37º
11		87050212		1	TUBULAÇÃO HIDRAULICO
12		87357191		2	TUBULAÇÃO HIDRAULICO, Boom Up, Center
13		87535989		1	TUBULAÇÃO HIDRAULICO
14		280129		4	CONTRA PORCA, 1/4"-20, GC
15		627723		1	OBTURADOR
16		80701		2	ARRUELA PLANA, 1/4"
17		86643219		1	PRENDEDOR
18		87404		1	PARAFUSO, Hex, 1/4"-20 x 2", G5
19		87357182		1	TUBULAÇÃO HIDRAULICO, Boom Down, LH
20		87357184		1	TUBULAÇÃO HIDRAULICO, Boom Up, LH

VÁLVULA DE CONTROLE -

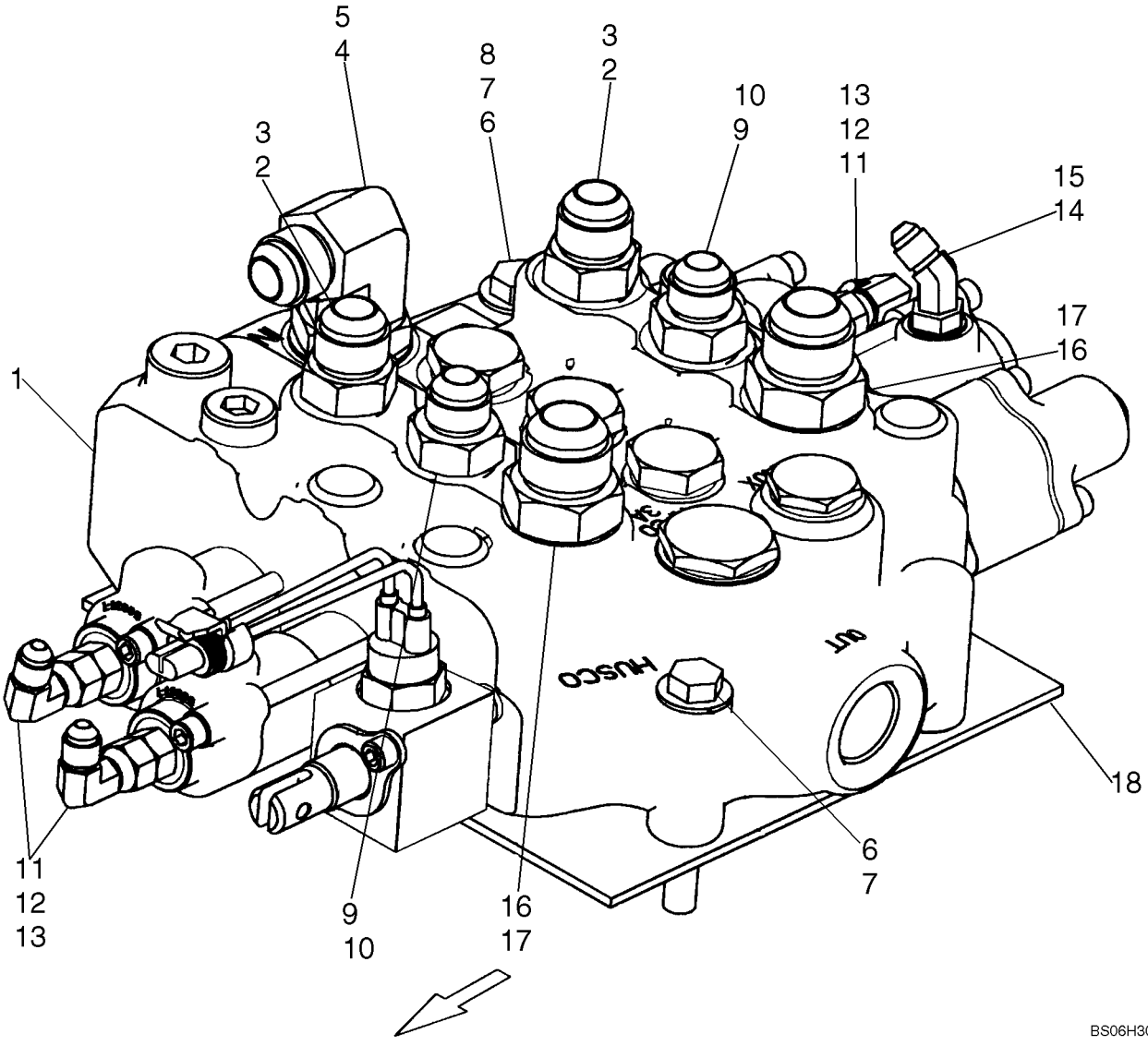

VÁLVULA DE CONTROLE -

REF	FN	PART NUMBER	YR/SN	QTY	DESCRIPTION
1		87357099		1	VÁLVULA HIDRAULICA, See Fig. 08-24
1		87583689		1	VALVULA, Replaces 87357099; See Figure 08-41
2		325059		2	CONEXÃO, 7/8"-14, 37º x 7/8"-14, O-Ring, Incl. 3
3		167269		2	ANEL "O", 10-1, 90 Duro, .755" ID x .097" Thk
4		84570		1	COTOVELO, 90º, 7/8"-14, 37º x 1 1/16"-12, O-Ring, Incl. 5
5		167266		1	ANEL "O", 12-1, 90 Duro, .924 ID x .116" Thk
6		280161		2	PARAFUSO, Hex, 3/8"-16 x 3", G5
7		140045		3	ARRUELA MOLA, Belleville, M10
8		9635082		1	PORCA, 5/16"-18, G5
9		128819		2	CONEXÃO, 3/4"-16, 37º x 7/8"-14, O-Ring, Incl. 10
10		167269		2	ANEL "O", 10-1, 90 Duro, .755" ID x .097" Thk
11		86512933		3	COTOVELO, 90º, 7/16"-20, 37º x 7/16"-20, 37º Fem Sw
12		265235		3	CONEXÃO, 7/16"-20, 37º x 7/16"-20, O-Ring, Incl. 13
13		165202		3	ANEL "O", 4-1, 90 Duro, .351" ID x .072" Thk
14		86512993		1	COTOVELO, 45º, 7/16"-20, 37º x 7/16"-20, O-Ring, Incl. 15
15		165202		1	ANEL "O", 4-1, 90 Duro, .351" ID x .072" Thk
16		322896		1	CONEXÃO, 1 1/16"-12, 37º x 1 1/16"-12, O-Ring, Incl. 17
17		167266		1	ANEL "O", 12-1, 90 Duro, .924 ID x .116" Thk
18		87462101		1	CUNHA, 3.2 mm Thick; If Used
18		87615827		1	CUNHA, 6.4 mm Thick; If Used

VÁLVULA DE CONTROLO - MODELOS COM CONTROLO AUTOMÁTICO, EH CONTROLE AUXILIAR

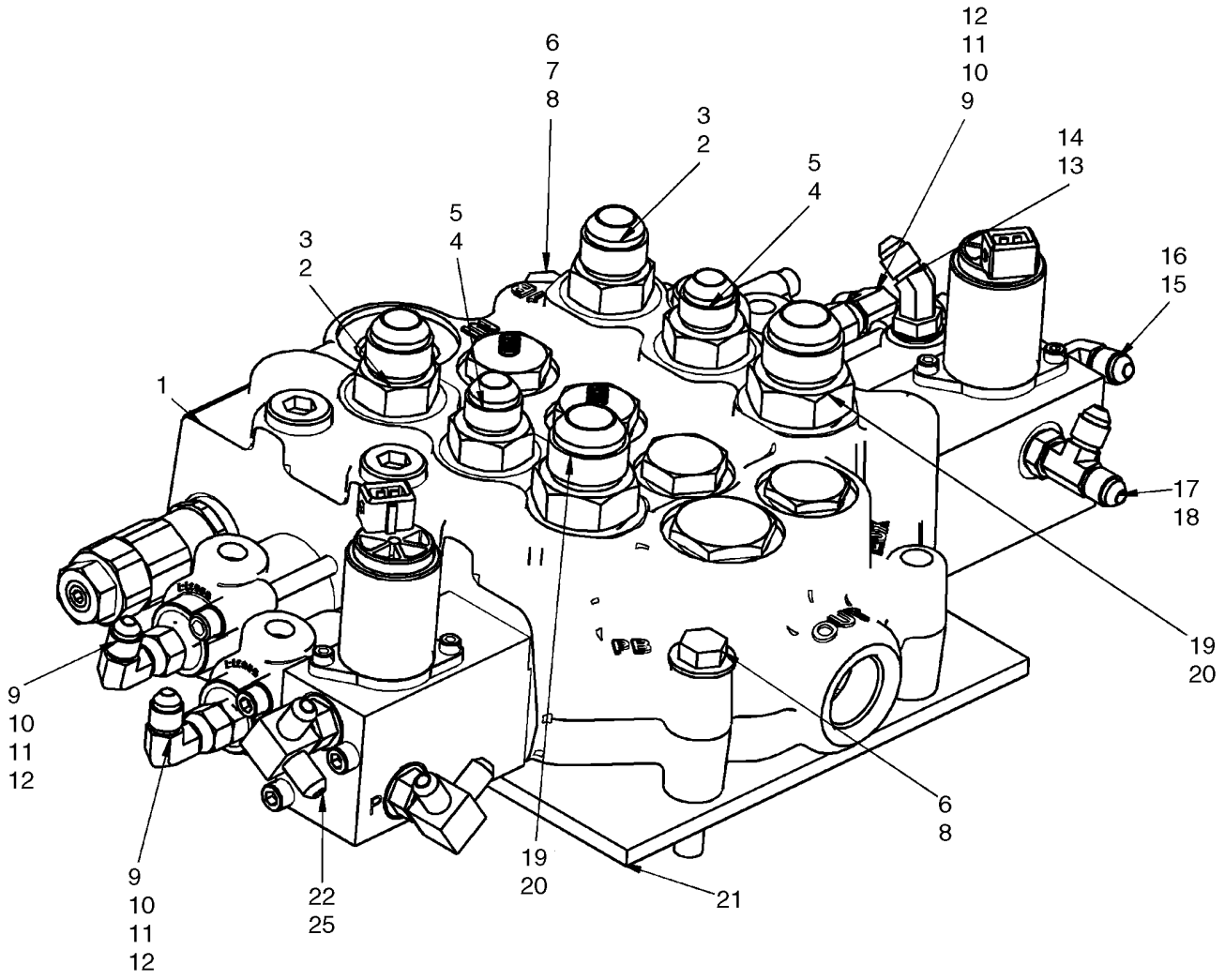

BS08A317

VÁLVULA DE CONTROLO - MODELOS COM CONTROLO AUTOMÁTICO, EH CONTROLE AUXILIAR

REF	FN	PART NUMBER	YR/SN	QTY	DESCRIPTION
1		87653270		1	VÁLVULA HIDRAULICA, See Figure 08-41A
2		325059		2	CONEXÃO, 7/8"-14, 37º x 7/8"-14, O-Ring, Incl. 3
3		167269		2	ANEL "O", 10-1, 90 Duro, .755" ID x .097" Thk
4		128819		2	CONEXÃO, 3/4"-16, 37º x 7/8"-14, O-Ring, Incl. 5
5		167269		2	ANEL "O", 10-1, 90 Duro, .755" ID x .097" Thk
6		140045		3	ARRUELA MOLA, Belleville, M10
7		9628503		1	PORCA, 3/8"-16, G5
8		280161		2	PARAFUSO, Hex, 3/8"-16 x 3", G5
9		265235		3	CONEXÃO, 7/16"-20, 37º x 7/16"-20, O-Ring, Incl. 10
10		165202		3	ANEL "O", 4-1, 90 Duro, .351" ID x .072" Thk
11		86512933		3	COTOVELO, 90º, 7/16"-20, 37º x 7/16"-20, 37º Fem Sw, Incl 12
12		165202		1	ANEL "O", 4-1, 90 Duro, .351" ID x .072" Thk
13		86512993		1	COTOVELO, 45º, 7/16"-20, 37º x 7/16"-20, O-Ring, Incl. 14
14		165202		1	ANEL "O", 4-1, 90 Duro, .351" ID x .072" Thk
15		216773		1	COTOVELO, 90º, 7/16"-20, 37º x 7/16"-20, O-Ring, Incl 16
16		165202		1	ANEL "O", 4-1, 90 Duro, .351" ID x .072" Thk
17		86513019		1	TEE, 7/16"-20, 37º x 7/16"-20, O-Ring Run, Incl 18
18		165202		1	ANEL "O", 4-1, 90 Duro, .351" ID x .072" Thk
19		322896		1	CONEXÃO, 1 1/16"-12, 37º x 1 1/16"-12, O-Ring, Incl. 20
20		167266		1	ANEL "O", 12-1, 90 Duro, .924 ID x .116" Thk
21		87462101		1	CUNHA, 6.4 mm Thick
22		87443051		2	COTOVELO, Elbow, 90 1/4 Tube; Incl 23
23		570186		1	ANEL "O", 20-1, 90 Duro, 1.475" ID x .116" Thk

VÁLVULA DE CONTROLO - MODELOS COM CONTROLO AUTOMÁTICO, EH CONTROLE AUXILIAR

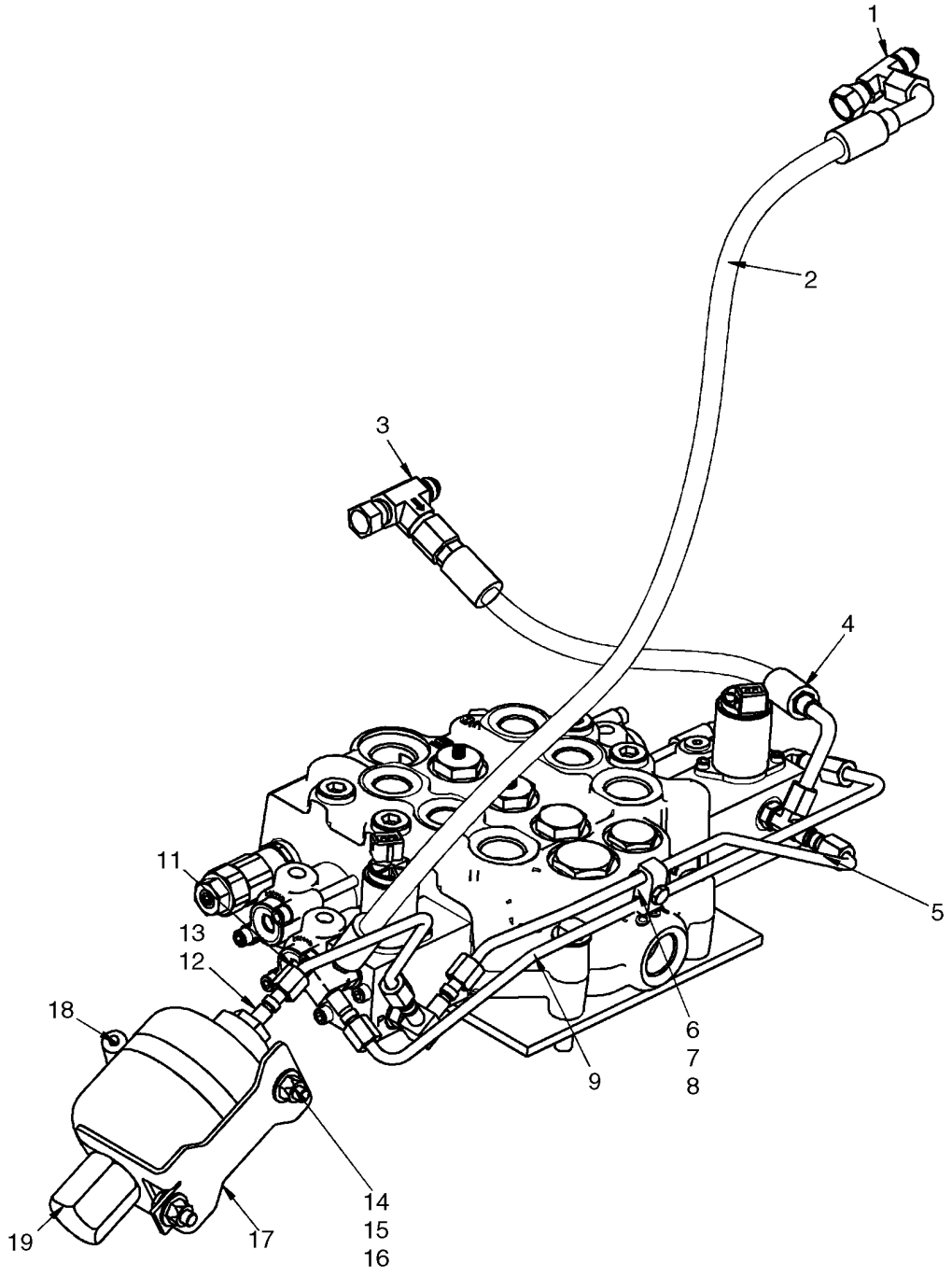

BS08A316

VÁLVULA DE CONTROLO - MODELOS COM CONTROLO AUTOMÁTICO, EH CONTROLE AUXILIAR

REF	FN	PART NUMBER	YR/SN	QTY	DESCRIPTION
1		129274		1	TEE, 37º, 9/16"-18, x 9/16"-18, Fem Sw Run
2		87661933		1	MANGUEIRA, EH Drain
3		87438766		1	TEE, Swivel 3/8
4		87705379		1	MANGUEIRA, EH Supply
5		87667728		1	TUBULAÇÃO HIDRAULICO, Pilot Pressure
6		87030561		1	CONTRA PORCA, M6 x 1, Cl 8
7		608089		1	PRENDEDOR
8		120100		1	PARAFUSO, Hex, M6 x 20, 8.8
9		87660357		1	TUBULAÇÃO HIDRAULICO, EH Drain
10		87653270		1	VÁLVULA HIDRAULICA, See Figure 08-41A
11		87659938		1	TUBULAÇÃO HIDRAULICO, Accumulator
12		87010110		1	CONEXÃO, Incl 13
13		128825		1	ANEL "O", 8-1, 90 Duro, .644" ID x .087" Thk
14		9628098		2	CONTRA PORCA, M8 x 1.25, Cl 10
15		120104		2	PARAFUSO, Hex, M8 x 20, 8.8
16		86625263		4	ARRUELA PLANA, M8 x 20 x 1.6
17		87440253		1	CANTONEIRA, Angle; Mounting Bracket
18		86625034		1	BRACADEIRA MANGUEIRA, #64, 3.56/4.50 Type F Worm
19		86624732		1	ACUMULADOR
20		529070		2	TIRA DE CABO, .30" x 14.5"

VÁLVULA DE CONTROLE, KITS DE SUBSTITUIÇÃO DE VEDAÇÕES

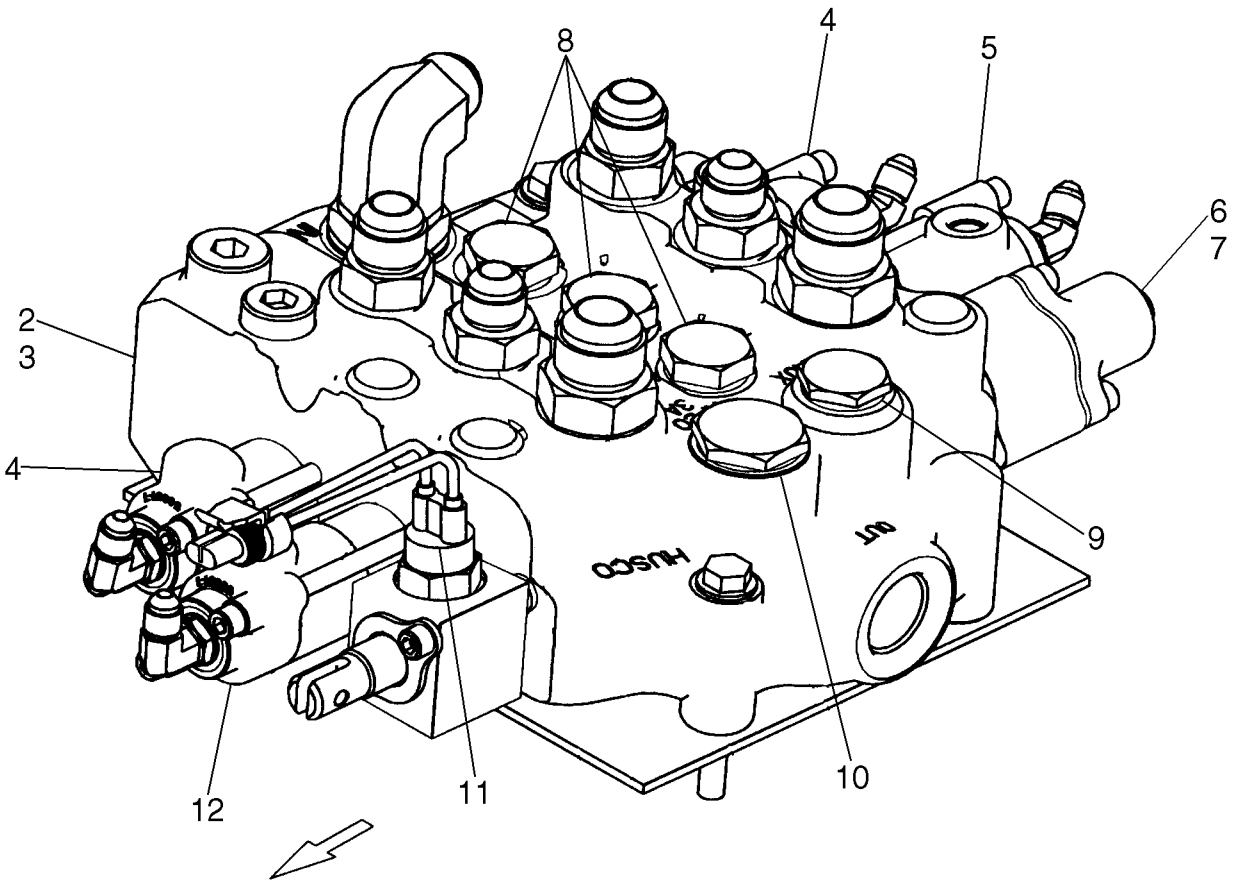

BS06H310

VÁLVULA DE CONTROLE, KITS DE SUBSTITUIÇÃO DE VEDAÇÕES

REF	FN	PART NUMBER	YR/SN	QTY	DESCRIPTION
1		87357099		1	VÁLVULA HIDRAULICA, Incl. 2 - 12
2		NSS		1	BOLETIM INFORMATIVO, Valve Body
3		87576151		1	JOGO DE JUNTAS, Seal Replacement Kit; Incl. 14 Replacement O-rings, (Qty 3) For Check Valves, (Qty 3) For Plugs, (Qty 8) For Spool Ends; See Fig. 08-25
4		87576166		2	CARRETO, Spool End Group; Complete Spool Assy; See Fig. 08-26
5		87576167		1	CARRETO, Spool End Group; Complete Spool Assy; See Fig. 08-27
6		87576164		1	CARRETO, Spool End Group - Detent; Complete Spool Assy; See Fig. 08-28
7		87576170		1	BUJÃO, Plug Assy; Incl. Plug 7/16-20 UNF Thd (1), O-ring (1); See Fig. 08-31
8		87576157		3	VÁLVULA AMORTECEDORA, Check Valve Group; Incl. Plug (1), O-ring (1), Spring (1), Poppet (1); See Fig. 08-29
9		87576160		1	BUJÃO, Plug Assy; Incl. Plug 7/8-14 UNF Thd (1), O-ring (1); See Fig. 08-31
10		87576158		1	BUJÃO, Plug Assy; Incl. Plug 1 - 1/16-12 UN Thd (1), O-ring (1); See Fig. 08-31
11		87446617		1	INTERRUPTOR, Auxillary Spool Ball Switch
12		87576165		1	CARRETO, Spool End Group; Complete Spool Assy; See Fig. 08-30
		87576162		2	BUJÃO, Plug Assy, M18 X 1.5 - 6H; Not Illustrated; See Fig. 08-31
		87445939		3	VALVULA, Work Port Relief Valve, Non Adjustable 245 Bar; See Fig. 08-31
		87445932		1	VALVULA, Work Port Anti Void Valve; See Fig. 08-31
		87594361		1	VALVULA, Main Relief Valve; Not Illustrated

VÁLVULA DE CONTROLE, KITS DE SUBSTITUIÇÃO DE VEDAÇÕES

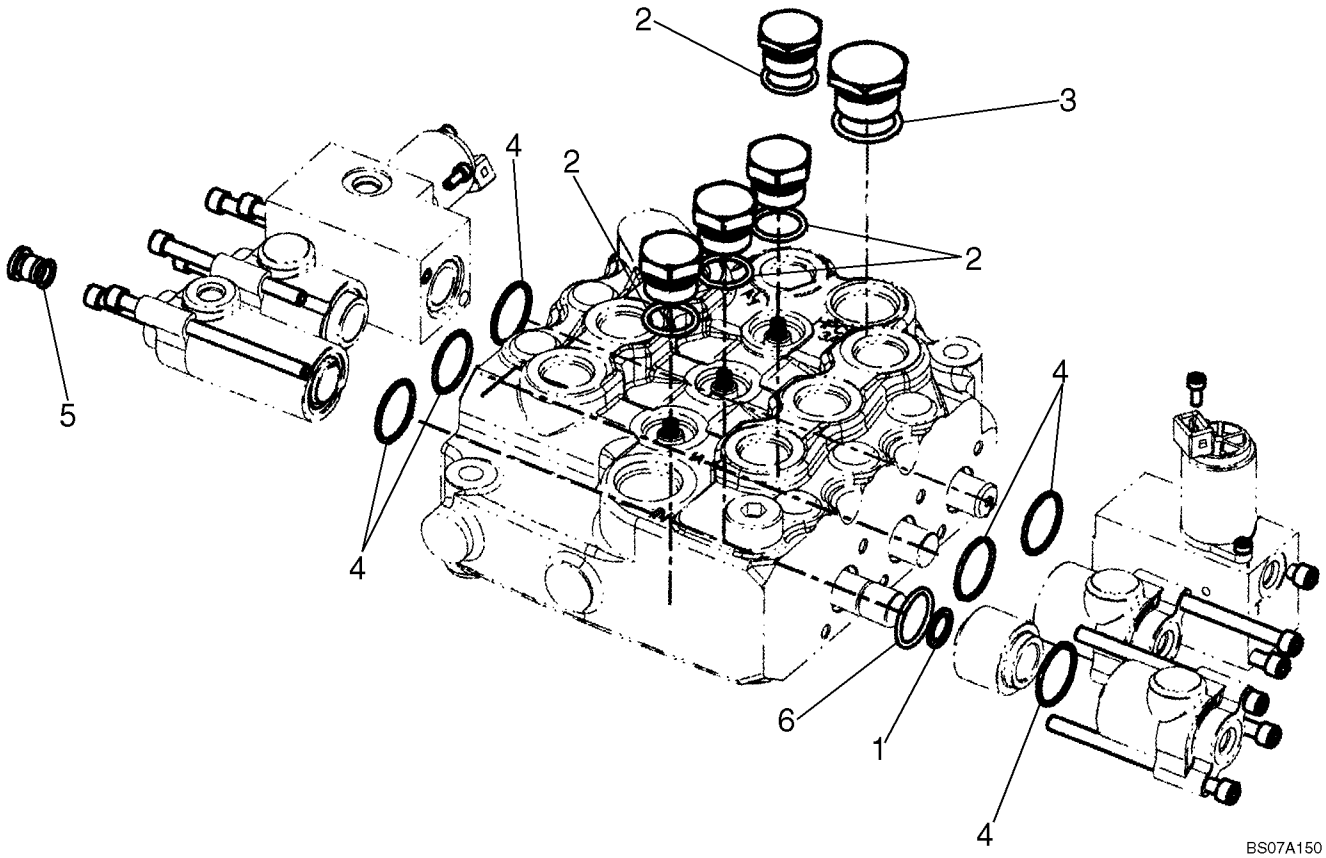

VÁLVULA DE CONTROLE, KITS DE SUBSTITUIÇÃO DE VEDAÇÕES

REF	FN	PART NUMBER	YR/SN	QTY	DESCRIPTION
		87576151		1	JOGO DE JUNTAS, Seal Kit, Incl. 1 - 6
1		NSS		1	BOLETIM INFORMATIVO, Back Up Ring, .673 Dia.
2		NSS		4	BOLETIM INFORMATIVO, O-Ring, .949 Dia.
3		NSS		1	BOLETIM INFORMATIVO, O-Ring, 1.156 Dia.
4		NSS		6	BOLETIM INFORMATIVO, O-Ring, 1.129 Dia.
5		NSS		1	BOLETIM INFORMATIVO, O-Ring, .498 Dia.
6		NSS		1	BOLETIM INFORMATIVO, O-Ring, 1.063 Dia.

VÁLVULA DE CONTROLE, KITS DE SUBSTITUIÇÃO DE VEDAÇÕES - BOBINAS

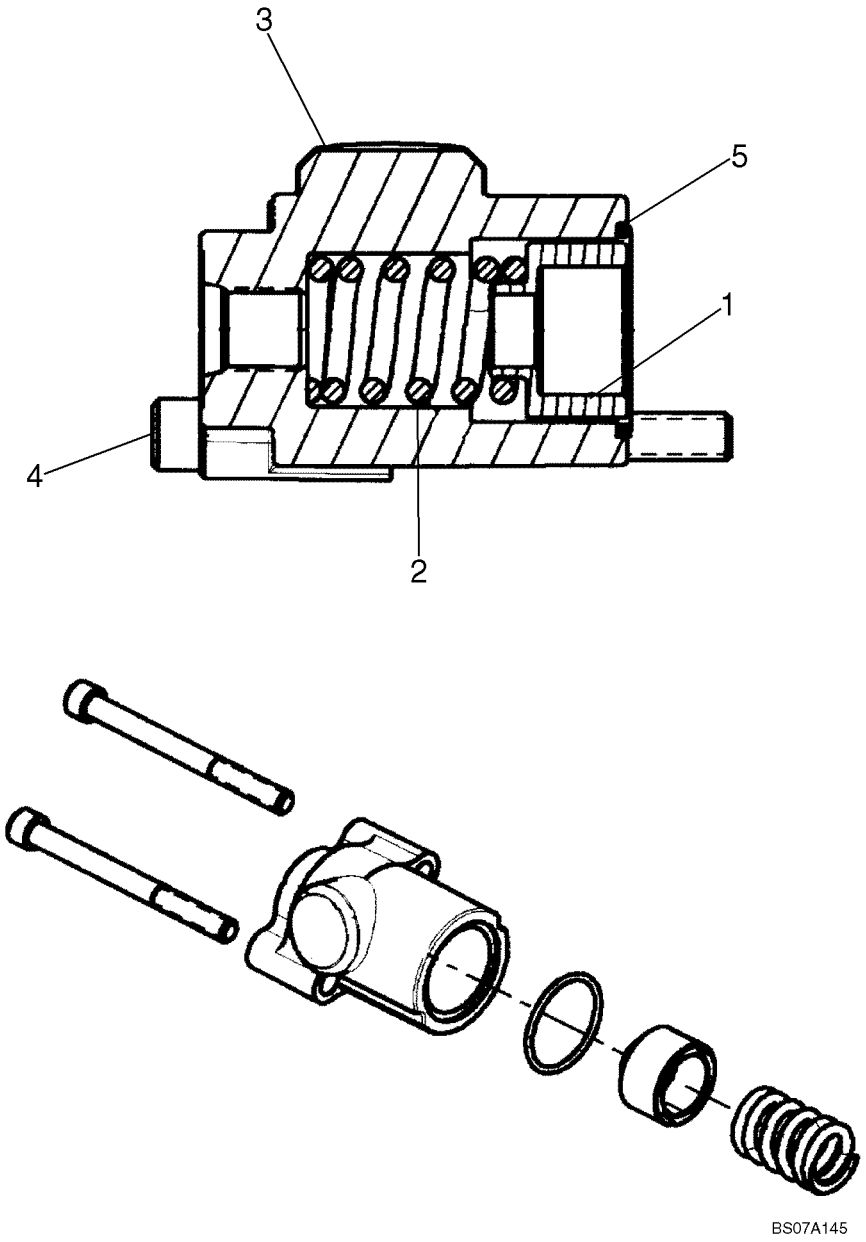

VÁLVULA DE CONTROLE, KITS DE SUBSTITUIÇÃO DE VEDAÇÕES - BOBINAS

REF	FN	PART NUMBER	YR/SN	QTY	DESCRIPTION
		87576166		1	CARRETO, Spool End Group; Incl. 1 - 5
1		NSS		1	BOLETIM INFORMATIVO, Spring Seat
2		NSS		1	BOLETIM INFORMATIVO, Spring
3		NSS		1	BOLETIM INFORMATIVO, Cap - Spool, P. O.
4		NSS		2	BOLETIM INFORMATIVO, Socket Head Cap Screw
5		NSS		1	BOLETIM INFORMATIVO, O-Ring

VÁLVULA DE CONTROLE, KITS DE SUBSTITUIÇÃO DE VEDAÇÕES - BOBINAS

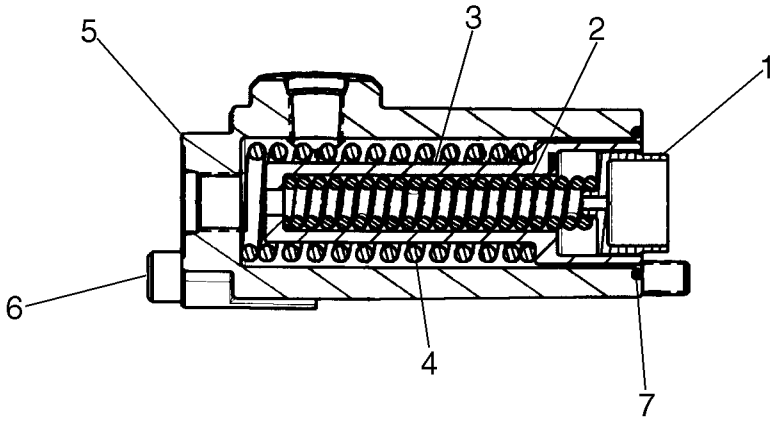

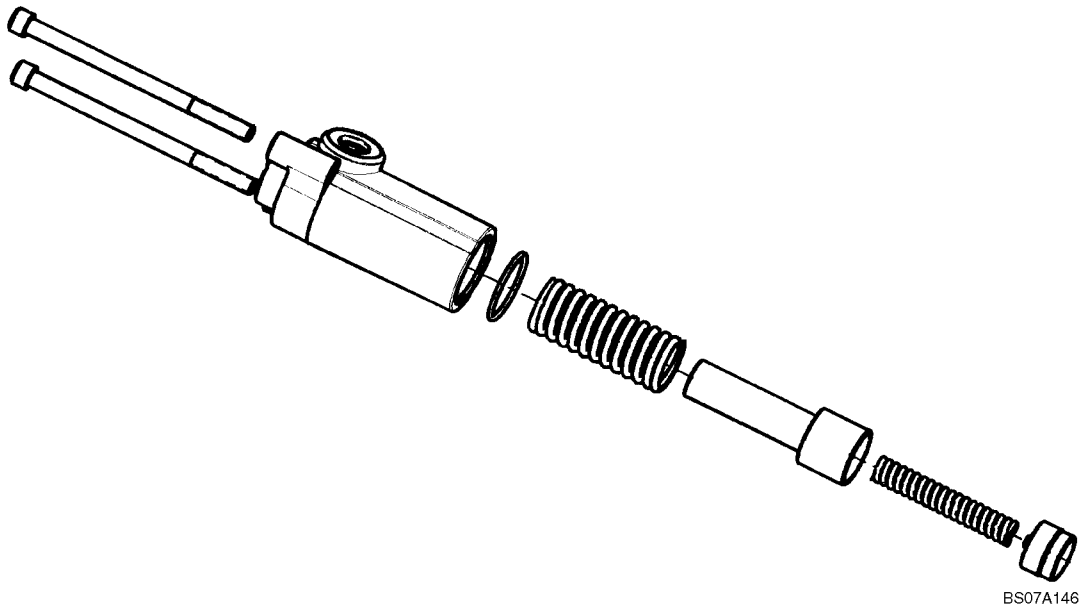

VÁLVULA DE CONTROLE, KITS DE SUBSTITUIÇÃO DE VEDAÇÕES - BOBINAS

REF	FN	PART NUMBER	YR/SN	QTY	DESCRIPTION
		87576167		1	CARRETO, Spool End Group; Incl. 1 - 7
1		NSS		1	BOLETIM INFORMATIVO, Spring Seat
2		NSS		1	BOLETIM INFORMATIVO, Spring
3		NSS		1	BOLETIM INFORMATIVO, Spring Seat
4		NSS		1	BOLETIM INFORMATIVO, Spring
5		NSS		1	BOLETIM INFORMATIVO, Cap - Spool, P. O.
6		NSS		2	BOLETIM INFORMATIVO, Socket Head Cap Screw
7		NSS		1	BOLETIM INFORMATIVO, O-Ring

VÁLVULA DE CONTROLE, KITS DE SUBSTITUIÇÃO DE VEDAÇÕES - BOBINAS E BATENTES

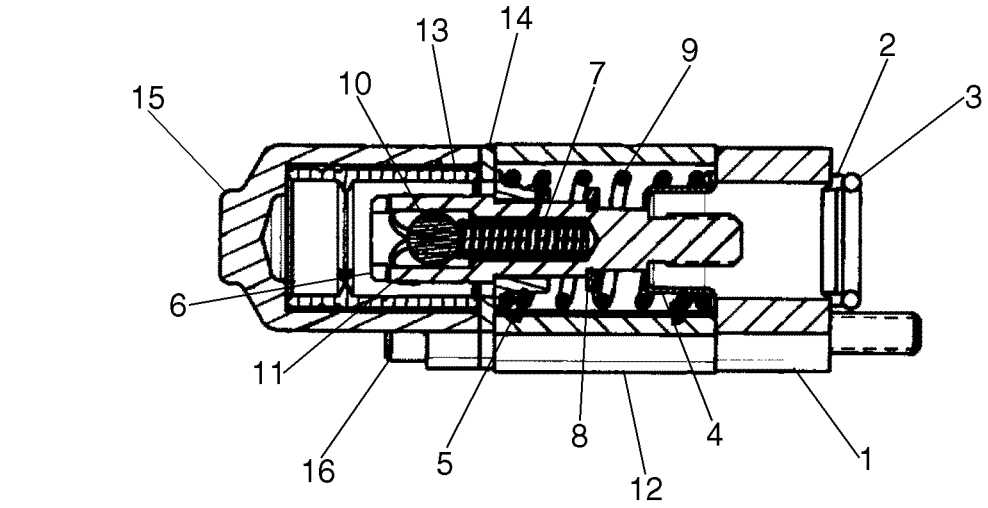

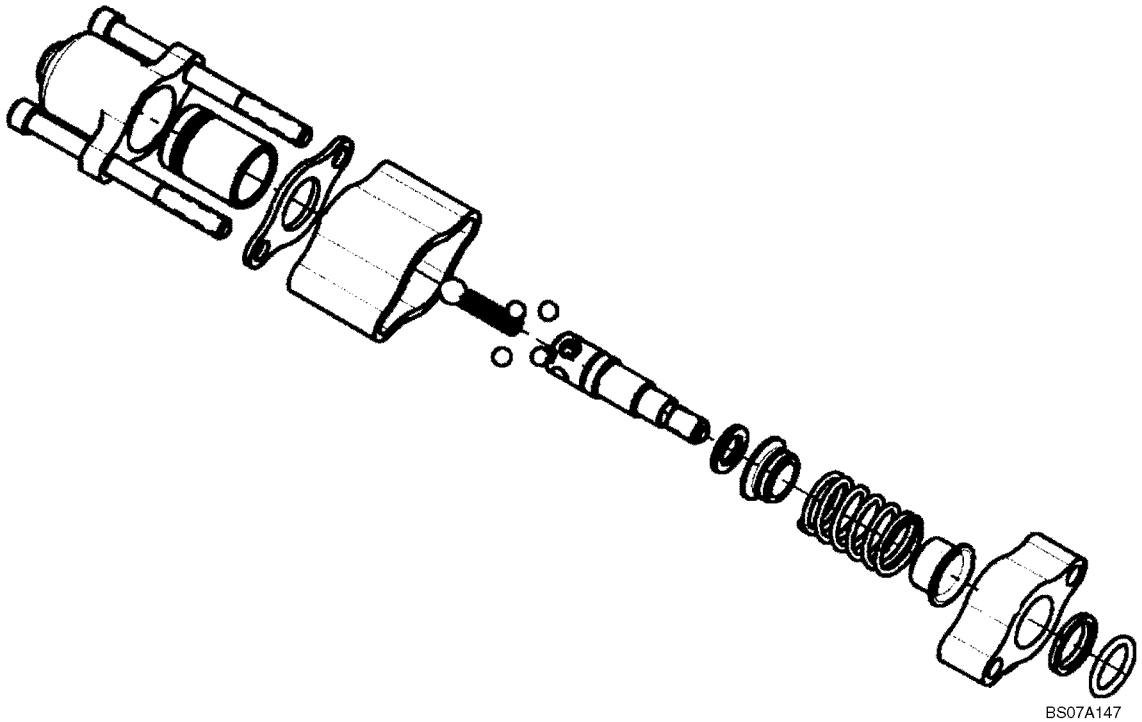

VÁLVULA DE CONTROLE, KITS DE SUBSTITUIÇÃO DE VEDAÇÕES - BOBINAS E BATENTES

REF	FN	PART NUMBER	YR/SN	QTY	DESCRIPTION
		87576164		1	CARRETO, Spool End Group - Detent; Incl. 1 - 16
1		NSS		1	BOLETIM INFORMATIVO, Plate, Seal
2		NSS		1	BOLETIM INFORMATIVO, Wiper
3		NSS		1	BOLETIM INFORMATIVO, O-Ring
4		NSS		1	BOLETIM INFORMATIVO, Spring Seat
5		NSS		1	BOLETIM INFORMATIVO, Spring Seat
6		NSS		1	BOLETIM INFORMATIVO, Spool End, Detent Pin
7		NSS		1	BOLETIM INFORMATIVO, Spring
8		NSS		1	BOLETIM INFORMATIVO, Washer, Flat
9		NSS		1	BOLETIM INFORMATIVO, Spring
10		NSS		1	BOLETIM INFORMATIVO, Ball
11		NSS		4	BOLETIM INFORMATIVO, Ball
12		NSS		1	BOLETIM INFORMATIVO, Spacer
13		NSS		1	BOLETIM INFORMATIVO, Sleeve, Detent
14		NSS		1	BOLETIM INFORMATIVO, Plate, Seal
15		NSS		1	BOLETIM INFORMATIVO, Cap, Spool
16		NSS		2	BOLETIM INFORMATIVO, Socket Head Cap Screw

VÁLVULA DE CONTROLE, CONFIRA VÁLVULA

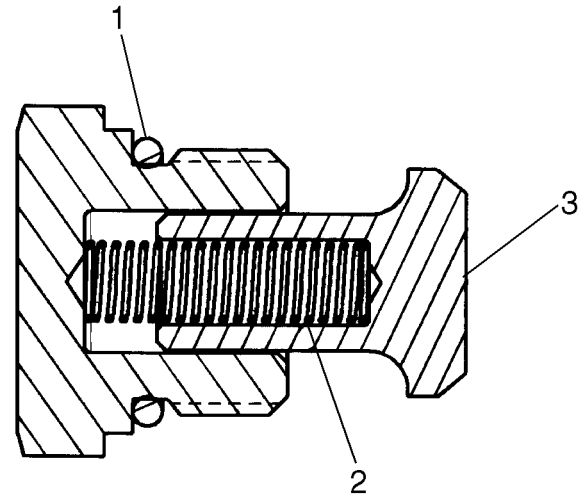

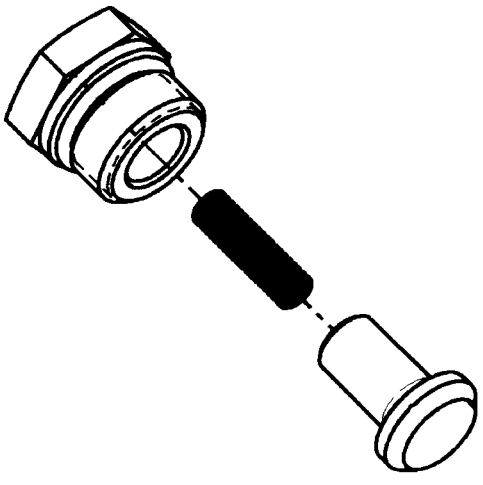

BS07A148

VÁLVULA DE CONTROLE, CONFIRA VÁLVULA

REF	FN	PART NUMBER	YR/SN	QTY	DESCRIPTION
		87576157		1	VÁLVULA AMORTECEDORA, Check Valve Group; Incl. 1 - 3
1		NSS		1	BOLETIM INFORMATIVO, Plug Assy
2		NSS		1	BOLETIM INFORMATIVO, Spring
3		NSS		1	BOLETIM INFORMATIVO, Poppet - C.V.

VÁLVULA DE CONTROLE, KITS DE SUBSTITUIÇÃO DE VEDAÇÕES - BOBINAS

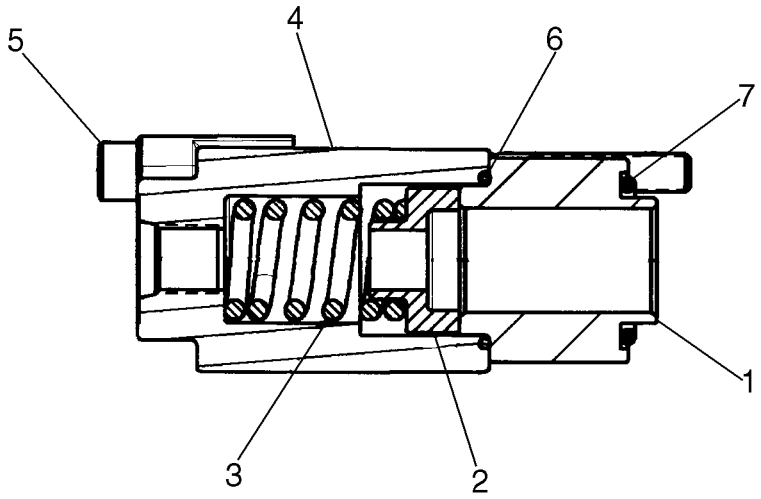

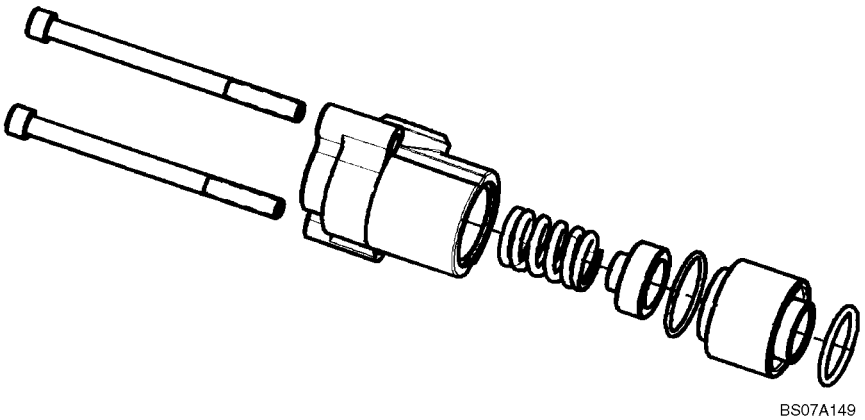

VÁLVULA DE CONTROLE, KITS DE SUBSTITUIÇÃO DE VEDAÇÕES - BOBINAS

REF	FN	PART NUMBER	YR/SN	QTY	DESCRIPTION
		87576165		1	CARRETO, Spool End Group; Incl. 1 - 7
1		NSS		1	BOLETIM INFORMATIVO, Retainer
2		NSS		1	BOLETIM INFORMATIVO, Spring Seat
3		NSS		1	BOLETIM INFORMATIVO, Spring
4		NSS		1	BOLETIM INFORMATIVO, Cap, Spool P.O.
5		NSS		2	BOLETIM INFORMATIVO, Socket Head Cap Screw
6		NSS		1	BOLETIM INFORMATIVO, O-Ring
7		NSS		1	BOLETIM INFORMATIVO, O-Ring

VÁLVULA DE CONTROLE, TAMPE ASSEMBLÉIA, CONJUNTO DA VÁLVULA

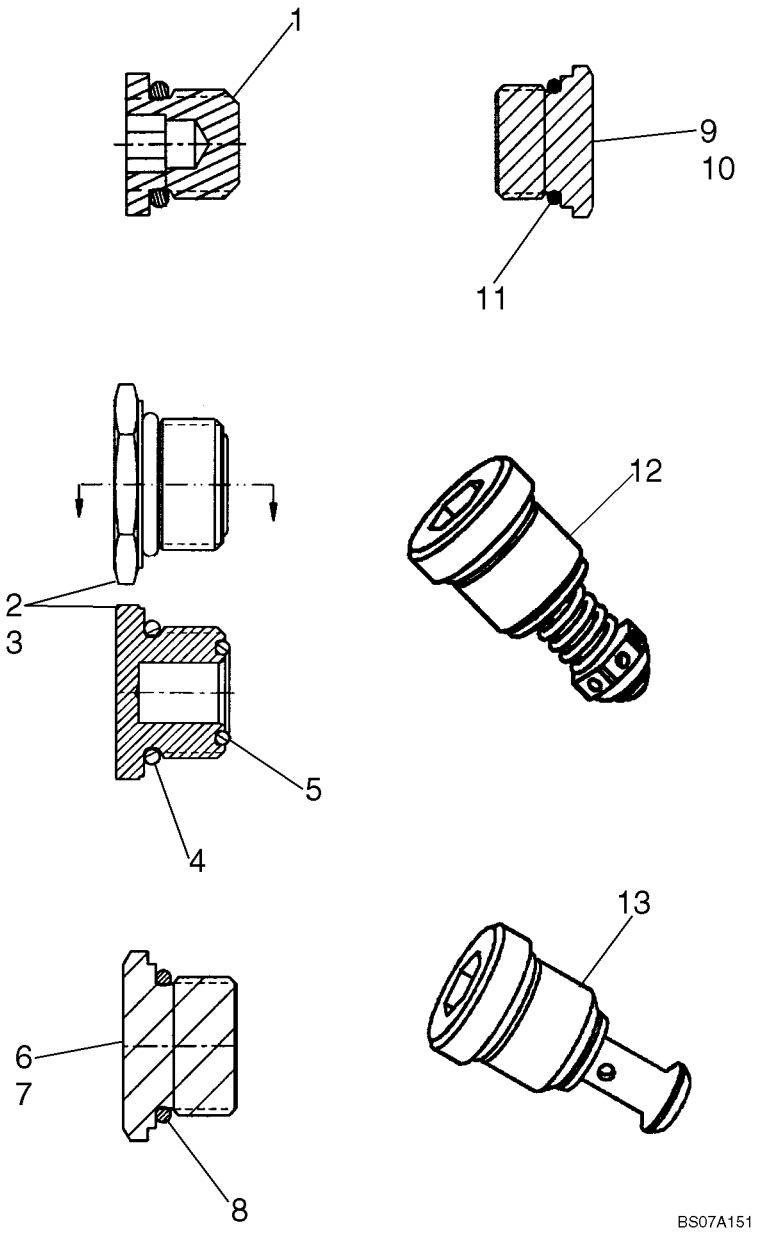

VÁLVULA DE CONTROLE, TAMPE ASSEMBLÉIA, CONJUNTO DA VÁLVULA

REF	FN	PART NUMBER	YR/SN	QTY	DESCRIPTION
1		87576170		1	BUJÃO, Plug Assy, 7/16 - 20 UNF Thd; Incl. Plug And O-ring
2		87576162		1	BUJÃO, Plug Assy, Metric - M18 X 1.5 - 6H; Incl. 3 - 5
3		NSS		1	BOLETIM INFORMATIVO, Plug, Metric
4		NSS		1	BOLETIM INFORMATIVO, O-Ring
5		NSS		1	BOLETIM INFORMATIVO, O-Ring
6		87576158		1	BUJÃO, Plug Assy, 1 - 1/16 - 12 UN Thd; Incl. 7, 8
7		NSS		1	BOLETIM INFORMATIVO, Plug, SAE
8		NSS		1	BOLETIM INFORMATIVO, O-Ring
9		87576160		1	BUJÃO, Plug Assy, 7/8 - 14 UNF Thd; Incl. 10, 11
10		NSS		1	BOLETIM INFORMATIVO, Plug, SAE
11		NSS		1	BOLETIM INFORMATIVO, O-Ring
12		87445939		1	VALVULA, Workport Relief Valve, Non Adjustable 245 Bar Stamped On Valve
13		87445932		1	VALVULA, Workport Anti-void Valve

SISTEMA HIDRÁULICO, STANDARD UMA VELOCIDADE - MODELOS COM CONTROLO AUTOMÁTICO

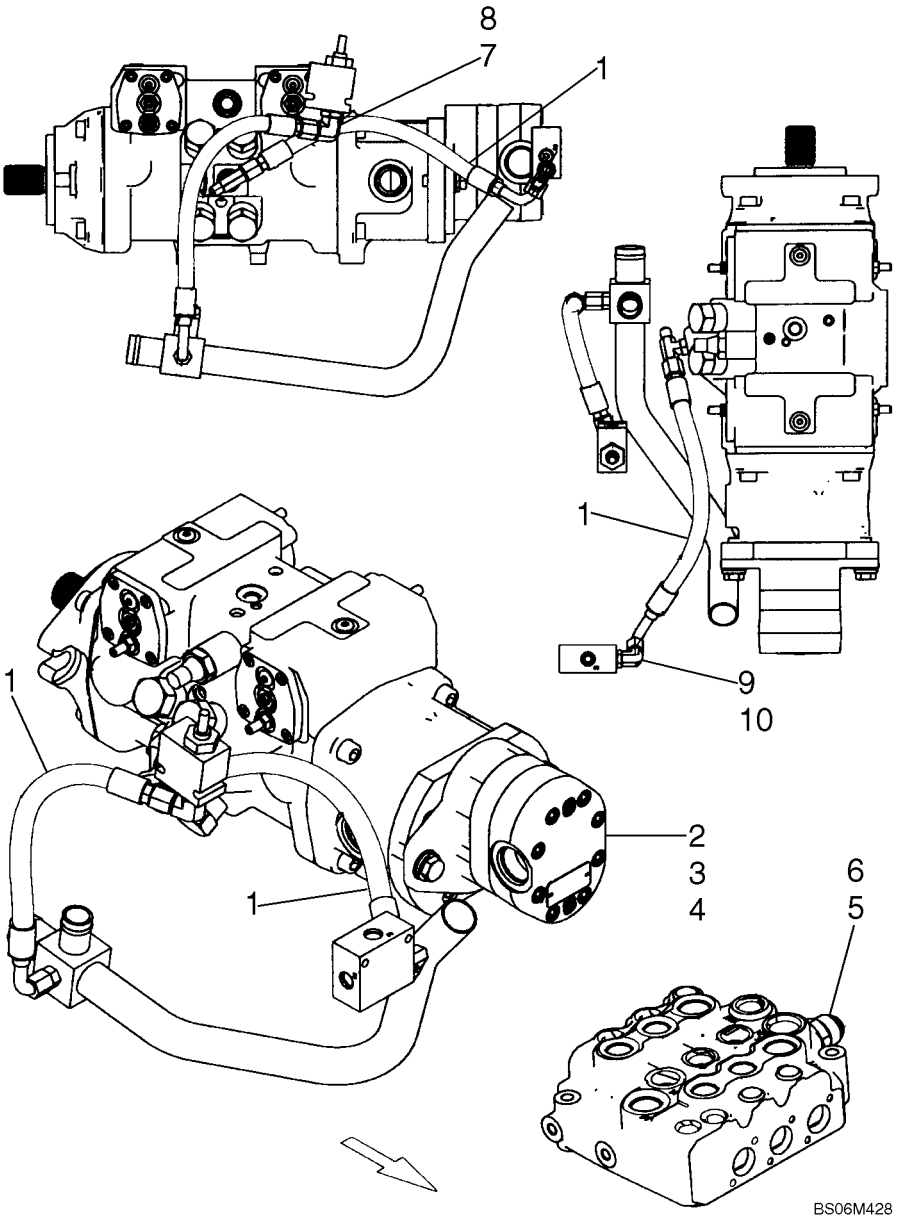

SISTEMA HIDRÁULICO, STANDARD UMA VELOCIDADE - MODELOS COM CONTROLO AUTOMÁTICO

REF	FN	PART NUMBER	YR/SN	QTY	DESCRIPTION
1		87586523		2	MANGUEIRA, Interlock Supply; 375 mm, 14.75 in. Length
2		86629541		2	PARAFUSO, Hex, M12 x 40, 8.8, Full Thd, If Used
2		87689		2	PARAFUSO, Hex, 1/2"-13 x 1 1/2", G5, Full Thd, If Used
3		65319		2	ARRUELA PLANA, If Used
3		86625256		2	ARRUELA PLANA, M12 x 28.5 x 4, HT, If Used
4		87368980		1	BOMBA, See Fig. 06-50; 2 Ports (1 Inlet /1 Outlet)
5		322896		1	CONEXÃO, 1 1/16"-12, 37° x 1 1/16"-12, O-Ring
6		167266		1	ANEL "O", 12-1, 90 Duro, .924 ID x .116" Thk
7		76347		1	COTOVELO, 90°, 9/16"-18, 37° x 3/4"-16, O-Ring, Incl 8; If Used
7		128817		1	CONEXÃO, 9/16"-18, 37° x 3/4"-18, O-Ring, Incl 8; If Used
8		128825		1	ANEL "O", 8-1, 90 Duro, .644" ID x .087" Thk
9		76344		1	COTOVELO, 90°, 9/16"-18, 37° x 9/16"-18, O-Ring, Incl 10
10		9617873			ANEL "O", 6-1, 90 Duro, .468" ID x .078" Thk

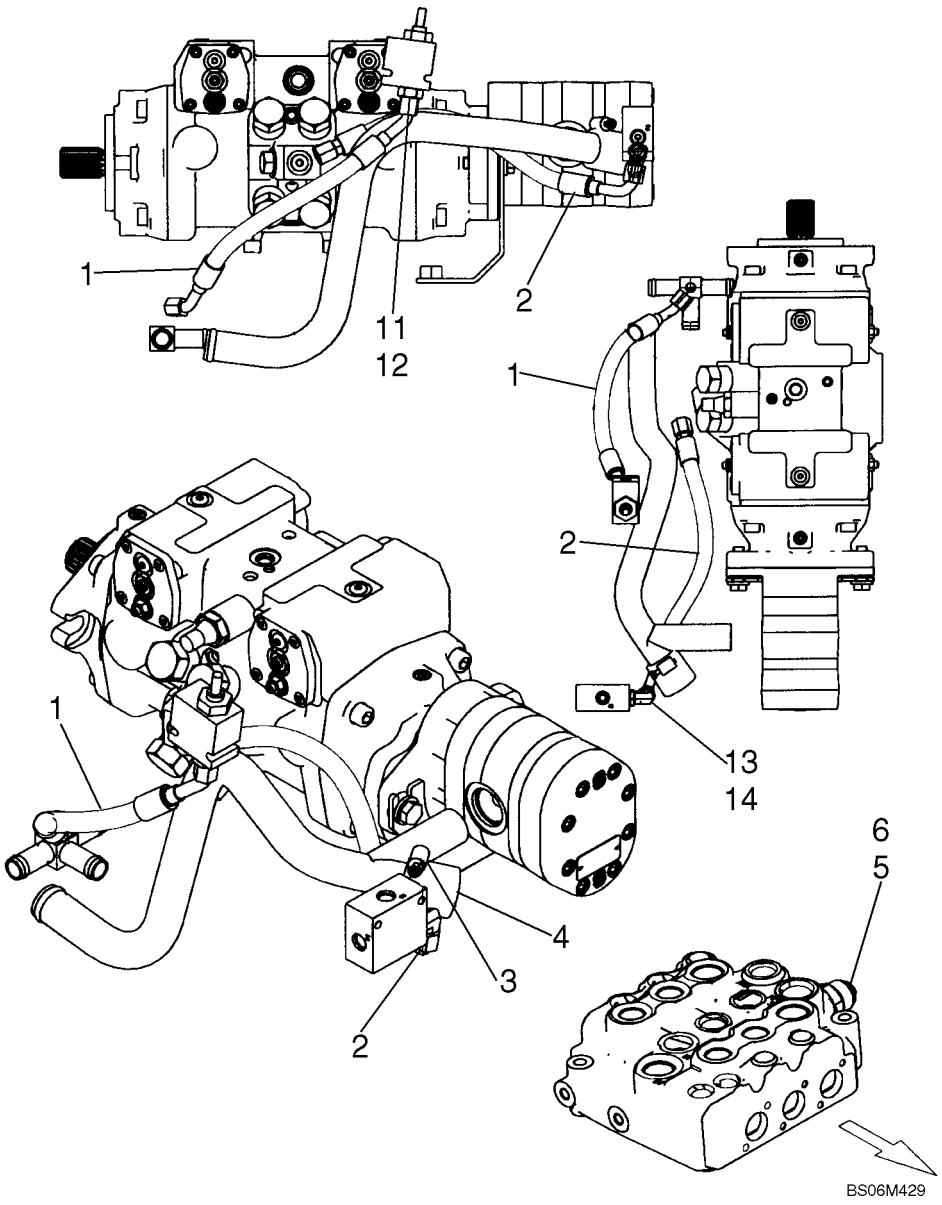
1
11
12
2
1
2
13
14
1
6
5
4
3
2
BS06M429

SISTEMA HIDRÁULICO, STANDARD TRANSMISSÃO DE DESLOCAMENTO DE DUAS VELOCIDADES - MODELOS COM CONTROLO

REF	FN	PART NUMBER	YR/SN	QTY	DESCRIPTION
1		87561132		1	MANGUEIRA, Override Valve Drain; 375 mm, 14.75 in. Length
2		87586523		1	MANGUEIRA, Interlock Supply; 375 mm, 14.75 in. Length
3		86637706		1	BRACADEIRA MANGUEIRA, #32, 1.56/2.50 Type F Worm, W/liner
4		87557914		1	TUBULAÇÃO HIDRAULICO, Cap, Hydraulic Tube
5		322896		1	CONEXÃO, 1 1/16"-12, 37º x 1 1/16"-12, O-Ring, Incl 6
6		167266		1	ANEL "O", 12-1, 90 Duro, .924 ID x .116" Thk
7		87368988		1	BOMBA, See Fig. 06-51; 3 Ports (1 Inlet/2 Outlet)
8		120080		2	PARAFUSO, Hex, M12 x 45, 8.8
9		65319		2	ARRUELA PLANA
10		87580571		1	SUPORTE, Pump Bracket, Gray
11		128817		1	CONEXÃO, 9/16"-18, 37º x 3/4"-18, O-Ring, Incl 12
12		128825		1	ANEL "O", 8-1, 90 Duro, .644" ID x .087" Thk
13		76344		1	COTOVELO, 90º, 9/16"-18, 37º x 9/16"-18, O-Ring, Incl 14
14		9617873		1	ANEL "O", 6-1, 90 Duro, .468" ID x .078" Thk

SISTEMA HIDRÁULICO, FLUXO ALTO UMA VELOCIDADE - MODELOS COM CONTROLO AUTOMÁTICO; SE UTILIZADO

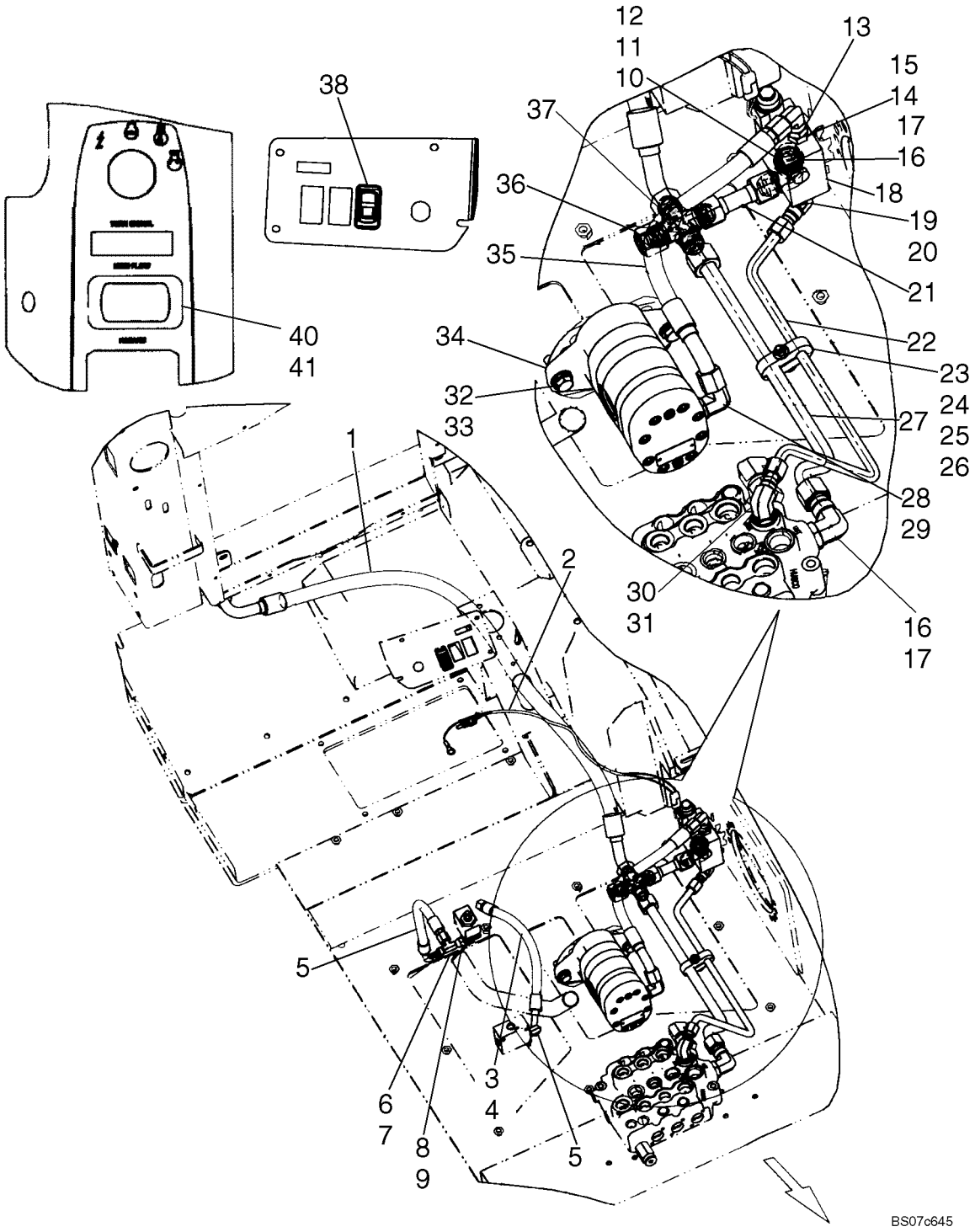

SISTEMA HIDRÁULICO, FLUXO ALTO UMA VELOCIDADE - MODELOS COM CONTROLO AUTOMÁTICO; SE UTILIZADO

REF	FN	PART NUMBER	YR/SN	QTY	DESCRIPTION
1		87617624		1	MANGUEIRA, Tee To Oil Cooler; 120 cm, 47.25 in. Length; Replaces 87365199
2		86621102		1	CHICOTE DE FIOS, High Flow Harness
3		76344		1	COTOVELO, 90º, 9/16"-18, 37º x 9/16"-18, O-Ring, Incl. 4
4		9617873		1	ANEL "O", 6-1, 90 Duro, .468" ID x .078" Thk
5		87586523		2	MANGUEIRA, Interlock Supply; 375 mm, 14.75 in. Length
6		129274		1	TEE, 37º, 9/16"-18, x 9/16"-18, Fem Sw Run, Incl. 7
7		9617873		1	ANEL "O", 6-1, 90 Duro, .468" ID x .078" Thk
8		76347		1	COTOVELO, 90º, 9/16"-18, 37º x 3/4"-16, O-Ring, Incl. 9
9		128825		1	ANEL "O", 8-1, 90 Duro, .644" ID x .087" Thk
10		88994		2	PORCA, Sq, 1/4"-20
11		87845		2	PARAFUSO, Hex, 1/4"-20 x 2 1/2", G5
12		80682		2	ARRUELA-TRAVA, 1/4"
13		248974		1	COTOVELO, 90º, 3/4"-16, 37º x 3/4"-16, 37º Fem Sw
14		81827427		1	CONEXÃO, Incl. 15
15		128817		1	CONEXÃO, 9/16"-18, 37º x 3/4"-18, O-Ring, Incl O-Ring 128825
16		322894		2	COTOVELO, 90º, 1 1/16"-12, 37º x 1 1/16"-12, O-Ring, Incl. 17
17		167266		2	ANEL "O", 12-1, 90 Duro, .924 ID x .116" Thk
18		86520550		1	VÁLVULA HIDRAULICA, See Fig. 08-19
19		128830		1	COTOVELO, 90º, 3/4"-16, 37º x 3/4"-16, O-Ring, Incl. 20
20		128825		1	ANEL "O", 8-1, 90 Duro, .644" ID x .087" Thk
21		86578853		1	TUBULAÇÃO HIDRAULICO
22		87397650		1	TUBO RÍGIDO, High Flow Supply
23		87394830		1	PRENDEDOR, Clamp
24		280164		1	PARAFUSO, Hex, 1/4"-20 x 1 3/4", G5
25		80701		2	ARRUELA PLANA, 1/4"
26		20356		1	CONTRA PORCA, 1/4"-20, GB
27		87397651		1	TUBO RÍGIDO, High Flow Valve Return

SISTEMA HIDRÁULICO, FLUXO ALTO UMA VELOCIDADE - MODELOS COM CONTROLO AUTOMÁTICO; SE UTILIZADO

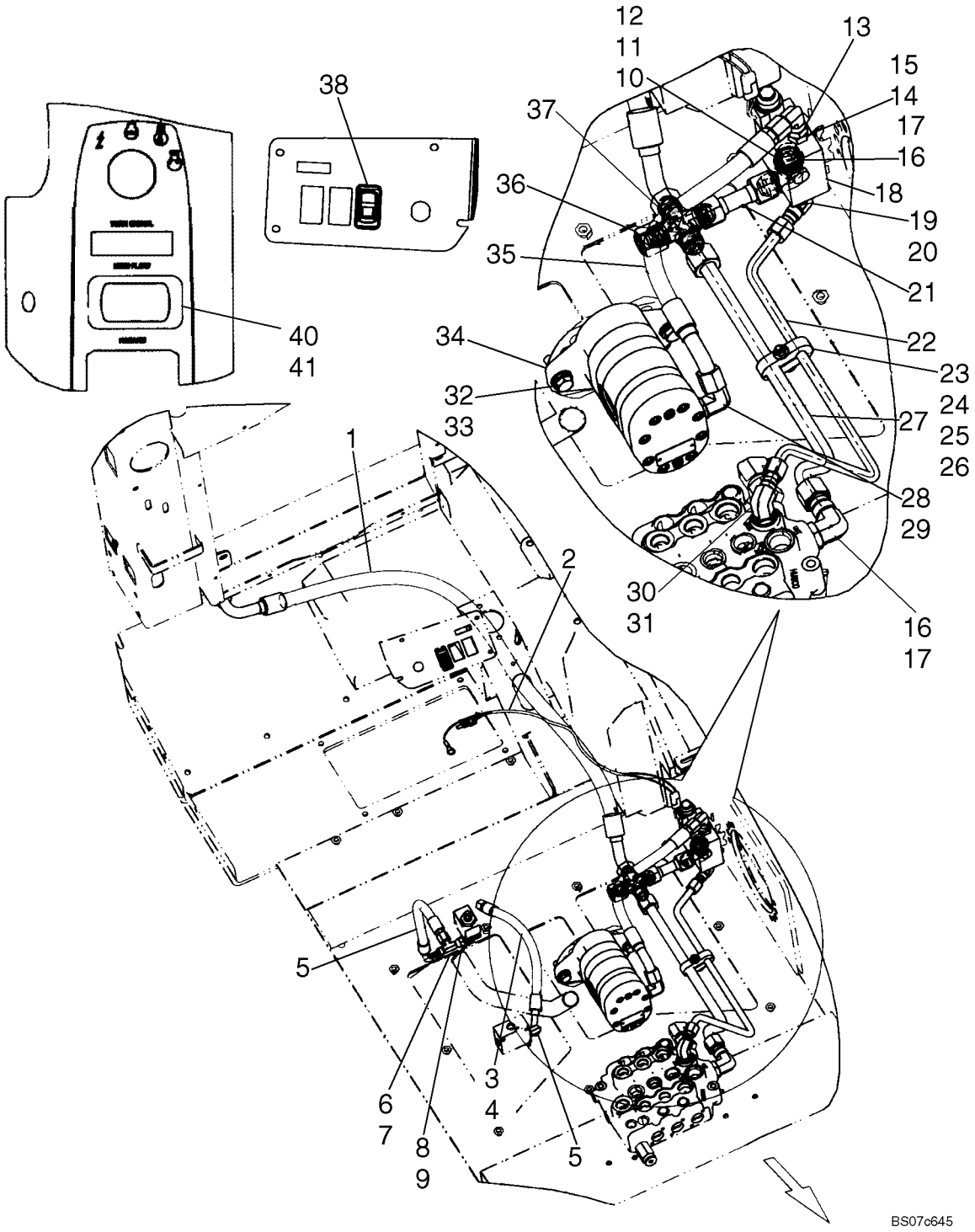

SISTEMA HIDRÁULICO, FLUXO ALTO UMA VELOCIDADE - MODELOS COM CONTROLO AUTOMÁTICO; SE UTILIZADO

REF	FN	PART NUMBER	YR/SN	QTY	DESCRIPTION
28		164910		1	COTOVELO, 90º, 7/8"-14, 37º x 7/8"-14, O-Ring, Incl. 29
29		167269		1	ANEL "O", 10-1, 90 Duro, .755" ID x .097" Thk
30		9617891		1	COTOVELO, 90º, 3/4"-16, 37º x 7/8"-14, O-Ring, Incl. 31
31		167269		1	ANEL "O", 10-1, 90 Duro, .755" ID x .097" Thk
32		86629541		2	PARAFUSO, Hex, M12 x 40, 8.8, Full Thd
33		65319		2	ARRUELA PLANA
34		87368988		1	BOMBA, See Fig. 06-51; 3 Ports (1 Inlet/2 Outlet)
35		87437198		1	MANGUEIRA, Pump To High Flow Valve; 555 mm, 21.85 in. Length
36		219606		1	TAMPA DO RESERVATÓRIO, 37º, 1 1/16"-12
37		86513045		1	CONEXÃO, Cross Male 37 Deg. Flare To Male 37 Deg. Flare
38		87034856		1	INTERRUPTOR, Rocker, High Flow
39		263117		7	TIRA DE CABO, .14" x 11 1/2", As Required
40		87572862		1	INTERRUPTOR, High Flow Switch
41		87572870		1	CHICOTE, High Flow Adapter; Not Illustrated

SISTEMA HIDRÁULICO, FLUXO ALTO UMA VELOCIDADE - MODELOS COM CONTROLO AUTOMÁTICO, EH AUX; SE UTILIZADO

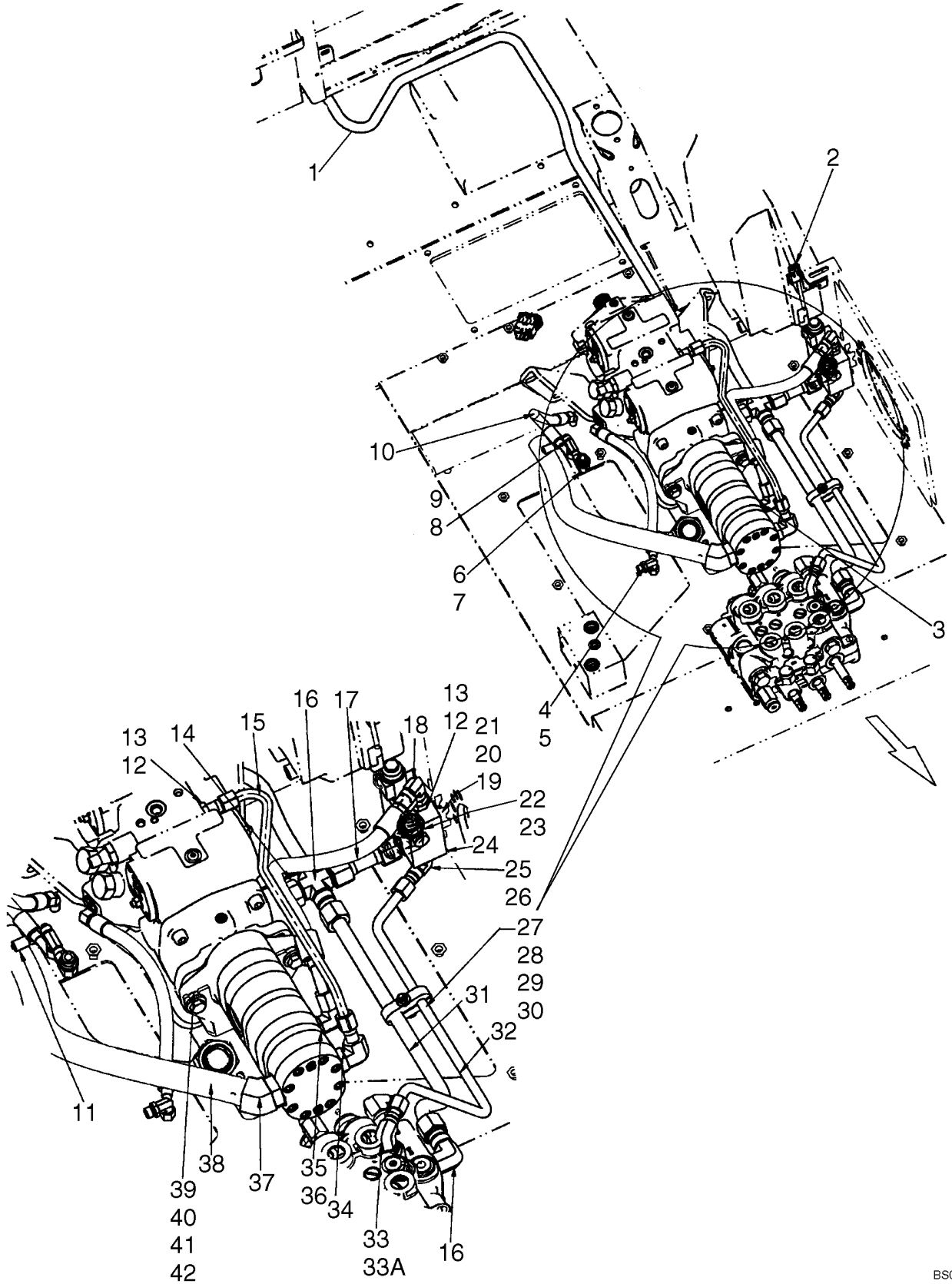

SISTEMA HIDRÁULICO, FLUXO ALTO UMA VELOCIDADE - MODELOS COM CONTROLO AUTOMÁTICO, EH AUX; SE UTILIZADO

REF	FN	PART NUMBER	YR/SN	QTY	DESCRIPTION
1		REF		1	INSTRUCAO, Tee To Oil Cooler; See Figure 08-16
2		87572870		1	CHICOTE, High Flow Harness
3		87437198		1	MANGUEIRA, Pump To High Flow Valve; 555 mm, 21.85 in. Length
4		76344		1	COTOVELO, 90º, 9/16"-18, 37º x 9/16"-18, O-Ring, Incl. 5
5		9617873		1	ANEL "O", 6-1, 90 Duro, .468" ID x .078" Thk
6		76347		1	COTOVELO, 90º, 9/16"-18, 37º x 3/4"-16, O-Ring, Incl. 7
7		128825		1	ANEL "O", 8-1, 90 Duro, .644" ID x .087" Thk
8		129274		1	TEE, 37º, 9/16"-18, x 9/16"-18, Fem Sw Run, Incl. 9
9		9617873		1	ANEL "O", 6-1, 90 Duro, .468" ID x .078" Thk
10		87586523		2	MANGUEIRA, Interlock Supply; 375 mm, 14.75 in. Length
11		507586		2	BRACADEIRA MANGUEIRA, #20, 0.81/1.75 Type F Worm
12		81827427		1	CONEXÃO, Incl. 13
13		128817		1	CONEXÃO, 9/16"-18, 37º x 3/4"-18, O-Ring, Incl O-Ring 128825
14		219606		1	TAMPA DO RESERVATÓRIO, 37º, 1 1/16"-12
15		87694638		1	TUBO, Charge
16		86513045		1	CONEXÃO
17		86578853		1	TUBULAÇÃO HIDRAULICO
18		248974		1	COTOVELO, 90º, 3/4"-16, 37º x 3/4"-16, 37º Fem Sw
19		88994		2	PORCA, Sq, 1/4"-20
20		87845		2	PARAFUSO, Hex, 1/4"-20 x 2 1/2", G5
21		80682		2	ARRUELA-TRAVA, 1/4"
22		322894		2	COTOVELO, 90º, 1 1/16"-12, 37º x 1 1/16"-12, O-Ring, Incl. 23
23		167266		2	ANEL "O", 12-1, 90 Duro, .924 ID x .116" Thk
24		86520550		1	VÁLVULA HIDRAULICA, See Fig. 08-19
25		128830		1	COTOVELO, 90º, 3/4"-16, 37º x 3/4"-16, O-Ring, Incl. 26
26		128825		1	ANEL "O", 8-1, 90 Duro, .644" ID x .087" Thk
27		87394830		1	PRENDEDOR

SISTEMA HIDRÁULICO, FLUXO ALTO UMA VELOCIDADE - MODELOS COM CONTROLO AUTOMÁTICO, EH AUX; SE UTILIZADO

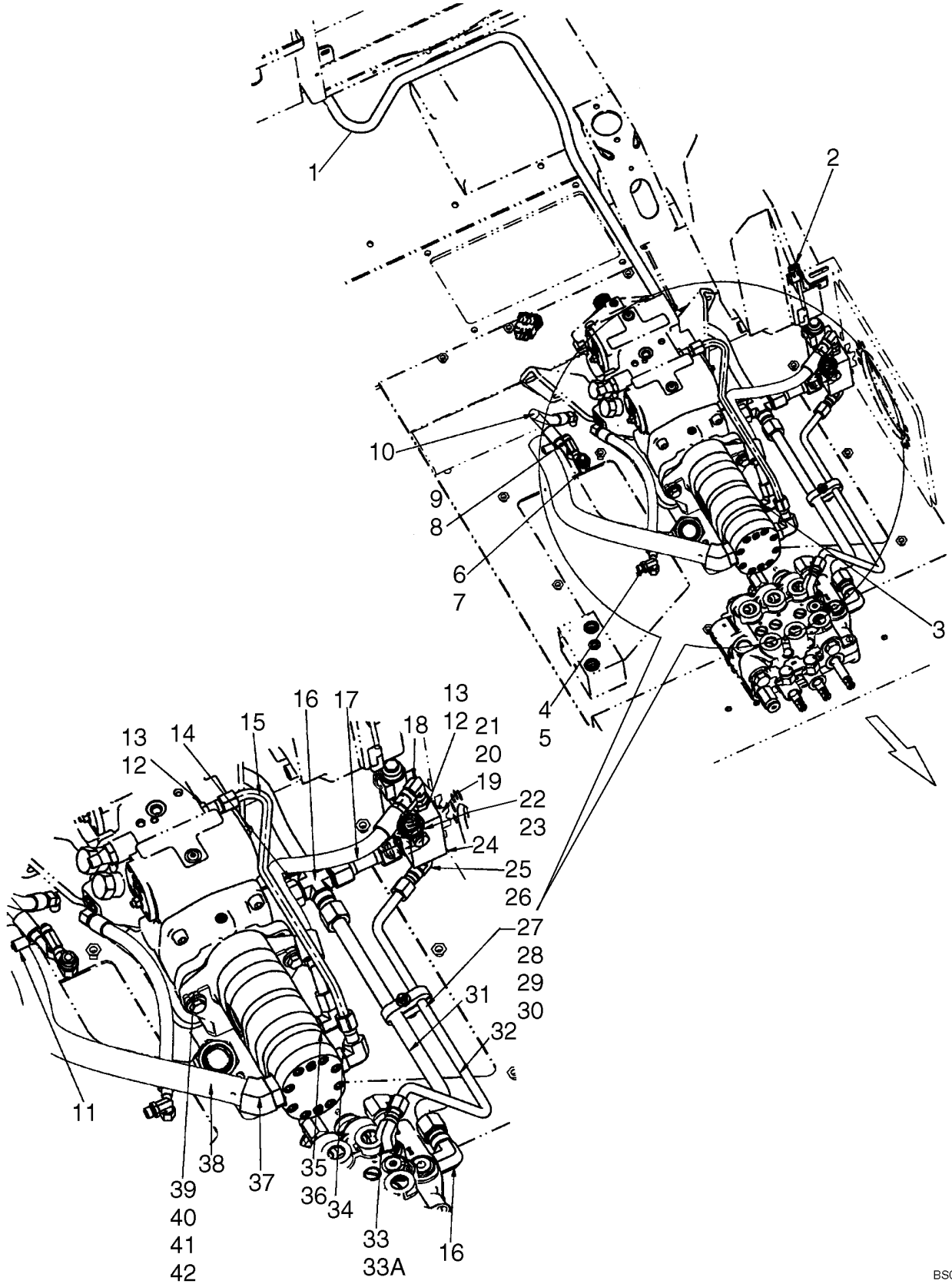

SISTEMA HIDRÁULICO, FLUXO ALTO UMA VELOCIDADE - MODELOS COM CONTROLO AUTOMÁTICO, EH AUX; SE UTILIZADO

REF	FN	PART NUMBER	YR/SN	QTY	DESCRIPTION
28		280164		1	PARAFUSO, Hex, 1/4"-20 x 1 3/4", G5
29		80701		2	ARRUELA PLANA, 1/4"
30		20356		1	CONTRA PORCA, 1/4"-20, GB
31		87397651		1	TUBO RÍGIDO, High Flow Valve Return
32		87397650		1	TUBO RÍGIDO, High Flow Supply
33		9617891		1	COTOVELO, 90º, 3/4"-16, 37º x 7/8"-14, O-Ring, Incl. 33A
33A		167269		1	ANEL "O", 10-1, 90 Duro, .755" ID x .097" Thk
34		87329785		1	COTOVELO, 90º, 3/4"-16, 37º x 1 1/16"-12, O-Ring
37		87029968		1	CONEXÃO, 1.0ID X1-5-16-12 THD
35		164910		1	COTOVELO, 90º, 7/8"-14, 37º x 7/8"-14, O-Ring, Incl. 36
38		87694637		1	MANGUEIRA, Suction; 620 mm (24.4 in)
36		167269		1	ANEL "O", 10-1, 90 Duro, .755" ID x .097" Thk
39		87551776		1	BOMBA, See Fig. 06-51; 3 Ports (1 Inlet/2 Outlet)
40		87580571		1	SUPORTE, Pump
41		86625256		2	ARRUELA PLANA, M12 x 28.5 x 4, HT
42		120080		2	PARAFUSO, Hex, M12 x 45, 8.8

SISTEMA HIDRÁULICO, FLUXO ALTO TRANSMISSÃO DE DESLOCAMENTO DE DUAS VELOCIDADES - MODELOS COM CONTROL; SE UTILIZ

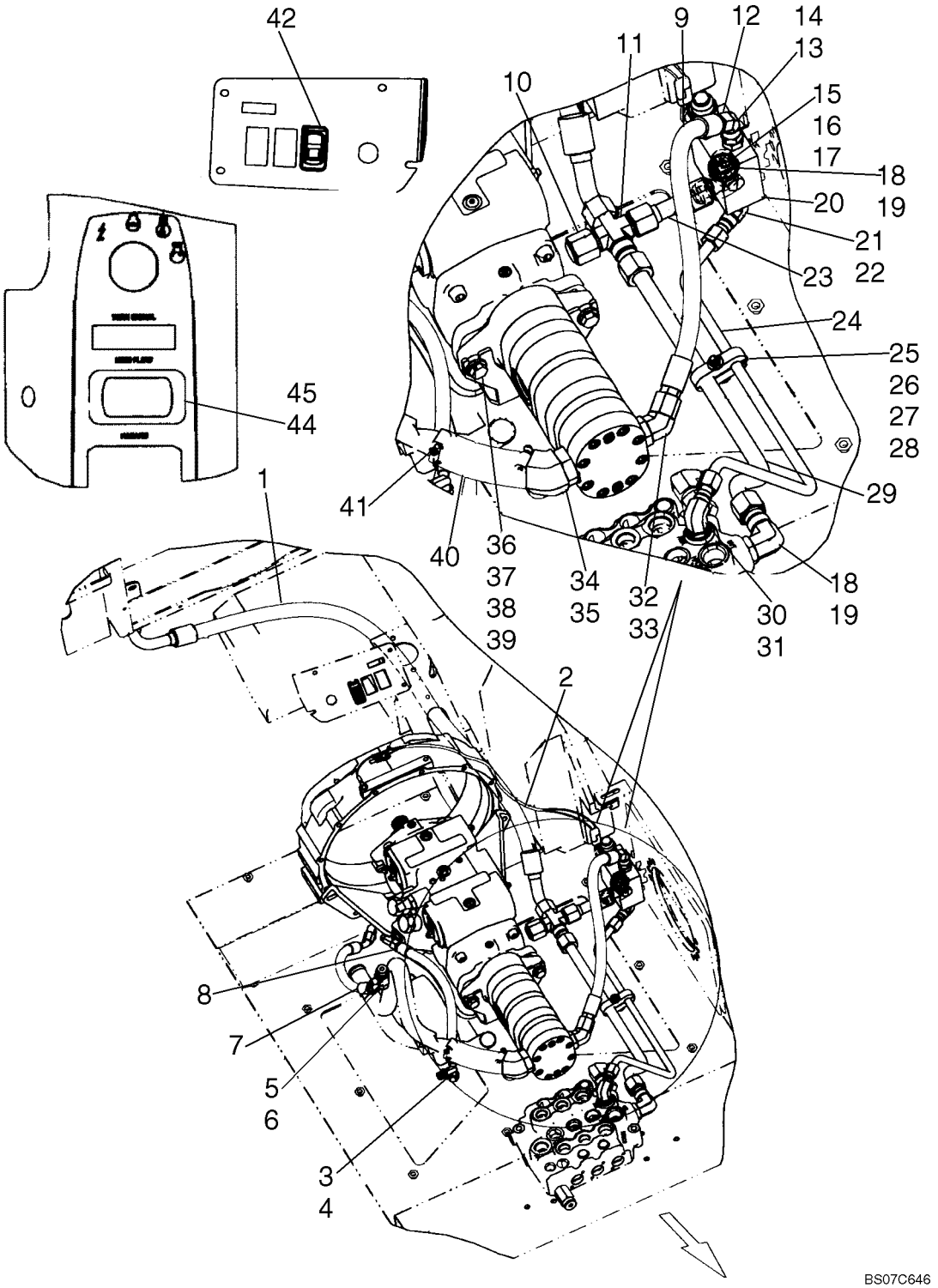

SISTEMA HIDRÁULICO, FLUXO ALTO TRANSMISSÃO DE DESLOCAMENTO DE DUAS VELOCIDADES - MODELOS COM CONTROL; SE UTI

REF	FN	PART NUMBER	YR/SN	QTY	DESCRIPTION
1		87617624		1	MANGUEIRA, Tee To Oil Cooler; 1200 mm, 47.25 in. Length; Replaces 87365199
2		86621102		1	CHICOTE DE FIOS, High Flow Harness
3		76344		1	COTOVELO, 90º, 9/16"-18, 37º x 9/16"-18, O-Ring, Incl. 4
4		9617873		1	ANEL "O", 6-1, 90 Duro, .468" ID x .078" Thk
5		129274		1	TEE, 37º, 9/16"-18, x 9/16"-18, Fem Sw Run, Incl. 6
5		87564739		1	TEE, Tee Adj Run 37 Flare 3/8 x 1/2 x 3/8; No Longer Used, Order 129274; Incl. 6
6		128825		1	ANEL "O", 8-1, 90 Duro, .644" ID x .087" Thk
7		87586523		1	MANGUEIRA, Override Valve Drain; 375 mm, 14.75 in. Length; Replaces 87561132
8		87586523		1	MANGUEIRA, Interlock Supply; 375 mm, 14.75 in. Length
9		87596307		1	MANGUEIRA, High Flow Supply; 545 mm, 21.46 in. Length
10		219606		1	TAMPA DO RESERVATÓRIO, 37º, 1 1/16"-12
11		86513045		1	CONEXÃO, Cross Male 37 Flare To Male 37 Flare
12		248992		1	COTOVELO, 45º, 3/4"-16, 37º x 3/4"-16, 37º Fem Sw
13		81827427		1	CONEXÃO, Incl. 14
14		128817		1	CONEXÃO, 9/16"-18, 37º x 3/4"-18, O-Ring, Incl O-Ring 128825
15		80682		2	ARRUELA-TRAVA, 1/4"
16		87845		2	PARAFUSO, Hex, 1/4"-20 x 2 1/2", G5
17		88994		2	PORCA, Sq, 1/4"-20
18		322894		2	COTOVELO, 90º, 1 1/16"-12, 37º x 1 1/16"-12, O-Ring, Incl. 19
19		167266		2	ANEL "O", 12-1, 90 Duro, .924 ID x .116" Thk
20		86520550		1	VÁLVULA HIDRAULICA, See Fig. 08-19
21		128830		1	COTOVELO, 90º, 3/4"-16, 37º x 3/4"-16, O-Ring, Incl. 22
22		128825		1	ANEL "O", 8-1, 90 Duro, .644" ID x .087" Thk
23		86578853		1	TUBULAÇÃO HIDRAULICO
24		87397650		1	TUBO RÍGIDO, High Flow Supply
25		87394830		1	PRENDEDOR, Clamp

SISTEMA HIDRÁULICO, FLUXO ALTO TRANSMISSÃO DE DESLOCAMENTO DE DUAS VELOCIDADES - MODELOS COM CONTROL; SE UTILIZ

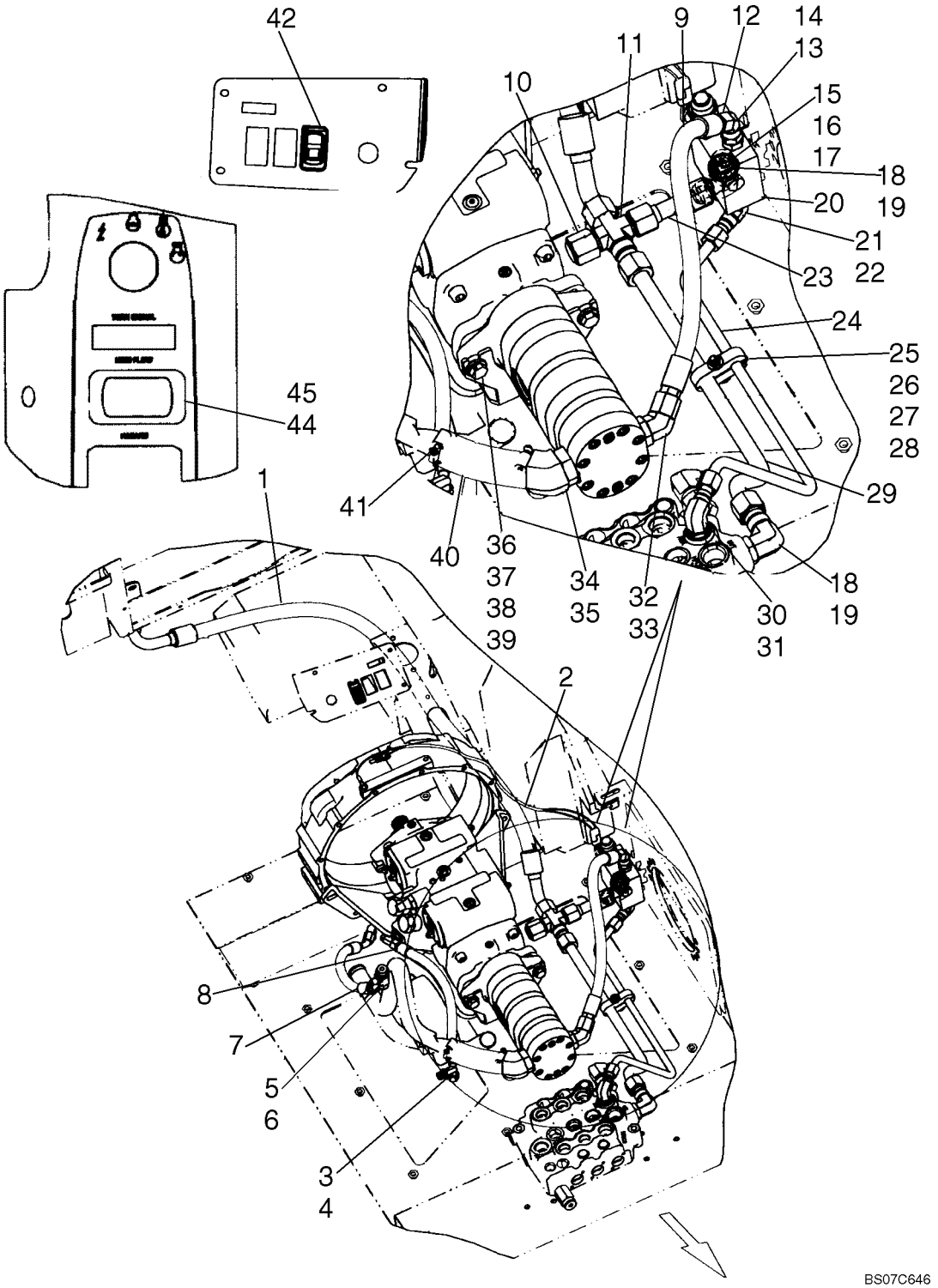

SISTEMA HIDRÁULICO, FLUXO ALTO TRANSMISSÃO DE DESLOCAMENTO DE DUAS VELOCIDADES - MODELOS COM CONTROL; SE UTI

REF	FN	PART NUMBER	YR/SN	QTY	DESCRIPTION
26		280164		1	PARAFUSO, Hex, 1/4"-20 x 1 3/4", G5
27		80701		2	ARRUELA PLANA, 1/4"
28		20356		1	CONTRA PORCA, 1/4"-20, GB
29		87397651		1	TUBO RÍGIDO, High Flow Valve Return
30		9617891		1	COTOVELO, 90º, 3/4"-16, 37º x 7/8"-14, O-Ring, Incl. 31
31		167269		1	ANEL "O", 10-1, 90 Duro, .755" ID x .097" Thk
32		100197		1	COTOVELO, 45º, 7/8"-14 x 1 1/16"-12, O-Ring, Incl. 33
33		167266		1	ANEL "O", 12-1, 90 Duro, .924 ID x .116" Thk
34		87033824		1	CONEXAO, Stem 45 Bead Hose 1.25 ID x 1-5/16 - 12; Incl. 35
35		237-6016		1	ANEL "O", 16-1, 90 Duro, 1.171" ID x .118" Thk
36		87551776		1	BOMBA, High Flow Two Speed; See Fig. 06-52
37		120080		2	PARAFUSO, Hex, M12 x 45, 8.8
38		65319		2	ARRUELA PLANA, No Longer Used, Order 86625256
38		86625256		2	ARRUELA PLANA, M12 x 28.5 x 4, HT
39		87580571		1	SUPORTE, Pump Bracket, Gray
40		87553648		1	MANGUEIRA, Suction
42		87034856		1	INTERRUPTOR, Rocker, High Flow
43		263117		7	TIRA DE CABO, .14" x 11 1/2", As Required
44		87572862		1	INTERRUPTOR, High Flow Switch
45		87572870		1	CHICOTE, High Flow Adapter; Not Illustrated
46		529070		2	TIRA DE CABO, .30" x 14.5"

SISTEMA HIDRÁULICO, FLUXO ALTO TRANSMISSÃO DE DESLOCAMENTO DE DUAS VELOCIDADES - MODELOS COM CONTROL; SE UTILIZ

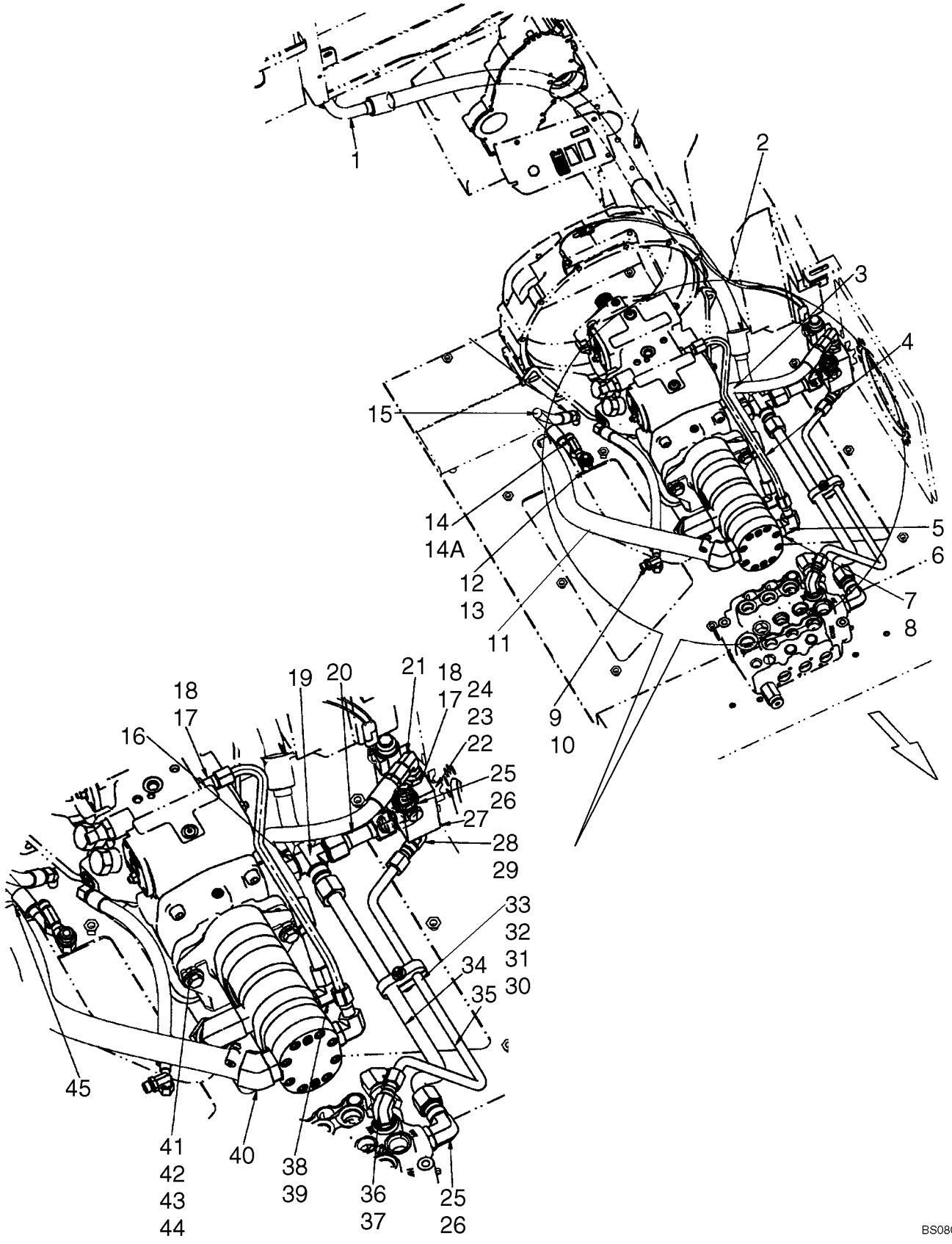

SISTEMA HIDRÁULICO, FLUXO ALTO TRANSMISSÃO DE DESLOCAMENTO DE DUAS VELOCIDADES - MODELOS COM CONTROL; SE UTI

REF	FN	PART NUMBER	YR/SN	QTY	DESCRIPTION
1		87617624		1	MANGUEIRA, Tee To Oil Cooler; 1200 mm, 47.25 in. Length; Replaces 87365199
2		86621102		1	CHICOTE DE FIOS, High Flow Harness
3		87437198		1	MANGUEIRA, Pump To High Flow Valve; 555 mm (21.85 in)
4		87694638		1	TUBO, Charge
5		128819		1	CONEXÃO, 3/4"-16, 37º x 7/8"-14, O-Ring, Incl 6
6		167269		1	ANEL "O", 10-1, 90 Duro, .755" ID x .097" Thk
7		176081		1	CONEXÃO, 3/4"-16, 37º x 1 1/16"-12, O-Ring, Incl 8
8		167266		1	ANEL "O", 12-1, 90 Duro, .924 ID x .116" Thk
9		76344		1	COTOVELO, 90º, 9/16"-18, 37º x 9/16"-18, O-Ring, Incl. 10
10		9617873		1	ANEL "O", 6-1, 90 Duro, .468" ID x .078" Thk
11		87694637		1	MANGUEIRA, Suction; 620 mm (24.4 in)
12		76347		1	COTOVELO, 90º, 9/16"-18, 37º x 3/4"-16, O-Ring, Incl 13
13		128825		1	ANEL "O", 8-1, 90 Duro, .644" ID x .087" Thk
14		129274		1	TEE, 37º, 9/16"-18, x 9/16"-18, Fem Sw Run, Incl. 14A
14A		128825		1	ANEL "O", 8-1, 90 Duro, .644" ID x .087" Thk
15		87586523		1	MANGUEIRA, Override Valve Drain; 375 mm, 14.75 in. Length
16		219606		1	TAMPA DO RESERVATÓRIO, 37º, 1 1/16"-12
17		81827427		1	CONEXÃO, Incl. 18
18		128817		1	CONEXÃO, 9/16"-18, 37º x 3/4"-18, O-Ring, Incl O-Ring 128825
19		86513045		1	CONEXÃO, Cross Male 37 Flare To Male 37 Flare
20		86578853		1	TUBULAÇÃO HIDRAULICO
21		248974		1	COTOVELO, 90º, 3/4"-16, 37º x 3/4"-16, 37º Fem Sw
22		88994		2	PORCA, Sq, 1/4"-20
23		87845		2	PARAFUSO, Hex, 1/4"-20 x 2 1/2", G5
24		80682		2	ARRUELA-TRAVA, 1/4"
25		322894		2	COTOVELO, 90º, 1 1/16"-12, 37º x 1 1/16"-12, O-Ring, Incl. 26
26		167266		2	ANEL "O", 12-1, 90 Duro, .924 ID x .116" Thk
27		86520550		1	VÁLVULA HIDRAULICA, See Fig. 08-19

SISTEMA HIDRÁULICO, FLUXO ALTO TRANSMISSÃO DE DESLOCAMENTO DE DUAS VELOCIDADES - MODELOS COM CONTROL; SE UTILIZ

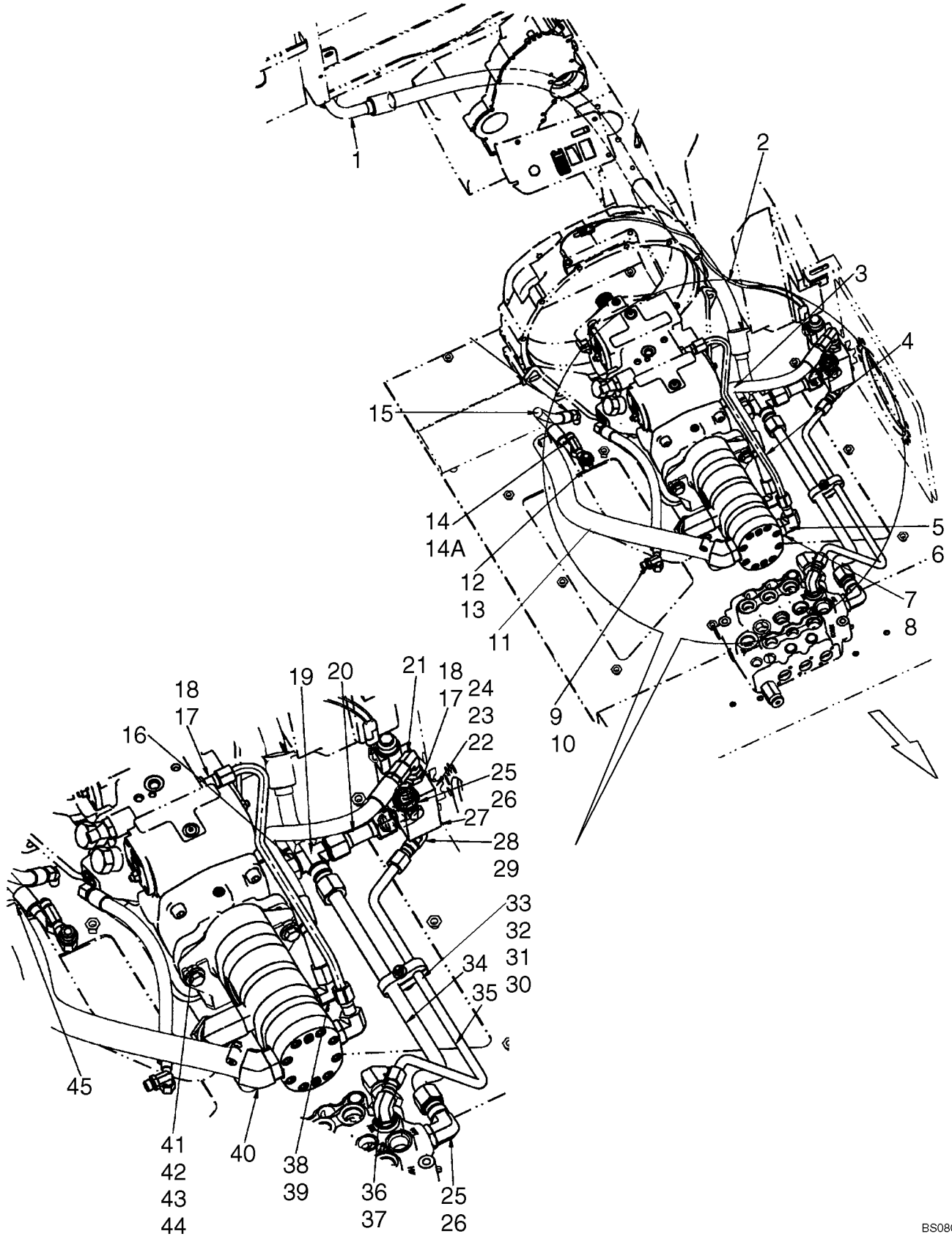

SISTEMA HIDRÁULICO, FLUXO ALTO TRANSMISSÃO DE DESLOCAMENTO DE DUAS VELOCIDADES - MODELOS COM CONTROL; SE UTI

REF	FN	PART NUMBER	YR/SN	QTY	DESCRIPTION
28		128830		1	COTOVELO, 90º, 3/4"-16, 37º x 3/4"-16, O-Ring, Incl. 29
29		128825		1	ANEL "O", 8-1, 90 Duro, .644" ID x .087" Thk
30		87394830		1	PRENDEDOR, Clamp
31		280164		1	PARAFUSO, Hex, 1/4"-20 x 1 3/4", G5
32		80701		2	ARRUELA PLANA, 1/4"
33		20356		1	CONTRA PORCA, 1/4"-20, GB
34		87397651		1	TUBO RÍGIDO, High Flow Valve Return
35		87397650		1	TUBO RÍGIDO, High Flow Supply
36		9617891		1	COTOVELO, 90º, 3/4"-16, 37º x 7/8"-14, O-Ring, Incl. 37
37		167266		1	ANEL "O", 12-1, 90 Duro, .924 ID x .116" Thk
38		164910		1	COTOVELO, 90º, 7/8"-14, 37º x 7/8"-14, O-Ring, Incl 39
39		167269		1	ANEL "O", 10-1, 90 Duro, .755" ID x .097" Thk
40		87029968		1	CONEXÃO, Stem, 45, 1.0ID x 1-5/16-12
41		87551776		1	BOMBA, High Flow Two Speed; See Fig. 06-52
42		87580571		1	SUPORTE, Pump Bracket, Gray
43		86625256		2	ARRUELA PLANA, M12 x 28.5 x 4, HT
44		120080		2	PARAFUSO, Hex, M12 x 45, 8.8
		87034856		1	INTERRUPTOR, Rocker, High Flow
		263117		7	TIRA DE CABO, .14" x 11 1/2", As Required

VÁLVULA DE CONTROLE, KITS DE SUBSTITUIÇÃO DE VEDAÇÕES

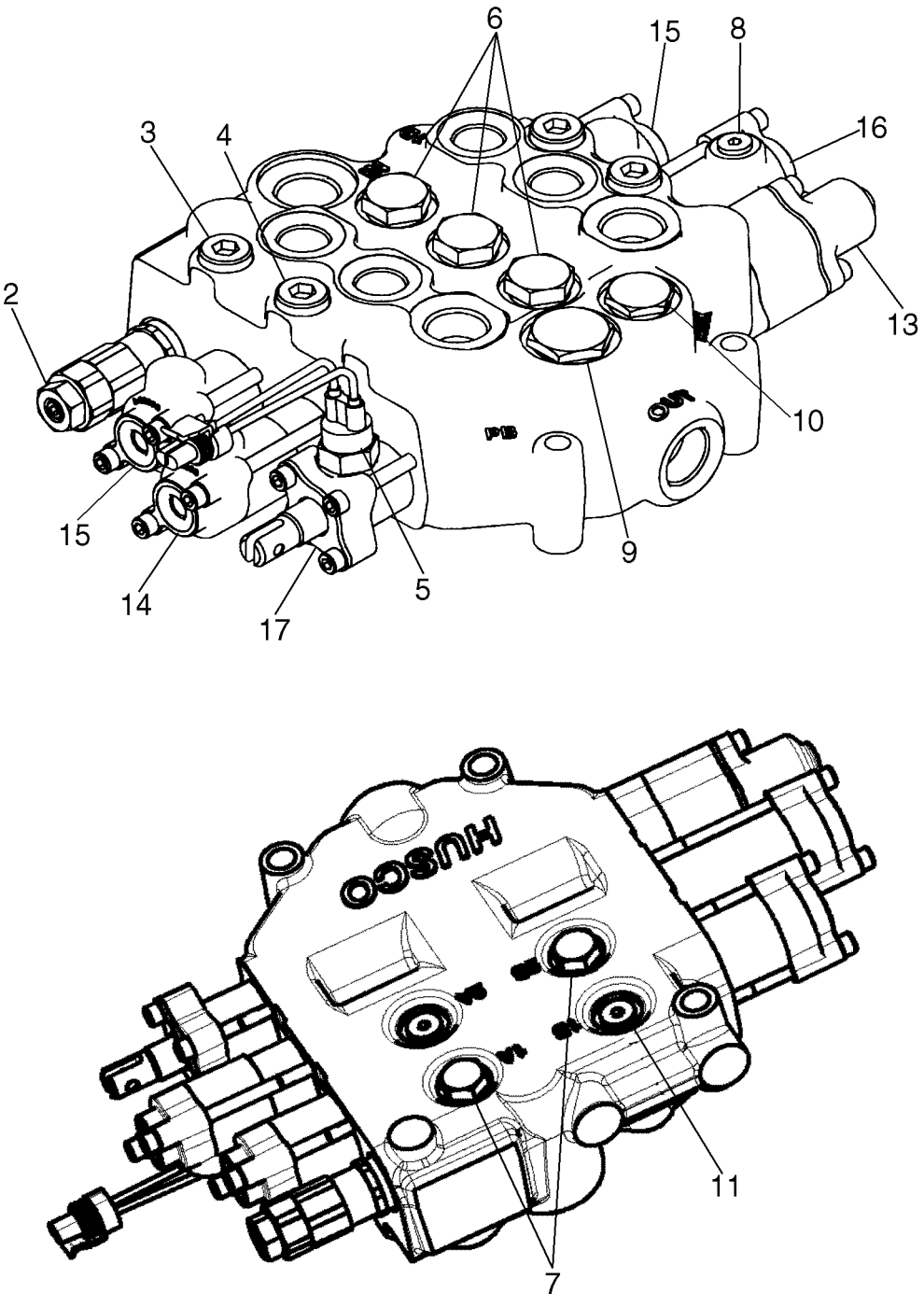

BS07D208

VÁLVULA DE CONTROLE, KITS DE SUBSTITUIÇÃO DE VEDAÇÕES

REF	FN	PART NUMBER	YR/SN	QTY	DESCRIPTION
		87583689		1	VALVULA, Control Valve, Pilot Control .143 Orifice; Incl. 1 - 17
1		87610517		1	JOGO DE JUNTAS, Seal Replacement Kit; See Fig. 08-42
2		87610521		1	VALVULA, Main Relief Valve; See Fig. 08-43
3		87445939		3	VALVULA, Workport Relief Valve; See Fig. 08-44
4		87445932		1	VALVULA, Workport Anti Cavitation Valve; See Fig. 08-44
5		87446617		1	INTERRUPTOR, Auxiliary Spool Interlock Switch; See Fig. 08-50
6		87576157		3	VÁLVULA AMORTECEDORA, Check Valve Group; See Fig. 08-45
7		87610351		2	VALVULA, Check Valve Group; See Fig. 08-51
8		87610530		1	BUJÃO, Plug Assembly; See Fig. 08-44
9		87576158		1	BUJÃO, Plug Assembly; See Fig. 08-44
10		87576160		1	BUJÃO, Plug Assembly; See Fig. 08-44
11		87610352		2	BUJÃO, Plug Assembly
12		87576162		2	BUJÃO, Plug Assembly, Metric; See Fig. 08-44
13		87643790		1	CARRETO, Spool End Group, Detent; See Fig. 08-46
14		87610531		1	CARRETO, Spool End Group P. O.; See Fig. 08-47
15		87610532		2	CARRETO, Spool End Group P. O.; See Fig. 08-48
16		87610533		1	CARRETO, Spool End Group P. O.; See Fig. 08-49
17		87611850		1	CARRETO, Spool End Group P. O.; See Fig. 08-50

VÁLVULA DE CONTROLE, KITS DE SUBSTITUIÇÃO DE VEDAÇÕES

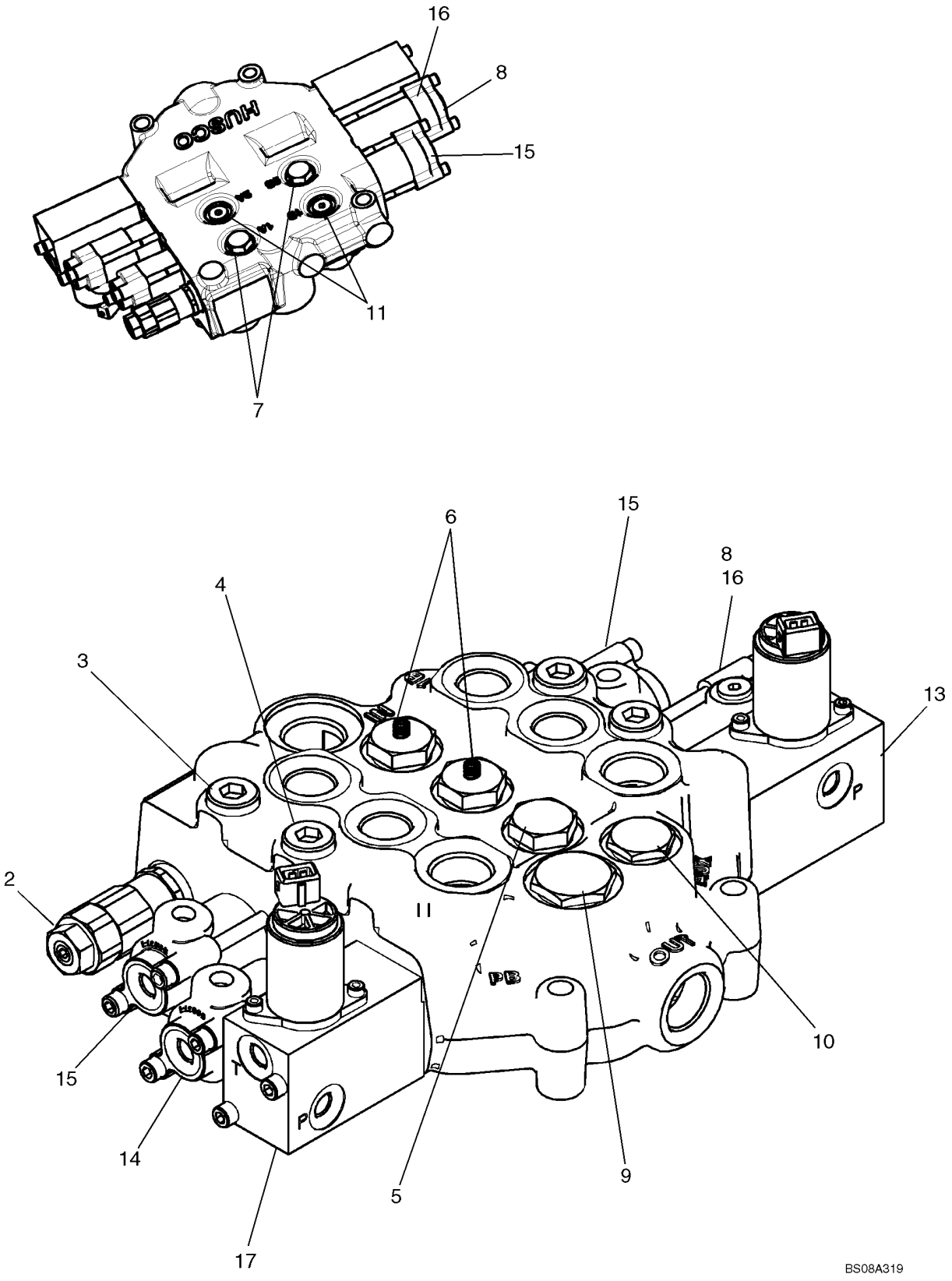

VÁLVULA DE CONTROLE, KITS DE SUBSTITUIÇÃO DE VEDAÇÕES

REF	FN	PART NUMBER	YR/SN	QTY	DESCRIPTION
		87653270		1	VÁLVULA HIDRAULICA, Control Valve, Pilot Control With EH Aux; Incl. 1 - 17
1		87610517		1	JOGO DE JUNTAS, Seal Replacement Kit; See Fig. 08-42
2		87610521		1	VALVULA, Main Relief Valve; See Fig. 08-43
3		87445939		3	VALVULA, Workport Relief Valve; See Fig. 08-44
4		87445932		1	VALVULA, Workport Anti Cavitation Valve; See Fig. 08-44
5		87576161		1	BUJÃO, Plug Assy
6		87576157		2	VÁLVULA AMORTECEDORA, Check Valve Group; See Fig. 08-45
7		87610351		2	VALVULA, Check Valve Group; See Fig. 08-51
8		87610530		1	BUJÃO, Plug Assembly; See Fig. 08-44
9		87576158		1	BUJÃO, Plug Assembly; See Fig. 08-44
10		87576160		1	BUJÃO, Plug Assembly; See Fig. 08-44
11		87610352		2	BUJÃO, Plug Assembly
12		87576162		2	BUJÃO, Plug Assembly, Metric; See Fig. 08-44
13		87611845		1	CARRETO, Spool End Group, EHPV; See Fig. 08-53
14		87610531		1	CARRETO, Spool End Group P. O.; See Fig. 08-47
15		87610532		2	CARRETO, Spool End Group P. O.; See Fig. 08-48
16		87610533		1	CARRETO, Spool End Group P. O.; See Fig. 08-49
17		87611846		1	CARRETO, Spool End Group EHPV; See Fig. 08-52

VÁLVULA DE CONTROLE, KITS DE SUBSTITUIÇÃO DE VEDAÇÕES

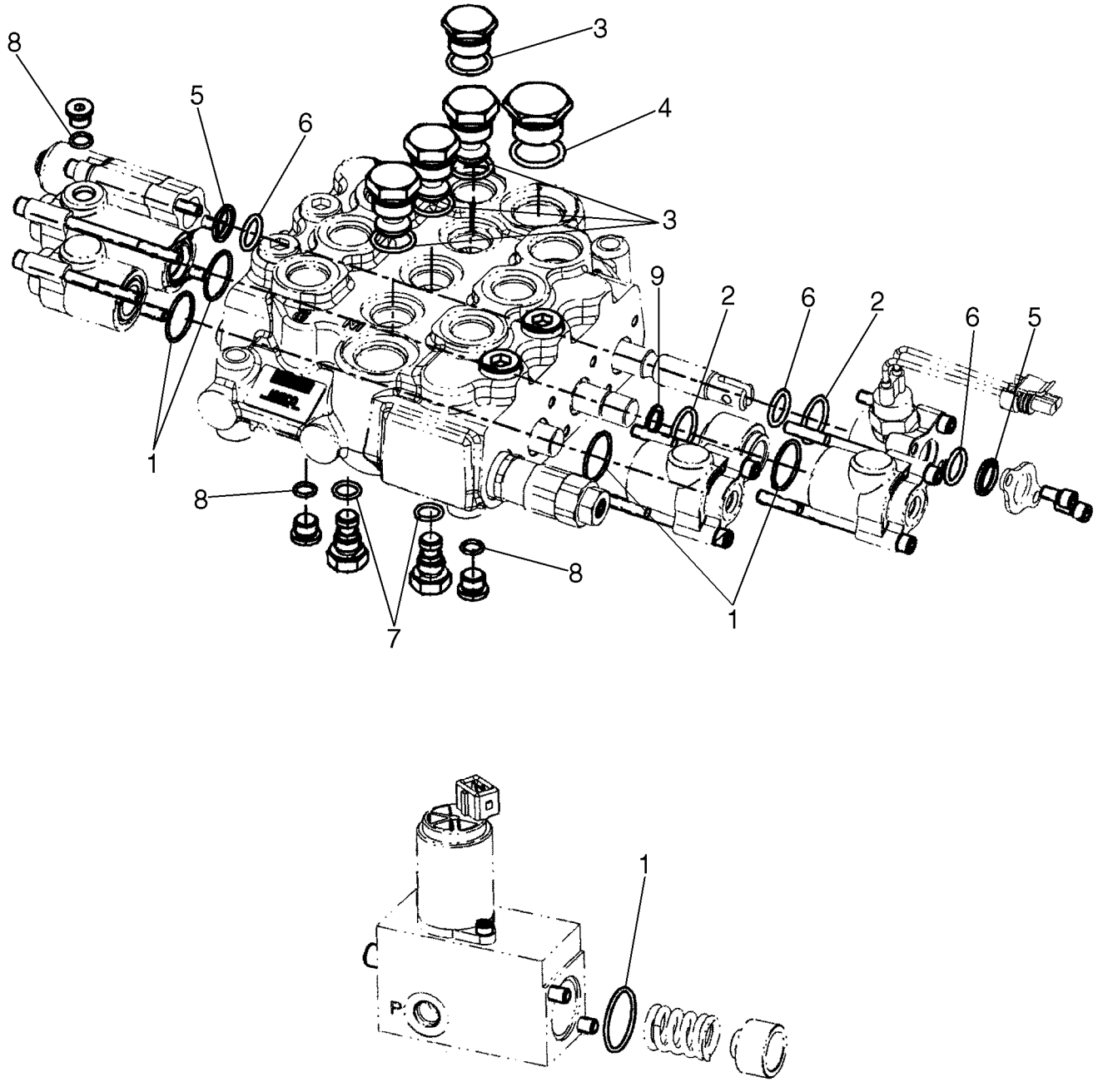

BS07D209

VÁLVULA DE CONTROLE, KITS DE SUBSTITUIÇÃO DE VEDAÇÕES

REF	FN	PART NUMBER	YR/SN	QTY	DESCRIPTION
		87610517		1	JOGO DE JUNTAS, Seal Replacement Kits; Incl. 1 - 9
1		NSS		6	BOLETIM INFORMATIVO, O-Ring, 1.129 OD.
2		NSS		2	BOLETIM INFORMATIVO, O-Ring, 1.063 OD.
3		NSS		4	BOLETIM INFORMATIVO, O-Ring, .949 OD.
4		NSS		1	BOLETIM INFORMATIVO, O-Ring, 1.156 OD.
5		NSS		2	BOLETIM INFORMATIVO, O-Ring, .796 OD.
6		NSS		3	BOLETIM INFORMATIVO, O-Ring, .818 OD.
7		NSS		2	BOLETIM INFORMATIVO, O-Ring, .614 OD.
8		NSS		3	BOLETIM INFORMATIVO, O-Ring, .498 OD.
9		NSS		1	BOLETIM INFORMATIVO, Back Up O-Ring, .673 OD.

VÁLVULA DE CONTROLE - CIRCUITO DE ALÍVIO, PRINCIPAL

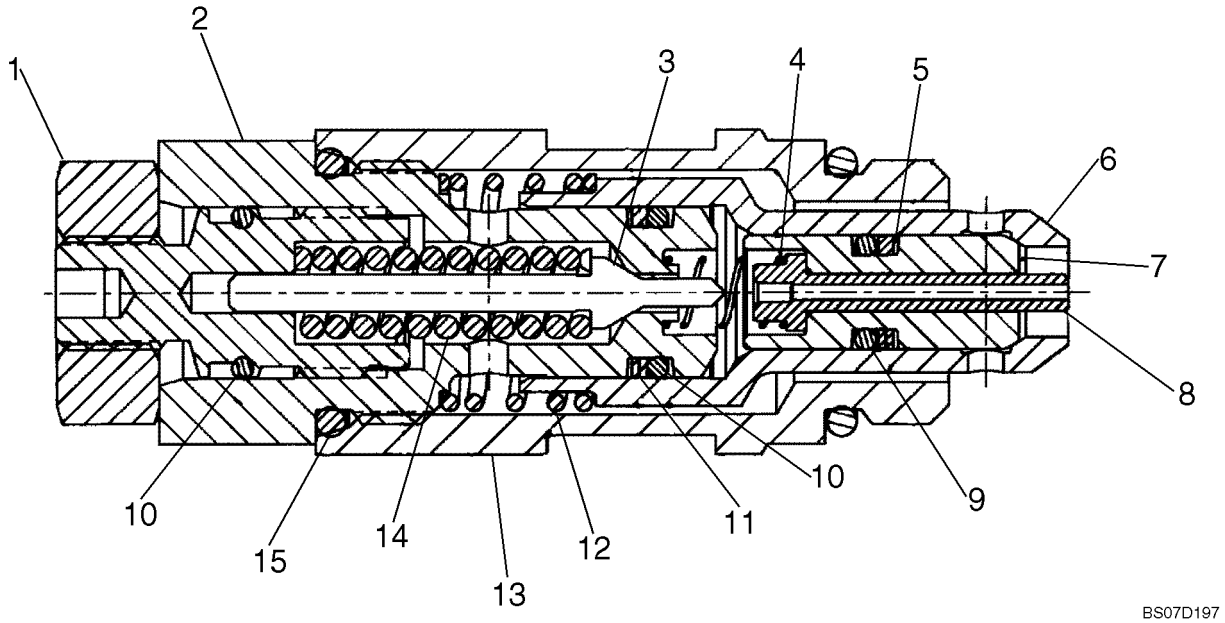

BS07D197

VÁLVULA DE CONTROLE - CIRCUITO DE ALÍVIO, PRINCIPAL

REF	FN	PART NUMBER	YR/SN	QTY	DESCRIPTION
		87610521		1	VALVULA, Main Relief Valve, 2750 PSI; Incl. 1 - 16
1		NSS		1	BOLETIM INFORMATIVO, Nut
2		NSS		1	BOLETIM INFORMATIVO, Plug
3		NSS		1	BOLETIM INFORMATIVO, Poppet
4		NSS		1	BOLETIM INFORMATIVO, Spring
5		NSS		1	BOLETIM INFORMATIVO, Back-Up Ring
6		NSS		1	BOLETIM INFORMATIVO, Poppet
7		NSS		1	BOLETIM INFORMATIVO, Poppet
8		NSS		1	BOLETIM INFORMATIVO, Piston
9		NSS		1	BOLETIM INFORMATIVO, O-Ring
10		NSS		2	BOLETIM INFORMATIVO, O-Ring
11		NSS		1	BOLETIM INFORMATIVO, Back-Up Ring
12		NSS		1	BOLETIM INFORMATIVO, Spring
13		NSS		1	BOLETIM INFORMATIVO, Body
14		NSS		1	BOLETIM INFORMATIVO, Spring
15		NSS		2	BOLETIM INFORMATIVO, O-Ring
16		NSS		1	BOLETIM INFORMATIVO, Adjust Screw

VÁLVULA DE CONTROLE, TAMPE ASSEMBLÉIA, CONJUNTO DA VÁLVULA

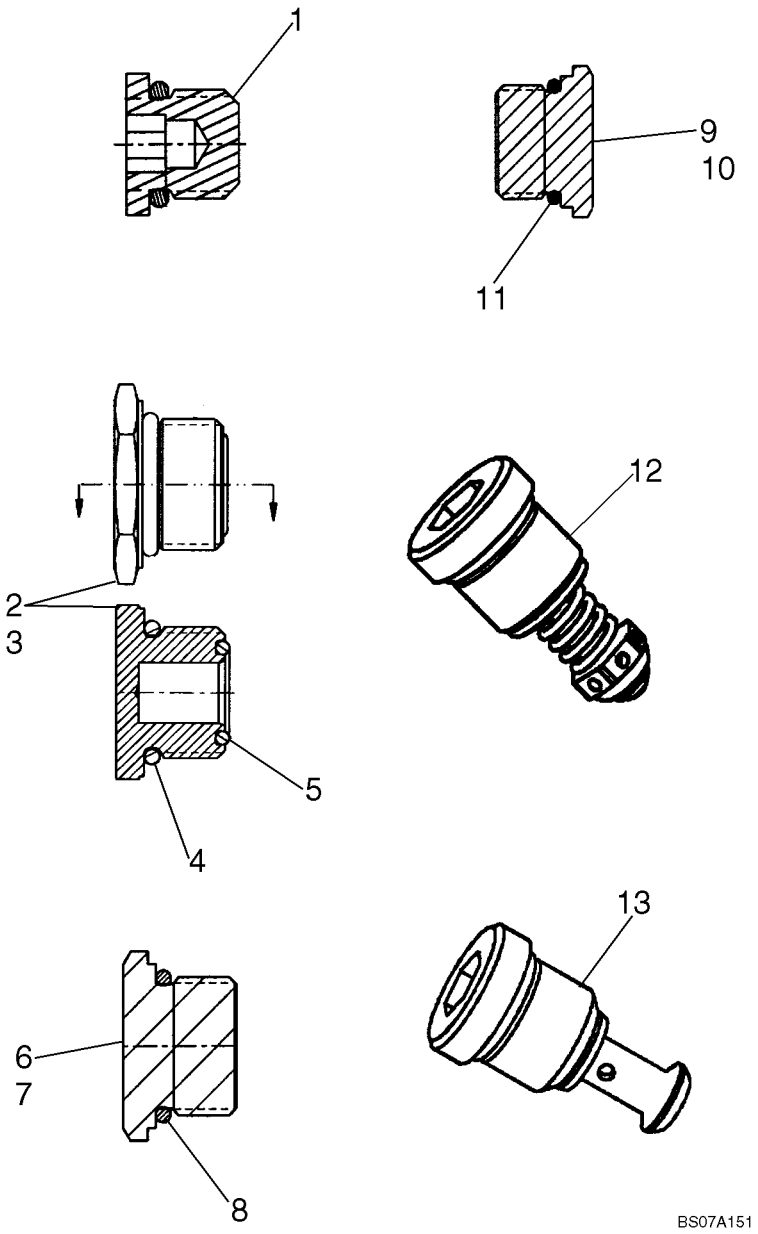

VÁLVULA DE CONTROLE, TAMPE ASSEMBLÉIA, CONJUNTO DA VÁLVULA

REF	FN	PART NUMBER	YR/SN	QTY	DESCRIPTION
1		87610530		1	BUJÃO, Plug Assy, 7/16 - 20 UNF Thd; Incl. Plug And O-ring
2		87576162		1	BUJÃO, Plug Assy, Metric - M18 X 1.5 - 6H; Incl. 3 - 5
3		NSS		1	BOLETIM INFORMATIVO, Plug, Metric
4		NSS		1	BOLETIM INFORMATIVO, O-Ring
5		NSS		1	BOLETIM INFORMATIVO, O-Ring
6		87576158		1	BUJÃO, Plug Assy, 1 - 1/16 - 12 UN Thd; Incl. 7, 8
7		NSS		1	BOLETIM INFORMATIVO, Plug, SAE
8		NSS		1	BOLETIM INFORMATIVO, O-Ring
9		87576160		1	BUJÃO, Plug Assy, 7/8 - 14 UNF Thd; Incl. 10, 11
10		NSS		1	BOLETIM INFORMATIVO, Plug, SAE
11		NSS		1	BOLETIM INFORMATIVO, O-Ring
12		87445939		1	VALVULA, Workport Relief Valve, Non Adjustable 245 Bar Stamped On Valve
13		87445932		1	VALVULA, Workport Anti-void Valve

VÁLVULA DE CONTROLE, CONFIRA VÁLVULA

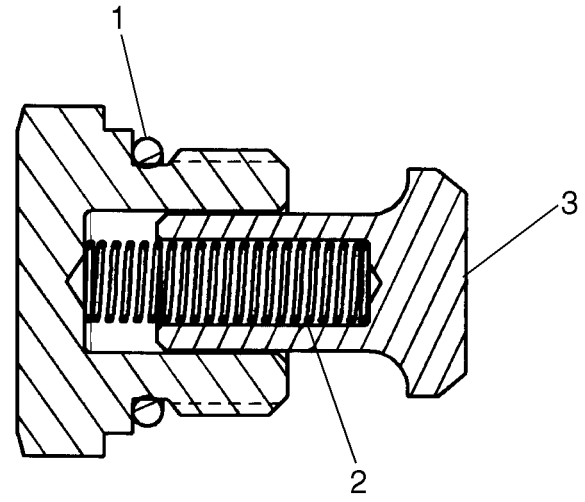

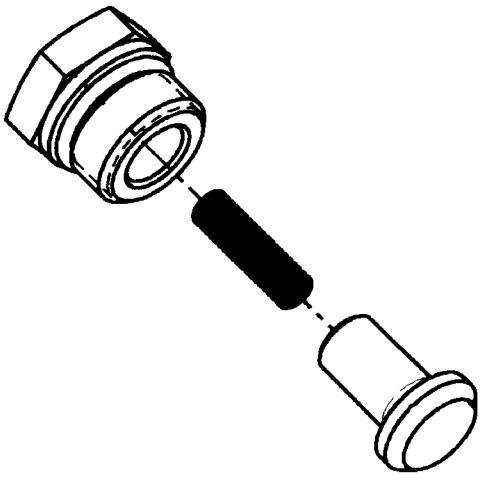

BS07A148

VÁLVULA DE CONTROLE, CONFIRA VÁLVULA

REF	FN	PART NUMBER	YR/SN	QTY	DESCRIPTION
		87576157		1	VÁLVULA AMORTECEDORA, Check Valve Group; Incl. 1 - 3
1		NSS		1	BOLETIM INFORMATIVO, Plug Assy
2		NSS		1	BOLETIM INFORMATIVO, Spring
3		NSS		1	BOLETIM INFORMATIVO, Poppet - C.V.

VÁLVULA DE CONTROLE, KITS DE SUBSTITUIÇÃO DE VEDAÇÕES - BOBINAS E BATENTES

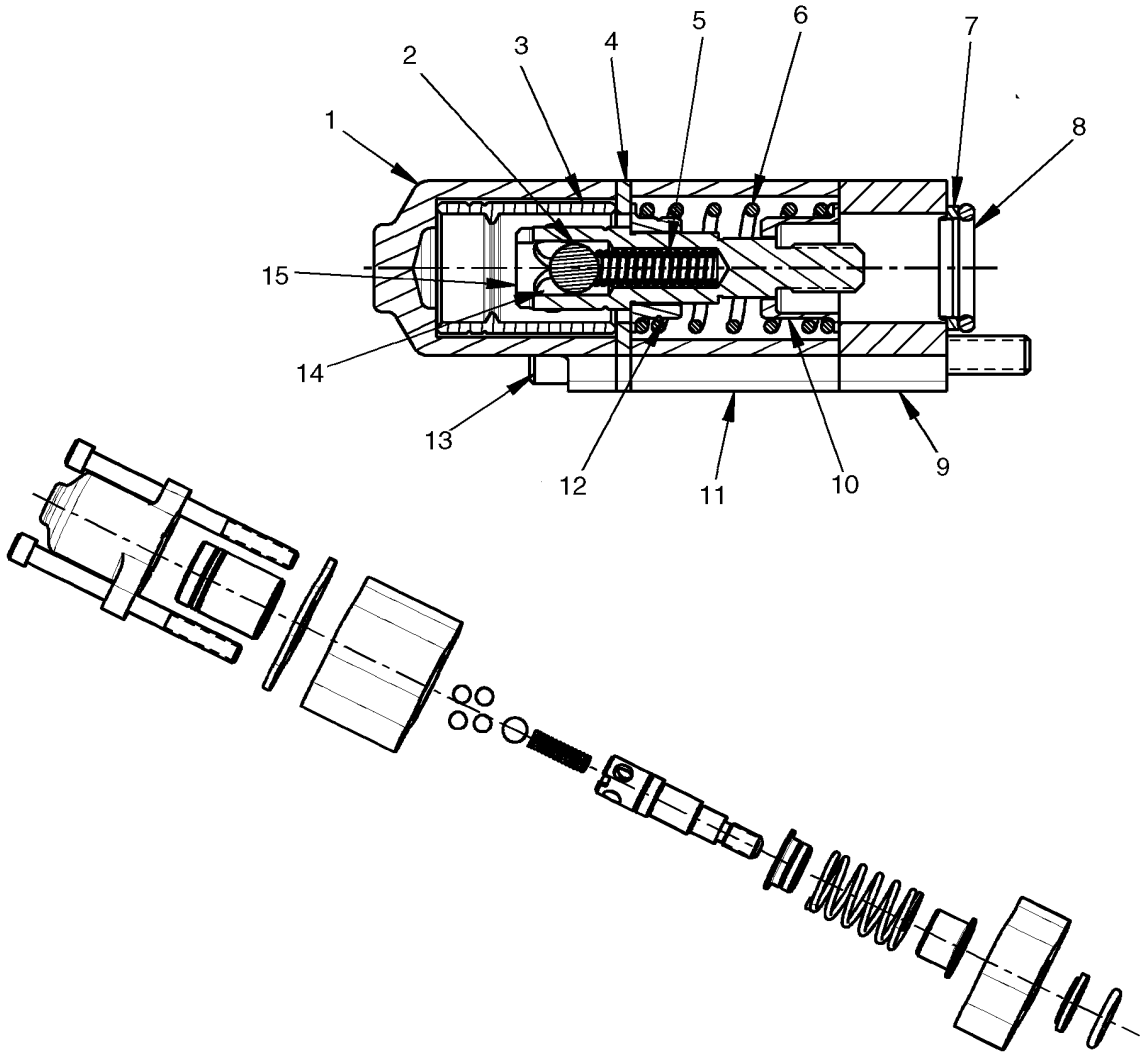

BS08A053

VÁLVULA DE CONTROLE, KITS DE SUBSTITUIÇÃO DE VEDAÇÕES - BOBINAS E BATENTES

REF	FN	PART NUMBER	YR/SN	QTY	DESCRIPTION
		87643790		1	CARRETO, Spool End Group - Detent; Incl. 1 - 15
1		NSS		1	BOLETIM INFORMATIVO, Cap, Spool
2		NSS		4	BOLETIM INFORMATIVO, Ball
3		NSS		1	BOLETIM INFORMATIVO, Sleeve, Detent
4		NSS		1	BOLETIM INFORMATIVO, Plate, Seal
5		NSS		1	BOLETIM INFORMATIVO, Spring
6		NSS		1	BOLETIM INFORMATIVO, Spring
7		NSS		1	BOLETIM INFORMATIVO, Wiper
8		NSS		1	BOLETIM INFORMATIVO, O-Ring
9		NSS		1	BOLETIM INFORMATIVO, Plate, Seal
10		NSS		1	BOLETIM INFORMATIVO, Spring Seat
11		NSS		1	BOLETIM INFORMATIVO, Spacer
12		NSS		1	BOLETIM INFORMATIVO, Spring Seat
13		NSS		2	BOLETIM INFORMATIVO, Socket Head Cap Screw
14		NSS		1	BOLETIM INFORMATIVO, Ball
15		NSS		1	BOLETIM INFORMATIVO, Spool End, Detent Pin

VÁLVULA DE CONTROLE, KITS DE SUBSTITUIÇÃO DE VEDAÇÕES - BOBINAS

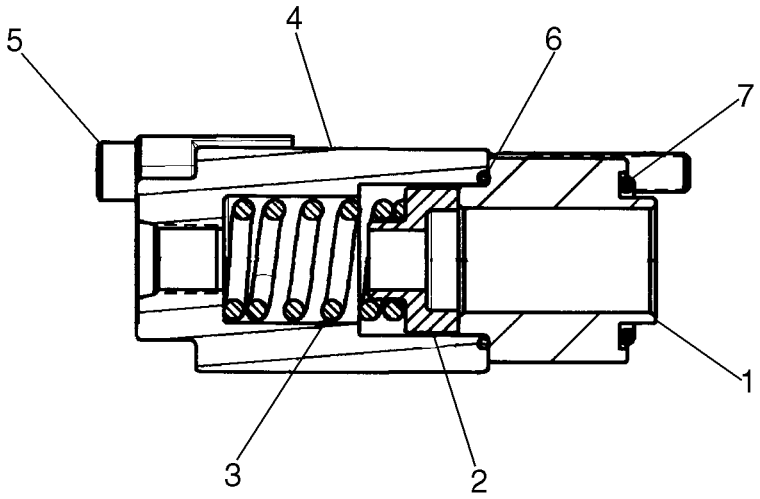

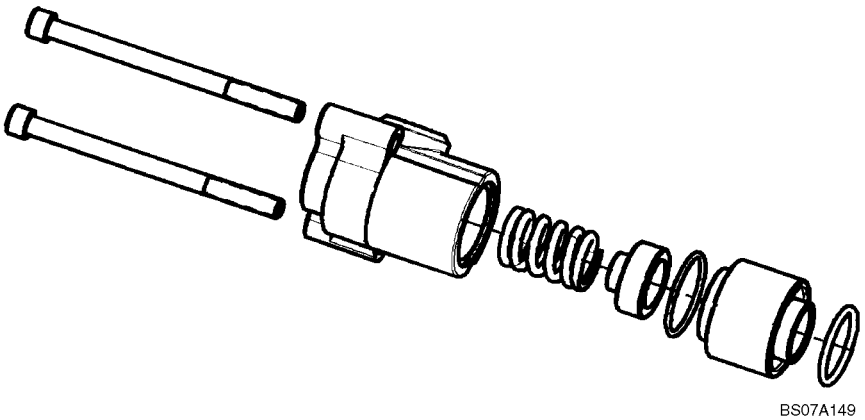

VÁLVULA DE CONTROLE, KITS DE SUBSTITUIÇÃO DE VEDAÇÕES - BOBINAS

REF	FN	PART NUMBER	YR/SN	QTY	DESCRIPTION
		87610531		1	CARRETO, Spool End Group; Incl. 1 - 7
1		NSS		1	BOLETIM INFORMATIVO, Retainer
2		NSS		1	BOLETIM INFORMATIVO, Spring Seat
3		NSS		1	BOLETIM INFORMATIVO, Spring
4		NSS		1	BOLETIM INFORMATIVO, Cap, Spool P.O.
5		NSS		2	BOLETIM INFORMATIVO, Socket Head Cap Screw
6		NSS		1	BOLETIM INFORMATIVO, O-Ring
7		NSS		1	BOLETIM INFORMATIVO, O-Ring

VÁLVULA DE CONTROLE, KITS DE SUBSTITUIÇÃO DE VEDAÇÕES - BOBINAS

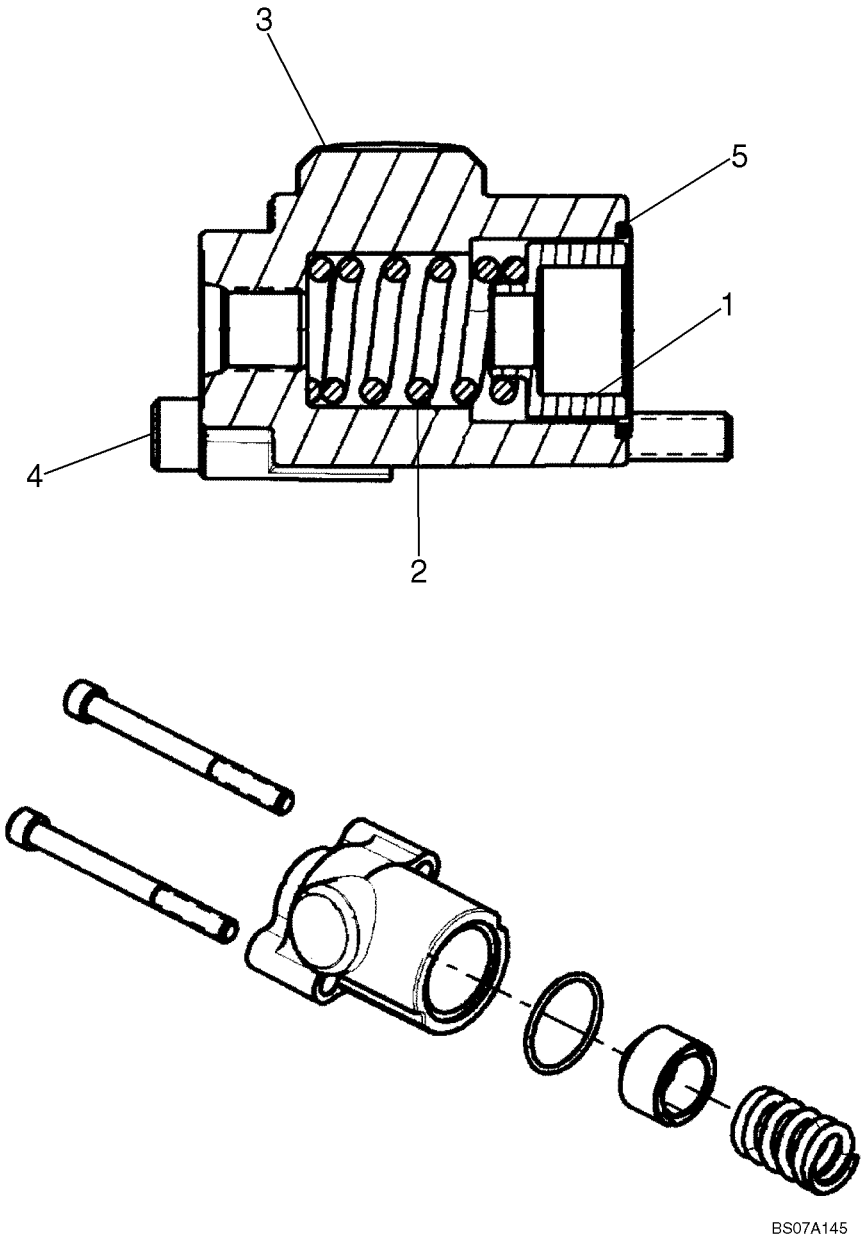

VÁLVULA DE CONTROLE, KITS DE SUBSTITUIÇÃO DE VEDAÇÕES - BOBINAS

REF	FN	PART NUMBER	YR/SN	QTY	DESCRIPTION
		87610532		1	CARRETO, Spool End Group; Incl. 1 - 5
1		NSS		1	BOLETIM INFORMATIVO, Spring Seat
2		NSS		1	BOLETIM INFORMATIVO, Spring
3		NSS		1	BOLETIM INFORMATIVO, Cap - Spool, P. O.
4		NSS		2	BOLETIM INFORMATIVO, Socket Head Cap Screw
5		NSS		1	BOLETIM INFORMATIVO, O-Ring

VÁLVULA DE CONTROLE, KITS DE SUBSTITUIÇÃO DE VEDAÇÕES - BOBINAS

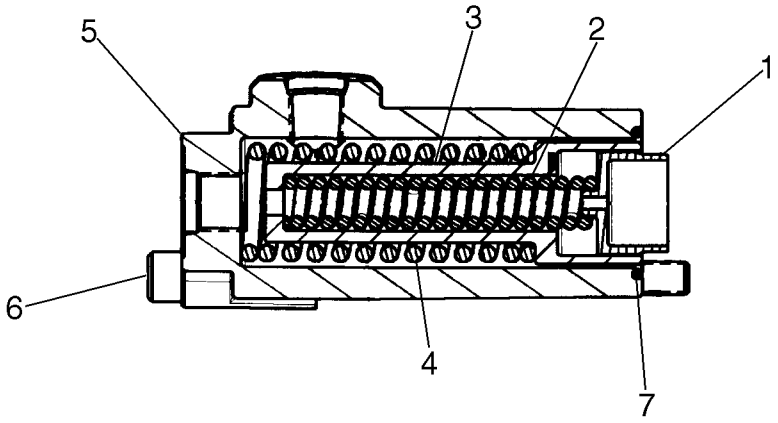

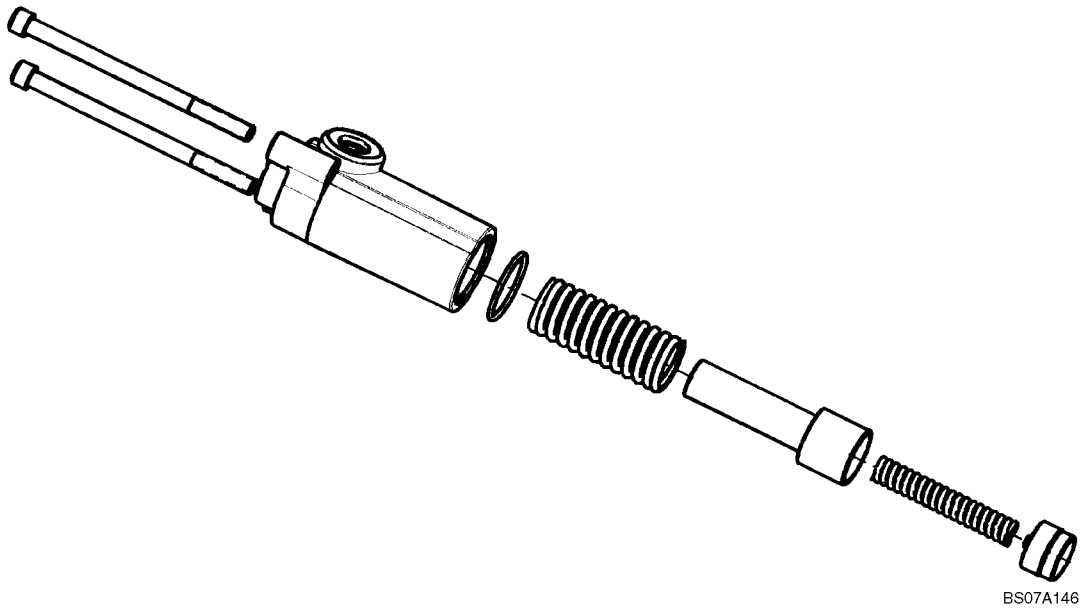

VÁLVULA DE CONTROLE, KITS DE SUBSTITUIÇÃO DE VEDAÇÕES - BOBINAS

REF	FN	PART NUMBER	YR/SN	QTY	DESCRIPTION
		87610533		1	CARRETO, Spool End Group; Incl. 1 - 7
1		NSS		1	BOLETIM INFORMATIVO, Spring Seat
2		NSS		1	BOLETIM INFORMATIVO, Spring
3		NSS		1	BOLETIM INFORMATIVO, Spring Seat
4		NSS		1	BOLETIM INFORMATIVO, Spring
5		NSS		1	BOLETIM INFORMATIVO, Cap - Spool, P. O.
6		NSS		2	BOLETIM INFORMATIVO, Socket Head Cap Screw
7		NSS		1	BOLETIM INFORMATIVO, O-Ring

VÁLVULA DE CONTROLE, KITS DE SUBSTITUIÇÃO DE VEDAÇÕES - BOBINAS

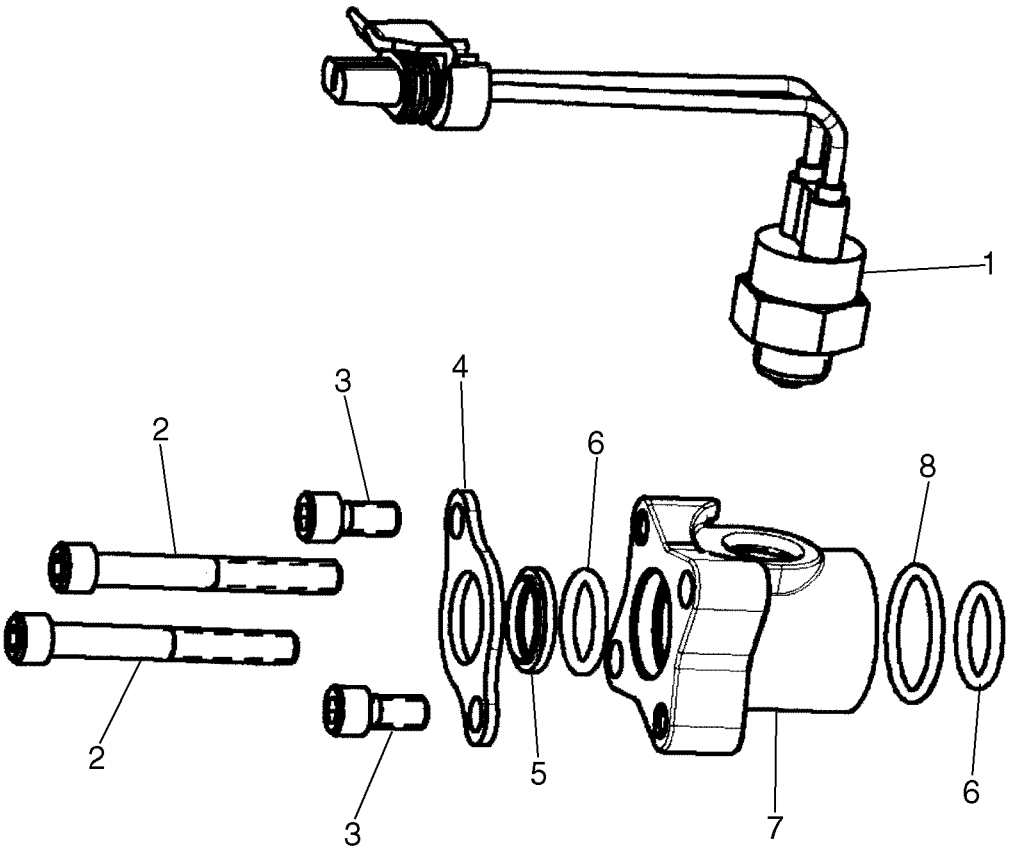

BS07D210

VÁLVULA DE CONTROLE, KITS DE SUBSTITUIÇÃO DE VEDAÇÕES - BOBINAS

REF	FN	PART NUMBER	YR/SN	QTY	DESCRIPTION
		87611850		1	CARRETO, Spool End Group; Incl. 1 - 8
1		87446617		1	INTERRUPTOR, Auxiliary Spool Ball Switch
2		NSS		2	BOLETIM INFORMATIVO, Cap Screw
3		NSS		2	BOLETIM INFORMATIVO, Cap Screw
4		NSS		1	BOLETIM INFORMATIVO, Seal Plate
5		NSS		1	BOLETIM INFORMATIVO, Wiper
6		NSS		2	BOLETIM INFORMATIVO, O-Ring
7		NSS		1	BOLETIM INFORMATIVO, Spool Cap
8		NSS		1	BOLETIM INFORMATIVO, O-Ring

VÁLVULA DE CONTROLE, CONFIRA VÁLVULA

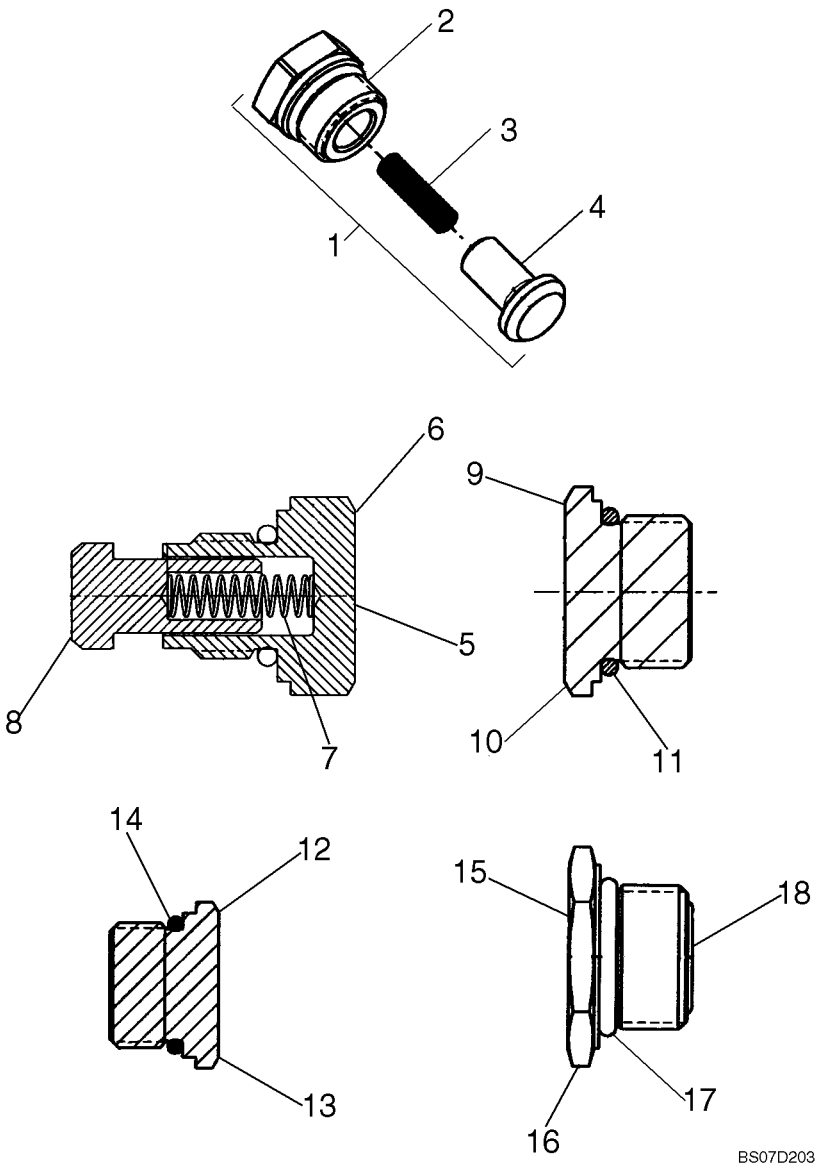

VÁLVULA DE CONTROLE, CONFIRA VÁLVULA

REF	FN	PART NUMBER	YR/SN	QTY	DESCRIPTION
1		87576157		1	VÁLVULA AMORTECEDORA, Check Valve; Incl. 2 - 4
2		NSS		1	BOLETIM INFORMATIVO, Plug
3		NSS		1	BOLETIM INFORMATIVO, Spring
4		NSS		1	BOLETIM INFORMATIVO, Poppet
5		87610351		1	VALVULA, Check Valve; Incl. 6 - 8
6		NSS		1	BOLETIM INFORMATIVO, Plug, M14 X 1.5-6G Thd.
7		NSS		1	BOLETIM INFORMATIVO, Spring
8		NSS		1	BOLETIM INFORMATIVO, Poppet
9		87576158		1	BUJÃO, Plug Assembly, 1-1/16 - 12UN-2A Thd.; Incl. 10, 11
10		NSS		1	BOLETIM INFORMATIVO, Plug, 1-1/16 - 12UN-2A Thd.
11		NSS		1	BOLETIM INFORMATIVO, O-Ring
12		87576160		1	BUJÃO, Plug Assembly, 7/8 - 14UNF - 2A Thd.; Incl. 13, 14
13		NSS		1	BOLETIM INFORMATIVO, Plug, 7/8 - 14UNF - 2A Thd.
14		NSS		1	BOLETIM INFORMATIVO, O-Ring
15		87576162		1	BUJÃO, Plug Assembly, M18 X 1.5-6H Thd.; Incl. 16 - 18
16		NSS		1	BOLETIM INFORMATIVO, Plug, M18 X 1.5-6H Thd.
17		NSS		1	BOLETIM INFORMATIVO, O-Ring
18		NSS		1	BOLETIM INFORMATIVO, O-Ring

VÁLVULA DE CONTROLE, KITS DE SUBSTITUIÇÃO DE VEDAÇÕES - BOBINAS

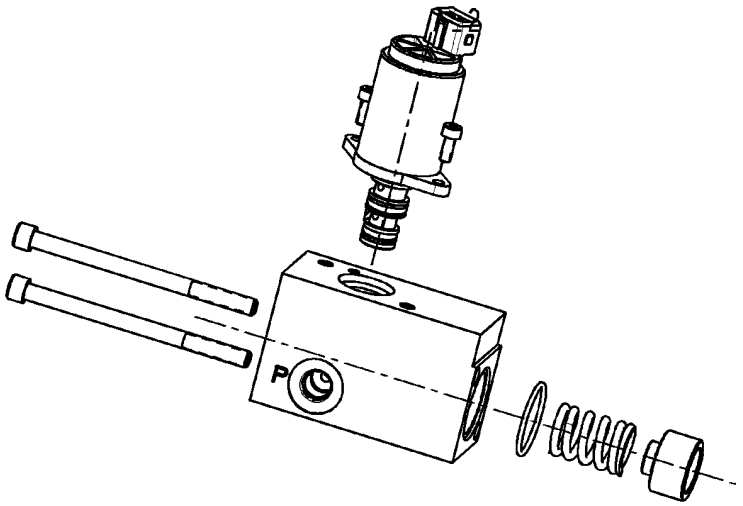

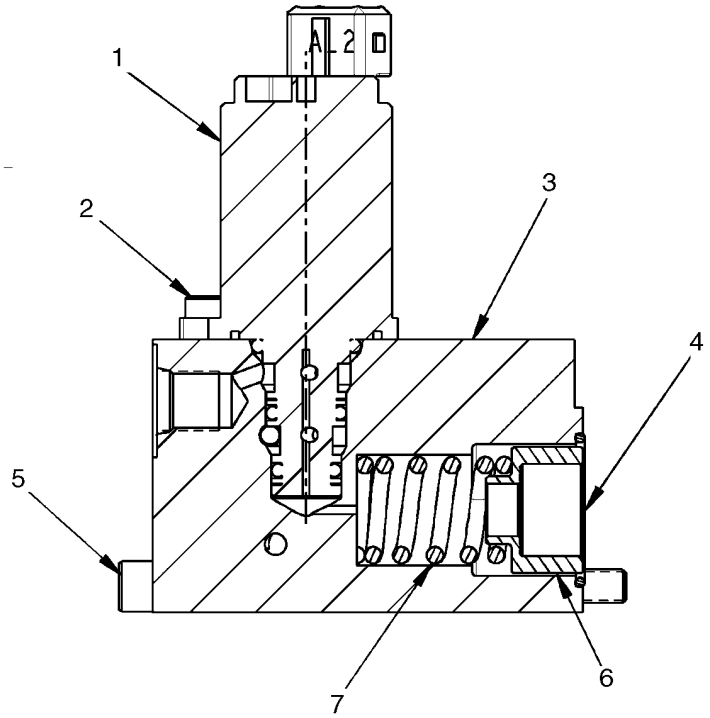

BS08A485

VÁLVULA DE CONTROLE, KITS DE SUBSTITUIÇÃO DE VEDAÇÕES - BOBINAS

REF	FN	PART NUMBER	YR/SN	QTY	DESCRIPTION
		87611846		1	CARRETO, Spool End Group EHPV; Incl. 1 - 7
1		NSS		1	BOLETIM INFORMATIVO, Solenoid - Cartridge Valve
2		NSS		2	BOLETIM INFORMATIVO, Socket Head Cap Screw
3		NSS		1	BOLETIM INFORMATIVO, End CAp Assy - Solenoid
4		NSS		1	BOLETIM INFORMATIVO, O-Ring - 022
5		NSS		1	BOLETIM INFORMATIVO, Cap Screw Socket Head
6		NSS		1	BOLETIM INFORMATIVO, Spring Seat
7		NSS		1	BOLETIM INFORMATIVO, Spring

VÁLVULA DE CONTROLE, KITS DE SUBSTITUIÇÃO DE VEDAÇÕES - BOBINAS

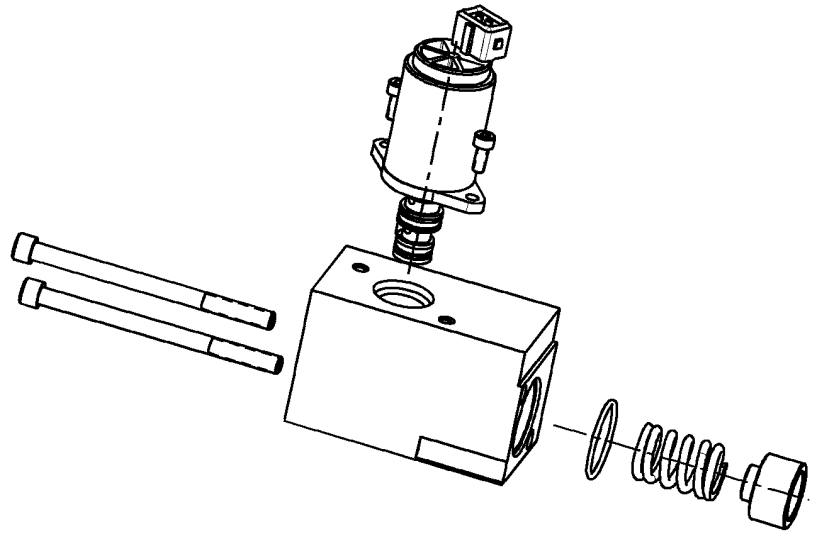

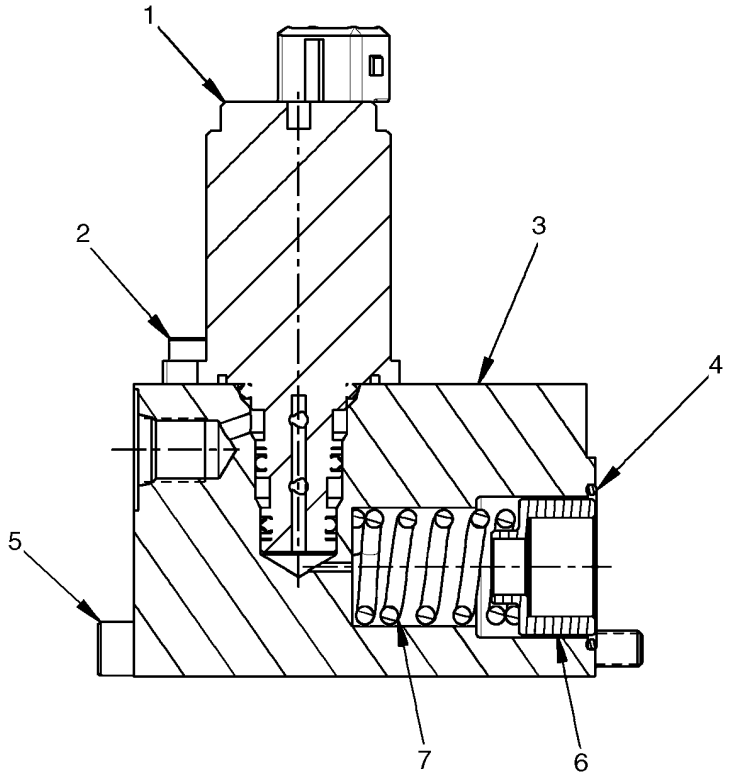

BS08A320

VÁLVULA DE CONTROLE, KITS DE SUBSTITUIÇÃO DE VEDAÇÕES - BOBINAS

REF	FN	PART NUMBER	YR/SN	QTY	DESCRIPTION
		87611845		1	CARRETO, Spool End Group EHPV; Incl. 1 - 7
1		NSS		1	BOLETIM INFORMATIVO, Solenoid - Cartridge Valve
2		NSS		2	BOLETIM INFORMATIVO, Socket Head Cap Screw
3		NSS		1	BOLETIM INFORMATIVO, End Cap Assy - Solenoid
4		NSS		1	BOLETIM INFORMATIVO, O-Ring - 022
5		NSS		1	BOLETIM INFORMATIVO, Cap Screw Socket Head
6		NSS		1	BOLETIM INFORMATIVO, Spring Seat
7		NSS		1	BOLETIM INFORMATIVO, Spring

SECTION INDEX
Chassi/Acessório

09-01	CHASSI (L175)
09-01A	CHASSI (C175)
09-02	CONJUNTO DA PLACA DE MONTAGEM
09-03	BOOM
09-04	BOOM LOCK
09-04A	FOLGA, KIT
09-05	BUCKET CYLINDER
09-06	BOOM CYLINDER
09-06A	BOOM CYLINDER
09-07	BUCKETS - LOADER, DIRT / FOUNDRY
09-08	BUCKETS - LOADER, EXTENDED LOW PROFILE
09-09	BUCKETS - LOADER, UTILITY / LIGHT MATERIAL
09-10	BUCKETS - LOADER, MANURE / SLURRY
09-10A	BUCKET - CUTTING EDGE
09-10B	BUCKET, CUTTING EDGE KIT
09-11	HORQUILLA
09-12	FENDERS (L175)
09-13	FENDERS (C175)
09-14	LIMITE - JANELA TRASEIRA
09-15	CAB
09-15A	CAB - DELUXE CAB
09-15B	CAB - INTERIOR TRIM, MANUAL CONTROLS, DELUXE CAB
09-15C	CAB - INTERIOR TRIM, PILOT CONTROLS, DELUXE CAB
09-16	CAB - HEADLINER
09-17	CAB - HEADLINER, WITH HEAT AND AIR CONDITIONING
09-17A	FORRO DO TECTO DA CABINA
09-17B	FORRO DO TECTO DA CABINA
09-18	SISTEMA DE LA CALEFACCION
09-18A	CABINE - SISTEMA DE LA CALEFACCION
09-19	AQUECEDOR DA CABINA
09-20	AQUECEDOR DA CABINA/AR CONDICIONADO
09-20A	AQUECEDOR DA CABINA/AR CONDICIONADO
09-21	AQUECEDOR DA CABINA/AR CONDICIONADO
09-21A	CALEFACCION Y AIRE ACONDICIONADO
09-22	CONDENSADOR - AR CONDICIONADO
09-23	COMPRESSOR CONJ. - AR CONDICIONADO
09-24	LIMITE & CABINE VENTANAS (EUROPA)
09-25	PORTA DA CABINA
09-26	PORTA DA CABINA - LIMPA PÁRA-BRISAS
09-27	PORTA DA CABINA
09-28	PORTA DE DEMOLIÇÃO
09-28A	KIT DA PORTA DE DEMOLIÇÃO
09-28B	CABINE - PORTA DE DEMOLIÇÃO, DE LUXO
09-28C	CABINE - PORTA DE DEMOLIÇÃO, DE LUXO
09-28D	KIT DE PORTA DE DEMOLIÇÃO / SEM PORTA
09-29	CAB - DOOR AND FRAME, DELUXE CAB
09-29A	PORTA DA CABINA KITS, DE LUXO CABINE
09-29B	PORTA DA CABINA
09-29C	CABINE - PORTA ESTRUTURA
09-30	PUERTA - CONJUNTO DEL INTERRUPTOR
09-31	CABINE - VENTANAS

SECTION INDEX
Chassi/Acessório

09-31A	CABINE - VENTANAS/TETO
09-32	CABINE - JANELA, DIREITA
09-32A	CABINE - JANELA, DIREITA
09-32B	CABINE - JANELA, DIREITA
09-32C	CABINE - JANELA, DIREITA
09-32D	CABINE - JANELA, DIREITA
09-33	CABINE - JANELA, ESQUERDA
09-33A	CABINE - JANELA, ESQUERDA
09-33B	CABINE - SUPERIOR VENTANILLA
09-33C	CABINE - JANELA, ESQUERDA
09-33D	CABINE - JANELA, ESQUERDA
09-33E	CABINE - JANELA, ESQUERDA
09-34	PLACAS, SUELO
09-35	PUERTA, TRASERA
09-36	CONJUNTO DA CAPOTA TRASEIRA
09-37	PEGAS
09-38	ALAVANCAS
09-38A	ALAVANCAS, MODELOS COM CONTROLO AUTOMÁTICO, CONTROLE AUXILIAR
09-39	PEGAS - MODELOS COM CONTROLO AUTOMÁTICO
09-39A	PEGAS - MODELOS COM CONTROLO AUTOMÁTICO, EH CONTROLE AUXILIAR
09-40	CONTROLE MANUAL - ALAVANCAS
09-41	CONTROLE MANUAL - PAINEL DE IMPULSO, DIREITA
09-42	CONTROLE MANUAL - PAINEL DE IMPULSO, ESQUERDA
09-43	CONTROLO MANUAL - CONJUNTO DO PEDAL
09-43A	KIT DE CONTROLO MANUAL
09-43B	CONTROLE MANUAL, CONJUNTO DO PEDAL, PADRÃO, FLUXO ALTO E AUX.
09-44	CONJUNTO DO CONTROLO DA TRANSMISSÃO - PEDAIS DE CONTROLO COM FLUXO ALTO E AUXILIAR
09-45	CONJUNTO DIREITO DO PAINEL DE AJUSTE - CONTROLE DE TRAÇÃO
09-46	CONJUNTO ESQUERDO DO PAINEL DE AJUSTE - CONTROLE DE TRAÇÃO
09-47	CONJUNTO DO PEDAL, PADRÃO E DE LUXO
09-48	LANÇA & CAÇAMBA CONTROLO, COMPONENTES DO TÚNEL
09-49	KIT DE CONTROLO MANUAL
09-50	ACELERADOR DE PEDAL KIT
09-51	COMPONENTES DO TÚNEL - MODELOS COM CONTROLO AUTOMÁTICO
09-51A	COMPONENTES DO TÚNEL - DE LUXO CABINE
09-51B	COMPONENTES DO TÚNEL - MODELOS COM CONTROLO AUTOMÁTICO, EH CONTROLE AUXILIAR
09-52	PEDAIS - MODELOS COM CONTROLO AUTOMÁTICO
09-52A	PEDAIS - MODELOS COM CONTROLO AUTOMÁTICO, EH CONTROLE AUXILIAR
09-53	CONTROLE MANUAL - CONTROLO AUTOMÁTICO, DIREITA
09-54	CONTROLE MANUAL - CONTROLO AUTOMÁTICO, DIREITA
09-55	CONTROLE MANUAL - CONTROLO AUTOMÁTICO, ESQUERDA
09-56	CONTROLE MANUAL - CONTROLO AUTOMÁTICO, ESQUERDA
09-57	CONJUNTO ACÚSTICO
09-58	CONJUNTO ACÚSTICO
09-58A	CONJUNTO ACÚSTICO
09-58B	CONJUNTO ACÚSTICO - SILENCIADOR
09-58C	CONJUNTO ACÚSTICO - JUEGO PARA EL RUIDO
09-59	CONJUNTO DO ASSENTO STANDARD
09-60	CONJUNTO DO ASSENTO STANDARD

SECTION INDEX
Chassi/Acessório

09-61	CONJUNTO DO ASSENTO SUSPENSÃO
09-62	CONJUNTO DO ASSENTO SUSPENSÃO
09-63	CONJUNTO DO ASSENTO SUSPENSÃO
09-64	CINTOS DE SEGURANÇA, STANDARD
09-65	CINTOS DE SEGURANÇA
09-66	CINTOS DE SEGURANÇA, 3 IN. COMBINAÇÃO - SE UTILIZADO
09-66A	CINTOS DE SEGURANÇA
09-67	CINTOS DE SEGURANÇA
09-68	DESCANSO PARA O BRAÇO - MODELOS COM CONTROLO AUTOMÁTICO
09-68A	DESCANSO PARA O BRAÇO
09-69	CONJUNTO DO DESCANSO DO ANTEBRAÇO
09-70	KIT DO SUPORTE PARA O BRAÇO
09-71	EXTINTOR DE INCÊNDIO, KITS DE RETROVISOR E PLACAS DO CHÃO
09-71A	ACESSÓRIOS E KITS, PARA EUROPA
09-72	CONTRA PESO
09-72A	KIT DO MACACO DA CABINA
09-73	CONJUNTO DE ADESIVOS - AMÉRICA DO NORTE
09-74	CONJUNTO DE ADESIVOS - AMÉRICA DO NORTE
09-75	CONJUNTO DE ADESIVOS - AMÉRICA DO NORTE
09-76	ADESIVOS - EUROPA
09-77	ADESIVOS - EUROPA
09-78	ADESIVOS - EUROPA
09-79	ADESIVOS - CONTROLO AUTOMÁTICO
09-80	ADESIVOS - PORTUGUÊS DO BRASIL, FRANCÊS DO CANADÁ, ESPANHOL DA AMÉRICA LATINA
09-81	ADESIVOS - LANÇA
09-82	ADESIVOS - CONTROLES
09-83	ADESIVOS - CONTROLES
09-84	ADESIVOS
09-85	ADESIVOS
09-86	ADESIVOS
09-87	ADESIVOS
09-88	KIT DO SÍMBOLO DE VEÍCULO LENTO
09-89	ADESIVOS

CHASSI (L175)

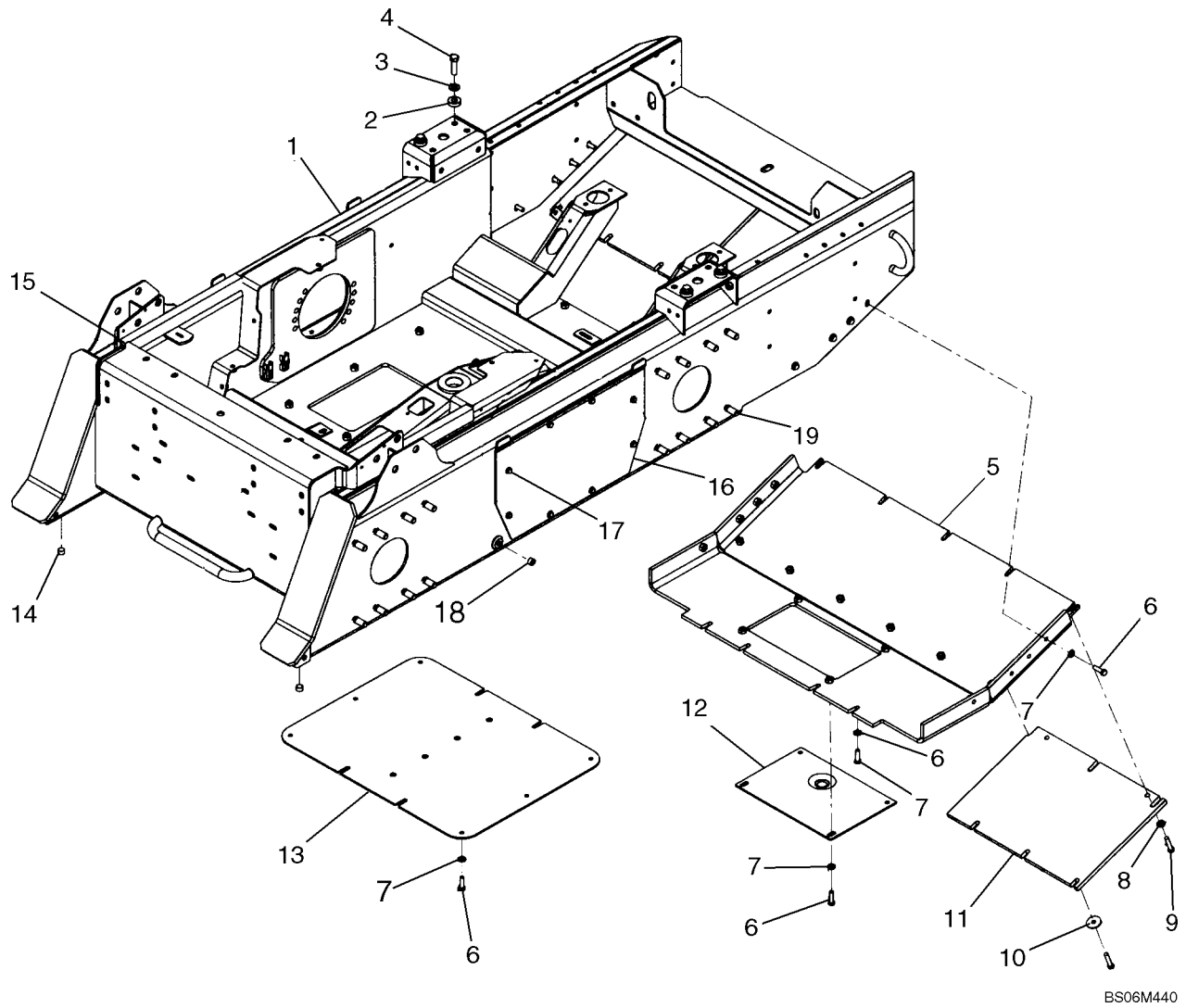

CHASSI (L175)

REF	FN	PART NUMBER	YR/SN	QTY	DESCRIPTION
		87564350		1	CHASSI, Complete Chassis Assembly On Pallet, Yellow, L175; Incl. 1 - 19; Order From Wholegoods
1		{87460725}		1	Frame Only, Yellow; Order 87564350 Complete Chassis Assembly
2		517015		4	ESPAÇADOR
3		65319		4	ARRUELA PLANA
4		9790095		4	PARAFUSO, Hex, 1/2"-13 x 1 3/4", G8
5		{87393346}		1	Rear Plate, Yellow
6		88011		26	PARAFUSO, Hex, 3/8"-16 x 1 1/4", G5, Full Thd
7		86625241		26	ARRUELA PLANA, 13/32" x 13/16" x .089", HDN
8		87039401		10	ARRUELA PLANA, 13/32" x 13/16" x .134", HDN
9		9706689		11	PARAFUSO, Hex, 3/8"-16 x 1 3/4", G5
10		86637594		1	ARRUELA PLANA, 13/32" x 1 1/2" x .120"
11		87387861		2	CONTRAPESO, Rear Counter Weight, Yellow
12		86563772		1	TAMPA
13		87460426		1	TAMPA, Cover, Yellow
14		236622		4	BUJÃO
15		87048885		2	ESPUMA
16		87460530		2	TAMPA, Cover, Yellow
17		87034819		16	PARAFUSO, Hex Wash Hd, 3/8"-16 x 5/8"
18		647429		1	BUJÃO DE DRENO, Sq Soc, 1/2"-14, NTPF, 1036 mm, 40.80 in. Required; Not Illustrated
19		9860108		32	PARAFUSO

CHASSI (C175)

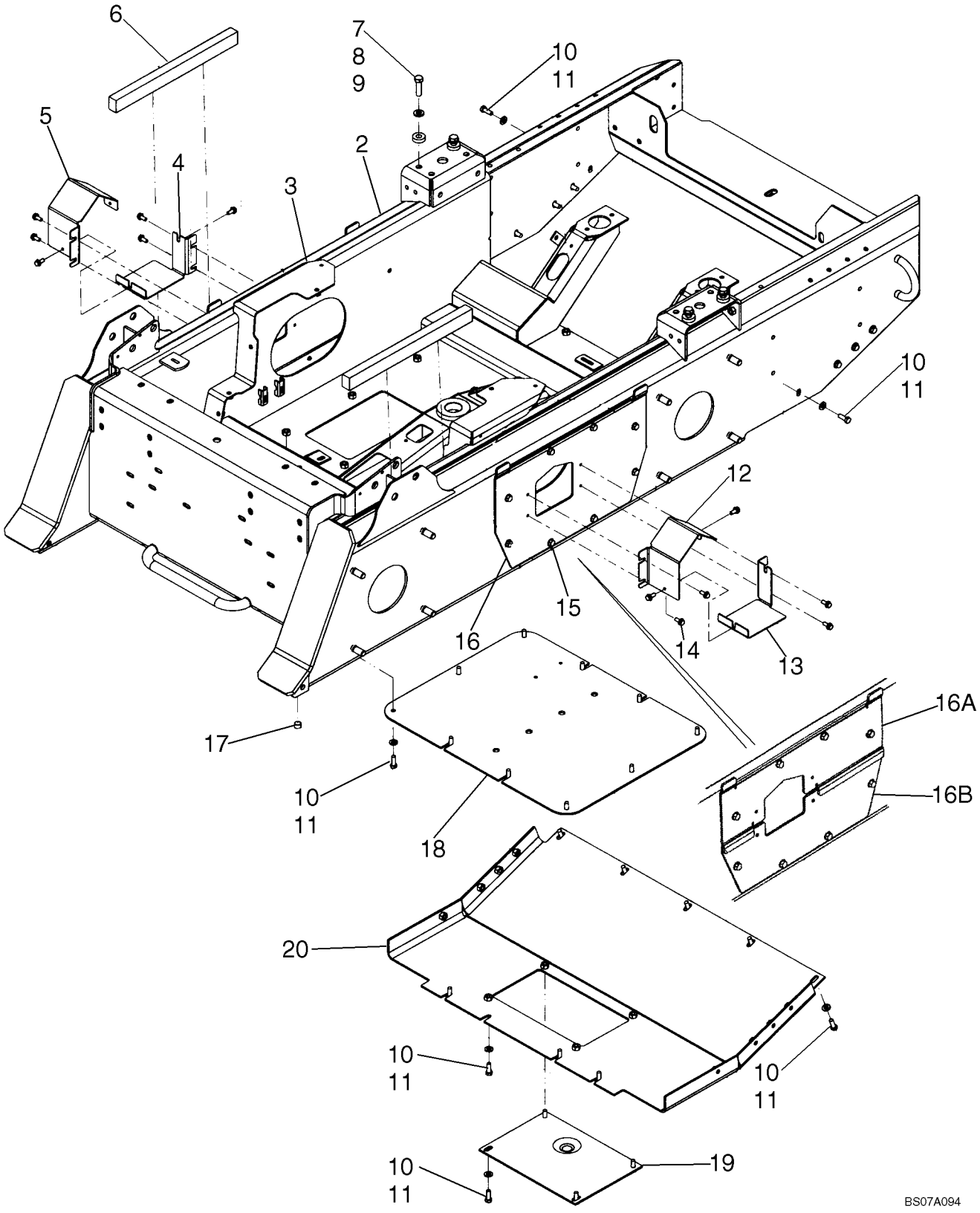
6
7
8
9
10
11
5
4
3
2
10
11
12
15
16
14
13
16A
16B
17
10
11
18
20
10
11
10
11
10
11
19
BS07A094

CHASSI (C175)

REF	FN	PART NUMBER	YR/SN	QTY	DESCRIPTION
1		87564401		1	CHASSI, Complete Chassis Assembly, Yellow, C175; Incl. 2 - 20; Order From Wholegoods
2		{87461564}		1	Frame Only, Yellow
3		{87396555}		1	Plate, Right Hand Center Cover; 1 Piece Production Only, Service With 2 Piece Cover 3A, 3B
3A		87596850		1	PLACA, Plate, Right Hand Center Cover, Upper
3B		87596852		1	PLACA, Plate, Right Hand Center Cover, Lower; If Used
4		87368770		1	PROTEÇÃO, Guard
3B		87596835		1	PLACA, Plate, Right Hand Center Cover, Lower; If Used
5		87368771		1	PROTEÇÃO, Hose Guard, Upper Right
6		87048885		2	ESPUMA
7		9790095		4	PARAFUSO, Hex, 1/2"-13 x 1 3/4", G8
8		65319		4	ARRUELA PLANA
9		517015		4	ESPAÇADOR
10		86625241		31	ARRUELA PLANA, 13/32" x 13/16" x .089", HDN
11		88206		31	PARAFUSO, Hex, 3/8"-16 x 1", G5, Full Thd
12		87368773		1	PROTEÇÃO, Hose Guard, Upper Left
13		87368772		1	PROTEÇÃO, Hose Guard, Lower Left
14		9840344		12	PARAFUSO
15		87034819		16	PARAFUSO, Hex Wash Hd, 3/8"-16 x 5/8"
16		{87528971}		1	Plate, Left Hand Center Cover; 1 Piece Production Only, Service With 2 Piece Cover 16A, 16B
16A		87596758		1	PLACA, Plate, Left Hand Center Cover, Upper
16B		87596835		1	PLACA, Plate, Left Hand Center Cover, Lower
17		236622		2	BUJÃO
18		87460426		1	TAMPA, Cover, Yellow
19		86563772		1	TAMPA
20		86609019		1	PLACA, Rear Plate, Yellow

CONJUNTO DA PLACA DE MONTAGEM

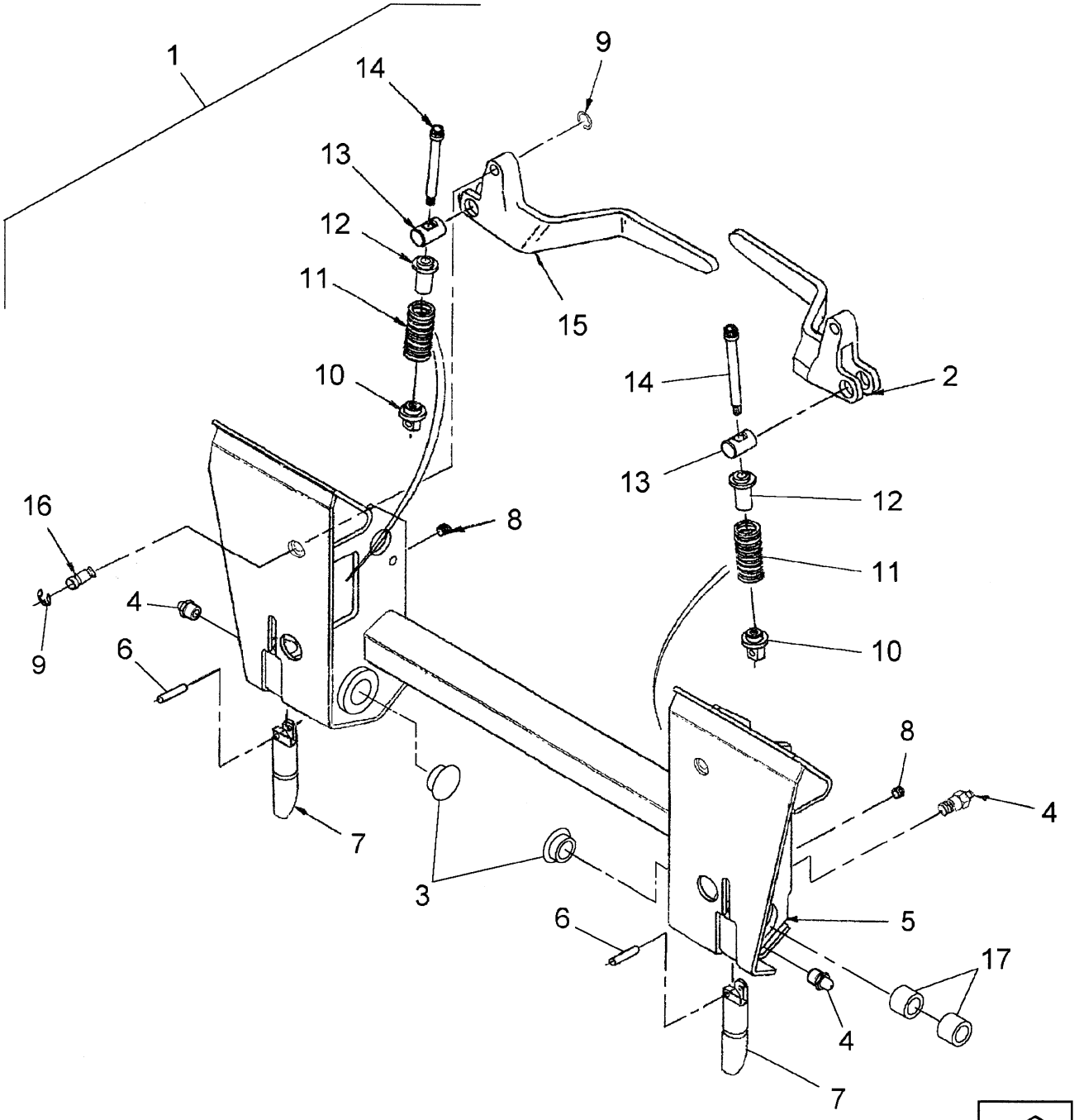

BS04E150

CONJUNTO DA PLACA DE MONTAGEM

REF	FN	PART NUMBER	YR/SN	QTY	DESCRIPTION
1		REF		1	INSTRUCAO, Manual Mounting Plate Assy; Not Serviced As Assembly, Order Components; Incl. 2 - 17
2		86633195		1	MANILHA, Left Hand
3		86561087		2	GUARDA-PÓ
4		87414		4	GRAXEIRA, 1/4"-28 x .56" lg, Drive
5		86633259		1	PLACA DE MONTAGEM, Incl. Ref 8, 17
6		86616372		2	PINO DE FIXAÇÃO, 3/8" x 1 3/4", Slotted
7		87413030		2	PINO, Latch
9		86571009		4	ANEL-ELÁSTICO
10		86510869		2	PINO, If Used
10		87579303		2	PINO, If Used
11		86610167		2	MOLA, 1.38" OD
12		86610166		2	GUIA
13		9829733		2	PINO
14		86506112		2	PARAFUSO, Screw, Cap, 12-pt Hd, Shoulder, G8, 3/8"-16 x 5"; If Used
14		87533223		2	PINO, Screw, Cap, 12-pt Hd, Shoulder, 1/2" X 4.0; If Used
15		86633196		1	MANILHA, Right Hand
16		86538563		2	PINO

BOOM

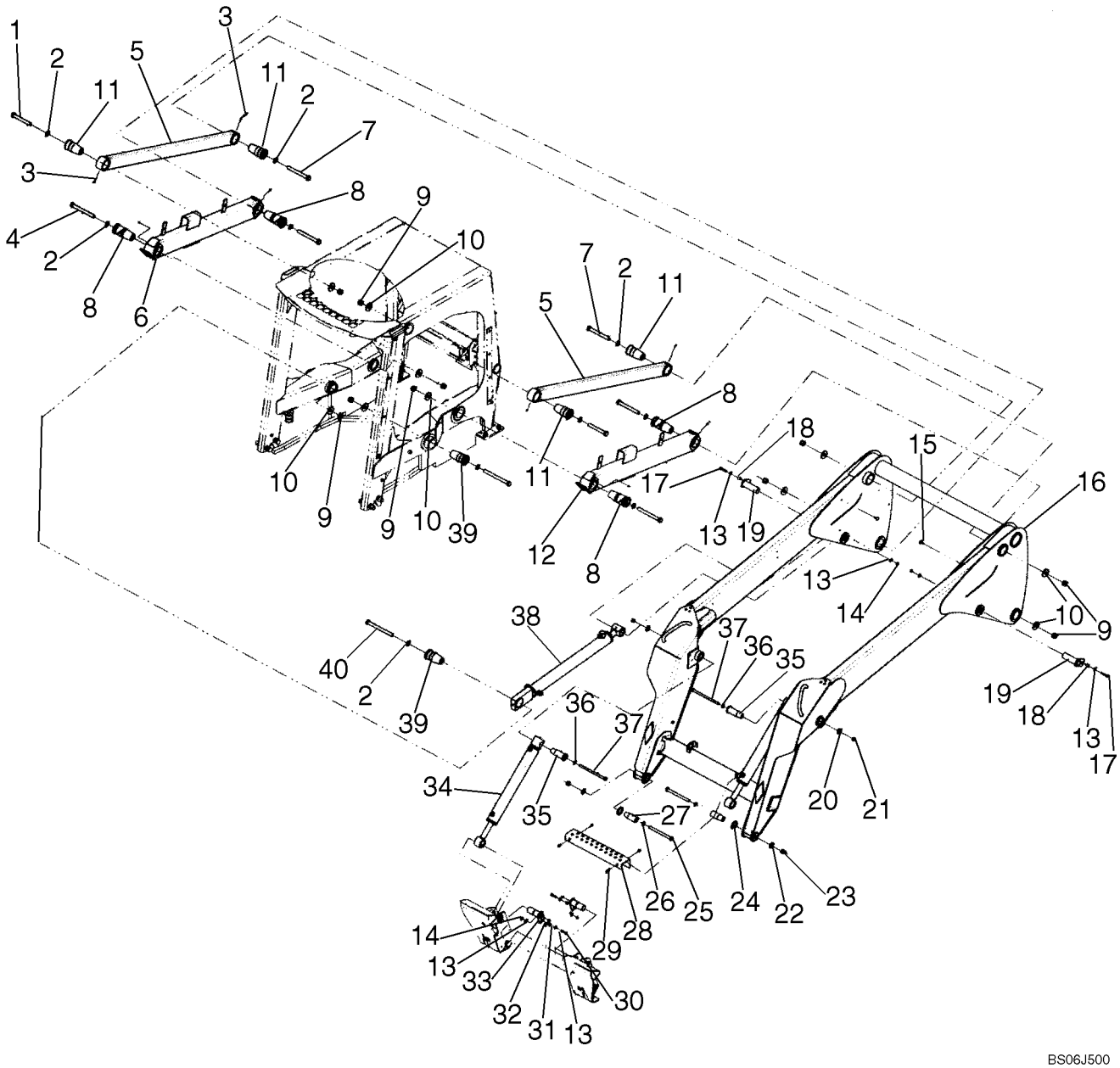

BOOM

REF	FN	PART NUMBER	YR/SN	QTY	DESCRIPTION
1		86507002		2	PARAFUSO, Hex, 3/4"-10 x 5 1/2", G5
2		86512328		10	ARRUELA PLANA
3		87414		8	GRAXEIRA, 1/4"-28 x .56" lg, Drive
4		280316		2	PARAFUSO, Hex, 3/4"-10 x 7", G5
5		9844573		2	ELO SUPERIOR
6		87043355		1	ELO INFERIOR, North American Models
6		87043353		1	ELO INFERIOR, European Models
7		280223		4	PARAFUSO, Hex, 3/4"-10 x 6 1/2", G5
8		86501422		4	PINO
9		9626598		10	CONTRA PORCA, 3/4"-10, GB
10		86509507		10	ARRUELA PLANA
11		86501420		4	PINO
12		87043354		1	ELO INFERIOR, North American Models
12		87043352		1	ELO INFERIOR, European Models
13		285072		8	ARRUELA PLANA
14		9637692		4	CONTRA PORCA, 3/8"-16, GB
15		86620930		2	BOTÃO DE IMPULSO
16		87564713		1	BRACO LANCA, Gray; If Used, Front Crossbeam Length 1012 mm; Rear Tube 1250 mm
16		87652305		1	BRACO LANCA, Gray; If Used, Front Crossbeam Length 1022 mm; Rear Tube 1257 mm
17		9706689		2	PARAFUSO, Hex, 3/8"-16 x 1 3/4", G5
18		229398		2	ESPAÇADOR
19		86521982		2	PINO
20		695335		2	ARRUELA PLANA
21		9636698		2	CONTRA PORCA, 1/2"-13, GB
22		86624156		2	ARRUELA PLANA, 21/32" x 1 1/2" x .188", HDN
23		19670		2	CONTRA PORCA, 5/8"-11, GB
24		191823		2	ARRUELA PLANA
25		280293		2	PARAFUSO, Hex, 5/8"-11 x 7", G5, If Used
25		280361		2	PARAFUSO, Hex, 5/8"-11 x 7 1/2", G5, If Used
26		87023159		2	ARRUELA PLANA
27		87584328		2	PINO, Pin
28		86574567		1	APOIA-PÉ
29		9840344		4	PARAFUSO

BOOM

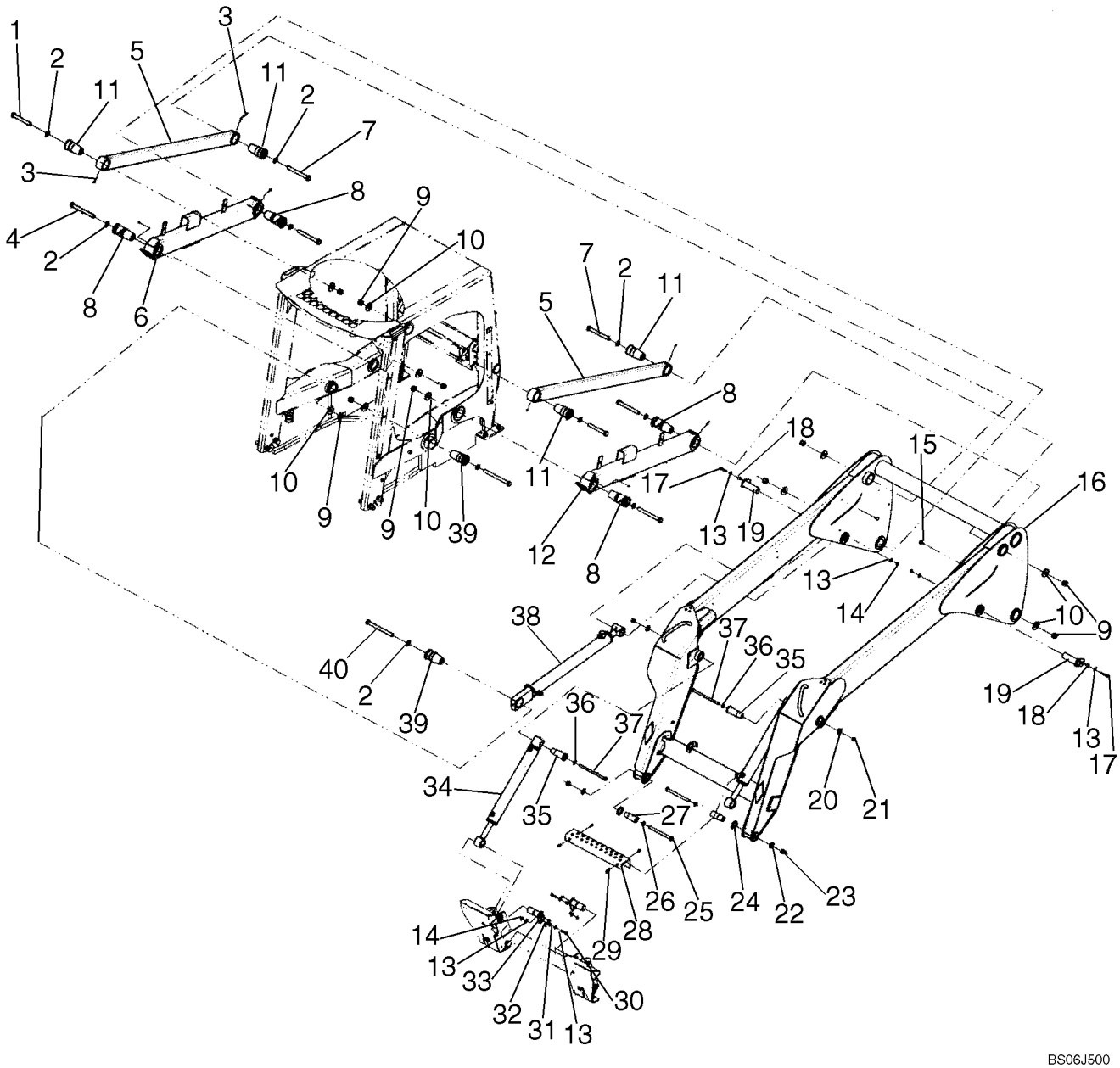

BOOM

REF	FN	PART NUMBER	YR/SN	QTY	DESCRIPTION
30		88044		2	PARAFUSO, Hex, 3/8"-16 x 1 1/2", G5
31		86589143		2	ESPAÇADOR
32		80710		2	GRAXEIRA, 1/8"-27 x .66 lg
33		9614349		2	PINO
34		87038978		2	CILINDRO HIDRÁULICO, See Fig. 09-05
35		86501430		2	PINO
36		65319		2	ARRUELA PLANA
37		280214		2	PARAFUSO, Hex, 1/2"-13 x 8 1/2", G5
38		87675772		2	CILINDRO, Cylinder; See Fig 09-06A; Replaces 87459207, See Fig 09-06
39		86504316		2	PINO
40		88945		2	PARAFUSO, Hex, 3/4"-10 x 8", G5
41		86530213		X	PINO, As Needed; Use On Lower Link To Level Bucket
42		86640779		X	PINO, As Needed; Use On Upper Link Pivot To Adjust Out Cab Contact

BOOM LOCK

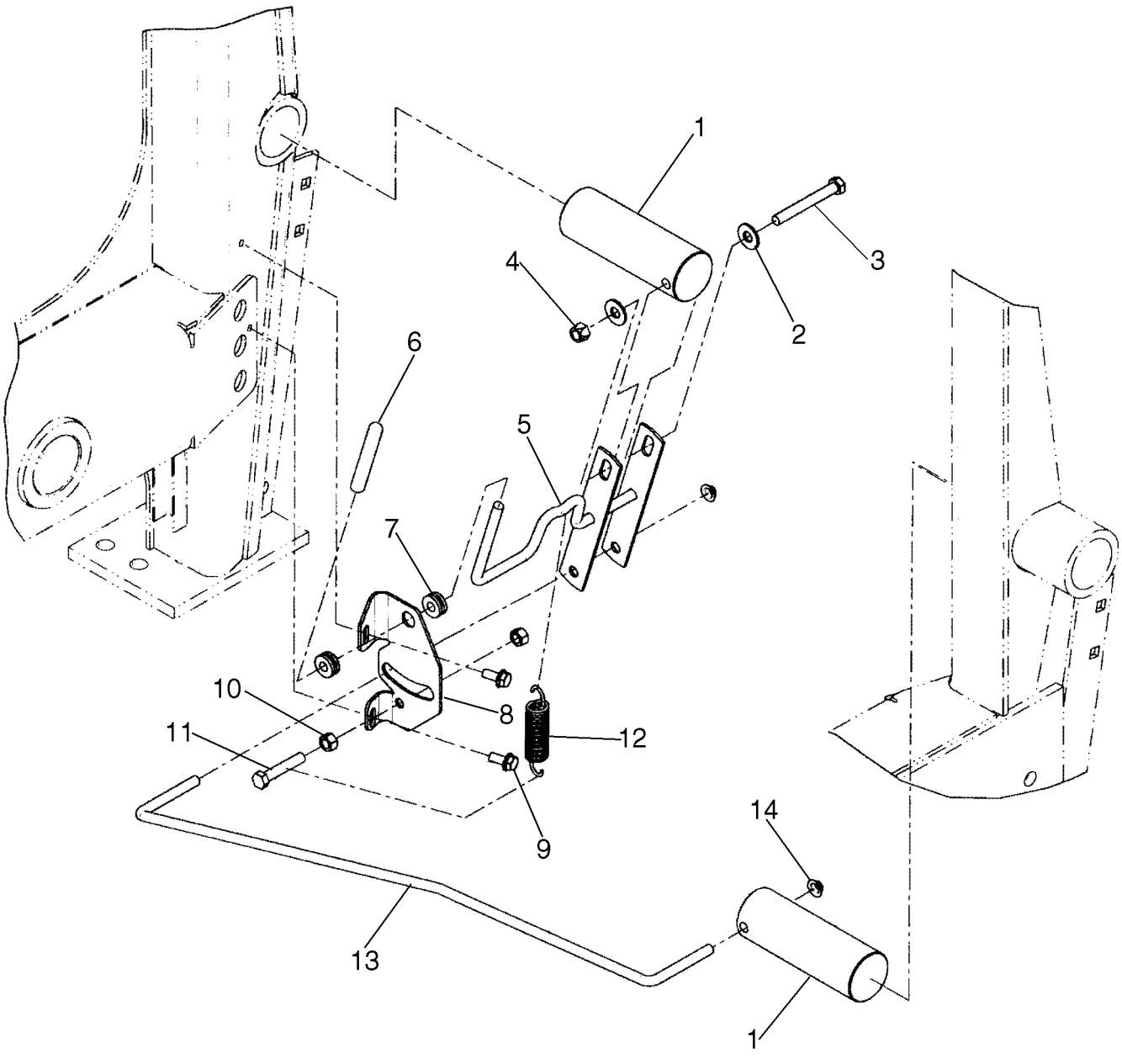

BOOM LOCK

REF	FN	PART NUMBER	YR/SN	QTY	DESCRIPTION
1		9622479		2	PINO
2		80702		2	ARRUELA PLANA, 3/8"
3		280161		1	PARAFUSO, Hex, 3/8"-16 x 3", G5
4		9637692		1	CONTRA PORCA, 3/8"-16, GB
5		86506368		1	MANILHA
6		847165		1	MACANETA
7		46288		2	CASQUILHO ISOLADOR
8		86501117		1	SUPORTE
9		9840344		2	PARAFUSO
10		9628503		2	PORCA, 3/8"-16, G5
11		88436		1	PARAFUSO, Hex, 3/8"-16 x 2", G5
12		86539120		1	MOLA
13		9622493		1	HASTE
14		595787		2	PORCA

FOLGA, KIT

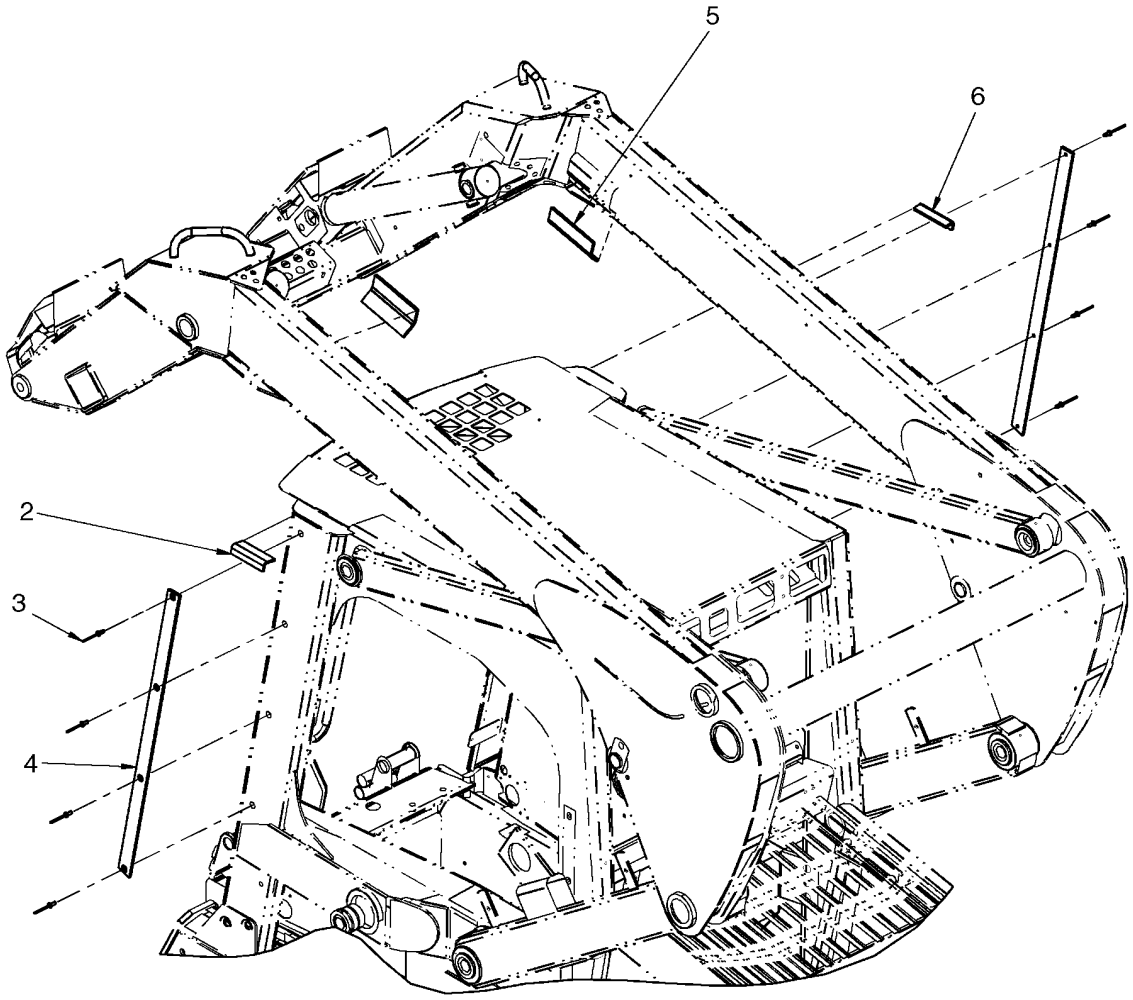

BS08B010

FOLGA, KIT

REF	FN	PART NUMBER	YR/SN	QTY	DESCRIPTION
1		87622555		1	KIT, SERVICE, Clearance Kit; Incl. 2 - 6
2		87396335		1	CANTONEIRA, LH
3		86534250		8	REBITE
4		87528057		2	PLACA DE DESGASTE
5		87622558		2	PLACA
6		87396336		1	CANTONEIRA, RH

BUCKET CYLINDER

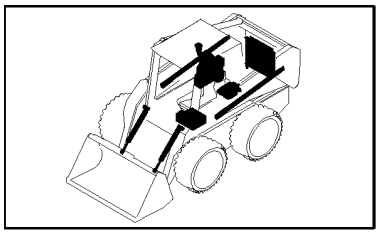

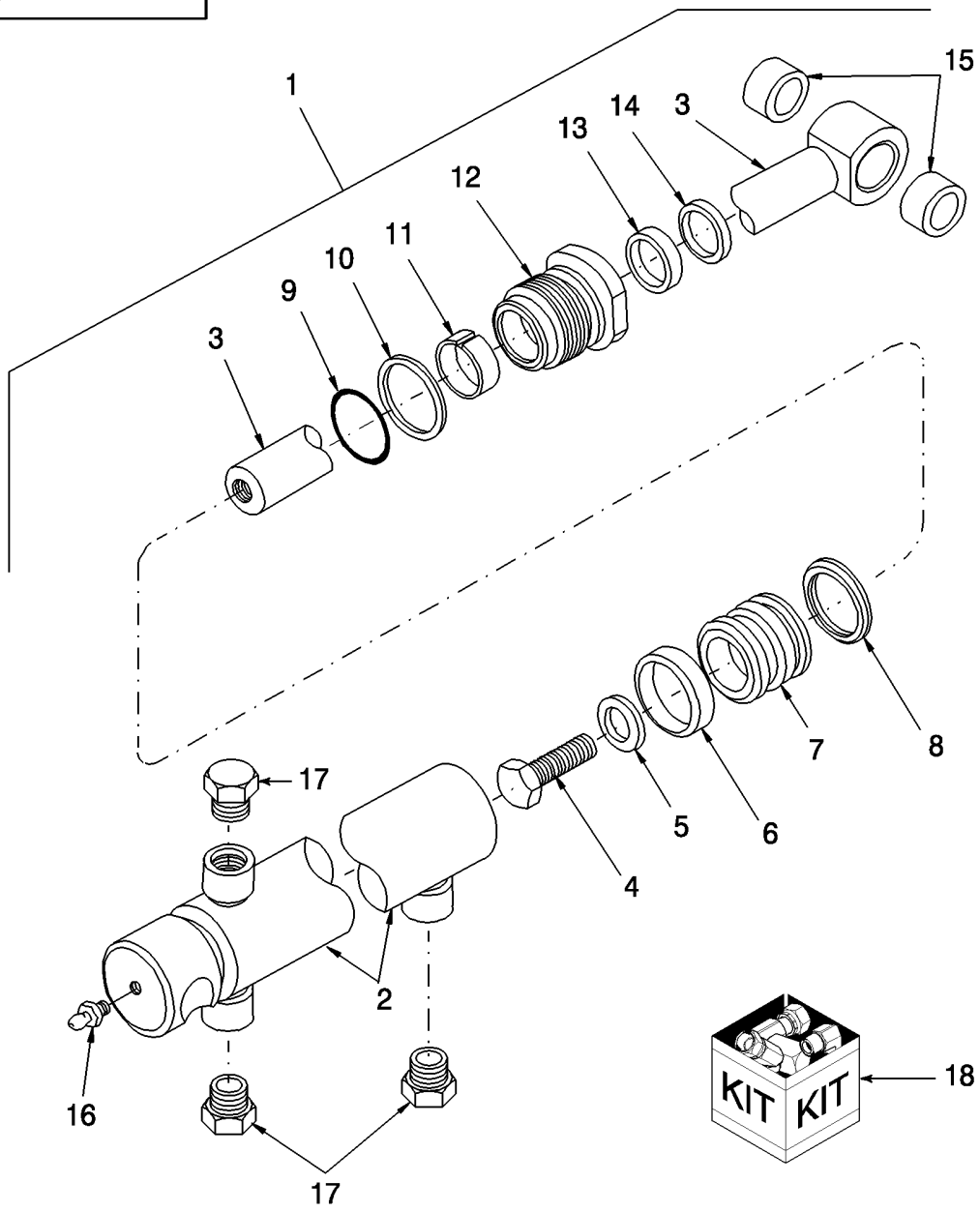

9

BUCKET CYLINDER

REF	FN	PART NUMBER	YR/SN	QTY	DESCRIPTION
1		87038978		2	CILINDRO HIDRÁULICO, Bucket; Incl. 2 - 18
2		NS		1	NOT SERVICED, Cylinder
3		86513304		1	HASTE, Piston, Incl. Ref. 15
4		86512048		1	PARAFUSO, Hex, 3/4-16 x 2 1/2", G8
5		86512328		1	ARRUELA PLANA, Hardened, G8, 3/4"
6		771701		1	Anillo De Desgaste, Wear, 2.002" ID x .375" Thick
7		86513306		1	PISTÃO
8		86570920		1	ANEL DE VEDACAO, Seal, 2-1/4"
9		510121		1	ANEL "O", -227, 70 Duro, 2.109" ID x .139" Thk
10		86502489		1	VEDADOR ESPECIAL, Backup, 2.147" ID x .04" Thick
11		9843627		1	Anillo De Desgaste, Wear, 1-1/4" ID x 1/2" Thick
12		9802846		1	CABEÇOTE
13		86513307		1	ANEL DE VEDACAO
14		529340		1	ANEL DE VEDACAO
15		9845313		4	BUCHA
16		87414		1	GRAXEIRA, 1/4"-28 x .56" lg, Drive
17		214389		3	BUJÃO, Hex Hd, 3/4"-16 ORB
18		86570919		AR	JOGO DE JUNTAS, Incl. Ref. 6, 8 - 11, 13, & 14

BOOM CYLINDER

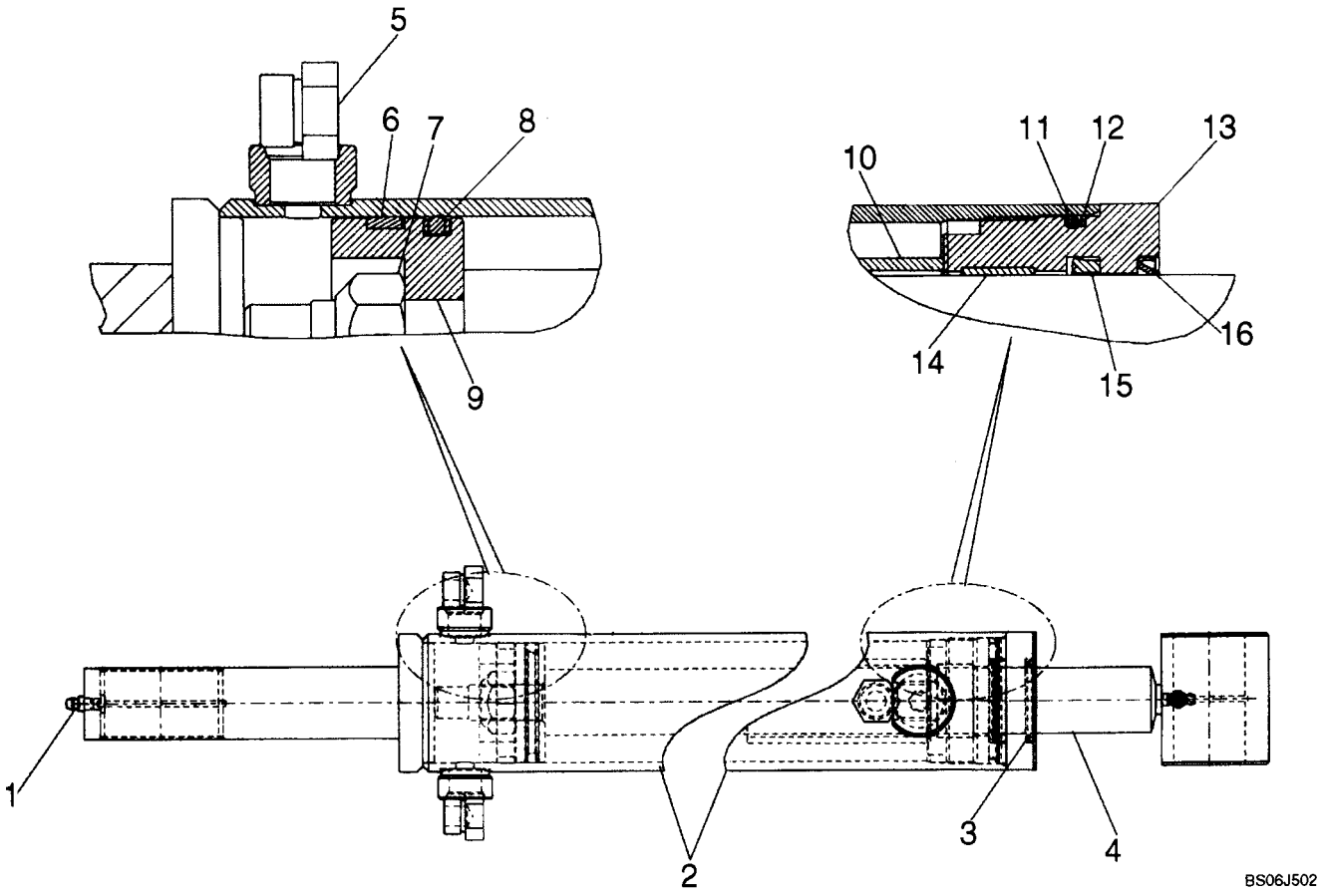

BOOM CYLINDER

REF	FN	PART NUMBER	YR/SN	QTY	DESCRIPTION
		87459207		1	CILINDRO, 63.5mm (2 1/5 in.) Bore X 539.75mm (21 1/4 in.) Stroke; Incl 1 - 16
1		87414		2	GRAXEIRA, 1/4"-28 x .56" lg, Drive
2		87460855		1	CILINDRO, Cylinder Barrel
3		86570922		1	JOGO DE JUNTAS, Not Illustrated
4		9800963		1	HASTE
5		214389		3	BUJÃO, Hex Hd, 3/4"-16 ORB
6		280724		1	CONTRA PORCA, 3/4"-16, GC
7		783874		1	Anillo De Desgaste
8		86563839		1	ANEL DE VEDACAO
9		848220		1	PISTÃO
10		87460854		1	CILINDRO, Spacer
11		9848676		1	ANEL "O", -229, 90 Duro, 2.359" ID x .139" Thk
12		86512008		1	VEDADOR ESPECIAL
13		86521396		1	CABEÇOTE
14		9842390		1	Anillo De Desgaste
15		9600664		1	ANEL DE VEDACAO
16		46886		1	ANEL DE VEDACAO

BOOM CYLINDER

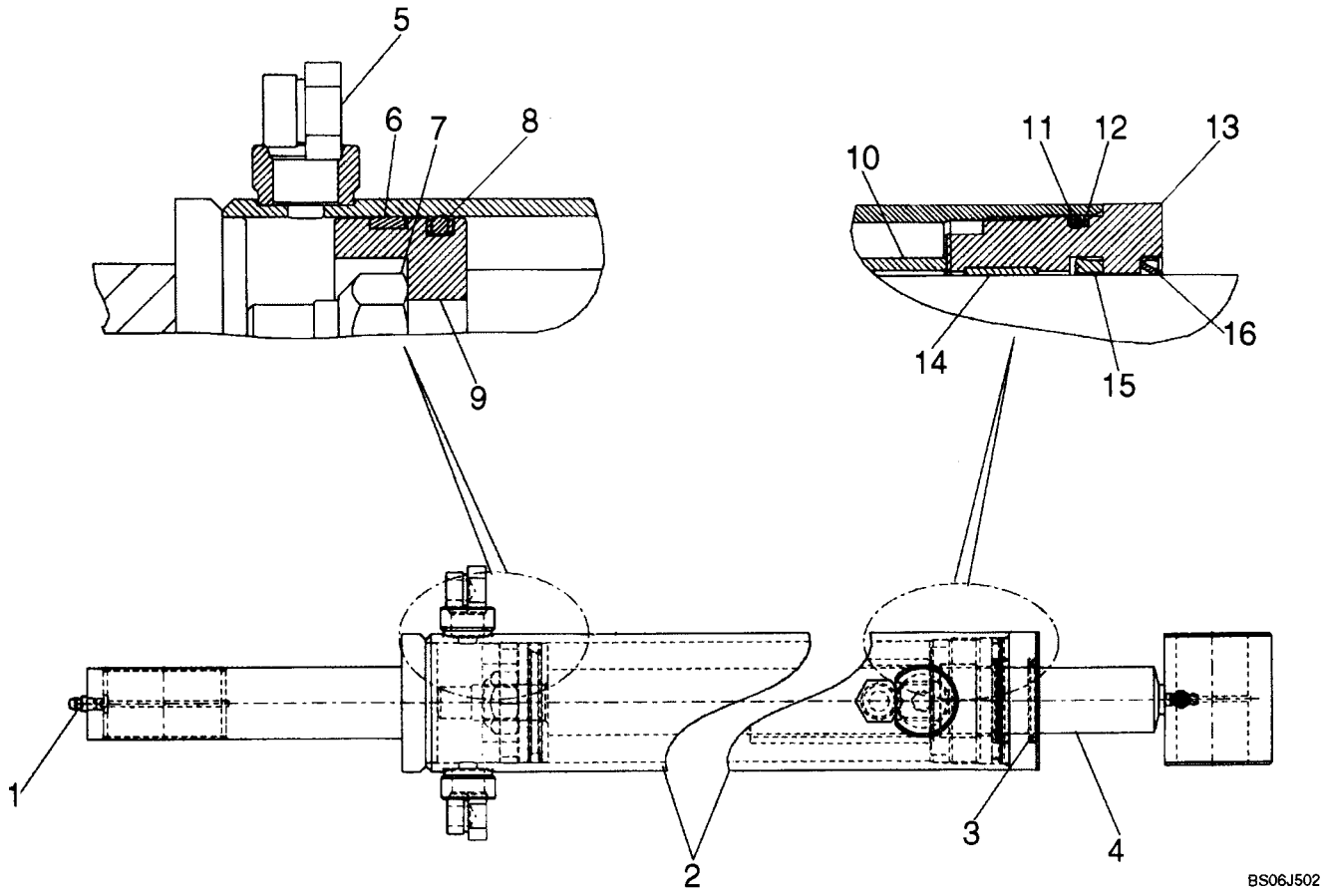

BOOM CYLINDER

REF	FN	PART NUMBER	YR/SN	QTY	DESCRIPTION
		87675772		1	CILINDRO, 63.5mm (2 1/5 in.) Bore X 532 (20 15/16 in.) Stroke; Incl 1 - 16
1		87414		2	GRAXEIRA, 1/4"-28 x .56" lg, Drive
2		87460855		1	CILINDRO, Cylinder Barrel
3		86570922		1	JOGO DE JUNTAS, Not Illustrated
4		87675762		1	HASTE CILINDRO
5		214389		3	BUJÃO, Hex Hd, 3/4"-16 ORB
6		280724		1	CONTRA PORCA, 3/4"-16, GC
7		783874		1	Anillo De Desgaste
8		86563839		1	ANEL DE VEDACAO
9		848220		1	PISTÃO
10		87460854		1	CILINDRO, Spacer
11		9848676		1	ANEL "O", -229, 90 Duro, 2.359" ID x .139" Thk
12		86512008		1	VEDADOR ESPECIAL
13		86521396		1	CABEÇOTE
14		9842390		1	Anillo De Desgaste
15		9600664		1	ANEL DE VEDACAO
16		46886		1	ANEL DE VEDACAO

BUCKETS - LOADER, DIRT / FOUNDRY

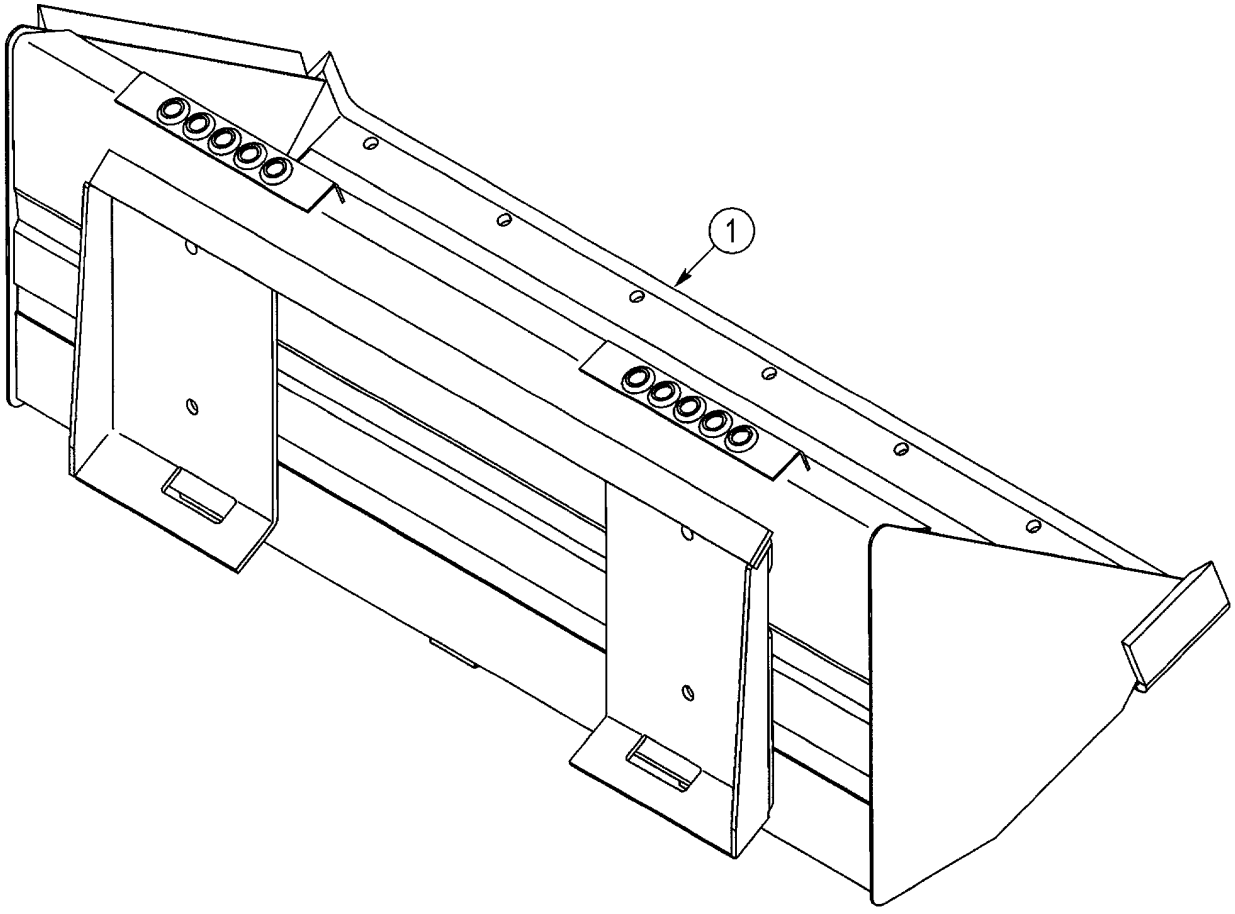

BC01B198

BUCKETS - LOADER, DIRT / FOUNDRY

REF	FN	PART NUMBER	YR/SN	QTY	DESCRIPTION
1		{86590377}		1	BUCKET, Dirt/Foundry; 1676 mm, 66 in.; Incl. 86592024, Order from Whole Goods
		86592024		1	DECALCOMANIA, Not Illustrated
1		{86590379}		1	BUCKET, Dirt/Foundry; 1829 mm, 72 in.; Incl. 86592026, Order from Whole Goods
		86592026		1	DECALCOMANIA, Not Illustrated
1		{86600559}		1	BUCKET, Dirt/Foundry; 1981 mm, 78 in.; Incl. 86600558, Order from Whole Goods
		86600558		1	DECALCOMANIA, Not Illustrated

BUCKETS - LOADER, EXTENDED LOW PROFILE

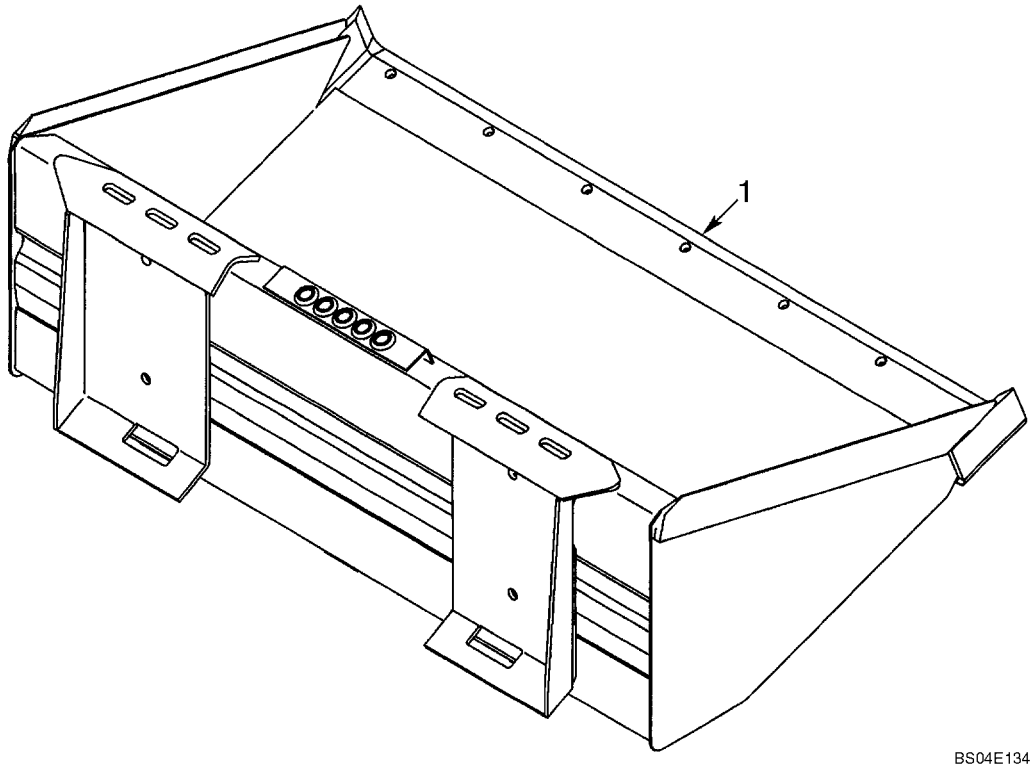

BS04E134

BUCKETS - LOADER, EXTENDED LOW PROFILE

REF	FN	PART NUMBER	YR/SN	QTY	DESCRIPTION
1		{715108016}		1	Gray Extended Low Profile; 1676 mm, 66 in.; Incl. Bucket 86590378, Decal 86592025, Order from Whole Goods
		86592025		1	DECALCOMANIA, Not Illustrated
1		{715112016}		1	Gray Extended Low Profile; 1820 mm, 72 in.; Incl. Bucket 86590381, Decal 86592028, Order from Whole Goods
		86592028		1	DECALCOMANIA, Not Illustrated
1		{715252016}		1	Gray Extended Low Profile; 1829 mm, 78 in.; Incl. Bucket 86590383, Decal 86592030, Order from Whole Goods
		86592030		1	DECALCOMANIA, Not Illustrated
1		{715118026}		1	Gray Extended Low Profile; 2134 mm, 84 in.; Incl. Bucket 86590386, Decal 86592033, Order from Whole Goods
		86592033		1	DECALCOMANIA, Not Illustrated

BUCKETS - LOADER, UTILITY / LIGHT MATERIAL

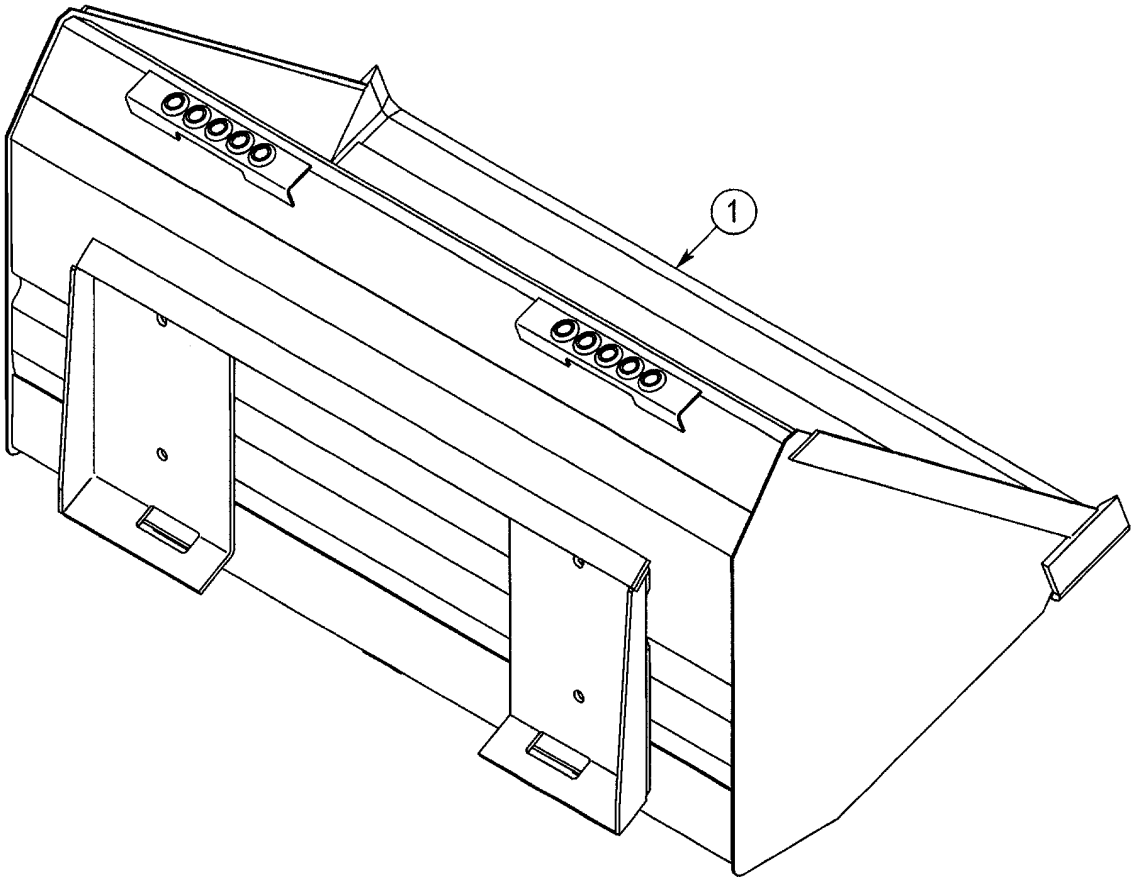

BC01B200

BUCKETS - LOADER, UTILITY / LIGHT MATERIAL

REF	FN	PART NUMBER	YR/SN	QTY	DESCRIPTION
1		{87010193}		1	BUCKET, Utility/Light Material; 1829 mm, 72 in.; Incl. 87010183, Order from Whole Goods
		87010183		1	DECALCOMANIA, Not Illustrated
1		{87010194}		1	BUCKET, Utility/Light Material; 2134 mm, 84 in.; Incl. 87010184, Order from Whole Goods
		87010184		1	DECALCOMANIA, Not Illustrated

BUCKETS - LOADER, MANURE / SLURRY

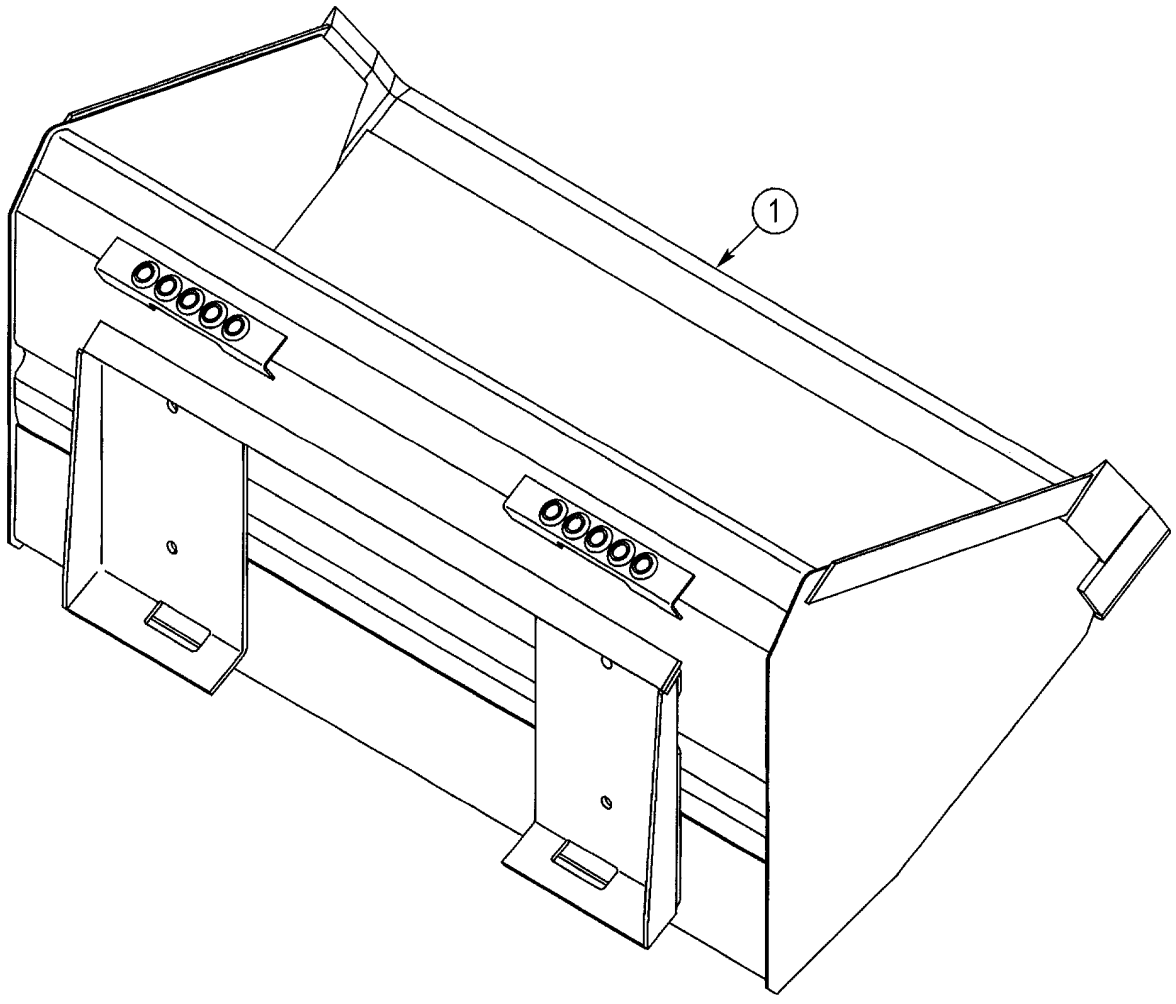

BC01B203

BUCKETS - LOADER, MANURE / SLURRY

REF	FN	PART NUMBER	YR/SN	QTY	DESCRIPTION
1		{86590382}		1	BUCKET, Manure/Slurry; 1829 mm, 72 in.; Incl. 86592029, Order from Whole Goods
		86592029		1	DECALCOMANIA, Not Illustrated

09-10A		p1	07/07

BUCKET - CUTTING EDGE

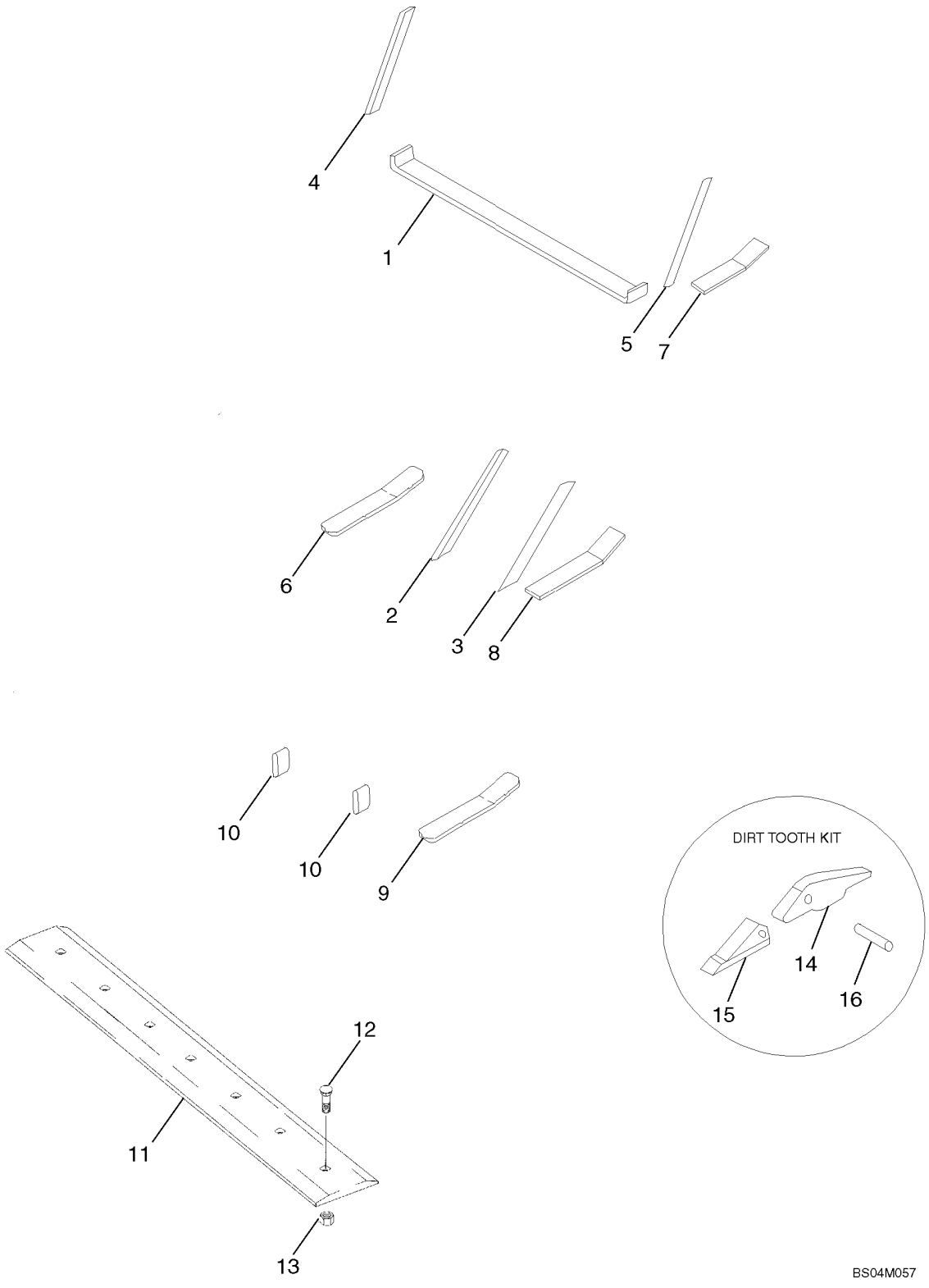

BUCKET - CUTTING EDGE

REF	FN	PART NUMBER	YR/SN	QTY	DESCRIPTION
1		87015514		1	FACA, 7 Holes, 66", Weld-on
		87436141		1	FACA, Incl. (1) 86577169 Edge, (7) 86548338 Bolt and (7) 280374, Nut
1		86577169		1	FACA, Reversible, 7 Holes, 72", Bolt-on
		86548338		X	PERNO DE ARADO, 5/8"-11 x 2", G5
		280374		X	PORCA, 5/8"-11, G5
1		87015513		1	FACA, 72 in; 7 Hole
1		87016982		1	FACA, 72 in; Solid
1		87026702		1	FACA, Solid, 78", Weld-on
1		87015515		1	FACA, 9 Holes, 78", Weld-on
1		87016981		1	FACA, Solid, 6" Wide, 84", Weld-on
1		87015516		1	FACA, 9 Hole, 84", Weld-on
1		87026703		1	FACA, Solid, 8" Wide, 84", Weld-on
1		87057433		1	FACA, 9 Hole, 6" Wide, 84"
		87057434		X	FACA, 20" Long
		87057435		X	FACA, 27.8" Long
2		87015311		1	FACA, 30.8" Long, Right Hand
3		87015312		1	FACA, 30.8" Long, Left Hand
4		87014504		1	NAVALHA DE CORTE, 24.8" Long, Right Hand
5		87014505		1	NAVALHA DE CORTE, 24.8" Long, Left Hand
6		87016954		4	BARRA, 25.6" Long, Skid
7		87016983		4	BARRA, Skid, 19" Long
8		87015310		4	BARRA, Skid, 28" Long
8		87016984		4	BARRA, Skid, 23" Long
8		87017184		5	BARRA, Skid, 26" Long
9		87016955		4	BARRA, Skid, 26.7" Long, 72" (4) & 84" (5)
10		87016980		2	FACA, 5.9" Long
11		86577167		1	FACA, Reversible, 7 Holes for 5/8" plow bolts, 66" Bucket, Bolt-on
11		86577169		1	FACA, Reversible, 7 Holes for 5/8" plow bolts, 72" Bucket, Bolt-on
11		86577171		1	FACA, Reversible, 9 Holes for 5/8" plow bolts, 78" Bucket, Bolt-on
11		86577173		1	FACA, Reversible, 9 Holes for 5/8" plow bolts, 84" Bucket, Bolt-on

BUCKET - CUTTING EDGE

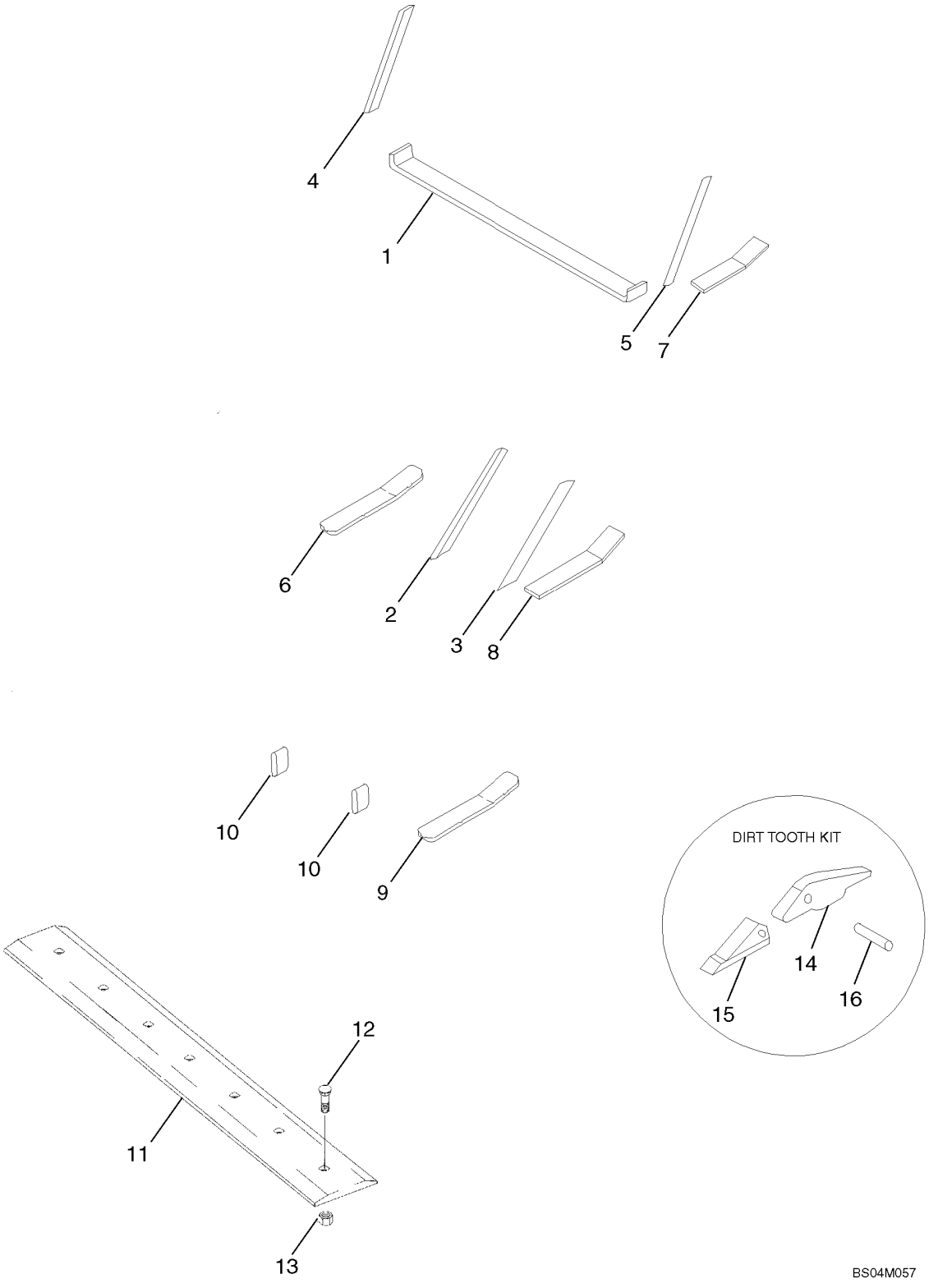

BUCKET - CUTTING EDGE

REF	FN	PART NUMBER	YR/SN	QTY	DESCRIPTION
		86635434		1	KIT, Bolt Kit, 7 Piece, Incl. (7) Ref 12, (7) Ref 13
		86635435		1	KIT, Bolt Kit, 9 Piece, Incl. (9) Ref 12, (9) Ref 13
12		86635723		X	PARAFUSO, G8 .62 x 2.00
13		85700693		X	CONTRA PORCA, 5/8"-11, GC
		9843725		X	KIT, Dirt Tooth, Incl. Ref 14 - 16 & Instructions
14		9827955		6	HASTE, Tooth Shank
15		293008		6	PONTA
16		D9NNA335AA		6	PINO, Retaining

BUCKET, CUTTING EDGE KIT

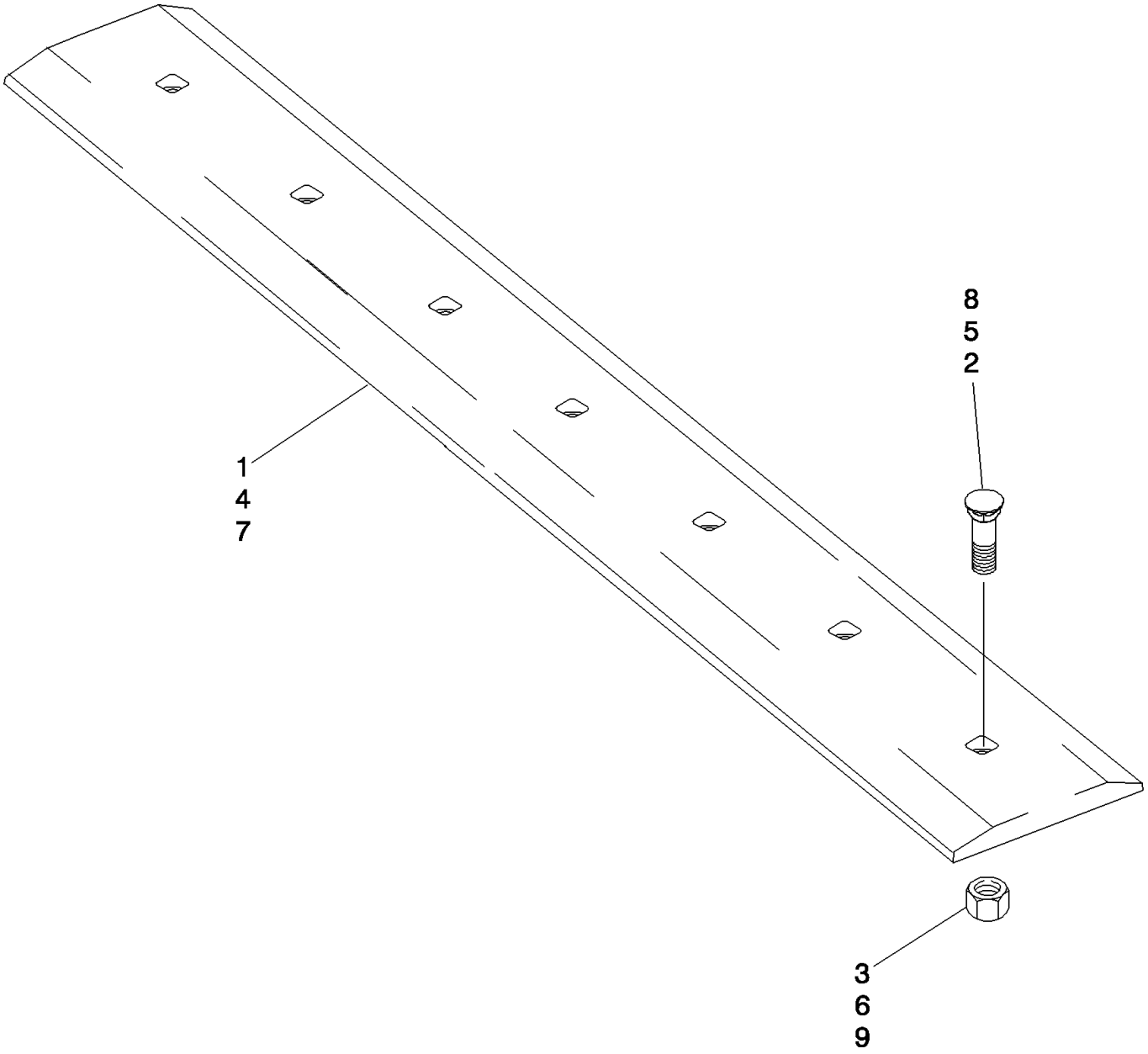

BS04A101

BUCKET, CUTTING EDGE KIT

REF	FN	PART NUMBER	YR/SN	QTY	DESCRIPTION
		430497A1		1	LAMINA DE CORTE, Kit; 60 Inch; Incl. Ref 1 - 3; Order Components
1		87454489		1	FACA, 1524 mm (60 inch); Power Tan
1		86577165		1	FACA, 1524 mm (60 inch); Gray
2		86548338		7	PERNO DE ARADO, 5/8"-11 x 2", G5
3		425-1010		7	PORCA, 5/8"-11, G5
		430498A1		1	LAMINA DE CORTE, Kit; 66 Inch; Incl. Ref 4 - 6; Order Components
4		87454483		1	FACA, 1676 mm (66 inch); Power Tan
4		86577167		1	FACA, 1676 mm (66 inch); Gray
5		86548338		7	PERNO DE ARADO, 5/8"-11 x 2", G5
6		425-1010		7	PORCA, 5/8"-11, G5
		430499A1		1	LAMINA DE CORTE, Kit; 72 Inch; Incl. Ref 7 - 9; Order Components
7		87454488		1	FACA, 1829 mm (72 inch); Power Tan
7		86577169		1	FACA, 1829 mm (72 inch); Gray
8		86548338		7	PERNO DE ARADO, 5/8"-11 x 2", G5
9		425-1010		7	PORCA, 5/8"-11, G5
		430500A1		1	LAMINA DE CORTE, Kit; 84 Inch; Incl. Ref 7 - 9; Order Components
		434817A1		1	LAMINA DE CORTE, Kit; 78 Inch; Incl. Ref 7 - 9; Order Components
7		86577173		1	FACA, 2134 mm (84 inch); Gray
7		86577171		1	FACA, 1981 mm (78 inch); Gray
8		420-21032		9	PARAFUSO
8		86548338		7	PERNO DE ARADO, 5/8"-11 x 2", G5
9		329-1010		9	PORCA
9		425-1010		7	PORCA, 5/8"-11, G5

HORQUILLA

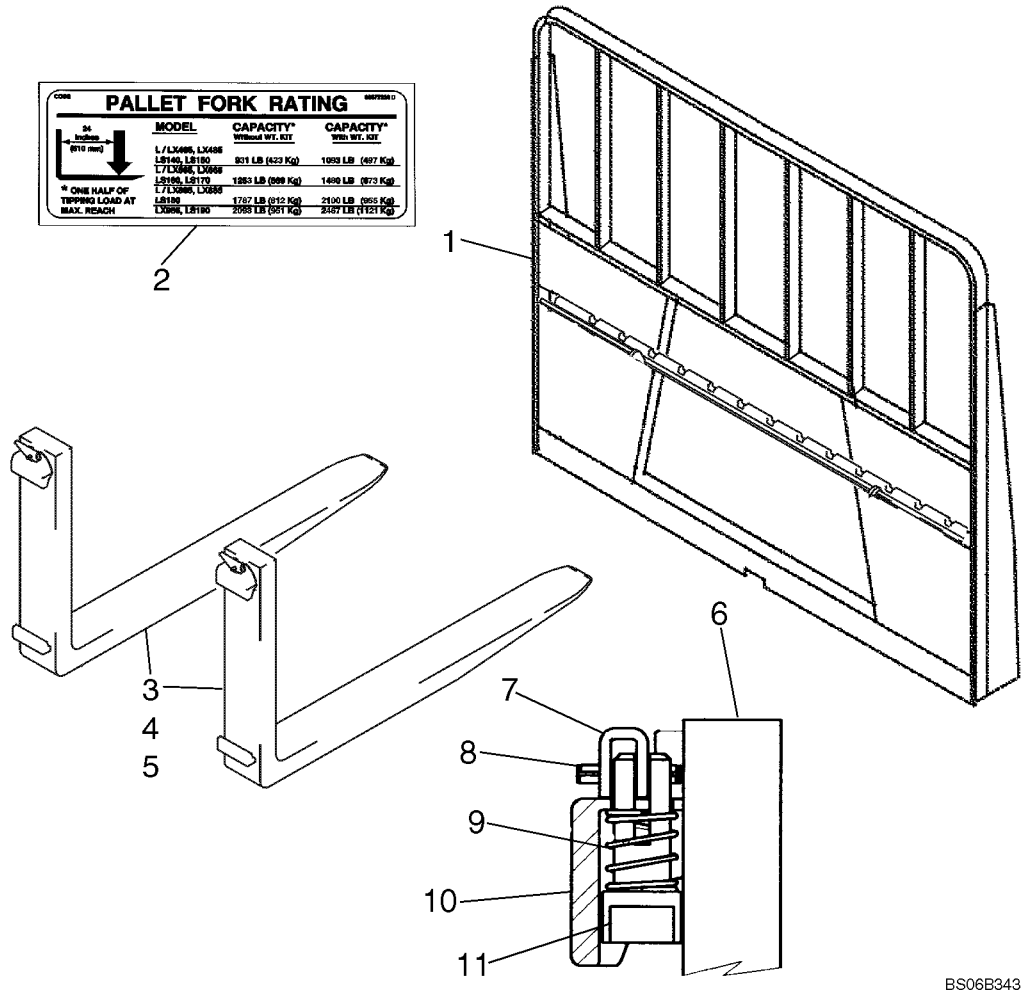
PALLET FORK RATING
MODEL
CAPACITY*
Without WT. KIT
CAPACITY*
With WT. KIT
24 Inches (610 mm)
L/LX486, LX486 LS140, LS180
931 LB (423 Kg)
1093 LB (497 Kg)
L/LX566, LX566 LS160, LS170 L/LX566, LX566
1253 LB (569 Kg)
1469 LB (673 Kg)
* ONE HALF OF TIPPING LOAD AT MAX. REACH
LS180
1787 LB (812 Kg)
2100 LB (955 Kg)
LX566, LS190
2065 LB (951 Kg)
2467 LB (1121 Kg)
1
2
3
4
5
6
7
8
9
10
11
BS06B343

HORQUILLA

REF	FN	PART NUMBER	YR/SN	QTY	DESCRIPTION
1		86589869		1	PLACA DE MONTAGEM, Pallet Fork; Incl. 2
2		86577330		1	DECALCOMANIA, Pallet Fork Rating
3		86589763		1	GARFO, 36 in. Pallet Fork Set; Incl. 86574053
		86574053		2	FORQUILHA, Fork Assy; 36 in.; Incl. 6 - 11
4		86589764		1	GARFO, 42 in. Pallet Fork Set; Incl. 86574054
		86574054		2	FORQUILHA, Fork Assy; 42 in.; Incl. 6 - 11
5		86589765		1	CONJUNTO DIA, 48 in. Pallet Fork Set; Incl. 86574055
		86574055		2	FORQUILHA, Fork Assy; 48 in.; Incl. 6 - 11
6		NSS		1	BOLETIM INFORMATIVO, Fork Arm
7		226129		1	MANILHA
8		118827		1	PINO, 3/16" x 1", Slotted
9		9800081		1	MOLA
10		NSS		1	BOLETIM INFORMATIVO, Top Hook
11		226130		1	PINO

FENDERS (L175)

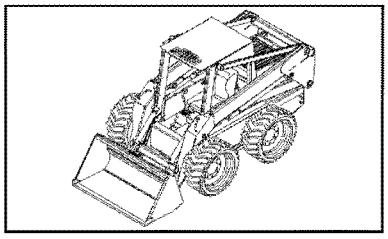

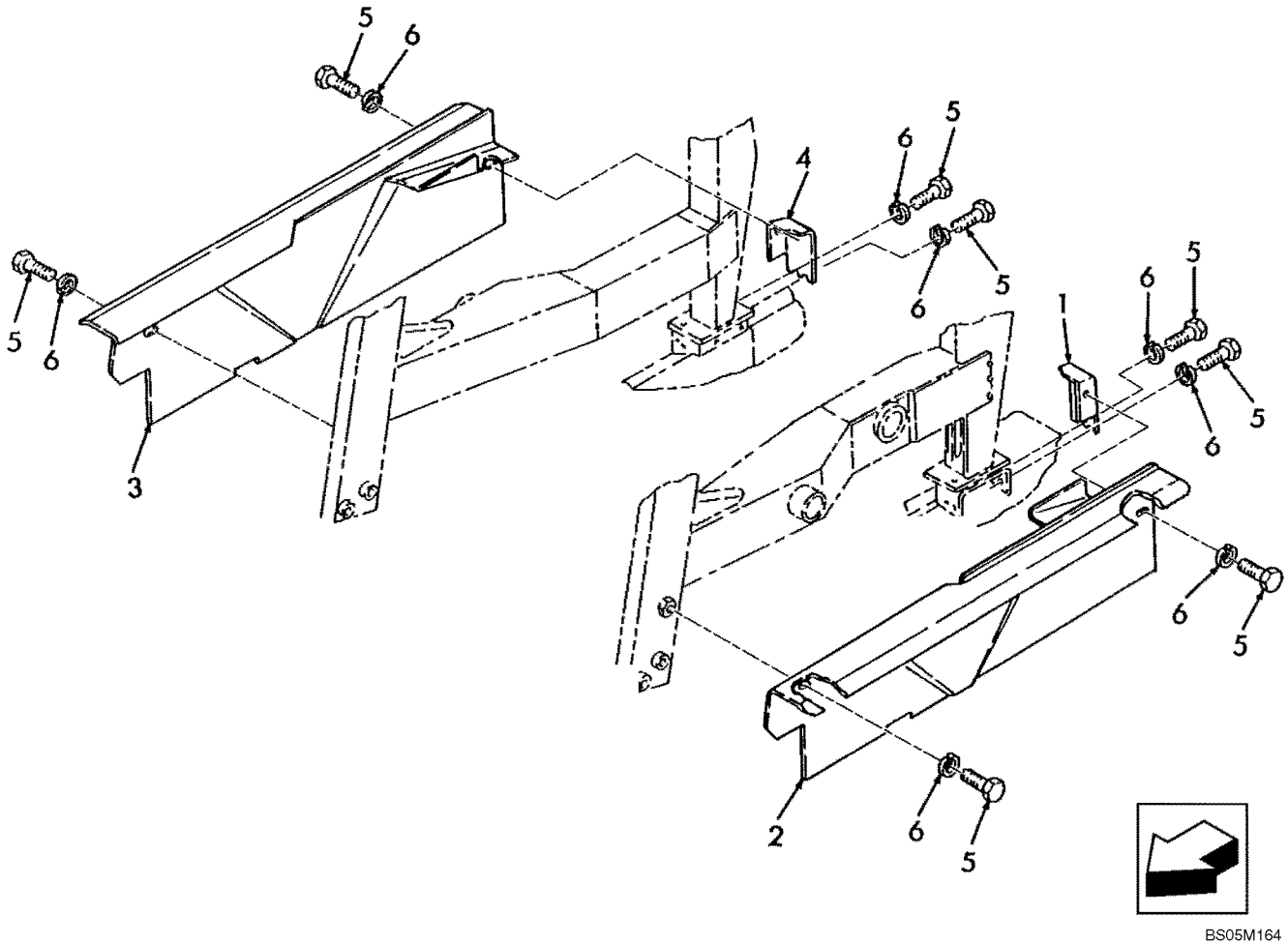

FENDERS (L175)

REF	FN	PART NUMBER	YR/SN	QTY	DESCRIPTION
1		87043287		1	TAMPA, LH, Gray
2		87058957		1	EXTENSÃO DO PÁRA-LAMA, Fender LH, Gray
3		87058956		1	EXTENSÃO DO PÁRA-LAMA, Fender RH, Gray
4		87043288		1	TAMPA, RH, Gray
5		88434		8	PARAFUSO, Hex, 3/8"-16 x 3/4", G5, Full Thd
6		140045		8	ARRUELA MOLA, Belleville, M10

FENDERS (C175)

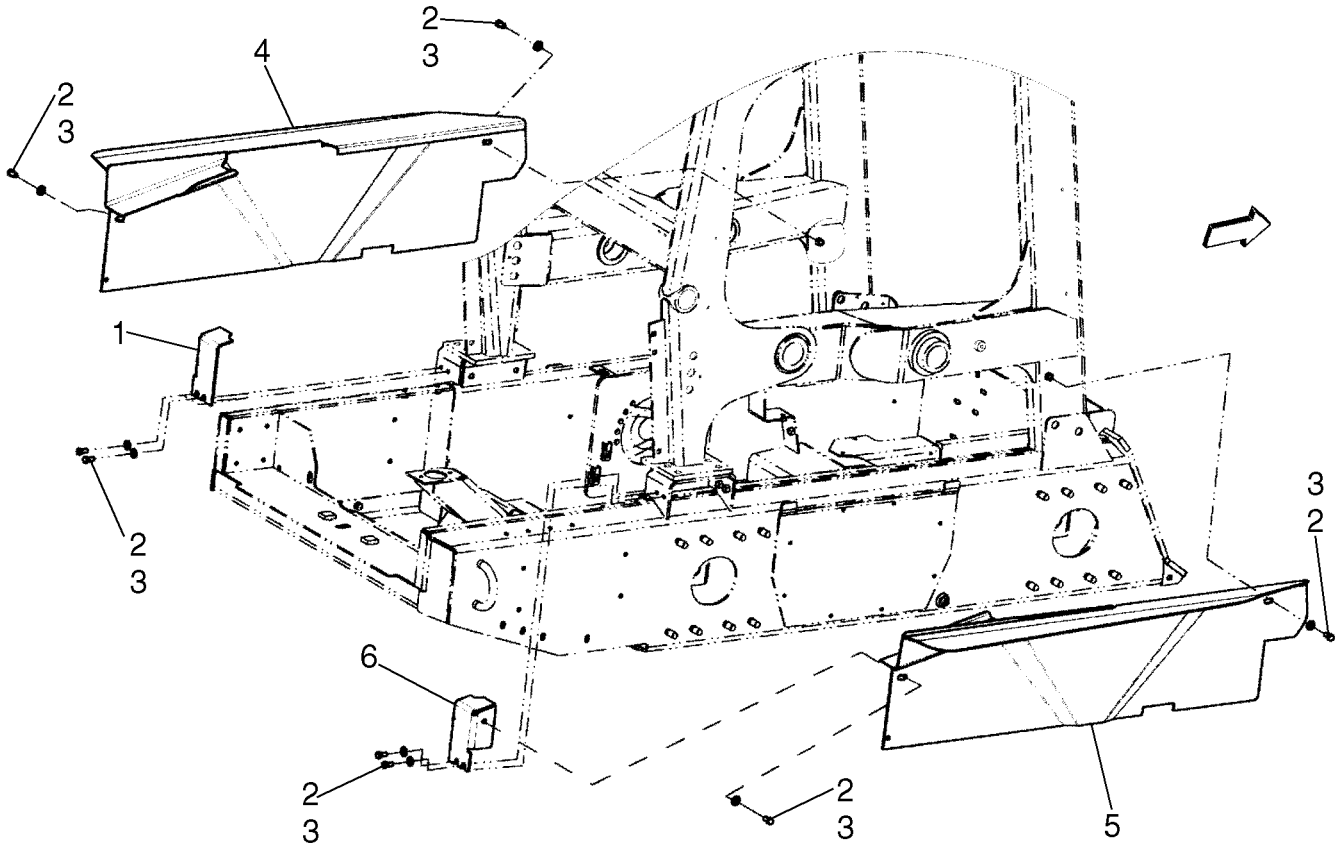

FENDERS (C175)

REF	FN	PART NUMBER	YR/SN	QTY	DESCRIPTION
1		87043287		1	TAMPA
2		88434		8	PARAFUSO, Hex, 3/8"-16 x 3/4", G5, Full Thd
3		140045		8	ARRUELA MOLA, Belleville, M10
4		87528960		1	PÁRA-LAMA, Fender LH, Gray
5		87528959		1	PÁRA-LAMA, Fender RH, Gray
6		87043288		1	TAMPA

09-14		p1	03/08

LIMITE - JANELA TRASEIRA

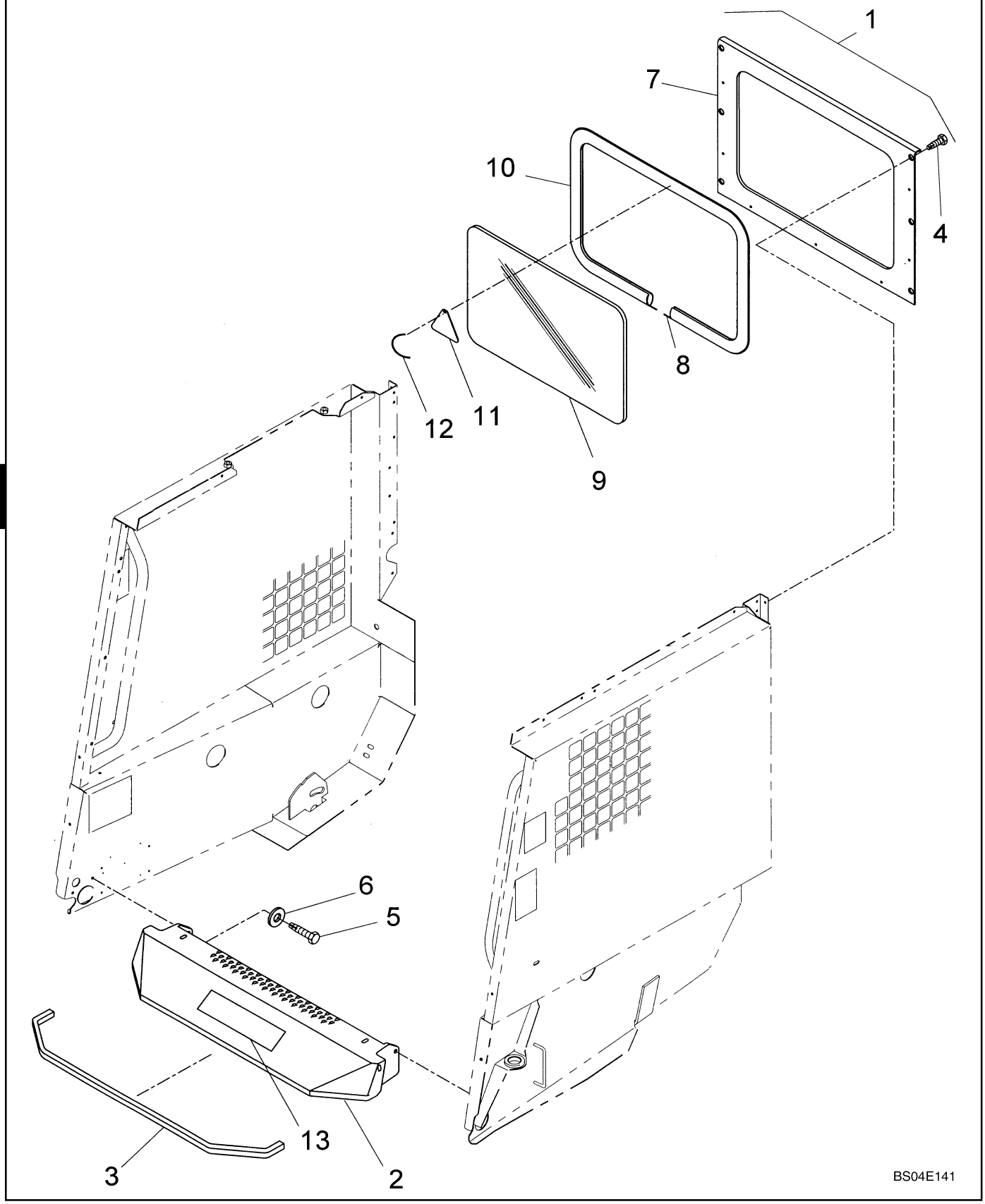

LIMITE - JANELA TRASEIRA

REF	FN	PART NUMBER	YR/SN	QTY	DESCRIPTION
1		86506354		1	JANELA, Rear, Incl. 7 - 12
2		86530077		1	ESTRIBO
3		86508457		1	CUNHA, Foam, Closed Cell; 1006 mm, 39.60 in. Required
4		9840344		14	PARAFUSO, 5/16"-18 x 11/16"
5		88825		4	PARAFUSO, Hex Hd, 5/16" x 1 1/4"
6		80664		4	ARRUELA PLANA, 5/16"
7		9841234		1	SUPORTE, Rear Window; With Extra Upper And Lower Holes; If Used
7		87669244		1	CAPA METÁLICA, Rear Window; Without Extra Upper And Lower Holes; If Used
8		92626		1	ENCHIMENTO, Filler Strip
9		9622411		1	JANELA, Rear
10		92625		1	MOLDURA, Glass Setting; 50' Bulk; Cut To Length
11		87026871		1	EMBLEMA, Tab, Exit
12		263117		1	TIRA DE CABO, .14" x 11 1/2", 9/64" x 11-1/2"

09-15		p1	04/07

CAB

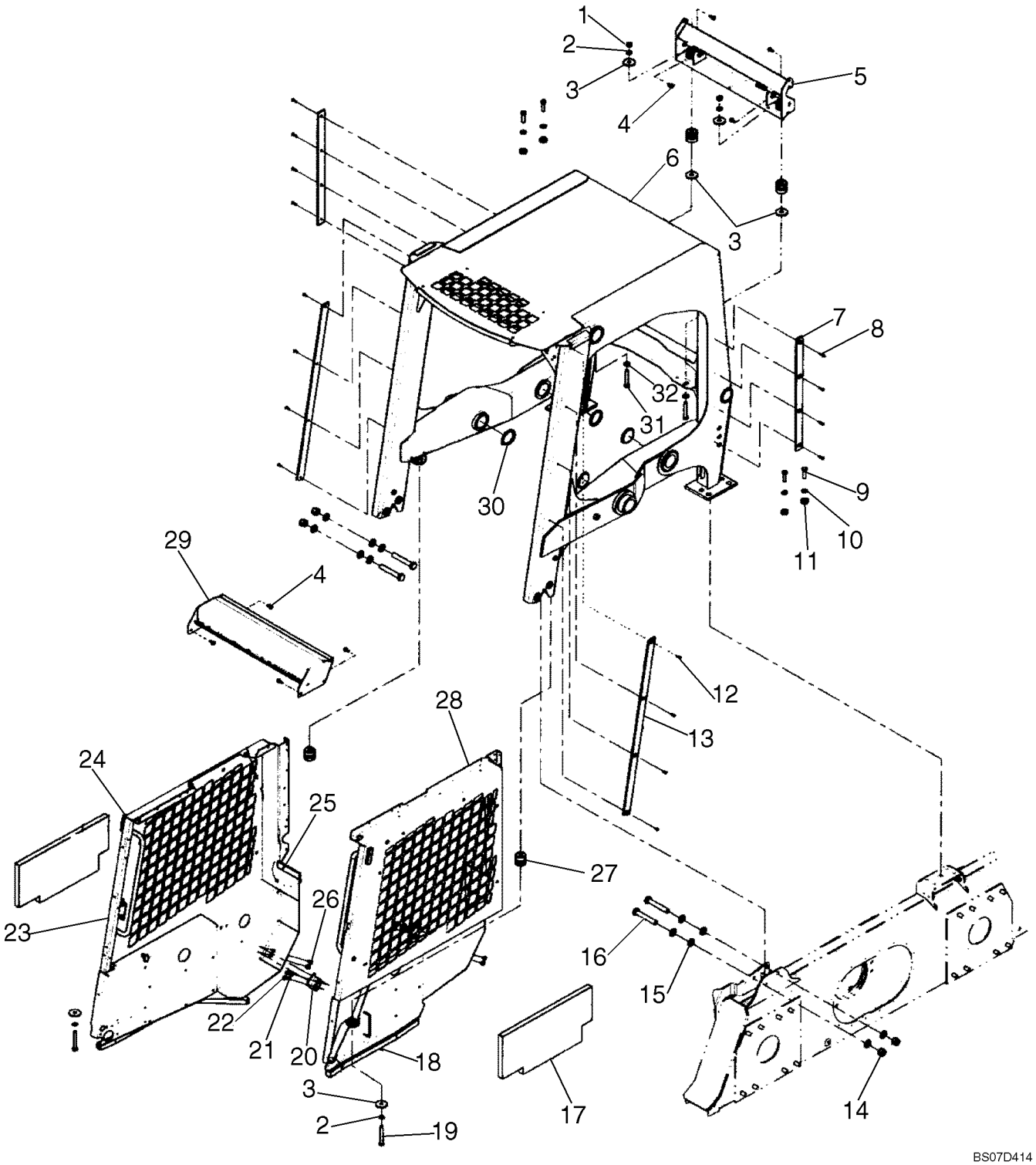

9

CAB

REF	FN	PART NUMBER	YR/SN	QTY	DESCRIPTION
1		280431		2	PORCA, 1/2"-13, G5
2		80679		4	ARRUELA-TRAVA, 1/2"
3		29684		4-6	ARRUELA PLANA
4		9840344		8	PARAFUSO
5		87029352		1	SUPORTE
6		87458915		1	CABINE, Order From Wholegoods
7		9622398		2	PLACA DE DESGASTE
8		617910		8	PARAFUSO, Cross Flat Hd, 1/4" x 1"
9		9790095		4	PARAFUSO, Hex, 1/2"-13 x 1 3/4", G8
10		65319		4	ARRUELA PLANA
11		517015		4	ESPAÇADOR
12		86534250		8	REBITE
13		87528057		2	PLACA DE DESGASTE
14		9626598		4	CONTRA PORCA, 3/4"-10, GB
15		86512328		12	ARRUELA PLANA
16		88007		4	PARAFUSO, Hex, 3/4"-10 x 4 1/2", G5
17		9829527		2	ISOLANTE
18		86508457		1	CUNHA, 5 Ft. Required
19		9637417		2	PARAFUSO, Hex, 1/2"-13 x 3 1/2", G5
20		86613407		2	TALÃO
21		322358		4	ARRUELA MOLA, Belleville, M8
22		9635082		4	PORCA, 5/16"-18, G5
23		87525072		1	CAPA METÁLICA, Side Sheet, RH
24		291308		1	TIRA VEDADORA, 6 in. Required
25		291809		1	ANEL DE VEDACAO, 10.56 in. Required
26		280327		4	PARAFUSO, Short NK, 5/16"-18 x 3/4", G5
27		612882		4	ISOLADOR
28		87525074		1	CAPA METÁLICA, Side Sheet, LH
29		87037401		1	SUPORTE
30		9822583		4	BUJÃO
31		87339		2	PARAFUSO, Hex, 1/2"-13 x 3", G5, If Used
31		9637417		2	PARAFUSO, Hex, 1/2"-13 x 3 1/2", G5, If Used
32		87364		2	ARRUELA PLANA, 1/2", SAE

CAB - DELUXE CAB

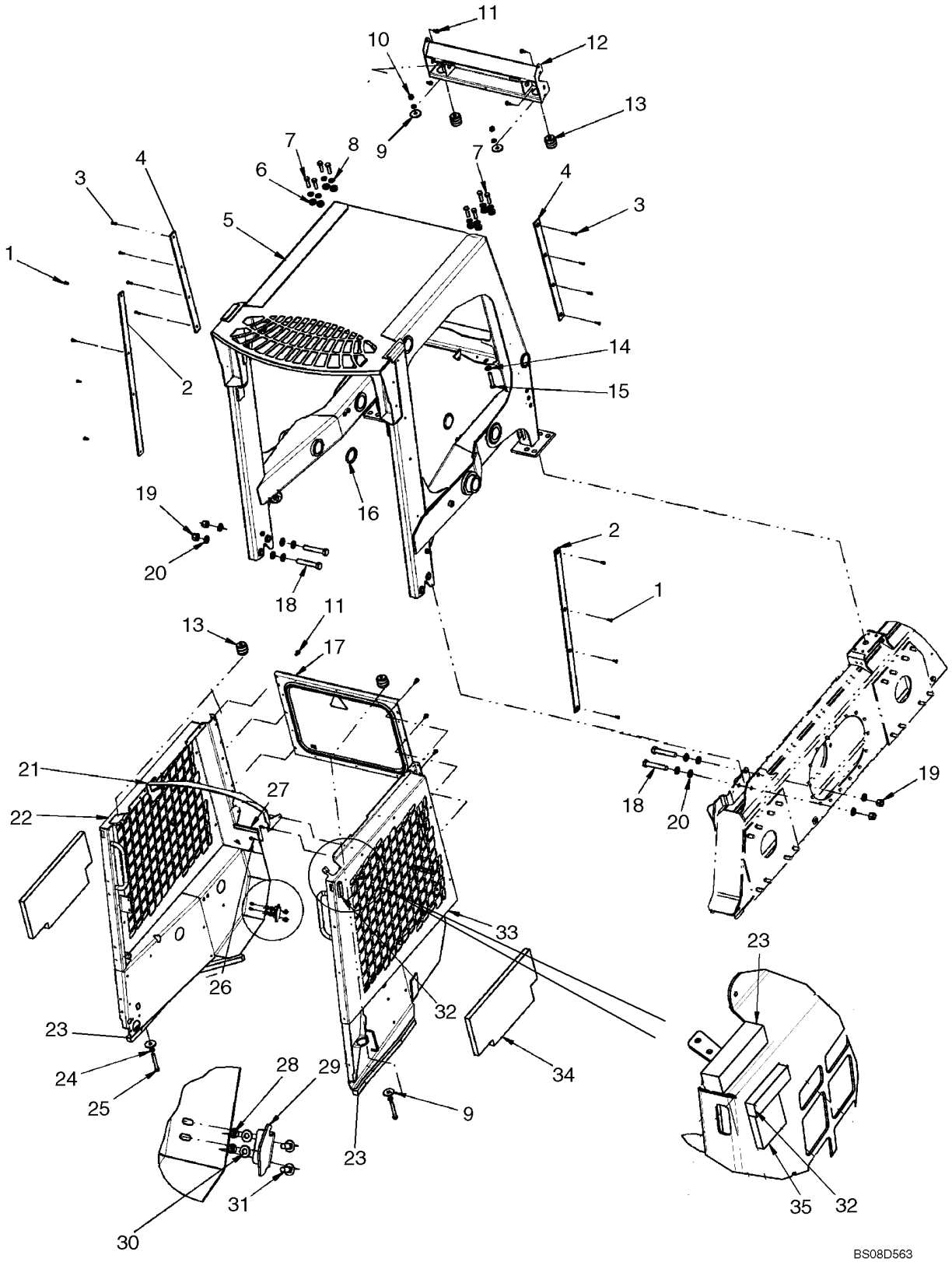

CAB - DELUXE CAB

REF	FN	PART NUMBER	YR/SN	QTY	DESCRIPTION
1		86534250		8	REBITE
2		87645655		2	PLACA DE DESGASTE, Wear Strip
3		86616032		8	PARAFUSO, Cross Flat Hd, 1/4" x 1", If Used
3		87577017		8	BOTÃO DE IMPULSO, Screw, Torx 1/4-20 x 1.00; If Used
4		87647989		2	PLACA DE DESGASTE, Wear Strip
5		87658800		1	KIT, SERVICE, Cab Service Kit; Incl. Cab Assembly, Gray And Decals (1) 87626170, (1) 86521713
5		87658802		1	KIT, SERVICE, Cab Service Kit, Europe; Incl. Cab Assembly, Gray And Decal (1) 87626170
6		517015		8	ESPAÇADOR
7		9790095		8	PARAFUSO, Hex, 1/2"-13 x 1 3/4", G8
8		65319		8	ARRUELA PLANA
9		29684		4	ARRUELA PLANA
10		280431		2	PORCA, 1/2"-13, G5
11		9840344		10	PARAFUSO
12		87029352		1	SUPORTE
13		612882		4	ISOLADOR
14		87364		2	ARRUELA PLANA, 1/2", SAE
15		87339		2	PARAFUSO, Hex, 1/2"-13 x 3", G5, If Used
15		9637417		2	PARAFUSO, Hex, 1/2"-13 x 3 1/2", G5, If Used
16		9822583		4	BUJÃO
17		86506354		1	JANELA, See Fig. 09-13
18		88007		4	PARAFUSO, Hex, 3/4"-10 x 4 1/2", G5
19		9626598		4	CONTRA PORCA, 3/4"-10, GB
20		86512328		12	ARRUELA PLANA
21		87677737		1	TIRANTE, Side Screen Tie
22		87676422		1	CAPA METÁLICA, Side Sheet, RH
		87658799		1	KIT, SERVICE, Right Hand Sidescreen Kit; Incl. Ref. 22 And Decal (1) 87586465
23		86508457		AR	CUNHA, Foam, Closed Cell; 6.04 Ft. Required
24		86512328		12	ARRUELA PLANA
25		9637417		2	PARAFUSO, Hex, 1/2"-13 x 3 1/2", G5
26		86625199		4	PARAFUSO, Hex Flg Hd, M6 x 13
27		291809		AR	ANEL DE VEDACAO, Sealing Strip; 9.50 in. Required

CAB - DELUXE CAB

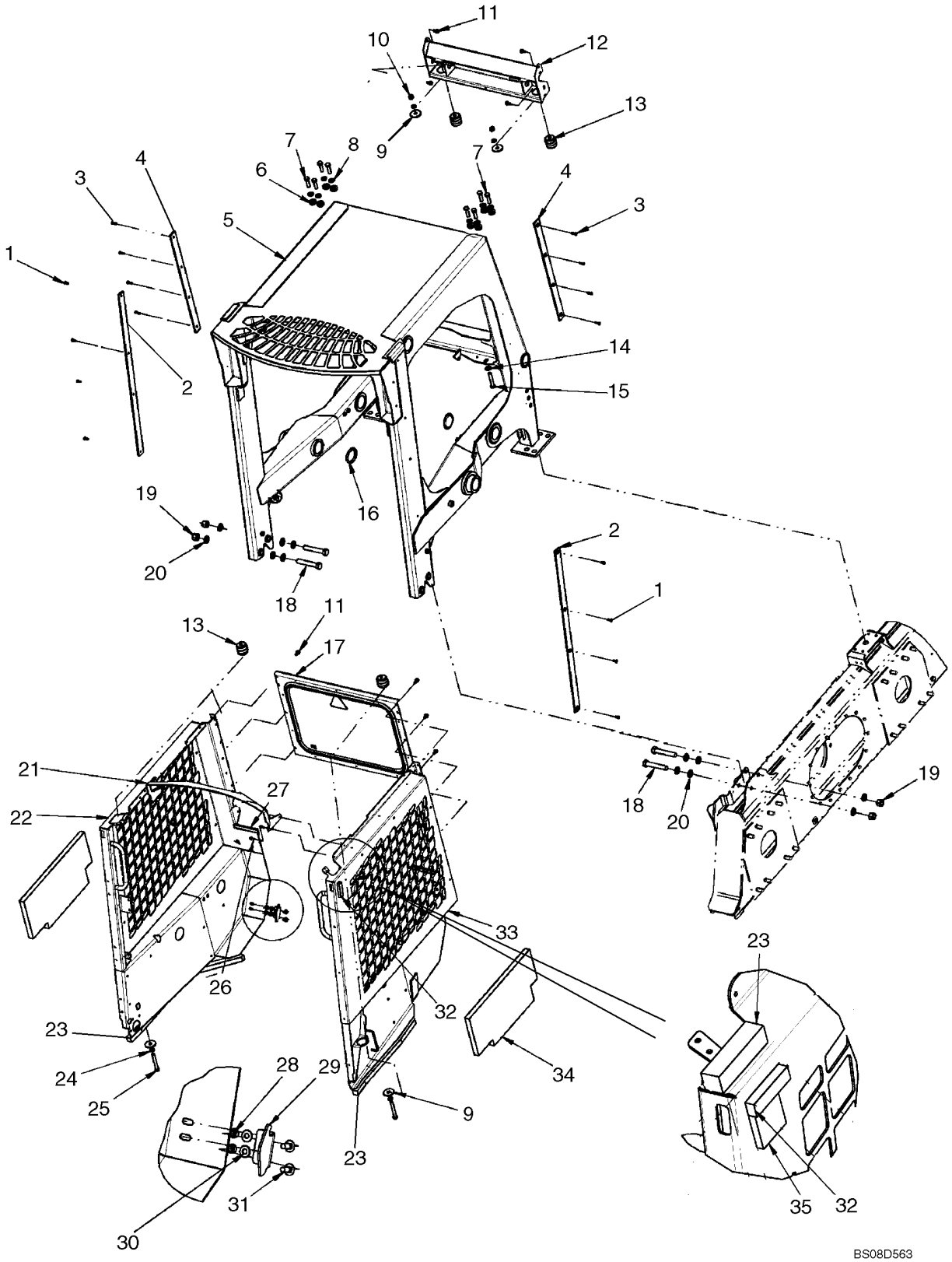

CAB - DELUXE CAB

REF	FN	PART NUMBER	YR/SN	QTY	DESCRIPTION
28		9635082		4	PORCA, 5/16"-18, G5
29		86613407		2	TALÃO
30		322358		4	ARRUELA MOLA, Belleville, M8
31		280327		4	PARAFUSO, Short NK, 5/16"-18 x 3/4", G5
32		291308		AR	TIRA VEDADORA, 2.0 Ft. Required
33		87676418		1	CAPA METÁLICA, Side Sheet, LH
34		9829527		2	ISOLANTE
35		87752551		2	"SILENTBLOC", If Used

CAB - INTERIOR TRIM, MANUAL CONTROLS, DELUXE CAB

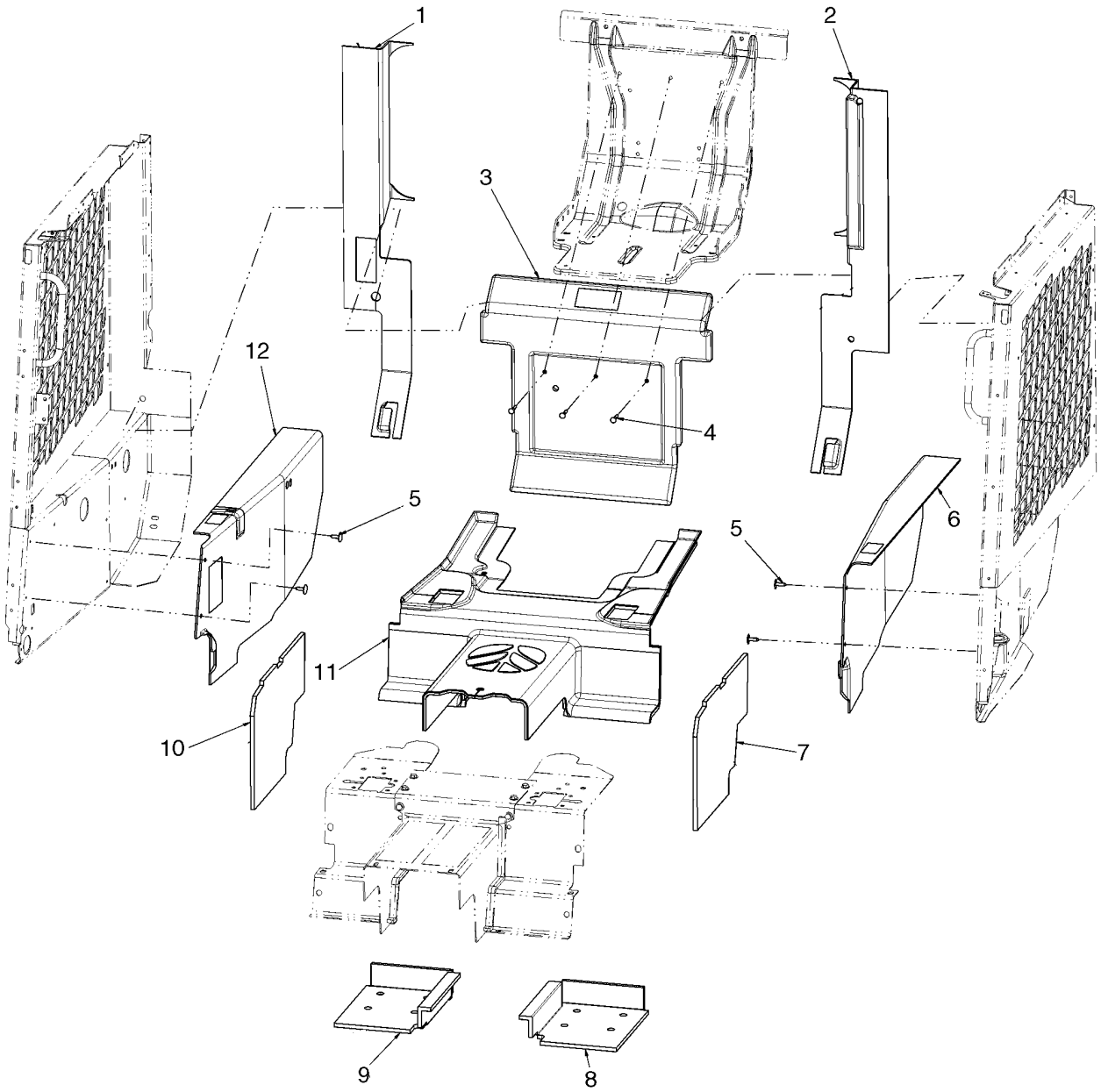

BS07C220

CAB - INTERIOR TRIM, MANUAL CONTROLS, DELUXE CAB

REF	FN	PART NUMBER	YR/SN	QTY	DESCRIPTION
		87640702		1	KIT, Cab Interior Trim Kit; Incl. 1 - 12 And Interior Decals, Not Illustrated
1		87604090		1	ESPUMA, Rear Side Trim, RH
2		87604087		1	ESPUMA, Rear Side Trim, LH
3		87604107		1	ESPUMA, Seat Pan Trim
4		9849641		3	PARAFUSO, Short NK, 1/4"-20 x 1 1/2", G5
5		86620930		4	BOTÃO DE IMPULSO
6		87604083		1	ESPUMA, Side Trim Panel, LH
7		87604118		1	ESPUMA ISOLANTE, Foot Well Side Trim, LH
8		87604120		1	ESPUMA ISOLANTE, Foot Well Floor Trim, LH
9		87604121		1	ESPUMA ISOLANTE, Foot Well Floor Trim, RH
10		87604119		1	ESPUMA ISOLANTE, Foot Well Side Trim, RH
11		87654841		1	ESPUMA, Floor Trim Mat, Manual Control
12		87654420		1	ESPUMA, Side Trim Panel, RH

CAB - INTERIOR TRIM, PILOT CONTROLS, DELUXE CAB

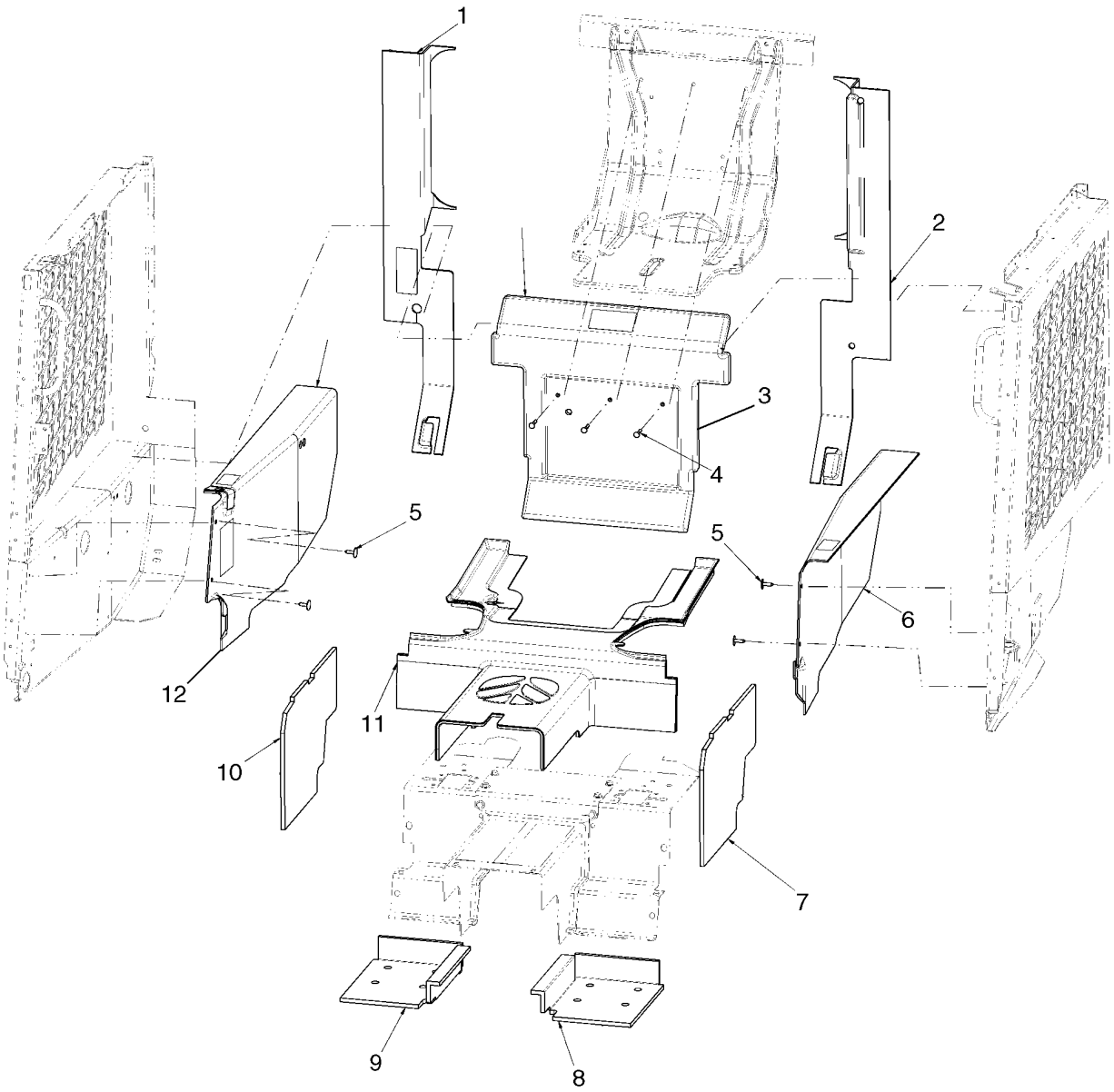

BS07C226

CAB - INTERIOR TRIM, PILOT CONTROLS, DELUXE CAB

REF	FN	PART NUMBER	YR/SN	QTY	DESCRIPTION
1		87604090		1	ESPUMA, Rear Side Trim, RH
2		87604087		1	ESPUMA, Rear Side Trim, LH
3		87604107		1	ESPUMA, Seat Pan Trim
4		9849641		3	PARAFUSO, Short NK, 1/4"-20 x 1 1/2", G5
5		86620930		4	BOTÃO DE IMPULSO
6		87604083		1	ESPUMA, Side Trim Panel, LH
7		87604118		1	ESPUMA ISOLANTE, Foot Well Side Trim, LH
8		87604120		1	ESPUMA ISOLANTE, Foot Well Floor Trim, LH
9		87604121		1	ESPUMA ISOLANTE, Foot Well Floor Trim, RH
10		87604119		1	ESPUMA ISOLANTE, Foot Well Side Trim, RH
11		87654421		1	ESPUMA, Floor Mat Trim, Pilot Controls
12		87654420		1	ESPUMA, Side Trim Panel, RH

CAB - HEADLINER

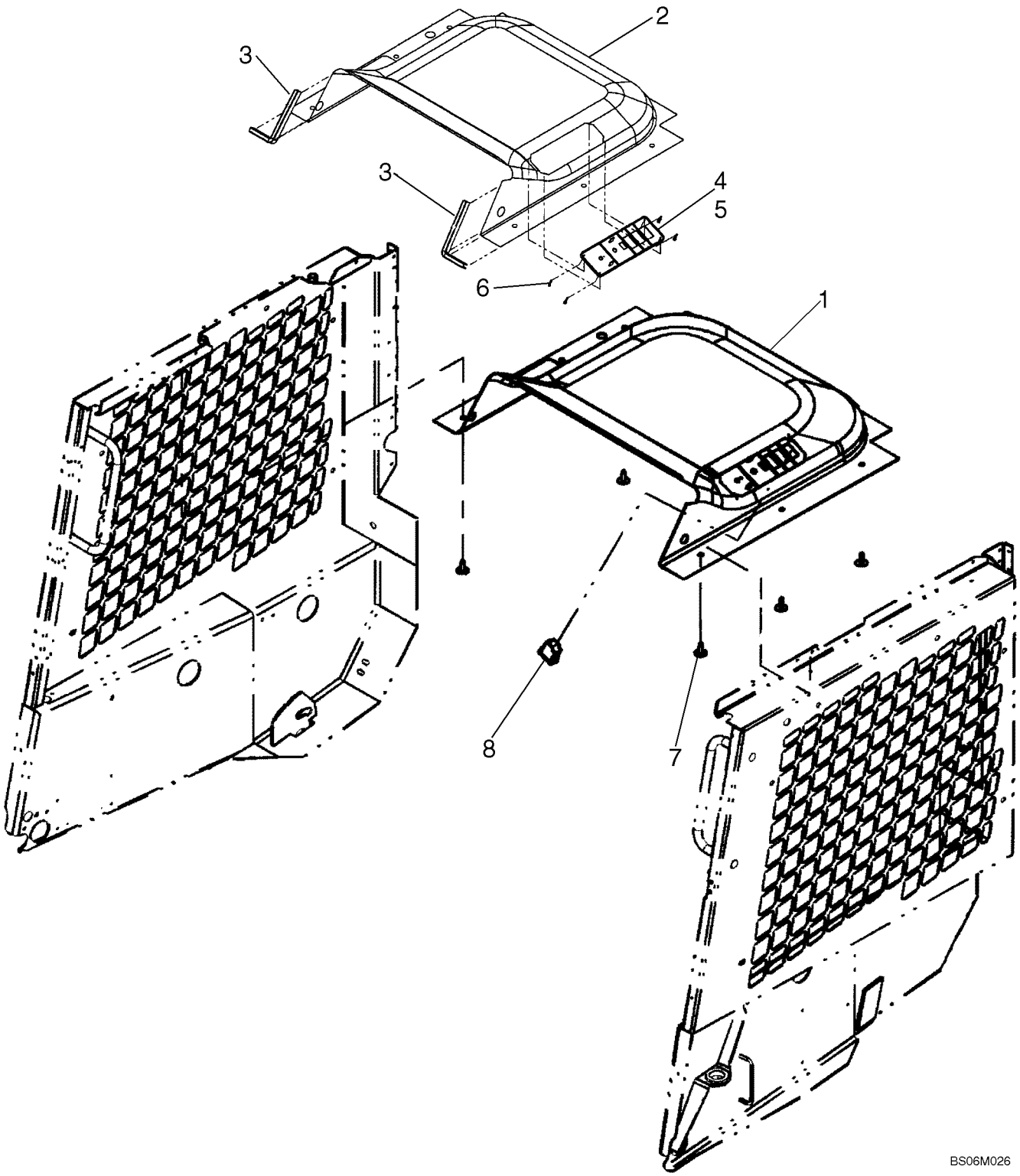

CAB - HEADLINER

REF	FN	PART NUMBER	YR/SN	QTY	DESCRIPTION
1		86729680		1	TUBO ISOLANTE, Incl. 2 - 6
2		86620865		1	TUBO ISOLANTE, Headliner Shell With Silver Foss Covering
3		NSS		2	BOLETIM INFORMATIVO, PVC Edge Trim
4		86729672		1	PAINEL DE CONTROLE
5		86729681		1	DECALCOMANIA
6		NSS		4	BOLETIM INFORMATIVO
7		86620930		5	BOTÃO DE IMPULSO
8		84320263		1	BUJÃO

CAB - HEADLINER, WITH HEAT AND AIR CONDITIONING

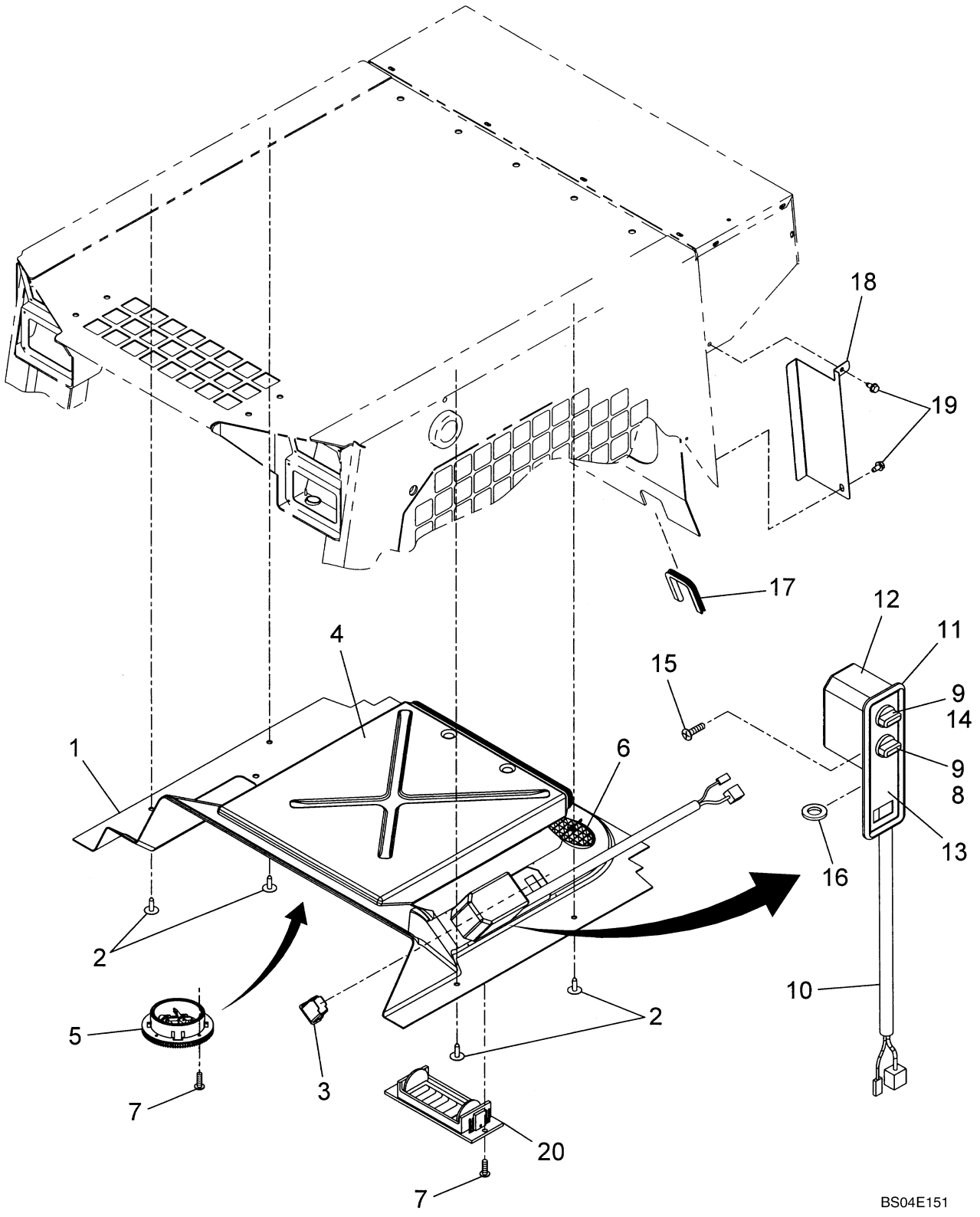

CAB - HEADLINER, WITH HEAT AND AIR CONDITIONING

REF	FN	PART NUMBER	YR/SN	QTY	DESCRIPTION
		87018632			TUBO ISOLANTE, Kit, Headliner, Incl. 1 - 16
1		86620859		1	TUBO ISOLANTE
2		86620930		5	BOTÃO DE IMPULSO
3		84320263		1	BUJÃO
4		86501203		1	CONDUTO DE AR
5		E8NN18N380AA		3	RESPIRO
6		86642944		2	RESPIRO, Round
7		281076		14	PARAFUSO, Cross Oval Hd, #6 x 5/8"
8		86729669		1	INTERRUPTOR, Use With Nut 271485
		271485		1	PORCA, 7/16-28UNEF
9		86729670		2	MANÍPULO
10		86592102		1	CHICOTE DE FIOS
11		87018633		1	PAINEL DE CONTROLE, Complete Switch Panel, Heat/Air Conditioning; Incl. 8 - 14
11A		86729672		1	PAINEL DE CONTROLE, Face Plate Only
11B		281076		4	PARAFUSO, Cross Oval Hd, #6 x 5/8", Not Illustrated
11C		87018688		1	INTERRUPTOR, Air Conditioning Switch; Not Illustrated
12		86729673		1	TAMPA
13		86729674		1	DECALCOMANIA
14		86729675		1	POTENCIÔMETRO
15		NSS		2	BOLETIM INFORMATIVO, Screw, Phillips
16		NSS		1	BOLETIM INFORMATIVO, Grommet
17		617215		X	MOLDURA, Edge; Not Used On This Model
18		86592134		1	PROTEÇÃO
19		86545825		2	PARAFUSO, Hex Wash Hd, 5/16" x 5/8"
20		86620864		1	RESPIRO, Square
21		87461762		4	FIXADOR, Retaining Clip; Not Illustrated
22		291186		1	FORRO, Edge Channel, Rear Hood; Not Illustrated

FORRO DO TECTO DA CABINA

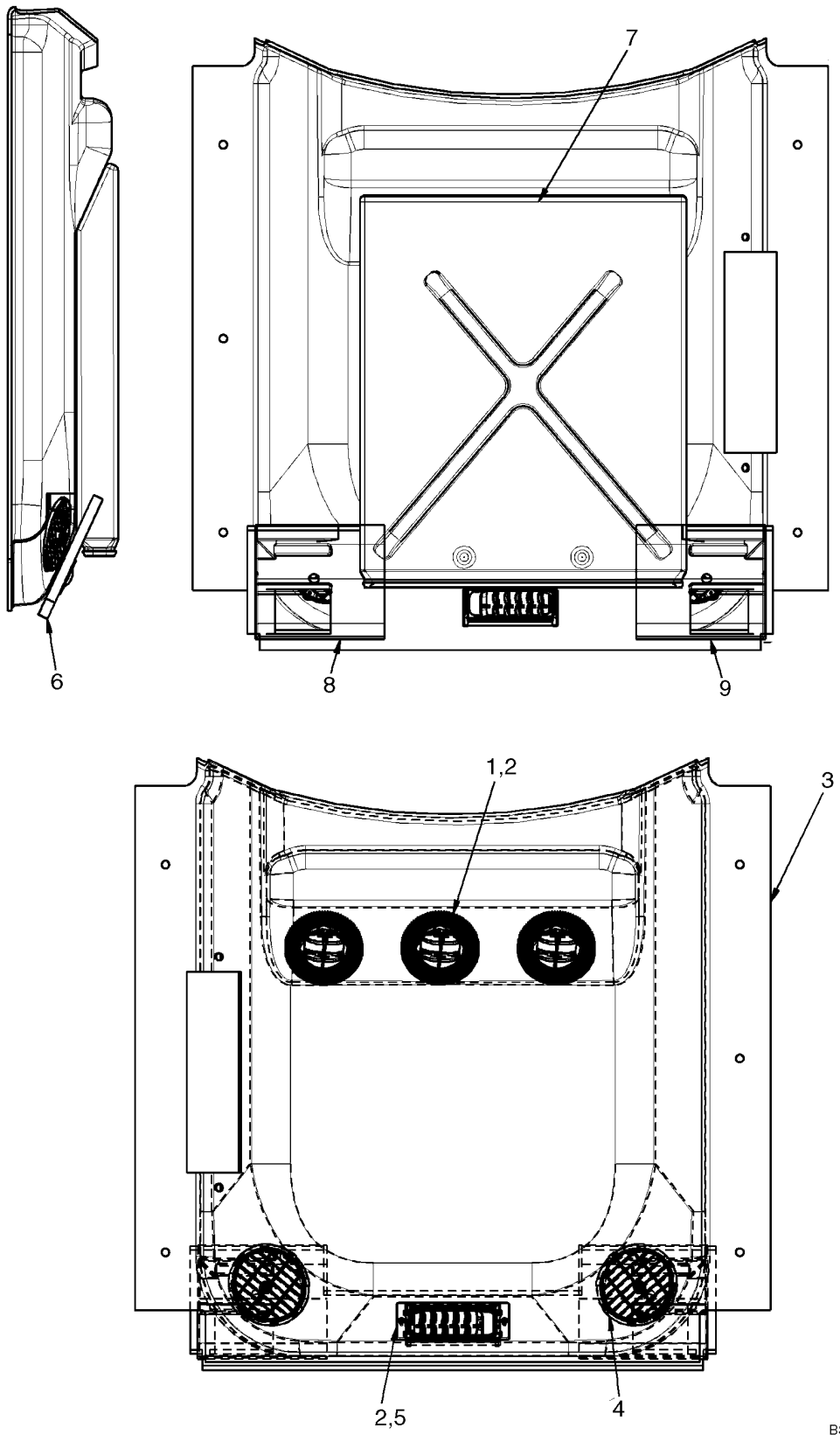

FORRO DO TECTO DA CABINA

REF	FN	PART NUMBER	YR/SN	QTY	DESCRIPTION
		87593952		1	REVESTIMENTO METÁLICO, Headliner Assembly; Incl. 1 -9
1		9994146		3	ADAPTADOR
2		281076		14	PARAFUSO, Cross Oval Hd, #6 x 5/8"
3		87568370		1	REVESTIMENTO METÁLICO, Headliner
4		86642944		2	RESPIRO
5		86620864		1	RESPIRO
6		87615381		1	REVESTIMENTO METÁLICO, Seal, Headliner
7		86501203		1	CONDUTO DE AR
8		NSS		1	BOLETIM INFORMATIVO, Plenum, LH
9		NSS		1	BOLETIM INFORMATIVO, Plenum, RH

09-17B		p1	03/08

FORRO DO TECTO DA CABINA

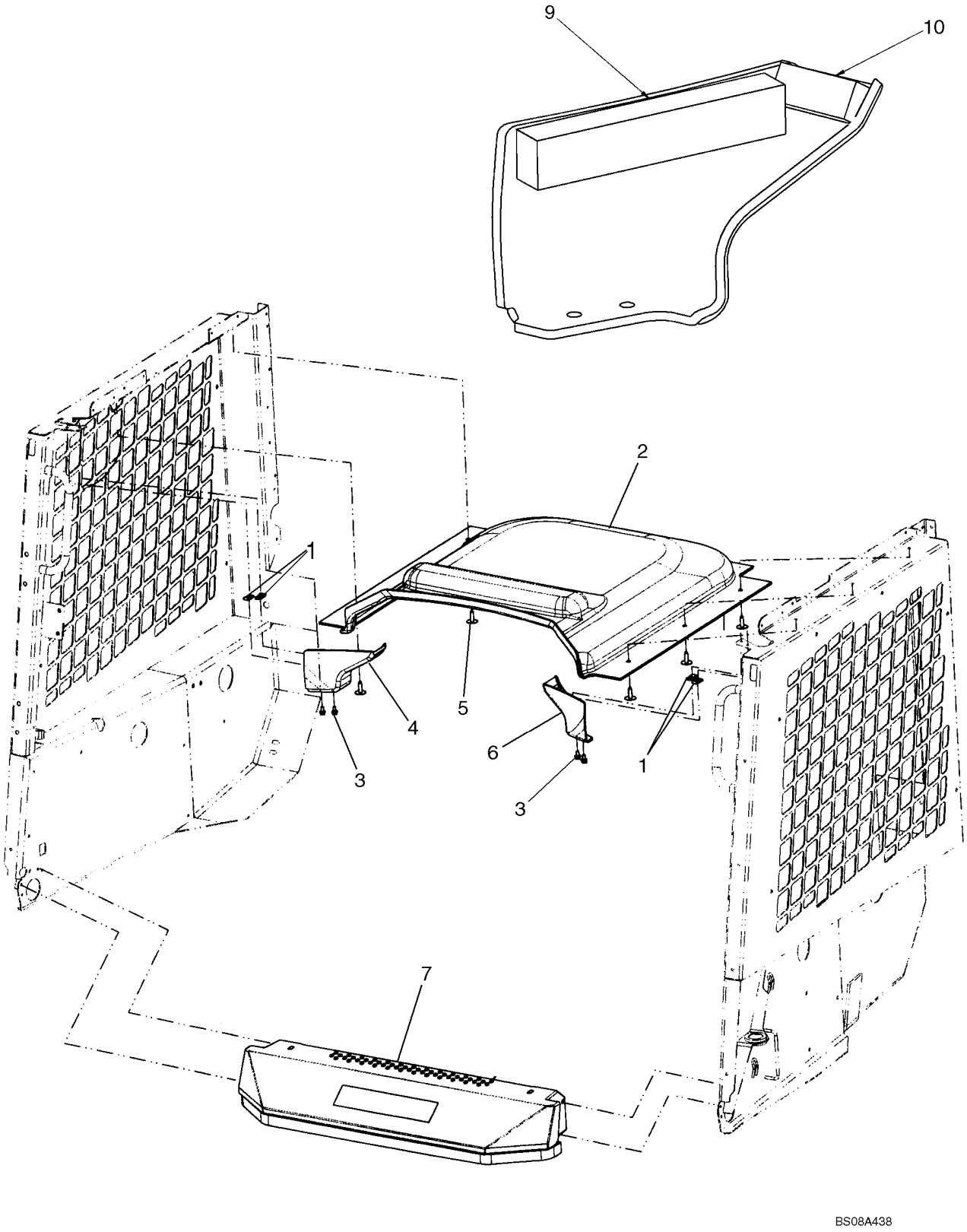

FORRO DO TECTO DA CABINA

REF	FN	PART NUMBER	YR/SN	QTY	DESCRIPTION
1		87594976		4	BOTÃO DE IMPULSO
2		87568372		1	TUBO ISOLANTE, Headliner
3		86050272		4	PARAFUSO, Hex Flg, M6 x 12, 8.8
4		87632390		1	TUBO ISOLANTE, Console Cap, RH
5		86620930		5-6	BOTÃO DE IMPULSO
6		87632391		1	TUBO ISOLANTE, Console Cap, LH
7		REF		1	INSTRUCAO, Threshold, Standard; See Figure 09-13A
8		87586498		1	DECALCOMANIA, Decal, Without Air Conditioning or Heater
9		87661758		2	ESPUMA ISOLANTE, LH, RH Console Cap
10		87661759		2	ESPUMA ISOLANTE, LH, RH Console Cap

SISTEMA DE LA CALEFACCION

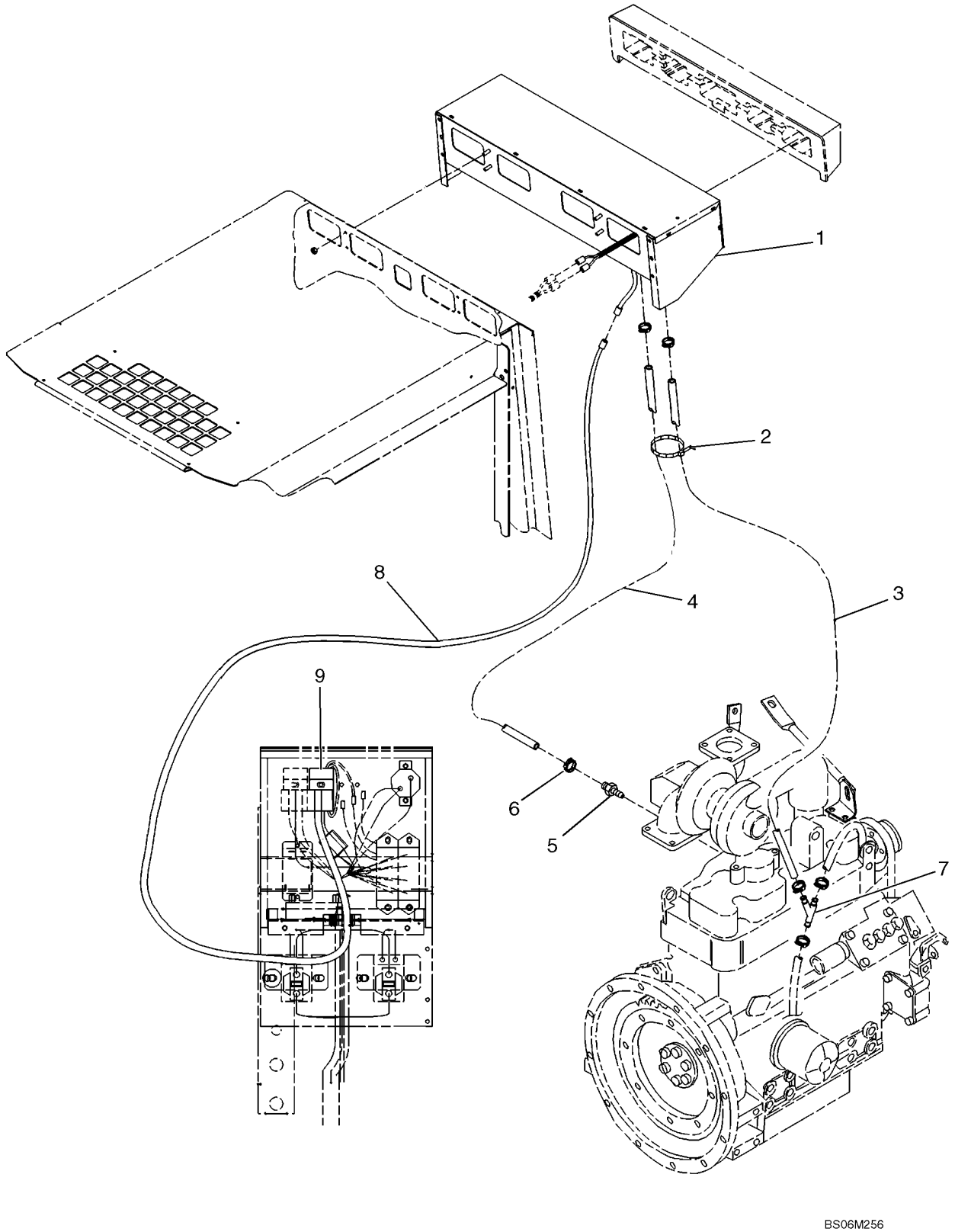

SISTEMA DE LA CALEFACCION

REF	FN	PART NUMBER	YR/SN	QTY	DESCRIPTION
1		87520821		1	VENTILADOR, Heater Assembly; See Fig. 09-19
2		263117		5	TIRA DE CABO, .14" x 11 1/2"
3		86592866		1	MANGUEIRA, Heater Hose; 127 cm., 50 in.
4		86592867		1	MANGUEIRA, Heater Hose; 165 cm., 65 in.
5		642560		1	CONEXAO, 5/8" Hose X 3/8" NPTF Beaded
6		13021		6	BRACADEIRA MANGUEIRA, #08, 0.50/0.91 Type F Worm
7		86530043		1	CONEXAO
8		86601825		1	CHICOTE DE FIOS
9		86529089		1	CONECTADOR

CABINE - SISTEMA DE LA CALEFACCION

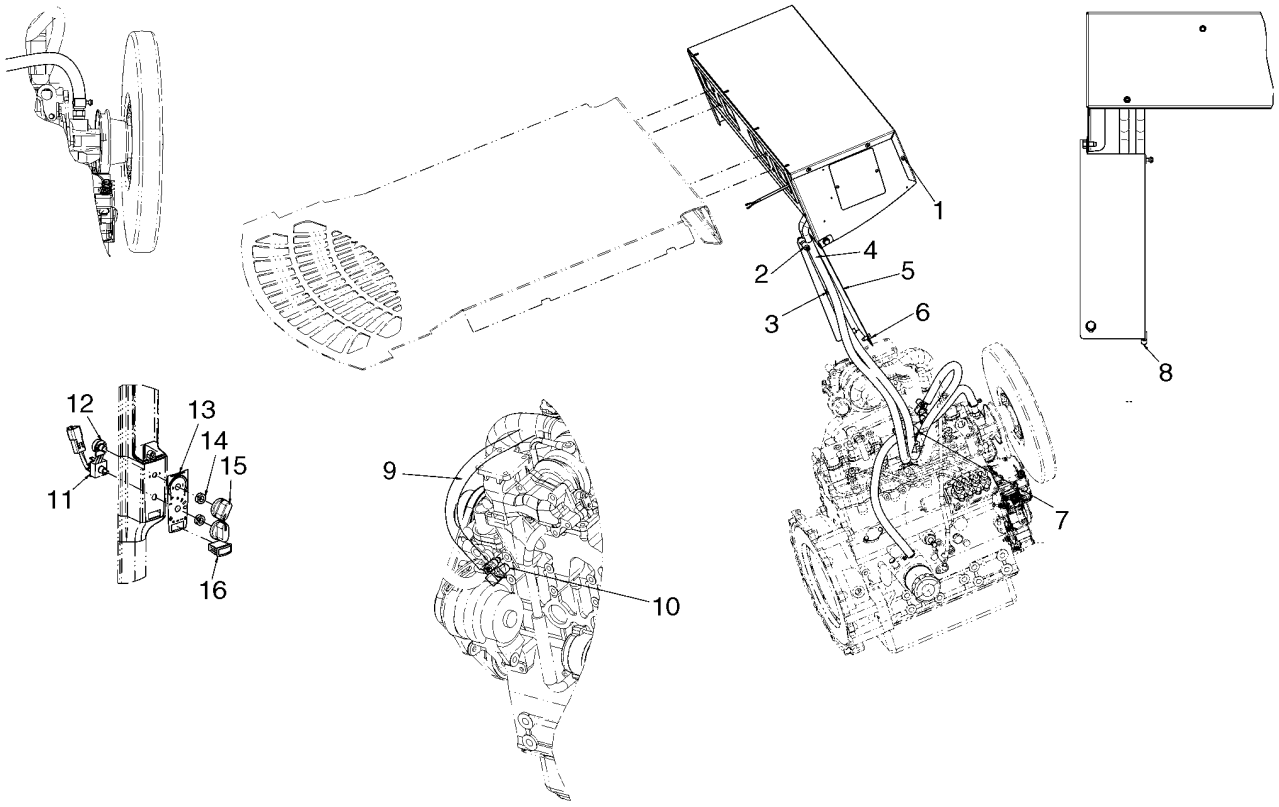

BS08B016

CABINE - SISTEMA DE LA CALEFACCION

REF	FN	PART NUMBER	YR/SN	QTY	DESCRIPTION
		87640711		1	KIT, Cab Heater Kit; Incl. 1 - 4, 7, 9 - 16 And Headliner; Does Not Include Shield, Ref 5 And Mounting Hardware
1		87576281		1	CLIMATIZADOR, Heater Assembly
2		13021		8	BRACADEIRA MANGUEIRA, #08, 0.50/0.91 Type F Worm
3		263117		5	TIRA DE CABO, .14" x 11 1/2"
4		86592866		1	MANGUEIRA, 127 cm, 50 in.; Heater
5		86592134		1	PROTEÇÃO
6		86545825		2	PARAFUSO, Hex Wash Hd, 5/16" x 5/8"
7		86530043		1	CONEXAO, Y Fitting
8		291186		AR	FORRO, Edge Channel; .26 Ft Required
9		86592867		1	MANGUEIRA, 165.1 cm, 65 in.; Heater
10		287644		1	CONEXAO, 90º, 5/8" Hose x 3/8" NPTF Beaded
11		86729669		1	INTERRUPTOR, Blower Switch
12		87576975		1	POTENCIÔMETRO, Temperature Control Switch
13		87586497		1	DECALCOMANIA, Temperature Controls
14		87310592		2	PORCA, Jam Nut For Control Switches; 7/16-28 GR 5 ZND
15		86729670		2	MANÍPULO
16		87555250		1	BUJÃO, A/C Switch Plug

AQUECEDOR DA CABINA

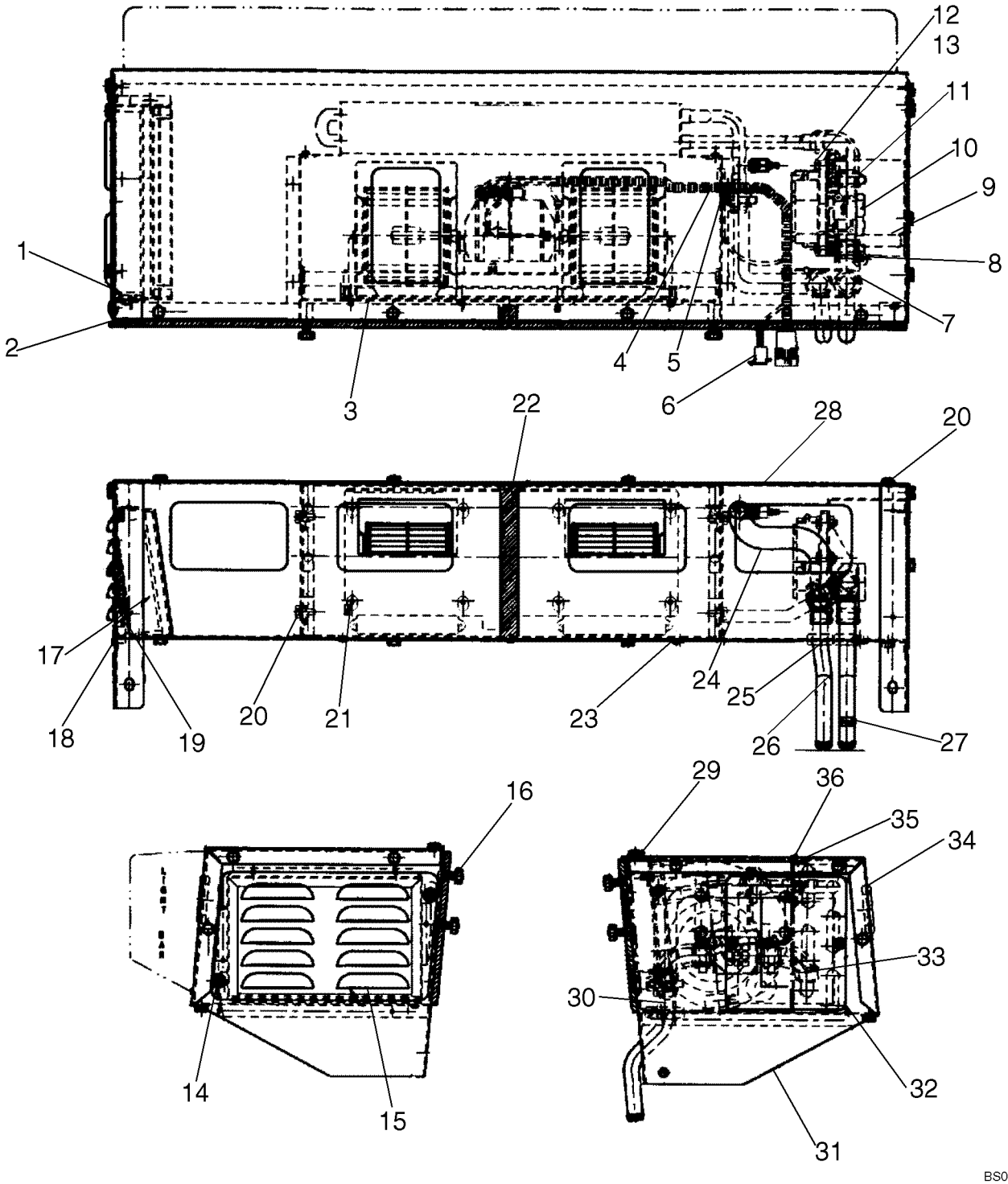

AQUECEDOR DA CABINA

REF	FN	PART NUMBER	YR/SN	QTY	DESCRIPTION
		87520821		1	VENTILADOR, Incl. 1 - 36
1		NSS		1	BOLETIM INFORMATIVO, Caplug
2		86615286		1	JUNTA
3		86592107		1	VENTILADOR ELÉTRICO
4		274568		1	CASQUILHO ISOLADOR
5		NSS		1	BOLETIM INFORMATIVO, Self Tapping Screw
6		87520824		1	CHICOTE DE FIOS
7		NSS		1	BOLETIM INFORMATIVO, Wire Tie
8		103989		1	CASQUILHO ISOLADOR
9		87461906		1	MANGUEIRA
10		87520822		1	DISTRIBUIDOR, Water Valve
11		NSS		6	BOLETIM INFORMATIVO, Hose Clamp
12		NSS		4	BOLETIM INFORMATIVO, 1/4-20 Hex Nut
13		NSS		4	BOLETIM INFORMATIVO, 1/4-20 Bolt x 3/4
14		NSS		2	BOLETIM INFORMATIVO, 1/4-20 Screw
15		86592111		1	TAMPA, Filter
16		NSS		4	BOLETIM INFORMATIVO, 5/16-18 Hex Nut
17		86504784		1	FILTRO DE AR
18		NSS		X	BOLETIM INFORMATIVO, 3/8 x 1/2 Foam Tape
19		87350483		1	FILTRO DE AR
20		NSS		16	BOLETIM INFORMATIVO, 1/4-20 x 5/8 Screw
21		NSS		8	BOLETIM INFORMATIVO, Screw
22		NSS		X	BOLETIM INFORMATIVO, 3/4 x 3/4 Foam Tape
23		NSS		7	BOLETIM INFORMATIVO, Screw
24		NSS		1	BOLETIM INFORMATIVO, Hose
25		86615285		2	CASQUILHO ISOLADOR
26		86615282		2	TUBO
27		NSS		X	BOLETIM INFORMATIVO, Inlet Tape
28		86592106		X	TAMPA, Heater
29		NSS		X	BOLETIM INFORMATIVO, 1/4 x 1/4 Foam Tape
30		86615276		1	PAINEL, Blower
31		87023389		1	ALOJAMENTO, Heater
32		86615281		1	TAMPA, Bleeder
33		87023393		2	MANGUEIRA
34		86615283		1	CASQUILHO ISOLADOR

AQUECEDOR DA CABINA

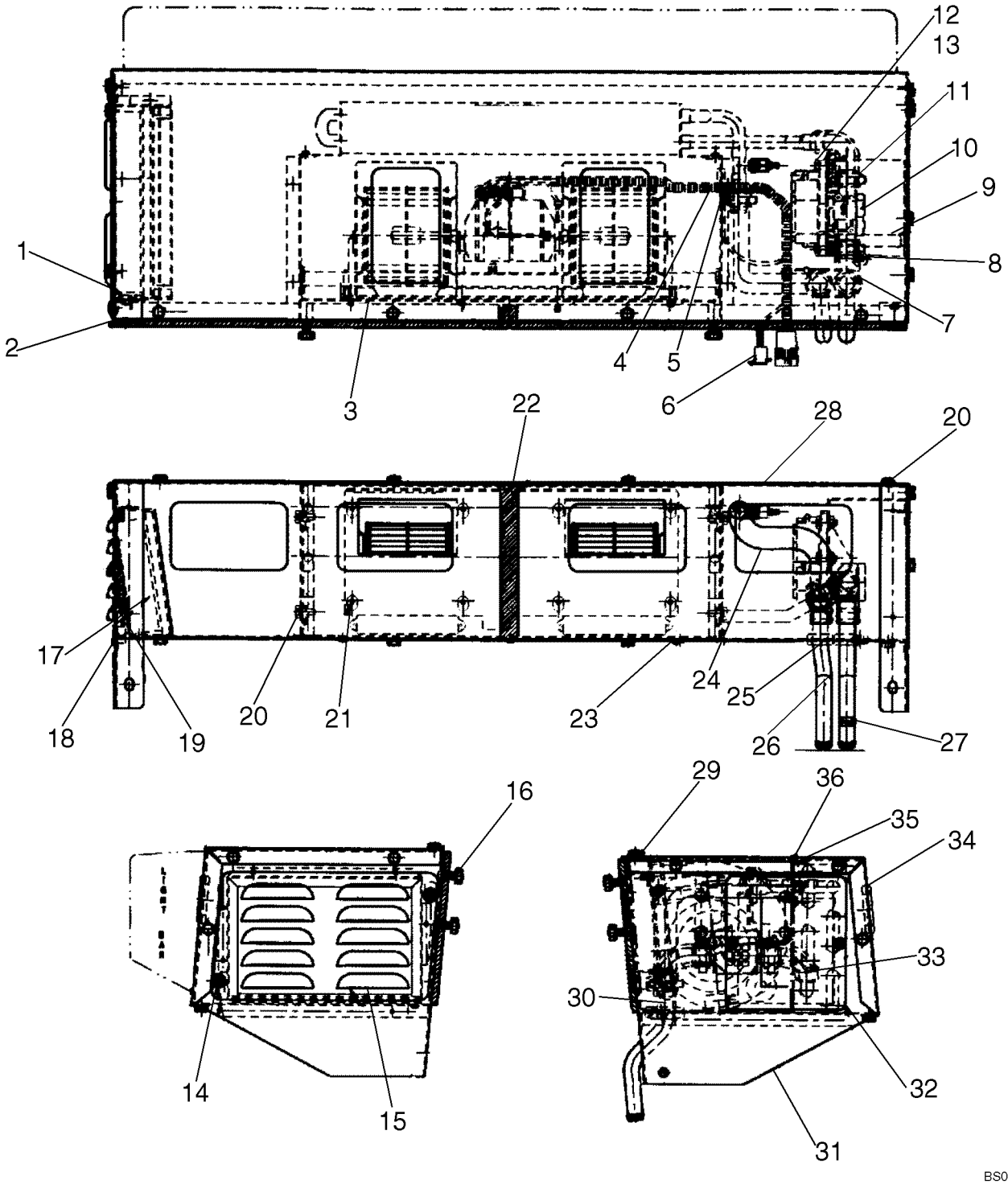

AQUECEDOR DA CABINA

REF	FN	PART NUMBER	YR/SN	QTY	DESCRIPTION
35		NSS		X	BOLETIM INFORMATIVO, 1/4 x 1/4 Foam Tape
36		87023392		1	AQUECEDOR

AQUECEDOR DA CABINA/AR CONDICIONADO

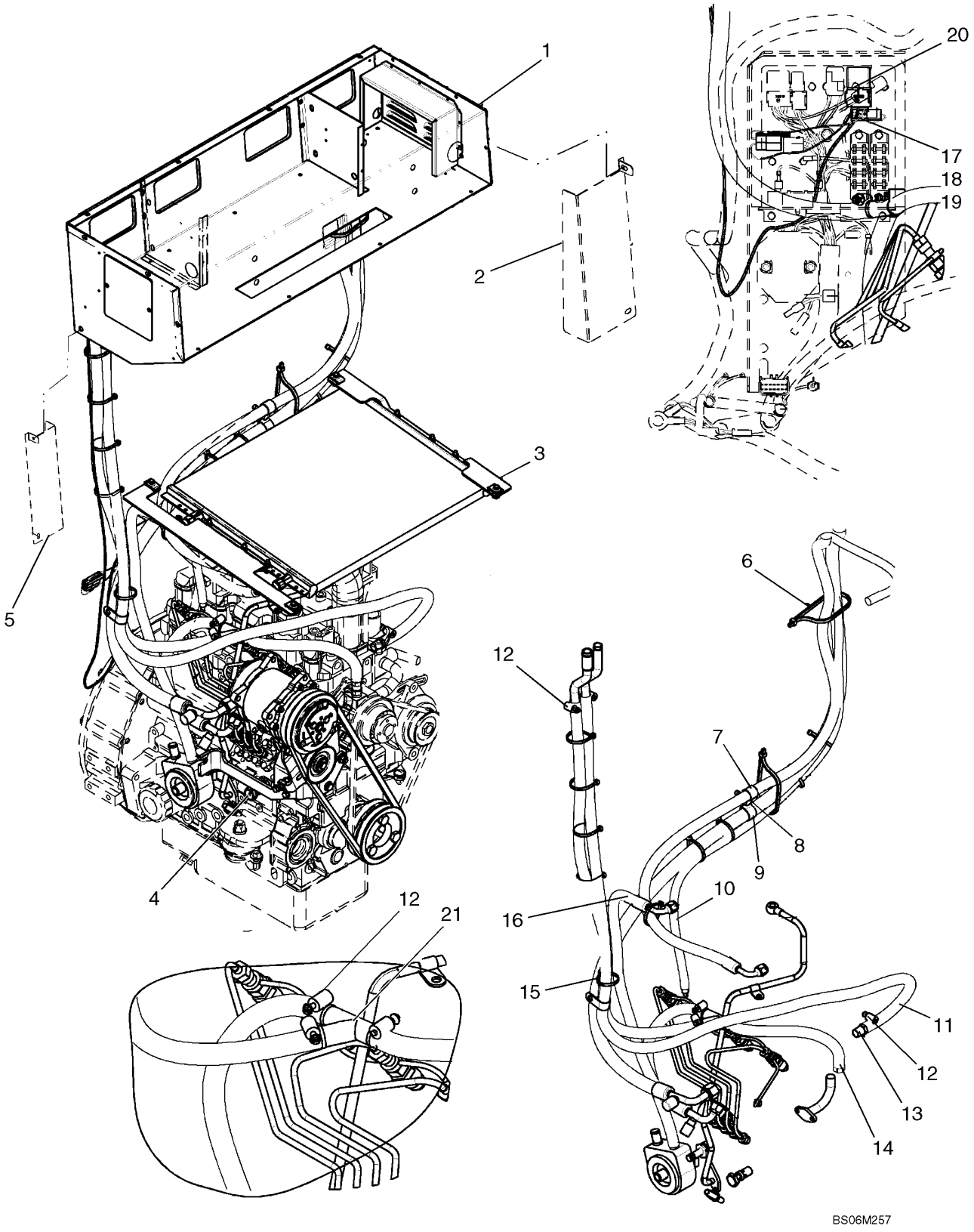

AQUECEDOR DA CABINA/AR CONDICIONADO

REF	FN	PART NUMBER	YR/SN	QTY	DESCRIPTION
1		87538586		1	UNIDADE DE AQUECIMENTO, Heater/Air Conditioning Assembly; See Fig. 09-21
2		86630203		1	PROTEÇÃO
3		87546517		1	CONDENSADOR, See Fig. 09-22
4		87546525		1	COMPRESSOR, See Fig. 09-23
5		86592134		1	PROTEÇÃO
6		L18331		2	TIRA DE CABO
7		87029955		1	PRENDEDOR, Insulated 22.2 mm, 3/8 Bolt ZND
8		280476		1	PARAFUSO, Hex Wash Hd, 3/8" x 1"
9		9827902		1	PRENDEDOR, 1", Insul, 3/8" Bolt
10		87445461		1	TUBO
11		86592867		1	MANGUEIRA, Heater; 165 cm, 65 in.
12		13021		6	BRACADEIRA MANGUEIRA, #08, 0.50/0.91 Type F Worm
13		642560		1	CONEXAO, 5/8" Hose X 3/8" NPTF Beaded, Straight Hose Stem; If Used
13		287644		1	CONEXAO, 90º, 5/8" Hose x 3/8" NPTF Beaded, 90 deg Hose Stem; If Used
14		86592866		1	MANGUEIRA, Heater; 127 cm, 50 in.
15		L11541		10	TIRA DE CABO
16		87538595		1	MANGUEIRA, A/C Condenser
17		86601825		1	CHICOTE DE FIOS, Incl. 18, 19
18		900336		1	LIMPADOR DE PÁRA-BRISA, Terminal
19		852103		1	CORPO, Connector
20		86529089		1	CONECTADOR
21		86530043		1	CONEXAO

AQUECEDOR DA CABINA/AR CONDICIONADO

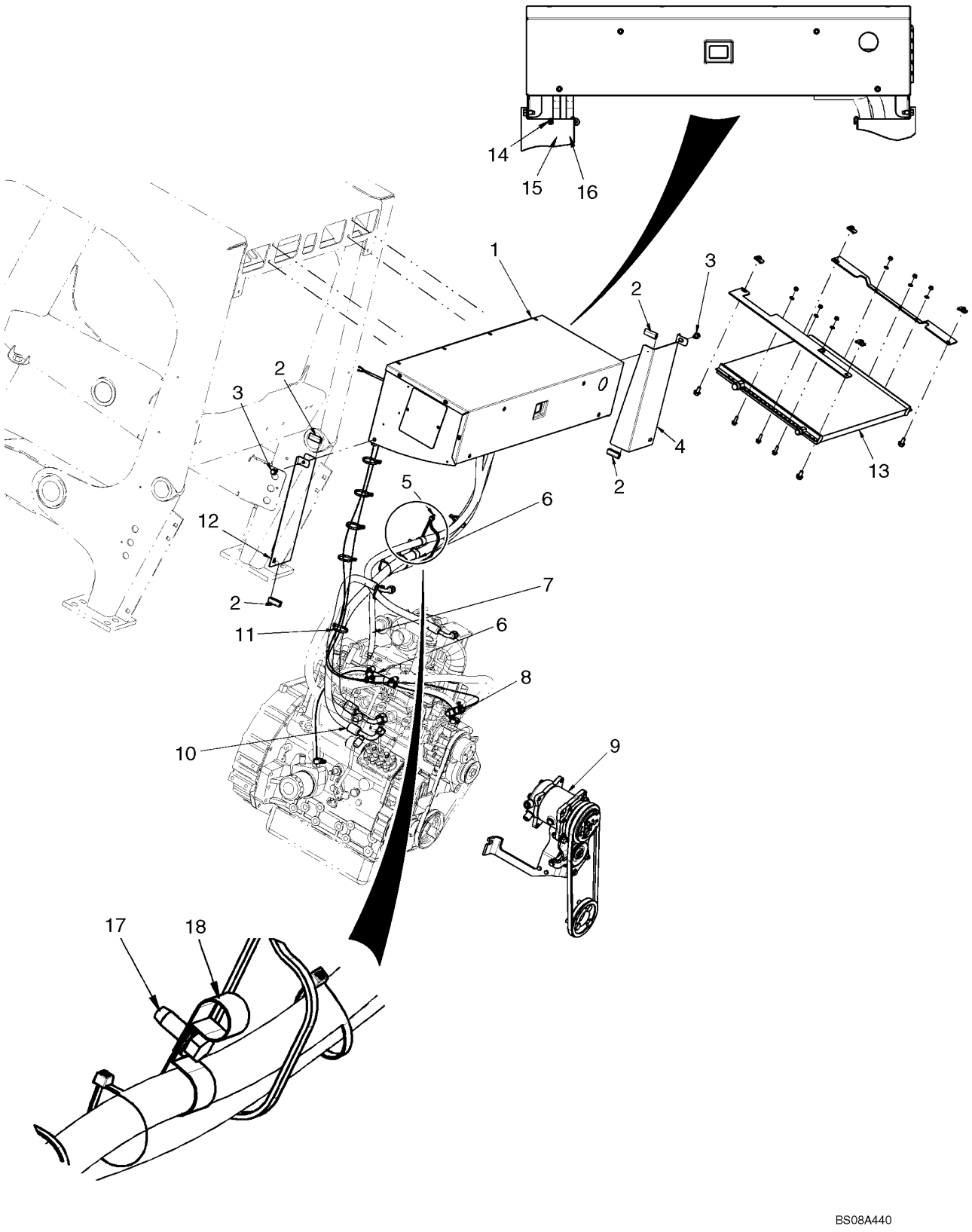

AQUECEDOR DA CABINA/AR CONDICIONADO

REF	FN	PART NUMBER	YR/SN	QTY	DESCRIPTION
		87640706		1	KIT, Cab Heater And Air Conditioning Kit; Incl. 1, 5 -11, 13 - 18 And Electrical Control Parts on 04-30, Does Not Include Shields Ref 4, 12 And Mounting Hardware
1		87601441		1	AQUECEDOR, See Fig. 09-21A
2		291186		AR	FORRO, Edge Channel; 1.5 Ft Required
3		86545825		2	PARAFUSO, Hex Wash Hd, 5/16" x 5/8"
4		86630203		1	PROTEÇÃO, Hose Cover, Large A/C
5		L18331		2	TIRA DE CABO
6		86530043		1	CONEXAO
7		87445461		1	TUBO, A/C Drain
8		287644		1	CONEXAO, 90º, 5/8" Hose x 3/8" NPTF Beaded
9		87546525		1	COMPRESSOR, See Fig. 09-23
10		87538595		1	MANGUEIRA, 720 mm, 28.38 in. Length; Condenser
11		L11541		10	TIRA DE CABO
12		86592134		1	PROTEÇÃO
13		87546517		1	CONDENSADOR, See Fig. 09-22
14		13021		8	BRACADEIRA MANGUEIRA, #08, 0.50/0.91 Type F Worm
15		86592866		1	MANGUEIRA, 127 cm, 50 in. Length; Heater
16		86592867		1	MANGUEIRA, 165 cm, 65 in. Length; Heater
17		280476		1	PARAFUSO, Hex Wash Hd, 3/8" x 1"
18		87029955		1	PRENDEDOR
		9827902		1	PRENDEDOR, 1", Insul, 3/8" Bolt

AQUECEDOR DA CABINA/AR CONDICIONADO

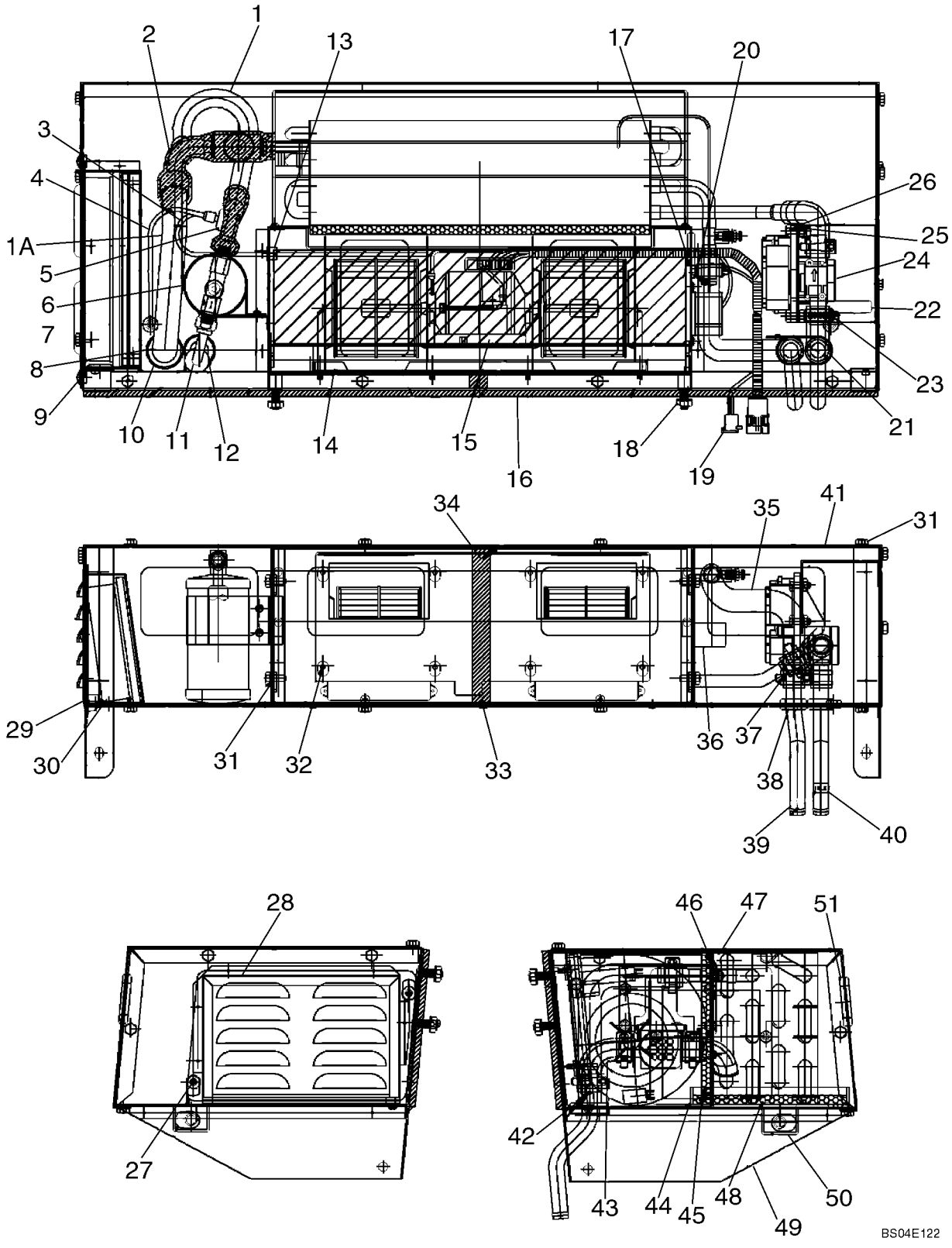

AQUECEDOR DA CABINA/AR CONDICIONADO

REF	FN	PART NUMBER	YR/SN	QTY	DESCRIPTION
		87538586		1	UNIDADE DE AQUECIMENTO, Heater A/C Assy; Incl. 1 - 51
		87520820		1	VENTILADOR, Heater A/C Assy; Incl. 1 - 51
1		86625512		1	MANGUEIRA, Evaporator; 14.5 in
1A		87538590		1	MANGUEIRA, Hose, Suction; 72 in
2		NSS		X	BOLETIM INFORMATIVO, Insulating Tape
3		86625494		1	CHICOTE DE FIOS
4		87453520		1	CHICOTE
5		86625515		1	INTERRUPTOR DE PRESSÃO
6		86625481		1	DESIDRATADOR
7		86625489		1	PRENDEDOR, Rec/Drier
8		86625514		1	MANGUEIRA
9		NSS		1	BOLETIM INFORMATIVO, Caplug
10		86625492		1	CASQUILHO ISOLADOR
11		87538594		1	MANGUEIRA, Hose Assembly
12		86625491		1	CASQUILHO ISOLADOR
13		86625490		1	CASQUILHO ISOLADOR
14		86592107		1	VENTILADOR ELÉTRICO
15		NSS		2	BOLETIM INFORMATIVO, Foam
16		86615286		1	JUNTA
17		274568		1	CASQUILHO ISOLADOR
18		NSS		4	BOLETIM INFORMATIVO, 5/16-18 Nut
19		87520825		1	CHICOTE DE FIOS
20		NSS		1	BOLETIM INFORMATIVO, Zip Screw
21		NSS		1	BOLETIM INFORMATIVO, Wire Tie
22		NSS		1	BOLETIM INFORMATIVO, Data Decal
23		103989		1	CASQUILHO ISOLADOR
24		87520839		1	VALVULA, Water Valve
25		NSS		4	BOLETIM INFORMATIVO, 1/4-20 Nut
26		NSS		4	BOLETIM INFORMATIVO, 1/4-20 x 3/4 Bolt
27		NSS		2	BOLETIM INFORMATIVO, 1/4-20 Screw
28		86592111		1	TAMPA, Filter
29		87350483		1	FILTRO DE AR, Precleaner; 3/8 x 1/2 Foam
30		86504784		1	FILTRO DE AR
31		NSS		18	BOLETIM INFORMATIVO, 1/4-20 x 5/8 Screw

AQUECEDOR DA CABINA/AR CONDICIONADO

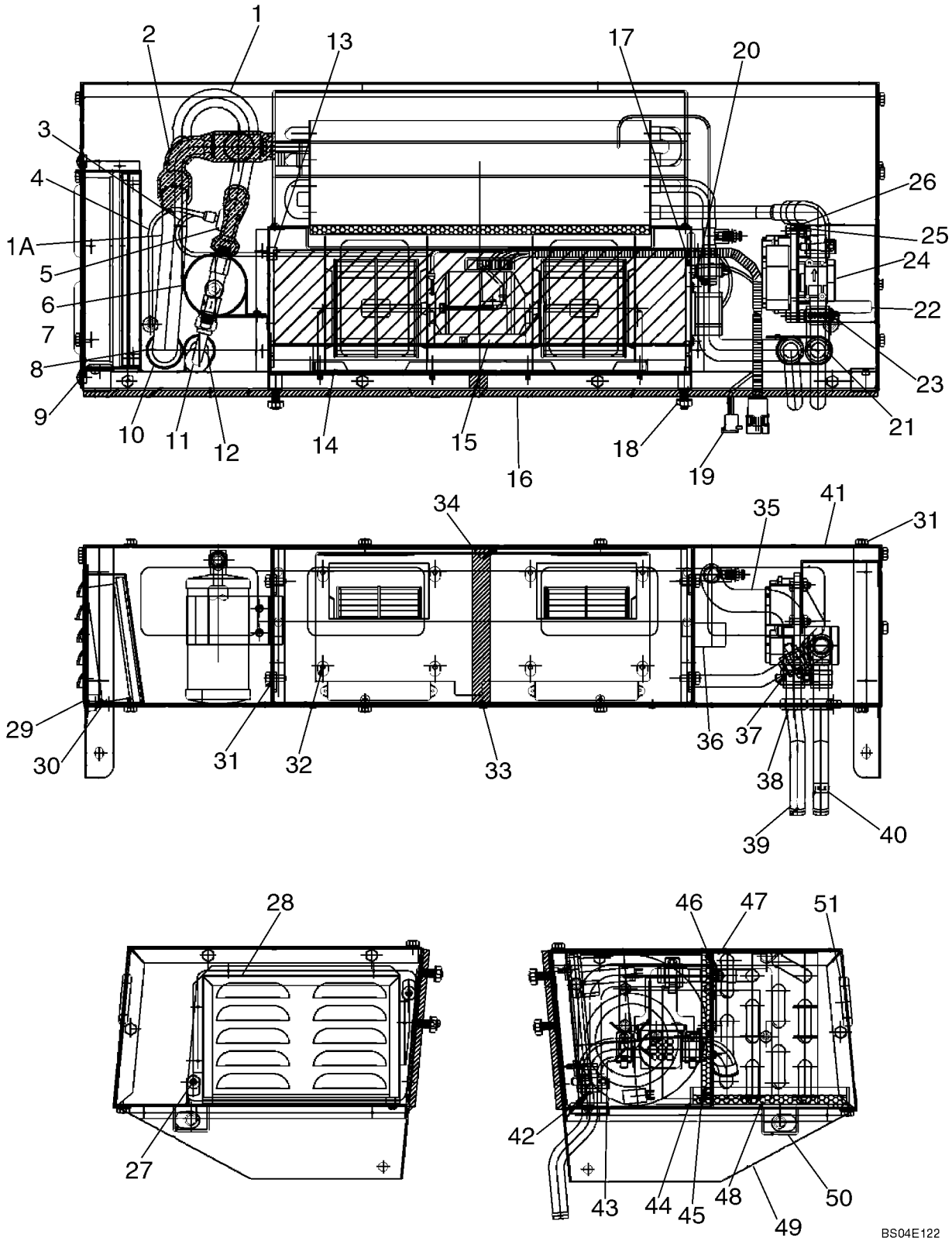

AQUECEDOR DA CABINA/AR CONDICIONADO

REF	FN	PART NUMBER	YR/SN	QTY	DESCRIPTION
32		NSS		8	BOLETIM INFORMATIVO, Screw
33		NSS		9	BOLETIM INFORMATIVO, Screw
34		NSS		X	BOLETIM INFORMATIVO, Foam Tape
35		87461906		1	MANGUEIRA, Formed Hose
36		86625480		1	TERMOSTATO
37		NSS		6	BOLETIM INFORMATIVO, Hose Clamp
38		86615285		2	CASQUILHO ISOLADOR
39		86615282		2	TUBO
40		NSS		X	BOLETIM INFORMATIVO, Inlet Tape
41		86625478		1	TAMPA
42		86615276		1	PAINEL, Blower
43		87043850		2	MANGUEIRA
44		86615281		1	TAMPA
45		NSS		1	BOLETIM INFORMATIVO, Foam
46		87043852		1	BOBINA, Incl. 46A - 46C
46A		86639750		2	ANEL "O", Not Illustrated
46B		86639749		1	VÁLVULA DE SEGURANÇA, Not Illustrated
46C		87350424		1	BOBINA, Combination Coil; Not Illustrated
47		NSS		X	BOLETIM INFORMATIVO, Foam Tape
48		NSS		X	BOLETIM INFORMATIVO, Drain Pan Foam
49		86625477		1	ESTOJO
50		86639416		1	TANQUE PEQUENO, Drain
51		86615283		1	CASQUILHO ISOLADOR
		86639749		1	VÁLVULA DE SEGURANÇA, Expansion Valve

CALEFACCION Y AIRE ACONDICIONADO

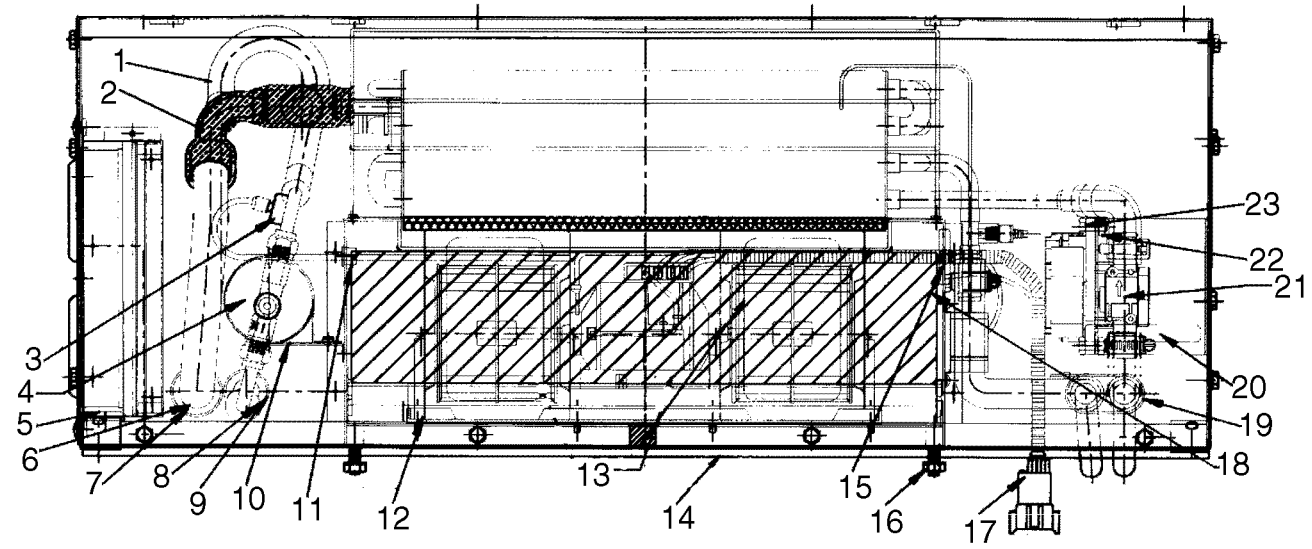

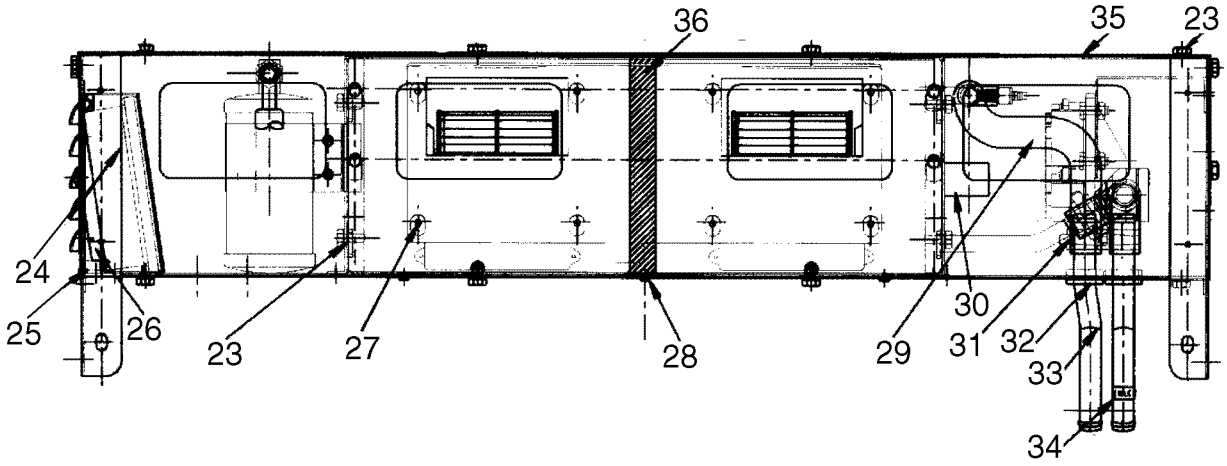

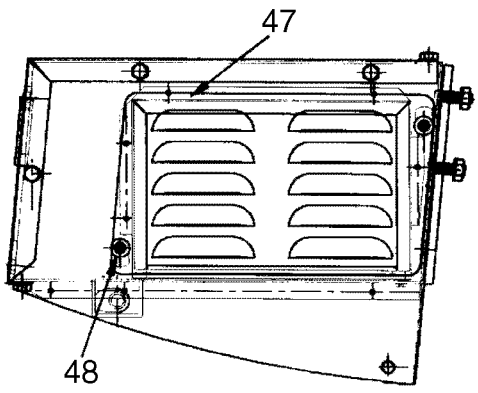

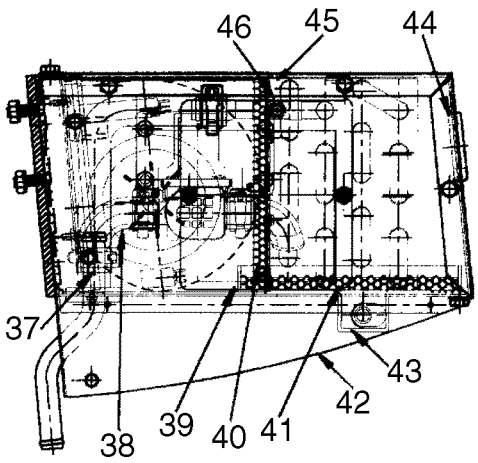

BS07C478

CALEFACCION Y AIRE ACONDICIONADO

REF	FN	PART NUMBER	YR/SN	QTY	DESCRIPTION
		87601441		1	AQUECEDOR, Heater And Air Conditioning Unit
1		86625514		1	MANGUEIRA, Liquid Hose; 381 cm, 12.5 ft.
2		NSS		AR	BOLETIM INFORMATIVO, Insulating Tape; 70 cm, 24 in. Length
3		86625515		1	INTERRUPTOR DE PRESSÃO
4		86625481		1	DESIDRATADOR
5		NSS		1	BOLETIM INFORMATIVO, Caplug
6		87453449		1	MANGUEIRA, Suction Hose; 182.8 cm, 6 ft.
7		86625491		1	CASQUILHO ISOLADOR
8		87446234		1	MANGUEIRA, Liquid Hose; 101.6 cm, 40 in.
9		86625492		1	CASQUILHO ISOLADOR
10		86625489		1	PRENDEDOR
11		86625490		1	CASQUILHO ISOLADOR
12		86592107		1	VENTILADOR ELÉTRICO
13		NSS		2	BOLETIM INFORMATIVO, Foam
14		86615286		1	JUNTA
15		274568		1	CASQUILHO ISOLADOR
16		NSS		4	BOLETIM INFORMATIVO, Hex Nut, 5/16 - 18
17		{87572851}		1	Wire Harness, HVAC
18		NSS		1	BOLETIM INFORMATIVO, Zip Screw
19		NSS		1	BOLETIM INFORMATIVO, Wire Tie
20		NSS		1	BOLETIM INFORMATIVO, Data Decal
21		87520839		1	VALVULA, Water Valve Assembly
22		NSS		4	BOLETIM INFORMATIVO, Hex Nut, 1/4 - 20
23		NSS		24	BOLETIM INFORMATIVO, Screw, 1/4 - 20 X 5/8
24		86504784		1	FILTRO DE AR
25		NSS		AR	BOLETIM INFORMATIVO, Foam
26		87350483		1	FILTRO DE AR
27		NSS		8	BOLETIM INFORMATIVO, Screw
28		NSS		9	BOLETIM INFORMATIVO, Screw
29		87461906		1	MANGUEIRA
30		86625480		1	TERMOSTATO
31		NSS		6	BOLETIM INFORMATIVO, Hose Clamp
32		86615285		2	CASQUILHO ISOLADOR
33		86615282		2	TUBO

CALEFACCION Y AIRE ACONDICIONADO

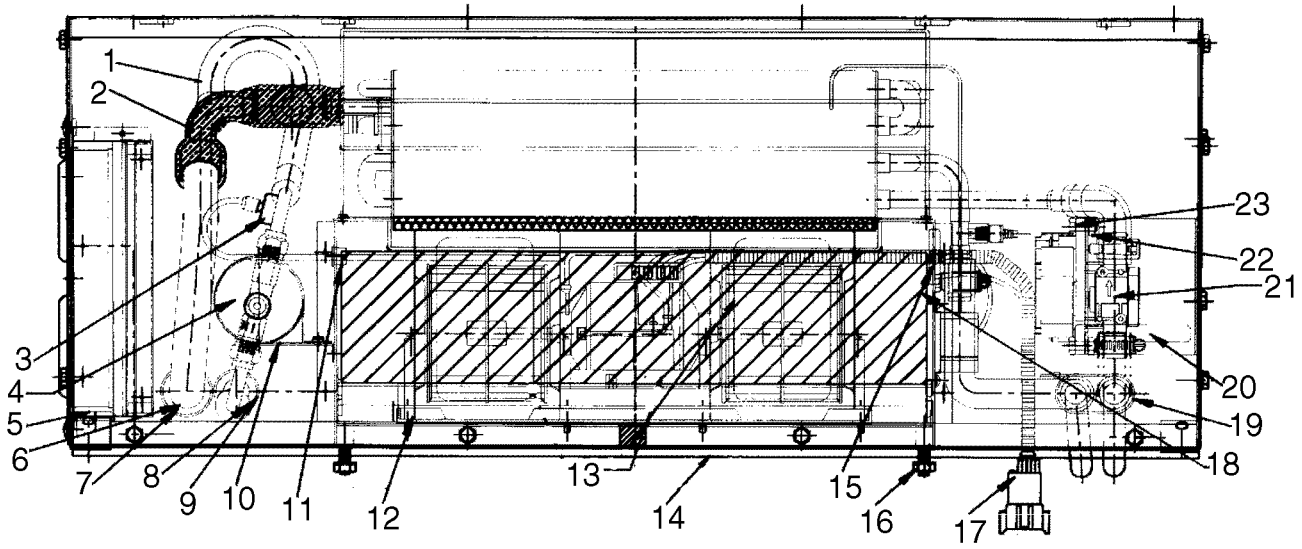

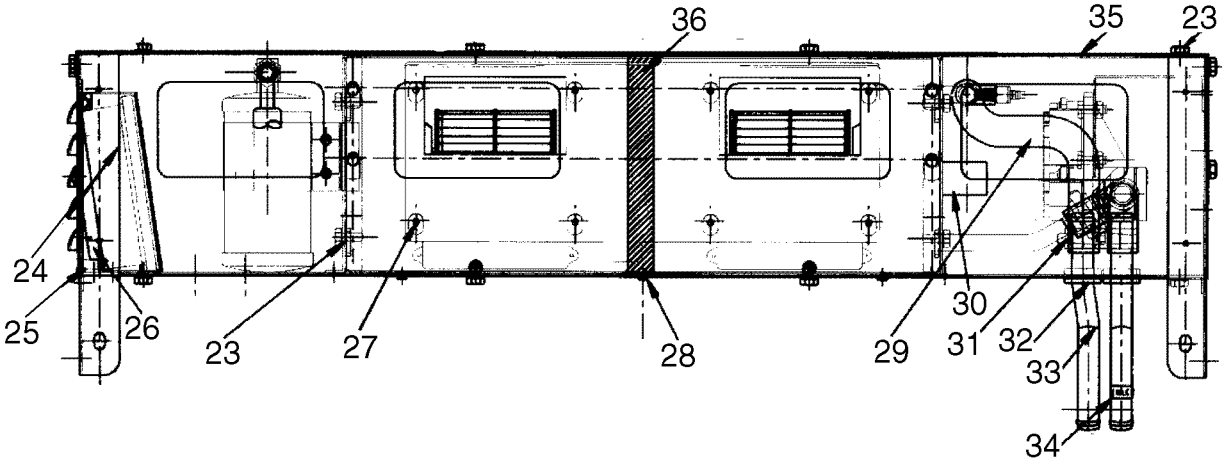

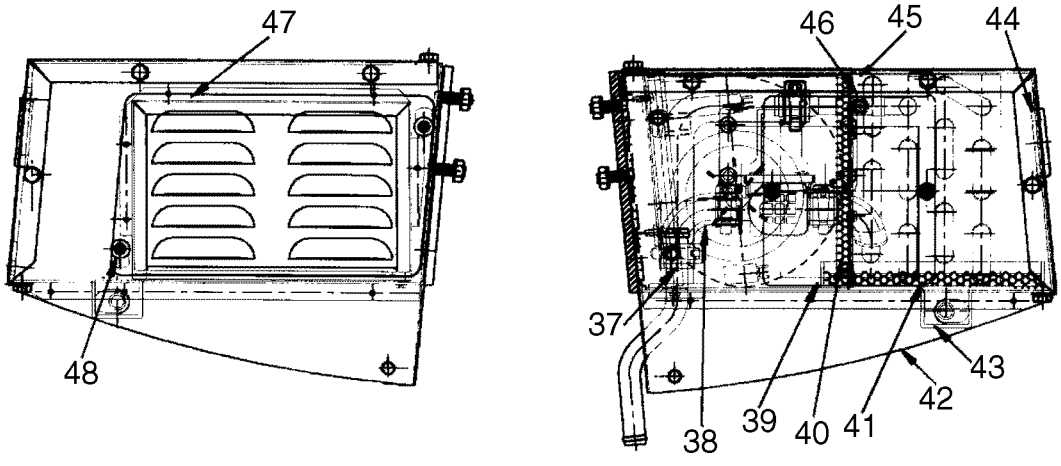

BS07C478

CALEFACCION Y AIRE ACONDICIONADO

REF	FN	PART NUMBER	YR/SN	QTY	DESCRIPTION
34		NSS		AR	BOLETIM INFORMATIVO, Tape
35		87604839		1	TAMPA
36		NSS		AR	BOLETIM INFORMATIVO, Foam Tape
37		86615276		1	PAINEL, Blower Panel
38		87043850		2	MANGUEIRA, Elbow Hose
39		86615281		1	TAMPA
40		NSS		1	BOLETIM INFORMATIVO, Open Cell Foam
41		NSS		AR	BOLETIM INFORMATIVO, Drain Pan Foam
42		87601442		1	ESTOJO
43		86639416		1	TANQUE PEQUENO
44		86615283		1	CASQUILHO ISOLADOR
45		NSS		AR	BOLETIM INFORMATIVO, Foam Tape
46		87043852		1	BOBINA, Incl 46A - 46C
46A		86639750		2	ANEL "O", Not Illustrated
46B		86639749		1	VÁLVULA DE SEGURANÇA, Not Illustrated
46C		87350424		1	BOBINA, Combination Coil; Not Illustrated
47		86592111		1	TAMPA, Filter Cover
48		NSS		2	BOLETIM INFORMATIVO, Screw, 1/4 - 20

CONDENSADOR - AR CONDICIONADO

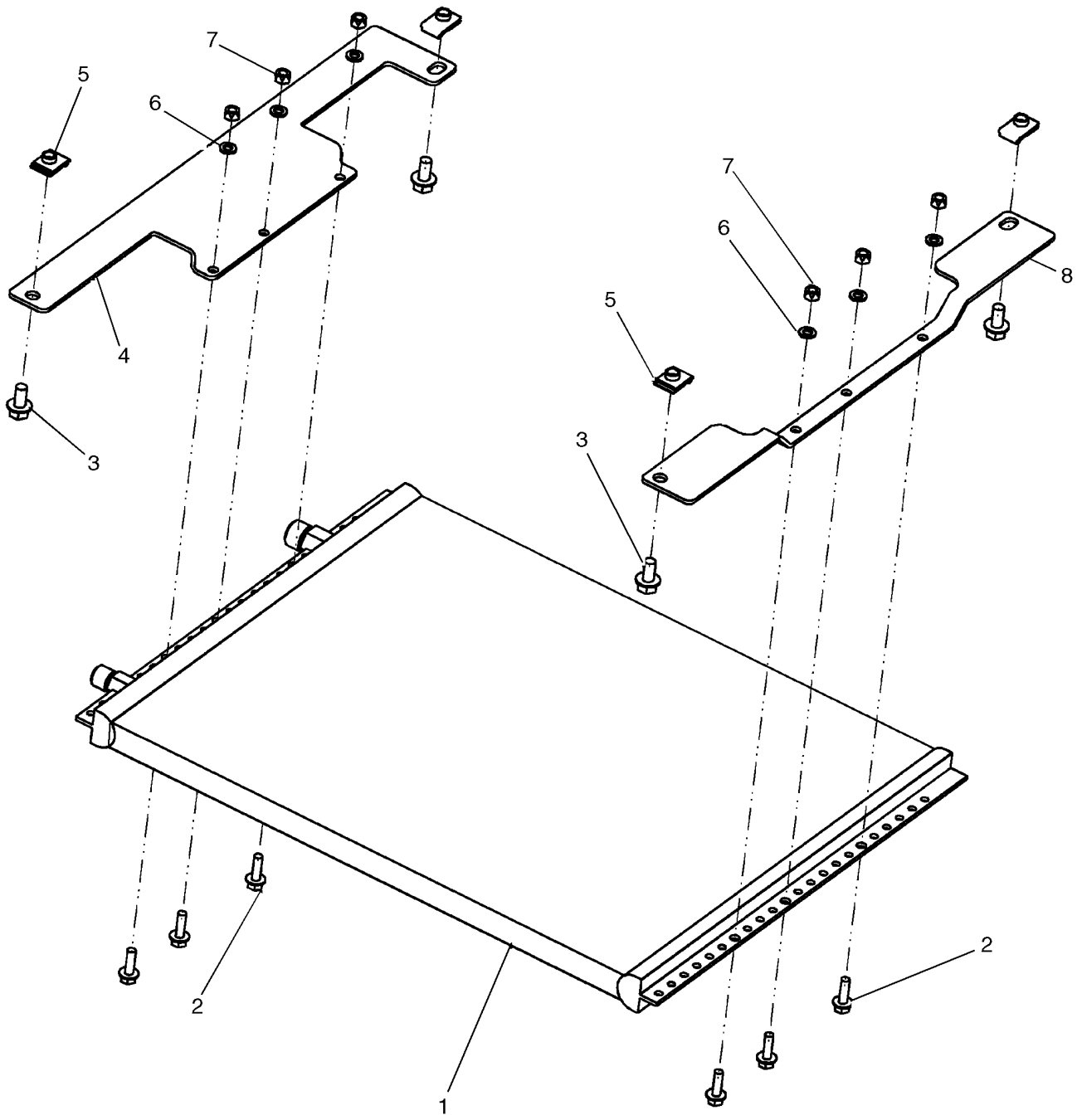

CONDENSADOR - AR CONDICIONADO

REF	FN	PART NUMBER	YR/SN	QTY	DESCRIPTION
1		87546517		1	CONDENSADOR, Condenser, Air Conditioning
2		9804256		6	PARAFUSO, Hex Flg, M6 x 20, 8.8
3		86511841		4	PARAFUSO, Hex Flg, M8 x 16, 8.8
4		87535113		1	SUPORTE, Bracket, A/C Condenser
5		86625074		4	PORCA, M8, U
6		86588450		6	ARRUELA PLANA, M6
7		353308		6	PORCA, M6 x 1, Cl 8
8		87535115		1	SUPORTE, Bracket, A/C Condenser

COMPRESSOR CONJ. - AR CONDICIONADO

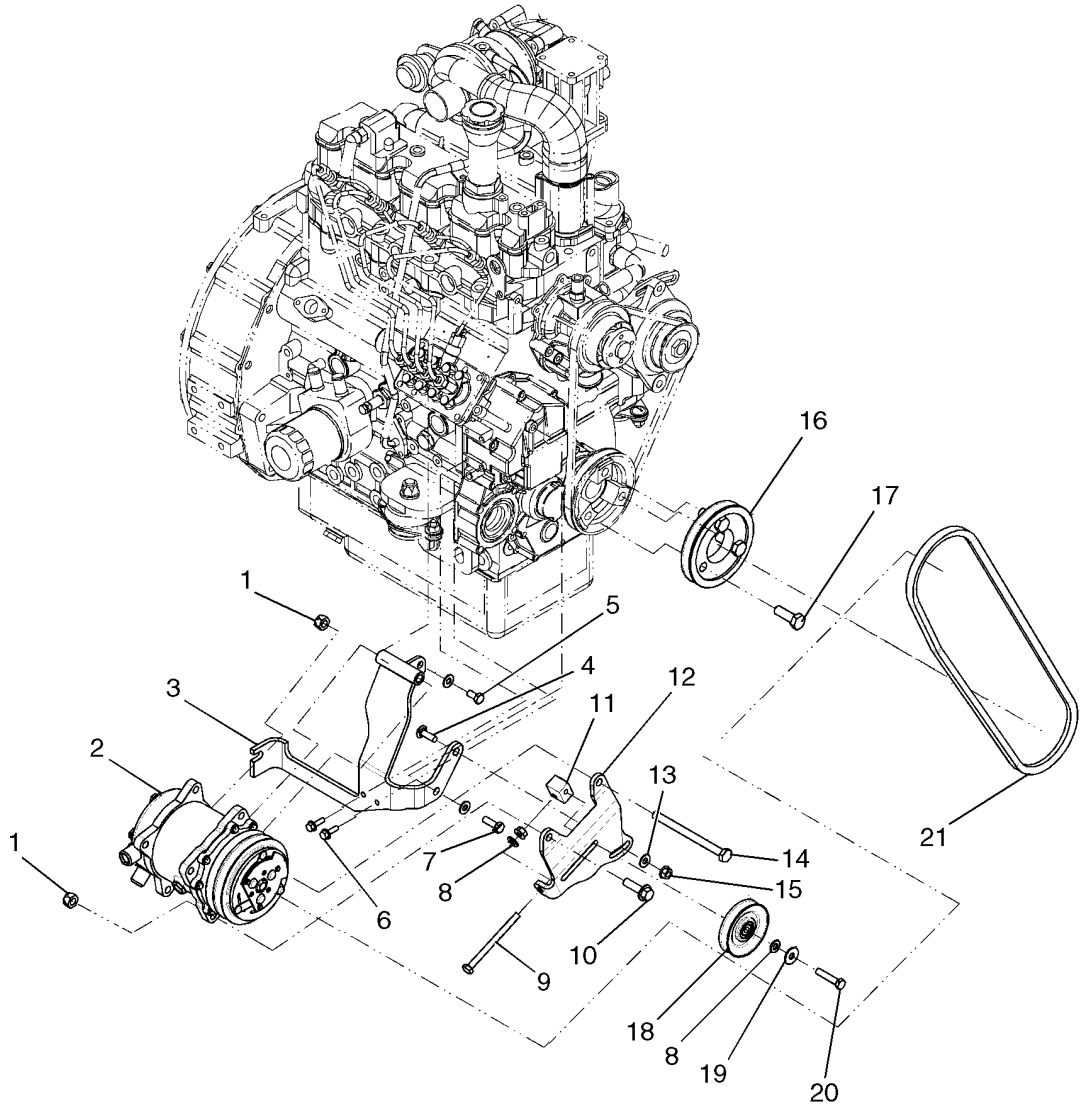

BS06M259

COMPRESSOR CONJ. - AR CONDICIONADO

REF	FN	PART NUMBER	YR/SN	QTY	DESCRIPTION
1		86512554		2	CONTRA PORCA, M10 x 1.5, Cl 10
2		87546525		1	COMPRESSOR, Air Conditioning
3		87527140		1	SUPORTE, Tier 2 Engine; L175 NA BSN N7M470553, L175 EU BSN N7M468035; C175 NA BSN N7M466429, C175 EU BSN N7M46796
3		87602962		1	SUPORTE, Can Be Used On Tier 2 Engine If Replaced As A Set With Bracket Ref 12 87602969; Tier 3 Engine, L175 NA ASN N7M470553, L175 EU ASN N7M468035; C175 NA ASN N7M466429, C175 EU ASN N7M46796
4		308761		1	PARAFUSO, Short NK, M8 x 25, Cl8.8, Full Thd
5		120103		1	PARAFUSO, Hex, M8 x 16, 8.8
6		9804256		2	PARAFUSO, Hex Flg, M6 x 20, 8.8, If Used
6		86508568		2	PARAFUSO, Hex, M6 x 16, 8.8, Used With Washer 322357, Ref 6A, If Used
6A		322357		2	ARRUELA MOLA, Belleville, M6, Not Illustrated; Used With Ref 6 86508568, If Used
7		43127		1	PARAFUSO, Hex, M8 x 25, 8.8
8		86624185		2	ARRUELA PLANA, M8 x 17.5 x 2, HT
9		725403		1	PARAFUSO, Hex, M8 x 100, 8.8, Full Thd
10		86511845		1	PARAFUSO, Hex Flg, M10 x 35, 8.8
11		86403973		1	BLOCO
12		87362246		1	SUPORTE, Tier 2 Engine; L175 NA BSN N7M470553, L175 EU BSN N7M468035; C175 NA BSN N7M466429, C175 EU BSN N7M46796
12		87602969		1	SUPORTE, Can Be Used On Tier 2 Engine If Replaced As A Set With Bracket Ref 3 87602962; Tier 3 Engine, L175 NA ASN N7M470553, L175 EU ASN N7M468035; C175 NA ASN N7M466429, C175 EU ASN N7M46796
13		322358		3	ARRUELA MOLA, Belleville, M8
14		86508621		1	PARAFUSO, Hex, M10 x 130, 10.9
15		9804277		2	PORCA, M8 x 1.25, Flg, Cl 8
16		86405134		1	POLIA, Compact
17		9824642		3	PARAFUSO, Hex, M12 x 35, 10.9

COMPRESSOR CONJ. - AR CONDICIONADO

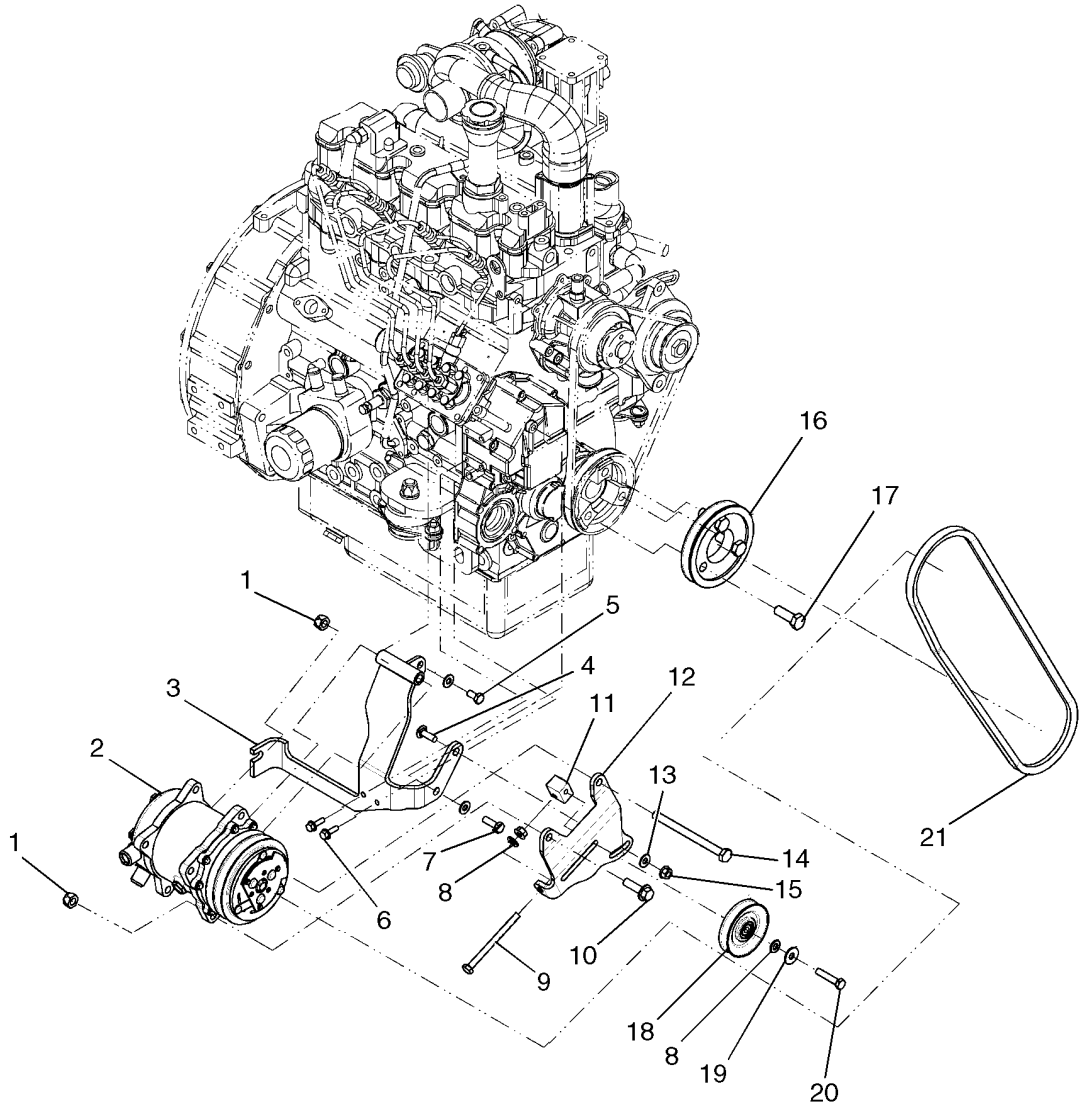

BS06M259

COMPRESSOR CONJ. - AR CONDICIONADO

REF	FN	PART NUMBER	YR/SN	QTY	DESCRIPTION
18		86403228		1	POLIA, If Used
18		87606706		1	POLIA, If Used
19		86639313		1	ARRUELA PLANA, M8 x 20 x 1.6
20		43129		1	PARAFUSO, Hex, M8 x 40, 8.8
21		86401123		1	CORREIAS

09-24		p1	03/08

LIMITE & CABINE VENTANAS (EUROPA)

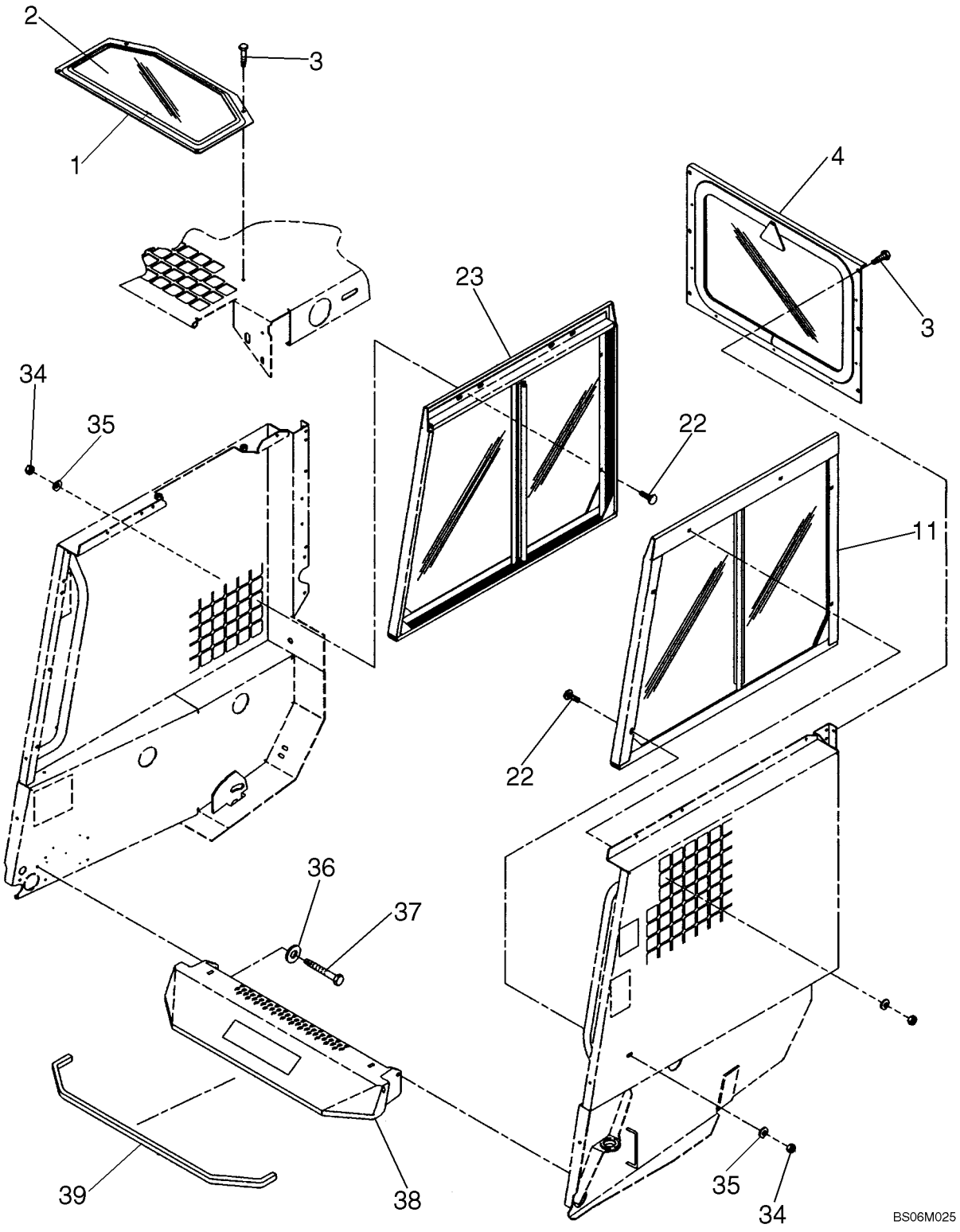

9

LIMITE & CABINE VENTANAS (EUROPA)

REF	FN	PART NUMBER	YR/SN	QTY	DESCRIPTION
1		86510832		1	TAMPA
2		9809734		1	JANELA
3		9840344		10	PARAFUSO
4		86506354		1	JANELA, Incl. 5 - 10
5		9841234		1	SUPORTE, Rear Window; With Extra Upper And Lower Holes; If Used
5		87669244		1	CAPA METÁLICA, Rear Window; Without Extra Upper And Lower Holes; If Used
6		92626		1	ENCHIMENTO, 1951 mm, 76.80 in. Required; Not Illustrated Separately
7		9622411		1	JANELA, Not Illustrated Separately
8		92625		1	MOLDURA, 1951 mm, 76.80 in. Required; Not Illustrated Separately
9		87026871		1	EMBLEMA
10		263117		1	TIRA DE CABO, .14" x 11 1/2"
11		86506611		1	JANELA, Incl. 12 - 21
12		86504339		1	GUIA, Not Illustrated Separately
13		86504357		2	CANAL, Not Illustrated Separately
14		86504355		1	CANAL, Not Illustrated Separately
15		86504356		1	CANAL, Not Illustrated Separately
16		86506338		1	GUIA, Not Illustrated Separately
17		86593705		1	JANELA, Not Illustrated Separately
18		86593688		1	JANELA, Not Illustrated Separately
19		280497		2	PARAFUSO, Short NK, 5/16"-18 x 3/4", G5, Full Thd, Not Illustrated Separately
20		322358		2	ARRUELA MOLA, Belleville, M8, Not Illustrated Separately
21		9635082		2	PORCA, 5/16"-18, G5, Not Illustrated Separately
22		280497		8	PARAFUSO, Short NK, 5/16"-18 x 3/4", G5, Full Thd
23		87527113		1	JANELA, Incl. 24 - 33
24		87527112		1	ESTRUTURA PARA-BRISA, Not Illustrated Separately
25		86504355		1	CANAL, Not Illustrated Separately
26		86504357		2	CANAL, Not Illustrated Separately
27		86506338		1	GUIA, Not Illustrated Separately

LIMITE & CABINE VENTANAS (EUROPA)

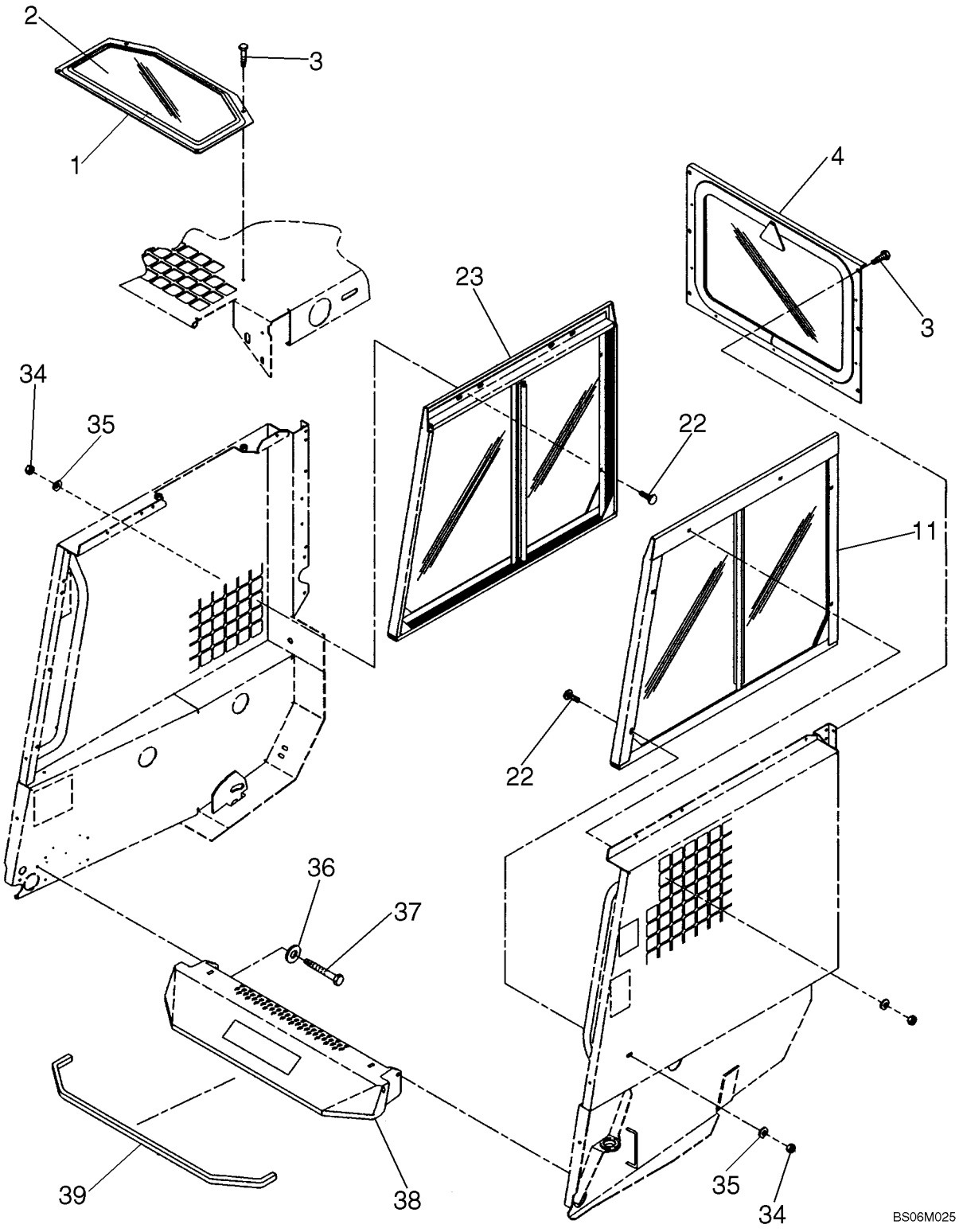

LIMITE & CABINE VENTANAS (EUROPA)

REF	FN	PART NUMBER	YR/SN	QTY	DESCRIPTION
28		86504356		1	CANAL, Not Illustrated Separately
29		280497		2	PARAFUSO, Short NK, 5/16"-18 x 3/4", G5, Full Thd, Not Illustrated Separately
30		86593707		1	JANELA, Not Illustrated Separately
31		86593688		1	JANELA, Not Illustrated Separately
32		322358		2	ARRUELA MOLA, Belleville, M8, Not Illustrated Separately
33		9635082		2	PORCA, 5/16"-18, G5, Not Illustrated Separately
34		9635082		8	PORCA, 5/16"-18, G5
35		322358		8	ARRUELA MOLA, Belleville, M8
36		80664		4	ARRUELA PLANA, 5/16"
37		88825		4	PARAFUSO, Hex Hd, 5/16" x 1 1/4"
38		86568350		1	ESTRIBO
39		86508457		1	CUNHA, 1006 mm, 39.61 in. Required

09-25		p1	03/08

PORTA DA CABINA

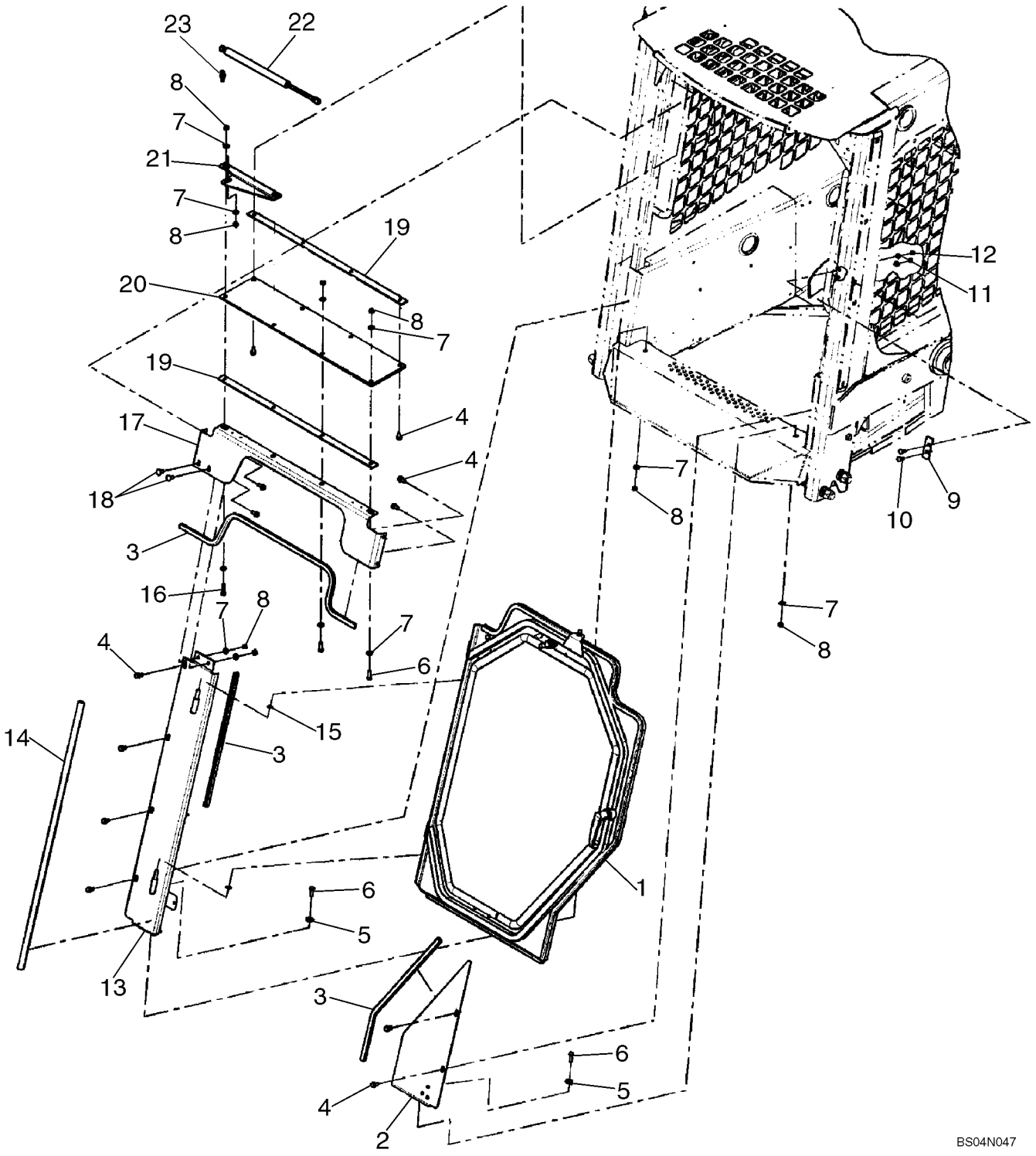

PORTA DA CABINA

REF	FN	PART NUMBER	YR/SN	QTY	DESCRIPTION
1		86547932		1	PORTA, If Used; See Figure 09-26
1		86547926		1	PORTA, Demolition Door, If Used; See Fig. 09-28
2		86547928		1	CANTONEIRA
3		617215		X	MOLDURA
4		9840344		14	PARAFUSO
5		80664		3	ARRUELA PLANA, 5/16"
6		9635884		4	PARAFUSO, Hex, 5/16"-18 x 1", G5, Full Thd
7		322358		13	ARRUELA MOLA, Belleville, M8
8		9635082		9	PORCA, 5/16"-18, G5
9		86590348		1	PLACA, Striker
10		280638		2	PARAFUSO, Short NK, 1/4"-20 x 3/4", G5, Full Thd
11		322357		2	ARRUELA MOLA, Belleville, M6
12		7770		2	PORCA, 1/4"-20, G5
13		86586648		1	DOBRADIÇA
14		86555682		X	ELEMENTO DE VEDAÇÃO, 3' D-Seal For Right Hand Hinge Plate Of Cab Door Or Demolition Door
15		86547919		3	ARRUELA PLANA, Brass
16		87657		2	PARAFUSO, Hex, 5/16"-18 x 1 1/4", G5
17		86547929		1	CANTONEIRA
18		280497		2	PARAFUSO, Short NK, 5/16"-18 x 3/4", G5, Full Thd
19		9822593		2	PERFILADO DE BORRACHA
20		9822592		1	TAMPA, Lexan
21		86547930		1	SUPORTE
22		87050853		1	MOLA
23		9803209		1	PRISIONEIRO

09-26		p1	03/08

PORTA DA CABINA - LIMPA PÁRA-BRISAS

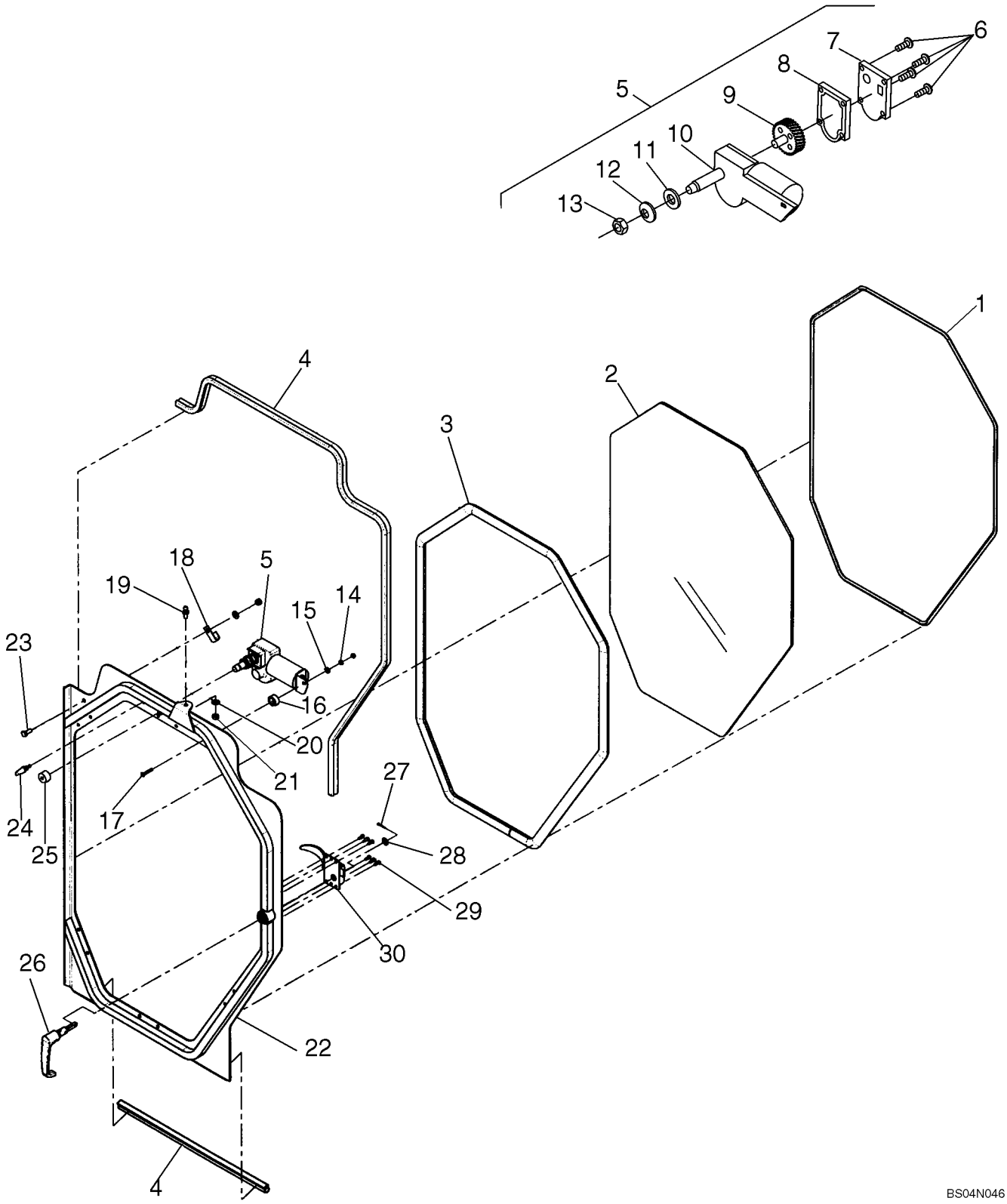

9

PORTA DA CABINA - LIMPA PÁRA-BRISAS

REF	FN	PART NUMBER	YR/SN	QTY	DESCRIPTION
		86547932		1	PORTA, Incl. 1 - 30
1		92626		X	ENCHIMENTO, 50' Bulk; Cut To Length; 10' Required
2		86547915		1	VIDRO, Door; Circumference 2540 mm (101 in)
3		92625		1	MOLDURA, Glass Setting; 50' Bulk; Cut To Length; 10' Required
4		86547916		X	ELEMENTO DE VEDAÇÃO, 8 Ft Long
5		227854		1	LIMPADOR DE PÁRA-BRISA, Incl. 6 - 13; See Figure 09-27 For Arm, Blade
6		86511907		4	PARAFUSO, Cross Pan Hd, #6-32 x 5/16"
7		241634		1	TAMPA, Incl. Switch; Slide Type Switch For Johnson Electric Motor Only, Wexco Wiper Motor Toggle Switch, Is Not Serviced Separately
8		241636		1	JUNTA
9		263299		1	EIXO, Gear
10		241630		1	EIXO
11		241631		1	JUNTA
12		241632		1	ESPAÇADOR
13		241633		2	PORCA, 5/8"-24
14		87304		2	PORCA, #10-24
15		322357		1	ARRUELA MOLA, Belleville, M6
16		87010766		1	ESPAÇADOR, .656 ID x 1" OD x 1/2"
17		84879		1	PARAFUSO, Slotted Truss Hd, #10-24 x 1 1/4"
18		134579		1	TERMINAL, 7/16" x 3/8" Bolt
19		9803209		1	PRISIONEIRO, Ball Stud, 5/16"-18 x 9/16"
20		322358		2	ARRUELA MOLA, Belleville, M8
21		9635082		2	PORCA, 5/16"-18, G5
22		86547926		1	PORTA
23		87872		1	PARAFUSO, Hex, 5/16"-18 x 3/4", G5, Full Thd
24		86515226		1	PULVERIZADOR
25		87010845		1	ESPAÇADOR, 3/32" ID x 1" OD x 5/8"
26		643758		1	MANILHA, Locking, Incl. Ref. 26A
26A		642628		1	JOGO 2 CHAVES, Not Illustrated
27		280250		1	GRAMPO, 3/32" x 3/4"
28		262279		X	ARRUELA PLANA, 3/8"
29		87824		6	PARAFUSO, Hex Hd, #10 x 1/2"

PORTA DA CABINA - LIMPA PÁRA-BRISAS

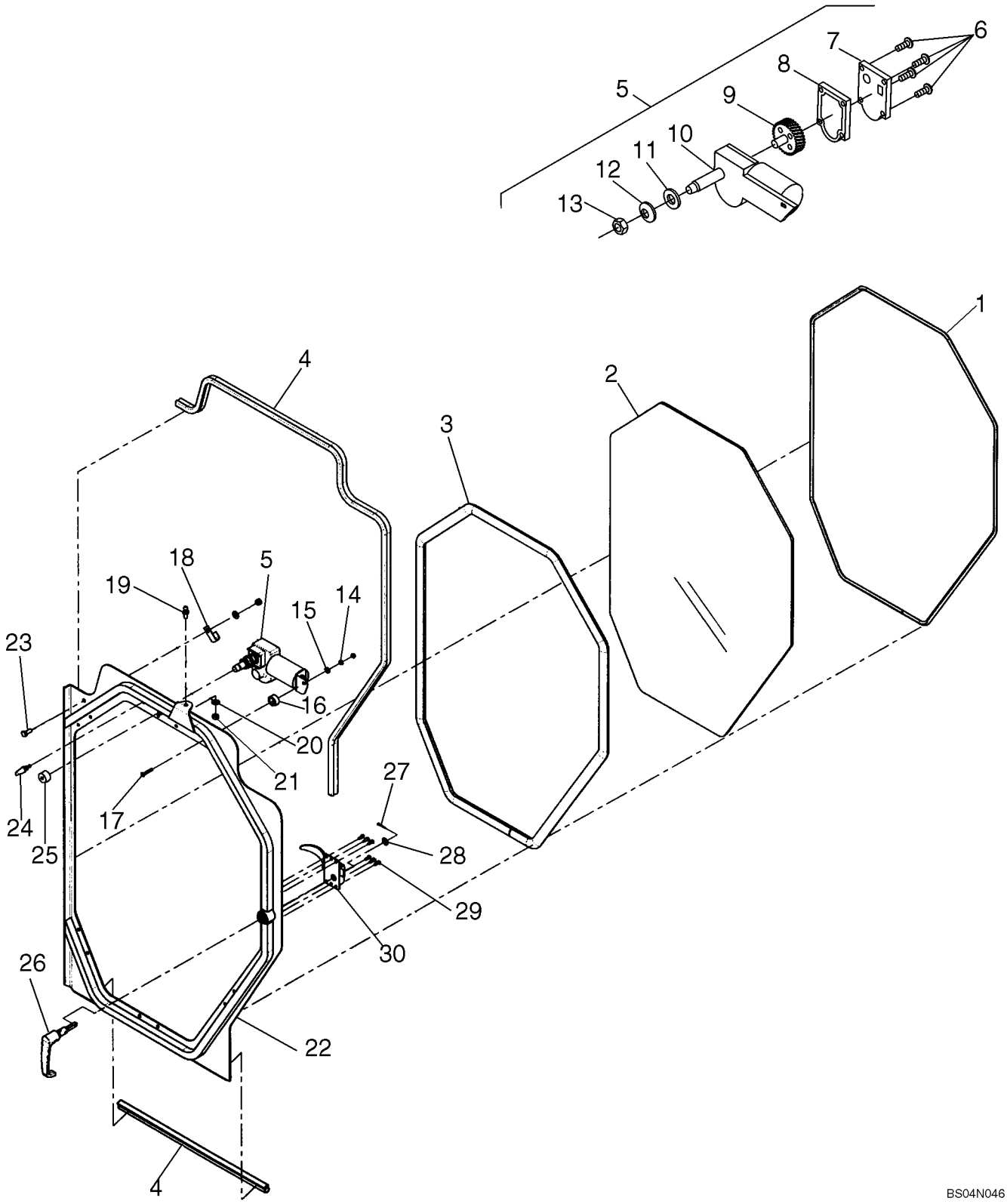

PORTA DA CABINA - LIMPA PÁRA-BRISAS

REF	FN	PART NUMBER	YR/SN	QTY	DESCRIPTION
30		86548779		1	TRINCO

PORTA DA CABINA

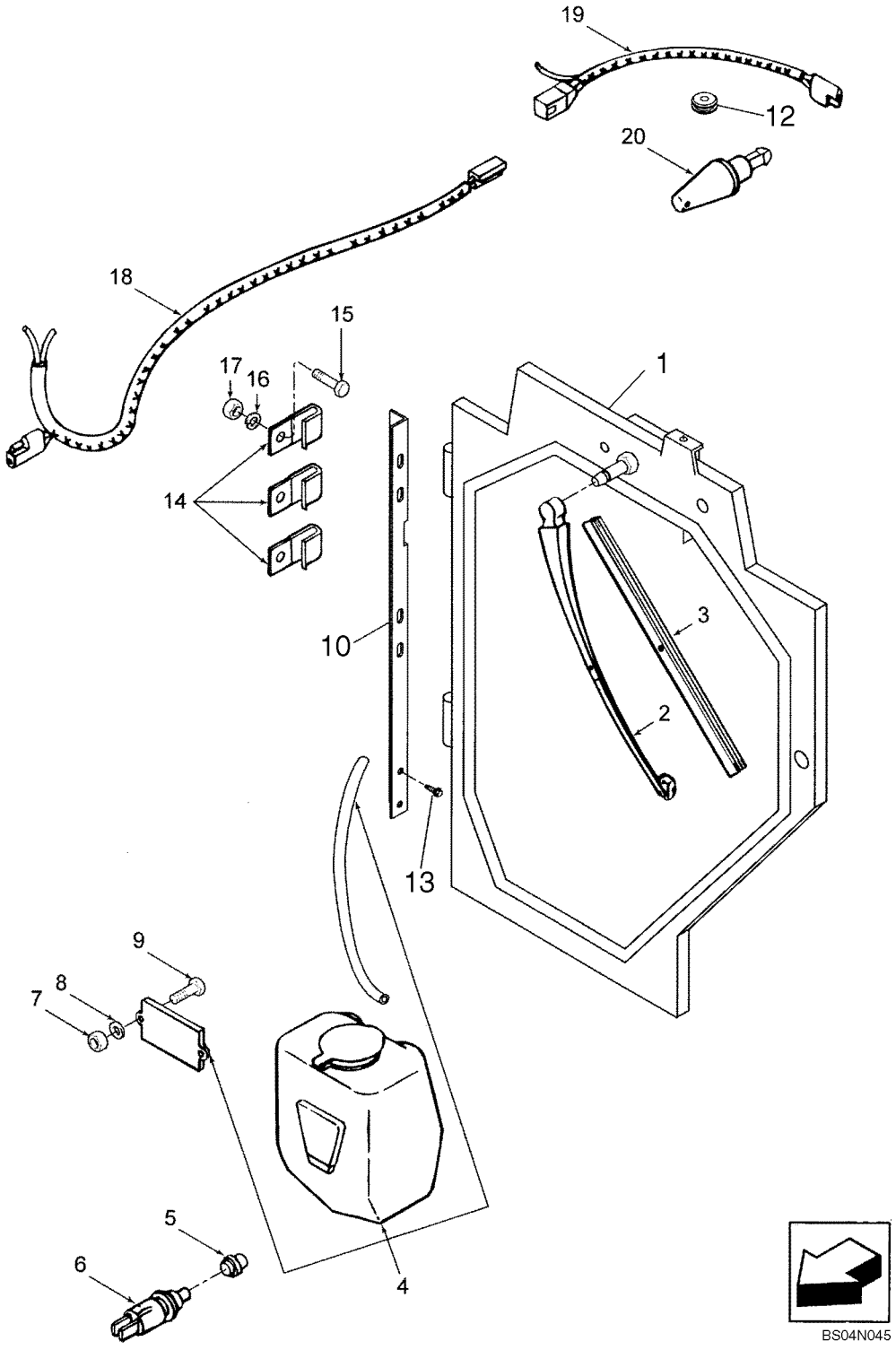

PORTA DA CABINA

REF	FN	PART NUMBER	YR/SN	QTY	DESCRIPTION
1		86547932		1	PORTA, See Figure 09-26
2		263296		1	BRAÇO LIMP. PÁRA-BRISA, Uses Blade 227856; See 09-26 For Wiper Motor
2		87558261		1	BRAÇO LIMP. PÁRA-BRISA, With Dyna Logo, Uses Blade 87558263; See 09-26 For Wiper Motor
3		227856		1	PALHETA LIMP. PÁRA-BRISA
3		87558263		1	PALHETA LIMP. PÁRA-BRISA, Blade
4		83962021		1	RESERV. LAV. PÁRA-BRISA, Motor & Washer, Incl. Bracket, 5/32" ID x 1/4" OD Tubing, & Cap; Component Parts Not Serviced Separately
4		9990433		1	RESERV. LAV. PÁRA-BRISA, Motor & Washer; Replaces 83962021; Incl. Bracket, Tubing, & Cap 87643453, And Harness 87575249
		87643453		1	PRATO
		87575249		1	CHICOTE, Windshield Washer; Used With 9990433
5		247521		1	ANEL DE VEDACAO
6		247520		1	INTERRUPTOR, Washer/Wiper
7		7770		3	PORCA, 1/4"-20, G5
8		322357		2	ARRUELA MOLA, Belleville, M6
9		88542		2	PARAFUSO, Hex, 1/4"-20 x 1/2", G5, Full Thd
10		86595394		1	PROTEÇÃO
11		87050853		1	MOLA, Gas
12		86637778		1	CASQUILHO ISOLADOR, 5/8" ID x 7/8" Groove Dia
13		9840344		3	PARAFUSO
14		134579		3	TERMINAL, 7/16" x 3/8" Bolt
15		87872		3	PARAFUSO, Hex, 5/16"-18 x 3/4", G5, Full Thd
16		322358		3	ARRUELA MOLA, Belleville, M8
17		9635082		3	PORCA, 5/16"-18, G5
18		86552688		1	CHICOTE DE FIOS, Wiper
19		86552689		1	CHICOTE DE FIOS, Washer
20		82006204		1	PULVERIZADOR

09-28		p1	03/08

PORTA DE DEMOLIÇÃO

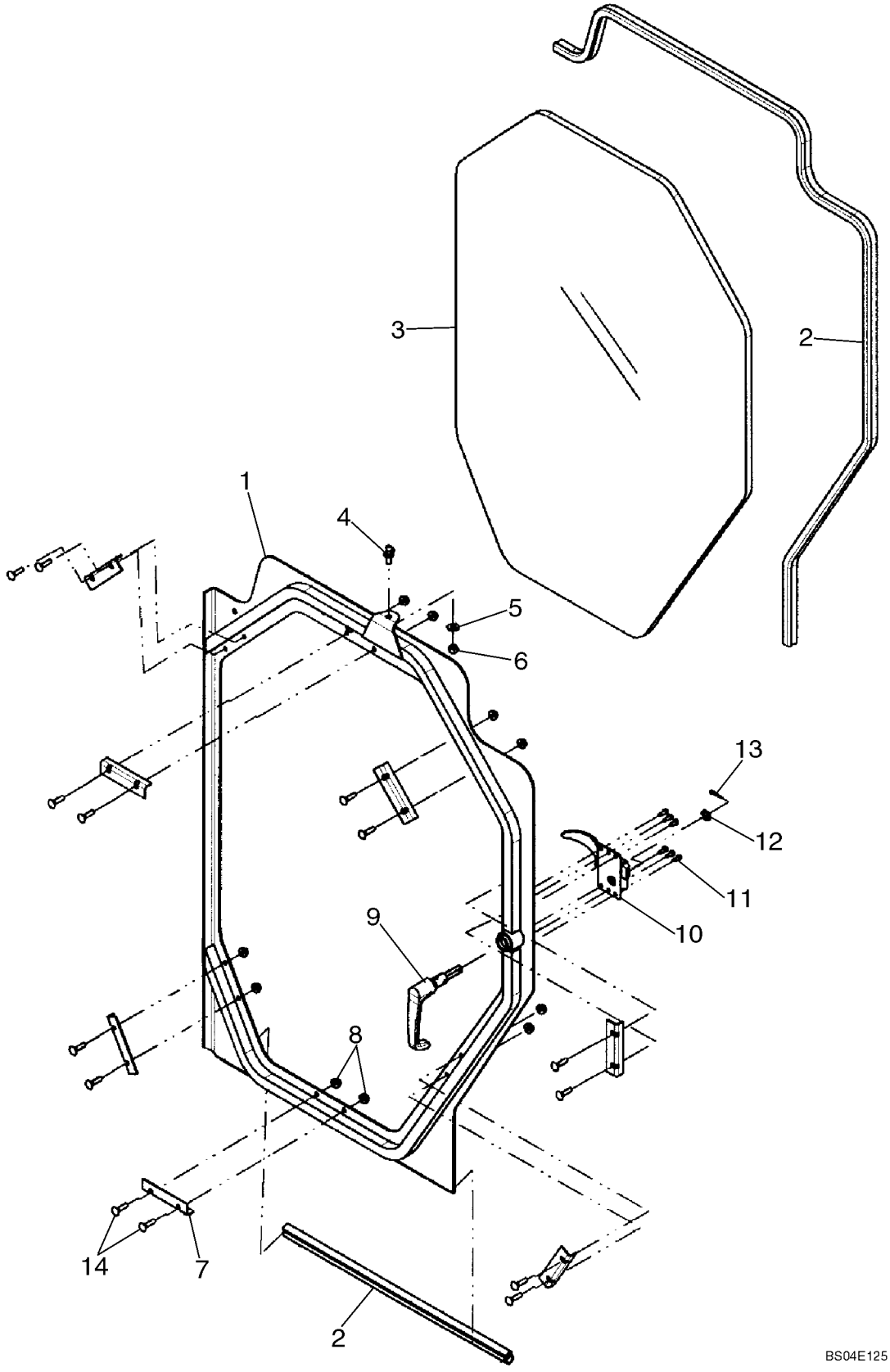

PORTA DE DEMOLIÇÃO

REF	FN	PART NUMBER	YR/SN	QTY	DESCRIPTION
		86594685		1	KIT, Incl. 1- 14 and Mounting Hardware
1		86547926		1	PORTA, Demolition Door
2		86555681		X	MOLDURA, 8' Clip-On Edge Molding For Cab Door Or Demolition Door
3		86547933		1	VIDRO
4		9803209		1	PRISIONEIRO
5		322358		1	ARRUELA MOLA, Belleville, M8
6		9635082		1	PORCA, 5/16"-18, G5
7		86547934		7	CANTONEIRA
8		523282		14	PORCA, Flg, USR, 1/4"-20
9		643758		1	MANILHA, Incl. Set Of Keys 642628
		642628			JOGO 2 CHAVES
10		86548779		1	TRINCO
11		87824		6	PARAFUSO, Hex Hd, #10 x 1/2"
12		262279		X	ARRUELA PLANA
13		280250		1	GRAMPO, 3/32" x 3/4"
14		86508769		14	PARAFUSO, Short NK, 1/4"-20 x 1", G5

KIT DA PORTA DE DEMOLIÇÃO

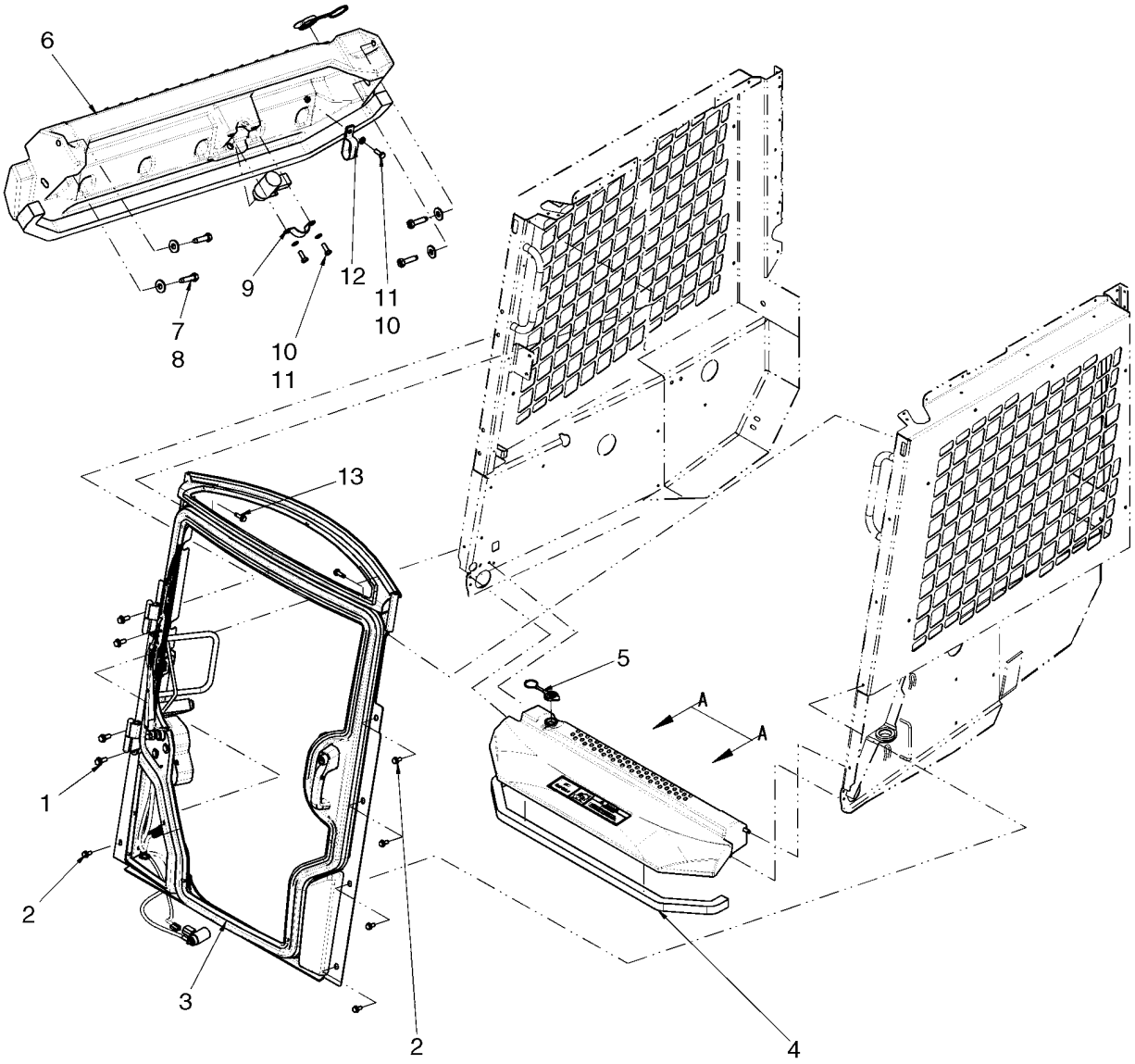

BS07F129

KIT DA PORTA DE DEMOLIÇÃO

REF	FN	PART NUMBER	YR/SN	QTY	DESCRIPTION
		87586364		1	KIT, Demolition Door Kit; Incl. 1 - 13
1		87327171		4	PARAFUSO, Bolt, 3/8 X 1.00 Gr 8 ZND
2		9840344		5	PARAFUSO, Sealing Screw
3		REF		1	INSTRUCAO, Demolition Door; See Fig. 09-28B
4		86508457		1	CUNHA, Closed Cell Foam, 100.6 cm (39 5/8 in.)
5		87645152		1	TAMPA DO RESERVATÓRIO, Washer Fluid Cap
6		87644259		1	PLASTICO, Threshold/Washer Fluid Tank
7		80664		4	ARRUELA PLANA, 5/16"
8		88825		4	PARAFUSO, Hex Hd, 5/16" x 1 1/4"
9		87653007		1	TIRA
10		9824259		3	ARRUELA PLANA, M6 x 12 x 1.6
11		86508568		3	PARAFUSO, Hex, M6 x 16, 8.8
12		578070		1	PRENDEDOR
13		87029931		2	PARAFUSO, Screw, 5/16 X 1.00

09-28B		p1	03/08

CABINE - PORTA DE DEMOLIÇÃO, DE LUXO

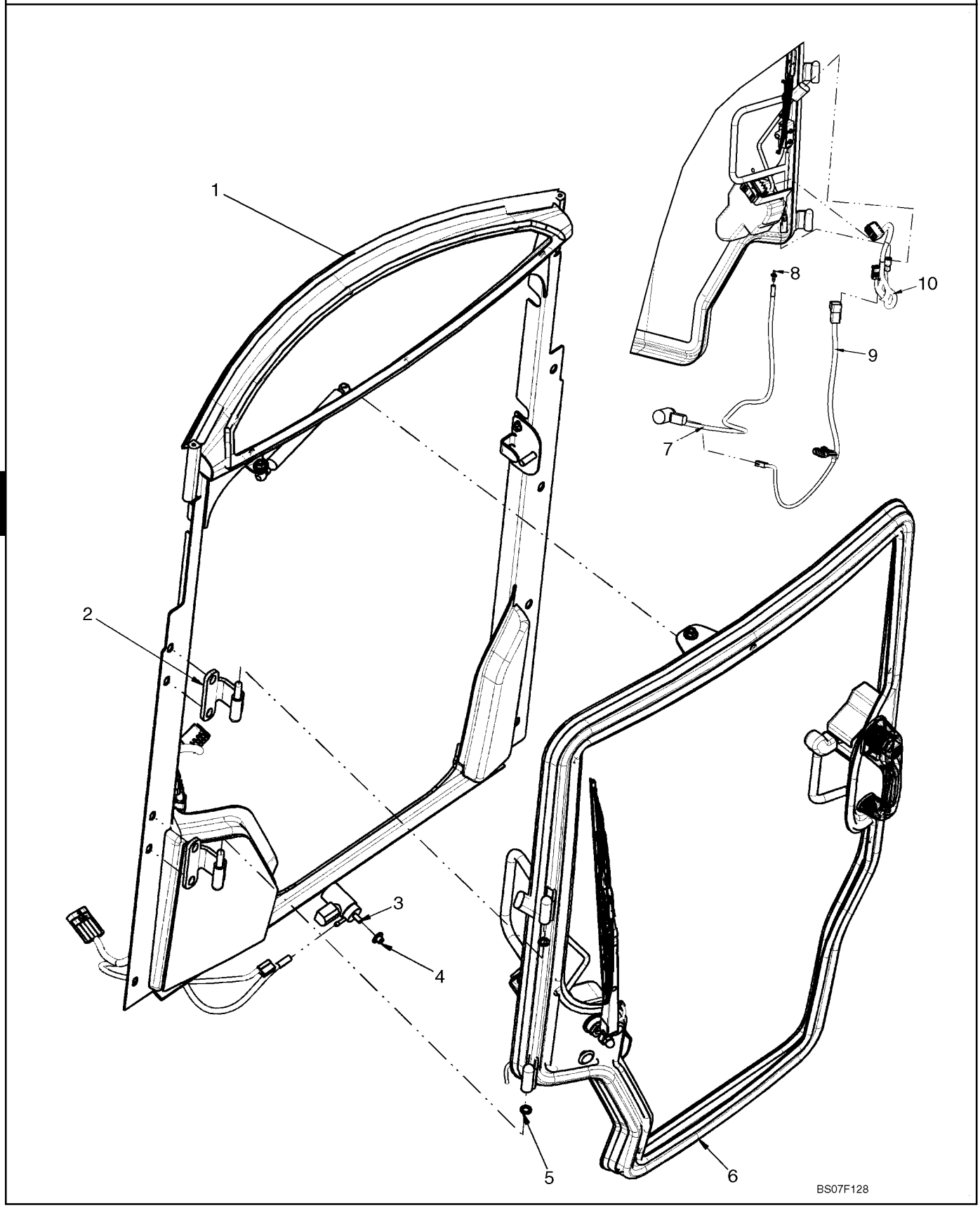

CABINE - PORTA DE DEMOLIÇÃO, DE LUXO

REF	FN	PART NUMBER	YR/SN	QTY	DESCRIPTION
1		REF		1	INSTRUCAO, Door Frame; See Fig. 09-29C
2		87635960		2	DOBRADIÇA, Door Hinge
3		87581786		1	BOMBA, Washer Pump
4		87658782		1	CASQUILHO ISOLADOR
5		87599753		2	BUCHA
6		REF		1	INSTRUCAO, Demolition Door; See Fig. 09-28C
7		87658793		1	MANGUEIRA, Windshield Washer Tubing
8		87658798		1	CONEXAO, Hose Fitting
9		87660792		1	CHICOTE, Door Frame Harness
10		87660793		1	CHICOTE, Door Harness
11		263117		2	TIRA DE CABO, .14" x 11 1/2", Cable Tie; Not Illustrated

09-28C		p1	03/08

CABINE - PORTA DE DEMOLIÇÃO, DE LUXO

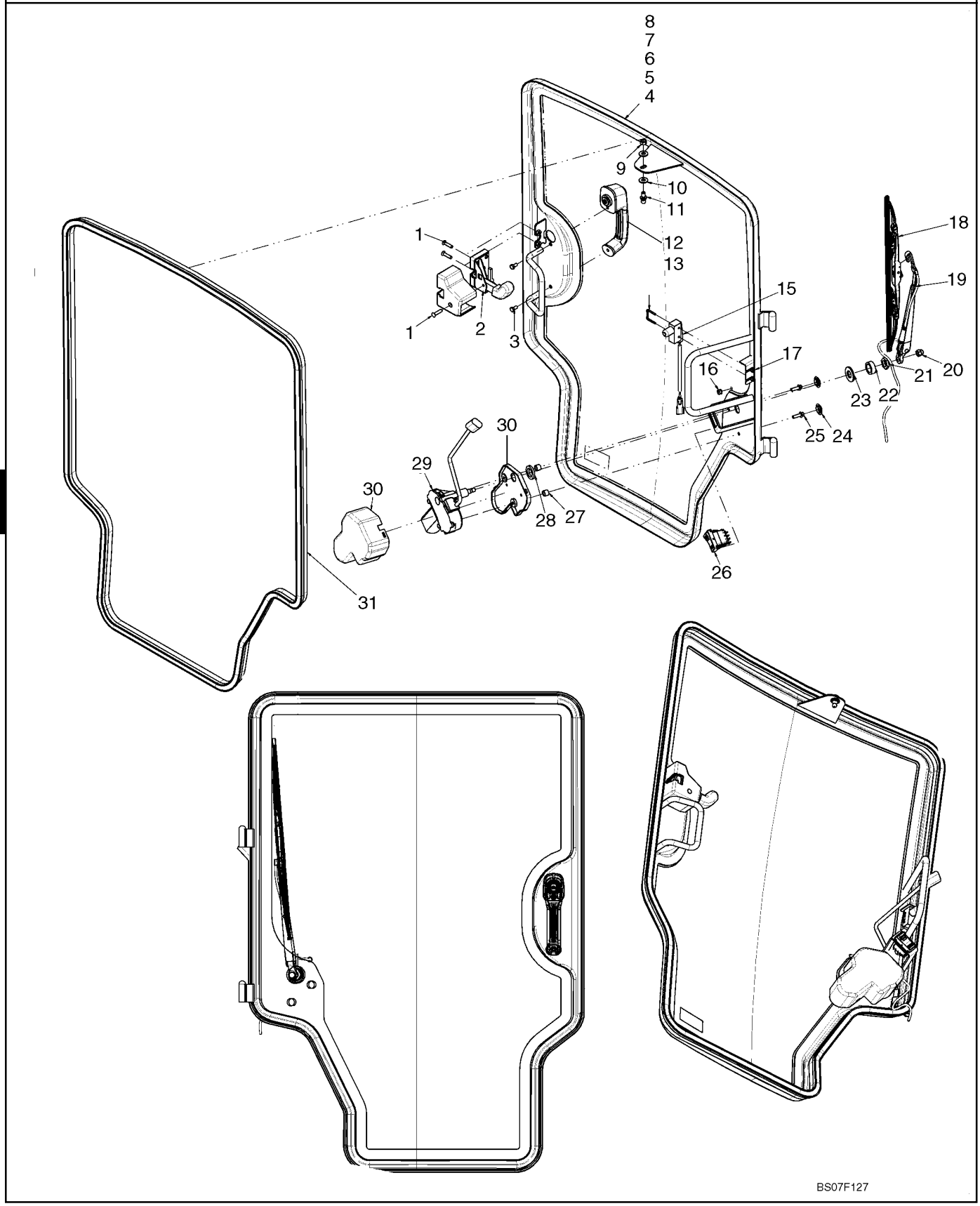

CABINE - PORTA DE DEMOLIÇÃO, DE LUXO

REF	FN	PART NUMBER	YR/SN	QTY	DESCRIPTION
1		86512463		3	PARAFUSO, Hex Flat Hd, M6 x 25, 4.8
2		87544288		1	TRINCO
3		86977726		2	PARAFUSO, Hex, M6 x 12, 8.8
4		87639937		1	PORTA, Demolition Door; Incl. 5 - 8
5		87600221		8	ESPAÇADOR
6		87639938		1	PLASTICO, Window
7		NSS		1	BOLETIM INFORMATIVO, Door
8		87660180		1	RESINA, Window Adhesive
9		43362		1	PORCA, M8, Cl 10
10		86625263		2	ARRUELA PLANA, M8 x 20 x 1.6
11		87581669		1	PRISIONEIRO, Ball Stud
12		87581681		1	MANILHA, Incl. 13
13		642628		1	JOGO 2 CHAVES
14		H435814		1	MOLA-TRAVA
15		87051110		1	INTERRUPTOR, Door Open Switch
16		87635968		1	CASQUILHO ISOLADOR
17		87622767		2	PORCA, Nut, #6-32
18		87629614		1	PALHETA LIMP. PÁRA-BRISA
19		87659082		1	BRAÇO LIMP. PÁRA-BRISA
20		412326		1	PORCA
21		87607505		1	PORCA
22		87607506		1	ESPAÇADOR
23		87602688		1	ARRUELA PLANA
24		87601294		2	TAPÓN PLÁSTICO, Plug
25		87017606		2	PARAFUSO, Hex Flg Hd, M6 x 20
26		87335499		1	INTERRUPTOR, Windshield Wiper/Washer Switch
27		87588635		2	ESPAÇADOR, Door Motor Spacer
28		86588504		1	ARRUELA PLANA, Washer, 21 X 32 X 4 mm
29		87635942		1	MOTOR, Wiper Motor
30		87581666		1	COBERTURA, Wiper Motor Cover
31		87659265		1	JUNTAS

09-28D		p1	03/08

KIT DE PORTA DE DEMOLIÇÃO / SEM PORTA

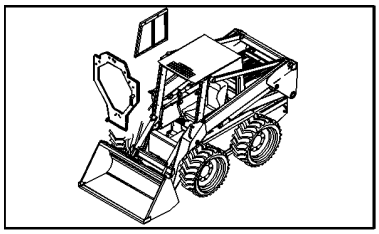

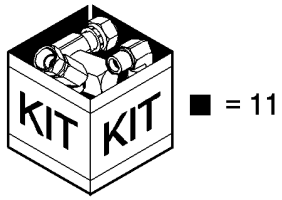

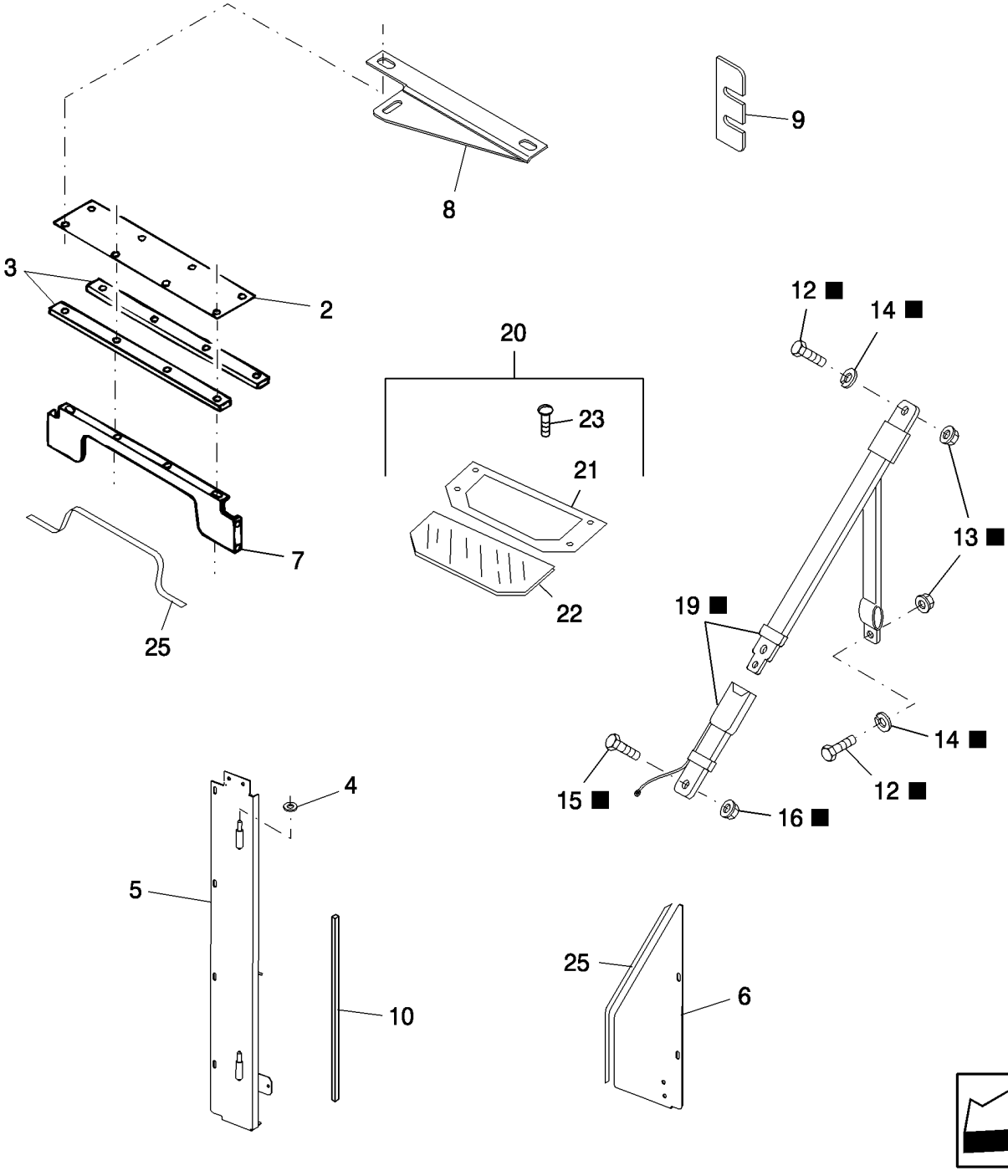

9

KIT DE PORTA DE DEMOLIÇÃO / SEM PORTA

REF	FN	PART NUMBER	YR/SN	QTY	DESCRIPTION
1		86590130			KIT, SERVICE, Demolition Door, Less Door, Includes Ref. 2 thru 10
2		9822592		1	TAMPA, Lexan
3		9822593		2	PERFILADO DE BORRACHA
4		86547919		3	ARRUELA PLANA, Copper, 3/8" ID x 5/8" OD
5		86586648		1	DOBRADIÇA
6		86593544		1	PROTEÇÃO
7		86593539		1	SUPORTE
8		86593537		1	SUPORTE
9		86590348		1	PLACA, Striker
10	1	617215		1	MOLDURA, 72" Long
11		86590072		1	KIT, Shoulder Belt, Includes: Ref. 12 thru 19
12		9670285		2	PARAFUSO, Hex, 3/8"-16 x 1", G8, Full Thd
13		80702		2	ARRUELA PLANA, 3/8"
14		140045		2	ARRUELA MOLA, Belleville, M10
15		87909		1	PARAFUSO, Hex, 1/2"-13 x 1", G5, Full Thd
16		88871		1	CONTRA PORCA, 1/2"-13, GC
17		88902		1	CONTRA PORCA, 3/8"-16, GC
18		88011		2	PARAFUSO, Hex, 3/8"-16 x 1 1/4", G5, Full Thd, Not Shown
19		NSS		1	BOLETIM INFORMATIVO, Shoulder Belt
20		W0		1	ORDER WHOLEGOODS, Kit, Top Window, Includes: Ref. 21 thru 24
21		86510832		1	TAMPA, Top Window
22		9809734		1	JANELA, Top Window
23		570821		4	PARAFUSO, Flg, USR, 5/16"-18 x 5/8"
24		86537848		1	SELANTE, Silicone Rubber, 10.3-oz. Tube
25	2	617215		AR	MOLDURA, 72"

(1) Cut to Required Length
(2) Cut to Required Length

Used With Straight Edged Door

L175 C175

CAB - DOOR AND FRAME, DELUXE CAB

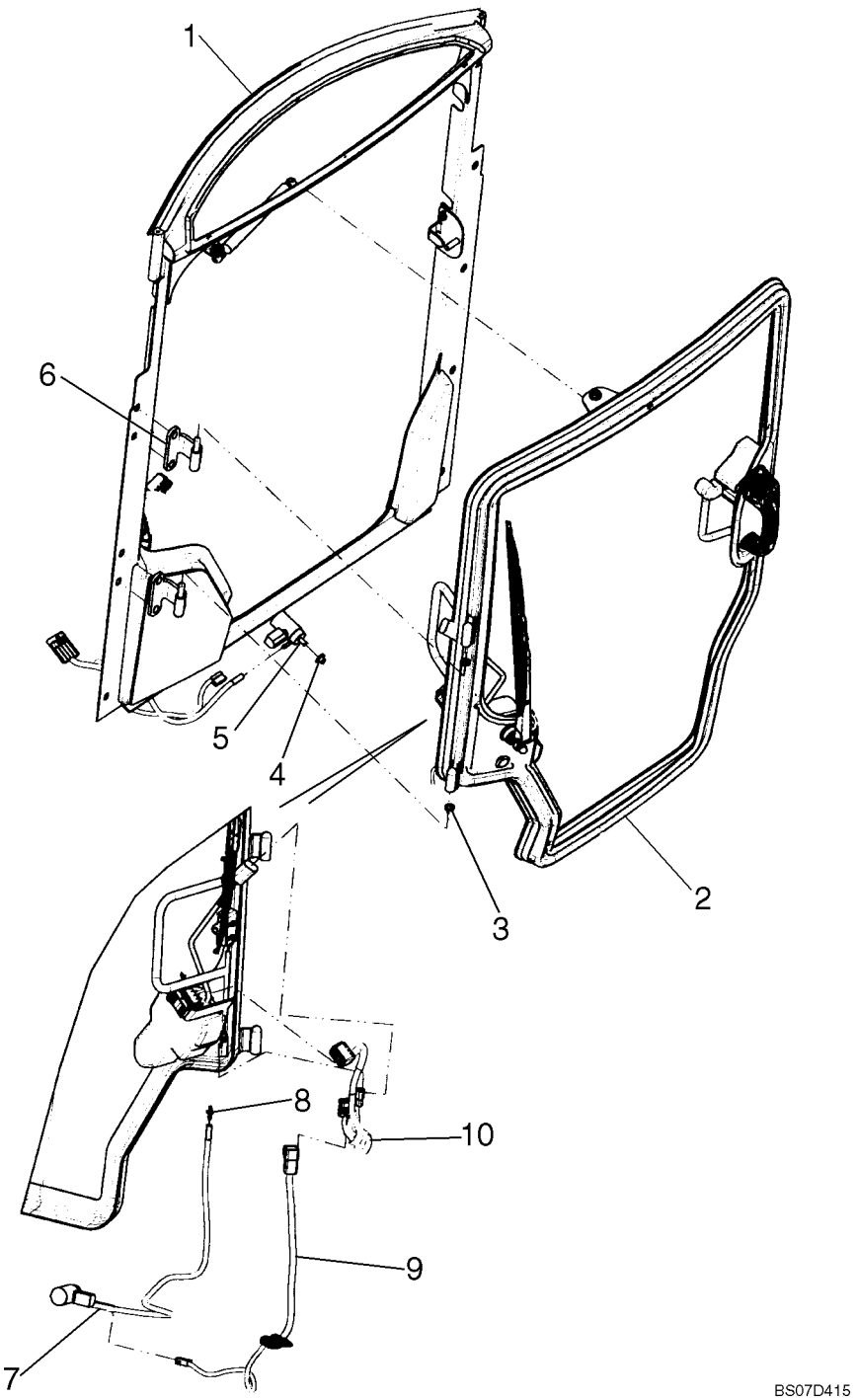

CAB - DOOR AND FRAME, DELUXE CAB

REF	FN	PART NUMBER	YR/SN	QTY	DESCRIPTION
1		REF		1	INSTRUCAO, Door Frame; See Fig. 09-29C
2		REF		1	INSTRUCAO, Door; See Fig. 09-29B
3		87599753		2	BUCHA
4		87658782		1	CASQUILHO ISOLADOR, Grommet
5		87581786		1	BOMBA, Washer Pump
6		87635960		2	DOBRADIÇA, Slotted Holes; If Used
6		87688534		2	DOBRADIÇA, Squared Holes; If Used; Secured With 6A, 6B, 6C, Not Illustrated
6A		87327171		4	PARAFUSO
6B		9827956		8	ARRUELA PLANA
6C		9628503		4	PORCA, 3/8"-16, G5
7		87658793		1	MANGUEIRA, Windshield Washer Tubing
8		87658798		1	CONEXAO, Hose Fitting
9		87660792		1	CHICOTE, Door Frame Harness
10		87660793		1	CHICOTE, Door Harness
11		263117		2	TIRA DE CABO, .14" x 11 1/2", Cable Tie; As Needed To Secure Hose And Harness

PORTA DA CABINA KITS, DE LUXO CABINE

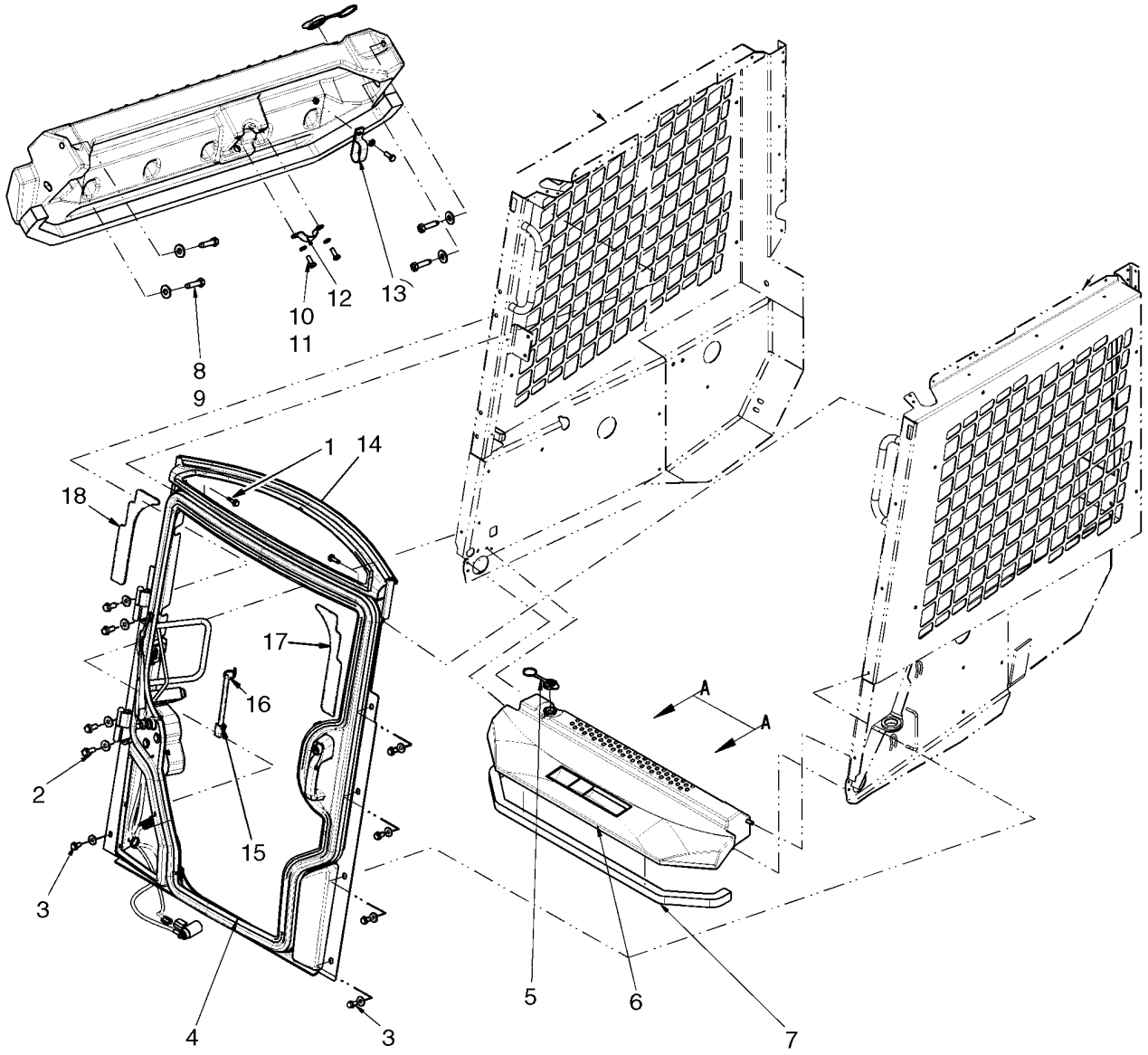

BS08C406

PORTA DA CABINA KITS, DE LUXO CABINE

REF	FN	PART NUMBER	YR/SN	QTY	DESCRIPTION
		87586363		1	KIT, Cab Door Kit; Incl. 1 - 14
1		87029931		2	PARAFUSO, Screw, 5/16-18 X 1.00
2		87327171		4	PARAFUSO, Flange Bolt, 3/8 X 1.00 Grade 8
3		9840344		5	PARAFUSO, Sealing Screw
4		REF		1	INSTRUCAO, Door; See Fig. 09-17B
5		87645152		1	TAMPA DO RESERVATÓRIO, Washer Fluid Cap
6		87644259		1	PLASTICO, Threshold/Washer Fluid Tank; NA
6		87644260		1	PLASTICO, Threshold/Washer Fluid Tank; Europe
7		86508457		1	CUNHA, Closed Cell Foam, 100.6 cm (39 5/8 in.)
8		88825		4	PARAFUSO, Hex Hd, 5/16" x 1 1/4"
9		80664		4-9	ARRUELA PLANA, 5/16"
10		9824259		3	ARRUELA PLANA, M6 x 12 x 1.6
11		86508568		3	PARAFUSO, Hex, M6 x 16, 8.8
12		87653007		1	TIRA
13		578070		1	PRENDEDOR, If Used
13		86010402		1	PRENDEDOR, 1/2", Insul, 3/8" Bolt, If Used
14		REF		1	INSTRUCAO, Door Frame; See Fig. 09-17C
15		87685436		1	INTERRUPTOR, Door Switch
16		14560287		1	TIRA DE CABO, 289mm lg
17		87695867		1	TAMPA PORTA, LH Cab Door Sealing
18		87695868		1	TAMPA PORTA, RH Cab Door Sealing

09-29B		p1	03/08

PORTA DA CABINA

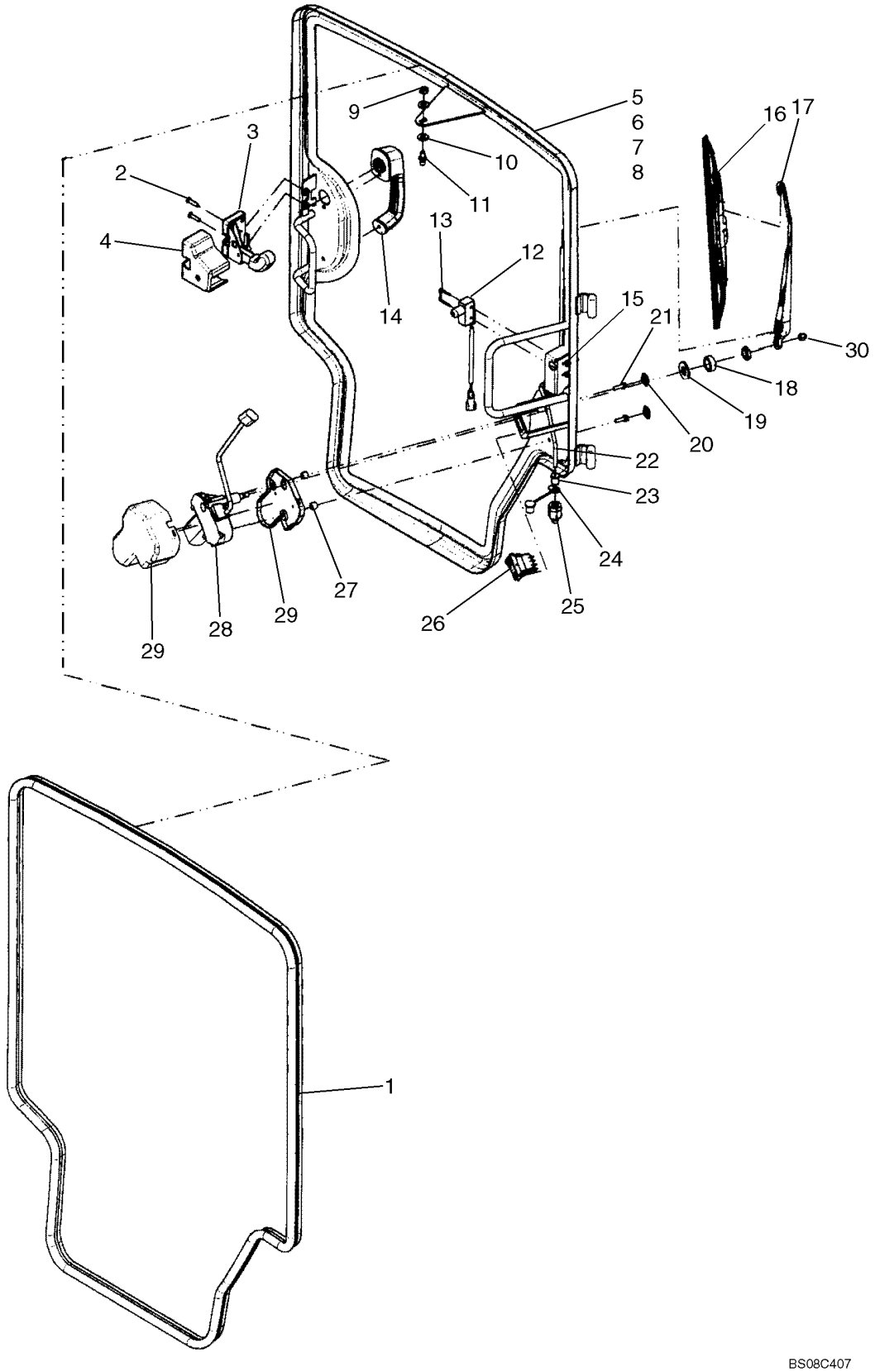

PORTA DA CABINA

REF	FN	PART NUMBER	YR/SN	QTY	DESCRIPTION
1		87688732		1	GUARNICAO PORTA, Bulb Seal, Door; Replaces 87659265
2		86512463		2	PARAFUSO, Hex Flat Hd, M6 x 25, 4.8
3		87544288		1	TRINCO, Rotary Latch With Cover; Incl. 4
4		NSS		1	BOLETIM INFORMATIVO, Latch Cover
5		87652748		1	PORTA, With Glass; Incl. 6 - 8; If Used
5		87691908		1	VIDRO, With Glass; Incl. 6 - 8; If Used
6		87600221		8	ESPAÇADOR, Not Illustrated
7		87635930		1	VIDRO, Door; Replaces 87605330
8		NSS		1	BOLETIM INFORMATIVO, Door Frame
9		43362		1	PORCA, M8, Cl 10
10		86625263		2	ARRUELA PLANA, M8 x 20 x 1.6
11		87581669		1	PRISIONEIRO, Ball
12		87051110		1	INTERRUPTOR, Incl. Harness
13		H435814		1	MOLA-TRAVA
14		87581681		1	MANILHA, Door Handle, Locking; Incl. 14A
14A		642628		1	JOGO 2 CHAVES, Not Illustrated
15		87622767		2	PORCA
16		87629614		1	PALHETA LIMP. PÁRA-BRISA, Replaces 87581671
17		87659082		1	BRAÇO LIMP. PÁRA-BRISA
18		87607506		1	ESPAÇADOR
19		87602688		1	ARRUELA PLANA
20		87601294		2	TAPÓN PLÁSTICO
21		87017606		2	PARAFUSO, Hex Flg Hd, M6 x 20
22		87581672		1	MANGUEIRA
23		87616981		1	CONEXAO
24		87616984		1	GUARDA-PÓ
25		87615807		1	CONEXAO, Male Coupler, Dry Break
26		87335499		1	INTERRUPTOR, Windshield Wiper/Washer
27		87588635		2	ESPAÇADOR, Door Motor
28		87581673		1	MOTOR, Wiper; Replaces 87581673
29		87581666		1	COBERTURA, Wiper Motor
30		412326		1	PORCA

CABINE - PORTA ESTRUTURA

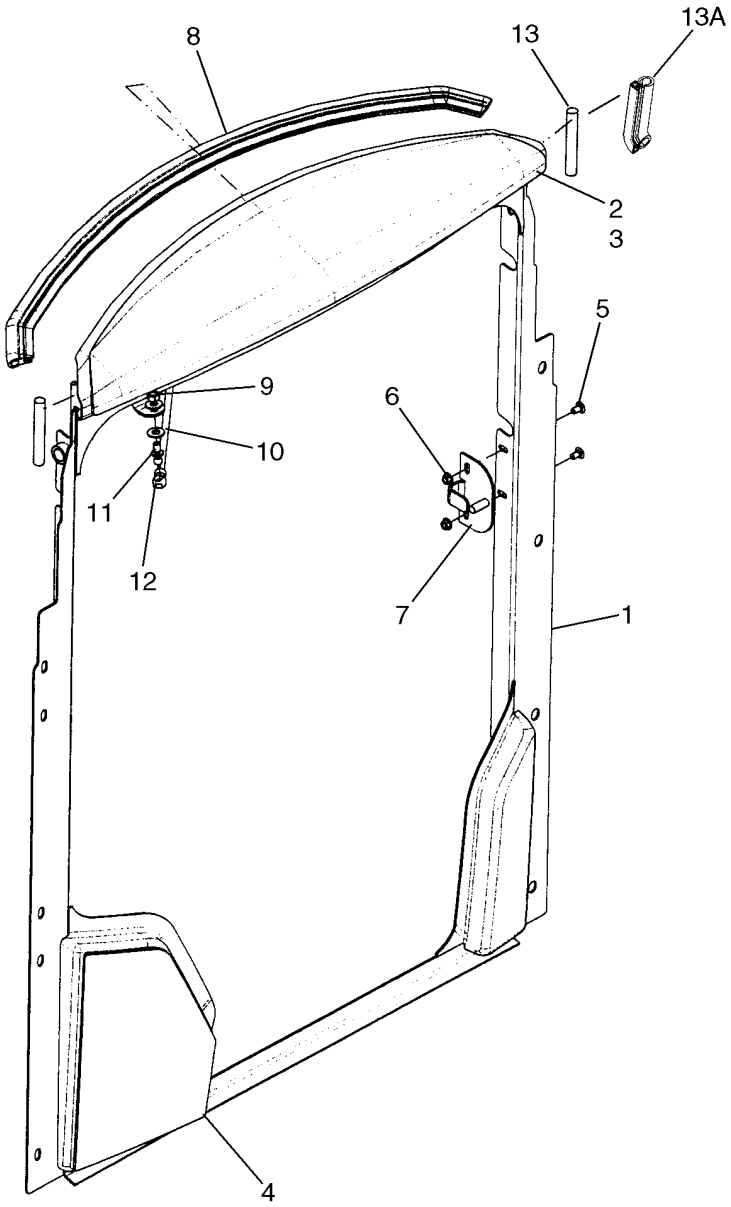

BS08C408

CABINE - PORTA ESTRUTURA

REF	FN	PART NUMBER	YR/SN	QTY	DESCRIPTION
1		87652757		1	CHASSI, Door Frame, Black; Frame Has Slotted Holes On Sides; If Used
1		87690544		1	PORTA, Door Frame, Black; Frame Has Square Holes On Sides; If Used
2		87642009		1	JANELA, Top
3		87600221		11	ESPAÇADOR, Glue Spacer
4		87642008		1	JANELA, Lower Window, RH
5		{87622768}		2	Bolt, M6 X 12
6		9804276		2	PORCA, M6 x 1, Flg, Cl 8
7		87657601		1	TRINCO, Latch; Used With Frame 87652757; Pin Length 26.6 mm (1.04 in)
7		87687979		1	TRINCO, Latch; Used With Frame 87690544; Pin Length 23.6 mm (.93 in)
8		87659267		1	JUNTAS, Bulb Seal; Used With Frame 87652757
8		9804276		1	PORCA, M6 x 1, Flg, Cl 8, Bulb Seal; Used With Frame 87690544
9		43362		1	PORCA, M8, Cl 10
10		86625263		2	ARRUELA PLANA, M8 x 20 x 1.6
11		87581669		1	PRISIONEIRO, Ball Stud
12		87581689		1	MOLA, Gas Spring
13		87658816		2	JUNTAS, Round Seal; Used With Frame 87652757
13A		87688733		1	ANEL DE VEDACAO, Used With Frame 87690544

PUERTA - CONJUNTO DEL INTERRUPTOR

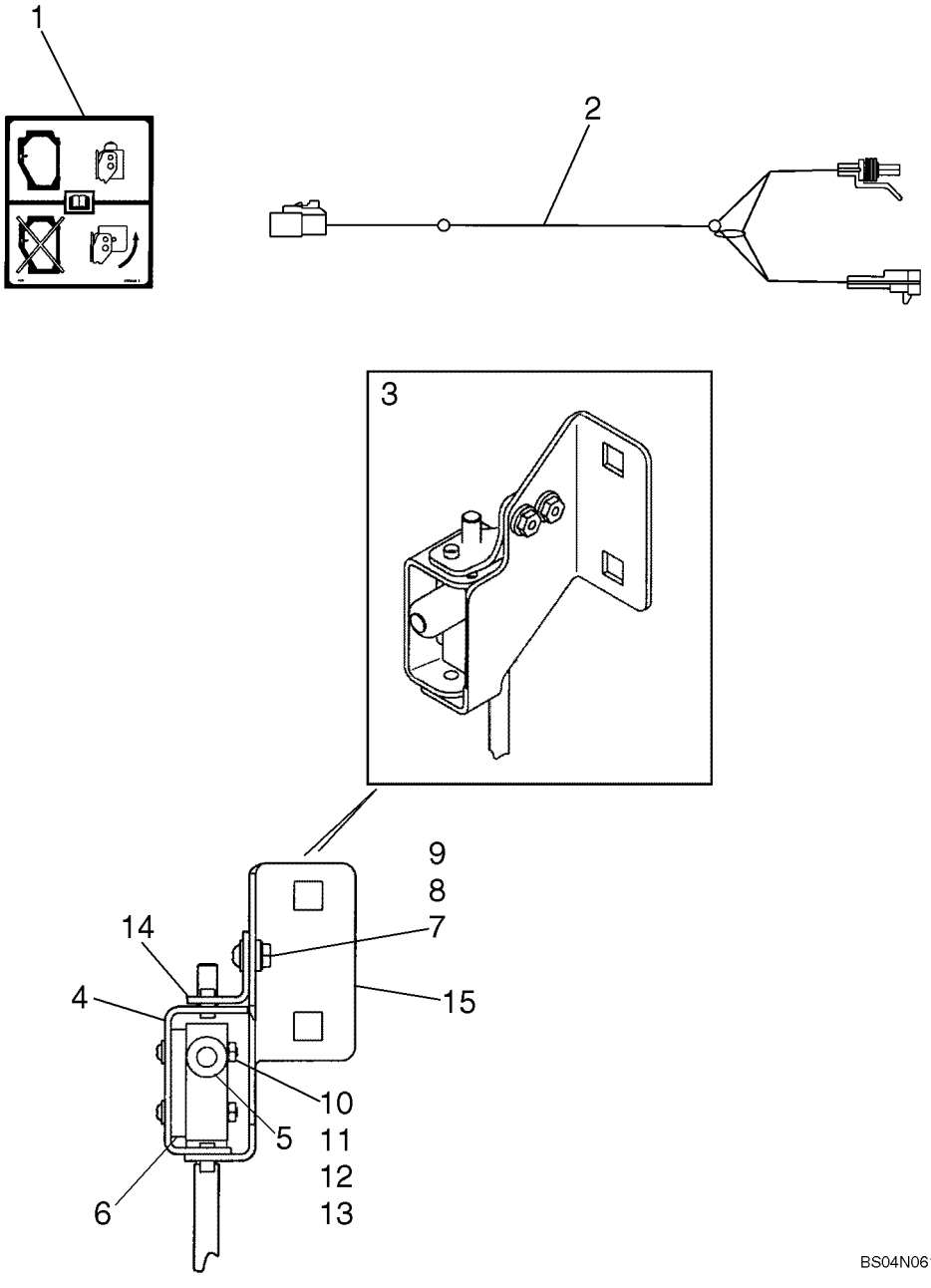

PUERTA - CONJUNTO DEL INTERRUPTOR

REF	FN	PART NUMBER	YR/SN	QTY	DESCRIPTION
		87052898		1	KIT, Door Switch Kit; Incl. 1 - 3
1		87053429		1	DECALCOMANIA, Door Switch
2		87050609		1	CHICOTE DE FIOS, Door Switch
2A		87685436		1	INTERRUPTOR, Door Switch Connector; Not Illustrated; Needed Only When Removing Rounded Skid Steer Door, When Removing Flat Door, Rotate Bracket 90 Dgrees To Depress Button
3		87051104		1	INTERRUPTOR, Door; Two Position; Incl. 4 - 15
4		87051257		1	SUPORTE CONJUNTO, Incl. 87051106, 87306763
		87051106		1	SUPORTE
		87306763		2	GUIA, M6 x 12
5		87051110		1	INTERRUPTOR, Plunger
6		87051108		1	ESPAÇADOR
7		87517845		2	PARAFUSO
8		88826		2	CONTRA PORCA, #10-24, GA
9		80707		2	ARRUELA PLANA, 3/16"
10		9635014		2	PARAFUSO, Cross Pan Hd, #6-32 x 1 1/4"
11		86511189		2	ARRUELA PLANA, #6
12		280471		2	ARRUELA-TRAVA, Ext, #6
13		88458		2	PORCA, #6-32
14		87051919		1	PIEZAS DE FIJACIÓN, Pivot Top; Incl. 87051109, 87051920
		87051109		2	ÊMBOLO
		87051920		1	SUPORTE CONJUNTO
15		87051105		1	SUPORTE

CABINE - VENTANAS

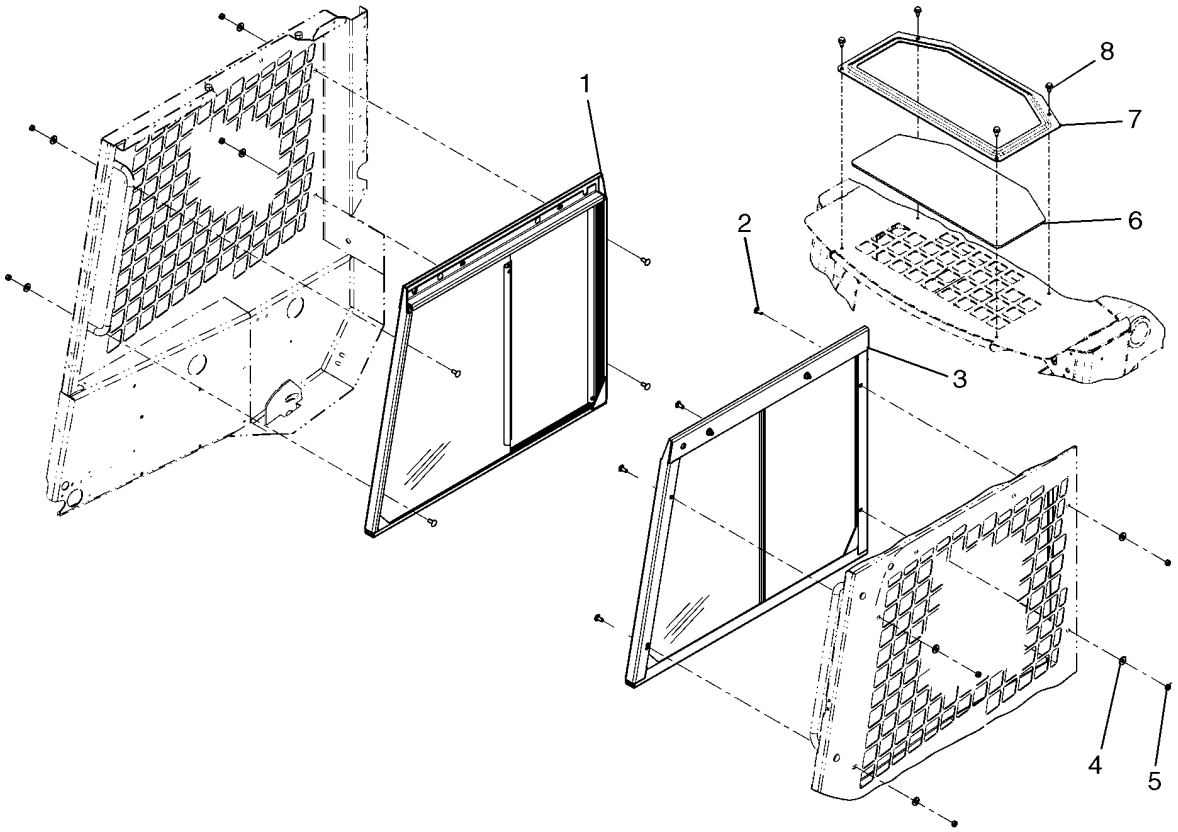

BS06M260

CABINE - VENTANAS

REF	FN	PART NUMBER	YR/SN	QTY	DESCRIPTION
1		87527113		1	JANELA, See Fig. 09-32
2		280497		8	PARAFUSO, Short NK, 5/16"-18 x 3/4", G5, Full Thd
3		86506611		1	JANELA, See Fig. 09-33
4		80664		8	ARRUELA PLANA, 5/16"
5		9635082		8	PORCA, 5/16"-18, G5
6		9809734		1	JANELA
7		86510832		1	TAMPA
8		86545825		4	PARAFUSO, Hex Wash Hd, 5/16" x 5/8"

CABINE - VENTANAS/TETO

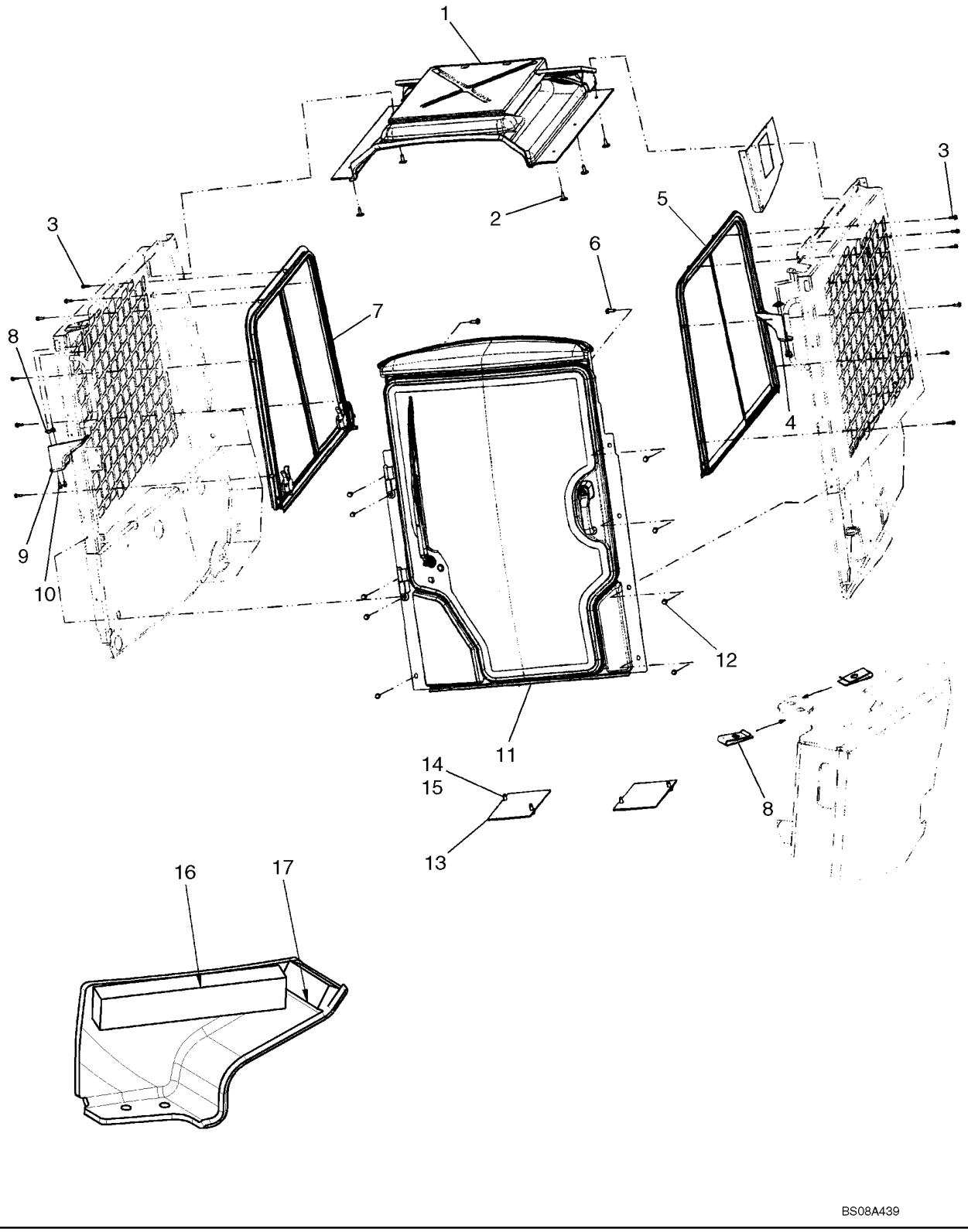

CABINE - VENTANAS/TETO

REF	FN	PART NUMBER	YR/SN	QTY	DESCRIPTION
1		87593952		1	REVESTIMENTO METÁLICO, Headliner; See Fig. 09-21A
		87640715		1	KIT, Cab Enclosure Kit; Incl. (1) Door Kit, (1) Floor Plate Kit, (1) Side Windows Kit
2		86620930		5-6	BOTÃO DE IMPULSO
3		9804256		12	PARAFUSO, Hex Flg, M6 x 20, 8.8
4		87632391		1	TUBO ISOLANTE, Cap, Console LH
5		87651304		1	VIDRO, Side Window, LH; See Fig. 09-14B
5		87592194		1	KIT, Side Windows Kit; Incl. (1) RH Window, (1) LH Window, And (12) Bolts
6		87029931		2	PARAFUSO, Screw, Hex Wash Hd, 5/16"-18 X 1"
7		87651306		1	VIDRO, Side Window, RH; See Fig. 09-14C
8		87594976		4	BOTÃO DE IMPULSO, U-Nut
9		87632390		1	TUBO ISOLANTE, Cap, Console RH
10		86050272		4	PARAFUSO, Hex Flg, M6 x 12, 8.8
11		REF		1	INSTRUCAO, Door With Door Frame; See Fig. 09-17A
12		9840344		9	PARAFUSO
13		87538914		2	PLAQUETA
14		280476		4	PARAFUSO, Hex Wash Hd, 3/8" x 1"
15		140045		4	ARRUELA MOLA, Belleville, M10
16		87661758		2	ESPUMA ISOLANTE, LH, RH Console Cap
17		87661759		2	ESPUMA ISOLANTE, LH, RH Console Cap

09-32		p1	03/08

CABINE - JANELA, DIREITA

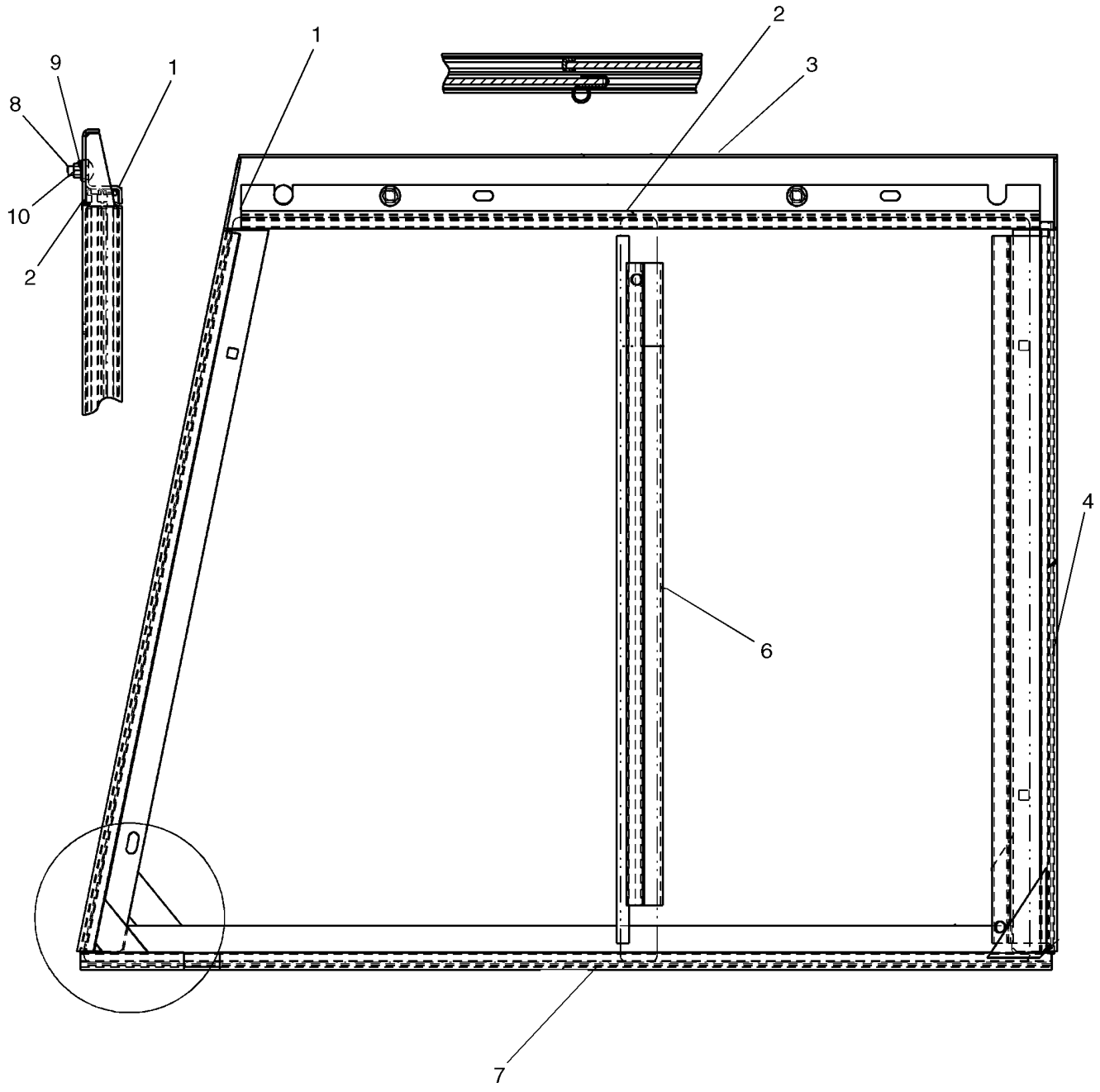

9

CABINE - JANELA, DIREITA

REF	FN	PART NUMBER	YR/SN	QTY	DESCRIPTION
		87527113		1	JANELA, Incl. 1 - 10
1		86506338		1	GUIA
2		86504356		1	CANAL
3		87527112		1	ESTRUTURA PARA-BRISA
4		86593688		1	JANELA
5		86504357		2	CANAL
6		86593707		1	JANELA
7		86504355		1	CANAL
8		280497		2	PARAFUSO, Short NK, 5/16"-18 x 3/4", G5, Full Thd
9		322358		2	ARRUELA MOLA, Belleville, M8
10		9635082		2	PORCA, 5/16"-18, G5

CABINE - JANELA, DIREITA

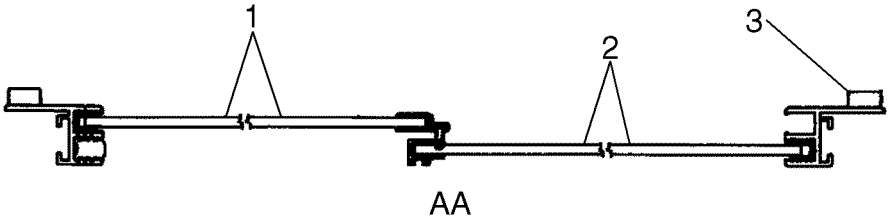

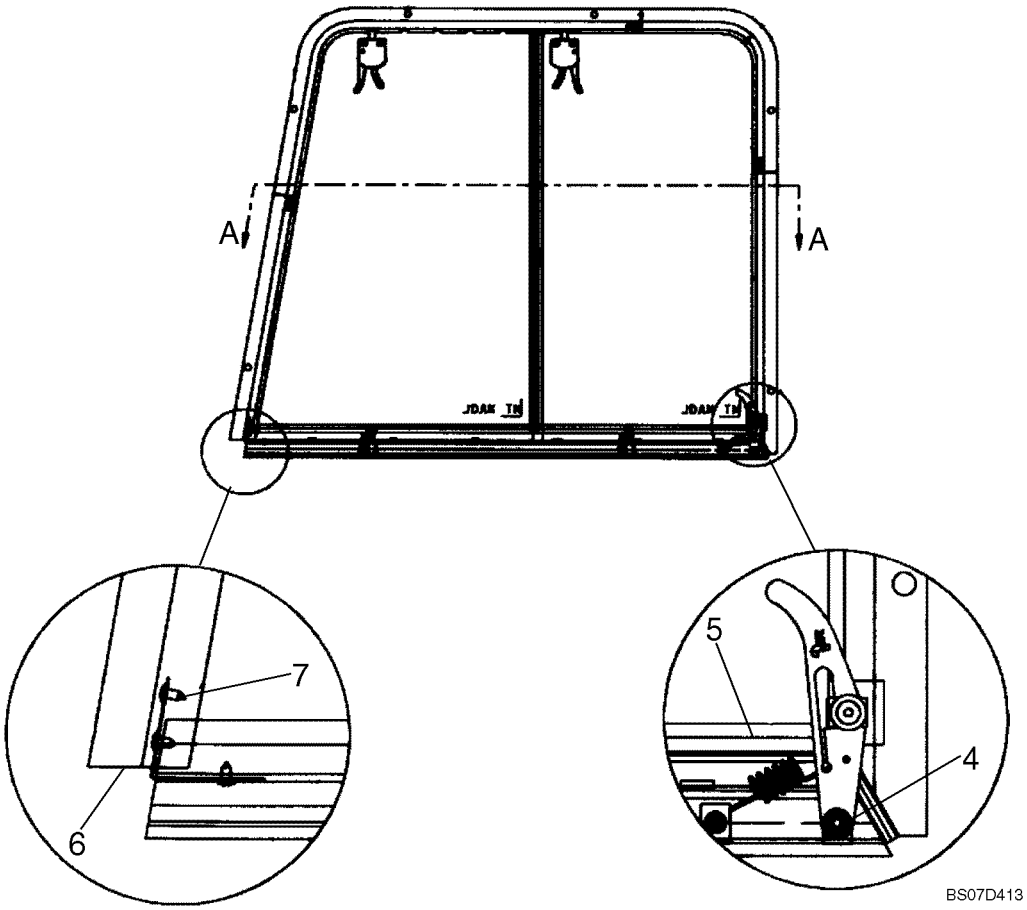

CABINE - JANELA, DIREITA

REF	FN	PART NUMBER	YR/SN	QTY	DESCRIPTION
		87651306			VIDRO, RH Side Window; Incl 1 - 7
1		87660660		1	VIDRO, See Figure 09-32B
2		87671506		1	VIDRO, See Figure 09-32C
3		NSS		1	BOLETIM INFORMATIVO, Foam Tape
4		87620981		1	PARAFUSO, Shoulder Bolt
5		87660664		1	BARRA, See Figure 09-32D
6		NSS		1	BOLETIM INFORMATIVO, Frame
7		{86634392}		2	Screw

09-32B		p1	03/08

CABINE - JANELA, DIREITA

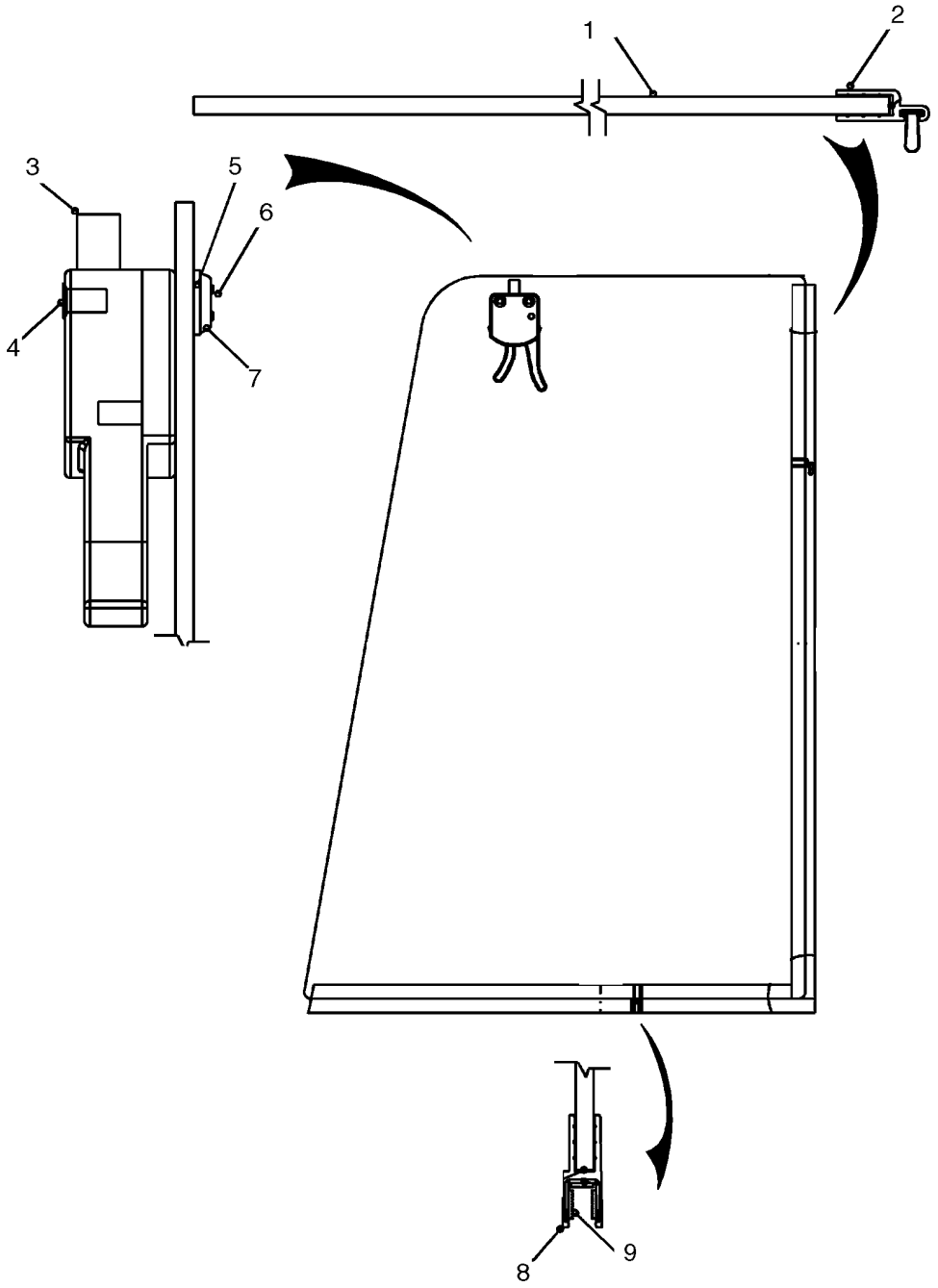

BS08B019

CABINE - JANELA, DIREITA

REF	FN	PART NUMBER	YR/SN	QTY	DESCRIPTION
		87660660		1	VIDRO, Side Window, RH; Incl. 1 - 9
1		NSS		1	BOLETIM INFORMATIVO, Glass
2		NSS		1	BOLETIM INFORMATIVO, Vertical Bar
3		87620986		1	TRINCO
4		87670693		2	PORCA, 8-32 x .375
5		87653402		2	BUCHA, .375
6		87670692		2	PARAFUSO, 8-32 x 1.250
7		87653400		2	ARRUELA PLANA, #8 CTSK
8		NSS		1	BOLETIM INFORMATIVO
9		NSS		1	BOLETIM INFORMATIVO

09-32C		p1	03/08

CABINE - JANELA, DIREITA

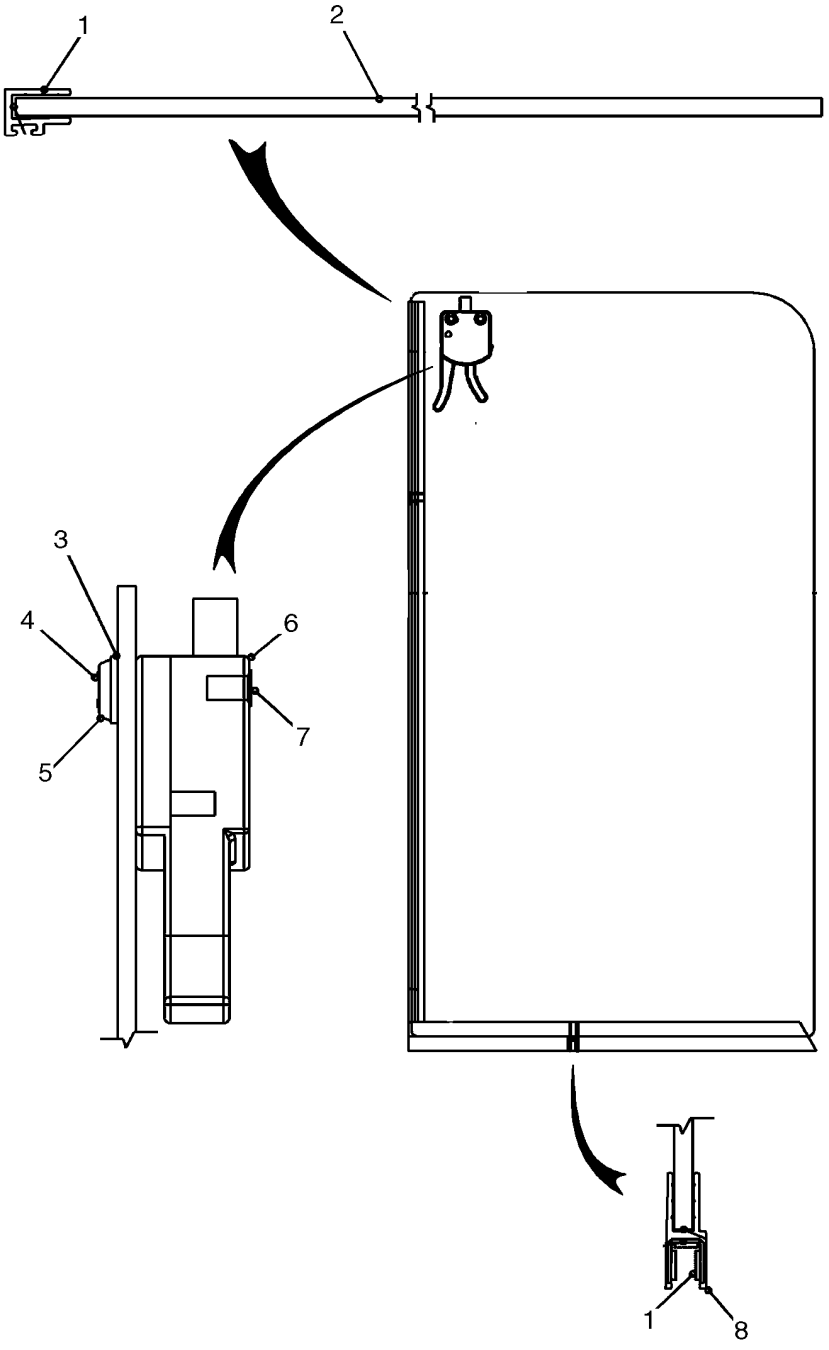

BS08B020

CABINE - JANELA, DIREITA

REF	FN	PART NUMBER	YR/SN	QTY	DESCRIPTION
		87671506		1	VIDRO, Side Window, RH; Incl. 1 - 8
1		NSS		1	BOLETIM INFORMATIVO, Vertical Bar
2		NSS		1	BOLETIM INFORMATIVO, Glass
3		87653402		2	BUCHA, .375
4		87670692		2	PARAFUSO, 8-32 x 1.250
5		87653400		2	ARRUELA PLANA, #8
6		87620986		1	TRINCO
7		87670693		2	PORCA, 8-32 x .375
8		NSS		1	BOLETIM INFORMATIVO

CABINE - JANELA, DIREITA

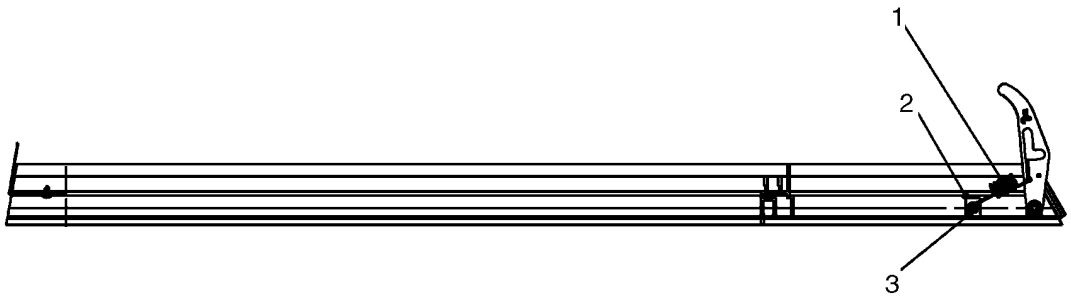

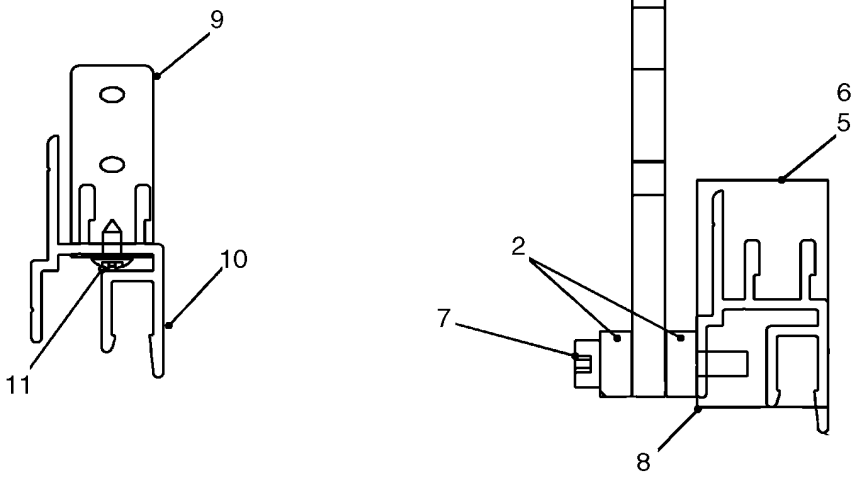

BS08B021

CABINE - JANELA, DIREITA

REF	FN	PART NUMBER	YR/SN	QTY	DESCRIPTION
		87660664		1	BARRA, Side Window, RH; Incl. 1 - 11
1		87620989		1	MOLA
2		87660654		2	ARRUELA PLANA, .433 OD x .220
3		86511920		1	PARAFUSO, Cross Pan Hd, #10-24 x 1/2"
4		87620990		1	MANILHA
5		NSS		1	BOLETIM INFORMATIVO, Gasket, Plate
6		NSS		1	BOLETIM INFORMATIVO, Foam, Tape
7		87673555		1	PARAFUSO
8		87670654		2	FIXADOR
9		87670653		1	DOBRADIÇA
10		NSS		1	BOLETIM INFORMATIVO, Bar, Mull
11		{86634392}		2	Screw, #8 x .375

CABINE - JANELA, ESQUERDA

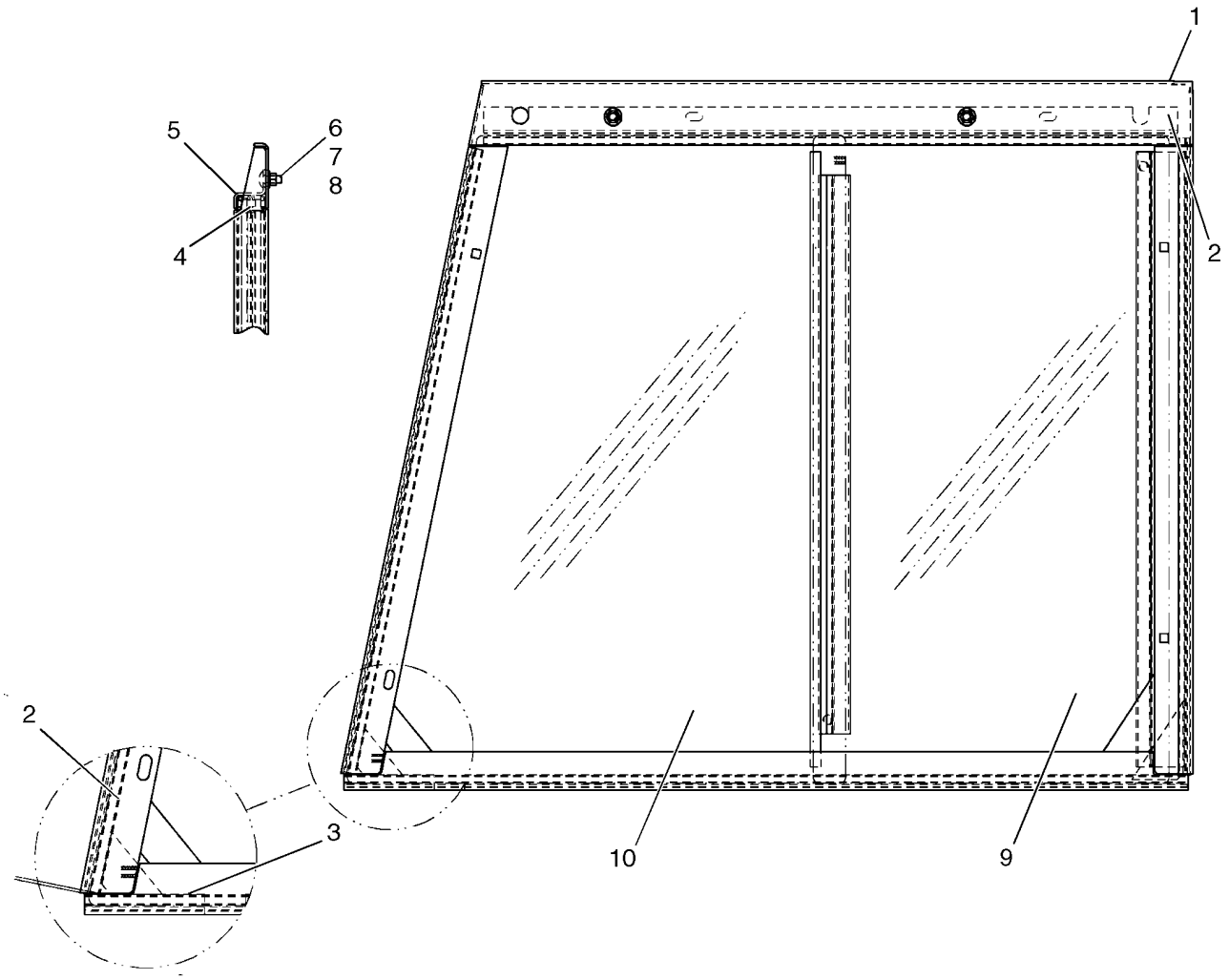

CABINE - JANELA, ESQUERDA

REF	FN	PART NUMBER	YR/SN	QTY	DESCRIPTION
		86506611		1	JANELA, Incl. 1 - 10
1		86504339		1	GUIA
2		86504357		2	CANAL
3		86504355		1	CANAL
4		86504356		1	CANAL
5		86506338		1	GUIA
6		280497		2	PARAFUSO, Short NK, 5/16"-18 x 3/4", G5, Full Thd
7		322358		2	ARRUELA MOLA, Belleville, M8
8		9635082		2	PORCA, 5/16"-18, G5
9		86593688		1	JANELA
10		86593705		1	JANELA

CABINE - JANELA, ESQUERDA

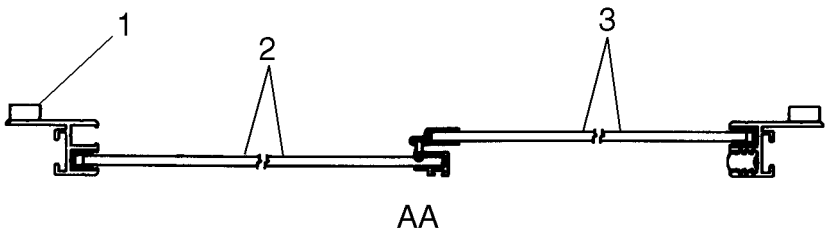

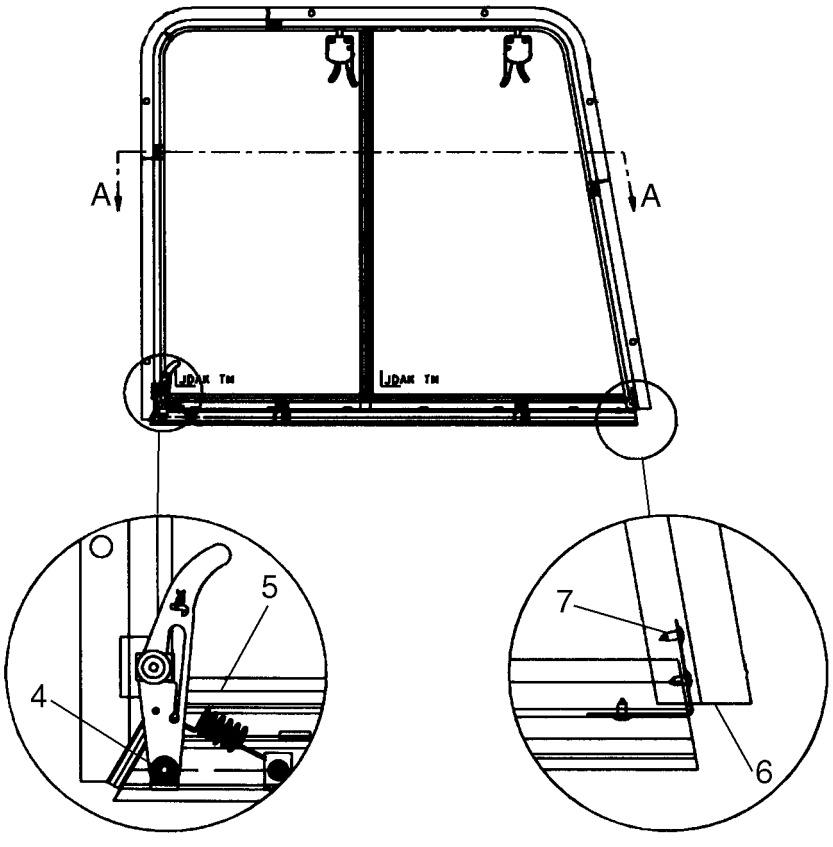

CABINE - JANELA, ESQUERDA

REF	FN	PART NUMBER	YR/SN	QTY	DESCRIPTION
		87651304		1	VIDRO, Side Window, LH; Incl. 1 - 7
1		NSS		1	BOLETIM INFORMATIVO, Foam Tape
2		87660656		1	VIDRO, See Figure 09-33C
3		87660657		1	VIDRO, See Figure 09-33D
4		87620981		1	PARAFUSO, Shoulder Bolt
5		87660662		1	BARRA, See Figure 09-33E
6		NSS		1	BOLETIM INFORMATIVO, Frame
7		{86634392}		2	Screw

09-33B		p1	03/08

CABINE - SUPERIOR VENTANILLA

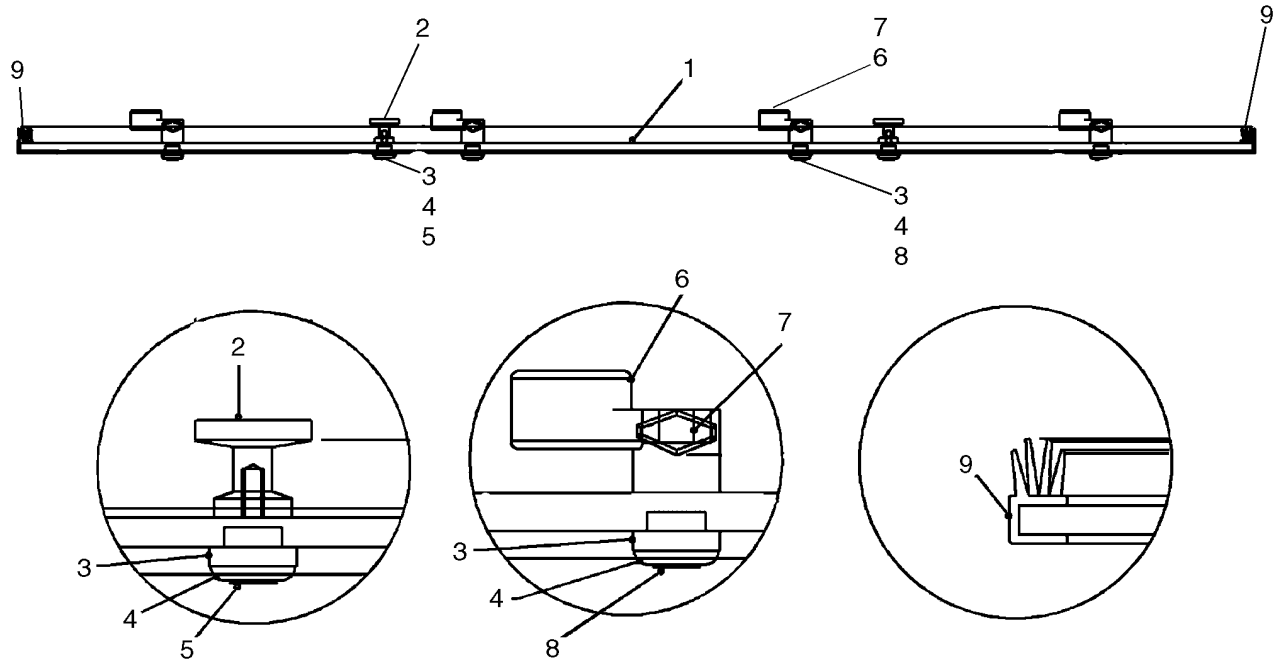

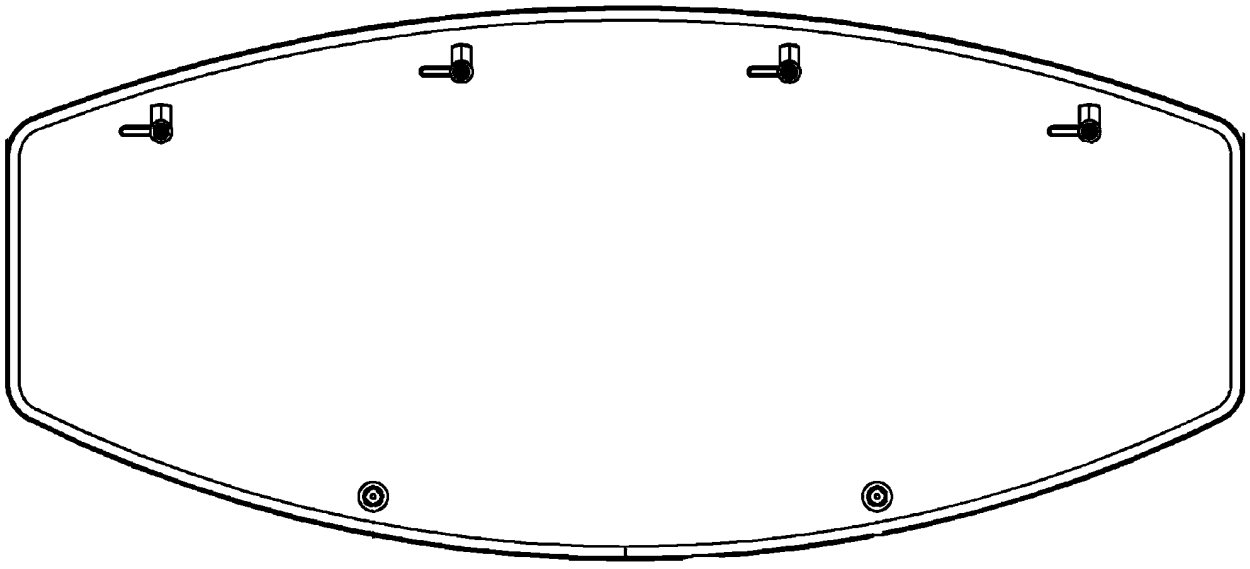

BS07F138

9

CABINE - SUPERIOR VENTANILLA

REF	FN	PART NUMBER	YR/SN	QTY	DESCRIPTION
		87640695		1	KIT, Top Window Kit; Incl. 1 - 9 And Instructions
		87665686		1	VIDRO, Top Window; Incl. 1 - 9
		87682304		1	VIDRO, Top Window; Incl. 1 - 9; Replaced 87665686 in Kit 87640965
1		NSS		1	BOLETIM INFORMATIVO, Polycarbonate Top Window
2		87653403		2	PRENDEDOR
3		87653402		8	BUCHA, Step Bushing .375
4		87653400		8	ARRUELA PLANA, Countersink #8
5		87653401		2	PARAFUSO, 8-32 X .625
6		87653404		6	TRINCO, 1/4 Turn
7		87304		6	PORCA, #10-24, Hex
8		87671901		6	PARAFUSO, 10-24 X 1.125
9		87673441		1	ANEL DE VEDACAO, Weather Seal

CABINE - JANELA, ESQUERDA

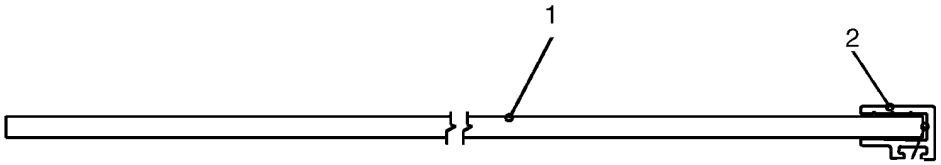

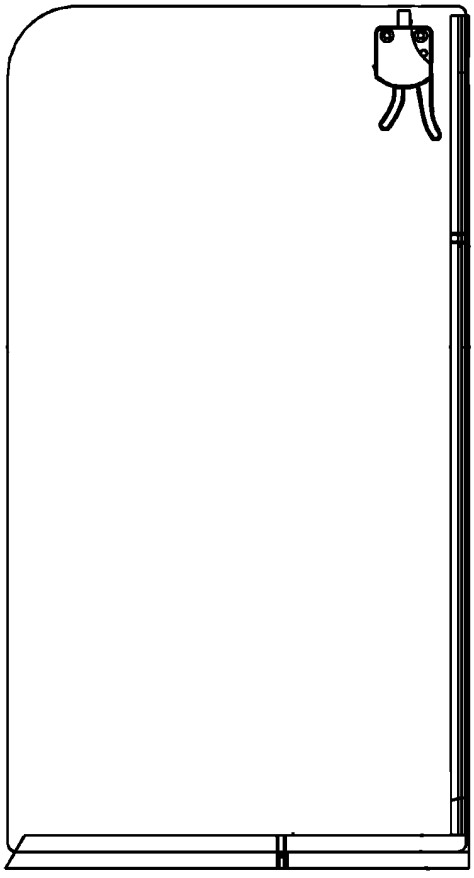

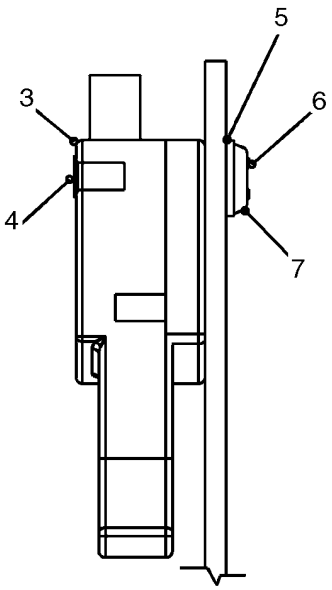

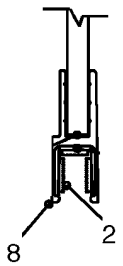

BS08B024

CABINE - JANELA, ESQUERDA

REF	FN	PART NUMBER	YR/SN	QTY	DESCRIPTION
		87660656		1	VIDRO, Side Window, LH; Incl. 1 - 8
1		NSS		1	BOLETIM INFORMATIVO, Glass
2		NSS		1	BOLETIM INFORMATIVO, Vertical Bar
3		87620986		1	TRINCO
4		87670693		2	PORCA, 8-32 x .375
5		87653402		2	BUCHA, .375
6		87670692		2	PARAFUSO, 8-32 x 1.250
7		87653400		2	ARRUELA PLANA, #8 CTSK
8		NSS		1	BOLETIM INFORMATIVO

09-33D		p1	03/08

CABINE - JANELA, ESQUERDA

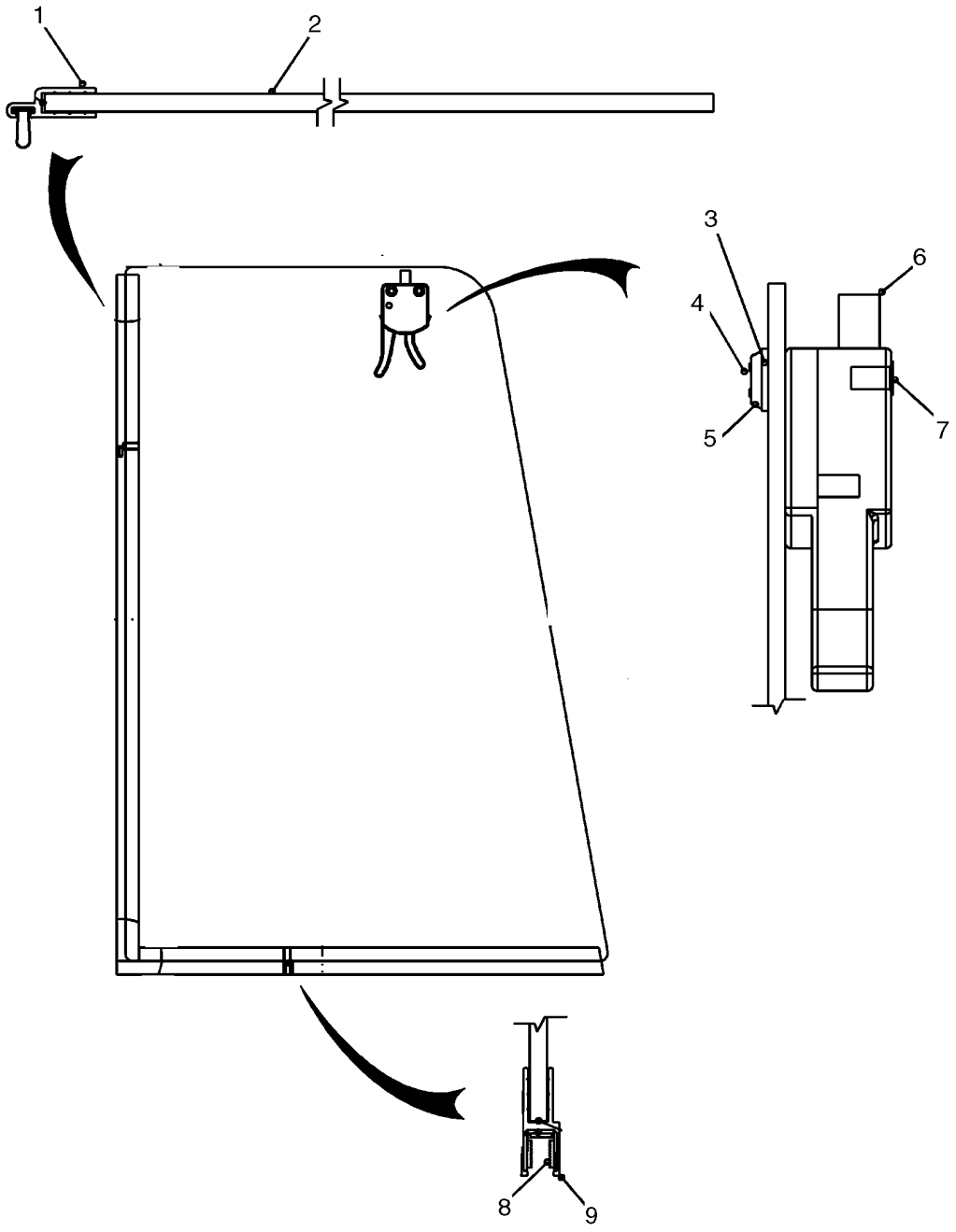

BS08B023

CABINE - JANELA, ESQUERDA

REF	FN	PART NUMBER	YR/SN	QTY	DESCRIPTION
		87660657		1	VIDRO, Side Window, LH; Incl. 1 - 9
1		NSS		1	BOLETIM INFORMATIVO, Vertical Bar
2		NSS		1	BOLETIM INFORMATIVO, Glass
3		87653402		2	BUCHA, .375
4		87670692		2	PARAFUSO, 8-32 x 1.250
5		87653400		2	ARRUELA PLANA, #8
6		87620986		1	TRINCO
7		87670693		2	PORCA, 8-32 x .375
8		NSS		1	BOLETIM INFORMATIVO
9		NSS		1	BOLETIM INFORMATIVO

CABINE - JANELA, ESQUERDA



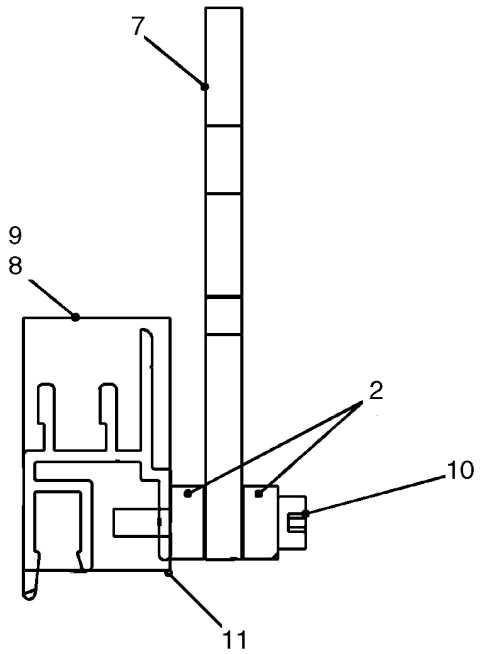

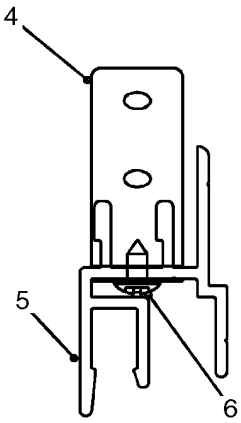

BS08B022

CABINE - JANELA, ESQUERDA

REF	FN	PART NUMBER	YR/SN	QTY	DESCRIPTION
		87660662		1	BARRA, Side Window, LH; Incl. 1 - 11
1		87620989		1	MOLA
2		87660654		2	ARRUELA PLANA, .433 OD x .220
3		86511920		1	PARAFUSO, Cross Pan Hd, #10-24 x 1/2"
4		87670653		1	DOBRADIÇA
5		NSS		1	BOLETIM INFORMATIVO, Bar, Mull
6		{86634392}		2	Screw, #8 x .375
7		87620990		1	MANILHA
8		NSS		1	BOLETIM INFORMATIVO, Foam, Tape
9		NSS		1	BOLETIM INFORMATIVO, Gasket, Plate
10		87673555		1	PARAFUSO
11		87670654		2	FIXADOR

PLACAS, SUELO

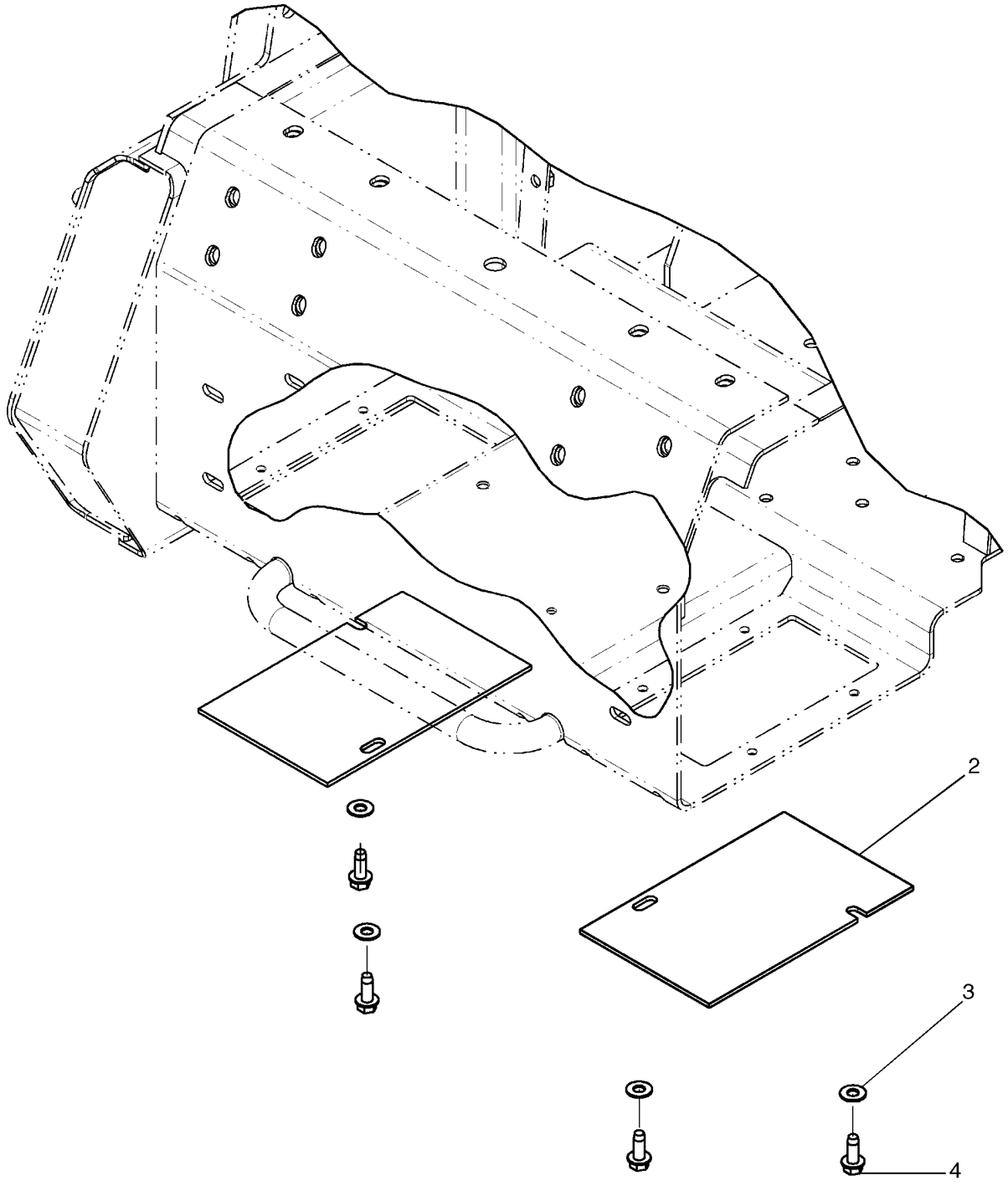

PLACAS, SUELO

REF	FN	PART NUMBER	YR/SN	QTY	DESCRIPTION
1		86590098		1	KIT, Floor Plate Kit; Incl. 2 - 5
2		87538914		2	PLAQUETA
3		140045		4	ARRUELA MOLA, Belleville, M10
4		280476		4	PARAFUSO, Hex Wash Hd, 3/8" x 1"

09-35		p1	11/06

PUERTA, TRASERA

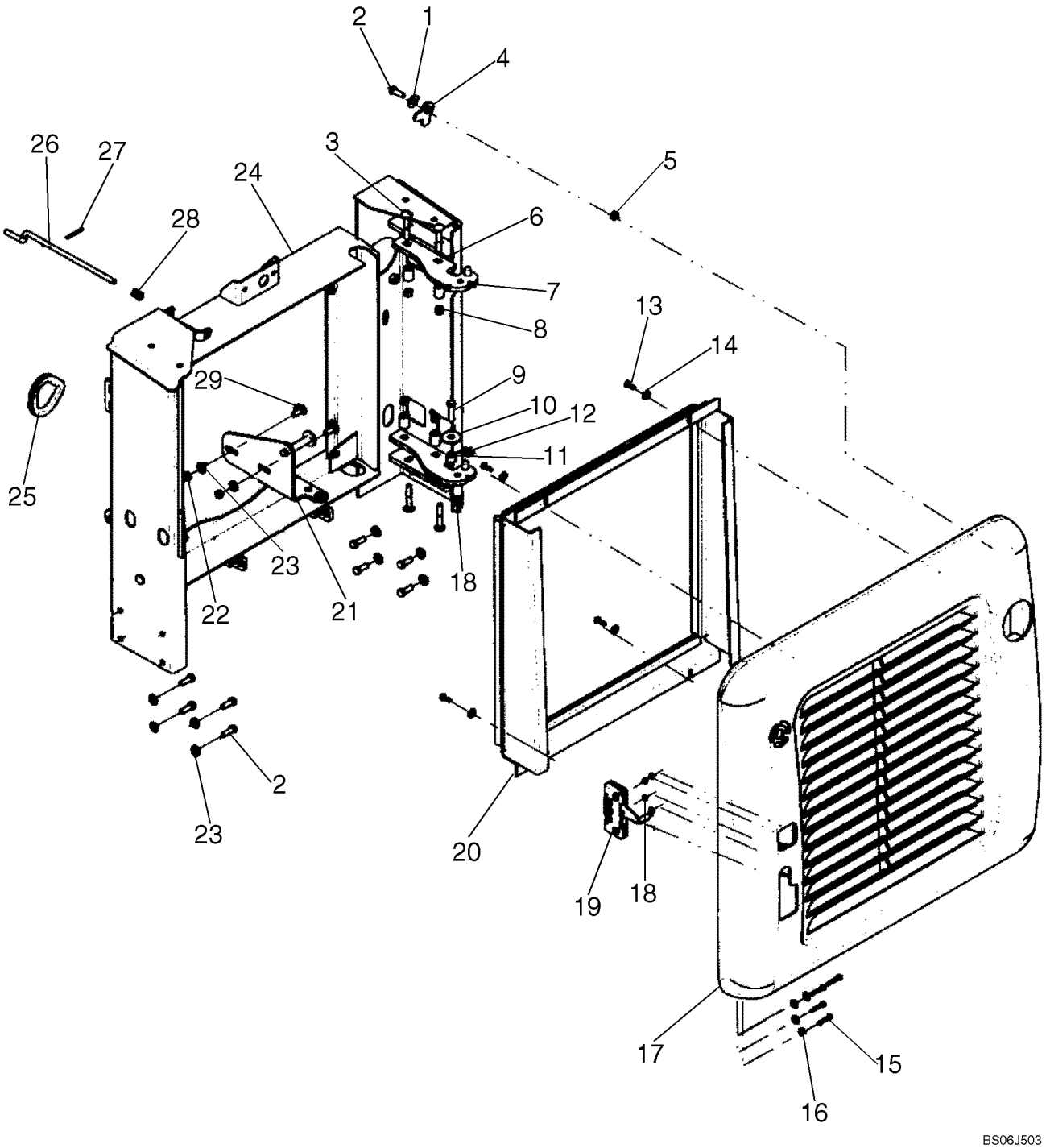

PUERTA, TRASERA

REF	FN	PART NUMBER	YR/SN	QTY	DESCRIPTION
1		80702		2	ARRUELA PLANA, 3/8"
2		88206		11	PARAFUSO, Hex, 3/8"-16 x 1", G5, Full Thd
3		280514		4	PARAFUSO, Short NK, 3/8"-16 x 2 1/4", G5
4		87455317		1	BRAÇO
5		87352559		1	ESPAÇADOR
6		87015605		2	PLACA
7		87047451		4	ESPAÇADOR
8		9637692		5	CONTRA PORCA, 3/8"-16, GB
9		88044		1	PARAFUSO, Hex, 3/8"-16 x 1 1/2", G5
10		225930		1	ARRUELA PLANA
11		103789		1	ESPAÇADOR
12		86611853		1	ARRUELA PLANA
13		9707580		6	PARAFUSO, Hex, 1/4"-20 x 3/4", G5, Full Thd
14		80701		4	ARRUELA PLANA, 1/4"
15		43117		4	PARAFUSO, Hex, M6 x 30, 8.8
16		86624182		4	ARRUELA PLANA, M6 x 18 x 1.6
17		87360257		1	TAMPA TRASEIRA, Door, Rear; Gray
18		86588450		4	ARRUELA PLANA, M6
19		87456359		1	TRINCO
20		87429652		1	CHASSI
21		87380283		1	SUPORTE, Stricker Bracket
22		9628503		2	PORCA, 3/8"-16, G5
23		140045		14	ARRUELA MOLA, Belleville, M10
24		87542886		1	RADIADOR ARREFECIMENTO, Radiator Support
25		291186		1	FORRO
26		87388452		1	HASTE DE REGULAGEM, Rod, Hood
27		87578		1	PINO DE FIXAÇÃO, 3/16" x 1 3/4", Slotted
28		86539686		1	MOLA
29		88682		2	PARAFUSO, Short NK, 3/8"-16 x 1", G5

09-36		p1	03/08

CONJUNTO DA CAPOTA TRASEIRA

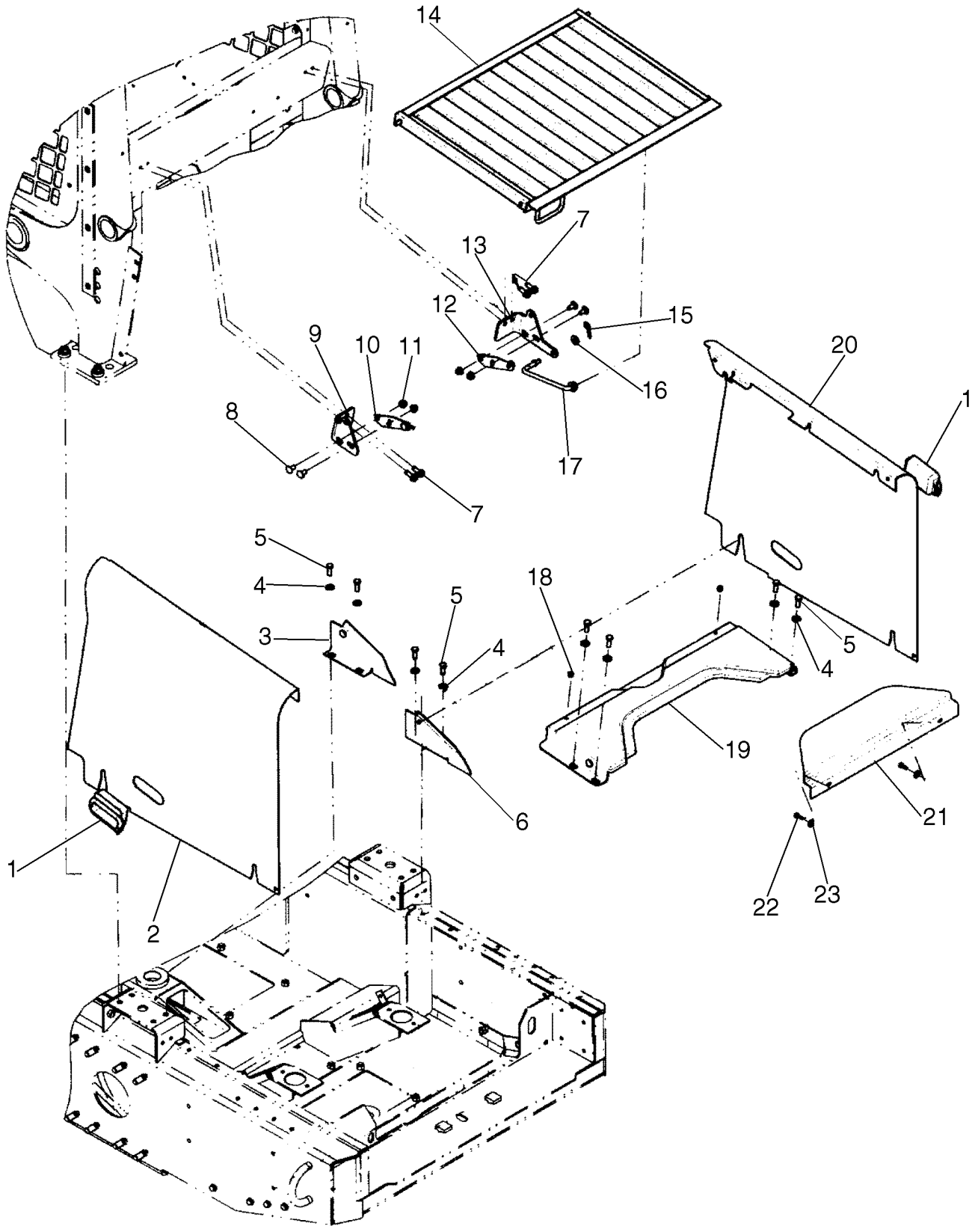

9

CONJUNTO DA CAPOTA TRASEIRA

REF	FN	PART NUMBER	YR/SN	QTY	DESCRIPTION
1		3962571		2	MANILHA
2		87360616		1	Placa Lateral, Sidesheet, LH; Yellow
3		86591163		1	GUIA
4		140045		4	ARRUELA MOLA, Belleville, M10
5		88206		6	PARAFUSO, Hex, 3/8"-16 x 1", G5, Full Thd
6		86591164		1	GUIA, RH; Yellow
7		280476		4	PARAFUSO, Hex Wash Hd, 3/8" x 1"
8		86508748		4	PARAFUSO, Short NK, 3/8"-16 x 3/4", G5, Full Thd
9		87360559		1	SUPORTE, Bracket; Gray
10		9844538		1	GUIA, LH; Gray
11		247780		4	PORCA, Flg, USR, 3/8"-16
12		9844539		1	GUIA, RH
13		87360560		1	SUPORTE, Bracket; Gray
14		87386304		1	JANELA (TAMPA), Lid; Yellow
15		216698		1	GRAMPO
16		80702		2	ARRUELA PLANA, 3/8"
17		87603956		1	HASTE, Replaces 9829702
18		523275		2	PÁRA-CHOQUE
19		87431190		1	PLACA
20		87360610		1	CAPA METÁLICA, Sidesheet, RH; Yellow
21		87461395		1	TAMPA
22		9707580		6	PARAFUSO, Hex, 1/4"-20 x 3/4", G5, Full Thd
23		80701		2	ARRUELA PLANA, 1/4"

PEGAS

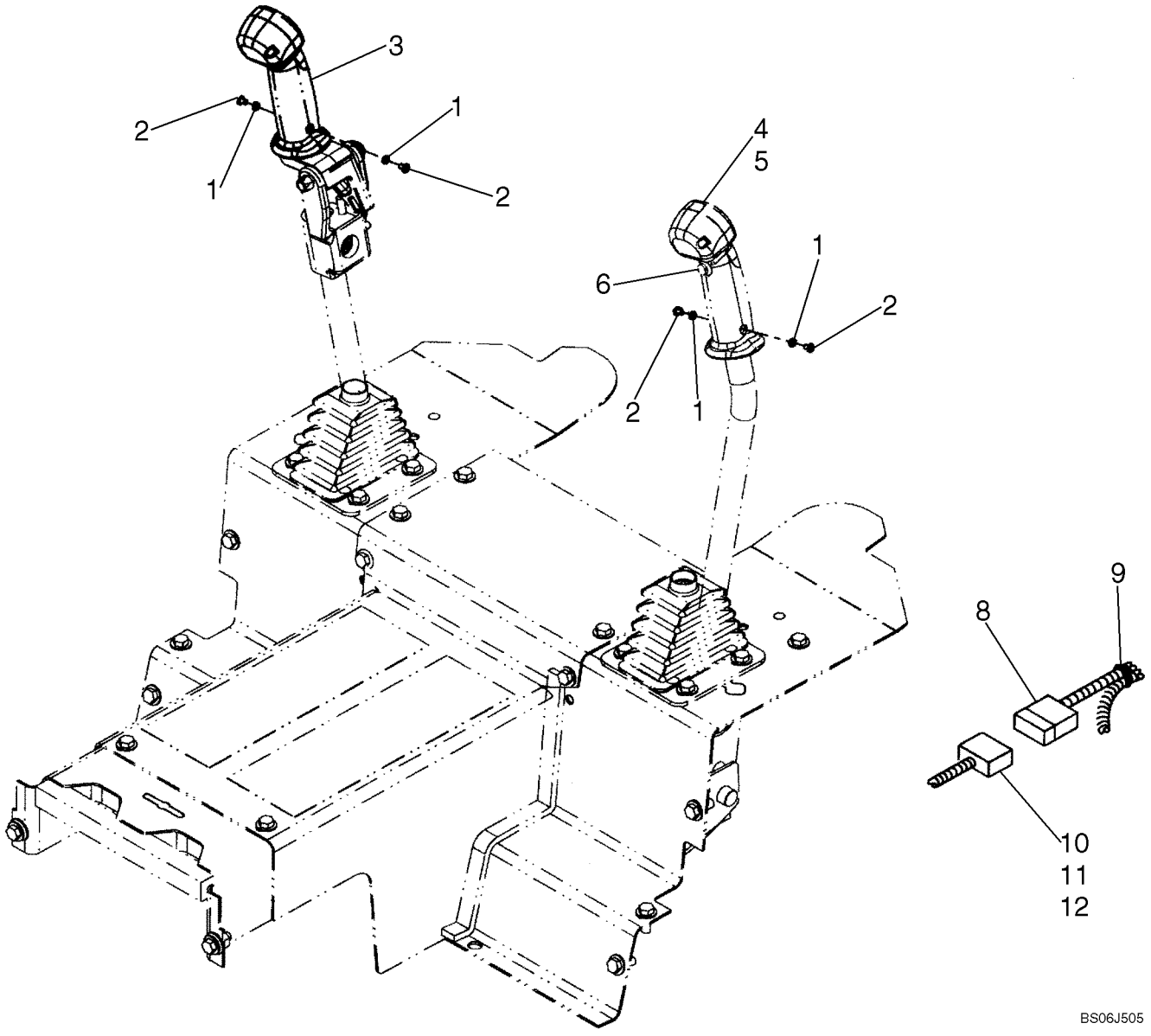

PEGAS

REF	FN	PART NUMBER	YR/SN	QTY	DESCRIPTION
1		80684		4	ARRUELA-TRAVA, #10
2		87365342		4	PARAFUSO
3		87353688		1	MANILHA, Incl. 5; See Fig. 09-38
4		87353708		1	MANILHA, Incl. 5, 6; L175 Models; See Fig. 09-38
4		87353709		1	MANILHA, Incl. 5, 6, 7; Two Speed Models; See Fig. 09-38
5		86837247		2	PARAFUSO, #4-40 x 1 1/4", w/LW
6		87427352		1	INTERRUPTOR
7		87447407		1	INTERRUPTOR, 2 Speed On/Off; Not Illustrated
8		87525075		1	CHICOTE, Harness, Adapter
9		263117		6	TIRA DE CABO, .14" x 11 1/2"
10		900367		10	BUJÃO
11		86593898		1	CONEXÃO
12		86593899		1	CORTE DE TECIDO

09-38		p1	03/08

ALAVANCAS

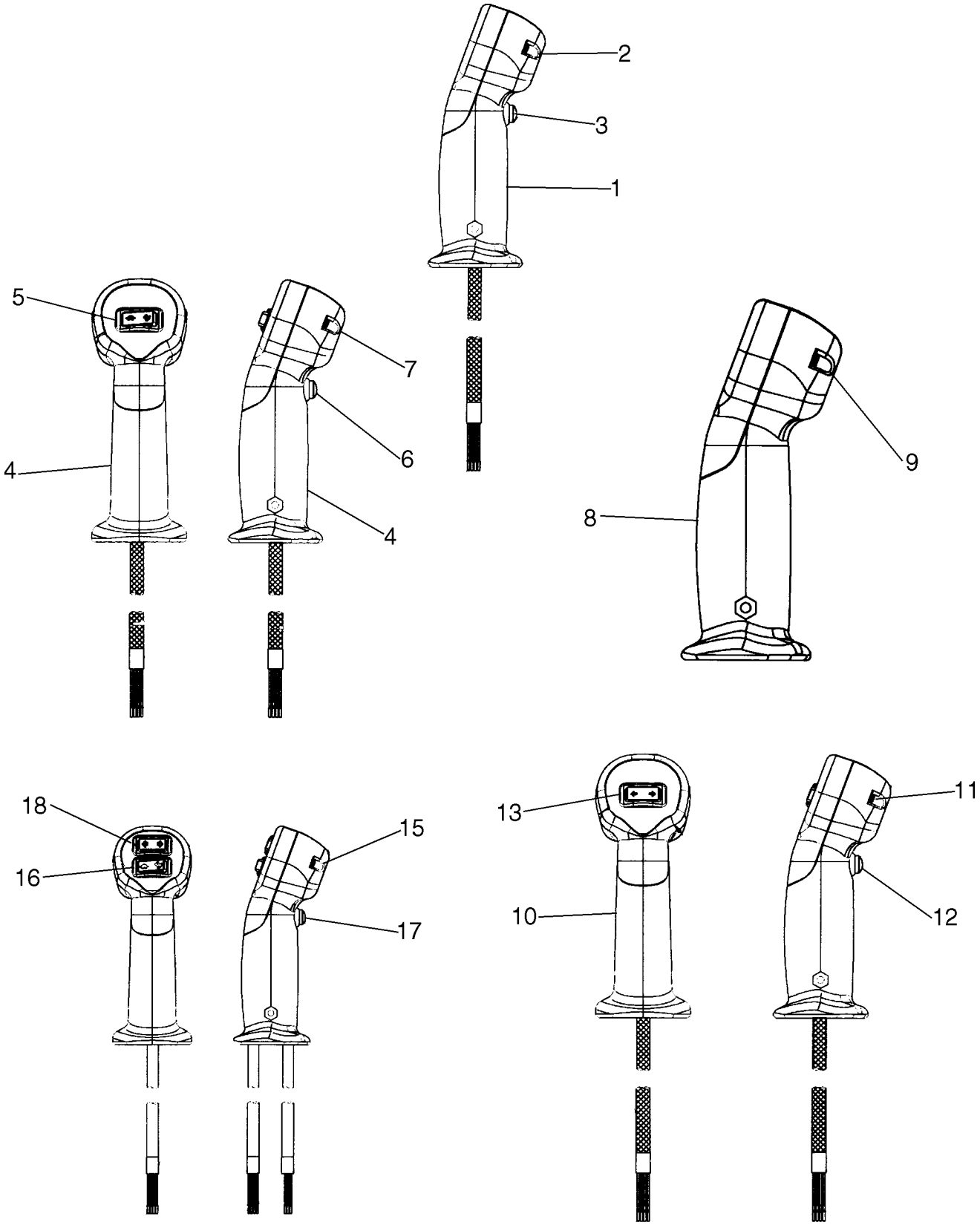

ALAVANCAS

REF	FN	PART NUMBER	YR/SN	QTY	DESCRIPTION
1		87353708		1	MANILHA, Incl. 2, 3; L175 Models
2		86837247		2	PARAFUSO, #4-40 x 1 1/4", w/LW
3		87427352		1	INTERRUPTOR, Horn
4		87353709		1	MANILHA, Incl. 5, 6, 7; Two Speed Models
5		87447407		1	INTERRUPTOR, 2 Speed On/Off
6		87427352		1	INTERRUPTOR, Horn
7		86837247		2	PARAFUSO, #4-40 x 1 1/4", w/LW
8		87353688		1	MANILHA, Incl. 9
9		86837247		2	PARAFUSO, #4-40 x 1 1/4", w/LW
10		87353710		1	MANILHA, Incl. 11 - 13; Horn And Turn Signals
11		86837247		2	PARAFUSO, #4-40 x 1 1/4", w/LW
12		87427352		1	INTERRUPTOR, Horn
13		87427353		1	INTERRUPTOR, Turn Signal
14		87353711		1	MANILHA, Right Hand, Horn, Two Speed, And Turn Signal; Incl. 15 - 18
15		86837247		2	PARAFUSO, #4-40 x 1 1/4", w/LW
16		87447407		1	INTERRUPTOR, Two Speed On/Off
17		87427352		1	INTERRUPTOR, Trigger On/Off
18		87427353		1	INTERRUPTOR, Turn Signal
		86597251		AR	BUJÃO, Rectangular Blank Switch Cover; If Needed

ALAVANCAS, MODELOS COM CONTROLO AUTOMÁTICO, CONTROLE AUXILIAR

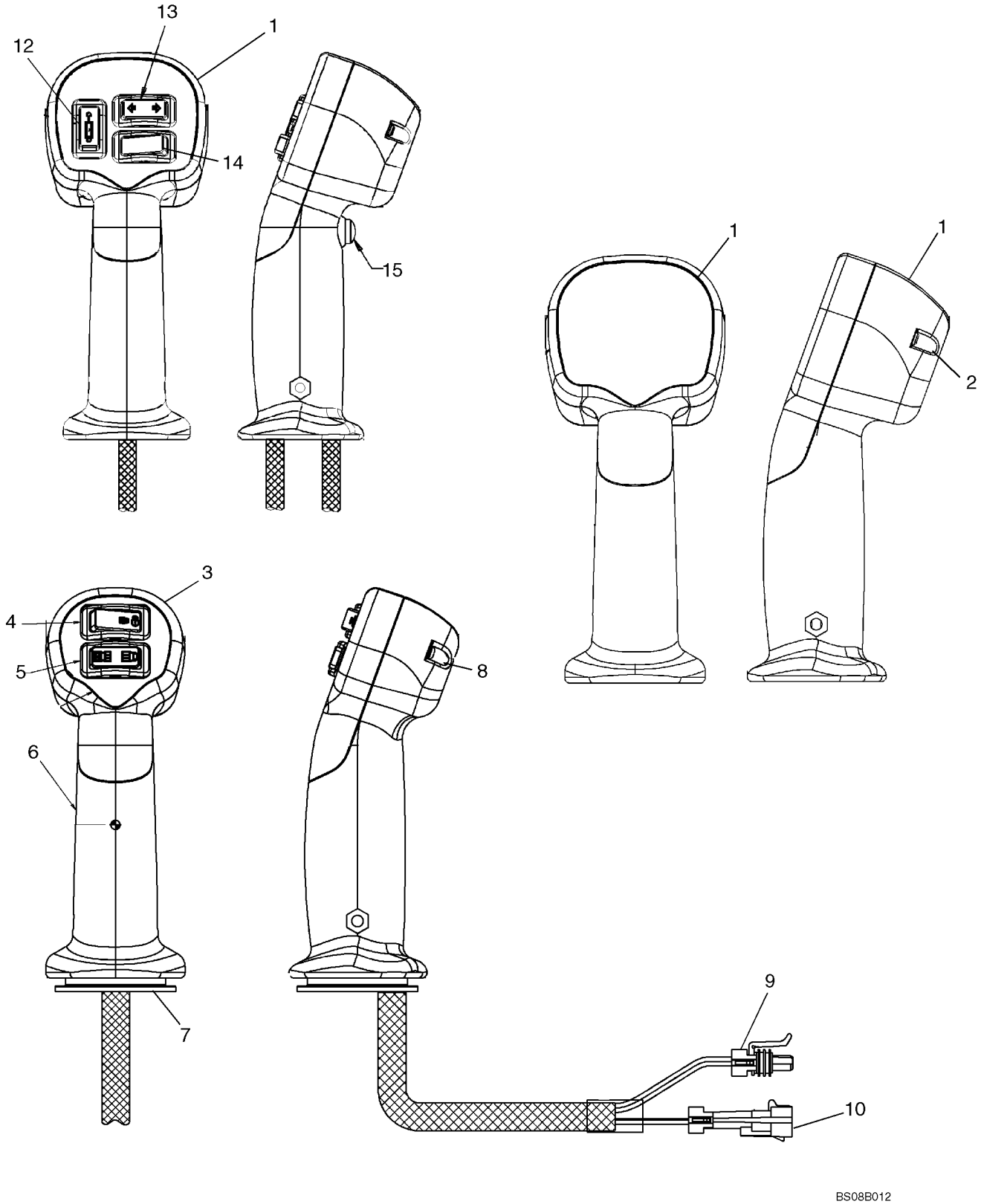

ALAVANCAS, MODELOS COM CONTROLO AUTOMÁTICO, CONTROLE AUXILIAR

REF	FN	PART NUMBER	YR/SN	QTY	DESCRIPTION
1		87365501		1	MANILHA, Medium Universal Grip; Incl 2
2		86837247		2	PARAFUSO, #4-40 x 1 1/4", w/LW
3		87663138		1	EMPUNHADURA, RH; Incl 4- 10
4		87458601		1	INTERRUPTOR, Switch; Hydrodraulic Attachment On/Off
5		87440121		1	INTERRUPTOR, Switch; Hydrodraulic Attachment M-O-M
6		87582391		1	MANILHA, Base Handle
7		87527964		1	ADAPTADOR
8		86837247		2	PARAFUSO, #4-40 x 1 1/4", w/LW
9		256342A1		1	CONECTOR
10		256341A1		1	CONECTOR
11		87353712		1	MANILHA, Incl 12 - 15
12		87427686		1	INTERRUPTOR, Secondary Aux Hyd Switch
13		87427353		1	INTERRUPTOR, Turn Signal
14		87447407		1	INTERRUPTOR, Two Speed On-Off
15		86837247		2	PARAFUSO, #4-40 x 1 1/4", w/LW

PEGAS - MODELOS COM CONTROLO AUTOMÁTICO

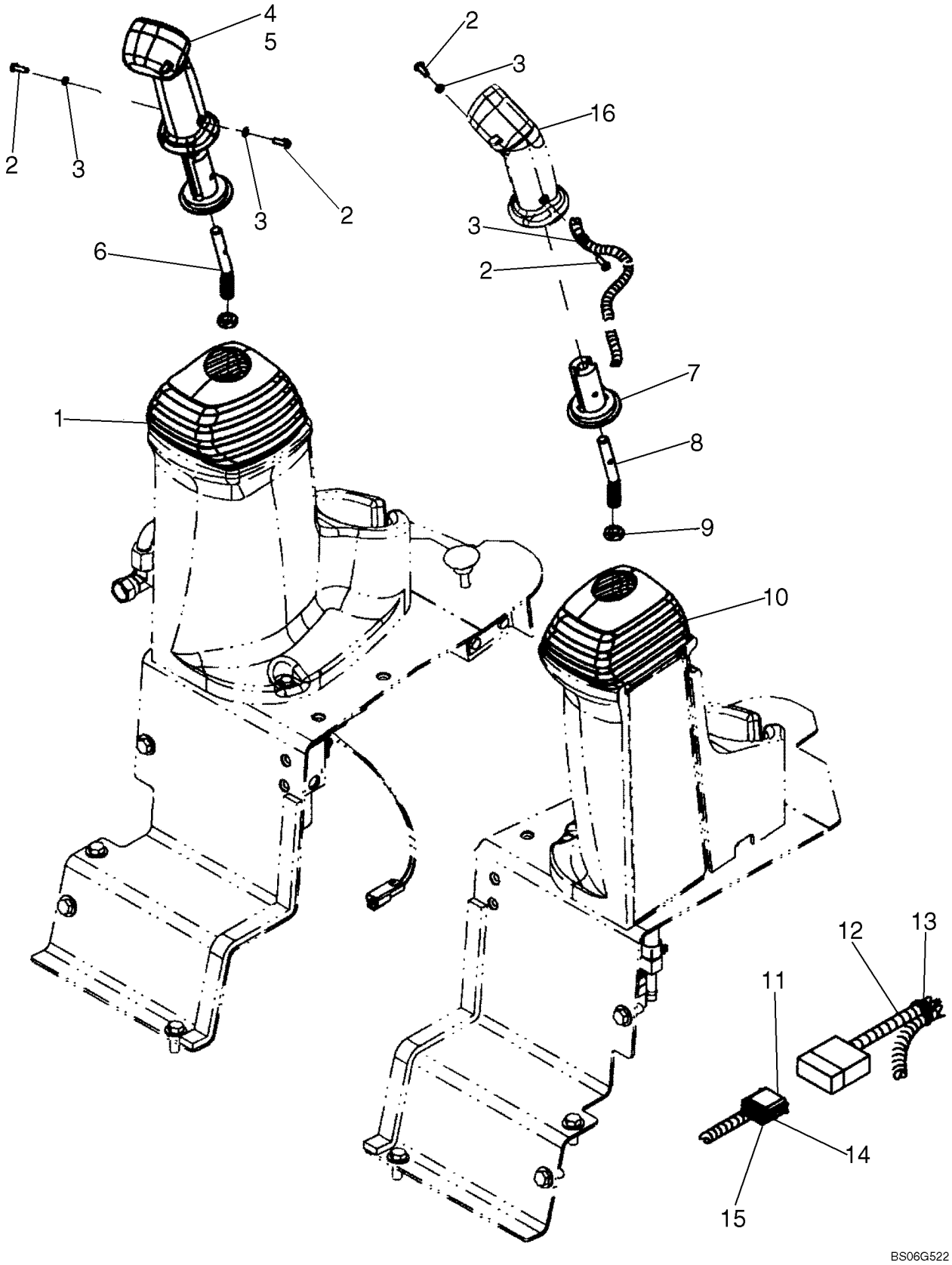

PEGAS - MODELOS COM CONTROLO AUTOMÁTICO

REF	FN	PART NUMBER	YR/SN	QTY	DESCRIPTION
1		87357221		1	CAPA, RH Pilot
2		87534744		4	BOTÃO DE IMPULSO, Screw; If Used
2		87742597		4	BOTÃO DE IMPULSO, Screw, Hex Soc, 10-32 X 5/8 Scotchgrip; If Used
3		80684		4	ARRUELA-TRAVA, #10
4		87353688		1	MANILHA, See Fig. 09-37
5		86837247		1	PARAFUSO, #4-40 x 1 1/4", w/LW
6		87527963		1	HASTE, 15 Deg. Bend; If Used
6		87619017		1	HASTE, 20 Deg. Bend; If Used
7		87527964		2	ADAPTADOR, Adapter, Handle
8		87527962		1	HASTE, 15 Deg. Bend; If Used
8		87619016		1	HASTE, 20 Deg. Bend; If Used
9		323238		2	PORCA, Thin, M12 x 1.75, Cl 05
10		87357222		1	CAPA, LH Pilot
11		86593898		1	CONEXÃO
12		87525075		1	CHICOTE, Adapter, Harness
13		263117		6	TIRA DE CABO, .14" x 11 1/2"
14		900367		10	BUJÃO
15		86593899		1	CORTE DE TECIDO
16		87353688		1	MANILHA, See Fig. 09-38

PEGAS - MODELOS COM CONTROLO AUTOMÁTICO, EH CONTROLE AUXILIAR

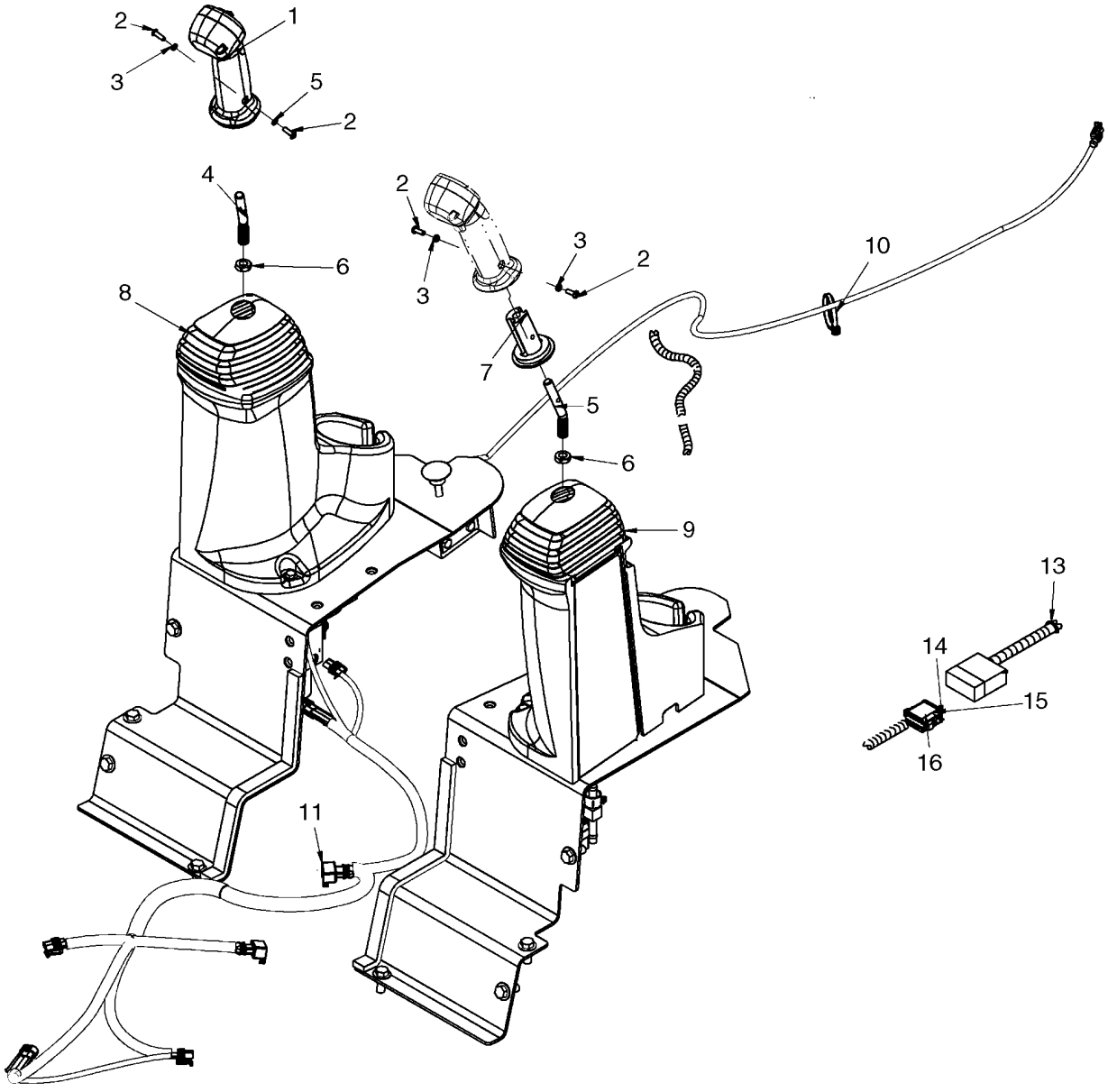

PEGAS - MODELOS COM CONTROLO AUTOMÁTICO, EH CONTROLE AUXILIAR

REF	FN	PART NUMBER	YR/SN	QTY	DESCRIPTION
1		87663138		1	EMPUNHADURA, See Fig. 09-38A
2		87534744		4	BOTÃO DE IMPULSO, Screw; If Used
2		87742597		4	BOTÃO DE IMPULSO, Hex Soc, 10-32 x 5/16 Scotchgrip; If Used
3		80684		4	ARRUELA-TRAVA, #10
4		87619016		1	HASTE, 20 Deg. Bend
5		87619017		1	HASTE, 20 Deg. Bend
6		323238		2	PORCA, Thin, M12 x 1.75, Cl 05
7		87527964		2	ADAPTADOR, Adapter, Handle
8		87357221		1	CAPA, RH Pilot
9		87357222		1	CAPA, LH Pilot
10		529070		8	TIRA DE CABO, .30" x 14.5"
11		87674842		1	CHICOTE, EH Aux
12		REF			INSTRUCAO, Tunnel Components; See Figure 09-51B
13		14560287		6	TIRA DE CABO, 289mm lg, Cable Tie
14		86593898		1	CONEXÃO, 12 Cavity Plug
15		900367		10	BUJÃO
16		86593899		1	CORTE DE TECIDO

CONTROLE MANUAL - ALAVANCAS

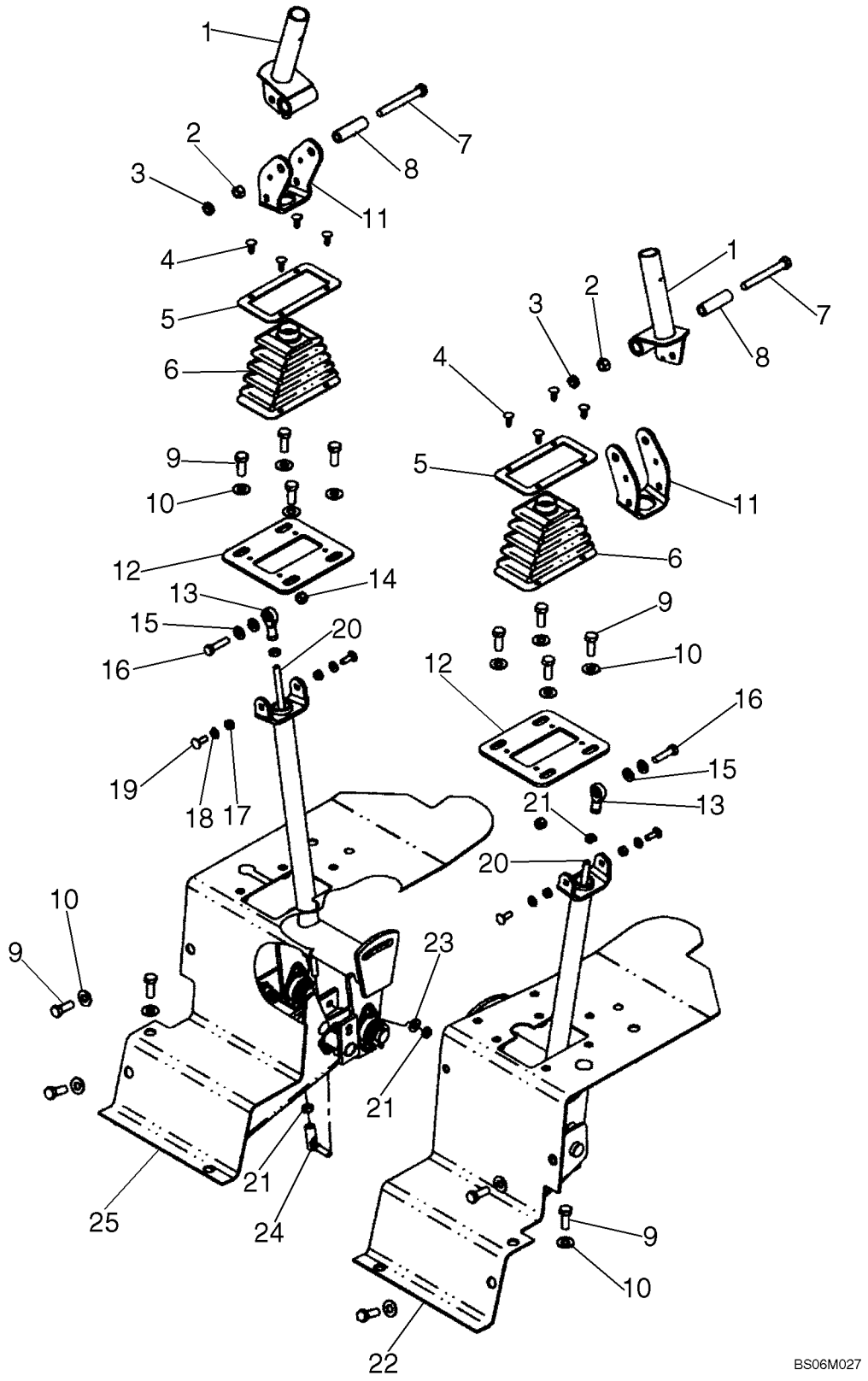

CONTROLE MANUAL - ALAVANCAS

REF	FN	PART NUMBER	YR/SN	QTY	DESCRIPTION
		87519831		1	COMANDO, LH Control Handle Assy; Incl 1- 24 for LH Assy
		87519832		1	COMANDO, RH Control Handle Assy; Incl 1- 21, 23 - 25 for RH Assy
1		87365734		1	MANILHA
2		9628503		1	PORCA, 3/8"-16, G5
3		86509499		1	PORCA, Jam, 3/8"-16, G2
4		86729477		4	BOTÃO DE IMPULSO
5		9844042		1	ANEL
6		9827590		1	CAPA
7		280161		1	PARAFUSO, Hex, 3/8"-16 x 3", G5
8		9615841		1	ESPAÇADOR
9		88206		7	PARAFUSO, Hex, 3/8"-16 x 1", G5, Full Thd
10		140045		7	ARRUELA MOLA, Belleville, M10
11		86573132		1	CANAL
12		9827335		1	PLACA
13		221665		1	HASTE
14		280736		1	CONTRA PORCA, 5/16"-18, GC
15		87362		2	ARRUELA PLANA, 5/16" SAE
16		87657		1	PARAFUSO, Hex, 5/16"-18 x 1 1/4", G5
17		7770		2	PORCA, 1/4"-20, G5
18		322357		2	ARRUELA MOLA, Belleville, M6
19		88832		2	PARAFUSO, Short NK, 1/4"-20 x 3/4", G5
20		86573256		1	HASTE
21		87307		3	PORCA, Jam, 5/16"-24, G2
22		86578889		1	PAINEL, Kick Panel, LH; See Fig. 09-42
23		322358		1	ARRUELA MOLA, Belleville, M8
24		86548493		1	ESFERA
25		86578890		1	PAINEL, Kick Panel, RH; See Fig. 09-41

CONTROLE MANUAL - PAINEL DE IMPULSO, DIREITA

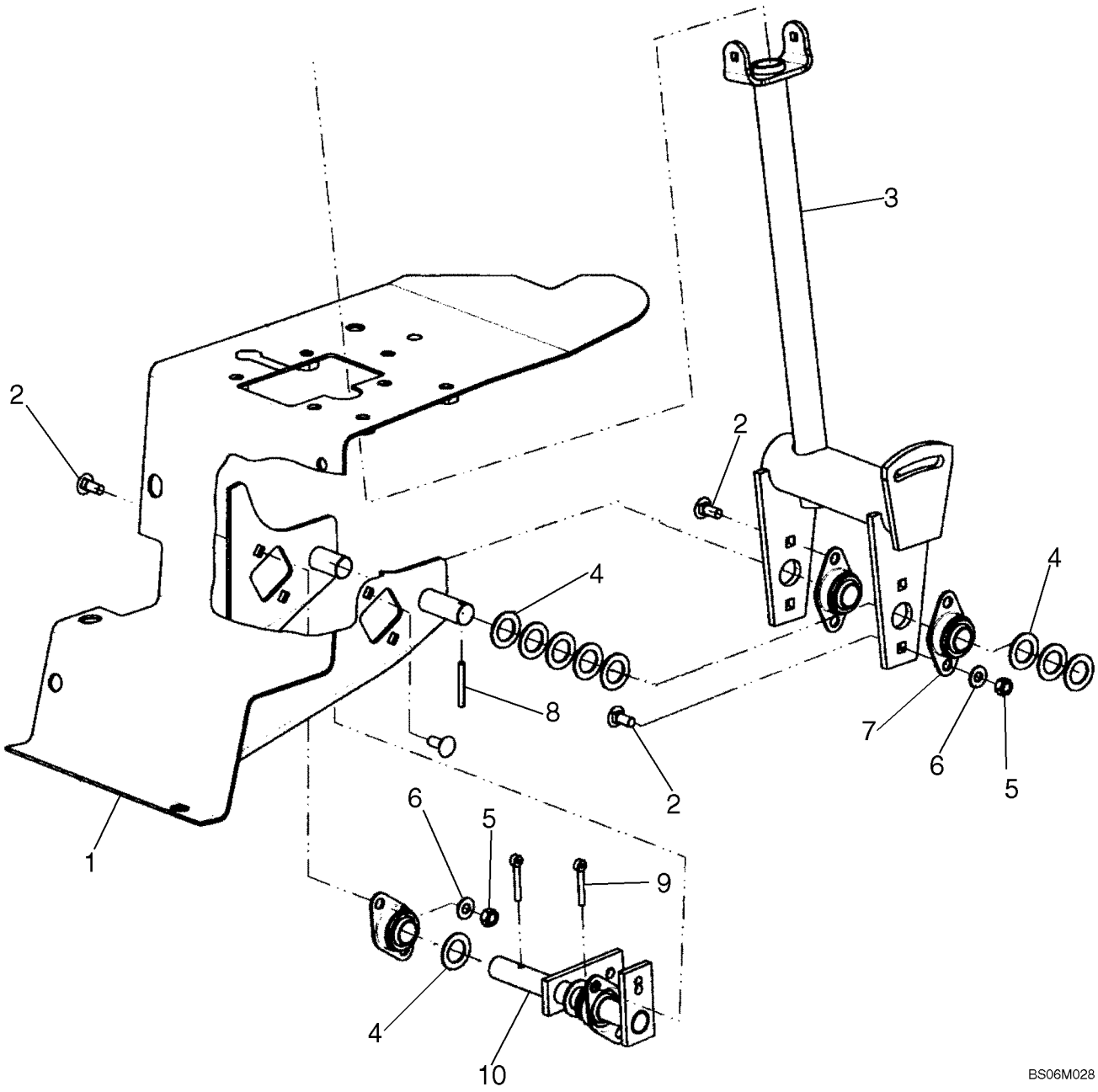

CONTROLE MANUAL - PAINEL DE IMPULSO, DIREITA

REF	FN	PART NUMBER	YR/SN	QTY	DESCRIPTION
1		86634910		1	PAINEL LATERAL
2		280327		8	PARAFUSO, Short NK, 5/16"-18 x 3/4", G5
3		86573243		1	MANILHA
4		249100		9	ARRUELA PLANA
5		9635082		8	PORCA, 5/16"-18, G5
6		322358		8	ARRUELA MOLA, Belleville, M8
7		86567251		3	ROLAMENTO
8		321950		1	PINO
9		87398		2	GRAMPO, 3/16" x 1 1/4"
10		86573113		1	EIXO

CONTROLE MANUAL - PAINEL DE IMPULSO, ESQUERDA

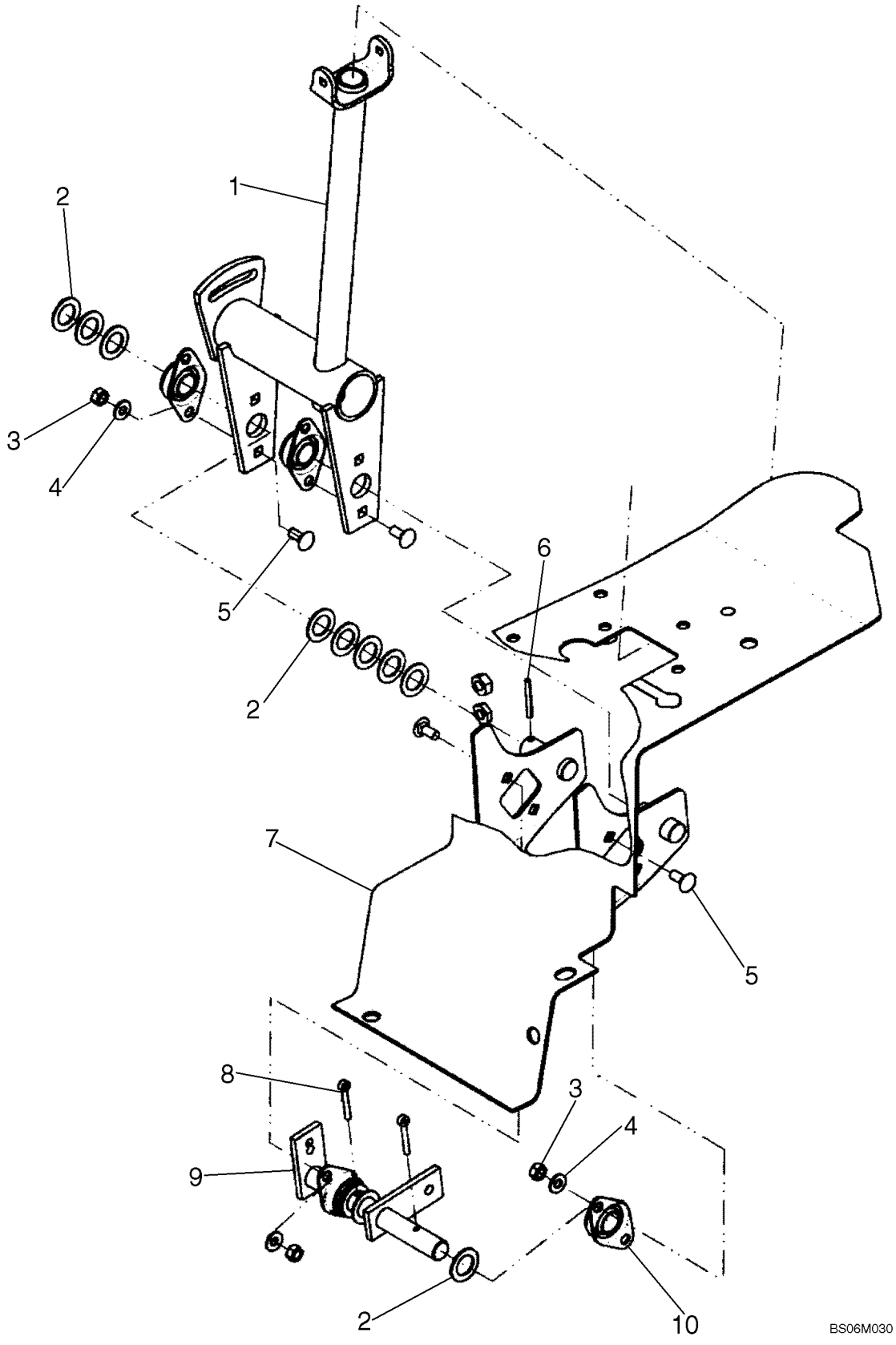

CONTROLE MANUAL - PAINEL DE IMPULSO, ESQUERDA

REF	FN	PART NUMBER	YR/SN	QTY	DESCRIPTION
1		86573243		1	MANILHA
2		249100		9	ARRUELA PLANA
3		9635082		8	PORCA, 5/16"-18, G5
4		322358		8	ARRUELA MOLA, Belleville, M8
5		280327		8	PARAFUSO, Short NK, 5/16"-18 x 3/4", G5
6		321950		1	PINO
7		86633056		1	PAINEL LATERAL
8		87398		2	GRAMPO, 3/16" x 1 1/4"
9		86573114		1	EIXO
10		86567251		3	ROLAMENTO

CONTROLO MANUAL - CONJUNTO DO PEDAL

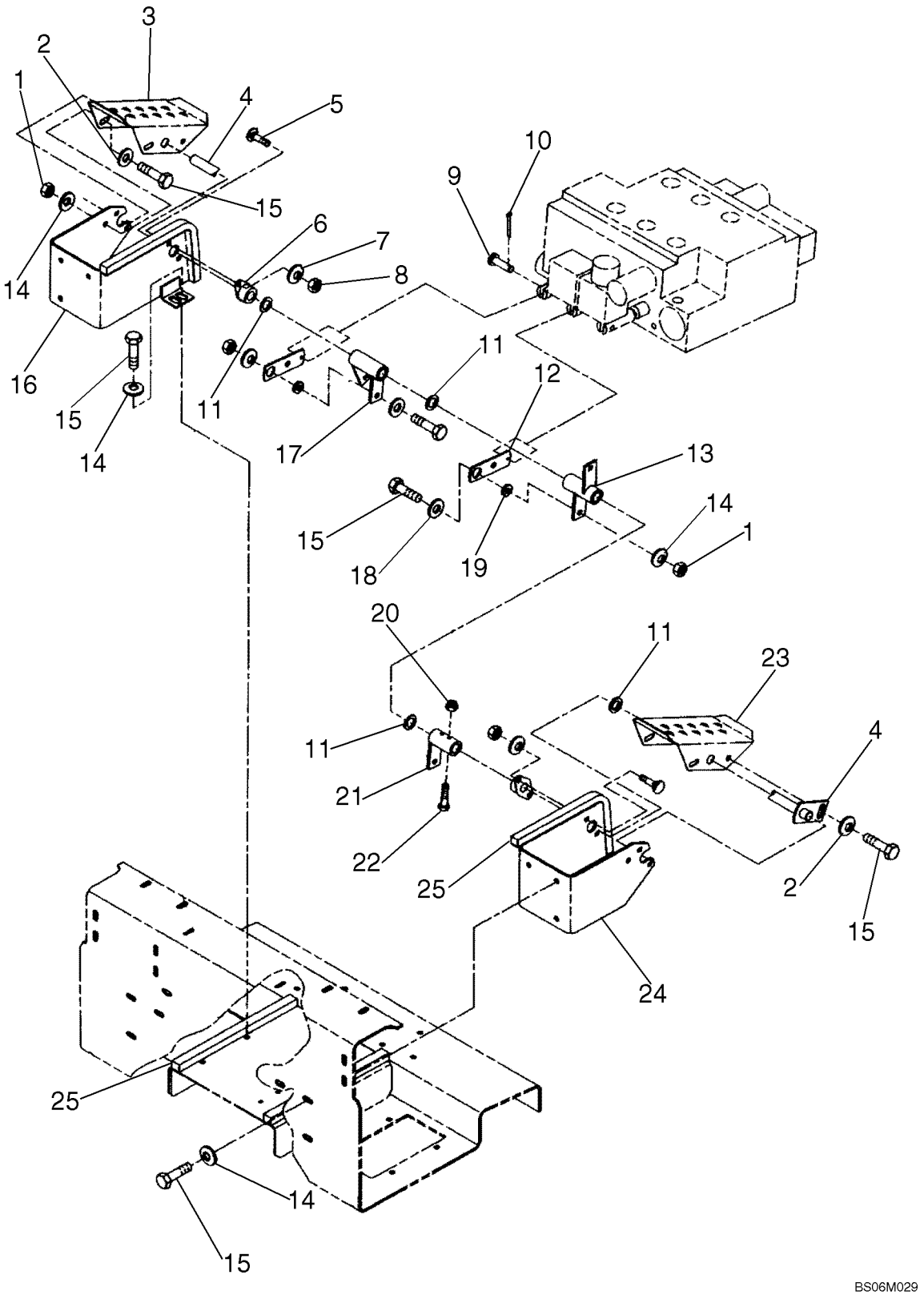

CONTROLO MANUAL - CONJUNTO DO PEDAL

REF	FN	PART NUMBER	YR/SN	QTY	DESCRIPTION
1		9628503		3	PORCA, 3/8"-16, G5
2		285072		2	ARRUELA PLANA
3		86573062		1	PEDAL
4		86573063		1	EIXO
5		280327		4	PARAFUSO, Short NK, 5/16"-18 x 3/4", G5
6		86567251		2	ROLAMENTO
7		322358		4	ARRUELA MOLA, Belleville, M8
8		9635082		4	PORCA, 5/16"-18, G5
9		234726		2	CUPILHA, 1/4" x .770"
10		81858		2	GRAMPO, 1/16" x 1/2"
11		249100		8	ARRUELA PLANA
12		9622464		2	ELO
13		86573066		1	CUBO
14		140045		11	ARRUELA MOLA, Belleville, M10
15		88206		12	PARAFUSO, Hex, 3/8"-16 x 1", G5, Full Thd
16		86639934		1	SUPORTE
17		86573065		1	CUBO
18		80702		2	ARRUELA PLANA, 3/8"
19		641419		2	ARRUELA PLANA
20		84060		2	CONTRA PORCA, 1/4"-20, GB
21		86522404		1	CUBO
22		86979755		2	PARAFUSO, Hex Soc Hd, 1/4"-20 x 1 1/2"
23		9622462		1	PEDAL
24		86639936		1	SUPORTE
25		291308		1	TIRA VEDADORA, 152.40 cm, 5 ft. Required

KIT DE CONTROLO MANUAL

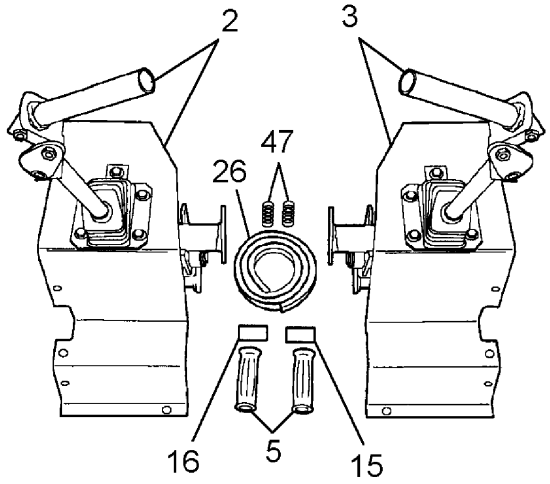

HAND CONTROLS

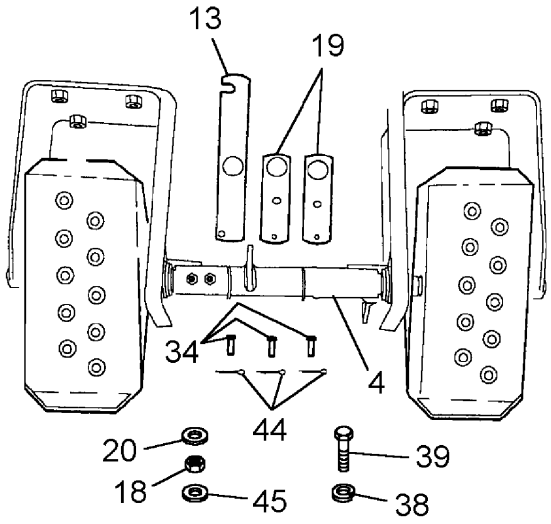

FOOT CONTROLS

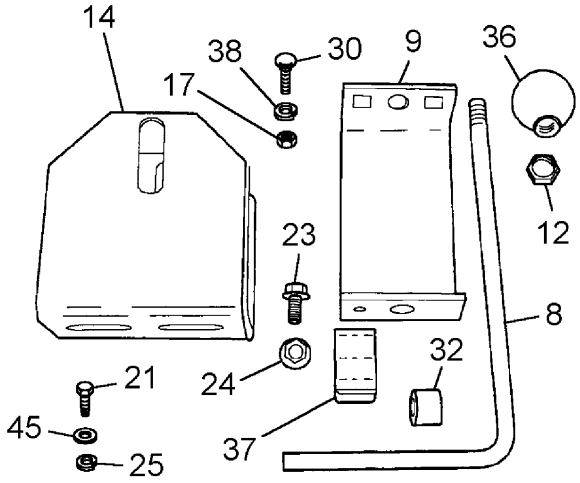

LEFT PEDAL LOCKOUT

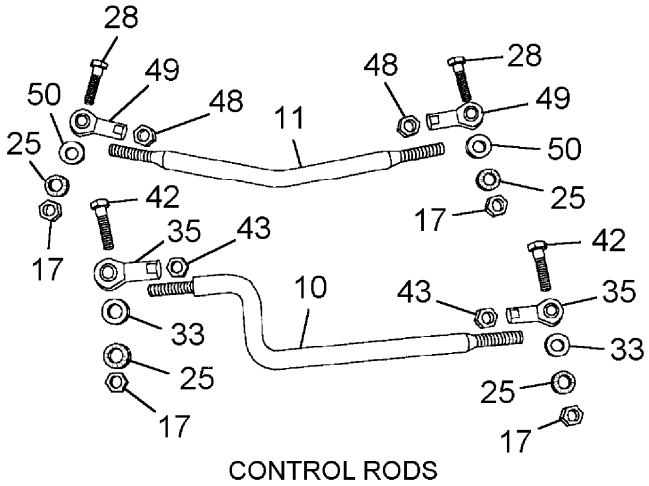

CONTROL RODS

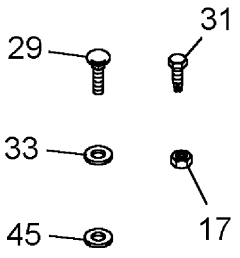

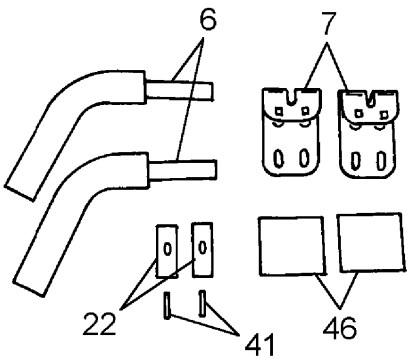

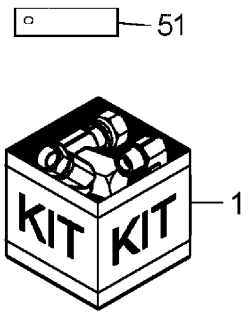

FOREARM RESTS

KIT DE CONTROLO MANUAL

REF	FN	PART NUMBER	YR/SN	QTY	DESCRIPTION
1		87519830			KIT, SERVICE, Kit, Conversion; Handle Control, Incl. Ref. 2 thru 50
2		87519832		1	COMANDO, Control Handle, RH, See Figure 09-40
3		87519831		1	COMANDO, Control Handle, LH, See Figure 09-40
4		86589163		1	PEDAL CONJUNTO, Control Pedals, See Figure 09-43B
5		86584202		2	EMPUNHADURA, Soft-touch
6		86580786		2	BRAÇO
7		86602768		2	SUPORTE
8		86526525		1	HASTE, Bent, 3/8"-16 x 191.5mm
8		87030899		1	HASTE, Bent, 3/8"-16 x 226mm
8		87536437		1	HASTE, Replaces 87030899
9		86526523		1	SUPORTE, 115mm Wide
9		87030898		1	SUPORTE, 143mm Wide
10		86522448		1	HASTE, 5/16" Thread
11		86582885		1	HASTE, 1/2" Thread
12		86509499		1	PORCA, Jam, 3/8"-16, G2
13		86506174		1	ELO, 226mm Long
14		86506171		1	SUPORTE
14		87536436		1	SUPORTE, Replaces 86506171
15		86505651		1	DECALCOMANIA, LH
16		86505650		1	DECALCOMANIA, RH
17		9635082		6	PORCA, 5/16"-18, G5
18		9628503		3	PORCA, 3/8"-16, G5
19		9622464		2	ELO, Control Valve
20		641419		3	ARRUELA PLANA, Hardened, 3/8"
21		637964		4	PARAFUSO, HS, 3/8"-16 x 3/4"
22		621326		2	CUNHA, Mounting, Rubber
23		523291		1	PARAFUSO, Hex Flg, 1/4"-20 x 1/2", Serr
24		523282		1	PORCA, Flg, USR, 1/4"-20
25		80681		10	ARRUELA-TRAVA, 5/16"
26		768715		4	ANEL DE VEDACAO, 1/2" x 3/4" x 144"
28		9707515		2	PARAFUSO, Hex, 5/16"-18 x 1 3/4", G5
29		280618		4	PARAFUSO, Short NK, 5/16"-18 x 2", G5
30		280497		2	PARAFUSO, Short NK, 5/16"-18 x 3/4", G5, Full Thd

KIT DE CONTROLO MANUAL

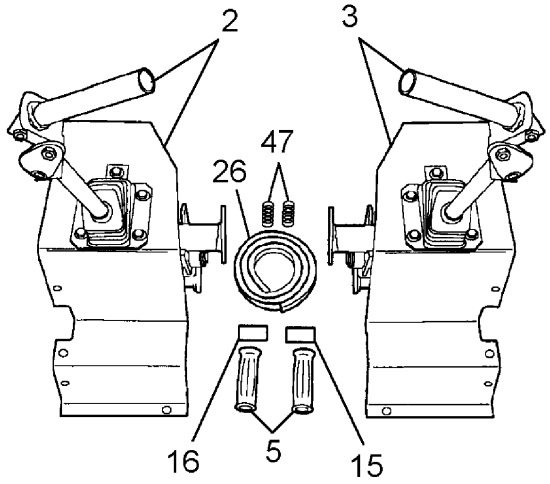

HAND CONTROLS

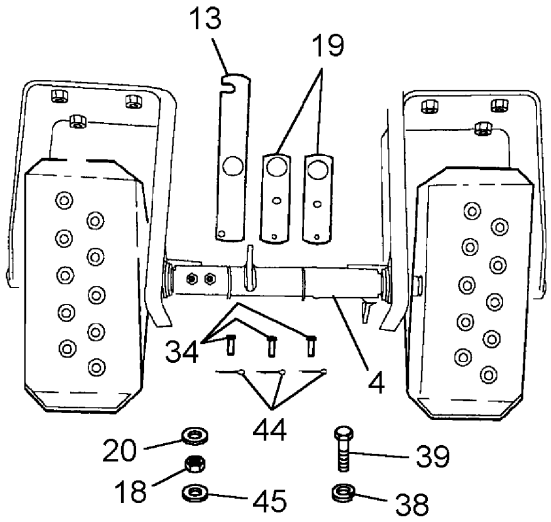

FOOT CONTROLS

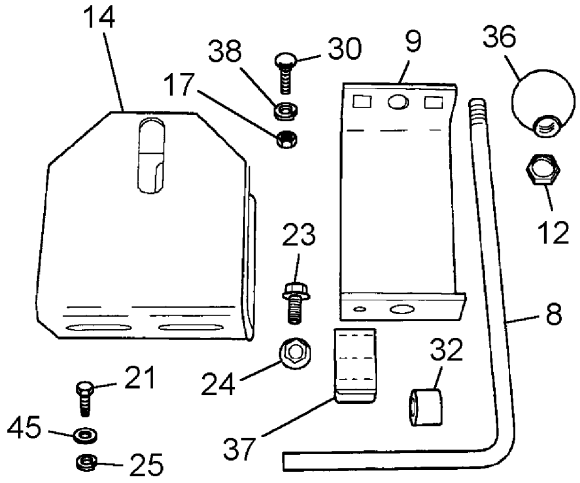

LEFT PEDAL LOCKOUT

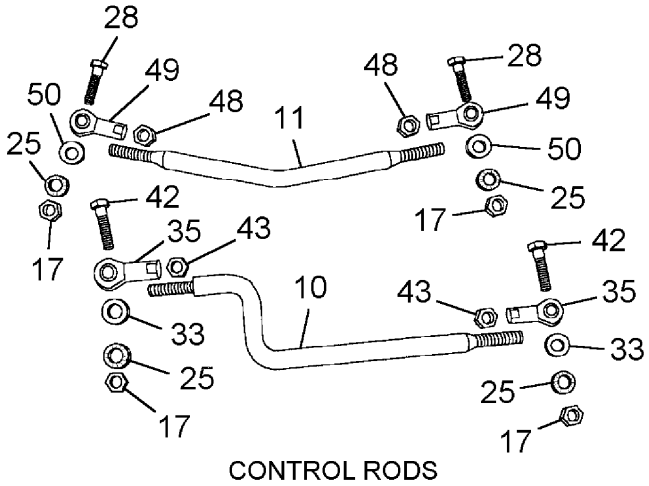

CONTROL RODS

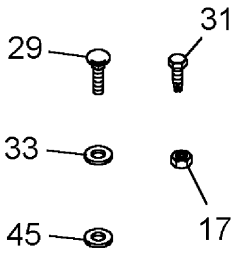

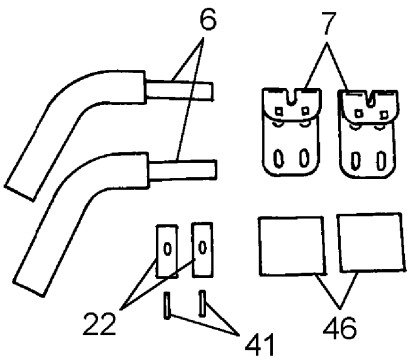

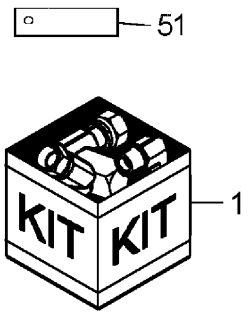

FOREARM RESTS

KIT DE CONTROLO MANUAL

REF	FN	PART NUMBER	YR/SN	QTY	DESCRIPTION
31		280476		2	PARAFUSO, Hex Wash Hd, 3/8" x 1"
32		254146		1	ESPAÇADOR
33		252687		8	ARRUELA PLANA, .344" x 1" x .098", HDN
34		9672307		3	CUPILHA, 1/4" x 3/4"
35		221665		2	HASTE, -end, Ball Joint, 5/16"
36		168982		1	MANÍPULO
37		163902		1	MOLA DE FIXAÇÃO
38		140045		6	ARRUELA MOLA, Belleville, M10
39		88206		5	PARAFUSO, Hex, 3/8"-16 x 1", G5, Full Thd
41		87721		2	PINO DE FIXAÇÃO, 5/16" x 1 1/4", Slotted
40		280736		4	CONTRA PORCA, 5/16"-18, GC
42		87657		2	PARAFUSO, Hex, 5/16"-18 x 1 1/4", G5
43		87307		2	PORCA, Jam, 5/16"-24, G2
44		280236		3	GRAMPO, 1/16" x 1/2"
45		80702		10	ARRUELA PLANA, 3/8"
46		86589362		2	BUJÃO DE BORRACHA
47		86578867		2	MOLA, Control Valve
48		87309		2	PORCA, Jam, 1/2"-20, G2
49		86582884		2	EXTREMIDADE, -end, Ball Joint, 1/2"
50		86582886		2	ESPAÇADOR
51		87034265		1	MANILHA

09-43B		p1	03/08

CONTROLE MANUAL, CONJUNTO DO PEDAL, PADRÃO, FLUXO ALTO E AUX.

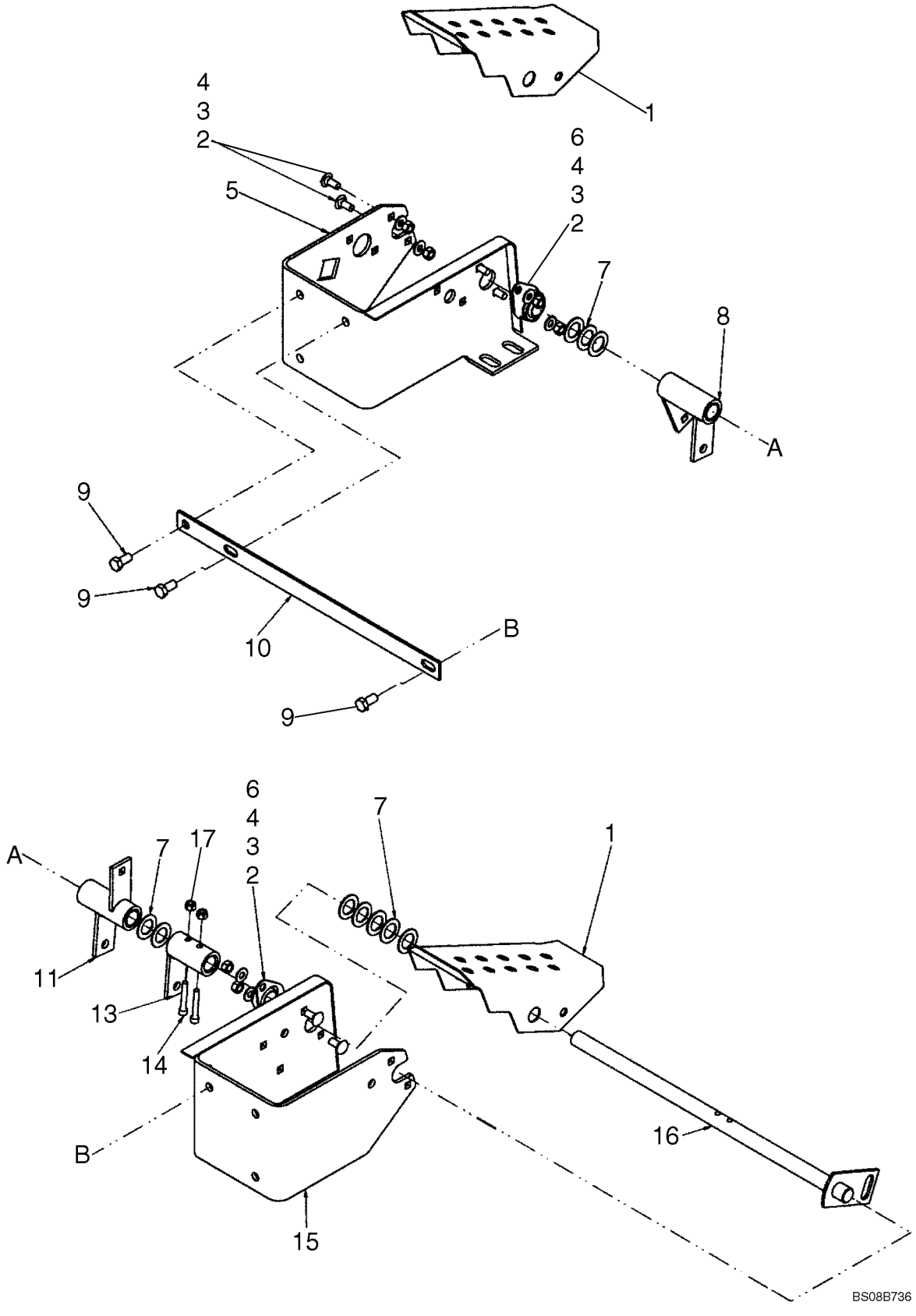

CONTROLE MANUAL, CONJUNTO DO PEDAL, PADRÃO, FLUXO ALTO E AUX.

REF	FN	PART NUMBER	YR/SN	QTY	DESCRIPTION
		86589163		1	PEDAL CONJUNTO, Kit, Hand Control Pedal Assy; Incl 1 - 16
1		87550553		2	PEDAL
2		280327		6	PARAFUSO, Short NK, 5/16"-18 x 3/4", G5
3		322358		6	ARRUELA MOLA, Belleville, M8
4		9635082		6	PORCA, 5/16"-18, G5
5		87557968		1	SUPORTE, RH
6		86567251		2	ROLAMENTO
7		249100		10	ARRUELA PLANA
8		86573065		1	CUBO
9		88434		3	PARAFUSO, Hex, 3/8"-16 x 3/4", G5, Full Thd
10		86581314		1	TIRA
11		86573066		1	CUBO
12		20356		2	CONTRA PORCA, 1/4"-20, GB
13		86522404		1	CUBO
14		86979755		2	PARAFUSO, Hex Soc Hd, 1/4"-20 x 1 1/2"
15		86639936		1	SUPORTE, LH
16		86573063		1	EIXO

CONJUNTO DO CONTROLO DA TRANSMISSÃO - PEDAIS DE CONTROLO COM FLUXO ALTO E AUXILIAR

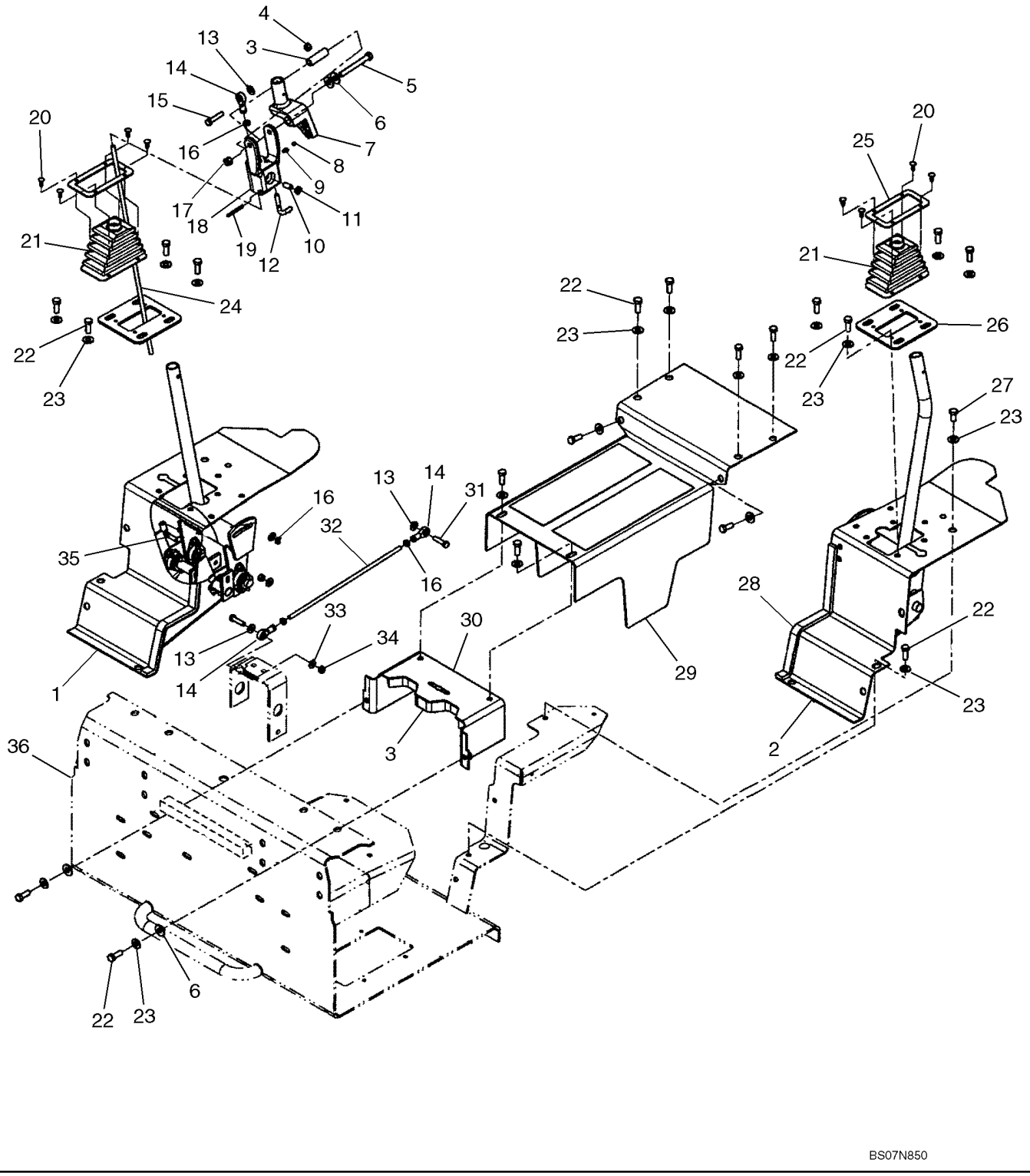

CONJUNTO DO CONTROLO DA TRANSMISSÃO - PEDAIS DE CONTROLO COM FLUXO ALTO E AUXILIAR

REF	FN	PART NUMBER	YR/SN	QTY	DESCRIPTION
		REF			INSTRUCAO, See Fig. 09-38 For Control Handles
1		REF		1	INSTRUCAO, Panel, Kick, Right Hand; See Figure 09-45
2		REF		1	INSTRUCAO, Panel, Kick, Left Hand; See Figure 09-46
3		9615841		1	ESPAÇADOR
4		280736		1	CONTRA PORCA, 5/16"-18, GC
5		9637240		1	PARAFUSO, Hex, 3/8"-16 x 3 1/4", G5
6		80702		4	ARRUELA PLANA, 3/8"
7		87360182		1	PIVOT, Pivot Stalk
8		86628554		1	ESFERA, Steel
9		86628555		1	MOLA
10		87030398		1	PARAFUSO, Set, HS, Cone Pt, 3/8"-16 x 1"
11		86509499		1	PORCA, Jam, 3/8"-16, G2
12		9846536		1	PINO
13		252687		3	ARRUELA PLANA, .344" x 1" x .098", HDN
14		221665		3	HASTE, -end, Spherical Bearing
15		88275		1	PARAFUSO, Hex, 5/16"-18 x 1 1/2", G5
16		87307		5	PORCA, Jam, 5/16"-24, G2
17		9637692		1	CONTRA PORCA, 3/8"-16, GB
18		9842506		1	SUPORTE, RH
19		80628		1	PERNO ESTRIADO, 3/16" x 1 3/4", Type A
20		86729477		8	BOTÃO DE IMPULSO
21		9827590		2	CAPA
22		88206		24	PARAFUSO, Hex, 3/8"-16 x 1", G5, Full Thd
23		140045		26	ARRUELA MOLA, Belleville, M10
24		9803275		1	HASTE, 5/16"-24 x 20.669"
25		9844042		2	ANEL
26		9827335		2	PLACA
27		88434		2	PARAFUSO, Hex, 3/8"-16 x 3/4", G5, Full Thd
28		291308		X	TIRA VEDADORA, 2.6 ft
29		86633166		1	TAMPA
30		86634711		1	SUPORTE
31		87657		2	PARAFUSO, Hex, 5/16"-18 x 1 1/4", G5
32		86580984		1	HASTE, 5/16"-24 x 13"

CONJUNTO DO CONTROLO DA TRANSMISSÃO - PEDAIS DE CONTROLO COM FLUXO ALTO E AUXILIAR

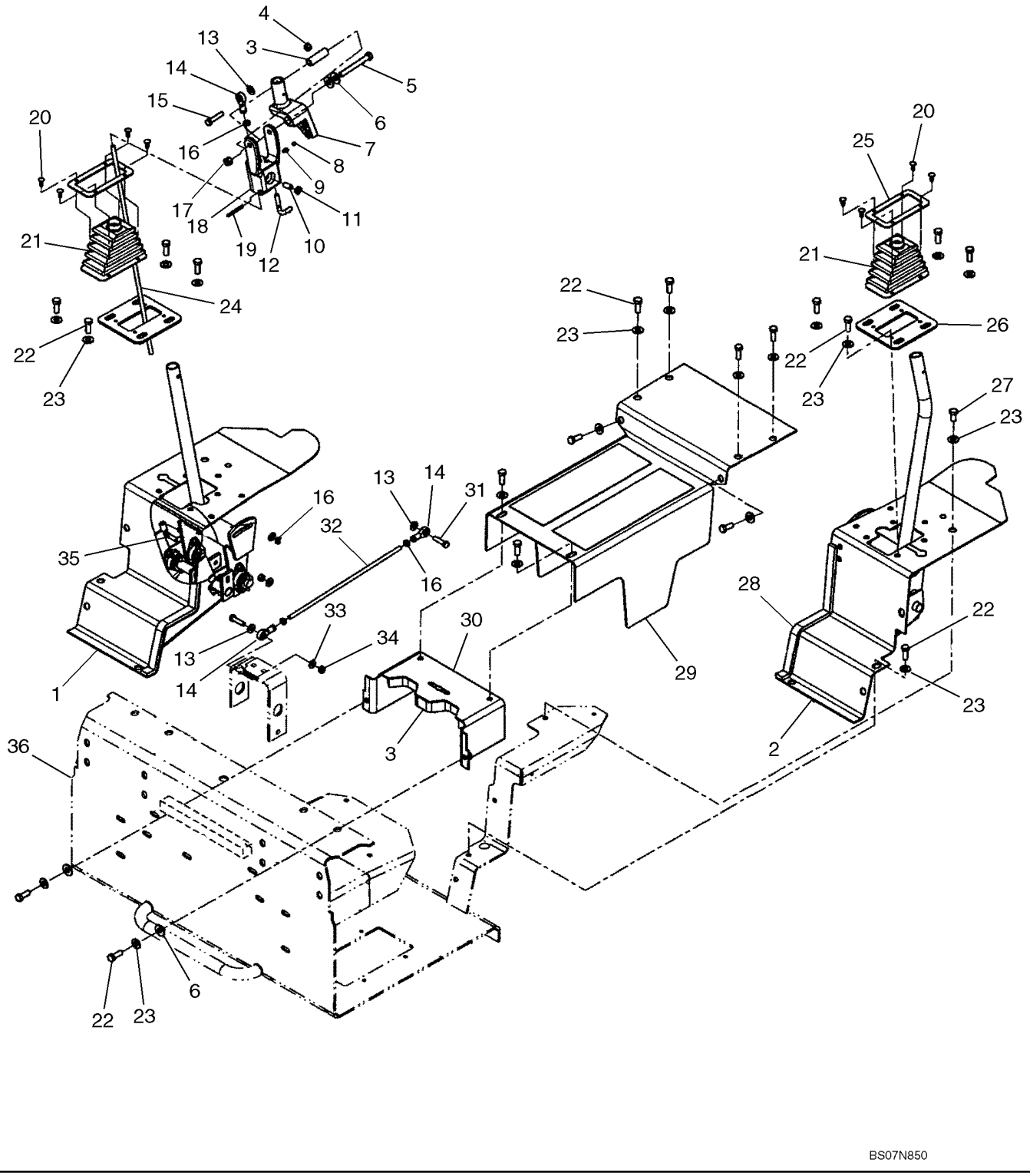

CONJUNTO DO CONTROLO DA TRANSMISSÃO - PEDAIS DE CONTROLO COM FLUXO ALTO E AUXILIAR

REF	FN	PART NUMBER	YR/SN	QTY	DESCRIPTION
33		322358		3	ARRUELA MOLA, Belleville, M8
34		9635082		2	PORCA, 5/16"-18, G5
35		86548493		1	ESFERA, -end
36		291355		X	CUNHA, 2 ft

CONJUNTO DIREITO DO PAINEL DE AJUSTE - CONTROLE DE TRAÇÃO

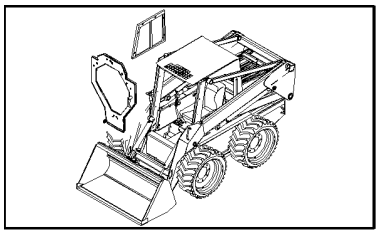

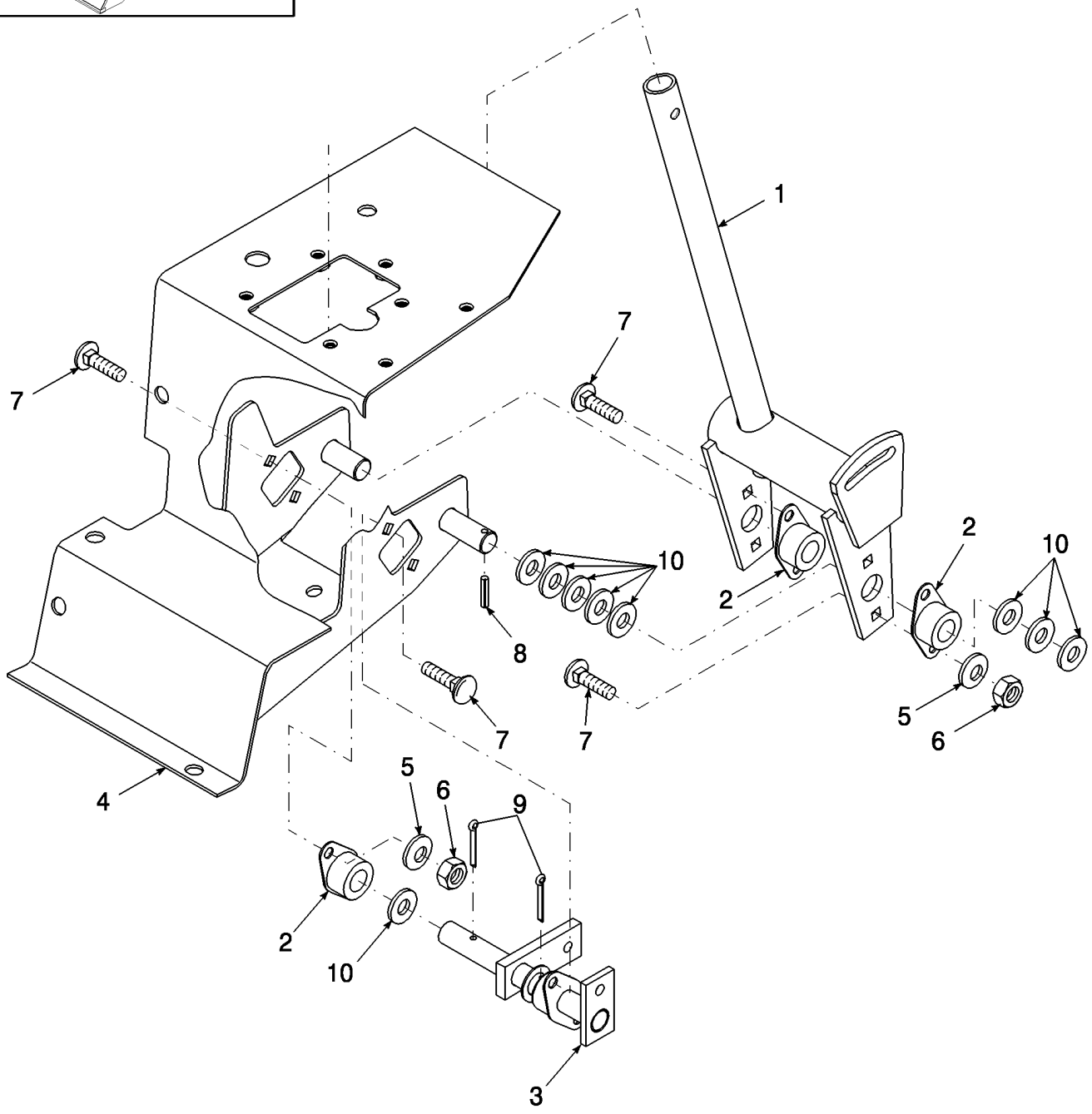

CONJUNTO DIREITO DO PAINEL DE AJUSTE - CONTROLE DE TRAÇÃO

REF	FN	PART NUMBER	YR/SN	QTY	DESCRIPTION
1		9615867		1	MANILHA
2		86567251		3	ROLAMENTO
3		87015330		1	EIXO, RH
4		86634910		1	PAINEL LATERAL, RH
5		322358		8	ARRUELA MOLA, Belleville, M8
6		9635082		8	PORCA, 5/16"-18, G5
7		280327		8	PARAFUSO, Short NK, 5/16"-18 x 3/4", G5
8		86977792		1	GRAMPO, M5 x 40, Slotted
9		87398		2	GRAMPO, 3/16" x 1 1/4"
10		249100		9	ARRUELA PLANA

09-46		p1	03/08

CONJUNTO ESQUERDO DO PAINEL DE AJUSTE - CONTROLE DE TRAÇÃO

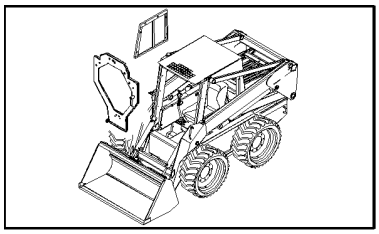

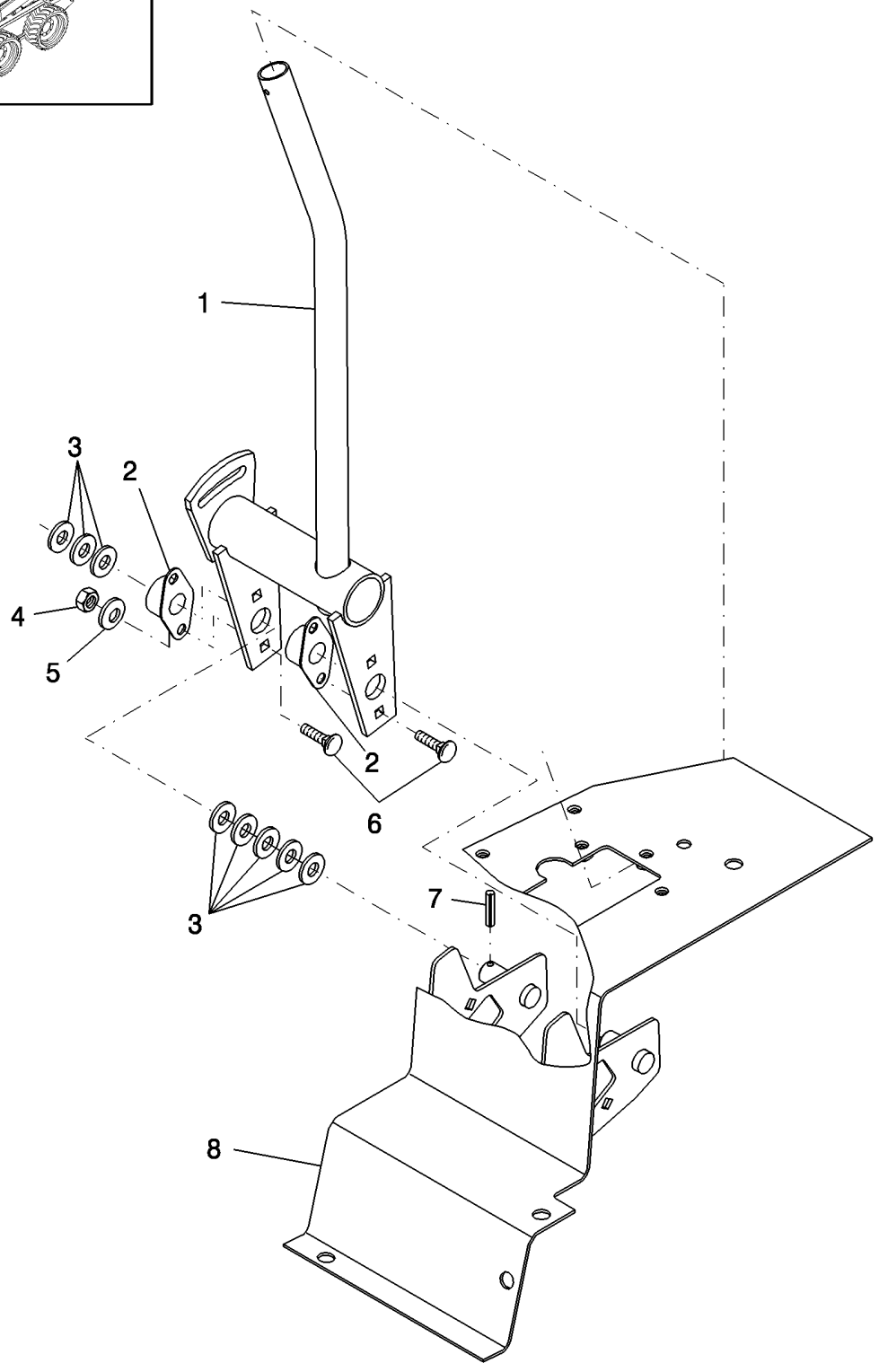

9

CONJUNTO ESQUERDO DO PAINEL DE AJUSTE - CONTROLE DE TRAÇÃO

REF	FN	PART NUMBER	YR/SN	QTY	DESCRIPTION
1		87362383		1	MANILHA, Handle
2		86567251		2	ROLAMENTO
3		249100		8	ARRUELA PLANA
4		9635082		4	PORCA, 5/16"-18, G5
5		322358		4	ARRUELA MOLA, Belleville, M8
6		280327		4	PARAFUSO, Short NK, 5/16"-18 x 3/4", G5
7		86977792		1	GRAMPO, M5 x 40, Slotted
8		86633056		1	PAINEL LATERAL

CONJUNTO DO PEDAL, PADRÃO E DE LUXO

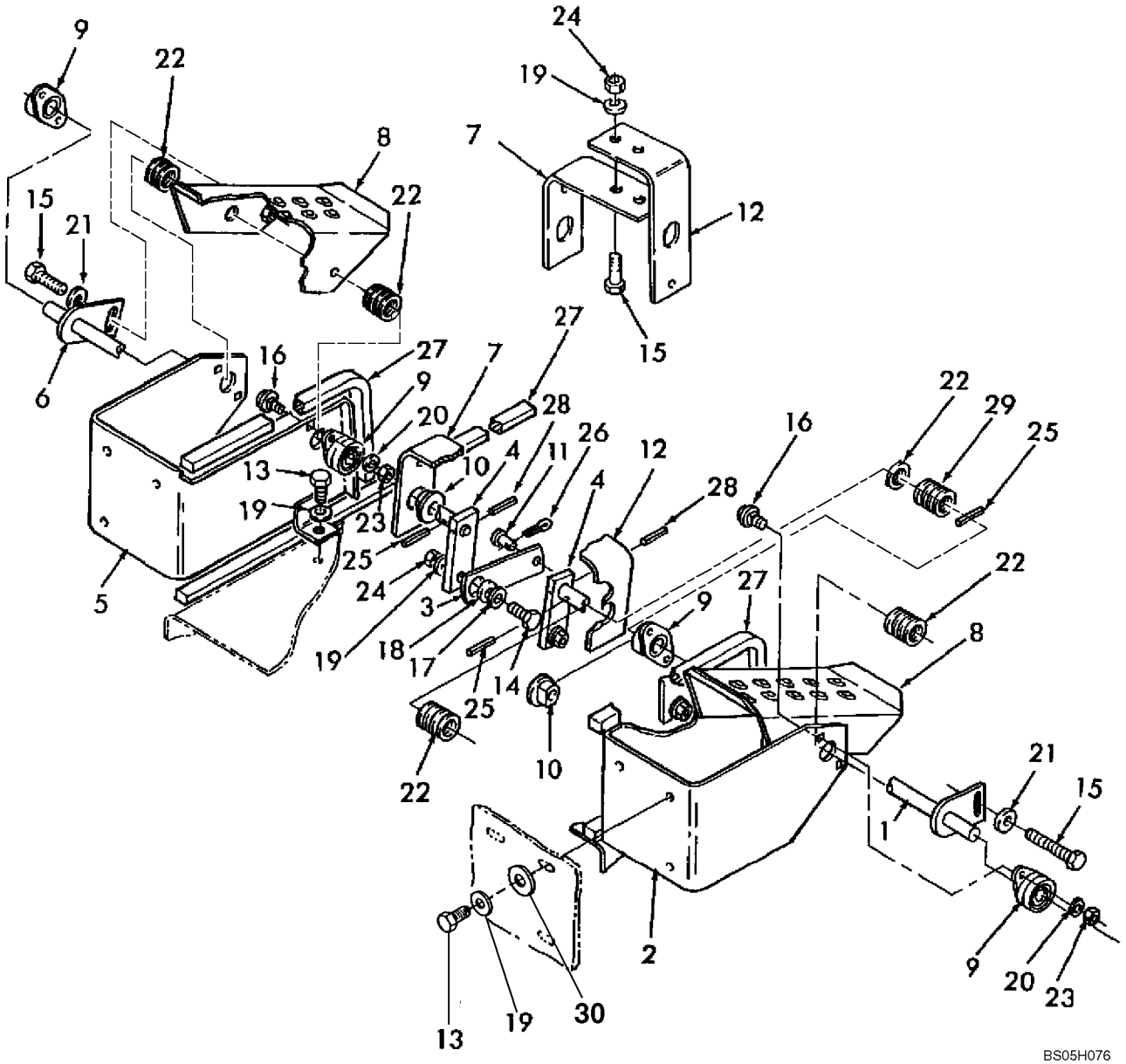

CONJUNTO DO PEDAL, PADRÃO E DE LUXO

REF	FN	PART NUMBER	YR/SN	QTY	DESCRIPTION
1		9622465		1	EIXO, Pedal
2		86639936		1	SUPORTE, LH, Gray
3		9622464		AR	ELO, Link, (2) Std, (3) Deluxe
4		86639398		2	BRAÇO
5		87557968		1	SUPORTE, RH, Gray
5		86639934		1	SUPORTE, No Longer Used, Order 87557968
6		87039493		1	EIXO CONJUNTO, Pedal
7		86506568		1	SUPORTE
8		87550553		2	PEDAL, Pedal, Gray
8		9622462		2	PEDAL, Gray; No Longer Used, Order 87550553
9		86567251		4	ROLAMENTO, Side Flange
10		228500		2	BUCHA, Deluxe
11		9672307		AR	CUPILHA, 1/4" x 3/4", (2) Std, (3) Deluxe
12		87376949		1	CANTONEIRA, Angle; 2 Slotted Holes On Shorter (109.5 mm) Side
13		88206		AR	PARAFUSO, Hex, 3/8"-16 x 1", G5, Full Thd
14		88011		AR	PARAFUSO, Hex, 3/8"-16 x 1 1/4", G5, Full Thd, (2) Std, (3) Deluxe, Incl. Ref. 11
15		88682		2	PARAFUSO, Short NK, 3/8"-16 x 1", G5
16		280327		8	PARAFUSO, Short NK, 5/16"-18 x 3/4", G5
17		80702		AR	ARRUELA PLANA, 3/8", (2) Std, (3) Deluxe
18		641419		AR	ARRUELA PLANA, Hardened, 3/8", (2) Std, (3) Deluxe
19		140045		AR	ARRUELA MOLA, Belleville, M10, (10) Std, (11) Deluxe
20		285072		8	ARRUELA PLANA, If Used
20		322358		8	ARRUELA MOLA, Belleville, M8, If Used
21		285072		2	ARRUELA PLANA, Hardened, 3/8"
22		249100		AR	ARRUELA PLANA
23		9635082		8	PORCA, 5/16"-18, G5
24		9628503		AR	PORCA, 3/8"-16, G5, (2) Std, (3) Deluxe
25		86977792		3	GRAMPO, M5 x 40, Slotted, Replaces 321950
26		280236		AR	GRAMPO, 1/16" x 1/2", (2) Std, (3) Deluxe
27		291308		AR	TIRA VEDADORA, 1/2" X 3/4" X 5' Long

CONJUNTO DO PEDAL, PADRÃO E DE LUXO

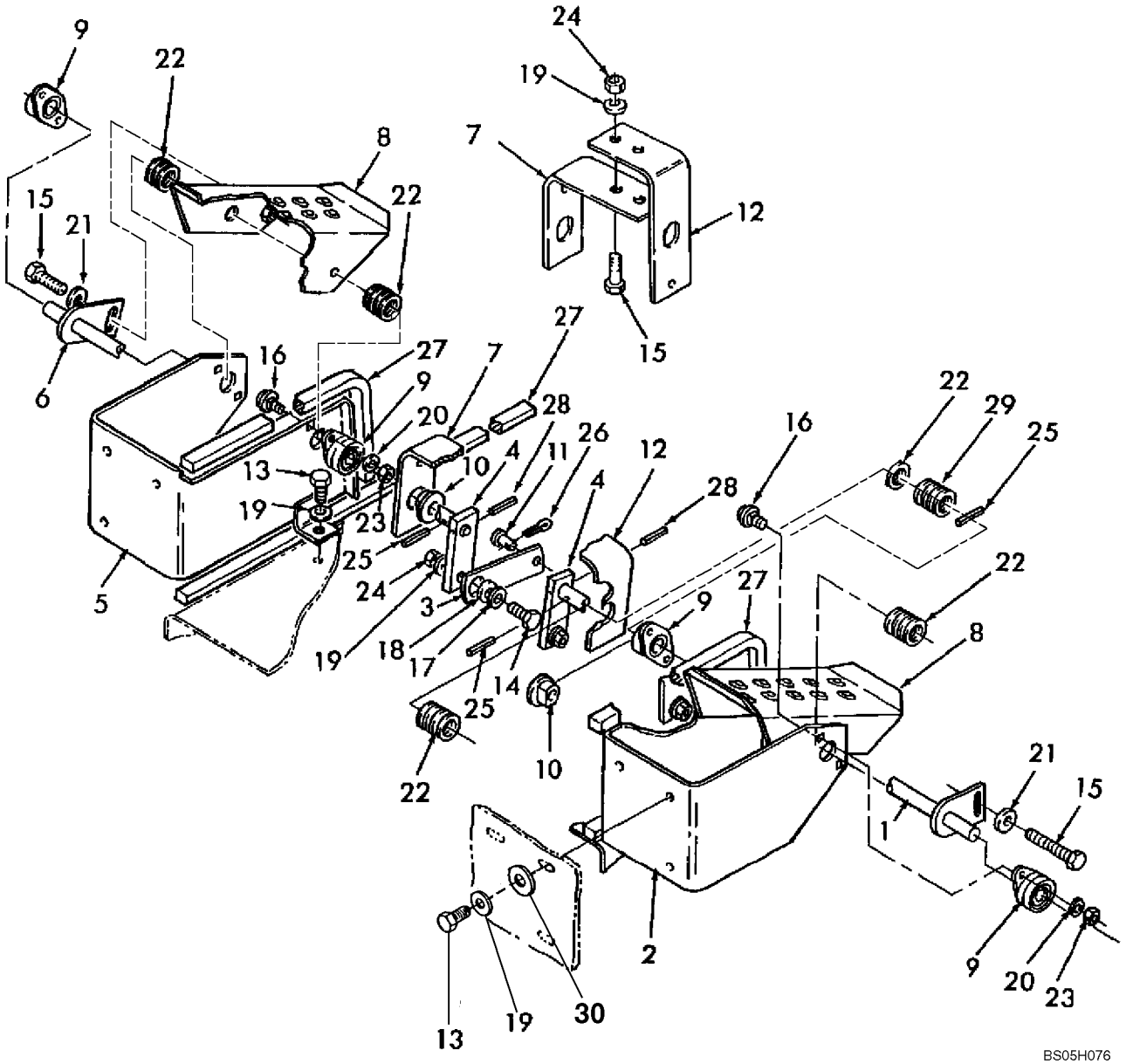

CONJUNTO DO PEDAL, PADRÃO E DE LUXO

REF	FN	PART NUMBER	YR/SN	QTY	DESCRIPTION
28		856800		2	PERNO ESTRIADO, 3/16" x 1 1/2", Type E, Hardened
29		9706679		3	ARRUELA PLANA, Hardened
30		80702		6	ARRUELA PLANA, 3/8"

LANÇA & CAÇAMBA CONTROLO, COMPONENTES DO TÚNEL

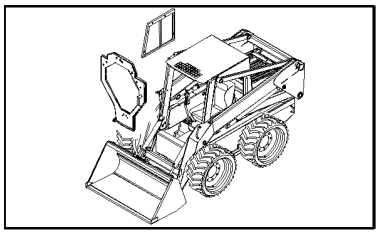

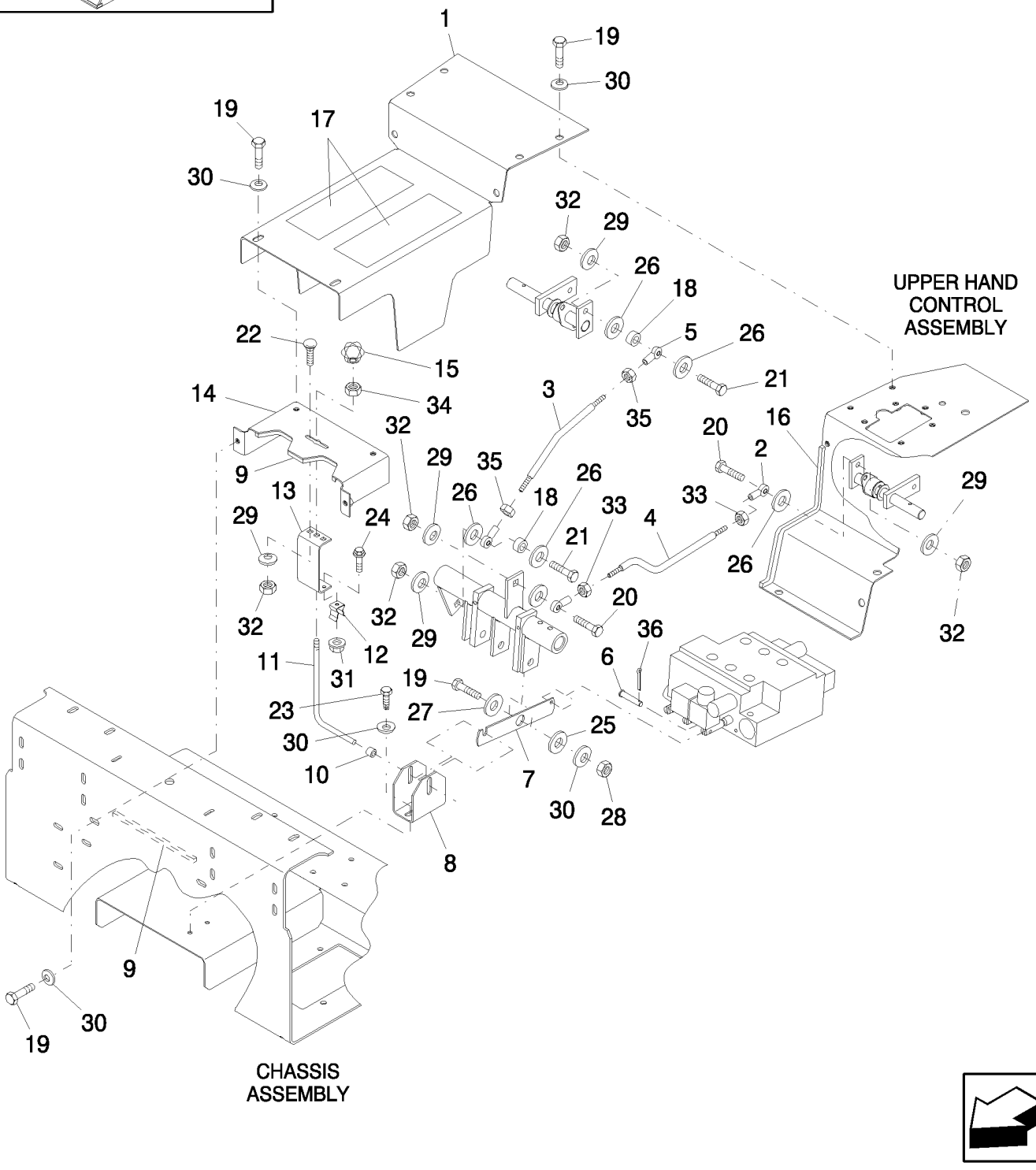

LANÇA & CAÇAMBA CONTROLO, COMPONENTES DO TÚNEL

REF	FN	PART NUMBER	YR/SN	QTY	DESCRIPTION
1		86594689		1	TAMPA
2		221665		2	HASTE, -end, Spherical Bearing, 5/16" Threads
3		86582885		1	HASTE, 1/2" Threaded Ends
4		86522448		1	HASTE
5		86582884		2	EXTREMIDADE, 1/2" Threads
6		9672307		1	CUPILHA, 1/4" x 3/4"
7		86506174		1	ELO
8		87536436		1	SUPORTE, Two Angled Sides; If Used
8		87591081		1	SUPORTE, One Angled Side, One Rounded Side; If Used
9		291355		AR	CUNHA, Strip, Foam, 1" x 1" x 40" Long; Cut to Required Length
10		254146		1	ESPAÇADOR
11		86526525		1	HASTE, Bent, 3/8"-16 x 191.5mm
12		163902		1	MOLA DE FIXAÇÃO
13		86526523		1	SUPORTE
14		9844213		1	SUPORTE
15		168982		1	MANÍPULO
16		291308		AR	TIRA VEDADORA, 1/2" x 3/4" x 144" Long; Cut to Required Length
17		263636		AR	FAIXA ANTI-DERRAPANTE, 4" x 55" Lg.
18		86582886		2	ESPAÇADOR
19		88206		11	PARAFUSO, Hex, 3/8"-16 x 1", G5, Full Thd
20		87657		2	PARAFUSO, Hex, 5/16"-18 x 1 1/4", G5
21		9707515		2	PARAFUSO, Hex, 5/16"-18 x 1 3/4", G5
22		280327		2	PARAFUSO, Short NK, 5/16"-18 x 3/4", G5
23		280476		2	PARAFUSO, Hex Wash Hd, 3/8" x 1"
24		523291		1	PARAFUSO, Hex Flg, 1/4"-20 x 1/2", Serr
25		641419		1	ARRUELA PLANA, Hardened, 3/8"
26		252687		8	ARRUELA PLANA, .344" x 1" x .098", HDN
27		80702		1	ARRUELA PLANA, 3/8"
28		9628503		1	PORCA, 3/8"-16, G5
29		322358		6	ARRUELA MOLA, Belleville, M8
30		140045		13	ARRUELA MOLA, Belleville, M10
31		523282		1	PORCA, Flg, USR, 1/4"-20

LANÇA & CAÇAMBA CONTROLO, COMPONENTES DO TÚNEL

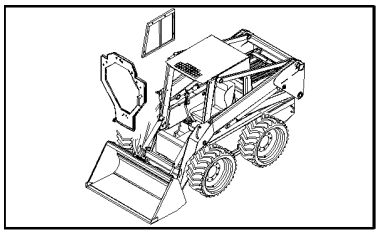

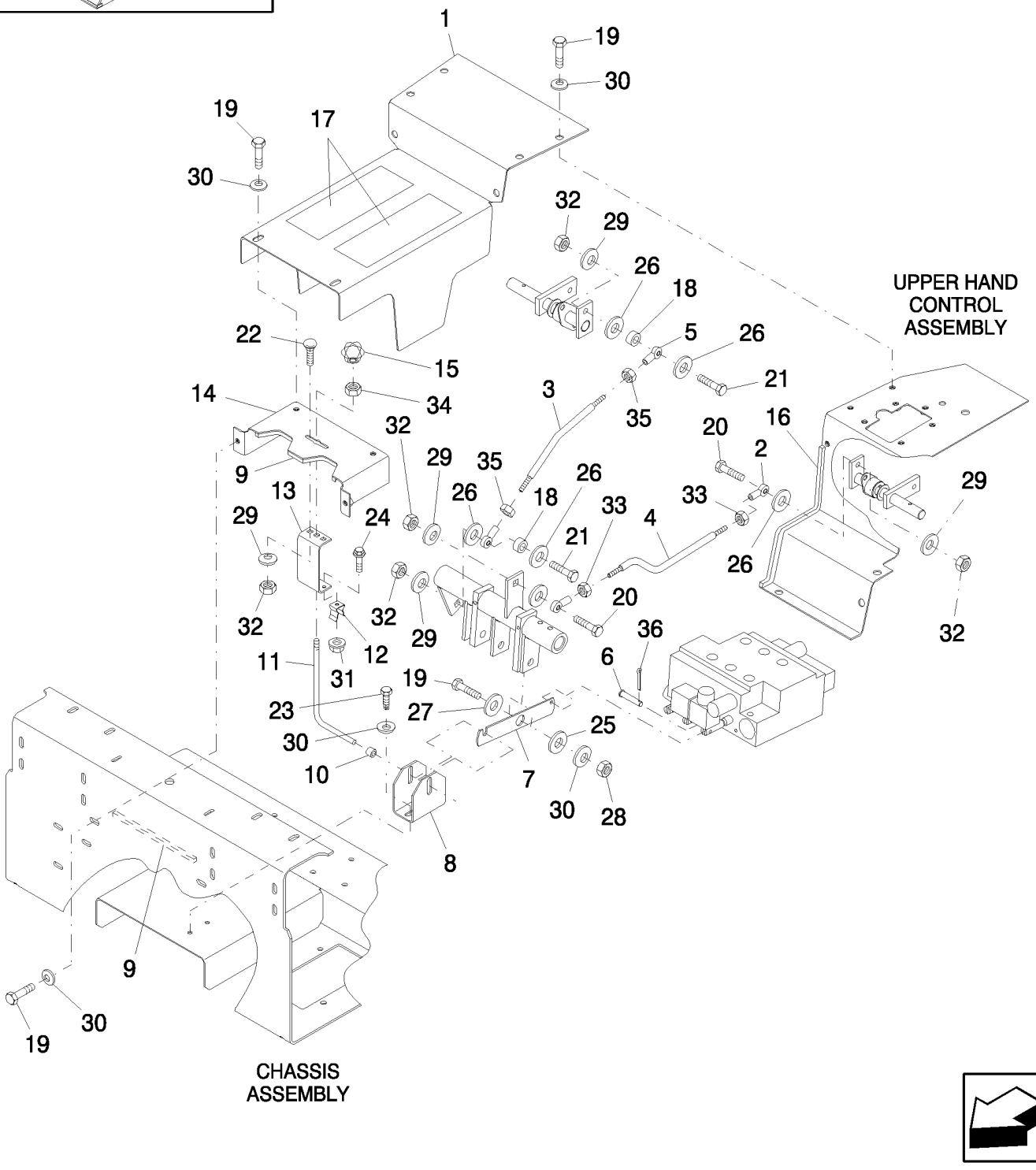

LANÇA & CAÇAMBA CONTROLO, COMPONENTES DO TÚNEL

REF	FN	PART NUMBER	YR/SN	QTY	DESCRIPTION
32		9635082		6	PORCA, 5/16"-18, G5
33		87307		2	PORCA, Jam, 5/16"-24, G2
34		86509499		1	PORCA, Jam, 3/8"-16, G2
35		87309		2	PORCA, Jam, 1/2"-20, G2
36		280236		1	GRAMPO, 1/16" x 1/2"

KIT DE CONTROLO MANUAL

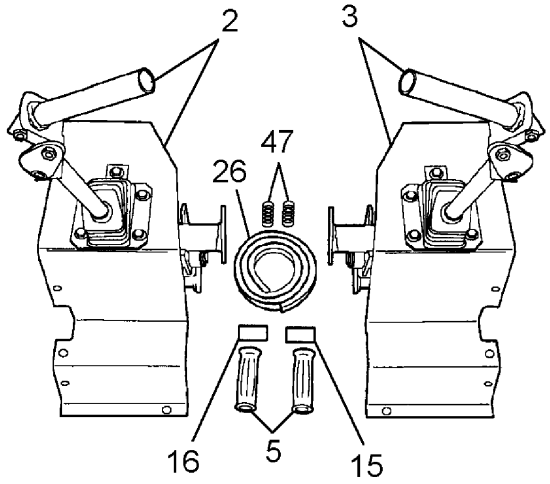

HAND CONTROLS

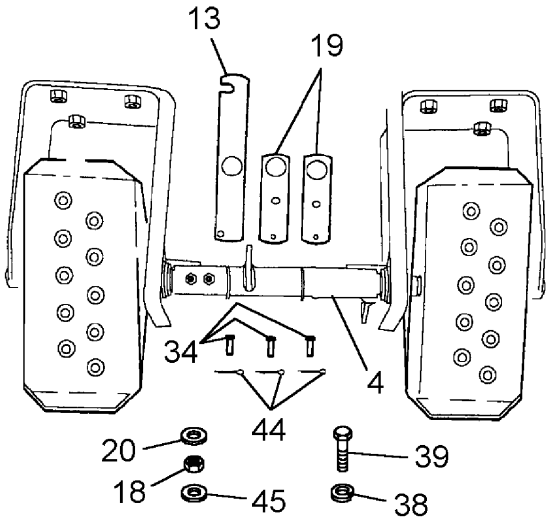

FOOT CONTROLS

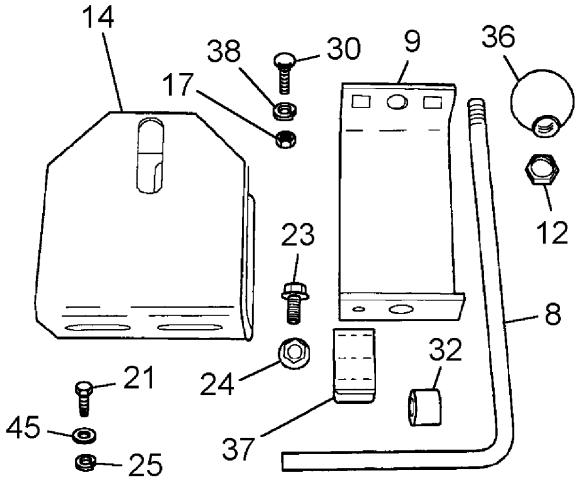

LEFT PEDAL LOCKOUT

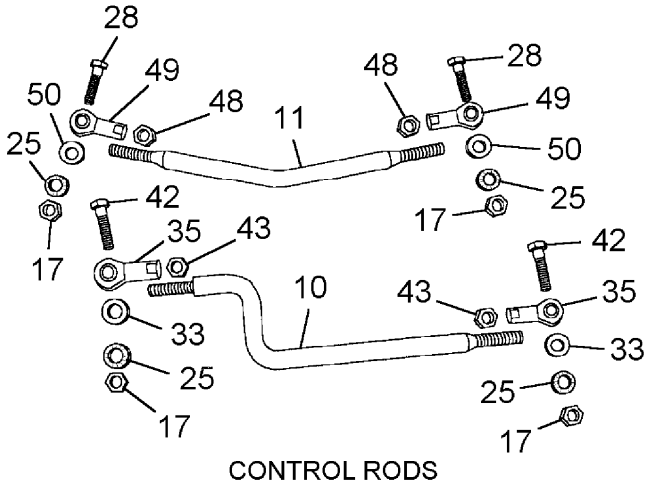

CONTROL RODS

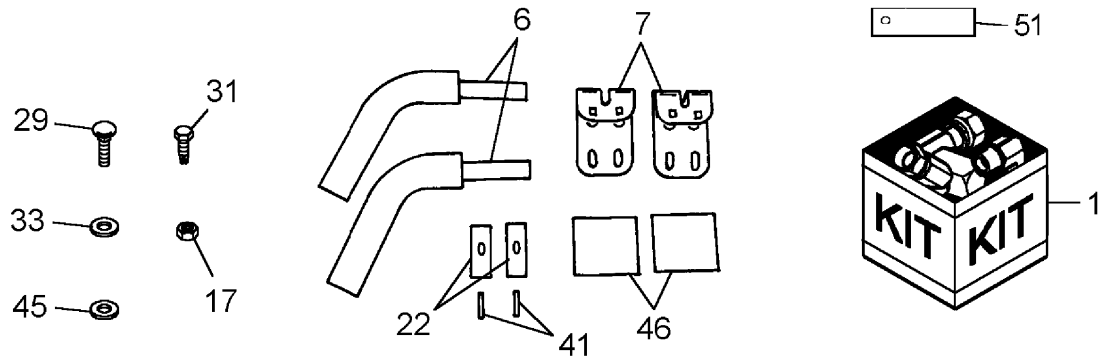

FOREARM RESTS

KIT DE CONTROLO MANUAL

REF	FN	PART NUMBER	YR/SN	QTY	DESCRIPTION
1		86589160			KIT DE TRANSFORMAÇÃO, Handle Control, Incl. Ref. 2, 3 thru 51
2		REF		1	INSTRUCAO, Control Handle, RH; See Fig. 09-45, Not Available As Assembly, Order Components
3		REF		1	INSTRUCAO, Control Handle, LH; See Fig. 09-46, Not Available As Assembly, Order Components
4		86589163		1	PEDAL CONJUNTO, Control Pedals, See Figure 09-52
5		86584202		2	EMPUNHADURA, Soft-touch
6		86580786		2	BRAÇO
7		86602768		2	SUPORTE
8		86526525		1	HASTE, Bent, 3/8"-16 x 191.5mm
8		87536437		1	HASTE
9		86526523		1	SUPORTE, 115mm Wide
9		87030898		1	SUPORTE, 143mm Wide
10		86522448		1	HASTE, 5/16" Thread
11		86582885		1	HASTE, 1/2" Thread
12		86509499		1	PORCA, Jam, 3/8"-16, G2
13		86506174		1	ELO, Link, 226mm Long, See Service Bulletin 2/00-I1
14		87536436		1	SUPORTE, Two Angled Sides; If Used
14		87591081		1	SUPORTE, One Angled Side, One Rounded Side; If Used
15		86505651		1	DECALCOMANIA, LH
16		86505650		1	DECALCOMANIA, RH
17		9635082		6	PORCA, 5/16"-18, G5
18		9628503		3	PORCA, 3/8"-16, G5
19		9622464		2	ELO, Link, Control Valve
20		641419		3	ARRUELA PLANA, Hardened, 3/8"
21		637964		4	PARAFUSO, HS, 3/8"-16 x 3/4"
22		621326		2	CUNHA, Mounting, Rubber
23		523291		1	PARAFUSO, Hex Flg, 1/4"-20 x 1/2", Serr
24		523282		1	PORCA, Flg, USR, 1/4"-20
25		322358		10	ARRUELA MOLA, Belleville, M8
26		291308		4	TIRA VEDADORA, 1/2" x 3/4" x 144"
28		9707515		2	PARAFUSO, Hex, 5/16"-18 x 1 3/4", G5

KIT DE CONTROLO MANUAL

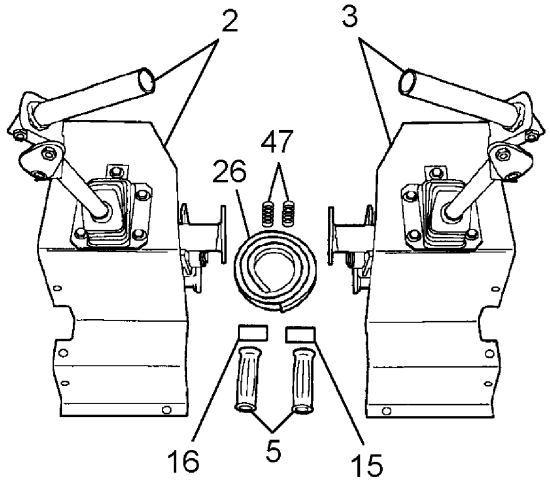

HAND CONTROLS

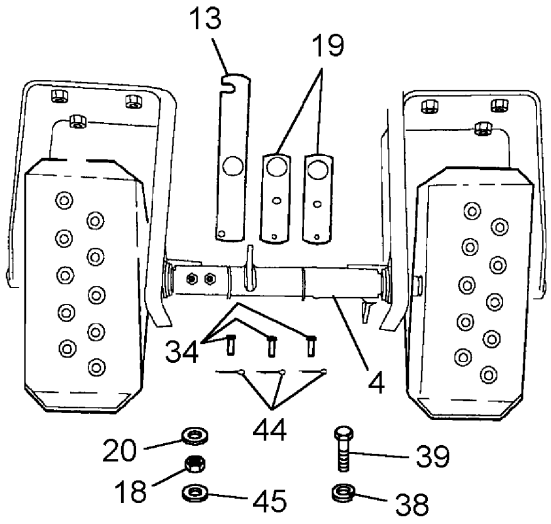

FOOT CONTROLS

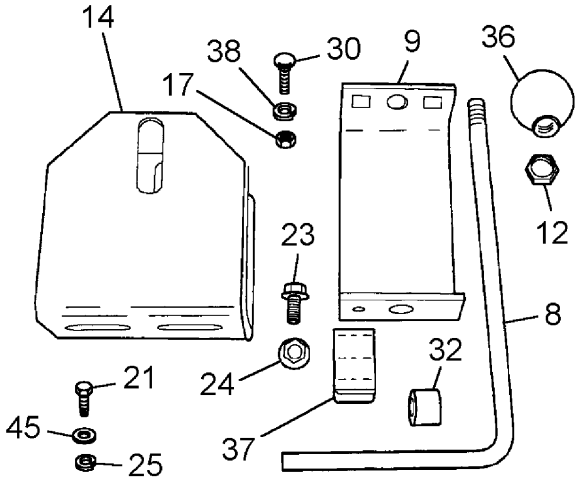

LEFT PEDAL LOCKOUT

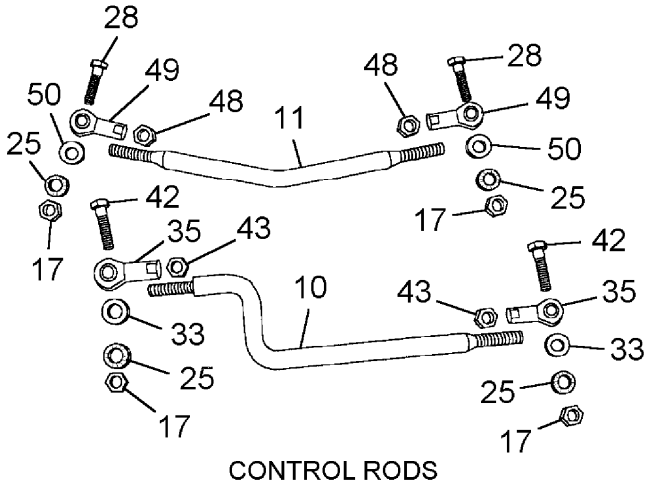

CONTROL RODS

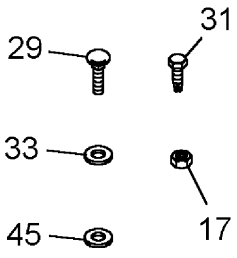

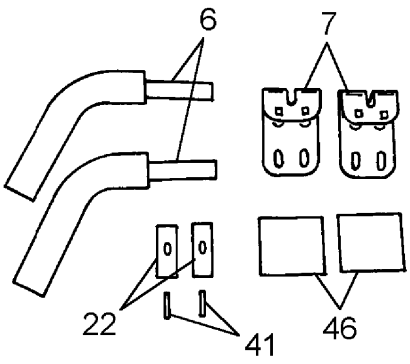

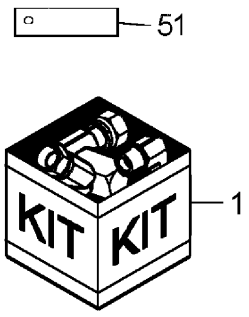

FOREARM RESTS

KIT DE CONTROLO MANUAL

REF	FN	PART NUMBER	YR/SN	QTY	DESCRIPTION
29		280618		4	PARAFUSO, Short NK, 5/16"-18 x 2", G5
30		280497		2	PARAFUSO, Short NK, 5/16"-18 x 3/4", G5, Full Thd
31		280476		2	PARAFUSO, Hex Wash Hd, 3/8" x 1"
32		254146		1	ESPAÇADOR
33		252687		8	ARRUELA PLANA, .344" x 1" x .098", HDN
34		9672307		3	CUPILHA, 1/4" x 3/4"
35		221665		2	HASTE, -end, Ball Joint, 5/16"
36		168982		1	MANÍPULO
37		163902		1	MOLA DE FIXAÇÃO
38		140045		6	ARRUELA MOLA, Belleville, M10
39		88206		5	PARAFUSO, Hex, 3/8"-16 x 1", G5, Full Thd
41		87721		2	PINO DE FIXAÇÃO, 5/16" x 1 1/4", Slotted
40		280736		4	CONTRA PORCA, 5/16"-18, GC
42		87657		2	PARAFUSO, Hex, 5/16"-18 x 1 1/4", G5
43		87307		2	PORCA, Jam, 5/16"-24, G2
44		280236		3	GRAMPO, 1/16" x 1/2"
45		80702		10	ARRUELA PLANA, 3/8"
46		86589362		2	BUJÃO DE BORRACHA
47		86578867		2	MOLA, Control Valve
48		87309		2	PORCA, Jam, 1/2"-20, G2
49		86582884		2	EXTREMIDADE, -end, Ball Joint, 1/2"
50		86582886		2	ESPAÇADOR
51		87034265		1	MANILHA

09-50		p1	02/08

ACELERADOR DE PEDAL KIT

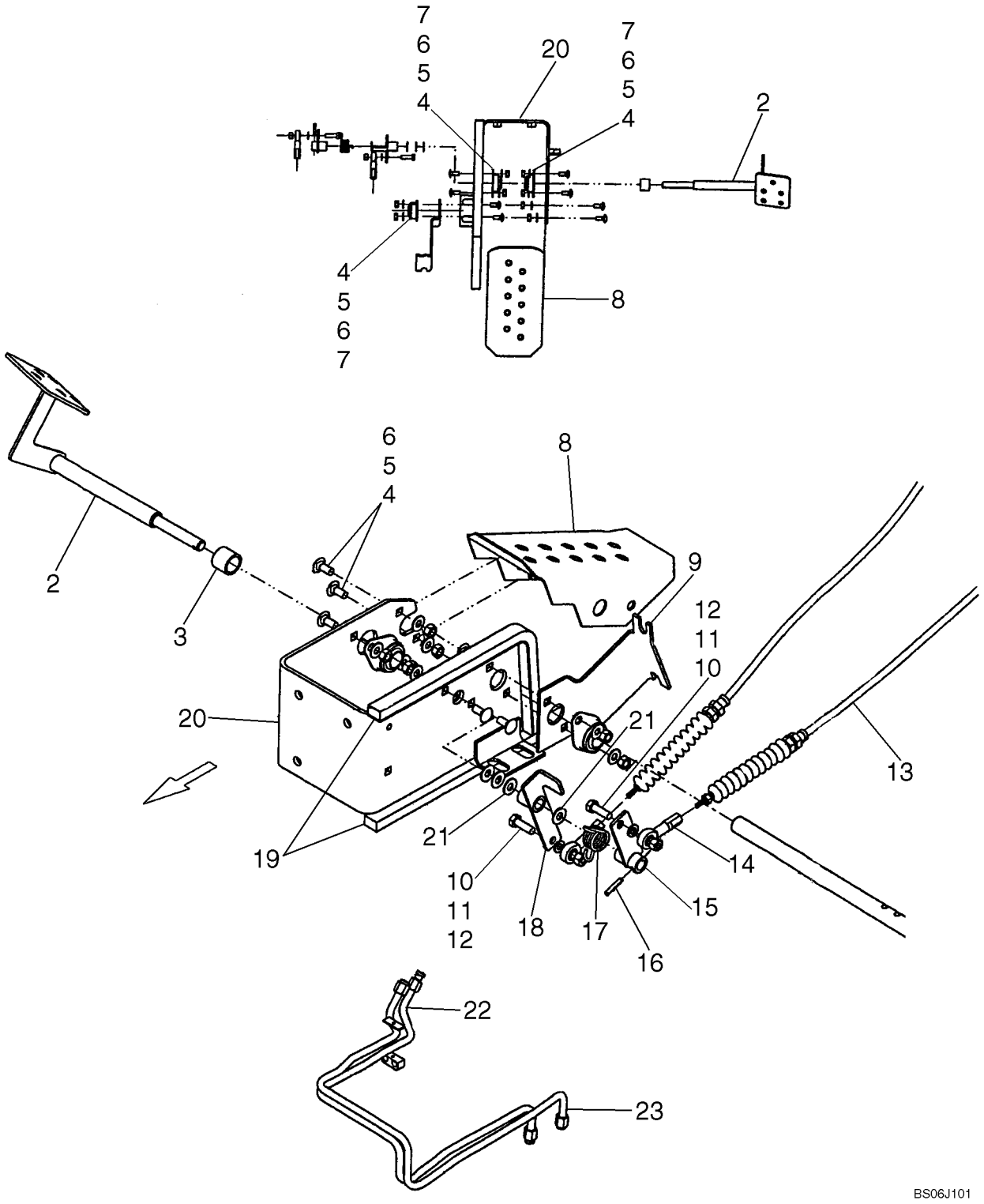

ACELERADOR DE PEDAL KIT

REF	FN	PART NUMBER	YR/SN	QTY	DESCRIPTION
1		87576179		1	DIA KIT,, Foot Throttle Kit; Incl. 2 - 23 and Instructions
2		87535988		1	PEDAL, Pedal, Foot Throttle; Replaces 87397667
3		87578956		1	ESPACADOR TUBO, Spacer
4		9635082		8	PORCA, 5/16"-18, G5
5		322358		8	ARRUELA MOLA, Belleville, M8
6		280327		8	PARAFUSO, Short NK, 5/16"-18 x 3/4", G5
7		86567251		3	ROLAMENTO, Bearing, Side Flange
8		87550553		1	PEDAL, Pedal
9		87584298		1	SUPORTE, Bracket, Cable Mount; Replaces 87550552
10		87360034		2	ESPAÇADOR
11		280736		2	CONTRA PORCA, 5/16"-18, GC
12		87657		2	PARAFUSO, Hex, 5/16"-18 x 1 1/4", G5
13		87548418		1	CABO, Cable, Foot Throttle
14		86603720		2	HASTE
15		87548416		1	PEDAL, Linkage, Foot Throttle
16		118827		1	PINO, 3/16" x 1", Slotted
17		87550545		1	MOLA, Spring, Foot Throttle
18		87550544		1	PEDAL, Link, Foot Throttle
19		291308		1	TIRA VEDADORA, 12 in. Required
20		87557968		1	SUPORTE, Bracket RH
21		87588864		4	ARRUELA PLANA
22		87550550		1	TUBO RÍGIDO, Tube, Bucket
23		87550551		1	TUBO RÍGIDO, Tube, Bucket

TOP CABLE SHOWN IN ART WITH NO REFERENCE NUMBER IS THE EXISTING HAND THROTTLE CABLE. REMOVE AND CONNECT TO THE FOOT THROTTLE LINKAGE AS SHOWN.

L175 C175

COMPONENTES DO TÚNEL - MODELOS COM CONTROLO AUTOMÁTICO

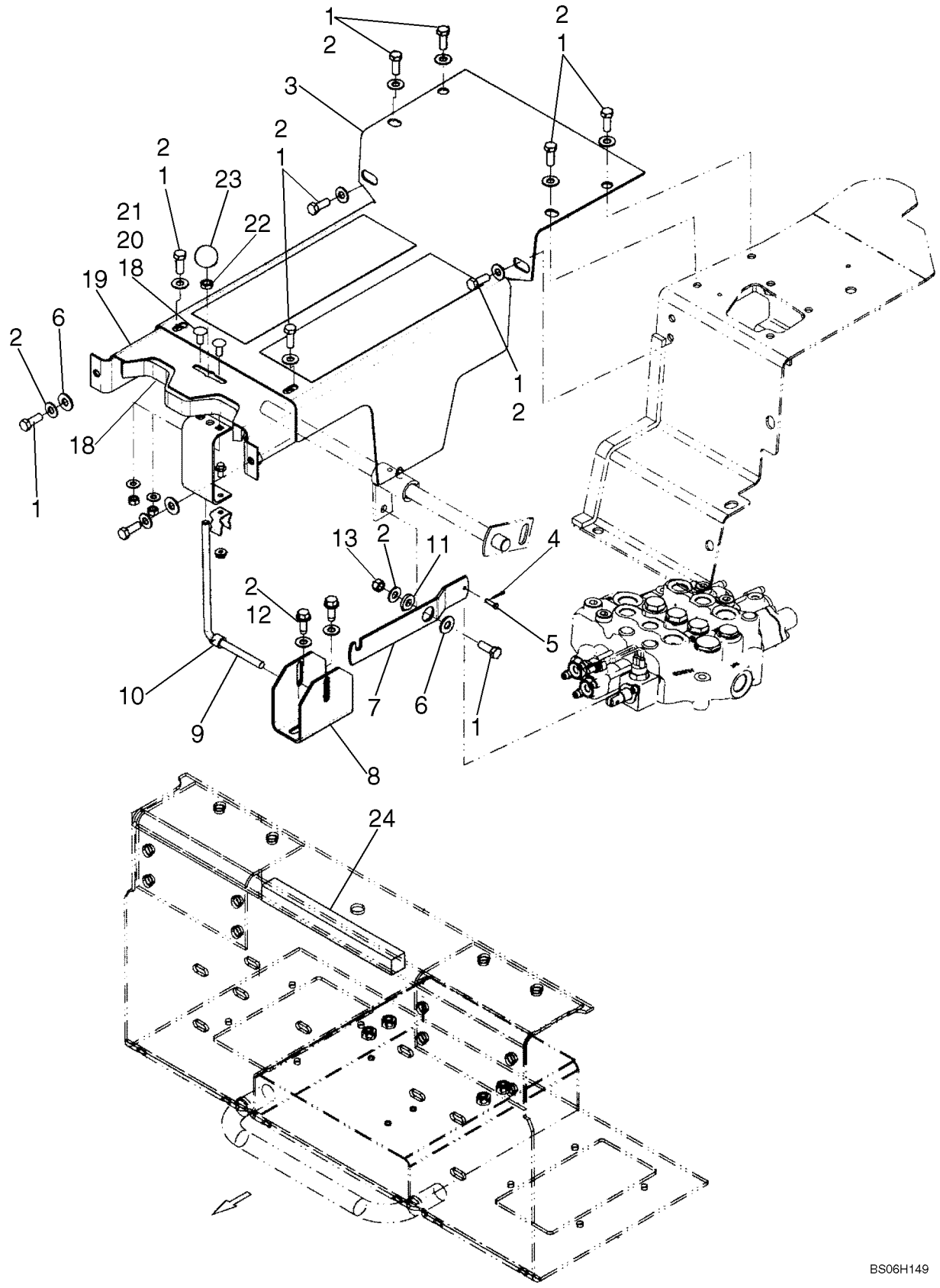

COMPONENTES DO TÚNEL - MODELOS COM CONTROLO AUTOMÁTICO

REF	FN	PART NUMBER	YR/SN	QTY	DESCRIPTION
1		88206		11	PARAFUSO, Hex, 3/8"-16 x 1", G5, Full Thd
2		140045		13	ARRUELA MOLA, Belleville, M10
3		86594689		1	TAMPA
4		81858		1	GRAMPO, 1/16" x 1/2"
5		87033644		1	CUPILHA, 3/16" x .719"
6		80702		3	ARRUELA PLANA, 3/8"
7		87357219		1	BRAÇO, Link, Arm; Aux Control
8		87536436		1	SUPORTE, Two Angled Sides; If Used
8		87591081		1	SUPORTE, One Angled Side, One Rounded Side; If Used
9		86526525		1	HASTE
10		254146		1	ESPAÇADOR
11		641419		1	ARRUELA PLANA
12		280476		2	PARAFUSO, Hex Wash Hd, 3/8" x 1"
13		9628503		1	PORCA, 3/8"-16, G5
14		163902		1	MOLA DE FIXAÇÃO
15		523282		1	PORCA, Flg, USR, 1/4"-20
16		86526523		1	SUPORTE
17		523291		1	PARAFUSO, Hex Flg, 1/4"-20 x 1/2", Serr
18		322358		2	ARRUELA MOLA, Belleville, M8
19		9844213		1	SUPORTE
20		9635082		2	PORCA, 5/16"-18, G5
21		280497		2	PARAFUSO, Short NK, 5/16"-18 x 3/4", G5, Full Thd
22		86509499		1	PORCA, Jam, 3/8"-16, G2
23		168982		1	MANÍPULO
24		291355		X	CUNHA, 2 ft. Required

09-51A		p1	03/08

COMPONENTES DO TÚNEL - DE LUXO CABINE

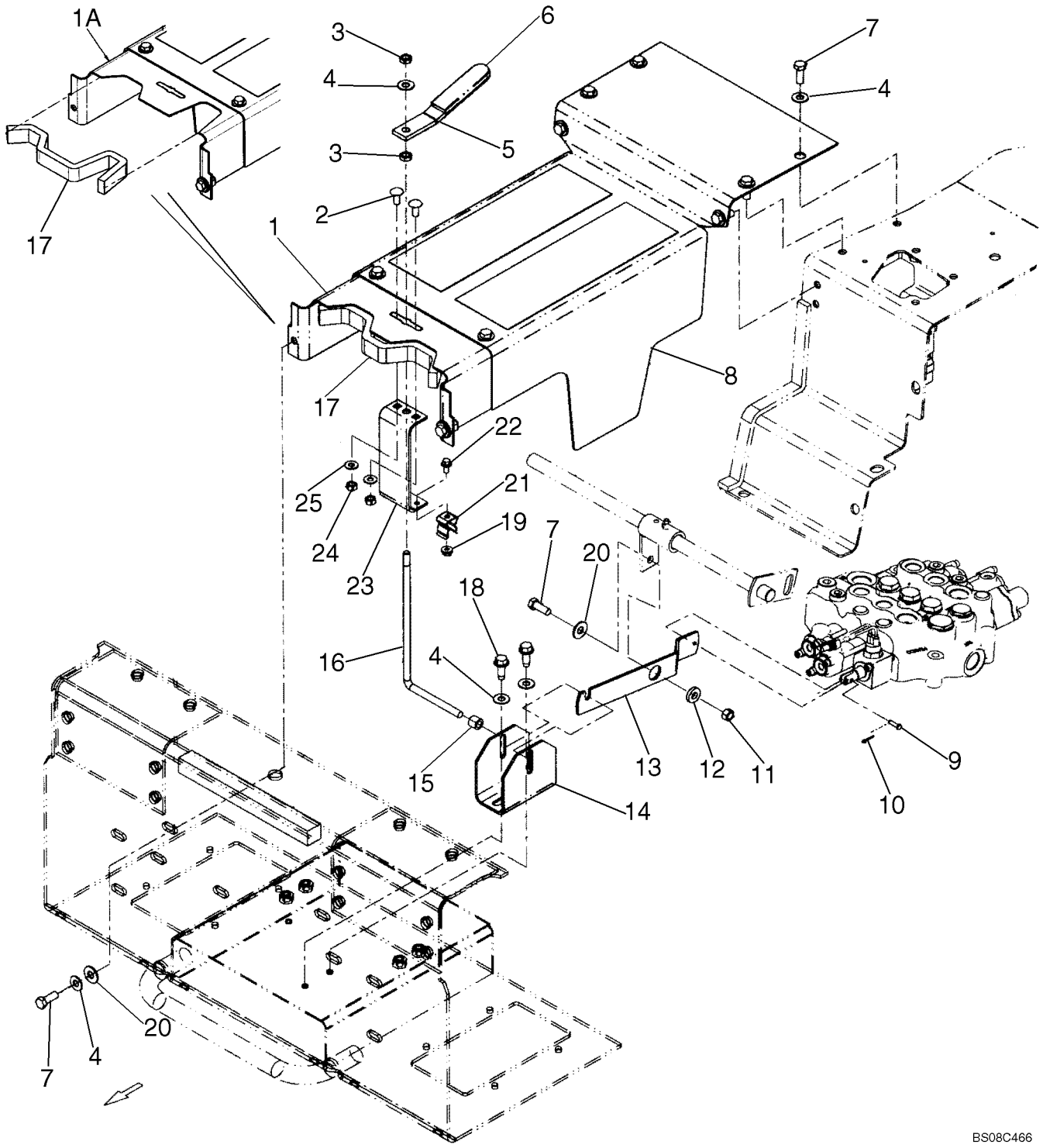

9

COMPONENTES DO TÚNEL - DE LUXO CABINE

REF	FN	PART NUMBER	YR/SN	QTY	DESCRIPTION
1		86634711		1	SUPORTE, If Used
1A		87708382		1	SUPORTE, If Used
2		280497		2	PARAFUSO, Short NK, 5/16"-18 x 3/4", G5, Full Thd
3		86509499		2	PORCA, Jam, 3/8"-16, G2
4		140045		13	ARRUELA MOLA, Belleville, M10
5		87458277		1	MANILHA
6		219838		1	EMPUNHADURA
7		88206		11	PARAFUSO, Hex, 3/8"-16 x 1", G5, Full Thd, Bolt, 3/8-16 x 1 Full Gr5 Znd
8		86633166		1	TAMPA
9		87033644		1	CUPILHA, 3/16" x .719"
10		280236		1	GRAMPO, 1/16" x 1/2"
11		9628503		1	PORCA, 3/8"-16, G5
12		641419		1	ARRUELA PLANA
13		87536438		1	VALVULA, Valve Link
14		87536436		1	SUPORTE, Two Angled Sides; If Used
14		87591081		1	SUPORTE, One Angled Side, One Rounded Side; If Used
15		254146		1	ESPAÇADOR
16		87536437		1	HASTE
17		291355		1	CUNHA, 2.0 Ft., Cut to Length
18		280476		2	PARAFUSO, Hex Wash Hd, 3/8" x 1"
19		523282		1	PORCA, Flg, USR, 1/4"-20
20		80702		3	ARRUELA PLANA, 3/8"
21		163902		1	MOLA DE FIXAÇÃO
22		523291		1	PARAFUSO, Hex Flg, 1/4"-20 x 1/2", Serr
23		87030898		1	SUPORTE
24		9635082		2	PORCA, 5/16"-18, G5
25		322358		2	ARRUELA MOLA, Belleville, M8

COMPONENTES DO TÚNEL - MODELOS COM CONTROLO AUTOMÁTICO, EH CONTROLE AUXILIAR

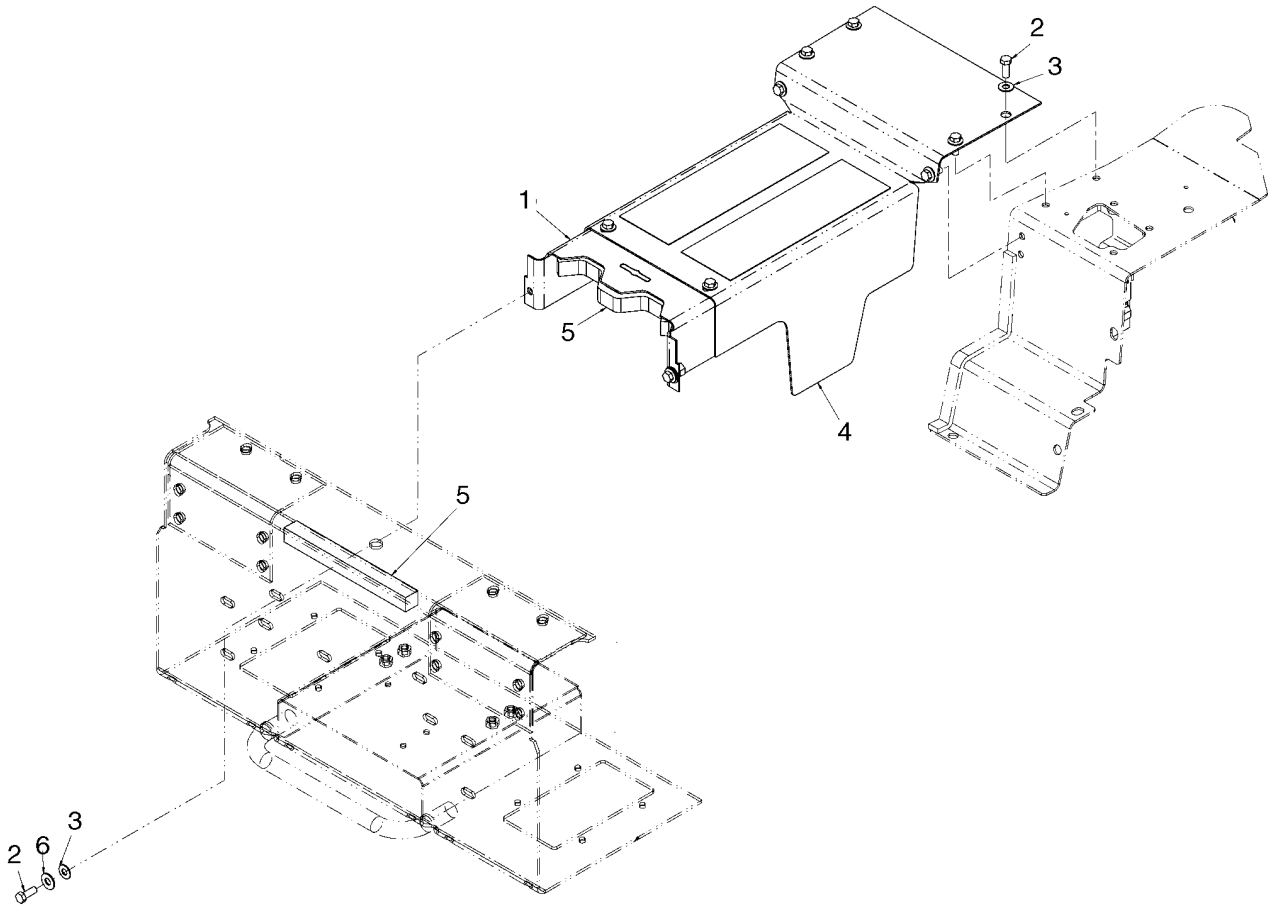

BS08A444

COMPONENTES DO TÚNEL - MODELOS COM CONTROLO AUTOMÁTICO, EH CONTROLE AUXILIAR

REF	FN	PART NUMBER	YR/SN	QTY	DESCRIPTION
1		86634711		1	SUPORTE
2		88206		10	PARAFUSO, Hex, 3/8"-16 x 1", G5, Full Thd
3		140045		10	ARRUELA MOLA, Belleville, M10
4		86633166		1	TAMPA
5		291355		AR	CUNHA, 2 FT Required
6		80702		2	ARRUELA PLANA, 3/8"

PEDAIS - MODELOS COM CONTROLO AUTOMÁTICO

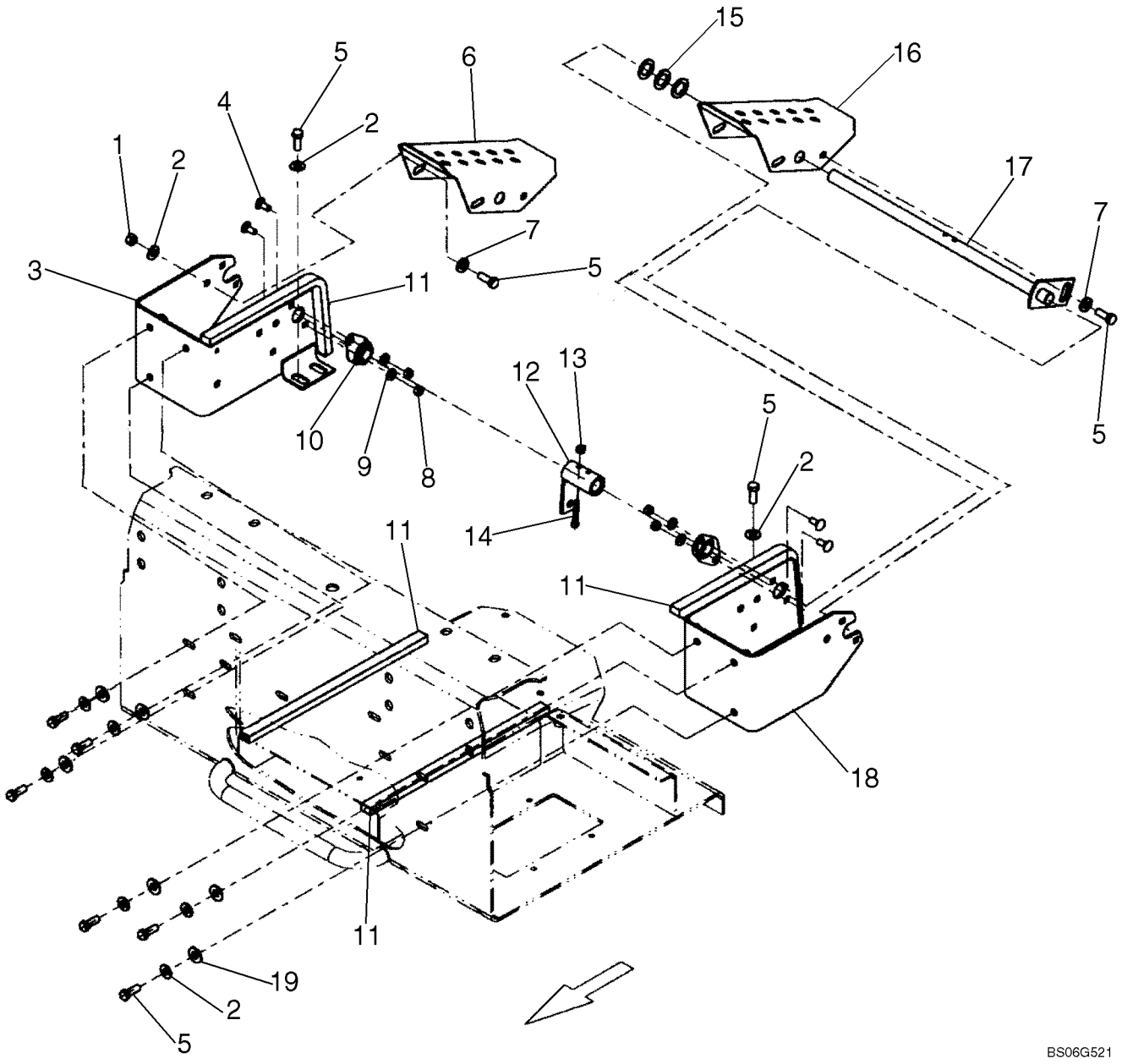

PEDAIS - MODELOS COM CONTROLO AUTOMÁTICO

REF	FN	PART NUMBER	YR/SN	QTY	DESCRIPTION
1		9628503		1	PORCA, 3/8"-16, G5
2		140045		9	ARRUELA MOLA, Belleville, M10
3		86639934		1	SUPORTE, RH
4		280327		4	PARAFUSO, Short NK, 5/16"-18 x 3/4", G5
5		88206		10	PARAFUSO, Hex, 3/8"-16 x 1", G5, Full Thd
6		86573062		1	PEDAL
7		285072		2	ARRUELA PLANA
8		9635082		4	PORCA, 5/16"-18, G5
9		322358		4	ARRUELA MOLA, Belleville, M8
10		86567251		2	ROLAMENTO
11		291308		1	TIRA VEDADORA, Cut To Length, 5 ft. Required
12		86522404		1	CUBO
13		20356		1	CONTRA PORCA, 1/4"-20, GB
14		86979755		1	PARAFUSO, Hex Soc Hd, 1/4"-20 x 1 1/2"
15		249100		3	ARRUELA PLANA
16		9622462		1	PEDAL
17		86573063		1	EIXO
18		86639936		1	SUPORTE, LH
19		80702		6	ARRUELA PLANA, 3/8"

PEDAIS - MODELOS COM CONTROLO AUTOMÁTICO, EH CONTROLE AUXILIAR

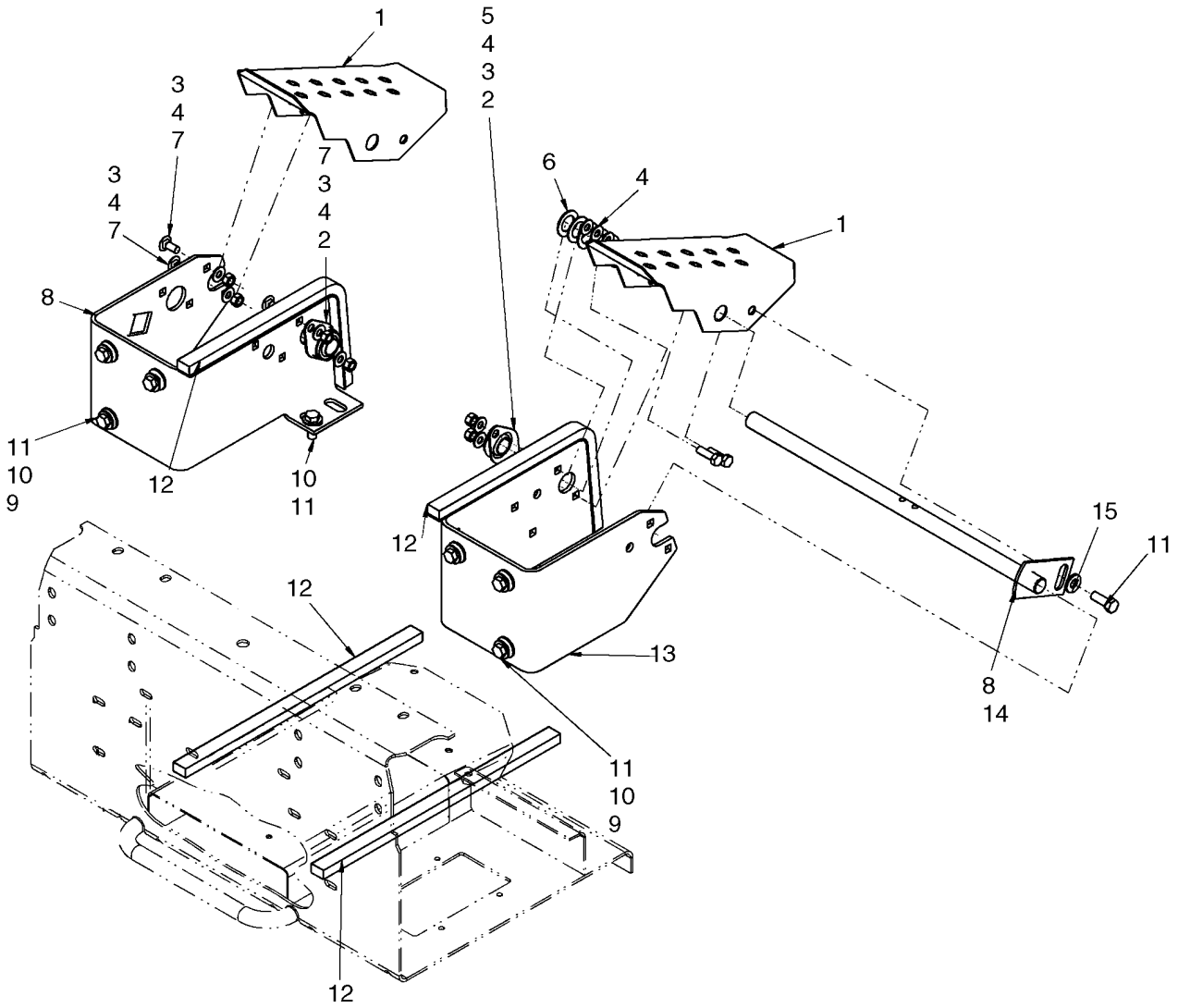

PEDAIS - MODELOS COM CONTROLO AUTOMÁTICO, EH CONTROLE AUXILIAR

REF	FN	PART NUMBER	YR/SN	QTY	DESCRIPTION
1		87550553		2	PEDAL
2		86567251		2	ROLAMENTO, Side Flange
3		9635082		6	PORCA, 5/16"-18, G5
4		322358		12	ARRUELA MOLA, Belleville, M8
5		9635884		2	PARAFUSO, Hex, 5/16"-18 x 1", G5, Full Thd
6		249100		5	ARRUELA PLANA
7		280327		4	PARAFUSO, Short NK, 5/16"-18 x 3/4", G5
8		87557968		1	SUPORTE, RH
9		80702		6	ARRUELA PLANA, 3/8"
10		140045		8	ARRUELA MOLA, Belleville, M10
11		88206		9	PARAFUSO, Hex, 3/8"-16 x 1", G5, Full Thd
12		291308		AR	TIRA VEDADORA, 5 Ft Required
13		86639936		1	SUPORTE, Bracket, LH
14		86573063		1	EIXO
15		285072		1	ARRUELA PLANA

CONTROLE MANUAL - CONTROLO AUTOMÁTICO, DIREITA

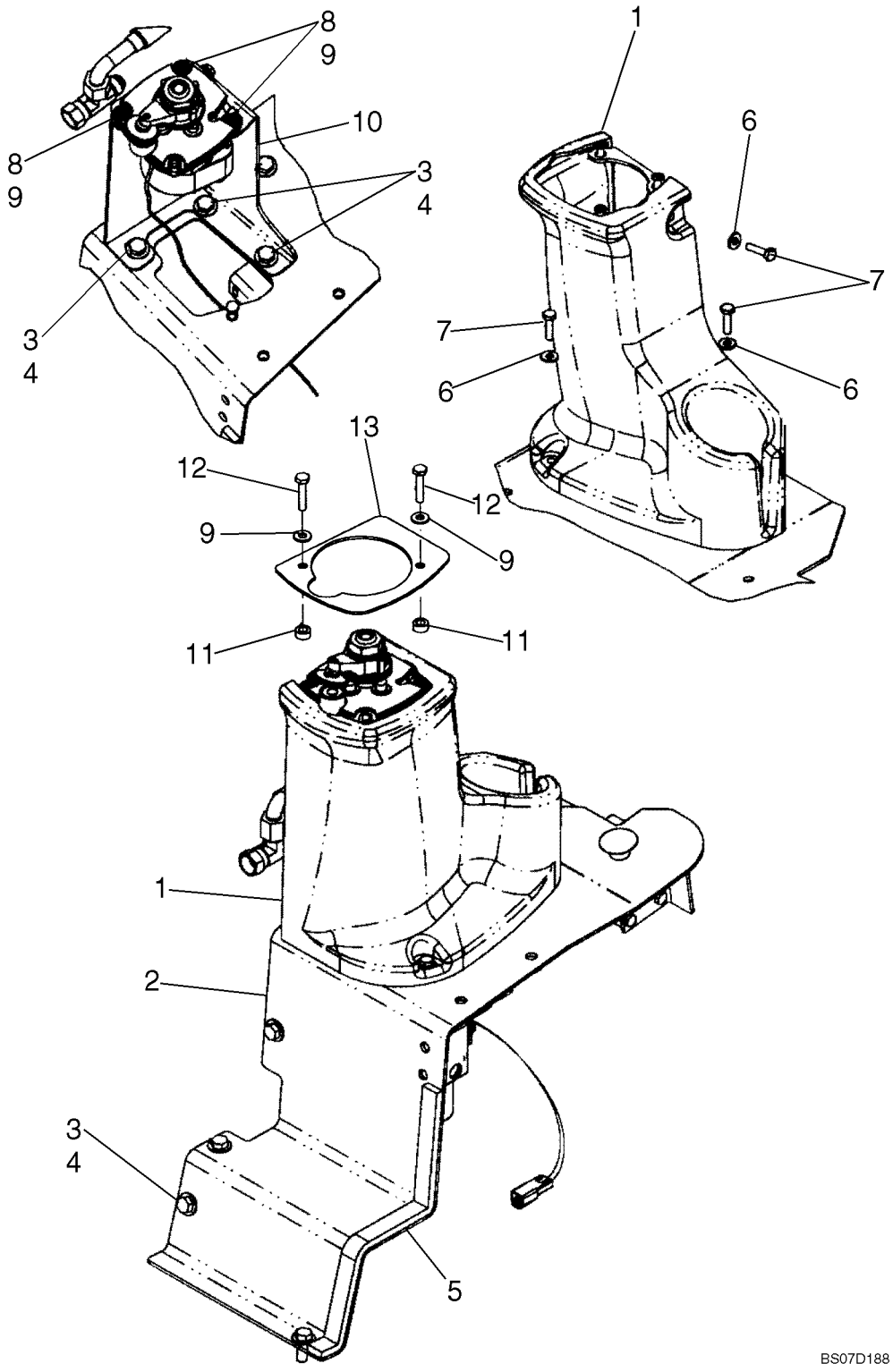

CONTROLE MANUAL - CONTROLO AUTOMÁTICO, DIREITA

REF	FN	PART NUMBER	YR/SN	QTY	DESCRIPTION
1		87357144		1	COBERTURA, Pilot Control, RH
2		87357127		1	PAINEL DE CONTROLE, Kick Panel, RH
3		140045		7	ARRUELA MOLA, Belleville, M10
4		88206		7	PARAFUSO, Hex, 3/8"-16 x 1", G5, Full Thd
5		291308		1	TIRA VEDADORA, 2.6 Ft. Required
6		88146		3	PARAFUSO, Hex, 1/4"-20 x 1", G5
7		87361		3	ARRUELA PLANA, 1/4", SAE
8		87557478		1-3	BOTÃO DE IMPULSO, Screw; Only (1) Used When Boot Retainer Plate Is Used
9		87318948		3	BOTÃO DE IMPULSO, Washer, .281 x .625 x .075 HDN ZND
10		87357132		1	PAINEL DE CONTROLE, Control Tower RH
11		87610699		2	BOTÃO DE IMPULSO, Spacer; 1/4 Pipe x 6.4 mm
12		87716		2	PARAFUSO, Hex, 1/4"-20 x 1 1/4", G5
13		87557965		1	PLACA, Boot Retainer
		87609685		1	KIT, SERVICE, Boot Retainer Kit; Incl. 11 - 13 And Instructions

CONTROLE MANUAL - CONTROLO AUTOMÁTICO, DIREITA

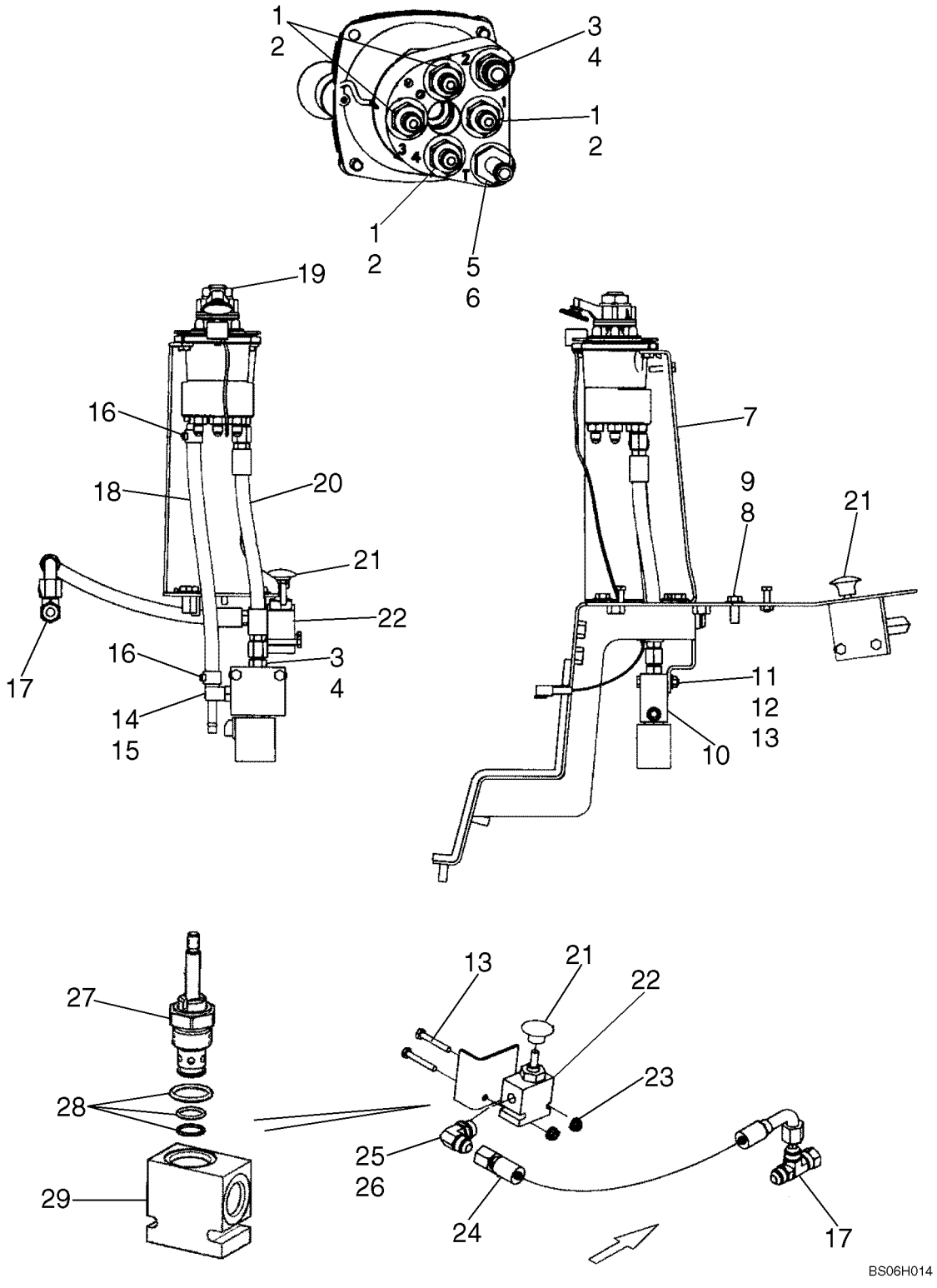

CONTROLE MANUAL - CONTROLO AUTOMÁTICO, DIREITA

REF	FN	PART NUMBER	YR/SN	QTY	DESCRIPTION
1		139398		4	CONEXÃO, 7/16"-20, 37º x 9/16"-18, O-Ring, Incl. 2
2		9617873		4	ANEL "O", 6-1, 90 Duro, .468" ID x .078" Thk
3		76350		2	CONEXÃO, 9/16"-18, 37º x 9/16"-18, O-Ring, Incl. 4
4		9617873		2	ANEL "O", 6-1, 90 Duro, .468" ID x .078" Thk
5		87360975		1	CONEXAO, Incl. 6
6		9617873		1	ANEL "O", 6-1, 90 Duro, .468" ID x .078" Thk
7		87357132		1	PAINEL DE CONTROLE
8		88206		1	PARAFUSO, Hex, 3/8"-16 x 1", G5, Full Thd
9		140045		1	ARRUELA MOLA, Belleville, M10
10		87357112		1	VÁLVULA HIDRAULICA, Service With Kit 87599278 Ref. 10A
10A		87599278		1	KIT, SERVICE, Use To Service 87357112; Not Illustrated
11		7770		2	PORCA, 1/4"-20, G5
12		87361		5	ARRUELA PLANA, 1/4", SAE
13		280164		4	PARAFUSO, Hex, 1/4"-20 x 1 3/4", G5
14		87357113		1	ADAPTADOR, Incl. 15
15		9617873		1	ANEL "O", 6-1, 90 Duro, .468" ID x .078" Thk
16		87019540		2	PRENDEDOR
16		87584302		2	PRENDEDOR, 18mm; Replaces 87019540
17		86511870		1	TEE, 37º, 3/4"-16 x 3/4"-16, Fem Sw Run
18		87357177		1	MANGUEIRA, 314 mm, 12.36 in.
19		87578504		1	VALVULA PILOTO, See Figure 08-21B
20		87397694		1	MANGUEIRA, 275 mm, 10.83 in.
21		87522292		1	MANÍPULO
22		87584305		1	VÁLVULA HIDRAULICA, Incl. 27, 28, 29, 30
23		523282		2	PORCA, Flg, USR, 1/4"-20
24		87522288		1	MANGUEIRA
25		128830		1	COTOVELO, 90º, 3/4"-16, 37º x 3/4"-16, O-Ring, Incl. 26
26		128825		1	ANEL "O", 8-1, 90 Duro, .644" ID x .087" Thk
27		87584306		1	VÁLVULA HIDRAULICA, Cartridge
28		87584307		1	VÁLVULA HIDRAULICA, Seal Kit
29		NSS		1	BOLETIM INFORMATIVO, Valve Body
30		87550546		1	ORIFICIO, Not Illustrated

CONTROLE MANUAL - CONTROLO AUTOMÁTICO, ESQUERDA

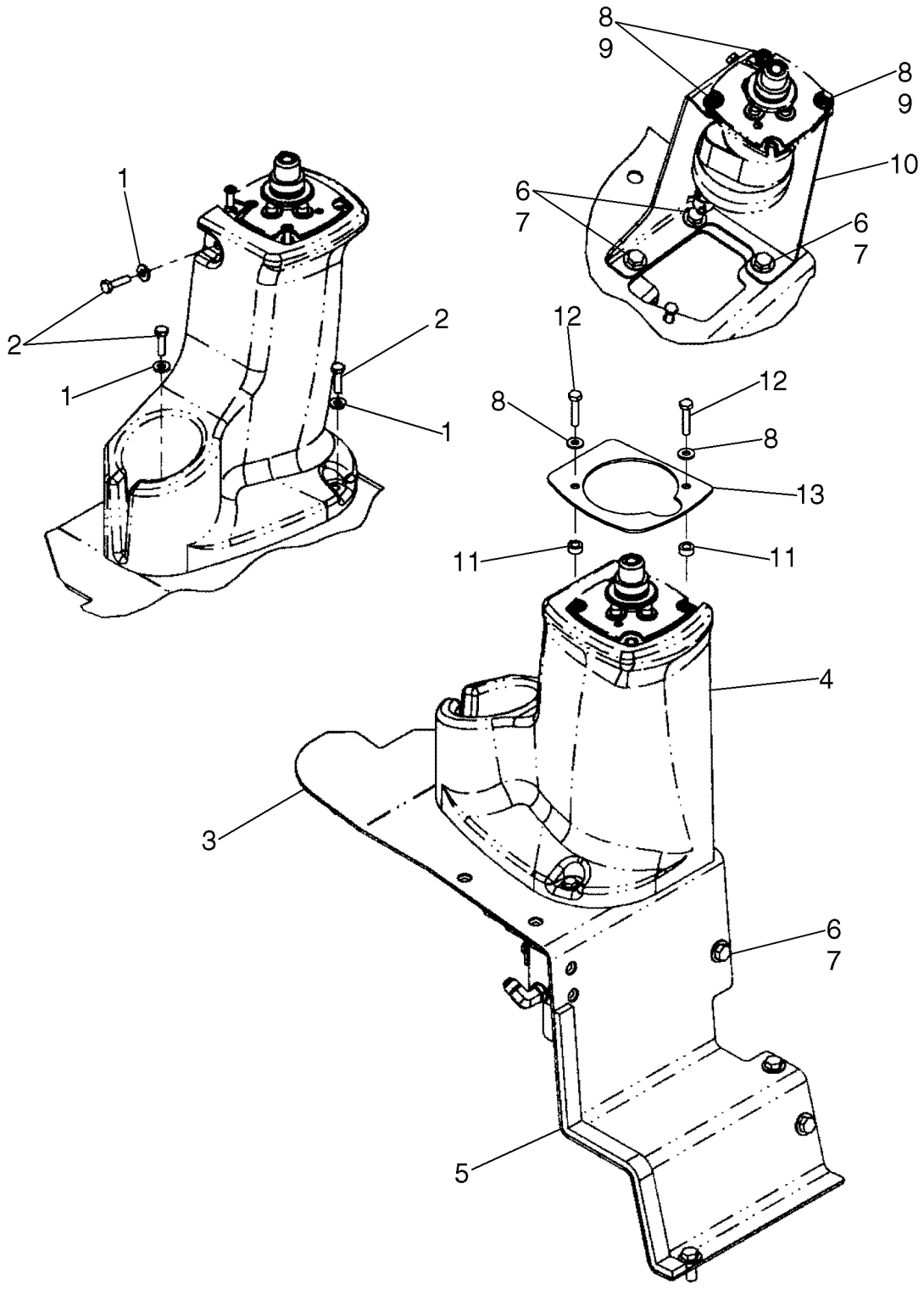

CONTROLE MANUAL - CONTROLO AUTOMÁTICO, ESQUERDA

REF	FN	PART NUMBER	YR/SN	QTY	DESCRIPTION
1		87361		3	ARRUELA PLANA, 1/4", SAE
2		88146		3	PARAFUSO, Hex, 1/4"-20 x 1", G5
3		87357136		1	PAINEL, Kick Panel, LH
4		87357145		1	COBERTURA, Pilot Control, LH
5		291308		1	TIRA VEDADORA, 2.6 Ft. Required
6		140045		7	ARRUELA MOLA, Belleville, M10
7		88206		7	PARAFUSO, Hex, 3/8"-16 x 1", G5, Full Thd
8		87318948		3	BOTÃO DE IMPULSO, Washer, .281 x .625 x .075 HDN ZND
9		87557478		1-3	BOTÃO DE IMPULSO, Screw; Only (1) Used When Boot Retainer Plate Is Used
10		87357140		1	PAINEL, Control Tower LH
11		87610699		2	BOTÃO DE IMPULSO, Spacer; 1/4 Pipe x 6.4 mm
12		87716		2	PARAFUSO, Hex, 1/4"-20 x 1 1/4", G5
13		87557965		1	PLACA, Boot Retainer
		87609685		1	KIT, SERVICE, Boot Retainer Kit; Incl. 11 - 13 And Instructions

CONTROLE MANUAL - CONTROLO AUTOMÁTICO, ESQUERDA

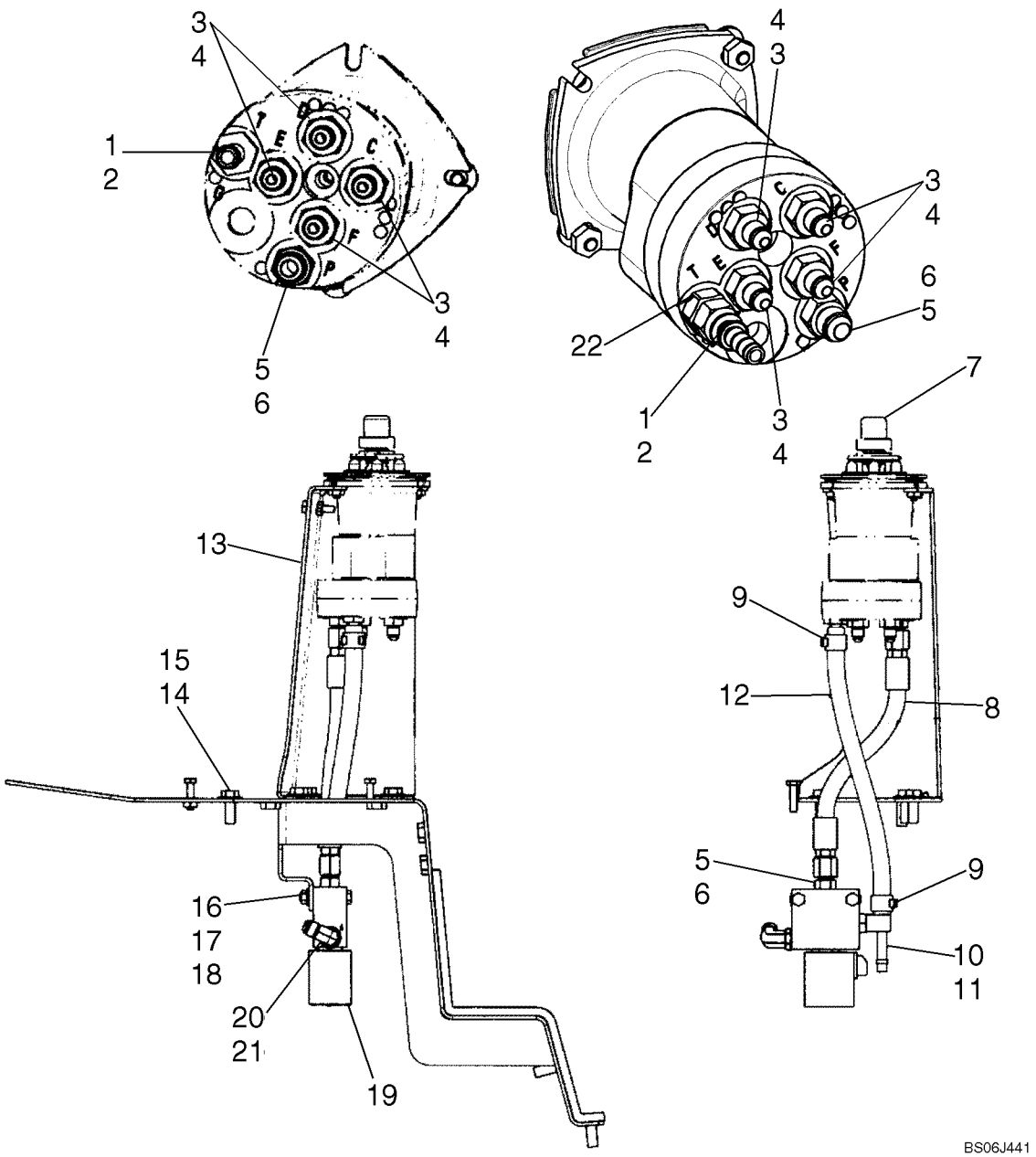

CONTROLE MANUAL - CONTROLO AUTOMÁTICO, ESQUERDA

REF	FN	PART NUMBER	YR/SN	QTY	DESCRIPTION
1		87580812		1	ADAPTADOR, Fitting, Female 37 Deg SW
2		9617873		1	ANEL "O", 6-1, 90 Duro, .468" ID x .078" Thk
3		139398		4	CONEXÃO, 7/16"-20, 37º x 9/16"-18, O-Ring, Incl. 4
4		9617873		4	ANEL "O", 6-1, 90 Duro, .468" ID x .078" Thk
5		76344		2	COTOVELO, 90º, 9/16"-18, 37º x 9/16"-18, O-Ring, Includes 6
5		76350		2	CONEXÃO, 9/16"-18, 37º x 9/16"-18, O-Ring, Replaces 76344; Incl. 6
6		9617873		2	ANEL "O", 6-1, 90 Duro, .468" ID x .078" Thk
7		87565841		1	DISTRIBUIDOR, Joystick Valve, LH - Component Parts Not Available At Time Of Printing
8		87357176		1	MANGUEIRA
9		87019540		2	PRENDEDOR
10		87357113		1	ADAPTADOR, Incl. 11
11		237-6006		1	ANEL "O", 6-1, 90 Duro, .468" ID x .078" Thk
12		87580068		1	MANGUEIRA, 260 mm, 10.24 in.; If Used
12		87397695		1	MANGUEIRA, 285 mm, 11.22 in.; If Used
13		87357140		1	PAINEL, Control Tower, LH
14		140045		1	ARRUELA MOLA, Belleville, M10
15		88206		8	PARAFUSO, Hex, 3/8"-16 x 1", G5, Full Thd
16		280164		2	PARAFUSO, Hex, 1/4"-20 x 1 3/4", G5
17		87361		2	ARRUELA PLANA, 1/4", SAE
18		7770		2	PORCA, 1/4"-20, G5
19		87357112		1	VÁLVULA HIDRAULICA, Service With Kit 87599278 Ref. 19A
19A		87599278		1	KIT, SERVICE, Use To Service 87357112; Not Illustrated
20		76344		1	COTOVELO, 90º, 9/16"-18, 37º x 9/16"-18, O-Ring, Includes 21
21		9617873		1	ANEL "O", 6-1, 90 Duro, .468" ID x .078" Thk
22		87579746		1	VÁLVULA HIDRAULICA, Check Valve, 15 PSI Crack Pressure

09-57		p1	03/08

CONJUNTO ACÚSTICO

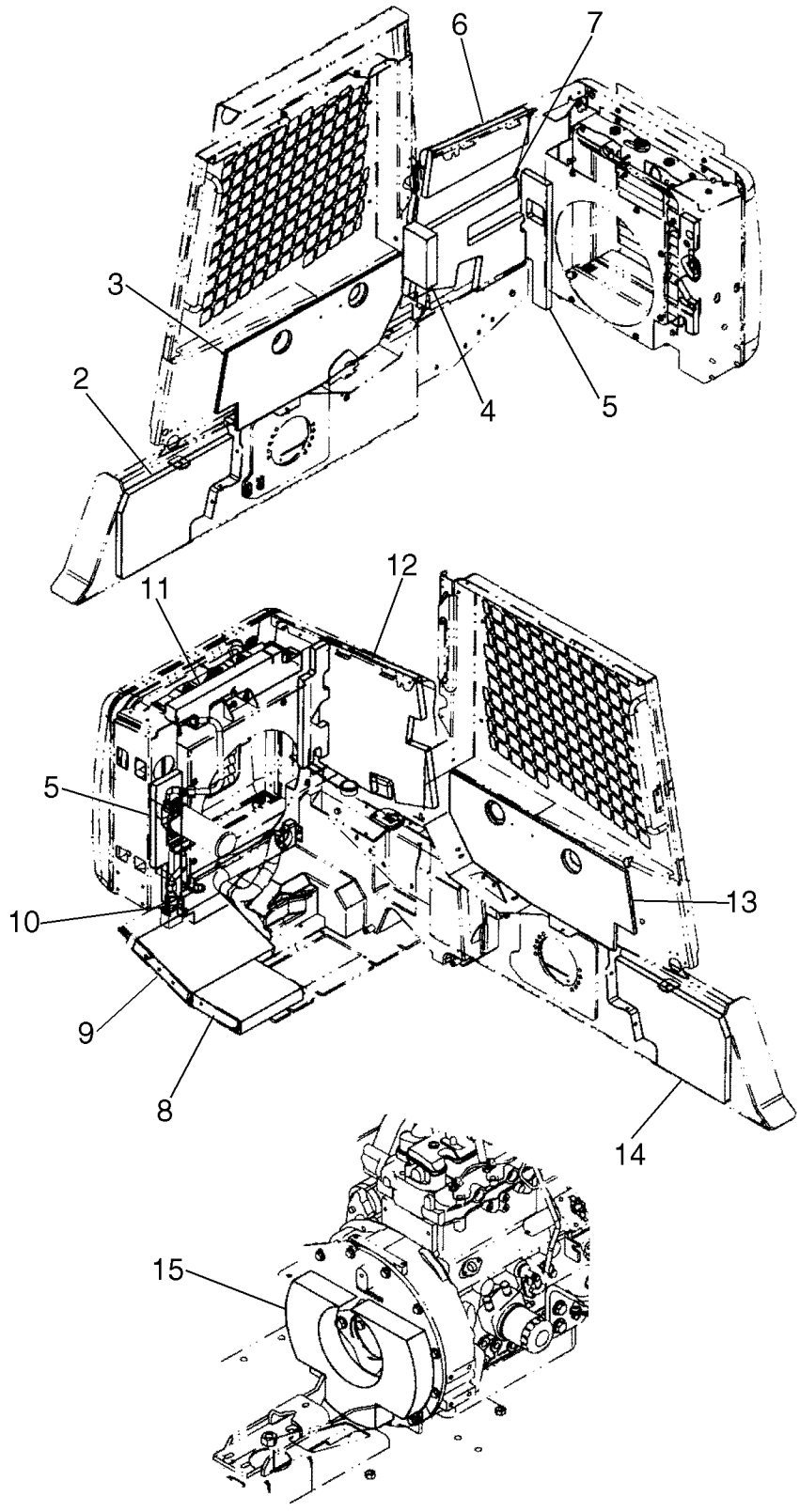

CONJUNTO ACÚSTICO

REF	FN	PART NUMBER	YR/SN	QTY	DESCRIPTION
1		251490		1	COBRE-JUNTA, Adhesive 732, Clear
2		86506570		1	PAINEL, Kick Panel, RH
3		86506559		1	REVESTIMENTO ISOLANTE, Panel, LH Liner
4		86518697		1	PAINEL, Panel, Engine Front
5		87397046		1	ESPUMA, Foam Pad, Radiator Support RH
6		87397044		1	ESPUMA, Foam Pad, Side Panel RH
7		87397043		1	ESPUMA, Foam Pad, Side Panel RH
8		87462499		1	CUNHA, Foam
9		87462500		1	CUNHA, Foam
10		87397042		1	ESPUMA, Pad, Radiator Support
11		87397056		1	ESPUMA, Pad, Top Radiator
12		87397048		1	ESPUMA, Foam Pad, Side Panel LH
13		86506560		1	REVESTIMENTO ISOLANTE, Panel, RH Liner
14		86506571		1	PAINEL, Kick Panel, LH
15		87397040		1	ESPUMA, Foam Pad, Flywheel Cover

09-58		p1	03/08

CONJUNTO ACÚSTICO

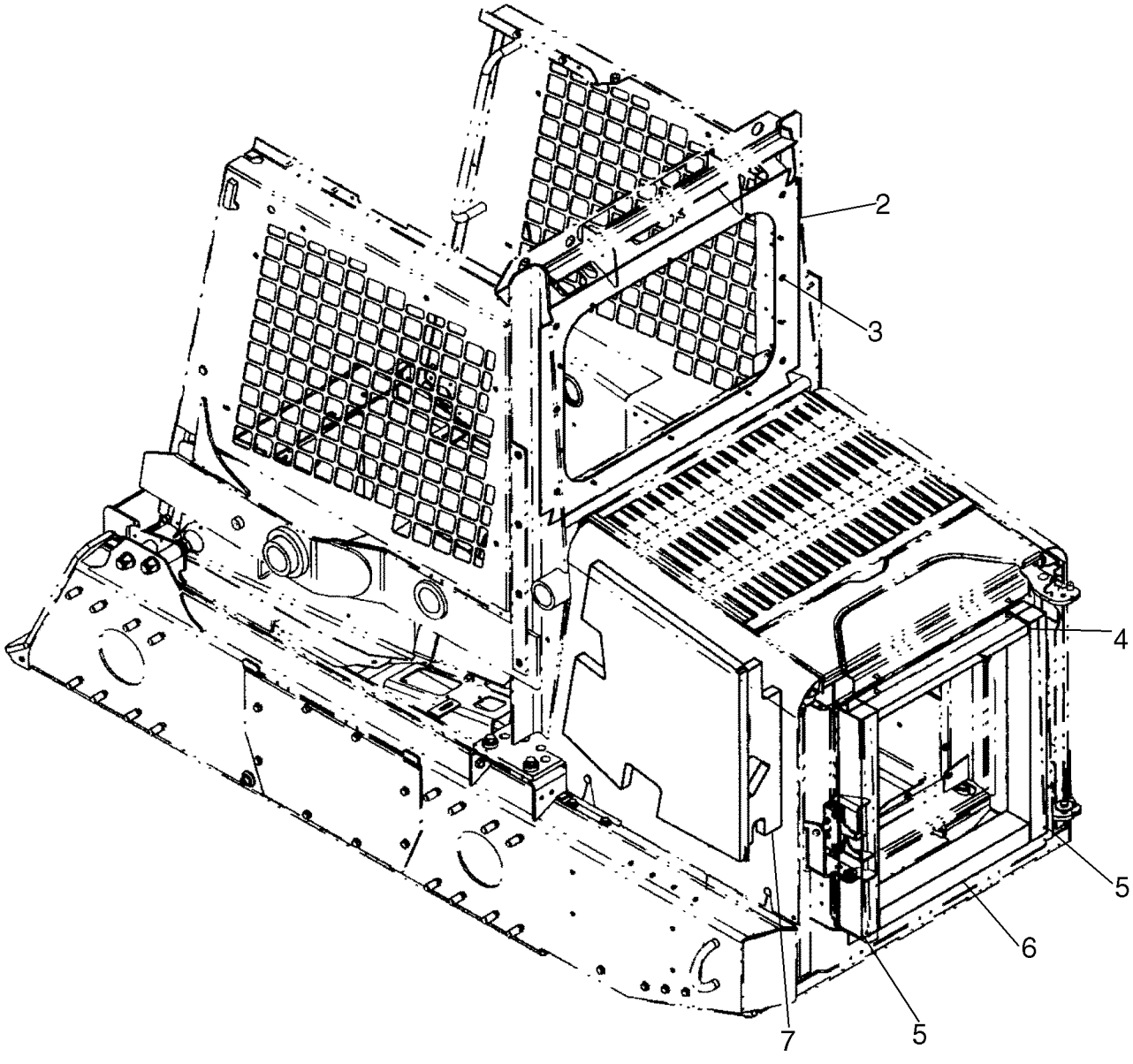

CONJUNTO ACÚSTICO

REF	FN	PART NUMBER	YR/SN	QTY	DESCRIPTION
1		251490		1	COBRE-JUNTA, Adhesive 732, Clear
2		86506562		1	PAINEL, Rear Window
3		86520136		10	REBITE
4		87397047		1	ESPUMA, Foam Pad, Door Top
5		87397049		2	ESPUMA, Foam Pad, Door Side
6		87397050		1	ESPUMA, Foam Pad, Door Bottom
7		87397045		1	ESPUMA, Foam Pad, Radiator Support LH

CONJUNTO ACÚSTICO

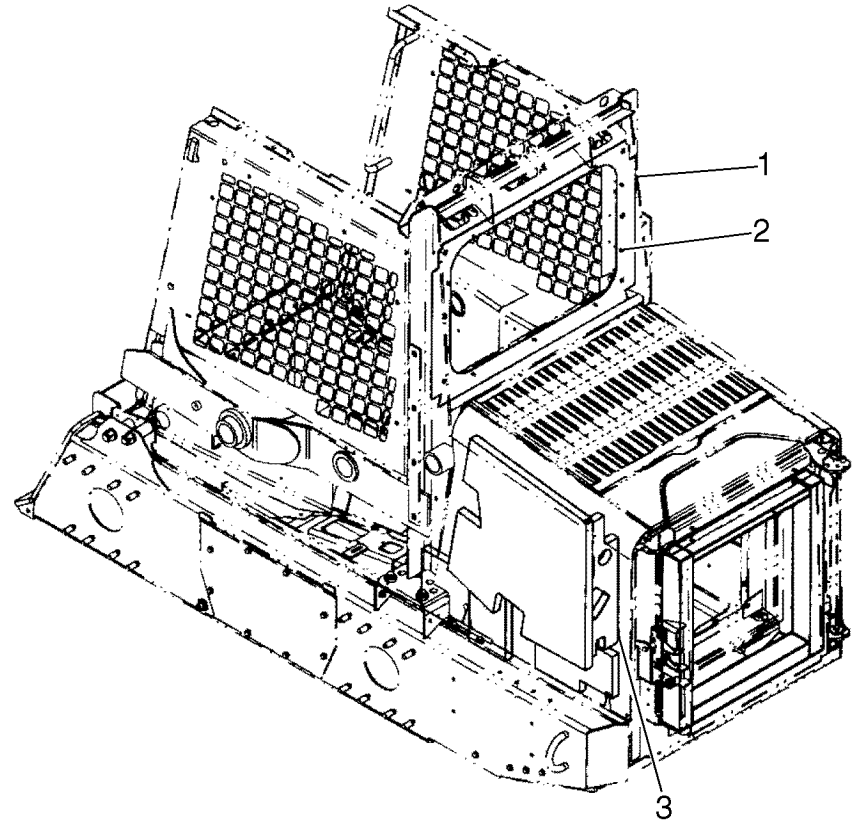

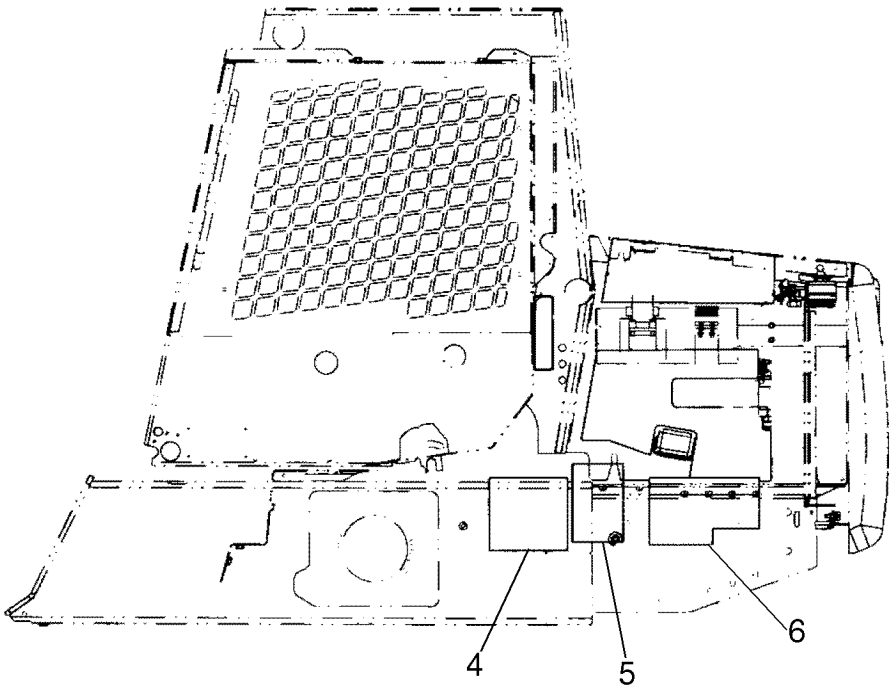

BS07C562

CONJUNTO ACÚSTICO

REF	FN	PART NUMBER	YR/SN	QTY	DESCRIPTION
1		87649532		1	ESPUMA, Sound Panel, Rear Window
2		86520136		10	REBITE
3		87611897		1	ESPUMA ISOLANTE, Sound Pad, Radiator Support LH
4		87615558		1	ESPUMA ISOLANTE, Foam Pad
5		87462527		1	CUNHA, Foam Pad
6		87462525		1	CUNHA, Foam Pad

CONJUNTO ACÚSTICO - SILENCIADOR

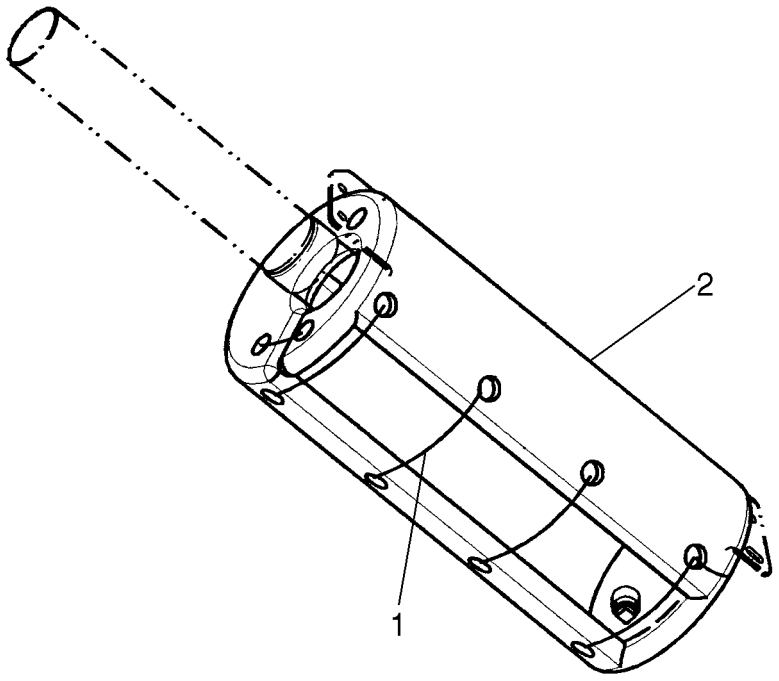

BS07A039

CONJUNTO ACÚSTICO - SILENCIADOR

REF	FN	PART NUMBER	YR/SN	QTY	DESCRIPTION
1		87393399		7	MOLA, Tie, Stainless Steel
2		87602973		1	SILENCIOSO, Muffler Wrap

CONJUNTO ACÚSTICO - JUEGO PARA EL RUIDO

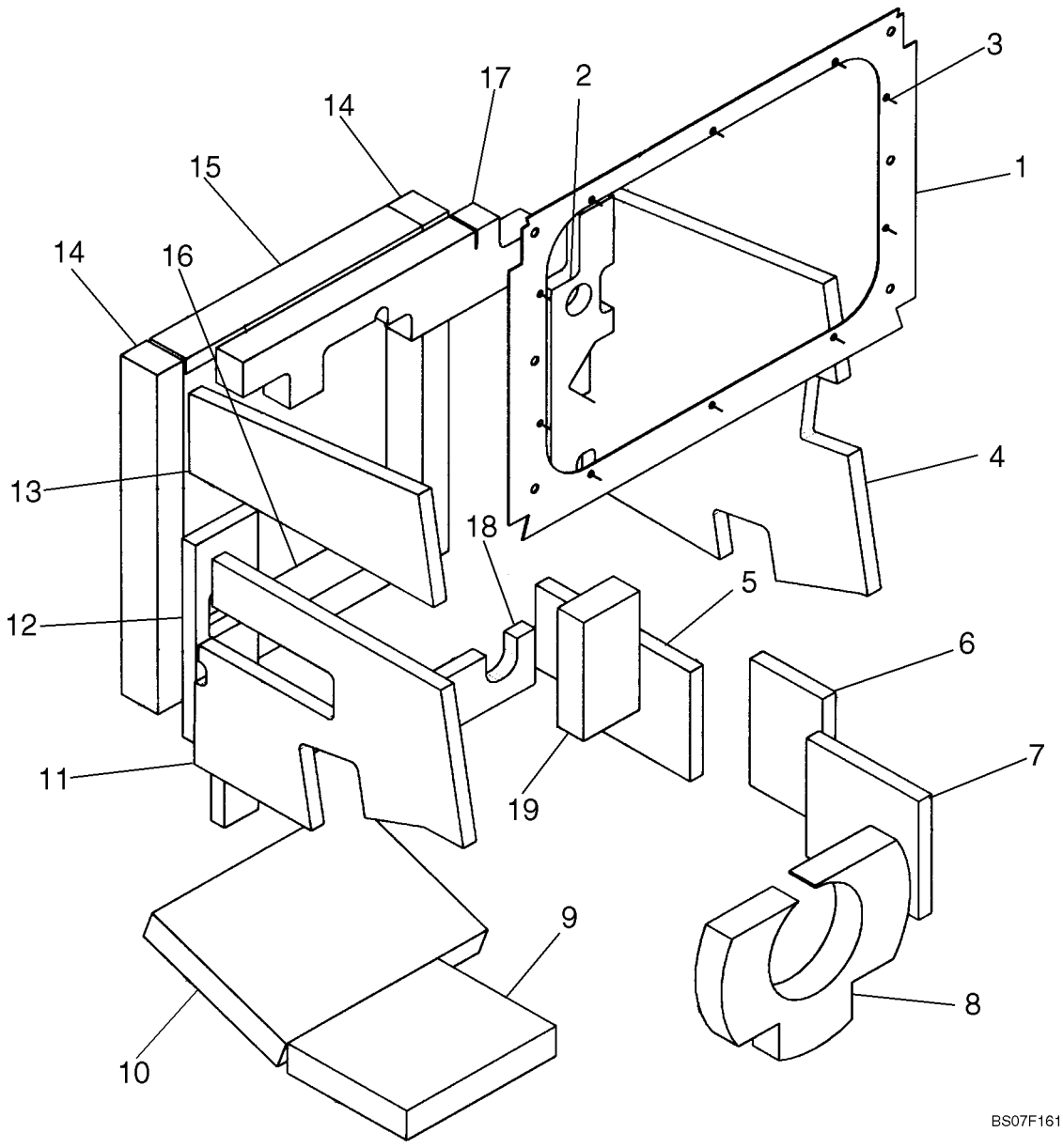

CONJUNTO ACÚSTICO - JUEGO PARA EL RUIDO

REF	FN	PART NUMBER	YR/SN	QTY	DESCRIPTION
		87654489		1	KIT, SERVICE, Noise Abatement Kit; Incl. 1 - 28
1		87649532		1	ESPUMA, Rear Window Panel
2		87611897		1	ESPUMA ISOLANTE, Sound Pad, Radiator Support LH
3		86520136		10	REBITE
4		87397048		1	ESPUMA, Sound Pad, Side Panel LH
5		87462525		1	CUNHA, Sound Pad
6		87462527		1	CUNHA, Sound Pad
7		87615558		1	ESPUMA ISOLANTE, Sound Pad
8		87397040		1	ESPUMA, Sound Pad, Flywheel Cover
9		87462499		1	CUNHA, Sound Pad
10		87462500		1	CUNHA, Sound Pad
11		87397043		1	ESPUMA, Sound Pad, Side Panel RH
12		87397046		1	ESPUMA, Sound Pad, Radiator Support RH
13		87397044		1	ESPUMA, Sound Pad, Top Side Panel RH
14		87397049		2	ESPUMA, Sound Pad, Side Door
15		87397047		1	ESPUMA, Sound Pad, Top Door
16		87397050		1	ESPUMA, Sound Pad, Bottom Door
17		87397056		1	ESPUMA, Sound Pad, Top Radiator
18		87397042		1	ESPUMA, Sound Pad, Bottom Radiator Support
19		86518697		1	PAINEL, Engine Front
20		86506559		1	REVESTIMENTO ISOLANTE, Liner, LH; Not Illustrated; See Fig. 09-57, Ref. 3
21		86506560		1	REVESTIMENTO ISOLANTE, Liner, RH; Not Illustrated; See Fig. 09-57, Ref. 13
22		86506570		1	PAINEL, Kick Panel, RH; Not Illustrated; See Fig. 09-57, Ref. 2
23		86506571		1	PAINEL, Kick Panel, LH; Not Illustrated; See Fig. 09-57, Ref. 14
24		87586454		1	DECALCOMANIA, Decal, Warning Read Manual, Know Controls; See Fig. 09-83, Ref. 4
25		87586455		1	DECALCOMANIA, Warning And Foot Controls; See Fig. 09-83, Ref. 9
26		87586456		1	DECALCOMANIA, Important, Avoid Engine Damage; See Fig. 09-83, Ref. 3

CONJUNTO ACÚSTICO - JUEGO PARA EL RUIDO

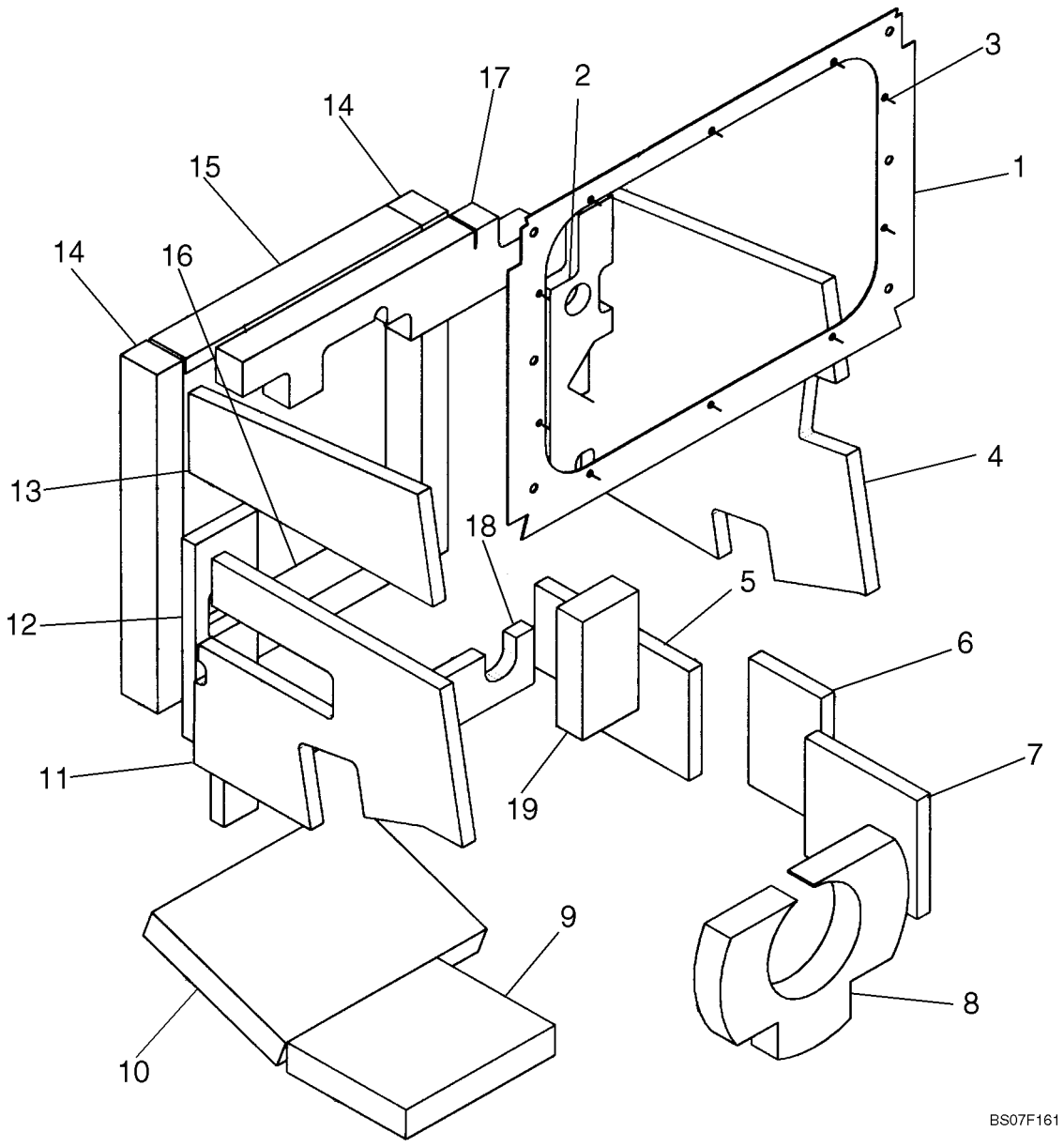

CONJUNTO ACÚSTICO - JUEGO PARA EL RUIDO

REF	FN	PART NUMBER	YR/SN	QTY	DESCRIPTION
27		87586457		1	DECALCOMANIA, Important, Foot Controls; See Fig. 09-83, Ref. 8
28		87626176		1	DECALCOMANIA, Decal, Pilot Control Warning; See Fig. 09-83, Ref. 7

CONJUNTO DO ASSENTO STANDARD

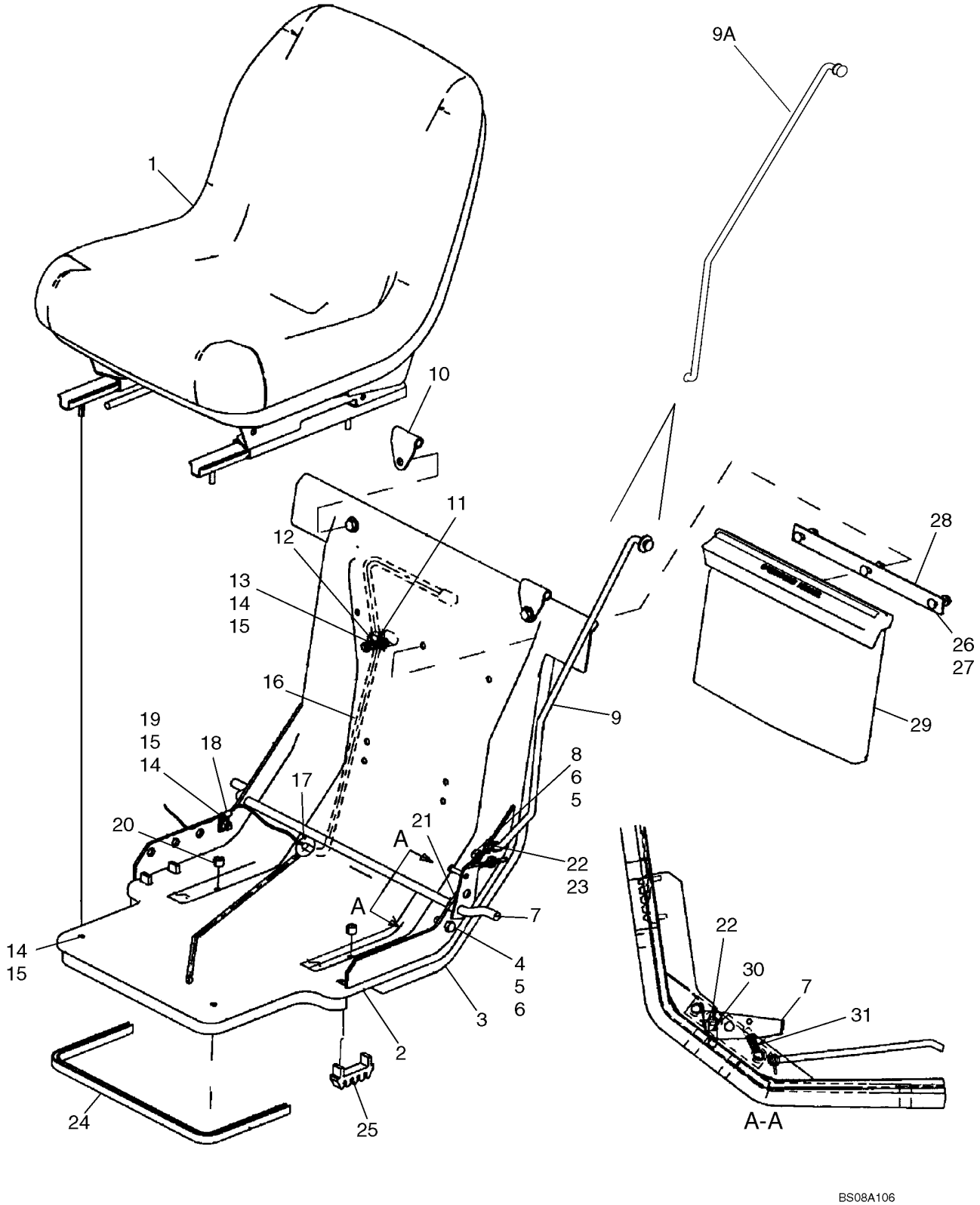

CONJUNTO DO ASSENTO STANDARD

REF	FN	PART NUMBER	YR/SN	QTY	DESCRIPTION
		REF			INSTRUCAO, Seat Assy 86579884, Used In Production; Incl. 1 - 31
1		87019258		1	ASSENTO/POLTRONA, With Logo, 1 Switch; See Figure 09-60
2		87029353		1	SUPORTE
3		87029454		1	ISOLANTE, Sound Barrier
4		88206		3	PARAFUSO, Hex, 3/8"-16 x 1", G5, Full Thd
5		140045		4	ARRUELA MOLA, Belleville, M10
6		9628503		3	PORCA, 3/8"-16, G5
7		86501739		1	TRINCO
8		88011		1	PARAFUSO, Hex, 3/8"-16 x 1 1/4", G5, Full Thd
9		86522000		1	HASTE
9A		87628301		1	HASTE, Rod
10		9622416		2	DOBRADIÇA
11		858956		1	PRENDEDOR, 7/16", Insul, 5/16" Bolt
12		86526695		1	ESPAÇADOR
13		88275		1	PARAFUSO, Hex, 5/16"-18 x 1 1/2", G5
14		322358		6	ARRUELA MOLA, Belleville, M8
15		9635082		6	PORCA, 5/16"-18, G5
16		9828011		1	CHICOTE DE FIOS, Seat
17		274569		1	CASQUILHO ISOLADOR
18		675162		1	TERMINAL, M6.3, Insul, 3/8" Bolt
19		87872		1	PARAFUSO, Hex, 5/16"-18 x 3/4", G5, Full Thd
20		86546788		2	ESPAÇADOR
21		86504473		1	CINTA
22		80755		2	GRAMPO, 1/8" x 1", If Used
22		86617977		2	GRAMPO, If Used
23		9790712		2	ARRUELA PLANA
24		617215		X	MOLDURA
25		52367		2	SUPORTE, Shear Bolt
26		280638		3	PARAFUSO, Short NK, 1/4"-20 x 3/4", G5, Full Thd
27		523282		3	PORCA, Flg, USR, 1/4"-20
28		86506829		1	CINTA
29		86504874		1	CAIXA/CARCAÇA, Manual Compartment
30		87364		1	ARRUELA PLANA, 1/2", SAE

CONJUNTO DO ASSENTO STANDARD

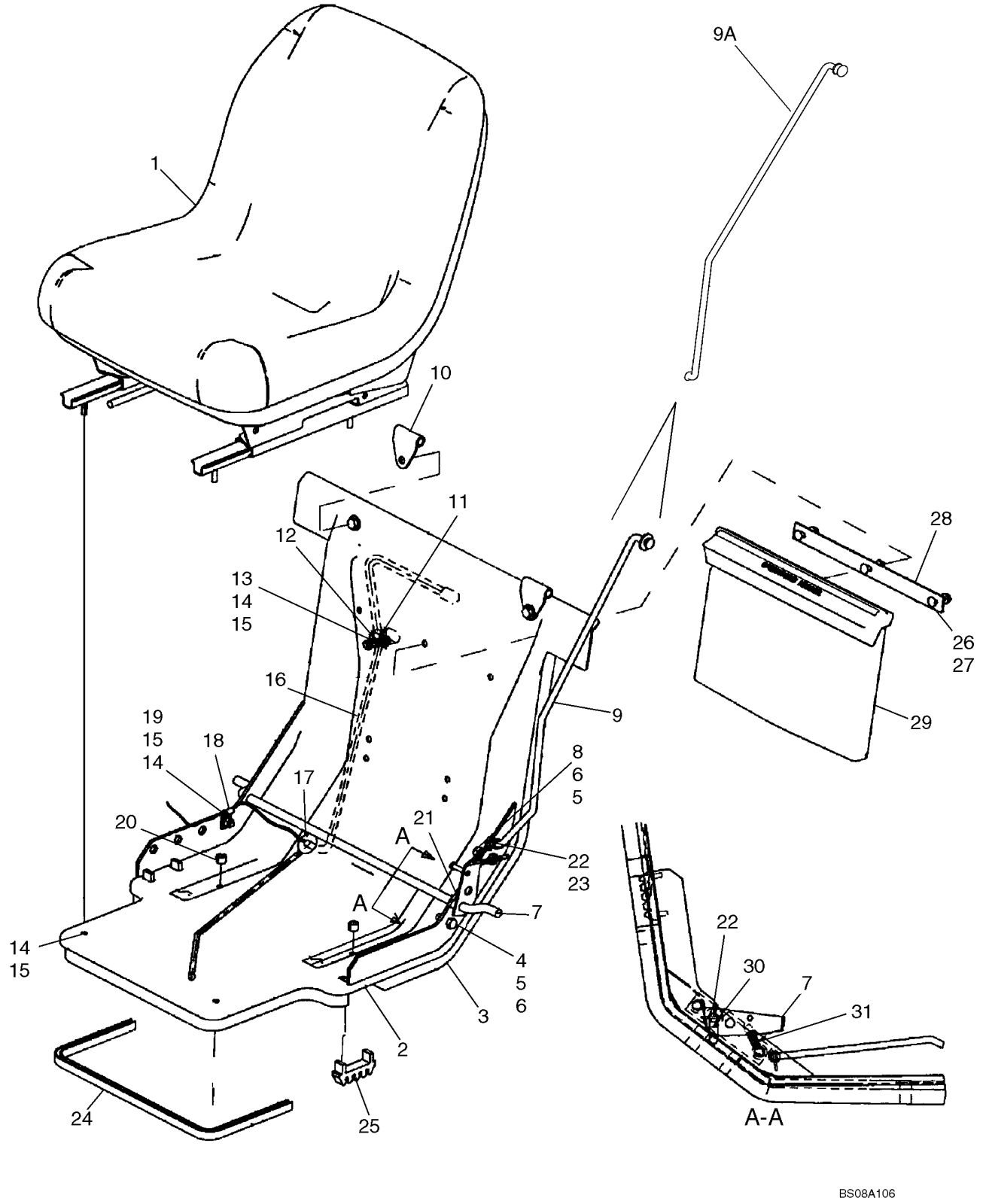

CONJUNTO DO ASSENTO STANDARD

REF	FN	PART NUMBER	YR/SN	QTY	DESCRIPTION
31		283373		1	MOLA
		9847458		1	INTERRUPTOR, Not Illustrated

CONJUNTO DO ASSENTO STANDARD

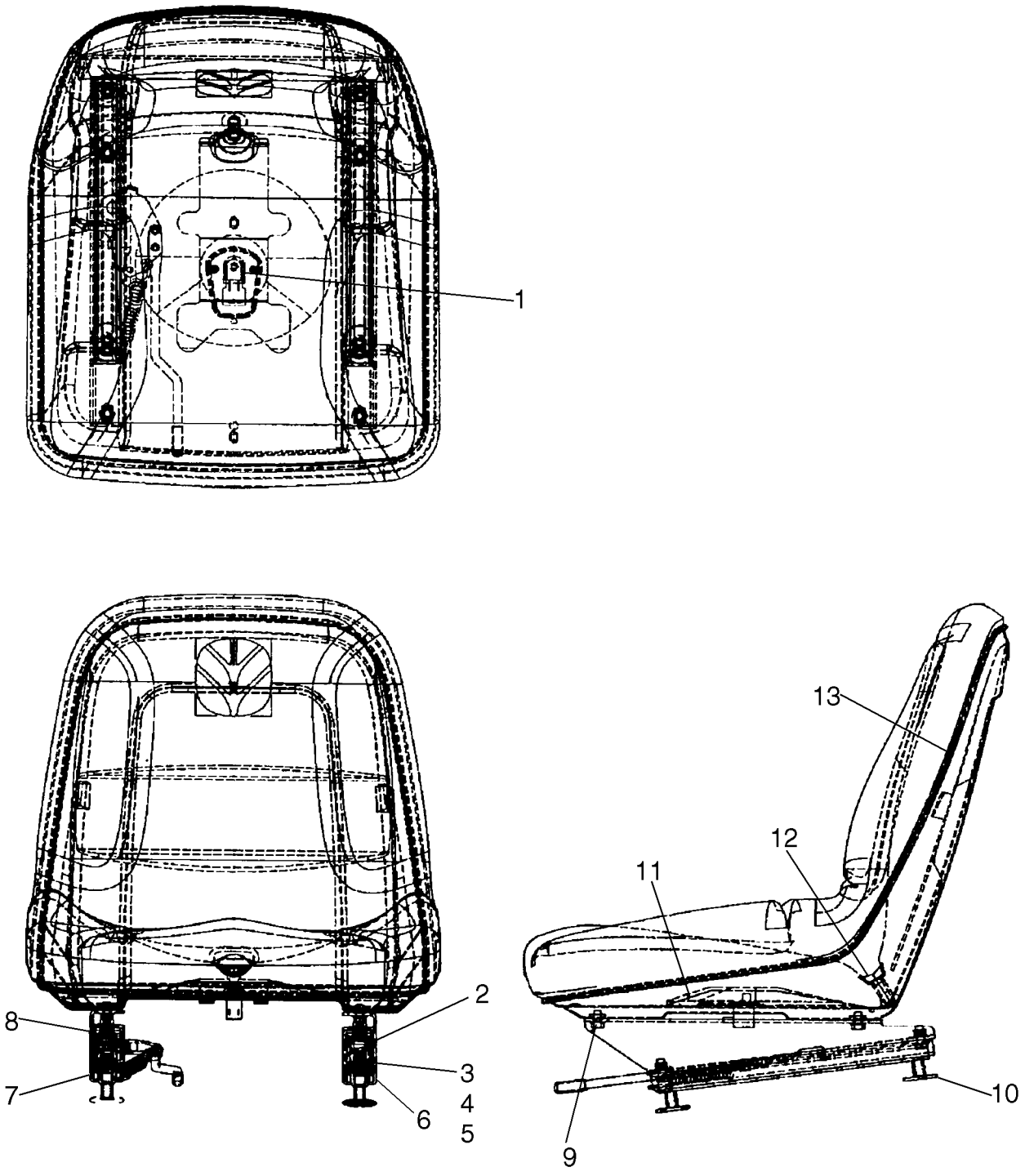

CONJUNTO DO ASSENTO STANDARD

REF	FN	PART NUMBER	YR/SN	QTY	DESCRIPTION
		87019258		1	ASSENTO/POLTRONA, Incl. 1 - 13
1		86400227		1	INTERRUPTOR
2		87019262		1	SUPORTE, Riser Left Hand
3		NSS		4	BOLETIM INFORMATIVO, Washer
4		NSS		4	BOLETIM INFORMATIVO, Taptite, 5/16-18 x .75
5		NSS		4	BOLETIM INFORMATIVO, Nut, 5/16-18
6		86520670		1	DISPOS. REGUL. ENCOSTO
7		86520671		1	MANILHA, Adjuster Assy
8		87019263		1	SUPORTE, Riser Right Hand
9		NSS		4	BOLETIM INFORMATIVO, Taptite, 5/16-18 x .5
10		NSS		4	BOLETIM INFORMATIVO, Thread Protector
11		NSS		1	BOLETIM INFORMATIVO, Switch Actuator
12		NSS		1	BOLETIM INFORMATIVO, Water Drain
13		NSS		1	BOLETIM INFORMATIVO, Seat Pan Assy

09-61		p1	04/08

CONJUNTO DO ASSENTO SUSPENSÃO

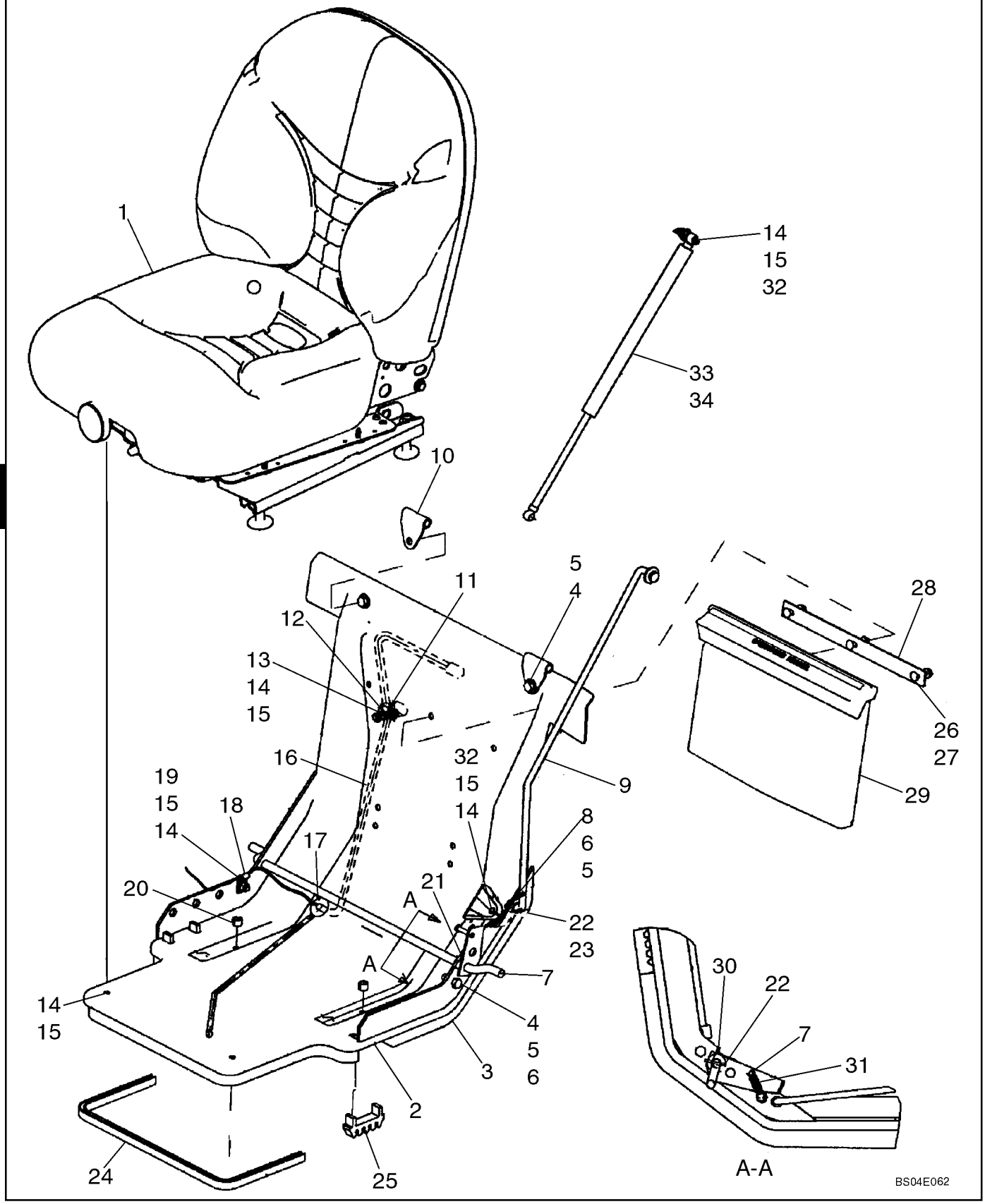

CONJUNTO DO ASSENTO SUSPENSÃO

REF	FN	PART NUMBER	YR/SN	QTY	DESCRIPTION
1		87542391		1	SUSPENSÃO, Suspension, With Logo; See Figure 09-62
2		87029353		1	SUPORTE
3		87029454		1	ISOLANTE, Sound Barrier
4		88206		3	PARAFUSO, Hex, 3/8"-16 x 1", G5, Full Thd
5		140045		4	ARRUELA MOLA, Belleville, M10
6		9628503		3	PORCA, 3/8"-16, G5
7		86501739		1	TRINCO
8		88011		1	PARAFUSO, Hex, 3/8"-16 x 1 1/4", G5, Full Thd
9		87628301		1	HASTE, Rod; Replaces 87603106, 86837275
		263117		X	TIRA DE CABO, .14" x 11 1/2", Secure Seat Harness To Seat
10		9622416		2	DOBRADIÇA
11		858956		1	PRENDEDOR, 7/16", Insul, 5/16" Bolt
12		86526695		1	ESPAÇADOR
13		88275		1	PARAFUSO, Hex, 5/16"-18 x 1 1/2", G5
14		322358		8	ARRUELA MOLA, Belleville, M8
15		9635082		8	PORCA, 5/16"-18, G5
16		9828011		1	CHICOTE DE FIOS, Seat
17		274569		1	CASQUILHO ISOLADOR
18		675162		1	TERMINAL, M6.3, Insul, 3/8" Bolt
19		87872		1	PARAFUSO, Hex, 5/16"-18 x 3/4", G5, Full Thd
20		86546788		2	ESPAÇADOR
21		86504473		1	CINTA
22		80755		2	GRAMPO, 1/8" x 1", If Used
22		86617977		2	GRAMPO, If Used
23		9790712		2	ARRUELA PLANA
24		617215		X	MOLDURA
25		52367		2	SUPORTE, Shear Bolt
26		280638		3	PARAFUSO, Short NK, 1/4"-20 x 3/4", G5, Full Thd
27		523282		3	PORCA, Flg, USR, 1/4"-20
28		86506829		1	CINTA
29		86504874		1	CAIXA/CARCAÇA, Manual Compartment
30		87364		1	ARRUELA PLANA, 1/2", SAE
31		283373		1	MOLA

CONJUNTO DO ASSENTO SUSPENSÃO

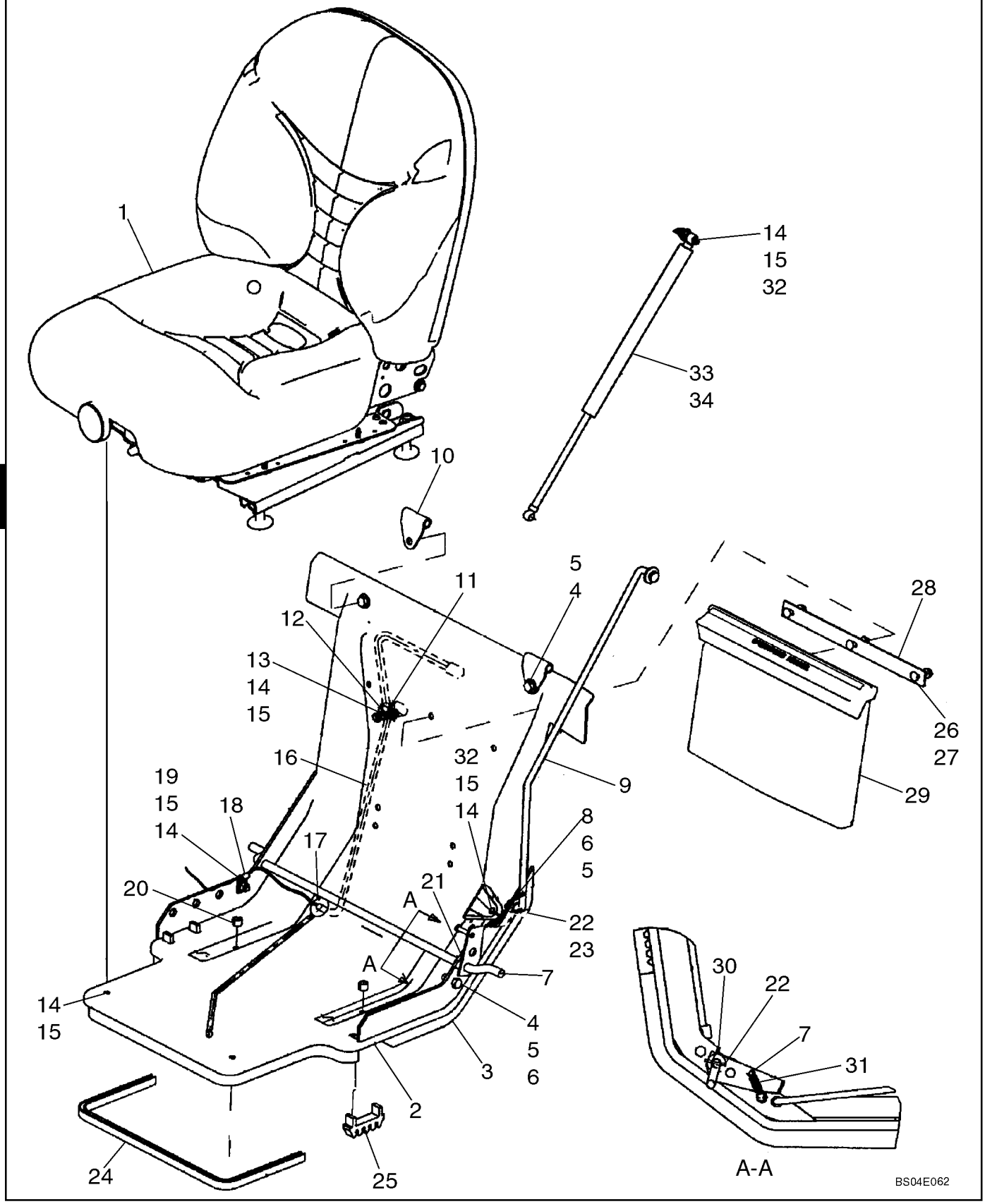

CONJUNTO DO ASSENTO SUSPENSÃO

REF	FN	PART NUMBER	YR/SN	QTY	DESCRIPTION
32		9803209		2	PRISIONEIRO
33		87050852		1	MOLA, Gas Spring; Incl. 33A
33A		87051003		2	CONEXÃO

CONJUNTO DO ASSENTO SUSPENSÃO

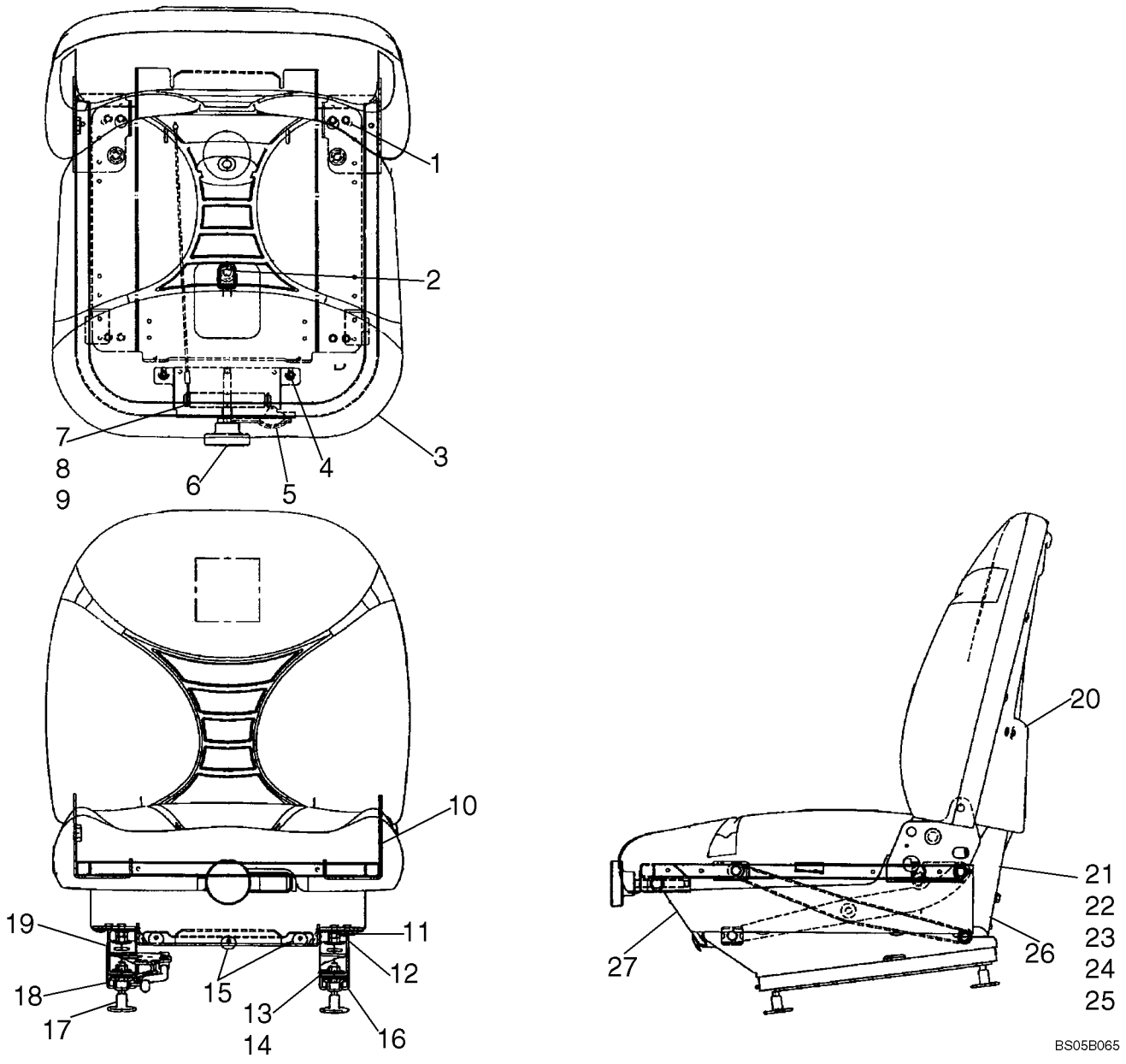

CONJUNTO DO ASSENTO SUSPENSÃO

REF	FN	PART NUMBER	YR/SN	QTY	DESCRIPTION
		87542391		1	SUSPENSÃO, Suspension, With Logo; Incl 1 - 27
1		NSS		1	BOLETIM INFORMATIVO, Clip
2		86400227		1	INTERRUPTOR
3		NSS		1	BOLETIM INFORMATIVO, Seat Cushion Assy
4		NSS		2	BOLETIM INFORMATIVO, Taptite, 1/4-20 x .5
5		NSS		1	BOLETIM INFORMATIVO, Weight Indicator Assy
6		NSS		1	BOLETIM INFORMATIVO, Knob, Weight Adjustment
7		NSS		5	BOLETIM INFORMATIVO, Hex Nut
8		NSS		2	BOLETIM INFORMATIVO, Cable Assy
9		NSS		1	BOLETIM INFORMATIVO, Weight Adjust Bar
10		NSS		1	BOLETIM INFORMATIVO, Seat Assy
11		NSS		4	BOLETIM INFORMATIVO, Taptite, 5/16-18 x .5
12		87542387		1	DEGRAU, Riser Left Hand
13		NSS		4	BOLETIM INFORMATIVO, Washer
14		NSS		4	BOLETIM INFORMATIVO, Taptite, 5/16-18 x .75
15		NSS		23	BOLETIM INFORMATIVO, Clip
16		86520671		1	MANILHA, Adjuster Assy
17		NSS		4	BOLETIM INFORMATIVO, Thread Protector
18		86520670		1	DISPOS. REGUL. ENCOSTO
19		87542390		1	DEGRAU, Riser Right Hand
20		87051678		1	ENCOSTO, Back Panel
21		87373988		1	SUSPENSÃO, Suspension Assy
22		NSS		4	BOLETIM INFORMATIVO, Bearing
23		NSS		2	BOLETIM INFORMATIVO, Bearing Shaft
24		NSS		2	BOLETIM INFORMATIVO, Roll Pin, .13 x .75
25		NSS		2	BOLETIM INFORMATIVO, Retainer Ring
26		NSS		1	BOLETIM INFORMATIVO, Serial Tag
27		NSS		1	BOLETIM INFORMATIVO, Skirt

CONJUNTO DO ASSENTO SUSPENSÃO

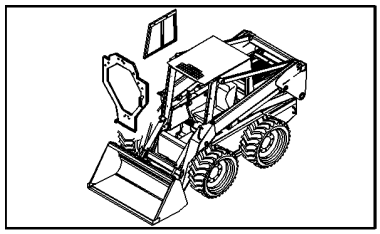

CONJUNTO DO ASSENTO SUSPENSÃO

REF	FN	PART NUMBER	YR/SN	QTY	DESCRIPTION
1		86591396		1	SUPORTE, Seat
2		86600814		1	ESPUMA ISOLANTE, Sound Barrier
3		86501739		1	TRINCO
4		87628301		1	HASTE, Rod; Replaces 87603106, 86837275
5		87364		1	ARRUELA PLANA, 1/2", SAE
6		80755		2	GRAMPO, 1/8" x 1"
7		86591623		2	DOBRADIÇA
8		86526695		1	ESPAÇADOR, Split
9		675162		1	TERMINAL, M6.3, Insul, 3/8" Bolt
10		9828011		1	CHICOTE DE FIOS, Suspension Seat
11		86575476		1	ASSENTO/POLTRONA, NH Leaf Logo, Incl. Ref. 11A thru G
11		86610722		1	ASSENTO/POLTRONA, No Logo, Incl. Ref. 11A thru G
11A		86837986		1	KIT, Boot
11B		86837987		1	KIT, Spring Cable
11C		86837988		1	KIT, Knob
11D		86837989		1	KIT, Weight Indicator
11E		86837990		1	KIT, Roller/Bumper
11F		86837991		1	KIT, Damper
11G		87024837		1	COXIM CONJUNTO
12		858956		1	PRENDEDOR, 7/16", Insul, 5/16" Bolt
13		274569		1	CASQUILHO ISOLADOR
14		86606079		1	CINTO DE SEGURANÇA, Component Parts Not Serviced Separately
15		86520670		1	DISPOS. REGUL. ENCOSTO, Slide, Slave
16		86520671		1	MANILHA, Slide, Handle
17		86600817		2	SUPORTE, LH
18		86600818		2	SUPORTE, RH
19		86591624		1	CINTA
20		52367		2	SUPORTE
21		283373		1	MOLA, Extension
22		88206		3	PARAFUSO, Hex, 3/8"-16 x 1", G5, Full Thd
23		88275		1	PARAFUSO, Hex, 5/16"-18 x 1 1/2", G5
24		87872		13	PARAFUSO, Hex, 5/16"-18 x 3/4", G5, Full Thd

CONJUNTO DO ASSENTO SUSPENSÃO

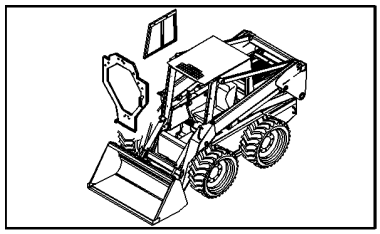

CONJUNTO DO ASSENTO SUSPENSÃO

REF	FN	PART NUMBER	YR/SN	QTY	DESCRIPTION
25		87909		2	PARAFUSO, Hex, 1/2"-13 x 1", G5, Full Thd
25		87670		2	PARAFUSO, Hex, 1/2"-13 x 1 1/4", G5, Full Thd
26		9670285		2	PARAFUSO, Hex, 3/8"-16 x 1", G8, Full Thd
27		140045		5	ARRUELA MOLA, Belleville, M10
28		80681		26	ARRUELA-TRAVA, 5/16"
29		80702		2	ARRUELA PLANA, 3/8"
30		88011		1	PARAFUSO, Hex, 3/8"-16 x 1 1/4", G5, Full Thd
31		280497		4	PARAFUSO, Short NK, 5/16"-18 x 3/4", G5, Full Thd
32		9803209		4	PRISIONEIRO, Ball Stud, 5/16"-18 x 9/16"
33		9635082		26	PORCA, 5/16"-18, G5
34		9628503		3	PORCA, 3/8"-16, G5
35		88902		1	CONTRA PORCA, 3/8"-16, GC
36		88871		2	CONTRA PORCA, 1/2"-13, GC
37		86603490		1	INTERRUPTOR
38		263117		2	TIRA DE CABO, .14" x 11 1/2", 3/32" x 11-1/2" L
39		9790712		2	ARRUELA PLANA, Hardened, 3/8"
40		86504874		1	CAIXA/CARCAÇA, Manual Compartment
41		86506829		1	CINTA
42		280638		3	PARAFUSO, Short NK, 1/4"-20 x 3/4", G5, Full Thd
43		523282		3	PORCA, Flg, USR, 1/4"-20
44		87050853		1	MOLA, Incl. Ref 44A; Does not use 9803210 Clip.
44A		87051003		2	CONEXÃO
45		86546788		4	ESPAÇADOR
46		86594696		2	SUPORTE, Gas Spring, Lower
47		86599149		2	SUPORTE, Gas Spring, Upper
48		617215		AR	MOLDURA, 72"; Cut to Required Length
49		9803210		4	FIXADOR, Retaining, Gas Spring
50		87362		2	ARRUELA PLANA, 5/16" SAE
51		86628884		AR	KIT, Suspension Seat
52		87364		2	ARRUELA PLANA, 1/2", SAE

CINTOS DE SEGURANÇA, STANDARD

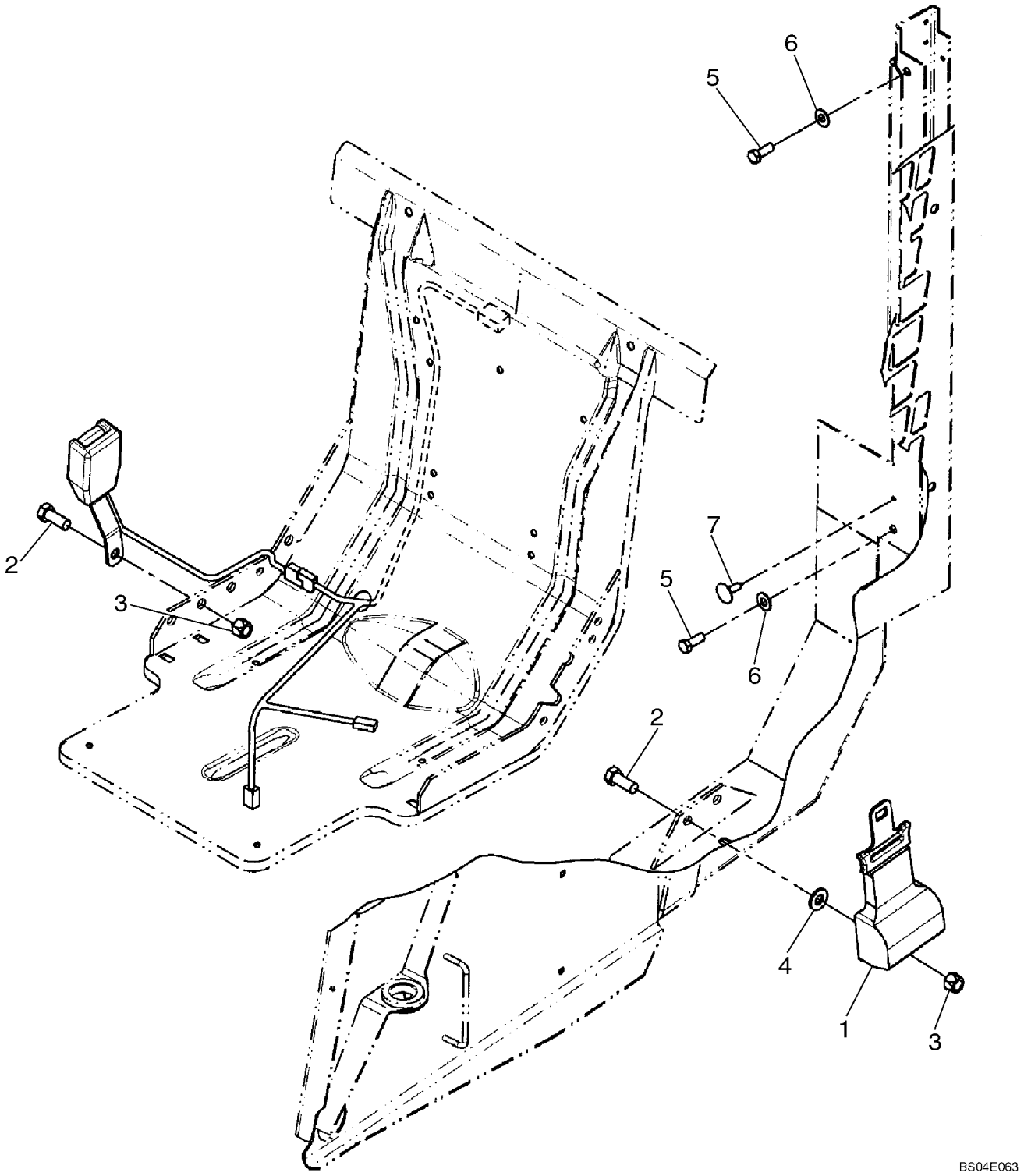

CINTOS DE SEGURANÇA, STANDARD

REF	FN	PART NUMBER	YR/SN	QTY	DESCRIPTION
1		9820622		1	CINTO DE SEGURANÇA, Component Parts Not Serviced Separately
2		87670		2	PARAFUSO, Hex, 1/2"-13 x 1 1/4", G5, Full Thd
3		88871		2	CONTRA PORCA, 1/2"-13, GC
4		87364		1	ARRUELA PLANA, 1/2", SAE
5		88206		2	PARAFUSO, Hex, 3/8"-16 x 1", G5, Full Thd
6		140045		2	ARRUELA MOLA, Belleville, M10
7		86620930		1	BOTÃO DE IMPULSO

09-65		p1	03/08

CINTOS DE SEGURANÇA

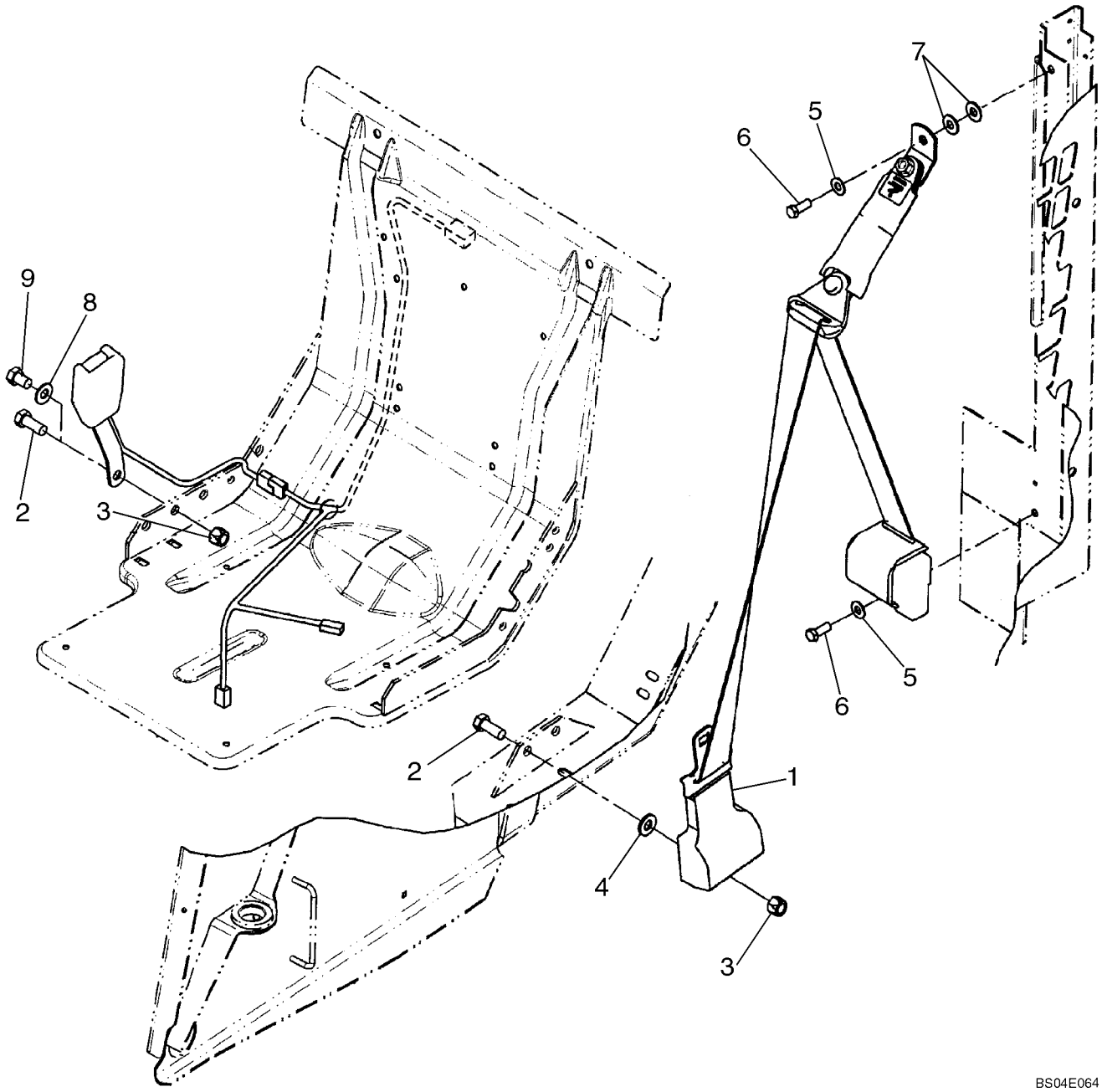

CINTOS DE SEGURANÇA

REF	FN	PART NUMBER	YR/SN	QTY	DESCRIPTION
1		86606079		1	CINTO DE SEGURANÇA, Shoulder/Lap Belt Assy; Component Parts Not Serviced Separately
2		87670		2	PARAFUSO, Hex, 1/2"-13 x 1 1/4", G5, Full Thd
3		88871		2	CONTRA PORCA, 1/2"-13, GC
4		87364		1	ARRUELA PLANA, 1/2", SAE
5		140045		2	ARRUELA MOLA, Belleville, M10
6		9670285		2	PARAFUSO, Hex, 3/8"-16 x 1", G8, Full Thd
7		80702		2	ARRUELA PLANA, 3/8"
8		140046		1	ARRUELA PLANA, Belleville, M12
9		9627879		1	PARAFUSO, Hex, 1/2"-13 x 3/4", G5, Full Thd

CINTOS DE SEGURANÇA, 3 IN. COMBINAÇÃO - SE UTILIZADO

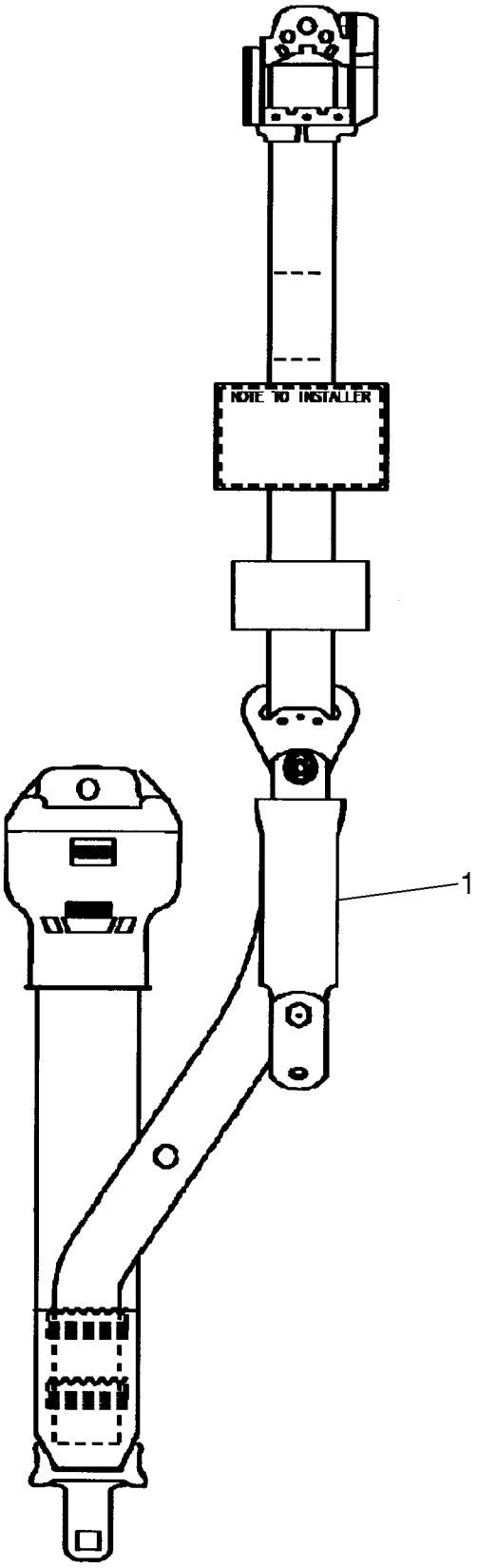

CINTOS DE SEGURANÇA, 3 IN. COMBINAÇÃO - SE UTILIZADO

REF	FN	PART NUMBER	YR/SN	QTY	DESCRIPTION
		87360979		1	KIT, 3 in Combination Seat Belt Kit; Incl. 1 - 7
1		87350427		1	CINTO DE SEGURANCA, Combination Seat Belt, 3 in; Component Parts Not Serviced Separately
2		9670285		2	PARAFUSO, Hex, 3/8"-16 x 1", G8, Full Thd, Not Illustrated
3		140045		2	ARRUELA MOLA, Belleville, M10, Not Illustrated
4		88902		1	CONTRA PORCA, 3/8"-16, GC, Not Illustrated
5		88871		2	CONTRA PORCA, 1/2"-13, GC, Not Illustrated
6		80702		2	ARRUELA PLANA, 3/8", Not Illustrated
7		87364		1	ARRUELA PLANA, 1/2", SAE, Not Illustrated

CINTOS DE SEGURANÇA

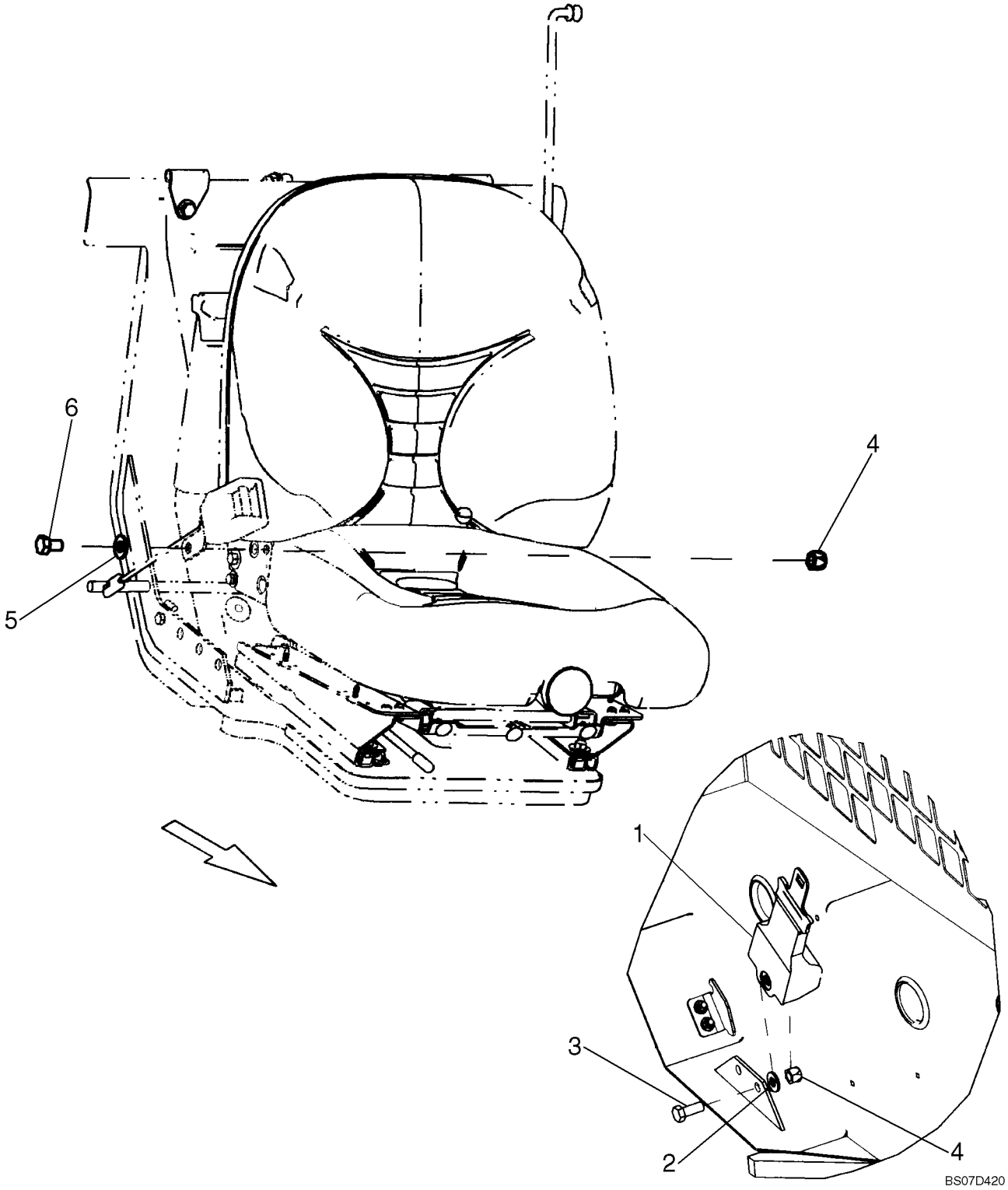

CINTOS DE SEGURANÇA

REF	FN	PART NUMBER	YR/SN	QTY	DESCRIPTION
1		87652259		1	CINTO DE SEGURANÇA, Seat Belt, Lap Belt; Component Parts Not Serviced Separately
2		87364		1	ARRUELA PLANA, 1/2", SAE
3		87670		1	PARAFUSO, Hex, 1/2"-13 x 1 1/4", G5, Full Thd
4		88871		2	CONTRA PORCA, 1/2"-13, GC
5		140046		1	ARRUELA PLANA, Belleville, M12
6		9627879		1	PARAFUSO, Hex, 1/2"-13 x 3/4", G5, Full Thd

CINTOS DE SEGURANÇA

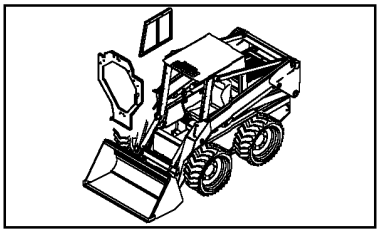

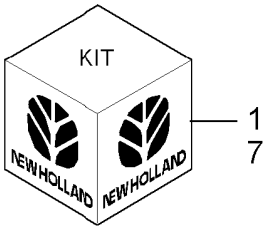

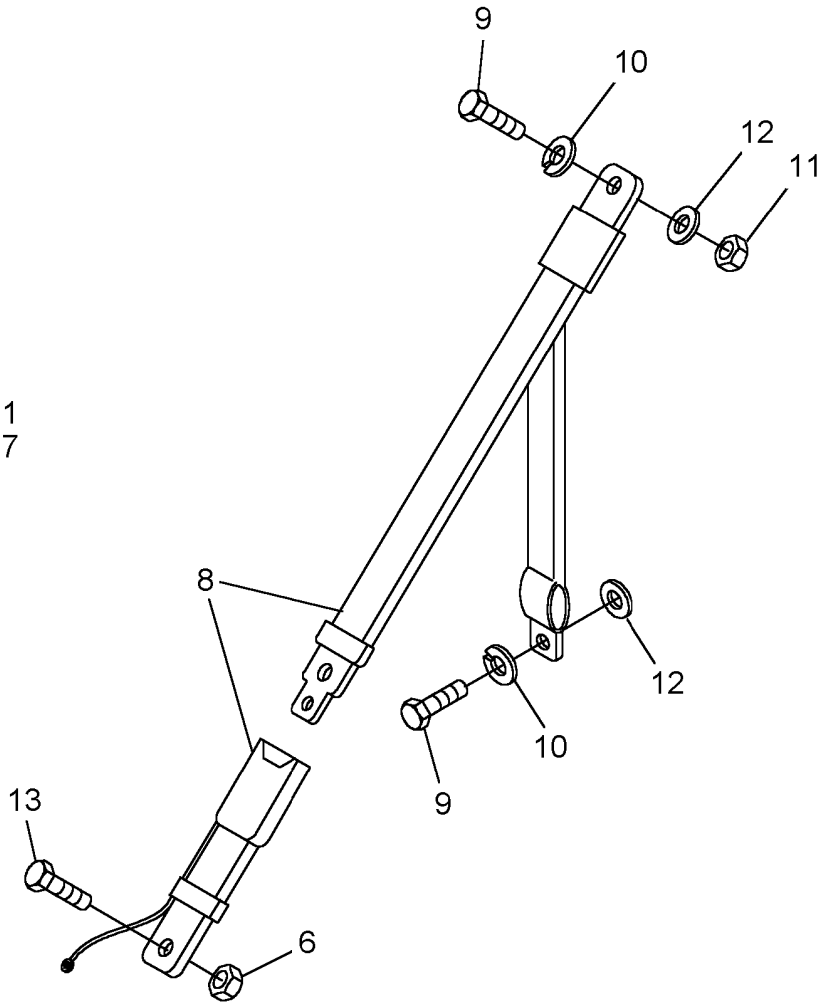

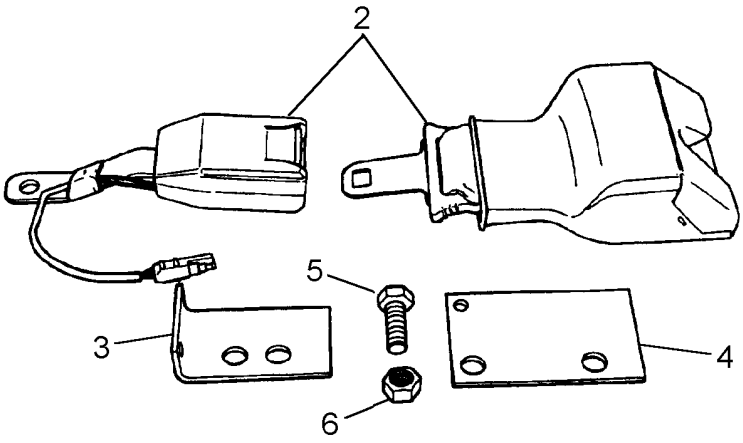

CINTOS DE SEGURANÇA

REF	FN	PART NUMBER	YR/SN	QTY	DESCRIPTION
1		86590073		1	KIT, Kit, Seat Belt, Retractable, 3" Wide, Includes: Ref. 2 thru 6
2	1	NSS		1	BOLETIM INFORMATIVO, Seat Belt Assy., 3" Wide
3	2	9846451		1	SUPORTE, Angle, Retractor Mount
4	3	9846452		1	PLACA, Plate, Retractor Mount
5		87909		2	PARAFUSO, Hex, 1/2"-13 x 1", G5, Full Thd
6		88871		3	CONTRA PORCA, 1/2"-13, GC
7		86590072		1	KIT, Kit, Shoulder Belt, Includes: Ref. 6, 8 thru 12, See Service Bulletin 11/95-I3
8	4	NSS		1	BOLETIM INFORMATIVO, Shoulder Belt Assy.
9		9670285		2	PARAFUSO, Hex, 3/8"-16 x 1", G8, Full Thd, Screw, Cap, HH, G8, 3/8"-16 x 1"
10		140045		2	ARRUELA MOLA, Belleville, M10
11		88902		1	CONTRA PORCA, 3/8"-16, GC
12		80702		2	ARRUELA PLANA, 3/8", Washer, 3/8"
13		9790143		1	PARAFUSO, Hex, 1/2"-13 x 1", G8, Full Thd, Screw, Cap, HH, G8, 1/2"-13 x 1"

(1) Not Serviced Separate
(2) Used on LS120, LS125, L250, L550 & L780 Series
(3) Used on L450 Series
(4) Not Serviced Separate

DESCANSO PARA O BRAÇO - MODELOS COM CONTROLO AUTOMÁTICO

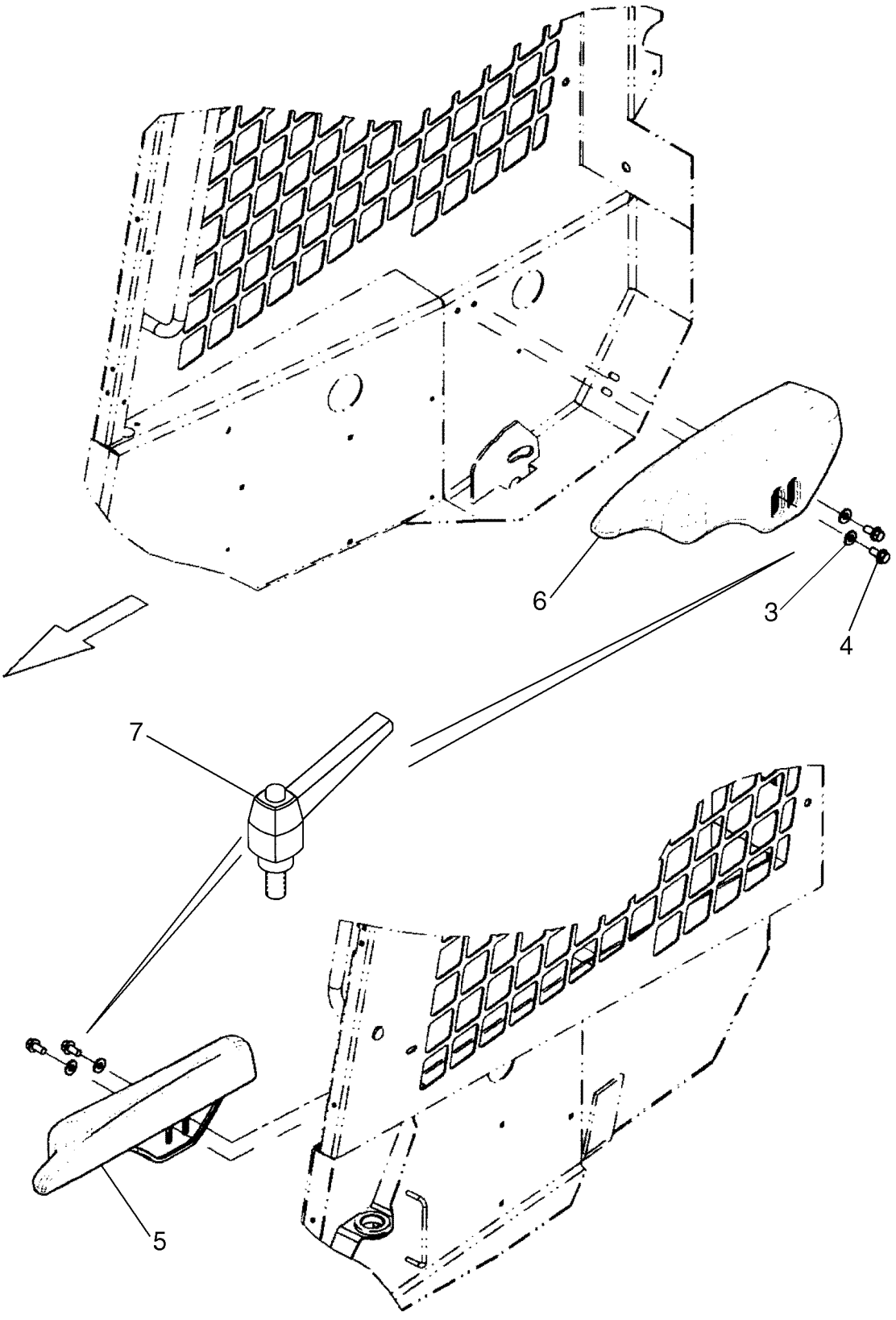

BS06K177

DESCANSO PARA O BRAÇO - MODELOS COM CONTROLO AUTOMÁTICO

REF	FN	PART NUMBER	YR/SN	QTY	DESCRIPTION
1		87357236		1	KIT, SERVICE, Pilot Control Armrest Kit, Incl. 3 - 6
3		80664		4	ARRUELA PLANA, 5/16"
4		9628510		4	PARAFUSO, Hex Flg, 3/8"-16 x 3/4", G5, Full Thd
5		87357152		1	APOIA-BRAÇO, Armrest LH, Incl. 5A - 5B
5A		87357153		1	SUPORTE, Bracket, Armrest, LH
5B		{87357154}		1	Foam, Armrest, LH
6		87357149		1	APOIA-BRAÇO, Armrest RH, Incl. 6A - 6B
6A		{87357150}		1	Bracket, Armrest, RH
6B		{87357151}		1	Foam, Armrest, RH
7		87522299		4	ALAVANCA, Handle, Adjustable Lever; Replaces 9628510 If Used

DESCANSO PARA O BRAÇO

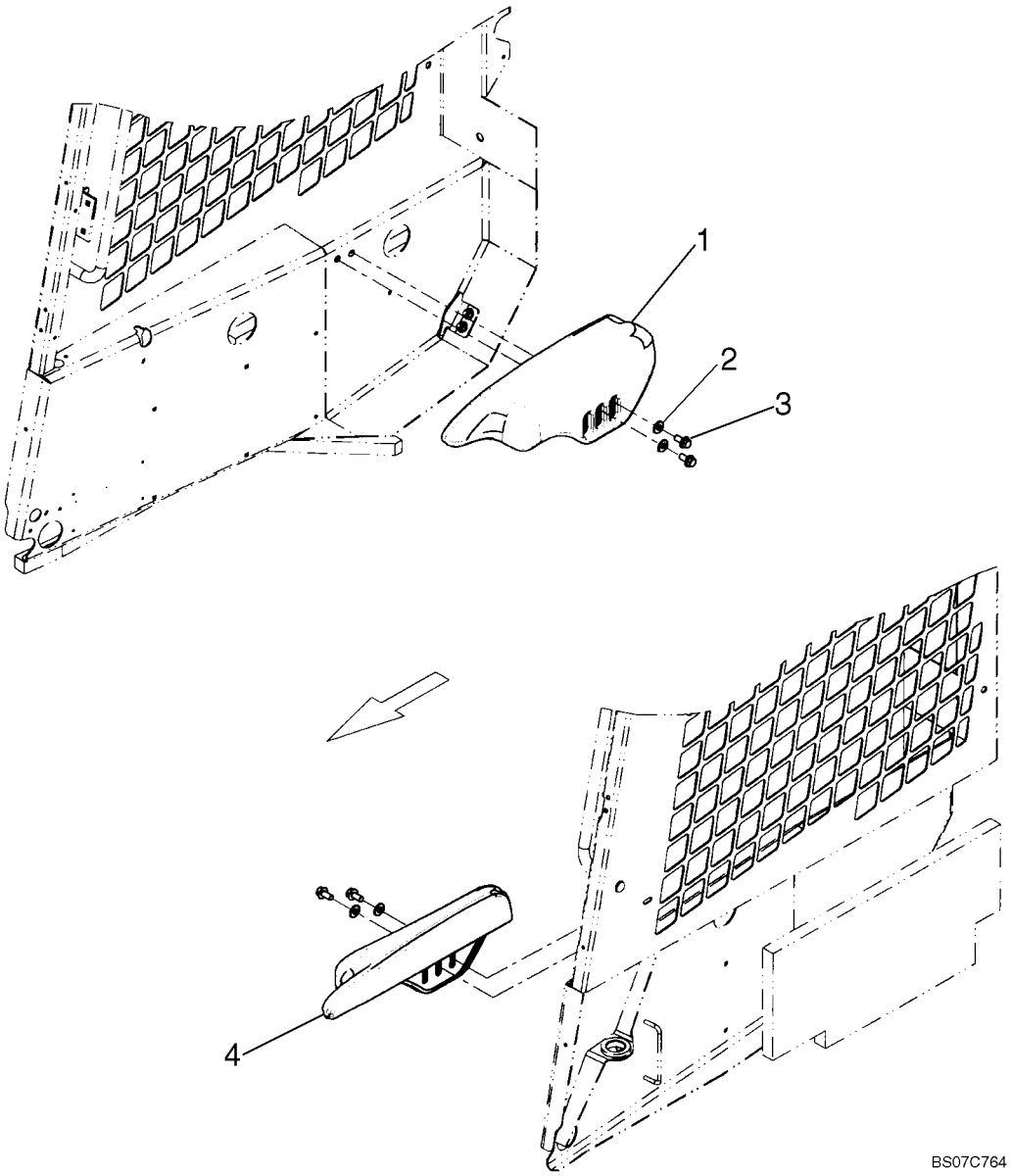

DESCANSO PARA O BRAÇO

REF	FN	PART NUMBER	YR/SN	QTY	DESCRIPTION
1		87582295		1	ASSENTO, Armrest, RH; For Use On Mechanical Or Pilot Controls
		{87582297}		1	Arm Rest Bracket, RH
		{87582298}		1	Foam Pad For Armrest, RH
2		80664		4	ARRUELA PLANA, 5/16"
3		9628510		4	PARAFUSO, Hex Flg, 3/8"-16 x 3/4", G5, Full Thd
4		87582299		1	ASSENTO, Armrest, LH; For Use On Mechanical Or Pilot Controls
		{87582300}		1	Arm Rest Bracket, LH
		{87582320}		1	Foam Pad For Armrest, LH

09-69		p1	03/08

CONJUNTO DO DESCANSO DO ANTEBRAÇO

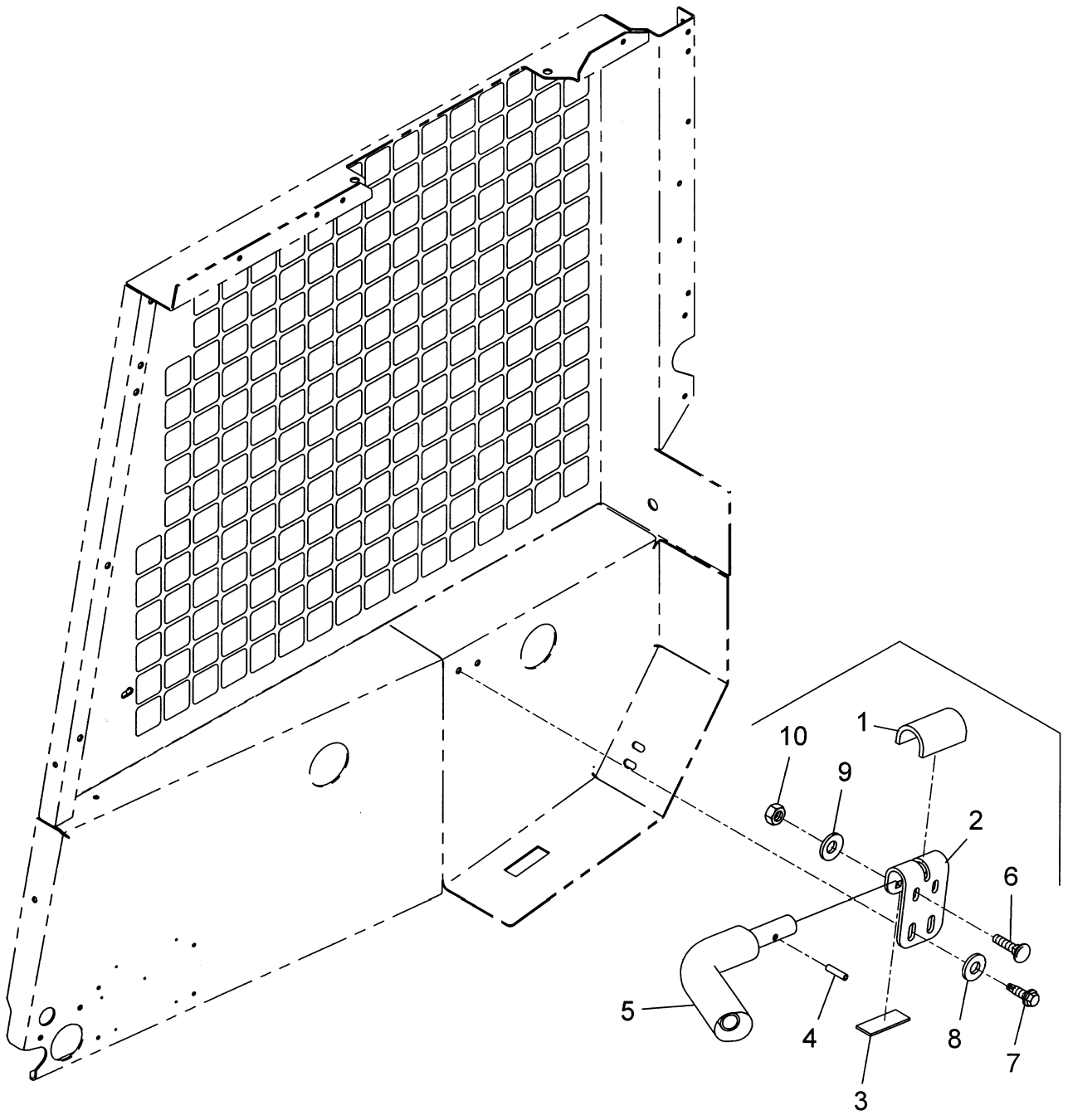

BS04E142

CONJUNTO DO DESCANSO DO ANTEBRAÇO

REF	FN	PART NUMBER	YR/SN	QTY	DESCRIPTION
1		86589362		2	BUJÃO DE BORRACHA, 3" x 3", Adhesive Backing
2		86602768		2	SUPORTE
3		621326		2	CUNHA
4		87721		2	PINO DE FIXAÇÃO, 5/16" x 1 1/4", Slotted
5		86580786		2	BRAÇO
6		280618		4	PARAFUSO, Short NK, 5/16"-18 x 2", G5
7		637964		4	PARAFUSO, 3/8"-16 x 3/4"
8		285072		4	ARRUELA PLANA, 3/8"
9		80664		4	ARRUELA PLANA, 5/16"
10		86629544		4	CONTRA PORCA, 5/16"-18, GB
11		86589170		1	KIT, SERVICE, Forearm, Incl. 1 - 10; One Kit Will Service Both Left And Right Sides
		86590104		1	KIT, Arm Rest Pads; Not Illustrated; Kit Incl. Replacement Foam Pads 86504092 To Be Glued To Cab Liner, Adhesive and Instructions
		86504092		2	APOIA-BRAÇO, Replacement Pads, Black Closed Cell Urethane Foam

KIT DO SUPORTE PARA O BRAÇO

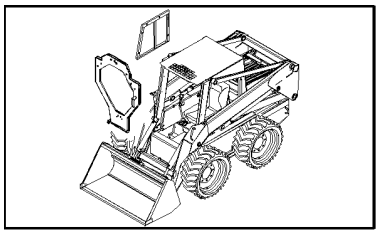

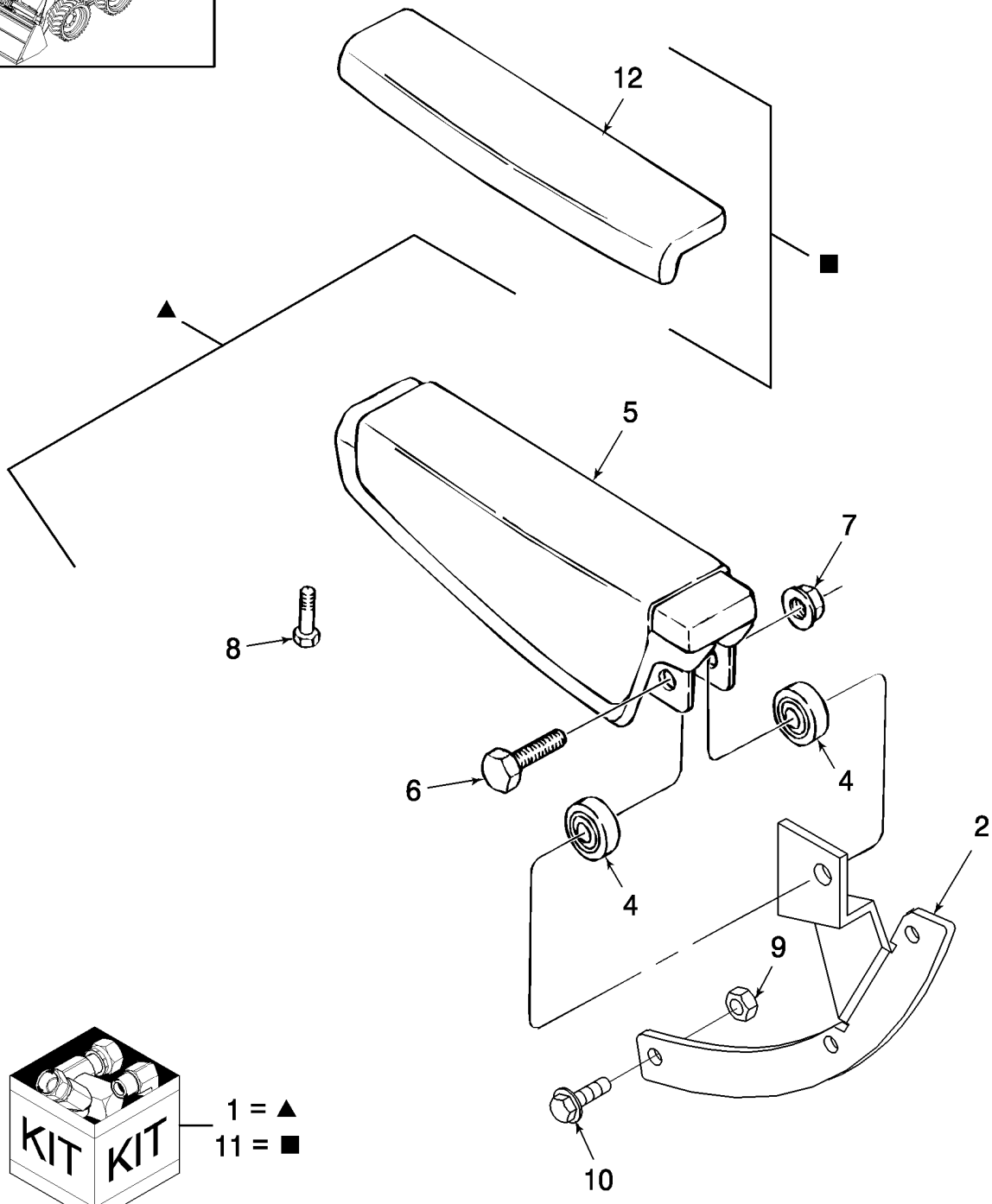

KIT DO SUPORTE PARA O BRAÇO

REF	FN	PART NUMBER	YR/SN	QTY	DESCRIPTION
1		86590126		1	KIT, Armrest, Incl. Ref. 2 - 10; Do Not Install on Suspension Seats
2		NSS		1	BOLETIM INFORMATIVO, Bracket, LH
3		NSS		1	BOLETIM INFORMATIVO, Bracket, RH; Not Illustrated
4		9823222		4	ESPAÇADOR
5		E8NNE412AA		2	APOIA-BRAÇO
6		87657		2	PARAFUSO, Hex, 5/16"-18 x 1 1/4", G5
7		280736		2	CONTRA PORCA, 5/16"-18, GC
8		88574		2	PARAFUSO, Hex, 5/16"-18 x 1/2", G5, Full Thd
9		44373		6	PORCA, Weld, 1/4"-20
10		9848895		6	PARAFUSO, Hex Soc But Hd, 1/4"-20 x 3/4"
11		86590104		1	KIT, Arm Rest Pad; Incl. Replacement Foam Pads 86504092, Adhesive and Instructions
12		86504092		2	APOIA-BRAÇO, Replacement Pads, Black Closed Cell Urethane Foam

EXTINTOR DE INCÊNDIO, KITS DE RETROVISOR E PLACAS DO CHÃO

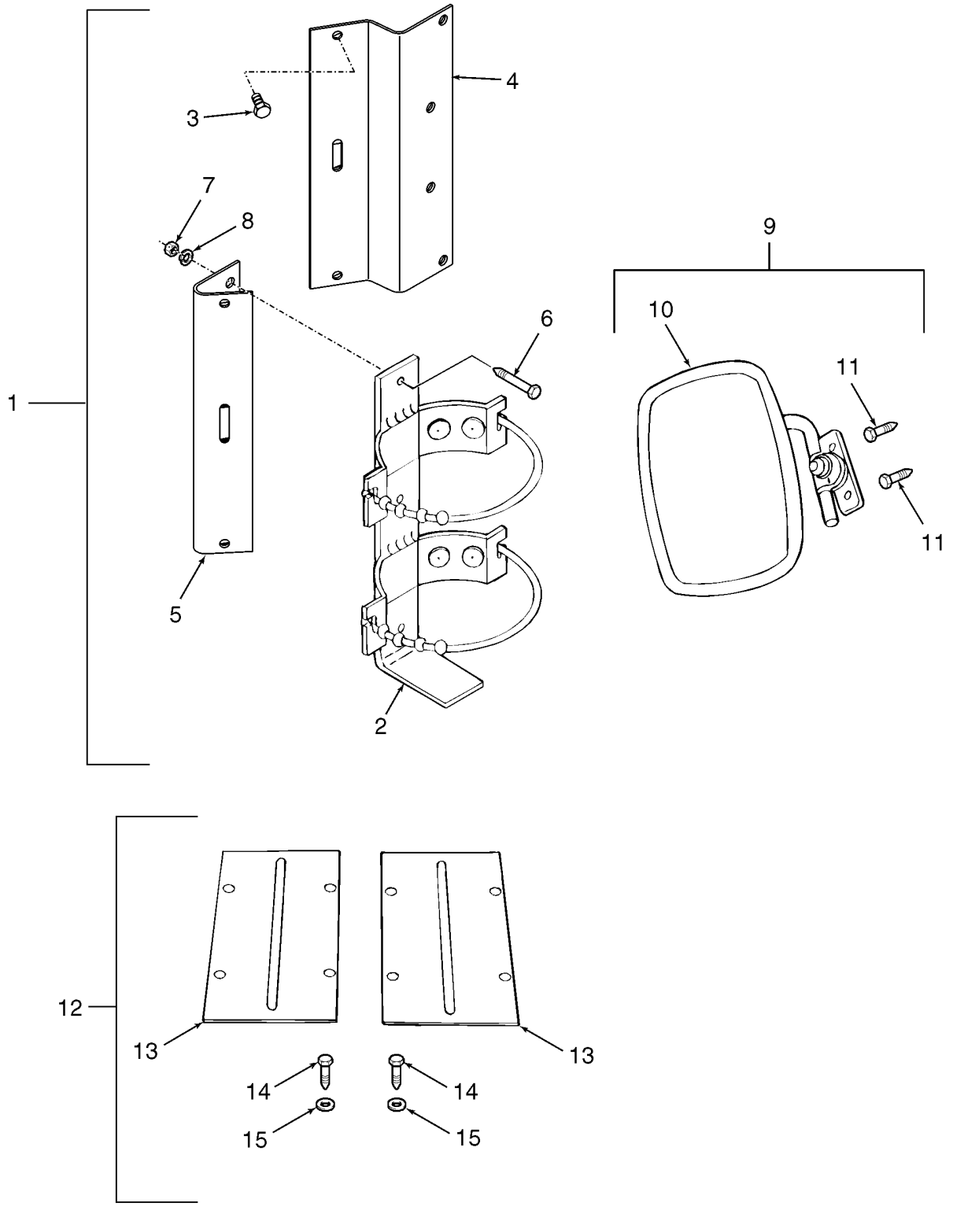

BS04M030

EXTINTOR DE INCÊNDIO, KITS DE RETROVISOR E PLACAS DO CHÃO

REF	FN	PART NUMBER	YR/SN	QTY	DESCRIPTION
1		86590103		1	EXTINTOR DE INCÊNDIO, Kit, Incl. Ref. 2 - 8
2		86506455		1	SUPORTE, Mount
3		9840344		6	PARAFUSO, 5/16"-18 x 5/8"
4		86518681		1	CANTONEIRA
5		86518680		1	CANTONEIRA
6		9635884		3	PARAFUSO, Hex, 5/16"-18 x 1", G5, Full Thd
7		9635082		3	PORCA, 5/16"-18, G5
8		80681		3	ARRUELA-TRAVA, 5/16"
9		86590083		1	KIT, Inside Rear-View Mirror, Incl. Ref 10, 11
10		E7NN17700AA		1	ESPELHO RETROVISOR, Inside Rear-View
11		9990936		2	PARAFUSO, #8 x 13
12		9862155		1	KIT, Floor Plate, Incl. Ref 13 - 15
13		87538914		2	PLAQUETA
14		280476		4-8	PARAFUSO, Hex Wash Hd, 3/8" x 1"
15		140045		4-8	ARRUELA MOLA, Belleville, M10

ACESSÓRIOS E KITS, PARA EUROPA

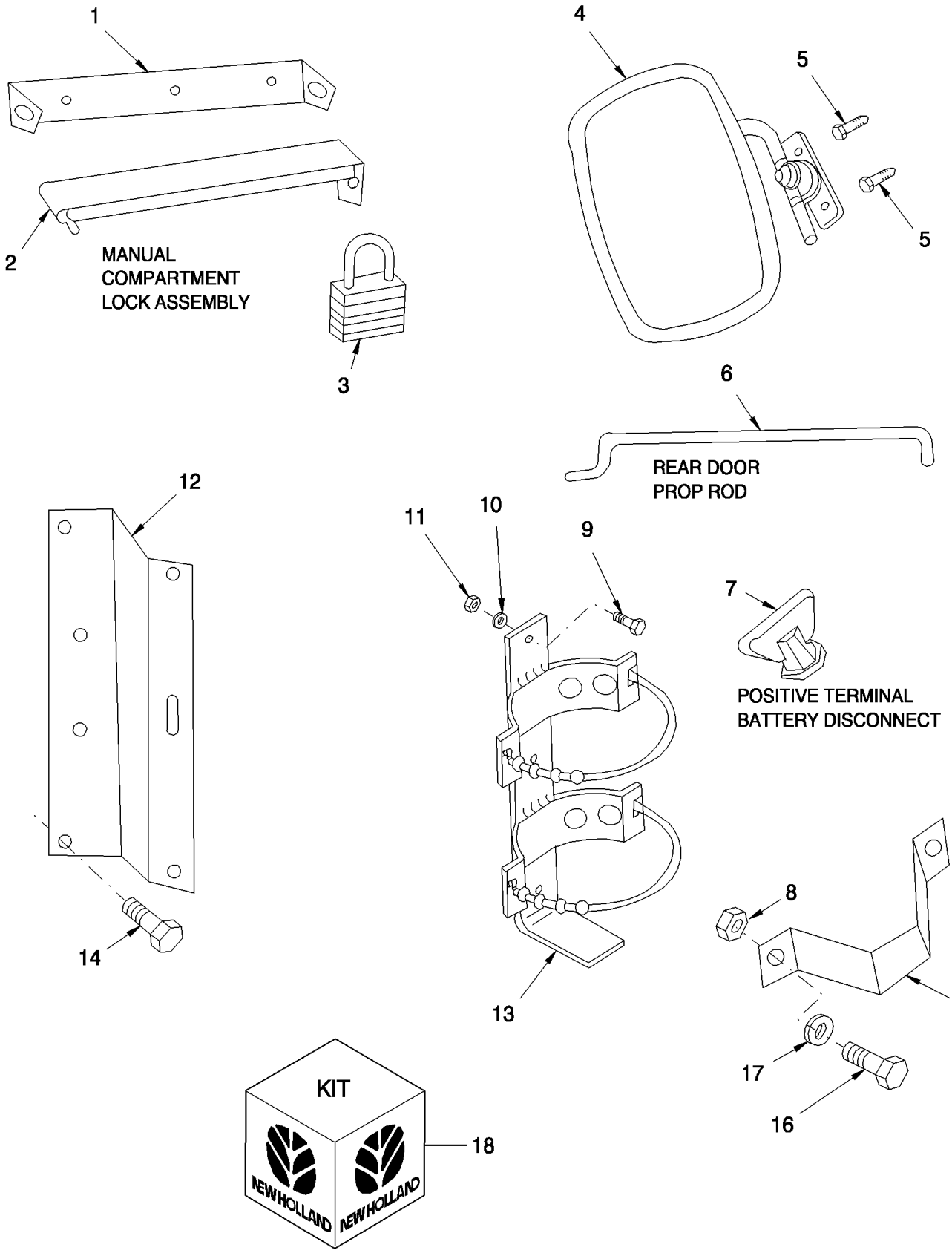

ACESSÓRIOS E KITS, PARA EUROPA

REF	FN	PART NUMBER	YR/SN	QTY	DESCRIPTION
1		86515873		1	SUPORTE, Manual Compartment Lock
2		86515872		1	CANTONEIRA, Manual Compartment Lock
3		86518576		1	CADEADO, Manual Compartment Lock
3		86575297		1	CHAVETA, Set Of Keys For 86518576 Padlock
4		E7NN17700AA		1	ESPELHO RETROVISOR, Inside
5		9990936		2	PARAFUSO, Self-Tapping, Oval Hd, #8 x 13
6		86506234		1	HASTE, Rear Door
7		86518650		1	PORCA BORBOLETA, Stainless Steel, 3/8"-16
8		280129		1	CONTRA PORCA, 1/4"-20, GC
9		87872		3	PARAFUSO, Hex, 5/16"-18 x 3/4", G5, Full Thd
10		80681		3	ARRUELA-TRAVA, 5/16"
11		9635082		3	PORCA, 5/16"-18, G5
12		86592983		1	SUPORTE, Angle, Fire Extinguisher Bracket
13		86506455		1	SUPORTE, Fire Extinguisher
14		570821		4	PARAFUSO, Flg, USR, 5/16"-18 x 5/8"
15		86519774		1	PROTEÇÃO, Guard
16		9707580		2	PARAFUSO, Hex, 1/4"-20 x 3/4", G5, Full Thd
17		9824259		2	ARRUELA PLANA, M6 x 12 x 1.6
18		86590083		1	KIT, Inside Rear-View Mirror, Includes: Ref. 4 & 5

CONTRA PESO

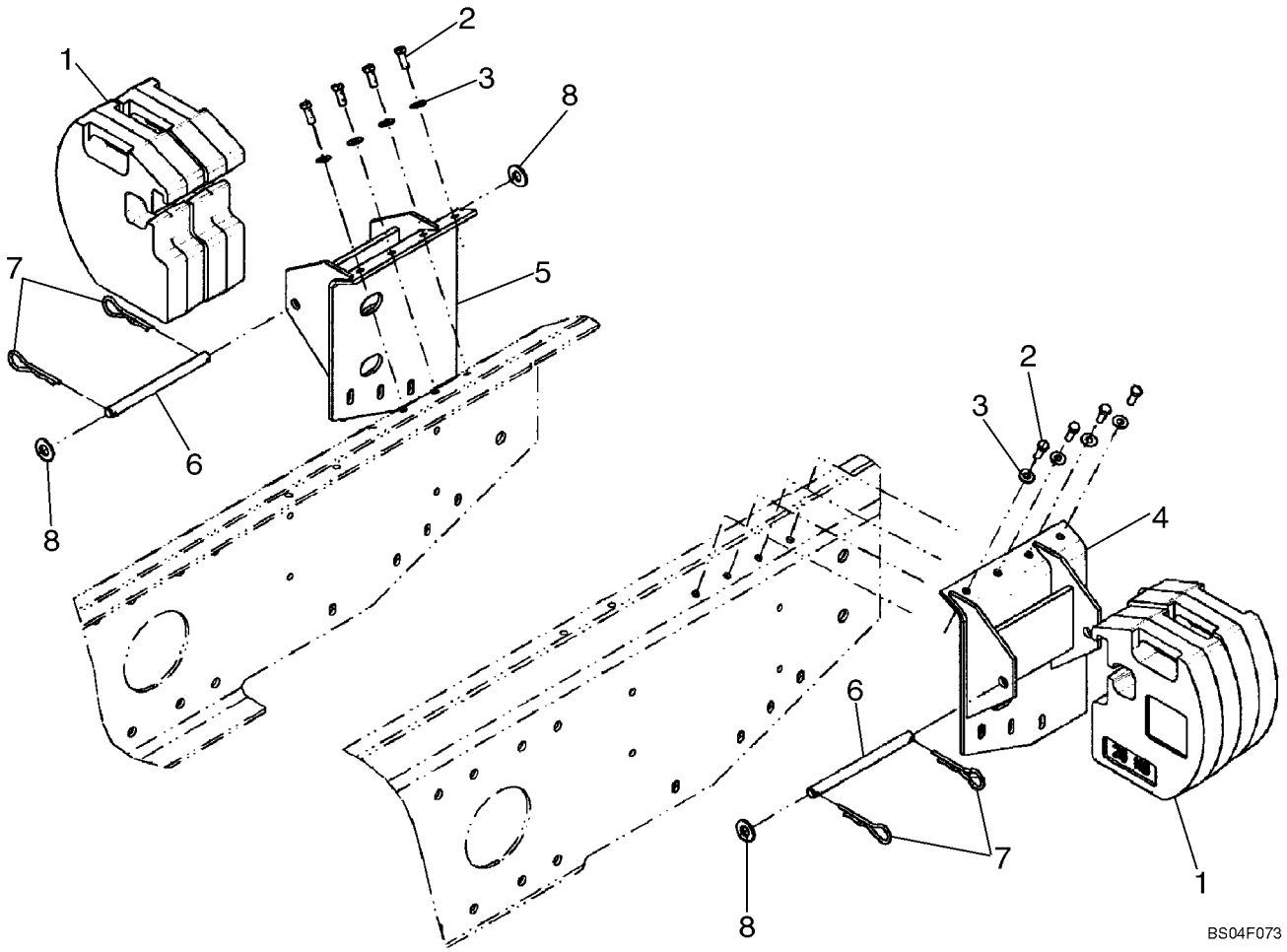

CONTRA PESO

REF	FN	PART NUMBER	YR/SN	QTY	DESCRIPTION
1		87440222		4	LASTRO, Counterweight; Yellow
2		9670285		8	PARAFUSO, Hex, 3/8"-16 x 1", G8, Full Thd
3		140045		8	ARRUELA MOLA, Belleville, M10
4		87043475		1	SUPORTE, Mount; Right Hand, Yellow
5		87043472		1	SUPORTE, Mount; Left Hand, Yellow
6		634233		2	HASTE
7		86000109		4	GRAMPO, 1/8" Thk x 3-1/4" Lg
8		87365		4	ARRUELA PLANA, 5/8", SAE

09-72A		p1	03/08

KIT DO MACACO DA CABINA

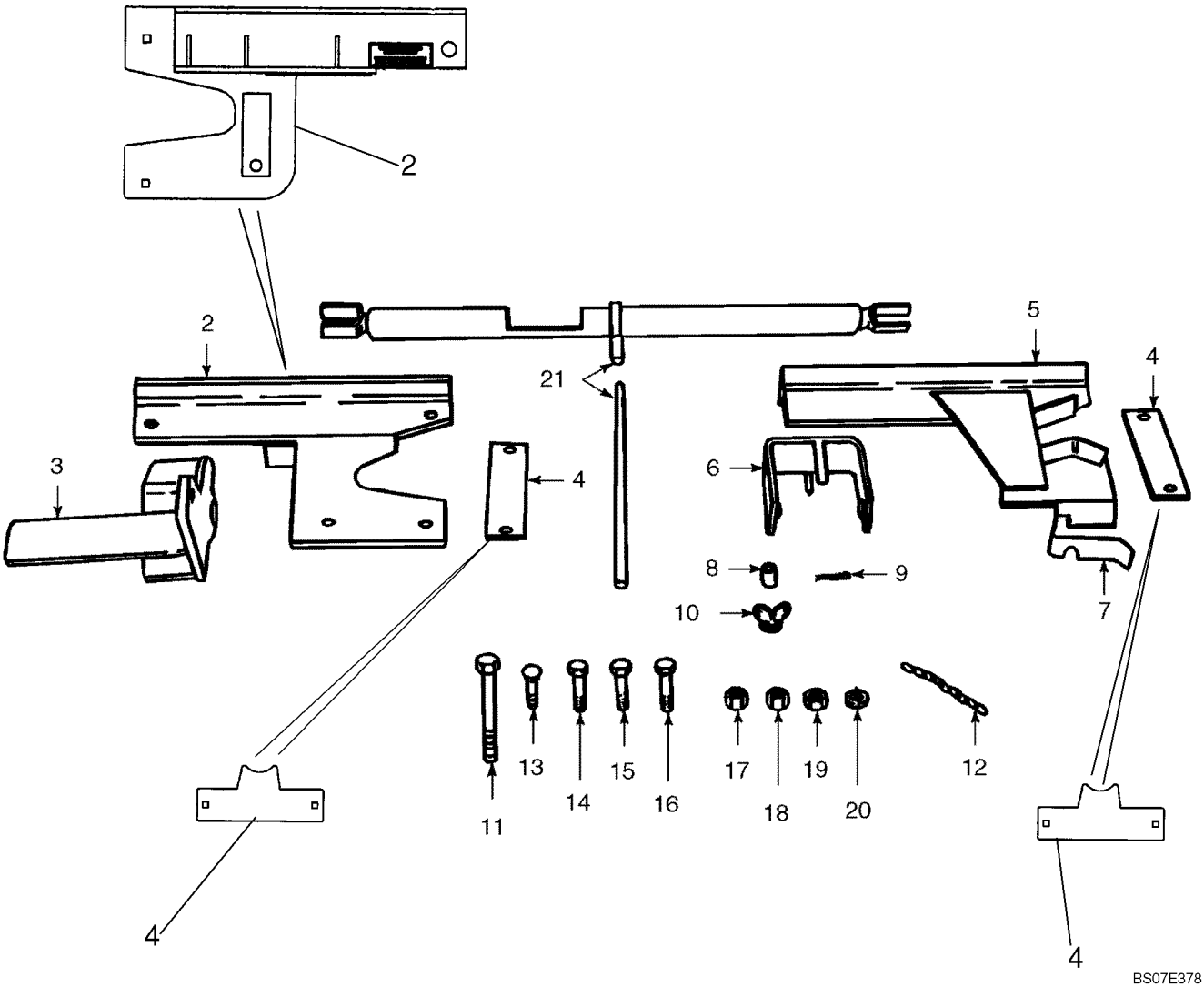

KIT DO MACACO DA CABINA

REF	FN	PART NUMBER	YR/SN	QTY	DESCRIPTION
1		9862147		1	MACACO, Kit, Cab Jack, Incl. 2 - 21, Order Wholegoods
1		87587350		1	KIT, Kit, Cab Jack, Incl. Ref. 2 - 21; Replaces 86590084
2		87587456		1	MACACO, Mounting Plate; Replaces 86504388
3		86504391		1	ANCORAGEM
4		87587352		2	TIRA, Strap; Replaces 86504124
5		86504116		1	MACACO
6		86504113		1	SUPORTE
7		86504125		1	CANAL, Filler
8		641787		2	ESPAÇADOR
9		80756		2	GRAMPO, 1/8" x 3/4"
10		88022		3	PORCA BORBOLETA, 1/2"-13
11		280831		1	PARAFUSO, Hex, 1/2"-13 x 8", G5
12		197559		1	CORRENTE
13		87868		4	PARAFUSO, Short NK, 1/2"-13 x 1 1/4", G5
14		87972		1	PARAFUSO, Hex, 1/2"-13 x 2 1/2", G5
15		88062		1	PARAFUSO, Hex, 5/8"-11 x 1 1/2", G5, Full Thd
16		88556		1	PARAFUSO, Hex, 5/8"-11 x 2 1/4", G5
17		280374		2	PORCA, 5/8"-11, G5
18		280431		1	PORCA, 1/2"-13, G5
19		9636698		1	CONTRA PORCA, 1/2"-13, GB
20		86629511		1	ARRUELA PLANA, 1/2"
21		86504211		1	MACACO

CONJUNTO DE ADESIVOS - AMÉRICA DO NORTE

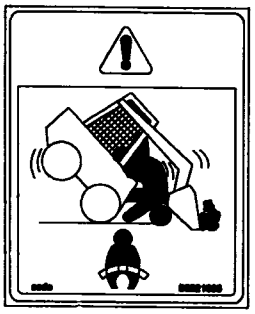
1

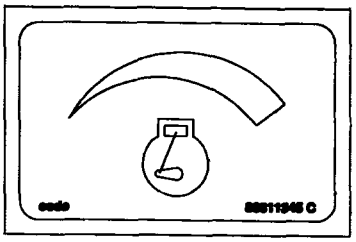
2

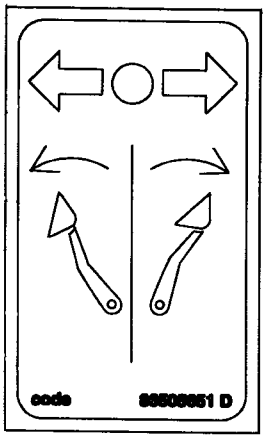
3

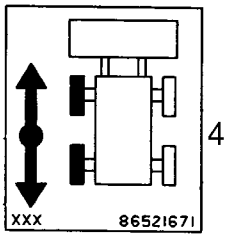

4

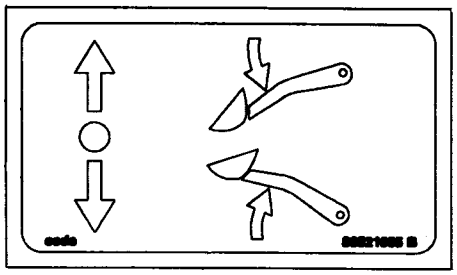
5

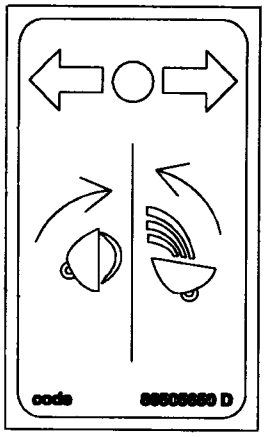
6

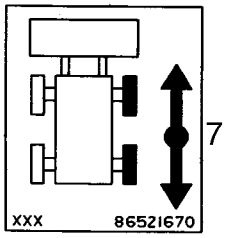

7

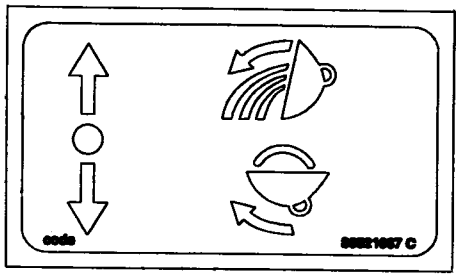
8

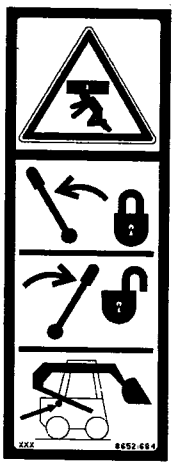
9

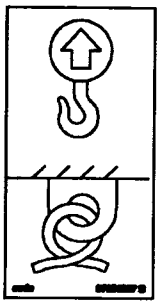
10

BS06J507

9

CONJUNTO DE ADESIVOS - AMÉRICA DO NORTE

REF	FN	PART NUMBER	YR/SN	QTY	DESCRIPTION
1		86521686		1	DECALCOMANIA, Warning Belts
2		86611345		1	DECALCOMANIA, Throttle
3		86505651		1	DECALCOMANIA, Left Hand, Hand Control
4		86521671		1	DECALCOMANIA, Steer, Left Hand
5		86521665		1	DECALCOMANIA, Boom
6		86505650		1	DECALCOMANIA, Right Hand, Hand Control
7		86521670		1	DECALCOMANIA, Steer, Right Hand
8		86521667		1	DECALCOMANIA, Bucket
9		86521684		1	DECALCOMANIA, Lift Arm Stops
10		87051987		3	DECALCOMANIA, Lift Point, Tie Down

CONJUNTO DE ADESIVOS - AMÉRICA DO NORTE



1

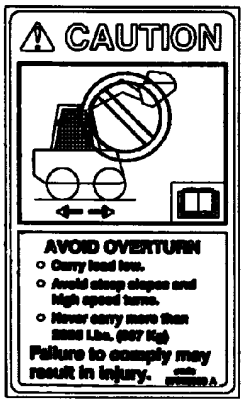

2

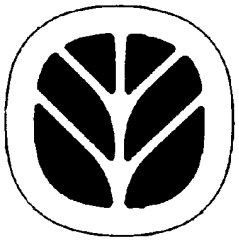
3

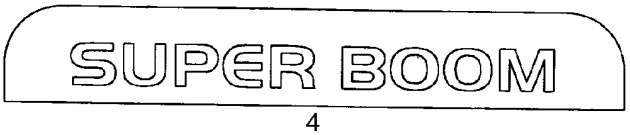

4

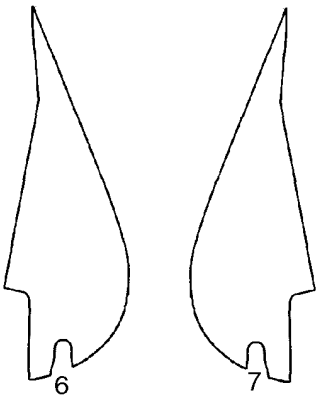
6 7



5



8

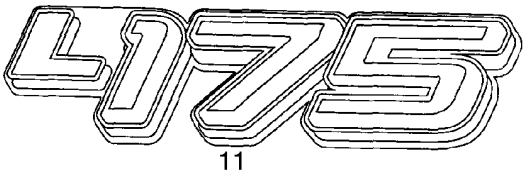

11



9

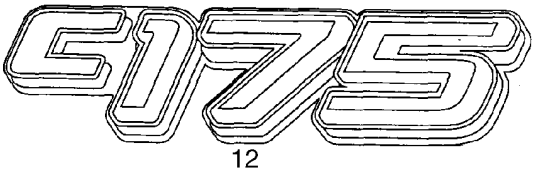

12



10

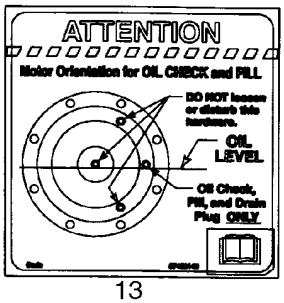

13

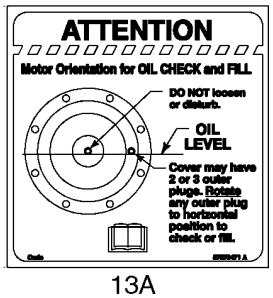

13A



14



14A

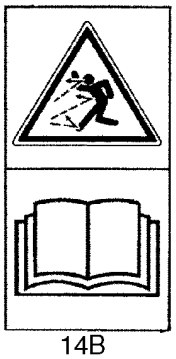
14B

BS08A308

CONJUNTO DE ADESIVOS - AMÉRICA DO NORTE

REF	FN	PART NUMBER	YR/SN	QTY	DESCRIPTION
1		87382310		1	DECALCOMANIA, Caution Rating (L175)
2		87382309		1	DECALCOMANIA, Caution Rating (C175)
3		86594346		1	SÍMBOLO, Leaf Logo
4		86589510		1	DECALCOMANIA, Super Boom, Window
5		87361358		1	DECALCOMANIA, New Holland, 57mm Wide 416.01 mm Long; Yellow
6		87526182		1	DECALCOMANIA, Left Hand Side Panel
7		87526183		1	DECALCOMANIA, Right Hand Side Panel
8		86509223		1	DECALCOMANIA, Leaf, New Holland
9		87526188		1	DECALCOMANIA, Boom LH
10		87526189		1	DECALCOMANIA, Boom RH
11		87377188		2	DECALCOMANIA, L175; North America And Europe
12		87377199		2	DECALCOMANIA, C175
13		87462146		2	DECALCOMANIA, Attention Oil Fill (C175); North America And Europe; If Used
13A		87673471		2	DECALCOMANIA, Attention - Oil Fill; If Used
14		369848A1		2	DECALCOMANIA, High Pressure Warning (C175); North America And Europe; If Used
14A		87673472		2	DECALCOMANIA, Warning - Grease Spring; If Used
14B		391157A1		2	DECALCOMANIA, Warning - Grease Spring; Europe

CONJUNTO DE ADESIVOS - AMÉRICA DO NORTE

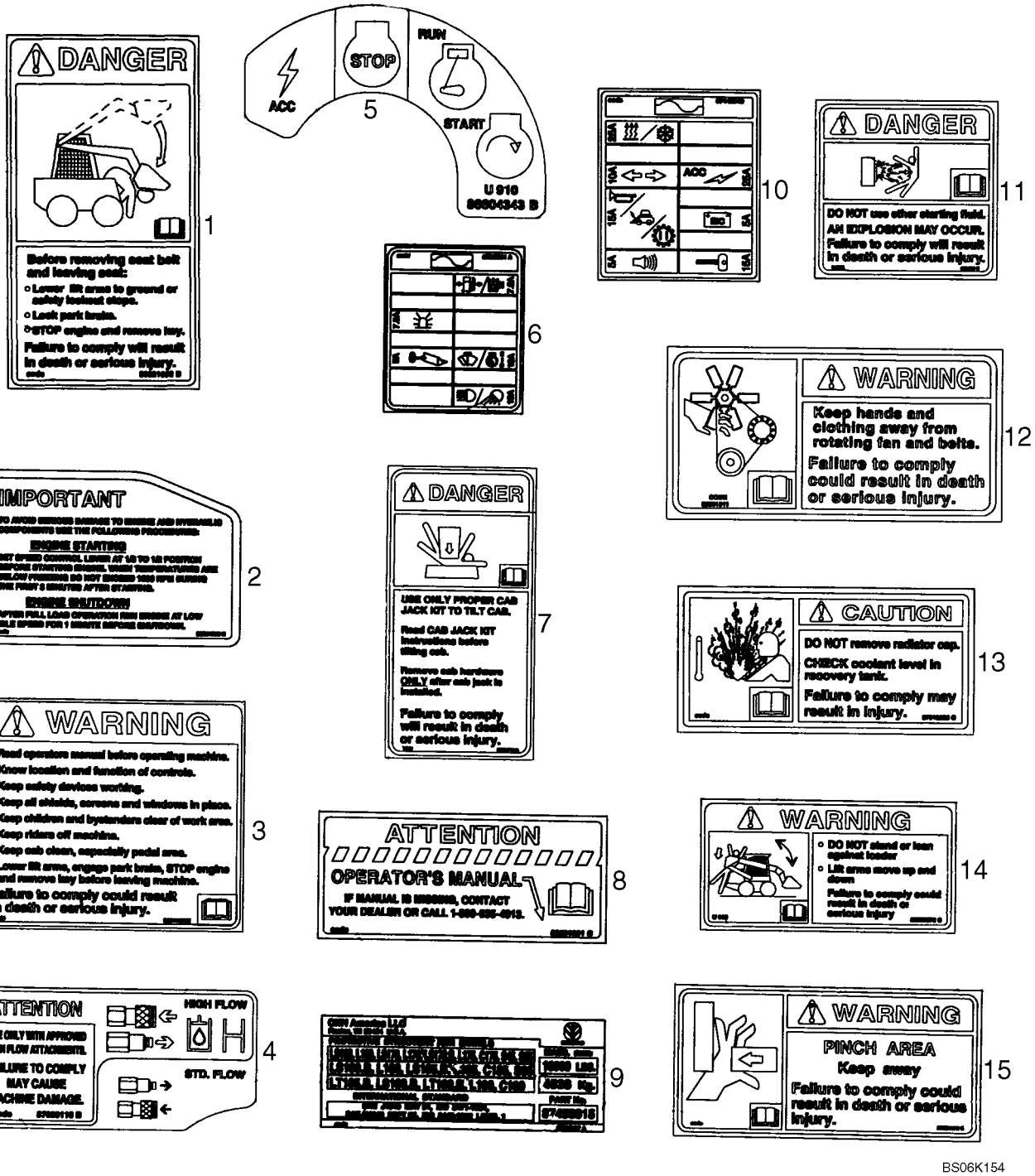

BS06K154

CONJUNTO DE ADESIVOS - AMÉRICA DO NORTE

REF	FN	PART NUMBER	YR/SN	QTY	DESCRIPTION
1		86521683		1	DECALCOMANIA, Exit, Danger
2		86521723		1	DECALCOMANIA, Important Start
3		86521688		1	DECALQUE DE ATENCAO, Caution
4		87039116		1	DECALCOMANIA, Hi Flow
5		86604343		1	DECALCOMANIA, Switch Panel EC
6		87399931		1	DECALCOMANIA, Fuse Service
7		86521713		1	DECALQUE DE AVISO, Danger
8		86521691		1	DECALCOMANIA, Attention
9		87385327		1	DECALCOMANIA, ROPS
10		87448849		1	DECALCOMANIA, Fuse
11		629086		1	DECALCOMANIA, Danger
12		9828825		1	DECALQUE DE AVISO, Fan Warning
13		87013363		1	DECALCOMANIA, Radiator Cap
14		86509972		1	DECALQUE DE AVISO, Crush Warning
15		86521673		4	DECALCOMANIA, Warning

ADESIVOS - EUROPA

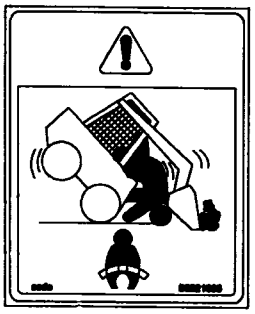
1

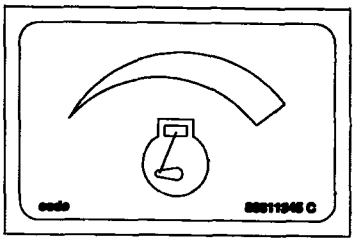
2

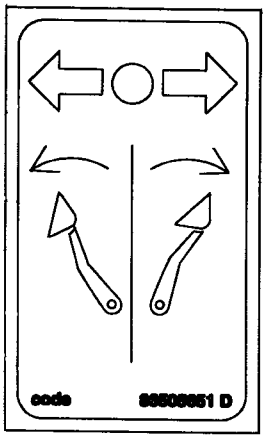
3

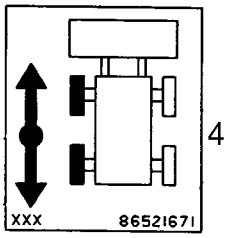

4

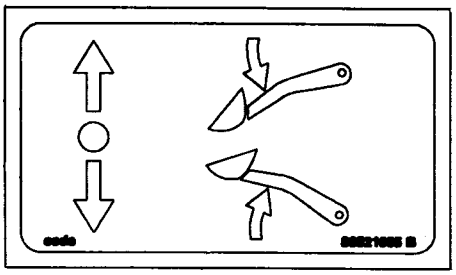
5

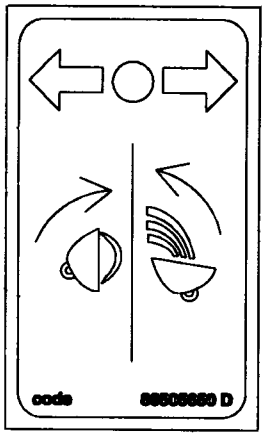
6

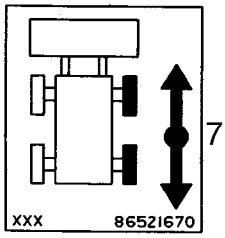

7

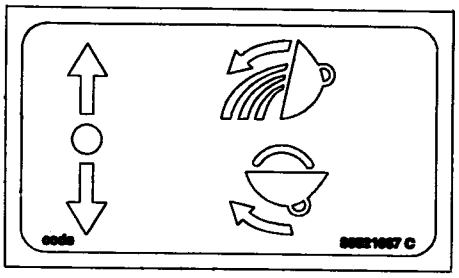
8

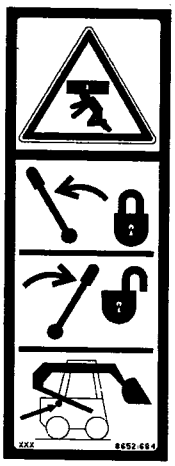
9

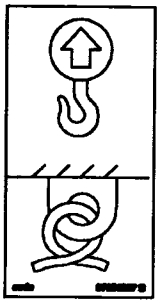
10

BS06J507

9

ADESIVOS - EUROPA

REF	FN	PART NUMBER	YR/SN	QTY	DESCRIPTION
1		86521686		1	DECALCOMANIA, Warning Belts
2		86611345		1	DECALCOMANIA, Throttle
3		86505651		1	DECALCOMANIA, Left Hand, Hand Control
4		86521671		1	DECALCOMANIA, Steer, Left Hand
5		86521665		1	DECALCOMANIA, Boom
6		86505650		1	DECALCOMANIA, Right Hand, Hand Control
7		86521670		1	DECALCOMANIA, Steer, Right Hand
8		86521667		1	DECALCOMANIA, Bucket
9		86521684		1	DECALCOMANIA, Lift Arm Stops
10		87051987		3	DECALCOMANIA, Lift Point, Tie Down

ADESIVOS - EUROPA

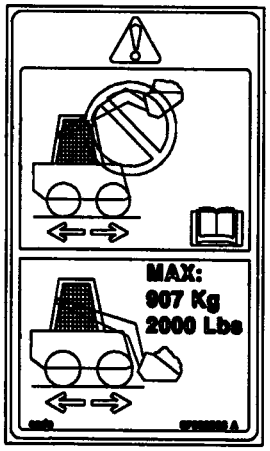

1

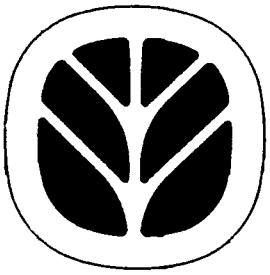

2



3

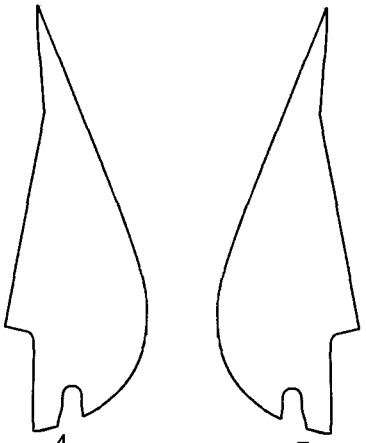

4 5



6



7



8



9

BS06K156

ADESIVOS - EUROPA

REF	FN	PART NUMBER	YR/SN	QTY	DESCRIPTION
1		87382308		1	DECALCOMANIA, Decal, Caution Rating (L175)
1		87607102		1	DECALCOMANIA, Decal, Caution Rating (C175); Not Illustrated
2		86594346		1	SÍMBOLO, Leaf Logo
3		87361358		1	DECALCOMANIA, New Holland, 57mm Wide 416.01 mm Long; Yellow
4		87526182		1	DECALCOMANIA, Decal, Left Hand Side Panel
5		87526183		1	DECALCOMANIA, Decal, Right Hand Side Panel
6		87460622		2	DECALCOMANIA, LS Logo; No Longer Used
7		87381966		2	DECALCOMANIA, Decal, LS175.B; No Longer Used, Order 87377188 - L175 Decal
8		87526188		1	DECALCOMANIA, Decal, Boom LH
9		87526189		1	DECALCOMANIA, Decal, Boom RH

ADESIVOS - EUROPA

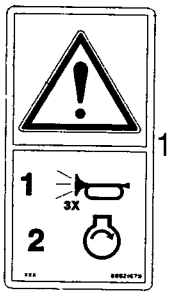

1

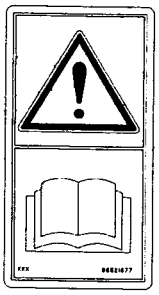

2

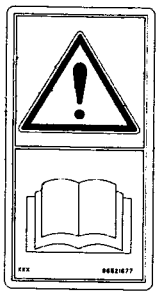

3

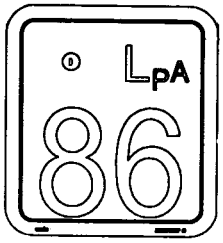

4

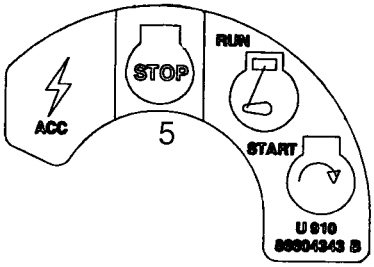

5

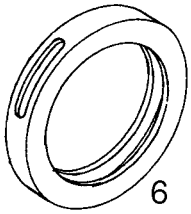

6



7

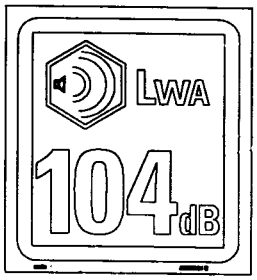

8

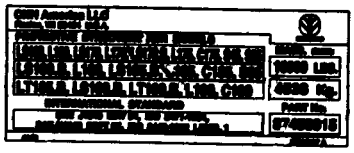

9

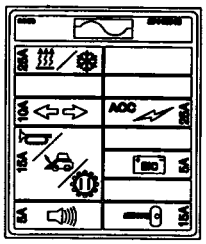

10



11

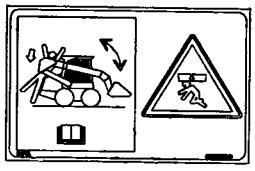

12

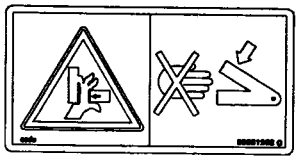

13

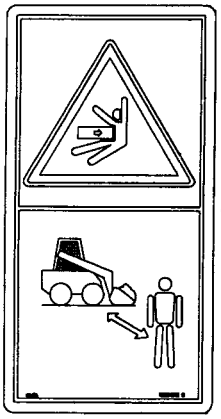

14

BS06K157

ADESIVOS - EUROPA

REF	FN	PART NUMBER	YR/SN	QTY	DESCRIPTION
1		86521679		1	DECALCOMANIA
2		86521677		1	DECALCOMANIA
3		86521678		1	DECALCOMANIA
4		86561617		1	DECALCOMANIA, Sign LPA 86
5		86604343		1	DECALCOMANIA, Switch Panel EC
6		9861090		2	ARMADURA, Protector, Key
7		87399931		1	DECALCOMANIA, Fuse Service Euro
8		86836504		1	DECALCOMANIA, Sign, LWA 104 (L175)
8		87607102		1	DECALCOMANIA, Decal, Sign, LWA 103 (C175); Not Illustrated
9		87385327		1	DECALCOMANIA, Decal, ROPS
10		87448849		1	DECALCOMANIA, Fuse
11		84015359		1	DECALCOMANIA
12		86500520		1	DECALCOMANIA, Crush Warning; If Used
12A		87621839		1	DECALCOMANIA, Crush Warning; If Used
13		86531262		4	DECALCOMANIA
14		86584761		2	DECALCOMANIA, Distance; If Used
14A		87621840		2	DECALCOMANIA, Distance; If Used

ADESIVOS - CONTROLO AUTOMÁTICO

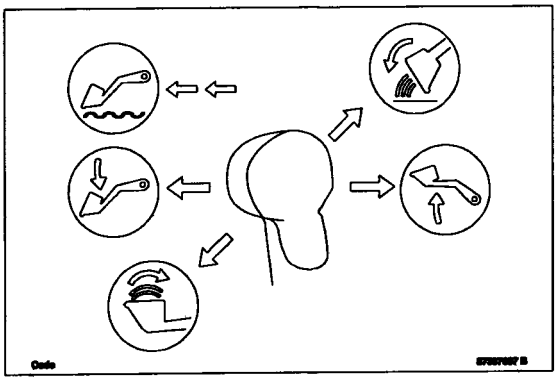

1

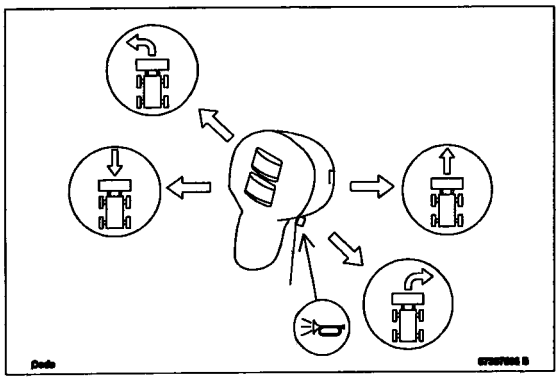

2

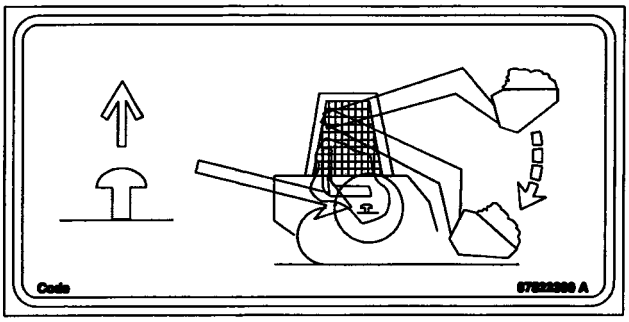

3

BS06H204

ADESIVOS - CONTROLO AUTOMÁTICO

REF	FN	PART NUMBER	YR/SN	QTY	DESCRIPTION
1		87397697		1	DECALCOMANIA, Pilot Controls RH
2		87397696		1	DECALCOMANIA, Pilot Controls LH
3		87522300		1	DECALCOMANIA, Overide Valve

ADESIVOS - PORTUGUÊS DO BRASIL, FRANCÊS DO CANADÁ, ESPANHOL DA AMÉRICA LATINA

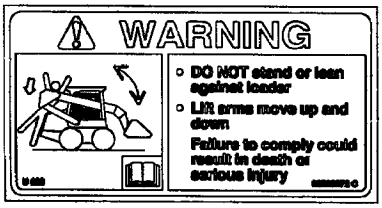

1



2



3

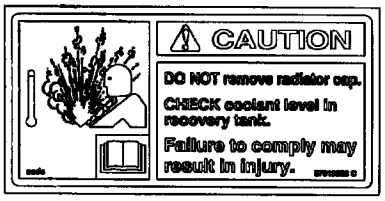

4

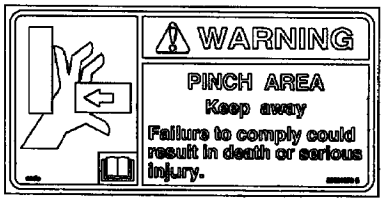

5



6

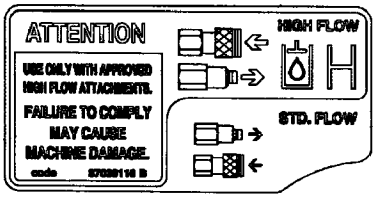

7

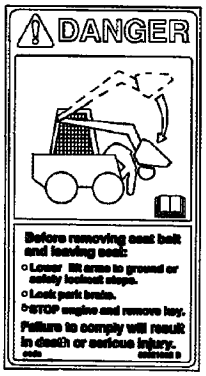

8



9

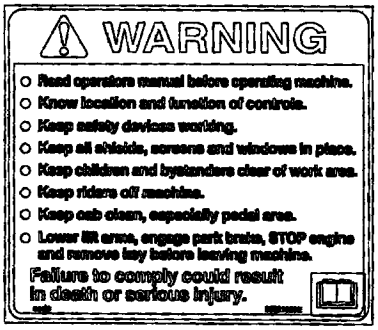

10

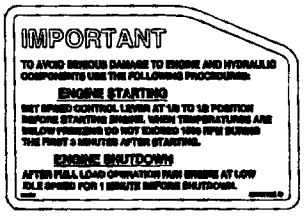

11

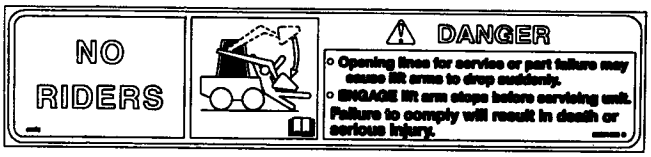

12

BS07A302

ADESIVOS - PORTUGUÊS DO BRASIL, FRANCÊS DO CANADÁ, ESPANHOL DA AMÉRICA LATINA

REF	FN	PART NUMBER	YR/SN	QTY	DESCRIPTION
		{87559297}		1	KIT, PORTUGUESE LANGUAGE DECALS, Incl. Ref 1 - 13 in Portuguese (Also Includes Ref 13 For Models L170, L160 Not Used In This Application)
1		{87559299}		1	Warning, Crush - Portuguese
2		87559298		1	DECALCOMANIA, Warning, Fan - Portuguese
3		{87559304}		1	Attention - Operator's Manual - Portuguese
4		{87559309}		1	Caution, Radiator Cap - Portuguese
5		{87559300}		1	Warning, Pinch Area - Portuguese
6		87527676		1	DECALCOMANIA, Danger, Do Not Use Ether - Portuguese
7		{87559310}		1	Attention, High Flow - Portuguese
8		{87559301}		1	Danger, Exit - Portuguese
9		{87559305}		1	Danger, Tilt Cab - Portuguese
10		{87559303}		1	Warning, Read Operator's Manual - Portuguese
11		{87559307}		1	Important, Starting/Shutdown - Portuguese
12		{87559302}		1	No Riders - Portuguese
13		{87559952}		1	Caution, Rating - L175 - Portuguese; Not Illustrated; See Figure 09-74 For English Version
13		{87559951}		1	Caution, Rating - C175 - Portuguese; Not Illustrated; See Figure 09-74 For English Version
		{87566578}		1	KIT, SPANISH LANGUAGE DECALS, Incl. Ref 1 - 13 in Spanish (Also Includes Ref 13 For Models L170, L160 Not Used In This Application)
1		86509974		1	DECALQUE DE AVISO, Warning, Crush - Spanish
2		86601164		1	DECALCOMANIA, Warning, Fan - Spanish
3		86509981		1	DECALCOMANIA, Attention - Operator's Manual - Spanish
4		87013365		1	DECALCOMANIA, Caution, Radiator Cap - Spanish
5		9801750		1	DECALCOMANIA, Warning, Pinch Area - Spanish
6		86600617		1	DECALCOMANIA, Danger, Do Not Use Ether - Spanish
7		{87559294}		1	Attention, High Flow - Spanish
8		9862235		1	DECALQUE DE PERIGO, Danger, Exit - Spanish
9		86509999		1	DECALCOMANIA, Danger, Tilt Cab - Spanish

ADESIVOS - PORTUGUÊS DO BRASIL, FRANCÊS DO CANADÁ, ESPANHOL DA AMÉRICA LATINA

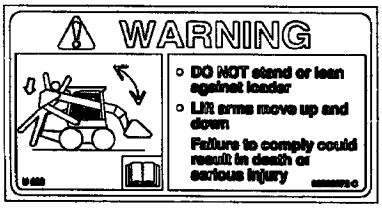

1



2



3

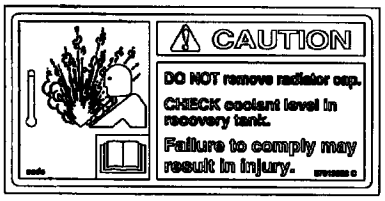

4

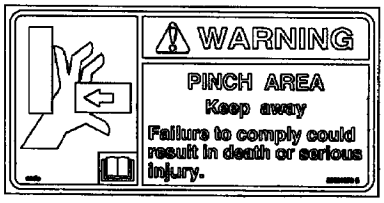

5



6

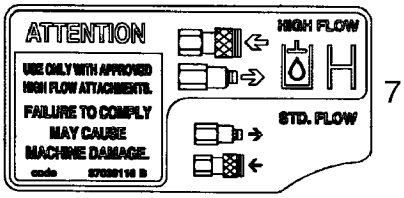

7

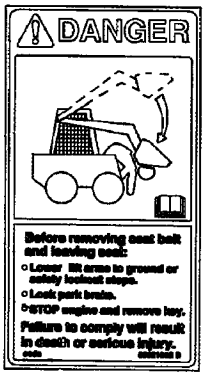

8



9

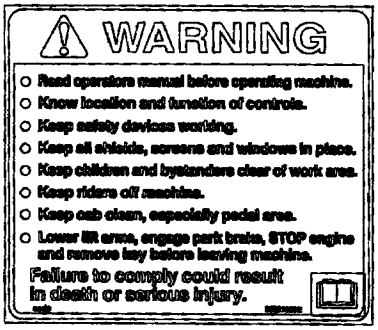

10

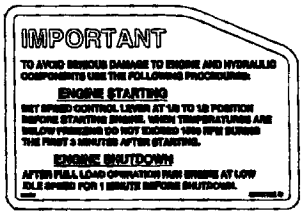

11

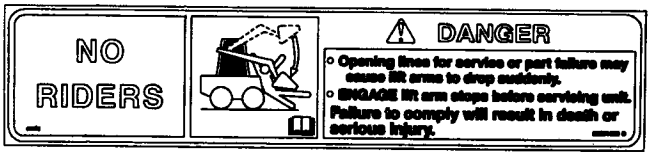

12

BS07A302

ADESIVOS - PORTUGUÊS DO BRASIL, FRANCÊS DO CANADÁ, ESPANHOL DA AMÉRICA LATINA

REF	FN	PART NUMBER	YR/SN	QTY	DESCRIPTION
10		86500526		1	DECALCOMANIA, Warning, Read Operator's Manual - Spanish
11		86517439		1	DECALCOMANIA, Important, Starting/Shutdown - Spanish
12		9862237		1	DECALCOMANIA, No Riders - Spanish
13		{87559946}		1	Caution, Rating - L175 - Spanish; Not Illustrated; See Figure 09-74 For English Version
13		{87559945}		1	Caution, Rating - C175 - Spanish; Not Illustrated; See Figure 09-74 For English Version
		{87569656}		1	KIT, FRENCH LANGUAGE DECALS, Incl. Ref 1 - 13 in French (Also Includes Ref 13 For Models L170, L160 Not Used In This Application)
1		86509973		1	DECALQUE DE AVISO, Warning, Crush - French
2		86509716		1	DECALCOMANIA, Warning, Fan - French
3		86509980		1	DECALCOMANIA, Attention - Operator's Manual - French
4		87013364		1	DECALCOMANIA, Caution, Radiator Cap - French
5		850610		1	DECALCOMANIA, Warning, Pinch Area - French
6		682683		1	DECALCOMANIA, Danger, Do Not Use Ether - French
7		{87559313}		1	Attention, High Flow - French
8		9862234		1	DECALCOMANIA, Danger, Exit - French
9		86509998		1	DECALCOMANIA, Danger, Tilt Cab - French
10		86500527		1	DECALCOMANIA, Warning, Read Operator's Manual - French
11		86517440		1	DECALCOMANIA, Important, Starting/Shutdown - French
12		9862236		1	DECALCOMANIA, No Riders - French
13		{87559949}		1	Caution, Rating - L175 - French; Not Illustrated; See Figure 09-74 For English Version
13		{87559948}		1	Caution, Rating - C175 - French; Not Illustrated; See Figure 09-74 For English Version

ADESIVOS - LANÇA

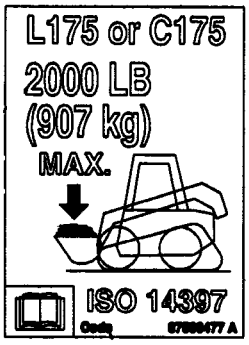

1

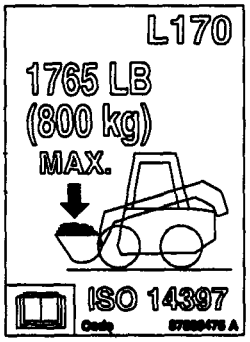

2

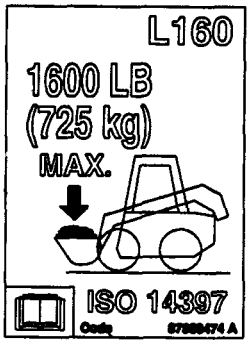

3

9



4



5



6



7

BS07C531

ADESIVOS - LANÇA

REF	FN	PART NUMBER	YR/SN	QTY	DESCRIPTION
1		87586477		1	DECALCOMANIA, Load, L175/C175
2		87586475		1	DECALCOMANIA, Load, L170
3		87586474		1	DECALCOMANIA, Load, L160
4		87586489		1	DECALCOMANIA, Boom, LH (L160/L170)
5		87586490		1	DECALCOMANIA, Boom, RH (L160/L170)
6		87586491		1	DECALCOMANIA, Boom, LH (L175)
7		87586492		1	DECALCOMANIA, Boom, RH (L175)

ADESIVOS - CONTROLES

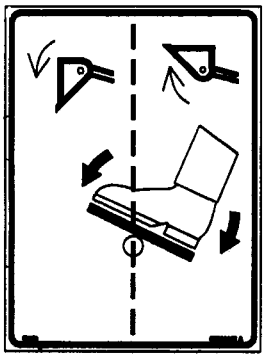
1

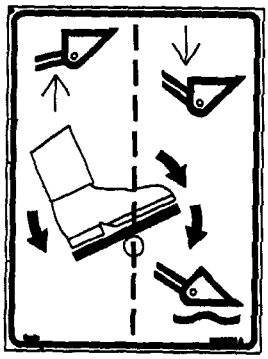
2

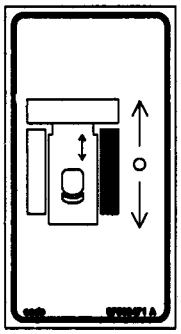
3

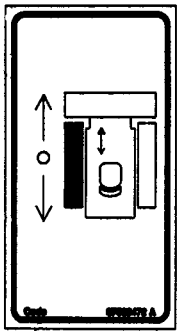
4

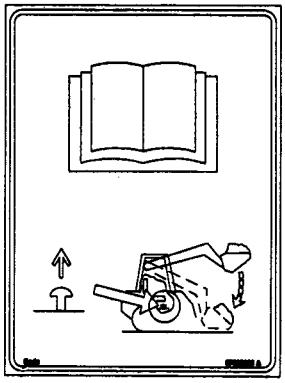
5

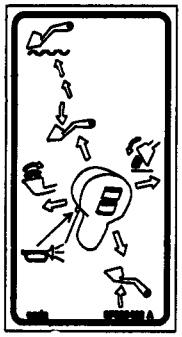
6

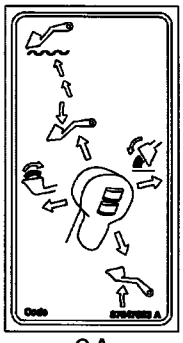
6A

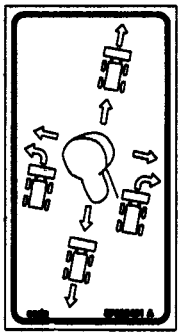
7

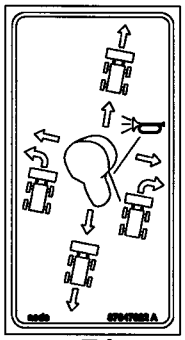
7A

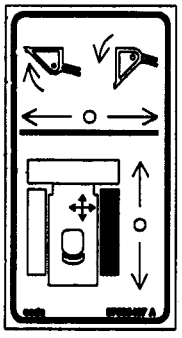
8

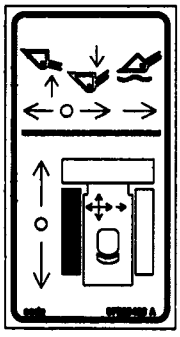
9

BS08A152

ADESIVOS - CONTROLES

REF	FN	PART NUMBER	YR/SN	QTY	DESCRIPTION
1		87586485		1	DECALCOMANIA, Foot Controls, RH (Europe)
2		87586484		1	DECALCOMANIA, Foot Controls, LH (Europe)
3		87586471		1	DECALCOMANIA, Foot Controls, RH
4		87586472		1	DECALCOMANIA, Foot Controls, LH
5		87629920		1	DECALCOMANIA, Decal, Boom Overide
6A		87647023		1	DECALCOMANIA, Pilot Controls, RH; Replaces 87586462
6		87586462		1	DECALCOMANIA, Pilot Controls, RH
7		87586461		1	DECALCOMANIA, Pilot Controls, LH
7A		87647022		1	DECALCOMANIA, Pilot Controls, LH; Replaces 87586461
8		87586467		1	DECALCOMANIA, Hand Controls, RH
9		87586466		1	DECALCOMANIA, Hand Controls, LH

ADESIVOS - CONTROLES

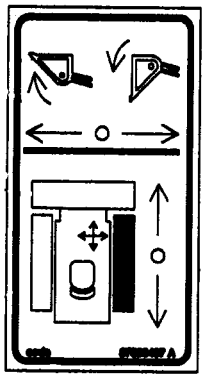
1

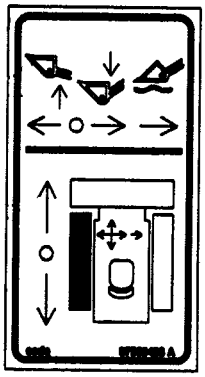
2

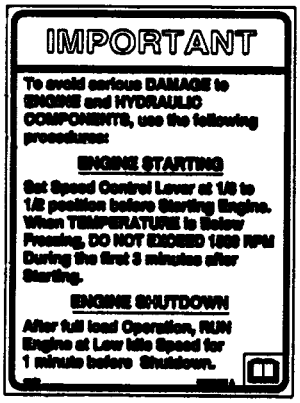

3

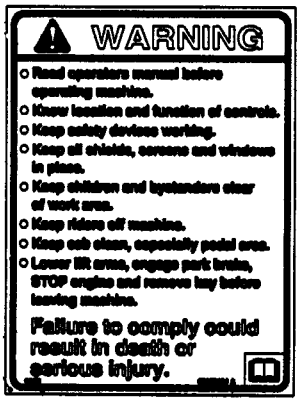

4

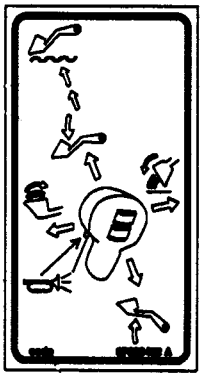
5

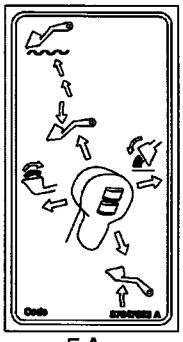
5A

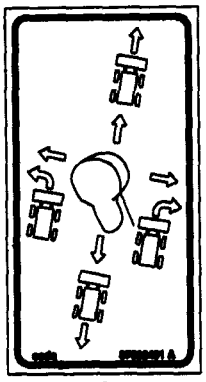
6

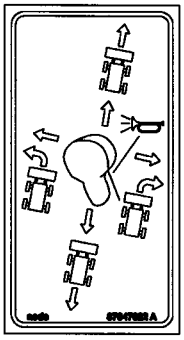
6A

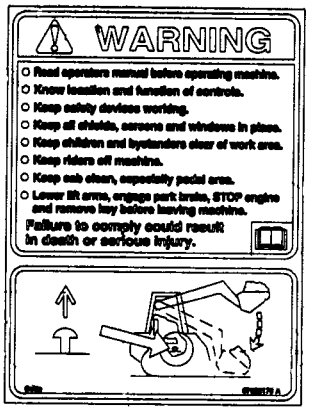

7

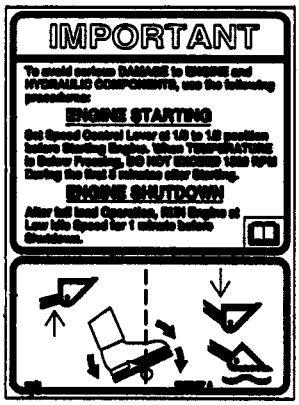

8

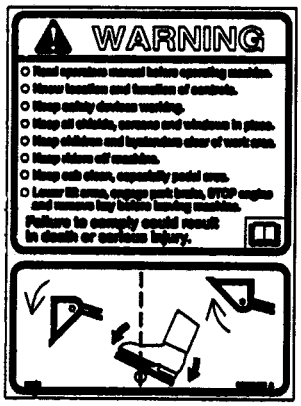

9

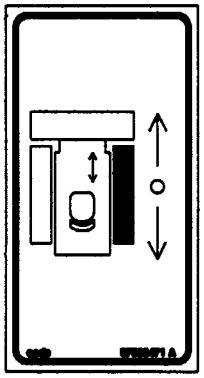
10

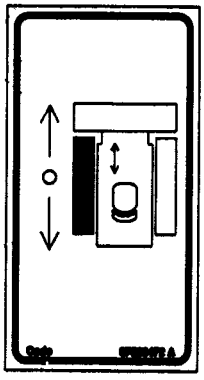
11

BS08A153

ADESIVOS - CONTROLES

REF	FN	PART NUMBER	YR/SN	QTY	DESCRIPTION
1		87586467		1	DECALCOMANIA, Hand Controls, RH
2		87586466		1	DECALCOMANIA, Hand Controls, LH
3		87586456		1	DECALCOMANIA, Important Avoid Engine Damage
4		87586454		1	DECALCOMANIA, Decal, Warning Read Manual, Know Controls
5		87586462		1	DECALCOMANIA, Pilot Controls, RH
5A		87647023		1	DECALCOMANIA, Pilot Controls, RH; Replaces 87586462
6		87586461		1	DECALCOMANIA, Pilot Controls, LH
6A		87647022		1	DECALCOMANIA, Pilot Controls, LH; Replaces 87586461
7		87626176		1	DECALCOMANIA, Decal, Pilot Control Warning
8		87586457		1	DECALCOMANIA, Foot Controls
9		87586455		1	DECALCOMANIA, Foot Controls
10		87586471		1	DECALCOMANIA, Foot Controls, RH
11		87586472		1	DECALCOMANIA, Foot Controls, LH

ADESIVOS

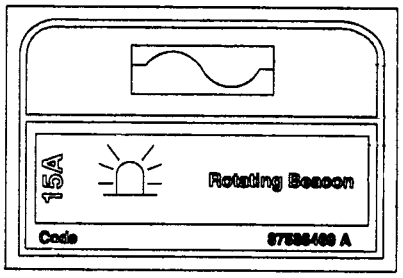

1

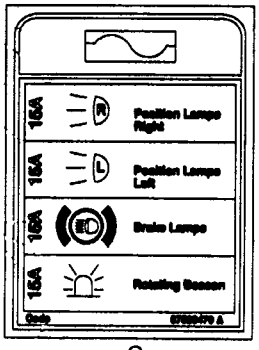

2

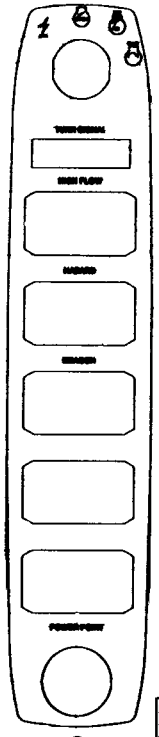

3

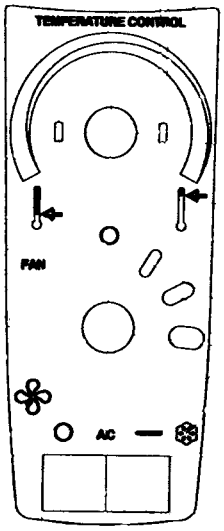

4

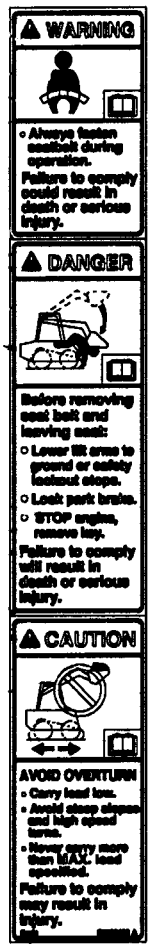

5

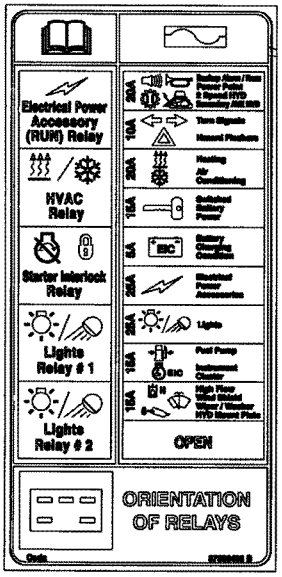

6

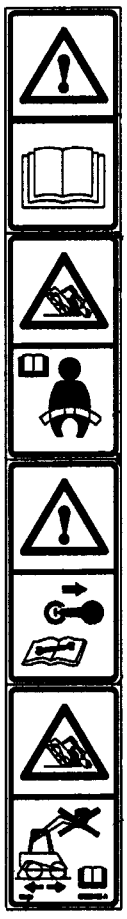

7

BS08A151

ADESIVOS

REF	FN	PART NUMBER	YR/SN	QTY	DESCRIPTION
1		87586469		1	DECALCOMANIA, Rotating Beacon
2		87586470		1	DECALCOMANIA, On Road Lights, Europe
3		87586495		1	DECALCOMANIA, Decal, Right Hand Controls
4		87586497		1	DECALCOMANIA, Decal, Temperature Controls
5		87586463		1	DECALCOMANIA, Combination, North America
6		87586468		1	DECALCOMANIA, Fuse Panel
7		87586453		1	DECALCOMANIA, Combination, Europe

ADESIVOS



1

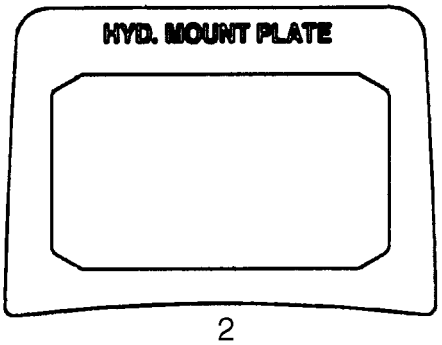

2

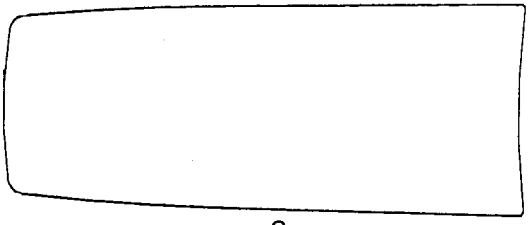

3

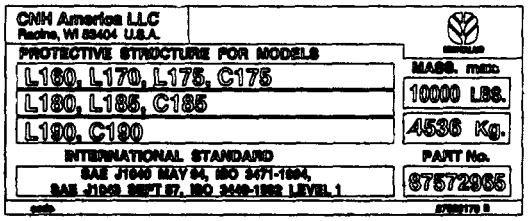

4

BS07C503

ADESIVOS

REF	FN	PART NUMBER	YR/SN	QTY	DESCRIPTION
1		87586886		1	DECALCOMANIA, Decal, New Holland, Black; 64mm (2.5 in.) X 559.5mm (22.03 in.)
2		87586496		1	DECALCOMANIA, Decal, Hydraulic Mount Plate
3		87586498		1	DECALCOMANIA, Decal, With Out Heater Or A/C
4		87626170		1	DECALCOMANIA, Decal, ROPS

ADESIVOS

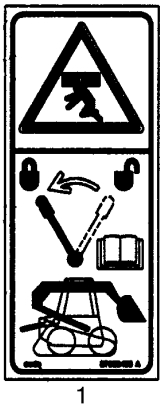

1

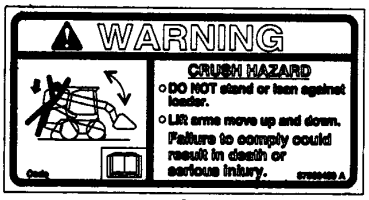

2

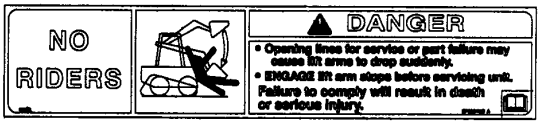

3

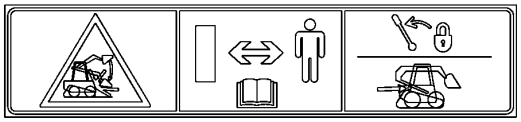

4

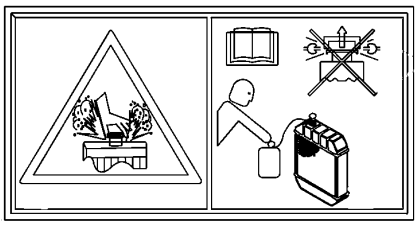

5

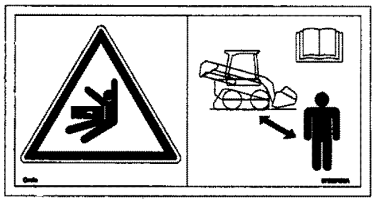

6

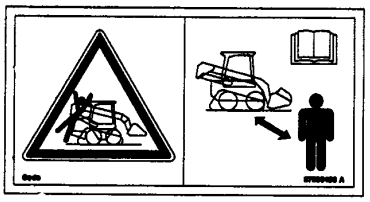

7

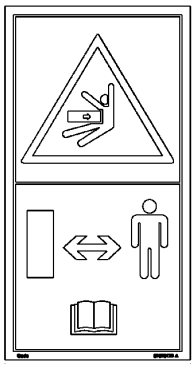

6A

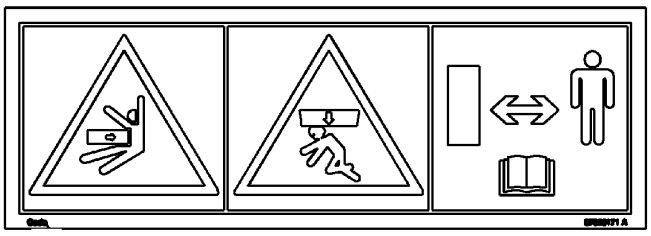

7A

BS08A054

ADESIVOS

REF	FN	PART NUMBER	YR/SN	QTY	DESCRIPTION
1		87586465		1	DECALCOMANIA, Lift Arm Stops
2		87586459		1	DECALCOMANIA, Lift Arms Move Up And Down, North America
3		87586452		1	DECALCOMANIA, Danger, No Riders
4		87658003		1	DECALCOMANIA, Threshold
5		87658005		1	DECALCOMANIA, Radiator Warning
6		87586460		1	DECALCOMANIA, Stay Away
6A		87626172		1	DECALCOMANIA, Keep Distance; Replaces Ref 6 87586460
7		{87586458}		1	Lift Arms Move Up And Down, Europe
7A		87626171		1	DECALCOMANIA, Crush Warning; Replaces Ref 7 87586468

ADESIVOS



1



2

BS07E381

ADESIVOS

REF	FN	PART NUMBER	YR/SN	QTY	DESCRIPTION
1		87666548		1	DECALCOMANIA, Decal, 35th Anniversary, LH
2		87666550		1	DECALCOMANIA, Decal, 35th Anniversary, RH

09-88		p1	03/08

KIT DO SÍMBOLO DE VEÍCULO LENTO

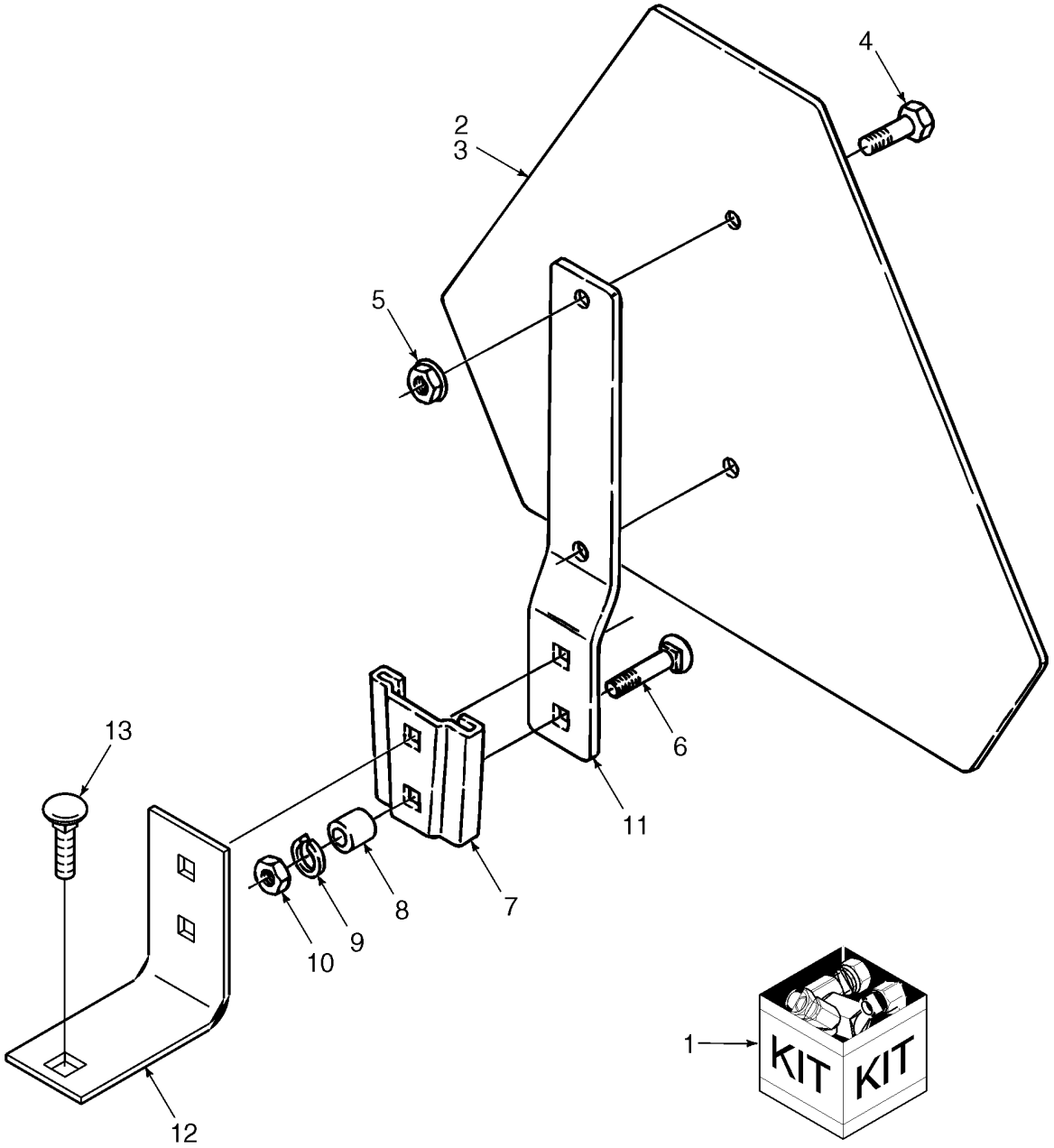

BS04M045

KIT DO SÍMBOLO DE VEÍCULO LENTO

REF	FN	PART NUMBER	YR/SN	QTY	DESCRIPTION
1		86590128		1	KIT, SMV, Incl. Ref 2, 4 - 13
2		86547710		1	TRIÂNGULO, Emblem, SMV, Incl. Decal 86547711
3		86547711		1	DECALCOMANIA
4		84821		2	PARAFUSO, Slotted Truss Hd, #10-24 x 1/2"
5		523310		2	PORCA, 5/16" x 1"
6		280428		2	PARAFUSO, Short NK, 5/16"-18 x 1", G5
7		847590		1	SUPORTE, Socket
8		213404		2	ESPAÇADOR
9		322358		2	ARRUELA MOLA, Belleville, M8
10		9635082		2	PORCA, 5/16"-18, G5
11		195035		1	SUPORTE
12		86559893		1	SUPORTE
13		280503		1	PARAFUSO, Short NK, 3/8"-16 x 1", G5, Full Thd, Used with (1) Spacer, Ref 8 and Nut 9628503
		9628503		1	PORCA, 3/8"-16, G5

ADESIVOS

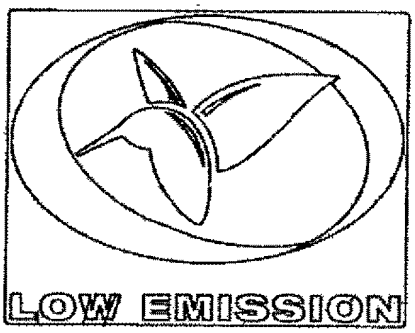

1

BS08F054

ADESIVOS

REF	FN	PART NUMBER	YR/SN	QTY	DESCRIPTION
1		87701340		2	DECALCOMANIA, Low Emission

Number	Figure	Sequence	Ref.
{}	08-09		
{715108016}	09-08		1
{715112016}	09-08		1
{715118026}	09-08		1
{715252016}	09-08		1
{86590377}	09-07		1
{86590379}	09-07		1
{86590382}	09-10		1
{86600559}	09-07		1
{86634392}	09-32A		7
	09-32D		11
	09-33A		7
	09-33E		6
{87010193}	09-09		1
{87010194}	09-09		1
{87357150}	09-68		6A
{87357151}	09-68		6B
{87357154}	09-68		5B
{87393130}	02-05A		1
	02-05B		1
{87393346}	09-01		5
{87396555}	09-01A		3
{87460725}	09-01		1
{87461564}	09-01A		2
{87488573}	08-14		32
	08-16		25
	08-16A		25
{87528971}	09-01A		16
{87543362}	02-04		1
{87559294}	09-80		7
{87559297}	09-80		
{87559299}	09-80		1
{87559300}	09-80		5
{87559301}	09-80		8
{87559302}	09-80		12
{87559303}	09-80		10
{87559304}	09-80		3
{87559305}	09-80		9
{87559307}	09-80		11
{87559309}	09-80		4
{87559310}	09-80		7
{87559313}	09-80		7
{87559945}	09-80		13
{87559946}	09-80		13
{87559948}	09-80		13
{87559949}	09-80		13
{87559951}	09-80		13
{87559952}	09-80		13
{87566578}	09-80		
{87566709}	08-09		8
	08-09A		9
{87569656}	09-80		
{87572851}	09-21A		17
{87582297}	09-68A		
{87582298}	09-68A		
{87582300}	09-68A		
{87582320}	09-68A		
{87586458}	09-86		7
{87622768}	09-29C		5
100197	08-40		32
102043	04-17		12
103789	09-35		11
103807	04-01A		4
	04-10		26
103989	09-19		8
	09-21		23
11104	03-02		23
	03-02A		21
11116431	06-56		7
11198471	03-02		3A
118827	09-11		8
	09-50		16
120040	06-07		21
	06-18		22
120056	06-21		23
120062	06-07		21
	06-18		22
120080	08-38		8
120080	08-39A		42
	08-40		37
	08-40A		44
120100	04-12		5
	04-12A		2
	08-23B		8
120103	04-07		3
	09-23		5
120104	04-07		7
	04-10		33
	08-23B		15
121410A1	04-05C		9
	04-05D		20
121412A1	04-05C		7
	04-05D		18
121413A1	04-05C		8
	04-05D		19
121414A1	04-05C		6
	04-05D		17
121415A1	04-05C		10
	04-05D		21
121573A1	04-16A		11
	04-19		10
	04-21		6
	04-21A		20
126844A1	04-04		28
	04-05A		2
	04-05B		10
128359	08-03		39
128817	06-15		27
	06-17		25
	08-18		27
	08-18		8
	08-37		7
	08-38		11
	08-39		15
	08-39A		13
	08-40		14
	08-40A		18
128818	06-18		3
	08-05		4
	08-18		23
128819	06-17		28
	08-01		13
	08-02		7
	08-23		9
	08-23A		4
	08-40A		5
128822	08-05		9
	08-12		8
	08-12A		1
	08-13		9
	08-13A		5
128825	06-03		2
	06-05		19A
	06-05		3
	06-07		3
	06-07		34
	06-15		24
	06-18		11
	06-18		4
	06-20		27
	06-23		4
	06-24		4
	06-25		4
	06-26		8
	06-27		4
	06-28		4
	08-03		9A
	08-04		2
	08-04		5
	08-05		12
	08-05		5
	08-06		2
	08-06		5
	08-18		13
	08-18		24
	08-18		28

Number	Figure	Sequence	Ref.
128825	08-20		26
	08-23B		13
	08-37		8
	08-38		12
	08-39		20
	08-39		9
	08-39A		26
	08-39A		7
	08-40		22
	08-40		6
	08-40A		13
	08-40A		14A
	08-40A		29
	09-54		26
128830	06-07		2
	06-15		23
	06-18		10
	06-20		19
	08-04		4
	08-05		11
	08-06		4
	08-18		12
	08-20		25
	08-39		19
	08-39A		25
	08-40		21
	08-40A		28
	09-54		25
128996	08-02		13
	08-04		7
	08-06		7
	08-22		15
	08-22A		10
129-667	08-15		3
129274	08-08		5
	08-13		8
	08-23B		1
	08-39		6
	08-39A		8
	08-40		5
	08-40A		14
129428	08-05		15
	08-05		8
13021	09-18		6
	09-18A		2
	09-20		12
	09-20A		14
130282	08-03		10
134579	03-01		11
	03-01A		12
	04-07		6
	04-10		1
	04-10A		10
	04-14		9
	04-24		11
	09-26		18
	09-27		14
136256	04-25		26
13734	03-02		21
	03-02A		20
137827A1	04-04		10
139398	08-20		1
	09-54		1
	09-56		3
140040	02-01		16
140045	02-01		18
	02-05		21
	02-05A		23
	02-05B		23
	03-01		32
	03-01A		25
	04-01A		6
	04-05E		6
	04-10		12
	04-10A		13
	04-10B		1
	04-11		8
	04-17		14
140045	04-18		16
	04-20		11
	04-21		21
	04-21A		7
	08-02		5
	08-06		18
	08-08		15
	08-08		19
	08-09		30
	08-09A		2
	08-14		1
	08-14A		1
	08-16		1
	08-16A		1
	08-16B		1
	08-20		9
	08-23		7
	08-23A		6
	09-12		6
	09-13		3
	09-28D		14
	09-31A		15
	09-34		3
	09-35		23
	09-36		4
	09-40		10
	09-43		14
	09-43A		38
	09-44		23
	09-47		19
	09-48		30
	09-49		38
	09-51		2
	09-51A		4
	09-51B		3
	09-52		2
	09-52A		10
	09-53		3
	09-54		9
	09-55		6
	09-56		14
	09-59		5
	09-61		5
	09-63		27
	09-64		6
	09-65		5
	09-66		3
	09-67		10
	09-71		15
	09-72		3
140046	06-02		9
	06-04		9
	06-15		20
	06-16		7
	09-65		8
	09-66A		5
14301821	06-56		28
143479	02-05		38
	02-05A		18
	02-05B		18
144120	08-14A		38
14457281	08-03		23
14461080	06-23		13
	06-24		13
	06-27		13
	06-28		13
145458	03-02		17
	03-02A		11
	04-10		8
	04-11		2
	04-14		11
	04-24		19
14560287	04-16A		7
	06-14		28
	06-17		37
	07-03		2
	09-29A		16
	09-39A		13

Number	Figure	Sequence	Ref.
145913	04-14		10
	04-24		18
15212521	02-05		9
15694	08-18		1
16043224	04-10		22
	04-10		22
163335	06-11		17
	06-15		28
	06-21		1
	07-04		1
163902	09-43A		37
	09-48		12
	09-49		37
	09-51		14
	09-51A		21
164380	08-03		15
16445	02-05		31
	02-05A		32
	02-05B		39
164910	08-18		17
	08-39		28
	08-39A		35
	08-40A		38
164918	08-01		26
165202	03-01		16A
	03-01A		4A
	06-14		12
	06-14		7
	06-17		2
	06-17		23
	06-20		2
	06-20		22
	08-23		13
	08-23		15
	08-23A		10
	08-23A		12
	08-23A		14
	08-23A		16
	08-23A		18
167266	06-02		2
	06-02		4
	06-04		3
	06-04		5
	06-04		7
	06-07		37
	06-07		5
	06-14		14
	06-14		4
	06-14		9
	06-15		3
	06-15		5
	06-16		13
	06-16		3
	06-16		5
	06-17		18
	06-18		13
	06-18		7
	06-20		18
	06-20		24
	06-25		2
	06-26		6
	08-02		20
	08-14		24
	08-14		26
	08-14A		29
	08-14A		32
	08-18		10
	08-23		17
	08-23		5
	08-23A		20
	08-37		6
	08-38		6
	08-39		17
	08-39A		23
	08-40		19
	08-40		33
	08-40A		26
	08-40A		37
167266	08-40A		8
167268	06-14		22
	06-17		31
	06-20		10
	06-20		7
	08-14		16
	08-14		21
	08-14A		19
	08-14A		24
	08-16		13
	08-16		18
	08-16A		13
	08-16A		18
	08-16B		19
	08-16B		24
167269	06-03		16
	06-05		19
	06-07		40
	06-08		19
	06-17		29
	07-03		5
	08-01		14
	08-02		10
	08-02		16
	08-02		4
	08-02		8
	08-03		22A
	08-03		40
	08-12		4
	08-13		7
	08-18		18
	08-23		10
	08-23		3
	08-23A		3
	08-23A		5
	08-39		29
	08-39		31
	08-39A		33A
	08-39A		36
	08-40		31
	08-40A		39
	08-40A		6
167509	04-18		11
	04-21		20
168982	09-43A		36
	09-48		15
	09-49		36
	09-51		23
175617	06-55		3
176081	08-40A		7
177239A2	04-21		1
	04-21A		10
182977	08-12		5
	08-13		5
184064	08-04		9
	08-06		9
187140A1	04-21		2
	04-21A		11
190003820001	04-05A		13
191823	09-03		24
195035	09-88		11
196033	06-57		2
19670	09-03		23
197559	09-72A		12
2010665	04-26		2
	04-27		2
2010668	04-26		
	04-27		
20356	08-18		22
	08-39		26
	08-39A		30
	08-40		28
	08-40A		33
	09-43B		12
	09-52		13
213404	04-17		11
	04-20		8
	08-14		3

Number	Figure	Sequence	Ref.
213404	08-14A		3
	08-16		3
	08-16A		3
	08-16B		3
	09-88		8
214389	09-05		17
	09-06		5
	09-06A		5
216698	09-36		15
216773	06-14		6
	06-17		1
	06-20		1
	08-23A		15
217114	08-03		14
219603	02-01		12
	06-02		6
	06-15		13
	06-16		20
	08-02		18
	08-14		17
	08-14A		20
	08-16		14
	08-16A		14
	08-16B		20
219606	08-18		1B
	08-39		36
	08-39A		14
	08-40		10
	08-40A		16
219838	09-51A		6
221407	02-02		4
221410	02-02		5
221665	09-40		13
	09-43A		35
	09-44		14
	09-48		2
	09-49		35
223593	03-01		5
	03-01A		27
225930	09-35		10
226129	09-11		7
226130	09-11		11
227854	09-26		5
227856	09-27		3
228500	09-47		10
229373	04-15		4
229398	09-03		18
233705	08-14		20
	08-14A		23
	08-16		17
	08-16A		17
	08-16B		23
234726	09-43		9
235671	08-05		14
	08-05		7
236622	09-01		14
	09-01A		17
237-6006	09-56		11
237-6016	06-14		20
	08-40		35
237915	04-04		6
	04-05		32
238-5011	08-15		6
239859	04-04		4
	04-05		3
	08-04		24
241630	09-26		10
241631	09-26		11
241632	09-26		12
241633	09-26		13
241634	09-26		7
241636	09-26		8
247520	09-27		6
247521	09-27		5
247780	08-04		15
	08-06		17
	08-07		4
	08-08		10
247780	09-36		11
248712	04-25		2A
	04-26		8
248974	08-12		10
	08-12A		5
	08-18		6
	08-39		13
	08-39A		18
	08-40A		21
248992	08-02		12
	08-40		12
249100	09-41		4
	09-42		2
	09-43		11
	09-43B		7
	09-45		10
	09-46		3
	09-47		22
	09-52		15
	09-52A		6
249825	04-08		8
251490	09-57		1
	09-58		1
252687	03-02A		2
	09-43A		33
	09-44		13
	09-48		26
	09-49		33
254146	09-43A		32
	09-48		10
	09-49		32
	09-51		10
	09-51A		15
256341A1	09-38A		10
256342A1	09-38A		9
258985	04-05		24
259816A1	04-21		5
260-1358	04-05		14
262279	09-26		28
	09-28		12
263117	02-04		7
	02-04A		7
	02-06		4
	04-04		5
	04-04A		1
	04-05		6
	04-05C		13
	04-05F		6
	04-05G		4
	04-09		5
	04-10		9
	04-10A		1
	04-11		4
	04-12		1
	04-12A		5
	04-13		2
	04-14		8
	04-15		7
	04-15A		2
	04-16		6
	04-22		4
	04-23		4
	04-24		17
	04-25		8
	04-26A		3
	08-01		25
	08-08		2
	08-18		30
	08-39		39
	08-40		43
	08-40A		
	09-14		12
	09-18		2
	09-18A		3
	09-24		10
	09-28B		11
	09-29		11
	09-37		9

Number	Figure	Sequence	Ref.
263117	09-39		13
	09-61		
	09-63		38
263296	09-27		2
263299	09-26		9
263636	09-48		17
265235	08-23		12
	08-23A		9
265808	06-05		18
271485	09-17		
272193	06-23		8
	06-28		8
272201	06-23		27
	06-28		27
272202	06-23		26
	06-28		26
272203	06-23		35
	06-24		30
	06-27		30
	06-28		35
272205	06-23		34
	06-24		29
	06-27		29
	06-28		34
272223	06-23		24
	06-28		24
272471	08-10		2
272487	06-23		29
	06-24		24
	06-27		24
	06-28		29
272488	06-23		32
	06-24		27
	06-27		27
	06-28		32
272499	06-25		9
273890	04-05C		16
	04-05D		9
	04-09		3
274506	08-03		6
274568	09-19		4
	09-21		17
	09-21A		15
274569	09-59		17
	09-61		17
	09-63		13
274754	08-10		6
275064	03-02		4
277633	06-23		30
	06-24		25
	06-27		25
	06-28		30
279638	08-03		23
280129	08-01		7
	08-09		27
	08-22		7
	08-22A		14
	09-71A		8
280161	06-01		35
	08-02		6
	08-23		6
	08-23A		8
	09-04		3
	09-40		7
280164	08-01		10
	08-18		20
	08-20		13
	08-22		3
	08-22A		2
	08-39		24
	08-39A		28
	08-40		26
	08-40A		31
	09-54		13
	09-56		16
280165	06-23		5
	06-24		5
	06-25		5
280165	06-27		5
	06-28		5
280214	09-03		37
280223	09-03		7
280236	09-43A		44
	09-47		26
	09-48		36
	09-49		44
	09-51A		10
280250	09-26		27
	09-28		13
280252	03-02A		8
280293	09-03		25
280316	09-03		4
280327	02-02		10
	03-02		13
	04-10		35
	09-15		26
	09-15A		31
	09-41		2
	09-42		5
	09-43		5
	09-43B		2
	09-45		7
	09-46		6
	09-47		16
	09-48		22
	09-50		6
	09-52		4
	09-52A		7
280342	04-25		9
	04-26		11
	04-27		9
280361	09-03		25
280374	09-10A		
	09-72A		17
280428	09-88		6
280431	09-15		1
	09-15A		10
	09-72A		18
280471	09-30		12
280476	04-04		7
	04-05		34
	09-20		8
	09-20A		17
	09-31A		14
	09-34		4
	09-36		7
	09-43A		31
	09-48		23
	09-49		31
	09-51		12
	09-51A		18
	09-71		14
280497	04-18		10
	04-21		15
	04-21A		5
	09-24		19
	09-24		22
	09-24		29
	09-25		18
	09-31		2
	09-32		8
	09-33		6
	09-43A		30
	09-49		30
	09-51		21
	09-51A		2
	09-63		31
280503	04-17		13
	09-88		13
280514	06-01		36
	09-35		3
280552	03-02		15
280589	02-05		29
	02-05A		30
	02-05B		33
	06-54		4

Number	Figure	Sequence	Ref.
280618	09-43A		29
	09-49		29
	09-69		6
280638	02-01		37
	09-25		10
	09-59		26
	09-61		26
	09-63		42
280724	09-06		6
	09-06A		6
280734	04-24		2
	04-25		25
280736	08-09		28
	08-09A		14
	09-40		14
	09-43A		40
	09-44		4
	09-49		40
	09-50		11
	09-70		7
280796	02-02		16
280825	04-21A		22
280831	09-72A		11
280853	02-05B		35
	06-54		9
280967	06-06		9
	06-08		11
	06-11		4
	07-01		10
	07-04		8
281045	04-17		16
281076	09-17		11B
	09-17		7
	09-17A		2
283373	09-59		31
	09-61		31
	09-63		21
283779A1	04-05B		11
285072	02-05		28
	02-05A		31
	02-05A		41
	02-05B		26
	06-01		17
	06-54		5
	09-03		13
	09-43		2
	09-47		20
	09-47		21
	09-52		7
	09-52A		15
	09-69		8
286217	06-07		4
	06-18		12
287066	06-55		8
287644	09-18A		10
	09-20		13
	09-20A		8
287902	06-55		7
290323	03-01		9
	03-01A		1
291186	09-17		22
	09-18A		8
	09-20A		2
	09-35		25
291260	03-01		7
	03-01A		30
291308	08-22		17
	08-22A		8
	09-15		24
	09-15A		32
	09-43		25
	09-44		28
	09-47		27
	09-48		16
	09-49		26
	09-50		19
	09-52		11
	09-52A		12
291308	09-53		5
	09-55		5
291355	09-44		36
	09-48		9
	09-51		24
	09-51A		17
	09-51B		5
291809	09-15		25
	09-15A		27
291966	04-08		21
292141	04-04		21
	04-05		23
293008	09-10A		15
293797A1	04-10A		3
29684	09-15		3
	09-15A		9
308761	09-23		4
3131227R1	04-21		3
	04-21A		12
3131234R1	04-21		4
	04-21A		13
321950	09-41		8
	09-42		6
322357	02-01		7
	02-05		13
	02-05A		12
	02-05B		12
	03-01		12
	03-01A		11
	04-04		24
	04-05		26
	04-05C		15
	07-02		3
	09-23		6A
	09-25		11
	09-26		15
	09-27		8
	09-40		18
322358	02-01		21
	02-03		6
	03-02		16
	03-02A		2
	04-05E		8
	04-07		2
	04-08		24
	04-10		7
	04-16A		5
	04-18		12
	04-19		2
	04-21		11
	04-21A		16
	04-24		21
	08-07		12
	09-15		21
	09-15A		30
	09-23		13
	09-24		20
	09-24		32
	09-24		35
	09-25		7
	09-26		20
	09-27		16
	09-28		5
	09-32		9
	09-33		7
	09-40		23
	09-41		6
	09-42		4
	09-43		7
	09-43B		3
	09-44		33
	09-45		5
	09-46		5
	09-47		20
	09-48		29
	09-49		25
	09-50		5
	09-51		18

Number	Figure	Sequence	Ref.
322358	09-51A		25
	09-52		9
	09-52A		4
	09-59		14
	09-61		14
	09-88		9
322894	06-04		6
	06-16		12
	08-14A		28
	08-18		9
	08-39		16
	08-39A		22
	08-40		18
	08-40A		25
322896	06-02		1
	06-04		2
	06-07		36
	06-14		3
	06-15		2
	06-16		2
	06-18		6
	06-20		17
	08-02		19
	08-14		25
	08-23		16
	08-23A		19
	08-37		5
	08-38		5
323238	09-39		9
	09-39A		6
325059	08-23		2
	08-23A		2
325142	08-03		3
329-1010	09-10B		9
330344	06-02		3
	06-04		4
	06-14		8
	06-15		4
	06-16		4
330346	06-06		11
	06-08		15
	07-01		7
337475	06-56		3
337476	06-02		8
	06-04		8
	06-15		21
	06-16		6
34821	04-10		
	08-14A		6
	08-16B		6
353308	09-22		7
354374	04-25		29
369848A1	09-74		14
373331A1	04-28		3
374835	06-56		23
378244	04-25		30
38785	06-23		25
	06-28		25
391157A1	09-74		14B
3916679	03-02		9
	03-02A		7
3917490	08-14A		7
	08-16B		7
3962571	09-36		1
398877	04-18		3
408	06-55		17
	06-56		14
412326	09-28C		20
	09-29B		30
412672	06-02		10
	06-04		10
	06-15		22
	06-16		8
418870	04-18		4
420-21032	09-10B		8
425-1010	09-10B		3
	09-10B		6
	09-10B		9
425-1010	09-10B		9
430497A1	09-10B		
430498A1	09-10B		
430499A1	09-10B		
430500A1	09-10B		
43117	02-24		14
	09-35		15
43127	02-05		7
	02-05A		7
	02-05B		7
	06-56		9
	09-23		7
43129	02-03		7
	09-23		20
43138	04-07		9
	08-14		19
	08-14A		22
	08-16		16
	08-16A		16
	08-16B		22
43260	06-56		4
43362	09-28C		9
	09-29B		9
	09-29C		9
434817A1	09-10B		
437024	04-16		1
	04-18		1
44373	09-70		9
445502	04-18		5
	04-21		8
	04-21A		18
45014	02-02		1
	02-04		6
	02-04A		4
	03-01		29
	03-01A		20
46288	04-14		2
	04-24		9
	09-04		7
46886	09-06		16
	09-06A		16
470017	04-18		6
	04-21		23
	04-21A		19
48751	03-01		3
	03-01A		37
493-21020	08-15		4
50032	06-54		2
507586	08-39A		11
510121	09-05		9
511836	08-03		30
512083	06-57		2
512306	04-05E		9
	04-10		25
513307	08-05		1
513309	02-01		5
517015	09-01		2
	09-01A		9
	09-15		11
	09-15A		6
523275	09-36		18
523282	04-05		19
	04-06		11
	04-07		17
	04-08		16
	04-10C		8
	04-11		9
	04-14		11
	04-14		5
	04-24		16
	04-25		31
	08-20		23
	09-28		8
	09-43A		24
	09-48		31
	09-49		24
	09-51		15
	09-51A		19

Number	Figure	Sequence	Ref.
523282	09-54		23
	09-59		27
	09-61		27
	09-63		43
523291	04-14		1
	04-24		13
	09-43A		23
	09-48		24
	09-49		23
	09-51		17
	09-51A		22
523292	04-05		20
	04-06		10
	04-14		10
	04-25		32
523310	04-25		10
	04-26		12
	04-27		10
	09-88		5
52367	09-59		25
	09-61		25
	09-63		20
529068	04-06		2A
	04-17		3J
529070	08-23B		20
	08-40		46
	09-39A		10
529340	09-05		14
570186	08-14		36
	08-14A		44
	08-23A		23
570821	04-15		5
	04-25		33
	09-28D		23
	09-71A		14
574518	02-05		3
	02-05A		3
	02-05B		3
	03-01		6
	03-01A		3
577927	04-10		21
578070	04-05		4
	08-12		6
	08-12		6A
	08-12A		8
	08-13		11
	08-13		11A
	08-13A		7
	09-28A		12
	09-29A		13
578384	06-17		21
58948	03-01		36
	03-01A		34
595787	09-04		14
596215	08-10		3
603916	06-55		9
60485	04-18		22
604893	08-01		19
608089	08-23B		7
612778	06-55		13
612882	09-15		27
	09-15A		13
617215	09-17		17
	09-25		3
	09-28D		10
	09-28D		25
	09-59		24
	09-61		24
	09-63		48
617910	09-15		8
621326	09-43A		22
	09-49		22
	09-69		3
625822	08-01		11
	08-22		5
	08-22A		3
626698	06-01		7
627723	08-22		10
627723	08-22A		15
629086	02-02		9
	09-75		11
634233	09-72		6
637964	09-43A		21
	09-49		21
	09-69		7
640682	08-05		3
641419	09-43		19
	09-43A		20
	09-47		18
	09-48		25
	09-49		20
	09-51		11
	09-51A		12
641787	09-72A		8
641833	04-05B		2
	04-09		10
642560	09-18		5
	09-20		13
642628	04-05B		3
	04-09		11
	09-26		26A
	09-28		
	09-28C		13
	09-29B		14A
643758	09-26		26
	09-28		9
646223	04-19		6
647429	09-01		18
64780	06-23		18
	06-24		18
	06-27		18
	06-28		18
65319	02-05		12
	02-05A		15
	02-05B		15
	06-01		8
	06-20		8
	08-37		3
	08-38		9
	08-39		33
	08-40		38
	09-01		3
	09-01A		8
	09-03		36
	09-15		10
	09-15A		8
66800	06-23		22
	06-28		22
675162	04-10		18
	09-59		18
	09-61		18
	09-63		9
679394	06-55		6
682683	09-80		6
694478	02-05		37
	02-05A		21
	02-05B		21
695335	09-03		20
696365	03-01		22
	03-01A		7
69AG13009AA	04-26		13
	04-27		11
700514	04-05E		3
	08-04		16
703639	06-23		23
	06-28		23
713030	04-25		34
	04-26		5
719922	02-05		30
	02-05A		33
	02-05B		38
725403	09-23		9
76344	06-06		5
	06-07		7
	06-08		6
	06-11		12

Number	Figure	Sequence	Ref.
76344	06-18		14
	06-20		3
	06-21		18
	07-01		5
	07-04		13
	08-09		21
	08-09A		34
	08-21		4
	08-37		9
	08-38		13
	08-39		3
	08-39A		4
	08-40		3
	08-40A		9
	09-56		20
	09-56		5
76347	08-04		1
	08-06		1
	08-37		7
	08-39		8
	08-39A		6
	08-40A		12
76349	06-44		13
	08-10		1
	08-19		6
76350	06-06		17
	06-11		14
	06-14		15
	06-15		18
	06-17		3
	06-20		3
	07-01		18
	07-04		15
	08-09		22
	08-09A		37
	08-20		3
	09-54		3
	09-56		5
76355	06-06		19
	06-11		11
76814	03-02		12
768715	09-43A		26
771701	09-05		6
773464	04-08		2
	04-10		
774735	04-06		16A
7770	02-01		8
	03-01		13
	03-01A		5
	04-04		23
	04-05		25
	04-05C		14
	04-05D		4
	06-19		12
	07-02		2
	08-20		11
	09-25		12
	09-27		7
	09-40		17
	09-54		11
	09-56		18
781221	08-01		6
	08-22		19
	08-22A		6
782673	08-05		2
783874	09-06		7
	09-06A		7
794967	04-10		29
799681	04-10C		1
80280503	02-02		18
	02-03		3
	04-20		12
	04-21		18
	08-09		33
	08-09A		41
80628	09-44		19
80664	04-04		17
	04-05		12
80664	08-04		11
	08-07		6
	09-14		6
	09-24		36
	09-25		5
	09-28A		7
	09-29A		9
	09-31		4
	09-68		3
	09-68A		2
	09-69		9
80679	09-15		2
80680	04-04		26
	04-05		28
80681	04-16		9
	04-25		28
	06-06		8
	06-11		3
	07-01		9
	07-04		7
	09-43A		25
	09-63		28
	09-71		8
	09-71A		10
80682	03-01		17
	03-01A		6
	06-03		9
	06-05		9
	06-07		16
	06-13		5
	06-17		34
	06-19		11
	08-18		5
	08-39		12
	08-39A		21
	08-40		15
	08-40A		24
80684	03-02		10
	07-02		8
	09-37		1
	09-39		3
	09-39A		3
80701	04-07		5
	08-01		3
	08-18		21
	08-22		4
	08-22A		16
	08-39		25
	08-39A		29
	08-40		27
	08-40A		32
	09-35		14
	09-36		23
80702	02-01		25
	04-01A		2
	04-10		31
	06-54		6
	09-04		2
	09-28D		13
	09-35		1
	09-36		16
	09-43		18
	09-43A		45
	09-44		6
	09-47		17
	09-47		30
	09-48		27
	09-49		45
	09-51		6
	09-51A		20
	09-51B		6
	09-52		19
	09-52A		9
	09-63		29
	09-65		7
	09-66		6
	09-67		12
80707	03-02		18

Number	Figure	Sequence	Ref.
80707	03-02A		18
	09-30		9
80710	09-03		32
80755	09-59		22
	09-61		22
	09-63		6
80756	09-72A		9
81827427	06-15		26
	06-17		24
	08-18		7
	08-39		14
	08-39A		12
	08-40		13
	08-40A		17
81858	09-43		10
	09-51		4
81871843	04-16		11
81AG13466DA	04-17		3D
82002966	04-05		21
	04-05G		3
	04-06		9
	04-23		6
	04-25		37
	04-26		3
	04-26A		1
	04-27		3
82006204	09-27		20
83962021	09-27		4
83982664	04-05G		6
	04-06		4
83982898	04-05		31
	04-06		5
	04-25		7
83985935	04-17		3A
83989780	04-17		3H
84015292	02-01		26
84015359	09-78		11
84037090	04-18		2
84060	09-43		20
84320234	04-27		5
84320263	09-16		8
	09-17		3
84464	03-01		4
	03-01A		38
84570	08-23		4
847165	09-04		6
847369	04-08		10
847590	09-88		7
84821	03-02		22
	03-02A		23
	09-88		4
848220	09-06		9
	09-06A		9
84879	09-26		17
84893	04-25		12
84899	08-09A		11
850610	09-80		5
852103	04-25		2B
	09-20		19
853764	04-05E		1
	04-10		14
853765	04-16		4
	04-16A		3
	04-19		4
856800	09-47		28
85700693	09-10A		13
858956	04-25		11
	09-59		11
	09-61		11
	09-63		12
86000109	09-72		7
86000535	04-05		15
86010402	04-16		5
	04-19		8
	08-04		21
	08-06		24
	09-29A		13
8604802	04-10		17
86050202	02-01		4
	02-02		22
86050272	04-05A		1
	04-05B		1
	09-17B		3
	09-31A		10
86400227	09-60		1
	09-62		2
86401123	09-23		21
86403228	09-23		18
86403973	09-23		11
86405134	09-23		16
86500348	06-01		37
86500520	09-78		12
86500526	09-80		10
86500527	09-80		10
86500939	04-04		2
	04-04A		3
	04-05		30
	04-05D		12
	04-05G		5
	04-06		6
	04-08		6
	04-10C		5
	04-15		2
	08-14		9
	08-14A		15
	08-16		9
	08-16A		9
	08-16B		16
86500940	04-05		29
	04-05D		13
	04-07		12
	04-09		9
	08-14		8
	08-14A		11
	08-16		8
	08-16A		8
	08-16B		11
86500990	06-01		2
86501115	02-05		15
	02-05A		13
	02-05B		13
86501117	09-04		8
86501184	06-55		14
86501203	09-17		4
	09-17A		7
86501420	09-03		11
86501422	09-03		8
86501430	09-03		35
86501706	08-04		14
	08-06		14
	08-07		9
	08-08		18
86501739	09-59		7
	09-61		7
	09-63		3
86502489	09-05		10
86502497	08-08		7
86502507	02-01		33
86504092	09-69		
	09-70		12
86504113	09-72A		6
86504116	09-72A		5
86504125	09-72A		7
86504211	09-72A		21
86504316	09-03		39
86504339	09-24		12
	09-33		1
86504355	09-24		14
	09-24		25
	09-32		7
	09-33		3
86504356	09-24		15
	09-24		28
	09-32		2
	09-33		4
86504357	09-24		13

Number	Figure	Sequence	Ref.
86504357	09-24		26
	09-32		5
	09-33		2
86504391	09-72A		3
86504449	06-55		20
86504473	09-59		21
	09-61		21
86504489	03-01		34
	03-01A		32
86504493	04-17		1
86504496	04-17		5
86504502	04-17		8
	04-20		9
86504503	04-17		6
86504507	02-04		4
	02-04A		6
86504514	04-18		9
	04-21		9
	04-21A		15
86504605	04-17		9
	04-20		5
86504606	04-17		10
	04-20		7
86504667	04-26		4
86504721	08-04		23
	08-06		27
86504722	08-04		20
	08-06		21
86504723	08-04		3
	08-06		3
86504784	09-19		17
	09-21		30
	09-21A		24
86504874	09-59		29
	09-61		29
	09-63		40
86505119	04-26		6
86505510	04-04		9
86505650	09-43A		16
	09-49		16
	09-73		6
	09-76		6
86505651	09-43A		15
	09-49		15
	09-73		3
	09-76		3
86506112	06-01		10
	08-09		29
	09-02		14
86506171	09-43A		14
86506174	09-43A		13
	09-48		7
	09-49		13
86506234	09-71A		6
86506338	09-24		16
	09-24		27
	09-32		1
	09-33		5
86506354	09-14		1
	09-15A		17
	09-24		4
86506368	09-04		5
86506399	02-04		3
	02-04A		3
86506455	09-71		2
	09-71A		13
86506559	09-57		3
	09-58C		20
86506560	09-57		13
	09-58C		21
86506562	09-58		2
86506568	09-47		7
86506570	09-57		2
	09-58C		22
86506571	09-57		14
	09-58C		23
86506611	09-24		11
	09-31		3
86506611	09-33		
86506626	08-14A		9
	08-16B		9
86506829	09-59		28
	09-61		28
	09-63		41
86507002	09-03		1
86507008	06-06		10
	06-11		2
86507410	04-17		4
86507507	08-03		8
86507518	08-03		35
86507519	08-03		28
86507522	08-03		13
86508184	04-17		2
86508457	09-14		3
	09-15		18
	09-15A		23
	09-24		39
	09-28A		4
	09-29A		7
86508568	02-05		14
	02-05A		11
	02-05B		11
	09-23		6
	09-28A		11
	09-29A		11
86508610	08-03		17
86508621	09-23		14
86508624	06-56		12
86508667	06-01		24
86508748	09-36		8
86508749	04-18		14
86508769	09-28		14
86508775	04-17		19
	04-20		4
86508819	04-23		2
86508823	08-03		41
86509023	08-11		6
86509223	03-01		37
	09-74		8
86509354	08-01		5
	08-22		6
	08-22A		5
86509499	09-40		3
	09-43A		12
	09-44		11
	09-48		34
	09-49		12
	09-51		22
	09-51A		3
86509500	04-23		3
86509507	09-03		10
86509590	04-05G		8
	04-06		15
	04-08		5
	04-09		8
	04-10		6
	04-25		20
86509716	09-80		2
86509972	09-75		14
86509973	09-80		1
86509974	09-80		1
86509980	09-80		3
86509981	09-80		3
86509998	09-80		9
86509999	09-80		9
86510832	09-24		1
	09-28D		21
	09-31		7
86510869	08-09		11
	09-02		10
86510906	04-25		19
86511189	09-30		11
86511315	06-56		10
86511444	02-05		9A
	04-12		2
	04-12A		4

Number	Figure	Sequence	Ref.
86511444	04-21		19
	04-21A		9
86511515	04-23		5
86511841	09-22		3
86511845	09-23		10
86511870	08-20		17
	09-54		17
86511907	09-26		6
86511920	07-02		6
	09-32D		3
	09-33E		3
86512008	09-06		12
	09-06A		12
86512048	09-05		4
86512134	06-40		7
	06-43		8
86512328	09-03		2
	09-05		5
	09-15		15
	09-15A		20
	09-15A		24
86512424	03-02		15A
86512463	09-28C		1
	09-29B		2
86512512	08-03		22
86512554	03-02		1A
	09-23		1
86512583	08-09		18
	08-09A		3
86512933	08-23		11
	08-23A		11
86512960	08-01		27
86512993	06-14		11
	06-17		22
	06-20		21
	08-23		14
	08-23A		13
86513015	08-02		14
	08-12		9
	08-12A		6
86513017	06-14		2
	06-20		16
86513019	08-23A		17
86513026	08-12		3
	08-13		6
86513045	08-18		1A
	08-39		37
	08-39A		16
	08-40		11
	08-40A		19
86513304	09-05		3
86513306	09-05		7
86513307	09-05		13
86514912	04-25		18
86515226	09-26		24
86515264	04-24		4
86515872	09-71A		2
86515873	09-71A		1
86515966	07-02		4
86516153	04-25		16
86516467	06-23		10
	06-24		10
	06-27		10
	06-28		10
86516468	06-23		15
	06-24		15
86517439	09-80		11
86517440	09-80		11
86518576	09-71A		3
86518632	04-24		6
	04-25		15
86518650	09-71A		7
86518680	09-71		5
86518681	09-71		4
86518697	09-57		4
	09-58C		19
86518733	07-02		5
86518755	04-24		5
86518755	04-25		14
86519153	07-02		12
86519194	07-02		11
86519774	09-71A		15
86520136	09-58		3
	09-58A		2
	09-58C		3
86520550	08-18		11
	08-19		1
	08-39		18
	08-39A		24
	08-40		20
	08-40A		27
86520670	09-60		6
	09-62		18
	09-63		15
86520671	09-60		7
	09-62		16
	09-63		16
86520926	04-09		4
86521396	09-06		13
	09-06A		13
86521612	04-05F		3
86521665	09-73		5
	09-76		5
86521667	09-73		8
	09-76		8
86521670	09-73		7
	09-76		7
86521671	09-73		4
	09-76		4
86521673	09-75		15
86521677	09-78		2
86521678	09-78		3
86521679	09-78		1
86521683	09-75		1
86521684	09-73		9
	09-76		9
86521686	09-73		1
	09-76		1
86521688	09-75		3
86521691	09-75		8
86521713	09-75		7
86521723	09-75		2
86521982	09-03		19
86522000	09-59		9
86522338	03-02		5
	03-02A		17
86522404	09-43		21
	09-43B		13
	09-52		12
86522442	04-16		2
	04-16A		9
	04-19		9
86522448	09-43A		10
	09-48		4
	09-49		10
86526523	09-43A		9
	09-48		13
	09-49		9
	09-51		16
86526525	09-43A		8
	09-48		11
	09-49		8
	09-51		9
86526695	09-59		12
	09-61		12
	09-63		8
86527859	08-19		5
86527861	08-19		4
86527863	08-19		
86527865	08-19		8
86527866	08-19		3
86528652	06-55		16
	06-56		13
86529089	04-08		4
	09-18		9
	09-20		20

Number	Figure	Sequence	Ref.
86529091	08-01		24
	08-02		21
	08-03		29
86529244	04-16		3
	04-16A		8
	04-19		5
86529369	04-16		7
86530043	09-18		7
	09-18A		7
	09-20		21
	09-20A		6
86530077	09-14		2
86530213	09-03		41
86531262	09-78		13
86533428	04-04		13
	04-05		9
86533429	04-04		14
	04-05		9A
86534250	09-04A		3
	09-15		12
	09-15A		1
86534692	02-03		5
86534969	06-20		14
	08-14		31
	08-14A		39
	08-16		24
	08-16A		24
	08-16B		36
86535238	06-01		1
86535636	04-06		7
	04-15		1
	04-25		13
	04-27		6
86536917	04-18		18
86537647	08-07		
	08-08		
86537848	09-28D		24
86538563	08-09		24
	08-09A		5
	09-02		16
86539120	09-04		12
86539137	02-06		3
86539335	04-25		2E
86539389	08-07		
	08-08		
86539403	08-07		
	08-08		
86539430	08-07		
	08-08		
86539686	09-35		28
86539711	04-25		2
86540327	06-01		14
86540356	08-07		10
86540358	08-08		21
86540635	04-05		22
	04-06		8
	04-27		4
86542118	04-04		16
	04-05		13
86542119	04-04		20
	04-05		8
86542120	04-04		15
	04-05		33
86542121	04-04		11
86542673	04-11		10
86544449	04-05		5
86545825	04-10		4
	04-16A		10
	08-04		8
	09-17		19
	09-18A		6
	09-20A		3
	09-31		8
86545826	04-04		12
	04-05		7
	04-08		7
86546788	09-59		20
	09-61		20
86546788	09-63		45
86547710	09-88		2
86547711	09-88		3
86547915	09-26		2
86547916	09-26		4
86547919	09-25		15
	09-28D		4
86547926	09-25		1
	09-26		22
	09-28		1
86547928	09-25		2
86547929	09-25		17
86547930	09-25		21
86547932	09-25		1
	09-26		
	09-27		1
86547933	09-28		3
86547934	09-28		7
86548338	09-10A		
	09-10B		2
	09-10B		5
	09-10B		8
	09-10B		8
86548493	09-40		24
	09-44		35
86548779	09-26		30
	09-28		10
86552688	09-27		18
86552689	09-27		19
86555026	08-01		2
86555027	08-01		1
86555030	08-01		20
86555031	08-01		21
86555681	09-28		2
86555682	09-25		14
86556581	03-02		3
86557328	08-04		26
	08-06		20
86559893	09-88		12
86560588	08-03		43
86561087	08-09		37
	08-09A		35
	09-02		3
86561617	09-78		4
86563024	04-24		20
86563772	09-01		12
	09-01A		19
86563839	09-06		8
	09-06A		8
86566100	06-40		16
	06-43		18
86566179	06-02		11
	06-07		1
	06-22		
86566181	06-02		11
	06-07		1
	06-22		
86566183	06-22		4
	06-26		4
	06-49		1
86566185	06-22		4
	06-26		4
	06-53		
86567000	02-05		27
	02-05A		29
	02-05B		30
86567155	06-01		29
86567198	02-05		36
	02-05A		39
86567199	06-01		34
86567251	09-41		7
	09-42		10
	09-43		6
	09-43B		6
	09-45		2
	09-46		2
	09-47		9
	09-50		7

Number	Figure	Sequence	Ref.
86567251	09-52		10
	09-52A		2
86567313	02-05		34
	02-05A		36
86567393	06-01		15
86568350	09-24		38
86568834	08-16		22
	08-16A		22
86570153	08-05		10
86570919	09-05		18
86570920	09-05		8
86570922	09-06		3
	09-06A		3
86571009	08-09		36
	08-09A		10
	09-02		9
86571511	06-01		18
86573062	09-43		3
	09-52		6
86573063	09-43		4
	09-43B		16
	09-52		17
	09-52A		14
86573065	09-43		17
	09-43B		8
86573066	09-43		13
	09-43B		11
86573113	09-41		10
86573114	09-42		9
86573132	09-40		11
86573243	09-41		3
	09-42		1
86573256	09-40		20
86574053	09-11		
86574054	09-11		
86574055	09-11		
86574567	09-03		28
86575297	09-71A		3
86575348	08-09A		32
86575418	06-01		26
86575476	09-63		11
86577165	09-10B		1
86577167	09-10A		11
	09-10B		4
86577169	09-10A		1
	09-10A		11
	09-10B		7
86577171	09-10A		11
	09-10B		7
86577173	09-10A		11
	09-10B		7
86577330	09-11		2
86578853	08-18		14
	08-39		21
	08-39A		17
	08-40		23
	08-40A		20
86578867	08-03		32
	09-43A		47
	09-49		47
86578868	08-03		44
	08-03		44
86578869	08-03		45
86578889	09-40		22
86578890	09-40		25
86578907	08-01		15
86580556	08-12		7
	08-12		7A
	08-12A		7
	08-13		10
	08-13		10A
	08-13A		6
86580786	09-43A		6
	09-49		6
	09-69		5
86580984	09-44		32
86581314	09-43B		10
86582884	09-43A		49
86582884	09-48		5
	09-49		49
86582885	09-43A		11
	09-48		3
	09-49		11
86582886	09-43A		50
	09-48		18
	09-49		50
86584195	04-08		23
86584202	09-43A		5
	09-49		5
86584761	09-78		14
86586648	09-25		13
	09-28D		5
86588450	04-12		4
	04-12A		3
	06-21		22
	09-22		6
	09-35		18
86588504	09-28C		28
86589143	08-04		25
	08-06		23
	09-03		31
86589160	09-49		1
86589163	09-43A		4
	09-43B		
	09-49		4
86589170	09-69		11
86589362	09-43A		46
	09-49		46
	09-69		1
86589510	09-74		4
86589763	09-11		3
86589764	09-11		4
86589765	09-11		5
86589808	06-55		18
86589809	06-55		19
86589813	06-23		20
	06-28		20
86589815	06-24		20
	06-27		20
86589819	06-22		1
	06-23		7
	06-26		1
	06-28		7
86589820	06-23		2
	06-24		2
	06-27		2
	06-28		2
86589823	06-23		14
	06-24		14
86589824	06-23		12
	06-24		12
	06-27		12
	06-28		12
86589825	06-23		1
	06-24		1
	06-27		1
	06-28		1
86589826	06-23		16
	06-28		16
86589827	06-24		16
86589828	06-23		17
	06-24		17
	06-27		17
	06-28		17
86589829	06-22		3
	06-25		7
86589830	06-25		1
86589831	06-22		2
	06-24		7
	06-26		3
	06-27		7
86589834	06-23		11
	06-24		11
	06-27		11
	06-28		11
86589835	06-24		9

Number	Figure	Sequence	Ref.
86589835	06-27		9
86589836	06-24		8
	06-27		8
86589837	06-23		37
	06-24		22
86589838	06-23		21
	06-24		21
	06-27		21
	06-28		21
86589869	09-11		1
86590072	09-28D		11
	09-67		7
86590073	09-67		1
86590083	09-71		9
	09-71A		18
86590098	09-34		1
86590103	09-71		1
86590104	09-69		
	09-70		11
86590115	04-23		1
86590117	02-06		1
86590119	04-26		1
86590126	09-70		1
86590128	09-88		1
86590130	09-28D		1
86590348	09-25		9
	09-28D		9
86590562	06-23		3
	06-24		3
	06-25		3
	06-26		7
	06-27		3
	06-28		3
	06-41		8
	06-43		25
86590565	06-49		1A
86590883	06-01		12
86590969	06-57		1
86591163	09-36		3
86591164	09-36		6
86591293	03-02		14
86591396	09-63		1
86591623	09-63		7
86591624	09-63		19
86591904	06-25		8
86592024	09-07		
86592025	09-08		
86592026	09-07		
86592028	09-08		
86592029	09-10		
86592030	09-08		
86592033	09-08		
86592102	09-17		10
86592106	09-19		28
86592107	09-19		3
	09-21		14
	09-21A		12
86592111	09-19		15
	09-21		28
	09-21A		47
86592134	09-17		18
	09-18A		5
	09-20		5
	09-20A		12
86592866	09-18		3
	09-18A		4
	09-20		14
	09-20A		15
86592867	09-18		4
	09-18A		9
	09-20		11
	09-20A		16
86592983	09-71A		12
86592986	04-25		38
86592988	04-25		39
86592991	04-25		40
86593537	09-28D		8
86593539	09-28D		7
86593544	09-28D		6
86593688	09-24		18
	09-24		31
	09-32		4
	09-33		9
86593705	09-24		17
	09-33		10
86593707	09-24		30
	09-32		6
86593898	09-37		11
	09-39		11
	09-39A		14
86593899	09-37		12
	09-39		15
	09-39A		16
86594346	09-74		3
	09-77		2
86594685	09-28		
86594689	09-48		1
	09-51		3
86594696	09-63		46
86594882	06-55		11
86595015	08-03		44
86595016	08-03		45
86595394	09-27		10
86597251	09-38		
86597618	04-06		12
	04-25		4
86597619	04-06		3
86598096	08-14		33
	08-14A		42
	08-16		26
	08-16A		26
	08-16B		32
86598854	04-08		13
86599149	09-63		47
86600558	09-07		
86600617	09-80		6
86600814	09-63		2
86600817	09-63		17
86600818	09-63		18
86601164	09-80		2
86601825	09-18		8
	09-20		17
86602768	09-43A		7
	09-49		7
	09-69		2
86603490	09-63		37
86603659	04-10B		4
86603720	09-50		14
86603920	04-10		37
86604340	04-09		12
86604343	09-75		5
	09-78		5
86604639	04-05		18
	04-06		13
86604640	04-05		16
86604657	04-04A		7
	04-05		17
	04-05B		4
	04-05G		9
	04-06		14
86604769	08-01		22
	08-03		
86604770	08-01		22
	08-02		1
	08-03		
86605608	08-10		7
86606079	09-63		14
	09-65		1
86607792	04-08		22
86609019	09-01A		20
86610166	08-09		10
	08-09A		27
	09-02		12
86610167	08-09		12
	08-09A		30
	09-02		11

Number	Figure	Sequence	Ref.	Number	Figure	Sequence	Ref.
86610722	09-63		11	86624184	06-16		18
86611345	09-73		2	86624185	09-23		8
	09-76		2	86624572	08-03		46
86611853	09-35		12	86624732	08-23B		19
86613407	09-15		20	86625021	06-03		12
	09-15A		29		06-05		17
86614539	08-08		22		06-07		19
86615177	06-49		2		06-14		26
86615179	06-23		37		06-17		8
	06-24		22	86625034	08-23B		18
	06-27		22	86625074	09-22		5
	06-28		37	86625179	03-02A		12
86615276	09-19		30	86625199	04-05A		6
	09-21		42		04-05B		19
	09-21A		37		04-05C		17
86615281	09-19		32		04-05D		10
	09-21		44		09-15A		26
	09-21A		39	86625241	09-01		7
86615282	09-19		26		09-01A		10
	09-21		39	86625255	06-56		5
	09-21A		33	86625256	02-05B		36
86615283	09-19		34		06-54		3
	09-21		51		06-54		8
	09-21A		44		08-37		3
86615285	09-19		25		08-39A		41
	09-21		38		08-40		38
	09-21A		32		08-40A		43
86615286	09-19		2	86625263	08-23B		16
	09-21		16		09-28C		10
	09-21A		14		09-29B		10
86615331	08-08		9		09-29C		10
86616032	09-15A		3	86625390	08-14		7
86616248	04-26A		7		08-14A		14
86616372	08-09		25		08-16		6
	08-09A		16		08-16A		6
	09-02		6		08-16B		14
86617977	09-59		22	86625477	09-21		49
	09-61		22	86625478	09-21		41
86619138	04-14		3	86625480	09-21		36
	04-24		15		09-21A		30
86620236	04-24		1	86625481	09-21		6
86620237	04-25		1		09-21A		4
86620859	09-17		1	86625489	09-21		7
86620864	09-17		20		09-21A		10
	09-17A		5	86625490	09-21		13
86620865	09-16		2		09-21A		11
86620930	09-03		15	86625491	09-21		12
	09-15B		5		09-21A		7
	09-15C		5	86625492	09-21		10
	09-16		7		09-21A		9
	09-17		2	86625494	09-21		3
	09-17B		5	86625512	09-21		1
	09-31A		2	86625514	09-21		8
	09-64		7		09-21A		1
86621102	08-18		26	86625515	09-21		5
	08-39		2		09-21A		3
	08-40		2	86627432	04-04		27
	08-40A		2		04-05B		5
86621721	04-06		16	86627859	08-10		9
86621756	04-14		6	86627862	08-10		10
	04-24		10	86627864	08-10		11
	04-25		36	86627877	08-09		8
86621875	04-27		7		08-09A		9
86624005	04-10A		7	86627878	08-09		7
	08-14A		37		08-09A		26
	08-16B		31	86628423	08-10		12
86624130	06-03		15	86628554	09-44		8
	06-05		18	86628555	09-44		9
	06-07		39	86628700	08-14		6
	06-08		18		08-14A		13
86624142	02-02		12		08-16		7
	02-03		11		08-16A		7
86624144	02-02		19		08-16B		13
	02-03		2	86628884	09-63		51
86624156	09-03		22	86629511	09-72A		20
86624182	09-35		16	86629541	08-37		2
86624183	04-24		22		08-39		32
86624184	06-15		12	86629544	02-02		13

Number	Figure	Sequence	Ref.
86629544	02-03		12
	08-12		14
	08-12A		11
	08-13		15
	08-13A		9
	09-69		10
86629584	06-23		28
	06-24		23
	06-27		23
	06-28		28
86629585	08-03		16A
	08-03		37
86629586	06-06		16
	06-11		16
	06-11		24
	06-13		13
	06-20		29
	08-06		28
	08-08		6
	08-13		4
86629792	08-11		1
86629891	06-56		21
86630203	09-20		2
	09-20A		4
86631374	08-14		5
	08-14A		12
	08-16		5
	08-16A		5
	08-16B		12
86631506	04-15		3
86631532	08-09		17
86631536	08-09		16
86632961	08-01		23
	08-02		2
86633056	09-42		7
	09-46		8
86633166	09-44		29
	09-51A		8
	09-51B		4
86633195	09-02		2
86633196	09-02		15
86633259	08-09		1
	09-02		5
86634711	09-44		30
	09-51A		1
	09-51B		1
86634904	08-11		3
86634910	09-41		1
	09-45		4
86635020	08-09		14
	08-09A		33
86635021	08-09		15
	08-09A		6
86635025	08-06		15
	08-08		1
	08-13		2
	08-13A		2
86635434	09-10A		
86635435	09-10A		
86635723	09-10A		12
86635833	08-09		19
	08-09A		4
	08-11		
86635834	08-11		7
86636023	04-27		1
86636678	08-09		6
	08-09A		12
86636688	04-15		9
86636689	04-15		8
86637408	08-10		13
86637594	03-01		26
	03-01A		23
	09-01		10
86637706	08-38		3
86637778	04-14		2
	04-15		6
	09-27		12
86637979	08-06		16
86637995	08-08		13
	08-08		8
86639223	08-09		
86639313	09-23		19
86639325	04-07		10
86639326	06-56		22
86639398	09-47		4
86639416	09-21		50
	09-21A		43
86639749	09-21		
	09-21		46B
	09-21A		46B
86639750	09-21		46A
	09-21A		46A
86639934	09-43		16
	09-47		5
	09-52		3
86639936	09-43		24
	09-43B		15
	09-47		2
	09-52		18
	09-52A		13
86640779	09-03		42
86642944	09-17		6
	09-17A		4
86643219	08-22		12
	08-22A		17
86643341	08-09		
86643552	08-11		4
86705192	08-09		
86705351	04-08		20
	04-10C		6
86705580	06-05		13
	06-06		13
	06-08		12
	06-11		20
	06-21		16
	07-01		12
	07-04		4
86705774	08-09		3
86705987	06-14		13
	06-17		6
	06-20		23
86705988	06-03		5
	06-05		6
	06-13		1
	06-17		11
	07-04		21
86729243	04-11		12
86729477	09-40		4
	09-44		20
86729669	04-30		2
	09-17		8
	09-18A		11
86729670	04-30		5
	09-17		9
	09-18A		15
86729672	09-16		4
	09-17		11A
86729673	09-17		12
86729674	09-17		13
86729675	09-17		14
86729680	09-16		1
86729681	09-16		5
86729996	08-09		4
86836504	09-78		8
86837247	09-37		5
	09-38		11
	09-38		15
	09-38		2
	09-38		7
	09-38		9
	09-38A		15
	09-38A		2
	09-38A		8
	09-39		5
86837874	06-26		5
86837986	09-63		11A

Number	Figure	Sequence	Ref.	Number	Figure	Sequence	Ref.
86837987	09-63		11B	87017045	02-01		9
86837988	09-63		11C	87017116	02-01		23
86837989	09-63		11D	87017184	09-10A		8
86837990	09-63		11E	87017606	09-28C		25
86837991	09-63		11F		09-29B		21
86900237	03-01A		24	87018632	09-17		
86976100	08-11		5	87018633	09-17		11
86976101	08-09		26	87018688	09-17		11C
86977689	08-14		35	87019258	09-59		1
	08-14A		43		09-60		
86977693	04-05C		2	87019262	09-60		2
86977726	09-28C		3	87019263	09-60		8
86977789	02-05		9	87019540	06-12		6
	02-05A		8		08-20		16
	02-05B		8		08-21		3
86977792	09-45		8		09-54		16
	09-46		7		09-56		9
	09-47		25	87021047	07-01		1
86979503	08-09		5		07-04		9
86979742	06-55		15	87021069	08-19		2
86979755	09-43		22	87021178	03-01		27
	09-43B		14		03-01A		18
	09-52		14	87021824	08-14		15
86981460	04-14A		3		08-14A		18
87000151	06-15		10		08-16		12
	06-16		15		08-16A		12
87000230	06-15		9		08-16B		18
	06-16		16	87023159	09-03		26
87000312	03-01		15	87023389	09-19		31
	03-01A		2	87023392	09-19		36
87010110	08-23B		12	87023393	09-19		33
87010183	09-09			87024697	06-51		
87010184	09-09			87024837	09-63		11G
87010568	06-55		17	87024903	03-01		14
	06-56		14		03-01A		13
87010592	08-14		13	87026112	02-01		20
	08-15		8	87026702	09-10A		1
87010672	06-14		21	87026703	09-10A		1
	06-20		9	87026871	09-14		11
87010766	09-26		16		09-24		9
87010845	09-26		25	87027734	08-11		2
87012267	06-01		4	87029352	09-15		5
87013232	02-01		29		09-15A		12
87013363	09-75		13	87029353	09-59		2
87013364	09-80		4		09-61		2
87013365	09-80		4	87029454	09-59		3
87013729	06-30				09-61		3
	06-50			87029930	08-04		8
87013856	02-01		1		08-06		8
87014504	09-10A		4	87029931	09-28A		13
87014505	09-10A		5		09-29A		1
87014852	02-01		22		09-31A		6
87015310	09-10A		8	87029955	04-07		4
87015311	09-10A		2		09-20		7
87015312	09-10A		3		09-20A		18
87015330	09-45		3	87029966	08-01		32
87015513	09-10A		1	87029968	08-39A		37
87015514	09-10A		1		08-40A		40
87015515	09-10A		1	87030398	09-44		10
87015516	09-10A		1	87030561	08-23B		6
87015605	09-35		6	87030707	08-03		12
87015862	04-14A		2	87030898	09-43A		9
87016	03-02		2		09-49		9
	06-01		21		09-51A		23
	08-06		12	87030899	09-43A		8
	08-08		11	87032485	02-01		3
	08-14A		4	87032486	02-01		2
	08-16B		4	87032778	02-04		5
87016615	06-56		8		02-04A		5
87016847	02-01		19	87033035	02-02		3
87016896	03-01A		16	87033038	02-02		6
87016954	09-10A		6	87033644	09-51		5
87016955	09-10A		9		09-51A		9
87016980	09-10A		10	87033824	08-40		34
87016981	09-10A		1	87034265	09-43A		51
87016982	09-10A		1		09-49		51
87016983	09-10A		7	87034524	08-09A		21
87016984	09-10A		8	87034527	03-02A		1

Number	Figure	Sequence	Ref.
87034687	06-02		7
	06-15		7
	06-40		
	06-41		
	06-42		
87034688	06-04		11
	06-16		10
	06-43		
	06-44		
	06-45		1
87034819	08-09A		40
	09-01		17
	09-01A		15
87034856	08-18		25
	08-39		38
	08-40		42
	08-40A		
87035435	06-17		17
87035488	02-02		7
87035489	02-02		8
87036043	03-01		18
	03-01A		8
87036044	03-01		19
	03-01A		8A
87036787	04-10		19
	04-10A		2
87037401	09-15		29
87037780	04-10		3
87037906	04-13		1
87038978	09-03		34
	09-05		1
87039116	09-75		4
87039373	06-42		
	06-45		21
87039374	06-40		1
87039375	06-43		1
87039376	06-42		
87039377	06-45		2
87039378	06-42		
87039379	06-45		15
87039401	09-01		8
87039493	09-47		6
87041995	08-14		4
	08-16		4
	08-16A		4
87042214	06-50		1
87042215	06-51		
87042231	03-01		20
	03-01A		8B
87042710	06-49		2
87042711	06-53		1
87042911	06-40		14
	06-43		16
87042912	06-40		6
	06-43		7
87042913	06-44		2
87042914	06-44		4
87042915	06-44		6
87042917	06-44		3
87042918	06-44		1
87042923	06-40		19
	06-43		21
87042924	06-40		17
	06-43		19
87042925	06-40		18
	06-43		20
87042926	06-40		8
	06-43		9
87042928	06-41		3
	06-44		8
87042929	06-41		5
	06-44		10
87042932	06-41		13
	06-44		14
87042933	06-41		14
	06-44		17
87042934	06-41		7
	06-44		7
87042935	06-41		4
	06-44		9
87043028	06-55		1
87043287	09-12		1
	09-13		1
87043288	09-12		4
	09-13		6
87043352	09-03		12
87043353	09-03		6
87043354	09-03		12
87043355	09-03		6
87043472	09-72		5
87043475	09-72		4
87043850	09-21		43
	09-21A		38
87043852	09-21		46
	09-21A		46
87043921	02-01		13
87043988	06-40		2
	06-43		2
87043989	06-40		12
	06-43		13
87043990	06-40		10
	06-43		11
87043991	06-40		11
	06-43		12
87043992	06-40		13
	06-43		14
87043993	06-43		3
87043994	06-43		5
87043995	06-43		6
87043996	06-43		15
87043997	06-40		4
	06-43		4
87043998	06-43		17
87043999	06-40		9
	06-43		10
87045005	06-41		12
	06-44		15
87045006	06-40		3
87045007	06-40		5
87045008	06-40		20
87045009	06-41		2
87045010	06-40		15
87045554	04-18		15
87045779	04-10		2
87046760	04-18		19
87047034	07-03		4
87047278	06-57		1
87047451	09-35		7
87048133	04-10		40
	04-10A		8
87048202	04-10		39
	04-10A		9
87048419	04-10		16
87048885	09-01		15
	09-01A		6
87049215	04-14		4
	04-24		14
87050212	08-22		14
	08-22A		11
87050609	09-30		2
87050852	09-61		33
87050853	09-25		22
	09-27		11
	09-63		44
87051003	09-61		33A
	09-63		44A
87051100	04-10		10
	04-10A		6
87051104	09-30		3
87051105	09-30		15
87051106	09-30		
87051108	09-30		6
87051109	09-30		
87051110	09-28C		15
	09-29B		12
	09-30		5

Number	Figure	Sequence	Ref.
87051257	09-30		4
87051678	09-62		20
87051919	09-30		14
87051920	09-30		
87051987	09-73		10
	09-76		10
87052429	06-04		12
	06-05		1
	06-26		
87052430	06-04		12
	06-26		
87052745	06-01		39
87052747	06-01		40
87052898	09-30		
87053323	06-02		5
	06-04		1
87053353	06-04		1
87053429	09-30		1
87057433	09-10A		1
87057434	09-10A		
87057435	09-10A		
87058956	09-12		3
87058957	09-12		2
87276	04-17		18
	04-18		8
	04-21		17
	04-21A		2
87283179	04-17		3C
87301330	08-02		9
87301358	06-13		11
	06-14		18
	06-20		5
87302564	06-07		24
	06-18		24
87304	07-02		7
	09-26		14
	09-33B		7
87305	07-02		10
87306763	09-30		
87307	09-40		21
	09-43A		43
	09-44		16
	09-48		33
	09-49		43
87307746	04-07		8
87308	06-01		38
87309	09-43A		48
	09-48		35
	09-49		48
87310592	04-30		5A
	09-18A		14
87318948	09-53		9
	09-55		8
87319809	04-05D		8
87327171	09-28A		1
	09-29		6A
	09-29A		2
87329785	08-39A		34
87335499	09-28C		26
	09-29B		26
87339	02-05		19
	02-05A		20
	02-05B		20
	09-15		31
	09-15A		15
87346	04-05E		7
	04-18		20
87350424	09-21		46C
	09-21A		46C
87350427	09-66		1
87350483	09-19		19
	09-21		29
	09-21A		26
87352524	06-09		
87352527	06-09		3
87352559	09-35		5
87353688	09-37		3
	09-38		8
87353688	09-39		16
	09-39		4
87353708	09-37		4
	09-38		1
87353709	09-37		4
	09-38		4
87353710	04-14		12
	09-38		10
87353711	09-38		14
87353712	09-38A		11
87354210	06-56		16
87356572	06-56		26B
87357097	06-12		8
	06-15		1
	06-18		2
	06-30		
87357099	08-23		1
	08-24		1
87357112	08-20		10
	09-54		10
	09-56		19
87357113	08-20		14
	09-54		14
	09-56		10
87357117	08-21		12
87357127	09-53		2
87357132	08-20		7
	09-53		10
	09-54		7
87357136	09-55		3
87357140	09-55		10
	09-56		13
87357144	09-53		1
87357145	09-55		4
87357146	06-16		9
87357149	09-68		6
87357152	09-68		5
87357153	09-68		5A
87357165	06-13		9
	06-17		15
	06-19		3
87357167	08-21		11
87357171	08-21		8
87357176	09-56		8
87357177	08-20		18
	09-54		18
87357179	08-21		6
87357182	08-22		8
	08-22A		19
87357184	08-22		9
	08-22A		20
87357185	08-22		2
87357186	08-22		1
87357191	08-22		16
	08-22A		12
87357202	06-13		10
	06-17		5
	06-20		13
87357216	06-12		7
87357219	09-51		7
87357221	09-39		1
	09-39A		8
87357222	09-39		10
	09-39A		9
87357236	09-68		1
87357251	06-15		8
87357253	06-15		15
87357255	08-16		23
	08-16A		23
	08-16B		38
87357989	02-05		16
	02-05A		17
	02-05B		17
87360034	09-50		10
87360182	09-44		7
87360257	09-35		17
87360559	09-36		9
87360560	09-36		13

Number	Figure	Sequence	Ref.	Number	Figure	Sequence	Ref.
87360610	09-36		20	87369712	06-19		6
87360616	09-36		2	87370205	08-14		22
87360734	02-01		30	87370209	08-14		30
87360743	02-02		21	87370805	04-12		7
87360744	02-01		27		04-12A		7
87360745	02-01		6	87371436	08-14		32
87360746	03-01		30		08-16		25
	03-01A		21		08-16A		25
87360975	08-20		5	87372004	08-14		18
	09-54		5		08-14A		21
87360979	09-66				08-16		15
87361	06-19		5		08-16A		15
	08-20		12		08-16B		21
	09-53		7	87372090	08-14		27
	09-54		12		08-14A		33
	09-55		1	87372529	06-03		1
	09-56		17		06-05		2
87361289	03-01		33		06-07		33
87361292	03-01		28	87372533	06-03		13
	03-01A		19		06-05		15
87361358	09-74		5		06-07		25
	09-77		3		06-13		12
87362	06-08		10		06-14		23
	09-40		15		06-17		35
	09-63		50		06-19		9
87362246	09-23		12	87372552	06-03		14
87362383	09-46		1		06-05		16
87363097	02-01		34		06-07		26
87364	06-01		9	87373988	09-62		21
	09-15		32	87376136	08-12		2
	09-15A		14		08-12A		4
	09-59		30		08-13		3
	09-61		30		08-13A		3
	09-63		5	87376949	09-47		12
	09-63		52	87377188	09-74		11
	09-64		4	87377199	09-74		12
	09-65		4	87377682	08-18		16
	09-66		7	87377742	08-02		11
	09-66A		2	87377750	08-01		9
87364613	06-56		11	87377751	08-01		8
87365	09-72		8	87377752	08-01		16
87365198	08-18		15	87377753	08-01		17
87365199	08-18		29	87379064	02-02		15
87365271	06-16		14	87380283	09-35		21
87365342	09-37		2	87380875	06-08		14
87365501	09-38A		1		06-21		13
87365734	09-40		1	87380881	06-08		1
87366	08-08		26		06-21		11
87366162	04-04			87381966	09-77		7
	04-05			87382308	09-77		1
	04-09		13	87382309	09-74		2
87366818	02-05		24	87382310	09-74		1
	02-05A		26	87384112	02-02		11
87367432	06-08		13	87384114	02-02		20
	06-21		12	87385021	08-06		8
87367436	06-03		4	87385327	09-75		9
	06-05		5		09-78		9
	06-07		38	87386304	09-36		14
	06-19		2	87387861	09-01		11
87368770	09-01A		4	87388082	08-12		
87368771	09-01A		5	87388452	09-35		26
87368772	09-01A		13	87390667	02-02		14
87368773	09-01A		12	87393399	09-58B		1
87368980	06-50			87393455	02-01		10
	08-37		4	87393628	06-14		19
87368988	06-51				06-20		6
	08-38		7	87394830	08-18		19
	08-39		34		08-39		23
87369311	02-05		39		08-39A		27
87369335	02-05		8		08-40		25
	02-05A		10		08-40A		30
	02-05B		10	87396335	09-04A		2
87369396	04-10		38	87396336	09-04A		6
87369712	06-03		8	87397040	09-57		15
	06-05		11		09-58C		8
	06-07		18	87397042	09-57		10
	06-13		4		09-58C		18
	06-17		32	87397043	09-57		7

Number	Figure	Sequence	Ref.
87397043	09-58C		11
87397044	09-57		6
	09-58C		13
87397045	09-58		7
87397046	09-57		5
	09-58C		12
87397047	09-58		4
	09-58C		15
87397048	09-57		12
	09-58C		4
87397049	09-58		5
	09-58C		14
87397050	09-58		6
	09-58C		16
87397056	09-57		11
	09-58C		17
87397649	06-14		17
	06-20		11
87397650	08-39		22
	08-39A		32
	08-40		24
	08-40A		35
87397651	08-39		27
	08-39A		31
	08-40		29
	08-40A		34
87397681	06-16		19
87397682	06-16		21
87397690	06-13		7
	06-17		16
	06-19		4
87397694	08-20		20
	08-21		2
	09-54		20
87397695	09-56		12
87397696	09-79		2
87397697	09-79		1
87397834	04-22		3
87398	09-41		9
	09-42		8
	09-45		9
87398986	08-14		23
	08-14A		31
87399931	09-75		6
	09-78		7
87404	06-03		10
	06-05		10
	06-07		17
	06-13		6
	06-17		33
	06-19		10
	08-01		4
	08-22		11
	08-22A		18
87404992	06-21		24
87411460	06-15		30
	06-21		3
87413030	08-09		13
	09-02		7
87414	06-55		10
	08-09		23
	08-09A		31
	09-02		4
	09-03		3
	09-05		16
	09-06		1
	09-06A		1
87417308	08-07		14
	08-08		24
87424182	06-09		1
	07-01		2
	07-04		12
87426545	06-09		4
87426762	08-07		15
	08-08		25
87427352	09-37		6
	09-38		12
	09-38		17
87427352	09-38		3
	09-38		6
87427353	09-38		13
	09-38		18
	09-38A		13
87427686	09-38A		12
87429625	06-06		7
	06-09		
	06-11		1
87429652	09-35		20
87430430	02-05		23
	02-05A		16
	02-05B		16
87430661	08-14		11
	08-14A		17
	08-15		
	08-16		11
	08-16A		11
	08-16B		17
87431190	09-36		19
87433266	06-02		12
	06-05		20
	06-07		32
87433495	06-09		5
87433496	06-09		2
	07-01		3
	07-04		11
87433497	06-09		3
87433499	06-09		6
87433931	06-06		2
	06-11		9
	07-01		16
	07-04		20
87433932	06-06		4
	06-11		5
	07-01		14
	07-04		17
87433933	06-05		21
	06-08		17
	06-11		19
	06-21		4
	07-01		15
	07-04		3
87434275	06-03		7
	06-05		8
	06-13		3
	06-17		14
87434276	06-05		12
	06-06		1
	06-08		2
	06-11		6
	06-19		7
	06-21		14
87436141	09-10A		
87437198	08-39		35
	08-39A		3
	08-40A		3
87438046	08-12		
	08-12A		12
	08-13		
	08-13A		11
87438766	08-23B		3
87439984	08-14		12
	08-15		1
87440121	09-38A		5
87440222	09-72		1
87440253	08-23B		17
87442336	08-09		2
	08-09A		13
	08-10		
87443051	08-23A		22
87443510	06-03		3
	06-05		4
	06-06		15
	06-07		20
	06-07		35
	06-08		3
	06-11		22

Number	Figure	Sequence	Ref.
87443510	06-13		8
	06-17		13
	06-19		1
	06-21		15
	07-01		13
	07-04		18
87445461	09-20		10
	09-20A		7
87445932	08-24		
	08-31		13
	08-41		4
	08-41A		4
	08-44		13
87445939	08-24		
	08-31		12
	08-41		3
	08-41A		3
	08-44		12
87446234	09-21A		8
87446617	08-24		11
	08-41		5
	08-50		1
87447407	09-37		7
	09-38		16
	09-38		5
	09-38A		14
87448849	09-75		10
	09-78		10
87452108	06-07		23
	06-18		25
87452146	06-07		22
	06-18		23
87453449	09-21A		6
87453520	09-21		4
87454483	09-10B		4
87454488	09-10B		7
87454489	09-10B		1
87455317	09-35		4
87455867	08-14		10
	08-14A		16
	08-16		10
	08-16A		10
	08-16B		15
87456359	09-35		19
87458061	06-09		7
	06-10		2
	06-21		6
	07-01		4
	07-04		10
87458277	09-51A		5
87458601	09-38A		4
87458915	09-15		6
87459207	09-06		
87459340	02-01		36
87459479	04-05		1
87459517	06-56		18
87459518	06-56		6
87459839	04-18		21
87460426	09-01		13
	09-01A		18
87460530	09-01		16
87460622	09-77		6
87460854	09-06		10
	09-06A		10
87460855	09-06		2
	09-06A		2
87460888	06-56		2
87461395	09-36		21
87461762	09-17		21
87461906	09-19		9
	09-21		35
	09-21A		29
87462056	04-07		1
	04-10		20
87462084	04-04		1
	04-06		1
	04-08		1
	04-09		1
87462084	04-10		2
87462101	08-23		18
	08-23A		21
87462146	09-74		13
87462149	04-04		
	04-05		
87462287	06-56		27
87462308	08-04		19
	08-06		22
87462499	09-57		8
	09-58C		9
87462500	09-57		9
	09-58C		10
87462525	09-58A		6
	09-58C		5
87462527	09-58A		5
	09-58C		6
87483832	06-09		6
87483833	06-09		5
87499	02-05		18
	02-05A		19
	02-05B		19
87515026	06-26		2
	06-29		
87515039	06-27		14
	06-28		14
87517845	09-30		7
87519830	09-43A		1
87519831	09-40		
	09-43A		3
87519832	09-40		
	09-43A		2
87520820	09-21		
87520821	09-18		1
	09-19		
87520822	09-19		10
87520824	09-19		6
87520825	09-21		19
87520839	09-21		24
	09-21A		21
87522288	08-20		24
	09-54		24
87522292	08-20		21
	09-54		21
87522299	09-68		7
87522300	09-79		3
87522944	08-08		16
87522945	08-08		17
87522946	08-04		12
	08-06		13
87522947	08-04		13
	08-06		10
87523716	06-01		25A
87524553	08-01		18
	08-01		28
87525072	09-15		23
87525074	09-15		28
87525075	09-37		8
	09-39		12
87526182	09-74		6
	09-77		4
87526183	09-74		7
	09-77		5
87526188	09-74		9
	09-77		8
87526189	09-74		10
	09-77		9
87527111	03-02		7
87527112	09-24		24
	09-32		3
87527113	09-24		23
	09-31		1
	09-32		
87527140	09-23		3
87527219	04-22		2
	04-22		5
87527222	08-01		31
87527661	02-05		2

Number	Figure	Sequence	Ref.
87527661	02-05A		2
	02-05B		2
87527665	02-05		4
	02-05A		4
	02-05B		4
87527676	09-80		6
87527962	09-39		8
87527963	09-39		6
87527964	09-38A		7
	09-39		7
	09-39A		7
87528057	09-04A		4
	09-15		13
87528959	09-13		5
87528960	09-13		4
87529370	08-07		8
87529378	08-07		7
87531197	06-27		16
87532182	02-05		5
	02-05A		5
	02-05B		5
87533025	06-08		8
	06-10		1
	06-21		5
87533223	06-01		10
	08-09		29
	08-09A		29
	09-02		14
87533242	06-27		22
	06-28		37
87534525	02-05		6
	02-05A		6
	02-05B		6
87534744	09-39		2
	09-39A		2
87535113	09-22		4
87535115	09-22		8
87535297	06-56		24
87535298	06-56		29
87535299	06-56		19
87535987	06-05		12
	06-05		8
	06-06		1
	06-11		6
	06-17		14B
87535988	09-50		2
87535989	08-22		13
	08-22A		13
87536436	09-43A		14
	09-48		8
	09-49		14
	09-51		8
	09-51A		14
87536437	09-43A		8
	09-49		8
	09-51A		16
87536438	09-51A		13
87537305	04-09		2
87538586	09-20		1
	09-21		
87538590	09-21		1A
87538594	09-21		11
87538595	09-20		16
	09-20A		10
87538914	09-31A		13
	09-34		2
	09-71		13
87539459	06-15		6
87539460	06-15		14
	06-16		11
87540693	06-12		2
87540695	06-12		5
87540697	06-06		20
	06-11		8
87540708	06-17		26
87540709	08-16		21
	08-16A		20
87541049	06-01		5
87541113	06-58		
87542387	09-62		12
87542390	09-62		19
87542391	09-61		1
	09-62		
87542886	09-35		24
87543378	02-01		14
87544288	09-28C		2
	09-29B		3
87545501	06-01		30
87545502	06-01		22
87546517	09-20		3
	09-20A		13
	09-22		1
87546525	09-20		4
	09-20A		9
	09-23		2
87546621	04-04		29
	04-05		14
87547025	06-05		8
	06-17		14A
87548048	08-01		29
87548412	07-03		1
87548416	09-50		15
87548418	09-50		13
87548834	08-21B		2
87548835	06-12A		3
87548836	08-21B		3
87548837	06-12A		4
87548838	06-12A		5
	08-21B		4
87548839	08-21B		5
87548840	06-12A		6
	08-21B		6
87548843	08-21B		8
87548844	06-12A		8
	08-21B		9
87548846	08-21B		10
87548847	08-21B		11
87548848	08-21B		12
87548871	06-12A		9
87548872	06-12A		10
87548873	06-12A		11
87548874	06-12A		12
	08-21B		13
87550245	08-21		10
87550544	09-50		18
87550545	09-50		17
87550546	08-20		30
	09-54		30
87550550	08-22		20
	08-22A		9
	09-50		22
87550551	08-22		18
	08-22A		7
	09-50		23
87550553	09-43B		1
	09-47		8
	09-50		8
	09-52A		1
87551728	06-12		4
87551775	06-16		1
	06-30A		
87551776	06-52		
	08-39A		39
	08-40		36
	08-40A		41
87551798	06-54		1
87553602	06-30		23
	06-36		
87553603	06-30		1
	06-30A		1
	06-31		
87553604	06-30		2
	06-30A		2
	06-32		
87553605	06-30		3
	06-30A		3

Number	Figure	Sequence	Ref.
87553606	06-30		4
	06-30A		4
87553607	06-30		5
	06-30A		5
87553608	06-30		6
	06-30A		6
	06-33		
87553609	06-30		7
	06-30A		7
87553610	06-30		25
	06-30A		25
	06-33		3
87553611	06-30		8
	06-30A		8
87553612	06-30		19
	06-30A		19
87553613	06-30		9
	06-30A		9
87553614	06-30		10
	06-30A		10
87553615	06-30		11
	06-30A		11
87553616	06-30		12
	06-30A		12
	06-33		11
87553617	06-30		13
	06-30A		13
87553618	06-30		14
	06-30A		14
87553619	06-30		15
	06-30A		15
87553620	06-30		16
	06-30A		16
87553621	06-30		17
	06-30A		17
87553622	06-30		18
	06-30A		18
87553623	06-30		24
	06-30A		24
	06-37		
87553647	06-17		20
87553648	08-40		40
87554297	06-15		25
	06-18		5
	06-20		25
87555249	04-30		3
87555250	09-18A		16
87557403	08-09A		17
87557478	09-53		8
	09-55		9
87557914	08-38		4
87557929	02-03		4
87557965	09-53		13
	09-55		13
87557968	09-43B		5
	09-47		5
	09-50		20
	09-52A		8
87558249	06-17		30
87558261	09-27		2
87558263	09-27		3
87559298	09-80		2
87559997	08-22		2
	08-22A		1
87559998	08-22		1
	08-22A		4
87561132	08-38		1
87561757	08-21		9
87561765	06-14		24
	06-19		8
	06-20		12
87563185	02-03		10
87564350	09-01		
87564401	09-01A		1
87564713	09-03		16
87564736	04-12B		2
87564739	08-40		5
87565841	06-12		3
87565841	06-12A		1
	08-21		7
	09-56		7
87567556	06-52		
87568370	09-17A		3
87568372	09-17B		2
87568388	08-07		13
	08-08		27
87568390	08-08		23
87568391	08-08		28
87569748	04-20		6
87569749	04-20		3
87569821	04-05C		18
	04-05D		6
87569827	04-05F		2
	04-21B		
87569828	04-05F		1
	04-20A		
87572847	04-05D		2
87572850	04-21		13
87572859	04-20		1
87572860	04-20		2
87572861	04-05A		3
	04-15A		3
87572862	04-05B		6
	08-18		31
	08-39		40
	08-40		44
87572868	04-12A		6
87572870	08-18		32
	08-39		41
	08-39A		2
	08-40		45
87572872	04-21C		1
87573050	08-08		4
87573053	06-06		3
	06-11		7
87573273	08-08		3
87573548	04-19		7
87573682	08-14		34
	08-14A		45
87574448	06-07		15
87574770	06-03		11
	07-01		17
	07-04		19
87575247	06-23		12
	06-24		12
	06-27		12
	06-28		12
87575249	09-27		
87576151	08-24		3
	08-25		
87576157	08-24		8
	08-29		
	08-41		6
	08-41A		6
	08-45		
	08-51		1
87576158	08-24		10
	08-31		6
	08-41		9
	08-41A		9
	08-44		6
	08-51		9
87576160	08-24		9
	08-31		9
	08-41		10
	08-41A		10
	08-44		9
	08-51		12
87576161	08-41A		5
87576162	08-24		
	08-31		2
	08-41		12
	08-41A		12
	08-44		2
	08-51		15
87576164	08-24		6

Number	Figure	Sequence	Ref.
87576164	08-28		
87576165	08-24		12
	08-30		
87576166	08-24		4
	08-26		
87576167	08-24		5
	08-27		
87576170	08-24		7
	08-31		1
87576179	09-50		1
87576182	07-03		3
87576183	07-03		6
87576281	09-18A		1
87576975	04-30		1
	09-18A		12
87577017	09-15A		3
87577322	04-12		6
87577418	04-21		12
87577424	04-21		14
87578	09-35		27
87578504	08-20		19
	08-21		1
	08-21B		1
	09-54		19
87578585	06-12		1
87578956	09-50		3
87579303	08-09		11
	08-09A		28
	09-02		10
87579746	09-56		22
87580068	09-56		12
87580571	08-38		10
	08-39A		40
	08-40		39
	08-40A		42
87580812	09-56		1
87581666	09-28C		30
	09-29B		29
87581669	09-28C		11
	09-29B		11
	09-29C		11
87581672	09-29B		22
87581673	09-29B		28
87581681	09-28C		12
	09-29B		14
87581689	09-29C		12
87581786	09-28B		3
	09-29		5
87582295	09-68A		1
87582299	09-68A		4
87582387	08-19A		1
87582388	06-08		8
87582391	09-38A		6
87582409	04-01A		8
87582879	04-05C		4
	04-05D		16
87582944	06-07		11
	06-18		20
87582945	06-07		6
	06-18		16
87582946	06-07		10
	06-18		19
87582951	06-07		13
	06-18		18
87582952	06-07		14
	06-18		17
87582953	06-07		31
	06-18		27
87582954	06-07		27
	06-18		28
87582955	06-07		30
	06-18		30
87582956	06-07		29
	06-18		29
87582957	06-07		28
	06-18		26
87583105	06-56		30
87583689	08-23		1
87583689	08-41		
87584234	08-18		2
87584238	08-05		13
87584239	08-05		6
87584298	09-50		9
87584302	09-54		16
87584305	08-20		22
	09-54		22
87584306	08-20		27
	09-54		27
87584307	08-20		28
	09-54		28
87584328	09-03		27
87586300	08-12		1
	08-13		1
87586301	08-12A		3
	08-13A		4
87586363	09-29A		
87586364	09-28A		
87586452	09-86		3
87586453	04-05B		18
	09-84		7
87586454	09-58C		24
	09-83		4
87586455	09-58C		25
	09-83		9
87586456	09-58C		26
	09-83		3
87586457	09-58C		27
	09-83		8
87586459	09-86		2
87586460	09-86		6
87586461	09-82		7
	09-83		6
87586462	09-82		6
	09-83		5
87586463	04-05B		15
	09-84		5
87586465	09-86		1
87586466	09-82		9
	09-83		2
87586467	09-82		8
	09-83		1
87586468	09-84		6
87586469	04-05G		11
	09-84		1
87586470	09-84		2
87586471	09-82		3
	09-83		10
87586472	09-82		4
	09-83		11
87586474	09-81		3
87586475	09-81		2
87586477	09-81		1
87586484	09-82		2
87586485	09-82		1
87586489	09-81		4
87586490	09-81		5
87586491	09-81		6
87586492	09-81		7
87586495	04-05B		14
	04-05B		17
	09-84		3
87586496	04-05A		8
	04-26A		5
	09-85		2
87586497	04-05A		10
	04-30		4
	09-18A		13
	09-84		4
87586498	04-05A		9
	09-17B		8
	09-85		3
87586523	08-37		1
	08-38		2
	08-39		5
	08-39A		10
	08-40		7

Number	Figure	Sequence	Ref.
87586523	08-40		8
	08-40A		15
87586886	09-85		1
87587350	09-72A		1
87587352	09-72A		4
87587456	09-72A		2
87588579	06-10		3
	06-21		7
87588585	06-10		5
	06-21		8
87588596	06-10		4
	06-21		9
87588597	06-10		6
	06-21		10
87588635	09-28C		27
	09-29B		27
87588864	09-50		21
87588897	06-07		9
	06-18		1
	06-46		
87590186	04-05C		19
	04-05D		5
87590346	03-01		34A
	03-01A		31
87591081	09-48		8
	09-49		14
	09-51		8
	09-51A		14
87592194	09-31A		5
87593952	09-17A		
	09-31A		1
87594361	08-24		
87594375	02-05B		34
	06-54		7
87594866	06-12A		7
	08-21B		7
87594867	06-12A		2
87594965	04-10A		4
	04-10C		7
87594975	04-05F		4
87594976	04-05A		12
	04-05B		21
	09-17B		1
	09-31A		8
87595013	06-14		1
	06-17		19
	06-20		15A
87595764	06-14		5
	06-17		10
	06-20		26
87595765	06-17		10
87595771	06-14		27
	06-17		36
87595772	06-20		15
87596211	06-17		19
87596267	06-18		8
87596268	06-18		9
87596307	08-40		9
87596758	09-01A		16A
87596835	09-01A		16B
	09-01A		3B
87596850	09-01A		3A
87596852	09-01A		3B
87597201	08-09A		20
87597259	06-34		2
	06-38		2
	06-38A		2
87597260	06-34		3
	06-38		3
	06-38A		3
87597262	06-34		5
	06-38		5
	06-38A		5
87597263	06-34		6
	06-38		6
	06-38A		6
87597264	06-34		7
	06-38		7
87597264	06-38A		7
87597265	06-34		8
	06-38		8
	06-38A		8
87597266	06-34		9
	06-38		9
	06-38A		9
87597267	06-34		10
	06-38		10
	06-38A		10
87597268	06-34		11
87597271	06-38		4
87597274	06-35		2
	06-35A		2
87597275	06-35		3
	06-35A		3
87597276	06-35		4
	06-35A		4
87597277	06-35		5
	06-35A		5
87597281	06-35		6
	06-35A		6
87597282	06-35		7
	06-35A		7
87597283	06-36		1
	06-36A		1
87597284	06-31		8
	06-36		3
	06-36A		3
87597285	06-31		9
87597286	06-32		6
87597287	06-33		1
87597288	06-33		2
87597289	06-33		4
87597290	06-33		5
87597291	06-33		6
87597292	06-33		7
87597293	06-33		8
87597294	06-33		9
87597295	06-33		10
87597296	06-33		12
87597297	06-33		13
87597298	06-30		20
	06-30A		20
	06-34		
87597299	06-34		1
87597301	06-34		4
87597302	06-30		21
	06-38		
87597303	06-38		1
	06-38A		1
87597305	06-30		22
	06-35		
87597314	06-35		1
87599254	04-05C		1
	04-05D		3
	04-05E		4
87599256	04-10A		11
87599259	04-21C		4
87599278	08-20		10A
	09-54		10A
	09-56		19A
87599753	09-28B		5
	09-29		3
87599754	04-14A		1
87600221	09-28C		5
	09-29B		6
	09-29C		3
87601294	09-28C		24
	09-29B		20
87601441	09-20A		1
	09-21A		
87601442	09-21A		42
87602688	09-28C		23
	09-29B		19
87602962	09-23		3
87602969	09-23		12
87602973	09-58B		2

Number	Figure	Sequence	Ref.
87602985	06-56		25
87602987	06-56		26
87602988	06-56		26A
87603533	08-09A		18
87603956	09-36		17
87604083	09-15B		6
	09-15C		6
87604087	09-15B		2
	09-15C		2
87604090	09-15B		1
	09-15C		1
87604107	09-15B		3
	09-15C		3
87604118	09-15B		7
	09-15C		7
87604119	09-15B		10
	09-15C		10
87604120	09-15B		8
	09-15C		8
87604121	09-15B		9
	09-15C		9
87604611	02-05		1
87604839	09-21A		35
87606706	09-23		18
87607102	09-77		1
	09-78		8
87607505	09-28C		21
87607506	09-28C		22
	09-29B		18
87608816	08-09A		1
87608817	08-09A		22
87609682	04-26A		2
87609685	09-53		
	09-55		
87610133	06-56		1
87610134	06-56		15
87610351	08-41		7
	08-41A		7
	08-51		5
87610352	08-41		11
	08-41A		11
87610517	08-41		1
	08-41A		1
	08-42		
87610521	08-41		2
	08-41A		2
	08-43		
87610530	08-41		8
	08-41A		8
	08-44		1
87610531	08-41		14
	08-41A		14
	08-47		
87610532	08-41		15
	08-41A		15
	08-48		
87610533	08-41		16
	08-41A		16
	08-49		
87610575	04-12B		
87610576	04-12B		1
87610699	09-53		11
	09-55		11
87610761	08-09A		7
87611475	02-04A		1
87611845	08-41A		13
	08-53		
87611846	08-41A		17
	08-52		
87611850	08-41		17
	08-50		
87611897	09-58A		3
	09-58C		2
87611906	08-09A		19
87612766	08-04		26
	08-06		20
87614446	04-05F		7
87614881	08-12		11
87614881	08-12A		2
	08-13		12
	08-13A		1
87615381	09-17A		6
87615558	09-58A		4
	09-58C		7
87615807	09-29B		25
87615827	08-23		18
87616981	09-29B		23
87616984	09-29B		24
87617624	08-18		29A
	08-39		1
	08-40		1
	08-40A		1
87618013	04-05C		12
	04-05D		22
87618186	04-15A		1
87619016	09-39		8
	09-39A		4
87619017	09-39		6
	09-39A		5
87619343	02-03		8
87619421	04-05C		3
	04-05D		7
87619750	06-56		17
87619883	06-46		13
87619885	06-46		14
87619899	06-46		1
87619900	06-46		12
87619901	06-46		11
87619902	06-46		2
87619905	06-46		3
87619914	06-46		5
87619915	06-46		8
87619916	06-46		10
87619917	06-46		9
87619918	06-46		6
87619919	06-46		7
87619920	06-46		4
87620981	09-32A		4
	09-33A		4
87620986	09-32B		3
	09-32C		6
	09-33C		3
	09-33D		6
87620989	09-32D		1
	09-33E		1
87620990	09-32D		4
	09-33E		7
87621239	06-30A		21
	06-38A		
87621240	06-30A		22
	06-35A		
87621242	06-30A		23
	06-36A		
87621839	09-78		12A
87621840	09-78		14A
87622430	06-38A		4
87622431	06-35A		1
87622433	06-36A		2
87622517	02-04A		
87622555	09-04A		1
87622558	09-04A		5
87622767	09-28C		17
	09-29B		15
87622774	06-14		2
	06-17		17
	06-20		16
87626170	09-85		4
87626171	09-86		7A
87626172	09-86		6A
87626176	09-58C		28
	09-83		7
87627425	04-28		1
87627427	04-28		2
87628301	09-59		9A
	09-61		9
	09-63		4

Number	Figure	Sequence	Ref.
87628436	04-16A		1
87628439	04-21A		8
87629236	03-02A		13
87629237	03-02		6
87629614	09-28C		18
	09-29B		16
87629763	04-26A		
87629920	09-82		5
87632313	04-28		
87632390	09-17B		4
	09-31A		9
87632391	09-17B		6
	09-31A		4
87635413	06-15		17
87635414	06-15		16
87635930	09-29B		7
87635942	09-28C		29
87635960	09-28B		2
	09-29		6
87635968	09-28C		16
87639937	09-28C		4
87639938	09-28C		6
87640695	09-33B		
87640702	09-15B		
87640706	09-20A		
87640711	09-18A		
87640715	09-31A		
87641188	04-05B		9
87641189	04-04A		8
	04-05B		7
	04-05G		10
87641191	04-04A		9
	04-05B		8
	04-26A		4
87641744	08-09A		15
87642008	09-29C		4
87642009	09-29C		2
87642984	04-05G		1
87642985	04-21B		7
	04-21C		2
87642986	04-05G		2
	04-21B		6
	04-21C		3
87643453	09-27		
87643790	08-41		13
	08-46		
87644259	09-28A		6
	09-29A		6
87644260	09-29A		6
87644664	04-05F		8
87645152	09-28A		5
	09-29A		5
87645655	09-15A		2
87647005	03-02A		16
87647008	03-02A		5
87647009	03-02A		14
87647017	03-02A		3
87647022	09-82		7A
	09-83		6A
87647023	09-82		6A
	09-83		5A
87647537	04-21A		14
87647540	04-21A		6
87647989	09-15A		4
87648321	06-11		23
	06-13		14
	06-20		30
87649518	08-14A		5
	08-16B		5
87649532	09-58A		1
	09-58C		1
87650009	06-56		33
87650010	06-56		32
87650011	06-56		31
87650571	04-05A		11
	04-05B		20
87650823	04-05G		12
87651304	09-31A		5
87651304	09-33A		
87651306	09-31A		7
	09-32A		
87652259	09-66A		1
87652292	04-05F		5
87652305	09-03		16
87652503	04-05B		12
87652504	04-05A		5
87652748	09-29B		5
87652757	09-29C		1
87653	04-24		3
	04-25		17
	04-25		27
87653007	09-28A		9
	09-29A		12
87653270	08-23A		1
	08-23B		10
	08-41A		
87653400	09-32B		7
	09-32C		5
	09-33B		4
	09-33C		7
	09-33D		5
87653401	09-33B		5
87653402	09-32B		5
	09-32C		3
	09-33B		3
	09-33C		5
	09-33D		3
87653403	09-33B		2
87653404	09-33B		6
87653763	03-02A		10
87654420	09-15B		12
	09-15C		12
87654421	09-15C		11
87654489	09-58C		
87654841	09-15B		11
87654912	04-05A		4
87654922	04-05A		4A
87657	08-04		22
	08-06		26
	08-07		11
	08-08		20
	09-25		16
	09-40		16
	09-43A		42
	09-44		31
	09-48		20
	09-49		42
	09-50		12
	09-70		6
87657290	03-01A		17
87657312	03-01A		28
87657601	09-29C		7
87658003	09-86		4
87658005	09-86		5
87658782	09-28B		4
	09-29		4
87658793	09-28B		7
	09-29		7
87658794	04-05B		13
87658795	04-05B		16
87658796	04-05A		7
87658798	09-28B		8
	09-29		8
87658799	09-15A		
87658800	09-15A		5
87658802	09-15A		5
87658816	09-29C		13
87659082	09-28C		19
	09-29B		17
87659265	09-28C		31
87659267	09-29C		8
87659800	04-14A		
87659806	04-05G		
87659938	08-23B		11
87660180	09-28C		8
87660357	08-23B		9

Number	Figure	Sequence	Ref.
87660654	09-32D		2
	09-33E		2
87660656	09-33A		2
	09-33C		
87660657	09-33A		3
	09-33D		
87660660	09-32A		1
	09-32B		
87660662	09-33A		5
	09-33E		
87660664	09-32A		5
	09-32D		
87660792	09-28B		9
	09-29		9
87660793	09-28B		10
	09-29		10
87661758	09-17B		9
	09-31A		16
87661759	09-17B		10
	09-31A		17
87661933	08-23B		2
87663138	09-38A		3
	09-39A		1
87665686	09-33B		
87666252	04-29		1
87666548	09-87		1
87666550	09-87		2
87667728	08-23B		5
87668163	04-04A		6
87668576	02-02		11
87669244	09-14		7
	09-24		5
87669376	06-56		1
87669384	06-56		15
87670	09-63		25
	09-64		2
	09-65		2
	09-66A		3
87670653	09-32D		9
	09-33E		4
87670654	09-32D		8
	09-33E		11
87670692	09-32B		6
	09-32C		4
	09-33C		6
	09-33D		4
87670693	09-32B		4
	09-32C		7
	09-33C		4
	09-33D		7
87671506	09-32A		2
	09-32C		
87671806	08-16A		27
87671901	09-33B		8
87673441	09-33B		9
87673471	09-74		13A
87673472	09-74		14A
87673555	09-32D		7
	09-33E		10
87674842	09-39A		11
87675762	09-06A		4
87675772	09-03		38
	09-06A		
87676418	09-15A		33
87676422	09-15A		22
87676979	06-20		28
87677737	09-15A		21
87682304	09-33B		
87683458	04-31		1
87685436	09-29A		15
	09-30		2A
87687979	09-29C		7
87688534	09-29		6
87688606	08-14A		10
	08-16B		10
87688608	08-14A		34
87688609	08-14A		26
	08-16B		26
87688610	08-14A		30
87688612	08-16B		35
87688613	08-16B		29
87688732	09-29B		1
87688733	09-29C		13A
87689	02-05		35
	02-05A		37
	02-05B		32
	08-37		2
87690544	09-29C		1
87691908	09-29B		5
87694585	06-14		17A
	06-20		11A
87694599	06-17		20
87694637	08-39A		38
	08-40A		11
87694638	08-39A		15
	08-40A		4
87695867	09-29A		17
87695868	09-29A		18
87701340	09-89		1
87702213	04-14A		1
87705306	02-01		26
87705379	08-23B		4
87705559	04-04A		6
87705782	04-19		7A
87706368	04-05A		4
87707863	06-17		1A
87708382	09-51A		1A
87710267	06-16		1
	06-30A		
87711639	06-14		24A
	06-19		8A
	06-20		12A
87713744	02-05		41
	02-05A		44
	02-05B		27
87713745	02-05		40
	02-05A		43
	02-05B		28
87714629	02-05		4
	02-05A		4
	02-05B		4
87716	03-01		24
	03-01A		10
	09-53		12
	09-55		12
87721	09-43A		41
	09-49		41
	09-69		4
87722431	03-02A		4
87732861	08-14A		35
	08-16B		28
87732882	08-14A		41
	08-16B		33
87733429	08-14A		40
	08-16B		34
87738587	04-21A		8
87742597	09-39		2
	09-39A		2
87743069	08-09		15
	08-09A		6
87745224	06-04		12
	06-05		1
	06-26		
87752551	09-15A		35
87752556	04-12		7
	04-12A		7
87824	04-15		2
	09-26		29
	09-28		11
87825	03-02		11
87836	03-02		8
	03-02A		6
87845	08-18		4
	08-39		11
	08-39A		20
	08-40		16

Number	Figure	Sequence	Ref.
87845	08-40A		23
87868	09-72A		13
87872	03-02A		9
	04-10		5
	04-11		1
	04-16		8
	04-16A		4
	04-19		1
	09-26		23
	09-27		15
	09-59		19
	09-61		19
	09-63		24
	09-71A		9
87887	04-04		19
	04-05		10
87909	09-28D		15
	09-63		25
	09-67		5
87972	09-72A		14
88007	09-15		16
	09-15A		18
88011	02-05		32
	02-05A		38
	02-05A		40
	08-09		31
	08-09A		36
	09-01		6
	09-28D		18
	09-47		14
	09-59		8
	09-61		8
	09-63		30
88022	09-72A		10
88044	06-01		13
	08-14		2
	08-14A		2
	08-16		2
	08-16A		2
	08-16B		2
	09-03		30
	09-35		9
88062	09-72A		15
88130	08-10		4
88146	04-07		16
	04-08		17
	04-10A		5
	09-53		6
	09-55		2
88180	06-25		10
88203	04-24		7
	04-25		24
88206	02-01		17
	02-05		26
	02-05A		28
	02-05A		42
	02-05B		31
	04-01A		5
	04-10		11
	04-10B		3
	04-10C		9
	08-09A		23
	08-14A		36
	08-16B		30
	08-20		8
	09-01A		11
	09-35		2
	09-36		5
	09-40		9
	09-43		15
	09-43A		39
	09-44		22
	09-47		13
	09-48		19
	09-49		39
	09-51		1
	09-51A		7
	09-51B		2
88206	09-52		5
	09-52A		11
	09-53		4
	09-54		8
	09-55		7
	09-56		15
	09-59		4
	09-61		4
	09-63		22
	09-64		5
88275	08-12		12
	08-12A		10
	08-13		14
	08-13A		8
	09-44		15
	09-59		13
	09-61		13
	09-63		23
88346	02-02		2
	08-09		34
	08-09A		38
88434	04-04		25
	04-05		27
	04-05E		5
	04-11		7
	08-09A		24
	09-12		5
	09-13		2
	09-43B		9
	09-44		27
88436	03-01		35
	03-01A		33
	06-01		19
	09-04		11
88458	04-17		17
	04-18		23
	04-21		16
	04-21A		3
	09-30		13
88542	09-27		9
88556	09-72A		16
88574	09-70		8
88575	08-09		35
	08-09A		39
88682	06-01		27
	09-35		29
	09-47		15
88825	04-04		18
	04-05		11
	08-04		10
	08-06		11
	08-07		3
	08-08		12
	09-14		5
	09-24		37
	09-28A		8
	09-29A		8
88826	03-02		20
	03-02A		15
	09-30		8
88832	09-40		19
88871	02-05		11
	02-05A		14
	02-05B		14
	09-28D		16
	09-63		36
	09-64		3
	09-65		3
	09-66		5
	09-66A		4
	09-67		6
88902	02-02		17
	02-03		1
	04-10		32
	06-01		16
	06-01		20
	09-28D		17
	09-63		35

Number	Figure	Sequence	Ref.
88902	09-66		4
	09-67		11
88945	09-03		40
88994	08-18		3
	08-39		10
	08-39A		19
	08-40		17
	08-40A		22
89827059	08-03		38
900336	09-20		18
900367	09-37		10
	09-39		14
	09-39A		15
900793	04-25		2C
	04-25		36
92625	09-14		10
	09-24		8
	09-26		3
92626	09-14		8
	09-24		6
	09-26		1
93867	04-04		22
	04-11		6
93963	08-14		28
	08-14A		25
	08-16		19
	08-16A		19
	08-16B		25
9512573	06-56		20
9600664	09-06		15
	09-06A		15
9601073	04-07		15
	04-08		15
	04-10C		4
9605018	06-23		19
	06-24		19
	06-27		19
	06-28		19
9610706	08-02		3
9611973	03-01		10
	03-01A		14
9612631	04-07		13
	04-08		26
	04-10C		2
9612633	04-07		14
	04-08		14
9614349	09-03		33
9615841	09-40		8
	09-44		3
9615867	09-45		1
9616376	03-01		1
	03-01A		35
9616607	02-05		17
	02-05A		24
	02-05B		24
9617873	04-12		8
	04-12A		8
	06-03		6
	06-05		14
	06-05		7
	06-06		12
	06-06		14
	06-06		18
	06-06		6
	06-07		8
	06-08		16
	06-08		5
	06-08		7
	06-11		13
	06-11		15
	06-11		18
	06-11		21
	06-13		2
	06-14		16
	06-15		19
	06-15		29
	06-17		12
	06-17		4
9617873	06-17		7
	06-18		15
	06-20		4
	06-21		17
	06-21		19
	06-21		2
	07-01		19
	07-01		6
	07-01		8
	07-04		14
	07-04		16
	07-04		2
	07-04		5
	08-03		11
	08-09		20
	08-09A		34A
	08-09A		37A
	08-15		5
	08-19		7
	08-20		15
	08-20		2
	08-20		4
	08-20		6
	08-21		5
	08-37		10
	08-38		14
	08-39		4
	08-39		7
	08-39A		5
	08-39A		9
	08-40		4
	08-40A		10
	09-54		15
	09-54		2
	09-54		4
	09-54		6
	09-56		2
	09-56		21
	09-56		4
	09-56		6
9617891	08-02		15
	08-39		30
	08-39A		33
	08-40		30
	08-40A		36
9617966	06-17		21
	08-16B		37
9622398	09-15		7
9622411	09-14		9
	09-24		7
9622416	09-59		10
	09-61		10
9622462	09-43		23
	09-47		8
	09-52		16
9622464	09-43		12
	09-43A		19
	09-47		3
	09-49		19
9622465	09-47		1
9622479	09-04		1
9622493	09-04		13
9623774	04-08		12
	04-09		7
9623775	04-05D		14
	04-08		11
	04-15		10
9623776	04-05D		15
	04-06		16B
	04-09		6
	04-25		2D
	04-26		9
	04-27		8
9624466DS	04-01A		9
	04-10		28
9626558	02-01		35
9626598	09-03		9
	09-15		14

Number	Figure	Sequence	Ref.
9626598	09-15A		19
9627879	06-01		6
	09-65		9
	09-66A		6
9628098	06-07		21A
	06-18		31
	08-23B		14
9628503	02-05		20
	02-05A		22
	02-05B		22
	03-01		31
	03-01A		26
	04-01A		7
	04-10		13
	04-10A		12
	04-10B		2
	04-17		15
	04-18		17
	04-20		10
	04-21		22
	04-21A		4
	08-09		32
	08-09A		42
	08-14		29
	08-16		20
	08-16A		21
	08-23A		7
	09-04		10
	09-29		6C
	09-35		22
	09-40		2
	09-43		1
	09-43A		18
	09-47		24
	09-48		28
	09-49		18
	09-51		13
	09-51A		11
	09-52		1
	09-59		6
	09-61		6
	09-63		34
	09-88		
9628510	09-68		4
	09-68A		3
9635014	04-18		7
	04-21		7
	04-21A		21
	09-30		10
9635082	02-01		24
	03-02		17
	04-08		25
	04-10		36
	04-16		10
	04-16A		6
	04-18		13
	04-19		3
	04-21		10
	04-21A		17
	04-25		35
	08-23		8
	09-15		22
	09-15A		28
	09-24		21
	09-24		33
	09-24		34
	09-25		8
	09-26		21
	09-27		17
	09-28		6
	09-31		5
	09-32		10
	09-33		8
	09-41		5
	09-42		3
	09-43		8
	09-43A		17
	09-43B		4
9635082	09-44		34
	09-45		6
	09-46		4
	09-47		23
	09-48		32
	09-49		17
	09-50		4
	09-51		20
	09-51A		24
	09-52		8
	09-52A		3
	09-59		15
	09-61		15
	09-63		33
	09-71		7
	09-71A		11
	09-88		10
9635884	02-03		9
	09-25		6
	09-52A		5
	09-71		6
9636698	09-03		21
	09-72A		19
9636711	06-08		9
	06-15		11
	06-16		17
	07-01		11
	07-04		6
9637240	09-44		5
9637417	09-15		19
	09-15		31
	09-15A		15
	09-15A		25
9637692	03-02		1
	04-01A		3
	04-10		32
	08-14A		27
	08-16B		27
	09-03		14
	09-04		4
	09-35		8
	09-44		17
9670285	09-28D		12
	09-63		26
	09-65		6
	09-66		2
	09-67		9
	09-72		2
9672307	09-43A		34
	09-47		11
	09-48		6
	09-49		34
9706679	09-47		29
9706689	03-01		25
	03-01A		22
	06-01		19
	09-01		9
	09-03		17
9706726	08-04		17
	08-07		5
	08-08		14
9706732	04-10		3
	08-06		25
9706748	02-01		32
	04-19		12
	08-12		13
	08-12A		9
	08-13		13
	08-13A		10
9706918	06-14		25
9706921	02-04		2
	02-04A		2
9707515	09-43A		28
	09-48		21
	09-49		28
9707580	02-01		15
	03-01		23
	03-01A		9

Number	Figure	Sequence	Ref.
9707580	04-11		11
	07-02		1
	07-02		9
	09-35		13
	09-36		22
	09-71A		16
9712608	04-10		23
9790095	09-01		4
	09-01A		7
	09-15		9
	09-15A		7
9790143	09-67		13
9790527	06-14		10
	06-17		9
	06-20		20
	08-01		30
9790712	06-23		6
	06-24		6
	06-25		6
	06-27		6
	06-28		6
	09-59		23
	09-61		23
	09-63		39
9800081	09-11		9
9800963	09-06		4
9801235	04-12B		3
9801239	04-12B		4
9801750	09-80		5
9802846	09-05		12
9803209	09-25		23
	09-26		19
	09-28		4
	09-61		32
	09-63		32
9803210	09-63		49
9803275	09-44		24
9804256	09-22		2
	09-23		6
	09-31A		3
9804276	02-24		15
	09-29C		6
	09-29C		8
9804277	02-24		23
	09-23		15
9804960	04-10		
	08-14A		8
	08-16B		8
9807283	04-11		3
	04-12		3
	04-12A		1
9807943	02-01		31
9808450	06-01		25
9809734	09-24		2
	09-28D		22
	09-31		6
9811773	04-10		34
	04-25		23
	04-26		10
9820622	09-64		1
9821783	04-04A		2
	04-05D		11
	04-05G		7
9822583	09-15		30
	09-15A		16
9822592	09-25		20
	09-28D		2
9822593	09-25		19
	09-28D		3
9822595	04-08		18
9822596	04-08		19
9823222	09-70		4
9824050	06-01		28
	06-07		12
	06-18		21
9824259	02-05		10
	02-05A		9
	02-05B		9
9824259	09-28A		10
	09-29A		10
	09-71A		17
9824642	09-23		17
9825770	06-21		21
9825803	08-04		18
	08-06		19
	08-07		2
9826108	08-10		5
9826542	08-07		1
9826723	06-01		11
9827335	09-40		12
	09-44		26
9827590	09-40		6
	09-44		21
9827601	04-24		8
9827602	04-11		5
9827626	04-25		21
9827779	06-01		3
9827902	09-20		9
	09-20A		
9827955	09-10A		14
9827956	09-29		6B
9828011	09-59		16
	09-61		16
	09-63		10
9828153	04-25		5
	04-26		7
9828477	04-25		6
9828790	04-01A		11
	04-10		24
9828791	04-01A		1
	04-10		30
9828825	09-75		12
9829515	04-04		8
9829527	09-15		17
	09-15A		34
9829733	08-09		9
	08-09A		8
	09-02		13
9829877	06-55		4
9829882	06-55		5
9840344	04-04		3
	04-05		2
	04-05E		2
	04-10		4
	04-14		7
	04-16A		2
	04-19		11
	04-24		12
	09-01A		14
	09-03		29
	09-04		9
	09-14		4
	09-15		4
	09-15A		11
	09-24		3
	09-25		4
	09-27		13
	09-28A		2
	09-29A		3
	09-31A		12
	09-71		3
9840716	04-26A		6
9841234	09-14		7
	09-24		5
9841237	06-55		12
9841242	06-55		21
9841566	04-06		2
	04-25		3
9842368	04-01A		10
	04-10		27
9842390	09-06		14
	09-06A		14
9842392	08-15		8
9842506	09-44		18
9843303	08-04		6
	08-06		6

Number	Figure	Sequence	Ref.
9843627	09-05		11
9843725	09-10A		
9843910	04-07		11
9844042	09-40		5
	09-44		25
9844141	02-05		22
	02-05A		25
	02-05B		25
9844213	09-48		14
	09-51		19
9844342	03-01		16
	03-01A		4
9844532	03-02		19
	03-02A		19
9844538	09-36		10
9844539	09-36		12
9844553	02-05		33
	02-05A		34
	02-05B		37
9844573	09-03		5
9844697	03-01		8
	03-01A		15
9844772	03-01A		29
9845313	09-05		15
9846342	04-08		9
9846451	09-67		3
9846452	09-67		4
9846536	09-44		12
9846677	02-05		25
	02-05A		27
	02-05B		29
9847312	04-20A		1
	04-21B		8
9847458	09-59		
9848676	09-06		11
	09-06A		11
9848895	09-70		10
9849595	08-02		17
9849641	09-15B		4
	09-15C		4
9860032	03-01		2
	03-01A		36
9860108	09-01		19
9860169	03-02		24
	03-02A		22
9861090	09-78		6
9862147	09-72A		1
9862155	09-71		12
9862234	09-80		8
9862235	09-80		8
9862236	09-80		12
9862237	09-80		12
9990433	09-27		4
9990936	09-71		11
	09-71A		5
9992298	08-03		42
9994146	09-17A		1
A149798	04-04A		5
A149799	04-04A		4
A37179	08-01		12
D137186	08-09A		25
D9NNA335AA	09-10A		16
E7NN17700AA	09-71		10
	09-71A		4
E8NN18N380AA	09-17		5
E8NNE412AA	09-70		5
E9NN13R367AA	04-25		22
F775DS	04-10		28
F775DSW	04-01A		9
	04-10		28
H435814	09-28C		14
	09-29B		13
L104616	06-08		4
	06-21		20
L11541	04-05D		1
	04-10C		3
	04-21A		1
	09-20		15
L11541	09-20A		11
L18331	09-20		6
	09-20A		5
L71879	04-05C		11
	04-08		3
	04-10		
N13268	08-14		14
	08-15		
NS	09-05		2
NSS	02-06		2
	02-07		1
	02-20		1
	04-01		4
	04-01		7
	04-17		3
	04-17		3B
	04-17		3E
	04-17		3F
	04-17		3G
	04-20A		2
	04-20A		3
	04-20A		4
	04-21B		1
	04-21B		10
	04-21B		2
	04-21B		3
	04-21B		4
	04-21B		5
	04-21B		9
	06-09		10
	06-09		11
	06-09		8
	06-09		9
	06-23		31
	06-23		33
	06-23		36
	06-24		26
	06-24		28
	06-24		31
	06-27		15
	06-27		26
	06-27		28
	06-27		31
	06-28		15
	06-28		31
	06-28		33
	06-28		36
	06-29		1
	06-29		2
	06-29		3
	06-29		4
	06-29		5
	06-29		6
	06-29		7
	06-31		1
	06-31		2
	06-31		3
	06-31		4
	06-31		5
	06-31		6
	06-31		7
	06-32		1
	06-32		2
	06-32		3
	06-32		4
	06-32		5
	06-32		7
	06-36		2
	06-37		1
	06-37		2
	06-37		3
	06-37		4
	06-37		5
	06-41		1
	06-41		10
	06-41		11
	06-41		15
	06-41		6

Number	Figure	Sequence	Ref.	Number	Figure	Sequence	Ref.
NSS	06-41		9	NSS	06-51		4
	06-42		1		06-51		5
	06-42		10		06-51		6
	06-42		11		06-51		7
	06-42		12		06-51		8
	06-42		13		06-51		9
	06-42		14		06-52		1
	06-42		15		06-52		10
	06-42		16		06-52		11
	06-42		17		06-52		12
	06-42		18		06-52		13
	06-42		2		06-52		14
	06-42		3		06-52		15
	06-42		4		06-52		16
	06-42		5		06-52		17
	06-42		6		06-52		18
	06-42		7		06-52		19
	06-42		8		06-52		2
	06-42		9		06-52		20
	06-43		22		06-52		21
	06-43		23		06-52		22
	06-43		24		06-52		23
	06-43		26		06-52		24
	06-44		11		06-52		25
	06-44		12		06-52		26
	06-44		16		06-52		27
	06-44		5		06-52		28
	06-45		10		06-52		29
	06-45		11		06-52		3
	06-45		12		06-52		4
	06-45		13		06-52		5
	06-45		14		06-52		6
	06-45		16		06-52		7
	06-45		17		06-52		8
	06-45		18		06-52		9
	06-45		19		06-55		2
	06-45		20		08-03		1
	06-45		22		08-03		16
	06-45		23		08-03		18
	06-45		24		08-03		19
	06-45		25		08-03		2
	06-45		26		08-03		20
	06-45		27		08-03		21
	06-45		3		08-03		24
	06-45		4		08-03		25
	06-45		5		08-03		26
	06-45		6		08-03		27
	06-45		7		08-03		31
	06-45		8		08-03		32
	06-45		9		08-03		33
	06-46		15		08-03		34
	06-50		2		08-03		36
	06-50		3		08-03		4
	06-50		4		08-03		5
	06-50		5		08-03		9
	06-50		6		08-10		8
	06-50		7		08-11		8
	06-50		8		08-11		9
	06-51		1		08-15		2
	06-51		10		08-15		7
	06-51		11		08-19A		2
	06-51		12		08-19A		3
	06-51		13		08-19A		4
	06-51		14		08-19A		5
	06-51		15		08-19A		6
	06-51		16		08-19A		7
	06-51		17		08-20		29
	06-51		18		08-24		2
	06-51		19		08-25		1
	06-51		2		08-25		2
	06-51		20		08-25		3
	06-51		21		08-25		4
	06-51		22		08-25		5
	06-51		23		08-25		6
	06-51		24		08-26		1
	06-51		25		08-26		2
	06-51		26		08-26		3
	06-51		3		08-26		4

Number	Figure	Sequence	Ref.	Number	Figure	Sequence	Ref.
NSS	08-26		5	NSS	08-46		11
	08-27		1		08-46		12
	08-27		2		08-46		13
	08-27		3		08-46		14
	08-27		4		08-46		15
	08-27		5		08-46		2
	08-27		6		08-46		3
	08-27		7		08-46		4
	08-28		1		08-46		5
	08-28		10		08-46		6
	08-28		11		08-46		7
	08-28		12		08-46		8
	08-28		13		08-46		9
	08-28		14		08-47		1
	08-28		15		08-47		2
	08-28		16		08-47		3
	08-28		2		08-47		4
	08-28		3		08-47		5
	08-28		4		08-47		6
	08-28		5		08-47		7
	08-28		6		08-48		1
	08-28		7		08-48		2
	08-28		8		08-48		3
	08-28		9		08-48		4
	08-29		1		08-48		5
	08-29		2		08-49		1
	08-29		3		08-49		2
	08-30		1		08-49		3
	08-30		2		08-49		4
	08-30		3		08-49		5
	08-30		4		08-49		6
	08-30		5		08-49		7
	08-30		6		08-50		2
	08-30		7		08-50		3
	08-31		10		08-50		4
	08-31		11		08-50		5
	08-31		3		08-50		6
	08-31		4		08-50		7
	08-31		5		08-50		8
	08-31		7		08-51		10
	08-31		8		08-51		11
	08-42		1		08-51		13
	08-42		2		08-51		14
	08-42		3		08-51		16
	08-42		4		08-51		17
	08-42		5		08-51		18
	08-42		6		08-51		2
	08-42		7		08-51		3
	08-42		8		08-51		4
	08-42		9		08-51		6
	08-43		1		08-51		7
	08-43		10		08-51		8
	08-43		11		08-52		1
	08-43		12		08-52		2
	08-43		13		08-52		3
	08-43		14		08-52		4
	08-43		15		08-52		5
	08-43		16		08-52		6
	08-43		2		08-52		7
	08-43		3		08-53		1
	08-43		4		08-53		2
	08-43		5		08-53		3
	08-43		6		08-53		4
	08-43		7		08-53		5
	08-43		8		08-53		6
	08-43		9		08-53		7
	08-44		10		09-11		10
	08-44		11		09-11		6
	08-44		3		09-16		3
	08-44		4		09-16		6
	08-44		5		09-17		15
	08-44		7		09-17		16
	08-44		8		09-17A		8
	08-45		1		09-17A		9
	08-45		2		09-19		1
	08-45		3		09-19		11
	08-46		1		09-19		12
	08-46		10		09-19		13

Number	Figure	Sequence	Ref.	Number	Figure	Sequence	Ref.
NSS	09-19		14	NSS	09-33E		8
	09-19		16		09-33E		9
	09-19		18		09-54		29
	09-19		20		09-60		10
	09-19		21		09-60		11
	09-19		22		09-60		12
	09-19		23		09-60		13
	09-19		24		09-60		3
	09-19		27		09-60		4
	09-19		29		09-60		5
	09-19		35		09-60		9
	09-19		5		09-62		1
	09-19		7		09-62		10
	09-21		15		09-62		11
	09-21		18		09-62		13
	09-21		2		09-62		14
	09-21		20		09-62		15
	09-21		21		09-62		17
	09-21		22		09-62		22
	09-21		25		09-62		23
	09-21		26		09-62		24
	09-21		27		09-62		25
	09-21		31		09-62		26
	09-21		32		09-62		27
	09-21		33		09-62		3
	09-21		34		09-62		4
	09-21		37		09-62		5
	09-21		40		09-62		6
	09-21		45		09-62		7
	09-21		47		09-62		8
	09-21		48		09-62		9
	09-21		9		09-67		2
	09-21A		13		09-67		8
	09-21A		16		09-70		2
	09-21A		18		09-70		3
	09-21A		19	REF	08-39A		1
	09-21A		2		09-02		1
	09-21A		20		09-17B		7
	09-21A		22		09-28A		3
	09-21A		23		09-28B		1
	09-21A		25		09-28B		6
	09-21A		27		09-29		1
	09-21A		28		09-29		2
	09-21A		31		09-29A		14
	09-21A		34		09-29A		4
	09-21A		36		09-31A		11
	09-21A		40		09-39A		12
	09-21A		41		09-44		
	09-21A		45		09-44		1
	09-21A		48		09-44		2
	09-21A		5		09-49		2
	09-28C		7		09-49		3
	09-28D		19		09-59		
	09-29B		4	SBA010109119	02-13		7
	09-29B		8	SBA010109235	02-16		2
	09-32A		3	SBA010109264	02-15		20
	09-32A		6		02-24		21
	09-32B		1	SBA010109341	02-19		15
	09-32B		2		02-26		15
	09-32B		8	SBA010109406	02-12		6
	09-32B		9	SBA010109465	02-14		9
	09-32C		1	SBA010109466	02-14		29
	09-32C		2	SBA010110625	03-03		19
	09-32C		8		03-03A		19
	09-32D		10	SBA010110630	02-15		16
	09-32D		5	SBA010310865	02-15		28
	09-32D		6	SBA010311035	04-03		7
	09-33A		1	SBA010411212	02-16		3
	09-33A		6	SBA010700820	03-03		5
	09-33B		1		03-03A		5
	09-33C		1	SBA010700860	02-12		15
	09-33C		2	SBA010800820	02-18		14
	09-33C		8		03-03		4
	09-33D		1		03-03A		4
	09-33D		2	SBA011310612	02-09		5
	09-33D		8		02-11		9
	09-33D		9		02-16		7
	09-33E		5		02-17		12

Number	Figure	Sequence	Ref.	Number	Figure	Sequence	Ref.
SBA011310612	02-17		16	SBA026100010	02-26		11
	02-22		5	SBA026109017	04-03		4
	02-23		9	SBA027100006	02-13		6
	02-25		12	SBA027100010	02-19		7
	02-25		16		02-26		7
	03-03		25	SBA030300414	02-13		4
	03-03A		25		02-15		2
SBA011310614	02-24		20		02-24		2
SBA011310616	02-14		13	SBA030309005	02-07		17
	02-14		18		02-20		17
	02-14		23	SBA030500612	02-07		14
	02-15		19		02-12		7
SBA011310625	02-10		11		02-20		14
SBA011310635	02-18		7	SBA030500616	02-07		15
SBA011310645	02-15		24		02-20		15
	02-24		29	SBA030501025	02-07		16
SBA011310650	02-10		10		02-20		16
SBA011310655	02-18		17	SBA030509020	02-12		4
SBA011310660	02-13		8	SBA031100004	02-15		11
	02-15		22		02-24		9
	02-24		30	SBA034100508	02-11		3
SBA011310680	02-15		23		02-12		3
	02-24		28		02-23		3
SBA011311030	02-19		12	SBA036500028	02-12		19
	02-19		6	SBA036800005	02-15		14
	02-26		12		02-24		18
	02-26		6	SBA036800008	02-15		8
SBA011510816	02-08		19	SBA036800010	02-17		9
	02-19		3		02-25		9
	02-21		19	SBA040106203	02-07		10
	02-26		3		02-20		10
	04-03		6	SBA040109057	02-11		6
SBA011510825	04-03		3		02-23		6
SBA011510865	02-24		27	SBA042309017	02-07		13
SBA011510875	02-14		4		02-20		13
SBA011511020	02-19		4	SBA042309018	02-07		12
	02-26		4		02-20		12
SBA011511045	02-26		5	SBA050209083	02-07		22
SBA011511050	02-19		5		02-20		22
SBA011511070	02-12		14	SBA052100400	02-09		8
SBA011511235	02-19		9		02-22		8
	02-26		9	SBA052109072	02-09		1
SBA012100655	02-18		16		02-22		1
SBA012100820	02-07		18	SBA052109074	02-10		18
	02-20		18	SBA052109076	02-10		9
SBA012109044	02-10		12		02-17		13
SBA012109235	02-14		8		02-25		13
SBA012110635	02-07		20	SBA052109078	02-14		22
	02-20		20	SBA052109108	02-15		13
SBA012110660	02-07		19		02-24		17
	02-20		19	SBA052109110	02-15		7
SBA012110875	02-14		3		02-24		12
SBA015300614	02-18		4	SBA052109113	02-07		29
SBA020100010	02-19		8		02-16		6
	02-26		8		02-20		29
SBA020109076	02-10		5	SBA052300600	02-15		26
SBA020109086	02-09		15		02-24		22
	02-22		15	SBA054109025	02-14		21
SBA020109120	02-12		23	SBA063209121	02-14		14
SBA020900010	04-03		8	SBA064100045	02-07		11
SBA023100006	02-18		8		02-20		11
	03-03		20	SBA064210010	02-08		5
	03-03A		20		02-21		5
SBA023100008	02-14		10	SBA064210018	02-08		2
	02-14		5		02-21		2
	02-15		29	SBA064210025	02-07		2
	03-03		3		02-08		4
	03-03A		3		02-20		2
SBA02310006	02-15		17		02-21		4
SBA023109002	02-10		13	SBA064210030	02-08		3
SBA024600010	02-09		13		02-21		3
	02-22		13	SBA064210040	02-07		3
SBA025100012	02-16		4		02-20		3
SBA025100016	03-03		26	SBA064500010	02-13		9
	03-03A		26	SBA064500020	02-07		23
SBA026100008	03-03		6		02-20		23
	03-03A		6	SBA064500030	02-18		15
SBA026100010	02-19		11		02-18		5

Number	Figure	Sequence	Ref.
SBA067100022	02-18		19
SBA067100025	02-07		33
	02-20		33
SBA067100065	02-14		25
SBA067200078	03-03		13
	03-03A		13
SBA068204112	03-03		12
	03-03A		12
SBA068209092	02-22		11
SBA068209179	02-09		11
SBA068209246	02-07		31
	02-20		31
SBA068209247	02-07		32
	02-20		32
SBA080109080	04-03		9
SBA110136400	02-08		14
	02-21		14
SBA110156360	02-12		5
SBA110156370	02-12		8
SBA110156380	02-12		9
SBA110156390	02-12		10
SBA110367580	02-19		1
	02-26		1
SBA110446980	02-19		2
	02-26		2
SBA110466031	02-09		7
	02-22		7
SBA110666050	02-09		3
	02-22		3
SBA110666060	02-09		4
SBA110666090	02-22		4
SBA110708030	02-16		1
SBA110756660	02-16		5
SBA110996860	02-07		21
	02-20		21
SBA111010670	02-08		1
SBA111011130	02-21		1
SBA111026150	02-09		2
	02-22		2
SBA111136480	02-08		16
	02-21		16
SBA111136490	02-08		17
	02-21		17
SBA111147591	02-08		15
SBA111147711	02-21		15
SBA111147721	02-21		15
SBA111147741	02-08		15
SBA111147751	02-21		15
SBA111147761	02-21		15
SBA111147771	02-21		15
SBA115017581	02-12		17
SBA115026330	02-12		20
SBA115104021	02-12		16
SBA115176140	02-12		22
SBA115256750	02-12		1
SBA115276200	02-12		2
SBA115326220	02-12		18
SBA115351030	02-19		13
	02-26		13
SBA115376160	02-19		14
	02-26		14
SBA115391060	02-22		14
SBA115396860	02-09		14
SBA120016050	02-11		2
	02-23		2
SBA120026320	02-11		1
SBA120026970	02-23		1
SBA120036393	02-10		1
SBA120116160	02-07		26
	02-20		26
SBA120166350	02-08		6
	02-21		6
SBA120176360	02-08		7
	02-21		7
SBA120186080	02-08		10
	02-21		10
SBA120216040	02-08		13
	02-21		13
SBA120216041	02-08		13
	02-21		13
SBA120226070	02-08		11
	02-21		11
SBA120316200	02-10		7
SBA120356131	02-10		2
SBA120356141	02-10		3
SBA120406050	02-08		12
	02-21		12
SBA120406070	02-08		8
	02-21		8
SBA120456310	02-07		27
	02-20		27
SBA120736081	02-11		4
	02-23		4
SBA125046510	02-15		5
	02-24		5
SBA125116141	02-15		12
	02-24		16
SBA125156170	02-15		6
	02-24		11
SBA125256120	02-11		7
	02-23		7
SBA125416300	02-15		15
	02-24		13
SBA125976120	02-15		18
	02-24		19
SBA130996130	03-03		23
	03-03A		23
SBA131011100	03-03A		1
SBA131017801	03-03		1
SBA131406360	03-03		8
	03-04		1
SBA131406520	03-03A		8
	03-04A		1
SBA131416170	03-04		8
	03-04A		8
SBA131426200	03-03		7
	03-03A		7
SBA131426230	03-04		3
	03-04A		3
SBA131426320	03-03		2
	03-03A		2
SBA131437360	03-04		4
	03-04A		4
SBA131446006	03-04		2
	03-04A		2
SBA131446074	03-04		5
SBA131446075	03-04		6
	03-04A		6
SBA131446076	03-04		7
	03-04A		7
SBA131446077	03-04		9
	03-04A		9
SBA131446989	03-04A		5
SBA131501030	03-03		14A
SBA131501040	03-03		15A
SBA131501050	03-03		16A
SBA131501060	03-03		17A
SBA131507700	03-03		14
	03-03A		14
SBA131507710	03-03		15
	03-03A		15
SBA131507720	03-03		16
	03-03A		16
SBA131507730	03-03		17
	03-03A		17
SBA131606950	03-03		9
	03-03A		9
SBA131996200	02-09		12
	02-22		12
SBA133633	02-07		
SBA133734	02-05A		
	02-05B		
	02-20		
SBA135596570	02-14		24
SBA135596710	02-13		5
SBA135596920	02-13		2

Number	Figure	Sequence	Ref.
SBA135617240	02-14		1
SBA135617440	02-14		27
SBA135756171	02-14		6
SBA135996780	02-14		2
SBA135996870	02-13		3
SBA135996880	02-13		1
SBA135997020	02-14		7
SBA135997031	02-14		28
SBA140036220	02-07		28
	02-20		28
SBA140116140	02-17		5
SBA140116220	02-25		5
SBA140166140	02-17		4
SBA140166250	02-25		4
SBA140406490	02-17		15
	02-25		15
SBA140406680	02-17		15
SBA140517020	02-07		25
	02-20		25
SBA140546020	02-07		24
	02-20		24
SBA140607020	02-10		15A
SBA140607090	02-10		15
SBA140607320	02-14		11
SBA140607360	02-14		19
SBA140607370	02-14		16
SBA140656150	02-07		30
	02-20		30
SBA140986581	02-09		6
	02-22		6
SBA140986820	02-17		14
	02-25		14
SBA140987020	02-17		14A
SBA140996260	02-10		16
SBA140996280	02-14		12
	02-14		17
SBA140996350	03-03		10
	03-03A		10
SBA145017730	02-18		1
SBA145146320	02-18		2
SBA145206220	02-18		12
SBA145216640	02-18		9
SBA145226340	02-18		11
SBA145306740	02-18		22
SBA145336051	02-18		18
SBA145336620	02-18		21
SBA145337040	02-18		21
SBA145996051	02-18		13
SBA145996670	02-18		6
SBA145996680	02-18		3
SBA145996710	02-18		10
SBA165026120	02-17		1
SBA165026230	02-25		1
SBA165106480	02-15		1
SBA165106840	02-24		1
SBA165166510	02-17		10
SBA165166650	02-25		10
SBA165206010	02-15		25
	02-24		25
SBA165206640	03-03		24
	03-03A		24
SBA165296132	02-07		7
	02-20		7
SBA165996110	02-15		27
SBA165996540	02-17		11
	02-25		11
SBA165996550	02-15		3
	02-24		3
SBA165996610	02-24		24
SBA185046380	04-02		1
	04-03		2
SBA185086530	02-19		10
	02-26		10
	04-01		
SBA185206083	03-03		27
	03-03A		27
SBA185246060	02-10		14
SBA185366190	03-03		21
SBA185366190	03-03A		21
SBA185376150	03-03		22
	03-03A		22
SBA185416480	04-02		14
SBA185426210	04-02		5
SBA185426240	04-02		11
SBA185436180	04-02		3
SBA185446269	04-02		2
SBA185446270	04-02		4
SBA185446271	04-02		6
SBA185446272	04-02		7
SBA185446274	04-02		9
SBA185446277	04-02		13
SBA185446278	04-02		12
SBA185446292	04-02		8
SBA185446293	04-02		10
SBA185446294	04-02		15
SBA185727000	04-03		1
SBA185816360	04-01		5
SBA185846286	04-01		12
SBA185846371	04-01		10
SBA185846378	04-01		18
SBA185846549	04-01		20
SBA185846551	04-01		11
SBA185846552	04-01		8
SBA185846560	04-01		13
SBA185846561	04-01		21
SBA185846562	04-01		22
SBA185846563	04-01		23
SBA185846570	04-01		1
SBA185846571	04-01		2
SBA185846573	04-01		6
SBA185846576	04-01		9
SBA185846579	04-01		14
SBA185846580	04-01		15
SBA185846581	04-01		16
SBA185846582	04-01		17
SBA185846583	04-01		19
SBA185866370	04-01		3
SBA185976510	04-03		5
SBA190297900	02-09		10
	02-22		10
SBA195816540	02-08		18
	02-21		18
SBA198216700	02-08		9
	02-21		9
SBA198216720	02-17		7
	02-25		7
SBA198216821	02-17		3
	02-25		3
SBA198217170	02-10		8
SBA198217380	02-15		9
	02-24		10
SBA198217560	02-15		10
	02-24		26
SBA198436010	02-09		9
	02-22		9
SBA198466010	02-07		4
	02-20		4
SBA198466020	02-07		5
	02-20		5
SBA198466030	02-07		6
	02-20		6
SBA198486780	02-10		17
	02-14		20
SBA198487840	02-10		17
	02-14		20
SBA198487870	02-18		20
SBA198487901	02-08		20
	02-21		20
SBA198487920	03-03		11
	03-03A		11
SBA198517090	02-07		8
	02-20		8
SBA198517221	02-07		9
SBA198517222	02-20		9
SBA198517231	02-12		11
SBA198517241	02-12		12

Number	Figure	Sequence	Ref.	Number	Figure	Sequence	Ref.
SBA198517251	02-12		24				
SBA198517260	02-12		21				
SBA198636160	02-15		4				
	02-24		4				
SBA198756200	02-14		15				
SBA199106020	03-03		18				
SBA199106021	03-03A		18				
SBA199216230	02-11		5				
	02-23		5				
SBA199236540	02-17		8				
	02-25		8				
SBA199266180	02-17		2				
SBA199266200	02-12		13				
SBA199266210	02-12		25				
SBA199266270	02-25		2				
SBA199286150	02-17		6				
	02-25		6				
SBA199286160	02-17		6				
	02-25		6				
SBA199286170	02-17		6				
	02-25		6				
SBA199286180	02-17		6				
	02-25		6				
SBA199486220	02-10		4				
SBA199566750	02-11		8				
	02-23		8				
SBA314990013	02-14		30				
SBA398750450	02-14		26				
V100409	04-10		15				
W0	09-28D		20				