RUTHZIL TRATOR COMERCIAL DE PEÇAS LTDA 11 97083-6812 ROLANDO CITRANGULO

NEW HOLLAND CONSTRUCTION

CATÁLOGO DE PEÇAS DE REPOSIÇÃO
CATALOGO DE PIEZAS DE REPUESTOS
SERVICE PARTS CATALOGUE

MINI CARREGADEIRA / MINI CARGADORA
SKID STEER

L225

TABELA DE CONTEÚDO / TABLA DE CONTENIDO / INDEX

Informações iniciais / Informaciones Generales / General Info
Filtros e Lubrificação / Filtros y Lubificación / Filters and Lubrication
Motor / Motor / Engine
Sistema de combustível / Sistema de combustible / Fuel System
Sistema Elétrico / Sistema electrico / Electrical System
Sistema de direção / Sistema de dirección / Steering System
Transmissão e Eixos / Transmisión y ejes / Transmission and Axles
Sistema de Freios / Sistema de frenos / Brake System
Sistema Hidráulico / Sistema Hidráulico / Hydraulic System
Chassi e Cabine / Chasi y Cabina / Chassis and Cab

Agosto/2011 - Agosto/2011 - August/2011
Impresso no Brasil / Impreso en Brazil / Printed in Brazil - 71114402
Todos os direitos reservados / Todos los derechos reservados / All rigths reserved
CNH Latin America Ltda.



L225

Todos os direitos são reservados à **CNH LATIN AMERICA LTDA.**.
Os dados contidos neste catálogo são fornecidos a título de indicação somente. A qualquer momento, a **CNH LATIN AMERICA LTDA.** poderá introduzir, por razões de ordem técnica ou comerciais, modificações nos produtos descritos neste catálogo. Para informações mais detalhadas e atualizadas, solicitamos ao usuário consultar o concessionário **CNH LATIN AMERICA LTDA.** mais próximo.
O sistema de numeração das peças utilizado neste catálogo não pode ser copiado ou utilizado sem autorização por escrito da **CNH LATIN AMERICA LTDA.**.

All rights reserved by Soc. **CNH LATIN AMERICA LTDA.**.
The information contained in this catalogue is intended to be of a general nature only. The **CNH LATIN AMERICA LTDA.** may at any time and from time to time, for technical or other necessary reasons, modify any of the details or specifications of the product described in this catalogue. To be sure of getting accurate, detailed and up-to-date information, an intending buyer should consult his nearest **CNH LATIN AMERICA LTDA.** dealer or distributor.
Single item numeration method used in this catalogue may not be used without written consent by Soc. **CNH LATIN AMERICA LTDA.**.

Reservados todos los derechos para Soc. **CNH LATIN AMERICA LTDA.**.
Los datos contenidos en este catálogo se facilitan a titulo indicativo. **CNH LATIN AMERICA LTDA.** podrá introducir, en cualquier momento, por razones de naturaleza tanto técnica como comercial, modificaciones en los modelos descritos en este catálogo. Para mayor información rogamos al cliente se dirija al Concesionario o Filiale **CNH LATIN AMERICA LTDA.** más próximo.
El sistema de numeración de las piezas reseñadas en el catálogo no puede ser objeto de imitación o copia en ningun caso sin autorización por escrito de Soc. **CNH LATIN AMERICA LTDA.**.

Tutti i diritti sono riservati alla Soc. **CNH LATIN AMERICA LTDA.**.
Il sistema di numerazione che individua is ingoli particolare elencati nel presente calatogo non può essere adottato in alcun caso senza autorizzazione scritta dalla Soc. **CNH LATIN AMERICA LTDA.**. I dati contenuti in questo catalogo sono forniti a titolo indicativo. La **CNH LATIN AMERICA LTDA.** potrà apportare in qualunque momento modifiche ai modelli descritti in questo catalogo, per ragioni di natura tecnica o commerciale.
Per ulteriore informazione, il cliente è pregato di rivolgersi al più vicino Concessionario o Sede **CNH LATIN AMERICA LTDA.**.

Alle in diesem Propekt anthaltenen Angaben sind Orientierungsdate. Es können jedoch von **CNH LATIN AMERICA LTDA.** sowohl aus technischen und Kaufmännischen Gründen als auch aus der Notwendigkeit, geänderte gesetzliche Erfordernisse der verschiedenen Lander zu berücksichtigen, Anderugen einge führt werden. Der Kunde ist gebeten, sich für weirtere information an Vertragshändler order.
CNH LATIN AMERICA LTDA.-Niederlassungen zu werden.
Alle Urheberrechte sind von der **CNH LATIN AMERICA LTDA.**-vorbehalten.
Die Benutzung des Numerierungssustems zur Kennzeichnung der im vorliegende Katalog aufgeführten Ersatzteile bedarf in jedem Falle der schriftlichen Genehmigung der **CNH LATIN AMERICA LTDA.**.

Tous droits réservés à la Soc. **CNH LATIN AMERICA LTDA.**.
Les données de cette brochure sont fournies à titre indicatif et pourraient se révéler caduques à la suite de modifications apportées par le constructeur, à n'import quel moment, pour de raisons techniques ou commerciales ainsi que pour satisfaire aux normes en vigueur dans le différents Pays. Pour toute information, nous prions le client de bien vouloir s'adresser au Concessionnaire ou à la Filiale **CNH LATIN AMERICA LTDA.** les plus proches.
Le système de numérotation des pièces en list dans ce catalogue ne peut être adopté en aucun cas, sans une autorisation écrite de la Soc. **CNH LATIN AMERICA LTDA.**.

Copyrigth by **CNH LATIN AMERICA LTDA.**
Printed in Brazil

INSTRUÇÕES PARA O PEDIDO DE PEÇAS DE SERVIÇO

“Os números de peça indicados neste catálogo estão corretos até a data da publicação. A política da New Holland de contínuo melhoramento dos produtos durante toda a vida de produção do modelo, pode dar origem às últimas alterações nas figuras e nos números de peça. Quando encomendar peças de substituição, certifique-se de confirmar suas especificações no CD atual do sistema PAL ou com a microficha do catálogo de peças no seu concessionário.”

INSTRUCTIONS FOR ORDERING SPARE PARTS

“The part numbers shown in this catalogue are correct up to the date of publication. New Holland policy of continuously improving our products during the production lifetime of the Model may result in later changes to illustrations and to part numbers. When ordering replacement parts be sure to confirm your requirements against the current CD based PAL or microfiche parts catalogue at your dealership.”

INSTRUCCIONES PARA LOS PEDIDOS DE RECAMBIOS

“Los números de pieza indicados en este catálogo son los correctos en la fecha de la publicación. La política de New Holland es de constante mejora de sus productos durante todo el período de vida de la producción del Modelo, lo que puede hacer que se produzcan cambios en las ilustraciones y en los números de pieza. Al hacer pedidos de recambios debe asegurarse de que sean de acuerdo con sus necesidades comprobando el CD actualizado en sistema PAL o bien las microfichas de catálogos existentes en la agencia.”

ISTRUZIONI PER ORDINARE I RICAMBI

“ I numeri ricambio riportati in questo catalogo si intendono corretti fino alla data della pubblicazione. La New Holland persegue una politica di continuo miglioramento del prodotto durante tutto il periodo di produzione del modello per cui può accadere che ci siano modifiche successive alle illustrazioni e ai numeri ricambio. Al momento di ordinare un particolare di ricambio, verificare accuratamente i dati utilizzando il CD PAL o il catalogo ricambi su microfiche presente presso la Concessionaria.

ANLEITUNG ZUM BESTELLEN VON ERSATZTEILEN

“Die in diesem Katalog aufgeführten Teilnummern sind am Tag der Veröffentlichung korrekt. Die Firmenpolitik von New Holland sieht während der Produktionsdauer dieses Modells dessen kontinuierliche Verbesserung vor; dies kann zu späteren Änderungen an Abbildungen und Teilnummern führen. Stellen Sie vor der Bestellung von Ersatzteilen sicher, daß Sie bei Ihrem Händlerbetrieb die von Ihnen benötigten Teile mit dem aktuellen PAL auf der Grundlag e von CDs oder dem aktuellen Microfiche-Ersatzteilkatalog abgeglichen haben.”

INSTRUCTIONS POUR COMMANDE PIECES DETACHEES

Les références de pièces détachées notées dans ce catalogue sont correctes à la date de publication.La politique New Holland pour l’amélioration constante des produits durant la durée de vie des modèles peut changer les illustrations et les références des pièces détachées.Quand l’ordre de remplacement de pièces est confirmé, il est nécessaire de mettre à jour l’actuel CD base PAL ou microfiches de pièces détachées chez votre concessionnaire.

REGRAS PARA PEDIDO DE PEÇAS

Este catálogo está dividido em seções principais correspondendo a áreas específicas do produto. Cada seção está representada através de figuras detalhadas (desenhos) para auxiliar na localização e identificação de peças. As peças disponíveis para serviço estão indicadas ao lado da figura e, para a correta identificação das peças necessárias proceder da seguinte forma:

1) Consultar a figura da seção principal na página 16 para identificar a seção em questão.

2) Em seguida, consultar as páginas 17 a 36 para encontrar a figura à qual pertence o número de peça necessário.

3) Consultar o índice do número de peça na página 44. Este índice apresenta todos os números de peça que aparecem no catálogo.

ORDERING RULES

This catalogue is divided into main sections corresponding to specific areas of the product. Each section is represented by detailed figures (illustrations) to assist in locating and identifying parts. Parts released for service are indicated alongside the figure, hence, for the correct identification of parts required proceed as follows:

1) Consult the main section illustration on page 16 to identify the section in question.

2) Then consult pages 17 to 36 to find the figure to which the required part number belongs.

3) Refer to the part number index on page 44. This index lists all part numbers appearing in the catalogue.

NORMATIVA DE PEDIDOS

Este catálogo se divide en tres secciones principales correspondientes a áreas específicas del producto. Cada sección se representa con figuras detalladas (ilustraciones) para facilitar la localización e identificación de las piezas. Las piezas disponibles para el servicio se encuentran indicadas al lado de la figura, de aquí, que para la identificación correcta de las piezas necesarias, deba seguirse este orden:

1) Consultar la sección principal en la ilustración de la página 16 para identificar la sección en cuestión.

2) Seguidamente consultar las páginas 17 to 36 para localizar la figura a la que pertenece el número de pieza buscada.

3) Ver el índica de números de pieza en la página 44. Este índica contiene todos los números de pieza del catálogo.

NORME PER L'ORDINAZIONE

Questo catalogo è suddiviso in sezioni principali corrispondenti alle aree specifiche della macchina. Ogni sezione è composta da figure tecniche dettagliate che agevolano l'individuazione e l'identificazione dei particolari. I particolari disponibili per l'assistenza sono indicati unitamente alla figura, per cui per la corretta identificazione degli stess i è necessario procedere come segue:

1) Consultare l'illustrazione delle sezioni principali a pag. 16 per individuare la sezione che interessa.

2) Consultare poi le pagine da 17 a 36 per trovare la figura alla quale appartiene il numero del ricambio necessario.

3) Fare riferimento all'indice dei numeri ricambio a pag. 44, che elenca tutti i numeri ricambio che appaiono nel catalogo.

BESTELLREGELN

Dieser Katalog ist in Hauptabschnitte aufgeteilt, die speziellen Baugruppen des Produkts entsprechen. Jeder Abschnitt wird durch detaillierte Abbildungen veranschaulicht, die das Auffinden und Identifizieren von Teilen erleichtern. Für den Service freigegebene Teile sind neben der Abbildung aufgeführt; um erforderliche Teile richtig zuzuordnen, gehen Sie somit wie folgt vor:

1) Stellen Sie mit Hilfe der auf Seite 16 veranschaulichten Hauptabschnitte fest, zu welcher Baugruppe bzw. welchem Abschnitt das Teil gehört.

2) Suchen Sie dann auf den Seiten 17 bis 36 die Abbildung, zu der die Nu mmer des benötigten Teils gehört.

3) Suchen Sie die Nummer im Teilnummer-Verzeichnis auf Seite 44. In diesem Verzeichnis sind alle im Katalog enthaltenen Teilnummern zusammengefaßt.

REGLES DE COMMANDES

Ce catalogue est divisé en sections principales correspondant aux aires spécifiques de production. Chaques sections est représentées par des figures détaillées (illustrations) pour aider à la localisation et à l'identification des pièces détachées. Les pièces nécessaires pour le service sont indiquées sur le côté de la figure, pour l'identification correcte de la pièce requise procédez comme ci dessous

1) Consultez l'illustration de la section principale page 16 pour identifier la section en question

2) Consulter les pages de 17 à 36 pour trouver la figure qui contient la référence demandée

3) Se référer à l'index de la référence pièce à la page 44 .Cet index indique toutes les références pièces apparaissant dans le catalogue.

01.01	01	p6	02/03

CHASSI
MAIN FRAME
BASTIDOR
TELAIO
GESTELL
CHASSI

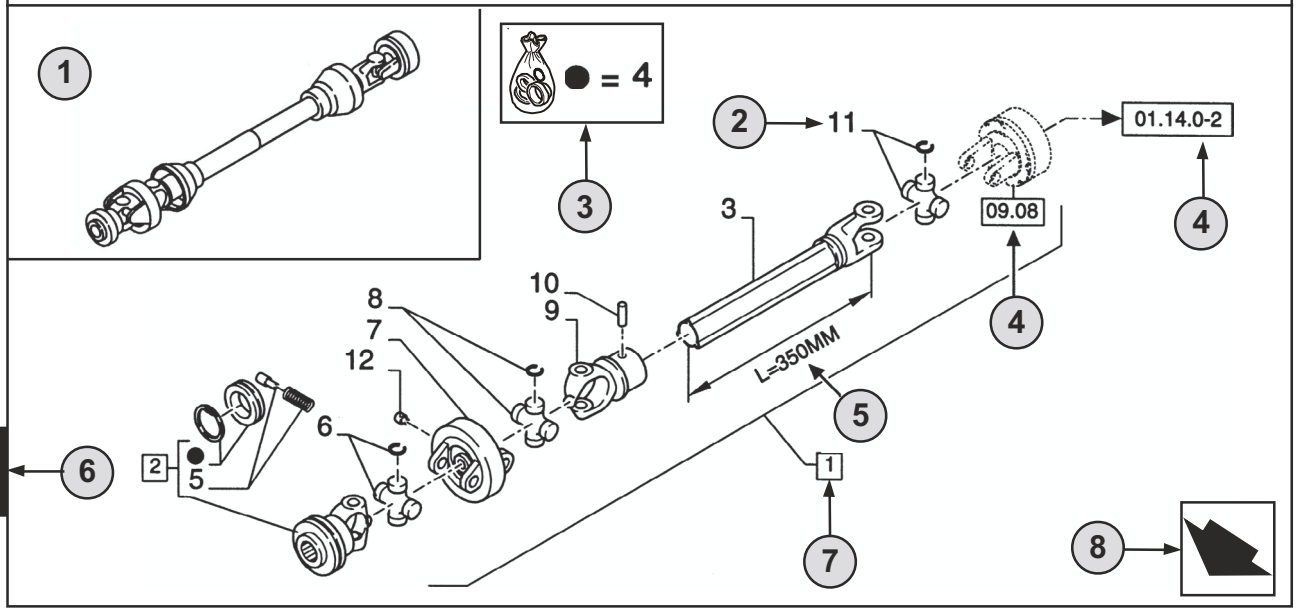

1

9 10

01.01	01	p6	02/03
11	12	13	14

CHASSI - D0200
MAIN FRAME
BASTIDOR
TELAIO
GESTELL
CHASSI

R	N	P.N.	MOD	Q	Descrição	Description	Descripción	L.C.
	A	**86529340**		1	TOMADA DE FORÇA **(2 AO 11)**	SHAFT, PTO	TOMA DE FUERZA	207P
2		**84014007**		1	GARFO **(4,5)**	YOKE	HORQUILLA	085F
3		**NSS**		1	EIXO, **L=350MM**	SHAFT	EJE	016A
4		**84004292**	C0204	1	KIT	KIT	EQUIPO	305C
		[84058743]	D0500	1	KIT	KIT	EQUIPO	305C

15 16 7 2 18 19 20 21 17 22 22 23

(A) SOMENTE BRASIL 24

1

STANDARD 25

26 **MODELOS**

PORTUGUÊS

1 **Posição** da “Figura” na máquina.

2 Referência - figura chamar pelo n° de peça.

3 Peças fornecidas nos kits de reparação por referência de símbolo.

4 01.14.0-2 Peça indicada na **Página** ou no **Figura**, ou chamadas para **Variações** ou **Detalhes**. Indicam componentes que se mostram em detalhe em um outro local do catálogo com o número da figura indicado.

5 Especificações técnicas relacionadas com a peça indicada.

6 Número da **Seção**.

7 2 Inclui os item(s) .....

8 Orientação (A seta indica a frente da máquina). 

9 Descrição da figura.

10 Informação geral da figura.

11 Código do **Conjunto**.

12 Código de **Seqüência** no conjunto.

13 Número da página no código de seqüência.

14 **Data** da impressão ou da atualização da página (mês-ano).

15 **Nota** - Em relação ao n°. de peça. Existe uma chave para os símbolos e abreviaturas na parte inferior da página.

16 Peças que não são disponibilizadas (ver a Página 42).

17 Descrição adicional da peça para auxiliar a confirmar a identificação.
Consultar a página 42 para explicação dos símbolos usados.

18 Não disponível como peça de serviço.

19 Número de Peça.

20 Modificação.
C 0201 = Peça válida **ATÉ 0201** mudar.
D 0300 = Peça válida **A PARTIR** de **0300** mudar.
F 0202 = Peça válida **A PARTIR do N°. de Série.... até ao N°. de Série....**

Implementação da mudança. N° de série a partir do qual a alteração tem início. Os números são indicados na plaqueta de identificação do modelo (ver a página 38).
Ex.: **D0300 N° de Série 2503001** significa que a peça foi montada **“A PARTIR”** do n°. de série **2503001.**
Como conseqüência, as peças marcadas por **C0201**, foram montadas **“ATÉ”** ao n°. de série **2501999.**
Ver a tabela de códigos na página 41.

21 **Quantidade** total de peças referenciadas na página. A quantidade pode ser substituída pelas seguintes indicações:
M = fornecido em metros. **AR** = Quantidade consoante ao pedido.

22 **Descrição** da peça.

23 **L.C. - Código Léxico** para a identificação dos nomes das peças (ver página 45).

24 Referências de rodapé.

25 Notas das figuras.

26 Número do modelo.

01.01	01	p8	02/03

CHASSI
MAIN FRAME
BASTIDOR
TELAIO
GESTELL
CHASSI

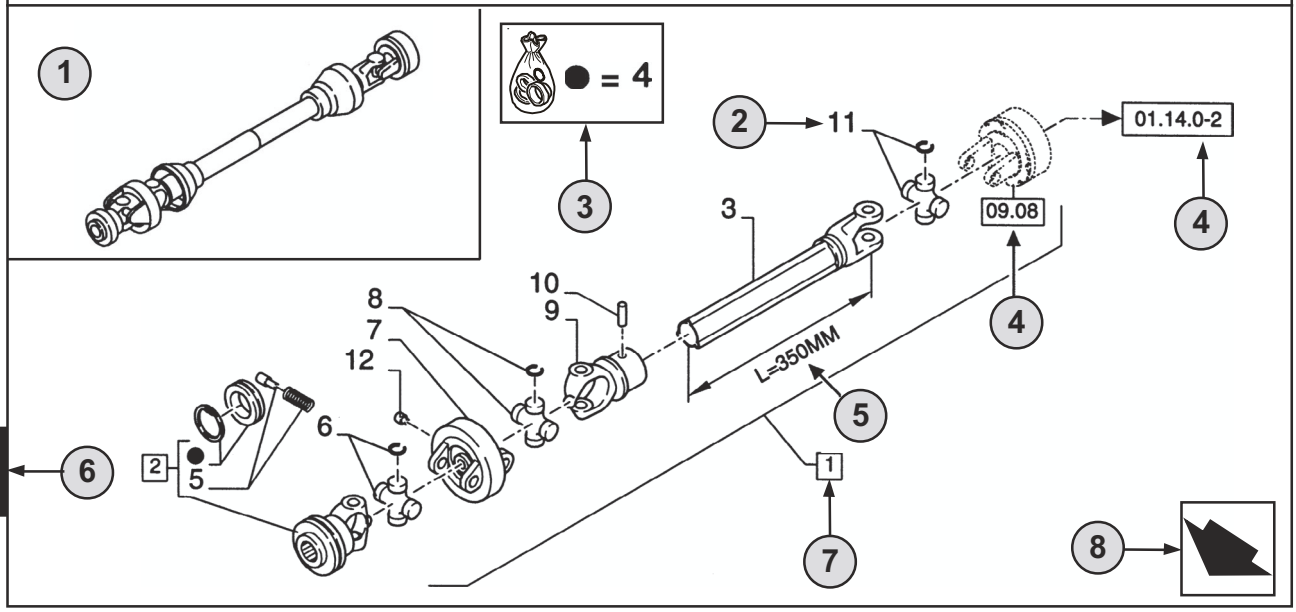

9 10

01.01	01	p8	02/03
11	12	13	14

CHASSI - D0200
MAIN FRAME
BASTIDOR
TELAIO
GESTELL
CHASSI

R	N	P.N.	MOD	Q	Descrição	Description	Descripción	L.C.
	A	**86529340**		1	TOMADA DE FORÇA **(2 AO 11)**	SHAFT, PTO	TOMA DE FUERZA	207P
2		**84014007**		1	GARFO **(4,5)**	YOKE	HORQUILLA	085F
3		**NSS**		1	EIXO, **L=350MM**	SHAFT	EJE	016A
4		**84004292**	C0204	1	KIT	KIT	EQUIPO	305C
		[84058743]	D0500	1	KIT	KIT	EQUIPO	305C

15 16 7 2 18 19 20 21 17 22 22 23

(A) SOMENTE BRASIL 24

STANDARD 25

26 **MODELOS**

1

ENGLISH

1 **Position** of the “Figure” on the machine.

2 Reference - Figure call-out of the partnumber.

3 Parts supplied in repair kits per symbol reference.

4 01.14.0-2 Part illustrated on the **Page** or in the **Figure** indicated, or calls for **Variations** or **Details**. Indicates components shown in detail elsewhere in the catalogue under the figure number shown.

5 Technical specifications relating to the Part indicated.

6 **Section** number.

7 2 Includes item(s) .....

8 Orientation. (Arrow indicates front of the machine). 

9 Figure description.

10 General information of the figure.

11 **Assembly** code.

12 **Sequence** code within the assembly.

13 Page number within the sequence code.

14 **Date** of printing or updating of page (month-year).

15 **Note** - Relating to the Part Number. There is a key to symbols and abbreviations at the bottom of the text page.

16 Non-serviced parts. (see page 42).

17 Further description of the part to help confirm identification. Refer to page 42 for explanation of symbols used.

18 Not available as service part.

19 Part Number.

20 Modification.
C 0201 = Part valid **UNTIL 0201** change.
D 0300 = Part valid **FROM 0300** change.
F 0202 = Part valid **FROM Serial N.... to Serial N....**

Implementation of change. Serial number from which the change starts.
The numbers are indicated on the identification plate of the model (see page 38).
E.g.: **D0300 Serial n° 2503001** means that the part has been installed **“FROM”** serial number **2503001**. Consequently, the parts marked by C0201, were installed **“UP TO”** serial number **2501999**.
See code table page 41.

21 Total **Quantity** of the Part referred to in the page.
The quantity can be replaced by the following indications:
M = supplied in metres. **AR** = quantity as requested.

22 Part **Description**.

23 **L.C. - Lexicon code** for the identification of Part names (see page 45).

24 Footnote references.

25 Figure notes.

26 Model number.

01.01	01	p10	02/03

CHASSI
MAIN FRAME
BASTIDOR
TELAIO
GESTELL
CHASSI

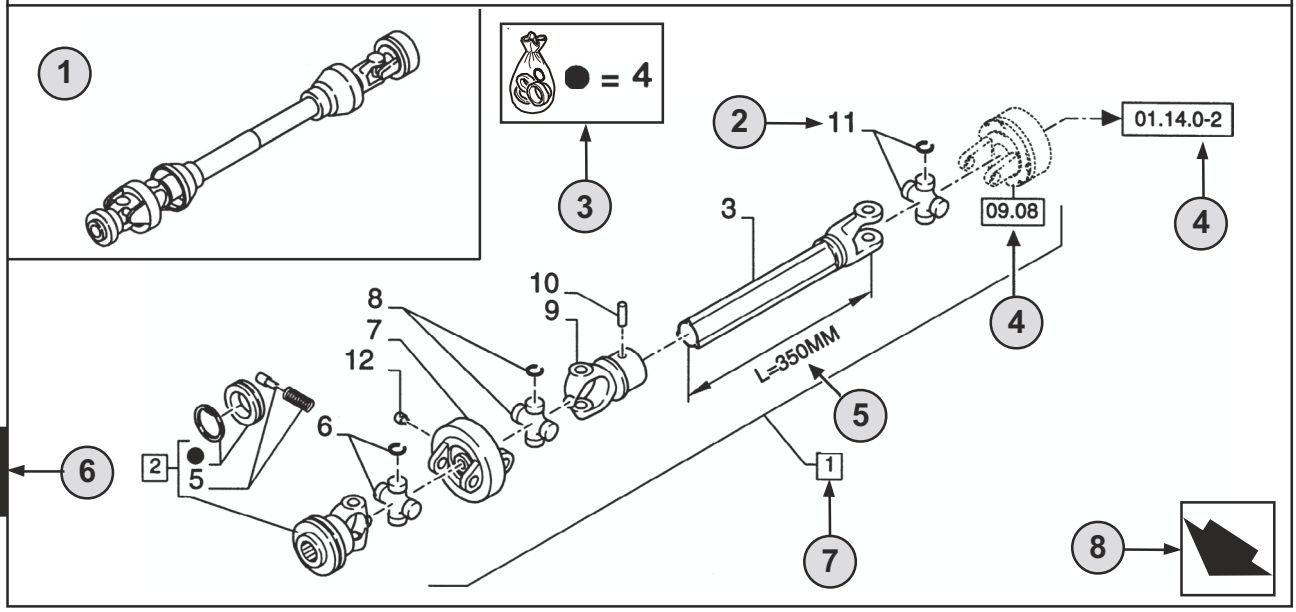

1

9 10

01.01	01	p10	02/03
11	12	13	14

CHASSI - D0200
MAIN FRAME
BASTIDOR
TELAIO
GESTELL
CHASSI

R	N	P.N.	MOD	Q	Descrição	Description	Descripción	L.C.
	A	**86529340**		1	TOMADA DE FORÇA **(2 AO 11)**	SHAFT, PTO	TOMA DE FUERZA	207P
2		**84014007**		1	GARFO **(4,5)**	YOKE	HORQUILLA	085F
3		**NSS**		1	EIXO, **L=350MM**	SHAFT	EJE	016A
4		**84004292**	C0204	1	KIT	KIT	EQUIPO	305C
		[84058743]	D0500	1	KIT	KIT	EQUIPO	305C

15 16 7 2 18 19 20 21 17 22 22 23

(A) SOMENTE BRASIL 24

1

STANDARD 25

26 **MODELOS**

ESPAÑOL

1 **Posición** de la “Figura” en la máquina.

2 Referencia - Figura correspondiente del número de pieza.

3 Piezas suministradas en juegos de reparación por símbolo de referencia.

4 01.14.0-2 Pieza ilustrada en la **Página** o en la **Figura** indicado, o indicaciones por **Variaciones** o **Detalles.** Señala componentes mostrados en detalle en algún lugar del catálogo bajo este número de figura.

5 Especificaciones técnicas relacionadas con la pieza indicada.

6 Número de **Sección**.

7 2 Incluye punto(s) .....

8 Orientación (La flecha indica la parte delantera de la máquina). 

9 Descripción de la figura.

10 Información general de la figura.

11 Código de **Conjunto.**

12 Código de **Secuencia dentro del conjunto.**

13 Número de pieza dentro del código de secuencia.

14 **Fecha** de impresión o puesta al día de la página (mes-año).

15 **Nota -** Relacionada con el Número de Pieza.Hay una clave de símbolos y abreviaciones al final de la página de texto.

16 Piezas que no se suministran en servicio (ver página 42).

17 Descripción ulterior de la pieza para facilitar su identificación. Ver la explicación de los símbolos utilizados en la página 42.

18 No disponible como pieza de servicio.

19 Número de pieza.

20 Modificación.
C 0201 = Pieza válida **HASTA** el cambio **0201**.
D 0300 = Pieza válida **DESDE** el cambio **0300**.
F 0202 = Pieza válida **DESDE el N° de Serie.... al N° de Serie....**

Implementación del cambio. Número de serie a partir del cual comienza el cambio. Los números se indican en la placa de identificación del modelo (ver página 38).
P.e.: **D0300 Serie n° 2503001** significa que las piezas se han instalado **“DESDE”** el número de serie **2503001**.
En consecuencia, las piezas marcadas con **C0201**, fueron montadas **“HASTA”** el número de serie **2501999**.
Ver tabla de códigos en la página 41.

21 **Cantidad** total de las piezas referenciadas en la página.
La cantidad puede ser sustituida por cualquiera de las siguientes indicaciones:
M = suministrada por metros. **AR** = cantidad según sea necesario.

22 **Descripción** de la pieza.

23 **L.C. - Código Léxico** para la identificación de los nombres de piezas (ver página 45).

24 Notas de pié de página.

25 Notas de figura.

26 Número de modelo.

01.01	01	p12	02/03

CHASSI
MAIN FRAME
BASTIDOR
TELAIO
GESTELL
CHASSI

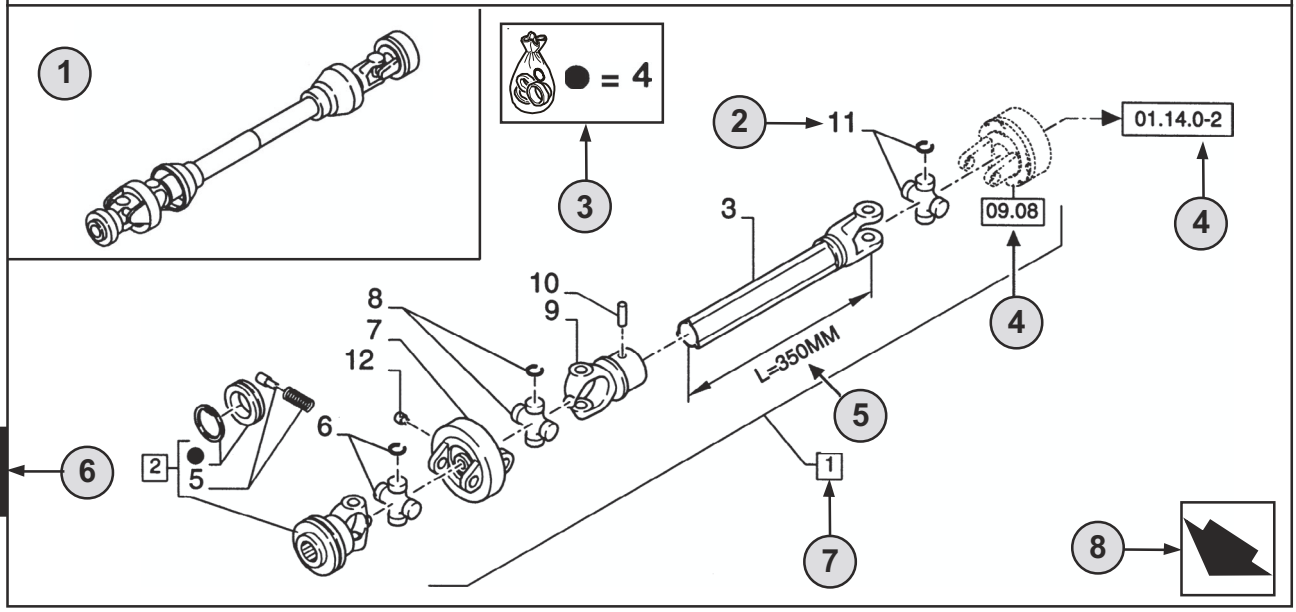

1

9 10

01.01	01	p12	02/03
11	12	13	14

CHASSI - D0200
MAIN FRAME
BASTIDOR
TELAIO
GESTELL
CHASSI

R	N	P.N.	MOD	Q	Descrição	Description	Descripción	L.C.
	A	**86529340**		1	TOMADA DE FORÇA **(2 AO 11)**	SHAFT, PTO	TOMA DE FUERZA	207P
2		**84014007**		1	GARFO **(4,5)**	YOKE	HORQUILLA	085F
3		**NSS**		1	EIXO, **L=350MM**	SHAFT	EJE	016A
4		**84004292**	C0204	1	KIT	KIT	EQUIPO	305C
		[84058743]	D0500	1	KIT	KIT	EQUIPO	305C

15 16 7 2 18 19 20 21 17 22 22 23

(A) SOMENTE BRASIL 24

1

STANDARD 25

26 **MODELOS**

1 **Posizione** della “Figura” sulla macchina.

2 Riferimento del Numero ricambio nella figura.

3 Particolari forniti nei corredi di riparazione per riferimento simbolico.

4 01.14.0-2 Particolare illustrato alla **Pagina** o nella **Figura** indicata, oppure richiamo per **Variazioni** o **Dettagli.** Indica i componenti illustrati in dettaglio in un’altra parte nel catalogo sotto il numero di figura riportato.

5 Dati tecnici relativi al particolare indicato.

6 Numero **Sezione**.

7 2 Comprende il/i pezzo/i .....

8 Orientamento (la freccia indica la parte anteriore della macchina). 

9 Descrizione figura.

10 Informazioni generali sulla figura.

11 Codice **complessivo**.

12 Codice **sequenza** nel complessivo.

13 Numero pagina nel codice sequenza.

14 **Data** di stampa o di aggiornamento della pagina (mese-anno).

15 **Nota** - Si riferisce al numero ricambio. In fondo alla pagina di testo è riportato la legenda dei simboli e delle abbreviazioni.

16 Particolari non soggetti a manutenzione (vedi pag.42).

17 Ulteriore descrizione del particolare per confermare definitivamente l’indentificazione.Fare riferimento a pag.42 per la spiegazione dei simboli utilizzati.

18 Non disponibile come particolare per l’assistenza.

19 Numero ricambio.

20 Modifica.
C 0201 = Particolare valido **FINO alla modifica 0201**.
D 0300 = Particolare valido **A PARTIRE dalla modifica 0300**.
F 0202 = Particolare valido **A PARTIRE dal telaio n. .... fino al telaio n. ....**

Introduzione della modifica. Numero telaio a partire dal quale la modifica è stata adottata.
I numeri sono indicati sulla targhetta di identificazione del modello (vedi pag. 38).
E.s.: **D0300 telaio n. 2503001** significa che il particolare è stato installato **“A PARTIRE DAL”** talaio n. **2503001**. Per cui, i particolari marcati **C0201**, sono stati installati **“FINO AL”** telaio n. **2501999**.
Vedere tabella codici a pag. 41.

21 **Quantità** totale del particolare indicato nella pagina.
La quantità può essere sostituita dalle indicazioni seguenti:
M = fornito a metri. **AR** = quantità come necessario (‘as required’).

22 **Descrizione particolare**.

23 **L.C. - Codice Lessico** per l’identificazione dei nomi dei particolari (vedi pag.45).

24 Riferimenti note a piè di pagina.

25 Note figura**.**

26 Numero modello.

01.01	01	p14	02/03

CHASSI
MAIN FRAME
BASTIDOR
TELAIO
GESTELL
CHASSI

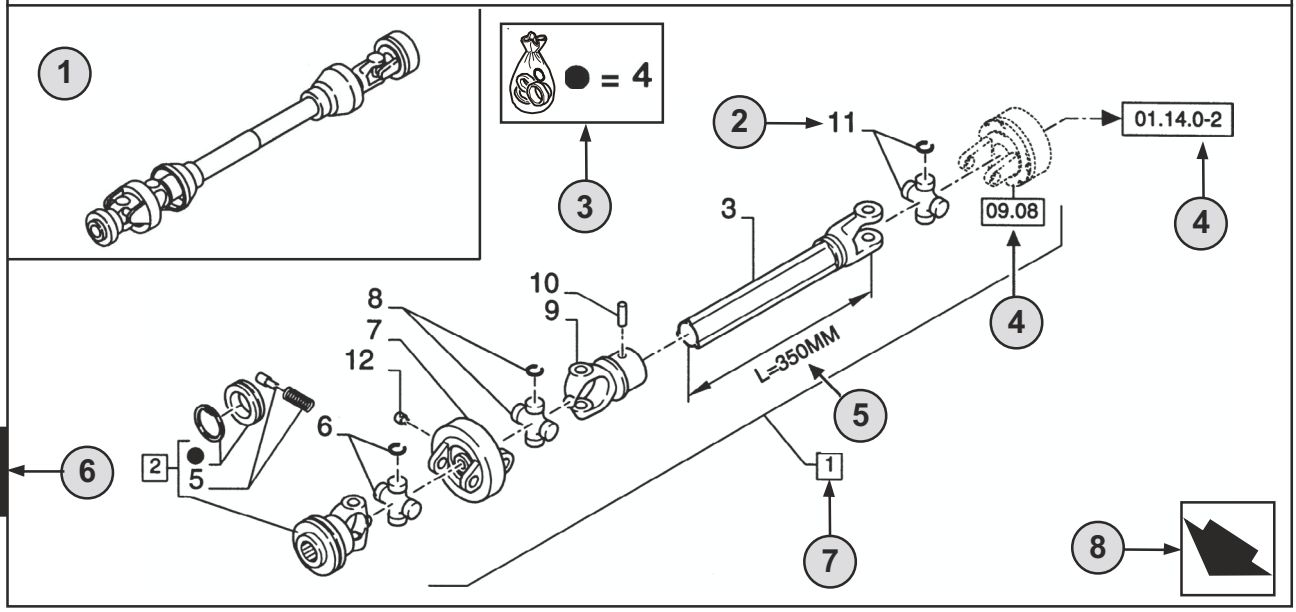

1

9 10

01.01	01	p14	02/03
11	12	13	14

CHASSI - D0200
MAIN FRAME
BASTIDOR
TELAIO
GESTELL
CHASSI

R	N	P.N.	MOD	Q	Descrição	Description	Descripción	L.C.
	A	**86529340**		1	TOMADA DE FORÇA **(2 AO 11)**	SHAFT, PTO	TOMA DE FUERZA	207P
2		**84014007**		1	GARFO **(4,5)**	YOKE	HORQUILLA	085F
3		**NSS**		1	EIXO, **L=350MM**	SHAFT	EJE	016A
4		**84004292**	C0204	1	KIT	KIT	EQUIPO	305C
		[84058743]	D0500	1	KIT	KIT	EQUIPO	305C

15 16 7 2 18 19 20 21 17 22 22 23

(A) SOMENTE BRASIL 24

1

STANDARD 25

26 **MODELOS**

DEUTSCH

1 **Position** der “Abbildung” an der Maschine.

2 Bezug - Abbilding, auf der die Teilnummer aufgeführt ist.

3 Teile, die gemäß der Bezeichnung durch das Symbol in Reparatursätzen geliefert werden.

4 01.14.0-2 Teil, das auf der angegebenen **Seite** oder **Abbildung** veranschaulicht ist, oder Verweis auf **Änderungen** oder **dataillierte Angaben**. Angabe von Teilen, die an anderer Stelle innerhalb des Katalogs unter der dargestellten Abbildungsnummer detailliert dargestellt sind.

5 Technische Daten zum angegebenen Teil.

6 **Abschnitts**nummer.

7 2 I Umfaßt Teil(e) .....

8 Orientierung (der Pfeil weist zur Vorderseite der Maschine). 

9 Beschreibung der Abbildung.

10 Allgemeine Information zur Abbildung.

11 **Montage**code.

12 **Folge**code innerhalb der Baugruppe.

13 Seitennummer innerhalb des Folgecodes.

14 **Datum** des Drucks oder der Aktualisierung der Seite (Monat-Jahr).

15 **Hinweis -** Bezieht sich auf die Teilnummer. Ein Schlüssel für die Symbole und Abkürzungen befindet sich unten auf der Textseite.

16 Kein gewartetes Teil. (Siehe Seite 42).

17 Weitere Beschreibung des Teils; dient als Hilfe bei der Identifizierung des Teils. Beachten Sie Seite 42 mit einer Erläuterung der verwendeten Symbole.

18 Nicht als Service-Teil erhältlich

19 Teilnummer.

20 Modifizierung.
C 0201 = Teil gültig **BIS** zur Änderung **0201**.
D 0300 = Teil gültig **AB** der Änderung **0300**.
F 0202 = Teil gültig **AB Serien-N.... bis Serien-N....**

Einführung der Änderung. Serienummer, von der an die Änderung erfolgte. Die Nummern sind auf dem Typenschild des Modells aufgeführt (siehe Seite 38).
Beispiel: **D0300 Serienummer 2503001** bedeutet, daß das Teil “**AB**” Serienummer **2503001** montiert wurde. Folglich wurden Teile, die mit **C0201** markiert sind, **“BIS”** Serienummer **2501999** montiert.Es sei auf die Code-Tabelle auf Seite 41 verwiesen.

21 **Gesamtzahl** des auf der Seite Aufgeführten Teils.Diese Zahl kann durch die folgenden Angaben ersetzt sein:
M = Lieferung in Meter. **AR** = Anzahl nach Bedarf.

22 **Beschreibung** von Teilen.

23 **L.C. - Lexikon-Code** zur Identifizierung von Bezeichnungen für Teile (siehe Seite 45).

24 Fußnotenverzeichnisse.

25 Hinweise zu Abbildungen.

26 Modellnummer.

01.01	01	p16	02/03

CHASSI
MAIN FRAME
BASTIDOR
TELAIO
GESTELL
CHASSI

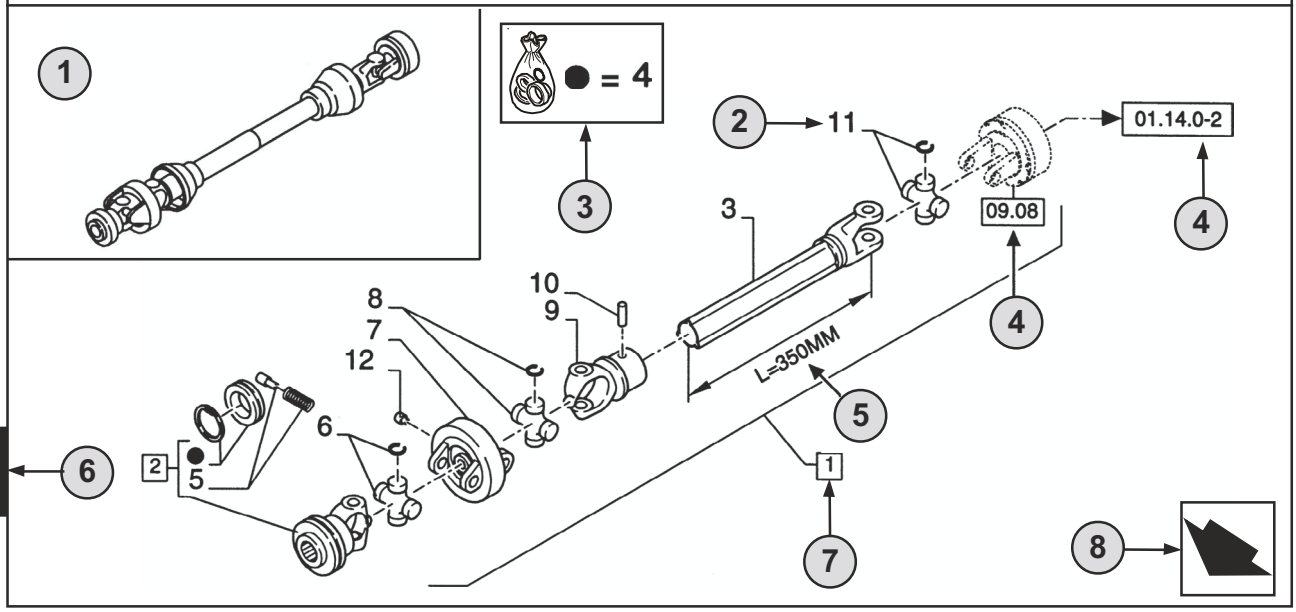

1

9 10

01.01	01	p16	02/03

11 12 13 14

CHASSI - D0200
MAIN FRAME
BASTIDOR
TELAIO
GESTELL
CHASSI

R	N	P.N.	MOD	Q	Descrição	Description	Descripción	L.C.
	A	**86529340**		1	TOMADA DE FORÇA **(2 AO 11)**	SHAFT, PTO	TOMA DE FUERZA	207P
2		**84014007**		1	GARFO **(4,5)**	YOKE	HORQUILLA	085F
3		**NSS**		1	EIXO, **L=350MM**	SHAFT	EJE	016A
4		**84004292**	C0204	1	KIT	KIT	EQUIPO	305C
		[84058743]	D0500	1	KIT	KIT	EQUIPO	305C

15 16 7

2 18 19 20 21 17 22 22 23

(A) SOMENTE BRASIL 24

1

STANDARD 25

26 **MODELOS**

1 Position du “Chiffre” sur la machine.

2 Référence-Chiffre de terminaison de la référence**.**

3 Pièces détachées approvisionnées en kit de réparation par symbole de référence.

4 01.14.0-2 Pièce illustrée dans la **page** ou sur la **figure** indiquée, pour des **variations** ou des **détails**. Montre les composants détaillés par ailleurs dans le catalogue sous le numéro de la figure.

5 Spécifications techniques relatif à la pièce indiquée.

6 Numérotation des sections.

7 2 ITEM inclus .....

8 Orientation (la Flèche indique l’avant de la machine). 

9 Description de la figure.

10 Information générale de la figure.

11 Code d’assemblage.

12 Code de séquence sans l’assemblage.

13 Numéro de page sans le code de séquence.

14 Date d’impression ou mise à jour de la page (mois-année).

15 Note-relatif à la référence. Ceci est la clé des symboles et abréviations en bas de la page suivante.

16 Pièces non servies (voir page 42).

17 Description supplémentaire de la pièces pour aider à la confirmation de l’identification.
Se reporter à la page 42 pour l’explication des symboles utilisés.

18 Ne concerne pas le service pièces détachées.

19 Référence.

20 Modification.
C 0201 = Pièce valable **JUSQU’A 0201** Changement.
D 0300 = Pièce valable **A PARTIR DE 0300** Changement.
F 0202 = Pièce valable **A PARTIR DU** N° de série **.... Jusqu’au** N° de série**....**

Mise en oeuvre de changement.Les numéro de série qui démarrent.Les numéros sont indiqués sur la plaque d’identification du modèles (voir page 38).
Ex.: **D0300** N° de série **2503001** indique que la pièce a été installée à partir du N° de série **2503001**.
En conséquence la pièce marquée **C0201** serait installée après le N° de série **2501999**.
Voir la table - codes page 41.

21 Total du nombre de pièces référencées dans la page.
La quantité peut être remplacée par l’indications suivante:
M = Vendu au mètres. **AR** = Quantité à la demande.

22 Description de la pièce.

23 L.C. - Code Lexique ou Glossaire pour l’identification du nom des pièces (voir page 45).

24 Référence en bas de page.

25 Annotation des chiffres.

26 Numéro du modèle.

TABLE OF CONTENTS

00.100.01		INITIAL STOCKING LIST (ISL) (L225,L230)
05.100.01		FILTERS AND CAPACITIES (L223-L230)
10.000.01	01	PICTORIAL INDEX - ENGINE
10.000.01	02	PICTORIAL INDEX - ENGINE
10.001.01		ENGINE ASSY (504387947)
10.001.02		CYLINDER BLOCK & RELATED PARTS (504181441)
10.012.01		ENGINE MOUNTING (L223-C238)
10.012.01	02	REMOTE DIPSTICK (L223-C238)
10.012.01	03	REMOTE OIL DRAIN (L223-C238)
10.012.01	04	REMOTE ENGINE OIL (L223-C238)
10.012.04		HOOKS - ENGINE (504154713)
10.101.01		CYLINDER HEAD & RELATED PARTS (504385845)
10.101.02	01	ROCKER SHAFT (504335547)
10.101.02	02	CYLINDER HEAD COVERS (504191694)
10.101.03		ENGINE BREATHERS (504245734)
10.102.01		OIL SUMP & RELATED PARTS (504179441)
10.102.02		ENGINE BLOCK FRONT COVER (5801361473)
10.102.03		FLYWHEEL CASE (504380467)
10.103.01		CRANKSHAFT (504178873)
10.103.02		ENGINE, FLYWHEEL (504221728)
10.103.03		BELT PULLEY DRIVE & COVER (504388092)
10.103.04		PULLEY - CRANKSHAFT (504388089)
10.105.01		PISTON - ENGINE (504254748)
10.105.02		CONNECTING ROD (504245120)
10.106.01		CAMSHAFT - TIMING CONTROL (504228067)
10.202.01		AIR CLEANER ASSY NA 8IN (L223-L230,C232,C238)
10.206.02		FILTER ENGINE OIL (504245481 - 504332922)
10.216.01		FUEL SYSTEM (L223-L230,C232,C238)
10.218.01		INJECTION EQUIPMENT - PIPING (504207272)
10.218.01	02	INJECTION EQUIPMENT - PIPING (504207949)
10.218.01	03	INJECTION EQUIPMENT - PIPING (504207956)
10.218.02	02	INJECTION EQUIPMENT - INJECTOR (504385855)
10.220.01		THROTTLE HAND FOOT MECHANICAL (L223-L230)
10.220.02		THROTTLE HAND FOOT EH (L223-L230,C232,C238)
10.220.03		THROTTLE HAND MECHANICAL (L223-L230)
10.240.01	01	INJECTION PUMP (504379786)
10.250.02		TURBOCHARGING (504183274)
10.254.01		BLOCK HEATER NA (L223-C238)
10.254.02		BLOCK HEATER EU (L223-C238)
10.254.03		ENGINE EXHAUST LRG V (L223-L230,C232,C238)
10.254.04		INTAKE MANIFOLD (504385851 - 504385860)
10.254.05		EXHAUST MANIFOLD (504183273)
10.304.01	01	PUMP, ENGINE OIL & RELATED PARTS (504154680)
10.304.02		ENGINE OIL DIPSTICK (504183276)
10.304.03		OIL PUMP PIPING (504154691)
10.400.01		COOLING COMPONENTS (L223-L230,C232,C238)
10.402.01		TEMPERATURE CONTROL (THERMOSTAT) - (504216813)
10.402.02		WATER PUMP & RELATED PARTS (504154685)
10.402.03		PIPING - ENGINE COOLING SYSTEM (504191839)
10.406.02		MODULE, RADIATOR AND COOLING LG (L223-L230,C232,C238)
10.408.01		HEAT EXCHANGER - ENGINE - EGR GROUP (504385853)
10.408.02		HEAT EXCHANGER (504154694)
29.200.01		LEVEL 100 NH CONTROL HANDLES (L213-L230)
29.200.02		LEVEL 200 NH CONTROL HANDLES (L213-L230)
29.200.03		LEVEL 250 NH CONTROL HANDLES (ALL NH)

TABLE OF CONTENTS

29.200.04	01	LEVEL 300 NH CONTROL HANDLES (L218-L230)
29.200.04	02	LEVEL 300 NH CONTROL HANDLES, NO 2ND AUX (L218-L230)
29.200.05	01	LEVEL 350 NH CONTROL HANDLES (L218-C238)
29.200.05	02	LEVEL 350 NH CONTROL HANDLES, NO 2ND AUX (L218-C238)
29.212.01		TRAVEL SPEED 1SPD (L223-L230)
29.212.04	01	MOTOR, REXROTH DRIVE MOTOR 2SPD (L223-L230)
29.212.04	01	MOTOR, REXROTH DRIVE MOTOR 1SPD (L223-L230)
29.212.04	02	MOTOR, REXROTH DRIVE MOTOR 2SPD (L223-L230)
29.212.04	02	MOTOR, REXROTH DRIVE MOTOR 1SPD (L223-L230)
29.212.05	01	VALVE, BRAKE (L213-L230)
29.212.05	02	VALVE, BRAKE 2SPD (L220-L230)
29.212.05	04	VALVE, BRAKE EH 2SPD (L218-L230)
29.212.06	01	PUMP, HYDROSTATIC TANDEM 46CC MDC FRONT (L223,L225)
29.212.06	02	PUMP, HYDROSTATIC TANDEM 46CC MDC FRONT (L223,L225)
29.212.06	03	PUMP, HYDROSTATIC TANDEM 46CC MDC REAR (L223,L225)
29.212.06	04	PUMP, HYDROSTATIC TANDEM 46CC MDC REAR (L223,L225)
29.212.06	05	PUMP, HYDROSTATIC TANDEM 46CC MDC REAR (L223,L225)
29.212.06	06	PUMP, HYDROSTATIC TANDEM 46CC MDC REAR (L223,L225)
29.212.07		PUMP, HYDROSTATIC EH 46CC A20VG ET (C227-C238,L223-L230)
35.100.01		CHASSIS HYDRAULICS (L223-230,C232,238)
35.101.02		SELF LEVELING - NONE MED LG (L218-C238)
35.102.01		RIDE CONTROL (L218-C238)
35.102.02		RIDE CONTROL - NONE (L218-C238)
35.204.01		MANUAL COUPLER, GRAY (L218-C238)
35.204.02	01	HYDRAULIC COUPLER (L223-L230,C232,C238)
35.204.02	02	HYDRAULIC COUPLER - BASIC (L218-C238)
35.204.02	03	HYDRAULIC COUPLER CHASSIS PLUMBING - BASIC (L218-C238)
35.220.01	01	AUX HYD, STD FLOW (L223-L230,C232,C238)
35.220.01	01	AUX HYD, STD C.U.P. (L223-L230,C232,C238)
35.220.01	02	AUX HYD, STD, GEAR PUMP (L223-L230,C232,C238)
35.220.01	03	AUX HYD, STD CHASSIS PLUMBING (L223-L230,C232,C238)
35.220.01	04	AUX HYD, STD ARM PLUMBING (L223-L230,C232,C238)
35.220.01	04	AUX HYD, STD C.U.P. ARM PLUMBING (L223-L230,C232,C238)
35.220.01	05	AUX HYD, STD C.U.P. CASE DRAIN CHASSIS PLUMBING (L223-L230,C232,C238)
35.220.02	01	AUX HYD, HIGH FLOW (L223-L230,C232,C238)
35.220.02	02	AUX HYD, HIGH FLOW GEAR PUMP (L223-L230,C232,C238)
35.220.02	03	AUX HYD, HIGH FLOW CHASSIS PLUMBING (L223-L230,C232,C238)
35.220.02	04	AUX HYD, HIGH FLOW ARM PLUMBING (L223-L230,C232,C238)
35.220.02	05	AUX HYD, ARM PLUMBING BASIC (L223-L230,C232,C238)
35.359.01	01	PUMP, EH AND CONTROL VALVE (L223-L230)
35.359.01	02	PUMP, EH AND CONTROL VALVE (L223-L230)
35.359.02	01	PUMP, MECHANICAL (L223-L230)
35.359.02	02	PUMP, MECHANICAL (L223-L230)
35.359.03		CONTROL VALVE, ELECTRO-HYDRAULIC W/ HARNESS (ALL NH)
35.359.04		CONTROL VALVE, MECHANICAL HAND/ELECTRO-HYDRAULIC AUX (L213-L230)
35.359.05		CONTROL VALVE, EH AUX MECH FOOT CONTROL (L213-L230)
35.701.01		LOADER HYDRAULICS (L223,L225,L230,C232,C238)
35.701.02	01	LOADER VALVE PLUMBING (L223,L225,L230,C232,C238)
35.701.02	02	LOADER VALVE PLUMBING (L223,L225,L230,C232,C238)
35.701.03		SUPPLY PLUMBING (LOADER VALVE) (L223-L230,C232,C238)
35.701.04		RETURN PLUMBING (LOADER VALVE) (L223-L230,C232,C238)
35.701.05		2SPD PLUMBING (L223,L225,L230)
35.701.06		BRAKE PLUMBING (L223,L225,L230)
35.701.06	02	BRAKE PLUMBING (L213-L230)
35.730.01		HYDRAULIC CYLINDER, LH LIFT (L223-L230,C232,C238)

TABLE OF CONTENTS

35.730.01		HYDRAULIC CYLINDER, RH LIFT (L223-L230,C232,C238)
35.730.02		BUCKET CYLINDER (L223-L230,C232,C238)
35.750.01		TANK, HYDRAULIC (L223,L225,L230,C232,C238)
37.140.01		COUNTERWEIGHT (L223,L225,C232,C238)
39.100.01		CHASSIS HOODS AND COVERS (L223,L225,L230)
39.105.02		BOOM (L223-L230,C232,C238)
39.105.03		COUPLER, BASIC GRAY (L218,L220,L223,L225,L230,C232,C238)
39.105.04		BOOM LOCK (L223-L230,C232,C238)
44.106.01		POWER TRAIN (L223,L225,L230)
44.106.02		AXLE ASSY, HD (L223-L230)
44.511.01		RODAS
44.511.01		RODAS
50.200.01		OPEN CAB, NO HEAT OR HVAC (L223-L230,C232,C238)
50.200.02	01	HVAC, MEDIUM FRAME F5C (L223,L225)
50.200.03		HVAC, LARGE FRAME (L223-L230,C232,C238)
50.200.03	03	HVAC, LARGE FRAME F5C (L223-C238)
50.200.03	04	HEATER PLUMBING BASIC (L223-L230,C232,C238)
50.200.03	05	AC PLUMBING BASIC (L223-L230,C232,C238)
50.200.04		HEATER, LARGE FRAME (L223-L230,C232,C238)
50.200.05		HEATER (ALL NH)
50.200.06		HEATER W/AC (L218-C238)
55.100.01		CHASSIS OPTIONS HARNESS, MECH LG (L223-L230)
55.100.01		ELECTRICAL MECH, LG OPEN CAB (L223-L230)
55.100.02		ELECTRICAL MECH, LG (L223-L230)
55.100.02	01	ELECTRICAL ELECTRO-HYDRAULIC LG (L223-L230,C232,C238)
55.100.02	02	ELECTRICAL ELECTRO-HYDRAULIC OPEN CAB LG (L223-L230,C232,C238)
55.100.05		CONNECTIONS CABLE FOR ENGINE INJECTION - PLUG GLOW (504385861 - 504385863)
55.100.07	01	BATTERY DISCONNECT LG (L223-L230,C232,C238)
55.100.07	02	NO BATTERY DISCONNECT LG (L223-L230,C232,C238)
55.100.08		MULTIFUNCTION ELECTRICAL (L218-L230,C232,C238)
55.100.09		NO MULTIFUNCTION ELECTRICAL (ALL NH)
55.100.10		ELECTRICAL ASSEMBLY SOCKET NA (ALL NH)
55.100.10		ELECTRICAL ASSEMBLY SOCKET EU (ALL NH)
55.101.01		ENGINE ELECTRICAL LG VERT (L223-L230,C232,C238)
55.101.02		BATTERY RETENTION MED (ALL NH)
55.301.02		ENGINE, ALTERNATOR MOUNTING (504388098)
55.414.01	02	DIAGNOSTIC SENSOR (504308864)
55.418.01		INSTRUMENTS AND ELECTRICAL VERT NH (L223-L230,C232,C238)
55.418.01	01	COMMON INSTRUMENTS AND ELEC (ALL NH)
55.512.01		IGNITION AND DISPLAY, KEYED/KEYLESS NH (ALL NH)
55.514.01		EU ROAD LIGHTS LG (L223-L230,C232,C238)
55.514.02		NO ROAD LIGHTS OR TURN SIGNAL (L223-L230,C232,C238)
55.514.03		TURN SIGNAL LG (L223,L225,L230,C232,C238)
55.514.04		LIGHT W/TURN SIGNAL (ALL NH)
55.514.06		LIGHT W/O TURN SIGNAL (ALL NH)
55.514.07		LAMP WORK REAR ASSEMBLY (ALL NH)
55.514.10		LIGHT W/TURN SIGNAL (ALL NH)
82.100.02		BUCKET, BOLT ON CUTTING EDGE (B.O.C.E.) (ALL NH)
82.100.03		PALLET FORK 48 TINE (ALL NH)
82.100.04	02	SPILL GUARD 72 GRAY (L218-C227)
82.100.04	03	SPILL GUARD 78 GRAY (L218-C238)
82.100.04	04	SPILL GUARD 84 GRAY (L223-L230,C232,C238)
82.100.15	04	BALDES - CARREGADOR
82.100.15	05	BALDES - CARREGADOR

TABLE OF CONTENTS

82.100.15	06	BALDES - CARREGADOR
82.100.15	07	BALDES - CARREGADOR
82.100.15	08	BUCKETS - LOADER, HEAVY DUTY DIRT
88.010.05		DIA KIT, ASPIRATOR (L223-L230,C232,C238)
88.010.08		DIA KIT, BLOCK HEATER 120V USA (L223-C238)
88.010.09		DIA KIT, BLOCK HEATER 220V - ROW (L223-C238)
88.035.04		DIA KIT, SELF-LEVEL 48 (L220-L230,C232,C238)
88.035.08		DIA KIT, RIDE CONTROL NH MED/LG (L220-L230,C227,C232,C238)
88.035.10		DIA KIT, HYDRAULIC COUPLER VERT (L218-L230,C232,C238)
88.035.13		DIA KIT, HIGH FLOW AUX - LG VERT (L223-L230,C232,C238)
88.035.18		DIA KIT, 2ND FRONT HYD AUX - LG VERT (L223-L230,C232,C238)
88.035.23		DIA KIT, LG FRM FOOT CONTROLS, MANUAL (L223-L230)
88.035.26		DIA KIT, LG FRM HAND CONTROLS SERVO (L223-L230)
88.037.03		DIA KIT, COUNTERWEIGHT LFW NH (L223-L230)
88.050.02		DIA KIT, LRG FRM F5C HVAC (L223-L230,C232,C238)
88.050.12		DIA KIT, F5C HEAT (L223-C238)
88.055.01		DIA KIT, BEACON (ALL NH)
88.055.02		DIA KIT, STROBE (ALL NH)
88.055.05		DIA KIT, TURN SIGNAL LG (L223-L230,C232,C238)
88.055.09		DIA KIT, MULTI-FUCTION ELEC MECH VERT (L223-L230,C232,C238)
88.055.10		DIA KIT, MULTI-FUNCTION ELEC EH VERT (L223-L230,C232,C238)
88.055.18		DIA KIT, EU ROAD LIGHTS LG NH (L223-L230,C232,C238)
88.055.24		DIA KIT, BATTERY DISCONNECT - LG (L223-L230,C232,C238)
88.055.28		DIA KIT, MECH CHASS OPT HARNESS - LARGE (L223-L230)
88.055.29		DIA KIT, SIDE LAMP (ALL NH)
88.082.03		DIA KIT, 72IN SPILL GUARD (L218-C227)
88.082.04		DIA KIT, 78IN SPILL GUARD (L218-C238)
88.082.05		DIA KIT, 84IN SPILL GUARD GRAY (L223-L230,C232,C238)
88.082.08		DIA KIT, 72IN B.O.C.E. (L213-C227)
88.082.09		DIA KIT, 78IN B.O.C.E. (L218-C238)
88.082.10		DIA KIT, 84IN B.O.C.E. (L218-C238)
88.082.11		DIA KIT, BUCKET TEETH (ALL NH)
88.082.12		DIA KIT, BUCKETS - FIELD (ALL NH)
88.088.05		DIA KIT, SINGLE POINT LIFT HOOK (L223-L230,C232,C238)
88.088.06		DIA KIT, RADIO (ALL NH)
88.088.08		DIA KIT, 4 POINT LIFT HOOK (L223-L230,C232,C238)
88.088.09		DIA KIT, FOPS LEVEL 2 MODS (ALL NH)
88.088.10		DIA KIT, MIRROR (ALL NH)
88.088.14		DIA KIT, DRAW BAR LG GRAY (L223-L230,C232,C238)
88.088.15		DIA KIT, FIRE EXTINGUISHER (ALL NH)
88.090.01		DIA KIT, DEMO REAR DOOR (ALL NH)
88.090.02		DIA KIT, GLASS FRONT DOOR (ALL NH)
88.090.03		DIA KIT, DEMO FRONT DOOR (ALL NH)
88.090.04		DIA KIT, CAB SIDE WINDOWS (ALL NH)
88.090.05		DIA KIT, REAR EXTERIOR ACCESS WINDOW (ALL NH)
88.090.07		DIA KIT, 3IN LAP BELT (ALL NH)
88.090.08		DIA KIT, REMOVABLE TOP WINDOW (ALL NH)
88.090.09		DIA KIT, RH, SIDE SCREEN (ALL NH)
88.090.10		DIA KIT, LH, SIDE SCREEN (ALL NH)
88.090.11		DIA KIT, ARMRESTS (ALL NH)
88.090.13		DIA KIT, HANDLE 300/400 (ALL NH)
88.090.15		DIA KIT, HANDLE 350/450 (ALL NH)
88.100.01		ENGINE ACCESSORIES EU/OPEN EU (L223,L225,C232)
88.100.01		ENGINE ACCESSORIES NA (L223-L230,C232,C238)
88.120.01		SEAL PACKAGE, FOAM (ALL NH)

TABLE OF CONTENTS

88.120.02		FUSE COVER, MED-LG CHASSIS (L218-C238)
90.100.01		HOODS AND COVERS (L223,L225,L230)
90.112.01		HAND CONTROLS, LG FRAME SERVO (L223-L230)
90.112.01		FOOT CONTROLS, LG FRM SERVO (L223,L225,L230)
90.112.01	01	FLOORPLATE, NO PEDAL (ALL NH)
90.112.01	01	FLOORPLATE, PEDAL (L213-L230)
90.112.01	02	HAND CONTROLS, INTERLINK (L213-L230)
90.112.01	03	HANDLE MOUNTING, MD LG FRM FC (L218-L230)
90.112.01	04	HAND CONTROLS, HANDLE LH (L213-L230)
90.112.01	05	HAND CONTROLS, HANDLE RH (L213-L230)
90.112.01	06	DAMPENING CONTROL (L213-L230)
90.112.01	06	DAMPENING & CENTERING CONTROL (L223-L230)
90.112.01	07	SERVO PUMP CENTERING (L223, L225, L230)
90.112.01	08	PEDAL MOUNTING (L213 - L230)
90.112.02		ELEC-HYDRAULIC CONTROLS MD-LG FRM (L218-C238)
90.112.02	02	HANDLE MOUNTING EH (L218-C238)
90.112.02	03	HANDLE, ELECTRONIC CONTROL NH (ALL NH)
90.116.01		LOADER STOP 63MM (L218-L230)
90.116.01		LOADER STOP 40MM (L218-L230,C232,C238)
90.120.01		SEAT, NON SUSPENSION (ALL NH)
90.120.02		SEAT, SUSPENSION (ALL NH)
90.120.03		SEAT, AIR SUSPENSION (ALL NH)
90.120.04	01	SEAT BELT, 2 PT RETRACTOR 2 IN WEB (ALL NH)
90.120.04	02	SEAT BELT, 3 PT (ALL NH)
90.150.01	01	CAB NH (L218-C238)
90.150.01	02	CAB NH (L218-C238)
90.150.01	03	CAB, GAS STRUT ASSY (ALL NH)
90.150.02		CAB SEALING (ALL NH)
90.150.03		FLOOR MAT, MECHANICAL HAND CONTROL (ALL NH)
90.150.04		FLOOR MAT, MECHANICAL FOOT CONTROLS (L213-L230)
90.150.05		FLOOR MAT, EH CONTROLS (L213-L230)
90.154.00		FRONT DOOR, GLASS (ALL NH)
90.154.01	01	DOOR ASSY, FRONT (ALL NH)
90.154.01	02	DOOR ASSY, FRONT (ALL NH)
90.154.01	03	NO FRONT DOOR (ALL NH)
90.154.01	04	DOOR ASSY, FRONT DEMO (ALL NH)
90.154.01	05	DOOR ASSY, FRONT DEMO (ALL NH)
90.154.01	06	FRONT DEMO, DOOR (ALL NH)
90.154.02		SIDE WINDOW ASSY (ALL NH)
90.154.03	02	DOOR ASSY, REAR NH MED LG (L218-C238)
90.154.04		REAR WINDOW NA (ALL NH)
90.154.04		REAR WINDOW EU (ALL NH)
90.154.05	01	WASHER BOTTLE, FRONT (ALL NH)
90.154.05	02	WASHER BOTTLE, REAR (ALL NH)
90.154.05	03	WASHER BOTTLE, FRONT & REAR (ALL NH)
90.160.01	01	INTERIOR TRIM NH (ALL NH)
90.160.01	02	INTERIOR TRIM NH (ALL NH)
90.160.01	03	CAB SEALING (ALL NH)
90.160.02		SEAL PACKAGE (L218-C238)
90.160.03	01	CAB HEADLINER, NO RADIO (ALL NH)
90.160.03	02	CAB HEADLINER, WITH RADIO (ALL NH)
90.180.01	01	DECALS (L225)
90.180.01	02	DECALS - WARNING (ALL NH)
90.180.01	03	DECALS (ALL NH)
90.180.01	04	DECALS (L225)

SECTION INDEX
00 - Manutenção

00.100.01 INITIAL STOCKING LIST (ISL) (L225,L230)

00.100.01		p1	08/11

INITIAL STOCKING LIST (ISL) (L225,L230)
INITIAL STOCKING LIST (ISL) (L225,L230)
INITIAL STOCKING LIST (ISL) (L225,L230)
INITIAL STOCKING LIST (ISL) (L225,L230)

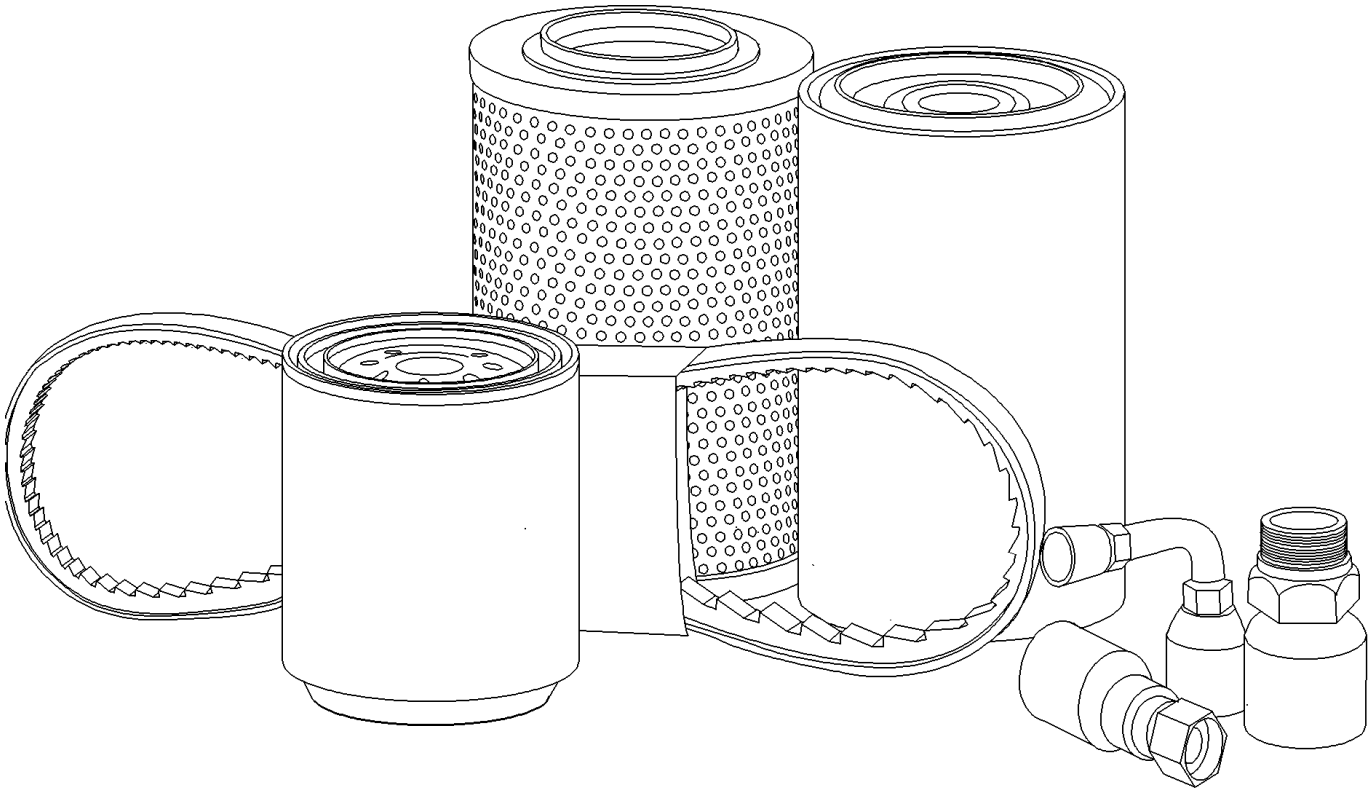

INITIAL STOCKING LIST (ISL) (L225,L230)
INITIAL STOCKING LIST (ISL) (L225,L230)
INITIAL STOCKING LIST (ISL) (L225,L230)
INITIAL STOCKING LIST (ISL) (L225,L230)

R	N	P.N.	MOD	Q	Denominação Description	Description Bezeichnung	Denominacion Beskrivelse	Descrizione Beschrijving	L.C.
		{LIST A}			Parts required for Preventative Maintenance				
1		**87679494**		1	FILTRO DE ÓLEO DO MOTOR, F5C Engine				
						ENGINE OIL FILTER	FILTRO DE ACEITE DE M	FILTRO OLIO MOTORE	067F
					FILTRE A HUILE MOTEU	MOTORÖLFILTER	MOTOROLIEFILTER	MOTOROLIEFILTER	
2		**84278070**		1	ELEMENTO, Hyd Filter	ELEMENT	ELEMENTO	ELEMENTO	020E
					ELEMENT	ELEMENT	ELEMENT	ELEMENT	
3		**84299977**		1	ELEMENTO, Fuel Filter - Main (Door)				
						ELEMENT	ELEMENTO	ELEMENTO	020E
					ELEMENT	ELEMENT	ELEMENT	ELEMENT	
4		**87548612**		1	FILTRO DE COMBUSTÍVEL, Inline F5C				
						FUEL FILTER	FILTRO DE COMBUSTIBI	FILTRO CARBURANTE	064F
					FILTRE A CARBURANT	KRAFTSTOFFFILTER	BRÆNDSTOFFILTER	BRANDSTOFFILTER	
5		**84217229**		1	FILTRO DE AR, Primary F5C				
						AIR FILTER	FILTRO DE AIRE	FILTRO ARIA	066F
					FILTRE A AIR	LUFTFILTER	LUFTFILTER	LUCHTFILTER	
6		**87682999**		1	FILTRO DE AR, Secondary F5C				
						AIR FILTER	FILTRO DE AIRE	FILTRO ARIA	066F
					FILTRE A AIR	LUFTFILTER	LUFTFILTER	LUCHTFILTER	
7		**84331239**		1	CORREIA, V-ribbed, F5C, 296FC, Standard Flow				
						BELT	CORREA	CINGHIA	174C
					COURROIE	RIEMEN	REM	RIEM	
8		**87621132**		1	CORREIA V, 28.48 mm W x 1475.00 mm L, 8 Ribs, Fan, F5C, High Flow				
						V-BELT	CORREA TRAPEZOIDAL	CINGHIA, TRAPEZ	Z087
					COURROIE TRAPEZOID.	KEILRIEMEN	V-BELT	V-BELT	
9		**84317961**		1	CORREIA, A/C F5C	BELT	CORREA	CINGHIA	174C
					COURROIE	RIEMEN	REM	RIEM	
		{LIST B}			Parts required for Preventative Maintenance and Basic Repair				
11		**9712608**		1	EMISSOR DE TEMPERATURA, Water F5C				
						TEMPERATURE SENDEF	EMISOR DE TEMPERATU	TRASMETT. TEMPERATI	Z366
					TRANSMETTEUR TEMPE	TEMPERATURGEBER	TEMPERATURSENDER	TEMPERATUURSENSOR	
12		**2856350**		1	SENSOR, Oil	SENSOR	SENSOR	SENSORE	608S
					CAPTEUR	SENSOR	FØLER	SENSOR	
13		**504245257**		1	SENSOR, Air	SENSOR	SENSOR	SENSORE	608S
					CAPTEUR	SENSOR	FØLER	SENSOR	
14		**2852889**		1	INTERRUPTOR DE PRESSÃO, Oil				
						PRESSURE SWITCH	INTERRUPTOR DE PRES	PRESSOSTATO	079I
					PRESSOSTAT	DRUCKSCHALTER	KONTAKT, TRYK	DRUKSCHAKELAAR	
15		**SBA185246060**		1	TRANSMISSOR, Oil Pressure				
						SENDER UNIT	UNIDAD EMISORA	TRASMETTITORE	160T
					ENS. TRANSMETTEUR	SIGNALGEBER	SENDER	SENSOREENHEID	
16		**87668736**		1	INTERRUPTOR, AuxProportional Hyd handle (mechanical)				
						SWITCH	INTERRUPTOR	INTERRUTTORE	075I
					CONTACTEUR	SCHALTER	KONTAKT	SCHAKELAAR	

INITIAL STOCKING LIST (ISL) (L225,L230)
INITIAL STOCKING LIST (ISL) (L225,L230)
INITIAL STOCKING LIST (ISL) (L225,L230)
INITIAL STOCKING LIST (ISL) (L225,L230)

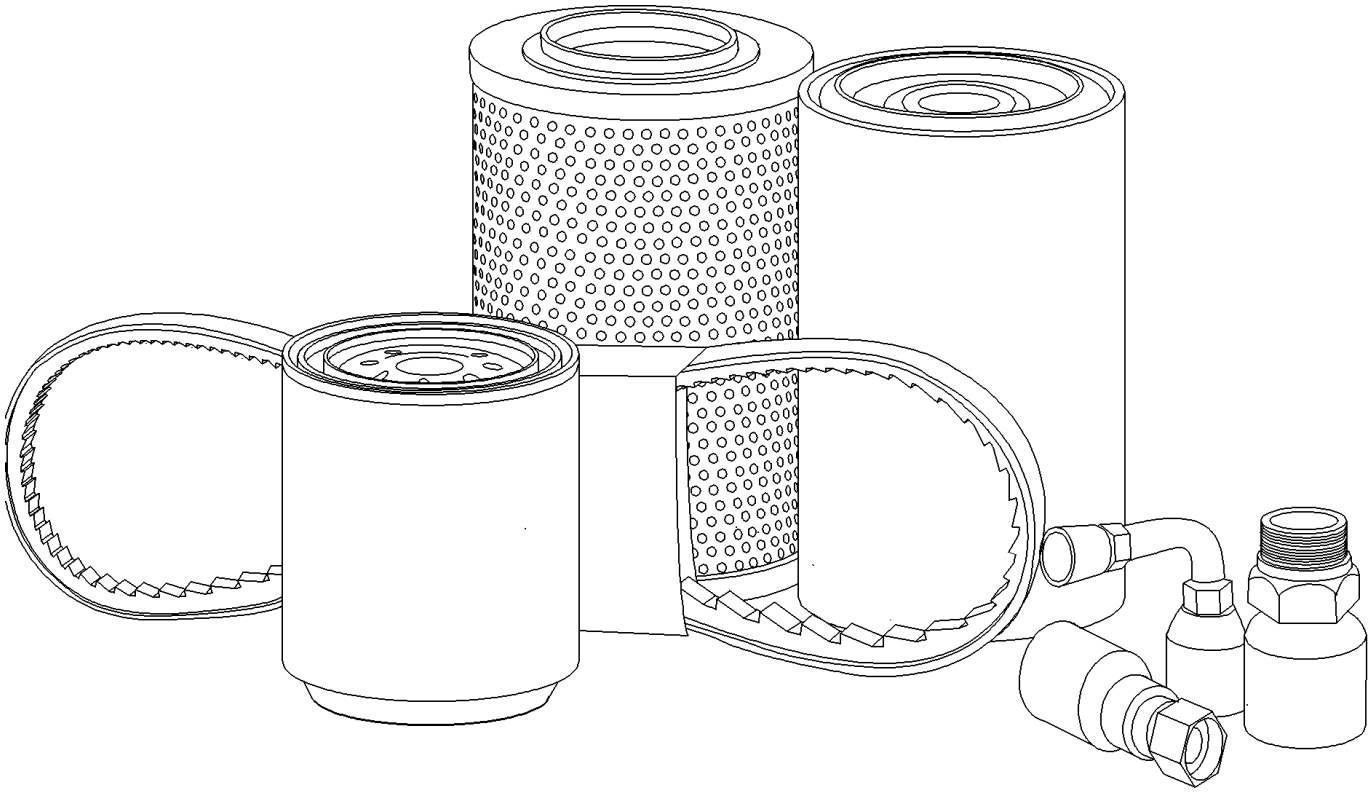

INITIAL STOCKING LIST (ISL) (L225,L230)
INITIAL STOCKING LIST (ISL) (L225,L230)
INITIAL STOCKING LIST (ISL) (L225,L230)
INITIAL STOCKING LIST (ISL) (L225,L230)

R	N	P.N.	MOD	Q	Denominação Description	Description Bezeichnung	Denominacion Beskrivelse	Descrizione Beschrijving	L.C.
17		84282677		1	INTERRUPTOR, AuxProportional Hyd handle (EH)				
						SWITCH	INTERRUPTOR	INTERRUTTORE	075I
					CONTACTEUR	SCHALTER	KONTAKT	SCHAKELAAR	
18		87427686		1	INTERRUPTOR, Hyd MOM 2 (front elec handle switch)				
						SWITCH	CONTACTOR	INTERRUTTORE	8850
					CONTACTEUR	SCHALTER	KONTAKT	AAN-UIT SCHAKELAAR	
19		87427685		1	INTERRUPTOR, Hyd MOM 1				
						SWITCH	CONTACTOR	INTERRUTTORE	8850
					CONTACTEUR	SCHALTER	KONTAKT	AAN-UIT SCHAKELAAR	
20		282775A1		1	COMUTADOR, w/ Padded Keys - key 1964831C2				
						IGNITION SWITCH	CONMUTADOR DE ARR/	INTERRUTTORE ACCEN	P654
					CONTACTEUR DE DEMA	ZÜNDSCHALTER	KONTAKT, TÆNDING	CONTACTSCHAKELAAR	
21		84239537		1	INTERRUPTOR, Backup Alarm				
						SWITCH	INTERRUPTOR	INTERRUTTORE	075I
					CONTACTEUR	SCHALTER	KONTAKT	SCHAKELAAR	
22		87392235		1	INTERRUPTOR INTERMITENTE, Lap Bar/Door				
						SWITCH ASSY	CONJUNTO DE INTERRU	COMPLESSIVO INTERRU	067I
					ENSEMBLE COMMUTATI	SCHALTERBAUGRUPPE	KONTAKT, KPL.	SCHAKELAAREENHEID	
23		84257183		1	CONEXÃO, Quick Coupling (5/8-Male)				
						FITTING	ACOPLAMIENTO	RACCORDO	3300
					RACCORD	ARMATUR	FITTING	AANSLUITING	
24		84257182		1	CONEXÃO, Quick Coupling (5/8-Female)				
						FITTING	ACOPLAMIENTO	RACCORDO	3300
					RACCORD	ARMATUR	FITTING	AANSLUITING	
25		84390117		1	ENGATE, Quick Coupler	COUPLING	ACOPLAMIENTO	GIUNTO	Z321
					RACCORD	KUPPLUNG	KOBLING	KOPPELING	
26		84390118		1	ENGATE, Quick Coupler	COUPLING	ACOPLAMIENTO	GIUNTO	Z321
					RACCORD	KUPPLUNG	KOBLING	KOPPELING	
27		84390119		1	ENGATE, Quick Coupler	COUPLING	ACOPLAMIENTO	GIUNTO	Z321
					RACCORD	KUPPLUNG	KOBLING	KOPPELING	
28		84292121		1	LÂMPADA DE TRABALHO, Rear NH				
						WORK LAMP	LÁMPARA DE TRABAJO	LUCE DI LAVORO	219P
					FEU DE TRAVAIL	ARBEITSLEUCHTE	ARBEJDSLAMPE	WERKLAMP	
29		44995162		1	LÂMPADA, Lamp 888-12V	BULB	BOMBILLA	LAMPADINA	030L
					AMPOULE	GLÜHLAMPE	PÆRE	LAMP	
30		9847313		1	LÂMPADA, #894, 12V, 37.5W, Halogen				
						BULB	BOMBILLA	LAMPADINA	030L
					AMPOULE	GLÜHLAMPE	PÆRE	LAMP	
31		84277824		1	MANGUEIRA, Lower Radiator F5C				
						HOSE	TUBO	TUBO FLESSIBILE	030M
					FLEXIBLE	SCHLAUCH	SLANGE	SLANG	
32		84277825		1	MANGUEIRA, Upper Radiator F5C				
						HOSE	TUBO	TUBO FLESSIBILE	030M
					FLEXIBLE	SCHLAUCH	SLANGE	SLANG	
33		257448A1		1	TAMPA DO RESERVATÓRIO, Engine Oil Filler F5C				
						CAP	TAPON DEL DEPOSITO	TAPPO SERBATOIO	1380
					CHAPEAU	ABDECKAPPE	TANKDAEKSEL	RESERVOIRDOP	

INITIAL STOCKING LIST (ISL) (L225,L230)
INITIAL STOCKING LIST (ISL) (L225,L230)
INITIAL STOCKING LIST (ISL) (L225,L230)
INITIAL STOCKING LIST (ISL) (L225,L230)

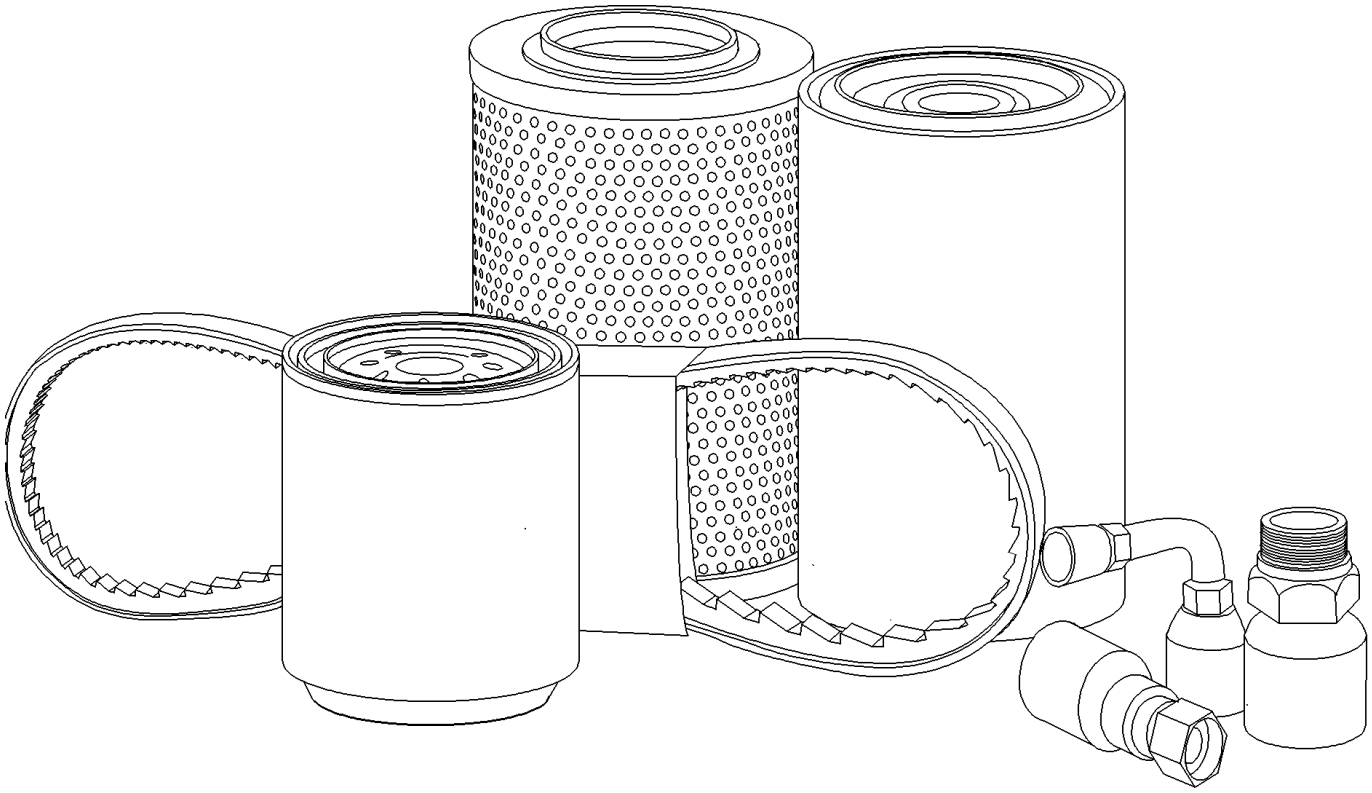

INITIAL STOCKING LIST (ISL) (L225,L230)
INITIAL STOCKING LIST (ISL) (L225,L230)
INITIAL STOCKING LIST (ISL) (L225,L230)
INITIAL STOCKING LIST (ISL) (L225,L230)

R	N	P.N.	MOD	Q	Denominação Description	Description Bezeichnung	Denominacion Beskrivelse	Descrizione Beschrijving	L.C.
34		257884A1		1	BUJÃO, Hydraulic Reservoir Cap				
						PLUG	TAPÓN	TAPPO	6400
					BOUCHON	STOPFEN	PROP	PLUG	
35		87687375		1	TAMPA DO RADIADOR	RADIATOR CAP	TAPÓN DE RADIADOR	TAPPO DEL RADIATORE	039T
					BOUCHON DU RADIATEI	KÜHLERVERSCHLUSSK/	KØLERDÆKSEL	RADIATEURDOP	
36		2852531		1	RESPIRO, F5C	BREATHER	RESPIRADERO	SFIATO	145S
					RENIFLARD	ENTLÜFTER	UDLUFTNINGSSKRUE	ONTLUCHTER	
37		504209127		1	TERMOSTATO, ISM	THERMOSTAT	TERMOSTATO	TERMOSTATO	096T
					THERMOSTAT	THERMOSTAT	TERMOSTAT	THERMOSTAAT	
38		84200822		1	CORRENTE, 80/76P	CHAIN	CADENA	CATENA	095C
					CHAINE	KETTE	KÆDE	KETTING	
39		84200823		1	CORRENTE, 100/74P	CHAIN	CADENA	CATENA	095C
					CHAINE	KETTE	KÆDE	KETTING	
40		84259684		1	PINHÃO, Assy 30T	DRIVEN SPROCKET	CONTROL CON PIÑÓN	PIGNONE CONDOTTO	122P
					PIGNON MENE	ABTRIEBSZAHNRAD	KÆDEHJUL	AANGEDREVEN KETTIN(	
41		84347514		1	BRAÇO LIMPADOR, Front	WIPER ARM	BRAZO LIMPIAPARABRIS	BRACCIO TERGICRISTA	134B
					BRAS D'ESSUIE-GLACE	WISCHERARM	VISKERARM	ARM VAN RUITENWISSE	
42		84347625		1	PALHETA LIMPADOR, Front				
						WIPER BLADE	RASQUETA LIMPIAPARA	SPAZZOLA TERGICRIST.	175S
					LAME D'ESSUIE-GLACE	WISCHERBLATT	VISKERBLAD	RUITENWISSERBLAD	
43		84323115		1	BRAÇO LIMPADOR, Rear (EU)				
						WIPER ARM	BRAZO LIMPIAPARABRIS	BRACCIO TERGICRISTA	134B
					BRAS D'ESSUIE-GLACE	WISCHERARM	VISKERARM	ARM VAN RUITENWISSE	
44		84323116		1	LIMPADOR DO PARA-BRISA, Rear (EU)				
						WINDSHIELD WIPER	LIMPIAPARABRISAS	TERGICRISTALLI	Z493
					ESSUIE-GLACE	FRONTSCHEIBENWISCH	FORRUDEVISKER	RUITENWISSER VÓÓR	
45		87355337		1	CONECTADOR, A/C	RELAY	CONECTADOR	RELE'	7025
					RELAIS	RELAIS	RELAE	RELAIS	
46		87638510		1	MOTOR DE PARTIDA	STARTER MOTOR	MOTOR DE ARRANQUE	MOTORINO DI AVVIAME	133M
					DEMARREUR	ANLASSERMOTOR	STARTMOTOR	STARTMOTOR	
47		84254290		1	ALTERNADOR, F5C	ALTERNATOR	ALTERNADOR	ALTERNATORE	025A
					ALTERNATEUR	LICHTMASCHINE	GENERATOR	DYNAMO	
48		84389760		1	BOBINA, Proportional Solenoid				
						COIL	BOBINA	BOBINA	083B
					BOBINE	SPULE	SPOLE	SPOEL	
49		84386295		1	SENSOR, Loader Control Valve Spool Position (EH)				
						SENSOR	SENSOR	SENSORE	608S
					CAPTEUR	SENSOR	FØLER	SENSOR	
50		86503942		1	FUSÍVEL, Chart Autofuse	FUSE	FUSIBLE	FUSIBILE	110F
					FUSIBLE	SICHERUNG	SIKRING	ZEKERING	
51		10395890		1	FUSÍVEL, Mini 5 AMP	FUSE	FUSIBLE	FUSIBILE	110F
					FUSIBLE	SICHERUNG	SIKRING	ZEKERING	
52		87522597		1	FUSÍVEL, Mini 10 AMP	FUSE	FUSIBLE	FUSIBILE	110F
					FUSIBLE	SICHERUNG	SIKRING	ZEKERING	
53		87524877		1	FUSÍVEL, Mini 15 AMP	FUSE	FUSIBLE	FUSIBILE	110F
					FUSIBLE	SICHERUNG	SIKRING	ZEKERING	
54		10401190		1	FUSÍVEL, Mini 20 AMP	FUSE	FUSIBLE	FUSIBILE	110F
					FUSIBLE	SICHERUNG	SIKRING	ZEKERING	

INITIAL STOCKING LIST (ISL) (L225,L230)
INITIAL STOCKING LIST (ISL) (L225,L230)
INITIAL STOCKING LIST (ISL) (L225,L230)
INITIAL STOCKING LIST (ISL) (L225,L230)

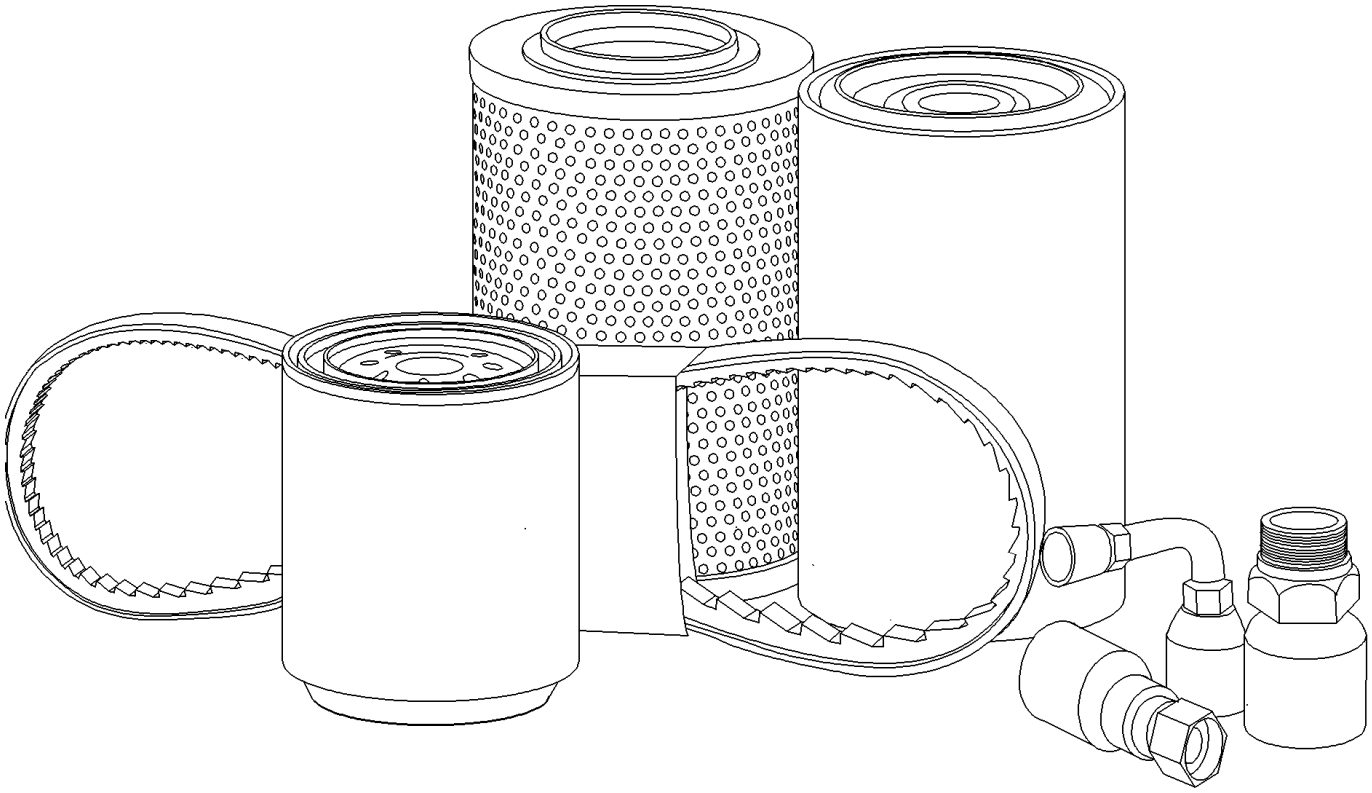

INITIAL STOCKING LIST (ISL) (L225,L230)
INITIAL STOCKING LIST (ISL) (L225,L230)
INITIAL STOCKING LIST (ISL) (L225,L230)
INITIAL STOCKING LIST (ISL) (L225,L230)

R	N	P.N.	MOD	Q	Denominação Description	Description Bezeichnung	Denominacion Beskrivelse	Descrizione Beschrijving	L.C.
55		**10401290**		1	FUSÍVEL, Mini 25 AMP	FUSE	FUSIBLE	FUSIBILE	110F
					FUSIBLE	SICHERUNG	SIKRING	ZEKERING	
56		**87472238**		1	FUSÍVEL, 60 AMP	FUSE	FUSIBLE	FUSIBILE	110F
					FUSIBLE	SICHERUNG	SIKRING	ZEKERING	
57		**SBA185366190**		1	VELA DE PRÉ-AQUECIMENTO, ISM				
						GLOW PLUG	BUJÍA INCANDESCENTE	CANDELA	056C
					BOUGIE DE PRECHAUFI	ZÜNDKERZE	GLØDERØR	GLOEIBOUGIE	
58		**87655334**		1	RELÉ, 35A N.O. ISO280 Micro				
						RELAY	RELÉ	RELÈ	011R
					RELAIS	RELAIS	RELÆ	RELAIS	
59		**84297432**		1	RELÉ, Glow Plug	RELAY	RELÉ	RELÈ	011R
					RELAIS	RELAIS	RELÆ	RELAIS	
60		**84389262**		1	KIT DE VEDAÇÃO, (Shimadzu Single Gear Pump)				
						SEAL KIT	KIT DE JUNTAS	KIT GUARNIZIONI	630S
					KIT DE JOINTS	DICHTUNGSSATZ	PAKNINGSSÆT	KIT MET AFDICHTINGEN	
61		**140008A1**		1	KIT DE GAXETAS, M46 Overhaul				
						GASKET KIT	KIT DE JUNTAS	KIT GUARNIZIONI	3740
					KIT DE JOINTS	DICHTUNGSSATZ	PAKNINGSSÆT	KIT MET PAKKINGEN	
62		**84174253**		1	KIT, NH 2 PT 3 Inch Wide	KIT	KIT	KIT	305C
					KIT	SATZ	SÆT	KIT	
63		**84174263**		1	CINTO DE SEGURANÇA, NH 2 PT 2 Inch Wide				
						SEAT BELT	CINTURÓN DE SEGURID	CINTURA DI SICUREZZA	182C
					CEINTURE DE SECURIT	SICHERHEITSGURT	SIKKERHEDSBÆLTE	VEILIGHEIDSGORDEL	
64		**84354488**		1	CINTO DE SEGURANÇA, NH 3 PT				
						SEAT BELT	CINTURÓN DE SEGURID	CINTURA DI SICUREZZA	182C
					CEINTURE DE SECURIT	SICHERHEITSGURT	SIKKERHEDSBÆLTE	VEILIGHEIDSGORDEL	

SECTION INDEX

05 - Acabamento da máquina e equipamento

05.100.01 FILTERS AND CAPACITIES (L223-L230)

FILTERS AND CAPACITIES (L223-L230)
FILTERS AND CAPACITIES (L223-L230)
FILTERS AND CAPACITIES (L223-L230)
FILTERS AND CAPACITIES (L223-L230)

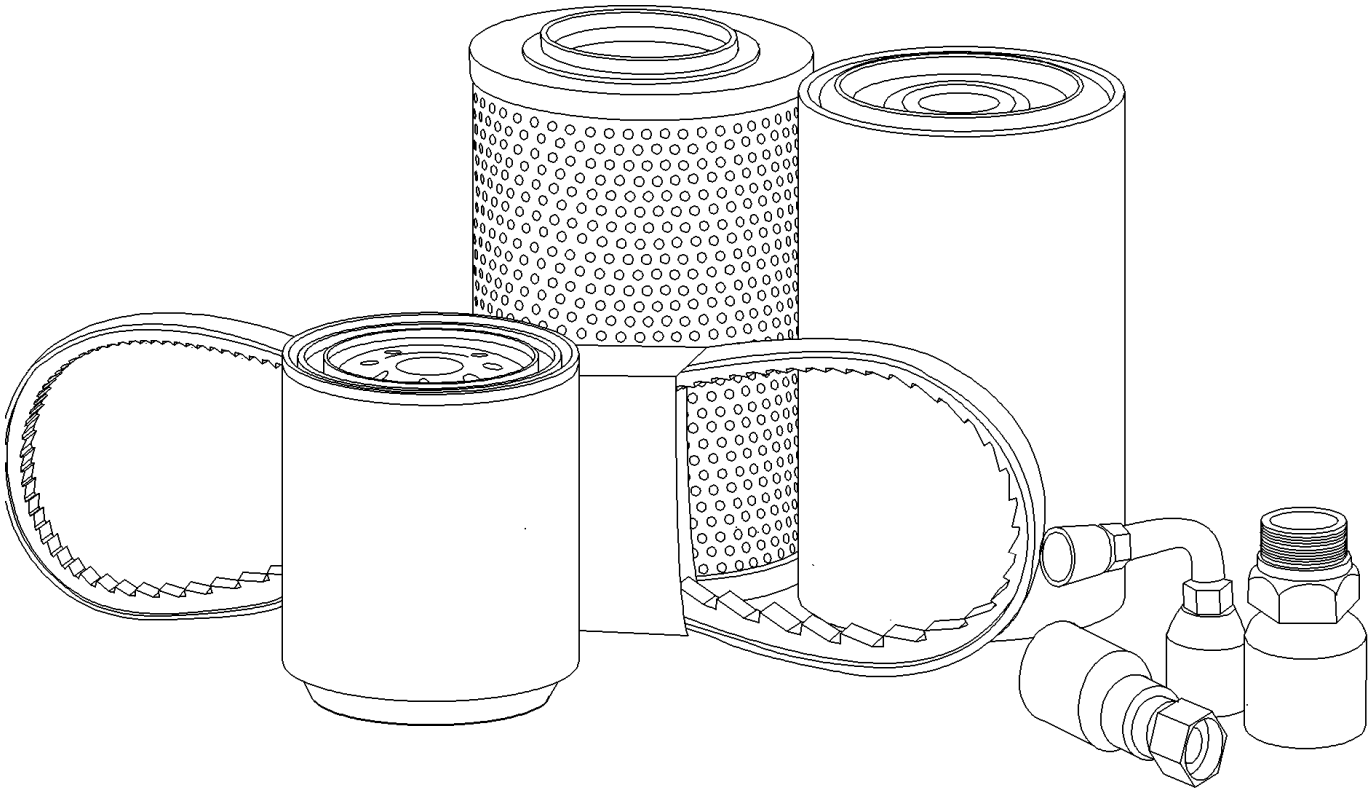

FILTERS AND CAPACITIES (L223-L230)
FILTERS AND CAPACITIES (L223-L230)
FILTERS AND CAPACITIES (L223-L230)
FILTERS AND CAPACITIES (L223-L230)

R	N	P.N.	MOD	Q	Denominação Description	Description Bezeichnung	Denominacion Beskrivelse	Descrizione Beschrijving	L.C.
		87679494		1	FILTRO DE ÓLEO DO MOTOR, F5C Engine				
						ENGINE OIL FILTER	FILTRO DE ACEITE DE M	FILTRO OLIO MOTORE	067F
					FILTRE A HUILE MOTEU	MOTORÖLFILTER	MOTOROLIEFILTER	MOTOROLIEFILTER	
		87415600		1	FILTRO DE ÓLEO DO MOTOR, ISM Engine				
						ENGINE OIL FILTER	FILTRO DE ACEITE DE M	FILTRO OLIO MOTORE	067F
					FILTRE A HUILE MOTEU	MOTORÖLFILTER	MOTOROLIEFILTER	MOTOROLIEFILTER	
		{}			Engine Crank case oil capacity: with filter change 7.5 l (7.9 US qt)				
		{}			Specifications: 10W30 Engine Oil 7-28				
		{}			Cooling System capacity: 15.6 l (4.2 US gal)				
		{}			Specifications: 50% distilled water and 50% ethylene glycol				
		84278070		1	ELEMENTO, Hyd Filter	ELEMENT	ELEMENTO	ELEMENTO	020E
					ELEMENT	ELEMENT	ELEMENT	ELEMENT	
		{}			Hydraulic System capacity: 32.1 l, (8.5 US gal)				
		{}			Hydraulic Reservoir capacity: 15.0 l (3.96 US gal)				
		{}			Specificaions: CNH MAT 3509				
		84299977		1	ELEMENTO, Fuel Filter - Main (Door)				
						ELEMENT	ELEMENTO	ELEMENTO	020E
					ELEMENT	ELEMENT	ELEMENT	ELEMENT	
		9611973		1	FILTRO DE COMBUSTÍVEL, Inline ISM				
						FUEL FILTER	FILTRO DE COMBUSTIBI	FILTRO CARBURANTE	064F
					FILTRE A CARBURANT	KRAFTSTOFFFILTER	BRÆNDSTOFFILTER	BRANDSTOFFILTER	
		{}			Fuel Tank capacity: 75.5 l (20.0 US gal)				
		{}			#2 Diesel				
		86982522		1	FILTRO DE AR, Primary ISI	AIR FILTER	FILTRO DE AIRE	FILTRO ARIA	066F
					FILTRE A AIR	LUFTFILTER	LUFTFILTER	LUCHTFILTER	
		86982523		1	FILTRO DE AR, Secondary ISM				
						AIR FILTER	FILTRO DE AIRE	FILTRO ARIA	066F
					FILTRE A AIR	LUFTFILTER	LUFTFILTER	LUCHTFILTER	
		{}			Grease Fittings: quantity - As Required				

FILTERS AND CAPACITIES (L223-L230)
FILTERS AND CAPACITIES (L223-L230)
FILTERS AND CAPACITIES (L223-L230)
FILTERS AND CAPACITIES (L223-L230)

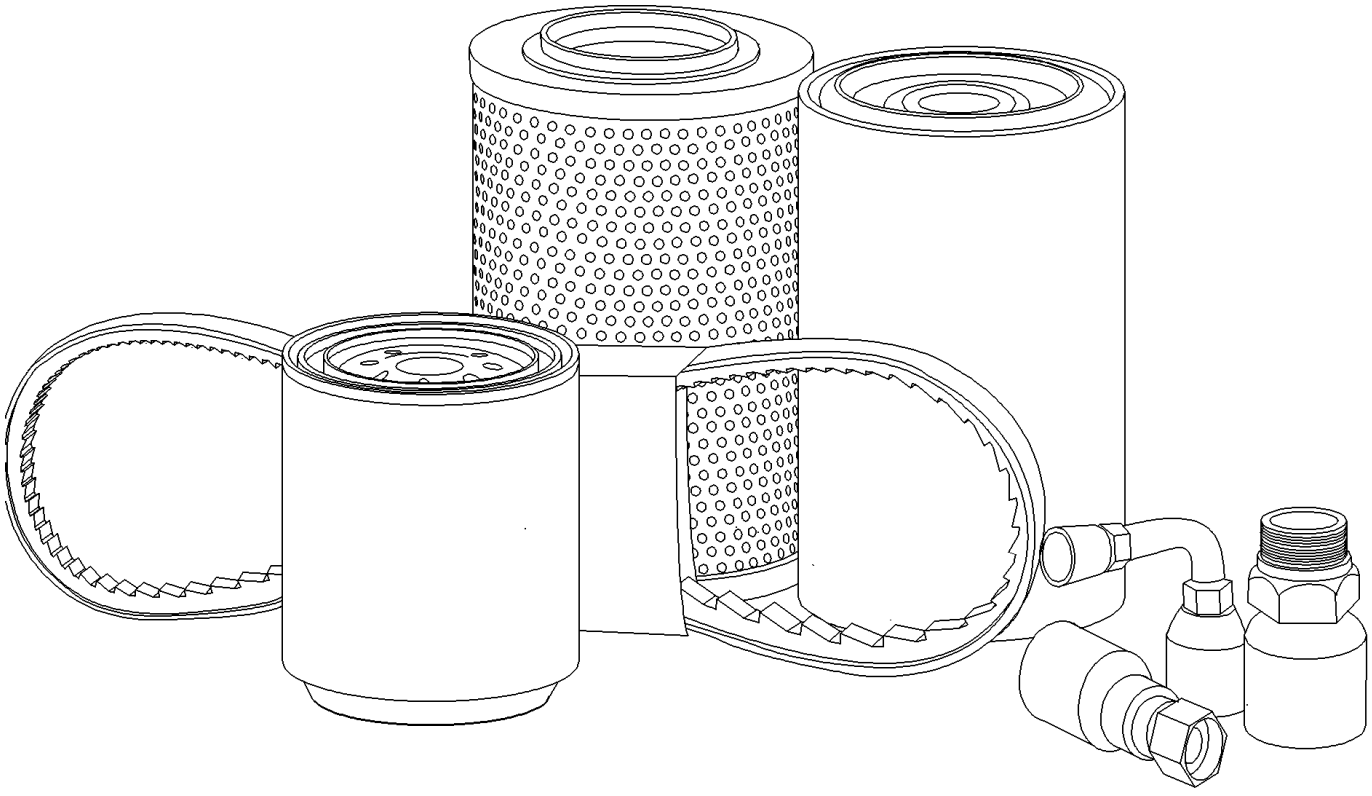

FILTERS AND CAPACITIES (L223-L230)
FILTERS AND CAPACITIES (L223-L230)
FILTERS AND CAPACITIES (L223-L230)
FILTERS AND CAPACITIES (L223-L230)

R	N	P.N.	MOD	Q	Denominação Description	Description Bezeichnung	Denominacion Beskrivelse	Descrizione Beschrijving	L.C.
		{}			Specifications: Molydisulfide grease				

SECTION INDEX
10 - Motor

10.000.01	01	PICTORIAL INDEX - ENGINE
10.000.01	02	PICTORIAL INDEX - ENGINE
10.001.01		ENGINE ASSY (504387947)
10.001.02		CYLINDER BLOCK & RELATED PARTS (504181441)
10.012.01		ENGINE MOUNTING (L223-C238)
10.012.01	02	REMOTE DIPSTICK (L223-C238)
10.012.01	03	REMOTE OIL DRAIN (L223-C238)
10.012.01	04	REMOTE ENGINE OIL (L223-C238)
10.012.04		HOOKS - ENGINE (504154713)
10.101.01		CYLINDER HEAD & RELATED PARTS (504385845)
10.101.02	01	ROCKER SHAFT (504335547)
10.101.02	02	CYLINDER HEAD COVERS (504191694)
10.101.03		ENGINE BREATHERS (504245734)
10.102.01		OIL SUMP & RELATED PARTS (504179441)
10.102.02		ENGINE BLOCK FRONT COVER (5801361473)
10.102.03		FLYWHEEL CASE (504380467)
10.103.01		CRANKSHAFT (504178873)
10.103.02		ENGINE, FLYWHEEL (504221728)
10.103.03		BELT PULLEY DRIVE & COVER (504388092)
10.103.04		PULLEY - CRANKSHAFT (504388089)
10.105.01		PISTON - ENGINE (504254748)
10.105.02		CONNECTING ROD (504245120)
10.106.01		CAMSHAFT - TIMING CONTROL (504228067)
10.202.01		AIR CLEANER ASSY NA 8IN (L223-L230,C232,C238)
10.206.02		FILTER ENGINE OIL (504245481 - 504332922)
10.216.01		FUEL SYSTEM (L223-L230,C232,C238)
10.218.01		INJECTION EQUIPMENT - PIPING (504207272)
10.218.01	02	INJECTION EQUIPMENT - PIPING (504207949)
10.218.01	03	INJECTION EQUIPMENT - PIPING (504207956)
10.218.02	02	INJECTION EQUIPMENT - INJECTOR (504385855)
10.220.01		THROTTLE HAND FOOT MECHANICAL (L223-L230)
10.220.02		THROTTLE HAND FOOT EH (L223-L230,C232,C238)
10.220.03		THROTTLE HAND MECHANICAL (L223-L230)
10.240.01	01	INJECTION PUMP (504379786)
10.250.02		TURBOCHARGING (504183274)
10.254.01		BLOCK HEATER NA (L223-C238)
10.254.02		BLOCK HEATER EU (L223-C238)
10.254.03		ENGINE EXHAUST LRG V (L223-L230,C232,C238)
10.254.04		INTAKE MANIFOLD (504385851 - 504385860)
10.254.05		EXHAUST MANIFOLD (504183273)
10.304.01	01	PUMP, ENGINE OIL & RELATED PARTS (504154680)
10.304.02		ENGINE OIL DIPSTICK (504183276)
10.304.03		OIL PUMP PIPING (504154691)
10.400.01		COOLING COMPONENTS (L223-L230,C232,C238)
10.402.01		TEMPERATURE CONTROL (THERMOSTAT) - (504216813)
10.402.02		WATER PUMP & RELATED PARTS (504154685)
10.402.03		PIPING - ENGINE COOLING SYSTEM (504191839)
10.406.02		MODULE, RADIATOR AND COOLING LG (L223-L230,C232,C238)
10.408.01		HEAT EXCHANGER - ENGINE - EGR GROUP (504385853)
10.408.02		HEAT EXCHANGER (504154694)

PICTORIAL INDEX - ENGINE
PICTORIAL INDEX - ENGINE
ÍNDICE GRÁFICO - MOTOR
INDICE ILLUSTRATO - MOTORE

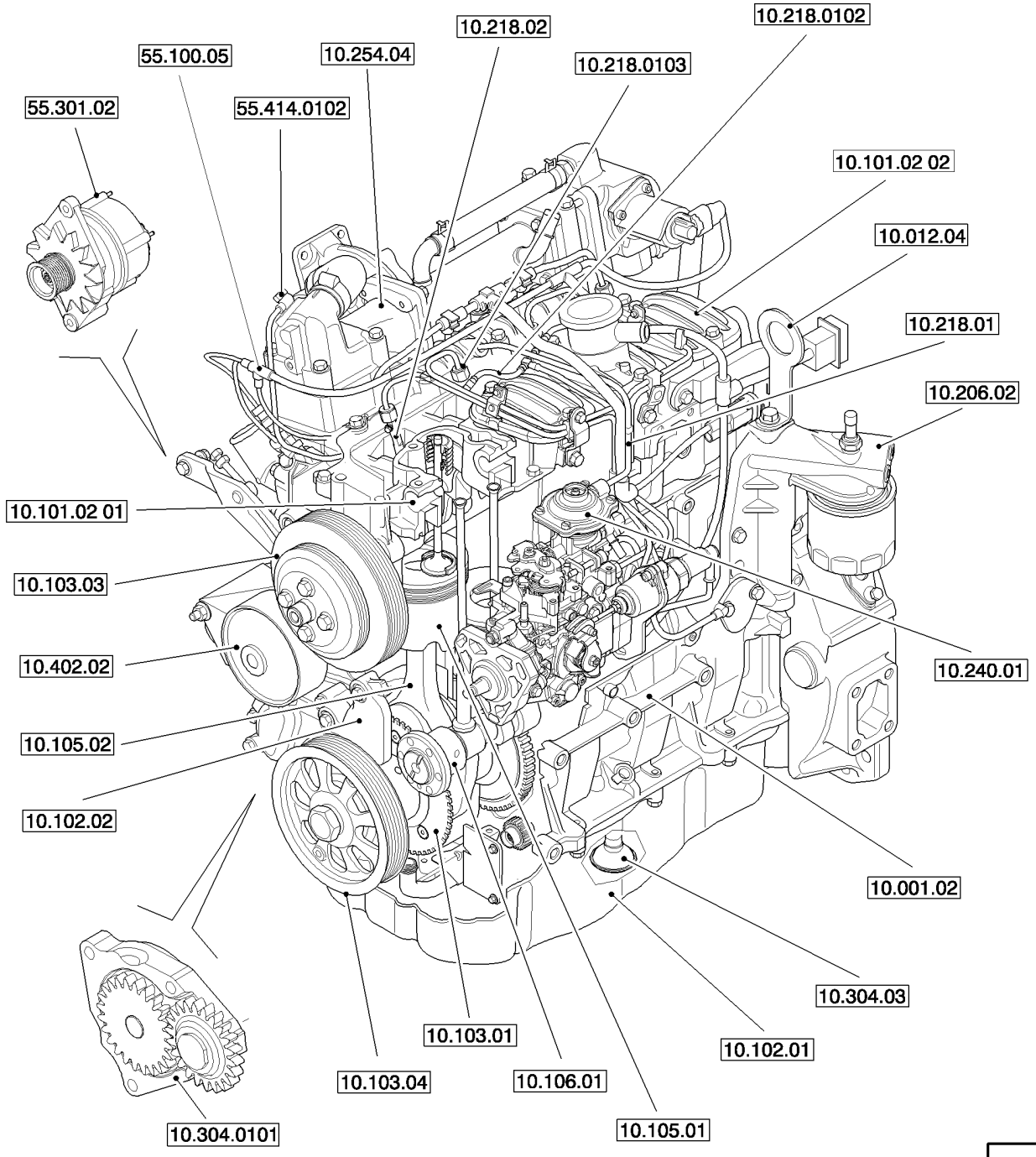

INDEX VISUEL - MOTEUR
ABBILDUNGSINDEX - MOTOR
BILLEDINDEKS - MOTOR
GRAFISCHE INDEXMOTOR

R	N	P.N.	MOD	Q	Denominação Description	Description Bezeichnung	Denominacion Beskrivelse	Descrizione Beschrijving	L.C.

PICTORIAL INDEX - ENGINE
PICTORIAL INDEX - ENGINE
ÍNDICE GRÁFICO - MOTOR
INDICE ILLUSTRATO - MOTORE

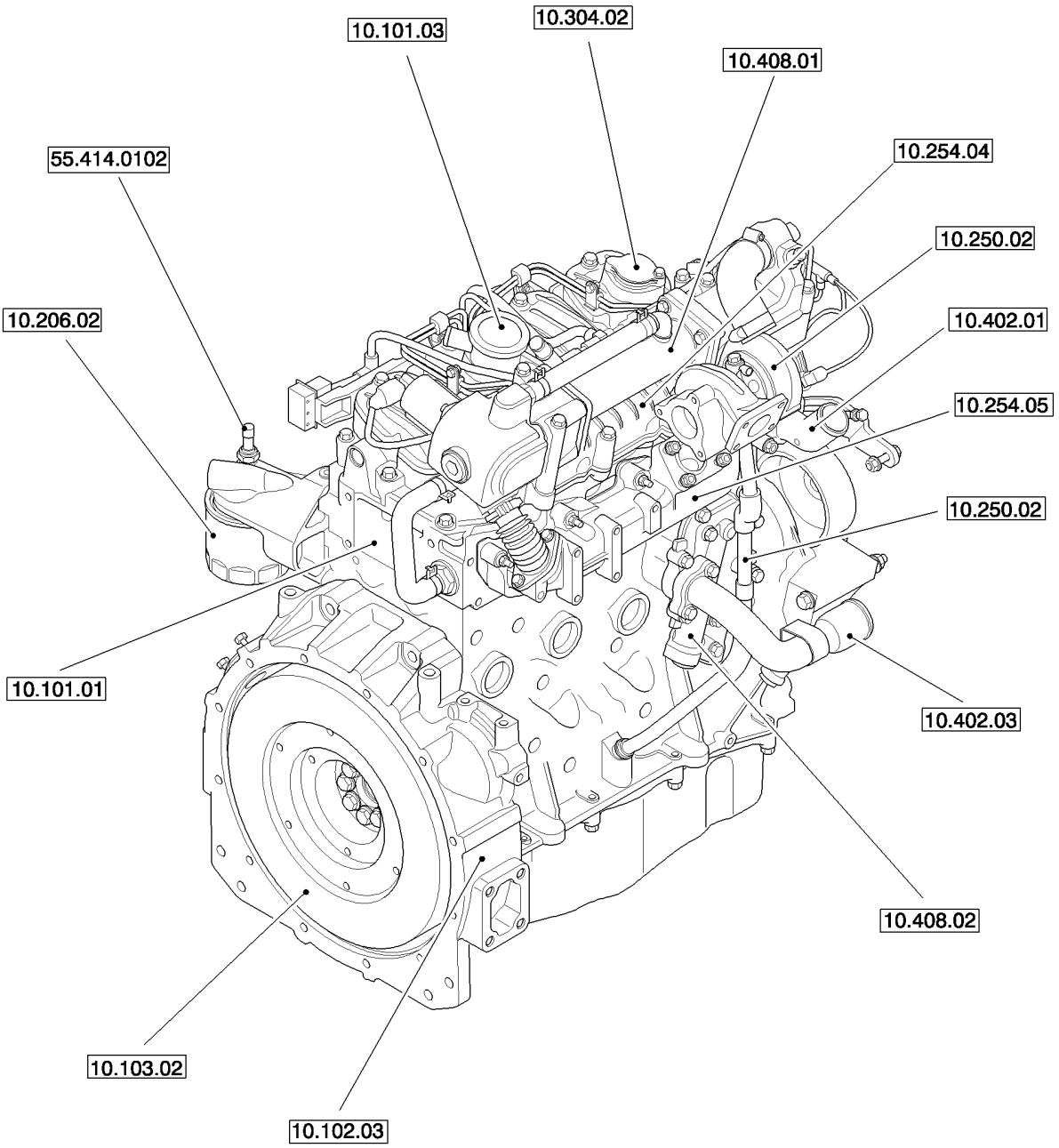

INDEX VISUEL - MOTEUR
ABBILDUNGSINDEX - MOTOR
BILLEDINDEKS - MOTOR
GRAFISCHE INDEXMOTOR

R	N	P.N.	MOD	Q	Denominação Description	Description Bezeichnung	Denominacion Beskrivelse	Descrizione Beschrijving	L.C.

10.001.01		p1	07/11

ENGINE ASSY (504387947)
ENGINE ASSY (504387947)
MOTOR(504387947)
MOTORE COMPLETO (504387947)

KIT KIT 2
3

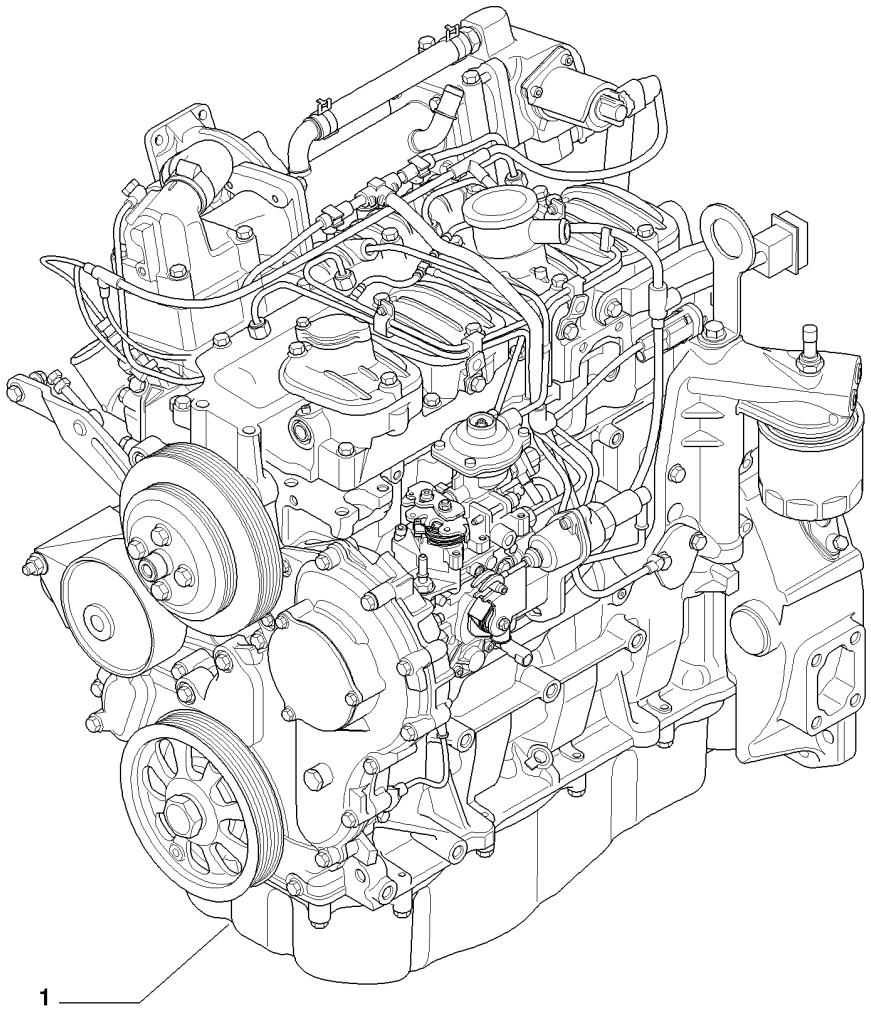

MOTEUR (504387947)
MOTOR (504387947)
MOTOR (504387947)
MOTOR(504387947)

R	N	P.N.	MOD	Q	Denominação Description	Description Bezeichnung	Denominacion Beskrivelse	Descrizione Beschrijving	L.C.
1		**84230116**		1	MOTOR, - ASSY (F5CE5454B*A005)				
						ENGINE	MOTOR	MOTORE	130M
					MOTEUR	MOTOR	MOTOR	MOTOR	
2		**8097550**		1	KIT DE REVISÃO DO MOTOR				
						ENGINE OVERHAUL KIT	KIT DE REVISIÓN DEL M	KIT REVISIONE MOTORE	002K
					KIT DE REVISION MOTEI	MOTORÜBERHOLUNGSS	MOTORREVISIONSSÆT	REVISIEKIT VOOR MOTO	
3		**8097551**		1	KIT DE GAXETAS SUP MOTOR				
						ENGINE TOP GASKETS I	KIT DE JUNTAS SUP. MO	KIT GUARN. SUPER. MO	318S
					KIT JOINTS SUP. MOTEU	SATZ OBERE MOTORDI(	VENTILSLIBESÆT	KIT MET BOVENPAKKIN(	

CYLINDER BLOCK & RELATED PARTS (504181441)
CYLINDER BLOCK & RELATED PARTS (504181441)
BLOQUE DE CILINDROS Y PIEZAS RELACIONADAS (504181441)
BASAMENTO MOTORE E PARTICOLARI RELATIVI (504181441)

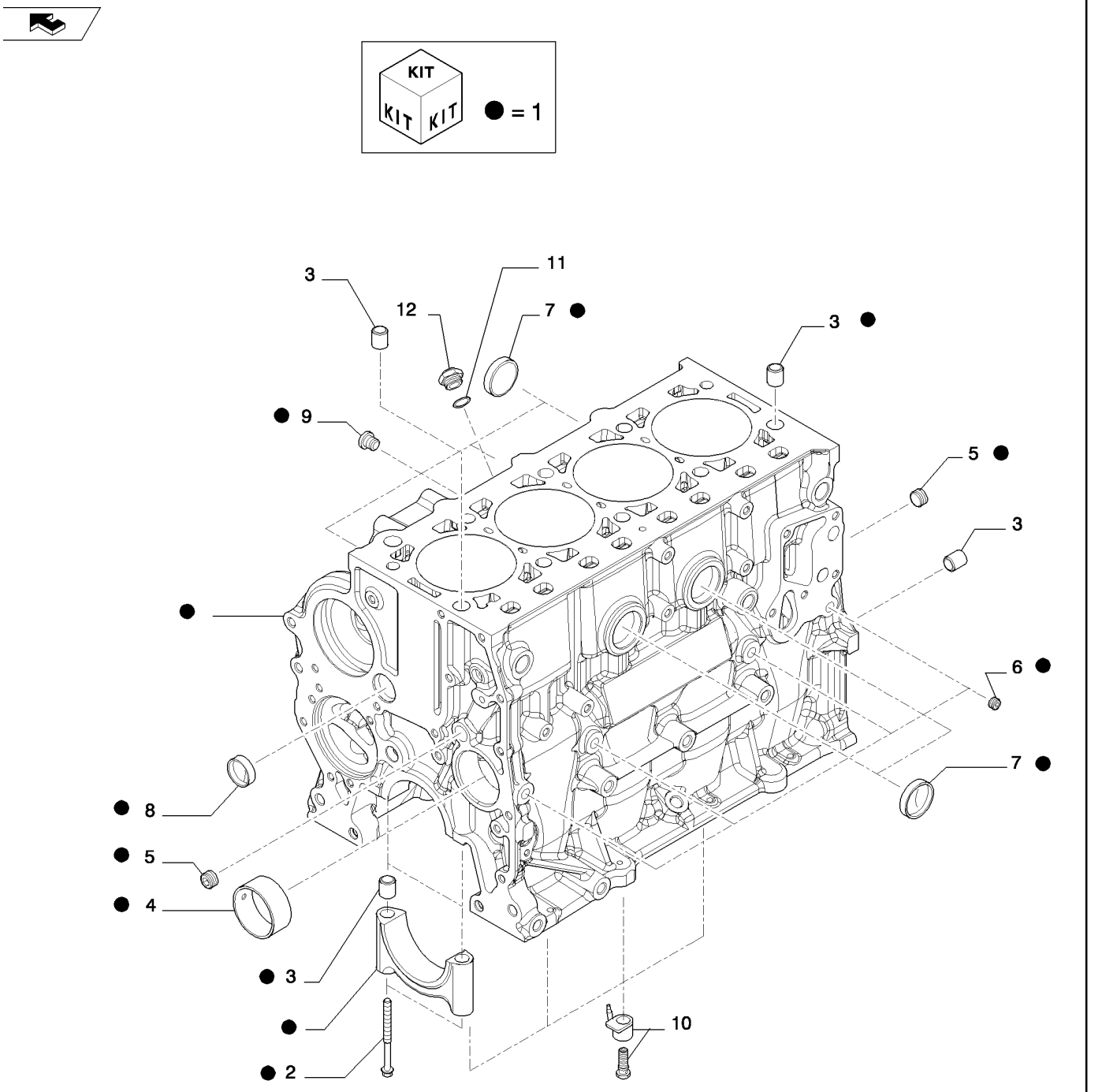

BLOC-MOTEUR ET PIÈCES ANNEXES (504181441)
KURBELGEHÄUSE UND DAZUGEHÖRIGE TEILE (504181441)
KRUMTAPHUS OG TILHØRENDE DELE (504181441)
MOTORBLOK EN DESBETREFFENDE DETAILS (504181441)

R	N	P.N.	MOD	Q	Denominação Description	Description Bezeichnung	Denominacion Beskrivelse	Descrizione Beschrijving	L.C.
1		504189766		1	BLOCO DE CILINDROS, - ASSY				
						CYLINDER BLOCK	BLOQUE DE CILINDRO	MONOBLOCCO	020B
					BLOC-CYLINDRES	ZYLINDERBLOCK	KRUMTAPHUS	CILINDERBLOK	
2		4891353		10	PARAFUSO, Flg Hd, M12 x 1.5 x 120				
						SCREW	TORNILLO	VITE	040V
					VIS	SCHRAUBE	SKRUE	SCHROEF	
3		7300019		14	GUIA	DOWEL	BULÓN	PERNO	090G
					GOUJON	PASSSTIFT	DYVEL	PASPEN	
4		4895040		1	BUCHA	BUSHING	CASQUILLO	BOCCOLA	095B
					BAGUE	BUCHSE	BØSNING	BUS	
5		504051238		3	BUJÃO, D. 3/8"	PLUG	TAPÓN	TAPPO	050T
					BOUCHON	STOPFEN	PROP	PLUG	
6		504051236		4	BUJÃO, D. 1/8"	PLUG	TAPÓN	TAPPO	050T
					BOUCHON	STOPFEN	PROP	PLUG	
7		16989101		6	BUJÃO	PLUG	TAPÓN	TAPPO	050T
					BOUCHON	STOPFEN	PROP	PLUG	
8		16988701		1	BUJÃO, D. 30 mm	PLUG	TAPÓN	TAPPO	050T
					BOUCHON	STOPFEN	PROP	PLUG	
9		504016052		1	BUJÃO, M14X1,5	PLUG	TAPÓN	TAPPO	050T
					BOUCHON	STOPFEN	PROP	PLUG	
10		504156515		4	PULVERIZADOR DE ÓLEO	LUBE OIL JET NOZZLE	BOQ. INYEC. ACEITE LU	UGELLO OLIO LUBRIFIC	020U
					GICLEUR D'HUILE	SCHMIERÖLSPRITZDÜS	DYSE, SMØREOLIE	SMEEROLIESPROEIER	
11		504077652		1	VEDAÇÃO	SEAL	ANILLO DE CIERRE	GUARNIZIONE; TENUTA	132A
					JOINT	DICHTUNG	PAKNING	AFDICHTING	
12		504356829		1					

10.012.01		p1	07/11

ENGINE MOUNTING (L223-C238)
ENGINE MOUNTING (L223-C238)
ENGINE MOUNTING (L223-C238)
ENGINE MOUNTING (L223-C238)

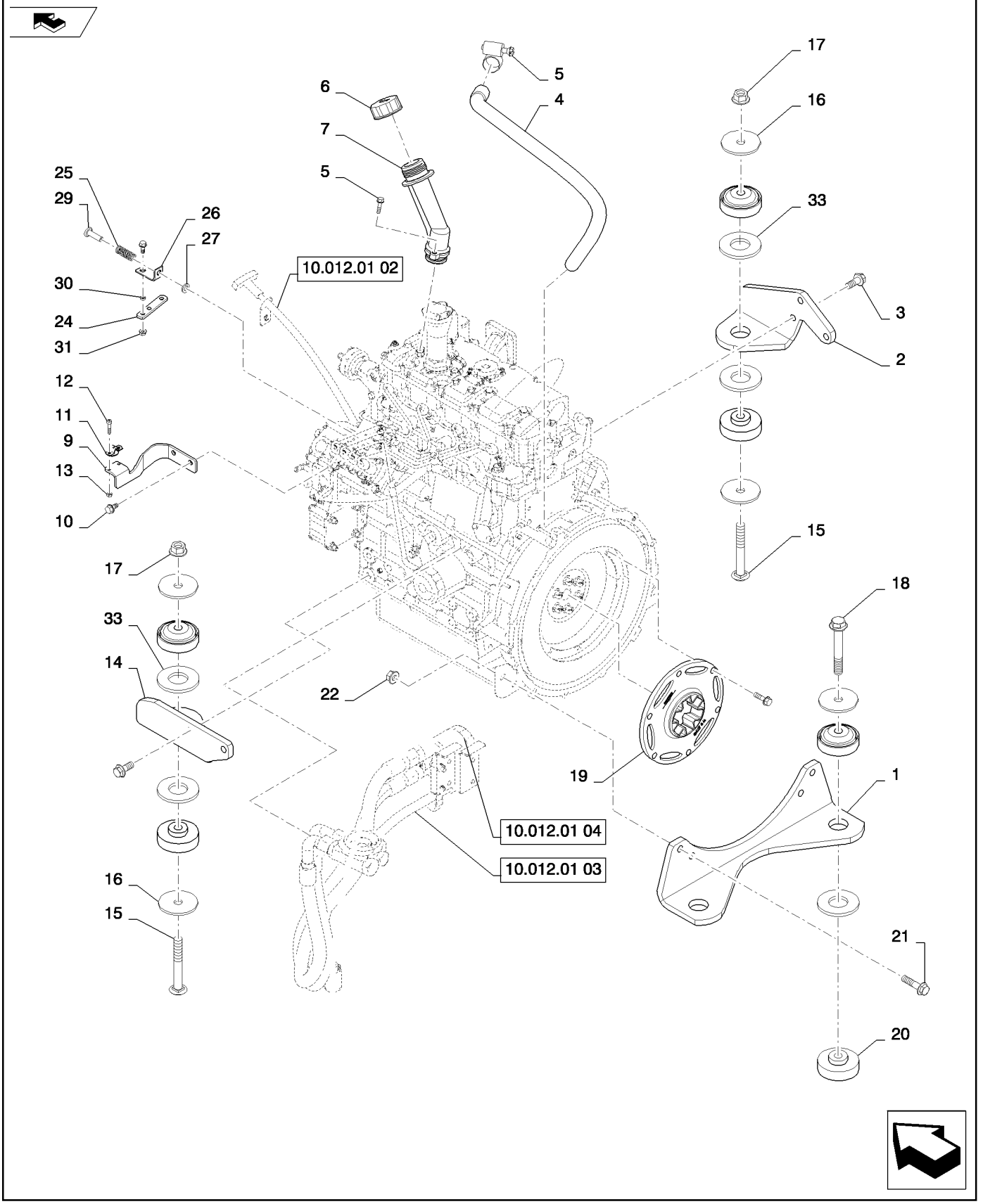

ENGINE MOUNTING (L223-C238)
ENGINE MOUNTING (L223-C238)
ENGINE MOUNTING (L223-C238)
ENGINE MOUNTING (L223-C238)

R	N	P.N.	MOD	Q	Denominação Description Bezeichnung	Denominacion Beskrivelse	Descrizione Beschrijving	L.C.
1		84239651		1	PLACA DE MONTAGEM, F5C Pump, Gray MOUNTING PLATE PLAQUE DE MONTAGE MONTAGEPLATTE	PLACA DE MONTAJE MONTERINGSPLADE	PIASTRA DI MONTAGGI(BEVESTIGINGSPLAAT	109P
2		84239653		1	PLACA DE MONTAGEM, F5C Fan, LH, Gray MOUNTING PLATE PLAQUE DE MONTAGE MONTAGEPLATTE	PLACA DE MONTAJE MONTERINGSPLADE	PIASTRA DI MONTAGGI(BEVESTIGINGSPLAAT	109P
3		87030508		5	PARAFUSO, Hex Flg, M12 x 30, 10.9, Full Thd BOLT VIS SCHRAUBE	PERNO BOLT	BULLONE BOUT	140B
4		84204223		1	MANGUEIRA ADMISSÃO DE AR, CCV INTAKE AIR HOSE DURIT D'ADMISSION D'A LUFTEINLASSSCHLAUCI	TUBO DE ADMISIÓN DE SLANGE, LUFTINDSUGN	TUBO FLESS. ARIA ASPI INLAATLUCHTSLANG	A059
5		86625021		1	BRAÇADEIRA MANGUEIRA, #12, 0.69/1.25 Type F Worm HOSE CLAMP COLLIER POUR FLEXIBL SCHLAUCHSCHELLE	ABRAZADERA DE MANG SLANGEKLEMME	FASCETTA STRINGITUB SLANGKLEM	P729
6		87674802		1	TAMPA, Oil Fill CAP CAPUCHON KAPPE	TAPÓN TANKDÆKSEL	TAPPO DOP	052T
7		87680042		1	GARGALO, Neck A, Oil NECK FILLER GOULOT DE REMPLISSA EINFÜLLSTUTZEN	BOCA DE LLENADO HALSFILLER	BOCCHETTONE RIEMPII VULHALS	5720
8		9804257		2	PARAFUSO, Hex Flg, M6 x 25, 8.8 BOLT VIS SCHRAUBE	PERNO BOLT	BULLONE BOUT	140B
9		84259542		1	SUPORTE, Throttle Cable BRACKET SUPPORT HALTERUNG	SOPORTE BESLAG	STAFFA STEUN	225S
10		86511841		2	PARAFUSO, Hex Flg, M8 x 16, 8.8 BOLT VIS SCHRAUBE	PERNO BOLT	BULLONE BOUT	140B
11		84200938		1	BRAÇADEIRA, Throttle Cable CLAMP COLLIER KLEMME	ABRAZADERA SPÆNDEBÅND	MORSETTO KLEM	120M
12		86639294		2	PARAFUSO, Hex Soc Hd, M4 x 20, 8.8 SCREW VIS SCHRAUBE	TORNILLO SKRUE	VITE SCHROEF	040V
13		100012		2	PORCA, M4, Cl 8 NUT ECROU MUTTER	TUERCA MØTRIK	DADO MOER	010D
14		84239654		1	PLACA DE MONTAGEM, F5C Fan, RH, Gray MOUNTING PLATE PLAQUE DE MONTAGE MONTAGEPLATTE	PLACA DE MONTAJE MONTERINGSPLADE	PIASTRA DI MONTAGGI(BEVESTIGINGSPLAAT	109P
15		300663		2	PARAFUSO, Short NK, M16 x 120, Cl8.8 CARRIAGE BOLT VIS A TETE BOMBEE SCHLOSSSCHRAUBE	PERNO ALOMADO BRÆDDEBOLT	BULLONE A TESTA TONI SLOTBOUT	P123
16		87630175		6	ARRUELA PLANA WASHER RONDELLE UNTERLEGSCHEIBE	ARANDELA FLADSKIVE	RONDELLA SLUITRING	131R
17		86512498		2	PORCA, M16 x 2, Flg, Cl 10NUT ECROU MUTTER	TUERCA MØTRIK	DADO MOER	010D
18		87015923		2	PARAFUSO, Hex Flg, M16 x 110, 10.9, Full Thd BOLT VIS SCHRAUBE	PERNO BOLT	BULLONE BOUT	140B

10.012.01		p2	07/11

ENGINE MOUNTING (L223-C238)
ENGINE MOUNTING (L223-C238)
ENGINE MOUNTING (L223-C238)
ENGINE MOUNTING (L223-C238)

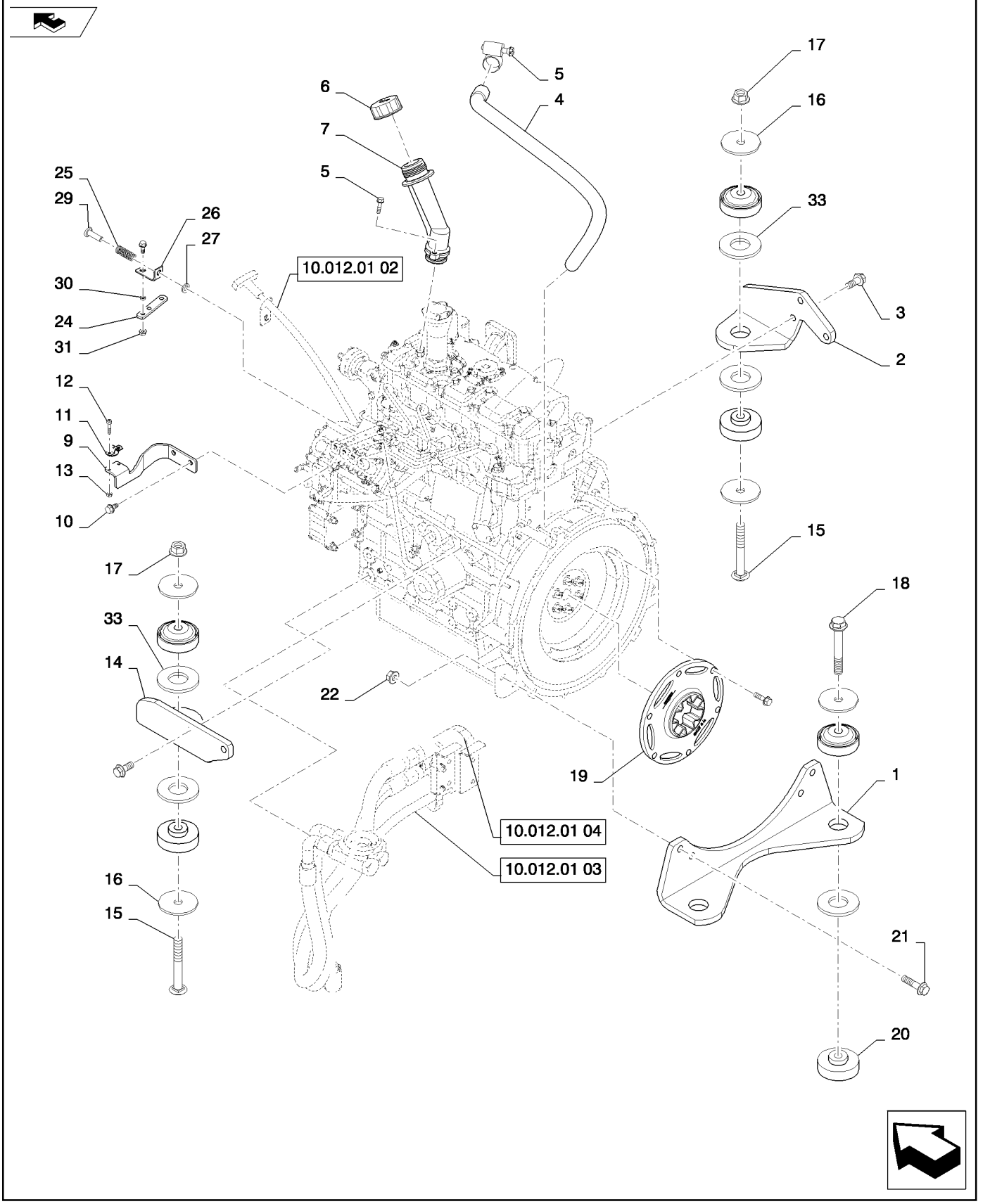

ENGINE MOUNTING (L223-C238)
ENGINE MOUNTING (L223-C238)
ENGINE MOUNTING (L223-C238)
ENGINE MOUNTING (L223-C238)

R	N	P.N.	MOD	Q	Denominação Description	Description Bezeichnung	Denominacion Beskrivelse	Descrizione Beschrijving	L.C.
19		87692685		1	ENGATE, Flexible	COUPLING	ACOPLAMIENTO	GIUNTO	Z321
					RACCORD	KUPPLUNG	KOBLING	KOPPELING	
20		84201266		8	ISOLADOR, Mount, ISO Engine				
						ISOLATOR	AISLADOR	ISOLATORE	Z082
					ISOLANT	ISOLATOR	ISOLATOR	ISOLATIE	
21		87670764		4	PARAFUSO, M12 X 50	BOLT	PERNO	BULLONE	140B
					VIS	SCHRAUBE	BOLT	BOUT	
22		86512497		4	PORCA, M12 x 1.75, Flg, Cl 10				
						NUT	TUERCA	DADO	010D
					ECROU	MUTTER	MØTRIK	MOER	
23		9804260		6	PARAFUSO, Hex Flg, M8 x 30, 8.8, Full Thd				
						BOLT	PERNO	BULLONE	140B
					VIS	SCHRAUBE	BOLT	BOUT	
24		84276430		1	SUPORTE, Throttle	BRACKET	SOPORTE	STAFFA	225S
					SUPPORT	HALTERUNG	BESLAG	STEUN	
25		84380082		1	MOLA, Throttle	SPRING	RESORTE	MOLLA	100M
					RESSORT	FEDER	FJEDER	VEER	
26		9844532		1	SUPORTE	BRACKET	SOPORTE	STAFFA	225S
					SUPPORT	HALTERUNG	BESLAG	STEUN	
27		86588450		1	ARRUELA PLANA, M6 x 12 x 1.6 Thk				
						WASHER	ARANDELA	RONDELLA	131R
					RONDELLE	UNTERLEGSCHEIBE	FLADSKIVE	SLUITRING	
28		9804255		3	PARAFUSO, Hex Flg, M6 x 16, 8.8				
						BOLT	PERNO	BULLONE	140B
					VIS	SCHRAUBE	BOLT	BOUT	
29		9860169		1	REBITE, Drilled	RIVET	REMACHE	RIVETTO	055R
					RIVET	NIET	NITTE	KLINKNAGEL	
30		13734		1	ESPAÇADOR	SPACER	SEPARADOR	DISTANZIALE	075D
					ENTRETOISE	DISTANZSTÜCK	AFSTANDSSTYKKE	AFSTANDSSTUK	
31		9804276		1	PORCA, M6 x 1, Flg, Cl 8	NUT	TUERCA	DADO	010D
					ECROU	MUTTER	MØTRIK	MOER	
32		L11541		1	PRENDEDOR DE CABOS, Tie				
						CABLE STRAP	BANDA DE CABLE	FASCETTA PER CAVO	P716
					BRIDE DE CABLE	KABELBINDER	KABELSTROP	BUNDELBAND	
33		3562		2	ARRUELA PLANA, Engine Mount				
						WASHER	ARANDELA	RONDELLA	131R
					RONDELLE	UNTERLEGSCHEIBE	FLADSKIVE	SLUITRING	

10.012.01	02	p1	05/11

REMOTE DIPSTICK (L223-C238)
REMOTE DIPSTICK (L223-C238)
REMOTE DIPSTICK (L223-C238)
REMOTE DIPSTICK (L223-C238)

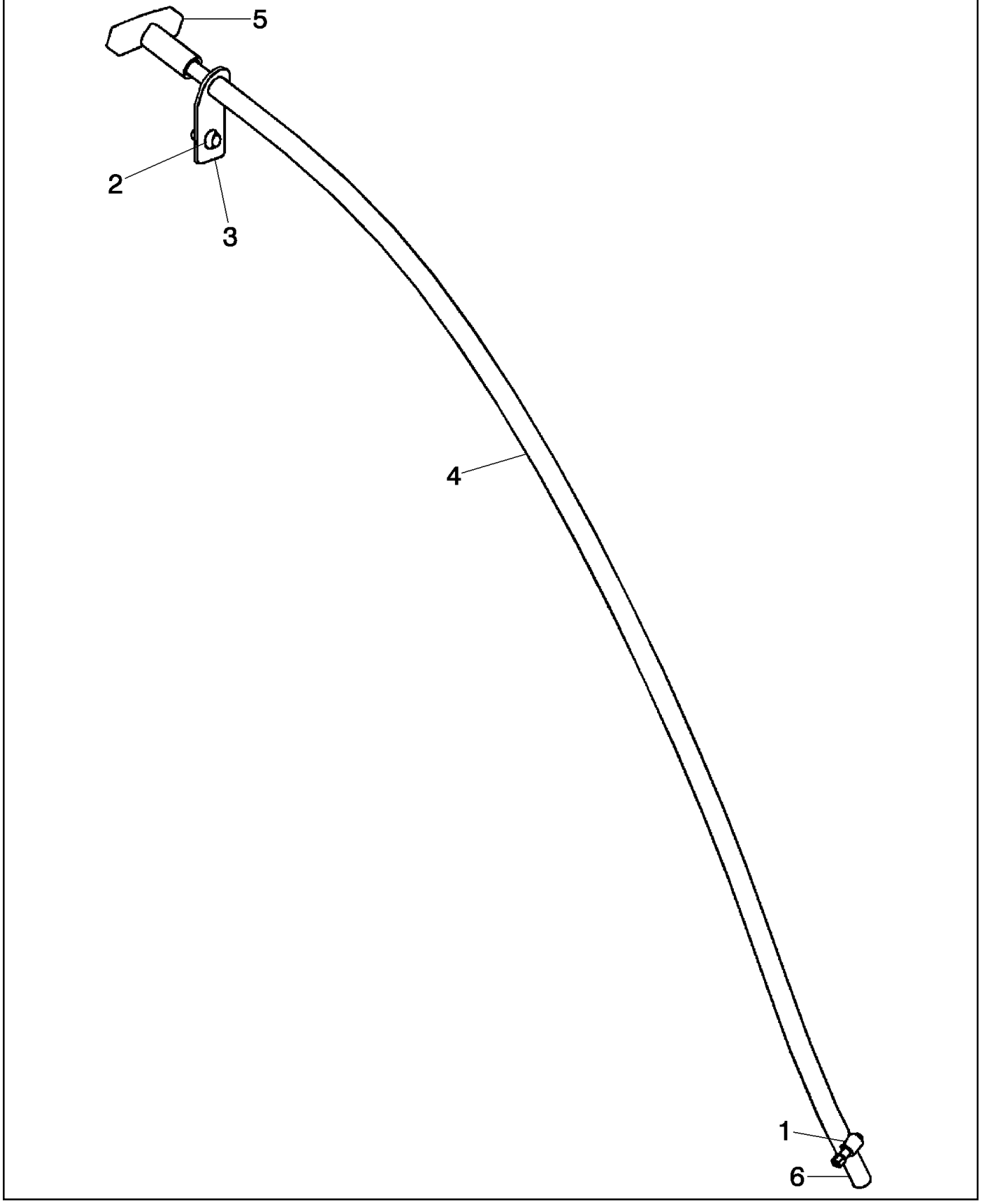

REMOTE DIPSTICK (L223-C238)
REMOTE DIPSTICK (L223-C238)
REMOTE DIPSTICK (L223-C238)
REMOTE DIPSTICK (L223-C238)

R	N	P.N.	MOD	Q	Denominação Description	Description Bezeichnung	Denominacion Beskrivelse	Descrizione Beschrijving	L.C.
1		574518		1	BRAÇADEIRA MANGUEIRA, #4, 0.25/0.62 Type M Worm				
						HOSE CLAMP	ABRAZADERA DE MANG	FASCETTA STRINGITUB	P729
					COLLIER POUR FLEXIBL	SCHLAUCHSCHELLE	SLANGEKLEMME	SLANGKLEM	
2		84163981		1	PARAFUSO, M6x15	SCREW	TORNILLO	VITE	040V
					VIS	SCHRAUBE	SKRUE	SCHROEF	
3		84259455		1	SUPORTE, Dipstick Tube	BRACKET	SOPORTE	STAFFA	225S
					SUPPORT	HALTERUNG	BESLAG	STEUN	
4		84259456		1	TUBO PLÁSTICO, 9.55 mm OD x 886 mm L, Dipstick				
						PLASTIC-RUBBER TUBE	TUBO DE GOMA DE PLÁ	TUBO IN PLASTICA-GOM	Z192
					GAINE PLASTIQUE	KUNSTSTOFF-/GUMMI-R	PLASTIKGUMMISLANGE	KUNSTSTOF-RUBBERLE	
5		84280441		1	HASTE DE NÍVEL, Engine	DIPSTICK	VARILLA DE NIVEL	ASTINA DI LIVELLO	091A
					JAUGE DE NIVEAU	MESSSTAB	MÅLEPIND	PEILSTOK	
6		87578147		1	ADAPTADOR, F5C Block To Dipstick				
						ADAPTER	ADAPTADOR	ADATTATORE	001A
					ADAPTATEUR	ADAPTER	ADAPTER	ADAPTER	
7		86632601		1	TRAVA DA ARRUELA, Ext Tooth, M8, (Not Shown) Use to mount Ref. 3				
						LOCK WASHER	ARANDELA DE BLOQUE	RONDELLA DI SICUREZ	132R
					RONDELLE FREIN	SICHERUNGSSCHEIBE	LÅSESKIVE	BORGRING	

10.012.01	03	p1	02/11

REMOTE OIL DRAIN (L223-C238)
REMOTE OIL DRAIN (L223-C238)
REMOTE OIL DRAIN (L223-C238)
REMOTE OIL DRAIN (L223-C238)

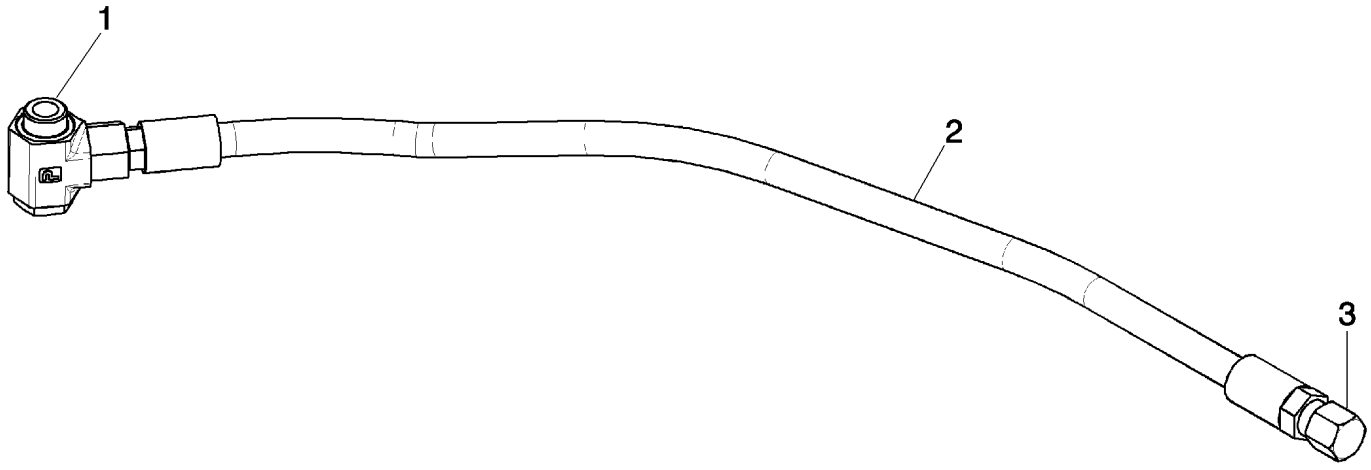

REMOTE OIL DRAIN (L223-C238)
REMOTE OIL DRAIN (L223-C238)
REMOTE OIL DRAIN (L223-C238)
REMOTE OIL DRAIN (L223-C238)

R	N	P.N.	MOD	Q	Denominação Description	Description Bezeichnung	Denominacion Beskrivelse	Descrizione Beschrijving	L.C.
1		87742610		1	CONEXÃO, Oil Pan RACCORD	FITTING ARMATUR	ACOPLAMIENTO FITTING	RACCORDO AANSLUITING	3300
2		84201423		1	MANGUEIRA, Remote Oil Drain FLEXIBLE	HOSE SCHLAUCH	TUBO SLANGE	TUBO FLESSIBILE SLANG	030M
3		262159		1	TAMPA, 37°, 3/4"-16 CAPUCHON	CAP KAPPE	TAPÓN TANKDÆKSEL	TAPPO DOP	052T

10.012.01	04	p1	02/11

REMOTE ENGINE OIL (L223-C238)
REMOTE ENGINE OIL (L223-C238)
REMOTE ENGINE OIL (L223-C238)
REMOTE ENGINE OIL (L223-C238)

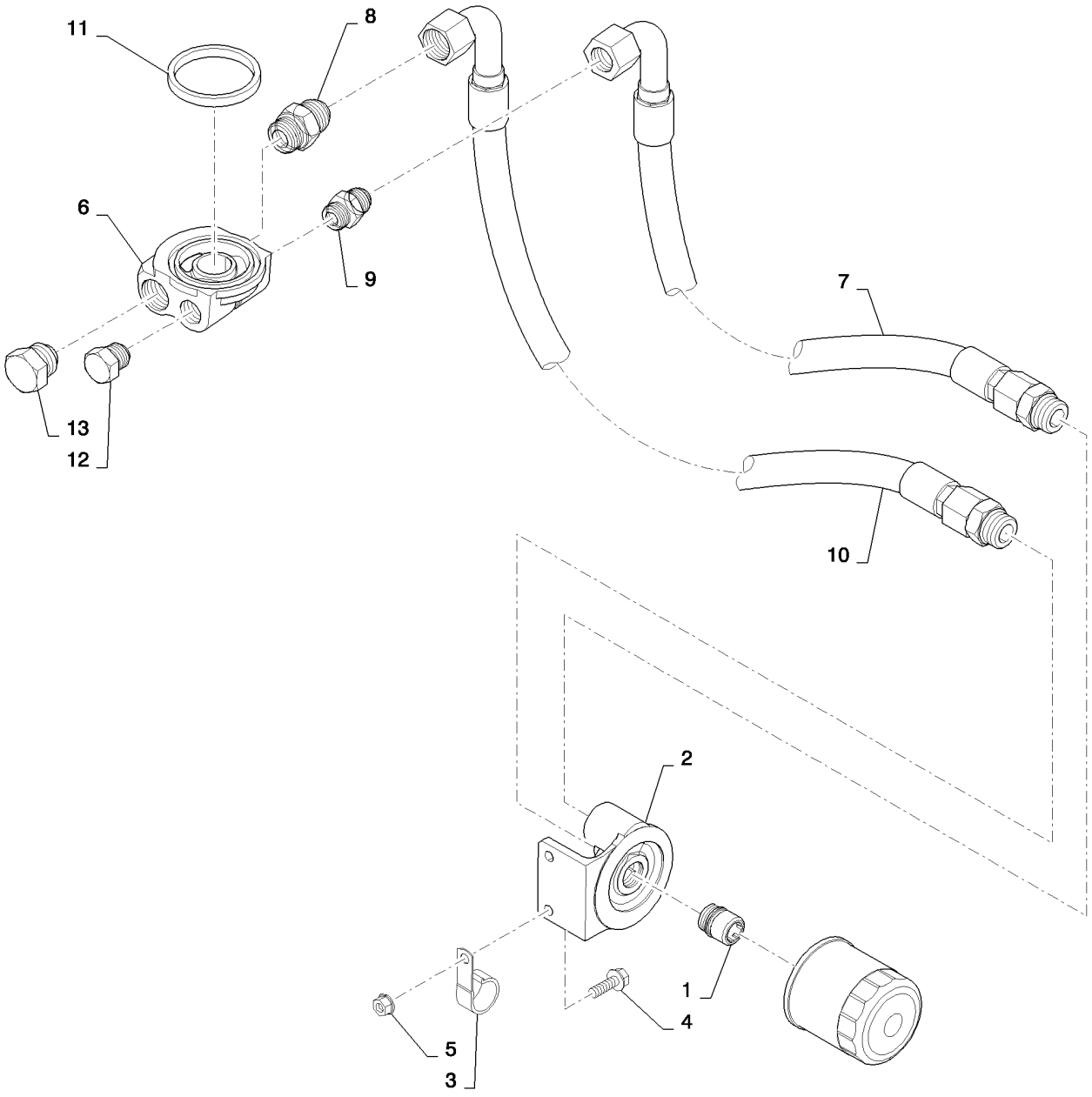

REMOTE ENGINE OIL (L223-C238)
REMOTE ENGINE OIL (L223-C238)
REMOTE ENGINE OIL (L223-C238)
REMOTE ENGINE OIL (L223-C238)

R	N	P.N.	MOD	Q	Denominação Description	Description Bezeichnung	Denominacion Beskrivelse	Descrizione Beschrijving	L.C.
1		84297794		1	ADAPTADOR, Filter Head, F5C Engine				
						ADAPTER	ADAPTADOR	ADATTATORE	001A
					ADAPTATEUR	ADAPTER	ADAPTER	ADAPTER	
2		84296830		1	ADAPTADOR, Oil Filter	ADAPTER	ADAPTADOR	ADATTATORE	001A
					ADAPTATEUR	ADAPTER	ADAPTER	ADAPTER	
3		87313351		1	GRAMPO, J, 25.4mm	CLIP	ABRAZADERA	FERMO	045F
					COLLIER	KLAMMER	KLIPS	KLEM	
4		9671714		2	PARAFUSO, Hex Flg, M8 x 25, 8.8				
						BOLT	PERNO	BULLONE	140B
					VIS	SCHRAUBE	BOLT	BOUT	
5		9804277		2	PORCA, M8 x 1.25, Flg, Cl 8				
						NUT	TUERCA	DADO	010D
					ECROU	MUTTER	MØTRIK	MOER	
6		84296854		1	ADAPTADOR, Oil Filter, F5C				
						ADAPTER	ADAPTADOR	ADATTATORE	001A
					ADAPTATEUR	ADAPTER	ADAPTER	ADAPTER	
7		84269293		1	MANGUEIRA HIDRÁULICA, Remote Oil Filter				
						HYDRAULIC HOSE	TUBO HIDRÁULICO	TUBO FLESSIBILE IDRAU	A058
					FLEXIBLE HYDRAULIQUI	HYDRAULIKSCHLAUCH	SLANGE, HYDRAULIK	HYDRAULISCHE SLANG	
8		322896		2	CONECTOR HIDRÁUL, 1 1/16"-12, 37º x 1 1/16"-12, O-Ring				
						HYD CONNECTOR	CONECTOR HIDRÁULIC	CONNETTORE IDRAULIC	020R
					CONNECTEUR HYDRAU	HYDR STECKVERBINDE	HYDRAULIKSTIK	HYDRAULISCHE AANSLU	
9		87301330		2	CONECTOR HIDRÁUL	HYD CONNECTOR	CONECTOR HIDRÁULIC	CONNETTORE IDRAULIC	020R
					CONNECTEUR HYDRAU	HYDR STECKVERBINDE	HYDRAULIKSTIK	HYDRAULISCHE AANSLU	
10		84305911		1	MANGUEIRA HIDRÁULICA, Remote Oil Filter				
						HYDRAULIC HOSE	TUBO HIDRÁULICO	TUBO FLESSIBILE IDRAU	A058
					FLEXIBLE HYDRAULIQUI	HYDRAULIKSCHLAUCH	SLANGE, HYDRAULIK	HYDRAULISCHE SLANG	
11		84303971		1	VEDADOR DE ÓLEO, Ring	OIL SEAL	JUNTA DE ACEITE	PARAOLIO	P278
					JOINT ETANCHEITE D'HI	ÖLDICHTUNG	OLIESEGL	OLIEAFDICHTING	
12		86512512		1	BUJÃO, Hex Hd, 7/8"-14 ORB				
						PLUG	TAPÓN	TAPPO	050T
					BOUCHON	STOPFEN	PROP	PLUG	
13		163410		1	BUJÃO, Hex Hd, 1 1/16"-12 ORB				
						PLUG	TAPÓN	TAPPO	050T
					BOUCHON	STOPFEN	PROP	PLUG	
14		84353803		1	GUARNIÇÃO, 290 mm; Not Shown				
						TRIM	GUARNICIÓN	RIVESTIMENTO	C046
					GARNITURE	VERKLEIDUNG	INDTRÆK	BEKLEDING	

10.012.04		p1	02/11

HOOKS - ENGINE (504154713)
HOOKS - ENGINE (504154713)
GANCHOS DE MANOIBRA - MOTOR (504154713)
GANCI MANOVRA - MOTORE (504154713)

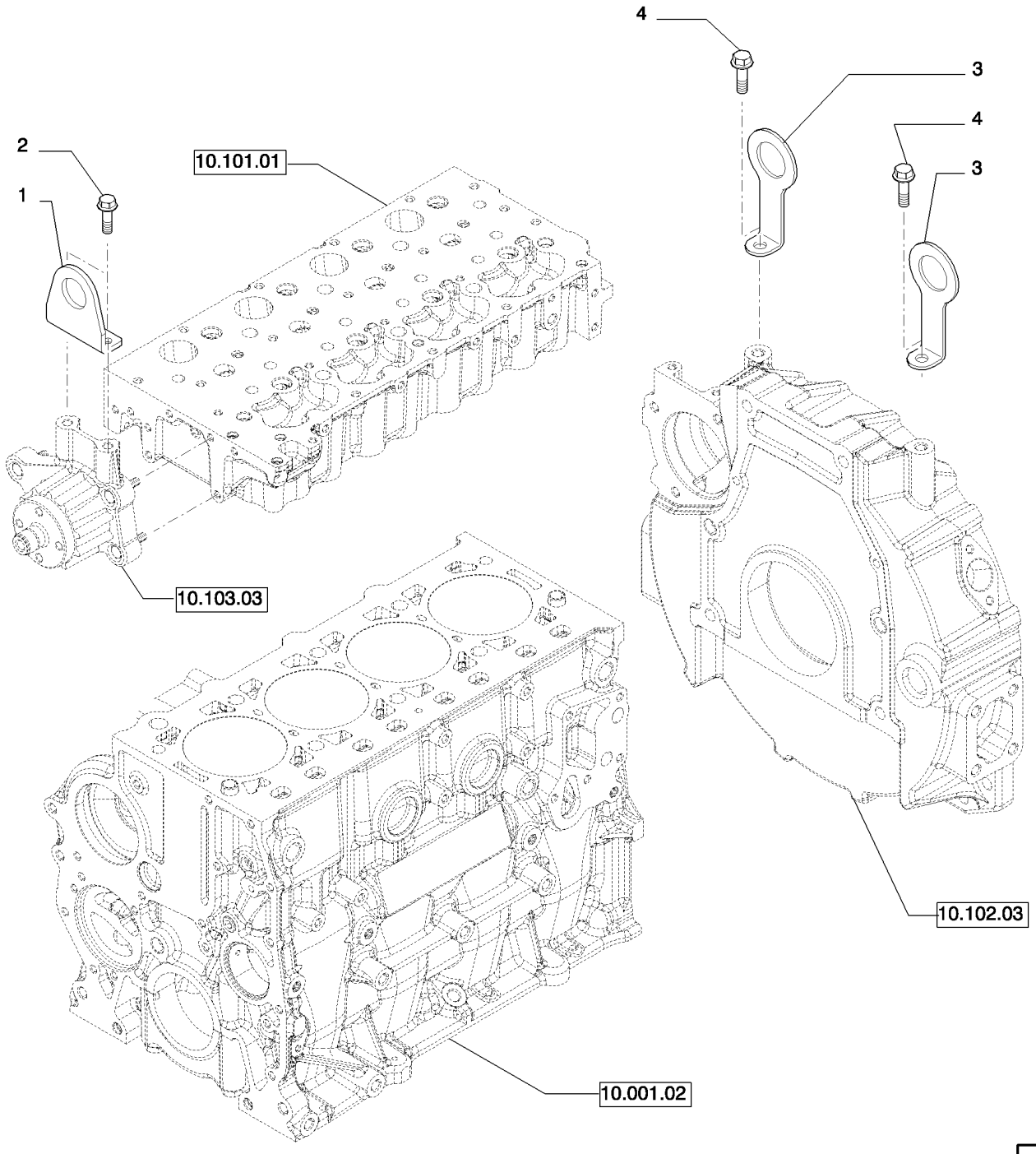

CROCHETS DE MANOEUVRE - MOTEUR (504154713)
ANKERHAKEN - MOTOR (504154713)
MANØVREKROGE - MOTOR (504154713)
HEFHAKEN - MOTOR (504154713)

R	N	P.N.	MOD	Q	Denominação Description	Description Bezeichnung	Denominacion Beskrivelse	Descrizione Beschrijving	L.C.
1		504082370		1	GANCHO CROCHET	HOOK HAKEN	GANCHO KROG	GANCIO HAAK	030G
2		18139424		2	PARAFUSO, M10 x 20 VIS	SCREW SCHRAUBE	TORNILLO SKRUE	VITE SCHROEF	040V
3		504239237		2	GANCHO CROCHET	HOOK HAKEN	GANCHO KROG	GANCIO HAAK	030G
4		16587925		2	PARAFUSO VIS	BOLT SCHRAUBE	PERNO BOLT	BULLONE BOUT	140B

CYLINDER HEAD & RELATED PARTS (504385845)
CYLINDER HEAD & RELATED PARTS (504385845)
CULATA Y PARTES RELACIONADAS (504385845)
TESTA CILINDRI E PARTICOLARI RELATIVI (504385845)

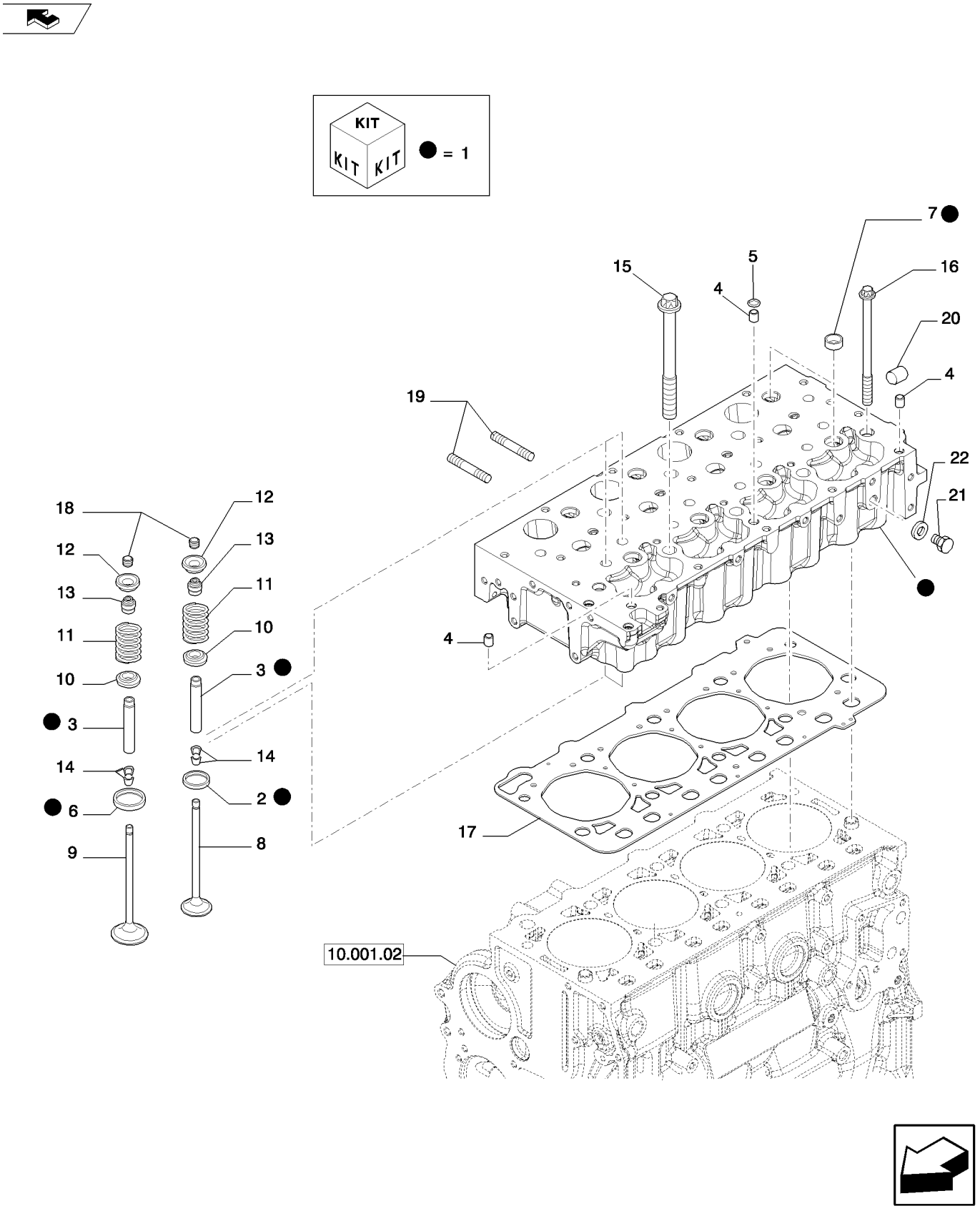

CULASSE ET PIECES ANNEXES (504385845)
ZYLINDERKOPF UND DAZUGEHÖRIGE TEILE (504385845)
CYLINDERHOVED OG TILHØRENDE DELE (504385845)
CYLINDERKOP EN DESBETREFFENDE DETAILS (504385845)

R	N	P.N.	MOD	Q	Denominação Description	Description Bezeichnung	Denominacion Beskrivelse	Descrizione Beschrijving	L.C.
1		{504385846}		1	- ASSY Include Ref 2,3,6,7				
2		504162949		4	SEDE DE VÁLVULA SIEGE DE SOUPAPE	VALVE SEAT VENTILSITZ	ASIENTO DE VÁLVULA VENTIL, SÆDE	SEDE VALVOLA KLEPZITTING	074S
3		4749397		8	GUIA DE VÁLVULA, +0,05 mm GUIDE-SOUPAPE	VALVE GUIDE VENTILFÜHRUNG	GUÍA DE VÁLVULA VENTILSTYR	GUIDA DELLA VALVOLA KLEPGELEIDER	150G
3		4749398		8	GUIA DE VÁLVULA, +0,1 mm GUIDE-SOUPAPE	VALVE GUIDE VENTILFÜHRUNG	GUÍA DE VÁLVULA VENTILSTYR	GUIDA DELLA VALVOLA KLEPGELEIDER	150G
3		4749399		8	GUIA DE VÁLVULA, +0,25 mm GUIDE-SOUPAPE	VALVE GUIDE VENTILFÜHRUNG	GUÍA DE VÁLVULA VENTILSTYR	GUIDA DELLA VALVOLA KLEPGELEIDER	150G
4		99435557		3	GUIA, D. 8,5 mm GOUJON	DOWEL PASSSTIFT	BULÓN DYVEL	PERNO PASPEN	090G
5		17281481		1	O-RING, 10.7mm ID x 2.6mm Width, D. 10,7 mm SP=2,6 mm JOINT TORIQUE	O-RING O-RING	JUNTA TÓRICA O-RING	ANELLO TOROIDALE O-RING	055A
6		504254094		4	SEDE DE VÁLVULA SIEGE DE SOUPAPE	VALVE SEAT VENTILSITZ	ASIENTO DE VÁLVULA VENTIL, SÆDE	SEDE VALVOLA KLEPZITTING	074S
7		16988301		8	BUJÃO, D. 20 mm BOUCHON	PLUG STOPFEN	TAPÓN PROP	TAPPO PLUG	050T
8		504162958		4	VÁLVULA DE ADMISSÃO SOUP. ADMISSION MOT	STD ENGINE INLET VALV STANDARD-MOTOREINL	VALV. ADM. DE MOTOR INDSUGNINGSVENTIL, S	VALV. ASPIR. MOTORE S STANDAARDINLAATKLE	111V
9		504162959		4	VÁLVULA DE ESCAPE SOUP. ECHAPPEMENT M	STD ENGINE EXHAUST V STANDARD-MOTORAUS	VALV. ESCAPE MOTOR I UDSTØDNINGSVENTIL,	VALV. SCARICO MOTOR STANDAARDUITLAATKL	112V
10		504178119		8	COPO RETENTOR COUPELLE DE RETENUI	RETAINER CUP HALTEKAPPE	COPA DE RETENCIÓN TALLERKENFORMET BÆ	SCODELLINO DI RITEGN OPVANGBAK	061S
11		4812347		8	MOLA RESSORT	SPRING FEDER	RESORTE FJEDER	MOLLA VEER	100M
12		4780558		8	COPO CUVETTE	CUP TASSE	TAZA LEJESKÅL	SCODELLINO SCHOTEL	060S
13		40101574		8	JUNTA JOINT	GASKET DICHTUNG	JUNTA PAKNING	GUARNIZIONE PAKKING	123G
14		14196670		16	TRAVA CÔNICA, D. 7,85 mm GOUPILLE BRAS CULBU	ROCKER ARM COTTER KIPPHEBELSTIFT	ALETA DE BALANCÍN HALVKILE TIL VENTILLØ	COPPIGLIA BILANCIERE TUIMELAARSPIE	100S
15		504081521		6	PARAFUSO, M15X1,5X193 mm VIS	SCREW SCHRAUBE	TORNILLO SKRUE	VITE SCHROEF	040V
16		504081533		4	PARAFUSO, M12X1,5X165 mm VIS	SCREW SCHRAUBE	TORNILLO SKRUE	VITE SCHROEF	040V
17		504190831		1	JUNTA DO CABEÇOTE, SP 0,8 JOINT DE CULASSE	CYLINDER HEAD GASKE ZYLINDERKOPFDICHTUI	JUNTA DE CULATA TOPPAKNING	GUARNIZIONE TESTATA CILINDERKOPPAKKING	129G
18		4838680		8	TAMPA CAPUCHON	CAP KAPPE	TAPÓN TANKDÆKSEL	TAPPO DOP	052T

CYLINDER HEAD & RELATED PARTS (504385845)
CYLINDER HEAD & RELATED PARTS (504385845)
CULATA Y PARTES RELACIONADAS (504385845)
TESTA CILINDRI E PARTICOLARI RELATIVI (504385845)

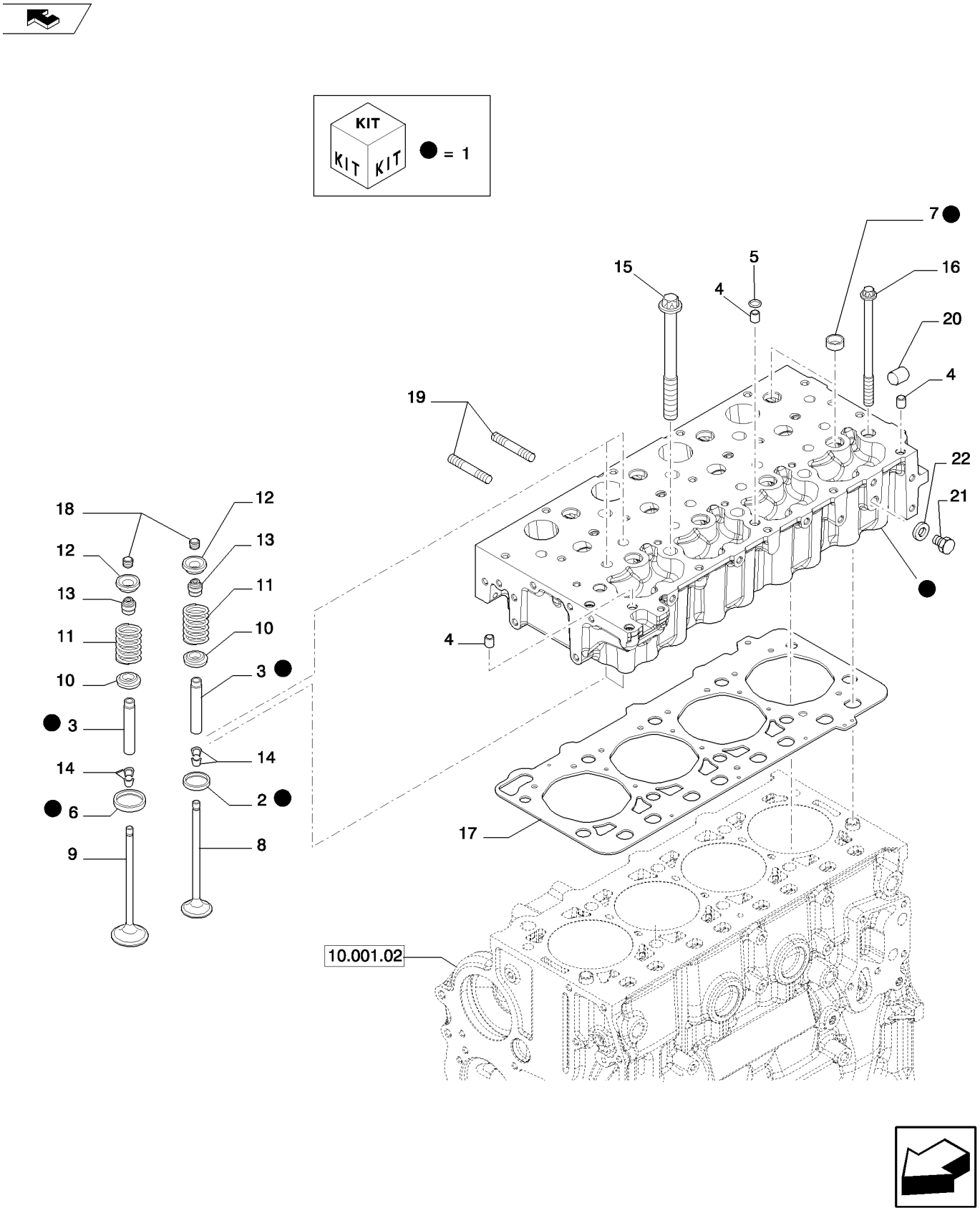

CULASSE ET PIECES ANNEXES (504385845)
ZYLINDERKOPF UND DAZUGEHÖRIGE TEILE (504385845)
CYLINDERHOVED OG TILHØRENDE DELE (504385845)
CYLINDERKOP EN DESBETREFFENDE DETAILS (504385845)

R	N	P.N.	MOD	Q	Denominação Description Bezeichnung	Description Bezeichnung Denominacion	Denominacion Beskrivelse Descrizione	Descrizione Beschrijving	L.C.
19		**500380521**		8	PRISIONEIRO, M8 x 1.25 x 45 STUD GOUJON	PRISIONERO GEWINDEBOLZEN STØTTEBOLT	PRIGIONIERO TAPEIND		210P
20		**16990970**		1	BUJÃO PLUG BOUCHON	TAPÓN STOPFEN PROP	TAPPO PLUG		050T
21		**10300511**		1	BUJÃO, M12 x 1.5 x 12, Cl5.8 PLUG BOUCHON	TAPÓN STOPFEN PROP	TAPPO PLUG		050T
22		**10298460**		1	ARRUELA DE COBRE, M12.2 x 18 x 1.5 COPPER WASHER RONDELLE CUIVRE	ARANDELA DE COBRE KUPFERUNTERLEGSCH KOBBERSKIVE	RONDELLA IN RAME KOPEREN SLUITRING		P674

10.101.02	01	p1	02/11

ROCKER SHAFT (504335547)
ROCKER SHAFT (504335547)
EJE BALANCINES (504335547)
ALBERO BILANCIERE (504335547)

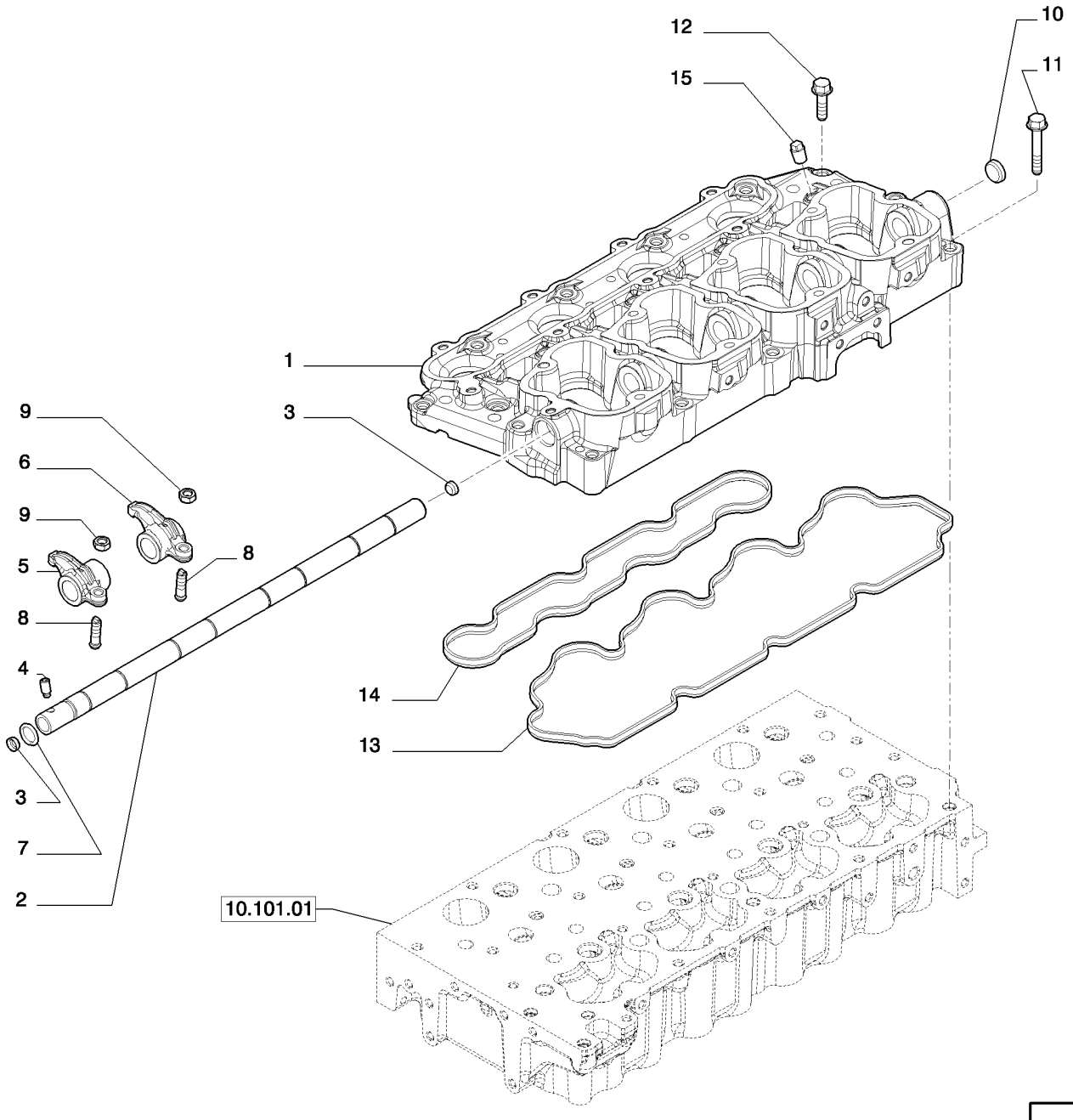

AXE DE CULBUTEUR (504335547)
KIPPHEBELWELLE (504335547)
VIPPEAKSEL (504335547)
TUIMELAARAS (504335547)

R	N	P.N.	MOD	Q	Denominação Description	Description Bezeichnung	Denominacion Beskrivelse	Descrizione Beschrijving	L.C.
1		504345342		1	TAMPA VÁLVULA COUVERCLE DE SOUPA	VALVE COVER VENTILDECKEL	TAPA DE VÁLVULA VENTILDÆKSEL	COPERCHIO VALVOLA KLEPPENDEKSEL	P889
2		504250345		1	EIXO ARBRE	SHAFT WELLE	EJE AKSEL	ALBERO AS	016A
3		16987801		2	BUJÃO, D. 12 mm BOUCHON	PLUG STOPFEN	TAPÓN PROP	TAPPO PLUG	050T
4		99454296		1	PARAFUSO VIS	SCREW SCHRAUBE	TORNILLO SKRUE	VITE SCHROEF	040V
5		504221915		4	BALANCIM BRAS DE CULBUTEUR	ROCKER ARM KIPPHEBELARM	BRAZO DE BALANCÍN VIPPEARM	BILANCIERE TUIMELAARARM	055B
6		504221914		4	BALANCIM BRAS DE CULBUTEUR	ROCKER ARM KIPPHEBELARM	BRAZO DE BALANCÍN VIPPEARM	BILANCIERE TUIMELAARARM	055B
7		17281681		1	O-RING, 13.9mm ID x 2.6mm Width, D. 13,9 mm SP=2,6 mm JOINT TORIQUE	O-RING O-RING	JUNTA TÓRICA O-RING	ANELLO TOROIDALE O-RING	055A
8		4699783		8	PARAFUSO VIS	SCREW SCHRAUBE	TORNILLO SKRUE	VITE SCHROEF	040V
9		4338920		8	PORCA ECROU	NUT MUTTER	TUERCA MØTRIK	DADO MOER	010D
10		16988401		1	BUJÃO, D. 22 mm BOUCHON	PLUG STOPFEN	TAPÓN PROP	TAPPO PLUG	050T
11		16586524		9	PARAFUSO, Hex, Flg Hd, M8 x 30, 8.8, M8 x 50 VIS	SCREW SCHRAUBE	TORNILLO SKRUE	VITE SCHROEF	040V
12		16673835		11	PARAFUSO, M8 x 30 VIS	SCREW SCHRAUBE	TORNILLO SKRUE	VITE SCHROEF	040V
13		504163121		1	JUNTA JOINT	GASKET DICHTUNG	JUNTA PAKNING	GUARNIZIONE PAKKING	123G
14		504177226		1	JUNTA JOINT	GASKET DICHTUNG	JUNTA PAKNING	GUARNIZIONE PAKKING	123G
15		504273002		4	BUJÃO, M12X1,5 mm BOUCHON	PLUG STOPFEN	TAPÓN PROP	TAPPO PLUG	050T

10.101.02	02	p1	02/11

CYLINDER HEAD COVERS (504191694)
CYLINDER HEAD COVERS (504191694)
TAPAS CULATA (504191694)
COPERCHI TESTA CILINDRI (504191694)

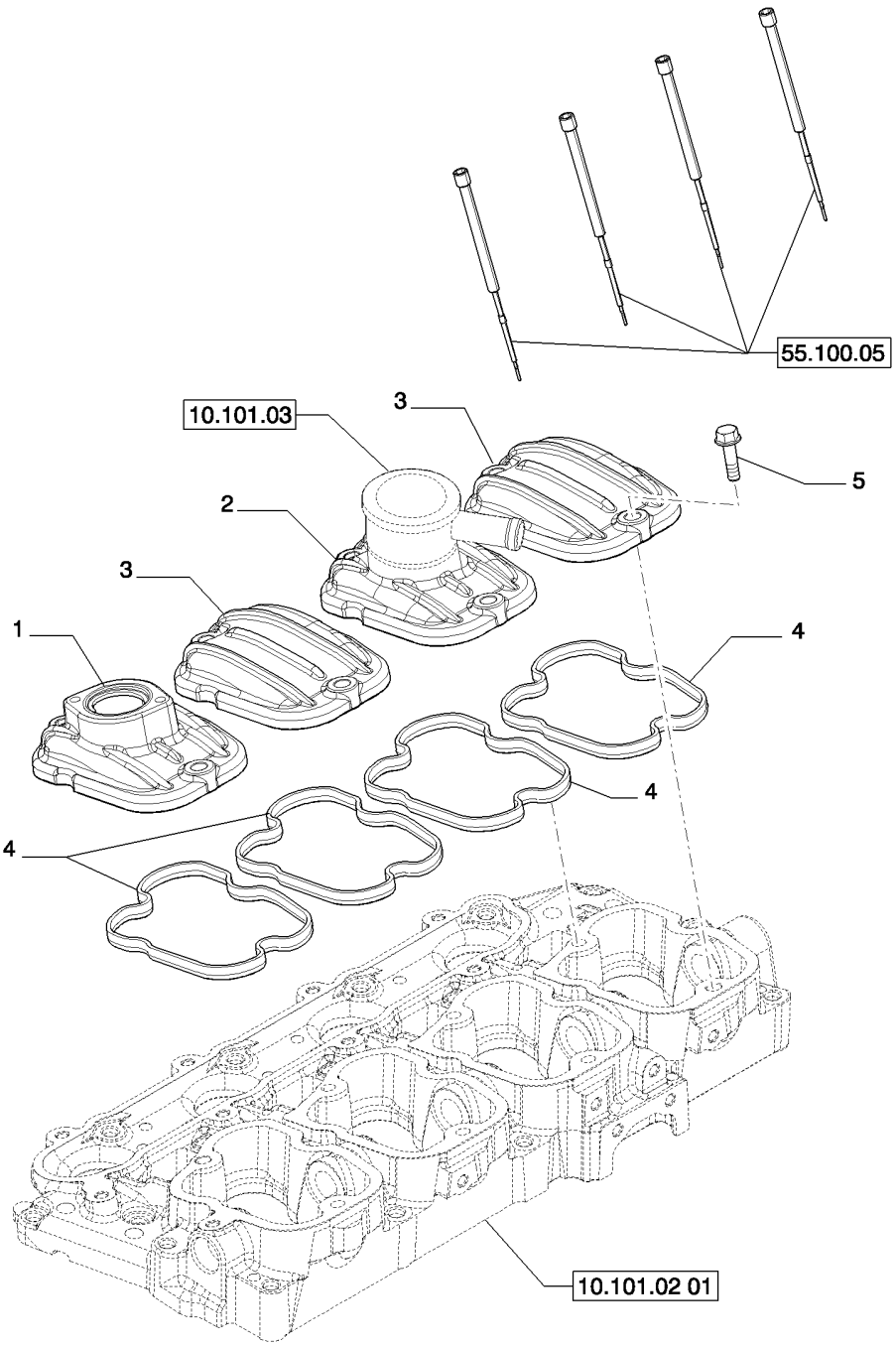

COUVERCLES CULASSE (504191694)
VENTILDECKEL (504191694)
TOPSTYKSDÆKSEL (504191694)
DEKSELS CILINDERKOPPEN (504191694)

R	N	P.N.	MOD	Q	Denominação Description	Description Bezeichnung	Denominacion Beskrivelse	Descrizione Beschrijving	L.C.
1		504245566		1	TAMPA VÁLVULA COUVERCLE DE SOUPA	VALVE COVER VENTILDECKEL	TAPA DE VÁLVULA VENTILDÆKSEL	COPERCHIO VALVOLA KLEPPENDEKSEL	P889
2		504349057		1	TAMPA VÁLVULA COUVERCLE DE SOUPA	VALVE COVER VENTILDECKEL	TAPA DE VÁLVULA VENTILDÆKSEL	COPERCHIO VALVOLA KLEPPENDEKSEL	P889
3		504221916		2	TAMPA VÁLVULA COUVERCLE DE SOUPA	VALVE COVER VENTILDECKEL	TAPA DE VÁLVULA VENTILDÆKSEL	COPERCHIO VALVOLA KLEPPENDEKSEL	P889
4		504173590		4	JUNTA JOINT	GASKET DICHTUNG	JUNTA PAKNING	GUARNIZIONE PAKKING	123G
5		16586624		8	PARAFUSO, M8X30 mm VIS	SCREW SCHRAUBE	TORNILLO SKRUE	VITE SCHROEF	040V

10.101.03		p1	02/11

ENGINE BREATHERS (504245734)
ENGINE BREATHERS (504245734)
RESPIRADEROS MOTOR (504245734)
SFIATI MOTORE (504245734)

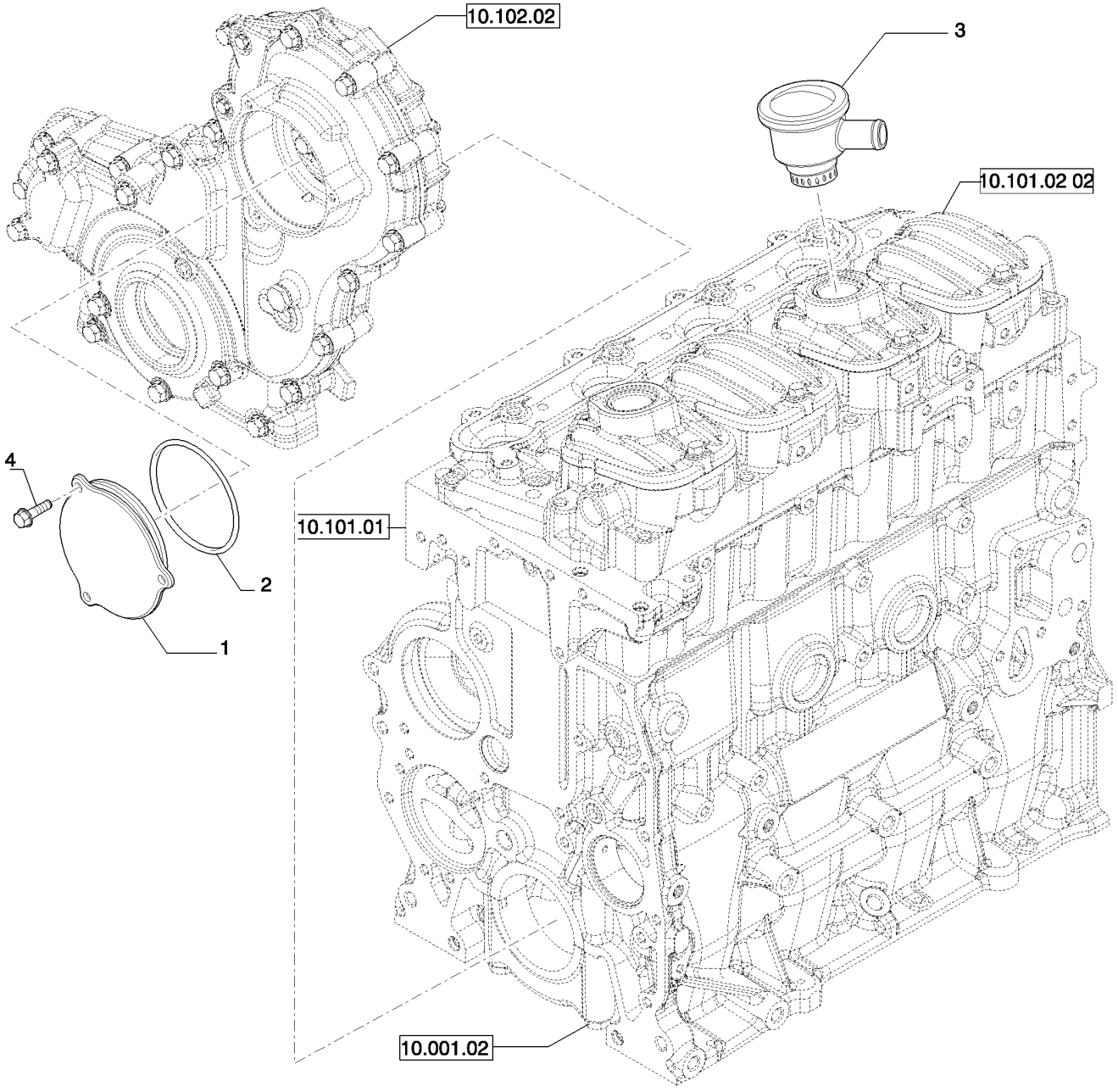

RENIFLARD MOTEUR (504245734)
MOTORENTLÜFTER (504245734)
MOTORÅNDERØR (504245734)
UITLATEN MOTOR (504245734)

R	N	P.N.	MOD	Q	Denominação Description	Description Bezeichnung	Denominacion Beskrivelse	Descrizione Beschrijving	L.C.
1		**504216814**		1	COBERTURA COUVERCLE	COVER ABDECKUNG	CUBIERTA DÆKSEL	COPERCHIO AFSCHERMING	265C
2		**17291280**		1	O-RING, 98.84mm ID x 3.53mm Width, M98.84 Dia x 3.53 SP JOINT TORIQUE	O-RING O-RING	JUNTA TÓRICA O-RING	ANELLO TOROIDALE O-RING	055A
3		**504372247**		1	RESPIRO RENIFLARD	BREATHER ENTLÜFTER	RESPIRADERO UDLUFTNINGSSKRUE	SFIATO ONTLUCHTER	145S
4		**16597224**		3	PARAFUSO, M6 x 18 VIS	SCREW SCHRAUBE	TORNILLO SKRUE	VITE SCHROEF	040V

10.102.01		p1	02/11

OIL SUMP & RELATED PARTS (504179441)
OIL SUMP & RELATED PARTS (504179441)
CARTER DE ACEITE Y PARTES RELACIONADAS (504179441)
COPPA OLIO E PARTICOLARI RELATIVI (504179441)

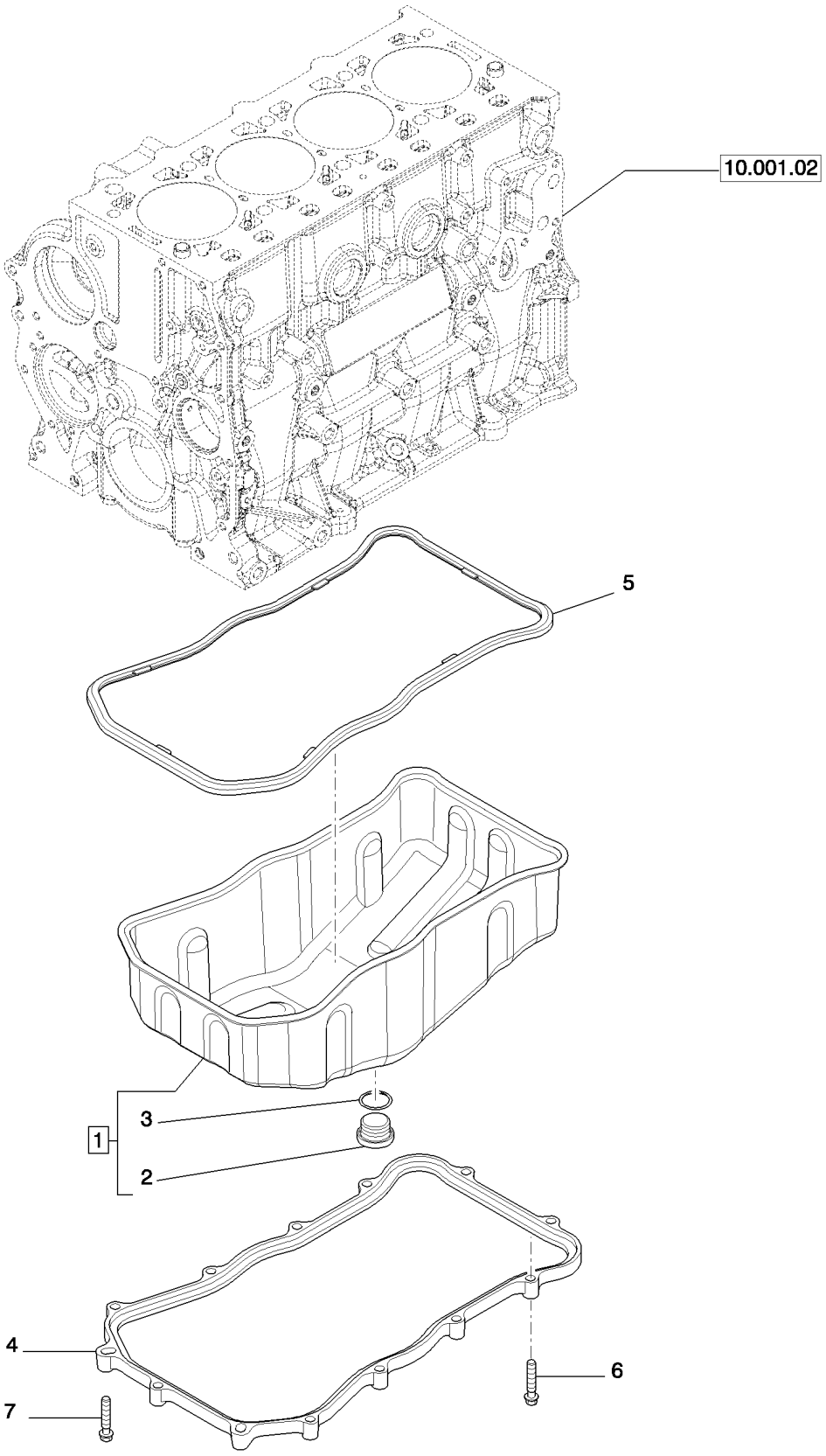

CARTER À HUILE ET PIÈCES ANNEXES (504179441)
ÖLWANNE UND DAZUGEHÖRIGE TEILE (504179441)
OLIEBUNDKAR OG TILHØRENDE DELE (504179441)
OLIECARTER EN DESBETREFFENDE DETAILS (504179441)

R	N	P.N.	MOD	Q	Denominação Description	Description Bezeichnung	Denominacion Beskrivelse	Descrizione Beschrijving	L.C.
1		504179445		1	CÁRTER DE ÓLEO DO MOTOR, - ASSY				
						ENGINE OIL PAN	CUBETA DE ACEITE DE	COPPA DELL'OLIO MOT(	274C
					CARTER D'HUILE MOTEI	MOTORÖLWANNE	BUNDKAR	MOTOROLIECARTER	
2		4894139		1	BUJÃO, Hex Soc, M22 x 1.5	PLUG	TAPÓN	TAPPO	050T
					BOUCHON	STOPFEN	PROP	PLUG	
3		17282280		1	JUNTA	GASKET	JUNTA	GUARNIZIONE	123G
					JOINT	DICHTUNG	PAKNING	PAKKING	
4		504179442		1	ESPAÇADOR	SPACER	SEPARADOR	DISTANZIALE	075D
					ENTRETOISE	DISTANZSTÜCK	AFSTANDSSTYKKE	AFSTANDSSTUK	
5		504179443		1	JUNTA	GASKET	JUNTA	GUARNIZIONE	123G
					JOINT	DICHTUNG	PAKNING	PAKKING	
6		16586625		11	PARAFUSO, M8 x 35 mm	SCREW	TORNILLO	VITE	040V
					VIS	SCHRAUBE	SKRUE	SCHROEF	
7		504049517		2	PARAFUSO, M10 x 1,5 x 9(	SCREW	TORNILLO	VITE	040V
					VIS	SCHRAUBE	SKRUE	SCHROEF	

10.102.02		p1	02/11

ENGINE BLOCK FRONT COVER (5801361473)
ENGINE BLOCK FRONT COVER (5801361473)
TAPA DELANTERA BASE MOTOR (5801361473)
COPERCHIO ANTERIORE BASAMENTO MOTORE (5801361473)

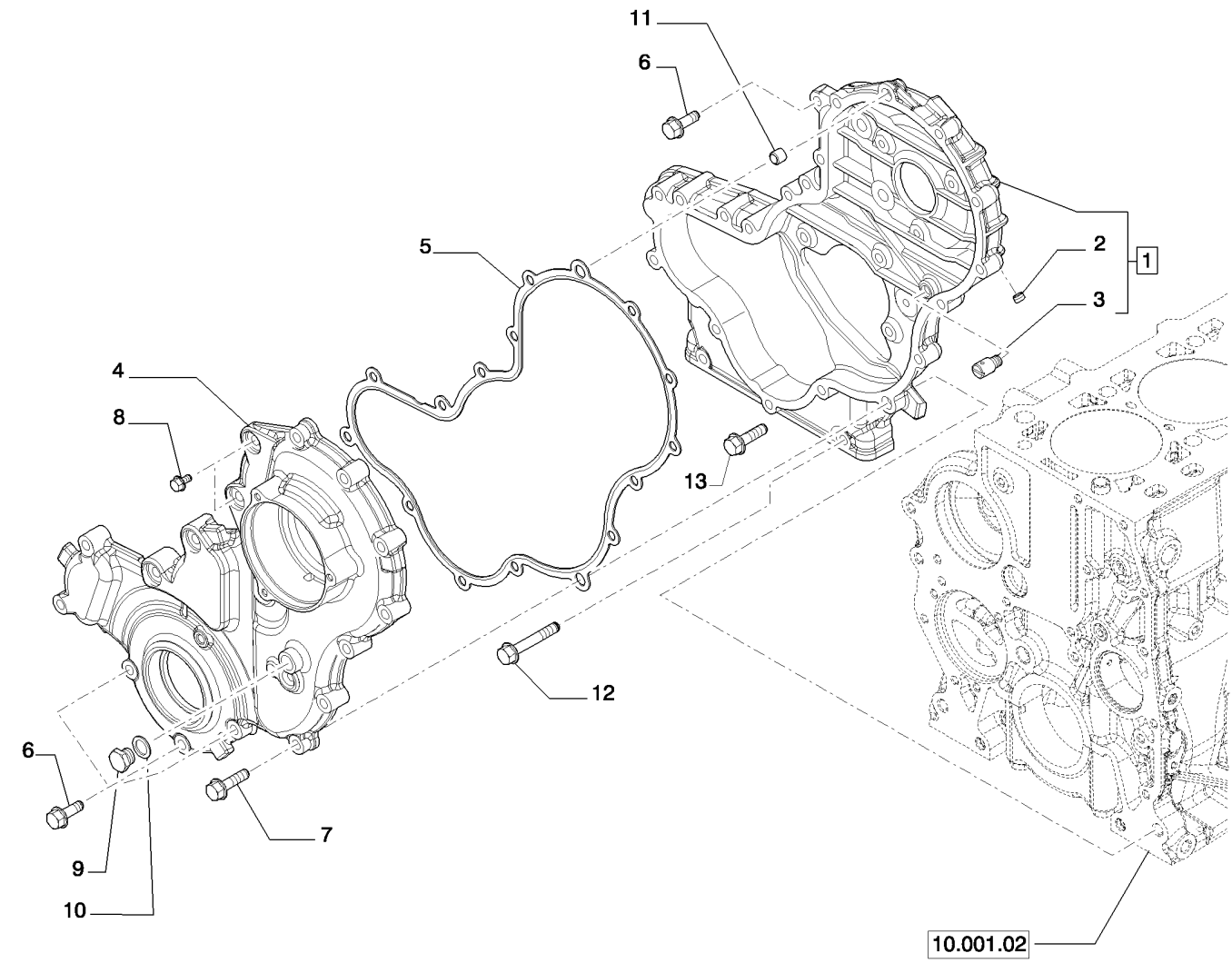

COUVERCLE AVANT CARTER MOTEUR (5801361473)
VORDERER DECKEL MOTORGEHÄUSE (5801361473)
FORRESTE DÆKSEL TIL KRUMTAPHUS (5801361473)
VOORDEKSEL MOTORBASIS (5801361473)

R	N	P.N.	MOD	Q	Denominação Description	Description Bezeichnung	Denominacion Beskrivelse	Descrizione Beschrijving	L.C.
1		504244214		1	COBERTURA, - ASSY COUVERCLE	COVER ABDECKUNG	CUBIERTA DÆKSEL	COPERCHIO AFSCHERMING	265C
2		504051236		1	BUJÃO, D.=1/8" BOUCHON	PLUG STOPFEN	TAPÓN PROP	TAPPO PLUG	050T
3		504204989		1	PULVERIZADOR DE ÓLEO GICLEUR D'HUILE	LUBE OIL JET NOZZLE SCHMIERÖLSPRITZDÜS	BOQ. INYEC. ACEITE LU DYSE, SMØREOLIE	UGELLO OLIO LUBRIFIC SMEEROLIESPROEIER	020U
4		504389774		1	COBERTURA COUVERCLE	COVER ABDECKUNG	CUBIERTA DÆKSEL	COPERCHIO AFSCHERMING	265C
5		504244287		1	JUNTA JOINT	GASKET DICHTUNG	JUNTA PAKNING	GUARNIZIONE PAKKING	123G
6		16586424		3	PARAFUSO, M8 x 25 VIS	SCREW SCHRAUBE	TORNILLO SKRUE	VITE SCHROEF	040V
6		16586624		2	PARAFUSO, M8 x 35 VIS	SCREW SCHRAUBE	TORNILLO SKRUE	VITE SCHROEF	040V
7		16586625		11	PARAFUSO, M8 x 35 VIS	SCREW SCHRAUBE	TORNILLO SKRUE	VITE SCHROEF	040V
8		4798845		2	PARAFUSO VIS	SCREW SCHRAUBE	TORNILLO SKRUE	VITE SCHROEF	040V
9		10300611		1	BUJÃO, M14 x 1.5 x 14, Cl5.8 BOUCHON	PLUG STOPFEN	TAPÓN PROP	TAPPO PLUG	050T
10		4858608		1	VEDAÇÃO, D. 14X20X1,5 mm JOINT	SEAL DICHTUNG	ANILLO DE CIERRE PAKNING	GUARNIZIONE; TENUTA AFDICHTING	132A
11		99435557		4	GUIA, D. 8,5 mm GOUJON	DOWEL PASSSTIFT	BULÓN DYVEL	PERNO PASPEN	090G
12		16586924		6	PARAFUSO, M8 x 50 VIS	SCREW SCHRAUBE	TORNILLO SKRUE	VITE SCHROEF	040V
13		98401723		5	PARAFUSO VIS	SCREW SCHRAUBE	TORNILLO SKRUE	VITE SCHROEF	040V
14		2995644		1	SELANTE, - NOT ILLUSTRATED PATE A JOINT	SEALANT DICHTMITTEL	SELLADOR TÆTNINGSMASSE	MATERIALE DI TENUTA; KIT	405S

10.102.03		p1	02/11

FLYWHEEL CASE (504380467)
FLYWHEEL CASE (504380467)
CÁRTER VOLANTE MOTOR (504380467)
CARTER VOLANO MOTORE (504380467)

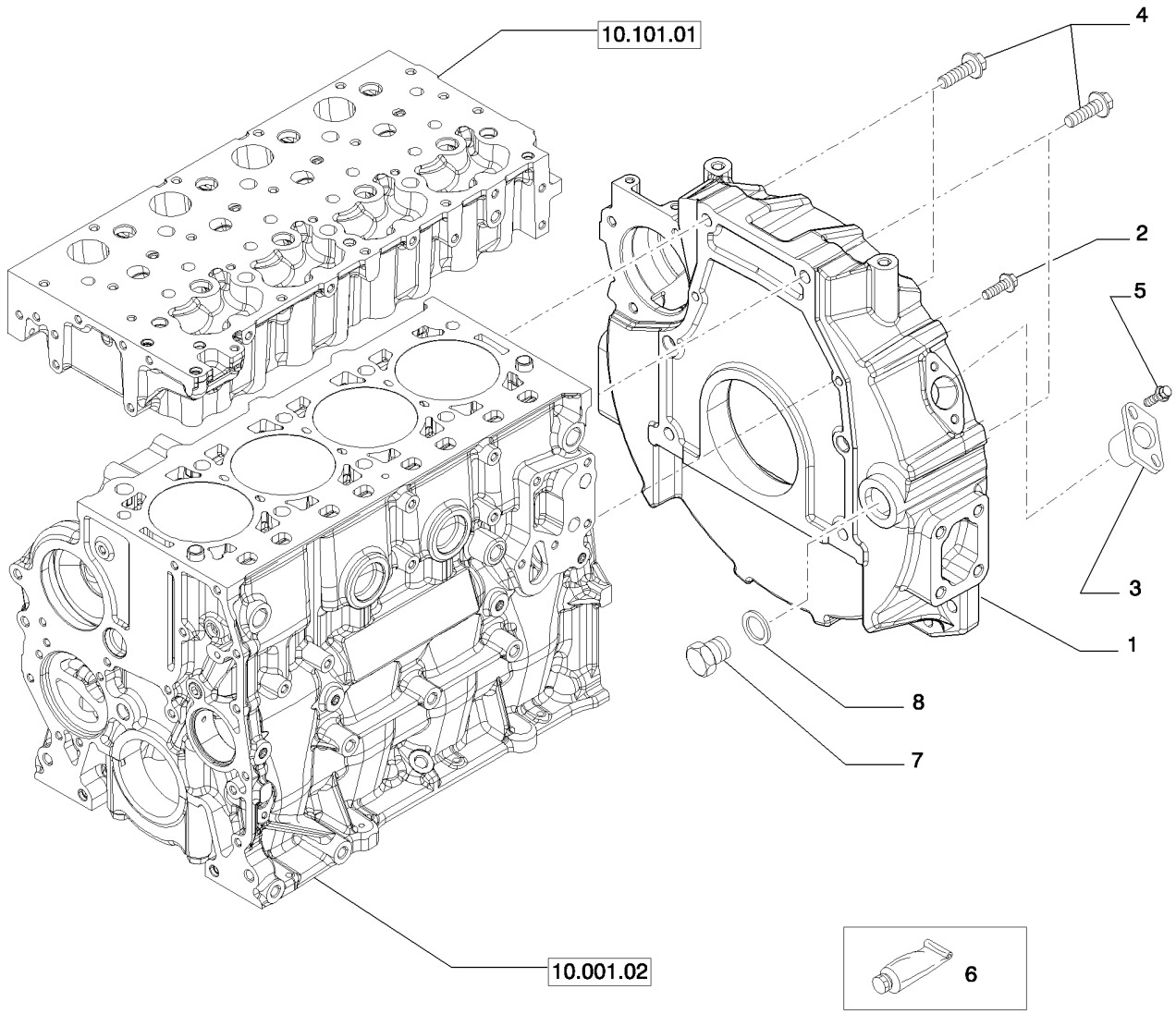

CARTER VOLANT MOTEUR (504380467)
SCHWUNGRADGEHÄUSE (504380467)
MOTOR-SVINGHJULSKASSE (504380467)
CARTER VLIEGWIEL MOTOR (504380467)

R	N	P.N.	MOD	Q	Denominação Description Bezeichnung	Description Denominacion Beskrivelse	Denominacion Descrizione Beschrijving	L.C.
1		{504380468}		1				
2		16673935		2	PARAFUSO, M8 x 35 mm VIS	SCREW SCHRAUBE	TORNILLO SKRUE	VITE SCHROEF	040V
3		504268669		1	PLACA PLAQUE	PLATE PLATTE	PLACA PLADE	PIASTRA PLAAT	105P
4		16678435		6	PARAFUSO, M12 x 60 mm VIS	SCREW SCHRAUBE	TORNILLO SKRUE	VITE SCHROEF	040V
5		504351177		2	PARAFUSO, M8 x 1,25 VIS	SCREW SCHRAUBE	TORNILLO SKRUE	VITE SCHROEF	040V
6		2995644		1	SELANTE PATE A JOINT	SEALANT DICHTMITTEL	SELLADOR TÆTNINGSMASSE	MATERIALE DI TENUTA; KIT	405S
7		4895378		1	BUJÃO TIPO BOTÃO, M29.2 BOUCHON BOUTON	BUTTON PLUG KNOPFFÖRMIGER STOF	TAPÓN DE BOTÓN KNAPPROP	TAPPO A PRESSIONE PLUG MET PLATTE KOP	A082
8		4895379		1	O-RING, 21.82mm ID x 3.53mm Width JOINT TORIQUE	O-RING O-RING	JUNTA TÓRICA O-RING	ANELLO TOROIDALE O-RING	055A

CRANKSHAFT (504178873)
CRANKSHAFT (504178873)
CIGUENAL (504178873)
ALBERO MOTORE (504178873)

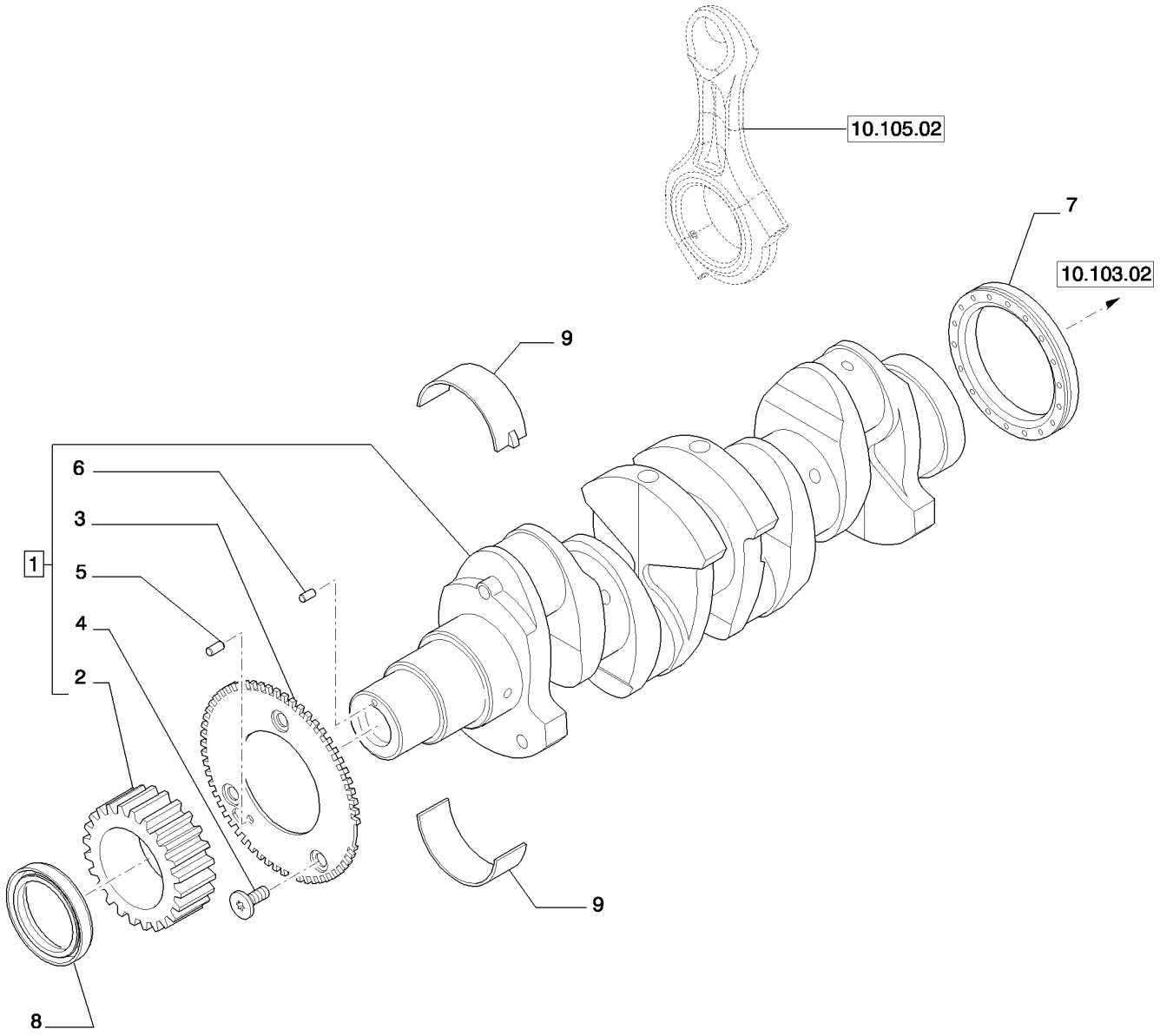

VILEBREQUIN (504178873)
KURBELWELLE (504178873)
KRUMTAPAKSEL (504178873)
AANDRIJFAS (504178873)

R	N	P.N.	MOD	Q	Denominação Description	Description Bezeichnung	Denominacion Beskrivelse	Descrizione Beschrijving	L.C.
1		504213230		1	VIRABREQUIM, - ASSY VILEBREQUIN	CRANKSHAFT KURBELWELLE	CIGÜEÑAL KRUMTAPAKSEL	ALBERO MOTORE KRUKAS	018A
2		504240426		1	ENGRENAGEM PIGNON	GEAR ZAHNRAD	ENGRANAJE TANDHJUL	INGRANAGGIO TANDWIEL	050I
3		504023782		1	ENGRENAGEM PIGNON	GEAR ZAHNRAD	ENGRANAJE TANDHJUL	INGRANAGGIO TANDWIEL	050I
4		500374310		3	PARAFUSO, M6X1 VIS	SCREW SCHRAUBE	TORNILLO SKRUE	VITE SCHROEF	040V
5		504006981		1	CONTRA PINO, D. 5,5 mm GOUPILLE FENDUE	COTTER PIN SPLINT	PASADOR SPLITBOLT	COPPIGLIA SPLITPEN	270C
6		17236324		1	ANEL ELÁSTICO GOUPILLE FENDUE	SPLIT PIN SPANNHÜLSE	PASADOR DIVIDIDO SPLIT	COPPIGLIA SPLITPEN	Z512
7		504014232		1	VEDAÇÃO DO EIXO JOINT D'ARBRE	SHAFT SEAL WELLENDICHTUNG	JUNTA DE EJE AKSELSTÆTNINGSRING	GUARNIZIONE DELL'ALE ASAFDICHTING	Z102
8		504056152		1	VEDAÇÃO DO EIXO JOINT D'ARBRE	SHAFT SEAL WELLENDICHTUNG	JUNTA DE EJE AKSELSTÆTNINGSRING	GUARNIZIONE DELL'ALE ASAFDICHTING	Z102
9		2995574		1	JOGO SEMI-BRONZINAS, -0,0 JEU PALIERS PRINC. ST	SET OF STD MAIN BRGS SATZ STANDARDHAUPT	JUEGO BRGS PRIN. SEF HOVEDLEJESÆT, STD.	KIT CUSCINETTI PRINC. SET STANDAARDHOOFI	102S
9		2995575		1	JOGO SEMI-BRONZ -0,254, -0,2 JEU PALIERS PRINC. -0,	SET OF MAIN BRGS -0. HAUPTLAGERSATZ -0,2	JUEGO BRGS PRIN. -0,2 SÆT M/ HOVEDLEJER -(	KIT CUSC. PRINC. -0,25 SET HOOFDLAGERS -0,2	332S
9		2995576		1	JOGO SEMI-BRONZ -0,762, -0,5 JEU PALIERS PRINC. -0,	SET OF MAIN BRGS -0. HAUPTLAGERSATZ -0,7	JUEGO BRGS PRIN. -0,7 SÆT M/ HOVEDLEJER -(	KIT CUSC. PRINC. -0,76 SET HOOFDLAGERS -0,7	334S

ENGINE, FLYWHEEL (504221728)
ENGINE, FLYWHEEL (504221728)
VOLANTE (504221728)
VOLANO (504221728)

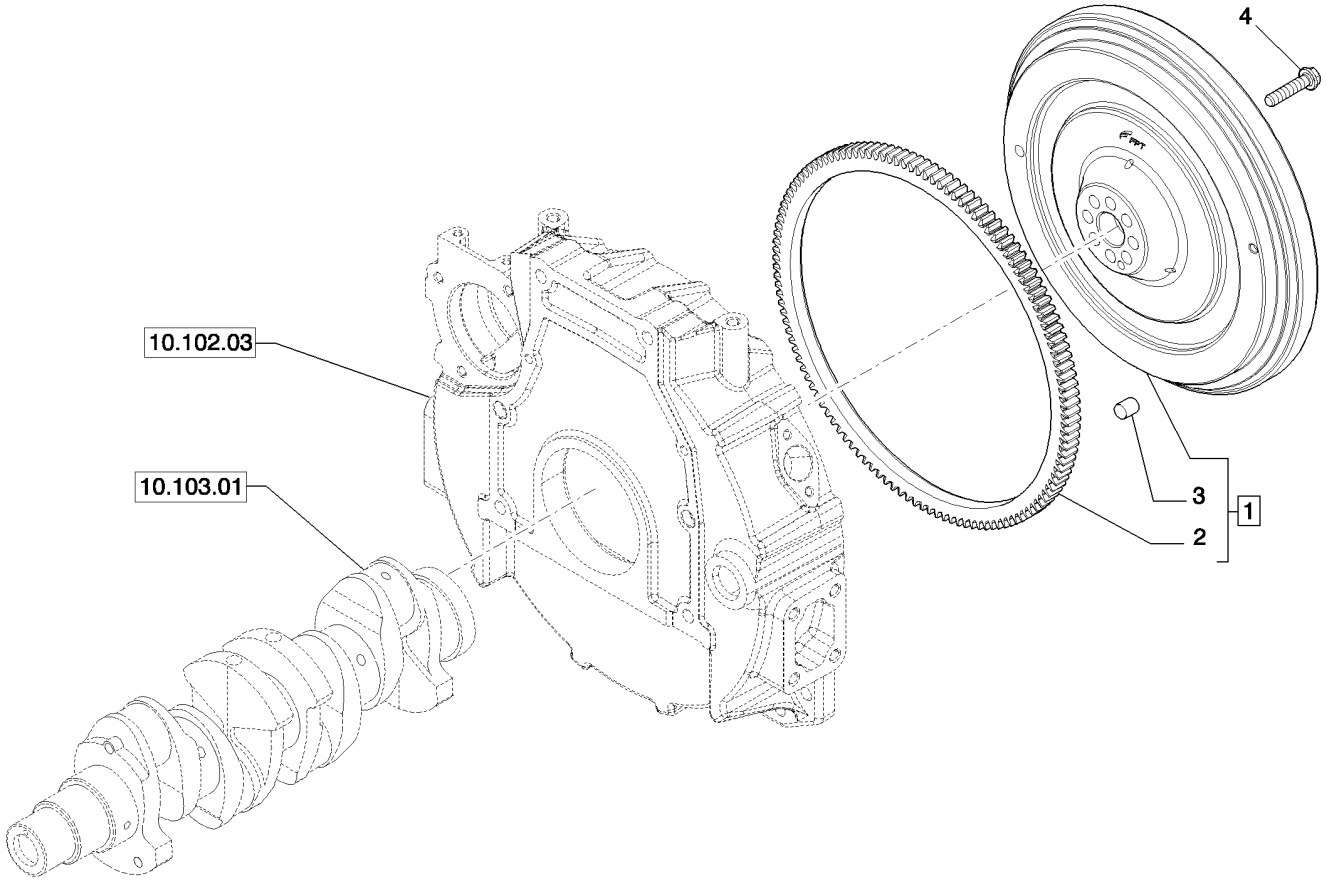

VOLANT (504221728)
SCHWUNGMASSE (504221728)
SVINGHJUL (504221728)
VLIEGWIEL (504221728)

R	N	P.N.	MOD	Q	Denominação Description Bezeichnung	Description Bezeichnung Beskrivelse	Denominacion Beskrivelse Beschrijving	Descrizione Beschrijving L.C.	L.C.
1		504221729		1	VOLANTE DE MOTOR, - ASSY ENGINE FLYWHEEL VOLANT MOTEUR	VOLANTE DE MOTOR MOTORSCHWUNGRAD	VOLANO MOTORE MOTOR SVINGHJUL	MOTORVLIEGWIEL	048V
2		4897821		1	COROA DENTADA COURONNE DENTEE	RING GEAR ZAHNKRANZ	CORONA DENTADA TANDKRANS	CORONA DENTATA RINGWIEL	297C
3		17275410		1	GUIA GOUJON	DOWEL PASSSTIFT	BULÓN DYVEL	PERNO PASPEN	090G
4		504027865		8	PARAFUSO, M12X1,25 mm VIS	SCREW SCHRAUBE	TORNILLO SKRUE	VITE SCHROEF	040V

BELT PULLEY DRIVE & COVER (504388092)
BELT PULLEY DRIVE & COVER (504388092)
CAJA Y TAPAS TOMA DE GIRO (504388092)
SCATOLE E COPERHI PRESA DI MOTO (504388092)



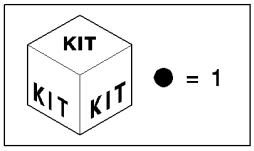

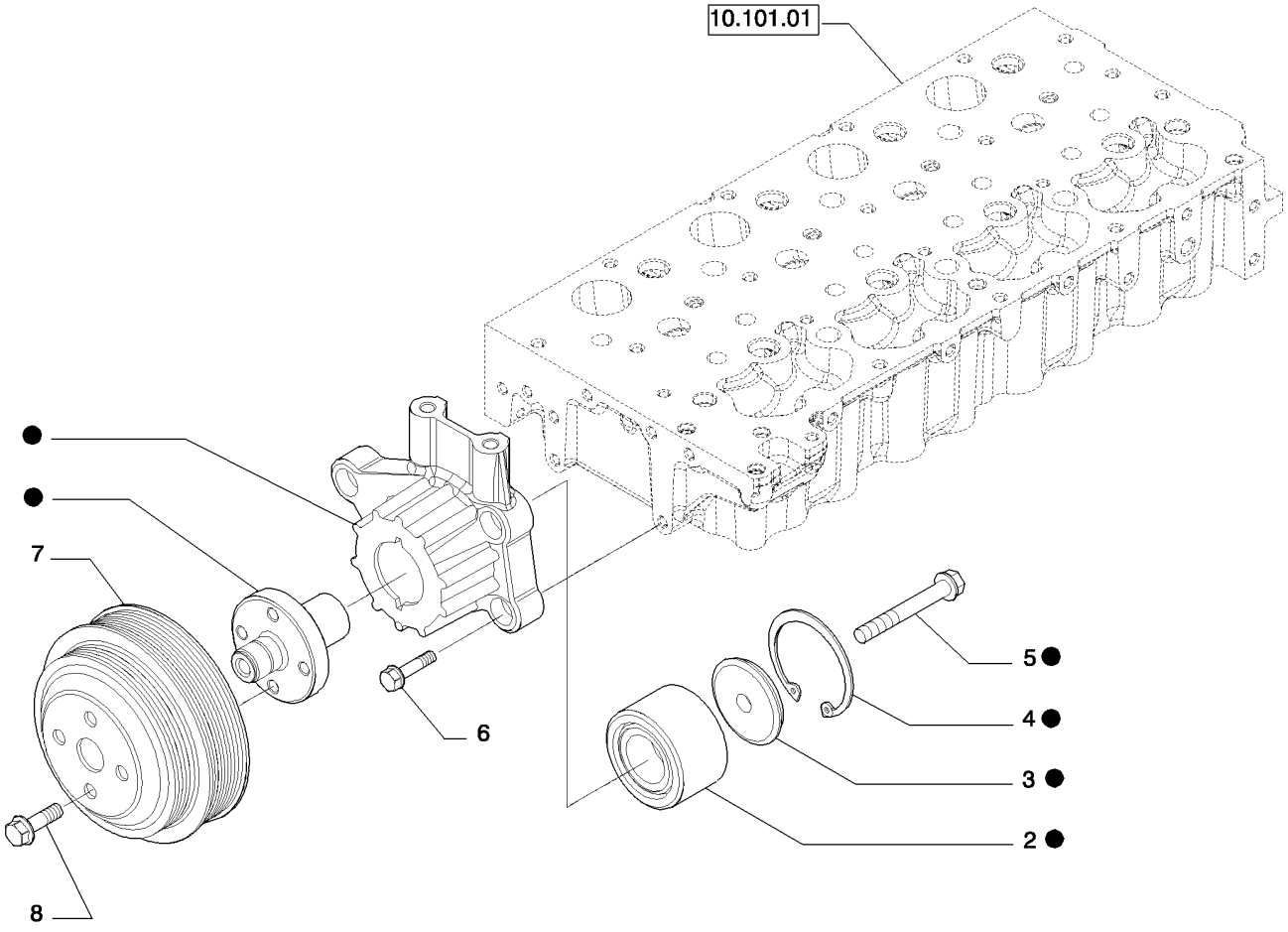



PRISE DE MOUVEMENT ET COUVERCLE (504388092)
ANTRIEBGEHÄUSE UND DECKELN (504388092)
HUSE OF DAEKSLER TIL DRIVAKSEL (504388092)
KASTEN EN DEKSELS VAN HET IN GANG BRENGEN (504388092)

R	N	P.N.	MOD	Q	Denominação Description Bezeichnung	Description Bezeichnung	Denominacion Beskrivelse	Descrizione Beschrijving	L.C.
1		504255374		1	CAIXA VENTILADORA, - ASSY CARTER DU VENTILATE	FAN HOUSING GEBLÄSEGEHÄUSE	ALOJAMIENTO DE VENT BLÆSERHUS	ALLOGGIAMENTO VENT VENTILATORHUIS	610C
2		4892732		1	ROLAMENTO ESFÉRICO, 34 mm ID x 64 mm OD x 37 mm ROULEMENT A BILLES	BALL BEARING KUGELLAGER	RODAMIENTO DE BOLA KUGLELEJE	CUSCINETTO A SFERE KOGELLAGER	343C
3		4890732		1	RETENTOR DISPOSITIF DE RETENU	RETAINER HALTERUNG	RETENEDOR HOLDER	FERMO HOUDER	109R
4		{500395467}		1					
5		16676834		1	PARAFUSO FLANGEADO, Hex, M10 x 70, M10 x 70 VIS A EMBASE	FLANGE BOLT FLANSCHSCHRAUBE	PERNO DE CORONA FLANGEBOLT	BULLONE FLANGIATO FLENSBOUT	A027
6		16673735		5	PARAFUSO, M8X30 mm VIS	SCREW SCHRAUBE	TORNILLO SKRUE	VITE SCHROEF	040V
7		504388091		1					
8		18139424		4	PARAFUSO, M10 x 20 VIS	SCREW SCHRAUBE	TORNILLO SKRUE	VITE SCHROEF	040V

10.103.04		p1	02/11

PULLEY - CRANKSHAFT (504388089)
PULLEY - CRANKSHAFT (504388089)
POLEA - CIGUENAL (504388089)
PULEGGIA - ALBERO MOTORE (504388089)

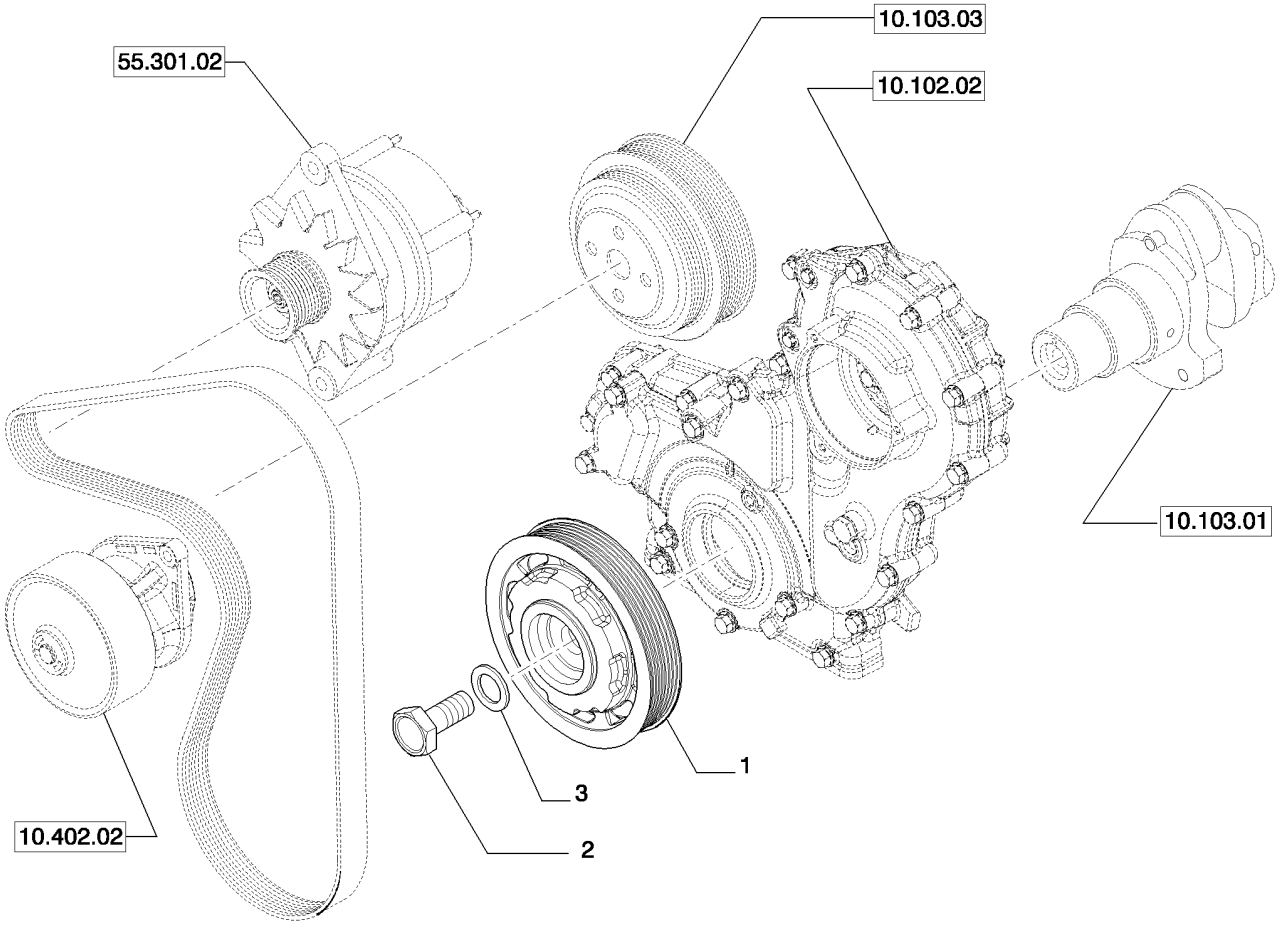

POULIE - VILEBREQUIN (504388089)
RIEMENSCHEIBE - KURBELWELLE (504388089)
REMSKIVE - KRUMTAPAKSEL (504388089)
RIEMSCHIJF - AANDRIJFAS (504388089)

R	N	P.N.	MOD	Q	Denominação Description	Description Bezeichnung	Denominacion Beskrivelse	Descrizione Beschrijving	L.C.
1		504273736		1	POLIA POULIE	PULLEY RIEMENSCHEIBE	POLEA REMSKIVE	PULEGGIA RIEMSCHIJF	230P
2		98419203		1	PARAFUSO, M20X1,5X58 mm VIS	SCREW SCHRAUBE	TORNILLO SKRUE	VITE SCHROEF	040V
3		17092874		1	ANEL DE ENCOSTO ANNEAU DE BUTEE	THRUST WASHER DRUCKSCHEIBE	ARANDELA DE EMPUJE TRYKSKIVE	RONDELLA REGGISPINT DRUKRING	023R

10.105.01		p1	02/11

PISTON - ENGINE (504254748)
PISTON - ENGINE (504254748)
EMBOLO - MOTOR (504254748)
STANTUFFO - MOTORE (504254748)

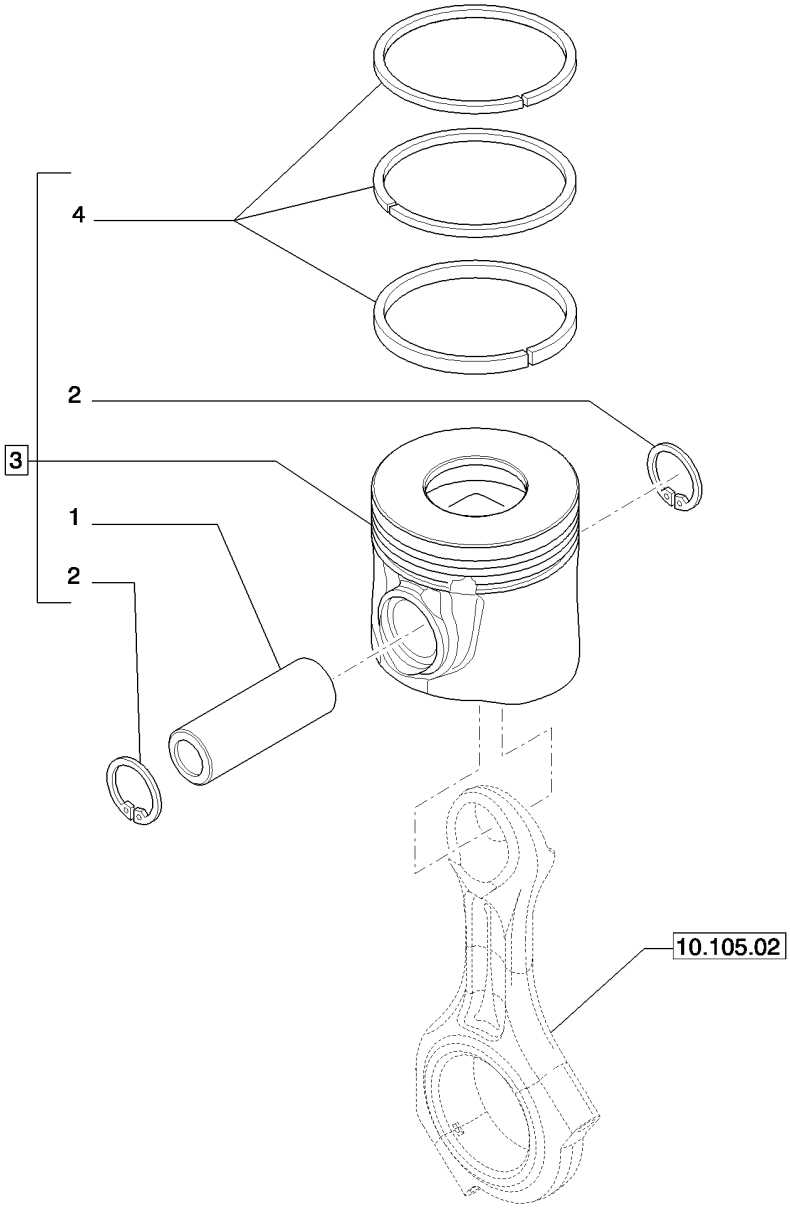

PISTON - MOTEUR (504254748)
KOLBEN - MOTOR (504254748)
STEMPEL - MOTOR (504254748)
ZUIGER - MOTOR (504254748)

R	N	P.N.	MOD	Q	Denominação Description	Description Bezeichnung	Denominacion Beskrivelse	Descrizione Beschrijving	L.C.
1		504047720		4	PINO DE PISTÃO AXE DE PISTON	PISTON PIN KOLBENBOLZEN	BULÓN DEL PISTÓN STEMPELPIND	PERNO DEL PISTONE ZUIGERPEN	084P
2		504051611		8	TRAVA DA ARRUELA RONDELLE FREIN	LOCK WASHER SICHERUNGSSCHEIBE	ARANDELA DE BLOQUE LÅSESKIVE	RONDELLA DI SICUREZ BORGRING	132R
3		8097546		4	CONJ PISTÃO, + 0,0 ENS. PISTON	PISTON ASSY KOLBENBAUGRUPPE	CONJUNTO DE PISTÓN STEMPEL KOMPLET	COMPLESSIVO PISTONE ZUIGEREENHEID	245S
3		8097548		4	CONJ PISTÃO +0,4 ENS. PISTON +0,4	PISTON ASSY +0.4 KOLBENBAUGRUPPE +	CONJUNTO DE PISTÓN STEMPEL KOMPLET +0.4	COMPLESSIVO PISTONE ZUIGEREENHEID +0,4	247S
4		8097545		4	JOGO DE PISTÃO, + 0,0 JEU SEGM. DE PISTONS	PISTON RING SET KOLBENRINGSATZ	JUEGO ANILLOS PISTÓN STEMPELRINGSSÆT	KIT FASCIA ELAST. PIST SET ZUIGERVEREN	Z307
4		8097547		4	JOGO ANÉIS PISTÃO +0,4 JEU SEGMENTS PISTON	SET OF PISTON RINGS KOLBENRINGSATZ +0,4	JUEGO AN. DE PISTÓN - SÆT M/ STEMPELRINGE	KIT FASCE EL. PIST. +0. SET ZUIGERVEREN +0,4	343S

CONNECTING ROD (504245120)
CONNECTING ROD (504245120)
BIELA PISTON (504245120)
BIELLA MOTORE (504245120)

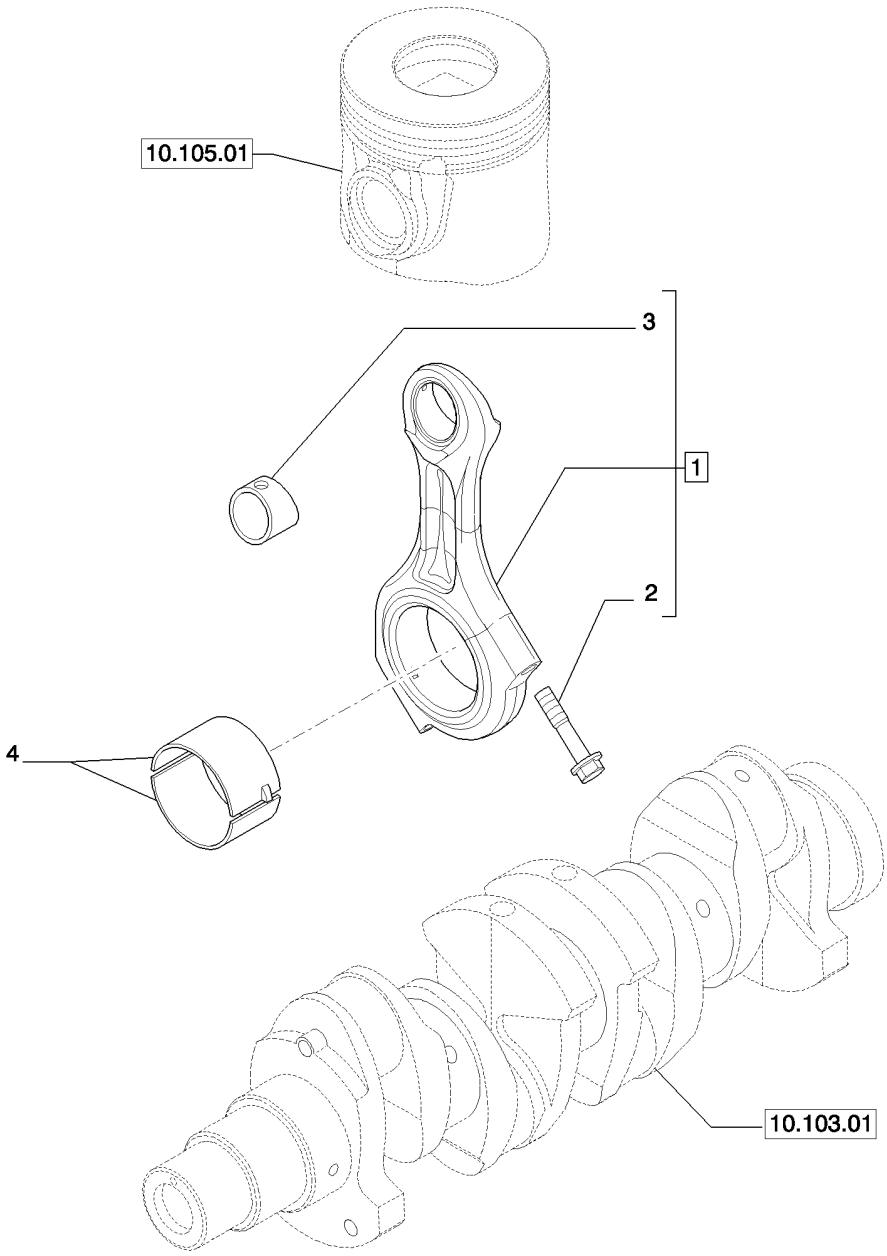

BIELLE (504245120)
PLEUEL (504245120)
PLEJLSTANG (504245120)
DRIJFSTANG MOTOR (504245120)

R	N	P.N.	MOD	Q	Denominação Description Bezeichnung Beskrivelse Descrizione Beschrijving	L.C.
1		504341496		4	HASTE DE CONEXÃO CONNECTING ROD BIELA BIELLE PLEUELSTANGE PLEJLSTANG BIELLA DRIJFSTANG	051B
2		504015229		8	PARAFUSO, M11X1,25X51 mm SCREW TORNILLO VIS SCHRAUBE SKRUE VITE SCHROEF	040V
3		NSS		4	SEM SERVIÇO EM SEPARADO NOT SERVICED SEPARA NO SE REPARA POR SE NON FOURNI SEPAREM NICHT A SEP ERS-T LIEI SERVICERES IKKE SEPA NON FORNITO SEPARAT NIET LOS VERKRIJGBAA	064N
4		2995577		4	SEMI-BRONZINA BIELA MIN., -0,000 SET OF CONN ROD BRG JUEGO DE ROD. BRGS U JEU COUSSIN. BIELLE R SATZ PLEUELLAGER UN LEJEPANDESÆT T/PLEJ KIT CUSCIN. BIELLA U/S SET ONDERMT. DRFST.	307S
4		2995578		4	SEMI-BRONZINA BIELA MIN., -2,254 SET OF CONN ROD BRG JUEGO DE ROD. BRGS U JEU COUSSIN. BIELLE R SATZ PLEUELLAGER UN LEJEPANDESÆT T/PLEJ KIT CUSCIN. BIELLA U/S SET ONDERMT. DRFST.	307S
4		2995579		4	SEMI-BRONZINA BIELA MIN., -5,508 SET OF CONN ROD BRG JUEGO DE ROD. BRGS U JEU COUSSIN. BIELLE R SATZ PLEUELLAGER UN LEJEPANDESÆT T/PLEJ KIT CUSCIN. BIELLA U/S SET ONDERMT. DRFST.	307S

CAMSHAFT - TIMING CONTROL (504228067)
CAMSHAFT - TIMING CONTROL (504228067)
ARBOL DE LEVAS - PINONES DE LA DISTRIBUCION (504228067)
ALBERO AD ECCENTRICI - COMANDO DISTRIBUZIONE (504228067)

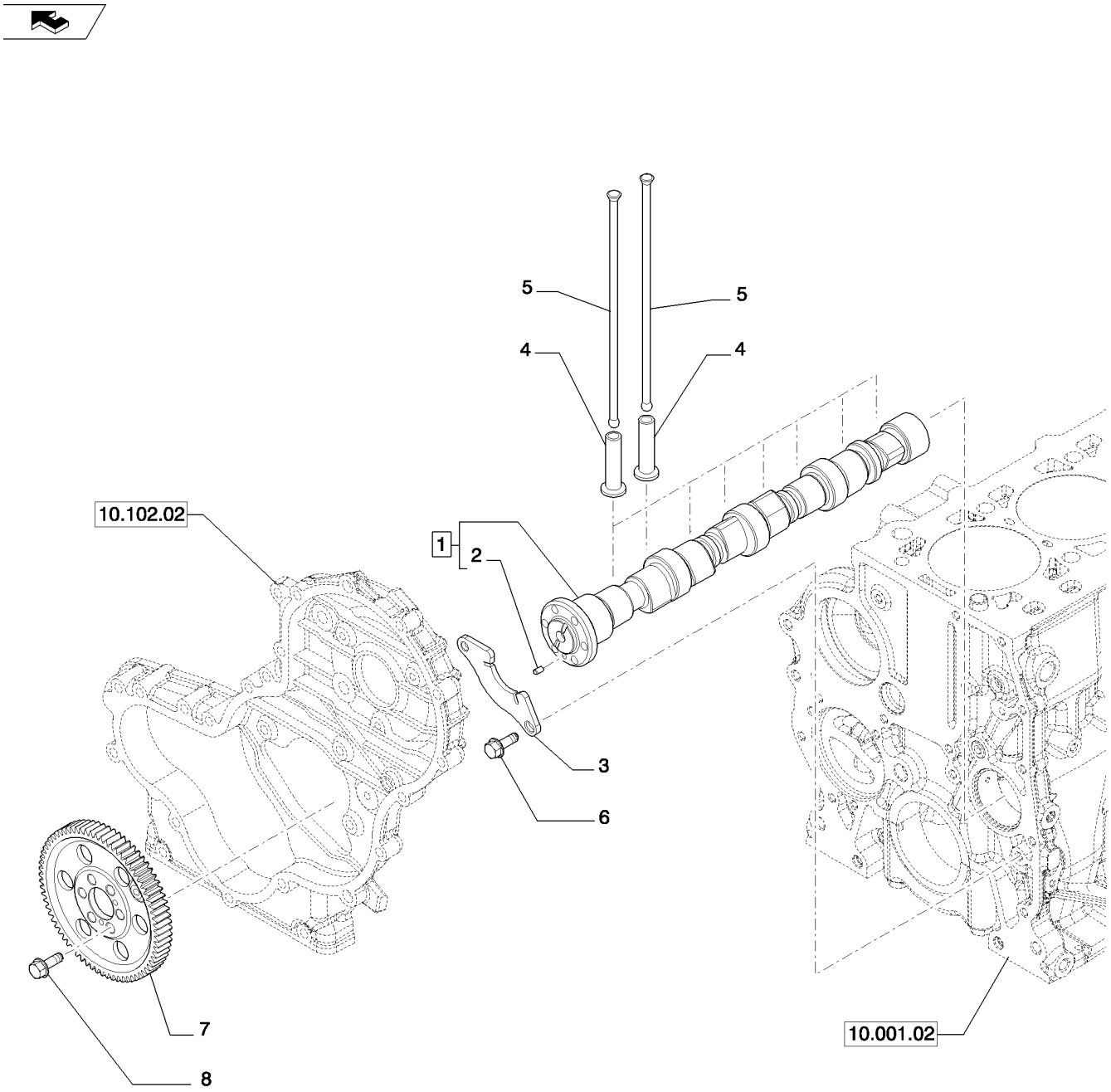

ARBRE A CAMES - COMMANDE DE DISTRIBUTION (504228067)
EXZENTERWELLE - STEUERUNGSANTRIEB (504228067)
KNASTAKSEL - TAKTHJUL (504228067)
AS NAAR NOKKEN - DISTRIBUTIEBESTURING (504228067)

R	N	P.N.	MOD	Q	Denominação Description	Description Bezeichnung	Denominacion Beskrivelse	Descrizione Beschrijving	L.C.
1		504272265		1	EIXO EXCÊNTRICO, - ASSY				
						CAMSHAFT	ÁRBOL DE LEVAS	ALBERO A CAMME	017A
					ARBRE A CAMES	NOCKENWELLE	KNASTAKSEL	NOKKENAS	
2		17275310		1	GUIA	DOWEL	BULÓN	PERNO	090G
					GOUJON	PASSSTIFT	DYVEL	PASPEN	
3		4897457		1	SUPORTE	SUPPORT	SOPORTE	SUPPORTO	300S
					SUPPORT	STÜTZE	BESLAG	STEUN	
4		98471524		8	PLATINADO, +0,0	TAPPET	LEVA	PUNTERIA	240P
					POUSSOIR DE SOUPAPI	STÖSSEL	VENTILLØFTER	KLEPSTOTER	
5		504163240		8	HASTE DE IMPULSO	PUSH ROD	VÁSTAGO DE EMPUJE	ASTA DI SPINTA	P307
					TIGE DE POUSSEE	STÖSSELSTANGE	SKUBBESTANG	STOTERSTANG	
6		16673635		2	PARAFUSO, M8 x 20	BOLT	PERNO	BULLONE	140B
					VIS	SCHRAUBE	BOLT	BOUT	
7		504240396		1	ENGRENAGEM	GEAR	ENGRANAJE	INGRANAGGIO	050I
					PIGNON	ZAHNRAD	TANDHJUL	TANDWIEL	
8		16673635		6	PARAFUSO, M8 x 20	BOLT	PERNO	BULLONE	140B
					VIS	SCHRAUBE	BOLT	BOUT	

10.202.01		p1	02/11

AIR CLEANER ASSY NA 8IN (L223-L230,C232,C238)
AIR CLEANER ASSY NA 8IN (L223-L230,C232,C238)
AIR CLEANER ASSY NA 8IN (L223-L230,C232,C238)
AIR CLEANER ASSY NA 8IN (L223-L230,C232,C238)

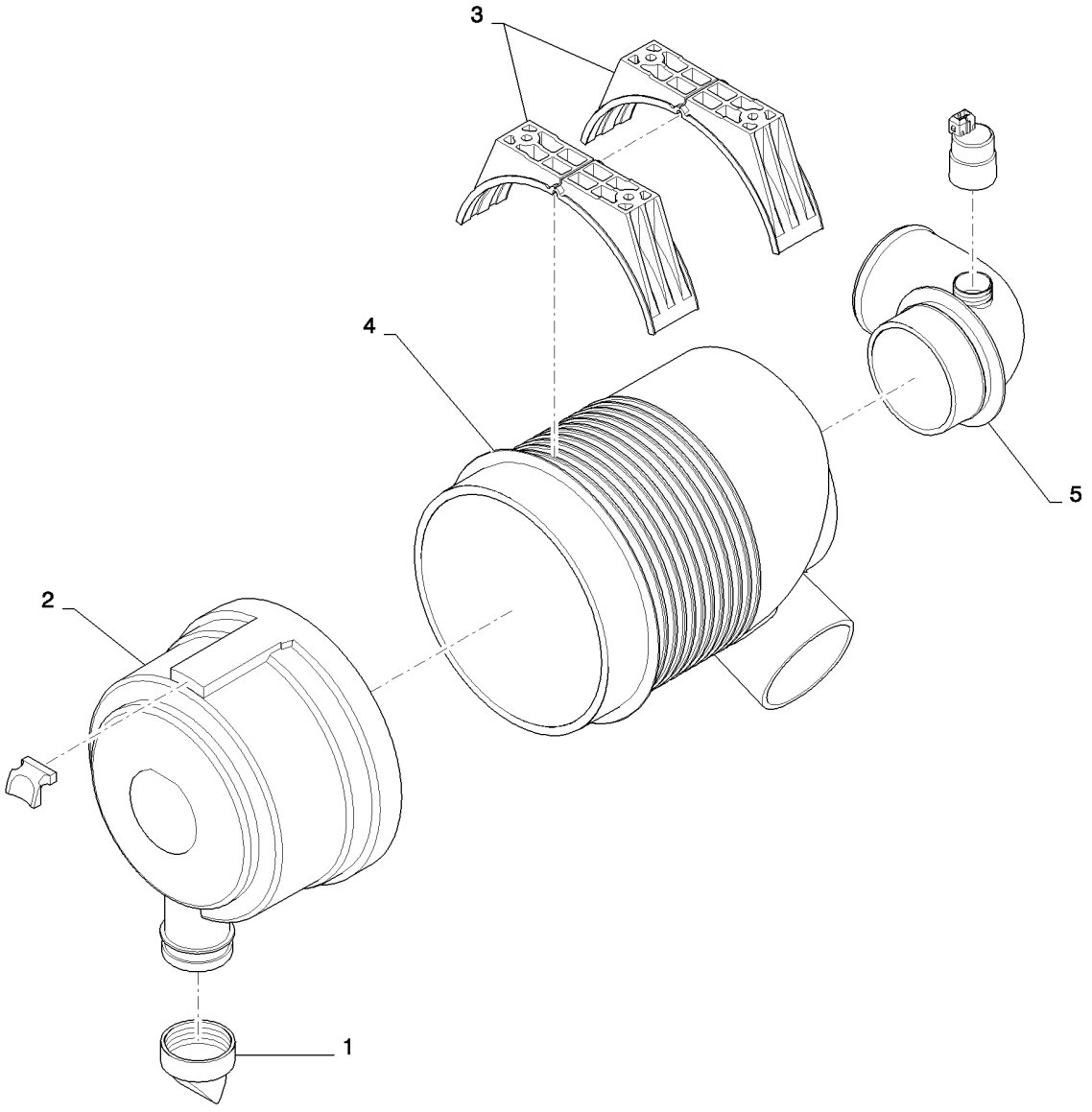

AIR CLEANER ASSY NA 8IN (L223-L230,C232,C238)
AIR CLEANER ASSY NA 8IN (L223-L230,C232,C238)
AIR CLEANER ASSY NA 8IN (L223-L230,C232,C238)
AIR CLEANER ASSY NA 8IN (L223-L230,C232,C238)

R	N	P.N.	MOD	Q	Denominação Description Bezeichnung	Description Bezeichnung	Denominacion Beskrivelse	Descrizione Beschrijving	L.C.
1		A184597		1	VÁLVULA DO OBTURADOR, Vacuator				
						VALVE POPPET	RESORTE DE VÁLVULA	VALVOLA A FUNGO	P048
					CLAPET A RESSORT	VENTILTELLER	DOKVENTIL	KLEPSCHOTEL	
2		395792A1		1	CONJUNTO DA TAMPA	COVER ASSY	CONJUNTO DE FUNDAS	COPERCHIO, COMPL	P426
					COUVERCLE	ABDECKUNGSBAUGRUF	DÆKSELENHED	AFSCHERMEENHEID	
3		222421A1		1	FILTRO DE AR, Primary	AIR FILTER	FILTRO DE AIRE	FILTRO ARIA	066F
					FILTRE A AIR	LUFTFILTER	LUFTFILTER	LUCHTFILTER	
4		222422A1		1	ELEMENTO FILTRANTE, Secondary				
						FILTER, ELEMENT	ELEMENTO DE FILTRAD	ELEMENTO DEL FILTRO	2960
					ELÉMENT FILTRANT	FILTERELEMENT	FILTERELEMENT	FILTERELEMENT	
5		279492A1		1	INTERRUPTOR DE RESTRIÇÃO				
						RESTRICTION SWITCH	INT. DE RESTRICCIÓN	INTERR. DI LIMITAZIONE	C037
					COMM. RESTRICTION	VERSTOPFUNGSSCHAL	KONTAKT, BEGRÆNSNI	BEGRENZINGSSCHAKEL	

10.206.02		p1	05/11

FILTER ENGINE OIL (504245481 - 504332922)
FILTER ENGINE OIL (504245481 - 504332922)
FILTRO ACEITE (504245481 - 504332922)
FILTRO OLIO (504245481 - 504332922)

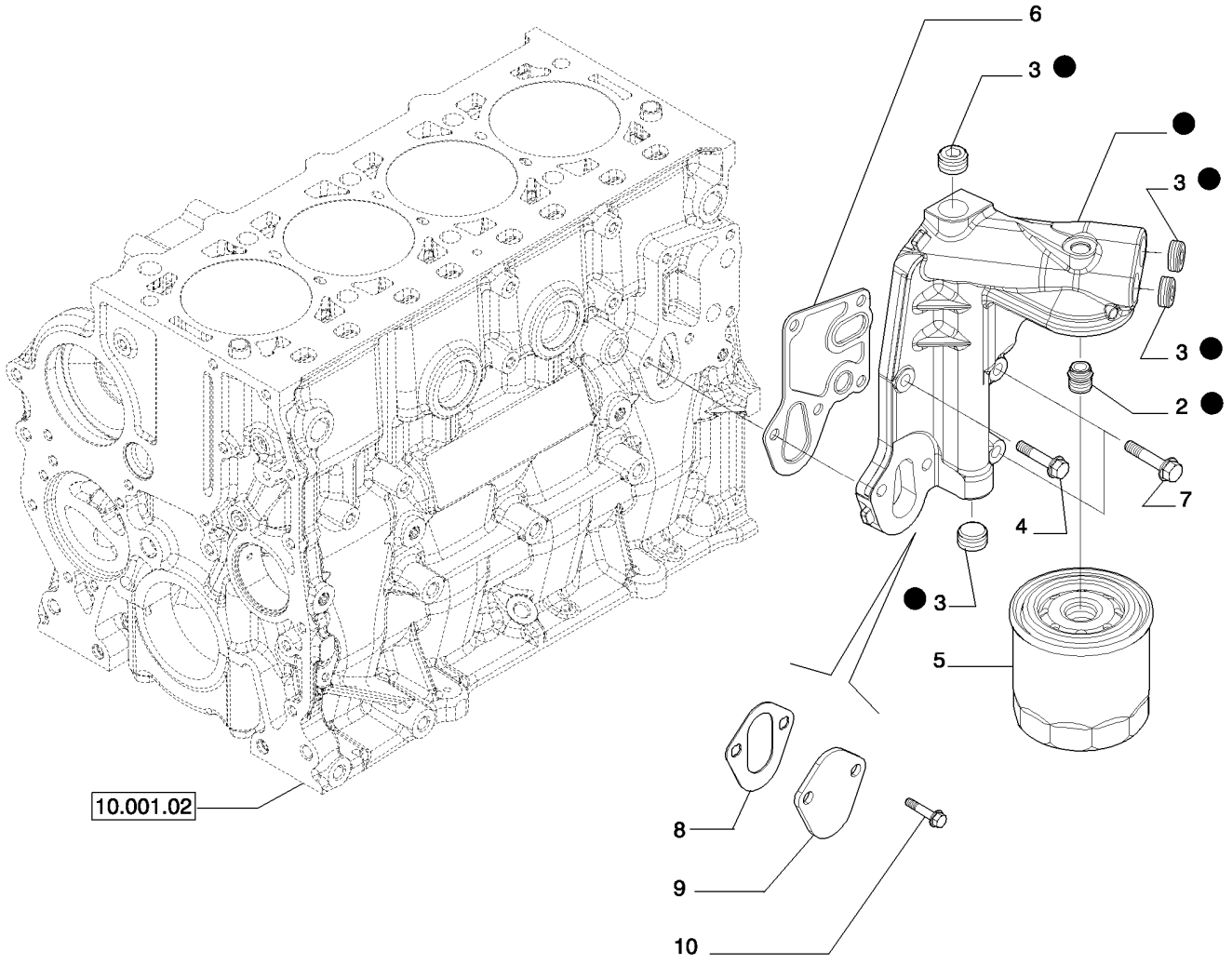

FILTRE HUILE (504245481 - 504332922)
ÖLFILTER (504245481 - 504332922)
OLIEFILTER (504245481 - 504332922)
OLIEFILTER (504245481 - 504332922)

R	N	P.N.	MOD	Q	Denominação Description Bezeichnung	Description Bezeichnung	Denominacion Beskrivelse	Descrizione Beschrijving	L.C.
1		504271928		1	FILTRO DE ÓLEO DO MOTOR, - ASSY				
						ENGINE OIL FILTER	FILTRO DE ACEITE DE M	FILTRO OLIO MOTORE	067F
					FILTRE A HUILE MOTEU	MOTORÖLFILTER	MOTOROLIEFILTER	MOTOROLIEFILTER	
2		{504289002}		1					
3		504113860		4	BUJÃO	PLUG	TAPÓN	TAPPO	050T
					BOUCHON	STOPFEN	PROP	PLUG	
4		16673835		1	PARAFUSO, M8 x 30	SCREW	TORNILLO	VITE	040V
					VIS	SCHRAUBE	SKRUE	SCHROEF	
6		504235816		1	VEDAÇÃO	SEAL	ANILLO DE CIERRE	GUARNIZIONE; TENUTA	132A
					JOINT	DICHTUNG	PAKNING	AFDICHTING	
5		87679494		1	FILTRO DE ÓLEO DO MOTOR				
						ENGINE OIL FILTER	FILTRO DE ACEITE DE M	FILTRO OLIO MOTORE	067F
					FILTRE A HUILE MOTEU	MOTORÖLFILTER	MOTOROLIEFILTER	MOTOROLIEFILTER	
7		16592225		2	PARAFUSO	SCREW	TORNILLO	VITE	040V
					VIS	SCHRAUBE	SKRUE	SCHROEF	
8		{504332889}		1					
9		{504332869}		1					
10		16586524		2	PARAFUSO, Hex, Flg Hd, M8 x 30, 8.8				
						SCREW	TORNILLO	VITE	040V
					VIS	SCHRAUBE	SKRUE	SCHROEF	

10.216.01		p1	07/11

FUEL SYSTEM (L223-L230,C232,C238)
FUEL SYSTEM (L223-L230,C232,C238)
FUEL SYSTEM (L223-L230,C232,C238)
FUEL SYSTEM (L223-L230,C232,C238)

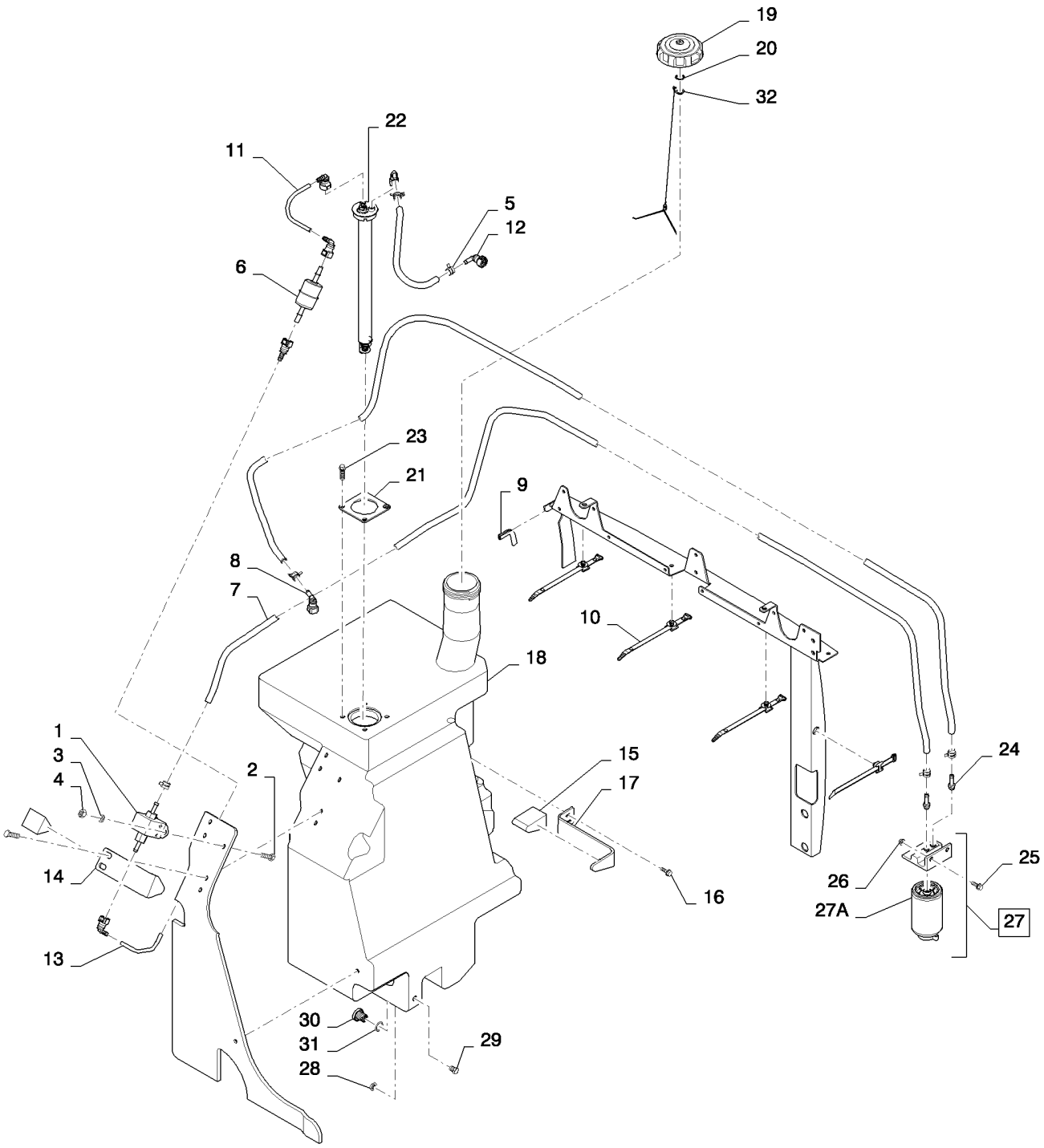

FUEL SYSTEM (L223-L230,C232,C238)
FUEL SYSTEM (L223-L230,C232,C238)
FUEL SYSTEM (L223-L230,C232,C238)
FUEL SYSTEM (L223-L230,C232,C238)

R	N	P.N.	MOD	Q	Denominação Description Bezeichnung	Denominacion Beskrivelse	Descrizione Beschrijving	L.C.
1		84306974		1	BOMBA DE COMBUSTÍVEL, Electric Lift FUEL PUMP POMPE A CARBURANT KRAFTSTOFFPUMPE	BOMBA DE COMBUSTIBI BRÆNDSTOFPUMPE	POMPA CARBURANTE BRANDSTOFPOMP	154P
2		120100		2	PARAFUSO, Hex, M6 x 20, 8.8 BOLT VIS SCHRAUBE	PERNO BOLT	BULLONE BOUT	140B
3		87655041		2	ARRUELA ESPECIAL, M6, 6.85 X 12.75 X 1.8 SPECIAL WASHER RONDELLE SPECIALE SPEZIALUNTERLEGSCH	ARANDELA ESPECIAL SPECIALSKIVE	RONDELLA SPECIALE SPECIALE RING	Z333
4		9804276		2	PORCA, M6 x 1, Flg, Cl 8 NUT ECROU MUTTER	TUERCA MØTRIK	DADO MOER	010D
5		87436932		6	BRAÇADEIRA, CTB CLAMP COLLIER KLEMME	ABRAZADERA SPÆNDEBÅND	MORSETTO KLEM	120M
6		87548612		1	FILTRO DE COMBUSTÍVEL, Inline FUEL FILTER FILTRE A CARBURANT KRAFTSTOFFFILTER	FILTRO DE COMBUSTIBI BRÆNDSTOFFILTER	FILTRO CARBURANTE BRANDSTOFFILTER	064F
7		290323		1	MANGUEIRA, 0.31" ID, SAE 30R7, Fuel HOSE FLEXIBLE SCHLAUCH	TUBO SLANGE	TUBO FLESSIBILE SLANG	030M
8		84350217		2	CONECTOR HIDRÁUL, Fuel, 5/16 HYD CONNECTOR CONNECTEUR HYDRAU HYDR STECKVERBINDE	CONECTOR HIDRÁULIC HYDRAULIKSTIK	CONNETTORE IDRAULIC HYDRAULISCHE AANSLI	020R
9		NSS		1	SEM SERVIÇO EM SEPARADO, Edge, Channel NOT SERVICED SEPARA NON FOURNI SEPAREM NICHT A SEP ERS-T LIEI	NO SE REPARA POR SE SERVICERES IKKE SEPA	NON FORNITO SEPARAT NIET LOS VERKRIJGBAA	064N
10		84259663		4	CORREIA DE FIXAÇÃO, Tie SECURING STRAP SANGLE DE FIXATION SICHERUNGSBAND	BANDA DE SEGURIDAD FASTSPÆNDINGSSTRO	FASCETTA DI FISSAGGI BORGRIEM	172C
11		84305872		1	TUBO DE COMBUSTÍVEL, Plastic FUEL TUBE TUYAU D'ALIM. CARBUR KRAFTSTOFFLEITUNG	TUBO DE COMBUSTIBLE BRÆNDSTOFRØR	TUBO CARBURANTE BRANDSTOFLEIDING	A133
12		84350218		1	CONECTOR HIDRÁUL, Fuel, 3/8 HYD CONNECTOR CONNECTEUR HYDRAU HYDR STECKVERBINDE	CONECTOR HIDRÁULIC HYDRAULIKSTIK	CONNETTORE IDRAULIC HYDRAULISCHE AANSLI	020R
13		84305879		1	TUBO DE COMBUSTÍVEL, Plastic FUEL TUBE TUYAU D'ALIM. CARBUR KRAFTSTOFFLEITUNG	TUBO DE COMBUSTIBLE BRÆNDSTOFRØR	TUBO CARBURANTE BRANDSTOFLEIDING	A133
14		84273624		1	SUPORTE, Fuel Tank BRACKET SUPPORT HALTERUNG	SOPORTE BESLAG	STAFFA STEUN	225S
15		84373790		2	ESPUMA, Pad FOAM MOUSSE SCHAUM	ESPUMA SKUM	SCHIUMA SCHUIM	P033
16		280476		4	PARAFUSO, Hex Wash Hd, 3/8" x 1" SELF-TAP SCREW VIS AUTOTARAUDEUSE SELBSTSCHN SCHRAUE	TORNILLO AUTORROSC SELVLÅSENDE BOLT	VITE AUTOFILETTANTE ZELFTAPPENDE SCHRO	062V
17		87054825		1	SUPORTE, Tank SUPPORT SUPPORT STÜTZE	SOPORTE BESLAG	SUPPORTO STEUN	300S
18		84201104		1	TANQUE DE COMBUSTÍVEL, Fuel FUEL TANK RESERVOIR DE CARBUI KRAFTSTOFFTANK	DEPÓSITO DE COMBUS BRÆNDSTOFTANK	SERBATOIO CARBURAN BRANDSTOFTANK	P550

10.216.01		p2	07/11

FUEL SYSTEM (L223-L230,C232,C238)
FUEL SYSTEM (L223-L230,C232,C238)
FUEL SYSTEM (L223-L230,C232,C238)
FUEL SYSTEM (L223-L230,C232,C238)

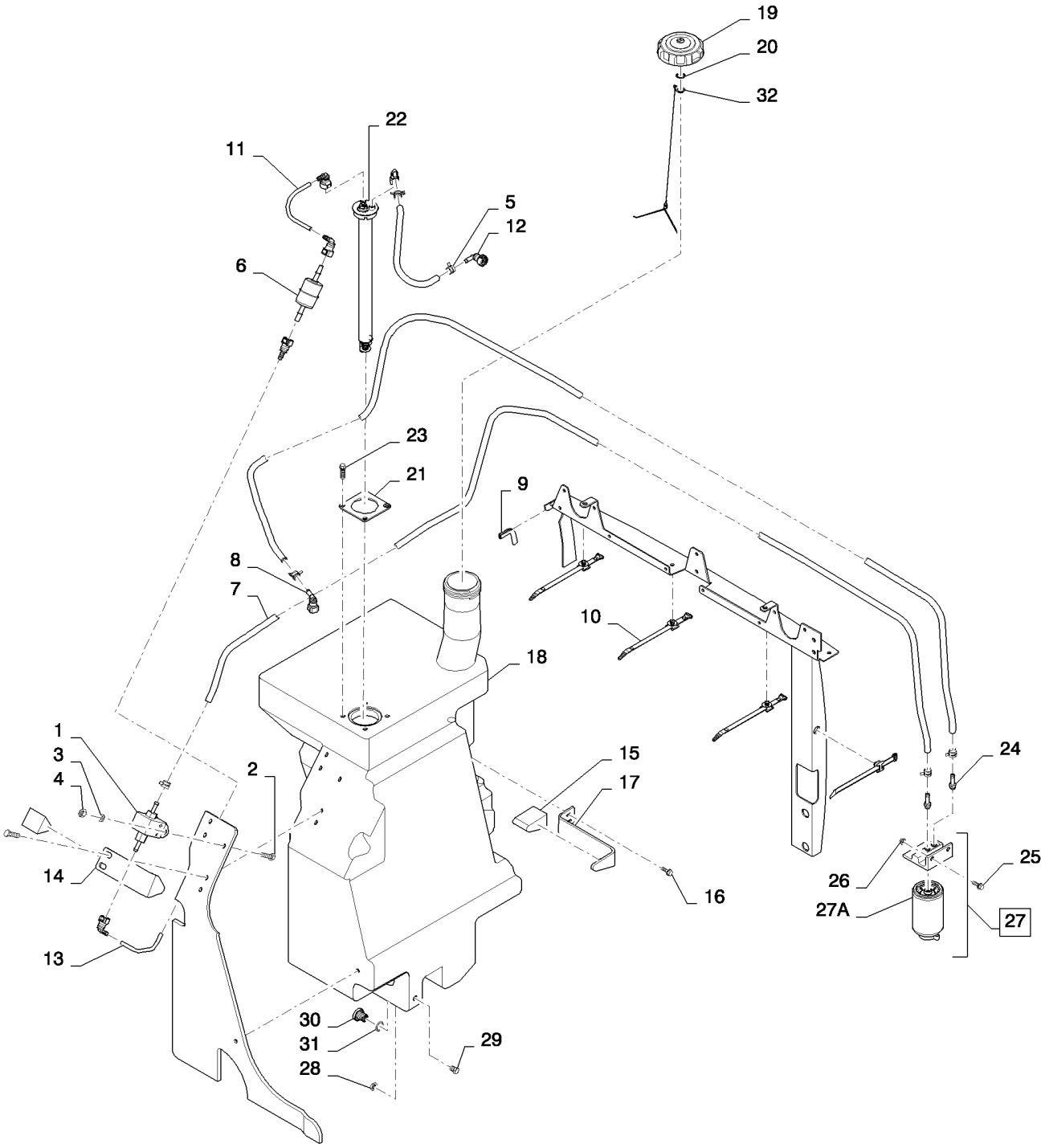

FUEL SYSTEM (L223-L230,C232,C238)
FUEL SYSTEM (L223-L230,C232,C238)
FUEL SYSTEM (L223-L230,C232,C238)
FUEL SYSTEM (L223-L230,C232,C238)

R	N	P.N.	MOD	Q	Denominação Description	Description Bezeichnung	Denominacion Beskrivelse	Descrizione Beschrijving	L.C.
19		**87700725**		1	TAMPA DE RESERVATÓRIO, W/Check Valve				
						FILLER CAP	TAPÓN DE DEPÓSITO	TAPPO BOCCHETT. RIF(	P676
					BOUCHON DE REMPLIS	EINFÜLLKAPPE	PÅFYLDNINGSDÆKSEL	VULDOP	
20		**84367737**		1	TRAVA DA ARRUELA, Fuel Cap				
						LOCK WASHER	ARANDELA DE BLOQUE(	RONDELLA DI SICUREZ/	132R
					RONDELLE FREIN	SICHERUNGSSCHEIBE	LÅSESKIVE	BORGRING	
21		**84338049**		1	PLACA DE MONTAGEM, Sender, Retaining				
						MOUNTING PLATE	PLACA DE MONTAJE	PIASTRA DI MONTAGGI(	109P
					PLAQUE DE MONTAGE	MONTAGEPLATTE	MONTERINGSPLADE	BEVESTIGINGSPLAAT	
22		**84268571**		1	TRANSMISSOR, Fuel	SENDER UNIT	UNIDAD EMISORA	TRASMETTITORE	160T
					ENS. TRANSMETTEUR	SIGNALGEBER	SENDER	SENSOREENHEID	
23		**9804257**		4	PARAFUSO, Hex Flg, M6 x 25, 8.8				
						BOLT	PERNO	BULLONE	140B
					VIS	SCHRAUBE	BOLT	BOUT	
24		**9844342**		2	CONEXÃO, Assembly	FITTING	ACOPLAMIENTO	RACCORDO	3300
					RACCORD	ARMATUR	FITTING	AANSLUITING	
25		**9804256**		2	PARAFUSO, Hex Flg, M6 x 20, 8.8				
						BOLT	PERNO	BULLONE	140B
					VIS	SCHRAUBE	BOLT	BOUT	
26		**86619800**		2	CONTRA PORCA, M6 x 1, Flg, Cl 8				
						LOCK NUT	TUERCA DE BLOQUEO	DADO DI BLOCCAGGIO	P263
					CONTRE-ECROU	SICHERUNGSMUTTER	LÅSEMØTRIK	BORGMOER	
27		**84299976**		1	FILTRO DE COMBUSTÍVEL, Assembly, Incl. 27A				
						FUEL FILTER	FILTRO DE COMBUSTIB	FILTRO CARBURANTE	064F
					FILTRE A CARBURANT	KRAFTSTOFFFILTER	BRÆNDSTOFFILTER	BRANDSTOFFILTER	
27A		**84299977**		1	ELEMENTO, Fuel Filter	ELEMENT	ELEMENTO	ELEMENTO	020E
					ELEMENT	ELEMENT	ELEMENT	ELEMENT	
28		**1251791C1**		1	PORCA, Fuel Tank Drain Fitting				
						NUT	TUERCA	DADO	010D
					ECROU	MUTTER	MØTRIK	MOER	
29		**87694594**		1	PARAFUSO, Fitting Fuel Tank Drain				
						BOLT	PERNO	BULLONE	140B
					VIS	SCHRAUBE	BOLT	BOUT	
30		**9576801**		1	BUJÃO, Hex Hd, 1/4"-18, Brass				
						PLUG	TAPÓN	TAPPO	050T
					BOUCHON	STOPFEN	PROP	PLUG	
31		**238-5210**		1	O-RING, -210, 70 Duro, .734" ID x .139" Thk				
						O-RING	JUNTA TÓRICA	ANELLO TOROIDALE	055A
					JOINT TORIQUE	O-RING	O-RING	O-RING	
32		**84370069**		1	CORRENTE (CONSTR), Fuel Cap				
						CHAIN (CE)	CADENA (CE)	CATENA (CE)	P458
					CHAINE (TP)	KETTE (BAUMASCHINEN	KÆDE (CE)	KETTING (CE)	

10.218.01		p1	02/11

INJECTION EQUIPMENT - PIPING (504207272)
INJECTION EQUIPMENT - PIPING (504207272)
GRUPO DE INYECCION - TUBERIAS (504207272)
GRUPPO INIEZIONE - TUBAZIONI (504207272)

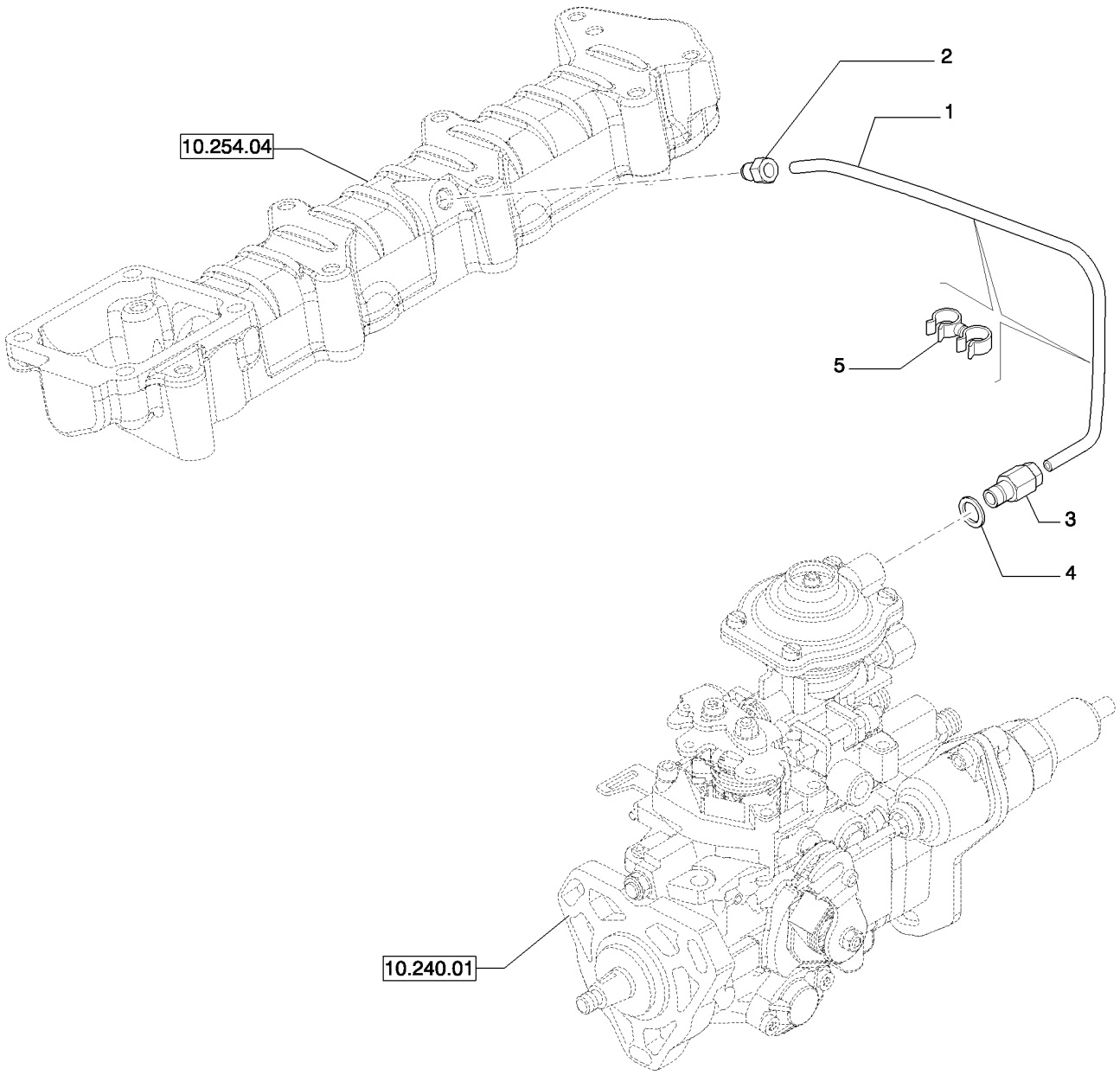

GROUPE D'INJECTION - TUYAUTERIE (504207272)
EINSPRITZAUSRUESTUNG - LEITUNGEN (504207272)
INDSPRØJTNINGSGRUPPE - RØRLEDNINGER (504207272)
INSPUITGROEP - LEIDINGEN (504207272)

R	N	P.N.	MOD	Q	Denominação Description Bezeichnung	Description Bezeichnung	Denominacion Beskrivelse	Descrizione Beschrijving	L.C.
1		504341138		1	TUBO TUYAU	PIPE ROHR	TUBO PÅFYLDNINGSSTUDS	TUBO BUIS	200T
2		4896770		1	CONEXÃO, M10 x 1 RACCORD	FITTING ARMATUR	ACOPLAMIENTO FITTING	RACCORDO AANSLUITING	3300
3		4893518		1	CONEXÃO, M8 x 1 x 29.5 L RACCORD	FITTING ARMATUR	ACOPLAMIENTO FITTING	RACCORDO AANSLUITING	3300
4		4858605		1	VEDAÇÃO, D. 8X12 mm JOINT	SEAL DICHTUNG	ANILLO DE CIERRE PAKNING	GUARNIZIONE; TENUTA AFDICHTING	132A
5		98429625		2	BRAÇADEIRA COLLIER	CLAMP KLEMME	ABRAZADERA SPÆNDEBÅND	MORSETTO KLEM	120M

10.218.01	02	p1	02/11

INJECTION EQUIPMENT - PIPING (504207949)
INJECTION EQUIPMENT - PIPING (504207949)
GRUPO DE INYECCION - TUBERIAS - (504207949)
GRUPPO INIEZIONE - TUBAZIONI - (504207949)

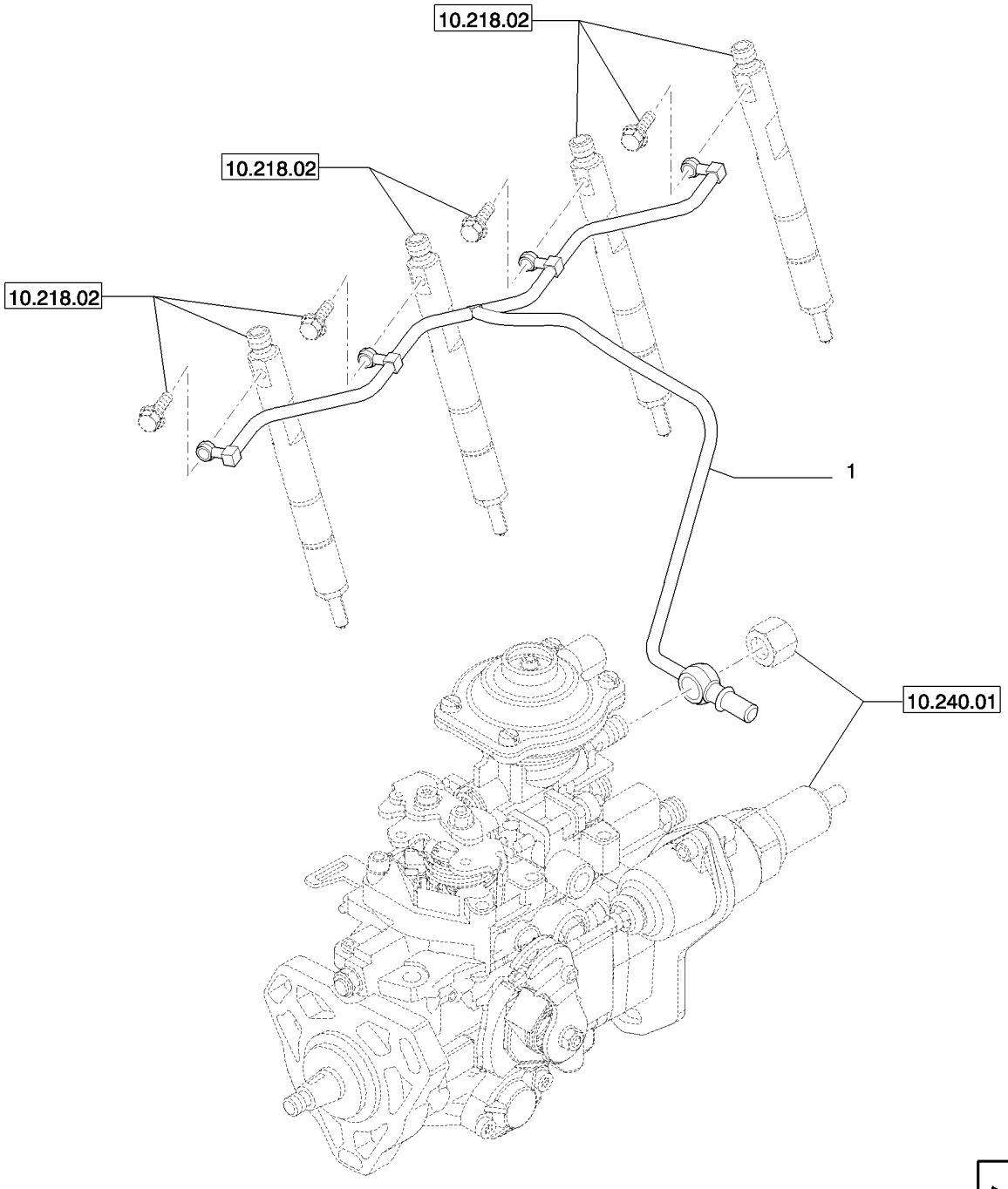

GROUPE D'INJECTION - TUYAUTERIE - (504207949)
EINSPRITZAUSRUESTUNG - LEITUNGEN - (504207949)
INDSPRØJTNINGSGRUPPE - RØRLEDNINGER - (504207949)
INSPUITGROEP - LEIDINGEN - (504207949)

R	N	P.N.	MOD	Q	Denominação Description	Description Bezeichnung	Denominacion Beskrivelse	Descrizione Beschrijving	L.C.
1		504372185		1	RETURN PIPE				

10.218.01	03	p1	02/11

INJECTION EQUIPMENT - PIPING (504207956)
INJECTION EQUIPMENT - PIPING (504207956)
GRUPO DE INYECCION - TUBERIAS (504207956)
GRUPPO INIEZIONE - TUBAZION (504207956)

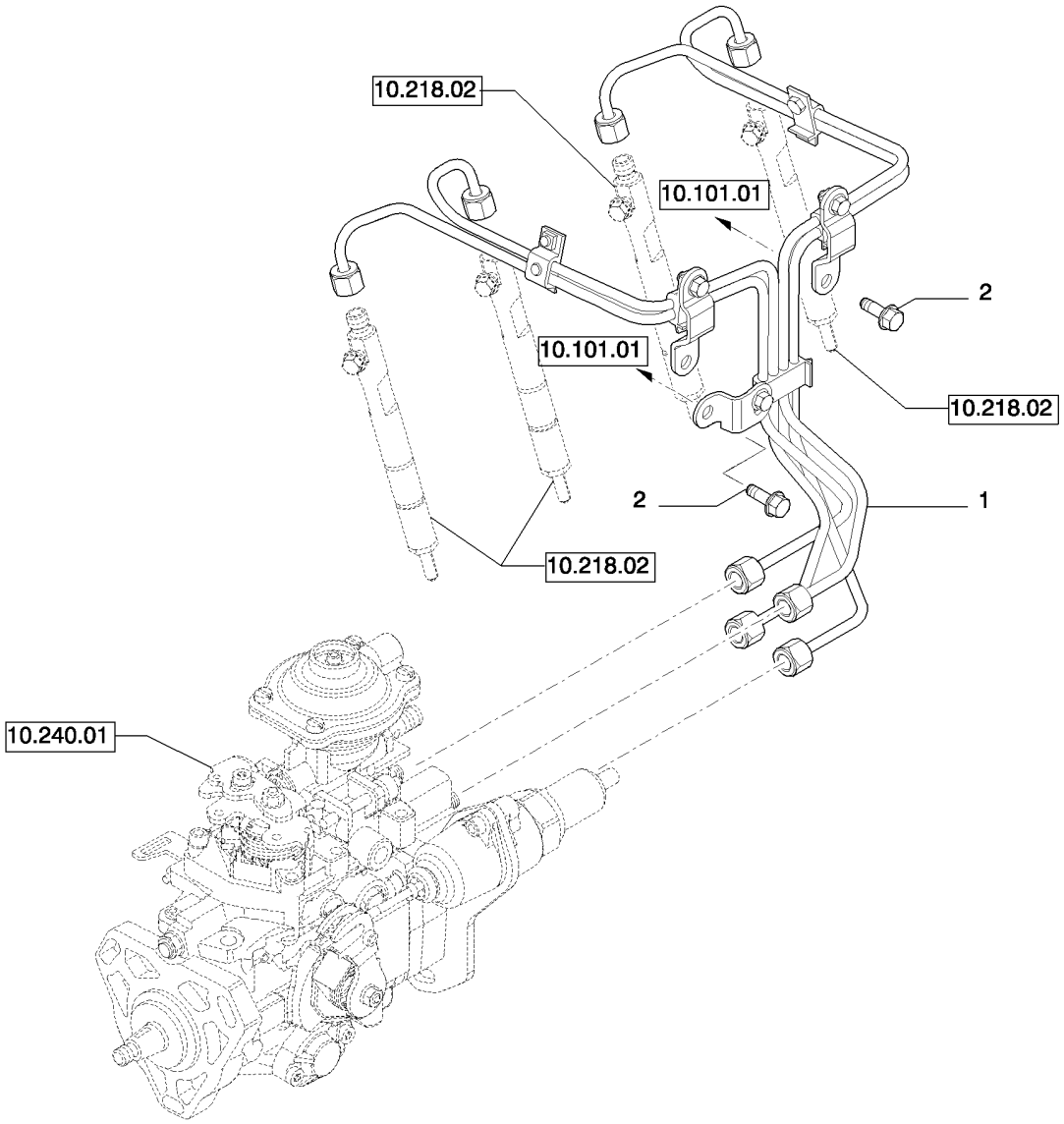

GROUPE D'INJECTION - TUYAUTERIE (504207956)
EINSPRITZAUSRUESTUNG - LEITUNGEN (504207956)
INDSPRØJTNINGSGRUPPE - RØRLEDNINGER (504207956)
INSPUITGROEP - LEIDINGEN (504207956)

R	N	P.N.	MOD	Q	Denominação Description	Description Bezeichnung	Denominacion Beskrivelse	Descrizione Beschrijving	L.C.
1		504216298		1	TUBO INJEÇÃO TUYAU D'INJECTION	INJECTION PIPE EINSPRITZLEITUNG	TUBO DE INYECCIÓN INDSPRØJTNINGSRØR	TUBO DI INIEZIONE INSPUITLEIDING	Z050
2		16597924		3	PARAFUSO, M8X14 mm VIS	SCREW SCHRAUBE	TORNILLO SKRUE	VITE SCHROEF	040V

10.218.02	02	p1	06/11

INJECTION EQUIPMENT - INJECTOR (504385855)
INJECTION EQUIPMENT - INJECTOR (504385855)
GRUPO DE INYECCION - INYECTOR (504385855)
GRUPPO INIEZIONE - INIETTORE (504385855)

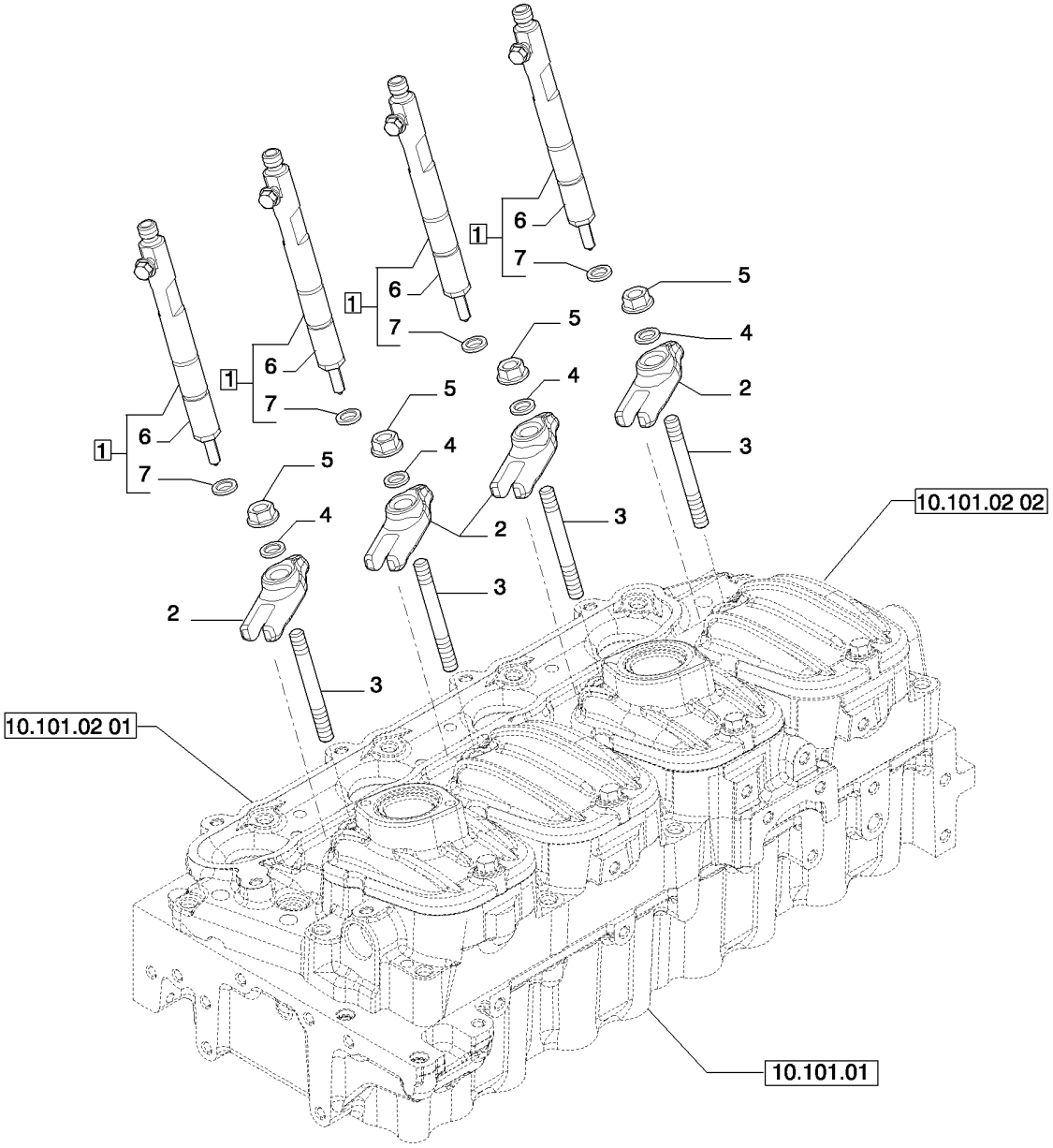

GROUPE D'INJECTION - INJECTEUR (504385855)
EINSPRITZAUSRUESTUNG - EINSPRITZDUESE (504385855)
INDSPRØJTNINGSGRUPPE - INDSPRØJTNINGSDYSE (504385855)
INSPUITGROEP - INSPUITSTUK (504385855)

R	N	P.N.	MOD	Q	Denominação Description Bezeichnung	Description Bezeichnung	Denominacion Beskrivelse	Descrizione Beschrijving	L.C.
1		504385978		4	INJETOR SIST COMBUSTÍVEL INJECTEUR DE CARBUR	FUEL SYSTEM INJECTO KRAFTSTOFFEINSPRITZ	INYECTOR DE SIST. COI BRÆNDSTOFPUMPE	INIETT. SISTEMA CARBU VERSTUIVER	089I
2		{504385832}		4					
3		504315404		4	PRISIONEIRO, M8X16X60 GOUJON	STUD GEWINDEBOLZEN	PRISIONERO STØTTEBOLT	PRIGIONIERO TAPEIND	210P
4		500353601		4	ARRUELA PLANA RONDELLE	WASHER UNTERLEGSCHEIBE	ARANDELA FLADSKIVE	RONDELLA SLUITRING	131R
5		17044735		4	PORCA, M8 ECROU	NUT MUTTER	TUERCA MØTRIK	DADO MOER	010D
6		{8097807}		4					
7		4899689		4	VEDAÇÃO DA ARRUELA, D = 14 MM SP = 1,78 MM RONDELLE D'ETANCHEI	SEALING WASHER DICHTSCHEIBE	ARANDELA HERMÉTICA TÆTNINGSSKIVE	ROSETTA DI TENUTA AFDICHTRING	133R

10.220.01		p1	02/11

THROTTLE HAND FOOT MECHANICAL (L223-L230)
THROTTLE HAND FOOT MECHANICAL (L223-L230)
THROTTLE HAND FOOT MECHANICAL (L223-L230)
THROTTLE HAND FOOT MECHANICAL (L223-L230)

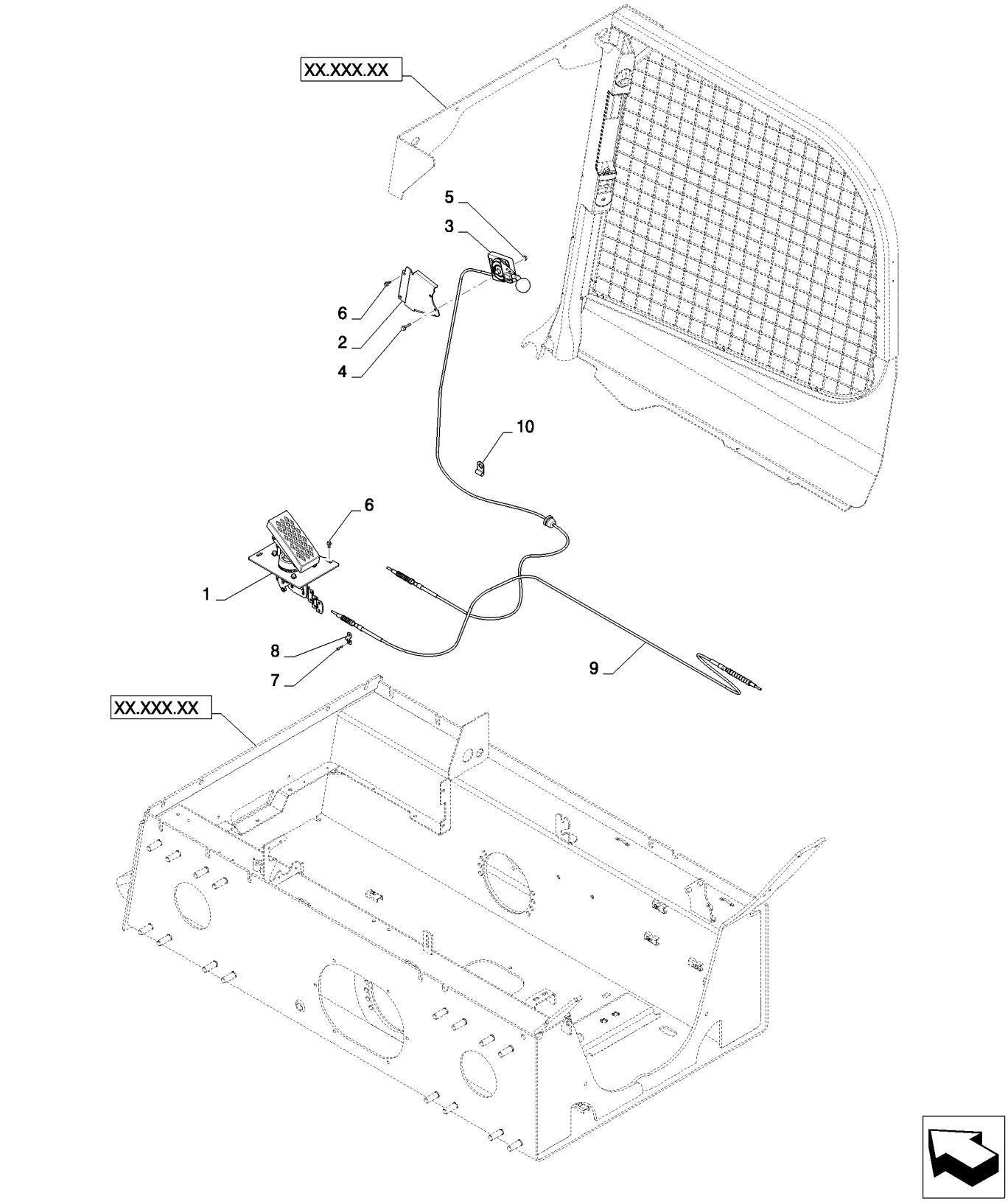

THROTTLE HAND FOOT MECHANICAL (L223-L230)
THROTTLE HAND FOOT MECHANICAL (L223-L230)
THROTTLE HAND FOOT MECHANICAL (L223-L230)
THROTTLE HAND FOOT MECHANICAL (L223-L230)

R	N	P.N.	MOD	Q	Denominação Description	Description Bezeichnung	Denominacion Beskrivelse	Descrizione Beschrijving	L.C.
1		84374767		1	COMANDO DO ACELERADOR, Mechanical, Foot				
						THROTTLE CONTROL	CONTROL DE REGULAD	COMANDO ACCELERAT(	197C
					COMMANDE D'ACCELEF	DROSSELKLAPPENZUG	GASREGULERINGSKABE	GASBEDIENINGSKABEL	
2		84333202		1	FIXADOR, Hand Throttle, CE Gray				
						MOUNT	SOPORTE	SUPPORTO	C022
					MONTAGE	GESTELL	BESLAG	BEVESTIGING	
3		84258153		1	EMPUNHADURA, Throttle to Pedal				
						HANDLE GRIP	PERILLA	IMPUGNATURA	025I
					POIGNEE DE MAINTIEN	HANDGRIFF	HÅNDGREB	HANDGREEP	
4		86511839		2	PARAFUSO, Hex Flg, M6 x 30, 8.8				
						BOLT	PERNO	BULLONE	140B
					VIS	SCHRAUBE	BOLT	BOUT	
5		9804276		2	PORCA, M6 x 1, Flg, Cl 8	NUT	TUERCA	DADO	010D
					ECROU	MUTTER	MØTRIK	MOER	
6		84305556		5	PARAFUSO, RDW-HD M6x25 TORX				
						SCREW	TORNILLO	VITE	040V
					VIS	SCHRAUBE	SKRUE	SCHROEF	
7		84200938		2	BRAÇADEIRA, Throttle Cable				
						CLAMP	ABRAZADERA	MORSETTO	120M
					COLLIER	KLEMME	SPÆNDEBÅND	KLEM	
8		86624126		4	PARAFUSO, Hex Soc Hd, M4 x 16, 8.8				
						SCREW	TORNILLO	VITE	040V
					VIS	SCHRAUBE	SKRUE	SCHROEF	
9		84258818		1	CABO, Pedal to Governor, LG FRM				
						CABLE	CABLE	CAVO	650C
					CABLE	KABEL	KABEL	KABEL	
10		86639010		1	BRAÇADEIRA, 3/8", Insul, 1/2" Bolt				
						CLAMP	ABRAZADERA	MORSETTO	120M
					COLLIER	KLEMME	SPÆNDEBÅND	KLEM	
11		84272827		2	REBITE, M6x1.0 (Not Shown)				
						RIVET	REMACHE	RIVETTO	055R
					RIVET	NIET	NITTE	KLINKNAGEL	

10.220.02		p1	05/11

THROTTLE HAND FOOT EH (L223-L230,C232,C238)
THROTTLE HAND FOOT EH (L223-L230,C232,C238)
THROTTLE HAND FOOT EH (L223-L230,C232,C238)
THROTTLE HAND FOOT EH (L223-L230,C232,C238)

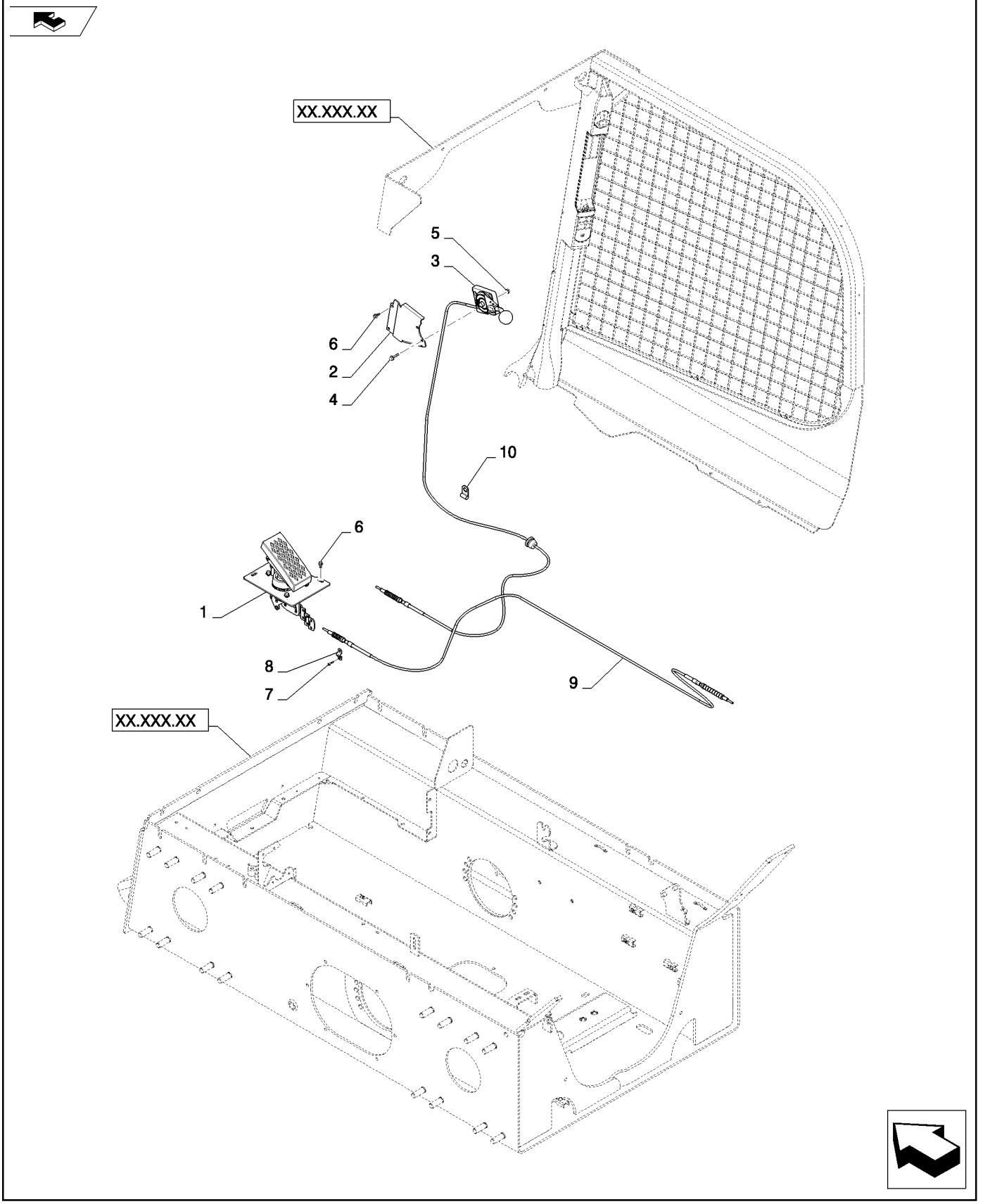

THROTTLE HAND FOOT EH (L223-L230,C232,C238)
THROTTLE HAND FOOT EH (L223-L230,C232,C238)
THROTTLE HAND FOOT EH (L223-L230,C232,C238)
THROTTLE HAND FOOT EH (L223-L230,C232,C238)

R	N	P.N.	MOD	Q	Denominação Description	Description Bezeichnung	Denominacion Beskrivelse	Descrizione Beschrijving	L.C.
1		84374768		1	REGULADOR PRESSÃO, EH, Foot				
						THROTTLE	REGULADOR	ACCELERATORE	P070
					PAPIL. GAZ ; ACCELERA	DROSSEL; GASPEDAL	GASPEDAL	GASKLEP	
2		84333202		1	FIXADOR, Hand Throttle, CE Gray				
						MOUNT	SOPORTE	SUPPORTO	C022
					MONTAGE	GESTELL	BESLAG	BEVESTIGING	
3		84258153		1	EMPUNHADURA, Throttle to Pedal				
						HANDLE GRIP	PERILLA	IMPUGNATURA	025I
					POIGNEE DE MAINTIEN	HANDGRIFF	HÅNDGREB	HANDGREEP	
4		86511839		2	PARAFUSO, Hex Flg, M6 x 30, 8.8				
						BOLT	PERNO	BULLONE	140B
					VIS	SCHRAUBE	BOLT	BOUT	
5		9804276		2	PORCA, M6 x 1, Flg, Cl 8	NUT	TUERCA	DADO	010D
					ECROU	MUTTER	MØTRIK	MOER	
6		84305556		5	PARAFUSO, RDW-HD M66x25 TORX				
						SCREW	TORNILLO	VITE	040V
					VIS	SCHRAUBE	SKRUE	SCHROEF	
7		84200938		2	BRAÇADEIRA, Throttle Cable				
						CLAMP	ABRAZADERA	MORSETTO	120M
					COLLIER	KLEMME	SPÆNDEBÅND	KLEM	
8		86624126		4	PARAFUSO, Hex Soc Hd, M4 x 16, 8.8				
						SCREW	TORNILLO	VITE	040V
					VIS	SCHRAUBE	SKRUE	SCHROEF	
9		84258818		1	CABO, Pedal to Governor, LG FRM				
						CABLE	CABLE	CAVO	650C
					CABLE	KABEL	KABEL	KABEL	
10		86639010		1	BRAÇADEIRA, 3/8", Insul, 1/2" Bolt				
						CLAMP	ABRAZADERA	MORSETTO	120M
					COLLIER	KLEMME	SPÆNDEBÅND	KLEM	
11		84272827		2	REBITE	RIVET	REMACHE	RIVETTO	055R
					RIVET	NIET	NITTE	KLINKNAGEL	

10.220.03		p1	02/11

THROTTLE HAND MECHANICAL (L223-L230)
THROTTLE HAND MECHANICAL (L223-L230)
THROTTLE HAND MECHANICAL (L223-L230)
THROTTLE HAND MECHANICAL (L223-L230)

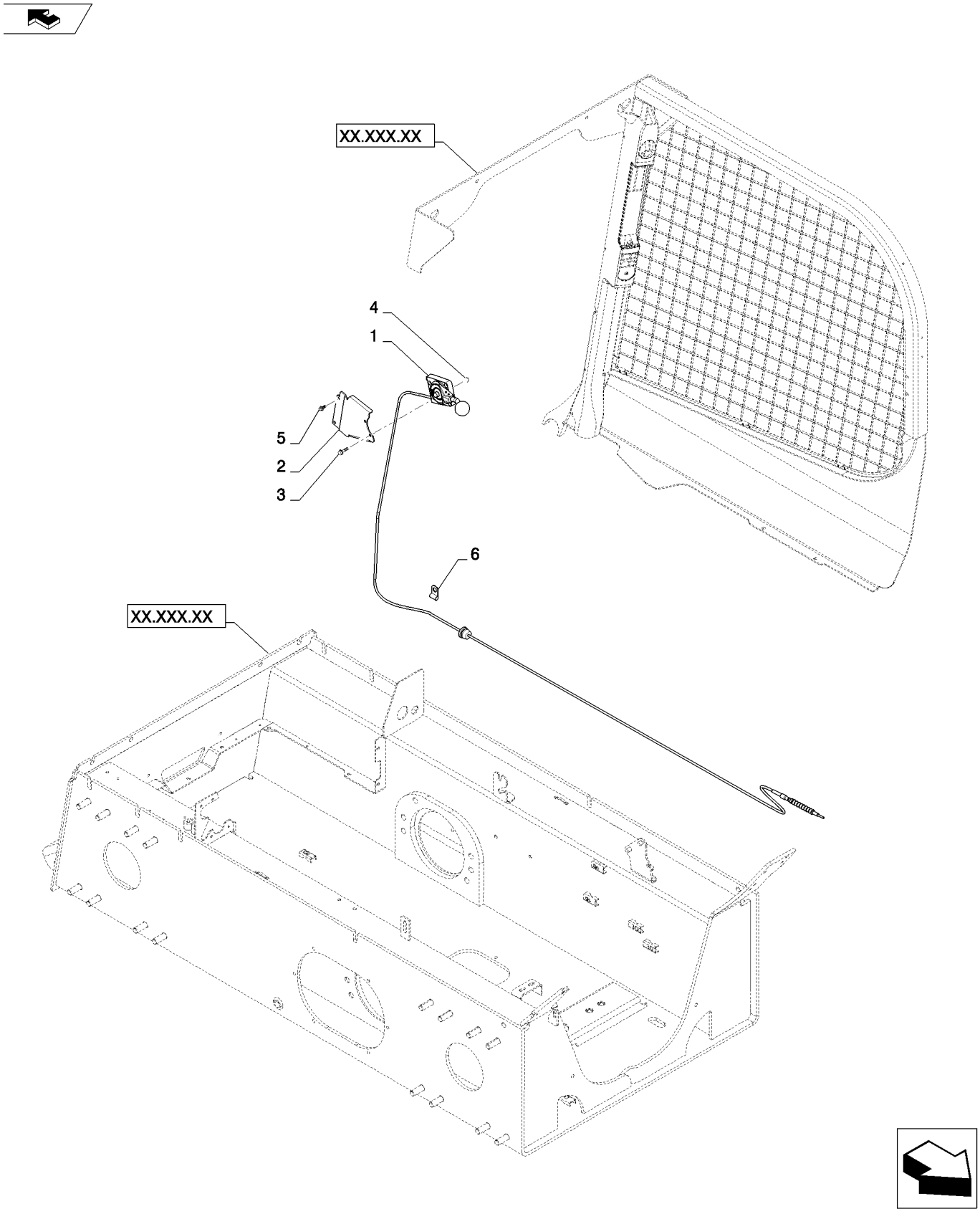

THROTTLE HAND MECHANICAL (L223-L230)
THROTTLE HAND MECHANICAL (L223-L230)
THROTTLE HAND MECHANICAL (L223-L230)
THROTTLE HAND MECHANICAL (L223-L230)

R	N	P.N.	MOD	Q	Denominação Description	Description Bezeichnung	Denominacion Beskrivelse	Descrizione Beschrijving	L.C.
1		84262592		1	EMPUNHADURA, Throttle to Governor, SM FRM				
						HANDLE GRIP	PERILLA	IMPUGNATURA	025I
					POIGNEE DE MAINTIEN	HANDGRIFF	HÅNDGREB	HANDGREEP	
2		84333202		1	FIXADOR, Hand Throttle, CE Gray				
						MOUNT	SOPORTE	SUPPORTO	C022
					MONTAGE	GESTELL	BESLAG	BEVESTIGING	
3		86511839		2	PARAFUSO, Hex Flg, M6 x 30, 8.8				
						BOLT	PERNO	BULLONE	140B
					VIS	SCHRAUBE	BOLT	BOUT	
4		9804276		2	PORCA, M6 x 1, Flg, Cl 8	NUT	TUERCA	DADO	010D
					ECROU	MUTTER	MØTRIK	MOER	
5		{84605556}		2					
6		86639010		1	BRAÇADEIRA, 3/8", Insul, 1/2" Bolt				
						CLAMP	ABRAZADERA	MORSETTO	120M
					COLLIER	KLEMME	SPÆNDEBÅND	KLEM	
7		84272827		2	REBITE, Not Shown	RIVET	REMACHE	RIVETTO	055R
					RIVET	NIET	NITTE	KLINKNAGEL	

10.240.01	01	p1	02/11

INJECTION PUMP (504379786)
INJECTION PUMP (504379786)
BOMBA DE INYECCION (504379786)
POMPA INIEZIONE (504379786)

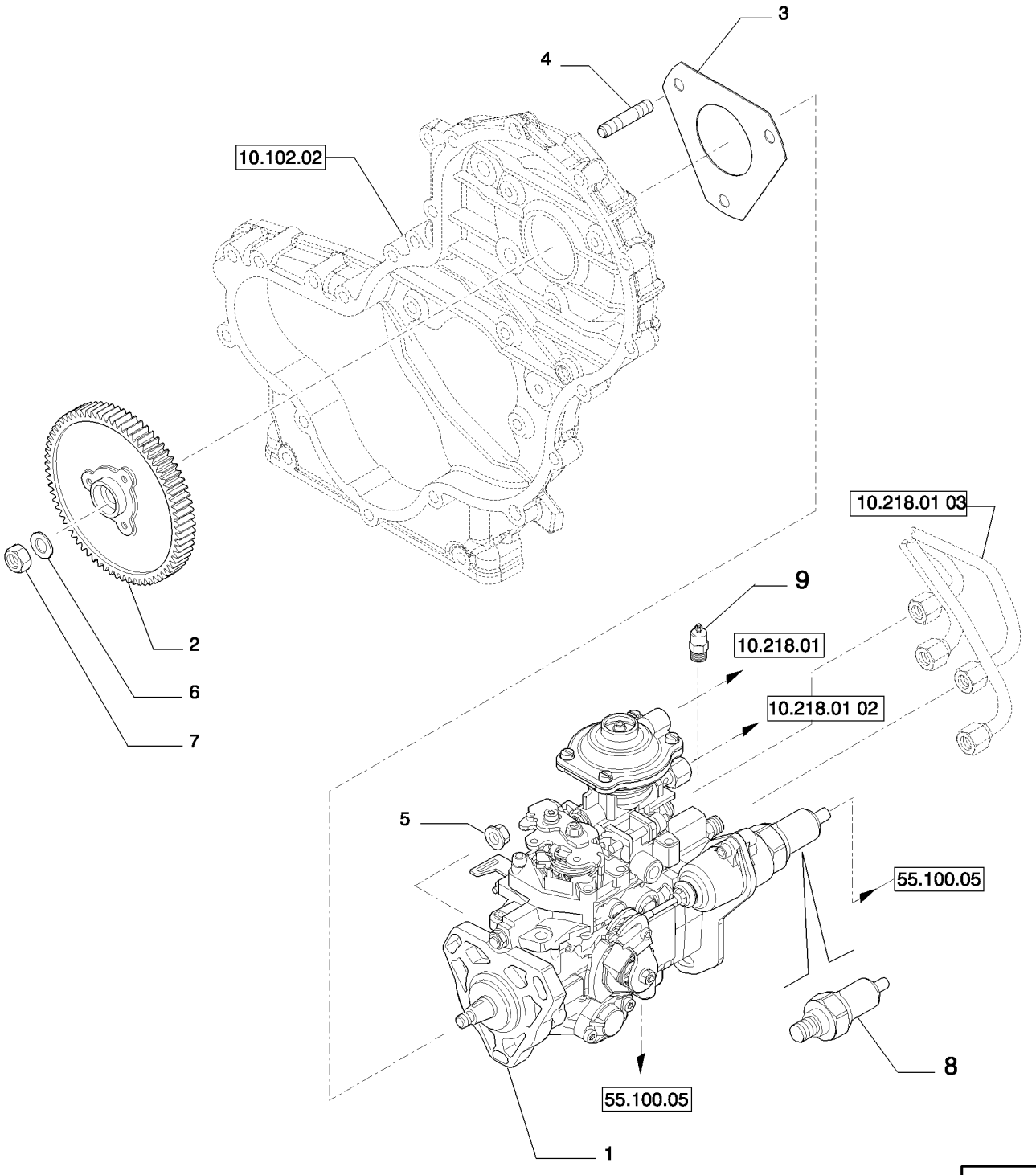

POMPE D'INJECTION (504379786)
EINSPRITZPUMPE (504379786)
INDSPRØJTNINGSPUMPE (504379786)
INSPUITPOMP (504379786)

R	N	P.N.	MOD	Q	Denominação Description Bezeichnung	Description Bezeichnung	Denominacion Beskrivelse	Descrizione Beschrijving	L.C.
1		504374952		1	BOMBA INJEÇÃO COMBUSTÍVEL, 61 KW				
						FUEL INJECTION PUMP	BOMBA DE INY. DE COM	POMPA INIEZ. CARBURA	158P
					POMPE INJECT. CARBUI	KRAFTSTOFFEINPRITZP	INDSPRØJTNINGSPUMP	INSPUITPOMP	
2		504240405		1	ENGRENAGEM	GEAR	ENGRANAJE	INGRANAGGIO	050I
					PIGNON	ZAHNRAD	TANDHJUL	TANDWIEL	
3		504083433		1	JUNTA	GASKET	JUNTA	GUARNIZIONE	123G
					JOINT	DICHTUNG	PAKNING	PAKKING	
4		504315405		3	PRISIONEIRO	STUD	PRISIONERO	PRIGIONIERO	210P
					GOUJON	GEWINDEBOLZEN	STØTTEBOLT	TAPEIND	
5		500368408		3	PORCA, M8X1,25	NUT	TUERCA	DADO	010D
					ECROU	MUTTER	MØTRIK	MOER	
6		17095401		1	ARRUELA PLANA	WASHER	ARANDELA	RONDELLA	131R
					RONDELLE	UNTERLEGSCHEIBE	FLADSKIVE	SLUITRING	
7		16980331		1	PORCA, M14X1,5	NUT	TUERCA	DADO	010D
					ECROU	MUTTER	MØTRIK	MOER	
8		93160151		1	TRANSMISSOR	SENDER UNIT	UNIDAD EMISORA	TRASMETTITORE	160T
					ENS. TRANSMETTEUR	SIGNALGEBER	SENDER	SENSOREENHEID	
9		42533181		1	VÁLVULA DE PARADA	SHUT-OFF VALVE	VÁLVULA DE CIERRE	VALVOLA DI ARRESTO	P337
					VANNE D'ARRET	ABSPERRVENTIL	AFSPÆRRINGSVENTIL	UITSCHAKELKLEP	

10.250.02		p1	02/11

TURBOCHARGING (504183274)
TURBOCHARGING (504183274)
TURBOCOMPRESOR (504183274)
TURBOCOMPRESSORE (504183274)

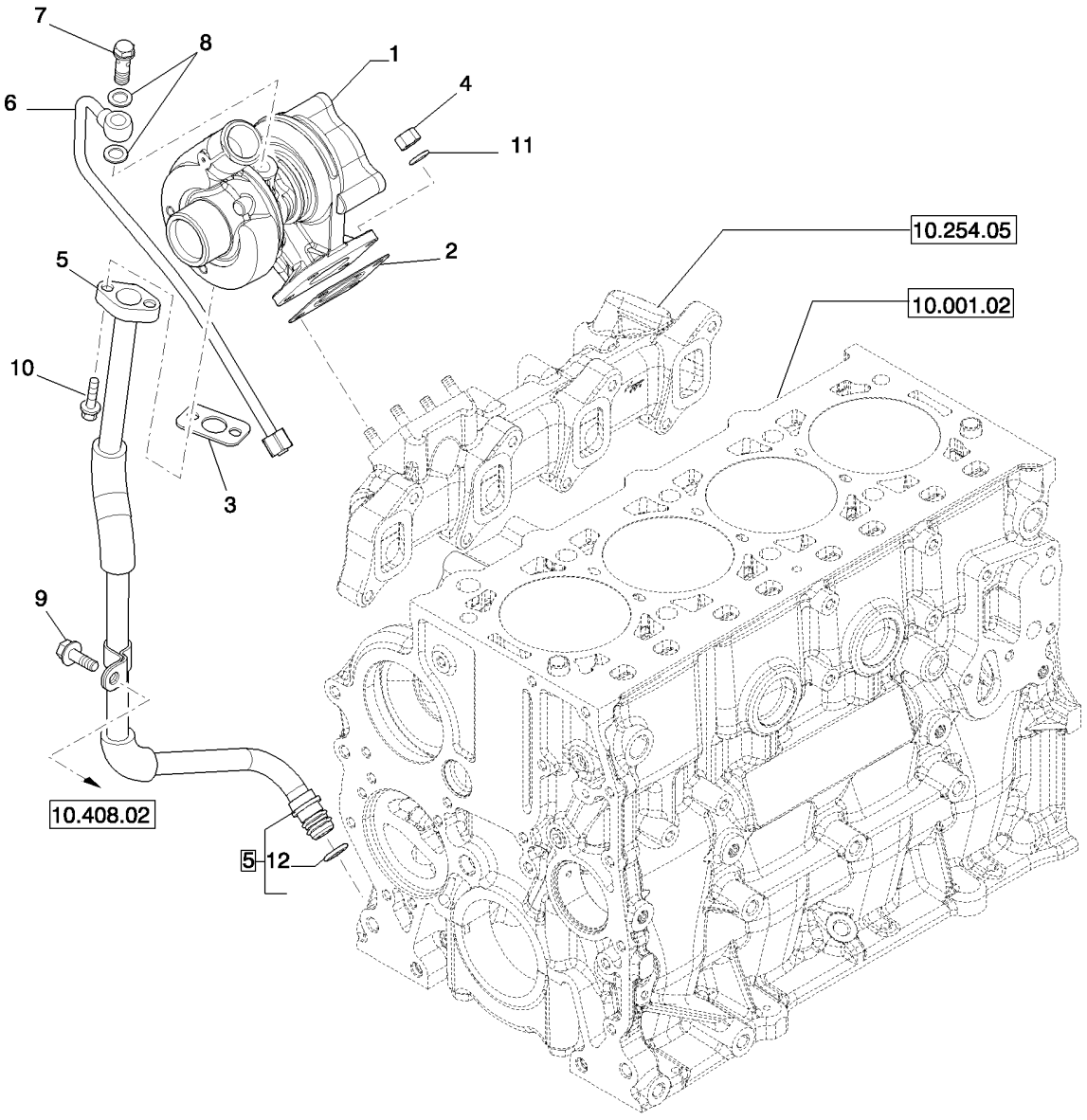

TURBOCOMPRESSEUR (504183274)
TURBOLADER (504183274)
TURBOLADER (504183274)
TURBOCOMPRESSOR (504183274)

R	N	P.N.	MOD	Q	Denominação Description	Description Bezeichnung	Denominacion Beskrivelse	Descrizione Beschrijving	L.C.
1		504242763		1	TURBO-COMPRESSOR TURBOCOMPRESSEUR	TURBOCHARGER TURBOLADER	TURBOCOMPRESOR TURBOLADER	TURBOCOMPRESSORE TURBOCOMPRESSOR	210T
2		4899343		1	JUNTA JOINT	GASKET DICHTUNG	JUNTA PAKNING	GUARNIZIONE PAKKING	123G
3		500370706		1	JUNTA JOINT	GASKET DICHTUNG	JUNTA PAKNING	GUARNIZIONE PAKKING	123G
4		500322677		4	PORCA FLANGEADA, M8 ECROU A EMBASE	FLANGE NUT FLANSCHMUTTER	TUERCA DE BRIDA FLANGEMØTRIK	DADO FLANGIATO FLENSMOER	A069
5		504164226		1	TUBO TUYAU	PIPE ROHR	TUBO PÅFYLDNINGSSTUDS	TUBO BUIS	200T
6		504164224		1	TUBO TUYAU	PIPE ROHR	TUBO PÅFYLDNINGSSTUDS	TUBO BUIS	200T
7		4864080		1	PARAFUSO DE BANJO, M10X1,25 VIS BANJO	BANJO BOLT HOHLSCHRAUBE	PERNO BANJO BANJOBOLT	BULLONE MASCHIO BANJOBOUT	090B
8		17750480		2	JUNTA JOINT	GASKET DICHTUNG	JUNTA PAKNING	GUARNIZIONE PAKKING	123G
9		16586225		1	PARAFUSO, M8 x 16 VIS	SCREW SCHRAUBE	TORNILLO SKRUE	VITE SCHROEF	040V
10		18137825		2	PARAFUSO, M6 x 20 VIS	SCREW SCHRAUBE	TORNILLO SKRUE	VITE SCHROEF	040V
11		17094914		4	ARRUELA PLANA, 8,4X16 mm RONDELLE	WASHER UNTERLEGSCHEIBE	ARANDELA FLADSKIVE	RONDELLA SLUITRING	131R
12		17281681		1	O-RING, 13.9mm ID x 2.6mm Width JOINT TORIQUE	O-RING O-RING	JUNTA TÓRICA O-RING	ANELLO TOROIDALE O-RING	055A

10.254.01		p1	02/11

BLOCK HEATER NA (L223-C238)
BLOCK HEATER NA (L223-C238)
BLOCK HEATER NA (L223-C238)
BLOCK HEATER NA (L223-C238)

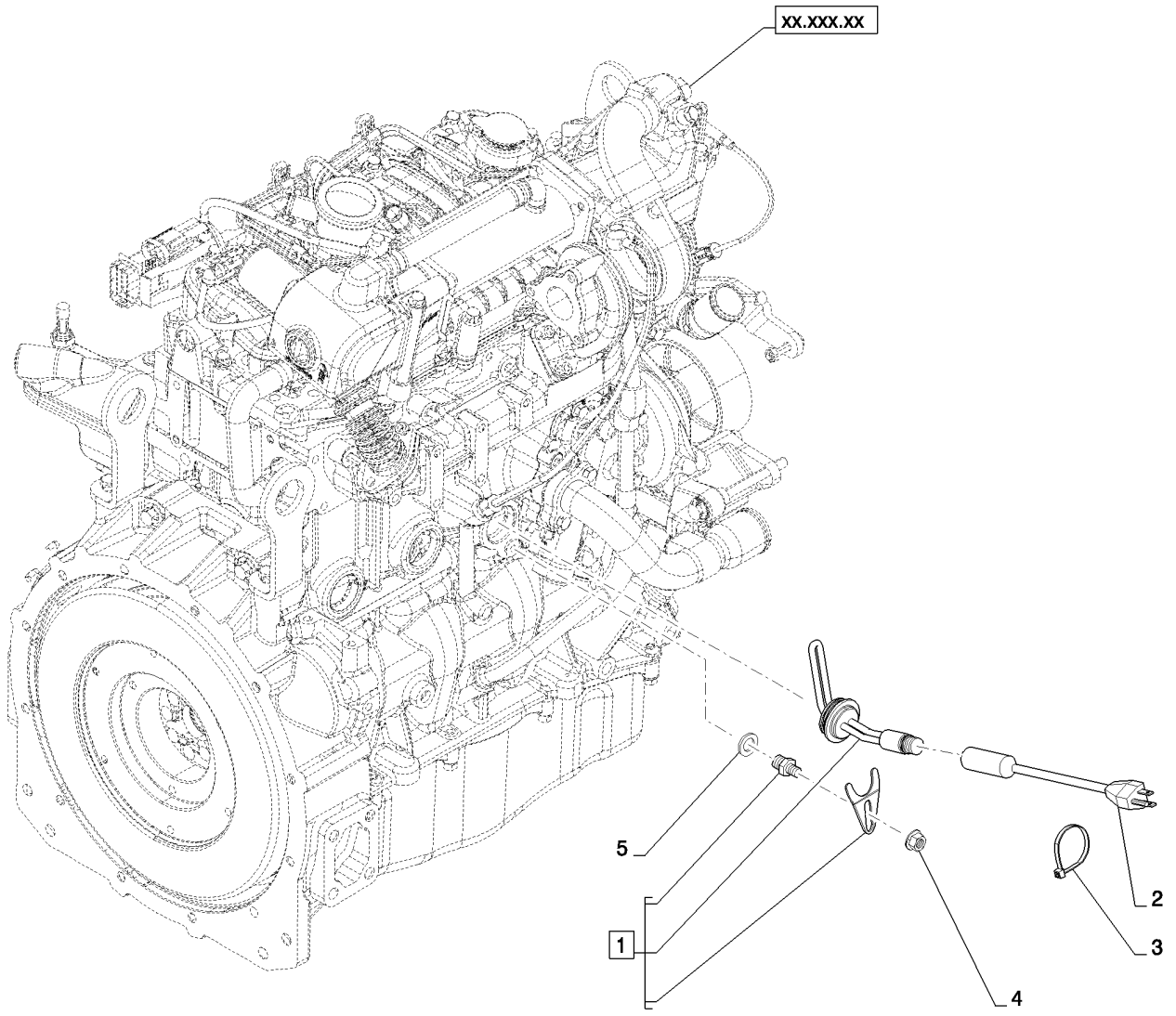

BLOCK HEATER NA (L223-C238)
BLOCK HEATER NA (L223-C238)
BLOCK HEATER NA (L223-C238)
BLOCK HEATER NA (L223-C238)

R	N	P.N.	MOD	Q	Denominação Description	Description Bezeichnung	Denominacion Beskrivelse	Descrizione Beschrijving	L.C.
1		87693857		1	UNIDADE DE AQUECIMENTO, Assembly				
						UNIT HEATER	APARATO DE CALEFAC(	RISCALDATORE UNITÀ	Z375
					APPAREIL DE CHAUFFA	HEIZUNGSEINHEIT	RADIATORENHED	VERWARMING	
2		87693858		1	CABO, Block Heater	CABLE	CABLE	CAVO	650C
					CABLE	KABEL	KABEL	KABEL	
3		L11541		1	PRENDEDOR DE CABOS,	Nylon Tie 7-8in			
						CABLE STRAP	BANDA DE CABLE	FASCETTA PER CAVO	P716
					BRIDE DE CABLE	KABELBINDER	KABELSTROP	BUNDELBAND	
4		86050279		1	PORCA, M10 x 1.5, Flg, Cl	10			
						NUT	TUERCA	DADO	010D
					ECROU	MUTTER	MØTRIK	MOER	
5		12646001		1	ARRUELA PLANA, M14 x 24 x 2				
						WASHER	ARANDELA	RONDELLA	131R
					RONDELLE	UNTERLEGSCHEIBE	FLADSKIVE	SLUITRING	

10.254.02		p1	02/11

BLOCK HEATER EU (L223-C238)
BLOCK HEATER EU (L223-C238)
BLOCK HEATER EU (L223-C238)
BLOCK HEATER EU (L223-C238)

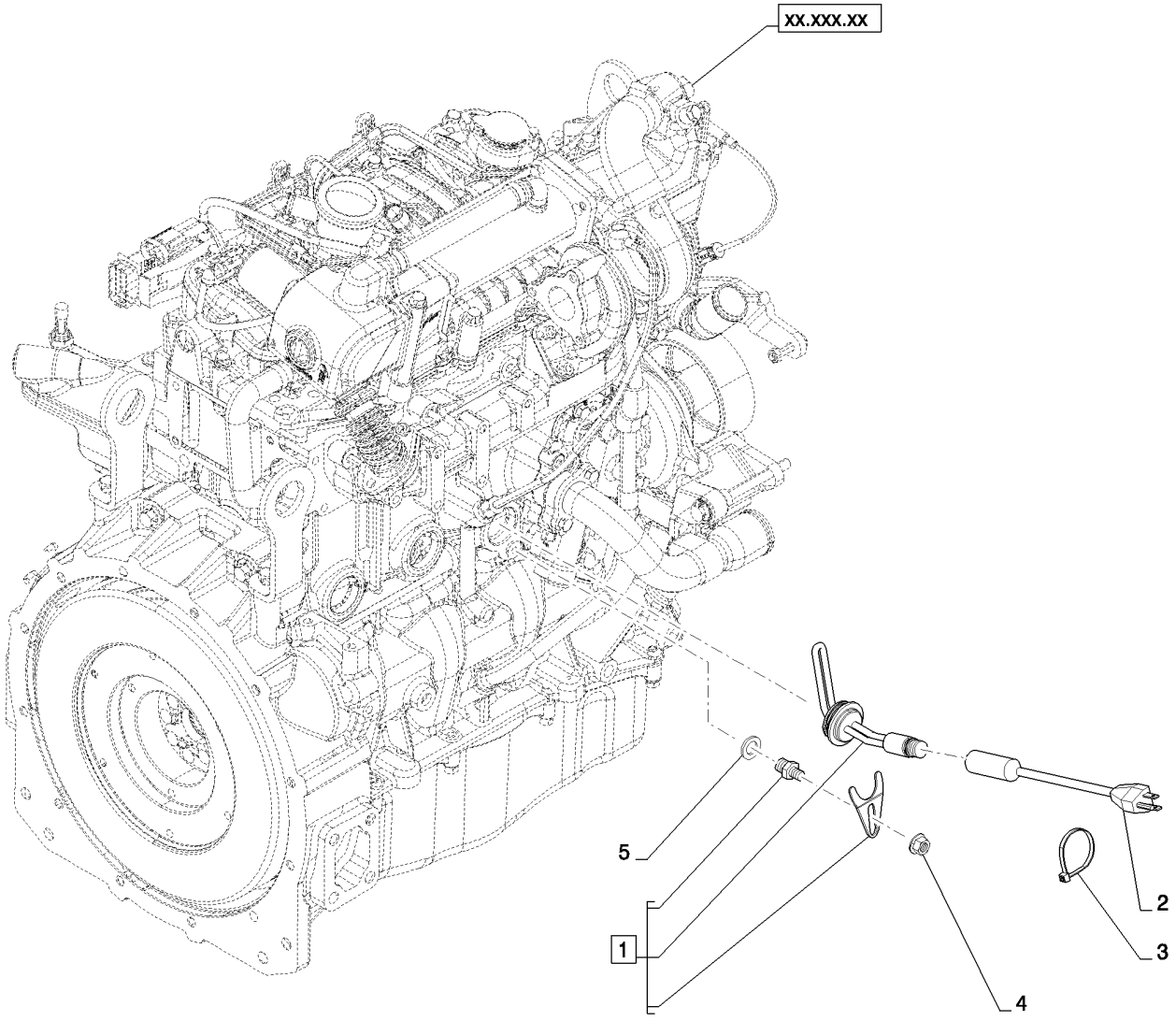

BLOCK HEATER EU (L223-C238)
BLOCK HEATER EU (L223-C238)
BLOCK HEATER EU (L223-C238)
BLOCK HEATER EU (L223-C238)

R	N	P.N.	MOD	Q	Denominação Description	Description Bezeichnung	Denominacion Beskrivelse	Descrizione Beschrijving	L.C.
1		87719400		1	AQUECEDOR, Assembly	HEATER	CALENTADOR	RISCALDATORE	105R
					CHAUFFAGE	HEIZUNG	VARMEAPPARAT	VERWARMING	
2		87693858		1	CABO, Block Heater	CABLE	CABLE	CAVO	650C
					CABLE	KABEL	KABEL	KABEL	
3		L11541		1	PRENDEDOR DE CABOS, Nylon Tie 7-8in				
						CABLE STRAP	BANDA DE CABLE	FASCETTA PER CAVO	P716
					BRIDE DE CABLE	KABELBINDER	KABELSTROP	BUNDELBAND	
4		86050279		1	PORCA, M10 x 1.5, Flg, Cl 10				
						NUT	TUERCA	DADO	010D
					ECROU	MUTTER	MØTRIK	MOER	
5		12646001		1	ARRUELA PLANA, M14 x 24 x 2				
						WASHER	ARANDELA	RONDELLA	131R
					RONDELLE	UNTERLEGSCHEIBE	FLADSKIVE	SLUITRING	

10.254.03		p1	02/11

ENGINE EXHAUST LRG V (L223-L230,C232,C238)
ENGINE EXHAUST LRG V (L223-L230,C232,C238)
ENGINE EXHAUST LRG V (L223-L230,C232,C238)
ENGINE EXHAUST LRG V (L223-L230,C232,C238)

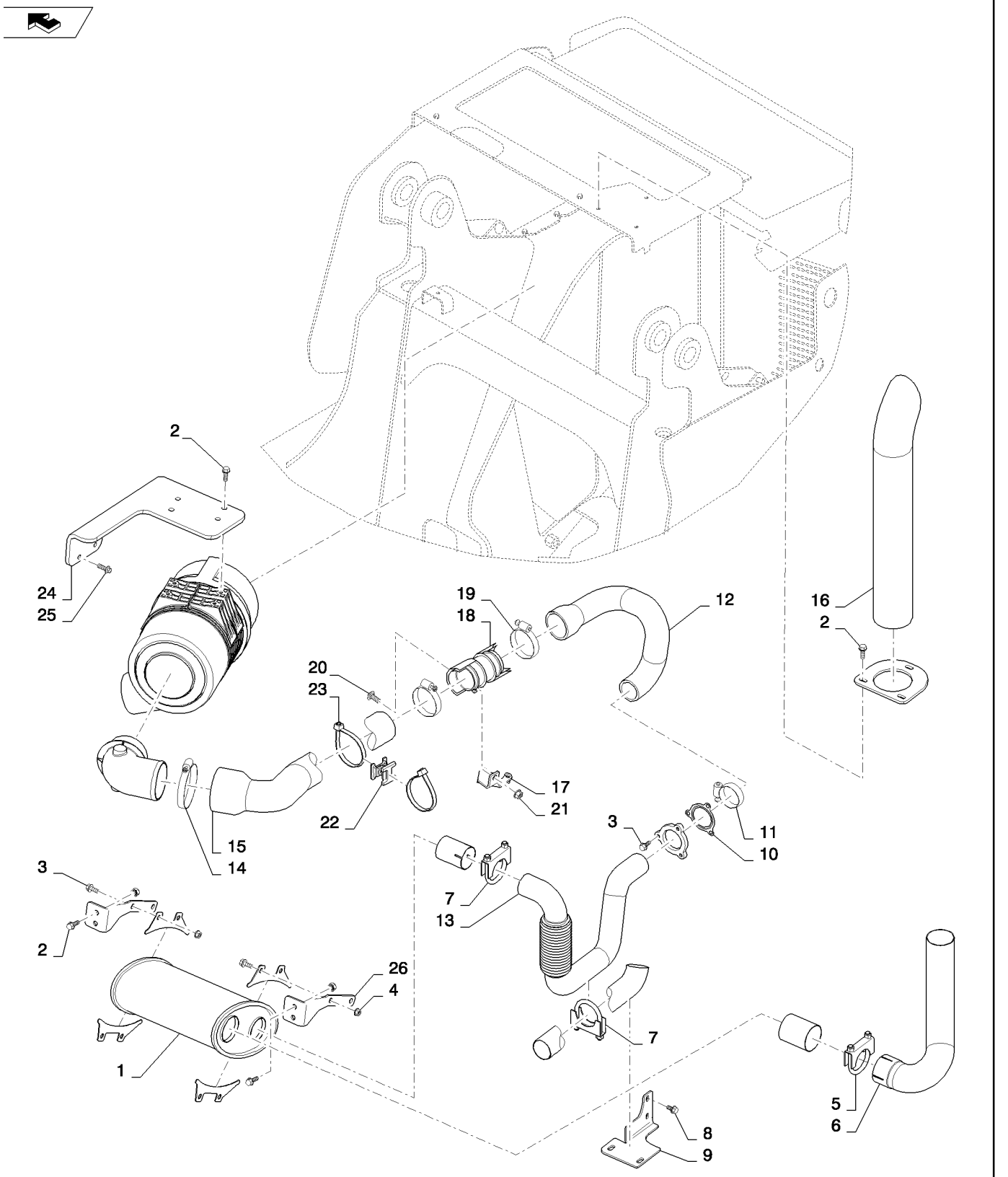

ENGINE EXHAUST LRG V (L223-L230,C232,C238)
ENGINE EXHAUST LRG V (L223-L230,C232,C238)
ENGINE EXHAUST LRG V (L223-L230,C232,C238)
ENGINE EXHAUST LRG V (L223-L230,C232,C238)

R	N	P.N.	MOD	Q	Denominação Description	Description Bezeichnung	Denominacion Beskrivelse	Descrizione Beschrijving	L.C.
1		84287182		1	SILENCIOSO, Bilen F5C	MUFFLER	SILENCIADOR	MARMITTA	160S
					SILENCIEUX	SCHALLDÄMPFER	LYDDÆMPER	UITLAATDEMPER	
2		9671714		11	PARAFUSO, Hex Flg, M8 x 25, 8.8				
						BOLT	PERNO	BULLONE	140B
					VIS	SCHRAUBE	BOLT	BOUT	
3		9804258		7	PARAFUSO, Hex Flg, M8 x 20, 8.8				
						BOLT	PERNO	BULLONE	140B
					VIS	SCHRAUBE	BOLT	BOUT	
4		9804277		4	PORCA, M8 x 1.25, Flg, Cl 8				
						NUT	TUERCA	DADO	010D
					ECROU	MUTTER	MØTRIK	MOER	
5		87461995		1	BRAÇADEIRA, Muffler	CLAMP	ABRAZADERA	MORSETTO	120M
					COLLIER	KLEMME	SPÆNDEBÅND	KLEM	
6		84304715		1	TUBO DE ADMISSÃO DE AR, Exhaust Tailpipe				
						AIR INTAKE TUBE	TUBO DE ADMISIÓN DE	TUBO DI ASPIRAZIONE /	P089
					TUBE D'ADMISSION D'AI	LUFTEINLASSROHR	LUFTINDSUGNINGSSLAI	LUCHTINLAATLEIDING	
7		83910871		2	BRAÇADEIRA	CLAMP	ABRAZADERA	MORSETTO	120M
					COLLIER	KLEMME	SPÆNDEBÅND	KLEM	
8		86511841		3	PARAFUSO, Hex Flg, M8 x 16, 8.8				
						BOLT	PERNO	BULLONE	140B
					VIS	SCHRAUBE	BOLT	BOUT	
9		84414896		1	SUPORTE	BRACKET	SOPORTE	STAFFA	225S
					SUPPORT	HALTERUNG	BESLAG	STEUN	
10		87611895		1	JUNTA, Muffler	GASKET	JUNTA	GUARNIZIONE	123G
					JOINT	DICHTUNG	PAKNING	PAKKING	
11		86050202		1	BRAÇADEIRA MANGUEIRA, #32, 1.56/2.50 Type F Worm				
						HOSE CLAMP	ABRAZADERA DE MANG	FASCETTA STRINGITUB	P729
					COLLIER POUR FLEXIBL	SCHLAUCHSCHELLE	SLANGEKLEMME	SLANGKLEM	
12		84335246		1	TUBO, Coupler to Turbo	TUBE	TUBO	TUBO	195T
					TUBE	ROHR	RØR	LEIDING	
13		84287189		1	TUBO DE ADMISSÃO DE AR, Exhaust Flexible				
						AIR INTAKE TUBE	TUBO DE ADMISIÓN DE	TUBO DI ASPIRAZIONE /	P089
					TUBE D'ADMISSION D'AI	LUFTEINLASSROHR	LUFTINDSUGNINGSSLAI	LUCHTINLAATLEIDING	
14		381144		1	BRAÇADEIRA MANGUEIRA, #60, 3.31/4.25 Type F Worm				
						HOSE CLAMP	ABRAZADERA DE MANG	FASCETTA STRINGITUB	P729
					COLLIER POUR FLEXIBL	SCHLAUCHSCHELLE	SLANGEKLEMME	SLANGKLEM	
15		84270605		1	MANGUEIRA AR CONDICIONADO				
						A/C HOSE	TUBO A/A	TUBO FLESSIBILE A/C	A054
					FLEXIBLE CLIMATISATIC	KLIMAANLAGENSCHLAU	SLANGE, AIRCONDITION	SLANG VOOR AIRCO	
16		84340478		1	TUBO ESCAPE, Stack	EXHAUST SYSTEM PIPE	TUBO DE SISTEMA DE E	TUBO SISTEMA DI SCAR	198T
					TUYAU D'ECHAPPEMEN	AUSPUFFROHR	RØRUDSTØDNINGSSYS	PIJP VAN UITLAATSYSTI	
17		87471945		1	SUPORTE, Air Cleaner Coupler				
						BRACKET	SOPORTE	STAFFA	225S
					SUPPORT	HALTERUNG	BESLAG	STEUN	
18		84198602		1	ENGATE PARA TUBO, Intake Hose				
						PIPE COUPLING	TUBO DE ACOPLAMIENT	RACCORDO TUBO	A035
					RACCORD DE TUYAU	ROHRKUPPLUNG	RØRKOBLING	BUISKOPPELING	

10.254.03		p2	02/11

ENGINE EXHAUST LRG V (L223-L230,C232,C238)
ENGINE EXHAUST LRG V (L223-L230,C232,C238)
ENGINE EXHAUST LRG V (L223-L230,C232,C238)
ENGINE EXHAUST LRG V (L223-L230,C232,C238)

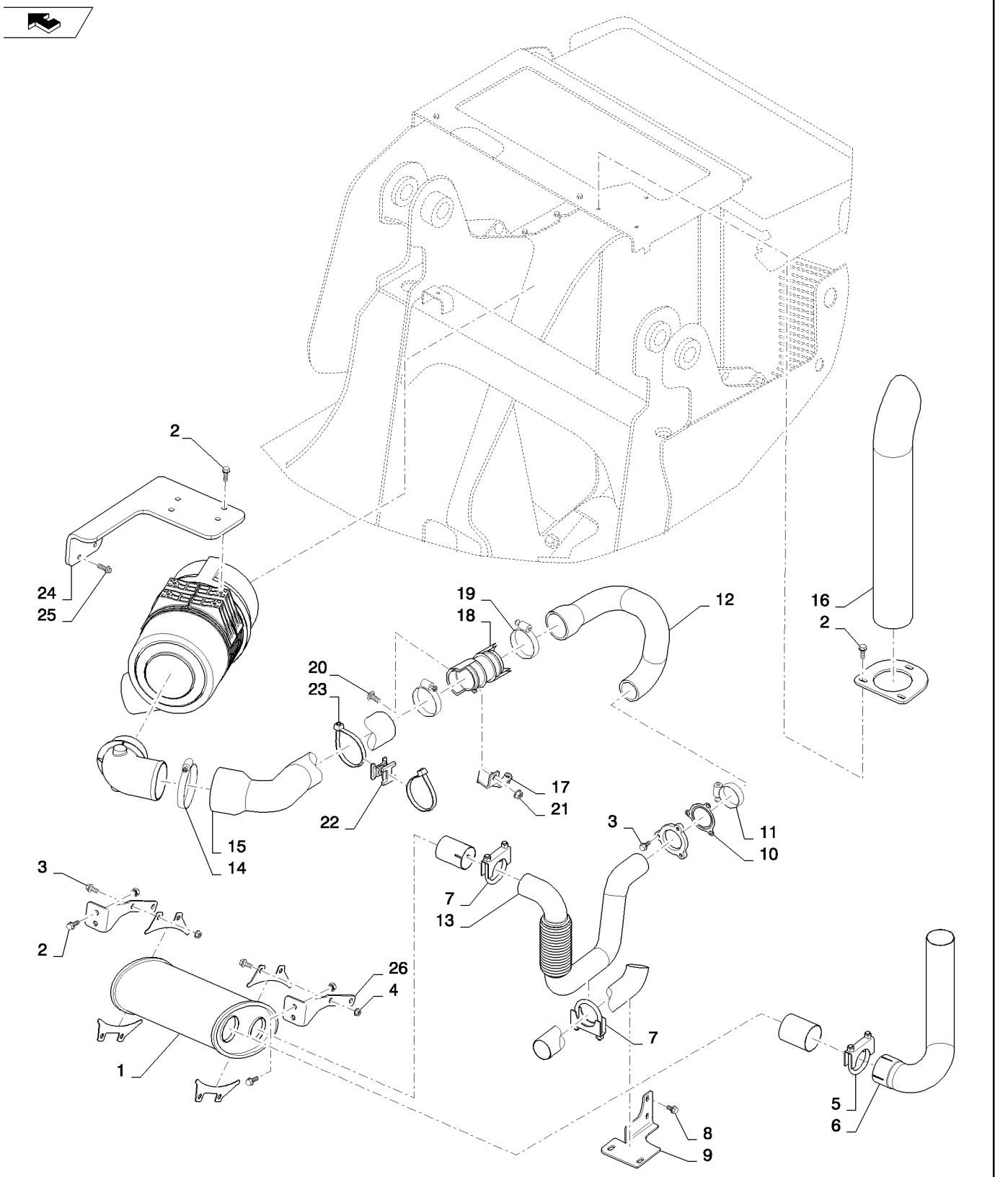

ENGINE EXHAUST LRG V (L223-L230,C232,C238)
ENGINE EXHAUST LRG V (L223-L230,C232,C238)
ENGINE EXHAUST LRG V (L223-L230,C232,C238)
ENGINE EXHAUST LRG V (L223-L230,C232,C238)

R	N	P.N.	MOD	Q	Denominação Description	Description Bezeichnung	Denominacion Beskrivelse	Descrizione Beschrijving	L.C.
19		**86050197**		2	BRAÇADEIRA MANGUEIRA, #44, 2.31/3.25 Type F Worm				
						HOSE CLAMP	ABRAZADERA DE MANG	FASCETTA STRINGITUB	P729
					COLLIER POUR FLEXIBL	SCHLAUCHSCHELLE	SLANGEKLEMME	SLANGKLEM	
20		**86633356**		1	PARAFUSO, Short NK, M10 x 25, Cl8.8, Full Thd				
						CARRIAGE BOLT	PERNO ALOMADO	BULLONE A TESTA TONI	P123
					VIS A TETE BOMBEE	SCHLOSSSCHRAUBE	BRÆDDEBOLT	SLOTBOUT	
21		**9804278**		1	PORCA, M10 x 1.5, Flg, Cl 8				
						NUT	TUERCA	DADO	010D
					ECROU	MUTTER	MØTRIK	MOER	
22		**84318895**		1	ESPAÇADOR, Swivel Tie Base				
						SPACER	SEPARADOR	DISTANZIALE	075D
					ENTRETOISE	DISTANZSTÜCK	AFSTANDSSTYKKE	AFSTANDSSTUK	
23		**L11541**		2	PRENDEDOR DE CABOS	CABLE STRAP	BANDA DE CABLE	FASCETTA PER CAVO	P716
					BRIDE DE CABLE	KABELBINDER	KABELSTROP	BUNDELBAND	
24		**84372993**		1	SUPORTE, Air Cleaner Vertical				
						BRACKET	SOPORTE	STAFFA	225S
					SUPPORT	HALTERUNG	BESLAG	STEUN	
25		**87016557**		3	PARAFUSO, Hex Flg Hd, M8 x 25				
						SELF-TAP SCREW	TORNILLO AUTORROSC	VITE AUTOFILETTANTE	062V
					VIS AUTOTARAUDEUSE	SELBSTSCHN SCHRAUE	SELVLÅSENDE BOLT	ZELFTAPPENDE SCHRO	
26		**84365609**		2	PLACA DE MONTAGEM, Muffler				
						MOUNTING PLATE	PLACA DE MONTAJE	PIASTRA DI MONTAGGI(	109P
					PLAQUE DE MONTAGE	MONTAGEPLATTE	MONTERINGSPLADE	BEVESTIGINGSPLAAT	

10.254.04		p1	05/11

INTAKE MANIFOLD (504385851 - 504385860)
INTAKE MANIFOLD (504385851 - 504385860)
COLLECTOR DE ASPIRACION (504385851 - 504385860)
COLLETTORE ASPIRAZIONE (504385851 - 504385860)

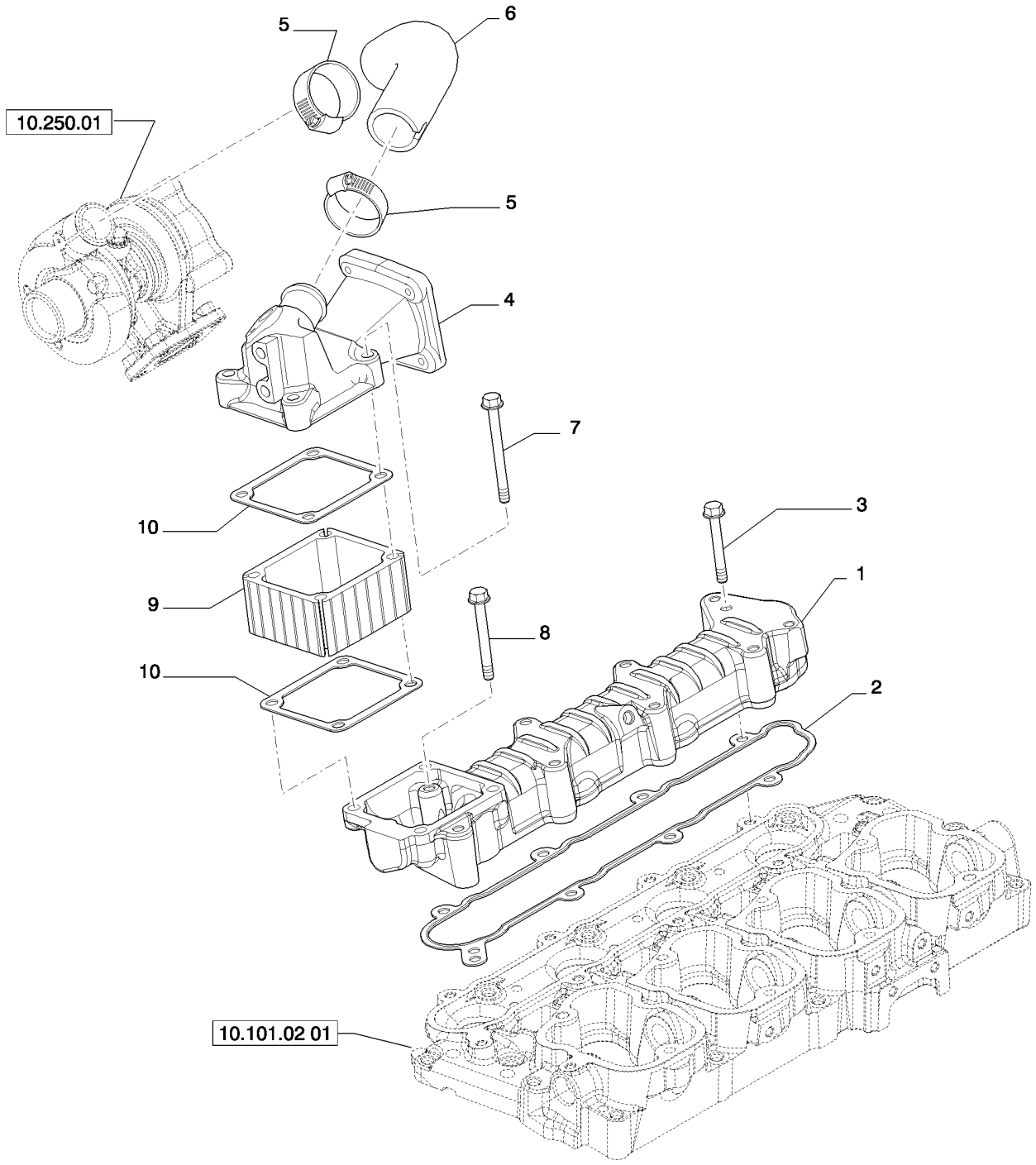

CONDUIT D'ADMISSION (504385851 - 504385860)
ANSAUGROHR (504385851 - 504385860)
INDSUGNINGSMANIFOLD (504385851 - 504385860)
SPRUITSTUK AANZUIGING (504385851 - 504385860)

R	N	P.N.	MOD	Q	Denominação Description Bezeichnung	Description Bezeichnung	Denominacion Beskrivelse	Descrizione Beschrijving	L.C.
1		{504385836}		1					
2		504171144		1	JUNTA DO COLETOR JOINT DE COLLECTEUR	MANIFOLD GASKET KRÜMMERDICHTUNG	JUNTA DE COLECTOR PAKNING, MANIFOLD	GUARNIZIONE COLLETT SPRUITSTUKPAKKING	125G
3		16592324		7	PARAFUSO VIS	SCREW SCHRAUBE	TORNILLO SKRUE	VITE SCHROEF	040V
4		504308861		1	DUTO DE AR CONDUITE D'AIR	AIR DUCT LUFTKANAL	CONDUCTO DE AIRE LUFTKANAL	CONDOTTO ARIA LUCHTKANAAL	224C
5		4899693		2	BRAÇADEIRA MANGUEIR COLLIER POUR FLEXIBL	HOSE CLAMP SCHLAUCHSCHELLE	ABRAZADERA DE MANG SLANGEKLEMME	FASCETTA STRINGITUB SLANGKLEM	P729
6		504249196		1	LUVA DE BORRACHA MANCHON EN CAOUTCI	RUBBER SLEEVE GUMMITÜLLE	MANGUITO DE GOMA GUMMIMANCHET	MANICOTTO DI GOMMA RUBBEREN MOF	Z548
7		16598224		4	PARAFUSO VIS	SCREW SCHRAUBE	TORNILLO SKRUE	VITE SCHROEF	040V
8		504315406		1	PARAFUSO, M8X55 mm VIS	SCREW SCHRAUBE	TORNILLO SKRUE	VITE SCHROEF	040V
9		504385856		1	Engine Air Intake (Spacer)				
10		504385842		2	Air Intake Gasket				

10.254.05		p1	02/11

EXHAUST MANIFOLD (504183273)
EXHAUST MANIFOLD (504183273)
COLLECTOR DE ESCAPE (504183273)
COLLETTORE DI SCARICO (504183273)

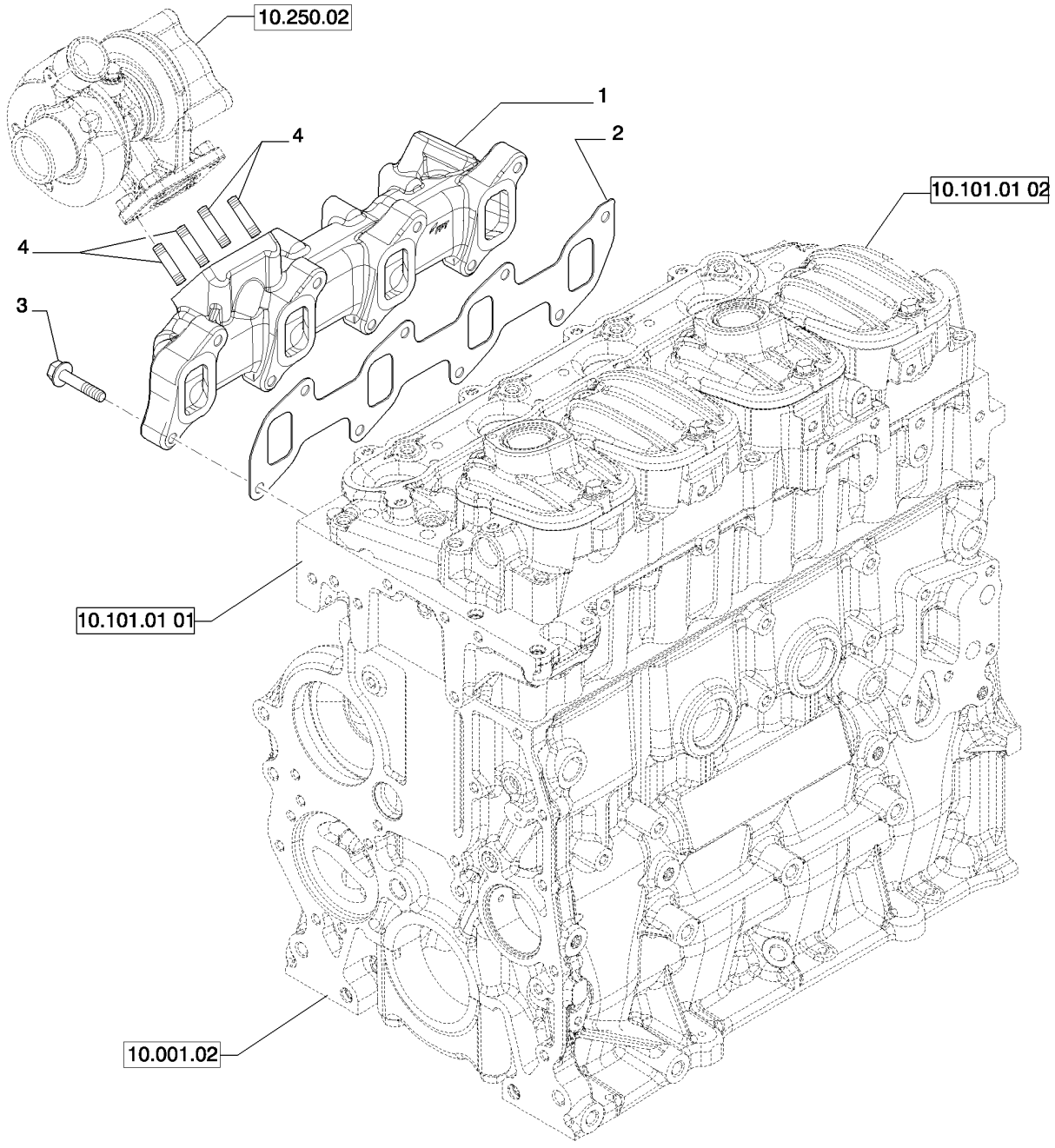

CONDUIT D'ECHAPPEMENT (504183273)
AUSPUFFKRUEMMER (504183273)
UDSTØDNINGSMANIFOLD (504183273)
SPRUITSTUK UITLAAT (504183273)

R	N	P.N.	MOD	Q	Denominação Description	Description Bezeichnung	Denominacion Beskrivelse	Descrizione Beschrijving	L.C.
1		504250944		1	COLETOR DE EXAUSTÃO COLLECTEUR D'ECHAPI	EXHAUST MANIFOLD AUSPUFFKRÜMMER	COLECTOR DE ESCAPE UDSTØDNINGSMANIFOL	COLLETTORE DI SCARIC UITLAATSPRUITSTUK	230C
2		504170332		1	JUNTA JOINT	GASKET DICHTUNG	JUNTA PAKNING	GUARNIZIONE PAKKING	123G
3		504294819		8	PARAFUSO VIS	BOLT SCHRAUBE	PERNO BOLT	BULLONE BOUT	140B
4		16729334		4	PRISIONEIRO, M8X20 mm GOUJON	STUD GEWINDEBOLZEN	PRISIONERO STØTTEBOLT	PRIGIONIERO TAPEIND	210P

10.304.01	01	p1	02/11

PUMP, ENGINE OIL & RELATED PARTS (504154680)
PUMP, ENGINE OIL & RELATED PARTS (504154680)
BOMBA DE ACEITE Y PIEZAS RELACIONADAS (504154680)
POMPA OLIO MOTORE E PARTICOLARI RELATIVI (504154680)

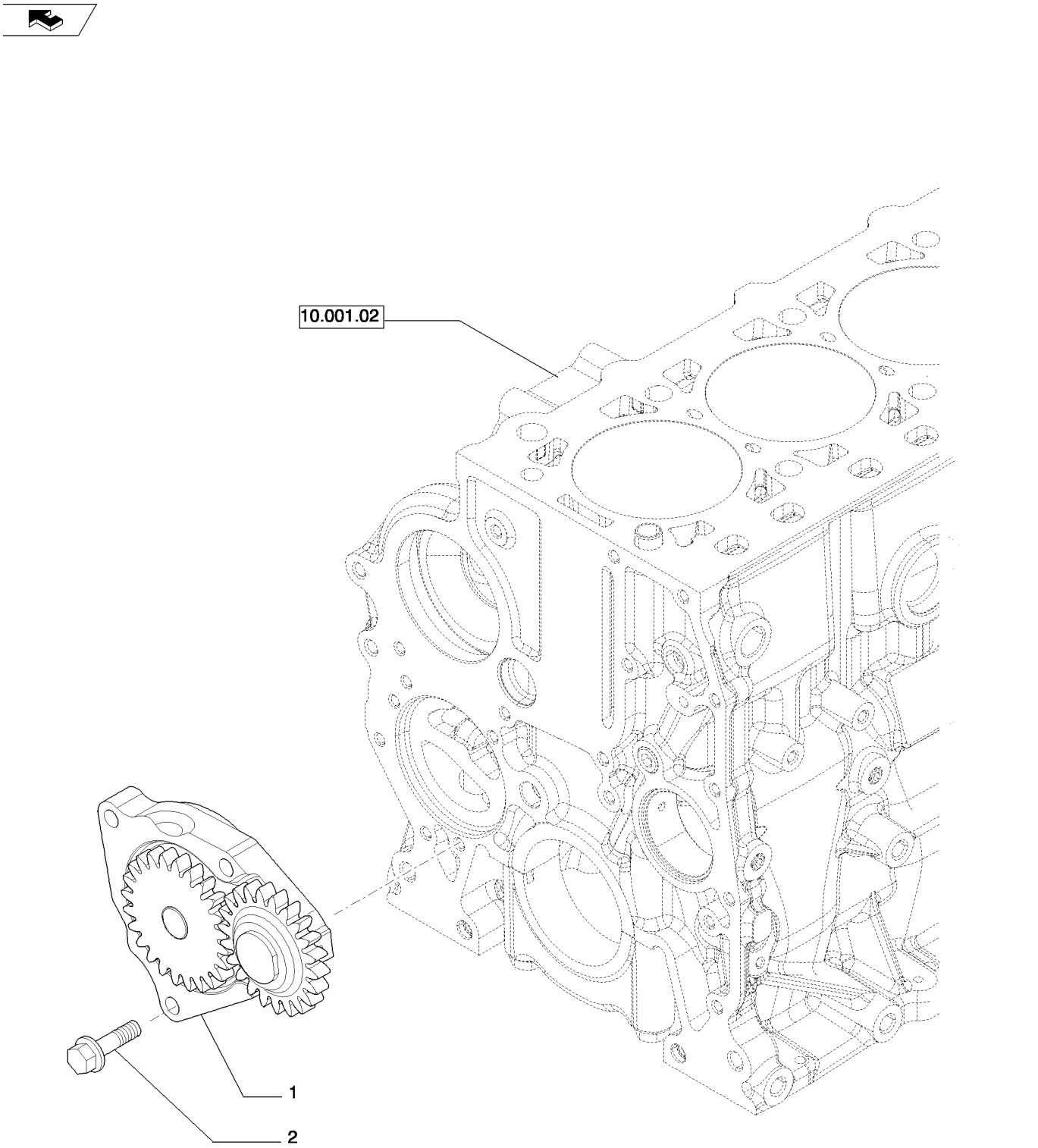

POMPE À HUILE ET PIÈCES ANNEXES (504154680)
MOTORÖLPUMPE UND DAZUGEHÖRIGE TEILE (504154680)
MOTOROLIEPUMPE OG TILHØRENDE DELE (504154680)
OLIEPOMP EN DESBETREFFENDE DETAILS (504154680)

R	N	P.N.	MOD	Q	Denominação Description Bezeichnung	Description Bezeichnung	Denominacion Beskrivelse	Descrizione Beschrijving	L.C.
1		504241684		1	BOMBA DE ÓLEO DO MOTOR, O.M.P				
						ENGINE OIL PUMP	BOMBA DE ACEITE DE M	POMPA OLIO MOTORE	153P
					POMPE A HUILE MOTEU	MOTORÖLPUMPE	MOTOROLIEPUMPE	MOTOROLIEPOMP	
1		504258833		1	BOMBA DE ÓLEO DO MOTOR, AUTOLEC				
						ENGINE OIL PUMP	BOMBA DE ACEITE DE M	POMPA OLIO MOTORE	153P
					POMPE A HUILE MOTEU	MOTORÖLPUMPE	MOTOROLIEPUMPE	MOTOROLIEPOMP	
2		4794007		3	PARAFUSO	SCREW	TORNILLO	VITE	040V
					VIS	SCHRAUBE	SKRUE	SCHROEF	

10.304.02		p1	02/11

ENGINE OIL DIPSTICK (504183276)
ENGINE OIL DIPSTICK (504183276)
VARILLA DE NIVEL - ACEITE DEL MOTOR (504183276)
ASTA LIVELLO OLIO MOTORE (504183276)

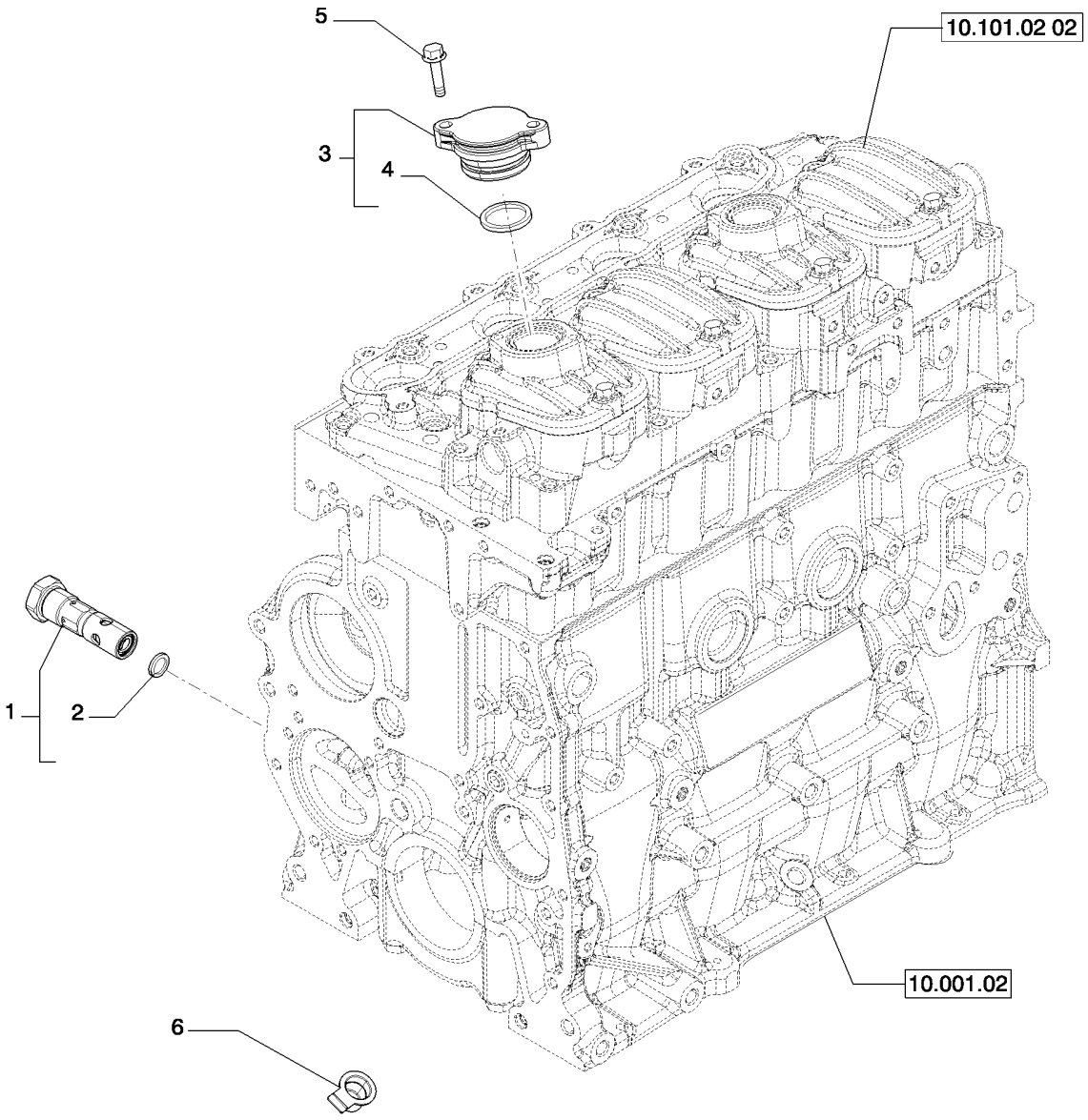

JAUGE DE NIVEAU - HUILE MOTEUR (504183276)
MOTORÖLMEßSTAB (504183276)
OLIEPIND (504183276)
PEILSTOK MOTOROLIE (504183276)

R	N	P.N.	MOD	Q	Denominação Description	Description Bezeichnung	Denominacion Beskrivelse	Descrizione Beschrijving	L.C.
1		504357733		1	VÁLVULA SOUPAPE	VALVE VENTIL	VÁLVULA VENTIL	VALVOLA KLEP	9620
2		99489022		1	VEDAÇÃO DA ARRUELA RONDELLE D'ETANCHEI	SEALING WASHER DICHTSCHEIBE	ARANDELA HERMÉTICA TÆTNINGSSKIVE	ROSETTA DI TENUTA AFDICHTRING	133R
3		{504285788}		1					
4		17283081		1	O-RING JOINT TORIQUE	O-RING O-RING	JUNTA TÓRICA O-RING	ANELLO TOROIDALE O-RING	055A
5		16585925		1	PARAFUSO VIS	SCREW SCHRAUBE	TORNILLO SKRUE	VITE SCHROEF	040V
6		{504308623}		1					

10.304.03		p1	02/11

OIL PUMP PIPING (504154691)
OIL PUMP PIPING (504154691)
TUBERÍAS BOMBA DE ACEITE (504154691)
TUBAZIONI POMPA OLIO (504154691)

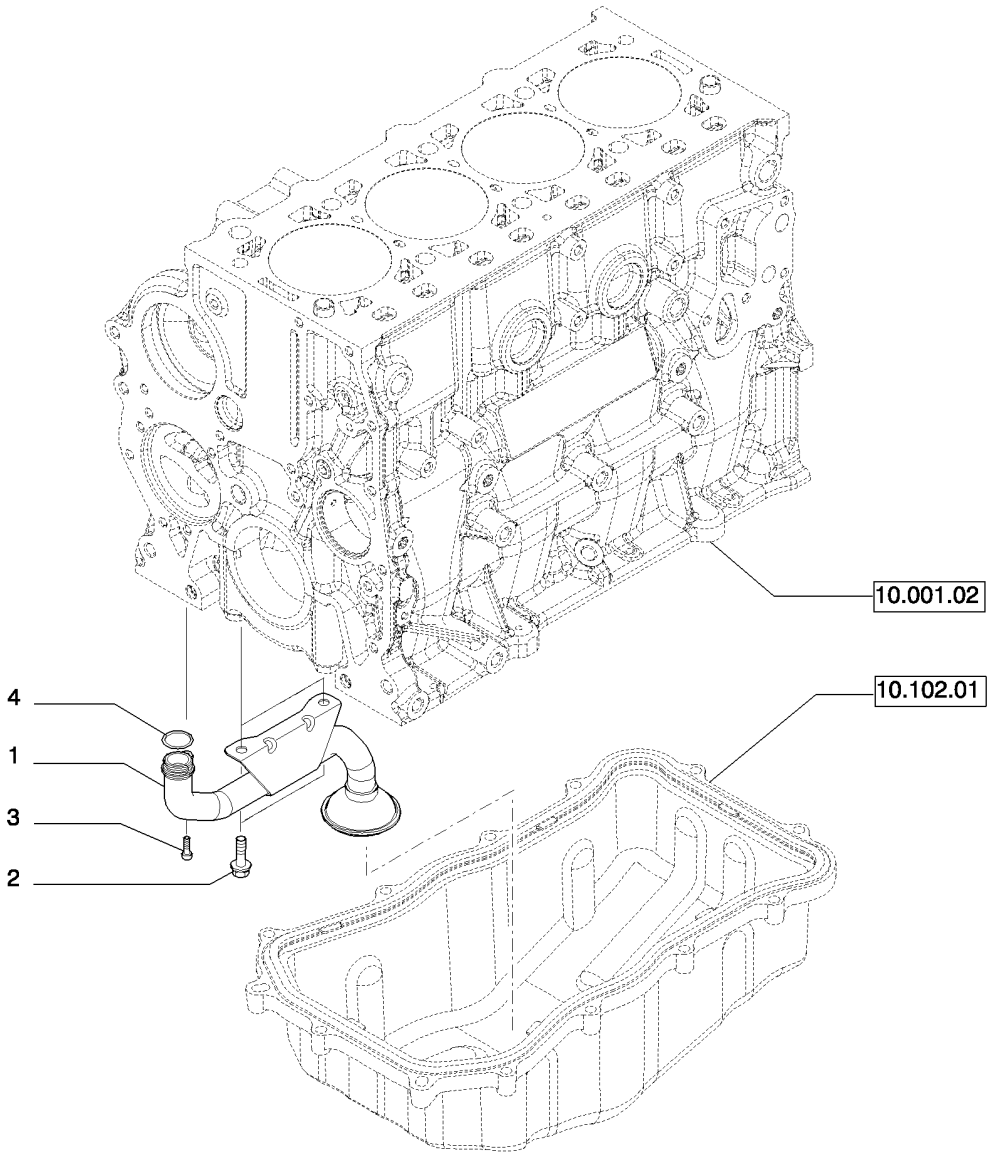

TUBULURES POMPE HUILE (504154691)
LEITUNGEN ÖLPUMPE (504154691)
SLANGER TIL OLIEPUMPE (504154691)
BUIZEN OLIEPOMP (504154691)

R	N	P.N.	MOD	Q	Denominação Description	Description Bezeichnung	Denominacion Beskrivelse	Descrizione Beschrijving	L.C.
1		504179050		1	REDE PARA FILTROS CREPINE FILTRANTE	FILTER STRAINER FILTERSIEB	COLADOR FILTERNET	RETICELLA DEL FILTRO FILTERZEEF	043R
2		18139424		2	PARAFUSO VIS	SCREW SCHRAUBE	TORNILLO SKRUE	VITE SCHROEF	040V
3		16689024		1	PARAFUSO VIS	SCREW SCHRAUBE	TORNILLO SKRUE	VITE SCHROEF	040V
4		17282281		1	O-RING, D. 23,4 mm SP=2,6 mm JOINT TORIQUE	O-RING O-RING	JUNTA TÓRICA O-RING	ANELLO TOROIDALE O-RING	055A

10.400.01		p1	02/11

COOLING COMPONENTS (L223-L230,C232,C238)
COOLING COMPONENTS (L223-L230,C232,C238)
COOLING COMPONENTS (L223-L230,C232,C238)
COOLING COMPONENTS (L223-L230,C232,C238)

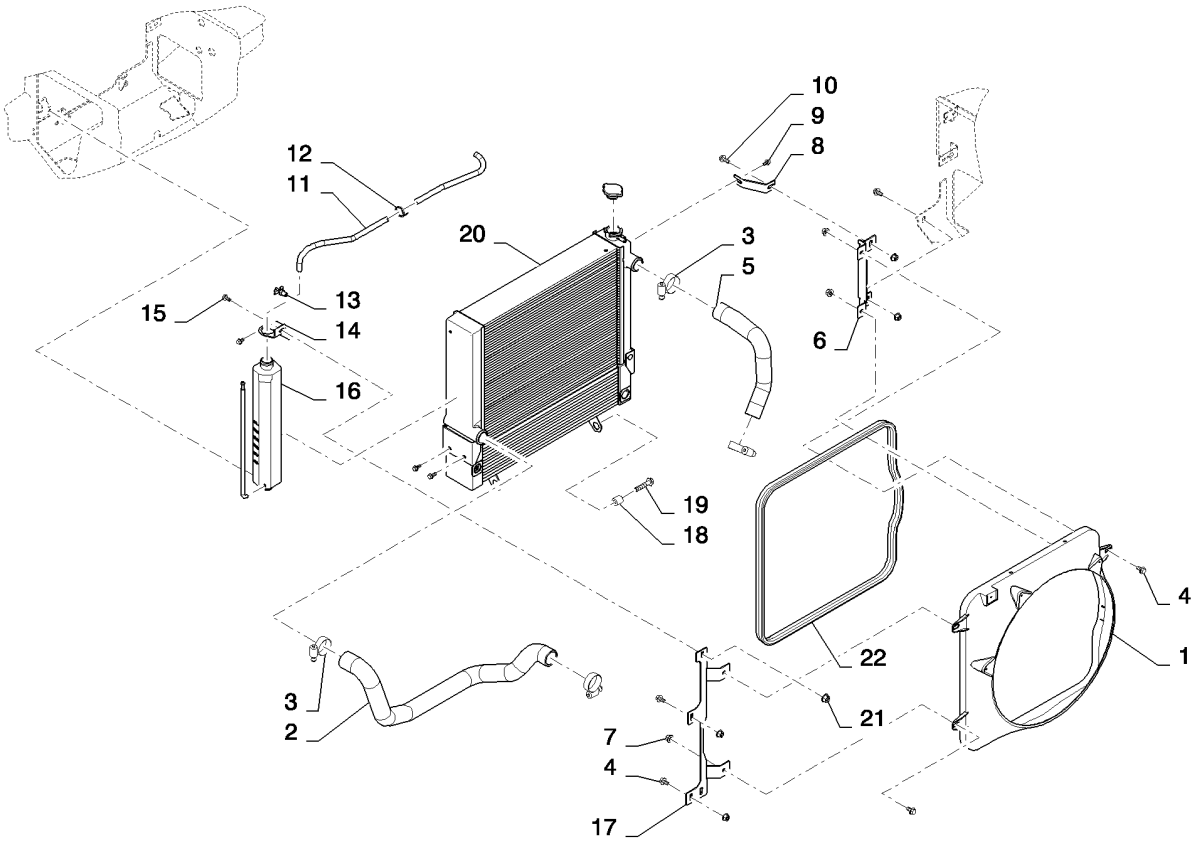

COOLING COMPONENTS (L223-L230,C232,C238)
COOLING COMPONENTS (L223-L230,C232,C238)
COOLING COMPONENTS (L223-L230,C232,C238)
COOLING COMPONENTS (L223-L230,C232,C238)

R	N	P.N.	MOD	Q	Denominação Description	Description Bezeichnung	Denominacion Beskrivelse	Descrizione Beschrijving	L.C.
1		84412503		1	COBERTURA, Fan PROTECTION	SHROUD VERKLEIDUNG	PROTECTOR DÆKKE	RIPARO MANTEL	7830
2		84277824		1	MANGUEIRA, Coolant, Lower FLEXIBLE	HOSE SCHLAUCH	TUBO SLANGE	TUBO FLESSIBILE SLANG	030M
3		84674		4	BRAÇADEIRA MANGUEIRA, #28, 1.31/2.25 Type F Worm COLLIER POUR FLEXIBL	HOSE CLAMP SCHLAUCHSCHELLE	ABRAZADERA DE MANG SLANGEKLEMME	FASCETTA STRINGITUB SLANGKLEM	P729
4		86050286		7	PARAFUSO FLANGEADO, Hex, M10 x 20, Cl 8.8, Full Thd VIS A EMBASE	FLANGE BOLT FLANSCHSCHRAUBE	PERNO DE CORONA FLANGEBOLT	BULLONE FLANGIATO FLENSBOUT	A027
5		84277825		1	MANGUEIRA, Coolant, Upper FLEXIBLE	HOSE SCHLAUCH	TUBO SLANGE	TUBO FLESSIBILE SLANG	030M
6		84259397		1	SUPORTE, Fan Shroud, LH SUPPORT	BRACKET HALTERUNG	SOPORTE BESLAG	STAFFA STEUN	225S
7		43435		8	PORCA, M10, Flg Ser ECROU	NUT MUTTER	TUERCA MØTRIK	DADO MOER	010D
8		84259564		1	SUPORTE, Radiator Mount SUPPORT	BRACKET HALTERUNG	SOPORTE BESLAG	STAFFA STEUN	225S
9		9804261		1	PARAFUSO, Hex Flg, M10 x 25, 8.8 VIS	BOLT SCHRAUBE	PERNO BOLT	BULLONE BOUT	140B
10		86511841		2	PARAFUSO, Hex Flg, M8 x 16, 8.8 VIS	BOLT SCHRAUBE	PERNO BOLT	BULLONE BOUT	140B
11		84268809		1	MANGUEIRA, Coolant Recovery FLEXIBLE	HOSE SCHLAUCH	TUBO SLANGE	TUBO FLESSIBILE SLANG	030M
12		84259663		2	CORREIA DE FIXAÇÃO, Tie SANGLE DE FIXATION	SECURING STRAP SICHERUNGSBAND	BANDA DE SEGURIDAD FASTSPÆNDINGSSTRO	FASCETTA DI FISSAGGI BORGRIEM	172C
13		86625234		1	TORNEIRA, Drain ROBINET	COCK HAHN	LLAVE DE PASO HANE	RUBINETTO KRAAN	P148
14		84254071		1	SUPORTE, Coolant Bottle, Upper SUPPORT	BRACKET HALTERUNG	SOPORTE BESLAG	STAFFA STEUN	225S
15		9804258		1	PARAFUSO, Hex Flg, M8 x 20, 8.8 VIS	BOLT SCHRAUBE	PERNO BOLT	BULLONE BOUT	140B
16		87020980		1	RESERVAT EXPANS LÍQ ARREF, Container RESERV. EXP. LIQ. REFI	COOLANT EXPANSION F KÜHLM-AUSGLEICHSBE	DEP. EXP. REFRIGERAN VAKUMTANK	SERB. ESPANS. LIQ. RAI EXPANSIETANK KOELSY	117S
17		84259396		1	SUPORTE, Fan Shroud, RH SUPPORT	BRACKET HALTERUNG	SOPORTE BESLAG	STAFFA STEUN	225S
18		87626729		2	ESPAÇADOR, Hinge, Pivot ENTRETOISE	SPACER DISTANZSTÜCK	SEPARADOR AFSTANDSSTYKKE	DISTANZIALE AFSTANDSSTUK	075D
19		87301277		2	PARAFUSO, M12 X 60 VIS	BOLT SCHRAUBE	PERNO BOLT	BULLONE BOUT	140B

COOLING COMPONENTS (L223-L230,C232,C238)
COOLING COMPONENTS (L223-L230,C232,C238)
COOLING COMPONENTS (L223-L230,C232,C238)
COOLING COMPONENTS (L223-L230,C232,C238)

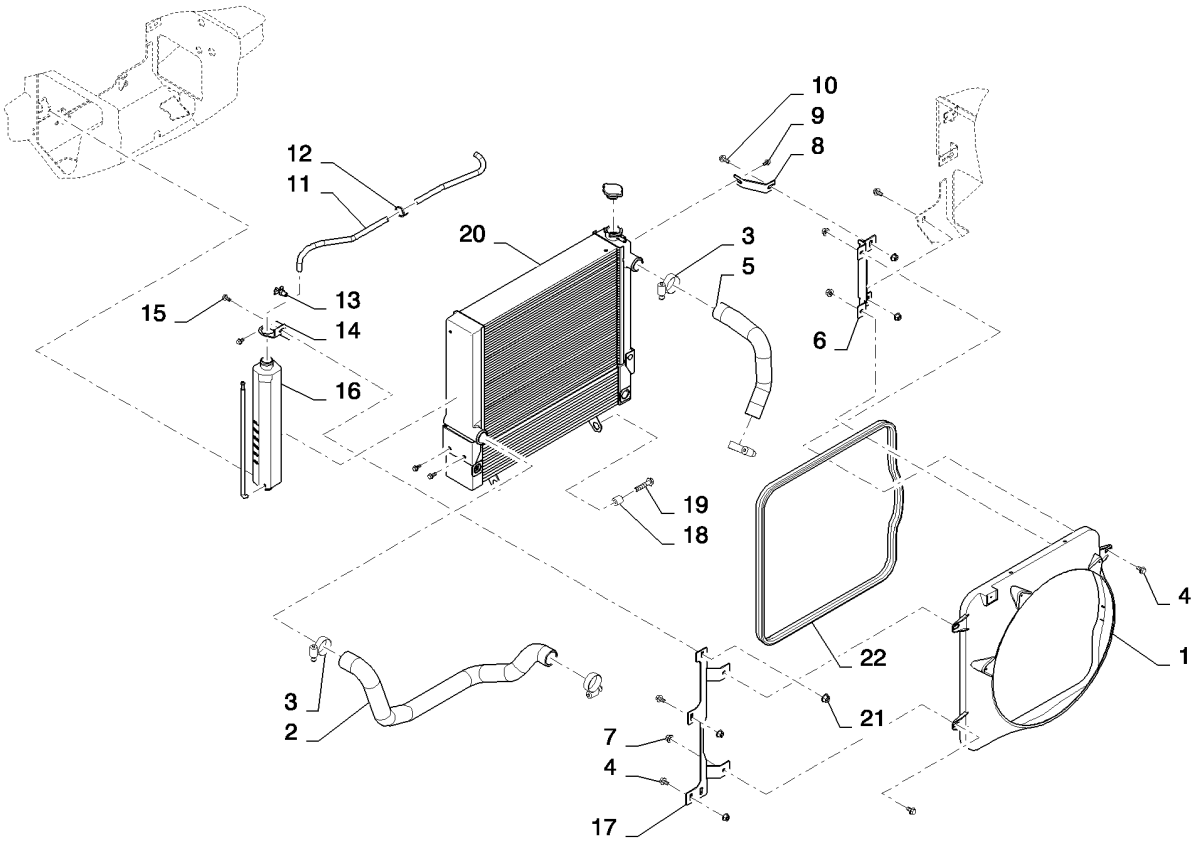

COOLING COMPONENTS (L223-L230,C232,C238)
COOLING COMPONENTS (L223-L230,C232,C238)
COOLING COMPONENTS (L223-L230,C232,C238)
COOLING COMPONENTS (L223-L230,C232,C238)

R	N	P.N.	MOD	Q	Denominação Description Description Bezeichnung	Denominacion Beskrivelse	Descrizione Beschrijving	L.C.
20		**84201143**		1	MÓDULO, Radiator and Cooling, Large MODULE MODULE	MÓDULO MODUL	MODULO MODULE	T102
21		**86505868**		1	PORCA, M8, Flg Ser ECROU	NUT MUTTER	TUERCA MØTRIK	DADO MOER	010D
22		**84268743**		1	VEDAÇÃO DE PORTA, Bulb DOOR SEAL JOINT DE PORTE	JUNTA DE PUERTA TÜRDICHTUNG	GUARNIZIONE SPORTEL DØRTÆTNING	PORTIERAFDICHTING	Z529

TEMPERATURE CONTROL (THERMOSTAT) - (504216813)
TEMPERATURE CONTROL (THERMOSTAT) - (504216813)
REGULADOR DE TEMPERATURE - (504216813)
REGOLATORE DI TEMPERATURA - (504216813)

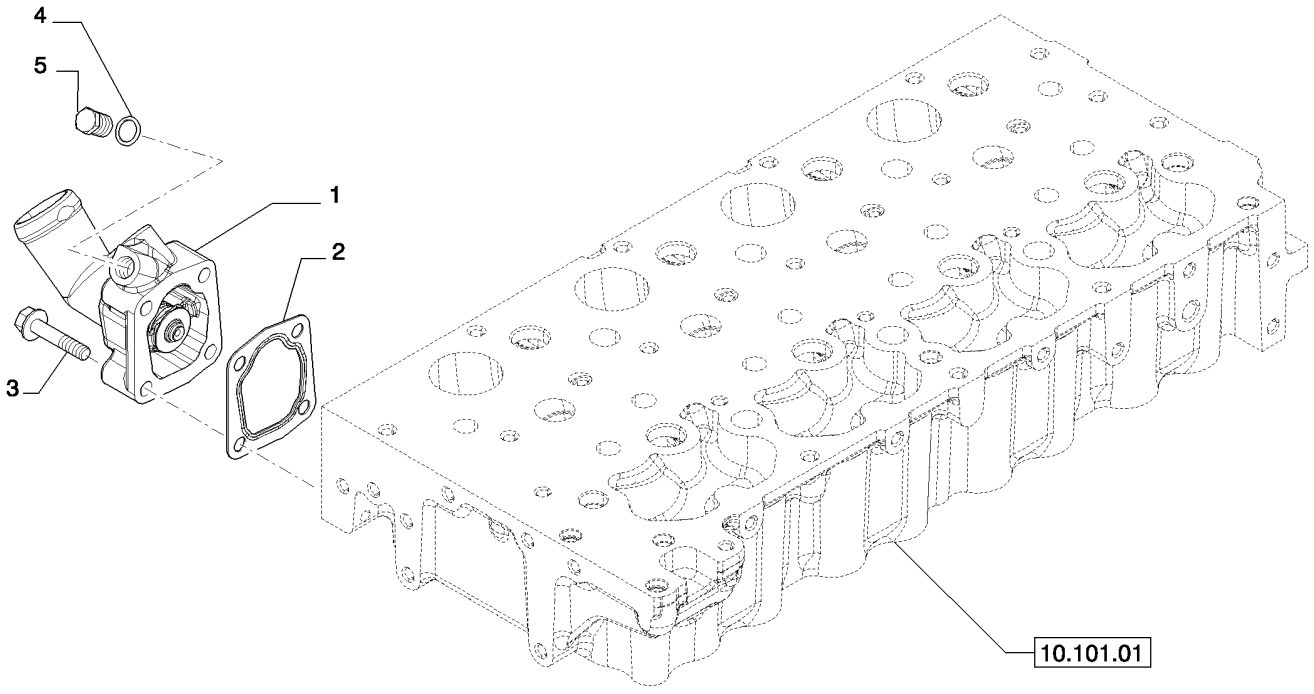

RÉGULATEUR DE TEMPÉRATURE - (504216813)
TEMPERATURREGLER (THERMOSTAT) - (504216813)
TEMPERATURREGULATOR - (504216813)
TEMPERATURREGELAAR - (504216813)

R	N	P.N.	MOD	Q	Denominação Description	Description Bezeichnung	Denominacion Beskrivelse	Descrizione Beschrijving	L.C.
1		504209127		1	TERMOSTATO THERMOSTAT	THERMOSTAT THERMOSTAT	TERMOSTATO TERMOSTAT	TERMOSTATO THERMOSTAAT	096T
2		504164205		1	JUNTA JOINT	GASKET DICHTUNG	JUNTA PAKNING	GUARNIZIONE PAKKING	123G
3		16586725		4	PARAFUSO, M8 x 1.25 x 4(VIS	SCREW SCHRAUBE	TORNILLO SKRUE	VITE SCHROEF	040V
4		4858606		1	JUNTA JOINT	GASKET DICHTUNG	JUNTA PAKNING	GUARNIZIONE PAKKING	123G
5		16992115		1	BUJÃO BOUCHON	PLUG STOPFEN	TAPÓN PROP	TAPPO PLUG	050T

WATER PUMP & RELATED PARTS (504154685)
WATER PUMP & RELATED PARTS (504154685)
BOMBA DE AGUA Y PIEZAS RELACIONADAS (504154685)
POMPA ACQUA E PARTICOLARI RELATIVI (504154685)

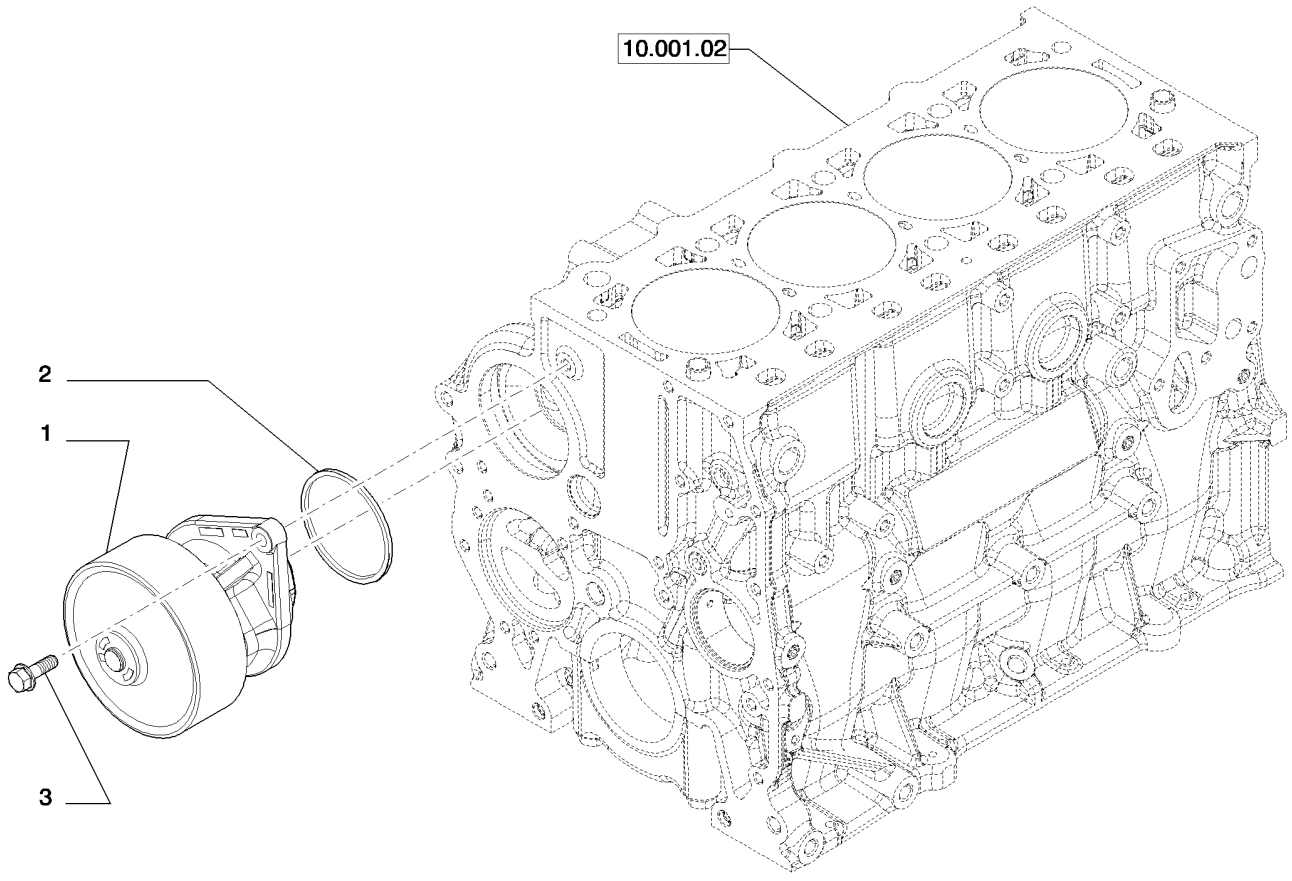

POMPE À EAU ET PIÈCES ANNEXES (504154685)
WASSERPUMPE UND DAZUGEHÖRIGE TEILE (504154685)
VANDPUMPE OG TILHØRENDE DELE (504154685)
WATERPOMP EN DESBETREFFENDE DETAILS (504154685)

R	N	P.N.	MOD	Q	Denominação Description	Description Bezeichnung	Denominacion Beskrivelse	Descrizione Beschrijving	L.C.
1		504216828		1	BOMBA DE ÁGUA POMPE A EAU	WATER PUMP WASSERPUMPE	BOMBA DE AGUA VANDPUMPE	POMPA ACQUA WATERPOMP	152P
2		504062856		1	JUNTA JOINT	GASKET DICHTUNG	JUNTA PAKNING	GUARNIZIONE PAKKING	123G
3		16586424		2	PARAFUSO, M8 x 25 VIS	SCREW SCHRAUBE	TORNILLO SKRUE	VITE SCHROEF	040V

PIPING - ENGINE COOLING SYSTEM (504191839)
PIPING - ENGINE COOLING SYSTEM (504191839)
TUBERIAS - REFRIGERACION DEL MOTOR (504191839)
TUBAZIONI - RAFFREDDAMENTO MOTORE (504191839)

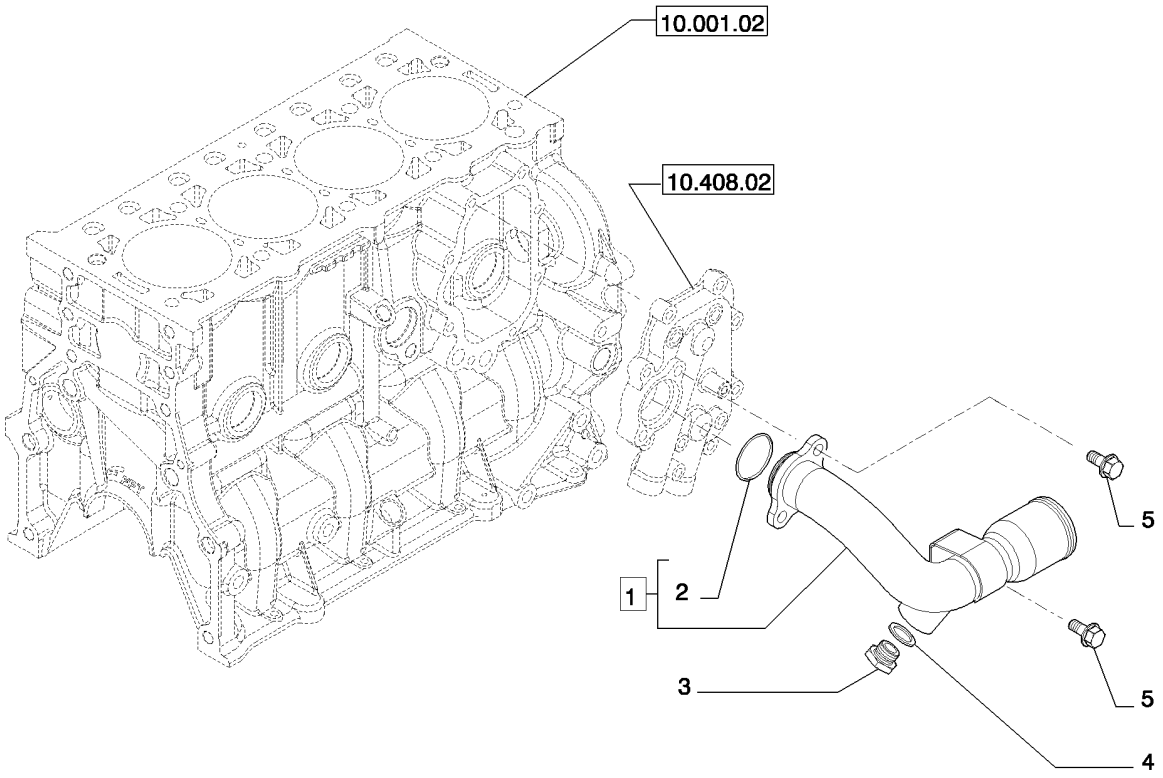

TUYAUTERIES - REFROIDISSEMENT MOTEUR (504191839)
LEITUNGEN - KUEHLUNG DES MOTORS (504191839)
RØRLEDNINGER - MOTORKØLING (504191839)
LEIDING - MOTORAFKOELING (504191839)

R	N	P.N.	MOD	Q	Denominação Description Bezeichnung	Description Bezeichnung Beskrivelse	Denominacion Beskrivelse Beschrijving	Descrizione Beschrijving	L.C.
1		**504182961**		1	TUBO, - ASSY TUYAU	PIPE ROHR	TUBO PÅFYLDNINGSSTUDS	TUBO BUIS	200T
2		**17289081**		1	O-RING, 31.34mm ID x 3.53mm Width, D. 31,34X3,53 mm JOINT TORIQUE	O-RING O-RING	JUNTA TÓRICA O-RING	ANELLO TOROIDALE O-RING	055A
3		**16992415**		1	BUJÃO, M16 x 1.5 BOUCHON	PLUG STOPFEN	TAPÓN PROP	TAPPO PLUG	050T
4		**16508260**		1	JUNTA, D = 16 x 20 JOINT	GASKET DICHTUNG	JUNTA PAKNING	GUARNIZIONE PAKKING	123G
5		**16600224**		1	PARAFUSO, M8X1,25X18 mm VIS	SCREW SCHRAUBE	TORNILLO SKRUE	VITE SCHROEF	040V

10.406.02		p1	08/11

MODULE, RADIATOR AND COOLING LG (L223-L230,C232,C238)
MODULE, RADIATOR AND COOLING LG (L223-L230,C232,C238)
MODULE, RADIATOR AND COOLING LG (L223-L230,C232,C238)
MODULE, RADIATOR AND COOLING LG (L223-L230,C232,C238)

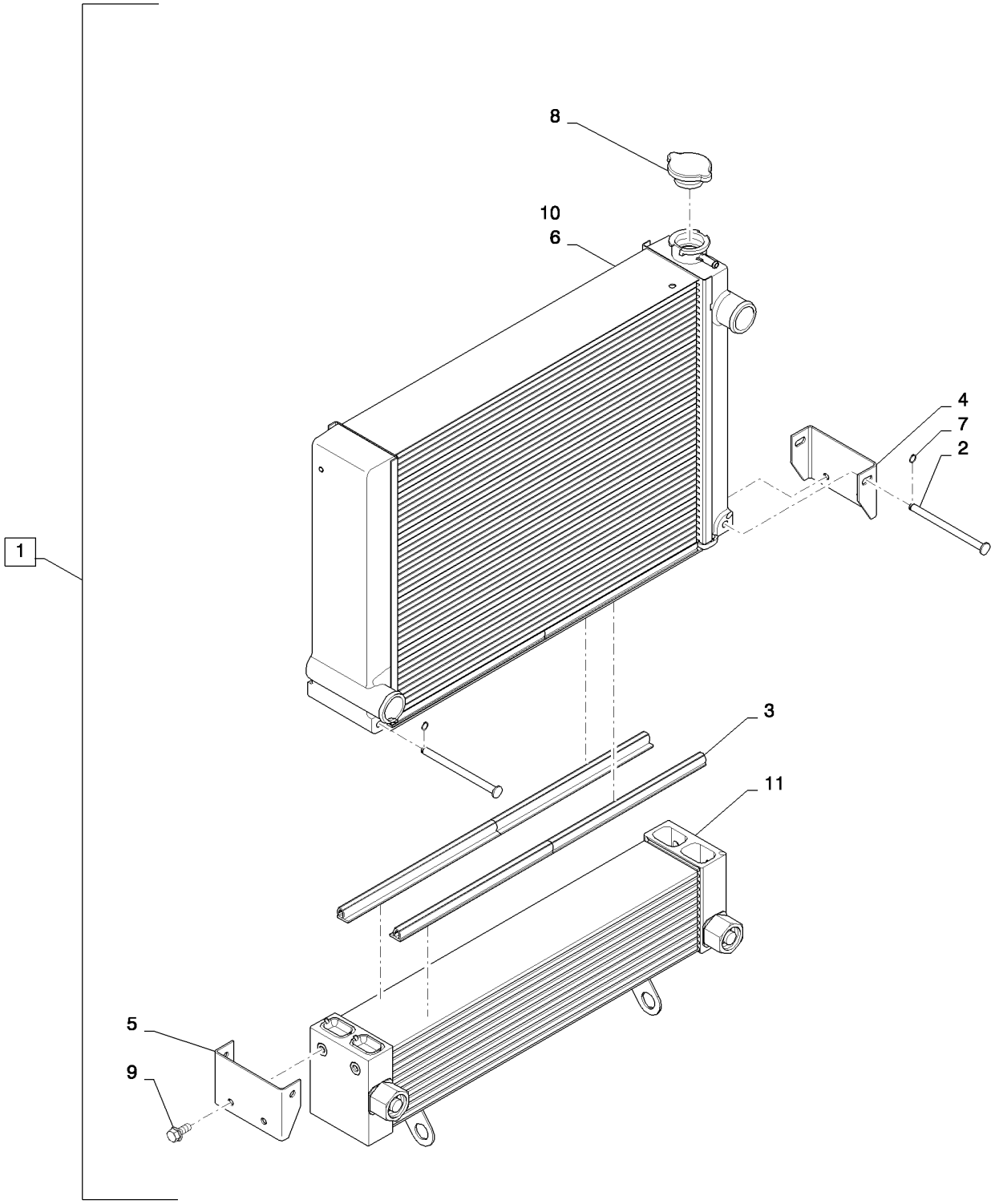

MODULE, RADIATOR AND COOLING LG (L223-L230,C232,C238)
MODULE, RADIATOR AND COOLING LG (L223-L230,C232,C238)
MODULE, RADIATOR AND COOLING LG (L223-L230,C232,C238)
MODULE, RADIATOR AND COOLING LG (L223-L230,C232,C238)

R	N	P.N.	MOD	Q	Denominação Description	Description Bezeichnung	Denominacion Beskrivelse	Descrizione Beschrijving	L.C.
2		84379139		1	PINO, ATS 814993	PIN	PASADOR	PERNO	080P
					BROCHE	PIN	STIFT	PEN	
1		84201143		1	MÓDULO, Assembly, Includes Oil Cooler and Radiator				
						MODULE	MÓDULO	MODULO	T102
					MODULE	MODUL	MODUL	MODULE	
3		84379140		1	VEDAÇÃO, ATS 824371	SEAL	ANILLO DE CIERRE	GUARNIZIONE; TENUTA	132A
					JOINT	DICHTUNG	PAKNING	AFDICHTING	
4		84379146		1	SUPORTE, Mounting	BRACKET	SOPORTE	STAFFA	225S
					SUPPORT	HALTERUNG	BESLAG	STEUN	
5		84379147		1	SUPORTE, Mounting	BRACKET	SOPORTE	STAFFA	225S
					SUPPORT	HALTERUNG	BESLAG	STEUN	
6		84379154		1	RADIADOR, W/Decals	RADIATOR	RADIADOR	RADIATORE	025R
					RADIATEUR	KÜHLER	KØLER	RADIATEUR	
7		87687374		1	GRAMPO, ATS 812837	CLIP	ABRAZADERA	FERMO	045F
					COLLIER	KLAMMER	KLIPS	KLEM	
8		87687375		1	TAMPA DO RADIADOR, ATS 816525				
						RADIATOR CAP	TAPÓN DE RADIADOR	TAPPO DEL RADIATORE	039T
					BOUCHON DU RADIATE	KÜHLERVERSCHLUSSK	KØLERDÆKSEL	RADIATEURDOP	
9		9804258		1	PARAFUSO, Hex Flg, M8 x 20, 8.8				
						BOLT	PERNO	BULLONE	140B
					VIS	SCHRAUBE	BOLT	BOUT	
10		84475134		1	RADIADOR, W/Decals, Low Fin Density, Applications With Significant Air-Born Debris, Not For Use In Hot Environments Or In High Engine Load Applications				
						RADIATOR	RADIADOR	RADIATORE	025R
					RADIATEUR	KÜHLER	KØLER	RADIATEUR	
11		84475136		1	RESFRIADOR DO ÓLEO, Low Fin Density, Applications With Significant Air-Born Debris, Not For Use In Hot Environments Or In High Engine Load Applications				
						OIL COOLER	REFRIGERADOR DE ACI	RADIATORE OLIO	026R
					REFROIDISSEUR D'HUIL	ÖLKÜHLER	OLIEKØLER	OLIEKOELER	
11		84379134		1	RESFRIADOR DO ÓLEO, ATS 22547				
						OIL COOLER	REFRIGERADOR DE ACI	RADIATORE OLIO	026R
					REFROIDISSEUR D'HUIL	ÖLKÜHLER	OLIEKØLER	OLIEKOELER	

10.408.01		p1	02/11

HEAT EXCHANGER - ENGINE - EGR GROUP (504385853)
HEAT EXCHANGER - ENGINE - EGR GROUP (504385853)
CAMBIADOR DE CALOR - MOTOR (504385853)
SCAMBIATORE DI CALORE - MOTORE - GRUPPO EGR (504385853)

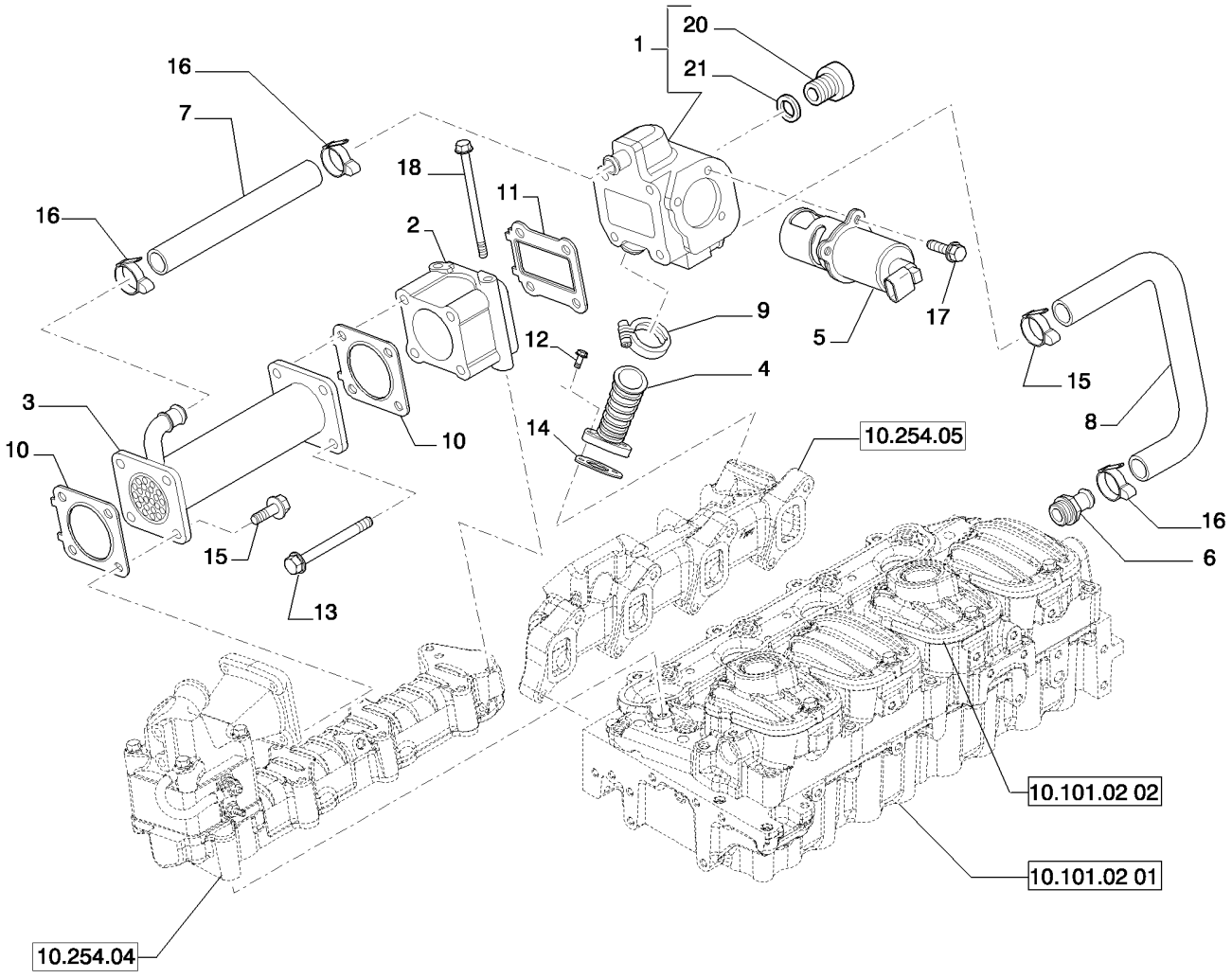

EXCHANGEUR DE TEMPERATURE - MOTEUR (504385853)
WAERMETAUSCHER - MOTOR (504385853)
OLIEKOLER - MOTOR (504385853)
WARMTEREGELAAR - MOTOR (504385853)

R	N	P.N.	MOD	Q	Denominação Description	Description Bezeichnung	Denominacion Beskrivelse	Descrizione Beschrijving	L.C.
1		{504357765}		1					
2		{504385854}		1					
3		504250954		1	TROCADOR DE CALOR ECHANGEUR THERMIQU	HEAT EXCHANGER WÄRMETAUSCHER	CAMBIADOR DE CALOR VARMEVEKSLER	SCAMBIATORE DI CALO WARMTEWISSELAAR	025S
4		504220149		1	CONEXÃO JONCTION	JUNCTION VERBINDUNG	CONEXIÓN SAMLING	CONNESSIONE KOPPELSTUK	P235
5		504365099		1	VÁLVULA DE DESVIO SOUPAPE DE DERIVATI(	BY-PASS VALVE BYPASS-VENTIL	VÁLVULA DE DERIVACIÓ OMLØBSVENTIL	VALVOLA DI BYPASS BYPASSKLEP	P673
6		504249332		1	CONEXÃO RACCORD	FITTING ARMATUR	ACOPLAMIENTO FITTING	RACCORDO AANSLUITING	3300
7		{504357767}		1					
8		{504357768}		1					
9		504196032		1	ARGOLA DE FIXAÇÃO COLLIER-DE-FIXATION	MOUNTING CLIP BEFESTIGUNGSKLEMME	ABRAZADERA DE MONT MONTERINGSKLEMME	GRAFFA DI MONTAGGIC BEVESTIGINGSKLEM	Z445
10		504221516		2	JUNTA JOINT	GASKET DICHTUNG	JUNTA PAKNING	GUARNIZIONE PAKKING	123G
11		504221515		1	JUNTA JOINT	GASKET DICHTUNG	JUNTA PAKNING	GUARNIZIONE PAKKING	123G
12		4798845		2	PARAFUSO VIS	SCREW SCHRAUBE	TORNILLO SKRUE	VITE SCHROEF	040V
13		16598224		4	PARAFUSO, M8X90 mm VIS	SCREW SCHRAUBE	TORNILLO SKRUE	VITE SCHROEF	040V
14		504341194		1	JUNTA JOINT	GASKET DICHTUNG	JUNTA PAKNING	GUARNIZIONE PAKKING	123G
15		16673735		4	PARAFUSO, M8X25 mm VIS	SCREW SCHRAUBE	TORNILLO SKRUE	VITE SCHROEF	040V
16		4893234		4	BRAÇADEIRA MANGUEIR/ COLLIER POUR FLEXIBL	HOSE CLAMP SCHLAUCHSCHELLE	ABRAZADERA DE MANG SLANGEKLEMME	FASCETTA STRINGITUB SLANGKLEM	P729
17		504367631		3	PARAFUSO, M6X18 mm VIS	SCREW SCHRAUBE	TORNILLO SKRUE	VITE SCHROEF	040V
18		16598524		2	PARAFUSO, M8X120 mm VIS	SCREW SCHRAUBE	TORNILLO SKRUE	VITE SCHROEF	040V
19		504225741		1	JUNTA JOINT	GASKET DICHTUNG	JUNTA PAKNING	GUARNIZIONE PAKKING	123G
20		16993511		1	BUJÃO, M28 x 1.5 BOUCHON	PLUG STOPFEN	TAPÓN PROP	TAPPO PLUG	050T
21		99432291		1	VEDAÇÃO DA ARRUELA, D=28 mm RONDELLE D'ETANCHEI	SEALING WASHER DICHTSCHEIBE	ARANDELA HERMÉTICA TÆTNINGSSKIVE	ROSETTA DI TENUTA AFDICHTRING	133R
22		504363071		1	RASPADOR LAME DE RACLEUR	SCRAPER BLADE SCHABERKLINGE	HOJA DE RASCADOR AFSTRYGER	LAMA RASCHIATORE SCHRAPERBLAD	176R

HEAT EXCHANGER (504154694)
HEAT EXCHANGER (504154694)
CAMBIADOR DE CALOR (504154694)
SCAMBIATORE DI CALORE (504154694)

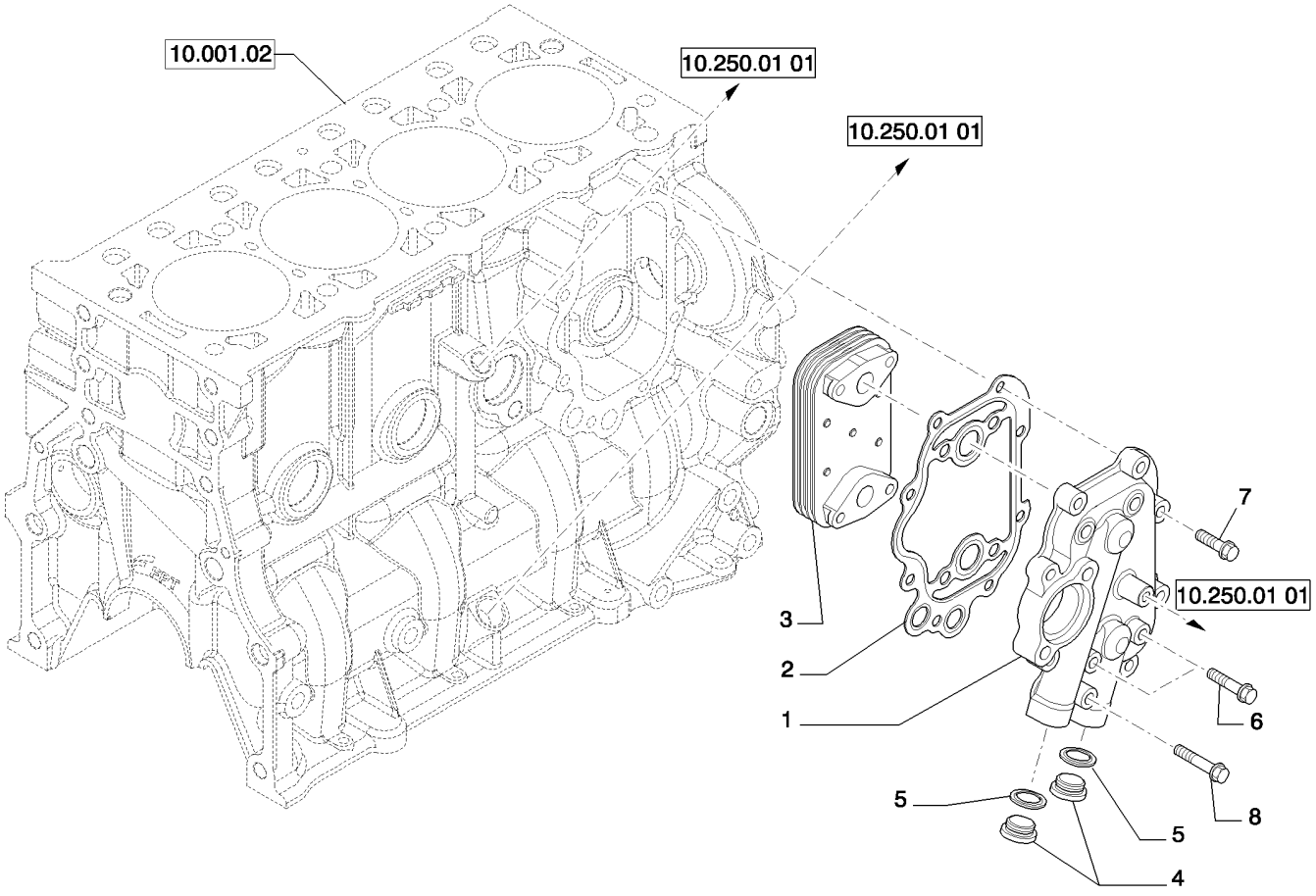

ECHANGEUR DE TEMPERATURE (504154694)
WÄRMETAUSCHER (ÖLKÜHLER) (504154694)
SCAMBIATORE DI CALORE (504154694)
WARMTEREGELAAR (504154694)

R	N	P.N.	MOD	Q	Denominação Description	Description Bezeichnung	Denominacion Beskrivelse	Descrizione Beschrijving	L.C.
1		504155542		1	CORPO CORPS	BODY KAROSSERIE	CUERPO HUS	CORPO HUIS	300C
2		504155544		1	JUNTA JOINT	GASKET DICHTUNG	JUNTA PAKNING	GUARNIZIONE PAKKING	123G
3		504164307		1	RESFRIADOR DO ÓLEO REFROIDISSEUR D'HUIL	OIL COOLER ÖLKÜHLER	REFRIGERADOR DE ACI OLIEKØLER	RADIATORE OLIO OLIEKOELER	026R
4		16993411		2	BUJÃO, M22X1,5 mm BOUCHON	PLUG STOPFEN	TAPÓN PROP	TAPPO PLUG	050T
5		99489022		2	VEDAÇÃO DA ARRUELA, D. 22 mm RONDELLE D'ETANCHEI	SEALING WASHER DICHTSCHEIBE	ARANDELA HERMÉTICA TÆTNINGSSKIVE	ROSETTA DI TENUTA AFDICHTRING	133R
6		16586725		2	PARAFUSO, M8 x 1.25 x 4(VIS	SCREW SCHRAUBE	TORNILLO SKRUE	VITE SCHROEF	040V
7		16673835		9	PARAFUSO, M8 x 30 VIS	SCREW SCHRAUBE	TORNILLO SKRUE	VITE SCHROEF	040V
8		16586925		1	PARAFUSO, M8 x 50 VIS	SCREW SCHRAUBE	TORNILLO SKRUE	VITE SCHROEF	040V

SECTION INDEX

29 - Transmissão hidrostática

29.200.01		LEVEL 100 NH CONTROL HANDLES (L213-L230)
29.200.02		LEVEL 200 NH CONTROL HANDLES (L213-L230)
29.200.03		LEVEL 250 NH CONTROL HANDLES (ALL NH)
29.200.04	01	LEVEL 300 NH CONTROL HANDLES (L218-L230)
29.200.04	02	LEVEL 300 NH CONTROL HANDLES, NO 2ND AUX (L218-L230)
29.200.05	01	LEVEL 350 NH CONTROL HANDLES (L218-C238)
29.200.05	02	LEVEL 350 NH CONTROL HANDLES, NO 2ND AUX (L218-C238)
29.212.01		TRAVEL SPEED 1SPD (L223-L230)
29.212.04	01	MOTOR, REXROTH DRIVE MOTOR 2SPD (L223-L230)
29.212.04	01	MOTOR, REXROTH DRIVE MOTOR 1SPD (L223-L230)
29.212.04	02	MOTOR, REXROTH DRIVE MOTOR 2SPD (L223-L230)
29.212.04	02	MOTOR, REXROTH DRIVE MOTOR 1SPD (L223-L230)
29.212.05	01	VALVE, BRAKE (L213-L230)
29.212.05	02	VALVE, BRAKE 2SPD (L220-L230)
29.212.05	04	VALVE, BRAKE EH 2SPD (L218-L230)
29.212.06	01	PUMP, HYDROSTATIC TANDEM 46CC MDC FRONT (L223,L225)
29.212.06	02	PUMP, HYDROSTATIC TANDEM 46CC MDC FRONT (L223,L225)
29.212.06	03	PUMP, HYDROSTATIC TANDEM 46CC MDC REAR (L223,L225)
29.212.06	04	PUMP, HYDROSTATIC TANDEM 46CC MDC REAR (L223,L225)
29.212.06	05	PUMP, HYDROSTATIC TANDEM 46CC MDC REAR (L223,L225)
29.212.06	06	PUMP, HYDROSTATIC TANDEM 46CC MDC REAR (L223,L225)
29.212.07		PUMP, HYDROSTATIC EH 46CC A20VG ET (C227-C238,L223-L230)

29.200.01		p1	06/11

LEVEL 100 NH CONTROL HANDLES (L213-L230)
LEVEL 100 NH CONTROL HANDLES (L213-L230)
LEVEL 100 NH CONTROL HANDLES (L213-L230)
LEVEL 100 NH CONTROL HANDLES (L213-L230)

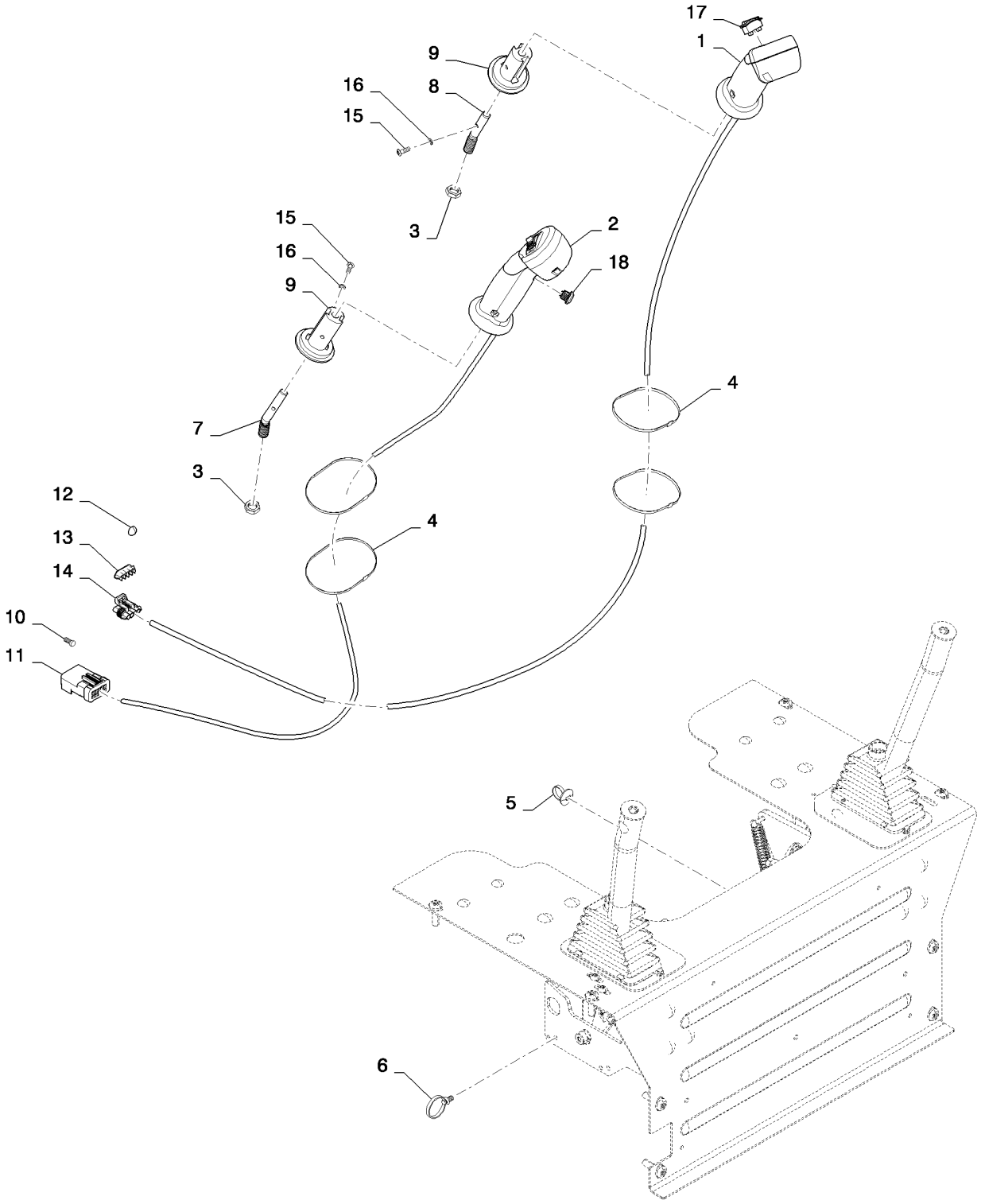

LEVEL 100 NH CONTROL HANDLES (L213-L230)
LEVEL 100 NH CONTROL HANDLES (L213-L230)
LEVEL 100 NH CONTROL HANDLES (L213-L230)
LEVEL 100 NH CONTROL HANDLES (L213-L230)

R	N	P.N.	MOD	Q	Denominação Description	Description Bezeichnung	Denominacion Beskrivelse	Descrizione Beschrijving	L.C.
1		84201278		1	MAÇANETA, New Holland Level 100 LH				
						GRIP	MANGO	IMPUGNATURA	4000
					POIGNEE	GRIFF	GREB	GRIPTANG	
2		84201281		1	MAÇANETA, New Holland Level 100 RH				
						GRIP	MANGO	IMPUGNATURA	4000
					POIGNEE	GRIFF	GREB	GRIPTANG	
3		323238		2	PORCA, Thin, M12 x 1.75, Cl 05				
						NUT	TUERCA	DADO	010D
					ECROU	MUTTER	MØTRIK	MOER	
4		263117		2	PRENDEDOR DE CABOS, .14" x 11 1/2"				
						CABLE STRAP	BANDA DE CABLE	FASCETTA PER CAVO	P716
					BRIDE DE CABLE	KABELBINDER	KABELSTROP	BUNDELBAND	
5		378884A2		3	TIRA, Panel Wire Tie	STRAP	BANDA	BANDELLA	8630
					SANGLE	GURT	STROP	RIEM	
6		87668737		5	TIRA, Fir Tree Assembly	STRAP	BANDA	FASCETTA	532B
					BRIDE	BAND	STROP	RIEM	
7		87619016		1	HASTE, Angled	ROD	VARILLA	ASTA	090A
					TIGE	STANGE	STANG	STANG	
8		87619017		1	HASTE, Angled	ROD	VARILLA	ASTA	090A
					TIGE	STANGE	STANG	STANG	
9		87527964		2	ADAPTADOR, Handle - Pilot Control				
						ADAPTER	ADAPTADOR	ADATTATORE	001A
					ADAPTATEUR	ADAPTER	ADAPTER	ADAPTER	
10		84279937		7	BUJÃO, Cavity Plug Apex 2.8MM				
						PLUG	TAPÓN	TAPPO	050T
					BOUCHON	STOPFEN	PROP	PLUG	
11		87382923		1	CONECTOR ELÉTR, 87382923, FCI Apex 2.8MM 10-Way Tab HSG				
						ELEC CONNECTOR	CONECTOR ELÉCTRICC	CONNETTORE ELETTRI(	235C
					CONNECTEUR ELECTRI	ELEKTR STECKVERBIND	EL-STIK	CONNECTOR	
12		87689636		2	BUJÃO, Dark Red Cable Cavity Plug				
						PLUG	TAPÓN	TAPPO	050T
					BOUCHON	STOPFEN	PROP	PLUG	
13		87689643		1	GRAMPO, Black Secondary Lock				
						CLIP	ABRAZADERA	FERMO	045F
					COLLIER	KLAMMER	KLIPS	KLEM	
14		87697724		1	CONECTOR ELÉTR, Packard Metri-Pack 150 4-Way Female				
						ELEC CONNECTOR	CONECTOR ELÉCTRICC	CONNETTORE ELETTRI(	235C
					CONNECTEUR ELECTRI	ELEKTR STECKVERBIND	EL-STIK	CONNECTOR	
15		87742597		4	PARAFUSO ALLEN, Locking, #10-32 x 5/8", 10-32 X 5/8 Scotchgrip Hex Soc				
						HEX SOC SCREW	TORNILLO DE CABEZA H	VITE A ESAGONO INCAS	A093
					VIS A EMBASE HEXAGOI	INNENSECHSKANTSCHF	SEKSKANTET SKRUE	INBUSBOUT	
16		80684		4	TRAVA DA ARRUELA, #10	LOCK WASHER	ARANDELA DE BLOQUE(	RONDELLA DI SICUREZ/	132R
					RONDELLE FREIN	SICHERUNGSSCHEIBE	LÅSESKIVE	BORGRING	
17		87427352		1	INTERRUPTOR, LH Handle, Trigger, Horn				
						SWITCH	CONTACTOR	INTERRUTTORE	8850
					CONTACTEUR	SCHALTER	KONTAKT	AAN-UIT SCHAKELAAR	

29.200.01		p2	06/11

LEVEL 100 NH CONTROL HANDLES (L213-L230)
LEVEL 100 NH CONTROL HANDLES (L213-L230)
LEVEL 100 NH CONTROL HANDLES (L213-L230)
LEVEL 100 NH CONTROL HANDLES (L213-L230)

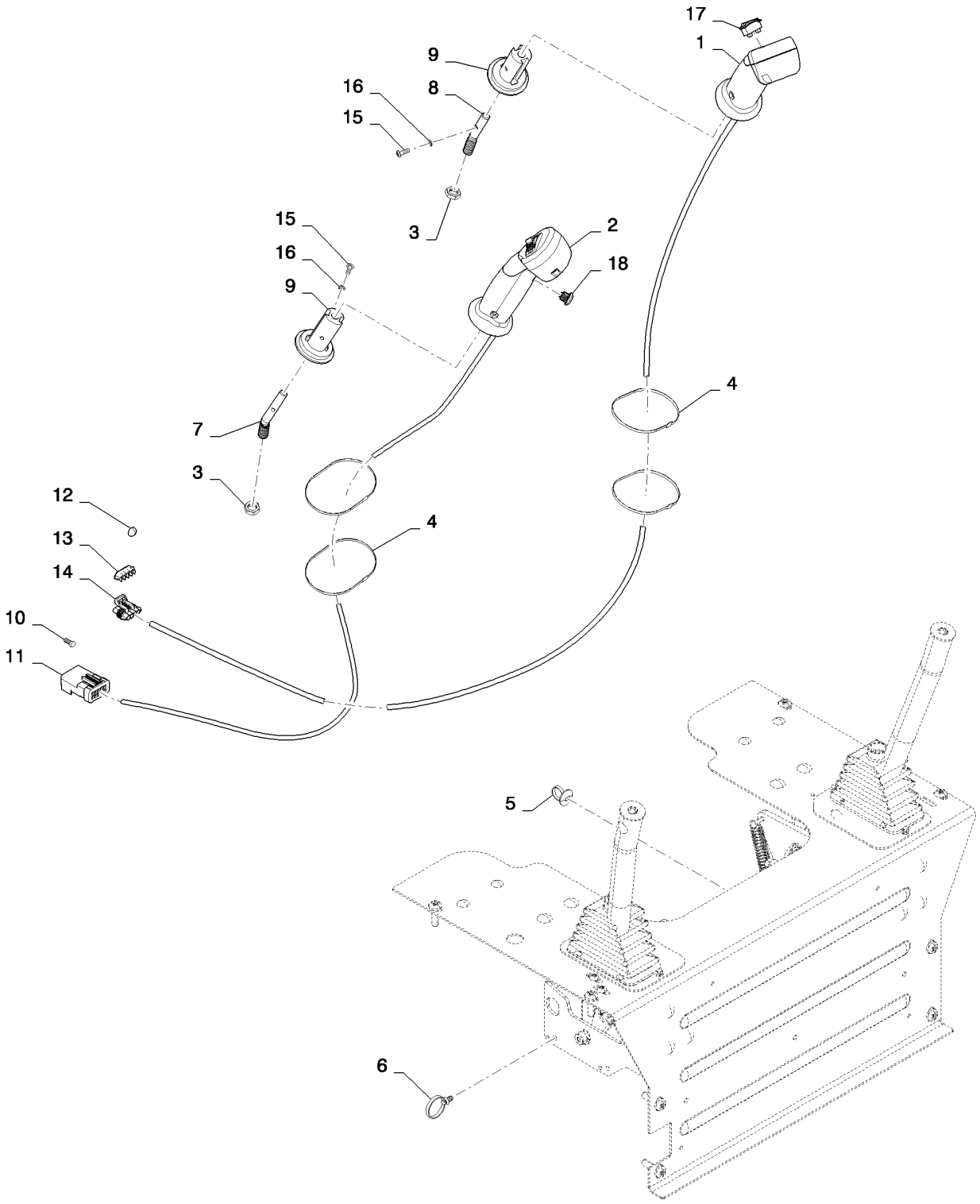

LEVEL 100 NH CONTROL HANDLES (L213-L230)
LEVEL 100 NH CONTROL HANDLES (L213-L230)
LEVEL 100 NH CONTROL HANDLES (L213-L230)
LEVEL 100 NH CONTROL HANDLES (L213-L230)

R	N	P.N.	MOD	Q	Denominação Description	Description Bezeichnung	Denominacion Beskrivelse	Descrizione Beschrijving	L.C.
18		**84296544**		1	INTERRUPTOR, RH Handle, Proportional Hydraulics				
					SWITCH		INTERRUPTOR	INTERRUTTORE	075I
					CONTACTEUR	SCHALTER	KONTAKT	SCHAKELAAR	

29.200.02		p1	06/11

LEVEL 200 NH CONTROL HANDLES (L213-L230)
LEVEL 200 NH CONTROL HANDLES (L213-L230)
LEVEL 200 NH CONTROL HANDLES (L213-L230)
LEVEL 200 NH CONTROL HANDLES (L213-L230)

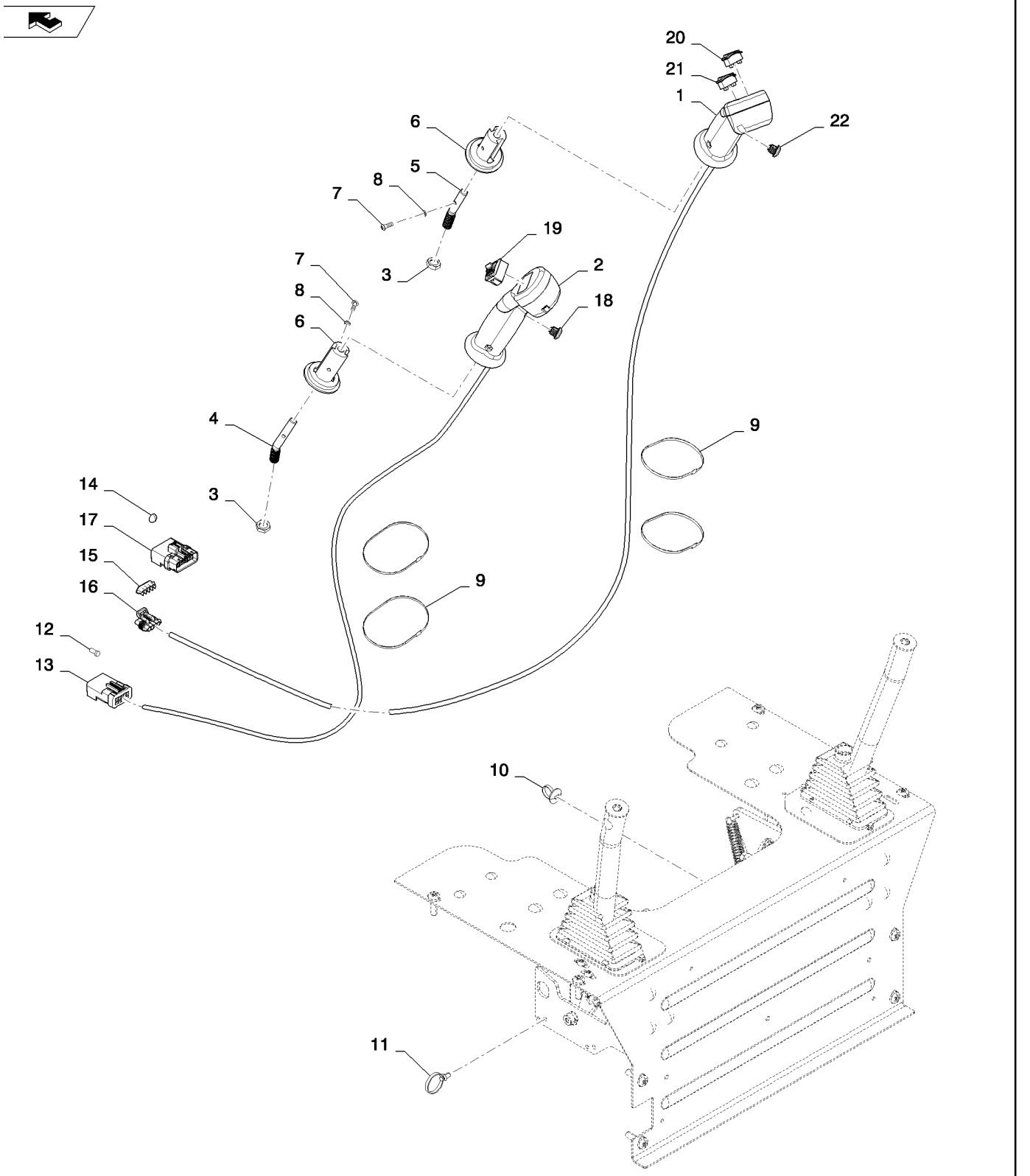

LEVEL 200 NH CONTROL HANDLES (L213-L230)
LEVEL 200 NH CONTROL HANDLES (L213-L230)
LEVEL 200 NH CONTROL HANDLES (L213-L230)
LEVEL 200 NH CONTROL HANDLES (L213-L230)

R	N	P.N.	MOD	Q	Denominação Description	Description Bezeichnung	Denominacion Beskrivelse	Descrizione Beschrijving	L.C.
1		84201279		1	EMPUNHADURA, New Holland Level 200 LH				
						HANDLE GRIP	PERILLA	IMPUGNATURA	025I
					POIGNEE DE MAINTIEN	HANDGRIFF	HÅNDGREB	HANDGREEP	
2		84201282		1	EMPUNHADURA, New Holland Level 200 RH				
						HANDLE GRIP	PERILLA	IMPUGNATURA	025I
					POIGNEE DE MAINTIEN	HANDGRIFF	HÅNDGREB	HANDGREEP	
3		323238		2	PORCA, Thin, M12 x 1.75, Cl 05				
						NUT	TUERCA	DADO	010D
					ECROU	MUTTER	MØTRIK	MOER	
4		87619016		1	HASTE, Angled	ROD	VARILLA	ASTA	090A
					TIGE	STANGE	STANG	STANG	
5		87619017		1	HASTE, Angled	ROD	VARILLA	ASTA	090A
					TIGE	STANGE	STANG	STANG	
6		87527964		2	ADAPTADOR, Handle - Pilot Control				
						ADAPTER	ADAPTADOR	ADATTATORE	001A
					ADAPTATEUR	ADAPTER	ADAPTER	ADAPTER	
7		87742597		4	PARAFUSO ALLEN, Locking, #10-32 x 5/8", 10-32 X 5/8 Scotchgrip Hex Soc				
						HEX SOC SCREW	TORNILLO DE CABEZA H	VITE A ESAGONO INCAS	A093
					VIS A EMBASE HEXAGO	INNENSECHSKANTSCHF	SEKSKANTET SKRUE	INBUSBOUT	
8		80684		4	TRAVA DA ARRUELA, #10	LOCK WASHER	ARANDELA DE BLOQUE	RONDELLA DI SICUREZ	132R
					RONDELLE FREIN	SICHERUNGSSCHEIBE	LÅSESKIVE	BORGRING	
9		263117		2	PRENDEDOR DE CABOS, .14" x 11 1/2"				
						CABLE STRAP	BANDA DE CABLE	FASCETTA PER CAVO	P716
					BRIDE DE CABLE	KABELBINDER	KABELSTROP	BUNDELBAND	
10		378884A2		3	TIRA, Panel Wire Tie	STRAP	BANDA	BANDELLA	8630
					SANGLE	GURT	STROP	RIEM	
11		87668737		5	TIRA, Fir Tree Assembly	STRAP	BANDA	FASCETTA	532B
					BRIDE	BAND	STROP	RIEM	
12		84279937		16	BUJÃO, Cavity Plug Apex 2.8 MM				
						PLUG	TAPÓN	TAPPO	050T
					BOUCHON	STOPFEN	PROP	PLUG	
13		87382923		1	CONECTOR ELÉTR, 87382923, FCI Apex 2.8MM 10-way Tab HSG				
						ELEC CONNECTOR	CONECTOR ELÉCTRICC	CONNETTORE ELETTRI	235C
					CONNECTEUR ELECTRI	ELEKTR STECKVERBIND	EL-STIK	CONNECTOR	
14		87689636		1	BUJÃO, Dark Red Cable Cavity Plug				
						PLUG	TAPÓN	TAPPO	050T
					BOUCHON	STOPFEN	PROP	PLUG	
15		87689643		1	GRAMPO, Black Secondary Lock				
						CLIP	ABRAZADERA	FERMO	045F
					COLLIER	KLAMMER	KLIPS	KLEM	
16		87697724		1	CONECTOR ELÉTR, Packard Metri-Pack 150 4-Way Female				
						ELEC CONNECTOR	CONECTOR ELÉCTRICC	CONNETTORE ELETTRI	235C
					CONNECTEUR ELECTRI	ELEKTR STECKVERBIND	EL-STIK	CONNECTOR	
17		87382927		1	CONECTOR ELÉTR, 87382927, FCI Apex 2.8MM 14-Way Tab HSG				
						ELEC CONNECTOR	CONECTOR ELÉCTRICC	CONNETTORE ELETTRI	235C
					CONNECTEUR ELECTRI	ELEKTR STECKVERBIND	EL-STIK	CONNECTOR	
18		87427352		1	INTERRUPTOR, Trigger, Ride Control				
						SWITCH	CONTACTOR	INTERRUTTORE	8850
					CONTACTEUR	SCHALTER	KONTAKT	AAN-UIT SCHAKELAAR	

29.200.02		p2	06/11

LEVEL 200 NH CONTROL HANDLES (L213-L230)
LEVEL 200 NH CONTROL HANDLES (L213-L230)
LEVEL 200 NH CONTROL HANDLES (L213-L230)
LEVEL 200 NH CONTROL HANDLES (L213-L230)

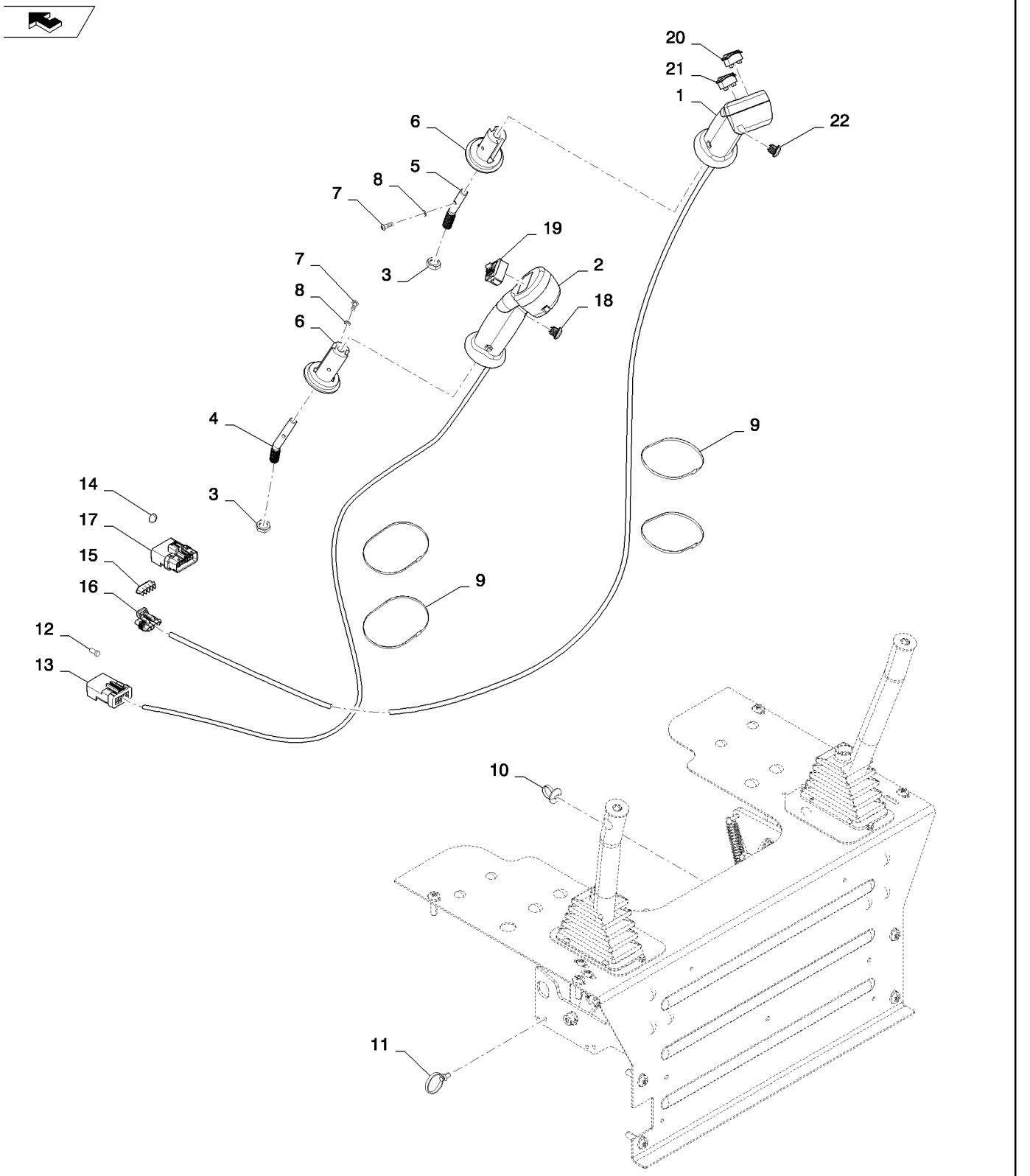

LEVEL 200 NH CONTROL HANDLES (L213-L230)
LEVEL 200 NH CONTROL HANDLES (L213-L230)
LEVEL 200 NH CONTROL HANDLES (L213-L230)
LEVEL 200 NH CONTROL HANDLES (L213-L230)

R	N	P.N.	MOD	Q	Denominação Description Bezeichnung	Description Bezeichnung Beschrijving	Denominacion Beskrivelse	Descrizione Beschrijving	L.C.
19		**84296544**		1	INTERRUPTOR, Proportional Auxiliary CONTACTEUR	SWITCH SCHALTER	INTERRUPTOR KONTAKT	INTERRUTTORE SCHAKELAAR	075I
20		**87447407**		1	INTERRUPTOR, 2-Speed CONTACTEUR	SWITCH SCHALTER	INTERRUPTOR KONTAKT	INTERRUTTORE SCHAKELAAR	075I
21		**87427353**		1	INTERRUPTOR, Turn Signal CONTACTEUR	SWITCH SCHALTER	CONTACTOR KONTAKT	INTERRUTTORE AAN-UIT SCHAKELAAR	8850
22		**87427352**		1	INTERRUPTOR, Horn CONTACTEUR	SWITCH SCHALTER	CONTACTOR KONTAKT	INTERRUTTORE AAN-UIT SCHAKELAAR	8850

29.200.03		p1	06/11

LEVEL 250 NH CONTROL HANDLES (ALL NH)
LEVEL 250 NH CONTROL HANDLES (ALL NH)
LEVEL 250 NH CONTROL HANDLES (ALL NH)
LEVEL 250 NH CONTROL HANDLES (ALL NH)

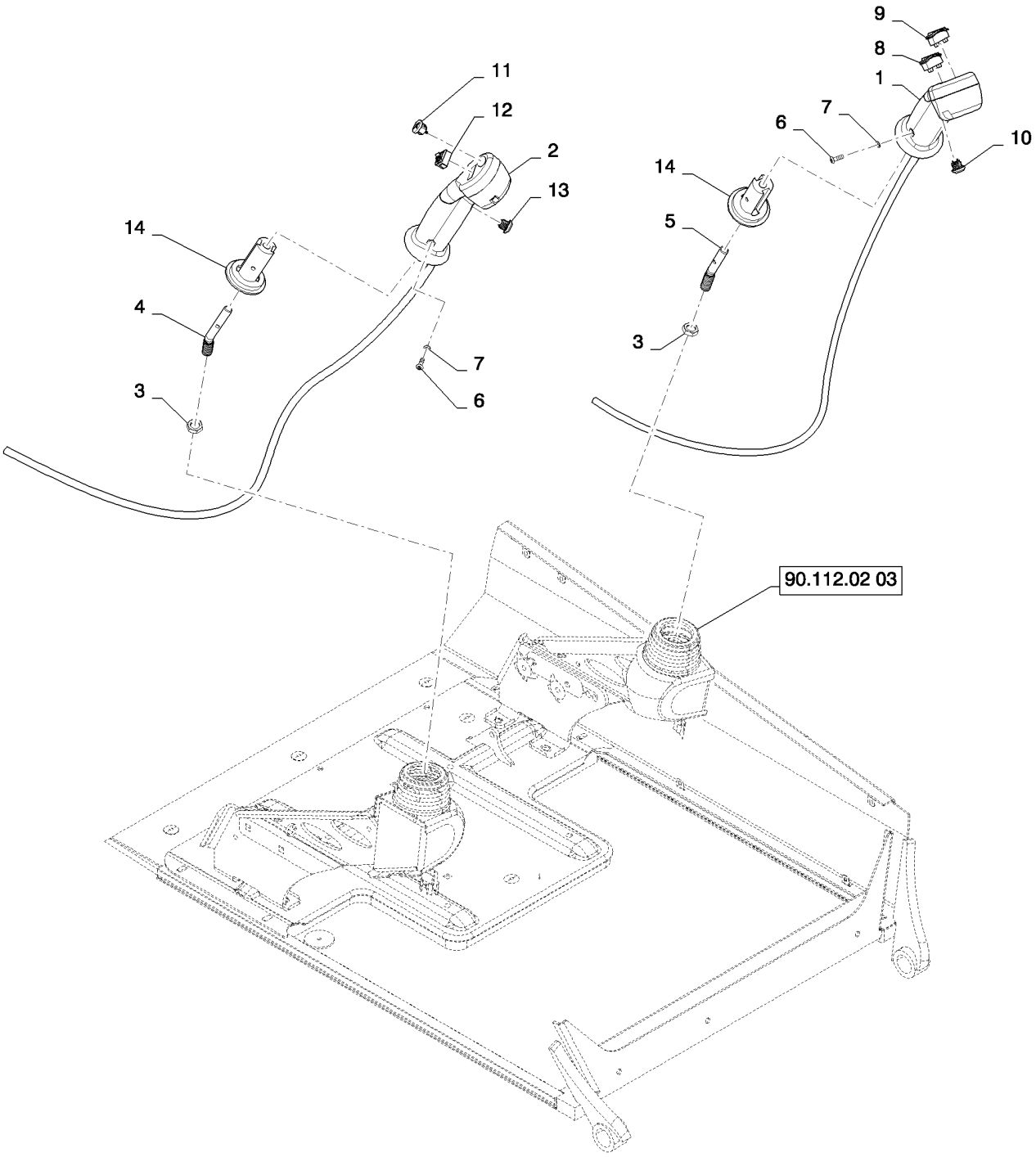

LEVEL 250 NH CONTROL HANDLES (ALL NH)
LEVEL 250 NH CONTROL HANDLES (ALL NH)
LEVEL 250 NH CONTROL HANDLES (ALL NH)
LEVEL 250 NH CONTROL HANDLES (ALL NH)

R	N	P.N.	MOD	Q	Denominação Description	Description Bezeichnung	Denominacion Beskrivelse	Descrizione Beschrijving	L.C.
1		84280479		1	EMPUNHADURA, New Holland Level 250 LH				
						HANDLE GRIP	PERILLA	IMPUGNATURA	025I
					POIGNEE DE MAINTIEN	HANDGRIFF	HÅNDGREB	HANDGREEP	
2		84201284		1	EMPUNHADURA, New Holland Level 250 RH				
						HANDLE GRIP	PERILLA	IMPUGNATURA	025I
					POIGNEE DE MAINTIEN	HANDGRIFF	HÅNDGREB	HANDGREEP	
3		323238		2	PORCA, Thin, M12 x 1.75, Cl 05				
						NUT	TUERCA	DADO	010D
					ECROU	MUTTER	MØTRIK	MOER	
4		87619016		1	HASTE, Angled	ROD	VARILLA	ASTA	090A
					TIGE	STANGE	STANG	STANG	
5		87619017		1	HASTE, Angled	ROD	VARILLA	ASTA	090A
					TIGE	STANGE	STANG	STANG	
6		87742597		4	PARAFUSO ALLEN, Locking, #10-32 x 5/8", 10-32 X 5/8 Scotchgrip Hex Soc				
						HEX SOC SCREW	TORNILLO DE CABEZA H	VITE A ESAGONO INCAS	A093
					VIS A EMBASE HEXAGOI	INNENSECHSKANTSCHF	SEKSKANTET SKRUE	INBUSBOUT	
7		80684		4	TRAVA DA ARRUELA, #10	LOCK WASHER	ARANDELA DE BLOQUEO	RONDELLA DI SICUREZ	132R
					RONDELLE FREIN	SICHERUNGSSCHEIBE	LÅSESKIVE	BORGRING	
8		87447407		1	INTERRUPTOR, 2-Speed	SWITCH	INTERRUPTOR	INTERRUTTORE	075I
					CONTACTEUR	SCHALTER	KONTAKT	SCHAKELAAR	
9		87427353		1	INTERRUPTOR, Turn Signal				
						SWITCH	CONTACTOR	INTERRUTTORE	8850
					CONTACTEUR	SCHALTER	KONTAKT	AAN-UIT SCHAKELAAR	
10		87427352		1	INTERRUPTOR, Trigger, Horn				
						SWITCH	CONTACTOR	INTERRUTTORE	8850
					CONTACTEUR	SCHALTER	KONTAKT	AAN-UIT SCHAKELAAR	
11		84296543		1	INTERRUPTOR, Dome, Float				
						SWITCH	INTERRUPTOR	INTERRUTTORE	075I
					CONTACTEUR	SCHALTER	KONTAKT	SCHAKELAAR	
12		84282677		1	INTERRUPTOR, Proportional Hydraulic				
						SWITCH	INTERRUPTOR	INTERRUTTORE	075I
					CONTACTEUR	SCHALTER	KONTAKT	SCHAKELAAR	
13		87427352		1	INTERRUPTOR, Ride Control				
						SWITCH	CONTACTOR	INTERRUTTORE	8850
					CONTACTEUR	SCHALTER	KONTAKT	AAN-UIT SCHAKELAAR	
14		87527964		2	ADAPTADOR, Pilot Control Adapter, LH and RH				
						ADAPTER	ADAPTADOR	ADATTATORE	001A
					ADAPTATEUR	ADAPTER	ADAPTER	ADAPTER	

29.200.04	01	p1	06/11

LEVEL 300 NH CONTROL HANDLES (L218-L230)
LEVEL 300 NH CONTROL HANDLES (L218-L230)
LEVEL 300 NH CONTROL HANDLES (L218-L230)
LEVEL 300 NH CONTROL HANDLES (L218-L230)

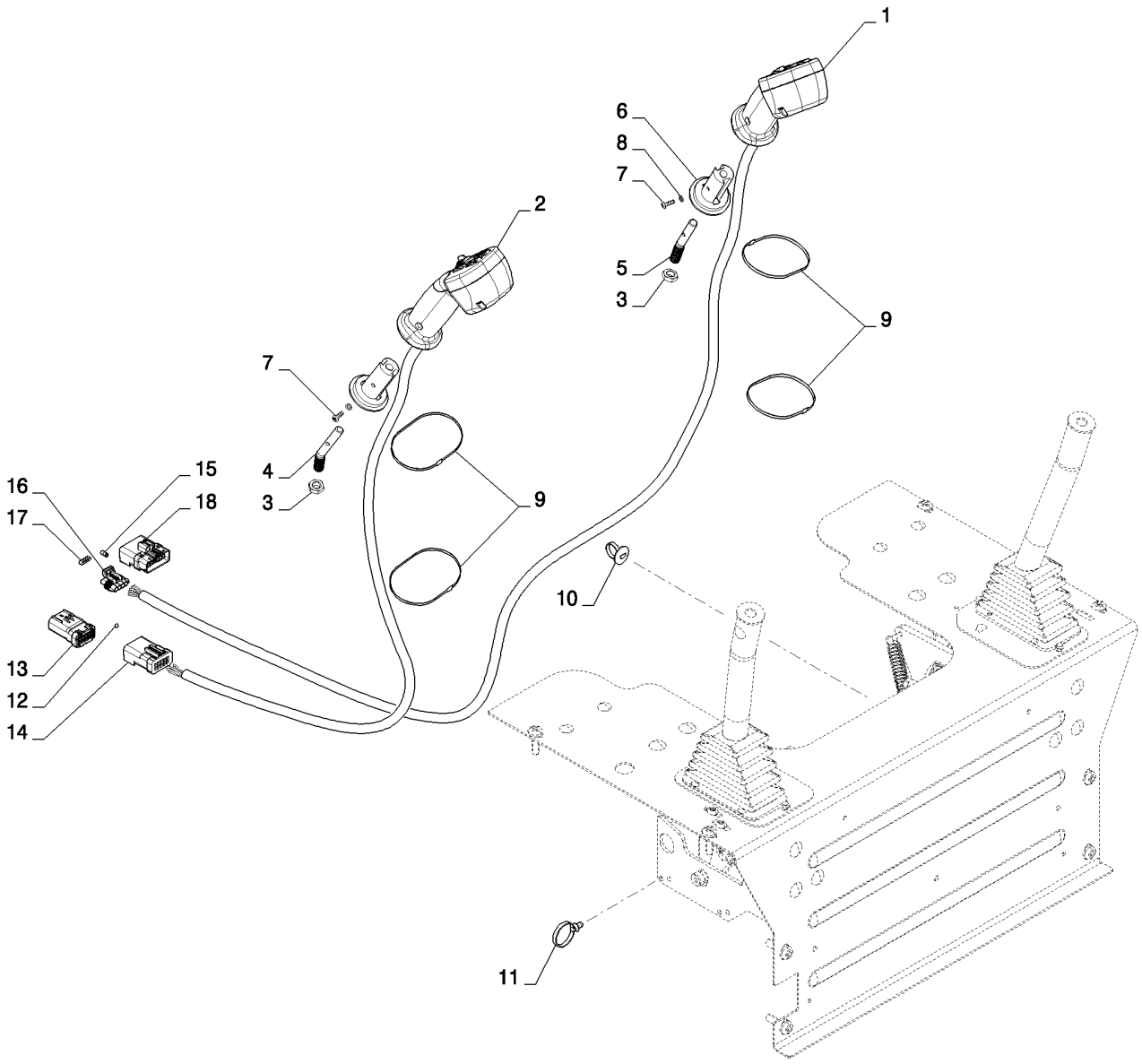

LEVEL 300 NH CONTROL HANDLES (L218-L230)
LEVEL 300 NH CONTROL HANDLES (L218-L230)
LEVEL 300 NH CONTROL HANDLES (L218-L230)
LEVEL 300 NH CONTROL HANDLES (L218-L230)

R	N	P.N.	MOD	Q	Denominação Description	Description Bezeichnung	Denominacion Beskrivelse	Descrizione Beschrijving	L.C.
1		84201280		1	MAÇANETA, New Holland Level 300 LH				
						GRIP	MANGO	IMPUGNATURA	4000
					POIGNEE	GRIFF	GREB	GRIPTANG	
2		84201285		1	MAÇANETA, New Holland Level 300 RH				
						GRIP	MANGO	IMPUGNATURA	4000
					POIGNEE	GRIFF	GREB	GRIPTANG	
3		323238		2	PORCA, Thin, M12 x 1.75, Cl 05				
						NUT	TUERCA	DADO	010D
					ECROU	MUTTER	MØTRIK	MOER	
4		87619016		1	HASTE, Angled	ROD	VARILLA	ASTA	090A
					TIGE	STANGE	STANG	STANG	
5		87619017		1	HASTE, Angled	ROD	VARILLA	ASTA	090A
					TIGE	STANGE	STANG	STANG	
6		87527964		2	ADAPTADOR, Handle - Pilot Control				
						ADAPTER	ADAPTADOR	ADATTATORE	001A
					ADAPTATEUR	ADAPTER	ADAPTER	ADAPTER	
7		87742597		4	PARAFUSO ALLEN, Locking, #10-32 x 5/8", 10-32 X 5/8 Scotchgrip Hex Soc				
						HEX SOC SCREW	TORNILLO DE CABEZA H	VITE A ESAGONO INCAS	A093
					VIS A EMBASE HEXAGO	INNENSECHSKANTSCHF	SEKSKANTET SKRUE	INBUSBOUT	
8		80684		4	TRAVA DA ARRUELA, #10	LOCK WASHER	ARANDELA DE BLOQUE	RONDELLA DI SICUREZ	132R
					RONDELLE FREIN	SICHERUNGSSCHEIBE	LÅSESKIVE	BORGRING	
9		263117		4	PRENDEDOR DE CABOS, .14" x 11 1/2"				
						CABLE STRAP	BANDA DE CABLE	FASCETTA PER CAVO	P716
					BRIDE DE CABLE	KABELBINDER	KABELSTROP	BUNDELBAND	
10		378884A2		3	TIRA, Panel Wire Tie	STRAP	BANDA	BANDELLA	8630
					SANGLE	GURT	STROP	RIEM	
11		87668737		5	TIRA, Fir Tree Assembly Strap				
						STRAP	BANDA	FASCETTA	532B
					BRIDE	BAND	STROP	RIEM	
12		84279937		11	BUJÃO, Cavity Plug Apex 2.8MM				
						PLUG	TAPÓN	TAPPO	050T
					BOUCHON	STOPFEN	PROP	PLUG	
13		87382919		1	CONECTOR ELÉTR, 87382919, 6 Cavity Plug Black				
						ELEC CONNECTOR	CONECTOR ELÉCTRICC	CONNETTORE ELETTRI	235C
					CONNECTEUR ELECTRI	ELEKTR STECKVERBIND	EL-STIK	CONNECTOR	
14		87382923		1	CONECTOR ELÉTR, 87382923, FCI Apex 2.8MM 10-Way Tab HSG				
						ELEC CONNECTOR	CONECTOR ELÉCTRICC	CONNETTORE ELETTRI	235C
					CONNECTEUR ELECTRI	ELEKTR STECKVERBIND	EL-STIK	CONNECTOR	
15		87689636		1	BUJÃO, Dark Red Cable Cavity Plug				
						PLUG	TAPÓN	TAPPO	050T
					BOUCHON	STOPFEN	PROP	PLUG	
16		87689643		1	GRAMPO, Black Secondary Lock				
						CLIP	ABRAZADERA	FERMO	045F
					COLLIER	KLAMMER	KLIPS	KLEM	
17		87697724		1	CONECTOR ELÉTR, Packard Metri-Pack 150 4-Way Female				
						ELEC CONNECTOR	CONECTOR ELÉCTRICC	CONNETTORE ELETTRI	235C
					CONNECTEUR ELECTRI	ELEKTR STECKVERBIND	EL-STIK	CONNECTOR	

29.200.04	01	p2	06/11

LEVEL 300 NH CONTROL HANDLES (L218-L230)
LEVEL 300 NH CONTROL HANDLES (L218-L230)
LEVEL 300 NH CONTROL HANDLES (L218-L230)
LEVEL 300 NH CONTROL HANDLES (L218-L230)

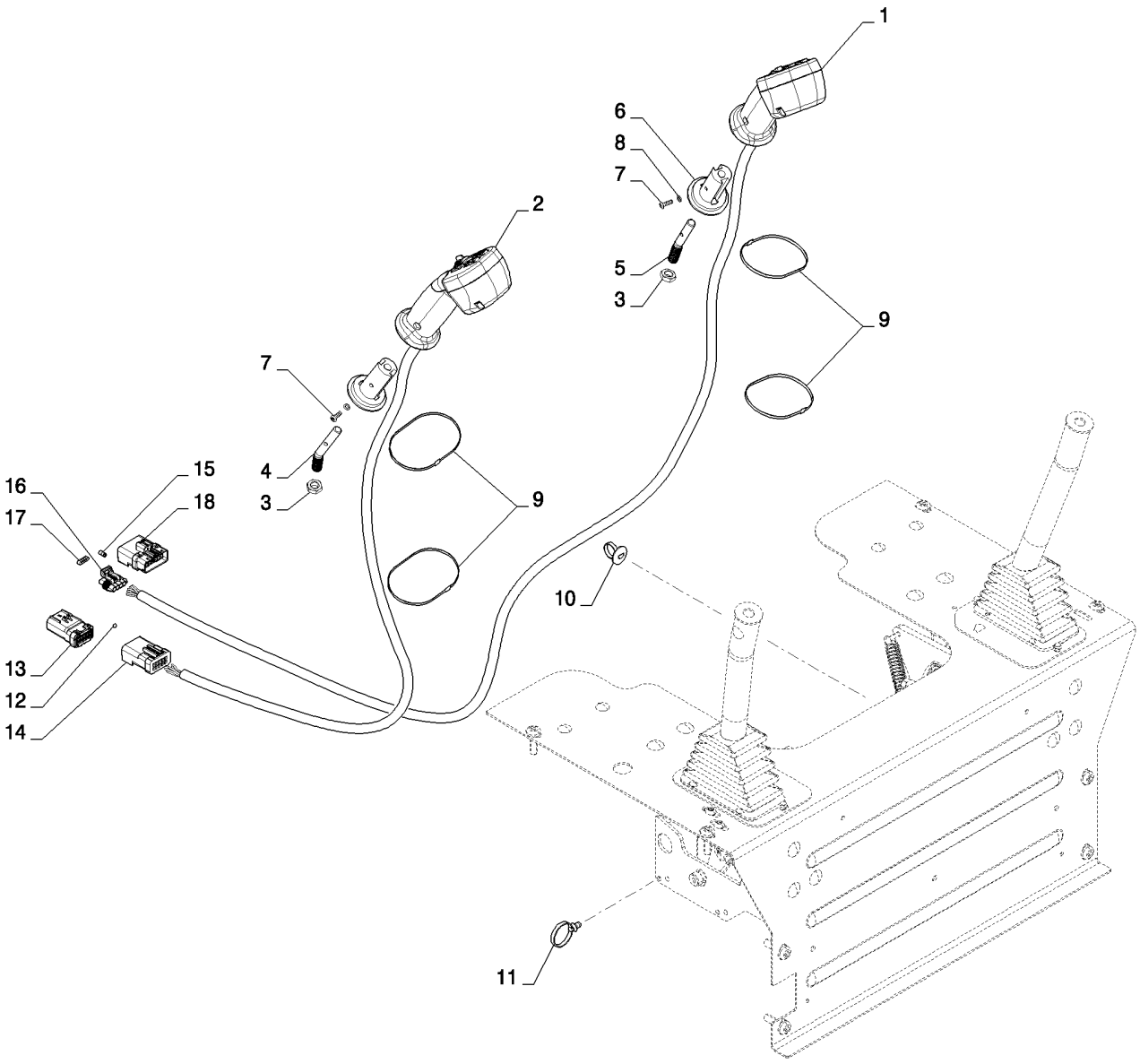

LEVEL 300 NH CONTROL HANDLES (L218-L230)
LEVEL 300 NH CONTROL HANDLES (L218-L230)
LEVEL 300 NH CONTROL HANDLES (L218-L230)
LEVEL 300 NH CONTROL HANDLES (L218-L230)

R	N	P.N.	MOD	Q	Denominação Description Bezeichnung Denominacion Beskrivelse Descrizione Beschrijving	L.C.
18		87382927		1	CONECTOR ELÉTR, 87382927, FCI Apex 2.8MM 14-Way Tab HSG ELEC CONNECTOR / CONECTOR ELÉCTRICC / CONNETTORE ELETTRI CONNECTEUR ELECTRI / ELEKTR STECKVERBINI / EL-STIK / CONNECTOR	235C
19		87427352		1	INTERRUPTOR, Trigger, Ride Control SWITCH / CONTACTOR / INTERRUTTORE CONTACTEUR / SCHALTER / KONTAKT / AAN-UIT SCHAKELAAR	8850
20		NSS		2	SEM SERVIÇO EM SEPARADO, Multifunction 2 NOT SERVICED SEPARA / NO SE REPARA POR SE / NON FORNITO SEPARAT NON FOURNI SEPAREM / NICHT A SEP ERS-T LIEI / SERVICERES IKKE SEPA / NIET LOS VERKRIJGBAA	064N
21		NSS		1	SEM SERVIÇO EM SEPARADO, Multifunction 1 NOT SERVICED SEPARA / NO SE REPARA POR SE / NON FORNITO SEPARAT NON FOURNI SEPAREM / NICHT A SEP ERS-T LIEI / SERVICERES IKKE SEPA / NIET LOS VERKRIJGBAA	064N
22		84296544		1	INTERRUPTOR, Proportional Hydraulic SWITCH / INTERRUPTOR / INTERRUTTORE CONTACTEUR / SCHALTER / KONTAKT / SCHAKELAAR	075I
23		87427353		1	INTERRUPTOR, Turn Signal SWITCH / CONTACTOR / INTERRUTTORE CONTACTEUR / SCHALTER / KONTAKT / AAN-UIT SCHAKELAAR	8850
24		87427352		1	INTERRUPTOR, Horn SWITCH / CONTACTOR / INTERRUTTORE CONTACTEUR / SCHALTER / KONTAKT / AAN-UIT SCHAKELAAR	8850
25		84328912		1	INTERRUPTOR, 2-Speed SWITCH / INTERRUPTOR / INTERRUTTORE CONTACTEUR / SCHALTER / KONTAKT / SCHAKELAAR	075I
26		NSS		1	SEM SERVIÇO EM SEPARADO, Multifunction 3 NOT SERVICED SEPARA / NO SE REPARA POR SE / NON FORNITO SEPARAT NON FOURNI SEPAREM / NICHT A SEP ERS-T LIEI / SERVICERES IKKE SEPA / NIET LOS VERKRIJGBAA	064N

29.200.04	02	p1	07/11

LEVEL 300 NH CONTROL HANDLES, NO 2ND AUX (L218-L230)
LEVEL 300 NH CONTROL HANDLES, NO 2ND AUX (L218-L230)
LEVEL 300 NH CONTROL HANDLES, NO 2ND AUX (L218-L230)
LEVEL 300 NH CONTROL HANDLES, NO 2ND AUX (L218-L230)

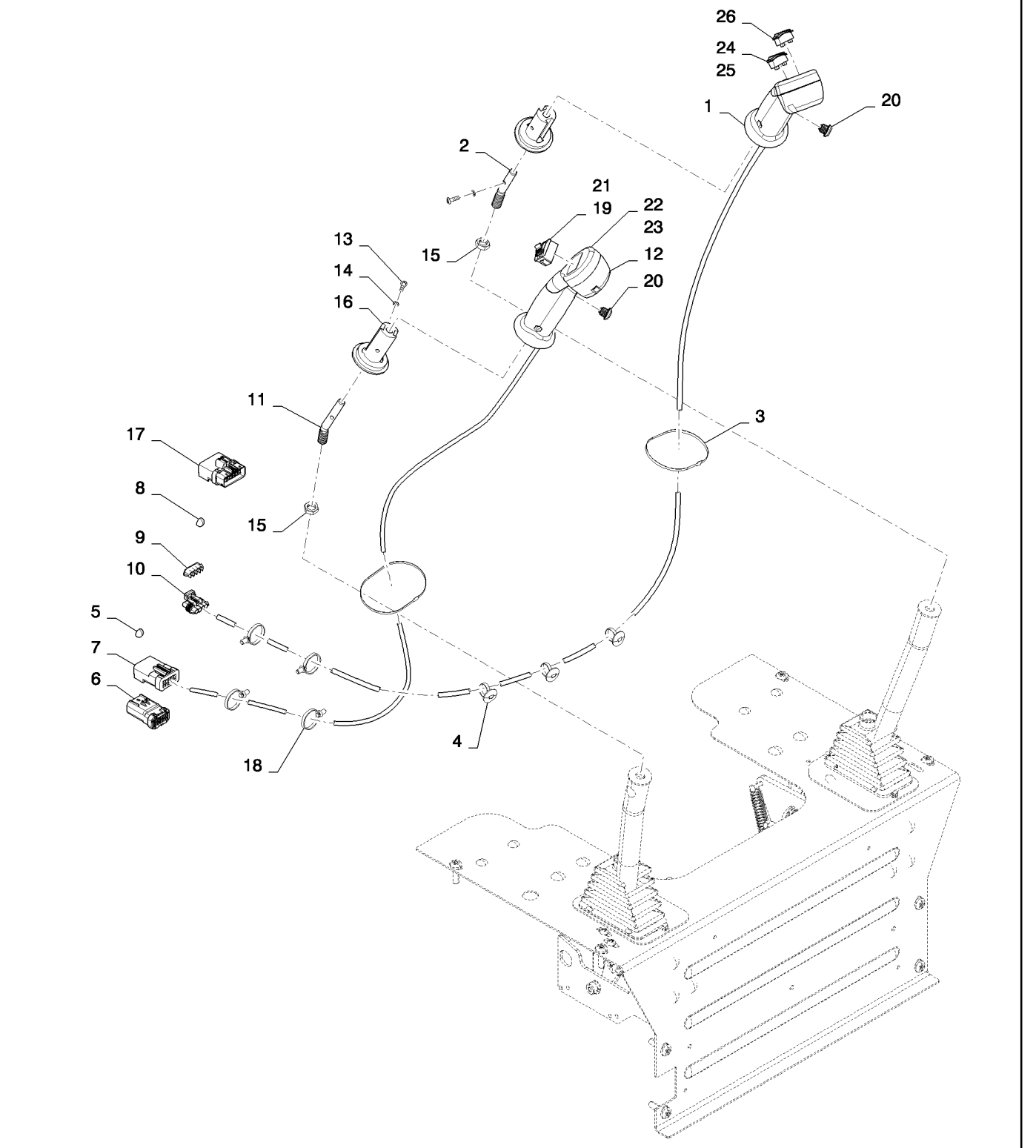

LEVEL 300 NH CONTROL HANDLES, NO 2ND AUX (L218-L230)
LEVEL 300 NH CONTROL HANDLES, NO 2ND AUX (L218-L230)
LEVEL 300 NH CONTROL HANDLES, NO 2ND AUX (L218-L230)
LEVEL 300 NH CONTROL HANDLES, NO 2ND AUX (L218-L230)

R	N	P.N.	MOD	Q	Denominação Description	Description Bezeichnung	Denominacion Beskrivelse	Descrizione Beschrijving	L.C.
1		84396079		1	MANILHA, Level 300 LH, No 2nd Aux				
						HANDLE	MANECILLA	MANIGLIA	020M
					POIGNEE	GRIFF	HÅNDTAG	HENDEL	
2		87619017		1	HASTE, Angled	ROD	VARILLA	ASTA	090A
					TIGE	STANGE	STANG	STANG	
3		263117		2	PRENDEDOR DE CABOS, .14" x 11 1/2"				
						CABLE STRAP	BANDA DE CABLE	FASCETTA PER CAVO	P716
					BRIDE DE CABLE	KABELBINDER	KABELSTROP	BUNDELBAND	
4		378884A2		3	TIRA, Through Panel Tie	STRAP	BANDA	BANDELLA	8630
					SANGLE	GURT	STROP	RIEM	
5		84279937		15	BUJÃO, Cavity	PLUG	TAPÓN	TAPPO	050T
					BOUCHON	STOPFEN	PROP	PLUG	
6		87382925		1	CONECTOR DO FIO	WIRE CONNECTOR	CONECTOR DE CABLE	CONNETTORE DEL FILO	250C
					CONNECTEUR DU FIL	KABELSTECKVERBINDE	SAMLEMUFFE	DRAADCONNECTOR	
7		87382923		1	CONECTOR ELÉTR, 87382923, 10-position				
						ELEC CONNECTOR	CONECTOR ELÉCTRICO	CONNETTORE ELETTRI(	235C
					CONNECTEUR ELECTRI	ELEKTR STECKVERBIND	EL-STIK	CONNECTOR	
8		87689636		1	BUJÃO, Cavity	PLUG	TAPÓN	TAPPO	050T
					BOUCHON	STOPFEN	PROP	PLUG	
9		87689643		1	GRAMPO, Secondary Lock	CLIP	ABRAZADERA	FERMO	045F
					COLLIER	KLAMMER	KLIPS	KLEM	
10		87697724		1	CONECTOR ELÉTR, 4-way Female				
						ELEC CONNECTOR	CONECTOR ELÉCTRICO	CONNETTORE ELETTRI(	235C
					CONNECTEUR ELECTRI	ELEKTR STECKVERBIND	EL-STIK	CONNECTOR	
11		87619016		1	HASTE, Angled	ROD	VARILLA	ASTA	090A
					TIGE	STANGE	STANG	STANG	
12		84396071		1	MANILHA, Level 300 RH, No 2nd Aux				
						HANDLE	MANECILLA	MANIGLIA	020M
					POIGNEE	GRIFF	HÅNDTAG	HENDEL	
13		87742597		4	PARAFUSO ALLEN, Locking, #10-32 x 5/8"				
						HEX SOC SCREW	TORNILLO DE CABEZA H	VITE A ESAGONO INCAS	A093
					VIS A EMBASE HEXAGOI	INNENSECHSKANTSCHF	SEKSKANTET SKRUE	INBUSBOUT	
14		80684		4	TRAVA DA ARRUELA, #10	LOCK WASHER	ARANDELA DE BLOQUE(	RONDELLA DI SICUREZ/	132R
					RONDELLE FREIN	SICHERUNGSSCHEIBE	LÅSESKIVE	BORGRING	
15		323238		2	PORCA, Thin, M12 x 1.75, Cl 05				
						NUT	TUERCA	DADO	010D
					ECROU	MUTTER	MØTRIK	MOER	
16		87527964		2	ADAPTADOR, Handle - Pilot Controls				
						ADAPTER	ADAPTADOR	ADATTATORE	001A
					ADAPTATEUR	ADAPTER	ADAPTER	ADAPTER	
17		87382927		1	CONECTOR ELÉTR, 87382927				
						ELEC CONNECTOR	CONECTOR ELÉCTRICO	CONNETTORE ELETTRI(	235C
					CONNECTEUR ELECTRI	ELEKTR STECKVERBIND	EL-STIK	CONNECTOR	
18		87668737		5	TIRA, Fir Tree Assy	STRAP	BANDA	FASCETTA	532B
					BRIDE	BAND	STROP	RIEM	
19		87427353		1	INTERRUPTOR, Turn Signal				
						SWITCH	CONTACTOR	INTERRUTTORE	8850
					CONTACTEUR	SCHALTER	KONTAKT	AAN-UIT SCHAKELAAR	

29.200.04	02	p2	07/11

LEVEL 300 NH CONTROL HANDLES, NO 2ND AUX (L218-L230)
LEVEL 300 NH CONTROL HANDLES, NO 2ND AUX (L218-L230)
LEVEL 300 NH CONTROL HANDLES, NO 2ND AUX (L218-L230)
LEVEL 300 NH CONTROL HANDLES, NO 2ND AUX (L218-L230)

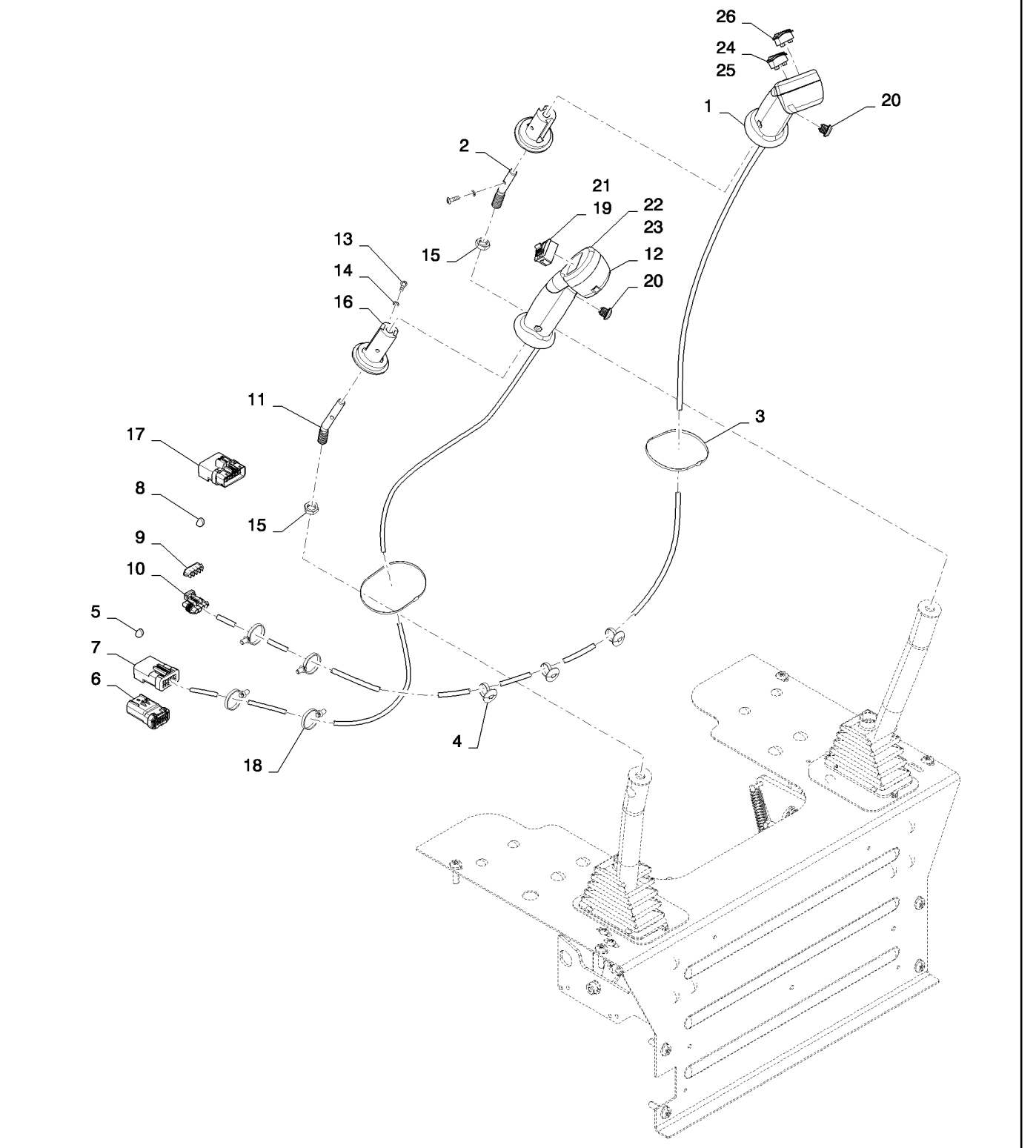

LEVEL 300 NH CONTROL HANDLES, NO 2ND AUX (L218-L230)
LEVEL 300 NH CONTROL HANDLES, NO 2ND AUX (L218-L230)
LEVEL 300 NH CONTROL HANDLES, NO 2ND AUX (L218-L230)
LEVEL 300 NH CONTROL HANDLES, NO 2ND AUX (L218-L230)

R	N	P.N.	MOD	Q	Denominação Description	Description Bezeichnung	Denominacion Beskrivelse	Descrizione Beschrijving	L.C.
20		**87427352**		2	INTERRUPTOR, Trigger, Horn/Ride Control				
						SWITCH	CONTACTOR	INTERRUTTORE	8850
					CONTACTEUR	SCHALTER	KONTAKT	AAN-UIT SCHAKELAAR	
21		**84328912**		1	INTERRUPTOR, 2-Speed	SWITCH	INTERRUPTOR	INTERRUTTORE	075I
					CONTACTEUR	SCHALTER	KONTAKT	SCHAKELAAR	
22		**NSS**		1	SEM SERVIÇO EM SEPARADO, Multi-Function 3				
						NOT SERVICED SEPARA	NO SE REPARA POR SE	NON FORNITO SEPARAT	064N
					NON FOURNI SEPAREM	NICHT A SEP ERS-T LIEI	SERVICERES IKKE SEPA	NIET LOS VERKRIJGBAA	
23		**NSS**		1	SEM SERVIÇO EM SEPARADO, Multi-Function 2				
						NOT SERVICED SEPARA	NO SE REPARA POR SE	NON FORNITO SEPARAT	064N
					NON FOURNI SEPAREM	NICHT A SEP ERS-T LIEI	SERVICERES IKKE SEPA	NIET LOS VERKRIJGBAA	
24		**84398133**		1	INTERRUPTOR, Rocker, Mutli-Function 4				
						SWITCH	INTERRUPTOR	INTERRUTTORE	075I
					CONTACTEUR	SCHALTER	KONTAKT	SCHAKELAAR	
25		**NSS**		1	SEM SERVIÇO EM SEPARADO, Multi-Function 1				
						NOT SERVICED SEPARA	NO SE REPARA POR SE	NON FORNITO SEPARAT	064N
					NON FOURNI SEPAREM	NICHT A SEP ERS-T LIEI	SERVICERES IKKE SEPA	NIET LOS VERKRIJGBAA	
26		**84296544**		1	INTERRUPTOR, Proportional Hydraulics				
						SWITCH	INTERRUPTOR	INTERRUTTORE	075I
					CONTACTEUR	SCHALTER	KONTAKT	SCHAKELAAR	

29.200.05	01	p1	06/11

LEVEL 350 NH CONTROL HANDLES (L218-C238)
LEVEL 350 NH CONTROL HANDLES (L218-C238)
LEVEL 350 NH CONTROL HANDLES (L218-C238)
LEVEL 350 NH CONTROL HANDLES (L218-C238)

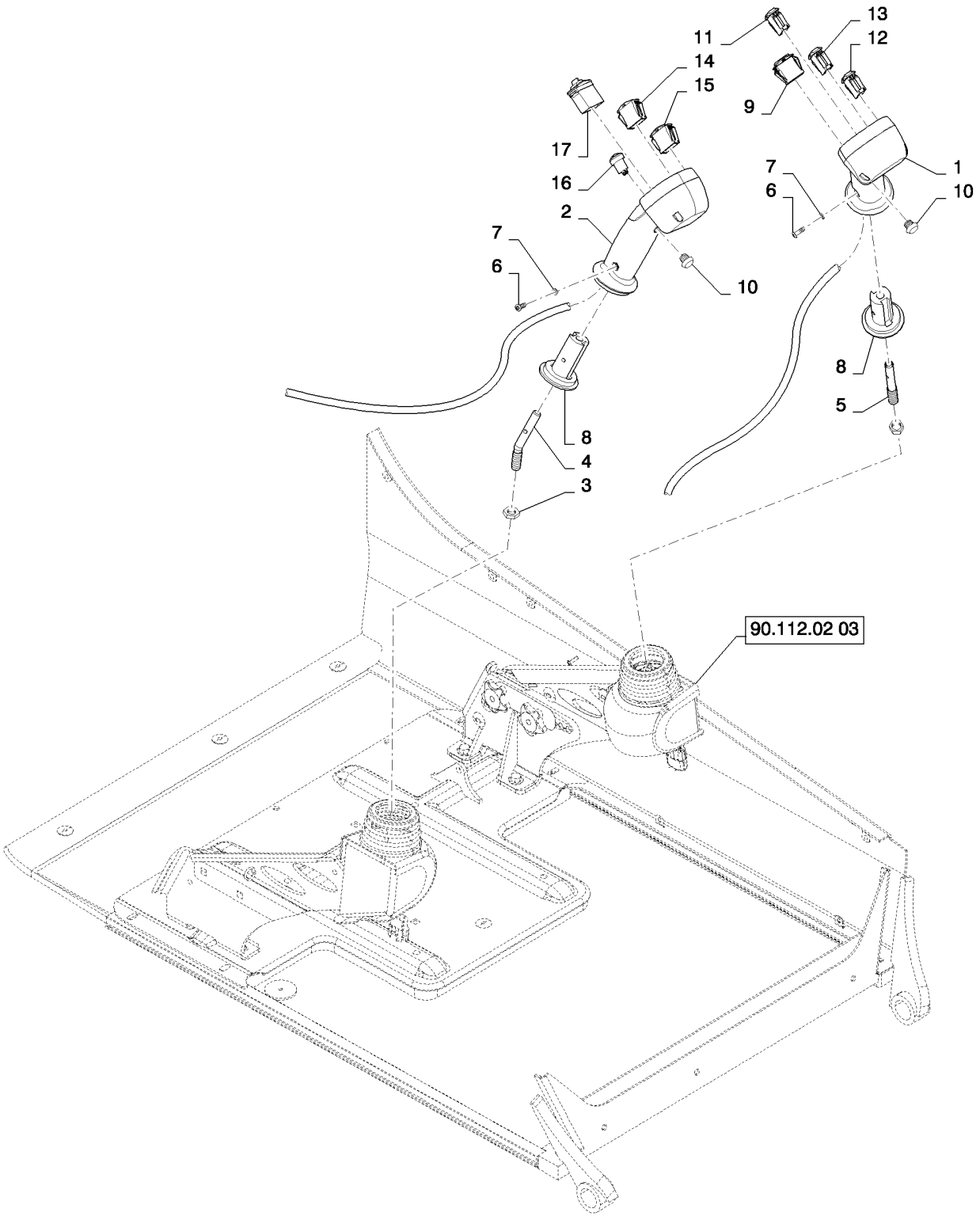

LEVEL 350 NH CONTROL HANDLES (L218-C238)
LEVEL 350 NH CONTROL HANDLES (L218-C238)
LEVEL 350 NH CONTROL HANDLES (L218-C238)
LEVEL 350 NH CONTROL HANDLES (L218-C238)

R	N	P.N.	MOD	Q	Denominação Description	Description Bezeichnung	Denominacion Beskrivelse	Descrizione Beschrijving	L.C.
1		84280480		1	MAÇANETA, New Holland Level 350 LH				
						GRIP	MANGO	IMPUGNATURA	4000
					POIGNEE	GRIFF	GREB	GRIPTANG	
2		84201286		1	MAÇANETA, New Holland Level 350 RH				
						GRIP	MANGO	IMPUGNATURA	4000
					POIGNEE	GRIFF	GREB	GRIPTANG	
3		323238		2	PORCA, Thin, M12 x 1.75, Cl 05				
						NUT	TUERCA	DADO	010D
					ECROU	MUTTER	MØTRIK	MOER	
4		87619016		1	HASTE, Angled	ROD	VARILLA	ASTA	090A
					TIGE	STANGE	STANG	STANG	
5		87619017		1	HASTE, Angled	ROD	VARILLA	ASTA	090A
					TIGE	STANGE	STANG	STANG	
6		87742597		4	PARAFUSO ALLEN, Locking, #10-32 x 5/8", 10-32 X 5/8 Scotchgrip Hex Soc				
						HEX SOC SCREW	TORNILLO DE CABEZA H	VITE A ESAGONO INCAS	A093
					VIS A EMBASE HEXAGO	INNENSECHSKANTSCHF	SEKSKANTET SKRUE	INBUSBOUT	
7		80684		4	TRAVA DA ARRUELA, #10	LOCK WASHER	ARANDELA DE BLOQUE	RONDELLA DI SICUREZ	132R
					RONDELLE FREIN	SICHERUNGSSCHEIBE	LÅSESKIVE	BORGRING	
8		87527964		2	ADAPTADOR, Handle (Not Shown)				
						ADAPTER	ADAPTADOR	ADATTATORE	001A
					ADAPTATEUR	ADAPTER	ADAPTER	ADAPTER	
9		87427353		1	INTERRUPTOR, Turn Signal				
						SWITCH	CONTACTOR	INTERRUTTORE	8850
					CONTACTEUR	SCHALTER	KONTAKT	AAN-UIT SCHAKELAAR	
10		87427352		2	INTERRUPTOR, Trigger, Horn/Ride Control				
						SWITCH	CONTACTOR	INTERRUTTORE	8850
					CONTACTEUR	SCHALTER	KONTAKT	AAN-UIT SCHAKELAAR	
11		84328912		1	INTERRUPTOR, 2-Speed	SWITCH	INTERRUPTOR	INTERRUTTORE	075I
					CONTACTEUR	SCHALTER	KONTAKT	SCHAKELAAR	
12		NSS		1	SEM SERVIÇO EM SEPARADO, Multi-Function 3				
						NOT SERVICED SEPARA	NO SE REPARA POR SE	NON FORNITO SEPARAT	064N
					NON FOURNI SEPAREM	NICHT A SEP ERS-T LIEI	SERVICERES IKKE SEPA	NIET LOS VERKRIJGBAA	
13		NSS		1	SEM SERVIÇO EM SEPARADO, Multi-Function 2				
						NOT SERVICED SEPARA	NO SE REPARA POR SE	NON FORNITO SEPARAT	064N
					NON FOURNI SEPAREM	NICHT A SEP ERS-T LIEI	SERVICERES IKKE SEPA	NIET LOS VERKRIJGBAA	
14		NSS		1	SEM SERVIÇO EM SEPARADO, Multi-Function 2				
						NOT SERVICED SEPARA	NO SE REPARA POR SE	NON FORNITO SEPARAT	064N
					NON FOURNI SEPAREM	NICHT A SEP ERS-T LIEI	SERVICERES IKKE SEPA	NIET LOS VERKRIJGBAA	
15		NSS		1	SEM SERVIÇO EM SEPARADO, Multi-Function 1				
						NOT SERVICED SEPARA	NO SE REPARA POR SE	NON FORNITO SEPARAT	064N
					NON FOURNI SEPAREM	NICHT A SEP ERS-T LIEI	SERVICERES IKKE SEPA	NIET LOS VERKRIJGBAA	
16		84296543		1	INTERRUPTOR, Float	SWITCH	INTERRUPTOR	INTERRUTTORE	075I
					CONTACTEUR	SCHALTER	KONTAKT	SCHAKELAAR	
17		84282677		1	INTERRUPTOR, Proportional Hydraulic				
						SWITCH	INTERRUPTOR	INTERRUTTORE	075I
					CONTACTEUR	SCHALTER	KONTAKT	SCHAKELAAR	

29.200.05	02	p1	07/11

LEVEL 350 NH CONTROL HANDLES, NO 2ND AUX (L218-C238)
LEVEL 350 NH CONTROL HANDLES, NO 2ND AUX (L218-C238)
LEVEL 350 NH CONTROL HANDLES, NO 2ND AUX (L218-C238)
LEVEL 350 NH CONTROL HANDLES, NO 2ND AUX (L218-C238)

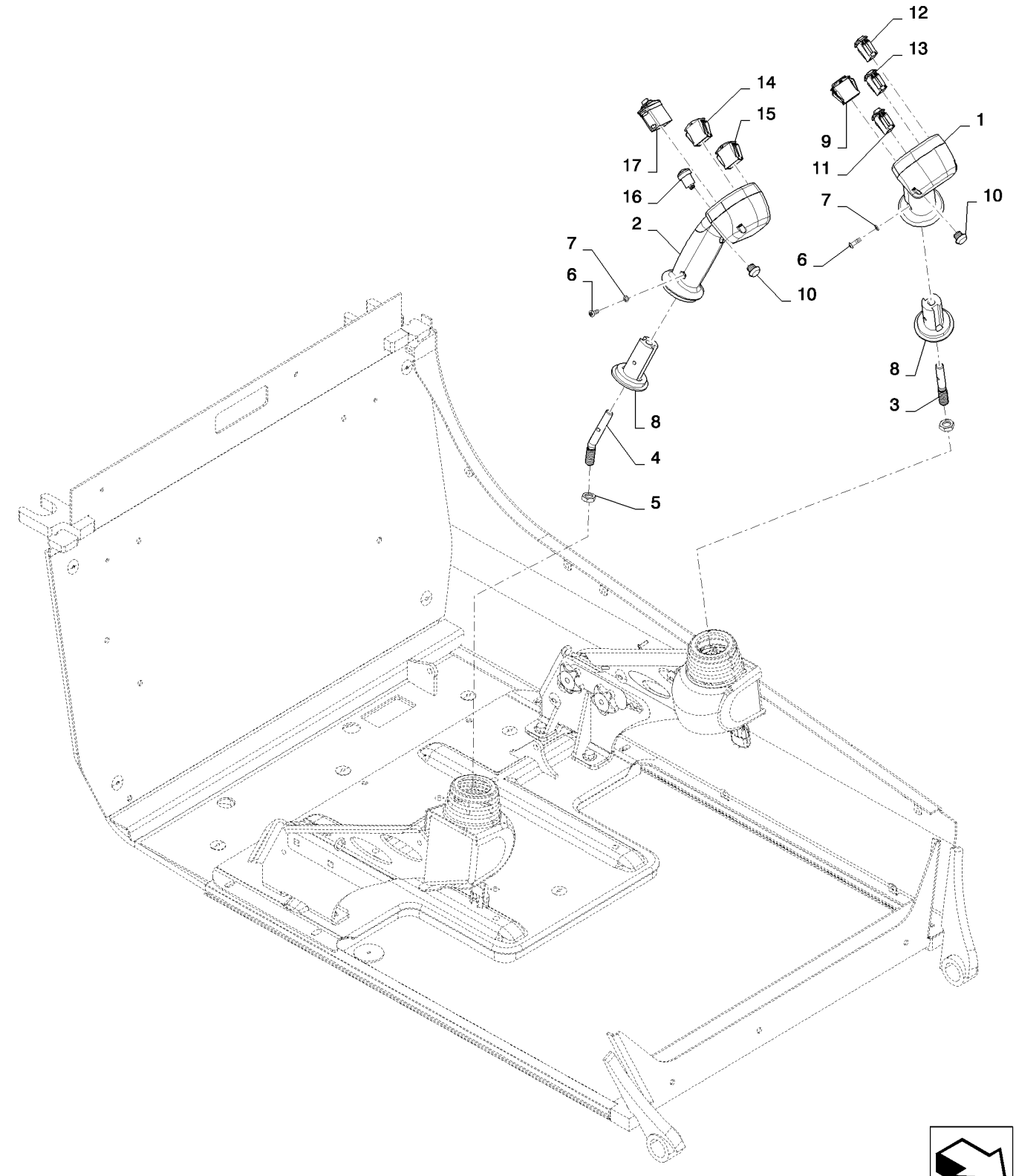

LEVEL 350 NH CONTROL HANDLES, NO 2ND AUX (L218-C238)
LEVEL 350 NH CONTROL HANDLES, NO 2ND AUX (L218-C238)
LEVEL 350 NH CONTROL HANDLES, NO 2ND AUX (L218-C238)
LEVEL 350 NH CONTROL HANDLES, NO 2ND AUX (L218-C238)

R	N	P.N.	MOD	Q	Denominação Description	Description Bezeichnung	Denominacion Beskrivelse	Descrizione Beschrijving	L.C.
1		84396074		1	MANILHA, Level 350 LH, No 2nd Aux				
						HANDLE	MANECILLA	MANIGLIA	020M
					POIGNEE	GRIFF	HÅNDTAG	HENDEL	
2		84396076		1	MANILHA, Level 350 RH	HANDLE	MANECILLA	MANIGLIA	020M
					POIGNEE	GRIFF	HÅNDTAG	HENDEL	
3		87619017		1	HASTE, Angled	ROD	VARILLA	ASTA	090A
					TIGE	STANGE	STANG	STANG	
4		87619016		1	HASTE, Angled	ROD	VARILLA	ASTA	090A
					TIGE	STANGE	STANG	STANG	
5		323238		2	PORCA, Thin, M12 x 1.75, Cl 05				
						NUT	TUERCA	DADO	010D
					ECROU	MUTTER	MØTRIK	MOER	
6		87742597		4	PARAFUSO ALLEN, Locking, #10-32 x 5/8"				
						HEX SOC SCREW	TORNILLO DE CABEZA H	VITE A ESAGONO INCAS	A093
					VIS A EMBASE HEXAGO	INNENSECHSKANTSCHR	SEKSKANTET SKRUE	INBUSBOUT	
7		80684		4	TRAVA DA ARRUELA, #10, Spring Lock				
						LOCK WASHER	ARANDELA DE BLOQUE	RONDELLA DI SICUREZ	132R
					RONDELLE FREIN	SICHERUNGSSCHEIBE	LÅSESKIVE	BORGRING	
8		87527964		2	ADAPTADOR, Handle (Not Shown)				
						ADAPTER	ADAPTADOR	ADATTATORE	001A
					ADAPTATEUR	ADAPTER	ADAPTER	ADAPTER	
9		87427353		1	INTERRUPTOR, Turn Signal				
						SWITCH	CONTACTOR	INTERRUTTORE	8850
					CONTACTEUR	SCHALTER	KONTAKT	AAN-UIT SCHAKELAAR	
10		87427352		2	INTERRUPTOR, Trigger, Horn/Ride Control				
						SWITCH	CONTACTOR	INTERRUTTORE	8850
					CONTACTEUR	SCHALTER	KONTAKT	AAN-UIT SCHAKELAAR	
11		84328912		1	INTERRUPTOR, 2-Speed	SWITCH	INTERRUPTOR	INTERRUTTORE	075I
					CONTACTEUR	SCHALTER	KONTAKT	SCHAKELAAR	
12		NSS		1	SEM SERVIÇO EM SEPARADO, Multi-Function 3				
						NOT SERVICED SEPARA	NO SE REPARA POR SE	NON FORNITO SEPARAT	064N
					NON FOURNI SEPAREM	NICHT A SEP ERS-T LIEI	SERVICERES IKKE SEPA	NIET LOS VERKRIJGBAA	
13		NSS		1	SEM SERVIÇO EM SEPARADO, Multi-Function 2				
						NOT SERVICED SEPARA	NO SE REPARA POR SE	NON FORNITO SEPARAT	064N
					NON FOURNI SEPAREM	NICHT A SEP ERS-T LIEI	SERVICERES IKKE SEPA	NIET LOS VERKRIJGBAA	
14		84398133		1	INTERRUPTOR, Rocker, Multi-Function 4				
						SWITCH	INTERRUPTOR	INTERRUTTORE	075I
					CONTACTEUR	SCHALTER	KONTAKT	SCHAKELAAR	
15		NSS		1	SEM SERVIÇO EM SEPARADO, Multi-Function 1				
						NOT SERVICED SEPARA	NO SE REPARA POR SE	NON FORNITO SEPARAT	064N
					NON FOURNI SEPAREM	NICHT A SEP ERS-T LIEI	SERVICERES IKKE SEPA	NIET LOS VERKRIJGBAA	
16		84296543		1	INTERRUPTOR, Float	SWITCH	INTERRUPTOR	INTERRUTTORE	075I
					CONTACTEUR	SCHALTER	KONTAKT	SCHAKELAAR	
17		84282677		1	INTERRUPTOR, Proportional Hydraulics				
						SWITCH	INTERRUPTOR	INTERRUTTORE	075I
					CONTACTEUR	SCHALTER	KONTAKT	SCHAKELAAR	

TRAVEL SPEED 1SPD (L223-L230)
TRAVEL SPEED 1SPD (L223-L230)
TRAVEL SPEED 1SPD (L223-L230)
TRAVEL SPEED 1SPD (L223-L230)

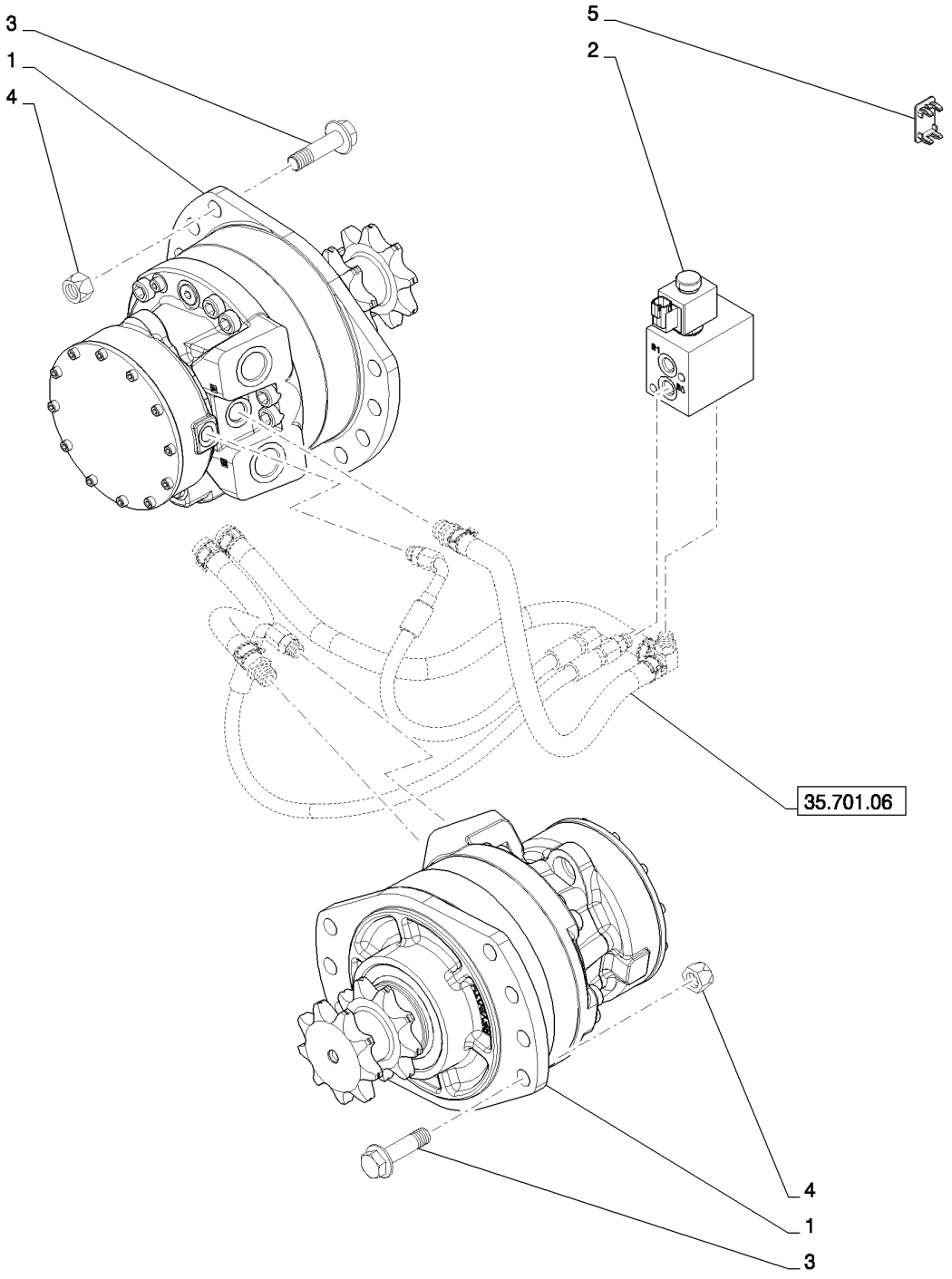

TRAVEL SPEED 1SPD (L223-L230)
TRAVEL SPEED 1SPD (L223-L230)
TRAVEL SPEED 1SPD (L223-L230)
TRAVEL SPEED 1SPD (L223-L230)

R	N	P.N.	MOD	Q	Denominação Description	Description Bezeichnung	Denominacion Beskrivelse	Descrizione Beschrijving	L.C.
1		84256616		2	MOTOR HIDRÁULICO, 470 cc 1-Spd w/Seal				
						HYDRAULIC MOTOR	MOTOR HIDRÁULICO	MOTORE IDRAULICO	900M
					MOTEUR HYDRAULIQUE	HYDRAULIKMOTOR	HYDRAULIKMOTOR	HYDRAULISCHE MOTOR	
2		84256530		1	VÁLVULA DE FREIO	BRAKE VALVE	VÁLVULA DE FRENO	VALVOLA DI COMANDO	017V
					SOUPAPE DE FREIN	BREMSVENTIL	BREMSEVENTIL	REMVENTIEL	
3		87675533		12	PARAFUSO, M16x60	BOLT	PERNO	BULLONE	140B
					VIS	SCHRAUBE	BOLT	BOUT	
4		86512555		12	CONTRA PORCA, M16 x 2, Cl 10				
						LOCK NUT	TUERCA DE BLOQUEO	DADO DI BLOCCAGGIO	P263
					CONTRE-ECROU	SICHERUNGSMUTTER	LÅSEMØTRIK	BORGMOER	
5		126844A1		1	BUJÃO, Switch Hole	PLUG	TAPÓN	TAPPO	050T
					BOUCHON	STOPFEN	PROP	PLUG	

29.212.04	01	p1	07/11

MOTOR, REXROTH DRIVE MOTOR 2SPD (L223-L230)
MOTOR, REXROTH DRIVE MOTOR 2SPD (L223-L230)
MOTOR, REXROTH DRIVE MOTOR 2SPD (L223-L230)
MOTOR, REXROTH DRIVE MOTOR 2SPD (L223-L230)

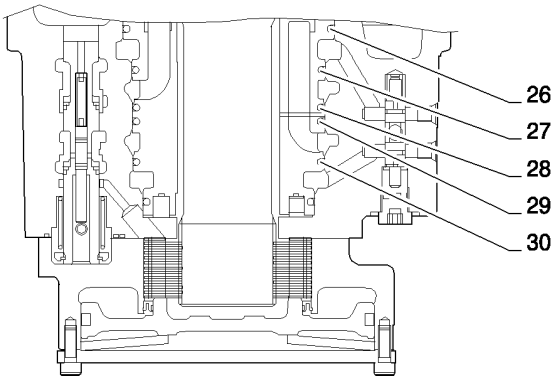

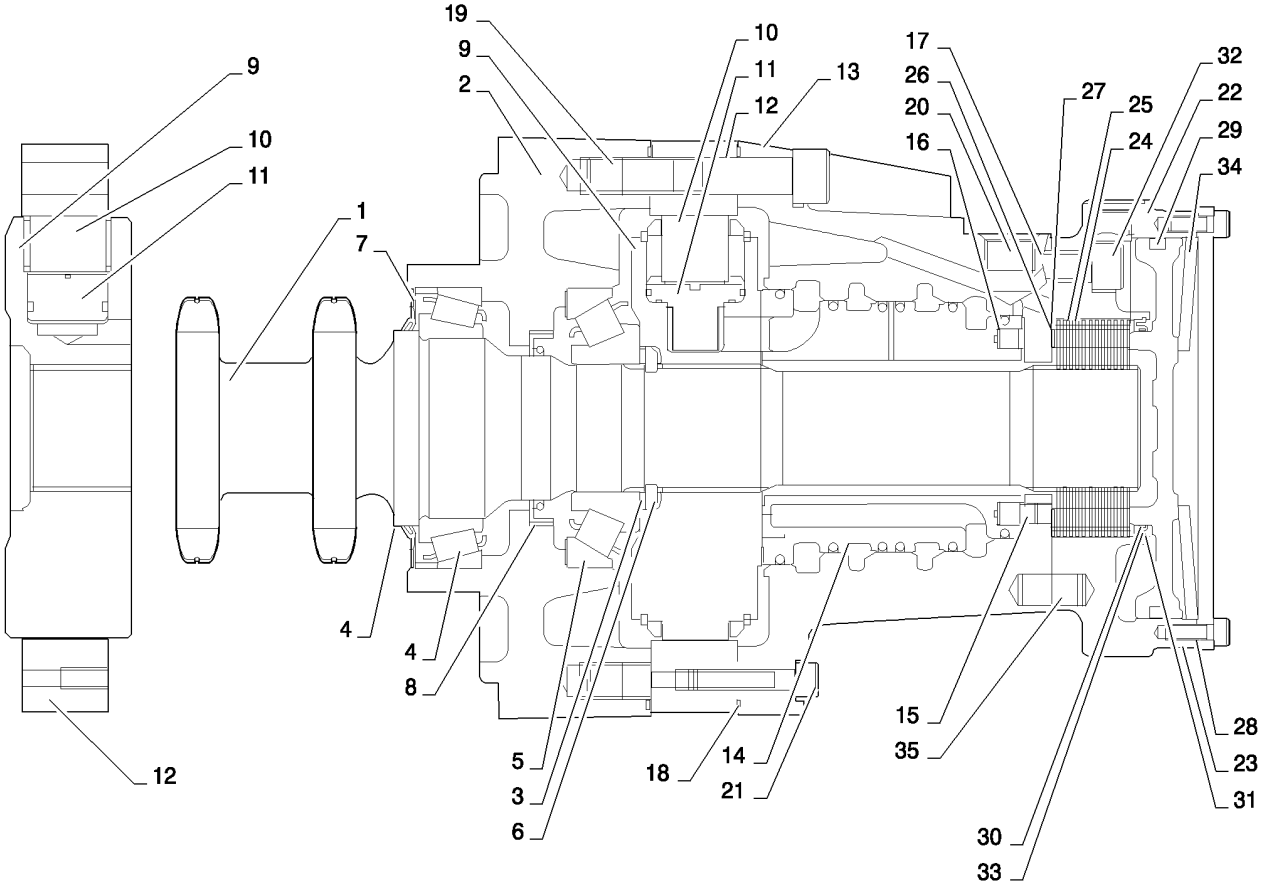

MOTOR, REXROTH DRIVE MOTOR 2SPD (L223-L230)
MOTOR, REXROTH DRIVE MOTOR 2SPD (L223-L230)
MOTOR, REXROTH DRIVE MOTOR 2SPD (L223-L230)
MOTOR, REXROTH DRIVE MOTOR 2SPD (L223-L230)

R	N	P.N.	MOD	Q	Denominação Description	Description Bezeichnung	Denominacion Beskrivelse	Descrizione Beschrijving	L.C.
		84256617		1	MOTOR HIDRÁULICO, Rexroth 2 Speed Drive Motor, Includes 1-35				
						HYDRAULIC MOTOR	MOTOR HIDRÁULICO	MOTORE IDRAULICO	900M
					MOTEUR HYDRAULIQUE	HYDRAULIKMOTOR	HYDRAULIKMOTOR	HYDRAULISCHE MOTOR	
1		**84293371**		1	EIXO COMANDO, MCR5 2 Speed ASM				
						DRIVE SHAFT	EJE DE TRANSMISIÓN	ALBERO DI TRASMISSIC	P754
					ARBRE D'ENTRAINEMEN	ANTRIEBSWELLE	DRIVAKSEL	AANDRIJFAS	
2		**84293380**		1	CARCAÇA MOTOR, ASM MCR5 Front W Seal				
						MOTOR HOUSING	ALOJAMIENTO DEL MOT	ALLOGGIAMENTO MOTC	P650
					CARTER DU MOTEUR	MOTORGEHÄUSE	MOTORHUS	MOTORHUIS	
3		**87042903**		1	KIT, Abutment Washer	KIT	KIT	KIT	305C
					KIT	SATZ	SÆT	KIT	
4		**87042904**		1	ROLAMENTO ESFÉRICO, 70 mm ID x 110 mm OD x 25 mm, 70 X 110 X 25				
						BALL BEARING	RODAMIENTO DE BOLAS	CUSCINETTO A SFERE	343C
					ROULEMENT A BILLES	KUGELLAGER	KUGLELEJE	KOGELLAGER	
5		**87042905**		1	ROLAMENTO ESFÉRICO, 50 mm ID x 110 mm OD x 29.25 mm, 50 X 110 X 29.25				
						BALL BEARING	RODAMIENTO DE BOLAS	CUSCINETTO A SFERE	343C
					ROULEMENT A BILLES	KUGELLAGER	KUGLELEJE	KOGELLAGER	
6		**87042906**		1	ANEL, MCR5 Split Ring	RING	ANILLO	ANELLO	045A
					ANNEAU	RING	RING	RING	
7		**NSS**		1	SEM SERVIÇO EM SEPARADO, Face Seal 78 X 110 X 12.2 NBR80				
						NOT SERVICED SEPARA	NO SE REPARA POR SE	NON FORNITO SEPARAT	064N
					NON FOURNI SEPAREM	NICHT A SEP ERS-T LIEI	SERVICERES IKKE SEPA	NIET LOS VERKRIJGBAA	
8		**87042907**		1	VEDAÇÃO DO EIXO, 57.15 X 76.2 X 9.53 VITON				
						SHAFT SEAL	JUNTA DE EJE	GUARNIZIONE DELL'ALB	Z102
					JOINT D'ARBRE	WELLENDICHTUNG	AKSELSTÆTNINGSRING	ASAFDICHTING	
9		**NSS**		1	SEM SERVIÇO EM SEPARADO, Cylinder Block 2 W				
						NOT SERVICED SEPARA	NO SE REPARA POR SE	NON FORNITO SEPARAT	064N
					NON FOURNI SEPAREM	NICHT A SEP ERS-T LIEI	SERVICERES IKKE SEPA	NIET LOS VERKRIJGBAA	
10		**NSS**		8	SEM SERVIÇO EM SEPARADO, Roll LD				
						NOT SERVICED SEPARA	NO SE REPARA POR SE	NON FORNITO SEPARAT	064N
					NON FOURNI SEPAREM	NICHT A SEP ERS-T LIEI	SERVICERES IKKE SEPA	NIET LOS VERKRIJGBAA	
11		**NSS**		8	SEM SERVIÇO EM SEPARADO, Pison S/A				
						NOT SERVICED SEPARA	NO SE REPARA POR SE	NON FORNITO SEPARAT	064N
					NON FOURNI SEPAREM	NICHT A SEP ERS-T LIEI	SERVICERES IKKE SEPA	NIET LOS VERKRIJGBAA	
12		**87042908**		1	EXCÊNTRICO, MCR5 Cam 680/470 W 2S				
						CAM	LEVA	CAMMA	040C
					CAME	NOCKE	KAM	NOK	
13		**87042909**		1	ESTOJO, MCR5 R/Case D/2W/S0465				
						CASE	ESTUCHE	CASSA; SCATOLA	101A
					CARTER	GEHÄUSE	KASSE	HUIS	
14		**87042910**		1	DISTRIBUIDOR, MCR5 Distributor 2WL				
						DISTRIBUTOR	DISTRIBUIDOR	DISTRIBUTORE	080D
					DISTRIBUTEUR	VERTEILER	STRØMFORDELER	VERDELER	
15		**87042911**		1	PINO, MCR5 Stop Pin S0471				
						PIN	PASADOR	PERNO	080P
					BROCHE	PIN	STIFT	PEN	
16		**87042912**		16	MOLA, MCR3 Spring	SPRING	RESORTE	MOLLA	100M
					RESSORT	FEDER	FJEDER	VEER	

29.212.04	01	p2	07/11

MOTOR, REXROTH DRIVE MOTOR 2SPD (L223-L230)
MOTOR, REXROTH DRIVE MOTOR 2SPD (L223-L230)
MOTOR, REXROTH DRIVE MOTOR 2SPD (L223-L230)
MOTOR, REXROTH DRIVE MOTOR 2SPD (L223-L230)

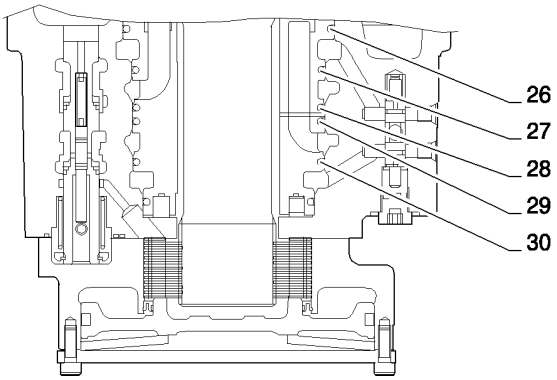

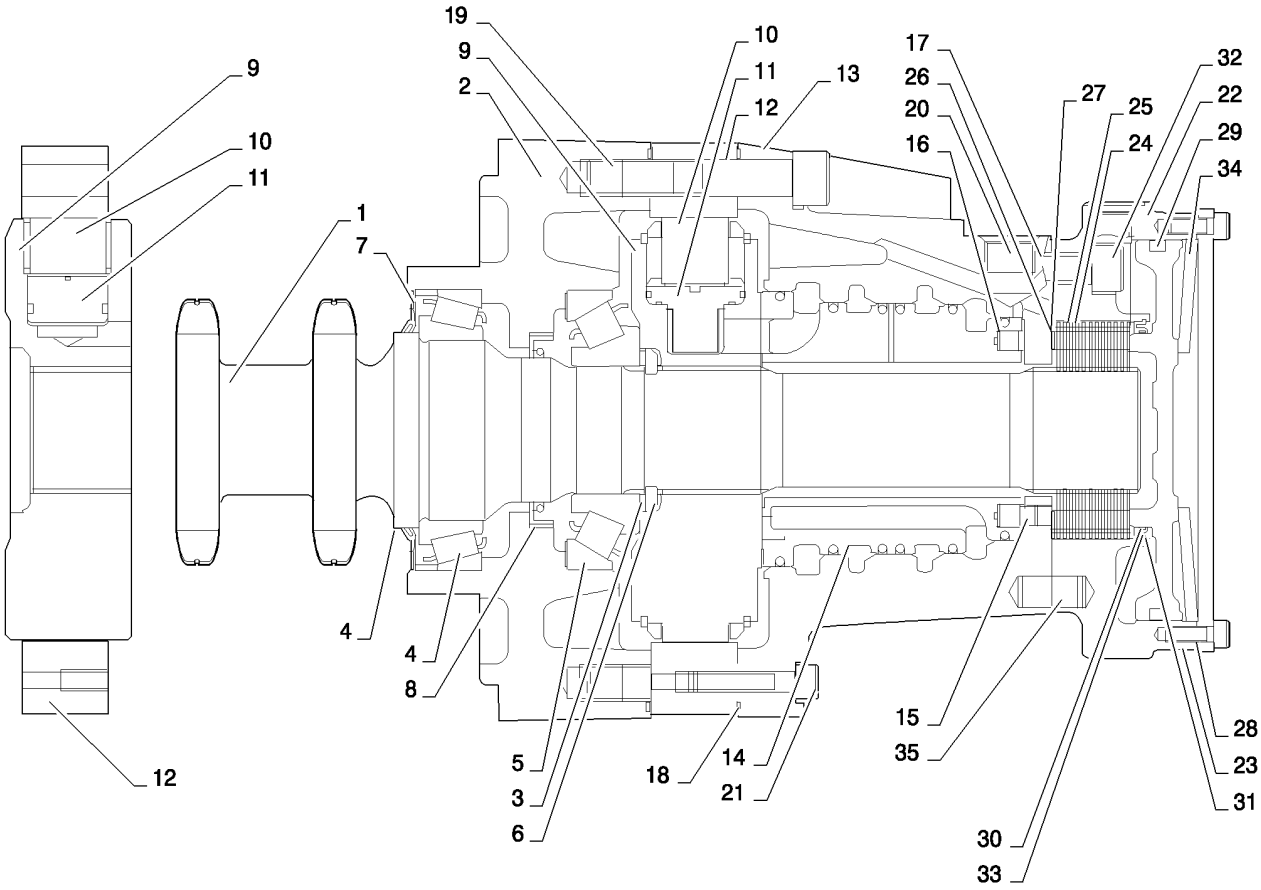

MOTOR, REXROTH DRIVE MOTOR 2SPD (L223-L230)
MOTOR, REXROTH DRIVE MOTOR 2SPD (L223-L230)
MOTOR, REXROTH DRIVE MOTOR 2SPD (L223-L230)
MOTOR, REXROTH DRIVE MOTOR 2SPD (L223-L230)

R	N	P.N.	MOD	Q	Denominação Description	Description Bezeichnung	Denominacion Beskrivelse	Descrizione Beschrijving	L.C.
17		87042919		1	O-RING, 107.67MM ID x 1.78MM Width, Sq. Ring 107.67 X 1.68 VITON FMK 70/80				
						O-RING	JUNTA TÓRICA	ANELLO TOROIDALE	055A
					JOINT TORIQUE	O-RING	O-RING	O-RING	
18		NSS		2	SEM SERVIÇO EM SEPARADO, Sq. Ring 213 X 2.51 VITON FMK90				
						NOT SERVICED SEPARA	NO SE REPARA POR SE	NON FORNITO SEPARAT	064N
					NON FOURNI SEPAREM	NICHT A SEP ERS-T LIEI	SERVICERES IKKE SEPA	NIET LOS VERKRIJGBAA	
19		{87605313}		10	Screw SH Cap M14 X 80 12.9				
20		NSS		1	SEM SERVIÇO EM SEPARADO, Shipping Plug 3/4 - 16 UNF				
						NOT SERVICED SEPARA	NO SE REPARA POR SE	NON FORNITO SEPARAT	064N
					NON FOURNI SEPAREM	NICHT A SEP ERS-T LIEI	SERVICERES IKKE SEPA	NIET LOS VERKRIJGBAA	
21		{87602944}		2	Screw SH Cap M8 X 40 12.9				
22		87042921		1	ALOJAMENTO, MCR5 Brake Housing B2/2W/12				
						HOUSING	ALOJAMIENTO	ALLOGGIAMENTO	014V
					CARTER	GEHÄUSE	HUS	HUIS	
23		87042922		1	PISTÃO, MCR3/5 Brake Piston				
						PISTON	PISTÓN	PISTONE	235S
					PISTON	KOLBEN	STEMPEL	ZUIGER	
24		NSS		16	SEM SERVIÇO EM SEPARADO, MCR3 Outer Plate				
						NOT SERVICED SEPARA	NO SE REPARA POR SE	NON FORNITO SEPARAT	064N
					NON FOURNI SEPAREM	NICHT A SEP ERS-T LIEI	SERVICERES IKKE SEPA	NIET LOS VERKRIJGBAA	
25		NSS		14	SEM SERVIÇO EM SEPARADO, MCR5 Inner Plate				
						NOT SERVICED SEPARA	NO SE REPARA POR SE	NON FORNITO SEPARAT	064N
					NON FOURNI SEPAREM	NICHT A SEP ERS-T LIEI	SERVICERES IKKE SEPA	NIET LOS VERKRIJGBAA	
26		NSS		1	SEM SERVIÇO EM SEPARADO, Shim 80 X 63 X 0.1				
						NOT SERVICED SEPARA	NO SE REPARA POR SE	NON FORNITO SEPARAT	064N
					NON FOURNI SEPAREM	NICHT A SEP ERS-T LIEI	SERVICERES IKKE SEPA	NIET LOS VERKRIJGBAA	
27		NSS		1	SEM SERVIÇO EM SEPARADO, Shim 80 X 63 X 0.3				
						NOT SERVICED SEPARA	NO SE REPARA POR SE	NON FORNITO SEPARAT	064N
					NON FOURNI SEPAREM	NICHT A SEP ERS-T LIEI	SERVICERES IKKE SEPA	NIET LOS VERKRIJGBAA	
28		NSS		1	SEM SERVIÇO EM SEPARADO, MCR3 Gasket B2M 0.5				
						NOT SERVICED SEPARA	NO SE REPARA POR SE	NON FORNITO SEPARAT	064N
					NON FOURNI SEPAREM	NICHT A SEP ERS-T LIEI	SERVICERES IKKE SEPA	NIET LOS VERKRIJGBAA	
29		NSS		1	SEM SERVIÇO EM SEPARADO, Sq. Ring 139.07 X 5.16 VITON FMK70				
						NOT SERVICED SEPARA	NO SE REPARA POR SE	NON FORNITO SEPARAT	064N
					NON FOURNI SEPAREM	NICHT A SEP ERS-T LIEI	SERVICERES IKKE SEPA	NIET LOS VERKRIJGBAA	
30		87042924		1	ANEL, MCR3 Brake Seal Ring B2M				
						RING	ANILLO	ANELLO	045A
					ANNEAU	RING	RING	RING	
31		87042925		1	GRAMPO, MCR3 Circlip Int DIA 87				
						CLIP	ABRAZADERA	FERMO	045F
					COLLIER	KLAMMER	KLIPS	KLEM	
32		86512142		5	PARAFUSO, Hex Soc Hd, M12 x 30, 12.9				
						SCREW	TORNILLO	VITE	040V
					VIS	SCHRAUBE	SKRUE	SCHROEF	

MOTOR, REXROTH DRIVE MOTOR 2SPD (L223-L230)
MOTOR, REXROTH DRIVE MOTOR 2SPD (L223-L230)
MOTOR, REXROTH DRIVE MOTOR 2SPD (L223-L230)
MOTOR, REXROTH DRIVE MOTOR 2SPD (L223-L230)

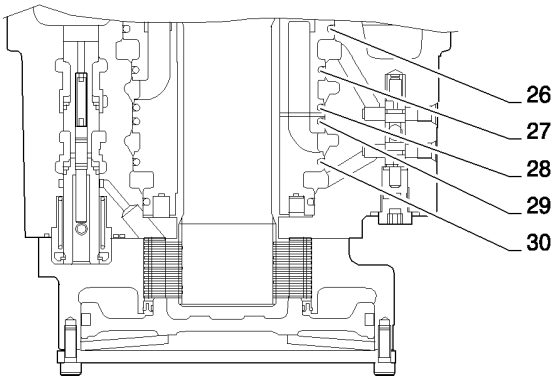

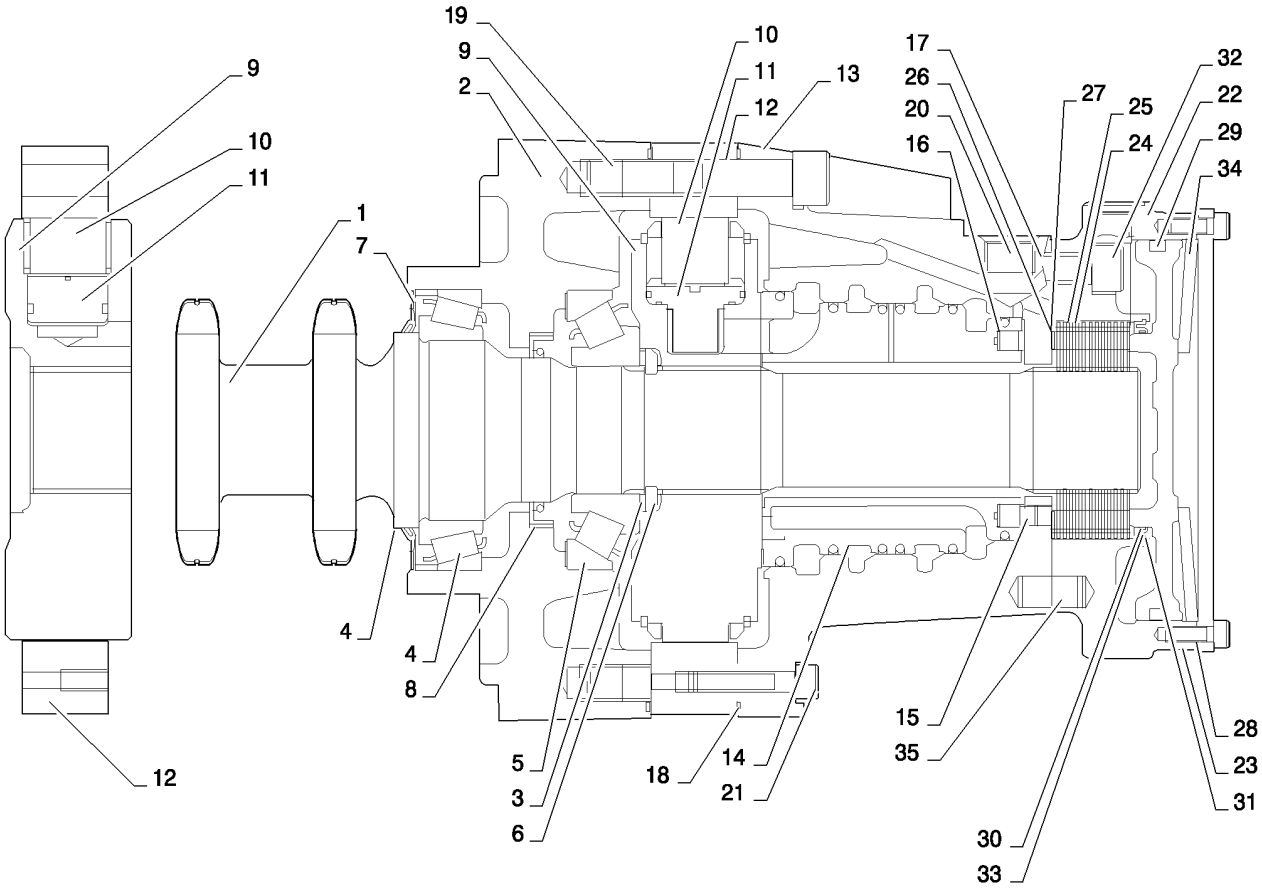

MOTOR, REXROTH DRIVE MOTOR 2SPD (L223-L230)
MOTOR, REXROTH DRIVE MOTOR 2SPD (L223-L230)
MOTOR, REXROTH DRIVE MOTOR 2SPD (L223-L230)
MOTOR, REXROTH DRIVE MOTOR 2SPD (L223-L230)

R	N	P.N.	MOD	Q	Denominação Description Bezeichnung Denominacion Beskrivelse Descrizione Beschrijving	L.C.
33		**NSS**		1	SEM SERVIÇO EM SEPARADO, O-Ring 75.92 X 1.78 VITON FMK 70/80 NOT SERVICED SEPARA / NO SE REPARA POR SE / NON FORNITO SEPARAT NON FOURNI SEPAREM / NICHT A SEP ERS-T LIEI / SERVICERES IKKE SEPA / NIET LOS VERKRIJGBAA	064N
34		**87042926**		1	MOLA, Disc Spring / SPRING / RESORTE / MOLLA RESSORT / FEDER / FJEDER / VEER	100M
35		**87042927**		3	PINO, Dowel Pin 12 X 25 / PIN / PASADOR / PERNO BROCHE / PIN / STIFT / PEN	080P

29.212.04	01	p1	02/11

MOTOR, REXROTH DRIVE MOTOR 1SPD (L223-L230)
MOTOR, REXROTH DRIVE MOTOR 1SPD (L223-L230)
MOTOR, REXROTH DRIVE MOTOR 1SPD (L223-L230)
MOTOR, REXROTH DRIVE MOTOR 1SPD (L223-L230)

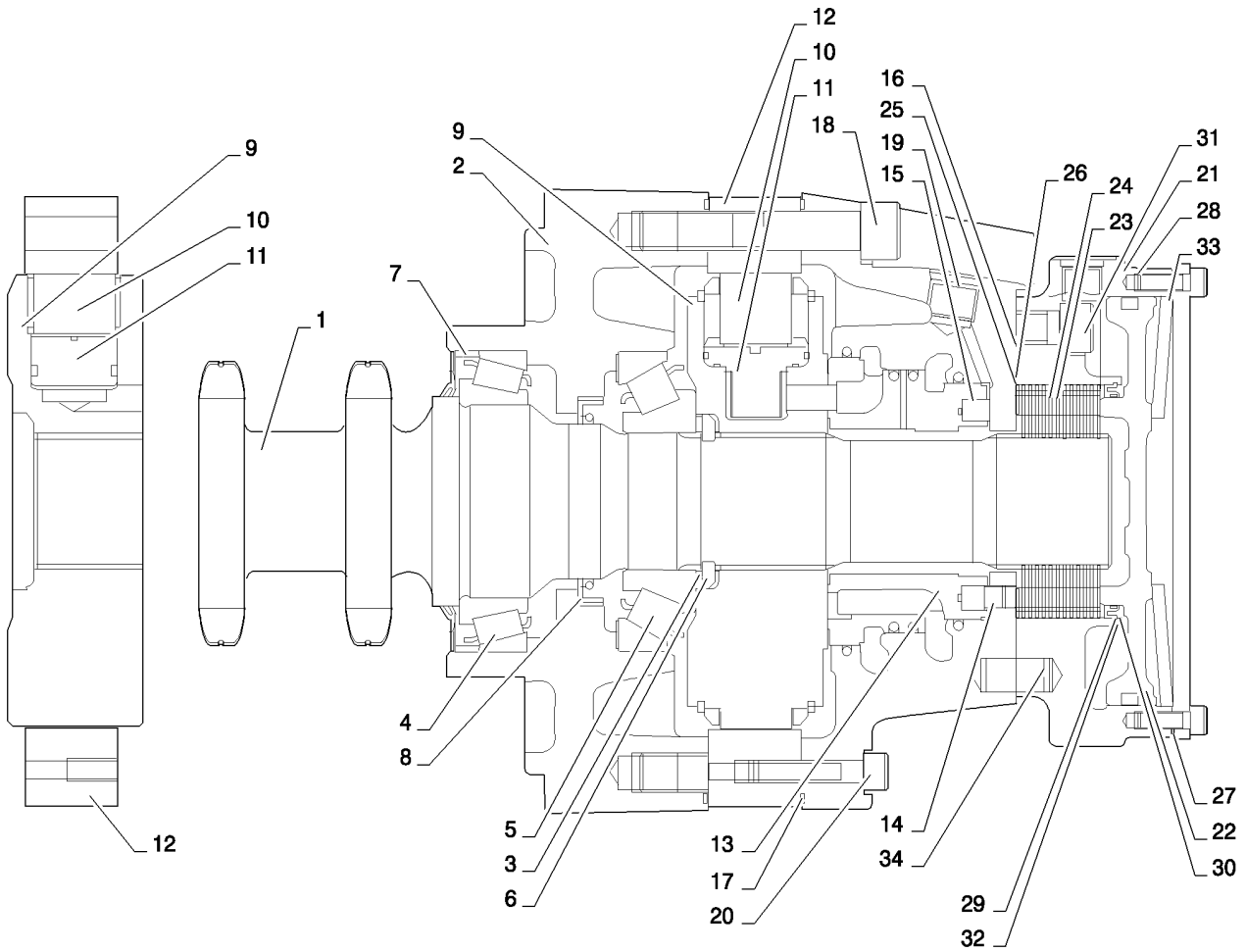

MOTOR, REXROTH DRIVE MOTOR 1SPD (L223-L230)
MOTOR, REXROTH DRIVE MOTOR 1SPD (L223-L230)
MOTOR, REXROTH DRIVE MOTOR 1SPD (L223-L230)
MOTOR, REXROTH DRIVE MOTOR 1SPD (L223-L230)

R	N	P.N.	MOD	Q	Denominação Description	Description Bezeichnung	Denominacion Beskrivelse	Descrizione Beschrijving	L.C.
1		84293370		1	EIXO COMANDO, MCR5 1 SPD				
						DRIVE SHAFT	EJE DE TRANSMISIÓN	ALBERO DI TRASMISSIC	P754
					ARBRE D'ENTRAINEMEN	ANTRIEBSWELLE	DRIVAKSEL	AANDRIJFAS	
2		84293380		1	CARCAÇA MOTOR, ASM MCR5 Front W Seal				
						MOTOR HOUSING	ALOJAMIENTO DEL MOT	ALLOGGIAMENTO MOTC	P650
					CARTER DU MOTEUR	MOTORGEHÄUSE	MOTORHUS	MOTORHUIS	
3		87042903		1	KIT, Abutment Washer	KIT	KIT	KIT	305C
					KIT	SATZ	SÆT	KIT	
4		87042904		1	ROLAMENTO ESFÉRICO, 70 mm ID x 110 mm OD x 25 mm, 70 X 110 X 25				
						BALL BEARING	RODAMIENTO DE BOLAS	CUSCINETTO A SFERE	343C
					ROULEMENT A BILLES	KUGELLAGER	KUGLELEJE	KOGELLAGER	
5		87042905		1	ROLAMENTO ESFÉRICO, 50 mm ID x 110 mm OD x 29.25 mm, 50 X 110 X 29.25				
						BALL BEARING	RODAMIENTO DE BOLAS	CUSCINETTO A SFERE	343C
					ROULEMENT A BILLES	KUGELLAGER	KUGLELEJE	KOGELLAGER	
6		87042906		1	ANEL, MCR5 Split Ring	RING	ANILLO	ANELLO	045A
					ANNEAU	RING	RING	RING	
7		NSS		1	SEM SERVIÇO EM SEPARADO, FACE SEAL 78 X 110 X 12.2 NBR80				
						NOT SERVICED SEPARA	NO SE REPARA POR SE	NON FORNITO SEPARAT	064N
					NON FOURNI SEPAREM	NICHT A SEP ERS-T LIEI	SERVICERES IKKE SEPA	NIET LOS VERKRIJGBAA	
8		87042907		1	VEDAÇÃO DO EIXO, 57.15 X 76.2 X 9.53 VITON				
						SHAFT SEAL	JUNTA DE EJE	GUARNIZIONE DELL'ALE	Z102
					JOINT D'ARBRE	WELLENDICHTUNG	AKSELSTÆTNINGSRING	ASAFDICHTING	
9		NSS		1	SEM SERVIÇO EM SEPARADO, Cylinder Block 1 SPD				
						NOT SERVICED SEPARA	NO SE REPARA POR SE	NON FORNITO SEPARAT	064N
					NON FOURNI SEPAREM	NICHT A SEP ERS-T LIEI	SERVICERES IKKE SEPA	NIET LOS VERKRIJGBAA	
10		NSS		8	SEM SERVIÇO EM SEPARADO, Roll LD				
						NOT SERVICED SEPARA	NO SE REPARA POR SE	NON FORNITO SEPARAT	064N
					NON FOURNI SEPAREM	NICHT A SEP ERS-T LIEI	SERVICERES IKKE SEPA	NIET LOS VERKRIJGBAA	
11		NSS		8	SEM SERVIÇO EM SEPARADO, Piston S/A				
						NOT SERVICED SEPARA	NO SE REPARA POR SE	NON FORNITO SEPARAT	064N
					NON FOURNI SEPAREM	NICHT A SEP ERS-T LIEI	SERVICERES IKKE SEPA	NIET LOS VERKRIJGBAA	
12		87042908		1	EXCÊNTRICO, MCR5 Cam 680/470 W 2S				
						CAM	LEVA	CAMMA	040C
					CAME	NOCKE	KAM	NOK	
13		87042954		1	ANEL, MCR5 Dist. Ring 1S	RING	ANILLO	ANELLO	045A
					ANNEAU	RING	RING	RING	
14		87042911		1	PINO, MCR5 Stop Pin S0471A				
						PIN	PASADOR	PERNO	080P
					BROCHE	PIN	STIFT	PEN	
15		87042912		9	MOLA, MCR3	SPRING	RESORTE	MOLLA	100M
					RESSORT	FEDER	FJEDER	VEER	
16		87042919		1	O-RING, 107.67MM ID x 1.78MM Width, SQ-Ring 107.67 X 1.68 VITON				
						O-RING	JUNTA TÓRICA	ANELLO TOROIDALE	055A
					JOINT TORIQUE	O-RING	O-RING	O-RING	
17		NSS		2	SEM SERVIÇO EM SEPARADO, SQ. Ring 213 X 2.51 VITON				
						NOT SERVICED SEPARA	NO SE REPARA POR SE	NON FORNITO SEPARAT	064N
					NON FOURNI SEPAREM	NICHT A SEP ERS-T LIEI	SERVICERES IKKE SEPA	NIET LOS VERKRIJGBAA	

MOTOR, REXROTH DRIVE MOTOR 1SPD (L223-L230)
MOTOR, REXROTH DRIVE MOTOR 1SPD (L223-L230)
MOTOR, REXROTH DRIVE MOTOR 1SPD (L223-L230)
MOTOR, REXROTH DRIVE MOTOR 1SPD (L223-L230)

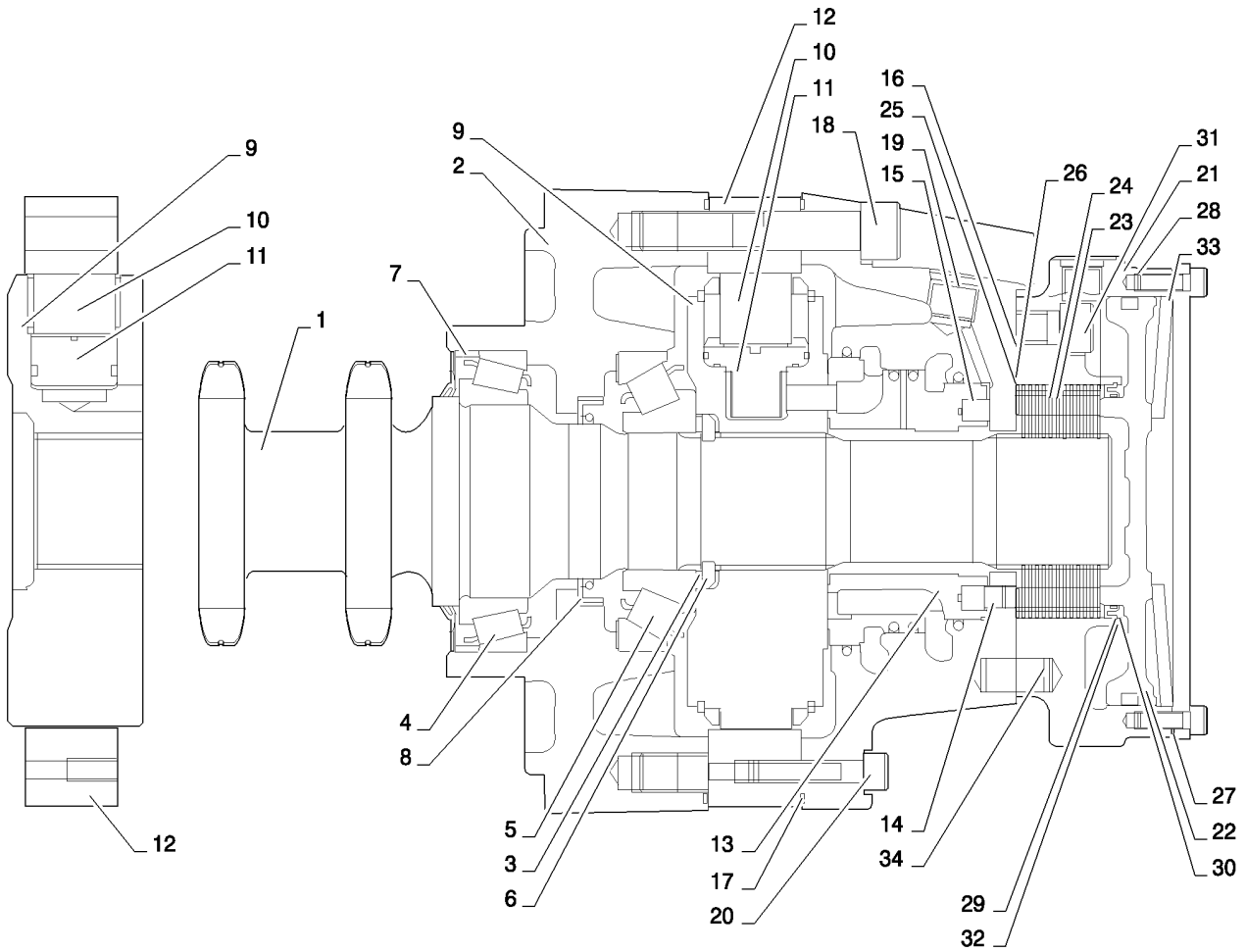

MOTOR, REXROTH DRIVE MOTOR 1SPD (L223-L230)
MOTOR, REXROTH DRIVE MOTOR 1SPD (L223-L230)
MOTOR, REXROTH DRIVE MOTOR 1SPD (L223-L230)
MOTOR, REXROTH DRIVE MOTOR 1SPD (L223-L230)

R	N	P.N.	MOD	Q	Denominação Description	Description Bezeichnung	Denominacion Beskrivelse	Descrizione Beschrijving	L.C.
18		{87605313}		10	Screw SH Cap M14 X 80 12.9				
19		NSS		1	SEM SERVIÇO EM SEPARADO, Shipping Plug 3/4 - 16 UNF				
						NOT SERVICED SEPARA	NO SE REPARA POR SE	NON FORNITO SEPARAT	064N
					NON FOURNI SEPAREM	NICHT A SEP ERS-T LIEI	SERVICERES IKKE SEPA	NIET LOS VERKRIJGBAA	
20		{87602944}		2	Screw SH Cap M8 X 40 12.9				
21		87042921		1	ALOJAMENTO, MCR5 Brake Housing S0465				
						HOUSING	ALOJAMIENTO	ALLOGGIAMENTO	014V
					CARTER	GEHÄUSE	HUS	HUIS	
22		87042922		1	PISTÃO, MCR 3/5 Brake Piston				
						PISTON	PISTÓN	PISTONE	235S
					PISTON	KOLBEN	STEMPEL	ZUIGER	
23		NSS		16	SEM SERVIÇO EM SEPARADO, MCR3 Outer Plate				
						NOT SERVICED SEPARA	NO SE REPARA POR SE	NON FORNITO SEPARAT	064N
					NON FOURNI SEPAREM	NICHT A SEP ERS-T LIEI	SERVICERES IKKE SEPA	NIET LOS VERKRIJGBAA	
24		NSS		14	SEM SERVIÇO EM SEPARADO, MCR5 Inner Plate				
						NOT SERVICED SEPARA	NO SE REPARA POR SE	NON FORNITO SEPARAT	064N
					NON FOURNI SEPAREM	NICHT A SEP ERS-T LIEI	SERVICERES IKKE SEPA	NIET LOS VERKRIJGBAA	
25		NSS		1	SEM SERVIÇO EM SEPARADO, Shim 80 X 63 X 0.1				
						NOT SERVICED SEPARA	NO SE REPARA POR SE	NON FORNITO SEPARAT	064N
					NON FOURNI SEPAREM	NICHT A SEP ERS-T LIEI	SERVICERES IKKE SEPA	NIET LOS VERKRIJGBAA	
26		NSS		1	SEM SERVIÇO EM SEPARADO, Shim 80 X 63 X 0.3				
						NOT SERVICED SEPARA	NO SE REPARA POR SE	NON FORNITO SEPARAT	064N
					NON FOURNI SEPAREM	NICHT A SEP ERS-T LIEI	SERVICERES IKKE SEPA	NIET LOS VERKRIJGBAA	
27		NSS		1	SEM SERVIÇO EM SEPARADO, MCR3 Brake Gasket B2/0.5				
						NOT SERVICED SEPARA	NO SE REPARA POR SE	NON FORNITO SEPARAT	064N
					NON FOURNI SEPAREM	NICHT A SEP ERS-T LIEI	SERVICERES IKKE SEPA	NIET LOS VERKRIJGBAA	
28		NSS		1	SEM SERVIÇO EM SEPARADO, SQ. Ring 139.07 x 5.16 VITON				
						NOT SERVICED SEPARA	NO SE REPARA POR SE	NON FORNITO SEPARAT	064N
					NON FOURNI SEPAREM	NICHT A SEP ERS-T LIEI	SERVICERES IKKE SEPA	NIET LOS VERKRIJGBAA	
29		87042924		1	ANEL, MCR3 Brake Seal Ring B2M				
						RING	ANILLO	ANELLO	045A
					ANNEAU	RING	RING	RING	
30		87042925		1	GRAMPO, MCR3 Circlip INT DIA 87				
						CLIP	ABRAZADERA	FERMO	045F
					COLLIER	KLAMMER	KLIPS	KLEM	
31		86512142		5	PARAFUSO, Hex Soc Hd, M12 x 30, 12.9				
						SCREW	TORNILLO	VITE	040V
					VIS	SCHRAUBE	SKRUE	SCHROEF	
32		NSS		1	SEM SERVIÇO EM SEPARADO, O-Ring 75.92 x 1.78 VITON				
						NOT SERVICED SEPARA	NO SE REPARA POR SE	NON FORNITO SEPARAT	064N
					NON FOURNI SEPAREM	NICHT A SEP ERS-T LIEI	SERVICERES IKKE SEPA	NIET LOS VERKRIJGBAA	
33		87042926		1	MOLA, Disc Spring	SPRING	RESORTE	MOLLA	100M
					RESSORT	FEDER	FJEDER	VEER	
34		87042927		3	PINO, Dowel Pin 12 X 25	PIN	PASADOR	PERNO	080P
					BROCHE	PIN	STIFT	PEN	

MOTOR, REXROTH DRIVE MOTOR 2SPD (L223-L230)
MOTOR, REXROTH DRIVE MOTOR 2SPD (L223-L230)
MOTOR, REXROTH DRIVE MOTOR 2SPD (L223-L230)
MOTOR, REXROTH DRIVE MOTOR 2SPD (L223-L230)

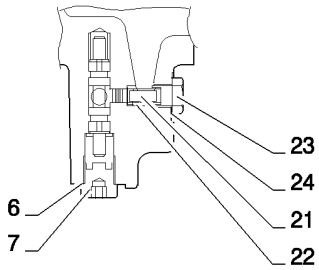

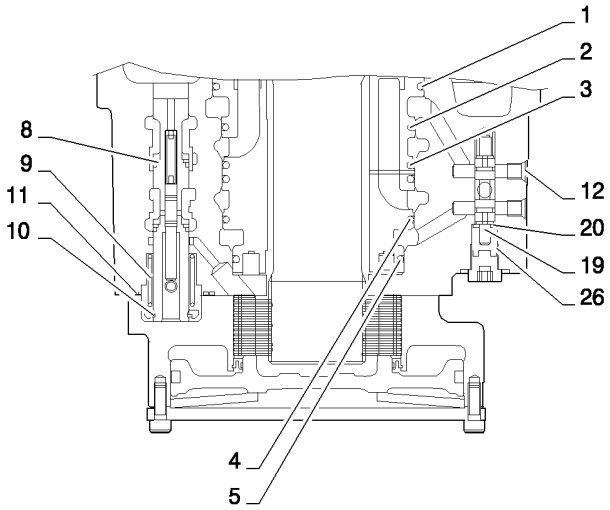

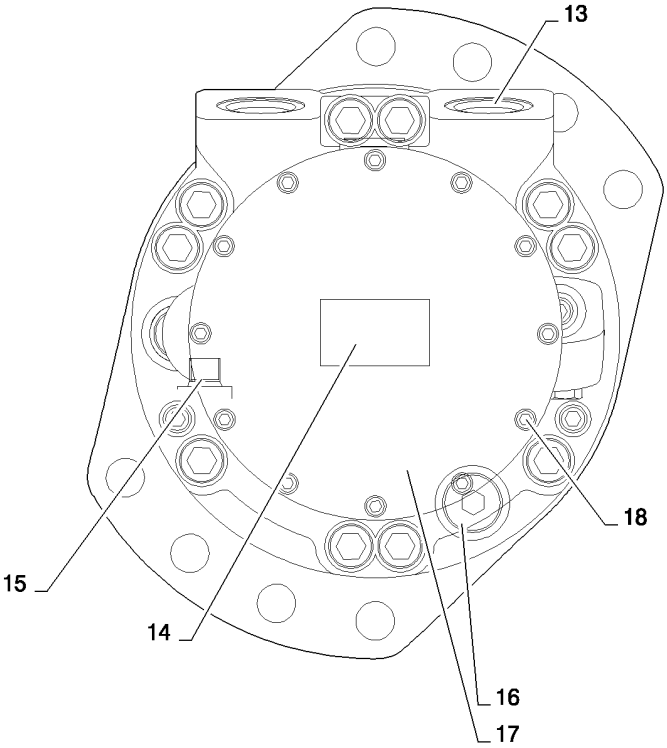

MOTOR, REXROTH DRIVE MOTOR 2SPD (L223-L230)
MOTOR, REXROTH DRIVE MOTOR 2SPD (L223-L230)
MOTOR, REXROTH DRIVE MOTOR 2SPD (L223-L230)
MOTOR, REXROTH DRIVE MOTOR 2SPD (L223-L230)

R	N	P.N.	MOD	Q	Denominação Description	Description Bezeichnung	Denominacion Beskrivelse	Descrizione Beschrijving	L.C.
		84256617		1	MOTOR HIDRÁULICO, Rexroth 2 Speed Drive Motor, Includes Ref. 1-30				
						HYDRAULIC MOTOR	MOTOR HIDRÁULICO	MOTORE IDRAULICO	900M
					MOTEUR HYDRAULIQUE	HYDRAULIKMOTOR	HYDRAULIKMOTOR	HYDRAULISCHE MOTOR	
1		**NSS**		1	SEM SERVIÇO EM SEPARADO, Piston Seal 107.125				
						NOT SERVICED SEPARA	NO SE REPARA POR SE	NON FORNITO SEPARAT	064N
					NON FOURNI SEPAREM	NICHT A SEP ERS-T LIEI	SERVICERES IKKE SEPA	NIET LOS VERKRIJGBAA	
2		**NSS**		1	SEM SERVIÇO EM SEPARADO, Piston Seal 98.725				
						NOT SERVICED SEPARA	NO SE REPARA POR SE	NON FORNITO SEPARAT	064N
					NON FOURNI SEPAREM	NICHT A SEP ERS-T LIEI	SERVICERES IKKE SEPA	NIET LOS VERKRIJGBAA	
3		**NSS**		2	SEM SERVIÇO EM SEPARADO, Piston Seal 97.725				
						NOT SERVICED SEPARA	NO SE REPARA POR SE	NON FORNITO SEPARAT	064N
					NON FOURNI SEPAREM	NICHT A SEP ERS-T LIEI	SERVICERES IKKE SEPA	NIET LOS VERKRIJGBAA	
4		**NSS**		1	SEM SERVIÇO EM SEPARADO, Piston Seal 96.725				
						NOT SERVICED SEPARA	NO SE REPARA POR SE	NON FORNITO SEPARAT	064N
					NON FOURNI SEPAREM	NICHT A SEP ERS-T LIEI	SERVICERES IKKE SEPA	NIET LOS VERKRIJGBAA	
5		**NSS**		1	SEM SERVIÇO EM SEPARADO, Piston Seal 87.25				
						NOT SERVICED SEPARA	NO SE REPARA POR SE	NON FORNITO SEPARAT	064N
					NON FOURNI SEPAREM	NICHT A SEP ERS-T LIEI	SERVICERES IKKE SEPA	NIET LOS VERKRIJGBAA	
6		**NSS**		1	SEM SERVIÇO EM SEPARADO, O-Ring 11.90 X 1.98 90 SH				
						NOT SERVICED SEPARA	NO SE REPARA POR SE	NON FORNITO SEPARAT	064N
					NON FOURNI SEPAREM	NICHT A SEP ERS-T LIEI	SERVICERES IKKE SEPA	NIET LOS VERKRIJGBAA	
7		**76349**		1	BUJÃO, Hex Hd, 9/16"-18 ORB				
						PLUG	TAPÓN	TAPPO	050T
					BOUCHON	STOPFEN	PROP	PLUG	
8		**NSS**		1	SEM SERVIÇO EM SEPARADO, MCR5 2-Speed Spool 12 Bar				
						NOT SERVICED SEPARA	NO SE REPARA POR SE	NON FORNITO SEPARAT	064N
					NON FOURNI SEPAREM	NICHT A SEP ERS-T LIEI	SERVICERES IKKE SEPA	NIET LOS VERKRIJGBAA	
9		**NSS**		1	SEM SERVIÇO EM SEPARADO, 2 Speed Washer & Spring 12 Bar				
						NOT SERVICED SEPARA	NO SE REPARA POR SE	NON FORNITO SEPARAT	064N
					NON FOURNI SEPAREM	NICHT A SEP ERS-T LIEI	SERVICERES IKKE SEPA	NIET LOS VERKRIJGBAA	
10		**NSS**		1	SEM SERVIÇO EM SEPARADO, Circlip EXT H/Duty 18 DIA				
						NOT SERVICED SEPARA	NO SE REPARA POR SE	NON FORNITO SEPARAT	064N
					NON FOURNI SEPAREM	NICHT A SEP ERS-T LIEI	SERVICERES IKKE SEPA	NIET LOS VERKRIJGBAA	
11		**NSS**		1	SEM SERVIÇO EM SEPARADO, O-Ring 33.05 X 1.78 VITON				
						NOT SERVICED SEPARA	NO SE REPARA POR SE	NON FORNITO SEPARAT	064N
					NON FOURNI SEPAREM	NICHT A SEP ERS-T LIEI	SERVICERES IKKE SEPA	NIET LOS VERKRIJGBAA	
12		**NSS**		2	SEM SERVIÇO EM SEPARADO, Shear Plug M8				
						NOT SERVICED SEPARA	NO SE REPARA POR SE	NON FORNITO SEPARAT	064N
					NON FOURNI SEPAREM	NICHT A SEP ERS-T LIEI	SERVICERES IKKE SEPA	NIET LOS VERKRIJGBAA	
13		**NSS**		2	SEM SERVIÇO EM SEPARADO, Shipping Plug 1-1/16 - 12				
						NOT SERVICED SEPARA	NO SE REPARA POR SE	NON FORNITO SEPARAT	064N
					NON FOURNI SEPAREM	NICHT A SEP ERS-T LIEI	SERVICERES IKKE SEPA	NIET LOS VERKRIJGBAA	
14		**NSS**		1	SEM SERVIÇO EM SEPARADO, CNH Label Bar Coded				
						NOT SERVICED SEPARA	NO SE REPARA POR SE	NON FORNITO SEPARAT	064N
					NON FOURNI SEPAREM	NICHT A SEP ERS-T LIEI	SERVICERES IKKE SEPA	NIET LOS VERKRIJGBAA	
15		**NSS**		2	SEM SERVIÇO EM SEPARADO, Shipping Plug 9/16 - 18 UNF				
						NOT SERVICED SEPARA	NO SE REPARA POR SE	NON FORNITO SEPARAT	064N
					NON FOURNI SEPAREM	NICHT A SEP ERS-T LIEI	SERVICERES IKKE SEPA	NIET LOS VERKRIJGBAA	

MOTOR, REXROTH DRIVE MOTOR 2SPD (L223-L230)
MOTOR, REXROTH DRIVE MOTOR 2SPD (L223-L230)
MOTOR, REXROTH DRIVE MOTOR 2SPD (L223-L230)
MOTOR, REXROTH DRIVE MOTOR 2SPD (L223-L230)

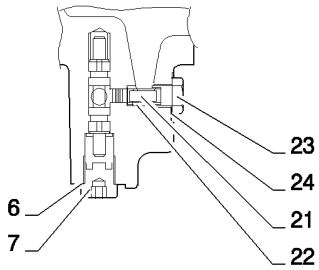

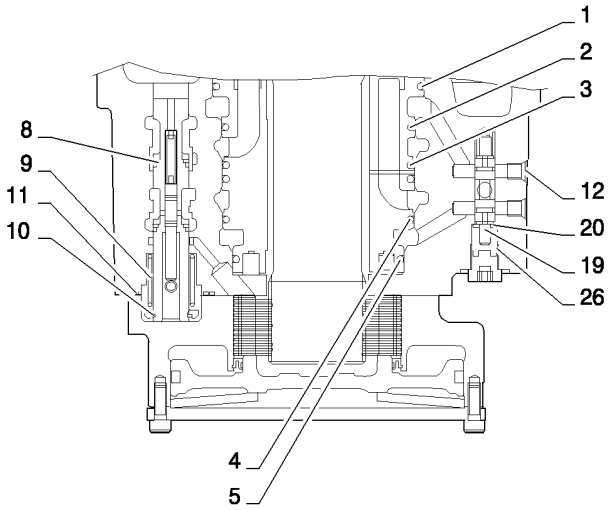

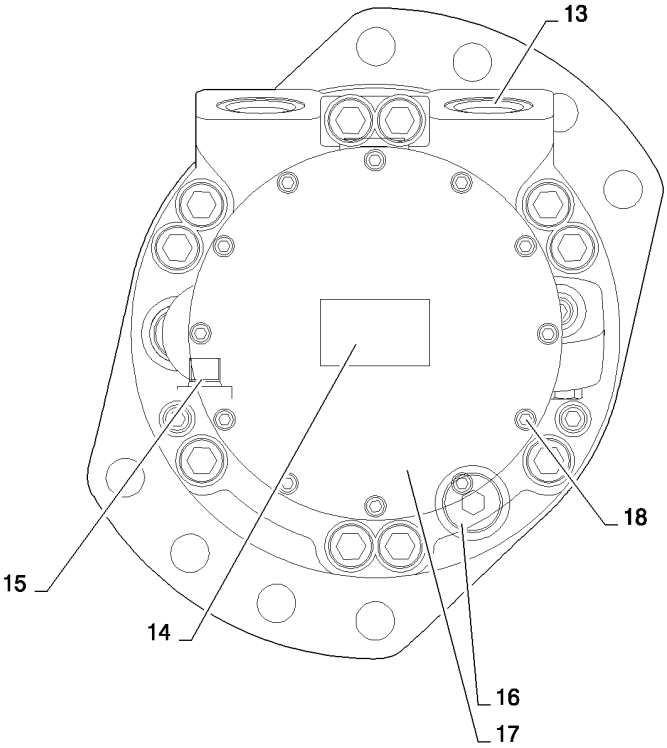

MOTOR, REXROTH DRIVE MOTOR 2SPD (L223-L230)
MOTOR, REXROTH DRIVE MOTOR 2SPD (L223-L230)
MOTOR, REXROTH DRIVE MOTOR 2SPD (L223-L230)
MOTOR, REXROTH DRIVE MOTOR 2SPD (L223-L230)

R	N	P.N.	MOD	Q	Denominação Description	Description Bezeichnung	Denominacion Beskrivelse	Descrizione Beschrijving	L.C.
16		214389		1	BUJÃO, Hex Hd, 3/4"-16 ORB				
						PLUG	TAPÓN	TAPPO	050T
					BOUCHON	STOPFEN	PROP	PLUG	
17		87042923		1	COBERTURA, MCR3 End Cover				
						COVER	CUBIERTA	COPERCHIO	265C
					COUVERCLE	ABDECKUNG	DÆKSEL	AFSCHERMING	
18		86512134		12	PARAFUSO, Hex Soc Hd, M6 x 16, 12.9				
						SCREW	TORNILLO	VITE	040V
					VIS	SCHRAUBE	SKRUE	SCHROEF	
19		87042928		1	CARRETO, Spool Flushing	SPOOL	BOBINA	STELO	134P
					TIROIR	KOLBENSCHIEBER	SPOLE	SPOEL	
20		87042929		1	ARRUELA PLANA, 1.5 TH	KWASHER	ARANDELA	RONDELLA	131R
					RONDELLE	UNTERLEGSCHEIBE	FLADSKIVE	SLUITRING	
21		87042931		1	OBTURADOR, Flushing, 1.7 Orifice				
						POPPET	RESORTE	PISTONCINO	012V
					CLAPET	KEGELVENTIL	POPNITTE	KLEP	
22		87042932		1	MOLA, Flushing R. V.	SPRING	RESORTE	MOLLA	100M
					RESSORT	FEDER	FJEDER	VEER	
23		87042933		1	OBTURADOR, Plug 7/16 SAE				
						POPPET	RESORTE	PISTONCINO	012V
					CLAPET	KEGELVENTIL	POPNITTE	KLEP	
24		NSS		1	SEM SERVIÇO EM SEPARADO, O-Ring 8.92 X 1.83 VITON FMK90				
						NOT SERVICED SEPARA	NO SE REPARA POR SE	NON FORNITO SEPARAT	064N
					NON FOURNI SEPAREM	NICHT A SEP ERS-T LIEI	SERVICERES IKKE SEPA	NIET LOS VERKRIJGBAA	
25		87042934		1	MOLA, Flushing (10 Bar) Side A				
						SPRING	RESORTE	MOLLA	100M
					RESSORT	FEDER	FJEDER	VEER	
26		87042935		1	MOLA, Flushing (10 Bar) Side B				
						SPRING	RESORTE	MOLLA	100M
					RESSORT	FEDER	FJEDER	VEER	
27		87039369		1	KIT, Rotating MCR5, 2 Spd	KIT	KIT	KIT	305C
					KIT	SATZ	SÆT	KIT	
28		84293532		1	KIT DE VEDAÇÃO, MCR5 2 Speed				
						SEAL KIT	KIT DE JUNTAS	KIT GUARNIZIONI	630S
					KIT DE JOINTS	DICHTUNGSSATZ	PAKNINGSSÆT	KIT MET AFDICHTINGEN	
29		87039372		1	KIT, Brake MCR5	KIT	KIT	KIT	305C
					KIT	SATZ	SÆT	KIT	
30		84281323		1	KIT DE SERVIÇO, 2 Speed Spool 12 Bar MCR5				
						SERVICE KIT	KIT DE SERVICIO	KIT DI MANUTENZIONE	021K
					KIT D'ENTRETIEN	SERVICE-SATZ	SERVICESÆT	SERVICEKIT	

29.212.04	02	p1	02/11

MOTOR, REXROTH DRIVE MOTOR 1SPD (L223-L230)
MOTOR, REXROTH DRIVE MOTOR 1SPD (L223-L230)
MOTOR, REXROTH DRIVE MOTOR 1SPD (L223-L230)
MOTOR, REXROTH DRIVE MOTOR 1SPD (L223-L230)

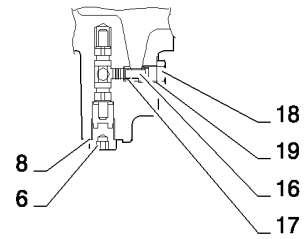

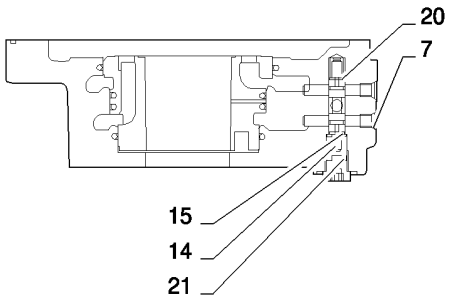

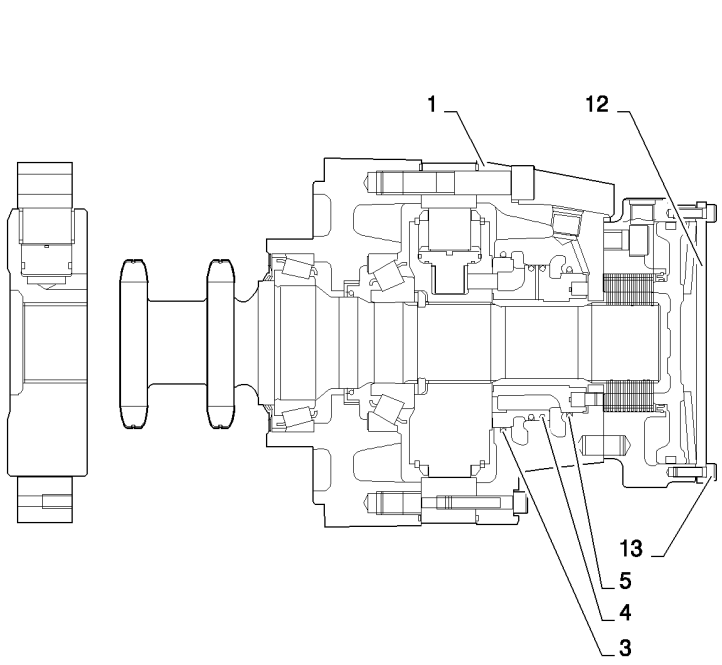

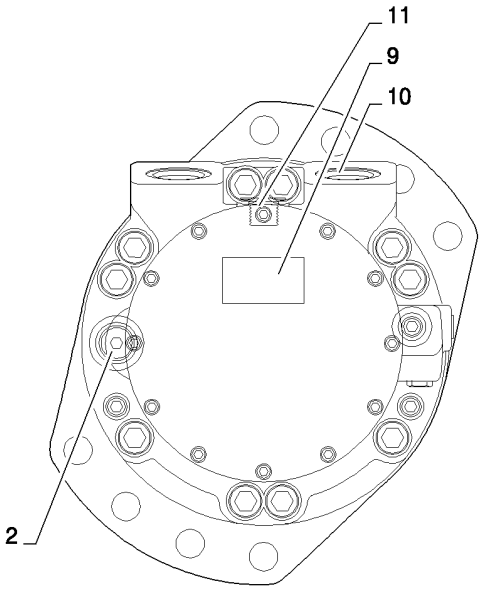

MOTOR, REXROTH DRIVE MOTOR 1SPD (L223-L230)
MOTOR, REXROTH DRIVE MOTOR 1SPD (L223-L230)
MOTOR, REXROTH DRIVE MOTOR 1SPD (L223-L230)
MOTOR, REXROTH DRIVE MOTOR 1SPD (L223-L230)

R	N	P.N.	MOD	Q	Denominação Description	Description Bezeichnung	Denominacion Beskrivelse	Descrizione Beschrijving	L.C.
1		87042953		1	ESTOJO, MCR5 Rear Case 1 S S0471A				
						CASE	ESTUCHE	CASSA; SCATOLA	101A
					CARTER	GEHÄUSE	KASSE	HUIS	
2		214389		1	BUJÃO, Hex Hd, 3/4"-16 ORB				
						PLUG	TAPÓN	TAPPO	050T
					BOUCHON	STOPFEN	PROP	PLUG	
3		NSS		1	SEM SERVIÇO EM SEPARADO, Distributor Rod Seal 105.0				
						NOT SERVICED SEPARA	NO SE REPARA POR SE	NON FORNITO SEPARAT	064N
					NON FOURNI SEPAREM	NICHT A SEP ERS-T LIEI	SERVICERES IKKE SEPA	NIET LOS VERKRIJGBAA	
4		NSS		2	SEM SERVIÇO EM SEPARADO, Distributor Piston Seal 96.5				
						NOT SERVICED SEPARA	NO SE REPARA POR SE	NON FORNITO SEPARAT	064N
					NON FOURNI SEPAREM	NICHT A SEP ERS-T LIEI	SERVICERES IKKE SEPA	NIET LOS VERKRIJGBAA	
5		NSS		1	SEM SERVIÇO EM SEPARADO, Distributor Rod Seal 87.15				
						NOT SERVICED SEPARA	NO SE REPARA POR SE	NON FORNITO SEPARAT	064N
					NON FOURNI SEPAREM	NICHT A SEP ERS-T LIEI	SERVICERES IKKE SEPA	NIET LOS VERKRIJGBAA	
6		76349		1	BUJÃO, Hex Hd, 9/16"-18 ORB				
						PLUG	TAPÓN	TAPPO	050T
					BOUCHON	STOPFEN	PROP	PLUG	
7		NSS		2	SEM SERVIÇO EM SEPARADO, Shear Plug M8				
						NOT SERVICED SEPARA	NO SE REPARA POR SE	NON FORNITO SEPARAT	064N
					NON FOURNI SEPAREM	NICHT A SEP ERS-T LIEI	SERVICERES IKKE SEPA	NIET LOS VERKRIJGBAA	
8		NSS		1	SEM SERVIÇO EM SEPARADO, O-Ring 11.90 x 1.98 90 SH				
						NOT SERVICED SEPARA	NO SE REPARA POR SE	NON FORNITO SEPARAT	064N
					NON FOURNI SEPAREM	NICHT A SEP ERS-T LIEI	SERVICERES IKKE SEPA	NIET LOS VERKRIJGBAA	
9		NSS		1	SEM SERVIÇO EM SEPARADO, Label Standard Motor				
						NOT SERVICED SEPARA	NO SE REPARA POR SE	NON FORNITO SEPARAT	064N
					NON FOURNI SEPAREM	NICHT A SEP ERS-T LIEI	SERVICERES IKKE SEPA	NIET LOS VERKRIJGBAA	
10		NSS		2	SEM SERVIÇO EM SEPARADO, Shipping Plug 1-1/16 - 12				
						NOT SERVICED SEPARA	NO SE REPARA POR SE	NON FORNITO SEPARAT	064N
					NON FOURNI SEPAREM	NICHT A SEP ERS-T LIEI	SERVICERES IKKE SEPA	NIET LOS VERKRIJGBAA	
11		NSS		2	SEM SERVIÇO EM SEPARADO, Shipping Plug 9/16 - 18 UNF				
						NOT SERVICED SEPARA	NO SE REPARA POR SE	NON FORNITO SEPARAT	064N
					NON FOURNI SEPAREM	NICHT A SEP ERS-T LIEI	SERVICERES IKKE SEPA	NIET LOS VERKRIJGBAA	
12		87042923		1	COBERTURA, MCR3 End Cover				
						COVER	CUBIERTA	COPERCHIO	265C
					COUVERCLE	ABDECKUNG	DÆKSEL	AFSCHERMING	
13		86512134		12	PARAFUSO, Hex Soc Hd, M6 x 16, 12.9				
						SCREW	TORNILLO	VITE	040V
					VIS	SCHRAUBE	SKRUE	SCHROEF	
14		87042928		1	CARRETO, Spool Flushing	SPOOL	BOBINA	STELO	134P
					TIROIR	KOLBENSCHIEBER	SPOLE	SPOEL	
15		87042929		1	ARRUELA PLANA, Washer 1.5 THK				
						WASHER	ARANDELA	RONDELLA	131R
					RONDELLE	UNTERLEGSCHEIBE	FLADSKIVE	SLUITRING	
16		87042931		1	OBTURADOR, Flushing Poppet F4 (1.7 Orifice)				
						POPPET	RESORTE	PISTONCINO	012V
					CLAPET	KEGELVENTIL	POPNITTE	KLEP	

MOTOR, REXROTH DRIVE MOTOR 1SPD (L223-L230)
MOTOR, REXROTH DRIVE MOTOR 1SPD (L223-L230)
MOTOR, REXROTH DRIVE MOTOR 1SPD (L223-L230)
MOTOR, REXROTH DRIVE MOTOR 1SPD (L223-L230)

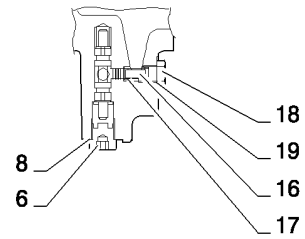

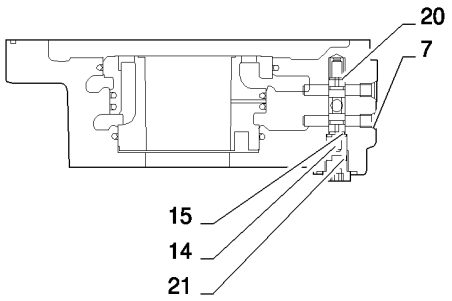

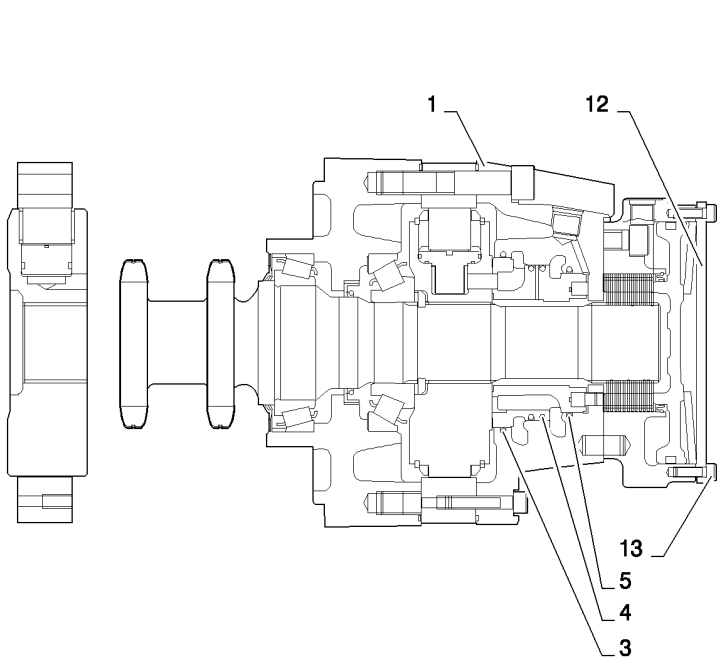

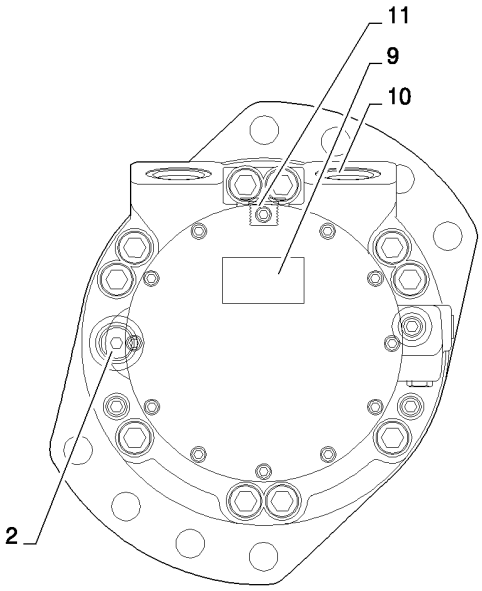

MOTOR, REXROTH DRIVE MOTOR 1SPD (L223-L230)
MOTOR, REXROTH DRIVE MOTOR 1SPD (L223-L230)
MOTOR, REXROTH DRIVE MOTOR 1SPD (L223-L230)
MOTOR, REXROTH DRIVE MOTOR 1SPD (L223-L230)

R	N	P.N.	MOD	Q	Denominação Description Description Bezeichnung	Denominacion Beskrivelse	Descrizione Beschrijving	L.C.
17		87042932		1	MOLA, Spring Flushing Poppet			
					SPRING	RESORTE	MOLLA	100M
					RESSORT FEDER	FJEDER	VEER	
18		87042933		1	OBTURADOR, Poppet Plug 7/16 SAE			
					POPPET	RESORTE	PISTONCINO	012V
					CLAPET KEGELVENTIL	POPNITTE	KLEP	
19		NSS		1	SEM SERVIÇO EM SEPARADO, O-Ring 8.92 x 1.83 VITON			
					NOT SERVICED SEPARA	NO SE REPARA POR SE	NON FORNITO SEPARAT	064N
					NON FOURNI SEPAREM NICHT A SEP ERS-T LIEI	SERVICERES IKKE SEPA	NIET LOS VERKRIJGBAA	
20		87042934		1	MOLA, Spring Flushing (10 BAR) Side A			
					SPRING	RESORTE	MOLLA	100M
					RESSORT FEDER	FJEDER	VEER	
21		87042935		1	MOLA, Spring Flushing (10 BAR) Side B			
					SPRING	RESORTE	MOLLA	100M
					RESSORT FEDER	FJEDER	VEER	
22		87039368		1	KIT, Rotating MCR5, 1 SPDKIT	KIT	KIT	305C
					KIT SATZ	SÆT	KIT	
23		84293531		1	KIT DE VEDAÇÃO, MCR5 1 SPD			
					SEAL KIT	KIT DE JUNTAS	KIT GUARNIZIONI	630S
					KIT DE JOINTS DICHTUNGSSATZ	PAKNINGSSÆT	KIT MET AFDICHTINGEN	
24		87039372		1	KIT, Brake MCR5 KIT	KIT	KIT	305C
					KIT SATZ	SÆT	KIT	

29.212.05	01	p1	02/11

VALVE, BRAKE (L213-L230)
VALVE, BRAKE (L213-L230)
VALVE, BRAKE (L213-L230)
VALVE, BRAKE (L213-L230)



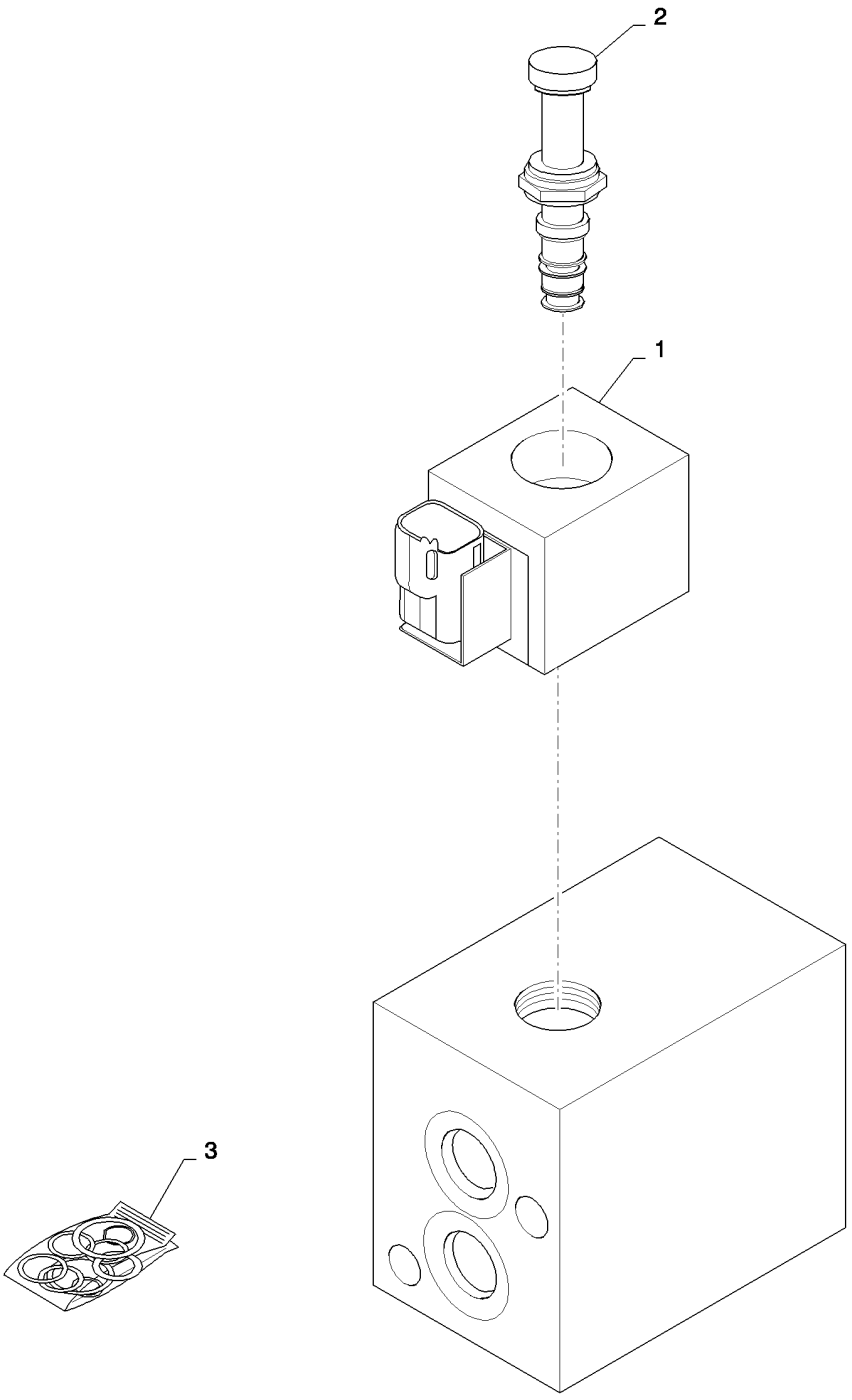

VALVE, BRAKE (L213-L230)
VALVE, BRAKE (L213-L230)
VALVE, BRAKE (L213-L230)
VALVE, BRAKE (L213-L230)

R	N	P.N.	MOD	Q	Denominação Description	Description Bezeichnung	Denominacion Beskrivelse	Descrizione Beschrijving	L.C.
1		84390141		1	BOBINA, Brake	COIL	BOBINA	BOBINA	083B
					BOBINE	SPULE	SPOLE	SPOEL	
2		84311808		1	VÁLVULA HIDRÁULICA, 2 Spd Interlock Brake 3W2P Spool				
						HYDRAULIC VALVE	VÁLVULA HIDRÁULICA	DISTRIBUTORE IDRAULI	010V
					SOUPAPE HYDRAULIQU	HYDRAULIKVENTIL	HYDRAULIKVENTIL	HYDRAULISCHE KLEP	
3		84311809		1	KIT DE VEDAÇÃO, Seal Kit, 2 Spd Interlock Brake				
						SEAL KIT	KIT DE JUNTAS	KIT GUARNIZIONI	630S
					KIT DE JOINTS	DICHTUNGSSATZ	PAKNINGSSÆT	KIT MET AFDICHTINGEN	

29.212.05	02	p1	07/11

VALVE, BRAKE 2SPD (L220-L230)
VALVE, BRAKE 2SPD (L220-L230)
VALVE, BRAKE 2SPD (L220-L230)
VALVE, BRAKE 2SPD (L220-L230)

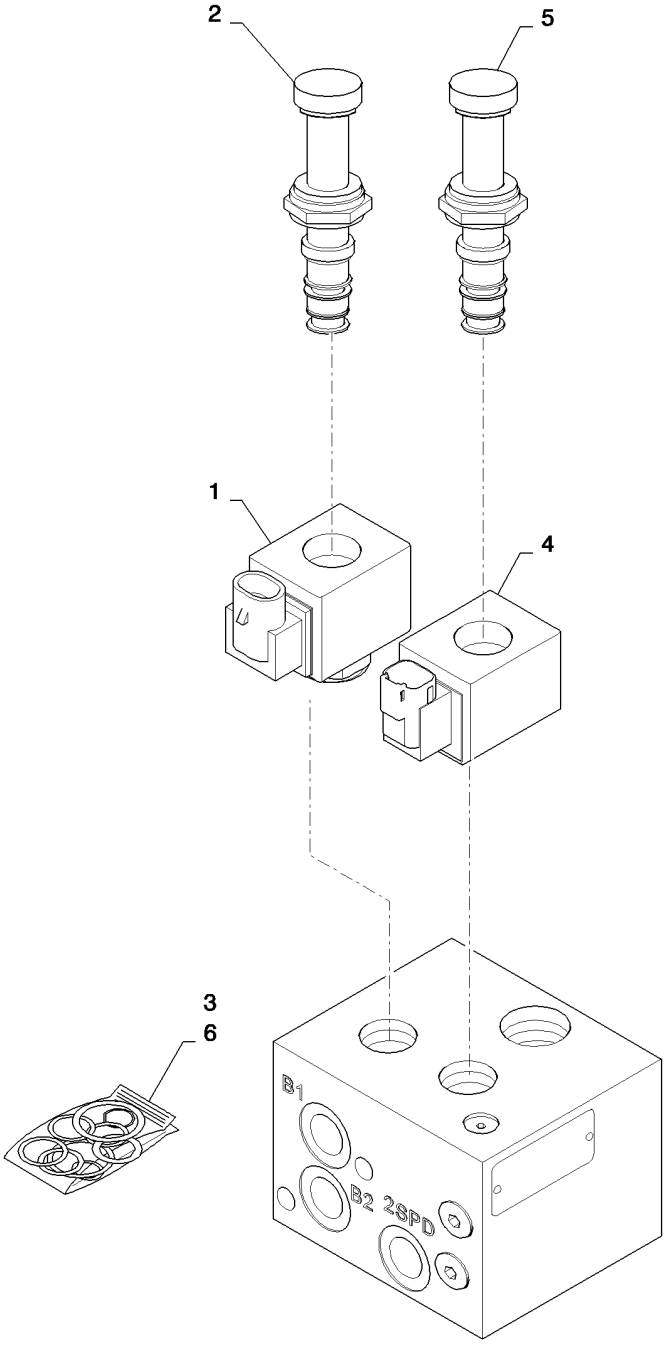

VALVE, BRAKE 2SPD (L220-L230)
VALVE, BRAKE 2SPD (L220-L230)
VALVE, BRAKE 2SPD (L220-L230)
VALVE, BRAKE 2SPD (L220-L230)

R	N	P.N.	MOD	Q	Denominação Description	Description Bezeichnung	Denominacion Beskrivelse	Descrizione Beschrijving	L.C.
1		84390141		1	BOBINA, Brake	COIL	BOBINA	BOBINA	083B
					BOBINE	SPULE	SPOLE	SPOEL	
2		84311808		2	VÁLVULA HIDRÁULICA, 2 Spd Brake Interlock 3W2P Spool				
						HYDRAULIC VALVE	VÁLVULA HIDRÁULICA	DISTRIBUTORE IDRAULI	010V
					SOUPAPE HYDRAULIQU	HYDRAULIKVENTIL	HYDRAULIKVENTIL	HYDRAULISCHE KLEP	
3		84311809		2	KIT DE VEDAÇÃO, Seal Kit, 2 Spd Brake Interlock				
						SEAL KIT	KIT DE JUNTAS	KIT GUARNIZIONI	630S
					KIT DE JOINTS	DICHTUNGSSATZ	PAKNINGSSÆT	KIT MET AFDICHTINGEN	
4		84390142		1	BOBINA, 2 Spd	COIL	BOBINA	BOBINA	083B
					BOBINE	SPULE	SPOLE	SPOEL	
5		84311811		1	VÁLVULA HIDRÁULICA, 2 Spd Sequence				
						HYDRAULIC VALVE	VÁLVULA HIDRÁULICA	DISTRIBUTORE IDRAULI	010V
					SOUPAPE HYDRAULIQU	HYDRAULIKVENTIL	HYDRAULIKVENTIL	HYDRAULISCHE KLEP	
6		84311809		1	KIT DE VEDAÇÃO, Seal Kit, 2 Spd Sequence				
						SEAL KIT	KIT DE JUNTAS	KIT GUARNIZIONI	630S
					KIT DE JOINTS	DICHTUNGSSATZ	PAKNINGSSÆT	KIT MET AFDICHTINGEN	

29.212.05	04	p1	07/11

VALVE, BRAKE EH 2SPD (L218-L230)
VALVE, BRAKE EH 2SPD (L218-L230)
VALVE, BRAKE EH 2SPD (L218-L230)
VALVE, BRAKE EH 2SPD (L218-L230)

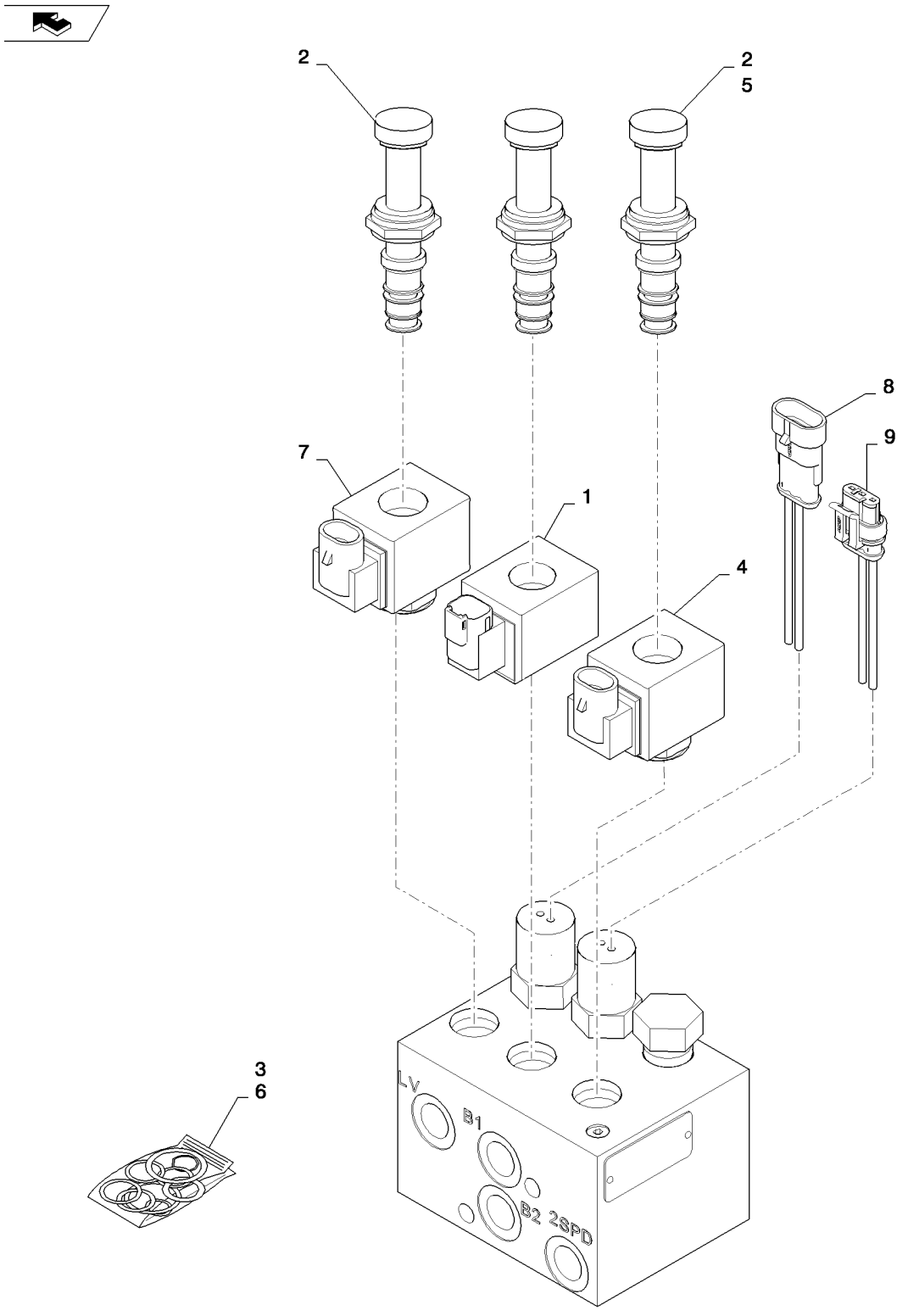

VALVE, BRAKE EH 2SPD (L218-L230)
VALVE, BRAKE EH 2SPD (L218-L230)
VALVE, BRAKE EH 2SPD (L218-L230)
VALVE, BRAKE EH 2SPD (L218-L230)

R	N	P.N.	MOD	Q	Denominação Description	Description Bezeichnung	Denominacion Beskrivelse	Descrizione Beschrijving	L.C.
1		84390141		1	BOBINA, Brake	COIL	BOBINA	BOBINA	083B
					BOBINE	SPULE	SPOLE	SPOEL	
2		84311808		3	VÁLVULA HIDRÁULICA, 2 Spd Brake Interlock 3W2P Spool				
						HYDRAULIC VALVE	VÁLVULA HIDRÁULICA	DISTRIBUTORE IDRAULI	010V
					SOUPAPE HYDRAULIQU	HYDRAULIKVENTIL	HYDRAULIKVENTIL	HYDRAULISCHE KLEP	
3		84311809		3	KIT DE VEDAÇÃO, Seal Kit, 2 Spd Brake Interlock				
						SEAL KIT	KIT DE JUNTAS	KIT GUARNIZIONI	630S
					KIT DE JOINTS	DICHTUNGSSATZ	PAKNINGSSÆT	KIT MET AFDICHTINGEN	
4		84390142		1	BOBINA, 2 Spd	COIL	BOBINA	BOBINA	083B
					BOBINE	SPULE	SPOLE	SPOEL	
5		84311811		1	VÁLVULA HIDRÁULICA, 2 Spd Sequence				
						HYDRAULIC VALVE	VÁLVULA HIDRÁULICA	DISTRIBUTORE IDRAULI	010V
					SOUPAPE HYDRAULIQU	HYDRAULIKVENTIL	HYDRAULIKVENTIL	HYDRAULISCHE KLEP	
6		84311809		1	KIT DE VEDAÇÃO, Seal Kit, 2 Spd Sequence				
						SEAL KIT	KIT DE JUNTAS	KIT GUARNIZIONI	630S
					KIT DE JOINTS	DICHTUNGSSATZ	PAKNINGSSÆT	KIT MET AFDICHTINGEN	
7		84390140		1	BOBINA, Interlock	COIL	BOBINA	BOBINA	083B
					BOBINE	SPULE	SPOLE	SPOEL	
8		84311813		1	INTERRUPTOR DE PRESSÃO, Charge Pressure				
						PRESSURE SWITCH	INTERRUPTOR DE PRES	PRESSOSTATO	079I
					PRESSOSTAT	DRUCKSCHALTER	KONTAKT, TRYK	DRUKSCHAKELAAR	
9		84311814		1	INTERRUPTOR DE PRESSÃO, Brake Pressure				
						PRESSURE SWITCH	INTERRUPTOR DE PRES	PRESSOSTATO	079I
					PRESSOSTAT	DRUCKSCHALTER	KONTAKT, TRYK	DRUKSCHAKELAAR	

29.212.06	01	p1	02/11

PUMP, HYDROSTATIC TANDEM 46CC MDC FRONT (L223,L225)
PUMP, HYDROSTATIC TANDEM 46CC MDC FRONT (L223,L225)
PUMP, HYDROSTATIC TANDEM 46CC MDC FRONT (L223,L225)
PUMP, HYDROSTATIC TANDEM 46CC MDC FRONT (L223,L225)

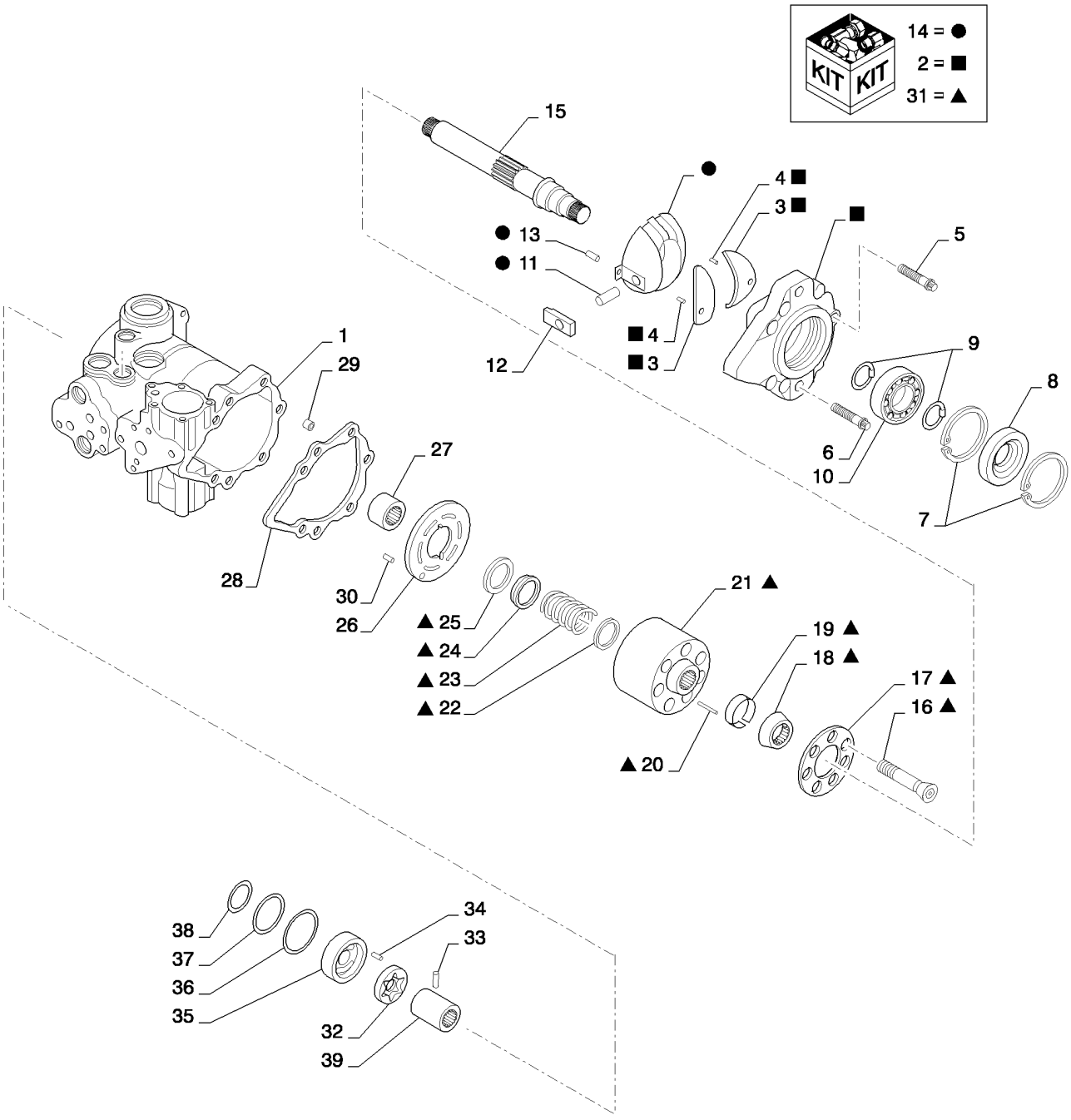

PUMP, HYDROSTATIC TANDEM 46CC MDC FRONT (L223,L225)
PUMP, HYDROSTATIC TANDEM 46CC MDC FRONT (L223,L225)
PUMP, HYDROSTATIC TANDEM 46CC MDC FRONT (L223,L225)
PUMP, HYDROSTATIC TANDEM 46CC MDC FRONT (L223,L225)

R	N	P.N.	MOD	Q	Denominação Description	Description Bezeichnung	Denominacion Beskrivelse	Descrizione Beschrijving	L.C.
1		402364A1		1	ALOJAMENTO, Front	HOUSING	CAVIDAD	ALLOGGIAMENTO	4540
					CARTER	GEHAEUSE	HUS	HUIS	
2		84383828		1	CONJUNTO DA TAMPA, Pump, Front				
						COVER ASSY	CONJUNTO DE FUNDAS	COPERCHIO, COMPL	P426
					COUVERCLE	ABDECKUNGSBAUGRUF	DÆKSELENHED	AFSCHERMEENHEID	
3		193488A1		2	CAMISA DO ROLAMENTO, Journal				
						BEARING LINER	FORRO INTER. DE COJI	CANNA CUSCINETTO	P114
					COUSSINET	LAGERBUCHSE	LEJEFORING	LAGERVOERING	
4		193494A1		4	PINO-ELÁSTICO	PIN, ROLL	PASADOR TUBOLAR	SPINA ELASTICA	P613
					GOUPILLE ELASTIQUE	SPANNSTIFT	SPLIT	SPANSTIFT	
5		223680A1		2	PARAFUSO ESPECIAL, Screw				
						SPECIAL BOLT	PERNO ESPECIAL	BULLONE SPECIALE	P698
					VIS SPECIALE	SPEZIALSCHRAUBE	SPECIALBOLT	SPECIALE BOUT	
6		223677A1		12	PARAFUSO	SCREW	TORNILLO	VITE	7450
					VIS	SCHRAUBE	SKRUE	SCHROEF	
7		F61018		3	ANEL DE PRESSÃO	SNAP RING	ANILLO DE RESORTE	ANELLO ELASTICO	054A
					ANNEAU D'ARRET	SPRENGRING	LÅSERING	VEERRING	
8		N14103		1	ANEL DE VEDAÇÃO	SEAL	ANILLO DE CIERRE	ANELLO DI TENUTA	7460
					JOINT	DICHTUNG	PAKNINGSRING	DICHTINGSRING	
9		100-11137		3	ANEL DE PRESSÃO, #137, Ext				
						SNAP RING	ANILLO DE RESORTE	ANELLO ELASTICO	054A
					ANNEAU D'ARRET	SPRENGRING	LÅSERING	VEERRING	
10		A29183		1	ROLAMENTO ESFÉRICO, 34.994 mm ID x 71.9935 mm OD x 16.94 mm				
						BALL BEARING	RODAMIENTO DE BOLA	CUSCINETTO A SFERE	343C
					ROULEMENT A BILLES	KUGELLAGER	KUGLELEJE	KOGELLAGER	
11		N13254		2	PINO	PIN	PERNO	PERNO	6200
					AXE	BOLZEN	STIFT	PEN	
12		N13224		2	MANGUEIRA RÍGIDA	SLEEVE	MANGUITO	MANICOTTO	8000
					MANCHON	MUFFE	TRYKLEJE, KOBLING	LAGER, KOPPELING DRI	
13		324610A1		2	PINO	PIN	PASADOR	PERNO	080P
					BROCHE	PIN	STIFT	PEN	
14		87050523		1	PLACA CONJUNTO, Variable				
						PLATE ASSY.	PLACA (CONJUNTO)	PIASTRA, COMPLESSIV	P433
					PLAQUE (ASSEMBLEE)	PLATTE (KPLT.)	PLATE ASSY.	PLATE ASSY.	
15		N13244		1	EIXO	SHAFT	EJE	ALBERO	7590
					ARBRE	WELLE	AKSEL	AS	
16		NSS		14	SEM SERVIÇO EM SEPARADO, Piston Assembly				
						NOT SERVICED SEPARA	NO SE REPARA POR SE	NON FORNITO SEPARAT	064N
					NON FOURNI SEPAREM	NICHT A SEP ERS-T LIEI	SERVICERES IKKE SEPA	NIET LOS VERKRIJGBAA	
17		NSS		2	SEM SERVIÇO EM SEPARADO, Slipper Guide				
						NOT SERVICED SEPARA	NO SE REPARA POR SE	NON FORNITO SEPARAT	064N
					NON FOURNI SEPAREM	NICHT A SEP ERS-T LIEI	SERVICERES IKKE SEPA	NIET LOS VERKRIJGBAA	
18		115942A1		2	GUIA	GUIDE	GUIA	GUIDA	4060
					GUIDE	FUEHRUNG	STYR	GELEIDER	
19		115943A1		2	ANEL-TRAVA	LOCKING RING	ANILLO DE BLOQUEO	ANELLO DI BLOCCAGGI	051A
					BAGUE DE BLOCAGE	SICHERUNGSRING	LÅSESKIVE	BORGRING	
20		110873A1		6	PINO, Slipper Hold-down	PIN	PASADOR	PERNO	080P
					BROCHE	PIN	STIFT	PEN	

29.212.06	01	p2	02/11

PUMP, HYDROSTATIC TANDEM 46CC MDC FRONT (L223,L225)
PUMP, HYDROSTATIC TANDEM 46CC MDC FRONT (L223,L225)
PUMP, HYDROSTATIC TANDEM 46CC MDC FRONT (L223,L225)
PUMP, HYDROSTATIC TANDEM 46CC MDC FRONT (L223,L225)

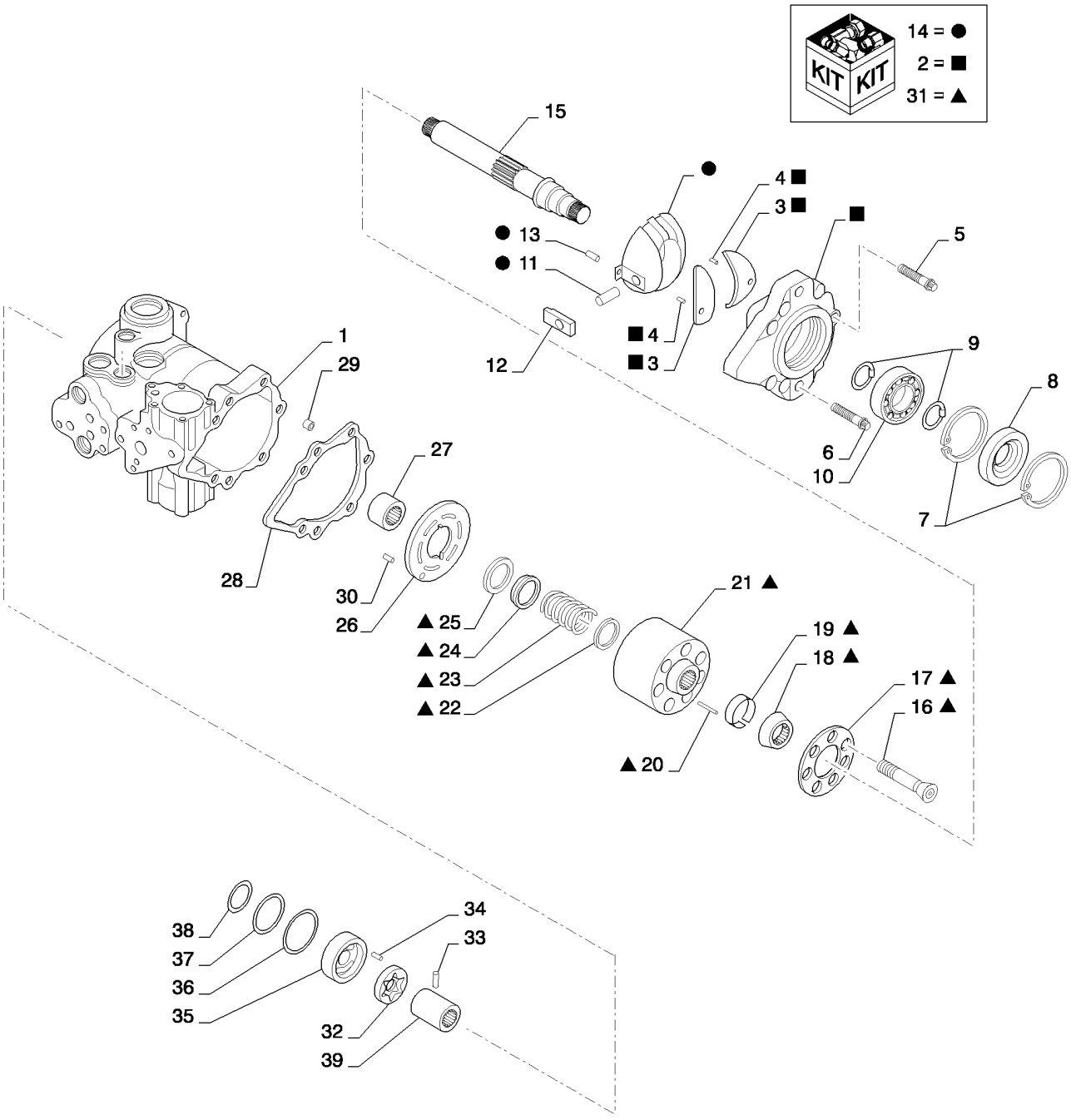

PUMP, HYDROSTATIC TANDEM 46CC MDC FRONT (L223,L225)
PUMP, HYDROSTATIC TANDEM 46CC MDC FRONT (L223,L225)
PUMP, HYDROSTATIC TANDEM 46CC MDC FRONT (L223,L225)
PUMP, HYDROSTATIC TANDEM 46CC MDC FRONT (L223,L225)

R	N	P.N.	MOD	Q	Denominação Description	Description Bezeichnung	Denominacion Beskrivelse	Descrizione Beschrijving	L.C.
21		NSS		2	SEM SERVIÇO EM SEPARADO, Cylinder Block, Non-Bushed				
						NOT SERVICED SEPARA	NO SE REPARA POR SE	NON FORNITO SEPARAT	064N
					NON FOURNI SEPAREM	NICHT A SEP ERS-T LIEI	SERVICERES IKKE SEPA	NIET LOS VERKRIJGBAA	
22		115946A1		2	DISCO, Washer	DISC	DISCO	DISCO	2700
					DISQUE	SCHEIBE	NAV	SCHIJF	
23		115948A1		2	MOLA	SPRING	RESORTE	MOLLA	8315
					RESSORT	FEDER	FJEDER	VEER	
24		115950A1		2	DISCO, Washer	DISC	DISCO	DISCO	2700
					DISQUE	SCHEIBE	NAV	SCHIJF	
25		NSS		2	SEM SERVIÇO EM SEPARADO, Retaining Ring				
						NOT SERVICED SEPARA	NO SE REPARA POR SE	NON FORNITO SEPARAT	064N
					NON FOURNI SEPAREM	NICHT A SEP ERS-T LIEI	SERVICERES IKKE SEPA	NIET LOS VERKRIJGBAA	
26		128928A1		1	PLACA ESPESSA, RH	PLATE, LARGE	PLACA, GRANDE	PIASTRA, LARGA	Z308
					PLAQUE, GRANDE	PLATTE, GROSS	PLATE, LARGE	PLATE, LARGE	
27		1277297C1		1	ROLAMENTO, Needle	BEARING	COJINETE	CUSCINETTO	0600
					ROULEMENT	LAGER	LEJE	LAGER	
28		H436704		2	JUNTA	GASKET	JUNTA HERMETICA	GUARNIZIONE	3720
					JOINT	DICHTUNG, FLACH	PAKNING	DICHTINGSSTUK	
29		N13994		2	ESPAÇADOR	SPACER	ESPACIADOR	DISTANZIALE	8090
					ENTRETOISE	DISTANZSTÜCK	AFSTANDSSTYKKE	AFSTANDSRING	
30		138-217		1	PINO DE FIXAÇÃO, 3/16" x 7/16", Slotted				
						LOCK PIN	PASADOR DE BLOQUEO	PERNO DI BLOCCAGGIC	081P
					GOUPILLE DE BLOCAGE	VERRIEGELUNGSSTIFT	LÅSETAP	BORGPEN	
31		N13234		1	ACOPLAMENTO	COUPLING, BREAK AWA	ACOPLAMIENTO	ATTACCO, CONTROFAS	2220
					ACCOUPLEMENT HYDR.	ABREISSKUPPLUNG	COUPLING, BREAK AWA	COUPLING, BREAK AWA	
32		N13247		1	JOGO ENGRENAGENS, Rotor				
						GEAR-SET	JUEGO DE PINONES	INGRANAGGIO, SET DI	3840
					JEU-DE-PIGNONS	ZAHNRADSATZ	GEAR-SET	GEAR-SET	
33		N13262		1	PINO	PIN	PERNO	PERNO	6200
					AXE	BOLZEN	STIFT	PEN	
34		181680A1		1	PINO	PIN	PASADOR	PERNO	080P
					BROCHE	PIN	STIFT	PEN	
35		N13999		1	PLACA, Cover	PLATE	PLACA	PIASTRA	6360
					PLAQUE	PLATTE	PLADE	PLAAT	
36		H437190		1	ANEL "O"	O-RING	JUNTA HERMETICA	ANELLO TOROIDALE	7176
					JOINT TORIQUE	O-RING	O-RING	O-RING	
37		A36405		1	O-RING, 3.484" ID x 3.762" OD x 0.139"				
						O-RING	JUNTA TÓRICA	ANELLO TOROIDALE	055A
					JOINT TORIQUE	O-RING	O-RING	O-RING	
38		H435776		1	ANEL "O", 1.734" ID	O-RING	JUNTA HERMETICA	ANELLO TOROIDALE	7176
					JOINT TORIQUE	O-RING	O-RING	O-RING	
39		N13234		1	ACOPLAMENTO	COUPLING, BREAK AWA	ACOPLAMIENTO	ATTACCO, CONTROFAS	2220
					ACCOUPLEMENT HYDR.	ABREISSKUPPLUNG	COUPLING, BREAK AWA	COUPLING, BREAK AWA	

29.212.06	02	p1	02/11

PUMP, HYDROSTATIC TANDEM 46CC MDC FRONT (L223,L225)
PUMP, HYDROSTATIC TANDEM 46CC MDC FRONT (L223,L225)
PUMP, HYDROSTATIC TANDEM 46CC MDC FRONT (L223,L225)
PUMP, HYDROSTATIC TANDEM 46CC MDC FRONT (L223,L225)

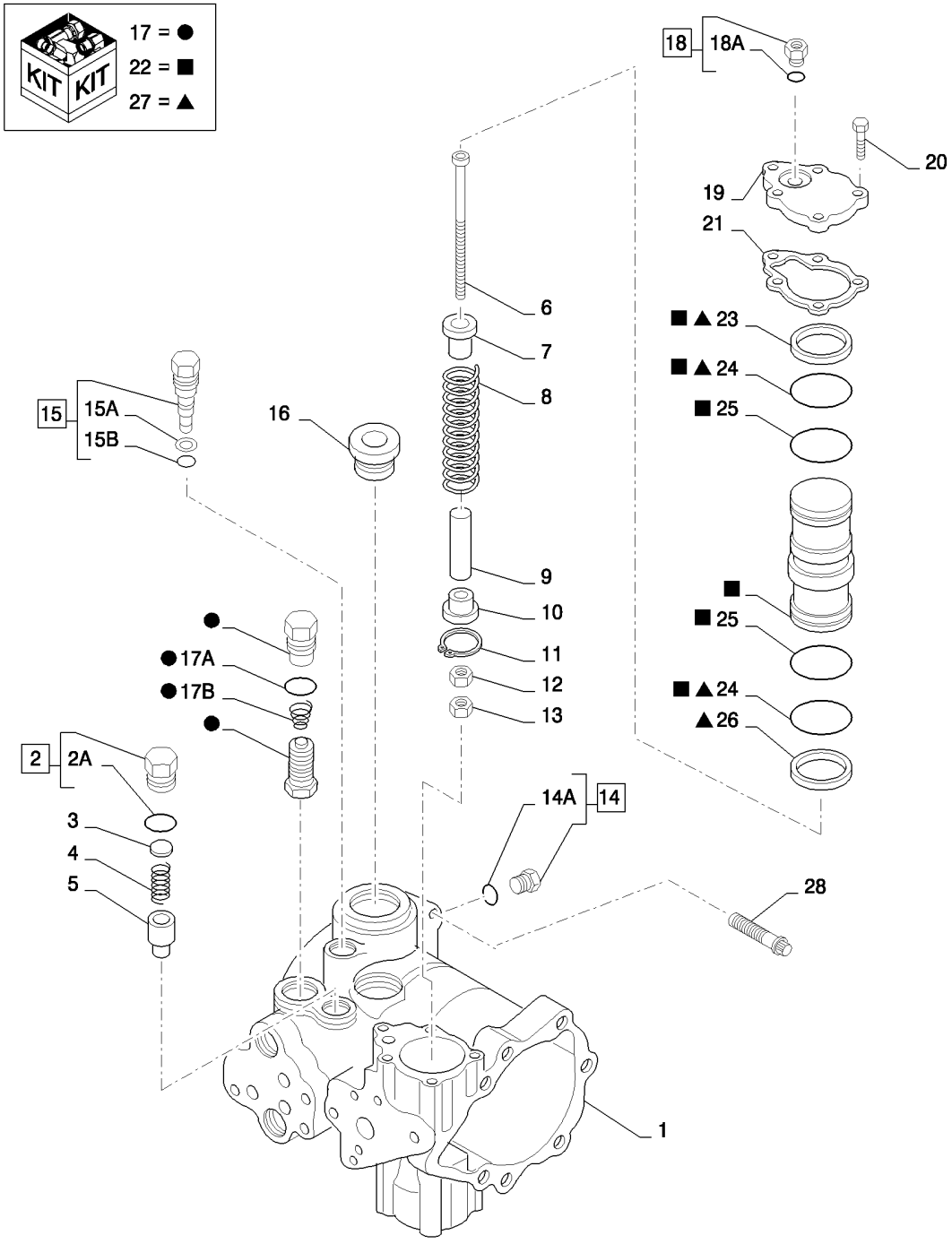

PUMP, HYDROSTATIC TANDEM 46CC MDC FRONT (L223,L225)
PUMP, HYDROSTATIC TANDEM 46CC MDC FRONT (L223,L225)
PUMP, HYDROSTATIC TANDEM 46CC MDC FRONT (L223,L225)
PUMP, HYDROSTATIC TANDEM 46CC MDC FRONT (L223,L225)

R	N	P.N.	MOD	Q	Denominação Description	Description Bezeichnung	Denominacion Beskrivelse	Descrizione Beschrijving	L.C.
1		402364A1		1	ALOJAMENTO, Front CARTER	HOUSING GEHAEUSE	CAVIDAD HUS	ALLOGGIAMENTO HUIS	4540
2		87039611		1	BUJÃO, Charge Relief BOUCHON	PLUG STOPFEN	TAPÓN PROP	TAPPO PLUG	6400
2A		237-6010		1	O-RING, 0.239" ID x 0.379" OD x 0.07" JOINT TORIQUE	O-RING O-RING	JUNTA TÓRICA O-RING	ANELLO TOROIDALE O-RING	055A
3		H407767		1	JOGO, Shim POCHETTE	KIT PACKUNG	JEUGO KIT	KIT KIT	4830
4		244898A1		1	MOLA RESSORT	SPRING FEDER	RESORTE FJEDER	MOLLA VEER	8315
5		V38371		1	VÁLVULA, Poppet SOUPAPE	VALVE VENTIL	VÁLVULA VENTIL	VALVOLA KLEP	9620
6		370531A1		1	PARAFUSO VIS	SCREW SCHRAUBE	TORNILLO SKRUE	VITE SCHROEF	7450
7		N14666		1	GUIA GUIDE	GUIDE FUEHRUNG	GUIA STYR	GUIDA GELEIDER	4060
8		N13226		1	MOLA RESSORT	SPRING FEDER	RESORTE FJEDER	MOLLA VEER	8315
9		N13242		1	MANGUEIRA RÍGIDA, Stop MANCHON	SLEEVE MUFFE	MANGUITO TRYKLEJE, KOBLING	MANICOTTO LAGER, KOPPELING DRI	8000
10		N13241		1	GUIA GUIDE	GUIDE FUEHRUNG	GUIA STYR	GUIDA GELEIDER	4060
11		N13255		1	ANEL ANNEAU	RING RING	ANILLO RING	ANELLO RING	7175
12		425-116		1	PORCA, 3/8"-24, G5 ECROU	NUT MUTTER	TUERCA MØTRIK	DADO MOER	010D
13		324604A1		1	PORCA ECROU	NUT MUTTER	TUERCA MØTRIK	DADO MOER	5780
14		218-5153		1	BUJÃO, Hex Hd, 7/16"-20 ORB BOUCHON	PLUG STOPFEN	TAPÓN PROP	TAPPO PLUG	050T
14A		165202		1	O-RING, 0.351" ID x 0.072" Width JOINT TORIQUE	O-RING O-RING	JUNTA TÓRICA O-RING	ANELLO TOROIDALE O-RING	055A
15		87039612		1	VÁLVULA DE DESVIO, Assembly SOUPAPE DE DERIVATI(	BY-PASS VALVE BYPASS-VENTIL	VÁLVULA DE DERIVACIÓ OMLØBSVENTIL	VALVOLA DI BYPASS BYPASSKLEP	P673
15A		S99877		2	ANEL, Backup ANNEAU	RING RING	ANILLO RING	ANELLO RING	7175
15B		86993475		2	O-RING JOINT TORIQUE	O-RING O-RING	JUNTA TÓRICA O-RING	ANELLO TOROIDALE O-RING	055A
16		{}							
17		105720A1		1	VALVULA VALVE	VALVE VENTIL	VALVULA VALVE	VALVOLA VALVE	P468
17A		237-6012		4	O-RING, 0.364" ID x 0.504" OD x 0.07" JOINT TORIQUE	O-RING O-RING	JUNTA TÓRICA O-RING	ANELLO TOROIDALE O-RING	055A

L225

29.212.06	02	p2	02/11

PUMP, HYDROSTATIC TANDEM 46CC MDC FRONT (L223,L225)
PUMP, HYDROSTATIC TANDEM 46CC MDC FRONT (L223,L225)
PUMP, HYDROSTATIC TANDEM 46CC MDC FRONT (L223,L225)
PUMP, HYDROSTATIC TANDEM 46CC MDC FRONT (L223,L225)

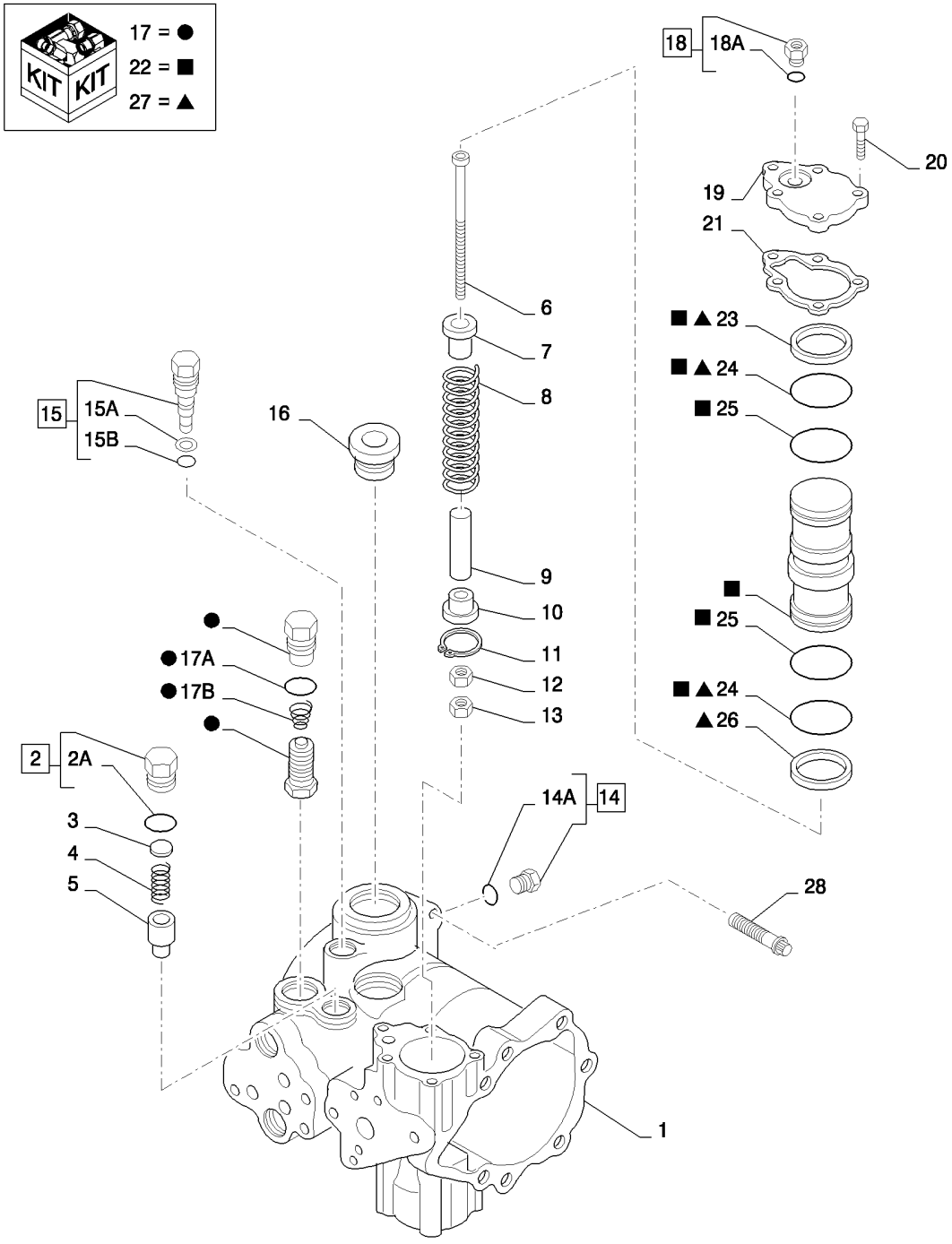

PUMP, HYDROSTATIC TANDEM 46CC MDC FRONT (L223,L225)
PUMP, HYDROSTATIC TANDEM 46CC MDC FRONT (L223,L225)
PUMP, HYDROSTATIC TANDEM 46CC MDC FRONT (L223,L225)
PUMP, HYDROSTATIC TANDEM 46CC MDC FRONT (L223,L225)

R	N	P.N.	MOD	Q	Denominação Description	Description Bezeichnung	Denominacion Beskrivelse	Descrizione Beschrijving	L.C.
17B		86993468		4	MOLA	SPRING	RESORTE	MOLLA	100M
					RESSORT	FEDER	FJEDER	VEER	
18		218-5155		1	BUJÃO, Hex Hd, 9/16"-18 ORB				
						PLUG	TAPÓN	TAPPO	050T
					BOUCHON	STOPFEN	PROP	PLUG	
18A		237-6006		1	O-RING, 0.114" ID x 0.254" OD x 0.07"				
						O-RING	JUNTA TÓRICA	ANELLO TOROIDALE	055A
					JOINT TORIQUE	O-RING	O-RING	O-RING	
19		H436053		1	TAMPA	COVER	TAPA	COPERCHIO	2250
					COUVERCLE	DECKEL	COVER	COVER	
20		87269453		5	PARAFUSO	SCREW	TORNILLO	VITE	040V
					VIS	SCHRAUBE	SKRUE	SCHROEF	
21		N14063		1	JUNTA	GASKET	JUNTA HERMETICA	GUARNIZIONE	3720
					JOINT	DICHTUNG, FLACH	PAKNING	DICHTINGSSTUK	
22		87039622		2	CONJ PISTÃO, Servo	PISTON ASSY	CONJUNTO DE PISTÓN	COMPLESSIVO PISTONE	245S
					ENS. PISTON	KOLBENBAUGRUPPE	STEMPEL KOMPLET	ZUIGEREENHEID	
23		N14668		2	ANEL DE PISTÃO	RING, PISTON	ARO DE EMBOLO	ANELLO STANTUFFO	P292
					SEGMENT DE PISTON	KOLBENRING	STEMPELRING	ZUIGERRING	
24		238-5131		4	O-RING, -131, 70 Duro, 1.674" ID x .103" Thk				
						O-RING	JUNTA TÓRICA	ANELLO TOROIDALE	055A
					JOINT TORIQUE	O-RING	O-RING	O-RING	
25		100536A1		4	FLANGE DE ROLAMENTO, 1.86" ID x 1.982" OD x 0.122"				
						BEARING WASHER	ARANDELA DE COJINET	RONDELLA CUSCINETT(	A142
					RONDELLE DE ROULEM	LAGERSCHEIBE	LEJESPÆNDSKIVE	LAGERRING	
26		N14668		2	ANEL DE PISTÃO	RING, PISTON	ARO DE EMBOLO	ANELLO STANTUFFO	P292
					SEGMENT DE PISTON	KOLBENRING	STEMPELRING	ZUIGERRING	
27		H673773		1	JOGO, Repair, Pump	KIT	JEUGO	KIT	4830
					POCHETTE	PACKUNG	KIT	KIT	
28		166-89		2	PARAFUSO, 12 Pt Flg, 1/2"-13 x 2", G8				
						SCREW	TORNILLO	VITE	040V
					VIS	SCHRAUBE	SKRUE	SCHROEF	

29.212.06	03	p1	02/11

PUMP, HYDROSTATIC TANDEM 46CC MDC REAR (L223,L225)
PUMP, HYDROSTATIC TANDEM 46CC MDC REAR (L223,L225)
PUMP, HYDROSTATIC TANDEM 46CC MDC REAR (L223,L225)
PUMP, HYDROSTATIC TANDEM 46CC MDC REAR (L223,L225)

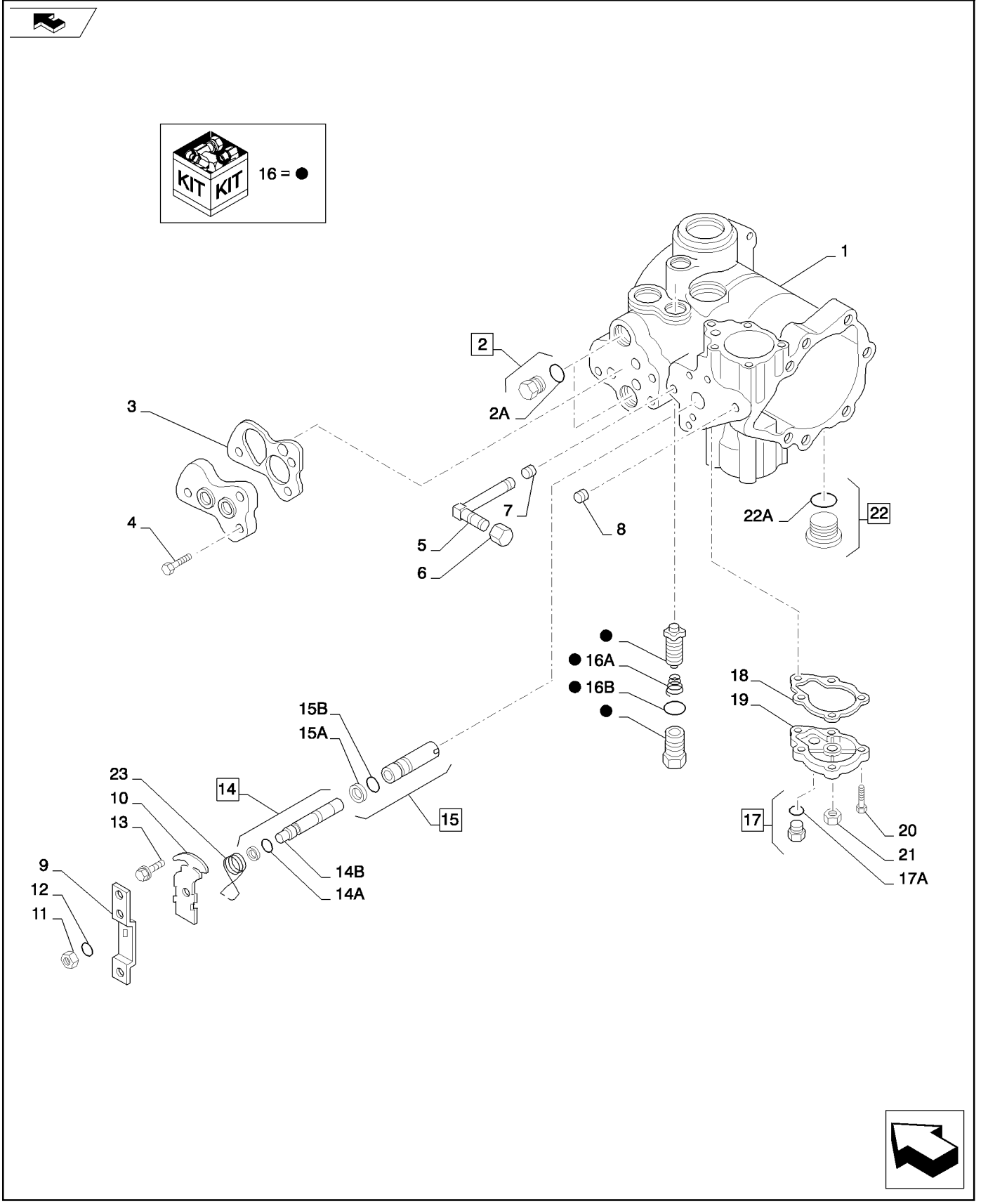

PUMP, HYDROSTATIC TANDEM 46CC MDC REAR (L223,L225)
PUMP, HYDROSTATIC TANDEM 46CC MDC REAR (L223,L225)
PUMP, HYDROSTATIC TANDEM 46CC MDC REAR (L223,L225)
PUMP, HYDROSTATIC TANDEM 46CC MDC REAR (L223,L225)

R	N	P.N.	MOD	Q	Denominação Description	Description Bezeichnung	Denominacion Beskrivelse	Descrizione Beschrijving	L.C.
1		402364A1		1	ALOJAMENTO, Front	HOUSING	CAVIDAD	ALLOGGIAMENTO	4540
					CARTER	GEHAEUSE	HUS	HUIS	
2		218-5155		2	BUJÃO, Hex Hd, 9/16"-18 ORB				
						PLUG	TAPÓN	TAPPO	050T
					BOUCHON	STOPFEN	PROP	PLUG	
2A		237-6006		2	O-RING, 0.114" ID x 0.254" OD x 0.07"				
						O-RING	JUNTA TÓRICA	ANELLO TOROIDALE	055A
					JOINT TORIQUE	O-RING	O-RING	O-RING	
3		303709A1		1	ANEL DE VEDAÇÃO	SEAL	ANILLO DE CIERRE	ANELLO DI TENUTA	7460
					JOINT	DICHTUNG	PAKNINGSRING	DICHTINGSRING	
4		26-516		3	PARAFUSO, Hex, 5/16"-18 x 1", G8, Full Thd				
						BOLT	PERNO	BULLONE	140B
					VIS	SCHRAUBE	BOLT	BOUT	
5		218-506		1	COTOVELO, 90º, 7/16"-20, 37º x 1/8"-27, NPTF, XLG				
						ELBOW	CODO	GOMITO	085G
					COUDE	KNIESTÜCK	VINKELRØR	KNIESTUK	
6		86993467		1	TAMPA, Tube, 37 Degree Flare				
						CAP	TAPÓN	TAPPO	052T
					CAPUCHON	KAPPE	TANKDÆKSEL	DOP	
7		86993479		1	BUJÃO, Pipe	PLUG	TAPÓN	TAPPO	050T
					BOUCHON	STOPFEN	PROP	PLUG	
8		F23137		1	BUJÃO	PLUG	TAPÓN	TAPPO	6400
					BOUCHON	STOPFEN	PROP	PLUG	
9		100713A1		1	ALAVANCA, Handle	LEVER	PALANCA	LEVA	5110
					LEVIER	HEBEL	HAANDTAG	HEFBOOM	
10		N13250		1	SUPORTE	BRACKET	PIEZA DE SOPORTE	STAFFA	1010
					PATTE FIXATION	HALTERUNG	BESLAG	STEUNBEUGEL	
11		H436054		1	PORCA	NUT	TUERCA	DADO	5780
					ECROU	MUTTER	MØTRIK	MOER	
12		493-41033		1	TRAVA DA ARRUELA, Ext Tooth, 5/16"				
						LOCK WASHER	ARANDELA DE BLOQUE	RONDELLA DI SICUREZ	132R
					RONDELLE FREIN	SICHERUNGSSCHEIBE	LÅSESKIVE	BORGRING	
13		H435770		2	PARAFUSO	SCREW	TORNILLO	VITE	7450
					VIS	SCHRAUBE	SKRUE	SCHROEF	
14		87042542		1	CARRETO, Assembly, Sauer				
						SPOOL	BOBINA	STELO	134P
					TIROIR	KOLBENSCHIEBER	SPOLE	SPOEL	
14A		86993484		2	ANEL, Backup, .390	RING	ANILLO	ANELLO	045A
					ANNEAU	RING	RING	RING	
14B		86993475		2	O-RING	O-RING	JUNTA TÓRICA	ANELLO TOROIDALE	055A
					JOINT TORIQUE	O-RING	O-RING	O-RING	
15		87039615		1	LUVA, Assembly	SLEEVE	MANGUITO	MANICOTTO	145B
					CHEMISE	BUCHSE	BØSNING	HOES; HULS	
15A		86993483		2	ANEL, Backup, .643	RING	ANILLO	ANELLO	045A
					ANNEAU	RING	RING	RING	
15B		NSS		2	SEM SERVIÇO EM SEPARADO, O-Ring				
						NOT SERVICED SEPARA	NO SE REPARA POR SE	NON FORNITO SEPARA	064N
					NON FOURNI SEPAREM	NICHT A SEP ERS-T LIEI	SERVICERES IKKE SEPA	NIET LOS VERKRIJGBAA	

29.212.06	03	p2	02/11

PUMP, HYDROSTATIC TANDEM 46CC MDC REAR (L223,L225)
PUMP, HYDROSTATIC TANDEM 46CC MDC REAR (L223,L225)
PUMP, HYDROSTATIC TANDEM 46CC MDC REAR (L223,L225)
PUMP, HYDROSTATIC TANDEM 46CC MDC REAR (L223,L225)

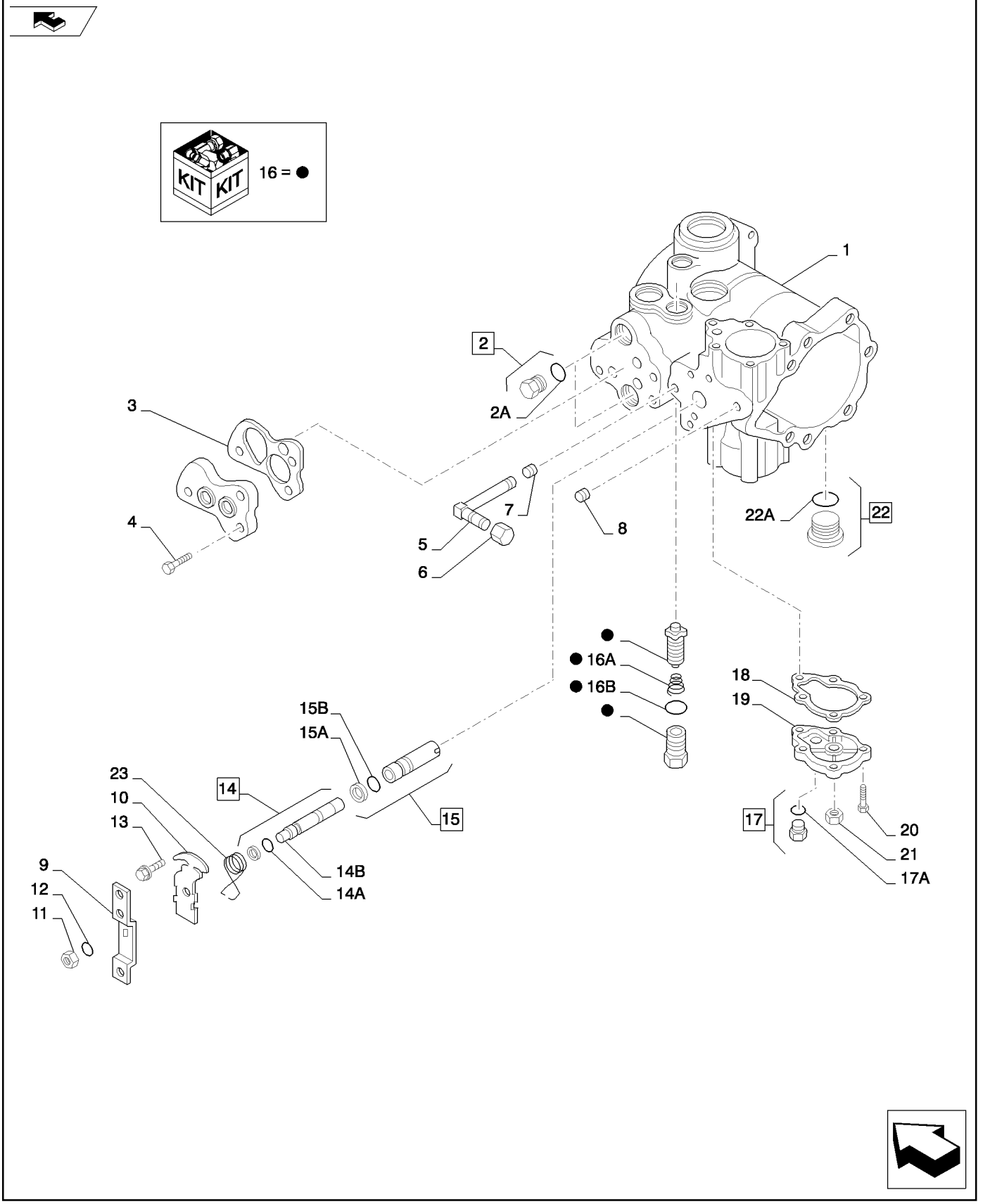

PUMP, HYDROSTATIC TANDEM 46CC MDC REAR (L223,L225)
PUMP, HYDROSTATIC TANDEM 46CC MDC REAR (L223,L225)
PUMP, HYDROSTATIC TANDEM 46CC MDC REAR (L223,L225)
PUMP, HYDROSTATIC TANDEM 46CC MDC REAR (L223,L225)

R	N	P.N.	MOD	Q	Denominação Description	Description Bezeichnung	Denominacion Beskrivelse	Descrizione Beschrijving	L.C.
16		**105720A1**		1	VALVULA	VALVE	VALVULA	VALVOLA	P468
					VALVE	VENTIL	VALVE	VALVE	
16A		**86993468**		4	MOLA	SPRING	RESORTE	MOLLA	100M
					RESSORT	FEDER	FJEDER	VEER	
16B		**237-6012**		4	O-RING, 0.364" ID x 0.504" OD x 0.07"				
						O-RING	JUNTA TÓRICA	ANELLO TOROIDALE	055A
					JOINT TORIQUE	O-RING	O-RING	O-RING	
17		**218-5155**		1	BUJÃO, Hex Hd, 9/16"-18 ORB				
						PLUG	TAPÓN	TAPPO	050T
					BOUCHON	STOPFEN	PROP	PLUG	
17A		**237-6006**		1	O-RING, 0.114" ID x 0.254" OD x 0.07"				
						O-RING	JUNTA TÓRICA	ANELLO TOROIDALE	055A
					JOINT TORIQUE	O-RING	O-RING	O-RING	
18		**N14063**		1	JUNTA	GASKET	JUNTA HERMETICA	GUARNIZIONE	3720
					JOINT	DICHTUNG, FLACH	PAKNING	DICHTINGSSTUK	
19		**H436065**		1	TAMPA	COVER	TAPA	COPERCHIO	2250
					COUVERCLE	DECKEL	COVER	COVER	
20		**87269453**		5	PARAFUSO	SCREW	TORNILLO	VITE	040V
					VIS	SCHRAUBE	SKRUE	SCHROEF	
21		**N13260**		2	PORCA	NUT	TUERCA	DADO	5780
					ECROU	MUTTER	MØTRIK	MOER	
22		**218-5212**		3	BUJÃO, Hex Soc, 1 1/16"-12 ORB				
						PLUG	TAPÓN	TAPPO	050T
					BOUCHON	STOPFEN	PROP	PLUG	
22A		**237-6012**		3	O-RING, 0.364" ID x 0.504" OD x 0.07"				
						O-RING	JUNTA TÓRICA	ANELLO TOROIDALE	055A
					JOINT TORIQUE	O-RING	O-RING	O-RING	
23		**N13248**		1	MOLA	SPRING	RESORTE	MOLLA	8315
					RESSORT	FEDER	FJEDER	VEER	

29.212.06	04	p1	02/11

PUMP, HYDROSTATIC TANDEM 46CC MDC REAR (L223,L225)
PUMP, HYDROSTATIC TANDEM 46CC MDC REAR (L223,L225)
PUMP, HYDROSTATIC TANDEM 46CC MDC REAR (L223,L225)
PUMP, HYDROSTATIC TANDEM 46CC MDC REAR (L223,L225)

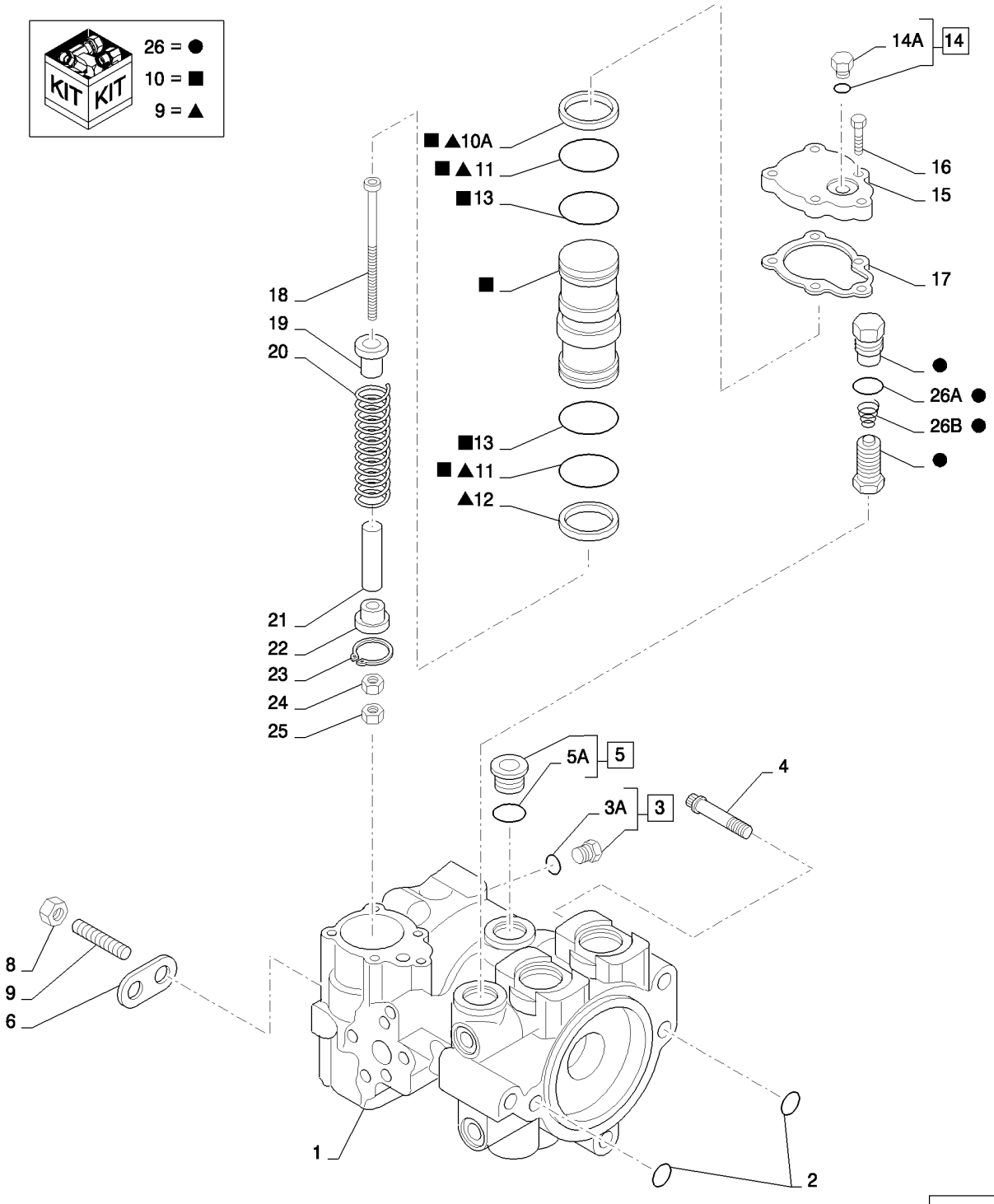

PUMP, HYDROSTATIC TANDEM 46CC MDC REAR (L223,L225)
PUMP, HYDROSTATIC TANDEM 46CC MDC REAR (L223,L225)
PUMP, HYDROSTATIC TANDEM 46CC MDC REAR (L223,L225)
PUMP, HYDROSTATIC TANDEM 46CC MDC REAR (L223,L225)

R	N	P.N.	MOD	Q	Denominação Description	Description Bezeichnung	Denominacion Beskrivelse	Descrizione Beschrijving	L.C.
1		402365A1		1	ALOJAMENTO, Rear	HOUSING	CAVIDAD	ALLOGGIAMENTO	4540
					CARTER	GEHAEUSE	HUS	HUIS	
2		238-6116		2	O-RING, -116, 90 Duro, .737" ID x .103" Thk				
						O-RING	JUNTA TÓRICA	ANELLO TOROIDALE	055A
					JOINT TORIQUE	O-RING	O-RING	O-RING	
3		218-5153		1	BUJÃO, Hex Hd, 7/16"-20 ORB				
						PLUG	TAPÓN	TAPPO	050T
					BOUCHON	STOPFEN	PROP	PLUG	
3A		165202		1	O-RING, 0.351" ID x 0.072" Width				
						O-RING	JUNTA TÓRICA	ANELLO TOROIDALE	055A
					JOINT TORIQUE	O-RING	O-RING	O-RING	
4		166-89		2	PARAFUSO, 12 Pt Flg, 1/2"-13 x 2", G8				
						SCREW	TORNILLO	VITE	040V
					VIS	SCHRAUBE	SKRUE	SCHROEF	
5		218-5212		3	BUJÃO, Hex Soc, 1 1/16"-12 ORB				
						PLUG	TAPÓN	TAPPO	050T
					BOUCHON	STOPFEN	PROP	PLUG	
5A		237-6012		3	O-RING, 0.364" ID x 0.504" OD x 0.07"				
						O-RING	JUNTA TÓRICA	ANELLO TOROIDALE	055A
					JOINT TORIQUE	O-RING	O-RING	O-RING	
6		NSS			SEM SERVIÇO EM SEPARADO				
						NOT SERVICED SEPARA	NO SE REPARA POR SE	NON FORNITO SEPARAT	064N
					NON FOURNI SEPAREM	NICHT A SEP ERS-T LIEI	SERVICERES IKKE SEPA	NIET LOS VERKRIJGBAA	
7		K608432		1	PRISIONEIRO	STUD	PRISIONERO	PRIGIONIERO	8720
					GOUJON	STIFTSCHRAUBE	STOETTEBOLT	TAPEIND	
8		425-108		1	PORCA, 1/2"-13, G5	NUT	TUERCA	DADO	010D
					ECROU	MUTTER	MØTRIK	MOER	
9		H673773		1	JOGO, Repair, Pump	KIT	JEUGO	KIT	4830
					POCHETTE	PACKUNG	KIT	KIT	
10		87039622		2	CONJ PISTÃO, Servo	PISTON ASSY	CONJUNTO DE PISTÓN	COMPLESSIVO PISTONE	245S
					ENS. PISTON	KOLBENBAUGRUPPE	STEMPEL KOMPLET	ZUIGEREENHEID	
10A		N14668		2	ANEL DE PISTÃO	RING, PISTON	ARO DE EMBOLO	ANELLO STANTUFFO	P292
					SEGMENT DE PISTON	KOLBENRING	STEMPELRING	ZUIGERRING	
11		238-5131		4	O-RING, -131, 70 Duro, 1.674" ID x .103" Thk				
						O-RING	JUNTA TÓRICA	ANELLO TOROIDALE	055A
					JOINT TORIQUE	O-RING	O-RING	O-RING	
12		N14668		2	ANEL DE PISTÃO	RING, PISTON	ARO DE EMBOLO	ANELLO STANTUFFO	P292
					SEGMENT DE PISTON	KOLBENRING	STEMPELRING	ZUIGERRING	
13		100536A1		4	FLANGE DE ROLAMENTO, 1.86" ID x 1.982" OD x 0.122"				
						BEARING WASHER	ARANDELA DE COJINET	RONDELLA CUSCINETT	A142
					RONDELLE DE ROULEM	LAGERSCHEIBE	LEJESPÆNDSKIVE	LAGERRING	
14		218-5155		1	BUJÃO, Hex Hd, 9/16"-18 ORB				
						PLUG	TAPÓN	TAPPO	050T
					BOUCHON	STOPFEN	PROP	PLUG	
14A		237-6006		1	O-RING, 0.114" ID x 0.254" OD x 0.07"				
						O-RING	JUNTA TÓRICA	ANELLO TOROIDALE	055A
					JOINT TORIQUE	O-RING	O-RING	O-RING	
15		H436053		1	TAMPA	COVER	TAPA	COPERCHIO	2250
					COUVERCLE	DECKEL	COVER	COVER	

29.212.06	04	p2	02/11

PUMP, HYDROSTATIC TANDEM 46CC MDC REAR (L223,L225)
PUMP, HYDROSTATIC TANDEM 46CC MDC REAR (L223,L225)
PUMP, HYDROSTATIC TANDEM 46CC MDC REAR (L223,L225)
PUMP, HYDROSTATIC TANDEM 46CC MDC REAR (L223,L225)

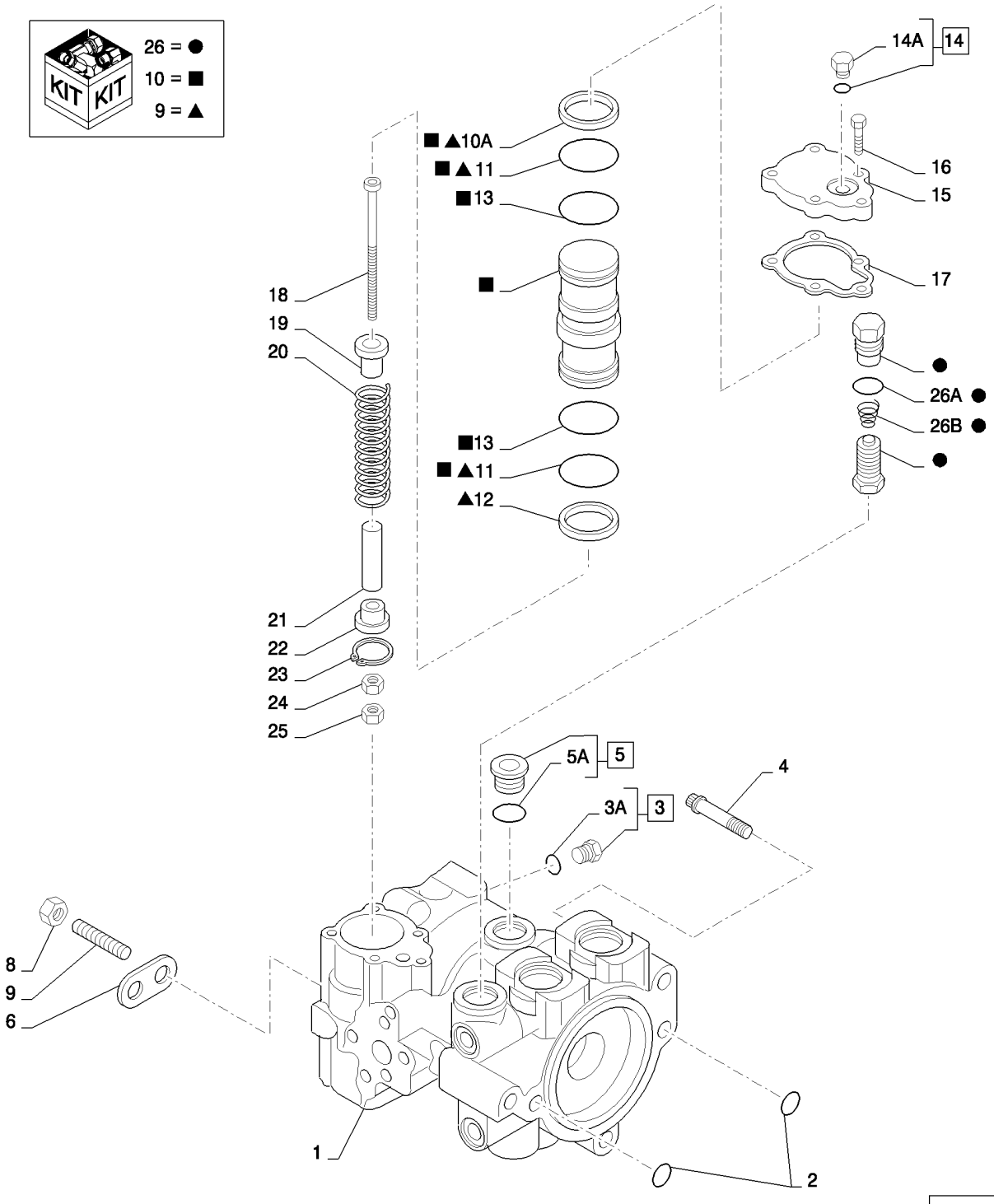

PUMP, HYDROSTATIC TANDEM 46CC MDC REAR (L223,L225)
PUMP, HYDROSTATIC TANDEM 46CC MDC REAR (L223,L225)
PUMP, HYDROSTATIC TANDEM 46CC MDC REAR (L223,L225)
PUMP, HYDROSTATIC TANDEM 46CC MDC REAR (L223,L225)

R	N	P.N.	MOD	Q	Denominação Description	Description Bezeichnung	Denominacion Beskrivelse	Descrizione Beschrijving	L.C.
16		**87269453**		5	PARAFUSO VIS	SCREW SCHRAUBE	TORNILLO SKRUE	VITE SCHROEF	040V
17		**N14063**		1	JUNTA JOINT	GASKET DICHTUNG, FLACH	JUNTA HERMETICA PAKNING	GUARNIZIONE DICHTINGSSTUK	3720
18		**370531A1**		1	PARAFUSO VIS	SCREW SCHRAUBE	TORNILLO SKRUE	VITE SCHROEF	7450
19		**N14666**		1	GUIA GUIDE	GUIDE FUEHRUNG	GUIA STYR	GUIDA GELEIDER	4060
20		**N13226**		1	MOLA RESSORT	SPRING FEDER	RESORTE FJEDER	MOLLA VEER	8315
21		**N13242**		1	MANGUEIRA RÍGIDA, Stop MANCHON	SLEEVE MUFFE	MANGUITO TRYKLEJE, KOBLING	MANICOTTO LAGER, KOPPELING DRI	8000
22		**N13241**		1	GUIA GUIDE	GUIDE FUEHRUNG	GUIA STYR	GUIDA GELEIDER	4060
23		**N13255**		1	ANEL ANNEAU	RING RING	ANILLO RING	ANELLO RING	7175
24		**425-116**		1	PORCA, 3/8"-24, G5 ECROU	NUT MUTTER	TUERCA MØTRIK	DADO MOER	010D
25		**324604A1**		1	PORCA ECROU	NUT MUTTER	TUERCA MØTRIK	DADO MOER	5780
26		**105720A1**		1	VALVULA VALVE	VALVE VENTIL	VALVULA VALVE	VALVOLA VALVE	P468
26A		**237-6012**		4	O-RING, 0.364" ID x 0.504" OD x 0.07" JOINT TORIQUE	O-RING O-RING	JUNTA TÓRICA O-RING	ANELLO TOROIDALE O-RING	055A
26B		**86993468**		4	MOLA RESSORT	SPRING FEDER	RESORTE FJEDER	MOLLA VEER	100M

29.212.06	05	p1	02/11

PUMP, HYDROSTATIC TANDEM 46CC MDC REAR (L223,L225)
PUMP, HYDROSTATIC TANDEM 46CC MDC REAR (L223,L225)
PUMP, HYDROSTATIC TANDEM 46CC MDC REAR (L223,L225)
PUMP, HYDROSTATIC TANDEM 46CC MDC REAR (L223,L225)

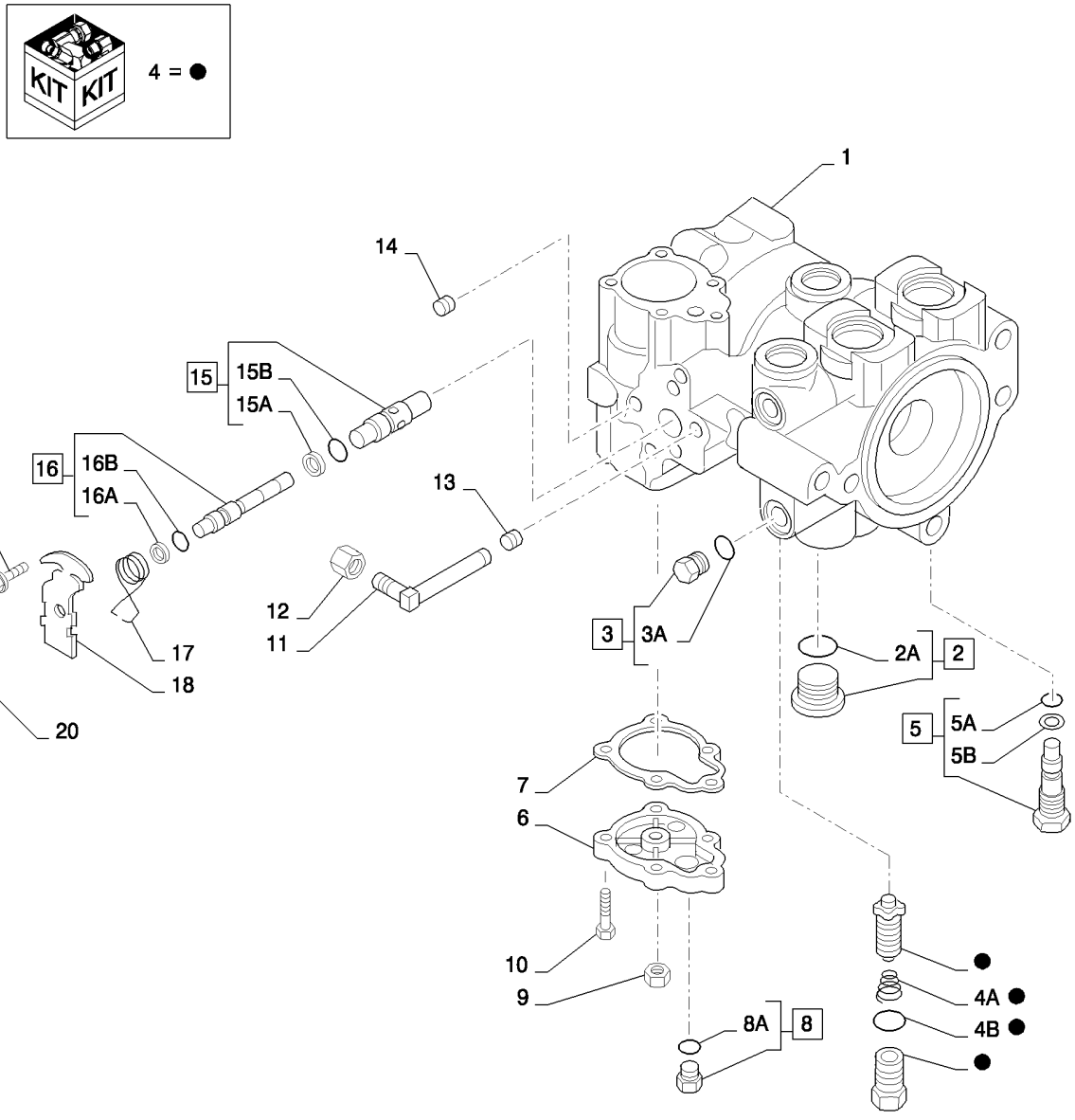

PUMP, HYDROSTATIC TANDEM 46CC MDC REAR (L223,L225)
PUMP, HYDROSTATIC TANDEM 46CC MDC REAR (L223,L225)
PUMP, HYDROSTATIC TANDEM 46CC MDC REAR (L223,L225)
PUMP, HYDROSTATIC TANDEM 46CC MDC REAR (L223,L225)

R	N	P.N.	MOD	Q	Denominação Description	Description Bezeichnung	Denominacion Beskrivelse	Descrizione Beschrijving	L.C.
1		402365A1		1	ALOJAMENTO, Rear	HOUSING	CAVIDAD	ALLOGGIAMENTO	4540
					CARTER	GEHAEUSE	HUS	HUIS	
2		218-5212		3	BUJÃO, Hex Soc, 1 1/16"-12 ORB				
						PLUG	TAPÓN	TAPPO	050T
					BOUCHON	STOPFEN	PROP	PLUG	
2A		237-6012		3	O-RING, 0.364" ID x 0.504" OD x 0.07"				
						O-RING	JUNTA TÓRICA	ANELLO TOROIDALE	055A
					JOINT TORIQUE	O-RING	O-RING	O-RING	
3		218-5155		2	BUJÃO, Hex Hd, 9/16"-18 ORB				
						PLUG	TAPÓN	TAPPO	050T
					BOUCHON	STOPFEN	PROP	PLUG	
3A		237-6006		2	O-RING, 0.114" ID x 0.254" OD x 0.07"				
						O-RING	JUNTA TÓRICA	ANELLO TOROIDALE	055A
					JOINT TORIQUE	O-RING	O-RING	O-RING	
4		105720A1		1	VALVULA	VALVE	VALVULA	VALVOLA	P468
					VALVE	VENTIL	VALVE	VALVE	
4A		86993468		4	MOLA	SPRING	RESORTE	MOLLA	100M
					RESSORT	FEDER	FJEDER	VEER	
4B		237-6012		4	O-RING, 0.364" ID x 0.504" OD x 0.07"				
						O-RING	JUNTA TÓRICA	ANELLO TOROIDALE	055A
					JOINT TORIQUE	O-RING	O-RING	O-RING	
5		87039612		1	VÁLVULA DE DESVIO, Assembly				
						BY-PASS VALVE	VÁLVULA DE DERIVACIÓ	VALVOLA DI BYPASS	P673
					SOUPAPE DE DERIVATI(	BYPASS-VENTIL	OMLØBSVENTIL	BYPASSKLEP	
5A		86993475		2	O-RING	O-RING	JUNTA TÓRICA	ANELLO TOROIDALE	055A
					JOINT TORIQUE	O-RING	O-RING	O-RING	
5B		S99877		2	ANEL, Backup	RING	ANILLO	ANELLO	7175
					ANNEAU	RING	RING	RING	
6		H436065		1	TAMPA	COVER	TAPA	COPERCHIO	2250
					COUVERCLE	DECKEL	COVER	COVER	
7		N14063		1	JUNTA	GASKET	JUNTA HERMETICA	GUARNIZIONE	3720
					JOINT	DICHTUNG, FLACH	PAKNING	DICHTINGSSTUK	
8		218-5155		1	BUJÃO, Hex Hd, 9/16"-18 ORB				
						PLUG	TAPÓN	TAPPO	050T
					BOUCHON	STOPFEN	PROP	PLUG	
8A		237-6006		1	O-RING, 0.114" ID x 0.254" OD x 0.07"				
						O-RING	JUNTA TÓRICA	ANELLO TOROIDALE	055A
					JOINT TORIQUE	O-RING	O-RING	O-RING	
9		N13260		2	PORCA	NUT	TUERCA	DADO	5780
					ECROU	MUTTER	MØTRIK	MOER	
10		87269453		5	PARAFUSO	SCREW	TORNILLO	VITE	040V
					VIS	SCHRAUBE	SKRUE	SCHROEF	
11		218-506		1	COTOVELO, 90º, 7/16"-20, 37º x 1/8"-27, NPTF, XLG				
						ELBOW	CODO	GOMITO	085G
					COUDE	KNIESTÜCK	VINKELRØR	KNIESTUK	
12		86993467		1	TAMPA, Tube, 37 Degree Flare				
						CAP	TAPÓN	TAPPO	052T
					CAPUCHON	KAPPE	TANKDÆKSEL	DOP	

29.212.06	05	p2	02/11

PUMP, HYDROSTATIC TANDEM 46CC MDC REAR (L223,L225)
PUMP, HYDROSTATIC TANDEM 46CC MDC REAR (L223,L225)
PUMP, HYDROSTATIC TANDEM 46CC MDC REAR (L223,L225)
PUMP, HYDROSTATIC TANDEM 46CC MDC REAR (L223,L225)

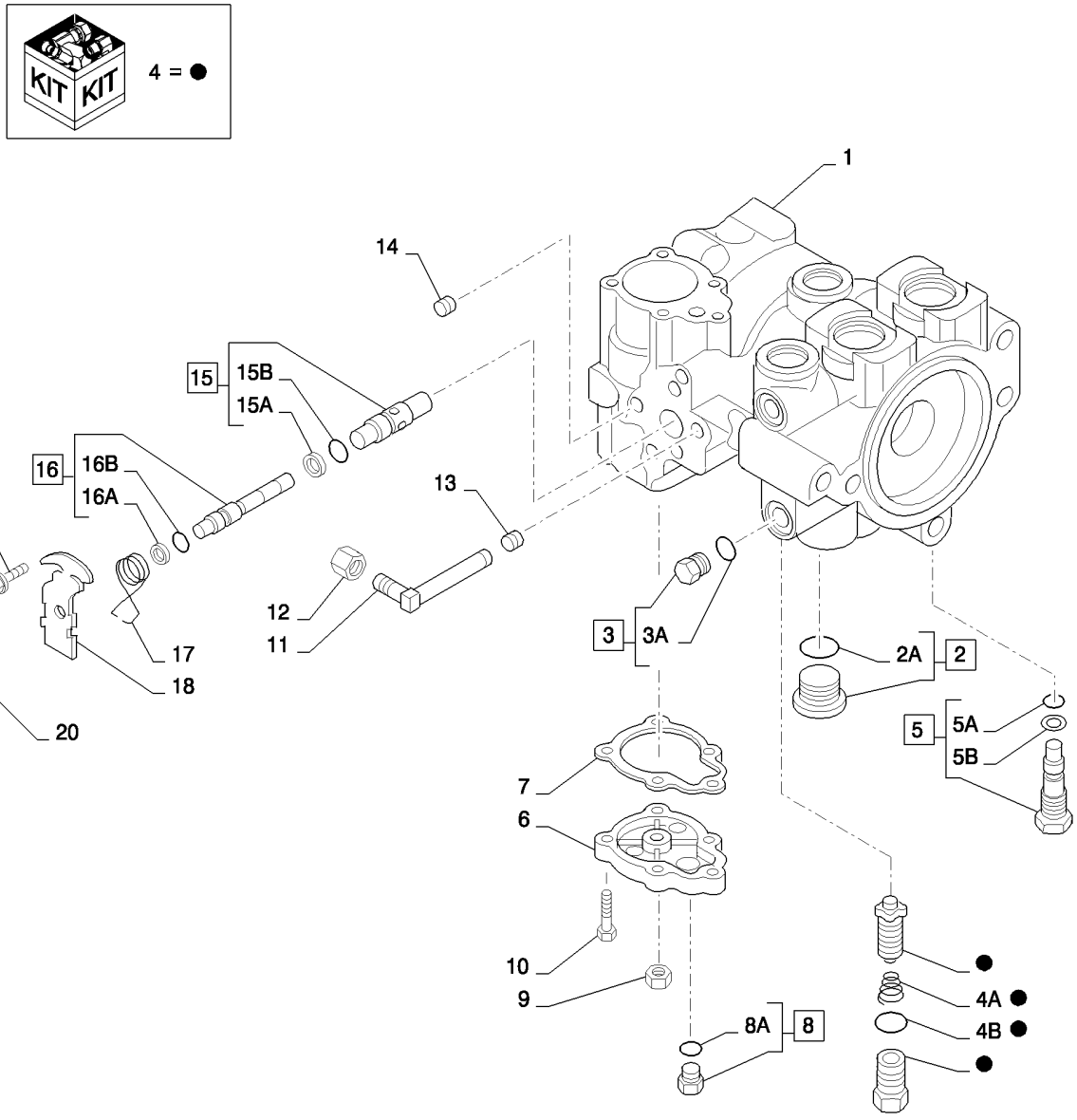

PUMP, HYDROSTATIC TANDEM 46CC MDC REAR (L223,L225)
PUMP, HYDROSTATIC TANDEM 46CC MDC REAR (L223,L225)
PUMP, HYDROSTATIC TANDEM 46CC MDC REAR (L223,L225)
PUMP, HYDROSTATIC TANDEM 46CC MDC REAR (L223,L225)

R	N	P.N.	MOD	Q	Denominação Description	Description Bezeichnung	Denominacion Beskrivelse	Descrizione Beschrijving	L.C.
13		86993479		1	BUJÃO, Pipe BOUCHON	PLUG STOPFEN	TAPÓN PROP	TAPPO PLUG	050T
14		F23137		1	BUJÃO BOUCHON	PLUG STOPFEN	TAPÓN PROP	TAPPO PLUG	6400
15		87039615		1	LUVA, Assembly CHEMISE	SLEEVE BUCHSE	MANGUITO BØSNING	MANICOTTO HOES; HULS	145B
15A		86993483		2	ANEL, Backup, .643 ANNEAU	RING RING	ANILLO RING	ANELLO RING	045A
15B		NSS			SEM SERVIÇO EM SEPARADO, O-Ring NON FOURNI SEPAREM	NOT SERVICED SEPARA NICHT A SEP ERS-T LIEI	NO SE REPARA POR SE SERVICERES IKKE SEPA	NON FORNITO SEPARAT NIET LOS VERKRIJGBAA	064N
16		87042542		1	CARRETO, Assembly TIROIR	SPOOL KOLBENSCHIEBER	BOBINA SPOLE	STELO SPOEL	134P
16A		86993484		2	ANEL ANNEAU	RING RING	ANILLO RING	ANELLO RING	045A
16B		86993475		2	O-RING JOINT TORIQUE	O-RING O-RING	JUNTA TÓRICA O-RING	ANELLO TOROIDALE O-RING	055A
17		N13248		1	MOLA RESSORT	SPRING FEDER	RESORTE FJEDER	MOLLA VEER	8315
18		N13250		1	SUPORTE PATTE FIXATION	BRACKET HALTERUNG	PIEZA DE SOPORTE BESLAG	STAFFA STEUNBEUGEL	1010
19		H435770		2	PARAFUSO VIS	SCREW SCHRAUBE	TORNILLO SKRUE	VITE SCHROEF	7450
20		100713A1		1	ALAVANCA, Handle LEVIER	LEVER HEBEL	PALANCA HAANDTAG	LEVA HEFBOOM	5110
21		H436054		1	PORCA ECROU	NUT MUTTER	TUERCA MØTRIK	DADO MOER	5780
22		493-41033		1	TRAVA DA ARRUELA, Ext Tooth, 5/16" RONDELLE FREIN	LOCK WASHER SICHERUNGSSCHEIBE	ARANDELA DE BLOQUE LÅSESKIVE	RONDELLA DI SICUREZ BORGRING	132R

29.212.06	06	p1	02/11

PUMP, HYDROSTATIC TANDEM 46CC MDC REAR (L223,L225)
PUMP, HYDROSTATIC TANDEM 46CC MDC REAR (L223,L225)
PUMP, HYDROSTATIC TANDEM 46CC MDC REAR (L223,L225)
PUMP, HYDROSTATIC TANDEM 46CC MDC REAR (L223,L225)

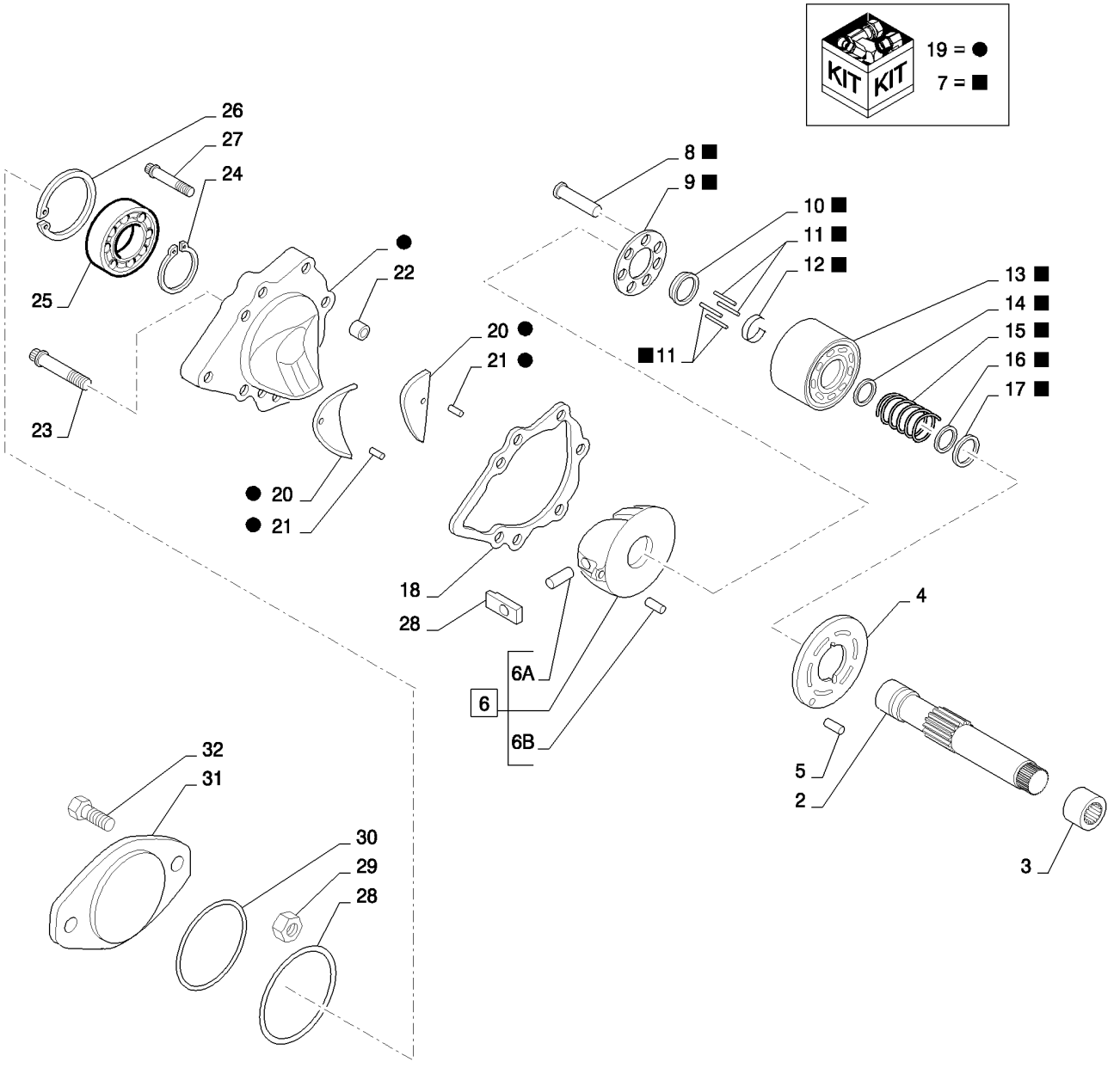

PUMP, HYDROSTATIC TANDEM 46CC MDC REAR (L223,L225)
PUMP, HYDROSTATIC TANDEM 46CC MDC REAR (L223,L225)
PUMP, HYDROSTATIC TANDEM 46CC MDC REAR (L223,L225)
PUMP, HYDROSTATIC TANDEM 46CC MDC REAR (L223,L225)

R	N	P.N.	MOD	Q	Denominação Description	Description Bezeichnung	Denominacion Beskrivelse	Descrizione Beschrijving	L.C.
1		402365A1		1	ALOJAMENTO, Rear CARTER	HOUSING GEHAEUSE	CAVIDAD HUS	ALLOGGIAMENTO HUIS	4540
2		87039623		1	EIXO, Pump ARBRE	SHAFT WELLE	EJE AKSEL	ALBERO AS	7590
3		1277297C1		1	ROLAMENTO, Needle ROULEMENT	BEARING LAGER	COJINETE LEJE	CUSCINETTO LAGER	0600
4		128929A1		1	PLACA ESPESSA, LH PLAQUE, GRANDE	PLATE, LARGE PLATTE, GROSS	PLACA, GRANDE PLATE, LARGE	PIASTRA, LARGA PLATE, LARGE	Z308
5		138-217		1	PINO DE FIXAÇÃO, 3/16" x 7/16", Slotted GOUPILLE DE BLOCAGE	LOCK PIN VERRIEGELUNGSSTIFT	PASADOR DE BLOQUEO LÅSETAP	PERNO DI BLOCCAGGIC BORGPEN	081P
6		87050523		1	PLACA CONJUNTO, Variable PLAQUE (ASSEMBLEE)	PLATE ASSY. PLATTE (KPLT.)	PLACA (CONJUNTO) PLATE ASSY.	PIASTRA, COMPLESSIVO PLATE ASSY.	P433
6A		N13254		2	PINO AXE	PIN BOLZEN	PERNO STIFT	PERNO PEN	6200
6B		324610A1		2	PINO BROCHE	PIN PIN	PASADOR STIFT	PERNO PEN	080P
7		87039625		1	KIT, Cylinder Block KIT	KIT SATZ	KIT SÆT	KIT KIT	305C
8		NSS		14	SEM SERVIÇO EM SEPARADO, Piston Assembly NON FOURNI SEPAREM	NOT SERVICED SEPARA NICHT A SEP ERS-T LIEI	NO SE REPARA POR SE SERVICERES IKKE SEPA	NON FORNITO SEPARAT NIET LOS VERKRIJGBAA	064N
9		NSS		2	SEM SERVIÇO EM SEPARADO, Slipper Guide NON FOURNI SEPAREM	NOT SERVICED SEPARA NICHT A SEP ERS-T LIEI	NO SE REPARA POR SE SERVICERES IKKE SEPA	NON FORNITO SEPARAT NIET LOS VERKRIJGBAA	064N
10		115942A1		2	GUIA GUIDE	GUIDE FUEHRUNG	GUIA STYR	GUIDA GELEIDER	4060
11		110873A1		6	PINO, Slipper, Hold-down BROCHE	PIN PIN	PASADOR STIFT	PERNO PEN	080P
12		115943A1		2	ANEL-TRAVA BAGUE DE BLOCAGE	LOCKING RING SICHERUNGSRING	ANILLO DE BLOQUEO LÅSESKIVE	ANELLO DI BLOCCAGGI BORGRING	051A
13		NSS		2	SEM SERVIÇO EM SEPARADO, Cylinder Block, Non-Bushed NON FOURNI SEPAREM	NOT SERVICED SEPARA NICHT A SEP ERS-T LIEI	NO SE REPARA POR SE SERVICERES IKKE SEPA	NON FORNITO SEPARAT NIET LOS VERKRIJGBAA	064N
14		115946A1		2	DISCO, Washer DISQUE	DISC SCHEIBE	DISCO NAV	DISCO SCHIJF	2700
15		115948A1		2	MOLA RESSORT	SPRING FEDER	RESORTE FJEDER	MOLLA VEER	8315
16		115950A1		2	DISCO, Washer DISQUE	DISC SCHEIBE	DISCO NAV	DISCO SCHIJF	2700
17		NSS		2	SEM SERVIÇO EM SEPARADO, Retaining Ring NON FOURNI SEPAREM	NOT SERVICED SEPARA NICHT A SEP ERS-T LIEI	NO SE REPARA POR SE SERVICERES IKKE SEPA	NON FORNITO SEPARAT NIET LOS VERKRIJGBAA	064N
18		H436704		2	JUNTA JOINT	GASKET DICHTUNG, FLACH	JUNTA HERMETICA PAKNING	GUARNIZIONE DICHTINGSSTUK	3720
19		84383829		1	CONJUNTO DA TAMPA, Pump, Rear COUVERCLE	COVER ASSY ABDECKUNGSBAUGRUP	CONJUNTO DE FUNDAS DÆKSELENHED	COPERCHIO, COMPL AFSCHERMEENHEID	P426

PUMP, HYDROSTATIC TANDEM 46CC MDC REAR (L223,L225)
PUMP, HYDROSTATIC TANDEM 46CC MDC REAR (L223,L225)
PUMP, HYDROSTATIC TANDEM 46CC MDC REAR (L223,L225)
PUMP, HYDROSTATIC TANDEM 46CC MDC REAR (L223,L225)

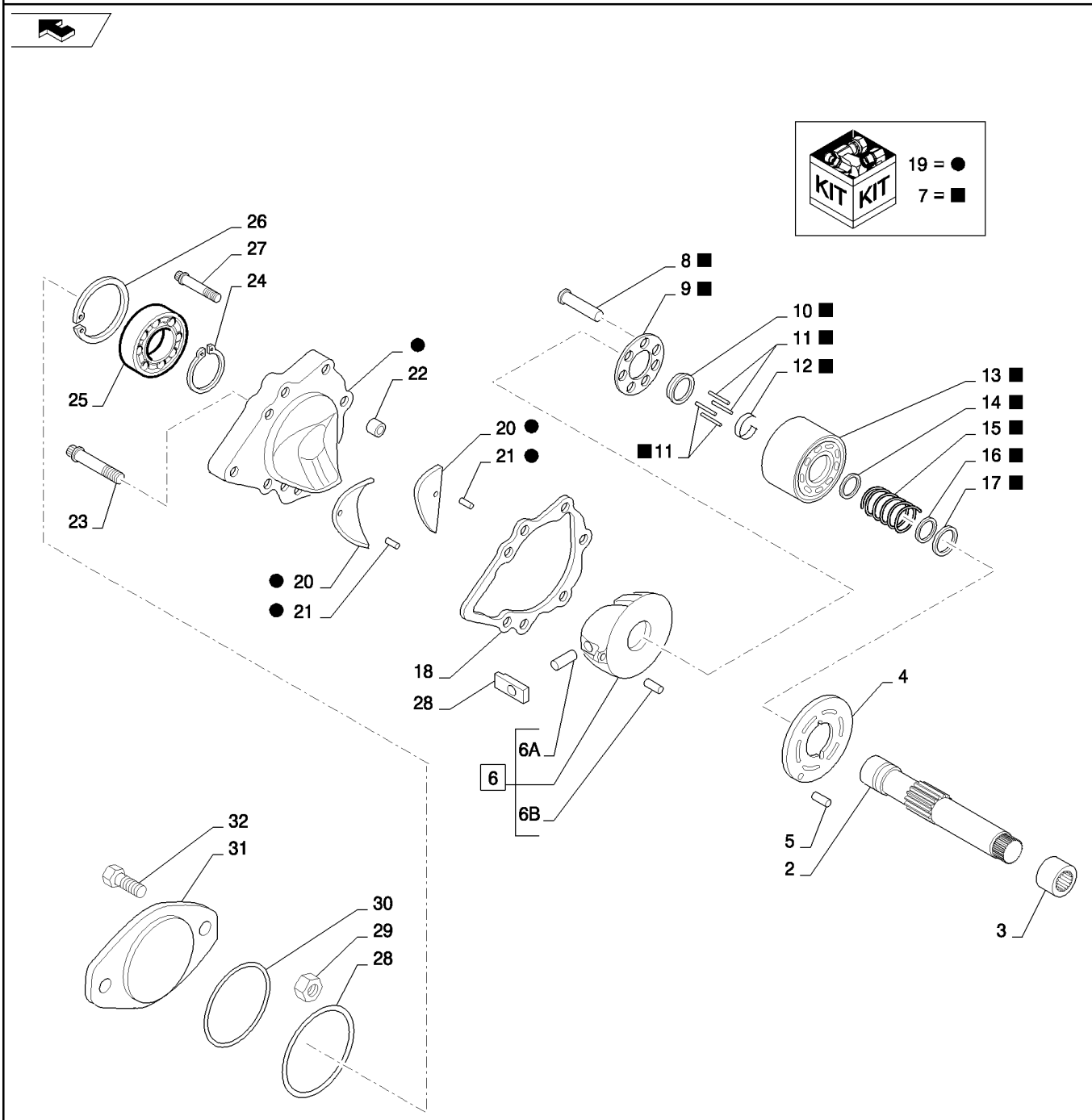

PUMP, HYDROSTATIC TANDEM 46CC MDC REAR (L223,L225)
PUMP, HYDROSTATIC TANDEM 46CC MDC REAR (L223,L225)
PUMP, HYDROSTATIC TANDEM 46CC MDC REAR (L223,L225)
PUMP, HYDROSTATIC TANDEM 46CC MDC REAR (L223,L225)

R	N	P.N.	MOD	Q	Denominação Description	Description Bezeichnung	Denominacion Beskrivelse	Descrizione Beschrijving	L.C.
20		193488A1		2	CAMISA DO ROLAMENTO, Journal				
						BEARING LINER	FORRO INTER. DE COJI	CANNA CUSCINETTO	P114
					COUSSINET	LAGERBUCHSE	LEJEFORING	LAGERVOERING	
21		193494A1		4	PINO-ELÁSTICO	PIN, ROLL	PASADOR TUBOLAR	SPINA ELASTICA	P613
					GOUPILLE ELASTIQUE	SPANNSTIFT	SPLIT	SPANSTIFT	
22		N13994		2	ESPAÇADOR	SPACER	ESPACIADOR	DISTANZIALE	8090
					ENTRETOISE	DISTANZSTÜCK	AFSTANDSSTYKKE	AFSTANDSRING	
23		223677A1		12	PARAFUSO	SCREW	TORNILLO	VITE	7450
					VIS	SCHRAUBE	SKRUE	SCHROEF	
24		100-11137		3	ANEL DE PRESSÃO, #137, Ext				
						SNAP RING	ANILLO DE RESORTE	ANELLO ELASTICO	054A
					ANNEAU D'ARRET	SPRENGRING	LÅSERING	VEERRING	
25		A29183		1	ROLAMENTO ESFÉRICO, 34.994 mm ID x 71.9935 mm OD x 16.94 mm				
						BALL BEARING	RODAMIENTO DE BOLA	CUSCINETTO A SFERE	343C
					ROULEMENT A BILLES	KUGELLAGER	KUGLELEJE	KOGELLAGER	
26		F61018		3	ANEL DE PRESSÃO	SNAP RING	ANILLO DE RESORTE	ANELLO ELASTICO	054A
					ANNEAU D'ARRET	SPRENGRING	LÅSERING	VEERRING	
27		223680A1		2	PARAFUSO ESPECIAL, Screw				
						SPECIAL BOLT	PERNO ESPECIAL	BULLONE SPECIALE	P698
					VIS SPECIALE	SPEZIALSCHRAUBE	SPECIALBOLT	SPECIALE BOUT	
28		N13224		2	MANGUEIRA RÍGIDA	SLEEVE	MANGUITO	MANICOTTO	8000
					MANCHON	MUFFE	TRYKLEJE, KOBLING	LAGER, KOPPELING DRI	
29		425-108		2	PORCA, 1/2"-13, G5	NUT	TUERCA	DADO	010D
					ECROU	MUTTER	MØTRIK	MOER	
30		87013729		1	O-RING, 3.739" ID x 3.879" OD x 0.07"				
						O-RING	JUNTA TÓRICA	ANELLO TOROIDALE	055A
					JOINT TORIQUE	O-RING	O-RING	O-RING	
31		NSS		1	SEM SERVIÇO EM SEPARADO, Cover Plate				
						NOT SERVICED SEPARA	NO SE REPARA POR SE	NON FORNITO SEPARAT	064N
					NON FOURNI SEPAREM	NICHT A SEP ERS-T LIEI	SERVICERES IKKE SEPA	NIET LOS VERKRIJGBAA	
32		13-836		2	PARAFUSO, Hex, 1/2"-13 x 2 1/4", G5				
						BOLT	PERNO	BULLONE	140B
					VIS	SCHRAUBE	BOLT	BOUT	

29.212.07		p1	05/11

PUMP, HYDROSTATIC EH 46CC A20VG ET (C227-C238,L223-L230)
PUMP, HYDROSTATIC EH 46CC A20VG ET (C227-C238,L223-L230)
PUMP, HYDROSTATIC EH 46CC A20VG ET (C227-C238,L223-L230)
PUMP, HYDROSTATIC EH 46CC A20VG ET (C227-C238,L223-L230)

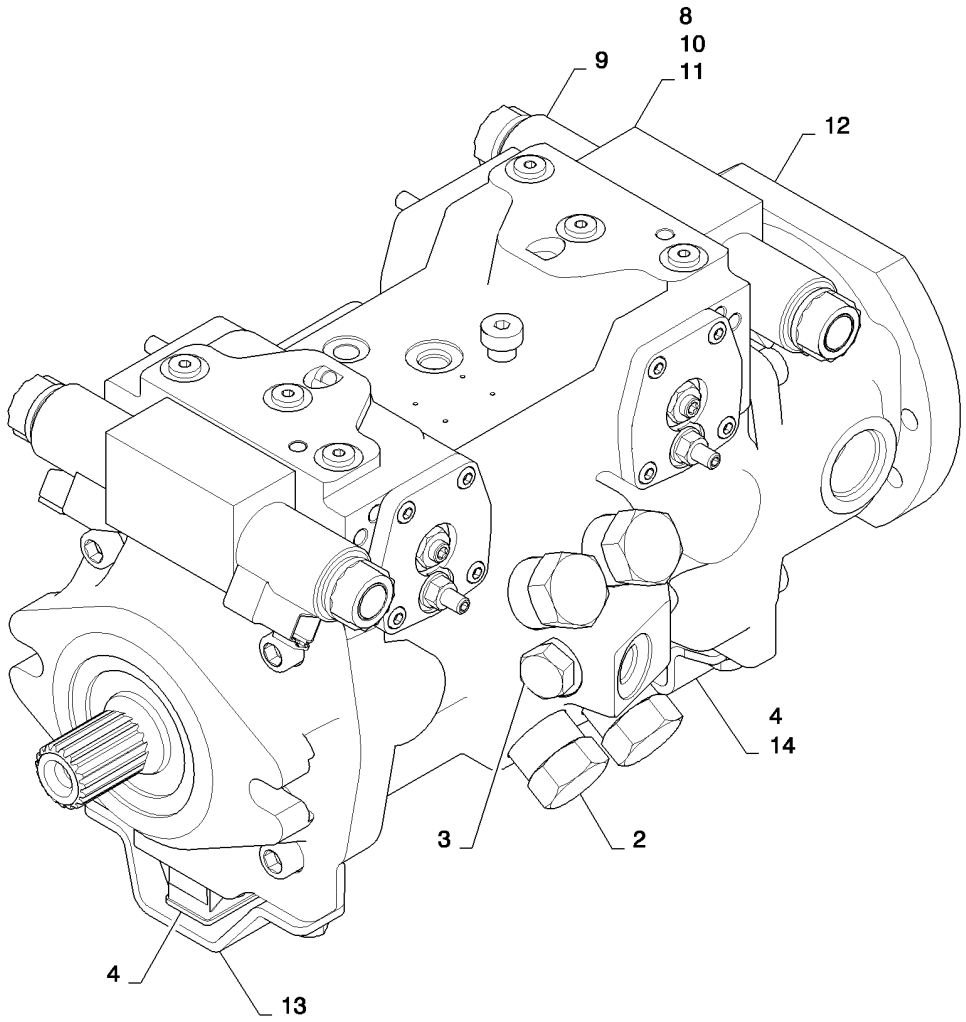

PUMP, HYDROSTATIC EH 46CC A20VG ET (C227-C238,L223-L230)
PUMP, HYDROSTATIC EH 46CC A20VG ET (C227-C238,L223-L230)
PUMP, HYDROSTATIC EH 46CC A20VG ET (C227-C238,L223-L230)
PUMP, HYDROSTATIC EH 46CC A20VG ET (C227-C238,L223-L230)

R	N	P.N.	MOD	Q	Denominação Description	Description Bezeichnung	Denominacion Beskrivelse	Descrizione Beschrijving	L.C.
1		87627399		4	TAMPA, Set of Service Caps (Not Shown)				
						CAP	TAPÓN	TAPPO	052T
					CAPUCHON	KAPPE	TANKDÆKSEL	DOP	
2		87614031		4	VÁLVULA ALÍVIO DA PRESSÃO, 360 Bar				
						PRESSURE RELIEF VAL	VÁLV. ALIVIO DE PRESI	VALV. LIMITATRICE PRE	007V
					CLAPET DECHARGE PR	DRUCKENTLASTUNGSV	SIKKERHEDSVENTIL	OVERDRUKKLEP	
3		87553604		1	VÁLVULA ALÍVIO DA PRESSÃO				
						PRESSURE RELIEF VAL	VÁLV. ALIVIO DE PRESI	VALV. LIMITATRICE PRE	007V
					CLAPET DECHARGE PR	DRUCKENTLASTUNGSV	SIKKERHEDSVENTIL	OVERDRUKKLEP	
4		84356794		2	SENSOR, Angle, A20 Pump	SENSOR	SENSOR	SENSORE	608S
					CAPTEUR	SENSOR	FØLER	SENSOR	
5		84389755		2	VEDAÇÃO, V-Ring (Not Shown)				
						SEAL	ANILLO DE CIERRE	GUARNIZIONE; TENUTA	132A
					JOINT	DICHTUNG	PAKNING	AFDICHTING	
6		84389757		1	VEDAÇÃO, Shaft (Not Shown)				
						SEAL	ANILLO DE CIERRE	GUARNIZIONE; TENUTA	132A
					JOINT	DICHTUNG	PAKNING	AFDICHTING	
7		84389758		4	PORCA, Seal Lock (Not Shown)				
						NUT	TUERCA	DADO	010D
					ECROU	MUTTER	MØTRIK	MOER	
8		84389759		1	MÓDULO, A20ET Control Complete; Incl. Ref. 9, 10, 11				
						MODULE	MÓDULO	MODULO	T102
					MODULE	MODUL	MODUL	MODULE	
9		84389760		4	BOBINA, Proportional Solenoid				
						COIL	BOBINA	BOBINA	083B
					BOBINE	SPULE	SPOLE	SPOEL	
10		84389762		1	MÓDULO, A20 ET Control w/o Coils				
						MODULE	MÓDULO	MODULO	T102
					MODULE	MODUL	MODUL	MODULE	
11		84389763		1	JUNTA, A20 ET Control Module				
						GASKET	JUNTA	GUARNIZIONE	123G
					JOINT	DICHTUNG	PAKNING	PAKKING	
12		84389765		1	BOMBA HIDRÁULICA, A20 Charge				
						HYDRAULIC PUMP	BOMBA HIDRÁULICO	POMPA IDRAULICA	155P
					POMPE HYDRAULIQUE	HYDRAULIKPUMPE	HYDRAULIKPUMPE	HYDRAULISCHE POMP	
13		84389781		1	PROTEÇÃO, A20 Front Angle Sensor				
						SHIELD	PROTECCIÓN	PROTEZIONE	224P
					PROTECTION	SCHILD	BESKYTTELSESKÆRM	AFSCHERMING	
14		84389782		1	PROTEÇÃO, A20 Rear Angle Sensor				
						SHIELD	PROTECCIÓN	PROTEZIONE	224P
					PROTECTION	SCHILD	BESKYTTELSESKÆRM	AFSCHERMING	

SECTION INDEX
35 - Sistemas hidráulicos

35.100.01		CHASSIS HYDRAULICS (L223-230,C232,238)
35.101.02		SELF LEVELING - NONE MED LG (L218-C238)
35.102.01		RIDE CONTROL (L218-C238)
35.102.02		RIDE CONTROL - NONE (L218-C238)
35.204.01		MANUAL COUPLER, GRAY (L218-C238)
35.204.02	01	HYDRAULIC COUPLER (L223-L230,C232,C238)
35.204.02	02	HYDRAULIC COUPLER - BASIC (L218-C238)
35.204.02	03	HYDRAULIC COUPLER CHASSIS PLUMBING - BASIC (L218-C238)
35.220.01	01	AUX HYD, STD FLOW (L223-L230,C232,C238)
35.220.01	01	AUX HYD, STD C.U.P. (L223-L230,C232,C238)
35.220.01	02	AUX HYD, STD, GEAR PUMP (L223-L230,C232,C238)
35.220.01	03	AUX HYD, STD CHASSIS PLUMBING (L223-L230,C232,C238)
35.220.01	04	AUX HYD, STD ARM PLUMBING (L223-L230,C232,C238)
35.220.01	04	AUX HYD, STD C.U.P. ARM PLUMBING (L223-L230,C232,C238)
35.220.01	05	AUX HYD, STD C.U.P. CASE DRAIN CHASSIS PLUMBING (L223-L230,C232,C238)
35.220.02	01	AUX HYD, HIGH FLOW (L223-L230,C232,C238)
35.220.02	02	AUX HYD, HIGH FLOW GEAR PUMP (L223-L230,C232,C238)
35.220.02	03	AUX HYD, HIGH FLOW CHASSIS PLUMBING (L223-L230,C232,C238)
35.220.02	04	AUX HYD, HIGH FLOW ARM PLUMBING (L223-L230,C232,C238)
35.220.02	05	AUX HYD, ARM PLUMBING BASIC (L223-L230,C232,C238)
35.359.01	01	PUMP, EH AND CONTROL VALVE (L223-L230)
35.359.01	02	PUMP, EH AND CONTROL VALVE (L223-L230)
35.359.02	01	PUMP, MECHANICAL (L223-L230)
35.359.02	02	PUMP, MECHANICAL (L223-L230)
35.359.03		CONTROL VALVE, ELECTRO-HYDRAULIC W/ HARNESS (ALL NH)
35.359.04		CONTROL VALVE, MECHANICAL HAND/ELECTRO-HYDRAULIC AUX (L213-L230)
35.359.05		CONTROL VALVE, EH AUX MECH FOOT CONTROL (L213-L230)
35.701.01		LOADER HYDRAULICS (L223,L225,L230,C232,C238)
35.701.02	01	LOADER VALVE PLUMBING (L223,L225,L230,C232,C238)
35.701.02	02	LOADER VALVE PLUMBING (L223,L225,L230,C232,C238)
35.701.03		SUPPLY PLUMBING (LOADER VALVE) (L223-L230,C232,C238)
35.701.04		RETURN PLUMBING (LOADER VALVE) (L223-L230,C232,C238)
35.701.05		2SPD PLUMBING (L223,L225,L230)
35.701.06		BRAKE PLUMBING (L223,L225,L230)
35.701.06	02	BRAKE PLUMBING (L213-L230)
35.730.01		HYDRAULIC CYLINDER, LH LIFT (L223-L230,C232,C238)
35.730.01		HYDRAULIC CYLINDER, RH LIFT (L223-L230,C232,C238)
35.730.02		BUCKET CYLINDER (L223-L230,C232,C238)
35.750.01		TANK, HYDRAULIC (L223,L225,L230,C232,C238)

35.100.01		p1	02/11

CHASSIS HYDRAULICS (L223-230,C232,238)
CHASSIS HYDRAULICS (L223-230,C232,238)
CHASSIS HYDRAULICS (L223-230,C232,238)
CHASSIS HYDRAULICS (L223-230,C232,238)

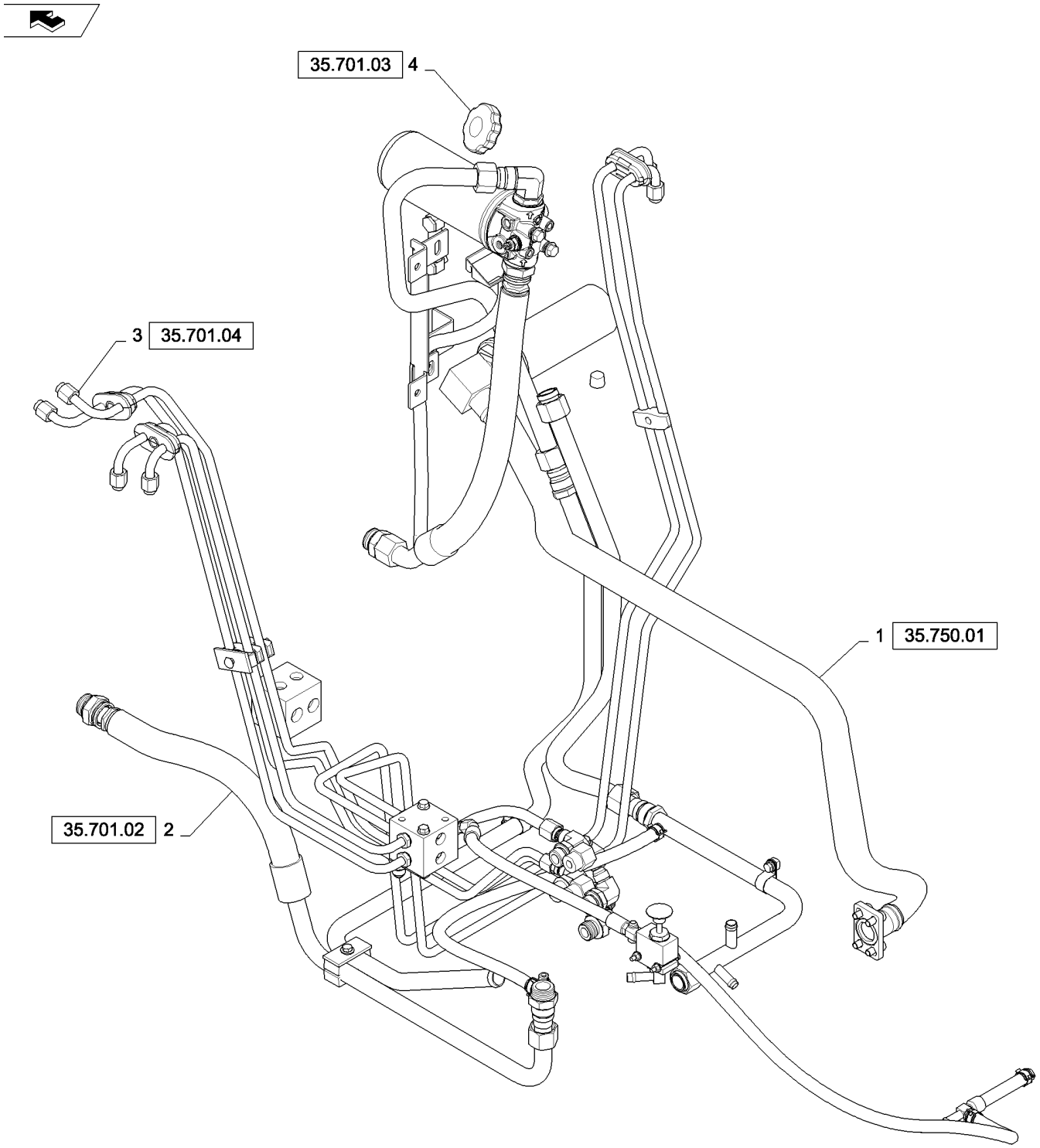

CHASSIS HYDRAULICS (L223-230,C232,238)
CHASSIS HYDRAULICS (L223-230,C232,238)
CHASSIS HYDRAULICS (L223-230,C232,238)
CHASSIS HYDRAULICS (L223-230,C232,238)

R	N	P.N.	MOD	Q	Denominação Description	Description Bezeichnung	Denominacion Beskrivelse	Descrizione Beschrijving	L.C.
1		NSS		1	SEM SERVIÇO EM SEPARADO, Supply Plumbing				
						NOT SERVICED SEPARA	NO SE REPARA POR SE	NON FORNITO SEPARAT	064N
					NON FOURNI SEPAREM	NICHT A SEP ERS-T LIEI	SERVICERES IKKE SEPA	NIET LOS VERKRIJGBAA	
2		NSS		1	SEM SERVIÇO EM SEPARADO, Loader Valve Plumbing				
						NOT SERVICED SEPARA	NO SE REPARA POR SE	NON FORNITO SEPARAT	064N
					NON FOURNI SEPAREM	NICHT A SEP ERS-T LIEI	SERVICERES IKKE SEPA	NIET LOS VERKRIJGBAA	
3		NSS		1	SEM SERVIÇO EM SEPARADO, Return Plumbing				
						NOT SERVICED SEPARA	NO SE REPARA POR SE	NON FORNITO SEPARAT	064N
					NON FOURNI SEPAREM	NICHT A SEP ERS-T LIEI	SERVICERES IKKE SEPA	NIET LOS VERKRIJGBAA	
4		NSS		1	SEM SERVIÇO EM SEPARADO, Hydraulic Tank				
						NOT SERVICED SEPARA	NO SE REPARA POR SE	NON FORNITO SEPARAT	064N
					NON FOURNI SEPAREM	NICHT A SEP ERS-T LIEI	SERVICERES IKKE SEPA	NIET LOS VERKRIJGBAA	

35.101.02		p1	02/11

SELF LEVELING - NONE MED LG (L218-C238)
SELF LEVELING - NONE MED LG (L218-C238)
SELF LEVELING - NONE MED LG (L218-C238)
SELF LEVELING - NONE MED LG (L218-C238)

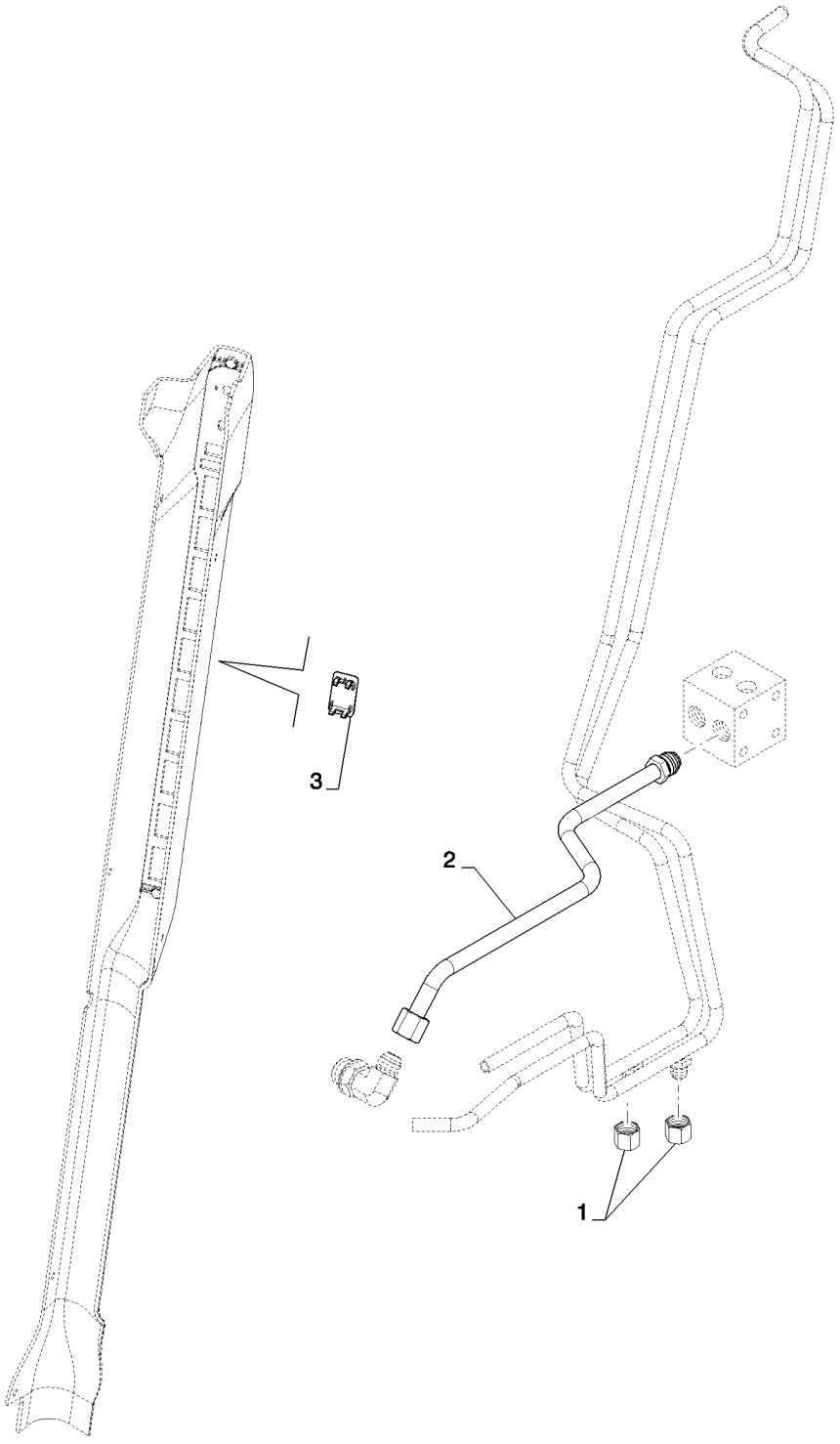

SELF LEVELING - NONE MED LG (L218-C238)
SELF LEVELING - NONE MED LG (L218-C238)
SELF LEVELING - NONE MED LG (L218-C238)
SELF LEVELING - NONE MED LG (L218-C238)

R	N	P.N.	MOD	Q	Denominação Description	Description Bezeichnung	Denominacion Beskrivelse	Descrizione Beschrijving	L.C.
1		262159		2	TAMPA, 37º, 3/4"-16 CAPUCHON	CAP KAPPE	TAPÓN TANKDÆKSEL	TAPPO DOP	052T
2		84186149		1	TUBO RÍGIDO, Assembly, Lower, LDR Valve to Manifold TUYAU RIGIDE	RIGID TUBE ROHR	TUBO RÍGIDO STIFT RØR	TUBO RIGIDO VASTE LEIDING	193T
3		126844A1		1	BUJÃO, Cover BOUCHON	PLUG STOPFEN	TAPÓN PROP	TAPPO PLUG	050T

35.102.01		p1	02/11

RIDE CONTROL (L218-C238)
RIDE CONTROL (L218-C238)
RIDE CONTROL (L218-C238)
RIDE CONTROL (L218-C238)

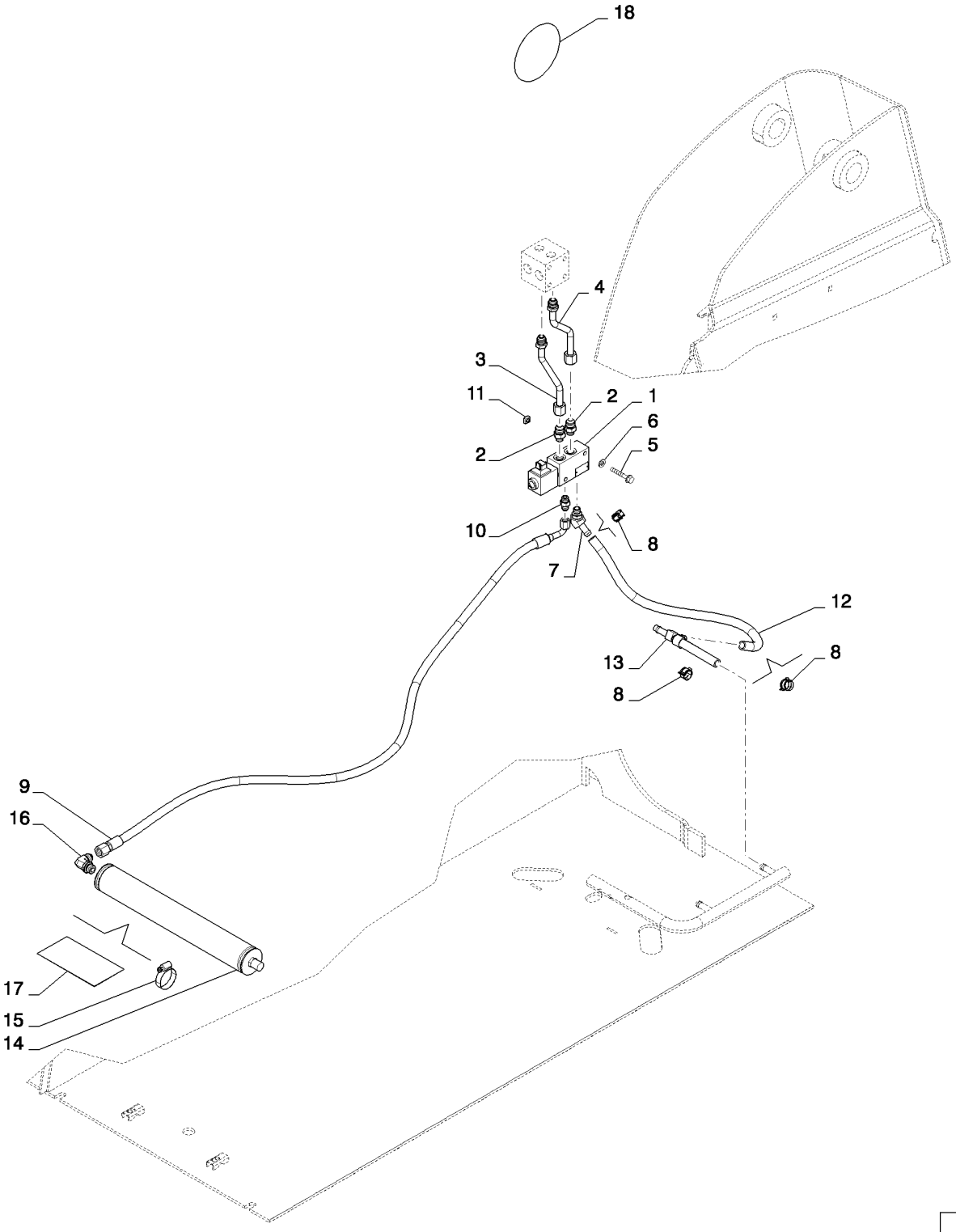

RIDE CONTROL (L218-C238)
RIDE CONTROL (L218-C238)
RIDE CONTROL (L218-C238)
RIDE CONTROL (L218-C238)

R	N	P.N.	MOD	Q	Denominação Description Bezeichnung	Description Denominacion Beskrivelse	Denominacion Descrizione Beschrijving	L.C.
1		84256404		1	VÁLVULA HIDRÁULICA, Ride Control			
					HYDRAULIC VALVE	VÁLVULA HIDRÁULICA	DISTRIBUTORE IDRAULI	010V
					SOUPAPE HYDRAULIQU	HYDRAULIKVENTIL	HYDRAULIKVENTIL	HYDRAULISCHE KLEP
2		86509028		2	CONECTOR HIDRÁUL, 3/4"-16, 37º x 9/16"-18, O-Ring			
					HYD CONNECTOR	CONECTOR HIDRÁULIC	CONNETTORE IDRAULIC	020R
					CONNECTEUR HYDRAU	HYDR STECKVERBINDE	HYDRAULIKSTIK	HYDRAULISCHE AANSLU
3		84375899		1	TUBO RÍGIDO, Hydraulic, Ride Control to Manifold			
					RIGID TUBE	TUBO RÍGIDO	TUBO RIGIDO	193T
					TUYAU RIGIDE	ROHR	STIFT RØR	VASTE LEIDING
4		84375901		1	TUBO RÍGIDO, Hydraulic, Ride Control to Manifold			
					RIGID TUBE	TUBO RÍGIDO	TUBO RIGIDO	193T
					TUYAU RIGIDE	ROHR	STIFT RØR	VASTE LEIDING
5		86511481		2	PARAFUSO, Hex Flg, M8 x 50, 8.8			
					BOLT	PERNO	BULLONE	140B
					VIS	SCHRAUBE	BOLT	BOUT
6		87655042		2	ARRUELA ESPECIAL, M8, 8.80 X 17.5 X 2.2 HTS			
					SPECIAL WASHER	ARANDELA ESPECIAL	RONDELLA SPECIALE	Z333
					RONDELLE SPECIALE	SPEZIALUNTERLEGSCH	SPECIALSKIVE	SPECIALE RING
7		87302140		1	CONEXÃO	FITTING	ACOPLAMIENTO	RACCORDO	3300
					RACCORD	ARMATUR	FITTING	AANSLUITING
8		87443510		3	BRAÇADEIRA MANGUEIRA, M20			
					HOSE CLAMP	ABRAZADERA DE MANG	FASCETTA STRINGITUB	P729
					COLLIER POUR FLEXIBL	SCHLAUCHSCHELLE	SLANGEKLEMME	SLANGKLEM
9		84331280		1	MANGUEIRA, Assembly, RC Valve to ACC			
					HOSE	TUBO	TUBO FLESSIBILE	030M
					FLEXIBLE	SCHLAUCH	SLANGE	SLANG
10		76350		1	CONECTOR HIDRÁUL, 9/16"-18, 37º x 9/16"-18, O-Ring			
					HYD CONNECTOR	CONECTOR HIDRÁULIC	CONNETTORE IDRAULIC	020R
					CONNECTEUR HYDRAU	HYDR STECKVERBINDE	HYDRAULIKSTIK	HYDRAULISCHE AANSLU
11		229197A1		2	PORCA, Square	NUT	TUERCA	DADO	5780
					ECROU	MUTTER	MØTRIK	MOER
12		84259548		1	MANGUEIRA, LOL, Ride Control Drain			
					HOSE	TUBO	TUBO FLESSIBILE	030M
					FLEXIBLE	SCHLAUCH	SLANGE	SLANG
13		84259682		1	CONEXÃO EM T, Assembly, Option			
					UNION TEE	RACOR EN T	RACCORDO A T	A134
					RACCORD EN T	T-VERSCHRAUBUNG	T-FORSKRUNING	KOPPEL-T-STUK
14		87403797		1	ACUMULADOR, Hydraulic	ACCUMULATOR	ACUMULADOR	ACCUMULATORE	037A
					ACCUMULATEUR	DRUCKSPEICHER	AKKUMULATOR	ACCUMULATOR
15		86624194		2	BRAÇADEIRA MANGUEIRA, #36, 1.81/2.75 Type F Worm			
					HOSE CLAMP	ABRAZADERA DE MANG	FASCETTA STRINGITUB	P729
					COLLIER POUR FLEXIBL	SCHLAUCHSCHELLE	SLANGEKLEMME	SLANGKLEM
16		128830		1	COTOVELO, 90º, 3/4"-16, 37º x 3/4"-16, O-Ring			
					ELBOW	CODO	GOMITO	085G
					COUDE	KNIESTÜCK	VINKELRØR	KNIESTUK
17		328903A1		1	DECALCOMANIA, Warning - Pressurized System			
					DECAL	CALCOMANIA	DECALCOMANIA	P903
					DECALCOMANIE	ABZIEHBILD	TRANSFER	DECAL

RIDE CONTROL (L218-C238)
RIDE CONTROL (L218-C238)
RIDE CONTROL (L218-C238)
RIDE CONTROL (L218-C238)

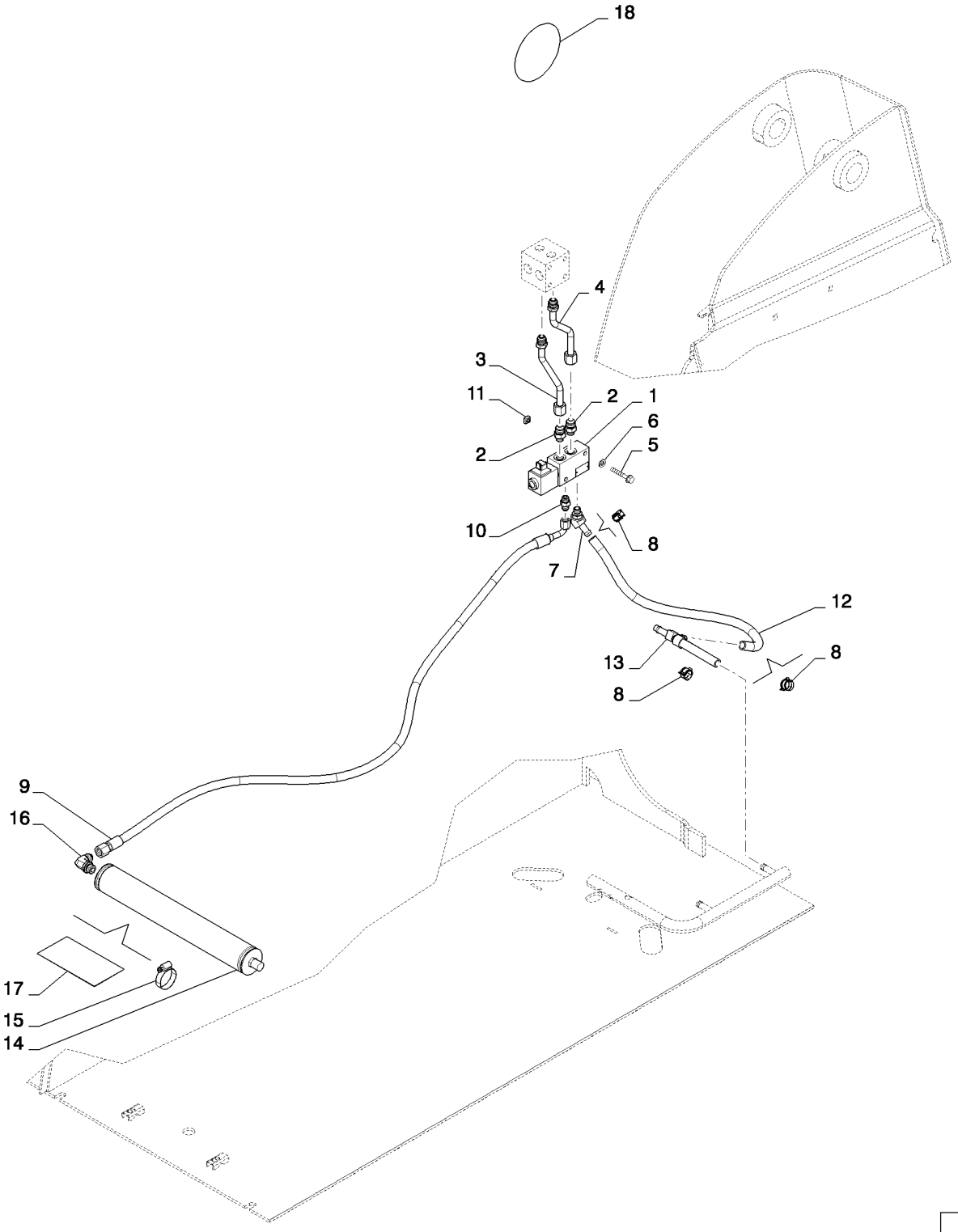

RIDE CONTROL (L218-C238)
RIDE CONTROL (L218-C238)
RIDE CONTROL (L218-C238)
RIDE CONTROL (L218-C238)

R	N	P.N.	MOD	Q	Denominação Description	Description Bezeichnung	Denominacion Beskrivelse	Descrizione Beschrijving	L.C.
18		**304083A1**		2	DECALCOMANIA, Ride Control Option				
						DECAL	CALCOMANIA	DECALCOMANIA	P903
					DECALCOMANIE	ABZIEHBILD	TRANSFER	DECAL	

RIDE CONTROL - NONE (L218-C238)
RIDE CONTROL - NONE (L218-C238)
RIDE CONTROL - NONE (L218-C238)
RIDE CONTROL - NONE (L218-C238)

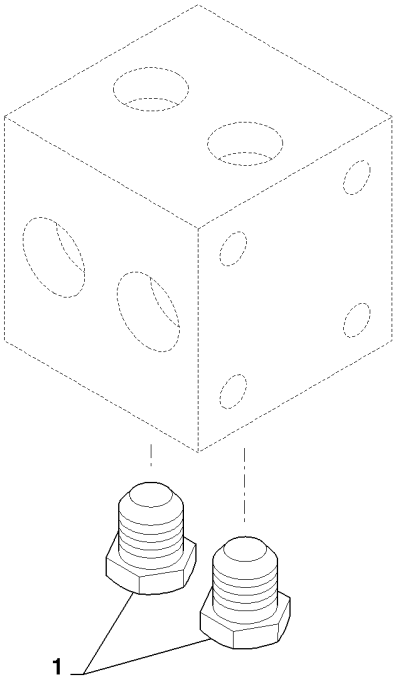

RIDE CONTROL - NONE (L218-C238)
RIDE CONTROL - NONE (L218-C238)
RIDE CONTROL - NONE (L218-C238)
RIDE CONTROL - NONE (L218-C238)

R	N	P.N.	MOD	Q	Denominação Description	Description Bezeichnung	Denominacion Beskrivelse	Descrizione Beschrijving	L.C.
1		86511868		2	BUJÃO, 3/4"-16, 37° BOUCHON	PLUG STOPFEN	TAPÓN PROP	TAPPO PLUG	050T

35.204.01		p1	03/11

MANUAL COUPLER, GRAY (L218-C238)
MANUAL COUPLER, GRAY (L218-C238)
MANUAL COUPLER, GRAY (L218-C238)
MANUAL COUPLER, GRAY (L218-C238)

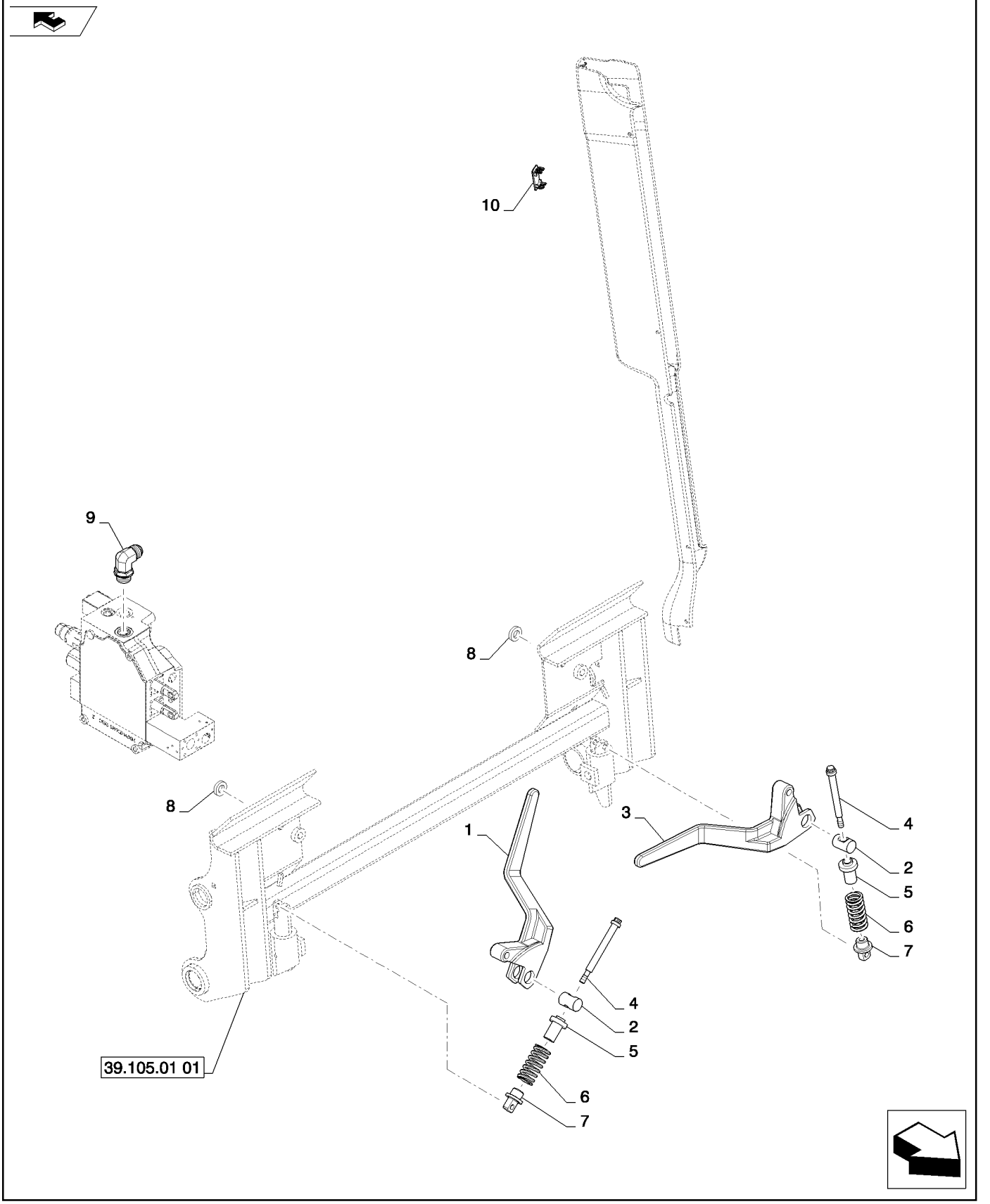

MANUAL COUPLER, GRAY (L218-C238)
MANUAL COUPLER, GRAY (L218-C238)
MANUAL COUPLER, GRAY (L218-C238)
MANUAL COUPLER, GRAY (L218-C238)

R	N	P.N.	MOD	Q	Denominação Description	Description Bezeichnung	Denominacion Beskrivelse	Descrizione Beschrijving	L.C.
1		86633196		1	MANILHA, RH Painted, CE Gray				
						HANDLE	MANECILLA	MANIGLIA	020M
					POIGNEE	GRIFF	HÅNDTAG	HENDEL	
2		9829733		2	PINO	PIN	PASADOR	PERNO	080P
					BROCHE	PIN	STIFT	PEN	
3		86633195		1	MANILHA, LH Painted, CE Gray				
						HANDLE	MANECILLA	MANIGLIA	020M
					POIGNEE	GRIFF	HÅNDTAG	HENDEL	
4		87533223		2	PINO, 12PT, 1/2in Shank, 3/8in Thread				
						PIN	PASADOR	PERNO	080P
					BROCHE	PIN	STIFT	PEN	
5		86610166		2	GUIA	GUIDE	GUÍA	GUIDA	145G
					GUIDE	FÜHRUNG	STYR	GELEIDER	
6		84218843		2	MOLA DE COMPRESSÃO	COMPRESSION SPRING	RESORTE DE COMPRES	MOLLA A COMPRESSIOI	Z641
					RESSORT DE COMPRES	DRUCKFEDER	TRYKFJEDER	COMPRESSIEVEER	
7		87579303		2	PINO, NH	PIN	PASADOR	PERNO	080P
					BROCHE	PIN	STIFT	PEN	
8		87655046		2	ARRUELA ESPECIAL, M10, 10.65 X 23.0 X 2.2MM HTS				
						SPECIAL WASHER	ARANDELA ESPECIAL	RONDELLA SPECIALE	Z333
					RONDELLE SPECIALE	SPEZIALUNTERLEGSCH	SPECIALSKIVE	SPECIALE RING	
9		322894		1	COTOVELO, 90º, 1 1/16"-12, 37º x 1 1/16"-12, O-Ring				
						ELBOW	CODO	GOMITO	085G
					COUDE	KNIESTÜCK	VINKELRØR	KNIESTUK	
10		126844A1		1	BUJÃO, Cover	PLUG	TAPÓN	TAPPO	050T
					BOUCHON	STOPFEN	PROP	PLUG	
11		87412041		2	ESPAÇADOR, Bushing (Not Shown)				
						SPACER	SEPARADOR	DISTANZIALE	075D
					ENTRETOISE	DISTANZSTÜCK	AFSTANDSSTYKKE	AFSTANDSSTUK	

35.204.02	01	p1	07/11

HYDRAULIC COUPLER (L223-L230,C232,C238)
HYDRAULIC COUPLER (L223-L230,C232,C238)
HYDRAULIC COUPLER (L223-L230,C232,C238)
HYDRAULIC COUPLER (L223-L230,C232,C238)

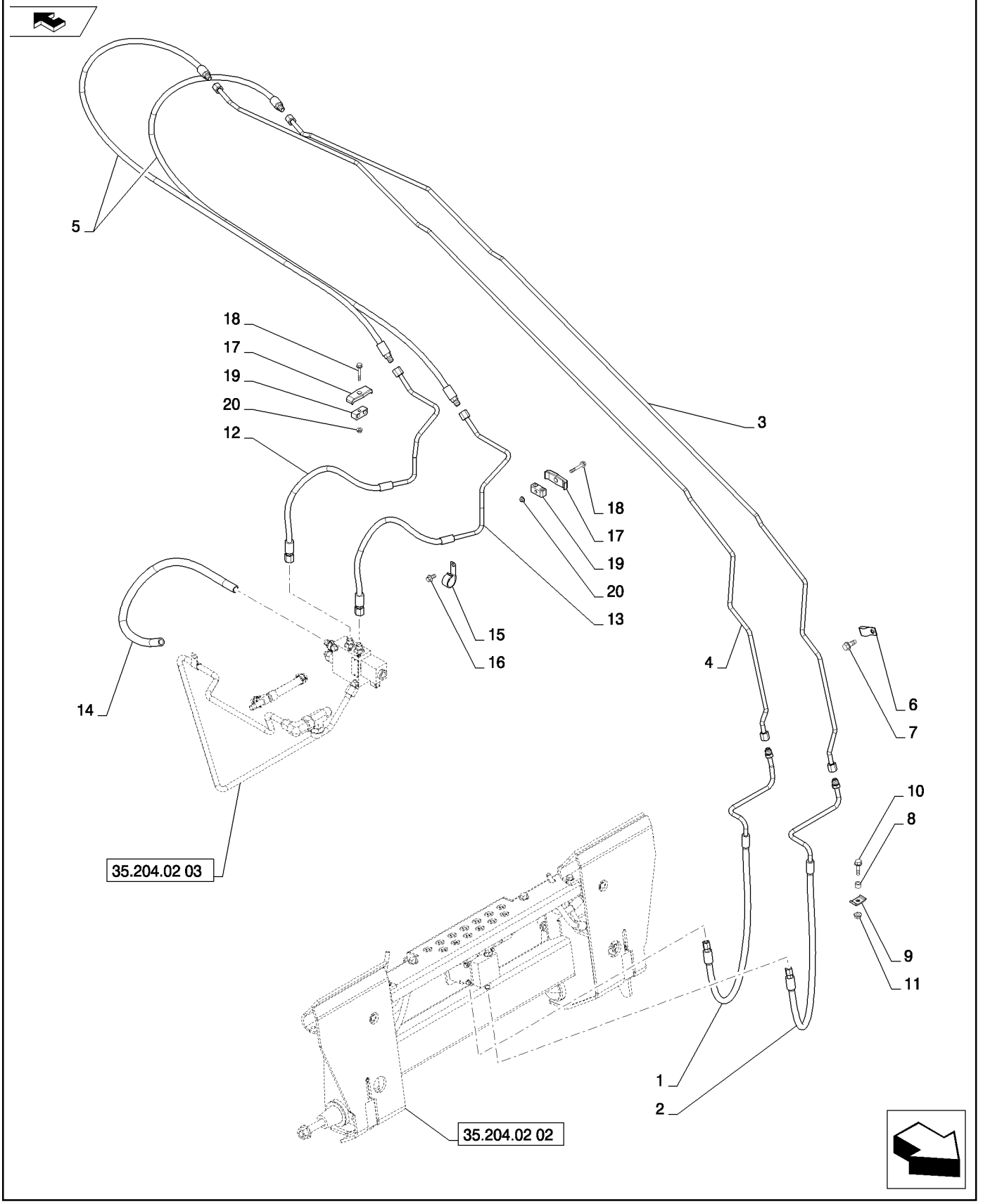

HYDRAULIC COUPLER (L223-L230,C232,C238)
HYDRAULIC COUPLER (L223-L230,C232,C238)
HYDRAULIC COUPLER (L223-L230,C232,C238)
HYDRAULIC COUPLER (L223-L230,C232,C238)

R	N	P.N.	MOD	Q	Denominação Description	Description Bezeichnung	Denominacion Beskrivelse	Descrizione Beschrijving	L.C.
1		84351547		1	TUBO HIDRÁULICO, Step to Coupler				
						HYD. TUBE	TUBO HIDRÁULICO	TUBO IDRAULICO	190T
					TUYAU HYDRAULIQUE	HYDRAULIKLEITUNG	HYD. RØR	HYDRAULISCHE LEIDIN(	
2		84351545		1	TUBO HIDRÁULICO, Step to Coupler				
						HYD. TUBE	TUBO HIDRÁULICO	TUBO IDRAULICO	190T
					TUYAU HYDRAULIQUE	HYDRAULIKLEITUNG	HYD. RØR	HYDRAULISCHE LEIDIN(	
3		84350178		1	TUBO HIDRÁULICO, Hydraulic Coupler				
						HYD. TUBE	TUBO HIDRÁULICO	TUBO IDRAULICO	190T
					TUYAU HYDRAULIQUE	HYDRAULIKLEITUNG	HYD. RØR	HYDRAULISCHE LEIDIN(	
4		84350180		1	TUBO HIDRÁULICO, Hydraulic Coupler				
						HYD. TUBE	TUBO HIDRÁULICO	TUBO IDRAULICO	190T
					TUYAU HYDRAULIQUE	HYDRAULIKLEITUNG	HYD. RØR	HYDRAULISCHE LEIDIN(	
5		84281694		2	CONJ. MANGUEIRA, Hydraulic Coupler				
						HOSE ASSY.	CONJUNTO DE TUBOS	COMPLESS. TUBO FLES	P457
					ENSEMBLE DE FLEXIBLE	SCHLAUCHBAUGRUPPE	SLANGEENHED	SLANGEENHEID	
6		605025		1	BRAÇADEIRA, Insulated	CLAMP	ABRAZADERA	MORSETTO	120M
					COLLIER	KLEMME	SPÆNDEBÅND	KLEM	
7		280476		1	PARAFUSO, Hex Wash Hd, 3/8" x 1"				
						SELF-TAP SCREW	TORNILLO AUTORROSC	VITE AUTOFILETTANTE	062V
					VIS AUTOTARAUDEUSE	SELBSTSCHN SCHRAUE	SELVLÅSENDE BOLT	ZELFTAPPENDE SCHRO	
8		87342191		1	ARRUELA PLANA, Spacer	WASHER	ARANDELA	RONDELLA	131R
					RONDELLE	UNTERLEGSCHEIBE	FLADSKIVE	SLUITRING	
9		84254052		1	BRAÇADEIRA MANGUEIRA, Tube				
						HOSE CLAMP	ABRAZADERA DE MANG	FASCETTA STRINGITUB	P729
					COLLIER POUR FLEXIBL	SCHLAUCHSCHELLE	SLANGEKLEMME	SLANGKLEM	
10		9804260		1	PARAFUSO, Hex Flg, M8 x 30, 8.8, Full Thd				
						BOLT	PERNO	BULLONE	140B
					VIS	SCHRAUBE	BOLT	BOUT	
11		9804277		1	PORCA, M8 x 1.25, Flg, Cl 8				
						NUT	TUERCA	DADO	010D
					ECROU	MUTTER	MØTRIK	MOER	
12		84281772		1	TUBO HIDRÁULICO, Hydraulic Coupler				
						HYD. TUBE	TUBO HIDRÁULICO	TUBO IDRAULICO	190T
					TUYAU HYDRAULIQUE	HYDRAULIKLEITUNG	HYD. RØR	HYDRAULISCHE LEIDIN(	
13		84281774		1	TUBO HIDRÁULICO, Hydraulic Coupler				
						HYD. TUBE	TUBO HIDRÁULICO	TUBO IDRAULICO	190T
					TUYAU HYDRAULIQUE	HYDRAULIKLEITUNG	HYD. RØR	HYDRAULISCHE LEIDIN(	
14		84201227		1	MANGUEIRA, Hydraulic Coupler Drain				
						HOSE	TUBO	TUBO FLESSIBILE	030M
					FLEXIBLE	SCHLAUCH	SLANGE	SLANG	
15		87313351		1	GRAMPO, 25.4mm	CLIP	ABRAZADERA	FERMO	045F
					COLLIER	KLAMMER	KLIPS	KLEM	
16		87752074		1	PARAFUSO, M8 X 16	SCREW	TORNILLO	VITE	040V
					VIS	SCHRAUBE	SKRUE	SCHROEF	
17		D120614		2	BRACADEIRA, Tube	CLAMP	COLLAR	MORSETTO	1640
					COLLIER	SCHELLE	CLAMP	CLAMP	
18		86511840		2	PARAFUSO, Hex Flg, M6 x 40, 8.8				
						BOLT	PERNO	BULLONE	140B
					VIS	SCHRAUBE	BOLT	BOUT	

35.204.02	01	p2	07/11

HYDRAULIC COUPLER (L223-L230,C232,C238)
HYDRAULIC COUPLER (L223-L230,C232,C238)
HYDRAULIC COUPLER (L223-L230,C232,C238)
HYDRAULIC COUPLER (L223-L230,C232,C238)

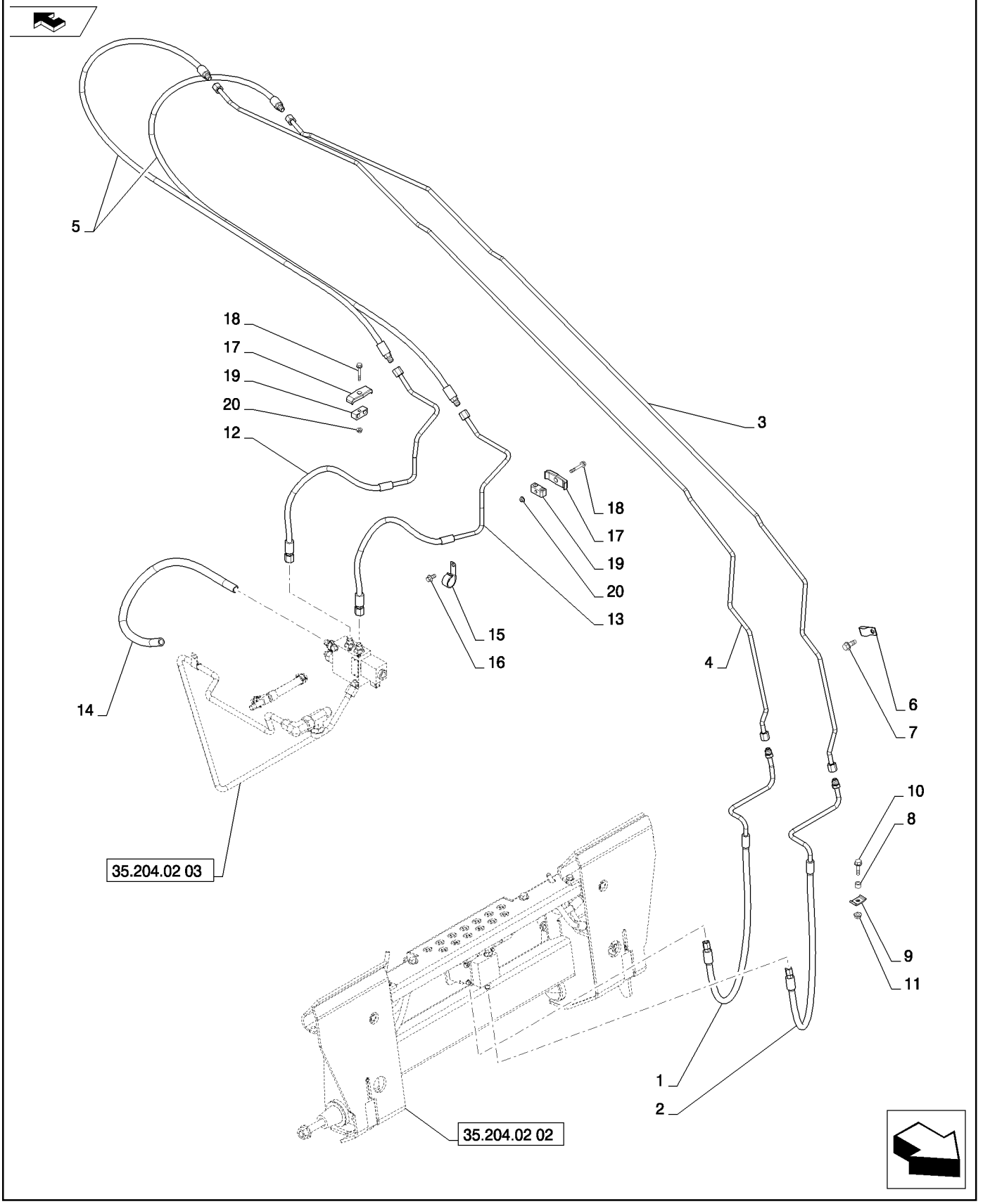

HYDRAULIC COUPLER (L223-L230,C232,C238)
HYDRAULIC COUPLER (L223-L230,C232,C238)
HYDRAULIC COUPLER (L223-L230,C232,C238)
HYDRAULIC COUPLER (L223-L230,C232,C238)

R	N	P.N.	MOD	Q	Denominação Description	Description Bezeichnung	Denominacion Beskrivelse	Descrizione Beschrijving	L.C.
19		**604896**		2	BRAÇADEIRA, Double COLLIER	CLAMP KLEMME	ABRAZADERA SPÆNDEBÅND	MORSETTO KLEM	120M
20		**9804276**		2	PORCA, M6 x 1, Flg, Cl 8 ECROU	NUT MUTTER	TUERCA MØTRIK	DADO MOER	010D

35.204.02	02	p1	02/11

HYDRAULIC COUPLER - BASIC (L218-C238)
HYDRAULIC COUPLER - BASIC (L218-C238)
HYDRAULIC COUPLER - BASIC (L218-C238)
HYDRAULIC COUPLER - BASIC (L218-C238)

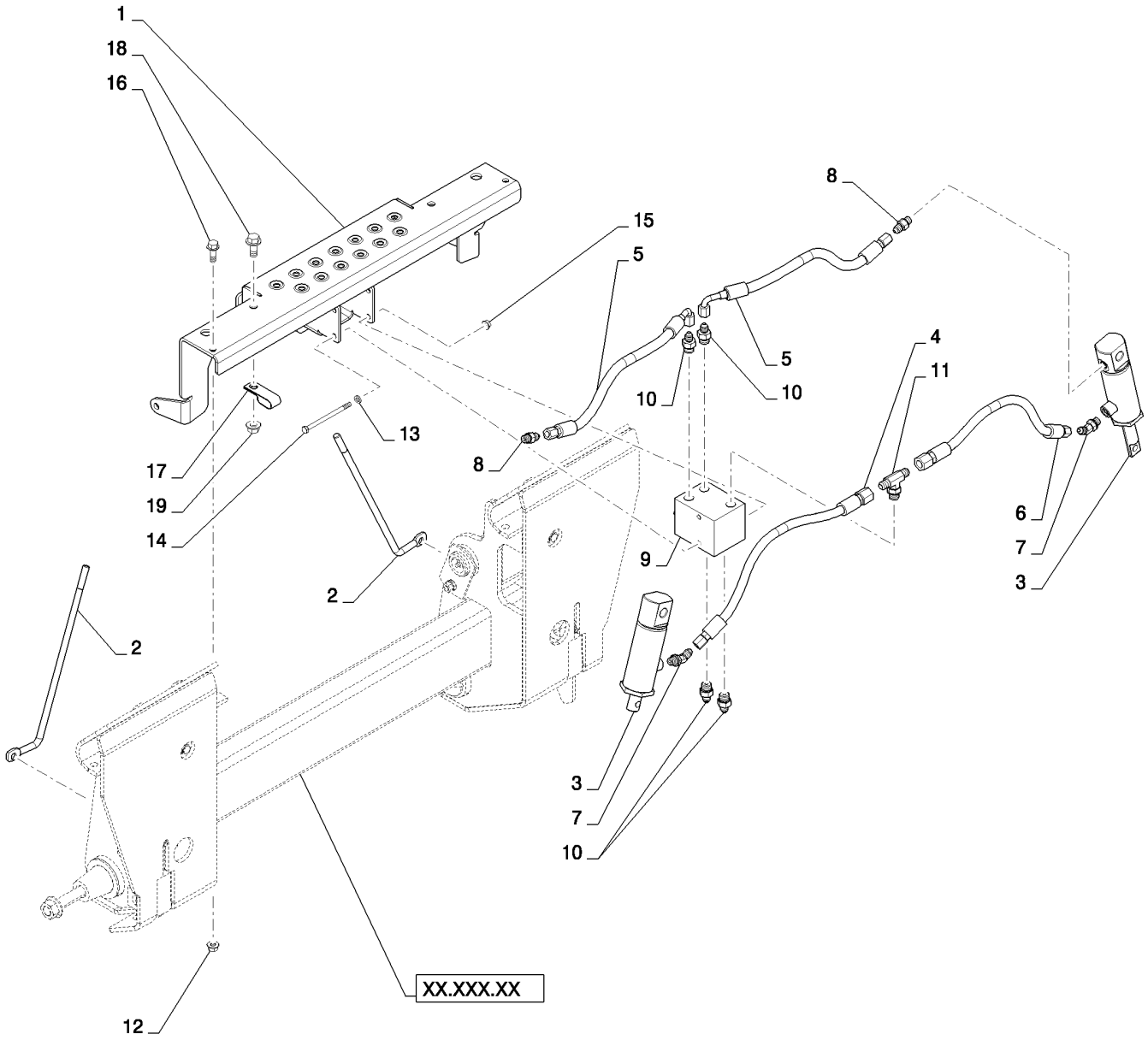

HYDRAULIC COUPLER - BASIC (L218-C238)
HYDRAULIC COUPLER - BASIC (L218-C238)
HYDRAULIC COUPLER - BASIC (L218-C238)
HYDRAULIC COUPLER - BASIC (L218-C238)

R	N	P.N.	MOD	Q	Denominação Description	Description Bezeichnung	Denominacion Beskrivelse	Descrizione Beschrijving	L.C.
1		84339847		1	ESTRIBO, Hydraulic Coupler, Gray				
						STEP	PELDAÑO	GRADINO	116M
					MARCHE-PIED	SCHRITT	TRINPLADE	TREDE	
2		84387739		2	HASTE, Hydraulic Coupler Position Indicator				
						ROD	VARILLA	ASTA	090A
					TIGE	STANGE	STANG	STANG	
1		84339845		1	ESTRIBO, Hydraulic Coupler, Power Tan				
						STEP	PELDAÑO	GRADINO	116M
					MARCHE-PIED	SCHRITT	TRINPLADE	TREDE	
3		87442337		2	CILINDRO, Hydraulic Coupler				
						CYLINDER	CILINDRO	CILINDRO	2480
					VERIN	ZYLINDER	CYLINDER	CYLINDER	
4		84345506		1	MANGUEIRA, Coupler Cylinder				
						HOSE	TUBO	TUBO FLESSIBILE	030M
					FLEXIBLE	SCHLAUCH	SLANGE	SLANG	
5		84345496		2	MANGUEIRA, Coupler Cylinder				
						HOSE	TUBO	TUBO FLESSIBILE	030M
					FLEXIBLE	SCHLAUCH	SLANGE	SLANG	
6		84345532		1	MANGUEIRA, Coupler Cylinder				
						HOSE	TUBO	TUBO FLESSIBILE	030M
					FLEXIBLE	SCHLAUCH	SLANGE	SLANG	
7		86512993		2	COTOVELO, 45º, 7/16"-20, 37º x 7/16"-20, O-Ring				
						ELBOW	CODO	GOMITO	085G
					COUDE	KNIESTÜCK	VINKELRØR	KNIESTUK	
8		265235		2	CONECTOR HIDRÁUL, 7/16"-20, 37º x 7/16"-20, O-Ring				
						HYD CONNECTOR	CONECTOR HIDRÁULIC	CONNETTORE IDRAULIC	020R
					CONNECTEUR HYDRAU	HYDR STECKVERBINDE	HYDRAULIKSTIK	HYDRAULISCHE AANSLI	
9		294741A1		1	VÁLVULA CHECAGEM	CHECK VALVE	VÁLVULA DE COMPROB.	VALVOLA DI RITEGNO	P394
					CLAPET ANTI-RETOUR	RÜCKSCHLAGVENTIL	KONTRAVENTIL	TERUGSLAGKLEP	
10		139398		4	CONECTOR HIDRÁUL, 7/16"-20, 37º x 9/16"-18, O-Ring				
						HYD CONNECTOR	CONECTOR HIDRÁULIC	CONNETTORE IDRAULIC	020R
					CONNECTEUR HYDRAU	HYDR STECKVERBINDE	HYDRAULIKSTIK	HYDRAULISCHE AANSLI	
11		163335		1	T, 9/16"-18, 37º x 9/16"-18, O-Ring Br				
						TEE	RACOR EN T	PEZZO A T	9020
					RACCORD EN T	T-STÜCK	T-STYKKE	T-STUK	
12		9804277		2	PORCA, M8 x 1.25, Flg, Cl 8				
						NUT	TUERCA	DADO	010D
					ECROU	MUTTER	MØTRIK	MOER	
13		86588450		2	ARRUELA PLANA, M6 x 12 x 1.6 Thk				
						WASHER	ARANDELA	RONDELLA	131R
					RONDELLE	UNTERLEGSCHEIBE	FLADSKIVE	SLUITRING	
14		9850685		2	PARAFUSO, Hex, M6 x 90, 8.8				
						BOLT	PERNO	BULLONE	140B
					VIS	SCHRAUBE	BOLT	BOUT	
15		9804276		2	PORCA, M6 x 1, Flg, Cl 8	NUT	TUERCA	DADO	010D
					ECROU	MUTTER	MØTRIK	MOER	
16		9671714		2	PARAFUSO, Hex Flg, M8 x 25, 8.8				
						BOLT	PERNO	BULLONE	140B
					VIS	SCHRAUBE	BOLT	BOUT	

35.204.02	02	p2	02/11

HYDRAULIC COUPLER - BASIC (L218-C238)
HYDRAULIC COUPLER - BASIC (L218-C238)
HYDRAULIC COUPLER - BASIC (L218-C238)
HYDRAULIC COUPLER - BASIC (L218-C238)

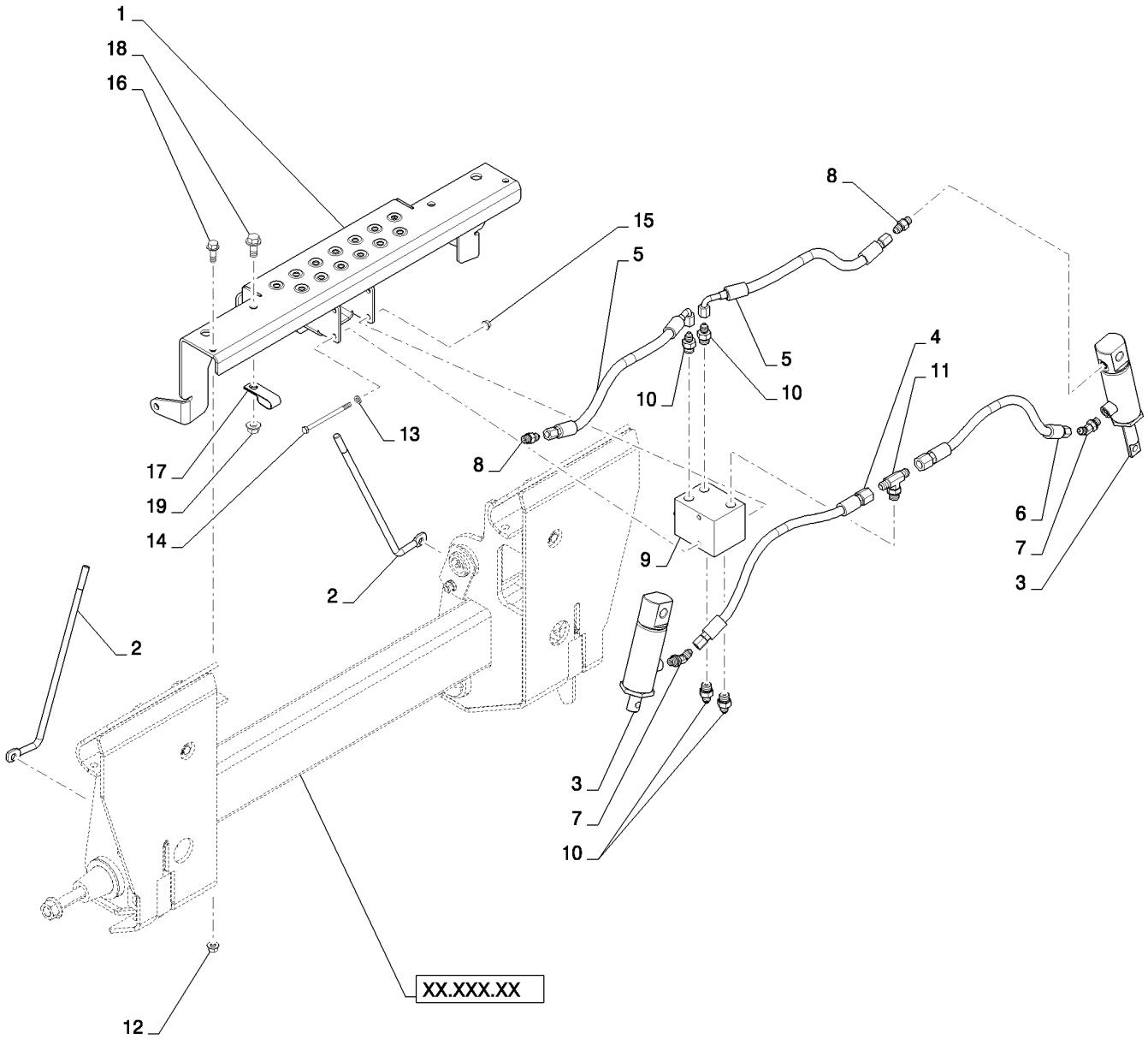

HYDRAULIC COUPLER - BASIC (L218-C238)
HYDRAULIC COUPLER - BASIC (L218-C238)
HYDRAULIC COUPLER - BASIC (L218-C238)
HYDRAULIC COUPLER - BASIC (L218-C238)

R	N	P.N.	MOD	Q	Denominação Description	Description Bezeichnung	Denominacion Beskrivelse	Descrizione Beschrijving	L.C.
17		**577927**		2	BRAÇADEIRA	CLAMP	ABRAZADERA	MORSETTO	120M
					COLLIER	KLEMME	SPÆNDEBÅND	KLEM	
18		**9804261**		2	PARAFUSO, Hex Flg, M10 x 25, 8.8				
						BOLT	PERNO	BULLONE	140B
					VIS	SCHRAUBE	BOLT	BOUT	
19		**9804278**		2	PORCA, M10 x 1.5, Flg, Cl 8				
						NUT	TUERCA	DADO	010D
					ECROU	MUTTER	MØTRIK	MOER	

35.204.02	03	p1	02/11

HYDRAULIC COUPLER CHASSIS PLUMBING - BASIC (L218-C238)
HYDRAULIC COUPLER CHASSIS PLUMBING - BASIC (L218-C238)
HYDRAULIC COUPLER CHASSIS PLUMBING - BASIC (L218-C238)
HYDRAULIC COUPLER CHASSIS PLUMBING - BASIC (L218-C238)

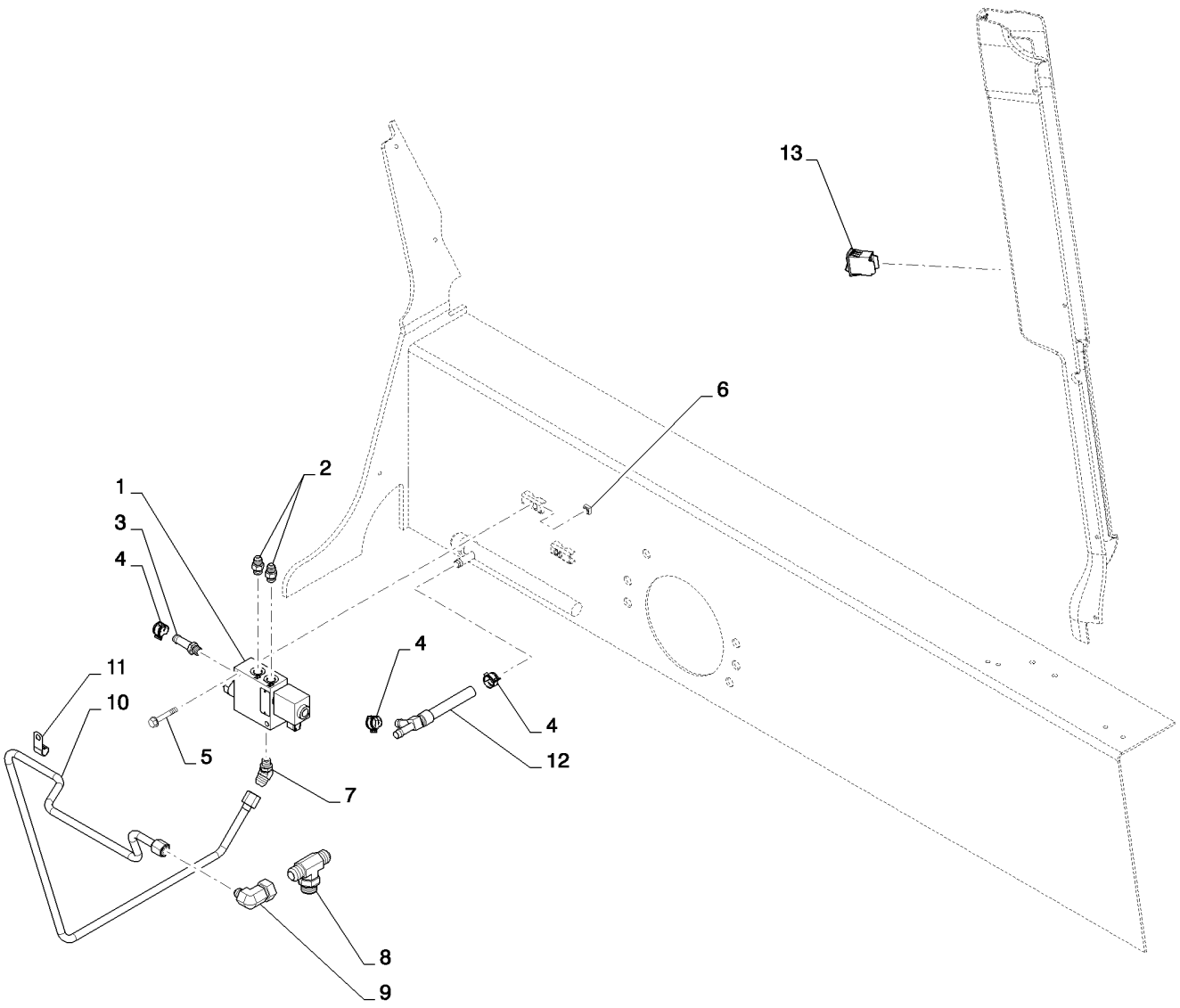

HYDRAULIC COUPLER CHASSIS PLUMBING - BASIC (L218-C238)
HYDRAULIC COUPLER CHASSIS PLUMBING - BASIC (L218-C238)
HYDRAULIC COUPLER CHASSIS PLUMBING - BASIC (L218-C238)
HYDRAULIC COUPLER CHASSIS PLUMBING - BASIC (L218-C238)

R	N	P.N.	MOD	Q	Denominação Description Bezeichnung Denominacion Beskrivelse Descrizione Beschrijving	L.C.
1		84256406		1	VÁLVULA HIDRÁULICA, Coupler HYDRAULIC VALVE / VÁLVULA HIDRÁULICA / DISTRIBUTORE IDRAULI SOUPAPE HYDRAULIQU / HYDRAULIKVENTIL / HYDRAULIKVENTIL / HYDRAULISCHE KLEP	010V
2		76350		2	CONECTOR HIDRÁUL, 9/16"-18, 37º x 9/16"-18, O-Ring HYD CONNECTOR / CONECTOR HIDRÁULIC / CONNETTORE IDRAULIC CONNECTEUR HYDRAU / HYDR STECKVERBINDE / HYDRAULIKSTIK / HYDRAULISCHE AANSLU	020R
3		86705988		1	CONEXÃO, 1/2" Hose x 9/16"-18 ORB, Beaded FITTING / ACOPLAMIENTO / RACCORDO RACCORD / ARMATUR / FITTING / AANSLUITING	3300
4		87443510		3	BRAÇADEIRA MANGUEIRA, M20 HOSE CLAMP / ABRAZADERA DE MANG / FASCETTA STRINGITUB COLLIER POUR FLEXIBL / SCHLAUCHSCHELLE / SLANGEKLEMME / SLANGKLEM	P729
5		86511481		2	PARAFUSO, Hex Flg, M8 x 50, 8.8 BOLT / PERNO / BULLONE VIS / SCHRAUBE / BOLT / BOUT	140B
6		229197A1		2	PORCA, Square / NUT / TUERCA / DADO ECROU / MUTTER / MØTRIK / MOER	5780
7		87301276		1	CONECTOR HIDRÁUL, 45 Adj, Elbow, 37FL 1/2in X 3/8in HYD CONNECTOR / CONECTOR HIDRÁULIC / CONNETTORE IDRAULIC CONNECTEUR HYDRAU / HYDR STECKVERBINDE / HYDRAULIKSTIK / HYDRAULISCHE AANSLU	020R
8		87622774		1	CONEXÃO, Hydraulic Tee / FITTING / ACOPLAMIENTO / RACCORDO RACCORD / ARMATUR / FITTING / AANSLUITING	3300
9		86624011		1	COTOVELO, 90º, 3/4"-16, 37º x 1 1/16"-12, 37º Fem Sw ELBOW / CODO / GOMITO COUDE / KNIESTÜCK / VINKELRØR / KNIESTUK	085G
10		84291016		1	TUBO RÍGIDO, Assembly, Hydraulic Coupler RIGID TUBE / TUBO RÍGIDO / TUBO RIGIDO TUYAU RIGIDE / ROHR / STIFT RØR / VASTE LEIDING	193T
11		87301490		1	BRAÇADEIRA, J, 12.7MM Insul 3/8in Bolt CLAMP / ABRAZADERA / MORSETTO COLLIER / KLEMME / SPÆNDEBÅND / KLEM	120M
12		84259682		1	CONEXÃO EM T, Assembly, Option UNION TEE / RACOR EN T / RACCORDO A T RACCORD EN T / T-VERSCHRAUBUNG / T-FORSKRUNING / KOPPEL-T-STUK	A134
13		84251346		1	INTERRUPTOR, Rocker, Hydraulic Coupler SWITCH / INTERRUPTOR / INTERRUTTORE CONTACTEUR / SCHALTER / KONTAKT / SCHAKELAAR	075I

35.220.01	01	p1	04/11

AUX HYD, STD FLOW (L223-L230,C232,C238)
AUX HYD, STD FLOW (L223-L230,C232,C238)
AUX HYD, STD FLOW (L223-L230,C232,C238)
AUX HYD, STD FLOW (L223-L230,C232,C238)

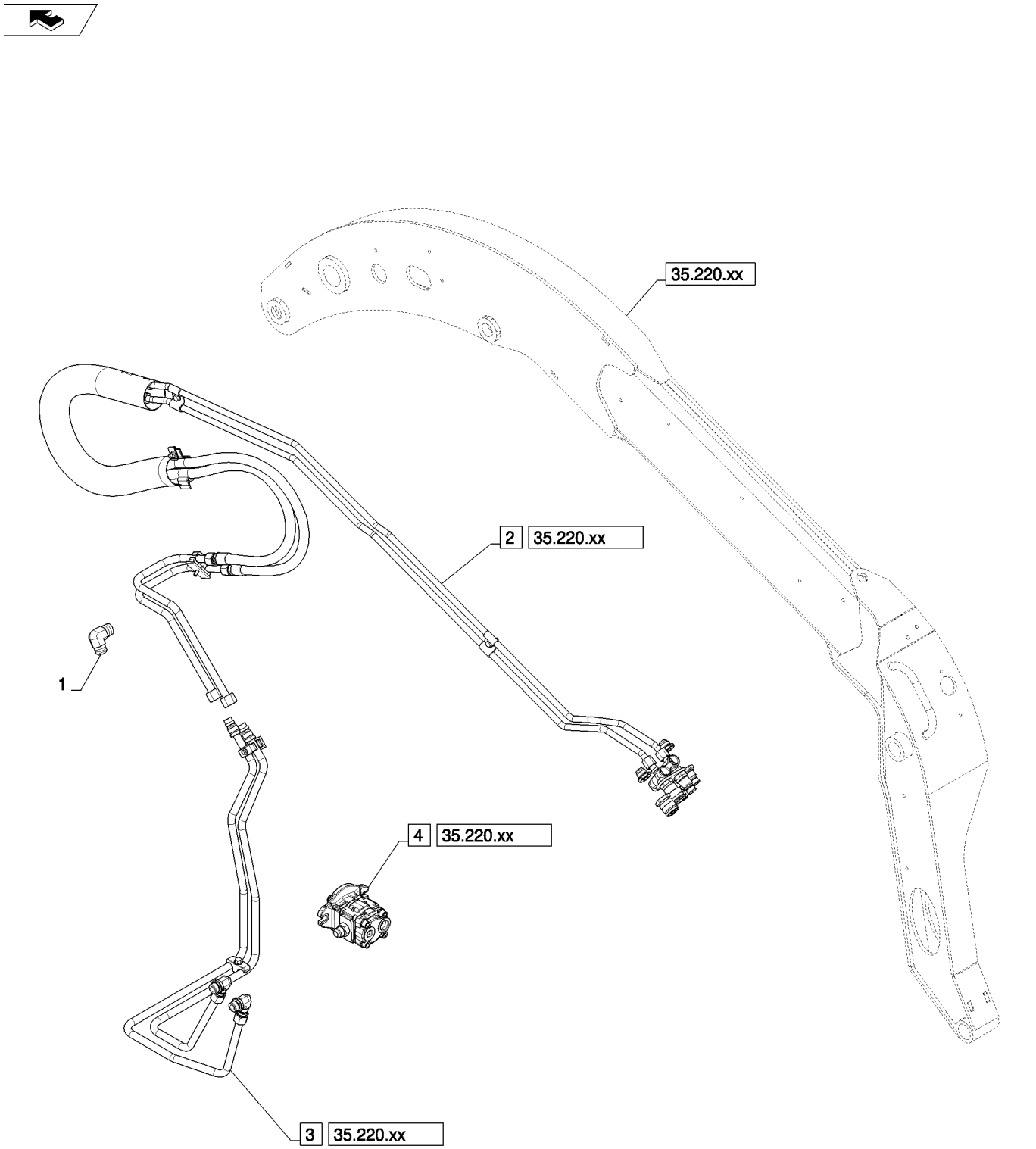

AUX HYD, STD FLOW (L223-L230,C232,C238)
AUX HYD, STD FLOW (L223-L230,C232,C238)
AUX HYD, STD FLOW (L223-L230,C232,C238)
AUX HYD, STD FLOW (L223-L230,C232,C238)

R	N	P.N.	MOD	Q	Denominação Description	Description Bezeichnung	Denominacion Beskrivelse	Descrizione Beschrijving	L.C.
1		86512952		1	COTOVELO, 90º, 1 5/16"-12, 37º x 1"-11 1/2, NPTF				
						ELBOW	CODO	GOMITO	085G
					COUDE	KNIESTÜCK	VINKELRØR	KNIESTUK	
2		NSS		1	SEM SERVIÇO EM SEPARADO, Std Aux, Arm Plumbing				
						NOT SERVICED SEPARA	NO SE REPARA POR SE	NON FORNITO SEPARAT	064N
					NON FOURNI SEPAREM	NICHT A SEP ERS-T LIEI	SERVICERES IKKE SEPA	NIET LOS VERKRIJGBAA	
3		NSS		1	SEM SERVIÇO EM SEPARADO, Std Aux, Chassis Plumbing				
						NOT SERVICED SEPARA	NO SE REPARA POR SE	NON FORNITO SEPARAT	064N
					NON FOURNI SEPAREM	NICHT A SEP ERS-T LIEI	SERVICERES IKKE SEPA	NIET LOS VERKRIJGBAA	
4		NSS		1	SEM SERVIÇO EM SEPARADO, Gear Pump				
						NOT SERVICED SEPARA	NO SE REPARA POR SE	NON FORNITO SEPARAT	064N
					NON FOURNI SEPAREM	NICHT A SEP ERS-T LIEI	SERVICERES IKKE SEPA	NIET LOS VERKRIJGBAA	

35.220.01	01	p1	02/11

AUX HYD, STD C.U.P. (L223-L230,C232,C238)
AUX HYD, STD C.U.P. (L223-L230,C232,C238)
AUX HYD, STD C.U.P. (L223-L230,C232,C238)
AUX HYD, STD C.U.P. (L223-L230,C232,C238)

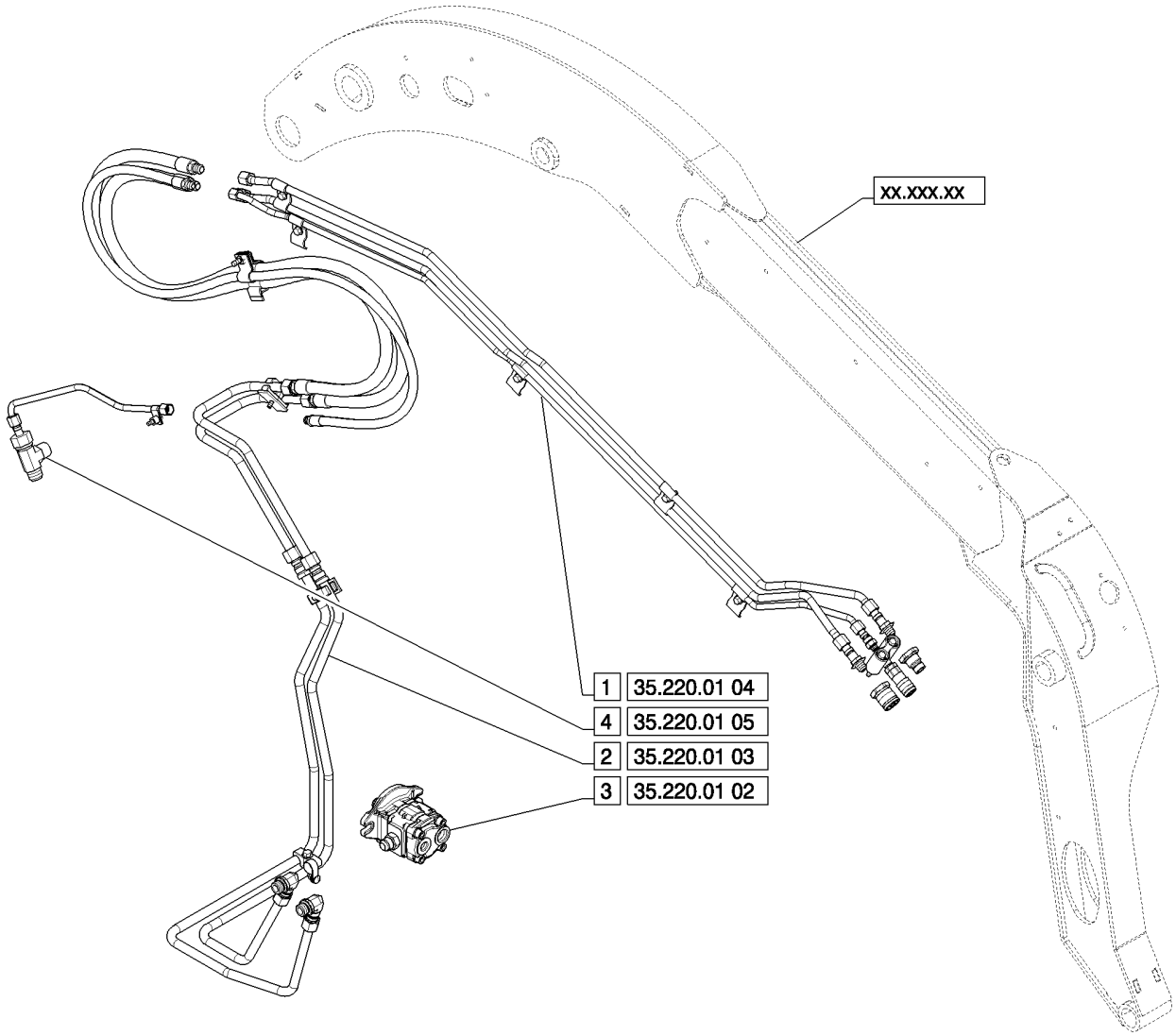

AUX HYD, STD C.U.P. (L223-L230,C232,C238)
AUX HYD, STD C.U.P. (L223-L230,C232,C238)
AUX HYD, STD C.U.P. (L223-L230,C232,C238)
AUX HYD, STD C.U.P. (L223-L230,C232,C238)

R	N	P.N.	MOD	Q	Denominação Description	Description Bezeichnung	Denominacion Beskrivelse	Descrizione Beschrijving	L.C.
1		NSS		1	SEM SERVIÇO EM SEPARADO, Std Aux, C.U.P., Arm Plumbing				
						NOT SERVICED SEPARA	NO SE REPARA POR SE	NON FORNITO SEPARAT	064N
					NON FOURNI SEPAREM	NICHT A SEP ERS-T LIEI	SERVICERES IKKE SEPA	NIET LOS VERKRIJGBAA	
2		NSS		1	SEM SERVIÇO EM SEPARADO, Std Aux, Chassis Plumbing				
						NOT SERVICED SEPARA	NO SE REPARA POR SE	NON FORNITO SEPARAT	064N
					NON FOURNI SEPAREM	NICHT A SEP ERS-T LIEI	SERVICERES IKKE SEPA	NIET LOS VERKRIJGBAA	
3		NSS		1	SEM SERVIÇO EM SEPARADO, Gear Pump				
						NOT SERVICED SEPARA	NO SE REPARA POR SE	NON FORNITO SEPARAT	064N
					NON FOURNI SEPAREM	NICHT A SEP ERS-T LIEI	SERVICERES IKKE SEPA	NIET LOS VERKRIJGBAA	
4		NSS		1	SEM SERVIÇO EM SEPARADO, Case Drain, Chassis Plumbing				
						NOT SERVICED SEPARA	NO SE REPARA POR SE	NON FORNITO SEPARAT	064N
					NON FOURNI SEPAREM	NICHT A SEP ERS-T LIEI	SERVICERES IKKE SEPA	NIET LOS VERKRIJGBAA	

35.220.01	02	p1	02/11

AUX HYD, STD, GEAR PUMP (L223-L230,C232,C238)
AUX HYD, STD, GEAR PUMP (L223-L230,C232,C238)
AUX HYD, STD, GEAR PUMP (L223-L230,C232,C238)
AUX HYD, STD, GEAR PUMP (L223-L230,C232,C238)

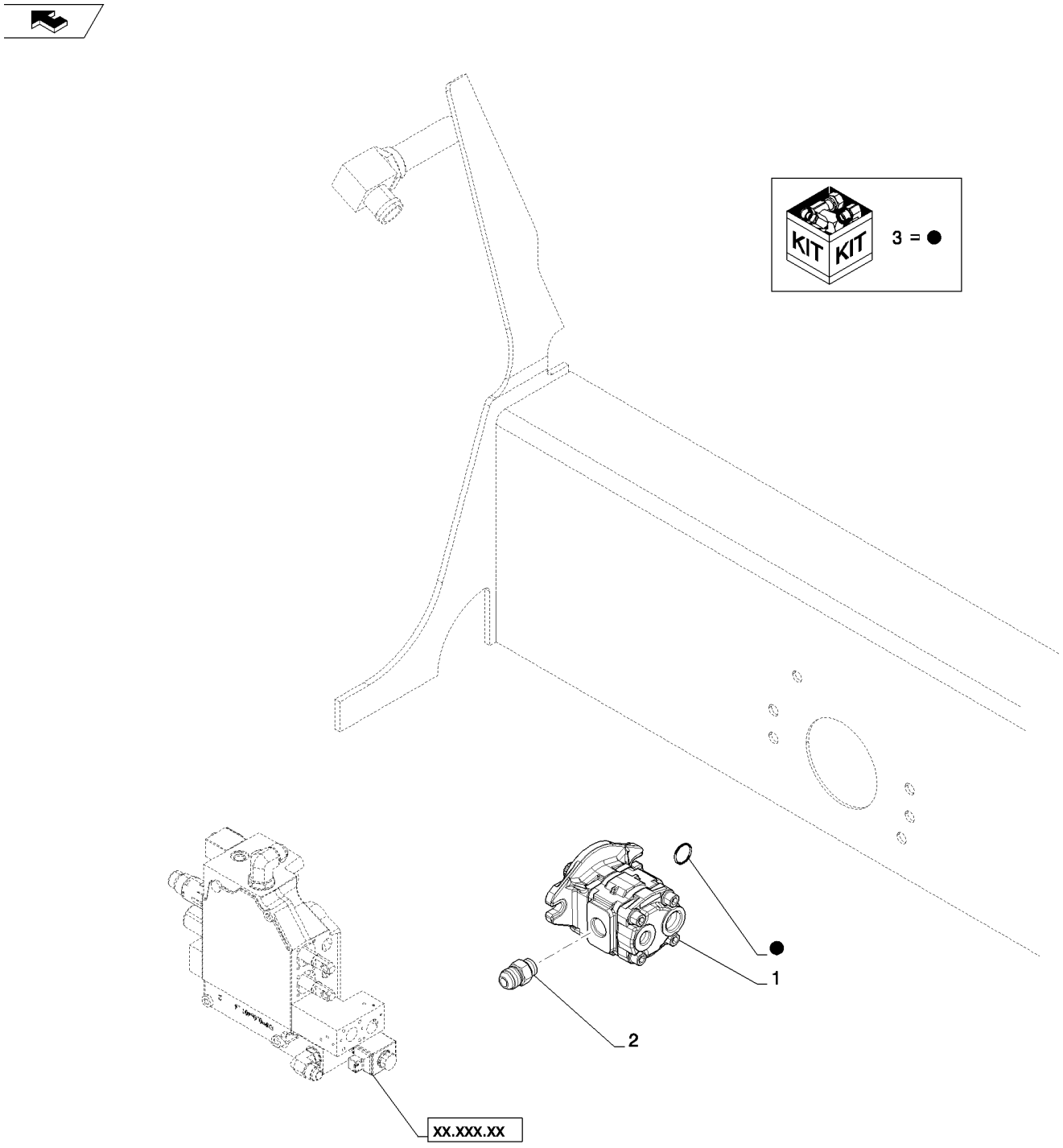

AUX HYD, STD, GEAR PUMP (L223-L230,C232,C238)
AUX HYD, STD, GEAR PUMP (L223-L230,C232,C238)
AUX HYD, STD, GEAR PUMP (L223-L230,C232,C238)
AUX HYD, STD, GEAR PUMP (L223-L230,C232,C238)

R	N	P.N.	MOD	Q	Denominação Description	Description Bezeichnung	Denominacion Beskrivelse	Descrizione Beschrijving	L.C.
1		84256247		1	BOMBA, 34.1CC, Gear POMPE	PUMP PUMPE	BOMBA PUMPE	POMPA POMP	6570
2		322896		1	CONECTOR HIDRÁUL, 1 1/16"-12, 37º x 1 1/16"-12, O-Ring CONNECTEUR HYDRAU	HYD CONNECTOR HYDR STECKVERBINDE	CONECTOR HIDRÁULIC HYDRAULIKSTIK	CONNETTORE IDRAULIC HYDRAULISCHE AANSLU	020R
3		84389261		1	KIT DE VEDAÇÃO, Single Pump KIT DE JOINTS	SEAL KIT DICHTUNGSSATZ	KIT DE JUNTAS PAKNINGSSÆT	KIT GUARNIZIONI KIT MET AFDICHTINGEN	630S

35.220.01	03	p1	02/11

AUX HYD, STD CHASSIS PLUMBING (L223-L230,C232,C238)
AUX HYD, STD CHASSIS PLUMBING (L223-L230,C232,C238)
AUX HYD, STD CHASSIS PLUMBING (L223-L230,C232,C238)
AUX HYD, STD CHASSIS PLUMBING (L223-L230,C232,C238)

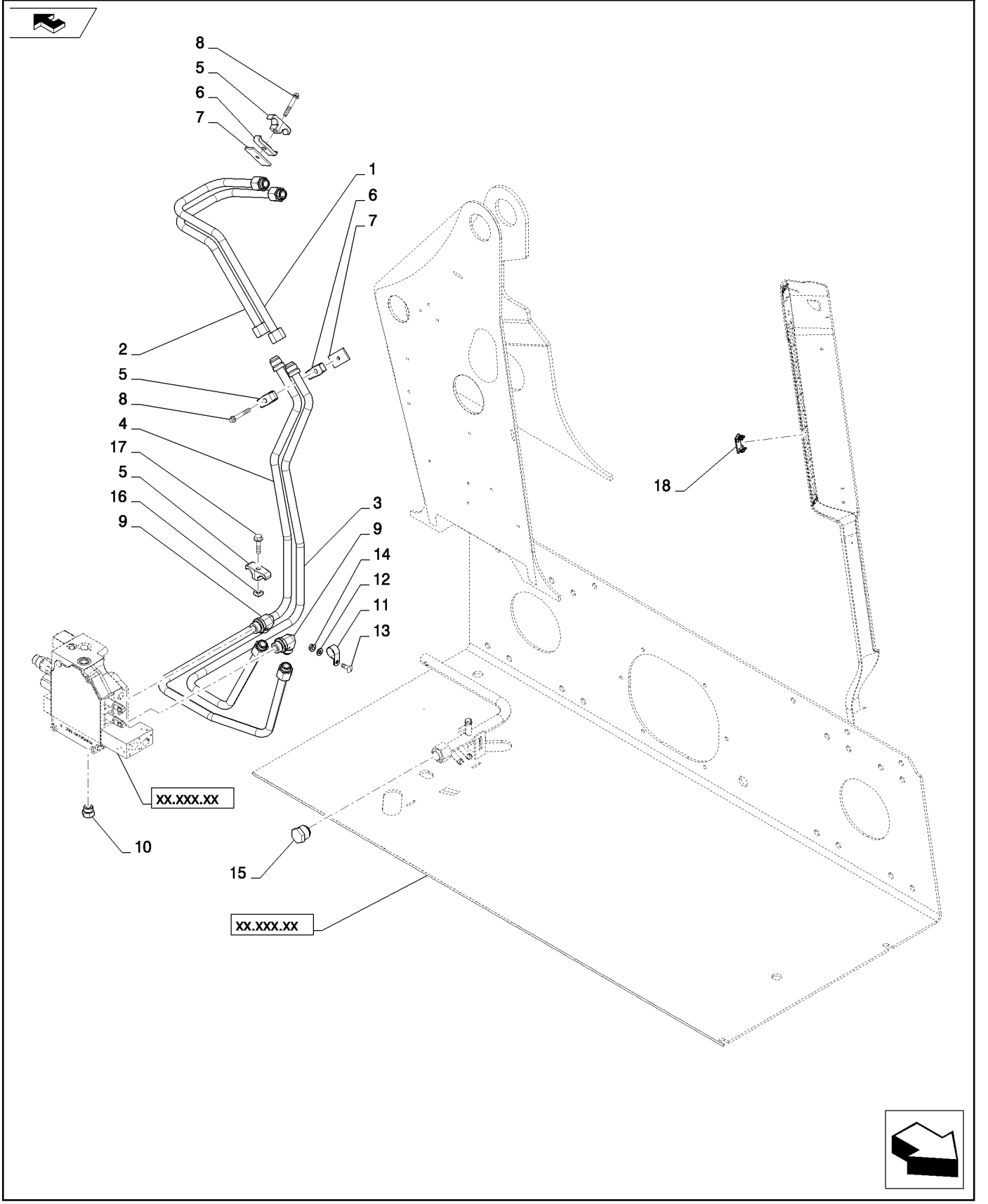

AUX HYD, STD CHASSIS PLUMBING (L223-L230,C232,C238)
AUX HYD, STD CHASSIS PLUMBING (L223-L230,C232,C238)
AUX HYD, STD CHASSIS PLUMBING (L223-L230,C232,C238)
AUX HYD, STD CHASSIS PLUMBING (L223-L230,C232,C238)

R	N	P.N.	MOD	Q	Denominação Description	Description Bezeichnung	Denominacion Beskrivelse	Descrizione Beschrijving	L.C.
1		84377523		1	TUBO, Assembly, Aux, LH Tower				
						TUBE	TUBO	TUBO	195T
					TUBE	ROHR	RØR	LEIDING	
2		84377525		1	TUBO, Assembly, Aux, LH Tower				
						TUBE	TUBO	TUBO	195T
					TUBE	ROHR	RØR	LEIDING	
3		84377508		1	TUBO, Assembly, Aux, LDR Valve to LFT Tower				
						TUBE	TUBO	TUBO	195T
					TUBE	ROHR	RØR	LEIDING	
4		84377510		1	TUBO, Assembly, Aux, LDR Valve to LFT Tower				
						TUBE	TUBO	TUBO	195T
					TUBE	ROHR	RØR	LEIDING	
5		D124301		3	BRACADEIRA	CLAMP	COLLAR	MORSETTO	1640
					COLLIER	SCHELLE	CLAMP	CLAMP	
6		D120614		2	BRACADEIRA	CLAMP	COLLAR	MORSETTO	1640
					COLLIER	SCHELLE	CLAMP	CLAMP	
7		257859A1		2	PLACA ESPACADORA, Bar				
						PLATE,SPACER	PLAQUETA	DISTANZ PIASTRA	Z324
					PLAQUETTE	PLAETTCHEN	PLATE,SPACER	PLATE,SPACER	
8		87582902		2	PARAFUSO, HXFLNGHD, M8 X 55				
						SELF-TAP SCREW	TORNILLO AUTORROSC	VITE AUTOFILETTANTE	062V
					VIS AUTOTARAUDEUSE	SELBSTSCHN SCHRAUE	SELVLÅSENDE BOLT	ZELFTAPPENDE SCHRO	
9		322894		2	COTOVELO, 90º, 1 1/16"-12, 37º x 1 1/16"-12, O-Ring				
						ELBOW	CODO	GOMITO	085G
					COUDE	KNIESTÜCK	VINKELRØR	KNIESTUK	
10		86512512		1	BUJÃO, Hex Hd, 7/8"-14 ORB				
						PLUG	TAPÓN	TAPPO	050T
					BOUCHON	STOPFEN	PROP	PLUG	
11		86637977		1	BRAÇADEIRA, 1", Insul, 5/16" Bolt				
						CLAMP	ABRAZADERA	MORSETTO	120M
					COLLIER	KLEMME	SPÆNDEBÅND	KLEM	
12		87655042		1	ARRUELA ESPECIAL, M8, 8.80 X 17.5 X 2.2 HTS				
						SPECIAL WASHER	ARANDELA ESPECIAL	RONDELLA SPECIALE	Z333
					RONDELLE SPECIALE	SPEZIALUNTERLEGSCH	SPECIALSKIVE	SPECIALE RING	
13		308761		1	PARAFUSO, Short NK, M8 x 25, Cl8.8, Full Thd				
						CARRIAGE BOLT	PERNO ALOMADO	BULLONE A TESTA TONI	P123
					VIS A TETE BOMBEE	SCHLOSSSCHRAUBE	BRÆDDEBOLT	SLOTBOUT	
14		9804277		1	PORCA, M8 x 1.25, Flg, Cl 8				
						NUT	TUERCA	DADO	010D
					ECROU	MUTTER	MØTRIK	MOER	
15		9790527		1	BUJÃO, 1 5/16"-12, 37º	PLUG	TAPÓN	TAPPO	050T
					BOUCHON	STOPFEN	PROP	PLUG	
16		230427A1		1	PORCA, Square M10	NUT	TUERCA	DADO	5780
					ECROU	MUTTER	MØTRIK	MOER	
17		9804263		1	PARAFUSO, Hex Flg, M10 x 40, 8.8				
						BOLT	PERNO	BULLONE	140B
					VIS	SCHRAUBE	BOLT	BOUT	
18		126844A1		1	BUJÃO, Cover	PLUG	TAPÓN	TAPPO	050T
					BOUCHON	STOPFEN	PROP	PLUG	

35.220.01	04	p1	02/11

AUX HYD, STD ARM PLUMBING (L223-L230,C232,C238)
AUX HYD, STD ARM PLUMBING (L223-L230,C232,C238)
AUX HYD, STD ARM PLUMBING (L223-L230,C232,C238)
AUX HYD, STD ARM PLUMBING (L223-L230,C232,C238)

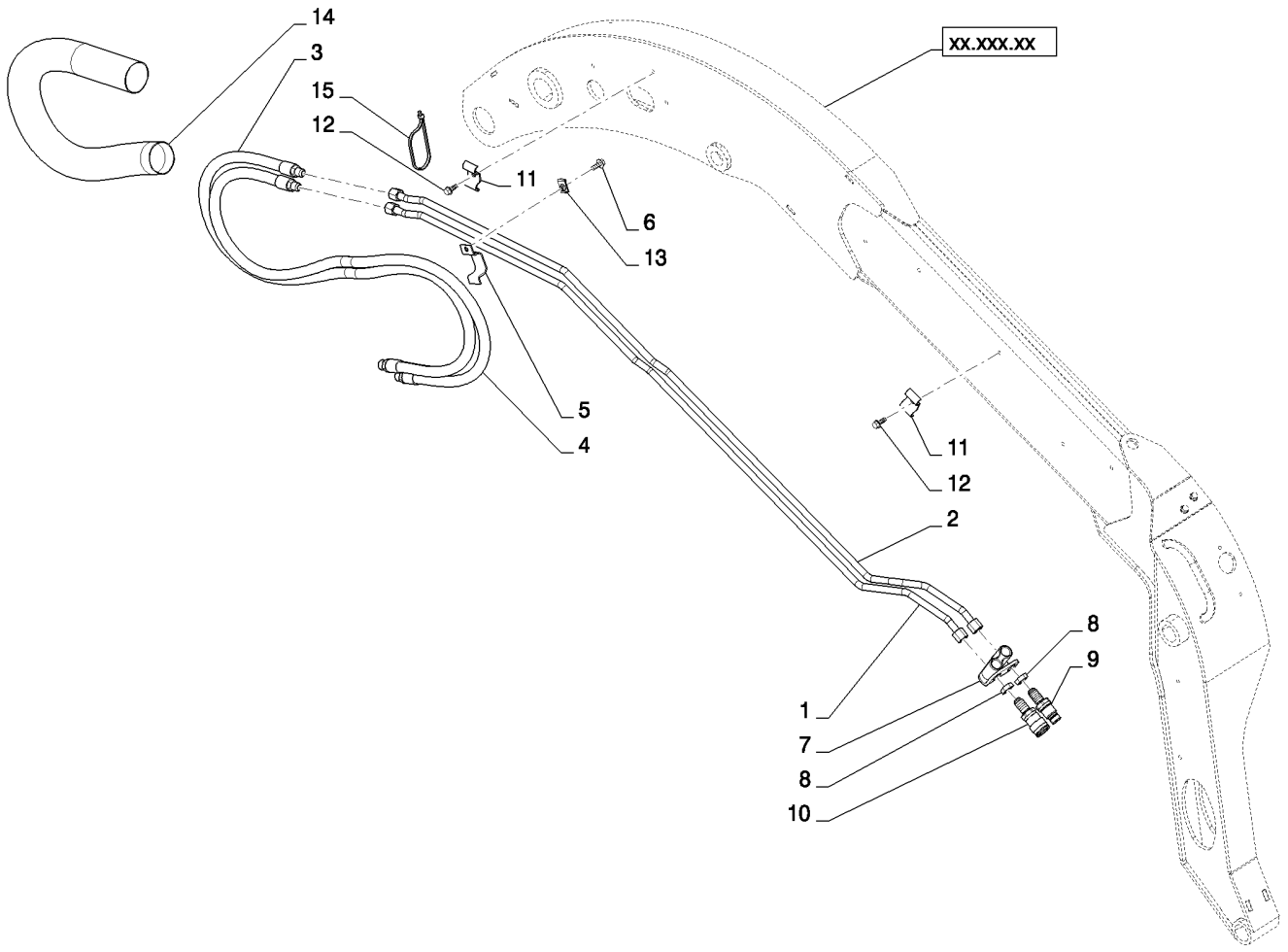

AUX HYD, STD ARM PLUMBING (L223-L230,C232,C238)
AUX HYD, STD ARM PLUMBING (L223-L230,C232,C238)
AUX HYD, STD ARM PLUMBING (L223-L230,C232,C238)
AUX HYD, STD ARM PLUMBING (L223-L230,C232,C238)

R	N	P.N.	MOD	Q	Denominação Description	Description Bezeichnung	Denominacion Beskrivelse	Descrizione Beschrijving	L.C.
1		84304133		1	TUBO RÍGIDO, Assembly, Std Aux				
						RIGID TUBE	TUBO RÍGIDO	TUBO RIGIDO	193T
					TUYAU RIGIDE	ROHR	STIFT RØR	VASTE LEIDING	
2		84304135		1	TUBO RÍGIDO, Assembly, Std Aux				
						RIGID TUBE	TUBO RÍGIDO	TUBO RIGIDO	193T
					TUYAU RIGIDE	ROHR	STIFT RØR	VASTE LEIDING	
3		84304100		1	TUBO FLEXÍVEL, Assembly, Aux				
						FLEXIBLE HOSE	TUBO FLEXIBLE	TUBO FLESSIBILE	192T
					TUYAU FLEXIBLE	BIEGSAMER SCHLAUCH	FLEKSIBEL SLANGE	FLEXIBELE SLANG	
4		84304099		1	TUBO FLEXÍVEL, Assembly, Aux				
						FLEXIBLE HOSE	TUBO FLEXIBLE	TUBO FLESSIBILE	192T
					TUYAU FLEXIBLE	BIEGSAMER SCHLAUCH	FLEKSIBEL SLANGE	FLEXIBELE SLANG	
5		84285091		1	BRAÇADEIRA MANGUEIRA, -10 Hose Double				
						HOSE CLAMP	ABRAZADERA DE MANG	FASCETTA STRINGITUB	P729
					COLLIER POUR FLEXIBL	SCHLAUCHSCHELLE	SLANGEKLEMME	SLANGKLEM	
6		9804261		1	PARAFUSO, Hex Flg, M10 x 25, 8.8				
						BOLT	PERNO	BULLONE	140B
					VIS	SCHRAUBE	BOLT	BOUT	
7		84252821		1	SUPORTE, Aux Coupler	BRACKET	SOPORTE	STAFFA	225S
					SUPPORT	HALTERUNG	BESLAG	STEUN	
8		595460		2	CONTRA PORCA, Blkhd, 7/8"-14				
						LOCK NUT	TUERCA DE BLOQUEO	DADO DI BLOCCAGGIO	P263
					CONTRE-ECROU	SICHERUNGSMUTTER	LÅSEMØTRIK	BORGMOER	
9		87741500		1	ENGATE RÁPIDO MACHO	QUICK MALE COUPLING	ACOPLAMIENTO RÁPID(	ATTACCO RAPIDO MAS(	115A
					ACCOUPLEMENT RAP. M	SCHNELLKUPPLUNGSST	LYNKOBLING	SNELKOPPELINGSPEN	
10		87741499		1	ENGATE RÁPIDO FÊMEA	QUICK FEMALE COUPLII	ACOPL. RÁPIDO HEMBR	ATTACCO RAPIDO FEMI	540A
					ACCOUPLEMENT RAPID	SCHNELLKUPPLUNGSM	KOBLINGSSKIVE	SNELKOPPELINGSBUS	
11		84252828		2	BRAÇADEIRA, Butterfly Tube				
						CLAMP	ABRAZADERA	MORSETTO	120M
					COLLIER	KLEMME	SPÆNDEBÅND	KLEM	
12		280476		4	PARAFUSO, Hex Wash Hd, 3/8" x 1"				
						SELF-TAP SCREW	TORNILLO AUTORROSC	VITE AUTOFILETTANTE	062V
					VIS AUTOTARAUDEUSE	SELBSTSCHN SCHRAUE	SELVLÅSENDE BOLT	ZELFTAPPENDE SCHRO	
13		86625071		1	PORCA, M10, U	NUT	TUERCA	DADO	010D
					ECROU	MUTTER	MØTRIK	MOER	
14		84362110		1	PROTEÇÃO, Hose	GUARD	DEFENSA	PROTEZIONE	070R
					PROTECTION	SCHUTZABDECKUNG	BESKYTTELSESSKÆRM	AFSCHERMING	
15		L18331		1	PRENDEDOR DE CABOS, Nylon Tie 15.5in				
						CABLE STRAP	BANDA DE CABLE	FASCETTA PER CAVO	P716
					BRIDE DE CABLE	KABELBINDER	KABELSTROP	BUNDELBAND	

35.220.01	04	p1	08/11

AUX HYD, STD C.U.P. ARM PLUMBING (L223-L230,C232,C238)
AUX HYD, STD C.U.P. ARM PLUMBING (L223-L230,C232,C238)
AUX HYD, STD C.U.P. ARM PLUMBING (L223-L230,C232,C238)
AUX HYD, STD C.U.P. ARM PLUMBING (L223-L230,C232,C238)

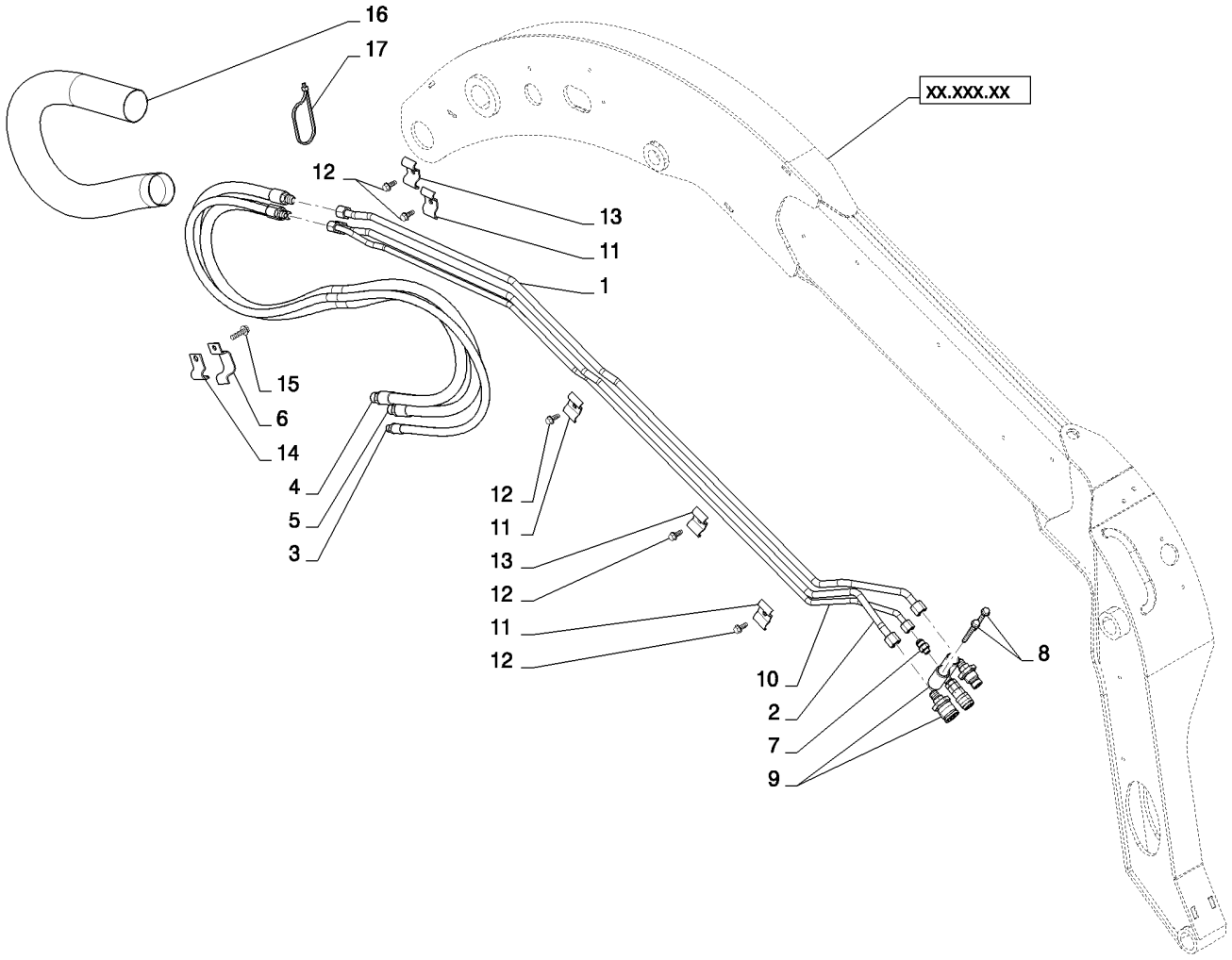

AUX HYD, STD C.U.P. ARM PLUMBING (L223-L230,C232,C238)
AUX HYD, STD C.U.P. ARM PLUMBING (L223-L230,C232,C238)
AUX HYD, STD C.U.P. ARM PLUMBING (L223-L230,C232,C238)
AUX HYD, STD C.U.P. ARM PLUMBING (L223-L230,C232,C238)

R	N	P.N.	MOD	Q	Denominação Description	Description Bezeichnung	Denominacion Beskrivelse	Descrizione Beschrijving	L.C.
1		84304105		1	TUBO RÍGIDO, Assembly, Aux, C.U.P.				
						RIGID TUBE	TUBO RÍGIDO	TUBO RIGIDO	193T
					TUYAU RIGIDE	ROHR	STIFT RØR	VASTE LEIDING	
2		84304103		1	TUBO RÍGIDO, Assembly, Aux, C.U.P.				
						RIGID TUBE	TUBO RÍGIDO	TUBO RIGIDO	193T
					TUYAU RIGIDE	ROHR	STIFT RØR	VASTE LEIDING	
3		84281611		1	TUBO FLEXÍVEL, Assembly, Case Drain				
						FLEXIBLE HOSE	TUBO FLEXIBLE	TUBO FLESSIBILE	192T
					TUYAU FLEXIBLE	BIEGSAMER SCHLAUCH	FLEKSIBEL SLANGE	FLEXIBELE SLANG	
4		84304100		1	TUBO FLEXÍVEL, Assembly, Aux				
						FLEXIBLE HOSE	TUBO FLEXIBLE	TUBO FLESSIBILE	192T
					TUYAU FLEXIBLE	BIEGSAMER SCHLAUCH	FLEKSIBEL SLANGE	FLEXIBELE SLANG	
5		84304099		1	TUBO FLEXÍVEL, Assembly, Aux				
						FLEXIBLE HOSE	TUBO FLEXIBLE	TUBO FLESSIBILE	192T
					TUYAU FLEXIBLE	BIEGSAMER SCHLAUCH	FLEKSIBEL SLANGE	FLEXIBELE SLANG	
6		84285091		1	BRAÇADEIRA MANGUEIRA, -10 Hose Double				
						HOSE CLAMP	ABRAZADERA DE MANG	FASCETTA STRINGITUB	P729
					COLLIER POUR FLEXIBL	SCHLAUCHSCHELLE	SLANGEKLEMME	SLANGKLEM	
7		86509028		1	CONECTOR HIDRÁUL, 3/4"-16, 37° x 9/16"-18, O-Ring				
						HYD CONNECTOR	CONECTOR HIDRÁULIC	CONNETTORE IDRAULIC	020R
					CONNECTEUR HYDRAU	HYDR STECKVERBINDE	HYDRAULIKSTIK	HYDRAULISCHE AANSLI	
8		84331287		2	PARAFUSO, Tapping, 3/8-16 X 3 TT				
						SCREW	TORNILLO	VITE	040V
					VIS	SCHRAUBE	SKRUE	SCHROEF	
9		84173613		1	VÁLVULA, Quick Attach, Includes Ref. 18-20				
						VALVE	VÁLVULA	VALVOLA	9620
					SOUPAPE	VENTIL	VENTIL	KLEP	
10		84297619		1	TUBO RÍGIDO, Assembly, Case Drain				
						RIGID TUBE	TUBO RÍGIDO	TUBO RIGIDO	193T
					TUYAU RIGIDE	ROHR	STIFT RØR	VASTE LEIDING	
11		84254056		3	BRAÇADEIRA MANGUEIRA, Butterfly Tube				
						HOSE CLAMP	ABRAZADERA DE MANG	FASCETTA STRINGITUB	P729
					COLLIER POUR FLEXIBL	SCHLAUCHSCHELLE	SLANGEKLEMME	SLANGKLEM	
12		280476		5	PARAFUSO, Hex Wash Hd, 3/8" x 1"				
						SELF-TAP SCREW	TORNILLO AUTORROSC	VITE AUTOFILETTANTE	062V
					VIS AUTOTARAUDEUSE	SELBSTSCHN SCHRAUE	SELVLÅSENDE BOLT	ZELFTAPPENDE SCHRO	
13		84252828		2	BRAÇADEIRA, Butterfly Tube				
						CLAMP	ABRAZADERA	MORSETTO	120M
					COLLIER	KLEMME	SPÆNDEBÅND	KLEM	
14		84299413		1	BRAÇADEIRA MANGUEIRA, W -6 Hose Single				
						HOSE CLAMP	ABRAZADERA DE MANG	FASCETTA STRINGITUB	P729
					COLLIER POUR FLEXIBL	SCHLAUCHSCHELLE	SLANGEKLEMME	SLANGKLEM	
15		9804263		1	PARAFUSO, Hex Flg, M10 x 40, 8.8				
						BOLT	PERNO	BULLONE	140B
					VIS	SCHRAUBE	BOLT	BOUT	
16		84362110		1	PROTEÇÃO, Hose	GUARD	DEFENSA	PROTEZIONE	070R
					PROTECTION	SCHUTZABDECKUNG	BESKYTTELSESSKÆRM	AFSCHERMING	

35.220.01	04	p2	08/11

AUX HYD, STD C.U.P. ARM PLUMBING (L223-L230,C232,C238)
AUX HYD, STD C.U.P. ARM PLUMBING (L223-L230,C232,C238)
AUX HYD, STD C.U.P. ARM PLUMBING (L223-L230,C232,C238)
AUX HYD, STD C.U.P. ARM PLUMBING (L223-L230,C232,C238)

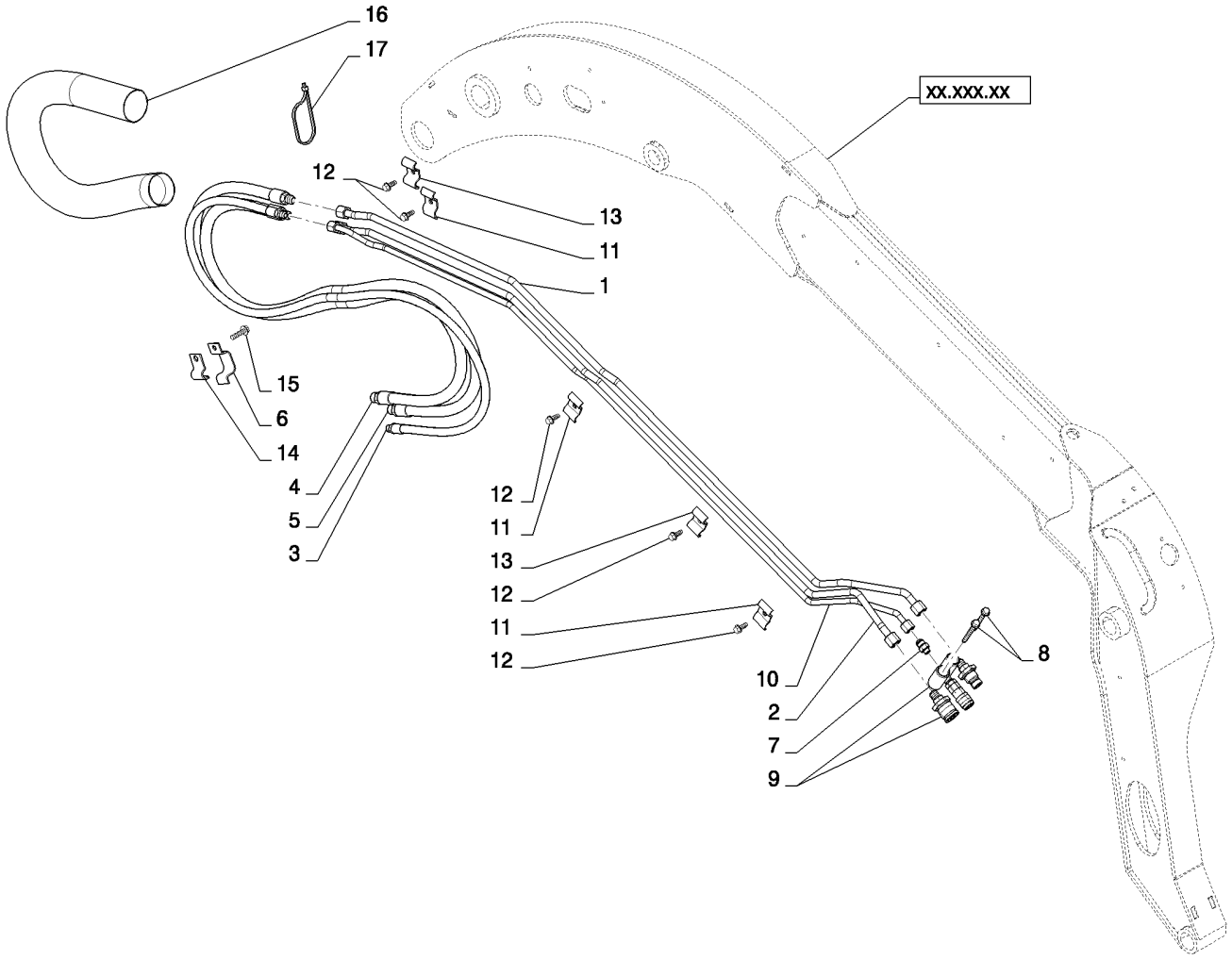

AUX HYD, STD C.U.P. ARM PLUMBING (L223-L230,C232,C238)
AUX HYD, STD C.U.P. ARM PLUMBING (L223-L230,C232,C238)
AUX HYD, STD C.U.P. ARM PLUMBING (L223-L230,C232,C238)
AUX HYD, STD C.U.P. ARM PLUMBING (L223-L230,C232,C238)

R	N	P.N.	MOD	Q	Denominação Description	Description Bezeichnung	Denominacion Beskrivelse	Descrizione Beschrijving	L.C.
17		L18331		1	PRENDEDOR DE CABOS, Nylon Tie 15.5in				
					CABLE STRAP	BANDA DE CABLE	FASCETTA PER CAVO		P716
					BRIDE DE CABLE	KABELBINDER	KABELSTROP	BUNDELBAND	
18		84390117		1	ENGATE, 1/2" Male (Not Shown)				
					COUPLING	ACOPLAMIENTO	GIUNTO		Z321
					RACCORD	KUPPLUNG	KOBLING	KOPPELING	
19		84390118		1	ENGATE, 1/2" Female (Not Shown)				
					COUPLING	ACOPLAMIENTO	GIUNTO		Z321
					RACCORD	KUPPLUNG	KOBLING	KOPPELING	
20		84390119		1	ENGATE, 3/8" Male (Not Shown)				
					COUPLING	ACOPLAMIENTO	GIUNTO		Z321
					RACCORD	KUPPLUNG	KOBLING	KOPPELING	

35.220.01	05	p1	02/11

AUX HYD, STD C.U.P. CASE DRAIN CHASSIS PLUMBING (L223-L230,C232,C238)
AUX HYD, STD C.U.P. CASE DRAIN CHASSIS PLUMBING (L223-L230,C232,C238)
AUX HYD, STD C.U.P. CASE DRAIN CHASSIS PLUMBING (L223-L230,C232,C238)
AUX HYD, STD C.U.P. CASE DRAIN CHASSIS PLUMBING (L223-L230,C232,C238)

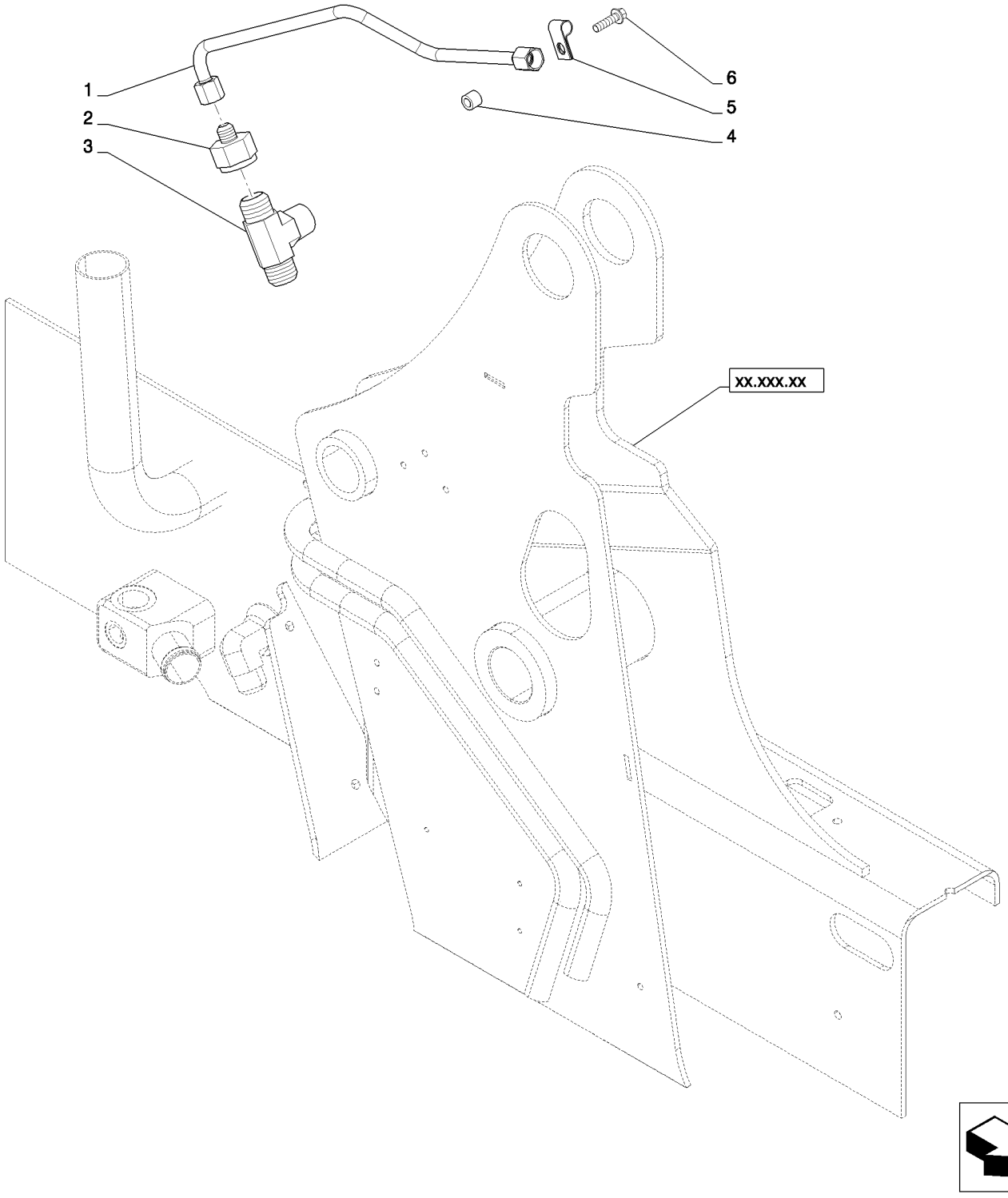

AUX HYD, STD C.U.P. CASE DRAIN CHASSIS PLUMBING (L223-L230,C232,C238)
AUX HYD, STD C.U.P. CASE DRAIN CHASSIS PLUMBING (L223-L230,C232,C238)
AUX HYD, STD C.U.P. CASE DRAIN CHASSIS PLUMBING (L223-L230,C232,C238)
AUX HYD, STD C.U.P. CASE DRAIN CHASSIS PLUMBING (L223-L230,C232,C238)

R	N	P.N.	MOD	Q	Denominação Description Bezeichnung	Description Bezeichnung	Denominacion Beskrivelse	Descrizione Beschrijving	L.C.
1		84201229		1	TUBO RÍGIDO, Assembly, Case Drain				
						RIGID TUBE	TUBO RÍGIDO	TUBO RIGIDO	193T
					TUYAU RIGIDE	ROHR	STIFT RØR	VASTE LEIDING	
2		84278113		1	CONECTOR REDUTOR, 37FL 1-5/16-12 X 3/4-16				
						REDUCER FITTING	ACOPLAMIENTO DE REI	RACCORDO RIDUTTORE	P053
					RACCORD REDUCTEUR	REDUZIERSTÜCK	ARMATURREDUKTOR	REDUCEERAANSLUITIN	
3		9790547		1	T, 1 5/16"-12, 37° x 1"-11 1/2, NPTF Br				
						TEE	RACOR EN T	PEZZO A T	9020
					RACCORD EN T	T-STÜCK	T-STYKKE	T-STUK	
4		86589143		1	ESPAÇADOR	SPACER	SEPARADOR	DISTANZIALE	075D
					ENTRETOISE	DISTANZSTÜCK	AFSTANDSSTYKKE	AFSTANDSSTUK	
5		86010402		1	BRAÇADEIRA, 1/2", Insul, 3/8" Bolt				
						CLAMP	ABRAZADERA	MORSETTO	120M
					COLLIER	KLEMME	SPÆNDEBÅND	KLEM	
6		86625201		1	PARAFUSO, Hex Flg Hd, M8 x 30				
						SELF-TAP SCREW	TORNILLO AUTORROSC	VITE AUTOFILETTANTE	062V
					VIS AUTOTARAUDEUSE	SELBSTSCHN SCHRAUE	SELVLÅSENDE BOLT	ZELFTAPPENDE SCHRO	

35.220.02	01	p1	02/11

AUX HYD, HIGH FLOW (L223-L230,C232,C238)
AUX HYD, HIGH FLOW (L223-L230,C232,C238)
AUX HYD, HIGH FLOW (L223-L230,C232,C238)
AUX HYD, HIGH FLOW (L223-L230,C232,C238)

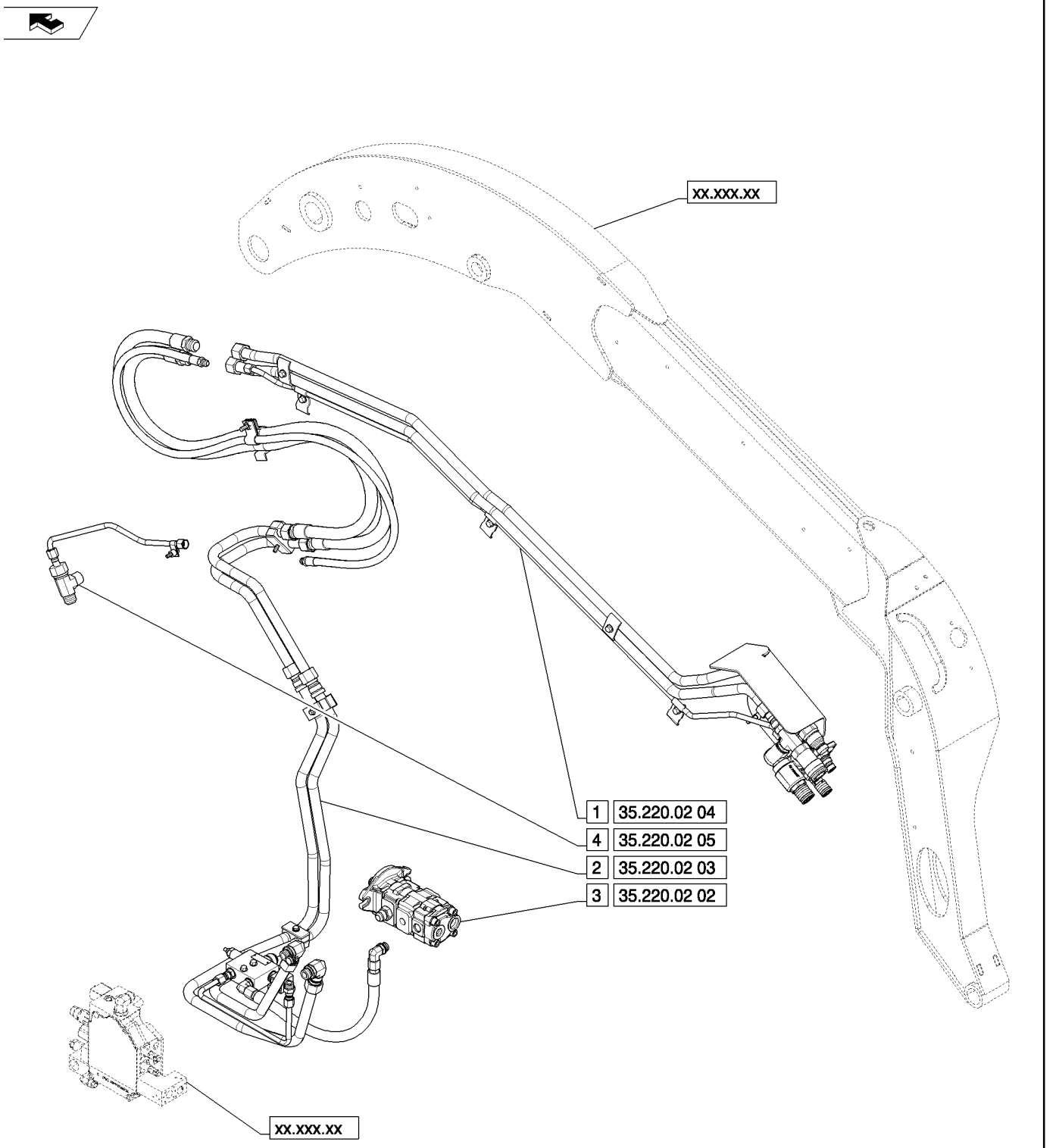

AUX HYD, HIGH FLOW (L223-L230,C232,C238)
AUX HYD, HIGH FLOW (L223-L230,C232,C238)
AUX HYD, HIGH FLOW (L223-L230,C232,C238)
AUX HYD, HIGH FLOW (L223-L230,C232,C238)

R	N	P.N.	MOD	Q	Denominação Description	Description Bezeichnung	Denominacion Beskrivelse	Descrizione Beschrijving	L.C.
1		NSS		1	SEM SERVIÇO EM SEPARADO, High Flow Aux, Arm Plumbing				
						NOT SERVICED SEPARA	NO SE REPARA POR SE	NON FORNITO SEPARAT	064N
					NON FOURNI SEPAREM	NICHT A SEP ERS-T LIEI	SERVICERES IKKE SEPA	NIET LOS VERKRIJGBAA	
2		NSS		1	SEM SERVIÇO EM SEPARADO, High Flow Aux, Chassis Plumbing				
						NOT SERVICED SEPARA	NO SE REPARA POR SE	NON FORNITO SEPARAT	064N
					NON FOURNI SEPAREM	NICHT A SEP ERS-T LIEI	SERVICERES IKKE SEPA	NIET LOS VERKRIJGBAA	
3		NSS		1	SEM SERVIÇO EM SEPARADO, High Flow, Gear Pump				
						NOT SERVICED SEPARA	NO SE REPARA POR SE	NON FORNITO SEPARAT	064N
					NON FOURNI SEPAREM	NICHT A SEP ERS-T LIEI	SERVICERES IKKE SEPA	NIET LOS VERKRIJGBAA	
4		NSS		1	SEM SERVIÇO EM SEPARADO, Case Drain, Chassis Plumbing				
						NOT SERVICED SEPARA	NO SE REPARA POR SE	NON FORNITO SEPARAT	064N
					NON FOURNI SEPAREM	NICHT A SEP ERS-T LIEI	SERVICERES IKKE SEPA	NIET LOS VERKRIJGBAA	

AUX HYD, HIGH FLOW GEAR PUMP (L223-L230,C232,C238)
AUX HYD, HIGH FLOW GEAR PUMP (L223-L230,C232,C238)
AUX HYD, HIGH FLOW GEAR PUMP (L223-L230,C232,C238)
AUX HYD, HIGH FLOW GEAR PUMP (L223-L230,C232,C238)

ART NOT AVAILABLE

AUX HYD, HIGH FLOW GEAR PUMP (L223-L230,C232,C238)
AUX HYD, HIGH FLOW GEAR PUMP (L223-L230,C232,C238)
AUX HYD, HIGH FLOW GEAR PUMP (L223-L230,C232,C238)
AUX HYD, HIGH FLOW GEAR PUMP (L223-L230,C232,C238)

R	N	P.N.	MOD	Q	Denominação Description	Description Bezeichnung	Denominacion Beskrivelse	Descrizione Beschrijving	L.C.
1		84256249		1	BOMBA, 34.1/18.3CC, Gear				
						PUMP	BOMBA	POMPA	6570
					POMPE	PUMPE	PUMPE	POMP	
2		322896		1	CONECTOR HIDRÁUL, 1 1/16"-12, 37º x 1 1/16"-12, O-Ring				
						HYD CONNECTOR	CONECTOR HIDRÁULIC(	CONNETTORE IDRAULIC	020R
					CONNECTEUR HYDRAU	HYDR STECKVERBINDE	HYDRAULIKSTIK	HYDRAULISCHE AANSLU	
3		84329004		1	MANGUEIRA, Assembly, High Flow, Supply				
						HOSE	TUBO	TUBO FLESSIBILE	030M
					FLEXIBLE	SCHLAUCH	SLANGE	SLANG	
4		164910		1	COTOVELO, 90º, 7/8"-14, 37º x 7/8"-14, O-Ring				
						ELBOW	CODO	GOMITO	085G
					COUDE	KNIESTÜCK	VINKELRØR	KNIESTUK	
5		84389262		1	KIT DE VEDAÇÃO, Double Pump				
						SEAL KIT	KIT DE JUNTAS	KIT GUARNIZIONI	630S
					KIT DE JOINTS	DICHTUNGSSATZ	PAKNINGSSÆT	KIT MET AFDICHTINGEN	

35.220.02	03	p1	02/11

AUX HYD, HIGH FLOW CHASSIS PLUMBING (L223-L230,C232,C238)
AUX HYD, HIGH FLOW CHASSIS PLUMBING (L223-L230,C232,C238)
AUX HYD, HIGH FLOW CHASSIS PLUMBING (L223-L230,C232,C238)
AUX HYD, HIGH FLOW CHASSIS PLUMBING (L223-L230,C232,C238)

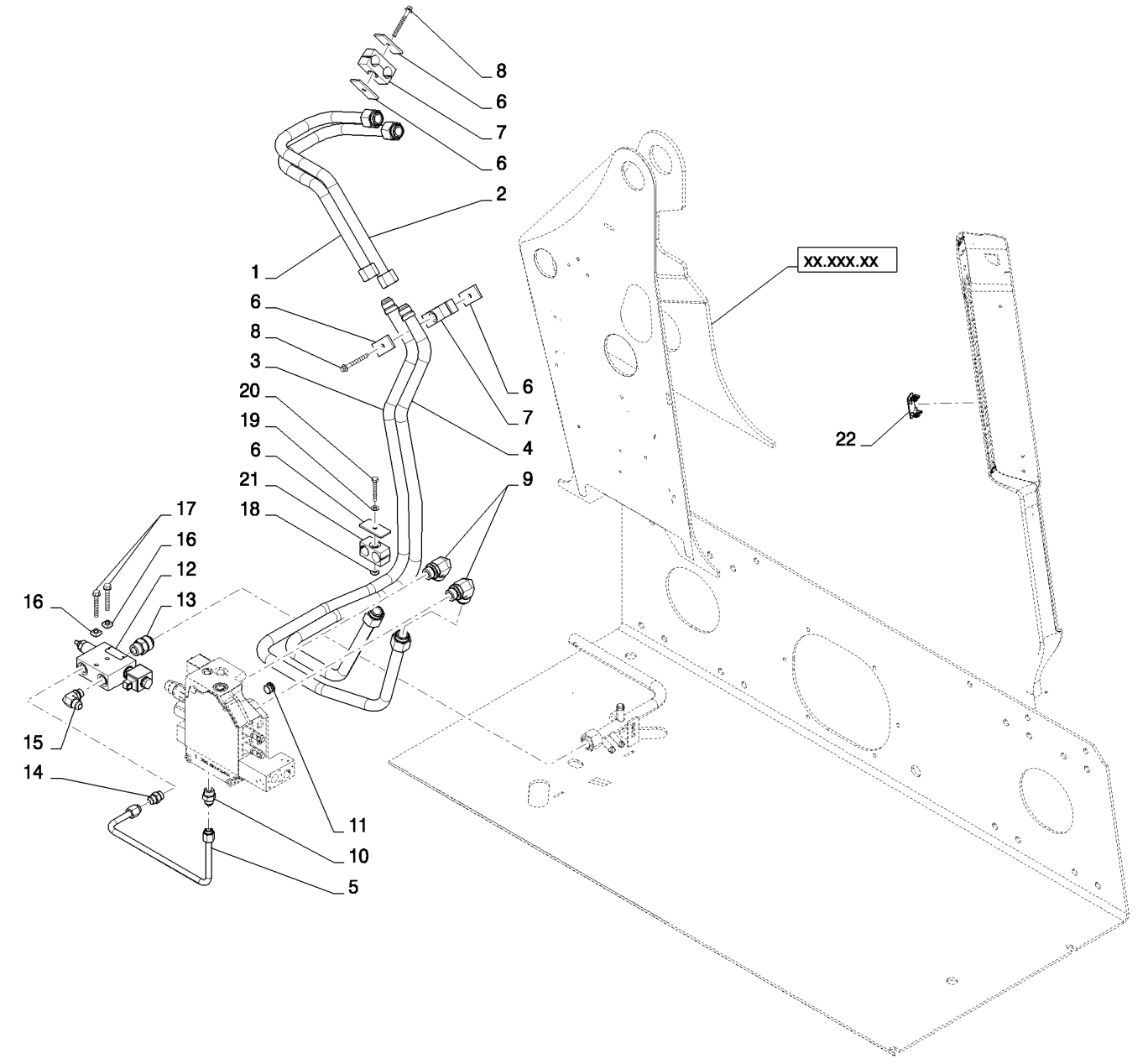

AUX HYD, HIGH FLOW CHASSIS PLUMBING (L223-L230,C232,C238)
AUX HYD, HIGH FLOW CHASSIS PLUMBING (L223-L230,C232,C238)
AUX HYD, HIGH FLOW CHASSIS PLUMBING (L223-L230,C232,C238)
AUX HYD, HIGH FLOW CHASSIS PLUMBING (L223-L230,C232,C238)

R	N	P.N.	MOD	Q	Denominação Description	Description Bezeichnung	Denominacion Beskrivelse	Descrizione Beschrijving	L.C.
1		84377529		1	TUBO, Aux, High Flow, LH Tower				
						TUBE	TUBO	TUBO	195T
					TUBE	ROHR	RØR	LEIDING	
2		84377527		1	TUBO, Aux, High Flow, LH Tower				
						TUBE	TUBO	TUBO	195T
					TUBE	ROHR	RØR	LEIDING	
3		84377514		1	TUBO, Aux, High Flow, LDR Valve to LFT Tower				
						TUBE	TUBO	TUBO	195T
					TUBE	ROHR	RØR	LEIDING	
4		84377512		1	TUBO, Aux, High Flow, LDR Valve to LFT Tower				
						TUBE	TUBO	TUBO	195T
					TUBE	ROHR	RØR	LEIDING	
5		84186155		1	TUBO, Assembly, High Flow, Valve to LDR Valve				
						TUBE	TUBO	TUBO	195T
					TUBE	ROHR	RØR	LEIDING	
6		257859A1		5	PLACA ESPACADORA, Bar				
						PLATE,SPACER	PLAQUETA	DISTANZ PIASTRA	Z324
					PLAQUETTE	PLAETTCHEN	PLATE,SPACER	PLATE,SPACER	
7		1546028C1		2	BRACADEIRA	CLAMP	COLLAR	MORSETTO	1640
					COLLIER	SCHELLE	CLAMP	CLAMP	
8		84323488		2	PARAFUSO, Tapping, M8 X 70 FLGHD				
						SELF-TAP SCREW	TORNILLO AUTORROSC	VITE AUTOFILETTANTE	062V
					VIS AUTOTARAUDEUSE	SELBSTSCHN SCHRAUE	SELVLÅSENDE BOLT	ZELFTAPPENDE SCHRO	
9		286217		2	COTOVELO, 90º, 1 5/16"-12, 37º x 1 1/16"-12, O-Ring				
						ELBOW	CODO	GOMITO	085G
					COUDE	KNIESTÜCK	VINKELRØR	KNIESTUK	
10		128819		1	CONECTOR HIDRÁUL, 3/4"-16, 37º x 7/8"-14, O-Ring				
						HYD CONNECTOR	CONECTOR HIDRÁULIC	CONNETTORE IDRAULIC	020R
					CONNECTEUR HYDRAU	HYDR STECKVERBINDE	HYDRAULIKSTIK	HYDRAULISCHE AANSLI	
11		84373460		1	BUJÃO, Load Check	PLUG	TAPÓN	TAPPO	050T
					BOUCHON	STOPFEN	PROP	PLUG	
12		84256405		1	VÁLVULA HIDRÁULICA, High Flow, Combiner				
						HYDRAULIC VALVE	VÁLVULA HIDRÁULICA	DISTRIBUTORE IDRAULI	010V
					SOUPAPE HYDRAULIQU	HYDRAULIKVENTIL	HYDRAULIKVENTIL	HYDRAULISCHE KLEP	
13		86512926		1	CONECTOR HIDRÁUL, 1 5/16"-12, 37º x 1 1/16"-12, O-Ring				
						HYD CONNECTOR	CONECTOR HIDRÁULIC	CONNETTORE IDRAULIC	020R
					CONNECTEUR HYDRAU	HYDR STECKVERBINDE	HYDRAULIKSTIK	HYDRAULISCHE AANSLI	
14		128818		1	CONECTOR HIDRÁUL, 3/4"-16, 37º x 3/4"-16, O-Ring				
						HYD CONNECTOR	CONECTOR HIDRÁULIC	CONNETTORE IDRAULIC	020R
					CONNECTEUR HYDRAU	HYDR STECKVERBINDE	HYDRAULIKSTIK	HYDRAULISCHE AANSLI	
15		86527		1	COTOVELO, 90º, 7/8"-14, 37º x 3/4"-16, O-Ring				
						ELBOW	CODO	GOMITO	085G
					COUDE	KNIESTÜCK	VINKELRØR	KNIESTUK	
16		87016586		2	PORCA, M8, U	NUT	TUERCA	DADO	010D
					ECROU	MUTTER	MØTRIK	MOER	
17		86511843		2	PARAFUSO, Hex Flg, M8 x 60, 8.8				
						BOLT	PERNO	BULLONE	140B
					VIS	SCHRAUBE	BOLT	BOUT	

35.220.02	03	p2	02/11

AUX HYD, HIGH FLOW CHASSIS PLUMBING (L223-L230,C232,C238)
AUX HYD, HIGH FLOW CHASSIS PLUMBING (L223-L230,C232,C238)
AUX HYD, HIGH FLOW CHASSIS PLUMBING (L223-L230,C232,C238)
AUX HYD, HIGH FLOW CHASSIS PLUMBING (L223-L230,C232,C238)

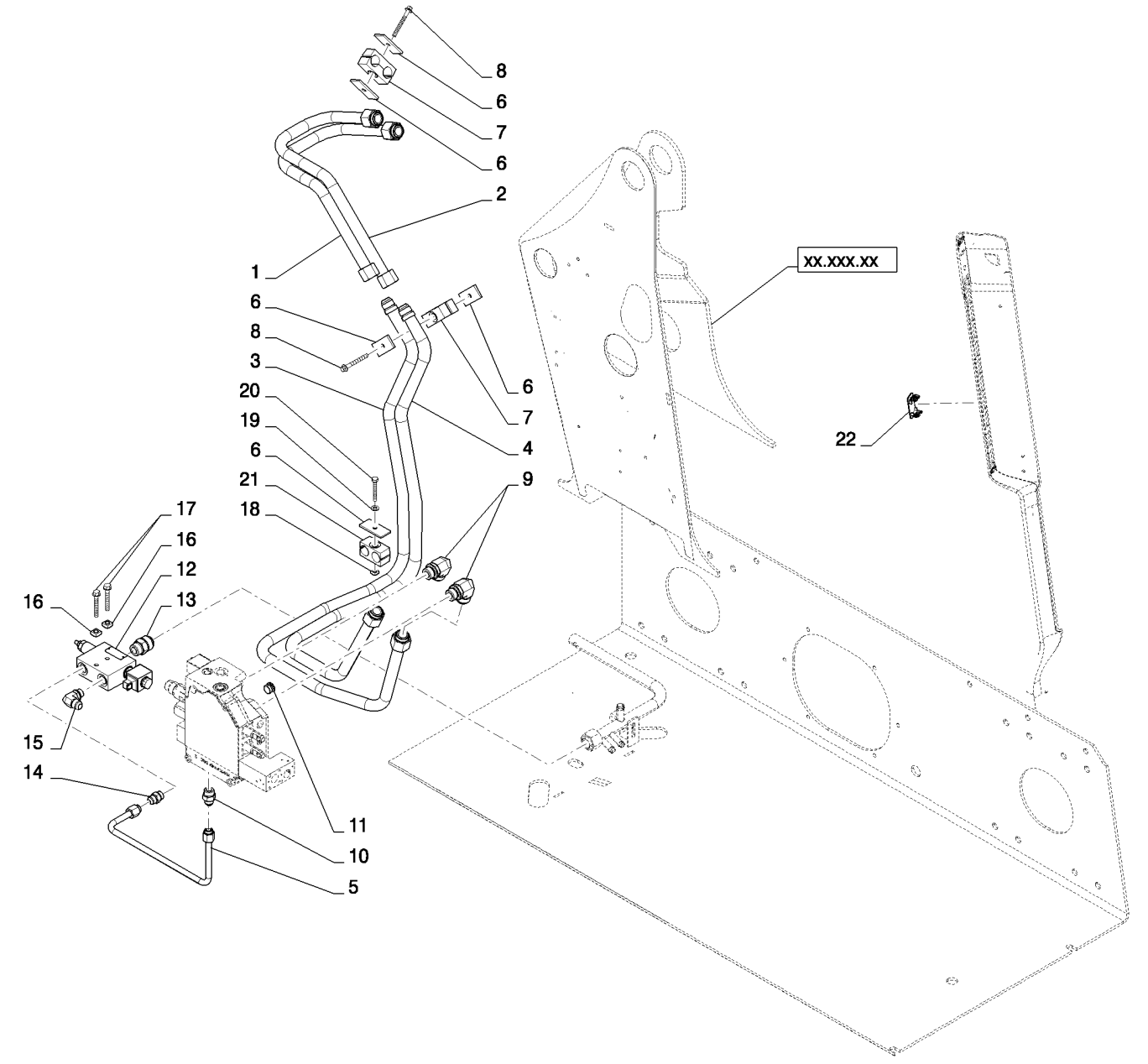

AUX HYD, HIGH FLOW CHASSIS PLUMBING (L223-L230,C232,C238)
AUX HYD, HIGH FLOW CHASSIS PLUMBING (L223-L230,C232,C238)
AUX HYD, HIGH FLOW CHASSIS PLUMBING (L223-L230,C232,C238)
AUX HYD, HIGH FLOW CHASSIS PLUMBING (L223-L230,C232,C238)

R	N	P.N.	MOD	Q	Denominação Description	Description Bezeichnung	Denominacion Beskrivelse	Descrizione Beschrijving	L.C.
18		229197A1		1	PORCA, Square ECROU	NUT MUTTER	TUERCA MØTRIK	DADO MOER	5780
19		87655042		1	ARRUELA ESPECIAL, M8, 8.80 X 17.5 X 2.2 HTS RONDELLE SPECIALE	SPECIAL WASHER SPEZIALUNTERLEGSCH	ARANDELA ESPECIAL SPECIALSKIVE	RONDELLA SPECIALE SPECIALE RING	Z333
20		16044321		1	PARAFUSO, Hex, M8 x 55, 8.8 VIS	SCREW SCHRAUBE	TORNILLO SKRUE	VITE SCHROEF	040V
21		225529A1		1	CONEXÃO, Clamp Tube RACCORD	FITTING ARMATUR	ACOPLAMIENTO FITTING	RACCORDO AANSLUITING	3300
22		84251427		1	INTERRUPTOR, Rocker, High Flow CONTACTEUR	SWITCH SCHALTER	INTERRUPTOR KONTAKT	INTERRUTTORE SCHAKELAAR	075I

35.220.02	04	p1	02/11

AUX HYD, HIGH FLOW ARM PLUMBING (L223-L230,C232,C238)
AUX HYD, HIGH FLOW ARM PLUMBING (L223-L230,C232,C238)
AUX HYD, HIGH FLOW ARM PLUMBING (L223-L230,C232,C238)
AUX HYD, HIGH FLOW ARM PLUMBING (L223-L230,C232,C238)

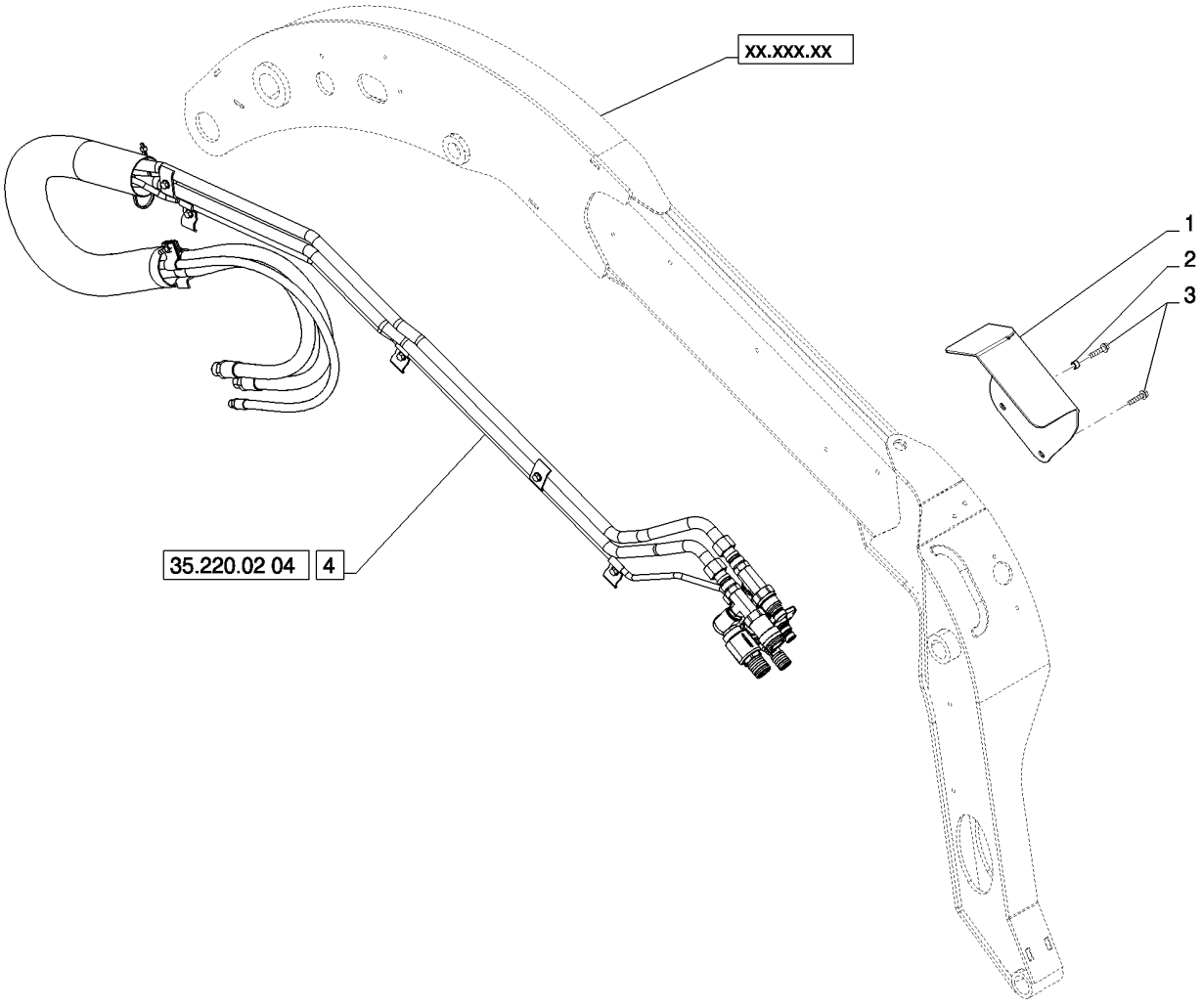

AUX HYD, HIGH FLOW ARM PLUMBING (L223-L230,C232,C238)
AUX HYD, HIGH FLOW ARM PLUMBING (L223-L230,C232,C238)
AUX HYD, HIGH FLOW ARM PLUMBING (L223-L230,C232,C238)
AUX HYD, HIGH FLOW ARM PLUMBING (L223-L230,C232,C238)

R	N	P.N.	MOD	Q	Denominação Description	Description Bezeichnung	Denominacion Beskrivelse	Descrizione Beschrijving	L.C.
1		84306939		1	COBERTURA, Hydraulic Gray				
						COVER	COBERTURA	COPERTURA	271C
					COUVERTURE	ABDECKUNG	AFDAEKNING	AFSCHERMING	
2		84306875		1	ESPAÇADOR	SPACER	SEPARADOR	DISTANZIALE	075D
					ENTRETOISE	DISTANZSTÜCK	AFSTANDSSTYKKE	AFSTANDSSTUK	
3		87030530		2	PARAFUSO, 3/8 X 1.75 TT	HW ZND			
						SCREW	TORNILLO	VITE	040V
					VIS	SCHRAUBE	SKRUE	SCHROEF	
4		NSS		1	SEM SERVIÇO EM SEPARADO, High Flow Aux, Arm Plumbing - Basic				
						NOT SERVICED SEPARA	NO SE REPARA POR SE	NON FORNITO SEPARAT	064N
					NON FOURNI SEPAREM	NICHT A SEP ERS-T LIEI	SERVICERES IKKE SEPA	NIET LOS VERKRIJGBAA	

35.220.02	05	p1	07/11

AUX HYD, ARM PLUMBING BASIC (L223-L230,C232,C238)
AUX HYD, ARM PLUMBING BASIC (L223-L230,C232,C238)
AUX HYD, ARM PLUMBING BASIC (L223-L230,C232,C238)
AUX HYD, ARM PLUMBING BASIC (L223-L230,C232,C238)

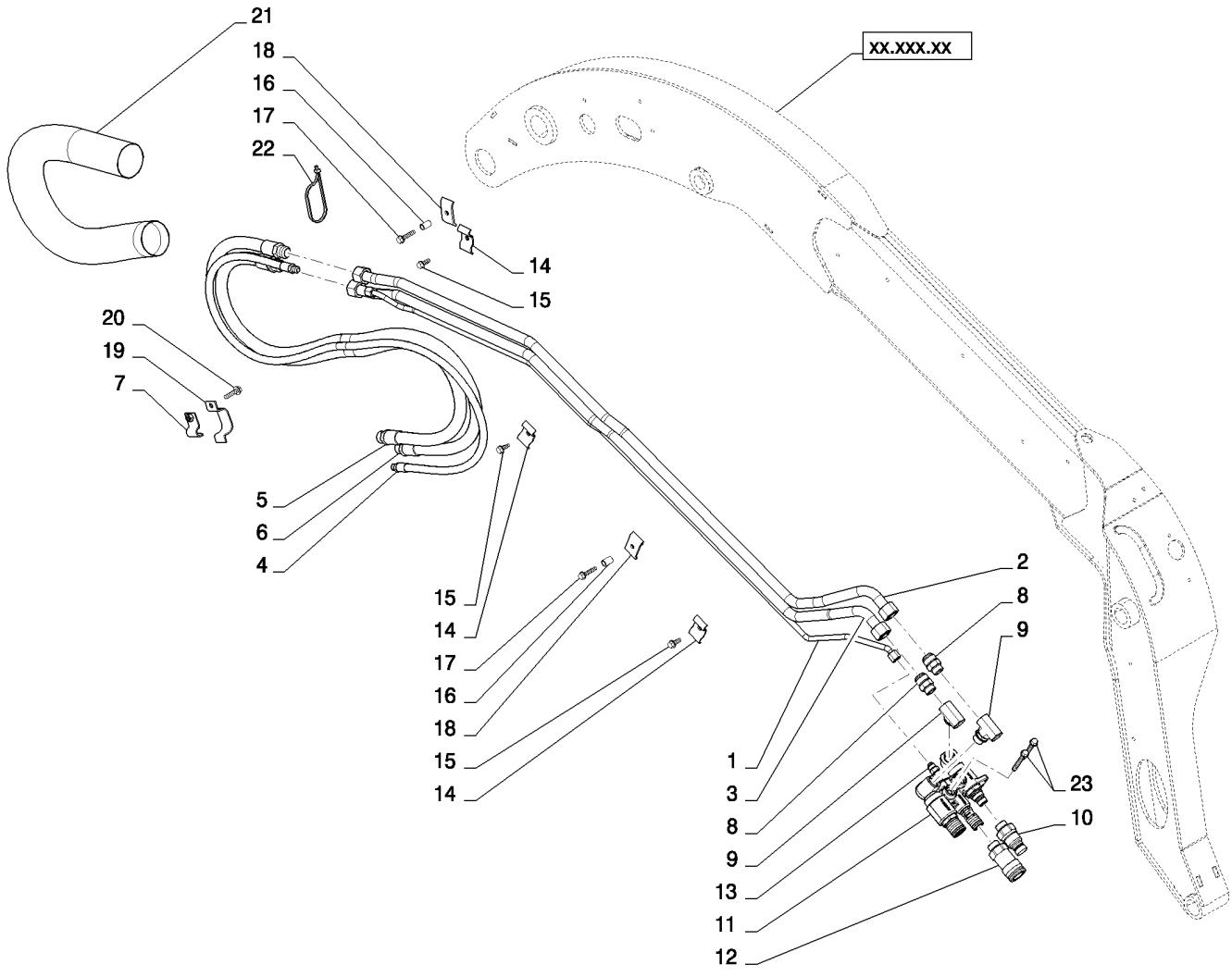

AUX HYD, ARM PLUMBING BASIC (L223-L230,C232,C238)
AUX HYD, ARM PLUMBING BASIC (L223-L230,C232,C238)
AUX HYD, ARM PLUMBING BASIC (L223-L230,C232,C238)
AUX HYD, ARM PLUMBING BASIC (L223-L230,C232,C238)

R	N	P.N.	MOD	Q	Denominação Description	Description Bezeichnung	Denominacion Beskrivelse	Descrizione Beschrijving	L.C.
1		84297619		1	TUBO RÍGIDO, Assembly, Case Drain				
						RIGID TUBE	TUBO RÍGIDO	TUBO RIGIDO	193T
					TUYAU RIGIDE	ROHR	STIFT RØR	VASTE LEIDING	
2		84297613		1	TUBO RÍGIDO, Assembly, High Flow				
						RIGID TUBE	TUBO RÍGIDO	TUBO RIGIDO	193T
					TUYAU RIGIDE	ROHR	STIFT RØR	VASTE LEIDING	
3		84297610		1	TUBO RÍGIDO, Assembly, High Flow				
						RIGID TUBE	TUBO RÍGIDO	TUBO RIGIDO	193T
					TUYAU RIGIDE	ROHR	STIFT RØR	VASTE LEIDING	
4		84281611		1	TUBO FLEXÍVEL, Assembly, Case Drain				
						FLEXIBLE HOSE	TUBO FLEXIBLE	TUBO FLESSIBILE	192T
					TUYAU FLEXIBLE	BIEGSAMER SCHLAUCH	FLEKSIBEL SLANGE	FLEXIBELE SLANG	
5		84281607		1	TUBO FLEXÍVEL, Assembly, High Flow				
						FLEXIBLE HOSE	TUBO FLEXIBLE	TUBO FLESSIBILE	192T
					TUYAU FLEXIBLE	BIEGSAMER SCHLAUCH	FLEKSIBEL SLANGE	FLEXIBELE SLANG	
6		84281606		1	TUBO FLEXÍVEL, Assembly, High Flow				
						FLEXIBLE HOSE	TUBO FLEXIBLE	TUBO FLESSIBILE	192T
					TUYAU FLEXIBLE	BIEGSAMER SCHLAUCH	FLEKSIBEL SLANGE	FLEXIBELE SLANG	
7		84282424		1	BRAÇADEIRA MANGUEIRA, -12 Hose Double				
						HOSE CLAMP	ABRAZADERA DE MANG	FASCETTA STRINGITUB	P729
					COLLIER POUR FLEXIBL	SCHLAUCHSCHELLE	SLANGEKLEMME	SLANGKLEM	
8		86512926		2	CONECTOR HIDRÁUL, 1 5/16"-12, 37º x 1 1/16"-12, O-Ring				
						HYD CONNECTOR	CONECTOR HIDRÁULIC	CONNETTORE IDRAULIC	020R
					CONNECTEUR HYDRAU	HYDR STECKVERBINDE	HYDRAULIKSTIK	HYDRAULISCHE AANSLI	
9		84255994		2	CONEXÃO, Tee Adj, -12 ORB				
						FITTING	ACOPLAMIENTO	RACCORDO	3300
					RACCORD	ARMATUR	FITTING	AANSLUITING	
10		84257183		1	CONEXÃO, Quick Coupler, Male				
						FITTING	ACOPLAMIENTO	RACCORDO	3300
					RACCORD	ARMATUR	FITTING	AANSLUITING	
11		84259689		1	VÁLVULA, Quick Attach, High Flow, Includes 11A-11C				
						VALVE	VÁLVULA	VALVOLA	9620
					SOUPAPE	VENTIL	VENTIL	KLEP	
11A		84390117		1	ENGATE, 1/2 Inch, Male, End Position				
						COUPLING	ACOPLAMIENTO	GIUNTO	Z321
					RACCORD	KUPPLUNG	KOBLING	KOPPELING	
12		84257182		1	CONEXÃO, Quick Coupler, Female				
						FITTING	ACOPLAMIENTO	RACCORDO	3300
					RACCORD	ARMATUR	FITTING	AANSLUITING	
13		86509028		1	CONECTOR HIDRÁUL, 3/4"-16, 37º x 9/16"-18, O-Ring				
						HYD CONNECTOR	CONECTOR HIDRÁULIC	CONNETTORE IDRAULIC	020R
					CONNECTEUR HYDRAU	HYDR STECKVERBINDE	HYDRAULIKSTIK	HYDRAULISCHE AANSLI	
11B		84390118		1	ENGATE, 1/2 Inch, Female, End Position				
						COUPLING	ACOPLAMIENTO	GIUNTO	Z321
					RACCORD	KUPPLUNG	KOBLING	KOPPELING	
14		84254056		3	BRAÇADEIRA MANGUEIRA, Butterfly Tube				
						HOSE CLAMP	ABRAZADERA DE MANG	FASCETTA STRINGITUB	P729
					COLLIER POUR FLEXIBL	SCHLAUCHSCHELLE	SLANGEKLEMME	SLANGKLEM	

35.220.02	05	p2	07/11

AUX HYD, ARM PLUMBING BASIC (L223-L230,C232,C238)
AUX HYD, ARM PLUMBING BASIC (L223-L230,C232,C238)
AUX HYD, ARM PLUMBING BASIC (L223-L230,C232,C238)
AUX HYD, ARM PLUMBING BASIC (L223-L230,C232,C238)

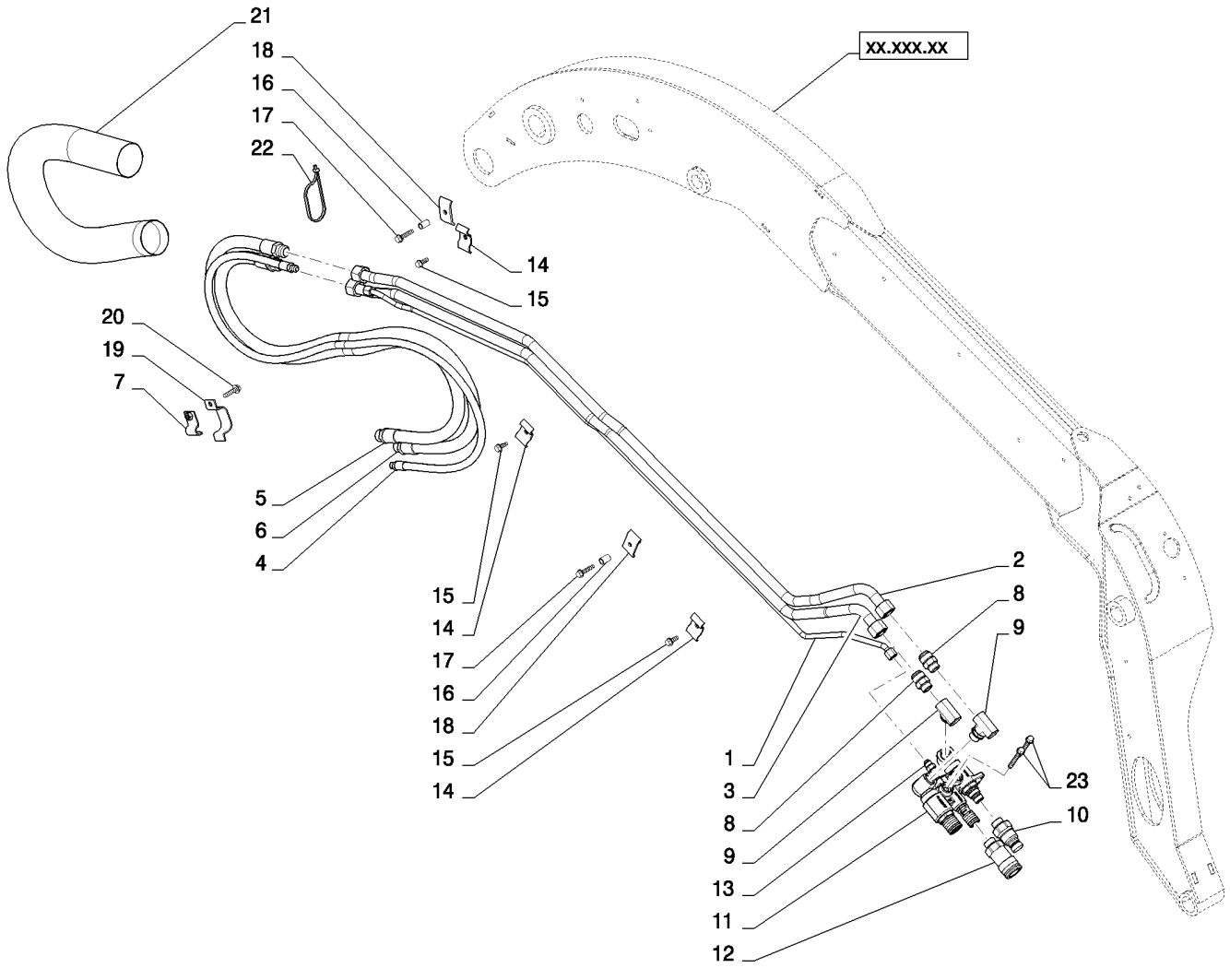

AUX HYD, ARM PLUMBING BASIC (L223-L230,C232,C238)
AUX HYD, ARM PLUMBING BASIC (L223-L230,C232,C238)
AUX HYD, ARM PLUMBING BASIC (L223-L230,C232,C238)
AUX HYD, ARM PLUMBING BASIC (L223-L230,C232,C238)

R	N	P.N.	MOD	Q	Denominação Description	Description Bezeichnung	Denominacion Beskrivelse	Descrizione Beschrijving	L.C.
11C		84390119		1	ENGATE, 3/8 Inch, Female, Center Position				
						COUPLING	ACOPLAMIENTO	GIUNTO	Z321
					RACCORD	KUPPLUNG	KOBLING	KOPPELING	
15		280476		3	PARAFUSO, Hex Wash Hd, 3/8" x 1"				
						SELF-TAP SCREW	TORNILLO AUTORROSC	VITE AUTOFILETTANTE	062V
					VIS AUTOTARAUDEUSE	SELBSTSCHN SCHRAUE	SELVLÅSENDE BOLT	ZELFTAPPENDE SCHRO	
16		87022737		2	ESPAÇADOR	SPACER	ESPACIADOR	DISTANZIALE	8090
					ENTRETOISE	DISTANZSTÜCK	AFSTANDSSTYKKE	AFSTANDSRING	
17		87030530		2	PARAFUSO, 3/8 X 1.75 TT HW ZND				
						SCREW	TORNILLO	VITE	040V
					VIS	SCHRAUBE	SKRUE	SCHROEF	
18		84254045		2	BRAÇADEIRA, Tube	CLAMP	ABRAZADERA	MORSETTO	120M
					COLLIER	KLEMME	SPÆNDEBÅND	KLEM	
19		84299413		1	BRAÇADEIRA MANGUEIRA, W -6 Hose Single				
						HOSE CLAMP	ABRAZADERA DE MANG	FASCETTA STRINGITUB	P729
					COLLIER POUR FLEXIBL	SCHLAUCHSCHELLE	SLANGEKLEMME	SLANGKLEM	
20		9804263		1	PARAFUSO, Hex Flg, M10 x 40, 8.8				
						BOLT	PERNO	BULLONE	140B
					VIS	SCHRAUBE	BOLT	BOUT	
21		84362111		1	PROTEÇÃO, Hose	GUARD	DEFENSA	PROTEZIONE	070R
					PROTECTION	SCHUTZABDECKUNG	BESKYTTELSESSKÆRM	AFSCHERMING	
22		L18331		1	PRENDEDOR DE CABOS, Nylon Tie 15.5in				
						CABLE STRAP	BANDA DE CABLE	FASCETTA PER CAVO	P716
					BRIDE DE CABLE	KABELBINDER	KABELSTROP	BUNDELBAND	
23		84331287		2	PARAFUSO, Tapping, 3/8-16 X 3 TT				
						SCREW	TORNILLO	VITE	040V
					VIS	SCHRAUBE	SKRUE	SCHROEF	

35.359.01	01	p1	04/11

PUMP, EH AND CONTROL VALVE (L223-L230)
PUMP, EH AND CONTROL VALVE (L223-L230)
PUMP, EH AND CONTROL VALVE (L223-L230)
PUMP, EH AND CONTROL VALVE (L223-L230)

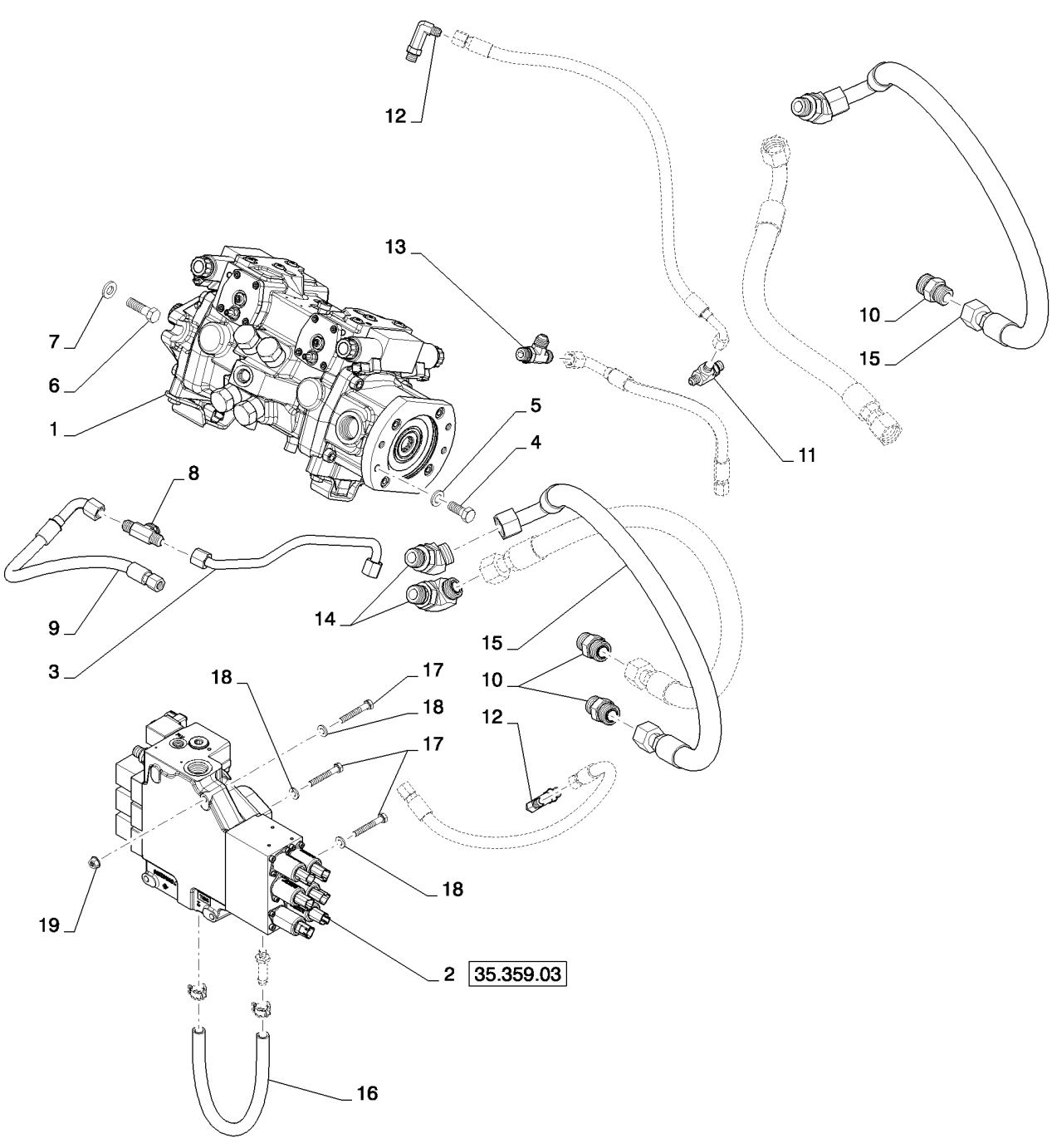

PUMP, EH AND CONTROL VALVE (L223-L230)
PUMP, EH AND CONTROL VALVE (L223-L230)
PUMP, EH AND CONTROL VALVE (L223-L230)
PUMP, EH AND CONTROL VALVE (L223-L230)

R	N	P.N.	MOD	Q	Denominação Description	Description Bezeichnung	Denominacion Beskrivelse	Descrizione Beschrijving	L.C.
1		84295013		1	BOMBA HIDRÁULICA, EH, 46cc, 360BAR; See Figure 29.212.07				
						HYDRAULIC PUMP	BOMBA HIDRÁULICO	POMPA IDRAULICA	155P
					POMPE HYDRAULIQUE	HYDRAULIKPUMPE	HYDRAULIKPUMPE	HYDRAULISCHE POMP	
2		84273646		1	MANGUEIRA, Pump Drain	HOSE	TUBO	TUBO FLESSIBILE	030M
					FLEXIBLE	SCHLAUCH	SLANGE	SLANG	
3		84273629		1	CONEXÃO, M10 X 1	FITTING	ACOPLAMIENTO	RACCORDO	3300
					RACCORD	ARMATUR	FITTING	AANSLUITING	
4		9840535		5	CONECTOR HIDRÁUL, 1 3/16"-12 ORFS x 1 1/16"-12 ORB				
						HYD CONNECTOR	CONECTOR HIDRÁULIC	CONNETTORE IDRAULIC	020R
					CONNECTEUR HYDRAU	HYDR STECKVERBINDE	HYDRAULIKSTIK	HYDRAULISCHE AANSLU	
5		84312282		1	TUBO FLEXÍVEL, Assembly, Loop				
						FLEXIBLE HOSE	TUBO FLEXIBLE	TUBO FLESSIBILE	192T
					TUYAU FLEXIBLE	BIEGSAMER SCHLAUCH	FLEKSIBEL SLANGE	FLEXIBELE SLANG	
6		76344		2	COTOVELO, 90º, 9/16"-18, 37º x 9/16"-18, O-Ring				
						ELBOW	CODO	GOMITO	085G
					COUDE	KNIESTÜCK	VINKELRØR	KNIESTUK	
7		9846848		1	COTOVELO 90, 1 3/16"-12 ORFS x 1 1/16"-12 ORB				
						90 ELBOW	CODO 90	GOMITO A 90°	A045
					COUDE A 90°	90-GRAD-KNIESTÜCK	VINKELRØR, 90	KNIESTUK 90º	
8		87443511		2	BRAÇADEIRA, Spring	CLAMP	ABRAZADERA	MORSETTO	120M
					COLLIER	KLEMME	SPÆNDEBÅND	KLEM	
9		84312508		1	VÁLVULA HIDRÁULICA, Valve, EH Control with Harness; See Figure 35.359.03				
						HYDRAULIC VALVE	VÁLVULA HIDRÁULICA	DISTRIBUTORE IDRAULI	010V
					SOUPAPE HYDRAULIQU	HYDRAULIKVENTIL	HYDRAULIKVENTIL	HYDRAULISCHE KLEP	
10		86512936		1	COTOVELO, 90º, 9/16"-18, 37º x 7/16"-20, O-Ring				
						ELBOW	CODO	GOMITO	085G
					COUDE	KNIESTÜCK	VINKELRØR	KNIESTUK	
11		86526		2	COTOVELO, 90º, 9/16"-18, 37º x 9/16"-18, LG				
						ELBOW	CODO	GOMITO	085G
					COUDE	KNIESTÜCK	VINKELRØR	KNIESTUK	
12		84309599		1	TUBO FLEXÍVEL, Assembly, EH, Brake Nor				
						FLEXIBLE HOSE	TUBO FLEXIBLE	TUBO FLESSIBILE	192T
					TUYAU FLEXIBLE	BIEGSAMER SCHLAUCH	FLEKSIBEL SLANGE	FLEXIBELE SLANG	
13		84299737		1	TUBO FLEXÍVEL, Assembly, EH, Brake Charge				
						FLEXIBLE HOSE	TUBO FLEXIBLE	TUBO FLESSIBILE	192T
					TUYAU FLEXIBLE	BIEGSAMER SCHLAUCH	FLEKSIBEL SLANGE	FLEXIBELE SLANG	
14		84288343		1	TUBO FLEXÍVEL, Assembly, EH, Control to Brake				
						FLEXIBLE HOSE	TUBO FLEXIBLE	TUBO FLESSIBILE	192T
					TUYAU FLEXIBLE	BIEGSAMER SCHLAUCH	FLEKSIBEL SLANGE	FLEXIBELE SLANG	
15		87314487		1	CONECTOR HIDRÁUL, Bead, Hose, 1/2in				
						HYD CONNECTOR	CONECTOR HIDRÁULIC	CONNETTORE IDRAULIC	020R
					CONNECTEUR HYDRAU	HYDR STECKVERBINDE	HYDRAULIKSTIK	HYDRAULISCHE AANSLU	
16		87443510		2	BRAÇADEIRA MANGUEIRA, M20				
						HOSE CLAMP	ABRAZADERA DE MANG	FASCETTA STRINGITUB	P729
					COLLIER POUR FLEXIBL	SCHLAUCHSCHELLE	SLANGEKLEMME	SLANGKLEM	
17		84349292		1	MANGUEIRA, Gear Pump, Suction				
						HOSE	TUBO	TUBO FLESSIBILE	030M
					FLEXIBLE	SCHLAUCH	SLANGE	SLANG	

35.359.01	01	p2	04/11

PUMP, EH AND CONTROL VALVE (L223-L230)
PUMP, EH AND CONTROL VALVE (L223-L230)
PUMP, EH AND CONTROL VALVE (L223-L230)
PUMP, EH AND CONTROL VALVE (L223-L230)

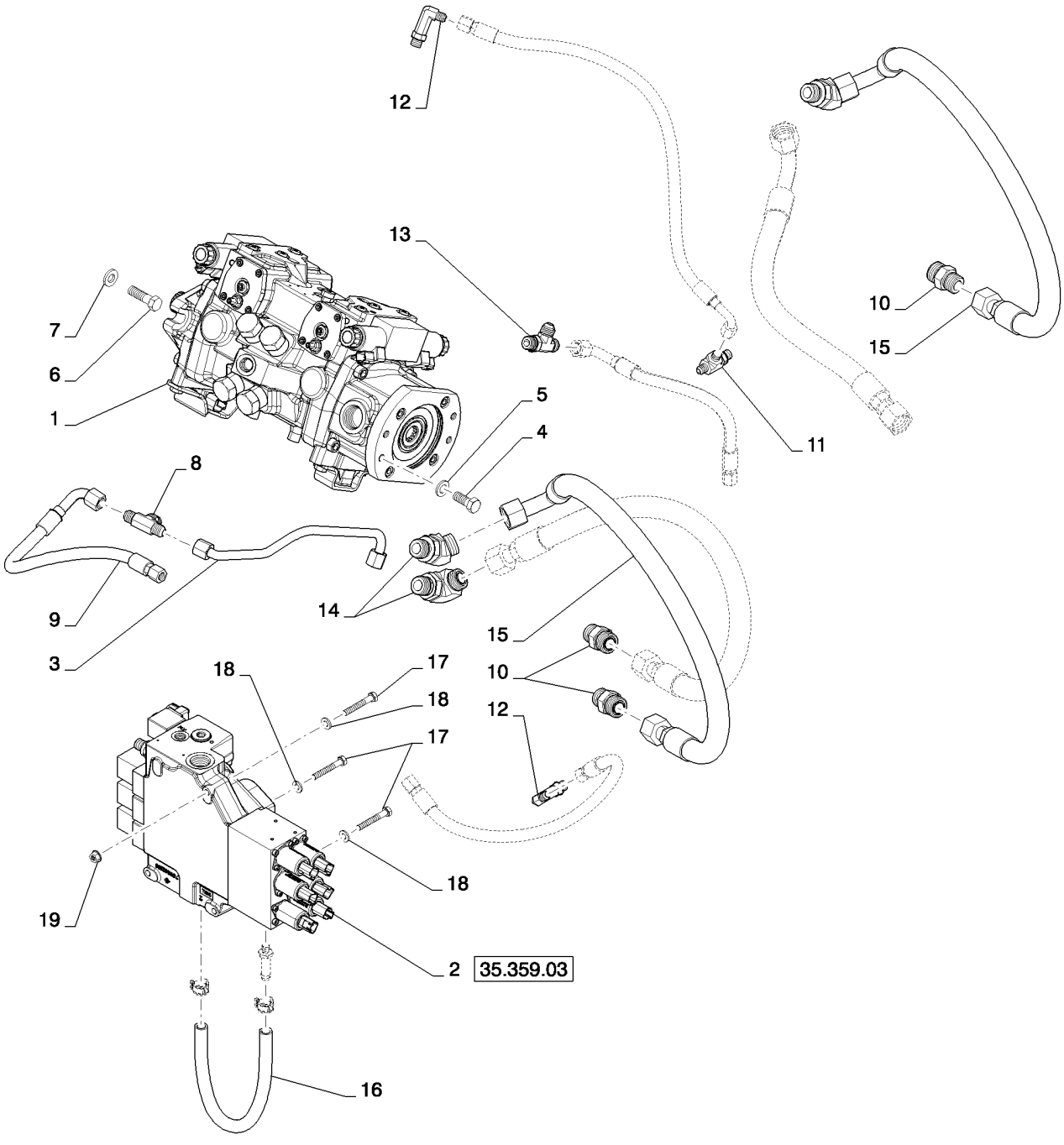

PUMP, EH AND CONTROL VALVE (L223-L230)
PUMP, EH AND CONTROL VALVE (L223-L230)
PUMP, EH AND CONTROL VALVE (L223-L230)
PUMP, EH AND CONTROL VALVE (L223-L230)

R	N	P.N.	MOD	Q	Denominação Description	Description Bezeichnung	Denominacion Beskrivelse	Descrizione Beschrijving	L.C.
18		84349296		1	MANGUEIRA, Gear Pump, Suction				
						HOSE	TUBO	TUBO FLESSIBILE	030M
					FLEXIBLE	SCHLAUCH	SLANGE	SLANG	
19		84344919		1	T, -24 Bead, -24 Bead, -12 Bead				
						TEE	RACOR EN T	PEZZO A T	9020
					RACCORD EN T	T-STÜCK	T-STYKKE	T-STUK	
20		84344942		1	MANGUEIRA, Tandem Supply				
						HOSE	TUBO	TUBO FLESSIBILE	030M
					FLEXIBLE	SCHLAUCH	SLANGE	SLANG	
21		86625021		2	BRAÇADEIRA MANGUEIRA, #12, 0.69/1.25 Type F Worm				
						HOSE CLAMP	ABRAZADERA DE MANG	FASCETTA STRINGITUB	P729
					COLLIER POUR FLEXIBL	SCHLAUCHSCHELLE	SLANGEKLEMME	SLANGKLEM	
22		84344932		1	TUBO RÍGIDO, Hydraulic, Tandem Supply				
						RIGID TUBE	TUBO RÍGIDO	TUBO RIGIDO	193T
					TUYAU RIGIDE	ROHR	STIFT RØR	VASTE LEIDING	
23		87022737		1	ESPAÇADOR	SPACER	ESPACIADOR	DISTANZIALE	8090
					ENTRETOISE	DISTANZSTÜCK	AFSTANDSSTYKKE	AFSTANDSRING	
24		9804265		3	PARAFUSO, Hex Flg, M10 x 60, 8.8				
						BOLT	PERNO	BULLONE	140B
					VIS	SCHRAUBE	BOLT	BOUT	
25		86637999		1	BRAÇADEIRA, 3/4", Insul, 7/16" Bolt				
						CLAMP	ABRAZADERA	MORSETTO	120M
					COLLIER	KLEMME	SPÆNDEBÅND	KLEM	
26		84303515		1	TUBO FLEXÍVEL, Assembly, Charge Supply				
						FLEXIBLE HOSE	TUBO FLEXIBLE	TUBO FLESSIBILE	192T
					TUYAU FLEXIBLE	BIEGSAMER SCHLAUCH	FLEKSIBEL SLANGE	FLEXIBELE SLANG	
27		507586		2	BRAÇADEIRA MANGUEIRA, #20, 0.81/1.75 Type F Worm				
						HOSE CLAMP	ABRAZADERA DE MANG	FASCETTA STRINGITUB	P729
					COLLIER POUR FLEXIBL	SCHLAUCHSCHELLE	SLANGEKLEMME	SLANGKLEM	
28		84344924		1	COTOVELO 90, Fitting, -16MB, -16 Bead, -12MJ				
						90 ELBOW	CODO 90	GOMITO A 90°	A045
					COUDE A 90°	90-GRAD-KNIESTÜCK	VINKELRØR, 90	KNIESTUK 90º	
29		9804277		3	PORCA, M8 x 1.25, Flg, Cl 8				
						NUT	TUERCA	DADO	010D
					ECROU	MUTTER	MØTRIK	MOER	
30		87655042		5	ARRUELA ESPECIAL, M8, 8.80 X 17.5 X 2.2 HTS				
						SPECIAL WASHER	ARANDELA ESPECIAL	RONDELLA SPECIALE	Z333
					RONDELLE SPECIALE	SPEZIALUNTERLEGSCH	SPECIALSKIVE	SPECIALE RING	
31		84265306		2	BRAÇADEIRA, 47.6MM M8 Bolt ZND				
						CLAMP	ABRAZADERA	MORSETTO	120M
					COLLIER	KLEMME	SPÆNDEBÅND	KLEM	
32		308761		2	PARAFUSO, Short NK, M8 x 25, Cl8.8, Full Thd				
						CARRIAGE BOLT	PERNO ALOMADO	BULLONE A TESTA TONI	P123
					VIS A TETE BOMBEE	SCHLOSSSCHRAUBE	BRÆDDEBOLT	SLOTBOUT	
33		513309		4	BRAÇADEIRA MANGUEIRA, #24, 1.06/2.00 Type F Worm				
						HOSE CLAMP	ABRAZADERA DE MANG	FASCETTA STRINGITUB	P729
					COLLIER POUR FLEXIBL	SCHLAUCHSCHELLE	SLANGEKLEMME	SLANGKLEM	

35.359.01	02	p1	07/11

PUMP, EH AND CONTROL VALVE (L223-L230)
PUMP, EH AND CONTROL VALVE (L223-L230)
PUMP, EH AND CONTROL VALVE (L223-L230)
PUMP, EH AND CONTROL VALVE (L223-L230)

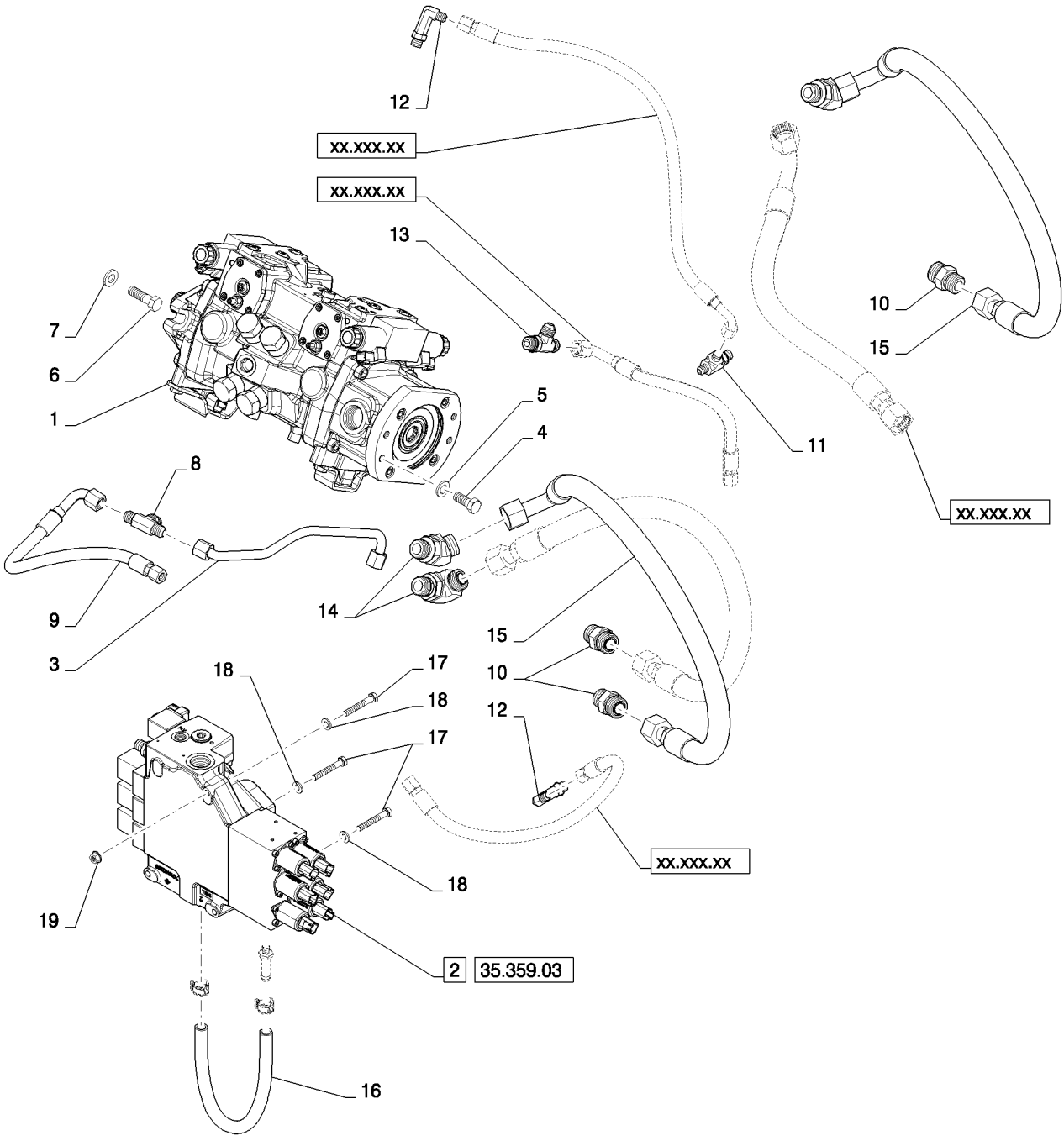

PUMP, EH AND CONTROL VALVE (L223-L230)
PUMP, EH AND CONTROL VALVE (L223-L230)
PUMP, EH AND CONTROL VALVE (L223-L230)
PUMP, EH AND CONTROL VALVE (L223-L230)

R	N	P.N.	MOD	Q	Denominação Description Bezeichnung	Denominacion Beskrivelse	Descrizione Beschrijving	L.C.
1		84295013		1	BOMBA HIDRÁULICA, EH, 46cc, 360BAR HYDRAULIC PUMP POMPE HYDRAULIQUE HYDRAULIKPUMPE	BOMBA HIDRÁULICO HYDRAULIKPUMPE	POMPA IDRAULICA HYDRAULISCHE POMP	155P
2		84312508		1	VÁLVULA HIDRÁULICA, EH Control with Harness HYDRAULIC VALVE SOUPAPE HYDRAULIQU HYDRAULIKVENTIL	VÁLVULA HIDRÁULICA HYDRAULIKVENTIL	DISTRIBUTORE IDRAULI HYDRAULISCHE KLEP	010V
3		84349300		1	TUBO RÍGIDO, Hydraulic, EH, Charge Supply RIGID TUBE TUYAU RIGIDE ROHR	TUBO RÍGIDO STIFT RØR	TUBO RIGIDO VASTE LEIDING	193T
4		87670		2	PARAFUSO, Hex, 1/2"-13 x 1 1/4", G5, Full Thd BOLT VIS SCHRAUBE	PERNO BOLT	BULLONE BOUT	140B
5		86625255		2	ARRUELA PLANA, M13.5 x 24.5 x 3, HT WASHER RONDELLE UNTERLEGSCHEIBE	ARANDELA FLADSKIVE	RONDELLA SLUITRING	131R
6		9790095		2	PARAFUSO, Hex, 1/2"-13 x 1 3/4", G8 BOLT VIS SCHRAUBE	PERNO BOLT	BULLONE BOUT	140B
7		65319		2	ARRUELA PLANA, M13 x 25 x 3.5, HT WASHER RONDELLE UNTERLEGSCHEIBE	ARANDELA FLADSKIVE	RONDELLA SLUITRING	131R
8		86513024		1	T, 3/4"-16, 37º x 3/4"-16, O-Ring Br TEE RACCORD EN T T-STÜCK	RACOR EN T T-STYKKE	PEZZO A T T-STUK	9020
9		84299736		1	TUBO FLEXÍVEL, Assembly, EH, LV Interlock FLEXIBLE HOSE TUYAU FLEXIBLE BIEGSAMER SCHLAUCH	TUBO FLEXIBLE FLEKSIBEL SLANGE	TUBO FLESSIBILE FLEXIBELE SLANG	192T
10		9840535		6	CONECTOR HIDRÁUL, 1 3/16"-12 ORFS x 1 1/16"-12 ORB HYD CONNECTOR CONNECTEUR HYDRAU HYDR STECKVERBINDE	CONECTOR HIDRÁULIC HYDRAULIKSTIK	CONNETTORE IDRAULIC HYDRAULISCHE AANSLI	020R
11		86513020		1	T, 9/16"-18, 37º x 9/16"-18, O-Ring Run TEE RACCORD EN T T-STÜCK	RACOR EN T T-STYKKE	PEZZO A T T-STUK	9020
12		86526		2	COTOVELO, 90º, 9/16"-18, 37º x 9/16"-18, LG ELBOW COUDE KNIESTÜCK	CODO VINKELRØR	GOMITO KNIESTUK	085G
13		265808		1	T, 3/4"-16, 37º x 3/4"-18, O-Ring Run TEE RACCORD EN T T-STÜCK	RACOR EN T T-STYKKE	PEZZO A T T-STUK	9020
14		9846870		1	COTOVELO, 45º, 1 3/16"-12 x 1 1/16"-12. Adj, ORFS ELBOW COUDE KNIESTÜCK	CODO VINKELRØR	GOMITO KNIESTUK	085G
15		84258848		2	TUBO FLEXÍVEL, Assembly, Loop, Includes O-Ring FLEXIBLE HOSE TUYAU FLEXIBLE BIEGSAMER SCHLAUCH	TUBO FLEXIBLE FLEKSIBEL SLANGE	TUBO FLESSIBILE FLEXIBELE SLANG	192T
15		9991976		2	O-RING, 0.739" ID x 0.879" OD x 0.07" O-RING JOINT TORIQUE O-RING	JUNTA TÓRICA O-RING	ANELLO TOROIDALE O-RING	055A

PUMP, EH AND CONTROL VALVE (L223-L230)
PUMP, EH AND CONTROL VALVE (L223-L230)
PUMP, EH AND CONTROL VALVE (L223-L230)
PUMP, EH AND CONTROL VALVE (L223-L230)

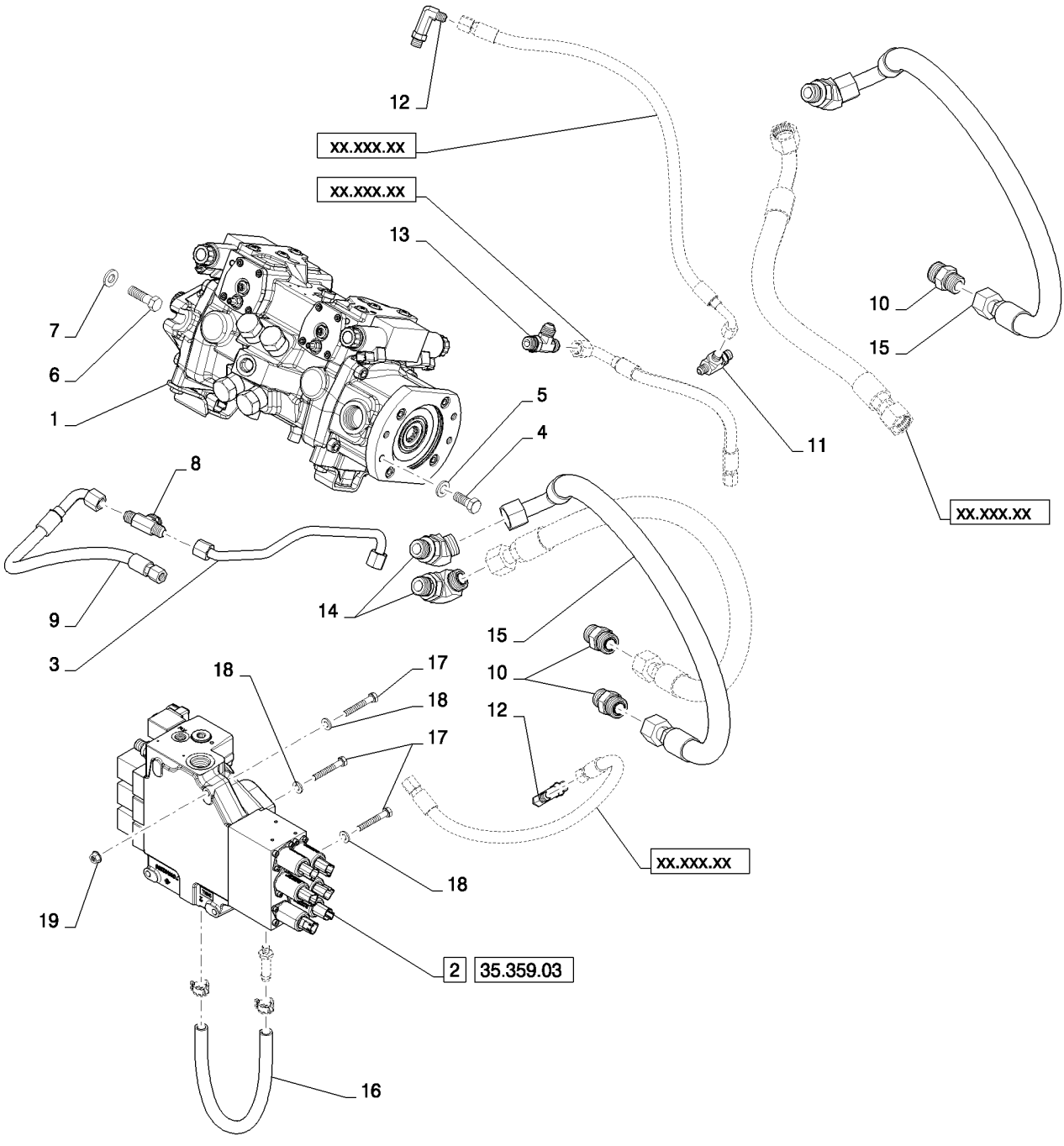

PUMP, EH AND CONTROL VALVE (L223-L230)
PUMP, EH AND CONTROL VALVE (L223-L230)
PUMP, EH AND CONTROL VALVE (L223-L230)
PUMP, EH AND CONTROL VALVE (L223-L230)

R	N	P.N.	MOD	Q	Denominação Description	Description Bezeichnung	Denominacion Beskrivelse	Descrizione Beschrijving	L.C.
16		**84373394**		1	MANGUEIRA, EH Aux to EH Aux Drain				
						HOSE	TUBO	TUBO FLESSIBILE	030M
					FLEXIBLE	SCHLAUCH	SLANGE	SLANG	
17		**16044321**		3	PARAFUSO, Hex, M8 x 55, 8.8				
						SCREW	TORNILLO	VITE	040V
					VIS	SCHRAUBE	SKRUE	SCHROEF	
18		**87655042**		5	ARRUELA ESPECIAL, M8, 8.80 X 17.5 X 2.2 HTS				
						SPECIAL WASHER	ARANDELA ESPECIAL	RONDELLA SPECIALE	Z333
					RONDELLE SPECIALE	SPEZIALUNTERLEGSCH	SPECIALSKIVE	SPECIALE RING	
19		**9804277**		3	PORCA, M8 x 1.25, Flg, Cl 8				
						NUT	TUERCA	DADO	010D
					ECROU	MUTTER	MØTRIK	MOER	

35.359.02	01	p1	02/11

PUMP, MECHANICAL (L223-L230)
PUMP, MECHANICAL (L223-L230)
PUMP, MECHANICAL (L223-L230)
PUMP, MECHANICAL (L223-L230)

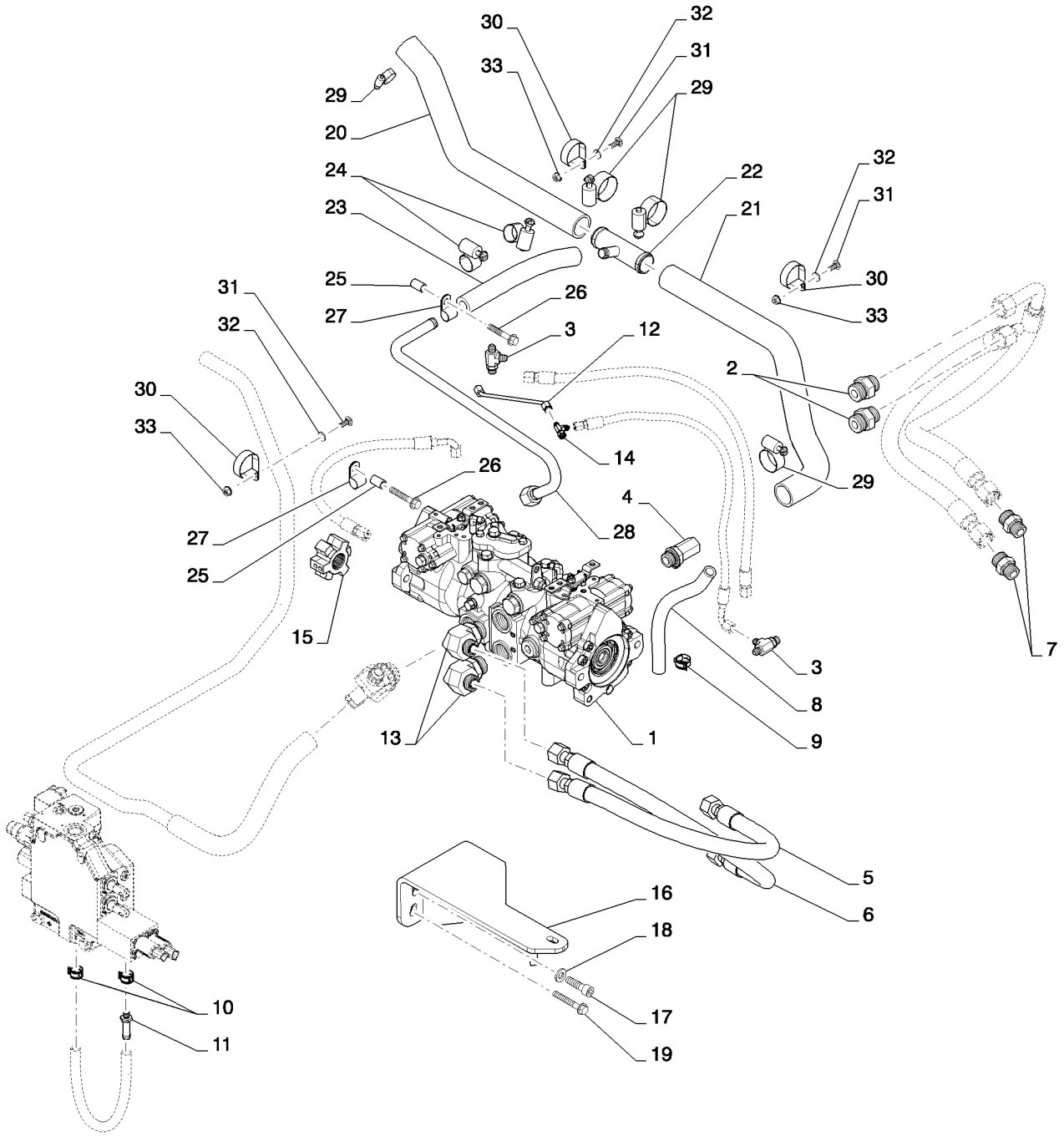

PUMP, MECHANICAL (L223-L230)
PUMP, MECHANICAL (L223-L230)
PUMP, MECHANICAL (L223-L230)
PUMP, MECHANICAL (L223-L230)

R	N	P.N.	MOD	Q	Denominação Description	Description Bezeichnung	Denominacion Beskrivelse	Descrizione Beschrijving	L.C.
1		84322471		1	BOMBA HIDROSTÁTICA, Tandem, 48cc MDC; See Figures 29.212.06				
						HYDROSTATIC PUMP	BOMBA HIDROSTÁTICO	POMPA IDROSTATICA	156P
					POMPE HYDROSTATIQU	HYDROSTATIKPUMPE	HYDROSTATISK PUMPE	HYDROSTATISCHE POM	
2		87359470		2	CONECTOR HIDRÁUL	HYD CONNECTOR	CONECTOR HIDRÁULIC	CONNETTORE IDRAULIC	020R
					CONNECTEUR HYDRAU	HYDR STECKVERBINDE	HYDRAULIKSTIK	HYDRAULISCHE AANSLU	
3		86513020		2	T, 9/16"-18, 37º x 9/16"-18, O-Ring Run				
						TEE	RACOR EN T	PEZZO A T	9020
					RACCORD EN T	T-STÜCK	T-STYKKE	T-STUK	
4		84273629		1	CONEXÃO, M10 X 1	FITTING	ACOPLAMIENTO	RACCORDO	3300
					RACCORD	ARMATUR	FITTING	AANSLUITING	
5		84258856		1	TUBO FLEXÍVEL, Assembly, Loop				
						FLEXIBLE HOSE	TUBO FLEXIBLE	TUBO FLESSIBILE	192T
					TUYAU FLEXIBLE	BIEGSAMER SCHLAUCH	FLEKSIBEL SLANGE	FLEXIBELE SLANG	
6		84258846		1	TUBO FLEXÍVEL, Assembly, Loop				
						FLEXIBLE HOSE	TUBO FLEXIBLE	TUBO FLESSIBILE	192T
					TUYAU FLEXIBLE	BIEGSAMER SCHLAUCH	FLEKSIBEL SLANGE	FLEXIBELE SLANG	
7		9840535		4	CONECTOR HIDRÁUL, 1 3/16"-12 ORFS x 1 1/16"-12 ORB				
						HYD CONNECTOR	CONECTOR HIDRÁULIC	CONNETTORE IDRAULIC	020R
					CONNECTEUR HYDRAU	HYDR STECKVERBINDE	HYDRAULIKSTIK	HYDRAULISCHE AANSLU	
8		84273646		1	MANGUEIRA, Pump Drain	HOSE	TUBO	TUBO FLESSIBILE	030M
					FLEXIBLE	SCHLAUCH	SLANGE	SLANG	
9		87443511		2	BRAÇADEIRA, Spring	CLAMP	ABRAZADERA	MORSETTO	120M
					COLLIER	KLEMME	SPÆNDEBÅND	KLEM	
10		87443510		2	BRAÇADEIRA MANGUEIRA, M20				
						HOSE CLAMP	ABRAZADERA DE MANG	FASCETTA STRINGITUB	P729
					COLLIER POUR FLEXIBL	SCHLAUCHSCHELLE	SLANGEKLEMME	SLANGKLEM	
11		87314487		1	CONECTOR HIDRÁUL, Bead, Hose, 1/2in				
						HYD CONNECTOR	CONECTOR HIDRÁULIC	CONNETTORE IDRAULIC	020R
					CONNECTEUR HYDRAU	HYDR STECKVERBINDE	HYDRAULIKSTIK	HYDRAULISCHE AANSLU	
12		87021277		1	TUBO CONJUNTO, 6.35 mm OD x 105.4, 124.9 mm L				
						TUBE ASSY.	TUBO (CONJUNTO)	TUBO, COMPLESSIVO	P465
					TUYAUTERIE	ROHRLEITUNG	TUBE ASSY.	TUBE ASSY.	
13		87326965		2	COTOVELO	ELBOW	CODO	GOMITO	085G
					COUDE	KNIESTÜCK	VINKELRØR	KNIESTUK	
14		86513653		1	T, 37º, 7/16"-20 x 7/16"-20, Fem Sw Run				
						TEE	RACOR EN T	PEZZO A T	9020
					RACCORD EN T	T-STÜCK	T-STYKKE	T-STUK	
15		87711337		1	ENGATE, Drive, Star	COUPLING	ACOPLAMIENTO	GIUNTO	Z321
					RACCORD	KUPPLUNG	KOBLING	KOPPELING	
16		84201132		1	FIXADOR, Pump Support	MOUNT	SOPORTE	SUPPORTO	C022
					MONTAGE	GESTELL	BESLAG	BEVESTIGING	
17		15734		4	PARAFUSO, Hex Soc Hd, 1/2"-13 x 1 3/4"				
						SCREW	TORNILLO	VITE	040V
					VIS	SCHRAUBE	SKRUE	SCHROEF	
18		65319		4	ARRUELA PLANA, M13 x 25 x 3.5, HT				
						WASHER	ARANDELA	RONDELLA	131R
					RONDELLE	UNTERLEGSCHEIBE	FLADSKIVE	SLUITRING	

35.359.02	01	p2	02/11

PUMP, MECHANICAL (L223-L230)
PUMP, MECHANICAL (L223-L230)
PUMP, MECHANICAL (L223-L230)
PUMP, MECHANICAL (L223-L230)

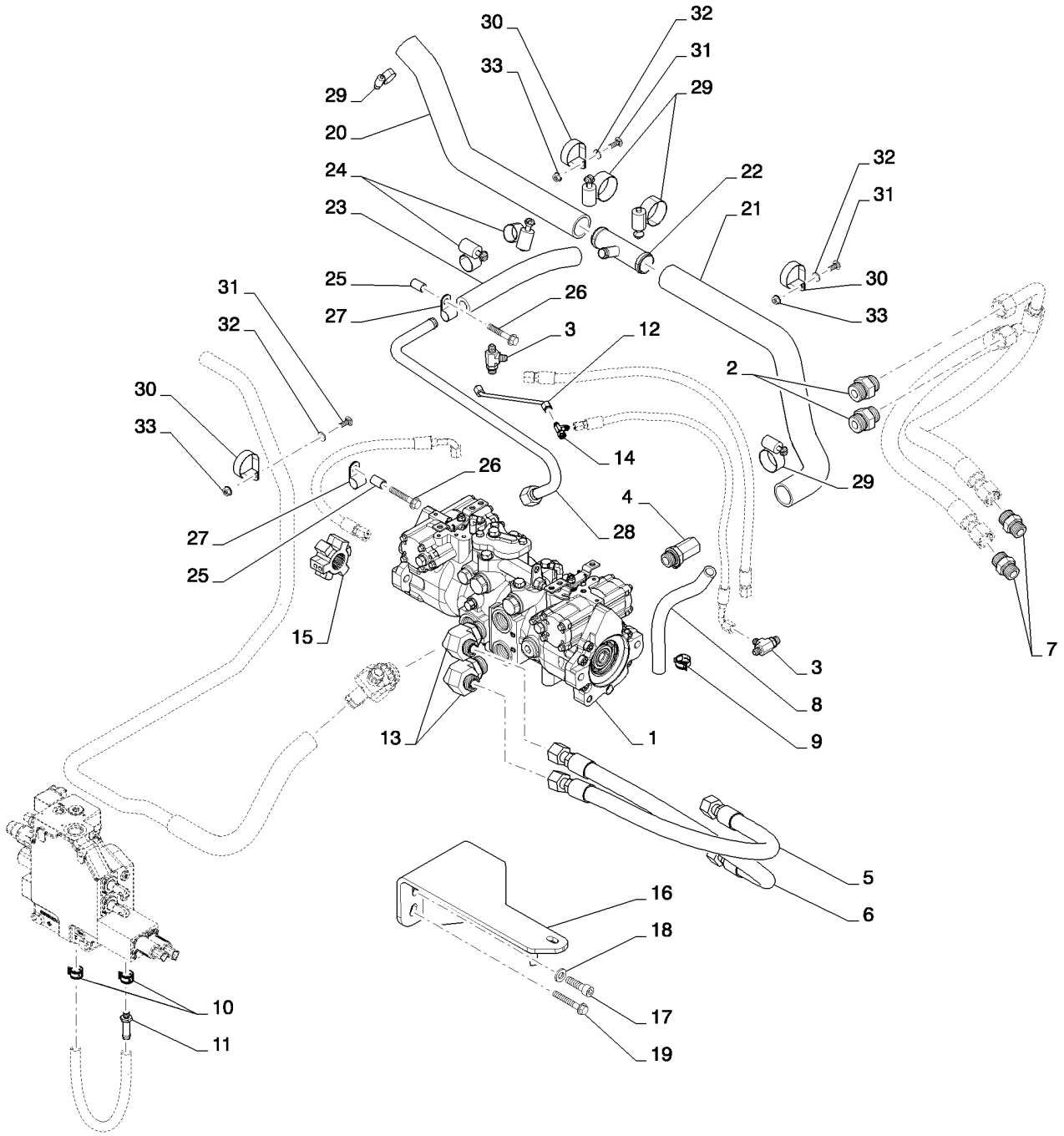

PUMP, MECHANICAL (L223-L230)
PUMP, MECHANICAL (L223-L230)
PUMP, MECHANICAL (L223-L230)
PUMP, MECHANICAL (L223-L230)

R	N	P.N.	MOD	Q	Denominação Description	Description Bezeichnung	Denominacion Beskrivelse	Descrizione Beschrijving	L.C.
19		**86011090**		2	PARAFUSO, Hex Flg, M10 x 70, 8.8				
						BOLT	PERNO	BULLONE	140B
					VIS	SCHRAUBE	BOLT	BOUT	
20		**84349292**		1	MANGUEIRA, Gear Pump, Suction				
						HOSE	TUBO	TUBO FLESSIBILE	030M
					FLEXIBLE	SCHLAUCH	SLANGE	SLANG	
21		**84349297**		1	MANGUEIRA, Gear Pump, Suction				
						HOSE	TUBO	TUBO FLESSIBILE	030M
					FLEXIBLE	SCHLAUCH	SLANGE	SLANG	
22		**84344919**		1	T, -24 Bead, -24 Bead, -12 Bead				
						TEE	RACOR EN T	PEZZO A T	9020
					RACCORD EN T	T-STÜCK	T-STYKKE	T-STUK	
23		**84344942**		1	MANGUEIRA, Tandem Supply				
						HOSE	TUBO	TUBO FLESSIBILE	030M
					FLEXIBLE	SCHLAUCH	SLANGE	SLANG	
24		**86625021**		2	BRAÇADEIRA MANGUEIRA, #12, 0.69/1.25 Type F Worm				
						HOSE CLAMP	ABRAZADERA DE MANG	FASCETTA STRINGITUB	P729
					COLLIER POUR FLEXIBL	SCHLAUCHSCHELLE	SLANGEKLEMME	SLANGKLEM	
25		**87022737**		1	ESPAÇADOR	SPACER	ESPACIADOR	DISTANZIALE	8090
					ENTRETOISE	DISTANZSTÜCK	AFSTANDSSTYKKE	AFSTANDSRING	
26		**9804265**		1	PARAFUSO, Hex Flg, M10 x 60, 8.8				
						BOLT	PERNO	BULLONE	140B
					VIS	SCHRAUBE	BOLT	BOUT	
27		**86637999**		1	BRAÇADEIRA, 3/4", Insul, 7/16" Bolt				
						CLAMP	ABRAZADERA	MORSETTO	120M
					COLLIER	KLEMME	SPÆNDEBÅND	KLEM	
28		**84344926**		1	TUBO RÍGIDO, Hydraulic, Tandem Supply				
						RIGID TUBE	TUBO RÍGIDO	TUBO RIGIDO	193T
					TUYAU RIGIDE	ROHR	STIFT RØR	VASTE LEIDING	
29		**513309**		4	BRAÇADEIRA MANGUEIRA, #24, 1.06/2.00 Type F Worm				
						HOSE CLAMP	ABRAZADERA DE MANG	FASCETTA STRINGITUB	P729
					COLLIER POUR FLEXIBL	SCHLAUCHSCHELLE	SLANGEKLEMME	SLANGKLEM	
30		**84265306**		2	BRAÇADEIRA, 47.6MM M8 Bolt ZND				
						CLAMP	ABRAZADERA	MORSETTO	120M
					COLLIER	KLEMME	SPÆNDEBÅND	KLEM	
31		**308761**		2	PARAFUSO, Short NK, M8 x 25, Cl8.8, Full Thd				
						CARRIAGE BOLT	PERNO ALOMADO	BULLONE A TESTA TONI	P123
					VIS A TETE BOMBEE	SCHLOSSSCHRAUBE	BRÆDDEBOLT	SLOTBOUT	
32		**87655042**		5	ARRUELA ESPECIAL, M8, 8.80 X 17.5 X 2.2 HTS				
						SPECIAL WASHER	ARANDELA ESPECIAL	RONDELLA SPECIALE	Z333
					RONDELLE SPECIALE	SPEZIALUNTERLEGSCH	SPECIALSKIVE	SPECIALE RING	
33		**9804277**		3	PORCA, M8 x 1.25, Flg, Cl 8				
						NUT	TUERCA	DADO	010D
					ECROU	MUTTER	MØTRIK	MOER	

35.359.02	02	p1	07/11

PUMP, MECHANICAL (L223-L230)
PUMP, MECHANICAL (L223-L230)
PUMP, MECHANICAL (L223-L230)
PUMP, MECHANICAL (L223-L230)

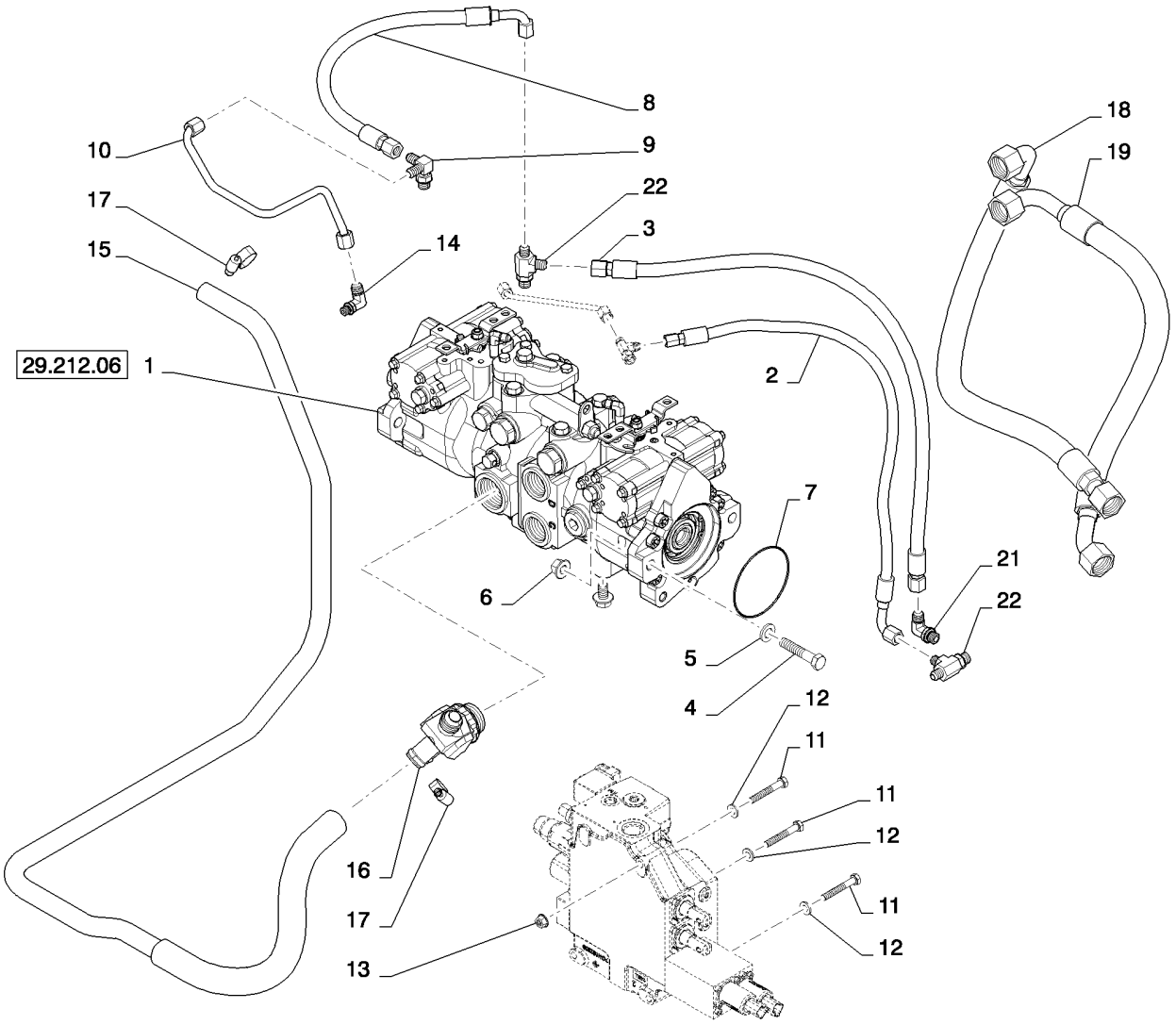

PUMP, MECHANICAL (L223-L230)
PUMP, MECHANICAL (L223-L230)
PUMP, MECHANICAL (L223-L230)
PUMP, MECHANICAL (L223-L230)

R	N	P.N.	MOD	Q	Denominação Description	Description Bezeichnung	Denominacion Beskrivelse	Descrizione Beschrijving	L.C.
1		84322471		1	BOMBA HIDROSTÁTICA, Tandem, 48cc MDC; See Figure 29.212.06				
						HYDROSTATIC PUMP	BOMBA HIDROSTÁTICO	POMPA IDROSTATICA	156P
					POMPE HYDROSTATIQU	HYDROSTATIKPUMPE	HYDROSTATISK PUMPE	HYDROSTATISCHE POM	
2		84257175		1	CONJ. MANGUEIRA, Brake	HOSE ASSY.	CONJUNTO DE TUBOS	COMPLESS. TUBO FLES	P457
					ENSEMBLE DE FLEXIBLE	SCHLAUCHBAUGRUPPE	SLANGEENHED	SLANGEENHEID	
3		84257174		1	CONJ. MANGUEIRA, Charge to Brake				
						HOSE ASSY.	CONJUNTO DE TUBOS	COMPLESS. TUBO FLES	P457
					ENSEMBLE DE FLEXIBLE	SCHLAUCHBAUGRUPPE	SLANGEENHED	SLANGEENHEID	
4		9706693		2	PARAFUSO, Hex, M12 x 60, 8.8				
						BOLT	PERNO	BULLONE	140B
					VIS	SCHRAUBE	BOLT	BOUT	
5		86625255		2	ARRUELA PLANA, M13.5 x 24.5 x 3, HT				
						WASHER	ARANDELA	RONDELLA	131R
					RONDELLE	UNTERLEGSCHEIBE	FLADSKIVE	SLUITRING	
6		9804279		2	PORCA, M12 x 1.75, Flg, Cl 8				
						NUT	TUERCA	DADO	010D
					ECROU	MUTTER	MØTRIK	MOER	
7		87013729		1	O-RING, 3.739" ID x 3.879" OD x 0.07"				
						O-RING	JUNTA TÓRICA	ANELLO TOROIDALE	055A
					JOINT TORIQUE	O-RING	O-RING	O-RING	
8		84259516		1	TUBO FLEXÍVEL, Assembly, LV Interlock				
						FLEXIBLE HOSE	TUBO FLEXIBLE	TUBO FLESSIBILE	192T
					TUYAU FLEXIBLE	BIEGSAMER SCHLAUCH	FLEKSIBEL SLANGE	FLEXIBELE SLANG	
9		L104616		1	COTOVELO 90, 9/16"-18 x 9/16"-18 ORB				
						90 ELBOW	CODO 90	GOMITO A 90°	A045
					COUDE A 90°	90-GRAD-KNIESTÜCK	VINKELRØR, 90	KNIESTUK 90º	
10		84373389		1	TUBO RÍGIDO, Assembly, EH, Aux Charge				
						RIGID TUBE	TUBO RÍGIDO	TUBO RIGIDO	193T
					TUYAU RIGIDE	ROHR	STIFT RØR	VASTE LEIDING	
11		16044321		3	PARAFUSO, Hex, M8 x 55, 8.8				
						SCREW	TORNILLO	VITE	040V
					VIS	SCHRAUBE	SKRUE	SCHROEF	
12		87655042		5	ARRUELA ESPECIAL, M8, 8.80 X 17.5 X 2.2 HTS				
						SPECIAL WASHER	ARANDELA ESPECIAL	RONDELLA SPECIALE	Z333
					RONDELLE SPECIALE	SPEZIALUNTERLEGSCH	SPECIALSKIVE	SPECIALE RING	
13		9804277		3	PORCA, M8 x 1.25, Flg, Cl 8				
						NUT	TUERCA	DADO	010D
					ECROU	MUTTER	MØTRIK	MOER	
14		86512936		1	COTOVELO, 90º, 9/16"-18, 37º x 7/16"-20, O-Ring				
						ELBOW	CODO	GOMITO	085G
					COUDE	KNIESTÜCK	VINKELRØR	KNIESTUK	
15		84280437		1	TUBO FLEXÍVEL, Assembly, Charge Supply				
						FLEXIBLE HOSE	TUBO FLEXIBLE	TUBO FLESSIBILE	192T
					TUYAU FLEXIBLE	BIEGSAMER SCHLAUCH	FLEKSIBEL SLANGE	FLEXIBELE SLANG	
16		84344921		1	COTOVELO 45, Fitting, 45 -20MB, -16 Bead, -12MJ				
						45 ELBOW	CODO 45	GOMITO A 45°	A044
					COUDE A 45°	45-GRAD-KNIESTÜCK	VINKELRØR, 45	KNIESTUK 45º	

35.359.02	02	p2	07/11

PUMP, MECHANICAL (L223-L230)
PUMP, MECHANICAL (L223-L230)
PUMP, MECHANICAL (L223-L230)
PUMP, MECHANICAL (L223-L230)

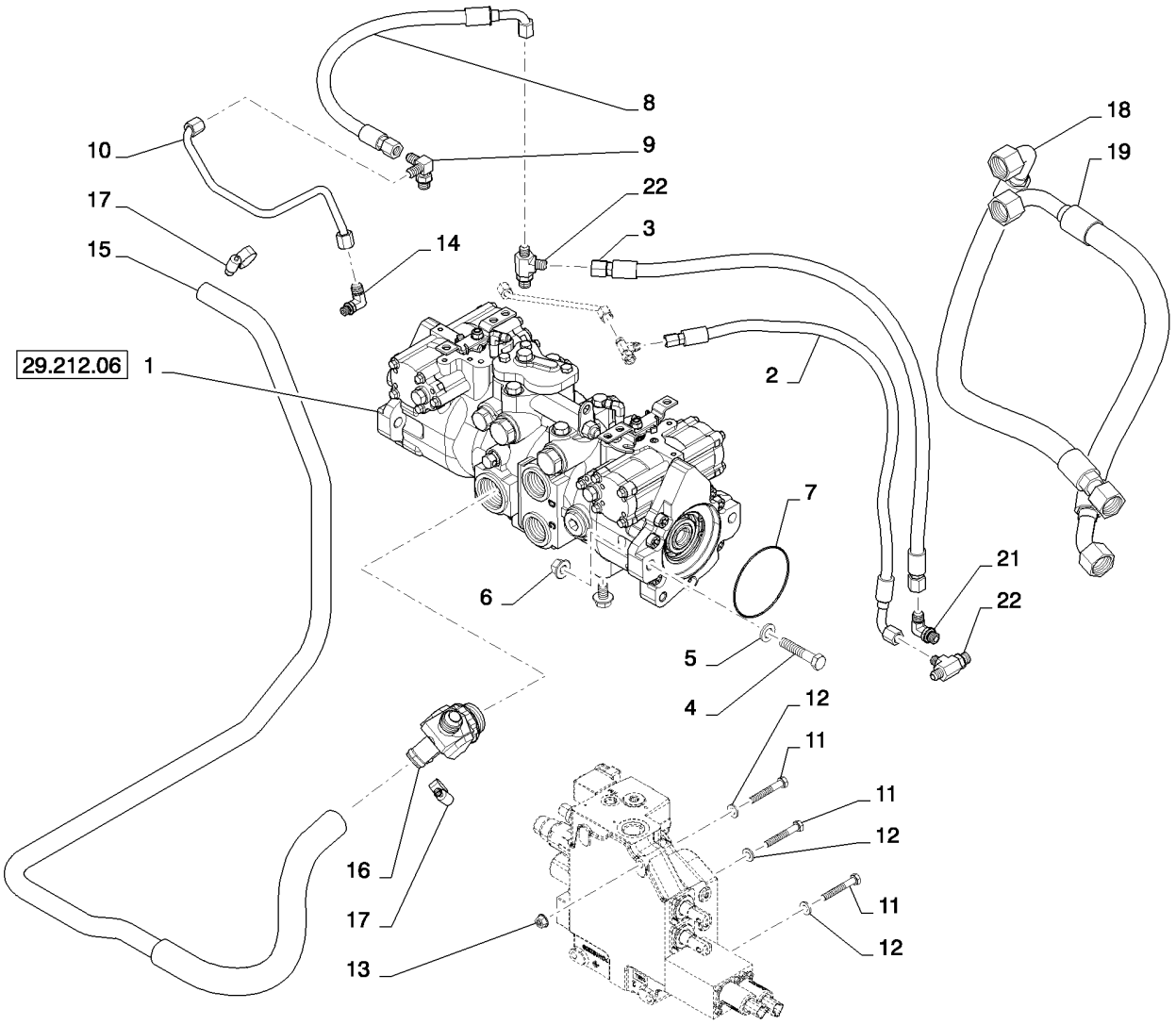

PUMP, MECHANICAL (L223-L230)
PUMP, MECHANICAL (L223-L230)
PUMP, MECHANICAL (L223-L230)
PUMP, MECHANICAL (L223-L230)

R	N	P.N.	MOD	Q	Denominação Description Bezeichnung Denominacion Beskrivelse Descrizione Beschrijving	L.C.
17		507586		2	BRAÇADEIRA MANGUEIRA, #20, 0.81/1.75 Type F Worm HOSE CLAMP ABRAZADERA DE MANG FASCETTA STRINGITUB COLLIER POUR FLEXIBL SCHLAUCHSCHELLE SLANGEKLEMME SLANGKLEM	P729
18		84258848		1	TUBO FLEXÍVEL, Assembly, Loop, Includes O-Ring FLEXIBLE HOSE TUBO FLEXIBLE TUBO FLESSIBILE TUYAU FLEXIBLE BIEGSAMER SCHLAUCH FLEKSIBEL SLANGE FLEXIBELE SLANG	192T
18		9991976		2	O-RING, 0.739" ID x 0.879" OD x 0.07" O-RING JUNTA TÓRICA ANELLO TOROIDALE JOINT TORIQUE O-RING O-RING O-RING	055A
19		84467700		1	TUBO FLEXÍVEL, Assembly, Loop FLEXIBLE HOSE TUBO FLEXIBLE TUBO FLESSIBILE TUYAU FLEXIBLE BIEGSAMER SCHLAUCH FLEKSIBEL SLANGE FLEXIBELE SLANG	192T
20		87698844		1	PARAFUSO, Flange, M12 X 20 Full BOLT PERNO BULLONE VIS SCHRAUBE BOLT BOUT	140B
21		76344		1	COTOVELO, 90º, 9/16"-18, 37º x 9/16"-18, O-Ring ELBOW CODO GOMITO COUDE KNIESTÜCK VINKELRØR KNIESTUK	085G
22		86513020		2	T, 9/16"-18, 37º x 9/16"-18, O-Ring Run TEE RACOR EN T PEZZO A T RACCORD EN T T-STÜCK T-STYKKE T-STUK	9020

35.359.03		p1	08/11

CONTROL VALVE, ELECTRO-HYDRAULIC W/ HARNESS (ALL NH)
CONTROL VALVE, ELECTRO-HYDRAULIC W/ HARNESS (ALL NH)
CONTROL VALVE, ELECTRO-HYDRAULIC W/ HARNESS (ALL NH)
CONTROL VALVE, ELECTRO-HYDRAULIC W/ HARNESS (ALL NH)

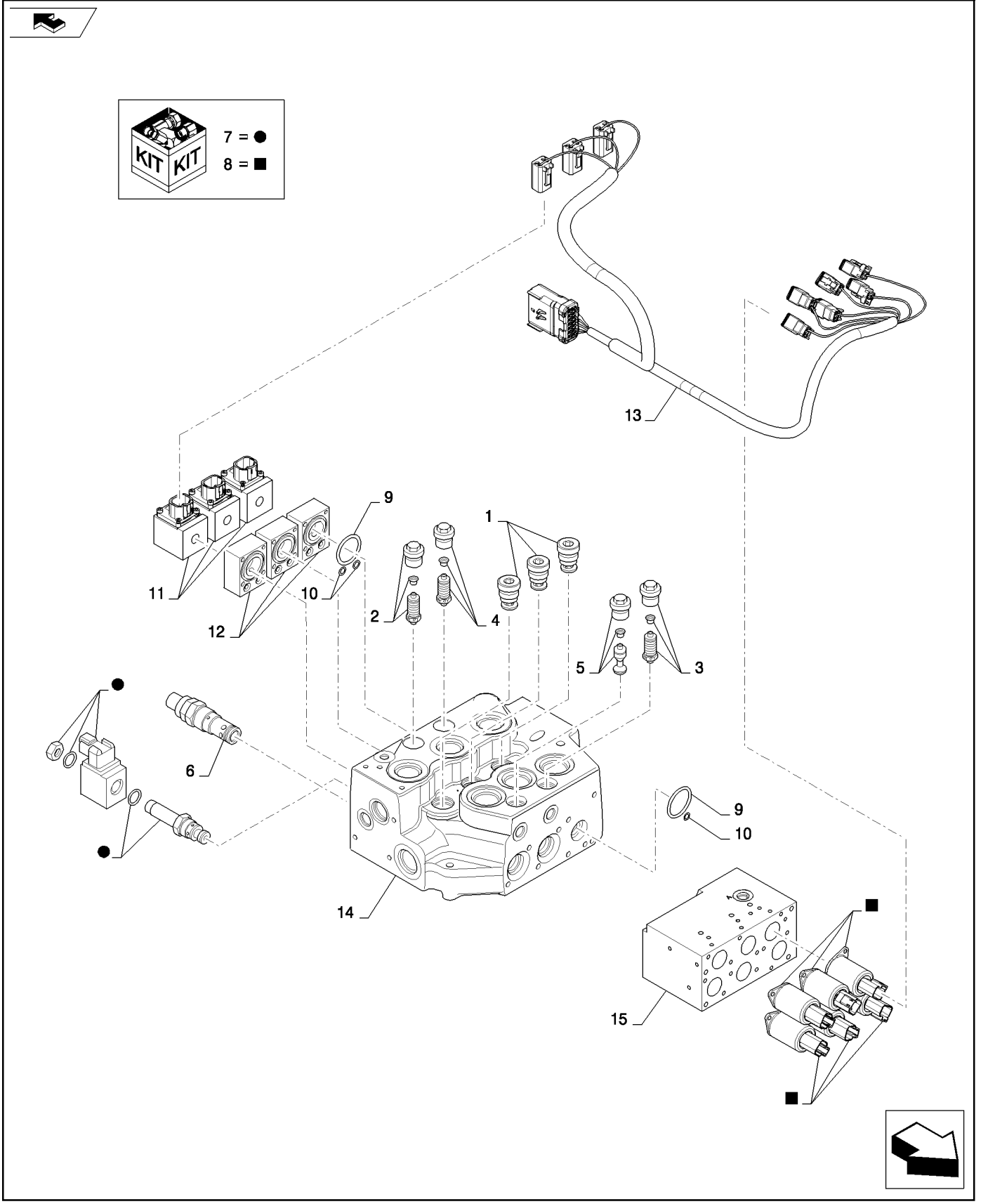

CONTROL VALVE, ELECTRO-HYDRAULIC W/ HARNESS (ALL NH)
CONTROL VALVE, ELECTRO-HYDRAULIC W/ HARNESS (ALL NH)
CONTROL VALVE, ELECTRO-HYDRAULIC W/ HARNESS (ALL NH)
CONTROL VALVE, ELECTRO-HYDRAULIC W/ HARNESS (ALL NH)

R	N	P.N.	MOD	Q	Denominação Description	Description Bezeichnung	Denominacion Beskrivelse	Descrizione Beschrijving	L.C.
1		84386281		3	VÁLVULA CHECAGEM, Load				
						CHECK VALVE	VÁLVULA DE COMPROB.	VALVOLA DI RITEGNO	P394
					CLAPET ANTI-RETOUR	RÜCKSCHLAGVENTIL	KONTRAVENTIL	TERUGSLAGKLEP	
2		84386282		1	VÁLVULA ALÍVIO DA PRESSÃO, 225 BAR Port Relief				
						PRESSURE RELIEF VAL\	VÁLV. ALIVIO DE PRESI(	VALV. LIMITATRICE PRE	007V
					CLAPET DECHARGE PRI	DRUCKENTLASTUNGSV	SIKKERHEDSVENTIL	OVERDRUKKLEP	
3		84386283		1	VÁLVULA ALÍVIO DA PRESSÃO, 230 BAR Port Relief				
						PRESSURE RELIEF VAL\	VÁLV. ALIVIO DE PRESI(	VALV. LIMITATRICE PRE	007V
					CLAPET DECHARGE PRI	DRUCKENTLASTUNGSV	SIKKERHEDSVENTIL	OVERDRUKKLEP	
4		84386284		1	VÁLVULA ALÍVIO DA PRESSÃO, 240 BAR Port Relief				
						PRESSURE RELIEF VAL\	VÁLV. ALIVIO DE PRESI(	VALV. LIMITATRICE PRE	007V
					CLAPET DECHARGE PRI	DRUCKENTLASTUNGSV	SIKKERHEDSVENTIL	OVERDRUKKLEP	
5		84386285		1	VÁLVULA HIDRÁULICA, Anti-Cavitation				
						HYDRAULIC VALVE	VÁLVULA HIDRÁULICA	DISTRIBUTORE IDRAULI	010V
					SOUPAPE HYDRAULIQU	HYDRAULIKVENTIL	HYDRAULIKVENTIL	HYDRAULISCHE KLEP	
6		84386287		1	VÁLVULA ALÍVIO DA PRESSÃO, 207 BAR Port Relief				
						PRESSURE RELIEF VAL\	VÁLV. ALIVIO DE PRESI(	VALV. LIMITATRICE PRE	007V
					CLAPET DECHARGE PRI	DRUCKENTLASTUNGSV	SIKKERHEDSVENTIL	OVERDRUKKLEP	
7		84386288		1	VÁLVULA HIDRÁULICA, PLV Cartridge				
						HYDRAULIC VALVE	VÁLVULA HIDRÁULICA	DISTRIBUTORE IDRAULI	010V
					SOUPAPE HYDRAULIQU	HYDRAULIKVENTIL	HYDRAULIKVENTIL	HYDRAULISCHE KLEP	
8		84386289		6	VÁLVULA CONTR. PRESSÃO, Reducing				
						PRESSURE CONTROL V	VÁLV. CONTROL DE PRI	VALVOLA CONTROLLO F	A140
					DISTRIBUTEUR DE PRE:	DRUCKSTEUERVENTIL	TRYKSTYRINGSVENTIL	DRUKREGELKLEP	
9		84386293		6	O-RING, EH Spool Cap	O-RING	JUNTA TÓRICA	ANELLO TOROIDALE	055A
					JOINT TORIQUE	O-RING	O-RING	O-RING	
10		84386294		9	O-RING, EH Passage	O-RING	JUNTA TÓRICA	ANELLO TOROIDALE	055A
					JOINT TORIQUE	O-RING	O-RING	O-RING	
11		84386295		3	SENSOR, Spool Position	SENSOR	SENSOR	SENSORE	608S
					CAPTEUR	SENSOR	FØLER	SENSOR	
12		84386296		3	TAMPA, Spool Position Sensor End				
						CAP	TAPÓN	TAPPO	052T
					CAPUCHON	KAPPE	TANKDÆKSEL	DOP	
13		84484220		1	CHICOTE, EH Control Valve				
						WIRE HARNESS	GRUPO DE CABLES	CABLAGGIO	070I
					FAISCEAU ELECTRIQUE	KABELBAUM	KABELNET	KABELBOOM	
14		84250154		1	VÁLVULA CONTROLE, Directional Control, Electro-Hydraulic, Includes Ref. 1-12				
						CONTROL VALVE	VÁLVULA DE CONTROL	DISTRIBUTORE IDRAULI	083D
					DISTRIBUTEUR	STEUERVENTIL	STYREVENTIL	REGELKLEP	

CONTROL VALVE, MECHANICAL HAND/ELECTRO-HYDRAULIC AUX (L213-L230)
CONTROL VALVE, MECHANICAL HAND/ELECTRO-HYDRAULIC AUX (L213-L230)
CONTROL VALVE, MECHANICAL HAND/ELECTRO-HYDRAULIC AUX (L213-L230)
CONTROL VALVE, MECHANICAL HAND/ELECTRO-HYDRAULIC AUX (L213-L230)

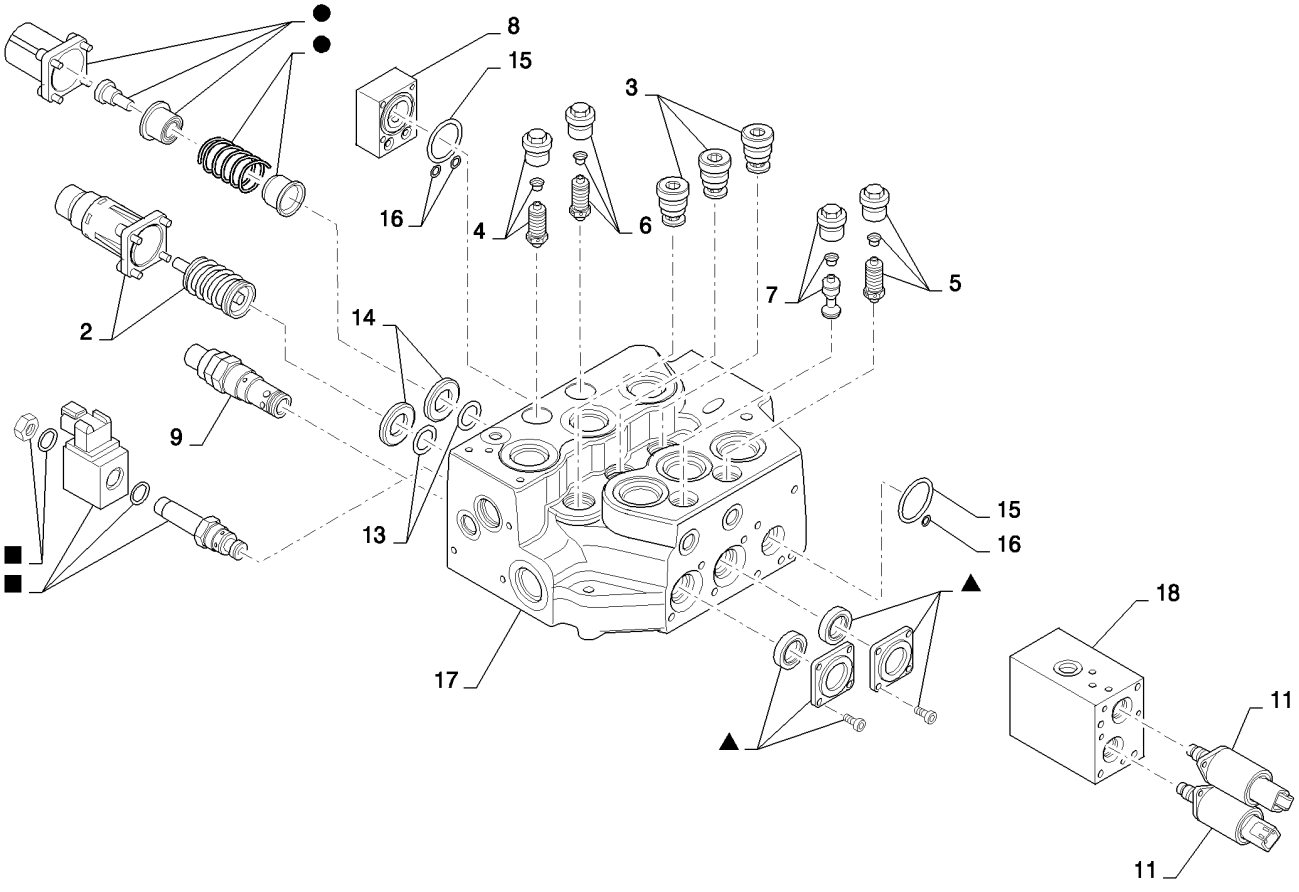

CONTROL VALVE, MECHANICAL HAND/ELECTRO-HYDRAULIC AUX (L213-L230)
CONTROL VALVE, MECHANICAL HAND/ELECTRO-HYDRAULIC AUX (L213-L230)
CONTROL VALVE, MECHANICAL HAND/ELECTRO-HYDRAULIC AUX (L213-L230)
CONTROL VALVE, MECHANICAL HAND/ELECTRO-HYDRAULIC AUX (L213-L230)

R	N	P.N.	MOD	Q	Denominação Description	Description Bezeichnung	Denominacion Beskrivelse	Descrizione Beschrijving	L.C.
1		84386277		1	JOGO, Hand Bucket Spring	KIT	JEUGO	KIT	4830
					POCHETTE	PACKUNG	KIT	KIT	
2		84386278		1	JOGO, Hand Boom Spring	KIT	JEUGO	KIT	4830
					POCHETTE	PACKUNG	KIT	KIT	
3		84386281		3	VÁLVULA CHECAGEM, Load				
						CHECK VALVE	VÁLVULA DE COMPROB.	VALVOLA DI RITEGNO	P394
					CLAPET ANTI-RETOUR	RÜCKSCHLAGVENTIL	KONTRAVENTIL	TERUGSLAGKLEP	
4		84386282		1	VÁLVULA ALÍVIO DA PRESSÃO, 225 BAR Port Relief				
						PRESSURE RELIEF VAL\	VÁLV. ALIVIO DE PRESI(	VALV. LIMITATRICE PRE	007V
					CLAPET DECHARGE PRI	DRUCKENTLASTUNGSV	SIKKERHEDSVENTIL	OVERDRUKKLEP	
5		84386283		1	VÁLVULA ALÍVIO DA PRESSÃO, 230 BAR Port Relief				
						PRESSURE RELIEF VAL\	VÁLV. ALIVIO DE PRESI(	VALV. LIMITATRICE PRE	007V
					CLAPET DECHARGE PRI	DRUCKENTLASTUNGSV	SIKKERHEDSVENTIL	OVERDRUKKLEP	
6		84386284		1	VÁLVULA ALÍVIO DA PRESSÃO, 240 BAR Port Relief				
						PRESSURE RELIEF VAL\	VÁLV. ALIVIO DE PRESI(	VALV. LIMITATRICE PRE	007V
					CLAPET DECHARGE PRI	DRUCKENTLASTUNGSV	SIKKERHEDSVENTIL	OVERDRUKKLEP	
7		84386285		1	VÁLVULA HIDRÁULICA, Anti-Cavitation				
						HYDRAULIC VALVE	VÁLVULA HIDRÁULICA	DISTRIBUTORE IDRAULI	010V
					SOUPAPE HYDRAULIQU	HYDRAULIKVENTIL	HYDRAULIKVENTIL	HYDRAULISCHE KLEP	
8		84386286		1	TAMPA, EH Aux End	CAP	TAPÓN	TAPPO	052T
					CAPUCHON	KAPPE	TANKDÆKSEL	DOP	
9		84386287		1	VÁLVULA ALÍVIO DA PRESSÃO, 207 BAR Port Relief				
						PRESSURE RELIEF VAL\	VÁLV. ALIVIO DE PRESI(	VALV. LIMITATRICE PRE	007V
					CLAPET DECHARGE PRI	DRUCKENTLASTUNGSV	SIKKERHEDSVENTIL	OVERDRUKKLEP	
10		84386288		1	VÁLVULA HIDRÁULICA, PLV Cartridge				
						HYDRAULIC VALVE	VÁLVULA HIDRÁULICA	DISTRIBUTORE IDRAULI	010V
					SOUPAPE HYDRAULIQU	HYDRAULIKVENTIL	HYDRAULIKVENTIL	HYDRAULISCHE KLEP	
11		84386289		2	VÁLVULA CONTR. PRESSÃO, Reducing				
						PRESSURE CONTROL V	VÁLV. CONTROL DE PRE	VALVOLA CONTROLLO F	A140
					DISTRIBUTEUR DE PRES	DRUCKSTEUERVENTIL	TRYKSTYRINGSVENTIL	DRUKREGELKLEP	
12		84386290		3	JOGO, Spool Wiper	KIT	JEUGO	KIT	4830
					POCHETTE	PACKUNG	KIT	KIT	
13		84386291		4	O-RING, Spool	O-RING	JUNTA TÓRICA	ANELLO TOROIDALE	055A
					JOINT TORIQUE	O-RING	O-RING	O-RING	
14		84386292		4	ANEL DE SEGURANÇA, Spool				
						BACK-UP RING	ANILLO DE SEGURIDAD	ANELLO DI SOSTEGNO	Z334
					BAGUE ANTI-EXTRUSIOI	STÜTZRING	RESERVERING	ONDERLEGRING	
15		84386293		2	O-RING, EH Spool Cap	O-RING	JUNTA TÓRICA	ANELLO TOROIDALE	055A
					JOINT TORIQUE	O-RING	O-RING	O-RING	
16		84386294		3	O-RING, EH Passage	O-RING	JUNTA TÓRICA	ANELLO TOROIDALE	055A
					JOINT TORIQUE	O-RING	O-RING	O-RING	
17		84279514		1	VÁLVULA HIDRÁULICA, Mechanical Hand Control/Electro-Hydraulic Aux				
						HYDRAULIC VALVE	VÁLVULA HIDRÁULICA	DISTRIBUTORE IDRAULI	010V
					SOUPAPE HYDRAULIQU	HYDRAULIKVENTIL	HYDRAULIKVENTIL	HYDRAULISCHE KLEP	

CONTROL VALVE, EH AUX MECH FOOT CONTROL (L213-L230)
CONTROL VALVE, EH AUX MECH FOOT CONTROL (L213-L230)
CONTROL VALVE, EH AUX MECH FOOT CONTROL (L213-L230)
CONTROL VALVE, EH AUX MECH FOOT CONTROL (L213-L230)

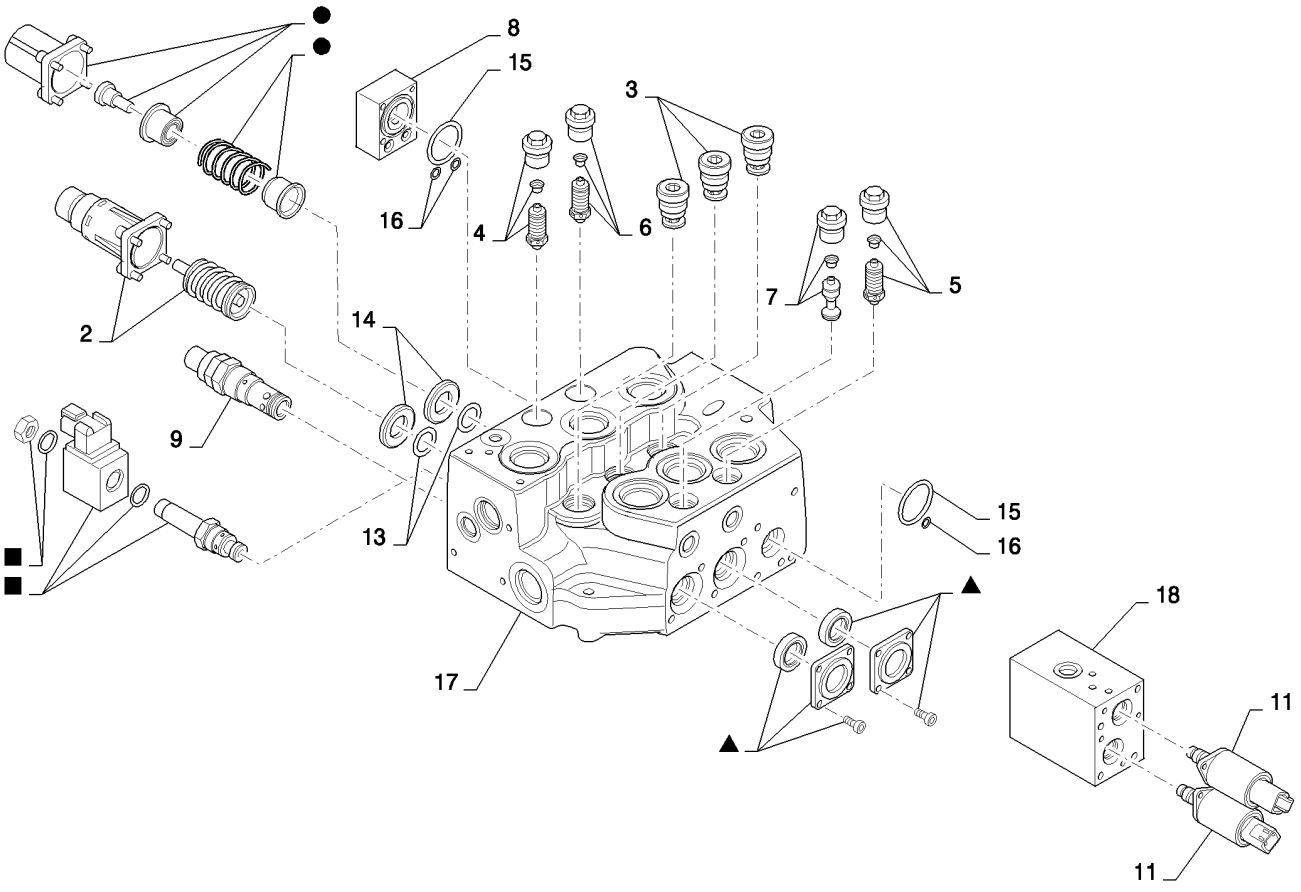

CONTROL VALVE, EH AUX MECH FOOT CONTROL (L213-L230)
CONTROL VALVE, EH AUX MECH FOOT CONTROL (L213-L230)
CONTROL VALVE, EH AUX MECH FOOT CONTROL (L213-L230)
CONTROL VALVE, EH AUX MECH FOOT CONTROL (L213-L230)

R	N	P.N.	MOD	Q	Denominação Description	Description Bezeichnung	Denominacion Beskrivelse	Descrizione Beschrijving	L.C.
1		84386279		1	JOGO, Foot Bucket, Spring POCHETTE	KIT PACKUNG	JEUGO KIT	KIT KIT	4830
2		84386280		1	JOGO, Foot Boom, Spring POCHETTE	KIT PACKUNG	JEUGO KIT	KIT KIT	4830
3		84386281		3	VÁLVULA CHECAGEM, Load Check CLAPET ANTI-RETOUR	CHECK VALVE RÜCKSCHLAGVENTIL	VÁLVULA DE COMPROB. KONTRAVENTIL	VALVOLA DI RITEGNO TERUGSLAGKLEP	P394
4		84386282		1	VÁLVULA ALÍVIO DA PRESSÃO, 225 BAR Port Relief CLAPET DECHARGE PRI	PRESSURE RELIEF VAL\ DRUCKENTLASTUNGSV	VÁLV. ALIVIO DE PRESI(SIKKERHEDSVENTIL	VALV. LIMITATRICE PRE OVERDRUKKLEP	007V
5		84386283		1	VÁLVULA ALÍVIO DA PRESSÃO, 230 BAR Port Relief CLAPET DECHARGE PRI	PRESSURE RELIEF VAL\ DRUCKENTLASTUNGSV	VÁLV. ALIVIO DE PRESI(SIKKERHEDSVENTIL	VALV. LIMITATRICE PRE OVERDRUKKLEP	007V
6		84386284		1	VÁLVULA ALÍVIO DA PRESSÃO, 240 BAR Port Relief CLAPET DECHARGE PRI	PRESSURE RELIEF VAL\ DRUCKENTLASTUNGSV	VÁLV. ALIVIO DE PRESI(SIKKERHEDSVENTIL	VALV. LIMITATRICE PRE OVERDRUKKLEP	007V
7		84386285		1	VÁLVULA HIDRÁULICA, Anti-Cavitation SOUPAPE HYDRAULIQU	HYDRAULIC VALVE HYDRAULIKVENTIL	VÁLVULA HIDRÁULICA HYDRAULIKVENTIL	DISTRIBUTORE IDRAULI HYDRAULISCHE KLEP	010V
8		84386286		1	TAMPA, EH, Aux, End CAPUCHON	CAP KAPPE	TAPÓN TANKDÆKSEL	TAPPO DOP	052T
9		84386287		1	VÁLVULA ALÍVIO DA PRESSÃO, 207 BAR Port Relief CLAPET DECHARGE PRI	PRESSURE RELIEF VAL\ DRUCKENTLASTUNGSV	VÁLV. ALIVIO DE PRESI(SIKKERHEDSVENTIL	VALV. LIMITATRICE PRE OVERDRUKKLEP	007V
10		84386288		1	VÁLVULA HIDRÁULICA, PLV Cartridge SOUPAPE HYDRAULIQU	HYDRAULIC VALVE HYDRAULIKVENTIL	VÁLVULA HIDRÁULICA HYDRAULIKVENTIL	DISTRIBUTORE IDRAULI HYDRAULISCHE KLEP	010V
11		84386289		2	VÁLVULA CONTR. PRESSÃO, Reducing DISTRIBUTEUR DE PRES	PRESSURE CONTROL V DRUCKSTEUERVENTIL	VÁLV. CONTROL DE PRE TRYKSTYRINGSVENTIL	VALVOLA CONTROLLO F DRUKREGELKLEP	A140
12		84386290		3	JOGO, Spool Wiper POCHETTE	KIT PACKUNG	JEUGO KIT	KIT KIT	4830
13		84386291		4	O-RING, Spool JOINT TORIQUE	O-RING O-RING	JUNTA TÓRICA O-RING	ANELLO TOROIDALE O-RING	055A
14		84386292		4	ANEL DE SEGURANÇA, Spool BAGUE ANTI-EXTRUSIOI	BACK-UP RING STÜTZRING	ANILLO DE SEGURIDAD RESERVERING	ANELLO DI SOSTEGNO ONDERLEGRING	Z334
15		84386293		2	O-RING, EH, Spool, Cap JOINT TORIQUE	O-RING O-RING	JUNTA TÓRICA O-RING	ANELLO TOROIDALE O-RING	055A
16		84386294		3	O-RING, EH, Passage JOINT TORIQUE	O-RING O-RING	JUNTA TÓRICA O-RING	ANELLO TOROIDALE O-RING	055A
17		84319698		1	VÁLVULA CONTROLE, Mechanical Foot/Electro-Hydraulic Aux DISTRIBUTEUR	CONTROL VALVE STEUERVENTIL	VÁLVULA DE CONTROL STYREVENTIL	DISTRIBUTORE IDRAULI REGELKLEP	083D
18		NSS		1	SEM SERVIÇO EM SEPARADO, Part of Control Valve NON FOURNI SEPAREM	NOT SERVICED SEPARA NICHT A SEP ERS-T LIEI	NO SE REPARA POR SE SERVICERES IKKE SEPA	NON FORNITO SEPARAT NIET LOS VERKRIJGBAA	064N

35.701.01		p1	02/11

LOADER HYDRAULICS (L223,L225,L230,C232,C238)
LOADER HYDRAULICS (L223,L225,L230,C232,C238)
LOADER HYDRAULICS (L223,L225,L230,C232,C238)
LOADER HYDRAULICS (L223,L225,L230,C232,C238)

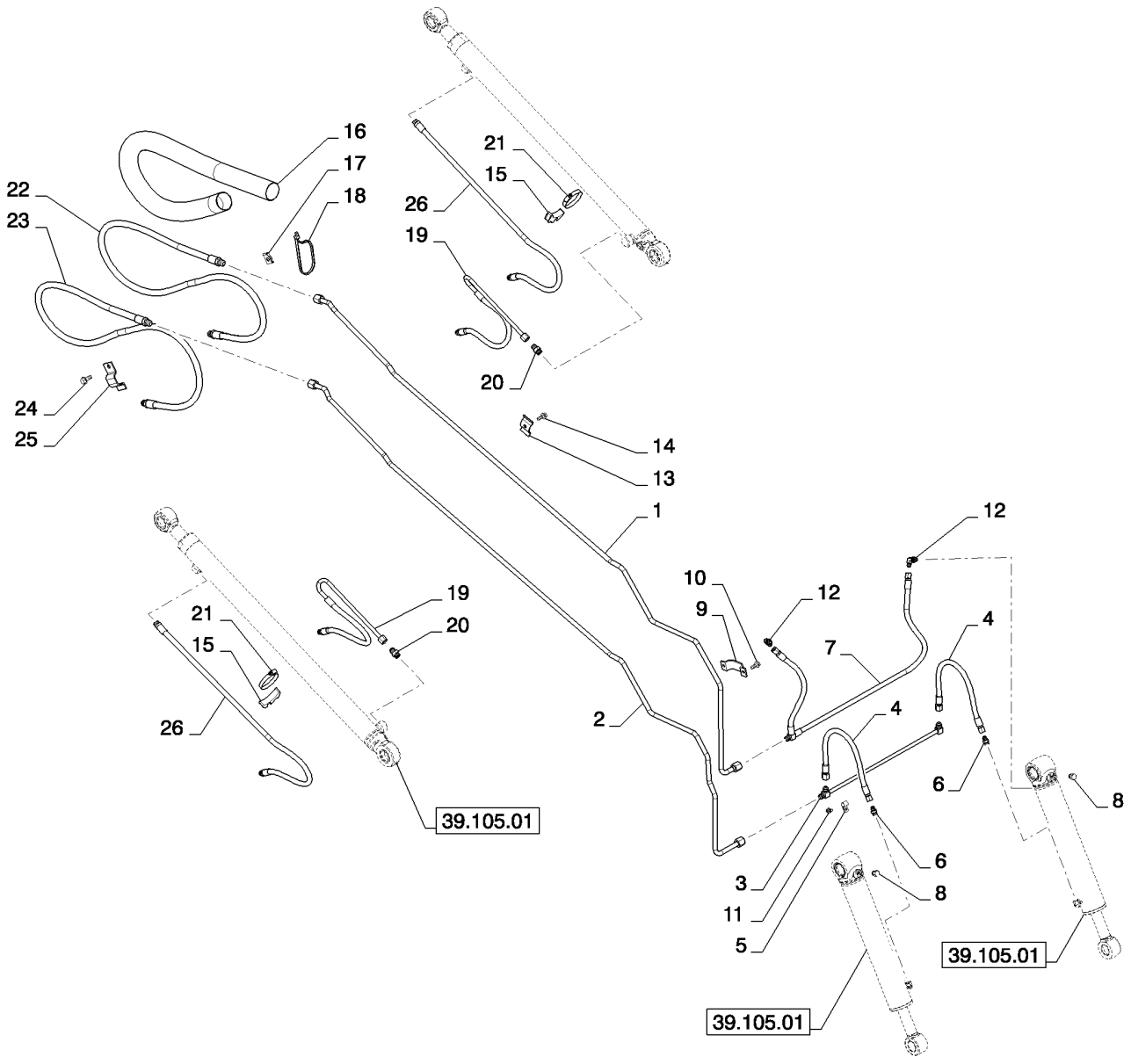

LOADER HYDRAULICS (L223,L225,L230,C232,C238)
LOADER HYDRAULICS (L223,L225,L230,C232,C238)
LOADER HYDRAULICS (L223,L225,L230,C232,C238)
LOADER HYDRAULICS (L223,L225,L230,C232,C238)

R	N	P.N.	MOD	Q	Denominação Description	Description Bezeichnung	Denominacion Beskrivelse	Descrizione Beschrijving	L.C.
1		84346623		1	TUBO HIDRÁULICO, Tip Cylinder				
						HYD. TUBE	TUBO HIDRÁULICO	TUBO IDRAULICO	190T
					TUYAU HYDRAULIQUE	HYDRAULIKLEITUNG	HYD. RØR	HYDRAULISCHE LEIDIN(	
2		84346625		1	TUBO HIDRÁULICO, Tip Cylinder				
						HYD. TUBE	TUBO HIDRÁULICO	TUBO IDRAULICO	190T
					TUYAU HYDRAULIQUE	HYDRAULIKLEITUNG	HYD. RØR	HYDRAULISCHE LEIDIN(	
3		84346785		1	TUBO HIDRÁULICO, Tip Crossover				
						HYD. TUBE	TUBO HIDRÁULICO	TUBO IDRAULICO	190T
					TUYAU HYDRAULIQUE	HYDRAULIKLEITUNG	HYD. RØR	HYDRAULISCHE LEIDIN(	
4		84346755		2	CONJ. MANGUEIRA, Tip Cylinder				
						HOSE ASSY.	CONJUNTO DE TUBOS	COMPLESS. TUBO FLES	P457
					ENSEMBLE DE FLEXIBLE	SCHLAUCHBAUGRUPPE	SLANGEENHED	SLANGEENHEID	
5		86625036		2	BRAÇADEIRA, 1/2", Insul, 5/16" Bolt				
						CLAMP	ABRAZADERA	MORSETTO	120M
					COLLIER	KLEMME	SPÆNDEBÅND	KLEM	
6		76350		2	CONECTOR HIDRÁUL, 9/16"-18, 37º x 9/16"-18, O-Ring				
						HYD CONNECTOR	CONECTOR HIDRÁULIC(	CONNETTORE IDRAULIC	020R
					CONNECTEUR HYDRAU	HYDR STECKVERBINDE	HYDRAULIKSTIK	HYDRAULISCHE AANSLI	
7		84346682		1	CONJ. MANGUEIRA, Tip Cylinder Base				
						HOSE ASSY.	CONJUNTO DE TUBOS	COMPLESS. TUBO FLES	P457
					ENSEMBLE DE FLEXIBLE	SCHLAUCHBAUGRUPPE	SLANGEENHED	SLANGEENHEID	
8		76349		2	BUJÃO, Hex Hd, 9/16"-18 ORB				
						PLUG	TAPÓN	TAPPO	050T
					BOUCHON	STOPFEN	PROP	PLUG	
9		184064		2	GRAMPO	CLIP	ABRAZADERA	FERMO	045F
					COLLIER	KLAMMER	KLIPS	KLEM	
10		87016557		2	PARAFUSO, Hex Flg Hd, M8 x 25				
						SELF-TAP SCREW	TORNILLO AUTORROSC	VITE AUTOFILETTANTE	062V
					VIS AUTOTARAUDEUSE	SELBSTSCHN SCHRAUE	SELVLÅSENDE BOLT	ZELFTAPPENDE SCHRO	
11		84285339		2	PARAFUSO	SELF-TAP SCREW	TORNILLO AUTORROSC	VITE AUTOFILETTANTE	062V
					VIS AUTOTARAUDEUSE	SELBSTSCHN SCHRAUE	SELVLÅSENDE BOLT	ZELFTAPPENDE SCHRO	
12		76344		2	COTOVELO, 90º, 9/16"-18, 37º x 9/16"-18, O-Ring				
						ELBOW	CODO	GOMITO	085G
					COUDE	KNIESTÜCK	VINKELRØR	KNIESTUK	
13		86501706		3	BRAÇADEIRA, Double Tube				
						CLAMP	ABRAZADERA	MORSETTO	120M
					COLLIER	KLEMME	SPÆNDEBÅND	KLEM	
14		280476		3	PARAFUSO, Hex Wash Hd, 3/8" x 1"				
						SELF-TAP SCREW	TORNILLO AUTORROSC	VITE AUTOFILETTANTE	062V
					VIS AUTOTARAUDEUSE	SELBSTSCHN SCHRAUE	SELVLÅSENDE BOLT	ZELFTAPPENDE SCHRO	
15		84255986		2	BRAÇADEIRA MANGUEIRA, Cylinder Saddle				
						HOSE CLAMP	ABRAZADERA DE MANG	FASCETTA STRINGITUB	P729
					COLLIER POUR FLEXIBL	SCHLAUCHSCHELLE	SLANGEKLEMME	SLANGKLEM	
16		84362109		1	PROTEÇÃO, Hose Guard	GUARD	DEFENSA	PROTEZIONE	070R
					PROTECTION	SCHUTZABDECKUNG	BESKYTTELSESSKÆRM	AFSCHERMING	
17		86625071		1	PORCA, M10, U, Spring	NUT	TUERCA	DADO	010D
					ECROU	MUTTER	MØTRIK	MOER	
18		L18331		1	PRENDEDOR DE CABOS	CABLE STRAP	BANDA DE CABLE	FASCETTA PER CAVO	P716
					BRIDE DE CABLE	KABELBINDER	KABELSTROP	BUNDELBAND	

LOADER HYDRAULICS (L223,L225,L230,C232,C238)
LOADER HYDRAULICS (L223,L225,L230,C232,C238)
LOADER HYDRAULICS (L223,L225,L230,C232,C238)
LOADER HYDRAULICS (L223,L225,L230,C232,C238)

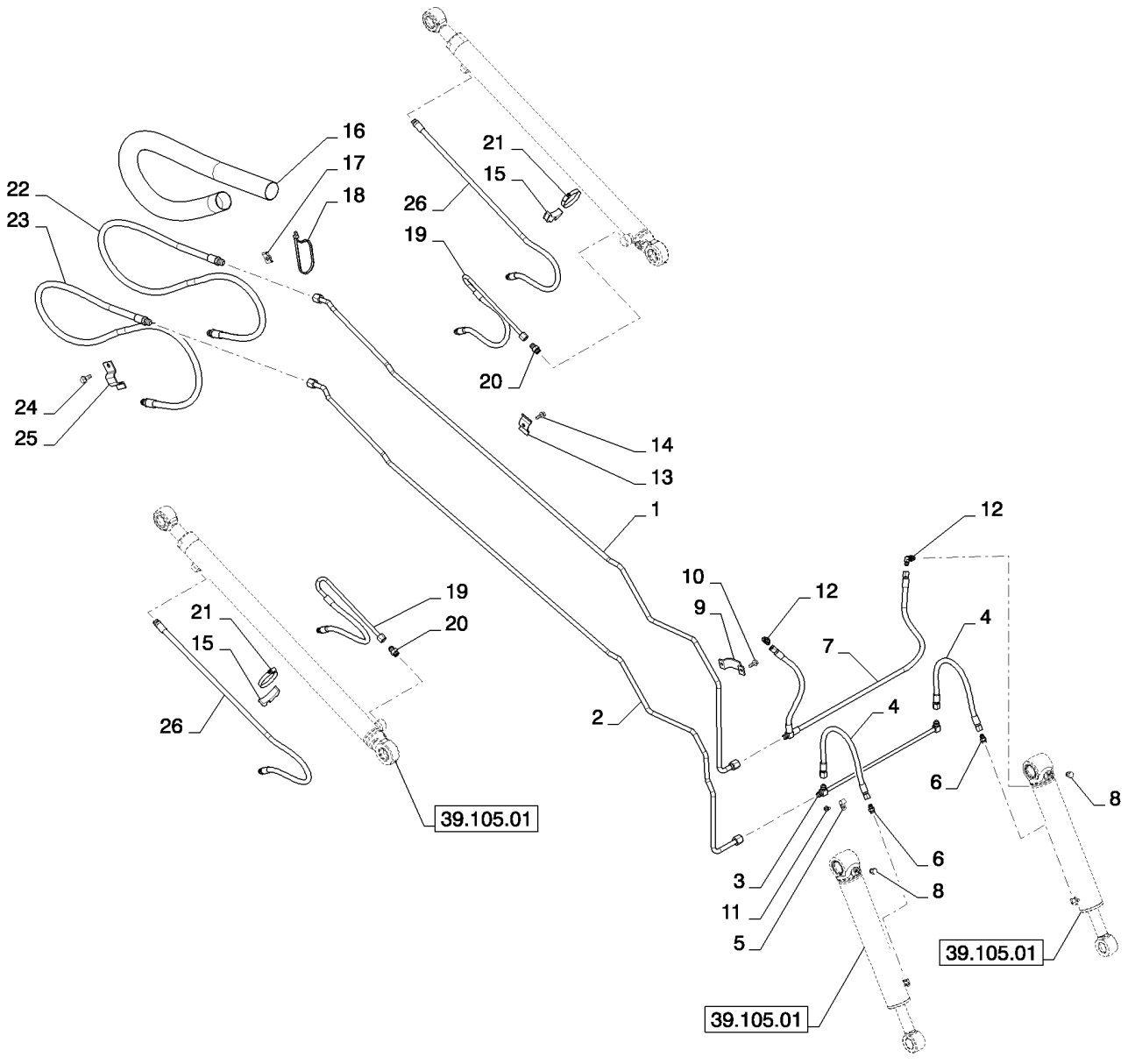

LOADER HYDRAULICS (L223,L225,L230,C232,C238)
LOADER HYDRAULICS (L223,L225,L230,C232,C238)
LOADER HYDRAULICS (L223,L225,L230,C232,C238)
LOADER HYDRAULICS (L223,L225,L230,C232,C238)

R	N	P.N.	MOD	Q	Denominação Description	Description Bezeichnung	Denominacion Beskrivelse	Descrizione Beschrijving	L.C.
19		84255975		2	CONJ. MANGUEIRA, Lift Cylinder Base				
						HOSE ASSY.	CONJUNTO DE TUBOS	COMPLESS. TUBO FLES	P457
					ENSEMBLE DE FLEXIBLE	SCHLAUCHBAUGRUPPE	SLANGEENHED	SLANGEENHEID	
20		81827427		2	CONECTOR HIDRÁUL	HYD CONNECTOR	CONECTOR HIDRÁULIC	CONNETTORE IDRAULIC	020R
					CONNECTEUR HYDRAU	HYDR STECKVERBINDE	HYDRAULIKSTIK	HYDRAULISCHE AANSLU	
21		86625033		2	BRAÇADEIRA MANGUEIRA, #56, 3.06/4.00 Type F Worm				
						HOSE CLAMP	ABRAZADERA DE MANG	FASCETTA STRINGITUB	P729
					COLLIER POUR FLEXIBL	SCHLAUCHSCHELLE	SLANGEKLEMME	SLANGKLEM	
22		84281692		1	MANGUEIRA HIDRÁULICA, Assy, Tip Clylinder				
						HYDRAULIC HOSE	TUBO HIDRÁULICO	TUBO FLESSIBILE IDRAU	A058
					FLEXIBLE HYDRAULIQUE	HYDRAULIKSCHLAUCH	SLANGE, HYDRAULIK	HYDRAULISCHE SLANG	
23		84281693		1	MANGUEIRA HIDRÁULICA, Assy, Tip Clylinder				
						HYDRAULIC HOSE	TUBO HIDRÁULICO	TUBO FLESSIBILE IDRAU	A058
					FLEXIBLE HYDRAULIQUE	HYDRAULIKSCHLAUCH	SLANGE, HYDRAULIK	HYDRAULISCHE SLANG	
24		9804261		1	PARAFUSO, Hex Flg, M10 x 25, 8.8				
						BOLT	PERNO	BULLONE	140B
					VIS	SCHRAUBE	BOLT	BOUT	
25		84318865		1	BRAÇADEIRA MANGUEIRA	HOSE CLAMP	ABRAZADERA DE MANG	FASCETTA STRINGITUB	P729
					COLLIER POUR FLEXIBL	SCHLAUCHSCHELLE	SLANGEKLEMME	SLANGKLEM	
26		84281674		1	MANGUEIRA HIDRÁULICA, Assy, Tip Clylinder Rod				
						HYDRAULIC HOSE	TUBO HIDRÁULICO	TUBO FLESSIBILE IDRAU	A058
					FLEXIBLE HYDRAULIQUE	HYDRAULIKSCHLAUCH	SLANGE, HYDRAULIK	HYDRAULISCHE SLANG	

35.701.02	01	p1	03/11

LOADER VALVE PLUMBING (L223,L225,L230,C232,C238)
LOADER VALVE PLUMBING (L223,L225,L230,C232,C238)
LOADER VALVE PLUMBING (L223,L225,L230,C232,C238)
LOADER VALVE PLUMBING (L223,L225,L230,C232,C238)

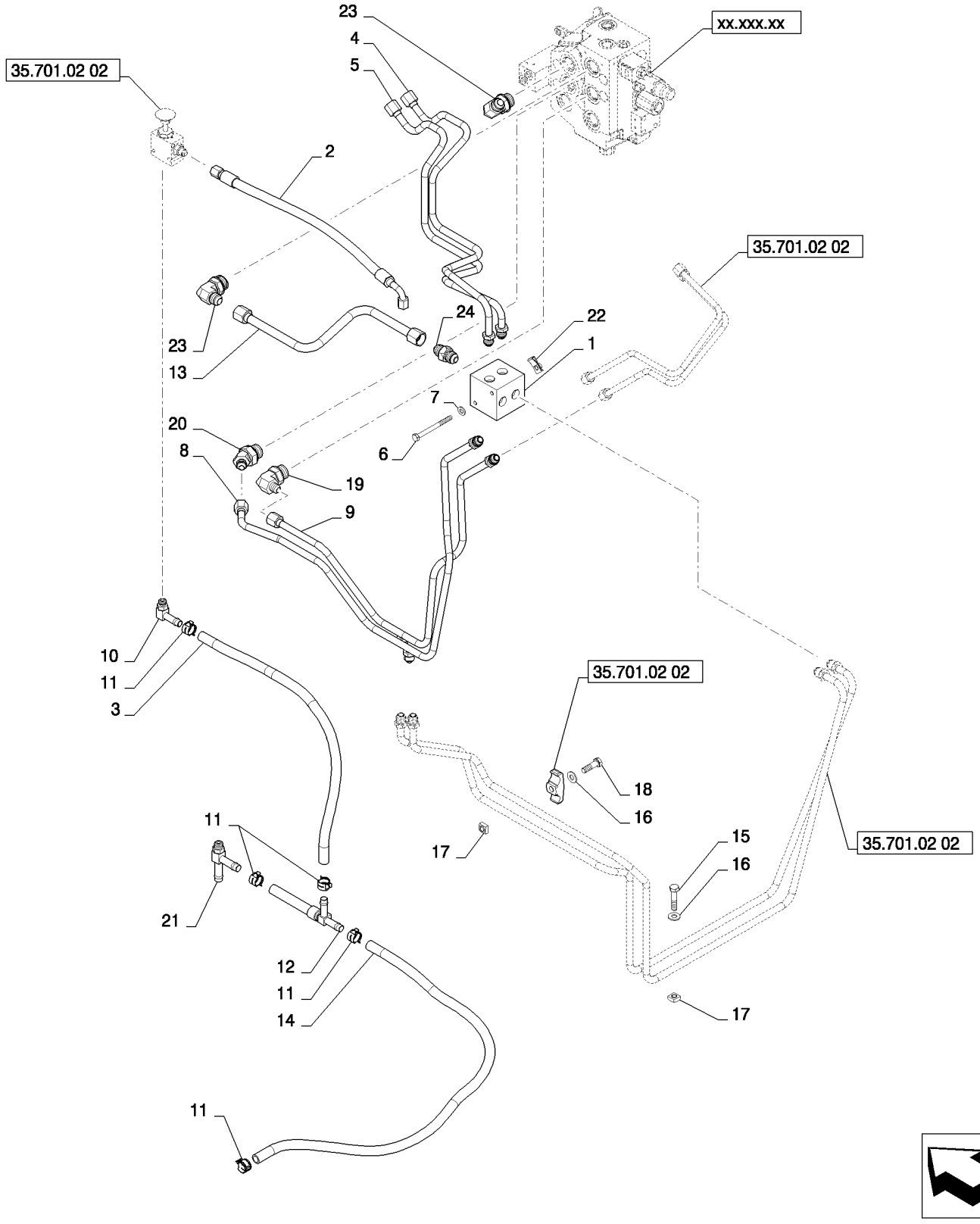

LOADER VALVE PLUMBING (L223,L225,L230,C232,C238)
LOADER VALVE PLUMBING (L223,L225,L230,C232,C238)
LOADER VALVE PLUMBING (L223,L225,L230,C232,C238)
LOADER VALVE PLUMBING (L223,L225,L230,C232,C238)

R	N	P.N.	MOD	Q	Denominação Description	Description Bezeichnung	Denominacion Beskrivelse	Descrizione Beschrijving	L.C.
1		84258823		1	COLETOR HIDRÁULICO COLLECTEUR HYDRAUL	HYDRAULIC MANIFOLD HYDRAULIKVERTEILER	COLECTOR HIDRÁULIC(HYDRAULISK MANIFOLD	COLLETTORE IDRAULIC HYDRAULISCH VERDEE	A063
2		84201224		1	MANGUEIRA HIDRÁULICA, Override FLEXIBLE HYDRAULIQUI	HYDRAULIC HOSE HYDRAULIKSCHLAUCH	TUBO HIDRÁULICO SLANGE, HYDRAULIK	TUBO FLESSIBILE IDRAU HYDRAULISCHE SLANG	A058
3		84299733		1	MANGUEIRA, Override to EH Aux Drain FLEXIBLE	HOSE SCHLAUCH	TUBO SLANGE	TUBO FLESSIBILE SLANG	030M
4		84178521		1	TUBO, Assy, Lower, Manifold to Rt Arm TUBE	TUBE ROHR	TUBO RØR	TUBO LEIDING	195T
5		84178523		1	TUBO, Assy, Lift, Manifold to Rt Arm TUBE	TUBE ROHR	TUBO RØR	TUBO LEIDING	195T
6		86508571		2	PARAFUSO, Hex, M8 x 90, 8.8 VIS	BOLT SCHRAUBE	PERNO BOLT	BULLONE BOUT	140B
7		87655042		2	ARRUELA ESPECIAL RONDELLE SPECIALE	SPECIAL WASHER SPEZIALUNTERLEGSCH	ARANDELA ESPECIAL SPECIALSKIVE	RONDELLA SPECIALE SPECIALE RING	Z333
8		84181023		1	TUBO, Assy, Tip, Loader Valve to Rt Arm TUBE	TUBE ROHR	TUBO RØR	TUBO LEIDING	195T
9		84181026		1	TUBO, Assy, Tip, Loader Valve to Rt Arm TUBE	TUBE ROHR	TUBO RØR	TUBO LEIDING	195T
10		86705580		1	CONEXÃO, 90º, 1/2" Hose x 9/16"-18 ORB Beaded RACCORD	FITTING ARMATUR	ACOPLAMIENTO FITTING	RACCORDO AANSLUITING	3300
11		87443510		5	BRAÇADEIRA MANGUEIRA, M20 COLLIER POUR FLEXIBL	HOSE CLAMP SCHLAUCHSCHELLE	ABRAZADERA DE MANG SLANGEKLEMME	FASCETTA STRINGITUB SLANGKLEM	P729
12		84259682		1	CONEXÃO EM T RACCORD EN T	UNION TEE T-VERSCHRAUBUNG	RACOR EN T T-FORSKRUNING	RACCORDO A T KOPPEL-T-STUK	A134
13		84378484		1	TUBO RÍGIDO, Lift, Valve to Manifold TUYAU RIGIDE	RIGID TUBE ROHR	TUBO RÍGIDO STIFT RØR	TUBO RIGIDO VASTE LEIDING	193T
14		84299735		1	MANGUEIRA FLEXIBLE	HOSE SCHLAUCH	TUBO SLANGE	TUBO FLESSIBILE SLANG	030M
15		325829		1	PARAFUSO, Hex, M10 x 45, 8.8 VIS	BOLT SCHRAUBE	PERNO BOLT	BULLONE BOUT	140B
16		87655046		2	ARRUELA ESPECIAL RONDELLE SPECIALE	SPECIAL WASHER SPEZIALUNTERLEGSCH	ARANDELA ESPECIAL SPECIALSKIVE	RONDELLA SPECIALE SPECIALE RING	Z333
17		230427A1		2	PORCA ECROU	NUT MUTTER	TUERCA MØTRIK	DADO MOER	5780
18		9706704		1	PARAFUSO, Hex, M10 x 35, 8.8, Full Thd VIS	BOLT SCHRAUBE	PERNO BOLT	BULLONE BOUT	140B

35.701.02	01	p2	03/11

LOADER VALVE PLUMBING (L223,L225,L230,C232,C238)
LOADER VALVE PLUMBING (L223,L225,L230,C232,C238)
LOADER VALVE PLUMBING (L223,L225,L230,C232,C238)
LOADER VALVE PLUMBING (L223,L225,L230,C232,C238)

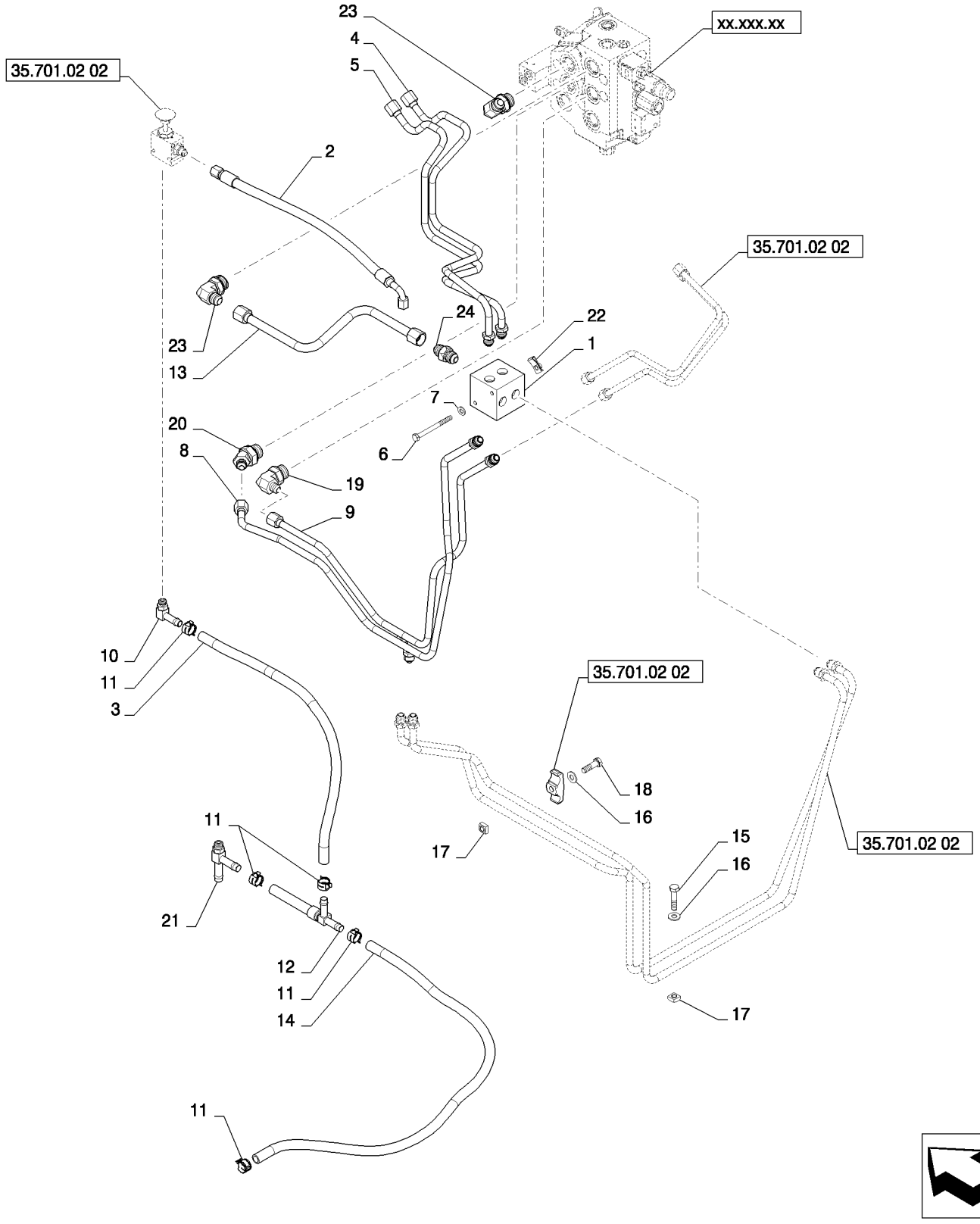

LOADER VALVE PLUMBING (L223,L225,L230,C232,C238)
LOADER VALVE PLUMBING (L223,L225,L230,C232,C238)
LOADER VALVE PLUMBING (L223,L225,L230,C232,C238)
LOADER VALVE PLUMBING (L223,L225,L230,C232,C238)

R	N	P.N.	MOD	Q	Denominação Description	Description Bezeichnung	Denominacion Beskrivelse	Descrizione Beschrijving	L.C.
19		**87329785**		1	COTOVELO, 90º, 3/4"-16, 37º x 1 1/16"-12, O-Ring				
						ELBOW	CODO	GOMITO	085G
					COUDE	KNIESTÜCK	VINKELRØR	KNIESTUK	
20		**84289681**		1	COTOVELO 45	45 ELBOW	CODO 45	GOMITO A 45°	A044
					COUDE A 45°	45-GRAD-KNIESTÜCK	VINKELRØR, 45	KNIESTUK 45º	
21		**84299732**		7	CONEXÃO	FITTING	ACOPLAMIENTO	RACCORDO	3300
					RACCORD	ARMATUR	FITTING	AANSLUITING	
22		**87016586**		2	PORCA, M8, U	NUT	TUERCA	DADO	010D
					ECROU	MUTTER	MØTRIK	MOER	
23		**84570**		2	COTOVELO, 90º, 7/8"-14, 37º x 1 1/16"-12, O-Ring				
						ELBOW	CODO	GOMITO	085G
					COUDE	KNIESTÜCK	VINKELRØR	KNIESTUK	
24		**84373458**		2	ORIFÍCIO, Orifice, 4.5 mm Directional				
						ORIFICE	ORIFICIO	ORIFIZIO	056O
					ORIFICE	BLENDE	PROP	SMOORPLAATJE	

35.701.02	02	p1	03/11

LOADER VALVE PLUMBING (L223,L225,L230,C232,C238)
LOADER VALVE PLUMBING (L223,L225,L230,C232,C238)
LOADER VALVE PLUMBING (L223,L225,L230,C232,C238)
LOADER VALVE PLUMBING (L223,L225,L230,C232,C238)

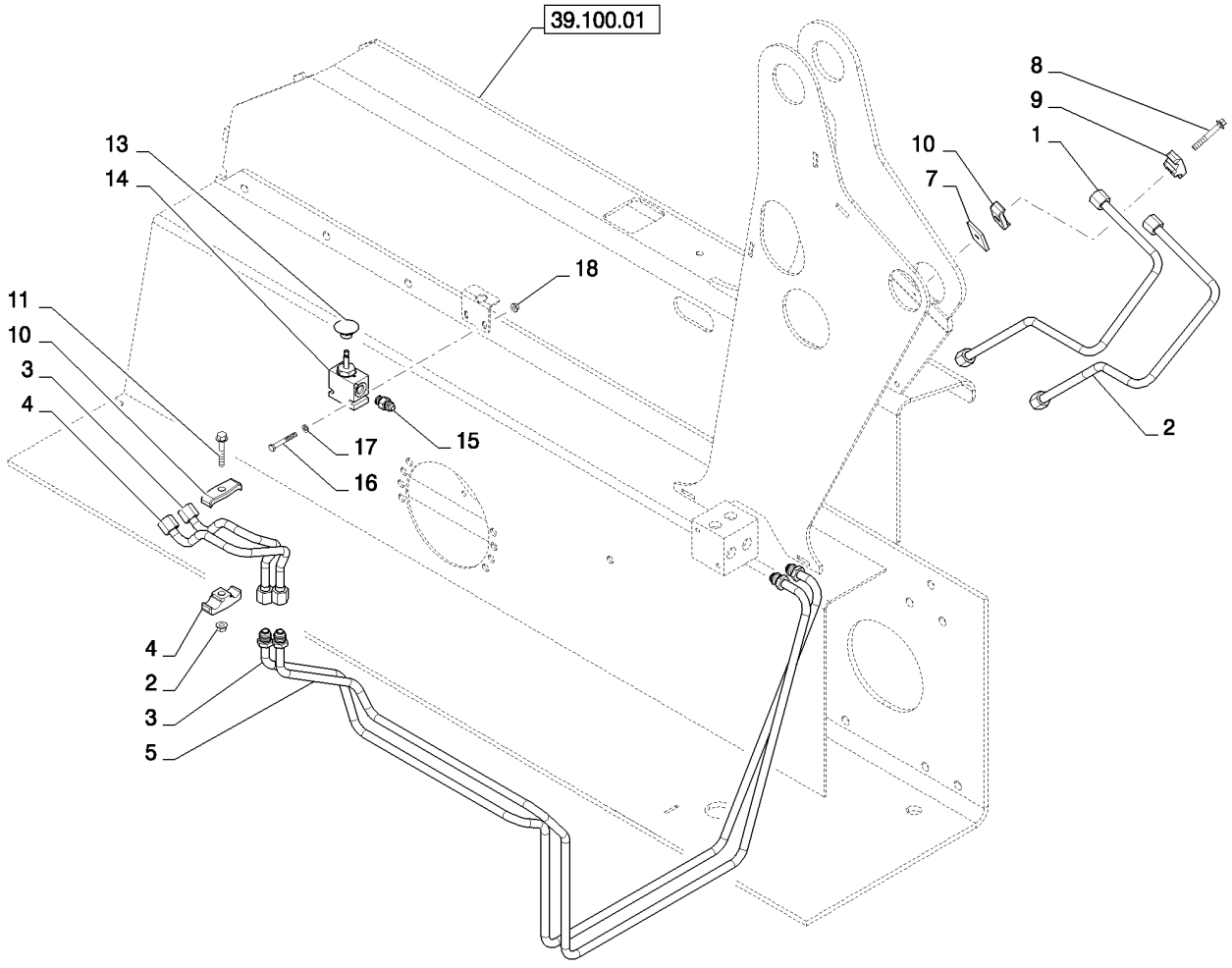

LOADER VALVE PLUMBING (L223,L225,L230,C232,C238)
LOADER VALVE PLUMBING (L223,L225,L230,C232,C238)
LOADER VALVE PLUMBING (L223,L225,L230,C232,C238)
LOADER VALVE PLUMBING (L223,L225,L230,C232,C238)

R	N	P.N.	MOD	Q	Denominação Description	Description Bezeichnung	Denominacion Beskrivelse	Descrizione Beschrijving	L.C.
1		84179316		1	TUBO, Tip, RH Tower	TUBE	TUBO	TUBO	195T
					TUBE	ROHR	RØR	LEIDING	
2		84179318		1	TUBO, Tip, RH Tower	TUBE	TUBO	TUBO	195T
					TUBE	ROHR	RØR	LEIDING	
3		84377541		1	TUBO, Lift, Left Fender	TUBE	TUBO	TUBO	195T
					TUBE	ROHR	RØR	LEIDING	
4		84377543		1	TUBO, Lower, Left Fender	TUBE	TUBO	TUBO	195T
					TUBE	ROHR	RØR	LEIDING	
5		84377535		1	TUBO, Lift, Manifold to Lft Arm				
						TUBE	TUBO	TUBO	195T
					TUBE	ROHR	RØR	LEIDING	
6		84377537		1	TUBO, Lower, Manifold to Lft Arm				
						TUBE	TUBO	TUBO	195T
					TUBE	ROHR	RØR	LEIDING	
7		257859A1		3	PLACA ESPACADORA, Bar Clamp Top				
						PLATE,SPACER	PLAQUETA	DISTANZ PIASTRA	Z324
					PLAQUETTE	PLAETTCHEN	PLATE,SPACER	PLATE,SPACER	
8		87582902		3	PARAFUSO	SELF-TAP SCREW	TORNILLO AUTORROSC	VITE AUTOFILETTANTE	062V
					VIS AUTOTARAUDEUSE	SELBSTSCHN SCHRAUE	SELVLÅSENDE BOLT	ZELFTAPPENDE SCHRO	
9		D120679		7	BRACADEIRA	CLAMP	COLLAR	MORSETTO	1640
					COLLIER	SCHELLE	CLAMP	CLAMP	
10		D120614		6	BRACADEIRA	CLAMP	COLLAR	MORSETTO	1640
					COLLIER	SCHELLE	CLAMP	CLAMP	
11		86511481		2	PARAFUSO, Hex Flg, M8 x 50, 8.8				
						BOLT	PERNO	BULLONE	140B
					VIS	SCHRAUBE	BOLT	BOUT	
12		9804277		2	PORCA, M8 x 1.25, Flg, Cl 8				
						NUT	TUERCA	DADO	010D
					ECROU	MUTTER	MØTRIK	MOER	
13		87522292		1	MAÇANETA, Override Valve Knob				
						KNOB	MANDO	MANOPOLA	150P
					BOUTON	RUNDGRIFF	GREB	KNOP	
14		84294239		1	VÁLVULA	VALVE	VÁLVULA	VALVOLA	9620
					SOUPAPE	VENTIL	VENTIL	KLEP	
15		76350		1	CONECTOR HIDRÁUL, 9/16"-18, 37º x 9/16"-18, O-Ring				
						HYD CONNECTOR	CONECTOR HIDRÁULIC	CONNETTORE IDRAULIC	020R
					CONNECTEUR HYDRAU	HYDR STECKVERBINDE	HYDRAULIKSTIK	HYDRAULISCHE AANSLI	
16		120056		2	PARAFUSO, Hex, M6 x 50, 8.8				
						BOLT	PERNO	BULLONE	140B
					VIS	SCHRAUBE	BOLT	BOUT	
17		87655041		2	ARRUELA ESPECIAL	SPECIAL WASHER	ARANDELA ESPECIAL	RONDELLA SPECIALE	Z333
					RONDELLE SPECIALE	SPEZIALUNTERLEGSCH	SPECIALSKIVE	SPECIALE RING	
18		9804276		2	PORCA, M6 x 1, Flg, Cl 8	NUT	TUERCA	DADO	010D
					ECROU	MUTTER	MØTRIK	MOER	

35.701.03		p1	02/11

SUPPLY PLUMBING (LOADER VALVE) (L223-L230,C232,C238)
SUPPLY PLUMBING (LOADER VALVE) (L223-L230,C232,C238)
SUPPLY PLUMBING (LOADER VALVE) (L223-L230,C232,C238)
SUPPLY PLUMBING (LOADER VALVE) (L223-L230,C232,C238)

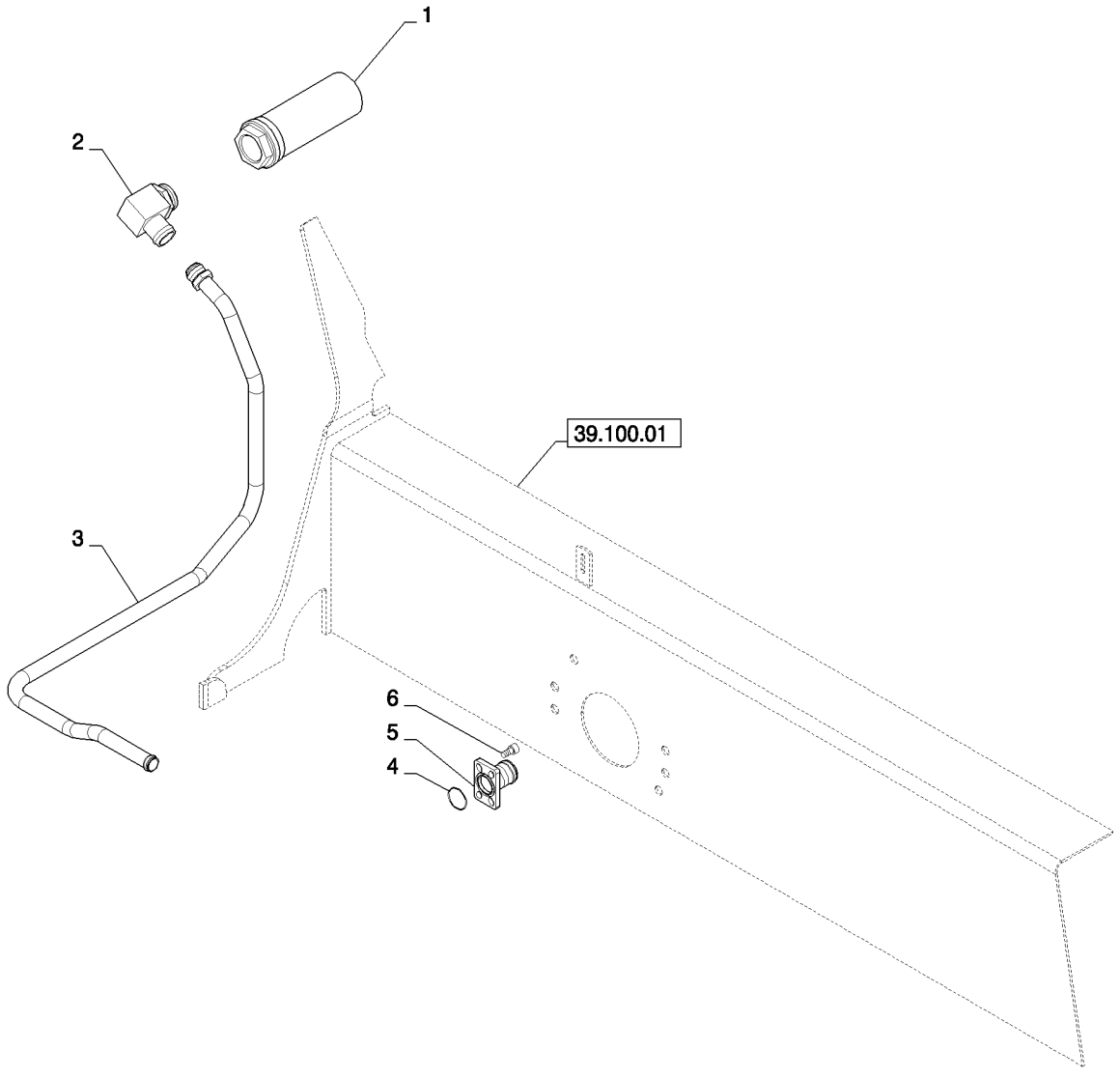

SUPPLY PLUMBING (LOADER VALVE) (L223-L230,C232,C238)
SUPPLY PLUMBING (LOADER VALVE) (L223-L230,C232,C238)
SUPPLY PLUMBING (LOADER VALVE) (L223-L230,C232,C238)
SUPPLY PLUMBING (LOADER VALVE) (L223-L230,C232,C238)

R	N	P.N.	MOD	Q	Denominação Description Bezeichnung	Description Bezeichnung Beskrivelse	Denominacion Beskrivelse Descrizione	Descrizione Beschrijving	L.C.
1		**84344918**		1	REDE PARA FILTROS CREPINE FILTRANTE	FILTER STRAINER FILTERSIEB	COLADOR FILTERNET	RETICELLA DEL FILTRO FILTERZEEF	043R
2		**84344944**		1	COTOVELO 90 COUDE A 90°	90 ELBOW 90-GRAD-KNIESTÜCK	CODO 90 VINKELRØR, 90	GOMITO A 90° KNIESTUK 90º	A045
3		**84344911**		1	TUBO RÍGIDO, Tandem Supply TUYAU RIGIDE	RIGID TUBE ROHR	TUBO RÍGIDO STIFT RØR	TUBO RIGIDO VASTE LEIDING	193T
4		**274754**		1	O-RING, -220, 70 Duro, 1.359" ID x .139" Thk JOINT TORIQUE	O-RING O-RING	JUNTA TÓRICA O-RING	ANELLO TOROIDALE O-RING	055A
5		**84269151**		1	CONEXÃO, Gear Pump Suction RACCORD	FITTING ARMATUR	ACOPLAMIENTO FITTING	RACCORDO AANSLUITING	3300
6		**14307321**		4	PARAFUSO, Hex Soc Hd, M10 x 20, 8.8 VIS	SCREW SCHRAUBE	TORNILLO SKRUE	VITE SCHROEF	040V

35.701.04		p1	08/11

RETURN PLUMBING (LOADER VALVE) (L223-L230,C232,C238)
RETURN PLUMBING (LOADER VALVE) (L223-L230,C232,C238)
RETURN PLUMBING (LOADER VALVE) (L223-L230,C232,C238)
RETURN PLUMBING (LOADER VALVE) (L223-L230,C232,C238)

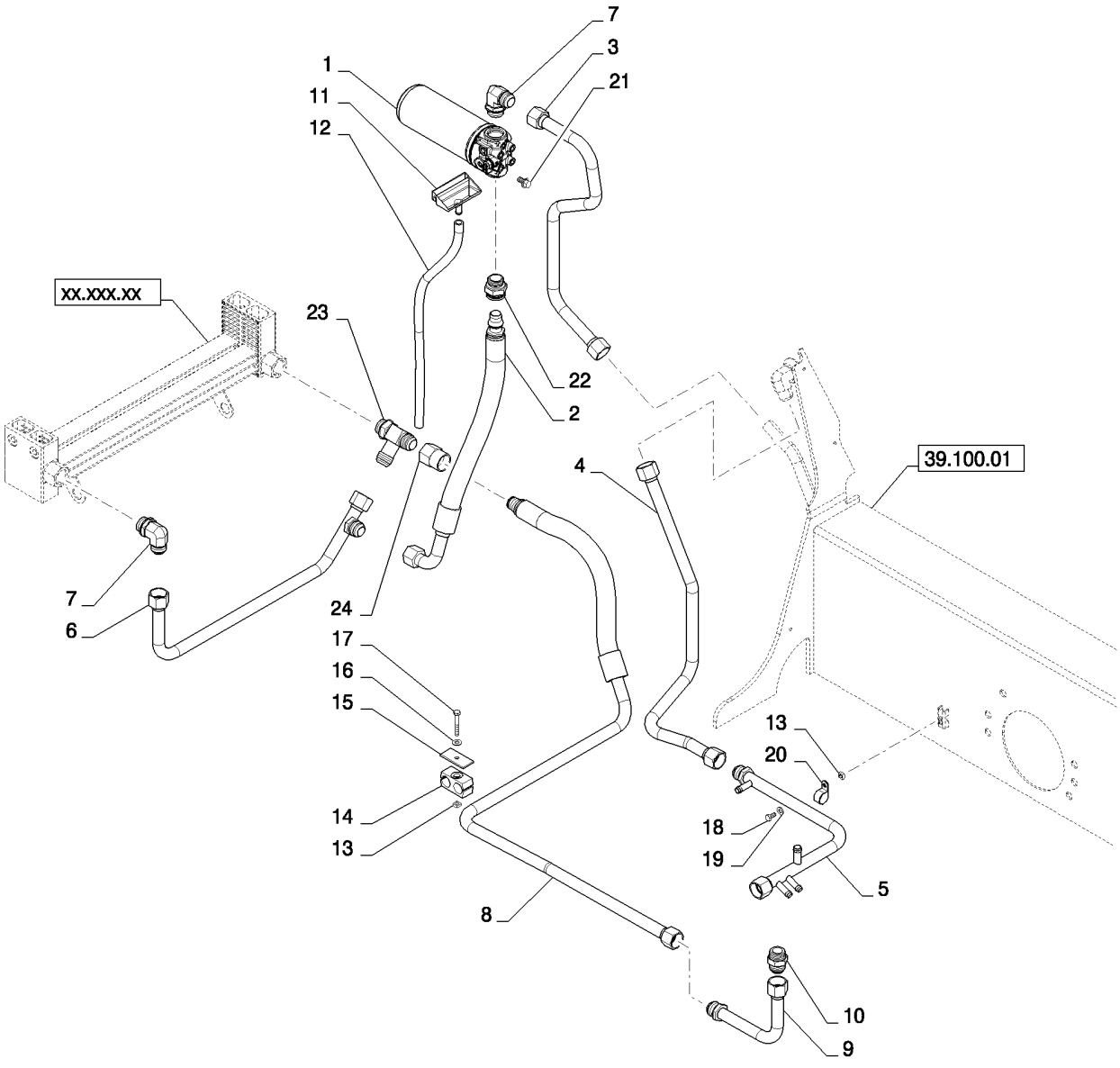

RETURN PLUMBING (LOADER VALVE) (L223-L230,C232,C238)
RETURN PLUMBING (LOADER VALVE) (L223-L230,C232,C238)
RETURN PLUMBING (LOADER VALVE) (L223-L230,C232,C238)
RETURN PLUMBING (LOADER VALVE) (L223-L230,C232,C238)

R	N	P.N.	MOD	Q	Denominação Description	Description Bezeichnung	Denominacion Beskrivelse	Descrizione Beschrijving	L.C.
1		84278071		1	FILTRO DE ÓLEO HIDRÁULICO, Filter Assembly, Hydraulic Oil, Includes 84278070				
						HYDRAULIC OIL FILTER	FILTRO DE ACEITE HIDF	FILTRO OLIO IDRAULICO	074F
					FILTRE A HUILE HYDR.	HYDRAULIKÖLFILTER	HYDRAULIKOLIEFILTER	HYDRAULISCHE-OLIEFIL	
2		84276171		1	TUBO FLEXÍVEL, Oil Cooler Outlet				
						FLEXIBLE HOSE	TUBO FLEXIBLE	TUBO FLESSIBILE	192T
					TUYAU FLEXIBLE	BIEGSAMER SCHLAUCH	FLEKSIBEL SLANGE	FLEXIBELE SLANG	
1		84274694		1	ANEL DE DESGASTE, Friction				
						WEAR RING	ANILLO DE DESGASTE	ANELLO ANTIUSURA	A012
					BAGUE D'USURE	VERSCHLEISSRING	SLIDRING	SLIJTRING	
1		84278070		1	ELEMENTO, Filter Assembly, Hydraulic Oil				
						ELEMENT	ELEMENTO	ELEMENTO	020E
					ELEMENT	ELEMENT	ELEMENT	ELEMENT	
3		84344914		1	TUBO RÍGIDO, Hyd. Filter Return				
						RIGID TUBE	TUBO RÍGIDO	TUBO RIGIDO	193T
					TUYAU RIGIDE	ROHR	STIFT RØR	VASTE LEIDING	
4		84269657		1	TUBO RÍGIDO, Case Drain Return				
						RIGID TUBE	TUBO RÍGIDO	TUBO RIGIDO	193T
					TUYAU RIGIDE	ROHR	STIFT RØR	VASTE LEIDING	
5		84259538		1	TUBO RÍGIDO, Case Drain Manifold				
						RIGID TUBE	TUBO RÍGIDO	TUBO RIGIDO	193T
					TUYAU RIGIDE	ROHR	STIFT RØR	VASTE LEIDING	
6		84259444		1	TUBO RÍGIDO, Oil Cooler Outlet				
						RIGID TUBE	TUBO RÍGIDO	TUBO RIGIDO	193T
					TUYAU RIGIDE	ROHR	STIFT RØR	VASTE LEIDING	
7		268277		2	COTOVELO, 90º, 1 5/16"-12, 37º x 1 5/16"-12, O-Ring				
						ELBOW	CODO	GOMITO	085G
					COUDE	KNIESTÜCK	VINKELRØR	KNIESTUK	
8		84310719		1	TUBO RÍGIDO, Loader Valve Outlet				
						RIGID TUBE	TUBO RÍGIDO	TUBO RIGIDO	193T
					TUYAU RIGIDE	ROHR	STIFT RØR	VASTE LEIDING	
9		84310722		1	TUBO RÍGIDO, Loader Valve Outlet				
						RIGID TUBE	TUBO RÍGIDO	TUBO RIGIDO	193T
					TUYAU RIGIDE	ROHR	STIFT RØR	VASTE LEIDING	
10		378970		1	CONECTOR HIDRÁUL, 1 5/16"-12, 37º x 1 5/16"-12, O-Ring				
						HYD CONNECTOR	CONECTOR HIDRÁULIC	CONNETTORE IDRAULIC	020R
					CONNECTEUR HYDRAU	HYDR STECKVERBINDE	HYDRAULIKSTIK	HYDRAULISCHE AANSLI	
11		87455867		1	FUNIL, Oil Filter	FUNNEL	EMBUDO	IMBUTO	020I
					ENTONNOIR	TRICHTER	TRAGT	TRECHTER	
12		93963		2'	TUBO PLÁSTICO, 0.50" ID x 0.75" OD, 2 Feet				
						PLASTIC-RUBBER TUBE	TUBO DE GOMA DE PLÁ	TUBO IN PLASTICA-GOM	Z192
					GAINE PLASTIQUE	KUNSTSTOFF-/GUMMI-R	PLASTIKGUMMISLANGE	KUNSTSTOF-RUBBERLE	
13		229197A1		3	PORCA, Square M8-1.25	NUT	TUERCA	DADO	5780
					ECROU	MUTTER	MØTRIK	MOER	
14		225529A1		2	CONEXÃO, Tube Clamp	FITTING	ACOPLAMIENTO	RACCORDO	3300
					RACCORD	ARMATUR	FITTING	AANSLUITING	
15		257859A1		2	PLACA ESPACADORA, Bar Clamp Top				
						PLATE,SPACER	PLAQUETA	DISTANZ PIASTRA	Z324
					PLAQUETTE	PLAETTCHEN	PLATE,SPACER	PLATE,SPACER	

35.701.04		p2	08/11

RETURN PLUMBING (LOADER VALVE) (L223-L230,C232,C238)
RETURN PLUMBING (LOADER VALVE) (L223-L230,C232,C238)
RETURN PLUMBING (LOADER VALVE) (L223-L230,C232,C238)
RETURN PLUMBING (LOADER VALVE) (L223-L230,C232,C238)

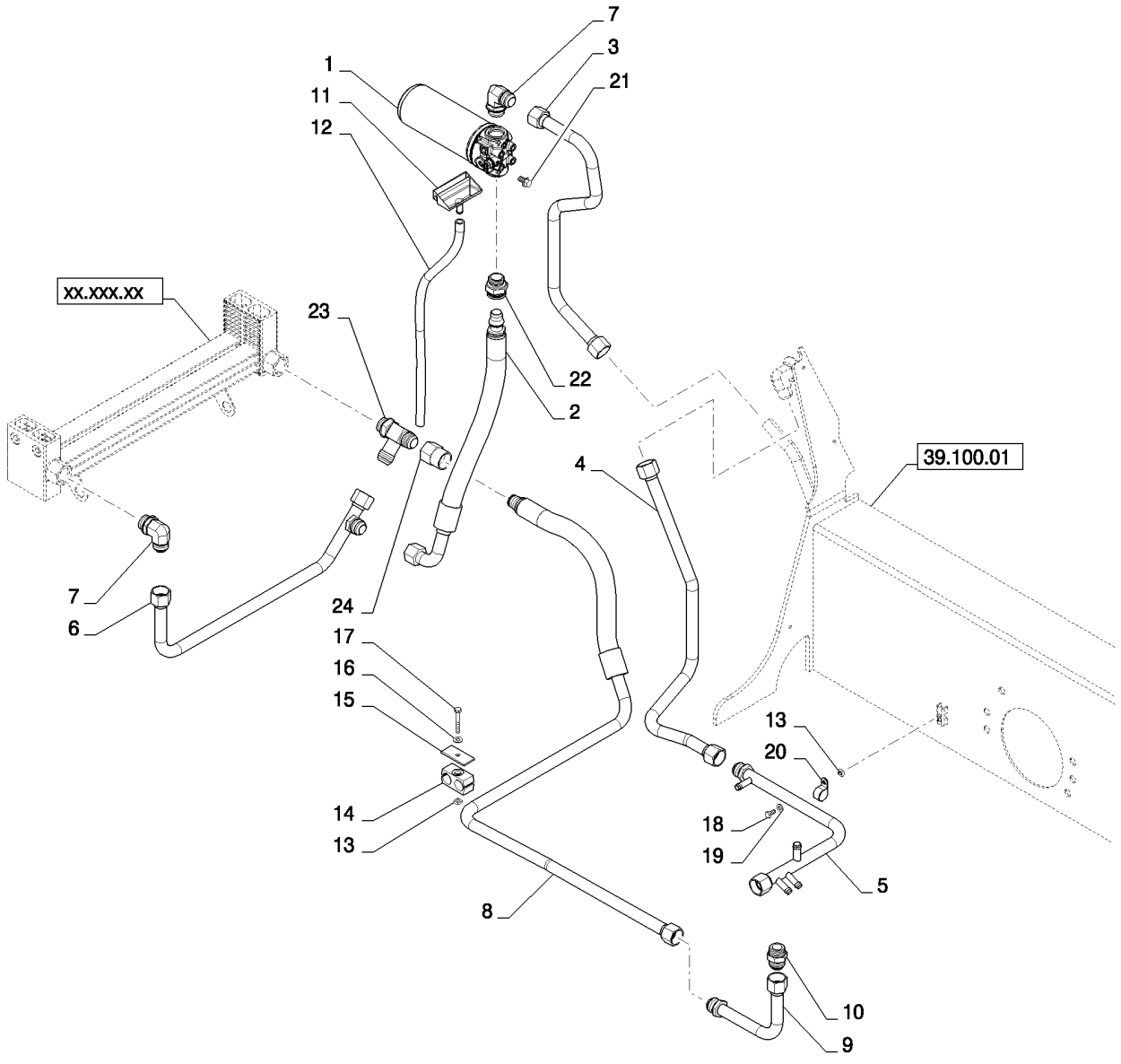

RETURN PLUMBING (LOADER VALVE) (L223-L230,C232,C238)
RETURN PLUMBING (LOADER VALVE) (L223-L230,C232,C238)
RETURN PLUMBING (LOADER VALVE) (L223-L230,C232,C238)
RETURN PLUMBING (LOADER VALVE) (L223-L230,C232,C238)

R	N	P.N.	MOD	Q	Denominação Description	Description Bezeichnung	Denominacion Beskrivelse	Descrizione Beschrijving	L.C.
16		86625263		2	ARRUELA PLANA, M8 x 20 x 1.6				
						WASHER	ARANDELA	RONDELLA	131R
					RONDELLE	UNTERLEGSCHEIBE	FLADSKIVE	SLUITRING	
17		16044321		2	PARAFUSO, Hex, M8 x 55, 8.8				
						SCREW	TORNILLO	VITE	040V
					VIS	SCHRAUBE	SKRUE	SCHROEF	
18		120103		1	PARAFUSO, Hex, M8 x 16, 8.8				
						BOLT	PERNO	BULLONE	140B
					VIS	SCHRAUBE	BOLT	BOUT	
19		87655042		1	ARRUELA ESPECIAL	SPECIAL WASHER	ARANDELA ESPECIAL	RONDELLA SPECIALE	Z333
					RONDELLE SPECIALE	SPEZIALUNTERLEGSCH	SPECIALSKIVE	SPECIALE RING	
20		86637977		1	BRAÇADEIRA, 1", Insul, 5/16" Bolt				
						CLAMP	ABRAZADERA	MORSETTO	120M
					COLLIER	KLEMME	SPÆNDEBÅND	KLEM	
21		86050286		2	PARAFUSO FLANGEADO, Hex, M10 x 20, Cl 8.8, Full Thd				
						FLANGE BOLT	PERNO DE CORONA	BULLONE FLANGIATO	A027
					VIS A EMBASE	FLANSCHSCHRAUBE	FLANGEBOLT	FLENSBOUT	
22		84259488		1	ADAPTADOR	ADAPTER	ADAPTADOR	ADATTATORE	001A
					ADAPTATEUR	ADAPTER	ADAPTER	ADAPTER	
23		84259489		1	ADAPTADOR	ADAPTER	ADAPTADOR	ADATTATORE	001A
					ADAPTATEUR	ADAPTER	ADAPTER	ADAPTER	
24		84259482		1	CONEXÃO EM T	UNION TEE	RACOR EN T	RACCORDO A T	A134
					RACCORD EN T	T-VERSCHRAUBUNG	T-FORSKRUNING	KOPPEL-T-STUK	
25		646223		1	TIRA, .19" x 8 1/2", Cable Tie; Not Shown				
						STRAP	BANDA	FASCETTA	532B
					BRIDE	BAND	STROP	RIEM	
26		87642915		1	PRENDEDOR DE CABOS, Not Shown				
						CABLE STRAP	BANDA DE CABLE	FASCETTA PER CAVO	P716
					BRIDE DE CABLE	KABELBINDER	KABELSTROP	BUNDELBAND	

2SPD PLUMBING (L223,L225,L230)
2SPD PLUMBING (L223,L225,L230)
2SPD PLUMBING (L223,L225,L230)
2SPD PLUMBING (L223,L225,L230)

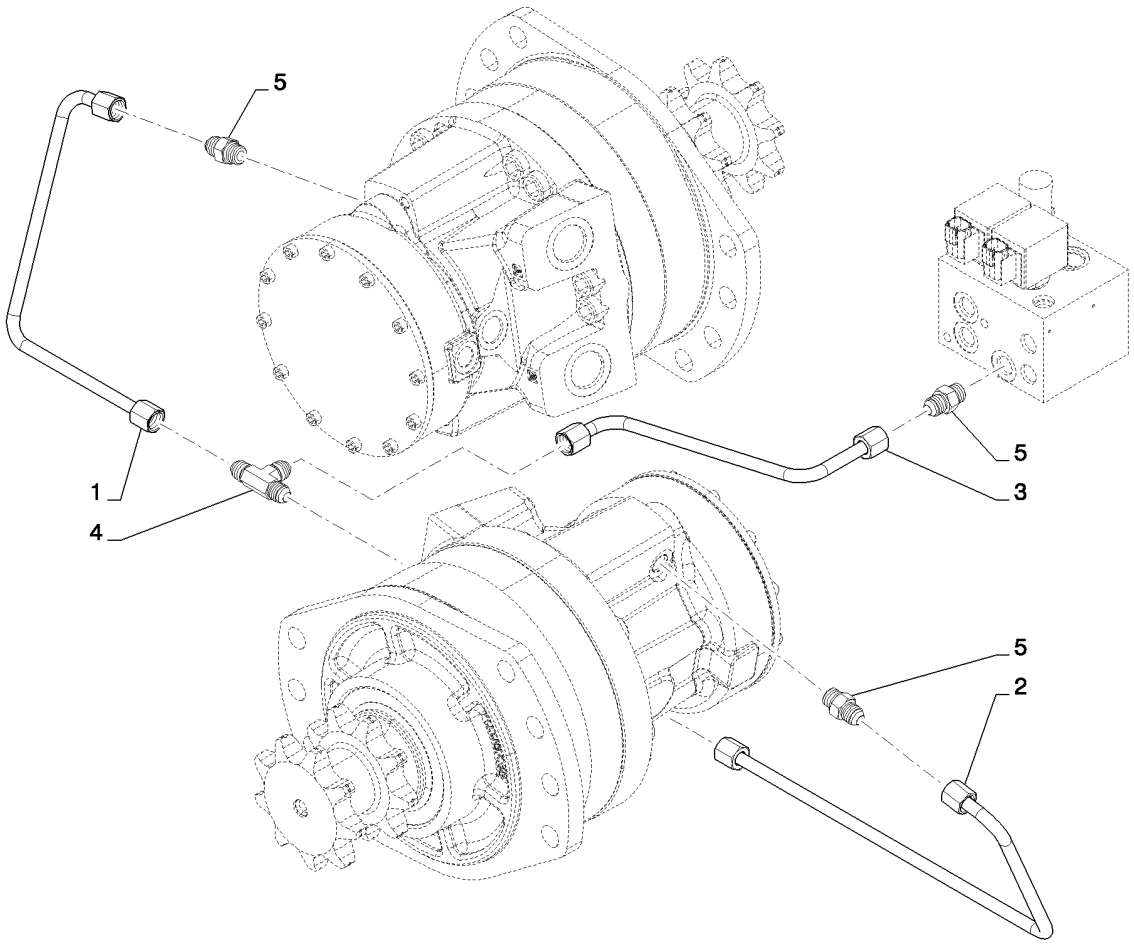

2SPD PLUMBING (L223,L225,L230)
2SPD PLUMBING (L223,L225,L230)
2SPD PLUMBING (L223,L225,L230)
2SPD PLUMBING (L223,L225,L230)

R	N	P.N.	MOD	Q	Denominação Description	Description Bezeichnung	Denominacion Beskrivelse	Descrizione Beschrijving	L.C.
1		84258811		1	TUBO RÍGIDO, Assy, Two Speed				
						RIGID TUBE	TUBO RÍGIDO	TUBO RIGIDO	193T
					TUYAU RIGIDE	ROHR	STIFT RØR	VASTE LEIDING	
2		84259631		1	TUBO RÍGIDO, Assy, Two Speed				
						RIGID TUBE	TUBO RÍGIDO	TUBO RIGIDO	193T
					TUYAU RIGIDE	ROHR	STIFT RØR	VASTE LEIDING	
3		84258810		1	TUBO RÍGIDO, Assy, Two Speed Common				
						RIGID TUBE	TUBO RÍGIDO	TUBO RIGIDO	193T
					TUYAU RIGIDE	ROHR	STIFT RØR	VASTE LEIDING	
4		76355		1	T, 9/16"-18, 37º	TEE	RACOR EN T	PEZZO A T	9020
					RACCORD EN T	T-STÜCK	T-STYKKE	T-STUK	
5		76350		3	CONECTOR HIDRÁUL, 9/16"-18, 37º x 9/16"-18, O-Ring				
						HYD CONNECTOR	CONECTOR HIDRÁULIC	CONNETTORE IDRAULIC	020R
					CONNECTEUR HYDRAU	HYDR STECKVERBINDE	HYDRAULIKSTIK	HYDRAULISCHE AANSLI	

35.701.06		p1	02/11

BRAKE PLUMBING (L223,L225,L230)
BRAKE PLUMBING (L223,L225,L230)
BRAKE PLUMBING (L223,L225,L230)
BRAKE PLUMBING (L223,L225,L230)

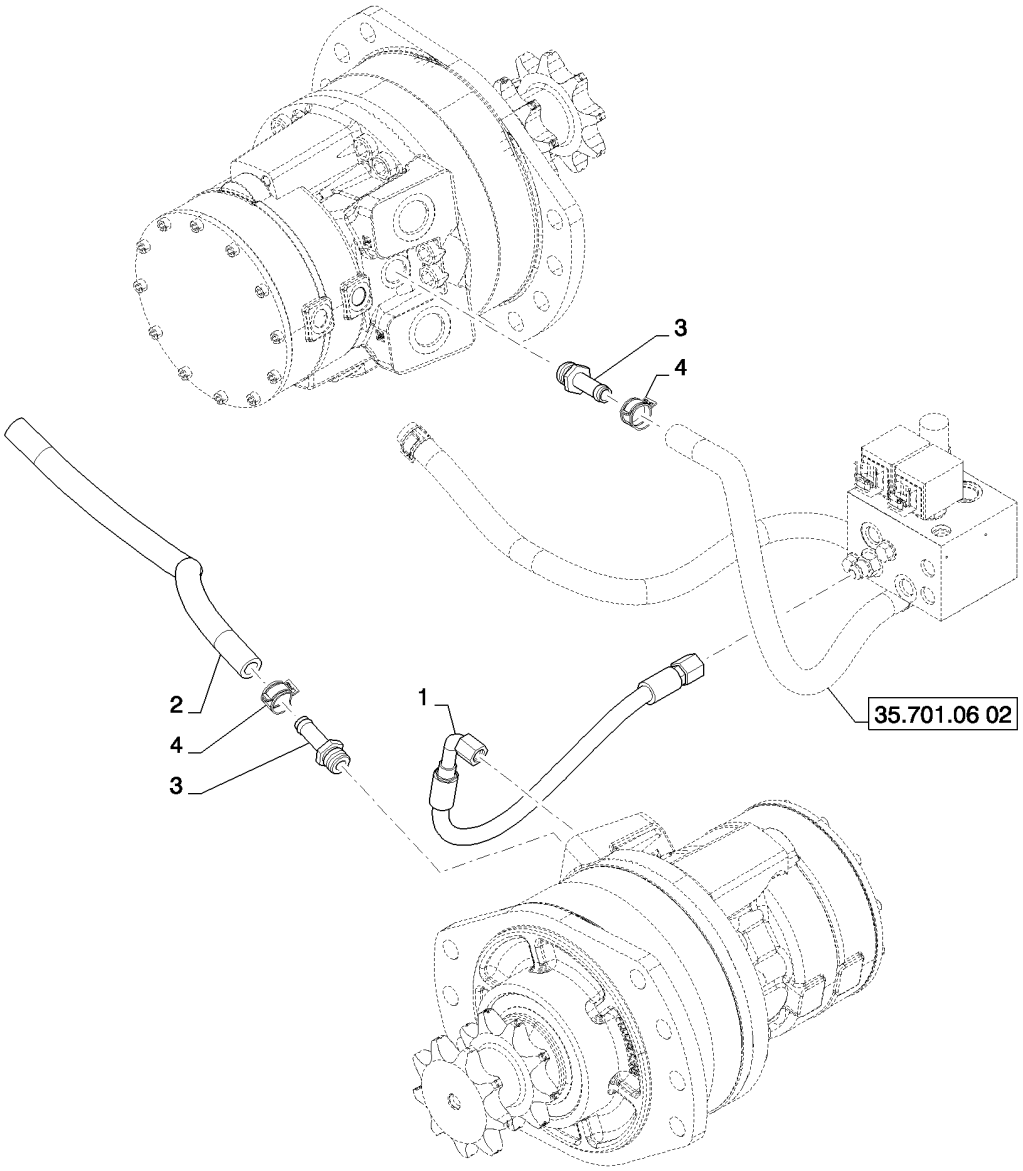

BRAKE PLUMBING (L223,L225,L230)
BRAKE PLUMBING (L223,L225,L230)
BRAKE PLUMBING (L223,L225,L230)
BRAKE PLUMBING (L223,L225,L230)

R	N	P.N.	MOD	Q	Denominação Description	Description Bezeichnung	Denominacion Beskrivelse	Descrizione Beschrijving	L.C.
1		84257177		1	CONJ. MANGUEIRA, Brake ENSEMBLE DE FLEXIBLE	HOSE ASSY. SCHLAUCHBAUGRUPPE	CONJUNTO DE TUBOS SLANGEENHED	COMPLESS. TUBO FLES SLANGEENHEID	P457
2		84257173		1	MANGUEIRA, Drain FLEXIBLE	HOSE SCHLAUCH	TUBO SLANGE	TUBO FLESSIBILE SLANG	030M
3		87010108		2	CONEXÃO, 1/2" Hose x 3/4"-16 ORB, Beaded RACCORD	FITTING ARMATUR	ACOPLAMIENTO FITTING	RACCORDO AANSLUITING	3300
4		87443510		2	BRAÇADEIRA MANGUEIRA, M20 COLLIER POUR FLEXIBL	HOSE CLAMP SCHLAUCHSCHELLE	ABRAZADERA DE MANG SLANGEKLEMME	FASCETTA STRINGITUB SLANGKLEM	P729

35.701.06	02	p1	05/11

BRAKE PLUMBING (L213-L230)
BRAKE PLUMBING (L213-L230)
BRAKE PLUMBING (L213-L230)
BRAKE PLUMBING (L213-L230)

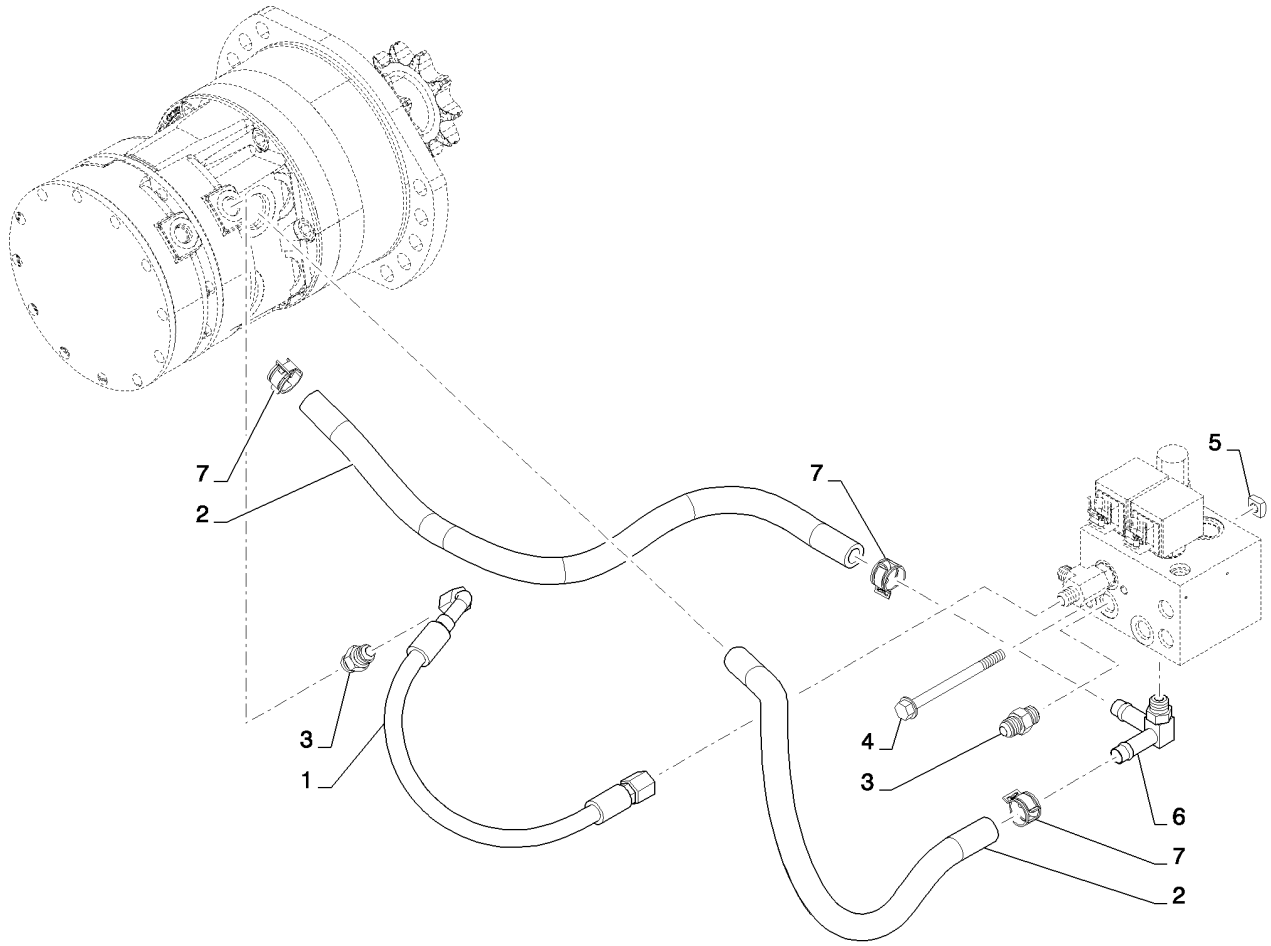

BRAKE PLUMBING (L213-L230)
BRAKE PLUMBING (L213-L230)
BRAKE PLUMBING (L213-L230)
BRAKE PLUMBING (L213-L230)

R	N	P.N.	MOD	Q	Denominação Description	Description Bezeichnung	Denominacion Beskrivelse	Descrizione Beschrijving	L.C.
1		84257177		1	CONJ. MANGUEIRA, Brake ENSEMBLE DE FLEXIBLE	HOSE ASSY. SCHLAUCHBAUGRUPPE	CONJUNTO DE TUBOS SLANGEENHED	COMPLESS. TUBO FLES SLANGEENHEID	P457
2		84257173		2	MANGUEIRA, Drain FLEXIBLE	HOSE SCHLAUCH	TUBO SLANGE	TUBO FLESSIBILE SLANG	030M
3		76350		3	CONECTOR HIDRÁUL, 9/16"-18, 37º x 9/16"-18, O-Ring CONNECTEUR HYDRAU	HYD CONNECTOR HYDR STECKVERBINDE	CONECTOR HIDRÁULIC HYDRAULIKSTIK	CONNETTORE IDRAULIC HYDRAULISCHE AANSLU	020R
4		86511844		2	PARAFUSO, Hex Flg, M8 x 100, 8.8, Flange, M8x100 VIS	BOLT SCHRAUBE	PERNO BOLT	BULLONE BOUT	140B
5		229197A1		2	PORCA, Square, M8-1.25 ECROU	NUT MUTTER	TUERCA MØTRIK	DADO MOER	5780
6		84187294		1	ADAPTADOR, Fitting ADAPTATEUR	ADAPTER ADAPTER	ADAPTADOR ADAPTER	ADATTATORE ADAPTER	001A
7		87443510		4	BRAÇADEIRA MANGUEIRA, M20 COLLIER POUR FLEXIBL	HOSE CLAMP SCHLAUCHSCHELLE	ABRAZADERA DE MANG SLANGEKLEMME	FASCETTA STRINGITUB SLANGKLEM	P729

35.730.01		p1	05/11

HYDRAULIC CYLINDER, LH LIFT (L223-L230,C232,C238)
HYDRAULIC CYLINDER, LH LIFT (L223-L230,C232,C238)
HYDRAULIC CYLINDER, LH LIFT (L223-L230,C232,C238)
HYDRAULIC CYLINDER, LH LIFT (L223-L230,C232,C238)

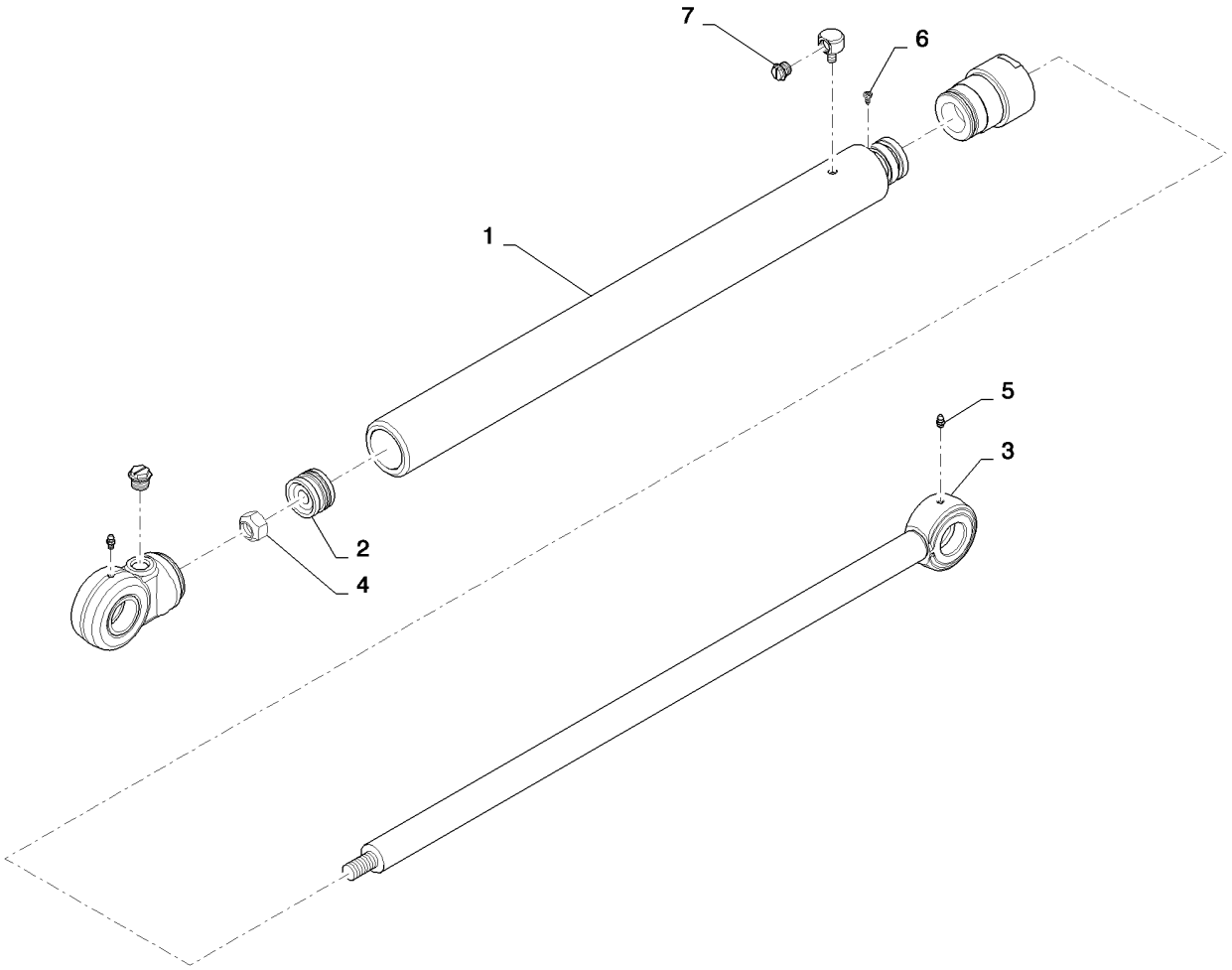

HYDRAULIC CYLINDER, LH LIFT (L223-L230,C232,C238)
HYDRAULIC CYLINDER, LH LIFT (L223-L230,C232,C238)
HYDRAULIC CYLINDER, LH LIFT (L223-L230,C232,C238)
HYDRAULIC CYLINDER, LH LIFT (L223-L230,C232,C238)

R	N	P.N.	MOD	Q	Denominação Description	Description Bezeichnung	Denominacion Beskrivelse	Descrizione Beschrijving	L.C.
		84340476			CILINDRO, Hydraulic, LH Lift, Gray, Incl. 1-7				
						CYLINDER	CILINDRO	CILINDRO	164C
					VERIN	ZYLINDER	CYLINDER	CILINDER	
1		**NSS**			SEM SERVIÇO EM SEPARADO, Tube, W				
						NOT SERVICED SEPARA	NO SE REPARA POR SE	NON FORNITO SEPARAT	064N
					NON FOURNI SEPAREM	NICHT A SEP ERS-T LIEI	SERVICERES IKKE SEPA	NIET LOS VERKRIJGBAA	
2		**NSS**			SEM SERVIÇO EM SEPARADO, Package, Piston-Gland				
						NOT SERVICED SEPARA	NO SE REPARA POR SE	NON FORNITO SEPARAT	064N
					NON FOURNI SEPAREM	NICHT A SEP ERS-T LIEI	SERVICERES IKKE SEPA	NIET LOS VERKRIJGBAA	
3		**84365643**		1	HASTE, W	ROD	VARILLA	ASTA	090A
					TIGE	STANGE	STANG	STANG	
4		**280724**		1	CONTRA PORCA, 3/4"-16, GC				
						LOCK NUT	TUERCA DE BLOQUEO	DADO DI BLOCCAGGIO	P263
					CONTRE-ECROU	SICHERUNGSMUTTER	LÅSEMØTRIK	BORGMOER	
5		**86977989**		1	GRAXEIRA, 90º, 1/8"-27 NPT x .97" lg, Leakproof				
						LUBE NIPPLE	BOQUILLA DE LUBRICAC	INGRASSATORE	060I
					GRAISSEUR	SCHMIERNIPPEL	SMØRENIPPEL	SMEERNIPPEL	
6		**87414**		1	GRAXEIRA, 1/4"-28 x .56" lg, Self-Tap				
						LUBE NIPPLE	BOQUILLA DE LUBRICAC	INGRASSATORE	060I
					GRAISSEUR	SCHMIERNIPPEL	SMØRENIPPEL	SMEERNIPPEL	
7		**86625120**		2	BUJÃO, 3/4-16	PLUG	TAPÓN	TAPPO	050T
					BOUCHON	STOPFEN	PROP	PLUG	
8		**84480921**			KIT DE VEDAÇÃO, (Not Shown) Cylinder Repair Kit				
						SEAL KIT	KIT DE JUNTAS	KIT GUARNIZIONI	630S
					KIT DE JOINTS	DICHTUNGSSATZ	PAKNINGSSÆT	KIT MET AFDICHTINGEN	

35.730.01		p1	05/11

HYDRAULIC CYLINDER, RH LIFT (L223-L230,C232,C238)
HYDRAULIC CYLINDER, RH LIFT (L223-L230,C232,C238)
HYDRAULIC CYLINDER, RH LIFT (L223-L230,C232,C238)
HYDRAULIC CYLINDER, RH LIFT (L223-L230,C232,C238)

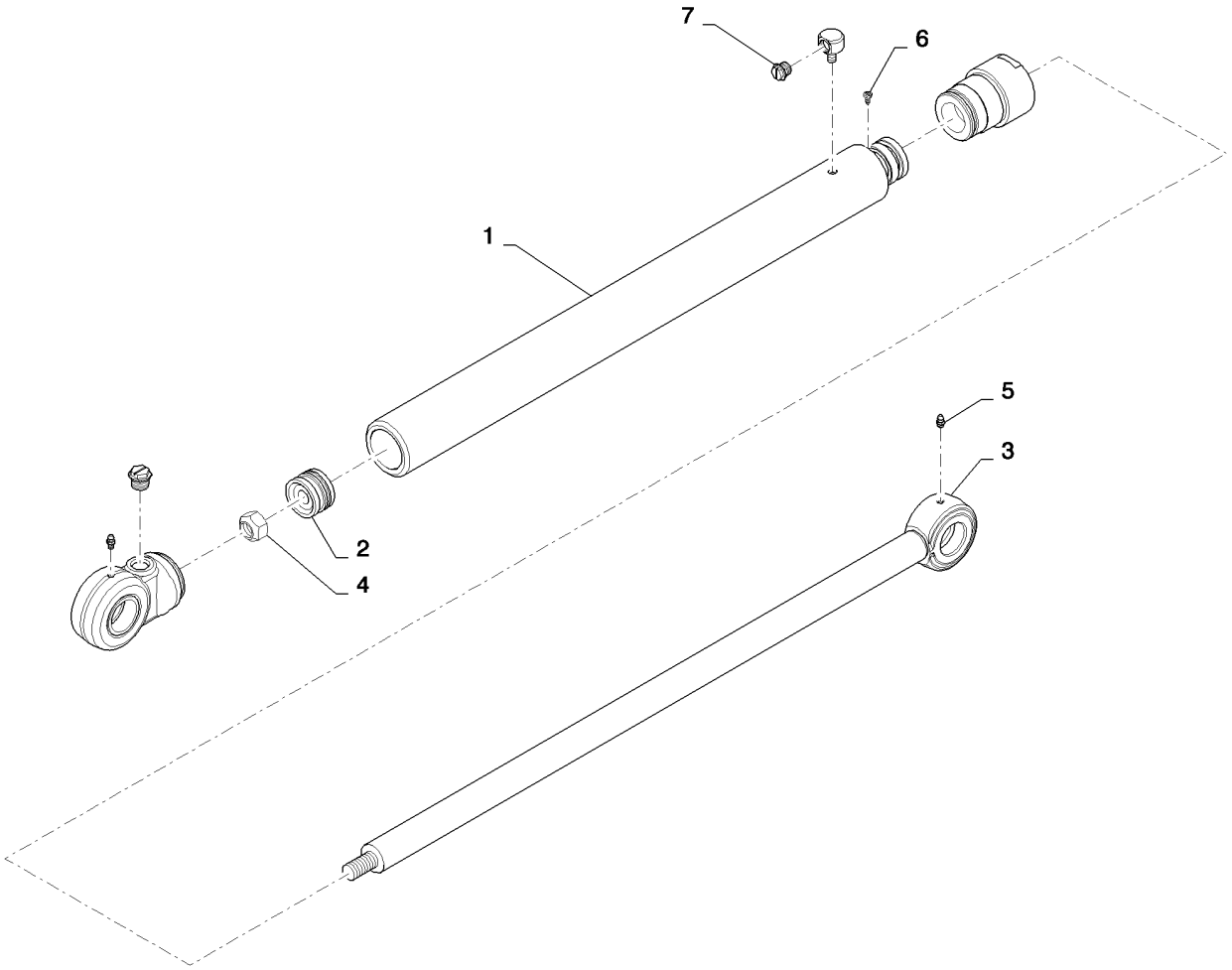

HYDRAULIC CYLINDER, RH LIFT (L223-L230,C232,C238)
HYDRAULIC CYLINDER, RH LIFT (L223-L230,C232,C238)
HYDRAULIC CYLINDER, RH LIFT (L223-L230,C232,C238)
HYDRAULIC CYLINDER, RH LIFT (L223-L230,C232,C238)

R	N	P.N.	MOD	Q	Denominação Description	Description Bezeichnung	Denominacion Beskrivelse	Descrizione Beschrijving	L.C.
		84340475			CILINDRO, Hydraulic, RH Lift, Incl. 1-7				
						CYLINDER	CILINDRO	CILINDRO	164C
					VERIN	ZYLINDER	CYLINDER	CILINDER	
1		**NSS**			SEM SERVIÇO EM SEPARADO, Tube, W				
						NOT SERVICED SEPARA	NO SE REPARA POR SE	NON FORNITO SEPARAT	064N
					NON FOURNI SEPAREM	NICHT A SEP ERS-T LIEI	SERVICERES IKKE SEPA	NIET LOS VERKRIJGBAA	
2		**84370081**		1	HASTE/GAXETA PISTÃO, Package				
						PISTON ROD/GLAND	VÁSTAGO DE PISTÓN/GI	BIELLA/PREMISTOPPA	Z642
					TIGE DE PISTON/ETOUF	KOLBENSTANGENFÜHR	STEMPELSTANG/DÅSE	DRIJFSTANG/ZUIGERPA	
3		**84365643**		1	HASTE, W	ROD	VARILLA	ASTA	090A
					TIGE	STANGE	STANG	STANG	
4		**280724**		1	CONTRA PORCA, 3/4"-16, GC				
						LOCK NUT	TUERCA DE BLOQUEO	DADO DI BLOCCAGGIO	P263
					CONTRE-ECROU	SICHERUNGSMUTTER	LÅSEMØTRIK	BORGMOER	
5		**86977989**		1	GRAXEIRA, 90º, 1/8"-27 NPT x .97" lg, Leakproof				
						LUBE NIPPLE	BOQUILLA DE LUBRICAC	INGRASSATORE	060I
					GRAISSEUR	SCHMIERNIPPEL	SMØRENIPPEL	SMEERNIPPEL	
6		**87414**		1	GRAXEIRA, 1/4"-28 x .56" lg, Self-Tap				
						LUBE NIPPLE	BOQUILLA DE LUBRICAC	INGRASSATORE	060I
					GRAISSEUR	SCHMIERNIPPEL	SMØRENIPPEL	SMEERNIPPEL	
7		**86625120**		2	BUJÃO, 3/4-16	PLUG	TAPÓN	TAPPO	050T
					BOUCHON	STOPFEN	PROP	PLUG	
8		**84480921**			KIT DE VEDAÇÃO, (Not Shown) Cylinder Repair Kit				
						SEAL KIT	KIT DE JUNTAS	KIT GUARNIZIONI	630S
					KIT DE JOINTS	DICHTUNGSSATZ	PAKNINGSSÆT	KIT MET AFDICHTINGEN	

35.730.02		p1	05/11

BUCKET CYLINDER (L223-L230,C232,C238)
BUCKET CYLINDER (L223-L230,C232,C238)
BUCKET CYLINDER (L223-L230,C232,C238)
BUCKET CYLINDER (L223-L230,C232,C238)

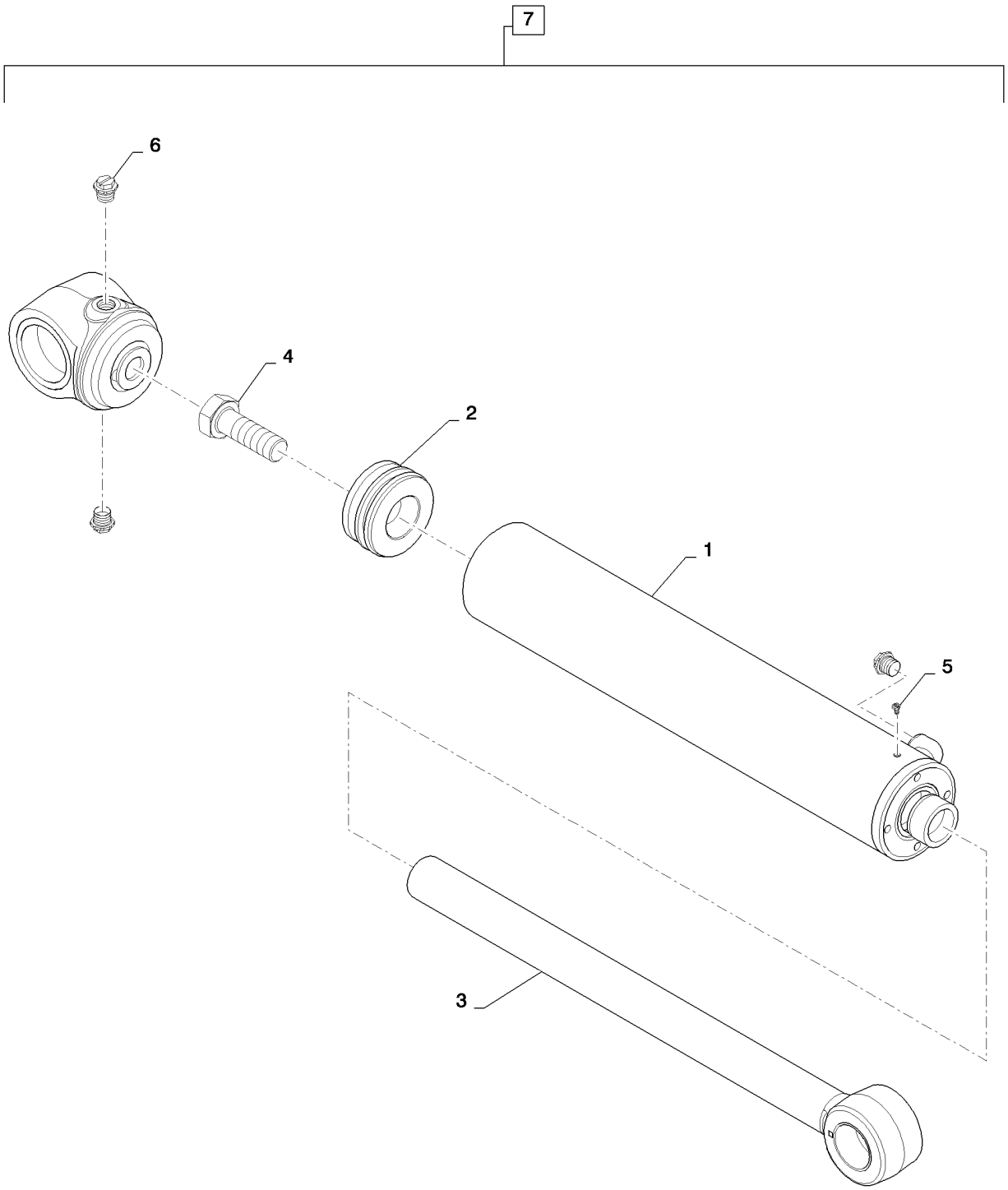

BUCKET CYLINDER (L223-L230,C232,C238)
BUCKET CYLINDER (L223-L230,C232,C238)
BUCKET CYLINDER (L223-L230,C232,C238)
BUCKET CYLINDER (L223-L230,C232,C238)

R	N	P.N.	MOD	Q	Denominação Description Bezeichnung	Description Denominacion Beskrivelse	Denominacion Descrizione Beschrijving	L.C.
7		84290565			CILINDRO LEVANTAMENTO, Cylinder, Assembly, Bucket, Gray, Incl. 1-6			
					LIFT CYLINDER	CILINDRO DE ELEVADOI	CILINDRO DI SOLLEVAM	133C
					VERIN DE RELEVAGE	HUBZYLINDER	LØFTECYLINDER	HEFCILINDER
1		84293475		1	TUBO, Hydraulic, W	TUBE	TUBO	TUBO	195T
					TUBE	ROHR	RØR	LEIDING
2		NSS			SEM SERVIÇO EM SEPARADO, Package, Piston-Gland			
					NOT SERVICED SEPARA	NO SE REPARA POR SE	NON FORNITO SEPARAT	064N
					NON FOURNI SEPAREM	NICHT A SEP ERS-T LIEI	SERVICERES IKKE SEPA	NIET LOS VERKRIJGBAA
3		84293530		1	HASTE/GAXETA PISTÃO, Rod, W			
					PISTON ROD/GLAND	VÁSTAGO DE PISTÓN/GI	BIELLA/PREMISTOPPA	Z642
					TIGE DE PISTON/ETOUF	KOLBENSTANGENFÜHR	STEMPELSTANG/DÅSE	DRIJFSTANG/ZUIGERPA
4		86982436		1	PARAFUSO ESPECIAL, SEMS/A, 7/8 X 2.5			
					SPECIAL BOLT	PERNO ESPECIAL	BULLONE SPECIALE	P698
					VIS SPECIALE	SPEZIALSCHRAUBE	SPECIALBOLT	SPECIALE BOUT
5		G109395		1	PARAFUSO	SELF-TAP SCREW	TORNILLO AUTORROSC	VITE AUTOFILETTANTE	062V
					VIS AUTOTARAUDEUSE	SELBSTSCHN SCHRAUE	SELVLÅSENDE BOLT	ZELFTAPPENDE SCHRO
6		86625122		3	BUJÃO, Sltd Hd, 9/16"-18, w/O-Ring			
					PLUG	TAPÓN	TAPPO	050T
					BOUCHON	STOPFEN	PROP	PLUG
8		84480948			KIT DE VEDAÇÃO, (Not Shown) Cylinder Repair Kit			
					SEAL KIT	KIT DE JUNTAS	KIT GUARNIZIONI	630S
					KIT DE JOINTS	DICHTUNGSSATZ	PAKNINGSSÆT	KIT MET AFDICHTINGEN

35.750.01		p1	08/11

TANK, HYDRAULIC (L223,L225,L230,C232,C238)
TANK, HYDRAULIC (L223,L225,L230,C232,C238)
TANK, HYDRAULIC (L223,L225,L230,C232,C238)
TANK, HYDRAULIC (L223,L225,L230,C232,C238)

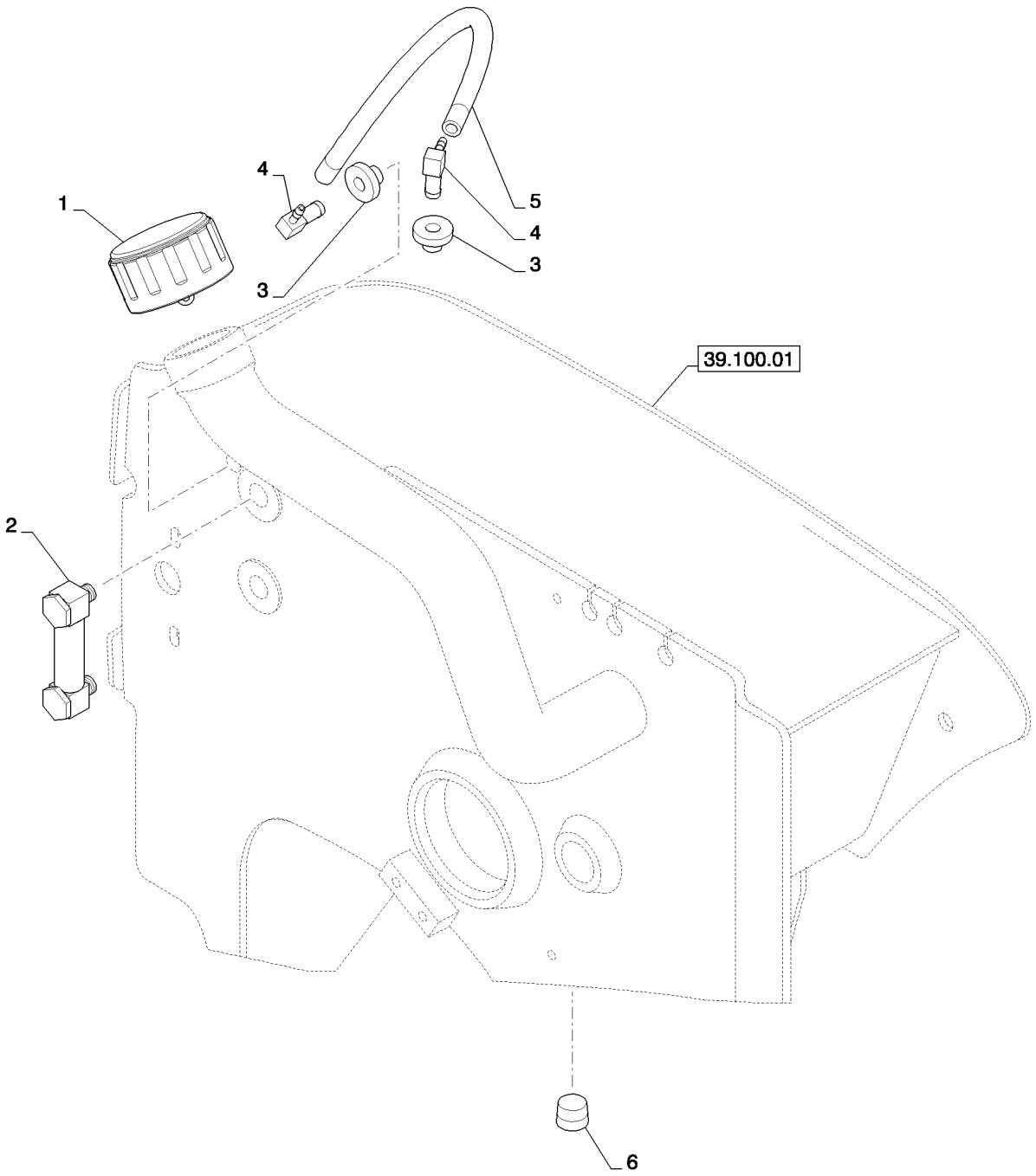

TANK, HYDRAULIC (L223,L225,L230,C232,C238)
TANK, HYDRAULIC (L223,L225,L230,C232,C238)
TANK, HYDRAULIC (L223,L225,L230,C232,C238)
TANK, HYDRAULIC (L223,L225,L230,C232,C238)

R	N	P.N.	MOD	Q	Denominação Description	Description Bezeichnung	Denominacion Beskrivelse	Descrizione Beschrijving	L.C.
1		257448A1		1	TAMPA DO RESERVATÓRIO				
						CAP	TAPON DEL DEPOSITO	TAPPO SERBATOIO	1380
					CHAPEAU	ABDECKAPPE	TANKDAEKSEL	RESERVOIRDOP	
2		84344624		1	MEDIDOR, Liquid Level Gauge				
						GAUGE	INDICADOR	INDICATORE	Z211
					JAUGE	ANZEIGE	MANOMETER	METER	
3		86532842		2	BUCHA	BUSHING	CASQUILLO	BOCCOLA	095B
					BAGUE	BUCHSE	BØSNING	BUS	
4		86532841		2	COTOVELO 90, 5/16", Hosebarb				
						90 ELBOW	CODO 90	GOMITO A 90°	A045
					COUDE A 90°	90-GRAD-KNIESTÜCK	VINKELRØR, 90	KNIESTUK 90º	
5		84355847		1	MANGUEIRA, Hydraulic Tank Vent				
						HOSE	TUBO	TUBO FLESSIBILE	030M
					FLEXIBLE	SCHLAUCH	SLANGE	SLANG	
6		647429		1	BUJÃO DE DRENO, Sq Soc, 1/2"-14, NTPF				
						DRAIN PLUG	TAPÓN DE VACIADO	TAPPO DI SCARICO	056T
					BOUCHON DE VIDANGE	ABLASSSCHRAUBE	AFTAPNINGSPROP	AFTAPPLUG	

SECTION INDEX
37 - Ganchos de reboque e lastro

37.140.01 COUNTERWEIGHT (L223,L225,C232,C238)

37.140.01		p1	03/11

COUNTERWEIGHT (L223,L225,C232,C238)
COUNTERWEIGHT (L223,L225,C232,C238)
COUNTERWEIGHT (L223,L225,C232,C238)
COUNTERWEIGHT (L223,L225,C232,C238)

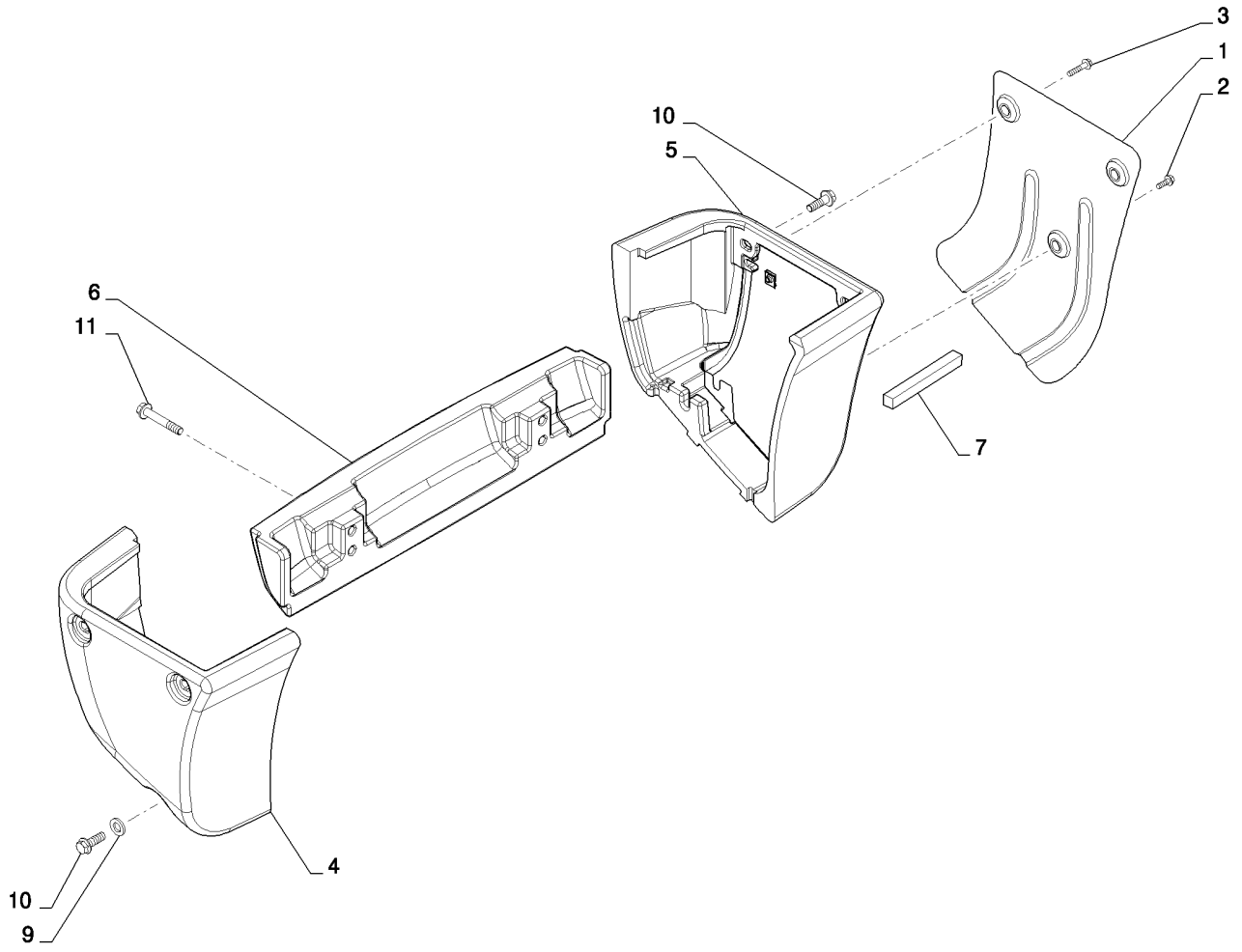

COUNTERWEIGHT (L223,L225,C232,C238)
COUNTERWEIGHT (L223,L225,C232,C238)
COUNTERWEIGHT (L223,L225,C232,C238)
COUNTERWEIGHT (L223,L225,C232,C238)

R	N	P.N.	MOD	Q	Denominação Description	Description Bezeichnung	Denominacion Beskrivelse	Descrizione Beschrijving	L.C.
1		84312435		1	PLACA DE COBERTURA COUVERCLE	COVER PLATE ABDECKPLATTE	PLACA DE CUBIERTA DÆKPLADE	PIASTRA DI COPERTUR AFSCHERMPLAAT	110P
2		9804262		1	PARAFUSO, Hex Flg, M10 x 30, 8.8 VIS	BOLT SCHRAUBE	PERNO BOLT	BULLONE BOUT	140B
3		9804264		2	PARAFUSO, Hex Flg, M10 x 50, 8.8 VIS	BOLT SCHRAUBE	PERNO BOLT	BULLONE BOUT	140B
4		84274259		1	CHASSI, Bumper, Right CHASSIS	FRAME GESTELL	BASTIDOR RAMME	TELAIO RAAM	077T
5		84274263		1	CHASSI, Bumper, Left CHASSIS	FRAME GESTELL	BASTIDOR RAMME	TELAIO RAAM	077T
6		84274289		1	CHASSI, Bumper, Rear CHASSIS	FRAME GESTELL	BASTIDOR RAMME	TELAIO RAAM	077T
7		84355546		1	ESPUMA ISOLANTE MOUSSE ISOLANTE	FOAM INSULATION SCHAUMSTOFFISOLIER	ESPUMA AISLANTE SKUM ISOLERING	ISOLANTE IN SCHIUMA SCHUIMISOLATIE	051S
8		86625071		3	PORCA, M10, U ECROU	NUT MUTTER	TUERCA MØTRIK	DADO MOER	010D
9		{87655047}		1					
10		87698849		6	PARAFUSO VIS	BOLT SCHRAUBE	PERNO BOLT	BULLONE BOUT	140B
11		87698850		4	PARAFUSO VIS	BOLT SCHRAUBE	PERNO BOLT	BULLONE BOUT	140B

SECTION INDEX
39 - Estruturas

39.100.01	CHASSIS HOODS AND COVERS (L223,L225,L230)
39.105.02	BOOM (L223-L230,C232,C238)
39.105.03	COUPLER, BASIC GRAY (L218,L220,L223,L225,L230,C232,C238)
39.105.04	BOOM LOCK (L223-L230,C232,C238)

39.100.01		p1	02/11

CHASSIS HOODS AND COVERS (L223,L225,L230)
CHASSIS HOODS AND COVERS (L223,L225,L230)
CHASSIS HOODS AND COVERS (L223,L225,L230)
CHASSIS HOODS AND COVERS (L223,L225,L230)

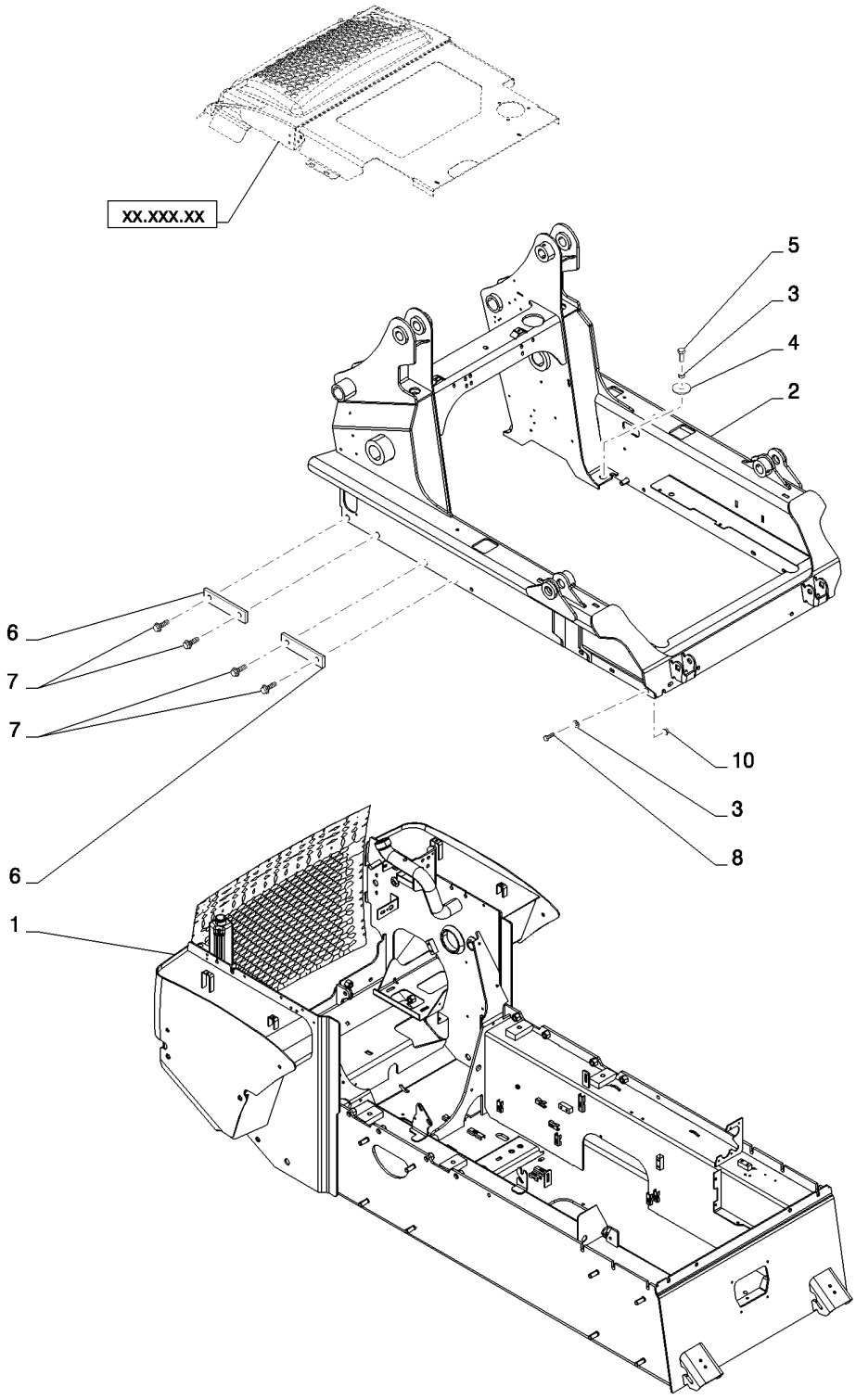

CHASSIS HOODS AND COVERS (L223,L225,L230)
CHASSIS HOODS AND COVERS (L223,L225,L230)
CHASSIS HOODS AND COVERS (L223,L225,L230)
CHASSIS HOODS AND COVERS (L223,L225,L230)

R	N	P.N.	MOD	Q	Denominação Description	Description Bezeichnung	Denominacion Beskrivelse	Descrizione Beschrijving	L.C.
1		{84201161}		1					
2		NSS		1	SEM SERVIÇO EM SEPARADO, Chassis				
						NOT SERVICED SEPARA	NO SE REPARA POR SE	NON FORNITO SEPARAT	064N
					NON FOURNI SEPAREM	NICHT A SEP ERS-T LIEI	SERVICERES IKKE SEPA	NIET LOS VERKRIJGBAA	
3		84329193		4	BARRA, Clamping	BAR	BARRA	BARRA	530B
					BARRE	BAR	BJÆLKE	STANG	
4		87698849		8	PARAFUSO, Flange, M16x50				
						BOLT	PERNO	BULLONE	140B
					VIS	SCHRAUBE	BOLT	BOUT	
5		9824642		10	PARAFUSO, Hex, M12 x 35, 10.9				
						BOLT	PERNO	BULLONE	140B
					VIS	SCHRAUBE	BOLT	BOUT	
6		86512497		10	PORCA, M12 x 1.75, Flg, Cl 10				
						NUT	TUERCA	DADO	010D
					ECROU	MUTTER	MØTRIK	MOER	
7		86625256		10	ARRUELA PLANA, M12 x 28.5 x 4, HT				
						WASHER	ARANDELA	RONDELLA	131R
					RONDELLE	UNTERLEGSCHEIBE	FLADSKIVE	SLUITRING	
8		374835		4	PARAFUSO, Hex, M16 x 40, 10.9				
						BOLT	PERNO	BULLONE	140B
					VIS	SCHRAUBE	BOLT	BOUT	
9		87305411		4	ESPAÇADOR	SPACER	SEPARADOR	DISTANZIALE	075D
					ENTRETOISE	DISTANZSTÜCK	AFSTANDSSTYKKE	AFSTANDSSTUK	
10		87687021		4	ARRUELA PLANA, Washer 70mm OD				
						WASHER	ARANDELA	RONDELLA	131R
					RONDELLE	UNTERLEGSCHEIBE	FLADSKIVE	SLUITRING	

39.105.02		p1	07/11

BOOM (L223-L230,C232,C238)
BOOM (L223-L230,C232,C238)
BOOM (L223-L230,C232,C238)
BOOM (L223-L230,C232,C238)

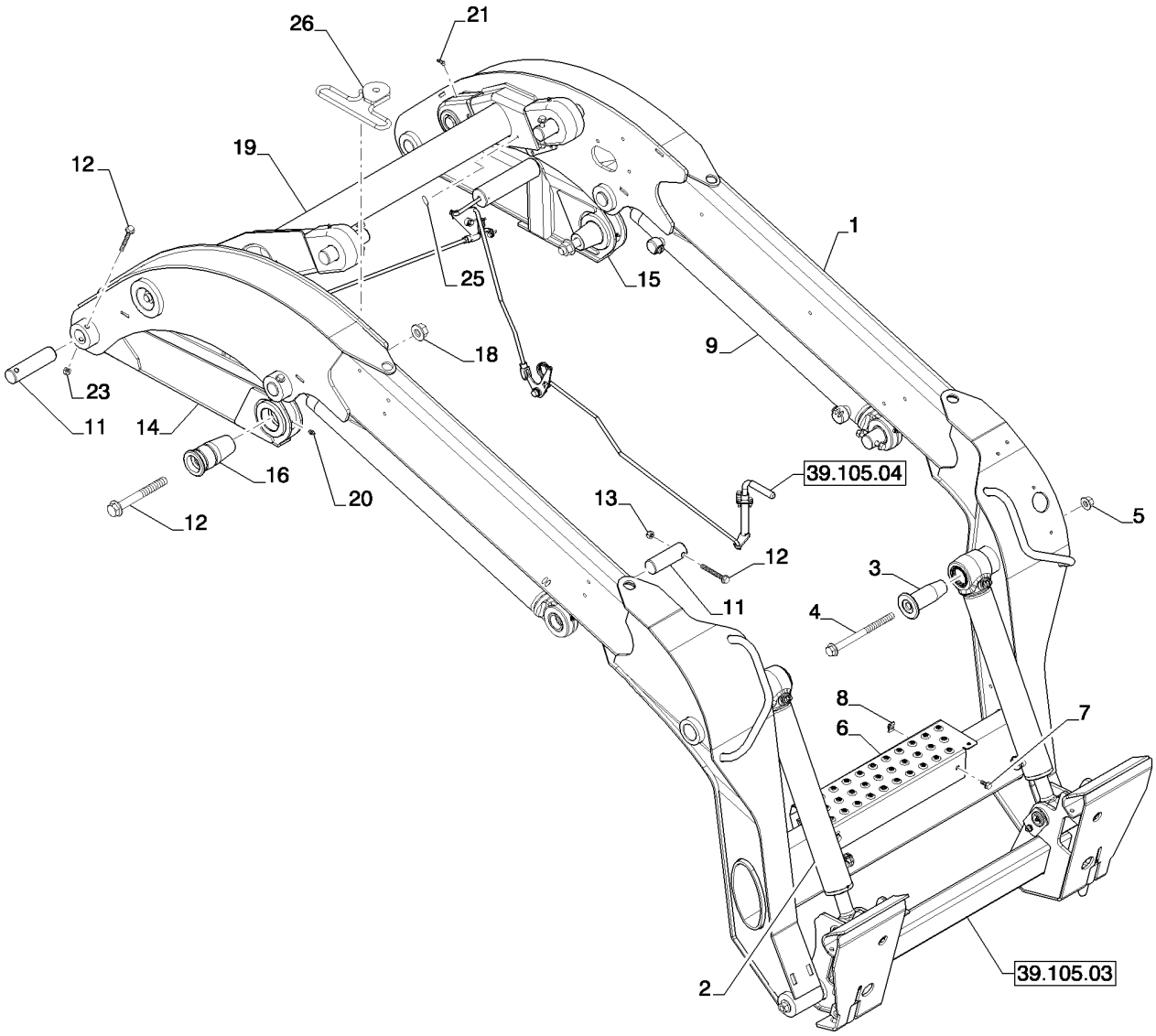

BOOM (L223-L230,C232,C238)
BOOM (L223-L230,C232,C238)
BOOM (L223-L230,C232,C238)
BOOM (L223-L230,C232,C238)

R	N	P.N.	MOD	Q	Denominação Description	Description Bezeichnung	Denominacion Beskrivelse	Descrizione Beschrijving	L.C.
1		84291790		1	BRAÇO LANÇA, Gray	BOOM	BRAZO	BRACCIO	136B
					FLECHE	AUSLEGER	BOM	GIEK	
2		84290565		2	CILINDRO LEVANTAMENTO, Bucket				
						LIFT CYLINDER	CILINDRO DE ELEVADOI	CILINDRO DI SOLLEVAM	133C
					VERIN DE RELEVAGE	HUBZYLINDER	LØFTECYLINDER	HEFCILINDER	
3		84319704		2	PINO, Boom to Tip Cylinder	PIN	PASADOR	PERNO	080P
					BROCHE	PIN	STIFT	PEN	
4		84238749		2	PARAFUSO	BOLT	PERNO	BULLONE	140B
					VIS	SCHRAUBE	BOLT	BOUT	
5		87016581		2	CONTRA PORCA, M16 x 2, Flg, Cl 10				
						LOCK NUT	TUERCA DE BLOQUEO	DADO DI BLOCCAGGIO	P263
					CONTRE-ECROU	SICHERUNGSMUTTER	LÅSEMØTRIK	BORGMOER	
6		84377148		1	ESTRIBO, Loader Step, Gray				
						STEP	PELDAÑO	GRADINO	116M
					MARCHE-PIED	SCHRITT	TRINPLADE	TREDE	
7		86625074		4	PORCA, M8, U	NUT	TUERCA	DADO	010D
					ECROU	MUTTER	MØTRIK	MOER	
8		9804258		4	PARAFUSO, Hex Flg, M8 x 20, 8.8				
						BOLT	PERNO	BULLONE	140B
					VIS	SCHRAUBE	BOLT	BOUT	
9		84340476		1	CILINDRO, Hyd Lift Cylinder, LH				
						CYLINDER	CILINDRO	CILINDRO	164C
					VERIN	ZYLINDER	CYLINDER	CILINDER	
10		84340475		1	CILINDRO, Hyd Lift Cylinder, RH				
						CYLINDER	CILINDRO	CILINDRO	164C
					VERIN	ZYLINDER	CYLINDER	CILINDER	
11		84280377		2	PINO, Chassis to Lift Cylinder				
						PIN	PASADOR	PERNO	080P
					BROCHE	PIN	STIFT	PEN	
12		86507311		8	PARAFUSO, Hex Flg, M10 x 80, 8.8				
						BOLT	PERNO	BULLONE	140B
					VIS	SCHRAUBE	BOLT	BOUT	
13		86512554		8	CONTRA PORCA, M10 x 1.5, Cl 10				
						LOCK NUT	TUERCA DE BLOQUEO	DADO DI BLOCCAGGIO	P263
					CONTRE-ECROU	SICHERUNGSMUTTER	LÅSEMØTRIK	BORGMOER	
14		84378091		1	ELO DE LIGAÇÃO, Lower Link RH				
						CONNECTING LINK	ESLABÓN DE CONEXIÓN	TIRANTE DI COLLEGAMI	540M
					MAILLON DE RACCORD	VERBINDUNGSGLIED	SAMLELED	VERBINDINGSSCHAKEL	
15		84270981		1	ESCORA, Lower Link LH	LIFT LINK	ESLABÓN DE ELEVACIÓ	TIRANTE DI SOLLEVAME	239P
					ARTICULATION RELEVA	HUBSTREBE	LØFTELED	HEFARM	
16		84239550		4	PINO, Boom to Links	PIN	PASADOR	PERNO	080P
					BROCHE	PIN	STIFT	PEN	
17		84246761		4	PARAFUSO, M20 X 170	BOLT	PERNO	BULLONE	140B
					VIS	SCHRAUBE	BOLT	BOUT	
18		86512499		4	PORCA, M20 x 2.5, Flg, Cl 10				
						NUT	TUERCA	DADO	010D
					ECROU	MUTTER	MØTRIK	MOER	
19		84378085		1	ELO DE LIGAÇÃO	CONNECTING LINK	ESLABÓN DE CONEXIÓN	TIRANTE DI COLLEGAMI	540M
					MAILLON DE RACCORD	VERBINDUNGSGLIED	SAMLELED	VERBINDINGSSCHAKEL	

BOOM (L223-L230,C232,C238)
BOOM (L223-L230,C232,C238)
BOOM (L223-L230,C232,C238)
BOOM (L223-L230,C232,C238)

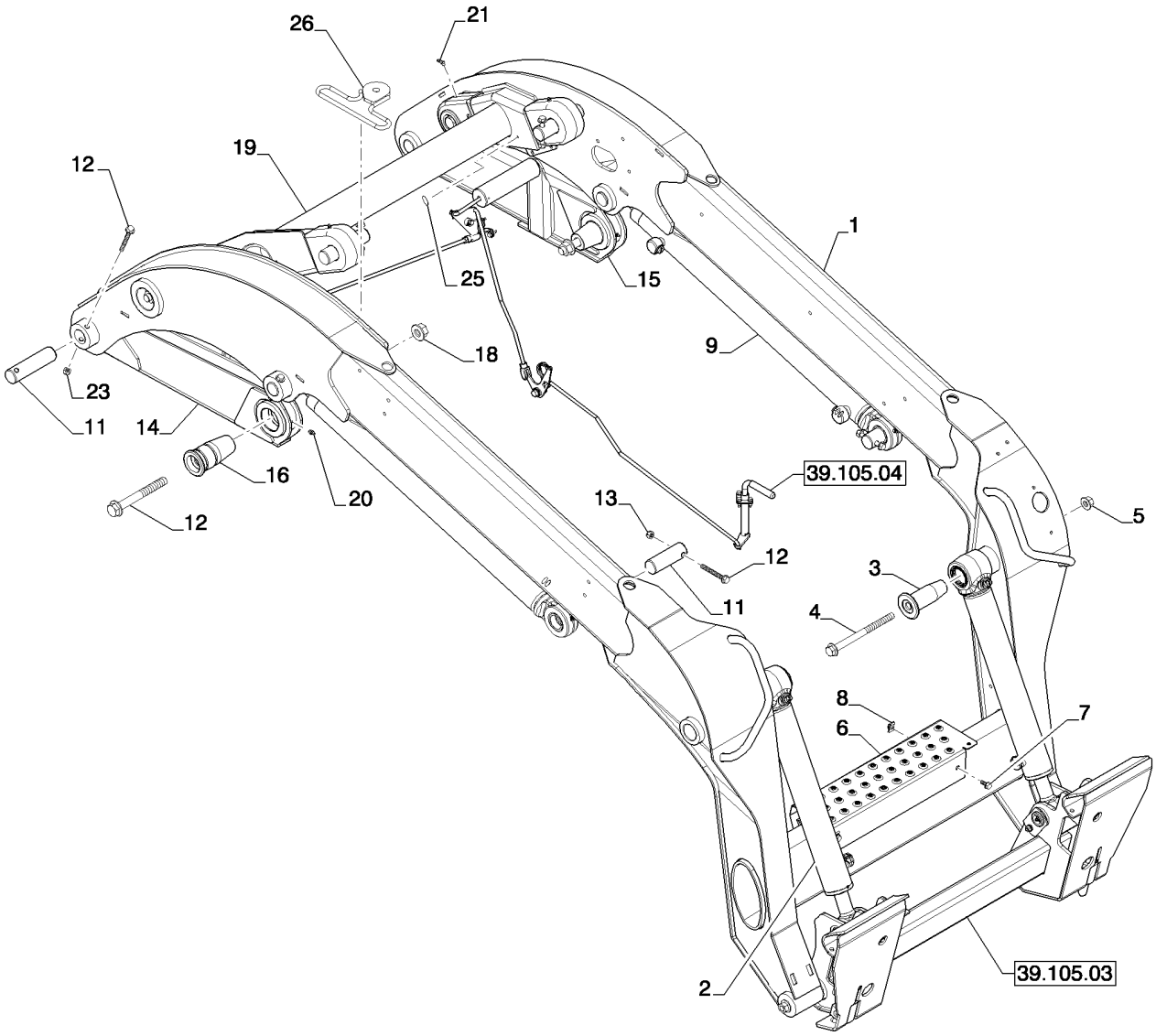

BOOM (L223-L230,C232,C238)
BOOM (L223-L230,C232,C238)
BOOM (L223-L230,C232,C238)
BOOM (L223-L230,C232,C238)

R	N	P.N.	MOD	Q	Denominação Description Bezeichnung	Description Denominacion Beskrivelse	Denominacion Descrizione Beschrijving	L.C.
20		**87414**		4	GRAXEIRA, 1/4"-28 x .56" lg, Self-Tap			
					LUBE NIPPLE	BOQUILLA DE LUBRICA(	INGRASSATORE	060I
					GRAISSEUR	SCHMIERNIPPEL	SMØRENIPPEL	SMEERNIPPEL
21		**87569**		2	GRAXEIRA, 45º, 1/4" NPT x .80" lg, Drive			
					LUBE NIPPLE	BOQUILLA DE LUBRICA(	INGRASSATORE	060I
					GRAISSEUR	SCHMIERNIPPEL	SMØRENIPPEL	SMEERNIPPEL
22		**87415**		2	GRAXEIRA, 90º, 1/4" NPT x .75" lg, Drive			
					LUBE NIPPLE	BOQUILLA DE LUBRICA(	INGRASSATORE	060I
					GRAISSEUR	SCHMIERNIPPEL	SMØRENIPPEL	SMEERNIPPEL
23		**84201510**		4	PINO, Boom to Lift Cylinder	PIN	PASADOR	PERNO	080P
					BROCHE	PIN	STIFT	PEN	
24		**84423056**		2	PINO, Boom to Lift Cylinder (Not Shown) Located near center of boom			
					PIN	PASADOR	PERNO	080P
					BROCHE	PIN	STIFT	PEN
25		**414635A1**		3	TAMPA, Cover, Lexan 25.4mm			
					COVER	TAPA	COPERCHIO	2250
					COUVERCLE	DECKEL	COVER	COVER
26		**84411613**		2	SUPORTE, Guide, Hose Loop			
					BRACKET	SOPORTE	STAFFA	225S
					SUPPORT	HALTERUNG	BESLAG	STEUN

39.105.03		p1	07/11

COUPLER, BASIC GRAY (L218,L220,L223,L225,L230,C232,C238)
COUPLER, BASIC GRAY (L218,L220,L223,L225,L230,C232,C238)
COUPLER, BASIC GRAY (L218,L220,L223,L225,L230,C232,C238)
COUPLER, BASIC GRAY (L218,L220,L223,L225,L230,C232,C238)

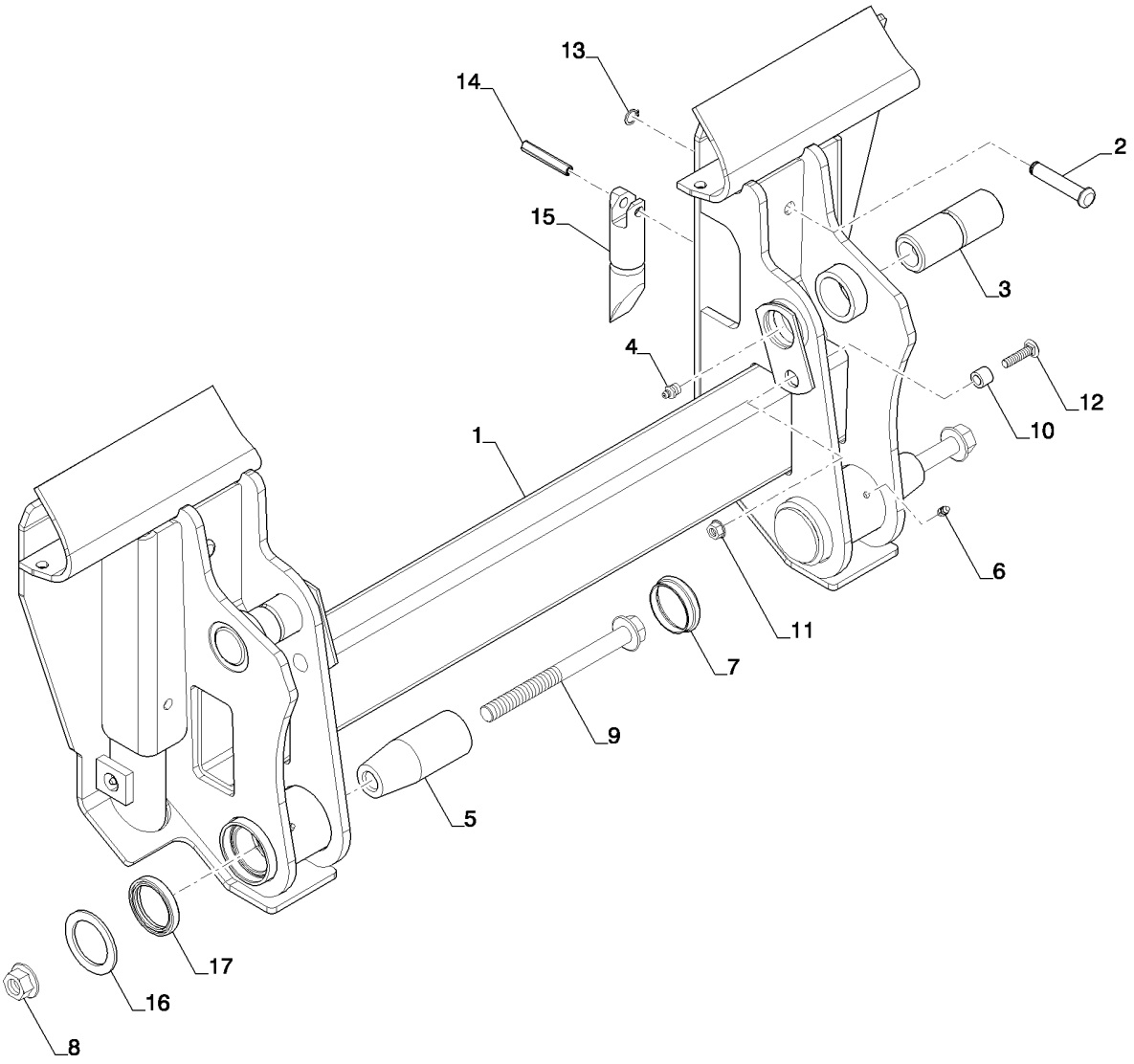

COUPLER, BASIC GRAY (L218,L220,L223,L225,L230,C232,C238)
COUPLER, BASIC GRAY (L218,L220,L223,L225,L230,C232,C238)
COUPLER, BASIC GRAY (L218,L220,L223,L225,L230,C232,C238)
COUPLER, BASIC GRAY (L218,L220,L223,L225,L230,C232,C238)

R	N	P.N.	MOD	Q	Denominação Description	Description Bezeichnung	Denominacion Beskrivelse	Descrizione Beschrijving	L.C.
1		84291891		1	FIXADOR, Plate CE Gray, Order W/Kit 84390422				
						MOUNT	SOPORTE	SUPPORTO	C022
					MONTAGE	GESTELL	BESLAG	BEVESTIGING	
2		87387540		2	RETENTOR	RETAINER	RETENEDOR	FERMO	109R
					DISPOSITIF DE RETENU	HALTERUNG	HOLDER	HOUDER	
3		9614349		2	PINO	PIN	PASADOR	PERNO	080P
					BROCHE	PIN	STIFT	PEN	
4		80710		2	GRAXEIRA, 1/8"-27 x .66 lg	LUBE NIPPLE	BOQUILLA DE LUBRICAC	INGRASSATORE	060I
					GRAISSEUR	SCHMIERNIPPEL	SMØRENIPPEL	SMEERNIPPEL	
5		84201514		2	PINO, Boom to Coupler	PIN	PASADOR	PERNO	080P
					BROCHE	PIN	STIFT	PEN	
6		87414		4	GRAXEIRA, 1/4"-28 x .56" lg, Self-Tap				
						LUBE NIPPLE	BOQUILLA DE LUBRICAC	INGRASSATORE	060I
					GRAISSEUR	SCHMIERNIPPEL	SMØRENIPPEL	SMEERNIPPEL	
7		86561087		2	GUARDA PÓ	DUST CAP	CAPUCHÓN ANTIPOLVO	CAPPUCCIO PARAPOLV	066C
					CACHE-POUSSIERE	STAUBKAPPE	STØVHÆTTE	STOFKAP	
8		86512498		2	PORCA, M16 x 2, Flg, Cl 10	NUT	TUERCA	DADO	010D
					ECROU	MUTTER	MØTRIK	MOER	
9		87015924		2	PARAFUSO, Hex Flg, M16 x 180, 8.8				
						BOLT	PERNO	BULLONE	140B
					VIS	SCHRAUBE	BOLT	BOUT	
10		86589143		2	ESPAÇADOR	SPACER	SEPARADOR	DISTANZIALE	075D
					ENTRETOISE	DISTANZSTÜCK	AFSTANDSSTYKKE	AFSTANDSSTUK	
11		9804277		2	PORCA, M8 x 1.25, Flg, Cl 8				
						NUT	TUERCA	DADO	010D
					ECROU	MUTTER	MØTRIK	MOER	
12		86512443		2	PARAFUSO, Short NK, M8 x 35, Cl8.8, Full Thd				
						CARRIAGE BOLT	PERNO ALOMADO	BULLONE A TESTA TONI	P123
					VIS A TETE BOMBEE	SCHLOSSSCHRAUBE	BRÆDDEBOLT	SLOTBOUT	
13		87612753		2	RETENTOR	RETAINER	RETENEDOR	FERMO	109R
					DISPOSITIF DE RETENU	HALTERUNG	HOLDER	HOUDER	
14		87610718		2	PINO, Coiled Spring	PIN	PASADOR	PERNO	080P
					BROCHE	PIN	STIFT	PEN	
15		87758365		2	PINO, Latch	PIN	PASADOR	PERNO	080P
					BROCHE	PIN	STIFT	PEN	
16		87613204		2	ARRUELA PLANA	WASHER	ARANDELA	RONDELLA	131R
					RONDELLE	UNTERLEGSCHEIBE	FLADSKIVE	SLUITRING	
17		D95143		2	VEDAÇÃO, Wiper Rod	SEAL	ANILLO DE CIERRE	GUARNIZIONE; TENUTA	132A
					JOINT	DICHTUNG	PAKNING	AFDICHTING	

39.105.04		p1	08/11

BOOM LOCK (L223-L230,C232,C238)
BOOM LOCK (L223-L230,C232,C238)
BOOM LOCK (L223-L230,C232,C238)
BOOM LOCK (L223-L230,C232,C238)

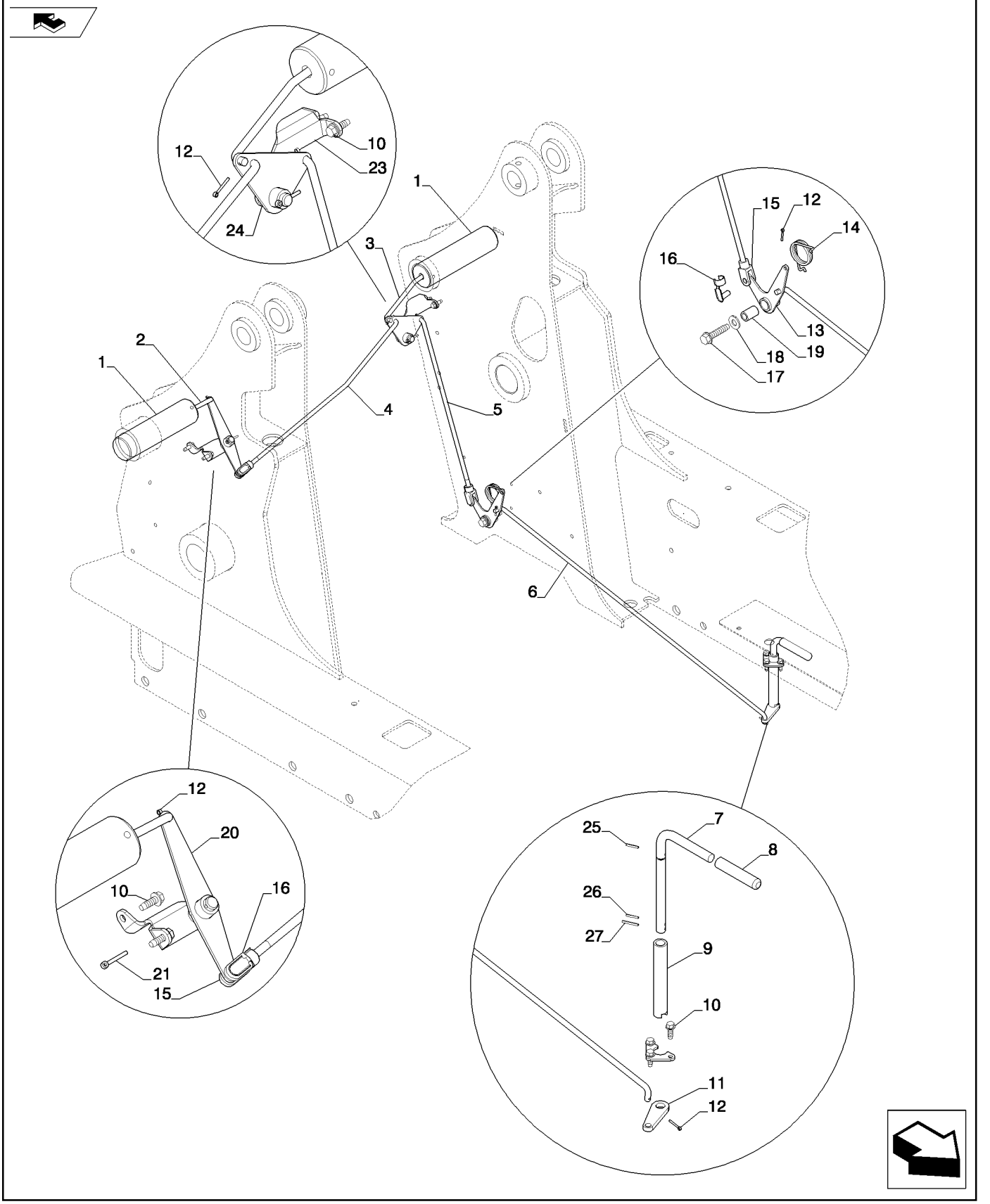

BOOM LOCK (L223-L230,C232,C238)
BOOM LOCK (L223-L230,C232,C238)
BOOM LOCK (L223-L230,C232,C238)
BOOM LOCK (L223-L230,C232,C238)

R	N	P.N.	MOD	Q	Denominação Description	Description Bezeichnung	Denominacion Beskrivelse	Descrizione Beschrijving	L.C.
1		84325375		2	PINO, Boom Lock	PIN	PASADOR	PERNO	080P
					BROCHE	PIN	STIFT	PEN	
2		84325464		1	BRAÇO LANÇA, Boom Lock Pin Link				
						BOOM	BRAZO	BRACCIO	136B
					FLECHE	AUSLEGER	BOM	GIEK	
3		84325514		1	BRAÇO LANÇA, Boom Lock Pin Link				
						BOOM	BRAZO	BRACCIO	136B
					FLECHE	AUSLEGER	BOM	GIEK	
4		84325519		1	BRAÇO LANÇA, Upper Boom Lock Link				
						BOOM	BRAZO	BRACCIO	136B
					FLECHE	AUSLEGER	BOM	GIEK	
5		84325653		1	BRAÇO LANÇA, Vertical Boom Lock Link				
						BOOM	BRAZO	BRACCIO	136B
					FLECHE	AUSLEGER	BOM	GIEK	
6		84325396		1	BRAÇO LANÇA, Lower Boom Lock Link				
						BOOM	BRAZO	BRACCIO	136B
					FLECHE	AUSLEGER	BOM	GIEK	
7		84325533		1	MANILHA COM BLOCOS	LOCKING HANDLE	MANIVELA DE CIERRE	MANIGLIA DI BLOCCAG(	018M
					POIGNEE DE VERROUIL	VERRIEGELUNGSHEBEL	HÅNDTAG MED LÅS	VERGRENDELHENDEL	
8		84331884		1	MAÇANETA	GRIP	MANGO	IMPUGNATURA	4000
					POIGNEE	GRIFF	GREB	GRIPTANG	
9		84325537		1	TUBO RÍGIDO, Handle Pivot Tube				
						RIGID TUBE	TUBO RÍGIDO	TUBO RIGIDO	193T
					TUYAU RIGIDE	ROHR	STIFT RØR	VASTE LEIDING	
10		86625224		7	PARAFUSO	SCREW	TORNILLO	VITE	040V
					VIS	SCHRAUBE	SKRUE	SCHROEF	
11		84325531		1	ALAVANCA, Handle	LEVER	PALANCA	LEVA	045L
					LEVIER	HEBEL	ARM	HEFBOOM	
12		280250		6	CONTRA PINO, 3/32" x 3/4"				
						COTTER PIN	PASADOR	COPPIGLIA	270C
					GOUPILLE FENDUE	SPLINT	SPLITBOLT	SPLITPEN	
13		84326066		1	ALAVANCA EM ÂNGULO, Lower Boom Lock				
						BELLCRANK	PALANCA ACODADA	LEVA A SQUADRA	048L
					LEVIER DE RENVOI	WINKELHEBEL	VINKEVÆGTSTANG	TUIMELAAR	
14		84331883		1	MOLA DE TORÇÃO	TORSION SPRING	RESORTE DE TORSIÓN	MOLLA DI TORSIONE	Z619
					RESSORT DE TORSION	DREHFEDER	VRIDNINGSFJEDER	TORSIEVEER	
15		87602942		2	PINO DE GARFO	CLEVIS PIN	EJE CON CABEZA	PERNO A TESTA PIANA	P694
					AXE DE CHAPE	GABELBOLZEN	GAFFELBOLT	GAFFELPEN	
16		87602941		2	GARFO AJUSTÁVEL, Short	ADJUSTABLE CLEVIS	MOSQUETÓN AJUSTABL	FORCELLA ATTACCO RI	1680
					CHAPE DE REGLAGE	EINSTELLBARER SCHÄK	JUSTERBAR GAFFEL	VERSTELBARE GAFFEL	
17		87036413		1	ESPAÇADOR	SPACER	SEPARADOR	DISTANZIALE	075D
					ENTRETOISE	DISTANZSTÜCK	AFSTANDSSTYKKE	AFSTANDSSTUK	
18		87030530		1	PARAFUSO	SCREW	TORNILLO	VITE	040V
					VIS	SCHRAUBE	SKRUE	SCHROEF	
19		84331883		1	MOLA DE TORÇÃO	TORSION SPRING	RESORTE DE TORSIÓN	MOLLA DI TORSIONE	Z619
					RESSORT DE TORSION	DREHFEDER	VRIDNINGSFJEDER	TORSIEVEER	
20		84326044		1	ALAVANCA EM ÂNGULO, Upper Boom Lock				
						BELLCRANK	PALANCA ACODADA	LEVA A SQUADRA	048L
					LEVIER DE RENVOI	WINKELHEBEL	VINKEVÆGTSTANG	TUIMELAAR	

39.105.04		p2	08/11

BOOM LOCK (L223-L230,C232,C238)
BOOM LOCK (L223-L230,C232,C238)
BOOM LOCK (L223-L230,C232,C238)
BOOM LOCK (L223-L230,C232,C238)

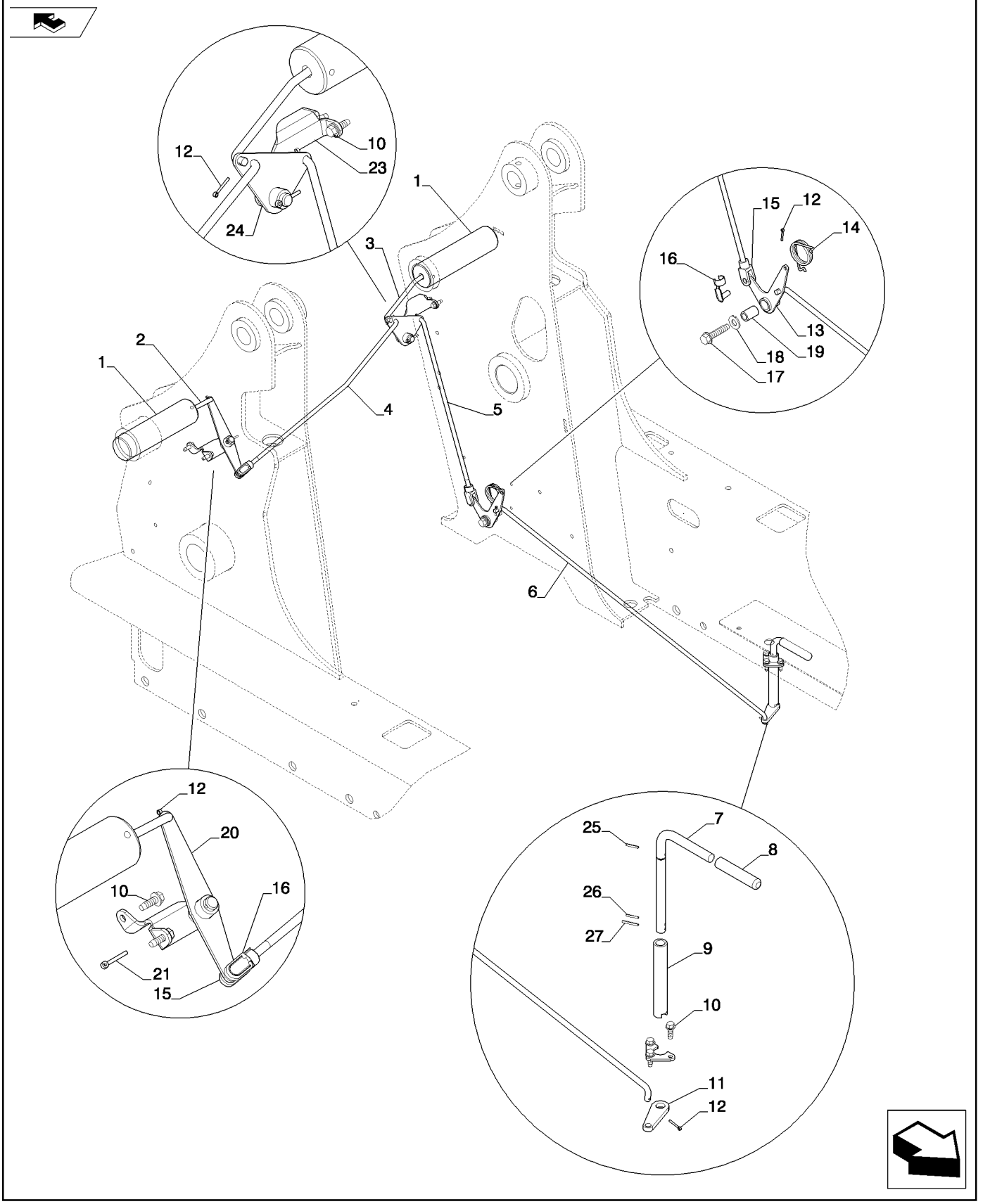

BOOM LOCK (L223-L230,C232,C238)
BOOM LOCK (L223-L230,C232,C238)
BOOM LOCK (L223-L230,C232,C238)
BOOM LOCK (L223-L230,C232,C238)

R	N	P.N.	MOD	Q	Denominação Description	Description Bezeichnung	Denominacion Beskrivelse	Descrizione Beschrijving	L.C.
21		**80755**		2	CONTRA PINO, 1/8" x 1" L	COTTER PIN	PASADOR	COPPIGLIA	270C
					GOUPILLE FENDUE	SPLINT	SPLITBOLT	SPLITPEN	
22		**84326340**		1	PIVÔ, RH	PIVOT	PIVOTE	PERNO	093A
					PIVOT	DREHLAGER	TAP	DRAAIPUNT	
23		**84326360**		1	PIVÔ, LH	PIVOT	PIVOTE	PERNO	093A
					PIVOT	DREHLAGER	TAP	DRAAIPUNT	
24		**84325961**		1	ALAVANCA EM ÂNGULO	BELLCRANK	PALANCA ACODADA	LEVA A SQUADRA	048L
					LEVIER DE RENVOI	WINKELHEBEL	VINKEVÆGTSTANG	TUIMELAAR	
25		**87663**		2	PINO DE FIXAÇÃO, 1/8" x 3/4", Slotted				
						LOCK PIN	PASADOR DE BLOQUEO	PERNO DI BLOCCAGGIO	081P
					GOUPILLE DE BLOCAGE	VERRIEGELUNGSSTIFT	LÅSETAP	BORGPEN	
26		**87455**		3	PINO ENTALHADO, 1/8" x 1"				
						SLOTTED PIN	PASADOR RANURADO	PERNO ASOLATO	A079
					GOUPILLE FENDUE	KERBNAGEL	STIFT MED KÆRV	SLEUFPEN	
27		**86629543**		1	O-RING, 0.364" ID x 0.504" OD x 0.07"				
						O-RING	JUNTA TÓRICA	ANELLO TOROIDALE	055A
					JOINT TORIQUE	O-RING	O-RING	O-RING	
28		**87644665**		2	ADESIVO, Cover, Front Holes (Not Shown)				
						DECAL	CALCOMANÍA	DECALCOMANIA	012D
					AUTOCOLLANT	AUFKLEBER	TRANSFER	STICKER	

SECTION INDEX
44 - Eixos e rodas

44.106.01	POWER TRAIN (L223,L225,L230)
44.106.02	AXLE ASSY, HD (L223-L230)
44.511.01	RODAS
44.511.01	RODAS

POWER TRAIN (L223,L225,L230)
POWER TRAIN (L223,L225,L230)
POWER TRAIN (L223,L225,L230)
POWER TRAIN (L223,L225,L230)

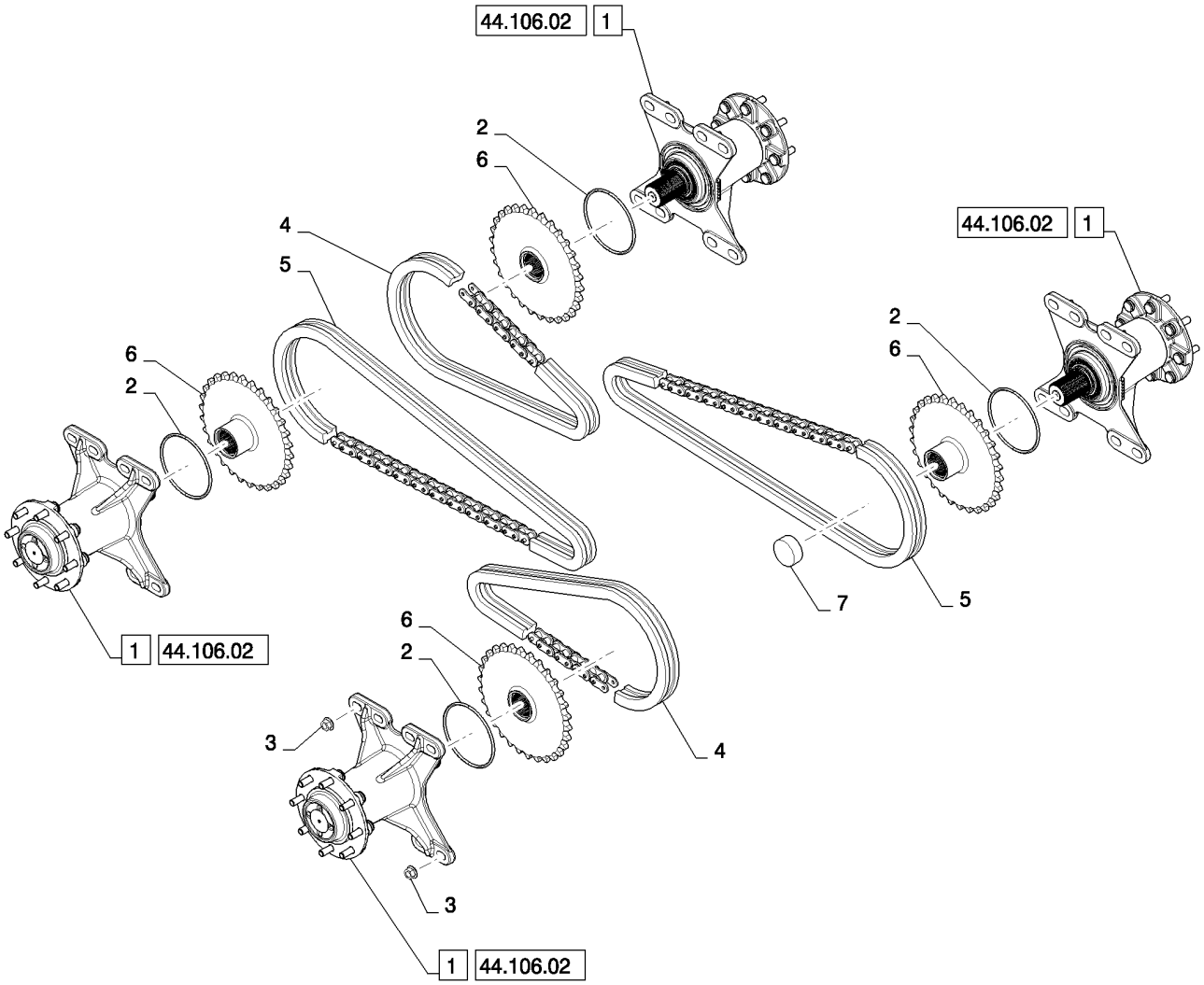

POWER TRAIN (L223,L225,L230)
POWER TRAIN (L223,L225,L230)
POWER TRAIN (L223,L225,L230)
POWER TRAIN (L223,L225,L230)

R	N	P.N.	MOD	Q	Denominação Description Bezeichnung	Description Bezeichnung Beskrivelse	Denominacion Beskrivelse Descrizione	Descrizione Beschrijving	L.C.
1		84350582		4	CONJUNTO EIXO 4WD, Md., CE Gray 4WD AXLE ASSY ESSIEU 4RM	4WD AXLE ASSY 4WD AXLE ASSY	CONJUNTO DE EJE 4WD 4WD AKSELSAMLING	COMPLESSIVO ASSALE COMPLETE 4WD-AS	P569
2		70923606		4	O-RING, -439, 70 Duro, 6.475" ID x .275" Thk O-RING JOINT TORIQUE	O-RING O-RING	JUNTA TÓRICA O-RING	ANELLO TOROIDALE O-RING	055A
3		86512498		32	PORCA, M16 x 2, Flg, Cl 10 ECROU	NUT MUTTER	TUERCA MØTRIK	DADO MOER	010D
4		84200822		4	CORRENTE, 100/50P CHAINE	CHAIN KETTE	CADENA KÆDE	CATENA KETTING	095C
5		84200823		4	CORRENTE, 100/74P CHAINE	CHAIN KETTE	CADENA KÆDE	CATENA KETTING	095C
6		84259684		4	PINHÃO, Driven 30 tooth 100 PIGNON MENE	DRIVEN SPROCKET ABTRIEBSZAHNRAD	CONTROL CON PIÑÓN KÆDEHJUL	PIGNONE CONDOTTO AANGEDREVEN KETTIN	122P
7		84298060		4	PARA-CHOQUE, Nylon PARE-CHOC	BUMPER STOSSFÄNGER	PARACHOQUES STØDVÆRN	PARAURTI BUMPER	036P

AXLE ASSY, HD (L223-L230)
AXLE ASSY, HD (L223-L230)
AXLE ASSY, HD (L223-L230)
AXLE ASSY, HD (L223-L230)

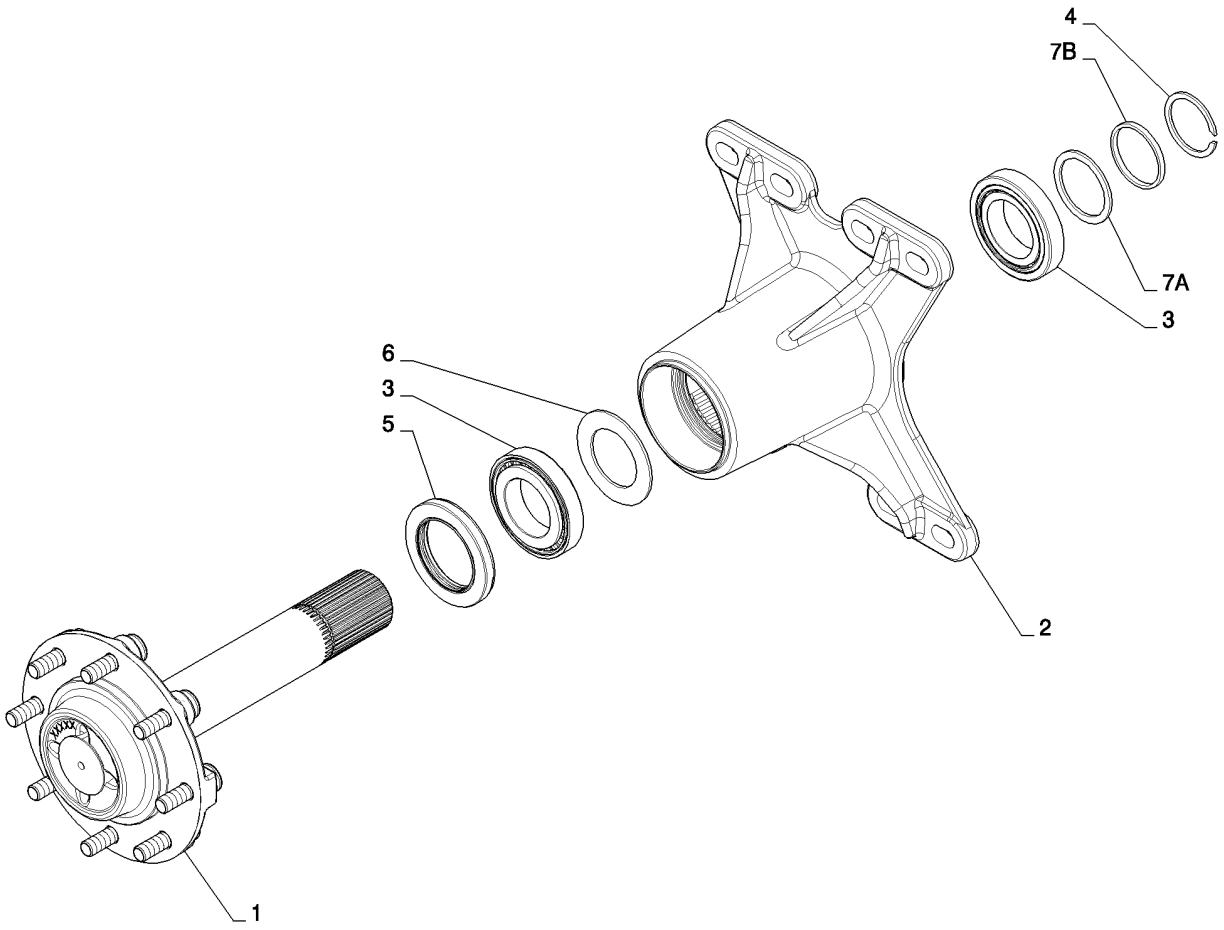

AXLE ASSY, HD (L223-L230)
AXLE ASSY, HD (L223-L230)
AXLE ASSY, HD (L223-L230)
AXLE ASSY, HD (L223-L230)

R	N	P.N.	MOD	Q	Denominação Description	Description Bezeichnung	Denominacion Beskrivelse	Descrizione Beschrijving	L.C.
1		84354076		1	EIXO, HD, Incl. Ref. 8	AXLE	EJE	ASSALE	087A
					ESSIEU	ACHSE	AKSEL	AS	
2		84354066		1	ALOJAMENTO DO EIXO, HD, CE Gray				
						AXLE HOUSING	ALOJAMIENTO DE EJE	ALLOGGIAMENTO ASSA	Z161
					CARTER D'ESSIEU	ACHSGEHÄUSE	AKSELHUS	ASHUIS	
3		496536C1		2	ROLAMENTO, RLR TPR, TM#392-394A				
						BEARING	COJINETE	CUSCINETTO	0600
					ROULEMENT	LAGER	LEJE	LAGER	
4		84239398		1	ANEL DE PRESSÃO, Ext. Heavy, 61.9MM Shaft				
						SNAP RING	ANILLO DE RESORTE	ANELLO ELASTICO	054A
					ANNEAU D'ARRET	SPRENGRING	LÅSERING	VEERRING	
5		341841A2		1	ANEL DE VEDAÇÃO, Axle	SEAL	ANILLO DE CIERRE	ANELLO DI TENUTA	7460
					JOINT	DICHTUNG	PAKNINGSRING	DICHTINGSRING	
6		84356906		1	DISCO, 63.00 X 98.90 X 3.20				
						DISC	DISCO	DISCO	060D
					DISQUE	SCHEIBE	NAV	SCHIJF	
7A		84393418		1	ESPAÇADOR, 62.25 X 69 X 5.3/Use one 7A				
						SPACER	SEPARADOR	DISTANZIALE	075D
					ENTRETOISE	DISTANZSTÜCK	AFSTANDSSTYKKE	AFSTANDSSTUK	
7A		84393419		1	ESPAÇADOR, 62.25 X 69 X 5.8/Use one 7A				
						SPACER	SEPARADOR	DISTANZIALE	075D
					ENTRETOISE	DISTANZSTÜCK	AFSTANDSSTYKKE	AFSTANDSSTUK	
7A		84393420		1	ESPAÇADOR, 62.25 X 69 X 6.3/Use one 7A				
						SPACER	SEPARADOR	DISTANZIALE	075D
					ENTRETOISE	DISTANZSTÜCK	AFSTANDSSTYKKE	AFSTANDSSTUK	
7A		84393421		1	ESPAÇADOR, 62.25 X 69 X 6.8/Use one 7A				
						SPACER	SEPARADOR	DISTANZIALE	075D
					ENTRETOISE	DISTANZSTÜCK	AFSTANDSSTYKKE	AFSTANDSSTUK	
7B		84404996		1	ESPAÇADOR, Shim, 61.94 Shft, 1.6 T/Use one 7B				
						SPACER	SEPARADOR	DISTANZIALE	075D
					ENTRETOISE	DISTANZSTÜCK	AFSTANDSSTYKKE	AFSTANDSSTUK	
7B		84405003		1	ESPAÇADOR, Shim, 61.94 Shft, 1.7 T/Use one 7B				
						SPACER	SEPARADOR	DISTANZIALE	075D
					ENTRETOISE	DISTANZSTÜCK	AFSTANDSSTYKKE	AFSTANDSSTUK	
7B		84393466		1	ESPAÇADOR, Shim, 61.94 Shft, 1.8 T/Use one 7B				
						SPACER	SEPARADOR	DISTANZIALE	075D
					ENTRETOISE	DISTANZSTÜCK	AFSTANDSSTYKKE	AFSTANDSSTUK	
7B		84393470		1	ESPAÇADOR, Shim, 61.94 Shft, 1.9 T/Use one 7B				
						SPACER	SEPARADOR	DISTANZIALE	075D
					ENTRETOISE	DISTANZSTÜCK	AFSTANDSSTYKKE	AFSTANDSSTUK	
7B		84393472		1	ESPAÇADOR, Shim, 61.94 Shft, 2.0 T/Use one 7B				
						SPACER	SEPARADOR	DISTANZIALE	075D
					ENTRETOISE	DISTANZSTÜCK	AFSTANDSSTYKKE	AFSTANDSSTUK	
8		84249319		8	PRISIONEIRO, Wheel, M16 X 2 X 60				
						STUD	PRISIONERO	PRIGIONIERO	210P
					GOUJON	GEWINDEBOLZEN	STØTTEBOLT	TAPEIND	
9		408127A1		32	PORCA, M16 X 2, 90 Degree Taper (Not Shown)				
						NUT	TUERCA	DADO	5780
					ECROU	MUTTER	MØTRIK	MOER	

AXLE ASSY, HD (L223-L230)
AXLE ASSY, HD (L223-L230)
AXLE ASSY, HD (L223-L230)
AXLE ASSY, HD (L223-L230)

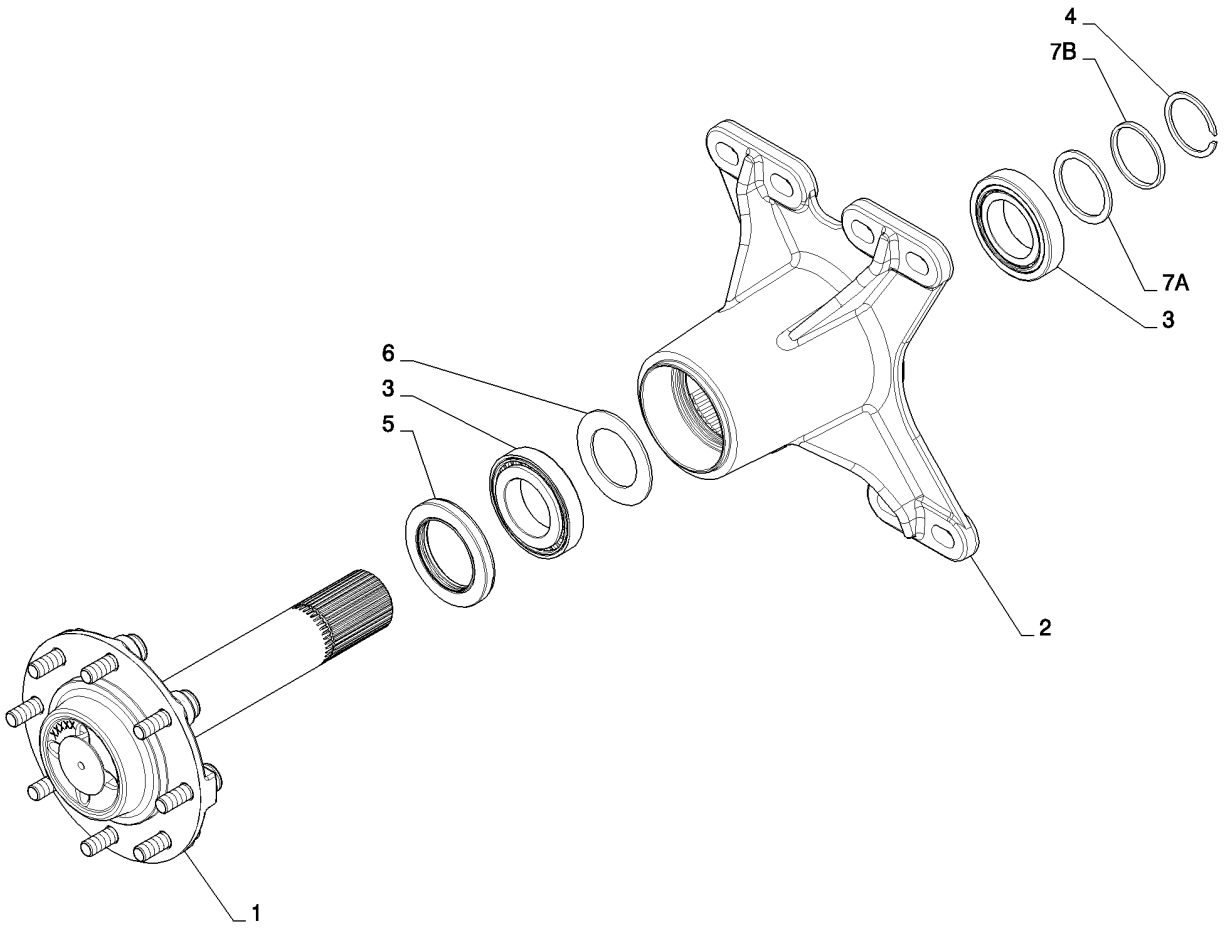

AXLE ASSY, HD (L223-L230)
AXLE ASSY, HD (L223-L230)
AXLE ASSY, HD (L223-L230)
AXLE ASSY, HD (L223-L230)

R	N	P.N.	MOD	Q	Denominação Description	Description Bezeichnung	Denominacion Beskrivelse	Descrizione Beschrijving	L.C.
9		86512498		32	PORCA, M16 x 2, Flg, Cl 10, (Not Shown)				
						NUT	TUERCA	DADO	010D
					ECROU	MUTTER	MØTRIK	MOER	

RODAS
WHEELS (L218-L230)
RUEDAS
RUOTE

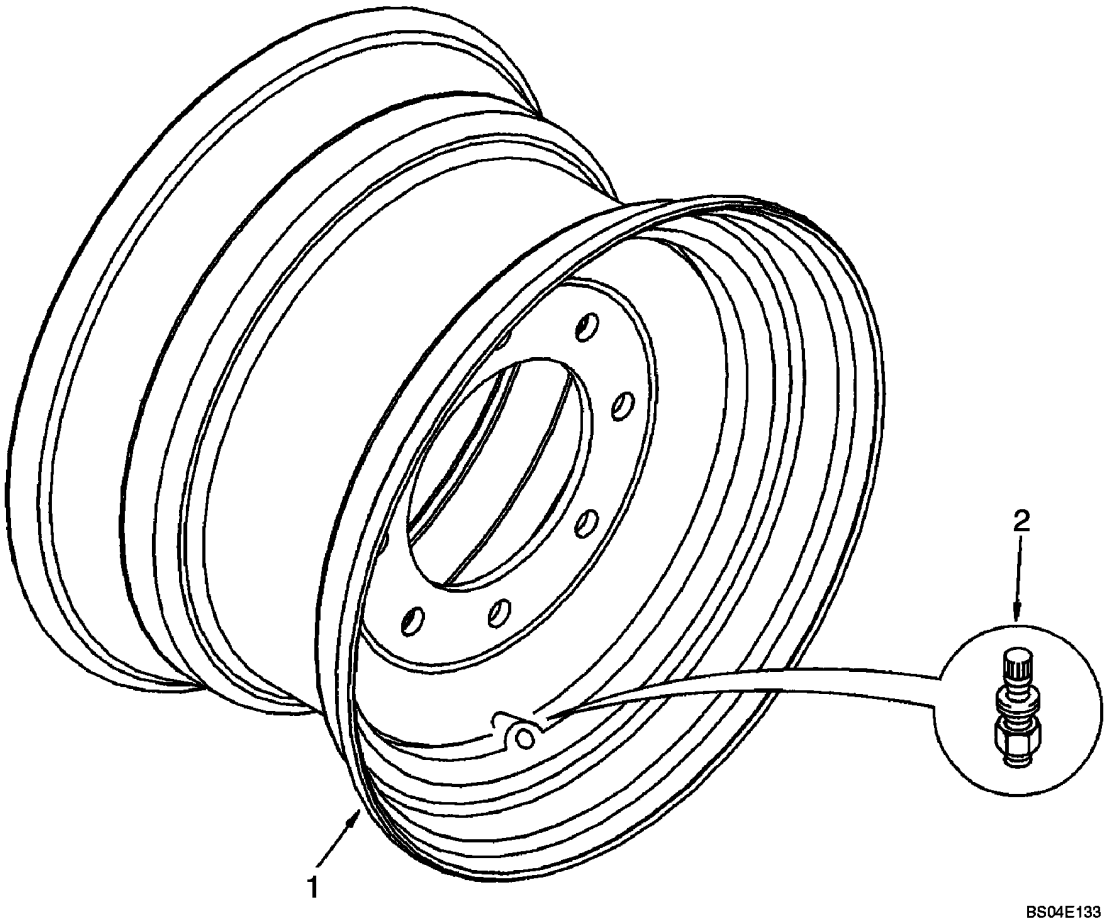

ROUES
RÄDER
HJUL
WIELEN

R	N	P.N.	MOD	Q	Denominação Description Bezeichnung Denominacion Beskrivelse Descrizione Beschrijving	L.C.
1		84239415		4	ARO, 16.5x9.75 Std Duty Stamped Center 70 OTW Yellow, LH & RH; Incl. Ref. 2 & 3 RIM / LLANTA / CERCHIONE JANTE / FELGE / FÆLG / VELG	135C
1		84369430		4	ARO, 16.5x8.25 Std Duty Stamped Center 70 OTW Yellow, LH & RH; Incl. Ref. 2 & 3 RIM / LLANTA / CERCHIONE JANTE / FELGE / FÆLG / VELG	135C
2		512083		4	HASTE DA VÁLVULA / VALVE STEM / VÁSTAGO DE VÁLVULA / STELO DELLA VALVOLA TIGE DE SOUPAPE / VENTILSCHAFT / STILKVENTIL / KLEPSTEEL	P397
3		408127A1		32	PORCA, MX 16X2-6G, 90 Deg Taper; (Not Shown) NUT / TUERCA / DADO ECROU / MUTTER / MØTRIK / MOER	5780

RODAS
WHEELS (L223-L230)
RUEDAS
RUOTE

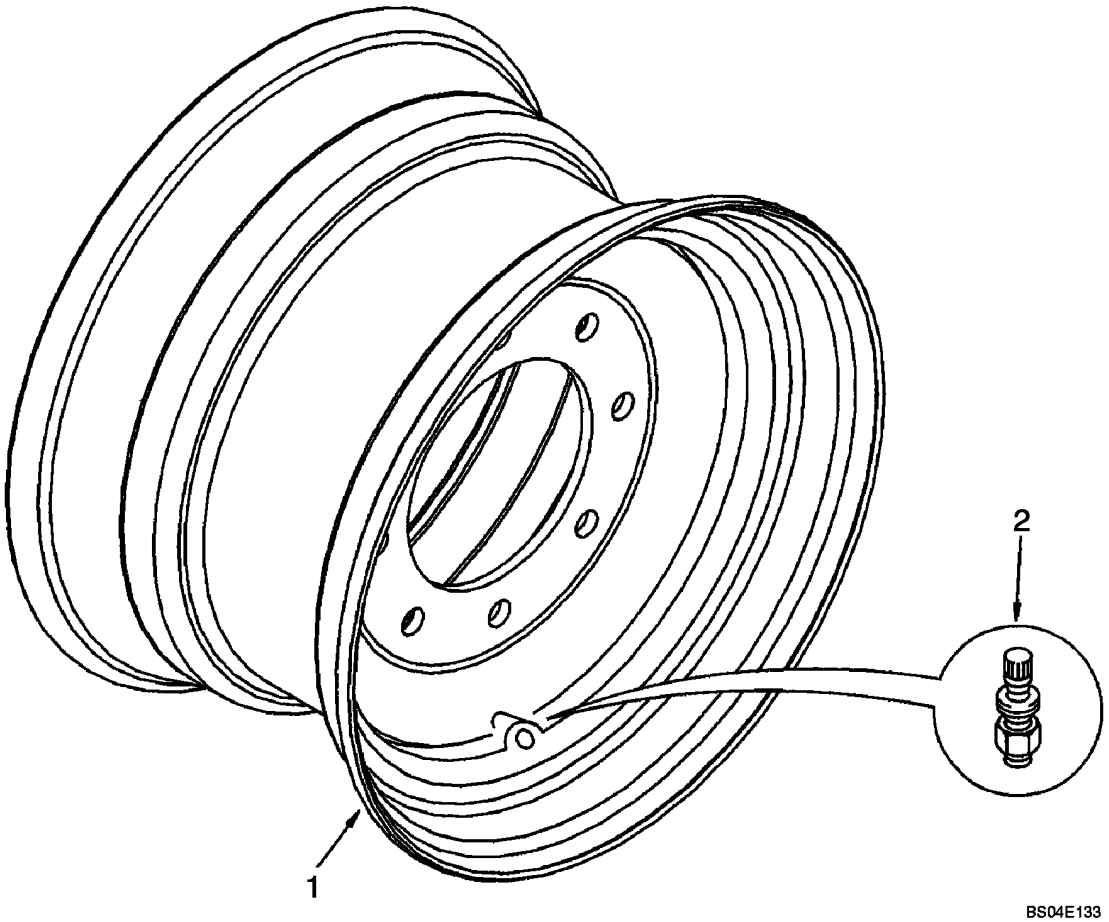

ROUES
RÄDER
HJUL
WIELEN

R	N	P.N.	MOD	Q	Denominação Description Bezeichnung Denominacion Beskrivelse Descrizione Beschrijving	L.C.
1		84239419		4	ARO, 17.5x10.5 Full Center, Premium Full Center 76 OTW Yellow LH & RH; Uses Ref. 2 & 3 RIM / LLANTA / CERCHIONE JANTE / FELGE / FÆLG / VELG	135C
2		512083		4	HASTE DA VÁLVULA / VALVE STEM / VÁSTAGO DE VÁLVULA / STELO DELLA VALVOLA TIGE DE SOUPAPE / VENTILSCHAFT / STILKVENTIL / KLEPSTEEL	P397
3		86512498		32	PORCA, M16 x 2, Flg, Cl 10, (Not Shown) NUT / TUERCA / DADO ECROU / MUTTER / MØTRIK / MOER	010D

SECTION INDEX

50 - Controle de climatização da cabine

50.200.01		OPEN CAB, NO HEAT OR HVAC (L223-L230,C232,C238)
50.200.02	01	HVAC, MEDIUM FRAME F5C (L223,L225)
50.200.03		HVAC, LARGE FRAME (L223-L230,C232,C238)
50.200.03	03	HVAC, LARGE FRAME F5C (L223-C238)
50.200.03	04	HEATER PLUMBING BASIC (L223-L230,C232,C238)
50.200.03	05	AC PLUMBING BASIC (L223-L230,C232,C238)
50.200.04		HEATER, LARGE FRAME (L223-L230,C232,C238)
50.200.05		HEATER (ALL NH)
50.200.06		HEATER W/AC (L218-C238)

50.200.01		p1	02/11

OPEN CAB, NO HEAT OR HVAC (L223-L230,C232,C238)
OPEN CAB, NO HEAT OR HVAC (L223-L230,C232,C238)
OPEN CAB, NO HEAT OR HVAC (L223-L230,C232,C238)
OPEN CAB, NO HEAT OR HVAC (L223-L230,C232,C238)

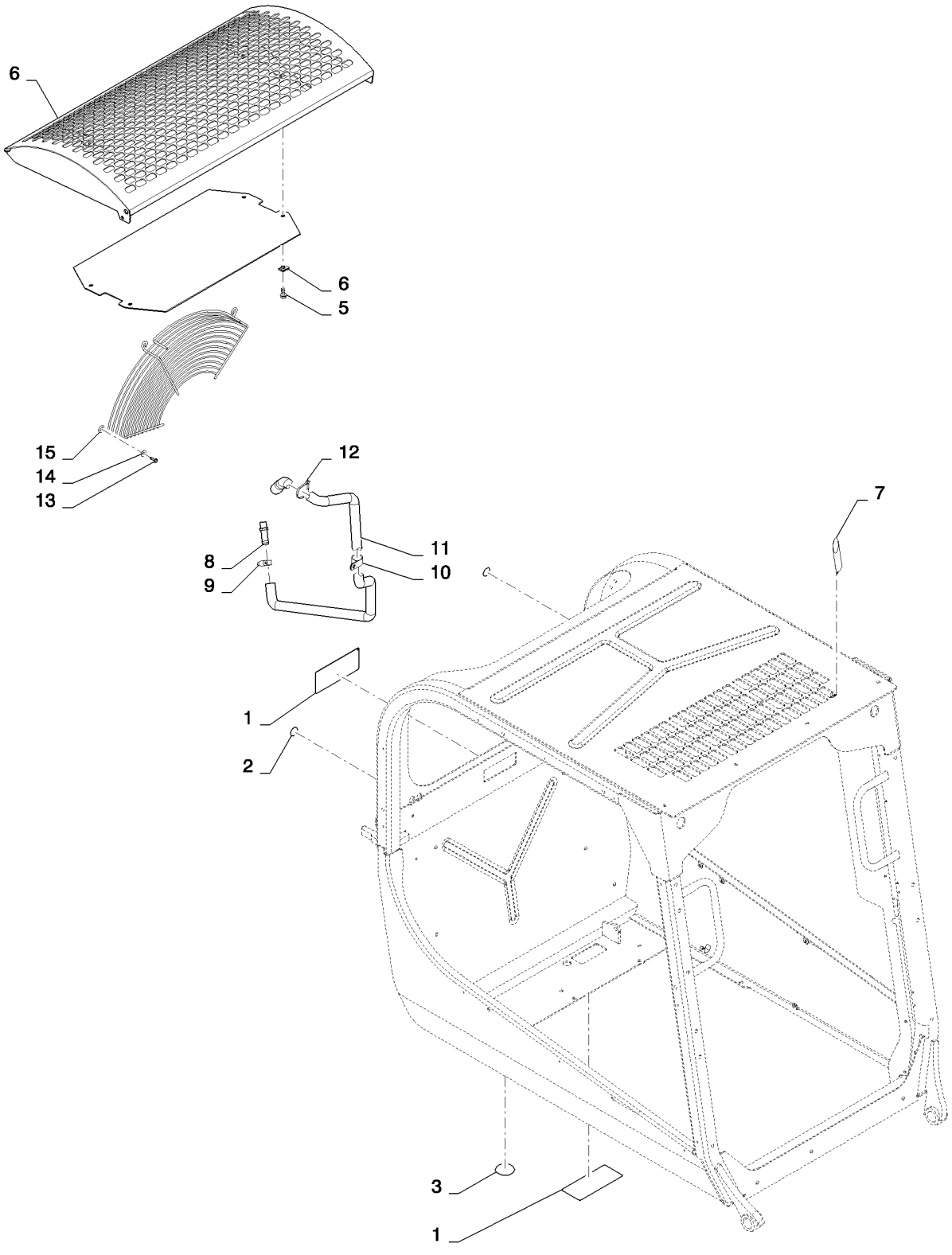

OPEN CAB, NO HEAT OR HVAC (L223-L230,C232,C238)
OPEN CAB, NO HEAT OR HVAC (L223-L230,C232,C238)
OPEN CAB, NO HEAT OR HVAC (L223-L230,C232,C238)
OPEN CAB, NO HEAT OR HVAC (L223-L230,C232,C238)

R	N	P.N.	MOD	Q	Denominação Description	Description Bezeichnung	Denominacion Beskrivelse	Descrizione Beschrijving	L.C.
1		84312310		2	COBERTURA, Plate, Gray	COVER	CUBIERTA	COPERCHIO	265C
					COUVERCLE	ABDECKUNG	DÆKSEL	AFSCHERMING	
2		414635A1		2	TAMPA, Lexan Gray	COVER	TAPA	COPERCHIO	2250
					COUVERCLE	DECKEL	COVER	COVER	
3		84357636		1	ADESIVO, Plug	DECAL	CALCOMANÍA	DECALCOMANIA	012D
					AUTOCOLLANT	AUFKLEBER	TRANSFER	STICKER	
4		86511841		4	PARAFUSO, Hex Flg, M8 x 16, 8.8				
						BOLT	PERNO	BULLONE	140B
					VIS	SCHRAUBE	BOLT	BOUT	
5		86625074		4	PORCA, M8, U	NUT	TUERCA	DADO	010D
					ECROU	MUTTER	MØTRIK	MOER	
6		84331307		1	TELA, No AC, Tilt Hood, Gray				
						SCREEN	PANTALLA	FILTRO; SCHERMO	047S
					TAMIS	GITTER; ABSCHIRMUNG	SKÆRM	SCHERM	
7		84353623		1	ADESIVO, HVAC Blank	DECAL	CALCOMANÍA	DECALCOMANIA	012D
					AUTOCOLLANT	AUFKLEBER	TRANSFER	STICKER	
8		642560		1	CONEXÃO, 5/8" Hose X 3/8" NPTF Beaded				
						FITTING	ACOPLAMIENTO	RACCORDO	3300
					RACCORD	ARMATUR	FITTING	AANSLUITING	
9		86625021		2	BRAÇADEIRA MANGUEIRA, #12, 0.69/1.25 Type F Worm				
						HOSE CLAMP	ABRAZADERA DE MANG	FASCETTA STRINGITUB	P729
					COLLIER POUR FLEXIBL	SCHLAUCHSCHELLE	SLANGEKLEMME	SLANGKLEM	
10		86637995		1	BRAÇADEIRA, 1 1/16", Insul, 3/8" Bolt				
						CLAMP	ABRAZADERA	MORSETTO	120M
					COLLIER	KLEMME	SPÆNDEBÅND	KLEM	
11		84333356		1	TUBO, Heater, Loop	TUBE	TUBO	TUBO	195T
					TUBE	ROHR	RØR	LEIDING	
12		L11541		1	PRENDEDOR DE CABOS, Nylon Tie, 7-8in				
						CABLE STRAP	BANDA DE CABLE	FASCETTA PER CAVO	P716
					BRIDE DE CABLE	KABELBINDER	KABELSTROP	BUNDELBAND	
13		84137412		3	PARAFUSO, Bosscrew, M6 X 18				
						SCREW	TORNILLO	VITE	040V
					VIS	SCHRAUBE	SKRUE	SCHROEF	
14		86624182		3	ARRUELA PLANA, M6 x 18 x 1.6				
						WASHER	ARANDELA	RONDELLA	131R
					RONDELLE	UNTERLEGSCHEIBE	FLADSKIVE	SLUITRING	
15		84335903		1	PROTEÇÃO, Fan	GUARD	DEFENSA	PROTEZIONE	070R
					PROTECTION	SCHUTZABDECKUNG	BESKYTTELSESSKÆRM	AFSCHERMING	

HVAC, MEDIUM FRAME F5C (L223,L225)
HVAC, MEDIUM FRAME F5C (L223,L225)
HVAC, MEDIUM FRAME F5C (L223,L225)
HVAC, MEDIUM FRAME F5C (L223,L225)

ART
NOT
AVAILABLE

HVAC, MEDIUM FRAME F5C (L223,L225)
HVAC, MEDIUM FRAME F5C (L223,L225)
HVAC, MEDIUM FRAME F5C (L223,L225)
HVAC, MEDIUM FRAME F5C (L223,L225)

R	N	P.N.	MOD	Q	Denominação Description	Description Bezeichnung	Denominacion Beskrivelse	Descrizione Beschrijving	L.C.
1		84321961		1	COMPRESSOR AR COND. COMPRESSEUR CLIMAT	AIRCOND. COMPRESSO KLIMAANLAGENKOMPRI	COMPRESOR DE A/C AIRCONDITION KOMPRE	COMPRESSORE ARIA C AIRCOCOMPRESSOR	217C
2		87711926		1	SUPORTE, Tensioner SUPPORT	BRACKET HALTERUNG	SOPORTE BESLAG	STAFFA STEUN	225S
3		9804261		2	PARAFUSO, Hex Flg, M10 x 25, 8.8 VIS	BOLT SCHRAUBE	PERNO BOLT	BULLONE BOUT	140B
4		9804278		2	PORCA, M10 x 1.5, Flg, Cl 8 ECROU	NUT MUTTER	TUERCA MØTRIK	DADO MOER	010D
5		9804262		1	PARAFUSO, Hex Flg, M10 x 30, 8.8 VIS	BOLT SCHRAUBE	PERNO BOLT	BULLONE BOUT	140B
6		86511845		2	PARAFUSO, Hex Flg, M10 x 35, 8.8 VIS	BOLT SCHRAUBE	PERNO BOLT	BULLONE BOUT	140B
7		9706690		1	PORCA, M8, Cl 8 ECROU	NUT MUTTER	TUERCA MØTRIK	DADO MOER	010D
8		87649979		1	PARAFUSO VIS	BOLT SCHRAUBE	PERNO BOLT	BULLONE BOUT	140B
9		87649945		1	SUPORTE, Air Conditioning Compressor SUPPORT	BRACKET HALTERUNG	SOPORTE BESLAG	STAFFA STEUN	225S
10		86511843		2	PARAFUSO, Hex Flg, M8 x 60, 8.8 VIS	BOLT SCHRAUBE	PERNO BOLT	BULLONE BOUT	140B
11		86705425		1	PARAFUSO, Hex Flg, M8 x 80, 8.8 VIS	BOLT SCHRAUBE	PERNO BOLT	BULLONE BOUT	140B
12		87622384		1	BUCHA, F5C A/C Mounting BAGUE	BUSHING BUCHSE	CASQUILLO BØSNING	BOCCOLA BUS	095B
13		84317961		1	CORREIA, V-belt, A/C Drive COURROIE	BELT RIEMEN	CORREA REM	CINGHIA RIEM	174C
14		84315532		1	CHICOTE, Wire Harness HVAC Jumper FAISCEAU ELECTRIQUE	WIRE HARNESS KABELBAUM	GRUPO DE CABLES KABELNET	CABLAGGIO KABELBOOM	070I

50.200.03		p1	03/11

HVAC, LARGE FRAME (L223-L230,C232,C238)
HVAC, LARGE FRAME (L223-L230,C232,C238)
HVAC, LARGE FRAME (L223-L230,C232,C238)
HVAC, LARGE FRAME (L223-L230,C232,C238)

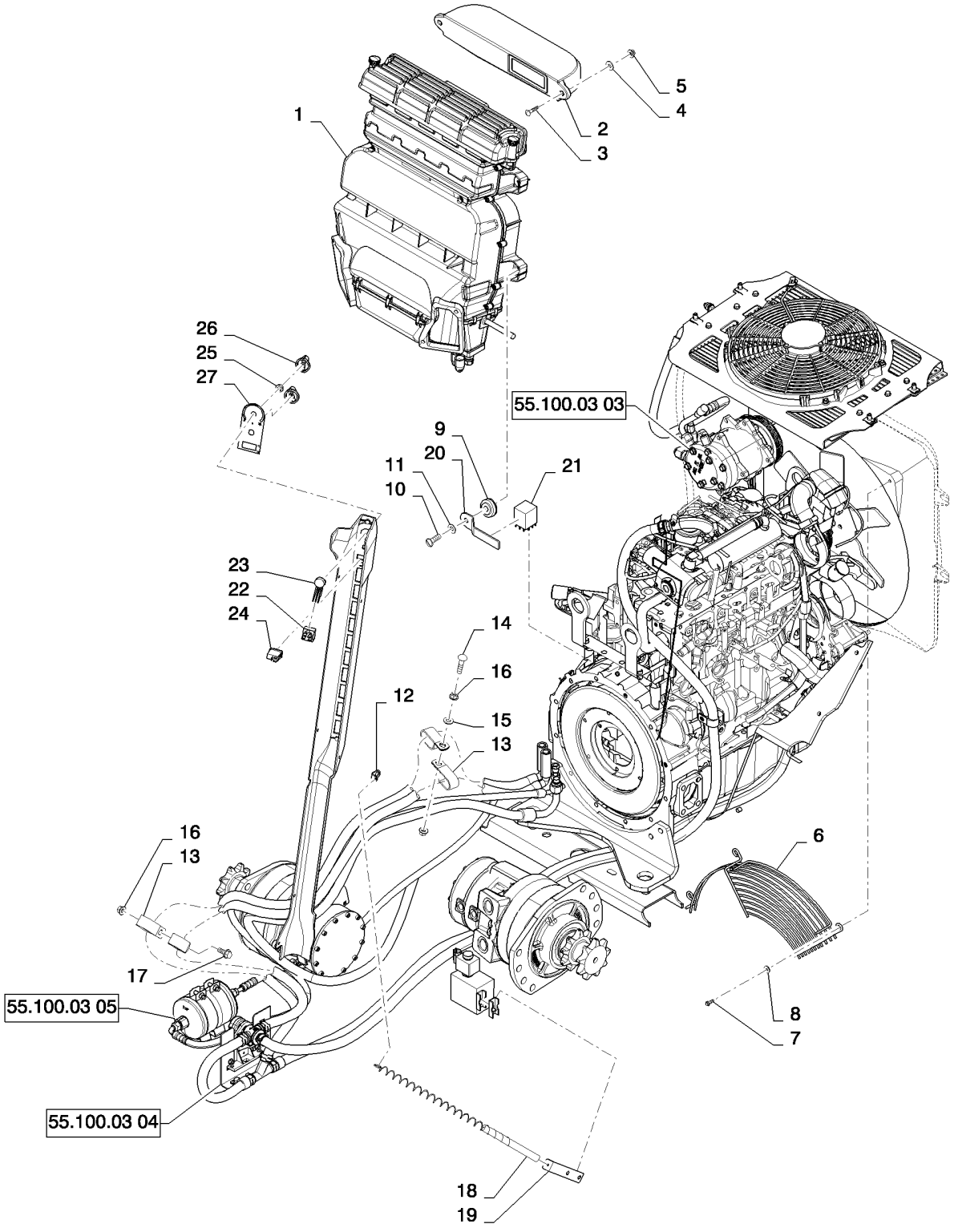

HVAC, LARGE FRAME (L223-L230,C232,C238)
HVAC, LARGE FRAME (L223-L230,C232,C238)
HVAC, LARGE FRAME (L223-L230,C232,C238)
HVAC, LARGE FRAME (L223-L230,C232,C238)

R	N	P.N.	MOD	Q	Denominação Description	Description Bezeichnung	Denominacion Beskrivelse	Descrizione Beschrijving	L.C.
1		84267544		1	UNIDADE DE AQUECIMENTO, w/AC, Cab				
						UNIT HEATER	APARATO DE CALEFAC(	RISCALDATORE UNITÀ	Z375
					APPAREIL DE CHAUFFA	HEIZUNGSEINHEIT	RADIATORENHED	VERWARMING	
2		84280313		1	DUTO DE AR, Intake	AIR DUCT	CONDUCTO DE AIRE	CONDOTTO ARIA	224C
					CONDUITE D'AIR	LUFTKANAL	LUFTKANAL	LUCHTKANAAL	
3		86512441		2	PARAFUSO, Short NK, M6 x 30, Cl8.8, Full Thd				
						CARRIAGE BOLT	PERNO ALOMADO	BULLONE A TESTA TONI	P123
					VIS A TETE BOMBEE	SCHLOSSSCHRAUBE	BRÆDDEBOLT	SLOTBOUT	
4		87655042		2	ARRUELA ESPECIAL, M8, 8.80 X 17.5 X 2.2 HTS				
						SPECIAL WASHER	ARANDELA ESPECIAL	RONDELLA SPECIALE	Z333
					RONDELLE SPECIALE	SPEZIALUNTERLEGSCH	SPECIALSKIVE	SPECIALE RING	
5		86619800		2	CONTRA PORCA, M6 x 1, Flg, Cl 8				
						LOCK NUT	TUERCA DE BLOQUEO	DADO DI BLOCCAGGIO	P263
					CONTRE-ECROU	SICHERUNGSMUTTER	LÅSEMØTRIK	BORGMOER	
6		84335904		1	PROTEÇÃO, Fan	GUARD	DEFENSA	PROTEZIONE	070R
					PROTECTION	SCHUTZABDECKUNG	BESKYTTELSESSKÆRM	AFSCHERMING	
7		84137412		3	PARAFUSO, Bosscrew, M6 X 18				
						SCREW	TORNILLO	VITE	040V
					VIS	SCHRAUBE	SKRUE	SCHROEF	
8		86624182		3	ARRUELA PLANA, M6 x 18 x 1.6				
						WASHER	ARANDELA	RONDELLA	131R
					RONDELLE	UNTERLEGSCHEIBE	FLADSKIVE	SLUITRING	
9		87436247		4	ENCHIMENTO ROSCADO, M6, Blind Threaded				
						THREADED INSERT	PIEZA DE INS. ROSCAD/	INSERTO FILETTATO	054I
					INSERT FILETE	GEWINDEEINSATZ	GEVINDINDSATS	INZETST. MET SCHROEI	
10		86511833		4	PARAFUSO, Cross Pan Hd, M6 x 40				
						SCREW	TORNILLO	VITE	040V
					VIS	SCHRAUBE	SKRUE	SCHROEF	
11		86624183		3	ARRUELA PLANA, M6 x 25 x 1.6				
						WASHER	ARANDELA	RONDELLA	131R
					RONDELLE	UNTERLEGSCHEIBE	FLADSKIVE	SLUITRING	
12		84361522		1	SUPORTE	BRACKET	SOPORTE	STAFFA	225S
					SUPPORT	HALTERUNG	BESLAG	STEUN	
13		D39696		4	BRACADEIRA	CLAMP	COLLAR	MORSETTO	1640
					COLLIER	SCHELLE	CLAMP	CLAMP	
14		350459		1	PARAFUSO, Short NK, M10 x 50, Cl8.8, Full Thd				
						SCREW	TORNILLO	VITE	040V
					VIS	SCHRAUBE	SKRUE	SCHROEF	
15		87655046		1	ARRUELA ESPECIAL, M10, 10.65 X 23.0 X 2.2 HTS				
						SPECIAL WASHER	ARANDELA ESPECIAL	RONDELLA SPECIALE	Z333
					RONDELLE SPECIALE	SPEZIALUNTERLEGSCH	SPECIALSKIVE	SPECIALE RING	
16		9804278		3	PORCA, M10 x 1.5, Flg, Cl 8				
						NUT	TUERCA	DADO	010D
					ECROU	MUTTER	MØTRIK	MOER	
17		9804261		1	PARAFUSO, Hex Flg, M10 x 25, 8.8				
						BOLT	PERNO	BULLONE	140B
					VIS	SCHRAUBE	BOLT	BOUT	
18		412679A2		2	MOLA, Heater Hose	SPRING	RESORTE	MOLLA	8315
					RESSORT	FEDER	FJEDER	VEER	

50.200.03		p2	03/11

HVAC, LARGE FRAME (L223-L230,C232,C238)
HVAC, LARGE FRAME (L223-L230,C232,C238)
HVAC, LARGE FRAME (L223-L230,C232,C238)
HVAC, LARGE FRAME (L223-L230,C232,C238)

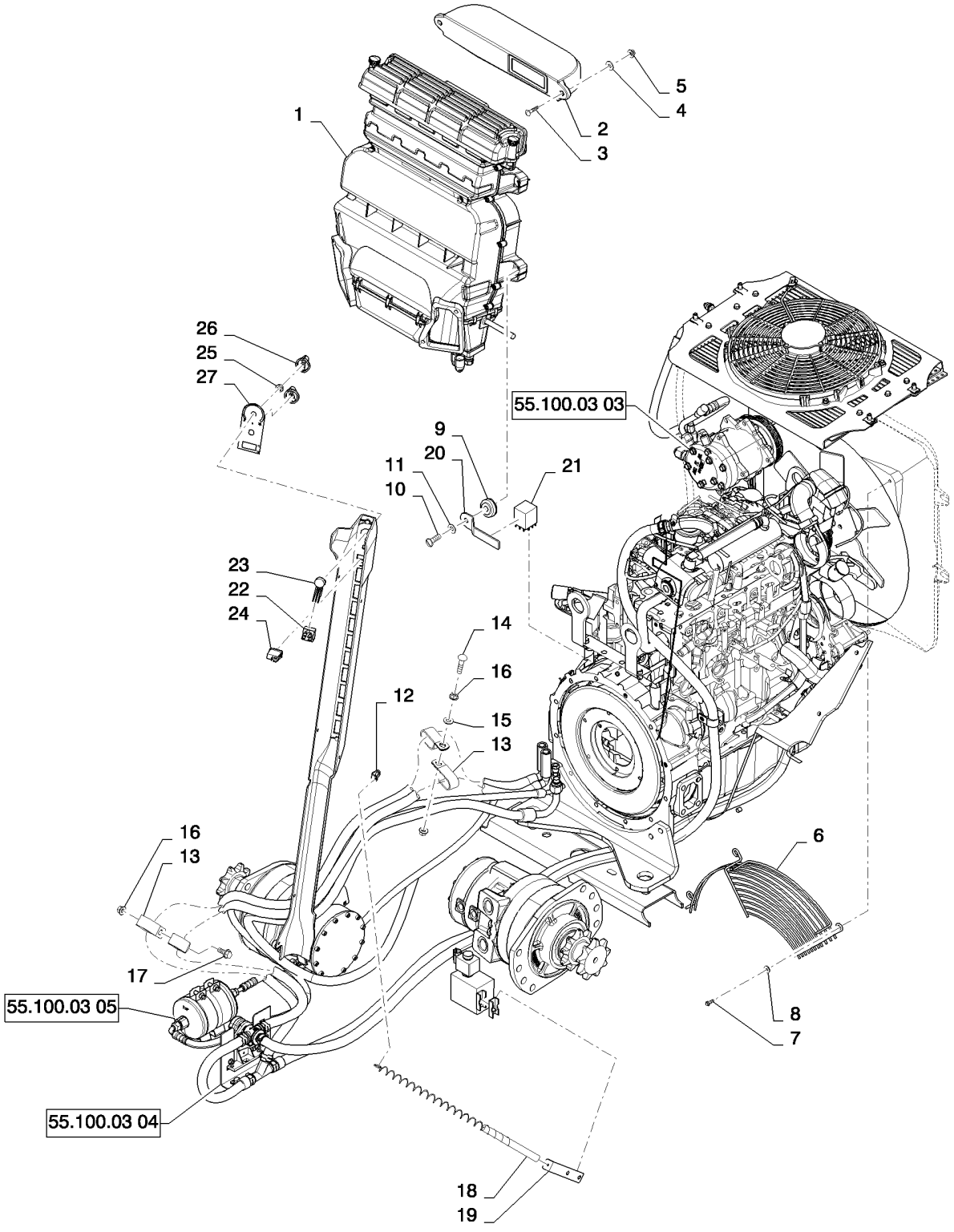

HVAC, LARGE FRAME (L223-L230,C232,C238)
HVAC, LARGE FRAME (L223-L230,C232,C238)
HVAC, LARGE FRAME (L223-L230,C232,C238)
HVAC, LARGE FRAME (L223-L230,C232,C238)

R	N	P.N.	MOD	Q	Denominação Description	Description Bezeichnung	Denominacion Beskrivelse	Descrizione Beschrijving	L.C.
19		**84370705**		1	SUPORTE SUPPORT	BRACKET HALTERUNG	SOPORTE BESLAG	STAFFA STEUN	225S
20		**84380240**		1	SUPORTE, Relay SUPPORT	BRACKET HALTERUNG	SOPORTE BESLAG	STAFFA STEUN	225S
21		**87355337**		1	CONECTADOR, Heavy Duty, 45 Amp RELAIS	RELAY RELAIS	CONECTADOR RELAE	RELE' RELAIS	7025
22		**86729669**		1	INTERRUPTOR, Blower/Light CONTACTEUR	SWITCH SCHALTER	INTERRUPTOR KONTAKT	INTERRUTTORE SCHAKELAAR	075I
23		**86729675**		1	POTENCIÔMETRO, Switch POTENTIOMETRE	POTENTIOMETER POTENTIOMETER	POTENCIÓMETRO POTENTIOMETER	POTENZIOMETRO POTENTIOMETER	550P
24		**87555249**		1	INTERRUPTOR, A/C CONTACTEUR	SWITCH SCHALTER	INTERRUPTOR KONTAKT	INTERRUTTORE SCHAKELAAR	075I
25		**87310592**		2	PORCA ECROU	NUT MUTTER	TUERCA MØTRIK	DADO MOER	010D
26		**86729670**		2	MAÇANETA BOUTON	KNOB RUNDGRIFF	MANDO GREB	MANOPOLA KNOP	150P
27		**84347258**		1	ADESIVO, HVAC, Heat AC AUTOCOLLANT	DECAL AUFKLEBER	CALCOMANÍA TRANSFER	DECALCOMANIA STICKER	012D

50.200.03	03	p1	02/11

HVAC, LARGE FRAME F5C (L223-C238)
HVAC, LARGE FRAME F5C (L223-C238)
HVAC, LARGE FRAME F5C (L223-C238)
HVAC, LARGE FRAME F5C (L223-C238)

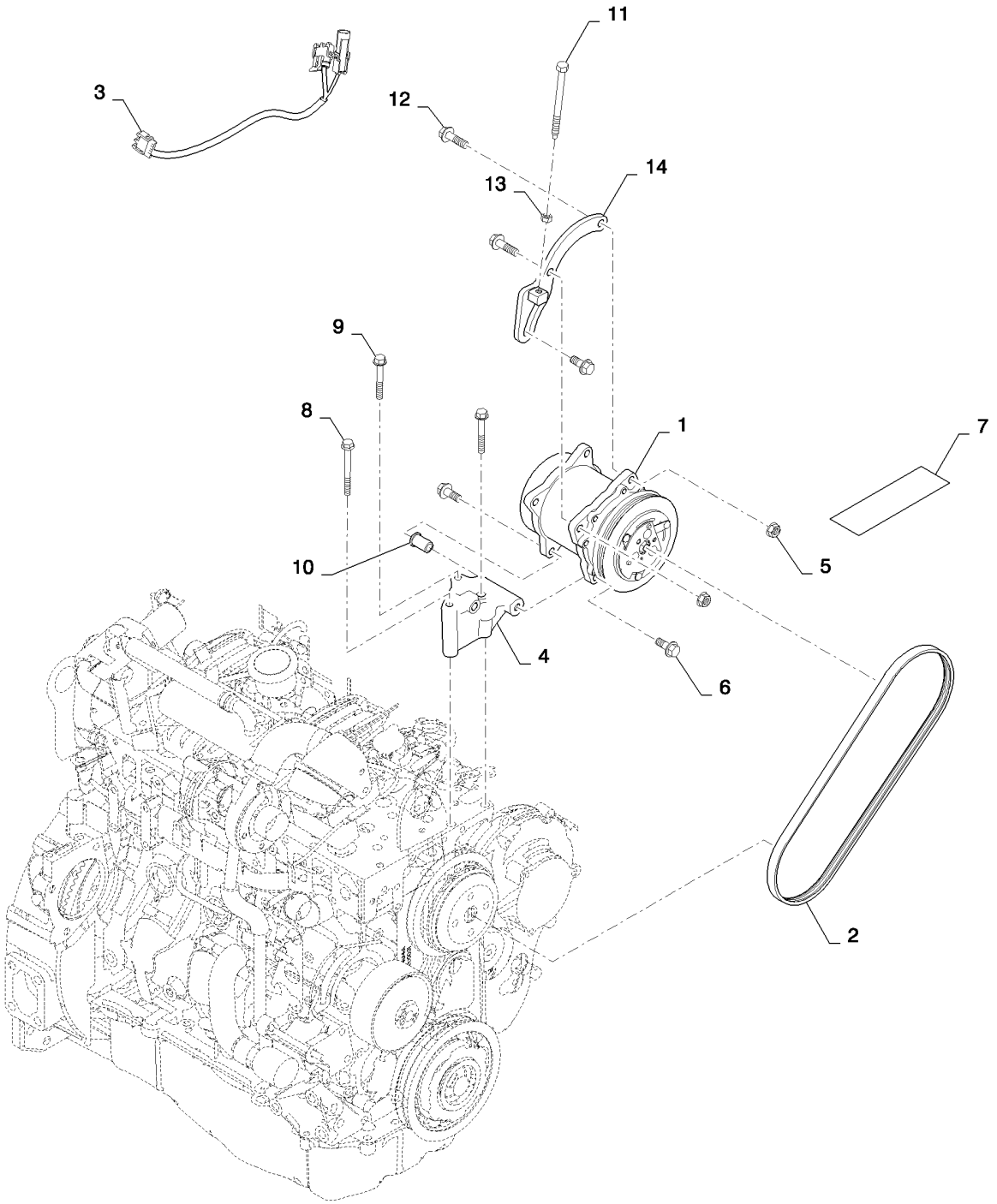

HVAC, LARGE FRAME F5C (L223-C238)
HVAC, LARGE FRAME F5C (L223-C238)
HVAC, LARGE FRAME F5C (L223-C238)
HVAC, LARGE FRAME F5C (L223-C238)

R	N	P.N.	MOD	Q	Denominação Description	Description Bezeichnung	Denominacion Beskrivelse	Descrizione Beschrijving	L.C.
1		84321961		1	COMPRESSOR AR COND. COMPRESSEUR CLIMAT	AIRCOND. COMPRESSO KLIMAANLAGENKOMPRI	COMPRESOR DE A/C AIRCONDITION KOMPRE	COMPRESSORE ARIA C AIRCOCOMPRESSOR	217C
2		84317961		1	CORREIA, V-Belt, AC Drive COURROIE	BELT RIEMEN	CORREA REM	CINGHIA RIEM	174C
3		84315532		1	CHICOTE, HVAC Jumper FAISCEAU ELECTRIQUE	WIRE HARNESS KABELBAUM	GRUPO DE CABLES KABELNET	CABLAGGIO KABELBOOM	070I
4		87649945		1	SUPORTE, Compressor, AC SUPPORT	BRACKET HALTERUNG	SOPORTE BESLAG	STAFFA STEUN	225S
5		9804278		2	PORCA, M10 x 1.5, Flg, Cl 8 ECROU	NUT MUTTER	TUERCA MØTRIK	DADO MOER	010D
6		9804261		3	PARAFUSO, Hex Flg, M10 x 25, 8.8 VIS	BOLT SCHRAUBE	PERNO BOLT	BULLONE BOUT	140B
7		86639409		1	ADESIVO AUTOCOLLANT	DECAL AUFKLEBER	CALCOMANÍA TRANSFER	DECALCOMANIA STICKER	012D
8		86705425		1	PARAFUSO, Hex Flg, M8 x 80, 8.8 VIS	BOLT SCHRAUBE	PERNO BOLT	BULLONE BOUT	140B
9		86511843		2	PARAFUSO, Hex Flg, M8 x 60, 8.8 VIS	BOLT SCHRAUBE	PERNO BOLT	BULLONE BOUT	140B
10		87622384		1	BUCHA, F5C AC Bracket BAGUE	BUSHING BUCHSE	CASQUILLO BØSNING	BOCCOLA BUS	095B
11		87649979		1	PARAFUSO, Tensioner VIS	BOLT SCHRAUBE	PERNO BOLT	BULLONE BOUT	140B
12		86511845		2	PARAFUSO, Hex Flg, M10 x 35, 8.8 VIS	BOLT SCHRAUBE	PERNO BOLT	BULLONE BOUT	140B
13		9706690		1	PORCA, M8, Cl 8 ECROU	NUT MUTTER	TUERCA MØTRIK	DADO MOER	010D
14		87711926		1	SUPORTE, Tensioner, WA SUPPORT	BRACKET HALTERUNG	SOPORTE BESLAG	STAFFA STEUN	225S

50.200.03	04	p1	03/11

HEATER PLUMBING BASIC (L223-L230,C232,C238)
HEATER PLUMBING BASIC (L223-L230,C232,C238)
HEATER PLUMBING BASIC (L223-L230,C232,C238)
HEATER PLUMBING BASIC (L223-L230,C232,C238)

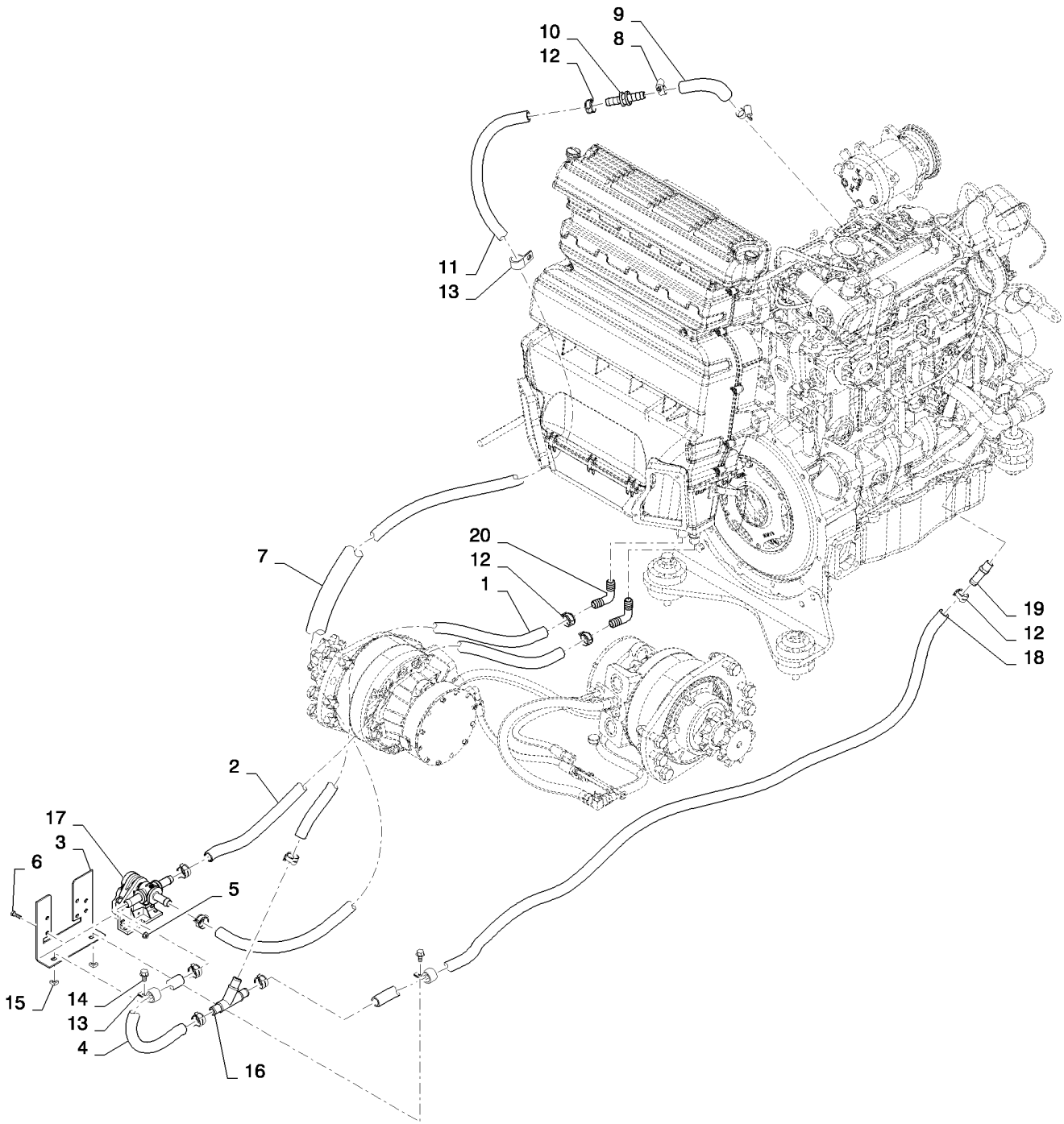

HEATER PLUMBING BASIC (L223-L230,C232,C238)
HEATER PLUMBING BASIC (L223-L230,C232,C238)
HEATER PLUMBING BASIC (L223-L230,C232,C238)
HEATER PLUMBING BASIC (L223-L230,C232,C238)

R	N	P.N.	MOD	Q	Denominação Description	Description Bezeichnung	Denominacion Beskrivelse	Descrizione Beschrijving	L.C.
1		84357678		1	MANGUEIRA, Heater Supply, Guarded				
						HOSE	TUBO	TUBO FLESSIBILE	030M
					FLEXIBLE	SCHLAUCH	SLANGE	SLANG	
2		84359308		1	MANGUEIRA, Heater Return, Guarded				
						HOSE	TUBO	TUBO FLESSIBILE	030M
					FLEXIBLE	SCHLAUCH	SLANGE	SLANG	
3		84247845		1	SUPORTE, Water Valve and Dryer				
						BRACKET	SOPORTE	STAFFA	225S
					SUPPORT	HALTERUNG	BESLAG	STEUN	
4		84359205		1	MANGUEIRA, Heater Return, Guarded				
						HOSE	TUBO	TUBO FLESSIBILE	030M
					FLEXIBLE	SCHLAUCH	SLANGE	SLANG	
5		9804276		4	PORCA, M6 x 1, Flg, Cl 8	NUT	TUERCA	DADO	010D
					ECROU	MUTTER	MØTRIK	MOER	
6		120100		4	PARAFUSO, Hex, M6 x 20, 8.8				
						BOLT	PERNO	BULLONE	140B
					VIS	SCHRAUBE	BOLT	BOUT	
7		87441006		1	PROTEÇÃO, AC Hose	GUARD	DEFENSA	PROTEZIONE	070R
					PROTECTION	SCHUTZABDECKUNG	BESKYTTELSESSKÆRM	AFSCHERMING	
8		86625021		1	BRAÇADEIRA MANGUEIRA, #12, 0.69/1.25 Type F Worm				
						HOSE CLAMP	ABRAZADERA DE MANG	FASCETTA STRINGITUB	P729
					COLLIER POUR FLEXIBL	SCHLAUCHSCHELLE	SLANGEKLEMME	SLANGKLEM	
9		87617163		1	MANGUEIRA DO AQUECEDOR, 15.00 mm ID, 18.00 mm ID x 73.00 mm, SAE 20R4, Heater Supply, Formed				
						HEATER HOSE	TUBO DE CALENTADOR	TUBO FLESS. RISCALDA	A057
					FLEXIBLE DE CHAUFFA(	HEIZUNGSSCHLAUCH	SLANGE, VARMEAPPAR/	VERWARMINGSSLANG	
10		87617165		1	ADAPTADOR, Hose, Barb Splice, Connector				
						ADAPTER	ADAPTADOR	ADATTATORE	001A
					ADAPTATEUR	ADAPTER	ADAPTER	ADAPTER	
11		87567192		1	MANGUEIRA, Heating Supply, 2540mm				
						HOSE	TUBO	TUBO FLESSIBILE	030M
					FLEXIBLE	SCHLAUCH	SLANGE	SLANG	
12		87443511		13	BRAÇADEIRA, Spring	CLAMP	ABRAZADERA	MORSETTO	120M
					COLLIER	KLEMME	SPÆNDEBÅND	KLEM	
13		619284		3	BRAÇADEIRA, 15/16", Insul, 3/8" Bolt				
						CLAMP	ABRAZADERA	MORSETTO	120M
					COLLIER	KLEMME	SPÆNDEBÅND	KLEM	
14		86511841		2	PARAFUSO, Hex Flg, M8 x 16, 8.8				
						BOLT	PERNO	BULLONE	140B
					VIS	SCHRAUBE	BOLT	BOUT	
15		229197A1		2	PORCA, Square	NUT	TUERCA	DADO	5780
					ECROU	MUTTER	MØTRIK	MOER	
16		86530043		1	CONEXÃO, Hose	FITTING	ACOPLAMIENTO	RACCORDO	3300
					RACCORD	ARMATUR	FITTING	AANSLUITING	
17		84245940		1	VÁLVULA, Water Supply, 3 Way				
						VALVE	VÁLVULA	VALVOLA	9620
					SOUPAPE	VENTIL	VENTIL	KLEP	
18		87567191		1	MANGUEIRA, Heating Return, 1905mm				
						HOSE	TUBO	TUBO FLESSIBILE	030M
					FLEXIBLE	SCHLAUCH	SLANGE	SLANG	

50.200.03	04	p2	03/11

HEATER PLUMBING BASIC (L223-L230,C232,C238)
HEATER PLUMBING BASIC (L223-L230,C232,C238)
HEATER PLUMBING BASIC (L223-L230,C232,C238)
HEATER PLUMBING BASIC (L223-L230,C232,C238)

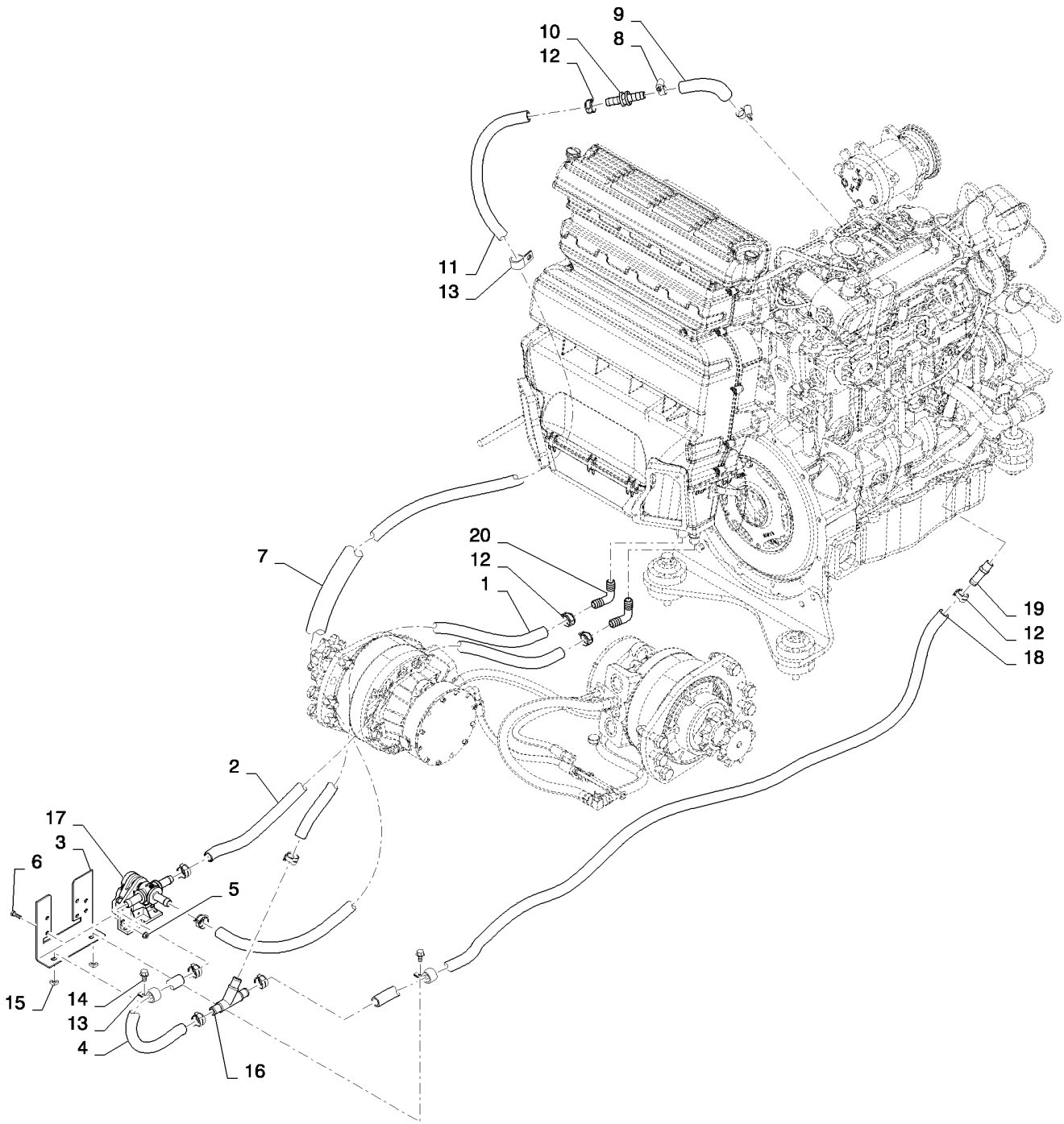

HEATER PLUMBING BASIC (L223-L230,C232,C238)
HEATER PLUMBING BASIC (L223-L230,C232,C238)
HEATER PLUMBING BASIC (L223-L230,C232,C238)
HEATER PLUMBING BASIC (L223-L230,C232,C238)

R	N	P.N.	MOD	Q	Denominação Description Bezeichnung	Description Bezeichnung	Denominacion Beskrivelse	Descrizione Beschrijving	L.C.
19		**642560**		1	CONEXÃO, 5/8" Hose X 3/8" NPTF Beaded FITTING RACCORD	FITTING ARMATUR	ACOPLAMIENTO FITTING	RACCORDO AANSLUITING	3300
20		**127083A1**		2	COTOVELO COUDE	ELBOW KNIESTÜCK	CODO VINKELRØR	GOMITO KNIESTUK	085G

50.200.03	05	p1	06/11

AC PLUMBING BASIC (L223-L230,C232,C238)
AC PLUMBING BASIC (L223-L230,C232,C238)
AC PLUMBING BASIC (L223-L230,C232,C238)
AC PLUMBING BASIC (L223-L230,C232,C238)

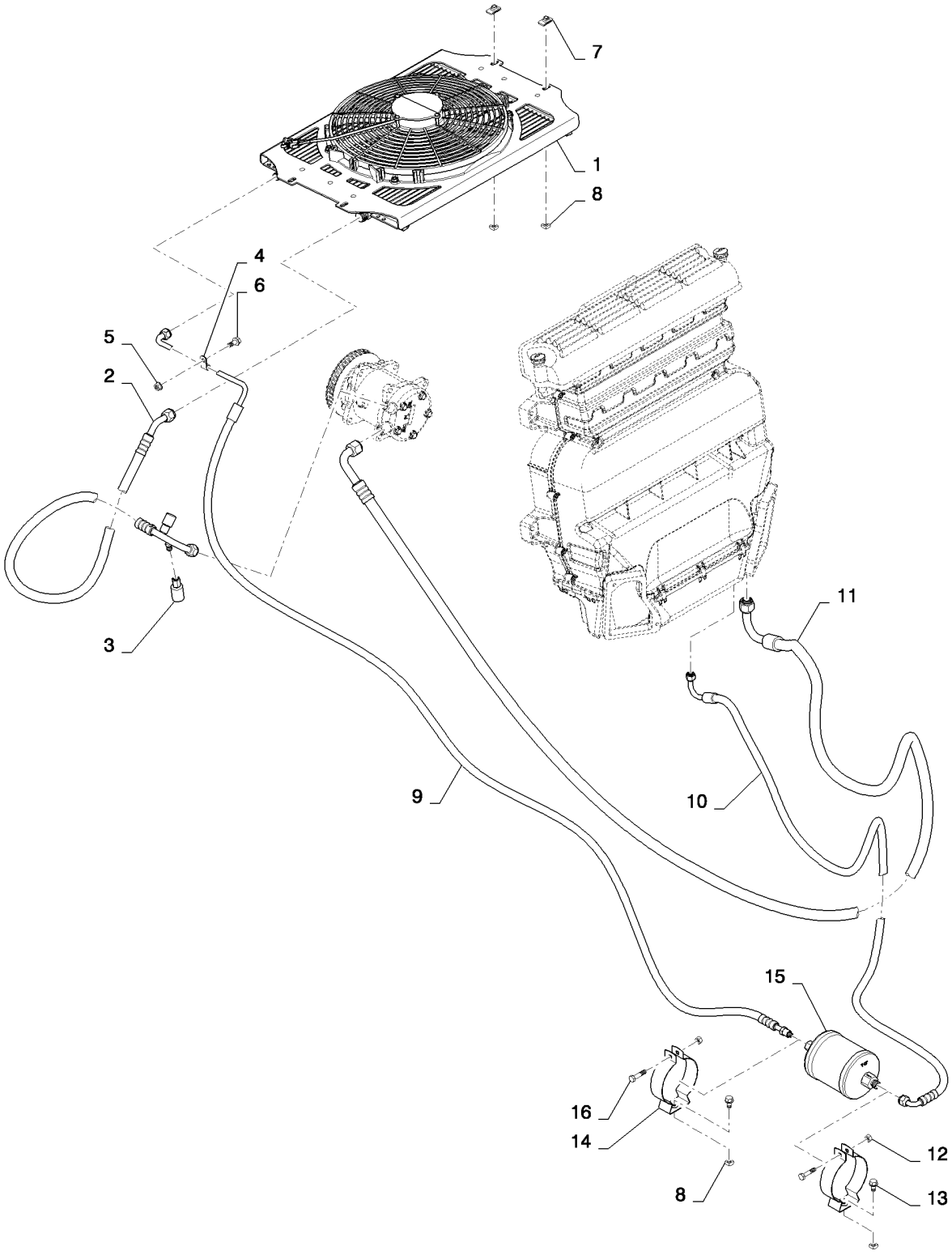

AC PLUMBING BASIC (L223-L230,C232,C238)
AC PLUMBING BASIC (L223-L230,C232,C238)
AC PLUMBING BASIC (L223-L230,C232,C238)
AC PLUMBING BASIC (L223-L230,C232,C238)

R	N	P.N.	MOD	Q	Denominação Description	Description Bezeichnung	Denominacion Beskrivelse	Descrizione Beschrijving	L.C.
1		84312881		1	CONDENSADOR, Assembly, w/Fan				
						CONDENSER	CONDENSADOR	CONDENSATORE	220C
					CONDENSATEUR	KONDENSATOR	KONDENSATOR	CONDENSOR	
2		84308858		1	MANGUEIRA AR CONDICIONADO, AC Discharge				
						A/C HOSE	TUBO A/A	TUBO FLESSIBILE A/C	A054
					FLEXIBLE CLIMATISATIC	KLIMAANLAGENSCHLAU	SLANGE, AIRCONDITION	SLANG VOOR AIRCO	
3		87000227		1	INTERRUP ALTA PRESSÃO AC				
						A/C HIGH PRESSURE SV	INT. PRESIÓN ALTA A/A	INTERR. ALTA PRESS. A	A102
					PRESSOSTAT HP CLIMA	HOCHDR-SCHALTER KL	KONTAKT, A/C HØJTRYK	HOGEDRUKSCHAKELAA	
4		86637978		1	BRAÇADEIRA, 3/8", Insul, 5/16" Bolt				
						CLAMP	ABRAZADERA	MORSETTO	120M
					COLLIER	KLEMME	SPÆNDEBÅND	KLEM	
5		9804277		1	PORCA, M8 x 1.25, Flg, Cl 8				
						NUT	TUERCA	DADO	010D
					ECROU	MUTTER	MØTRIK	MOER	
6		9804258		5	PARAFUSO, Hex Flg, M8 x 20, 8.8				
						BOLT	PERNO	BULLONE	140B
					VIS	SCHRAUBE	BOLT	BOUT	
7		86625074		4	PORCA, M8, U	NUT	TUERCA	DADO	010D
					ECROU	MUTTER	MØTRIK	MOER	
8		229197A1		2	PORCA, Square	NUT	TUERCA	DADO	5780
					ECROU	MUTTER	MØTRIK	MOER	
9		84407297		1	CONJ. MANGUEIRA, AC Liquid				
						HOSE ASSY.	CONJUNTO DE TUBOS	COMPLESS. TUBO FLES	P457
					ENSEMBLE DE FLEXIBLE	SCHLAUCHBAUGRUPPE	SLANGEENHED	SLANGEENHEID	
10		84403037		1	CONJ. MANGUEIRA, AC Discharge				
						HOSE ASSY.	CONJUNTO DE TUBOS	COMPLESS. TUBO FLES	P457
					ENSEMBLE DE FLEXIBLE	SCHLAUCHBAUGRUPPE	SLANGEENHED	SLANGEENHEID	
11		84473564		1	CONJ. MANGUEIRA, AC Suction				
						HOSE ASSY.	CONJUNTO DE TUBOS	COMPLESS. TUBO FLES	P457
					ENSEMBLE DE FLEXIBLE	SCHLAUCHBAUGRUPPE	SLANGEENHED	SLANGEENHEID	
12		9706690		2	PORCA, M8, Cl 8	NUT	TUERCA	DADO	010D
					ECROU	MUTTER	MØTRIK	MOER	
13		86511841		2	PARAFUSO, Hex Flg, M8 x 16, 8.8				
						BOLT	PERNO	BULLONE	140B
					VIS	SCHRAUBE	BOLT	BOUT	
14		87105841		2	SUPORTE, HVAC	BRACKET	SOPORTE	STAFFA	225S
					SUPPORT	HALTERUNG	BESLAG	STEUN	
15		87105840		1	DESIDRATADOR	RECEIVER-DRYER	RECEPTOR-SECADOR	SERBATOIO-ESSICCATC	058D
					RESERVOIR DESHYDRA	TROCKNERPATRONE	VANDUDSKILLER	FILTERDROGER	
16		412479		2	PARAFUSO, Hex, M8 x 35, 8.8				
						BOLT	PERNO	BULLONE	140B
					VIS	SCHRAUBE	BOLT	BOUT	

50.200.04		p1	03/11

HEATER, LARGE FRAME (L223-L230,C232,C238)
HEATER, LARGE FRAME (L223-L230,C232,C238)
HEATER, LARGE FRAME (L223-L230,C232,C238)
HEATER, LARGE FRAME (L223-L230,C232,C238)

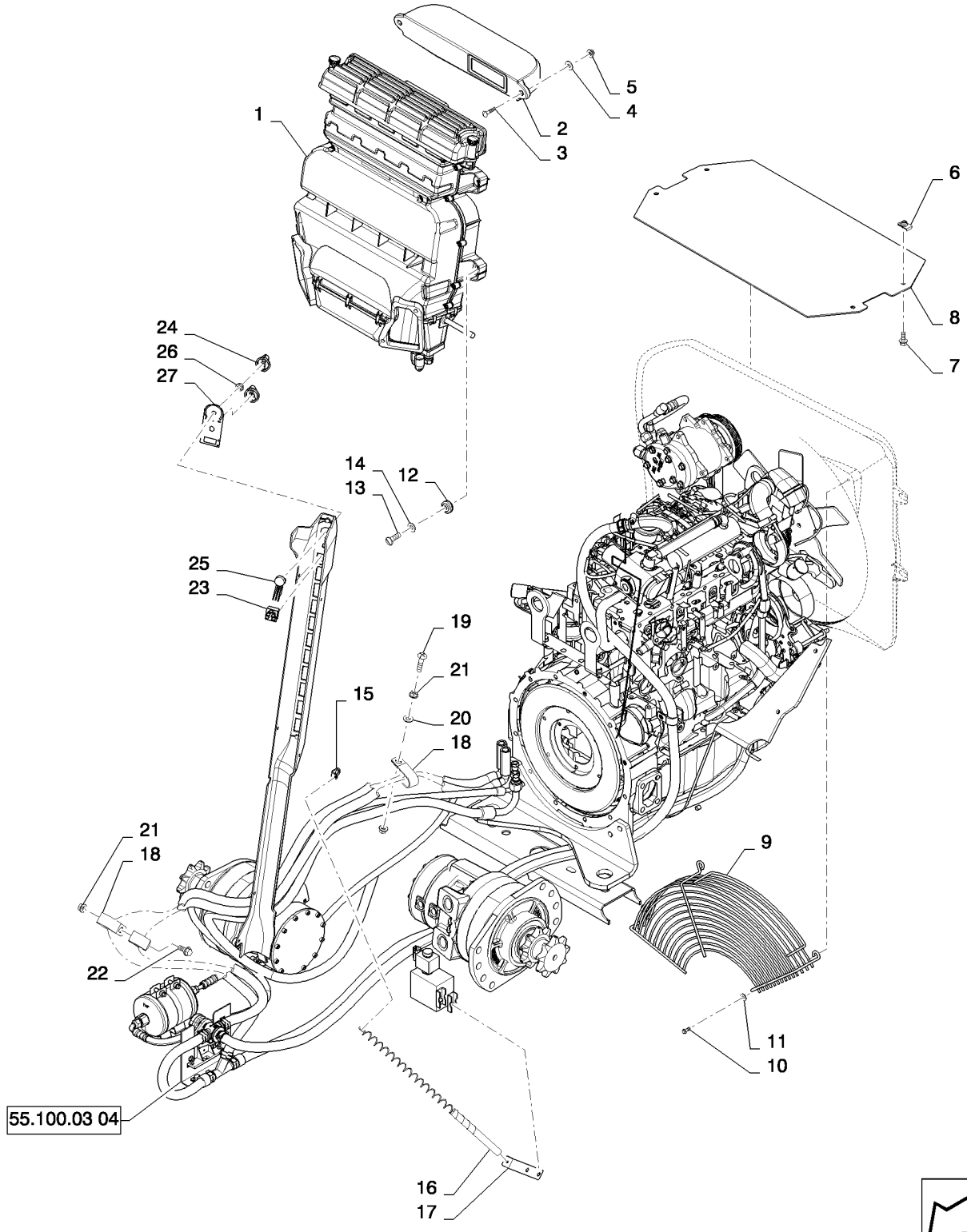

HEATER, LARGE FRAME (L223-L230,C232,C238)
HEATER, LARGE FRAME (L223-L230,C232,C238)
HEATER, LARGE FRAME (L223-L230,C232,C238)
HEATER, LARGE FRAME (L223-L230,C232,C238)

R	N	P.N.	MOD	Q	Denominação Description	Description Bezeichnung	Denominacion Beskrivelse	Descrizione Beschrijving	L.C.
1		84267543		1	AQUECEDOR	HEATER	CALENTADOR	RISCALDATORE	105R
					CHAUFFAGE	HEIZUNG	VARMEAPPARAT	VERWARMING	
2		84280313		1	DUTO DE AR, Intake	AIR DUCT	CONDUCTO DE AIRE	CONDOTTO ARIA	224C
					CONDUITE D'AIR	LUFTKANAL	LUFTKANAL	LUCHTKANAAL	
3		86512441		2	PARAFUSO, Short NK, M6 x 30, Cl8.8, Full Thd				
						CARRIAGE BOLT	PERNO ALOMADO	BULLONE A TESTA TONI	P123
					VIS A TETE BOMBEE	SCHLOSSSCHRAUBE	BRÆDDEBOLT	SLOTBOUT	
4		87655042		2	ARRUELA ESPECIAL, M8, 8.80 X 17.5 X 2.2 HTS				
						SPECIAL WASHER	ARANDELA ESPECIAL	RONDELLA SPECIALE	Z333
					RONDELLE SPECIALE	SPEZIALUNTERLEGSCH	SPECIALSKIVE	SPECIALE RING	
5		86619800		2	CONTRA PORCA, M6 x 1, Flg, Cl 8				
						LOCK NUT	TUERCA DE BLOQUEO	DADO DI BLOCCAGGIO	P263
					CONTRE-ECROU	SICHERUNGSMUTTER	LÅSEMØTRIK	BORGMOER	
6		86625074		4	PORCA, M8, U	NUT	TUERCA	DADO	010D
					ECROU	MUTTER	MØTRIK	MOER	
7		9804258		4	PARAFUSO, Hex Flg, M8 x 20, 8.8				
						BOLT	PERNO	BULLONE	140B
					VIS	SCHRAUBE	BOLT	BOUT	
8		84331307		1	TELA, No AC, Tilt Hood, Gray				
						SCREEN	PANTALLA	FILTRO; SCHERMO	047S
					TAMIS	GITTER; ABSCHIRMUNG	SKÆRM	SCHERM	
9		84335903		1	PROTEÇÃO, Fan	GUARD	DEFENSA	PROTEZIONE	070R
					PROTECTION	SCHUTZABDECKUNG	BESKYTTELSESSKÆRM	AFSCHERMING	
10		84137412		3	PARAFUSO, Bosscrew, M6 X 18				
						SCREW	TORNILLO	VITE	040V
					VIS	SCHRAUBE	SKRUE	SCHROEF	
11		86624182		3	ARRUELA PLANA, M6 x 18 x 1.6				
						WASHER	ARANDELA	RONDELLA	131R
					RONDELLE	UNTERLEGSCHEIBE	FLADSKIVE	SLUITRING	
12		87436247		4	ENCHIMENTO ROSCADO, M6, Blind Threaded				
						THREADED INSERT	PIEZA DE INS. ROSCAD/	INSERTO FILETTATO	054I
					INSERT FILETE	GEWINDEEINSATZ	GEVINDINDSATS	INZETST. MET SCHROEI	
13		86511833		4	PARAFUSO, Cross Pan Hd, M6 x 40				
						SCREW	TORNILLO	VITE	040V
					VIS	SCHRAUBE	SKRUE	SCHROEF	
14		86624183		4	ARRUELA PLANA, M6 x 25 x 1.6				
						WASHER	ARANDELA	RONDELLA	131R
					RONDELLE	UNTERLEGSCHEIBE	FLADSKIVE	SLUITRING	
15		84361522		1	SUPORTE	BRACKET	SOPORTE	STAFFA	225S
					SUPPORT	HALTERUNG	BESLAG	STEUN	
16		412679A2		2	MOLA, Heater Hose	SPRING	RESORTE	MOLLA	8315
					RESSORT	FEDER	FJEDER	VEER	
17		84370705		1	SUPORTE	BRACKET	SOPORTE	STAFFA	225S
					SUPPORT	HALTERUNG	BESLAG	STEUN	
18		D39696		2	BRACADEIRA	CLAMP	COLLAR	MORSETTO	1640
					COLLIER	SCHELLE	CLAMP	CLAMP	
19		350459		1	PARAFUSO, Short NK, M10 x 50, Cl8.8, Full Thd				
						SCREW	TORNILLO	VITE	040V
					VIS	SCHRAUBE	SKRUE	SCHROEF	

50.200.04		p2	03/11

HEATER, LARGE FRAME (L223-L230,C232,C238)
HEATER, LARGE FRAME (L223-L230,C232,C238)
HEATER, LARGE FRAME (L223-L230,C232,C238)
HEATER, LARGE FRAME (L223-L230,C232,C238)

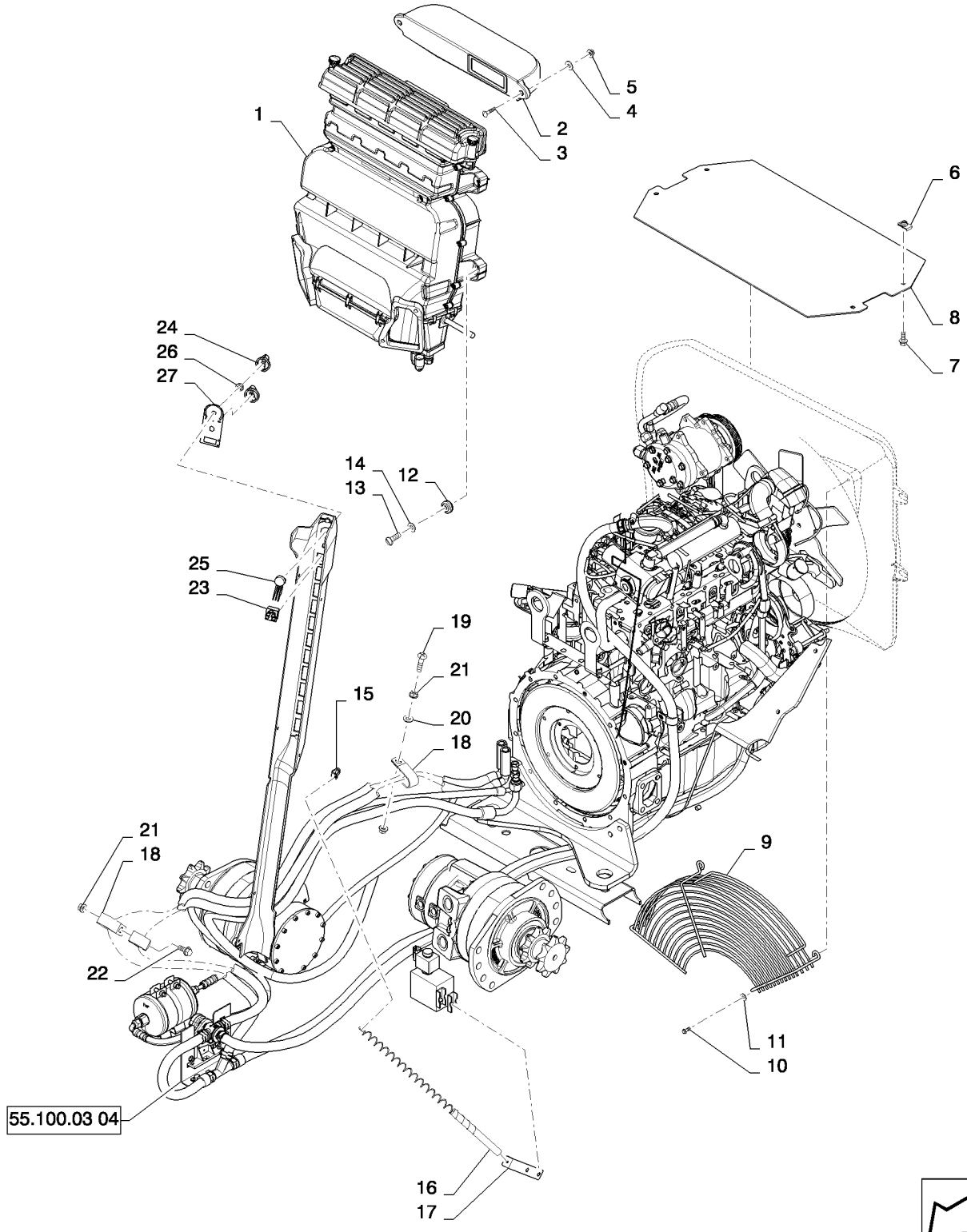

HEATER, LARGE FRAME (L223-L230,C232,C238)
HEATER, LARGE FRAME (L223-L230,C232,C238)
HEATER, LARGE FRAME (L223-L230,C232,C238)
HEATER, LARGE FRAME (L223-L230,C232,C238)

R	N	P.N.	MOD	Q	Denominação Description Bezeichnung Beskrivelse Descrizione Beschrijving	L.C.
20		87655046		1	ARRUELA ESPECIAL, M10, 10.65 X 23.0 X 2.2 HTS SPECIAL WASHER ARANDELA ESPECIAL RONDELLA SPECIALE RONDELLE SPECIALE SPEZIALUNTERLEGSCH SPECIALSKIVE SPECIALE RING	Z333
21		9804278		3	PORCA, M10 x 1.5, Flg, Cl 8 NUT TUERCA DADO ECROU MUTTER MØTRIK MOER	010D
22		9804261		1	PARAFUSO, Hex Flg, M10 x 25, 8.8 BOLT PERNO BULLONE VIS SCHRAUBE BOLT BOUT	140B
23		86729669		1	INTERRUPTOR, Blower/Light SWITCH INTERRUPTOR INTERRUTTORE CONTACTEUR SCHALTER KONTAKT SCHAKELAAR	075I
24		86729670		2	MAÇANETA KNOB MANDO MANOPOLA BOUTON RUNDGRIFF GREB KNOP	150P
25		86729675		1	POTENCIÔMETRO, Switch POTENTIOMETER POTENCIÓMETRO POTENZIOMETRO POTENTIOMETRE POTENTIOMETER POTENTIOMETER POTENTIOMETER	550P
26		87310592		2	PORCA NUT TUERCA DADO ECROU MUTTER MØTRIK MOER	010D
27		84347261		1	ADESIVO, HVAC, Heat Only DECAL CALCOMANÍA DECALCOMANIA AUTOCOLLANT AUFKLEBER TRANSFER STICKER	012D

50.200.05		p1	08/11

HEATER (ALL NH)
HEATER (ALL NH)
HEATER (ALL NH)
HEATER (ALL NH)

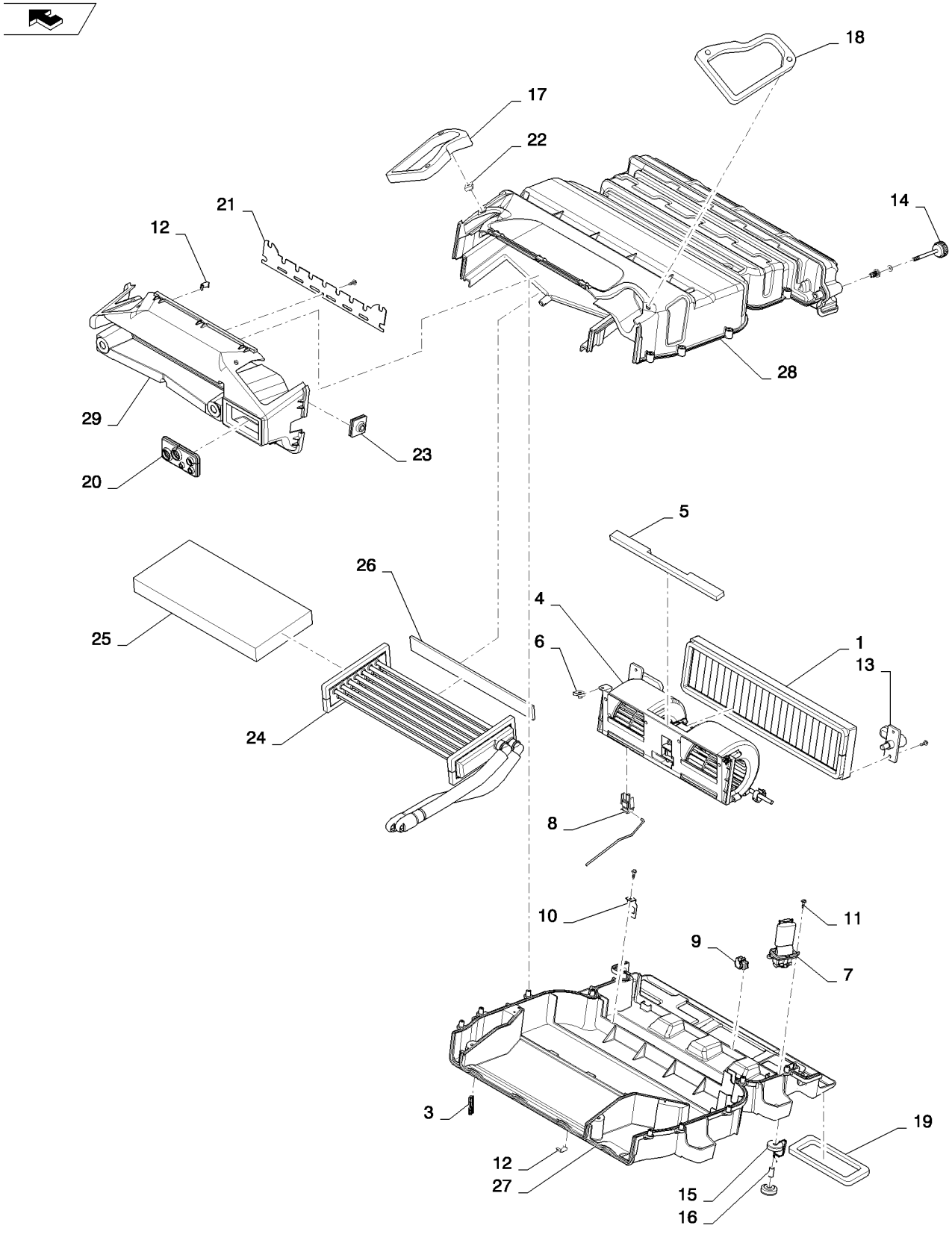

HEATER (ALL NH)
HEATER (ALL NH)
HEATER (ALL NH)
HEATER (ALL NH)

R	N	P.N.	MOD	Q	Denominação Description	Description Bezeichnung	Denominacion Beskrivelse	Descrizione Beschrijving	L.C.
1		84376814		1	FILTRO DA CABINE, Air, Service				
						CAB FILTER	FILTRO DE CABINA	FILTRO CABINA	063F
					FILTRE DE LA CABINE	KABINENFILTER	KABINEFILTER	CABINEFILTER	
2		84376815		1	FILTRO DA CABINE, Air, Charcoal, Service, Not Shown				
						CAB FILTER	FILTRO DE CABINA	FILTRO CABINA	063F
					FILTRE DE LA CABINE	KABINENFILTER	KABINEFILTER	CABINEFILTER	
3		84380586		1	ESTOJO, Filter	CASE	ESTUCHE	CASSA; SCATOLA	101A
					CARTER	GEHÄUSE	KASSE	HUIS	
4		84380587		1	MOTOR ELÉTRICO, Blower				
						ELECTRIC MOTOR	MOTOR ELÉCTRICO	MOTORE ELETTRICO	128M
					MOTEUR ELECTRIQUE	ELEKTROMOTOR	EL-MOTOR	ELEKTROMOTOR	
5		84380588		1	JUNTA, Blower	GASKET	JUNTA	GUARNIZIONE	123G
					JOINT	DICHTUNG	PAKNING	PAKKING	
6		84380589		2	GRAMPO DO CABO, Spring, Blower				
						CABLE CLIP	ABRAZADERA DE CABLE	FERMO PER CAVO	P656
					ATTACHE-CABLE	KABELSCHELLE	KABELKLEMME	KABELKLEM	
7		84380590		1	RESISTOR	RESISTOR	RESISTENCIA	RESISTORE	040R
					RESISTANCE	WIDERSTAND	MODSTAND	WEERSTAND	
8		84380592		1	CHICOTE, W/ Relay	WIRE HARNESS	GRUPO DE CABLES	CABLAGGIO	070I
					FAISCEAU ELECTRIQUE	KABELBAUM	KABELNET	KABELBOOM	
9		84380593		3	GRAMPO DO CABO, Harness				
						CABLE CLIP	ABRAZADERA DE CABLE	FERMO PER CAVO	P656
					ATTACHE-CABLE	KABELSCHELLE	KABELKLEMME	KABELKLEM	
10		84380594		1	SUPORTE, Relay	BRACKET	SOPORTE	STAFFA	225S
					SUPPORT	HALTERUNG	BESLAG	STEUN	
11		84380596		23	PARAFUSO, 4 X 16	SCREW	TORNILLO	VITE	040V
					VIS	SCHRAUBE	SKRUE	SCHROEF	
12		84380597		11	ESTOJO, Cup, Condensate	CASE	ESTUCHE	CASSA; SCATOLA	101A
					CARTER	GEHÄUSE	KASSE	HUIS	
13		84380598		2	TRINCO, Filter, Closing	LATCH HOOK	GANCHO DE PESTILLO	GANCIO DISPOS. CHIUS	Z305
					CROCHET DE VERROUI	VERRIEGELUNGSHAKEN	SMÆKKROG	VERGRENDELHAAK	
14		84380599		2	MAÇANETA, Closing	KNOB	MANDO	MANOPOLA	150P
					BOUTON	RUNDGRIFF	GREB	KNOP	
15		5192101		8	BLOCO, Anti-vibration	BLOCK	BLOQUE	BLOCCO	074B
					BLOC	BLOCK	MOTORBLOK	BLOK	
16		84380601		4	ESPAÇADOR, Washer, Silent, Block				
						SPACER	SEPARADOR	DISTANZIALE	075D
					ENTRETOISE	DISTANZSTÜCK	AFSTANDSSTYKKE	AFSTANDSSTUK	
17		84380602		1	JUNTA, Left, Air Outlet	GASKET	JUNTA	GUARNIZIONE	123G
					JOINT	DICHTUNG	PAKNING	PAKKING	
18		84380603		1	JUNTA, Right, Air Outlet	GASKET	JUNTA	GUARNIZIONE	123G
					JOINT	DICHTUNG	PAKNING	PAKKING	
19		84380604		1	JUNTA, Air Inlet	GASKET	JUNTA	GUARNIZIONE	123G
					JOINT	DICHTUNG	PAKNING	PAKKING	
20		84380608		1	JUNTA, Hose Interface	GASKET	JUNTA	GUARNIZIONE	123G
					JOINT	DICHTUNG	PAKNING	PAKKING	
21		84380609		1	PLACA, Plate, Water Condensate				
						PLATE	PLACA	PIASTRA	105P
					PLAQUE	PLATTE	PLADE	PLAAT	

50.200.05		p2	08/11

HEATER (ALL NH)
HEATER (ALL NH)
HEATER (ALL NH)
HEATER (ALL NH)

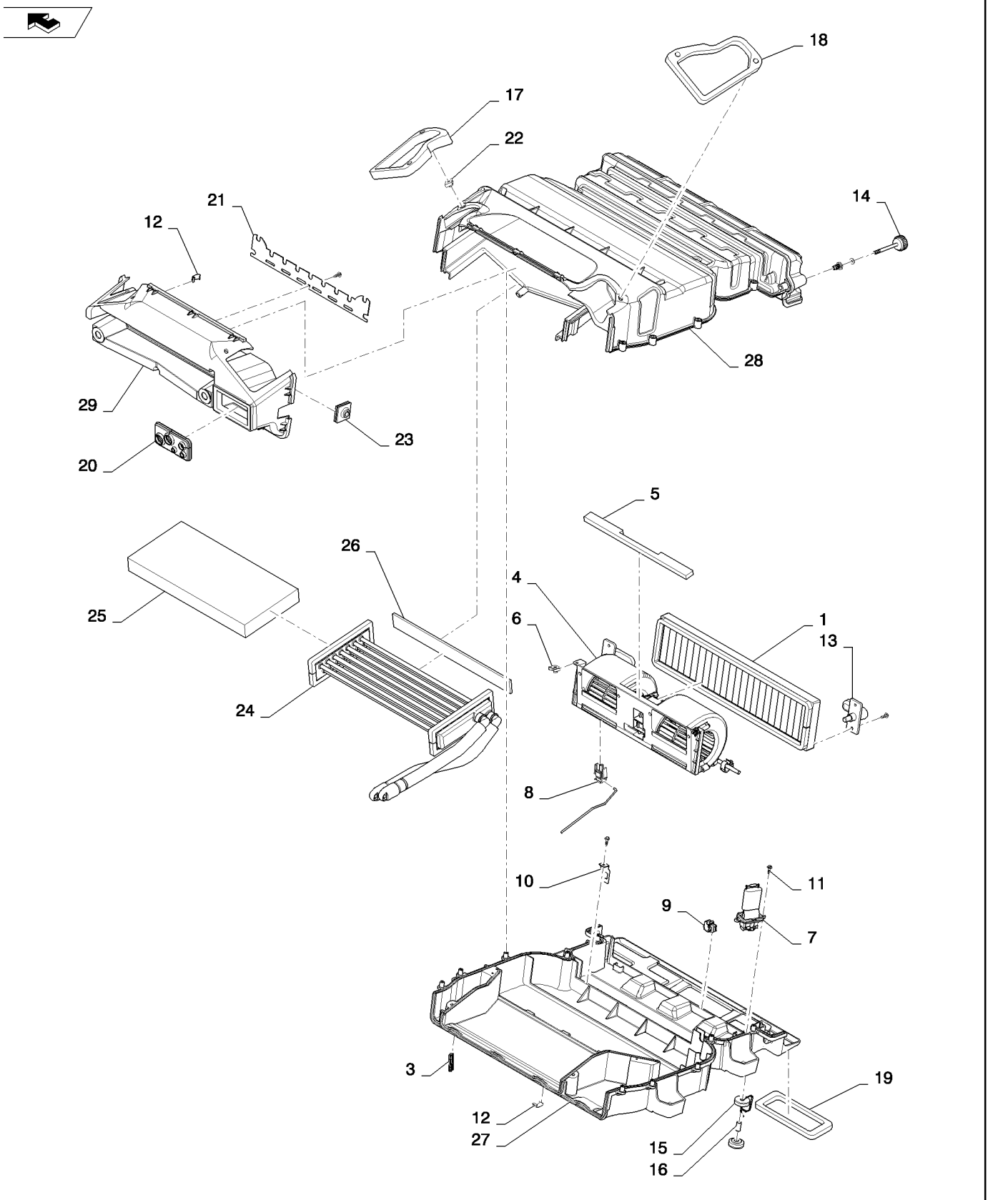

HEATER (ALL NH)
HEATER (ALL NH)
HEATER (ALL NH)
HEATER (ALL NH)

R	N	P.N.	MOD	Q	Denominação Description Bezeichnung	Description Bezeichnung	Denominacion Beskrivelse	Descrizione Beschrijving	L.C.
22		**84380611**		4	GRAMPO, Spring, M6 for Ducts				
						CLIP	ABRAZADERA	FERMO	045F
					COLLIER	KLAMMER	KLIPS	KLEM	
23		**84380612**		1	JUNTA, Harness	GASKET	JUNTA	GUARNIZIONE	123G
					JOINT	DICHTUNG	PAKNING	PAKKING	
24		**84380613**		1	AQUECEDOR	HEATER	CALENTADOR	RISCALDATORE	105R
					CHAUFFAGE	HEIZUNG	VARMEAPPARAT	VERWARMING	
25		**84380614**		1	JUNTA, Heater Core	GASKET	JUNTA	GUARNIZIONE	123G
					JOINT	DICHTUNG	PAKNING	PAKKING	
26		**84380615**		1	JUNTA, Heater, Lateral	GASKET	JUNTA	GUARNIZIONE	123G
					JOINT	DICHTUNG	PAKNING	PAKKING	
27		**84381032**		1	CAIXA, Lower	BOX	CAJA	CASSA; SCATOLA	035S
					BOITIER	KASTEN; OFF KASTENAI	KASSE	DOOS	
28		**84381034**		1	CAIXA, Upper	BOX	CAJA	CASSA; SCATOLA	035S
					BOITIER	KASTEN; OFF KASTENAI	KASSE	DOOS	
29		**84381035**		1	CAIXA, Bottom	BOX	CAJA	CASSA; SCATOLA	035S
					BOITIER	KASTEN; OFF KASTENAI	KASSE	DOOS	

50.200.06		p1	08/11

HEATER W/AC (L218-C238)
HEATER W/AC (L218-C238)
HEATER W/AC (L218-C238)
HEATER W/AC (L218-C238)

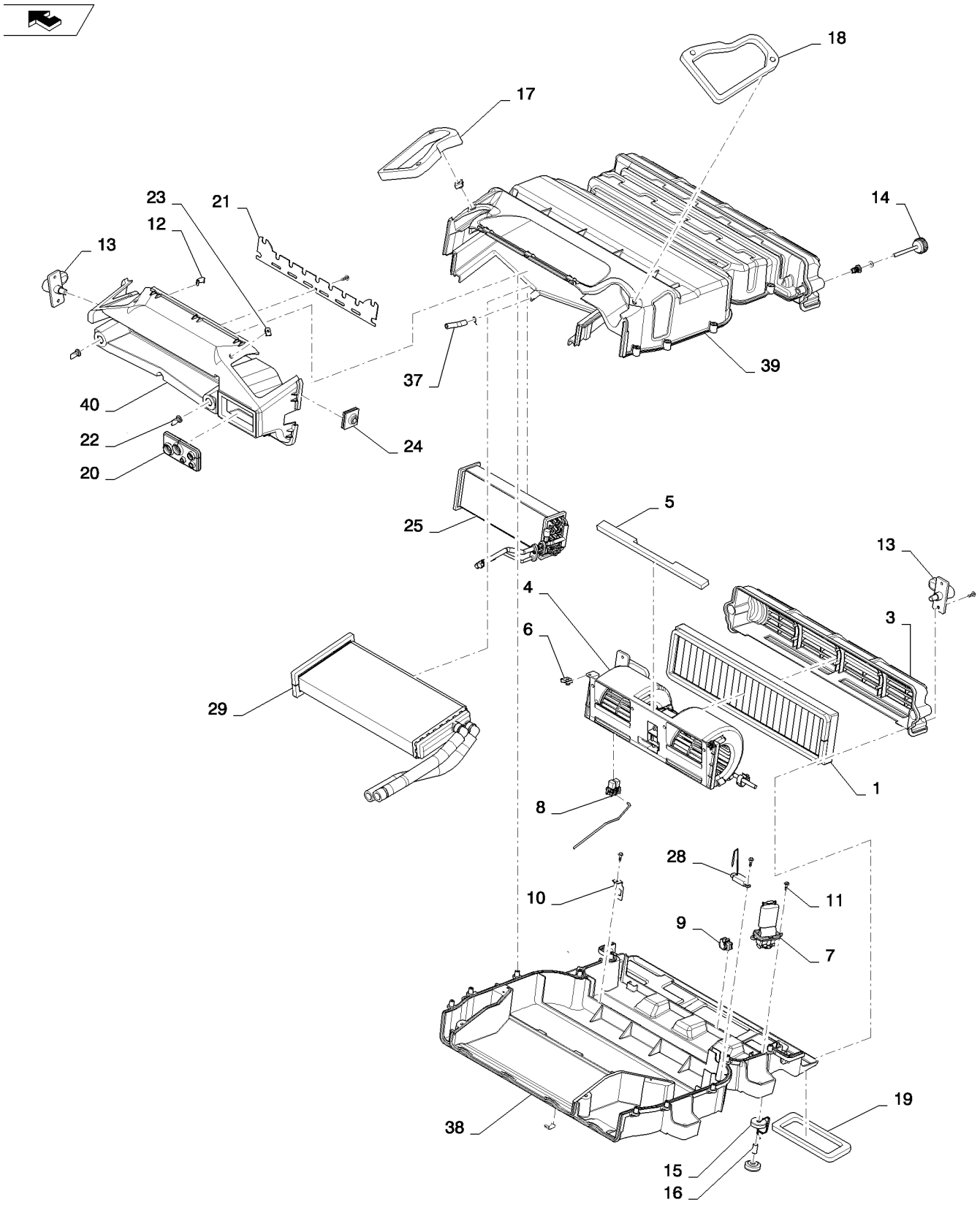

HEATER W/AC (L218-C238)
HEATER W/AC (L218-C238)
HEATER W/AC (L218-C238)
HEATER W/AC (L218-C238)

R	N	P.N.	MOD	Q	Denominação Description	Description Bezeichnung	Denominacion Beskrivelse	Descrizione Beschrijving	L.C.
1		84376814		1	FILTRO DA CABINE, Air, Service				
						CAB FILTER	FILTRO DE CABINA	FILTRO CABINA	063F
					FILTRE DE LA CABINE	KABINENFILTER	KABINEFILTER	CABINEFILTER	
2		84376815		1	FILTRO DA CABINE, Air, Charcoal, Service, Not Shown				
						CAB FILTER	FILTRO DE CABINA	FILTRO CABINA	063F
					FILTRE DE LA CABINE	KABINENFILTER	KABINEFILTER	CABINEFILTER	
3		84380586		1	ESTOJO, Filter	CASE	ESTUCHE	CASSA; SCATOLA	101A
					CARTER	GEHÄUSE	KASSE	HUIS	
4		84380587		1	MOTOR ELÉTRICO, Blower				
						ELECTRIC MOTOR	MOTOR ELÉCTRICO	MOTORE ELETTRICO	128M
					MOTEUR ELECTRIQUE	ELEKTROMOTOR	EL-MOTOR	ELEKTROMOTOR	
5		84380588		1	JUNTA, Blower	GASKET	JUNTA	GUARNIZIONE	123G
					JOINT	DICHTUNG	PAKNING	PAKKING	
6		84380589		2	GRAMPO DO CABO, Spring, Blower				
						CABLE CLIP	ABRAZADERA DE CABLE	FERMO PER CAVO	P656
					ATTACHE-CABLE	KABELSCHELLE	KABELKLEMME	KABELKLEM	
7		84380590		1	RESISTOR	RESISTOR	RESISTENCIA	RESISTORE	040R
					RESISTANCE	WIDERSTAND	MODSTAND	WEERSTAND	
8		84380592		1	CHICOTE, W/ Relay	WIRE HARNESS	GRUPO DE CABLES	CABLAGGIO	070I
					FAISCEAU ELECTRIQUE	KABELBAUM	KABELNET	KABELBOOM	
9		84380593		3	GRAMPO DO CABO, Harness				
						CABLE CLIP	ABRAZADERA DE CABLE	FERMO PER CAVO	P656
					ATTACHE-CABLE	KABELSCHELLE	KABELKLEMME	KABELKLEM	
10		84380594		1	SUPORTE, Relay	BRACKET	SOPORTE	STAFFA	225S
					SUPPORT	HALTERUNG	BESLAG	STEUN	
11		84380596		23	PARAFUSO, 4 X 16	SCREW	TORNILLO	VITE	040V
					VIS	SCHRAUBE	SKRUE	SCHROEF	
12		84380597		11	ESTOJO, Cup, Condensate	CASE	ESTUCHE	CASSA; SCATOLA	101A
					CARTER	GEHÄUSE	KASSE	HUIS	
13		84380598		2	TRINCO, Filter Closing	LATCH HOOK	GANCHO DE PESTILLO	GANCIO DISPOS. CHIUS	Z305
					CROCHET DE VERROUI	VERRIEGELUNGSHAKEN	SMÆKKROG	VERGRENDELHAAK	
14		84380599		2	MAÇANETA, Closing	KNOB	MANDO	MANOPOLA	150P
					BOUTON	RUNDGRIFF	GREB	KNOP	
15		5192101		8	BLOCO, Anti-vibration	BLOCK	BLOQUE	BLOCCO	074B
					BLOC	BLOCK	MOTORBLOK	BLOK	
16		84380601		4	ESPAÇADOR, Silent Block	SPACER	SEPARADOR	DISTANZIALE	075D
					ENTRETOISE	DISTANZSTÜCK	AFSTANDSSTYKKE	AFSTANDSSTUK	
17		84380602		1	JUNTA, Left, Air Outlet	GASKET	JUNTA	GUARNIZIONE	123G
					JOINT	DICHTUNG	PAKNING	PAKKING	
18		84380603		1	JUNTA, Right, Air Outlet	GASKET	JUNTA	GUARNIZIONE	123G
					JOINT	DICHTUNG	PAKNING	PAKKING	
19		84380604		1	JUNTA, Air Inlet	GASKET	JUNTA	GUARNIZIONE	123G
					JOINT	DICHTUNG	PAKNING	PAKKING	
20		84380608		1	JUNTA, Hose Interface	GASKET	JUNTA	GUARNIZIONE	123G
					JOINT	DICHTUNG	PAKNING	PAKKING	
21		84380609		1	PLACA, Water Condensate	PLATE	PLACA	PIASTRA	105P
					PLAQUE	PLATTE	PLADE	PLAAT	

50.200.06		p2	08/11

HEATER W/AC (L218-C238)
HEATER W/AC (L218-C238)
HEATER W/AC (L218-C238)
HEATER W/AC (L218-C238)

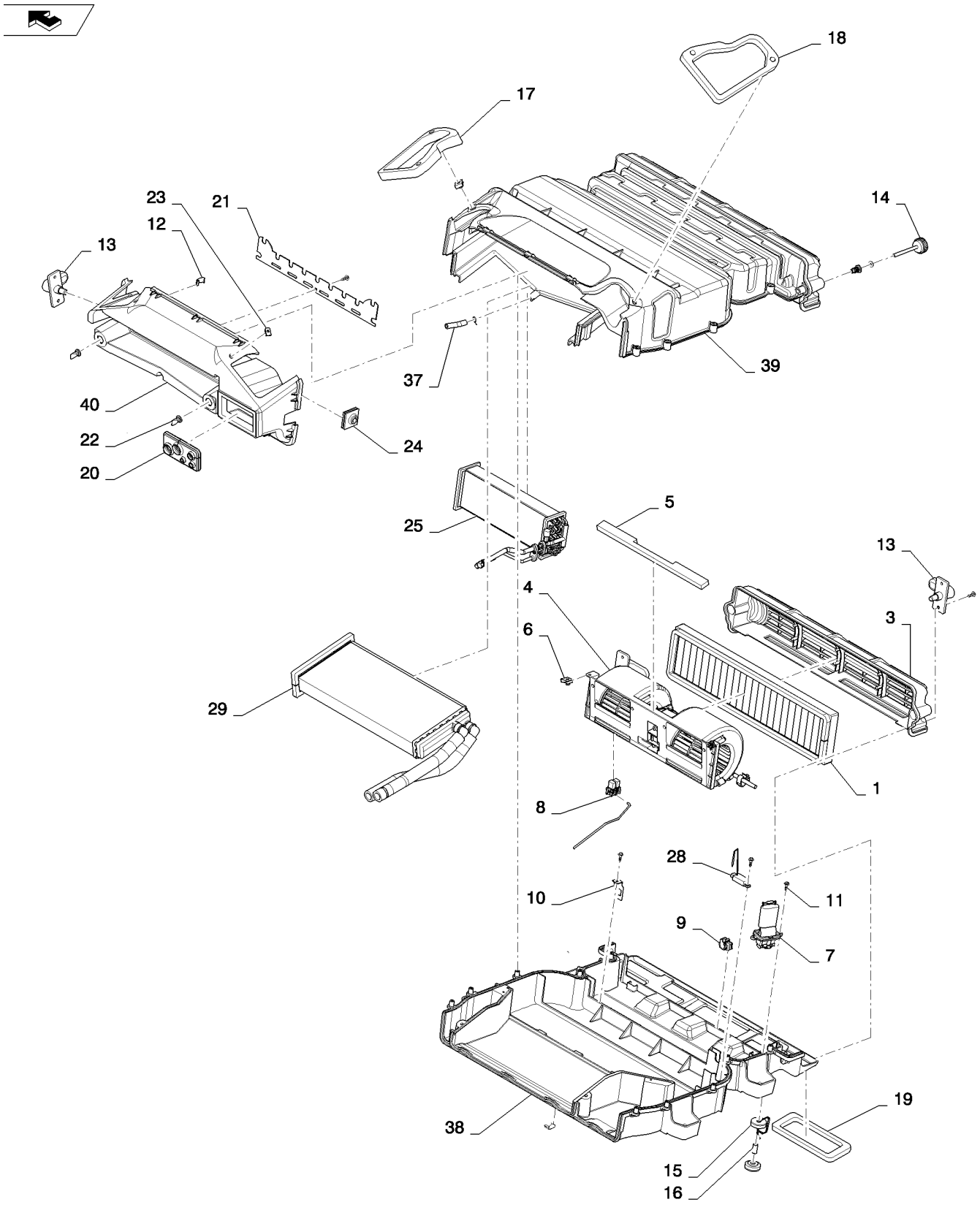

HEATER W/AC (L218-C238)
HEATER W/AC (L218-C238)
HEATER W/AC (L218-C238)
HEATER W/AC (L218-C238)

R	N	P.N.	MOD	Q	Denominação Description	Description Bezeichnung	Denominacion Beskrivelse	Descrizione Beschrijving	L.C.
22		84380610		2	VÁLVULA, Water Condensate				
						VALVE	VÁLVULA	VALVOLA	9620
					SOUPAPE	VENTIL	VENTIL	KLEP	
23		84380611		4	GRAMPO, Spring, M6 for Ducts				
						CLIP	ABRAZADERA	FERMO	045F
					COLLIER	KLAMMER	KLIPS	KLEM	
24		84380612		1	JUNTA, Harness	GASKET	JUNTA	GUARNIZIONE	123G
					JOINT	DICHTUNG	PAKNING	PAKKING	
25		84380613		1	AQUECEDOR	HEATER	CALENTADOR	RISCALDATORE	105R
					CHAUFFAGE	HEIZUNG	VARMEAPPARAT	VERWARMING	
26		84380614		1	JUNTA, Heater Core	GASKET	JUNTA	GUARNIZIONE	123G
					JOINT	DICHTUNG	PAKNING	PAKKING	
27		84380615		1	JUNTA, Heater Lateral	GASKET	JUNTA	GUARNIZIONE	123G
					JOINT	DICHTUNG	PAKNING	PAKKING	
28		84380616		1	TERMOSTATO, Electronic	THERMOSTAT	TERMOSTATO	TERMOSTATO	096T
					THERMOSTAT	THERMOSTAT	TERMOSTAT	THERMOSTAAT	
29		84380617		1	EVAPORADOR, Incl. Ref. 30 thru 36				
						EVAPORATOR	EVAPORADOR	EVAPORATORE	064E
					EVAPORATEUR	VERDAMPFER	FORDAMPER	VERDAMPER	
30		84380618		1	EVAPORADOR, Pipe, Inlet/Outlet Freon (Not Shown)				
						EVAPORATOR	EVAPORADOR	EVAPORATORE	064E
					EVAPORATEUR	VERDAMPFER	FORDAMPER	VERDAMPER	
31		84380619		1	JUNTA, Evaporator Core (Not Shown)				
						GASKET	JUNTA	GUARNIZIONE	123G
					JOINT	DICHTUNG	PAKNING	PAKKING	
32		84380620		1	JUNTA, Evaporator Lateral (Not Shown)				
						GASKET	JUNTA	GUARNIZIONE	123G
					JOINT	DICHTUNG	PAKNING	PAKKING	
33		84380621		1	VÁLVULA, Expansion (Not Shown)				
						VALVE	VÁLVULA	VALVOLA	9620
					SOUPAPE	VENTIL	VENTIL	KLEP	
34		84380622		1	PARAFUSO, M6 X 55, For Expansion Valve (Not Shown)				
						SCREW	TORNILLO	VITE	040V
					VIS	SCHRAUBE	SKRUE	SCHROEF	
35		84380623		1	TAMPA, Freon Inlet Cover, 5/8-18 (Not Shown)				
						CAP	TAPÓN	TAPPO	052T
					CAPUCHON	KAPPE	TANKDÆKSEL	DOP	
36		84380624		1	TAMPA, Freon Outlet Cover, 7/8-14 (Not Shown)				
						CAP	TAPÓN	TAPPO	052T
					CAPUCHON	KAPPE	TANKDÆKSEL	DOP	
37		84380625		1	MANGUEIRA, Tube, Condensate				
						HOSE	TUBO	TUBO FLESSIBILE	030M
					FLEXIBLE	SCHLAUCH	SLANGE	SLANG	
38		84381032		1	CAIXA, Lower	BOX	CAJA	CASSA; SCATOLA	035S
					BOITIER	KASTEN; OFF KASTENAI	KASSE	DOOS	
39		84381034		1	CAIXA, Upper	BOX	CAJA	CASSA; SCATOLA	035S
					BOITIER	KASTEN; OFF KASTENAI	KASSE	DOOS	
40		84381035		1	CAIXA, Bottom	BOX	CAJA	CASSA; SCATOLA	035S
					BOITIER	KASTEN; OFF KASTENAI	KASSE	DOOS	

SECTION INDEX
55 - Sistemas elétricos

55.100.01		CHASSIS OPTIONS HARNESS, MECH LG (L223-L230)
55.100.01		ELECTRICAL MECH, LG OPEN CAB (L223-L230)
55.100.02		ELECTRICAL MECH, LG (L223-L230)
55.100.02	01	ELECTRICAL ELECTRO-HYDRAULIC LG (L223-L230,C232,C238)
55.100.02	02	ELECTRICAL ELECTRO-HYDRAULIC OPEN CAB LG (L223-L230,C232,C238)
55.100.05		CONNECTIONS CABLE FOR ENGINE INJECTION - PLUG GLOW (504385861 - 504385863)
55.100.07	01	BATTERY DISCONNECT LG (L223-L230,C232,C238)
55.100.07	02	NO BATTERY DISCONNECT LG (L223-L230,C232,C238)
55.100.08		MULTIFUNCTION ELECTRICAL (L218-L230,C232,C238)
55.100.09		NO MULTIFUNCTION ELECTRICAL (ALL NH)
55.100.10		ELECTRICAL ASSEMBLY SOCKET NA (ALL NH)
55.100.10		ELECTRICAL ASSEMBLY SOCKET EU (ALL NH)
55.101.01		ENGINE ELECTRICAL LG VERT (L223-L230,C232,C238)
55.101.02		BATTERY RETENTION MED (ALL NH)
55.301.02		ENGINE, ALTERNATOR MOUNTING (504388098)
55.414.01	02	DIAGNOSTIC SENSOR (504308864)
55.418.01		INSTRUMENTS AND ELECTRICAL VERT NH (L223-L230,C232,C238)
55.418.01	01	COMMON INSTRUMENTS AND ELEC (ALL NH)
55.512.01		IGNITION AND DISPLAY, KEYED/KEYLESS NH (ALL NH)
55.514.01		EU ROAD LIGHTS LG (L223-L230,C232,C238)
55.514.02		NO ROAD LIGHTS OR TURN SIGNAL (L223-L230,C232,C238)
55.514.03		TURN SIGNAL LG (L223,L225,L230,C232,C238)
55.514.04		LIGHT W/TURN SIGNAL (ALL NH)
55.514.06		LIGHT W/O TURN SIGNAL (ALL NH)
55.514.07		LAMP WORK REAR ASSEMBLY (ALL NH)
55.514.10		LIGHT W/TURN SIGNAL (ALL NH)

CHASSIS OPTIONS HARNESS, MECH LG (L223-L230)
CHASSIS OPTIONS HARNESS, MECH LG (L223-L230)
CHASSIS OPTIONS HARNESS, MECH LG (L223-L230)
CHASSIS OPTIONS HARNESS, MECH LG (L223-L230)

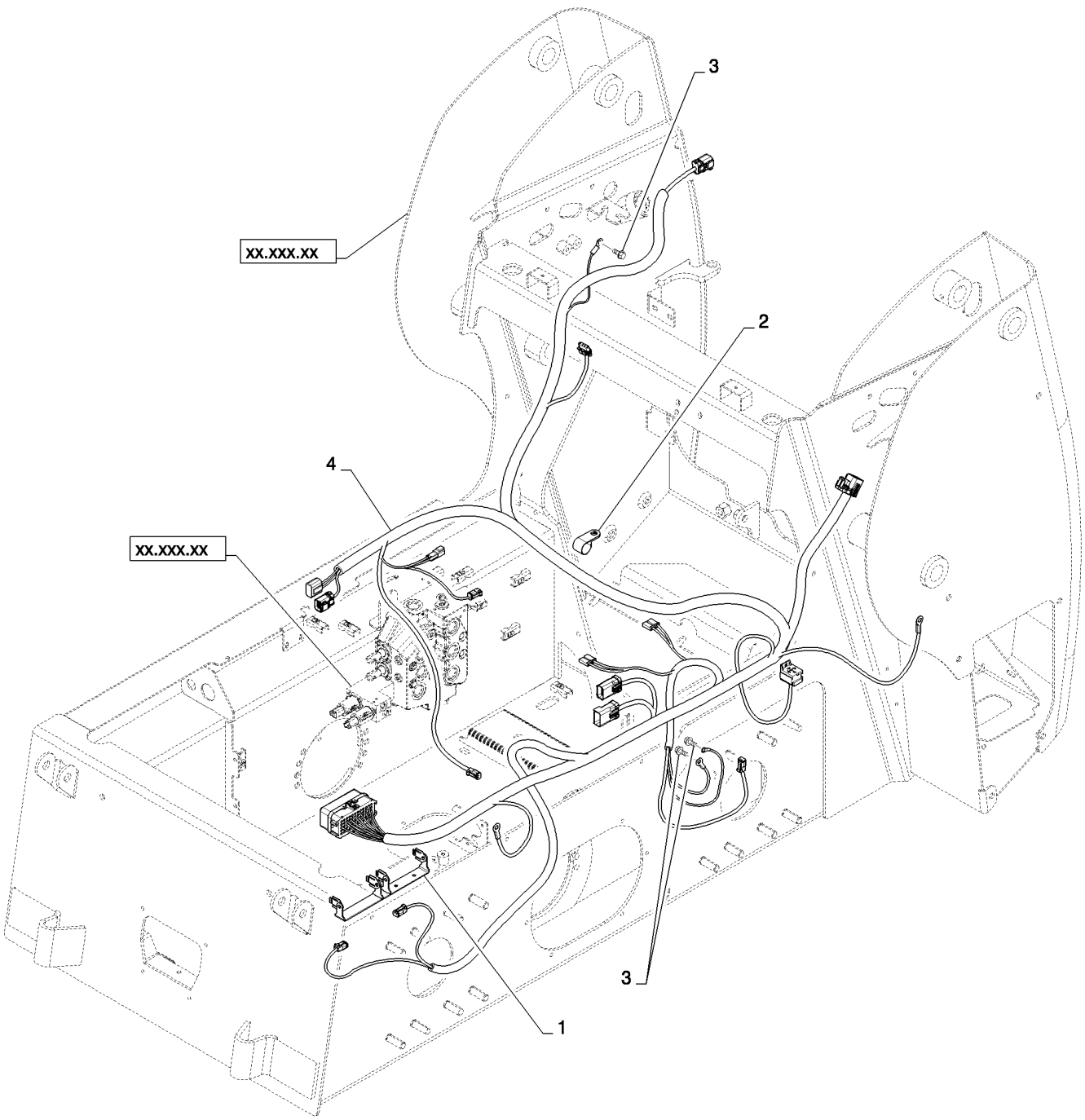

CHASSIS OPTIONS HARNESS, MECH LG (L223-L230)
CHASSIS OPTIONS HARNESS, MECH LG (L223-L230)
CHASSIS OPTIONS HARNESS, MECH LG (L223-L230)
CHASSIS OPTIONS HARNESS, MECH LG (L223-L230)

R	N	P.N.	MOD	Q	Denominação Description Bezeichnung	Description Bezeichnung Beskrivelse	Denominacion Beskrivelse Descrizione	Descrizione Beschrijving Beschrijving	L.C.
1		84285504		1	SUPORTE, Double Fuse Box EQUERRE	BRACKET, SUPPORTING SCHALTER,AUTOM.AUS	PIEZA DE APOYO STOETTEBESLAG	SQUADRETTA DRAAGARM	215S
2		86000810		1	BRAÇADEIRA COLLIER	CLAMP KLEMME	ABRAZADERA SPÆNDEBÅND	MORSETTO KLEM	120M
3		86511841		3	PARAFUSO, Hex Flg, M8 x 16, 8.8 VIS	BOLT SCHRAUBE	PERNO BOLT	BULLONE BOUT	140B
4		84315527		1	CHICOTE, Chassis FAISCEAU ELECTRIQUE	WIRE HARNESS KABELBAUM	GRUPO DE CABLES KABELNET	CABLAGGIO KABELBOOM	070I

ELECTRICAL MECH, LG OPEN CAB (L223-L230)
ELECTRICAL MECH, LG OPEN CAB (L223-L230)
ELECTRICAL MECH, LG OPEN CAB (L223-L230)
ELECTRICAL MECH, LG OPEN CAB (L223-L230)

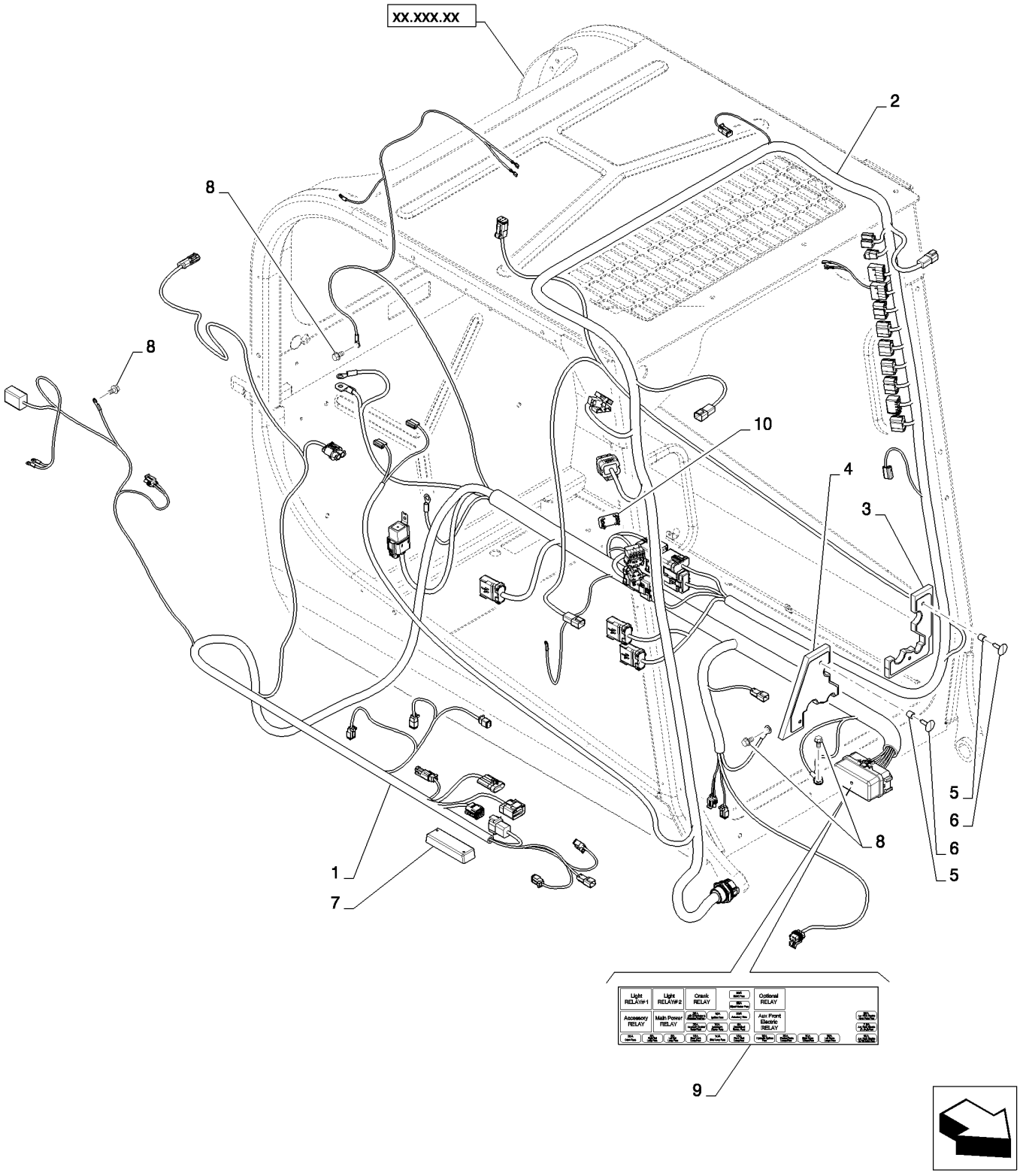

ELECTRICAL MECH, LG OPEN CAB (L223-L230)
ELECTRICAL MECH, LG OPEN CAB (L223-L230)
ELECTRICAL MECH, LG OPEN CAB (L223-L230)
ELECTRICAL MECH, LG OPEN CAB (L223-L230)

R	N	P.N.	MOD	Q	Denominação Description	Description Bezeichnung	Denominacion Beskrivelse	Descrizione Beschrijving	L.C.
1		**84352397**		1	CHICOTE, Chassis Mechanical LG				
						WIRE HARNESS	GRUPO DE CABLES	CABLAGGIO	070I
					FAISCEAU ELECTRIQUE	KABELBAUM	KABELNET	KABELBOOM	
2		**84353936**		1	CHICOTE, Cab Mechanical Basic				
						WIRE HARNESS	GRUPO DE CABLES	CABLAGGIO	070I
					FAISCEAU ELECTRIQUE	KABELBAUM	KABELNET	KABELBOOM	
3		**84309934**		1	VEDAÇÃO, Assy, LH	SEAL	ANILLO DE CIERRE	GUARNIZIONE; TENUTA	132A
					JOINT	DICHTUNG	PAKNING	AFDICHTING	
4		**84309935**		1	VEDAÇÃO, Assy, LH	SEAL	ANILLO DE CIERRE	GUARNIZIONE; TENUTA	132A
					JOINT	DICHTUNG	PAKNING	AFDICHTING	
5		**87035448**		4	ESPAÇADOR	SPACER	SEPARADOR	DISTANZIALE	075D
					ENTRETOISE	DISTANZSTÜCK	AFSTANDSSTYKKE	AFSTANDSSTUK	
6		**86620930**		4	BOTÃO DE IMPULSO	FASTENER	SUJETADOR	DISPOSITIVO DI FISSAG	123B
					ATTACHE	BEFESTIGUNGSELEMEN	LUKKER	BEVESTIGING	
7		**84131374**		1	VÁLVULA, Driver, PWM Prop Aux				
						VALVE	VÁLVULA	VALVOLA	9620
					SOUPAPE	VENTIL	VENTIL	KLEP	
8		**86511841**		6	PARAFUSO, Hex Flg, M8 x 16, 8.8				
						BOLT	PERNO	BULLONE	140B
					VIS	SCHRAUBE	BOLT	BOUT	
9		**84380451**		1	ADESIVO, Fuse Box Layout Mechanical				
						DECAL	CALCOMANÍA	DECALCOMANIA	012D
					AUTOCOLLANT	AUFKLEBER	TRANSFER	STICKER	
10		**126844A1**		1	BUJÃO, Cover	PLUG	TAPÓN	TAPPO	050T
					BOUCHON	STOPFEN	PROP	PLUG	
11		**87313351**		1	GRAMPO, J-clip Insul. M8; Not Shown				
						CLIP	ABRAZADERA	FERMO	045F
					COLLIER	KLAMMER	KLIPS	KLEM	
12		**84420768**		10	BOTÃO DE IMPULSO, Push-in Fastener (Not Shown)				
						FASTENER	SUJETADOR	DISPOSITIVO DI FISSAG	123B
					ATTACHE	BEFESTIGUNGSELEMEN	LUKKER	BEVESTIGING	
13		**84420746**		10	TIRA, Tie (Not Shown)	STRAP	BANDA	FASCETTA	532B
					BRIDE	BAND	STROP	RIEM	

ELECTRICAL MECH, LG (L223-L230)
ELECTRICAL MECH, LG (L223-L230)
ELECTRICAL MECH, LG (L223-L230)
ELECTRICAL MECH, LG (L223-L230)

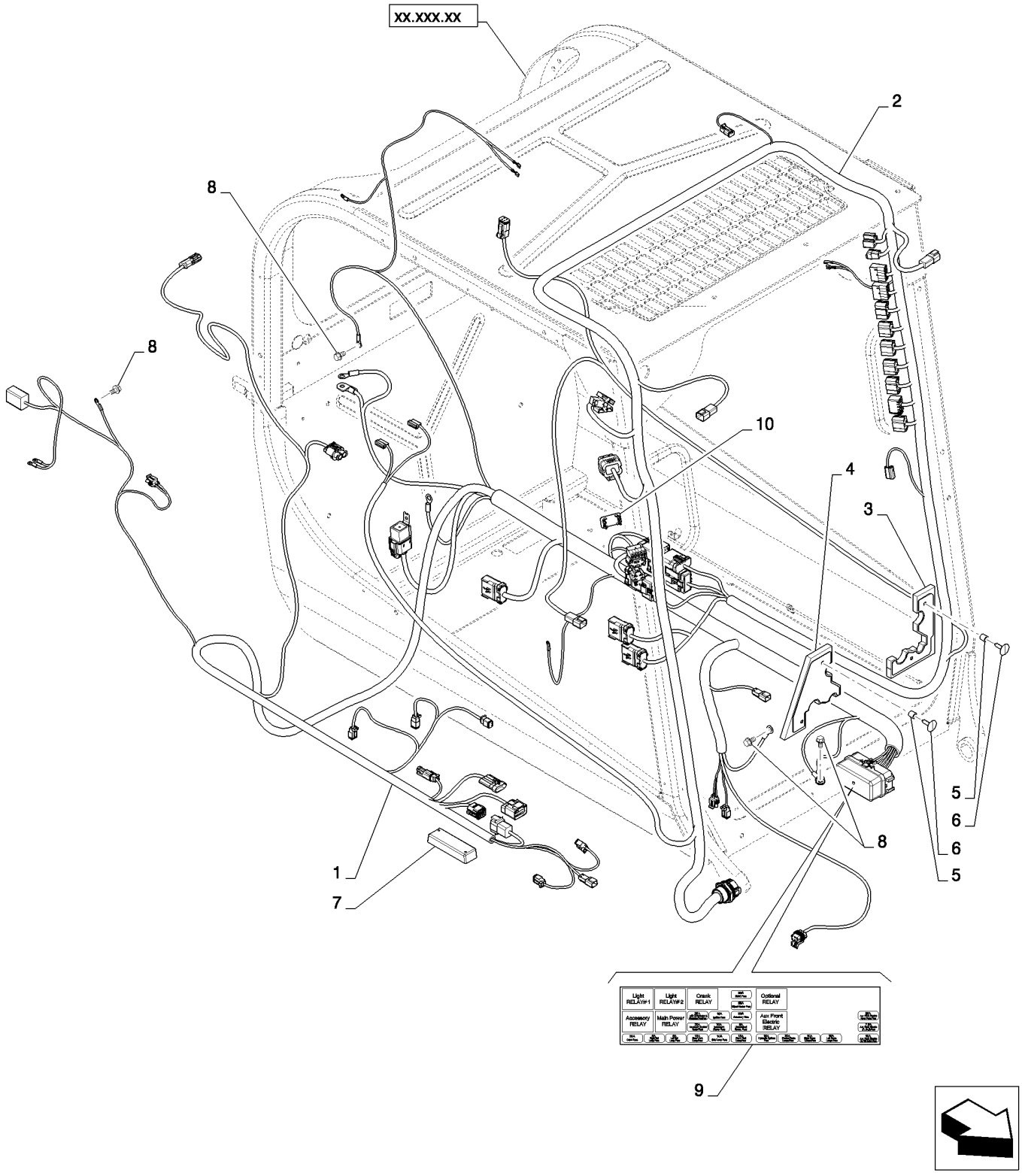

ELECTRICAL MECH, LG (L223-L230)
ELECTRICAL MECH, LG (L223-L230)
ELECTRICAL MECH, LG (L223-L230)
ELECTRICAL MECH, LG (L223-L230)

R	N	P.N.	MOD	Q	Denominação Description	Description Bezeichnung	Denominacion Beskrivelse	Descrizione Beschrijving	L.C.
1		84352397		1	CHICOTE, Chassis Mechanical LG				
						WIRE HARNESS	GRUPO DE CABLES	CABLAGGIO	070I
					FAISCEAU ELECTRIQUE	KABELBAUM	KABELNET	KABELBOOM	
2		84352394		1	CHICOTE, Cab Mechanical	WIRE HARNESS	GRUPO DE CABLES	CABLAGGIO	070I
					FAISCEAU ELECTRIQUE	KABELBAUM	KABELNET	KABELBOOM	
3		84309934		1	VEDAÇÃO, Assy, LH	SEAL	ANILLO DE CIERRE	GUARNIZIONE; TENUTA	132A
					JOINT	DICHTUNG	PAKNING	AFDICHTING	
4		84309935		1	VEDAÇÃO, Assy, LH	SEAL	ANILLO DE CIERRE	GUARNIZIONE; TENUTA	132A
					JOINT	DICHTUNG	PAKNING	AFDICHTING	
5		87035448		4	ESPAÇADOR	SPACER	SEPARADOR	DISTANZIALE	075D
					ENTRETOISE	DISTANZSTÜCK	AFSTANDSSTYKKE	AFSTANDSSTUK	
6		86620930		4	BOTÃO DE IMPULSO	FASTENER	SUJETADOR	DISPOSITIVO DI FISSAG	123B
					ATTACHE	BEFESTIGUNGSELEMEN	LUKKER	BEVESTIGING	
7		84131374		1	VÁLVULA, Driver, PWM Prop Aux				
						VALVE	VÁLVULA	VALVOLA	9620
					SOUPAPE	VENTIL	VENTIL	KLEP	
8		86511841		6	PARAFUSO, Hex Flg, M8 x 16, 8.8				
						BOLT	PERNO	BULLONE	140B
					VIS	SCHRAUBE	BOLT	BOUT	
9		84380451		1	ADESIVO, Fuse Box Layout Mechanical				
						DECAL	CALCOMANÍA	DECALCOMANIA	012D
					AUTOCOLLANT	AUFKLEBER	TRANSFER	STICKER	
10		126844A1		1	BUJÃO, Cover	PLUG	TAPÓN	TAPPO	050T
					BOUCHON	STOPFEN	PROP	PLUG	
11		84420768		10	BOTÃO DE IMPULSO, Push-in Fastener (Not Shown)				
						FASTENER	SUJETADOR	DISPOSITIVO DI FISSAG	123B
					ATTACHE	BEFESTIGUNGSELEMEN	LUKKER	BEVESTIGING	
12		84420746		10	TIRA, Tie (Not Shown)	STRAP	BANDA	FASCETTA	532B
					BRIDE	BAND	STROP	RIEM	

55.100.02	01	p1	08/11

ELECTRICAL ELECTRO-HYDRAULIC LG (L223-L230,C232,C238)
ELECTRICAL ELECTRO-HYDRAULIC LG (L223-L230,C232,C238)
ELECTRICAL ELECTRO-HYDRAULIC LG (L223-L230,C232,C238)
ELECTRICAL ELECTRO-HYDRAULIC LG (L223-L230,C232,C238)

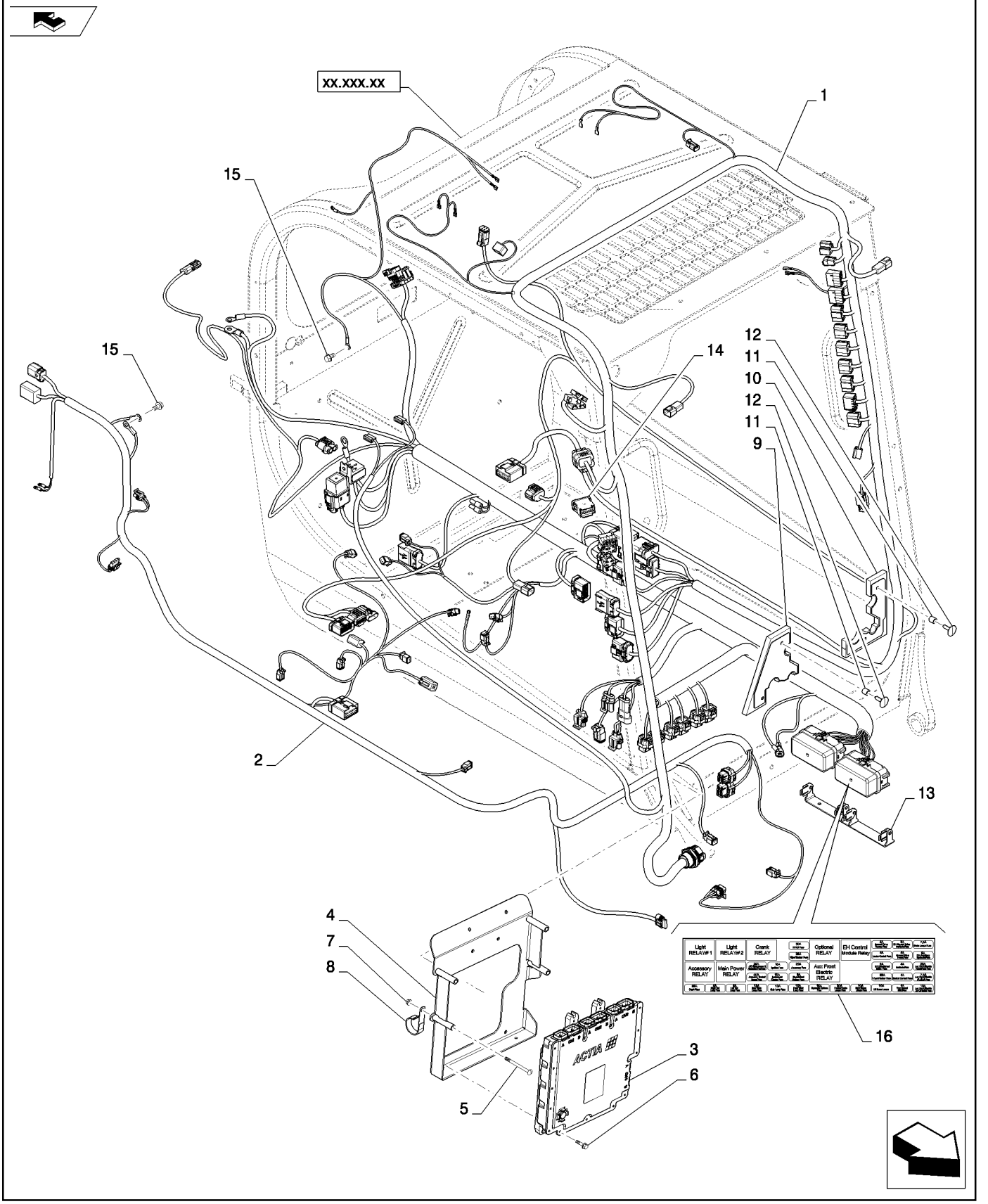

ELECTRICAL ELECTRO-HYDRAULIC LG (L223-L230,C232,C238)
ELECTRICAL ELECTRO-HYDRAULIC LG (L223-L230,C232,C238)
ELECTRICAL ELECTRO-HYDRAULIC LG (L223-L230,C232,C238)
ELECTRICAL ELECTRO-HYDRAULIC LG (L223-L230,C232,C238)

R	N	P.N.	MOD	Q	Denominação Description	Description Bezeichnung	Denominacion Beskrivelse	Descrizione Beschrijving	L.C.
1		84383805		1	CHICOTE, Chassis EH LG	WIRE HARNESS	GRUPO DE CABLES	CABLAGGIO	070I
					FAISCEAU ELECTRIQUE	KABELBAUM	KABELNET	KABELBOOM	
2		84352401		1	CHICOTE, Cab EH	WIRE HARNESS	GRUPO DE CABLES	CABLAGGIO	070I
					FAISCEAU ELECTRIQUE	KABELBAUM	KABELNET	KABELBOOM	
3		84348127		1	CENTRAL ELETRÔNICA, UCM SSL				
						ELECTRONIC CONTROL	UNIDAD DE CONTROL E	CENTRALINA ELETTRON	655C
					UNITE CMDE ELECTRON	ELEKTRON STEUERGER	ELEKTRONIKBOKS	ELEKTRON. REGELEENH	
4		84332287		1	SUPORTE, ECM Black	BRACKET	SOPORTE	STAFFA	225S
					SUPPORT	HALTERUNG	BESLAG	STEUN	
5		86512442		4	PARAFUSO, Carriage 8.8 P M6 X 80				
						BOLT	PERNO	BULLONE	140B
					VIS	SCHRAUBE	BOLT	BOUT	
6		9804257		4	PARAFUSO, Hex Flg, M6 x 25, 8.8				
						BOLT	PERNO	BULLONE	140B
					VIS	SCHRAUBE	BOLT	BOUT	
7		9804276		4	PORCA, M6 x 1, Flg, Cl 8	NUT	TUERCA	DADO	010D
					ECROU	MUTTER	MØTRIK	MOER	
8		87313355		2	BRAÇADEIRA, 38.1MM J Insul 5/16 Bolt				
						CLAMP	ABRAZADERA	MORSETTO	120M
					COLLIER	KLEMME	SPÆNDEBÅND	KLEM	
9		84309937		1	VEDAÇÃO, Assy, LH	SEAL	ANILLO DE CIERRE	GUARNIZIONE; TENUTA	132A
					JOINT	DICHTUNG	PAKNING	AFDICHTING	
10		84309938		1	VEDAÇÃO, Assy, LH	SEAL	ANILLO DE CIERRE	GUARNIZIONE; TENUTA	132A
					JOINT	DICHTUNG	PAKNING	AFDICHTING	
11		87035448		4	ESPAÇADOR	SPACER	SEPARADOR	DISTANZIALE	075D
					ENTRETOISE	DISTANZSTÜCK	AFSTANDSSTYKKE	AFSTANDSSTUK	
12		86620930		4	BOTÃO DE IMPULSO	FASTENER	SUJETADOR	DISPOSITIVO DI FISSAG	123B
					ATTACHE	BEFESTIGUNGSELEMEN	LUKKER	BEVESTIGING	
13		84285504		1	SUPORTE, Double Fuse Box				
						BRACKET, SUPPORTING	PIEZA DE APOYO	SQUADRETTA	215S
					EQUERRE	SCHALTER,AUTOM.AUS	STOETTEBESLAG	DRAAGARM	
14		84251343		1	INTERRUPTOR, Rocker, Drive Pattern				
						SWITCH	INTERRUPTOR	INTERRUTTORE	075I
					CONTACTEUR	SCHALTER	KONTAKT	SCHAKELAAR	
15		86511841		4	PARAFUSO, Hex Flg, M8 x 16, 8.8				
						BOLT	PERNO	BULLONE	140B
					VIS	SCHRAUBE	BOLT	BOUT	
16		84380452		1	ADESIVO, Fuse Box Layout EH				
						DECAL	CALCOMANÍA	DECALCOMANIA	012D
					AUTOCOLLANT	AUFKLEBER	TRANSFER	STICKER	
17		84420768		10	BOTÃO DE IMPULSO, Push-in Fastener (Not Shown)				
						FASTENER	SUJETADOR	DISPOSITIVO DI FISSAG	123B
					ATTACHE	BEFESTIGUNGSELEMEN	LUKKER	BEVESTIGING	
18		84420746		10	TIRA, Tie (Not Shown)	STRAP	BANDA	FASCETTA	532B
					BRIDE	BAND	STROP	RIEM	
19		84392527		1	INTERRUPTOR, Rocker, Aux Electric On/Off, Side Post (Not Shown)				
						SWITCH	INTERRUPTOR	INTERRUTTORE	075I
					CONTACTEUR	SCHALTER	KONTAKT	SCHAKELAAR	

ELECTRICAL ELECTRO-HYDRAULIC OPEN CAB LG (L223-L230,C232,C238)
ELECTRICAL ELECTRO-HYDRAULIC OPEN CAB LG (L223-L230,C232,C238)
ELECTRICAL ELECTRO-HYDRAULIC OPEN CAB LG (L223-L230,C232,C238)
ELECTRICAL ELECTRO-HYDRAULIC OPEN CAB LG (L223-L230,C232,C238)

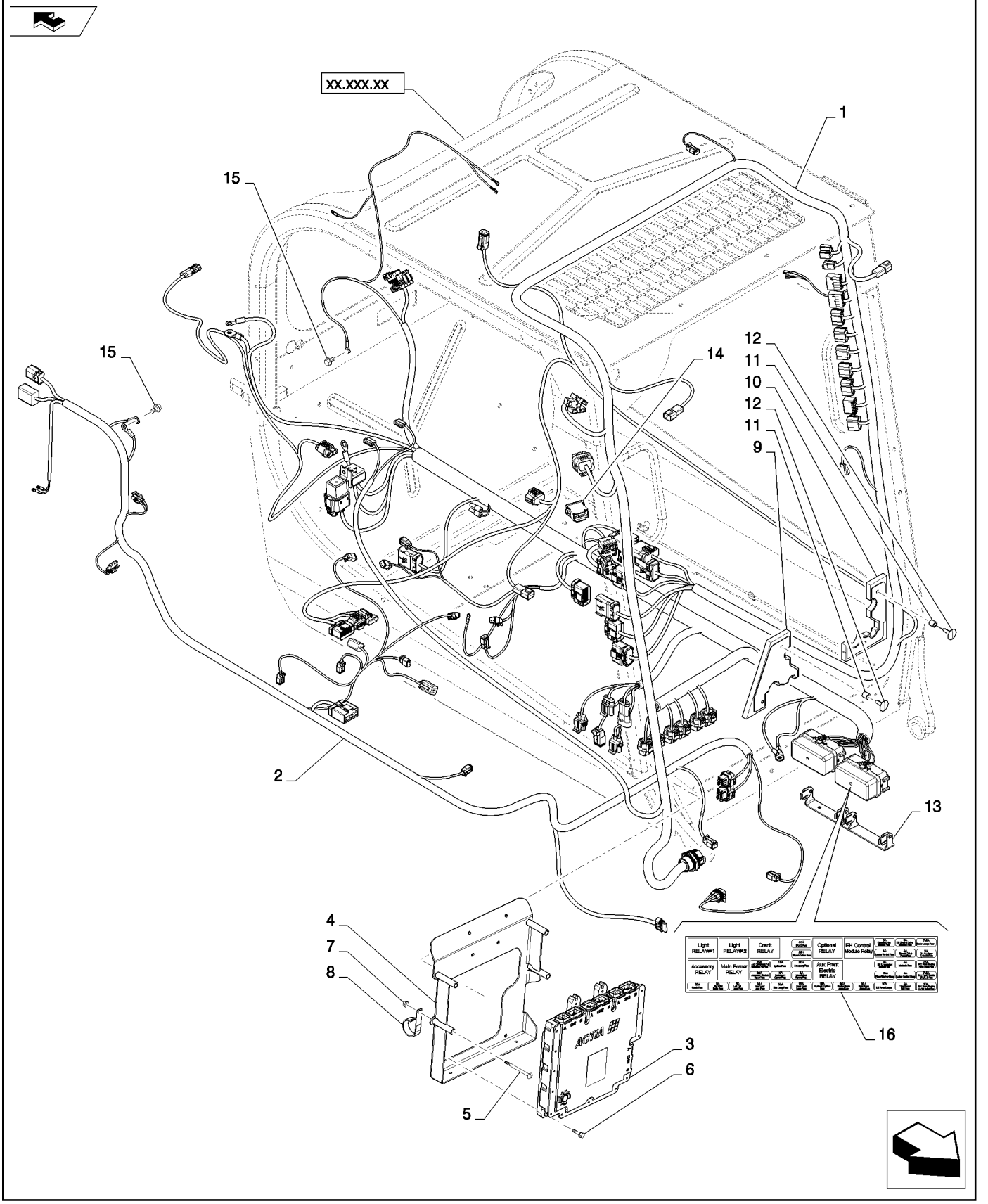

ELECTRICAL ELECTRO-HYDRAULIC OPEN CAB LG (L223-L230,C232,C238)
ELECTRICAL ELECTRO-HYDRAULIC OPEN CAB LG (L223-L230,C232,C238)
ELECTRICAL ELECTRO-HYDRAULIC OPEN CAB LG (L223-L230,C232,C238)
ELECTRICAL ELECTRO-HYDRAULIC OPEN CAB LG (L223-L230,C232,C238)

R	N	P.N.	MOD	Q	Denominação Description	Description Bezeichnung	Denominacion Beskrivelse	Descrizione Beschrijving	L.C.
1		84352385		1	CHICOTE, Cab EH Basic	WIRE HARNESS	GRUPO DE CABLES	CABLAGGIO	070I
					FAISCEAU ELECTRIQUE	KABELBAUM	KABELNET	KABELBOOM	
2		84383805		1	CHICOTE, Chassis EH LG	WIRE HARNESS	GRUPO DE CABLES	CABLAGGIO	070I
					FAISCEAU ELECTRIQUE	KABELBAUM	KABELNET	KABELBOOM	
3		84348127		1	CENTRAL ELETRÔNICA, UCM SSL				
						ELECTRONIC CONTROL	UNIDAD DE CONTROL E	CENTRALINA ELETTRON	655C
					UNITE CMDE ELECTRON	ELEKTRON STEUERGER	ELEKTRONIKBOKS	ELEKTRON. REGELEENH	
4		84332287		1	SUPORTE, ECM Black	BRACKET	SOPORTE	STAFFA	225S
					SUPPORT	HALTERUNG	BESLAG	STEUN	
5		86512442		4	PARAFUSO, Carriage 8.8 P M6 X 80				
						BOLT	PERNO	BULLONE	140B
					VIS	SCHRAUBE	BOLT	BOUT	
6		9804257		4	PARAFUSO, Hex Flg, M6 x 25, 8.8				
						BOLT	PERNO	BULLONE	140B
					VIS	SCHRAUBE	BOLT	BOUT	
7		9804276		4	PORCA, M6 x 1, Flg, Cl 8	NUT	TUERCA	DADO	010D
					ECROU	MUTTER	MØTRIK	MOER	
8		87313355		2	BRAÇADEIRA, 38.1MM J Insul 5/16 Bolt				
						CLAMP	ABRAZADERA	MORSETTO	120M
					COLLIER	KLEMME	SPÆNDEBÅND	KLEM	
9		84309937		1	VEDAÇÃO, Assy LH	SEAL	ANILLO DE CIERRE	GUARNIZIONE; TENUTA	132A
					JOINT	DICHTUNG	PAKNING	AFDICHTING	
10		84309938		1	VEDAÇÃO, Assy LH	SEAL	ANILLO DE CIERRE	GUARNIZIONE; TENUTA	132A
					JOINT	DICHTUNG	PAKNING	AFDICHTING	
11		87035448		4	ESPAÇADOR	SPACER	SEPARADOR	DISTANZIALE	075D
					ENTRETOISE	DISTANZSTÜCK	AFSTANDSSTYKKE	AFSTANDSSTUK	
12		86620930		4	BOTÃO DE IMPULSO	FASTENER	SUJETADOR	DISPOSITIVO DI FISSAG	123B
					ATTACHE	BEFESTIGUNGSELEMEN	LUKKER	BEVESTIGING	
13		84285504		1	SUPORTE, Double Fuse Box				
						BRACKET, SUPPORTING	PIEZA DE APOYO	SQUADRETTA	215S
					EQUERRE	SCHALTER,AUTOM.AUS	STOETTEBESLAG	DRAAGARM	
14		84251343		1	INTERRUPTOR, Rocker, Drive Pattern				
						SWITCH	INTERRUPTOR	INTERRUTTORE	075I
					CONTACTEUR	SCHALTER	KONTAKT	SCHAKELAAR	
15		86511841		4	PARAFUSO, Hex Flg, M8 x 16, 8.8				
						BOLT	PERNO	BULLONE	140B
					VIS	SCHRAUBE	BOLT	BOUT	
16		84380452		1	ADESIVO, Fuse Box Layout EH				
						DECAL	CALCOMANÍA	DECALCOMANIA	012D
					AUTOCOLLANT	AUFKLEBER	TRANSFER	STICKER	
17		87313351		1	GRAMPO, J-clip Insul M8	(Not Shown)			
						CLIP	ABRAZADERA	FERMO	045F
					COLLIER	KLAMMER	KLIPS	KLEM	
18		84420746		10	TIRA, Tie Strap (Not Shown)				
						STRAP	BANDA	FASCETTA	532B
					BRIDE	BAND	STROP	RIEM	

ELECTRICAL ELECTRO-HYDRAULIC OPEN CAB LG (L223-L230,C232,C238)
ELECTRICAL ELECTRO-HYDRAULIC OPEN CAB LG (L223-L230,C232,C238)
ELECTRICAL ELECTRO-HYDRAULIC OPEN CAB LG (L223-L230,C232,C238)
ELECTRICAL ELECTRO-HYDRAULIC OPEN CAB LG (L223-L230,C232,C238)

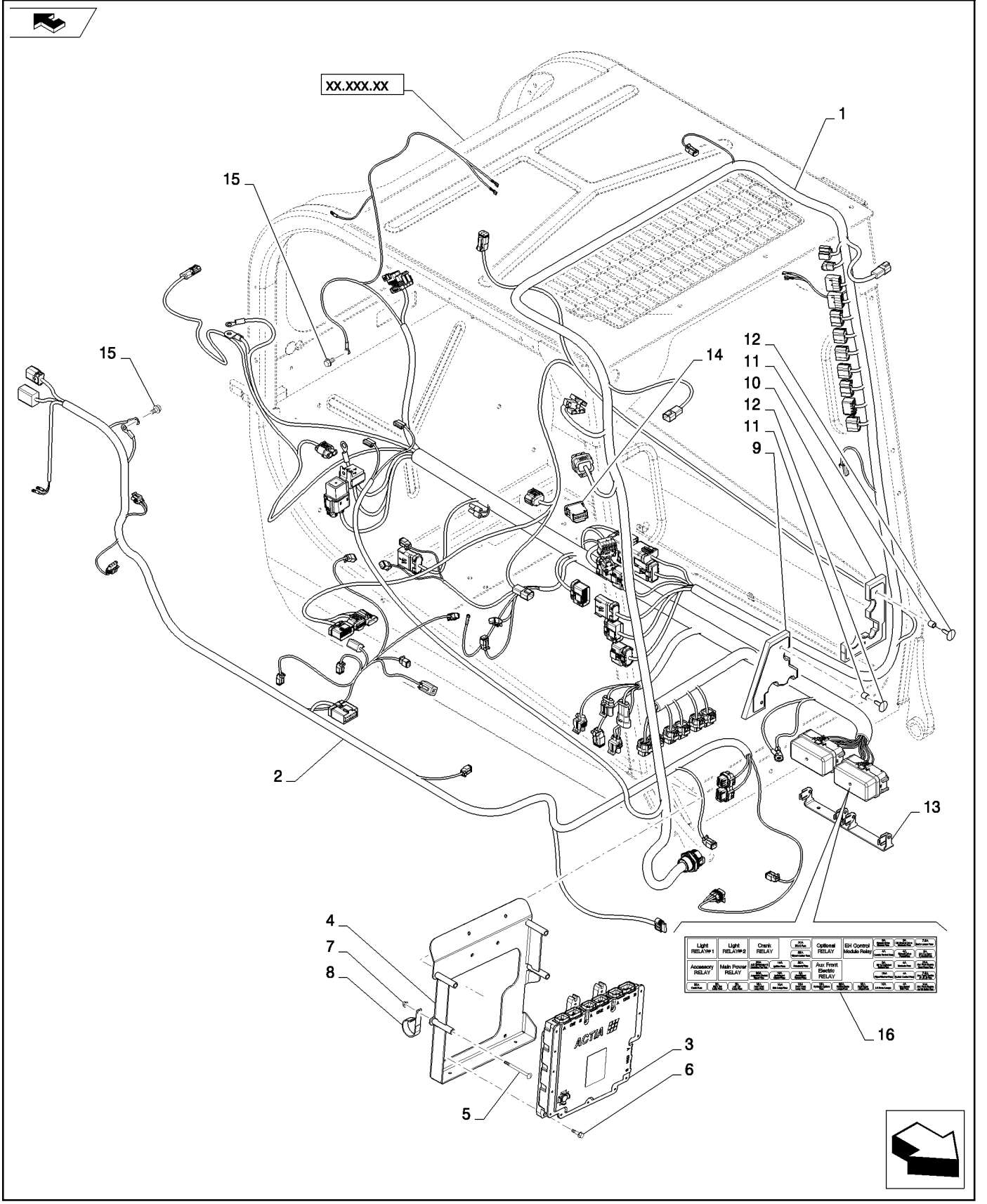

ELECTRICAL ELECTRO-HYDRAULIC OPEN CAB LG (L223-L230,C232,C238)
ELECTRICAL ELECTRO-HYDRAULIC OPEN CAB LG (L223-L230,C232,C238)
ELECTRICAL ELECTRO-HYDRAULIC OPEN CAB LG (L223-L230,C232,C238)
ELECTRICAL ELECTRO-HYDRAULIC OPEN CAB LG (L223-L230,C232,C238)

R	N	P.N.	MOD	Q	Denominação Description	Description Bezeichnung	Denominacion Beskrivelse	Descrizione Beschrijving	L.C.
19		**84420768**		10	BOTÃO DE IMPULSO, Push-in Fastener (Not Shown)				
						FASTENER	SUJETADOR	DISPOSITIVO DI FISSAG	123B
					ATTACHE	BEFESTIGUNGSELEMEN	LUKKER	BEVESTIGING	
20		**84392527**		1	INTERRUPTOR, Rocker, Aux Electric On/Off, Side Post (Not Shown)				
						SWITCH	INTERRUPTOR	INTERRUTTORE	075I
					CONTACTEUR	SCHALTER	KONTAKT	SCHAKELAAR	

55.100.05		p1	06/11

CONNECTIONS CABLE FOR ENGINE INJECTION - PLUG GLOW (504385861 - 504385863)
CONNECTIONS CABLE FOR ENGINE INJECTION - PLUG GLOW (504385861 - 504385863)
CABLE DE CONEXIÓN PARA INYECCIÓN DEL MOTOR (504385861 - 504385863)
CAVO DEI COLLEGAMENTI PER INIEZIONE MOTORE - CANDELETTE PRERISCALDO (504385861 - 504385863)

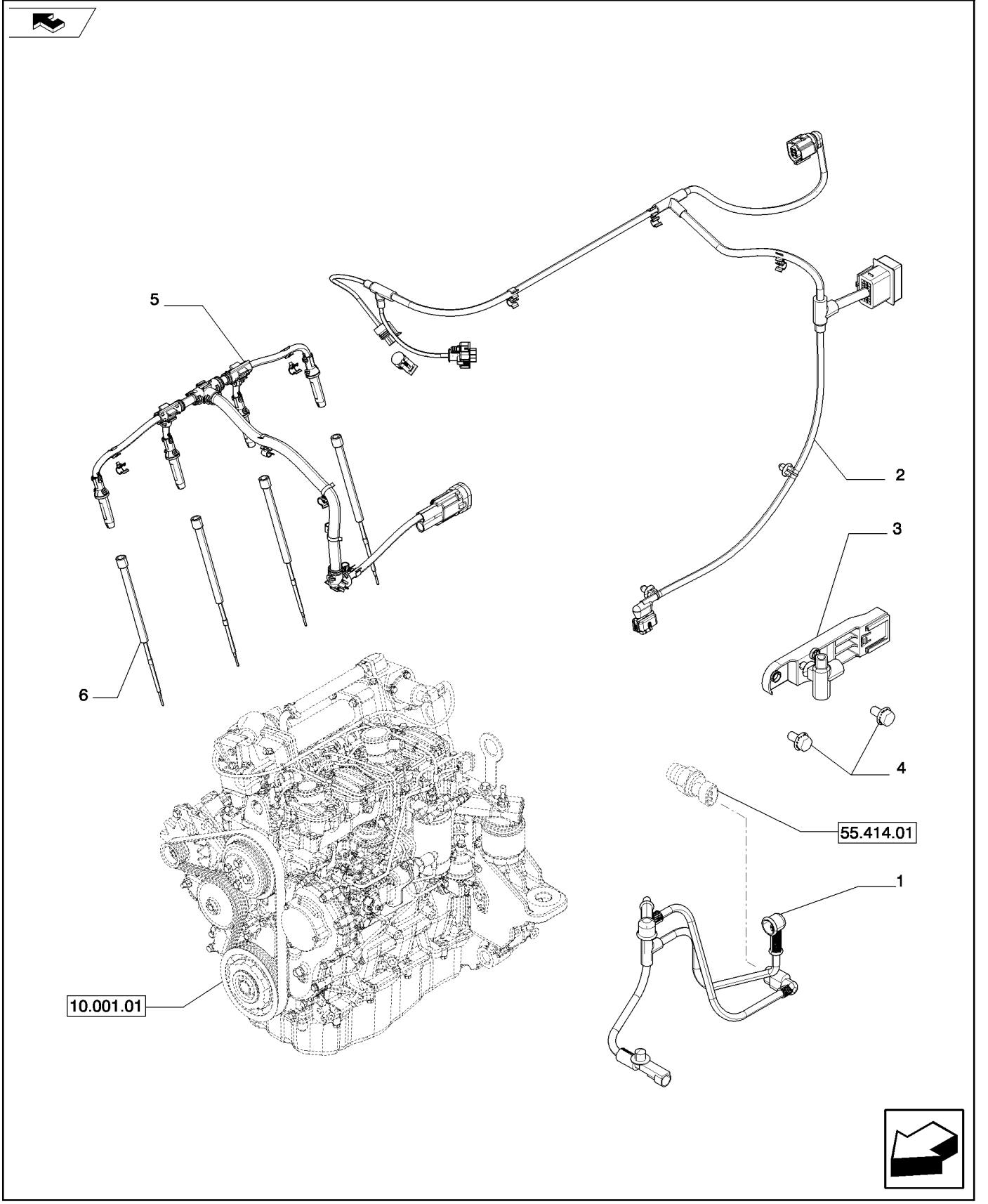

CÂBLE DE CONNEXION POUR INJECTION MOTEUR (504385861 - 504385863)
KABELBAUM FÜR MOTOREINSPRITZUNG (504385861 - 504385863)
TILSLUTNINGSKABEL TIL MOTORINDSPRØJTNING (504385861 - 504385863)
KABELAANSLUITINGEN VOOR MOTORINSPUITING (504385861 - 504385863)

R	N	P.N.	MOD	Q	Denominação Description	Description Bezeichnung	Denominacion Beskrivelse	Descrizione Beschrijving	L.C.
1		504264648		1	CHICOTE FAISCEAU	HARNESS KABELBAUM	MAZO DE CABLES LEDNINGSNET	CABLAGGIO KABELBOOM	4160
2		5801366188		1	CHICOTE FAISCEAU	HARNESS KABELBAUM	MAZO DE CABLES LEDNINGSNET	CABLAGGIO KABELBOOM	4160
3		504284210		1	BRAÇADEIRA DE FIO SERRE-CABLES	WIRE CLAMP KABELSCHELLE	ABRAZADERA DE CABLE KABELKLEMME	SERRAFILO DRAADKLEM	118S
4		16597925		2	PARAFUSO, M8X14 mm VIS	SCREW SCHRAUBE	TORNILLO SKRUE	VITE SCHROEF	040V
5		{504385864}		1					
6		{504385468}		4					

55.100.07	01	p1	03/11

BATTERY DISCONNECT LG (L223-L230,C232,C238)
BATTERY DISCONNECT LG (L223-L230,C232,C238)
BATTERY DISCONNECT LG (L223-L230,C232,C238)
BATTERY DISCONNECT LG (L223-L230,C232,C238)

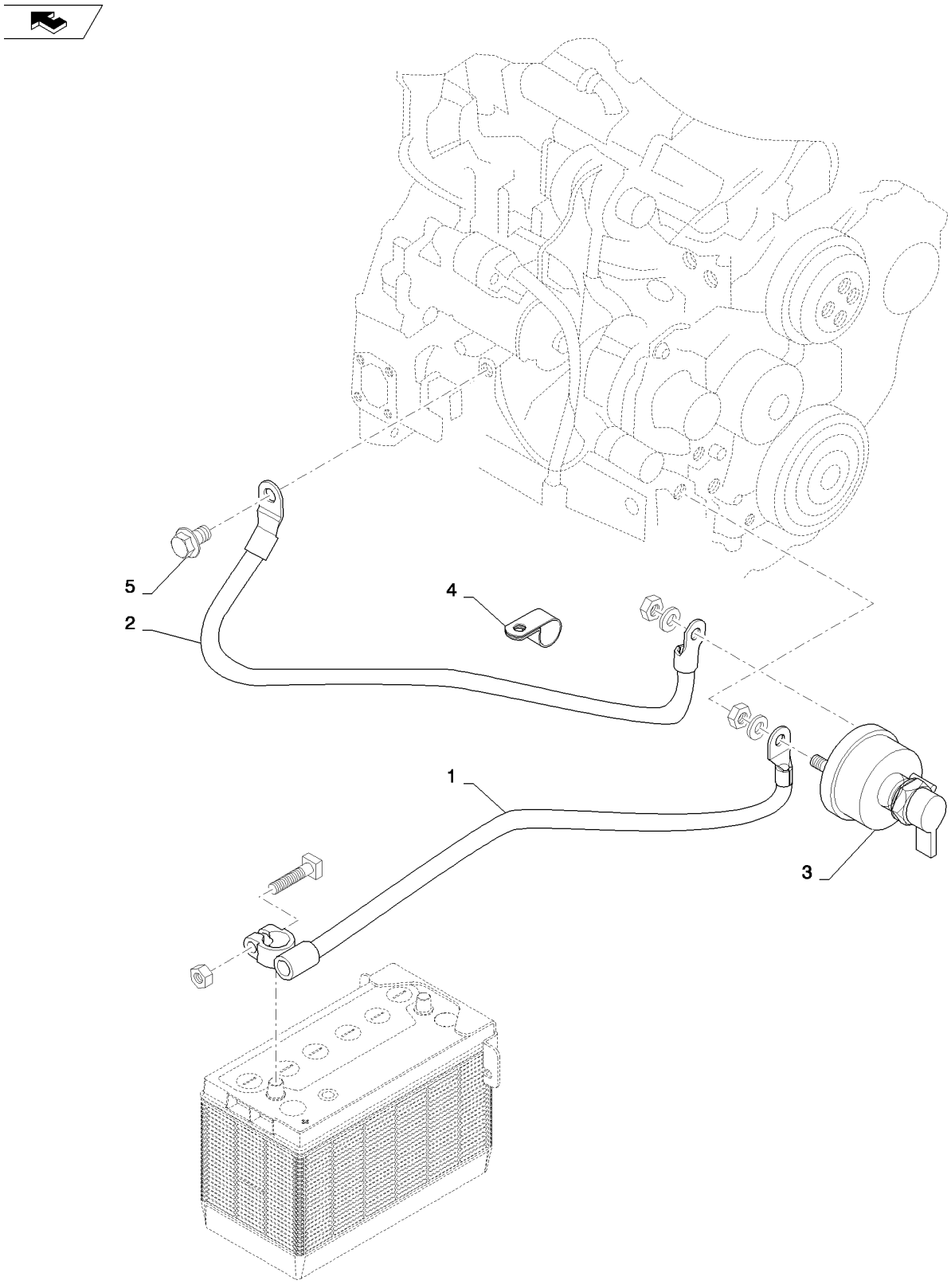

BATTERY DISCONNECT LG (L223-L230,C232,C238)
BATTERY DISCONNECT LG (L223-L230,C232,C238)
BATTERY DISCONNECT LG (L223-L230,C232,C238)
BATTERY DISCONNECT LG (L223-L230,C232,C238)

R	N	P.N.	MOD	Q	Denominação Description	Description Bezeichnung	Denominacion Beskrivelse	Descrizione Beschrijving	L.C.
1		84284996		1	CABO BATERIA NEG CABLE DE BATTERIE - N	NEG BATTERY CABLE NEGATIVES BATTERIEK	CABLE NEG. DE LA BATI BATTERIKABEL - NEG	CAVO NEGATIVO DELLA ACCUKABEL - MIN	Z221
2		84283241		1	CABO DO TERRA CABLE DE MASSE	GROUND CABLE MASSEKABEL	CABLE DE MASA STELKABEL	CAVO DI TERRA MASSAKABEL	112C
3		87458467		1	INTERRUPTOR, Master Disconnect CONTACTEUR	SWITCH SCHALTER	CONTACTOR KONTAKT	INTERRUTTORE AAN-UIT SCHAKELAAR	8850
4		86637976		1	BRAÇADEIRA, 3/4", Insul, 5/16" Bolt COLLIER	CLAMP KLEMME	ABRAZADERA SPÆNDEBÅND	MORSETTO KLEM	120M
5		87698844		1	PARAFUSO, Flange, M12 X 20 Full VIS	BOLT SCHRAUBE	PERNO BOLT	BULLONE BOUT	140B
6		176332A1		1	DECALCOMANIA DECALCOMANIE	DECAL ABZIEHBILD	CALCOMANIA TRANSFER	DECALCOMANIA DECAL	P903

NO BATTERY DISCONNECT LG (L223-L230,C232,C238)
NO BATTERY DISCONNECT LG (L223-L230,C232,C238)
NO BATTERY DISCONNECT LG (L223-L230,C232,C238)
NO BATTERY DISCONNECT LG (L223-L230,C232,C238)

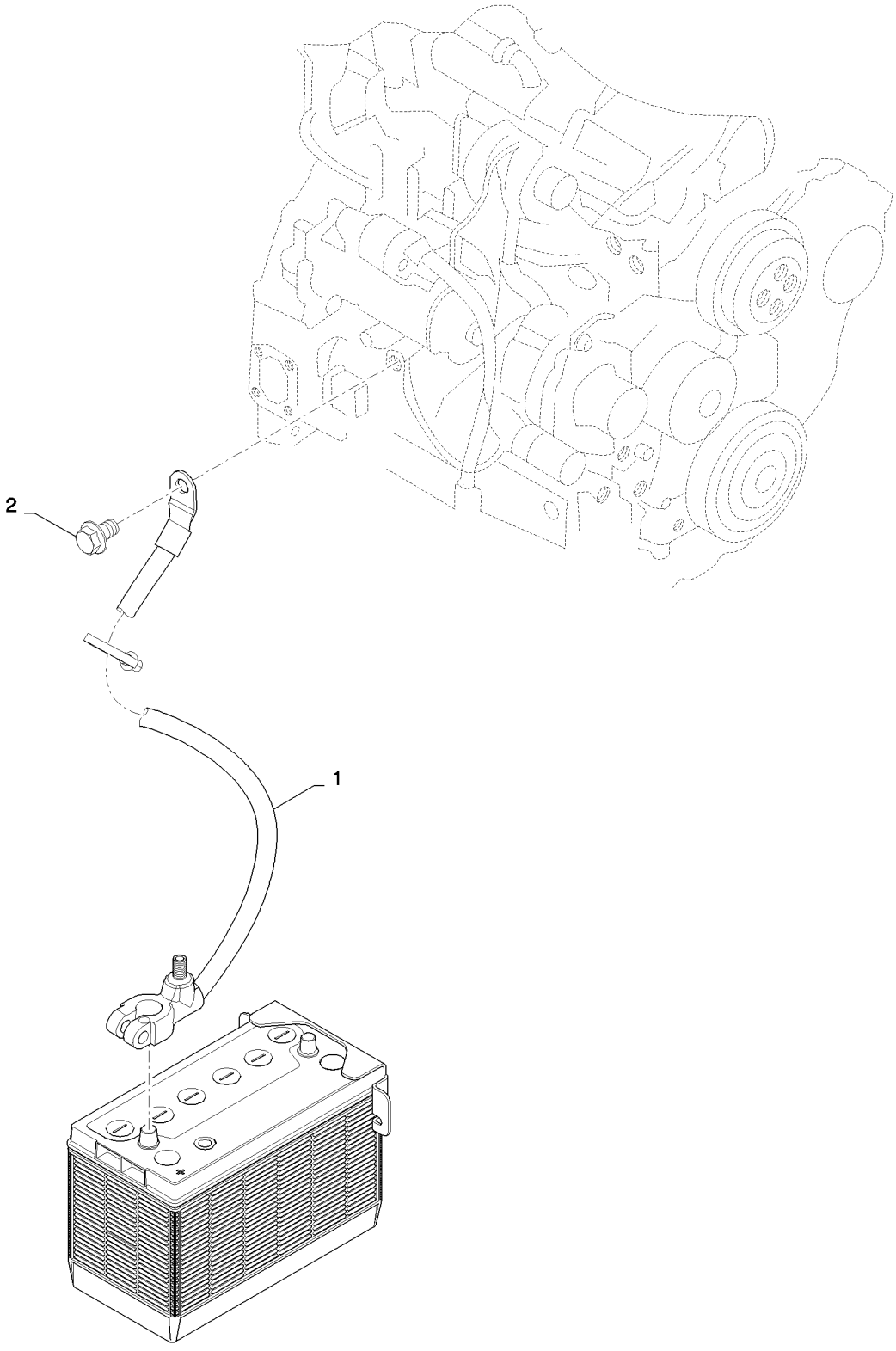

NO BATTERY DISCONNECT LG (L223-L230,C232,C238)
NO BATTERY DISCONNECT LG (L223-L230,C232,C238)
NO BATTERY DISCONNECT LG (L223-L230,C232,C238)
NO BATTERY DISCONNECT LG (L223-L230,C232,C238)

R	N	P.N.	MOD	Q	Denominação Description Bezeichnung Denominacion Beskrivelse Descrizione Beschrijving	L.C.
1		84298931		1	CABO BATERIA NEG CABLE DE BATTERIE - N NEG BATTERY CABLE NEGATIVES BATTERIEK. CABLE NEG. DE LA BATI BATTERIKABEL - NEG CAVO NEGATIVO DELLA ACCUKABEL - MIN	Z221
2		87698844		1	PARAFUSO, Flange, M12 X 20 Full BOLT VIS SCHRAUBE PERNO BOLT BULLONE BOUT	140B

55.100.08		p1	08/11

MULTIFUNCTION ELECTRICAL (L218-L230,C232,C238)
MULTIFUNCTION ELECTRICAL (L218-L230,C232,C238)
MULTIFUNCTION ELECTRICAL (L218-L230,C232,C238)
MULTIFUNCTION ELECTRICAL (L218-L230,C232,C238)

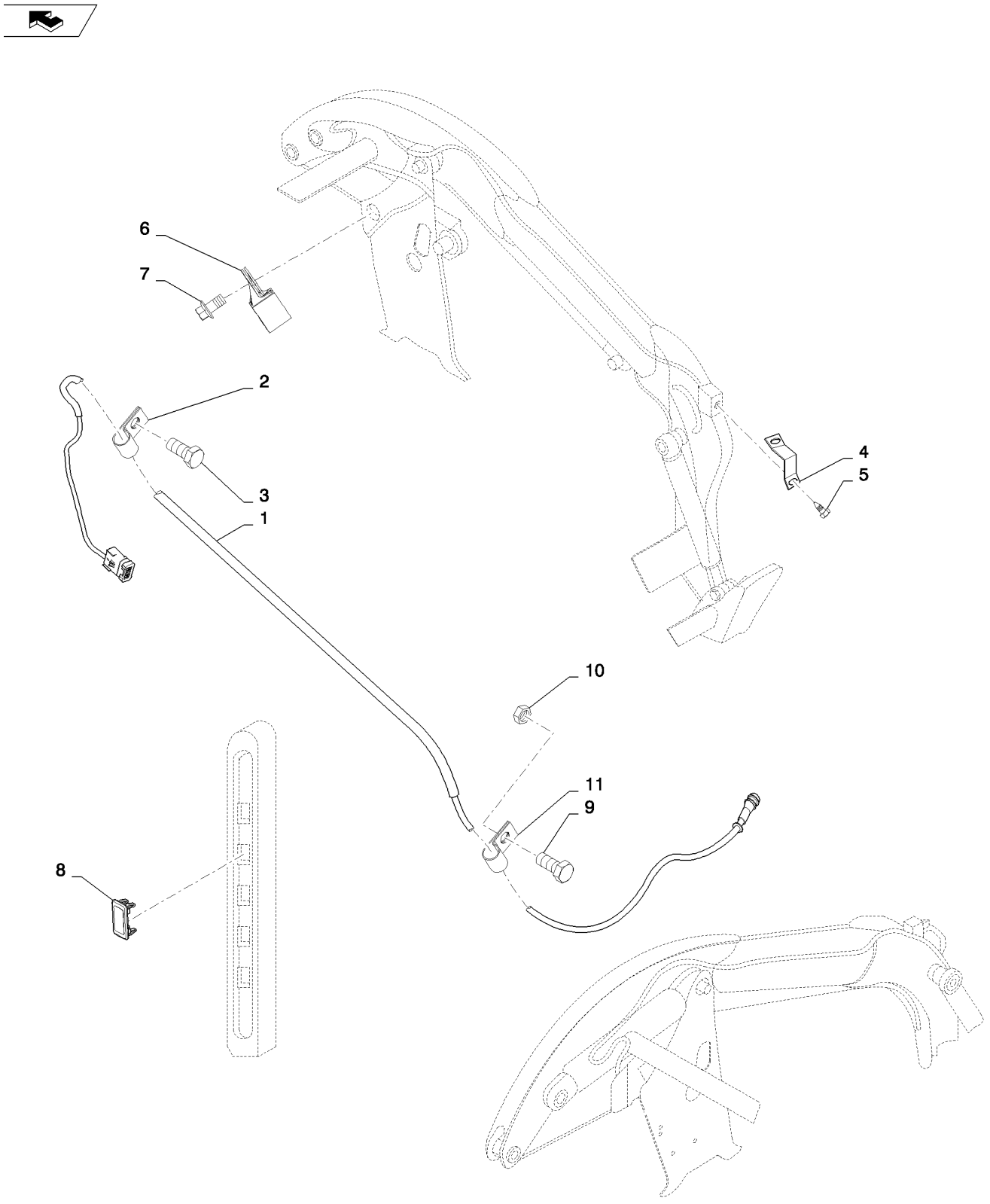

MULTIFUNCTION ELECTRICAL (L218-L230,C232,C238)
MULTIFUNCTION ELECTRICAL (L218-L230,C232,C238)
MULTIFUNCTION ELECTRICAL (L218-L230,C232,C238)
MULTIFUNCTION ELECTRICAL (L218-L230,C232,C238)

R	N	P.N.	MOD	Q	Denominação Description	Description Bezeichnung	Denominacion Beskrivelse	Descrizione Beschrijving	L.C.
1		84251324		1	CHICOTE, Front Electric Boom Vertical				
						WIRE HARNESS	GRUPO DE CABLES	CABLAGGIO	070I
					FAISCEAU ELECTRIQUE	KABELBAUM	KABELNET	KABELBOOM	
2		84396816		1	BRAÇADEIRA, Butterfly w/Nut				
						CLAMP	ABRAZADERA	MORSETTO	120M
					COLLIER	KLEMME	SPÆNDEBÅND	KLEM	
3		9804260		1	PARAFUSO, Hex Flg, M8 x 30, 8.8, Full Thd				
						BOLT	PERNO	BULLONE	140B
					VIS	SCHRAUBE	BOLT	BOUT	
4		84293533		1	SUPORTE, Front Aux, Electric				
						BRACKET, SUPPORTING	PIEZA DE APOYO	SQUADRETTA	215S
					EQUERRE	SCHALTER,AUTOM.AUS	STOETTEBESLAG	DRAAGARM	
5		87030531		2	PARAFUSO, ST8 X 19	SCREW	TORNILLO	VITE	040V
					VIS	SCHRAUBE	SKRUE	SCHROEF	
6		86978777		4	BRAÇADEIRA	CLAMP	ABRAZADERA	MORSETTO	120M
					COLLIER	KLEMME	SPÆNDEBÅND	KLEM	
7		86625199		4	PARAFUSO, Hex Flg Hd, M6 x 13				
						SELF-TAP SCREW	TORNILLO AUTORROSC	VITE AUTOFILETTANTE	062V
					VIS AUTOTARAUDEUSE	SELBSTSCHN SCHRAUE	SELVLÅSENDE BOLT	ZELFTAPPENDE SCHRO	
8		126844A1		1	BUJÃO, Switch Hole Cover	PLUG	TAPÓN	TAPPO	050T
					BOUCHON	STOPFEN	PROP	PLUG	
9		9804258		1	PARAFUSO, Hex Flg, M8 x 20, 8.8				
						BOLT	PERNO	BULLONE	140B
					VIS	SCHRAUBE	BOLT	BOUT	
10		86505868		1	PORCA, M8, Flg Ser	NUT	TUERCA	DADO	010D
					ECROU	MUTTER	MØTRIK	MOER	
11		87029955		2	BRAÇADEIRA	CLAMP	ABRAZADERA	MORSETTO	120M
					COLLIER	KLEMME	SPÆNDEBÅND	KLEM	

NO MULTIFUNCTION ELECTRICAL (ALL NH)
NO MULTIFUNCTION ELECTRICAL (ALL NH)
NO MULTIFUNCTION ELECTRICAL (ALL NH)
NO MULTIFUNCTION ELECTRICAL (ALL NH)

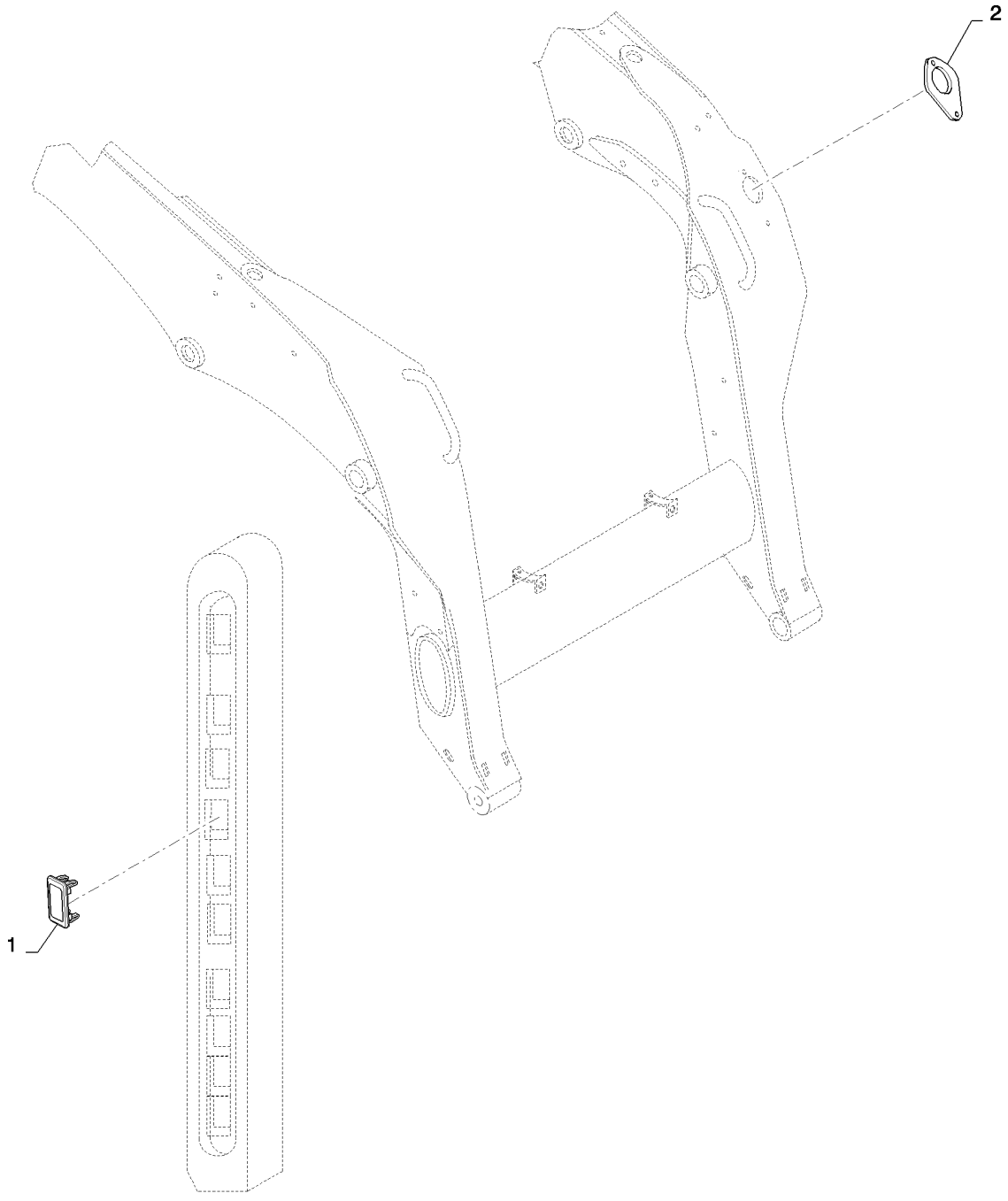

NO MULTIFUNCTION ELECTRICAL (ALL NH)
NO MULTIFUNCTION ELECTRICAL (ALL NH)
NO MULTIFUNCTION ELECTRICAL (ALL NH)
NO MULTIFUNCTION ELECTRICAL (ALL NH)

R	N	P.N.	MOD	Q	Denominação Description Bezeichnung	Description Bezeichnung	Denominacion Beskrivelse	Descrizione Beschrijving	L.C.
1		126844A1		1	BUJÃO, Cover BOUCHON	PLUG STOPFEN	TAPÓN PROP	TAPPO PLUG	050T
2		84300942		1	ADESIVO, Lexan Aux Electrical, Gray AUTOCOLLANT	DECAL AUFKLEBER	CALCOMANÍA TRANSFER	DECALCOMANIA STICKER	012D

ELECTRICAL ASSEMBLY SOCKET NA (ALL NH)
ELECTRICAL ASSEMBLY SOCKET NA (ALL NH)
ELECTRICAL ASSEMBLY SOCKET NA (ALL NH)
ELECTRICAL ASSEMBLY SOCKET NA (ALL NH)

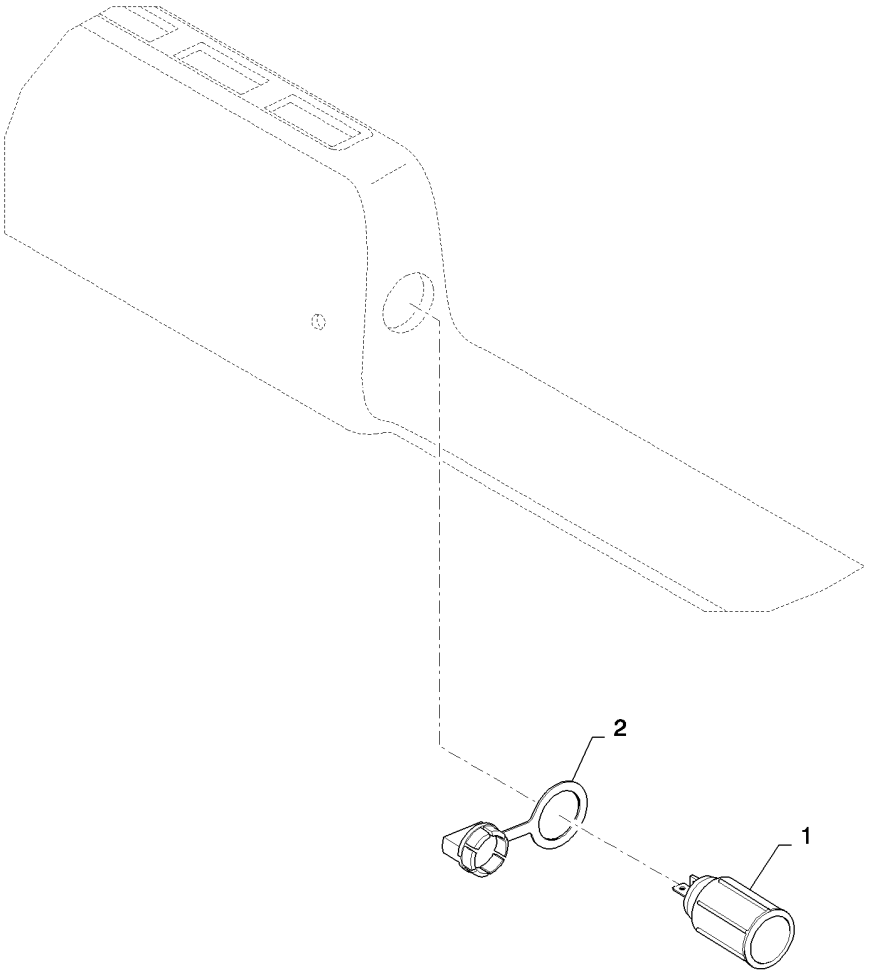

ELECTRICAL ASSEMBLY SOCKET NA (ALL NH)
ELECTRICAL ASSEMBLY SOCKET NA (ALL NH)
ELECTRICAL ASSEMBLY SOCKET NA (ALL NH)
ELECTRICAL ASSEMBLY SOCKET NA (ALL NH)

R	N	P.N.	MOD	Q	Denominação Description Bezeichnung	Description Bezeichnung	Denominacion Beskrivelse	Descrizione Beschrijving	L.C.
1		283779A1		1	TOMADA ELÉTRICA, Outlet Assembly				
						POWER SOCKET	ZÓCALO DE CORRIENTE	PRESA DI CORRENTE	205P
					PRISE DE COURANT	STECKDOSE	STRØMUDTAG	CONTACTDOOS	
2		283781A1		1	TAMPA DO RESERVATÓRIO, Outlet, Power				
						CAP	TAPON DEL DEPOSITO	TAPPO SERBATOIO	1380
					CHAPEAU	ABDECKAPPE	TANKDAEKSEL	RESERVOIRDOP	

55.100.10		p1	02/11

ELECTRICAL ASSEMBLY SOCKET EU (ALL NH)
ELECTRICAL ASSEMBLY SOCKET EU (ALL NH)
ELECTRICAL ASSEMBLY SOCKET EU (ALL NH)
ELECTRICAL ASSEMBLY SOCKET EU (ALL NH)

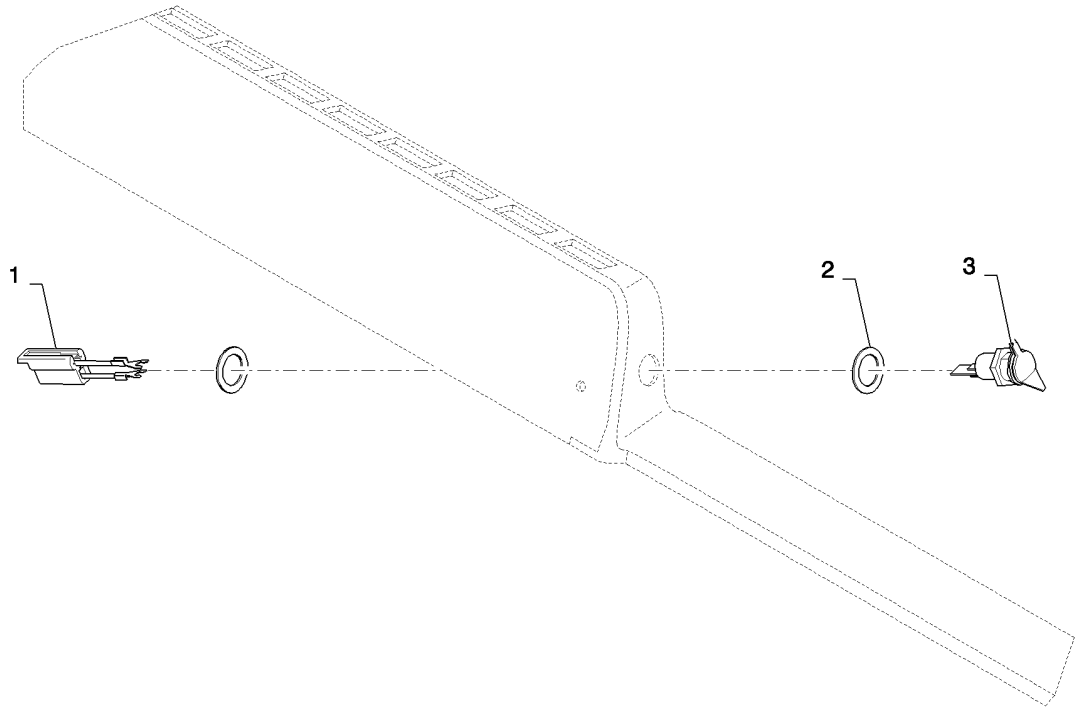

ELECTRICAL ASSEMBLY SOCKET EU (ALL NH)
ELECTRICAL ASSEMBLY SOCKET EU (ALL NH)
ELECTRICAL ASSEMBLY SOCKET EU (ALL NH)
ELECTRICAL ASSEMBLY SOCKET EU (ALL NH)

R	N	P.N.	MOD	Q	Denominação Description Bezeichnung	Description WIRE HARNESS FAISCEAU ELECTRIQUE	Denominacion GRUPO DE CABLES KABELBAUM	Descrizione CABLAGGIO KABELNET	Beschrijving KABELBOOM	L.C.
1		**445092A1**		1	CHICOTE, Accessory Socket					070I
2		**87644538**		2	ESPAÇADOR, Washer Plated SPACER ENTRETOISE		SEPARADOR DISTANZSTÜCK	DISTANZIALE AFSTANDSSTYKKE	AFSTANDSSTUK	075D
3		**142211A1**		1	SOQUETE, Receptacle DOUILLE	SOCKET FASSUNG	LLAVE DE CUBO FATNING	PRESA; CHIAVE A BUSS AANSLUITING		P483

55.101.01		p1	03/11

ENGINE ELECTRICAL LG VERT (L223-L230,C232,C238)
ENGINE ELECTRICAL LG VERT (L223-L230,C232,C238)
ENGINE ELECTRICAL LG VERT (L223-L230,C232,C238)
ENGINE ELECTRICAL LG VERT (L223-L230,C232,C238)

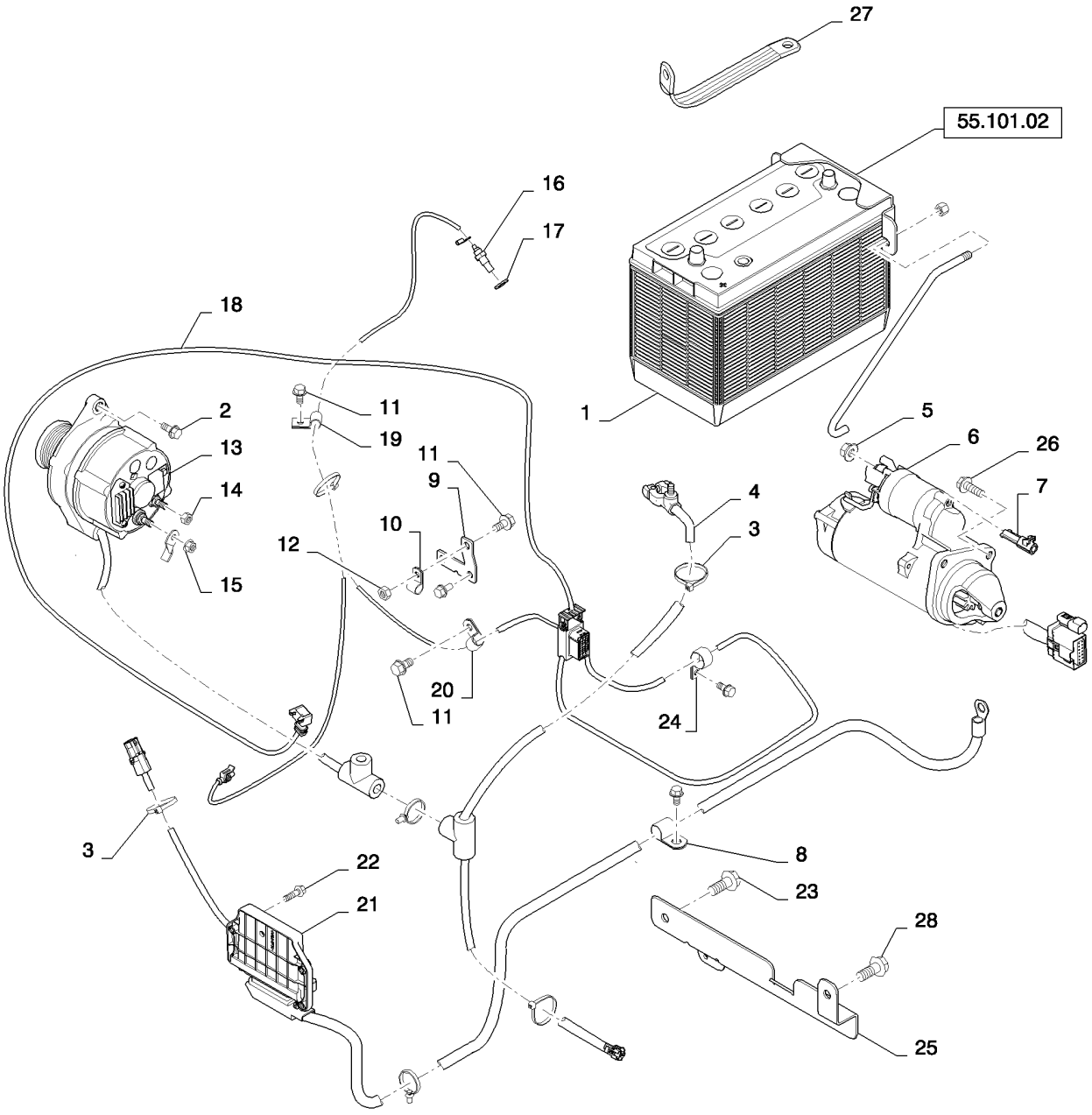

ENGINE ELECTRICAL LG VERT (L223-L230,C232,C238)
ENGINE ELECTRICAL LG VERT (L223-L230,C232,C238)
ENGINE ELECTRICAL LG VERT (L223-L230,C232,C238)
ENGINE ELECTRICAL LG VERT (L223-L230,C232,C238)

R	N	P.N.	MOD	Q	Denominação Description	Description Bezeichnung	Denominacion Beskrivelse	Descrizione Beschrijving	L.C.
1		84183281		1	BATERIA, 12V, 1000cca	BATTERY	BATERIA	BATTERIA	0560
					BATTERIE	BATTERIE	BATTERI	ACCU	
2		9804258		1	PARAFUSO, Hex Flg, M8 x 20, 8.8				
						BOLT	PERNO	BULLONE	140B
					VIS	SCHRAUBE	BOLT	BOUT	
3		L11541		4	PRENDEDOR DE CABOS,	Nylon Tie, 7-8in			
						CABLE STRAP	BANDA DE CABLE	FASCETTA PER CAVO	P716
					BRIDE DE CABLE	KABELBINDER	KABELSTROP	BUNDELBAND	
4		84298935		1	CABO BATERIA POSITIVO	POS BATTERY CABLE	CABLE POS. DE LA BATE	CAVO POSITIVO DELLA	N51C
					CABLE DE BATTERIE - P	POSITIVES BATTERIEKA	BATTERIKABEL - POS	ACCUKABEL - PLUS	
5		86050279		1	PORCA, M10 x 1.5, Flg, Cl 10				
						NUT	TUERCA	DADO	010D
					ECROU	MUTTER	MØTRIK	MOER	
6		504357110		1	MOTOR DE PARTIDA, 3 KW, Bosch				
						STARTER MOTOR	MOTOR DE ARRANQUE	MOTORINO DI AVVIAME	133M
					DEMARREUR	ANLASSERMOTOR	STARTMOTOR	STARTMOTOR	
7		87053083		1	CHICOTE, Starter, Jumper	HARNESS	MAZO DE CABLES	CABLAGGIO	4160
					FAISCEAU	KABELBAUM	LEDNINGSNET	KABELBOOM	
8		86598598		1	BRAÇADEIRA, 3/4", Insul, 1/2" Bolt				
						CLAMP	ABRAZADERA	MORSETTO	120M
					COLLIER	KLEMME	SPÆNDEBÅND	KLEM	
9		87591549		1	SUPORTE, Grid Heater	BRACKET	SOPORTE	STAFFA	225S
					SUPPORT	HALTERUNG	BESLAG	STEUN	
10		86625036		1	BRAÇADEIRA, 1/2", Insul, 5/16" Bolt				
						CLAMP	ABRAZADERA	MORSETTO	120M
					COLLIER	KLEMME	SPÆNDEBÅND	KLEM	
11		86511841		6	PARAFUSO, Hex Flg, M8 x 16, 8.8				
						BOLT	PERNO	BULLONE	140B
					VIS	SCHRAUBE	BOLT	BOUT	
12		9706690		1	PORCA, M8, Cl 8	NUT	TUERCA	DADO	010D
					ECROU	MUTTER	MØTRIK	MOER	
13		84254290		1	ALTERNADOR	ALTERNATOR	ALTERNADOR	ALTERNATORE	025A
					ALTERNATEUR	LICHTMASCHINE	GENERATOR	DYNAMO	
14		86508813		1	PORCA, M5, Cl 8	NUT	TUERCA	DADO	010D
					ECROU	MUTTER	MØTRIK	MOER	
15		9804277		1	PORCA, M8 x 1.25, Flg, Cl 8				
						NUT	TUERCA	DADO	010D
					ECROU	MUTTER	MØTRIK	MOER	
16		87688409		1	EMISSOR DE TEMPERATURA, Water				
						TEMPERATURE SENDER	EMISOR DE TEMPERATU	TRASMETT. TEMPERATU	Z366
					TRANSMETTEUR TEMPE	TEMPERATURGEBER	TEMPERATURSENDER	TEMPERATUURSENSOR	
17		86624176		1	ARRUELA PLANA, M10 x 20 x 2				
						WASHER	ARANDELA	RONDELLA	131R
					RONDELLE	UNTERLEGSCHEIBE	FLADSKIVE	SLUITRING	
18		84375316		1	CHICOTE, Engine, F5C	WIRE HARNESS	GRUPO DE CABLES	CABLAGGIO	070I
					FAISCEAU ELECTRIQUE	KABELBAUM	KABELNET	KABELBOOM	
19		86010402		1	BRAÇADEIRA, 1/2", Insul, 3/8" Bolt				
						CLAMP	ABRAZADERA	MORSETTO	120M
					COLLIER	KLEMME	SPÆNDEBÅND	KLEM	

55.101.01		p2	03/11

ENGINE ELECTRICAL LG VERT (L223-L230,C232,C238)
ENGINE ELECTRICAL LG VERT (L223-L230,C232,C238)
ENGINE ELECTRICAL LG VERT (L223-L230,C232,C238)
ENGINE ELECTRICAL LG VERT (L223-L230,C232,C238)

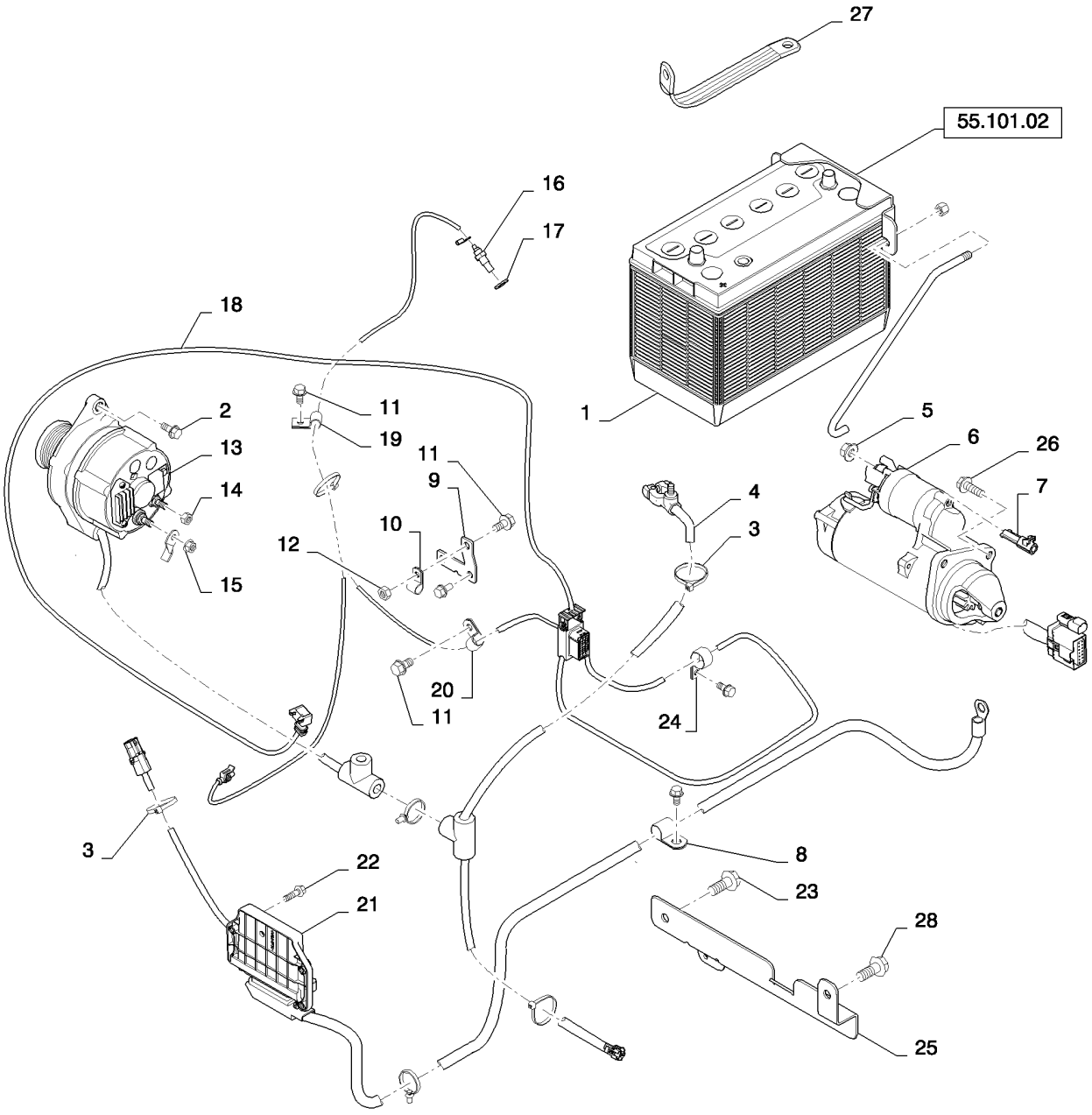

ENGINE ELECTRICAL LG VERT (L223-L230,C232,C238)
ENGINE ELECTRICAL LG VERT (L223-L230,C232,C238)
ENGINE ELECTRICAL LG VERT (L223-L230,C232,C238)
ENGINE ELECTRICAL LG VERT (L223-L230,C232,C238)

R	N	P.N.	MOD	Q	Denominação Description	Description Bezeichnung	Denominacion Beskrivelse	Descrizione Beschrijving	L.C.
20		**86594406**		1	BRAÇADEIRA, 5/8", Insul, 3/8" Bolt				
						CLAMP	ABRAZADERA	MORSETTO	120M
					COLLIER	KLEMME	SPÆNDEBÅND	KLEM	
21		**84420643**		1	CONTROLADOR, F5C, EGR				
						CONTROLLER	CONTROLADOR	CENTRALINA	N67C
					CONTROLEUR	STEUERGERÄT	STYREENHED	CONTROLLER	
22		**87017606**		3	PARAFUSO, Hex Flg Hd, M6 x 20				
						SELF-TAP SCREW	TORNILLO AUTORROSC	VITE AUTOFILETTANTE	062V
					VIS AUTOTARAUDEUSE	SELBSTSCHN SCHRAUE	SELVLÅSENDE BOLT	ZELFTAPPENDE SCHRO	
23		**87030508**		1	PARAFUSO, Hex Flg, M12 x 30, 10.9, Full Thd				
						BOLT	PERNO	BULLONE	140B
					VIS	SCHRAUBE	BOLT	BOUT	
24		**700514**		1	BRAÇADEIRA	CLAMP	ABRAZADERA	MORSETTO	120M
					COLLIER	KLEMME	SPÆNDEBÅND	KLEM	
25		**84273652**		1	SUPORTE, Battery Cable	BRACKET	SOPORTE	STAFFA	225S
					SUPPORT	HALTERUNG	BESLAG	STEUN	
26		**9804262**		3	PARAFUSO, Hex Flg, M10 x 30, 8.8				
						BOLT	PERNO	BULLONE	140B
					VIS	SCHRAUBE	BOLT	BOUT	
27		**D140369**		1	CABO PUXADOR, Strap	CABLE PULLING GRIP	MANGO DE TRACC. DEL	TESTA DI TIRO PER CAV	Z646
					TIRE-CABLE	KABELZIEHGRIFF	KABELTRÆK	TREKHANDGREEP VAN	
28		**87698844**		1	PARAFUSO, Flange, M12 X 20 (Not Shown)				
						BOLT	PERNO	BULLONE	140B
					VIS	SCHRAUBE	BOLT	BOUT	

55.101.02		p1	02/11

BATTERY RETENTION MED (ALL NH)
BATTERY RETENTION MED (ALL NH)
BATTERY RETENTION MED (ALL NH)
BATTERY RETENTION MED (ALL NH)

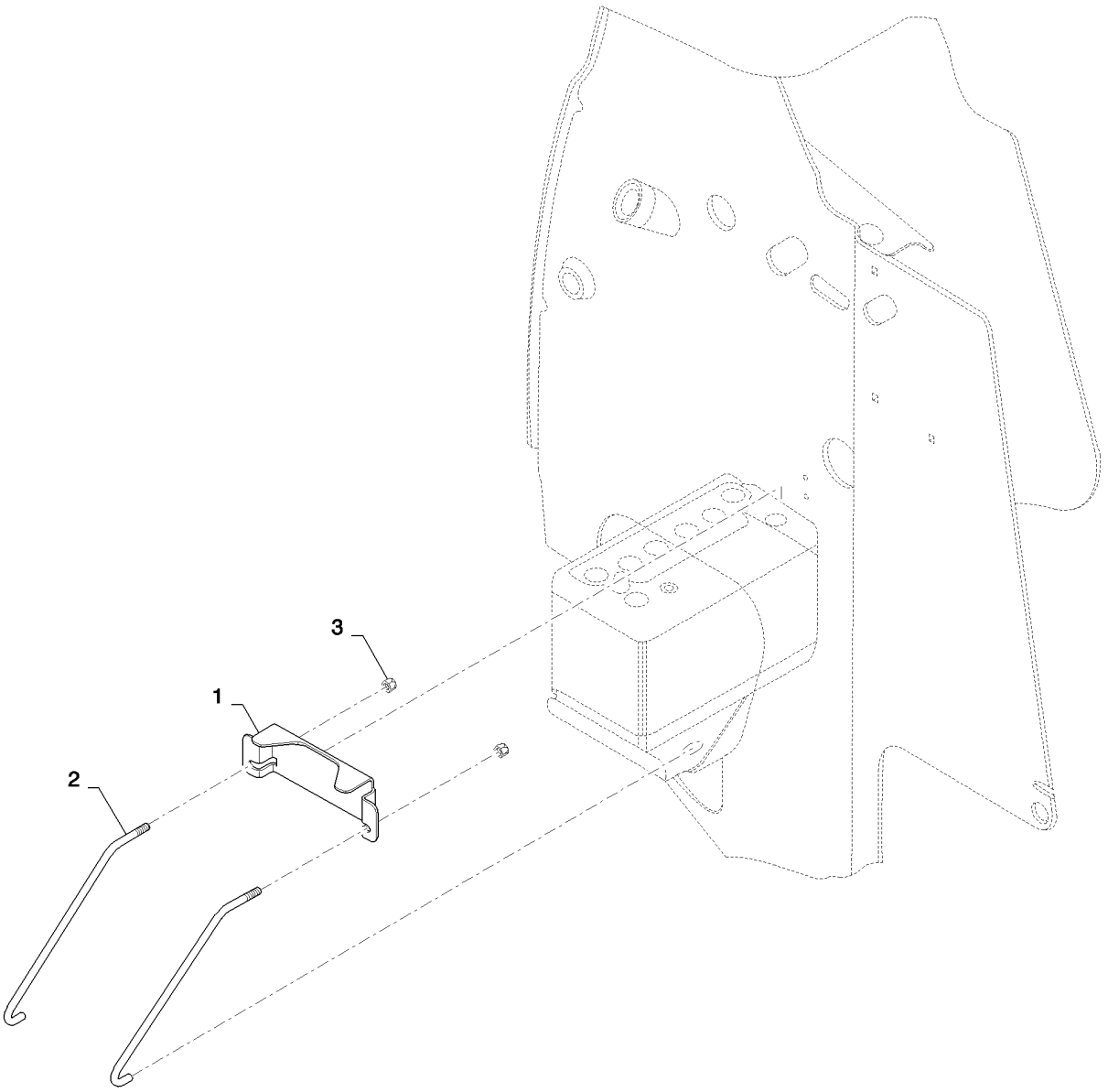

BATTERY RETENTION MED (ALL NH)
BATTERY RETENTION MED (ALL NH)
BATTERY RETENTION MED (ALL NH)
BATTERY RETENTION MED (ALL NH)

R	N	P.N.	MOD	Q	Denominação Description Bezeichnung	Description Bezeichnung	Denominacion Beskrivelse	Descrizione Beschrijving	L.C.
1		84420303		1	TIRA, Battery Mount BRIDE	STRAP BAND	BANDA STROP	FASCETTA RIEM	532B
2		84381823		2	GANCHO, Battery Tie Dowr CROCHET	HOOK HAKEN	GANCHO KROG	GANCIO HAAK	030G
3		9637692		2	CONTRA PORCA, 3/8"-16, GB CONTRE-ECROU	LOCK NUT SICHERUNGSMUTTER	TUERCA DE BLOQUEO LÅSEMØTRIK	DADO DI BLOCCAGGIO BORGMOER	P263

ENGINE, ALTERNATOR MOUNTING (504388098)
ENGINE, ALTERNATOR MOUNTING (504388098)
ALTERNATOR (504388098)
ALTERNATORE (504388098)

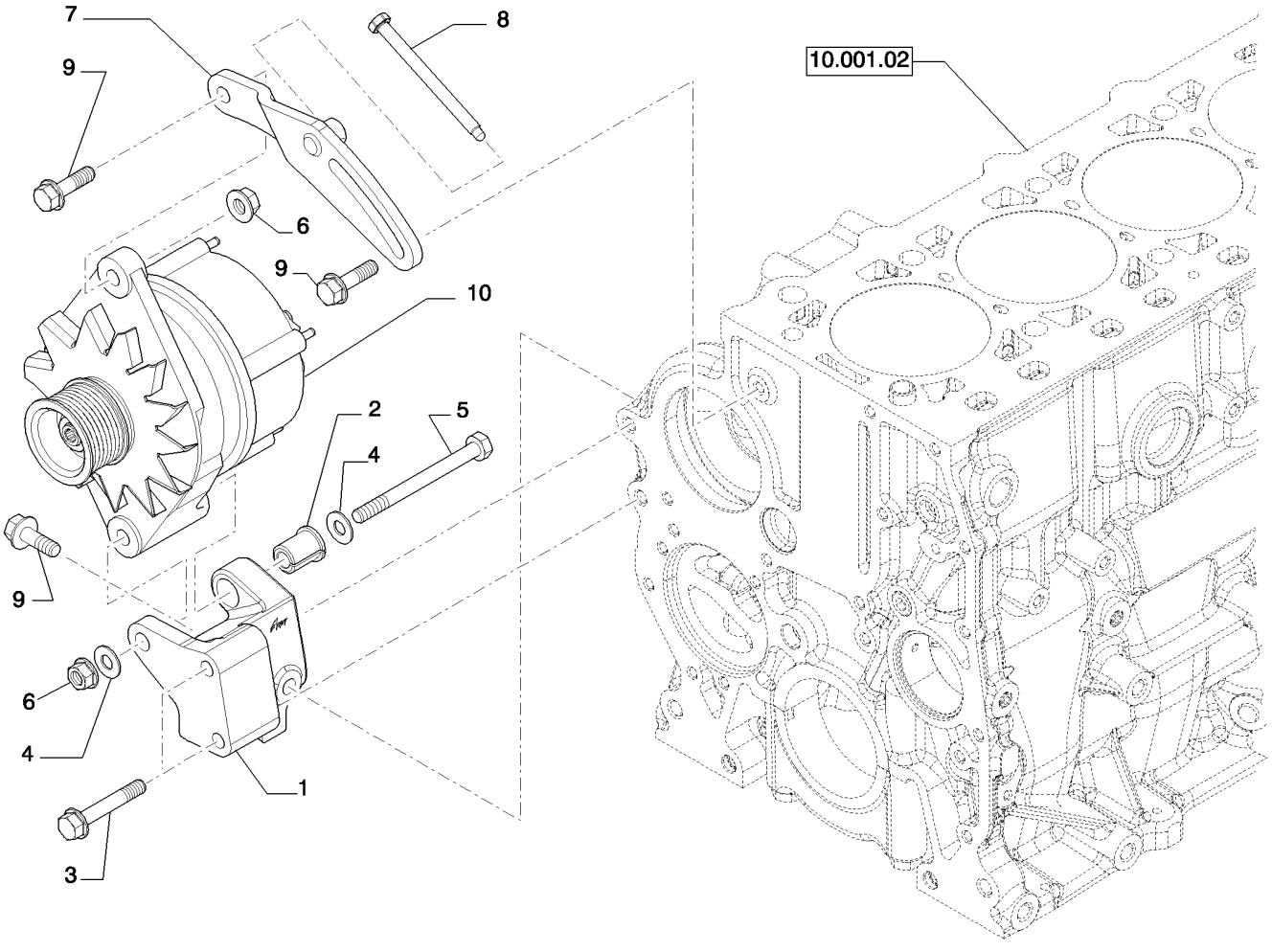

ALTERNATEUR (504388098)
WECHSELSTROMGENERATOR (504388098)
VEKSELSTROMSGENERATOR (504388098)
WISSELSTROOMDYNAMO (504388098)

R	N	P.N.	MOD	Q	Denominação Description	Description Bezeichnung	Denominacion Beskrivelse	Descrizione Beschrijving	L.C.
1		504276997		1	SUPORTE EQUERRE	BRACKET, SUPPORTING SCHALTER,AUTOM.AUS	PIEZA DE APOYO STOETTEBESLAG	SQUADRETTA DRAAGARM	215S
2		504060839		1	ESPAÇADOR ENTRETOISE	SPACER DISTANZSTÜCK	SEPARADOR AFSTANDSSTYKKE	DISTANZIALE AFSTANDSSTUK	075D
3		16587824		2	PARAFUSO, M10 x 1.5 x 6(VIS	SCREW SCHRAUBE	TORNILLO SKRUE	VITE SCHROEF	040V
4		17095104		2	ARRUELA PLANA, D. 10X21X2 mm RONDELLE	WASHER UNTERLEGSCHEIBE	ARANDELA FLADSKIVE	RONDELLA SLUITRING	131R
5		16609024		1	PARAFUSO VIS	SCREW SCHRAUBE	TORNILLO SKRUE	VITE SCHROEF	040V
6		17044821		1	PORCA, M10 ECROU	NUT MUTTER	TUERCA MØTRIK	DADO MOER	010D
6		17037921		1	PORCA ECROU	NUT MUTTER	TUERCA MØTRIK	DADO MOER	010D
7		504243953		1	TENSOR DE CORREIA TENDEUR DE COURROI	BELT TENSIONER GURTSTRAFFER	TENSOR DE CORREA REMSTRAMMER	TENDICINGHIA RIEMSPANNER	087T
8		504302206		1	PARAFUSO VIS	BOLT SCHRAUBE	PERNO BOLT	BULLONE BOUT	140B
9		16587325		3	PARAFUSO, M10 x 35 VIS	SCREW SCHRAUBE	TORNILLO SKRUE	VITE SCHROEF	040V
10		504060771		1	- ASSY 95 AMP 12V				

55.414.01	02	p1	02/11

DIAGNOSTIC SENSOR (504308864)
DIAGNOSTIC SENSOR (504308864)
SENSORES DIAGNOSIS (504308864)
SENSORI DIAGNOSTICA (504308864)

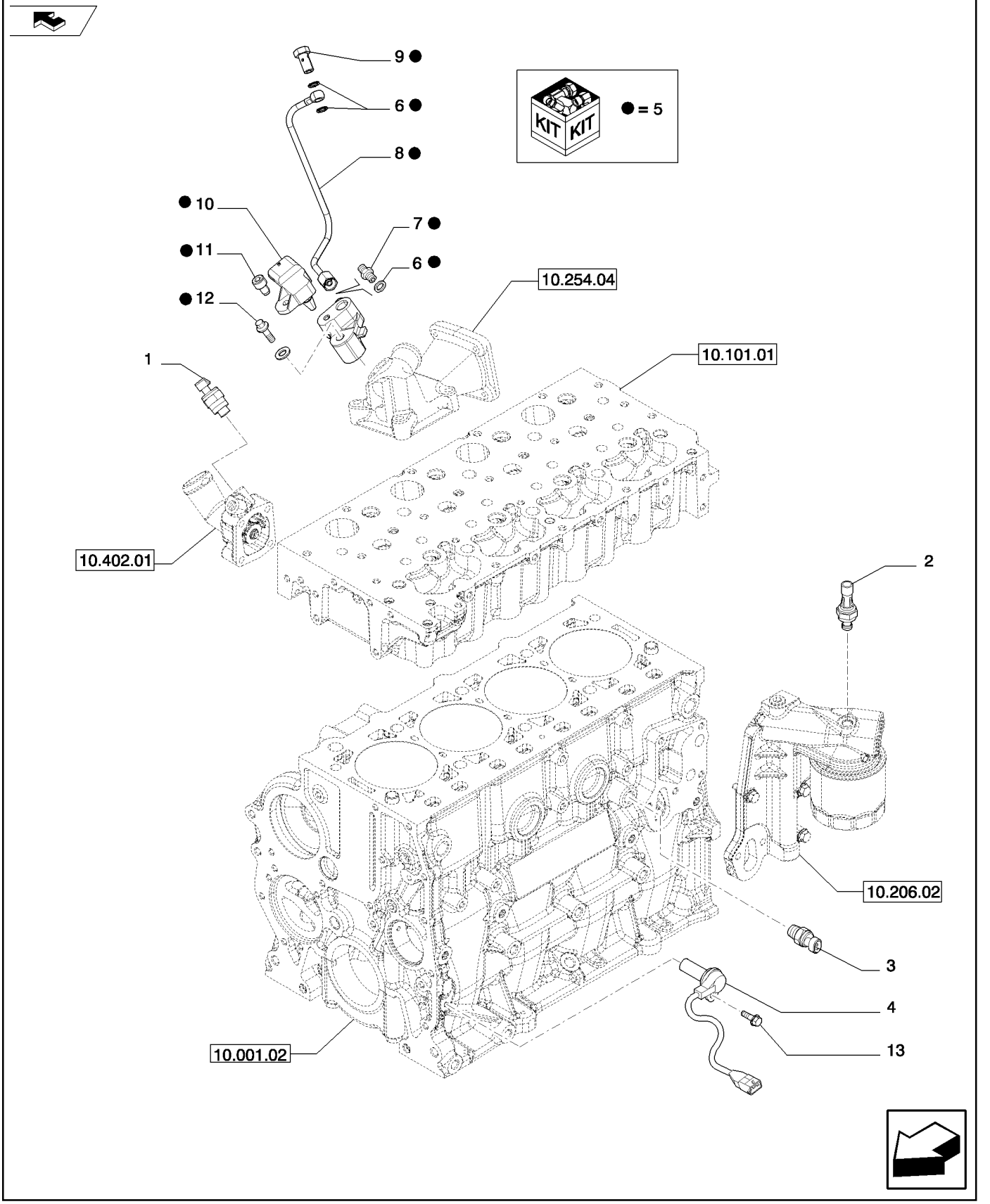

CAPTEURS DIADNOSTIC (504308864)
DIAGNOSE-SENSORE (504308864)
DIAGNOSTISKE FØLERE (504308864)
DIAGNOSE-SENSOREN (504308864)

R	N	P.N.	MOD	Q	Denominação Description	Description Bezeichnung	Denominacion Beskrivelse	Descrizione Beschrijving	L.C.
1		504025599		1	EMISSOR DE TEMPERATURA, Water				
						TEMPERATURE SENDEF	EMISOR DE TEMPERATU	TRASMETT. TEMPERATU	Z366
					TRANSMETTEUR TEMPE	TEMPERATURGEBER	TEMPERATURSENDER	TEMPERATUURSENSOR	
2		504084983		1	INTERRUPTOR DE PRESSÃO				
						PRESSURE SWITCH	INTERRUPTOR DE PRES	PRESSOSTATO	079I
					PRESSOSTAT	DRUCKSCHALTER	KONTAKT, TRYK	DRUKSCHAKELAAR	
3		504273290		1	SENSOR, Water temperature KSB				
						SENSOR	SENSOR	SENSORE	608S
					CAPTEUR	SENSOR	FØLER	SENSOR	
4		500374763		1	TRANSMISSOR, Crankshaft				
						TRANSMITTER	TRANSMISOR	TRASMETTITORE	9250
					EMETTEUR	TRANSMITTER	SENDER	ZENDER	
5		504307972		1	Air press. & temperature				
6		10260150		3	VEDAÇÃO DA ARRUELA, M10.2 x 14 x 1, Alum				
						SEALING WASHER	ARANDELA HERMÉTICA	ROSETTA DI TENUTA	133R
					RONDELLE D'ETANCHEI	DICHTSCHEIBE	TÆTNINGSSKIVE	AFDICHTRING	
7		41905549		1	CONECTOR HIDRÁUL	HYD CONNECTOR	CONECTOR HIDRÁULIC	CONNETTORE IDRAULIC	020R
					CONNECTEUR HYDRAU	HYDR STECKVERBINDE	HYDRAULIKSTIK	HYDRAULISCHE AANSLI	
8		504309070		1					
9		16511111		1	PARAFUSO DE BANJO	BANJO BOLT	PERNO BANJO	BULLONE MASCHIO	090B
					VIS BANJO	HOHLSCHRAUBE	BANJOBOLT	BANJOBOUT	
10		504245257		1	SENSOR	SENSOR	SENSOR	SENSORE	608S
					CAPTEUR	SENSOR	FØLER	SENSOR	
11		16689121		1	PARAFUSO, M6 x 16	SCREW	TORNILLO	VITE	040V
					VIS	SCHRAUBE	SKRUE	SCHROEF	
12		16592625		1	PARAFUSO	SCREW	TORNILLO	VITE	040V
					VIS	SCHRAUBE	SKRUE	SCHROEF	
13		16585625		1	PARAFUSO, M6X12 mm	SCREW	TORNILLO	VITE	040V
					VIS	SCHRAUBE	SKRUE	SCHROEF	

55.418.01		p1	03/11

INSTRUMENTS AND ELECTRICAL VERT NH (L223-L230,C232,C238)
INSTRUMENTS AND ELECTRICAL VERT NH (L223-L230,C232,C238)
INSTRUMENTS AND ELECTRICAL VERT NH (L223-L230,C232,C238)
INSTRUMENTS AND ELECTRICAL VERT NH (L223-L230,C232,C238)

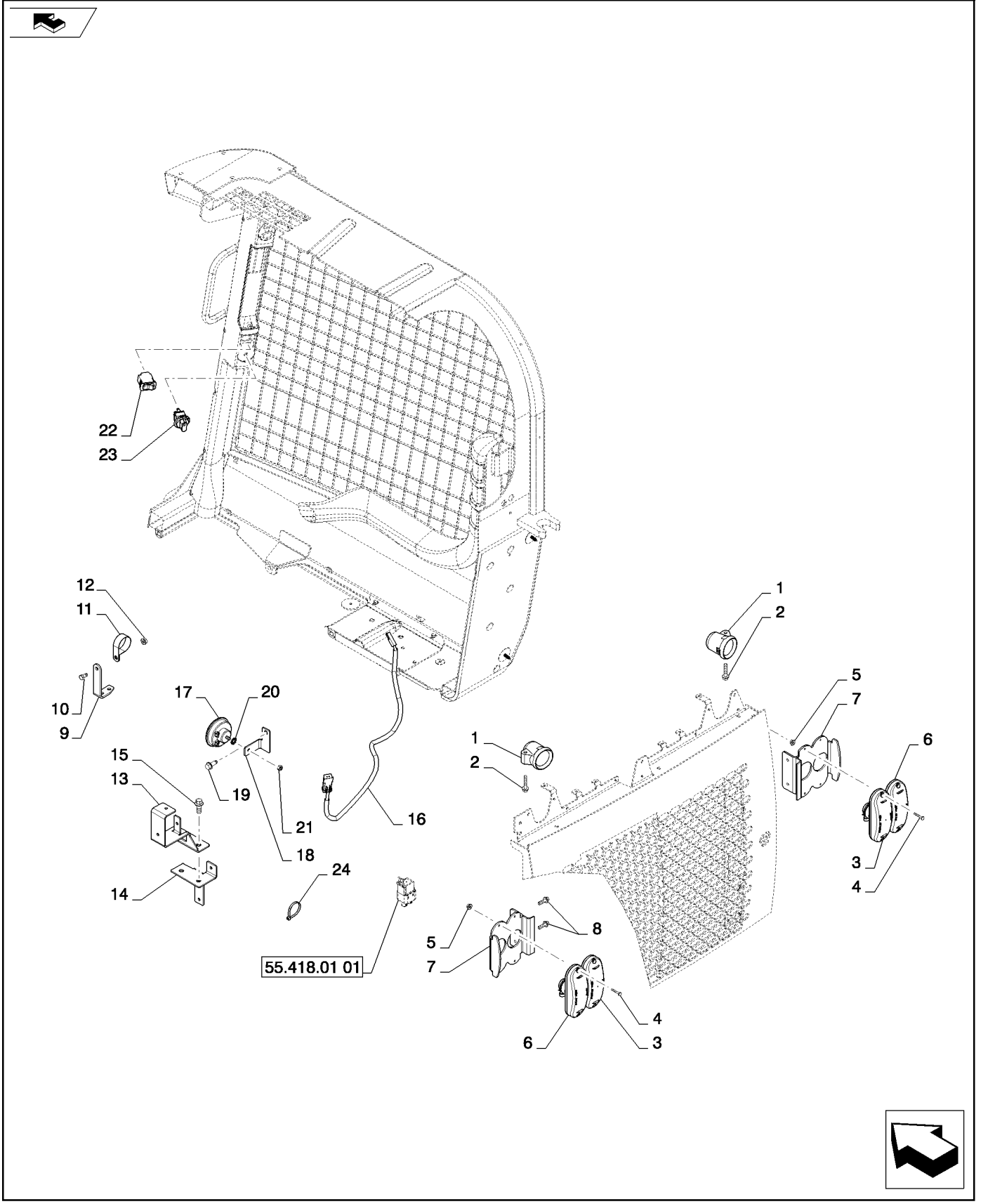

INSTRUMENTS AND ELECTRICAL VERT NH (L223-L230,C232,C238)
INSTRUMENTS AND ELECTRICAL VERT NH (L223-L230,C232,C238)
INSTRUMENTS AND ELECTRICAL VERT NH (L223-L230,C232,C238)
INSTRUMENTS AND ELECTRICAL VERT NH (L223-L230,C232,C238)

R	N	P.N.	MOD	Q	Denominação Description	Description Bezeichnung	Denominacion Beskrivelse	Descrizione Beschrijving	L.C.
1		84292121		2	LÂMPADA DE TRABALHO	WORK LAMP	LÁMPARA DE TRABAJO	LUCE DI LAVORO	219P
					FEU DE TRAVAIL	ARBEITSLEUCHTE	ARBEJDSLAMPE	WERKLAMP	
2		86511842		2	PARAFUSO, Hex Flg, M8 x 40, 8.8				
						BOLT	PERNO	BULLONE	140B
					VIS	SCHRAUBE	BOLT	BOUT	
3		84239207		2	LÂMPADA TRASEIRA	TAIL LAMP	LÁMPARA TRASERA	LUCE POSIZIONE POSTI	013F
					FEU ARRIERE	SCHLUSSLEUCHTE	BAGLYGTE	ACHTERLICHT	
4		86502967		8	PARAFUSO, Cross Pan Hd, M5 x 30				
						SCREW	TORNILLO	VITE	040V
					VIS	SCHRAUBE	SKRUE	SCHROEF	
5		86512495		8	PORCA, M5 x .8, Flg, Cl 8	NUT	TUERCA	DADO	010D
					ECROU	MUTTER	MØTRIK	MOER	
6		84239208		2	LÂMPADA	LAMP	LÁMPARA	SPIA	009F
					LAMPE	LEUCHTE	LYGTE	LAMP	
7		84321336		2	PLACA DE MONTAGEM	MOUNTING PLATE	PLACA DE MONTAJE	PIASTRA DI MONTAGGI(	109P
					PLAQUE DE MONTAGE	MONTAGEPLATTE	MONTERINGSPLADE	BEVESTIGINGSPLAAT	
8		87016557		4	PARAFUSO, Hex Flg Hd, M8 x 25				
						SELF-TAP SCREW	TORNILLO AUTORROSC	VITE AUTOFILETTANTE	062V
					VIS AUTOTARAUDEUSE	SELBSTSCHN SCHRAUE	SELVLÅSENDE BOLT	ZELFTAPPENDE SCHRO	
9		84323563		1	CANTONEIRA	ANGLE	ÁNGULO	ANGOLARE	057C
					CORNIERE	WINKEL	VINKELBESLAG	HOEKSTUK	
10		120104		1	PARAFUSO, Hex, M8 x 20, 8.8				
						SCREW	TORNILLO	VITE	040V
					VIS	SCHRAUBE	SKRUE	SCHROEF	
11		603022		1	BRAÇADEIRA, 1 3/4", Insul, 3/8" Bolt				
						CLAMP	ABRAZADERA	MORSETTO	120M
					COLLIER	KLEMME	SPÆNDEBÅND	KLEM	
12		9804277		1	PORCA, M8 x 1.25, Flg, Cl 8				
						NUT	TUERCA	DADO	010D
					ECROU	MUTTER	MØTRIK	MOER	
13		84296194		1	SUPORTE, FCI Connector Support				
						BRACKET, SUPPORTING	PIEZA DE APOYO	SQUADRETTA	215S
					EQUERRE	SCHALTER,AUTOM.AUS	STOETTEBESLAG	DRAAGARM	
14		84296250		1	SUPORTE, FCI Connector Support				
						BRACKET, SUPPORTING	PIEZA DE APOYO	SQUADRETTA	215S
					EQUERRE	SCHALTER,AUTOM.AUS	STOETTEBESLAG	DRAAGARM	
15		87550233		2	PARAFUSO	SCREW	TORNILLO	VITE	040V
					VIS	SCHRAUBE	SKRUE	SCHROEF	
16		84297138		1	CHICOTE	WIRE HARNESS	GRUPO DE CABLES	CABLAGGIO	070I
					FAISCEAU ELECTRIQUE	KABELBAUM	KABELNET	KABELBOOM	
17		87714969		1	BUZINA, W/Breather	HORN	BOCINA	AVVISATORE ACUSTICC	105A
					AVERTISSEUR SONORE	HUPE	HORN	CLAXON	
18		84331854		1	SUPORTE, Horn Mounting	BRACKET, SUPPORTING	PIEZA DE APOYO	SQUADRETTA	215S
					EQUERRE	SCHALTER,AUTOM.AUS	STOETTEBESLAG	DRAAGARM	
19		280476		1	PARAFUSO, Hex Wash Hd, 3/8" x 1"				
						SELF-TAP SCREW	TORNILLO AUTORROSC	VITE AUTOFILETTANTE	062V
					VIS AUTOTARAUDEUSE	SELBSTSCHN SCHRAUE	SELVLÅSENDE BOLT	ZELFTAPPENDE SCHRO	

55.418.01		p2	03/11

INSTRUMENTS AND ELECTRICAL VERT NH (L223-L230,C232,C238)
INSTRUMENTS AND ELECTRICAL VERT NH (L223-L230,C232,C238)
INSTRUMENTS AND ELECTRICAL VERT NH (L223-L230,C232,C238)
INSTRUMENTS AND ELECTRICAL VERT NH (L223-L230,C232,C238)

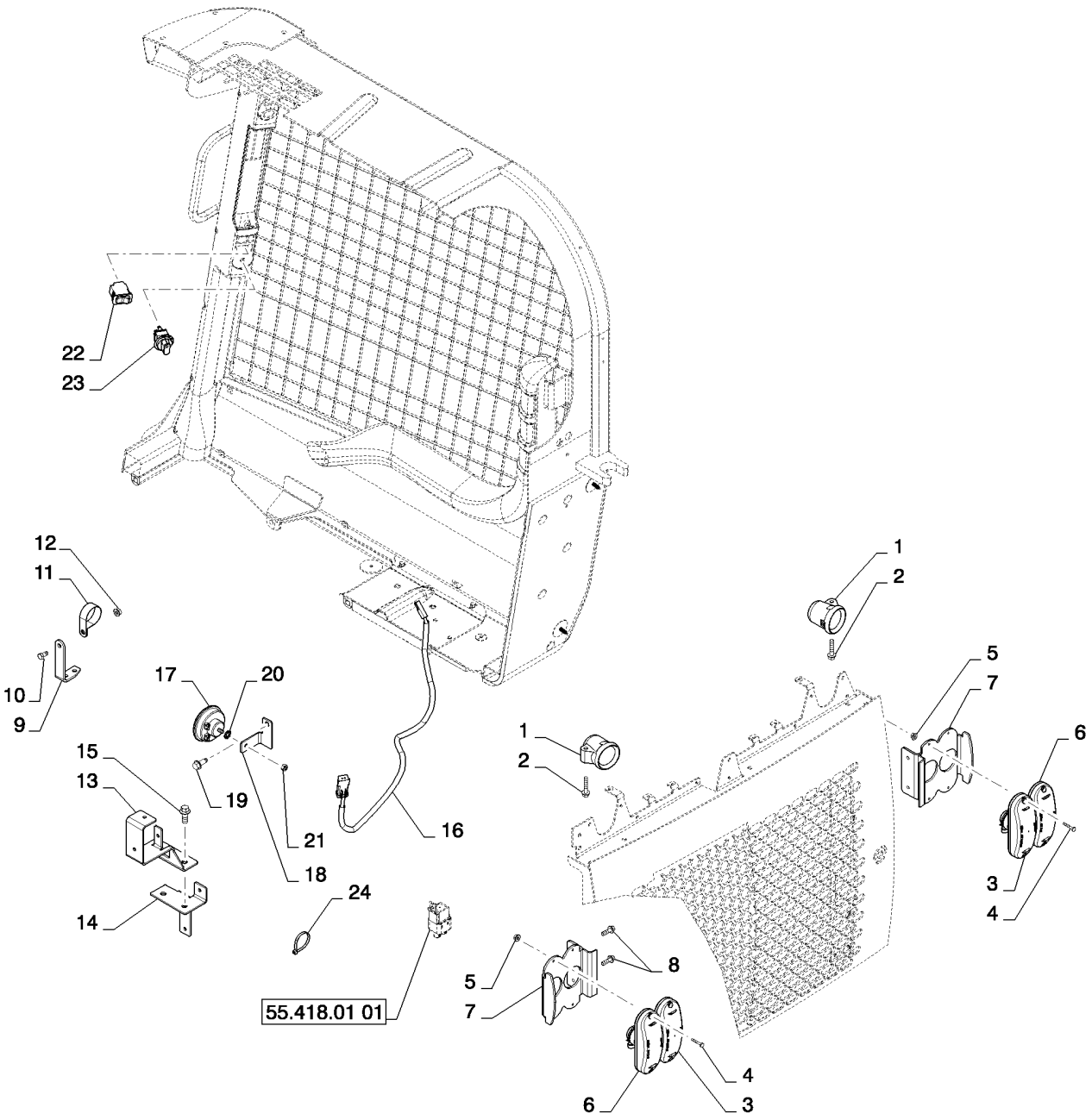

INSTRUMENTS AND ELECTRICAL VERT NH (L223-L230,C232,C238)
INSTRUMENTS AND ELECTRICAL VERT NH (L223-L230,C232,C238)
INSTRUMENTS AND ELECTRICAL VERT NH (L223-L230,C232,C238)
INSTRUMENTS AND ELECTRICAL VERT NH (L223-L230,C232,C238)

R	N	P.N.	MOD	Q	Denominação Description	Description Bezeichnung	Denominacion Beskrivelse	Descrizione Beschrijving	L.C.
20		**9804255**		1	PARAFUSO, Hex Flg, M6 x 16, 8.8, Ref. 18 mounting				
					BOLT	PERNO	BULLONE		140B
					VIS	SCHRAUBE	BOLT	BOUT	
21		**9804276**		1	PORCA, M6 x 1, Flg, Cl 8	NUT	TUERCA	DADO	010D
					ECROU	MUTTER	MØTRIK	MOER	
22		**84251345**		1	INTERRUPTOR	SWITCH	INTERRUPTOR	INTERRUTTORE	075I
					CONTACTEUR	SCHALTER	KONTAKT	SCHAKELAAR	
23		**84412289**		1	ADESIVO, Light Switch NH	DECAL	CALCOMANÍA	DECALCOMANIA	012D
					AUTOCOLLANT	AUFKLEBER	TRANSFER	STICKER	
24		**L11541**		1	PRENDEDOR DE CABOS	CABLE STRAP	BANDA DE CABLE	FASCETTA PER CAVO	P716
					BRIDE DE CABLE	KABELBINDER	KABELSTROP	BUNDELBAND	
25		**126844A1**		1	BUJÃO, Cover	PLUG	TAPÓN	TAPPO	050T
					BOUCHON	STOPFEN	PROP	PLUG	

55.418.01	01	p1	05/11

COMMON INSTRUMENTS AND ELEC (ALL NH)
COMMON INSTRUMENTS AND ELEC (ALL NH)
COMMON INSTRUMENTS AND ELEC (ALL NH)
COMMON INSTRUMENTS AND ELEC (ALL NH)

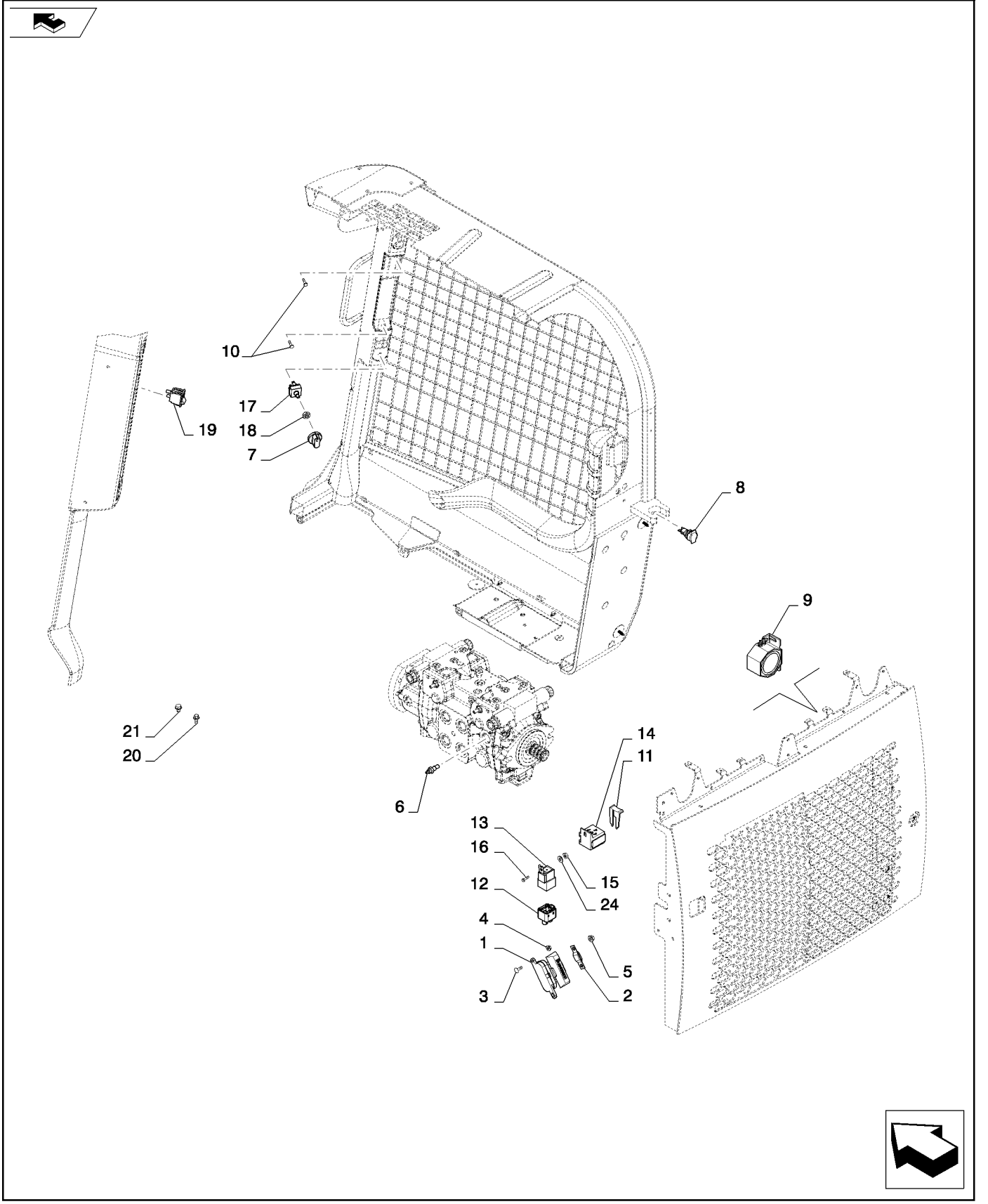

COMMON INSTRUMENTS AND ELEC (ALL NH)
COMMON INSTRUMENTS AND ELEC (ALL NH)
COMMON INSTRUMENTS AND ELEC (ALL NH)
COMMON INSTRUMENTS AND ELEC (ALL NH)

R	N	P.N.	MOD	Q	Denominação Description	Description Bezeichnung	Denominacion Beskrivelse	Descrizione Beschrijving	L.C.
1		440038A1		1	BLOCO DE JUNÇÃO, Fuse Block				
						JUNCTION BLOCK	BLOQUE DE CONEXIÓN	BASETTA DI GIUNZIONE	Z398
					BLOC DE JONCTION	ANSCHLUSSBLOCK	FORBINDELSESBLOK	VERDEELBLOK	
2		87472238		1	FUSÍVEL, 60 Amp	FUSE	FUSIBLE	FUSIBILE	110F
					FUSIBLE	SICHERUNG	SIKRING	ZEKERING	
3		9706703		2	PARAFUSO, Short NK, M6 x 20, Cl8.8, Full Thd				
						CARRIAGE BOLT	PERNO ALOMADO	BULLONE A TESTA TONI	P123
					VIS A TETE BOMBEE	SCHLOSSSCHRAUBE	BRÆDDEBOLT	SLOTBOUT	
4		9804276		2	PORCA, M6 x 1, Flg, Cl 8	NUT	TUERCA	DADO	010D
					ECROU	MUTTER	MØTRIK	MOER	
5		9804277		2	PORCA, M8 x 1.25, Flg, Cl 8				
						NUT	TUERCA	DADO	010D
					ECROU	MUTTER	MØTRIK	MOER	
6		87688409		1	EMISSOR DE TEMPERATURA, Water				
						TEMPERATURE SENDER	EMISOR DE TEMPERATU	TRASMETT. TEMPERATI	Z366
					TRANSMETTEUR TEMPE	TEMPERATURGEBER	TEMPERATURSENDER	TEMPERATUURSENSOR	
7		86729670		1	MAÇANETA	KNOB	MANDO	MANOPOLA	150P
					BOUTON	RUNDGRIFF	GREB	KNOP	
8		82002966		1	TOMADA ELÉTRICA	POWER SOCKET	ZÓCALO DE CORRIENTE	PRESA DI CORRENTE	205P
					PRISE DE COURANT	STECKDOSE	STRØMUDTAG	CONTACTDOOS	
9		325258A1		1	KIT DE SERVIÇO, Backup Alarm Assembly				
						SERVICE KIT	KIT DE SERVICIO	KIT DI MANUTENZIONE	021K
					KIT D'ENTRETIEN	SERVICE-SATZ	SERVICESÆT	SERVICEKIT	
10		86511042		2	PARAFUSO, Cross Pan Hd, M4 x 16				
						SCREW	TORNILLO	VITE	040V
					VIS	SCHRAUBE	SKRUE	SCHROEF	
11		84352550		1	CONECTOR ELÉTR	ELEC CONNECTOR	CONECTOR ELÉCTRICC	CONNETTORE ELETTRI(	235C
					CONNECTEUR ELECTRI	ELEKTR STECKVERBIND	EL-STIK	CONNECTOR	
12		84359805		1	CONECTOR ELÉTR, Relay Socket 8W				
						ELEC CONNECTOR	CONECTOR ELÉCTRICC	CONNETTORE ELETTRI(	235C
					CONNECTEUR ELECTRI	ELEKTR STECKVERBIND	EL-STIK	CONNECTOR	
13		84297432		1	RELÉ	RELAY	RELÉ	RELÈ	011R
					RELAIS	RELAIS	RELÆ	RELAIS	
14		NSS		1	SEM SERVIÇO EM SEPARADO, Packard Metri-Pack Female 5-way				
						NOT SERVICED SEPARA	NO SE REPARA POR SE	NON FORNITO SEPARAT	064N
					NON FOURNI SEPAREM	NICHT A SEP ERS-T LIEI	SERVICERES IKKE SEPA	NIET LOS VERKRIJGBAA	
15		87825		1	PORCA, #10-32	NUT	TUERCA	DADO	010D
					ECROU	MUTTER	MØTRIK	MOER	
16		87308282		1	PARAFUSO	SCREW	TORNILLO	VITE	040V
					VIS	SCHRAUBE	SKRUE	SCHROEF	
17		86729669		1	INTERRUPTOR, Blower	SWITCH	INTERRUPTOR	INTERRUTTORE	075I
					CONTACTEUR	SCHALTER	KONTAKT	SCHAKELAAR	
18		87310592		1	PORCA	NUT	TUERCA	DADO	010D
					ECROU	MUTTER	MØTRIK	MOER	
19		133714A1		1	INTERRUPTOR, Rocker, Beacon				
						SWITCH	CONTACTOR	INTERRUTTORE	8850
					CONTACTEUR	SCHALTER	KONTAKT	AAN-UIT SCHAKELAAR	

55.418.01	01	p2	05/11

COMMON INSTRUMENTS AND ELEC (ALL NH)
COMMON INSTRUMENTS AND ELEC (ALL NH)
COMMON INSTRUMENTS AND ELEC (ALL NH)
COMMON INSTRUMENTS AND ELEC (ALL NH)

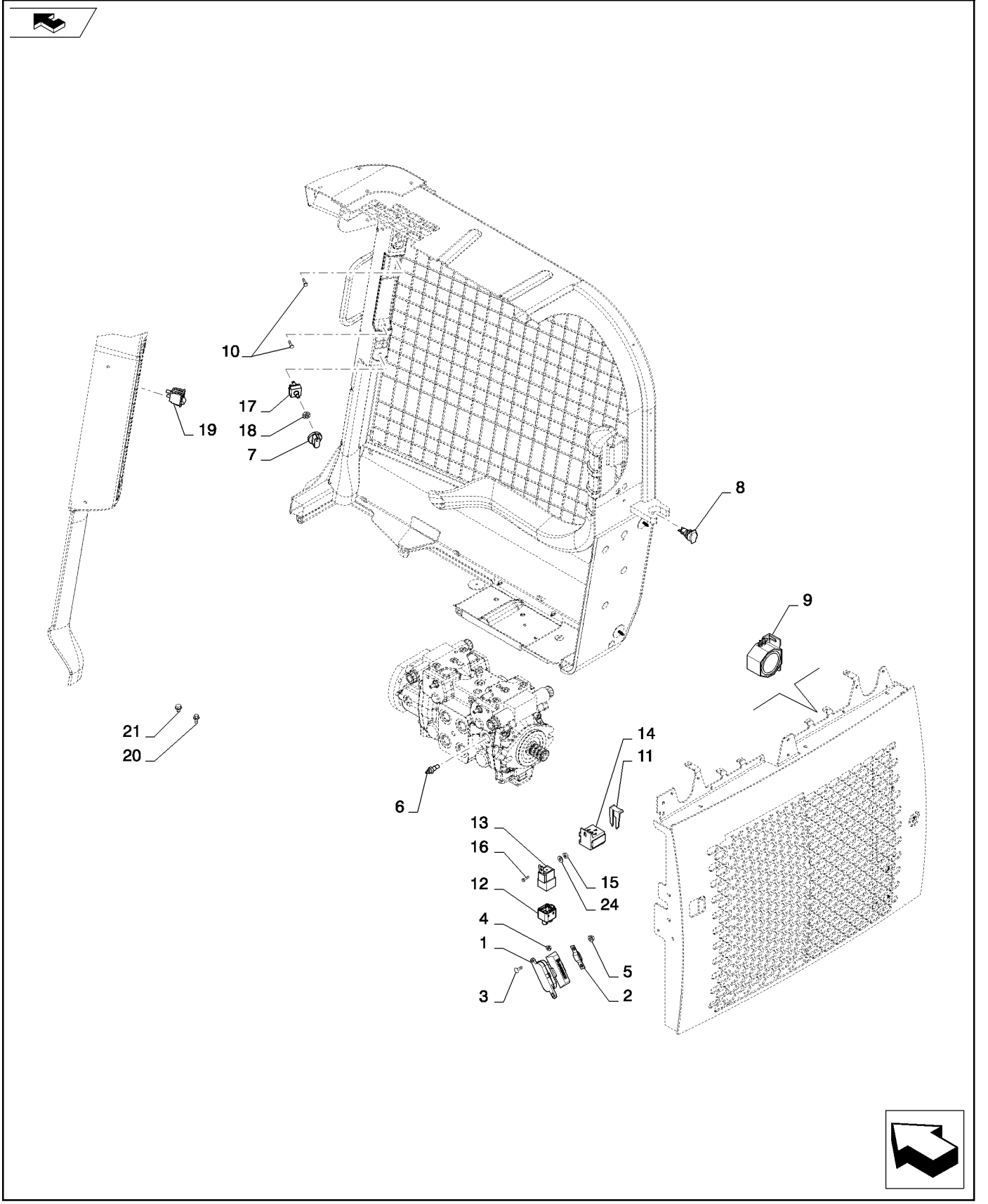

COMMON INSTRUMENTS AND ELEC (ALL NH)
COMMON INSTRUMENTS AND ELEC (ALL NH)
COMMON INSTRUMENTS AND ELEC (ALL NH)
COMMON INSTRUMENTS AND ELEC (ALL NH)

R	N	P.N.	MOD	Q	Denominação Description	Description Bezeichnung	Denominacion Beskrivelse	Descrizione Beschrijving	L.C.
20		**86625199**		1	PARAFUSO, Hex Flg Hd, M6 x 13				
						SELF-TAP SCREW	TORNILLO AUTORROSC	VITE AUTOFILETTANTE	062V
					VIS AUTOTARAUDEUSE	SELBSTSCHN SCHRAUE	SELVLÅSENDE BOLT	ZELFTAPPENDE SCHRO	
21		**380426**		1	PARAFUSO	SCREW	TORNILLO	VITE	040V
					VIS	SCHRAUBE	SKRUE	SCHROEF	
22		**84360112**		1	SUPORTE, (Not shown)	BRACKET	SOPORTE	STAFFA	225S
					SUPPORT	HALTERUNG	BESLAG	STEUN	
23		**84409478**		1	ADESIVO, LH Post Console (Not shown)				
						DECAL	CALCOMANÍA	DECALCOMANIA	012D
					AUTOCOLLANT	AUFKLEBER	TRANSFER	STICKER	
24		**80707**		2	ARRUELA PLANA, 3/16"	WASHER	ARANDELA	RONDELLA	131R
					RONDELLE	UNTERLEGSCHEIBE	FLADSKIVE	SLUITRING	

55.512.01		p1	05/11

IGNITION AND DISPLAY, KEYED/KEYLESS NH (ALL NH)
IGNITION AND DISPLAY, KEYED/KEYLESS NH (ALL NH)
IGNITION AND DISPLAY, KEYED/KEYLESS NH (ALL NH)
IGNITION AND DISPLAY, KEYED/KEYLESS NH (ALL NH)

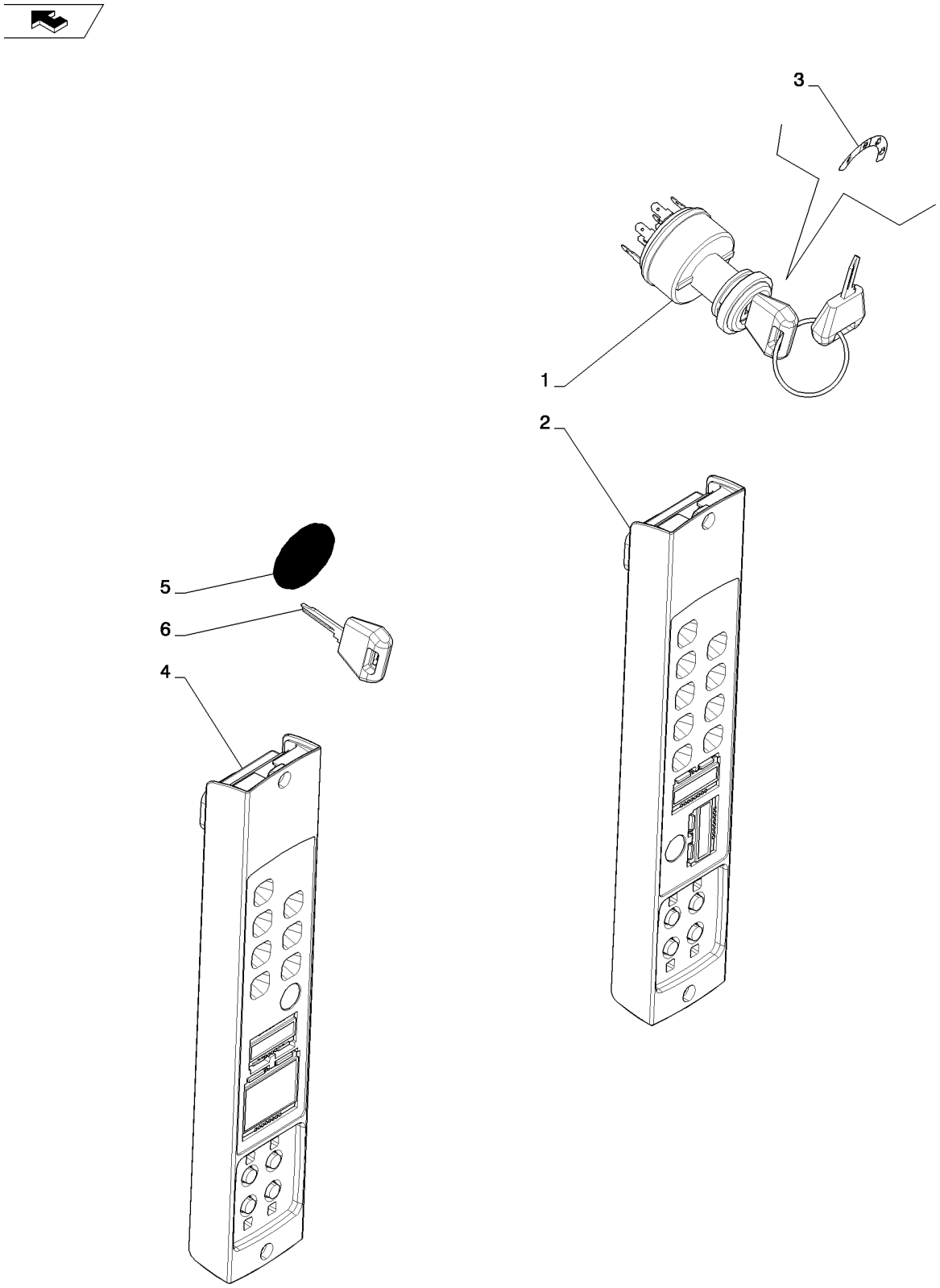

IGNITION AND DISPLAY, KEYED/KEYLESS NH (ALL NH)
IGNITION AND DISPLAY, KEYED/KEYLESS NH (ALL NH)
IGNITION AND DISPLAY, KEYED/KEYLESS NH (ALL NH)
IGNITION AND DISPLAY, KEYED/KEYLESS NH (ALL NH)

R	N	P.N.	MOD	Q	Denominação Description Bezeichnung	Denominacion Beskrivelse	Descrizione Beschrijving	L.C.
1		84384716		1	CONJUNTO DE INSTRUMENTOS, Instrument Cluster, NH Standard INSTRUMENT CLUSTER TABLEAU DE BORD KOMBIINSTRUMENT	GRUPO DE INSTRUMEN KOMBIINSTRUMENT	QUADRO STRUMENTI INSTRUMENTENPANEEL	288S
2		87416177		1	COMUTADOR, NH, Ignition CONTACTEUR DE DEMA IGNITION SWITCH ZÜNDSCHALTER	CONMUTADOR DE ARR/ KONTAKT, TÆNDING	INTERRUTTORE ACCEN CONTACTSCHAKELAAR	P654
3		84377887		1	ADESIVO, Key Switch NH AUTOCOLLANT DECAL AUFKLEBER	CALCOMANÍA TRANSFER	DECALCOMANIA STICKER	012D
4		84239243		1	CONJ INSTRUMEN MILHAGEM, Instrument Cluster, NH Deluxe, Keyless MILES INSTRUMENT CLI TABLEAU DE BORD (MIL KOMBIINSTRUMENT (ME	GRUPO DE INSTR. DE M INSTRUMENTBRÆT, MIL	QUADRO STRUM. CONT INSTRUM.PANEEL V. MI.	287S
5		84322949		1	ADESIVO, Key Blank NH AUTOCOLLANT DECAL AUFKLEBER	CALCOMANÍA TRANSFER	DECALCOMANIA STICKER	012D
6		86502201		1	CHAVE DE PARTIDA, Ignition/Cab No logo IGNITION KEY CLE DE CONTACT ZÜNDSCHLÜSSEL	LLAVE DE CONTACTO TÆNDINGSNØGLE	CHIAVE DI AVVIAMENTO CONTACTSLEUTEL	149C

55.514.01		p1	03/11

EU ROAD LIGHTS LG (L223-L230,C232,C238)
EU ROAD LIGHTS LG (L223-L230,C232,C238)
EU ROAD LIGHTS LG (L223-L230,C232,C238)
EU ROAD LIGHTS LG (L223-L230,C232,C238)

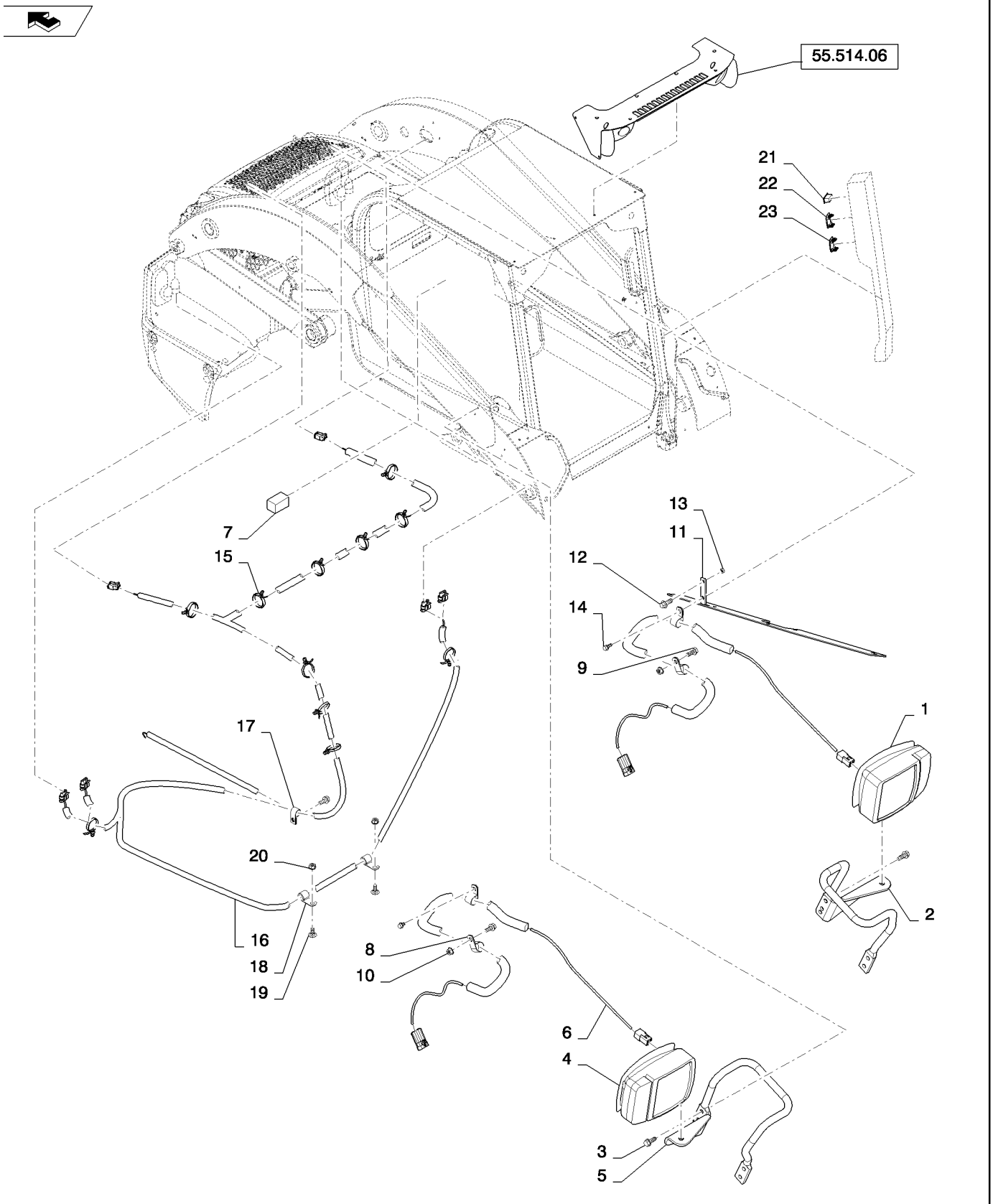

EU ROAD LIGHTS LG (L223-L230,C232,C238)
EU ROAD LIGHTS LG (L223-L230,C232,C238)
EU ROAD LIGHTS LG (L223-L230,C232,C238)
EU ROAD LIGHTS LG (L223-L230,C232,C238)

R	N	P.N.	MOD	Q	Denominação Description	Description Bezeichnung	Denominacion Beskrivelse	Descrizione Beschrijving	L.C.
1		87572860		1	LÂMPADA, EU Boom, Left Lamp				
						LAMP	LÁMPARA	SPIA	009F
					LAMPE	LEUCHTE	LYGTE	LAMP	
2		84306584		1	SUPORTE, Light, LH, Gray	BRACKET, SUPPORTING	PIEZA DE APOYO	SQUADRETTA	215S
					EQUERRE	SCHALTER,AUTOM.AUS	STOETTEBESLAG	DRAAGARM	
3		280476		4	PARAFUSO, Hex Wash Hd, 3/8" x 1"				
						SELF-TAP SCREW	TORNILLO AUTORROSC	VITE AUTOFILETTANTE	062V
					VIS AUTOTARAUDEUSE	SELBSTSCHN SCHRAUE	SELVLÅSENDE BOLT	ZELFTAPPENDE SCHRO	
4		87572859		1	LÂMPADA, EU Boom, Right Lamp				
						LAMP	LÁMPARA	SPIA	009F
					LAMPE	LEUCHTE	LYGTE	LAMP	
5		84306586		1	SUPORTE, Light, RH, Gray	BRACKET, SUPPORTING	PIEZA DE APOYO	SQUADRETTA	215S
					EQUERRE	SCHALTER,AUTOM.AUS	STOETTEBESLAG	DRAAGARM	
6		84262452		1	CHICOTE, FE Boom VT	WIRE HARNESS	GRUPO DE CABLES	CABLAGGIO	070I
					FAISCEAU ELECTRIQUE	KABELBAUM	KABELNET	KABELBOOM	
7		9821783		1	LÂMPADA INTERMITENTE, Assembly				
						FLASHER UNIT	UNIDAD INTERMITENTE	UNITÀ LAMPEGGIATORE	035L
					CENTRALE CLIGNOTAN	BLINKEREINHEIT	BLINKLAMPE	KNIPPERAUTOMAAT	
8		87029955		3	BRAÇADEIRA	CLAMP	ABRAZADERA	MORSETTO	120M
					COLLIER	KLEMME	SPÆNDEBÅND	KLEM	
9		84221257		2	BRAÇADEIRA	CLAMP	ABRAZADERA	MORSETTO	120M
					COLLIER	KLEMME	SPÆNDEBÅND	KLEM	
10		86512420		2	PARAFUSO, Short NK, M8 x 20, Cl8.8, Full Thd				
						CARRIAGE BOLT	PERNO ALOMADO	BULLONE A TESTA TON	P123
					VIS A TETE BOMBEE	SCHLOSSSCHRAUBE	BRÆDDEBOLT	SLOTBOUT	
11		9804277		2	PORCA, M8 x 1.25, Flg, Cl 8				
						NUT	TUERCA	DADO	010D
					ECROU	MUTTER	MØTRIK	MOER	
12		9706748		1	BRAÇADEIRA, 5/8", Insul, 5/16" Bolt				
						CLAMP	ABRAZADERA	MORSETTO	120M
					COLLIER	KLEMME	SPÆNDEBÅND	KLEM	
13		9804258		3	PARAFUSO, Hex Flg, M8 x 20, 8.8				
						BOLT	PERNO	BULLONE	140B
					VIS	SCHRAUBE	BOLT	BOUT	
14		84383044		1	CHICOTE, Rear Road Jumper				
						WIRE HARNESS	GRUPO DE CABLES	CABLAGGIO	070I
					FAISCEAU ELECTRIQUE	KABELBAUM	KABELNET	KABELBOOM	
15		87668737		5	TIRA	STRAP	BANDA	FASCETTA	532B
					BRIDE	BAND	STROP	RIEM	
16		86589143		2	ESPAÇADOR	SPACER	SEPARADOR	DISTANZIALE	075D
					ENTRETOISE	DISTANZSTÜCK	AFSTANDSSTYKKE	AFSTANDSSTUK	
17		86505868		4	PORCA, M8, Flg Ser	NUT	TUERCA	DADO	010D
					ECROU	MUTTER	MØTRIK	MOER	
18		87015934		2	PARAFUSO, M8x35	BOLT	PERNO	BULLONE	140B
					VIS	SCHRAUBE	BOLT	BOUT	
19		263117		6	PRENDEDOR DE CABOS,	.14" x 11 1/2"			
						CABLE STRAP	BANDA DE CABLE	FASCETTA PER CAVO	P716
					BRIDE DE CABLE	KABELBINDER	KABELSTROP	BUNDELBAND	

55.514.01		p2	03/11

EU ROAD LIGHTS LG (L223-L230,C232,C238)
EU ROAD LIGHTS LG (L223-L230,C232,C238)
EU ROAD LIGHTS LG (L223-L230,C232,C238)
EU ROAD LIGHTS LG (L223-L230,C232,C238)

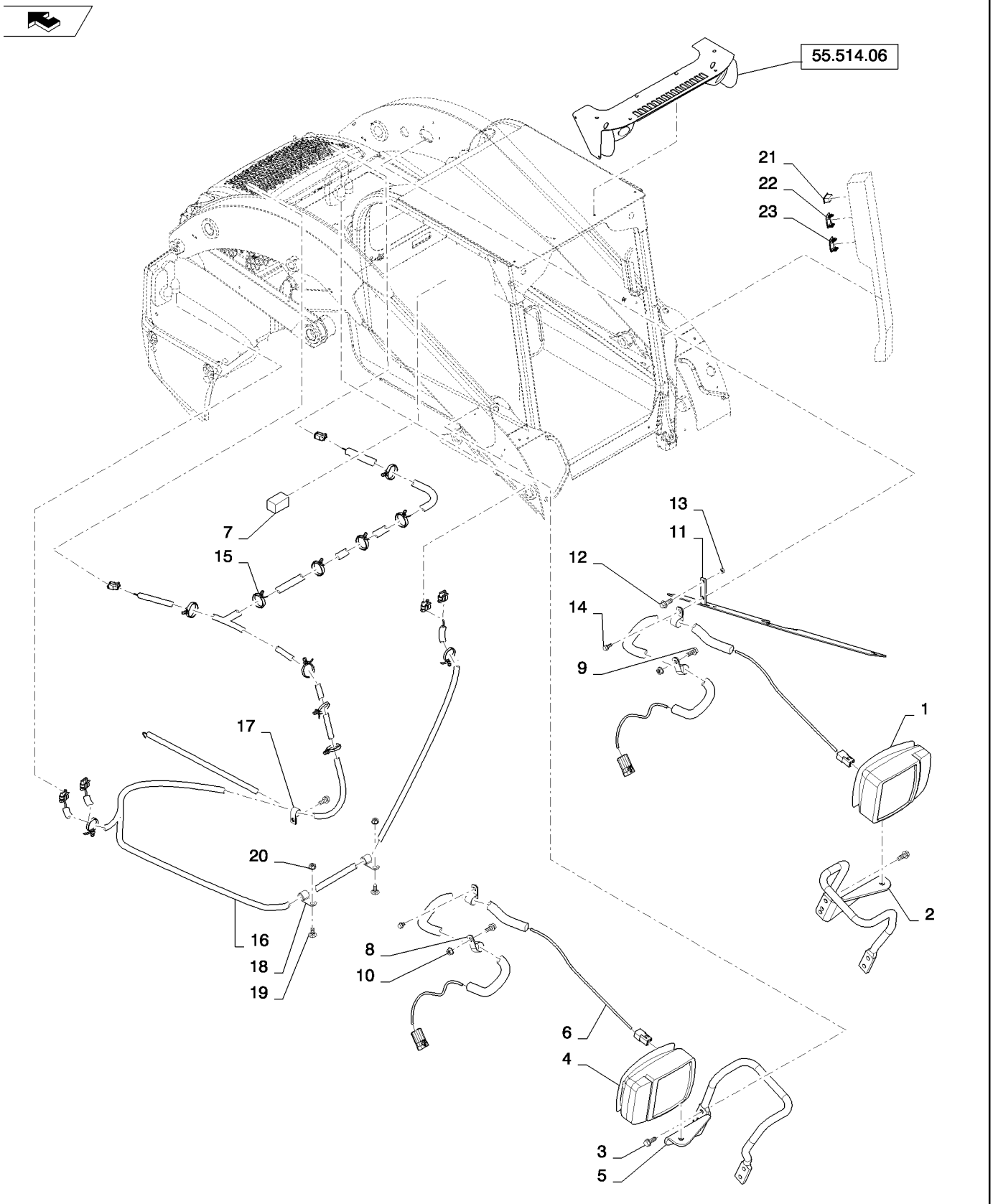

EU ROAD LIGHTS LG (L223-L230,C232,C238)
EU ROAD LIGHTS LG (L223-L230,C232,C238)
EU ROAD LIGHTS LG (L223-L230,C232,C238)
EU ROAD LIGHTS LG (L223-L230,C232,C238)

R	N	P.N.	MOD	Q	Denominação Description	Description Bezeichnung	Denominacion Beskrivelse	Descrizione Beschrijving	L.C.
20		**86637977**		3	BRAÇADEIRA, 1", Insul, 5/16" Bolt				
						CLAMP	ABRAZADERA	MORSETTO	120M
					COLLIER	KLEMME	SPÆNDEBÅND	KLEM	
21		**84420530**		1	CHICOTE, Boom LH Vert	WIRE HARNESS	GRUPO DE CABLES	CABLAGGIO	070I
					FAISCEAU ELECTRIQUE	KABELBAUM	KABELNET	KABELBOOM	
22		**84335932**		1	LUZ, W/O Turn Signal	LIGHT	LUZ	LUCE	Z496
					FEU	LAMPE	BELYSNING	LAMP	
23		**86604657**		1	INDICADOR DE DIREÇÃO	TURN SIGNAL INDICATC	INDIC. DE SEÑAL DE GIF	INDICATORE DI DIREZIC	029I
					CLIGNOTANT	FAHRTRICHTUNGSANZE	RETNINGSVISER	RICHTINGAANWIJZER	
24		**87634133**		1	INTERRUPTOR, Rocker, Hazard Lights				
						SWITCH	INTERRUPTOR	INTERRUTTORE	075I
					CONTACTEUR	SCHALTER	KONTAKT	SCHAKELAAR	
25		**84263153**		1	INTERRUPTOR, Rocker, Loader Lockout				
						SWITCH	INTERRUPTOR	INTERRUTTORE	075I
					CONTACTEUR	SCHALTER	KONTAKT	SCHAKELAAR	

55.514.02		p1	02/11

NO ROAD LIGHTS OR TURN SIGNAL (L223-L230,C232,C238)
NO ROAD LIGHTS OR TURN SIGNAL (L223-L230,C232,C238)
NO ROAD LIGHTS OR TURN SIGNAL (L223-L230,C232,C238)
NO ROAD LIGHTS OR TURN SIGNAL (L223-L230,C232,C238)

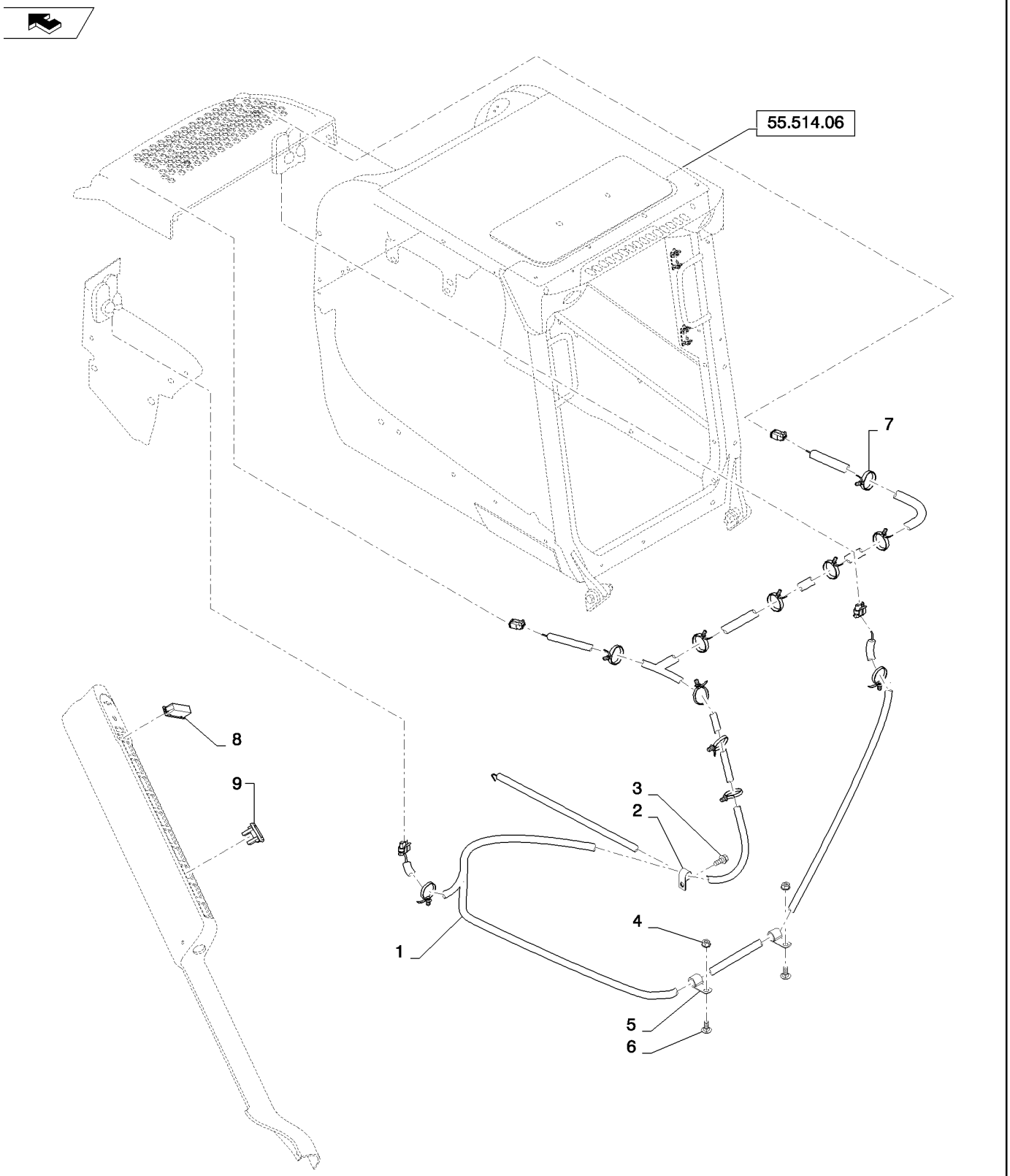

NO ROAD LIGHTS OR TURN SIGNAL (L223-L230,C232,C238)
NO ROAD LIGHTS OR TURN SIGNAL (L223-L230,C232,C238)
NO ROAD LIGHTS OR TURN SIGNAL (L223-L230,C232,C238)
NO ROAD LIGHTS OR TURN SIGNAL (L223-L230,C232,C238)

R	N	P.N.	MOD	Q	Denominação Description	Description Bezeichnung	Denominacion Beskrivelse	Descrizione Beschrijving	L.C.
1		84251332		1	CHICOTE, RR, Lamp Jumper				
						WIRE HARNESS	GRUPO DE CABLES	CABLAGGIO	070I
					FAISCEAU ELECTRIQUE	KABELBAUM	KABELNET	KABELBOOM	
2		9706748		1	BRAÇADEIRA, 5/8", Insul, 5/16" Bolt				
						CLAMP	ABRAZADERA	MORSETTO	120M
					COLLIER	KLEMME	SPÆNDEBÅND	KLEM	
3		9804258		1	PARAFUSO, Hex Flg, M8 x 20, 8.8				
						BOLT	PERNO	BULLONE	140B
					VIS	SCHRAUBE	BOLT	BOUT	
4		9804277		2	PORCA, M8 x 1.25, Flg, Cl 8				
						NUT	TUERCA	DADO	010D
					ECROU	MUTTER	MØTRIK	MOER	
5		84221257		2	BRAÇADEIRA, J, 14.2mm	CLAMP	ABRAZADERA	MORSETTO	120M
					COLLIER	KLEMME	SPÆNDEBÅND	KLEM	
6		86512420		2	PARAFUSO, Short NK, M8 x 20, Cl8.8, Full Thd				
						CARRIAGE BOLT	PERNO ALOMADO	BULLONE A TESTA TONI	P123
					VIS A TETE BOMBEE	SCHLOSSSCHRAUBE	BRÆDDEBOLT	SLOTBOUT	
7		87668737		5	TIRA, Fir Tree Assembly	STRAP	BANDA	FASCETTA	532B
					BRIDE	BAND	STROP	RIEM	
8		86627432		1	BUJÃO DE PLÁSTICO	PLASTIC PLUG	TAPÓN DE PLÁSTICO	TAPPO IN PLASTICA	Z412
					BOUCHON EN PLASTIQU	KUNSTSTOFFSTOPFEN	PLASTPROP	KUNSTSTOFPLUG	
9		126844A1		2	BUJÃO, Cover	PLUG	TAPÓN	TAPPO	050T
					BOUCHON	STOPFEN	PROP	PLUG	
10		263117		6	PRENDEDOR DE CABOS,	.14" x 11 1/2", Not Shown			
						CABLE STRAP	BANDA DE CABLE	FASCETTA PER CAVO	P716
					BRIDE DE CABLE	KABELBINDER	KABELSTROP	BUNDELBAND	
11		84357636		2	ADESIVO, Plug; Not Shown	DECAL	CALCOMANÍA	DECALCOMANIA	012D
					AUTOCOLLANT	AUFKLEBER	TRANSFER	STICKER	

55.514.03		p1	02/11

TURN SIGNAL LG (L223,L225,L230,C232,C238)
TURN SIGNAL LG (L223,L225,L230,C232,C238)
TURN SIGNAL LG (L223,L225,L230,C232,C238)
TURN SIGNAL LG (L223,L225,L230,C232,C238)

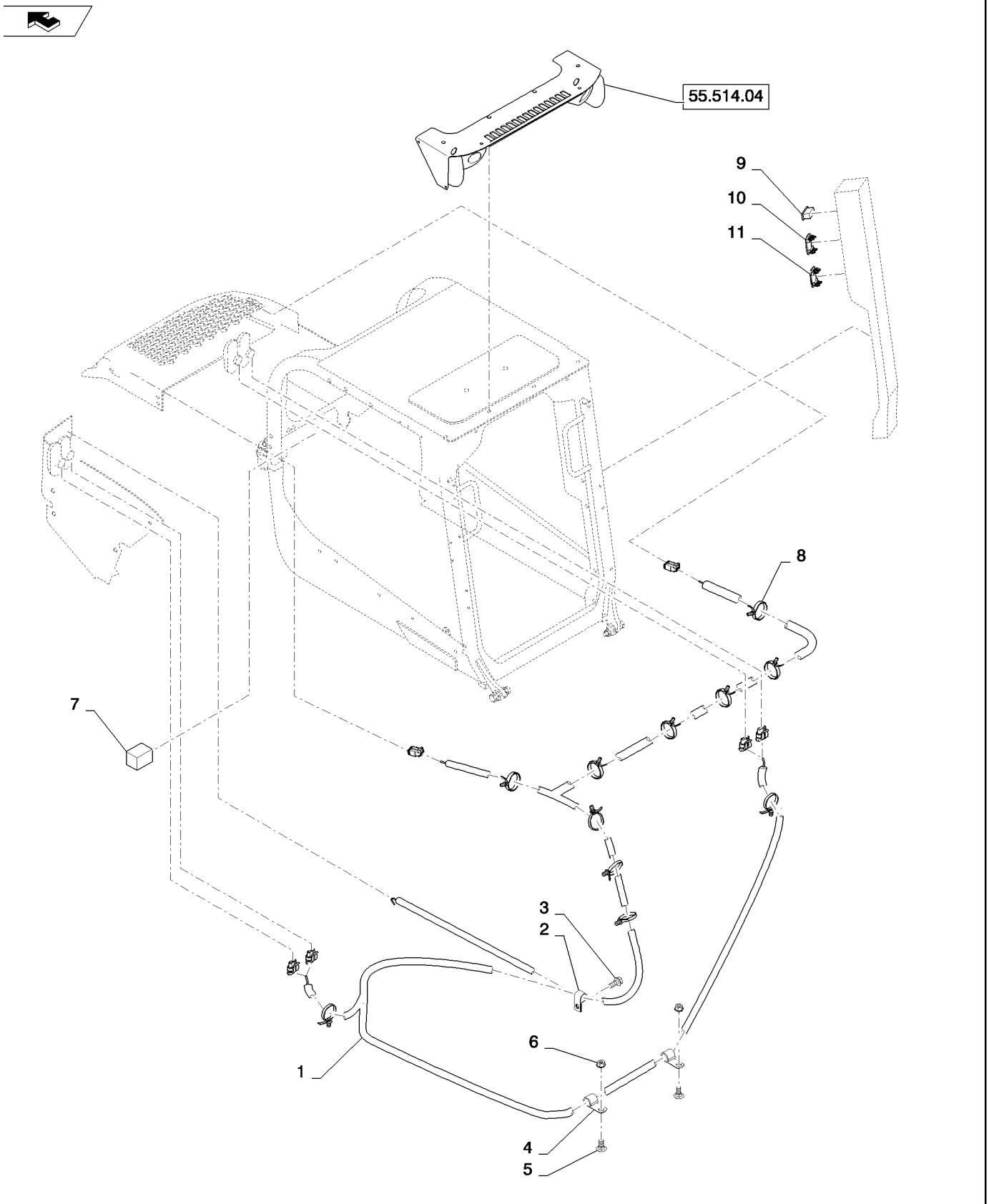

TURN SIGNAL LG (L223,L225,L230,C232,C238)
TURN SIGNAL LG (L223,L225,L230,C232,C238)
TURN SIGNAL LG (L223,L225,L230,C232,C238)
TURN SIGNAL LG (L223,L225,L230,C232,C238)

R	N	P.N.	MOD	Q	Denominação Description	Description Bezeichnung	Denominacion Beskrivelse	Descrizione Beschrijving	L.C.
1		84383044		1	CHICOTE, Rear, Road Jumper				
						WIRE HARNESS	GRUPO DE CABLES	CABLAGGIO	070I
					FAISCEAU ELECTRIQUE	KABELBAUM	KABELNET	KABELBOOM	
2		9706748		1	BRAÇADEIRA, 5/8", Insul, 5/16" Bolt				
						CLAMP	ABRAZADERA	MORSETTO	120M
					COLLIER	KLEMME	SPÆNDEBÅND	KLEM	
3		9804258		1	PARAFUSO, Hex Flg, M8 x 20, 8.8				
						BOLT	PERNO	BULLONE	140B
					VIS	SCHRAUBE	BOLT	BOUT	
4		84221257		2	BRAÇADEIRA, J, 14.2mm	CLAMP	ABRAZADERA	MORSETTO	120M
					COLLIER	KLEMME	SPÆNDEBÅND	KLEM	
5		86512420		2	PARAFUSO, Short NK, M8 x 20, Cl8.8, Full Thd				
						CARRIAGE BOLT	PERNO ALOMADO	BULLONE A TESTA TONI	P123
					VIS A TETE BOMBEE	SCHLOSSSCHRAUBE	BRÆDDEBOLT	SLOTBOUT	
6		9804277		2	PORCA, M8 x 1.25, Flg, Cl 8				
						NUT	TUERCA	DADO	010D
					ECROU	MUTTER	MØTRIK	MOER	
7		9821783		1	LÂMPADA INTERMITENTE, Assembly				
						FLASHER UNIT	UNIDAD INTERMITENTE	UNITÀ LAMPEGGIATORE	035L
					CENTRALE CLIGNOTAN	BLINKEREINHEIT	BLINKLAMPE	KNIPPERAUTOMAAT	
8		87668737		5	TIRA, Fir Tree Assembly	STRAP	BANDA	FASCETTA	532B
					BRIDE	BAND	STROP	RIEM	
9		86604657		1	INDICADOR DE DIREÇÃO	TURN SIGNAL INDICATC	INDIC. DE SEÑAL DE GIF	INDICATORE DI DIREZIC	029I
					CLIGNOTANT	FAHRTRICHTUNGSANZE	RETNINGSVISER	RICHTINGAANWIJZER	
10		87634133		1	INTERRUPTOR, Hazard Lights				
						SWITCH	INTERRUPTOR	INTERRUTTORE	075I
					CONTACTEUR	SCHALTER	KONTAKT	SCHAKELAAR	
11		126844A1		1	BUJÃO, Cover	PLUG	TAPÓN	TAPPO	050T
					BOUCHON	STOPFEN	PROP	PLUG	
12		263117		6	PRENDEDOR DE CABOS, .14" x 11 1/2", Not Shown				
						CABLE STRAP	BANDA DE CABLE	FASCETTA PER CAVO	P716
					BRIDE DE CABLE	KABELBINDER	KABELSTROP	BUNDELBAND	

55.514.04		p1	02/11

LIGHT W/TURN SIGNAL (ALL NH)
LIGHT W/TURN SIGNAL (ALL NH)
LIGHT W/TURN SIGNAL (ALL NH)
LIGHT W/TURN SIGNAL (ALL NH)

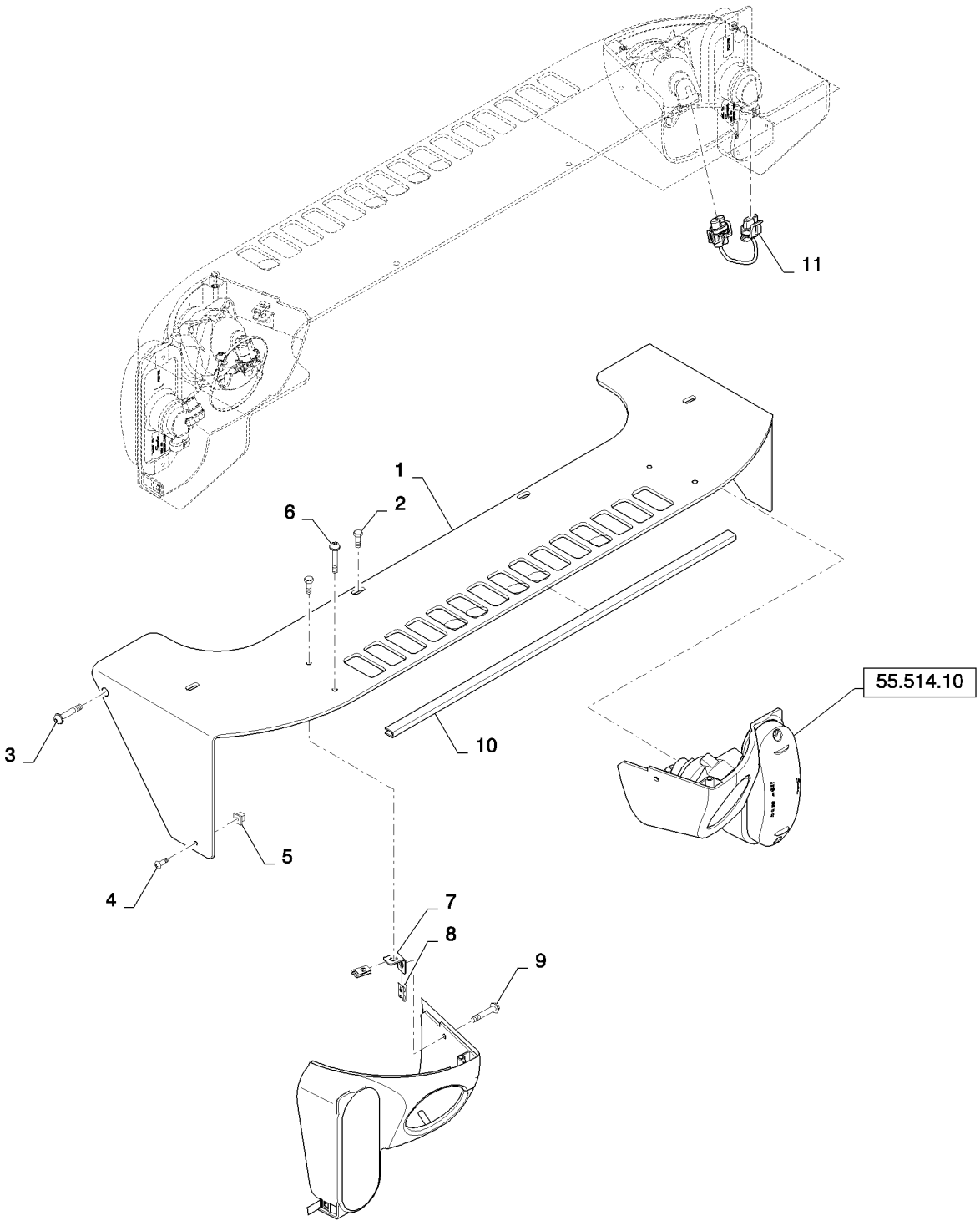

LIGHT W/TURN SIGNAL (ALL NH)
LIGHT W/TURN SIGNAL (ALL NH)
LIGHT W/TURN SIGNAL (ALL NH)
LIGHT W/TURN SIGNAL (ALL NH)

R	N	P.N.	MOD	Q	Denominação Description	Description Bezeichnung	Denominacion Beskrivelse	Descrizione Beschrijving	L.C.
1		84333222		1	SUPORTE, Brow, Gray	BRACKET	SOPORTE	STAFFA	225S
					SUPPORT	HALTERUNG	BESLAG	STEUN	
2		87682398		4	PARAFUSO	SCREW	TORNILLO	VITE	040V
					VIS	SCHRAUBE	SKRUE	SCHROEF	
3		84359102		2	PARAFUSO, M6 X 35 RDW-HD				
						SCREW	TORNILLO	VITE	040V
					VIS	SCHRAUBE	SKRUE	SCHROEF	
4		84173781		2	PARAFUSO	SELF-TAP SCREW	TORNILLO AUTORROSC	VITE AUTOFILETTANTE	062V
					VIS AUTOTARAUDEUSE	SELBSTSCHN SCHRAUE	SELVLÅSENDE BOLT	ZELFTAPPENDE SCHRO	
5		84335751		2	PORCA, Grommet	NUT	TUERCA	DADO	010D
					ECROU	MUTTER	MØTRIK	MOER	
6		86511042		2	PARAFUSO, Cross Pan Hd, M4 x 16				
						SCREW	TORNILLO	VITE	040V
					VIS	SCHRAUBE	SKRUE	SCHROEF	
7		84333233		2	SUPORTE	BRACKET	SOPORTE	STAFFA	225S
					SUPPORT	HALTERUNG	BESLAG	STEUN	
8		86900239		4	PORCA	NUT	TUERCA	DADO	010D
					ECROU	MUTTER	MØTRIK	MOER	
9		87307791		4	PARAFUSO, 10-24 X 1/2	SCREW	TORNILLO	VITE	040V
					VIS	SCHRAUBE	SKRUE	SCHROEF	
10		84353803		1	GUARNIÇÃO, Edge, 565mn	TRIM	GUARNICIÓN	RIVESTIMENTO	C046
					GARNITURE	VERKLEIDUNG	INDTRÆK	BEKLEDING	
11		84331370		2	CHICOTE, Front, NH Lamp	WIRE HARNESS	GRUPO DE CABLES	CABLAGGIO	070I
					FAISCEAU ELECTRIQUE	KABELBAUM	KABELNET	KABELBOOM	
12		263117		2	PRENDEDOR DE CABOS,	.14" x 11 1/2", Not Shown			
						CABLE STRAP	BANDA DE CABLE	FASCETTA PER CAVO	P716
					BRIDE DE CABLE	KABELBINDER	KABELSTROP	BUNDELBAND	

55.514.06		p1	07/11

LIGHT W/O TURN SIGNAL (ALL NH)
LIGHT W/O TURN SIGNAL (ALL NH)
LIGHT W/O TURN SIGNAL (ALL NH)
LIGHT W/O TURN SIGNAL (ALL NH)

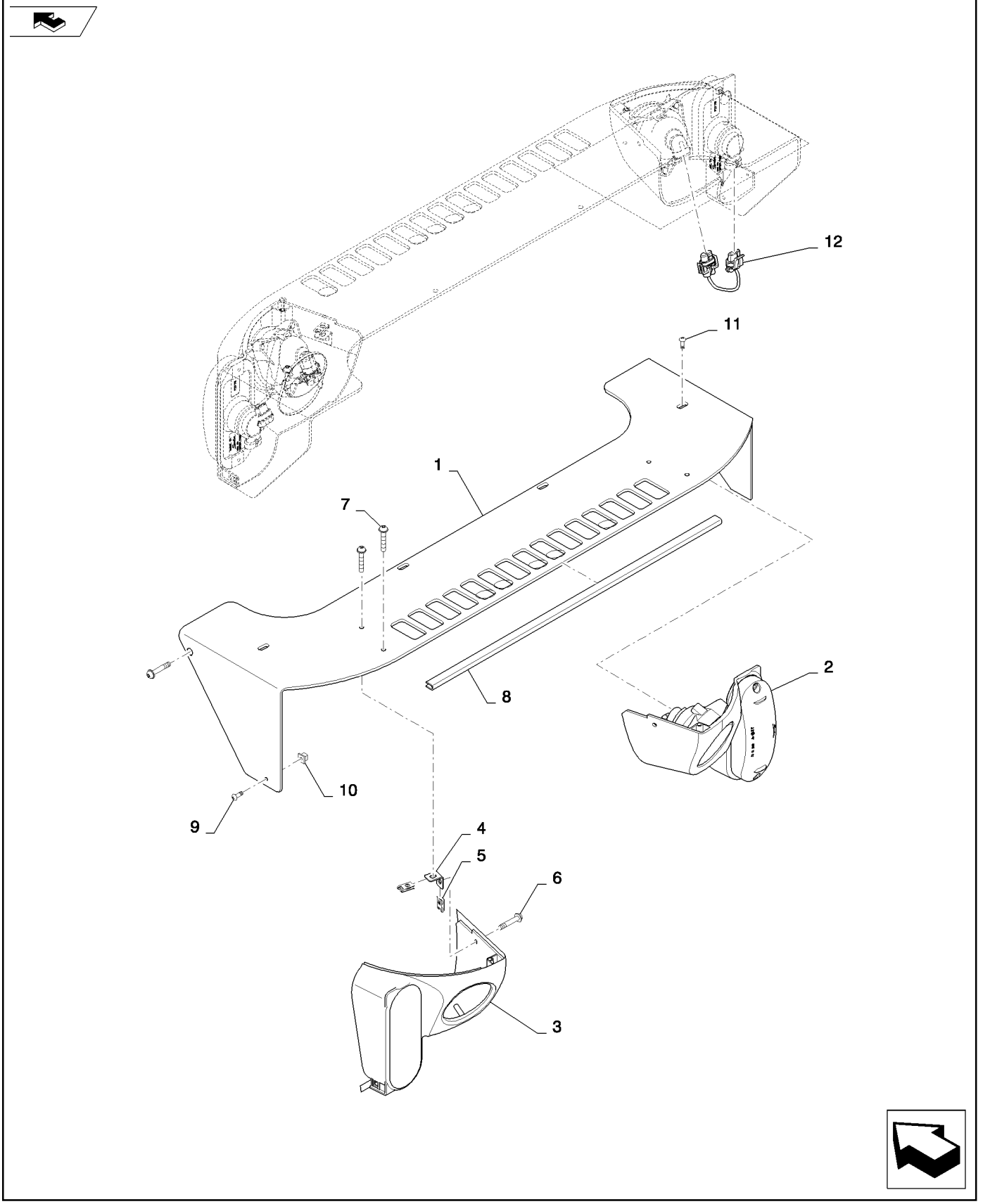

LIGHT W/O TURN SIGNAL (ALL NH)
LIGHT W/O TURN SIGNAL (ALL NH)
LIGHT W/O TURN SIGNAL (ALL NH)
LIGHT W/O TURN SIGNAL (ALL NH)

R	N	P.N.	MOD	Q	Denominação Description	Description Bezeichnung	Denominacion Beskrivelse	Descrizione Beschrijving	L.C.
1		84333222		1	SUPORTE, Brow	BRACKET	SOPORTE	STAFFA	225S
					SUPPORT	HALTERUNG	BESLAG	STEUN	
2		84335806		1	ALOJAMENTO, Light, RH, w/o Turn Signal				
						HOUSING	ALOJAMIENTO	ALLOGGIAMENTO	014V
					CARTER	GEHÄUSE	HUS	HUIS	
3		84335810		1	ALOJAMENTO, Light, LH, w/o Turn Signal				
						HOUSING	ALOJAMIENTO	ALLOGGIAMENTO	014V
					CARTER	GEHÄUSE	HUS	HUIS	
4		84333233		2	SUPORTE	BRACKET	SOPORTE	STAFFA	225S
					SUPPORT	HALTERUNG	BESLAG	STEUN	
5		86900239		4	PORCA, U-Speed 10-24	NUT	TUERCA	DADO	010D
					ECROU	MUTTER	MØTRIK	MOER	
6		87307791		4	PARAFUSO, 10-24 X 1/2	SCREW	TORNILLO	VITE	040V
					VIS	SCHRAUBE	SKRUE	SCHROEF	
7		86511042		2	PARAFUSO, Cross Pan Hd, M4 x 16				
						SCREW	TORNILLO	VITE	040V
					VIS	SCHRAUBE	SKRUE	SCHROEF	
8		84353803		1	GUARNIÇÃO, Edge, 565mn	TRIM	GUARNICIÓN	RIVESTIMENTO	C046
					GARNITURE	VERKLEIDUNG	INDTRÆK	BEKLEDING	
9		84173781		2	PARAFUSO	SELF-TAP SCREW	TORNILLO AUTORROSC	VITE AUTOFILETTANTE	062V
					VIS AUTOTARAUDEUSE	SELBSTSCHN SCHRAUE	SELVLÅSENDE BOLT	ZELFTAPPENDE SCHRO	
10		84335751		2	PORCA, Grommet	NUT	TUERCA	DADO	010D
					ECROU	MUTTER	MØTRIK	MOER	
11		87682398		4	PARAFUSO	SCREW	TORNILLO	VITE	040V
					VIS	SCHRAUBE	SKRUE	SCHROEF	
12		84331370		2	CHICOTE, Front, NH Lamp	WIRE HARNESS	GRUPO DE CABLES	CABLAGGIO	070I
					FAISCEAU ELECTRIQUE	KABELBAUM	KABELNET	KABELBOOM	
13		84359102		2	PARAFUSO, M6 X 35, Side Brow, Not Shown				
						SCREW	TORNILLO	VITE	040V
					VIS	SCHRAUBE	SKRUE	SCHROEF	
14		263117		2	PRENDEDOR DE CABOS, .14" x 11 1/2", Not Shown				
						CABLE STRAP	BANDA DE CABLE	FASCETTA PER CAVO	P716
					BRIDE DE CABLE	KABELBINDER	KABELSTROP	BUNDELBAND	
15		82035642		1	FAROL, Light Assy, Not Shown				
						HEADLAMP	FARO	FARO	220P
					FEU	FRONTSCHEINWERFER	HOVEDLAMPE	KOPLAMP	
16		84335748		6	PARAFUSO, Light Assy, Round, Not Shown				
						SCREW	TORNILLO	VITE	040V
					VIS	SCHRAUBE	SKRUE	SCHROEF	

55.514.07		p1	05/11

LAMP WORK REAR ASSEMBLY (ALL NH)
LAMP WORK REAR ASSEMBLY (ALL NH)
LAMP WORK REAR ASSEMBLY (ALL NH)
LAMP WORK REAR ASSEMBLY (ALL NH)

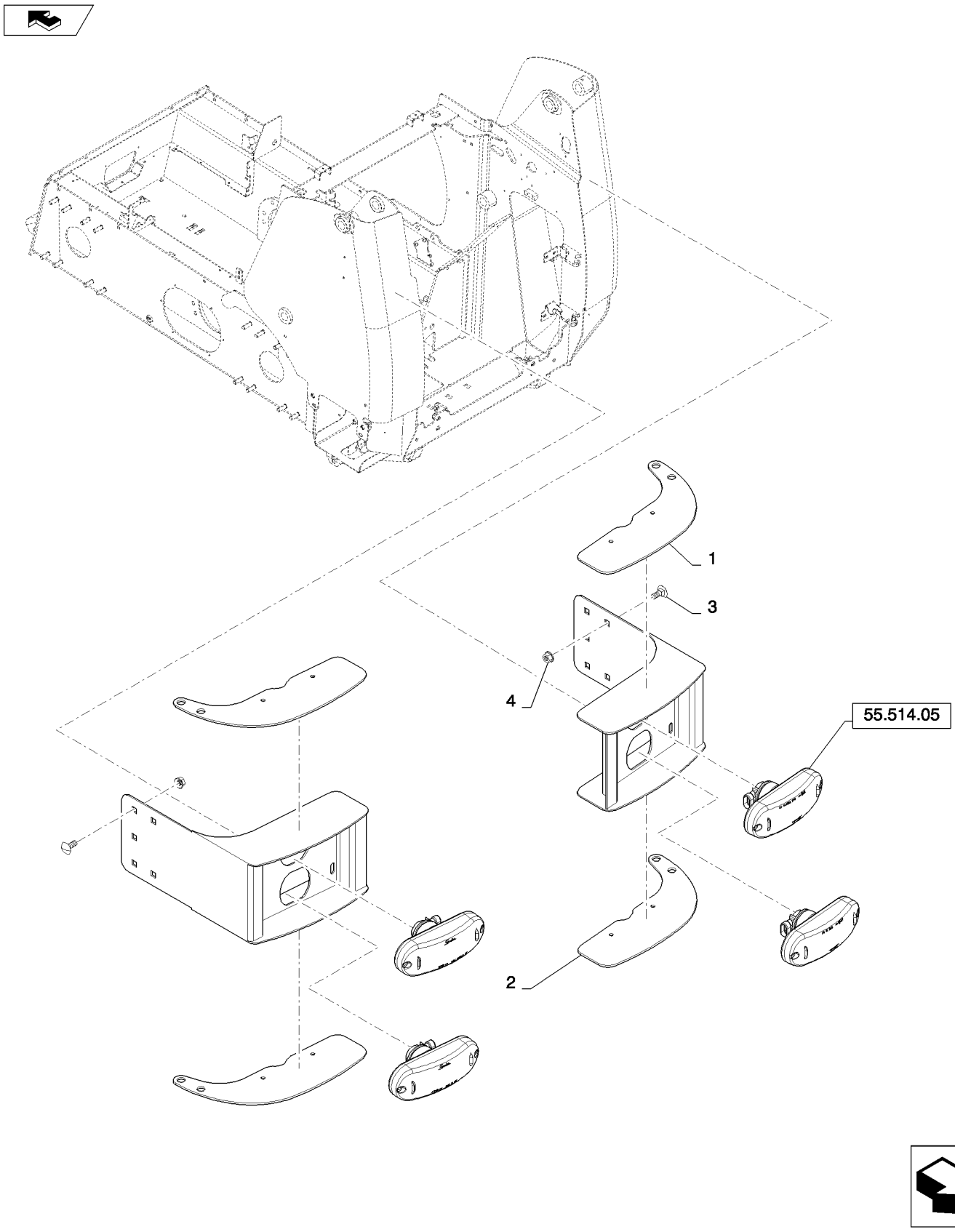

LAMP WORK REAR ASSEMBLY (ALL NH)
LAMP WORK REAR ASSEMBLY (ALL NH)
LAMP WORK REAR ASSEMBLY (ALL NH)
LAMP WORK REAR ASSEMBLY (ALL NH)

R	N	P.N.	MOD	Q	Denominação Description	Description Bezeichnung	Denominacion Beskrivelse	Descrizione Beschrijving	L.C.
1		84419629		2	SUPORTE, RR, Road Light, NH Bright Yellow				
						BRACKET	SOPORTE	STAFFA	225S
					SUPPORT	HALTERUNG	BESLAG	STEUN	
2		84383469		2	SUPORTE, Radial, NH Bright Yellow				
						BRACKET	SOPORTE	STAFFA	225S
					SUPPORT	HALTERUNG	BESLAG	STEUN	
3		86511844		2	PARAFUSO, Hex Flg, M8 x 100, 8.8, Screw				
						BOLT	PERNO	BULLONE	140B
					VIS	SCHRAUBE	BOLT	BOUT	
4		9804277		2	PORCA, M8 x 1.25, Flg, Cl 8				
						NUT	TUERCA	DADO	010D
					ECROU	MUTTER	MØTRIK	MOER	

55.514.10		p1	02/11

LIGHT W/TURN SIGNAL (ALL NH)
LIGHT W/TURN SIGNAL (ALL NH)
LIGHT W/TURN SIGNAL (ALL NH)
LIGHT W/TURN SIGNAL (ALL NH)

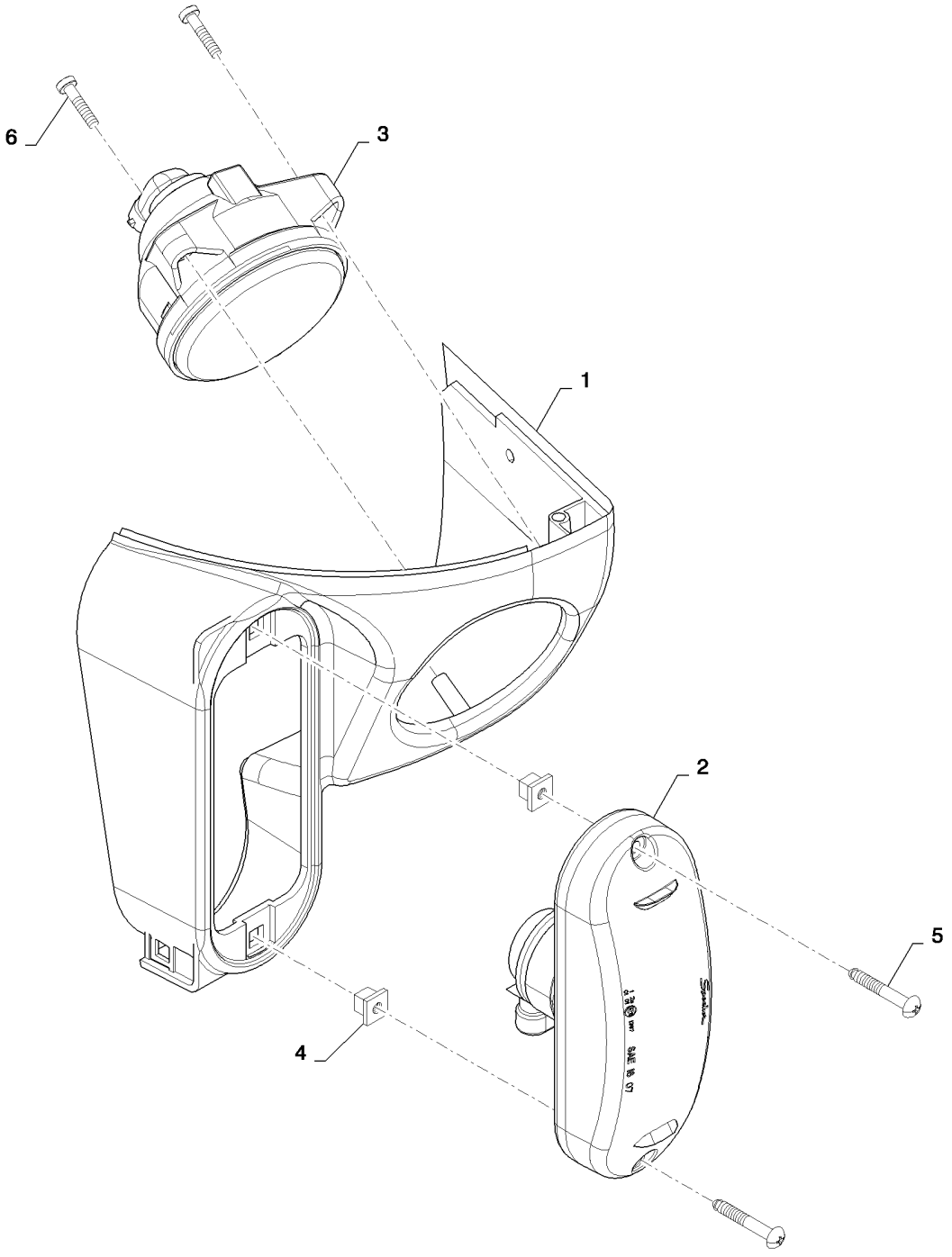

LIGHT W/TURN SIGNAL (ALL NH)
LIGHT W/TURN SIGNAL (ALL NH)
LIGHT W/TURN SIGNAL (ALL NH)
LIGHT W/TURN SIGNAL (ALL NH)

R	N	P.N.	MOD	Q	Denominação Description	Description Bezeichnung	Denominacion Beskrivelse	Descrizione Beschrijving	L.C.
1		84333224		1	ALOJAMENTO, Assembly, RH, W/Turn Signal				
					HOUSING	ALOJAMIENTO	ALLOGGIAMENTO		014V
					CARTER	GEHÄUSE	HUS	HUIS	
1		84333230		1	ALOJAMENTO, Assembly, LH, W/Turn Signal				
					HOUSING	ALOJAMIENTO	ALLOGGIAMENTO		014V
					CARTER	GEHÄUSE	HUS	HUIS	
2		84239208		1	LÂMPADA, Vertical Oval, Rear Turn				
					LAMP	LÁMPARA	SPIA		009F
					LAMPE	LEUCHTE	LYGTE	LAMP	
3		82035642		1	FAROL	HEADLAMP	FARO	FARO	220P
					FEU	FRONTSCHEINWERFER	HOVEDLAMPE	KOPLAMP	
4		84335751		2	PORCA, Grommet	NUT	TUERCA	DADO	010D
					ECROU	MUTTER	MØTRIK	MOER	
5		87034816		2	PARAFUSO, Cross Pan Hd, #10 x 1 1/4"				
					SELF-TAP SCREW	TORNILLO AUTORROSC	VITE AUTOFILETTANTE		062V
					VIS AUTOTARAUDEUSE	SELBSTSCHN SCHRAUE	SELVLÅSENDE BOLT	ZELFTAPPENDE SCHRO	
6		84335748		3	PARAFUSO, Light, Round	SCREW	TORNILLO	VITE	040V
					VIS	SCHRAUBE	SKRUE	SCHROEF	

SECTION INDEX

82 - Pá carregadeira dianteira

82.100.02		BUCKET, BOLT ON CUTTING EDGE (B.O.C.E.) (ALL NH)
82.100.03		PALLET FORK 48 TINE (ALL NH)
82.100.04	02	SPILL GUARD 72 GRAY (L218-C227)
82.100.04	03	SPILL GUARD 78 GRAY (L218-C238)
82.100.04	04	SPILL GUARD 84 GRAY (L223-L230,C232,C238)
82.100.15	04	BALDES - CARREGADOR
82.100.15	05	BALDES - CARREGADOR
82.100.15	06	BALDES - CARREGADOR
82.100.15	07	BALDES - CARREGADOR
82.100.15	08	BUCKETS - LOADER, HEAVY DUTY DIRT

82.100.02		p1	05/11

BUCKET, BOLT ON CUTTING EDGE (B.O.C.E.) (ALL NH)
BUCKET, BOLT ON CUTTING EDGE (B.O.C.E.) (ALL NH)
BUCKET, BOLT ON CUTTING EDGE (B.O.C.E.) (ALL NH)
BUCKET, BOLT ON CUTTING EDGE (B.O.C.E.) (ALL NH)

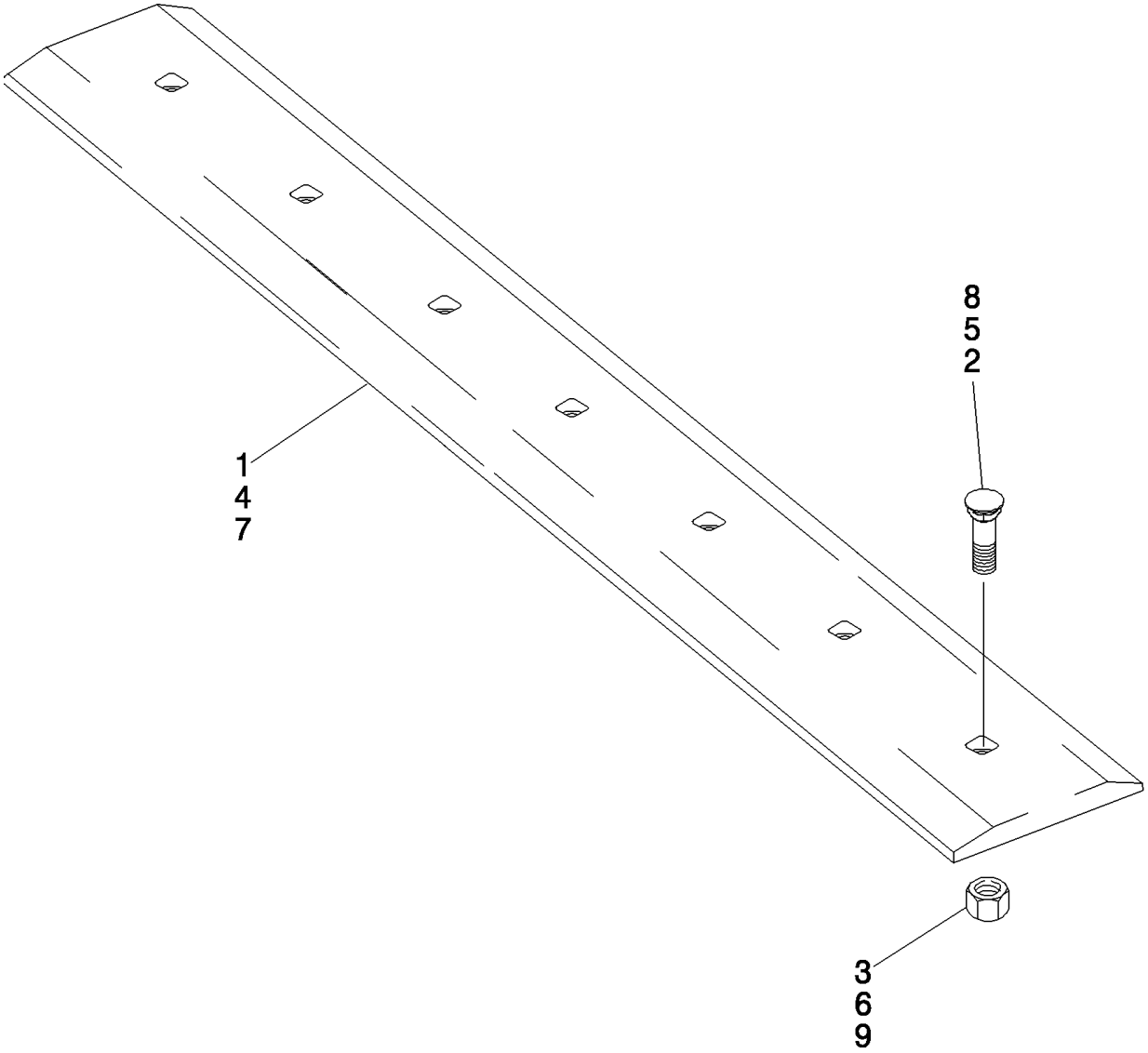

BUCKET, BOLT ON CUTTING EDGE (B.O.C.E.) (ALL NH)
BUCKET, BOLT ON CUTTING EDGE (B.O.C.E.) (ALL NH)
BUCKET, BOLT ON CUTTING EDGE (B.O.C.E.) (ALL NH)
BUCKET, BOLT ON CUTTING EDGE (B.O.C.E.) (ALL NH)

R	N	P.N.	MOD	Q	Denominação Description	Description Bezeichnung	Denominacion Beskrivelse	Descrizione Beschrijving	L.C.
1		86576801		1	BORDA CORTANTE, 54 in; Bolt-on; 6 Hole				
						CUTTING EDGE	BORDE DE CORTE	BORDO TAGLIENTE	018T
					BORD TRANCHANT	SCHNEIDKANTE	SKÆREKANT	SNIJRAND	
		430497A1		1	LAMINA DE CORTE, Kit; 60 Inch; Incl. Ref 1 - 3; Order Components				
						EDGE, CUTTING	CUCHILLA DE ATAQUE	TAGLIENTE	Z114
					LAME D'ATTAQUE	SCHNEIDE	SKÆREKANT	SNEDE	
1		86576801		1	BORDA CORTANTE, 54 in; Bolt-on; 7 Hole				
						CUTTING EDGE	BORDE DE CORTE	BORDO TAGLIENTE	018T
					BORD TRANCHANT	SCHNEIDKANTE	SKÆREKANT	SNIJRAND	
1		86577165		1	BORDA CORTANTE, 1524 mm (60 inch); Gray				
						CUTTING EDGE	BORDE DE CORTE	BORDO TAGLIENTE	018T
					BORD TRANCHANT	SCHNEIDKANTE	SKÆREKANT	SNIJRAND	
2		86548338		7	PARAFUSO DE ARADO, 5/8"-11 x 2", G5				
						PLOW BOLT	PERNO DE ARADO	BULLONE SCANALATO	P128
					BOULON DE CHARRUE	PFLUGSCHRAUBE	PLOVRIGEL	PLOEGBOUT	
3		425-1010		7	PORCA, 5/8"-11, G5	NUT	TUERCA	DADO	010D
					ECROU	MUTTER	MØTRIK	MOER	
		430498A1		1	LAMINA DE CORTE, Kit; 66 Inch; Incl. Ref 4 - 6; Order Components				
						EDGE, CUTTING	CUCHILLA DE ATAQUE	TAGLIENTE	Z114
					LAME D'ATTAQUE	SCHNEIDE	SKÆREKANT	SNEDE	
4		86577167		1	BORDA CORTANTE, 1676 mm (66 inch); Gray				
						CUTTING EDGE	BORDE DE CORTE	BORDO TAGLIENTE	018T
					BORD TRANCHANT	SCHNEIDKANTE	SKÆREKANT	SNIJRAND	
5		86548338		7	PARAFUSO DE ARADO, 5/8"-11 x 2", G5				
						PLOW BOLT	PERNO DE ARADO	BULLONE SCANALATO	P128
					BOULON DE CHARRUE	PFLUGSCHRAUBE	PLOVRIGEL	PLOEGBOUT	
6		425-1010		7	PORCA, 5/8"-11, G5	NUT	TUERCA	DADO	010D
					ECROU	MUTTER	MØTRIK	MOER	
		430499A1		1	LAMINA DE CORTE, Kit; 72 Inch; Incl. Ref 7 - 9; Order Components				
						EDGE, CUTTING	CUCHILLA DE ATAQUE	TAGLIENTE	Z114
					LAME D'ATTAQUE	SCHNEIDE	SKÆREKANT	SNEDE	
7		86577169		1	BORDA CORTANTE, 1829 mm (72 inch); Gray				
						CUTTING EDGE	BORDE DE CORTE	BORDO TAGLIENTE	018T
					BORD TRANCHANT	SCHNEIDKANTE	SKÆREKANT	SNIJRAND	
8		86548338		7	PARAFUSO DE ARADO, 5/8"-11 x 2", G5				
						PLOW BOLT	PERNO DE ARADO	BULLONE SCANALATO	P128
					BOULON DE CHARRUE	PFLUGSCHRAUBE	PLOVRIGEL	PLOEGBOUT	
9		425-1010		7	PORCA, 5/8"-11, G5	NUT	TUERCA	DADO	010D
					ECROU	MUTTER	MØTRIK	MOER	
		434817A1		1	LAMINA DE CORTE, Kit; 78 Inch; Incl. Ref 7 - 9; Order Components				
						EDGE, CUTTING	CUCHILLA DE ATAQUE	TAGLIENTE	Z114
					LAME D'ATTAQUE	SCHNEIDE	SKÆREKANT	SNEDE	
7		86577171		1	BORDA CORTANTE, 1981 mm (78 inch); Gray				
						CUTTING EDGE	BORDE DE CORTE	BORDO TAGLIENTE	018T
					BORD TRANCHANT	SCHNEIDKANTE	SKÆREKANT	SNIJRAND	
8		420-21032		9	PARAFUSO	CARRIAGE BOLT	PERNO ALOMADO	BULLONE A TESTA TONI	P123
					VIS A TETE BOMBEE	SCHLOSSSCHRAUBE	BRÆDDEBOLT	SLOTBOUT	
9		329-1010		9	PORCA	NUT	TUERCA	DADO	010D
					ECROU	MUTTER	MØTRIK	MOER	

BUCKET, BOLT ON CUTTING EDGE (B.O.C.E.) (ALL NH)
BUCKET, BOLT ON CUTTING EDGE (B.O.C.E.) (ALL NH)
BUCKET, BOLT ON CUTTING EDGE (B.O.C.E.) (ALL NH)
BUCKET, BOLT ON CUTTING EDGE (B.O.C.E.) (ALL NH)

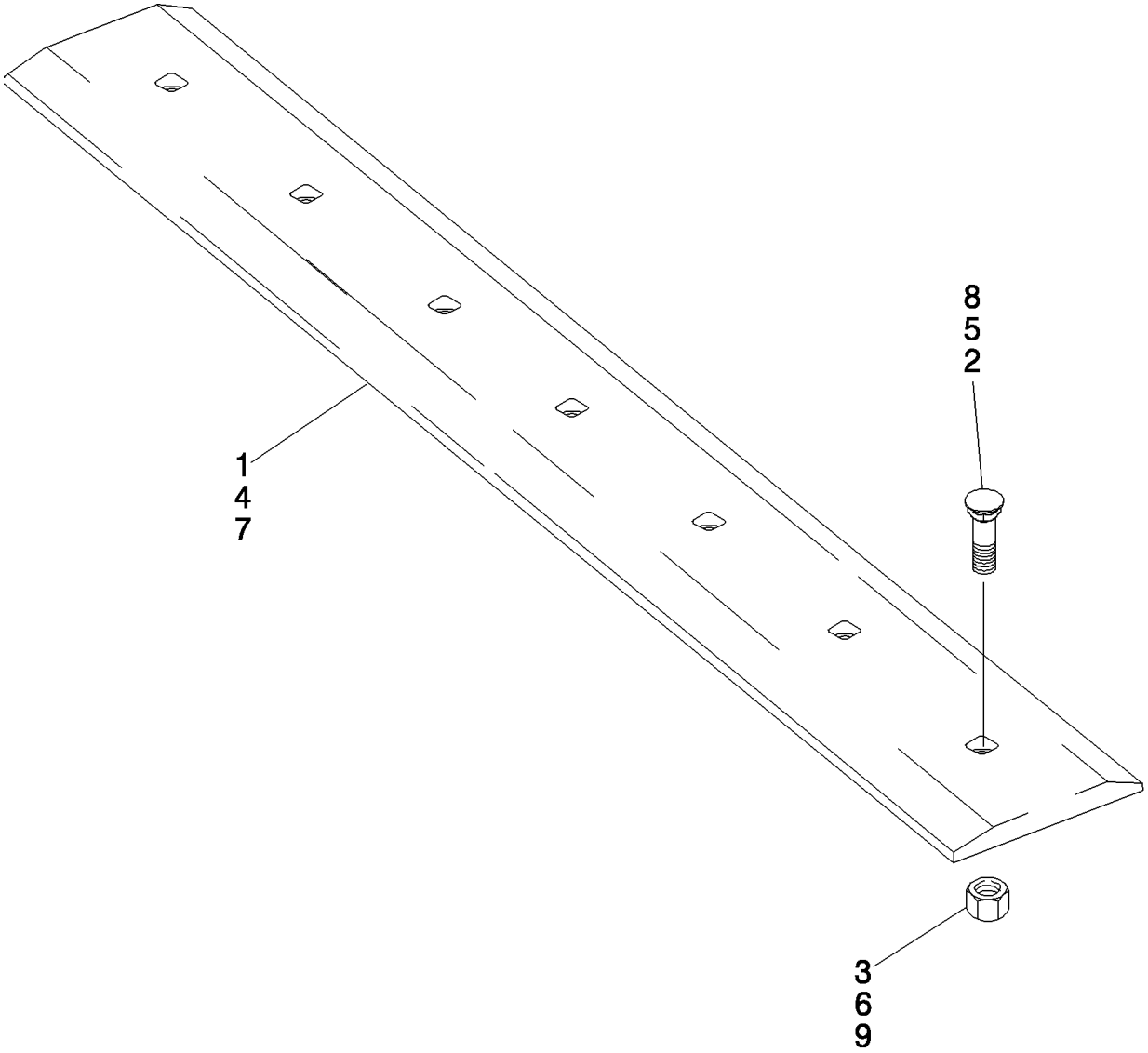

BUCKET, BOLT ON CUTTING EDGE (B.O.C.E.) (ALL NH)
BUCKET, BOLT ON CUTTING EDGE (B.O.C.E.) (ALL NH)
BUCKET, BOLT ON CUTTING EDGE (B.O.C.E.) (ALL NH)
BUCKET, BOLT ON CUTTING EDGE (B.O.C.E.) (ALL NH)

R	N	P.N.	MOD	Q	Denominação Description	Description Bezeichnung	Denominacion Beskrivelse	Descrizione Beschrijving	L.C.
		430500A1		1	LAMINA DE CORTE, Kit; 84 Inch; Incl. Ref 7 - 9; Order Components				
					EDGE, CUTTING	CUCHILLA DE ATAQUE	TAGLIENTE		Z114
					LAME D'ATTAQUE	SCHNEIDE	SKÆREKANT	SNEDE	
7		**86577173**		1	BORDA CORTANTE, 2134 mm (84 inch); Gray				
					CUTTING EDGE	BORDE DE CORTE	BORDO TAGLIENTE		018T
					BORD TRANCHANT	SCHNEIDKANTE	SKÆREKANT	SNIJRAND	
8		**86548338**		7	PARAFUSO DE ARADO, 5/8"-11 x 2", G5				
					PLOW BOLT	PERNO DE ARADO	BULLONE SCANALATO		P128
					BOULON DE CHARRUE	PFLUGSCHRAUBE	PLOVRIGEL	PLOEGBOUT	
9		**280374**		7	PORCA, 5/8"-11, G5	NUT	TUERCA	DADO	010D
					ECROU	MUTTER	MØTRIK	MOER	

PALLET FORK 48 TINE (ALL NH)
PALLET FORK 48 TINE (ALL NH)
PALLET FORK 48 TINE (ALL NH)
PALLET FORK 48 TINE (ALL NH)

ART

NOT

AVAILABLE

PALLET FORK 48 TINE (ALL NH)
PALLET FORK 48 TINE (ALL NH)
PALLET FORK 48 TINE (ALL NH)
PALLET FORK 48 TINE (ALL NH)

R	N	P.N.	MOD	Q	Denominação Description	Description Bezeichnung	Denominacion Beskrivelse	Descrizione Beschrijving	L.C.
1		**84332182**		1	CHASSI, Pallet Forks CHASSIS	FRAME GESTELL	BASTIDOR RAMME	TELAIO RAAM	077T
2		**86574055**		2	GARFO DA CAÇAMBA, A-48 FOURCHE A GODET	BUCKET FORK GABELSCHAUFEL	HORQUILLA DE CUCHAI SKOVLGAFFEL	FORCA PER BENNA VORK VOOR GRAAFBAK	127F
3		**84476691**		1	ADESIVO, Pallet Fork, NH AUTOCOLLANT	DECAL AUFKLEBER	CALCOMANÍA TRANSFER	DECALCOMANIA STICKER	012D

82.100.04	02	p1	02/11

SPILL GUARD 72 GRAY (L218-C227)
SPILL GUARD 72 GRAY (L218-C227)
SPILL GUARD 72 GRAY (L218-C227)
SPILL GUARD 72 GRAY (L218-C227)

ART
NOT
AVAILABLE

SPILL GUARD 72 GRAY (L218-C227)
SPILL GUARD 72 GRAY (L218-C227)
SPILL GUARD 72 GRAY (L218-C227)
SPILL GUARD 72 GRAY (L218-C227)

R	N	P.N.	MOD	Q	Denominação Description Bezeichnung	Description Bezeichnung	Denominacion Beskrivelse	Descrizione Beschrijving	L.C.
1		84263255		1	EXTENSÃO, 72 Spill Guard, Gray				
						EXTENSION	EXTENSIÓN	PROLUNGA	226P
					RALLONGE	ERWEITERUNG	FORLÆNGNING	VERLENGSTUK	
2		120044		2	PARAFUSO, Short NK, M12 x 30, Cl8.8, Full Thd				
						CARRIAGE BOLT	PERNO ALOMADO	BULLONE A TESTA TONI	P123
					VIS A TETE BOMBEE	SCHLOSSSCHRAUBE	BRÆDDEBOLT	SLOTBOUT	
3		86512497		2	PORCA, M12 x 1.75, Flg, Cl 10				
						NUT	TUERCA	DADO	010D
					ECROU	MUTTER	MØTRIK	MOER	
4		9804262		4	PARAFUSO, Hex Flg, M10 x 30, 8.8				
						BOLT	PERNO	BULLONE	140B
					VIS	SCHRAUBE	BOLT	BOUT	
5		390618A1		4	INSERTO	INSERT	INTRODUCTOR	INSERTO	4675
					INSERT	EINSATZ	INDSATS	TUSSENSTUK	

SPILL GUARD 78 GRAY (L218-C238)
SPILL GUARD 78 GRAY (L218-C238)
SPILL GUARD 78 GRAY (L218-C238)
SPILL GUARD 78 GRAY (L218-C238)

ART
NOT
AVAILABLE

SPILL GUARD 78 GRAY (L218-C238)
SPILL GUARD 78 GRAY (L218-C238)
SPILL GUARD 78 GRAY (L218-C238)
SPILL GUARD 78 GRAY (L218-C238)

R	N	P.N.	MOD	Q	Denominação Description Bezeichnung	Description Bezeichnung	Denominacion Beskrivelse	Descrizione Beschrijving	L.C.
1		84263257		1	EXTENSÃO, 78 Spill Guard, Gray				
						EXTENSION	EXTENSIÓN	PROLUNGA	226P
					RALLONGE	ERWEITERUNG	FORLÆNGNING	VERLENGSTUK	
2		120044		2	PARAFUSO, Short NK, M12 x 30, Cl8.8, Full Thd				
						CARRIAGE BOLT	PERNO ALOMADO	BULLONE A TESTA TON	P123
					VIS A TETE BOMBEE	SCHLOSSSCHRAUBE	BRÆDDEBOLT	SLOTBOUT	
3		86512497		2	PORCA, M12 x 1.75, Flg, Cl 10				
						NUT	TUERCA	DADO	010D
					ECROU	MUTTER	MØTRIK	MOER	
4		9804262		4	PARAFUSO, Hex Flg, M10 x 30, 8.8				
						BOLT	PERNO	BULLONE	140B
					VIS	SCHRAUBE	BOLT	BOUT	
5		390618A1		4	INSERTO	INSERT	INTRODUCTOR	INSERTO	4675
					INSERT	EINSATZ	INDSATS	TUSSENSTUK	

82.100.04	04	p1	02/11

SPILL GUARD 84 GRAY (L223-L230,C232,C238)
SPILL GUARD 84 GRAY (L223-L230,C232,C238)
SPILL GUARD 84 GRAY (L223-L230,C232,C238)
SPILL GUARD 84 GRAY (L223-L230,C232,C238)

ART

NOT

AVAILABLE

SPILL GUARD 84 GRAY (L223-L230,C232,C238)
SPILL GUARD 84 GRAY (L223-L230,C232,C238)
SPILL GUARD 84 GRAY (L223-L230,C232,C238)
SPILL GUARD 84 GRAY (L223-L230,C232,C238)

R	N	P.N.	MOD	Q	Denominação Description	Description Bezeichnung	Denominacion Beskrivelse	Descrizione Beschrijving	L.C.
1		84263259		1	EXTENSÃO, 84 Spill Guard, Gray				
						EXTENSION	EXTENSIÓN	PROLUNGA	226P
					RALLONGE	ERWEITERUNG	FORLÆNGNING	VERLENGSTUK	
2		120044		2	PARAFUSO, Short NK, M12 x 30, Cl8.8, Full Thd				
						CARRIAGE BOLT	PERNO ALOMADO	BULLONE A TESTA TON	P123
					VIS A TETE BOMBEE	SCHLOSSSCHRAUBE	BRÆDDEBOLT	SLOTBOUT	
3		86512497		2	PORCA, M12 x 1.75, Flg, Cl 10				
						NUT	TUERCA	DADO	010D
					ECROU	MUTTER	MØTRIK	MOER	
4		9804262		4	PARAFUSO, Hex Flg, M10 x 30, 8.8				
						BOLT	PERNO	BULLONE	140B
					VIS	SCHRAUBE	BOLT	BOUT	
5		390618A1		4	INSERTO	INSERT	INTRODUCTOR	INSERTO	4675
					INSERT	EINSATZ	INDSATS	TUSSENSTUK	

82.100.15	04	p1	02/11

BALDES - CARREGADOR
BUCKETS - LOADER, DIRT / FOUNDRY
CUCHARON - CARGADORA, SUCIEDAD/FUNDICIÓN
BENNE - CARICATORE

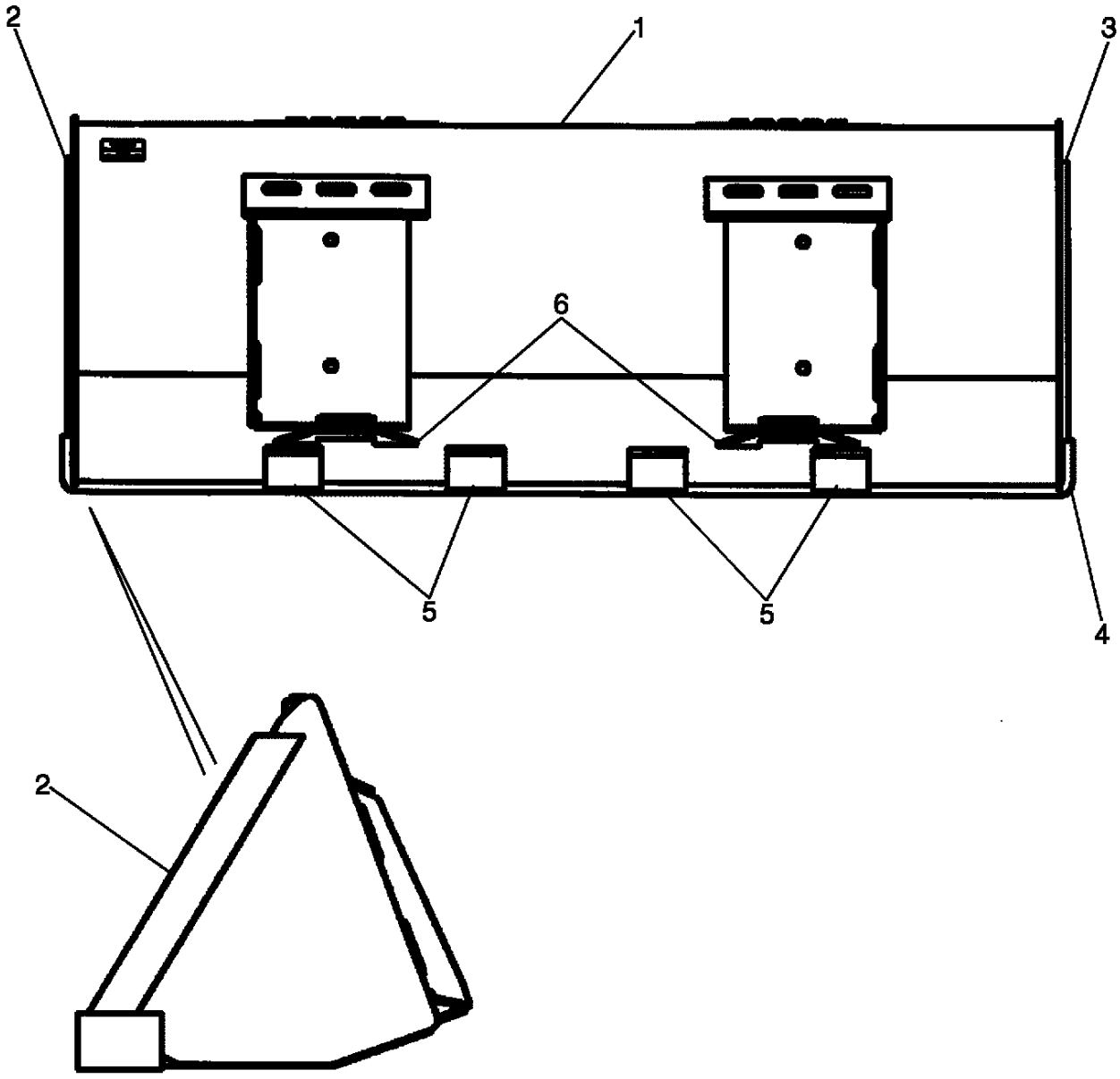

BS07K012

GODETS - CHARGEUSE, POUSSIÈRE/FONDERIE
LADESCHAUFELN - LADER
SKOVLE - LÆSSER
GRAAFBAKKEN - LADER

R	N	P.N.	MOD	Q	Denominação Description	Description Bezeichnung	Denominacion Beskrivelse	Descrizione Beschrijving	L.C.
1		**86590372**		1	CAÇAMBA, Dirt/Foundry; 60 Inch; Incl. 86592019, Incl. 2 - 6, Order from Whole Goods				
						BUCKET	CUCHARA	BENNA	1100
					GODET	KUEBEL	SKOVL	GRAAFBAK	
		86592019		1	ADESIVO, Not Shown	DECAL	CALCOMANÍA	DECALCOMANIA	012D
					AUTOCOLLANT	AUFKLEBER	TRANSFER	STICKER	
2		**9841636**		1	BORDA CORTANTE, LH Cutter				
						CUTTING EDGE	BORDE DE CORTE	BORDO TAGLIENTE	018T
					BORD TRANCHANT	SCHNEIDKANTE	SKÆREKANT	SNIJRAND	
3		**9841637**		1	BORDA CORTANTE, RH Cutter				
						CUTTING EDGE	BORDE DE CORTE	BORDO TAGLIENTE	018T
					BORD TRANCHANT	SCHNEIDKANTE	SKÆREKANT	SNIJRAND	
4		**86577164**		1	BORDA CORTANTE, Weld On Blade, 60 in				
						CUTTING EDGE	BORDE DE CORTE	BORDO TAGLIENTE	018T
					BORD TRANCHANT	SCHNEIDKANTE	SKÆREKANT	SNIJRAND	
5		**86501841**		3	BARRA, Skid Bar	BAR	BARRA	BARRA	530B
					BARRE	BAR	BJÆLKE	STANG	
6		**9822175**		2	PLACA	PLATE	PLACA	PIASTRA	105P
					PLAQUE	PLATTE	PLADE	PLAAT	
1A		**{86590377}**		1	Dirt/Foundry; 66 in.; Incl. 86592024, 2A - 6A; Order from Whole Goods				
		86592024		1	ADESIVO, Not Shown	DECAL	CALCOMANÍA	DECALCOMANIA	012D
					AUTOCOLLANT	AUFKLEBER	TRANSFER	STICKER	
2A		**9829813**		1	BORDA CORTANTE, LH Cutter				
						CUTTING EDGE	BORDE DE CORTE	BORDO TAGLIENTE	018T
					BORD TRANCHANT	SCHNEIDKANTE	SKÆREKANT	SNIJRAND	
3A		**9829812**		1	BORDA CORTANTE, RH Cutter				
						CUTTING EDGE	BORDE DE CORTE	BORDO TAGLIENTE	018T
					BORD TRANCHANT	SCHNEIDKANTE	SKÆREKANT	SNIJRAND	
4A		**NSS**		1	SEM SERVIÇO EM SEPARADO, Weld On Blade, W/Holes, 66 Inch				
						NOT SERVICED SEPARA	NO SE REPARA POR SE	NON FORNITO SEPARAT	064N
					NON FOURNI SEPAREM	NICHT A SEP ERS-T LIEI	SERVICERES IKKE SEPA	NIET LOS VERKRIJGBAA	
5A		**NSS**		3	SEM SERVIÇO EM SEPARADO, Skid Bar				
						NOT SERVICED SEPARA	NO SE REPARA POR SE	NON FORNITO SEPARAT	064N
					NON FOURNI SEPAREM	NICHT A SEP ERS-T LIEI	SERVICERES IKKE SEPA	NIET LOS VERKRIJGBAA	
6A		**9822175**		2	PLACA	PLATE	PLACA	PIASTRA	105P
					PLAQUE	PLATTE	PLADE	PLAAT	
1B		**{86590379}**		1	Dirt/Foundry; 72 in.; Incl. 86592026, 2B - 6B; Order from Whole Goods				
		86592026		1	ADESIVO, Not Shown	DECAL	CALCOMANÍA	DECALCOMANIA	012D
					AUTOCOLLANT	AUFKLEBER	TRANSFER	STICKER	
2B		**9829813**		1	BORDA CORTANTE, LH Cutter				
						CUTTING EDGE	BORDE DE CORTE	BORDO TAGLIENTE	018T
					BORD TRANCHANT	SCHNEIDKANTE	SKÆREKANT	SNIJRAND	
3B		**9829812**		1	BORDA CORTANTE, RH Cutter				
						CUTTING EDGE	BORDE DE CORTE	BORDO TAGLIENTE	018T
					BORD TRANCHANT	SCHNEIDKANTE	SKÆREKANT	SNIJRAND	

82.100.15	04	p2	02/11

BALDES - CARREGADOR
BUCKETS - LOADER, DIRT / FOUNDRY
CUCHARON - CARGADORA, SUCIEDAD/FUNDICIÓN
BENNE - CARICATORE

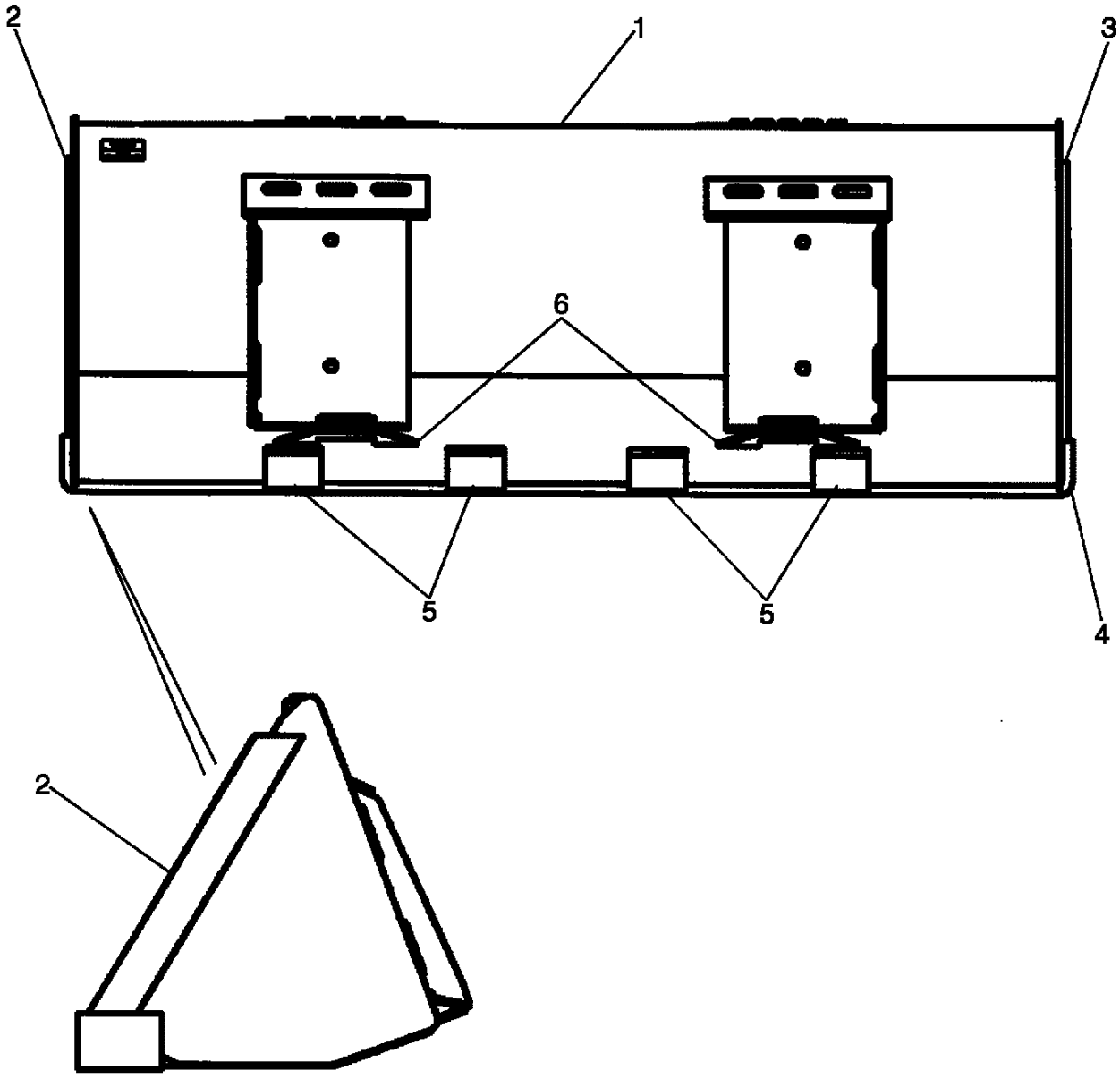

BS07K012

GODETS - CHARGEUSE, POUSSIÈRE/FONDERIE
LADESCHAUFELN - LADER
SKOVLE - LÆSSER
GRAAFBAKKEN - LADER

R	N	P.N.	MOD	Q	Denominação Description Bezeichnung	Description Bezeichnung	Denominacion Beskrivelse	Descrizione Beschrijving	L.C.
4B		86577168		1	BORDA CORTANTE, Weld On Blade, 72 Inch				
						CUTTING EDGE	BORDE DE CORTE	BORDO TAGLIENTE	018T
					BORD TRANCHANT	SCHNEIDKANTE	SKÆREKANT	SNIJRAND	
5B		NSS		4	SEM SERVIÇO EM SEPARADO, Skid Bar				
						NOT SERVICED SEPARA	NO SE REPARA POR SE	NON FORNITO SEPARAT	064N
					NON FOURNI SEPAREM	NICHT A SEP ERS-T LIEI	SERVICERES IKKE SEPA	NIET LOS VERKRIJGBAA	
6B		9822175		2	PLACA	PLATE	PLACA	PIASTRA	105P
					PLAQUE	PLATTE	PLADE	PLAAT	
1C		{86600559}		1	Dirt/Foundry; 78 in.; Incl. 86600558, 2C - 6C; Order from Whole Goods				
		86600558		1	ADESIVO, Not Shown	DECAL	CALCOMANÍA	DECALCOMANIA	012D
					AUTOCOLLANT	AUFKLEBER	TRANSFER	STICKER	
2C		9829813		1	BORDA CORTANTE, LH Cutter				
						CUTTING EDGE	BORDE DE CORTE	BORDO TAGLIENTE	018T
					BORD TRANCHANT	SCHNEIDKANTE	SKÆREKANT	SNIJRAND	
3C		9829812		1	BORDA CORTANTE, RH Cutter				
						CUTTING EDGE	BORDE DE CORTE	BORDO TAGLIENTE	018T
					BORD TRANCHANT	SCHNEIDKANTE	SKÆREKANT	SNIJRAND	
4C		86577170		1	BORDA CORTANTE, Weld On Blade, 78 Inch				
						CUTTING EDGE	BORDE DE CORTE	BORDO TAGLIENTE	018T
					BORD TRANCHANT	SCHNEIDKANTE	SKÆREKANT	SNIJRAND	
5C		NSS		4	SEM SERVIÇO EM SEPARADO, Skid Bar				
						NOT SERVICED SEPARA	NO SE REPARA POR SE	NON FORNITO SEPARAT	064N
					NON FOURNI SEPAREM	NICHT A SEP ERS-T LIEI	SERVICERES IKKE SEPA	NIET LOS VERKRIJGBAA	
6C		9822175		2	PLACA	PLATE	PLACA	PIASTRA	105P
					PLAQUE	PLATTE	PLADE	PLAAT	

82.100.15	05	p1	02/11

BALDES - CARREGADOR
BUCKETS - LOADER, EXTENDED LOW PROFILE
CUCHARON - CARGADORA
BENNE - CARICATORE

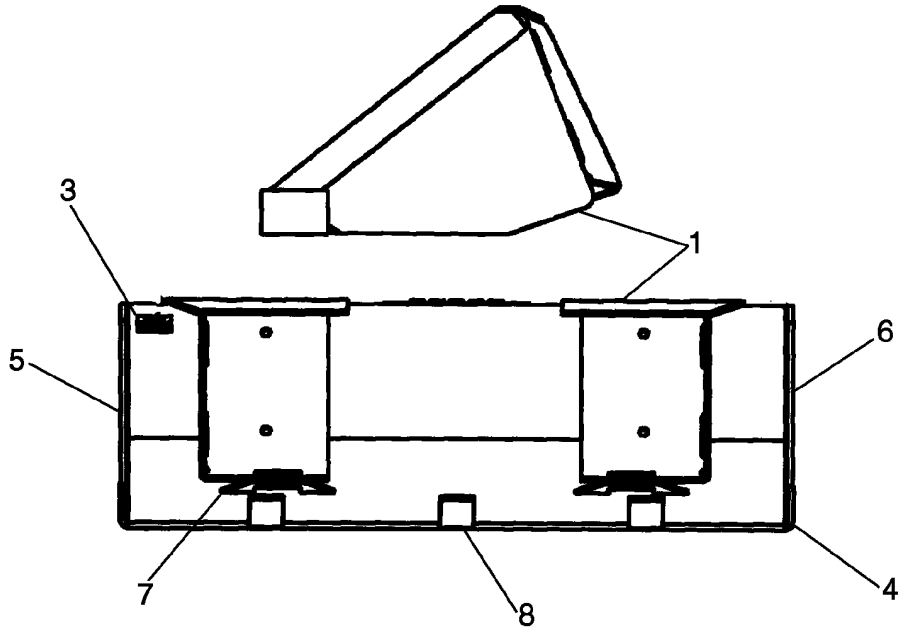

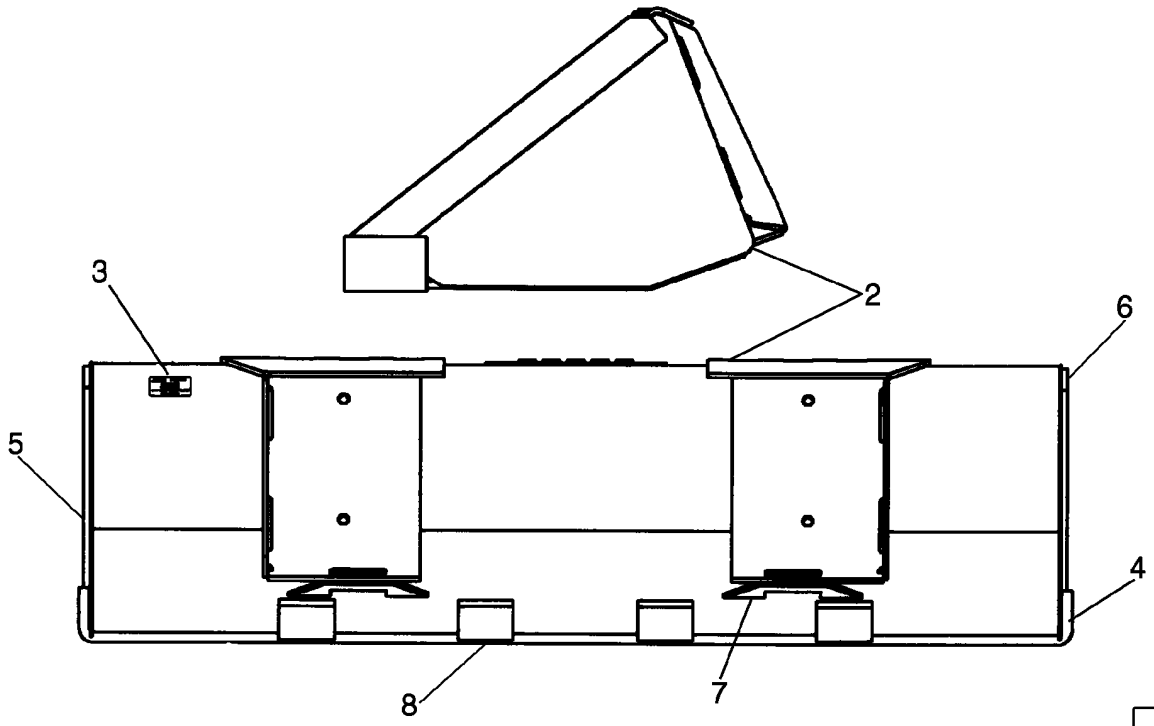

BS07C156

GODETS - CHARGEUSE
LADESCHAUFELN - LADER
SKOVLE - LÆSSER
GRAAFBAKKEN - LADER

R	N	P.N.	MOD	Q	Denominação Description	Description Bezeichnung	Denominacion Beskrivelse	Descrizione Beschrijving	L.C.
1		**{87010196}**		1	BUCKET, Low Profile Dirt/Foundry; 60 Inch Gray; Incl. 3 - 8; Order from Whole Goods				
3		**87010186**		1	ADESIVO AUTOCOLLANT	DECAL AUFKLEBER	CALCOMANÍA TRANSFER	DECALCOMANIA STICKER	012D
4		**86577164**		1	BORDA CORTANTE, Weld On Blade 60 Inch BORD TRANCHANT	CUTTING EDGE SCHNEIDKANTE	BORDE DE CORTE SKÆREKANT	BORDO TAGLIENTE SNIJRAND	018T
5		**9829784**		1	BORDA CORTANTE, LH Cutter BORD TRANCHANT	CUTTING EDGE SCHNEIDKANTE	BORDE DE CORTE SKÆREKANT	BORDO TAGLIENTE SNIJRAND	018T
6		**9829783**		1	BORDA CORTANTE, RH Cutter BORD TRANCHANT	CUTTING EDGE SCHNEIDKANTE	BORDE DE CORTE SKÆREKANT	BORDO TAGLIENTE SNIJRAND	018T
7		**9822175**		2	PLACA, LH & RH PLAQUE	PLATE PLATTE	PLACA PLADE	PIASTRA PLAAT	105P
8		**86501840**	a	3	BARRA, Skid BARRE	BAR BAR	BARRA BJÆLKE	BARRA STANG	530B
2		**{86590375}**		1	BUCKET, Low Profile Extended Dirt; 60 Inch Gray; Incl. 3A - 8A; Order from Whole Goods				
3A		**86592022**		1	ADESIVO AUTOCOLLANT	DECAL AUFKLEBER	CALCOMANÍA TRANSFER	DECALCOMANIA STICKER	012D
4A		**86577164**		1	BORDA CORTANTE, Weld On Blade 60 Inch BORD TRANCHANT	CUTTING EDGE SCHNEIDKANTE	BORDE DE CORTE SKÆREKANT	BORDO TAGLIENTE SNIJRAND	018T
5A		**86510316**		1	BORDA CORTANTE, LH Cutter BORD TRANCHANT	CUTTING EDGE SCHNEIDKANTE	BORDE DE CORTE SKÆREKANT	BORDO TAGLIENTE SNIJRAND	018T
6A		**86510315**		1	BORDA CORTANTE, RH Cutter BORD TRANCHANT	CUTTING EDGE SCHNEIDKANTE	BORDE DE CORTE SKÆREKANT	BORDO TAGLIENTE SNIJRAND	018T
7A		**9822175**		2	PLACA, LH & RH PLAQUE	PLATE PLATTE	PLACA PLADE	PIASTRA PLAAT	105P
8A		**86510313**		3	BARRA, Skid BARRE	BAR BAR	BARRA BJÆLKE	BARRA STANG	530B
2A		**86590378**		1	CAÇAMBA, Low Profile Extended Dirt; 66 Inch Gray; Incl. 3B - 8B; Order from Whole Goods GODET	BUCKET LÖFFEL	CUCHARA SKOVL	BENNA GRAAFBAK	035B
3B		**86592025**		1	ADESIVO AUTOCOLLANT	DECAL AUFKLEBER	CALCOMANÍA TRANSFER	DECALCOMANIA STICKER	012D
4B		**86577166**		1	BORDA CORTANTE, Weld On Blade 66 Inch BORD TRANCHANT	CUTTING EDGE SCHNEIDKANTE	BORDE DE CORTE SKÆREKANT	BORDO TAGLIENTE SNIJRAND	018T
5B		**86510316**		1	BORDA CORTANTE, LH Cutter BORD TRANCHANT	CUTTING EDGE SCHNEIDKANTE	BORDE DE CORTE SKÆREKANT	BORDO TAGLIENTE SNIJRAND	018T

(a) BSN 87533738

82.100.15	05	p2	02/11

BALDES - CARREGADOR
BUCKETS - LOADER, EXTENDED LOW PROFILE
CUCHARON - CARGADORA
BENNE - CARICATORE

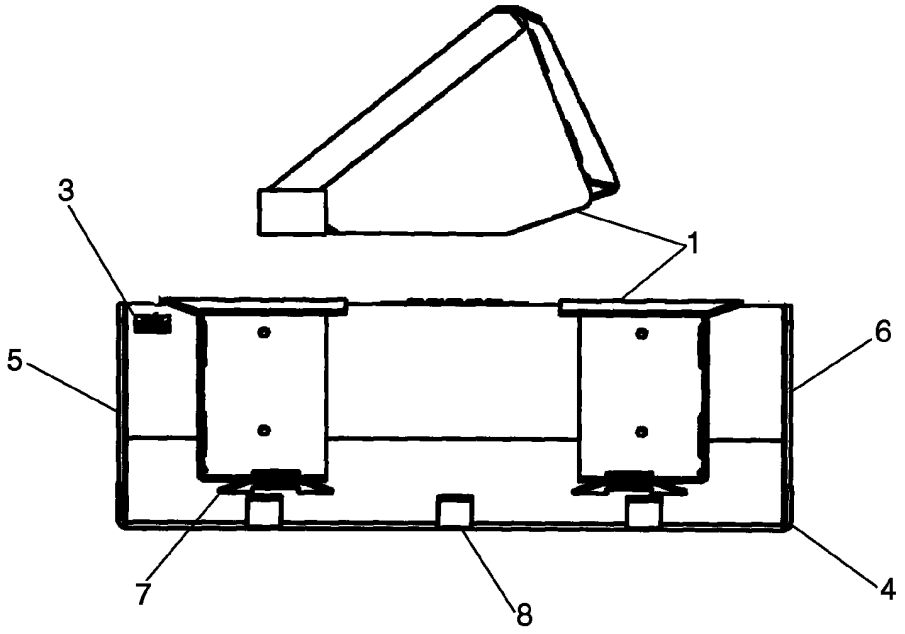

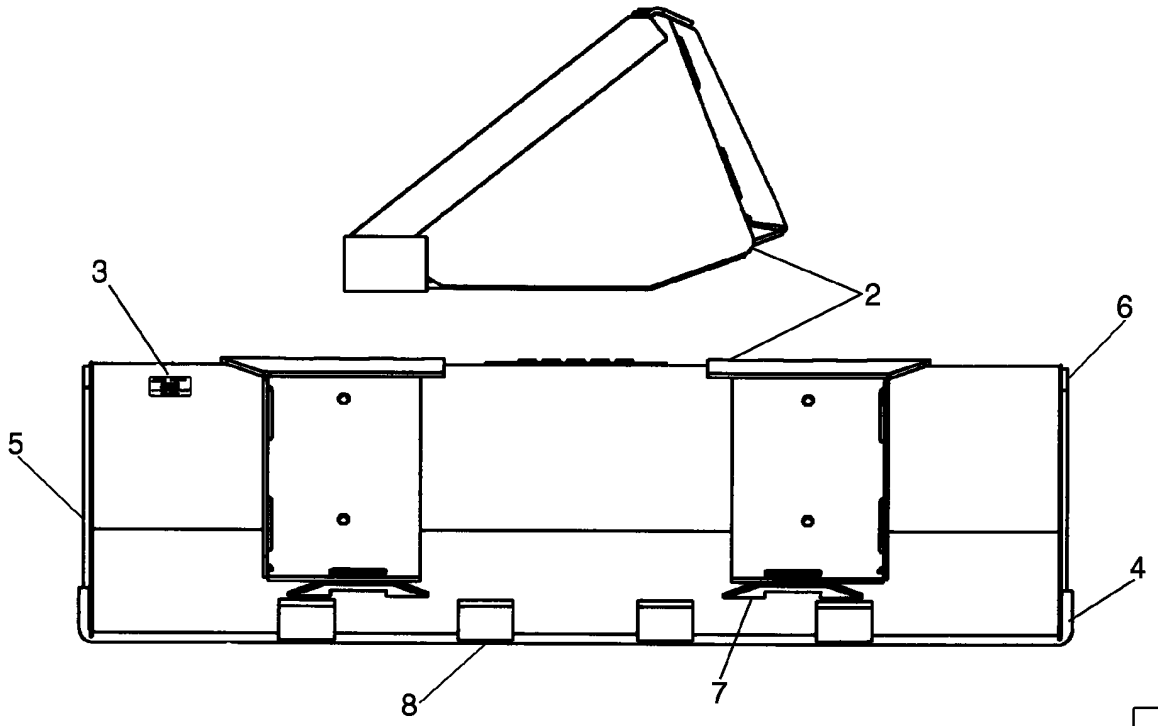

BS07C156

GODETS - CHARGEUSE
LADESCHAUFELN - LADER
SKOVLE - LÆSSER
GRAAFBAKKEN - LADER

R	N	P.N.	MOD	Q	Denominação Description	Description Bezeichnung	Denominacion Beskrivelse	Descrizione Beschrijving	L.C.
6B		86510315		1	BORDA CORTANTE, RH Cutter				
						CUTTING EDGE	BORDE DE CORTE	BORDO TAGLIENTE	018T
					BORD TRANCHANT	SCHNEIDKANTE	SKÆREKANT	SNIJRAND	
7B		9822175		2	PLACA, LH & RH	PLATE	PLACA	PIASTRA	105P
					PLAQUE	PLATTE	PLADE	PLAAT	
8B		86510314		3	BARRA, SKid	BAR	BARRA	BARRA	530B
					BARRE	BAR	BJÆLKE	STANG	
2B		86590381		1	CAÇAMBA, Low Profile Extended Dirt; 72 Inch Gray; Incl. 3C - 8C; Order from Whole Goods				
						BUCKET	CUCHARA	BENNA	035B
					GODET	LÖFFEL	SKOVL	GRAAFBAK	
3C		86592028		1	ADESIVO	DECAL	CALCOMANÍA	DECALCOMANIA	012D
					AUTOCOLLANT	AUFKLEBER	TRANSFER	STICKER	
4C		86577168		1	BORDA CORTANTE, Weld On Blade 72 Inch				
						CUTTING EDGE	BORDE DE CORTE	BORDO TAGLIENTE	018T
					BORD TRANCHANT	SCHNEIDKANTE	SKÆREKANT	SNIJRAND	
5C		86510316		1	BORDA CORTANTE, LH Cutter				
						CUTTING EDGE	BORDE DE CORTE	BORDO TAGLIENTE	018T
					BORD TRANCHANT	SCHNEIDKANTE	SKÆREKANT	SNIJRAND	
6C		86510315		1	BORDA CORTANTE, RH Cutter				
						CUTTING EDGE	BORDE DE CORTE	BORDO TAGLIENTE	018T
					BORD TRANCHANT	SCHNEIDKANTE	SKÆREKANT	SNIJRAND	
7C		9822175		2	PLACA, LH & RH	PLATE	PLACA	PIASTRA	105P
					PLAQUE	PLATTE	PLADE	PLAAT	
8C		86510314		4	BARRA, SKid	BAR	BARRA	BARRA	530B
					BARRE	BAR	BJÆLKE	STANG	
2C		{86590383}		1	Bucket, Low Profile Extended Dirt; 78 Inch Gray; Incl. 3D - 8D; Order from Whole Goods				
3D		86592030		1	ADESIVO	DECAL	CALCOMANÍA	DECALCOMANIA	012D
					AUTOCOLLANT	AUFKLEBER	TRANSFER	STICKER	
4D		86577170		1	BORDA CORTANTE, Weld On Blade 78 Inch				
						CUTTING EDGE	BORDE DE CORTE	BORDO TAGLIENTE	018T
					BORD TRANCHANT	SCHNEIDKANTE	SKÆREKANT	SNIJRAND	
5D		86510316		1	BORDA CORTANTE, LH Cutter				
						CUTTING EDGE	BORDE DE CORTE	BORDO TAGLIENTE	018T
					BORD TRANCHANT	SCHNEIDKANTE	SKÆREKANT	SNIJRAND	
6D		86510315		1	BORDA CORTANTE, RH Cutter				
						CUTTING EDGE	BORDE DE CORTE	BORDO TAGLIENTE	018T
					BORD TRANCHANT	SCHNEIDKANTE	SKÆREKANT	SNIJRAND	
7D		9822175		2	PLACA, LH & RH	PLATE	PLACA	PIASTRA	105P
					PLAQUE	PLATTE	PLADE	PLAAT	
8D		86510314		4	BARRA, Skid	BAR	BARRA	BARRA	530B
					BARRE	BAR	BJÆLKE	STANG	
2D		{86590386}		1	Bucket, Low Profile Extended Dirt; 84 Inch Gray; Incl. 3E - 8E; Order from Whole Goods				
3E		86592033		1	ADESIVO	DECAL	CALCOMANÍA	DECALCOMANIA	012D
					AUTOCOLLANT	AUFKLEBER	TRANSFER	STICKER	

82.100.15	05	p3	02/11

BALDES - CARREGADOR
BUCKETS - LOADER, EXTENDED LOW PROFILE
CUCHARON - CARGADORA
BENNE - CARICATORE

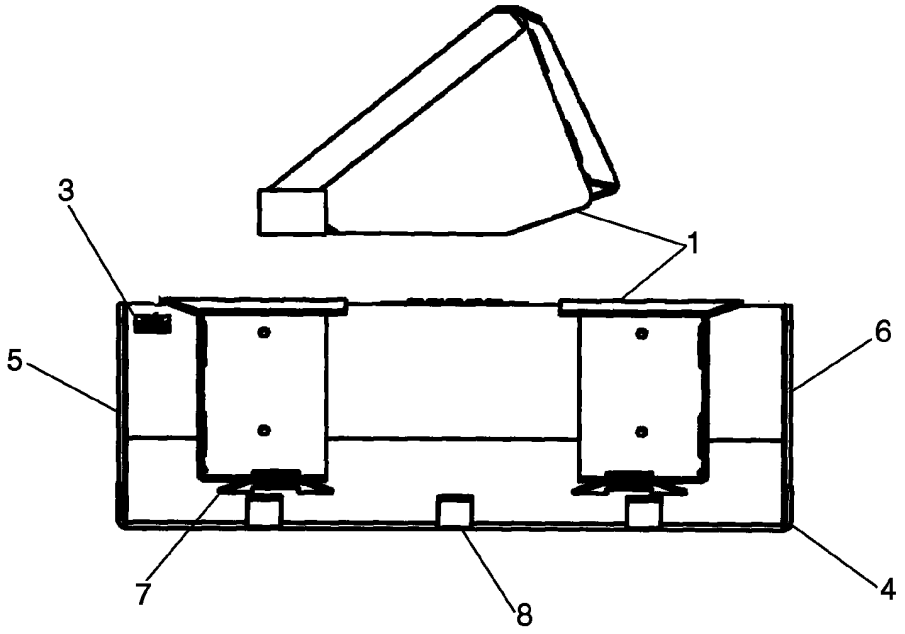

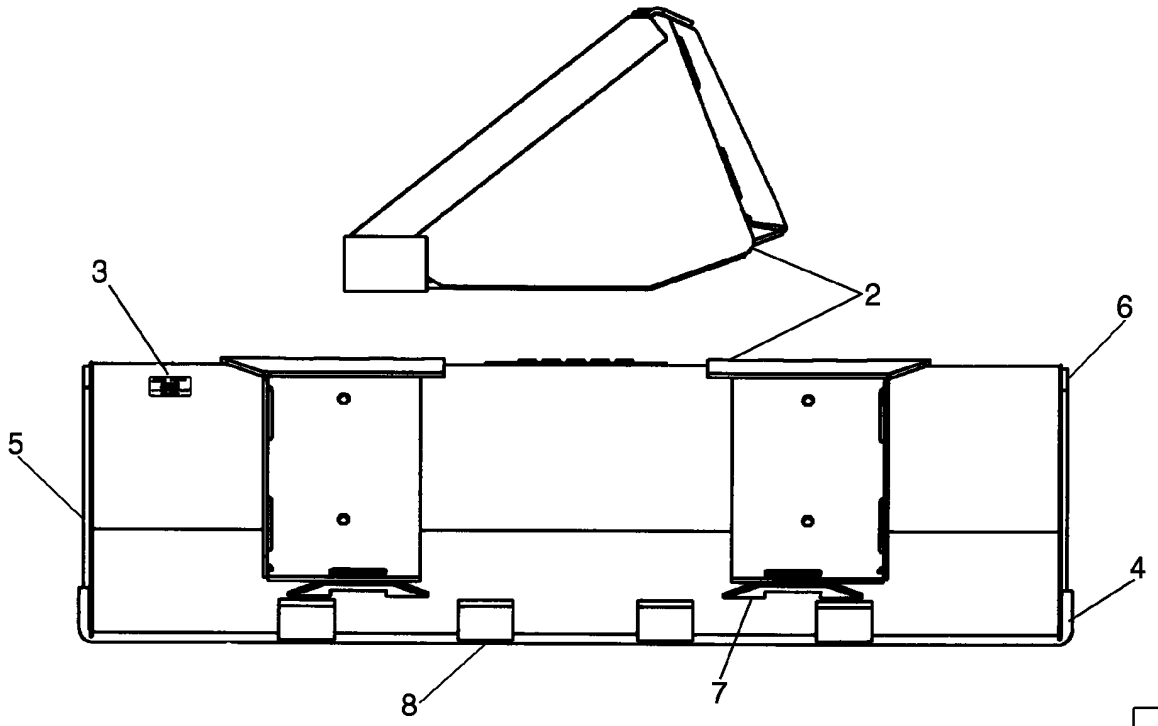

BS07C156

GODETS - CHARGEUSE
LADESCHAUFELN - LADER
SKOVLE - LÆSSER
GRAAFBAKKEN - LADER

R	N	P.N.	MOD	Q	Denominação Description	Description Bezeichnung	Denominacion Beskrivelse	Descrizione Beschrijving	L.C.
4E		86577172		1	BORDA CORTANTE, Weld On Blade 84 Inch				
						CUTTING EDGE	BORDE DE CORTE	BORDO TAGLIENTE	018T
					BORD TRANCHANT	SCHNEIDKANTE	SKÆREKANT	SNIJRAND	
5E		86510316		1	BORDA CORTANTE, LH Cutter				
						CUTTING EDGE	BORDE DE CORTE	BORDO TAGLIENTE	018T
					BORD TRANCHANT	SCHNEIDKANTE	SKÆREKANT	SNIJRAND	
6E		86510315		1	BORDA CORTANTE, RH Cutter				
						CUTTING EDGE	BORDE DE CORTE	BORDO TAGLIENTE	018T
					BORD TRANCHANT	SCHNEIDKANTE	SKÆREKANT	SNIJRAND	
7E		9822175		2	PLACA, LH & RH	PLATE	PLACA	PIASTRA	105P
					PLAQUE	PLATTE	PLADE	PLAAT	
8E		86554088		5	BARRA, Skid	BAR	BARRA	BARRA	530B
					BARRE	BAR	BJÆLKE	STANG	

82.100.15	06	p1	02/11

BALDES - CARREGADOR
BUCKETS - LOADER, UTILITY / LIGHT MATERIAL
CUCHARON - CARGADORA, SERVICIO PÚBLICO/MATERIAL LIGERO
BENNE - CARICATORE

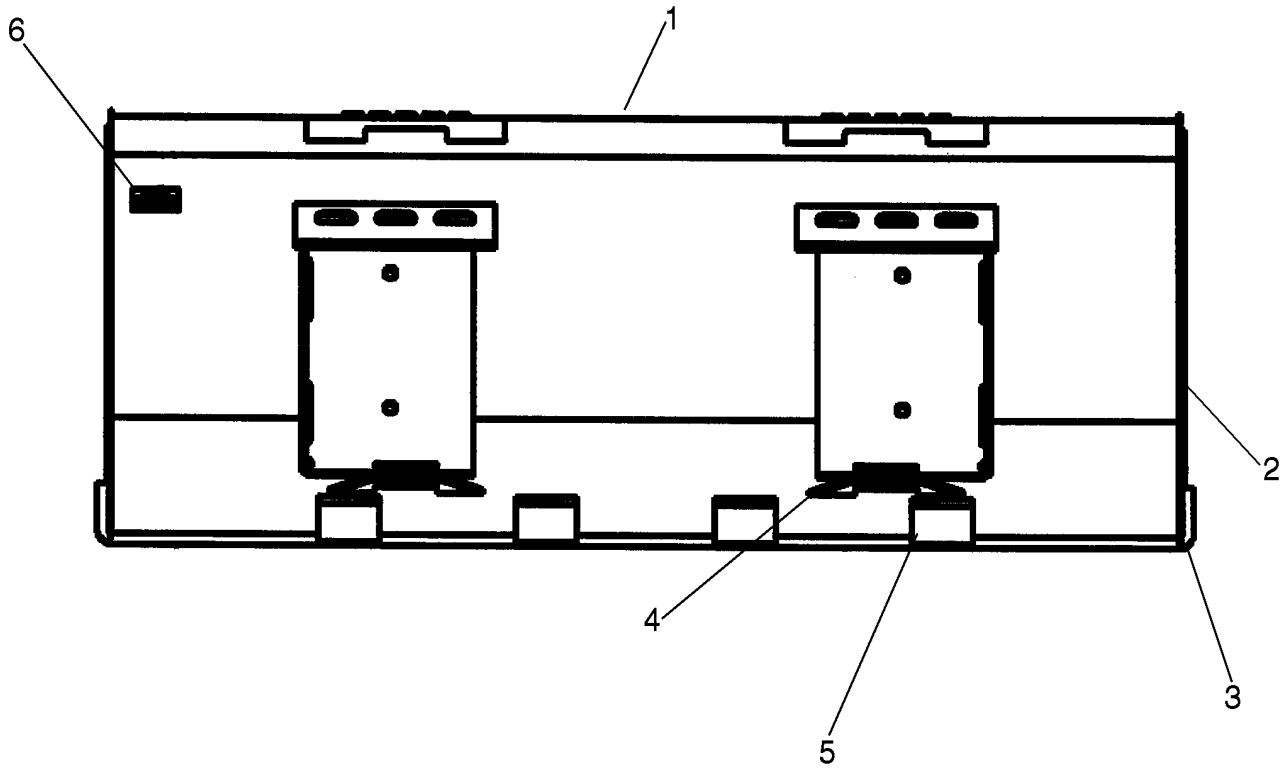

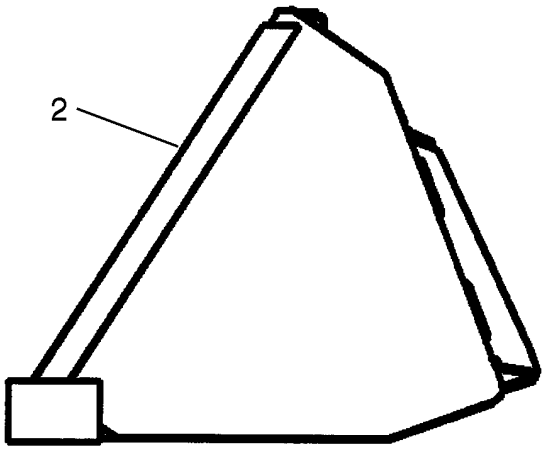

BS07K013

GODETS - CHARGEUSE, MATÉRIEL LÉGER/UTILITAIRE
LADESCHAUFELN - LADER
SKOVLE - LÆSSER
GRAAFBAKKEN - LADER

R	N	P.N.	MOD	Q	Denominação Description	Description Bezeichnung	Denominacion Beskrivelse	Descrizione Beschrijving	L.C.
1		{87010192}		1	Bucket, Utility/Light Material; 60 Inch; Incl. 2 - 6; Order from Whole Goods				
2		86501801		2	BORDA CORTANTE, LH & RH				
						CUTTING EDGE	BORDE DE CORTE	BORDO TAGLIENTE	018T
					BORD TRANCHANT	SCHNEIDKANTE	SKÆREKANT	SNIJRAND	
3		86577164		1	BORDA CORTANTE, 60 Inch				
						CUTTING EDGE	BORDE DE CORTE	BORDO TAGLIENTE	018T
					BORD TRANCHANT	SCHNEIDKANTE	SKÆREKANT	SNIJRAND	
4		9822175		2	PLACA, LH & RH	PLATE	PLACA	PIASTRA	105P
					PLAQUE	PLATTE	PLADE	PLAAT	
5		86501839		4	BARRA, Skid	BAR	BARRA	BARRA	530B
					BARRE	BAR	BJÆLKE	STANG	
6		87010183		1	ADESIVO	DECAL	CALCOMANÍA	DECALCOMANIA	012D
					AUTOCOLLANT	AUFKLEBER	TRANSFER	STICKER	
1A		{87010193}		1	Bucket, Utility/Light Material; 72 Inch; Incl. 2A - 6A; Order from Whole Goods				
2A		86501801		2	BORDA CORTANTE, LH & RH				
						CUTTING EDGE	BORDE DE CORTE	BORDO TAGLIENTE	018T
					BORD TRANCHANT	SCHNEIDKANTE	SKÆREKANT	SNIJRAND	
3A		86577168		1	BORDA CORTANTE, 72 Inch				
						CUTTING EDGE	BORDE DE CORTE	BORDO TAGLIENTE	018T
					BORD TRANCHANT	SCHNEIDKANTE	SKÆREKANT	SNIJRAND	
4A		9822175		2	PLACA, LH & RH	PLATE	PLACA	PIASTRA	105P
					PLAQUE	PLATTE	PLADE	PLAAT	
5A		86501815		4	BARRA, Skid	BAR	BARRA	BARRA	530B
					BARRE	BAR	BJÆLKE	STANG	
6A		87010183		1	ADESIVO	DECAL	CALCOMANÍA	DECALCOMANIA	012D
					AUTOCOLLANT	AUFKLEBER	TRANSFER	STICKER	
1B		{87010194}		1	Bucket, Utility/Light Material; 84 Inch; Incl. 2B - 6B; Order from Whole Goods				
2B		86501801		2	BORDA CORTANTE, LH & RH				
						CUTTING EDGE	BORDE DE CORTE	BORDO TAGLIENTE	018T
					BORD TRANCHANT	SCHNEIDKANTE	SKÆREKANT	SNIJRAND	
3B		86900574		1	BORDA CORTANTE, 84 Inch				
						CUTTING EDGE	BORDE DE CORTE	BORDO TAGLIENTE	018T
					BORD TRANCHANT	SCHNEIDKANTE	SKÆREKANT	SNIJRAND	
4B		9822175		2	PLACA, LH & RH	PLATE	PLACA	PIASTRA	105P
					PLAQUE	PLATTE	PLADE	PLAAT	
5B		86501815		5	BARRA, Skid	BAR	BARRA	BARRA	530B
					BARRE	BAR	BJÆLKE	STANG	
6B		87010184		1	ADESIVO	DECAL	CALCOMANÍA	DECALCOMANIA	012D
					AUTOCOLLANT	AUFKLEBER	TRANSFER	STICKER	

82.100.15	07	p1	02/11

BALDES - CARREGADOR
BUCKETS - LOADER, MANURE / SLURRY
CUCHARON - CARGADORA, ESTIÉRCOL/LODO
BENNE - CARICATORE

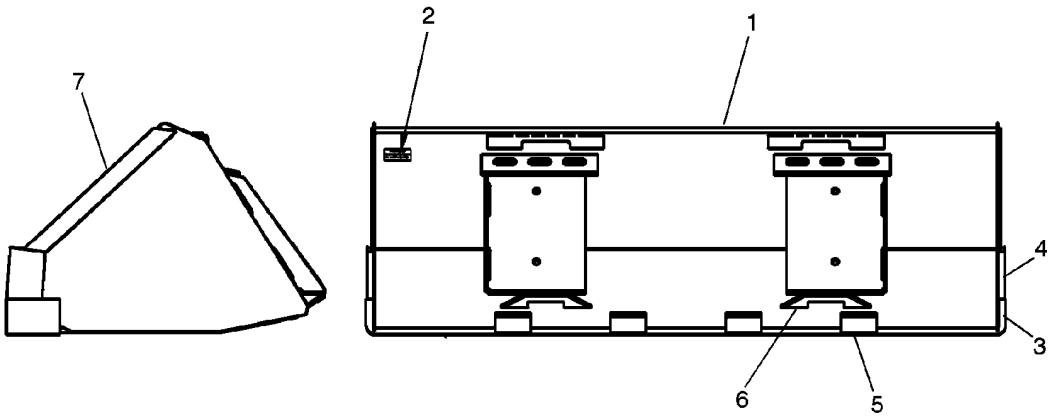

BS08J022

GODETS - CHARGEUSE, FUMIER/LISIER
LADESCHAUFELN - LADER
SKOVLE - LÆSSER
GRAAFBAKKEN - LADER

R	N	P.N.	MOD	Q	Denominação Description	Description Bezeichnung	Denominacion Beskrivelse	Descrizione Beschrijving	L.C.
1		**84304958**		1	CAÇAMBA, Manure/Slurry; 60 Inch; Incl. 2 - 7, Order from Whole Goods				
						BUCKET	CUCHARA	BENNA	035B
					GODET	LÖFFEL	SKOVL	GRAAFBAK	
2		**84304972**		1	ADESIVO	DECAL	CALCOMANÍA	DECALCOMANIA	012D
					AUTOCOLLANT	AUFKLEBER	TRANSFER	STICKER	
3		**86577164**		1	BORDA CORTANTE, 60 Inch				
						CUTTING EDGE	BORDE DE CORTE	BORDO TAGLIENTE	018T
					BORD TRANCHANT	SCHNEIDKANTE	SKÆREKANT	SNIJRAND	
4		**86501834**		2	BORDA CORTANTE, LH & RH				
						CUTTING EDGE	BORDE DE CORTE	BORDO TAGLIENTE	018T
					BORD TRANCHANT	SCHNEIDKANTE	SKÆREKANT	SNIJRAND	
5		**86501838**		3	BARRA, Skid	BAR	BARRA	BARRA	530B
					BARRE	BAR	BJÆLKE	STANG	
6		**9822175**		2	PLACA	PLATE	PLACA	PIASTRA	105P
					PLAQUE	PLATTE	PLADE	PLAAT	
7		**86501789**		2	BORDA CORTANTE, LH & RH				
						CUTTING EDGE	BORDE DE CORTE	BORDO TAGLIENTE	018T
					BORD TRANCHANT	SCHNEIDKANTE	SKÆREKANT	SNIJRAND	
1A		**84304963**		1	CAÇAMBA, Manure/Slurry; 72 Inch; Incl. 2A - 7A, Order from Whole Goods				
						BUCKET	CUCHARA	BENNA	035B
					GODET	LÖFFEL	SKOVL	GRAAFBAK	
2A		**84304980**		1	ADESIVO	DECAL	CALCOMANÍA	DECALCOMANIA	012D
					AUTOCOLLANT	AUFKLEBER	TRANSFER	STICKER	
3A		**86577168**		1	BORDA CORTANTE, 72 Inch				
						CUTTING EDGE	BORDE DE CORTE	BORDO TAGLIENTE	018T
					BORD TRANCHANT	SCHNEIDKANTE	SKÆREKANT	SNIJRAND	
4A		**86501788**		2	BORDA CORTANTE, LH & RH				
						CUTTING EDGE	BORDE DE CORTE	BORDO TAGLIENTE	018T
					BORD TRANCHANT	SCHNEIDKANTE	SKÆREKANT	SNIJRAND	
5A		**86501816**		4	BARRA, Skid	BAR	BARRA	BARRA	530B
					BARRE	BAR	BJÆLKE	STANG	
6A		**9822175**		2	PLACA	PLATE	PLACA	PIASTRA	105P
					PLAQUE	PLATTE	PLADE	PLAAT	
7A		**86501789**		2	BORDA CORTANTE, LH & RH				
						CUTTING EDGE	BORDE DE CORTE	BORDO TAGLIENTE	018T
					BORD TRANCHANT	SCHNEIDKANTE	SKÆREKANT	SNIJRAND	
1B		**84304967**		1	CAÇAMBA, Manure/Slurry; 84 Inch; Incl. 2B - 7B, Order from Whole Goods				
						BUCKET	CUCHARA	BENNA	035B
					GODET	LÖFFEL	SKOVL	GRAAFBAK	
2B		**84304984**		1	ADESIVO	DECAL	CALCOMANÍA	DECALCOMANIA	012D
					AUTOCOLLANT	AUFKLEBER	TRANSFER	STICKER	
3B		**86900574**		1	BORDA CORTANTE, 84 Inch				
						CUTTING EDGE	BORDE DE CORTE	BORDO TAGLIENTE	018T
					BORD TRANCHANT	SCHNEIDKANTE	SKÆREKANT	SNIJRAND	
4B		**86501788**		2	BORDA CORTANTE, LH & RH				
						CUTTING EDGE	BORDE DE CORTE	BORDO TAGLIENTE	018T
					BORD TRANCHANT	SCHNEIDKANTE	SKÆREKANT	SNIJRAND	
5B		**86501816**		5	BARRA, Skid	BAR	BARRA	BARRA	530B
					BARRE	BAR	BJÆLKE	STANG	

BALDES - CARREGADOR
BUCKETS - LOADER, MANURE / SLURRY
CUCHARON - CARGADORA, ESTIÉRCOL/LODO
BENNE - CARICATORE

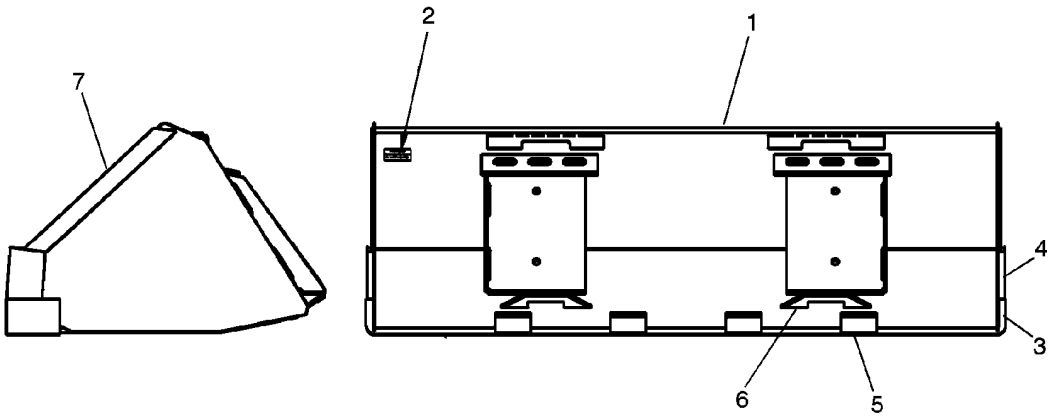

BS08J022

GODETS - CHARGEUSE, FUMIER/LISIER
LADESCHAUFELN - LADER
SKOVLE - LÆSSER
GRAAFBAKKEN - LADER

R	N	P.N.	MOD	Q	Denominação Description	Description Bezeichnung	Denominacion Beskrivelse	Descrizione Beschrijving	L.C.
6B		9822175		2	PLACA PLAQUE	PLATE PLATTE	PLACA PLADE	PIASTRA PLAAT	105P
7B		86501789		2	BORDA CORTANTE, LH & RH CUTTING EDGE BORD TRANCHANT	BORDE DE CORTE SCHNEIDKANTE	BORDO TAGLIENTE SKÆREKANT	SNIJRAND	018T

BUCKETS - LOADER, HEAVY DUTY DIRT
BUCKETS - LOADER, HEAVY DUTY DIRT
BUCKETS - LOADER, HEAVY DUTY DIRT
BUCKETS - LOADER, HEAVY DUTY DIRT

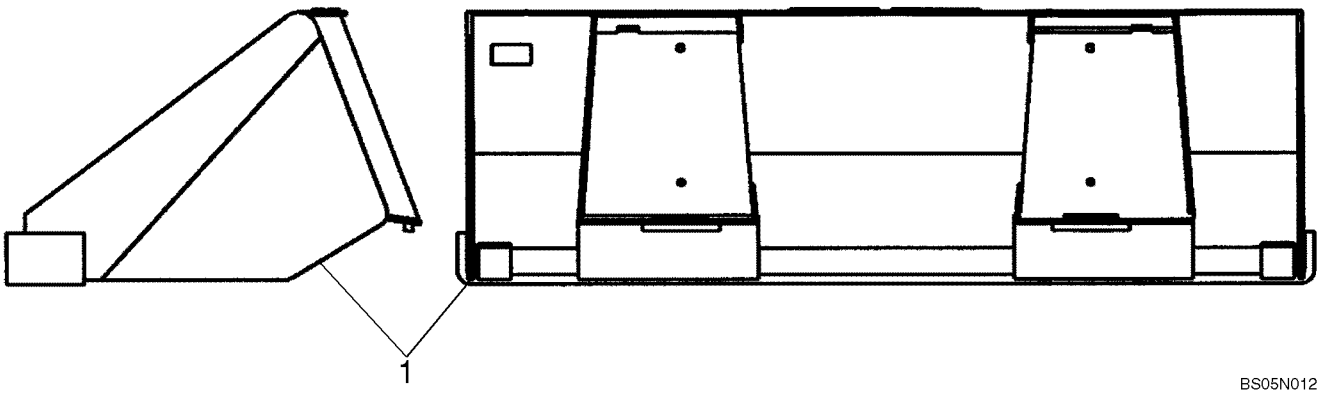

BUCKETS - LOADER, HEAVY DUTY DIRT
BUCKETS - LOADER, HEAVY DUTY DIRT
BUCKETS - LOADER, HEAVY DUTY DIRT
BUCKETS - LOADER, HEAVY DUTY DIRT

R	N	P.N.	MOD	Q	Denominação Description Bezeichnung	Description Bezeichnung	Denominacion Beskrivelse	Descrizione Beschrijving	L.C.
1		84285097		1	CAÇAMBA, 66 Inch Heavy Duty Dirt Gray; Order from Whole Goods; Incl. 84296997 & 84285096				
						BUCKET	CUCHARA	BENNA	035B
					GODET	LÖFFEL	SKOVL	GRAAFBAK	
		84296996		1	ADESIVO	DECAL	CALCOMANÍA	DECALCOMANIA	012D
					AUTOCOLLANT	AUFKLEBER	TRANSFER	STICKER	
		84285096		1	CAÇAMBA, 66 Inch, W	BUCKET	CUCHARA	BENNA	035B
					GODET	LÖFFEL	SKOVL	GRAAFBAK	
1A		84285100		1	CAÇAMBA, 72 Inch Heavy Duty Dirt Gray; Order from Whole Goods; Incl. 84296999 & 84285099				
						BUCKET	CUCHARA	BENNA	035B
					GODET	LÖFFEL	SKOVL	GRAAFBAK	
		84296998		1	ADESIVO	DECAL	CALCOMANÍA	DECALCOMANIA	012D
					AUTOCOLLANT	AUFKLEBER	TRANSFER	STICKER	
		84285099		1	CAÇAMBA, 72 Inch, W	BUCKET	CUCHARA	BENNA	035B
					GODET	LÖFFEL	SKOVL	GRAAFBAK	
1B		84285103		1	CAÇAMBA, 78 Inch Heavy Duty Dirt Gray; Order from Whole Goods; Incl. 84297001 & 84285102				
						BUCKET	CUCHARA	BENNA	035B
					GODET	LÖFFEL	SKOVL	GRAAFBAK	
		84297000		1	ADESIVO	DECAL	CALCOMANÍA	DECALCOMANIA	012D
					AUTOCOLLANT	AUFKLEBER	TRANSFER	STICKER	
		84285102		1	CAÇAMBA, 78 Inch, W	BUCKET	CUCHARA	BENNA	035B
					GODET	LÖFFEL	SKOVL	GRAAFBAK	
1C		84285107		1	CAÇAMBA, 84 Inch Heavy Duty Dirt Gray; Order from Whole Goods; Incl. 84297003 & 84285105				
						BUCKET	CUCHARA	BENNA	035B
					GODET	LÖFFEL	SKOVL	GRAAFBAK	
		84297002		1	ADESIVO	DECAL	CALCOMANÍA	DECALCOMANIA	012D
					AUTOCOLLANT	AUFKLEBER	TRANSFER	STICKER	
		84285105		1	CAÇAMBA, 84 Inch, W	BUCKET	CUCHARA	BENNA	035B
					GODET	LÖFFEL	SKOVL	GRAAFBAK	

SECTION INDEX
88 - Acessórios

88.010.05	DIA KIT, ASPIRATOR (L223-L230,C232,C238)
88.010.08	DIA KIT, BLOCK HEATER 120V USA (L223-C238)
88.010.09	DIA KIT, BLOCK HEATER 220V - ROW (L223-C238)
88.035.04	DIA KIT, SELF-LEVEL 48 (L220-L230,C232,C238)
88.035.08	DIA KIT, RIDE CONTROL NH MED/LG (L220-L230,C227,C232,C238)
88.035.10	DIA KIT, HYDRAULIC COUPLER VERT (L218-L230,C232,C238)
88.035.13	DIA KIT, HIGH FLOW AUX - LG VERT (L223-L230,C232,C238)
88.035.18	DIA KIT, 2ND FRONT HYD AUX - LG VERT (L223-L230,C232,C238)
88.035.23	DIA KIT, LG FRM FOOT CONTROLS, MANUAL (L223-L230)
88.035.26	DIA KIT, LG FRM HAND CONTROLS SERVO (L223-L230)
88.037.03	DIA KIT, COUNTERWEIGHT LFW NH (L223-L230)
88.050.02	DIA KIT, LRG FRM F5C HVAC (L223-L230,C232,C238)
88.050.12	DIA KIT, F5C HEAT (L223-C238)
88.055.01	DIA KIT, BEACON (ALL NH)
88.055.02	DIA KIT, STROBE (ALL NH)
88.055.05	DIA KIT, TURN SIGNAL LG (L223-L230,C232,C238)
88.055.09	DIA KIT, MULTI-FUCTION ELEC MECH VERT (L223-L230,C232,C238)
88.055.10	DIA KIT, MULTI-FUNCTION ELEC EH VERT (L223-L230,C232,C238)
88.055.18	DIA KIT, EU ROAD LIGHTS LG NH (L223-L230,C232,C238)
88.055.24	DIA KIT, BATTERY DISCONNECT - LG (L223-L230,C232,C238)
88.055.28	DIA KIT, MECH CHASS OPT HARNESS - LARGE (L223-L230)
88.055.29	DIA KIT, SIDE LAMP (ALL NH)
88.082.03	DIA KIT, 72IN SPILL GUARD (L218-C227)
88.082.04	DIA KIT, 78IN SPILL GUARD (L218-C238)
88.082.05	DIA KIT, 84IN SPILL GUARD GRAY (L223-L230,C232,C238)
88.082.08	DIA KIT, 72IN B.O.C.E. (L213-C227)
88.082.09	DIA KIT, 78IN B.O.C.E. (L218-C238)
88.082.10	DIA KIT, 84IN B.O.C.E. (L218-C238)
88.082.11	DIA KIT, BUCKET TEETH (ALL NH)
88.082.12	DIA KIT, BUCKETS - FIELD (ALL NH)
88.088.05	DIA KIT, SINGLE POINT LIFT HOOK (L223-L230,C232,C238)
88.088.06	DIA KIT, RADIO (ALL NH)
88.088.08	DIA KIT, 4 POINT LIFT HOOK (L223-L230,C232,C238)
88.088.09	DIA KIT, FOPS LEVEL 2 MODS (ALL NH)
88.088.10	DIA KIT, MIRROR (ALL NH)
88.088.14	DIA KIT, DRAW BAR LG GRAY (L223-L230,C232,C238)
88.088.15	DIA KIT, FIRE EXTINGUISHER (ALL NH)
88.090.01	DIA KIT, DEMO REAR DOOR (ALL NH)
88.090.02	DIA KIT, GLASS FRONT DOOR (ALL NH)
88.090.03	DIA KIT, DEMO FRONT DOOR (ALL NH)
88.090.04	DIA KIT, CAB SIDE WINDOWS (ALL NH)
88.090.05	DIA KIT, REAR EXTERIOR ACCESS WINDOW (ALL NH)
88.090.07	DIA KIT, 3IN LAP BELT (ALL NH)
88.090.08	DIA KIT, REMOVABLE TOP WINDOW (ALL NH)
88.090.09	DIA KIT, RH, SIDE SCREEN (ALL NH)
88.090.10	DIA KIT, LH, SIDE SCREEN (ALL NH)
88.090.11	DIA KIT, ARMRESTS (ALL NH)
88.090.13	DIA KIT, HANDLE 300/400 (ALL NH)
88.090.15	DIA KIT, HANDLE 350/450 (ALL NH)
88.100.01	ENGINE ACCESSORIES EU/OPEN EU (L223,L225,C232)
88.100.01	ENGINE ACCESSORIES NA (L223-L230,C232,C238)
88.120.01	SEAL PACKAGE, FOAM (ALL NH)
88.120.02	FUSE COVER, MED-LG CHASSIS (L218-C238)

DIA KIT, ASPIRATOR (L223-L230,C232,C238)
DIA KIT, ASPIRATOR (L223-L230,C232,C238)
DIA KIT, ASPIRATOR (L223-L230,C232,C238)
DIA KIT, ASPIRATOR (L223-L230,C232,C238)



DIA KIT, ASPIRATOR (L223-L230,C232,C238)
DIA KIT, ASPIRATOR (L223-L230,C232,C238)
DIA KIT, ASPIRATOR (L223-L230,C232,C238)
DIA KIT, ASPIRATOR (L223-L230,C232,C238)

R	N	P.N.	MOD	Q	Denominação Description Bezeichnung	Denominacion Beskrivelse	Descrizione Beschrijving	L.C.
		84488602			KIT DE SERVIÇO, DIA Kit, Aspirator, Incl. 1-11 SERVICE KIT KIT D'ENTRETIEN SERVICE-SATZ	KIT DE SERVICIO SERVICESÆT	KIT DI MANUTENZIONE SERVICEKIT	021K
1		**84674**		2	BRAÇADEIRA MANGUEIRA, #28, 1.31/2.25 Type F Worm HOSE CLAMP COLLIER POUR FLEXIBL SCHLAUCHSCHELLE	ABRAZADERA DE MANG SLANGEKLEMME	FASCETTA STRINGITUB SLANGKLEM	P729
2		**507586**		1	BRAÇADEIRA MANGUEIRA, #20, 0.81/1.75 Type F Worm HOSE CLAMP COLLIER POUR FLEXIBL SCHLAUCHSCHELLE	ABRAZADERA DE MANG SLANGEKLEMME	FASCETTA STRINGITUB SLANGKLEM	P729
3		**9671714**		1	PARAFUSO, Hex Flg, M8 x 25, 8.8 BOLT VIS SCHRAUBE	PERNO BOLT	BULLONE BOUT	140B
4		**9804277**		1	PORCA, M8 x 1.25, Flg, Cl 8 NUT ECROU MUTTER	TUERCA MØTRIK	DADO MOER	010D
5		**84137995**		1	BRAÇADEIRA MANGUEIRA, Turn Key Grip HOSE CLAMP COLLIER POUR FLEXIBL SCHLAUCHSCHELLE	ABRAZADERA DE MANG SLANGEKLEMME	FASCETTA STRINGITUB SLANGKLEM	P729
6		**84312438**		1	MANGUEIRA, Tail Pipe to Aspirator HOSE FLEXIBLE SCHLAUCH	TUBO SLANGE	TUBO FLESSIBILE SLANG	030M
7		**84488517**		1	MANGUEIRA, Air Cleaner to Aspirator HOSE FLEXIBLE SCHLAUCH	TUBO SLANGE	TUBO FLESSIBILE SLANG	030M
8		**84359079**		1	TUBO RÍGIDO, Exhaust Tail Pipe RIGID TUBE TUYAU RIGIDE ROHR	TUBO RÍGIDO STIFT RØR	TUBO RIGIDO VASTE LEIDING	193T
9		**84488515**		1	SUPORTE, Aspirator Mounting BRACKET SUPPORT HALTERUNG	SOPORTE BESLAG	STAFFA STEUN	225S
10		**406089A2**		1	VALVULA, Aspirator Check VALVE VALVE VENTIL	VALVULA VALVE	VALVOLA VALVE	P468
11		**84488605**		1	INSTRUÇÃO, Sheet, Aspirator INSTRUCTION INSTRUCTION ANLEITUNG	INSTRUCCIÓN INSTRUKTION	ISTRUZIONI INSTRUCTIE	Z571

DIA KIT, BLOCK HEATER 120V USA (L223-C238)
DIA KIT, BLOCK HEATER 120V USA (L223-C238)
DIA KIT, BLOCK HEATER 120V USA (L223-C238)
DIA KIT, BLOCK HEATER 120V USA (L223-C238)



DIA KIT, BLOCK HEATER 120V USA (L223-C238)
DIA KIT, BLOCK HEATER 120V USA (L223-C238)
DIA KIT, BLOCK HEATER 120V USA (L223-C238)
DIA KIT, BLOCK HEATER 120V USA (L223-C238)

R	N	P.N.	MOD	Q	Denominação Description Bezeichnung	Denominacion Beskrivelse	Descrizione Beschrijving	L.C.
		84395706			KIT DE SERVIÇO, DIA Kit, Block Heater, 120V, Incl. 1-6 SERVICE KIT KIT D'ENTRETIEN	KIT DE SERVICIO SERVICE-SATZ	KIT DI MANUTENZIONE SERVICESÆT	021K
1		**86050279**		1	PORCA, M10 x 1.5, Flg, Cl 10 NUT ECROU	TUERCA MUTTER	DADO MØTRIK	010D
2		**87693857**		1	UNIDADE DE AQUECIMENTO, Assembly UNIT HEATER APPAREIL DE CHAUFFA	APARATO DE CALEFAC(HEIZUNGSEINHEIT	RISCALDATORE UNITÀ RADIATORENHED	Z375
3		**87693858**		1	CABO, Block Heater CABLE	CABLE KABEL	CAVO KABEL	650C
4		**435437A1**		1	PRENDEDOR DE CABOS, 3/16" x 7 1/4" CABLE STRAP BRIDE DE CABLE	BANDA DE CABLE KABELBINDER	FASCETTA PER CAVO KABELSTROP	P716
5		**84395716**		1	INSTRUÇÃO, Installation, F5C, 120V INSTRUCTION INSTRUCTION	INSTRUCCIÓN ANLEITUNG	ISTRUZIONI INSTRUKTION	Z571
6		**12646001**		1	ARRUELA PLANA, M14 x 24 x 2 WASHER RONDELLE	ARANDELA UNTERLEGSCHEIBE	RONDELLA FLADSKIVE	131R

88.010.09		p1	03/11

DIA KIT, BLOCK HEATER 220V - ROW (L223-C238)
DIA KIT, BLOCK HEATER 220V - ROW (L223-C238)
DIA KIT, BLOCK HEATER 220V - ROW (L223-C238)
DIA KIT, BLOCK HEATER 220V - ROW (L223-C238)

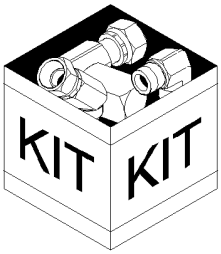

DIA KIT, BLOCK HEATER 220V - ROW (L223-C238)
DIA KIT, BLOCK HEATER 220V - ROW (L223-C238)
DIA KIT, BLOCK HEATER 220V - ROW (L223-C238)
DIA KIT, BLOCK HEATER 220V - ROW (L223-C238)

R	N	P.N.	MOD	Q	Denominação Description Bezeichnung	Description Denominacion Beskrivelse	Denominacion Descrizione Beschrijving	Descrizione Beschrijving	L.C.
		84465561			KIT DE SERVIÇO, DIA Kit, Block Heater, 220V, Incl. 1-6				
					SERVICE KIT	KIT DE SERVICIO	KIT DI MANUTENZIONE		021K
					KIT D'ENTRETIEN	SERVICE-SATZ	SERVICESÆT	SERVICEKIT	
1		**86050279**		1	PORCA, M10 x 1.5, Flg, Cl 10				
					NUT	TUERCA	DADO		010D
					ECROU	MUTTER	MØTRIK	MOER	
2		**87693858**		1	CABO, Heater, Assembly	CABLE	CABLE	CAVO	650C
					CABLE	KABEL	KABEL	KABEL	
3		**87719400**		1	AQUECEDOR, Assembly	HEATER	CALENTADOR	RISCALDATORE	105R
					CHAUFFAGE	HEIZUNG	VARMEAPPARAT	VERWARMING	
4		**435437A1**		1	PRENDEDOR DE CABOS, 3/16" x 7 1/4"				
					CABLE STRAP	BANDA DE CABLE	FASCETTA PER CAVO		P716
					BRIDE DE CABLE	KABELBINDER	KABELSTROP	BUNDELBAND	
5		**{84470983}**		1	Instruction, Installation, F5C, 220V				
6		**12646001**		1	ARRUELA PLANA, M14 x 24 x 2				
					WASHER	ARANDELA	RONDELLA		131R
					RONDELLE	UNTERLEGSCHEIBE	FLADSKIVE	SLUITRING	

88.035.04		p1	02/11

DIA KIT, SELF-LEVEL 48 (L220-L230,C232,C238)
DIA KIT, SELF-LEVEL 48 (L220-L230,C232,C238)
DIA KIT, SELF-LEVEL 48 (L220-L230,C232,C238)
DIA KIT, SELF-LEVEL 48 (L220-L230,C232,C238)



DIA KIT, SELF-LEVEL 48 (L220-L230,C232,C238)
DIA KIT, SELF-LEVEL 48 (L220-L230,C232,C238)
DIA KIT, SELF-LEVEL 48 (L220-L230,C232,C238)
DIA KIT, SELF-LEVEL 48 (L220-L230,C232,C238)

R	N	P.N.	MOD	Q	Denominação Description	Description Bezeichnung	Denominacion Beskrivelse	Descrizione Beschrijving	L.C.
		84305862			JOGO, DIA Kit, Self-Level 48, Incl. 1-12				
						KIT	JEUGO	KIT	4830
					POCHETTE	PACKUNG	KIT	KIT	
1		**84326482**		1	VÁLVULA, 48, Self-Level	VALVE	VÁLVULA	VALVOLA	9620
					SOUPAPE	VENTIL	VENTIL	KLEP	
2		**128819**		2	CONECTOR HIDRÁUL, 3/4"-16, 37º x 7/8"-14, O-Ring				
						HYD CONNECTOR	CONECTOR HIDRÁULIC(	CONNETTORE IDRAULIC	020R
					CONNECTEUR HYDRAU	HYDR STECKVERBINDE	HYDRAULIKSTIK	HYDRAULISCHE AANSLI	
3		**164910**		1	COTOVELO, 90º, 7/8"-14, 37º x 7/8"-14, O-Ring				
						ELBOW	CODO	GOMITO	085G
					COUDE	KNIESTÜCK	VINKELRØR	KNIESTUK	
4		**84186140**		1	TUBO RÍGIDO, Assembly, Lower, LDR Valve to SL				
						RIGID TUBE	TUBO RÍGIDO	TUBO RIGIDO	193T
					TUYAU RIGIDE	ROHR	STIFT RØR	VASTE LEIDING	
5		**84258865**		1	TUBO RÍGIDO, Assembly, Lower, SL to Manifold				
						RIGID TUBE	TUBO RÍGIDO	TUBO RIGIDO	193T
					TUYAU RIGIDE	ROHR	STIFT RØR	VASTE LEIDING	
6		**84258866**		2	TUBO RÍGIDO, Assembly, SL Valve to TIP				
						RIGID TUBE	TUBO RÍGIDO	TUBO RIGIDO	193T
					TUYAU RIGIDE	ROHR	STIFT RØR	VASTE LEIDING	
7		**84271904**		1	INTERRUPTOR, Rocker, Self-Leveling				
						SWITCH	INTERRUPTOR	INTERRUTTORE	075I
					CONTACTEUR	SCHALTER	KONTAKT	SCHAKELAAR	
8		**86511843**		2	PARAFUSO, Hex Flg, M8 x 60, 8.8				
						BOLT	PERNO	BULLONE	140B
					VIS	SCHRAUBE	BOLT	BOUT	
9		**87301330**		1	CONECTOR HIDRÁUL, 37FL -ORB 5/8				
						HYD CONNECTOR	CONECTOR HIDRÁULIC(	CONNETTORE IDRAULIC	020R
					CONNECTEUR HYDRAU	HYDR STECKVERBINDE	HYDRAULIKSTIK	HYDRAULISCHE AANSLI	
10		**87655042**		4	ARRUELA ESPECIAL, M8, 8.80 X 17.5 X 2.2 HTS				
						SPECIAL WASHER	ARANDELA ESPECIAL	RONDELLA SPECIALE	Z333
					RONDELLE SPECIALE	SPEZIALUNTERLEGSCH	SPECIALSKIVE	SPECIALE RING	
11		**229197A1**		2	PORCA, Square	NUT	TUERCA	DADO	5780
					ECROU	MUTTER	MØTRIK	MOER	
12		**84366429**		1	INSTRUÇÃO, Installation	INSTRUCTION	INSTRUCCIÓN	ISTRUZIONI	Z571
					INSTRUCTION	ANLEITUNG	INSTRUKTION	INSTRUCTIE	

DIA KIT, RIDE CONTROL NH MED/LG (L220-L230,C227,C232,C238)
DIA KIT, RIDE CONTROL NH MED/LG (L220-L230,C227,C232,C238)
DIA KIT, RIDE CONTROL NH MED/LG (L220-L230,C227,C232,C238)
DIA KIT, RIDE CONTROL NH MED/LG (L220-L230,C227,C232,C238)



DIA KIT, RIDE CONTROL NH MED/LG (L220-L230,C227,C232,C238)
DIA KIT, RIDE CONTROL NH MED/LG (L220-L230,C227,C232,C238)
DIA KIT, RIDE CONTROL NH MED/LG (L220-L230,C227,C232,C238)
DIA KIT, RIDE CONTROL NH MED/LG (L220-L230,C227,C232,C238)

R	N	P.N.	MOD	Q	Denominação Description Bezeichnung	Description Bezeichnung	Denominacion Beskrivelse	Descrizione Beschrijving	L.C.
		84392988			JOGO, DIA Kit, Ride Control, NH Med/LG, Incl. 1-18				
						KIT	JEUGO	KIT	4830
					POCHETTE	PACKUNG	KIT	KIT	
1		**76350**		1	CONECTOR HIDRÁUL, 9/16"-18, 37° x 9/16"-18, O-Ring				
						HYD CONNECTOR	CONECTOR HIDRÁULIC	CONNETTORE IDRAULIC	020R
					CONNECTEUR HYDRAU	HYDR STECKVERBINDE	HYDRAULIKSTIK	HYDRAULISCHE AANSLU	
2		**128830**		1	COTOVELO, 90°, 3/4"-16, 37° x 3/4"-16, O-Ring				
						ELBOW	CODO	GOMITO	085G
					COUDE	KNIESTÜCK	VINKELRØR	KNIESTUK	
3		**84256404**		1	VÁLVULA HIDRÁULICA, Ride Control				
						HYDRAULIC VALVE	VÁLVULA HIDRÁULICA	DISTRIBUTORE IDRAULI	010V
					SOUPAPE HYDRAULIQU	HYDRAULIKVENTIL	HYDRAULIKVENTIL	HYDRAULISCHE KLEP	
4		**84259548**		1	MANGUEIRA, LOL, Ride Control, Drain				
						HOSE	TUBO	TUBO FLESSIBILE	030M
					FLEXIBLE	SCHLAUCH	SLANGE	SLANG	
5		**84259682**		1	CONEXÃO EM T, Assembly, Option				
						UNION TEE	RACOR EN T	RACCORDO A T	A134
					RACCORD EN T	T-VERSCHRAUBUNG	T-FORSKRUNING	KOPPEL-T-STUK	
6		**84331280**		1	MANGUEIRA, Assembly, Valve to Accumulator				
						HOSE	TUBO	TUBO FLESSIBILE	030M
					FLEXIBLE	SCHLAUCH	SLANGE	SLANG	
7		**84375899**		1	TUBO RÍGIDO, Hydraulic, Ride Control to Manifold				
						RIGID TUBE	TUBO RÍGIDO	TUBO RIGIDO	193T
					TUYAU RIGIDE	ROHR	STIFT RØR	VASTE LEIDING	
8		**84375901**		1	TUBO RÍGIDO, Hydraulic, Ride Control to Manifold				
						RIGID TUBE	TUBO RÍGIDO	TUBO RIGIDO	193T
					TUYAU RIGIDE	ROHR	STIFT RØR	VASTE LEIDING	
9		**86509028**		2	CONECTOR HIDRÁUL, 3/4"-16, 37° x 9/16"-18, O-Ring				
						HYD CONNECTOR	CONECTOR HIDRÁULIC	CONNETTORE IDRAULIC	020R
					CONNECTEUR HYDRAU	HYDR STECKVERBINDE	HYDRAULIKSTIK	HYDRAULISCHE AANSLU	
10		**86511481**		2	PARAFUSO, Hex Flg, M8 x 50, 8.8				
						BOLT	PERNO	BULLONE	140B
					VIS	SCHRAUBE	BOLT	BOUT	
11		**86624194**		2	BRAÇADEIRA MANGUEIRA, #36, 1.81/2.75 Type F Worm				
						HOSE CLAMP	ABRAZADERA DE MANG	FASCETTA STRINGITUB	P729
					COLLIER POUR FLEXIBL	SCHLAUCHSCHELLE	SLANGEKLEMME	SLANGKLEM	
12		**87302140**		1	CONEXÃO	FITTING	ACOPLAMIENTO	RACCORDO	3300
					RACCORD	ARMATUR	FITTING	AANSLUITING	
13		**87403797**		1	ACUMULADOR, Hydraulic	ACCUMULATOR	ACUMULADOR	ACCUMULATORE	037A
					ACCUMULATEUR	DRUCKSPEICHER	AKKUMULATOR	ACCUMULATOR	
14		**87443510**		3	BRAÇADEIRA MANGUEIRA, M20				
						HOSE CLAMP	ABRAZADERA DE MANG	FASCETTA STRINGITUB	P729
					COLLIER POUR FLEXIBL	SCHLAUCHSCHELLE	SLANGEKLEMME	SLANGKLEM	
15		**87655042**		2	ARRUELA ESPECIAL, M8, 8.80 X 17.5 X 2.2 HTS				
						SPECIAL WASHER	ARANDELA ESPECIAL	RONDELLA SPECIALE	Z333
					RONDELLE SPECIALE	SPEZIALUNTERLEGSCH	SPECIALSKIVE	SPECIALE RING	
16		**229197A1**		2	PORCA, Square	NUT	TUERCA	DADO	5780
					ECROU	MUTTER	MØTRIK	MOER	

DIA KIT, RIDE CONTROL NH MED/LG (L220-L230,C227,C232,C238)
DIA KIT, RIDE CONTROL NH MED/LG (L220-L230,C227,C232,C238)
DIA KIT, RIDE CONTROL NH MED/LG (L220-L230,C227,C232,C238)
DIA KIT, RIDE CONTROL NH MED/LG (L220-L230,C227,C232,C238)



DIA KIT, RIDE CONTROL NH MED/LG (L220-L230,C227,C232,C238)
DIA KIT, RIDE CONTROL NH MED/LG (L220-L230,C227,C232,C238)
DIA KIT, RIDE CONTROL NH MED/LG (L220-L230,C227,C232,C238)
DIA KIT, RIDE CONTROL NH MED/LG (L220-L230,C227,C232,C238)

R	N	P.N.	MOD	Q	Denominação Description	Description Bezeichnung	Denominacion Beskrivelse	Descrizione Beschrijving	L.C.
17		**328903A1**		1	DECALCOMANIA DECALCOMANIE	DECAL ABZIEHBILD	CALCOMANIA TRANSFER	DECALCOMANIA DECAL	P903
18		**84392991**		1	INSTRUÇÃO, Sheet, Ride Control INSTRUCTION	INSTRUCTION ANLEITUNG	INSTRUCCIÓN INSTRUKTION	ISTRUZIONI INSTRUCTIE	Z571

DIA KIT, HYDRAULIC COUPLER VERT (L218-L230,C232,C238)
DIA KIT, HYDRAULIC COUPLER VERT (L218-L230,C232,C238)
DIA KIT, HYDRAULIC COUPLER VERT (L218-L230,C232,C238)
DIA KIT, HYDRAULIC COUPLER VERT (L218-L230,C232,C238)



DIA KIT, HYDRAULIC COUPLER VERT (L218-L230,C232,C238)
DIA KIT, HYDRAULIC COUPLER VERT (L218-L230,C232,C238)
DIA KIT, HYDRAULIC COUPLER VERT (L218-L230,C232,C238)
DIA KIT, HYDRAULIC COUPLER VERT (L218-L230,C232,C238)

R	N	P.N.	MOD	Q	Denominação Description	Description Bezeichnung	Denominacion Beskrivelse	Descrizione Beschrijving	L.C.
		84392553			JOGO, DIA Kit, Hydraulic Coupler Vert, Incl. 1-				
						KIT	JEUGO	KIT	4830
					POCHETTE	PACKUNG	KIT	KIT	
1		**280476**		3	PARAFUSO, Hex Wash Hd, 3/8" x 1"				
						SELF-TAP SCREW	TORNILLO AUTORROSC	VITE AUTOFILETTANTE	062V
					VIS AUTOTARAUDEUSE	SELBSTSCHN SCHRAUE	SELVLÅSENDE BOLT	ZELFTAPPENDE SCHRO	
2		**605025**		1	BRAÇADEIRA	CLAMP	ABRAZADERA	MORSETTO	120M
					COLLIER	KLEMME	SPÆNDEBÅND	KLEM	
3		**9804260**		1	PARAFUSO, Hex Flg, M8 x 30, 8.8, Full Thd				
						BOLT	PERNO	BULLONE	140B
					VIS	SCHRAUBE	BOLT	BOUT	
4		**9804277**		1	PORCA, M8 x 1.25, Flg, Cl 8				
						NUT	TUERCA	DADO	010D
					ECROU	MUTTER	MØTRIK	MOER	
5		**84254052**		1	BRAÇADEIRA MANGUEIRA, Tube				
						HOSE CLAMP	ABRAZADERA DE MANG	FASCETTA STRINGITUB	P729
					COLLIER POUR FLEXIBL	SCHLAUCHSCHELLE	SLANGEKLEMME	SLANGKLEM	
6		**84254056**		2	BRAÇADEIRA MANGUEIRA, Butterfly Tube				
						HOSE CLAMP	ABRAZADERA DE MANG	FASCETTA STRINGITUB	P729
					COLLIER POUR FLEXIBL	SCHLAUCHSCHELLE	SLANGEKLEMME	SLANGKLEM	
7		**84284644**		2	CONJ. MANGUEIRA, Hydraulic Coupler				
						HOSE ASSY.	CONJUNTO DE TUBOS	COMPLESS. TUBO FLES	P457
					ENSEMBLE DE FLEXIBLE	SCHLAUCHBAUGRUPPE	SLANGEENHED	SLANGEENHEID	
8		**84396808**		1	TUBO HIDRÁULICO, Hydraulic Tube, Assembly, Hydraulic Coupler				
						HYD. TUBE	TUBO HIDRÁULICO	TUBO IDRAULICO	190T
					TUYAU HYDRAULIQUE	HYDRAULIKLEITUNG	HYD. RØR	HYDRAULISCHE LEIDIN(	
9		**84351507**		1	TUBO HIDRÁULICO, Assembly, Hydraulic Coupler				
						HYD. TUBE	TUBO HIDRÁULICO	TUBO IDRAULICO	190T
					TUYAU HYDRAULIQUE	HYDRAULIKLEITUNG	HYD. RØR	HYDRAULISCHE LEIDIN(	
10		**84351545**		1	TUBO HIDRÁULICO, Assembly, Step to Coupler				
						HYD. TUBE	TUBO HIDRÁULICO	TUBO IDRAULICO	190T
					TUYAU HYDRAULIQUE	HYDRAULIKLEITUNG	HYD. RØR	HYDRAULISCHE LEIDIN(	
11		**84351547**		1	TUBO HIDRÁULICO, Assembly, Step to Coupler				
						HYD. TUBE	TUBO HIDRÁULICO	TUBO IDRAULICO	190T
					TUYAU HYDRAULIQUE	HYDRAULIKLEITUNG	HYD. RØR	HYDRAULISCHE LEIDIN(	
12		**87342191**		1	ARRUELA PLANA, Spacer	WASHER	ARANDELA	RONDELLA	131R
					RONDELLE	UNTERLEGSCHEIBE	FLADSKIVE	SLUITRING	
13		**84281694**		2	CONJ. MANGUEIRA, Hydraulic Coupler				
						HOSE ASSY.	CONJUNTO DE TUBOS	COMPLESS. TUBO FLES	P457
					ENSEMBLE DE FLEXIBLE	SCHLAUCHBAUGRUPPE	SLANGEENHED	SLANGEENHEID	
14		**84350180**		1	TUBO HIDRÁULICO, Coupler				
						HYD. TUBE	TUBO HIDRÁULICO	TUBO IDRAULICO	190T
					TUYAU HYDRAULIQUE	HYDRAULIKLEITUNG	HYD. RØR	HYDRAULISCHE LEIDIN(	
15		**84350178**		1	TUBO HIDRÁULICO, Assembly, Coupler				
						HYD. TUBE	TUBO HIDRÁULICO	TUBO IDRAULICO	190T
					TUYAU HYDRAULIQUE	HYDRAULIKLEITUNG	HYD. RØR	HYDRAULISCHE LEIDIN(	

DIA KIT, HYDRAULIC COUPLER VERT (L218-L230,C232,C238)
DIA KIT, HYDRAULIC COUPLER VERT (L218-L230,C232,C238)
DIA KIT, HYDRAULIC COUPLER VERT (L218-L230,C232,C238)
DIA KIT, HYDRAULIC COUPLER VERT (L218-L230,C232,C238)



DIA KIT, HYDRAULIC COUPLER VERT (L218-L230,C232,C238)
DIA KIT, HYDRAULIC COUPLER VERT (L218-L230,C232,C238)
DIA KIT, HYDRAULIC COUPLER VERT (L218-L230,C232,C238)
DIA KIT, HYDRAULIC COUPLER VERT (L218-L230,C232,C238)

R	N	P.N.	MOD	Q	Denominação Description	Description Bezeichnung	Denominacion Beskrivelse	Descrizione Beschrijving	L.C.
16		139398		4	CONECTOR HIDRÁUL, 7/16"-20, 37º x 9/16"-18, O-Ring				
						HYD CONNECTOR	CONECTOR HIDRÁULIC	CONNETTORE IDRAULIC	020R
					CONNECTEUR HYDRAU	HYDR STECKVERBINDE	HYDRAULIKSTIK	HYDRAULISCHE AANSLU	
17		163335		1	T, 9/16"-18, 37º x 9/16"-18, O-Ring Br				
						TEE	RACOR EN T	PEZZO A T	9020
					RACCORD EN T	T-STÜCK	T-STYKKE	T-STUK	
18		265235		2	CONECTOR HIDRÁUL, 7/16"-20, 37º x 7/16"-20, O-Ring				
						HYD CONNECTOR	CONECTOR HIDRÁULIC	CONNETTORE IDRAULIC	020R
					CONNECTEUR HYDRAU	HYDR STECKVERBINDE	HYDRAULIKSTIK	HYDRAULISCHE AANSLU	
19		577927		2	BRAÇADEIRA	CLAMP	ABRAZADERA	MORSETTO	120M
					COLLIER	KLEMME	SPÆNDEBÅND	KLEM	
20		9671714		2	PARAFUSO, Hex Flg, M8 x 25, 8.8				
						BOLT	PERNO	BULLONE	140B
					VIS	SCHRAUBE	BOLT	BOUT	
21		9804261		2	PARAFUSO, Hex Flg, M10 x 25, 8.8				
						BOLT	PERNO	BULLONE	140B
					VIS	SCHRAUBE	BOLT	BOUT	
22		9804276		2	PORCA, M6 x 1, Flg, Cl 8	NUT	TUERCA	DADO	010D
					ECROU	MUTTER	MØTRIK	MOER	
23		9804277		2	PORCA, M8 x 1.25, Flg, Cl 8				
						NUT	TUERCA	DADO	010D
					ECROU	MUTTER	MØTRIK	MOER	
24		9804278		2	PORCA, M10 x 1.5, Flg, Cl 8				
						NUT	TUERCA	DADO	010D
					ECROU	MUTTER	MØTRIK	MOER	
25		9850685		2	PARAFUSO, Hex, M6 x 90, 8.8				
						BOLT	PERNO	BULLONE	140B
					VIS	SCHRAUBE	BOLT	BOUT	
26		84387739		2	HASTE, Hydraulic Coupler, Position Indicator				
						ROD	VARILLA	ASTA	090A
					TIGE	STANGE	STANG	STANG	
27		84339845		1	ESTRIBO, Hydraulic Coupler, Power Tan				
						STEP	PELDAÑO	GRADINO	116M
					MARCHE-PIED	SCHRITT	TRINPLADE	TREDE	
28		84345496		2	MANGUEIRA, Hydraulic Cylinder				
						HOSE	TUBO	TUBO FLESSIBILE	030M
					FLEXIBLE	SCHLAUCH	SLANGE	SLANG	
29		84345506		1	MANGUEIRA, Coupler Cylinder				
						HOSE	TUBO	TUBO FLESSIBILE	030M
					FLEXIBLE	SCHLAUCH	SLANGE	SLANG	
30		84345532		1	MANGUEIRA, Coupler Cylinder				
						HOSE	TUBO	TUBO FLESSIBILE	030M
					FLEXIBLE	SCHLAUCH	SLANGE	SLANG	
31		86512993		2	COTOVELO, 45º, 7/16"-20, 37º x 7/16"-20, O-Ring				
						ELBOW	CODO	GOMITO	085G
					COUDE	KNIESTÜCK	VINKELRØR	KNIESTUK	
32		86588450		2	ARRUELA PLANA, M6 x 12 x 1.6 Thk				
						WASHER	ARANDELA	RONDELLA	131R
					RONDELLE	UNTERLEGSCHEIBE	FLADSKIVE	SLUITRING	

DIA KIT, HYDRAULIC COUPLER VERT (L218-L230,C232,C238)
DIA KIT, HYDRAULIC COUPLER VERT (L218-L230,C232,C238)
DIA KIT, HYDRAULIC COUPLER VERT (L218-L230,C232,C238)
DIA KIT, HYDRAULIC COUPLER VERT (L218-L230,C232,C238)



DIA KIT, HYDRAULIC COUPLER VERT (L218-L230,C232,C238)
DIA KIT, HYDRAULIC COUPLER VERT (L218-L230,C232,C238)
DIA KIT, HYDRAULIC COUPLER VERT (L218-L230,C232,C238)
DIA KIT, HYDRAULIC COUPLER VERT (L218-L230,C232,C238)

R	N	P.N.	MOD	Q	Denominação Description	Description Bezeichnung	Denominacion Beskrivelse	Descrizione Beschrijving	L.C.
33		87442337		2	CILINDRO, Hydraulic Coupler				
						CYLINDER	CILINDRO	CILINDRO	2480
					VERIN	ZYLINDER	CYLINDER	CYLINDER	
34		294741A1		1	VÁLVULA CHECAGEM	CHECK VALVE	VÁLVULA DE COMPROB.	VALVOLA DI RITEGNO	P394
					CLAPET ANTI-RETOUR	RÜCKSCHLAGVENTIL	KONTRAVENTIL	TERUGSLAGKLEP	
35		84339847		1	ESTRIBO, Hydraulic Coupler, Gray				
						STEP	PELDAÑO	GRADINO	116M
					MARCHE-PIED	SCHRITT	TRINPLADE	TREDE	
36		604896		2	BRAÇADEIRA	CLAMP	ABRAZADERA	MORSETTO	120M
					COLLIER	KLEMME	SPÆNDEBÅND	KLEM	
37		9804276		2	PORCA, M6 x 1, Flg, Cl 8	NUT	TUERCA	DADO	010D
					ECROU	MUTTER	MØTRIK	MOER	
38		84281772		1	TUBO HIDRÁULICO, Assembly, Coupler				
						HYD. TUBE	TUBO HIDRÁULICO	TUBO IDRAULICO	190T
					TUYAU HYDRAULIQUE	HYDRAULIKLEITUNG	HYD. RØR	HYDRAULISCHE LEIDIN(	
39		84281774		1	TUBO HIDRÁULICO, Assembly, Coupler				
						HYD. TUBE	TUBO HIDRÁULICO	TUBO IDRAULICO	190T
					TUYAU HYDRAULIQUE	HYDRAULIKLEITUNG	HYD. RØR	HYDRAULISCHE LEIDIN(	
40		84292314		1	MANGUEIRA, Hydraulic Coupler, Drain				
						HOSE	TUBO	TUBO FLESSIBILE	030M
					FLEXIBLE	SCHLAUCH	SLANGE	SLANG	
41		86511840		2	PARAFUSO, Hex Flg, M6 x 40, 8.8				
						BOLT	PERNO	BULLONE	140B
					VIS	SCHRAUBE	BOLT	BOUT	
42		87313351		1	GRAMPO, 25.4mm, J	CLIP	ABRAZADERA	FERMO	045F
					COLLIER	KLAMMER	KLIPS	KLEM	
43		87752074		1	PARAFUSO, Tapping, M8 X 16				
						SCREW	TORNILLO	VITE	040V
					VIS	SCHRAUBE	SKRUE	SCHROEF	
44		D120614		2	BRACADEIRA	CLAMP	COLLAR	MORSETTO	1640
					COLLIER	SCHELLE	CLAMP	CLAMP	
45		84201227		1	MANGUEIRA, Hydraulic Coupler, Drain				
						HOSE	TUBO	TUBO FLESSIBILE	030M
					FLEXIBLE	SCHLAUCH	SLANGE	SLANG	
46		76350		2	CONECTOR HIDRÁUL, 9/16"-18, 37º x 9/16"-18, O-Ring				
						HYD CONNECTOR	CONECTOR HIDRÁULIC(	CONNETTORE IDRAULIC	020R
					CONNECTEUR HYDRAU	HYDR STECKVERBINDE	HYDRAULIKSTIK	HYDRAULISCHE AANSLI(	
47		84251346		1	INTERRUPTOR, Rocker, Hydraulic Coupler				
						SWITCH	INTERRUPTOR	INTERRUTTORE	075I
					CONTACTEUR	SCHALTER	KONTAKT	SCHAKELAAR	
48		84256406		1	VÁLVULA HIDRÁULICA, Coupler				
						HYDRAULIC VALVE	VÁLVULA HIDRÁULICA	DISTRIBUTORE IDRAULI	010V
					SOUPAPE HYDRAULIQU	HYDRAULIKVENTIL	HYDRAULIKVENTIL	HYDRAULISCHE KLEP	
49		84259682		1	CONEXÃO EM T, Assembly, Option				
						UNION TEE	RACOR EN T	RACCORDO A T	A134
					RACCORD EN T	T-VERSCHRAUBUNG	T-FORSKRUNING	KOPPEL-T-STUK	
50		84291016		1	TUBO RÍGIDO, Assembly, Hydraulic Coupler				
						RIGID TUBE	TUBO RÍGIDO	TUBO RIGIDO	193T
					TUYAU RIGIDE	ROHR	STIFT RØR	VASTE LEIDING	

DIA KIT, HYDRAULIC COUPLER VERT (L218-L230,C232,C238)
DIA KIT, HYDRAULIC COUPLER VERT (L218-L230,C232,C238)
DIA KIT, HYDRAULIC COUPLER VERT (L218-L230,C232,C238)
DIA KIT, HYDRAULIC COUPLER VERT (L218-L230,C232,C238)



DIA KIT, HYDRAULIC COUPLER VERT (L218-L230,C232,C238)
DIA KIT, HYDRAULIC COUPLER VERT (L218-L230,C232,C238)
DIA KIT, HYDRAULIC COUPLER VERT (L218-L230,C232,C238)
DIA KIT, HYDRAULIC COUPLER VERT (L218-L230,C232,C238)

R	N	P.N.	MOD	Q	Denominação Description	Description Bezeichnung	Denominacion Beskrivelse	Descrizione Beschrijving	L.C.
51		86511481		2	PARAFUSO, Hex Flg, M8 x 50, 8.8				
						BOLT	PERNO	BULLONE	140B
					VIS	SCHRAUBE	BOLT	BOUT	
52		86624011		1	COTOVELO, 90º, 3/4"-16, 37º x 1 1/16"-12, 37º Fem Sw				
						ELBOW	CODO	GOMITO	085G
					COUDE	KNIESTÜCK	VINKELRØR	KNIESTUK	
53		86705988		1	CONEXÃO, 1/2" Hose x 9/16"-18 ORB, Beaded				
						FITTING	ACOPLAMIENTO	RACCORDO	3300
					RACCORD	ARMATUR	FITTING	AANSLUITING	
54		87301276		1	CONECTOR HIDRÁUL, 37FL X ORB 8-6 Elbow				
						HYD CONNECTOR	CONECTOR HIDRÁULIC(	CONNETTORE IDRAULIC	020R
					CONNECTEUR HYDRAU	HYDR STECKVERBINDE	HYDRAULIKSTIK	HYDRAULISCHE AANSLI	
55		87301490		1	BRAÇADEIRA, J, 12.7mm	CLAMP	ABRAZADERA	MORSETTO	120M
					COLLIER	KLEMME	SPÆNDEBÅND	KLEM	
56		87443510		3	BRAÇADEIRA MANGUEIRA, M20				
						HOSE CLAMP	ABRAZADERA DE MANG	FASCETTA STRINGITUB	P729
					COLLIER POUR FLEXIBL	SCHLAUCHSCHELLE	SLANGEKLEMME	SLANGKLEM	
57		87622774		1	CONEXÃO, Hydraulic Tee	FITTING	ACOPLAMIENTO	RACCORDO	3300
					RACCORD	ARMATUR	FITTING	AANSLUITING	
58		229197A1		2	PORCA, Square	NUT	TUERCA	DADO	5780
					ECROU	MUTTER	MØTRIK	MOER	
59		84392556		1	INSTRUÇÃO, Sheet, Hydraulic Coupler VERT				
						INSTRUCTION	INSTRUCCIÓN	ISTRUZIONI	Z571
					INSTRUCTION	ANLEITUNG	INSTRUKTION	INSTRUCTIE	

88.035.13		p1	02/11

DIA KIT, HIGH FLOW AUX - LG VERT (L223-L230,C232,C238)
DIA KIT, HIGH FLOW AUX - LG VERT (L223-L230,C232,C238)
DIA KIT, HIGH FLOW AUX - LG VERT (L223-L230,C232,C238)
DIA KIT, HIGH FLOW AUX - LG VERT (L223-L230,C232,C238)



DIA KIT, HIGH FLOW AUX - LG VERT (L223-L230,C232,C238)
DIA KIT, HIGH FLOW AUX - LG VERT (L223-L230,C232,C238)
DIA KIT, HIGH FLOW AUX - LG VERT (L223-L230,C232,C238)
DIA KIT, HIGH FLOW AUX - LG VERT (L223-L230,C232,C238)

R	N	P.N.	MOD	Q	Denominação Description Bezeichnung	Description Bezeichnung	Denominacion Beskrivelse	Descrizione Beschrijving	L.C.
		84389672			JOGO, DIA Kit, High Flow Aux, LG Vert, Incl. 1-60				
						KIT	JEUGO	KIT	4830
					POCHETTE	PACKUNG	KIT	KIT	
1		**86527**		1	COTOVELO, 90º, 7/8"-14, 37º x 3/4"-16, O-Ring				
						ELBOW	CODO	GOMITO	085G
					COUDE	KNIESTÜCK	VINKELRØR	KNIESTUK	
2		**81827427**		1	CONECTOR HIDRÁUL, Adapter, 3/4-16				
						HYD CONNECTOR	CONECTOR HIDRÁULIC	CONNETTORE IDRAULIC	020R
					CONNECTEUR HYDRAU	HYDR STECKVERBINDE	HYDRAULIKSTIK	HYDRAULISCHE AANSLU	
3		**128819**		1	CONECTOR HIDRÁUL, 3/4"-16, 37º x 7/8"-14, O-Ring				
						HYD CONNECTOR	CONECTOR HIDRÁULIC	CONNETTORE IDRAULIC	020R
					CONNECTEUR HYDRAU	HYDR STECKVERBINDE	HYDRAULIKSTIK	HYDRAULISCHE AANSLU	
4		**286217**		2	COTOVELO, 90º, 1 5/16"-12, 37º x 1 1/16"-12, O-Ring				
						ELBOW	CODO	GOMITO	085G
					COUDE	KNIESTÜCK	VINKELRØR	KNIESTUK	
5		**16044321**		1	PARAFUSO, Hex, M8 x 55, 8.8				
						SCREW	TORNILLO	VITE	040V
					VIS	SCHRAUBE	SKRUE	SCHROEF	
6		**84377527**		1	TUBO, Assembly, Aux, High Flow LH Tower				
						TUBE	TUBO	TUBO	195T
					TUBE	ROHR	RØR	LEIDING	
7		**84377529**		1	TUBO, Assembly, Aux, High Flow LH Tower				
						TUBE	TUBO	TUBO	195T
					TUBE	ROHR	RØR	LEIDING	
8		**84186155**		1	TUBO, Assembly, High Flow Valve to LDR Valve				
						TUBE	TUBO	TUBO	195T
					TUBE	ROHR	RØR	LEIDING	
9		**84251427**		1	INTERRUPTOR, Rocker, High Flow				
						SWITCH	INTERRUPTOR	INTERRUTTORE	075I
					CONTACTEUR	SCHALTER	KONTAKT	SCHAKELAAR	
10		**84256405**		1	VÁLVULA HIDRÁULICA, High Flow Combiner				
						HYDRAULIC VALVE	VÁLVULA HIDRÁULICA	DISTRIBUTORE IDRAULI	010V
					SOUPAPE HYDRAULIQU	HYDRAULIKVENTIL	HYDRAULIKVENTIL	HYDRAULISCHE KLEP	
11		**84377512**		1	TUBO, Assembly, Aux High Flow, LDR Valve to LFT Tower				
						TUBE	TUBO	TUBO	195T
					TUBE	ROHR	RØR	LEIDING	
12		**84377514**		1	TUBO, Assembly, Aux High Flow, LDR Valve to LFT Tower				
						TUBE	TUBO	TUBO	195T
					TUBE	ROHR	RØR	LEIDING	
13		**84323488**		2	PARAFUSO, M8 X 70	SELF-TAP SCREW	TORNILLO AUTORROSC	VITE AUTOFILETTANTE	062V
					VIS AUTOTARAUDEUSE	SELBSTSCHN SCHRAUE	SELVLÅSENDE BOLT	ZELFTAPPENDE SCHRO	
14		**86511843**		2	PARAFUSO, Hex Flg, M8 x 60, 8.8				
						BOLT	PERNO	BULLONE	140B
					VIS	SCHRAUBE	BOLT	BOUT	
15		**86512926**		1	CONECTOR HIDRÁUL, 1 5/16"-12, 37º x 1 1/16"-12, O-Ring				
						HYD CONNECTOR	CONECTOR HIDRÁULIC	CONNETTORE IDRAULIC	020R
					CONNECTEUR HYDRAU	HYDR STECKVERBINDE	HYDRAULIKSTIK	HYDRAULISCHE AANSLU	
16		**87016586**		2	PORCA, M8, U	NUT	TUERCA	DADO	010D
					ECROU	MUTTER	MØTRIK	MOER	

DIA KIT, HIGH FLOW AUX - LG VERT (L223-L230,C232,C238)
DIA KIT, HIGH FLOW AUX - LG VERT (L223-L230,C232,C238)
DIA KIT, HIGH FLOW AUX - LG VERT (L223-L230,C232,C238)
DIA KIT, HIGH FLOW AUX - LG VERT (L223-L230,C232,C238)



DIA KIT, HIGH FLOW AUX - LG VERT (L223-L230,C232,C238)
DIA KIT, HIGH FLOW AUX - LG VERT (L223-L230,C232,C238)
DIA KIT, HIGH FLOW AUX - LG VERT (L223-L230,C232,C238)
DIA KIT, HIGH FLOW AUX - LG VERT (L223-L230,C232,C238)

R	N	P.N.	MOD	Q	Denominação Description	Description Bezeichnung	Denominacion Beskrivelse	Descrizione Beschrijving	L.C.
17		87655042		1	ARRUELA ESPECIAL, M8, 8.80 X 17.5 X 2.2 HTS				
						SPECIAL WASHER	ARANDELA ESPECIAL	RONDELLA SPECIALE	Z333
					RONDELLE SPECIALE	SPEZIALUNTERLEGSCH	SPECIALSKIVE	SPECIALE RING	
18		1546028C1		2	BRACADEIRA	CLAMP	COLLAR	MORSETTO	1640
					COLLIER	SCHELLE	CLAMP	CLAMP	
19		225529A1		1	CONEXÃO, Clamp, Tube	FITTING	ACOPLAMIENTO	RACCORDO	3300
					RACCORD	ARMATUR	FITTING	AANSLUITING	
20		229197A1		1	PORCA, Square	NUT	TUERCA	DADO	5780
					ECROU	MUTTER	MØTRIK	MOER	
21		257859A1		5	PLACA ESPACADORA, Bar				
						PLATE,SPACER	PLAQUETA	DISTANZ PIASTRA	Z324
					PLAQUETTE	PLAETTCHEN	PLATE,SPACER	PLATE,SPACER	
22		164910		1	COTOVELO, 90º, 7/8"-14, 37º x 7/8"-14, O-Ring				
						ELBOW	CODO	GOMITO	085G
					COUDE	KNIESTÜCK	VINKELRØR	KNIESTUK	
23		322896		1	CONECTOR HIDRÁUL, 1 1/16"-12, 37º x 1 1/16"-12, O-Ring				
						HYD CONNECTOR	CONECTOR HIDRÁULIC	CONNETTORE IDRAULIC	020R
					CONNECTEUR HYDRAU	HYDR STECKVERBINDE	HYDRAULIKSTIK	HYDRAULISCHE AANSLI	
24		84256249		1	BOMBA, 34.1/18.3cc, Gear	PUMP	BOMBA	POMPA	6570
					POMPE	PUMPE	PUMPE	POMP	
25		84291250		1	CONJ. MANGUEIRA, Valve Supply				
						HOSE ASSY.	CONJUNTO DE TUBOS	COMPLESS. TUBO FLES	P457
					ENSEMBLE DE FLEXIBLE	SCHLAUCHBAUGRUPPE	SLANGEENHED	SLANGEENHEID	
26		84383953		1	CONJ. MANGUEIRA, Valve Supply				
						HOSE ASSY.	CONJUNTO DE TUBOS	COMPLESS. TUBO FLES	P457
					ENSEMBLE DE FLEXIBLE	SCHLAUCHBAUGRUPPE	SLANGEENHED	SLANGEENHEID	
27		84329004		1	MANGUEIRA, Assembly, High Flow, Supply				
						HOSE	TUBO	TUBO FLESSIBILE	030M
					FLEXIBLE	SCHLAUCH	SLANGE	SLANG	
28		87030530		4	PARAFUSO, 3/8 X 1.75	SCREW	TORNILLO	VITE	040V
					VIS	SCHRAUBE	SKRUE	SCHROEF	
29		84306875		1	ESPAÇADOR	SPACER	SEPARADOR	DISTANZIALE	075D
					ENTRETOISE	DISTANZSTÜCK	AFSTANDSSTYKKE	AFSTANDSSTUK	
30		84306937		1	PLACA DE COBERTURA, Hydraulic, Tan				
						COVER PLATE	PLACA DE CUBIERTA	PIASTRA DI COPERTUR/	110P
					COUVERCLE	ABDECKPLATTE	DÆKPLADE	AFSCHERMPLAAT	
31		84306939		1	COBERTURA, Hydraulic, Gray				
						COVER	COBERTURA	COPERTURA	271C
					COUVERTURE	ABDECKUNG	AFDAEKNING	AFSCHERMING	
32		9804261		1	PARAFUSO, Hex Flg, M10 x 25, 8.8				
						BOLT	PERNO	BULLONE	140B
					VIS	SCHRAUBE	BOLT	BOUT	
33		84254045		2	BRAÇADEIRA, Tube	CLAMP	ABRAZADERA	MORSETTO	120M
					COLLIER	KLEMME	SPÆNDEBÅND	KLEM	
34		84255994		2	CONEXÃO, Tee Adj -12 ORB				
						FITTING	ACOPLAMIENTO	RACCORDO	3300
					RACCORD	ARMATUR	FITTING	AANSLUITING	

DIA KIT, HIGH FLOW AUX - LG VERT (L223-L230,C232,C238)
DIA KIT, HIGH FLOW AUX - LG VERT (L223-L230,C232,C238)
DIA KIT, HIGH FLOW AUX - LG VERT (L223-L230,C232,C238)
DIA KIT, HIGH FLOW AUX - LG VERT (L223-L230,C232,C238)



DIA KIT, HIGH FLOW AUX - LG VERT (L223-L230,C232,C238)
DIA KIT, HIGH FLOW AUX - LG VERT (L223-L230,C232,C238)
DIA KIT, HIGH FLOW AUX - LG VERT (L223-L230,C232,C238)
DIA KIT, HIGH FLOW AUX - LG VERT (L223-L230,C232,C238)

R	N	P.N.	MOD	Q	Denominação Description	Description Bezeichnung	Denominacion Beskrivelse	Descrizione Beschrijving	L.C.
35		84257182		1	CONEXÃO, Female, Quick Coupler				
						FITTING	ACOPLAMIENTO	RACCORDO	3300
					RACCORD	ARMATUR	FITTING	AANSLUITING	
36		84257183		1	CONEXÃO, Male, Quick Coupler				
						FITTING	ACOPLAMIENTO	RACCORDO	3300
					RACCORD	ARMATUR	FITTING	AANSLUITING	
37		84259689		1	VÁLVULA, Quick Attach, High Flow				
						VALVE	VÁLVULA	VALVOLA	9620
					SOUPAPE	VENTIL	VENTIL	KLEP	
38		84281606		1	TUBO FLEXÍVEL, Assembly, High Flow				
						FLEXIBLE HOSE	TUBO FLEXIBLE	TUBO FLESSIBILE	192T
					TUYAU FLEXIBLE	BIEGSAMER SCHLAUCH	FLEKSIBEL SLANGE	FLEXIBELE SLANG	
39		84281607		1	TUBO FLEXÍVEL, Assembly, High Flow				
						FLEXIBLE HOSE	TUBO FLEXIBLE	TUBO FLESSIBILE	192T
					TUYAU FLEXIBLE	BIEGSAMER SCHLAUCH	FLEKSIBEL SLANGE	FLEXIBELE SLANG	
40		84281611		1	TUBO FLEXÍVEL, Assembly, Case Drain				
						FLEXIBLE HOSE	TUBO FLEXIBLE	TUBO FLESSIBILE	192T
					TUYAU FLEXIBLE	BIEGSAMER SCHLAUCH	FLEKSIBEL SLANGE	FLEXIBELE SLANG	
41		84282424		1	BRAÇADEIRA MANGUEIRA, -12 Hose Double				
						HOSE CLAMP	ABRAZADERA DE MANG	FASCETTA STRINGITUB	P729
					COLLIER POUR FLEXIBL	SCHLAUCHSCHELLE	SLANGEKLEMME	SLANGKLEM	
42		84331287		2	PARAFUSO, 3/8-16 X 3	SCREW	TORNILLO	VITE	040V
					VIS	SCHRAUBE	SKRUE	SCHROEF	
43		84297610		1	TUBO RÍGIDO, Assembly, High Flow				
						RIGID TUBE	TUBO RÍGIDO	TUBO RIGIDO	193T
					TUYAU RIGIDE	ROHR	STIFT RØR	VASTE LEIDING	
44		84297613		1	TUBO RÍGIDO, Assembly, High Flow				
						RIGID TUBE	TUBO RÍGIDO	TUBO RIGIDO	193T
					TUYAU RIGIDE	ROHR	STIFT RØR	VASTE LEIDING	
45		84297619		1	TUBO RÍGIDO, Assembly, Case Drain				
						RIGID TUBE	TUBO RÍGIDO	TUBO RIGIDO	193T
					TUYAU RIGIDE	ROHR	STIFT RØR	VASTE LEIDING	
46		84299413		1	BRAÇADEIRA MANGUEIRA, W -6 Hose Single				
						HOSE CLAMP	ABRAZADERA DE MANG	FASCETTA STRINGITUB	P729
					COLLIER POUR FLEXIBL	SCHLAUCHSCHELLE	SLANGEKLEMME	SLANGKLEM	
47		86509028		1	CONECTOR HIDRÁUL, 3/4"-16, 37° x 9/16"-18, O-Ring				
						HYD CONNECTOR	CONECTOR HIDRÁULIC	CONNETTORE IDRAULIC	020R
					CONNECTEUR HYDRAU	HYDR STECKVERBINDE	HYDRAULIKSTIK	HYDRAULISCHE AANSLI	
48		86512926		2	CONECTOR HIDRÁUL, 1 5/16"-12, 37° x 1 1/16"-12, O-Ring				
						HYD CONNECTOR	CONECTOR HIDRÁULIC	CONNETTORE IDRAULIC	020R
					CONNECTEUR HYDRAU	HYDR STECKVERBINDE	HYDRAULIKSTIK	HYDRAULISCHE AANSLI	
49		87022737		2	ESPAÇADOR	SPACER	ESPACIADOR	DISTANZIALE	8090
					ENTRETOISE	DISTANZSTÜCK	AFSTANDSSTYKKE	AFSTANDSRING	
50		84362111		1	PROTEÇÃO, Hose	GUARD	DEFENSA	PROTEZIONE	070R
					PROTECTION	SCHUTZABDECKUNG	BESKYTTELSESSKÆRM	AFSCHERMING	
51		L18331		1	PRENDEDOR DE CABOS, Nylon Tie, 15.5in				
						CABLE STRAP	BANDA DE CABLE	FASCETTA PER CAVO	P716
					BRIDE DE CABLE	KABELBINDER	KABELSTROP	BUNDELBAND	

DIA KIT, HIGH FLOW AUX - LG VERT (L223-L230,C232,C238)
DIA KIT, HIGH FLOW AUX - LG VERT (L223-L230,C232,C238)
DIA KIT, HIGH FLOW AUX - LG VERT (L223-L230,C232,C238)
DIA KIT, HIGH FLOW AUX - LG VERT (L223-L230,C232,C238)



DIA KIT, HIGH FLOW AUX - LG VERT (L223-L230,C232,C238)
DIA KIT, HIGH FLOW AUX - LG VERT (L223-L230,C232,C238)
DIA KIT, HIGH FLOW AUX - LG VERT (L223-L230,C232,C238)
DIA KIT, HIGH FLOW AUX - LG VERT (L223-L230,C232,C238)

R	N	P.N.	MOD	Q	Denominação Description	Description Bezeichnung	Denominacion Beskrivelse	Descrizione Beschrijving	L.C.
52		**280476**		3	PARAFUSO, Hex Wash Hd, 3/8" x 1"				
						SELF-TAP SCREW	TORNILLO AUTORROSC	VITE AUTOFILETTANTE	062V
					VIS AUTOTARAUDEUSE	SELBSTSCHN SCHRAUE	SELVLÅSENDE BOLT	ZELFTAPPENDE SCHRO	
53		**84254056**		3	BRAÇADEIRA MANGUEIRA, Butterfly Tube				
						HOSE CLAMP	ABRAZADERA DE MANG	FASCETTA STRINGITUB	P729
					COLLIER POUR FLEXIBL	SCHLAUCHSCHELLE	SLANGEKLEMME	SLANGKLEM	
54		**9790547**		1	T, 1 5/16"-12, 37° x 1"-11 1/2, NPTF Br				
						TEE	RACOR EN T	PEZZO A T	9020
					RACCORD EN T	T-STÜCK	T-STYKKE	T-STUK	
55		**84201229**		1	TUBO RÍGIDO, Assembly, Case Drain				
						RIGID TUBE	TUBO RÍGIDO	TUBO RIGIDO	193T
					TUYAU RIGIDE	ROHR	STIFT RØR	VASTE LEIDING	
56		**84278113**		1	CONECTOR REDUTOR	REDUCER FITTING	ACOPLAMIENTO DE REI	RACCORDO RIDUTTORE	P053
					RACCORD REDUCTEUR	REDUZIERSTÜCK	ARMATURREDUKTOR	REDUCEERAANSLUITIN	
57		**86010402**		1	BRAÇADEIRA, 1/2", Insul, 3/8" Bolt				
						CLAMP	ABRAZADERA	MORSETTO	120M
					COLLIER	KLEMME	SPÆNDEBÅND	KLEM	
58		**86589143**		1	ESPAÇADOR	SPACER	SEPARADOR	DISTANZIALE	075D
					ENTRETOISE	DISTANZSTÜCK	AFSTANDSSTYKKE	AFSTANDSSTUK	
59		**87752075**		1	PARAFUSO, Tapping, M8 X 25				
						SCREW	TORNILLO	VITE	040V
					VIS	SCHRAUBE	SKRUE	SCHROEF	
60		**{84389674}**		1	Sheet, High Flow Aux, LG Vert				

DIA KIT, 2ND FRONT HYD AUX - LG VERT (L223-L230,C232,C238)
DIA KIT, 2ND FRONT HYD AUX - LG VERT (L223-L230,C232,C238)
DIA KIT, 2ND FRONT HYD AUX - LG VERT (L223-L230,C232,C238)
DIA KIT, 2ND FRONT HYD AUX - LG VERT (L223-L230,C232,C238)



DIA KIT, 2ND FRONT HYD AUX - LG VERT (L223-L230,C232,C238)
DIA KIT, 2ND FRONT HYD AUX - LG VERT (L223-L230,C232,C238)
DIA KIT, 2ND FRONT HYD AUX - LG VERT (L223-L230,C232,C238)
DIA KIT, 2ND FRONT HYD AUX - LG VERT (L223-L230,C232,C238)

R	N	P.N.	MOD	Q	Denominação Description	Description Bezeichnung	Denominacion Beskrivelse	Descrizione Beschrijving	L.C.
		84402926			JOGO, DIA Kit, 2nd Front Hydraulic Aux - LG Vert, Incl. 1-42				
						KIT	JEUGO	KIT	4830
					POCHETTE	PACKUNG	KIT	KIT	
1		**84569**		1	COTOVELO, 90º, 1 1/16"-12, 37º x 1 1/16"-12, LG				
						ELBOW	CODO	GOMITO	085G
					COUDE	KNIESTÜCK	VINKELRØR	KNIESTUK	
2		**280476**		4	PARAFUSO, Hex Wash Hd, 3/8" x 1"				
						SELF-TAP SCREW	TORNILLO AUTORROSC	VITE AUTOFILETTANTE	062V
					VIS AUTOTARAUDEUSE	SELBSTSCHN SCHRAUE	SELVLÅSENDE BOLT	ZELFTAPPENDE SCHRO	
3		**322894**		1	COTOVELO, 90º, 1 1/16"-12, 37º x 1 1/16"-12, O-Ring				
						ELBOW	CODO	GOMITO	085G
					COUDE	KNIESTÜCK	VINKELRØR	KNIESTUK	
4		**577927**		1	BRAÇADEIRA	CLAMP	ABRAZADERA	MORSETTO	120M
					COLLIER	KLEMME	SPÆNDEBÅND	KLEM	
5		**595460**		2	CONTRA PORCA, Blkhd, 7/8"-14				
						LOCK NUT	TUERCA DE BLOQUEO	DADO DI BLOCCAGGIO	P263
					CONTRE-ECROU	SICHERUNGSMUTTER	LÅSEMØTRIK	BORGMOER	
6		**9671714**		1	PARAFUSO, Hex Flg, M8 x 25, 8.8				
						BOLT	PERNO	BULLONE	140B
					VIS	SCHRAUBE	BOLT	BOUT	
7		**9804263**		1	PARAFUSO, Hex Flg, M10 x 40, 8.8				
						BOLT	PERNO	BULLONE	140B
					VIS	SCHRAUBE	BOLT	BOUT	
8		**9804277**		2	PORCA, M8 x 1.25, Flg, Cl 8				
						NUT	TUERCA	DADO	010D
					ECROU	MUTTER	MØTRIK	MOER	
9		**81827427**		2	CONECTOR HIDRÁUL, 3/4-16				
						HYD CONNECTOR	CONECTOR HIDRÁULIC	CONNETTORE IDRAULIC	020R
					CONNECTEUR HYDRAU	HYDR STECKVERBINDE	HYDRAULIKSTIK	HYDRAULISCHE AANSLI	
10		**84252828**		3	BRAÇADEIRA, Butterfly Tube				
						CLAMP	ABRAZADERA	MORSETTO	120M
					COLLIER	KLEMME	SPÆNDEBÅND	KLEM	
11		**84292198**		1	VÁLVULA, EH Secondary Aux				
						VALVE	VÁLVULA	VALVOLA	9620
					SOUPAPE	VENTIL	VENTIL	KLEP	
12		**84299740**		1	TUBO RÍGIDO, 2nd Aux, Control				
						RIGID TUBE	TUBO RÍGIDO	TUBO RIGIDO	193T
					TUYAU RIGIDE	ROHR	STIFT RØR	VASTE LEIDING	
13		**84321362**		1	CONJ. MANGUEIRA, 2nd Aux, Supply				
						HOSE ASSY.	CONJUNTO DE TUBOS	COMPLESS. TUBO FLES	P457
					ENSEMBLE DE FLEXIBLE	SCHLAUCHBAUGRUPPE	SLANGEENHED	SLANGEENHEID	
14		**84322489**		1	SUPORTE, 2nd Aux, Valve	SUPPORT	SOPORTE	SUPPORTO	300S
					SUPPORT	STÜTZE	BESLAG	STEUN	
15		**84330199**		1	TUBO RÍGIDO, 2nd Aux, Arm				
						RIGID TUBE	TUBO RÍGIDO	TUBO RIGIDO	193T
					TUYAU RIGIDE	ROHR	STIFT RØR	VASTE LEIDING	
16		**84330201**		1	TUBO RÍGIDO, 2nd Aux, Arm				
						RIGID TUBE	TUBO RÍGIDO	TUBO RIGIDO	193T
					TUYAU RIGIDE	ROHR	STIFT RØR	VASTE LEIDING	

DIA KIT, 2ND FRONT HYD AUX - LG VERT (L223-L230,C232,C238)
DIA KIT, 2ND FRONT HYD AUX - LG VERT (L223-L230,C232,C238)
DIA KIT, 2ND FRONT HYD AUX - LG VERT (L223-L230,C232,C238)
DIA KIT, 2ND FRONT HYD AUX - LG VERT (L223-L230,C232,C238)



DIA KIT, 2ND FRONT HYD AUX - LG VERT (L223-L230,C232,C238)
DIA KIT, 2ND FRONT HYD AUX - LG VERT (L223-L230,C232,C238)
DIA KIT, 2ND FRONT HYD AUX - LG VERT (L223-L230,C232,C238)
DIA KIT, 2ND FRONT HYD AUX - LG VERT (L223-L230,C232,C238)

R	N	P.N.	MOD	Q	Denominação Description	Description Bezeichnung	Denominacion Beskrivelse	Descrizione Beschrijving	L.C.
17		84330252		1	CONJ. MANGUEIRA, 2nd Aux, A				
						HOSE ASSY.	CONJUNTO DE TUBOS	COMPLESS. TUBO FLES	P457
					ENSEMBLE DE FLEXIBLE	SCHLAUCHBAUGRUPPE	SLANGEENHED	SLANGEENHEID	
18		84330253		1	CONJ. MANGUEIRA, 2nd Aux, B				
						HOSE ASSY.	CONJUNTO DE TUBOS	COMPLESS. TUBO FLES	P457
					ENSEMBLE DE FLEXIBLE	SCHLAUCHBAUGRUPPE	SLANGEENHED	SLANGEENHEID	
19		84332288		1	TUBO RÍGIDO, 2nd Aux, Valve				
						RIGID TUBE	TUBO RÍGIDO	TUBO RIGIDO	193T
					TUYAU RIGIDE	ROHR	STIFT RØR	VASTE LEIDING	
20		84362109		1	PROTEÇÃO, Hose	GUARD	DEFENSA	PROTEZIONE	070R
					PROTECTION	SCHUTZABDECKUNG	BESKYTTELSESSKÆRM	AFSCHERMING	
21		84392527		1	INTERRUPTOR, Rocker, Aux Elec				
						SWITCH	INTERRUPTOR	INTERRUTTORE	075I
					CONTACTEUR	SCHALTER	KONTAKT	SCHAKELAAR	
22		84471600		1	INSTRUÇÃO, Installation, Vert				
						INSTRUCTION	INSTRUCCIÓN	ISTRUZIONI	Z571
					INSTRUCTION	ANLEITUNG	INSTRUKTION	INSTRUCTIE	
23		84474235		1	SUPORTE, Aux Coupler	BRACKET	SOPORTE	STAFFA	225S
					SUPPORT	HALTERUNG	BESLAG	STEUN	
24		84474270		1	TUBO HIDRÁULICO, 2nd Aux A				
						HYD. TUBE	TUBO HIDRÁULICO	TUBO IDRAULICO	190T
					TUYAU HYDRAULIQUE	HYDRAULIKLEITUNG	HYD. RØR	HYDRAULISCHE LEIDIN(	
25		84474272		1	TUBO HIDRÁULICO, 2nd Aux A				
						HYD. TUBE	TUBO HIDRÁULICO	TUBO IDRAULICO	190T
					TUYAU HYDRAULIQUE	HYDRAULIKLEITUNG	HYD. RØR	HYDRAULISCHE LEIDIN(	
26		84474383		1	PROTETOR DE MANGUEIRA, Hose				
						HOSE PROTECTION	PROTECCIÓN DE TUBO	PROTEZ. TUBO FLESSIE	P827
					PROTECTION DE FLEXIE	SCHLAUCHSCHUTZ	SLANGEBESKYTTELSE	SLANGBESCHERMING	
27		84474384		2	CONJ. MANGUEIRA, 2nd Aux				
						HOSE ASSY.	CONJUNTO DE TUBOS	COMPLESS. TUBO FLES	P457
					ENSEMBLE DE FLEXIBLE	SCHLAUCHBAUGRUPPE	SLANGEENHED	SLANGEENHEID	
29		86505868		1	PORCA, M8, Flg Ser	NUT	TUERCA	DADO	010D
					ECROU	MUTTER	MØTRIK	MOER	
28		84475145		1	CONJ. MANGUEIRA, 2nd Aux, Return				
						HOSE ASSY.	CONJUNTO DE TUBOS	COMPLESS. TUBO FLES	P457
					ENSEMBLE DE FLEXIBLE	SCHLAUCHBAUGRUPPE	SLANGEENHED	SLANGEENHEID	
30		86589143		1	ESPAÇADOR	SPACER	SEPARADOR	DISTANZIALE	075D
					ENTRETOISE	DISTANZSTÜCK	AFSTANDSSTYKKE	AFSTANDSSTUK	
31		86636815		2	PARAFUSO, Short NK, M8 x 25, Cl8.8, Full Thd				
						CARRIAGE BOLT	PERNO ALOMADO	BULLONE A TESTA TON	P123
					VIS A TETE BOMBEE	SCHLOSSSCHRAUBE	BRÆDDEBOLT	SLOTBOUT	
32		86637976		2	BRAÇADEIRA, 3/4", Insul, 5/16" Bolt				
						CLAMP	ABRAZADERA	MORSETTO	120M
					COLLIER	KLEMME	SPÆNDEBÅND	KLEM	
33		87016586		2	PORCA, M8, U	NUT	TUERCA	DADO	010D
					ECROU	MUTTER	MØTRIK	MOER	
34		87023483		1	PLACA	PLATE	PLACA	PIASTRA	105P
					PLAQUE	PLATTE	PLADE	PLAAT	

DIA KIT, 2ND FRONT HYD AUX - LG VERT (L223-L230,C232,C238)
DIA KIT, 2ND FRONT HYD AUX - LG VERT (L223-L230,C232,C238)
DIA KIT, 2ND FRONT HYD AUX - LG VERT (L223-L230,C232,C238)
DIA KIT, 2ND FRONT HYD AUX - LG VERT (L223-L230,C232,C238)



DIA KIT, 2ND FRONT HYD AUX - LG VERT (L223-L230,C232,C238)
DIA KIT, 2ND FRONT HYD AUX - LG VERT (L223-L230,C232,C238)
DIA KIT, 2ND FRONT HYD AUX - LG VERT (L223-L230,C232,C238)
DIA KIT, 2ND FRONT HYD AUX - LG VERT (L223-L230,C232,C238)

R	N	P.N.	MOD	Q	Denominação Description	Description Bezeichnung	Denominacion Beskrivelse	Descrizione Beschrijving	L.C.
35		87303203		1	ESPAÇADOR ENTRETOISE	SPACER DISTANZSTÜCK	SEPARADOR AFSTANDSSTYKKE	DISTANZIALE AFSTANDSSTUK	075D
36		87329785		1	COTOVELO, 90º, 3/4"-16, 37º x 1 1/16"-12, O-Ring COUDE	ELBOW KNIESTÜCK	CODO VINKELRØR	GOMITO KNIESTUK	085G
37		87344205		2	PARAFUSO VIS	BOLT SCHRAUBE	PERNO BOLT	BULLONE BOUT	140B
39		87741499		1	ENGATE RÁPIDO FÊMEA ACCOUPLEMENT RAPID	QUICK FEMALE COUPLI SCHNELLKUPPLUNGSM	ACOPL. RÁPIDO HEMBR KOBLINGSSKIVE	ATTACCO RAPIDO FEMI SNELKOPPELINGSBUS	540A
38		87655042		2	ARRUELA ESPECIAL, M8 RONDELLE SPECIALE	SPECIAL WASHER SPEZIALUNTERLEGSCH	ARANDELA ESPECIAL SPECIALSKIVE	RONDELLA SPECIALE SPECIALE RING	Z333
40		87741500		1	ENGATE RÁPIDO MACHO ACCOUPLEMENT RAP. M	QUICK MALE COUPLING SCHNELLKUPPLUNGSS	ACOPLAMIENTO RÁPIDO LYNKOBLING	ATTACCO RAPIDO MAS SNELKOPPELINGSPEN	115A
41		87752075		1	PARAFUSO, M8 X 25 VIS	SCREW SCHRAUBE	TORNILLO SKRUE	VITE SCHROEF	040V
42		L18331		1	PRENDEDOR DE CABOS, Nylon Tie, 15.5 Inch BRIDE DE CABLE	CABLE STRAP KABELBINDER	BANDA DE CABLE KABELSTROP	FASCETTA PER CAVO BUNDELBAND	P716

DIA KIT, LG FRM FOOT CONTROLS, MANUAL (L223-L230)
DIA KIT, LG FRM FOOT CONTROLS, MANUAL (L223-L230)
DIA KIT, LG FRM FOOT CONTROLS, MANUAL (L223-L230)
DIA KIT, LG FRM FOOT CONTROLS, MANUAL (L223-L230)



DIA KIT, LG FRM FOOT CONTROLS, MANUAL (L223-L230)
DIA KIT, LG FRM FOOT CONTROLS, MANUAL (L223-L230)
DIA KIT, LG FRM FOOT CONTROLS, MANUAL (L223-L230)
DIA KIT, LG FRM FOOT CONTROLS, MANUAL (L223-L230)

R	N	P.N.	MOD	Q	Denominação Description Bezeichnung	Description Denominacion Beskrivelse	Descrizione Beschrijving	L.C.
		84423362			KIT DE SERVIÇO, DIA Kit, Large Frame, Foot Controls, Incl. 1-38			
					SERVICE KIT	KIT DE SERVICIO	KIT DI MANUTENZIONE	021K
					KIT D'ENTRETIEN	SERVICE-SATZ	SERVICESÆT	SERVICEKIT
1		**84425014**		1	INSTRUÇÃO, Instruction, Installation, Foot Controls			
					INSTRUCTION	INSTRUCCIÓN	ISTRUZIONI	Z571
					INSTRUCTION	ANLEITUNG	INSTRUKTION	INSTRUCTIE
2		**84201059**		1	PLACA, Pedal	PLATE	PLACA	PIASTRA	105P
					PLAQUE	PLATTE	PLADE	PLAAT
3		**84339380**		2	DEGRAU, Block	RISER	REALCE	MONTANTE	7205
					REHAUSSE	HEBEVORRICHTUNG	STIGRØR	STAANDER
4		**84291859**		2	ROLAMENTO ESFÉRICO, Pillow Block			
					BALL BEARING	RODAMIENTO DE BOLAS	CUSCINETTO A SFERE	343C
					ROULEMENT A BILLES	KUGELLAGER	KUGLELEJE	KOGELLAGER
5		**14305821**		4	PARAFUSO, Hex Soc Hd, M6 x 40, 8.8			
					SCREW	TORNILLO	VITE	040V
					VIS	SCHRAUBE	SKRUE	SCHROEF
6		**84349081**		2	TUBO, Foot Control, Handle, Gray			
					TUBE	TUBO	TUBO	195T
					TUBE	ROHR	RØR	LEIDING
7		**294901A1**		4	MOLA-TRAVA	U-BOLT	HORQUILLA	CAVALLOTTO	P611
					CAVALIER	U-BOLZEN	HAARNAAL	VEERKLEM
8		**9804277**		8	PORCA, M8 x 1.25, Flg, Cl 8			
					NUT	TUERCA	DADO	010D
					ECROU	MUTTER	MØTRIK	MOER
9		**84409570**		2	PLACA, Foot Controls, Boot Base, Gray			
					PLATE	PLACA	PIASTRA	105P
					PLAQUE	PLATTE	PLADE	PLAAT
10		**9827590**		2	CAPA, Soft Cover	BOOT	FUNDA	PARAPOLVERE	330C
					SOUFFLET	MANSCHETTE	MANCHET	HOES
11		**9844042**		2	ANEL	RING	ANILLO	ANELLO	045A
					ANNEAU	RING	RING	RING
12		**86729477**		8	BOTÃO DE IMPULSO	FASTENER	SUJETADOR	DISPOSITIVO DI FISSAG	123B
					ATTACHE	BEFESTIGUNGSELEMEN	LUKKER	BEVESTIGING
13		**84317959**		1	HASTE, Valve Lift	ROD	VARILLA	ASTA	090A
					TIGE	STANGE	STANG	STANG
14		**84317960**		1	HASTE, Valve Tip1	ROD	VARILLA	ASTA	090A
					TIGE	STANGE	STANG	STANG
15		**84359579**		1	MOLA, Assembly, FC Boom	SPRING	RESORTE	MOLLA	100M
					RESSORT	FEDER	FJEDER	VEER
16		**84359580**		1	MOLA, Assembly, FC Bucket			
					SPRING	RESORTE	MOLLA	100M
					RESSORT	FEDER	FJEDER	VEER
17		**84262592**		1	EMPUNHADURA, Throttle to Governor, Small Frame			
					HANDLE GRIP	PERILLA	IMPUGNATURA	025I
					POIGNEE DE MAINTIEN	HANDGRIFF	HÅNDGREB	HANDGREEP
18		**84355747**		1	CAPA, Foot Controls	BOOT	FUNDA	PARAPOLVERE	330C
					SOUFFLET	MANSCHETTE	MANCHET	HOES

DIA KIT, LG FRM FOOT CONTROLS, MANUAL (L223-L230)
DIA KIT, LG FRM FOOT CONTROLS, MANUAL (L223-L230)
DIA KIT, LG FRM FOOT CONTROLS, MANUAL (L223-L230)
DIA KIT, LG FRM FOOT CONTROLS, MANUAL (L223-L230)



DIA KIT, LG FRM FOOT CONTROLS, MANUAL (L223-L230)
DIA KIT, LG FRM FOOT CONTROLS, MANUAL (L223-L230)
DIA KIT, LG FRM FOOT CONTROLS, MANUAL (L223-L230)
DIA KIT, LG FRM FOOT CONTROLS, MANUAL (L223-L230)

R	N	P.N.	MOD	Q	Denominação Description	Description Bezeichnung	Denominacion Beskrivelse	Descrizione Beschrijving	L.C.
19		87586485		1	ADESIVO, EU Foot Controls, RH				
						DECAL	CALCOMANÍA	DECALCOMANIA	012D
					AUTOCOLLANT	AUFKLEBER	TRANSFER	STICKER	
20		87586484		1	ADESIVO, EU Foot Controls, LH				
						DECAL	CALCOMANÍA	DECALCOMANIA	012D
					AUTOCOLLANT	AUFKLEBER	TRANSFER	STICKER	
21		84353742		1	ADESIVO, Case, Level 200, RH				
						DECAL	CALCOMANÍA	DECALCOMANIA	012D
					AUTOCOLLANT	AUFKLEBER	TRANSFER	STICKER	
22		84353741		1	ADESIVO, Case, Level 200, LH				
						DECAL	CALCOMANÍA	DECALCOMANIA	012D
					AUTOCOLLANT	AUFKLEBER	TRANSFER	STICKER	
23		84353738		1	ADESIVO, Case, Level 100, RH				
						DECAL	CALCOMANÍA	DECALCOMANIA	012D
					AUTOCOLLANT	AUFKLEBER	TRANSFER	STICKER	
24		84353734		1	ADESIVO, Case, Level 100, LH				
						DECAL	CALCOMANÍA	DECALCOMANIA	012D
					AUTOCOLLANT	AUFKLEBER	TRANSFER	STICKER	
25		D131983		2	PINO, Ring	PIN	PASADOR	PERNO	080P
					BROCHE	PIN	STIFT	PEN	
26		87343114		1	PARAFUSO, 3/8 X 1.00	BOLT	PERNO	BULLONE	140B
					VIS	SCHRAUBE	BOLT	BOUT	
27		84357328		1	PEDAL, RH, Gray	PEDAL	PEDAL	PEDALE	060P
					PEDALE	PEDAL	PEDAL	PEDAAL	
28		84357323		1	PEDAL, LH, Gray	PEDAL	PEDAL	PEDALE	060P
					PEDALE	PEDAL	PEDAL	PEDAAL	
29		84317963		2	HASTE, Foot Control	ROD	VARILLA	ASTA	090A
					TIGE	STANGE	STANG	STANG	
30		84291866		2	COLAR DE FIXAÇÃO, 3/4 Shaft				
						RETAINER COLLAR	COLLAR DE RETENCIÓN	COLLARE DI FISSAGGIO	230S
					COLLIER DE RETENUE	HALTERING	RING, SPÆNDE	BORGKRAAG	
31		84291855		1	PLACA, Foot Control, EAR	PLATE	PLACA	PIASTRA	105P
					PLAQUE	PLATTE	PLADE	PLAAT	
32		84201070		1	EIXO, Pedal	SHAFT	EJE	ALBERO	016A
					ARBRE	WELLE	AKSEL	AS	
33		83980600		2	PORCA, Thin, M10 x 1.25, Cl 04				
						NUT	TUERCA	DADO	010D
					ECROU	MUTTER	MØTRIK	MOER	
34		10090811		2	PORCA, Adjusting, M10 x 1.25 x 90mm				
						NUT	TUERCA	DADO	010D
					ECROU	MUTTER	MØTRIK	MOER	
35		856800		1	PINO RANHURADO, 3/16" x 1 1/2", Type E, Hardened				
						GROOVED PIN	PASADOR RANURADO	PERNO SCANALATO	086P
					GOUPILLE CANNELEE	KERBSTIFT	TAP M/NOT	GEGROEFDE PEN	
36		600083		4	ARRUELA PLANA	WASHER	ARANDELA	RONDELLA	131R
					RONDELLE	UNTERLEGSCHEIBE	FLADSKIVE	SLUITRING	
37		234726		2	PINO DE GARFO, 1/4" x .770"				
						CLEVIS PIN	EJE CON CABEZA	PERNO A TESTA PIANA	P694
					AXE DE CHAPE	GABELBOLZEN	GAFFELBOLT	GAFFELPEN	

DIA KIT, LG FRM FOOT CONTROLS, MANUAL (L223-L230)
DIA KIT, LG FRM FOOT CONTROLS, MANUAL (L223-L230)
DIA KIT, LG FRM FOOT CONTROLS, MANUAL (L223-L230)
DIA KIT, LG FRM FOOT CONTROLS, MANUAL (L223-L230)



DIA KIT, LG FRM FOOT CONTROLS, MANUAL (L223-L230)
DIA KIT, LG FRM FOOT CONTROLS, MANUAL (L223-L230)
DIA KIT, LG FRM FOOT CONTROLS, MANUAL (L223-L230)
DIA KIT, LG FRM FOOT CONTROLS, MANUAL (L223-L230)

R	N	P.N.	MOD	Q	Denominação Description	Description Bezeichnung	Denominacion Beskrivelse	Descrizione Beschrijving	L.C.
38		**228500**		2	BUCHA BAGUE	BUSHING BUCHSE	CASQUILLO BØSNING	BOCCOLA BUS	095B

DIA KIT, LG FRM HAND CONTROLS SERVO (L223-L230)
DIA KIT, LG FRM HAND CONTROLS SERVO (L223-L230)
DIA KIT, LG FRM HAND CONTROLS SERVO (L223-L230)
DIA KIT, LG FRM HAND CONTROLS SERVO (L223-L230)



DIA KIT, LG FRM HAND CONTROLS SERVO (L223-L230)
DIA KIT, LG FRM HAND CONTROLS SERVO (L223-L230)
DIA KIT, LG FRM HAND CONTROLS SERVO (L223-L230)
DIA KIT, LG FRM HAND CONTROLS SERVO (L223-L230)

R	N	P.N.	MOD	Q	Denominação Description Bezeichnung	Description Bezeichnung	Denominacion Beskrivelse	Descrizione Beschrijving	L.C.
		84423365			KIT DE SERVIÇO, DIA Kit, LG FRM, Hand Controls, Servo, Incl. 1-42				
						SERVICE KIT	KIT DE SERVICIO	KIT DI MANUTENZIONE	021K
					KIT D'ENTRETIEN	SERVICE-SATZ	SERVICESÆT	SERVICEKIT	
1		**84425015**		1	INSTRUÇÃO, Instruction, Installation, Hand Controls				
						INSTRUCTION	INSTRUCCIÓN	ISTRUZIONI	Z571
					INSTRUCTION	ANLEITUNG	INSTRUKTION	INSTRUCTIE	
2		**84201060**		1	PLACA PLÁSTICA, Floor, No Pedal				
						PLASTIC PLATE	PLACA DE PLÁSTICO	PIASTRA DI PLASTICA	P778
					PLAQUE EN PLASTIQUE	KUNSTSTOFFPLATTE	PLASTPLADE	KUNSTSTOFPLAAT	
3		**84348730**		2	MANILHA, Channel, Gray	HANDLE	MANECILLA	MANIGLIA	020M
					POIGNEE	GRIFF	HÅNDTAG	HENDEL	
4		**84302564**		2	HASTE, Grip, Pivot	ROD	VARILLA	ASTA	090A
					TIGE	STANGE	STANG	STANG	
5		**84291862**		2	JUNTA ARTICULAÇÃO, Hand Control				
						KNUCKLE JOINT	JUNTA DE PIVOTE	ARTICOLAZIONE A FOR(	Z408
					ROTULE	GELENKVERBINDUNG	FORBINDELSESSPINDEI	GEWRICHTSKOPPELING	
6		**86013179**		4	BUCHA, Bearing	BUSHING	CASQUILLO	BOCCOLA	095B
					BAGUE	BUCHSE	BØSNING	BUS	
7		**84406845**		4	PARAFUSO, M8 X 16	SCREW	TORNILLO	VITE	040V
					VIS	SCHRAUBE	SKRUE	SCHROEF	
8		**86511843**		6	PARAFUSO, Hex Flg, M8 x 60, 8.8				
						BOLT	PERNO	BULLONE	140B
					VIS	SCHRAUBE	BOLT	BOUT	
9		**9804277**		8	PORCA, M8 x 1.25, Flg, Cl 8				
						NUT	TUERCA	DADO	010D
					ECROU	MUTTER	MØTRIK	MOER	
10		**84263144**		2	JUNTA ESFÉRICA, Rod End				
						BALL JOINT	RÓTULA	GIUNTO SFERICO	070G
					JOINT A ROTULE	KUGELGELENK	KUGLELED	KOGELGEWRICHT	
11		**84300731**		2	HASTE ROSCADA, Hand Control, LDR				
						THREADED ROD	VÁSTAGO ROSCADO	ASTA FILETTATA	095A
					TIGE FILETEE	GEWINDESTANGE	GEVINDSTANG	DRAADSTANG	
12		**86511843**		2	PARAFUSO, Hex Flg, M8 x 60, 8.8				
						BOLT	PERNO	BULLONE	140B
					VIS	SCHRAUBE	BOLT	BOUT	
13		**87034513**		2	PORCA-TRAVA, 5/16-24	JAM NUT	CONTRATUERCA	CONTRODADO	A070
					CONTRE-ECROU	KONTERMUTTER	KONTRAMØTRIK	CONTRAMOER	
14		**84201371**		2	CAPA, Control Rod	BOOT	FUNDA	PARAPOLVERE	330C
					SOUFFLET	MANSCHETTE	MANCHET	HOES	
15		**84339565**		1	CAPA, Control, Handle, SQ, RH				
						BOOT	FUNDA	PARAPOLVERE	330C
					SOUFFLET	MANSCHETTE	MANCHET	HOES	
16		**84339566**		1	CAPA, Control, Handle, SQ, LH				
						BOOT	FUNDA	PARAPOLVERE	330C
					SOUFFLET	MANSCHETTE	MANCHET	HOES	
17		**84299261**		2	GARFO, M20 X 20	CLEVIS	MOSQUETÓN	FORCELLA DI ATTACCO	084F
					CHAPE	SCHÄKEL	GAFFELBOLT	GAFFEL	

DIA KIT, LG FRM HAND CONTROLS SERVO (L223-L230)
DIA KIT, LG FRM HAND CONTROLS SERVO (L223-L230)
DIA KIT, LG FRM HAND CONTROLS SERVO (L223-L230)
DIA KIT, LG FRM HAND CONTROLS SERVO (L223-L230)



DIA KIT, LG FRM HAND CONTROLS SERVO (L223-L230)
DIA KIT, LG FRM HAND CONTROLS SERVO (L223-L230)
DIA KIT, LG FRM HAND CONTROLS SERVO (L223-L230)
DIA KIT, LG FRM HAND CONTROLS SERVO (L223-L230)

R	N	P.N.	MOD	Q	Denominação Description	Description Bezeichnung	Denominacion Beskrivelse	Descrizione Beschrijving	L.C.
18		84299262		2	PINO DE GARFO, M10 X 20				
						CLEVIS PIN	EJE CON CABEZA	PERNO A TESTA PIANA	P694
					AXE DE CHAPE	GABELBOLZEN	GAFFELBOLT	GAFFELPEN	
19		84300039		1	HASTE, LDR Valve, Boom	ROD	VARILLA	ASTA	090A
					TIGE	STANGE	STANG	STANG	
20		84300037		1	HASTE, LDR Valve, Bucket	ROD	VARILLA	ASTA	090A
					TIGE	STANGE	STANG	STANG	
21		84221258		2	PORCA FINA, M10 X 1.5	THIN NUT	TUERCA DELGADA	DADO SOTTILE	A076
					ECROU FIN	FLACHMUTTER	MØTRIK, TYND	DUNNE MOER	
22		84359577		1	MOLA, Assembly, HC Boom	SPRING	RESORTE	MOLLA	100M
					RESSORT	FEDER	FJEDER	VEER	
23		84359578		1	MOLA, Assembly, HC Bucket				
						SPRING	RESORTE	MOLLA	100M
					RESSORT	FEDER	FJEDER	VEER	
24		84359445		1	ADESIVO, NH, Hand Control, EH 100/200 Grip				
						DECAL	CALCOMANÍA	DECALCOMANIA	012D
					AUTOCOLLANT	AUFKLEBER	TRANSFER	STICKER	
25		84359448		1	ADESIVO, NH, Hand Control, EH 300 Grip				
						DECAL	CALCOMANÍA	DECALCOMANIA	012D
					AUTOCOLLANT	AUFKLEBER	TRANSFER	STICKER	
26		84258153		1	EMPUNHADURA, Throttle to Pedal				
						HANDLE GRIP	PERILLA	IMPUGNATURA	025I
					POIGNEE DE MAINTIEN	HANDGRIFF	HÅNDGREB	HANDGREEP	
27		84258818		1	CABO, Pedal to Governor, Large Frame				
						CABLE	CABLE	CAVO	650C
					CABLE	KABEL	KABEL	KABEL	
28		86625199		3	PARAFUSO, Hex Flg Hd, M6 x 13				
						SELF-TAP SCREW	TORNILLO AUTORROSC	VITE AUTOFILETTANTE	062V
					VIS AUTOTARAUDEUSE	SELBSTSCHN SCHRAUE	SELVLÅSENDE BOLT	ZELFTAPPENDE SCHRO	
29		84200938		2	BRAÇADEIRA, Throttle Cable				
						CLAMP	ABRAZADERA	MORSETTO	120M
					COLLIER	KLEMME	SPÆNDEBÅND	KLEM	
30		86624126		4	PARAFUSO, Hex Soc Hd, M4 x 16, 8.8				
						SCREW	TORNILLO	VITE	040V
					VIS	SCHRAUBE	SKRUE	SCHROEF	
31		84374767		1	COMANDO DO ACELERADOR, Assembly, MECH, Foot				
						THROTTLE CONTROL	CONTROL DE REGULAD	COMANDO ACCELERAT	197C
					COMMANDE D'ACCELEF	DROSSELKLAPPENZUG	GASREGULERINGSKABE	GASBEDIENINGSKABEL	
32		87360034		2	ESPAÇADOR	SPACER	SEPARADOR	DISTANZIALE	075D
					ENTRETOISE	DISTANZSTÜCK	AFSTANDSSTYKKE	AFSTANDSSTUK	
33		87034527		2	PORCA, 5/16-24	NUT	TUERCA	DADO	010D
					ECROU	MUTTER	MØTRIK	MOER	
34		86637933		2	PORCA, Jam, 5/16"-24, G5	NUT	TUERCA	DADO	010D
					ECROU	MUTTER	MØTRIK	MOER	
35		84299785		1	EIXO DE COMANDO, Hand Control, Bucket				
						CONTROL SHAFT	EJE DE CONTROL	ALBERO DI COMANDO	008A
					ARBRE DE COMMANDE	STEUERWELLE	DRIVAKSEL	REGELAS	

DIA KIT, LG FRM HAND CONTROLS SERVO (L223-L230)
DIA KIT, LG FRM HAND CONTROLS SERVO (L223-L230)
DIA KIT, LG FRM HAND CONTROLS SERVO (L223-L230)
DIA KIT, LG FRM HAND CONTROLS SERVO (L223-L230)



DIA KIT, LG FRM HAND CONTROLS SERVO (L223-L230)
DIA KIT, LG FRM HAND CONTROLS SERVO (L223-L230)
DIA KIT, LG FRM HAND CONTROLS SERVO (L223-L230)
DIA KIT, LG FRM HAND CONTROLS SERVO (L223-L230)

R	N	P.N.	MOD	Q	Denominação Description Bezeichnung Denominacion Beskrivelse Descrizione Beschrijving	L.C.
36		84299773		1	EIXO DE COMANDO, Hand Control, Boom CONTROL SHAFT EJE DE CONTROL ALBERO DI COMANDO ARBRE DE COMMANDE STEUERWELLE DRIVAKSEL REGELAS	008A
37		84291866		4	COLAR DE FIXAÇÃO, 3/4 Shaft RETAINER COLLAR COLLAR DE RETENCIÓN COLLARE DI FISSAGGIO COLLIER DE RETENUE HALTERING RING, SPÆNDE BORGKRAAG	230S
38		84273628		2	PLACA, Hand Control, EAR PLATE PLACA PIASTRA PLAQUE PLATTE PLADE PLAAT	105P
39		856800		2	PINO RANHURADO, 3/16" x 1 1/2", Type E, Hardened GROOVED PIN PASADOR RANURADO PERNO SCANALATO GOUPILLE CANNELEE KERBSTIFT TAP M/NOT GEGROEFDE PEN	086P
40		280483		2	PARAFUSO, Hex, 5/16"-24 x 1", G5, Full Thd BOLT PERNO BULLONE VIS SCHRAUBE BOLT BOUT	140B
41		228500		4	BUCHA BUSHING CASQUILLO BOCCOLA BAGUE BUCHSE BØSNING BUS	095B
42		221665		2	ROLAMENTO ESFÉRICO, 0.315" ID x 0.625" OD x 0.437", End SPHERICAL BEARING COJINETE ESFÉRICO CUSCINETTO SFERICO ROULEMENT SPHERIQU PENDELKUGELLAGER SFÆRISK LEJE KOGELLAGER	A164

DIA KIT, COUNTERWEIGHT LFW NH (L223-L230)
DIA KIT, COUNTERWEIGHT LFW NH (L223-L230)
DIA KIT, COUNTERWEIGHT LFW NH (L223-L230)
DIA KIT, COUNTERWEIGHT LFW NH (L223-L230)



DIA KIT, COUNTERWEIGHT LFW NH (L223-L230)
DIA KIT, COUNTERWEIGHT LFW NH (L223-L230)
DIA KIT, COUNTERWEIGHT LFW NH (L223-L230)
DIA KIT, COUNTERWEIGHT LFW NH (L223-L230)

R	N	P.N.	MOD	Q	Denominação Description	Description Bezeichnung	Denominacion Beskrivelse	Descrizione Beschrijving	L.C.
		84332832			JOGO, DIA Kit, Counterweight LFW, NH, Incl. 1-4				
						KIT	JEUGO	KIT	4830
					POCHETTE	PACKUNG	KIT	KIT	
1		**84332301**		4	PLACA, Counterweight, Yellow				
						PLATE	PLACA	PIASTRA	105P
					PLAQUE	PLATTE	PLADE	PLAAT	
2		**87698846**		4	PARAFUSO, M12 X 80	BOLT	PERNO	BULLONE	140B
					VIS	SCHRAUBE	BOLT	BOUT	
3		**86512497**		3	PORCA, M12 x 1.75, Flg, Cl 10				
						NUT	TUERCA	DADO	010D
					ECROU	MUTTER	MØTRIK	MOER	
4		**84354546**		1	INSTRUÇÃO, Installation	INSTRUCTION	INSTRUCCIÓN	ISTRUZIONI	Z571
					INSTRUCTION	ANLEITUNG	INSTRUKTION	INSTRUCTIE	

DIA KIT, LRG FRM F5C HVAC (L223-L230,C232,C238)
DIA KIT, LRG FRM F5C HVAC (L223-L230,C232,C238)
DIA KIT, LRG FRM F5C HVAC (L223-L230,C232,C238)
DIA KIT, LRG FRM F5C HVAC (L223-L230,C232,C238)



DIA KIT, LRG FRM F5C HVAC (L223-L230,C232,C238)
DIA KIT, LRG FRM F5C HVAC (L223-L230,C232,C238)
DIA KIT, LRG FRM F5C HVAC (L223-L230,C232,C238)
DIA KIT, LRG FRM F5C HVAC (L223-L230,C232,C238)

R	N	P.N.	MOD	Q	Denominação Description Bezeichnung	Description Denominacion Beskrivelse	Descrizione Beschrijving	L.C.
		84468210			KIT DE SERVIÇO, DIA Kit, LRG FRM F5C HVAC, Incl. 1-89			
					SERVICE KIT	KIT DE SERVICIO	KIT DI MANUTENZIONE	021K
					KIT D'ENTRETIEN	SERVICE-SATZ	SERVICESÆT	SERVICEKIT
1		**120100**		4	PARAFUSO, Hex, M6 x 20, 8.8			
					BOLT	PERNO	BULLONE	140B
					VIS	SCHRAUBE	BOLT	BOUT
2		**350459**		1	PARAFUSO, Short NK, M10 x 50, Cl8.8, Full Thd			
					SCREW	TORNILLO	VITE	040V
					VIS	SCHRAUBE	SKRUE	SCHROEF
3		**412479**		2	PARAFUSO, Hex, M8 x 35, 8.8			
					BOLT	PERNO	BULLONE	140B
					VIS	SCHRAUBE	BOLT	BOUT
4		**619284**		3	BRAÇADEIRA, 15/16", Insul, 3/8" Bolt			
					CLAMP	ABRAZADERA	MORSETTO	120M
					COLLIER	KLEMME	SPÆNDEBÅND	KLEM
5		**642560**		1	CONEXÃO, 5/8" Hose X 3/8" NPTF Beaded			
					FITTING	ACOPLAMIENTO	RACCORDO	3300
					RACCORD	ARMATUR	FITTING	AANSLUITING
6		**9706690**		3	PORCA, M8, Cl 8	NUT	TUERCA	DADO	010D
					ECROU	MUTTER	MØTRIK	MOER
7		**9804258**		1	PARAFUSO, Hex Flg, M8 x 20, 8.8			
					BOLT	PERNO	BULLONE	140B
					VIS	SCHRAUBE	BOLT	BOUT
8		**9804261**		3	PARAFUSO, Hex Flg, M10 x 25, 8.8			
					BOLT	PERNO	BULLONE	140B
					VIS	SCHRAUBE	BOLT	BOUT
9		**9804262**		1	PARAFUSO, Hex Flg, M10 x 30, 8.8			
					BOLT	PERNO	BULLONE	140B
					VIS	SCHRAUBE	BOLT	BOUT
10		**9804276**		4	PORCA, M6 x 1, Flg, Cl 8	NUT	TUERCA	DADO	010D
					ECROU	MUTTER	MØTRIK	MOER
11		**9804277**		1	PORCA, M8 x 1.25, Flg, Cl 8			
					NUT	TUERCA	DADO	010D
					ECROU	MUTTER	MØTRIK	MOER
12		**9804278**		5	PORCA, M10 x 1.5, Flg, Cl 8			
					NUT	TUERCA	DADO	010D
					ECROU	MUTTER	MØTRIK	MOER
13		**84137412**		3	PARAFUSO, M6 X 18	SCREW	TORNILLO	VITE	040V
					VIS	SCHRAUBE	SKRUE	SCHROEF
14		**84245940**		1	VÁLVULA, Water Supply, 3-Way			
					VALVE	VÁLVULA	VALVOLA	9620
					SOUPAPE	VENTIL	VENTIL	KLEP
15		**84247845**		1	SUPORTE, Water Valve and Dryer			
					BRACKET	SOPORTE	STAFFA	225S
					SUPPORT	HALTERUNG	BESLAG	STEUN
16		**84267544**		1	UNIDADE DE AQUECIMENTO, W/AC			
					UNIT HEATER	APARATO DE CALEFAC(	RISCALDATORE UNITÀ	Z375
					APPAREIL DE CHAUFFA	HEIZUNGSEINHEIT	RADIATORENHED	VERWARMING

DIA KIT, LRG FRM F5C HVAC (L223-L230,C232,C238)
DIA KIT, LRG FRM F5C HVAC (L223-L230,C232,C238)
DIA KIT, LRG FRM F5C HVAC (L223-L230,C232,C238)
DIA KIT, LRG FRM F5C HVAC (L223-L230,C232,C238)



DIA KIT, LRG FRM F5C HVAC (L223-L230,C232,C238)
DIA KIT, LRG FRM F5C HVAC (L223-L230,C232,C238)
DIA KIT, LRG FRM F5C HVAC (L223-L230,C232,C238)
DIA KIT, LRG FRM F5C HVAC (L223-L230,C232,C238)

R	N	P.N.	MOD	Q	Denominação Description	Description Bezeichnung	Denominacion Beskrivelse	Descrizione Beschrijving	L.C.
17		84280313		1	DUTO DE AR, Intake CONDUITE D'AIR	AIR DUCT LUFTKANAL	CONDUCTO DE AIRE LUFTKANAL	CONDOTTO ARIA LUCHTKANAAL	224C
18		84285339		4	PARAFUSO, M8 X 15 VIS AUTOTARAUDEUSE	SELF-TAP SCREW SELBSTSCHN SCHRAUE	TORNILLO AUTORROSC SELVLÅSENDE BOLT	VITE AUTOFILETTANTE ZELFTAPPENDE SCHRO	062V
19		84389703		1	PAINEL, Rear Trim, Gray PANNEAU	PANEL PLATTE	PANEL PANEL	PANNELLO PANEEL	025P
20		84299752		1	DUTO DE AR, RH, Trim, Gray CONDUITE D'AIR	AIR DUCT LUFTKANAL	CONDUCTO DE AIRE LUFTKANAL	CONDOTTO ARIA LUCHTKANAAL	224C
21		84299755		1	DUTO DE AR, RH, Trim, Gray CONDUITE D'AIR	AIR DUCT LUFTKANAL	CONDUCTO DE AIRE LUFTKANAL	CONDOTTO ARIA LUCHTKANAAL	224C
22		84403037		1	CONJ. MANGUEIRA, A/C Discharge ENSEMBLE DE FLEXIBLE	HOSE ASSY. SCHLAUCHBAUGRUPPE	CONJUNTO DE TUBOS SLANGEENHED	COMPLESS. TUBO FLES SLANGEENHEID	P457
23		84308858		1	MANGUEIRA AR CONDICIONADO, A/C Discharge FLEXIBLE CLIMATISATIC	A/C HOSE KLIMAANLAGENSCHLAU	TUBO A/A SLANGE, AIRCONDITION	TUBO FLESSIBILE A/C SLANG VOOR AIRCO	A054
24		84312881		1	CONDENSADOR, Assembly, With Fan CONDENSATEUR	CONDENSER KONDENSATOR	CONDENSADOR KONDENSATOR	CONDENSATORE CONDENSOR	220C
25		84315532		1	CHICOTE, HVAC Jumper FAISCEAU ELECTRIQUE	WIRE HARNESS KABELBAUM	GRUPO DE CABLES KABELNET	CABLAGGIO KABELBOOM	070I
26		84317961		1	CORREIA, A/C Drive COURROIE	BELT RIEMEN	CORREA REM	CINGHIA RIEM	174C
27		84380552		6	BOTÃO DE IMPULSO, Pine Tree, Gray ATTACHE	FASTENER BEFESTIGUNGSELEMEN	SUJETADOR LUKKER	DISPOSITIVO DI FISSAG BEVESTIGING	123B
28		84321961		1	COMPRESSOR AR COND. COMPRESSEUR CLIMAT	AIRCOND. COMPRESSO KLIMAANLAGENKOMPRE	COMPRESOR DE A/C AIRCONDITION KOMPRE	COMPRESSORE ARIA C AIRCOCOMPRESSOR	217C
29		84322854		1	ESPUMA ISOLANTE, 684mm MOUSSE ISOLANTE	FOAM INSULATION SCHAUMSTOFFISOLIER	ESPUMA AISLANTE SKUM ISOLERING	ISOLANTE IN SCHIUMA SCHUIMISOLATIE	051S
30		84322901		1	PLACA, Cover, Yellow PLAQUE	PLATE PLATTE	PLACA PLADE	PIASTRA PLAAT	105P
31		84335904		1	PROTEÇÃO, Fan PROTECTION	GUARD SCHUTZABDECKUNG	DEFENSA BESKYTTELSESSKÆRM	PROTEZIONE AFSCHERMING	070R
32		84347258		1	ADESIVO, HVAC, Heat, A/C AUTOCOLLANT	DECAL AUFKLEBER	CALCOMANÍA TRANSFER	DECALCOMANIA STICKER	012D
33		84407297		1	CONJ. MANGUEIRA, A/C Liquid ENSEMBLE DE FLEXIBLE	HOSE ASSY. SCHLAUCHBAUGRUPPE	CONJUNTO DE TUBOS SLANGEENHED	COMPLESS. TUBO FLES SLANGEENHEID	P457
34		84357678		1	MANGUEIRA, Heater Supply FLEXIBLE	HOSE SCHLAUCH	TUBO SLANGE	TUBO FLESSIBILE SLANG	030M
35		84359205		1	MANGUEIRA, Heater Return FLEXIBLE	HOSE SCHLAUCH	TUBO SLANGE	TUBO FLESSIBILE SLANG	030M

DIA KIT, LRG FRM F5C HVAC (L223-L230,C232,C238)
DIA KIT, LRG FRM F5C HVAC (L223-L230,C232,C238)
DIA KIT, LRG FRM F5C HVAC (L223-L230,C232,C238)
DIA KIT, LRG FRM F5C HVAC (L223-L230,C232,C238)



DIA KIT, LRG FRM F5C HVAC (L223-L230,C232,C238)
DIA KIT, LRG FRM F5C HVAC (L223-L230,C232,C238)
DIA KIT, LRG FRM F5C HVAC (L223-L230,C232,C238)
DIA KIT, LRG FRM F5C HVAC (L223-L230,C232,C238)

R	N	P.N.	MOD	Q	Denominação Description	Description Bezeichnung	Denominacion Beskrivelse	Descrizione Beschrijving	L.C.
36		84359308		1	MANGUEIRA, Heater Return				
						HOSE	TUBO	TUBO FLESSIBILE	030M
					FLEXIBLE	SCHLAUCH	SLANGE	SLANG	
37		84361522		1	SUPORTE	BRACKET	SOPORTE	STAFFA	225S
					SUPPORT	HALTERUNG	BESLAG	STEUN	
38		84362125		1	ESPUMA ISOLANTE, Crossmember				
						FOAM INSULATION	ESPUMA AISLANTE	ISOLANTE IN SCHIUMA	051S
					MOUSSE ISOLANTE	SCHAUMSTOFFISOLIER	SKUM ISOLERING	SCHUIMISOLATIE	
39		84362126		1	ESPUMA ISOLANTE, Roof	FOAM INSULATION	ESPUMA AISLANTE	ISOLANTE IN SCHIUMA	051S
					MOUSSE ISOLANTE	SCHAUMSTOFFISOLIER	SKUM ISOLERING	SCHUIMISOLATIE	
40		84473564		1	CONJ. MANGUEIRA, A/C Suction				
						HOSE ASSY.	CONJUNTO DE TUBOS	COMPLESS. TUBO FLES	P457
					ENSEMBLE DE FLEXIBLE	SCHLAUCHBAUGRUPPE	SLANGEENHED	SLANGEENHEID	
41		84370302		1	ESPUMA, HVAC Box	FOAM	ESPUMA	SCHIUMA	P033
					MOUSSE	SCHAUM	SKUM	SCHUIM	
42		84370705		1	SUPORTE	BRACKET	SOPORTE	STAFFA	225S
					SUPPORT	HALTERUNG	BESLAG	STEUN	
43		86511833		4	PARAFUSO, Cross Pan Hd, M6 x 40				
						SCREW	TORNILLO	VITE	040V
					VIS	SCHRAUBE	SKRUE	SCHROEF	
44		86511841		8	PARAFUSO, Hex Flg, M8 x 16, 8.8				
						BOLT	PERNO	BULLONE	140B
					VIS	SCHRAUBE	BOLT	BOUT	
45		86511843		2	PARAFUSO, Hex Flg, M8 x 60, 8.8				
						BOLT	PERNO	BULLONE	140B
					VIS	SCHRAUBE	BOLT	BOUT	
46		86511845		2	PARAFUSO, Hex Flg, M10 x 35, 8.8				
						BOLT	PERNO	BULLONE	140B
					VIS	SCHRAUBE	BOLT	BOUT	
47		86512441		2	PARAFUSO, Short NK, M6 x 30, Cl8.8, Full Thd				
						CARRIAGE BOLT	PERNO ALOMADO	BULLONE A TESTA TONI	P123
					VIS A TETE BOMBEE	SCHLOSSSCHRAUBE	BRÆDDEBOLT	SLOTBOUT	
48		86530043		1	CONEXÃO, Y	FITTING	ACOPLAMIENTO	RACCORDO	3300
					RACCORD	ARMATUR	FITTING	AANSLUITING	
49		86619800		6	CONTRA PORCA, M6 x 1, Flg, Cl 8				
						LOCK NUT	TUERCA DE BLOQUEO	DADO DI BLOCCAGGIO	P263
					CONTRE-ECROU	SICHERUNGSMUTTER	LÅSEMØTRIK	BORGMOER	
50		86624182		3	ARRUELA PLANA, M6 x 18 x 1.6				
						WASHER	ARANDELA	RONDELLA	131R
					RONDELLE	UNTERLEGSCHEIBE	FLADSKIVE	SLUITRING	
51		86624183		4	ARRUELA PLANA, M6 x 25 x 1.6				
						WASHER	ARANDELA	RONDELLA	131R
					RONDELLE	UNTERLEGSCHEIBE	FLADSKIVE	SLUITRING	
52		86625021		1	BRAÇADEIRA MANGUEIRA, #12, 0.69/1.25 Type F Worm				
						HOSE CLAMP	ABRAZADERA DE MANG	FASCETTA STRINGITUB	P729
					COLLIER POUR FLEXIBL	SCHLAUCHSCHELLE	SLANGEKLEMME	SLANGKLEM	
53		86625074		4	PORCA, M8, U	NUT	TUERCA	DADO	010D
					ECROU	MUTTER	MØTRIK	MOER	

DIA KIT, LRG FRM F5C HVAC (L223-L230,C232,C238)
DIA KIT, LRG FRM F5C HVAC (L223-L230,C232,C238)
DIA KIT, LRG FRM F5C HVAC (L223-L230,C232,C238)
DIA KIT, LRG FRM F5C HVAC (L223-L230,C232,C238)



DIA KIT, LRG FRM F5C HVAC (L223-L230,C232,C238)
DIA KIT, LRG FRM F5C HVAC (L223-L230,C232,C238)
DIA KIT, LRG FRM F5C HVAC (L223-L230,C232,C238)
DIA KIT, LRG FRM F5C HVAC (L223-L230,C232,C238)

R	N	P.N.	MOD	Q	Denominação Description	Description Bezeichnung	Denominacion Beskrivelse	Descrizione Beschrijving	L.C.
54		86637978		1	BRAÇADEIRA, 3/8", Insul, 5/16" Bolt				
						CLAMP	ABRAZADERA	MORSETTO	120M
					COLLIER	KLEMME	SPÆNDEBÅND	KLEM	
55		86705425		1	PARAFUSO, Hex Flg, M8 x 80, 8.8				
						BOLT	PERNO	BULLONE	140B
					VIS	SCHRAUBE	BOLT	BOUT	
56		86729669		1	INTERRUPTOR	SWITCH	INTERRUPTOR	INTERRUTTORE	075I
					CONTACTEUR	SCHALTER	KONTAKT	SCHAKELAAR	
57		86729670		2	MAÇANETA	KNOB	MANDO	MANOPOLA	150P
					BOUTON	RUNDGRIFF	GREB	KNOP	
58		86729675		1	POTENCIÔMETRO, Switch	POTENTIOMETER	POTENCIÓMETRO	POTENZIOMETRO	550P
					POTENTIOMETRE	POTENTIOMETER	POTENTIOMETER	POTENTIOMETER	
59		87000227		1	INTERRUP ALTA PRESSÃO AC				
						A/C HIGH PRESSURE SV	INT. PRESIÓN ALTA A/A	INTERR. ALTA PRESS. A	A102
					PRESSOSTAT HP CLIMA	HOCHDR-SCHALTER KL	KONTAKT, A/C HØJTRYK	HOGEDRUKSCHAKELAA	
60		87015931		4	PARAFUSO, Hex Flg, M6 x 35, 8.8				
						BOLT	PERNO	BULLONE	140B
					VIS	SCHRAUBE	BOLT	BOUT	
61		87105840		1	DESIDRATADOR, Assembly				
						RECEIVER-DRYER	RECEPTOR-SECADOR	SERBATOIO-ESSICCATC	058D
					RESERVOIR DESHYDRA	TROCKNERPATRONE	VANDUDSKILLER	FILTERDROGER	
62		87105841		2	SUPORTE, Receiver/Dryer	BRACKET	SOPORTE	STAFFA	225S
					SUPPORT	HALTERUNG	BESLAG	STEUN	
63		87310592		2	PORCA, 7/16-28	NUT	TUERCA	DADO	010D
					ECROU	MUTTER	MØTRIK	MOER	
64		87355337		1	CONECTADOR, HD, Sealed, 45 Amp				
						RELAY	CONECTADOR	RELE'	7025
					RELAIS	RELAIS	RELAE	RELAIS	
65		87443511		13	BRAÇADEIRA, Hose, 24mm	CLAMP	ABRAZADERA	MORSETTO	120M
					COLLIER	KLEMME	SPÆNDEBÅND	KLEM	
66		87555249		1	INTERRUPTOR, A/C	SWITCH	INTERRUPTOR	INTERRUTTORE	075I
					CONTACTEUR	SCHALTER	KONTAKT	SCHAKELAAR	
67		87567191		1	MANGUEIRA, Heating Return, 1905mm				
						HOSE	TUBO	TUBO FLESSIBILE	030M
					FLEXIBLE	SCHLAUCH	SLANGE	SLANG	
68		87567192		1	MANGUEIRA, Heating Supply, 2540mm				
						HOSE	TUBO	TUBO FLESSIBILE	030M
					FLEXIBLE	SCHLAUCH	SLANGE	SLANG	
69		87617163		1	MANGUEIRA DO AQUECEDOR, 15.00 mm ID, 18.00 mm ID x 73.00 mm, SAE 20R4, Heater Supply				
						HEATER HOSE	TUBO DE CALENTADOR	TUBO FLESS. RISCALDA	A057
					FLEXIBLE DE CHAUFFA(	HEIZUNGSSCHLAUCH	SLANGE, VARMEAPPAR/	VERWARMINGSSLANG	
70		87617165		1	ADAPTADOR, Barb Splice	ADAPTER	ADAPTADOR	ADATTATORE	001A
					ADAPTATEUR	ADAPTER	ADAPTER	ADAPTER	
71		87622384		1	BUCHA, F5C, A/C Bracket	BUSHING	CASQUILLO	BOCCOLA	095B
					BAGUE	BUCHSE	BØSNING	BUS	
72		87649945		1	SUPORTE, A/C Compressor				
						BRACKET	SOPORTE	STAFFA	225S
					SUPPORT	HALTERUNG	BESLAG	STEUN	

DIA KIT, LRG FRM F5C HVAC (L223-L230,C232,C238)
DIA KIT, LRG FRM F5C HVAC (L223-L230,C232,C238)
DIA KIT, LRG FRM F5C HVAC (L223-L230,C232,C238)
DIA KIT, LRG FRM F5C HVAC (L223-L230,C232,C238)



DIA KIT, LRG FRM F5C HVAC (L223-L230,C232,C238)
DIA KIT, LRG FRM F5C HVAC (L223-L230,C232,C238)
DIA KIT, LRG FRM F5C HVAC (L223-L230,C232,C238)
DIA KIT, LRG FRM F5C HVAC (L223-L230,C232,C238)

R	N	P.N.	MOD	Q	Denominação Description	Description Bezeichnung	Denominacion Beskrivelse	Descrizione Beschrijving	L.C.
73		**87649979**		1	PARAFUSO, Tensioner VIS	BOLT SCHRAUBE	PERNO BOLT	BULLONE BOUT	140B
74		**87655042**		2	ARRUELA ESPECIAL, M8 RONDELLE SPECIALE	SPECIAL WASHER SPEZIALUNTERLEGSCH	ARANDELA ESPECIAL SPECIALSKIVE	RONDELLA SPECIALE SPECIALE RING	Z333
75		**87655046**		1	ARRUELA ESPECIAL, M10 RONDELLE SPECIALE	SPECIAL WASHER SPEZIALUNTERLEGSCH	ARANDELA ESPECIAL SPECIALSKIVE	RONDELLA SPECIALE SPECIALE RING	Z333
76		**87669161**		6	RESPIRO, Louver, Global BUSE D'AERATION	VENT AUSSTRÖMER	RESPIRADERO UDLUFTNINGSDYSE	BOCCHETTA LUCHTROOSTER	P079
77		**87711926**		1	SUPORTE, Tensioner SUPPORT	BRACKET HALTERUNG	SOPORTE BESLAG	STAFFA STEUN	225S
78		**127083A1**		2	COTOVELO, Heater Hose COUDE	ELBOW KNIESTÜCK	CODO VINKELRØR	GOMITO KNIESTUK	085G
79		**229197A1**		4	PORCA, M8 ECROU	NUT MUTTER	TUERCA MØTRIK	DADO MOER	5780
80		**412679A2**		2	MOLA, Heater Hose RESSORT	SPRING FEDER	RESORTE FJEDER	MOLLA VEER	8315
81		**D39696**		4	BRACADEIRA, Double COLLIER	CLAMP SCHELLE	COLLAR CLAMP	MORSETTO CLAMP	1640
82		**87441006**		1	PROTEÇÃO, A/C Hoses PROTECTION	GUARD SCHUTZABDECKUNG	DEFENSA BESKYTTELSESSKÆRM	PROTEZIONE AFSCHERMING	070R
83		**84473576**		1	INSTRUÇÃO, NH, Large Frame F5C HVAC INSTRUCTION	INSTRUCTION ANLEITUNG	INSTRUCCIÓN INSTRUKTION	ISTRUZIONI INSTRUCTIE	Z571
84		**86639409**		1	ADESIVO, A/C Specs AUTOCOLLANT	DECAL AUFKLEBER	CALCOMANÍA TRANSFER	DECALCOMANIA STICKER	012D
85		**84411489**		1	ESPUMA ISOLANTE, Center, Upper Chassis MOUSSE ISOLANTE	FOAM INSULATION SCHAUMSTOFFISOLIER	ESPUMA AISLANTE SKUM ISOLERING	ISOLANTE IN SCHIUMA SCHUIMISOLATIE	051S
86		**84416163**		2	ESPUMA ISOLANTE, RH, Upper Chassis MOUSSE ISOLANTE	FOAM INSULATION SCHAUMSTOFFISOLIER	ESPUMA AISLANTE SKUM ISOLERING	ISOLANTE IN SCHIUMA SCHUIMISOLATIE	051S
87		**84416164**		2	ESPUMA ISOLANTE, RH, Upper Chassis MOUSSE ISOLANTE	FOAM INSULATION SCHAUMSTOFFISOLIER	ESPUMA AISLANTE SKUM ISOLERING	ISOLANTE IN SCHIUMA SCHUIMISOLATIE	051S
88		**348452A1**		10	BOTÃO DE IMPULSO, Pine Tree, 1 Inch Grip ATTACHE	FASTENER BEFESTIGUNGSELEMEN	SUJETADOR LUKKER	DISPOSITIVO DI FISSAG BEVESTIGING	123B
89		**84318534**		8	BOTÃO DE IMPULSO, Push-In, Gray ATTACHE	FASTENER BEFESTIGUNGSELEMEN	SUJETADOR LUKKER	DISPOSITIVO DI FISSAG BEVESTIGING	123B

DIA KIT, F5C HEAT (L223-C238)
DIA KIT, F5C HEAT (L223-C238)
DIA KIT, F5C HEAT (L223-C238)
DIA KIT, F5C HEAT (L223-C238)



DIA KIT, F5C HEAT (L223-C238)
DIA KIT, F5C HEAT (L223-C238)
DIA KIT, F5C HEAT (L223-C238)
DIA KIT, F5C HEAT (L223-C238)

R	N	P.N.	MOD	Q	Denominação Description Bezeichnung	Denominacion Beskrivelse	Descrizione Beschrijving	L.C.
		84468194			KIT DE SERVIÇO, DIA Kit, F5C Heat, Incl. 1-61			
					SERVICE KIT	KIT DE SERVICIO	KIT DI MANUTENZIONE	021K
					KIT D'ENTRETIEN SERVICE-SATZ	SERVICESÆT	SERVICEKIT	
1		**120100**		4	PARAFUSO, Hex, M6 x 20, 8.8			
					BOLT	PERNO	BULLONE	140B
					VIS SCHRAUBE	BOLT	BOUT	
2		**350459**		1	PARAFUSO, Short NK, M10 x 50, Cl8.8, Full Thd			
					SCREW	TORNILLO	VITE	040V
					VIS SCHRAUBE	SKRUE	SCHROEF	
3		**619284**		3	BRAÇADEIRA, 15/16", Insul, 3/8" Bolt			
					CLAMP	ABRAZADERA	MORSETTO	120M
					COLLIER KLEMME	SPÆNDEBÅND	KLEM	
4		**642560**		1	CONEXÃO, 5/8" Hose X 3/8" NPTF Beaded			
					FITTING	ACOPLAMIENTO	RACCORDO	3300
					RACCORD ARMATUR	FITTING	AANSLUITING	
5		**9804261**		1	PARAFUSO, Hex Flg, M10 x 25, 8.8			
					BOLT	PERNO	BULLONE	140B
					VIS SCHRAUBE	BOLT	BOUT	
6		**9804276**		4	PORCA, M6 x 1, Flg, Cl 8 NUT	TUERCA	DADO	010D
					ECROU MUTTER	MØTRIK	MOER	
7		**9804278**		3	PORCA, M10 x 1.5, Flg, Cl 8			
					NUT	TUERCA	DADO	010D
					ECROU MUTTER	MØTRIK	MOER	
8		**84137412**		3	PARAFUSO, M6 X 18 SCREW	TORNILLO	VITE	040V
					VIS SCHRAUBE	SKRUE	SCHROEF	
9		**84245940**		1	VÁLVULA, Water Supply, 3-Way			
					VALVE	VÁLVULA	VALVOLA	9620
					SOUPAPE VENTIL	VENTIL	KLEP	
10		**84247845**		1	SUPORTE, Water Valve and Dryer			
					BRACKET	SOPORTE	STAFFA	225S
					SUPPORT HALTERUNG	BESLAG	STEUN	
11		**84267543**		1	AQUECEDOR HEATER	CALENTADOR	RISCALDATORE	105R
					CHAUFFAGE HEIZUNG	VARMEAPPARAT	VERWARMING	
12		**84280313**		1	DUTO DE AR, Intake AIR DUCT	CONDUCTO DE AIRE	CONDOTTO ARIA	224C
					CONDUITE D'AIR LUFTKANAL	LUFTKANAL	LUCHTKANAAL	
13		**84285339**		4	PARAFUSO, M8 X 15 SELF-TAP SCREW	TORNILLO AUTORROSC	VITE AUTOFILETTANTE	062V
					VIS AUTOTARAUDEUSE SELBSTSCHN SCHRAUE	SELVLÅSENDE BOLT	ZELFTAPPENDE SCHRO	
14		**84389703**		1	PAINEL, Rear Trim, Gray PANEL	PANEL	PANNELLO	025P
					PANNEAU PLATTE	PANEL	PANEEL	
15		**84299752**		1	DUTO DE AR, RH, Trim, Gray			
					AIR DUCT	CONDUCTO DE AIRE	CONDOTTO ARIA	224C
					CONDUITE D'AIR LUFTKANAL	LUFTKANAL	LUCHTKANAAL	
16		**84299755**		1	DUTO DE AR, RH, Trim, Gray			
					AIR DUCT	CONDUCTO DE AIRE	CONDOTTO ARIA	224C
					CONDUITE D'AIR LUFTKANAL	LUFTKANAL	LUCHTKANAAL	
17		**84380552**		6	BOTÃO DE IMPULSO, Pine Tree, Gray			
					FASTENER	SUJETADOR	DISPOSITIVO DI FISSAG	123B
					ATTACHE BEFESTIGUNGSELEMEN	LUKKER	BEVESTIGING	

DIA KIT, F5C HEAT (L223-C238)
DIA KIT, F5C HEAT (L223-C238)
DIA KIT, F5C HEAT (L223-C238)
DIA KIT, F5C HEAT (L223-C238)



DIA KIT, F5C HEAT (L223-C238)
DIA KIT, F5C HEAT (L223-C238)
DIA KIT, F5C HEAT (L223-C238)
DIA KIT, F5C HEAT (L223-C238)

R	N	P.N.	MOD	Q	Denominação Description	Description Bezeichnung	Denominacion Beskrivelse	Descrizione Beschrijving	L.C.
18		84322854		1	ESPUMA ISOLANTE, Sealing, 684mm				
						FOAM INSULATION	ESPUMA AISLANTE	ISOLANTE IN SCHIUMA	051S
					MOUSSE ISOLANTE	SCHAUMSTOFFISOLIER	SKUM ISOLERING	SCHUIMISOLATIE	
19		84322901		1	PLACA, Cover	PLATE	PLACA	PIASTRA	105P
					PLAQUE	PLATTE	PLADE	PLAAT	
20		84331307		1	TELA, No A/C, Tilt Hood	SCREEN	PANTALLA	FILTRO; SCHERMO	047S
					TAMIS	GITTER; ABSCHIRMUNG	SKÆRM	SCHERM	
21		84335903		1	PROTEÇÃO, Fan	GUARD	DEFENSA	PROTEZIONE	070R
					PROTECTION	SCHUTZABDECKUNG	BESKYTTELSESSKÆRM	AFSCHERMING	
22		84347261		1	ADESIVO, HVAC, Heat Only				
						DECAL	CALCOMANÍA	DECALCOMANIA	012D
					AUTOCOLLANT	AUFKLEBER	TRANSFER	STICKER	
23		84357678		1	MANGUEIRA, Heater Supply, Guarded				
						HOSE	TUBO	TUBO FLESSIBILE	030M
					FLEXIBLE	SCHLAUCH	SLANGE	SLANG	
24		84359205		1	MANGUEIRA, Heater Return, Guarded				
						HOSE	TUBO	TUBO FLESSIBILE	030M
					FLEXIBLE	SCHLAUCH	SLANGE	SLANG	
25		84359308		1	MANGUEIRA, Heater Return, Guarded				
						HOSE	TUBO	TUBO FLESSIBILE	030M
					FLEXIBLE	SCHLAUCH	SLANGE	SLANG	
26		84361522		1	SUPORTE	BRACKET	SOPORTE	STAFFA	225S
					SUPPORT	HALTERUNG	BESLAG	STEUN	
27		84362125		1	ESPUMA ISOLANTE, Crossmember				
						FOAM INSULATION	ESPUMA AISLANTE	ISOLANTE IN SCHIUMA	051S
					MOUSSE ISOLANTE	SCHAUMSTOFFISOLIER	SKUM ISOLERING	SCHUIMISOLATIE	
28		84362126		1	ESPUMA ISOLANTE, Roof	FOAM INSULATION	ESPUMA AISLANTE	ISOLANTE IN SCHIUMA	051S
					MOUSSE ISOLANTE	SCHAUMSTOFFISOLIER	SKUM ISOLERING	SCHUIMISOLATIE	
29		84370302		1	ESPUMA, HVAC Box	FOAM	ESPUMA	SCHIUMA	P033
					MOUSSE	SCHAUM	SKUM	SCHUIM	
30		84370705		1	SUPORTE	BRACKET	SOPORTE	STAFFA	225S
					SUPPORT	HALTERUNG	BESLAG	STEUN	
31		86511833		4	PARAFUSO, Cross Pan Hd, M6 x 40				
						SCREW	TORNILLO	VITE	040V
					VIS	SCHRAUBE	SKRUE	SCHROEF	
32		86511841		6	PARAFUSO, Hex Flg, M8 x 16, 8.8				
						BOLT	PERNO	BULLONE	140B
					VIS	SCHRAUBE	BOLT	BOUT	
33		86512441		2	PARAFUSO, Short NK, M6 x 30, Cl8.8, Full Thd				
						CARRIAGE BOLT	PERNO ALOMADO	BULLONE A TESTA TONI	P123
					VIS A TETE BOMBEE	SCHLOSSSCHRAUBE	BRÆDDEBOLT	SLOTBOUT	
34		86530043		1	CONEXÃO, Y	FITTING	ACOPLAMIENTO	RACCORDO	3300
					RACCORD	ARMATUR	FITTING	AANSLUITING	
35		86619800		6	CONTRA PORCA, M6 x 1, Flg, Cl 8				
						LOCK NUT	TUERCA DE BLOQUEO	DADO DI BLOCCAGGIO	P263
					CONTRE-ECROU	SICHERUNGSMUTTER	LÅSEMØTRIK	BORGMOER	
36		86624182		3	ARRUELA PLANA, M6 x 18 x 1.6				
						WASHER	ARANDELA	RONDELLA	131R
					RONDELLE	UNTERLEGSCHEIBE	FLADSKIVE	SLUITRING	

DIA KIT, F5C HEAT (L223-C238)
DIA KIT, F5C HEAT (L223-C238)
DIA KIT, F5C HEAT (L223-C238)
DIA KIT, F5C HEAT (L223-C238)



DIA KIT, F5C HEAT (L223-C238)
DIA KIT, F5C HEAT (L223-C238)
DIA KIT, F5C HEAT (L223-C238)
DIA KIT, F5C HEAT (L223-C238)

R	N	P.N.	MOD	Q	Denominação Description	Description Bezeichnung	Denominacion Beskrivelse	Descrizione Beschrijving	L.C.
37		86624183		4	ARRUELA PLANA, M6 x 25 x 1.6				
						WASHER	ARANDELA	RONDELLA	131R
					RONDELLE	UNTERLEGSCHEIBE	FLADSKIVE	SLUITRING	
38		86625021		1	BRAÇADEIRA MANGUEIRA, #12, 0.69/1.25 Type F Worm				
						HOSE CLAMP	ABRAZADERA DE MANG	FASCETTA STRINGITUB	P729
					COLLIER POUR FLEXIBL	SCHLAUCHSCHELLE	SLANGEKLEMME	SLANGKLEM	
39		86625074		4	PORCA, M8, U	NUT	TUERCA	DADO	010D
					ECROU	MUTTER	MØTRIK	MOER	
40		86729669		1	INTERRUPTOR	SWITCH	INTERRUPTOR	INTERRUTTORE	075I
					CONTACTEUR	SCHALTER	KONTAKT	SCHAKELAAR	
41		86729670		2	MAÇANETA	KNOB	MANDO	MANOPOLA	150P
					BOUTON	RUNDGRIFF	GREB	KNOP	
42		86729675		1	POTENCIÔMETRO, Switch	POTENTIOMETER	POTENCIÓMETRO	POTENZIOMETRO	550P
					POTENTIOMETRE	POTENTIOMETER	POTENTIOMETER	POTENTIOMETER	
43		87015931		4	PARAFUSO, Hex Flg, M6 x 35, 8.8				
						BOLT	PERNO	BULLONE	140B
					VIS	SCHRAUBE	BOLT	BOUT	
44		87310592		2	PORCA, 7/16-28	NUT	TUERCA	DADO	010D
					ECROU	MUTTER	MØTRIK	MOER	
45		87443511		13	BRAÇADEIRA, Hose, 24mm	CLAMP	ABRAZADERA	MORSETTO	120M
					COLLIER	KLEMME	SPÆNDEBÅND	KLEM	
46		87567191		1	MANGUEIRA, Heating Return				
						HOSE	TUBO	TUBO FLESSIBILE	030M
					FLEXIBLE	SCHLAUCH	SLANGE	SLANG	
47		87567192		1	MANGUEIRA, Heating Supply				
						HOSE	TUBO	TUBO FLESSIBILE	030M
					FLEXIBLE	SCHLAUCH	SLANGE	SLANG	
48		87617163		1	MANGUEIRA DO AQUECEDOR, 15.00 mm ID, 18.00 mm ID x 73.00 mm, SAE 20R4, Heater Supply				
						HEATER HOSE	TUBO DE CALENTADOR	TUBO FLESS. RISCALDA	A057
					FLEXIBLE DE CHAUFFA(	HEIZUNGSSCHLAUCH	SLANGE, VARMEAPPAR/	VERWARMINGSSLANG	
49		87617165		1	ADAPTADOR, Barb Splice	ADAPTER	ADAPTADOR	ADATTATORE	001A
					ADAPTATEUR	ADAPTER	ADAPTER	ADAPTER	
50		87655042		2	ARRUELA ESPECIAL, M8	SPECIAL WASHER	ARANDELA ESPECIAL	RONDELLA SPECIALE	Z333
					RONDELLE SPECIALE	SPEZIALUNTERLEGSCH	SPECIALSKIVE	SPECIALE RING	
51		87655046		1	ARRUELA ESPECIAL, M10	SPECIAL WASHER	ARANDELA ESPECIAL	RONDELLA SPECIALE	Z333
					RONDELLE SPECIALE	SPEZIALUNTERLEGSCH	SPECIALSKIVE	SPECIALE RING	
52		87669161		6	RESPIRO, Louver, Global	VENT	RESPIRADERO	BOCCHETTA	P079
					BUSE D'AERATION	AUSSTRÖMER	UDLUFTNINGSDYSE	LUCHTROOSTER	
53		127083A1		2	COTOVELO, Heater Hose	ELBOW	CODO	GOMITO	085G
					COUDE	KNIESTÜCK	VINKELRØR	KNIESTUK	
54		229197A1		2	PORCA, M8	NUT	TUERCA	DADO	5780
					ECROU	MUTTER	MØTRIK	MOER	
55		412679A2		2	MOLA, Heater Hose	SPRING	RESORTE	MOLLA	8315
					RESSORT	FEDER	FJEDER	VEER	
56		D39696		2	BRACADEIRA, Double	CLAMP	COLLAR	MORSETTO	1640
					COLLIER	SCHELLE	CLAMP	CLAMP	
57		L11541		1	PRENDEDOR DE CABOS,	Black Tie			
						CABLE STRAP	BANDA DE CABLE	FASCETTA PER CAVO	P716
					BRIDE DE CABLE	KABELBINDER	KABELSTROP	BUNDELBAND	

DIA KIT, F5C HEAT (L223-C238)
DIA KIT, F5C HEAT (L223-C238)
DIA KIT, F5C HEAT (L223-C238)
DIA KIT, F5C HEAT (L223-C238)



DIA KIT, F5C HEAT (L223-C238)
DIA KIT, F5C HEAT (L223-C238)
DIA KIT, F5C HEAT (L223-C238)
DIA KIT, F5C HEAT (L223-C238)

R	N	P.N.	MOD	Q	Denominação Description	Description Bezeichnung	Denominacion Beskrivelse	Descrizione Beschrijving	L.C.
58		**87441006**		1	PROTEÇÃO, A/C Hoses PROTECTION	GUARD SCHUTZABDECKUNG	DEFENSA BESKYTTELSESSKÆRM	PROTEZIONE AFSCHERMING	070R
59		**84468197**		1	INSTRUÇÃO, Instruction Sheet, F5C Heat INSTRUCTION	INSTRUCTION ANLEITUNG	INSTRUCCIÓN INSTRUKTION	ISTRUZIONI INSTRUCTIE	Z571
60		**348452A1**		10	BOTÃO DE IMPULSO, Pine Tree, 1 Inch Grip ATTACHE	FASTENER BEFESTIGUNGSELEMEN	SUJETADOR LUKKER	DISPOSITIVO DI FISSAG BEVESTIGING	123B
61		**84318534**		8	BOTÃO DE IMPULSO, Push-In, Gray ATTACHE	FASTENER BEFESTIGUNGSELEMEN	SUJETADOR LUKKER	DISPOSITIVO DI FISSAG BEVESTIGING	123B

DIA KIT, BEACON (ALL NH)
DIA KIT, BEACON (ALL NH)
DIA KIT, BEACON (ALL NH)
DIA KIT, BEACON (ALL NH)



DIA KIT, BEACON (ALL NH)
DIA KIT, BEACON (ALL NH)
DIA KIT, BEACON (ALL NH)
DIA KIT, BEACON (ALL NH)

R	N	P.N.	MOD	Q	Denominação Description Bezeichnung	Description Bezeichnung	Denominacion Beskrivelse	Descrizione Beschrijving	L.C.
		84422725			KIT DE SERVIÇO, DIA Kit, Beacon, Incl. 1-2				
						SERVICE KIT	KIT DE SERVICIO	KIT DI MANUTENZIONE	021K
					KIT D'ENTRETIEN	SERVICE-SATZ	SERVICESÆT	SERVICEKIT	
1		**9840716**		1	LUZ DE SINALIZAÇÃO	BEACON	BALIZA	GIROFARO	080L
					GYROPHARE	RUNDUMLEUCHTE	ROTERENDE ADVARSEL	ZWAAILICHT	
2		**84422727**		1	INSTRUÇÃO, Instruction, Sheet, Beacon				
						INSTRUCTION	INSTRUCCIÓN	ISTRUZIONI	Z571
					INSTRUCTION	ANLEITUNG	INSTRUKTION	INSTRUCTIE	

DIA KIT, STROBE (ALL NH)
DIA KIT, STROBE (ALL NH)
DIA KIT, STROBE (ALL NH)
DIA KIT, STROBE (ALL NH)



DIA KIT, STROBE (ALL NH)
DIA KIT, STROBE (ALL NH)
DIA KIT, STROBE (ALL NH)
DIA KIT, STROBE (ALL NH)

R	N	P.N.	MOD	Q	Denominação Description	Description Bezeichnung	Denominacion Beskrivelse	Descrizione Beschrijving	L.C.
		84305658			KIT DE SERVIÇO, DIA Kit, Strobe, Incl. 1-13				
						SERVICE KIT	KIT DE SERVICIO	KIT DI MANUTENZIONE	021K
					KIT D'ENTRETIEN	SERVICE-SATZ	SERVICESÆT	SERVICEKIT	
1		**140024**		8	TRAVA DA ARRUELA, M4	LOCK WASHER	ARANDELA DE BLOQUE	RONDELLA DI SICUREZ	132R
					RONDELLE FREIN	SICHERUNGSSCHEIBE	LÅSESKIVE	BORGRING	
2		**9804258**		3	PARAFUSO, Hex Flg, M8 x 20, 8.8				
						BOLT	PERNO	BULLONE	140B
					VIS	SCHRAUBE	BOLT	BOUT	
3		**83990583**		3	TRAVA DA ARRUELA, M8	LOCK WASHER	ARANDELA DE BLOQUE	RONDELLA DI SICUREZ	132R
					RONDELLE FREIN	SICHERUNGSSCHEIBE	LÅSESKIVE	BORGRING	
4		**84251317**		1	CHICOTE, Strobe	WIRE HARNESS	GRUPO DE CABLES	CABLAGGIO	070I
					FAISCEAU ELECTRIQUE	KABELBAUM	KABELNET	KABELBOOM	
5		**84251538**		1	ESTRUTURA, WA Strobe, Gray				
						FRAME	BASTIDOR	TELAIO	072I
					CHASSIS	RAHMEN	RAMME	FRAME	
6		**84272827**		4	REBITE, Nut, M6 X 1.0	RIVET	REMACHE	RIVETTO	055R
					RIVET	NIET	NITTE	KLINKNAGEL	
7		**84305556**		4	PARAFUSO, M6 X 25	SCREW	TORNILLO	VITE	040V
					VIS	SCHRAUBE	SKRUE	SCHROEF	
8		**86508812**		8	PORCA, M3, Cl 8	NUT	TUERCA	DADO	010D
					ECROU	MUTTER	MØTRIK	MOER	
9		**86511818**		8	PARAFUSO, Cross Pan Hd, M3 x 30				
						SCREW	TORNILLO	VITE	040V
					VIS	SCHRAUBE	SKRUE	SCHROEF	
10		**86625036**		3	BRAÇADEIRA, 1/2", Insul, 5/16" Bolt				
						CLAMP	ABRAZADERA	MORSETTO	120M
					COLLIER	KLEMME	SPÆNDEBÅND	KLEM	
11		**86629542**		3	CONTRA PORCA, M8 x 1.25, Cl 8				
						LOCK NUT	TUERCA DE BLOQUEO	DADO DI BLOCCAGGIO	P263
					CONTRE-ECROU	SICHERUNGSMUTTER	LÅSEMØTRIK	BORGMOER	
12		**87745165**		4	LUZ, Strobe, LED Light	LIGHT	LUZ	LUCE	Z496
					FEU	LAMPE	BELYSNING	LAMP	
13		**84251531**		1	INSTRUÇÃO, Strobe Install	INSTRUCTION	INSTRUCCIÓN	ISTRUZIONI	Z571
					INSTRUCTION	ANLEITUNG	INSTRUKTION	INSTRUCTIE	

L225

DIA KIT, TURN SIGNAL LG (L223-L230,C232,C238)
DIA KIT, TURN SIGNAL LG (L223-L230,C232,C238)
DIA KIT, TURN SIGNAL LG (L223-L230,C232,C238)
DIA KIT, TURN SIGNAL LG (L223-L230,C232,C238)



DIA KIT, TURN SIGNAL LG (L223-L230,C232,C238)
DIA KIT, TURN SIGNAL LG (L223-L230,C232,C238)
DIA KIT, TURN SIGNAL LG (L223-L230,C232,C238)
DIA KIT, TURN SIGNAL LG (L223-L230,C232,C238)

R	N	P.N.	MOD	Q	Denominação Description	Description Bezeichnung	Denominacion Beskrivelse	Descrizione Beschrijving	L.C.
		84390425			JOGO, DIA Kit, Turn Signal, Incl. 1-13				
						KIT	JEUGO	KIT	4830
					POCHETTE	PACKUNG	KIT	KIT	
1		**9706748**		1	BRAÇADEIRA, 5/8", Insul, 5/16" Bolt				
						CLAMP	ABRAZADERA	MORSETTO	120M
					COLLIER	KLEMME	SPÆNDEBÅND	KLEM	
2		**9804258**		1	PARAFUSO, Hex Flg, M8 x 20, 8.8				
						BOLT	PERNO	BULLONE	140B
					VIS	SCHRAUBE	BOLT	BOUT	
3		**9804277**		2	PORCA, M8 x 1.25, Flg, Cl 8				
						NUT	TUERCA	DADO	010D
					ECROU	MUTTER	MØTRIK	MOER	
4		**9821783**		1	LÂMPADA INTERMITENTE, Assembly				
						FLASHER UNIT	UNIDAD INTERMITENTE	UNITÀ LAMPEGGIATORE	035L
					CENTRALE CLIGNOTAN	BLINKEREINHEIT	BLINKLAMPE	KNIPPERAUTOMAAT	
5		**84221257**		2	BRAÇADEIRA, J, 14.2mm	CLAMP	ABRAZADERA	MORSETTO	120M
					COLLIER	KLEMME	SPÆNDEBÅND	KLEM	
6		**84335931**		1	LUZ, Install, w/Turn Signal	LIGHT	LUZ	LUCE	Z496
					FEU	LAMPE	BELYSNING	LAMP	
7		**84383044**		1	CHICOTE, Rear, Road Jumper, NH				
						WIRE HARNESS	GRUPO DE CABLES	CABLAGGIO	070I
					FAISCEAU ELECTRIQUE	KABELBAUM	KABELNET	KABELBOOM	
8		**86512420**		2	PARAFUSO, Short NK, M8 x 20, Cl8.8, Full Thd				
						CARRIAGE BOLT	PERNO ALOMADO	BULLONE A TESTA TONI	P123
					VIS A TETE BOMBEE	SCHLOSSSCHRAUBE	BRÆDDEBOLT	SLOTBOUT	
9		**86604657**		1	INDICADOR DE DIREÇÃO	TURN SIGNAL INDICATC	INDIC. DE SEÑAL DE GIF	INDICATORE DI DIREZIC	029I
					CLIGNOTANT	FAHRTRICHTUNGSANZE	RETNINGSVISER	RICHTINGAANWIJZER	
10		**87634133**		1	INTERRUPTOR, Hazard Lights				
						SWITCH	INTERRUPTOR	INTERRUTTORE	075I
					CONTACTEUR	SCHALTER	KONTAKT	SCHAKELAAR	
11		**87668737**		11	TIRA, Fir Tree Assembly	STRAP	BANDA	FASCETTA	532B
					BRIDE	BAND	STROP	RIEM	
12		**126844A1**		1	BUJÃO, Cover	PLUG	TAPÓN	TAPPO	050T
					BOUCHON	STOPFEN	PROP	PLUG	
13		**84472134**		1	INSTRUÇÃO, Sheet, Turn Signal, LG				
						INSTRUCTION	INSTRUCCIÓN	ISTRUZIONI	Z571
					INSTRUCTION	ANLEITUNG	INSTRUKTION	INSTRUCTIE	

DIA KIT, MULTI-FUCTION ELEC MECH VERT (L223-L230,C232,C238)
DIA KIT, MULTI-FUCTION ELEC MECH VERT (L223-L230,C232,C238)
DIA KIT, MULTI-FUCTION ELEC MECH VERT (L223-L230,C232,C238)
DIA KIT, MULTI-FUCTION ELEC MECH VERT (L223-L230,C232,C238)



DIA KIT, MULTI-FUCTION ELEC MECH VERT (L223-L230,C232,C238)
DIA KIT, MULTI-FUCTION ELEC MECH VERT (L223-L230,C232,C238)
DIA KIT, MULTI-FUCTION ELEC MECH VERT (L223-L230,C232,C238)
DIA KIT, MULTI-FUCTION ELEC MECH VERT (L223-L230,C232,C238)

R	N	P.N.	MOD	Q	Denominação Description	Description Bezeichnung	Denominacion Beskrivelse	Descrizione Beschrijving	L.C.
		84399685			JOGO, DIA Kit, Multi-Function, Elec Mech, Incl. 1-10				
						KIT	JEUGO	KIT	4830
					POCHETTE	PACKUNG	KIT	KIT	
1		**9804258**		1	PARAFUSO, Hex Flg, M8 x 20, 8.8				
						BOLT	PERNO	BULLONE	140B
					VIS	SCHRAUBE	BOLT	BOUT	
2		**84251324**		1	CHICOTE, FE Boom, VT	WIRE HARNESS	GRUPO DE CABLES	CABLAGGIO	070I
					FAISCEAU ELECTRIQUE	KABELBAUM	KABELNET	KABELBOOM	
3		**84293533**		1	SUPORTE, Front Aux, Elec	BRACKET, SUPPORTING	PIEZA DE APOYO	SQUADRETTA	215S
					EQUERRE	SCHALTER,AUTOM.AUS	STOETTEBESLAG	DRAAGARM	
4		**86505868**		1	PORCA, M8, Flg Ser	NUT	TUERCA	DADO	010D
					ECROU	MUTTER	MØTRIK	MOER	
5		**87029955**		3	BRAÇADEIRA	CLAMP	ABRAZADERA	MORSETTO	120M
					COLLIER	KLEMME	SPÆNDEBÅND	KLEM	
6		**87030531**		2	PARAFUSO, ST8 X 19	SCREW	TORNILLO	VITE	040V
					VIS	SCHRAUBE	SKRUE	SCHROEF	
7		**87550233**		1	PARAFUSO, M10 X 25	SCREW	TORNILLO	VITE	040V
					VIS	SCHRAUBE	SKRUE	SCHROEF	
8		**87634134**		1	INTERRUPTOR, On/Off, Rocker				
						SWITCH	INTERRUPTOR	INTERRUTTORE	075I
					CONTACTEUR	SCHALTER	KONTAKT	SCHAKELAAR	
9		**84396783**		1	CHICOTE, Multi-Function Jumper				
						WIRE HARNESS	GRUPO DE CABLES	CABLAGGIO	070I
					FAISCEAU ELECTRIQUE	KABELBAUM	KABELNET	KABELBOOM	
10		**84399875**		1	INSTRUÇÃO, Installation, FE, Vertical				
						INSTRUCTION	INSTRUCCIÓN	ISTRUZIONI	Z571
					INSTRUCTION	ANLEITUNG	INSTRUKTION	INSTRUCTIE	

DIA KIT, MULTI-FUNCTION ELEC EH VERT (L223-L230,C232,C238)
DIA KIT, MULTI-FUNCTION ELEC EH VERT (L223-L230,C232,C238)
DIA KIT, MULTI-FUNCTION ELEC EH VERT (L223-L230,C232,C238)
DIA KIT, MULTI-FUNCTION ELEC EH VERT (L223-L230,C232,C238)



DIA KIT, MULTI-FUNCTION ELEC EH VERT (L223-L230,C232,C238)
DIA KIT, MULTI-FUNCTION ELEC EH VERT (L223-L230,C232,C238)
DIA KIT, MULTI-FUNCTION ELEC EH VERT (L223-L230,C232,C238)
DIA KIT, MULTI-FUNCTION ELEC EH VERT (L223-L230,C232,C238)

R	N	P.N.	MOD	Q	Denominação Description	Description Bezeichnung	Denominacion Beskrivelse	Descrizione Beschrijving	L.C.
		84399688			JOGO, DIA Kit, Multi-Function Elec, EH, Vert, Incl. 1-8				
						KIT	JEUGO	KIT	4830
					POCHETTE	PACKUNG	KIT	KIT	
1		**84251324**		1	CHICOTE, FE Boom, VT	WIRE HARNESS	GRUPO DE CABLES	CABLAGGIO	070I
					FAISCEAU ELECTRIQUE	KABELBAUM	KABELNET	KABELBOOM	
2		**84293533**		1	SUPORTE, Front Aux, Elec	BRACKET, SUPPORTING	PIEZA DE APOYO	SQUADRETTA	215S
					EQUERRE	SCHALTER,AUTOM.AUS	STOETTEBESLAG	DRAAGARM	
3		**86505868**		1	PORCA, M8, Flg Ser	NUT	TUERCA	DADO	010D
					ECROU	MUTTER	MØTRIK	MOER	
4		**87030531**		2	PARAFUSO, ST8 X 19	SCREW	TORNILLO	VITE	040V
					VIS	SCHRAUBE	SKRUE	SCHROEF	
5		**84396781**		1	CHICOTE, Multi-Function Jumper, EH				
						WIRE HARNESS	GRUPO DE CABLES	CABLAGGIO	070I
					FAISCEAU ELECTRIQUE	KABELBAUM	KABELNET	KABELBOOM	
6		**84469621**		1	INSTRUÇÃO, Instruction, Installation, FE, Vertical				
						INSTRUCTION	INSTRUCCIÓN	ISTRUZIONI	Z571
					INSTRUCTION	ANLEITUNG	INSTRUKTION	INSTRUCTIE	
7		**86637977**		2	BRAÇADEIRA, 1", Insul, 5/16" Bolt				
						CLAMP	ABRAZADERA	MORSETTO	120M
					COLLIER	KLEMME	SPÆNDEBÅND	KLEM	
8		**9804260**		1	PARAFUSO, Hex Flg, M8 x 30, 8.8, Full Thd				
						BOLT	PERNO	BULLONE	140B
					VIS	SCHRAUBE	BOLT	BOUT	

DIA KIT, EU ROAD LIGHTS LG NH (L223-L230,C232,C238)
DIA KIT, EU ROAD LIGHTS LG NH (L223-L230,C232,C238)
DIA KIT, EU ROAD LIGHTS LG NH (L223-L230,C232,C238)
DIA KIT, EU ROAD LIGHTS LG NH (L223-L230,C232,C238)



DIA KIT, EU ROAD LIGHTS LG NH (L223-L230,C232,C238)
DIA KIT, EU ROAD LIGHTS LG NH (L223-L230,C232,C238)
DIA KIT, EU ROAD LIGHTS LG NH (L223-L230,C232,C238)
DIA KIT, EU ROAD LIGHTS LG NH (L223-L230,C232,C238)

R	N	P.N.	MOD	Q	Denominação Description	Description Bezeichnung	Denominacion Beskrivelse	Descrizione Beschrijving	L.C.
		84424047			JOGO, DIA Kit, EU Road Lights, LG, NH, Incl. 1-38				
						KIT	JEUGO	KIT	4830
					POCHETTE	PACKUNG	KIT	KIT	
1		**263117**		6	PRENDEDOR DE CABOS, .14" x 11 1/2"				
						CABLE STRAP	BANDA DE CABLE	FASCETTA PER CAVO	P716
					BRIDE DE CABLE	KABELBINDER	KABELSTROP	BUNDELBAND	
2		**87668737**		5	TIRA, Fir Tree Assembly	STRAP	BANDA	FASCETTA	532B
					BRIDE	BAND	STROP	RIEM	
3		**9706748**		1	BRAÇADEIRA, 5/8", Insul, 5/16" Bolt				
						CLAMP	ABRAZADERA	MORSETTO	120M
					COLLIER	KLEMME	SPÆNDEBÅND	KLEM	
4		**9804258**		3	PARAFUSO, Hex Flg, M8 x 20, 8.8				
						BOLT	PERNO	BULLONE	140B
					VIS	SCHRAUBE	BOLT	BOUT	
5		**86604657**		1	INDICADOR DE DIREÇÃO	TURN SIGNAL INDICATC	INDIC. DE SEÑAL DE GIF	INDICATORE DI DIREZIC	029I
					CLIGNOTANT	FAHRTRICHTUNGSANZE	RETNINGSVISER	RICHTINGAANWIJZER	
6		**87634133**		1	INTERRUPTOR, Hazard Lights				
						SWITCH	INTERRUPTOR	INTERRUTTORE	075I
					CONTACTEUR	SCHALTER	KONTAKT	SCHAKELAAR	
7		**84263153**		1	INTERRUPTOR, Rocker, Loader Lockout				
						SWITCH	INTERRUPTOR	INTERRUTTORE	075I
					CONTACTEUR	SCHALTER	KONTAKT	SCHAKELAAR	
8		**84306586**		1	SUPORTE, Light, RH, Gray	BRACKET, SUPPORTING	PIEZA DE APOYO	SQUADRETTA	215S
					EQUERRE	SCHALTER,AUTOM.AUS	STOETTEBESLAG	DRAAGARM	
9		**84306584**		1	SUPORTE, Light, LH, Gray	BRACKET, SUPPORTING	PIEZA DE APOYO	SQUADRETTA	215S
					EQUERRE	SCHALTER,AUTOM.AUS	STOETTEBESLAG	DRAAGARM	
10		**87572859**		1	LÂMPADA, Head	LAMP	LÁMPARA	SPIA	009F
					LAMPE	LEUCHTE	LYGTE	LAMP	
11		**87572860**		1	LÂMPADA, Head	LAMP	LÁMPARA	SPIA	009F
					LAMPE	LEUCHTE	LYGTE	LAMP	
12		**280476**		4	PARAFUSO, Hex Wash Hd, 3/8" x 1"				
						SELF-TAP SCREW	TORNILLO AUTORROSC	VITE AUTOFILETTANTE	062V
					VIS AUTOTARAUDEUSE	SELBSTSCHN SCHRAUE	SELVLÅSENDE BOLT	ZELFTAPPENDE SCHRO	
13		**9821783**		1	LÂMPADA INTERMITENTE, Assembly				
						FLASHER UNIT	UNIDAD INTERMITENTE	UNITÀ LAMPEGGIATORE	035L
					CENTRALE CLIGNOTAN	BLINKEREINHEIT	BLINKLAMPE	KNIPPERAUTOMAAT	
14		**84262452**		1	CHICOTE, FE Boom, VT	WIRE HARNESS	GRUPO DE CABLES	CABLAGGIO	070I
					FAISCEAU ELECTRIQUE	KABELBAUM	KABELNET	KABELBOOM	
15		**84221257**		2	BRAÇADEIRA, J, 14.2mm	CLAMP	ABRAZADERA	MORSETTO	120M
					COLLIER	KLEMME	SPÆNDEBÅND	KLEM	
16		**86512420**		2	PARAFUSO, Short NK, M8 x 20, Cl8.8, Full Thd				
						CARRIAGE BOLT	PERNO ALOMADO	BULLONE A TESTA TONI	P123
					VIS A TETE BOMBEE	SCHLOSSSCHRAUBE	BRÆDDEBOLT	SLOTBOUT	
17		**9804277**		2	PORCA, M8 x 1.25, Flg, Cl 8				
						NUT	TUERCA	DADO	010D
					ECROU	MUTTER	MØTRIK	MOER	
18		**84420530**		1	CHICOTE, Boom, LH, VT	WIRE HARNESS	GRUPO DE CABLES	CABLAGGIO	070I
					FAISCEAU ELECTRIQUE	KABELBAUM	KABELNET	KABELBOOM	

DIA KIT, EU ROAD LIGHTS LG NH (L223-L230,C232,C238)
DIA KIT, EU ROAD LIGHTS LG NH (L223-L230,C232,C238)
DIA KIT, EU ROAD LIGHTS LG NH (L223-L230,C232,C238)
DIA KIT, EU ROAD LIGHTS LG NH (L223-L230,C232,C238)



DIA KIT, EU ROAD LIGHTS LG NH (L223-L230,C232,C238)
DIA KIT, EU ROAD LIGHTS LG NH (L223-L230,C232,C238)
DIA KIT, EU ROAD LIGHTS LG NH (L223-L230,C232,C238)
DIA KIT, EU ROAD LIGHTS LG NH (L223-L230,C232,C238)

R	N	P.N.	MOD	Q	Denominação Description	Description Bezeichnung	Denominacion Beskrivelse	Descrizione Beschrijving	L.C.
19		84383044		1	CHICOTE, Rear, Road Jumper				
						WIRE HARNESS	GRUPO DE CABLES	CABLAGGIO	070I
					FAISCEAU ELECTRIQUE	KABELBAUM	KABELNET	KABELBOOM	
20		86511042		2	PARAFUSO, Cross Pan Hd, M4 x 16				
						SCREW	TORNILLO	VITE	040V
					VIS	SCHRAUBE	SKRUE	SCHROEF	
21		82035642		2	FAROL, Work	HEADLAMP	FARO	FARO	220P
					FEU	FRONTSCHEINWERFER	HOVEDLAMPE	KOPLAMP	
22		84335806		1	ALOJAMENTO, RH, W/O Turn Signal				
						HOUSING	ALOJAMIENTO	ALLOGGIAMENTO	014V
					CARTER	GEHÄUSE	HUS	HUIS	
23		84335748		6	PARAFUSO, Light Round	SCREW	TORNILLO	VITE	040V
					VIS	SCHRAUBE	SKRUE	SCHROEF	
24		84335810		1	ALOJAMENTO, LH, W/O Turn Signal				
						HOUSING	ALOJAMIENTO	ALLOGGIAMENTO	014V
					CARTER	GEHÄUSE	HUS	HUIS	
25		84333233		2	SUPORTE	BRACKET	SOPORTE	STAFFA	225S
					SUPPORT	HALTERUNG	BESLAG	STEUN	
26		87682398		6	PARAFUSO	SCREW	TORNILLO	VITE	040V
					VIS	SCHRAUBE	SKRUE	SCHROEF	
27		84335751		2	PORCA, Grommet	NUT	TUERCA	DADO	010D
					ECROU	MUTTER	MØTRIK	MOER	
28		84173781		2	PARAFUSO, 10-16 X 5/8	SELF-TAP SCREW	TORNILLO AUTORROSC	VITE AUTOFILETTANTE	062V
					VIS AUTOTARAUDEUSE	SELBSTSCHN SCHRAUE	SELVLÅSENDE BOLT	ZELFTAPPENDE SCHRO	
29		86900239		1	PORCA, Spring	NUT	TUERCA	DADO	010D
					ECROU	MUTTER	MØTRIK	MOER	
30		87307791		4	PARAFUSO, 10-24 X 1/2	SCREW	TORNILLO	VITE	040V
					VIS	SCHRAUBE	SKRUE	SCHROEF	
31		84331370		2	CHICOTE, Lamp, Jumper, Front				
						WIRE HARNESS	GRUPO DE CABLES	CABLAGGIO	070I
					FAISCEAU ELECTRIQUE	KABELBAUM	KABELNET	KABELBOOM	
32		86589143		2	ESPAÇADOR, Assembly	SPACER	SEPARADOR	DISTANZIALE	075D
					ENTRETOISE	DISTANZSTÜCK	AFSTANDSSTYKKE	AFSTANDSSTUK	
33		86637977		2	BRAÇADEIRA, 1", Insul, 5/16" Bolt				
						CLAMP	ABRAZADERA	MORSETTO	120M
					COLLIER	KLEMME	SPÆNDEBÅND	KLEM	
34		87029955		2	BRAÇADEIRA, 3/8	CLAMP	ABRAZADERA	MORSETTO	120M
					COLLIER	KLEMME	SPÆNDEBÅND	KLEM	
35		86505868		4	PORCA, M8, Flg Ser	NUT	TUERCA	DADO	010D
					ECROU	MUTTER	MØTRIK	MOER	
36		87015934		2	PARAFUSO, Flange	BOLT	PERNO	BULLONE	140B
					VIS	SCHRAUBE	BOLT	BOUT	
37		84472128		1	INSTRUÇÃO, Instruction Sheet, Road Lights EU				
						INSTRUCTION	INSTRUCCIÓN	ISTRUZIONI	Z571
					INSTRUCTION	ANLEITUNG	INSTRUKTION	INSTRUCTIE	
38		84467699		2	BRAÇADEIRA, Clamp, P 25.4mm Insulated Special				
						CLAMP	ABRAZADERA	MORSETTO	120M
					COLLIER	KLEMME	SPÆNDEBÅND	KLEM	

DIA KIT, BATTERY DISCONNECT - LG (L223-L230,C232,C238)
DIA KIT, BATTERY DISCONNECT - LG (L223-L230,C232,C238)
DIA KIT, BATTERY DISCONNECT - LG (L223-L230,C232,C238)
DIA KIT, BATTERY DISCONNECT - LG (L223-L230,C232,C238)



DIA KIT, BATTERY DISCONNECT - LG (L223-L230,C232,C238)
DIA KIT, BATTERY DISCONNECT - LG (L223-L230,C232,C238)
DIA KIT, BATTERY DISCONNECT - LG (L223-L230,C232,C238)
DIA KIT, BATTERY DISCONNECT - LG (L223-L230,C232,C238)

R	N	P.N.	MOD	Q	Denominação Description	Description Bezeichnung	Denominacion Beskrivelse	Descrizione Beschrijving	L.C.
		84306066			JOGO, DIA Kit, Battery Disconnect, Large, Incl. 1-7				
						KIT	JEUGO	KIT	4830
					POCHETTE	PACKUNG	KIT	KIT	
1		**87458467**		1	INTERRUPTOR, Master Disconnect				
						SWITCH	CONTACTOR	INTERRUTTORE	8850
					CONTACTEUR	SCHALTER	KONTAKT	AAN-UIT SCHAKELAAR	
2		**84283241**		1	CABO DO TERRA	GROUND CABLE	CABLE DE MASA	CAVO DI TERRA	112C
					CABLE DE MASSE	MASSEKABEL	STELKABEL	MASSAKABEL	
3		**86637976**		1	BRAÇADEIRA, 3/4", Insul, 5/16" Bolt				
						CLAMP	ABRAZADERA	MORSETTO	120M
					COLLIER	KLEMME	SPÆNDEBÅND	KLEM	
4		**87698844**		1	PARAFUSO, Flange, M12 X 20				
						BOLT	PERNO	BULLONE	140B
					VIS	SCHRAUBE	BOLT	BOUT	
5		**84284996**		1	CABO BATERIA NEG	NEG BATTERY CABLE	CABLE NEG. DE LA BATI	CAVO NEGATIVO DELLA	Z221
					CABLE DE BATTERIE - N	NEGATIVES BATTERIEK.	BATTERIKABEL - NEG	ACCUKABEL - MIN	
6		**176332A1**		1	DECALCOMANIA, Battery Disconnect				
						DECAL	CALCOMANIA	DECALCOMANIA	P903
					DECALCOMANIE	ABZIEHBILD	TRANSFER	DECAL	
7		**84353245**		1	INSTRUÇÃO, Installation, Disconnect				
						INSTRUCTION	INSTRUCCIÓN	ISTRUZIONI	Z571
					INSTRUCTION	ANLEITUNG	INSTRUKTION	INSTRUCTIE	

DIA KIT, MECH CHASS OPT HARNESS - LARGE (L223-L230)
DIA KIT, MECH CHASS OPT HARNESS - LARGE (L223-L230)
DIA KIT, MECH CHASS OPT HARNESS - LARGE (L223-L230)
DIA KIT, MECH CHASS OPT HARNESS - LARGE (L223-L230)



DIA KIT, MECH CHASS OPT HARNESS - LARGE (L223-L230)
DIA KIT, MECH CHASS OPT HARNESS - LARGE (L223-L230)
DIA KIT, MECH CHASS OPT HARNESS - LARGE (L223-L230)
DIA KIT, MECH CHASS OPT HARNESS - LARGE (L223-L230)

R	N	P.N.	MOD	Q	Denominação Description	Description Bezeichnung	Denominacion Beskrivelse	Descrizione Beschrijving	L.C.
		84424526			JOGO, DIA Kit, Mech Chass, Option Harness, Incl. 1-5				
						KIT	JEUGO	KIT	4830
					POCHETTE	PACKUNG	KIT	KIT	
1		**84285504**		1	SUPORTE, Double Fuse Box				
						BRACKET, SUPPORTING	PIEZA DE APOYO	SQUADRETTA	215S
					EQUERRE	SCHALTER,AUTOM.AUS	STOETTEBESLAG	DRAAGARM	
2		**86000810**		1	BRAÇADEIRA	CLAMP	ABRAZADERA	MORSETTO	120M
					COLLIER	KLEMME	SPÆNDEBÅND	KLEM	
3		**84315527**		1	CHICOTE, Chassis	WIRE HARNESS	GRUPO DE CABLES	CABLAGGIO	070I
					FAISCEAU ELECTRIQUE	KABELBAUM	KABELNET	KABELBOOM	
4		**86511841**		3	PARAFUSO, Hex Flg, M8 x 16, 8.8				
						BOLT	PERNO	BULLONE	140B
					VIS	SCHRAUBE	BOLT	BOUT	
5		**{84424527}**		1	Installation, Option, Harness				

DIA KIT, SIDE LAMP (ALL NH)
DIA KIT, SIDE LAMP (ALL NH)
DIA KIT, SIDE LAMP (ALL NH)
DIA KIT, SIDE LAMP (ALL NH)



DIA KIT, SIDE LAMP (ALL NH)
DIA KIT, SIDE LAMP (ALL NH)
DIA KIT, SIDE LAMP (ALL NH)
DIA KIT, SIDE LAMP (ALL NH)

R	N	P.N.	MOD	Q	Denominação Description Bezeichnung	Description Bezeichnung Beschrijving	Denominacion Beskrivelse Beschrijving	Descrizione Beschrijving Beschrijving	L.C.
		84421496			KIT DE SERVIÇO, DIA Kit, Side Lamp, Incl. 1-6 SERVICE KIT KIT D'ENTRETIEN	SERVICE KIT SERVICE-SATZ	KIT DE SERVICIO SERVICESÆT	KIT DI MANUTENZIONE SERVICEKIT	021K
1		**82002966**		1	TOMADA ELÉTRICA, Aux, Electric Power POWER SOCKET PRISE DE COURANT	POWER SOCKET STECKDOSE	ZÓCALO DE CORRIENTE STRØMUDTAG	PRESA DI CORRENTE CONTACTDOOS	205P
2		**84422958**		1	CHICOTE, Harness, Wire, Side Lamp WIRE HARNESS FAISCEAU ELECTRIQUE	WIRE HARNESS KABELBAUM	GRUPO DE CABLES KABELNET	CABLAGGIO KABELBOOM	070I
3		**84384729**		2	LANTERNA LATERAL FEU LATERAL	SIDE LAMP ASSY SEITENLEUCHTENBAUG	CONJ. DE LÁMP. LATER. SIDELYGTE, KPL.	COMPLESSIVO LUCI LAT ZIJLAMP	011F
4		**87016557**		2	PARAFUSO, Hex Flg Hd, M8 x 25 SELF-TAP SCREW VIS AUTOTARAUDEUSE	SELF-TAP SCREW SELBSTSCHN SCHRAUE	TORNILLO AUTORROSC SELVLÅSENDE BOLT	VITE AUTOFILETTANTE ZELFTAPPENDE SCHRO	062V
5		**87668737**		4	TIRA, Fir Tree Assembly BRIDE	STRAP BAND	BANDA STROP	FASCETTA RIEM	532B
6		**84423012**		1	INSTRUÇÃO, Instruction, Installation, Side Lamp INSTRUCTION INSTRUCTION	INSTRUCTION ANLEITUNG	INSTRUCCIÓN INSTRUKTION	ISTRUZIONI INSTRUCTIE	Z571

DIA KIT, 72IN SPILL GUARD (L218-C227)
DIA KIT, 72IN SPILL GUARD (L218-C227)
DIA KIT, 72IN SPILL GUARD (L218-C227)
DIA KIT, 72IN SPILL GUARD (L218-C227)



DIA KIT, 72IN SPILL GUARD (L218-C227)
DIA KIT, 72IN SPILL GUARD (L218-C227)
DIA KIT, 72IN SPILL GUARD (L218-C227)
DIA KIT, 72IN SPILL GUARD (L218-C227)

R	N	P.N.	MOD	Q	Denominação Description	Description Bezeichnung	Denominacion Beskrivelse	Descrizione Beschrijving	L.C.
		84344509			JOGO, DIA Kit, 72in Spill Guard, Gray, Incl. 1-6				
						KIT	JEUGO	KIT	4830
					POCHETTE	PACKUNG	KIT	KIT	
1		**84263255**		1	EXTENSÃO, 72in Spill Guard, Gray				
						EXTENSION	EXTENSIÓN	PROLUNGA	226P
					RALLONGE	ERWEITERUNG	FORLÆNGNING	VERLENGSTUK	
2		**120044**		2	PARAFUSO, Short NK, M12 x 30, Cl8.8, Full Thd				
						CARRIAGE BOLT	PERNO ALOMADO	BULLONE A TESTA TONI	P123
					VIS A TETE BOMBEE	SCHLOSSSCHRAUBE	BRÆDDEBOLT	SLOTBOUT	
3		**86512497**		2	PORCA, M12 x 1.75, Flg, Cl 10				
						NUT	TUERCA	DADO	010D
					ECROU	MUTTER	MØTRIK	MOER	
4		**9804262**		4	PARAFUSO, Hex Flg, M10 x 30, 8.8				
						BOLT	PERNO	BULLONE	140B
					VIS	SCHRAUBE	BOLT	BOUT	
5		**390618A1**		4	INSERTO, M10, Threaded	INSERT	INTRODUCTOR	INSERTO	4675
					INSERT	EINSATZ	INDSATS	TUSSENSTUK	
6		**84353935**		1	INSTRUÇÃO, Installation	INSTRUCTION	INSTRUCCIÓN	ISTRUZIONI	Z571
					INSTRUCTION	ANLEITUNG	INSTRUKTION	INSTRUCTIE	

DIA KIT, 78IN SPILL GUARD (L218-C238)
DIA KIT, 78IN SPILL GUARD (L218-C238)
DIA KIT, 78IN SPILL GUARD (L218-C238)
DIA KIT, 78IN SPILL GUARD (L218-C238)



DIA KIT, 78IN SPILL GUARD (L218-C238)
DIA KIT, 78IN SPILL GUARD (L218-C238)
DIA KIT, 78IN SPILL GUARD (L218-C238)
DIA KIT, 78IN SPILL GUARD (L218-C238)

R	N	P.N.	MOD	Q	Denominação Description	Description Bezeichnung	Denominacion Beskrivelse	Descrizione Beschrijving	L.C.
		84344514			JOGO, DIA Kit, 78in Spill Guard, Gray, Incl. 1-6				
						KIT	JEUGO	KIT	4830
					POCHETTE	PACKUNG	KIT	KIT	
1		**84263257**		1	EXTENSÃO, 78in Spill Guard, Gray				
						EXTENSION	EXTENSIÓN	PROLUNGA	226P
					RALLONGE	ERWEITERUNG	FORLÆNGNING	VERLENGSTUK	
2		**120044**		2	PARAFUSO, Short NK, M12 x 30, Cl8.8, Full Thd				
						CARRIAGE BOLT	PERNO ALOMADO	BULLONE A TESTA TONI	P123
					VIS A TETE BOMBEE	SCHLOSSSCHRAUBE	BRÆDDEBOLT	SLOTBOUT	
3		**86512497**		2	PORCA, M12 x 1.75, Flg, Cl 10				
						NUT	TUERCA	DADO	010D
					ECROU	MUTTER	MØTRIK	MOER	
4		**9804262**		4	PARAFUSO, Hex Flg, M10 x 30, 8.8				
						BOLT	PERNO	BULLONE	140B
					VIS	SCHRAUBE	BOLT	BOUT	
5		**390618A1**		4	INSERTO, M10, Threaded	INSERT	INTRODUCTOR	INSERTO	4675
					INSERT	EINSATZ	INDSATS	TUSSENSTUK	
6		**84353935**		1	INSTRUÇÃO, Installation	INSTRUCTION	INSTRUCCIÓN	ISTRUZIONI	Z571
					INSTRUCTION	ANLEITUNG	INSTRUKTION	INSTRUCTIE	

88.082.05		p1	01/11

DIA KIT, 84IN SPILL GUARD GRAY (L223-L230,C232,C238)
DIA KIT, 84IN SPILL GUARD GRAY (L223-L230,C232,C238)
DIA KIT, 84IN SPILL GUARD GRAY (L223-L230,C232,C238)
DIA KIT, 84IN SPILL GUARD GRAY (L223-L230,C232,C238)



DIA KIT, 84IN SPILL GUARD GRAY (L223-L230,C232,C238)
DIA KIT, 84IN SPILL GUARD GRAY (L223-L230,C232,C238)
DIA KIT, 84IN SPILL GUARD GRAY (L223-L230,C232,C238)
DIA KIT, 84IN SPILL GUARD GRAY (L223-L230,C232,C238)

R	N	P.N.	MOD	Q	Denominação Description Bezeichnung	Description Denominacion Beskrivelse	Denominacion Descrizione Beschrijving	L.C.
		84344520			JOGO, DIA Kit, 84in Spill Guard, Gray, Incl. 1-6			
					KIT	JEUGO	KIT	4830
					POCHETTE	PACKUNG	KIT	KIT
1		**84263259**		1	EXTENSÃO, 84in Spill Guard, Gray			
					EXTENSION	EXTENSIÓN	PROLUNGA	226P
					RALLONGE	ERWEITERUNG	FORLÆNGNING	VERLENGSTUK
2		**120044**		2	PARAFUSO, Short NK, M12 x 30, Cl8.8, Full Thd			
					CARRIAGE BOLT	PERNO ALOMADO	BULLONE A TESTA TONI	P123
					VIS A TETE BOMBEE	SCHLOSSSCHRAUBE	BRÆDDEBOLT	SLOTBOUT
3		**86512497**		2	PORCA, M12 x 1.75, Flg, Cl 10			
					NUT	TUERCA	DADO	010D
					ECROU	MUTTER	MØTRIK	MOER
4		**9804262**		4	PARAFUSO, Hex Flg, M10 x 30, 8.8			
					BOLT	PERNO	BULLONE	140B
					VIS	SCHRAUBE	BOLT	BOUT
5		**390618A1**		4	INSERTO, M10, Threaded	INSERT	INTRODUCTOR	INSERTO	4675
					INSERT	EINSATZ	INDSATS	TUSSENSTUK
6		**84353935**		1	INSTRUÇÃO, Installation	INSTRUCTION	INSTRUCCIÓN	ISTRUZIONI	Z571
					INSTRUCTION	ANLEITUNG	INSTRUKTION	INSTRUCTIE

88.082.08		p1	01/11

DIA KIT, 72IN B.O.C.E. (L213-C227)
DIA KIT, 72IN B.O.C.E. (L213-C227)
DIA KIT, 72IN B.O.C.E. (L213-C227)
DIA KIT, 72IN B.O.C.E. (L213-C227)



DIA KIT, 72IN B.O.C.E. (L213-C227)
DIA KIT, 72IN B.O.C.E. (L213-C227)
DIA KIT, 72IN B.O.C.E. (L213-C227)
DIA KIT, 72IN B.O.C.E. (L213-C227)

R	N	P.N.	MOD	Q	Denominação Description	Description Bezeichnung	Denominacion Beskrivelse	Descrizione Beschrijving	L.C.
		84399878			JOGO, DIA Kit, 72in B.O.C.E., Incl. 1-4				
						KIT	JEUGO	KIT	4830
					POCHETTE	PACKUNG	KIT	KIT	
1		**86577169**		1	BORDA CORTANTE, 72in, Bolt On				
						CUTTING EDGE	BORDE DE CORTE	BORDO TAGLIENTE	018T
					BORD TRANCHANT	SCHNEIDKANTE	SKÆREKANT	SNIJRAND	
2		**86548338**		7	PARAFUSO DE ARADO, 5/8"-11 x 2", G5				
						PLOW BOLT	PERNO DE ARADO	BULLONE SCANALATO	P128
					BOULON DE CHARRUE	PFLUGSCHRAUBE	PLOVRIGEL	PLOEGBOUT	
3		**280374**		7	PORCA, 5/8"-11, G5	NUT	TUERCA	DADO	010D
					ECROU	MUTTER	MØTRIK	MOER	
4		**84399879**		1	INSTRUÇÃO, Sheet, B.O.C.E.				
						INSTRUCTION	INSTRUCCIÓN	ISTRUZIONI	Z571
					INSTRUCTION	ANLEITUNG	INSTRUKTION	INSTRUCTIE	

L225

88.082.09		p1	01/11

DIA KIT, 78IN B.O.C.E. (L218-C238)
DIA KIT, 78IN B.O.C.E. (L218-C238)
DIA KIT, 78IN B.O.C.E. (L218-C238)
DIA KIT, 78IN B.O.C.E. (L218-C238)



DIA KIT, 78IN B.O.C.E. (L218-C238)
DIA KIT, 78IN B.O.C.E. (L218-C238)
DIA KIT, 78IN B.O.C.E. (L218-C238)
DIA KIT, 78IN B.O.C.E. (L218-C238)

R	N	P.N.	MOD	Q	Denominação Description Bezeichnung	Description Bezeichnung	Denominacion Beskrivelse	Descrizione Beschrijving	L.C.
		84402211			JOGO, DIA Kit, 78in B.O.C.E., Incl. 1-4				
						KIT	JEUGO	KIT	4830
					POCHETTE	PACKUNG	KIT	KIT	
1		**86577171**		1	BORDA CORTANTE, 78in, Bolt On				
						CUTTING EDGE	BORDE DE CORTE	BORDO TAGLIENTE	018T
					BORD TRANCHANT	SCHNEIDKANTE	SKÆREKANT	SNIJRAND	
2		**86548338**		9	PARAFUSO DE ARADO, 5/8"-11 x 2", G5				
						PLOW BOLT	PERNO DE ARADO	BULLONE SCANALATO	P128
					BOULON DE CHARRUE	PFLUGSCHRAUBE	PLOVRIGEL	PLOEGBOUT	
3		**280374**		9	PORCA, 5/8"-11, G5	NUT	TUERCA	DADO	010D
					ECROU	MUTTER	MØTRIK	MOER	
4		**84399879**		1	INSTRUÇÃO, Sheet, B.O.C.E.				
						INSTRUCTION	INSTRUCCIÓN	ISTRUZIONI	Z571
					INSTRUCTION	ANLEITUNG	INSTRUKTION	INSTRUCTIE	

DIA KIT, 84IN B.O.C.E. (L218-C238)
DIA KIT, 84IN B.O.C.E. (L218-C238)
DIA KIT, 84IN B.O.C.E. (L218-C238)
DIA KIT, 84IN B.O.C.E. (L218-C238)



DIA KIT, 84IN B.O.C.E. (L218-C238)
DIA KIT, 84IN B.O.C.E. (L218-C238)
DIA KIT, 84IN B.O.C.E. (L218-C238)
DIA KIT, 84IN B.O.C.E. (L218-C238)

R	N	P.N.	MOD	Q	Denominação Description Bezeichnung	Description Bezeichnung	Denominacion Beskrivelse	Descrizione Beschrijving	L.C.
		84402199			JOGO, DIA Kit, 84in B.O.C.E., Incl. 1-4				
						KIT	JEUGO	KIT	4830
					POCHETTE	PACKUNG	KIT	KIT	
1		**86577173**		1	BORDA CORTANTE, 84in, Bolt On				
						CUTTING EDGE	BORDE DE CORTE	BORDO TAGLIENTE	018T
					BORD TRANCHANT	SCHNEIDKANTE	SKÆREKANT	SNIJRAND	
2		**86548338**		9	PARAFUSO DE ARADO, 5/8"-11 x 2", G5				
						PLOW BOLT	PERNO DE ARADO	BULLONE SCANALATO	P128
					BOULON DE CHARRUE	PFLUGSCHRAUBE	PLOVRIGEL	PLOEGBOUT	
3		**280374**		9	PORCA, 5/8"-11, G5	NUT	TUERCA	DADO	010D
					ECROU	MUTTER	MØTRIK	MOER	
4		**84402215**		1	INSTRUÇÃO, Sheet, B.O.C.E.				
						INSTRUCTION	INSTRUCCIÓN	ISTRUZIONI	Z571
					INSTRUCTION	ANLEITUNG	INSTRUKTION	INSTRUCTIE	

DIA KIT, BUCKET TEETH (ALL NH)
DIA KIT, BUCKET TEETH (ALL NH)
DIA KIT, BUCKET TEETH (ALL NH)
DIA KIT, BUCKET TEETH (ALL NH)



DIA KIT, BUCKET TEETH (ALL NH)
DIA KIT, BUCKET TEETH (ALL NH)
DIA KIT, BUCKET TEETH (ALL NH)
DIA KIT, BUCKET TEETH (ALL NH)

R	N	P.N.	MOD	Q	Denominação Description Bezeichnung	Description Bezeichnung	Denominacion Beskrivelse	Descrizione Beschrijving	L.C.
		84425857			JOGO, DIA Kit, Bucket Teeth, Incl. 1-4				
						KIT	JEUGO	KIT	4830
					POCHETTE	PACKUNG	KIT	KIT	
1		**84239378**		9	DENTE, Bolt On	TOOTH	DIENTE	DENTI	9130
					DENT	ZAHN	TAND	TAND	
2		**280374**		18	PORCA, 5/8"-11, G5	NUT	TUERCA	DADO	010D
					ECROU	MUTTER	MØTRIK	MOER	
3		**86548338**		18	PARAFUSO DE ARADO, 5/8"-11 x 2", G5				
						PLOW BOLT	PERNO DE ARADO	BULLONE SCANALATO	P128
					BOULON DE CHARRUE	PFLUGSCHRAUBE	PLOVRIGEL	PLOEGBOUT	
4		**84425858**		1	INSTRUÇÃO, Instruction Sheet, Bucket Teeth				
						INSTRUCTION	INSTRUCCIÓN	ISTRUZIONI	Z571
					INSTRUCTION	ANLEITUNG	INSTRUKTION	INSTRUCTIE	

DIA KIT, BUCKETS - FIELD (ALL NH)
DIA KIT, BUCKETS - FIELD (ALL NH)
DIA KIT, BUCKETS - FIELD (ALL NH)
DIA KIT, BUCKETS - FIELD (ALL NH)



DIA KIT, BUCKETS - FIELD (ALL NH)
DIA KIT, BUCKETS - FIELD (ALL NH)
DIA KIT, BUCKETS - FIELD (ALL NH)
DIA KIT, BUCKETS - FIELD (ALL NH)

R	N	P.N.	MOD	Q	Denominação Description Description Bezeichnung Denominacion Beskrivelse Descrizione Beschrijving	L.C.
1		{84363584}			DIA Kit, Bucket 66in DF, (L213-L220)	
2		{84363585}			DIA Kit, Bucket 72in DF, (L213-C227)	
3		{84363589}			DIA Kit, Bucket 78in DF, (L218-C238)	
4		{84363590}			DIA Kit, Bucket 60in LP, (L213,L215)	
5		{84363594}			DIA Kit, Bucket 66in LPE, (L213-L220)	
6		{84363597}			DIA Kit, Bucket 72in LPE, (L213-C227)	
7		{84363598}			DIA Kit, Bucket 78in LPE, (L218-C238)	
8		{84363603}			DIA Kit, Bucket 84in LPE, (L218-C238)	
9		{84363606}			DIA Kit, Bucket 60in LM, (L213,L215)	
10		{84363610}			DIA Kit, Bucket 72in LM, (L213-C227)	
11		{84363611}			DIA Kit, Bucket 84in LM, (L218-C238)	
12		{84363614}			DIA Kit, Bucket 60in MS, (L213,L215)	
13		{84363615}			DIA Kit, Bucket 72in MS, (L213-C227)	
14		{84363618}			DIA Kit, Bucket 84in MS, (L218-C238)	
15		{84363619}			DIA Kit, Bucket 66in HD, (L213-L220)	
16		{84363623}			DIA Kit, Bucket 72in HD, (L213-C227)	

DIA KIT, BUCKETS - FIELD (ALL NH)
DIA KIT, BUCKETS - FIELD (ALL NH)
DIA KIT, BUCKETS - FIELD (ALL NH)
DIA KIT, BUCKETS - FIELD (ALL NH)



DIA KIT, BUCKETS - FIELD (ALL NH)
DIA KIT, BUCKETS - FIELD (ALL NH)
DIA KIT, BUCKETS - FIELD (ALL NH)
DIA KIT, BUCKETS - FIELD (ALL NH)

R	N	P.N.	MOD	Q	Denominação Description	Description Bezeichnung	Denominacion Beskrivelse	Descrizione Beschrijving	L.C.
17		{84363624}			DIA Kit, Bucket 78in HD, (L218-C238)				
18		{84363627}			DIA Kit, Bucket 84in HD, (L223-C238)				

DIA KIT, SINGLE POINT LIFT HOOK (L223-L230,C232,C238)
DIA KIT, SINGLE POINT LIFT HOOK (L223-L230,C232,C238)
DIA KIT, SINGLE POINT LIFT HOOK (L223-L230,C232,C238)
DIA KIT, SINGLE POINT LIFT HOOK (L223-L230,C232,C238)



DIA KIT, SINGLE POINT LIFT HOOK (L223-L230,C232,C238)
DIA KIT, SINGLE POINT LIFT HOOK (L223-L230,C232,C238)
DIA KIT, SINGLE POINT LIFT HOOK (L223-L230,C232,C238)
DIA KIT, SINGLE POINT LIFT HOOK (L223-L230,C232,C238)

R	N	P.N.	MOD	Q	Denominação Description Bezeichnung	Denominacion Beskrivelse	Descrizione Beschrijving	L.C.
		84408948			KIT DE SERVIÇO, DIA Kit, Single Point Lift Hook, Incl. 1-14 SERVICE KIT KIT D'ENTRETIEN	KIT DE SERVICIO SERVICE-SATZ	KIT DI MANUTENZIONE SERVICESÆT	021K SERVICEKIT
1		**9804277**		4	PORCA, M8 x 1.25, Flg, Cl 8 NUT ECROU	TUERCA MUTTER	DADO MØTRIK	010D MOER
2		**84362347**		1	SUPORTE, Single Point, Gray CARRIER SUPPORT	SOPORTE TRÄGER	SUPPORTO MEDBRINGER	196P DRAGER
3		**84388634**		2	PLACA PLÁSTICA, Spacer, Nylatron Block PLASTIC PLATE PLAQUE EN PLASTIQUE	PLACA DE PLÁSTICO KUNSTSTOFFPLATTE	PIASTRA DI PLASTICA PLASTPLADE	P778 KUNSTSTOFPLAAT
4		**84408937**		1	PLACA, RH, Lift Strap PLAQUE	PLATE PLATTE	PLACA PLADE	PIASTRA PLAAT	105P
5		**84408939**		1	PLACA, LH, Lift Strap PLAQUE	PLATE PLATTE	PLACA PLADE	PIASTRA PLAAT	105P
6		**84408941**		1	PINO, Gray BROCHE	PIN PIN	PASADOR STIFT	PERNO PEN	080P
7		**84409170**		2	PLACA, Cover, Gray PLAQUE	PLATE PLATTE	PLACA PLADE	PIASTRA PLAAT	105P
8		**86625221**		4	PARAFUSO, Hex Soc Hd, M8 x 30, 8.8 SCREW VIS	TORNILLO SCHRAUBE	VITE SKRUE	040V SCHROEF
9		**87564735**		4	PARAFUSO, M10 X 35 VIS	BOLT SCHRAUBE	PERNO BOLT	BULLONE BOUT	140B
10		**87681209**		10	PORCA, M12 ECROU	NUT MUTTER	TUERCA MØTRIK	DADO MOER	010D
11		**87695414**		8	PARAFUSO, M12 X 35 VIS	BOLT SCHRAUBE	PERNO BOLT	BULLONE BOUT	140B
12		**87698845**		2	PARAFUSO, M12 X 70 VIS	BOLT SCHRAUBE	PERNO BOLT	BULLONE BOUT	140B
13		**84475174**		1	INSTRUÇÃO, Instruction, Single Point Large Vertical INSTRUCTION INSTRUCTION	INSTRUCCIÓN ANLEITUNG	ISTRUZIONI INSTRUKTION	Z571 INSTRUCTIE
14		**139729A1**		2	DECALCOMANIA, Lift DECALCOMANIE	DECAL ABZIEHBILD	CALCOMANIA TRANSFER	DECALCOMANIA DECAL	P903

DIA KIT, RADIO (ALL NH)
DIA KIT, RADIO (ALL NH)
DIA KIT, RADIO (ALL NH)
DIA KIT, RADIO (ALL NH)



DIA KIT, RADIO (ALL NH)
DIA KIT, RADIO (ALL NH)
DIA KIT, RADIO (ALL NH)
DIA KIT, RADIO (ALL NH)

R	N	P.N.	MOD	Q	Denominação Description	Description Bezeichnung	Denominacion Beskrivelse	Descrizione Beschrijving	L.C.
		84420704			JOGO, DIA Kit, Radio, Incl. 1-14				
						KIT	JEUGO	KIT	4830
					POCHETTE	PACKUNG	KIT	KIT	
1		**9804258**		2	PARAFUSO, Hex Flg, M8 x 20, 8.8				
						BOLT	PERNO	BULLONE	140B
					VIS	SCHRAUBE	BOLT	BOUT	
2		**84281707**		2	SUPORTE, Sheet, Speaker Bracket, Gray				
						BRACKET	SOPORTE	STAFFA	225S
					SUPPORT	HALTERUNG	BESLAG	STEUN	
3		**84281708**		1	SUPORTE, Sheet, Radio Bracket, Gray				
						BRACKET	SOPORTE	STAFFA	225S
					SUPPORT	HALTERUNG	BESLAG	STEUN	
4		**84298557**		2	ALTO-FALANTE, 4in, Sealed HP				
						SPEAKER	ALTAVOZ	ALTOPARLANTE	039A
					HAUT-PARLEUR	LAUTSPRECHER	HØJTALER	LUIDSPREKER	
5		**84347538**		1	ESPUMA ISOLANTE, Antenna Seal				
						FOAM INSULATION	ESPUMA AISLANTE	ISOLANTE IN SCHIUMA	051S
					MOUSSE ISOLANTE	SCHAUMSTOFFISOLIER	SKUM ISOLERING	SCHUIMISOLATIE	
6		**86500939**		8	PARAFUSO, Hex Wash Hd, #10 x 3/8"				
						SELF-TAP SCREW	TORNILLO AUTORROSC	VITE AUTOFILETTANTE	062V
					VIS AUTOTARAUDEUSE	SELBSTSCHN SCHRAUE	SELVLÅSENDE BOLT	ZELFTAPPENDE SCHRO	
7		**13272611**		4	PARAFUSO, Cross Pan Hd, M4 x 25				
						SCREW	TORNILLO	VITE	040V
					VIS	SCHRAUBE	SKRUE	SCHROEF	
8		**86624182**		4	ARRUELA PLANA, M6 x 18 x 1.6				
						WASHER	ARANDELA	RONDELLA	131R
					RONDELLE	UNTERLEGSCHEIBE	FLADSKIVE	SLUITRING	
9		**86625199**		4	PARAFUSO, Hex Flg Hd, M6 x 13				
						SELF-TAP SCREW	TORNILLO AUTORROSC	VITE AUTOFILETTANTE	062V
					VIS AUTOTARAUDEUSE	SELBSTSCHN SCHRAUE	SELVLÅSENDE BOLT	ZELFTAPPENDE SCHRO	
10		**86625241**		2	ARRUELA PLANA, 13/32" x 13/16" x .089", HDN				
						WASHER	ARANDELA	RONDELLA	131R
					RONDELLE	UNTERLEGSCHEIBE	FLADSKIVE	SLUITRING	
11		**87668735**		1	ANTENA, Rubber Mast	ANTENNA	ANTENA	ANTENNA	064A
					ANTENNE	ANTENNE	ANTENNE	ANTENNE	
12		**87672223**		1	RÁDIO	RADIO	RADIO	AUTORADIO	042R
					RADIO	RADIO	RADIO	RADIO	
13		**84420705**		1	INSTRUÇÃO, Radio Kit	INSTRUCTION	INSTRUCCIÓN	ISTRUZIONI	Z571
					INSTRUCTION	ANLEITUNG	INSTRUKTION	INSTRUCTIE	
14		**84363241**		1	ESPAÇADOR, Radio Cooling				
						SPACER	SEPARADOR	DISTANZIALE	075D
					ENTRETOISE	DISTANZSTÜCK	AFSTANDSSTYKKE	AFSTANDSSTUK	

88.088.08		p1	05/11

DIA KIT, 4 POINT LIFT HOOK (L223-L230,C232,C238)
DIA KIT, 4 POINT LIFT HOOK (L223-L230,C232,C238)
DIA KIT, 4 POINT LIFT HOOK (L223-L230,C232,C238)
DIA KIT, 4 POINT LIFT HOOK (L223-L230,C232,C238)



DIA KIT, 4 POINT LIFT HOOK (L223-L230,C232,C238)
DIA KIT, 4 POINT LIFT HOOK (L223-L230,C232,C238)
DIA KIT, 4 POINT LIFT HOOK (L223-L230,C232,C238)
DIA KIT, 4 POINT LIFT HOOK (L223-L230,C232,C238)

R	N	P.N.	MOD	Q	Denominação Description	Description Bezeichnung	Denominacion Beskrivelse	Descrizione Beschrijving	L.C.
		84405091			KIT DE SERVIÇO, DIA Kit, 4 Point Lift Hook, Order from Whole Goods PN: 735036026, Incl. 1-9				
						SERVICE KIT	KIT DE SERVICIO	KIT DI MANUTENZIONE	021K
					KIT D'ENTRETIEN	SERVICE-SATZ	SERVICESÆT	SERVICEKIT	
1		**87698849**		4	PARAFUSO, M16 X 50	BOLT	PERNO	BULLONE	140B
					VIS	SCHRAUBE	BOLT	BOUT	
2		**86512498**		4	PORCA, M16 x 2, Flg, Cl 10	NUT	TUERCA	DADO	010D
					ECROU	MUTTER	MØTRIK	MOER	
3		**84374556**		2	SUPORTE, Lift, Gray	BRACKET	SOPORTE	STAFFA	225S
					SUPPORT	HALTERUNG	BESLAG	STEUN	
4		**87695413**		4	PARAFUSO, Flange	BOLT	PERNO	BULLONE	140B
					VIS	SCHRAUBE	BOLT	BOUT	
5		**87533547**		4	PORCA, M12 X 1.75	NUT	TUERCA	DADO	010D
					ECROU	MUTTER	MØTRIK	MOER	
6		**139729A1**		4	DECALCOMANIA	DECAL	CALCOMANIA	DECALCOMANIA	P903
					DECALCOMANIE	ABZIEHBILD	TRANSFER	DECAL	
7		**84403433**		1	SUPORTE, WA, Lift, RH, Gray				
						BRACKET	SOPORTE	STAFFA	225S
					SUPPORT	HALTERUNG	BESLAG	STEUN	
8		**84403431**		1	SUPORTE, WA, Lift, LH, Gray				
						BRACKET	SOPORTE	STAFFA	225S
					SUPPORT	HALTERUNG	BESLAG	STEUN	
9		**84405093**		1	INSTRUÇÃO, 4 Point Lift Hook				
						INSTRUCTION	INSTRUCCIÓN	ISTRUZIONI	Z571
					INSTRUCTION	ANLEITUNG	INSTRUKTION	INSTRUCTIE	

DIA KIT, FOPS LEVEL 2 MODS (ALL NH)
DIA KIT, FOPS LEVEL 2 MODS (ALL NH)
DIA KIT, FOPS LEVEL 2 MODS (ALL NH)
DIA KIT, FOPS LEVEL 2 MODS (ALL NH)



DIA KIT, FOPS LEVEL 2 MODS (ALL NH)
DIA KIT, FOPS LEVEL 2 MODS (ALL NH)
DIA KIT, FOPS LEVEL 2 MODS (ALL NH)
DIA KIT, FOPS LEVEL 2 MODS (ALL NH)

R	N	P.N.	MOD	Q	Denominação Description Bezeichnung	Description Bezeichnung	Denominacion Beskrivelse	Descrizione Beschrijving	L.C.
		84350193			JOGO, DIA Kit, FOPS, Level 2, Mods, Incl. 1-3				
						KIT	JEUGO	KIT	4830
					POCHETTE	PACKUNG	KIT	KIT	
1		**84350192**		1	CHASSI DE SEGURANÇA, FOPS, Gray				
						ROPS	SIST. PROT. ANTIVUELC	TELAIO DI SICUREZZA R	078T
					PAVILLON DE SECURITE	ROPS	FØRERVÆRN	ROPS	
2		**84305556**		4	PARAFUSO, M6 X 25	SCREW	TORNILLO	VITE	040V
					VIS	SCHRAUBE	SKRUE	SCHROEF	
3		**84272827**		4	REBITE, M6 X 1.0	RIVET	REMACHE	RIVETTO	055R
					RIVET	NIET	NITTE	KLINKNAGEL	
4		**84368519**		1	INSTRUÇÃO, Installation, FOPS, Level 2				
						INSTRUCTION	INSTRUCCIÓN	ISTRUZIONI	Z571
					INSTRUCTION	ANLEITUNG	INSTRUKTION	INSTRUCTIE	

DIA KIT, MIRROR (ALL NH)
DIA KIT, MIRROR (ALL NH)
DIA KIT, MIRROR (ALL NH)
DIA KIT, MIRROR (ALL NH)



DIA KIT, MIRROR (ALL NH)
DIA KIT, MIRROR (ALL NH)
DIA KIT, MIRROR (ALL NH)
DIA KIT, MIRROR (ALL NH)

R	N	P.N.	MOD	Q	Denominação Description	Description Bezeichnung	Denominacion Beskrivelse	Descrizione Beschrijving	L.C.
		84355806			KIT DE SERVIÇO, DIA Kit, Mirror, Incl. 1-9				
						SERVICE KIT	KIT DE SERVICIO	KIT DI MANUTENZIONE	021K
					KIT D'ENTRETIEN	SERVICE-SATZ	SERVICESÆT	SERVICEKIT	
1		**84369357**		1	SUPORTE, Mirror, RH, Gray				
						BRACKET	SOPORTE	STAFFA	225S
					SUPPORT	HALTERUNG	BESLAG	STEUN	
2		**84369358**		1	SUPORTE, Mirror, LH, Gray	BRACKET	SOPORTE	STAFFA	225S
					SUPPORT	HALTERUNG	BESLAG	STEUN	
3		**3962022**		2	ESPELHO ESQUERDO	LH MIRROR	ESPEJO IZQDA	SPECCHIETTO SX	184S
					RETROVISEUR GAUCHE	LINKER SPIEGEL	SPEJL, VENSTRE	SPIEGEL LINKS	
4		**87682398**		2	PARAFUSO	SCREW	TORNILLO	VITE	040V
					VIS	SCHRAUBE	SKRUE	SCHROEF	
5		**84285339**		2	PARAFUSO, M8 X 15	SELF-TAP SCREW	TORNILLO AUTORROSC	VITE AUTOFILETTANTE	062V
					VIS AUTOTARAUDEUSE	SELBSTSCHN SCHRAUE	SELVLÅSENDE BOLT	ZELFTAPPENDE SCHRO	
6		**43646**		4	PARAFUSO, Hex Flat Hd, M4 x 20, 4.8, M4 X 20				
						SCREW	TORNILLO	VITE	040V
					VIS	SCHRAUBE	SKRUE	SCHROEF	
7		**9824840**		4	ARRUELA PLANA, M4.3 x 9 x 0.8				
						WASHER	ARANDELA	RONDELLA	131R
					RONDELLE	UNTERLEGSCHEIBE	FLADSKIVE	SLUITRING	
8		**152799**		4	PORCA	NUT	TUERCA	DADO	010D
					ECROU	MUTTER	MØTRIK	MOER	
9		**84363713**		1	INSTRUÇÃO, Mirror Install	INSTRUCTION	INSTRUCCIÓN	ISTRUZIONI	Z571
					INSTRUCTION	ANLEITUNG	INSTRUKTION	INSTRUCTIE	

DIA KIT, DRAW BAR LG GRAY (L223-L230,C232,C238)
DIA KIT, DRAW BAR LG GRAY (L223-L230,C232,C238)
DIA KIT, DRAW BAR LG GRAY (L223-L230,C232,C238)
DIA KIT, DRAW BAR LG GRAY (L223-L230,C232,C238)



DIA KIT, DRAW BAR LG GRAY (L223-L230,C232,C238)
DIA KIT, DRAW BAR LG GRAY (L223-L230,C232,C238)
DIA KIT, DRAW BAR LG GRAY (L223-L230,C232,C238)
DIA KIT, DRAW BAR LG GRAY (L223-L230,C232,C238)

R	N	P.N.	MOD	Q	Denominação Description Description Bezeichnung	Denominacion Beskrivelse	Descrizione Beschrijving	L.C.
		84373391			JOGO, DIA Kit, Draw Bar, Large, Gray, Incl. 1-5			
					KIT	JEUGO	KIT	4830
					POCHETTE	PACKUNG	KIT	KIT
1		**328754**		2	PARAFUSO, Short NK, M12 x 40, Cl8.8, Full Thd			
					SCREW	TORNILLO	VITE	040V
					VIS	SCHRAUBE	SKRUE	SCHROEF
2		**86512497**		2	PORCA, M12 x 1.75, Flg, Cl 10			
					NUT	TUERCA	DADO	010D
					ECROU	MUTTER	MØTRIK	MOER
3		**84372075**		1	BARRA DE TRAÇÃO, Large, Gray			
					DRAWBAR	BARRA DE ENGANCHE	BARRA DI TRAINO	013B
					BARRE D'ATTELAGE	ZUGSTANGE	TRÆKBOM	TREKSTANG
4		**87015923**		4	PARAFUSO, Hex Flg, M16 x 110, 10.9, Full Thd			
					BOLT	PERNO	BULLONE	140B
					VIS	SCHRAUBE	BOLT	BOUT
5		**84373858**		1	INSTRUÇÃO, Installation	INSTRUCTION	INSTRUCCIÓN	ISTRUZIONI	Z571
					INSTRUCTION	ANLEITUNG	INSTRUKTION	INSTRUCTIE

DIA KIT, FIRE EXTINGUISHER (ALL NH)
DIA KIT, FIRE EXTINGUISHER (ALL NH)
DIA KIT, FIRE EXTINGUISHER (ALL NH)
DIA KIT, FIRE EXTINGUISHER (ALL NH)



DIA KIT, FIRE EXTINGUISHER (ALL NH)
DIA KIT, FIRE EXTINGUISHER (ALL NH)
DIA KIT, FIRE EXTINGUISHER (ALL NH)
DIA KIT, FIRE EXTINGUISHER (ALL NH)

R	N	P.N.	MOD	Q	Denominação Description Bezeichnung	Description Bezeichnung	Denominacion Beskrivelse	Descrizione Beschrijving	L.C.
		84300931			JOGO, DIA Kit, Fire Extinguisher, Incl. 1-6				
						KIT	JEUGO	KIT	4830
					POCHETTE	PACKUNG	KIT	KIT	
1		**84300929**		1	FIXADOR, Fire Extinguisher	MOUNT	SOPORTE	SUPPORTO	C022
					MONTAGE	GESTELL	BESLAG	BEVESTIGING	
2		**9804276**		3	PORCA, M6 x 1, Flg, Cl 8	NUT	TUERCA	DADO	010D
					ECROU	MUTTER	MØTRIK	MOER	
3		**86977726**		3	PARAFUSO, Hex, M6 x 12, 8.8				
						SCREW	TORNILLO	VITE	040V
					VIS	SCHRAUBE	SKRUE	SCHROEF	
4		**86625199**		2	PARAFUSO, Hex Flg Hd, M6 x 13				
						SELF-TAP SCREW	TORNILLO AUTORROSC	VITE AUTOFILETTANTE	062V
					VIS AUTOTARAUDEUSE	SELBSTSCHN SCHRAUE	SELVLÅSENDE BOLT	ZELFTAPPENDE SCHRO	
5		**84324365**		1	FIXADOR, Fire Extinguisher	MOUNT	SOPORTE	SUPPORTO	C022
					MONTAGE	GESTELL	BESLAG	BEVESTIGING	
6		**84325028**		1	INSTRUÇÃO, Installation, Fire Extinguisher				
						INSTRUCTION	INSTRUCCIÓN	ISTRUZIONI	Z571
					INSTRUCTION	ANLEITUNG	INSTRUKTION	INSTRUCTIE	

DIA KIT, DEMO REAR DOOR (ALL NH)
DIA KIT, DEMO REAR DOOR (ALL NH)
DIA KIT, DEMO REAR DOOR (ALL NH)
DIA KIT, DEMO REAR DOOR (ALL NH)



DIA KIT, DEMO REAR DOOR (ALL NH)
DIA KIT, DEMO REAR DOOR (ALL NH)
DIA KIT, DEMO REAR DOOR (ALL NH)
DIA KIT, DEMO REAR DOOR (ALL NH)

R	N	P.N.	MOD	Q	Denominação Description Bezeichnung	Description Bezeichnung Beskrivelse	Denominacion Beskrivelse Descrizione	Descrizione Beschrijving	L.C.
		84306068			JOGO, DIA Kit, Demo Rear Door, Incl. 1-4				
						KIT	JEUGO	KIT	4830
					POCHETTE	PACKUNG	KIT	KIT	
1		**9671714**		6	PARAFUSO, Hex Flg, M8 x 25, 8.8				
						BOLT	PERNO	BULLONE	140B
					VIS	SCHRAUBE	BOLT	BOUT	
2		**84329292**		1	PORTA, Heavy Duty, Gray	DOOR	PUERTA	SPORTELLO	180P
					PORTE	TÜR	DØR	PORTIER	
3		**84365533**		1	INSTRUÇÃO, Install, Demo Rear				
						INSTRUCTION	INSTRUCCIÓN	ISTRUZIONI	Z571
					INSTRUCTION	ANLEITUNG	INSTRUKTION	INSTRUCTIE	
4		**87752089**		1	BUJÃO, Pipe, 1/4 - 18	PLUG	TAPÓN	TAPPO	050T
					BOUCHON	STOPFEN	PROP	PLUG	

DIA KIT, GLASS FRONT DOOR (ALL NH)
DIA KIT, GLASS FRONT DOOR (ALL NH)
DIA KIT, GLASS FRONT DOOR (ALL NH)
DIA KIT, GLASS FRONT DOOR (ALL NH)



DIA KIT, GLASS FRONT DOOR (ALL NH)
DIA KIT, GLASS FRONT DOOR (ALL NH)
DIA KIT, GLASS FRONT DOOR (ALL NH)
DIA KIT, GLASS FRONT DOOR (ALL NH)

R	N	P.N.	MOD	Q	Denominação Description	Description Bezeichnung	Denominacion Beskrivelse	Descrizione Beschrijving	L.C.
		84427179			KIT DE SERVIÇO, DIA Kit, Glass Front Door, Incl. 1-23				
						SERVICE KIT	KIT DE SERVICIO	KIT DI MANUTENZIONE	021K
					KIT D'ENTRETIEN	SERVICE-SATZ	SERVICESÆT	SERVICEKIT	
1		**84272826**		2	REBITE, Nut, M6 X 1.0	RIVET	REMACHE	RIVETTO	055R
					RIVET	NIET	NITTE	KLINKNAGEL	
2		**84281703**		1	MANGUEIRA DO LAVADOR, Tube, Front Windshield Washer				
						HOSE WASHER	TUBO DE LAVAPARABRI	RONDELLA FLESSIBILE	A061
					TUYAU DE LAVE-GLACE	WASCHANLAGENSCHLA	SLANGE, SPRINKLER	SLUITRING VOOR SLAN(	
3		**84285452**		1	MANGUEIRA DO LAVADOR, Tube, Rear Windshield Washer				
						HOSE WASHER	TUBO DE LAVAPARABRI	RONDELLA FLESSIBILE	A061
					TUYAU DE LAVE-GLACE	WASCHANLAGENSCHLA	SLANGE, SPRINKLER	SLUITRING VOOR SLAN(	
4		**84285453**		2	MANGUEIRA DO LAVADOR, Tube, Washer Bottle				
						HOSE WASHER	TUBO DE LAVAPARABRI	RONDELLA FLESSIBILE	A061
					TUYAU DE LAVE-GLACE	WASCHANLAGENSCHLA	SLANGE, SPRINKLER	SLUITRING VOOR SLAN(	
5		**84306335**		1	T, Barb Connector	TEE	RACOR EN T	PEZZO A T	9020
					RACCORD EN T	T-STÜCK	T-STYKKE	T-STUK	
6		**84389613**		1	GARRAFA, Washer Assembly				
						BOTTLE	BOTELLA	BOTTIGLIA	102B
					BOUTEILLE	FLASCHE	FLASKE	FLES	
7		**84326923**		2	SUPORTE, Washer Bottle, CE Gray				
						BRACKET	SOPORTE	STAFFA	225S
					SUPPORT	HALTERUNG	BESLAG	STEUN	
8		**87335499**		1	INTERRUPTOR, Wiper/Washer				
						SWITCH	INTERRUPTOR	INTERRUTTORE	075I
					CONTACTEUR	SCHALTER	KONTAKT	SCHAKELAAR	
9		**87682398**		2	PARAFUSO	SCREW	TORNILLO	VITE	040V
					VIS	SCHRAUBE	SKRUE	SCHROEF	
10		**K307050**		1	VÁLVULA, Non-Return	VALVE	VÁLVULA	VALVOLA	9620
					SOUPAPE	VENTIL	VENTIL	KLEP	
11		**L11541**		6	PRENDEDOR DE CABOS, Nylon Tie, 7-8in.				
						CABLE STRAP	BANDA DE CABLE	FASCETTA PER CAVO	P716
					BRIDE DE CABLE	KABELBINDER	KABELSTROP	BUNDELBAND	
12		**84257150**		1	PORTA, Assembly, Jamb	DOOR	PUERTA	SPORTELLO	180P
					PORTE	TÜR	DØR	PORTIER	
13		**84415694**		1	PORTA, Assembly, Front	DOOR	PUERTA	SPORTELLO	180P
					PORTE	TÜR	DØR	PORTIER	
14		**84378453**		1	COMPASSO, Spring, Gas	GAS STRUT	COLUMNA DE GAS	AMMORTIZZATORE A G/	Z331
					BEQUILLE A GAZ	GASDRUCKFEDER	CYLINDER, GASSTØDD/	GASVEER	
15		**86624468**		1	ESPAÇADOR	SPACER	SEPARADOR	DISTANZIALE	075D
					ENTRETOISE	DISTANZSTÜCK	AFSTANDSSTYKKE	AFSTANDSSTUK	
16		**87392235**		1	INTERRUPTOR INTERMITENTE, Reed, Non-Contact				
						SWITCH ASSY	CONJUNTO DE INTERRU	COMPLESSIVO INTERRU	067I
					ENSEMBLE COMMUTATI	SCHALTERBAUGRUPPE	KONTAKT, KPL.	SCHAKELAAREENHEID	
17		**84183818**		2	PARAFUSO, M4 X 20	SCREW	TORNILLO	VITE	040V
					VIS	SCHRAUBE	SKRUE	SCHROEF	
18		**100012**		2	PORCA, M4, Cl 8	NUT	TUERCA	DADO	010D
					ECROU	MUTTER	MØTRIK	MOER	
19		**84305556**		11	PARAFUSO, M6 X 25	SCREW	TORNILLO	VITE	040V
					VIS	SCHRAUBE	SKRUE	SCHROEF	

DIA KIT, GLASS FRONT DOOR (ALL NH)
DIA KIT, GLASS FRONT DOOR (ALL NH)
DIA KIT, GLASS FRONT DOOR (ALL NH)
DIA KIT, GLASS FRONT DOOR (ALL NH)



DIA KIT, GLASS FRONT DOOR (ALL NH)
DIA KIT, GLASS FRONT DOOR (ALL NH)
DIA KIT, GLASS FRONT DOOR (ALL NH)
DIA KIT, GLASS FRONT DOOR (ALL NH)

R	N	P.N.	MOD	Q	Denominação Description	Description Bezeichnung	Denominacion Beskrivelse	Descrizione Beschrijving	L.C.
20		**84359102**		4	PARAFUSO, M6 X 35 VIS	SCREW SCHRAUBE	TORNILLO SKRUE	VITE SCHROEF	040V
21		**84272827**		15	REBITE, Nut, M6 X 1.0 RIVET	RIVET NIET	REMACHE NITTE	RIVETTO KLINKNAGEL	055R
22		**84331404**		1	CONECTOR DO FIO, Jumper CONNECTEUR DU FIL	WIRE CONNECTOR KABELSTECKVERBINDE	CONECTOR DE CABLE SAMLEMUFFE	CONNETTORE DEL FILO DRAADCONNECTOR	250C
23		**84427180**		1	INSTRUÇÃO, Instruction Sheet, Glass, Front Door INSTRUCTION	INSTRUCTION ANLEITUNG	INSTRUCCIÓN INSTRUKTION	ISTRUZIONI INSTRUCTIE	Z571

DIA KIT, DEMO FRONT DOOR (ALL NH)
DIA KIT, DEMO FRONT DOOR (ALL NH)
DIA KIT, DEMO FRONT DOOR (ALL NH)
DIA KIT, DEMO FRONT DOOR (ALL NH)



DIA KIT, DEMO FRONT DOOR (ALL NH)
DIA KIT, DEMO FRONT DOOR (ALL NH)
DIA KIT, DEMO FRONT DOOR (ALL NH)
DIA KIT, DEMO FRONT DOOR (ALL NH)

R	N	P.N.	MOD	Q	Denominação Description	Description Bezeichnung	Denominacion Beskrivelse	Descrizione Beschrijving	L.C.
		84427186			KIT DE SERVIÇO, DIA Kit, Demo Front Door, Incl. 1-23				
						SERVICE KIT	KIT DE SERVICIO	KIT DI MANUTENZIONE	021K
					KIT D'ENTRETIEN	SERVICE-SATZ	SERVICESÆT	SERVICEKIT	
1		**84272826**		2	REBITE, Nut, M6 X 1.0	RIVET	REMACHE	RIVETTO	055R
					RIVET	NIET	NITTE	KLINKNAGEL	
2		**84281703**		1	MANGUEIRA DO LAVADOR, Tube, Front Windshield Washer				
						HOSE WASHER	TUBO DE LAVAPARABRI	RONDELLA FLESSIBILE	A061
					TUYAU DE LAVE-GLACE	WASCHANLAGENSCHLA	SLANGE, SPRINKLER	SLUITRING VOOR SLAN(	
3		**84285452**		1	MANGUEIRA DO LAVADOR, Tube, Rear Windshield Washer				
						HOSE WASHER	TUBO DE LAVAPARABRI	RONDELLA FLESSIBILE	A061
					TUYAU DE LAVE-GLACE	WASCHANLAGENSCHLA	SLANGE, SPRINKLER	SLUITRING VOOR SLAN(	
4		**84285453**		2	MANGUEIRA DO LAVADOR, Tube, Washer Bottle				
						HOSE WASHER	TUBO DE LAVAPARABRI	RONDELLA FLESSIBILE	A061
					TUYAU DE LAVE-GLACE	WASCHANLAGENSCHLA	SLANGE, SPRINKLER	SLUITRING VOOR SLAN(	
5		**84306335**		1	T, Barb Connector	TEE	RACOR EN T	PEZZO A T	9020
					RACCORD EN T	T-STÜCK	T-STYKKE	T-STUK	
6		**84389613**		1	GARRAFA, Washer Assembly				
						BOTTLE	BOTELLA	BOTTIGLIA	102B
					BOUTEILLE	FLASCHE	FLASKE	FLES	
7		**84326923**		2	SUPORTE, Washer Bottle, CE Gray				
						BRACKET	SOPORTE	STAFFA	225S
					SUPPORT	HALTERUNG	BESLAG	STEUN	
8		**87335499**		1	INTERRUPTOR, Wiper/Washer				
						SWITCH	INTERRUPTOR	INTERRUTTORE	075I
					CONTACTEUR	SCHALTER	KONTAKT	SCHAKELAAR	
9		**87682398**		2	PARAFUSO	SCREW	TORNILLO	VITE	040V
					VIS	SCHRAUBE	SKRUE	SCHROEF	
10		**K307050**		1	VÁLVULA, Non-Return	VALVE	VÁLVULA	VALVOLA	9620
					SOUPAPE	VENTIL	VENTIL	KLEP	
11		**L11541**		7	PRENDEDOR DE CABOS, Nylon Tie, 7-8in				
						CABLE STRAP	BANDA DE CABLE	FASCETTA PER CAVO	P716
					BRIDE DE CABLE	KABELBINDER	KABELSTROP	BUNDELBAND	
12		**84323416**		1	PORTA, Assembly, Jamb	DOOR	PUERTA	SPORTELLO	180P
					PORTE	TÜR	DØR	PORTIER	
13		**84416291**		1	PORTA, Door Assembly, Front, Demo				
						DOOR	PUERTA	SPORTELLO	180P
					PORTE	TÜR	DØR	PORTIER	
14		**84378453**		1	COMPASSO, Spring, Gas	GAS STRUT	COLUMNA DE GAS	AMMORTIZZATORE A G/	Z331
					BEQUILLE A GAZ	GASDRUCKFEDER	CYLINDER, GASSTØDD/	GASVEER	
15		**86624468**		1	ESPAÇADOR	SPACER	SEPARADOR	DISTANZIALE	075D
					ENTRETOISE	DISTANZSTÜCK	AFSTANDSSTYKKE	AFSTANDSSTUK	
16		**87392235**		1	INTERRUPTOR INTERMITENTE, Reed, Non-Contact				
						SWITCH ASSY	CONJUNTO DE INTERRU	COMPLESSIVO INTERRU	067I
					ENSEMBLE COMMUTATI	SCHALTERBAUGRUPPE	KONTAKT, KPL.	SCHAKELAAREENHEID	
17		**84183818**		2	PARAFUSO, M4 X 20	SCREW	TORNILLO	VITE	040V
					VIS	SCHRAUBE	SKRUE	SCHROEF	
18		**100012**		2	PORCA, M4, Cl 8	NUT	TUERCA	DADO	010D
					ECROU	MUTTER	MØTRIK	MOER	

DIA KIT, DEMO FRONT DOOR (ALL NH)
DIA KIT, DEMO FRONT DOOR (ALL NH)
DIA KIT, DEMO FRONT DOOR (ALL NH)
DIA KIT, DEMO FRONT DOOR (ALL NH)



DIA KIT, DEMO FRONT DOOR (ALL NH)
DIA KIT, DEMO FRONT DOOR (ALL NH)
DIA KIT, DEMO FRONT DOOR (ALL NH)
DIA KIT, DEMO FRONT DOOR (ALL NH)

R	N	P.N.	MOD	Q	Denominação Description	Description Bezeichnung	Denominacion Beskrivelse	Descrizione Beschrijving	L.C.
19		**84305556**		11	PARAFUSO, M6 X 25 VIS	SCREW SCHRAUBE	TORNILLO SKRUE	VITE SCHROEF	040V
20		**84359102**		4	PARAFUSO, M6 X 35 VIS	SCREW SCHRAUBE	TORNILLO SKRUE	VITE SCHROEF	040V
21		**84272827**		15	REBITE, Nut, M6 X 1.0 RIVET	RIVET NIET	REMACHE NITTE	RIVETTO KLINKNAGEL	055R
22		**84331404**		1	CONECTOR DO FIO, Jumper CONNECTEUR DU FIL	WIRE CONNECTOR KABELSTECKVERBINDE	CONECTOR DE CABLE SAMLEMUFFE	CONNETTORE DEL FILO DRAADCONNECTOR	250C
23		**84427187**		1	INSTRUÇÃO, Instruction Sheet, Demo Door INSTRUCTION	INSTRUCTION ANLEITUNG	INSTRUCCIÓN INSTRUKTION	ISTRUZIONI INSTRUCTIE	Z571

DIA KIT, CAB SIDE WINDOWS (ALL NH)
DIA KIT, CAB SIDE WINDOWS (ALL NH)
DIA KIT, CAB SIDE WINDOWS (ALL NH)
DIA KIT, CAB SIDE WINDOWS (ALL NH)



DIA KIT, CAB SIDE WINDOWS (ALL NH)
DIA KIT, CAB SIDE WINDOWS (ALL NH)
DIA KIT, CAB SIDE WINDOWS (ALL NH)
DIA KIT, CAB SIDE WINDOWS (ALL NH)

R	N	P.N.	MOD	Q	Denominação Description	Description Bezeichnung	Denominacion Beskrivelse	Descrizione Beschrijving	L.C.
		84427190			KIT DE SERVIÇO, DIA Kit, Cab, Side Windows, Incl. 1-10				
						SERVICE KIT	KIT DE SERVICIO	KIT DI MANUTENZIONE	021K
					KIT D'ENTRETIEN	SERVICE-SATZ	SERVICESÆT	SERVICEKIT	
1		**84272827**		12	REBITE	RIVET	REMACHE	RIVETTO	055R
					RIVET	NIET	NITTE	KLINKNAGEL	
2		**84310724**		22	REBITE	RIVET	REMACHE	RIVETTO	055R
					RIVET	NIET	NITTE	KLINKNAGEL	
3		**84473111**		8	SUPORTE, Bracket, Window, Gray				
						BRACKET	SOPORTE	STAFFA	225S
					SUPPORT	HALTERUNG	BESLAG	STEUN	
4		**84473118**		1	JANELA, Window Assy, RH Side				
						WINDOW	VENTANILLA	FINESTRINO	9810
					FENETRE	FENSTER	VINDUE	RUIT	
5		**84473121**		1	JANELA, Window Assy, LH Side				
						WINDOW	VENTANILLA	FINESTRINO	9810
					FENETRE	FENSTER	VINDUE	RUIT	
6		**84473199**		2	SUPORTE, Bracket, Window, RH, Gray				
						BRACKET	SOPORTE	STAFFA	225S
					SUPPORT	HALTERUNG	BESLAG	STEUN	
7		**84473201**		2	SUPORTE, Bracket, Window, LH, Gray				
						BRACKET	SOPORTE	STAFFA	225S
					SUPPORT	HALTERUNG	BESLAG	STEUN	
8		**84481921**		1	INSTRUÇÃO, Instruction Sheet, Kit, Cab Side Window				
						INSTRUCTION	INSTRUCCIÓN	ISTRUZIONI	Z571
					INSTRUCTION	ANLEITUNG	INSTRUKTION	INSTRUCTIE	
9		**87682398**		24	PARAFUSO	SCREW	TORNILLO	VITE	040V
					VIS	SCHRAUBE	SKRUE	SCHROEF	
10		**84425058**		2	ESPUMA ISOLANTE, Window				
						FOAM INSULATION	ESPUMA AISLANTE	ISOLANTE IN SCHIUMA	051S
					MOUSSE ISOLANTE	SCHAUMSTOFFISOLIER	SKUM ISOLERING	SCHUIMISOLATIE	

DIA KIT, REAR EXTERIOR ACCESS WINDOW (ALL NH)
DIA KIT, REAR EXTERIOR ACCESS WINDOW (ALL NH)
DIA KIT, REAR EXTERIOR ACCESS WINDOW (ALL NH)
DIA KIT, REAR EXTERIOR ACCESS WINDOW (ALL NH)



DIA KIT, REAR EXTERIOR ACCESS WINDOW (ALL NH)
DIA KIT, REAR EXTERIOR ACCESS WINDOW (ALL NH)
DIA KIT, REAR EXTERIOR ACCESS WINDOW (ALL NH)
DIA KIT, REAR EXTERIOR ACCESS WINDOW (ALL NH)

R	N	P.N.	MOD	Q	Denominação Description Bezeichnung	Description Bezeichnung	Denominacion Beskrivelse	Descrizione Beschrijving	L.C.
		84306071			JOGO, DIA Kit, Rear Ext Access Window, Incl. 1-5				
						KIT	JEUGO	KIT	4830
					POCHETTE	PACKUNG	KIT	KIT	
1		**263117**		2	PRENDEDOR DE CABOS, .14" x 11 1/2"				
						CABLE STRAP	BANDA DE CABLE	FASCETTA PER CAVO	P716
					BRIDE DE CABLE	KABELBINDER	KABELSTROP	BUNDELBAND	
2		**84366018**		1	CHAVE, Lock	KEY	LLAVE	CHIAVE	060L
					CLE	FEDERKEIL	KILE	SPIE	
3		**84366019**		1	JUNTA, Locking	GASKET	JUNTA	GUARNIZIONE	123G
					JOINT	DICHTUNG	PAKNING	PAKKING	
4		**87026871**		2	SINAL PLÁSTICO, Exit Tag	PLASTIC SIGN	SEÑAL DE PLÁSTICO	TARGHETTA IN PLASTIC	092I
					PLAQUE SIGN. PLASTIQ	KUNSTSTOFFSCHILD	PLASTIKSKILT	KUNSTSTOF BORD	
5		**84366065**		1	INSTRUÇÃO, Installation	INSTRUCTION	INSTRUCCIÓN	ISTRUZIONI	Z571
					INSTRUCTION	ANLEITUNG	INSTRUKTION	INSTRUCTIE	

DIA KIT, 3IN LAP BELT (ALL NH)
DIA KIT, 3IN LAP BELT (ALL NH)
DIA KIT, 3IN LAP BELT (ALL NH)
DIA KIT, 3IN LAP BELT (ALL NH)



DIA KIT, 3IN LAP BELT (ALL NH)
DIA KIT, 3IN LAP BELT (ALL NH)
DIA KIT, 3IN LAP BELT (ALL NH)
DIA KIT, 3IN LAP BELT (ALL NH)

R	N	P.N.	MOD	Q	Denominação Description Description Bezeichnung	Denominacion Beskrivelse	Descrizione Beschrijving	L.C.
		84365639			JOGO, DIA Kit, 3in Lap Belt, Incl. 1-5			
					KIT	JEUGO	KIT	4830
					POCHETTE	PACKUNG	KIT	KIT
1		**9804262**		1	PARAFUSO, Hex Flg, M10 x 30, 8.8			
					BOLT	PERNO	BULLONE	140B
					VIS	SCHRAUBE	BOLT	BOUT
2		**84174253**		1	KIT, Seat Belt, 3in Wide, 2 Point			
					KIT	KIT	KIT	305C
					KIT	SATZ	SÆT	KIT
3		**86512554**		1	CONTRA PORCA, M10 x 1.5, Cl 10			
					LOCK NUT	TUERCA DE BLOQUEO	DADO DI BLOCCAGGIO	P263
					CONTRE-ECROU	SICHERUNGSMUTTER	LÅSEMØTRIK	BORGMOER
4		**87655046**		1	ARRUELA ESPECIAL, M10, 10.65 X 23.0 X 2.2			
					SPECIAL WASHER	ARANDELA ESPECIAL	RONDELLA SPECIALE	Z333
					RONDELLE SPECIALE	SPEZIALUNTERLEGSCH	SPECIALSKIVE	SPECIALE RING
5		**84365638**		1	INSTRUÇÃO, Installation, Lap Belt Kits			
					INSTRUCTION	INSTRUCCIÓN	ISTRUZIONI	Z571
					INSTRUCTION	ANLEITUNG	INSTRUKTION	INSTRUCTIE

DIA KIT, REMOVABLE TOP WINDOW (ALL NH)
DIA KIT, REMOVABLE TOP WINDOW (ALL NH)
DIA KIT, REMOVABLE TOP WINDOW (ALL NH)
DIA KIT, REMOVABLE TOP WINDOW (ALL NH)



DIA KIT, REMOVABLE TOP WINDOW (ALL NH)
DIA KIT, REMOVABLE TOP WINDOW (ALL NH)
DIA KIT, REMOVABLE TOP WINDOW (ALL NH)
DIA KIT, REMOVABLE TOP WINDOW (ALL NH)

R	N	P.N.	MOD	Q	Denominação Description Bezeichnung	Description Bezeichnung	Denominacion Beskrivelse	Descrizione Beschrijving	L.C.
		84306096			JOGO, DIA Kit, Removable Top Window, Incl. 1-3				
						KIT	JEUGO	KIT	4830
					POCHETTE	PACKUNG	KIT	KIT	
1		**84476813**		1	INSTRUÇÃO, Installation, Removable				
						INSTRUCTION	INSTRUCCIÓN	ISTRUZIONI	Z571
					INSTRUCTION	ANLEITUNG	INSTRUKTION	INSTRUCTIE	
2		**84336571**		1	JANELA, Skylight	WINDOW	VENTANILLA	FINESTRINO	9810
					FENETRE	FENSTER	VINDUE	RUIT	
3		**84354563**		1	VEDAÇÃO, Bulb	SEAL	ANILLO DE CIERRE	GUARNIZIONE; TENUTA	132A
					JOINT	DICHTUNG	PAKNING	AFDICHTING	

DIA KIT, RH, SIDE SCREEN (ALL NH)
DIA KIT, RH, SIDE SCREEN (ALL NH)
DIA KIT, RH, SIDE SCREEN (ALL NH)
DIA KIT, RH, SIDE SCREEN (ALL NH)



DIA KIT, RH, SIDE SCREEN (ALL NH)
DIA KIT, RH, SIDE SCREEN (ALL NH)
DIA KIT, RH, SIDE SCREEN (ALL NH)
DIA KIT, RH, SIDE SCREEN (ALL NH)

R	N	P.N.	MOD	Q	Denominação Description	Description Bezeichnung	Denominacion Beskrivelse	Descrizione Beschrijving	L.C.
		84374152			JOGO, DIA Kit, RH, Side Screen, Incl. 1-3				
						KIT	JEUGO	KIT	4830
					POCHETTE	PACKUNG	KIT	KIT	
1		**84200803**		1	TELA, W, Side ROPS, RH	SCREEN	PANTALLA	FILTRO; SCHERMO	047S
					TAMIS	GITTER; ABSCHIRMUNG	SKÆRM	SCHERM	
2		**84310724**		11	REBITE, Pop, 1/4 X 5/8	RIVET	REMACHE	RIVETTO	055R
					RIVET	NIET	NITTE	KLINKNAGEL	
3		**84374159**		1	INSTRUÇÃO, Sheet, Side Screen, RH				
						INSTRUCTION	INSTRUCCIÓN	ISTRUZIONI	Z571
					INSTRUCTION	ANLEITUNG	INSTRUKTION	INSTRUCTIE	

DIA KIT, LH, SIDE SCREEN (ALL NH)
DIA KIT, LH, SIDE SCREEN (ALL NH)
DIA KIT, LH, SIDE SCREEN (ALL NH)
DIA KIT, LH, SIDE SCREEN (ALL NH)



DIA KIT, LH, SIDE SCREEN (ALL NH)
DIA KIT, LH, SIDE SCREEN (ALL NH)
DIA KIT, LH, SIDE SCREEN (ALL NH)
DIA KIT, LH, SIDE SCREEN (ALL NH)

R	N	P.N.	MOD	Q	Denominação Description Bezeichnung	Description Bezeichnung	Denominacion Beskrivelse	Descrizione Beschrijving	L.C.
		84374154			JOGO, DIA Kit, LH, Side Screen, Incl. 1-3				
						KIT	JEUGO	KIT	4830
					POCHETTE	PACKUNG	KIT	KIT	
1		**84307405**		1	TELA, W, Side ROPS, LH	SCREEN	PANTALLA	FILTRO; SCHERMO	047S
					TAMIS	GITTER; ABSCHIRMUNG	SKÆRM	SCHERM	
2		**84310724**		11	REBITE, Pop, 1/4 X 5/8	RIVET	REMACHE	RIVETTO	055R
					RIVET	NIET	NITTE	KLINKNAGEL	
3		**84374160**		1	INSTRUÇÃO, Sheet, Side Screen, LH				
						INSTRUCTION	INSTRUCCIÓN	ISTRUZIONI	Z571
					INSTRUCTION	ANLEITUNG	INSTRUKTION	INSTRUCTIE	

DIA KIT, ARMRESTS (ALL NH)
DIA KIT, ARMRESTS (ALL NH)
DIA KIT, ARMRESTS (ALL NH)
DIA KIT, ARMRESTS (ALL NH)



DIA KIT, ARMRESTS (ALL NH)
DIA KIT, ARMRESTS (ALL NH)
DIA KIT, ARMRESTS (ALL NH)
DIA KIT, ARMRESTS (ALL NH)

R	N	P.N.	MOD	Q	Denominação Description Description Bezeichnung	Denominacion Beskrivelse	Descrizione Beschrijving	L.C.
		84281776			JOGO, DIA Kit, Armrests, Incl. 1-8			
					KIT	JEUGO	KIT	4830
					POCHETTE	PACKUNG	KIT	KIT
1		**84251557**		1	SUPORTE, Armrest, LH	BRACKET	SOPORTE	STAFFA	225S
					SUPPORT	HALTERUNG	BESLAG	STEUN	
2		**84251558**		1	SUPORTE, Armrest, RH	BRACKET	SOPORTE	STAFFA	225S
					SUPPORT	HALTERUNG	BESLAG	STEUN	
3		**9804262**		4	PARAFUSO, Hex Flg, M10 x 30, 8.8			
					BOLT	PERNO	BULLONE	140B
					VIS	SCHRAUBE	BOLT	BOUT	
4		**87357152**		1	APOIO DE BRAÇO, Assembly, LH			
					ARMREST	REPOSABRAZOS	BRACCIOLO	074A
					ACCOUDOIR	ARMLEHNE	ARMLÆN	ARMLEUNING	
5		**87357149**		1	APOIO DE BRAÇO, Assembly, RH			
					ARMREST	REPOSABRAZOS	BRACCIOLO	074A
					ACCOUDOIR	ARMLEHNE	ARMLÆN	ARMLEUNING	
6		**86512446**		4	PARAFUSO, Short NK, M10 x 30, Cl8.8, Full Thd			
					CARRIAGE BOLT	PERNO ALOMADO	BULLONE A TESTA TONI	P123
					VIS A TETE BOMBEE	SCHLOSSSCHRAUBE	BRÆDDEBOLT	SLOTBOUT	
7		**86619802**		4	CONTRA PORCA	LOCK NUT	TUERCA DE BLOQUEO	DADO DI BLOCCAGGIO	P263
					CONTRE-ECROU	SICHERUNGSMUTTER	LÅSEMØTRIK	BORGMOER	
8		**84322105**		1	INSTRUÇÃO, Installation, Armrests			
					INSTRUCTION	INSTRUCCIÓN	ISTRUZIONI	Z571
					INSTRUCTION	ANLEITUNG	INSTRUKTION	INSTRUCTIE	

DIA KIT, HANDLE 300/400 (ALL NH)
DIA KIT, HANDLE 300/400 (ALL NH)
DIA KIT, HANDLE 300/400 (ALL NH)
DIA KIT, HANDLE 300/400 (ALL NH)



DIA KIT, HANDLE 300/400 (ALL NH)
DIA KIT, HANDLE 300/400 (ALL NH)
DIA KIT, HANDLE 300/400 (ALL NH)
DIA KIT, HANDLE 300/400 (ALL NH)

R	N	P.N.	MOD	Q	Denominação Description	Description Bezeichnung	Denominacion Beskrivelse	Descrizione Beschrijving	L.C.
		84428511			JOGO, DIA Kit, Handle 200 NH SM LH-Mech, Incl. 1-14				
						KIT	JEUGO	KIT	4830
					POCHETTE	PACKUNG	KIT	KIT	
1		**80684**		2	TRAVA DA ARRUELA, #10	LOCK WASHER	ARANDELA DE BLOQUE	RONDELLA DI SICUREZ	132R
					RONDELLE FREIN	SICHERUNGSSCHEIBE	LÅSESKIVE	BORGRING	
2		**323238**		1	PORCA, Thin, M12 x 1.75, Cl 05				
						NUT	TUERCA	DADO	010D
					ECROU	MUTTER	MØTRIK	MOER	
3		**84201279**		1	EMPUNHADURA, NH Level 200, LH				
						HANDLE GRIP	PERILLA	IMPUGNATURA	025I
					POIGNEE DE MAINTIEN	HANDGRIFF	HÅNDGREB	HANDGREEP	
4		**84279937**		11	BUJÃO, Cavity	PLUG	TAPÓN	TAPPO	050T
					BOUCHON	STOPFEN	PROP	PLUG	
5		**84353757**		1	ADESIVO	DECAL	CALCOMANÍA	DECALCOMANIA	012D
					AUTOCOLLANT	AUFKLEBER	TRANSFER	STICKER	
6		**84353762**		1	ADESIVO	DECAL	CALCOMANÍA	DECALCOMANIA	012D
					AUTOCOLLANT	AUFKLEBER	TRANSFER	STICKER	
7		**87382927**		1	CONECTOR ELÉTR, 87382927, FCI				
						ELEC CONNECTOR	CONECTOR ELÉCTRICC	CONNETTORE ELETTRI	235C
					CONNECTEUR ELECTRI	ELEKTR STECKVERBIND	EL-STIK	CONNECTOR	
8		**87527964**		1	ADAPTADOR, Handle	ADAPTER	ADAPTADOR	ADATTATORE	001A
					ADAPTATEUR	ADAPTER	ADAPTER	ADAPTER	
9		**87619017**		1	HASTE, Angled	ROD	VARILLA	ASTA	090A
					TIGE	STANGE	STANG	STANG	
10		**87689636**		1	BUJÃO, Cavity	PLUG	TAPÓN	TAPPO	050T
					BOUCHON	STOPFEN	PROP	PLUG	
11		**87689643**		1	GRAMPO, Secondary Lock	CLIP	ABRAZADERA	FERMO	045F
					COLLIER	KLAMMER	KLIPS	KLEM	
12		**87697724**		1	CONECTOR ELÉTR, Packard Metri-pack 4-Way				
						ELEC CONNECTOR	CONECTOR ELÉCTRICC	CONNETTORE ELETTRI	235C
					CONNECTEUR ELECTRI	ELEKTR STECKVERBIND	EL-STIK	CONNECTOR	
13		**87742597**		2	PARAFUSO ALLEN, Locking, #10-32 x 5/8"				
						HEX SOC SCREW	TORNILLO DE CABEZA H	VITE A ESAGONO INCAS	A093
					VIS A EMBASE HEXAGOI	INNENSECHSKANTSCHF	SEKSKANTET SKRUE	INBUSBOUT	
14		**84470440**		1	INSTRUÇÃO, Installation	INSTRUCTION	INSTRUCCIÓN	ISTRUZIONI	Z571
					INSTRUCTION	ANLEITUNG	INSTRUKTION	INSTRUCTIE	
		84428512			JOGO, DIA Kit, Handle 400 NH SM RH-Mech, Incl. 1a-11a				
						KIT	JEUGO	KIT	4830
					POCHETTE	PACKUNG	KIT	KIT	
1a		**80684**		2	TRAVA DA ARRUELA, #10	LOCK WASHER	ARANDELA DE BLOQUE	RONDELLA DI SICUREZ	132R
					RONDELLE FREIN	SICHERUNGSSCHEIBE	LÅSESKIVE	BORGRING	
2a		**323238**		1	PORCA, Thin, M12 x 1.75, Cl 05				
						NUT	TUERCA	DADO	010D
					ECROU	MUTTER	MØTRIK	MOER	
3a		**84201282**		1	EMPUNHADURA, NH Level 200, RH				
						HANDLE GRIP	PERILLA	IMPUGNATURA	025I
					POIGNEE DE MAINTIEN	HANDGRIFF	HÅNDGREB	HANDGREEP	
4a		**84279937**		5	BUJÃO, Cavity	PLUG	TAPÓN	TAPPO	050T
					BOUCHON	STOPFEN	PROP	PLUG	

DIA KIT, HANDLE 300/400 (ALL NH)
DIA KIT, HANDLE 300/400 (ALL NH)
DIA KIT, HANDLE 300/400 (ALL NH)
DIA KIT, HANDLE 300/400 (ALL NH)



DIA KIT, HANDLE 300/400 (ALL NH)
DIA KIT, HANDLE 300/400 (ALL NH)
DIA KIT, HANDLE 300/400 (ALL NH)
DIA KIT, HANDLE 300/400 (ALL NH)

R	N	P.N.	MOD	Q	Denominação Description	Description Bezeichnung	Denominacion Beskrivelse	Descrizione Beschrijving	L.C.
5a		84353758		1	ADESIVO AUTOCOLLANT	DECAL AUFKLEBER	CALCOMANÍA TRANSFER	DECALCOMANIA STICKER	012D
6a		84353772		1	ADESIVO AUTOCOLLANT	DECAL AUFKLEBER	CALCOMANÍA TRANSFER	DECALCOMANIA STICKER	012D
7a		87382923		1	CONECTOR ELÉTR, 87382923, 10 Position APEX CONNECTEUR ELECTRI	ELEC CONNECTOR ELEKTR STECKVERBIND	CONECTOR ELÉCTRICC EL-STIK	CONNETTORE ELETTRI(CONNECTOR	235C
8a		87527964		1	ADAPTADOR, Handle ADAPTATEUR	ADAPTER ADAPTER	ADAPTADOR ADAPTER	ADATTATORE ADAPTER	001A
9a		87619016		1	HASTE, Angled TIGE	ROD STANGE	VARILLA STANG	ASTA STANG	090A
10a		87742597		2	PARAFUSO ALLEN, Locking, #10-32 x 5/8" VIS A EMBASE HEXAGOI	HEX SOC SCREW INNENSECHSKANTSCHF	TORNILLO DE CABEZA H SEKSKANTET SKRUE	VITE A ESAGONO INCAS INBUSBOUT	A093
11a		84470440		1	INSTRUÇÃO, Installation INSTRUCTION	INSTRUCTION ANLEITUNG	INSTRUCCIÓN INSTRUKTION	ISTRUZIONI INSTRUCTIE	Z571
		84428513			JOGO, DIA Kit, Handle 300 NH LG LH-No 2nd Aux-Mech, Incl. 1b-14b POCHETTE	KIT PACKUNG	JEUGO KIT	KIT KIT	4830
1b		80684		2	TRAVA DA ARRUELA, #10 LOCK WASHER RONDELLE FREIN	SICHERUNGSSCHEIBE	ARANDELA DE BLOQUE(LÅSESKIVE	RONDELLA DI SICUREZ BORGRING	132R
2b		323238		1	PORCA, Thin, M12 x 1.75, Cl 05 ECROU	NUT MUTTER	TUERCA MØTRIK	DADO MOER	010D
3b		84279937		5	BUJÃO, Cavity BOUCHON	PLUG STOPFEN	TAPÓN PROP	TAPPO PLUG	050T
4b		84353759		1	ADESIVO AUTOCOLLANT	DECAL AUFKLEBER	CALCOMANÍA TRANSFER	DECALCOMANIA STICKER	012D
5b		84353780		1	ADESIVO AUTOCOLLANT	DECAL AUFKLEBER	CALCOMANÍA TRANSFER	DECALCOMANIA STICKER	012D
6b		84396079		1	MANILHA, NH Level 300, LH POIGNEE	HANDLE GRIFF	MANECILLA HÅNDTAG	MANIGLIA HENDEL	020M
7b		87382927		1	CONECTOR ELÉTR, 87382927, FCI CONNECTEUR ELECTRI	ELEC CONNECTOR ELEKTR STECKVERBIND	CONECTOR ELÉCTRICC EL-STIK	CONNETTORE ELETTRI(CONNECTOR	235C
8b		87527964		1	ADAPTADOR, Handle ADAPTATEUR	ADAPTER ADAPTER	ADAPTADOR ADAPTER	ADATTATORE ADAPTER	001A
9b		87619017		1	HASTE, Angled TIGE	ROD STANGE	VARILLA STANG	ASTA STANG	090A
10b		87689636		1	BUJÃO, Cavity BOUCHON	PLUG STOPFEN	TAPÓN PROP	TAPPO PLUG	050T
11b		87689643		1	GRAMPO, Secondary Lock COLLIER	CLIP KLAMMER	ABRAZADERA KLIPS	FERMO KLEM	045F
12b		87697724		1	CONECTOR ELÉTR, Packard Metri-pack 4-Way CONNECTEUR ELECTRI	ELEC CONNECTOR ELEKTR STECKVERBIND	CONECTOR ELÉCTRICC EL-STIK	CONNETTORE ELETTRI(CONNECTOR	235C

DIA KIT, HANDLE 300/400 (ALL NH)
DIA KIT, HANDLE 300/400 (ALL NH)
DIA KIT, HANDLE 300/400 (ALL NH)
DIA KIT, HANDLE 300/400 (ALL NH)



DIA KIT, HANDLE 300/400 (ALL NH)
DIA KIT, HANDLE 300/400 (ALL NH)
DIA KIT, HANDLE 300/400 (ALL NH)
DIA KIT, HANDLE 300/400 (ALL NH)

R	N	P.N.	MOD	Q	Denominação Description	Description Bezeichnung	Denominacion Beskrivelse	Descrizione Beschrijving	L.C.
13b		87742597		2	PARAFUSO ALLEN, Locking, #10-32 x 5/8"				
						HEX SOC SCREW	TORNILLO DE CABEZA H	VITE A ESAGONO INCAS	A093
					VIS A EMBASE HEXAGOI	INNENSECHSKANTSCHF	SEKSKANTET SKRUE	INBUSBOUT	
14b		84470440		1	INSTRUÇÃO, Installation	INSTRUCTION	INSTRUCCIÓN	ISTRUZIONI	Z571
					INSTRUCTION	ANLEITUNG	INSTRUKTION	INSTRUCTIE	
		84428514			JOGO, DIA Kit, Handle 300	NH LG RH-Mech, Incl. 1c-12c			
						KIT	JEUGO	KIT	4830
					POCHETTE	PACKUNG	KIT	KIT	
1c		80684		2	TRAVA DA ARRUELA, #10	LOCK WASHER	ARANDELA DE BLOQUEI	RONDELLA DI SICUREZ	132R
					RONDELLE FREIN	SICHERUNGSSCHEIBE	LÅSESKIVE	BORGRING	
2c		323238		1	PORCA, Thin, M12 x 1.75, Cl 05				
						NUT	TUERCA	DADO	010D
					ECROU	MUTTER	MØTRIK	MOER	
3c		84279937		10	BUJÃO, Cavity	PLUG	TAPÓN	TAPPO	050T
					BOUCHON	STOPFEN	PROP	PLUG	
4c		84396071		1	MANILHA, NH Level 300, RH				
						HANDLE	MANECILLA	MANIGLIA	020M
					POIGNEE	GRIFF	HÅNDTAG	HENDEL	
5c		84396161		1	ADESIVO	DECAL	CALCOMANÍA	DECALCOMANIA	012D
					AUTOCOLLANT	AUFKLEBER	TRANSFER	STICKER	
6c		84396165		1	ADESIVO	DECAL	CALCOMANÍA	DECALCOMANIA	012D
					AUTOCOLLANT	AUFKLEBER	TRANSFER	STICKER	
7c		87382923		1	CONECTOR ELÉTR, 87382923, 10 Position APEX				
						ELEC CONNECTOR	CONECTOR ELÉCTRICO	CONNETTORE ELETTRI	235C
					CONNECTEUR ELECTRI	ELEKTR STECKVERBIND	EL-STIK	CONNECTOR	
8c		87382925		1	CONECTOR DO FIO, 10 Cavity Plug, LT				
						WIRE CONNECTOR	CONECTOR DE CABLE	CONNETTORE DEL FILO	250C
					CONNECTEUR DU FIL	KABELSTECKVERBINDE	SAMLEMUFFE	DRAADCONNECTOR	
9c		87527964		1	ADAPTADOR, Handle	ADAPTER	ADAPTADOR	ADATTATORE	001A
					ADAPTATEUR	ADAPTER	ADAPTER	ADAPTER	
10c		87619016		1	HASTE, Angled	ROD	VARILLA	ASTA	090A
					TIGE	STANGE	STANG	STANG	
11c		87742597		2	PARAFUSO ALLEN, Locking, #10-32 x 5/8"				
						HEX SOC SCREW	TORNILLO DE CABEZA H	VITE A ESAGONO INCAS	A093
					VIS A EMBASE HEXAGOI	INNENSECHSKANTSCHF	SEKSKANTET SKRUE	INBUSBOUT	
12c		84470440		1	INSTRUÇÃO, Installation	INSTRUCTION	INSTRUCCIÓN	ISTRUZIONI	Z571
					INSTRUCTION	ANLEITUNG	INSTRUKTION	INSTRUCTIE	
		84428517			JOGO, DIA Kit, Handle 400	NH LG LH-2nd Aux-Mech, Incl. 1d-14d			
						KIT	JEUGO	KIT	4830
					POCHETTE	PACKUNG	KIT	KIT	
1d		80684		2	TRAVA DA ARRUELA, #10	LOCK WASHER	ARANDELA DE BLOQUEI	RONDELLA DI SICUREZ	132R
					RONDELLE FREIN	SICHERUNGSSCHEIBE	LÅSESKIVE	BORGRING	
2d		323238		1	PORCA, Thin, M12 x 1.75, Cl 05				
						NUT	TUERCA	DADO	010D
					ECROU	MUTTER	MØTRIK	MOER	
3d		84201280		1	MAÇANETA, NH Level 300, LH				
						GRIP	MANGO	IMPUGNATURA	4000
					POIGNEE	GRIFF	GREB	GRIPTANG	

DIA KIT, HANDLE 300/400 (ALL NH)
DIA KIT, HANDLE 300/400 (ALL NH)
DIA KIT, HANDLE 300/400 (ALL NH)
DIA KIT, HANDLE 300/400 (ALL NH)



DIA KIT, HANDLE 300/400 (ALL NH)
DIA KIT, HANDLE 300/400 (ALL NH)
DIA KIT, HANDLE 300/400 (ALL NH)
DIA KIT, HANDLE 300/400 (ALL NH)

R	N	P.N.	MOD	Q	Denominação Description	Description Bezeichnung	Denominacion Beskrivelse	Descrizione Beschrijving	L.C.
4d		84279937		5	BUJÃO, Cavity BOUCHON	PLUG STOPFEN	TAPÓN PROP	TAPPO PLUG	050T
5d		84396162		1	ADESIVO AUTOCOLLANT	DECAL AUFKLEBER	CALCOMANÍA TRANSFER	DECALCOMANIA STICKER	012D
6d		84396163		1	ADESIVO AUTOCOLLANT	DECAL AUFKLEBER	CALCOMANÍA TRANSFER	DECALCOMANIA STICKER	012D
7d		87382927		1	CONECTOR ELÉTR, 87382927, FCI CONNECTEUR ELECTRI	ELEC CONNECTOR ELEKTR STECKVERBIND	CONECTOR ELÉCTRICO EL-STIK	CONNETTORE ELETTRI CONNECTOR	235C
8d		87527964		1	ADAPTADOR, Handle ADAPTATEUR	ADAPTER ADAPTER	ADAPTADOR ADAPTER	ADATTATORE ADAPTER	001A
9d		87619017		1	HASTE, Angled TIGE	ROD STANGE	VARILLA STANG	ASTA STANG	090A
10d		87689636		1	BUJÃO, Cavity BOUCHON	PLUG STOPFEN	TAPÓN PROP	TAPPO PLUG	050T
11d		87689643		1	GRAMPO, Secondary Lock COLLIER	CLIP KLAMMER	ABRAZADERA KLIPS	FERMO KLEM	045F
12d		87697724		1	CONECTOR ELÉTR, Packard Metri-pack 4-Way CONNECTEUR ELECTRI	ELEC CONNECTOR ELEKTR STECKVERBIND	CONECTOR ELÉCTRICO EL-STIK	CONNETTORE ELETTRI CONNECTOR	235C
13d		87742597		2	PARAFUSO ALLEN, Locking, #10-32 x 5/8" VIS A EMBASE HEXAGO	HEX SOC SCREW INNENSECHSKANTSCHR	TORNILLO DE CABEZA H SEKSKANTET SKRUE	VITE A ESAGONO INCAS INBUSBOUT	A093
14d		84470440		1	INSTRUÇÃO, Installation INSTRUCTION	INSTRUCTION ANLEITUNG	INSTRUCCIÓN INSTRUKTION	ISTRUZIONI INSTRUCTIE	Z571

DIA KIT, HANDLE 350/450 (ALL NH)
DIA KIT, HANDLE 350/450 (ALL NH)
DIA KIT, HANDLE 350/450 (ALL NH)
DIA KIT, HANDLE 350/450 (ALL NH)



DIA KIT, HANDLE 350/450 (ALL NH)
DIA KIT, HANDLE 350/450 (ALL NH)
DIA KIT, HANDLE 350/450 (ALL NH)
DIA KIT, HANDLE 350/450 (ALL NH)

R	N	P.N.	MOD	Q	Denominação Description	Description Bezeichnung	Denominacion Beskrivelse	Descrizione Beschrijving	L.C.
		84428516			JOGO, DIA Kit, Level 350 and 450 RH EH Hand Grips, Incl. 1-9				
						KIT	JEUGO	KIT	4830
					POCHETTE	PACKUNG	KIT	KIT	
1		**87527964**		1	ADAPTADOR, Handle	ADAPTER	ADAPTADOR	ADATTATORE	001A
					ADAPTATEUR	ADAPTER	ADAPTER	ADAPTER	
2		**84396165**		1	ADESIVO	DECAL	CALCOMANÍA	DECALCOMANIA	012D
					AUTOCOLLANT	AUFKLEBER	TRANSFER	STICKER	
3		**84396161**		1	ADESIVO	DECAL	CALCOMANÍA	DECALCOMANIA	012D
					AUTOCOLLANT	AUFKLEBER	TRANSFER	STICKER	
4		**84396076**		1	MANILHA, NH Level 350 and 450, RH				
						HANDLE	MANECILLA	MANIGLIA	020M
					POIGNEE	GRIFF	HÅNDTAG	HENDEL	
5		**84470444**		1	INSTRUÇÃO, Installation	INSTRUCTION	INSTRUCCIÓN	ISTRUZIONI	Z571
					INSTRUCTION	ANLEITUNG	INSTRUKTION	INSTRUCTIE	
6		**323238**		1	PORCA, Thin, M12 x 1.75, Cl 05				
						NUT	TUERCA	DADO	010D
					ECROU	MUTTER	MØTRIK	MOER	
7		**87619016**		1	HASTE, Angled	ROD	VARILLA	ASTA	090A
					TIGE	STANGE	STANG	STANG	
8		**87742597**		2	PARAFUSO ALLEN, Locking, #10-32 x 5/8"				
						HEX SOC SCREW	TORNILLO DE CABEZA H	VITE A ESAGONO INCAS	A093
					VIS A EMBASE HEXAGO	INNENSECHSKANTSCHF	SEKSKANTET SKRUE	INBUSBOUT	
9		**80684**		2	TRAVA DA ARRUELA, #10	LOCK WASHER	ARANDELA DE BLOQUE	RONDELLA DI SICUREZ	132R
					RONDELLE FREIN	SICHERUNGSSCHEIBE	LÅSESKIVE	BORGRING	
		84428515			JOGO, DIA Kit, Level 350 LH EH Hand Grips, Incl. 1a-9a				
						KIT	JEUGO	KIT	4830
					POCHETTE	PACKUNG	KIT	KIT	
1a		**87527964**		1	ADAPTADOR, Handle	ADAPTER	ADAPTADOR	ADATTATORE	001A
					ADAPTATEUR	ADAPTER	ADAPTER	ADAPTER	
2a		**84353759**		1	ADESIVO	DECAL	CALCOMANÍA	DECALCOMANIA	012D
					AUTOCOLLANT	AUFKLEBER	TRANSFER	STICKER	
3a		**84353780**		1	ADESIVO	DECAL	CALCOMANÍA	DECALCOMANIA	012D
					AUTOCOLLANT	AUFKLEBER	TRANSFER	STICKER	
4a		**84396074**		1	MANILHA, NH Level 350 LH, No 2nd Aux				
						HANDLE	MANECILLA	MANIGLIA	020M
					POIGNEE	GRIFF	HÅNDTAG	HENDEL	
5a		**84470444**		1	INSTRUÇÃO, Installation	INSTRUCTION	INSTRUCCIÓN	ISTRUZIONI	Z571
					INSTRUCTION	ANLEITUNG	INSTRUKTION	INSTRUCTIE	
6a		**323238**		1	PORCA, Thin, M12 x 1.75, Cl 05				
						NUT	TUERCA	DADO	010D
					ECROU	MUTTER	MØTRIK	MOER	
7a		**87619017**		1	HASTE, Angled	ROD	VARILLA	ASTA	090A
					TIGE	STANGE	STANG	STANG	
8a		**87742597**		2	PARAFUSO ALLEN, Locking, #10-32 x 5/8"				
						HEX SOC SCREW	TORNILLO DE CABEZA H	VITE A ESAGONO INCAS	A093
					VIS A EMBASE HEXAGO	INNENSECHSKANTSCHF	SEKSKANTET SKRUE	INBUSBOUT	
9a		**80684**		2	TRAVA DA ARRUELA, #10	LOCK WASHER	ARANDELA DE BLOQUE	RONDELLA DI SICUREZ	132R
					RONDELLE FREIN	SICHERUNGSSCHEIBE	LÅSESKIVE	BORGRING	

DIA KIT, HANDLE 350/450 (ALL NH)
DIA KIT, HANDLE 350/450 (ALL NH)
DIA KIT, HANDLE 350/450 (ALL NH)
DIA KIT, HANDLE 350/450 (ALL NH)



DIA KIT, HANDLE 350/450 (ALL NH)
DIA KIT, HANDLE 350/450 (ALL NH)
DIA KIT, HANDLE 350/450 (ALL NH)
DIA KIT, HANDLE 350/450 (ALL NH)

R	N	P.N.	MOD	Q	Denominação Description	Description Bezeichnung	Denominacion Beskrivelse	Descrizione Beschrijving	L.C.
		84428518			JOGO, DIA Kit, Level 450 LH EH Hand Grips, Incl. 1b-9b				
						KIT	JEUGO	KIT	4830
					POCHETTE	PACKUNG	KIT	KIT	
1b		**87527964**		1	ADAPTADOR, Handle	ADAPTER	ADAPTADOR	ADATTATORE	001A
					ADAPTATEUR	ADAPTER	ADAPTER	ADAPTER	
2b		**84396163**		1	ADESIVO, NH Level 450	DECAL	CALCOMANÍA	DECALCOMANIA	012D
					AUTOCOLLANT	AUFKLEBER	TRANSFER	STICKER	
3b		**84396162**		1	ADESIVO	DECAL	CALCOMANÍA	DECALCOMANIA	012D
					AUTOCOLLANT	AUFKLEBER	TRANSFER	STICKER	
4b		**84280480**		1	MAÇANETA, NH Level 450 LH, No 2nd Aux				
						GRIP	MANGO	IMPUGNATURA	4000
					POIGNEE	GRIFF	GREB	GRIPTANG	
5b		**84470444**		1	INSTRUÇÃO, Installation	INSTRUCTION	INSTRUCCIÓN	ISTRUZIONI	Z571
					INSTRUCTION	ANLEITUNG	INSTRUKTION	INSTRUCTIE	
6b		**323238**		1	PORCA, Thin, M12 x 1.75, Cl 05				
						NUT	TUERCA	DADO	010D
					ECROU	MUTTER	MØTRIK	MOER	
7b		**87619017**		1	HASTE, Angled	ROD	VARILLA	ASTA	090A
					TIGE	STANGE	STANG	STANG	
8b		**87742597**		2	PARAFUSO ALLEN, Locking, #10-32 x 5/8"				
						HEX SOC SCREW	TORNILLO DE CABEZA H	VITE A ESAGONO INCAS	A093
					VIS A EMBASE HEXAGOI	INNENSECHSKANTSCHF	SEKSKANTET SKRUE	INBUSBOUT	
9b		**80684**		2	TRAVA DA ARRUELA, #10	LOCK WASHER	ARANDELA DE BLOQUEO	RONDELLA DI SICUREZ/	132R
					RONDELLE FREIN	SICHERUNGSSCHEIBE	LÅSESKIVE	BORGRING	

ENGINE ACCESSORIES EU/OPEN EU (L223,L225,C232)
ENGINE ACCESSORIES EU/OPEN EU (L223,L225,C232)
ENGINE ACCESSORIES EU/OPEN EU (L223,L225,C232)
ENGINE ACCESSORIES EU/OPEN EU (L223,L225,C232)

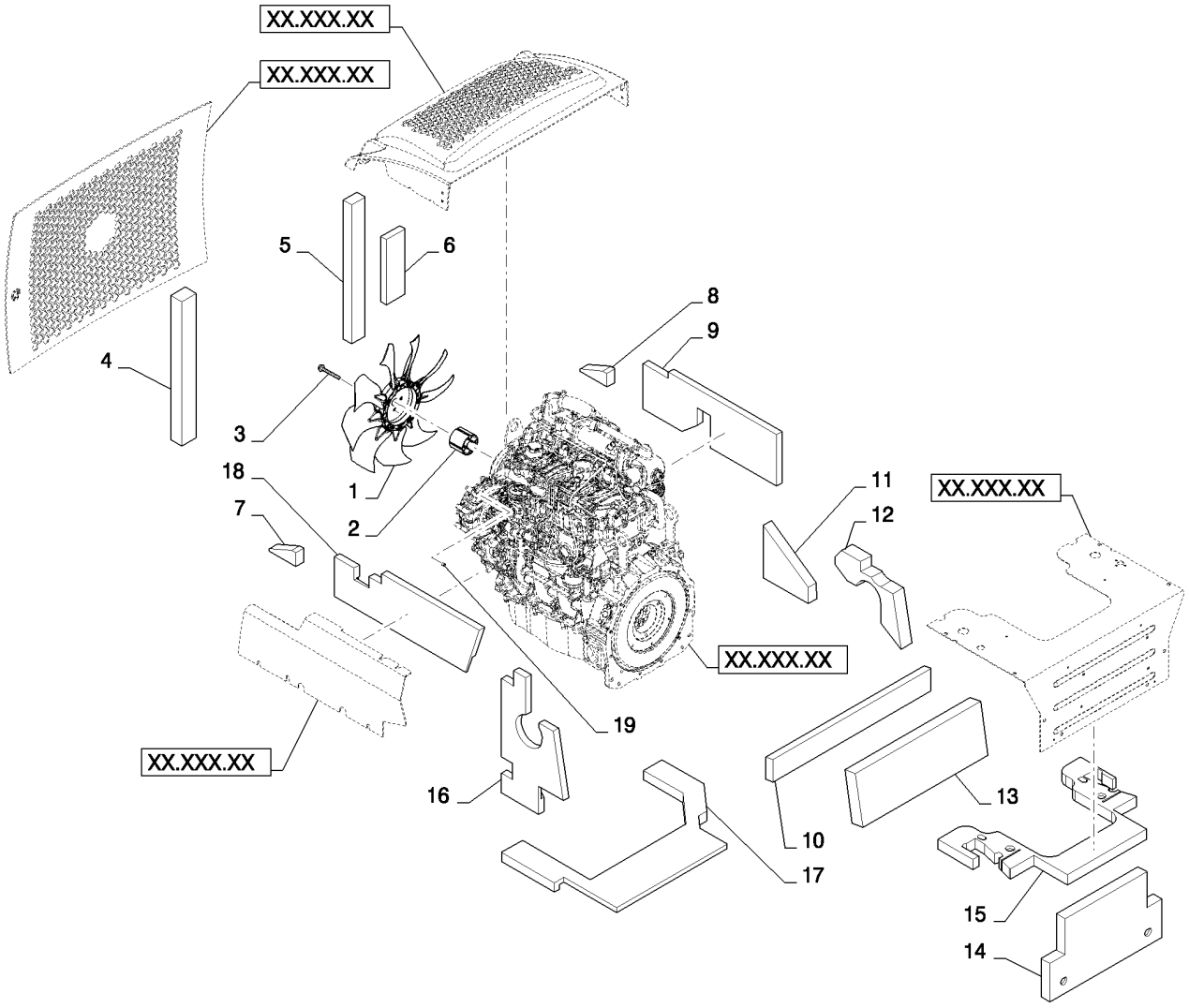

ENGINE ACCESSORIES EU/OPEN EU (L223,L225,C232)
ENGINE ACCESSORIES EU/OPEN EU (L223,L225,C232)
ENGINE ACCESSORIES EU/OPEN EU (L223,L225,C232)
ENGINE ACCESSORIES EU/OPEN EU (L223,L225,C232)

R	N	P.N.	MOD	Q	Denominação Description	Description Bezeichnung	Denominacion Beskrivelse	Descrizione Beschrijving	L.C.
1		84371085		1	VENTILADOR, Clockwise Pusher				
						FAN	VENTILADOR	VENTOLA	030V
					VENTILATEUR	GEBLÄSE	VENTILATOR	VENTILATOR	
2		84373345		1	ESPAÇADOR, Fan 32/33M	SPACER	SEPARADOR	DISTANZIALE	075D
					ENTRETOISE	DISTANZSTÜCK	AFSTANDSSTYKKE	AFSTANDSSTUK	
3		86011090		4	PARAFUSO, Hex Flg, M10 x 70, 8.8				
						BOLT	PERNO	BULLONE	140B
					VIS	SCHRAUBE	BOLT	BOUT	
4		84372988		1	ESPUMA ISOLANTE, Fan RH				
						FOAM INSULATION	ESPUMA AISLANTE	ISOLANTE IN SCHIUMA	051S
					MOUSSE ISOLANTE	SCHAUMSTOFFISOLIER	SKUM ISOLERING	SCHUIMISOLATIE	
5		84372981		1	ESPUMA ISOLANTE, Fan	FOAM INSULATION	ESPUMA AISLANTE	ISOLANTE IN SCHIUMA	051S
					MOUSSE ISOLANTE	SCHAUMSTOFFISOLIER	SKUM ISOLERING	SCHUIMISOLATIE	
6		84372973		1	ESPUMA ISOLANTE, Fan LH				
						FOAM INSULATION	ESPUMA AISLANTE	ISOLANTE IN SCHIUMA	051S
					MOUSSE ISOLANTE	SCHAUMSTOFFISOLIER	SKUM ISOLERING	SCHUIMISOLATIE	
7		84372986		1	ESPUMA ISOLANTE, Hood Top LH				
						FOAM INSULATION	ESPUMA AISLANTE	ISOLANTE IN SCHIUMA	051S
					MOUSSE ISOLANTE	SCHAUMSTOFFISOLIER	SKUM ISOLERING	SCHUIMISOLATIE	
8		84372987		1	ESPUMA ISOLANTE, Firewall BLK				
						FOAM INSULATION	ESPUMA AISLANTE	ISOLANTE IN SCHIUMA	051S
					MOUSSE ISOLANTE	SCHAUMSTOFFISOLIER	SKUM ISOLERING	SCHUIMISOLATIE	
9		84372983		1	ESPUMA ISOLANTE, LH Tower				
						FOAM INSULATION	ESPUMA AISLANTE	ISOLANTE IN SCHIUMA	051S
					MOUSSE ISOLANTE	SCHAUMSTOFFISOLIER	SKUM ISOLERING	SCHUIMISOLATIE	
10		84362125		1	ESPUMA ISOLANTE, Crossmember; Used only with Open Cab				
						FOAM INSULATION	ESPUMA AISLANTE	ISOLANTE IN SCHIUMA	051S
					MOUSSE ISOLANTE	SCHAUMSTOFFISOLIER	SKUM ISOLERING	SCHUIMISOLATIE	
11		84372979		1	ESPUMA ISOLANTE, RH Tower				
						FOAM INSULATION	ESPUMA AISLANTE	ISOLANTE IN SCHIUMA	051S
					MOUSSE ISOLANTE	SCHAUMSTOFFISOLIER	SKUM ISOLERING	SCHUIMISOLATIE	
12		84372978		1	ESPUMA ISOLANTE, RH Tower				
						FOAM INSULATION	ESPUMA AISLANTE	ISOLANTE IN SCHIUMA	051S
					MOUSSE ISOLANTE	SCHAUMSTOFFISOLIER	SKUM ISOLERING	SCHUIMISOLATIE	
13		{}		1	Pad Right Tower OBSOLETE - Not Used				
14		84366353		1	ESPUMA ISOLANTE, Heel Plate Horizontal				
						FOAM INSULATION	ESPUMA AISLANTE	ISOLANTE IN SCHIUMA	051S
					MOUSSE ISOLANTE	SCHAUMSTOFFISOLIER	SKUM ISOLERING	SCHUIMISOLATIE	
15		84366352		1	ESPUMA ISOLANTE, Heel Plate Vertical				
						FOAM INSULATION	ESPUMA AISLANTE	ISOLANTE IN SCHIUMA	051S
					MOUSSE ISOLANTE	SCHAUMSTOFFISOLIER	SKUM ISOLERING	SCHUIMISOLATIE	
16		84372977		1	ESPUMA ISOLANTE, RH Tower				
						FOAM INSULATION	ESPUMA AISLANTE	ISOLANTE IN SCHIUMA	051S
					MOUSSE ISOLANTE	SCHAUMSTOFFISOLIER	SKUM ISOLERING	SCHUIMISOLATIE	
17		84372980		1	ESPUMA ISOLANTE, Rear Hood				
						FOAM INSULATION	ESPUMA AISLANTE	ISOLANTE IN SCHIUMA	051S
					MOUSSE ISOLANTE	SCHAUMSTOFFISOLIER	SKUM ISOLERING	SCHUIMISOLATIE	

ENGINE ACCESSORIES EU/OPEN EU (L223,L225,C232)
ENGINE ACCESSORIES EU/OPEN EU (L223,L225,C232)
ENGINE ACCESSORIES EU/OPEN EU (L223,L225,C232)
ENGINE ACCESSORIES EU/OPEN EU (L223,L225,C232)

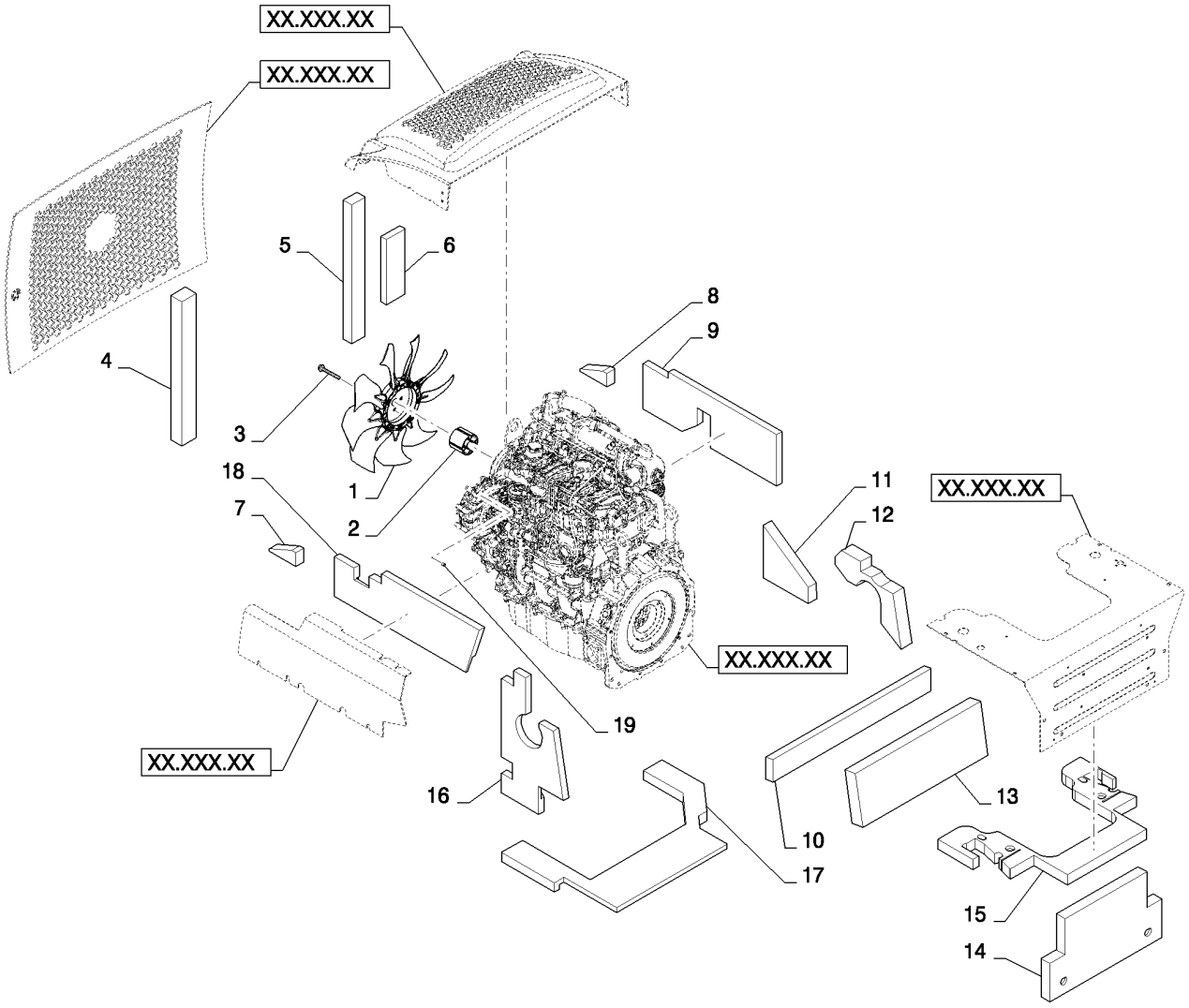

ENGINE ACCESSORIES EU/OPEN EU (L223,L225,C232)
ENGINE ACCESSORIES EU/OPEN EU (L223,L225,C232)
ENGINE ACCESSORIES EU/OPEN EU (L223,L225,C232)
ENGINE ACCESSORIES EU/OPEN EU (L223,L225,C232)

R	N	P.N.	MOD	Q	Denominação Description	Description Bezeichnung	Denominacion Beskrivelse	Descrizione Beschrijving	L.C.
18		**84372982**		1	ESPUMA ISOLANTE, RH Tower				
						FOAM INSULATION	ESPUMA AISLANTE	ISOLANTE IN SCHIUMA	051S
					MOUSSE ISOLANTE	SCHAUMSTOFFISOLIER	SKUM ISOLERING	SCHUIMISOLATIE	
19		**87461957**		1	PARADA, Stop	STOP	TOPE	ARRESTO; FERMO	080A
					BUTEE	STOP	STOP	AANSLAG	
20		**87595771**		1	ISOLADOR, Pad (Not Slhown)				
						ISOLATOR	AISLADOR	ISOLATORE	Z082
					ISOLANT	ISOLATOR	ISOLATOR	ISOLATIE	
21		**L18331**		2	PRENDEDOR DE CABOS, Tie (Not Shown)				
						CABLE STRAP	BANDA DE CABLE	FASCETTA PER CAVO	P716
					BRIDE DE CABLE	KABELBINDER	KABELSTROP	BUNDELBAND	
22		**84372040**		1	ESPUMA, Seat Pan; Used only with Open Cab (Not Shown)				
						FOAM	ESPUMA	SCHIUMA	P033
					MOUSSE	SCHAUM	SKUM	SCHUIM	

ENGINE ACCESSORIES NA (L223-L230,C232,C238)
ENGINE ACCESSORIES NA (L223-L230,C232,C238)
ENGINE ACCESSORIES NA (L223-L230,C232,C238)
ENGINE ACCESSORIES NA (L223-L230,C232,C238)

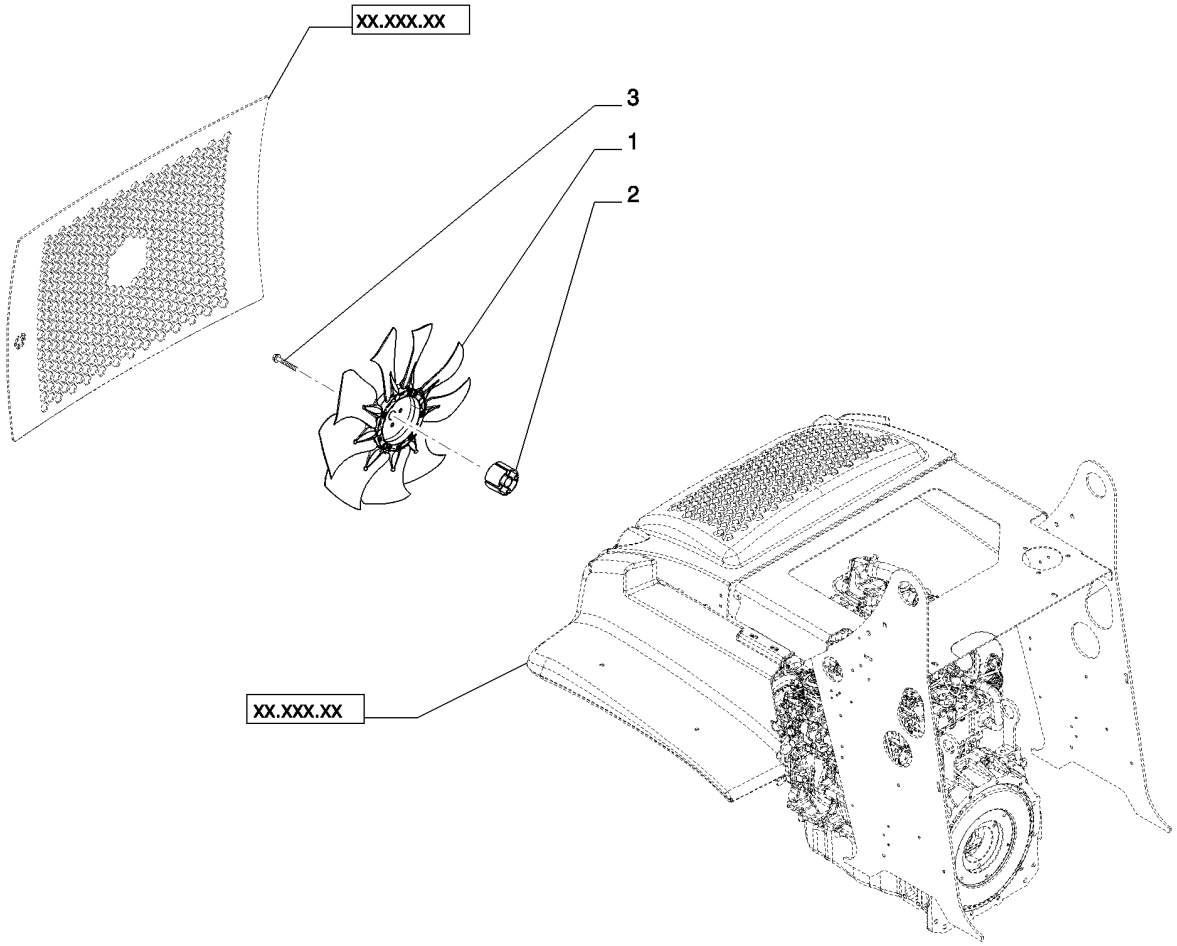

ENGINE ACCESSORIES NA (L223-L230,C232,C238)
ENGINE ACCESSORIES NA (L223-L230,C232,C238)
ENGINE ACCESSORIES NA (L223-L230,C232,C238)
ENGINE ACCESSORIES NA (L223-L230,C232,C238)

R	N	P.N.	MOD	Q	Denominação Description Bezeichnung	Description Bezeichnung	Denominacion Beskrivelse	Descrizione Beschrijving	L.C.
1		84371085		1	VENTILADOR, Clockwise Pusher				
						FAN	VENTILADOR	VENTOLA	030V
					VENTILATEUR	GEBLÄSE	VENTILATOR	VENTILATOR	
2		84373345		1	ESPAÇADOR, Fan 32/33MM	SPACER	SEPARADOR	DISTANZIALE	075D
					ENTRETOISE	DISTANZSTÜCK	AFSTANDSSTYKKE	AFSTANDSSTUK	
3		86011090		4	PARAFUSO, Hex Flg, M10 x 70, 8.8				
						BOLT	PERNO	BULLONE	140B
					VIS	SCHRAUBE	BOLT	BOUT	

SEAL PACKAGE, FOAM (ALL NH)
SEAL PACKAGE, FOAM (ALL NH)
SEAL PACKAGE, FOAM (ALL NH)
SEAL PACKAGE, FOAM (ALL NH)

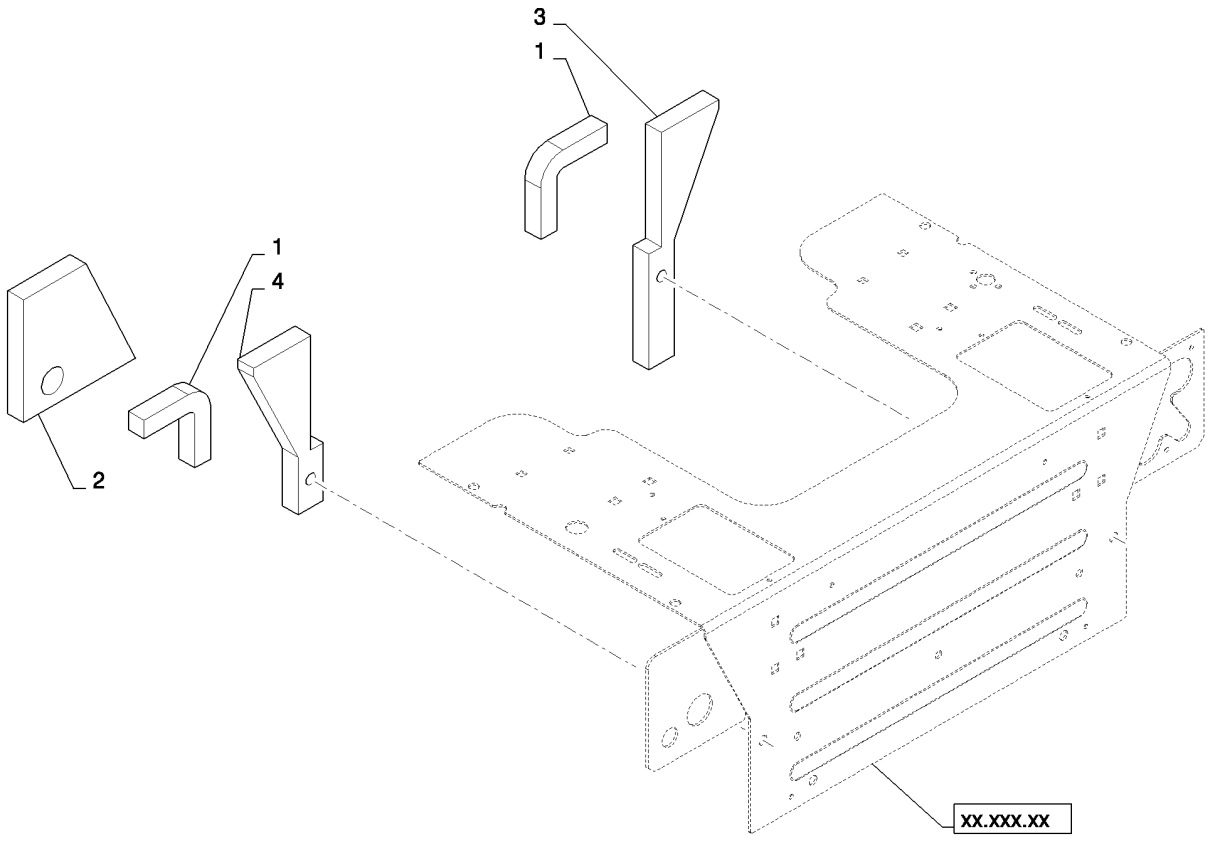

SEAL PACKAGE, FOAM (ALL NH)
SEAL PACKAGE, FOAM (ALL NH)
SEAL PACKAGE, FOAM (ALL NH)
SEAL PACKAGE, FOAM (ALL NH)

R	N	P.N.	MOD	Q	Denominação Description	Description Bezeichnung	Denominacion Beskrivelse	Descrizione Beschrijving	L.C.
1		84342690		2	ESPUMA ISOLANTE MOUSSE ISOLANTE	FOAM INSULATION SCHAUMSTOFFISOLIER	ESPUMA AISLANTE SKUM ISOLERING	ISOLANTE IN SCHIUMA SCHUIMISOLATIE	051S
2		84287773		1	ESPUMA, RH Filler MOUSSE	FOAM SCHAUM	ESPUMA SKUM	SCHIUMA SCHUIM	P033
3		84287772		1	ESPUMA, LH Heel Plate MOUSSE	FOAM SCHAUM	ESPUMA SKUM	SCHIUMA SCHUIM	P033
4		84287771		1	ESPUMA, RH Heel Plate MOUSSE	FOAM SCHAUM	ESPUMA SKUM	SCHIUMA SCHUIM	P033

88.120.02		p1	05/11

FUSE COVER, MED-LG CHASSIS (L218-C238)
FUSE COVER, MED-LG CHASSIS (L218-C238)
FUSE COVER, MED-LG CHASSIS (L218-C238)
FUSE COVER, MED-LG CHASSIS (L218-C238)

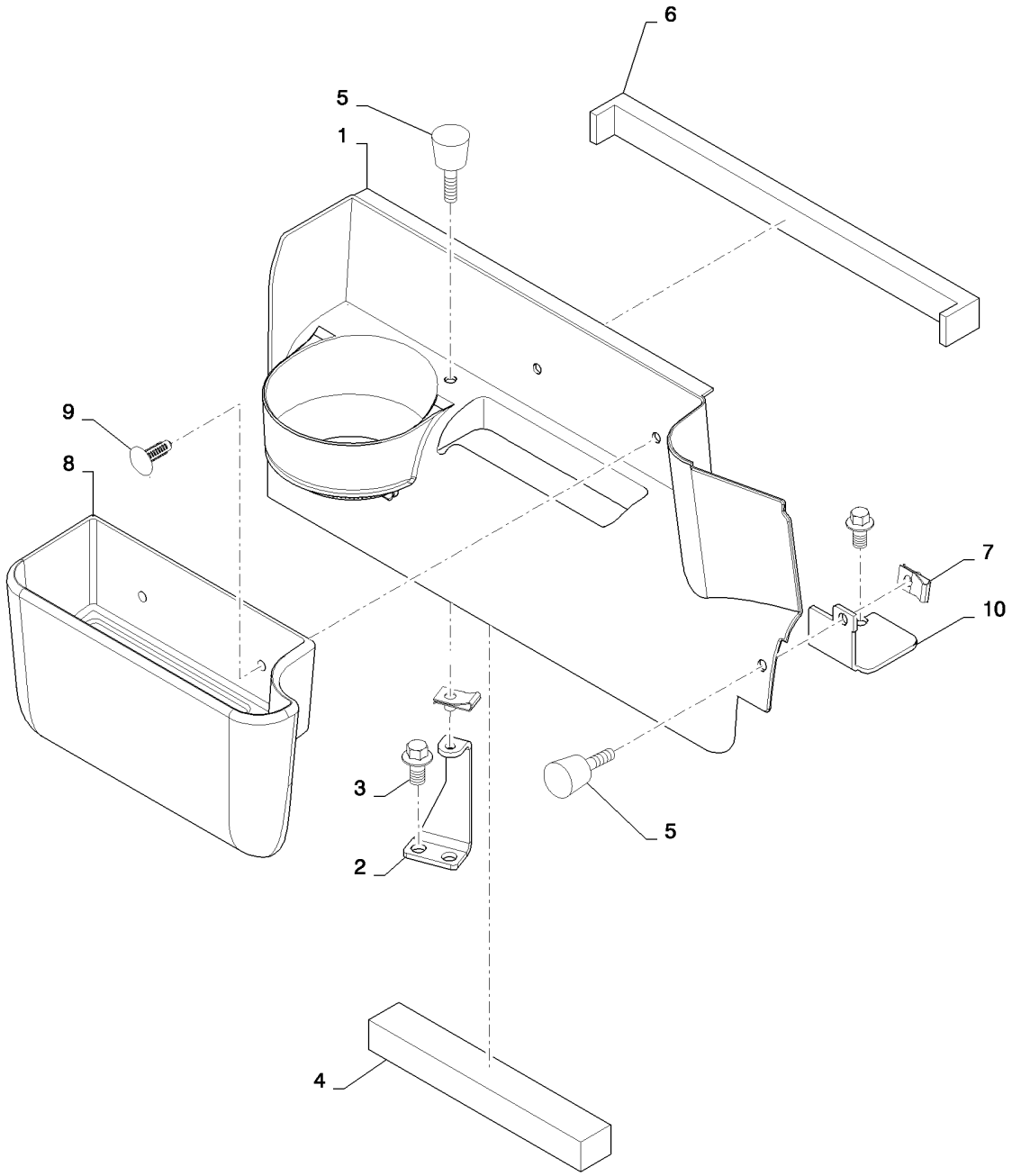

FUSE COVER, MED-LG CHASSIS (L218-C238)
FUSE COVER, MED-LG CHASSIS (L218-C238)
FUSE COVER, MED-LG CHASSIS (L218-C238)
FUSE COVER, MED-LG CHASSIS (L218-C238)

R	N	P.N.	MOD	Q	Denominação Description Bezeichnung	Denominacion Beskrivelse	Descrizione Beschrijving	L.C.
1		84301221		1	COBERTURA, Fuse Cover, Large Chassis COVER COUVERCLE ABDECKUNG	CUBIERTA DÆKSEL	COPERCHIO AFSCHERMING	265C
2		84481035		1	SUPORTE, Bracket, Fuse Cover, Gray BRACKET SUPPORT HALTERUNG	SOPORTE BESLAG	STAFFA STEUN	225S
3		84285339		4	PARAFUSO, Flg, M8x15 SELF-TAP SCREW VIS AUTOTARAUDEUSE SELBSTSCHN SCHRAUE	TORNILLO AUTORROSC SELVLÅSENDE BOLT	VITE AUTOFILETTANTE ZELFTAPPENDE SCHRO	062V
4		84282686		1	ESPUMA ISOLANTE, Fuse Cover FOAM INSULATION MOUSSE ISOLANTE SCHAUMSTOFFISOLIER	ESPUMA AISLANTE SKUM ISOLERING	ISOLANTE IN SCHIUMA SCHUIMISOLATIE	051S
5		273890		2	MAÇANETA, Thumb Screw KNOB BOUTON RUNDGRIFF	MANDO GREB	MANOPOLA KNOP	150P
6		86508457		1	PASTILHA, Foam, Closed Cell .97 ft. PAD COUSSIN UNTERLAGE	PASTILLA BREMSEKLODS	CUSCINO; TAMPONE BLOK	060T
7		87301324		2	PORCA, Spring, M5x.8 NUT ECROU MUTTER	TUERCA MØTRIK	DADO MOER	010D
8		84362695		1	CESTO BASKET PANIER KORB	CESTA KURV	CESTINO KORF	A024
9		84318534		2	BOTÃO DE IMPULSO, Push In, Gray FASTENER ATTACHE BEFESTIGUNGSELEMEN	SUJETADOR LUKKER	DISPOSITIVO DI FISSAG BEVESTIGING	123B
10		84379555		1	SUPORTE, Fuse Cover BRACKET SUPPORT HALTERUNG	SOPORTE BESLAG	STAFFA STEUN	225S

SECTION INDEX

90 - Plataforma, cabine, lataria e adesivos

90.100.01		HOODS AND COVERS (L223,L225,L230)
90.112.01		HAND CONTROLS, LG FRAME SERVO (L223-L230)
90.112.01		FOOT CONTROLS, LG FRM SERVO (L223,L225,L230)
90.112.01	01	FLOORPLATE, NO PEDAL (ALL NH)
90.112.01	01	FLOORPLATE, PEDAL (L213-L230)
90.112.01	02	HAND CONTROLS, INTERLINK (L213-L230)
90.112.01	03	HANDLE MOUNTING, MD LG FRM FC (L218-L230)
90.112.01	04	HAND CONTROLS, HANDLE LH (L213-L230)
90.112.01	05	HAND CONTROLS, HANDLE RH (L213-L230)
90.112.01	06	DAMPENING CONTROL (L213-L230)
90.112.01	06	DAMPENING & CENTERING CONTROL (L223-L230)
90.112.01	07	SERVO PUMP CENTERING (L223, L225, L230)
90.112.01	08	PEDAL MOUNTING (L213 - L230)
90.112.02		ELEC-HYDRAULIC CONTROLS MD-LG FRM (L218-C238)
90.112.02	02	HANDLE MOUNTING EH (L218-C238)
90.112.02	03	HANDLE, ELECTRONIC CONTROL NH (ALL NH)
90.116.01		LOADER STOP 63MM (L218-L230)
90.116.01		LOADER STOP 40MM (L218-L230,C232,C238)
90.120.01		SEAT, NON SUSPENSION (ALL NH)
90.120.02		SEAT, SUSPENSION (ALL NH)
90.120.03		SEAT, AIR SUSPENSION (ALL NH)
90.120.04	01	SEAT BELT, 2 PT RETRACTOR 2 IN WEB (ALL NH)
90.120.04	02	SEAT BELT, 3 PT (ALL NH)
90.150.01	01	CAB NH (L218-C238)
90.150.01	02	CAB NH (L218-C238)
90.150.01	03	CAB, GAS STRUT ASSY (ALL NH)
90.150.02		CAB SEALING (ALL NH)
90.150.03		FLOOR MAT, MECHANICAL HAND CONTROL (ALL NH)
90.150.04		FLOOR MAT, MECHANICAL FOOT CONTROLS (L213-L230)
90.150.05		FLOOR MAT, EH CONTROLS (L213-L230)
90.154.00		FRONT DOOR, GLASS (ALL NH)
90.154.01	01	DOOR ASSY, FRONT (ALL NH)
90.154.01	02	DOOR ASSY, FRONT (ALL NH)
90.154.01	03	NO FRONT DOOR (ALL NH)
90.154.01	04	DOOR ASSY, FRONT DEMO (ALL NH)
90.154.01	05	DOOR ASSY, FRONT DEMO (ALL NH)
90.154.01	06	FRONT DEMO, DOOR (ALL NH)
90.154.02		SIDE WINDOW ASSY (ALL NH)
90.154.03	02	DOOR ASSY, REAR NH MED LG (L218-C238)
90.154.04		REAR WINDOW NA (ALL NH)
90.154.04		REAR WINDOW EU (ALL NH)
90.154.05	01	WASHER BOTTLE, FRONT (ALL NH)
90.154.05	02	WASHER BOTTLE, REAR (ALL NH)
90.154.05	03	WASHER BOTTLE, FRONT & REAR (ALL NH)
90.160.01	01	INTERIOR TRIM NH (ALL NH)
90.160.01	02	INTERIOR TRIM NH (ALL NH)
90.160.01	03	CAB SEALING (ALL NH)
90.160.02		SEAL PACKAGE (L218-C238)
90.160.03	01	CAB HEADLINER, NO RADIO (ALL NH)
90.160.03	02	CAB HEADLINER, WITH RADIO (ALL NH)
90.180.01	01	DECALS (L225)
90.180.01	02	DECALS - WARNING (ALL NH)
90.180.01	03	DECALS (ALL NH)
90.180.01	04	DECALS (L225)

90.100.01		p1	04/11

HOODS AND COVERS (L223,L225,L230)
HOODS AND COVERS (L223,L225,L230)
HOODS AND COVERS (L223,L225,L230)
HOODS AND COVERS (L223,L225,L230)

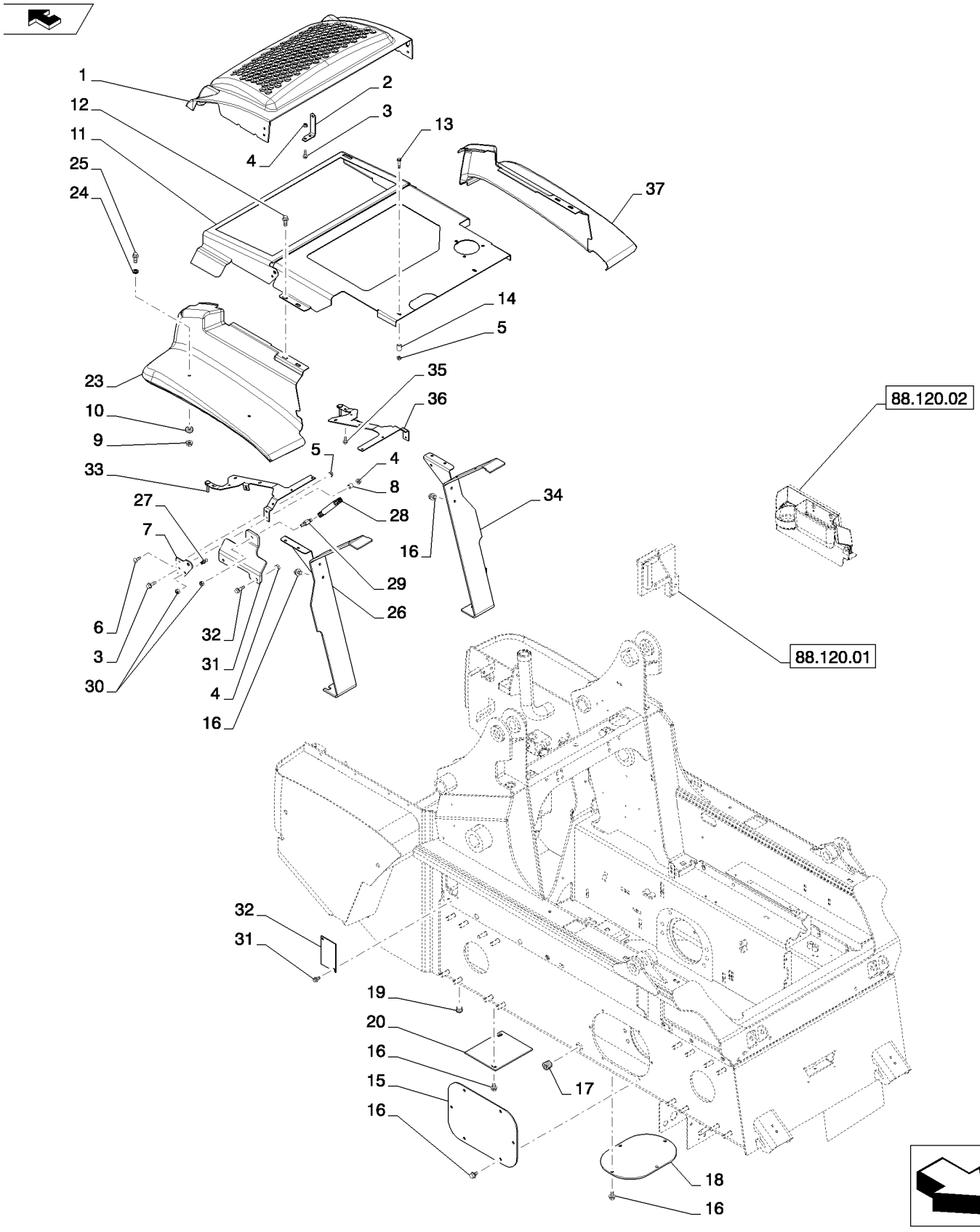

HOODS AND COVERS (L223,L225,L230)
HOODS AND COVERS (L223,L225,L230)
HOODS AND COVERS (L223,L225,L230)
HOODS AND COVERS (L223,L225,L230)

R	N	P.N.	MOD	Q	Denominação Description	Description Bezeichnung	Denominacion Beskrivelse	Descrizione Beschrijving	L.C.
1		84296236		1	CAPÔ, Rear NH	HOOD	CUBIERTA	COFANO	4360
					CAPOT	HAUBE	HJELMPLADE	KAP	
2		84323563		1	CANTONEIRA, Hood Lock Tab, Gray				
						ANGLE	ÁNGULO	ANGOLARE	057C
					CORNIERE	WINKEL	VINKELBESLAG	HOEKSTUK	
3		9671714		2	PARAFUSO, Hex Flg, M8 x 25, 8.8				
						BOLT	PERNO	BULLONE	140B
					VIS	SCHRAUBE	BOLT	BOUT	
4		9804277		4	PORCA, M8 x 1.25, Flg, Cl 8				
						NUT	TUERCA	DADO	010D
					ECROU	MUTTER	MØTRIK	MOER	
5		9804276		8	PORCA, M6 x 1, Flg, Cl 8	NUT	TUERCA	DADO	010D
					ECROU	MUTTER	MØTRIK	MOER	
6		9706703		4	PARAFUSO, Short NK, M6 x 20, Cl8.8, Full Thd				
						CARRIAGE BOLT	PERNO ALOMADO	BULLONE A TESTA TONI	P123
					VIS A TETE BOMBEE	SCHLOSSSCHRAUBE	BRÆDDEBOLT	SLOTBOUT	
7		84323092		2	PLACA PIVÔ, Yellow	PIVOT PLATE	PLACA DE PIVOTE	PIASTRA GIREVOLE	P815
					PLAQUE D'ARTICULATIC	DREHPLATTE	TAPPLADE	DRAAIPLAAT	
8		87035448		2	ESPAÇADOR	SPACER	SEPARADOR	DISTANZIALE	075D
					ENTRETOISE	DISTANZSTÜCK	AFSTANDSSTYKKE	AFSTANDSSTUK	
9		14369271		4	PORCA, Spring, U M6 X 16.2 X .0.				
						NUT	TUERCA	DADO	010D
					ECROU	MUTTER	MØTRIK	MOER	
10		5093041		4	BUCHA DE BORRACHA	RUBBER BUSHING	CASQUILLO DE GOMA	BOCCOLA IN GOMMA	100B
					BAGUE EN CAOUTCHOU	GUMMIBUCHSE	GUMMIBØSNING	RUBBEREN BUS	
11		84324182		1	PAINEL, A, Rear Deck, Yellow				
						PANEL	PANEL	PANNELLO	025P
					PANNEAU	PLATTE	PANEL	PANEEL	
12		87550233		4	PARAFUSO, M10 X 25 FLG HD THD Cut G				
						SCREW	TORNILLO	VITE	040V
					VIS	SCHRAUBE	SKRUE	SCHROEF	
13		87015931		2	PARAFUSO, Hex Flg, M6 x 35, 8.8				
						BOLT	PERNO	BULLONE	140B
					VIS	SCHRAUBE	BOLT	BOUT	
14		87036415		2	ESPAÇADOR	SPACER	SEPARADOR	DISTANZIALE	075D
					ENTRETOISE	DISTANZSTÜCK	AFSTANDSSTYKKE	AFSTANDSSTUK	
15		84421074		2	PLACA DE COBERTURA, W/Bung NH Yellow				
						COVER PLATE	PLACA DE CUBIERTA	PIASTRA DI COPERTUR/	110P
					COUVERCLE	ABDECKPLATTE	DÆKPLADE	AFSCHERMPLAAT	
16		87030529		22	PARAFUSO, 3/8-16 X 7/8	SELF-TAP SCREW	TORNILLO AUTORROSC	VITE AUTOFILETTANTE	062V
					VIS AUTOTARAUDEUSE	SELBSTSCHN SCHRAUE	SELVLÅSENDE BOLT	ZELFTAPPENDE SCHRO	
17		647429		4	BUJÃO DE DRENO, Sq Soc, 1/2"-14, NTPF, Pipe				
						DRAIN PLUG	TAPÓN DE VACIADO	TAPPO DI SCARICO	056T
					BOUCHON DE VIDANGE	ABLASSSCHRAUBE	AFTAPNINGSPROP	AFTAPPLUG	
18		84299800		1	PLACA DE COBERTURA, Gray				
						COVER PLATE	PLACA DE CUBIERTA	PIASTRA DI COPERTUR/	110P
					COUVERCLE	ABDECKPLATTE	DÆKPLADE	AFSCHERMPLAAT	
19		236622		2	BUJÃO, Pipe	PLUG	TAPÓN	TAPPO	050T
					BOUCHON	STOPFEN	PROP	PLUG	

90.100.01		p2	04/11

HOODS AND COVERS (L223,L225,L230)
HOODS AND COVERS (L223,L225,L230)
HOODS AND COVERS (L223,L225,L230)
HOODS AND COVERS (L223,L225,L230)

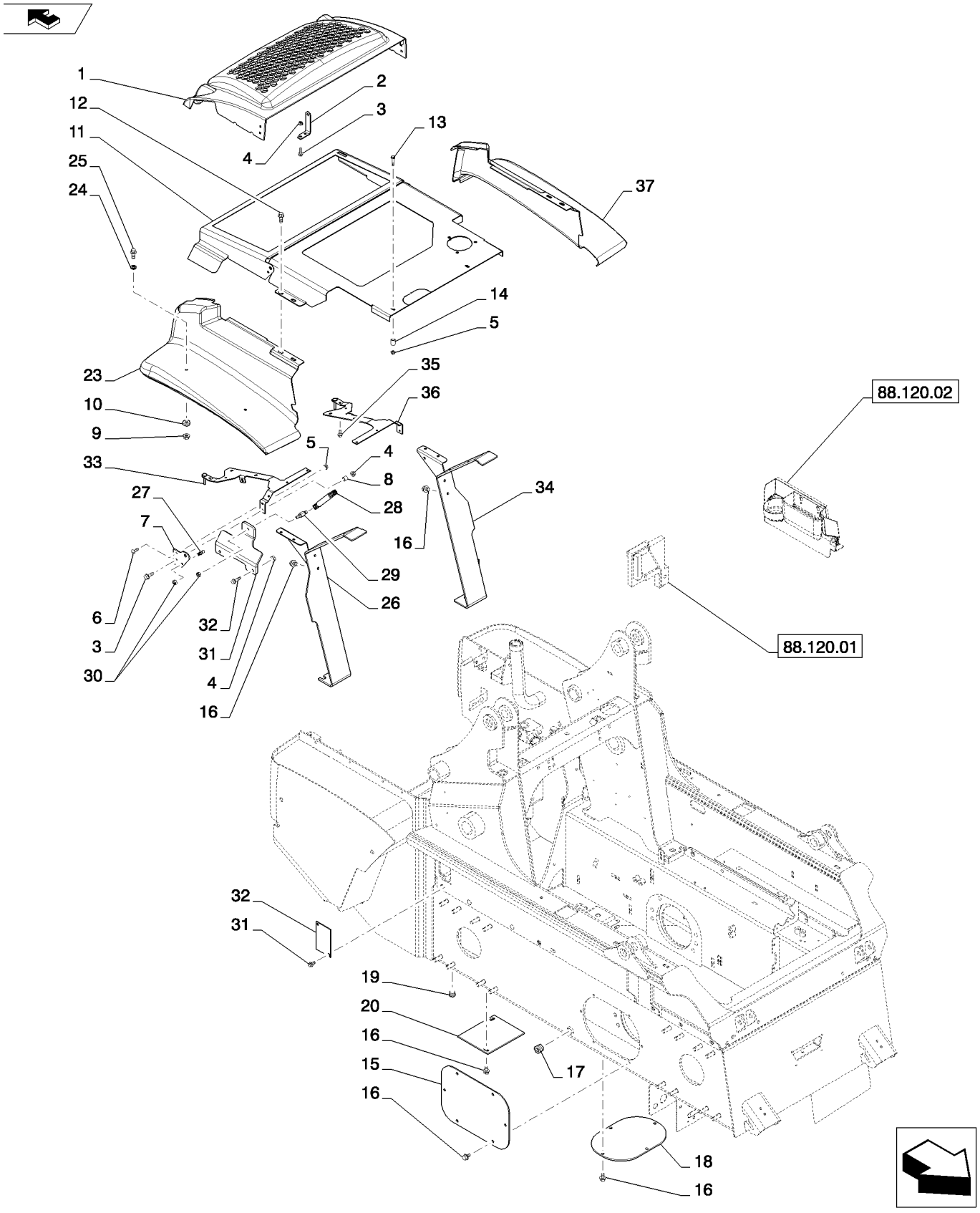

HOODS AND COVERS (L223,L225,L230)
HOODS AND COVERS (L223,L225,L230)
HOODS AND COVERS (L223,L225,L230)
HOODS AND COVERS (L223,L225,L230)

R	N	P.N.	MOD	Q	Denominação Description Bezeichnung	Description Bezeichnung Beskrivelse	Denominacion Beskrivelse Descrizione	Descrizione Beschrijving	L.C.
20		**84299809**		1	PLACA DE COBERTURA, Plumbing Access Cover				
					COVER PLATE	PLACA DE CUBIERTA	PIASTRA DI COPERTUR/		110P
					COUVERCLE	ABDECKPLATTE	DÆKPLADE	AFSCHERMPLAAT	
21		**84370417**		2	PLACA, Cover CE Gray	PLATE	PLACA	PIASTRA	105P
					PLAQUE	PLATTE	PLADE	PLAAT	
22		**84285339**		4	PARAFUSO, M8 X 15	SELF-TAP SCREW	TORNILLO AUTORROSC	VITE AUTOFILETTANTE	062V
					VIS AUTOTARAUDEUSE	SELBSTSCHN SCHRAUE	SELVLÅSENDE BOLT	ZELFTAPPENDE SCHRO	
23		**84297656**		1	COBERTURA, Right	COVER	CUBIERTA	COPERCHIO	265C
					COUVERCLE	ABDECKUNG	DÆKSEL	AFSCHERMING	
24		**140040**		4	ARRUELA PLANA, M6 x 22 x 2				
					WASHER	ARANDELA	RONDELLA		131R
					RONDELLE	UNTERLEGSCHEIBE	FLADSKIVE	SLUITRING	
25		**9804256**		4	PARAFUSO, Hex Flg, M6 x 20, 8.8				
					BOLT	PERNO	BULLONE		140B
					VIS	SCHRAUBE	BOLT	BOUT	
26		**84281046**		1	CANTONEIRA, Cover Mounting Gray				
					ANGLE	ÁNGULO	ANGOLARE		057C
					CORNIERE	WINKEL	VINKELBESLAG	HOEKSTUK	
27		**189609A1**		1	PRISIONEIRO	STUD	PRISIONERO	PRIGIONIERO	8720
					GOUJON	STIFTSCHRAUBE	STOETTEBOLT	TAPEIND	
28		**400472A1**		1	MOLA, Hood Assist	SPRING	RESORTE	MOLLA	8315
					RESSORT	FEDER	FJEDER	VEER	
29		**109498A1**		1	PRISIONEIRO, Ball	STUD	ESPARRAGO	PRIGIONIERO	P521
					GOUJON	STEHBOLZEN	STUD	STUD	
30		**43362**		1	PORCA, M8, Cl 10	NUT	TUERCA	DADO	010D
					ECROU	MUTTER	MØTRIK	MOER	
31		**84373759**		1	SUPORTE, Gas Strut Support Gray				
					BRACKET	SOPORTE	STAFFA		225S
					SUPPORT	HALTERUNG	BESLAG	STEUN	
32		**9804260**		2	PARAFUSO, Hex Flg, M8 x 30, 8.8, Full Thd				
					BOLT	PERNO	BULLONE		140B
					VIS	SCHRAUBE	BOLT	BOUT	
33		**84374135**		1	SUPORTE, RH, AC Cond Mounting Gray				
					BRACKET	SOPORTE	STAFFA		225S
					SUPPORT	HALTERUNG	BESLAG	STEUN	
34		**84281047**		1	CANTONEIRA, Cover Mounting Gray				
					ANGLE	ÁNGULO	ANGOLARE		057C
					CORNIERE	WINKEL	VINKELBESLAG	HOEKSTUK	
35		**9804255**		2	PARAFUSO, Hex Flg, M6 x 16, 8.8				
					BOLT	PERNO	BULLONE		140B
					VIS	SCHRAUBE	BOLT	BOUT	
36		**84374137**		1	SUPORTE, LH, AC Cond Mounting Gray				
					BRACKET	SOPORTE	STAFFA		225S
					SUPPORT	HALTERUNG	BESLAG	STEUN	
37		**84297657**		1	COBERTURA, Left	COVER	CUBIERTA	COPERCHIO	265C
					COUVERCLE	ABDECKUNG	DÆKSEL	AFSCHERMING	

90.100.01		p3	04/11

HOODS AND COVERS (L223,L225,L230)
HOODS AND COVERS (L223,L225,L230)
HOODS AND COVERS (L223,L225,L230)
HOODS AND COVERS (L223,L225,L230)

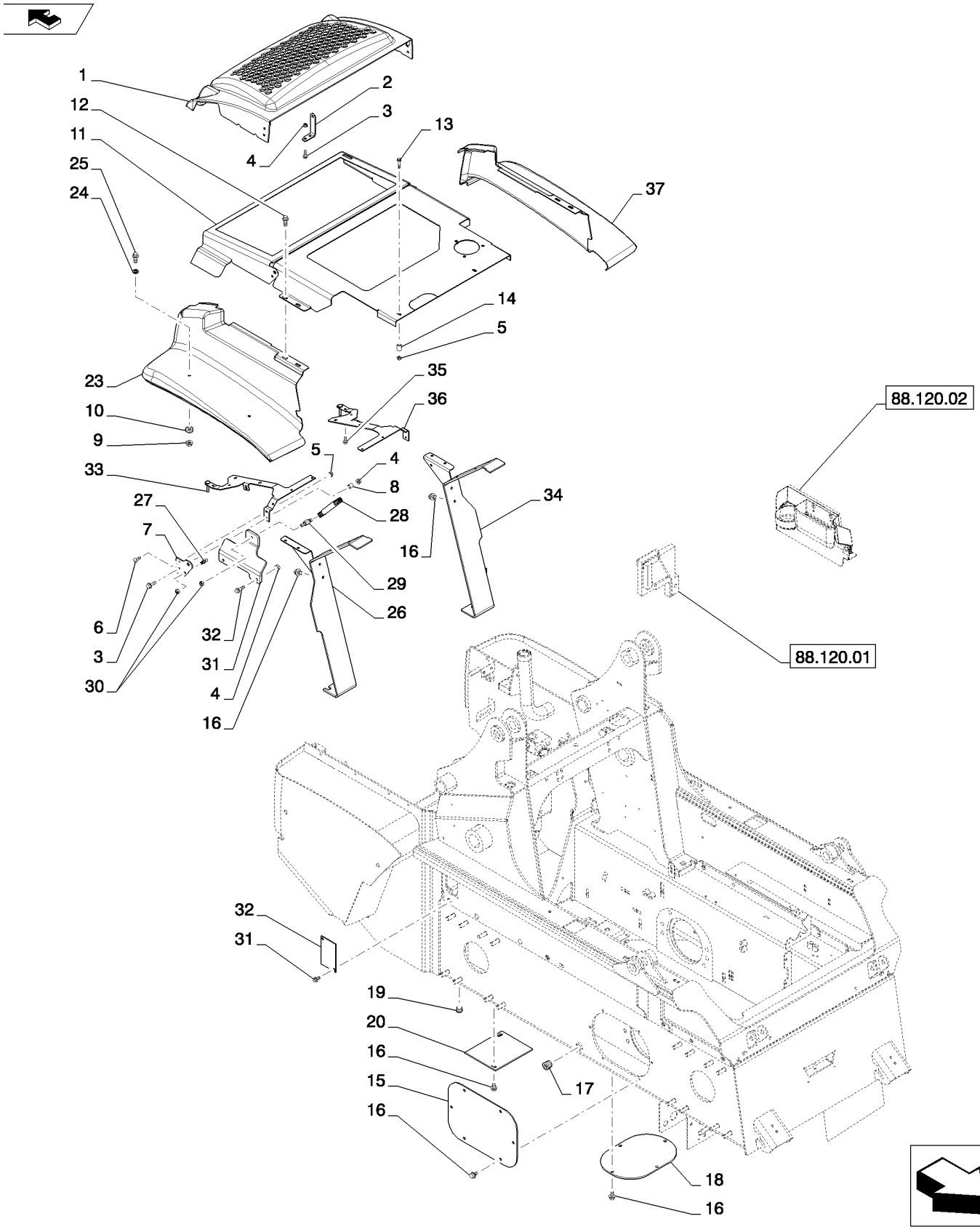

HOODS AND COVERS (L223,L225,L230)
HOODS AND COVERS (L223,L225,L230)
HOODS AND COVERS (L223,L225,L230)
HOODS AND COVERS (L223,L225,L230)

R	N	P.N.	MOD	Q	Denominação Description	Description Bezeichnung	Denominacion Beskrivelse	Descrizione Beschrijving	L.C.
38		**9635082**		1	PORCA, 5/16"-18, G5, Used W/ Ref. 29 (Not Shown)				
						NUT	TUERCA	DADO	010D
					ECROU	MUTTER	MØTRIK	MOER	
39		**9804257**		2	PARAFUSO, Hex Flg, M6 x 25, 8.8, (Not Shown)				
						BOLT	PERNO	BULLONE	140B
					VIS	SCHRAUBE	BOLT	BOUT	

90.112.01		p1	02/11

HAND CONTROLS, LG FRAME SERVO (L223-L230)
HAND CONTROLS, LG FRAME SERVO (L223-L230)
HAND CONTROLS, LG FRAME SERVO (L223-L230)
HAND CONTROLS, LG FRAME SERVO (L223-L230)

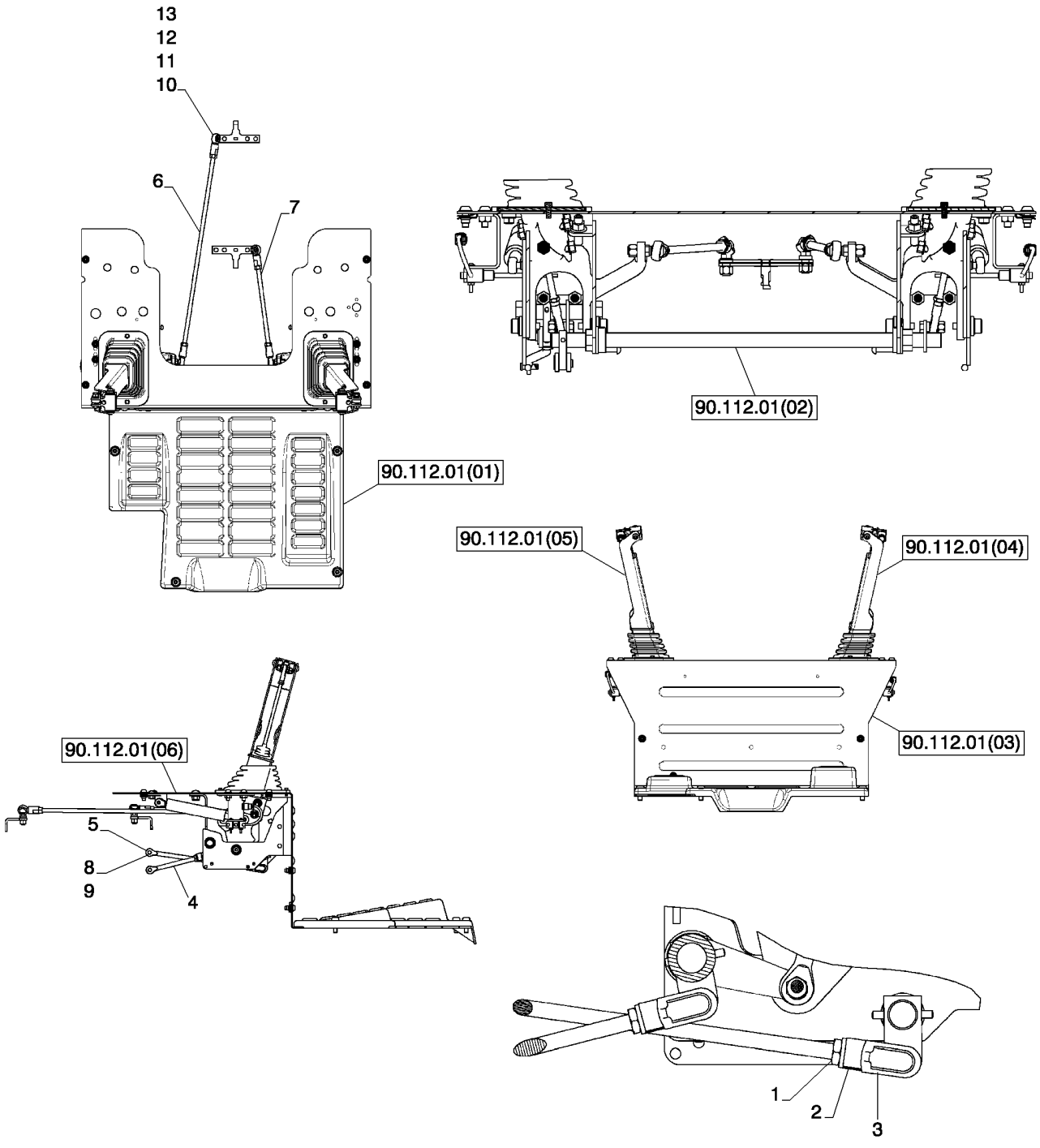

HAND CONTROLS, LG FRAME SERVO (L223-L230)
HAND CONTROLS, LG FRAME SERVO (L223-L230)
HAND CONTROLS, LG FRAME SERVO (L223-L230)
HAND CONTROLS, LG FRAME SERVO (L223-L230)

R	N	P.N.	MOD	Q	Denominação Description	Description Bezeichnung	Denominacion Beskrivelse	Descrizione Beschrijving	L.C.
1		84221258		2	PORCA FINA ECROU FIN	THIN NUT FLACHMUTTER	TUERCA DELGADA MØTRIK, TYND	DADO SOTTILE DUNNE MOER	A076
2		84299261		2	GARFO CHAPE	CLEVIS SCHÄKEL	MOSQUETÓN GAFFELBOLT	FORCELLA DI ATTACCO GAFFEL	084F
3		84299262		2	PINO DE GARFO AXE DE CHAPE	CLEVIS PIN GABELBOLZEN	EJE CON CABEZA GAFFELBOLT	PERNO A TESTA PIANA GAFFELPEN	P694
4		84300037		1	HASTE, Loader Valve Bucket TIGE	ROD STANGE	VARILLA STANG	ASTA STANG	090A
5		84300039		1	HASTE, Loader Valve Boom TIGE	ROD STANGE	VARILLA STANG	ASTA STANG	090A
6		84300954		1	HASTE ROSCADA, Ground Drive, Md Frm Servo TIGE FILETEE	THREADED ROD GEWINDESTANGE	VÁSTAGO ROSCADO GEVINDSTANG	ASTA FILETTATA DRAADSTANG	095A
7		84300956		1	HASTE ROSCADA, Ground Drive, Md Frm Servo TIGE FILETEE	THREADED ROD GEWINDESTANGE	VÁSTAGO ROSCADO GEVINDSTANG	ASTA FILETTATA DRAADSTANG	095A
8		234726		2	PINO DE GARFO, 1/4" x .770" AXE DE CHAPE	CLEVIS PIN GABELBOLZEN	EJE CON CABEZA GAFFELBOLT	PERNO A TESTA PIANA GAFFELPEN	P694
9		D131983		2	PINO BROCHE	PIN PIN	PASADOR STIFT	PERNO PEN	080P
10		80855		2	CONTRA PORCA, 3/8"-24, GC CONTRE-ECROU	LOCK NUT SICHERUNGSMUTTER	TUERCA DE BLOQUEO LÅSEMØTRIK	DADO DI BLOCCAGGIO BORGMOER	P263
11		694371		2	ESPAÇADOR ENTRETOISE	SPACER DISTANZSTÜCK	SEPARADOR AFSTANDSSTYKKE	DISTANZIALE AFSTANDSSTUK	075D
12		86509310		2	PORCA, 3/8"-24, G5 ECROU	NUT MUTTER	TUERCA MØTRIK	DADO MOER	010D
13		230425A1		2	JUNTA ESFÉRICA ROTULE	BALL JOINT KUGELGELENK	JUNTA DE ROTULA KUGLELED	GIUNTO SFERICO KOGELGEWRICHT	P009

90.112.01		p1	02/11

FOOT CONTROLS, LG FRM SERVO (L223,L225,L230)
FOOT CONTROLS, LG FRM SERVO (L223,L225,L230)
FOOT CONTROLS, LG FRM SERVO (L223,L225,L230)
FOOT CONTROLS, LG FRM SERVO (L223,L225,L230)

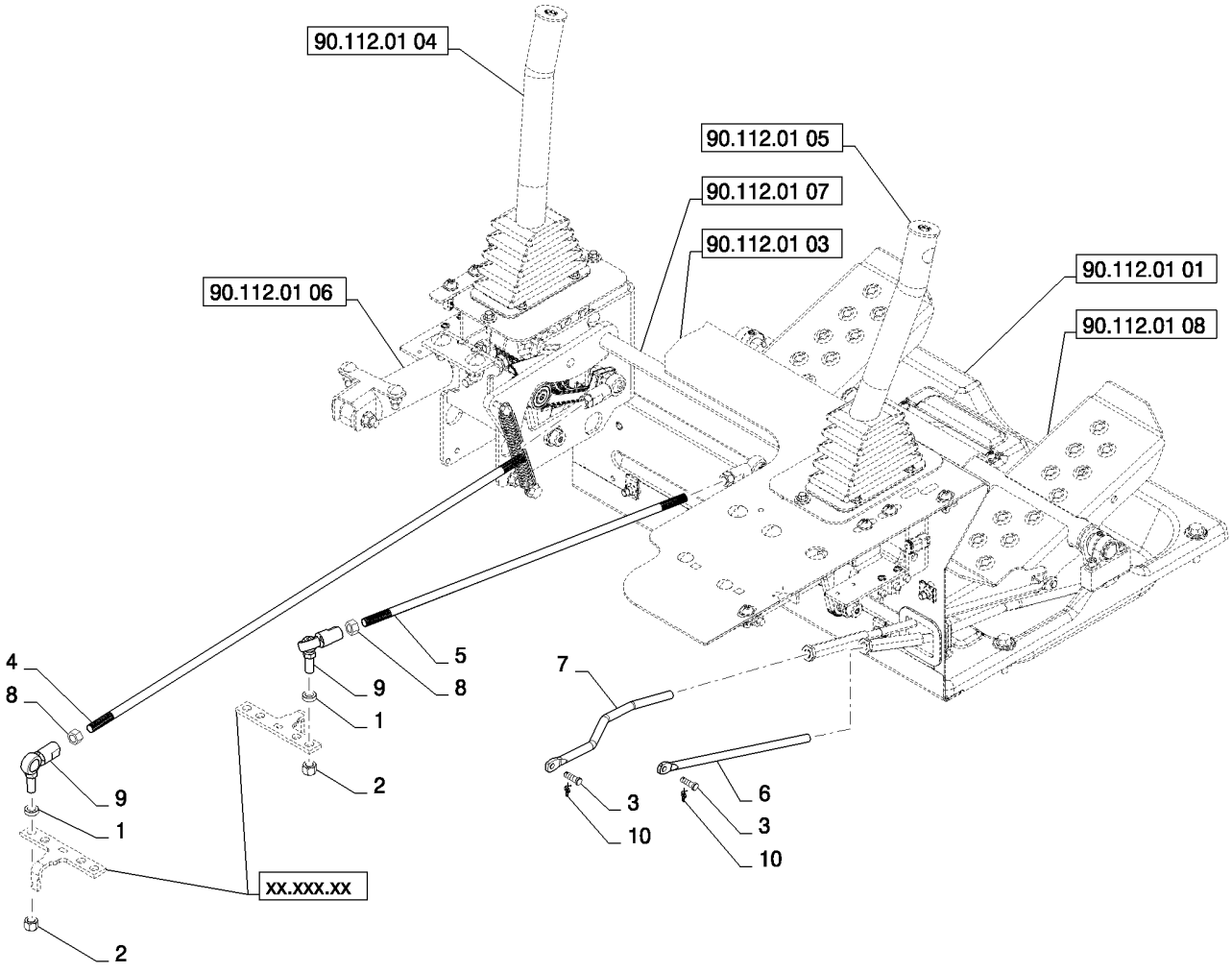

FOOT CONTROLS, LG FRM SERVO (L223,L225,L230)
FOOT CONTROLS, LG FRM SERVO (L223,L225,L230)
FOOT CONTROLS, LG FRM SERVO (L223,L225,L230)
FOOT CONTROLS, LG FRM SERVO (L223,L225,L230)

R	N	P.N.	MOD	Q	Denominação Description	Description Bezeichnung	Denominacion Beskrivelse	Descrizione Beschrijving	L.C.
1		80702		2	ARRUELA PLANA, 3/8"	WASHER	ARANDELA	RONDELLA	131R
					RONDELLE	UNTERLEGSCHEIBE	FLADSKIVE	SLUITRING	
2		80855		2	CONTRA PORCA, 3/8"-24, GC				
						LOCK NUT	TUERCA DE BLOQUEO	DADO DI BLOCCAGGIO	P263
					CONTRE-ECROU	SICHERUNGSMUTTER	LÅSEMØTRIK	BORGMOER	
3		234726		2	PINO DE GARFO, 1/4" x .770"				
						CLEVIS PIN	EJE CON CABEZA	PERNO A TESTA PIANA	P694
					AXE DE CHAPE	GABELBOLZEN	GAFFELBOLT	GAFFELPEN	
4		84300954		1	HASTE ROSCADA	THREADED ROD	VÁSTAGO ROSCADO	ASTA FILETTATA	095A
					TIGE FILETEE	GEWINDESTANGE	GEVINDSTANG	DRAADSTANG	
5		84300956		1	HASTE ROSCADA	THREADED ROD	VÁSTAGO ROSCADO	ASTA FILETTATA	095A
					TIGE FILETEE	GEWINDESTANGE	GEVINDSTANG	DRAADSTANG	
6		84317959		1	HASTE	ROD	VARILLA	ASTA	090A
					TIGE	STANGE	STANG	STANG	
7		84317960		1	HASTE	ROD	VARILLA	ASTA	090A
					TIGE	STANGE	STANG	STANG	
8		{84509310}		2					
9		230425A1		2	JUNTA ESFÉRICA	BALL JOINT	JUNTA DE ROTULA	GIUNTO SFERICO	P009
					ROTULE	KUGELGELENK	KUGLELED	KOGELGEWRICHT	
10		D131983		2	PINO	PIN	PASADOR	PERNO	080P
					BROCHE	PIN	STIFT	PEN	

90.112.01	01	p1	02/11

FLOORPLATE, NO PEDAL (ALL NH)
FLOORPLATE, NO PEDAL (ALL NH)
FLOORPLATE, NO PEDAL (ALL NH)
FLOORPLATE, NO PEDAL (ALL NH)

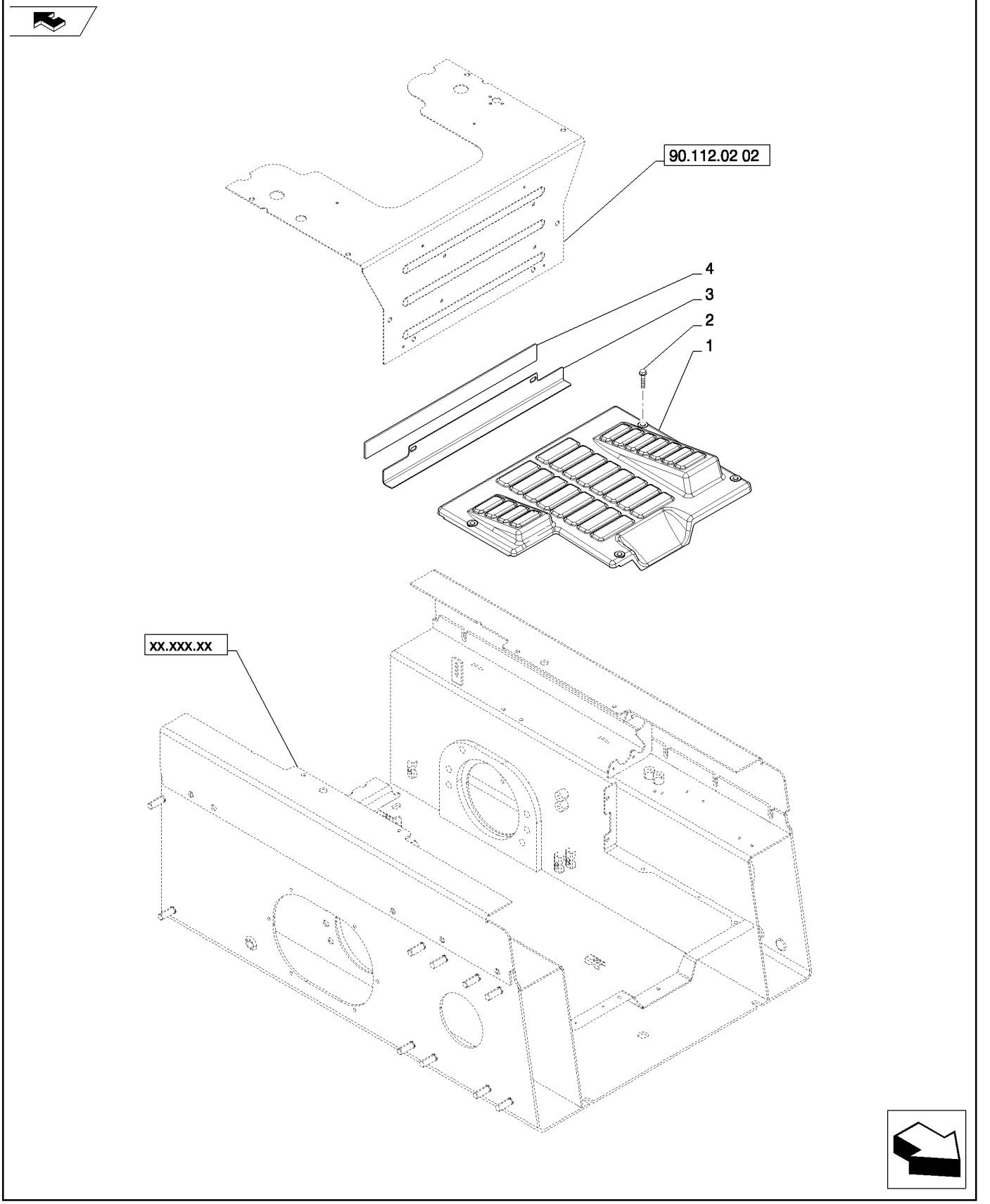

FLOORPLATE, NO PEDAL (ALL NH)
FLOORPLATE, NO PEDAL (ALL NH)
FLOORPLATE, NO PEDAL (ALL NH)
FLOORPLATE, NO PEDAL (ALL NH)

R	N	P.N.	MOD	Q	Denominação Description	Description Bezeichnung	Denominacion Beskrivelse	Descrizione Beschrijving	L.C.
1		84201060		1	PLACA PLÁSTICA PLAQUE EN PLASTIQUE	PLASTIC PLATE KUNSTSTOFFPLATTE	PLACA DE PLÁSTICO PLASTPLADE	PIASTRA DI PLASTICA KUNSTSTOFPLAAT	P778
2		84312232		4	PARAFUSO VIS AUTOTARAUDEUSE	SELF-TAP SCREW SELBSTSCHN SCHRAUE	TORNILLO AUTORROSC SELVLÅSENDE BOLT	VITE AUTOFILETTANTE ZELFTAPPENDE SCHRO	062V
3		84341453		1	CANTONEIRA CORNIERE	ANGLE WINKEL	ÁNGULO VINKELBESLAG	ANGOLARE HOEKSTUK	057C
4		87061045		2	FITA ADESIVA BANDE ADHESIVE	ADHESIVE STRIP KLEBESTREIFEN	CINTA ADHESIVA SELVKLÆBENDE STRIP	NASTRO ADESIVO KLEEFSTRIP	Z391

90.112.01	01	p1	02/11

FLOORPLATE, PEDAL (L213-L230)
FLOORPLATE, PEDAL (L213-L230)
FLOORPLATE, PEDAL (L213-L230)
FLOORPLATE, PEDAL (L213-L230)

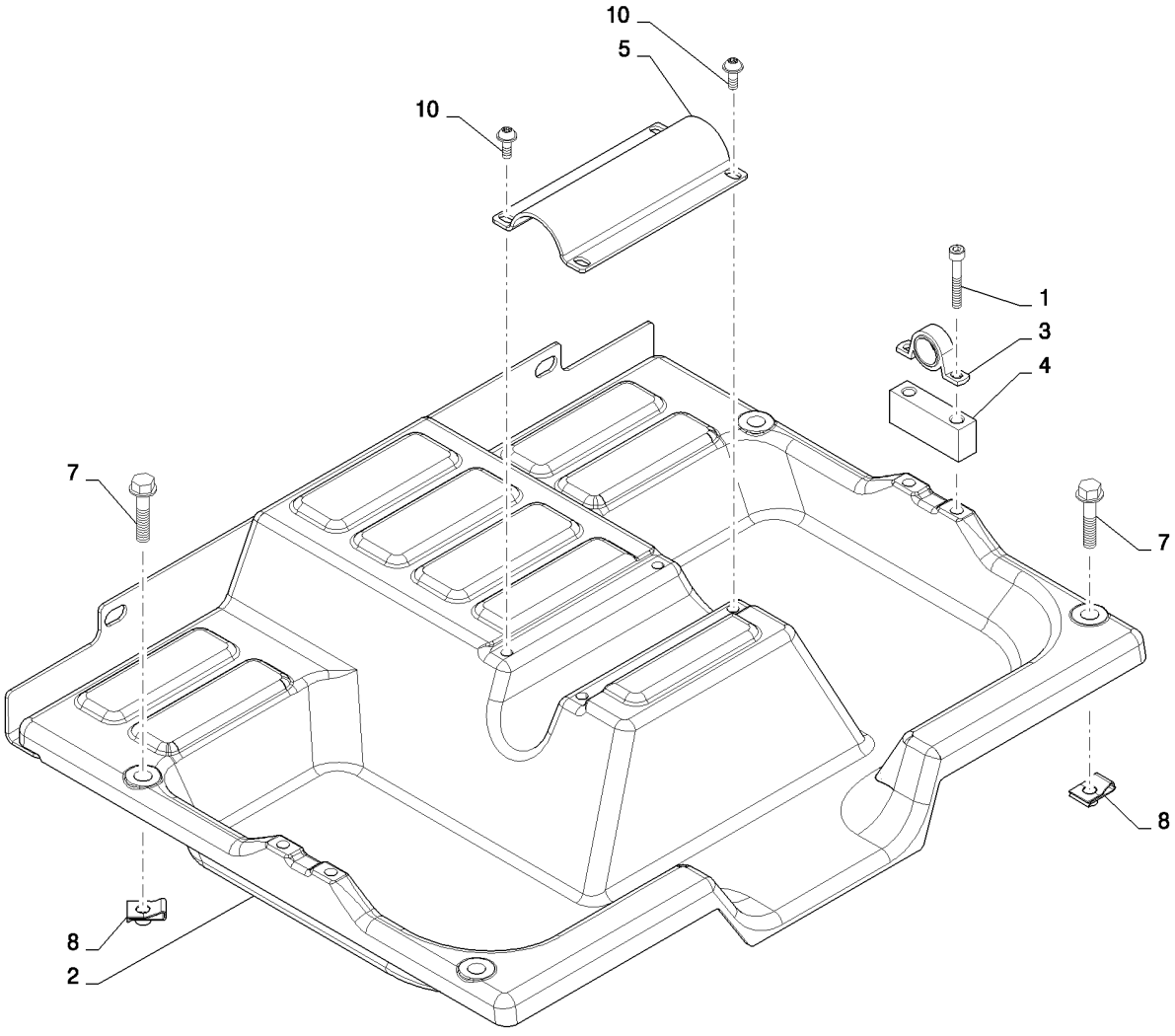

FLOORPLATE, PEDAL (L213-L230)
FLOORPLATE, PEDAL (L213-L230)
FLOORPLATE, PEDAL (L213-L230)
FLOORPLATE, PEDAL (L213-L230)

R	N	P.N.	MOD	Q	Denominação Description	Description Bezeichnung	Denominacion Beskrivelse	Descrizione Beschrijving	L.C.
1		14305821		4	PARAFUSO, Hex Soc Hd, M6 x 40, 8.8				
					SCREW	TORNILLO	VITE		040V
					VIS	SCHRAUBE	SKRUE	SCHROEF	
2		84201059		1	PLACA	PLATE	PLACA	PIASTRA	105P
					PLAQUE	PLATTE	PLADE	PLAAT	
3		84291859		2	ROLAMENTO ESFÉRICO	BALL BEARING	RODAMIENTO DE BOLAS	CUSCINETTO A SFERE	343C
					ROULEMENT A BILLES	KUGELLAGER	KUGLELEJE	KOGELLAGER	
4		84339380		4	DEGRAU	RISER	REALCE	MONTANTE	7205
					REHAUSSE	HEBEVORRICHTUNG	STIGRØR	STAANDER	
5		84373687		2	PLACA	PLATE	PLACA	PIASTRA	105P
					PLAQUE	PLATTE	PLADE	PLAAT	
6		84377351		1	CANTONEIRA, Heelplate	ANGLE	ÁNGULO	ANGOLARE	057C
					CORNIERE	WINKEL	VINKELBESLAG	HOEKSTUK	
7		86511842		2	PARAFUSO, Hex Flg, M8 x 40, 8.8				
					BOLT	PERNO	BULLONE		140B
					VIS	SCHRAUBE	BOLT	BOUT	
8		86625074		4	PORCA, M8, U	NUT	TUERCA	DADO	010D
					ECROU	MUTTER	MØTRIK	MOER	
9		87061045		2	FITA ADESIVA	ADHESIVE STRIP	CINTA ADHESIVA	NASTRO ADESIVO	Z391
					BANDE ADHESIVE	KLEBESTREIFEN	SELVKLÆBENDE STRIP	KLEEFSTRIP	
10		87682398		4	PARAFUSO	SCREW	TORNILLO	VITE	040V
					VIS	SCHRAUBE	SKRUE	SCHROEF	

90.112.01	02	p1	02/11

HAND CONTROLS, INTERLINK (L213-L230)
HAND CONTROLS, INTERLINK (L213-L230)
HAND CONTROLS, INTERLINK (L213-L230)
HAND CONTROLS, INTERLINK (L213-L230)

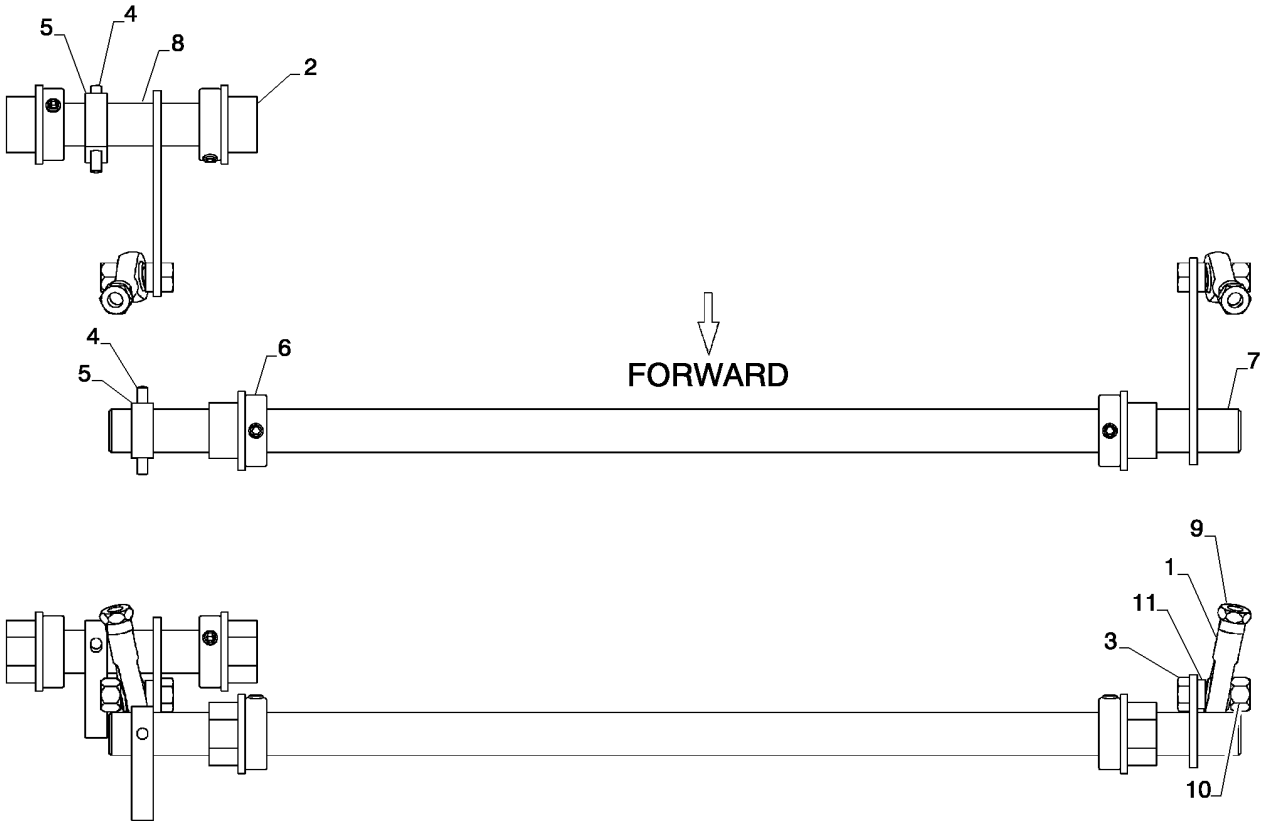

HAND CONTROLS, INTERLINK (L213-L230)
HAND CONTROLS, INTERLINK (L213-L230)
HAND CONTROLS, INTERLINK (L213-L230)
HAND CONTROLS, INTERLINK (L213-L230)

R	N	P.N.	MOD	Q	Denominação Description	Description Bezeichnung	Denominacion Beskrivelse	Descrizione Beschrijving	L.C.
1		221665		2	ROLAMENTO ESFÉRICO, 0.315" ID x 0.625" OD x 0.437"				
						SPHERICAL BEARING	COJINETE ESFÉRICO	CUSCINETTO SFERICO	A164
					ROULEMENT SPHERIQU	PENDELKUGELLAGER	SFÆRISK LEJE	KOGELLAGER	
2		228500		4	BUCHA	BUSHING	CASQUILLO	BOCCOLA	095B
					BAGUE	BUCHSE	BØSNING	BUS	
3		280483		2	PARAFUSO, Hex, 5/16"-24 x 1", G5, Full Thd				
						BOLT	PERNO	BULLONE	140B
					VIS	SCHRAUBE	BOLT	BOUT	
4		856800		2	PINO RANHURADO, 3/16" x 1 1/2", Type E, Hardened				
						GROOVED PIN	PASADOR RANURADO	PERNO SCANALATO	086P
					GOUPILLE CANNELEE	KERBSTIFT	TAP M/NOT	GEGROEFDE PEN	
5		84273628		2	PLACA, Foot Control Ear	PLATE	PLACA	PIASTRA	105P
					PLAQUE	PLATTE	PLADE	PLAAT	
6		84291866		4	COLAR DE FIXAÇÃO, 3/4" Shaft				
						RETAINER COLLAR	COLLAR DE RETENCIÓN	COLLARE DI FISSAGGIO	230S
					COLLIER DE RETENUE	HALTERING	RING, SPÆNDE	BORGKRAAG	
7		84299773		1	EIXO DE COMANDO, Hand Control, Boom				
						CONTROL SHAFT	EJE DE CONTROL	ALBERO DI COMANDO	008A
					ARBRE DE COMMANDE	STEUERWELLE	DRIVAKSEL	REGELAS	
8		84299785		1	EIXO DE COMANDO, Hand Control, Bucket				
						CONTROL SHAFT	EJE DE CONTROL	ALBERO DI COMANDO	008A
					ARBRE DE COMMANDE	STEUERWELLE	DRIVAKSEL	REGELAS	
9		86637933		2	PORCA, Jam, 5/16"-24, G5	NUT	TUERCA	DADO	010D
					ECROU	MUTTER	MØTRIK	MOER	
10		87034527		2	PORCA	NUT	TUERCA	DADO	010D
					ECROU	MUTTER	MØTRIK	MOER	
11		87360034		2	ESPAÇADOR, 1/2" Tube	SPACER	SEPARADOR	DISTANZIALE	075D
					ENTRETOISE	DISTANZSTÜCK	AFSTANDSSTYKKE	AFSTANDSSTUK	

90.112.01	03	p1	08/11

HANDLE MOUNTING, MD LG FRM FC (L218-L230)
HANDLE MOUNTING, MD LG FRM FC (L218-L230)
HANDLE MOUNTING, MD LG FRM FC (L218-L230)
HANDLE MOUNTING, MD LG FRM FC (L218-L230)

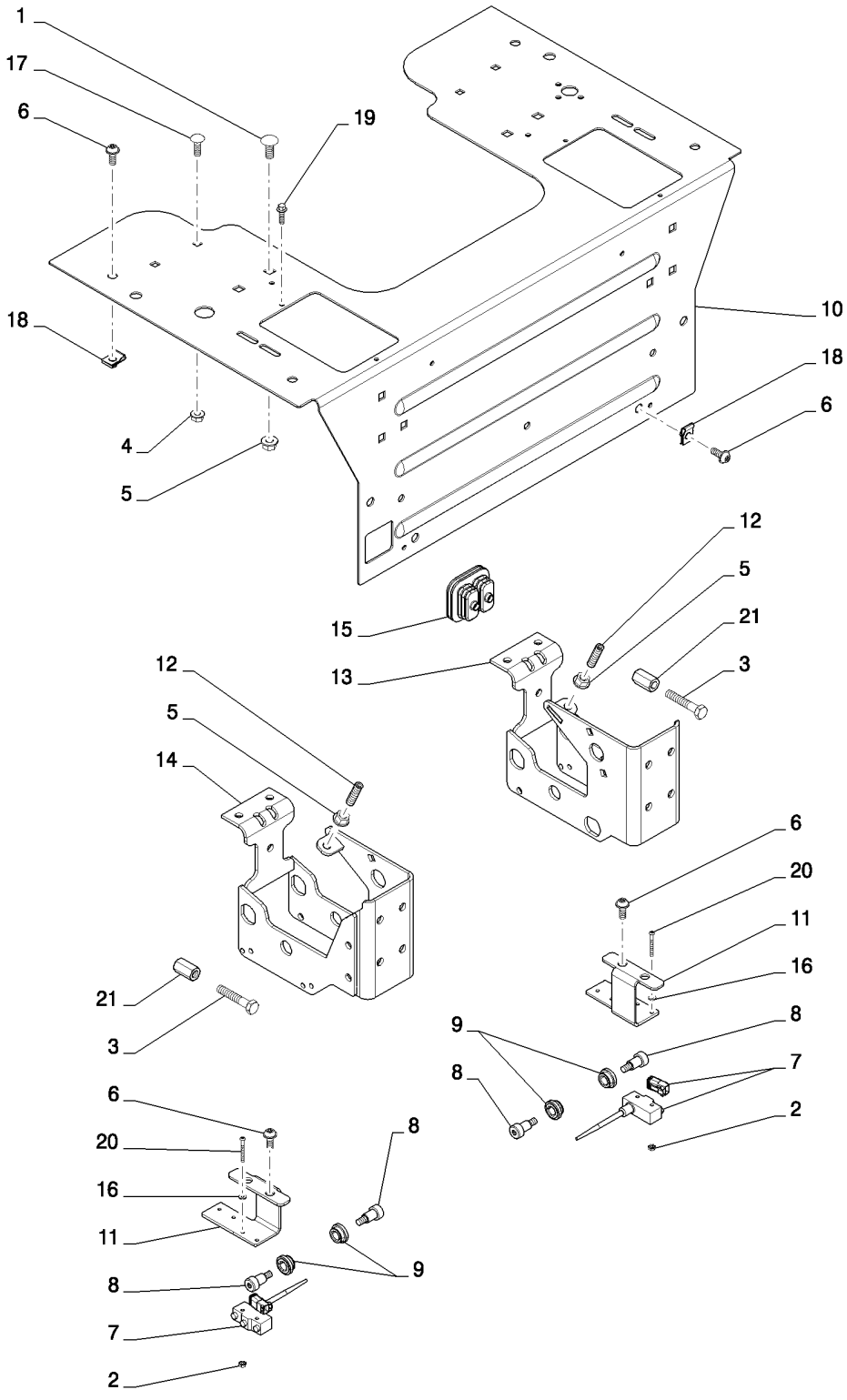

HANDLE MOUNTING, MD LG FRM FC (L218-L230)
HANDLE MOUNTING, MD LG FRM FC (L218-L230)
HANDLE MOUNTING, MD LG FRM FC (L218-L230)
HANDLE MOUNTING, MD LG FRM FC (L218-L230)

R	N	P.N.	MOD	Q	Denominação Description	Description Bezeichnung	Denominacion Beskrivelse	Descrizione Beschrijving	L.C.
1		86633356		10	PARAFUSO, Short NK, M10 x 25, Cl8.8, Full Thd				
						CARRIAGE BOLT	PERNO ALOMADO	BULLONE A TESTA TONI	P123
					VIS A TETE BOMBEE	SCHLOSSSCHRAUBE	BRÆDDEBOLT	SLOTBOUT	
2		280859		4	PORCA, Keps, w/LW,#6-32	NUT	TUERCA	DADO	010D
					ECROU	MUTTER	MØTRIK	MOER	
3		412217		2	PARAFUSO, Hex, M10 x 55, 8.8, Full Thd				
						BOLT	PERNO	BULLONE	140B
					VIS	SCHRAUBE	BOLT	BOUT	
4		9804277		4	PORCA, M8 x 1.25, Flg, Cl 8				
						NUT	TUERCA	DADO	010D
					ECROU	MUTTER	MØTRIK	MOER	
5		9804278		12	PORCA, M10 x 1.5, Flg, Cl 8				
						NUT	TUERCA	DADO	010D
					ECROU	MUTTER	MØTRIK	MOER	
6		84187826		12	PARAFUSO	SCREW	TORNILLO	VITE	040V
					VIS	SCHRAUBE	SKRUE	SCHROEF	
7		84239537		2	INTERRUPTOR	SWITCH	INTERRUPTOR	INTERRUTTORE	075I
					CONTACTEUR	SCHALTER	KONTAKT	SCHAKELAAR	
8		84291864		4	PARAFUSO, Custom Shoulder Pivot				
						BOLT	PERNO	BULLONE	140B
					VIS	SCHRAUBE	BOLT	BOUT	
9		84291865		4	BUCHA, Handle Pivot	BUSHING	CASQUILLO	BOCCOLA	095B
					BAGUE	BUCHSE	BØSNING	BUS	
10		84373699		1	PLACA, Heel Removable Med-Lg FC				
						PLATE	PLACA	PIASTRA	105P
					PLAQUE	PLATTE	PLADE	PLAAT	
11		84407176		1	SUPORTE, Back-up Alarm Switch, RH				
						BRACKET	SOPORTE	STAFFA	225S
					SUPPORT	HALTERUNG	BESLAG	STEUN	
11		84407179		1	SUPORTE, Back-up Alarm Switch, LH				
						BRACKET	SOPORTE	STAFFA	225S
					SUPPORT	HALTERUNG	BESLAG	STEUN	
12		84345494		2	PARAFUSO DE AJUSTE	SET SCREW	TORNILLO DE AJUSTE	VITE DI FERMO	P327
					VIS DE REGLAGE	STELLSCHRAUBE	SÆTSKRUE	STELSCHROEF	
13		84386369		1	SUPORTE, Handle Mounting LH				
						BRACKET	SOPORTE	STAFFA	225S
					SUPPORT	HALTERUNG	BESLAG	STEUN	
14		84386372		1	SUPORTE, Handle Mounting RH				
						BRACKET	SOPORTE	STAFFA	225S
					SUPPORT	HALTERUNG	BESLAG	STEUN	
15		84355747		1	CAPA, Foot Controls	BOOT	FUNDA	PARAPOLVERE	330C
					SOUFFLET	MANSCHETTE	MANCHET	HOES	
16		86511189		4	ARRUELA PLANA, #6	WASHER	ARANDELA	RONDELLA	131R
					RONDELLE	UNTERLEGSCHEIBE	FLADSKIVE	SLUITRING	
17		308761		4	PARAFUSO, Short NK, M8 x 25, Cl8.8, Full Thd				
						CARRIAGE BOLT	PERNO ALOMADO	BULLONE A TESTA TONI	P123
					VIS A TETE BOMBEE	SCHLOSSSCHRAUBE	BRÆDDEBOLT	SLOTBOUT	
18		86625074		8	PORCA, M8, U	NUT	TUERCA	DADO	010D
					ECROU	MUTTER	MØTRIK	MOER	

90.112.01	03	p2	08/11

HANDLE MOUNTING, MD LG FRM FC (L218-L230)
HANDLE MOUNTING, MD LG FRM FC (L218-L230)
HANDLE MOUNTING, MD LG FRM FC (L218-L230)
HANDLE MOUNTING, MD LG FRM FC (L218-L230)

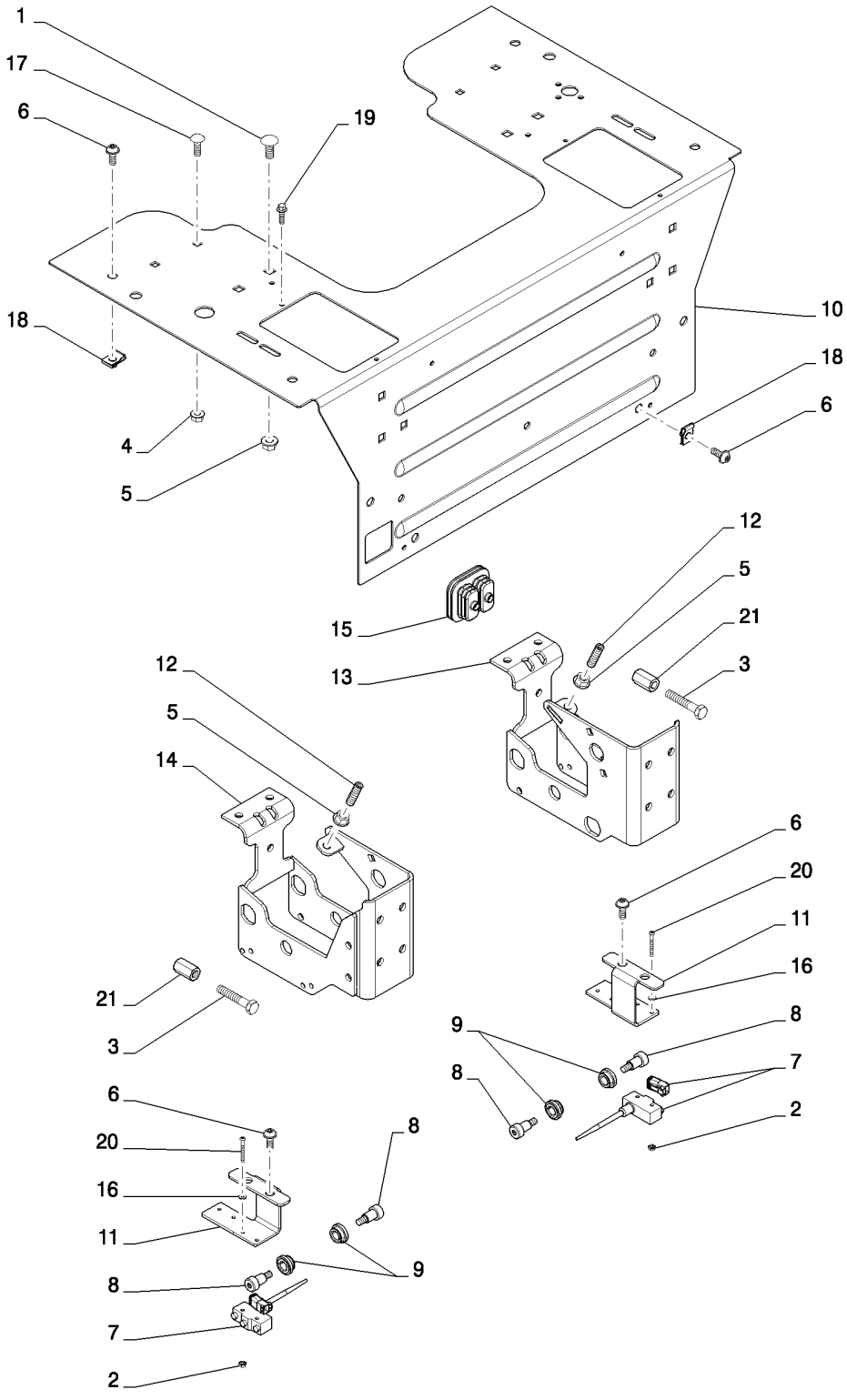

HANDLE MOUNTING, MD LG FRM FC (L218-L230)
HANDLE MOUNTING, MD LG FRM FC (L218-L230)
HANDLE MOUNTING, MD LG FRM FC (L218-L230)
HANDLE MOUNTING, MD LG FRM FC (L218-L230)

R	N	P.N.	MOD	Q	Denominação Description	Description Bezeichnung	Denominacion Beskrivelse	Descrizione Beschrijving	L.C.
19		**87017606**		4	PARAFUSO, Hex Flg Hd, M6 x 20				
						SELF-TAP SCREW	TORNILLO AUTORROSC	VITE AUTOFILETTANTE	062V
					VIS AUTOTARAUDEUSE	SELBSTSCHN SCHRAUE	SELVLÅSENDE BOLT	ZELFTAPPENDE SCHRO	
20		**87319756**		4	PARAFUSO	SCREW	TORNILLO	VITE	040V
					VIS	SCHRAUBE	SKRUE	SCHROEF	
21		**130105A1**		2	PORCA	NUT	TUERCA	DADO	5780
					ECROU	MUTTER	MØTRIK	MOER	
22		**86624182**		4	ARRUELA PLANA, M6 x 18 x 1.6, (Not Shown) Used with Ref. 19				
						WASHER	ARANDELA	RONDELLA	131R
					RONDELLE	UNTERLEGSCHEIBE	FLADSKIVE	SLUITRING	
23		**87026182**		12	ARRUELA PLANA, 17/32" x 1" x .030", (Not Shown) Used with Ref. 8 & 9				
						WASHER	ARANDELA	RONDELLA	131R
					RONDELLE	UNTERLEGSCHEIBE	FLADSKIVE	SLUITRING	

90.112.01	04	p1	02/11

HAND CONTROLS, HANDLE LH (L213-L230)
HAND CONTROLS, HANDLE LH (L213-L230)
HAND CONTROLS, HANDLE LH (L213-L230)
HAND CONTROLS, HANDLE LH (L213-L230)

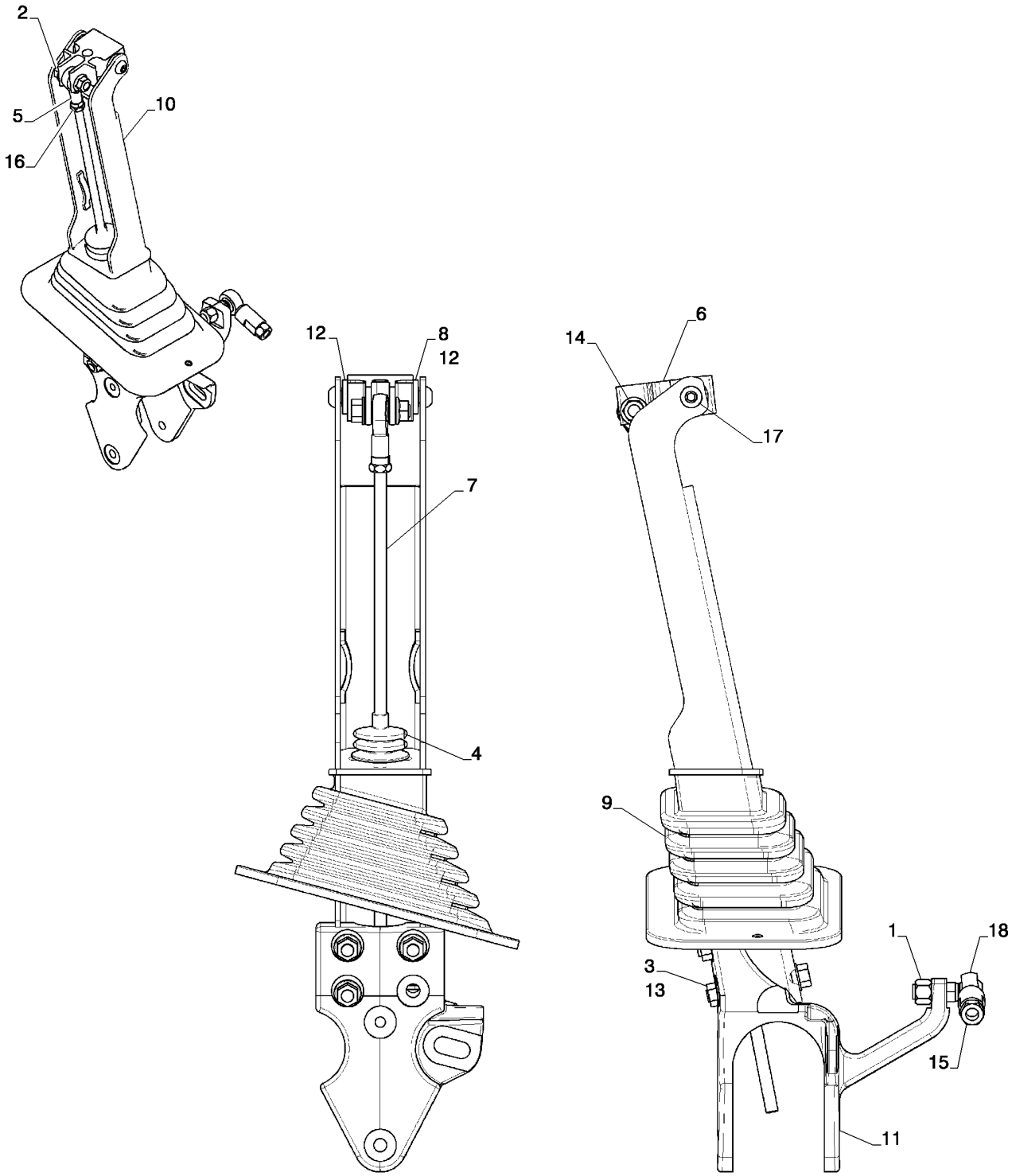

HAND CONTROLS, HANDLE LH (L213-L230)
HAND CONTROLS, HANDLE LH (L213-L230)
HAND CONTROLS, HANDLE LH (L213-L230)
HAND CONTROLS, HANDLE LH (L213-L230)

R	N	P.N.	MOD	Q	Denominação Description	Description Bezeichnung	Denominacion Beskrivelse	Descrizione Beschrijving	L.C.
1		80855		1	CONTRA PORCA, 3/8"-24, GC				
						LOCK NUT	TUERCA DE BLOQUEO	DADO DI BLOCCAGGIO	P263
					CONTRE-ECROU	SICHERUNGSMUTTER	LÅSEMØTRIK	BORGMOER	
2		9804260		1	PARAFUSO, Hex Flg, M8 x 30, 8.8, Full Thd				
						BOLT	PERNO	BULLONE	140B
					VIS	SCHRAUBE	BOLT	BOUT	
3		9804277		3	PORCA, M8 x 1.25, Flg, Cl 8				
						NUT	TUERCA	DADO	010D
					ECROU	MUTTER	MØTRIK	MOER	
4		84201371		1	CAPA, Control Rod Boot	BOOT	FUNDA	PARAPOLVERE	330C
					SOUFFLET	MANSCHETTE	MANCHET	HOES	
5		84263144		1	JUNTA ESFÉRICA, Rod End				
						BALL JOINT	RÓTULA	GIUNTO SFERICO	070G
					JOINT A ROTULE	KUGELGELENK	KUGLELED	KOGELGEWRICHT	
6		84291862		1	JUNTA ARTICULAÇÃO, Hand Control				
						KNUCKLE JOINT	JUNTA DE PIVOTE	ARTICOLAZIONE A FOR(	Z408
					ROTULE	GELENKVERBINDUNG	FORBINDELSESSPINDEI	GEWRICHTSKOPPELING	
7		84300731		1	HASTE ROSCADA, Hand Control LDH				
						THREADED ROD	VÁSTAGO ROSCADO	ASTA FILETTATA	095A
					TIGE FILETEE	GEWINDESTANGE	GEVINDSTANG	DRAADSTANG	
8		84302564		1	HASTE, Grip Pivol	ROD	VARILLA	ASTA	090A
					TIGE	STANGE	STANG	STANG	
9		84339566		1	CAPA, Control Handle SQ LH				
						BOOT	FUNDA	PARAPOLVERE	330C
					SOUFFLET	MANSCHETTE	MANCHET	HOES	
10		84348730		1	MANILHA, C Channel W Silver				
						HANDLE	MANECILLA	MANIGLIA	020M
					POIGNEE	GRIFF	HÅNDTAG	HENDEL	
11		84351110		1	FIXADOR, Handle Pivot LH	MOUNT	SOPORTE	SUPPORTO	C022
					MONTAGE	GESTELL	BESLAG	BEVESTIGING	
12		86013179		2	BUCHA, Flange Bearing	BUSHING	CASQUILLO	BOCCOLA	095B
					BAGUE	BUCHSE	BØSNING	BUS	
13		86511843		3	PARAFUSO, Hex Flg, M8 x 60, 8.8				
						BOLT	PERNO	BULLONE	140B
					VIS	SCHRAUBE	BOLT	BOUT	
14		86619801		1	CONTRA PORCA, M8 x 1.25, Flg, Cl 8				
						LOCK NUT	TUERCA DE BLOQUEO	DADO DI BLOCCAGGIO	P263
					CONTRE-ECROU	SICHERUNGSMUTTER	LÅSEMØTRIK	BORGMOER	
15		87030547		1	PORCA	NUT	TUERCA	DADO	010D
					ECROU	MUTTER	MØTRIK	MOER	
16		87034513		1	PORCA-TRAVA	JAM NUT	CONTRATUERCA	CONTRODADO	A070
					CONTRE-ECROU	KONTERMUTTER	KONTRAMØTRIK	CONTRAMOER	
17		87360874		2	PARAFUSO, Hex Soc Btn Hd M8x16				
						SCREW	TORNILLO	VITE	040V
					VIS	SCHRAUBE	SKRUE	SCHROEF	
18		230426A1		1	JUNTA ESFÉRICA, Socket Threaded Stuc w/ Rod End				
						BALL JOINT	JUNTA DE ROTULA	GIUNTO SFERICO	P009
					ROTULE	KUGELGELENK	KUGLELED	KOGELGEWRICHT	

90.112.01	05	p1	02/11

HAND CONTROLS, HANDLE RH (L213-L230)
HAND CONTROLS, HANDLE RH (L213-L230)
HAND CONTROLS, HANDLE RH (L213-L230)
HAND CONTROLS, HANDLE RH (L213-L230)

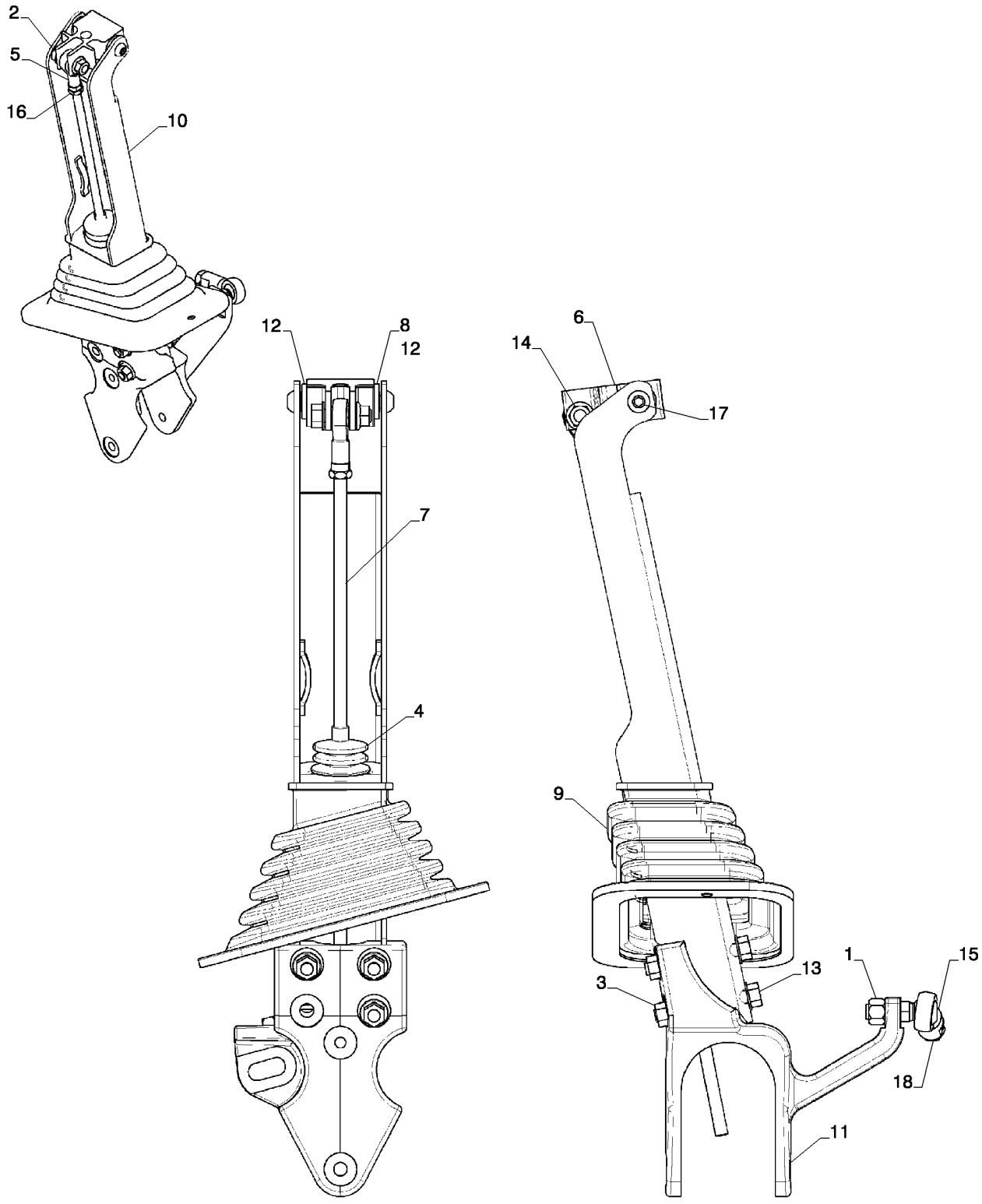

HAND CONTROLS, HANDLE RH (L213-L230)
HAND CONTROLS, HANDLE RH (L213-L230)
HAND CONTROLS, HANDLE RH (L213-L230)
HAND CONTROLS, HANDLE RH (L213-L230)

R	N	P.N.	MOD	Q	Denominação Description	Description Bezeichnung	Denominacion Beskrivelse	Descrizione Beschrijving	L.C.
1		80855		1	CONTRA PORCA, 3/8"-24, GC				
						LOCK NUT	TUERCA DE BLOQUEO	DADO DI BLOCCAGGIO	P263
					CONTRE-ECROU	SICHERUNGSMUTTER	LÅSEMØTRIK	BORGMOER	
2		9804260		1	PARAFUSO, Hex Flg, M8 x 30, 8.8, Full Thd				
						BOLT	PERNO	BULLONE	140B
					VIS	SCHRAUBE	BOLT	BOUT	
3		9804277		3	PORCA, M8 x 1.25, Flg, Cl 8				
						NUT	TUERCA	DADO	010D
					ECROU	MUTTER	MØTRIK	MOER	
4		84201371		1	CAPA, Control Rod Boot	BOOT	FUNDA	PARAPOLVERE	330C
					SOUFFLET	MANSCHETTE	MANCHET	HOES	
5		84263144		1	JUNTA ESFÉRICA, Rod End				
						BALL JOINT	RÓTULA	GIUNTO SFERICO	070G
					JOINT A ROTULE	KUGELGELENK	KUGLELED	KOGELGEWRICHT	
6		84291862		1	JUNTA ARTICULAÇÃO, Hand Control				
						KNUCKLE JOINT	JUNTA DE PIVOTE	ARTICOLAZIONE A FOR(	Z408
					ROTULE	GELENKVERBINDUNG	FORBINDELSESSPINDEI	GEWRICHTSKOPPELING	
7		84300731		1	HASTE ROSCADA, Hand Control LDH				
						THREADED ROD	VÁSTAGO ROSCADO	ASTA FILETTATA	095A
					TIGE FILETEE	GEWINDESTANGE	GEVINDSTANG	DRAADSTANG	
8		84302564		1	HASTE, Grip Pivol	ROD	VARILLA	ASTA	090A
					TIGE	STANGE	STANG	STANG	
9		84339565		1	CAPA, Control Handle SQ RH				
						BOOT	FUNDA	PARAPOLVERE	330C
					SOUFFLET	MANSCHETTE	MANCHET	HOES	
10		84348730		1	MANILHA, C Channel W Silver				
						HANDLE	MANECILLA	MANIGLIA	020M
					POIGNEE	GRIFF	HÅNDTAG	HENDEL	
11		84351111		1	FIXADOR, Handle Pivot RH	MOUNT	SOPORTE	SUPPORTO	C022
					MONTAGE	GESTELL	BESLAG	BEVESTIGING	
12		86013179		2	BUCHA, Flange Bearing	BUSHING	CASQUILLO	BOCCOLA	095B
					BAGUE	BUCHSE	BØSNING	BUS	
13		86511843		3	PARAFUSO, Hex Flg, M8 x 60, 8.8				
						BOLT	PERNO	BULLONE	140B
					VIS	SCHRAUBE	BOLT	BOUT	
14		86619801		1	CONTRA PORCA, M8 x 1.25, Flg, Cl 8				
						LOCK NUT	TUERCA DE BLOQUEO	DADO DI BLOCCAGGIO	P263
					CONTRE-ECROU	SICHERUNGSMUTTER	LÅSEMØTRIK	BORGMOER	
15		87030547		1	PORCA	NUT	TUERCA	DADO	010D
					ECROU	MUTTER	MØTRIK	MOER	
16		87034513		1	PORCA-TRAVA	JAM NUT	CONTRATUERCA	CONTRODADO	A070
					CONTRE-ECROU	KONTERMUTTER	KONTRAMØTRIK	CONTRAMOER	
17		87360874		2	PARAFUSO, Hex Soc Btn Hd M8x16				
						SCREW	TORNILLO	VITE	040V
					VIS	SCHRAUBE	SKRUE	SCHROEF	
18		230426A1		1	JUNTA ESFÉRICA, Socket Threaded Stuc w/ Rod End				
						BALL JOINT	JUNTA DE ROTULA	GIUNTO SFERICO	P009
					ROTULE	KUGELGELENK	KUGLELED	KOGELGEWRICHT	

90.112.01	06	p1	02/11

DAMPENING CONTROL (L213-L230)
DAMPENING CONTROL (L213-L230)
DAMPENING CONTROL (L213-L230)
DAMPENING CONTROL (L213-L230)

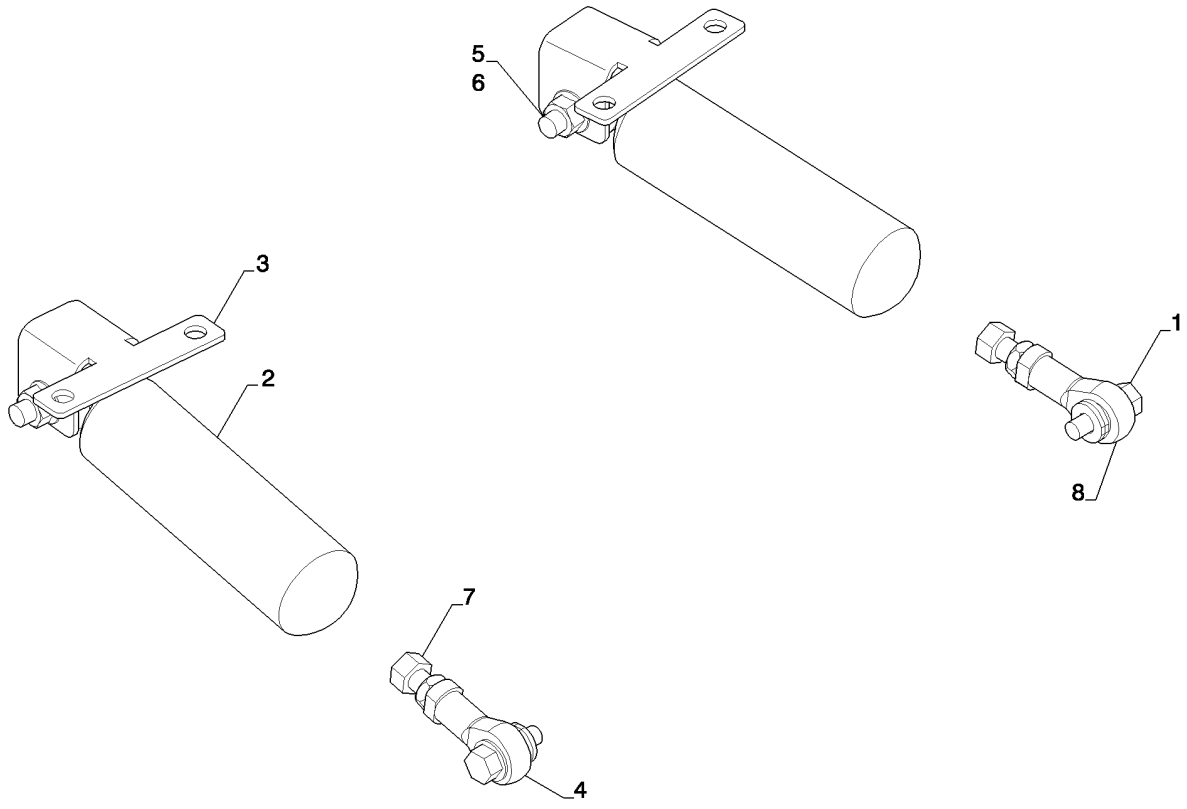

DAMPENING CONTROL (L213-L230)
DAMPENING CONTROL (L213-L230)
DAMPENING CONTROL (L213-L230)
DAMPENING CONTROL (L213-L230)

R	N	P.N.	MOD	Q	Denominação Description	Description Bezeichnung	Denominacion Beskrivelse	Descrizione Beschrijving	L.C.
1		9671714		2	PARAFUSO, Hex Flg, M8 x 25, 8.8				
						BOLT	PERNO	BULLONE	140B
					VIS	SCHRAUBE	BOLT	BOUT	
2		9826723		2	AMORTECEDOR	SHOCK ABSORBER	AMORTIGUADOR	AMMORTIZZATORE	036A
					AMORTISSEUR	STOSSDÄMPFER	STØDDÆMPER	SCHOKDEMPER	
3		84258844		2	SUPORTE, Shock Mount	BRACKET	SOPORTE	STAFFA	225S
					SUPPORT	HALTERUNG	BESLAG	STEUN	
4		86500348		2	JUNTA ESFÉRICA, Spher Brg Rod End .38				
						BALL JOINT	RÓTULA	GIUNTO SFERICO	070G
					JOINT A ROTULE	KUGELGELENK	KUGLELED	KOGELGEWRICHT	
5		86521606		2	PORCA, Flg, 3/8"-16, G5	NUT	TUERCA	DADO	010D
					ECROU	MUTTER	MØTRIK	MOER	
6		86533830		2	PARAFUSO, Hex Flg, 3/8"-16 x 2", G5				
						BOLT	PERNO	BULLONE	140B
					VIS	SCHRAUBE	BOLT	BOUT	
7		87319446		2	PORCA, Hex Jam .375-24UNF GR5				
						NUT	TUERCA	DADO	010D
					ECROU	MUTTER	MØTRIK	MOER	
8		694371		2	ESPAÇADOR	SPACER	SEPARADOR	DISTANZIALE	075D
					ENTRETOISE	DISTANZSTÜCK	AFSTANDSSTYKKE	AFSTANDSSTUK	

90.112.01	06	p1	02/11

DAMPENING & CENTERING CONTROL (L223-L230)
DAMPENING & CENTERING CONTROL (L223-L230)
DAMPENING & CENTERING CONTROL (L223-L230)
DAMPENING & CENTERING CONTROL (L223-L230)

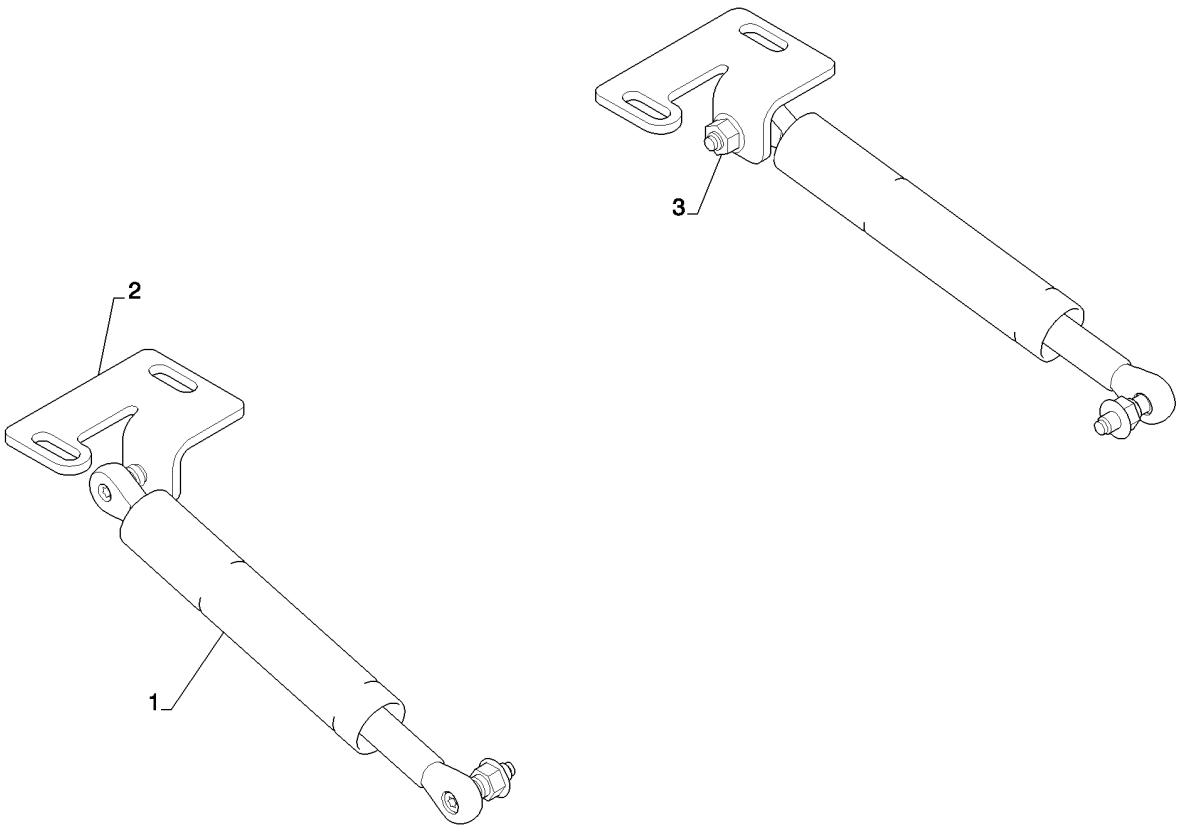

DAMPENING & CENTERING CONTROL (L223-L230)
DAMPENING & CENTERING CONTROL (L223-L230)
DAMPENING & CENTERING CONTROL (L223-L230)
DAMPENING & CENTERING CONTROL (L223-L230)

R	N	P.N.	MOD	Q	Denominação Description	Description Bezeichnung	Denominacion Beskrivelse	Descrizione Beschrijving	L.C.
1		**84310789**		2	AMORTECEDOR DE VIBRAÇÃO, Self-Centering				
						DAMPER	AMORTIGUADOR	AMMORTIZZATORE	164S
					AMORTISSEUR	DÄMPFER	SVINGNINGSDÆMPER	DEMPER	
2		**84338477**		2	SUPORTE, Shock Mount Gray				
						BRACKET, SUPPORTING	PIEZA DE APOYO	SQUADRETTA	215S
					EQUERRE	SCHALTER,AUTOM.AUS	STOETTEBESLAG	DRAAGARM	
3		**9804277**		4	PORCA, M8 x 1.25, Flg, Cl 8				
						NUT	TUERCA	DADO	010D
					ECROU	MUTTER	MØTRIK	MOER	

90.112.01	07	p1	02/11

SERVO PUMP CENTERING (L223, L225, L230)
SERVO PUMP CENTERING (L223, L225, L230)
SERVO PUMP CENTERING (L223, L225, L230)
SERVO PUMP CENTERING (L223, L225, L230)

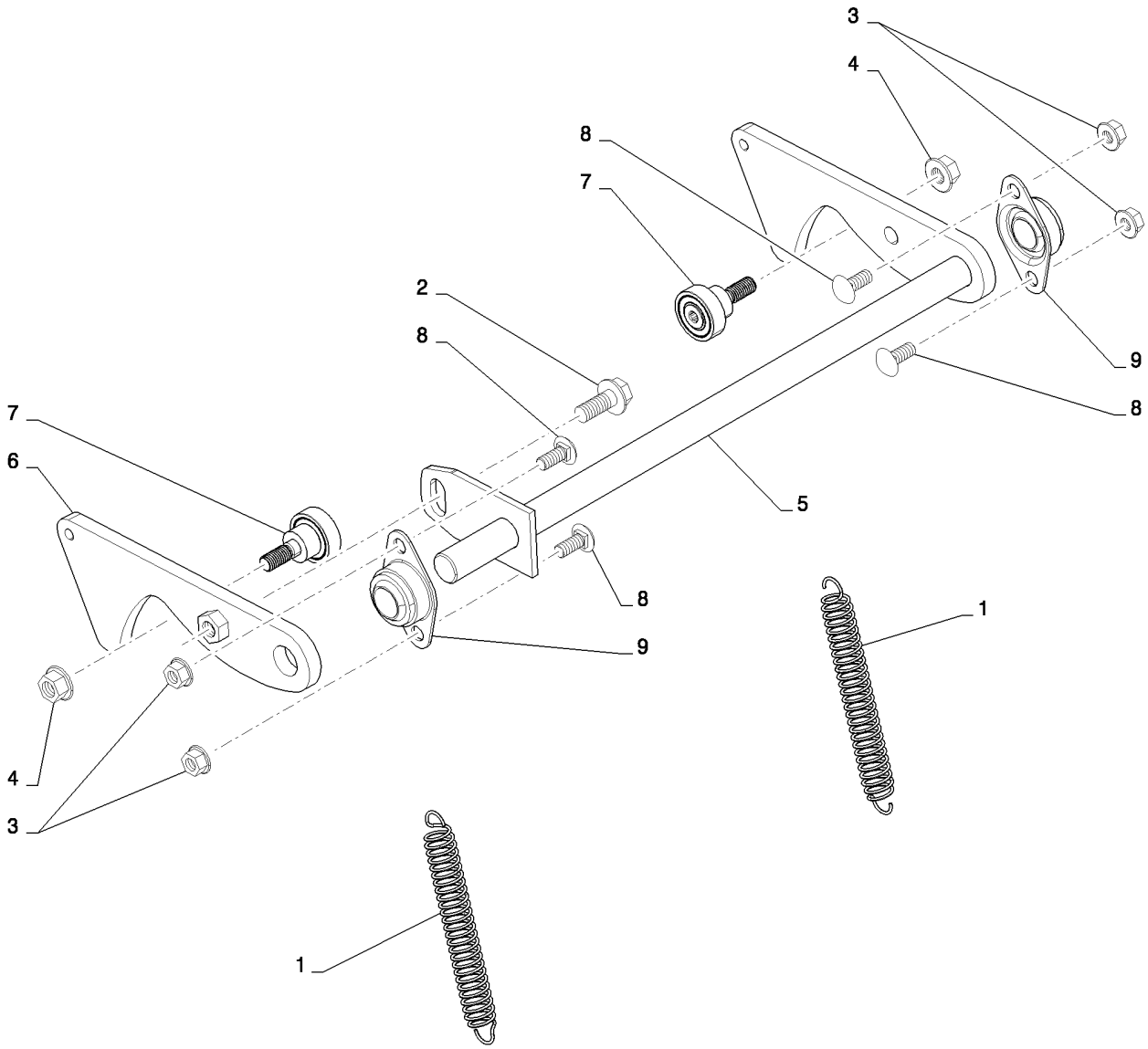

SERVO PUMP CENTERING (L223, L225, L230)
SERVO PUMP CENTERING (L223, L225, L230)
SERVO PUMP CENTERING (L223, L225, L230)
SERVO PUMP CENTERING (L223, L225, L230)

R	N	P.N.	MOD	Q	Denominação Description	Description Bezeichnung	Denominacion Beskrivelse	Descrizione Beschrijving	L.C.
1		163826		2	MOLA, Extension	SPRING	RESORTE	MOLLA	100M
					RESSORT	FEDER	FJEDER	VEER	
2		9804261		1	PARAFUSO, Hex Flg, M10 x 25, 8.8				
						BOLT	PERNO	BULLONE	140B
					VIS	SCHRAUBE	BOLT	BOUT	
3		9804277		4	PORCA, M8 x 1.25, Flg, Cl 8				
						NUT	TUERCA	DADO	010D
					ECROU	MUTTER	MØTRIK	MOER	
4		9804278		2	PORCA, M10 x 1.5, Flg, Cl 8				
						NUT	TUERCA	DADO	010D
					ECROU	MUTTER	MØTRIK	MOER	
5		84257200		1	EIXO DE COMANDO, Cam, RH Centering				
						CONTROL SHAFT	EJE DE CONTROL	ALBERO DI COMANDO	008A
					ARBRE DE COMMANDE	STEUERWELLE	DRIVAKSEL	REGELAS	
6		84282833		1	PLACA, Cam, RH Centering	PLATE	PLACA	PIASTRA	105P
					PLAQUE	PLATTE	PLADE	PLAAT	
7		84291861		2	CAME SEGUIDOR	CAM FOLLOWER	RODILLO DE LEVA	RULLO DI PUNTERIA	A006
					GALET DE CAME	NOCKENSTÖSSEL	KAMSKIVEDREV	NOKVOLGER	
8		86507486		4	PARAFUSO, Short NK, M8 x 20, Cl8.8, Full Thd				
						CARRIAGE BOLT	PERNO ALOMADO	BULLONE A TESTA TONI	P123
					VIS A TETE BOMBEE	SCHLOSSSCHRAUBE	BRÆDDEBOLT	SLOTBOUT	
9		86567251		2	ROLAMENTO FLANGEADO, Side Flange Bearing				
						FLANGED BEARING	COJINETE CON BRIDA	CUSCINETTO FLANGIAT	C006
					PALIER A BRIDE	FLANSCHLAGER	FLANGELEJE	FLENSLAGER	

90.112.01	08	p1	03/11

PEDAL MOUNTING (L213 - L230)
PEDAL MOUNTING (L213 - L230)
PEDAL MOUNTING (L213 - L230)
PEDAL MOUNTING (L213 - L230)

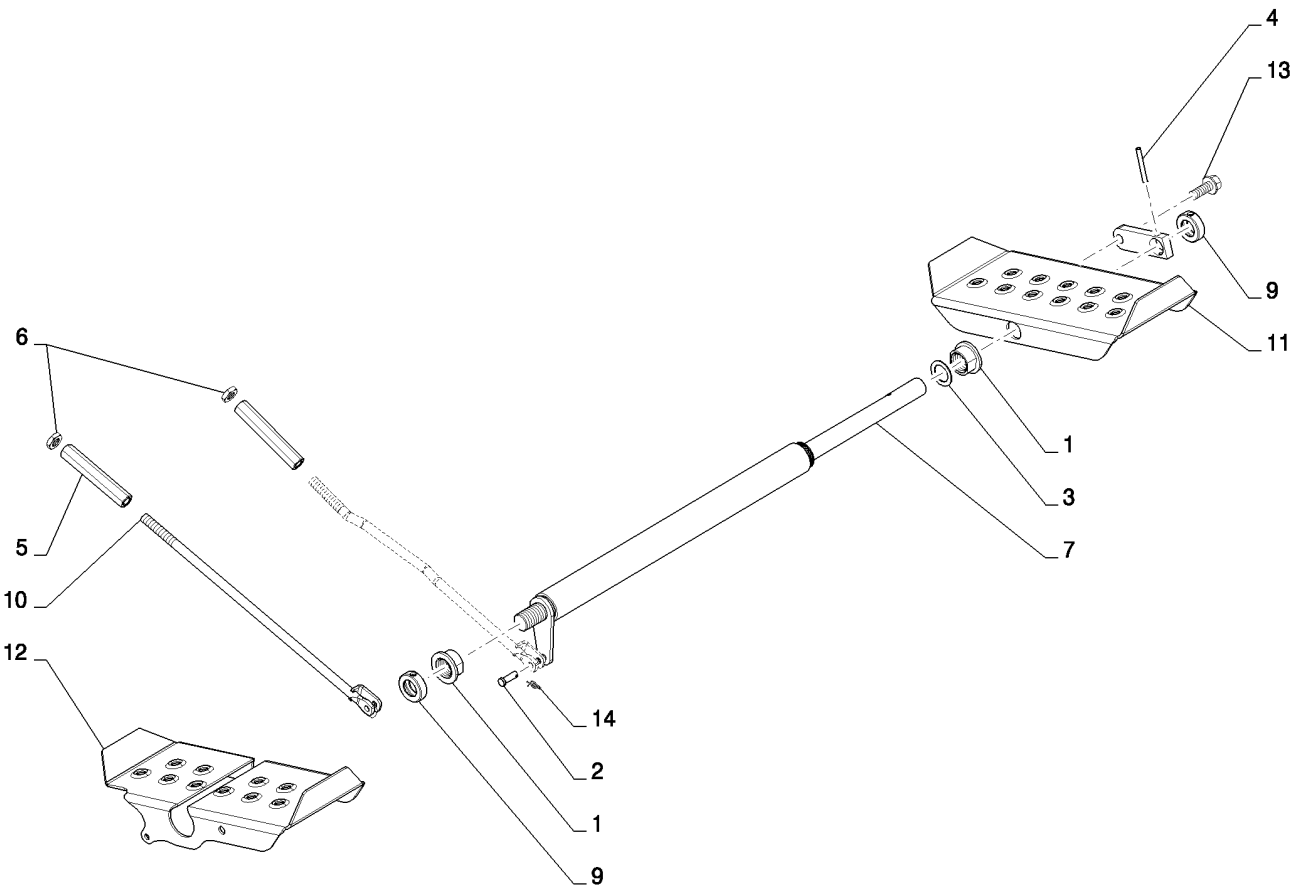

PEDAL MOUNTING (L213 - L230)
PEDAL MOUNTING (L213 - L230)
PEDAL MOUNTING (L213 - L230)
PEDAL MOUNTING (L213 - L230)

R	N	P.N.	MOD	Q	Denominação Description	Description Bezeichnung	Denominacion Beskrivelse	Descrizione Beschrijving	L.C.
1		228500		2	BUCHA	BUSHING	CASQUILLO	BOCCOLA	095B
					BAGUE	BUCHSE	BØSNING	BUS	
2		234726		2	PINO DE GARFO, 1/4" x .770"				
						CLEVIS PIN	EJE CON CABEZA	PERNO A TESTA PIANA	P694
					AXE DE CHAPE	GABELBOLZEN	GAFFELBOLT	GAFFELPEN	
3		87644538		4	ESPAÇADOR, Washer, Plated				
						SPACER	SEPARADOR	DISTANZIALE	075D
					ENTRETOISE	DISTANZSTÜCK	AFSTANDSSTYKKE	AFSTANDSSTUK	
4		856800		1	PINO RANHURADO, 3/16" x 1 1/2", Type E, Hardened				
						GROOVED PIN	PASADOR RANURADO	PERNO SCANALATO	086P
					GOUPILLE CANNELEE	KERBSTIFT	TAP M/NOT	GEGROEFDE PEN	
5		10090811		2	PORCA, Adjusting, M10 x 1.25 x 90mm				
						NUT	TUERCA	DADO	010D
					ECROU	MUTTER	MØTRIK	MOER	
6		83980600		2	PORCA, Thin, M10 x 1.25, Cl 04				
						NUT	TUERCA	DADO	010D
					ECROU	MUTTER	MØTRIK	MOER	
7		84201070		1	EIXO	SHAFT	EJE	ALBERO	016A
					ARBRE	WELLE	AKSEL	AS	
8		84291855		1	PLACA	PLATE	PLACA	PIASTRA	105P
					PLAQUE	PLATTE	PLADE	PLAAT	
9		84291866		2	COLAR DE FIXAÇÃO	RETAINER COLLAR	COLLAR DE RETENCIÓN	COLLARE DI FISSAGGIO	230S
					COLLIER DE RETENUE	HALTERING	RING, SPÆNDE	BORGKRAAG	
10		84410639		1	HASTE, Foot Control	ROD	VARILLA	ASTA	090A
					TIGE	STANGE	STANG	STANG	
10		84317963		1	HASTE, Foot Control	ROD	VARILLA	ASTA	090A
					TIGE	STANGE	STANG	STANG	
11		84357323		1	PEDAL	PEDAL	PEDAL	PEDALE	060P
					PEDALE	PEDAL	PEDAL	PEDAAL	
12		84357328		1	PEDAL	PEDAL	PEDAL	PEDALE	060P
					PEDALE	PEDAL	PEDAL	PEDAAL	
13		87343114		1	PARAFUSO	BOLT	PERNO	BULLONE	140B
					VIS	SCHRAUBE	BOLT	BOUT	
14		D131983		2	PINO	PIN	PASADOR	PERNO	080P
					BROCHE	PIN	STIFT	PEN	

ELEC-HYDRAULIC CONTROLS MD-LG FRM (L218-C238)
ELEC-HYDRAULIC CONTROLS MD-LG FRM (L218-C238)
ELEC-HYDRAULIC CONTROLS MD-LG FRM (L218-C238)
ELEC-HYDRAULIC CONTROLS MD-LG FRM (L218-C238)

ART
NOT
AVAILABLE

ELEC-HYDRAULIC CONTROLS MD-LG FRM (L218-C238)
ELEC-HYDRAULIC CONTROLS MD-LG FRM (L218-C238)
ELEC-HYDRAULIC CONTROLS MD-LG FRM (L218-C238)
ELEC-HYDRAULIC CONTROLS MD-LG FRM (L218-C238)

R	N	P.N.	MOD	Q	Denominação Description	Description Bezeichnung	Denominacion Beskrivelse	Descrizione Beschrijving	L.C.
1		NSS		1	SEM SERVIÇO EM SEPARADO, No Pedal Floorplate [See 90.112.01(01)]				
						NOT SERVICED SEPARA	NO SE REPARA POR SE	NON FORNITO SEPARAT	064N
					NON FOURNI SEPAREM	NICHT A SEP ERS-T LIEI	SERVICERES IKKE SEPA	NIET LOS VERKRIJGBAA	
2		NSS		1	SEM SERVIÇO EM SEPARADO, Handle Mounting EH [See 90.112.02(02)]				
						NOT SERVICED SEPARA	NO SE REPARA POR SE	NON FORNITO SEPARAT	064N
					NON FOURNI SEPAREM	NICHT A SEP ERS-T LIEI	SERVICERES IKKE SEPA	NIET LOS VERKRIJGBAA	
3		NSS		1	SEM SERVIÇO EM SEPARADO, Handle, Electronic Control NH [See 90.112.02(03)]				
						NOT SERVICED SEPARA	NO SE REPARA POR SE	NON FORNITO SEPARAT	064N
					NON FOURNI SEPAREM	NICHT A SEP ERS-T LIEI	SERVICERES IKKE SEPA	NIET LOS VERKRIJGBAA	

90.112.02	02	p1	02/11

HANDLE MOUNTING EH (L218-C238)
HANDLE MOUNTING EH (L218-C238)
HANDLE MOUNTING EH (L218-C238)
HANDLE MOUNTING EH (L218-C238)

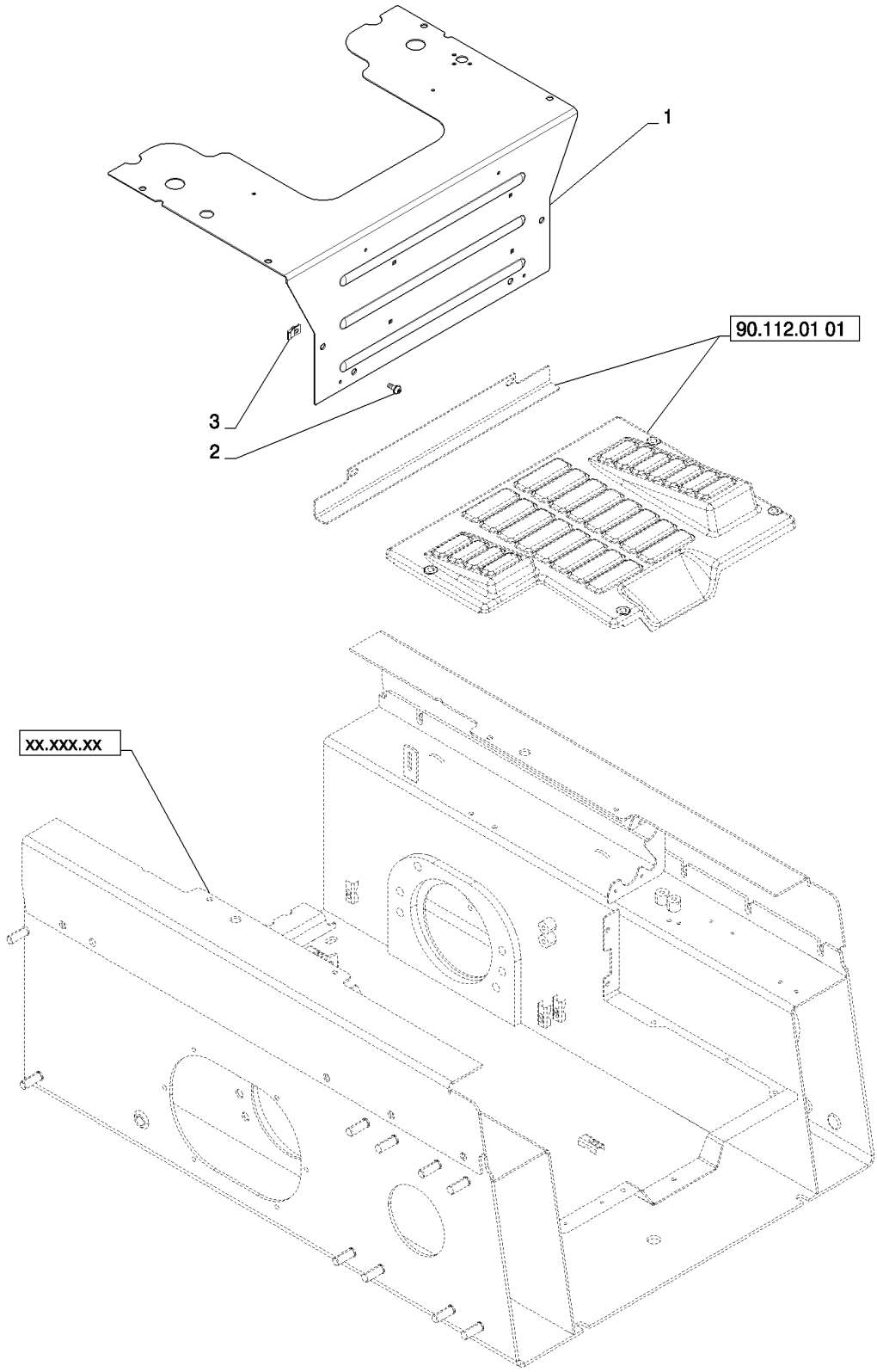

HANDLE MOUNTING EH (L218-C238)
HANDLE MOUNTING EH (L218-C238)
HANDLE MOUNTING EH (L218-C238)
HANDLE MOUNTING EH (L218-C238)

R	N	P.N.	MOD	Q	Denominação Description	Description Bezeichnung	Denominacion Beskrivelse	Descrizione Beschrijving	L.C.
1		84335594		1	PLACA, Removable Heel Plate Md-Lg Frame EH				
						PLATE	PLACA	PIASTRA	105P
					PLAQUE	PLATTE	PLADE	PLAAT	
2		84187826		8	PARAFUSO, RWH M8x20	SCREW	TORNILLO	VITE	040V
					VIS	SCHRAUBE	SKRUE	SCHROEF	
3		87016586		8	PORCA, M8, U, Spring, Multi - Thd, M8x1.25 lg				
						NUT	TUERCA	DADO	010D
					ECROU	MUTTER	MØTRIK	MOER	

90.112.02	03	p1	02/11

HANDLE, ELECTRONIC CONTROL NH (ALL NH)
HANDLE, ELECTRONIC CONTROL NH (ALL NH)
HANDLE, ELECTRONIC CONTROL NH (ALL NH)
HANDLE, ELECTRONIC CONTROL NH (ALL NH)

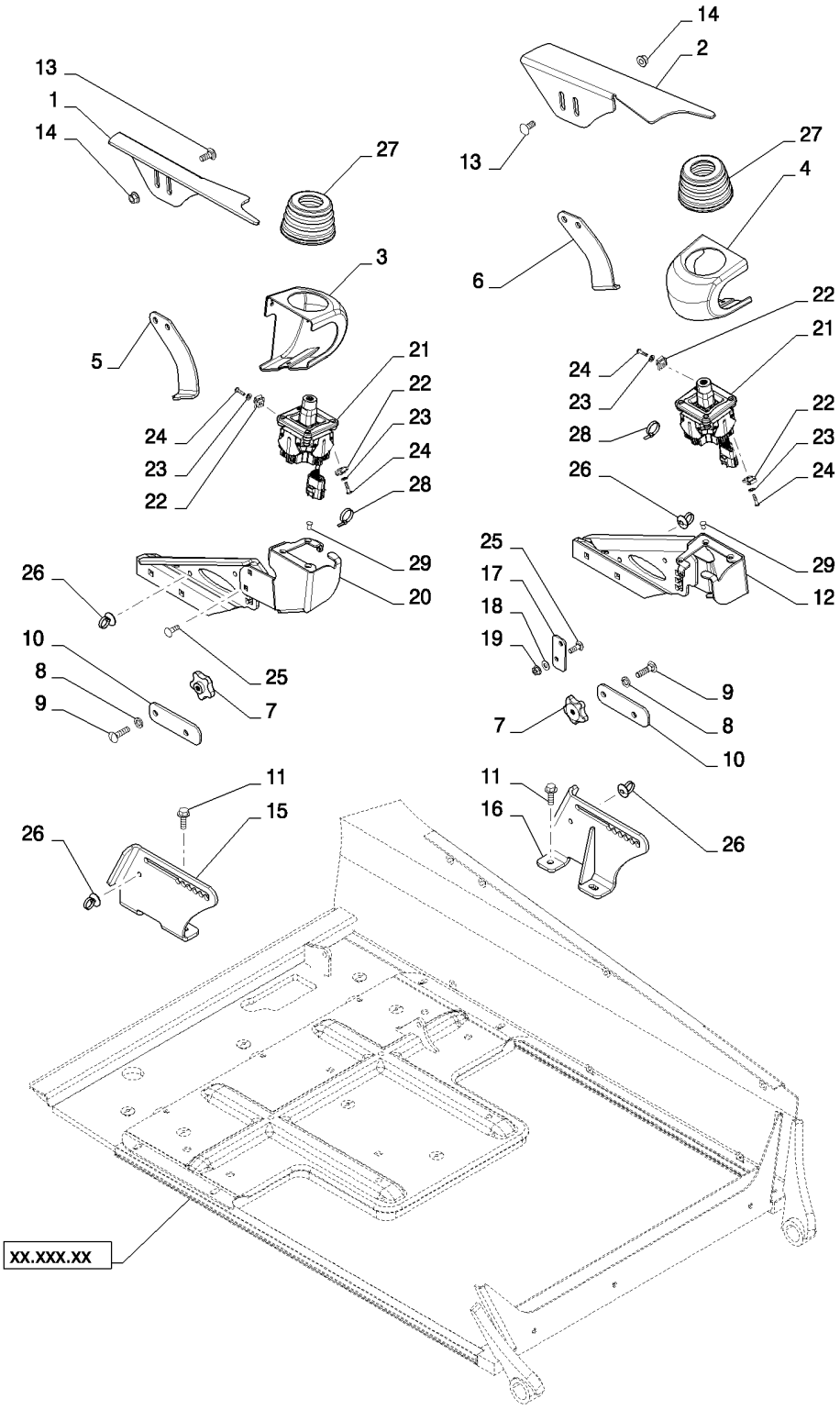

HANDLE, ELECTRONIC CONTROL NH (ALL NH)
HANDLE, ELECTRONIC CONTROL NH (ALL NH)
HANDLE, ELECTRONIC CONTROL NH (ALL NH)
HANDLE, ELECTRONIC CONTROL NH (ALL NH)

R	N	P.N.	MOD	Q	Denominação Description	Description Bezeichnung	Denominacion Beskrivelse	Descrizione Beschrijving	L.C.
1		87357149		1	APOIO DE BRAÇO, RH ACCOUDOIR	ARMREST ARMLEHNE	REPOSABRAZOS ARMLÆN	BRACCIOLO ARMLEUNING	074A
2		87357152		1	APOIO DE BRAÇO, LH ACCOUDOIR	ARMREST ARMLEHNE	REPOSABRAZOS ARMLÆN	BRACCIOLO ARMLEUNING	074A
3		84201491		1	COBERTURA, EH, RH COUVERCLE	COVER ABDECKUNG	CUBIERTA DÆKSEL	COPERCHIO AFSCHERMING	265C
4		84201490		1	COBERTURA, EH, LH COUVERCLE	COVER ABDECKUNG	CUBIERTA DÆKSEL	COPERCHIO AFSCHERMING	265C
5		84411088		1	SUPORTE, Upper EH NH, RH EQUERRE	BRACKET, SUPPORTING SCHALTER,AUTOM.AUS	PIEZA DE APOYO STOETTEBESLAG	SQUADRETTA DRAAGARM	215S
6		84411089		1	SUPORTE, Upper EH NH, LH EQUERRE	BRACKET, SUPPORTING SCHALTER,AUTOM.AUS	PIEZA DE APOYO STOETTEBESLAG	SQUADRETTA DRAAGARM	215S
7		87639912		4	MAÇANETA, Star 3/8 BOUTON	KNOB RUNDGRIFF	MANDO GREB	MANOPOLA KNOP	150P
8		81547		4	TRAVA DA ARRUELA, 7/16", Spring RONDELLE FREIN	LOCK WASHER SICHERUNGSSCHEIBE	ARANDELA DE BLOQUE LÅSESKIVE	RONDELLA DI SICUREZ BORGRING	132R
9		9706752		4	PARAFUSO, Short NK, 3/8"-16 x 1 1/2", G5 VIS A TETE BOMBEE	CARRIAGE BOLT SCHLOSSSCHRAUBE	PERNO ALOMADO BRÆDDEBOLT	BULLONE A TESTA TON SLOTBOUT	P123
10		84368561		2	PLACA PLAQUE	PLATE PLATTE	PLACA PLADE	PIASTRA PLAAT	105P
11		9804262		4	PARAFUSO, Hex Flg, M10 x 30, 8.8 VIS	BOLT SCHRAUBE	PERNO BOLT	BULLONE BOUT	140B
12		84410984		1	SUPORTE, Upper EH, RH SUPPORT	BRACKET HALTERUNG	SOPORTE BESLAG	STAFFA STEUN	225S
13		86633356		4	PARAFUSO, Short NK, M10 x 25, Cl8.8, Full Thd VIS A TETE BOMBEE	CARRIAGE BOLT SCHLOSSSCHRAUBE	PERNO ALOMADO BRÆDDEBOLT	BULLONE A TESTA TON SLOTBOUT	P123
14		86619802		4	CONTRA PORCA CONTRE-ECROU	LOCK NUT SICHERUNGSMUTTER	TUERCA DE BLOQUEO LÅSEMØTRIK	DADO DI BLOCCAGGIO BORGMOER	P263
15		84369519		1	SUPORTE, EH Base, RH EQUERRE	BRACKET, SUPPORTING SCHALTER,AUTOM.AUS	PIEZA DE APOYO STOETTEBESLAG	SQUADRETTA DRAAGARM	215S
16		84368998		1	TORRE, EH Base, LH TOURELLE	TOWER MAST	TORRECILLA TÅRN	TORRE TOREN	T100
17		84410988		2	ESPAÇADOR ENTRETOISE	SPACER DISTANZSTÜCK	SEPARADOR AFSTANDSSTYKKE	DISTANZIALE AFSTANDSSTUK	075D
18		322358		4	ARRUELA DE PRESSÃO, M8 RONDELLE BELLEVILLE	BELLEVILLE WASHER TELLERFEDER	ARANDELA BELLEVILLE BELLEVILLE-SPÆNDSKI	RONDELLA BELLEVILLE SCHOTELVEER	A143
19		86619801		4	CONTRA PORCA, M8 x 1.25, Flg, Cl 8 CONTRE-ECROU	LOCK NUT SICHERUNGSMUTTER	TUERCA DE BLOQUEO LÅSEMØTRIK	DADO DI BLOCCAGGIO BORGMOER	P263
20		84410986		1	SUPORTE, Upper EH, LH SUPPORT	BRACKET HALTERUNG	SOPORTE BESLAG	STAFFA STEUN	225S

90.112.02	03	p2	02/11

HANDLE, ELECTRONIC CONTROL NH (ALL NH)
HANDLE, ELECTRONIC CONTROL NH (ALL NH)
HANDLE, ELECTRONIC CONTROL NH (ALL NH)
HANDLE, ELECTRONIC CONTROL NH (ALL NH)

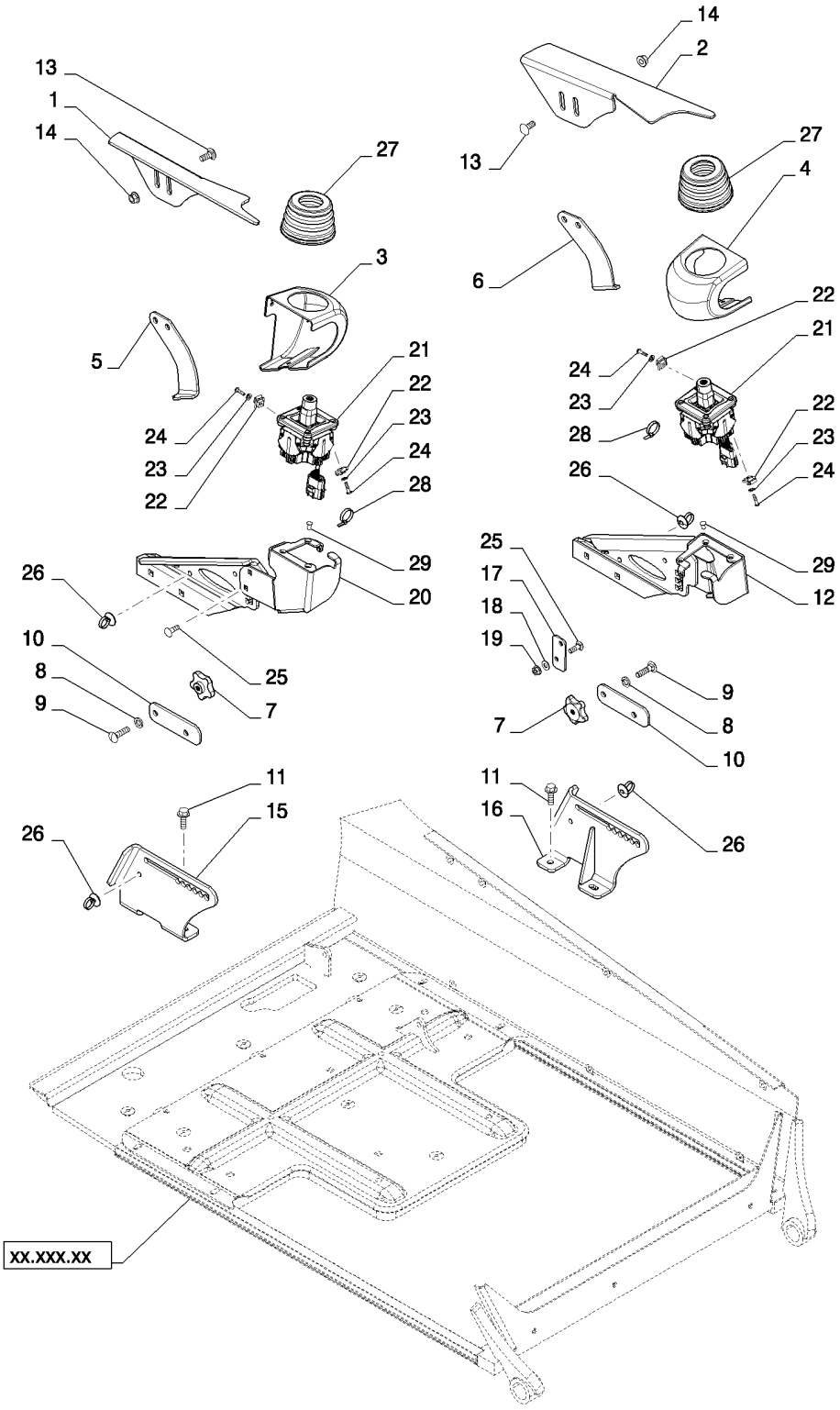

HANDLE, ELECTRONIC CONTROL NH (ALL NH)
HANDLE, ELECTRONIC CONTROL NH (ALL NH)
HANDLE, ELECTRONIC CONTROL NH (ALL NH)
HANDLE, ELECTRONIC CONTROL NH (ALL NH)

R	N	P.N.	MOD	Q	Denominação Description	Description Bezeichnung	Denominacion Beskrivelse	Descrizione Beschrijving	L.C.
21		84249066		2	JOYSTICK, Two Axis Ratiometric				
						JOYSTICK	JOYSTICK	JOYSTICK	001J
					JOYSTICK	JOYSTICK	JOYSTICK	JOYSTICK	
22		86625077		4	PORCA, J, Ret, #10-24	NUT	TUERCA	DADO	010D
					ECROU	MUTTER	MØTRIK	MOER	
23		86588450		4	ARRUELA PLANA, M6 x 12 x 1.6 Thk				
						WASHER	ARANDELA	RONDELLA	131R
					RONDELLE	UNTERLEGSCHEIBE	FLADSKIVE	SLUITRING	
24		86511922		4	PARAFUSO, Cross Pan Hd, #10-24 x 3/4"				
						SCREW	TORNILLO	VITE	040V
					VIS	SCHRAUBE	SKRUE	SCHROEF	
25		308761		4	PARAFUSO, Short NK, M8 x 25, Cl8.8, Full Thd				
						CARRIAGE BOLT	PERNO ALOMADO	BULLONE A TESTA TONI	P123
					VIS A TETE BOMBEE	SCHLOSSSCHRAUBE	BRÆDDEBOLT	SLOTBOUT	
26		378884A2		6	TIRA, Panel Wire Tie	STRAP	BANDA	BANDELLA	8630
					SANGLE	GURT	STROP	RIEM	
27		84412489		2	CAPA, EH Control	BOOT	FUNDA	PARAPOLVERE	330C
					SOUFFLET	MANSCHETTE	MANCHET	HOES	
28		263117		2	PRENDEDOR DE CABOS, .14" x 11 1/2"				
						CABLE STRAP	BANDA DE CABLE	FASCETTA PER CAVO	P716
					BRIDE DE CABLE	KABELBINDER	KABELSTROP	BUNDELBAND	
29		86511855		6	PARAFUSO, Hex Flat Hd, M6 x 12, 4.8				
						SCREW	TORNILLO	VITE	040V
					VIS	SCHRAUBE	SKRUE	SCHROEF	

90.116.01		p1	07/11

LOADER STOP 63MM (L218-L230)
LOADER STOP 63MM (L218-L230)
LOADER STOP 63MM (L218-L230)
LOADER STOP 63MM (L218-L230)

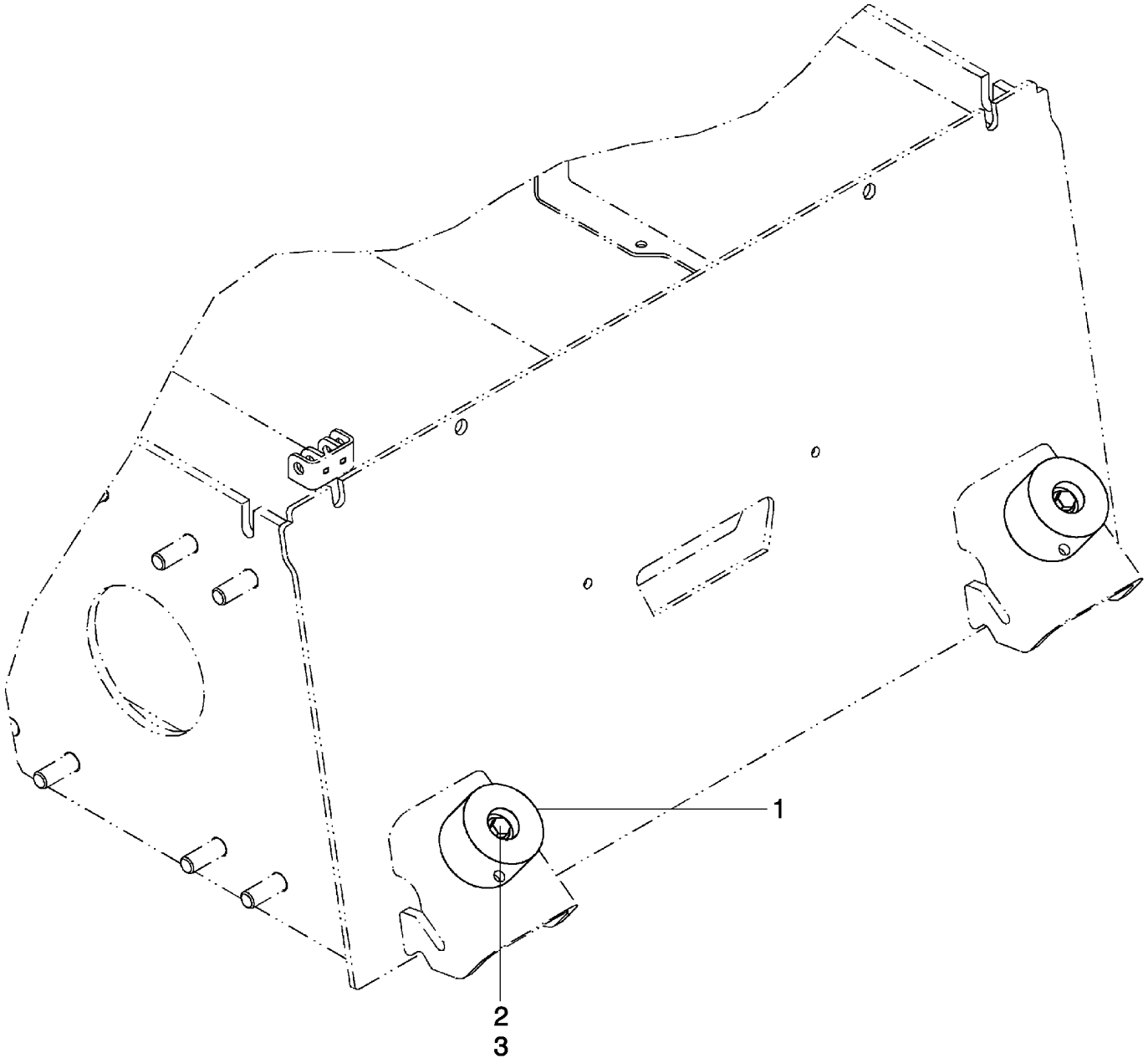

LOADER STOP 63MM (L218-L230)
LOADER STOP 63MM (L218-L230)
LOADER STOP 63MM (L218-L230)
LOADER STOP 63MM (L218-L230)

R	N	P.N.	MOD	Q	Denominação Description Bezeichnung Beskrivelse Descrizione Beschrijving	L.C.
1		84306053		2	BLOCO, Stop, 63mm BLOC BLOCK BLOCK BLOQUE MOTORBLOK BLOCCO BLOK	074B
2		9804265		2	PARAFUSO, Hex Flg, M10 x 60, 8.8 BOLT VIS SCHRAUBE PERNO BOLT BULLONE BOUT	140B
3		86619802		2	CONTRA PORCA, Flange CONTRE-ECROU LOCK NUT SICHERUNGSMUTTER TUERCA DE BLOQUEO LÅSEMØTRIK DADO DI BLOCCAGGIO BORGMOER	P263

90.116.01		p1	07/11

LOADER STOP 40MM (L218-L230,C232,C238)
LOADER STOP 40MM (L218-L230,C232,C238)
LOADER STOP 40MM (L218-L230,C232,C238)
LOADER STOP 40MM (L218-L230,C232,C238)

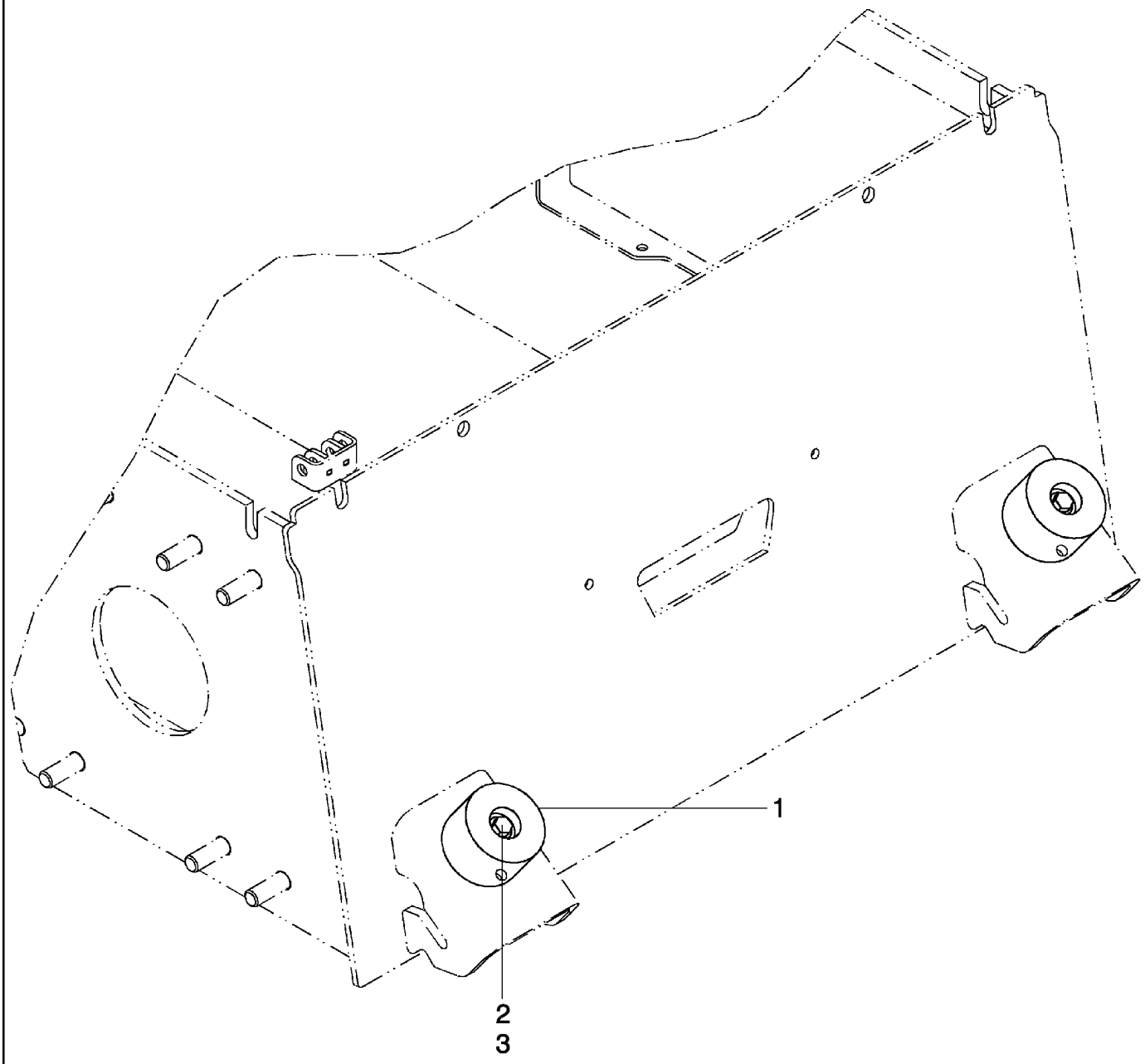

LOADER STOP 40MM (L218-L230,C232,C238)
LOADER STOP 40MM (L218-L230,C232,C238)
LOADER STOP 40MM (L218-L230,C232,C238)
LOADER STOP 40MM (L218-L230,C232,C238)

R	N	P.N.	MOD	Q	Denominação Description Bezeichnung	Description Bezeichnung Beskrivelse	Denominacion Beskrivelse Descrizione	Descrizione Beschrijving Beschrijving	L.C.
1		84306051		2	BLOCO, Stop, 40mm BLOC	BLOCK BLOCK	BLOQUE MOTORBLOK	BLOCCO BLOK	074B
2		9804264		2	PARAFUSO, Hex Flg, M10 x 50, 8.8 BOLT VIS	PERNO SCHRAUBE	BULLONE BOLT	BULLONE BOUT	140B
3		86619802		2	CONTRA PORCA, Flange CONTRE-ECROU	LOCK NUT SICHERUNGSMUTTER	TUERCA DE BLOQUEO LÅSEMØTRIK	DADO DI BLOCCAGGIO BORGMOER	P263

SEAT, NON SUSPENSION (ALL NH)
SEAT, NON SUSPENSION (ALL NH)
SEAT, NON SUSPENSION (ALL NH)
SEAT, NON SUSPENSION (ALL NH)

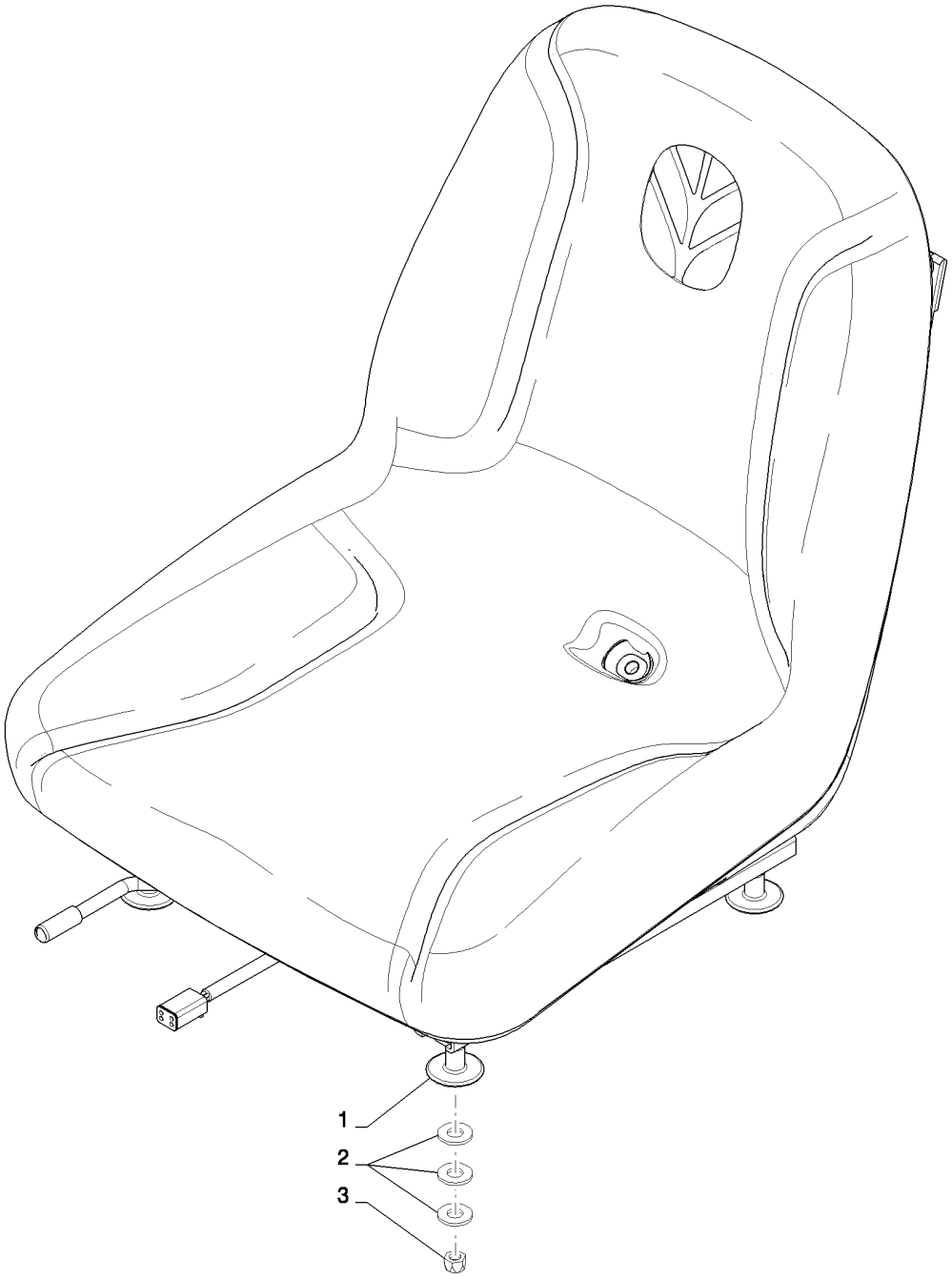

SEAT, NON SUSPENSION (ALL NH)
SEAT, NON SUSPENSION (ALL NH)
SEAT, NON SUSPENSION (ALL NH)
SEAT, NON SUSPENSION (ALL NH)

R	N	P.N.	MOD	Q	Denominação Description	Description Bezeichnung	Denominacion Beskrivelse	Descrizione Beschrijving	L.C.
1		84200770		1	ASSENTO, Non-Suspensior SIEGE	SEAT SITZ	ASIENTO SÆDE	SEDILE STOEL	7480
2		87655046		12	ARRUELA ESPECIAL RONDELLE SPECIALE	SPECIAL WASHER SPEZIALUNTERLEGSCH	ARANDELA ESPECIAL SPECIALSKIVE	RONDELLA SPECIALE SPECIALE RING	Z333
3		86629544		4	CONTRA PORCA, 5/16"-18, GB CONTRE-ECROU	LOCK NUT SICHERUNGSMUTTER	TUERCA DE BLOQUEO LÅSEMØTRIK	DADO DI BLOCCAGGIO BORGMOER	P263

SEAT, SUSPENSION (ALL NH)
SEAT, SUSPENSION (ALL NH)
SEAT, SUSPENSION (ALL NH)
SEAT, SUSPENSION (ALL NH)

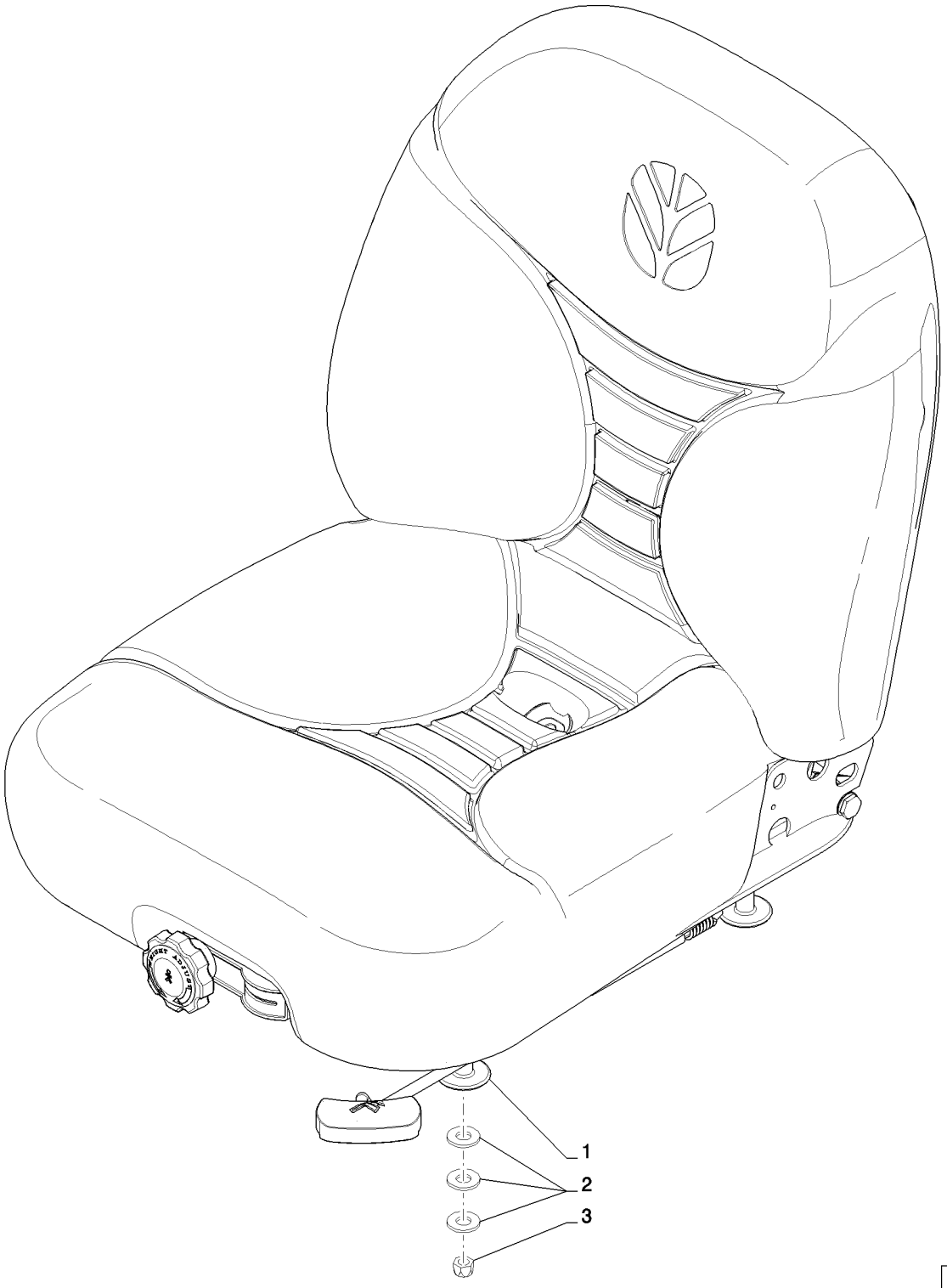

SEAT, SUSPENSION (ALL NH)
SEAT, SUSPENSION (ALL NH)
SEAT, SUSPENSION (ALL NH)
SEAT, SUSPENSION (ALL NH)

R	N	P.N.	MOD	Q	Denominação Description	Description Bezeichnung	Denominacion Beskrivelse	Descrizione Beschrijving	L.C.
1		84201370		1	ASSENTO, Suspension SIEGE	SEAT SITZ	ASIENTO SÆDE	SEDILE STOEL	7480
2		87655046		11	ARRUELA ESPECIAL RONDELLE SPECIALE	SPECIAL WASHER SPEZIALUNTERLEGSCH	ARANDELA ESPECIAL SPECIALSKIVE	RONDELLA SPECIALE SPECIALE RING	Z333
3		86629544		4	CONTRA PORCA, 5/16"-18, GB CONTRE-ECROU	LOCK NUT SICHERUNGSMUTTER	TUERCA DE BLOQUEO LÅSEMØTRIK	DADO DI BLOCCAGGIO BORGMOER	P263

90.120.03		p1	02/11

SEAT, AIR SUSPENSION (ALL NH)
SEAT, AIR SUSPENSION (ALL NH)
SEAT, AIR SUSPENSION (ALL NH)
SEAT, AIR SUSPENSION (ALL NH)



SEAT, AIR SUSPENSION (ALL NH)
SEAT, AIR SUSPENSION (ALL NH)
SEAT, AIR SUSPENSION (ALL NH)
SEAT, AIR SUSPENSION (ALL NH)

R	N	P.N.	MOD	Q	Denominação Description Bezeichnung	Description Bezeichnung Beskrivelse	Denominacion Beskrivelse Beschrijving	Descrizione Beschrijving L.C.	L.C.
1		**84200801**		1	ASSENTO, Air Suspension SIEGE	SEAT SITZ	ASIENTO SÆDE	SEDILE STOEL	7480
2		**87655046**		12	ARRUELA ESPECIAL RONDELLE SPECIALE	SPECIAL WASHER SPEZIALUNTERLEGSCH	ARANDELA ESPECIAL SPECIALSKIVE	RONDELLA SPECIALE SPECIALE RING	Z333
3		**86629544**		4	CONTRA PORCA, 5/16"-18, GB CONTRE-ECROU	LOCK NUT SICHERUNGSMUTTER	TUERCA DE BLOQUEO LÅSEMØTRIK	DADO DI BLOCCAGGIO BORGMOER	P263

SEAT BELT, 2 PT RETRACTOR 2 IN WEB (ALL NH)
SEAT BELT, 2 PT RETRACTOR 2 IN WEB (ALL NH)
SEAT BELT, 2 PT RETRACTOR 2 IN WEB (ALL NH)
SEAT BELT, 2 PT RETRACTOR 2 IN WEB (ALL NH)

ART

NOT

AVAILABLE

SEAT BELT, 2 PT RETRACTOR 2 IN WEB (ALL NH)
SEAT BELT, 2 PT RETRACTOR 2 IN WEB (ALL NH)
SEAT BELT, 2 PT RETRACTOR 2 IN WEB (ALL NH)
SEAT BELT, 2 PT RETRACTOR 2 IN WEB (ALL NH)

R	N	P.N.	MOD	Q	Denominação Description	Description Bezeichnung	Denominacion Beskrivelse	Descrizione Beschrijving	L.C.
1		84174263		1	CINTO DE SEGURANÇA, 2 Pt Retractor, NH 2 In Web				
						SEAT BELT	CINTURÓN DE SEGURID	CINTURA DI SICUREZZA	182C
					CEINTURE DE SECURIT	SICHERHEITSGURT	SIKKERHEDSBÆLTE	VEILIGHEIDSGORDEL	
2		9804262		1	PARAFUSO, Hex Flg, M10 x 30, 8.8				
						BOLT	PERNO	BULLONE	140B
					VIS	SCHRAUBE	BOLT	BOUT	
3		86512554		1	CONTRA PORCA, M10 x 1.5, Cl 10				
						LOCK NUT	TUERCA DE BLOQUEO	DADO DI BLOCCAGGIO	P263
					CONTRE-ECROU	SICHERUNGSMUTTER	LÅSEMØTRIK	BORGMOER	
4		87655046		1	ARRUELA ESPECIAL	SPECIAL WASHER	ARANDELA ESPECIAL	RONDELLA SPECIALE	Z333
					RONDELLE SPECIALE	SPEZIALUNTERLEGSCH	SPECIALSKIVE	SPECIALE RING	

SEAT BELT, 3 PT (ALL NH)
SEAT BELT, 3 PT (ALL NH)
SEAT BELT, 3 PT (ALL NH)
SEAT BELT, 3 PT (ALL NH)

ART

NOT

AVAILABLE

SEAT BELT, 3 PT (ALL NH)
SEAT BELT, 3 PT (ALL NH)
SEAT BELT, 3 PT (ALL NH)
SEAT BELT, 3 PT (ALL NH)

R	N	P.N.	MOD	Q	Denominação Description Bezeichnung	Description Bezeichnung Beschrijving	Denominacion Beskrivelse Descrizione	Descrizione Beschrijving Beschrijving	L.C.
1		84354488		1	CINTO DE SEGURANÇA, NH 3 Pt SEAT BELT CEINTURE DE SECURIT	CINTURÓN DE SEGURID SICHERHEITSGURT SIKKERHEDSBÆLTE	CINTURA DI SICUREZZA VEILIGHEIDSGORDEL		182C
2		86050286		1	PARAFUSO FLANGEADO, Hex, M10 x 20, Cl 8.8, Full Thd FLANGE BOLT VIS A EMBASE	PERNO DE CORONA FLANSCHSCHRAUBE FLANGEBOLT	BULLONE FLANGIATO FLENSBOUT		A027
3		86619802		1	CONTRA PORCA LOCK NUT CONTRE-ECROU	TUERCA DE BLOQUEO SICHERUNGSMUTTER LÅSEMØTRIK	DADO DI BLOCCAGGIO BORGMOER		P263
4		9804257		2	PARAFUSO, Hex Flg, M6 x 25, 8.8 BOLT VIS	PERNO SCHRAUBE BOLT	BULLONE BOUT		140B
5		87436247		2	ENCHIMENTO ROSCADO THREADED INSERT INSERT FILETE	PIEZA DE INS. ROSCAD/ GEWINDEEINSATZ GEVINDINDSATS	INSERTO FILETTATO INZETST. MET SCHROEI		054I
6		84291791		1	SUPORTE, Plate, C-Belt 3 Pt Retractable BRACKET SUPPORT	SOPORTE HALTERUNG BESLAG	STAFFA STEUN		225S
7		86512554		2	CONTRA PORCA, M10 x 1.5, Cl 10 LOCK NUT CONTRE-ECROU	TUERCA DE BLOQUEO SICHERUNGSMUTTER LÅSEMØTRIK	DADO DI BLOCCAGGIO BORGMOER		P263
8		87655046		2	ARRUELA ESPECIAL SPECIAL WASHER RONDELLE SPECIALE	ARANDELA ESPECIAL SPEZIALUNTERLEGSCH SPECIALSKIVE	RONDELLA SPECIALE SPECIALE RING		Z333

90.150.01	01	p1	03/11

CAB NH (L218-C238)
CAB NH (L218-C238)
CAB NH (L218-C238)
CAB NH (L218-C238)

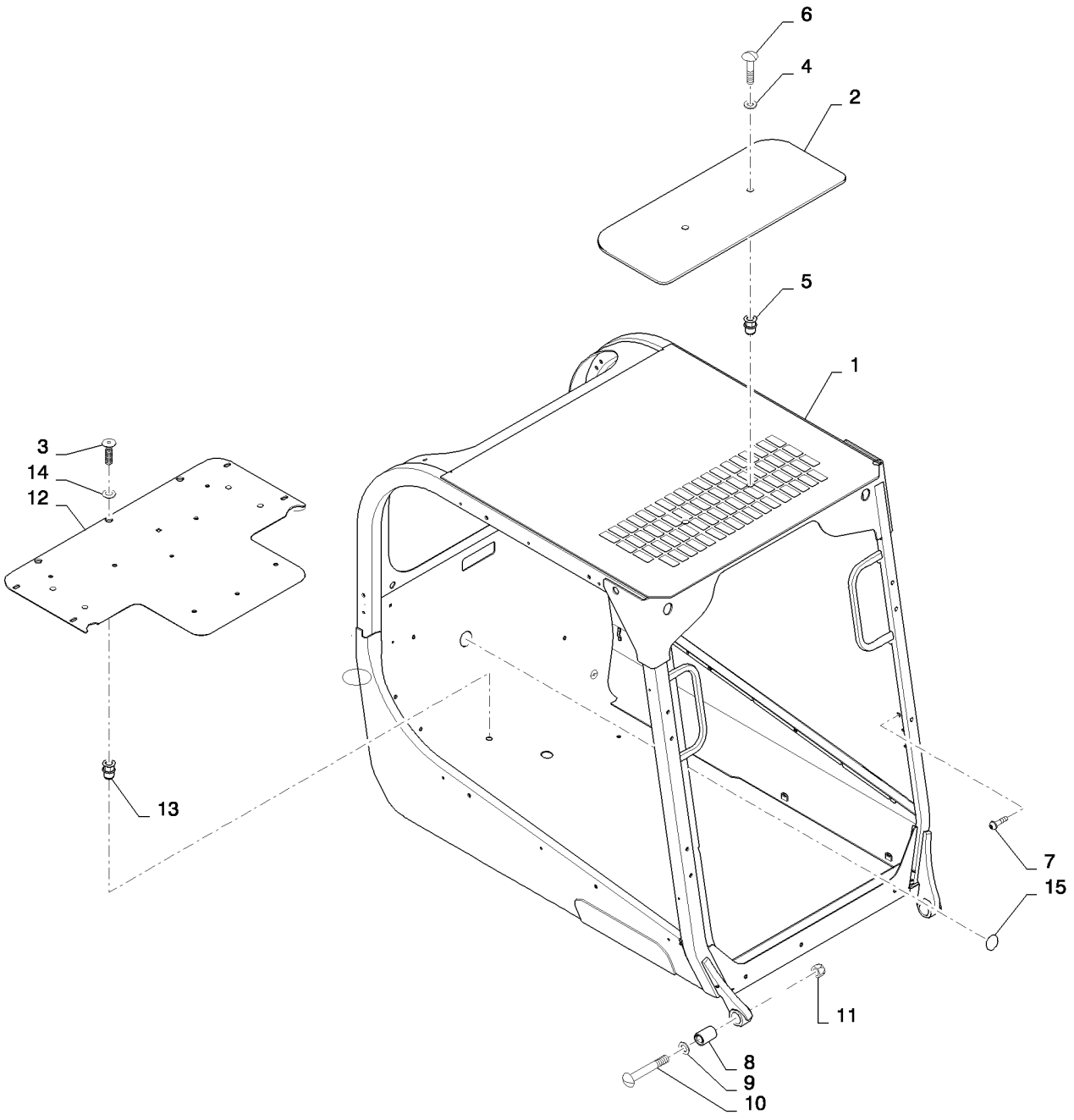

CAB NH (L218-C238)
CAB NH (L218-C238)
CAB NH (L218-C238)
CAB NH (L218-C238)

R	N	P.N.	MOD	Q	Denominação Description	Description Bezeichnung	Denominacion Beskrivelse	Descrizione Beschrijving	L.C.
1		NSS		1	SEM SERVIÇO EM SEPARADO, ROPS, CNH Gray				
						NOT SERVICED SEPARA	NO SE REPARA POR SE	NON FORNITO SEPARAT	064N
					NON FOURNI SEPAREM	NICHT A SEP ERS-T LIEI	SERVICERES IKKE SEPA	NIET LOS VERKRIJGBAA	
2		{84376784}		1	Skylight Window				
3		84305556		7	PARAFUSO	SCREW	TORNILLO	VITE	040V
					VIS	SCHRAUBE	SKRUE	SCHROEF	
4		394277A1		2	ARRUELA PLANA	WASHER	ARANDELA	ROSETTA PIANA	9720
					RONDELLE	UNTERLEGSCHEIBE	FLADSKIVE	SLUITRING	
5		84272827		6	REBITE	RIVET	REMACHE	RIVETTO	055R
					RIVET	NIET	NITTE	KLINKNAGEL	
6		84375323		2	PARAFUSO, Rubber Bumper				
						SCREW	TORNILLO	VITE	040V
					VIS	SCHRAUBE	SKRUE	SCHROEF	
7		86625199		8	PARAFUSO, Hex Flg Hd, M6 x 13				
						SELF-TAP SCREW	TORNILLO AUTORROSC	VITE AUTOFILETTANTE	062V
					VIS AUTOTARAUDEUSE	SELBSTSCHN SCHRAUE	SELVLÅSENDE BOLT	ZELFTAPPENDE SCHRO	
8		84200848		2	FIXADOR	MOUNT	SOPORTE	SUPPORTO	C022
					MONTAGE	GESTELL	BESLAG	BEVESTIGING	
9		{84365968}		2	Nylon Washer				
10		84370842		2	PARAFUSO, Carriage, M20x100				
						BOLT	PERNO	BULLONE	140B
					VIS	SCHRAUBE	BOLT	BOUT	
11		86536985		2	CONTRA PORCA, M20 x 2.5, Cl 10				
						LOCK NUT	TUERCA DE BLOQUEO	DADO DI BLOCCAGGIO	P263
					CONTRE-ECROU	SICHERUNGSMUTTER	LÅSEMØTRIK	BORGMOER	
12		84284728		1	ASSENTO, Seat Pan, Gray	SEAT	ASIENTO	SEDILE	7480
					SIEGE	SITZ	SÆDE	STOEL	
13		{}			Not Used				
14		86624182		4	ARRUELA PLANA, M6 x 18 x 1.6				
						WASHER	ARANDELA	RONDELLA	131R
					RONDELLE	UNTERLEGSCHEIBE	FLADSKIVE	SLUITRING	
15		414635A1		2	TAMPA, Lexan	COVER	TAPA	COPERCHIO	2250
					COUVERCLE	DECKEL	COVER	COVER	

90.150.01	02	p1	07/11

CAB NH (L218-C238)
CAB NH (L218-C238)
CAB NH (L218-C238)
CAB NH (L218-C238)

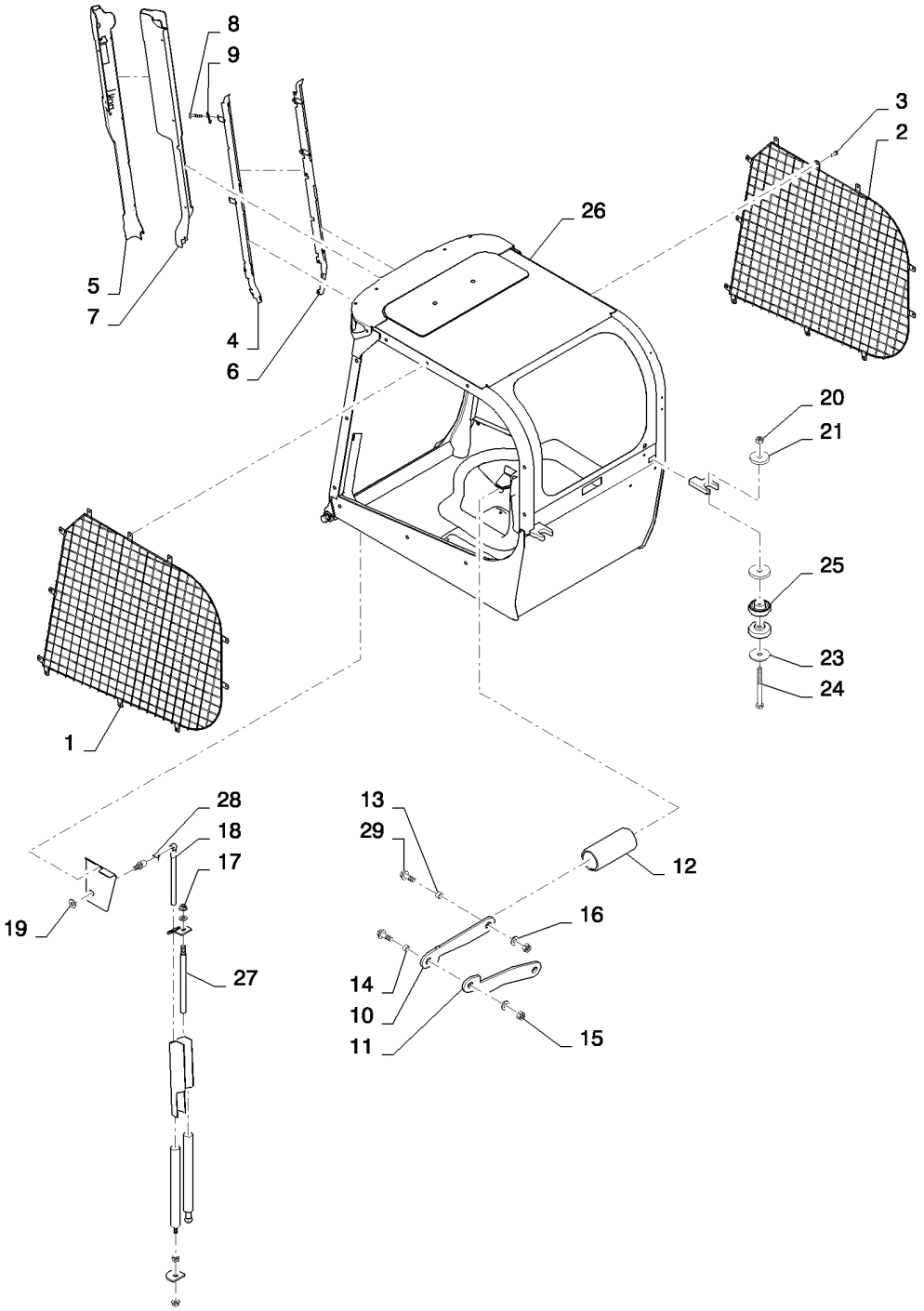

CAB NH (L218-C238)
CAB NH (L218-C238)
CAB NH (L218-C238)
CAB NH (L218-C238)

R	N	P.N.	MOD	Q	Denominação Description	Description Bezeichnung	Denominacion Beskrivelse	Descrizione Beschrijving	L.C.
1		84200803		1	TELA, ROPS Side Screen RH				
						SCREEN	PANTALLA	FILTRO; SCHERMO	047S
					TAMIS	GITTER; ABSCHIRMUNG	SKÆRM	SCHERM	
2		84307405		1	TELA, ROPS Side Screen LH				
						SCREEN	PANTALLA	FILTRO; SCHERMO	047S
					TAMIS	GITTER; ABSCHIRMUNG	SKÆRM	SCHERM	
3		84310724		22	REBITE	RIVET	REMACHE	RIVETTO	055R
					RIVET	NIET	NITTE	KLINKNAGEL	
4		84379511		1	CONSOLE, Console, LH NH	CONSOLE	CONSOLA	CONSOLE	080M
					CONSOLE	KONSOLE	KONSOL	CONSOLE	
5		84302478		1	CONSOLE, Console, RH NH	CONSOLE	CONSOLA	CONSOLE	080M
					CONSOLE	KONSOLE	KONSOL	CONSOLE	
6		84473542		1	SUPORTE, Bracket, LH Console				
						BRACKET	SOPORTE	STAFFA	225S
					SUPPORT	HALTERUNG	BESLAG	STEUN	
7		84473534		1	SUPORTE, Bracket, RH Console				
						BRACKET	SOPORTE	STAFFA	225S
					SUPPORT	HALTERUNG	BESLAG	STEUN	
8		87682398		6	PARAFUSO	SCREW	TORNILLO	VITE	040V
					VIS	SCHRAUBE	SKRUE	SCHROEF	
9		86625073		6	PORCA, M6, U	NUT	TUERCA	DADO	010D
					ECROU	MUTTER	MØTRIK	MOER	
10		84349494		1	PLACA, Plate, Upper Locking Arm				
						PLATE	PLACA	PIASTRA	105P
					PLAQUE	PLATTE	PLADE	PLAAT	
11		84349498		1	PLACA, Plate, Lower Locking Arm				
						PLATE	PLACA	PIASTRA	105P
					PLAQUE	PLATTE	PLADE	PLAAT	
12		84309929		1	TUBO, Tube, Locking Collar Safety				
						TUBE	TUBO	TUBO	195T
					TUBE	ROHR	RØR	LEIDING	
13		84349662		2	ESPAÇADOR, Spacer, 8 mm				
						SPACER	SEPARADOR	DISTANZIALE	075D
					ENTRETOISE	DISTANZSTÜCK	AFSTANDSSTYKKE	AFSTANDSSTUK	
14		84349661		1	ESPAÇADOR, Spacer, 16 mm				
						SPACER	SEPARADOR	DISTANZIALE	075D
					ENTRETOISE	DISTANZSTÜCK	AFSTANDSSTYKKE	AFSTANDSSTUK	
15		100037		3	PORCA, M10 x 1.5, Cl 8	NUT	TUERCA	DADO	010D
					ECROU	MUTTER	MØTRIK	MOER	
16		87655046		3	ARRUELA ESPECIAL	SPECIAL WASHER	ARANDELA ESPECIAL	RONDELLA SPECIALE	Z333
					RONDELLE SPECIALE	SPEZIALUNTERLEGSCH	SPECIALSKIVE	SPECIALE RING	
17		412141		1	CONTRA PORCA, M10 x 1.5, Cl 8				
						LOCK NUT	TUERCA DE BLOQUEO	DADO DI BLOCCAGGIO	P263
					CONTRE-ECROU	SICHERUNGSMUTTER	LÅSEMØTRIK	BORGMOER	
18		84473525		2	PORCA, Acorn	NUT	TUERCA	DADO	010D
					ECROU	MUTTER	MØTRIK	MOER	
19		86624176		1	ARRUELA PLANA, M10 x 20 x 2				
						WASHER	ARANDELA	RONDELLA	131R
					RONDELLE	UNTERLEGSCHEIBE	FLADSKIVE	SLUITRING	

90.150.01	02	p2	07/11

CAB NH (L218-C238)
CAB NH (L218-C238)
CAB NH (L218-C238)
CAB NH (L218-C238)

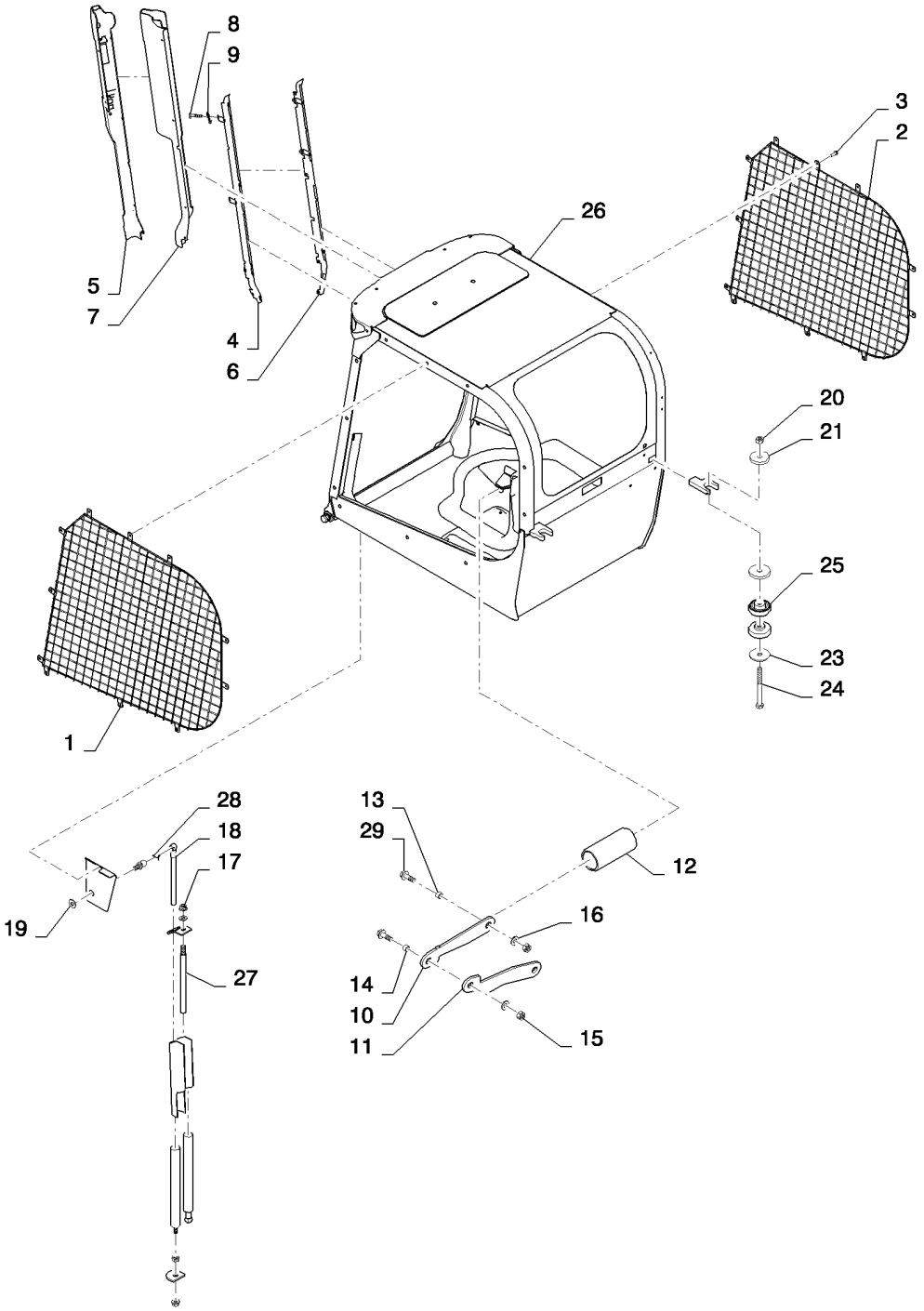

CAB NH (L218-C238)
CAB NH (L218-C238)
CAB NH (L218-C238)
CAB NH (L218-C238)

R	N	P.N.	MOD	Q	Denominação Description	Description Bezeichnung	Denominacion Beskrivelse	Descrizione Beschrijving	L.C.
20		**392530**		2	PORCA, M16, Cl 10 ECROU	NUT MUTTER	TUERCA MØTRIK	DADO MOER	010D
21		**84298254**		2	PLACA, Plate, Rear Mount PLAQUE	PLATE PLATTE	PLACA PLADE	PIASTRA PLAAT	105P
22		**84361070**		2	PLACA, Nut PLAQUE	PLATE PLATTE	PLACA PLADE	PIASTRA PLAAT	105P
23		**87630175**		2	ARRUELA PLANA RONDELLE	WASHER UNTERLEGSCHEIBE	ARANDELA FLADSKIVE	RONDELLA SLUITRING	131R
24		**87698773**		2	PARAFUSO VIS	BOLT SCHRAUBE	PERNO BOLT	BULLONE BOUT	140B
25		**84201266**		4	ISOLADOR, Engine Mount ISOLANT	ISOLATOR ISOLATOR	AISLADOR ISOLATOR	ISOLATORE ISOLATIE	Z082
26		**254206A1**		2	ESPAÇADOR ENTRETOISE	SPACER DISTANZSTÜCK	ESPACIADOR AFSTANDSSTYKKE	DISTANZIALE AFSTANDSRING	8090
27		**84372097**		2	PRISIONEIRO GOUJON	STUD GEWINDEBOLZEN	PRISIONERO STØTTEBOLT	PRIGIONIERO TAPEIND	210P
28		**84372099**		2	GRAMPO COLLIER	CLIP KLAMMER	ABRAZADERA KLIPS	FERMO KLEM	045F
29		**9804262**		2	PARAFUSO, Hex Flg, M10 x 30, 8.8 VIS	BOLT SCHRAUBE	PERNO BOLT	BULLONE BOUT	140B
30		**84469647**		1	SUPORTE, Cab Strut Bumper (Not Shown) SUPPORT	BRACKET HALTERUNG	SOPORTE BESLAG	STAFFA STEUN	225S
31		**120112**		1	PARAFUSO, Hex, M10 x 40, 8.8, Full Thd, (Not Shown) VIS	BOLT SCHRAUBE	PERNO BOLT	BULLONE BOUT	140B
32		**86512498**		2	PORCA, M16 x 2, Flg, Cl 10 ECROU	NUT MUTTER	TUERCA MØTRIK	DADO MOER	010D
33		**84338534**		1	VEDAÇÃO, 885 mm JOINT	SEAL DICHTUNG	ANILLO DE CIERRE PAKNING	GUARNIZIONE; TENUTA AFDICHTING	132A

90.150.01	03	p1	06/11

CAB, GAS STRUT ASSY (ALL NH)
CAB, GAS STRUT ASSY (ALL NH)
CAB, GAS STRUT ASSY (ALL NH)
CAB, GAS STRUT ASSY (ALL NH)

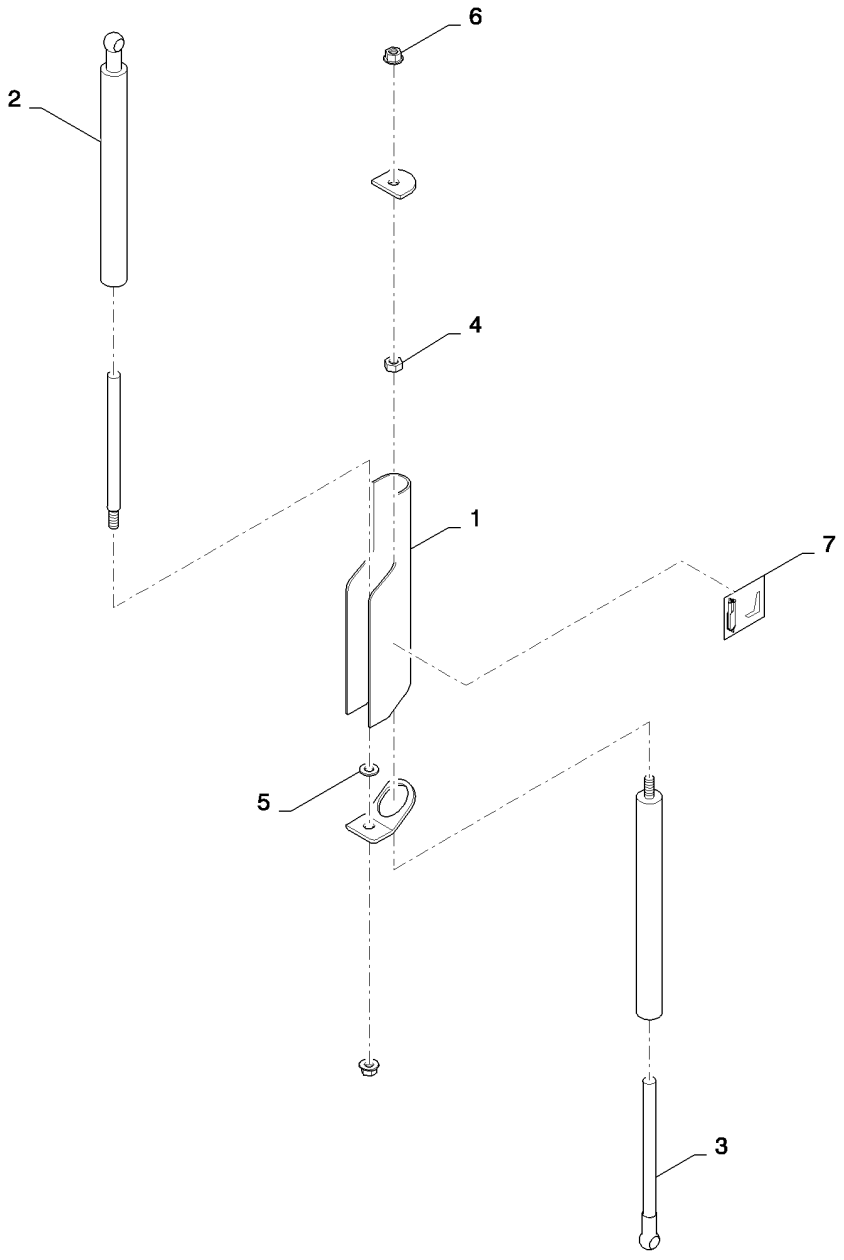

CAB, GAS STRUT ASSY (ALL NH)
CAB, GAS STRUT ASSY (ALL NH)
CAB, GAS STRUT ASSY (ALL NH)
CAB, GAS STRUT ASSY (ALL NH)

R	N	P.N.	MOD	Q	Denominação Description	Description Bezeichnung	Denominacion Beskrivelse	Descrizione Beschrijving	L.C.
		84385168		1	COMPASSO, Assembly, Incl. 1-7				
						GAS STRUT	COLUMNA DE GAS	AMMORTIZZATORE A G/	Z331
					BEQUILLE A GAZ	GASDRUCKFEDER	CYLINDER, GASSTØDD/	GASVEER	
1		**84418681**		1	ESCORA ESTABILIZADORA, Gray				
						STRUT	COLUMNA	AMMORTIZZATORE	245P
					JAMBE	STREBE	STØDDÆMPERARME	GASVEER	
2		**84365652**		1	COMPASSO, 3305N	GAS STRUT	COLUMNA DE GAS	AMMORTIZZATORE A G/	Z331
					BEQUILLE A GAZ	GASDRUCKFEDER	CYLINDER, GASSTØDD/	GASVEER	
3		**84365651**		1	COMPASSO, 2410 N	GAS STRUT	COLUMNA DE GAS	AMMORTIZZATORE A G/	Z331
					BEQUILLE A GAZ	GASDRUCKFEDER	CYLINDER, GASSTØDD/	GASVEER	
4		**100016**		1	PORCA, M10, Cl 8	NUT	TUERCA	DADO	010D
					ECROU	MUTTER	MØTRIK	MOER	
5		**86625241**		1	ARRUELA PLANA, 13/32" x 13/16" x .089", HDN, .406x.812x.089 HDN				
						WASHER	ARANDELA	RONDELLA	131R
					RONDELLE	UNTERLEGSCHEIBE	FLADSKIVE	SLUITRING	
6		**9804278**		2	PORCA, M10 x 1.5, Flg, Cl 8				
						NUT	TUERCA	DADO	010D
					ECROU	MUTTER	MØTRIK	MOER	
7		**84385641**		1	ADESIVO, Gas Strut Orientation				
						DECAL	CALCOMANÍA	DECALCOMANIA	012D
					AUTOCOLLANT	AUFKLEBER	TRANSFER	STICKER	

90.150.02		p1	02/11

CAB SEALING (ALL NH)
CAB SEALING (ALL NH)
CAB SEALING (ALL NH)
CAB SEALING (ALL NH)

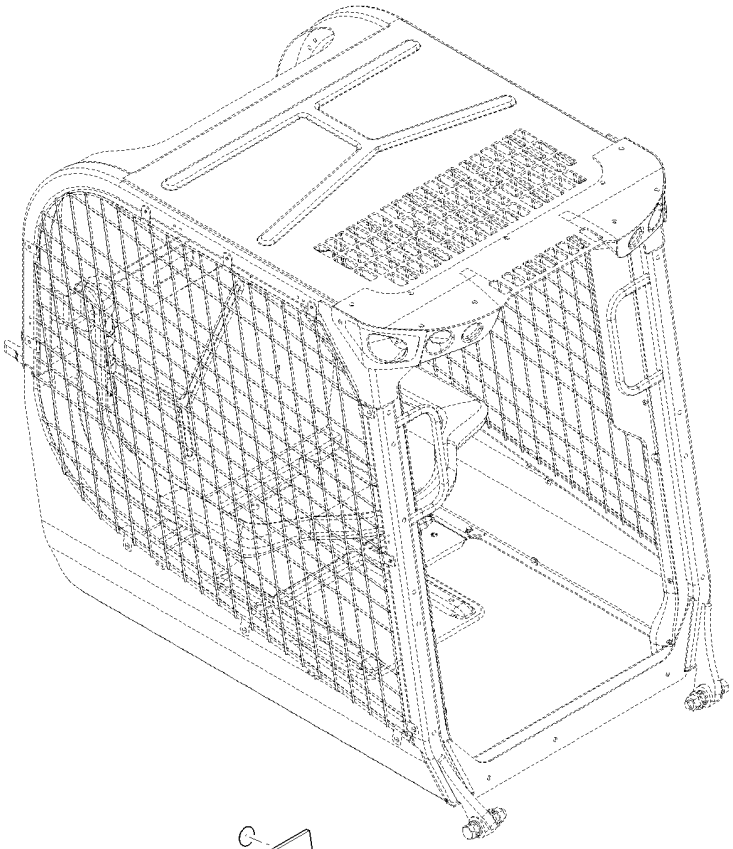

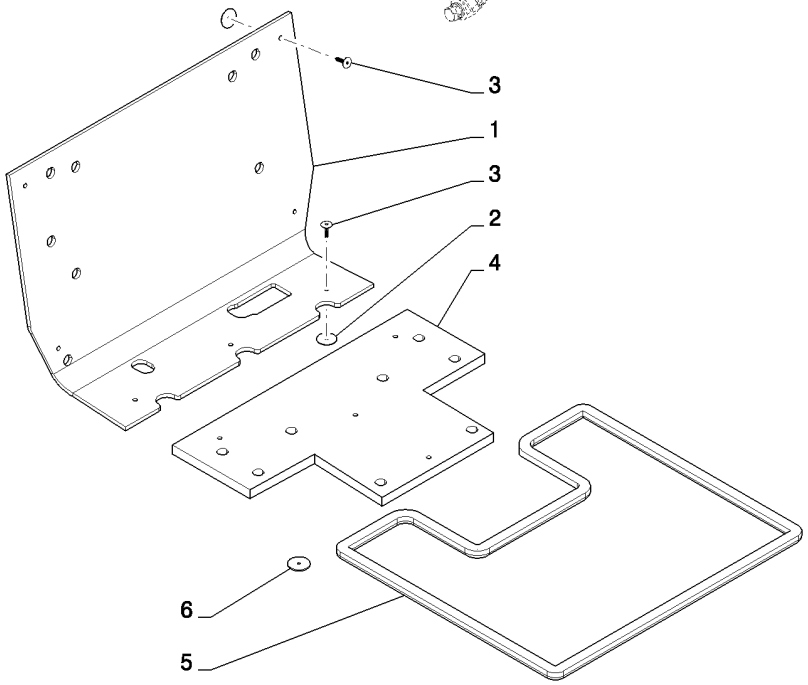

CAB SEALING (ALL NH)
CAB SEALING (ALL NH)
CAB SEALING (ALL NH)
CAB SEALING (ALL NH)

R	N	P.N.	MOD	Q	Denominação Description Bezeichnung	Denominacion Beskrivelse	Descrizione Beschrijving	L.C.
1		84362124		1	ESPUMA ISOLANTE, Firewall FOAM INSULATION MOUSSE ISOLANTE SCHAUMSTOFFISOLIER	ESPUMA AISLANTE SKUM ISOLERING	ISOLANTE IN SCHIUMA SCHUIMISOLATIE	051S
2		348434A1		11	ARRUELA PLANA, Flat WASHER RONDELLE UNTERLEGSCHEIBE	ARANDELA FLADSKIVE	ROSETTA PIANA SLUITRING	9720
3		348452A1		11	BOTÃO DE IMPULSO, Push-In FASTENER ATTACHE BEFESTIGUNGSELEMEN	SUJETADOR LUKKER	DISPOSITIVO DI FISSAG BEVESTIGING	123B
4		84342684		1	ESPUMA ISOLANTE, Seat Pan FOAM INSULATION MOUSSE ISOLANTE SCHAUMSTOFFISOLIER	ESPUMA AISLANTE SKUM ISOLERING	ISOLANTE IN SCHIUMA SCHUIMISOLATIE	051S
5		84338534		1	VEDAÇÃO, 3326mm SEAL JOINT DICHTUNG	ANILLO DE CIERRE PAKNING	GUARNIZIONE; TENUTA AFDICHTING	132A
6		84311384		1	ESPUMA ISOLANTE, Dump Valve FOAM INSULATION MOUSSE ISOLANTE SCHAUMSTOFFISOLIER	ESPUMA AISLANTE SKUM ISOLERING	ISOLANTE IN SCHIUMA SCHUIMISOLATIE	051S

90.150.03		p1	02/11

FLOOR MAT, MECHANICAL HAND CONTROL (ALL NH)
FLOOR MAT, MECHANICAL HAND CONTROL (ALL NH)
FLOOR MAT, MECHANICAL HAND CONTROL (ALL NH)
FLOOR MAT, MECHANICAL HAND CONTROL (ALL NH)

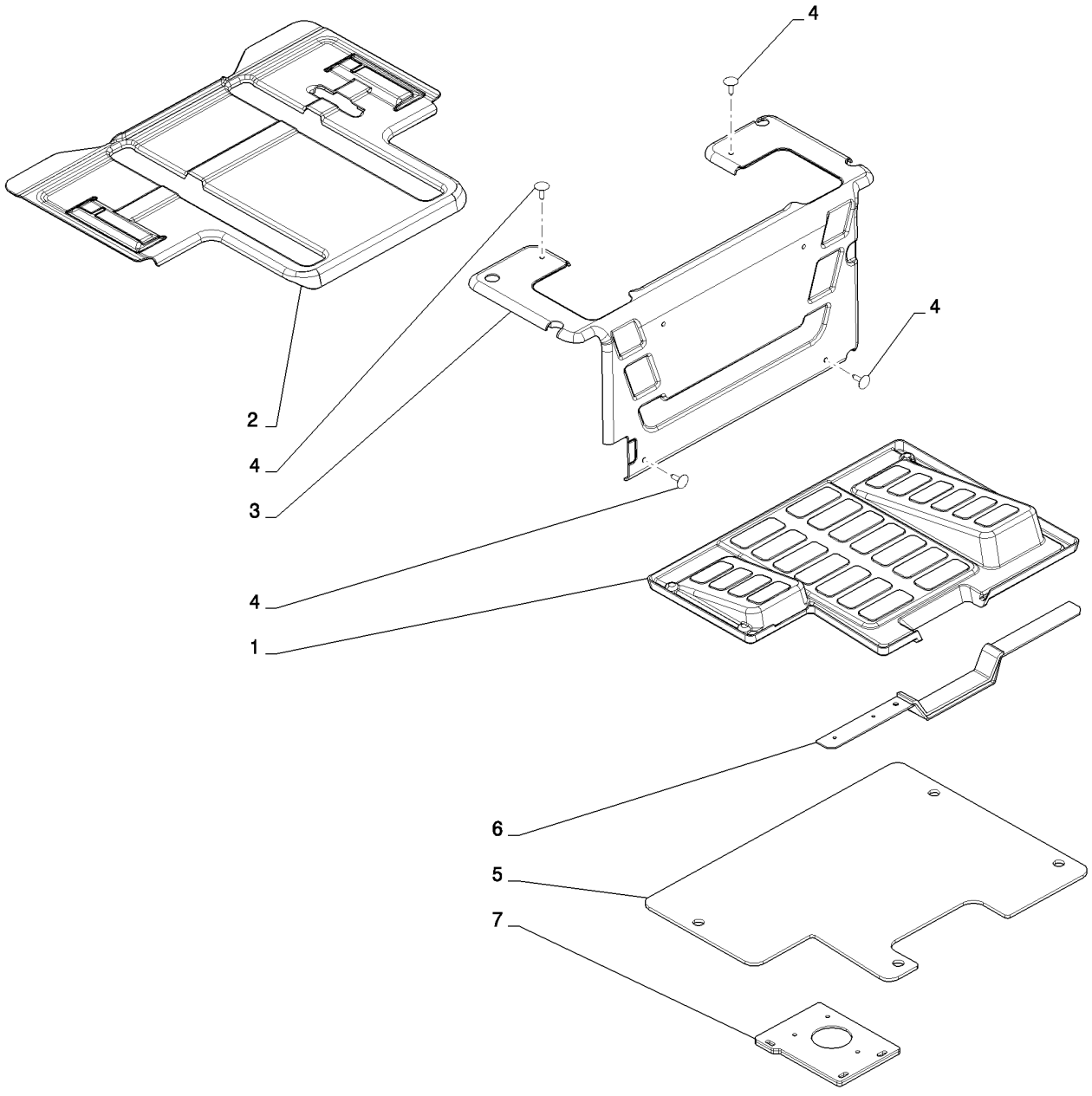

FLOOR MAT, MECHANICAL HAND CONTROL (ALL NH)
FLOOR MAT, MECHANICAL HAND CONTROL (ALL NH)
FLOOR MAT, MECHANICAL HAND CONTROL (ALL NH)
FLOOR MAT, MECHANICAL HAND CONTROL (ALL NH)

R	N	P.N.	MOD	Q	Denominação Description	Description Bezeichnung	Denominacion Beskrivelse	Descrizione Beschrijving	L.C.
1		84259690		1	TAPETE DO PISO, Trim	FLOOR MAT	ALFOMBRA	TAPPETINO	Z068
					TAPIS DE SOL	BODENMATTE	GULVMÅTTE	VLOERMAT	
2		84259693		1	TAPETE DO PISO, Seat Pan, Mechanical				
						FLOOR MAT	ALFOMBRA	TAPPETINO	Z068
					TAPIS DE SOL	BODENMATTE	GULVMÅTTE	VLOERMAT	
3		84397559		1	TAPETE, Heel Plate, Mechanical				
						MAT	ALFOMBRILLA	TAPPETINO	030T
					TAPIS	MATTE	MÅTTE	MAT	
4		86620930		6	BOTÃO DE IMPULSO, Push-In				
						FASTENER	SUJETADOR	DISPOSITIVO DI FISSAG	123B
					ATTACHE	BEFESTIGUNGSELEMEN	LUKKER	BEVESTIGING	
5		84372627		1	ESPUMA, No Pedal Floor Plate				
						FOAM	ESPUMA	SCHIUMA	P033
					MOUSSE	SCHAUM	SKUM	SCHUIM	
6		84372707		1	ESPUMA, Front Door Plate	FOAM	ESPUMA	SCHIUMA	P033
					MOUSSE	SCHAUM	SKUM	SCHUIM	
7		84372630		1	ESPUMA, Foot Throttle	FOAM	ESPUMA	SCHIUMA	P033
					MOUSSE	SCHAUM	SKUM	SCHUIM	

90.150.04		p1	02/11

FLOOR MAT, MECHANICAL FOOT CONTROLS (L213-L230)
FLOOR MAT, MECHANICAL FOOT CONTROLS (L213-L230)
FLOOR MAT, MECHANICAL FOOT CONTROLS (L213-L230)
FLOOR MAT, MECHANICAL FOOT CONTROLS (L213-L230)

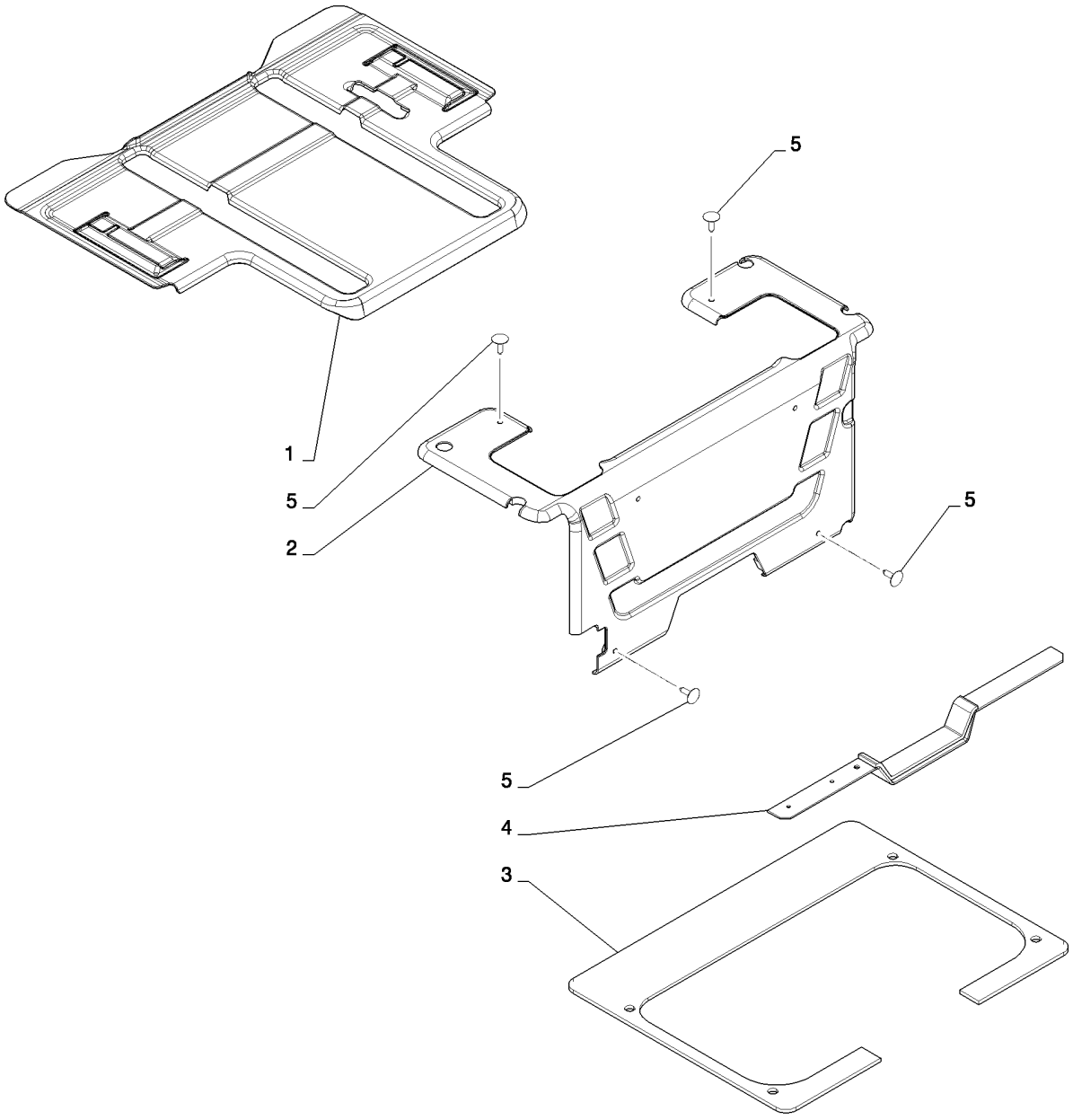

FLOOR MAT, MECHANICAL FOOT CONTROLS (L213-L230)
FLOOR MAT, MECHANICAL FOOT CONTROLS (L213-L230)
FLOOR MAT, MECHANICAL FOOT CONTROLS (L213-L230)
FLOOR MAT, MECHANICAL FOOT CONTROLS (L213-L230)

R	N	P.N.	MOD	Q	Denominação Description	Description Bezeichnung	Denominacion Beskrivelse	Descrizione Beschrijving	L.C.
1		84259693		1	TAPETE DO PISO, Seat Pan, Mechanical				
						FLOOR MAT	ALFOMBRA	TAPPETINO	Z068
					TAPIS DE SOL	BODENMATTE	GULVMÅTTE	VLOERMAT	
2		84397561		1	TAPETE, Heel Plate, Mechanical				
						MAT	ALFOMBRILLA	TAPPETINO	030T
					TAPIS	MATTE	MÅTTE	MAT	
3		84372626		1	ESPUMA, Pedal Floor Plate	FOAM	ESPUMA	SCHIUMA	P033
					MOUSSE	SCHAUM	SKUM	SCHUIM	
4		84372707		1	ESPUMA, Front Floor Plate	FOAM	ESPUMA	SCHIUMA	P033
					MOUSSE	SCHAUM	SKUM	SCHUIM	
5		86620930		6	BOTÃO DE IMPULSO, Push-In				
						FASTENER	SUJETADOR	DISPOSITIVO DI FISSAG	123B
					ATTACHE	BEFESTIGUNGSELEMEN	LUKKER	BEVESTIGING	

90.150.05		p1	02/11

FLOOR MAT, EH CONTROLS (L213-L230)
FLOOR MAT, EH CONTROLS (L213-L230)
FLOOR MAT, EH CONTROLS (L213-L230)
FLOOR MAT, EH CONTROLS (L213-L230)

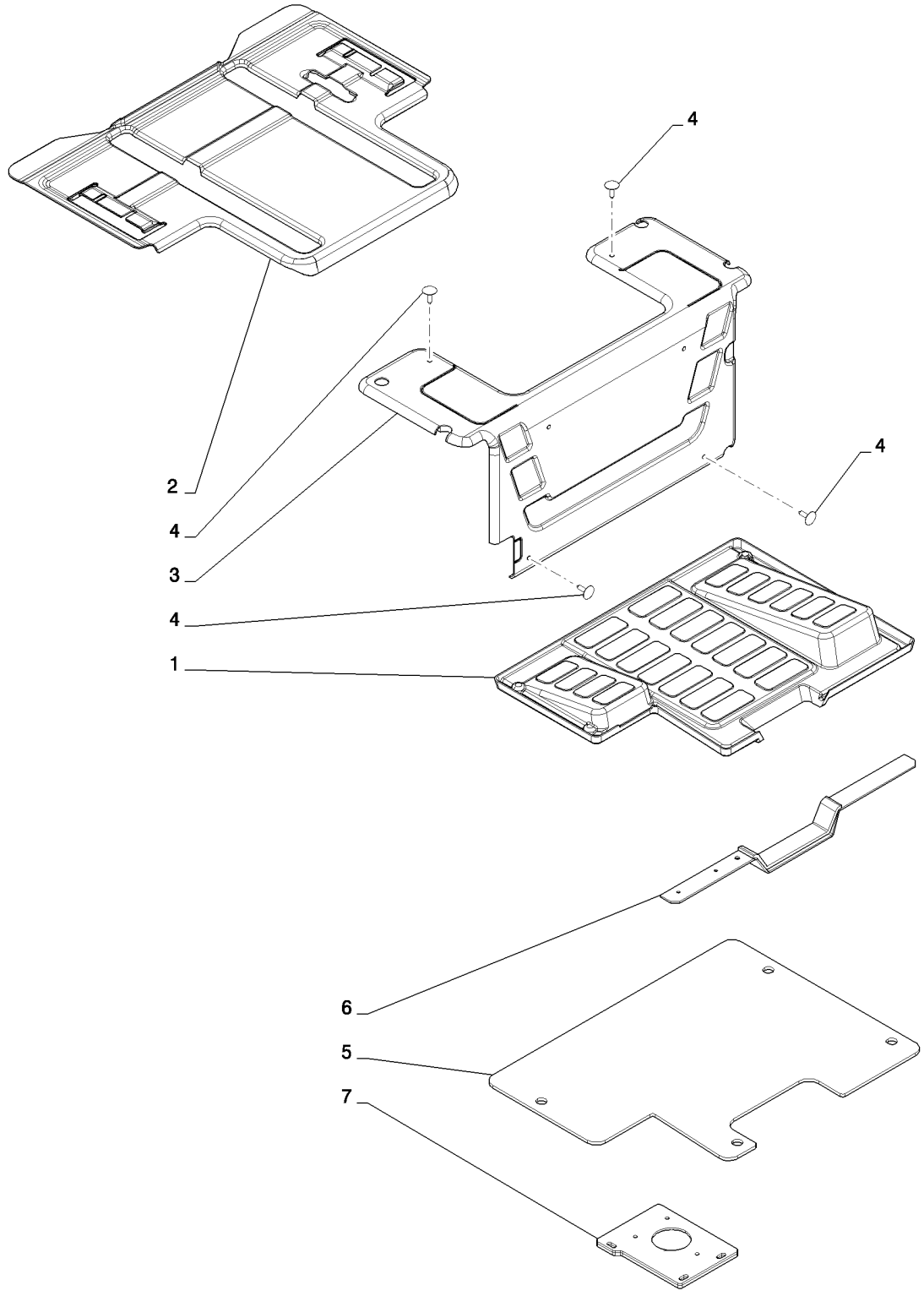

FLOOR MAT, EH CONTROLS (L213-L230)
FLOOR MAT, EH CONTROLS (L213-L230)
FLOOR MAT, EH CONTROLS (L213-L230)
FLOOR MAT, EH CONTROLS (L213-L230)

R	N	P.N.	MOD	Q	Denominação Description	Description Bezeichnung	Denominacion Beskrivelse	Descrizione Beschrijving	L.C.
1		84259690		1	TAPETE DO PISO, Trim TAPIS DE SOL	FLOOR MAT BODENMATTE	ALFOMBRA GULVMÅTTE	TAPPETINO VLOERMAT	Z068
2		84271712		1	TAPETE DO PISO, Seat Pan, EH TAPIS DE SOL	FLOOR MAT BODENMATTE	ALFOMBRA GULVMÅTTE	TAPPETINO VLOERMAT	Z068
3		84397556		1	TAPETE, Heel Plate, EH TAPIS	MAT MATTE	ALFOMBRILLA MÅTTE	TAPPETINO MAT	030T
4		86620930		6	BOTÃO DE IMPULSO, Push-In ATTACHE	FASTENER BEFESTIGUNGSELEMEN	SUJETADOR LUKKER	DISPOSITIVO DI FISSAG BEVESTIGING	123B
5		84372627		1	ESPUMA, No Pedal Floor Plate MOUSSE	FOAM SCHAUM	ESPUMA SKUM	SCHIUMA SCHUIM	P033
6		84372707		1	ESPUMA, Front Floor Plate MOUSSE	FOAM SCHAUM	ESPUMA SKUM	SCHIUMA SCHUIM	P033
7		84372630		1	ESPUMA, Foot Throttle MOUSSE	FOAM SCHAUM	ESPUMA SKUM	SCHIUMA SCHUIM	P033

90.154.00		p1	05/11

FRONT DOOR, GLASS (ALL NH)
FRONT DOOR, GLASS (ALL NH)
FRONT DOOR, GLASS (ALL NH)
FRONT DOOR, GLASS (ALL NH)

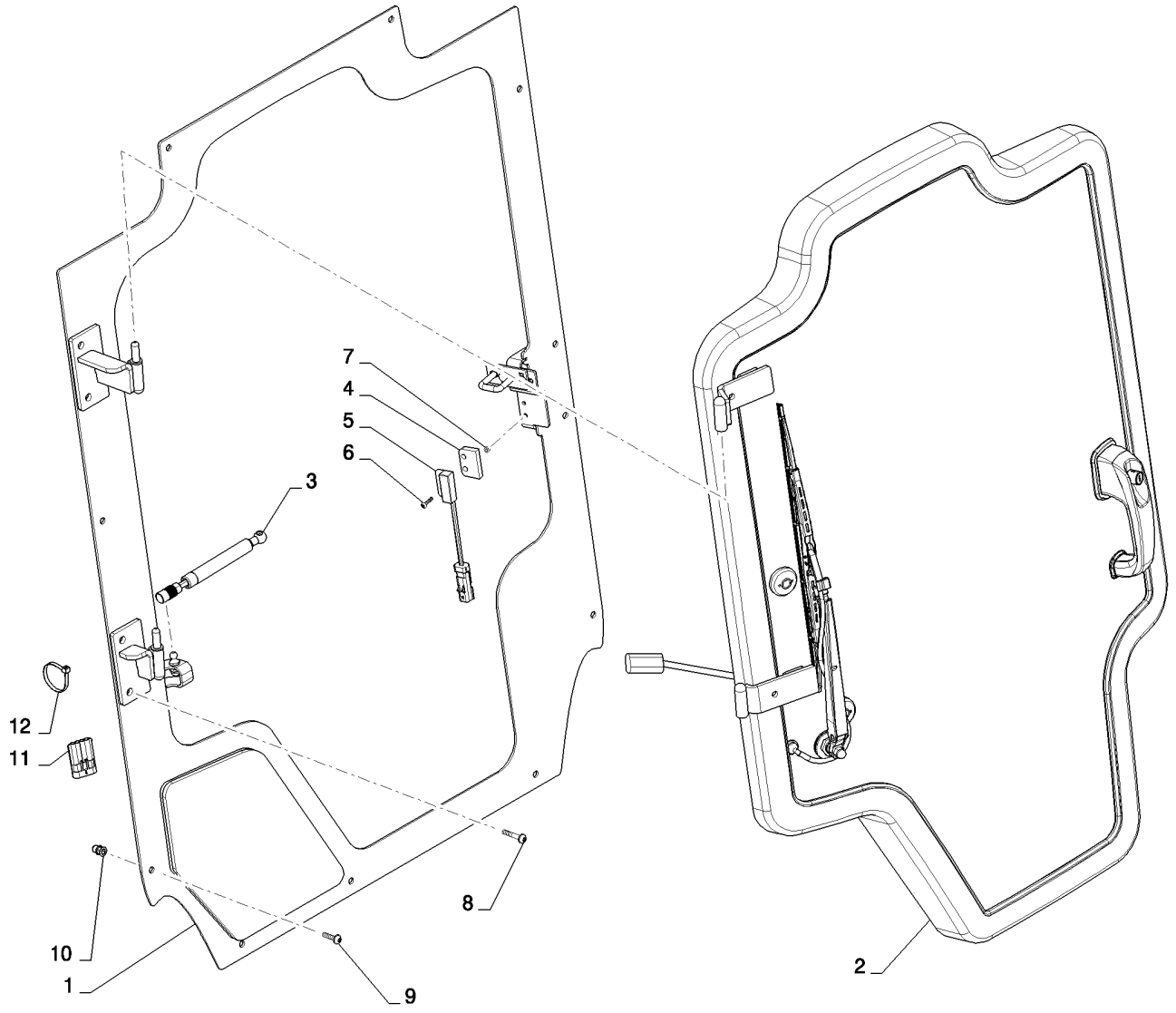

FRONT DOOR, GLASS (ALL NH)
FRONT DOOR, GLASS (ALL NH)
FRONT DOOR, GLASS (ALL NH)
FRONT DOOR, GLASS (ALL NH)

R	N	P.N.	MOD	Q	Denominação Description	Description Bezeichnung	Denominacion Beskrivelse	Descrizione Beschrijving	L.C.
1		84257150		1	PORTA, Door Assy, Jamb, Incl. 1A				
						DOOR	PUERTA	SPORTELLO	180P
					PORTE	TÜR	DØR	PORTIER	
2		84415694		1	PORTA, Assy, Front	DOOR	PUERTA	SPORTELLO	180P
					PORTE	TÜR	DØR	PORTIER	
1A		84259722		1	JANELA, Small, Lower Window				
						WINDOW	VENTANILLA	FINESTRINO	9810
					FENETRE	FENSTER	VINDUE	RUIT	
3		84378453		1	COMPASSO, Gas Spring	GAS STRUT	COLUMNA DE GAS	AMMORTIZZATORE A G/	Z331
					BEQUILLE A GAZ	GASDRUCKFEDER	CYLINDER, GASSTØDD/	GASVEER	
4		86624468		1	ESPAÇADOR, Switch	SPACER	SEPARADOR	DISTANZIALE	075D
					ENTRETOISE	DISTANZSTÜCK	AFSTANDSSTYKKE	AFSTANDSSTUK	
5		87392235		1	INTERRUPTOR INTERMITENTE, Reed, Non-Contact NO				
						SWITCH ASSY	CONJUNTO DE INTERRU	COMPLESSIVO INTERRU	067I
					ENSEMBLE COMMUTATI	SCHALTERBAUGRUPPE	KONTAKT, KPL.	SCHAKELAAREENHEID	
6		84183818		2	PARAFUSO	SCREW	TORNILLO	VITE	040V
					VIS	SCHRAUBE	SKRUE	SCHROEF	
7		100012		2	PORCA, M4, Cl 8	NUT	TUERCA	DADO	010D
					ECROU	MUTTER	MØTRIK	MOER	
8		84359102		4	PARAFUSO	SCREW	TORNILLO	VITE	040V
					VIS	SCHRAUBE	SKRUE	SCHROEF	
9		84305556		11	PARAFUSO	SCREW	TORNILLO	VITE	040V
					VIS	SCHRAUBE	SKRUE	SCHROEF	
10		84272827		15	REBITE	RIVET	REMACHE	RIVETTO	055R
					RIVET	NIET	NITTE	KLINKNAGEL	
11		84331404		1	CONECTOR DO FIO, Jumper				
						WIRE CONNECTOR	CONECTOR DE CABLE	CONNETTORE DEL FILO	250C
					CONNECTEUR DU FIL	KABELSTECKVERBINDE	SAMLEMUFFE	DRAADCONNECTOR	
12		L11541		1	PRENDEDOR DE CABOS	CABLE STRAP	BANDA DE CABLE	FASCETTA PER CAVO	P716
					BRIDE DE CABLE	KABELBINDER	KABELSTROP	BUNDELBAND	

90.154.01	01	p1	06/11

DOOR ASSY, FRONT (ALL NH)
DOOR ASSY, FRONT (ALL NH)
DOOR ASSY, FRONT (ALL NH)
DOOR ASSY, FRONT (ALL NH)

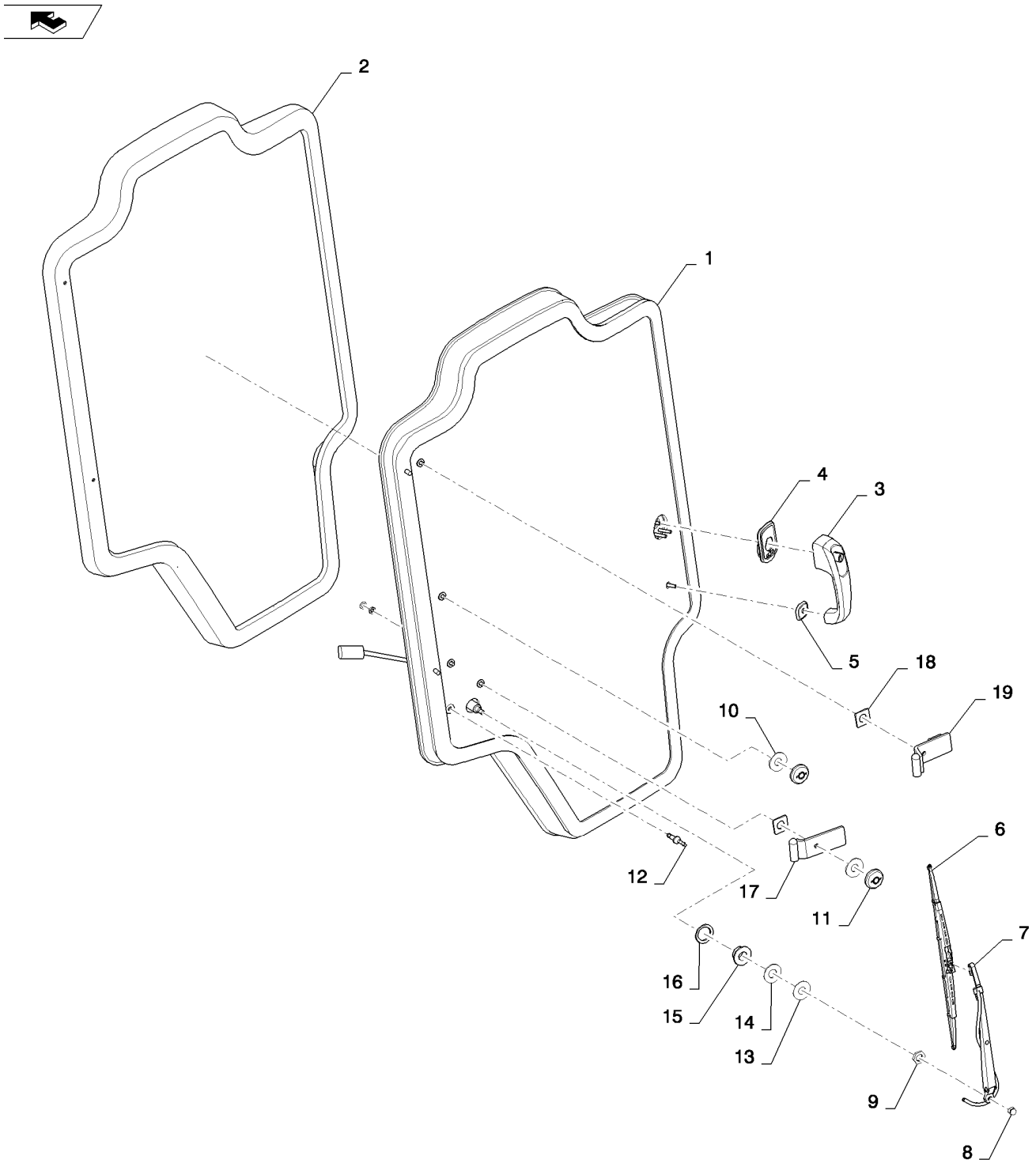

DOOR ASSY, FRONT (ALL NH)
DOOR ASSY, FRONT (ALL NH)
DOOR ASSY, FRONT (ALL NH)
DOOR ASSY, FRONT (ALL NH)

R	N	P.N.	MOD	Q	Denominação Description	Description Bezeichnung	Denominacion Beskrivelse	Descrizione Beschrijving	L.C.
1		84368761		1	VEDAÇÃO, Dust, Glass JOINT	SEAL DICHTUNG	ANILLO DE CIERRE PAKNING	GUARNIZIONE; TENUTA AFDICHTING	132A
2		84415734		1	PORTA, Assembly PORTE	DOOR TÜR	PUERTA DØR	SPORTELLO PORTIER	180P
3		84396681		1	MAÇANETA DA PORTA, Door POIGNEE DE PORTE	DOOR HANDLE TÜRGRIFF	EMPUÑADURA DE PUER DØRHÅNDTAG	MANIGLIA DELLA PORTA HANDGREEP VAN PORT	A051
4		84293060		1	VEDAÇÃO, Handle Upper JOINT	SEAL DICHTUNG	ANILLO DE CIERRE PAKNING	GUARNIZIONE; TENUTA AFDICHTING	132A
5		84293058		1	VEDAÇÃO, Handle Lower JOINT	SEAL DICHTUNG	ANILLO DE CIERRE PAKNING	GUARNIZIONE; TENUTA AFDICHTING	132A
6		84347625		1	PALHETA LIMPADOR LAME D'ESSUIE-GLACE	WIPER BLADE WISCHERBLATT	RASQUETA LIMPIAPARA VISKERBLAD	SPAZZOLA TERGICRIST. RUITENWISSERBLAD	175S
7		84347514		1	BRAÇO LIMPADOR, Arm BRAS D'ESSUIE-GLACE	WIPER ARM WISCHERARM	BRAZO LIMPIAPARABRIS VISKERARM	BRACCIO TERGICRISTA ARM VAN RUITENWISSE	134B
8		412326		2	PORCA, Dome Crown M8 ECROU	NUT MUTTER	TUERCA MØTRIK	DADO MOER	010D
9		87607505		1	PORCA, Wiper ECROU	NUT MUTTER	TUERCA MØTRIK	DADO MOER	010D
10		84415813		2	VEDAÇÃO, Washer JOINT	SEAL DICHTUNG	ANILLO DE CIERRE PAKNING	GUARNIZIONE; TENUTA AFDICHTING	132A
11		86531235		2	BUCHA, Hinge BAGUE	BUSHING BUCHSE	CASQUILLO BØSNING	BOCCOLA BUS	095B
12		84369351		1	COTOVELO 90, Assembly COUDE A 90°	90 ELBOW 90-GRAD-KNIESTÜCK	CODO 90 VINKELRØR, 90	GOMITO A 90° KNIESTUK 90º	A045
13		84346315		1	ARRUELA PLANA, Plastic RONDELLE	WASHER UNTERLEGSCHEIBE	ARANDELA FLADSKIVE	RONDELLA SLUITRING	131R
14		84346316		1	VEDAÇÃO DE BORRACHA, Wiper Motor JOINT EN CAOUTCHOU	RUBBER SEAL GUMMIDICHTUNG	JUNTA DE GOMA GUMMITÆTNING	GUARNIZIONE DI GOMM RUBBEREN AFDICHTINC	122G
15		84346317		1	ESPAÇADOR, Wiper Motor ENTRETOISE	SPACER DISTANZSTÜCK	SEPARADOR AFSTANDSSTYKKE	DISTANZIALE AFSTANDSSTUK	075D
16		84485661		1	VEDAÇÃO, Wiper Motor Foam JOINT	SEAL DICHTUNG	ANILLO DE CIERRE PAKNING	GUARNIZIONE; TENUTA AFDICHTING	132A
17		84298540		1	SEMI-DOBRADIÇA, Bottom Door, Black DEMI-CHARNIERE	HALF-HINGE SCHARNIERHÄLFTE	SEMIBISAGRA HÆNGSELHALVDEL	SEMICERNIERA SCHARNIERHELFT	413S
18		84257222		2	VEDAÇÃO DE BORRACHA, Hinge JOINT EN CAOUTCHOU	RUBBER SEAL GUMMIDICHTUNG	JUNTA DE GOMA GUMMITÆTNING	GUARNIZIONE DI GOMM RUBBEREN AFDICHTINC	122G
19		84298543		1	SEMI-DOBRADIÇA, Top Door, Black DEMI-CHARNIERE	HALF-HINGE SCHARNIERHÄLFTE	SEMIBISAGRA HÆNGSELHALVDEL	SEMICERNIERA SCHARNIERHELFT	413S

90.154.01	02	p1	06/11

DOOR ASSY, FRONT (ALL NH)
DOOR ASSY, FRONT (ALL NH)
DOOR ASSY, FRONT (ALL NH)
DOOR ASSY, FRONT (ALL NH)

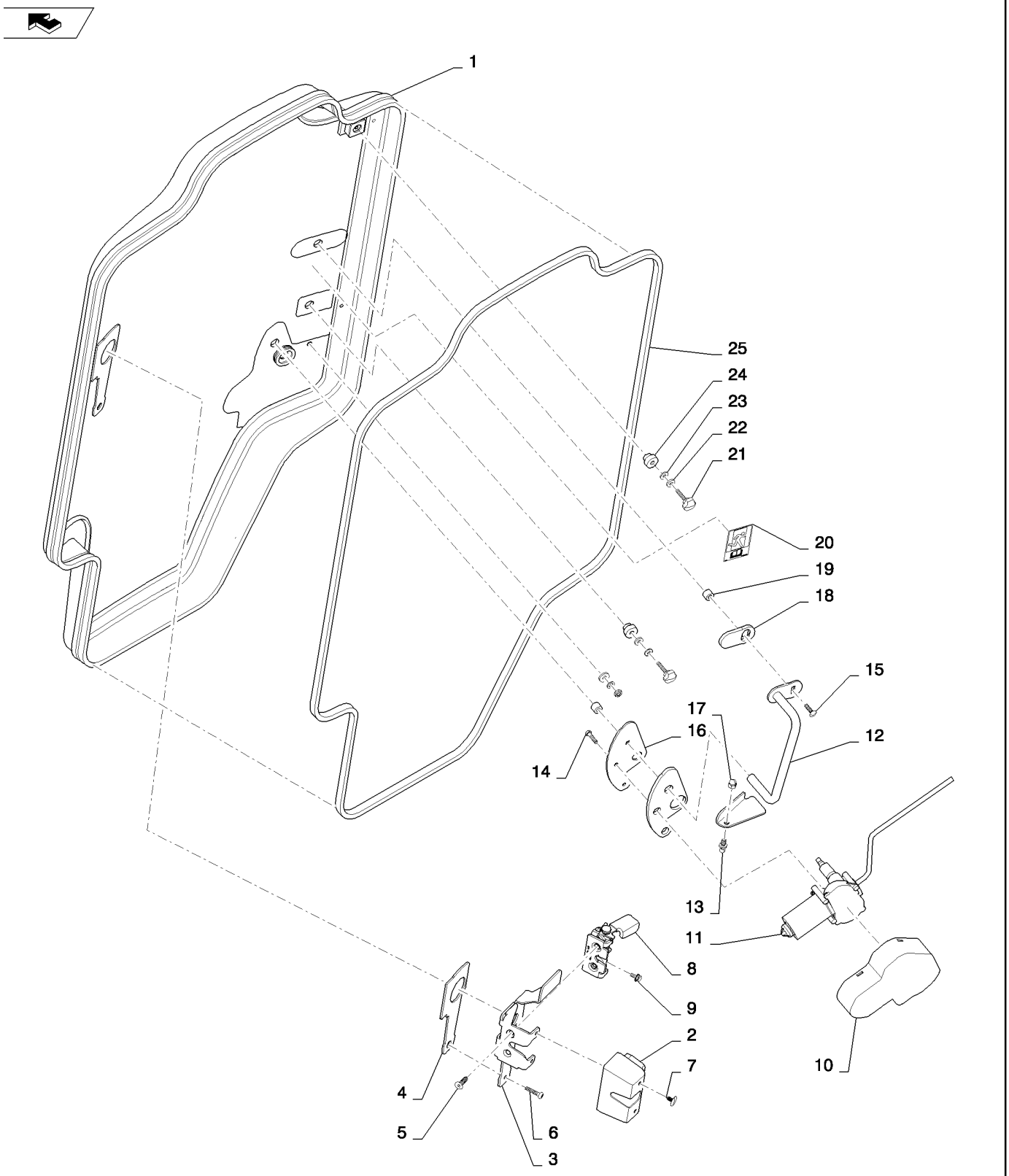

DOOR ASSY, FRONT (ALL NH)
DOOR ASSY, FRONT (ALL NH)
DOOR ASSY, FRONT (ALL NH)
DOOR ASSY, FRONT (ALL NH)

R	N	P.N.	MOD	Q	Denominação Description	Description Bezeichnung	Denominacion Beskrivelse	Descrizione Beschrijving	L.C.
1		84415734		1	PORTA, Assy, Door, Glass	DOOR	PUERTA	SPORTELLO	180P
					PORTE	TÜR	DØR	PORTIER	
2		84345556		1	COBERTURA, Latch	COVER	CUBIERTA	COPERCHIO	265C
					COUVERCLE	ABDECKUNG	DÆKSEL	AFSCHERMING	
3		84345554		1	SUPORTE, Latch	BRACKET	SOPORTE	STAFFA	225S
					SUPPORT	HALTERUNG	BESLAG	STEUN	
4		84293054		1	VEDAÇÃO, Door Latch	SEAL	ANILLO DE CIERRE	GUARNIZIONE; TENUTA	132A
					JOINT	DICHTUNG	PAKNING	AFDICHTING	
5		14442131		2	PARAFUSO, Hex Soc Flat Hd, M8 x 25, 10.9, M8 X 25				
						SCREW	TORNILLO	VITE	040V
					VIS	SCHRAUBE	SKRUE	SCHROEF	
6		84129691		3	PARAFUSO, M6 X 30	SCREW	TORNILLO	VITE	040V
					VIS	SCHRAUBE	SKRUE	SCHROEF	
7		87712706		2	BOTÃO DE IMPULSO, Push-in Fastener				
						FASTENER	SUJETADOR	DISPOSITIVO DI FISSAG	123B
					ATTACHE	BEFESTIGUNGSELEMEN	LUKKER	BEVESTIGING	
8		84293079		1	TRINCO, Door	LATCH	PESTILLO	CHIUSURA A SCATTO	156C
					LOQUET	VERRIEGELUNG	PAL	GRENDEL	
9		86050272		1	PARAFUSO, Hex Flg, M6 x 12, 8.8				
						BOLT	PERNO	BULLONE	140B
					VIS	SCHRAUBE	BOLT	BOUT	
10		84300094		1	MOTOR DO LIMPADOR, Cover				
						WIPER MOTOR	MOTOR DE LIMPIAPARA	MOTORINO TERGICRIST	093T
					MOTEUR D'ESSUIE-GLA	WISCHERMOTOR	VISKERMOTOR	RUITENWISSERMOTOR	
11		84345627		1	MOTOR DO LIMPADOR, Motor				
						WIPER MOTOR	MOTOR DE LIMPIAPARA	MOTORINO TERGICRIST	093T
					MOTEUR D'ESSUIE-GLA	WISCHERMOTOR	VISKERMOTOR	RUITENWISSERMOTOR	
12		84347705		1	MAÇANETA DA PORTA, Black				
						DOOR HANDLE	EMPUÑADURA DE PUER	MANIGLIA DELLA PORTA	A051
					POIGNEE DE PORTE	TÜRGRIFF	DØRHÅNDTAG	HANDGREEP VAN PORT	
13		87581669		1	PRISIONEIRO, Ball	STUD	PRISIONERO	PRIGIONIERO	210P
					GOUJON	GEWINDEBOLZEN	STØTTEBOLT	TAPEIND	
14		86977786		2	PARAFUSO, Hex, M6 x 25, 8.8, Full Thd				
						BOLT	PERNO	BULLONE	140B
					VIS	SCHRAUBE	BOLT	BOUT	
15		374891		2	PARAFUSO, Short NK, M6 x 25, Cl8.8, Full Thd				
						CARRIAGE BOLT	PERNO ALOMADO	BULLONE A TESTA TON	P123
					VIS A TETE BOMBEE	SCHLOSSSCHRAUBE	BRÆDDEBOLT	SLOTBOUT	
16		84293056		1	VEDAÇÃO, Wiper Motor	SEAL	ANILLO DE CIERRE	GUARNIZIONE; TENUTA	132A
					JOINT	DICHTUNG	PAKNING	AFDICHTING	
17		412326		2	PORCA, Dome Crown, M8	NUT	TUERCA	DADO	010D
					ECROU	MUTTER	MØTRIK	MOER	
18		84344562		1	VEDAÇÃO DE BORRACHA, Grab Handle				
						RUBBER SEAL	JUNTA DE GOMA	GUARNIZIONE DI GOMM	122G
					JOINT EN CAOUTCHOU	GUMMIDICHTUNG	GUMMITÆTNING	RUBBEREN AFDICHTINC	
19		84298763		2	ESPAÇADOR	SPACER	SEPARADOR	DISTANZIALE	075D
					ENTRETOISE	DISTANZSTÜCK	AFSTANDSSTYKKE	AFSTANDSSTUK	
20		84367244		1	ADESIVO, Emergency Exit	DECAL	CALCOMANÍA	DECALCOMANIA	012D
					AUTOCOLLANT	AUFKLEBER	TRANSFER	STICKER	

90.154.01	02	p2	06/11

DOOR ASSY, FRONT (ALL NH)
DOOR ASSY, FRONT (ALL NH)
DOOR ASSY, FRONT (ALL NH)
DOOR ASSY, FRONT (ALL NH)

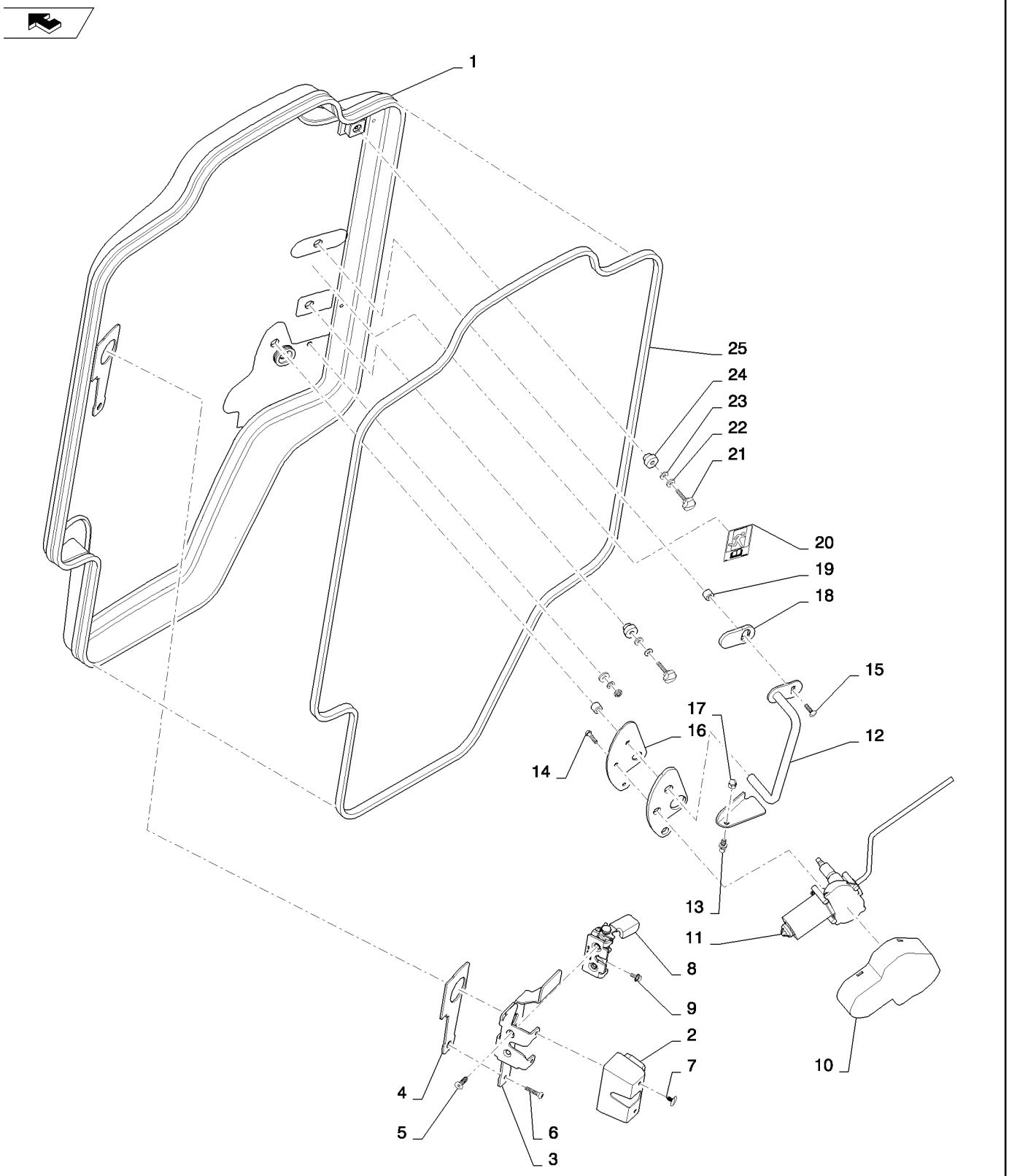

DOOR ASSY, FRONT (ALL NH)
DOOR ASSY, FRONT (ALL NH)
DOOR ASSY, FRONT (ALL NH)
DOOR ASSY, FRONT (ALL NH)

R	N	P.N.	MOD	Q	Denominação Description	Description Bezeichnung	Denominacion Beskrivelse	Descrizione Beschrijving	L.C.
21		44911647		2	MAÇANETA, M6	KNOB	MANDO	MANOPOLA	150P
					BOUTON	RUNDGRIFF	GREB	KNOP	
22		12647621		2	ARRUELA PLANA, M6 x 16 x 2				
						WASHER	ARANDELA	RONDELLA	131R
					RONDELLE	UNTERLEGSCHEIBE	FLADSKIVE	SLUITRING	
23		84385500		2	ARRUELA DE BORRACHA, 16 X 6.5 X 3				
						RUBBER WASHER	ARANDELA DE GOMA	RONDELLA IN GOMMA	Z363
					RONDELLE EN CAOUTC	GUMMIUNTERLEGSCHE	GUMMISKIVE	RUBBEREN SLUITRING	
24		84257223		2	ESPAÇADOR	SPACER	SEPARADOR	DISTANZIALE	075D
					ENTRETOISE	DISTANZSTÜCK	AFSTANDSSTYKKE	AFSTANDSSTUK	
25		84391276		1	VEDAÇÃO DE PORTA, Bulb				
						DOOR SEAL	JUNTA DE PUERTA	GUARNIZIONE SPORTEL	Z529
					JOINT DE PORTE	TÜRDICHTUNG	DØRTÆTNING	PORTIERAFDICHTING	
25		84344565		1	VIDRO, Door	GLASS	VIDRIO	CRISTALLO	038V
					VITRE	GLAS	GLAS	GLAS	

90.154.01	03	p1	04/11

NO FRONT DOOR (ALL NH)
NO FRONT DOOR (ALL NH)
NO FRONT DOOR (ALL NH)
NO FRONT DOOR (ALL NH)

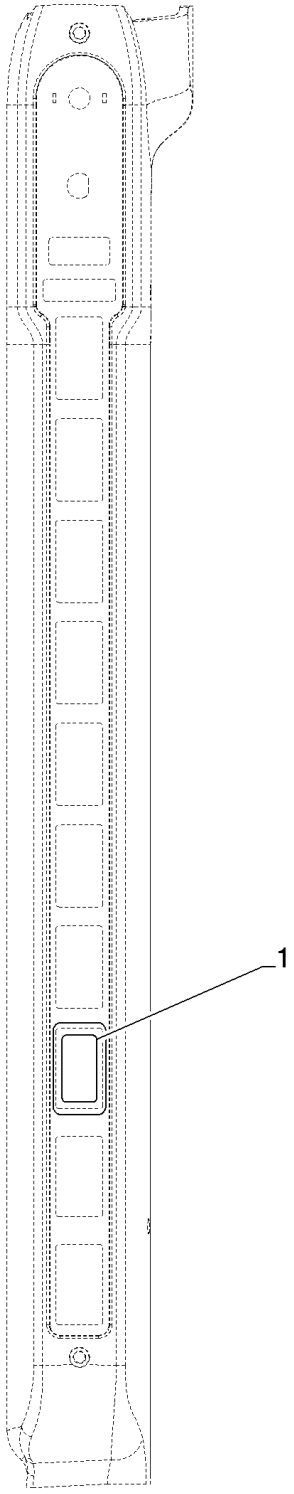

NO FRONT DOOR (ALL NH)
NO FRONT DOOR (ALL NH)
NO FRONT DOOR (ALL NH)
NO FRONT DOOR (ALL NH)

R	N	P.N.	MOD	Q	Denominação Description	Description Bezeichnung	Denominacion Beskrivelse	Descrizione Beschrijving	L.C.
1		126844A1		1	BUJÃO, Switch Hole Cover BOUCHON	PLUG STOPFEN	TAPÓN PROP	TAPPO PLUG	050T
2		84472461		1	COBERTURA, Rear Cover, NA, Gray, Not Shown COUVERTURE	COVER ABDECKUNG	COBERTURA AFDAEKNING	COPERTURA AFSCHERMING	271C

90.154.01	04	p1	06/11

DOOR ASSY, FRONT DEMO (ALL NH)
DOOR ASSY, FRONT DEMO (ALL NH)
DOOR ASSY, FRONT DEMO (ALL NH)
DOOR ASSY, FRONT DEMO (ALL NH)

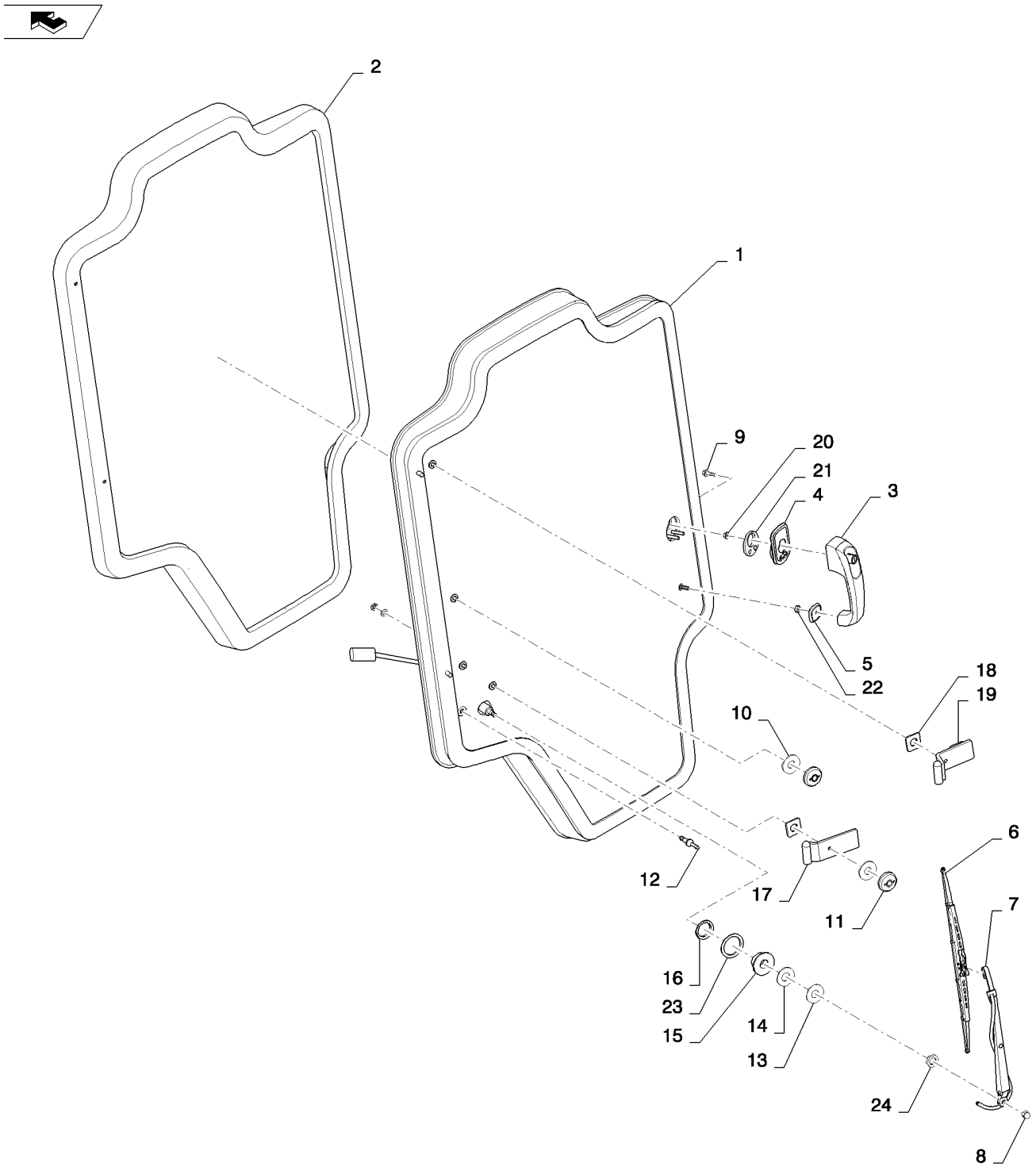

DOOR ASSY, FRONT DEMO (ALL NH)
DOOR ASSY, FRONT DEMO (ALL NH)
DOOR ASSY, FRONT DEMO (ALL NH)
DOOR ASSY, FRONT DEMO (ALL NH)

R	N	P.N.	MOD	Q	Denominação Description	Description Bezeichnung	Denominacion Beskrivelse	Descrizione Beschrijving	L.C.
1		84415734		1	PORTA, Assy, Door, Glass	DOOR	PUERTA	SPORTELLO	180P
					PORTE	TÜR	DØR	PORTIER	
2		84368761		1	VEDAÇÃO, Dust	SEAL	ANILLO DE CIERRE	GUARNIZIONE; TENUTA	132A
					JOINT	DICHTUNG	PAKNING	AFDICHTING	
3		84396681		1	MAÇANETA DA PORTA	DOOR HANDLE	EMPUÑADURA DE PUER	MANIGLIA DELLA PORTA	A051
					POIGNEE DE PORTE	TÜRGRIFF	DØRHÅNDTAG	HANDGREEP VAN PORT	
4		84293060		1	VEDAÇÃO, Handle Upper	SEAL	ANILLO DE CIERRE	GUARNIZIONE; TENUTA	132A
					JOINT	DICHTUNG	PAKNING	AFDICHTING	
5		84293058		1	VEDAÇÃO, Handle Lower	SEAL	ANILLO DE CIERRE	GUARNIZIONE; TENUTA	132A
					JOINT	DICHTUNG	PAKNING	AFDICHTING	
6		84347625		1	PALHETA LIMPADOR	WIPER BLADE	RASQUETA LIMPIAPARA	SPAZZOLA TERGICRIST.	175S
					LAME D'ESSUIE-GLACE	WISCHERBLATT	VISKERBLAD	RUITENWISSERBLAD	
7		84347514		1	BRAÇO LIMPADOR	WIPER ARM	BRAZO LIMPIAPARABRIS	BRACCIO TERGICRISTA	134B
					BRAS D'ESSUIE-GLACE	WISCHERARM	VISKERARM	ARM VAN RUITENWISSE	
8		412326		1	PORCA, Dome Crown M8	NUT	TUERCA	DADO	010D
					ECROU	MUTTER	MØTRIK	MOER	
9		86050272		1	PARAFUSO, Hex Flg, M6 x 12, 8.8				
						BOLT	PERNO	BULLONE	140B
					VIS	SCHRAUBE	BOLT	BOUT	
10		84415813		2	VEDAÇÃO, Washer, Seal	SEAL	ANILLO DE CIERRE	GUARNIZIONE; TENUTA	132A
					JOINT	DICHTUNG	PAKNING	AFDICHTING	
11		86531235		2	BUCHA	BUSHING	CASQUILLO	BOCCOLA	095B
					BAGUE	BUCHSE	BØSNING	BUS	
12		84369351		1	COTOVELO 90, Assembly	90 ELBOW	CODO 90	GOMITO A 90°	A045
					COUDE A 90°	90-GRAD-KNIESTÜCK	VINKELRØR, 90	KNIESTUK 90º	
13		84346315		1	ARRUELA PLANA, Plastic	WASHER	ARANDELA	RONDELLA	131R
					RONDELLE	UNTERLEGSCHEIBE	FLADSKIVE	SLUITRING	
14		84346316		1	VEDAÇÃO DE BORRACHA, Wiper Motor				
						RUBBER SEAL	JUNTA DE GOMA	GUARNIZIONE DI GOMM	122G
					JOINT EN CAOUTCHOU(	GUMMIDICHTUNG	GUMMITÆTNING	RUBBEREN AFDICHTINC	
15		84359052		1	ESPAÇADOR, Wiper Motor	SPACER	SEPARADOR	DISTANZIALE	075D
					ENTRETOISE	DISTANZSTÜCK	AFSTANDSSTYKKE	AFSTANDSSTUK	
16		84485661		1	VEDAÇÃO, Wiper Motor Foam				
						SEAL	ANILLO DE CIERRE	GUARNIZIONE; TENUTA	132A
					JOINT	DICHTUNG	PAKNING	AFDICHTING	
17		84298540		1	SEMI-DOBRADIÇA, Door Bottom				
						HALF-HINGE	SEMIBISAGRA	SEMICERNIERA	413S
					DEMI-CHARNIERE	SCHARNIERHÄLFTE	HÆNGSELHALVDEL	SCHARNIERHELFT	
18		84257222		2	VEDAÇÃO DE BORRACHA, Half Hinge				
						RUBBER SEAL	JUNTA DE GOMA	GUARNIZIONE DI GOMM	122G
					JOINT EN CAOUTCHOU(	GUMMIDICHTUNG	GUMMITÆTNING	RUBBEREN AFDICHTINC	
19		84298543		1	SEMI-DOBRADIÇA, Door Top				
						HALF-HINGE	SEMIBISAGRA	SEMICERNIERA	413S
					DEMI-CHARNIERE	SCHARNIERHÄLFTE	HÆNGSELHALVDEL	SCHARNIERHELFT	
20		9804276		1	PORCA, M6 x 1, Flg, Cl 8	NUT	TUERCA	DADO	010D
					ECROU	MUTTER	MØTRIK	MOER	
21		{84485291}		1	Upper Handle				

90.154.01	04	p2	06/11

DOOR ASSY, FRONT DEMO (ALL NH)
DOOR ASSY, FRONT DEMO (ALL NH)
DOOR ASSY, FRONT DEMO (ALL NH)
DOOR ASSY, FRONT DEMO (ALL NH)

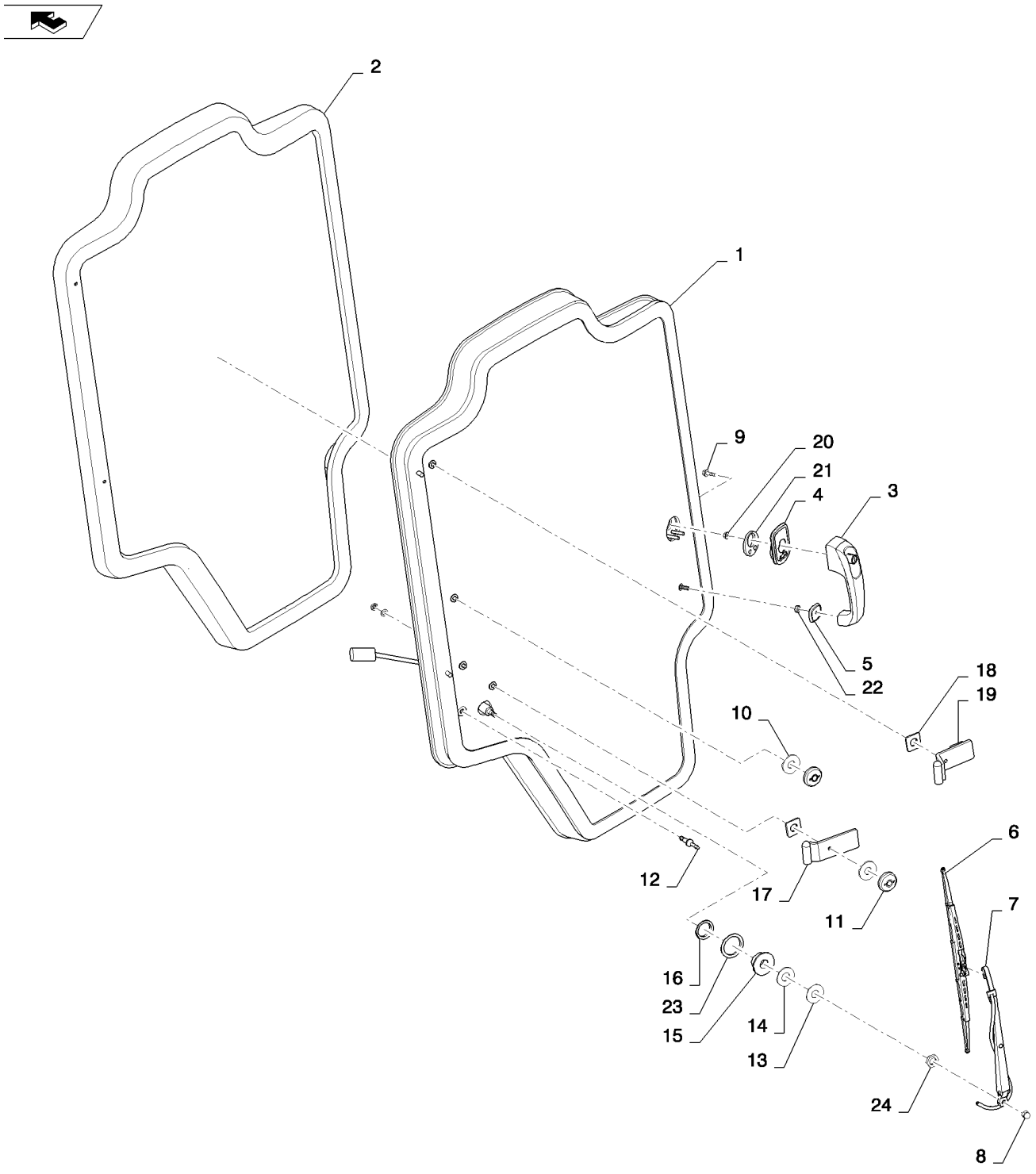

DOOR ASSY, FRONT DEMO (ALL NH)
DOOR ASSY, FRONT DEMO (ALL NH)
DOOR ASSY, FRONT DEMO (ALL NH)
DOOR ASSY, FRONT DEMO (ALL NH)

R	N	P.N.	MOD	Q	Denominação Description	Description Bezeichnung	Denominacion Beskrivelse	Descrizione Beschrijving	L.C.
22		{84485292}		1	Lower Handle				
23		{84485295}		1	Wiper Motor Foam				
24		87607505		1	PORCA, Wiper Arm ECROU	NUT MUTTER	TUERCA MØTRIK	DADO MOER	010D

90.154.01	05	p1	06/11

DOOR ASSY, FRONT DEMO (ALL NH)
DOOR ASSY, FRONT DEMO (ALL NH)
DOOR ASSY, FRONT DEMO (ALL NH)
DOOR ASSY, FRONT DEMO (ALL NH)

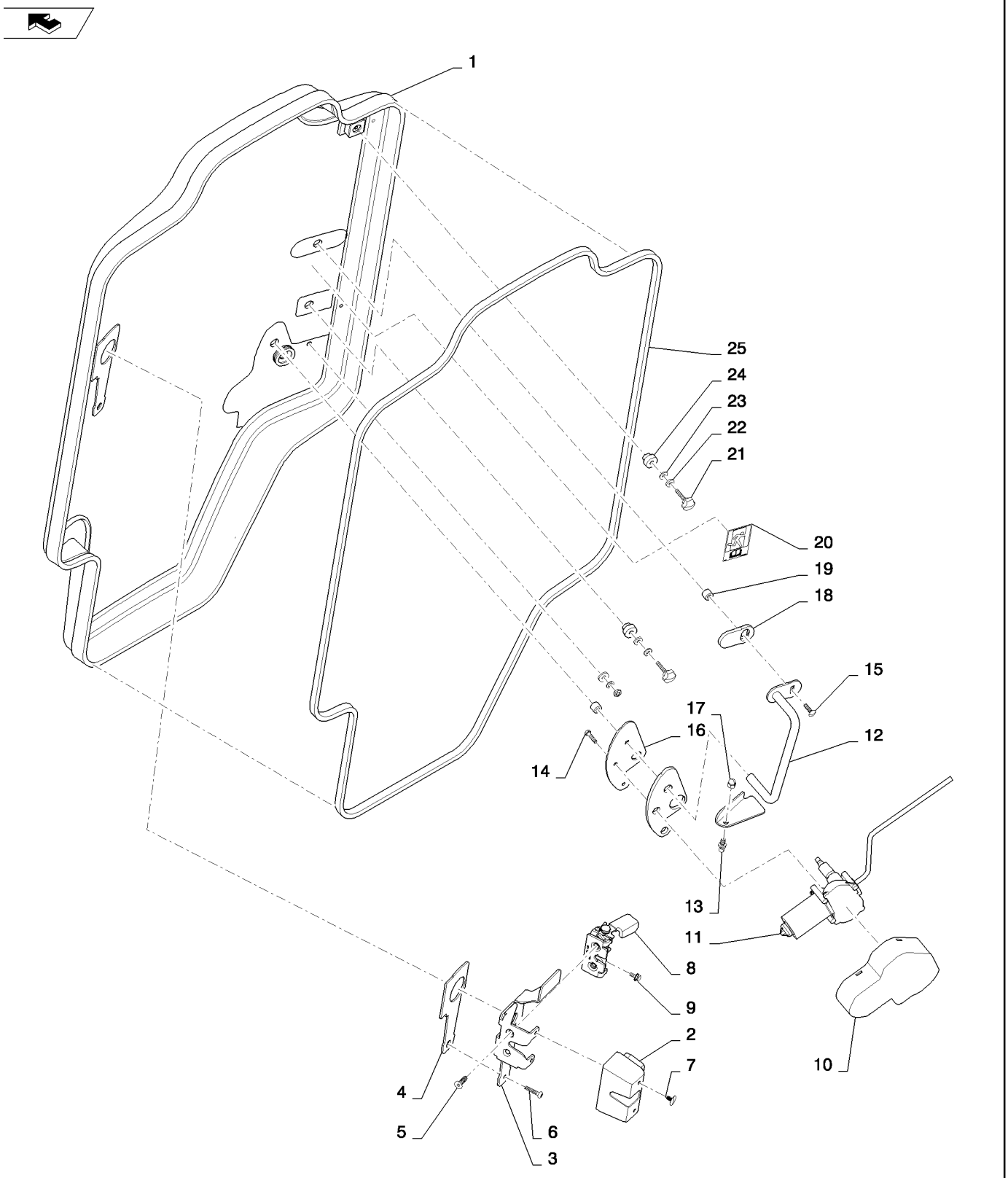

DOOR ASSY, FRONT DEMO (ALL NH)
DOOR ASSY, FRONT DEMO (ALL NH)
DOOR ASSY, FRONT DEMO (ALL NH)
DOOR ASSY, FRONT DEMO (ALL NH)

R	N	P.N.	MOD	Q	Denominação Description	Description Bezeichnung	Denominacion Beskrivelse	Descrizione Beschrijving	L.C.
1		84415734		1	PORTA, Assy, Door, Glass	DOOR	PUERTA	SPORTELLO	180P
					PORTE	TÜR	DØR	PORTIER	
2		84345556		1	COBERTURA, Latch	COVER	CUBIERTA	COPERCHIO	265C
					COUVERCLE	ABDECKUNG	DÆKSEL	AFSCHERMING	
3		84345554		1	SUPORTE, Door Latch	BRACKET	SOPORTE	STAFFA	225S
					SUPPORT	HALTERUNG	BESLAG	STEUN	
4		84293054		1	VEDAÇÃO, Door Latch	SEAL	ANILLO DE CIERRE	GUARNIZIONE; TENUTA	132A
					JOINT	DICHTUNG	PAKNING	AFDICHTING	
5		14442131		2	PARAFUSO, Hex Soc Flat Hd, M8 x 25, 10.9, Hex Soc FLH M8x25				
						SCREW	TORNILLO	VITE	040V
					VIS	SCHRAUBE	SKRUE	SCHROEF	
6		84129691		3	PARAFUSO, Pan Hd Torx M6x30				
						SCREW	TORNILLO	VITE	040V
					VIS	SCHRAUBE	SKRUE	SCHROEF	
7		87712706		2	BOTÃO DE IMPULSO, Push-in				
						FASTENER	SUJETADOR	DISPOSITIVO DI FISSAG	123B
					ATTACHE	BEFESTIGUNGSELEMEN	LUKKER	BEVESTIGING	
8		84293079		1	TRINCO, Door	LATCH	PESTILLO	CHIUSURA A SCATTO	156C
					LOQUET	VERRIEGELUNG	PAL	GRENDEL	
9		87607505		1	PORCA, Wiper	NUT	TUERCA	DADO	010D
					ECROU	MUTTER	MØTRIK	MOER	
10		84300094		1	MOTOR DO LIMPADOR, Cover				
						WIPER MOTOR	MOTOR DE LIMPIAPARA	MOTORINO TERGICRIST	093T
					MOTEUR D'ESSUIE-GLA	WISCHERMOTOR	VISKERMOTOR	RUITENWISSERMOTOR	
11		84345627		1	MOTOR DO LIMPADOR	WIPER MOTOR	MOTOR DE LIMPIAPARA	MOTORINO TERGICRIST	093T
					MOTEUR D'ESSUIE-GLA	WISCHERMOTOR	VISKERMOTOR	RUITENWISSERMOTOR	
12		84347705		1	MAÇANETA DA PORTA	DOOR HANDLE	EMPUÑADURA DE PUER	MANIGLIA DELLA PORTA	A051
					POIGNEE DE PORTE	TÜRGRIFF	DØRHÅNDTAG	HANDGREEP VAN PORT	
13		87581669		1	PRISIONEIRO, Ball	STUD	PRISIONERO	PRIGIONIERO	210P
					GOUJON	GEWINDEBOLZEN	STØTTEBOLT	TAPEIND	
14		86977786		2	PARAFUSO, Hex, M6 x 25, 8.8, Full Thd				
						BOLT	PERNO	BULLONE	140B
					VIS	SCHRAUBE	BOLT	BOUT	
15		374891		2	PARAFUSO, Short NK, M6 x 25, Cl8.8, Full Thd				
						CARRIAGE BOLT	PERNO ALOMADO	BULLONE A TESTA TON	P123
					VIS A TETE BOMBEE	SCHLOSSSCHRAUBE	BRÆDDEBOLT	SLOTBOUT	
16		84293056		1	VEDAÇÃO, Wiper Motor	SEAL	ANILLO DE CIERRE	GUARNIZIONE; TENUTA	132A
					JOINT	DICHTUNG	PAKNING	AFDICHTING	
17		412326		1	PORCA, Dome Crown M8	NUT	TUERCA	DADO	010D
					ECROU	MUTTER	MØTRIK	MOER	
18		84344562		1	VEDAÇÃO DE BORRACHA, Grab Handle				
						RUBBER SEAL	JUNTA DE GOMA	GUARNIZIONE DI GOMM	122G
					JOINT EN CAOUTCHOU	GUMMIDICHTUNG	GUMMITÆTNING	RUBBEREN AFDICHTING	
19		84298763		2	ESPAÇADOR	SPACER	SEPARADOR	DISTANZIALE	075D
					ENTRETOISE	DISTANZSTÜCK	AFSTANDSSTYKKE	AFSTANDSSTUK	
20		84367244		1	ADESIVO, Emergency Exit	DECAL	CALCOMANÍA	DECALCOMANIA	012D
					AUTOCOLLANT	AUFKLEBER	TRANSFER	STICKER	

90.154.01	05	p2	06/11

DOOR ASSY, FRONT DEMO (ALL NH)
DOOR ASSY, FRONT DEMO (ALL NH)
DOOR ASSY, FRONT DEMO (ALL NH)
DOOR ASSY, FRONT DEMO (ALL NH)

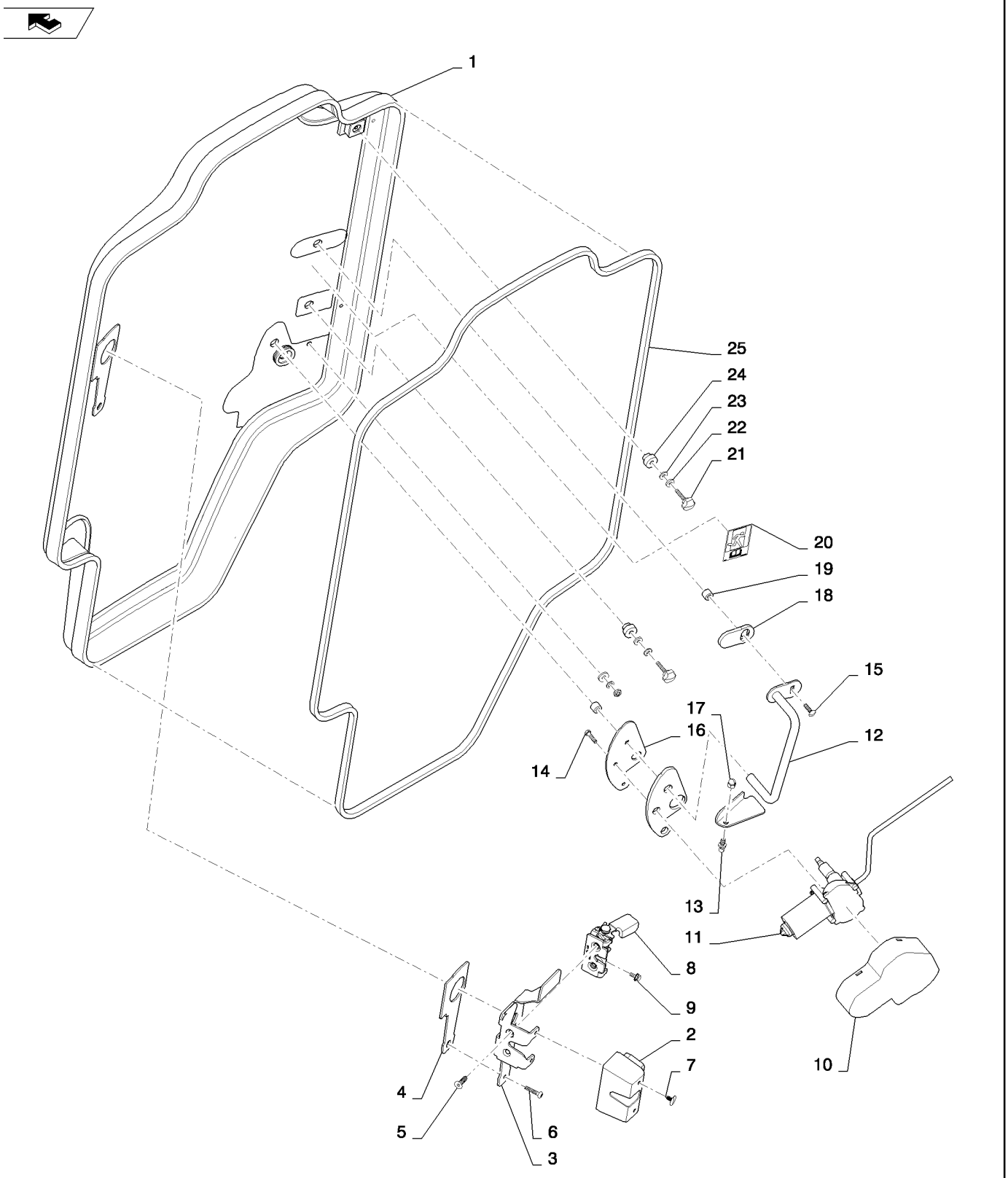

DOOR ASSY, FRONT DEMO (ALL NH)
DOOR ASSY, FRONT DEMO (ALL NH)
DOOR ASSY, FRONT DEMO (ALL NH)
DOOR ASSY, FRONT DEMO (ALL NH)

R	N	P.N.	MOD	Q	Denominação Description	Description Bezeichnung	Denominacion Beskrivelse	Descrizione Beschrijving	L.C.
21		**44911647**		2	MAÇANETA, M6 Thumb Screw				
						KNOB	MANDO	MANOPOLA	150P
					BOUTON	RUNDGRIFF	GREB	KNOP	
22		**12647621**		2	ARRUELA PLANA, M6 x 16 x 2				
						WASHER	ARANDELA	RONDELLA	131R
					RONDELLE	UNTERLEGSCHEIBE	FLADSKIVE	SLUITRING	
23		**84385500**		2	ARRUELA DE BORRACHA, 16x6.5x3				
						RUBBER WASHER	ARANDELA DE GOMA	RONDELLA IN GOMMA	Z363
					RONDELLE EN CAOUTC	GUMMIUNTERLEGSCHE	GUMMISKIVE	RUBBEREN SLUITRING	
24		**84257223**		2	ESPAÇADOR	SPACER	SEPARADOR	DISTANZIALE	075D
					ENTRETOISE	DISTANZSTÜCK	AFSTANDSSTYKKE	AFSTANDSSTUK	
25		**84391276**		1	VEDAÇÃO DE PORTA, Bulb				
						DOOR SEAL	JUNTA DE PUERTA	GUARNIZIONE SPORTEL	Z529
					JOINT DE PORTE	TÜRDICHTUNG	DØRTÆTNING	PORTIERAFDICHTING	
25		**84344565**		1	VIDRO, Demo Door	GLASS	VIDRIO	CRISTALLO	038V
					VITRE	GLAS	GLAS	GLAS	

90.154.01	06	p1	08/11

FRONT DEMO, DOOR (ALL NH)
FRONT DEMO, DOOR (ALL NH)
FRONT DEMO, DOOR (ALL NH)
FRONT DEMO, DOOR (ALL NH)

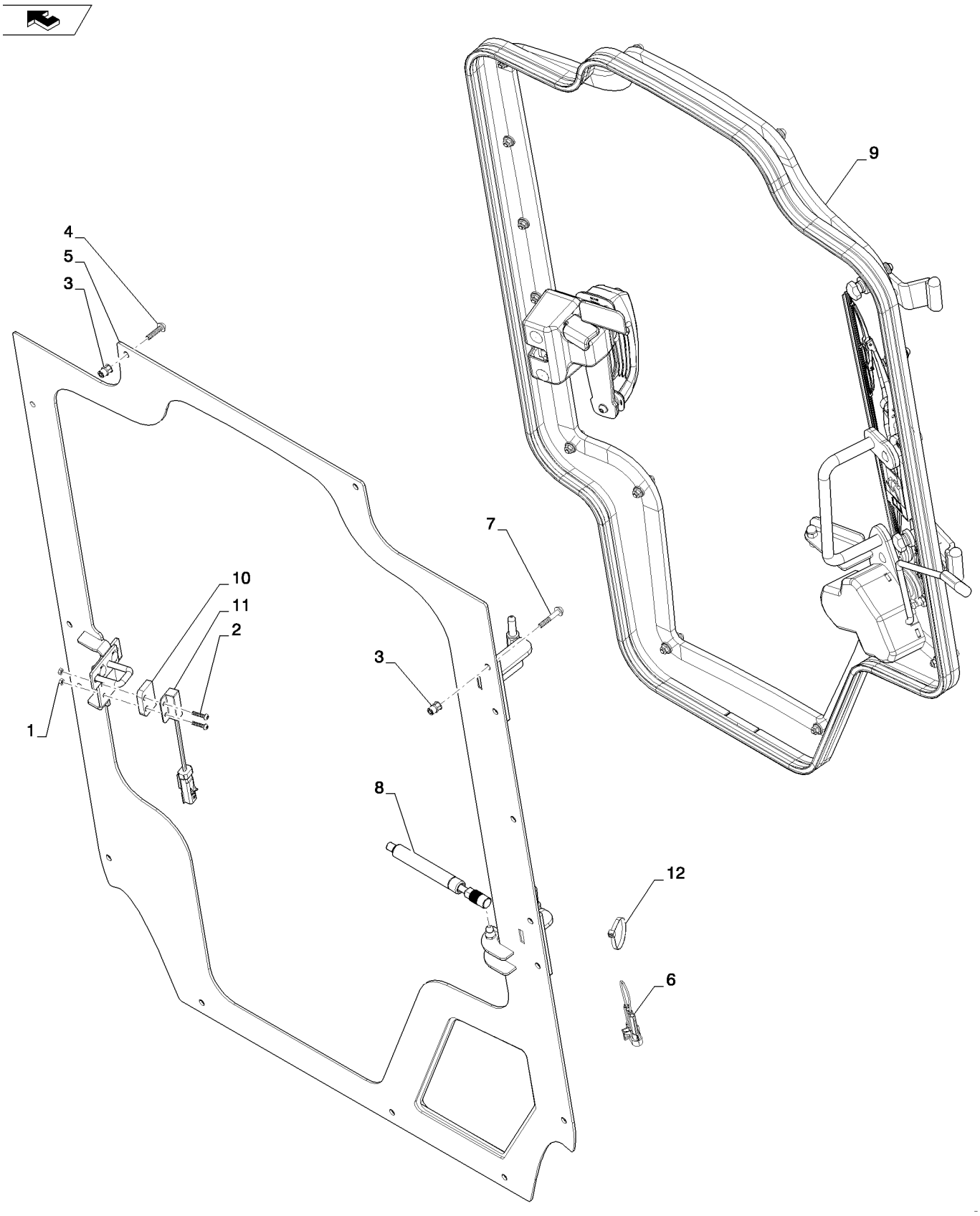

FRONT DEMO, DOOR (ALL NH)
FRONT DEMO, DOOR (ALL NH)
FRONT DEMO, DOOR (ALL NH)
FRONT DEMO, DOOR (ALL NH)

R	N	P.N.	MOD	Q	Denominação Description	Description Bezeichnung	Denominacion Beskrivelse	Descrizione Beschrijving	L.C.
1		100012		2	PORCA, M4, Cl 8	NUT	TUERCA	DADO	010D
					ECROU	MUTTER	MØTRIK	MOER	
2		84183818		2	PARAFUSO, Pan Head, M4 X 20				
						SCREW	TORNILLO	VITE	040V
					VIS	SCHRAUBE	SKRUE	SCHROEF	
3		84272827		15	REBITE, M6 X 1	RIVET	REMACHE	RIVETTO	055R
					RIVET	NIET	NITTE	KLINKNAGEL	
4		84305556		11	PARAFUSO, M6 X 25	SCREW	TORNILLO	VITE	040V
					VIS	SCHRAUBE	SKRUE	SCHROEF	
5		84323416		1	PORTA, Assembly, Jamb	DOOR	PUERTA	SPORTELLO	180P
					PORTE	TÜR	DØR	PORTIER	
6		84331404		1	CONECTOR DO FIO, Jumper				
						WIRE CONNECTOR	CONECTOR DE CABLE	CONNETTORE DEL FILO	250C
					CONNECTEUR DU FIL	KABELSTECKVERBINDE	SAMLEMUFFE	DRAADCONNECTOR	
7		84359102		4	PARAFUSO, M6 X 35	SCREW	TORNILLO	VITE	040V
					VIS	SCHRAUBE	SKRUE	SCHROEF	
8		84378453		1	COMPASSO, Spring	GAS STRUT	COLUMNA DE GAS	AMMORTIZZATORE A G/	Z331
					BEQUILLE A GAZ	GASDRUCKFEDER	CYLINDER, GASSTØDD/	GASVEER	
9		84416291		1	PORTA, Assembly, Front Demo				
						DOOR	PUERTA	SPORTELLO	180P
					PORTE	TÜR	DØR	PORTIER	
10		86624468		1	ESPAÇADOR, Switch	SPACER	SEPARADOR	DISTANZIALE	075D
					ENTRETOISE	DISTANZSTÜCK	AFSTANDSSTYKKE	AFSTANDSSTUK	
11		87392235		1	INTERRUPTOR INTERMITENTE, Reed, Normally Open				
						SWITCH ASSY	CONJUNTO DE INTERRU	COMPLESSIVO INTERRU	067I
					ENSEMBLE COMMUTATI	SCHALTERBAUGRUPPE	KONTAKT, KPL.	SCHAKELAAREENHEID	
12		L11541		1	PRENDEDOR DE CABOS, 7-8 Inch, Nylon				
						CABLE STRAP	BANDA DE CABLE	FASCETTA PER CAVO	P716
					BRIDE DE CABLE	KABELBINDER	KABELSTROP	BUNDELBAND	

90.154.02		p1	02/11

SIDE WINDOW ASSY (ALL NH)
SIDE WINDOW ASSY (ALL NH)
SIDE WINDOW ASSY (ALL NH)
SIDE WINDOW ASSY (ALL NH)

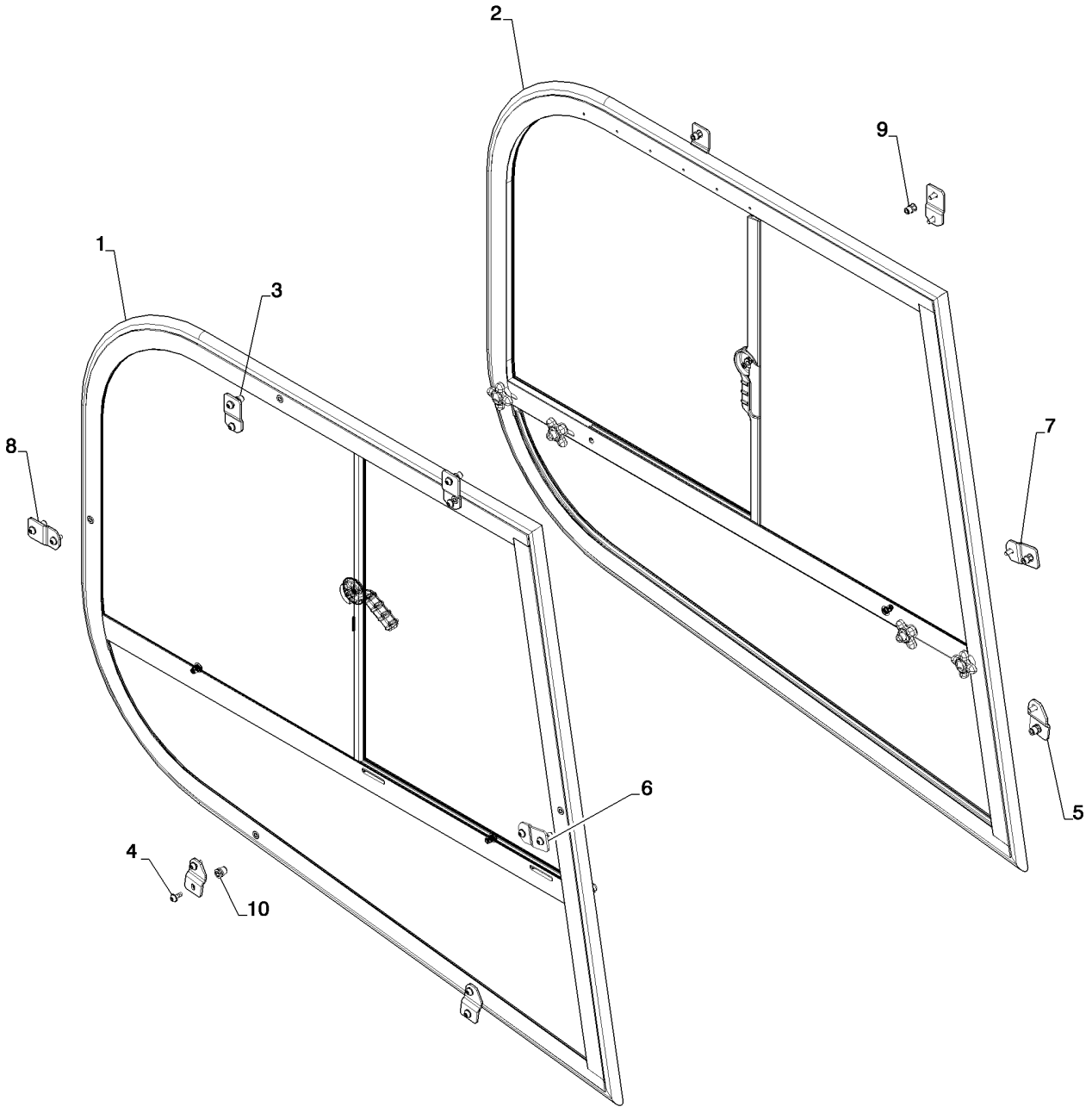

SIDE WINDOW ASSY (ALL NH)
SIDE WINDOW ASSY (ALL NH)
SIDE WINDOW ASSY (ALL NH)
SIDE WINDOW ASSY (ALL NH)

R	N	P.N.	MOD	Q	Denominação Description	Description Bezeichnung	Denominacion Beskrivelse	Descrizione Beschrijving	L.C.
1		84415735		1	JANELA, Assy, RH Side FENETRE	WINDOW FENSTER	VENTANILLA VINDUE	FINESTRINO RUIT	9810
2		84415736		1	JANELA, Assy, LH Side FENETRE	WINDOW FENSTER	VENTANILLA VINDUE	FINESTRINO RUIT	9810
3		84309360		6	SUPORTE, Window SUPPORT	BRACKET HALTERUNG	SOPORTE BESLAG	STAFFA STEUN	225S
4		84309339		2	SUPORTE, Window, RH SUPPORT	BRACKET HALTERUNG	SOPORTE BESLAG	STAFFA STEUN	225S
5		84309344		2	SUPORTE, Window, LH SUPPORT	BRACKET HALTERUNG	SOPORTE BESLAG	STAFFA STEUN	225S
6		84309356		1	SUPORTE, Window, RH SUPPORT	BRACKET HALTERUNG	SOPORTE BESLAG	STAFFA STEUN	225S
7		84309359		1	SUPORTE, Window, LH SUPPORT	BRACKET HALTERUNG	SOPORTE BESLAG	STAFFA STEUN	225S
8		87682398		24	PARAFUSO VIS	SCREW SCHRAUBE	TORNILLO SKRUE	VITE SCHROEF	040V
9		84272827		8	REBITE, Nut RIVET	RIVET NIET	REMACHE NITTE	RIVETTO KLINKNAGEL	055R
10		84272827		4	REBITE, Nut RIVET	RIVET NIET	REMACHE NITTE	RIVETTO KLINKNAGEL	055R
11		84425058		2	ESPUMA ISOLANTE, Window (Not Shown) MOUSSE ISOLANTE	FOAM INSULATION SCHAUMSTOFFISOLIER	ESPUMA AISLANTE SKUM ISOLERING	ISOLANTE IN SCHIUMA SCHUIMISOLATIE	051S

90.154.03	02	p1	02/11

DOOR ASSY, REAR NH MED LG (L218-C238)
DOOR ASSY, REAR NH MED LG (L218-C238)
DOOR ASSY, REAR NH MED LG (L218-C238)
DOOR ASSY, REAR NH MED LG (L218-C238)

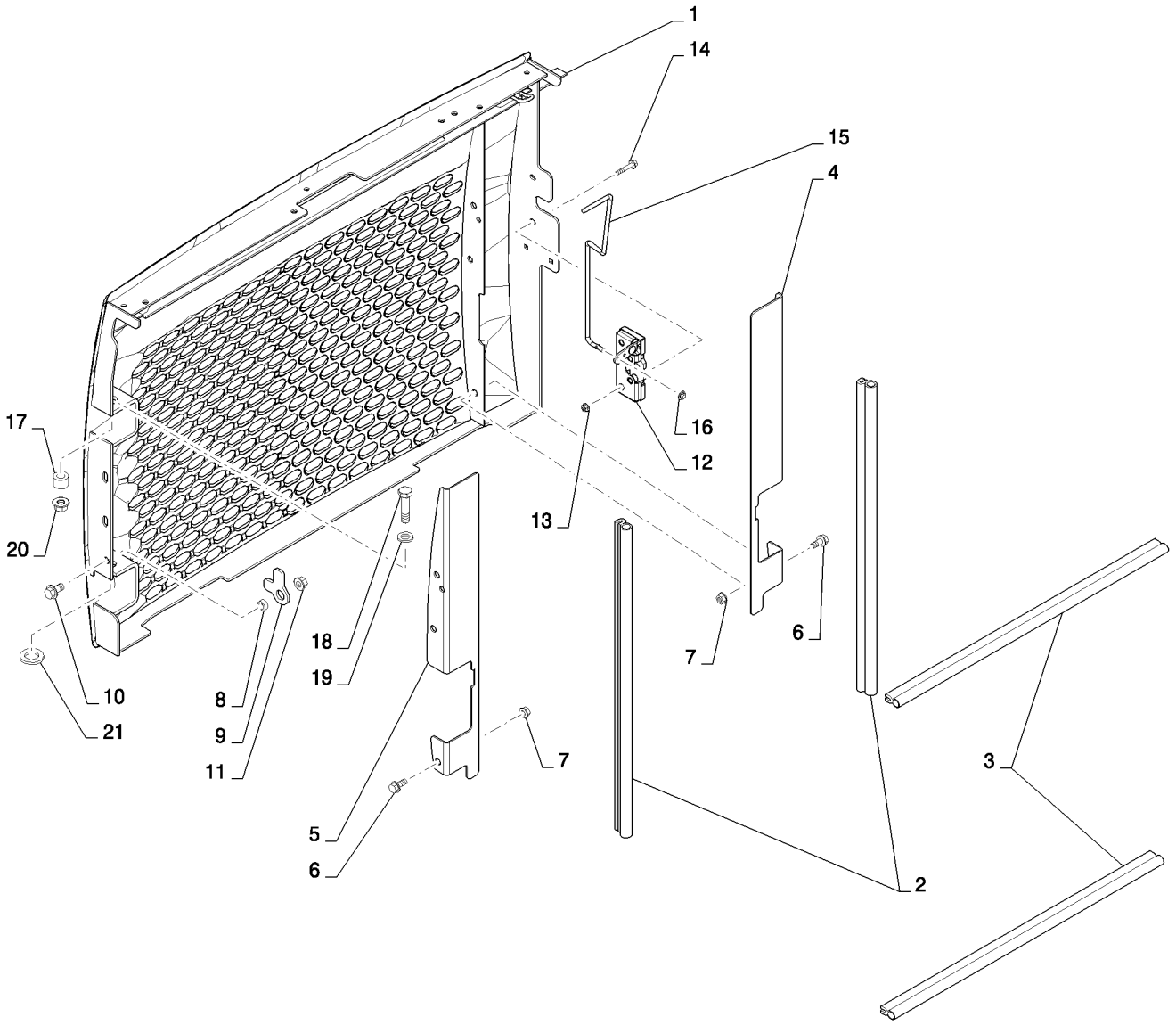

DOOR ASSY, REAR NH MED LG (L218-C238)
DOOR ASSY, REAR NH MED LG (L218-C238)
DOOR ASSY, REAR NH MED LG (L218-C238)
DOOR ASSY, REAR NH MED LG (L218-C238)

R	N	P.N.	MOD	Q	Denominação Description	Description Bezeichnung	Denominacion Beskrivelse	Descrizione Beschrijving	L.C.
1		84375774		1	PORTA, NH, Rear, CE Gray	DOOR	PUERTA	SPORTELLO	180P
					PORTE	TÜR	DØR	PORTIER	
2		84201450		2	VEDAÇÃO DE PORTA, Bulb, 575mm				
						DOOR SEAL	JUNTA DE PUERTA	GUARNIZIONE SPORTEL	Z529
					JOINT DE PORTE	TÜRDICHTUNG	DØRTÆTNING	PORTIERAFDICHTING	
3		84201449		2	VEDAÇÃO DE PORTA, Bulb, 580mm				
						DOOR SEAL	JUNTA DE PUERTA	GUARNIZIONE SPORTEL	Z529
					JOINT DE PORTE	TÜRDICHTUNG	DØRTÆTNING	PORTIERAFDICHTING	
4		84338540		1	CANTONEIRA, Door Seal, LH, Gray				
						ANGLE	ÁNGULO	ANGOLARE	057C
					CORNIERE	WINKEL	VINKELBESLAG	HOEKSTUK	
5		84338537		1	CANTONEIRA, Door Seal, RH, Gray				
						ANGLE	ÁNGULO	ANGOLARE	057C
					CORNIERE	WINKEL	VINKELBESLAG	HOEKSTUK	
6		9804258		6	PARAFUSO, Hex Flg, M8 x 20, 8.8				
						BOLT	PERNO	BULLONE	140B
					VIS	SCHRAUBE	BOLT	BOUT	
7		9804277		6	PORCA, M8 x 1.25, Flg, Cl 8				
						NUT	TUERCA	DADO	010D
					ECROU	MUTTER	MØTRIK	MOER	
8		87352559		1	ESPAÇADOR, Door Lock	SPACER	SEPARADOR	DISTANZIALE	075D
					ENTRETOISE	DISTANZSTÜCK	AFSTANDSSTYKKE	AFSTANDSSTUK	
9		84306554		1	PLACA DE TRAVAMENTO, Door Lock, Arm				
						LOCKING PLATE	PLACA DE BLOQUEO	PIASTRA DI BLOCCAGGI	113P
					PLAQUE DE SURETE	SICHERUNGSPLATTE	LÅSEPLADE	BORGPLAAT	
10		86050286		1	PARAFUSO FLANGEADO, Hex, M10 x 20, Cl 8.8, Full Thd				
						FLANGE BOLT	PERNO DE CORONA	BULLONE FLANGIATO	A027
					VIS A EMBASE	FLANSCHSCHRAUBE	FLANGEBOLT	FLENSBOUT	
11		9804278		1	PORCA, M10 x 1.5, Flg, Cl 8				
						NUT	TUERCA	DADO	010D
					ECROU	MUTTER	MØTRIK	MOER	
12		87437076		1	TRINCO	LATCH	PESTILLO	CHIUSURA A SCATTO	156C
					LOQUET	VERRIEGELUNG	PAL	GRENDEL	
13		86619800		2	CONTRA PORCA, M6 x 1, Flg, Cl 8				
						LOCK NUT	TUERCA DE BLOQUEO	DADO DI BLOCCAGGIO	P263
					CONTRE-ECROU	SICHERUNGSMUTTER	LÅSEMØTRIK	BORGMOER	
14		87015931		2	PARAFUSO, Hex Flg, M6 x 35, 8.8				
						BOLT	PERNO	BULLONE	140B
					VIS	SCHRAUBE	BOLT	BOUT	
15		84350974		1	HASTE, Latch Pull	ROD	VARILLA	ASTA	090A
					TIGE	STANGE	STANG	STANG	
16		380751A1		1	PORCA, Push Cap	NUT	TUERCA	DADO	5780
					ECROU	MUTTER	MØTRIK	MOER	
17		84306545		1	BUCHA, Bushing, Door Hinge				
						BUSHING	CASQUILLO	BOCCOLA	095B
					BAGUE	BUCHSE	BØSNING	BUS	
18		337476		1	PARAFUSO, Hex, M12 x 50, 10.9				
						BOLT	PERNO	BULLONE	140B
					VIS	SCHRAUBE	BOLT	BOUT	

90.154.03	02	p2	02/11

DOOR ASSY, REAR NH MED LG (L218-C238)
DOOR ASSY, REAR NH MED LG (L218-C238)
DOOR ASSY, REAR NH MED LG (L218-C238)
DOOR ASSY, REAR NH MED LG (L218-C238)

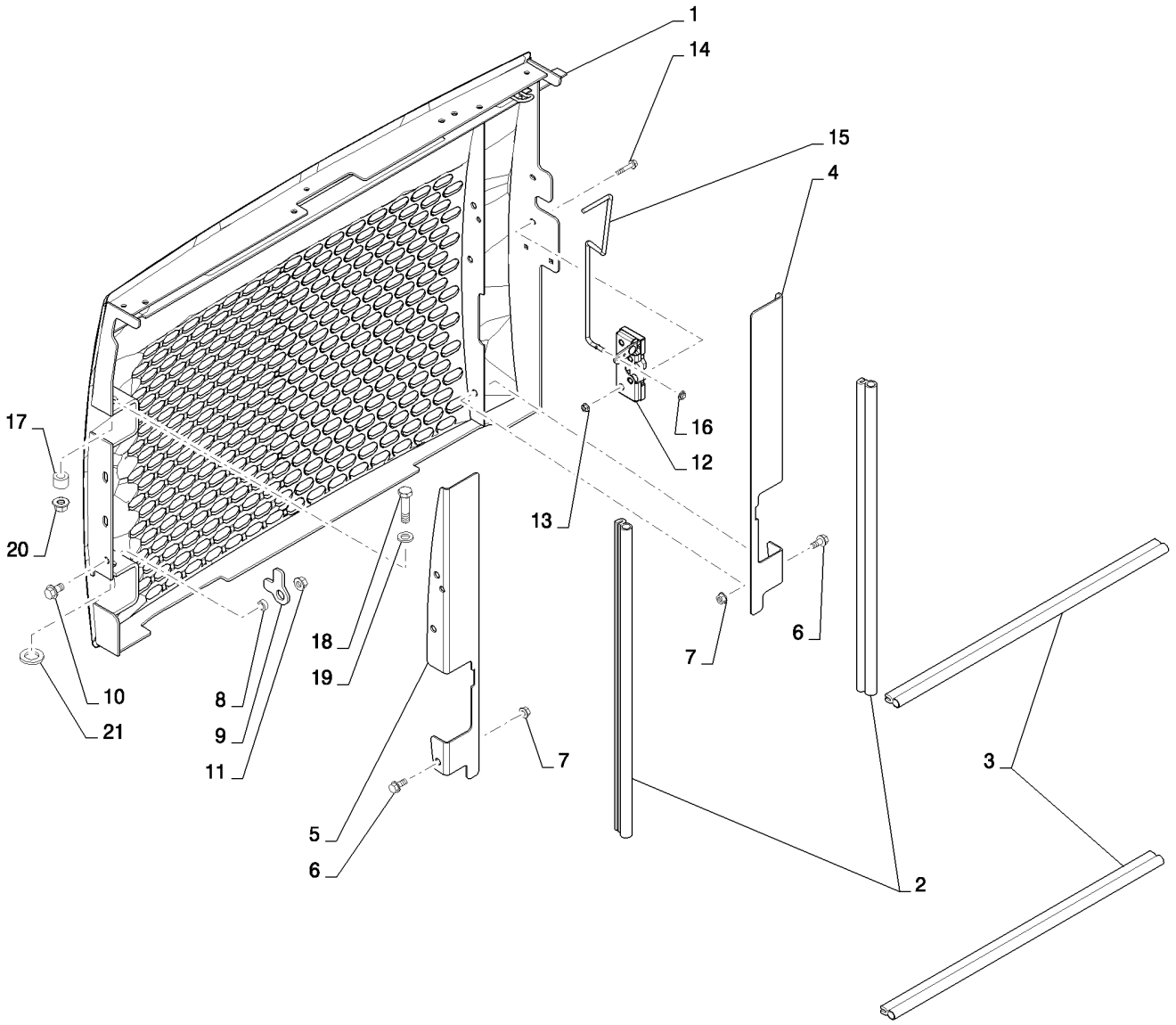

DOOR ASSY, REAR NH MED LG (L218-C238)
DOOR ASSY, REAR NH MED LG (L218-C238)
DOOR ASSY, REAR NH MED LG (L218-C238)
DOOR ASSY, REAR NH MED LG (L218-C238)

R	N	P.N.	MOD	Q	Denominação Description	Description Bezeichnung	Denominacion Beskrivelse	Descrizione Beschrijving	L.C.
19		**86625255**		1	ARRUELA PLANA, M13.5 x 24.5 x 3, HT				
						WASHER	ARANDELA	RONDELLA	131R
					RONDELLE	UNTERLEGSCHEIBE	FLADSKIVE	SLUITRING	
20		**87681209**		1	PORCA	NUT	TUERCA	DADO	010D
					ECROU	MUTTER	MØTRIK	MOER	
21		**86625260**		1	ARRUELA PLANA, M20 x 37.5 x 4, HT				
						WASHER	ARANDELA	RONDELLA	131R
					RONDELLE	UNTERLEGSCHEIBE	FLADSKIVE	SLUITRING	

90.154.04		p1	05/11

REAR WINDOW NA (ALL NH)
REAR WINDOW NA (ALL NH)
REAR WINDOW NA (ALL NH)
REAR WINDOW NA (ALL NH)

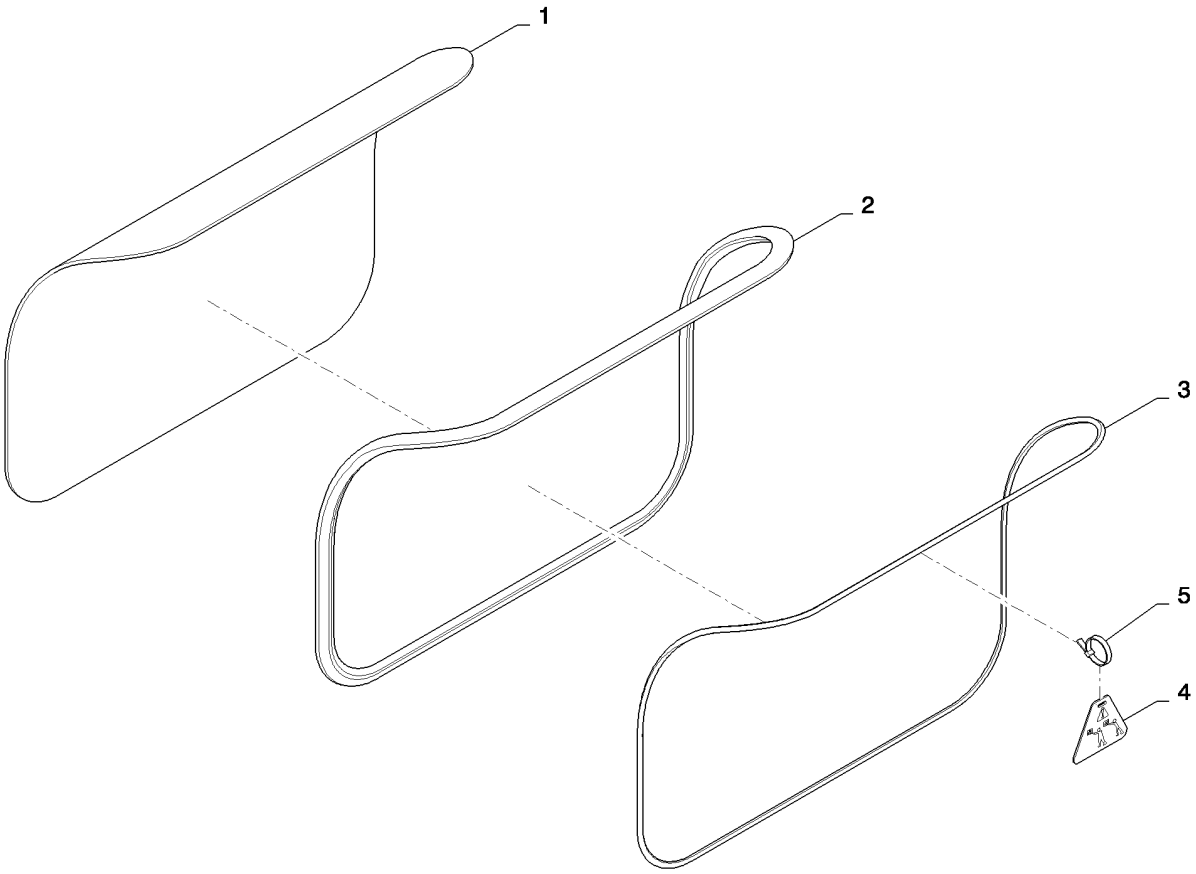

REAR WINDOW NA (ALL NH)
REAR WINDOW NA (ALL NH)
REAR WINDOW NA (ALL NH)
REAR WINDOW NA (ALL NH)

R	N	P.N.	MOD	Q	Denominação Description	Description Bezeichnung	Denominacion Beskrivelse	Descrizione Beschrijving	L.C.
1		84254142		1	MONTAGEM VIDRO DA CABINE, Rear Window				
						CAB GLASS ASSY	CONJ. CRISTALES DE C.	COMPL. CRISTALLO CAI	315C
					VITRE DE CABINE	KABINENVERGLASUNG	KABINERUDE, KPL.	GLASEENHEID CABINE	
2		84478939		1	JUNTA, Locking	GASKET	JUNTA	GUARNIZIONE	123G
					JOINT	DICHTUNG	PAKNING	PAKKING	
3		92626		1	ENCHIMENTO, Locking Strip 8 Ft.				
						FILLING STRIP	BANDA DE GUARNICIÓN	NASTRO DI RIFORNIMEI	P721
					BANDE DE REMPLISSAG	FÜLLSTREIFEN	FYLDNINGSLISTE	VULSTRIP	
4		87026871		1	SINAL PLÁSTICO, Exit Tag	PLASTIC SIGN	SEÑAL DE PLÁSTICO	TARGHETTA IN PLASTIC	092I
					PLAQUE SIGN. PLASTIQ	KUNSTSTOFFSCHILD	PLASTIKSKILT	KUNSTSTOF BORD	
5		263117		1	PRENDEDOR DE CABOS, .14" x 11 1/2"				
						CABLE STRAP	BANDA DE CABLE	FASCETTA PER CAVO	P716
					BRIDE DE CABLE	KABELBINDER	KABELSTROP	BUNDELBAND	

90.154.04		p1	05/11

REAR WINDOW EU (ALL NH)
REAR WINDOW EU (ALL NH)
REAR WINDOW EU (ALL NH)
REAR WINDOW EU (ALL NH)

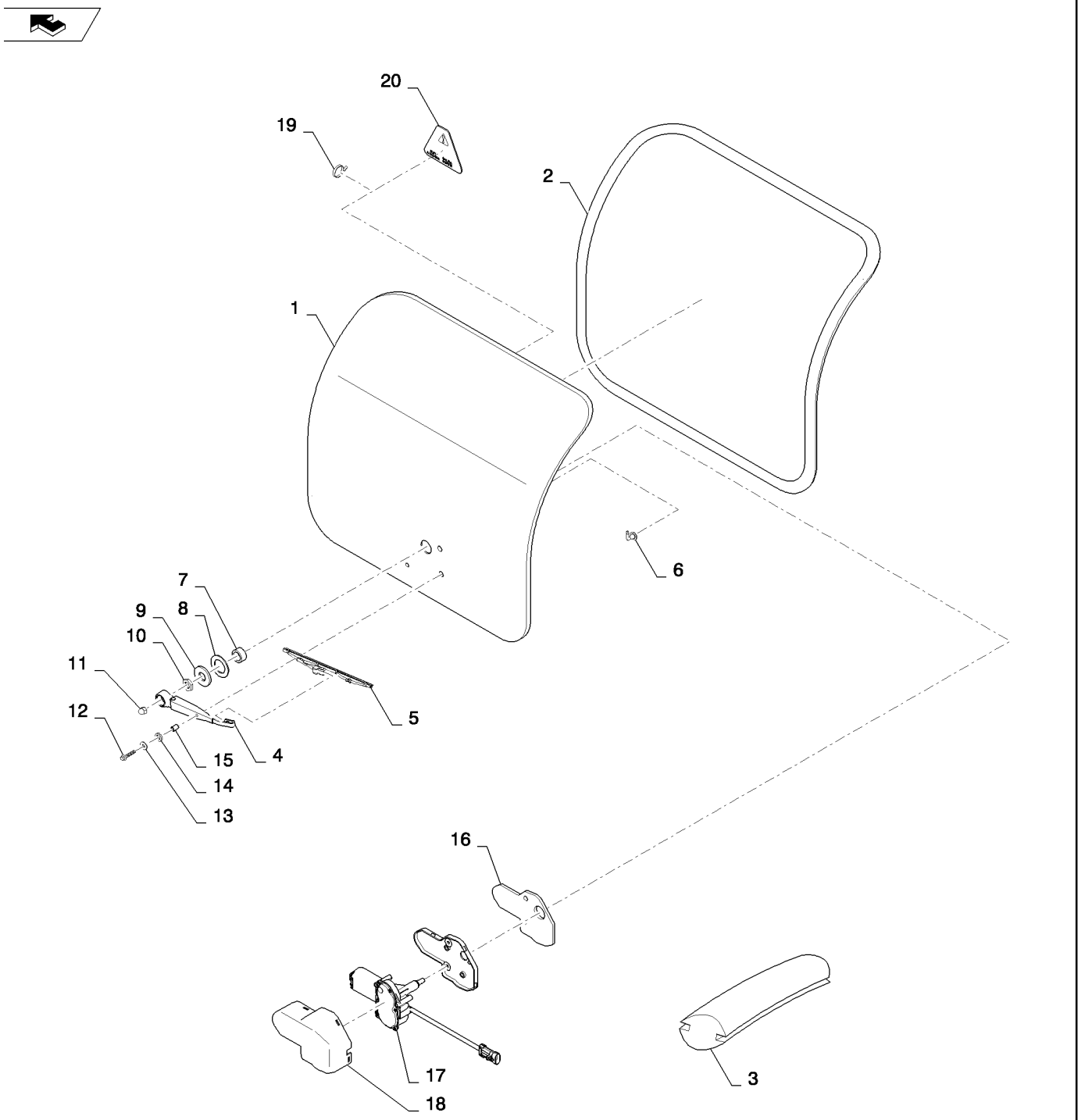

REAR WINDOW EU (ALL NH)
REAR WINDOW EU (ALL NH)
REAR WINDOW EU (ALL NH)
REAR WINDOW EU (ALL NH)

R	N	P.N.	MOD	Q	Denominação Description	Description Bezeichnung	Denominacion Beskrivelse	Descrizione Beschrijving	L.C.
1		84251333		1	VIDRO COLORIDO, Rear Window EU				
						TINTED GLASS	CRISTAL TINTADO	CRISTALLO ATERMICO	398C
					VITRE TEINTEE	GETÖNTE SCHEIBE	TONET RUDE	GETINT GLAS	
2		84478939		1	JUNTA, Locking	GASKET	JUNTA	GUARNIZIONE	123G
					JOINT	DICHTUNG	PAKNING	PAKKING	
3		92626		1	ENCHIMENTO, Locking Strip 8 Ft.				
						FILLING STRIP	BANDA DE GUARNICIÓN	NASTRO DI RIFORNIMEI	P721
					BANDE DE REMPLISSAG	FÜLLSTREIFEN	FYLDNINGSLISTE	VULSTRIP	
4		84323115		1	BRAÇO LIMPADOR	WIPER ARM	BRAZO LIMPIAPARABRIS	BRACCIO TERGICRISTA	134B
					BRAS D'ESSUIE-GLACE	WISCHERARM	VISKERARM	ARM VAN RUITENWISSE	
5		84323116		1	LIMPADOR DO PARA-BRISA				
						WINDSHIELD WIPER	LIMPIAPARABRISAS	TERGICRISTALLI	Z493
					ESSUIE-GLACE	FRONTSCHEIBENWISCH	FORRUDEVISKER	RUITENWISSER VÓÓR	
6		84369351		1	COTOVELO 90, Assy, Connector				
						90 ELBOW	CODO 90	GOMITO A 90°	A045
					COUDE A 90°	90-GRAD-KNIESTÜCK	VINKELRØR, 90	KNIESTUK 90º	
7		87642536		1	BUCHA, Wiper Motor	BUSHING	CASQUILLO	BOCCOLA	095B
					BAGUE	BUCHSE	BØSNING	BUS	
8		84297721		1	VEDAÇÃO, Washer	SEAL	ANILLO DE CIERRE	GUARNIZIONE; TENUTA	132A
					JOINT	DICHTUNG	PAKNING	AFDICHTING	
9		84156178		1	ARRUELA PLANA, .781 x 1.75 x .179"				
						WASHER	ARANDELA	RONDELLA	131R
					RONDELLE	UNTERLEGSCHEIBE	FLADSKIVE	SLUITRING	
10		87607505		1	PORCA, Wiper	NUT	TUERCA	DADO	010D
					ECROU	MUTTER	MØTRIK	MOER	
11		412326		1	PORCA, Dome Crown M8	NUT	TUERCA	DADO	010D
					ECROU	MUTTER	MØTRIK	MOER	
12		9804257		2	PARAFUSO, Hex Flg, M6 x 25, 8.8				
						BOLT	PERNO	BULLONE	140B
					VIS	SCHRAUBE	BOLT	BOUT	
13		86624182		2	ARRUELA PLANA, M6 x 18 x 1.6				
						WASHER	ARANDELA	RONDELLA	131R
					RONDELLE	UNTERLEGSCHEIBE	FLADSKIVE	SLUITRING	
14		84321136		2	VEDADOR	SEAL WASHER	JUNTA CIRCULAR	RONDELLA DELLA GUAF	Z526
					JOINT-CIRCULAIRE	DICHTUNGSSCHEIBE	SEAL WASHER	SEAL WASHER	
15		87642540		2	ESPAÇADOR, Wiper Motor	SPACER	SEPARADOR	DISTANZIALE	075D
					ENTRETOISE	DISTANZSTÜCK	AFSTANDSSTYKKE	AFSTANDSSTUK	
16		84319673		1	VEDAÇÃO DO LIMPADOR, Rear				
						WIPER SEAL	JUNTA ROZANTE	GUARNIZIONE, RASCHIA	Z350
					JOINT RACLEUR	ABSTREIFDICHTUNG	SKRABERING	RUITENWISSERAFDICH	
17		84319569		1	MOTOR DO LIMPADOR	WIPER MOTOR	MOTOR DE LIMPIAPARA	MOTORINO TERGICRIST	093T
					MOTEUR D'ESSUIE-GLA	WISCHERMOTOR	VISKERMOTOR	RUITENWISSERMOTOR	
18		84300094		1	MOTOR DO LIMPADOR, Cover				
						WIPER MOTOR	MOTOR DE LIMPIAPARA	MOTORINO TERGICRIST	093T
					MOTEUR D'ESSUIE-GLA	WISCHERMOTOR	VISKERMOTOR	RUITENWISSERMOTOR	
19		263117		1	PRENDEDOR DE CABOS, .14" x 11 1/2"				
						CABLE STRAP	BANDA DE CABLE	FASCETTA PER CAVO	P716
					BRIDE DE CABLE	KABELBINDER	KABELSTROP	BUNDELBAND	

90.154.04		p2	05/11

REAR WINDOW EU (ALL NH)
REAR WINDOW EU (ALL NH)
REAR WINDOW EU (ALL NH)
REAR WINDOW EU (ALL NH)

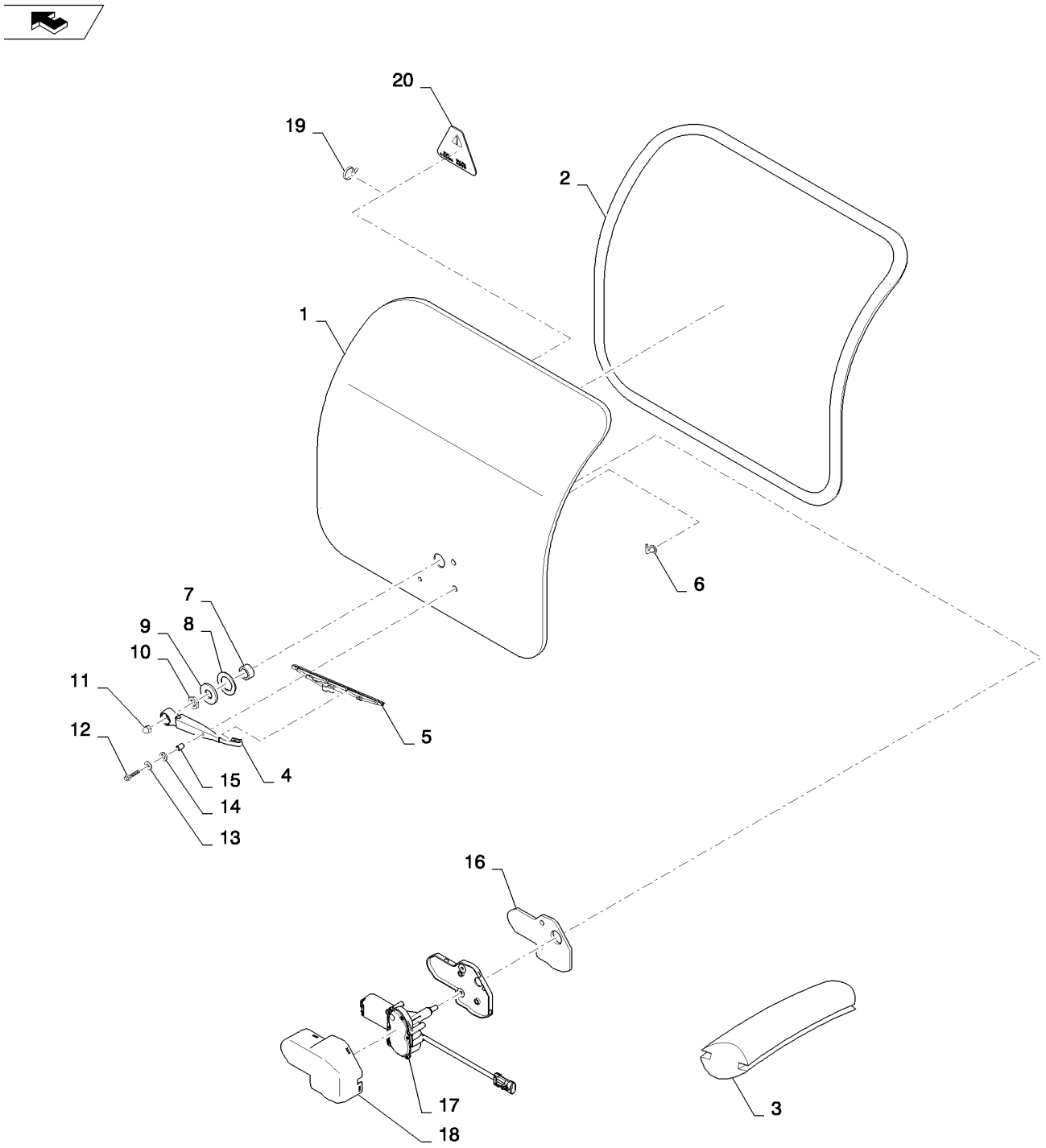

REAR WINDOW EU (ALL NH)
REAR WINDOW EU (ALL NH)
REAR WINDOW EU (ALL NH)
REAR WINDOW EU (ALL NH)

R	N	P.N.	MOD	Q	Denominação Description Bezeichnung	Description Bezeichnung	Denominacion Beskrivelse	Descrizione Beschrijving	L.C.
20		**87026871**		1	SINAL PLÁSTICO, Exit Tag PLAQUE SIGN. PLASTIQ	PLASTIC SIGN KUNSTSTOFFSCHILD	SEÑAL DE PLÁSTICO PLASTIKSKILT	TARGHETTA IN PLASTIC KUNSTSTOF BORD	092I
21		**87037822**		2	PARAFUSO, M6 X 30, Tapping (Not Shown) VIS AUTOTARAUDEUSE	SELF-TAP SCREW SELBSTSCHN SCHRAUE	TORNILLO AUTORROSC SELVLÅSENDE BOLT	VITE AUTOFILETTANTE ZELFTAPPENDE SCHRO	062V

90.154.05	01	p1	03/11

WASHER BOTTLE, FRONT (ALL NH)
WASHER BOTTLE, FRONT (ALL NH)
WASHER BOTTLE, FRONT (ALL NH)
WASHER BOTTLE, FRONT (ALL NH)

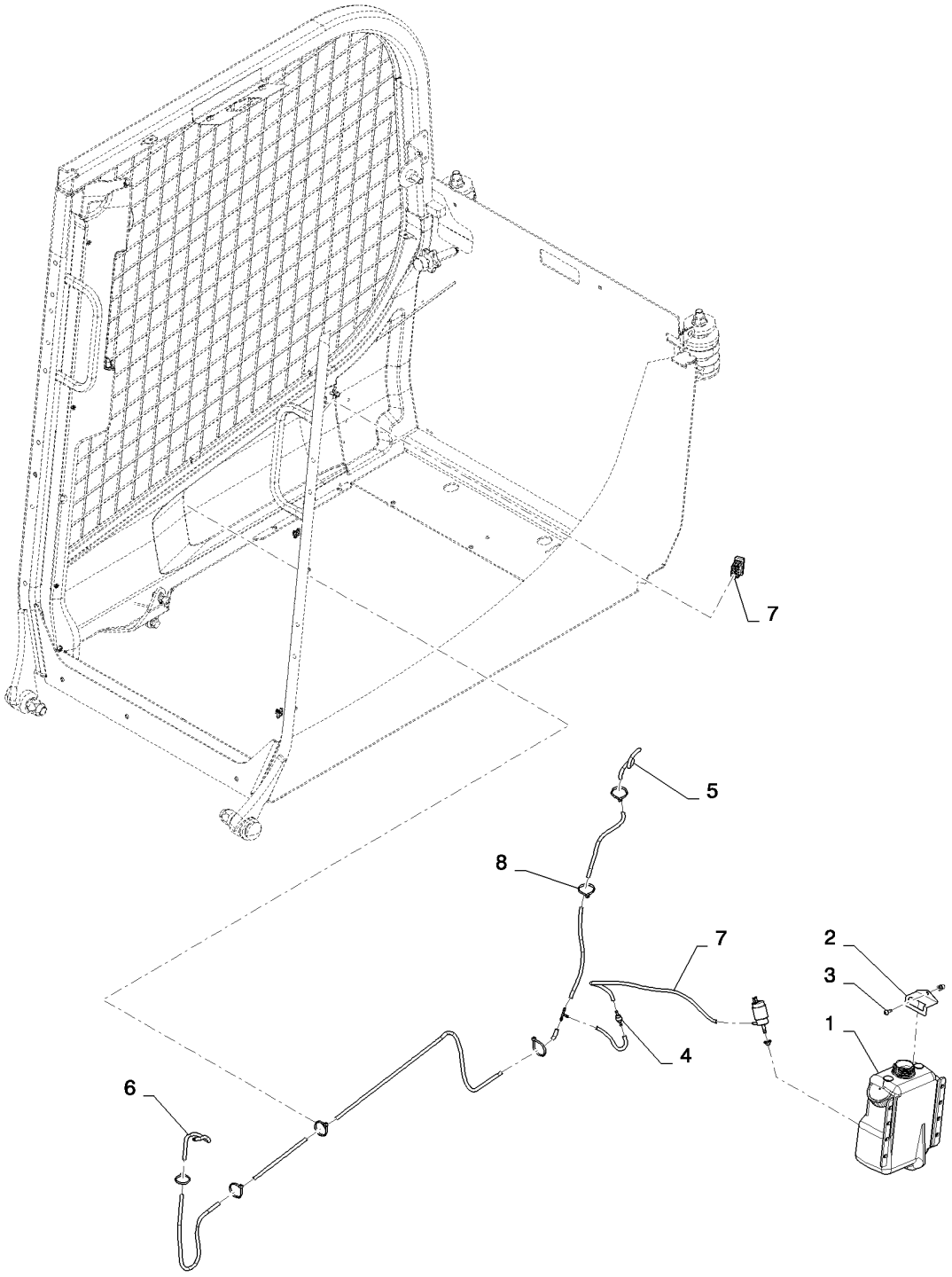

WASHER BOTTLE, FRONT (ALL NH)
WASHER BOTTLE, FRONT (ALL NH)
WASHER BOTTLE, FRONT (ALL NH)
WASHER BOTTLE, FRONT (ALL NH)

R	N	P.N.	MOD	Q	Denominação Description Bezeichnung	Description Bezeichnung	Denominacion Beskrivelse	Descrizione Beschrijving	L.C.
1		84389613		1	GARRAFA, Windshield Washer Bottle Assy				
						BOTTLE	BOTELLA	BOTTIGLIA	102B
					BOUTEILLE	FLASCHE	FLASKE	FLES	
2		84326923		2	SUPORTE, Washer Bottle	BRACKET	SOPORTE	STAFFA	225S
					SUPPORT	HALTERUNG	BESLAG	STEUN	
3		87682398		2	PARAFUSO, M6x16	SCREW	TORNILLO	VITE	040V
					VIS	SCHRAUBE	SKRUE	SCHROEF	
4		K307050		1	VÁLVULA, Non-Return	VALVE	VÁLVULA	VALVOLA	9620
					SOUPAPE	VENTIL	VENTIL	KLEP	
5		84281703		1	MANGUEIRA DO LAVADOR, Front Windshield Washer Hose				
						HOSE WASHER	TUBO DE LAVAPARABRI	RONDELLA FLESSIBILE	A061
					TUYAU DE LAVE-GLACE	WASCHANLAGENSCHLA	SLANGE, SPRINKLER	SLUITRING VOOR SLAN(	
6		84285453		1	MANGUEIRA DO LAVADOR, Washer Bottle Hose				
						HOSE WASHER	TUBO DE LAVAPARABRI	RONDELLA FLESSIBILE	A061
					TUYAU DE LAVE-GLACE	WASCHANLAGENSCHLA	SLANGE, SPRINKLER	SLUITRING VOOR SLAN(	
7		87335499		1	INTERRUPTOR, Rocker, Windshield Wiper/Washer				
						SWITCH	INTERRUPTOR	INTERRUTTORE	075I
					CONTACTEUR	SCHALTER	KONTAKT	SCHAKELAAR	
8		L11541		4	PRENDEDOR DE CABOS	CABLE STRAP	BANDA DE CABLE	FASCETTA PER CAVO	P716
					BRIDE DE CABLE	KABELBINDER	KABELSTROP	BUNDELBAND	

90.154.05	02	p1	04/11

WASHER BOTTLE, REAR (ALL NH)
WASHER BOTTLE, REAR (ALL NH)
WASHER BOTTLE, REAR (ALL NH)
WASHER BOTTLE, REAR (ALL NH)

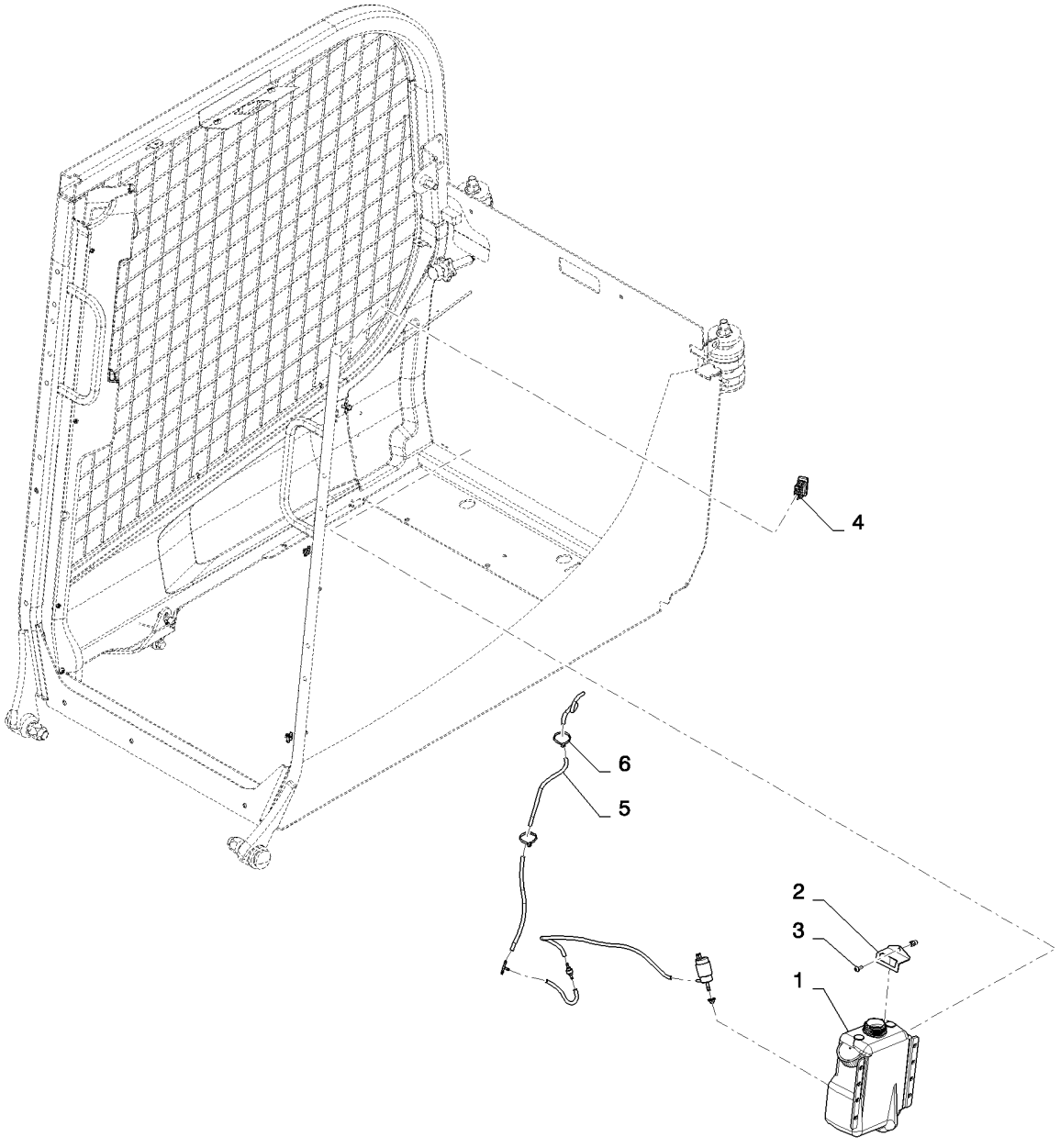

WASHER BOTTLE, REAR (ALL NH)
WASHER BOTTLE, REAR (ALL NH)
WASHER BOTTLE, REAR (ALL NH)
WASHER BOTTLE, REAR (ALL NH)

R	N	P.N.	MOD	Q	Denominação Description	Description Bezeichnung	Denominacion Beskrivelse	Descrizione Beschrijving	L.C.
1		84389613		1	GARRAFA, Windshield Washer Bottle Assy				
						BOTTLE	BOTELLA	BOTTIGLIA	102B
					BOUTEILLE	FLASCHE	FLASKE	FLES	
2		84326923		2	SUPORTE, Washer Bottle	BRACKET	SOPORTE	STAFFA	225S
					SUPPORT	HALTERUNG	BESLAG	STEUN	
3		87682398		2	PARAFUSO, M6x16	SCREW	TORNILLO	VITE	040V
					VIS	SCHRAUBE	SKRUE	SCHROEF	
4		87335499		1	INTERRUPTOR, Rocker, Windshield Wiper/Washer				
						SWITCH	INTERRUPTOR	INTERRUTTORE	075I
					CONTACTEUR	SCHALTER	KONTAKT	SCHAKELAAR	
5		84285452		1	MANGUEIRA DO LAVADOR, Washer, Rear Windshield				
						HOSE WASHER	TUBO DE LAVAPARABRI	RONDELLA FLESSIBILE	A061
					TUYAU DE LAVE-GLACE	WASCHANLAGENSCHLA	SLANGE, SPRINKLER	SLUITRING VOOR SLAN(	
6		L11541		2	PRENDEDOR DE CABOS	CABLE STRAP	BANDA DE CABLE	FASCETTA PER CAVO	P716
					BRIDE DE CABLE	KABELBINDER	KABELSTROP	BUNDELBAND	
7		84472462		1	COBERTURA, Rear Cover, Euro, Gray, Not Shown				
						COVER	COBERTURA	COPERTURA	271C
					COUVERTURE	ABDECKUNG	AFDAEKNING	AFSCHERMING	
8		84272827		2	REBITE, Nut, M6 X 1.0, Not Shown				
						RIVET	REMACHE	RIVETTO	055R
					RIVET	NIET	NITTE	KLINKNAGEL	

90.154.05	03	p1	03/11

WASHER BOTTLE, FRONT & REAR (ALL NH)
WASHER BOTTLE, FRONT & REAR (ALL NH)
WASHER BOTTLE, FRONT & REAR (ALL NH)
WASHER BOTTLE, FRONT & REAR (ALL NH)

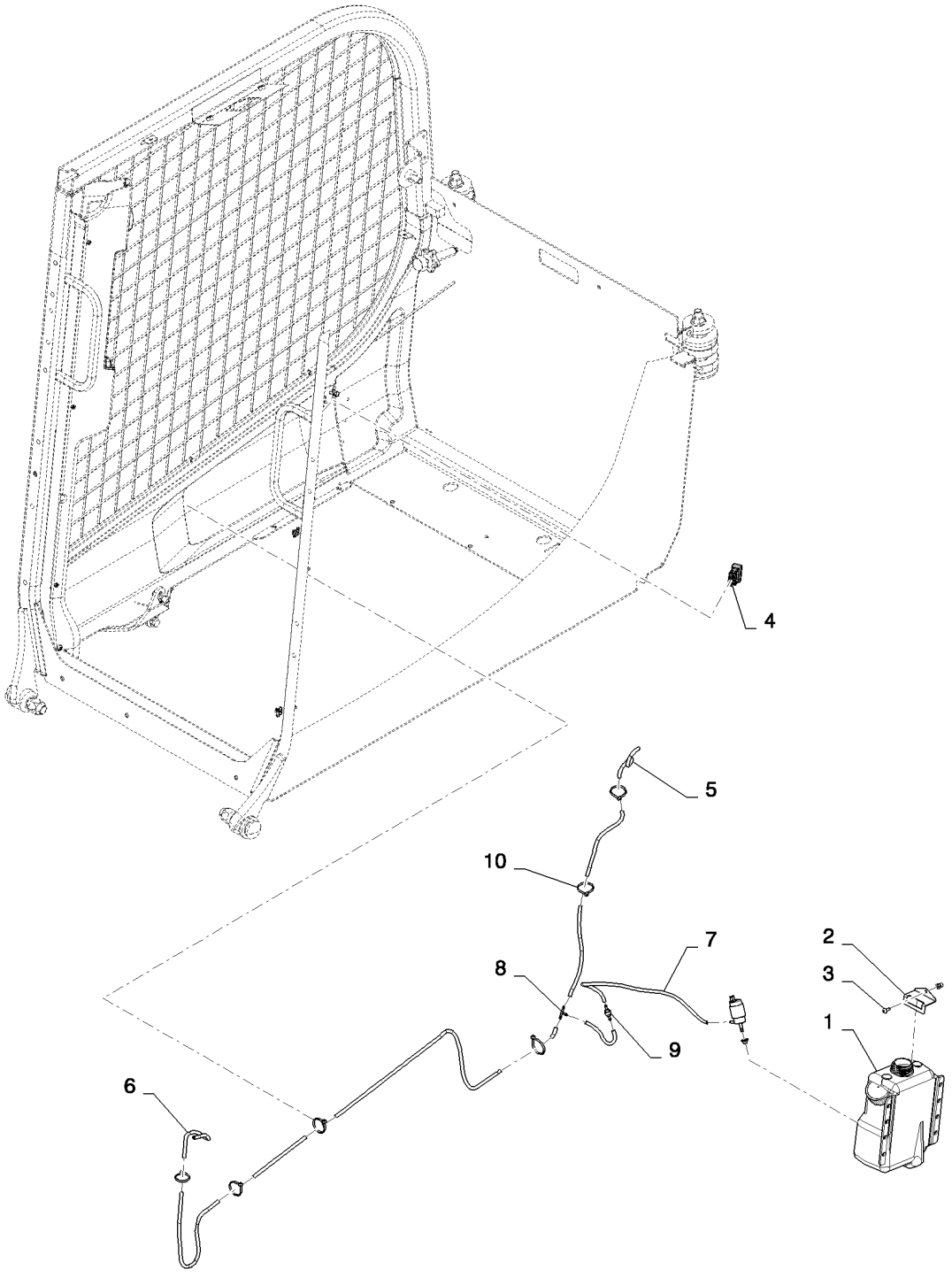

WASHER BOTTLE, FRONT & REAR (ALL NH)
WASHER BOTTLE, FRONT & REAR (ALL NH)
WASHER BOTTLE, FRONT & REAR (ALL NH)
WASHER BOTTLE, FRONT & REAR (ALL NH)

R	N	P.N.	MOD	Q	Denominação Description	Description Bezeichnung	Denominacion Beskrivelse	Descrizione Beschrijving	L.C.
1		84389613		1	GARRAFA, Windshield Washer Bottle Assy				
						BOTTLE	BOTELLA	BOTTIGLIA	102B
					BOUTEILLE	FLASCHE	FLASKE	FLES	
2		84326923		2	SUPORTE, Washer Bottle	BRACKET	SOPORTE	STAFFA	225S
					SUPPORT	HALTERUNG	BESLAG	STEUN	
3		87682398		2	PARAFUSO, M6x16	SCREW	TORNILLO	VITE	040V
					VIS	SCHRAUBE	SKRUE	SCHROEF	
4		87335498		1	INTERRUPTOR, Rocker, Windshield Wiper/Washer				
						LIGHT SWITCH	INTERRUPTOR DE LUZ	INTERRUTTORE LUCI	228S
					COMM. LUMIERES	LICHTSCHALTER	KONTAKT, LYS	VERLICHTINGSSCHAKEI	
5		84281703		1	MANGUEIRA DO LAVADOR, Windshield Washer, Front Door				
						HOSE WASHER	TUBO DE LAVAPARABRI	RONDELLA FLESSIBILE	A061
					TUYAU DE LAVE-GLACE	WASCHANLAGENSCHLA	SLANGE, SPRINKLER	SLUITRING VOOR SLAN(	
6		84285452		1	MANGUEIRA DO LAVADOR, Windshield Washer, Rear Window				
						HOSE WASHER	TUBO DE LAVAPARABRI	RONDELLA FLESSIBILE	A061
					TUYAU DE LAVE-GLACE	WASCHANLAGENSCHLA	SLANGE, SPRINKLER	SLUITRING VOOR SLAN(	
7		84285453		2	MANGUEIRA DO LAVADOR, Washer Bottle				
						HOSE WASHER	TUBO DE LAVAPARABRI	RONDELLA FLESSIBILE	A061
					TUYAU DE LAVE-GLACE	WASCHANLAGENSCHLA	SLANGE, SPRINKLER	SLUITRING VOOR SLAN(	
8		84306335		1	T, Barb Connector	TEE	RACOR EN T	PEZZO A T	9020
					RACCORD EN T	T-STÜCK	T-STYKKE	T-STUK	
9		K307050		1	VÁLVULA, Non-Return	VALVE	VÁLVULA	VALVOLA	9620
					SOUPAPE	VENTIL	VENTIL	KLEP	
10		L11541		6	PRENDEDOR DE CABOS	CABLE STRAP	BANDA DE CABLE	FASCETTA PER CAVO	P716
					BRIDE DE CABLE	KABELBINDER	KABELSTROP	BUNDELBAND	
11		84272827		2	REBITE, M6 X 1.0	RIVET	REMACHE	RIVETTO	055R
					RIVET	NIET	NITTE	KLINKNAGEL	

90.160.01	01	p1	05/11

INTERIOR TRIM NH (ALL NH)
INTERIOR TRIM NH (ALL NH)
INTERIOR TRIM NH (ALL NH)
INTERIOR TRIM NH (ALL NH)

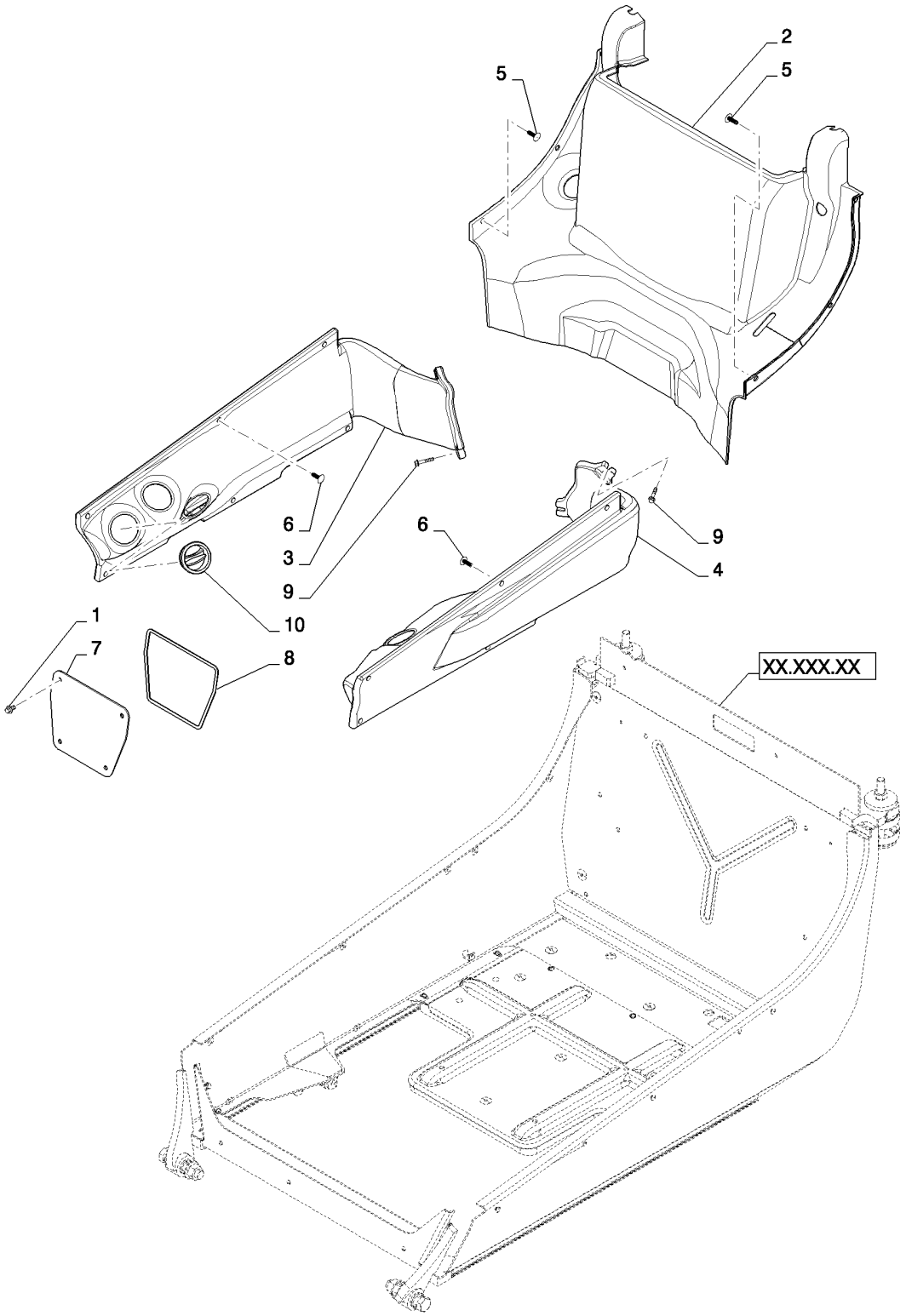

INTERIOR TRIM NH (ALL NH)
INTERIOR TRIM NH (ALL NH)
INTERIOR TRIM NH (ALL NH)
INTERIOR TRIM NH (ALL NH)

R	N	P.N.	MOD	Q	Denominação Description	Description Bezeichnung	Denominacion Beskrivelse	Descrizione Beschrijving	L.C.
1		84285339		4	PARAFUSO VIS AUTOTARAUDEUSE	SELF-TAP SCREW SELBSTSCHN SCHRAUE	TORNILLO AUTORROSC SELVLÅSENDE BOLT	VITE AUTOFILETTANTE ZELFTAPPENDE SCHRO	062V
2		84389703		1	PAINEL, Rear Trim, Gray PANNEAU	PANEL PLATTE	PANEL PANEL	PANNELLO PANEEL	025P
3		84299752		1	DUTO DE AR CONDUITE D'AIR	AIR DUCT LUFTKANAL	CONDUCTO DE AIRE LUFTKANAL	CONDOTTO ARIA LUCHTKANAAL	224C
4		84299755		1	DUTO DE AR CONDUITE D'AIR	AIR DUCT LUFTKANAL	CONDUCTO DE AIRE LUFTKANAL	CONDOTTO ARIA LUCHTKANAAL	224C
5		84380552		6	BOTÃO DE IMPULSO, Push-In, Gray ATTACHE	FASTENER BEFESTIGUNGSELEMEN	SUJETADOR LUKKER	DISPOSITIVO DI FISSAG BEVESTIGING	123B
6		84318573		12	BOTÃO DE IMPULSO, Push-In, Gray ATTACHE	FASTENER BEFESTIGUNGSELEMEN	SUJETADOR LUKKER	DISPOSITIVO DI FISSAG BEVESTIGING	123B
7		84322901		1	PLACA, Cover PLAQUE	PLATE PLATTE	PLACA PLADE	PIASTRA PLAAT	105P
8		84322854		1	ESPUMA ISOLANTE, Sealing Strip; 891mm MOUSSE ISOLANTE	FOAM INSULATION SCHAUMSTOFFISOLIER	ESPUMA AISLANTE SKUM ISOLERING	ISOLANTE IN SCHIUMA SCHUIMISOLATIE	051S
9		87015931		4	PARAFUSO, Hex Flg, M6 x 35, 8.8 VIS	BOLT SCHRAUBE	PERNO BOLT	BULLONE BOUT	140B
10		87669161		6	RESPIRO, Louver Global BUSE D'AERATION	VENT AUSSTRÖMER	RESPIRADERO UDLUFTNINGSDYSE	BOCCHETTA LUCHTROOSTER	P079
11		84372040		1	ESPUMA, Seat Pan MOUSSE	FOAM SCHAUM	ESPUMA SKUM	SCHIUMA SCHUIM	P033
12		348434A1		4	ARRUELA PLANA, Washer, Flat (Not Shown) RONDELLE	WASHER UNTERLEGSCHEIBE	ARANDELA FLADSKIVE	ROSETTA PIANA SLUITRING	9720
13		348452A1		4	BOTÃO DE IMPULSO, Push-in, 1 Inch Head, Gray (Not Shown) ATTACHE	FASTENER BEFESTIGUNGSELEMEN	SUJETADOR LUKKER	DISPOSITIVO DI FISSAG BEVESTIGING	123B

90.160.01	02	p1	02/11

INTERIOR TRIM NH (ALL NH)
INTERIOR TRIM NH (ALL NH)
INTERIOR TRIM NH (ALL NH)
INTERIOR TRIM NH (ALL NH)

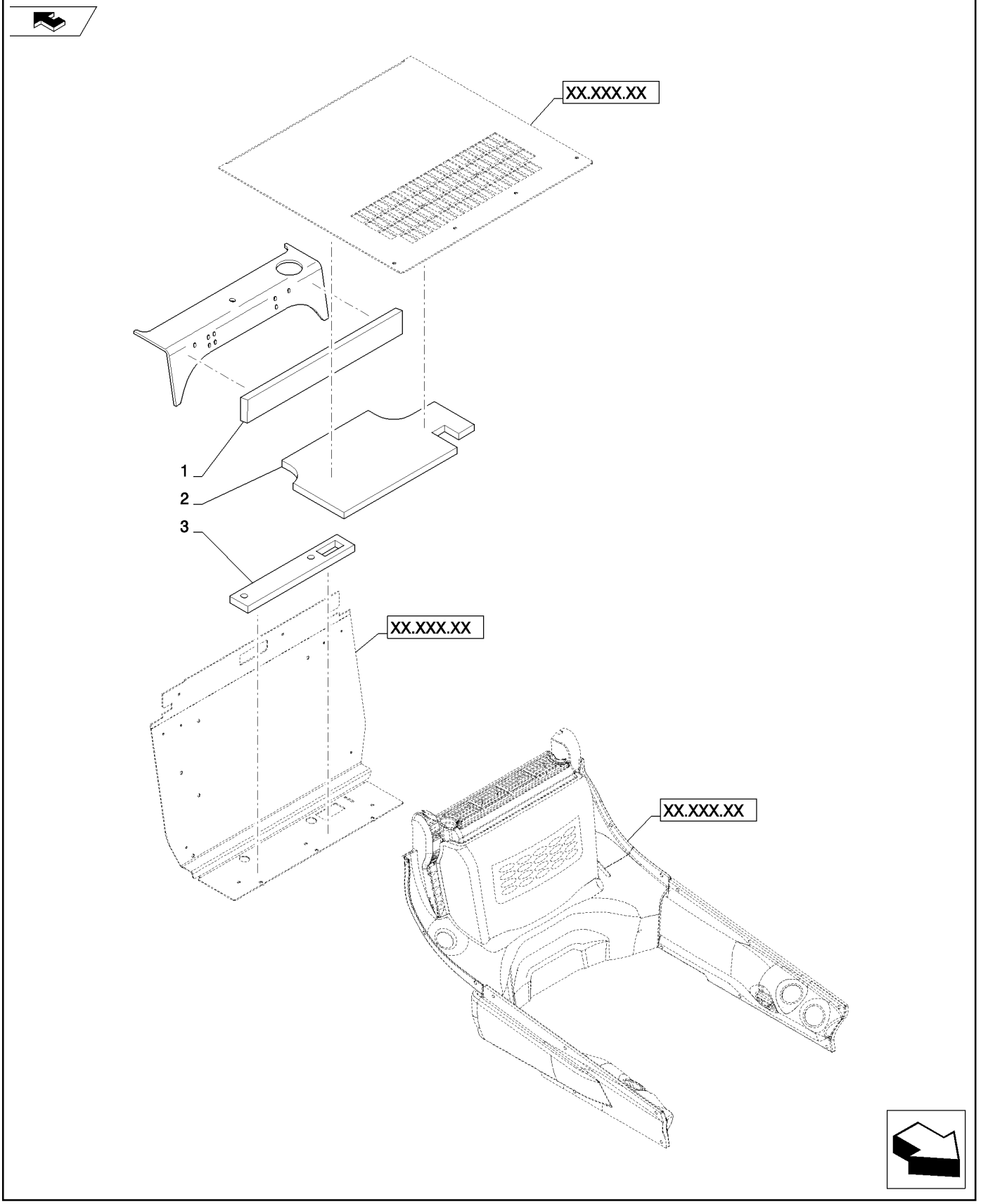

INTERIOR TRIM NH (ALL NH)
INTERIOR TRIM NH (ALL NH)
INTERIOR TRIM NH (ALL NH)
INTERIOR TRIM NH (ALL NH)

R	N	P.N.	MOD	Q	Denominação Description	Description Bezeichnung	Denominacion Beskrivelse	Descrizione Beschrijving	L.C.
1		**84362125**		1	ESPUMA ISOLANTE, Crossmember				
						FOAM INSULATION	ESPUMA AISLANTE	ISOLANTE IN SCHIUMA	051S
					MOUSSE ISOLANTE	SCHAUMSTOFFISOLIER	SKUM ISOLERING	SCHUIMISOLATIE	
2		**84362126**		1	ESPUMA ISOLANTE, Roof	FOAM INSULATION	ESPUMA AISLANTE	ISOLANTE IN SCHIUMA	051S
					MOUSSE ISOLANTE	SCHAUMSTOFFISOLIER	SKUM ISOLERING	SCHUIMISOLATIE	
3		**84370302**		1	ESPUMA, HVAC Box	FOAM	ESPUMA	SCHIUMA	P033
					MOUSSE	SCHAUM	SKUM	SCHUIM	

90.160.01	03	p1	02/11

CAB SEALING (ALL NH)
CAB SEALING (ALL NH)
CAB SEALING (ALL NH)
CAB SEALING (ALL NH)

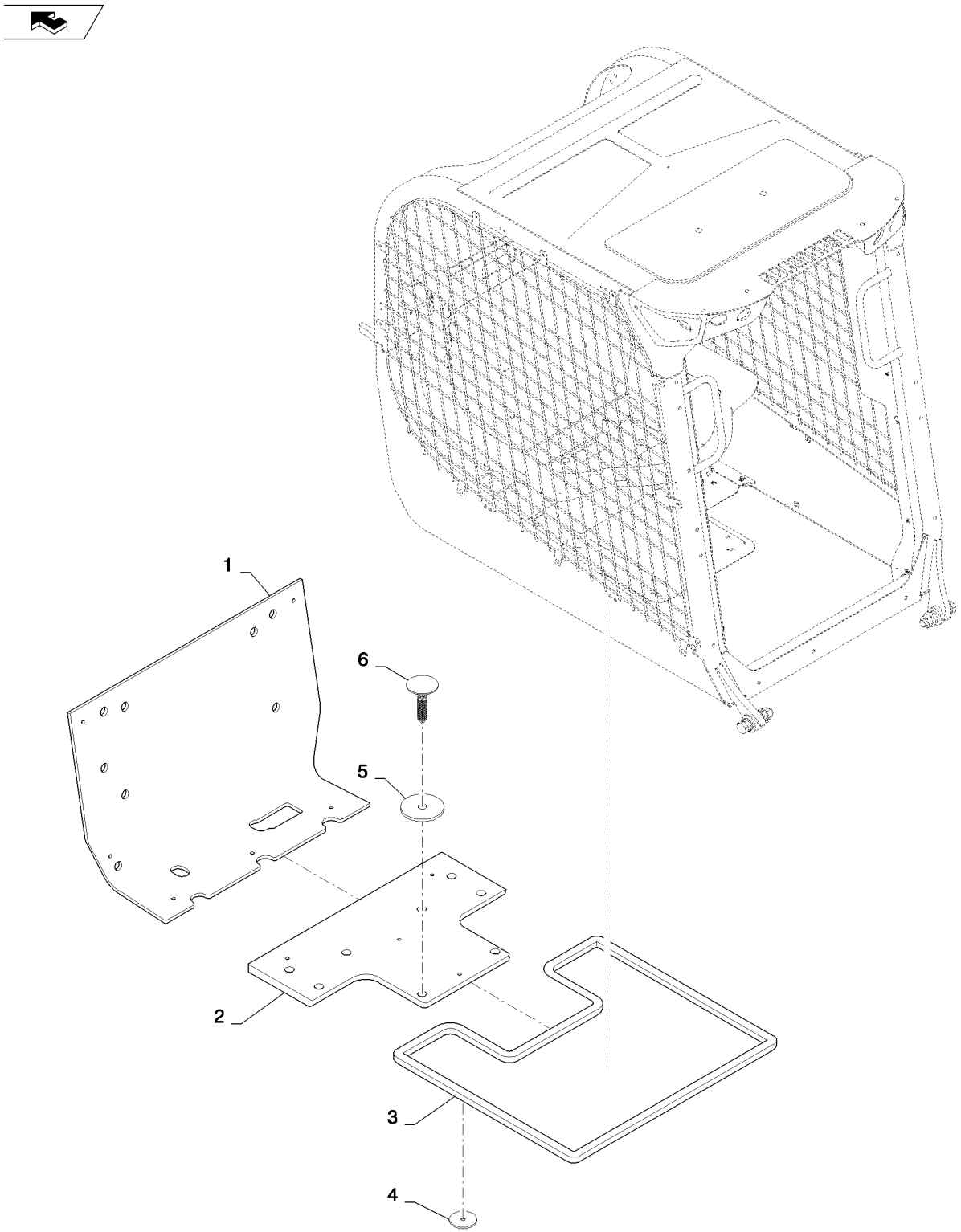

CAB SEALING (ALL NH)
CAB SEALING (ALL NH)
CAB SEALING (ALL NH)
CAB SEALING (ALL NH)

R	N	P.N.	MOD	Q	Denominação Description Bezeichnung	Denominacion Beskrivelse	Descrizione Beschrijving	L.C.
1		84362124		1	ESPUMA ISOLANTE, Firewall FOAM INSULATION MOUSSE ISOLANTE SCHAUMSTOFFISOLIER	ESPUMA AISLANTE SKUM ISOLERING	ISOLANTE IN SCHIUMA SCHUIMISOLATIE	051S
2		84338534		1	VEDAÇÃO, 3326 mm SEAL JOINT DICHTUNG	ANILLO DE CIERRE PAKNING	GUARNIZIONE; TENUTA AFDICHTING	132A
3		84311384		1	ESPUMA ISOLANTE, Dump Valve FOAM INSULATION MOUSSE ISOLANTE SCHAUMSTOFFISOLIER	ESPUMA AISLANTE SKUM ISOLERING	ISOLANTE IN SCHIUMA SCHUIMISOLATIE	051S
4		348434A1		7	ARRUELA PLANA, Flat WASHER RONDELLE UNTERLEGSCHEIBE	ARANDELA FLADSKIVE	ROSETTA PIANA SLUITRING	9720
5		348452A1		7	BOTÃO DE IMPULSO, Push-In FASTENER ATTACHE BEFESTIGUNGSELEMEN	SUJETADOR LUKKER	DISPOSITIVO DI FISSAG BEVESTIGING	123B

SEAL PACKAGE (L218-C238)
SEAL PACKAGE (L218-C238)
SEAL PACKAGE (L218-C238)
SEAL PACKAGE (L218-C238)

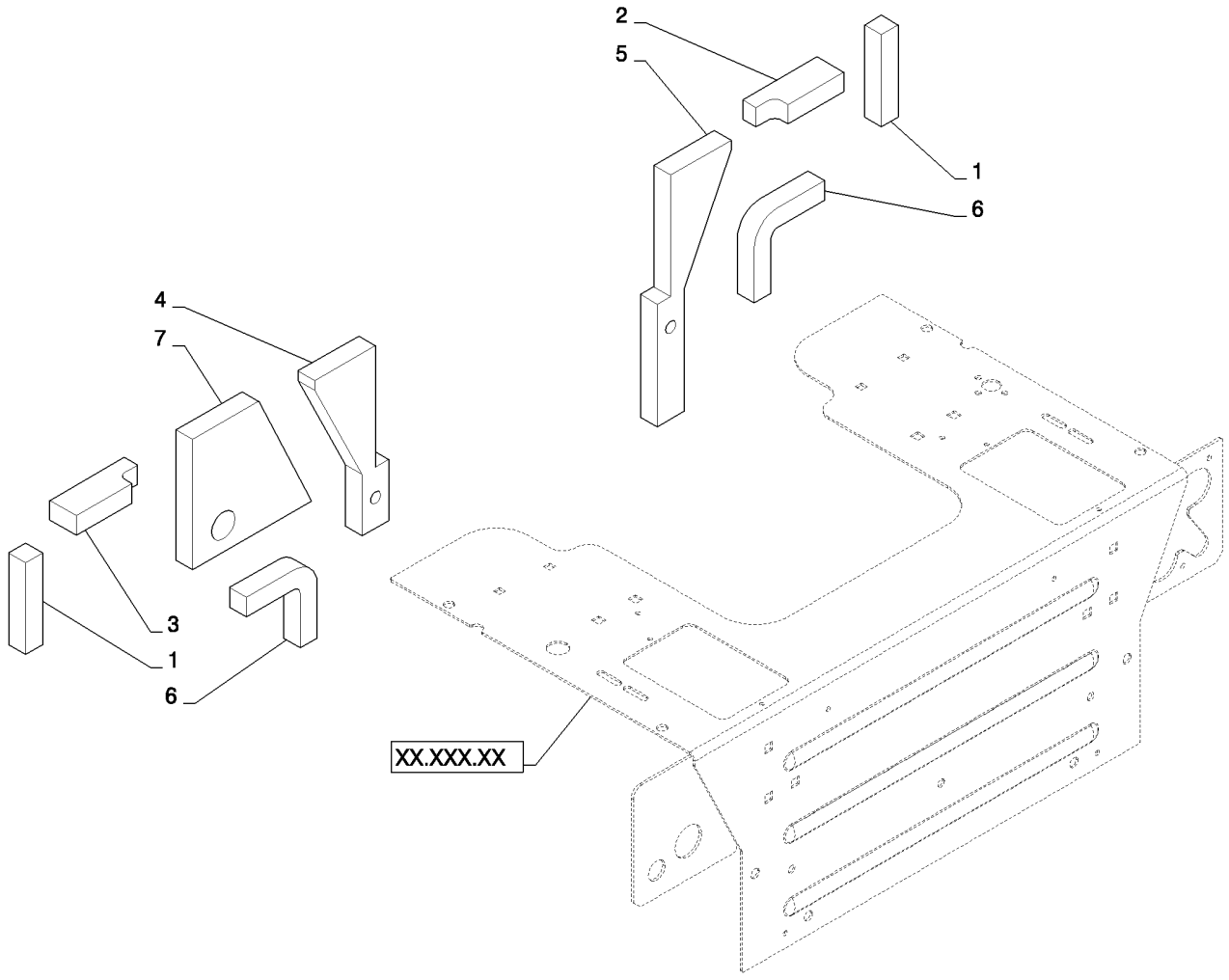

SEAL PACKAGE (L218-C238)
SEAL PACKAGE (L218-C238)
SEAL PACKAGE (L218-C238)
SEAL PACKAGE (L218-C238)

R	N	P.N.	MOD	Q	Denominação Description Bezeichnung	Description Bezeichnung	Denominacion Beskrivelse	Descrizione Beschrijving	L.C.
1		{84379232}		2	Chassis Filler				
2		84372899		1	ESPUMA, LH Upper Chassis Filler				
						FOAM	ESPUMA	SCHIUMA	P033
					MOUSSE	SCHAUM	SKUM	SCHUIM	
3		84372898		1	ESPUMA, RH Upper Chassis Filler				
						FOAM	ESPUMA	SCHIUMA	P033
					MOUSSE	SCHAUM	SKUM	SCHUIM	
4		84372629		1	ESPUMA, RH Heel Plate	FOAM	ESPUMA	SCHIUMA	P033
					MOUSSE	SCHAUM	SKUM	SCHUIM	
5		84372628		1	ESPUMA, LH Heel Plate	FOAM	ESPUMA	SCHIUMA	P033
					MOUSSE	SCHAUM	SKUM	SCHUIM	
6		84342690		2	ESPUMA ISOLANTE	FOAM INSULATION	ESPUMA AISLANTE	ISOLANTE IN SCHIUMA	051S
					MOUSSE ISOLANTE	SCHAUMSTOFFISOLIER	SKUM ISOLERING	SCHUIMISOLATIE	
7		84287773		1	ESPUMA, RH Filler	FOAM	ESPUMA	SCHIUMA	P033
					MOUSSE	SCHAUM	SKUM	SCHUIM	

90.160.03	01	p1	02/11

CAB HEADLINER, NO RADIO (ALL NH)
CAB HEADLINER, NO RADIO (ALL NH)
CAB HEADLINER, NO RADIO (ALL NH)
CAB HEADLINER, NO RADIO (ALL NH)

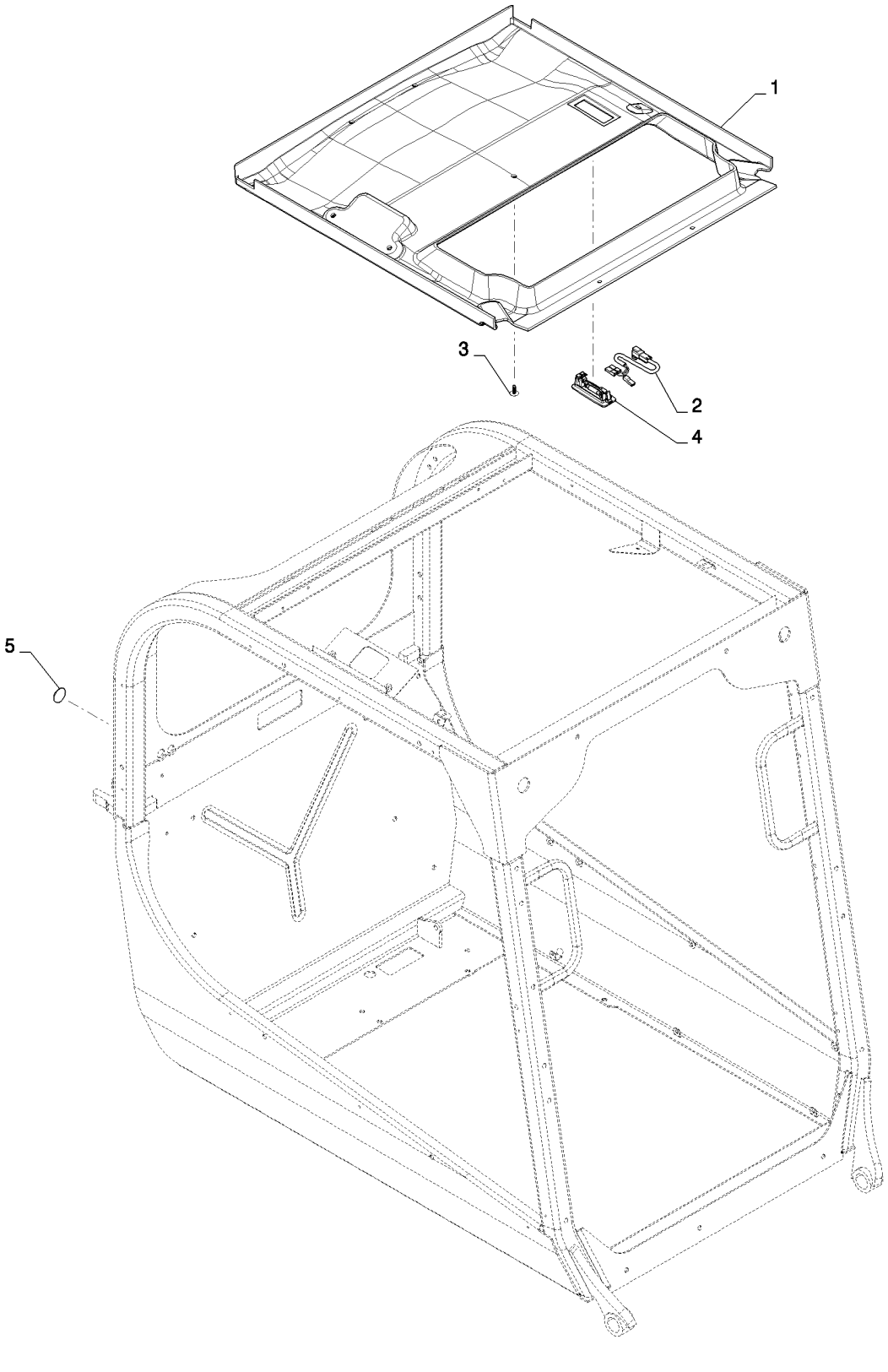

CAB HEADLINER, NO RADIO (ALL NH)
CAB HEADLINER, NO RADIO (ALL NH)
CAB HEADLINER, NO RADIO (ALL NH)
CAB HEADLINER, NO RADIO (ALL NH)

R	N	P.N.	MOD	Q	Denominação Description	Description Bezeichnung	Denominacion Beskrivelse	Descrizione Beschrijving	L.C.
1		84259657		1	PAINEL, Headliner W/Dome (NH)				
						PANEL	PANEL	PANNELLO	025P
					PANNEAU	PLATTE	PANEL	PANEEL	
2		84297137		1	CHICOTE, Dome Lamp	WIRE HARNESS	GRUPO DE CABLES	CABLAGGIO	070I
					FAISCEAU ELECTRIQUE	KABELBAUM	KABELNET	KABELBOOM	
3		84318534		8	BOTÃO DE IMPULSO, Push in, Gray				
						FASTENER	SUJETADOR	DISPOSITIVO DI FISSAG	123B
					ATTACHE	BEFESTIGUNGSELEMEN	LUKKER	BEVESTIGING	
4		1983391C1		1	LÂMPADA, Light Dome	LAMP	LÁMPARA	SPIA	009F
					LAMPE	LEUCHTE	LYGTE	LAMP	
5		NSS			SEM SERVIÇO EM SEPARADO				
						NOT SERVICED SEPARA	NO SE REPARA POR SE	NON FORNITO SEPARAT	064N
					NON FOURNI SEPAREM	NICHT A SEP ERS-T LIEI	SERVICERES IKKE SEPA	NIET LOS VERKRIJGBAA	
6		353-425		1	BUJÃO, Flat Face	PLUG	TAPÓN	TAPPO	6400
					BOUCHON	STOPFEN	PROP	PLUG	

90.160.03	02	p1	02/11

CAB HEADLINER, WITH RADIO (ALL NH)
CAB HEADLINER, WITH RADIO (ALL NH)
CAB HEADLINER, WITH RADIO (ALL NH)
CAB HEADLINER, WITH RADIO (ALL NH)

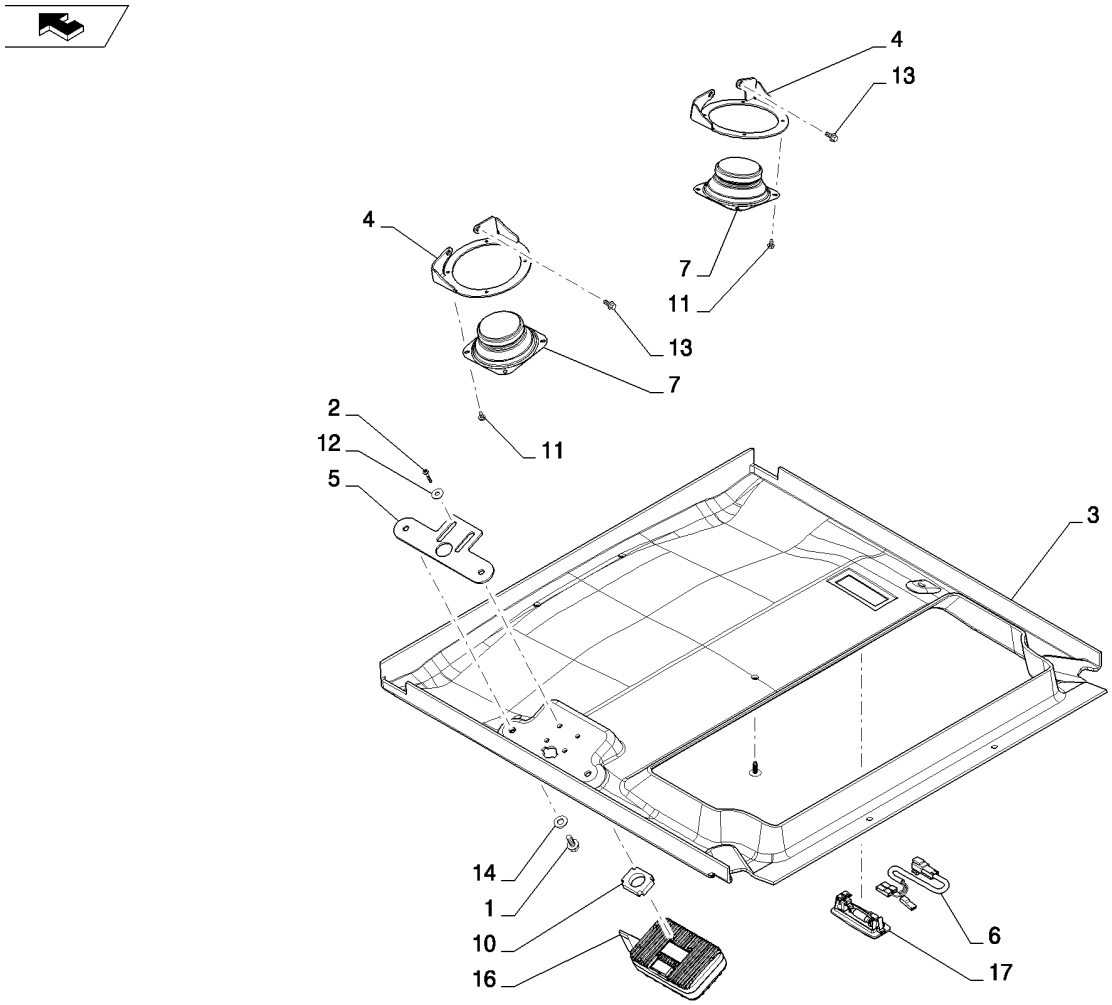

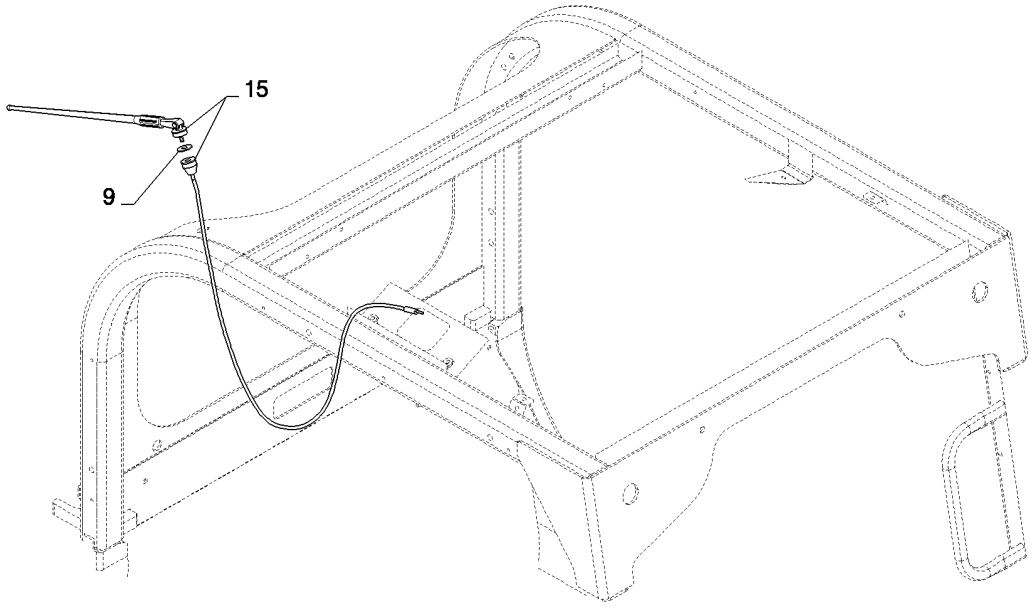

CAB HEADLINER, WITH RADIO (ALL NH)
CAB HEADLINER, WITH RADIO (ALL NH)
CAB HEADLINER, WITH RADIO (ALL NH)
CAB HEADLINER, WITH RADIO (ALL NH)

R	N	P.N.	MOD	Q	Denominação Description	Description Bezeichnung	Denominacion Beskrivelse	Descrizione Beschrijving	L.C.
1		9804258		2	PARAFUSO, Hex Flg, M8 x 20, 8.8				
						BOLT	PERNO	BULLONE	140B
					VIS	SCHRAUBE	BOLT	BOUT	
2		13272611		4	PARAFUSO, Cross Pan Hd, M4 x 25, M4 X 25 P/HD C/R-Z 5.8 ZND				
						SCREW	TORNILLO	VITE	040V
					VIS	SCHRAUBE	SKRUE	SCHROEF	
3		84259664		1	PAINEL, Headliner Radio Dome (NH)				
						PANEL	PANEL	PANNELLO	025P
					PANNEAU	PLATTE	PANEL	PANEEL	
4		84281707		2	SUPORTE, Sheet, Speaker Bracket, Gray				
						BRACKET	SOPORTE	STAFFA	225S
					SUPPORT	HALTERUNG	BESLAG	STEUN	
5		84281708		1	SUPORTE, Sheet, Radio Bracket, Gray				
						BRACKET	SOPORTE	STAFFA	225S
					SUPPORT	HALTERUNG	BESLAG	STEUN	
6		84297137		1	CHICOTE, Dome Lamp	WIRE HARNESS	GRUPO DE CABLES	CABLAGGIO	070I
					FAISCEAU ELECTRIQUE	KABELBAUM	KABELNET	KABELBOOM	
7		84298557		2	ALTO-FALANTE, 4 in. Sealed HP				
						SPEAKER	ALTAVOZ	ALTOPARLANTE	039A
					HAUT-PARLEUR	LAUTSPRECHER	HØJTALER	LUIDSPREKER	
8		84318534		6	BOTÃO DE IMPULSO, Push in, Gray				
						FASTENER	SUJETADOR	DISPOSITIVO DI FISSAG	123B
					ATTACHE	BEFESTIGUNGSELEMEN	LUKKER	BEVESTIGING	
9		84347538		1	ESPUMA ISOLANTE, Antenna Seal				
						FOAM INSULATION	ESPUMA AISLANTE	ISOLANTE IN SCHIUMA	051S
					MOUSSE ISOLANTE	SCHAUMSTOFFISOLIER	SKUM ISOLERING	SCHUIMISOLATIE	
10		84363241		1	ESPAÇADOR, Radio Cooling				
						SPACER	SEPARADOR	DISTANZIALE	075D
					ENTRETOISE	DISTANZSTÜCK	AFSTANDSSTYKKE	AFSTANDSSTUK	
11		86500939		8	PARAFUSO, Hex Wash Hd, #10 x 3/8"				
						SELF-TAP SCREW	TORNILLO AUTORROSC	VITE AUTOFILETTANTE	062V
					VIS AUTOTARAUDEUSE	SELBSTSCHN SCHRAUE	SELVLÅSENDE BOLT	ZELFTAPPENDE SCHRO	
12		86624182		4	ARRUELA PLANA, M6 x 18 x 1.6				
						WASHER	ARANDELA	RONDELLA	131R
					RONDELLE	UNTERLEGSCHEIBE	FLADSKIVE	SLUITRING	
13		86625199		4	PARAFUSO, Hex Flg Hd, M6 x 13				
						SELF-TAP SCREW	TORNILLO AUTORROSC	VITE AUTOFILETTANTE	062V
					VIS AUTOTARAUDEUSE	SELBSTSCHN SCHRAUE	SELVLÅSENDE BOLT	ZELFTAPPENDE SCHRO	
14		86625241		2	ARRUELA PLANA, 13/32" x 13/16" x .089", HDN, 0.406 X 0.812 X 0.089 IN HDN ZND				
						WASHER	ARANDELA	RONDELLA	131R
					RONDELLE	UNTERLEGSCHEIBE	FLADSKIVE	SLUITRING	
15		87668735		1	ANTENA, Rubber Mast	ANTENNA	ANTENA	ANTENNA	064A
					ANTENNE	ANTENNE	ANTENNE	ANTENNE	
16		87672223		1	RÁDIO, Mini WP AM/FM/WX Band				
						RADIO	RADIO	AUTORADIO	042R
					RADIO	RADIO	RADIO	RADIO	
17		1983391C1		1	LÂMPADA, Light Dome	LAMP	LÁMPARA	SPIA	009F
					LAMPE	LEUCHTE	LYGTE	LAMP	

90.180.01	01	p1	03/11

DECALS (L225)
DECALS (L225)
DECALS (L225)
DECALS (L225)

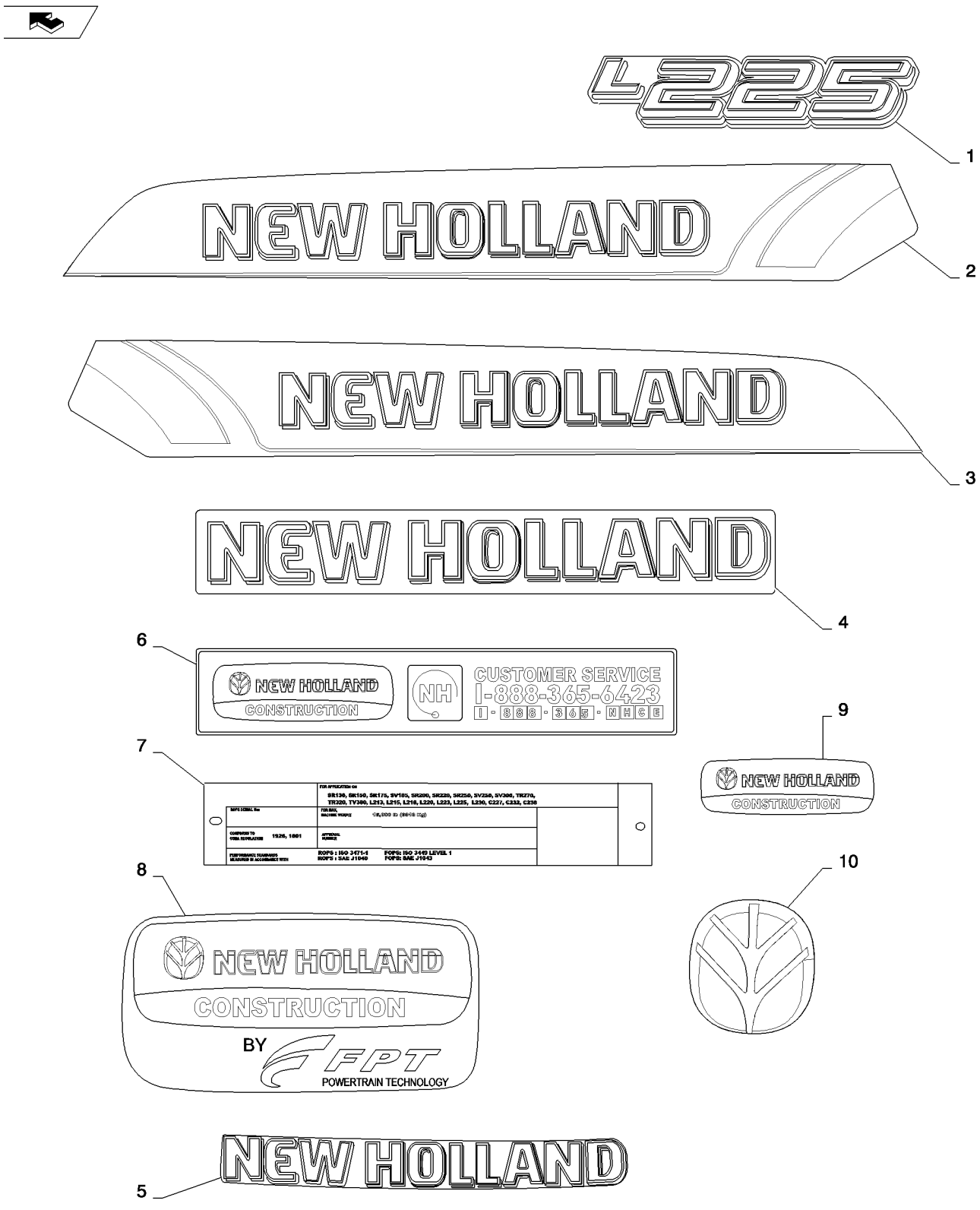

DECALS (L225)
DECALS (L225)
DECALS (L225)
DECALS (L225)

R	N	P.N.	MOD	Q	Denominação Description	Description Bezeichnung	Denominacion Beskrivelse	Descrizione Beschrijving	L.C.
1		84312490		2	ADESIVO, L225, Model Designation				
						DECAL	CALCOMANÍA	DECALCOMANIA	012D
					AUTOCOLLANT	AUFKLEBER	TRANSFER	STICKER	
2		84312494		1	ADESIVO, NH, LH, Large, Vertical				
						DECAL	CALCOMANÍA	DECALCOMANIA	012D
					AUTOCOLLANT	AUFKLEBER	TRANSFER	STICKER	
3		84312495		1	ADESIVO, NH, RH, Large, Vertical				
						DECAL	CALCOMANÍA	DECALCOMANIA	012D
					AUTOCOLLANT	AUFKLEBER	TRANSFER	STICKER	
4		87361358		1	ADESIVO, NH, Logo, Front	DECAL	CALCOMANÍA	DECALCOMANIA	012D
					AUTOCOLLANT	AUFKLEBER	TRANSFER	STICKER	
5		84328423		1	ADESIVO, NH, Rear, Door Decal				
						DECAL	CALCOMANÍA	DECALCOMANIA	012D
					AUTOCOLLANT	AUFKLEBER	TRANSFER	STICKER	
6		84311904		1	ADESIVO, Customer Service, NH				
						DECAL	CALCOMANÍA	DECALCOMANIA	012D
					AUTOCOLLANT	AUFKLEBER	TRANSFER	STICKER	
7		NSS			SEM SERVIÇO EM SEPARADO				
						NOT SERVICED SEPARA	NO SE REPARA POR SE	NON FORNITO SEPARAT	064N
					NON FOURNI SEPAREM	NICHT A SEP ERS-T LIEI	SERVICERES IKKE SEPA	NIET LOS VERKRIJGBAA	
8		87490305		1	ADESIVO, NH, Engine	DECAL	CALCOMANÍA	DECALCOMANIA	012D
					AUTOCOLLANT	AUFKLEBER	TRANSFER	STICKER	
9		84123944		1	ADESIVO, NH, Engine	DECAL	CALCOMANÍA	DECALCOMANIA	012D
					AUTOCOLLANT	AUFKLEBER	TRANSFER	STICKER	
10		87620419		1	ADESIVO, NH, Leaf Logo, Chromax 100mm				
						DECAL	CALCOMANÍA	DECALCOMANIA	012D
					AUTOCOLLANT	AUFKLEBER	TRANSFER	STICKER	

90.180.01	02	p1	02/11

DECALS - WARNING (ALL NH)
DECALS - WARNING (ALL NH)
DECALS - WARNING (ALL NH)
DECALS - WARNING (ALL NH)

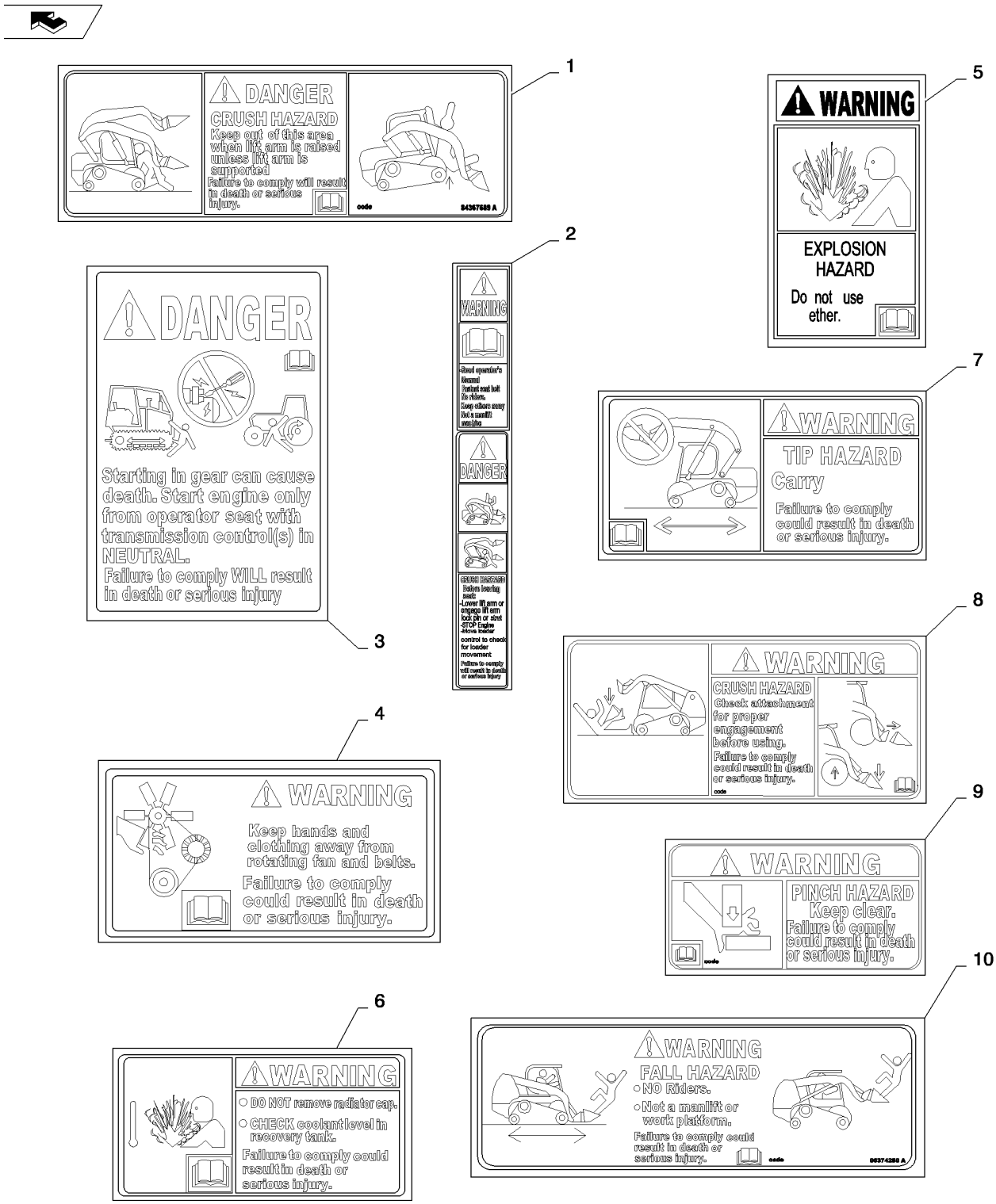

DECALS - WARNING (ALL NH)
DECALS - WARNING (ALL NH)
DECALS - WARNING (ALL NH)
DECALS - WARNING (ALL NH)

R	N	P.N.	MOD	Q	Denominação Description	Description Bezeichnung	Denominacion Beskrivelse	Descrizione Beschrijving	L.C.
1		84367563		1	ADESIVO DE PERIGO, Boom Crush Hazard				
						DANGER DECAL	RÓTULO DE PELIGRO	DECALCOMANIA PERIC(	A038
					AUTOCOLLANT DANGEF	AUFKLEBER GEFAHR	MÆRKAT, FARE	STICKER: GEVAAR	
2		84367570		1	ADESIVO DE ADVERTÊNCIA, Combination				
						WARNING DECAL	RÓTULO DE ADVERTEN	DECALCOMANIA AVVER	A040
					AUTOCOLLANT AVERTIS	AUFKLEBER WARNUNG	MÆRKAT, ADVARSEL	STICKER: WAARSCHUW	
3		84135011		1	ADESIVO, Warning, Engine Start				
						DECAL	CALCOMANÍA	DECALCOMANIA	012D
					AUTOCOLLANT	AUFKLEBER	TRANSFER	STICKER	
4		9828825		1	ADESIVO DE ADVERTÊNCIA, Fan				
						WARNING DECAL	RÓTULO DE ADVERTEN	DECALCOMANIA AVVER	A040
					AUTOCOLLANT AVERTIS	AUFKLEBER WARNUNG	MÆRKAT, ADVARSEL	STICKER: WAARSCHUW	
5		8603092		1	ADESIVO DE ADVERTÊNCIA, Ether				
						WARNING DECAL	RÓTULO DE ADVERTEN	DECALCOMANIA AVVER	A040
					AUTOCOLLANT AVERTIS	AUFKLEBER WARNUNG	MÆRKAT, ADVARSEL	STICKER: WAARSCHUW	
6		84316983		1	ADESIVO, Warning, Radiator Cap				
						DECAL	CALCOMANÍA	DECALCOMANIA	012D
					AUTOCOLLANT	AUFKLEBER	TRANSFER	STICKER	
7		84367572		1	ADESIVO DE PERIGO, Tip Hazard				
						DANGER DECAL	RÓTULO DE PELIGRO	DECALCOMANIA PERIC(	A038
					AUTOCOLLANT DANGEF	AUFKLEBER GEFAHR	MÆRKAT, FARE	STICKER: GEVAAR	
8		84367561		1	ADESIVO DE ADVERTÊNCIA, Crush Hazard				
						WARNING DECAL	RÓTULO DE ADVERTEN	DECALCOMANIA AVVER	A040
					AUTOCOLLANT AVERTIS	AUFKLEBER WARNUNG	MÆRKAT, ADVARSEL	STICKER: WAARSCHUW	
9		84394350		2	ADESIVO DE ADVERTÊNCIA, Pinch Point				
						WARNING DECAL	RÓTULO DE ADVERTEN	DECALCOMANIA AVVER	A040
					AUTOCOLLANT AVERTIS	AUFKLEBER WARNUNG	MÆRKAT, ADVARSEL	STICKER: WAARSCHUW	
10		84374298		1	ADESIVO DE ADVERTÊNCIA, No Rider, Manlift				
						WARNING DECAL	RÓTULO DE ADVERTEN	DECALCOMANIA AVVER	A040
					AUTOCOLLANT AVERTIS	AUFKLEBER WARNUNG	MÆRKAT, ADVARSEL	STICKER: WAARSCHUW	

DECALS (ALL NH)
DECALS (ALL NH)
DECALS (ALL NH)
DECALS (ALL NH)

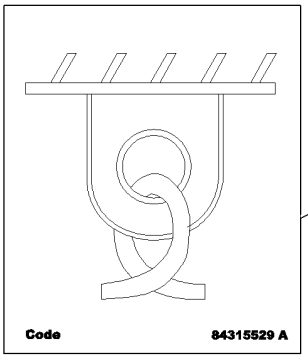

1

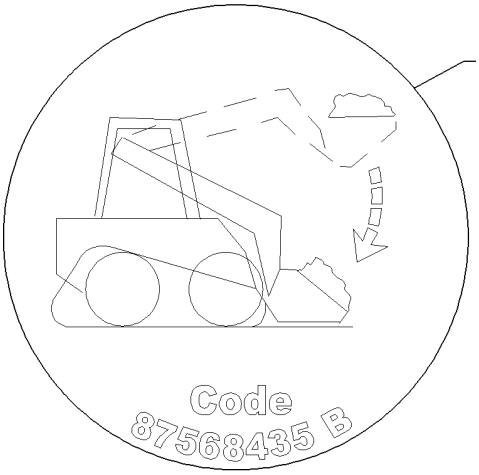

4

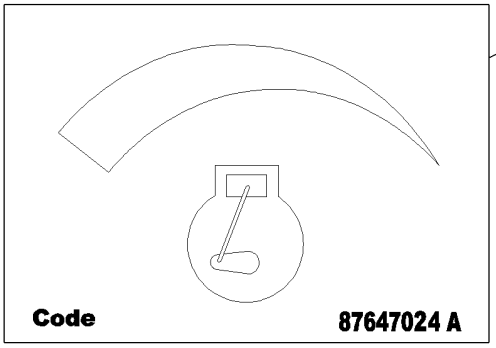

2

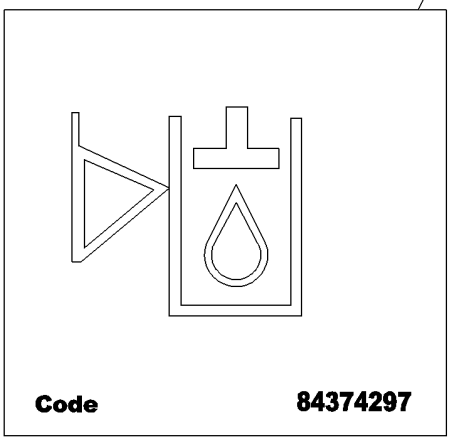

5

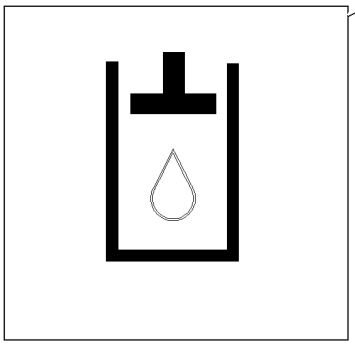

3

DECALS (ALL NH)
DECALS (ALL NH)
DECALS (ALL NH)
DECALS (ALL NH)

R	N	P.N.	MOD	Q	Denominação Description Bezeichnung	Description Bezeichnung	Denominacion Beskrivelse	Descrizione Beschrijving	L.C.
1		84315529		4	ADESIVO, Tie Down AUTOCOLLANT	DECAL AUFKLEBER	CALCOMANÍA TRANSFER	DECALCOMANIA STICKER	012D
2		87647024		1	ADESIVO, Throttle AUTOCOLLANT	DECAL AUFKLEBER	CALCOMANÍA TRANSFER	DECALCOMANIA STICKER	012D
3		251753A1		1	ADESIVO, Hydraulic Fluid AUTOCOLLANT	DECAL AUFKLEBER	CALCOMANÍA TRANSFER	DECALCOMANIA STICKER	012D
4		87568435		1	ADESIVO, Boom Override AUTOCOLLANT	DECAL AUFKLEBER	CALCOMANÍA TRANSFER	DECALCOMANIA STICKER	012D
5		84374297		1	ADESIVO, Hydraulic Oil Level AUTOCOLLANT	DECAL AUFKLEBER	CALCOMANÍA TRANSFER	DECALCOMANIA STICKER	012D
6		84469201		2	ADESIVO, Tie Down (Not Shown) AUTOCOLLANT	DECAL AUFKLEBER	CALCOMANÍA TRANSFER	DECALCOMANIA STICKER	012D

DECALS (L225)
DECALS (L225)
DECALS (L225)
DECALS (L225)

1

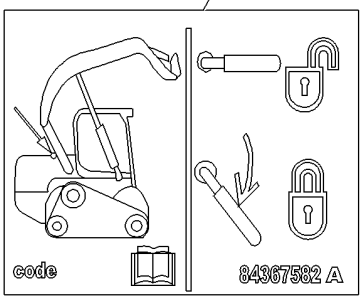

2



4

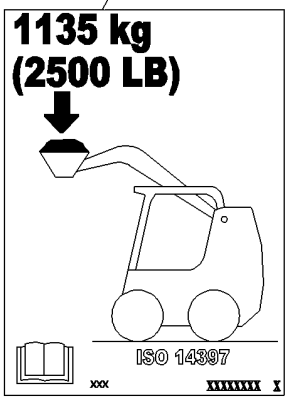

5

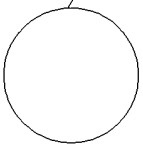

3



DECALS (L225)
DECALS (L225)
DECALS (L225)
DECALS (L225)

R	N	P.N.	MOD	Q	Denominação Description	Description Bezeichnung	Denominacion Beskrivelse	Descrizione Beschrijving	L.C.
1		**84367582**		1	ADESIVO, Loader Latch	DECAL	CALCOMANÍA	DECALCOMANIA	012D
					AUTOCOLLANT	AUFKLEBER	TRANSFER	STICKER	
2		**86521673**		2	ADESIVO DE ADVERTÊNCIA, Pinch Point				
						WARNING DECAL	RÓTULO DE ADVERTEN	DECALCOMANIA AVVER	A040
					AUTOCOLLANT AVERTIS	AUFKLEBER WARNUNG	MÆRKAT, ADVARSEL	STICKER: WAARSCHUW	
3		**84374269**		1	ADESIVO, Super Boom Window				
						DECAL	CALCOMANÍA	DECALCOMANIA	012D
					AUTOCOLLANT	AUFKLEBER	TRANSFER	STICKER	
4		**84350661**		1	ADESIVO, Operating Capacity				
						DECAL	CALCOMANÍA	DECALCOMANIA	012D
					AUTOCOLLANT	AUFKLEBER	TRANSFER	STICKER	
5		**87644665**		4	ADESIVO, Lexan	DECAL	CALCOMANÍA	DECALCOMANIA	012D
					AUTOCOLLANT	AUFKLEBER	TRANSFER	STICKER	