# Fig. 011 CYLINDER BLOCK

## DOOSAN L300A MOTOR

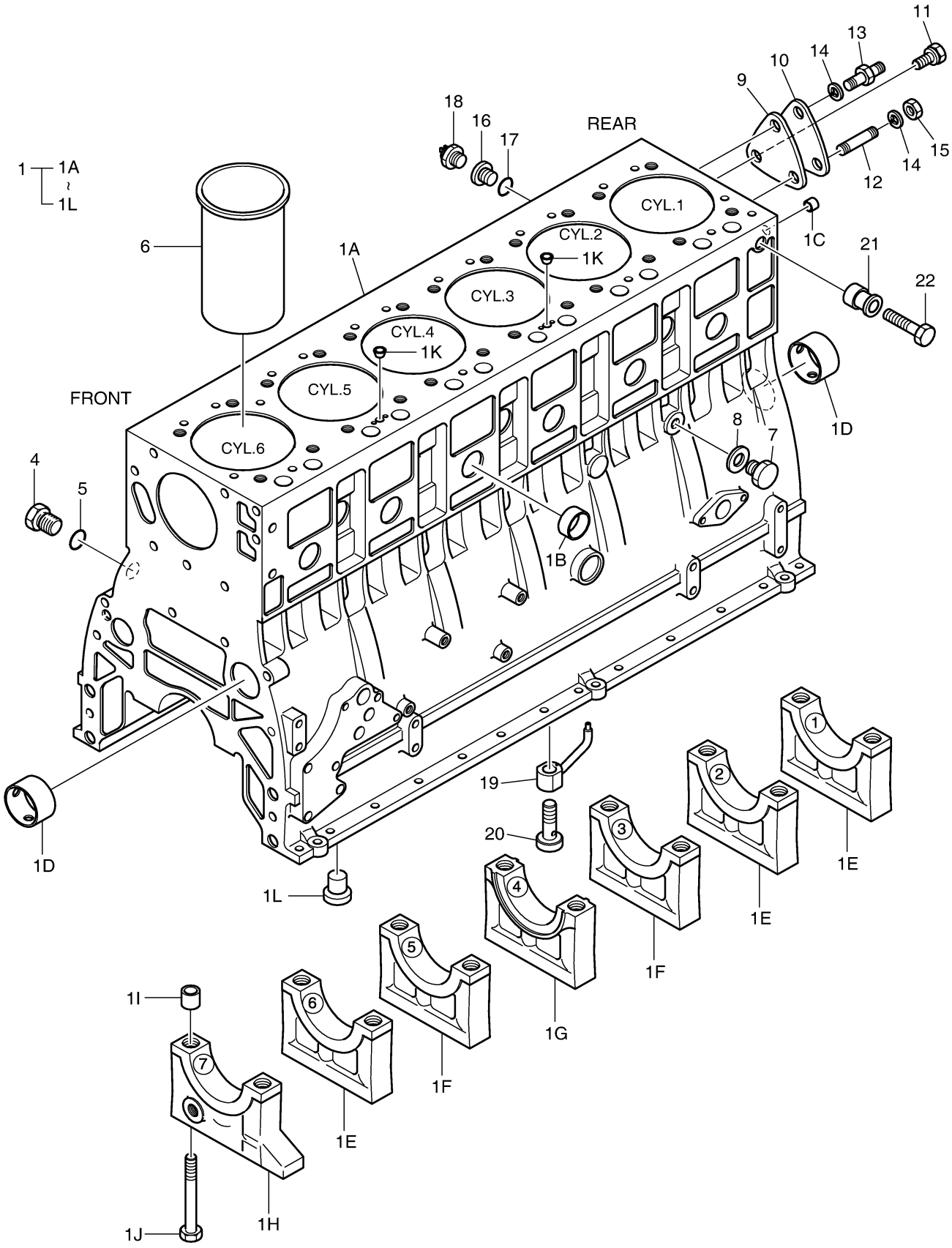

# Fig. 011 CYLINDER BLOCK

| Key No | Part No | Description | Qty | S.C | Serial No | ICA | Replacable | Qty |
|---|---|---|---|---|---|---|---|---|
| 1 | 150102-00405 | CYLINDER BLOCK ASS'Y | 1 | | | | | |
| 1A | 65.01101-0040Q | BLOCK;CYLINDER(T/C) | 1 | D | | | | |
| 1B | 65.91606-0037 | PLUG;CORE | 9 | | | | | |
| 1C | 65.91606-0041 | PLUG;CORE | 2 | | | | | |
| 1D | 65.04410-0017 | BUSH;CAM SHAFT | 4 | B | | | | |
| 1E | 65.01105-1172B | BEARING;CAP NO.1.2.6 | 3 | D | | | | |
| 1F | 65.01105-1160F | BEARING;CAP NO.3.5 | 2 | D | | | | |
| 1G | 65.01105-1156D | CAP BEARING;THRUST | 1 | D | | | | |
| 1H | 140202-00123 | CAP,BEARING | 1 | D | | | | |
| 1I | 65.91710-0035B | RING;LOCATING | 14 | | | | | |
| 1J | 65.90020-0035B | BOLT;BEARING CAP | 14 | | | | | |
| 1K | 65.91001-0013A | PIN;CORE | 2 | | | | | |
| 1L | 65.91020-0013 | PLUG;CORE | 1 | | | | | |
| 4 | 65.90310-0048 | SCREW;PLUG M10X1.5 | 6 | | | | | |
| 5 | 06.56180-0714 | RING;SEAL | 6 | | | | | |
| 6 | 65.01201-0050 | LINER;CYLINDER | 6 | | | | | |
| 7 | 65.90310-0091 | SCREW;PLUG M12X1.5X20 | 1 | | | | | |
| 8 | 06.56190-0704 | RING;SEAL | 1 | | | | | |
| 9 | 65.96601A0042 | GASKET;END COVER | 1 | | | | | |
| 10 | 65.91605-0006B | COVER;END | 1 | | | | | |
| 11 | 06.01913-3114 | BOLT ASS'Y M8X22 | 1 | | | | | |
| 12 | 06.06225-0704 | BOLT;STUD M8X20 | 1 | | | | | |
| 13 | 120122-00014 | BOLT,SPACER;M8 | 1 | | | | | |
| 14 | 06.16731-2107 | WASHER | 2 | | | | | |
| 15 | 06.11063-8214 | NUT | 1 | | | | | |
| 16 | 65.98130-0194 | ADAPTER | 1 | | | | | |
| 17 | 06.56180-0714 | RING;SEAL | 1 | | | | | |
| 18 | 65.27441-7007 | SWITCH;OIL PRESSURE | 1 | | | | | |
| 19 | 65.01601-6003C | OIL SPRAY NOZZLE ASS`Y | 6 | | | | | |
| 20 | 65.05405-6001 | RELIEF VALVE ASS`Y | 6 | | | | | |
| 21 | 65.91701-0148 | SPACER | 1 | | | | | |
| 22 | 06.01283-7524 | BOLT;HEX. M16X65 | 1 | | | | | |

# Fig. 012 TIMING GEAR CASE

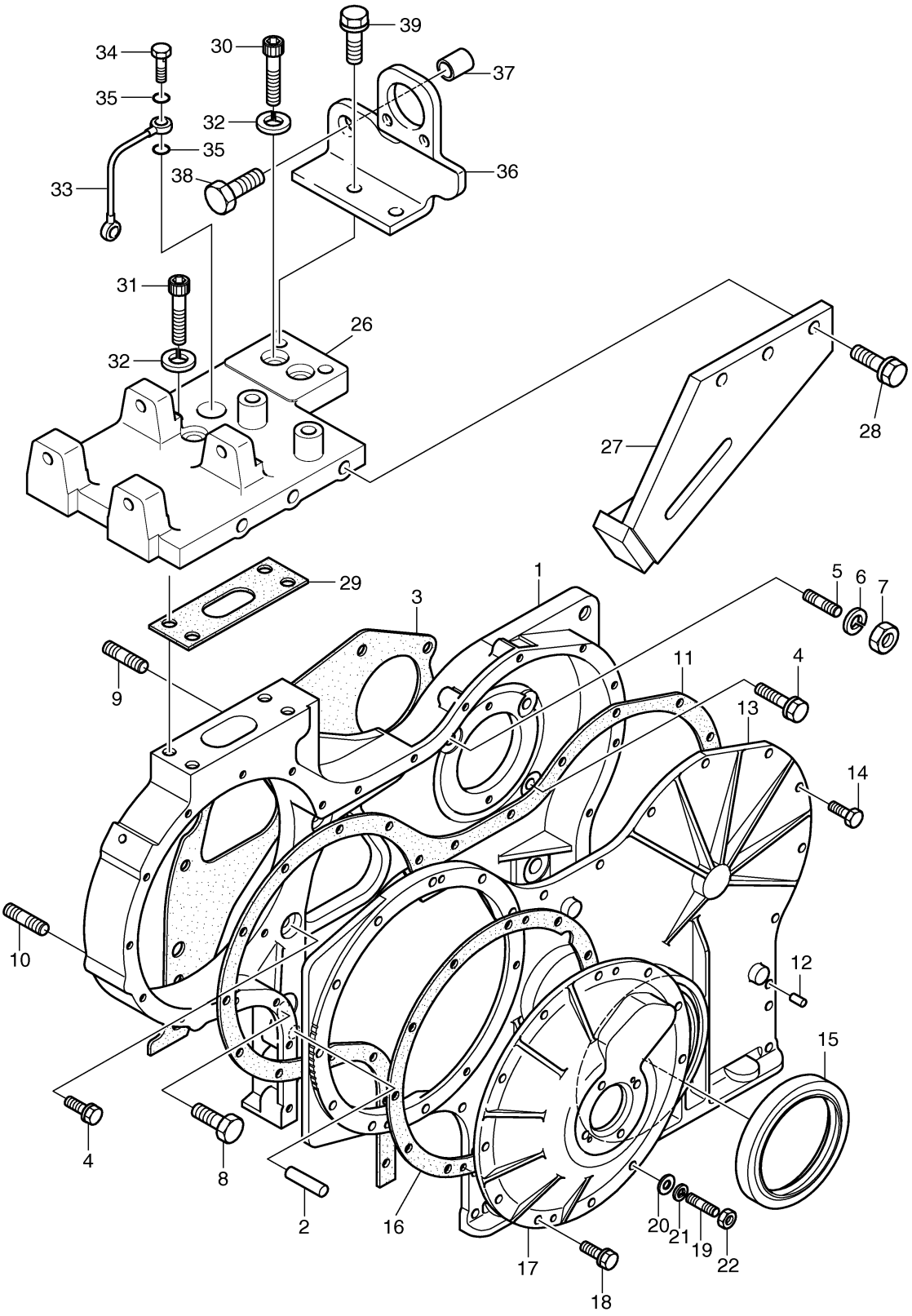




DOOSAN Doosan Infracore

# Fig. 012 TIMING GEAR CASE

| Key No | Part No | Description | Qty | S.C | Serial No | ICA | Replacable | Qty |
|---|---|---|---|---|---|---|---|---|
| 1 | 130405-00007 | CASE;TIMING GEAR | 1 | | | | | |
| 2 | 65.91010-0018 | PIN;DOWEL | 2 | | | | | |
| 3 | 65.01903C0021 | GASKET;TIMING GEAR CASE | 1 | | | | | |
| 4 | 06.01913-3113 | BOLT ASS'Y M8X20 | 5 | | | | | |
| 5 | 06.06225-0704 | BOLT;STUD M8X20 | 1 | | | | | |
| 6 | 06.16731-2107 | WASHER | 1 | | | | | |
| 7 | 06.11063-8214 | NUT | 1 | | | | | |
| 8 | 06.01943-3317 | BOLT ASS`Y M12X1.5X30 | 4 | | | | | |
| 9 | 65.90201-0048 | BOLT;STUD | 1 | | | | | |
| 10 | 06.06225-0809 | BOLT;STUD M10X35 | 6 | | | | | |
| 11 | 65.01903B0113 | GASKET;T.G.C COVER | 1 | | | | | |
| 12 | 06.22022-0907 | PIN;DOWEL 6M6X10 | 2 | | | | | |
| 13 | 65.01305-5028C | COVER;TIMING GEAR CASE | 1 | | | | | |
| 14 | 06.01923-2914 | BOLT ASS`Y M6X22 | 13 | | | | | |
| 15 | 65.01510-0157 | SEAL;OIL | 1 | | | | | |
| 16 | 65.01903B0029 | GASKET;COVER | 1 | | | | | |
| 17 | 65.01307-5002 | COVER;TIMING GEAR CASE | 1 | | | | | |
| 18 | 06.01923-2918 | BOLT ASS`Y M6X35 | 9 | | | | | |
| 19 | 65.90201-0146 | BOLT;STUD M6X16 | 2 | | | | | |
| 20 | 06.15010-2309 | WASHER;PLAIN | 2 | | | | | |
| 21 | 06.16731-2105 | WASHER | 2 | | | | | |
| 22 | 06.11063-8212 | NUT | 2 | | | | | |
| 26 | 65.54302-0021A | PLATE;AIR COMPRESSOR | 1 | | | | | |
| 27 | 65.95840-0033 | BRACKET;IDLE PULLEY | 1 | | | | | |
| 28 | 06.01913-3215 | BOLT ASS'Y M10X25 | 3 | | | | | |
| 29 | 65.54903A0013 | GASKET | 1 | | | | | |
| 30 | 06.02090-0511 | BOLT;SOCKET M10X22 | 2 | | | | | |
| 31 | 06.02090-0513 | BOLT;SOCKET | 2 | | | | | |
| 32 | 06.16731-2108 | WASHER;SPRING | 4 | | | | | |
| 33 | 65.05701-5456 | OIL PIPE ASS'Y | 1 | | | | | |
| 34 | 65.98150-0056 | SCREW;HOLLOW | 1 | | | | | |
| 35 | 06.56180-0712 | RING;SEAL | 2 | | | | | |
| 36 | 65.54306-0003 | ANGLE;BRACKET | 1 | | | | | |
| 37 | 65.91701-0273 | RING;SPACER | 1 | | | | | |
| 38 | 06.01013-9517 | BOLT;HEX M16X60 | 1 | | | | | |
| 39 | 06.01913-3215 | BOLT ASS'Y M10X25 | 2 | | | | | |

# Fig. 013 FLYWHEEL HOUSING

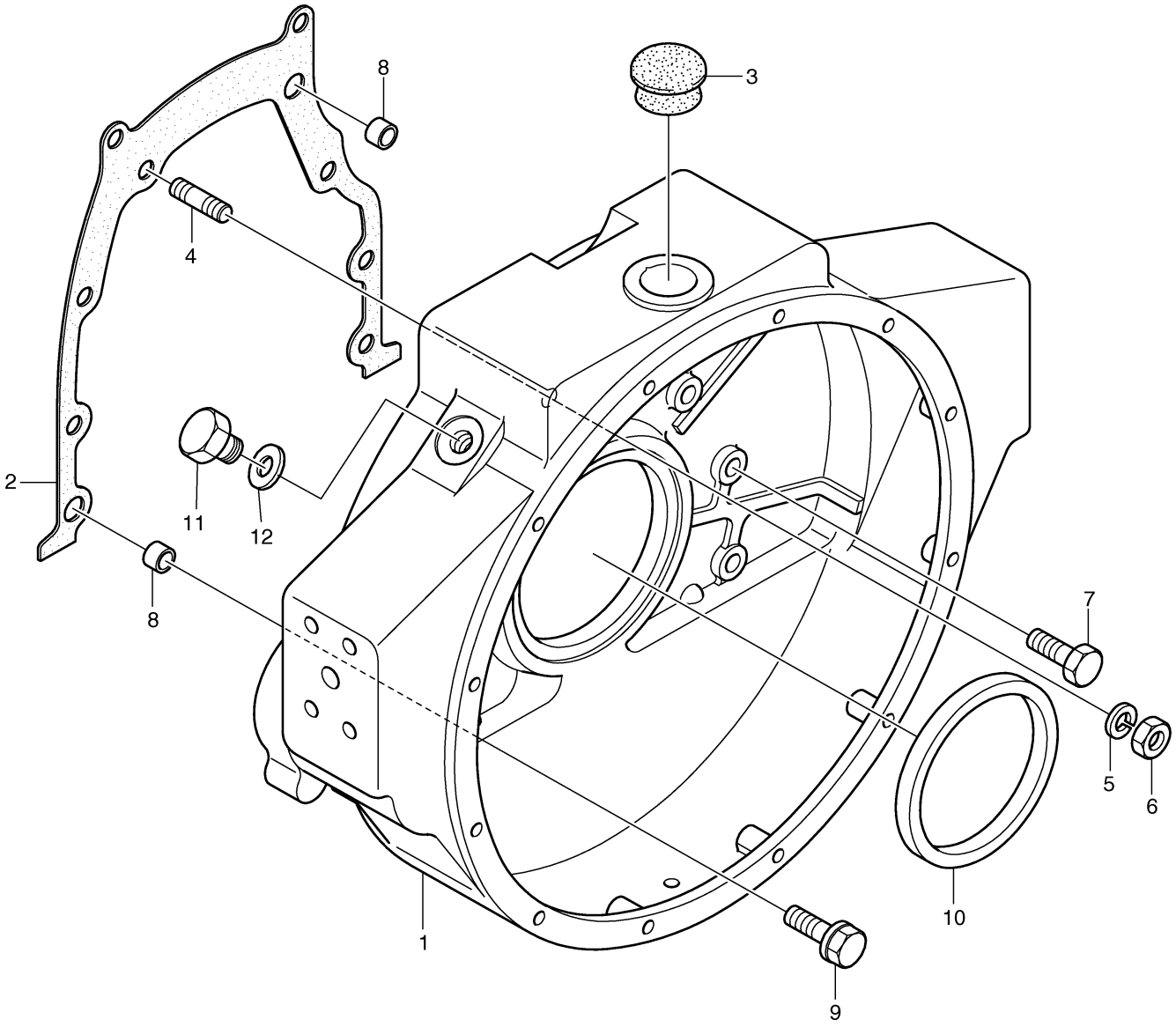




DOOSAN Doosan Infracore

# Fig. 013 FLYWHEEL HOUSING

| Key No | Part No | Description | Qty | S.C | Serial No | ICA | Replacable | Qty |
|---|---|---|---|---|---|---|---|---|
| 1 | 65.01401-0295B | HOUSING;FLY WHEEL | 1 | | | | | |
| 2 | 65.01903A0178 | GASKET;FLYWHEEL HOUSING | 1 | | | | | |
| 3 | 65.96002-0003 | PLUG;RUBBER | 1 | | | | | |
| 4 | 06.06176-8309 | BOLT,STUD | 1 | | | | | |
| 5 | 06.16731-2109 | WASHER;SPRING A12 | 1 | | | | | |
| 6 | 06.11063-9216 | NUT;HEX. M12X1.5 | 1 | | | | | |
| 7 | 06.01943-3319 | BOLT ASS'Y M12X1.5X40 | 7 | | | | | |
| 8 | 65.91710-0016 | RING;STOPPER | 2 | | | | | |
| 9 | 06.01943-3320 | BOLT ASS`Y M12X1.5X45 | 2 | | | | | |
| 10 | 65.01510-0037 | SEAL;OIL REAR | 1 | | | | | |
| 11 | 06.08092-2405 | PLUG SCREW M16 X 1.5 | 1 | | | | | |
| 12 | 06.56190-0709 | SEAL;RING | 1 | | | | | |

# Fig. 014 CRANK SHAFT

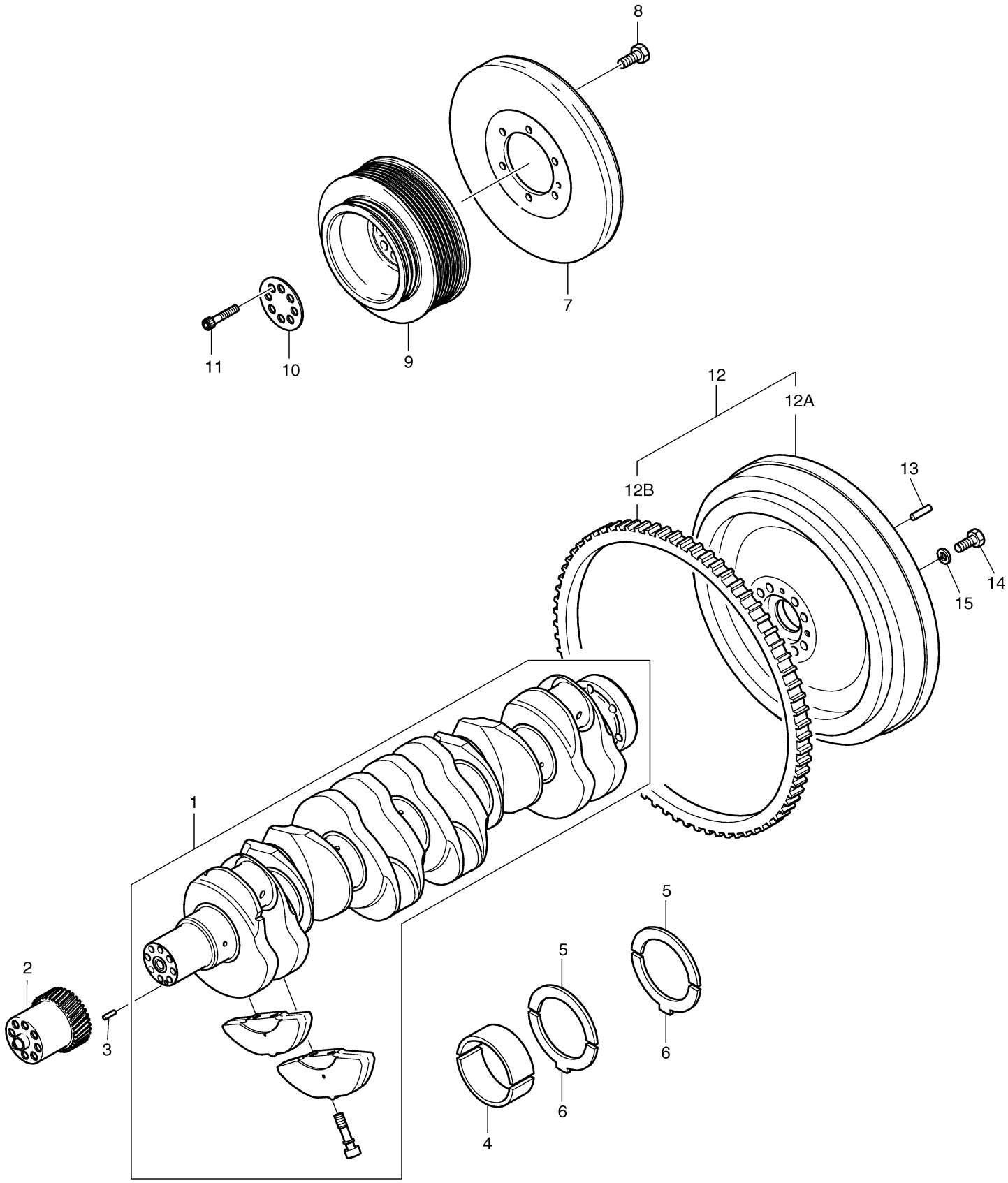




DOOSAN Doosan Infracore

# Fig. 014 CRANK SHAFT

| Key No | Part No | Description | Qty | S.C | Serial No | ICA | Replacable | Qty |
|---|---|---|---|---|---|---|---|---|
| 1 | 150107-00183 | CRANK SHAFT | 1 | | | | | |
| 2 | 65.02115-0040K | GEAR;CRANK SHAFT | 1 | | ~130307 | | | |
| 2 | 130410-00044A | GEAR,CRANKSHAFT | 1 | | 130308~ | | | |
| 3 | 06.22022-0912 | PIN;DOWEL | 1 | | | | | |
| 4 | 65.01110-6351 | METAL;MAIN STD | 7 | | | | | |
| 4 | 65.01110-6352 | METAL;MAIN 0.25 | 7 | US | | | | |
| 4 | 65.01110-6353 | METAL;MAIN 0.50 | 7 | US | | | | |
| 5 | 65.01150-0015 | WASHER;THRUST(UPPER) | 2 | | | | | |
| 5 | 65.01150-0019 | WASHER;THRUST(0.25) | 2 | | | | | |
| 5 | 65.01150-0020 | WASHER;THRUST(0.50) | 2 | | | | | |
| 6 | 65.01150-0016A | WASHER;THRUST(LOWER) | 2 | | | | | |
| 6 | 65.01150-0023A | WASHER;THRUST(0.25) | 2 | OS | | | | |
| 6 | 65.01150-0024A | WASHER;THRUST(0.50) | 2 | OS | | | | |
| 7 | 65.02201-7032 | DAMPER;VIBRATION | 1 | | | | | |
| 8 | 65.90020-0062B | BOLT;HEX M10X20 | 6 | | | | | |
| 9 | 65.02601-0168 | PULLEY;V-BELT | 1 | | | | | |
| 10 | 65.90701-0088 | WASHER | 1 | | | | | |
| 11 | 06.02106-0619 | BOLT;SOCKET HEAD | 8 | | | | | |
| 12 | 150111-00084 | FLYWHEEL ASSY | 1 | | | | | |
| 12A | 65.02301-0264A | FLYWHEEL | 1 | | | | | |
| 12B | 130422-00034 | GEAR,RING | 1 | | | | | |
| 13 | 06.22022-1010 | PIN;DOWEL | 1 | | | | | |
| 14 | 65.90001-0084 | BOLT;HEX. M14X1.5X40 | 6 | | | | | |
| 15 | 06.16731-2110 | WASHER;SPRING | 6 | | | | | |

# Fig. 015 PISTON

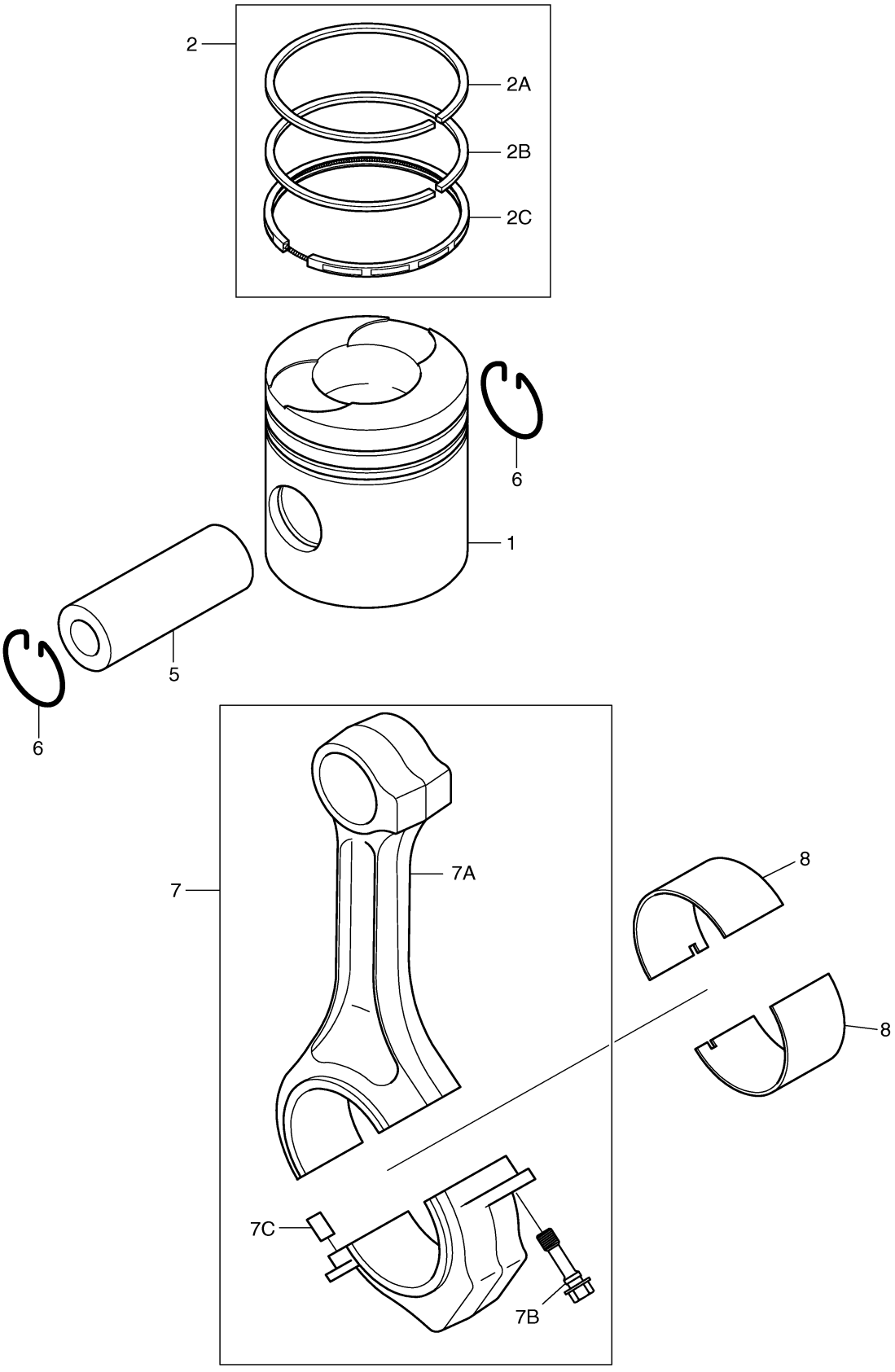

# Fig. 015 PISTON

| Key No | Part No | Description | Qty | S.C | Serial No | ICA | Replacable | Qty |
|---|---|---|---|---|---|---|---|---|
| 1 | 65.02501-0228B | PISTON | 6 | | | | | |
| 2 | 65.02503-8146 | PISTON RING KIT | 1 | | | | | |
| 2A | - | RING;TOP 111X3.5 | 6 | K | | | | |
| 2B | - | RING;SECOND 111X3.5 | 6 | K | | | | |
| 2C | - | RING;OIL 111X4 | 6 | K | | | | |
| 5 | 65.02502-0010 | PIN;PISTON 42X20X95 | 6 | | | | | |
| 6 | 06.29020-0126 | RING;SNAP 42X1.75 | 12 | | | | | |
| 7 | 65.02401-6018C | CONNECTING ROD ASS`Y | 6 | | | | | |
| 7A | 65.02401-0005A | ROD;CONNECTING | 1 | D | | | | |
| 7B | 65.90020-0009D | BOLT;CONNECTING ROD | 2 | | | | | |
| 7C | 65.02405-0010 | BUSH;CONNECTING ROD | 1 | B | | | | |
| 7D | 65.91301-0010 | PIN;DOWEL | 2 | | | | | |
| 8 | 65.02410-0010 | METAL;CONNECTING ROD(STD) | 6 | | | | | |
| 8 | 65.02410-0011 | METAL;CONNECTING ROD 0.25 | 6 | | | | | |
| 8 | 65.02410-0012 | METAL;CONNECTING ROD 0.5 | 6 | | | | | |

# Fig. 016 CYLINDER HEAD

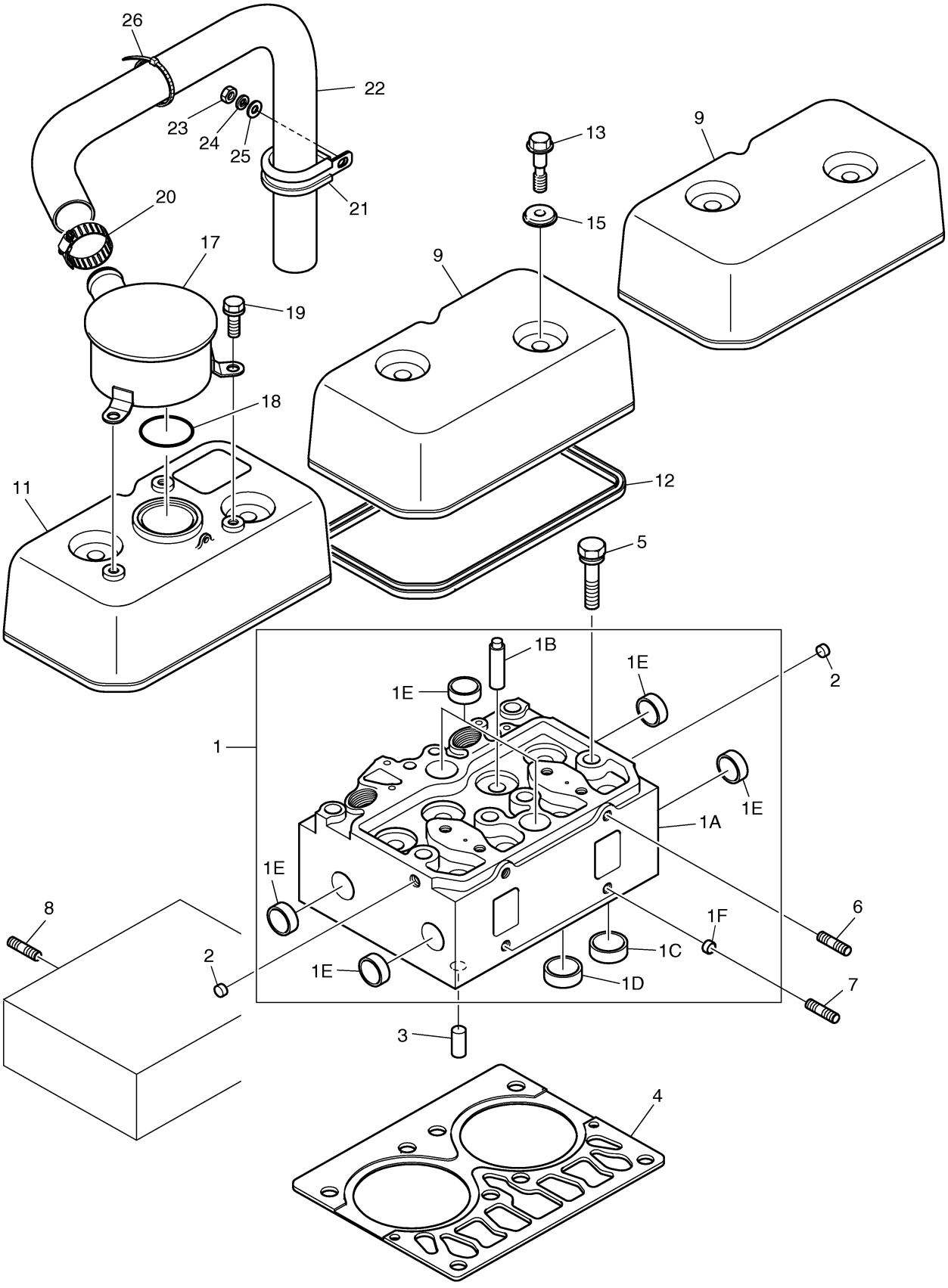




DOOSAN Doosan Infracore

# Fig. 016 CYLINDER HEAD

| Key No | Part No | Description | Qty | S.C | Serial No | ICA | Replacable | Qty |
|---|---|---|---|---|---|---|---|---|
| 1 | 150113-00036A | CYLINDER HEAD ASS'Y | 3 | | | | | |
| 1A | 150113-00200 | HEAD,CYLINDER | 1 | D | | | | |
| 1B | 65.03201-1061 | GUIDE,VALVE | 4 | B | | | | |
| 1C | 65.03203-1028D | RING;VALVE SEAT EXHAUST | 2 | B | | | | |
| 1D | 65.03203-1029G | RING;VALVE SEAT INTAKE | 2 | B | | | | |
| 1E | 65.90302-0041 | PLUG;CORE | 7 | | | | | |
| 1F | 65.91001-0013A | PIN;CORE | 2 | | | | | |
| 2 | 65.91001-0013A | PIN;CORE | 6 | | | | | |
| 3 | 06.22022-0909 | PIN;DOWEL 6M6X14 | 6 | | | | | |
| 4 | 65.03901-0070A | GASKET;CYLINDER HEAD | 3 | | | | | |
| 5 | 65.90021-0007 | BOLT;CYLINDER HEAD | 24 | | | | | |
| 6 | 120117-00053 | BOLT,STUD | 6 | | | | | |
| 7 | 120117-00046 | BOLT,STUD | 6 | | | | | |
| 8 | 06.06225-0809 | BOLT;STUD M10X35 | 2 | | | | | |
| 9 | 65.03401-0021I | COVER;CYLINDER HEAD | 1 | | | | | |
| 11 | 65.03401-6044B | COVER;CYLINDER HEAD | 1 | | | | | |
| 12 | 65.03905-0022 | GASKET;CYLINDER HEAD | 3 | | | | | |
| 13 | 65.90020-0073 | BOLT;COLLARED HEX. | 6 | | | | | |
| 15 | 400603-00049 | GASKET;CYL. HEAD COVER | 6 | | | | | |
| 17 | 65.01801-5099C | BREATHER HOUSING ASS'Y | 1 | | | | | |
| 18 | 65.96501-0033B | O-RING | 1 | | | | | |
| 19 | 06.01923-3113 | BOLT ASS'Y M8X20 | 3 | | | | | |
| 20 | 06.67020-0105 | CLAMP;HOSE | 1 | | | | | |
| 21 | 65.97401-0188 | CLIP;PIPE | 1 | | | | | |
| 22 | 65.96301-0294 | HOSE;RUBBER | 1 | | 120828~120828 | | | |
| 22 | 420108-00763 | HOSE,RUBBER | 1 | | 120829~ | | | |
| 23 | 06.11063-8214 | NUT | 1 | | | | | |
| 24 | 06.16731-2107 | WASHER | 1 | | | | | |
| 25 | 06.15010-2311 | WASHER | 1 | | | | | |
| 26 | 65.97460-0002 | CABLE TIA | 1 | | | | | |

# Fig. 017 CAM SHAFT

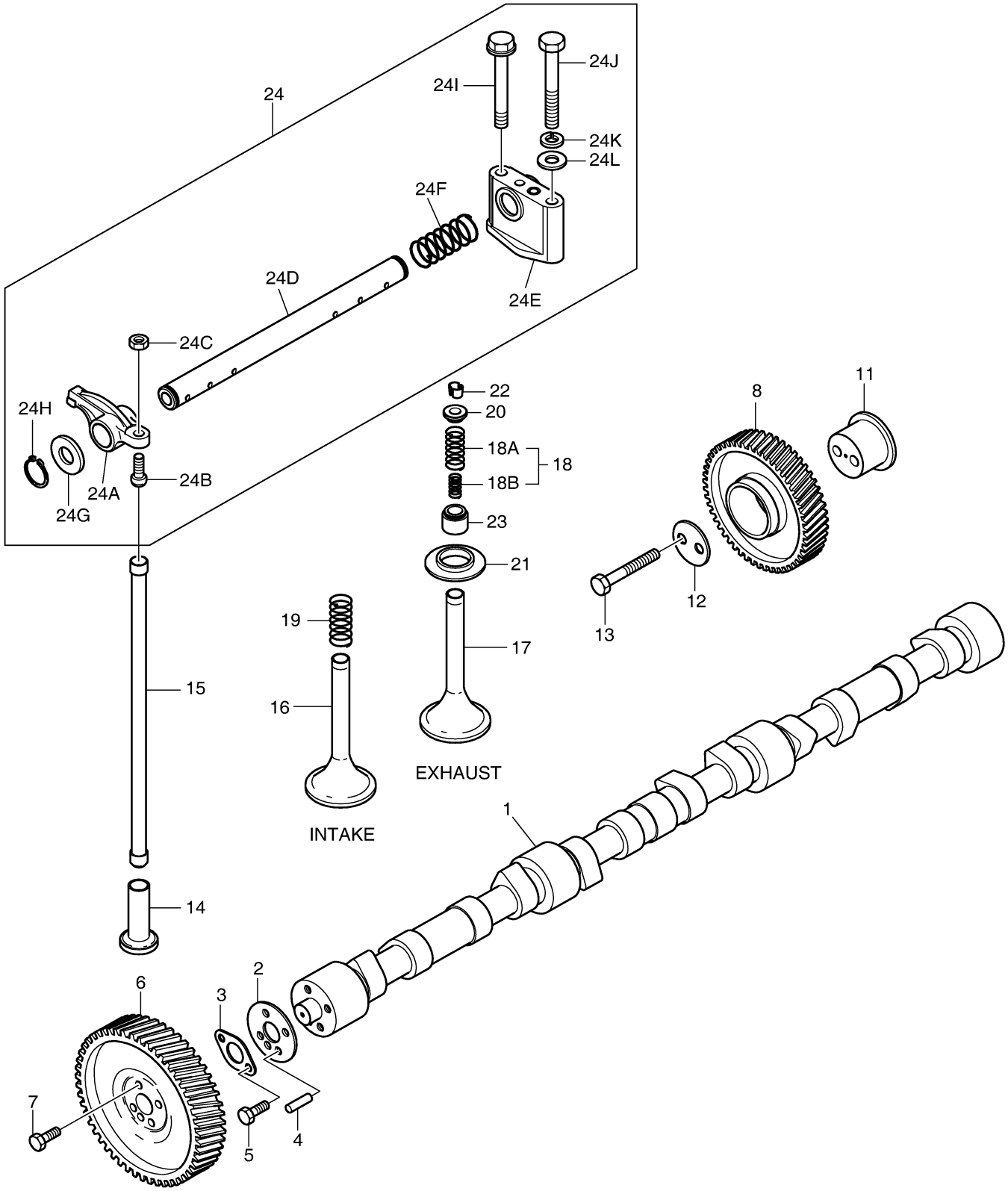




DOOSAN Doosan Infracore

# Fig. 017 CAM SHAFT

| Key No | Part No | Description | Qty | S.C | Serial No | ICA | Replacable | Qty |
|---|---|---|---|---|---|---|---|---|
| 1 | 150103-00054 | CAMSHAFT | 1 | | | | | |
| 2 | 65.90720-0099 | WASHER;THRUST | 1 | | | | | |
| 3 | 65.98112-0038 | FLANGE | 1 | | | | | |
| 4 | 65.90001-6003 | BOLT ASS`Y M6X14 | 2 | | | | | |
| 5 | 06.22022-1016 | PIN;DOWEL | 1 | | | | | |
| 6 | 65.04501-0057 | GEAR;CAM SHAFT | 1 | | | | | |
| 7 | 65.90020-0086 | BOLT;COLLARED HEX. | 4 | | | | | |
| 8 | 65.04505-5008A | IDLE GEAR ASS`Y | 1 | | ~130307 | | | |
| 8 | 130428-00081A | GEAR ASSY,IDLE | 1 | | 130308~ | | | |
| 11 | 65.04506-0008 | PIN;IDLE GEAR | 1 | | | | | |
| 12 | 65.90720-0019 | WASHER;THRUST | 1 | | | | | |
| 13 | 06.01914-3126 | BOLT;HEX. M8X75 | 2 | | | | | |
| 14 | 65.04301-0005 | TAPPET | 12 | | | | | |
| 15 | 65.04302-5010 | PUSH ROD | 12 | | | | | |
| 16 | 65.04101-0041 | VALVE;INTAKE | 6 | | | | | |
| 17 | 65.04101-0042 | VALVE;EXHAUST | 6 | | | | | |
| 18 | 65.04102-6002 | SPRING;VALVE(EXHAUST) | 6 | | | | | |
| 18A | 65.04102-0003 | SPRING;VALVE(EXHAUST | 1 | | | | | |
| 18B | 65.04102-0004 | SPRING;VALVE(EXHAUST INNER) | 1 | | | | | |
| 19 | 65.04102-0007 | SPRING;VALVE(INTAKE) | 6 | | | | | |
| 20 | 65.04103-0013 | RETAINER;VALVE SPRING | 12 | | | | | |
| 21 | 65.04103-0009 | SEAT;VALVE SPRING | 12 | | | | | |
| 22 | 65.04104-0006 | COTTER;VALVE | 24 | | | | | |
| 23 | 65.04902-0013 | SEAL;VALVE STEAM | 12 | | | | | |
| 24 | 65.04200-6025E | ROCKER ARM ASS'Y | 3 | | | | | |
| 24A | 65.04201-5013E | ROCKER ARM | 4 | | | | | |
| 24B | 65.04205-0003A | BOLT;ADJUSTING | 4 | | | | | |
| 24C | 65.90501-0003 | NUT | 4 | | | | | |
| 24D | 65.04203-5009 | ROCKER ARM SHAFT ASS`Y | 1 | | | | | |
| 24E | 65.04202-0017A | BRACKET;ROCKER ARM | 2 | | | | | |
| 24F | 65.97601-0055 | SPRING;ROCKER ARM SHAFT | 1 | | | | | |
| 24G | 65.90710-0039 | WASHER;ROCKER ARM | 2 | | | | | |
| 24H | 06.29010-0120 | RING;SNAP | 2 | | | | | |
| 24I | 65.90020-0056 | BOLT;HEX. M12X1.5X80 | 2 | | | | | |
| 24J | 06.01013-9221 | BOLT;HEX. M10X80 | 2 | | | | | |
| 24K | 06.16731-2108 | WASHER;SPRING | 2 | | | | | |

| Key No | Part No | Description | Qty | S.C | Serial No | ICA | Replacable | Qty |
|---|---|---|---|---|---|---|---|---|
| 24L | 06.15030-0514 | WASHER;PLAIN | 2 | | | | | |

# Fig. 018 INTERMEDIATE GEAR

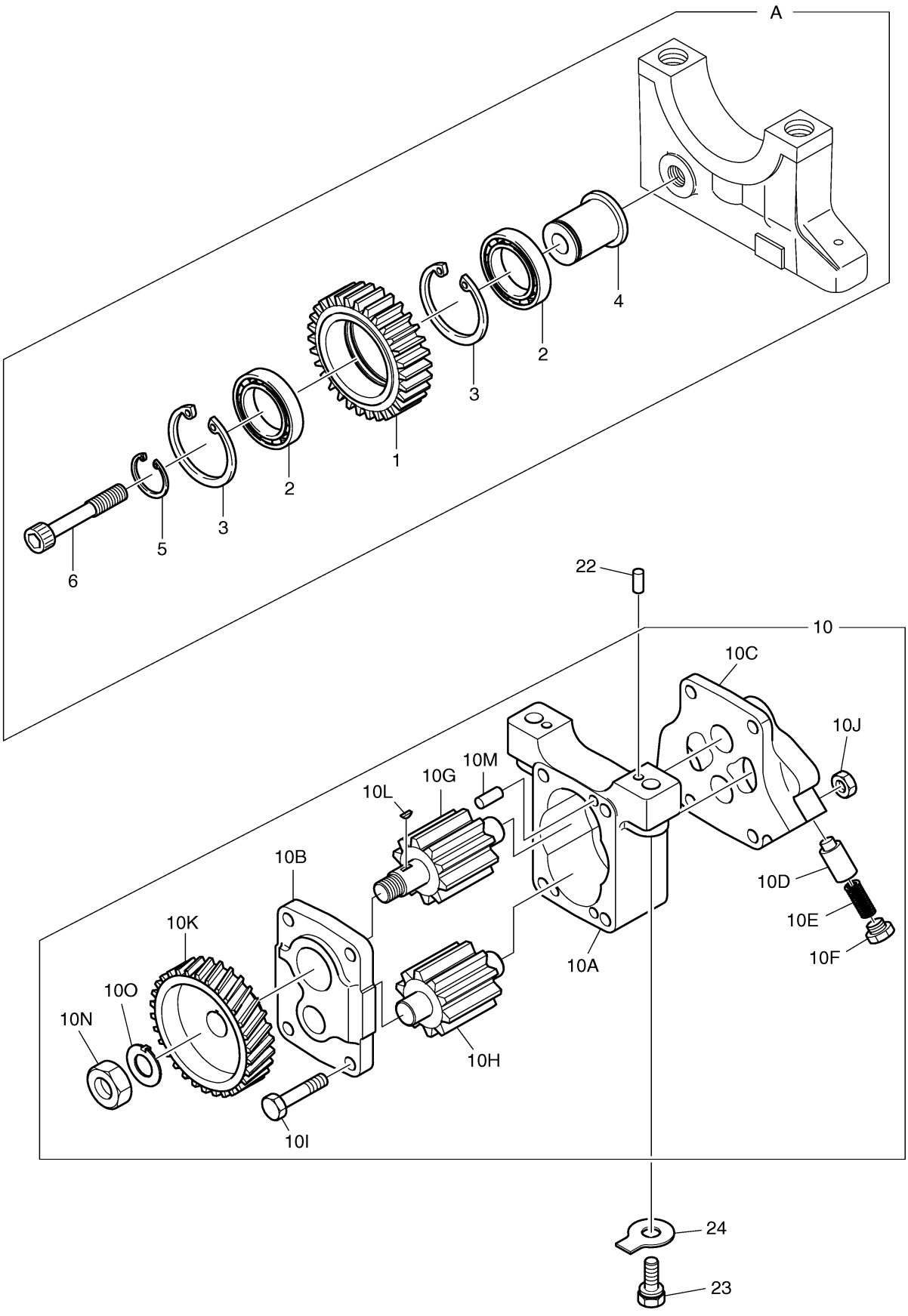




DOOSAN Doosan Infracore

# Fig. 018 INTERMEDIATE GEAR

| Key No | Part No | Description | Qty | S.C | Serial No | ICA | Replacable | Qty |
|---|---|---|---|---|---|---|---|---|
| A | 65.05200-6034 | IDLE GEAR ASS`Y | 1 | D | | | | |
| 1 | 65.05204-0036 | GEAR;IDLE | 1 | | | | | |
| 2 | 06.31420-0314 | BEARING;BALL | 2 | | | | | |
| 3 | 06.29020-0132 | SNAP RING 55X2 | 2 | | | | | |
| 4 | 65.05205-0018 | PIN;IDLE GEAR | 1 | | | | | |
| 5 | 06.29010-0125 | RING;SNAP 30X2 | 1 | | | | | |
| 6 | 65.90030-0009 | BOLT;SOCKET HEAD M10X60 | 1 | | | | | |
| 10 | 65.05100-6022 | OIL PUMP ASS'Y | 1 | | | | | |
| 10A | 65.05102-0014 | HOUSING;OIL PUMP | 1 | | | | | |
| 10B | 65.05103-5015 | OIL PUMP COVER(FRONT) | 1 | | | | | |
| 10C | 65.05103-5012 | OIL PUMP COVER(REAR) | 1 | | | | | |
| 10D | 65.05410-0025 | PLUNGER;VALVE | 1 | | | | | |
| 10E | 65.97601-0110 | SPRING;COMPRESSION | 1 | | | | | |
| 10F | 65.90310-0104 | SCREW;PLUG | 1 | | | | | |
| 10G | 65.05104-5004 | GEAR;PUMP | 1 | | | | | |
| 10H | 65.05104-5003 | GEAR | 1 | | | | | |
| 10I | 06.01013-9118 | BOLT;HEX. M8X65 | 4 | | | | | |
| 10J | 65.90510-0012 | NUT | 4 | | | | | |
| 10K | 65.05201-0037 | GEAR;OIL PUMP DRIVE | 1 | | | | | |
| 10L | 06.29141-0207 | KEY;WOODRUFF | 1 | | | | | |
| 10M | 06.22022-0909 | PIN;DOWEL 6M6X14 | 4 | | | | | |
| 10N | 06.11053-9217 | NUT;HEX. | 1 | | | | | |
| 10O | 06.16050-0311 | WASHER;LOCK | 1 | | | | | |
| 22 | 06.22022-0907 | PIN;DOWEL 6M6X10 | 2 | | | | | |
| 23 | 06.01013-9215 | BOLT;HEX. M10X50 | 2 | | | | | |
| 24 | 65.90801-0018 | WASHER;LOCK | 2 | | | | | |

# Fig. 018A INTERMEDIATE GEAR

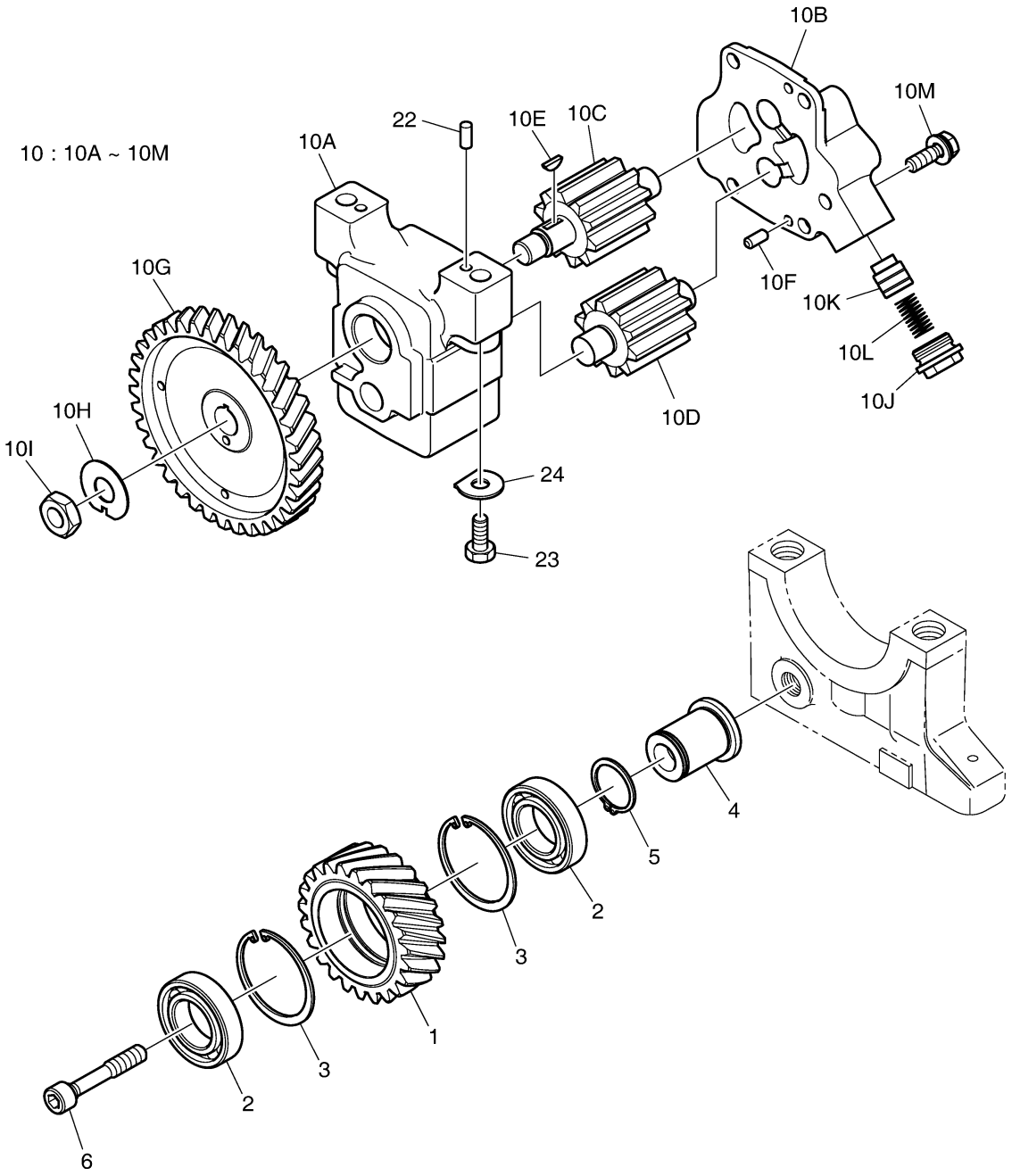

# Fig. 018A INTERMEDIATE GEAR

| Key No | Part No | Description | Qty | S.C | Serial No | ICA | Replacable | Qty |
|---|---|---|---|---|---|---|---|---|
| 1 | 65.05204-0036 | GEAR;IDLE | 1 | | | | | |
| 2 | 06.31420-0314 | BEARING;BALL | 2 | | | | | |
| 3 | 06.29020-0132 | SNAP RING 55X2 | 2 | | | | | |
| 4 | 65.05205-0018 | PIN;IDLE GEAR | 1 | | | | | |
| 5 | 06.29010-0125 | RING;SNAP 30X2 | 1 | | | | | |
| 6 | 65.90030-0009 | BOLT;SOCKET HEAD M10X60 | 1 | | | | | |
| 10 | 400915-00022A | PUMP ASSY,OIL | 1 | | | | | |
| 10A | 400923-00016A | HOUSING,OIL PUMP | 1 | D | | | | |
| 10B | 110508-00293 | OIL PUMP COVER(REAR) | 1 | | | | | |
| 10C | 65.05104-5004 | GEAR;PUMP | 1 | | | | | |
| 10D | 65.05104-5005 | GEAR;PUMP | 1 | | | | | |
| 10E | 06.29141-0207 | KEY;WOODRUFF | 1 | | | | | |
| 10F | 06.22022-0909 | PIN;DOWEL 6M6X14 | 2 | | | | | |
| 10G | 65.05201-0037 | GEAR;OIL PUMP DRIVE | 1 | | | | | |
| 10H | 06.16050-0311 | WASHER;LOCK | 1 | | | | | |
| 10I | 06.11053-9217 | NUT;HEX. | 1 | | | | | |
| 10J | 65.90310-0104 | SCREW;PLUG | 1 | | | | | |
| 10K | 65.05410-0007 | PLUNGER;VALVE | 1 | | | | | |
| 10L | 65.97601-0105 | SPRING;COMP. | 1 | | | | | |
| 10M | 06.01923-3115 | BOLT ASS'Y M8X25 | 4 | | | | | |
| 22 | 06.22022-0907 | PIN;DOWEL 6M6X10 | 2 | | | | | |
| 23 | 06.01013-9218 | BOLT;HEX. M10X65 | 2 | | | | | |
| 24 | 65.90801-0018 | WASHER;LOCK | 2 | | | | | |

# Fig. 019 OIL FILTER

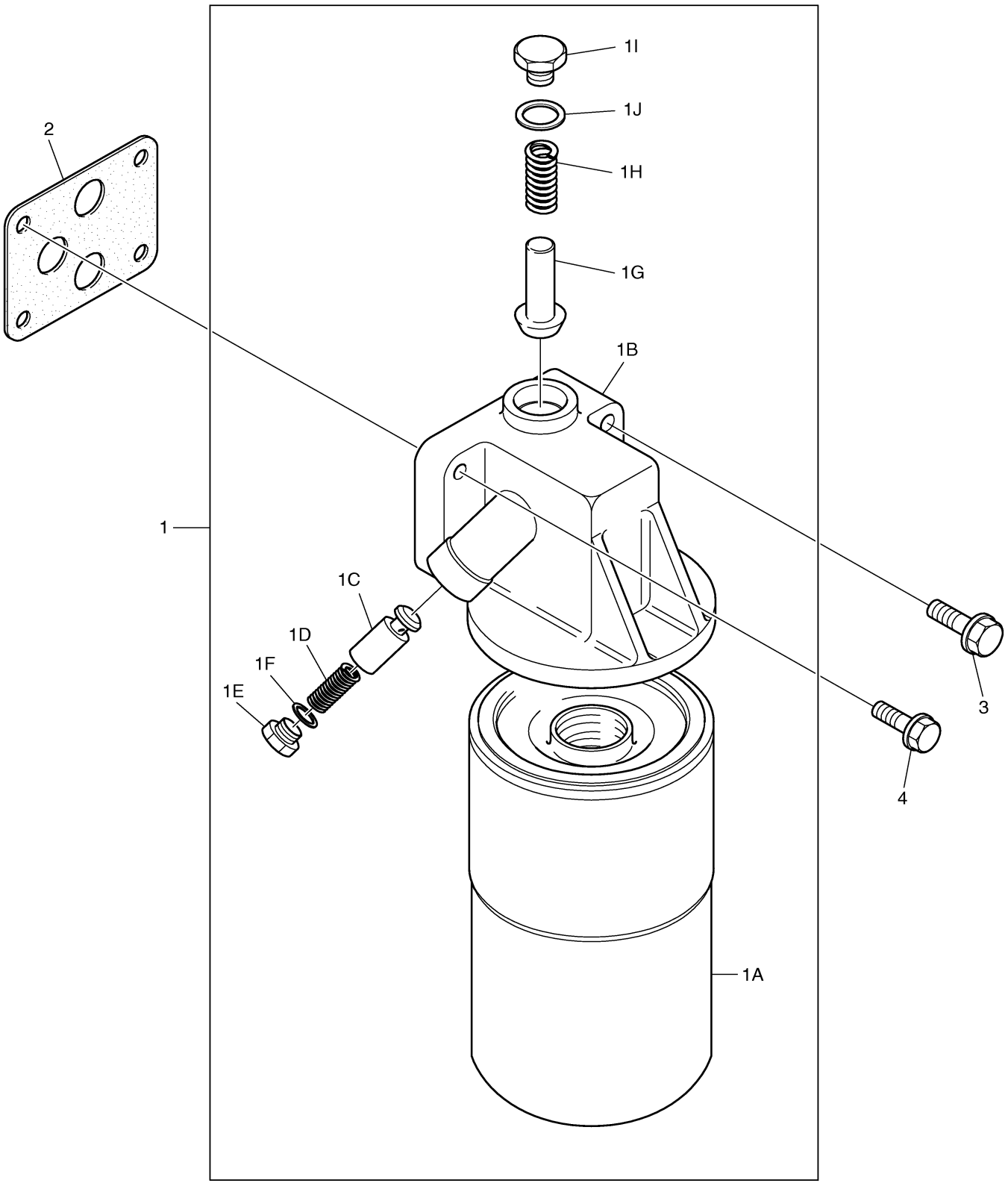

# Fig. 019 OIL FILTER

| Key No | Part No | Description | Qty | S.C | Serial No | ICA | Replacable | Qty |
|---|---|---|---|---|---|---|---|---|
| 1 | 65.05501-7064B | OIL FILTER ASS'Y | 1 | | | | | |
| 1A | 65.05510-5022B | CARTRIDGE;OIL FILTER | 1 | | | | | |
| 1B | 65.05503-5042 | HEAD;FILTER | 1 | | | | | |
| 1C | 65.05518-0003 | VALVE;PLUNGER | 1 | | | | | |
| 1D | 65.97601-0065 | SPRING | 1 | | | | | |
| 1E | 65.90310-0057 | SCREW;PLUG | 1 | | | | | |
| 1F | 06.56190-0716 | RING;SEAL | 1 | | | | | |
| 1G | 65.05518-0006 | VALVE | 1 | | | | | |
| 1H | 65.97601-0075 | SPRING | 1 | | | | | |
| 1I | 65.90310-0065 | SCREW;PLUG | 1 | | | | | |
| 1J | 06.56190-0726 | SEAL;RING | 1 | | | | | |
| 2 | 65.05901A0052 | GASKET;OIL FILTER | 1 | | | | | |
| 3 | 06.01913-3122 | BOLT ASS'Y M8X55 | 2 | | | | | |
| 4 | 06.01913-3118 | BOLT ASS'Y M8X35 | 2 | | | | | |

# Fig. 020 OIL COOLER

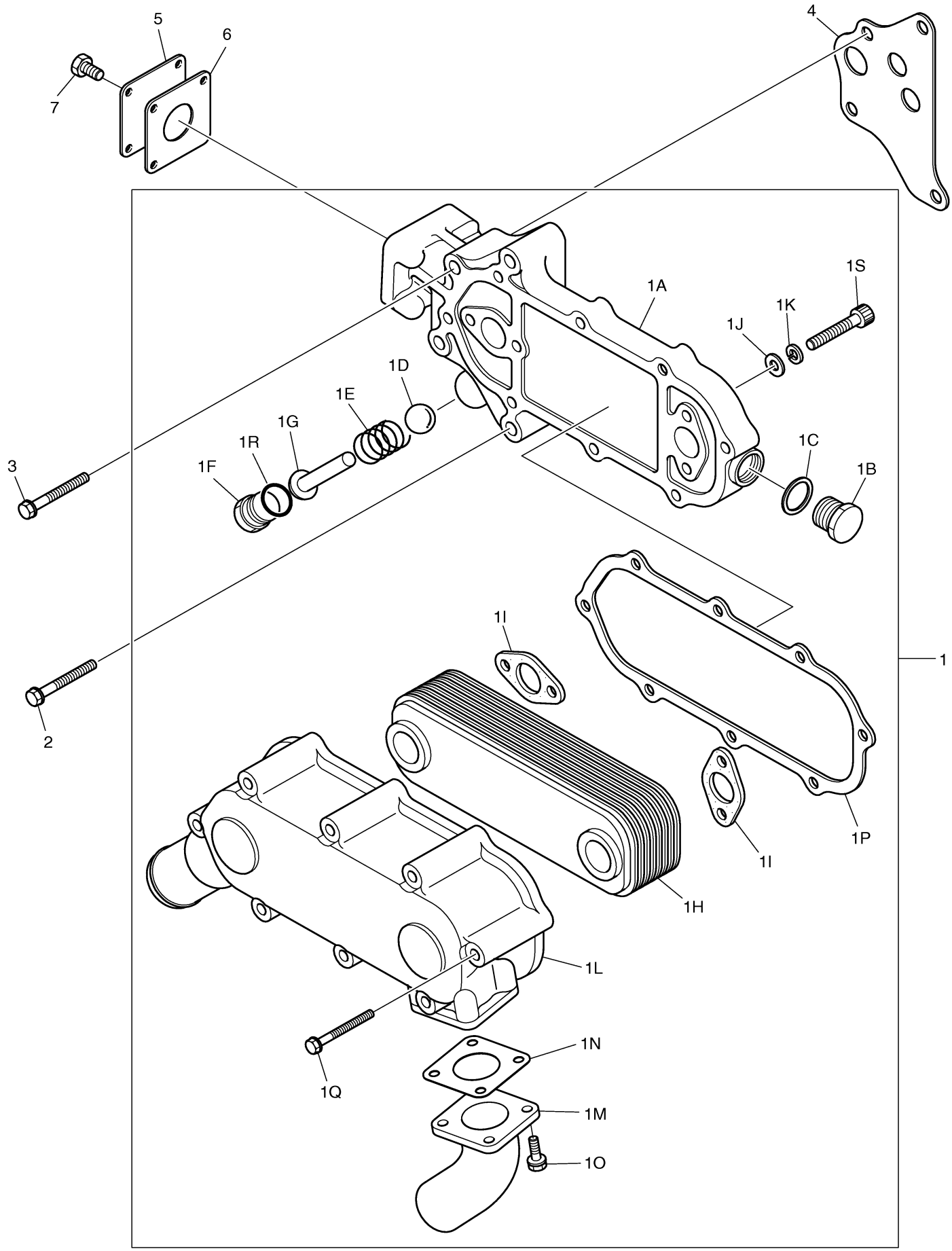




DOOSAN Doosan Infracore

# Fig. 020 OIL COOLER

| Key No | Part No | Description | Qty | S.C | Serial No | ICA | Replacable | Qty |
|---|---|---|---|---|---|---|---|---|
| 1 | 65.05601-7137B | OIL COOLER ASS'Y | 1 | | | | | |
| 1A | 65.05604-5030 | HOUSING;OIL COOLER | 1 | | | | | |
| 1B | 65.90310-0136A | SCREW;PLUG | 1 | | | | | |
| 1C | 06.56190-0718 | RING;SEAL | 1 | | | | | |
| 1D | 06.31641-0429 | BALL;BY-PASS | 1 | | | | | |
| 1E | 65.97601-0004 | SPRING | 1 | | | | | |
| 1F | 65.90310-0003 | SCREW;PLUG M26X1.5 | 1 | | | | | |
| 1G | 65.05611-0001 | PIN | 1 | | | | | |
| 1H | 65.05606-5020 | ELEMENT;OIL COOLER | 1 | | | | | |
| 1I | 65.96601-0018A | GASKET;OIL COOLER | 2 | | | | | |
| 1J | 06.15030-0513 | WASHER;PLAIN | 4 | | | | | |
| 1K | 06.16110-0106 | WASHER | 4 | | | | | |
| 1L | 65.05605-0028A | COVER;OIL COOLER | 1 | | | | | |
| 1M | 65.06301-0160 | PIPE;COOLING WATER | 1 | | | | | |
| 1N | 65.96601-0029 | GASKET;FLANGE | 1 | | | | | |
| 1O | 06.01923-3112 | BOLT ASS'Y M8X18 | 4 | | | | | |
| 1P | 65.05902-0008A | GASKET;OIL COOLER COVER | 1 | | | | | |
| 1Q | 06.01923-3126 | BOLT;HEX. M8X75 | 8 | | | | | |
| 1R | 06.56190-0728 | RING;SEAL | 1 | | | | | |
| 1S | 06.02090-0418 | BOLT;SOCKET HEAD M8X45 | 4 | | | | | |
| 2 | 65.90001-6011 | BOLT ASS'Y M10X70 | 2 | | | | | |
| 3 | 06.01924-3225 | BOLT ASS'Y M10X70 | 2 | | | | | |
| 4 | 65.05902A0011 | GASKET;OIL COOLER COVER | 1 | | | | | |
| 5 | 65.91605-0110 | COVER;BLIND | 1 | | | | | |
| 6 | 65.96601-0347 | GASKET;OIL COOLER ASS`Y | 1 | | | | | |
| 7 | 06.01913-3112 | BOLT ASS'Y M8X18 | 4 | | | | | |

# Fig. 021 OIL PIPE-IN OIL PAN

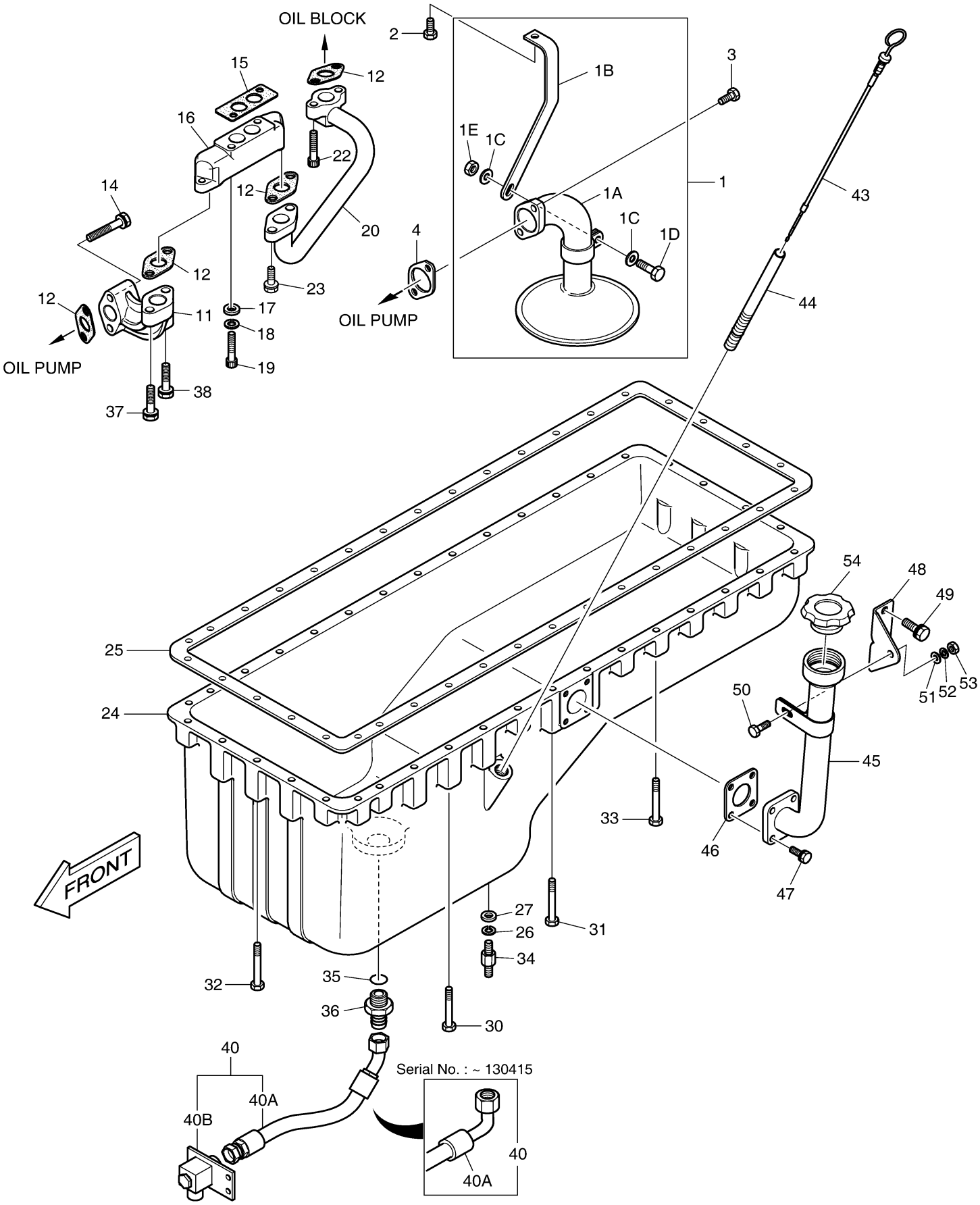




DOOSAN Doosan Infracore

# Fig. 021 OIL PIPE-IN OIL PAN

| Key No | Part No | Description | Qty | S.C | Serial No | ICA | Replacable | Qty |
|---|---|---|---|---|---|---|---|---|
| 1 | 65.05701-6075A | OIL SUCTION PIPE ASS'Y | 1 | | | | | |
| 1A | 65.05701-5635 | OIL SUCTION PIPE ASS'Y | 1 | | | | | |
| 1B | 65.05740-0096 | HOLDER;OIL SUCTION PIPE | 1 | | | | | |
| 1C | 06.15010-2311 | WASHER | 2 | | | | | |
| 1D | 06.01283-7114 | BOLT;HEX. M8X22 | 1 | | | | | |
| 1E | 65.90510-0012 | NUT | 1 | | | | | |
| 2 | 06.01923-3111 | BOLT, M8X16 | 1 | | | | | |
| 3 | 06.01923-3113 | BOLT ASS'Y M8X20 | 2 | | | | | |
| 4 | 65.96601B0019 | GASKET;OIL SUCTION PIPE | 1 | | | | | |
| 11 | 65.05701-0030A | OIL PIPE ASS`Y(O/P->C/F) | 1 | | | | | |
| 12 | 65.96601-0050 | GASKET;OIL PIPE | 4 | | | | | |
| 14 | 06.01923-3121 | BOLT;HEX. M8X50 | 2 | | | | | |
| 15 | 65.05903B0003 | GASKET;CONNECTING FLANGE | 1 | | | | | |
| 16 | 65.05715-5001 | CONNECTING FLANGE ASS`Y | 1 | | | | | |
| 17 | 06.15010-2311 | WASHER | 2 | | | | | |
| 18 | 06.16731-2107 | WASHER | 2 | | | | | |
| 19 | 06.02090-0422 | BOLT;SOCKET HEAD | 2 | | | | | |
| 20 | 65.05701-5230 | OIL PIPE ASS'Y | 1 | | | | | |
| 22 | 65.90001-6006 | BOLT;SOCKET HEAD M8X25 | 2 | | | | | |
| 23 | 06.01923-3113 | BOLT ASS'Y M8X20 | 2 | | | | | |
| 24 | 150119-00007 | OIL PAN | 1 | | | | | |
| 25 | 65.05904A0016 | GASKET;OIL PAN | 1 | | | | | |
| 26 | 06.16731-2107 | WASHER | 1 | | | | | |
| 27 | 06.15010-2311 | WASHER | 5 | | | | | |
| 30 | 06.01923-3129 | BOLT ASS'Y M8X90 | 3 | | | | | |
| 31 | 06.01913-7127 | BOLT ASS'Y M8X80 | 4 | | | | | |
| 32 | 06.01923-3126 | BOLT;HEX. M8X75 | 6 | | | | | |
| 33 | 06.01913-3121 | BOLT ASS'Y M8X50 | 23 | | | | | |
| 34 | 65.90201-0105 | STUD;BOLT | 1 | | | | | |
| 35 | 06.56190-0732 | SEAL;RING | 1 | | | | | |
| 36 | 65.98130-0203 | ADAPTER | 1 | | | | | |
| 37 | 06.01923-3118 | BOLT ASS'Y M8X35 | 1 | | | | | |
| 38 | 06.01923-3124 | BOLT ASS'Y M8X65 | 1 | | | | | |
| 40 | 460102-00012 | DRAIN ASSY | 1 | | ~130415 | | | |
| 40 | 460102-00035 | DRAIN ASSY | 1 | | 130416~ | | | |
| 40A | 65.96340-5013A | HOSE;DRAIN | 1 | | ~130415 | | | |

| Key No | Part No | Description | Qty | S.C | Serial No | ICA | Replacable | Qty |
|---|---|---|---|---|---|---|---|---|
| 40A | 65.96340-5039 | HOSE;DRAIN | 1 | | 130416~ | | | |
| 40B | 65.98125-5004A | COCK;DRAIN | 1 | | | | | |
| 43 | 65.05805-5189A | GAUGE;OIL LEVEL | 1 | | | | | |
| 44 | 65.05806-5098A | TUBE;GUIDE | 1 | | | | | |
| 45 | 65.01813-5018 | PIPE;OIL FILLER | 1 | | | | | |
| 46 | 65.05903-0025 | GASKET | 1 | | | | | |
| 47 | 06.01913-3114 | BOLT ASS'Y M8X22 | 4 | | | | | |
| 48 | 65.01840-0003 | BRACKET | 1 | | | | | |
| 49 | 06.01913-3211 | BOLT ASS'Y M10X1.5X16 | 2 | | | | | |
| 50 | 06.01283-7115 | BOLT M8X25 | 1 | | | | | |
| 51 | 06.15010-2311 | WASHER | 1 | | | | | |
| 52 | 06.16731-2107 | WASHER | 1 | | | | | |
| 53 | 06.11063-8214 | NUT | 1 | | | | | |
| 54 | 65.01810-5011 | CAP;OIL FILLER | 1 | | | | | |

# Fig. 022 COOLING WATER PUMP

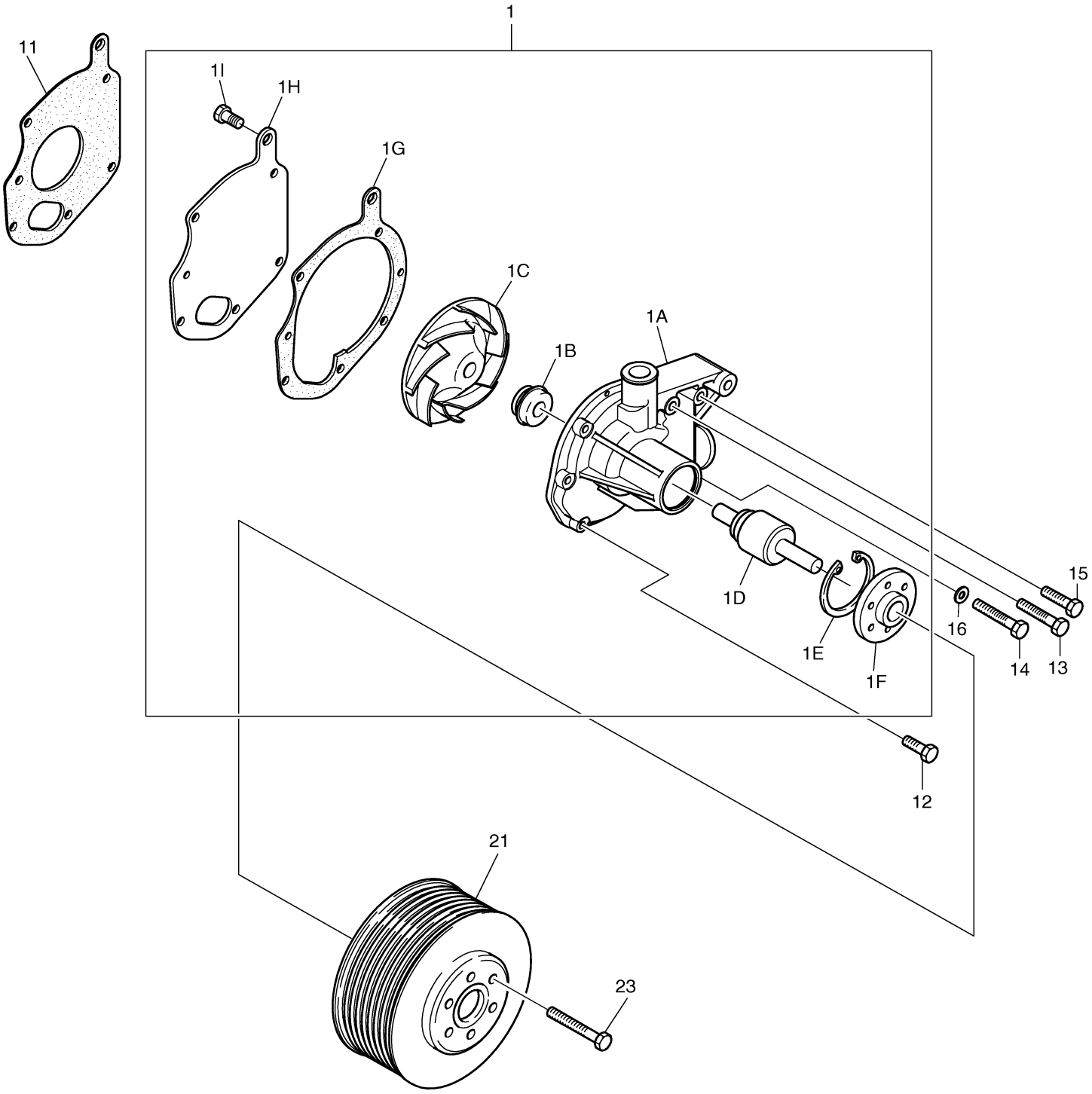




DOOSAN Doosan Infracore

# Fig. 022 COOLING WATER PUMP

| Key No | Part No | Description | Qty | S.C | Serial No | ICA | Replacable | Qty |
|---|---|---|---|---|---|---|---|---|
| 1 | 65.06500-6145D | WATER PUMP ASS`Y | 1 | | | | | |
| 1A | - | HOUSING;WATER PUMP | 1 | D | | | | |
| 1B | 65.06520-6007 | SEAL;MECHANICAL | 1 | | | | | |
| 1C | 65.06506-0023 | IMPELLAR | 1 | | | | | |
| 1D | 65.93410-0087 | BEARING | 1 | | | | | |
| 1E | 06.29020-0132 | SNAP RING 55X2 | 1 | | | | | |
| 1F | 65.06504-0030A | HUB | 1 | | | | | |
| 1G | 65.06901A0019 | GASKET;WATER PUMP INNER | 1 | | | | | |
| 1H | 65.06512-0010 | COVER;WATER PUMP | 1 | | | | | |
| 1I | 06.04201-8907 | BOLT;SLOTTED HEAD M6X14 | 3 | | | | | |
| 11 | 65.06901A0020 | GASKET;WATER PUMP | 1 | | | | | |
| 12 | 06.01913-3121 | BOLT ASS'Y M8X50 | 3 | | | | | |
| 13 | 06.01913-3125 | BOLT ASS`Y M8X70 | 1 | | | | | |
| 14 | 06.01013-9121 | BOLT ASS`Y M8X80 | 1 | | | | | |
| 15 | 06.01914-3225 | BOLT;HEX. M10X70 | 1 | | | | | |
| 16 | 06.16731-2107 | WASHER | 1 | | | | | |
| 21 | 65.06606-0037 | PULLEY;V-BELT | 1 | | | | | |
| 23 | 06.01913-3113 | BOLT ASS'Y M8X20 | 6 | | | | | |

# Fig. 023 COOLING SYSTEM

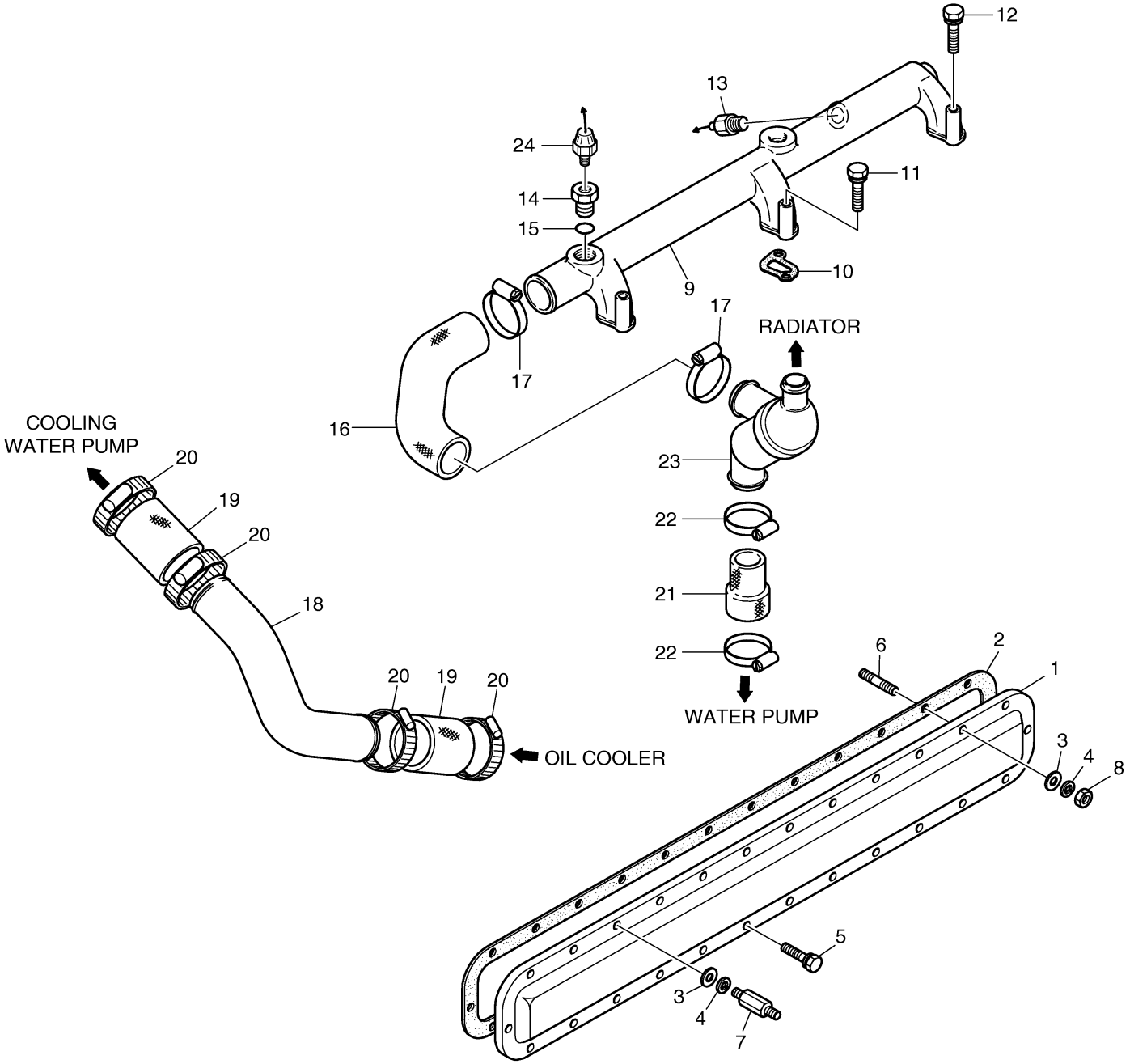




DOOSAN Doosan Infracore

# Fig. 023 COOLING SYSTEM

| Key No | Part No | Description | Qty | S.C | Serial No | ICA | Replacable | Qty |
|---|---|---|---|---|---|---|---|---|
| 1 | 65.01705-0002B | COVER;WATER CHAMBER | 1 | | | | | |
| 2 | 65.01907A0002 | GASKET;WATER CHAMBER | 1 | | | | | |
| 3 | 06.15010-2311 | WASHER | 12 | | | | | |
| 4 | 06.16731-2107 | WASHER | 12 | | | | | |
| 5 | 06.01923-3115 | BOLT ASS'Y M8X25 | 14 | | | | | |
| 6 | 65.90201-0149 | BOLT;STUD M8X25 | 10 | | | | | |
| 7 | 120122-00014 | BOLT,SPACER;M8 | 2 | | | | | |
| 8 | 06.11063-8214 | NUT | 11 | | | | | |
| 9 | 65.06301-0134C | PIPE;COOLING WATER | 1 | | | | | |
| 10 | 65.06903A0011 | GASKET;COOLING WATER PIPE | 3 | | | | | |
| 11 | 06.01923-3122 | BOLT ASS`Y M8X55 | 3 | | | | | |
| 12 | 06.01923-3124 | BOLT ASS'Y M8X65 | 3 | | | | | |
| 13 | 65.27435-6003 | SWITCH;WATER TEMP | 1 | | | | | |
| 14 | 65.90310-0168 | SCREW;PLUG M26X1.5 | 1 | | | | | |
| 15 | 06.56190-0728 | RING;SEAL | 1 | | | | | |
| 16 | 65.96301-0257 | HOSE;RUBBER | 1 | | | | | |
| 17 | 06.67020-0109 | CLAMP;HOSE | 2 | | | | | |
| 18 | 65.06301-0083 | PIPE;COOLING WATER | 1 | | | | | |
| 19 | 04.27405-1908A | HOSE;RUBBER M50X62X80 | 2 | | | | | |
| 20 | 06.67020-0109 | CLAMP;HOSE | 4 | | | | | |
| 21 | 65.96301-0258 | HOSE;RUBBER | 1 | | | | | |
| 22 | 06.67020-0106 | CLAMP;HOSE | 2 | | | | | |
| 23 | 300738-00085 | THERMOSTAT ASSY | 1 | | | | | |
| 24 | 66.27435-6008 | SWITCH;THERMO | 1 | | | | | |

# Fig. 024 INTAKE & EXHAUST MANIFOLD

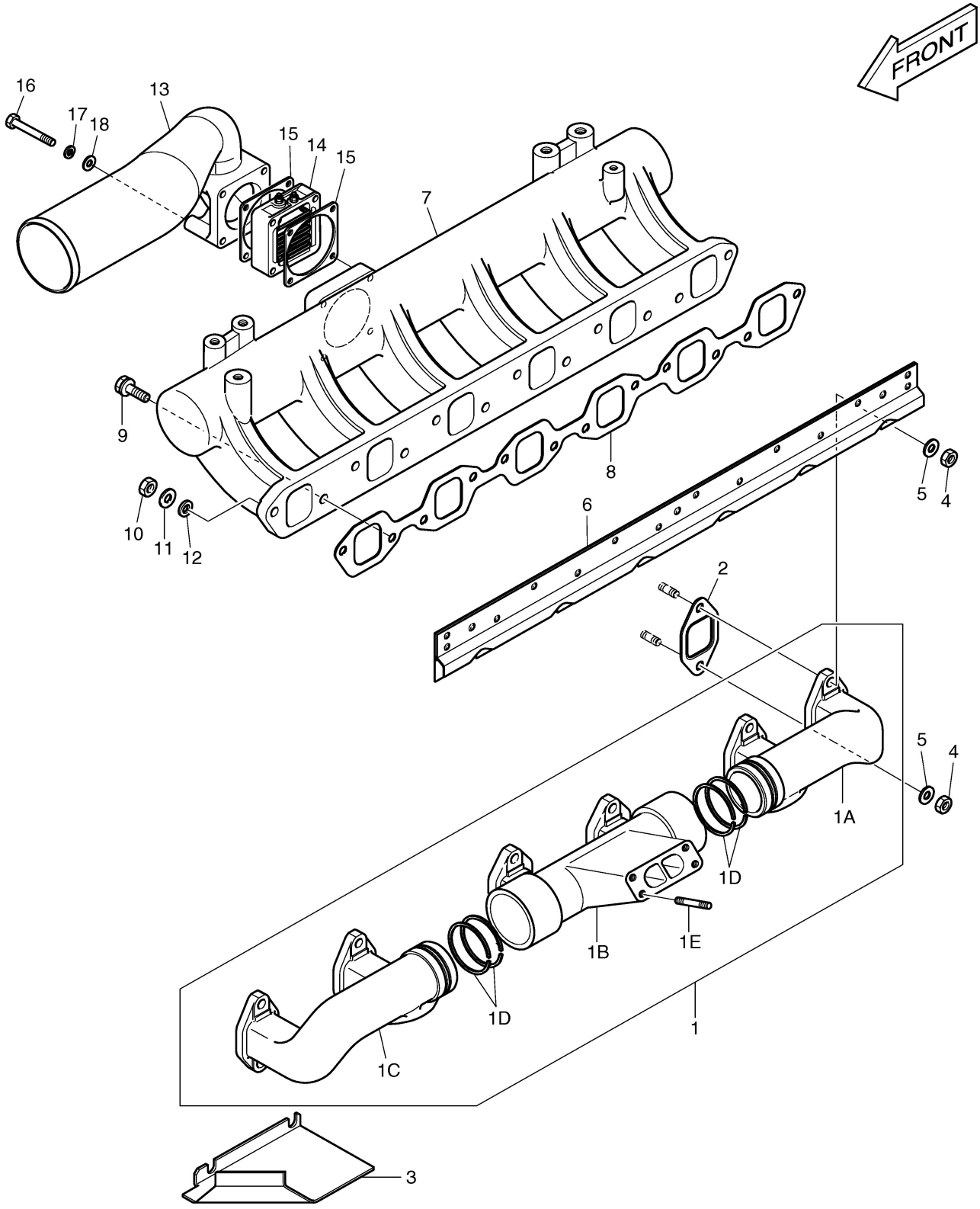




DOOSAN Doosan Infracore

# Fig. 024 INTAKE & EXHAUST MANIFOLD

| Key No | Part No | Description | Qty | S.C | Serial No | ICA | Replacable | Qty |
|---|---|---|---|---|---|---|---|---|
| 1 | 65.08100-6073A | EXHAUST MANIFOLD ASS'Y | 1 | | | | | |
| 1A | 65.08101-0193A | MANIFOLD;EXHAUST(L.H.) | 1 | | | | | |
| 1B | 65.08101-0207A | MANIFOLD;EXHAUST(M) | 1 | | | | | |
| 1C | 65.08101-0194A | MANIFOLD;EXHAUST(R.H.) | 1 | | | | | |
| 1D | 65.96501-0007 | RING;SEAL | 4 | | | | | |
| 1E | 65.90201-0073 | BOLT;STUD | 4 | | | | | |
| 2 | 65.08901A0013 | GASKET;EXHAUST MANIFOLD | 6 | | | | | |
| 3 | 65.08120-0017 | SCREEN;HEAT | 1 | | | | | |
| 4 | 65.90535-0001 | NUT | 12 | | | | | |
| 5 | 65.90710-0019 | WASHER | 1 | | | | | |
| 6 | 111002-00001 | SCREEN;HEAT | 1 | | | | | |
| 7 | 240203-00051A | MANIFOLD,INTAKE | 1 | | | | | |
| 8 | 65.08902A0024 | GASKET;INTAKE MANIFOLD | 1 | | | | | |
| 9 | 06.01923-3218 | BOLT ASS'Y M10X35 | 8 | | | | | |
| 10 | 06.11063-8215 | NUT;HEX. M10 | 2 | | | | | |
| 11 | 06.16731-2108 | WASHER;SPRING | 2 | | | | | |
| 12 | 06.15030-0514 | WASHER;PLAIN | 2 | | | | | |
| 13 | 240401-00115 | PIPE,AIR INLET | 1 | | 120828~120828 | | | |
| 13 | 240401-00114A | PIPE,AIR INLET | 1 | | 120829~ | | | |
| 14 | 65.26803-7028B | AIR HEATER | 1 | | | | | |
| 15 | 65.09904-0008 | GASKET;AIR HEATER | 2 | | | | | |
| 16 | 06.01013-9128 | BOLT;HEX. M8X130 | 4 | | 120828~120828 | | | |
| 16 | 06.01013-9126 | BOLT;HEX. M8X110 | 4 | | 120829~ | | | |
| 17 | 06.16731-2107 | WASHER | 4 | | | | | |
| 18 | 06.15010-2311 | WASHER | 4 | | | | | |

# Fig. 025 TURBO CHARGER & OIL PIPE

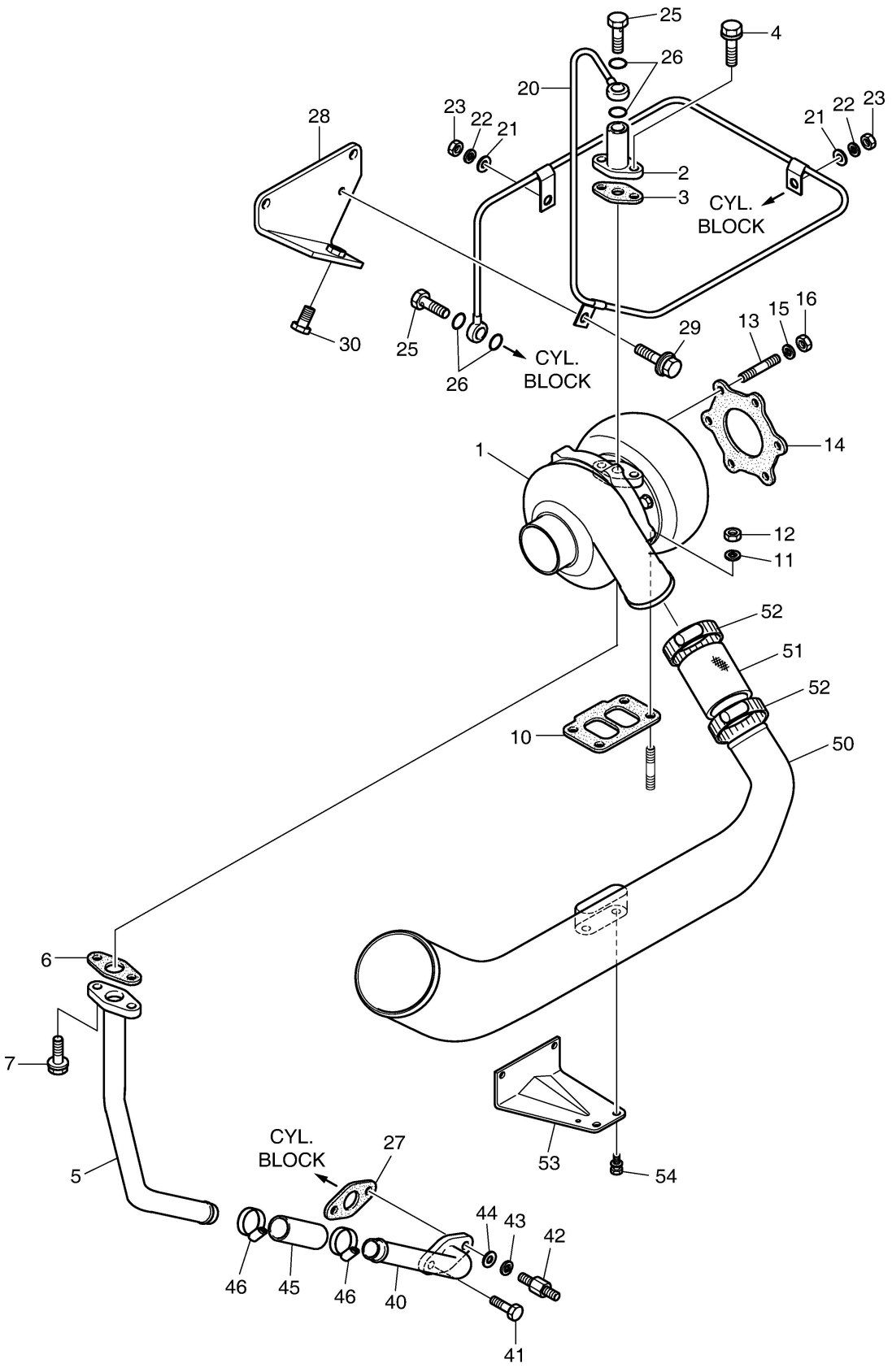




DOOSAN Doosan Infracore

# Fig. 025 TURBO CHARGER & OIL PIPE

| Key No | Part No | Description | Qty | S.C | Serial No | ICA | Replacable | Qty |
|---|---|---|---|---|---|---|---|---|
| 1 | 65.09100-7083 | TURBOCHARGER ASS'Y | 1 | | | | | |
| 2 | 65.98131-5003 | ADAPTER FLANGE ASS`Y | 1 | | | | | |
| 3 | 65.96601-0046B | GASKET;OIL PIPE ADAPTER | 1 | | | | | |
| 4 | 06.01913-3114 | BOLT ASS'Y M8X22 | 2 | | | | | |
| 5 | 65.05701-5481 | OIL PIPE ASS'Y(T/C-C/B) | 1 | | | | | |
| 6 | 65.96601-0067 | GASKET;T/C OIL RETURN | 1 | | | | | |
| 7 | 06.01913-3114 | BOLT ASS'Y M8X22 | 2 | | | | | |
| 10 | 65.09901-0018A | GASKET | 1 | | | | | |
| 11 | 06.16731-2108 | WASHER;SPRING | 4 | | | | | |
| 12 | 06.11024-9202 | NUT M10X1.25 | 4 | | | | | |
| 13 | 65.90201-0181 | BOLT;STUD | 6 | | | | | |
| 14 | 65.09901-0012 | GASKET | 1 | | | | | |
| 15 | 06.16731-2108 | WASHER;SPRING | 6 | | | | | |
| 16 | 06.11063-8215 | NUT;HEX. M10 | 6 | | | | | |
| 20 | 65.05701-5480A | OIL PIPE ASS'Y(C/B-T/C) | 1 | | | | | |
| 21 | 06.15010-2311 | WASHER | 2 | | | | | |
| 22 | 06.16731-2107 | WASHER | 2 | | | | | |
| 23 | 06.11063-8214 | NUT | 2 | | | | | |
| 25 | 06.78144-2403 | HOLLOW SCREW M12X1.5 | 2 | | | | | |
| 26 | 06.56190-0704 | RING;SEAL | 4 | | | | | |
| 27 | 65.96601-0067 | GASKET;T/C OIL RETURN | 1 | | | | | |
| 28 | 65.05740-5005 | BRACKET;OIL PIPE | 1 | | | | | |
| 29 | 65.90020-0068 | BOLT ASS'Y M8X16 | 1 | | | | | |
| 30 | 06.01923-3217 | BOLT ASS'Y M10X30 | 1 | | | | | |
| 40 | 65.05701-5336A | OIL PIPE ASS`Y(T/C-C/B) | 1 | | | | | |
| 41 | 06.01913-3113 | BOLT ASS'Y M8X20 | 1 | | | | | |
| 42 | 65.90201-0075 | BOLT;SPACER | 1 | | | | | |
| 43 | 06.16731-2107 | WASHER | 1 | | | | | |
| 44 | 06.15010-2311 | WASHER | 1 | | | | | |
| 45 | 65.96301-0327A | HOSE;RUBBER | 1 | | | | | |
| 46 | 06.67020-0105 | CLAMP;HOSE | 2 | | | | | |
| 50 | 420203-00246 | PIPE,EXHAUST | 1 | | 120828~120828 | | | |
| 50 | 420202-00233A | PIPE,EXHAUST | 1 | | 120829~ | | | |
| 51 | 65.96301-0279 | HOSE;RUBBER | 1 | | | | | |
| 52 | 06.67020-0109 | CLAMP;HOSE | 2 | | | | | |
| 53 | 65.09440-0010 | BRACKET | 1 | | | | | |

| Key No | Part No | Description | Qty | S.C | Serial No | ICA | Replacable | Qty |
|---|---|---|---|---|---|---|---|---|
| 54 | 06.01923-3215 | BOLT ASS'Y M10X25 | 2 | | | | | |

# Fig. 026 NOZZLE & FUEL INJECTION PIPE

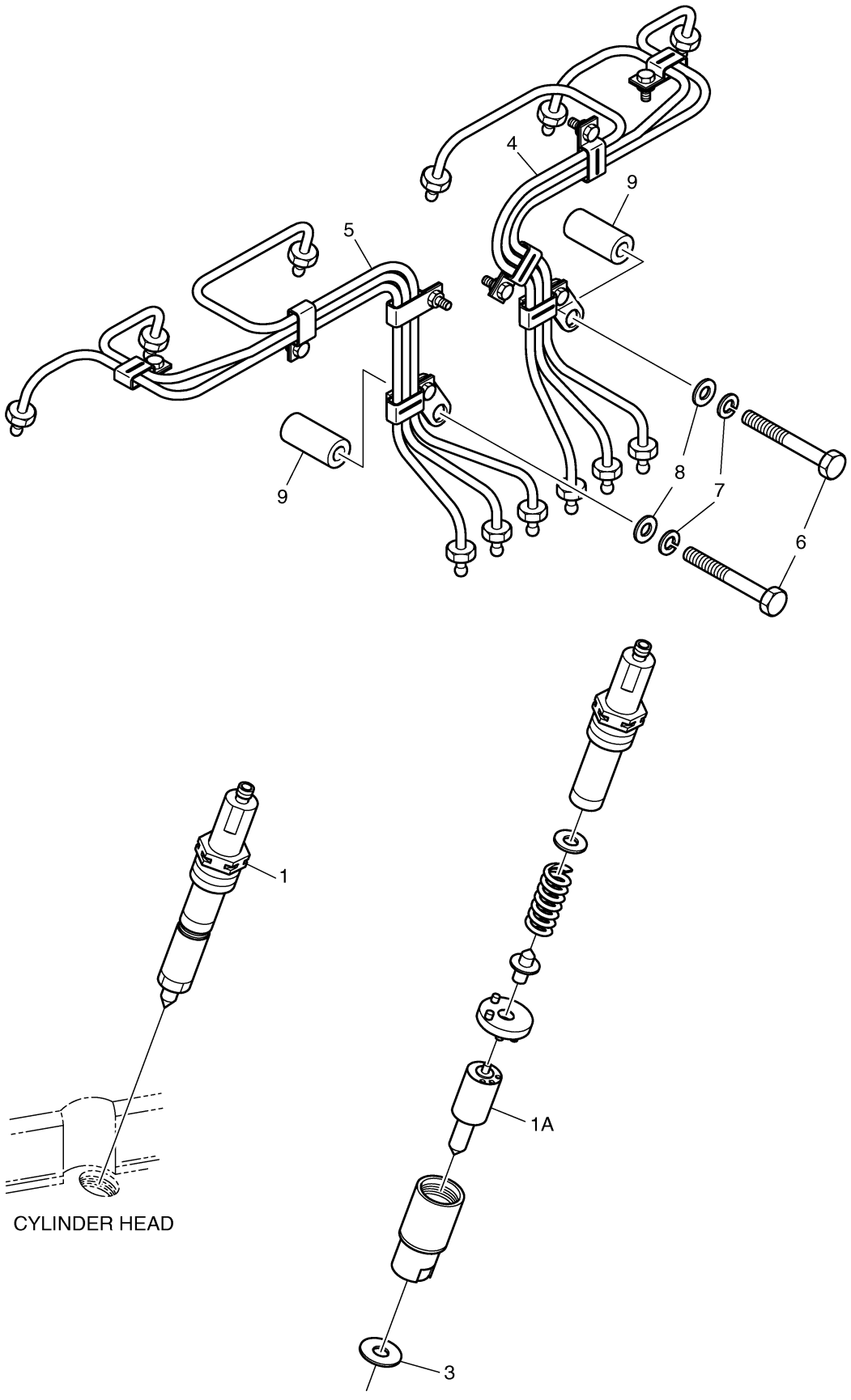

# Fig. 026 NOZZLE & FUEL INJECTION PIPE

| Key No | Part No | Description | Qty | S.C | Serial No | ICA | Replacable | Qty |
|---|---|---|---|---|---|---|---|---|
| 1 | 65.10101-7088 | NOZZLE & HOLDER ASS`Y | 6 | | | | | |
| 1A | 65.10102-6058 | NOZZLE | 1 | | | | | |
| 3 | 65.96501-0057 | RING;SEAL | 6 | | | | | |
| 4 | 420208-00002 | PIPE;INJECTION | 1 | | | | | |
| 5 | 65.10301-6052B | PIPE;INJECTION | 1 | | | | | |
| 6 | 06.01013-9221 | BOLT;HEX. M10X80 | 2 | | | | | |
| 7 | 06.16731-2108 | WASHER;SPRING | 2 | | | | | |
| 8 | 06.15010-2312 | WASHER;PLAIN | 2 | | | | | |
| 9 | 65.91701-0165 | SPACER | 2 | | | | | |

# Fig. 027 FUEL INJECTION PUMP

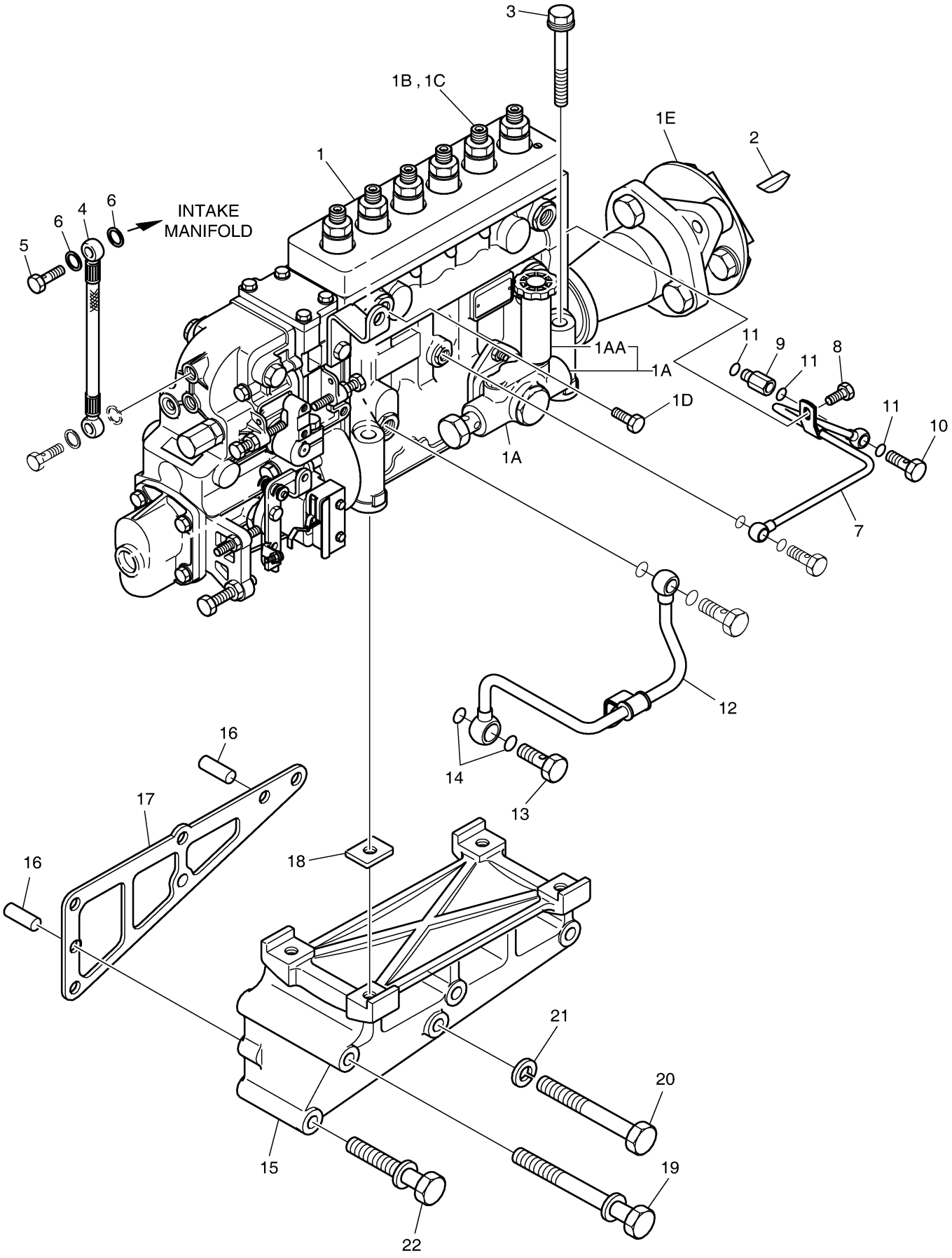




DOOSAN Doosan Infracore

# Fig. 027 FUEL INJECTION PUMP

| Key No | Part No | Description | Qty | S.C | Serial No | ICA | Replacable | Qty |
|---|---|---|---|---|---|---|---|---|
| 1 | 400912-00062 | PUMP ASSY,INJECTION | 1 | | | | | |
| 1A | 105207-154A | PUMP,FEED | 1 | | | | | |
| 1AA | 400908-00004 | HAND PRIMING PUMP | 1 | | | | | |
| 1B | 134151-2320 | PLUNGER | 6 | | | | | |
| 1C | 134110-1420 | VALVE;DELIVERY | 6 | | | | | |
| 1D | 134424-4120 | VALVE;OVERFLOW | 1 | | | | | |
| 1E | 105663-074B | COUPLING | 1 | | | | | |
| 2 | 06.29141-0215 | KEY;WOODRUFF | 1 | | | | | |
| 3 | 06.01923-3228 | BOLT ASS'Y M10X85 | 4 | | | | | |
| 4 | 65.08301-6010A | HOSE;AIR | 1 | | | | | |
| 5 | 65.98150-0053B | SCREW;HOLLOW | 1 | | | | | |
| 6 | 06.56180-0716 | RING;SEAL | 2 | | | | | |
| 7 | 65.05701-5356 | PIPE;OIL DELIVERY(I/P) | 1 | | | | | |
| 8 | 06.01913-2910 | BOLT;HEX. M6X12 | 1 | | | | | |
| 9 | 65.98130-0029 | ADAPTER | 1 | | | | | |
| 10 | 65.98150-0027 | SCREW;HOLLOW | 1 | | | | | |
| 11 | 06.56180-0714 | RING;SEAL | 3 | | | | | |
| 12 | 65.05701-5358 | OIL RETURN PIPE ASS`Y(I/P) | 1 | | | | | |
| 13 | 65.90420-0012A | SCREW;HOLLOW M16X2 | 1 | | | | | |
| 14 | 06.56190-0708 | RING;SEAL | 2 | | | | | |
| 15 | 65.11401-0046A | BRACKET | 1 | | | | | |
| 16 | 06.22022-1112 | PIN;DOWEL | 2 | | | | | |
| 17 | 65.11405-0001 | SHIM T=0.10 | 1 | | | | | |
| 17 | 65.11405-0002 | SHIM T=0.15 | 1 | | | | | |
| 17 | 65.11405-0003 | SHIM T=0.20 | 1 | | | | | |
| 17 | 65.11405-0004 | SHIM T=0.50 | 1 | | | | | |
| 18 | 65.11405-0009 | SHIM 0.10mm | 4 | | | | | |
| 18 | 65.11405-0010 | SHIM 0.30mm | 4 | | | | | |
| 19 | 06.01913-3234 | BOLT ASS`Y M10X130 | 3 | | | | | |
| 20 | 06.01013-9226 | BOLT;HEX. M10X1.5X110 | 1 | | | | | |
| 21 | 06.16731-2108 | WASHER;SPRING | 1 | | | | | |
| 22 | 06.01913-3229 | BOLT ASS`Y M10X90 | 1 | | | | | |

# Fig. 028 FUEL INJECTION PUMP DRIVE

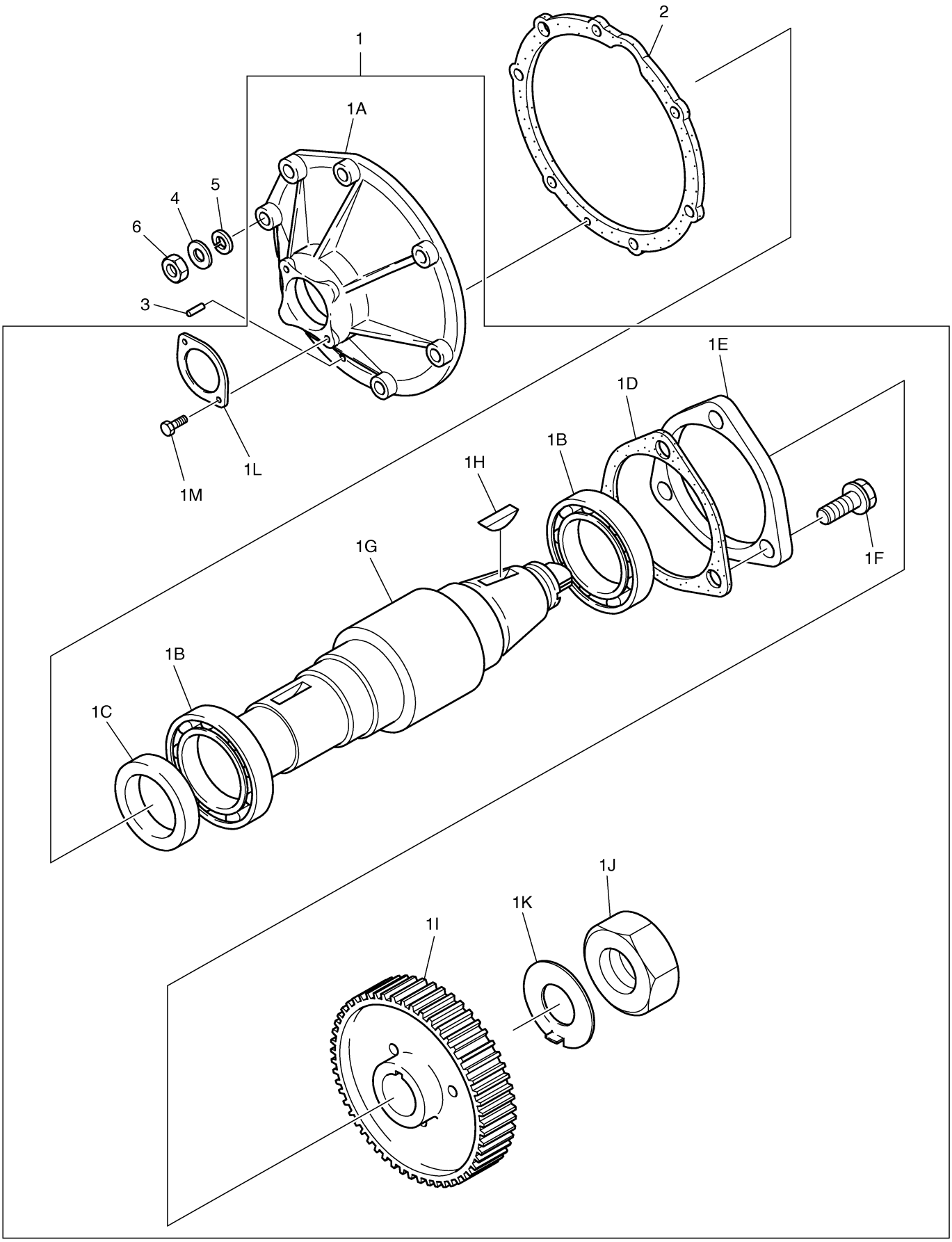




DOOSAN Doosan Infracore

# Fig. 028 FUEL INJECTION PUMP DRIVE

| Key No | Part No | Description | Qty | S.C | Serial No | ICA | Replacable | Qty |
|---|---|---|---|---|---|---|---|---|
| 1 | 65.11301-7008D | INJECTION PUMP DRIVE ASSY | 1 | | ~130331 | I | 130412-00119 | 1 |
| 1 | 130412-00119 | INJECTION PUMP DRIVE ASS'Y | 1 | | 130401~ | | | |
| 1A | 65.11309-0005C | HOUSING;INJ PUMP DRIVE | 1 | D | | | | |
| 1B | 06.32092-0307 | BEARING;TAPER ROLLER | 2 | | | | | |
| 1C | 65.01510-0039 | SEAL;OIL | 1 | | | | | |
| 1D | 65.11308-0001 | SHIM 0.50mm | 1 | R | | | | |
| 1D | 65.11308-0002 | SHIM 0.20mm | 1 | R | | | | |
| 1D | 65.11308-0003 | SHIM 0.15mm | 1 | R | | | | |
| 1D | 65.11308-0004 | SHIM 0.10mm | 1 | R | | | | |
| 1E | 65.11312-0006A | COVER | 1 | D | | | | |
| 1F | 06.01913-3114 | BOLT ASS'Y M8X22 | 3 | | | | | |
| 1G | 65.11302-0010A | SHAFT;INJECTION PUMP DRIVE | 1 | | | | | |
| 1H | 06.29141-0215 | KEY;WOODRUFF | 1 | | | | | |
| 1I | 65.11301-0009 | GEAR;INJECTION PUMP DRIVE | 1 | | | | | |
| 1J | 06.11250-4329 | NUT;HEX M24X1.5 | 1 | | ~130331 | I | 120307-00133 | 1 |
| 1J | 120307-00133 | NUT,HEX | 1 | | 130401~ | | | |
| 1K | 06.16050-0316 | WASHER;LOCK | 1 | | | | | |
| 1L | 65.98112-0027 | FLANGE | 1 | | | | | |
| 1M | 06.01913-2910 | BOLT;HEX. M6X12 | 2 | | | | | |
| 2 | 65.11902-0018A | GASKET;MOUNTING FLANGE | 1 | | | | | |
| 3 | 06.22220-1110 | PIN;SPRING | 1 | | | | | |
| 4 | 06.15010-2312 | WASHER;PLAIN | 7 | | | | | |
| 5 | 06.16731-2108 | WASHER;SPRING | 7 | | | | | |
| 6 | 06.11063-8215 | NUT;HEX. M10 | 7 | | | | | |

# Fig. 029 FUEL FILTER

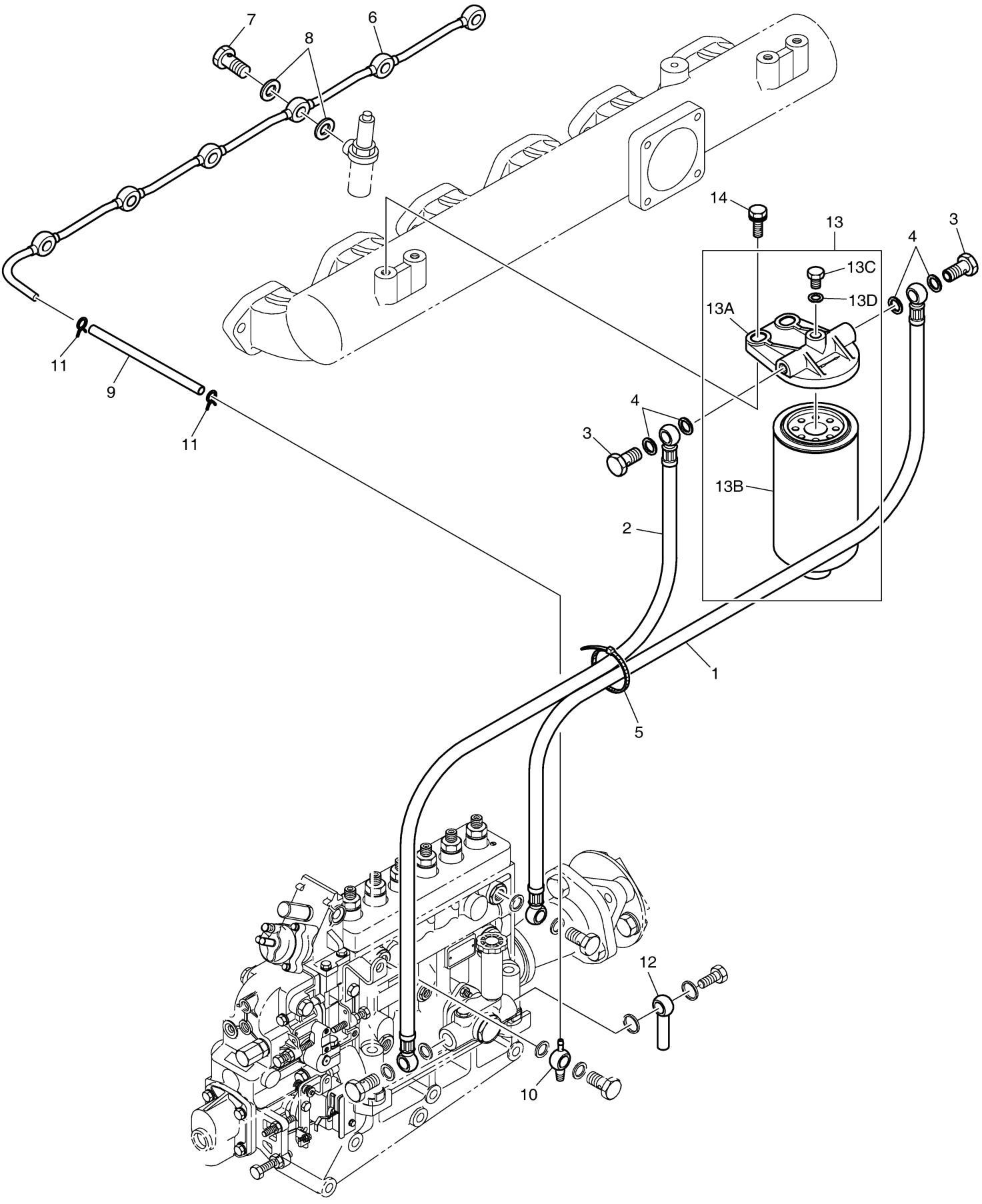




DOOSAN Doosan Infracore

# Fig. 029 FUEL FILTER

| Key No | Part No | Description | Qty | S.C | Serial No | ICA | Replacable | Qty |
|---|---|---|---|---|---|---|---|---|
| 1 | 65.96341-0107 | HOSE;FUEL | 1 | | | | | |
| 2 | 65.96341-0080 | HOSE;FUEL | 1 | | | | | |
| 3 | 06.78144-2204 | SCREW;HOLLOW | 2 | | | | | |
| 4 | 65.96507-0043 | RING;SEAL A14X20 | 4 | | | | | |
| 5 | 65.97460-0001 | BAND;TENSION | 1 | | | | | |
| 6 | 65.12301-5095D | PIPE;FUEL | 1 | | | | | |
| 7 | 65.98150-0042A | SCREW;HOLLOW | 6 | | | | | |
| 8 | 06.56180-0712 | RING;SEAL | 12 | | | | | |
| 9 | 65.96330-0129 | TUBE;FUEL OVER FLOW | 1 | | | | | |
| 10 | 65.98101-0008 | DOUBLE BANJO UNION | 1 | | | | | |
| 11 | 65.97445-0001 | CLAMP;SPRING | 2 | | | | | |
| 12 | 65.12301-5022 | PIPE;FUEL(RETURN) | 1 | | | | | |
| 13 | 65.12501-7023B | FUEL FILTER ASS`Y | 1 | | | | | |
| 13A | 65.12504-5013B | HEAD;FUEL FILTER | 1 | | | | | |
| 13B | 65.12503-5016B | ELEMENT;E/G FUEL FILTER | 1 | | | | | |
| 13C | 65.90310-0143 | SCREW;PLUG | 1 | | | | | |
| 13D | 06.56180-0716 | RING;SEAL | 1 | | | | | |
| 14 | 06.01953-3217 | BOLT ASS'Y M10X1.25X30 | 2 | | | | | |

# Fig. 030 ALTERNATOR & STARTER

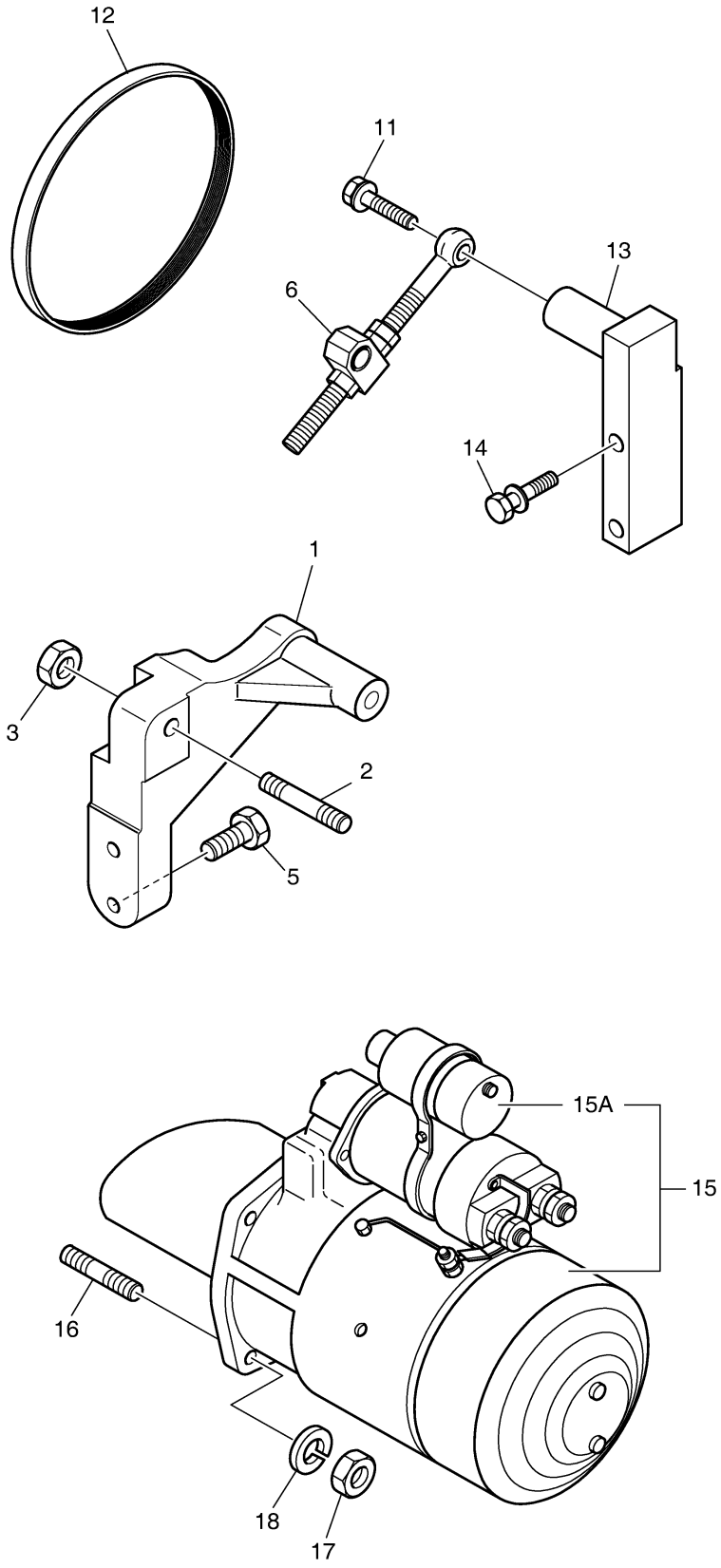

**Thank you very much for your reading.**

**Please Click Here Then Get More Information.**