RUTHZIL TRATOR COMERCIAL DE PEÇAS LTDA 11 97083-6812 ROLANDO CITRANGULO

VOLVO Construction Equipment

L60E

PROSIS Part Information

Date:	Image id:	Catalogue:	Model:
10/09/2018	**1004060**	**20009**	**L60E**
Brand:	Serial:	Group/Section:	Title:
Volvo	**1001-3355, 60001-61214, 70001-70530**	**030/100**	**Product identification plate**

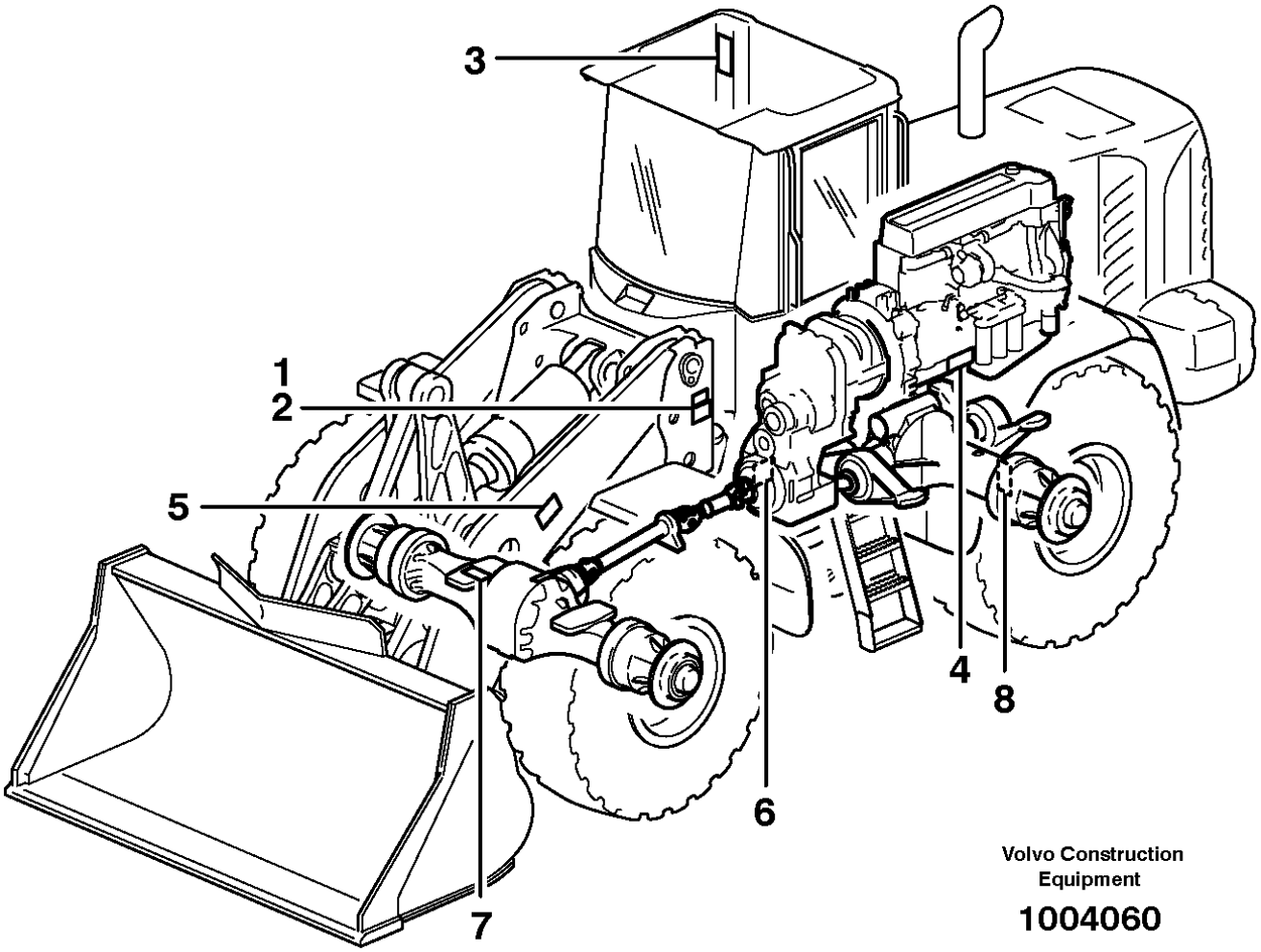

Pos	Part	Q1	Q2	Q3	Q4	Q5	PS	Kit	Description	Option(s)	Remark
1									Product sign plate		
2									Assembly Sign Plate		
3									Driver's cab		
4									Engine sign plate		
5									Lifting Unit		
6									Power Transmission		
7									Drive axle front sign plate		
8									Drive axle rear sign plate		

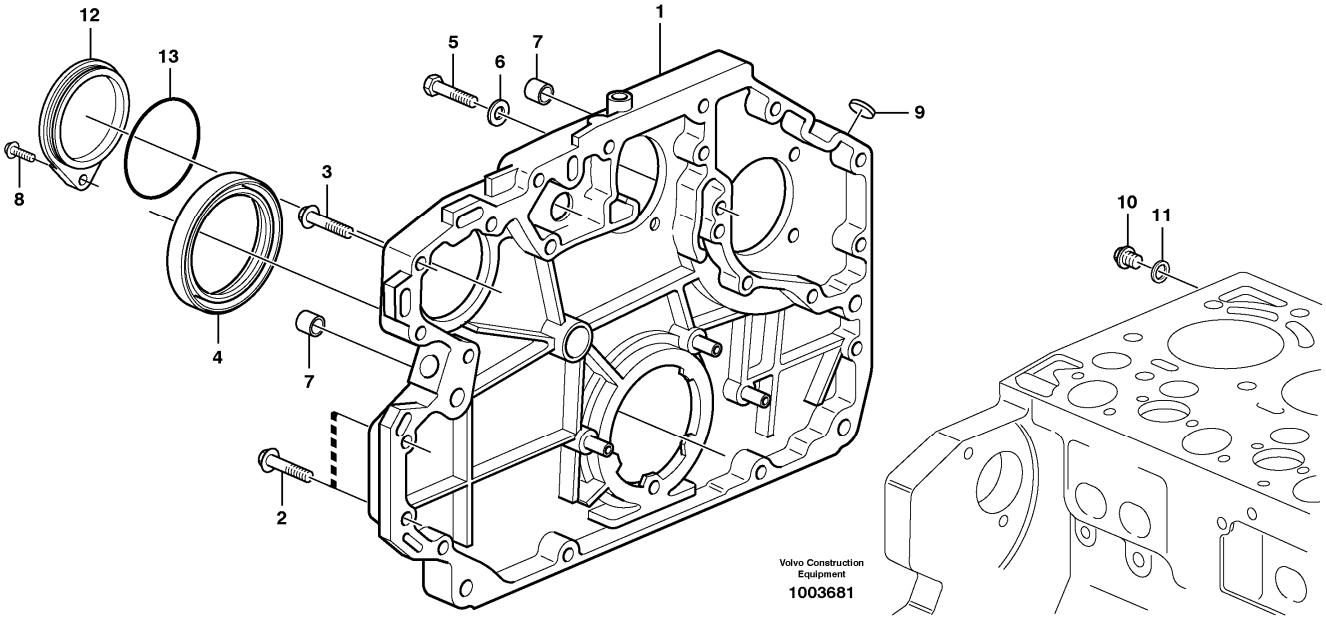
12
13
8
5
6
7
1
9
3
4
7
2
10
11
Volvo Construction Equipment
1003681

VOLVO

Construction Equipment

PROSIS Part Information

Date:	Image id:	Catalogue:	Model:
10/09/2018	**1004012**	**20009**	**L60E**
Brand:	Serial:	Group/Section:	Title:
Volvo	**1001-3355, 60001-61214, 70001-70530**	**210/100**	**Engine**

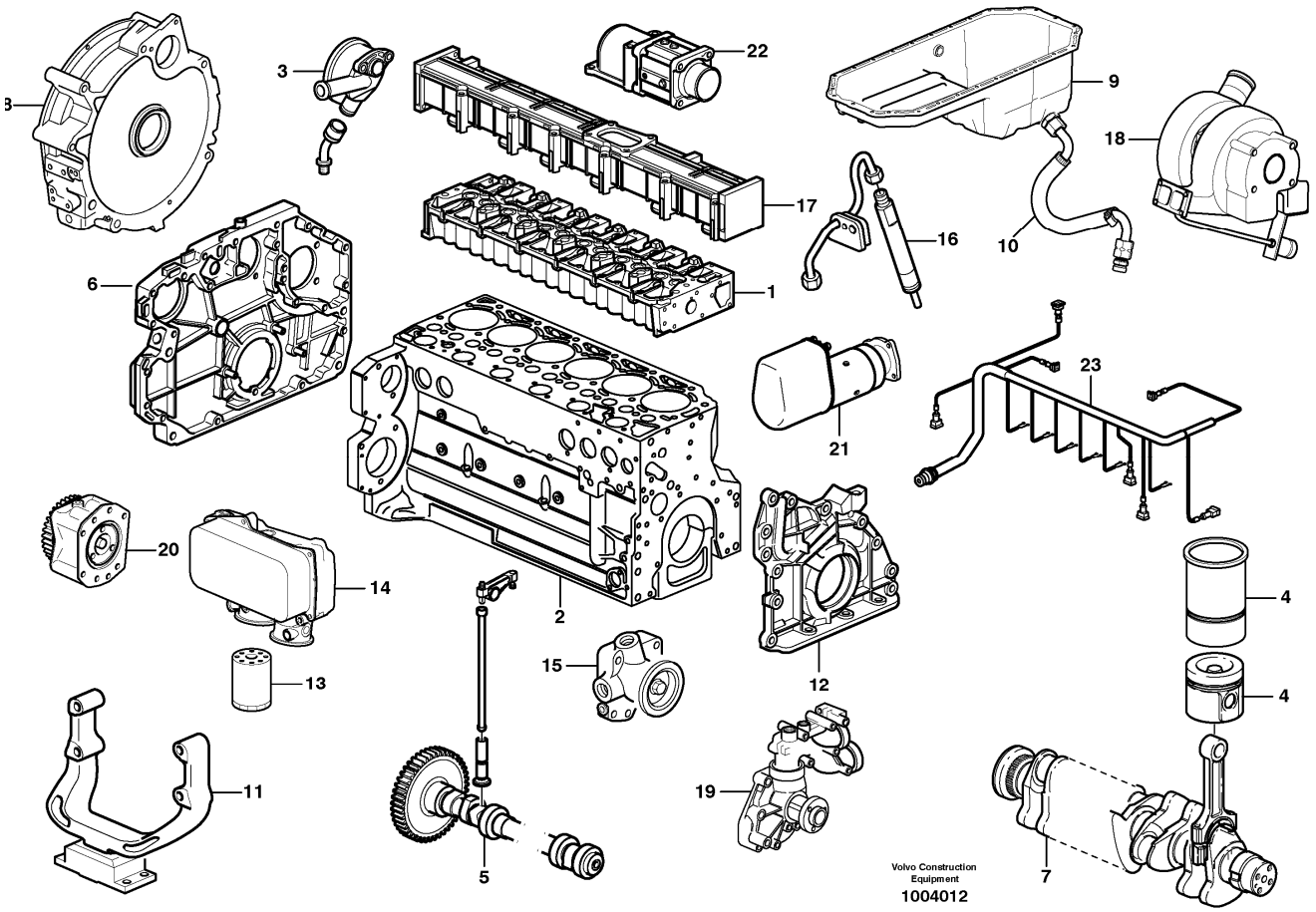

Section option	Kit	Option description
VOE11172410		Engine VOLVO D6D LCE2

Pos	Part	Q1	Q2	Q3	Q4	Q5	PS	Kit	Description	Option(s)	Remark
	VOE11172410	1							Engine		D6DLCE2, REMAN VOE9011172410
1		1							•Cylinder head		See ref 211/100
2		1							•Cylinder block		See ref 212/100
3		1							•Crankcase ventilation		See ref 212/150
4		6							•Cylinder Liner And Piston		See ref 213/100
5		1							•Valve mechanism		See ref 214/100
6		1							•Timing gear casing		See ref 215/100
7		1							•Crankshaft		See ref 216/100

8		1							•Flywheel housing		See ref 216/150
9		1							•Oil sump		See ref 217/100
10		1							•Oil Draining		See ref 217/150
11		1							Engine suspension		NOT INCLUDED See ref 218/100
12		1							•Lubricating system		See ref 221/100
13		1							•Oil filter		See ref 223/100
14		1							•Oil cooler		See ref 223/100
15		1							•Fuel pump		See ref 233/100
16		1							•Fuel pipes		See ref 237/100
17		1							•Inlet manifold		See ref 251/100
18		1							•Turbocharger		See ref 255/100
19		1							•Coolant Pump		See ref 262/100
20		1							•Pump Drive Power Take-off		See ref 263/250
21		1							•Starter motor		See ref 331/100
22		1							•Pre-heater With Fitting P		See ref 333/200
23		1							•Cable Harness, Engine		See ref 371/150

VOLVO

Construction Equipment

PROSIS Part Information

Date:	Image id:	Catalogue:	Model:
10/09/2018	**1032265**	**20009**	**L60E**
Brand:	Serial:	Group/Section:	Title:
Volvo	**1001-3355, 60001-61214, 70001-70530**	**211/100**	**Cylinder head**

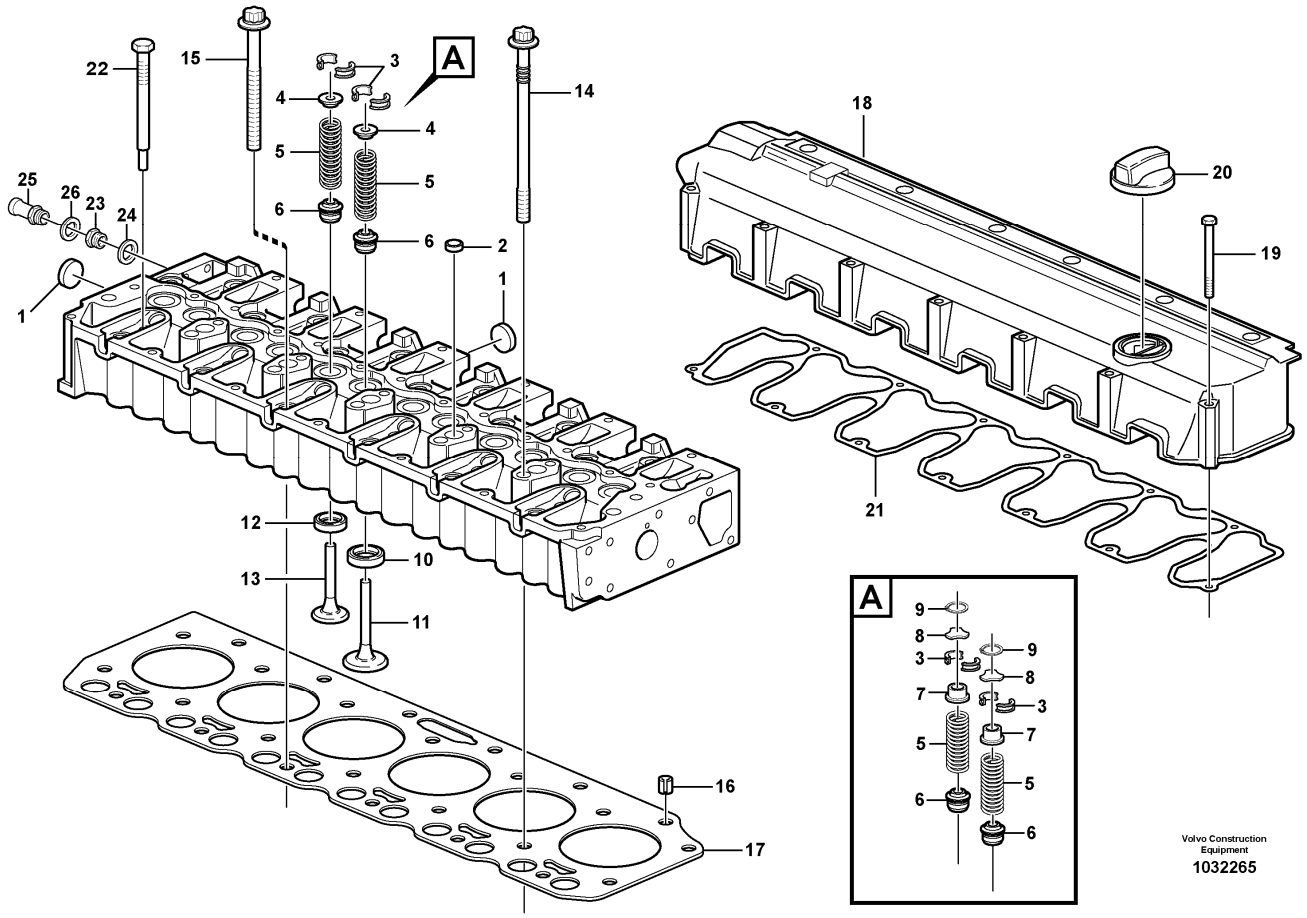

Section option	Kit	Option description
VOE11172410		Engine VOLVO D6D LCE2

Pos	Part	Q1	Q2	Q3	Q4	Q5	PS	Kit	Description	Option(s)	Remark
	VOE20747867	1							Cylinder head		(VOE20498711)ENG - 01031803, REMAN VOE9020747867, VOE9020498711
	VOE20747867	1							Cylinder head		ENG 1031804 - 2006/01, REMAN VOE9020747867
	VOE21055823	1							Cylinder head		ENG 2006/02 -, REMAN VOE9021055823
1	VOE20412745	5							•Core plug		
2	VOE20412733	5							•Core plug		

3	VOE20459857	24							•Valve sleeve		
4	VOE20535037	12							•Washer		ENG - 2006/01
5	VOE20459851	12							•Valve spring		
6	VOE20459855	12							•Valve seal		
7	VOE20840747	12							•Spring disc		ENG 2006/02 -
8	VOE20840807	12							•Thrust washer		
9	VOE20840772	12							•Lock ring		
10	VOE20459852	6							•Valve seat		
11	VOE20482741	6							•Inlet valve		(VOE20791517)ENG - 2006/01
11	VOE21026535	6							•Inlet valve		ENG 2006/02 -
12	VOE20459854	6							•Valve seat		
13	VOE20482742	6							•Exhaust valve		(VOE20459861)ENG - 2006/01
13	VOE21026536	6							•Exhaust valve		ENG 2006/02 -
14	VOE20459837	7							Bolt		
15	VOE20459838	19							Bolt		
16	VOE20459839	2							Bushing		
17	VOE20798183	1							Cylinder head gasket		(VOE24426690)1,27 MM
17	VOE20798186	1							Cylinder head gasket		(VOE24426691)1,37 MM
17	VOE20798191	1							Cylinder head gasket		(VOE24426692)1,47 MM
18	VOE20558880	1							Valve Cover		(VOE20459829)ENG - 620552
18	VOE20459831	1					SS		Valve cover		ENG 620553 - 859316
18	VOE20558810	1							Valve Cover		ENG 859317 -
19	VOE20459830	13							Screw		
20	VOE20412589	1							Filler cap		
21	VOE20459828	1							Gasket		ENG - 859316
21	VOE20558929	1							Gasket		ENG 859317 -
22	VOE20405895	6							Plug		
23	VOE20516927	1							Sealing ring		
24	VOE13969011	1							Gasket		
25	VOE20483764	1							Nipple		
26	VOE13947281	1							Gasket		

VOLVO

Construction Equipment

PROSIS Part Information

Date:	Image id:	Catalogue:	Model:
10/09/2018	**1021033**	**20009**	**L60E**
Brand:	Serial:	Group/Section:	Title:
Volvo	**1001-3355, 60001-61214, 70001-70530**	**212/100**	**Cylinder block**

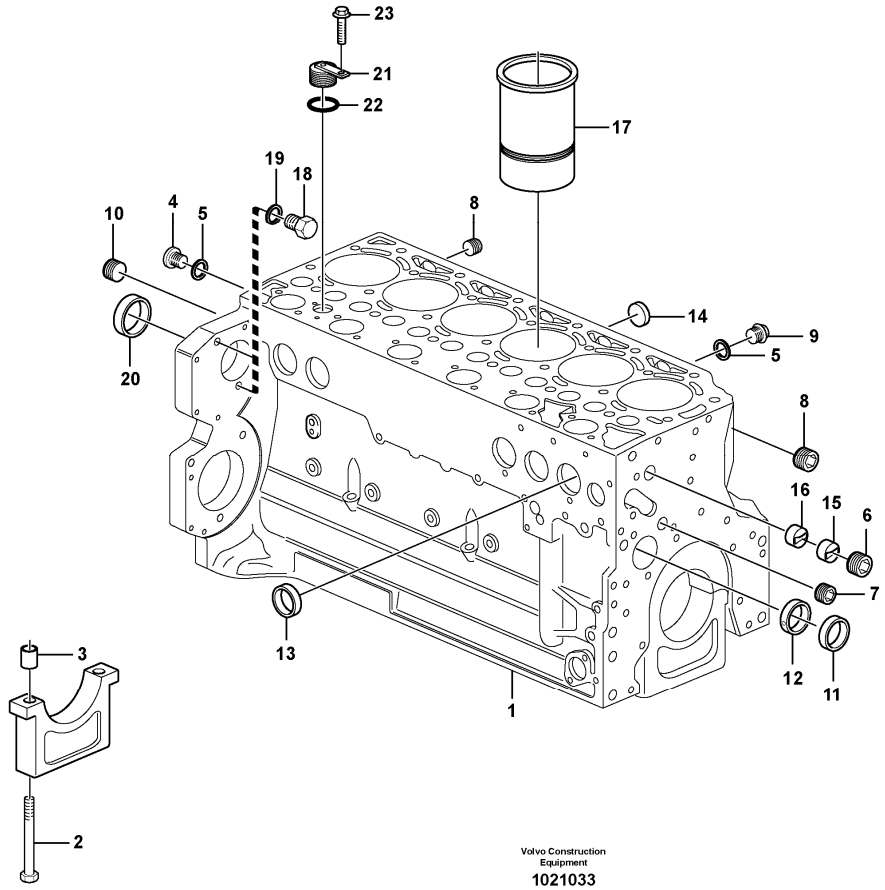

Section option	Kit	Option description
VOE11172410		Engine VOLVO D6D LCE2

Pos	Part	Q1	Q2	Q3	Q4	Q5	PS	Kit	Description	Option(s)	Remark
1	VOE20533309	1					SS		Cylinder Block		ENG - 01060658
1	VOE20785815	1					SS		Cylinder block		ENG 01060659 - 01099383
1	VOE22744763	1							Cylinder Block		(VOE21009708)ENG 01099384 -
2	VOE20460006	14							•Screw		ENG - 01099383
3	VOE20460001	14							•Bushing		ENG - 01099383
4	VOE945065	1							•Plug		
5	VOE13969011	3							•Gasket		
6	VOE20405717	1							•Plug		
7	VOE20405719	1							•Plug		ENG - 01099383

8	VOE20508600	2							•Plug		
9	VOE20405716	2							•Plug		
10	VOE20785813	1							•Plug		
11	VOE20459999	6							•Camshaft bushing		
12	VOE20459998	1							•Camshaft bushing		
13	VOE20405721	9							•Core plug		
14	VOE20412745	6							•Core plug		(VOE20450767)
15	VOE20405584	1							•Guide sleeve		
16	VOE20405906	1							•Guide sleeve		
17		6							•Cylinder Liner		NO PISTONS ETC. See ref 213/100
18	VOE20441859	2							Plug		(VOE20532680)
19	VOE13947281	2							Gasket		
20	VOE20450778	1							Core plug		
21	VOE20702078	1					SS		Plug		ENG - 01047118
	VOE20758137	1							Plug		ENG 01047119 -
22	VOE20405728	1							•Sealing ring		
23	VOE20711881	1							Screw		

VOLVO

Construction Equipment

PROSIS Part Information

Date:	Image id:	Catalogue:	Model:
10/09/2018	**1003881**	**20009**	**L60E**
Brand:	Serial:	Group/Section:	Title:
Volvo	**1001-3355, 60001-61214, 70001-70530**	**212/150**	**Crankcase ventilation**

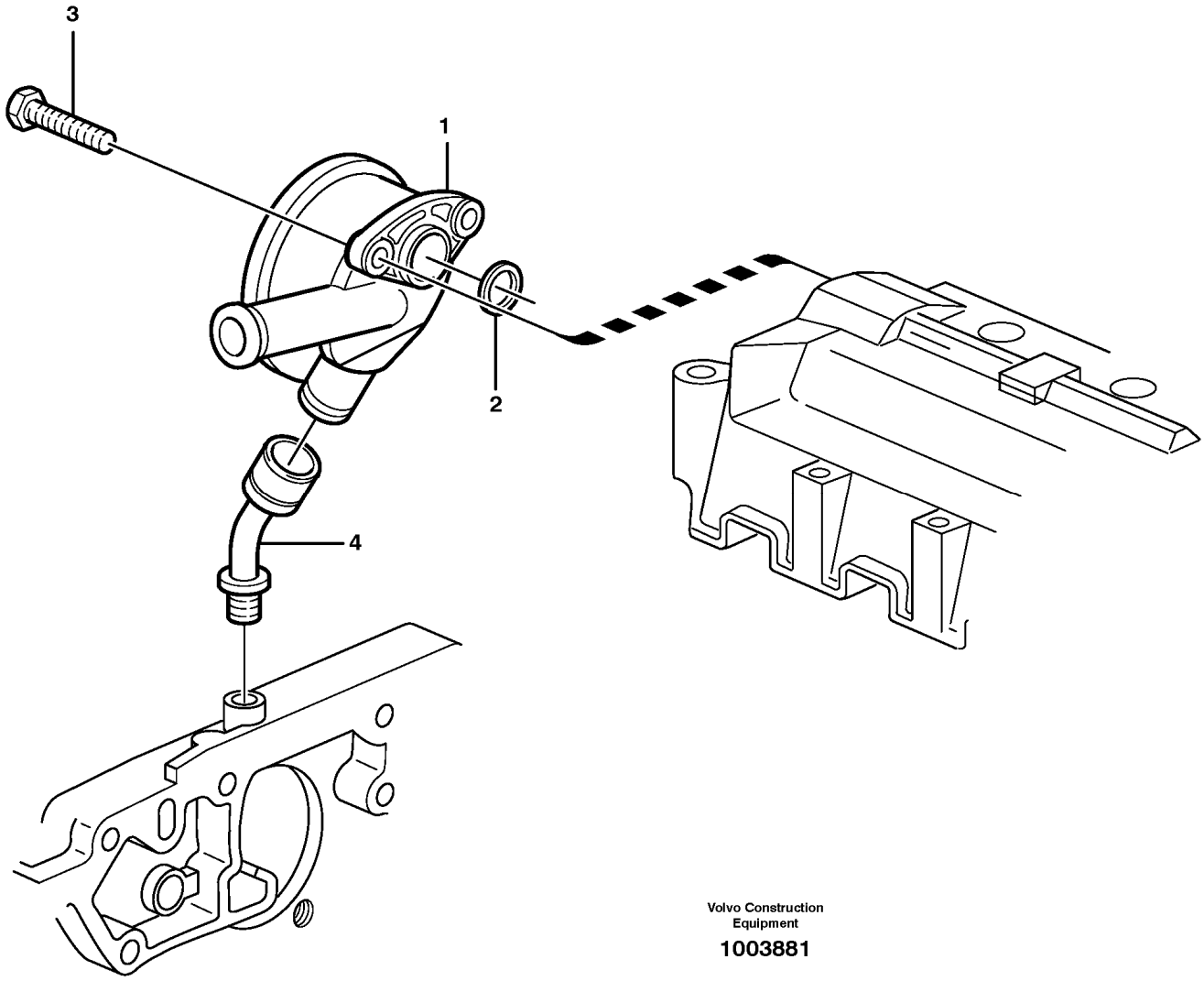

Section option	Kit	Option description
VOE11172410		Engine VOLVO D6D LCE2

Pos	Part	Q1	Q2	Q3	Q4	Q5	PS	Kit	Description	Option(s)	Remark
1	VOE20405626	1							Regulator		
2	VOE20405627	1							Gasket		
3	VOE20450728	2							Bolt		
4	VOE20405938	1							Connector		

VOLVO

Construction Equipment

PROSIS Part Information

Date:	Image id:	Catalogue:	Model:
10/09/2018	**1024633**	**20009**	**L60E**
Brand:	Serial:	Group/Section:	Title:
Volvo	**1001-3355, 60001-61214, 70001-70530**	**213/100**	**Cylinder liner and piston**

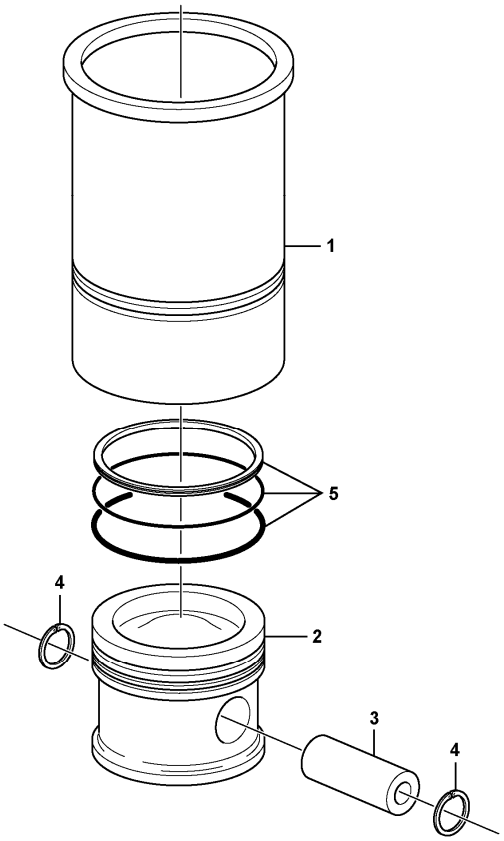

Section option	Kit	Option description
VOE11172410		Engine VOLVO D6D LCE2

Pos	Part	Q1	Q2	Q3	Q4	Q5	PS	Kit	Description	Option(s)	Remark
1	VOE20854651	6							Cyl Liner Kit		ENG - 01060666
1	VOE20854654	6							Cyl Liner Kit		ENG 01060667 -
2		6					NS		•Piston		
3	VOE20460009	6							••Gudgeon pin		
4	VOE21159226	12							••Snap ring		(VOE20460010)
5	VOE20460011	6							••Piston ring kit		

VOLVO

Construction Equipment

PROSIS Part Information

Date:	Image id:	Catalogue:	Model:
10/09/2018	**1001003**	**20009**	**L60E**
Brand:	Serial:	Group/Section:	Title:
Volvo	**1001-3355, 60001-61214, 70001-70530**	**214/100**	**Valve mechanism**

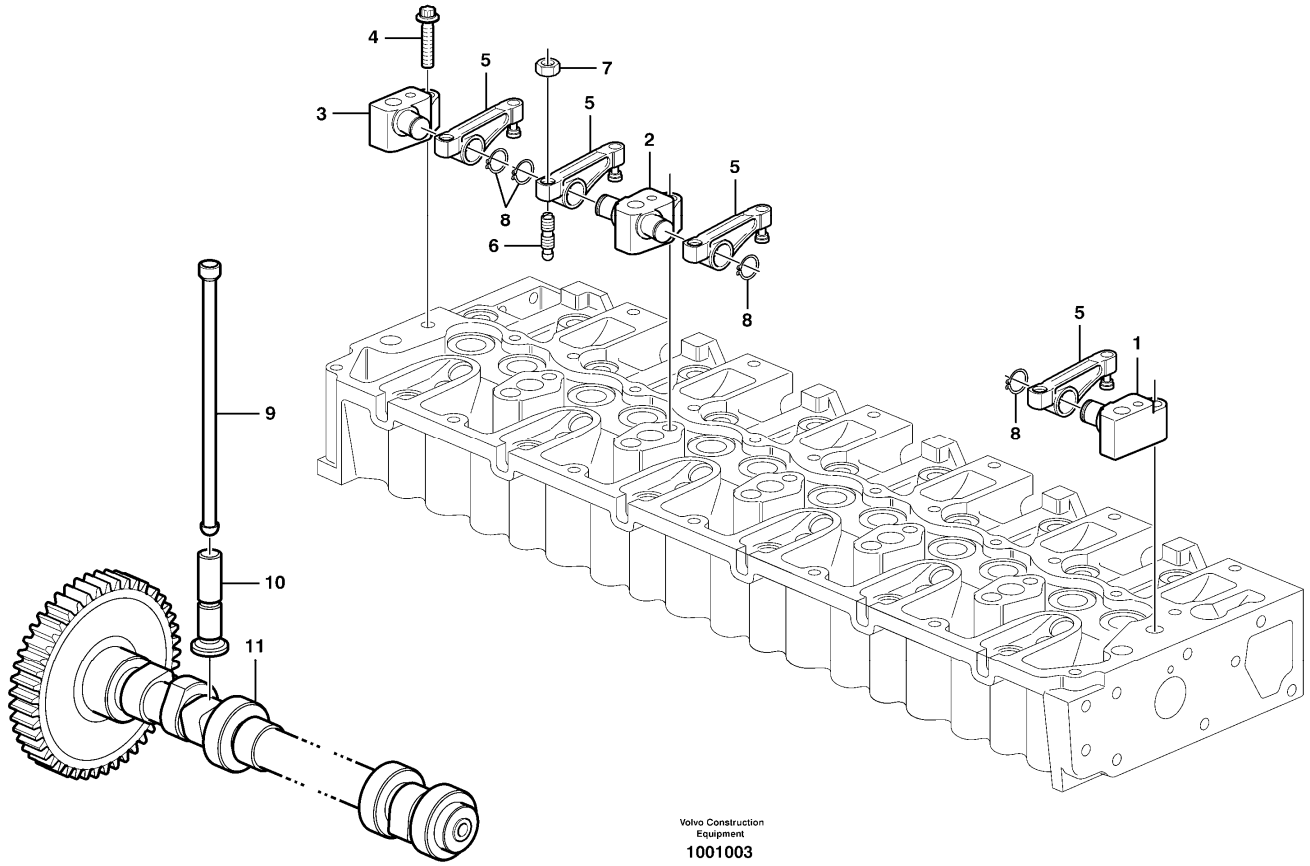

Section option	Kit	Option description
VOE11172410		Engine VOLVO D6D LCE2

Pos	Part	Q1	Q2	Q3	Q4	Q5	PS	Kit	Description	Option(s)	Remark
1	VOE20459848	1							Bracket		
2	VOE20459847	5							Bracket		
3	VOE20459849	1							Bracket		
4	VOE20459853	7							Screw		
5	VOE20459850	12							Rocker arm		ENG - 2006/01
5	VOE21448926	12							Rocker arm		(VOE20792876)ENG 2006/02 -
6	VOE20405524	12							Screw		ENG - 2007/08
6	VOE20913851	12							Adjusting Screw		ENG 2007/09 -
7	VOE11700373	12							Nut		
8	VOE945495	12							Snap ring		
9	VOE21345578	12							Tube		(VOE20460008)

10	VOE20460007	12							Tappet		
11	VOE20502005	1					SS		Camshaft		ENG - 01099344
11	VOE20973962	1							Camshaft		ENG 01099345 -

VOLVO

Construction Equipment

PROSIS Part Information

Date:	Image id:	Catalogue:	Model:
10/09/2018	**1003681**	**20009**	**L60E**
Brand:	Serial:	Group/Section:	Title:
Volvo	**1001-3355, 60001-61214, 70001-70530**	**215/100**	**Timing gear casing and gears**

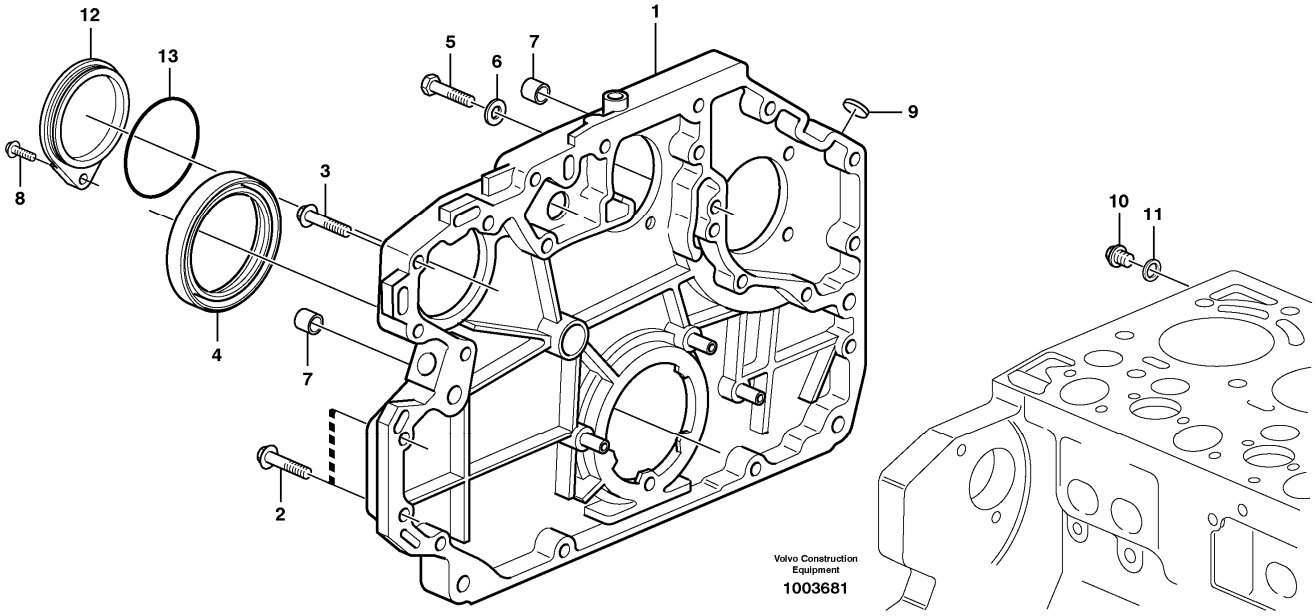

Section option	Kit	Option description
VOE11172410		Engine VOLVO D6D LCE2

Pos	Part	Q1	Q2	Q3	Q4	Q5	PS	Kit	Description	Option(s)	Remark
1	VOE22442987	1							Gear		(VOE20918119)
2	VOE20412324	12							Screw		
3	VOE20450801	3							Screw		
4	VOE20929860	1							Crankshaft Seal		
5	VOE20405653	2					SS		Screw		E PROD
6	VOE13955900	2							Washer		E PROD
7	VOE20405646	2							Bushing		ENG - 920347
7	VOE20585971	2							Bushing		ENG 920348 -
8	VOE20405672	1							Screw		
9	VOE20405605	1							Cover		
10	VOE960630	2							Plug		
11	VOE13947621	2							Plane gasket		
12	VOE20706651	1							Cover		(VOE20459901)
13	VOE20405652	1							Sealing ring		

VOLVO

Construction Equipment

PROSIS Part Information

Date:	Image id:	Catalogue:	Model:
10/09/2018	**1021711**	**20009**	**L60E**
Brand:	Serial:	Group/Section:	Title:
Volvo	**1001-3355, 60001-61214, 70001-70530**	**216/100**	**Crankshaft and related parts**

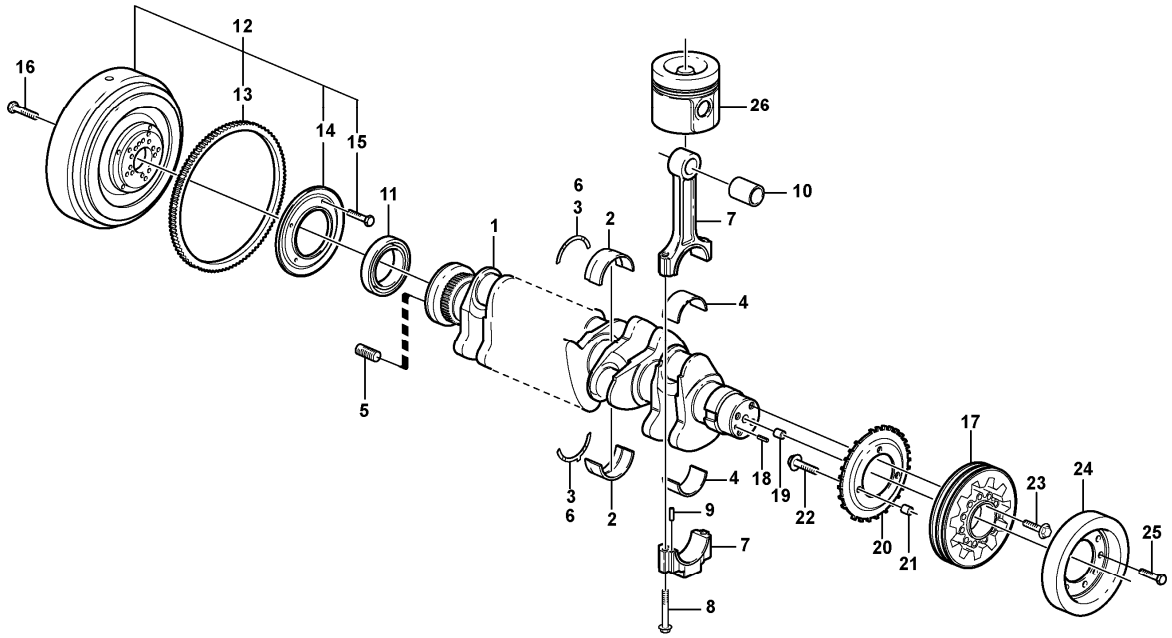

Volvo Construction Equipment
1021711

Section option	Kit	Option description
VOE11172410		Engine VOLVO D6D LCE2

Pos	Part	Q1	Q2	Q3	Q4	Q5	PS	Kit	Description	Option(s)	Remark
1	VOE20459146	1							Crankshaft		ENG - 851836, REMAN VOE9020459146, VOE9020769707
	VOE20769707	1					SS		Crankshaft		ENG 851837 - 1032859, REMAN VOE9020769707, VOE9020892713
	VOE21351400	1							Crankshaft		(VOE20785969)ENG 1032860 - 1099383, REMAN VOE9021351400, VOE9020892713

	VOE21351400	1							Crankshaft		(VOE20892713)ENG 1099384 -, REMAN VOE9021351400, VOE9020892713
2	VOE20459140	7							Main bearing		STD 84,00 MM
	VOE20459139	7							Main Bearing		U SZ 83,75 MM
3	VOE20459149	REQ							Thrust washer		STD WID 14 MM THICK 2,0 MM
	VOE20459148	REQ							Thrust Washer		WID 14 MM THICK 2,2 MM
4	VOE20555403	6							Bearing		ENG - 695616 STD 63,00 MM
	VOE20459147	6							Bearing		ENG - 695616 U SZ 62,75 MM
	VOE20480536	6							Bearing		ENG 695617 - STD 63,00 MM
	VOE20522433	6							Bearing		ENG 695617 - U SZ 62,75 MM
5	VOE20459144	1							Insert		
6	VOE20459143	REQ							Washer		STD WID 10 MM THICK 2,00 MM
	VOE20459142	REQ							Thrust Washer		WID 10 MM THICK 2,2 MM
7	VOE20882905	6							Connecting rod		
8	VOE20459133	12							•Bolt		
9	VOE20459134	12							•Pin		
10	VOE20523284	6							•Bushing		
11		1							Crankshaft Seal		See ref 215/100
12	VOE20459127	1					SS		Flywheel		ENG - 876577
	VOE20917910	1							Flywheel		ENG 876578 -
13	VOE20450830	1							•Gear		(VOE11700320)
14	VOE20450832	1							•Labyrinth ring		(VOE11700321)
15	VOE20450834	4							•Screw		(VOE11700322)
16	VOE20450835	10							Screw		(VOE11700307)
17	VOE20516985	1							Pulley		
18	VOE20450628	1							Pin		
19	VOE20405634	1							Spring pin		
20	VOE20459157	1							Lock washer		
21	VOE20450838	1							Pin		
22	VOE975108	3							Flange screw		(VOE888289)
23	VOE20405724	4							Screw		
24	VOE20585446	1							Vibration damper		
25	VOE975108	9							Flange screw		(VOE888289)
26		6							Piston		See ref 213/100

VOLVO

Construction Equipment

PROSIS Part Information

Date:	Image id:	Catalogue:	Model:
10/09/2018	**1003674**	**20009**	**L60E**
Brand:	Serial:	Group/Section:	Title:
Volvo	**1001-3355, 60001-61214, 70001-70530**	**216/150**	**Flywheel housing**

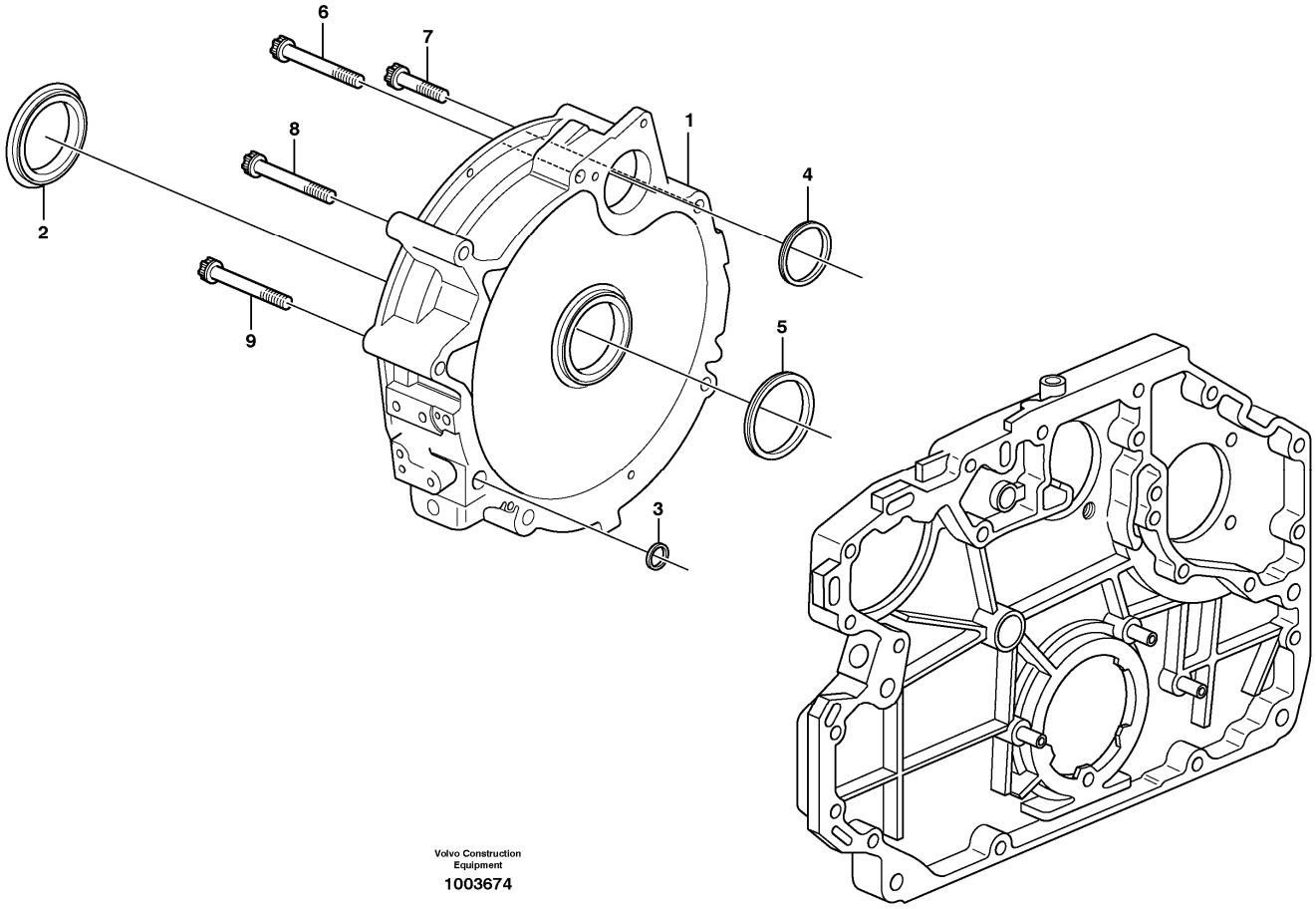

Section option	Kit	Option description
VOE11172410		Engine VOLVO D6D LCE2

Pos	Part	Q1	Q2	Q3	Q4	Q5	PS	Kit	Description	Option(s)	Remark
1	VOE20459987	1							Flywheel housing		
2	VOE20450784	1							•Labyrinth ring		(VOE11700592)
3	VOE20459993	4							O-ring		
4	VOE20459994	1							Sealing ring		
5	VOE20450786	1							Sealing ring		(VOE11700599)
6	VOE20459991	3							Screw		
7	VOE20460931	1							Screw		
8	VOE20459995	4							Screw		
9	VOE20459996	1							Screw		

VOLVO

Construction Equipment

PROSIS Part Information

Date:	Image id:	Catalogue:	Model:
10/09/2018	**1012850**	**20009**	**L60E**
Brand:	Serial:	Group/Section:	Title:
Volvo	**1001-3355, 60001-61214, 70001-70530**	**217/100**	**Oil sump**

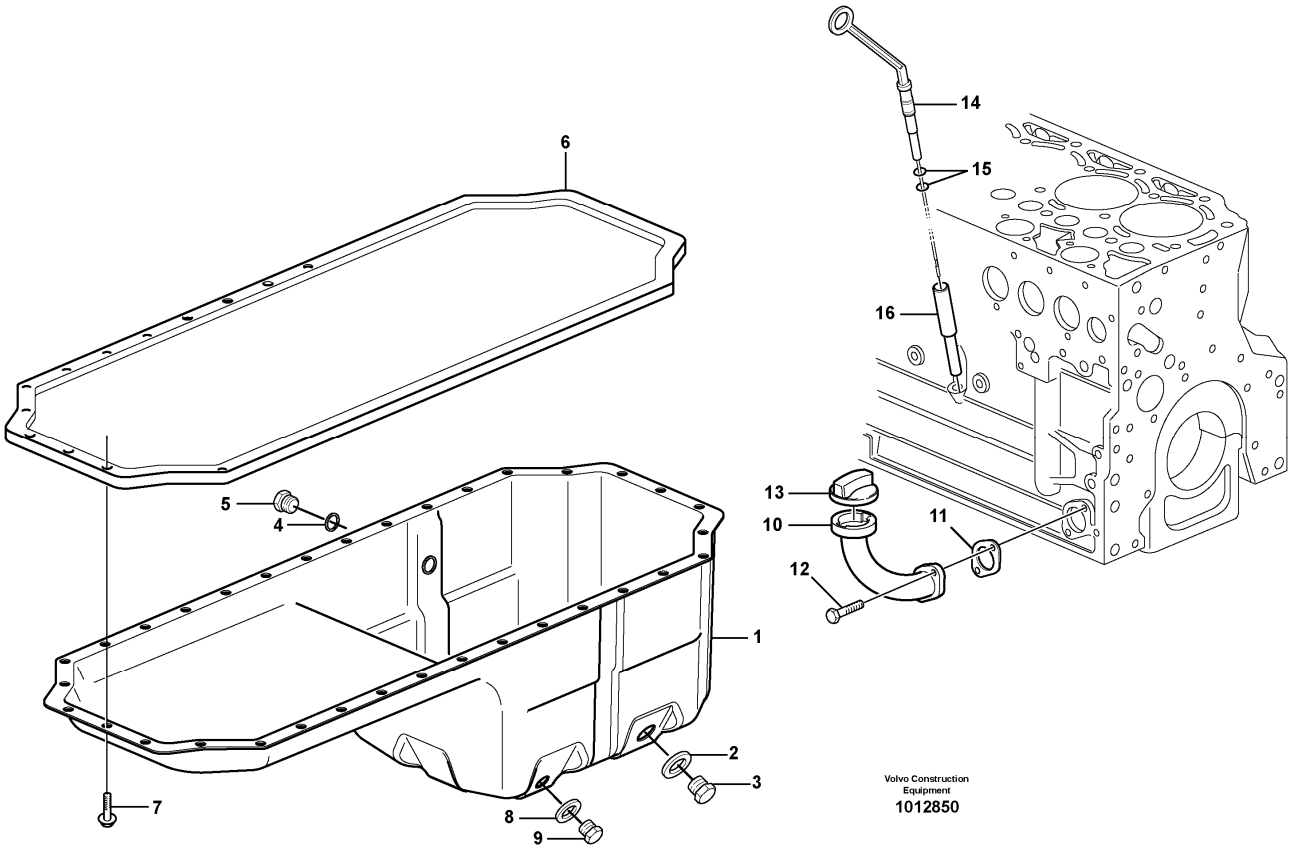

Section option	Kit	Option description
VOE11172410		Engine VOLVO D6D LCE2

Pos	Part	Q1	Q2	Q3	Q4	Q5	PS	Kit	Description	Option(s)	Remark
1	VOE21618972	1							Oil pan		(VOE21109768)
2	VOE20496256	1							•Gasket		
3	VOE20496257	1							•Plug		
4	VOE20460026	1							•Sealing ring		
5	VOE20460024	1							•Plug		
6	VOE20460022	1							Gasket		
7	VOE20405792	28							Screw		
8	VOE13947624	1							Plane gasket		(VOE7011998)
9	VOE20405506	1							Plug		
10	VOE20977060	1							Tube		

11	VOE20405825	1							Gasket		
12	VOE20405885	2							Screw		
13	VOE20412589	1							Filler cap		(VOE20405835)
14	VOE20564005	1							Dipstick		
15	VOE20412343	2							•Sealing ring		
16	VOE21739416	1							Guide tube		(VOE20459164)

VOLVO

Construction Equipment

PROSIS Part Information

Date:	Image id:	Catalogue:	Model:
10/09/2018	**1019351**	**20009**	**L60E**
Brand:	Serial:	Group/Section:	Title:
Volvo	**1001-3355, 60001-61214, 70001-70530**	**217/150**	**Drain line, oil sump**

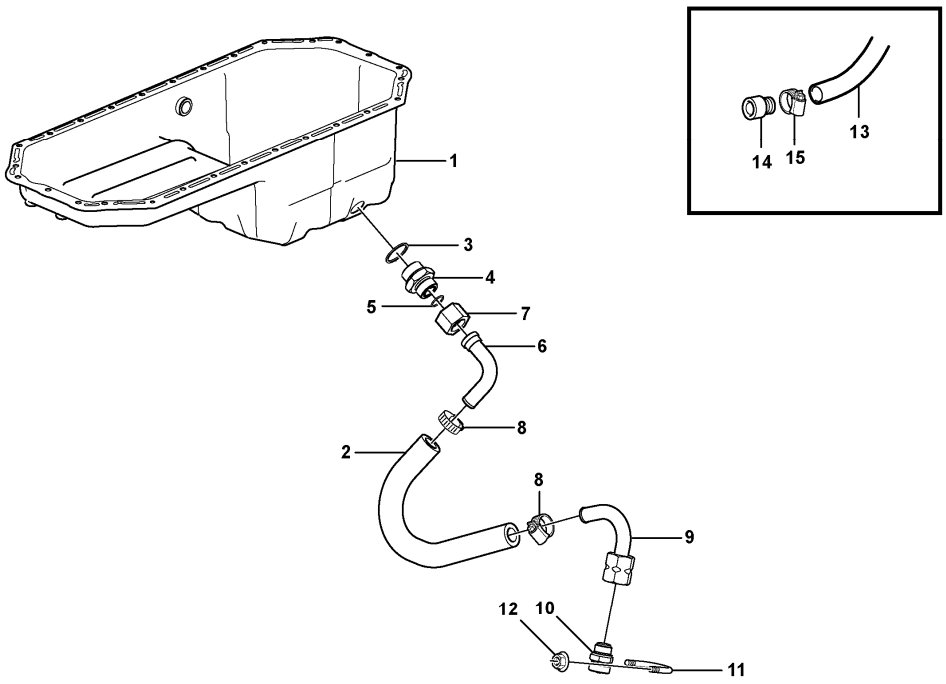

Section option	Kit	Option description
VOE33750		Wheel Loader

Pos	Part	Q1	Q2	Q3	Q4	Q5	PS	Kit	Description	Option(s)	Remark
1		1							Oil Pan		See ref 217/100
2	VOE11000285	REQ							Rubber hose		L = 430 MM
3	VOE13947630	1							Gasket		
4	VOE11163064	1							Nipple		
5	VOE990740	1							O-ring		
6	VOE11410190	1							Drain tube		
7	VOE13933877	1							Nut		
8	VOE13943474	2							Hose clamp		(VOE943473)
9	VOE11173508	1							Drain tube		
10	VOE11054692	1							Valve		

11	VOE11130269	1							Clamp		
12	VOE948645	2							Flange lock nut		
13	VOE11154125	1							Hose		
14	VOE11054659	1							Connector		
15	VOE13943474	1							Hose clamp		(VOE943473)

VOLVO

Construction Equipment

PROSIS Part Information

Date:	Image id:	Catalogue:	Model:
10/09/2018	**1001047**	**20009**	**L60E**
Brand:	Serial:	Group/Section:	Title:
Volvo	**1001-3355, 60001-61214, 70001-70530**	**218/100**	**Engine mounting**

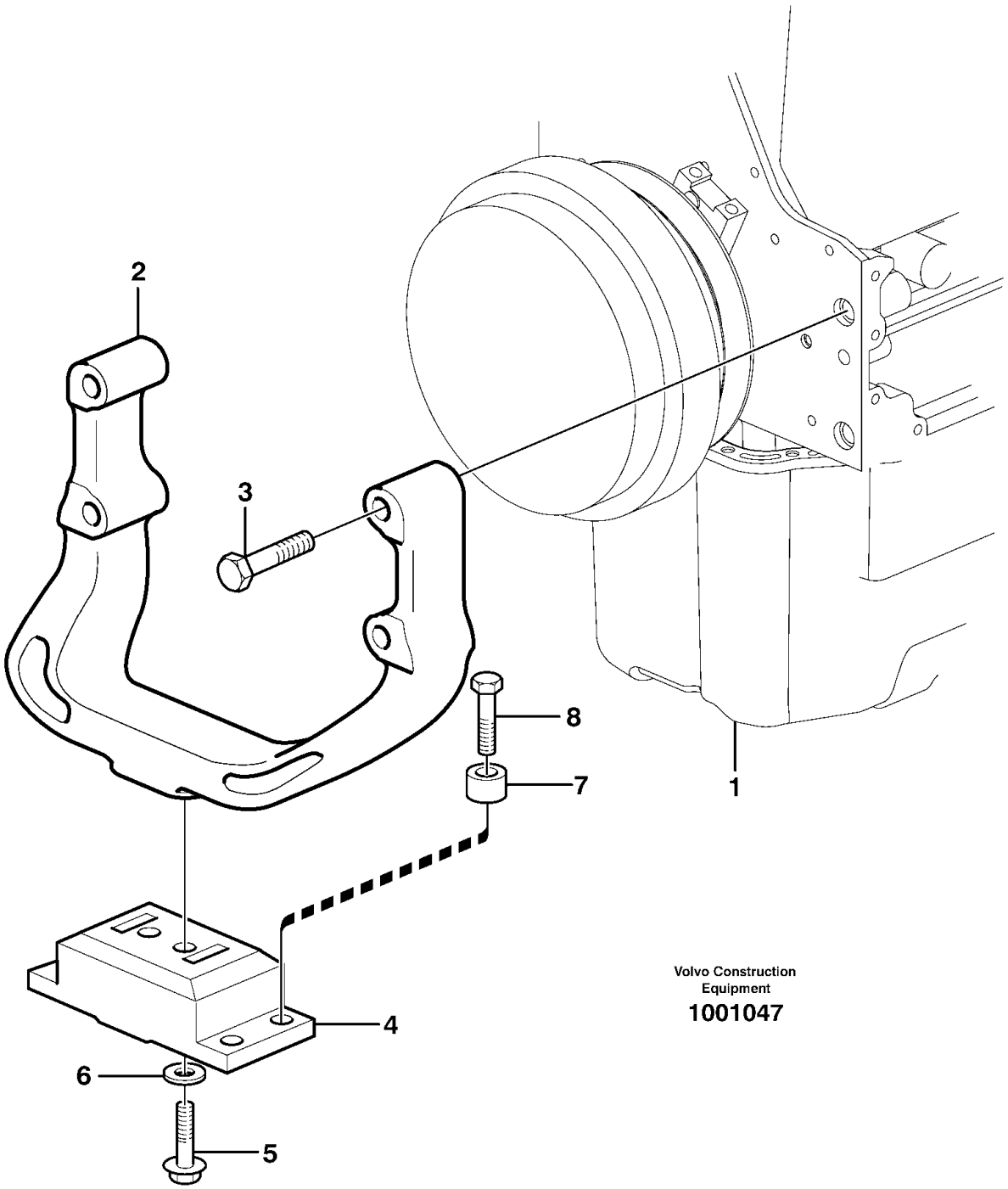

Section option	Kit	Option description
VOE33750		Wheel Loader

Pos	Part	Q1	Q2	Q3	Q4	Q5	PS	Kit	Description	Option(s)	Remark
1		1							Engine		See ref 210/100
2	VOE11172117	1							Engine anchorage		
3	VOE963320	4							Hexagon screw		
4	VOE20503552	1							Rubber cushion		
5	VOE13966362	2							Flange screw		
6	VOE930844	2							Plain washer		
7	VOE11025923	4							Spacer		
8	VOE13965193	4							Screw		

VOLVO

Construction Equipment

PROSIS Part Information

Date:	Image id:	Catalogue:	Model:
10/09/2018	**1000397**	**20009**	**L60E**
Brand:	Serial:	Group/Section:	Title:
Volvo	**1001-3355, 60001-61214, 70001-70530**	**218/150**	**Engine mounting 11172410**

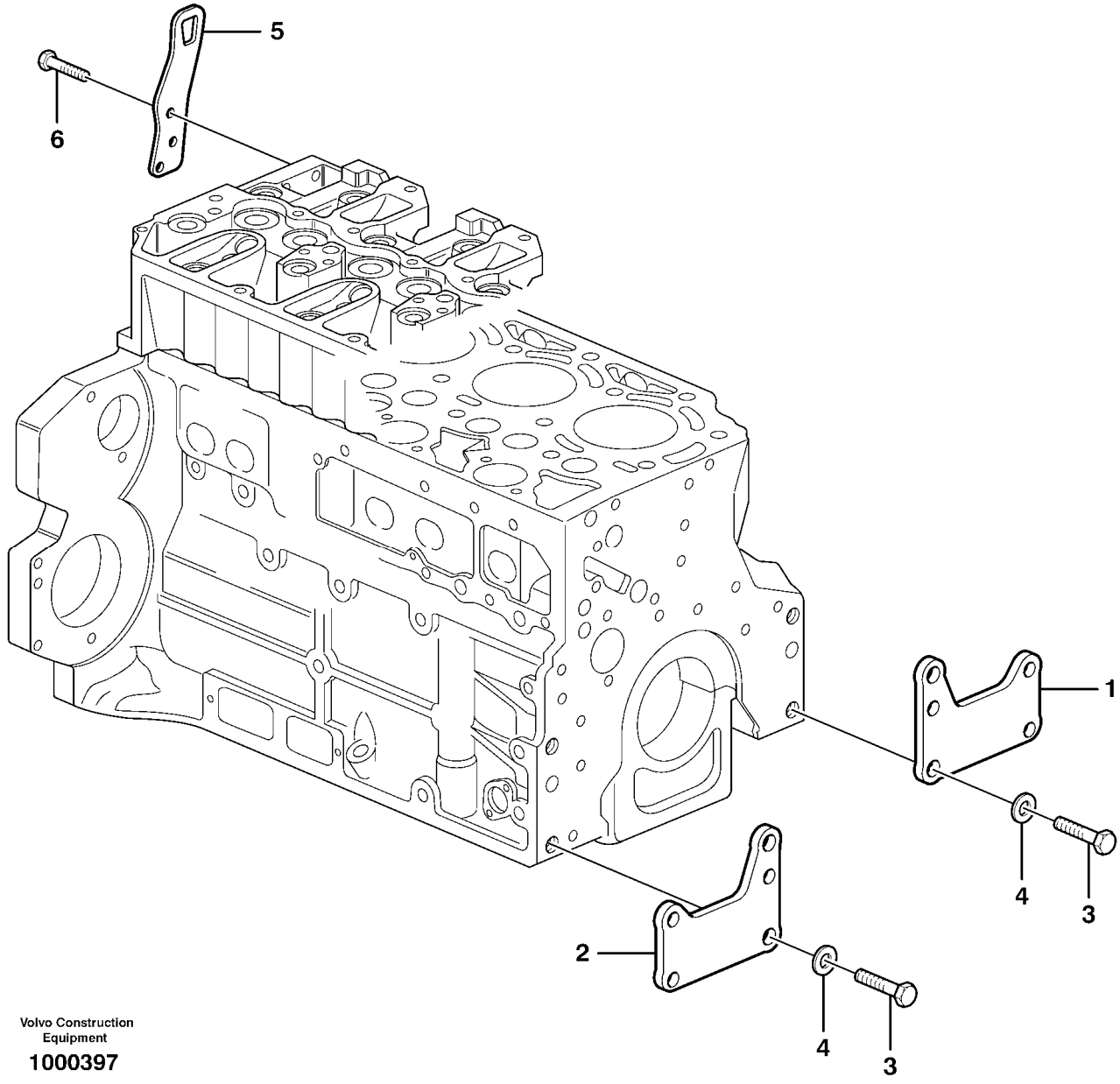

Pos	Part	Q1	Q2	Q3	Q4	Q5	PS	Kit	Description	Option(s)	Remark
1	VOE20723978	1							Bracket		
2	VOE20723984	1							Bracket		
3	VOE20535027	4							Screw		
4	VOE20405606	4							Washer		
5	VOE20450854	2							Lifting eye		

6	VOE20450756	6							Screw		

VOLVO

Construction Equipment

PROSIS Part Information

Date:	Image id:	Catalogue:	Model:
10/09/2018	**1003699**	**20009**	**L60E**
Brand:	Serial:	Group/Section:	Title:
Volvo	**1001-3355, 60001-61214, 70001-70530**	**221/100**	**Lubricating oil system**

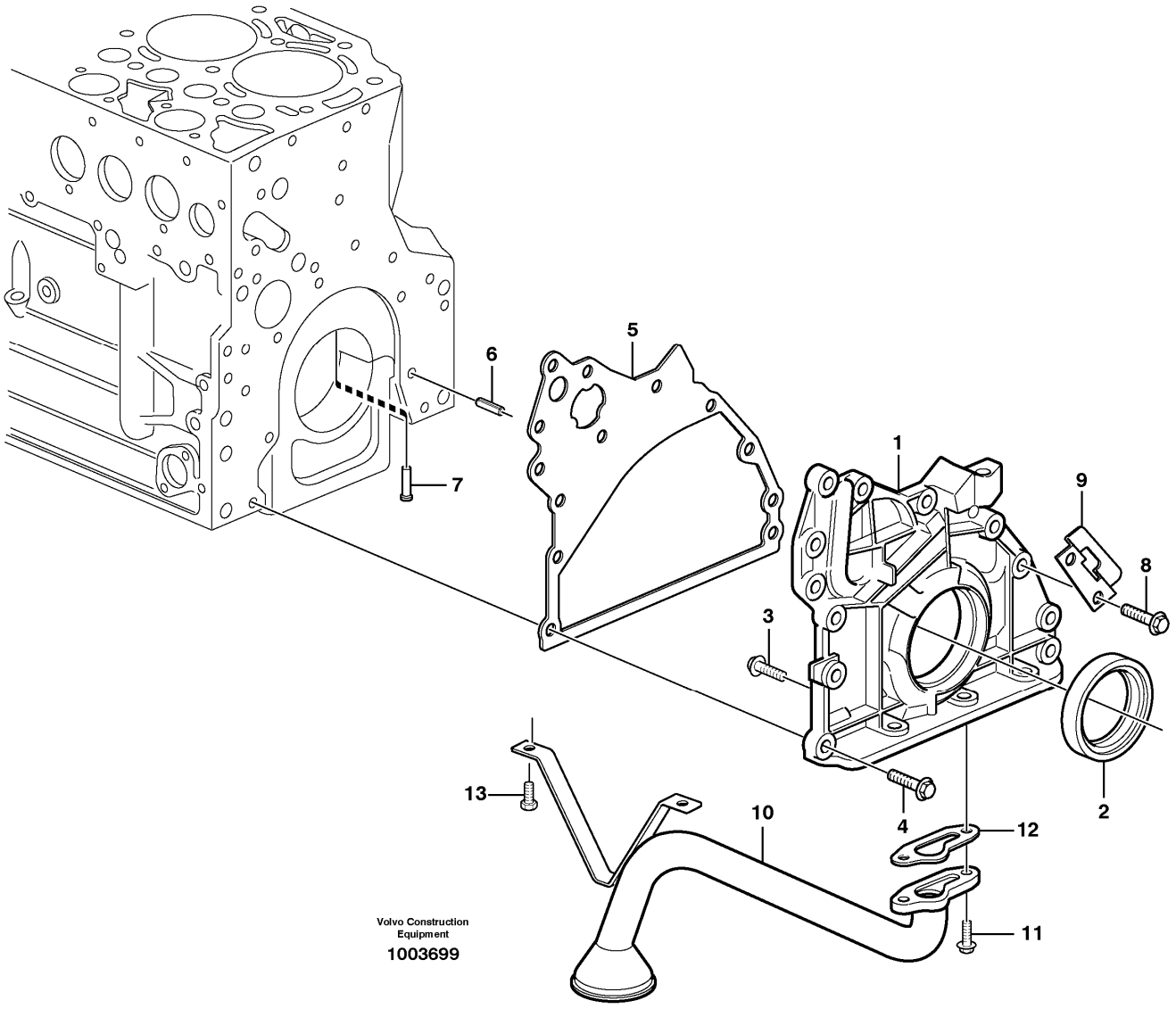

Section option	Kit	Option description
VOE11172410		Engine VOLVO D6D LCE2

Pos	Part	Q1	Q2	Q3	Q4	Q5	PS	Kit	Description	Option(s)	Remark
1	VOE20502113	1					SS		Oil pump		ENG - 912541
	VOE21489736	1							Oil pump		(VOE20574451)ENG 912542 -
2	VOE21496591	1							•Lip seal		(VOE20459168)
3	VOE20451738	8							•Screw		

4	VOE20412324	10							Screw		
5	VOE21531890	1							Gasket		(VOE20459161)
6	VOE20405603	1							Spring pin		
7	VOE20405561	6							Piston		
8	VOE20739886	2							Screw		
9	VOE20459162	1					SS		Bracket		ENG - 912541
	VOE21554124	1							Bracket		(VOE20739882)ENG 912542 -
10	VOE20496392	1							Oil pipe		
11	VOE20405709	2							Screw		
12	VOE20405888	1							Gasket		(VOE11700391)
13	VOE13949578	2							Screw		

VOLVO

Construction Equipment

PROSIS Part Information

Date:	Image id:	Catalogue:	Model:
10/09/2018	**1012627**	**20009**	**L60E**
Brand:	Serial:	Group/Section:	Title:
Volvo	**1001-3355, 60001-61214, 70001-70530**	**221/200**	**Lubricating oil system**

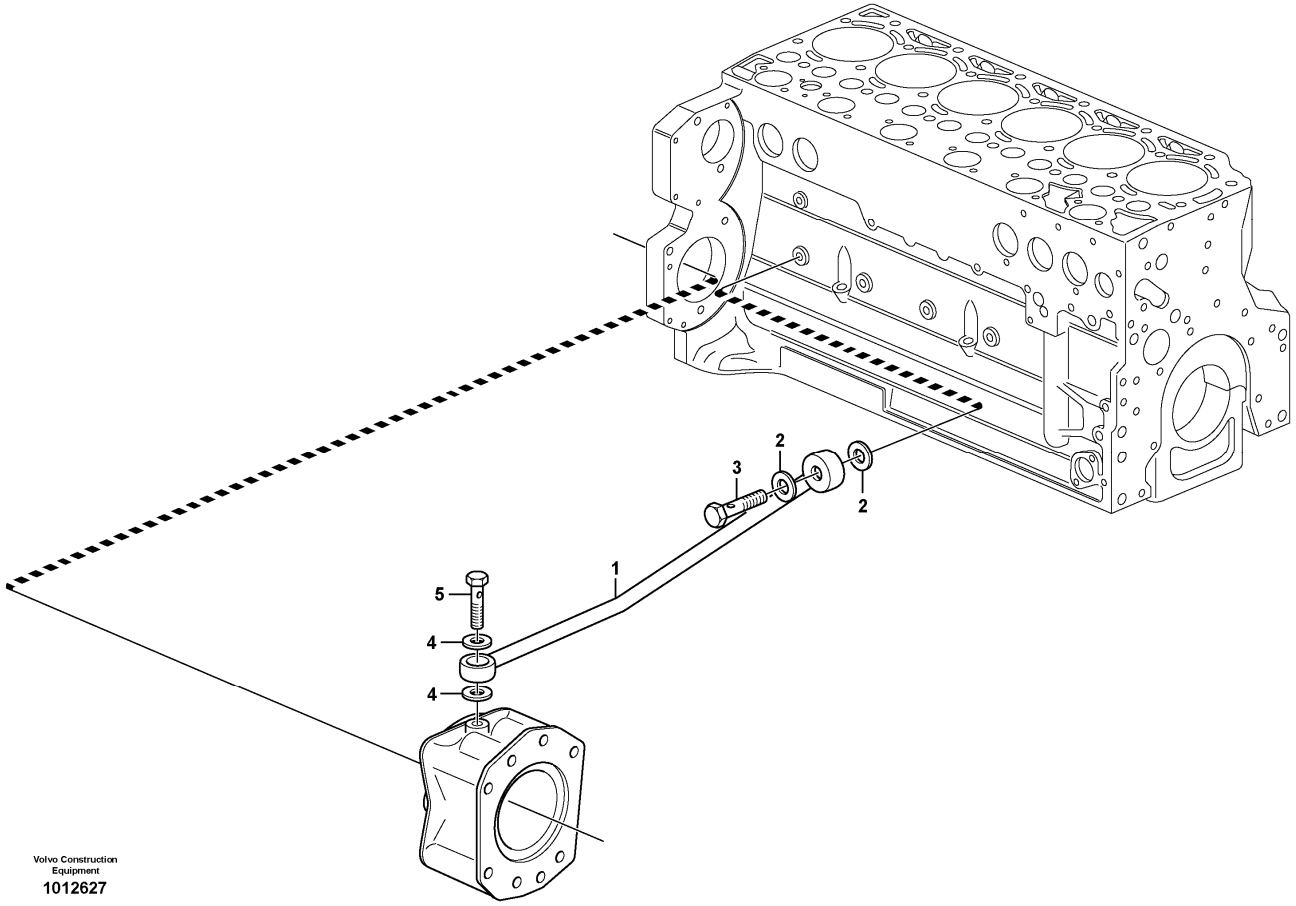

Pos	Part	Q1	Q2	Q3	Q4	Q5	PS	Kit	Description	Option(s)	Remark
1	VOE20459170	1							Oil line		
2	VOE13947621	2							Plane gasket		
3	VOE20460936	1							Hollow screw		
4	VOE13947281	2							Gasket		
5	VOE7025167	1							Hollow screw		(VOE20460231)

VOLVO

Construction Equipment

PROSIS Part Information

Date:	Image id:	Catalogue:	Model:
10/09/2018	**1000845**	**20009**	**L60E**
Brand:	Serial:	Group/Section:	Title:
Volvo	**1001-3355, 60001-61214, 70001-70530**	**222/100**	**Oil filter**

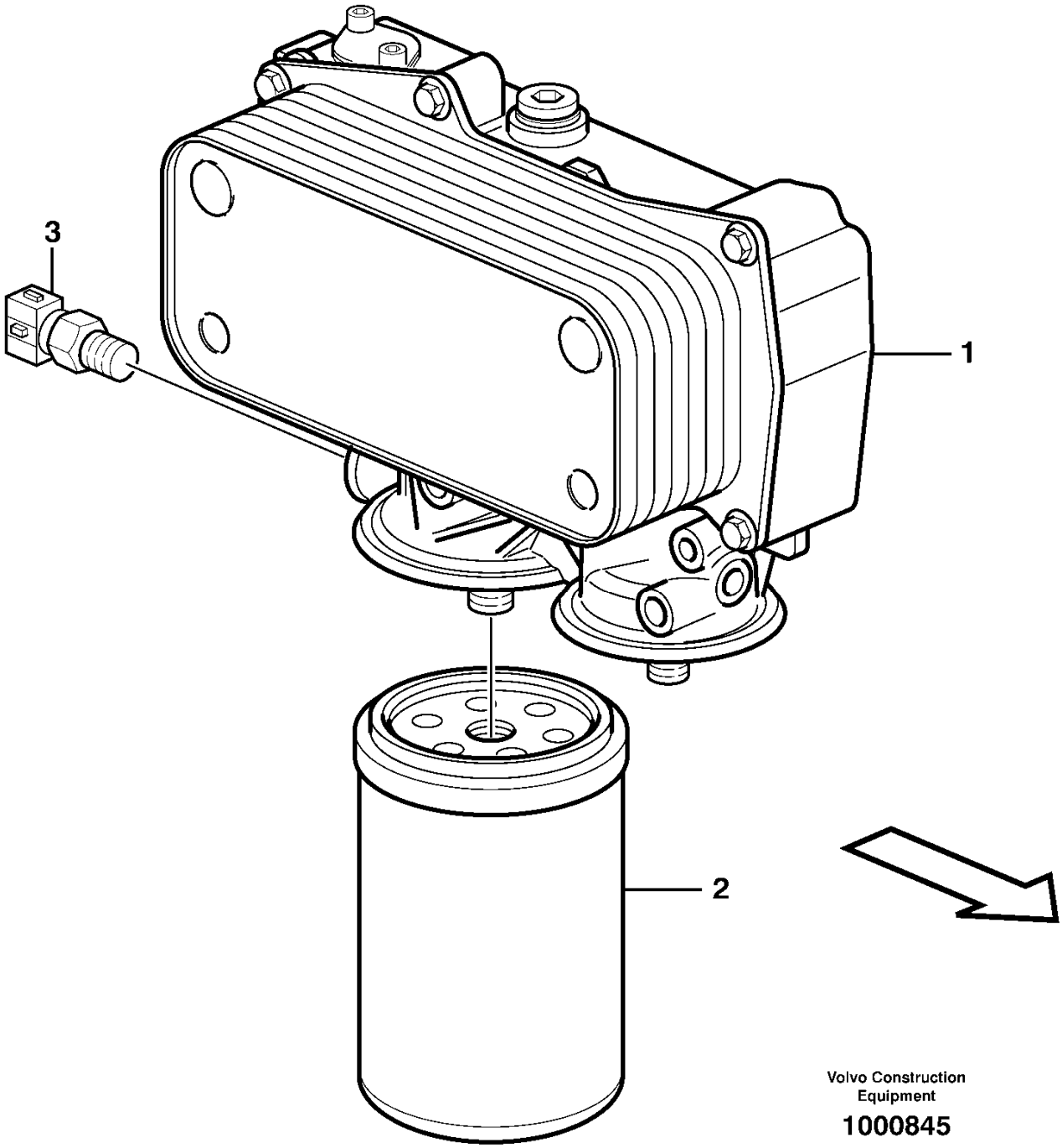

Section option	Kit	Option description
VOE11172410		Engine VOLVO D6D LCE2

Pos	Part	Q1	Q2	Q3	Q4	Q5	PS	Kit	Description	Option(s)	Remark
1		1							Oil Filter Hsg		See ref 223/100
2	VOE17457469	1							Oil filter		
3		1							Sensor		See ref 371/150

VOLVO

Construction Equipment

PROSIS Part Information

Date:	Image id:	Catalogue:	Model:
10/09/2018	**1045160**	**20009**	**L60E**
Brand:	Serial:	Group/Section:	Title:
Volvo	**1001-3355, 60001-61214, 70001-70530**	**223/100**	**Oil cooler**

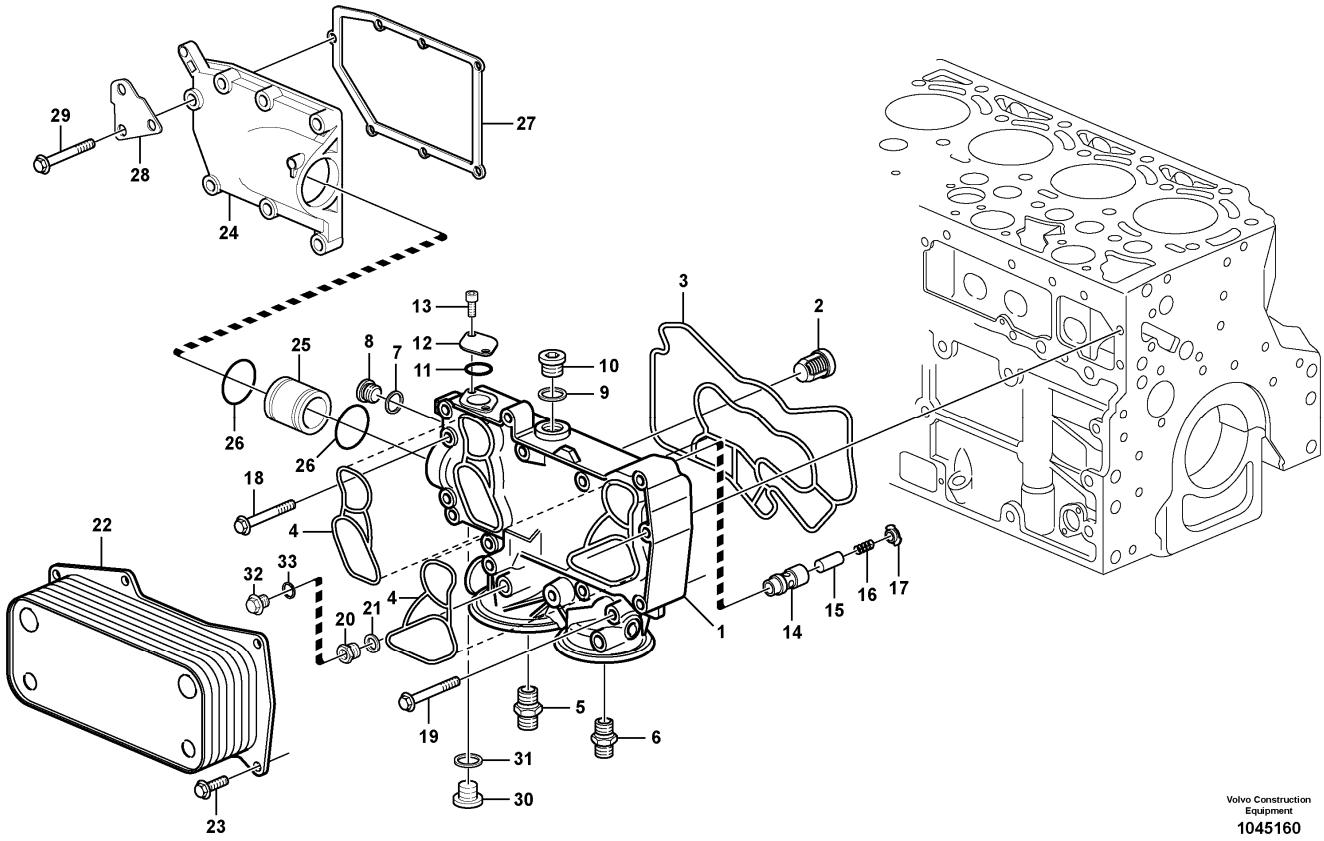

Section option	Kit	Option description
VOE11172410		Engine VOLVO D6D LCE2

Pos	Part	Q1	Q2	Q3	Q4	Q5	PS	Kit	Description	Option(s)	Remark
1	VOE21099784	1							Oil cooler		
2	VOE20459204	1							•Valve		
3	VOE20459203	1							•Gasket		
4	VOE21611489	2							•Gasket		(VOE20459202)
5	VOE20459201	1							•Nipple		
6	VOE20459200	1							•Nipple		
7	VOE13947622	1							•Plane gasket		
8	VOE20502245	1							•Plug		
9	VOE13947628	1							•Plane gasket		
10	VOE20459195	1							•Plug		

10	VOE16846378	1							Nipple		(VOE20496519)
11	VOE20405599	1							•Sealing ring		
12	VOE21072778	1							•Flange		
13	VOE20405885	2							•Screw		
14		1					NS		•Valve seat		
15		1					NS		•Plunger		
16		1					NS		•Spring		
17		1					NS		•Sleeve		
18	VOE20405672	5							•Screw		
19	VOE20405917	3							•Screw		
20	VOE21100412	1							•Screw		
21	VOE13969011	1							•Gasket		
22	VOE20511773	1					SS		Oil cooler		
23	VOE20405885	7							Screw		
24	VOE20796351	1							Tank		
25	VOE20459191	1							Plug		
26	VOE20459193	2							Sealing ring		
27	VOE20459192	1							Gasket		
28	VOE20914901	1							Retaining Plate		
29	VOE20412324	7							Screw		
30	VOE888474	1							Screw		
31	VOE20450890	1							Sealing ring		
32	VOE20450895	1							Plug		E PROD - 01/2007
32	VOE21011809	1							Plug		L PROD 02/2007 - INCL. SEALING RING
33	VOE13947281	1							Gasket		E PROD - 01/2007

VOLVO

Construction Equipment

PROSIS Part Information

Date:	Image id:	Catalogue:	Model:
10/09/2018	**1011435**	**20009**	**L60E**
Brand:	Serial:	Group/Section:	Title:
Volvo	**1001-3355, 60001-61214, 70001-70530**	**233/100**	**Fuel pump**

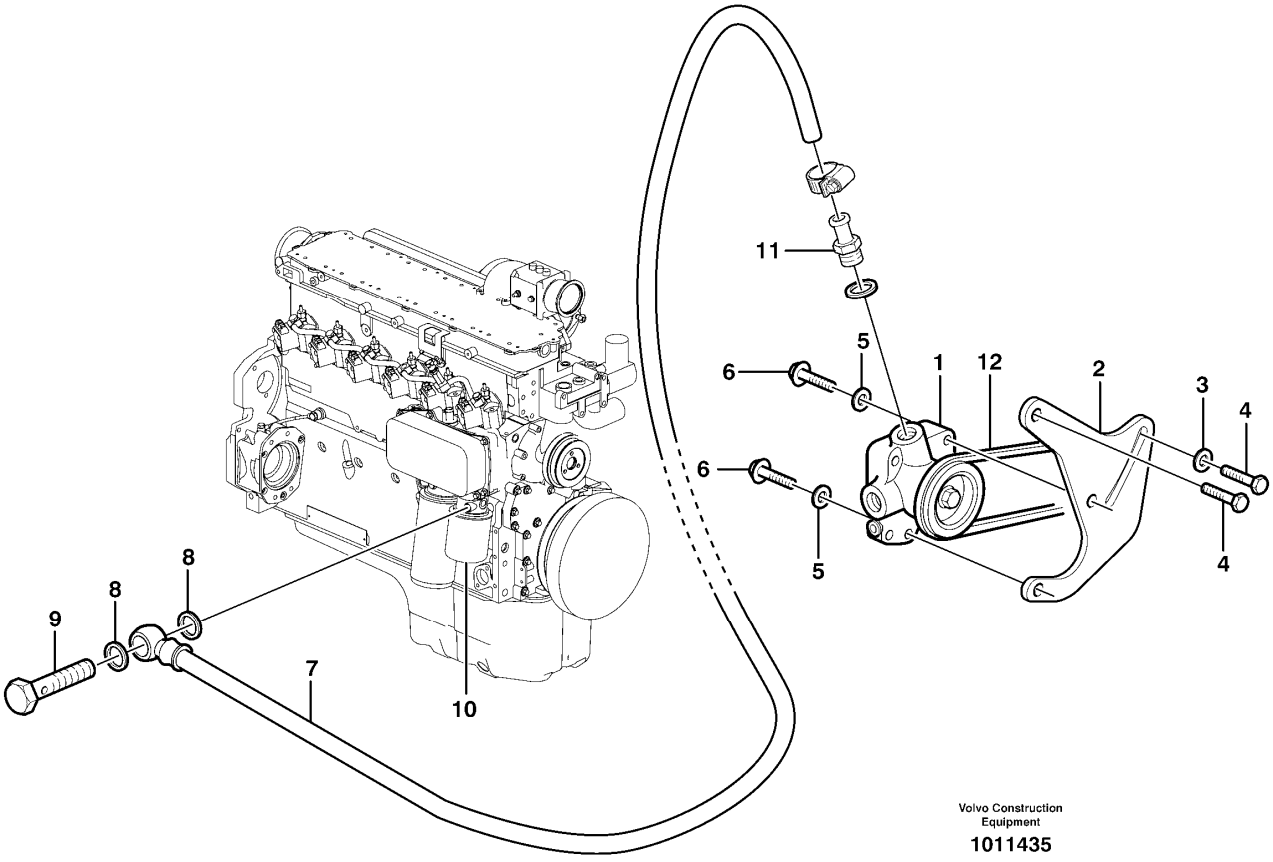

Section option	Kit	Option description
VOE11172410		Engine VOLVO D6D LCE2

Pos	Part	Q1	Q2	Q3	Q4	Q5	PS	Kit	Description	Option(s)	Remark
1	VOE20497044	1							Fuel pump		
2	VOE20880927	1							Bracket		(VOE20460032)ENG - 01099408
2	VOE20880927	1							Bracket		ENG 01099409 -
3	VOE20405734	1							Washer		
4	VOE20412357	2							Screw		(VOE20498595)
5	VOE20460063	2							Spring washer		
6	VOE13949578	2							Screw		
7	VOE20460044	1							Fuel pipe		
8	VOE976929	2							Gasket		

9	VOE7025167	1							Hollow screw		
10	VOE11708555	1							Fuel filter		
11	VOE20405767	1							Hose nipple		(VOE11702725)
12	VOE978710	1							V-belt		

VOLVO

Construction Equipment

PROSIS Part Information

Date:	Image id:	Catalogue:	Model:
10/09/2018	**1023156**	**20009**	**L60E**
Brand:	Serial:	Group/Section:	Title:
Volvo	**1001-3355, 60001-61214, 70001-70530**	**233/150**	**Water separator**

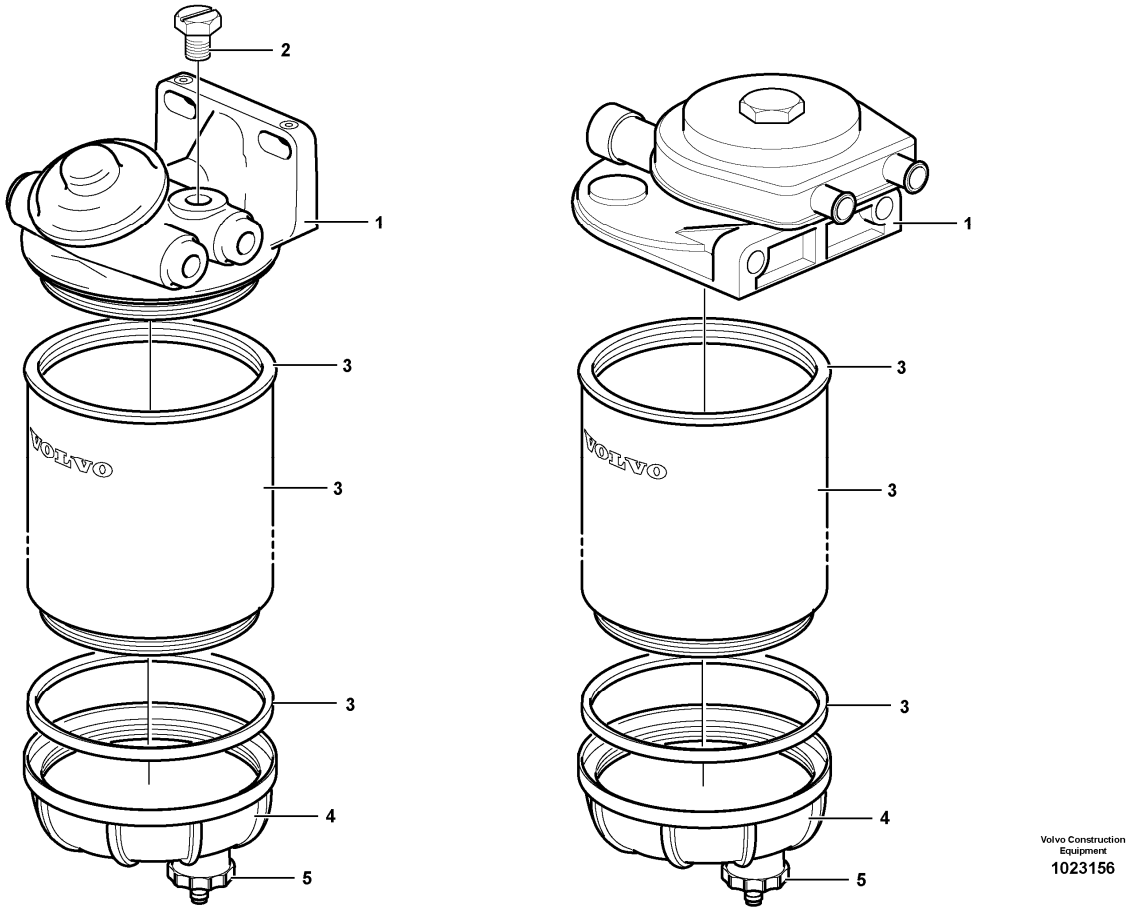

Section option	Kit	Option description
VOE83077		Fuel filter, extra with water trap and heating

Q1-Q5	Option	Option description	
Q1 11110670 STD			
Q2 11110501 83077			

Pos	Part	Q1	Q2	Q3	Q4	Q5	PS	Kit	Description	Option(s)	Remark
1	VOE11110670	1							Water separator		
1	VOE11110501		1						Water separator		
2		1					NS		Plug		
3	VOE11110668	1	1						•Filter		
4	VOE3943382		1						•Bowl		(VOE3836024)

	VOE11704242		2				OP		••Seal		
5	VOE11704244		1						•Drain valve		

VOLVO

Construction Equipment

PROSIS Part Information

Date:	Image id:	Catalogue:	Model:
10/09/2018	**1023151**	**20009**	**L60E**
Brand:	Serial:	Group/Section:	Title:
Volvo	**1001-3355, 60001-61214, 70001-70530**	**233/175**	**Water trap with hoses 83077**

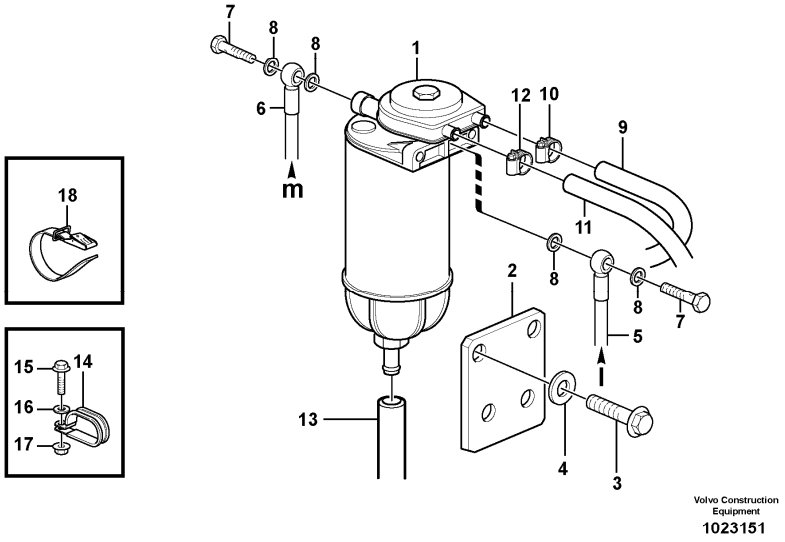

Section option	Kit	Option description
VOE83077		Fuel filter, extra with water trap and heating

Pos	Part	Q1	Q2	Q3	Q4	Q5	PS	Kit	Description	Option(s)	Remark
1		1							Water Separator		See ref 233/150
2		1					NS		Anchorage		
3	VOE946441	2							Flange screw		
4	VOE13960143	2							Washer		
5	VOE11411361	1							Fuel pipe		TANK - WATER TRAP
6	VOE11411560	1							Fuel pipe		WATER TRAP - ENGINE
7	VOE941686	2							Hollow screw		
8	VOE976930	4							Gasket		
9	VOE943369	REQ							Hose		L = 3000 MM
10	VOE13943474	1							Hose clamp		(VOE943473)

11	VOE943369	REQ							Hose		L = 2100 MM
12	VOE13943474	1							Hose clamp		(VOE943473)
13		1							Hose		See ref 235/100
14	VOE11130770	1							Clamp		
15	VOE13945444	1							Screw		
16	VOE11117464	1							Plain washer		(VOE13960141)
17	VOE948645	1							Flange lock nut		
18	VOE11104606	4							Retaining strap		

VOLVO

Construction Equipment

PROSIS Part Information

Date:	Image id:	Catalogue:	Model:
10/09/2018	**1013063**	**20009**	**L60E**
Brand:	Serial:	Group/Section:	Title:
Volvo	**1001-3355, 60001-61214, 70001-70530**	**234/100**	**Fuel tank with fitting parts STD, OPEN ROPS**

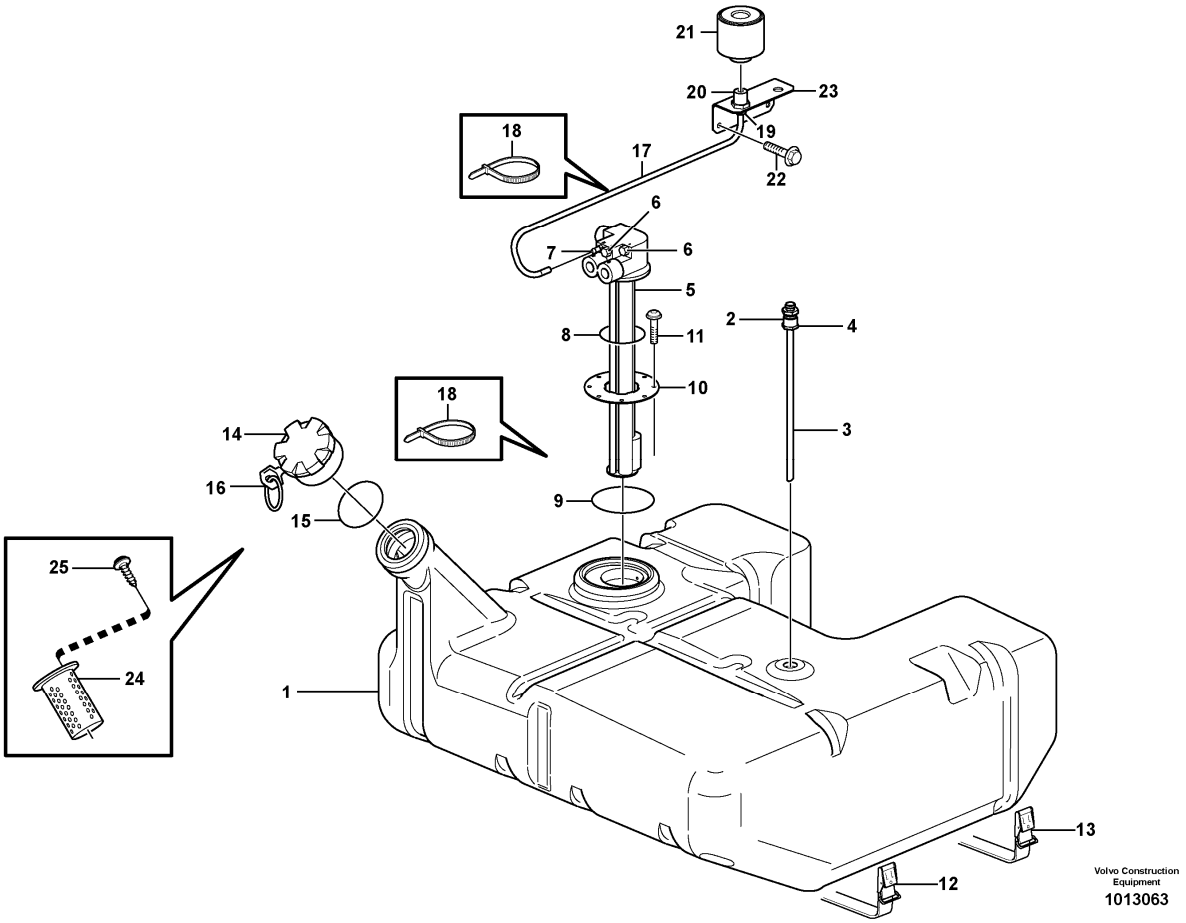

Section option	Kit	Option description
VOE33750		Wheel Loader
VOE33759		Wheel loader L60E OPEN ROPS
VOE91472		Strainer, fuel fill

Q1-Q5	Option	Option description	
Q1 SER NO - 1736			
Q2 SER NO 1737 -			

Pos	Part	Q1	Q2	Q3	Q4	Q5	PS	Kit	Description	Option(s)	Remark
1	VOE11410215	1							Fuel tank		
1	VOE11411048		1				SS		Fuel tank		
2	VOE11173189	1	1						••Nut		

3	VOE11173226	1	1						•Return pipe		
4	VOE925059	1	1						••O-ring		
5	VOE11039821	1							•Tank unit		
5	VOE11170365		1						•Tank unit		(VOE11170093)
6	VOE11712847		2						••Nipple		
7	VOE11712846		1						••Nipple		
8	VOE8151926	1	1						••O-ring		
9	VOE925075	1	1						•O-ring		
10	VOE9518442	1	1						•Plate		
11	VOE975378	8	8						•Six point socket screw		
12	VOE11172369	1	1						Retaining strap		L=3500 MM
13	VOE11172369	2	2						Retaining strap		L=1900 MM
14	VOE20392751	1	1						Filler cap		
15	VOE1698164	1	1						•Gasket		
16		2	2				NS		•Key		
17	VOE11024720	REQ	REQ						Plastic hose		L= 800 MM
18	VOE4881438	3	3						Cable tie		
19	VOE949221	1	1						Hose nipple		
20	VOE4854955	1	1						Nipple		
21	VOE11172907	1	1						Air filter		
22	VOE13946173	2	2						Screw		
23	VOE11410340	1	1						Anchorage		
24	VOE11173801	1	1						Strainer		91472
25	VOE955127	2	2						Cross recessed screw		91472

VOLVO

Construction Equipment

PROSIS Part Information

Date:	Image id:	Catalogue:	Model:
10/09/2018	**1013304**	**20009**	**L60E**
Brand:	Serial:	Group/Section:	Title:
Volvo	**1001-3355, 60001-61214, 70001-70530**	**235/100**	**Fuel pipes, fuel tank - injection pump STD, OPEN ROPS**

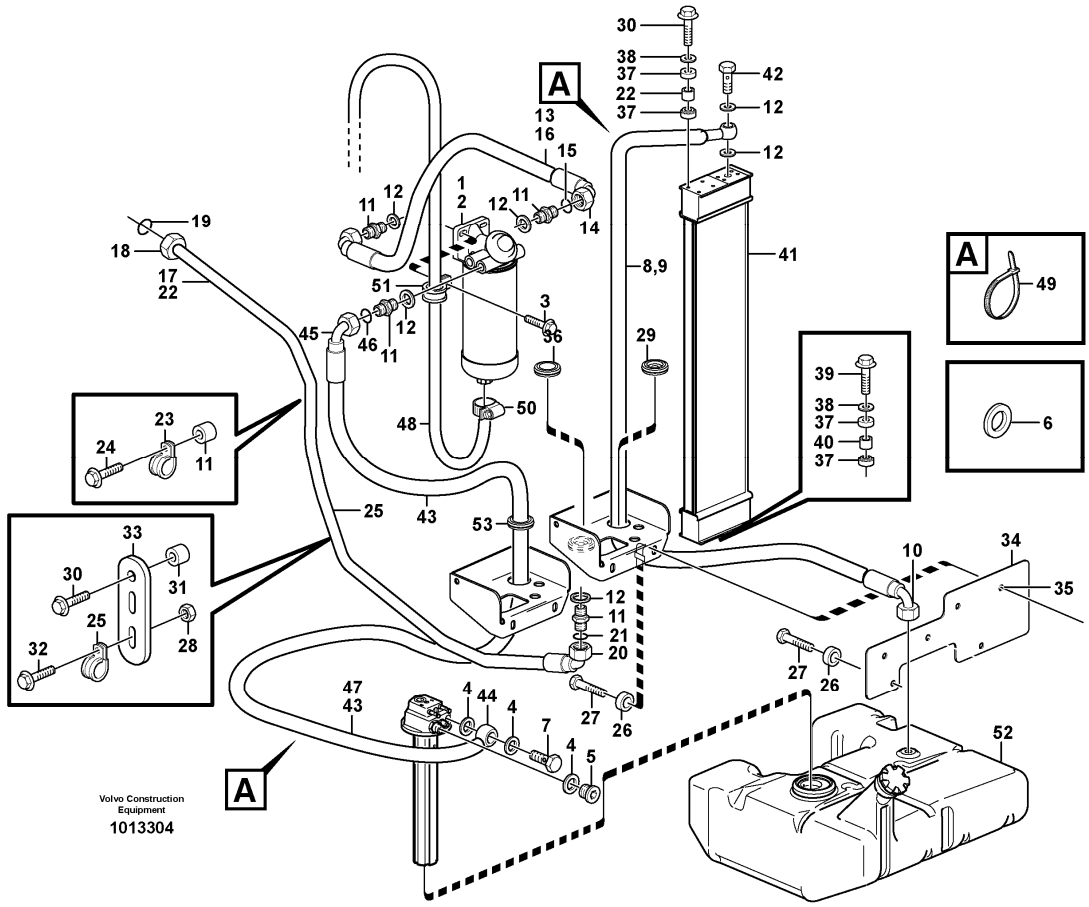

Section option	Kit	Option description
VOE33750		Wheel Loader
VOE33759		Wheel loader L60E OPEN ROPS

Pos	Part	Q1	Q2	Q3	Q4	Q5	PS	Kit	Description	Option(s)	Remark
1	VOE11110670	1							Water separator		
2	VOE11110668	1							•Filter		
	VOE11713138	1							•Filter housing		
	VOE3943382	1							•Bowl		
3	VOE946329	2							Flange screw		
4	VOE976930	3							Gasket		
5	VOE13966143	1							Plug		
6	VOE13945653	1							Plane gasket		
7	VOE941686	1							Hollow screw		

8	VOE11410158	1							Fuel pipe		
9	VOE978881	1							•Tube		L=1500 MM
10	VOE977754	1							•Banjo nipple		
11	VOE14213266	4							Fitting		
12	VOE976930	6							Gasket		
13	VOE11411546	1							Fuel pipe		
14	VOE11031348	2							•Nipple		
15	VOE990737	1							••O-ring		(VOE4880492)
16	VOE978881	REQ							•Tube		
17	VOE11173542	1							Fuel pipe		
18	VOE956984	1							•Fitting nut		
19	VOE976971	1							••O-ring		
20	VOE11031348	1							•Nipple		
21	VOE990737	1							••O-ring		(VOE4880492)
22	VOE978881	REQ							•Tube		
23	VOE952630	1							Clamp		
24	VOE13946934	1							Screw		
25	VOE13949747	2							Clamp		
26	VOE13948871	4							Spacer washer		
27	VOE13945444	4							Screw		
28	VOE13945408	1							Nut		
29	VOE13961962	2							Protecting bushing		
30	VOE13948217	2							Screw		
31	VOE11175803	2							Spacer sleeve		
32	VOE946440	1							Flange screw		
33	VOE13965534	1							Bracket		
34	VOE11410154	1					OP		Plate		
35	VOE961614	4							•Weld nut		
36	VOE943920	2							Plug		
37	VOE11024753	8							Rubber damper		
38	VOE925739	4							Washer		
39	VOE13947760	4							Screw		
40	VOE4951048	4							Tube		
41	VOE15175837	1							Hydraulic oil cooler		(VOE11110371)
	VOE15177897	1							Hydraulic oil cooler	VOE82140	(VOE11110389)SER NO 1104 -
42	VOE941686	1							Hollow screw		
43	VOE11411056	1							Fuel pipe		
44	VOE977753	1							•Banjo nipple		
45	VOE11031348	1							•Nipple		
46	VOE990737	1							••O-ring		(VOE4880492)
47	VOE978881	REQ							•Tube		
48	VOE949908	1							Hose		L=730 MM
49	VOE4881440	5							Cable tie		
50	VOE13975269	1							Clamp		
51	VOE980614	1							Clamp		
52		1							Fuel tank		See ref 234/100

53	VOE13961962	1							Protecting bushing		

VOLVO

Construction Equipment

PROSIS Part Information

Date:	Image id:	Catalogue:	Model:
10/09/2018	**1031735**	**20009**	**L60E**
Brand:	Serial:	Group/Section:	Title:
Volvo	**1001-3355, 60001-61214, 70001-70530**	**237/100**	**Fuel lines and injectors**

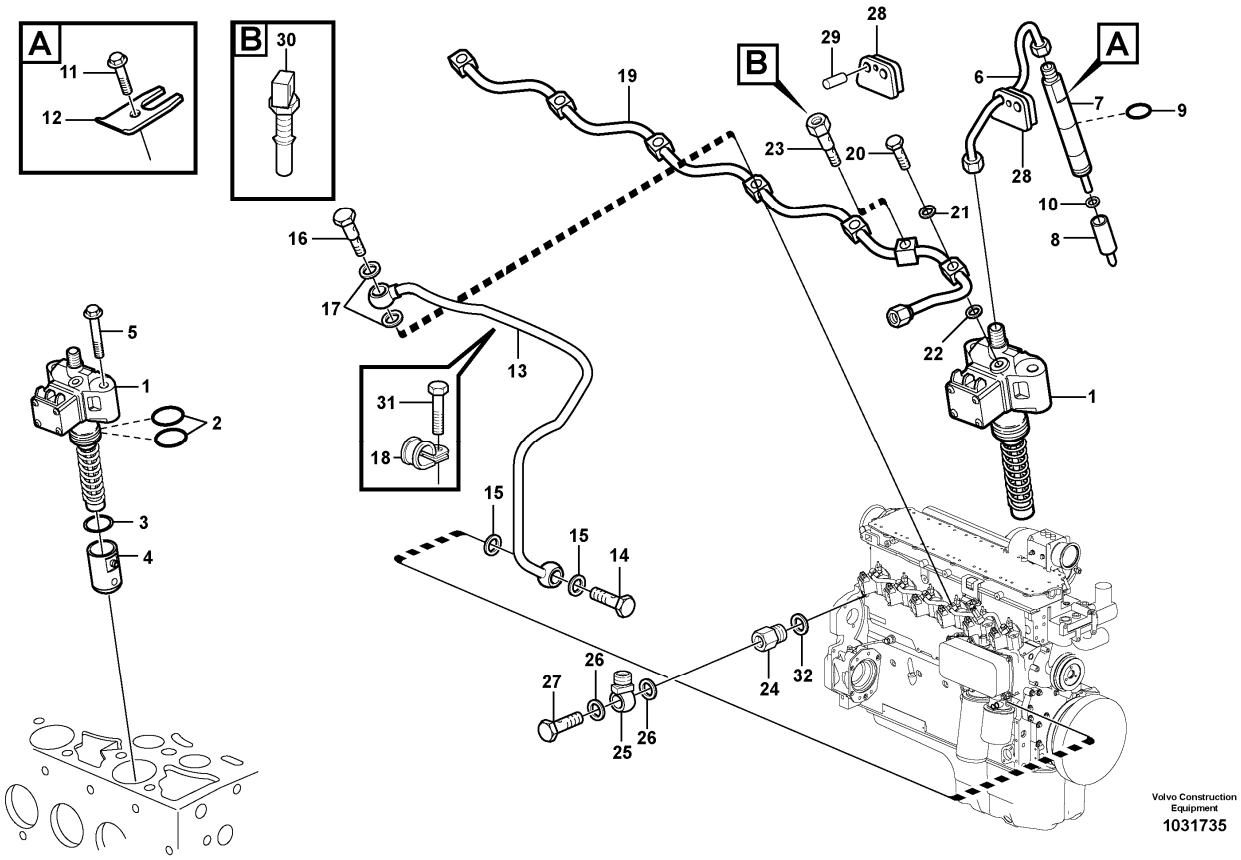

Section option	Kit	Option description
VOE11172410		Engine VOLVO D6D LCE2

Pos	Part	Q1	Q2	Q3	Q4	Q5	PS	Kit	Description	Option(s)	Remark
1	VOE20460075	6							Injection pump		MA2301-2306, REMAN VOE9020460075
2	VOE20460073	2							•O-ring		
3	VOE11700409	6					SS		Shim		
4	VOE21335229	6							Tappet		(VOE11700392)
5	VOE20450667	12							Screw		
6	VOE20460100	6							Fuel pipe		
7	VOE20460099	6					SS		Injector		ENG - 779284, REMAN VOE9020549383, VOE9020460099
	VOE20549383	6							Injector		ENG 779285 -, REMAN

											VOE9020549383
8	VOE20460098	6							•Nozzle		
9	VOE20729227	6							•Sealing ring		
10	VOE11700426	6							Sealing ring		
11	VOE20405559	6							Screw		
12	VOE11700424	12							Retainer		
13	VOE20517097	1							Fuel pipe		
14	VOE7025167	1							•Hollow screw		(VOE20460231)
15	VOE13969011	2							•Gasket		
16	VOE20502270	1							Screw		
17	VOE20460061	2							Sealing ring		
18	VOE20460045	1							Clamp		
19	VOE21333275	1							Fuel pipe		(VOE20551457)
20	VOE20502267	4							•Hollow screw		
21	VOE20460061	5							•Sealing ring		
22	VOE20504411	5							•Sealing ring		
23	VOE20537210	1							•Socket		
24	VOE20450673	1							Spacer		
25	VOE20459905	1							Banjo nipple		
26	VOE13969011	3							Gasket		
27	VOE20405847	1							Valve		
28	VOE20405886	6							Rubber Seal		(VOE11700487)
29	VOE20515652	6							Plug		
30	VOE21531072	1							Temperature sensor		(VOE20450685)
31	VOE20405729	1							Screw		
32	VOE13947621	1							Plane gasket		

VOLVO

Construction Equipment

PROSIS Part Information

Date:	Image id:	Catalogue:	Model:
10/09/2018	**1031735**	**20009**	**L60E**
Brand:	Serial:	Group/Section:	Title:
Volvo	**1001-3355, 60001-61214, 70001-70530**	**251/100**	**Inlet manifold and exhaust manifold**

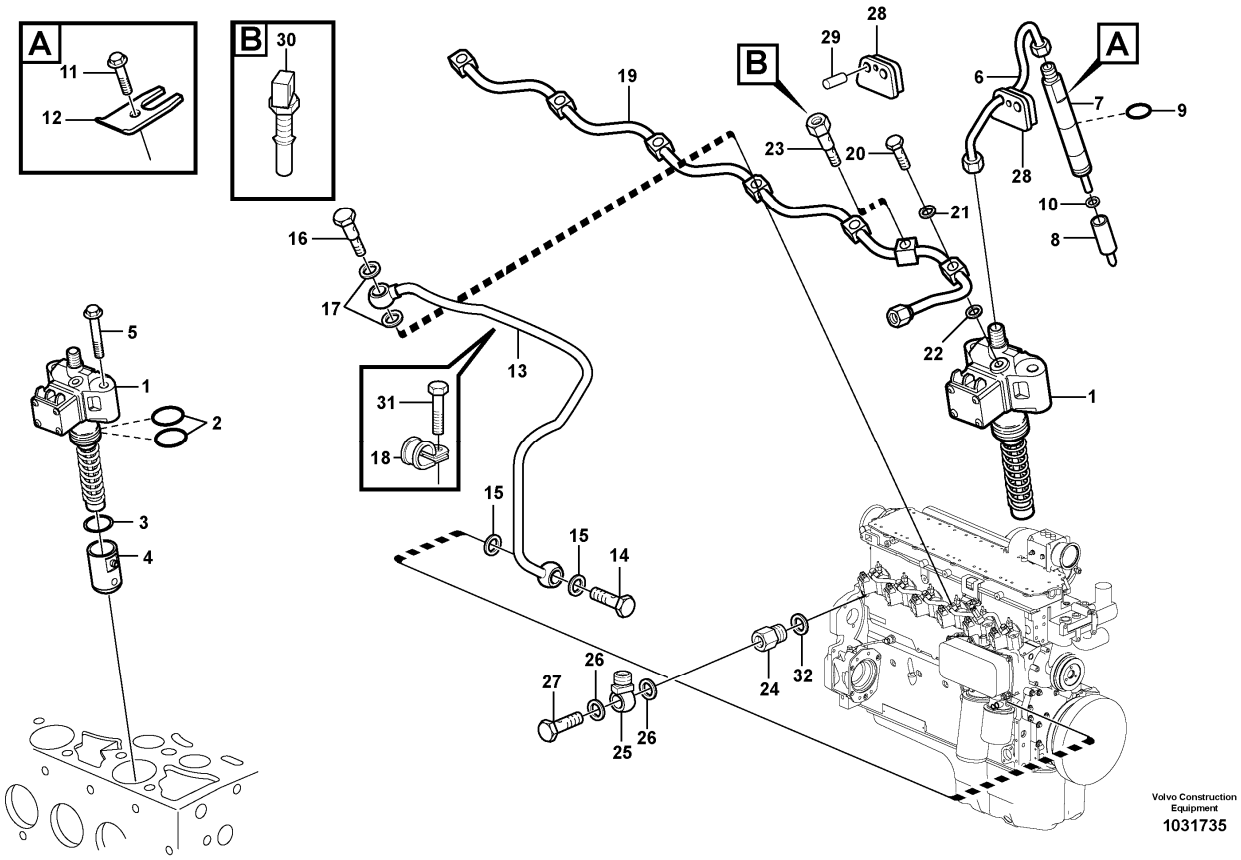

Section option	Kit	Option description
VOE11172410		Engine VOLVO D6D LCE2
VOE83136		Insulaton For Exhaust System

Q1-Q5	Option	Option description	
Q1 11172410	VOE11172410	Engine VOLVO D6D LCE2	
Q2 83136	VOE83136	Insulaton For Exhaust System	

Pos	Part	Q1	Q2	Q3	Q4	Q5	PS	Kit	Description	Option(s)	Remark

VOLVO

Construction Equipment

PROSIS Part Information

Date:	Image id:	Catalogue:	Model:
10/09/2018	**1008265**	**20009**	**L60E**
Brand:	Serial:	Group/Section:	Title:
Volvo	**1001-3355, 60001-61214, 70001-70530**	**252/100**	**Exhaust system, silencer STD, OPEN ROPS**

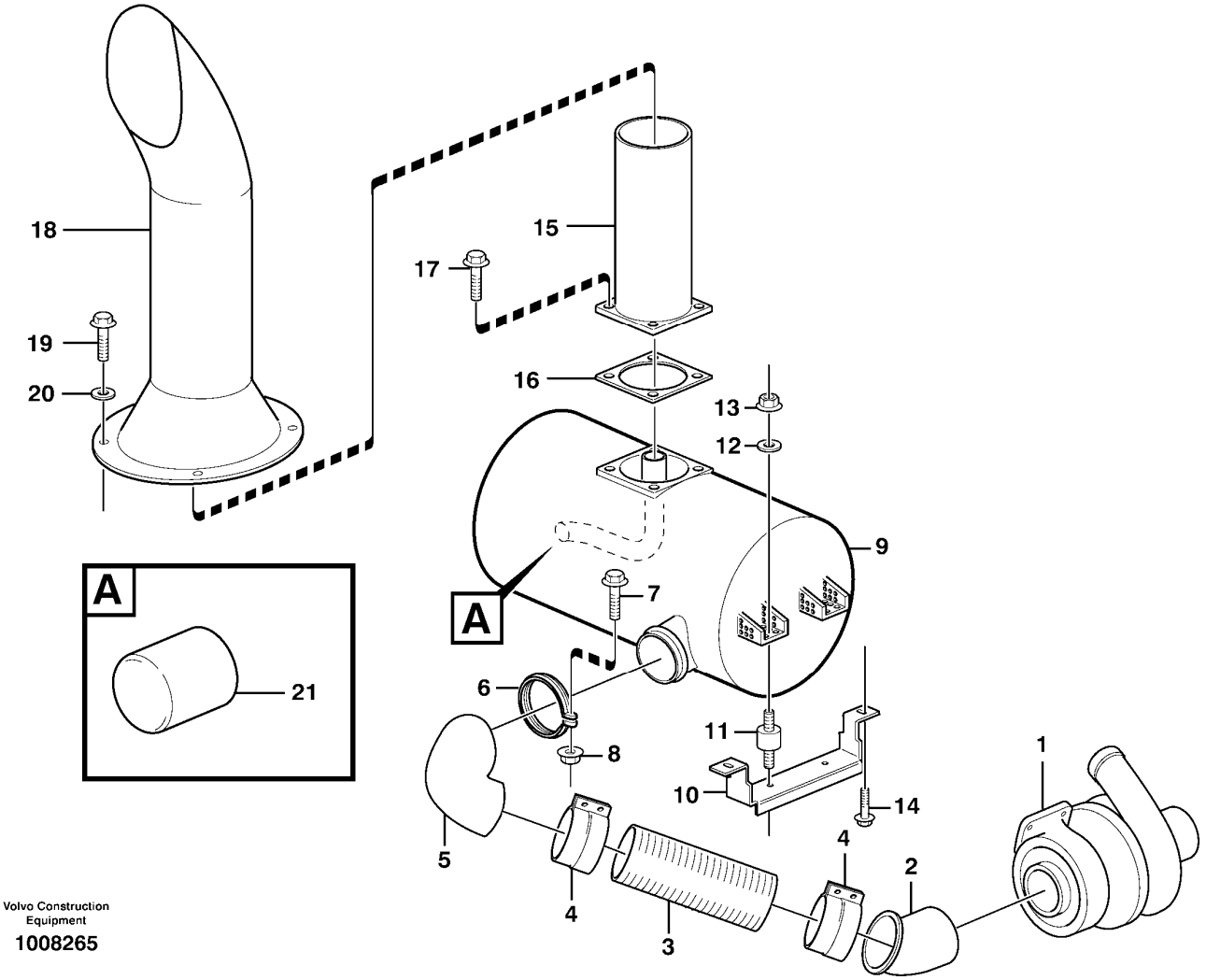

Section option	Kit	Option description
VOE33750		Wheel Loader
VOE33759		Wheel loader L60E OPEN ROPS

Pos	Part	Q1	Q2	Q3	Q4	Q5	PS	Kit	Description	Option(s)	Remark
1		1							Turbo		See ref 255/100
2	VOE11172889	1							Exhaust pipe		
3	VOE11110351	1							Exhaust hose		
4	VOE11110355	2							Clamp		
5	VOE11172244	1							Exhaust pipe		

6	VOE1624613	1							Clamp		
7	VOE13965179	1							Screw		
8	VOE13945408	1							Nut		
9	VOE11110309	1							Silencer		
10	VOE11174246	1							Attaching plate		
11	VOE11110276	4							Rubber cushion		
12	VOE13960145	4							Washer		
13	VOE13971096	8							Flange nut		
14	VOE13946752	4							Screw		
15	VOE11110273	1							Exhaust pipe		
16	VOE4773684	1							Gasket		
17	VOE13971019	4							Screw		
18	VOE11148403	1							Ejector pipe		
19	VOE946472	4							Flange screw		
20	VOE13960143	4							Washer		
21	VOE4932563	1							Rubber bushing	VOE80945, VOE80946	

VOLVO

Construction Equipment

PROSIS Part Information

Date:	Image id:	Catalogue:	Model:
10/09/2018	**1003789**	**20009**	**L60E**
Brand:	Serial:	Group/Section:	Title:
Volvo	**1001-3355, 60001-61214, 70001-70530**	**255/100**	**Turbocharger with fitting parts**

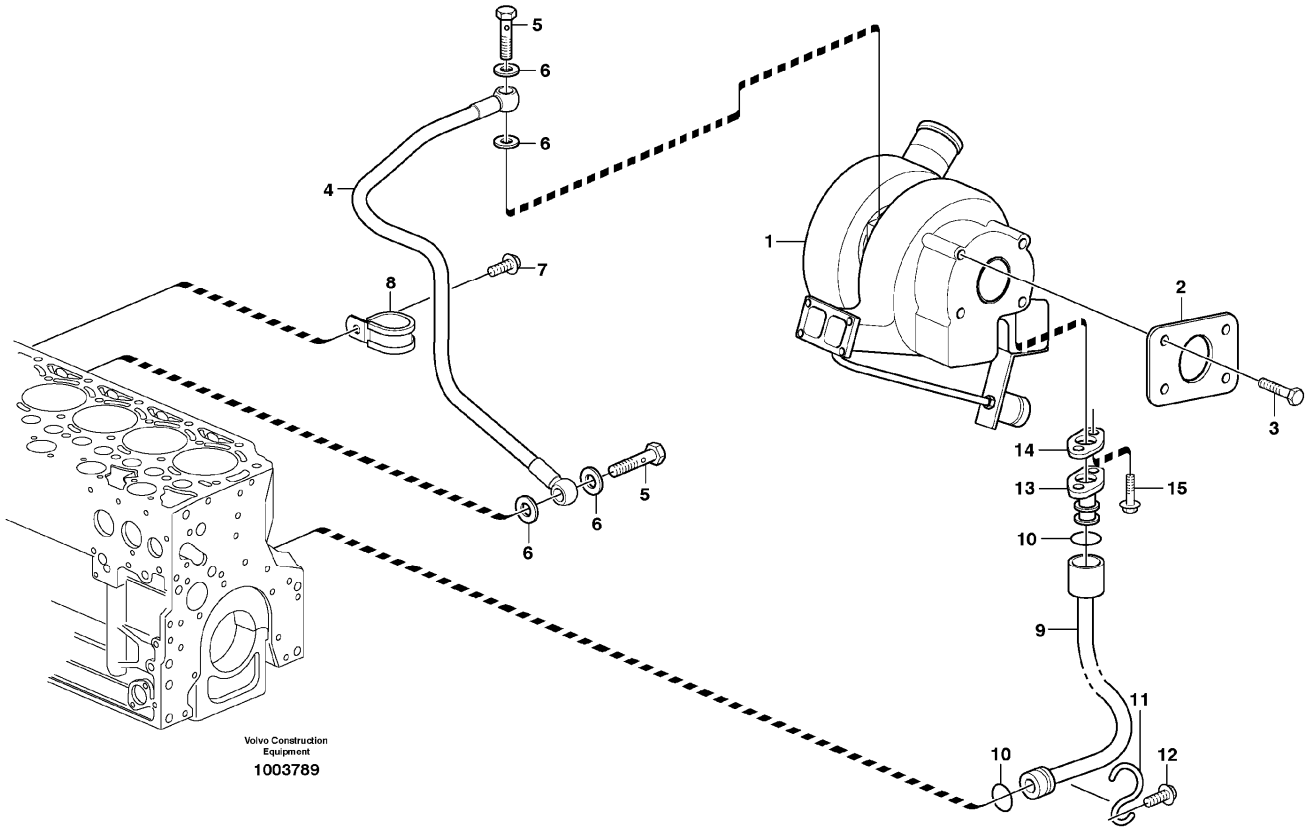

Section option	Kit	Option description
VOE11172410		Engine VOLVO D6D LCE2

Pos	Part	Q1	Q2	Q3	Q4	Q5	PS	Kit	Description	Option(s)	Remark
1	VOE20515585	1							Turbocharger		REMAN VOE9020515585
2	VOE20405969	1							Gasket		
3	VOE20405874	4					SS		Screw		
4	VOE20459188	1							Oil line		
5	VOE7025167	2							Hollow screw		
6	VOE13947621	4							Plane gasket		
7	VOE20450987	1							Clamp		
8	VOE20405792	1							Screw		
9	VOE20534632	1							Return Line		
10	VOE20405822	2							Sealing ring		
11	VOE21524802	1							Hook		(VOE20405789)

12	VOE20405792	1							Screw		
13	VOE20801403	1							Return Line		(VOE20459178)
14	VOE21242584	1							Gasket		(VOE20405790)
15	VOE20405885	2							Screw		

VOLVO

Construction Equipment

PROSIS Part Information

Date:	Image id:	Catalogue:	Model:
10/09/2018	**1070740**	**20009**	**L60E**
Brand:	Serial:	Group/Section:	Title:
Volvo	**1001-3355, 60001-61214, 70001-70530**	**256/100**	**Air filter with fitting parts 33750, 33759, 80945, 80946, 82281**

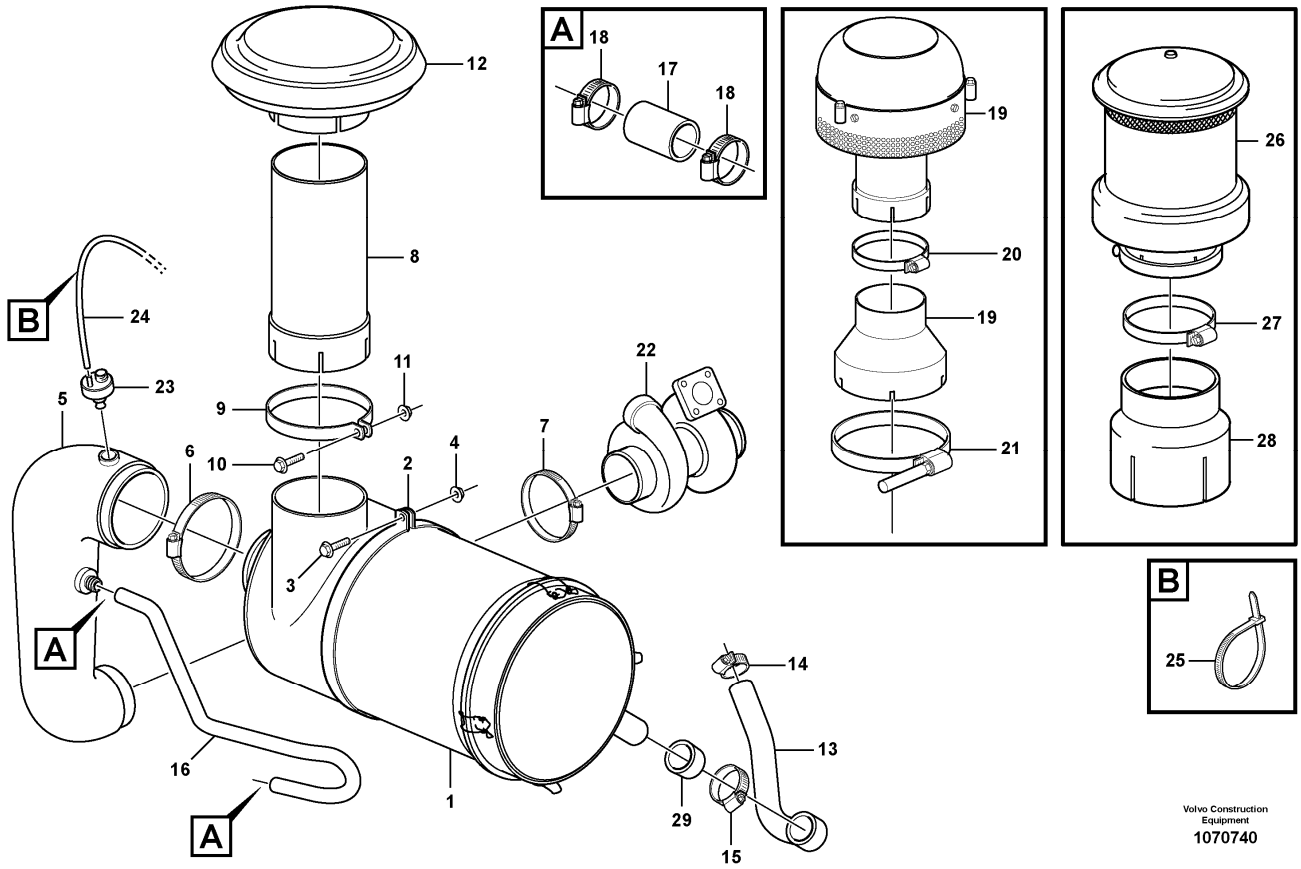

Section option	Kit	Option description
VOE33750		Wheel Loader
VOE33759		Wheel loader L60E OPEN ROPS
VOE82281		Pre-cleaner Sy-klone
VOE80846		Hydraulic attachment bracket
VOE80945	VOE11988660	Pre-cleaner oil bath type

Q1-Q5	Option	Option description	
Q1 33750 33759	VOE33750	Wheel Loader	
Q2 82281	VOE82281	Pre-cleaner Sy-klone	
Q3 80946	VOE80946	Pre cleaner Turbo	
Q4 80945	VOE80945	Pre-cleaner oil bath type	

Pos	Part	Q1	Q2	Q3	Q4	Q5	PS	Kit	Description	Option(s)	Remark

1	VOE14346120	1							Air cleaner		See ref 256/150
2	VOE14346045	2							Tensioning band		
3	VOE946671	2							Flange screw		
4	VOE13945408	2							Nut		
5	VOE11445003	1							Hose		(VOE11410091)
6	VOE1544734	1							Hose clamp		
7	VOE1544732	1							Hose clamp		
8	VOE11172892	1							Tube		
9	VOE982444	1							Clamp		
10	VOE13965185	1							Screw		
11	VOE13971095	1							Flange nut		
12	VOE11110213	1							Cover		
13	VOE11410085	1							Hose		
14	VOE943476	1							Hose clamp		
15	VOE943479	1							Hose clamp		
15	VOE943480			1					Hose clamp		
16	VOE11180505	1							Tube		
17	VOE190993	REQ							Hose		L = 2 x 80 MM
18	VOE13943474	4							Hose clamp		
19	VOE11180655		1						Pre-cleaner		
20	VOE1660378		1						•Hose clamp		
21	VOE1544736		1						•Hose clamp		
22		1							Turbocharger		See ref 255/100
23	VOE20560843	1							Vacuum switch		SE2501, SE2502
	VOE20565673		1	1	1				Vacuum switch		SE2501, SE2502
24	VOE969021	1							Hose		L = 400 MM
25	VOE4881440	1							Cable tie		
26	VOE16802765			1			SS		Pre-cleaner		(VOE11043114)
27	VOE16823045			1					•Clamp		
28	VOE15109294			1					Tube		
29	VOE14342769		1	1	1				Rubber sleeve		

VOLVO

Construction Equipment

PROSIS Part Information

Date:	Image id:	Catalogue:	Model:
10/09/2018	**LH487A**	**20009**	**L60E**
Brand:	Serial:	Group/Section:	Title:
Volvo	**1001-3355, 60001-61214, 70001-70530**	**256/150**	**Air filter STD, OPEN ROPS**

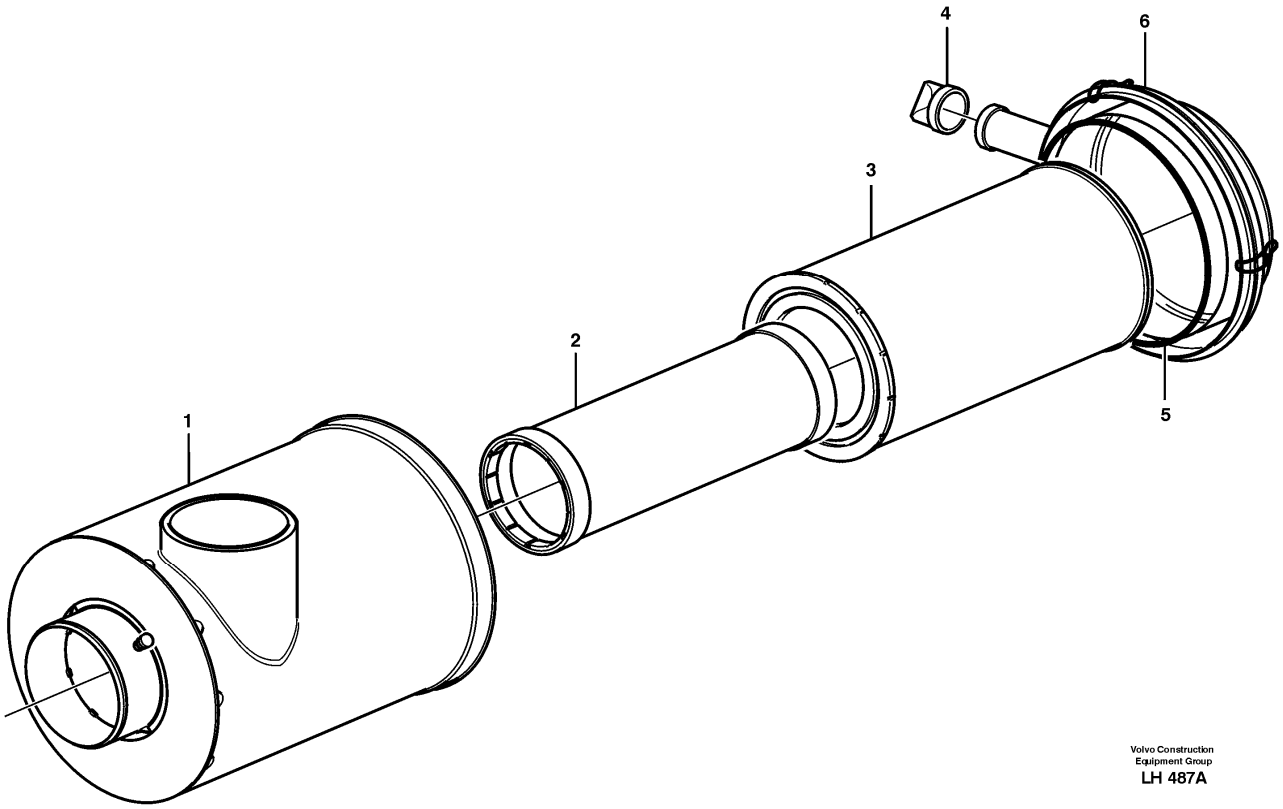

Section option	Kit	Option description
VOE33750		Wheel Loader
VOE33759		Wheel loader L60E OPEN ROPS

Pos	Part	Q1	Q2	Q3	Q4	Q5	PS	Kit	Description	Option(s)	Remark
1	VOE14346120	1							Air cleaner		
2	VOE11110176	1							•Safety filter		
3	VOE11110175	1							•Filter		
4	VOE11705911	1							•Valve		
5	VOE11705910	1							•O-ring		
6	VOE11705909	1							•Cover		
	VOE11708377	1							•Nipple		

VOLVO

Construction Equipment

PROSIS Part Information

Date:	Image id:	Catalogue:	Model:
10/09/2018	**1008257**	**20009**	**L60E**
Brand:	Serial:	Group/Section:	Title:
Volvo	**1001-3355, 60001-61214, 70001-70530**	**256/200**	**Oil bath filter 80945**

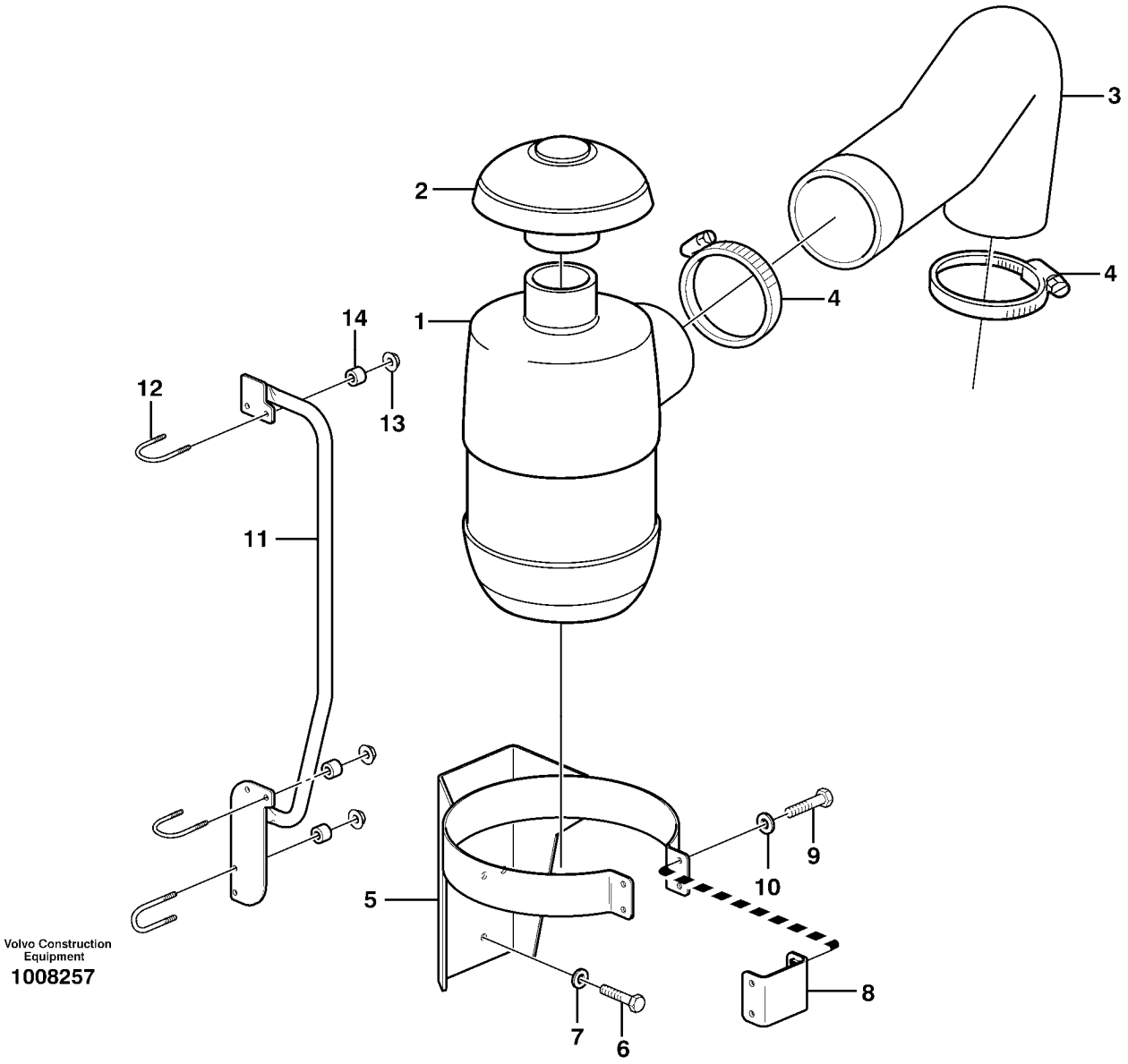

Section option	Kit	Option description
VOE80945	VOE11988660	Pre-cleaner oil bath type

Pos	Part	Q1	Q2	Q3	Q4	Q5	PS	Kit	Description	Option(s)	Remark
1		1							Air filter		See ref 256/250
2	VOE11707307	1							Cover		(VOE784112)
3	VOE11173903	1							Hose		

4	VOE943485	2							Hose clamp		
5	VOE11173901	1							Bracket		
6	VOE13965190	3							Screw		
7	VOE13960143	3							Washer		
8	VOE11410207	1							Brace		
	VOE961614	4							•Weld nut		
9	VOE13945444	4							Screw		
10	VOE11117464	4							Plain washer		(VOE13960141)
11	VOE11180884	1							Handle		
12	VOE11130269	3							Clamp		
13	VOE13945408	6							Nut		
14	VOE13949873	6							Spacer washer		

VOLVO

Construction Equipment

PROSIS Part Information

Date:	Image id:	Catalogue:	Model:
10/09/2018	**EC347**	**20009**	**L60E**
Brand:	Serial:	Group/Section:	Title:
Volvo	**1001-3355, 60001-61214, 70001-70530**	**256/250**	**Air filter 80945**

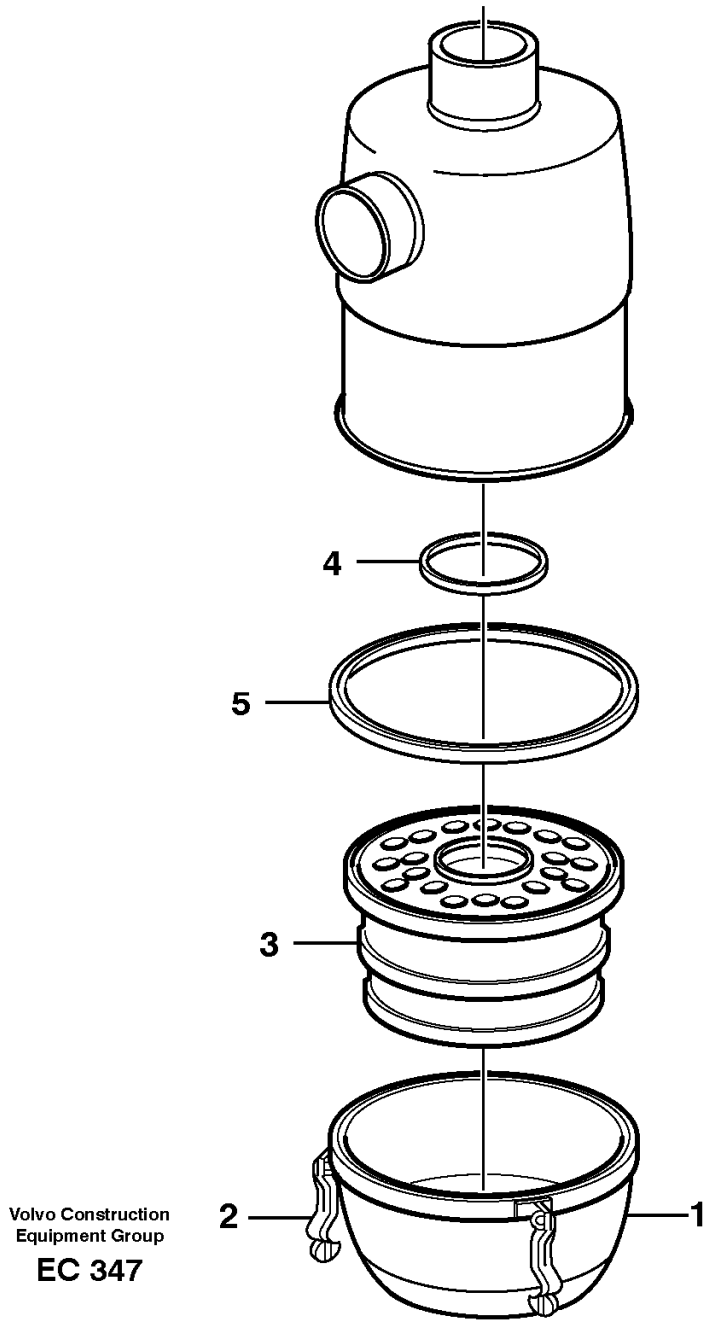

Section option	Kit	Option description

VOE80945	VOE11988660	Pre-cleaner oil bath type

Pos	Part	Q1	Q2	Q3	Q4	Q5	PS	Kit	Description	Option(s)	Remark
	VOE4880805	1							Air filter		
1	VOE6212135	1							•Oil reservoir		
2	VOE6634778	3							•Latch		
3	VOE6212136	1							•Insert		
4	VOE6212282	1							•Sealing ring		
5	VOE6212283	1							•Sealing ring		

VOLVO

Construction Equipment

PROSIS Part Information

Date:	Image id:	Catalogue:	Model:
10/09/2018	**1020018**	**20009**	**L60E**
Brand:	Serial:	Group/Section:	Title:
Volvo	**1001-3355, 60001-61214, 70001-70530**	**258/100**	**Intercooler STD, OPEN ROPS**

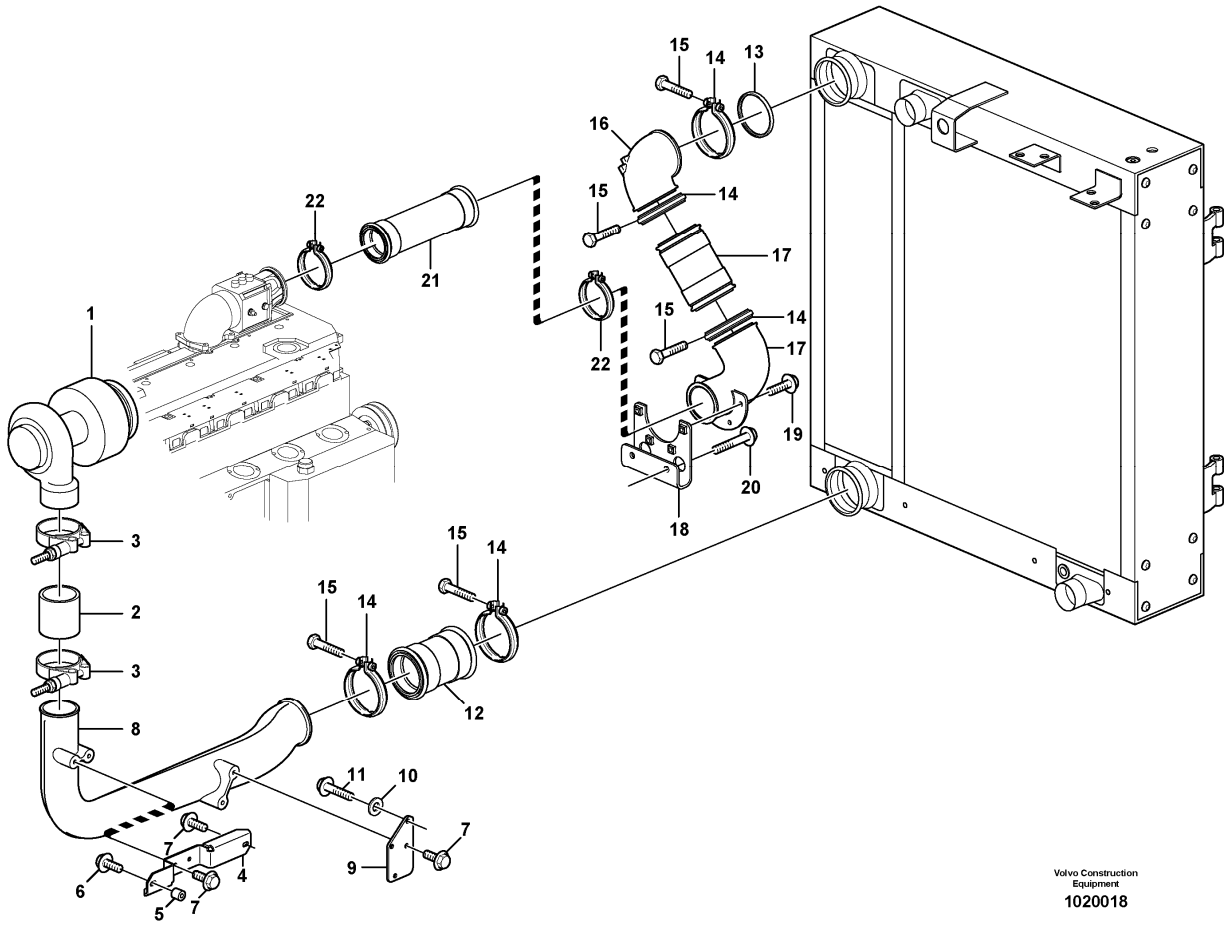

Section option	Kit	Option description
VOE33750		Wheel Loader
VOE33759		Wheel loader L60E OPEN ROPS

Pos	Part	Q1	Q2	Q3	Q4	Q5	PS	Kit	Description	Option(s)	Remark
1		1							Turbo		See ref 255/100
2	VOE11110354	1							Charge air hose		
3	VOE11173083	2							Hose clamp		(VOE1544730)
4	VOE11173932	1							Anchorage		
5	VOE930436	1							Spacer ring		
6	VOE13947760	1							Screw		
7	VOE13946173	5							Screw		
8	VOE11172879	1							Tube		
9	VOE11411687	1							Anchorage		

10	VOE930840	2							Plain washer		
11	VOE991123	2							Hexagon screw		
12	VOE11110496	2							Charge air hose		
13	VOE1675066	1							Sealing ring		
14	VOE1676424	5							Clamp		
15	VOE13948356	7							Flange screw		
16	VOE11172451	1							Pipe bend		
17	VOE11173523	1							Tube		
18	VOE11172926	1							Anchorage		
19	VOE13945444	4							Screw		
20	VOE13965187	2							Screw		
21	VOE11110499	1							Charge air hose		
22	VOE8149651	2							V-clamp		

VOLVO

Construction Equipment

PROSIS Part Information

Date:	Image id:	Catalogue:	Model:
10/09/2018	**1046076**	**20009**	**L60E**
Brand:	Serial:	Group/Section:	Title:
Volvo	**1001-3355, 60001-61214, 70001-70530**	**261/100**	**Radiator with fitting parts**

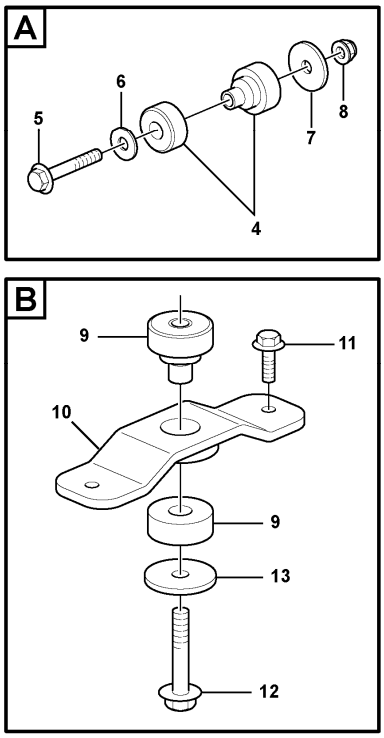

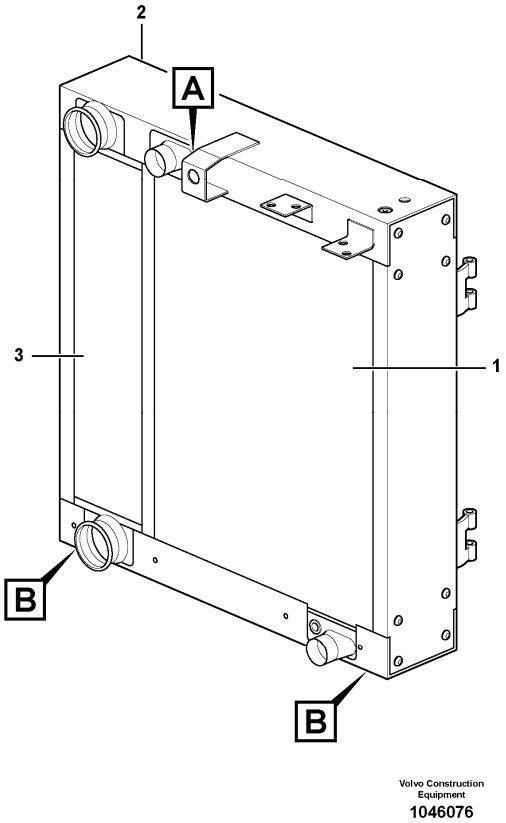

Section option	Kit	Option description
VOE33750		Wheel Loader
VOE33759		Wheel loader L60E OPEN ROPS
VOE82140		Radiator, corrosion protected

Q1-Q5	Option	Option description	
Q1 STD OPEN ROPS			
Q2 82140	VOE82140	Radiator, corrosion protected	

Pos	Part	Q1	Q2	Q3	Q4	Q5	PS	Kit	Description	Option(s)	Remark
		1					NS		Radiator		
			1				NS		Radiator		
1	VOE11110552	1							•Radiator		REMAN VOE9011110552

1	VOE11110553		1						•Radiator		
2	VOE11110589	1	1						•Frame		
3	VOE11110504	1							•Charge air cooler		
3	VOE11110507		1						•Charge air cooler		
4	VOE14264044	1							Rubber damper		
5	VOE13965196	1							Screw		
6	VOE13960145	2							Washer		
7	VOE11173827	1							Washer		
8	VOE971099	1							Flange lock nut		(VOE13971099)
9	VOE14264045	2							Rubber damper		
10	VOE11410131	2							Attachment		
11	VOE13965192	4							Screw		
12	VOE968298	2							Flange screw		
13	VOE11173827	2							Washer		

VOLVO

Construction Equipment

PROSIS Part Information

Date:	Image id:	Catalogue:	Model:
10/09/2018	**1032731**	**20009**	**L60E**
Brand:	Serial:	Group/Section:	Title:
Volvo	**1001-3355, 60001-61214, 70001-70530**	**261/150**	**Expansion tank with fitting parts STD, OPEN ROPS**

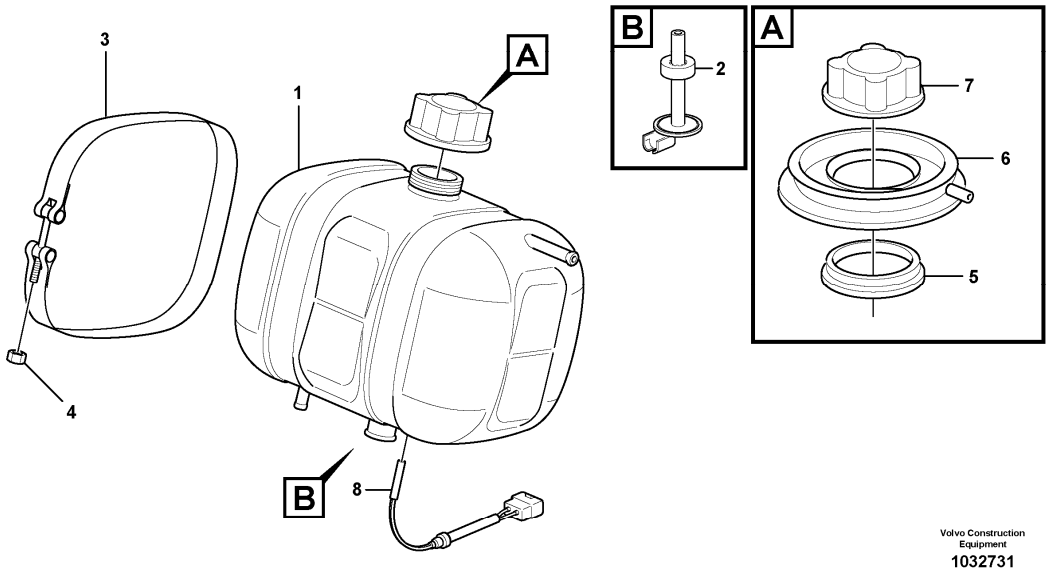

Section option	Kit	Option description
VOE33750		Wheel Loader
VOE33759		Wheel loader L60E OPEN ROPS

Pos	Part	Q1	Q2	Q3	Q4	Q5	PS	Kit	Description	Option(s)	Remark
1	VOE11110410	1					SS		Expansion tank		
2	VOE11110409	1							•Anchorage		
3	VOE4804563	2							Tensioning band		
4	VOE949874	2							Flange lock nut		(VOE13949874)
5	VOE4804410	1							Sealing ring		
6	VOE11431708	1							Collar		(VOE4804414)
7	VOE1542591	1							Cap		
7	VOE20879322	1							Pressure cap		YELLOW CAP
8	VOE11170064	1							Level guard		SE2603

VOLVO

Construction Equipment

PROSIS Part Information

Date:	Image id:	Catalogue:	Model:
10/09/2018	**1004504**	**20009**	**L60E**
Brand:	Serial:	Group/Section:	Title:
Volvo	**1001-3355, 60001-61214, 70001-70530**	**261/200**	**Cooling system STD, OPEN ROPS**

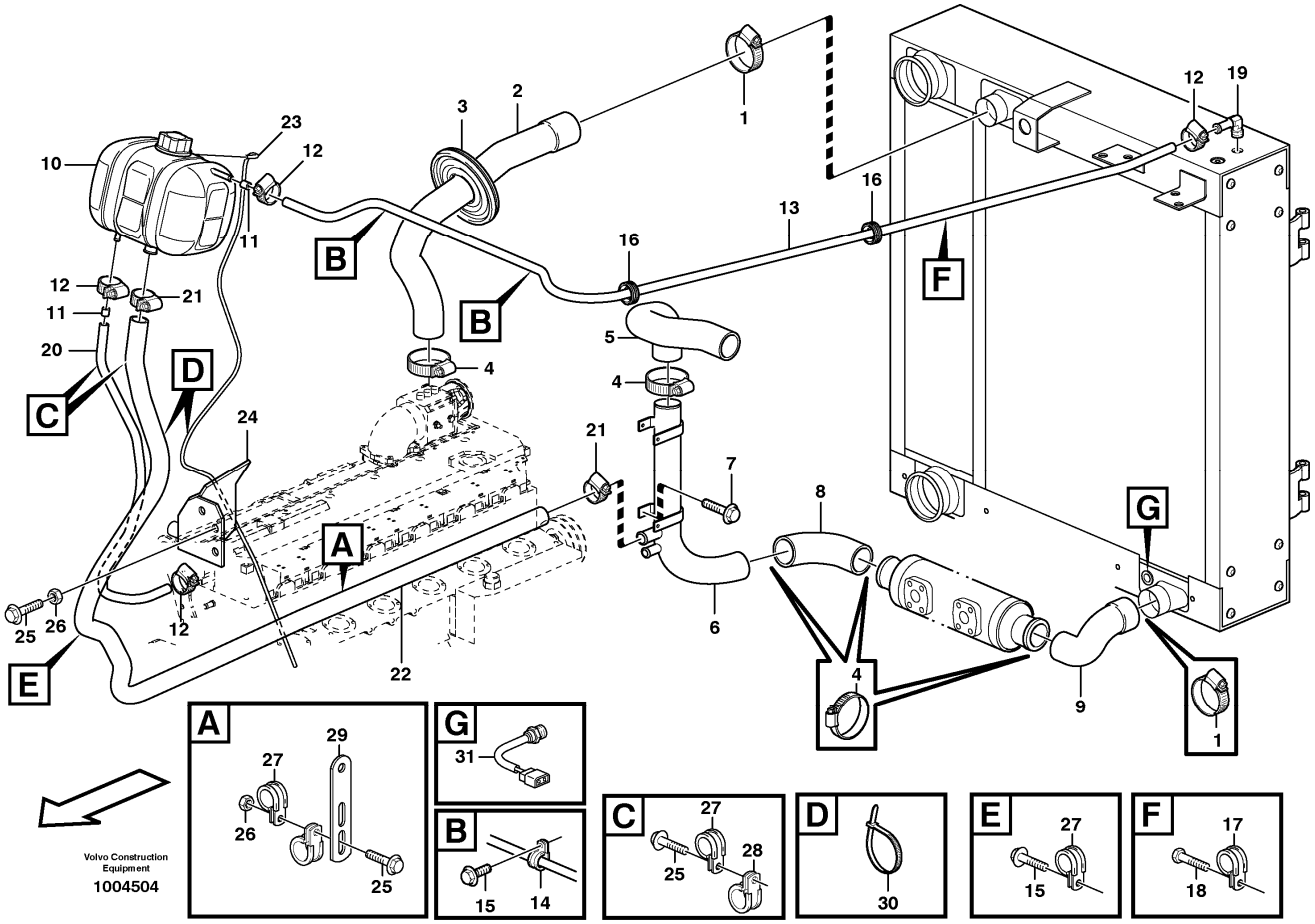

Section option	Kit	Option description
VOE33750		Wheel Loader
VOE33759		Wheel loader L60E OPEN ROPS

Pos	Part	Q1	Q2	Q3	Q4	Q5	PS	Kit	Description	Option(s)	Remark
1	VOE943480	2							Hose clamp		
2	VOE11172886	1							Radiator hose		
3	VOE11148867	1							Grommet		
4	VOE943479	6							Hose clamp		
5	VOE11180702	1							Radiator hose		
6	VOE11180511	1							Tube		
7	VOE946470	2							Flange screw		
8	VOE11173171	1							Radiator hose		
9	VOE11173170	1							Radiator hose		

10		1							Expansion Tank		See ref 261/150
11	VOE11033572	2							Restrictor		
12	VOE943471	4							Hose clamp		
13	VOE943367	REQ							Hose		L = 1700 MM
14	VOE977742	2							Clamp		
15	VOE946440	3							Flange screw		
16	VOE961960	2							Grommet		
17	VOE952630	1							Clamp		
18	VOE13965175	1							Screw		
19	VOE942758	1							Nipple		
20	VOE952967	REQ							Hose		L = 820 MM
21	VOE943475	2							Hose clamp		
22	VOE4856263	REQ							Radiator hose		L = 1600 MM
23	VOE941363	REQ							Hose		L = 1500 MM
24	VOE11411700	1							Heat shield		(VOE11410057)
25	VOE13946173	4							Screw		
26	VOE13945408	2							Nut		
27	VOE949850	3							Clamp		
28	VOE942810	1							Clamp		
29	VOE13965534	1							Bracket		
30	VOE4881440	REQ							Cable tie		
31	VOE11419485	1							Temperature sensor		SE210

VOLVO

Construction Equipment

PROSIS Part Information

Date:	Image id:	Catalogue:	Model:
10/09/2018	**1009072**	**20009**	**L60E**
Brand:	Serial:	Group/Section:	Title:
Volvo	**1001-3355, 60001-61214, 70001-70530**	**261/250**	**Coolant drainage STD, OPEN ROPS**

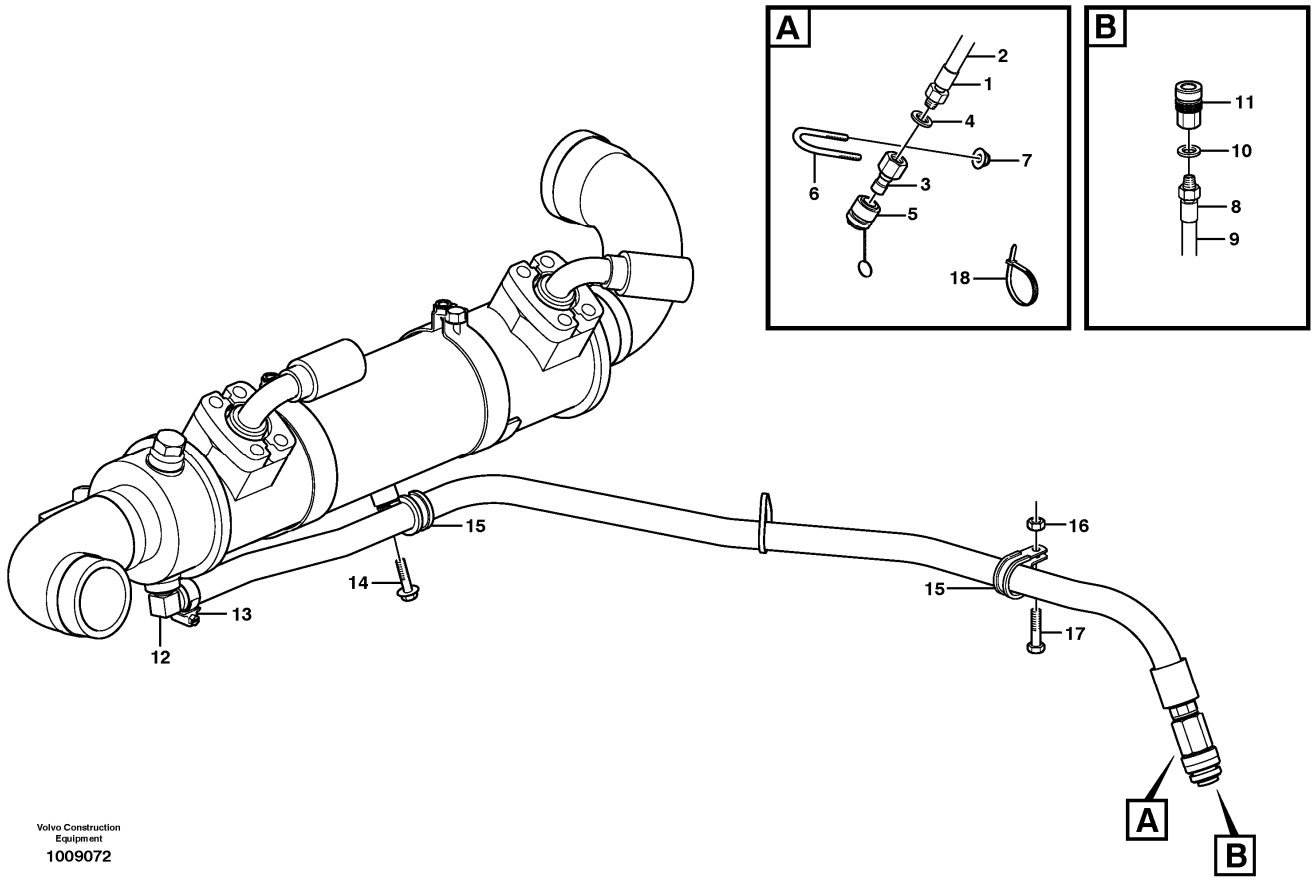

Section option	Kit	Option description
VOE33750		Wheel Loader
VOE33759		Wheel loader L60E OPEN ROPS

Pos	Part	Q1	Q2	Q3	Q4	Q5	PS	Kit	Description	Option(s)	Remark
	VOE11410446	1					SS		Drain hose		
1	VOE11410442	1							•Drain hose		
2	VOE13946652	REQ							•Hose		
3	VOE4786585	1							•Insert nipple		
4	VOE14042936	1							•Sealing washer		
5	VOE11194108	1							•Protecting sleeve		(VOE4881340)
6	VOE11130271	1							Clamp		
7	VOE13949278	2							Flange lock nut		
	VOE11410426	1					SS		Drain hose		
8	VOE11410428	1							•Drain hose		

9	VOE13946652	REQ							•Hose		
10	VOE14042936	1							•Sealing washer		
11	VOE4880194	1							•Snap-on coupling		
12	VOE13961604	1							Nipple		
13	VOE13943472	2							Hose clamp		
14	VOE947107	1							Flange screw		
15	VOE977599	2							Clamp		(VOE13977599)
16	VOE13945408	1							Nut		
17	VOE13945444	1							Screw		
18	VOE4881440	REQ							Cable tie		

VOLVO

Construction Equipment

PROSIS Part Information

Date:	Image id:	Catalogue:	Model:
10/09/2018	**1004852**	**20009**	**L60E**
Brand:	Serial:	Group/Section:	Title:
Volvo	**1001-3355, 60001-61214, 70001-70530**	**261/500**	**Coolant filter 82123**

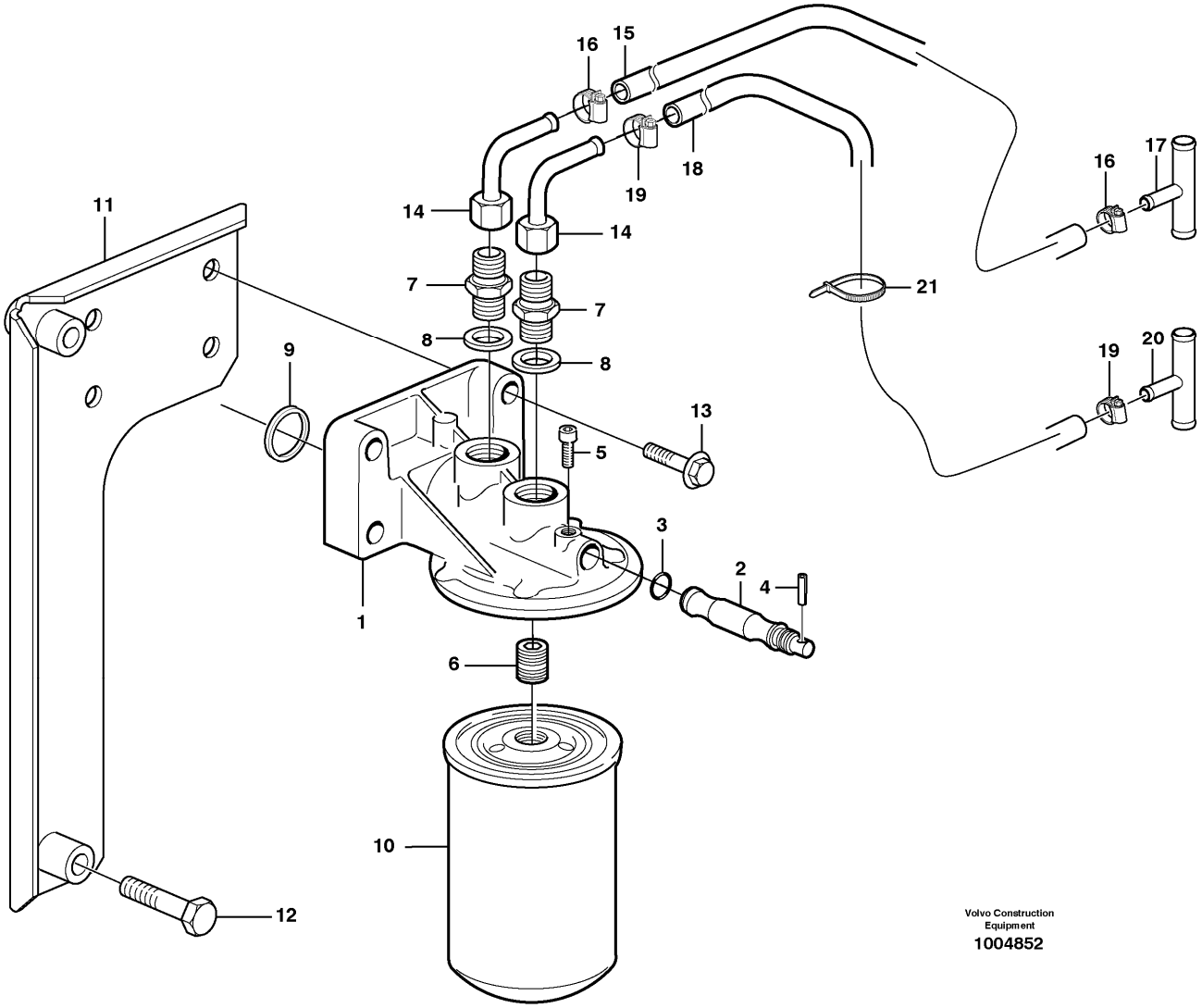

Section option	Kit	Option description
VOE82123		Coolant filter, engine

Pos	Part	Q1	Q2	Q3	Q4	Q5	PS	Kit	Description	Option(s)	Remark
	VOE11993236	1							Bracket		
1	VOE1661683	1							•Bracket		
2	VOE1661686	1							•Spindle		
3	VOE968725	1							•O-ring		
4	VOE951968	1							•Spring pin		
5	VOE961236	1							•Hex. socket screw		

6	VOE1676554	1							•Nipple		
7	VOE941754	2							•Nipple		
8	VOE976929	2							•Gasket		
9	VOE469846	1							•Sealing ring		
10	VOE20532237	1							Coolant filter		
11	VOE11173738	1							Bracket		
12	VOE13965180	2							Screw		
13	VOE946671	4							Flange screw		
14	VOE11033093	2							Pipe elbow		
15	VOE943367	REQ							Hose		L = 2250 MM
16	VOE943470	2							Hose clamp		
17	VOE11173737	1							T-pipe		OD = 20 MM See ref 873/150
18	VOE943367	REQ							Hose		L = 2250 MM
19	VOE943470	2							Hose clamp		
20	VOE11173736	1							T-pipe		OD = 16 MM See ref 873/150
21	VOE4881440	3							Cable tie		(VOE14215726)

VOLVO

Construction Equipment

PROSIS Part Information

Date:	Image id:	Catalogue:	Model:
10/09/2018	**1003999**	**20009**	**L60E**
Brand:	Serial:	Group/Section:	Title:
Volvo	**1001-3355, 60001-61214, 70001-70530**	**262/100**	**Water pump and thermostat housing**

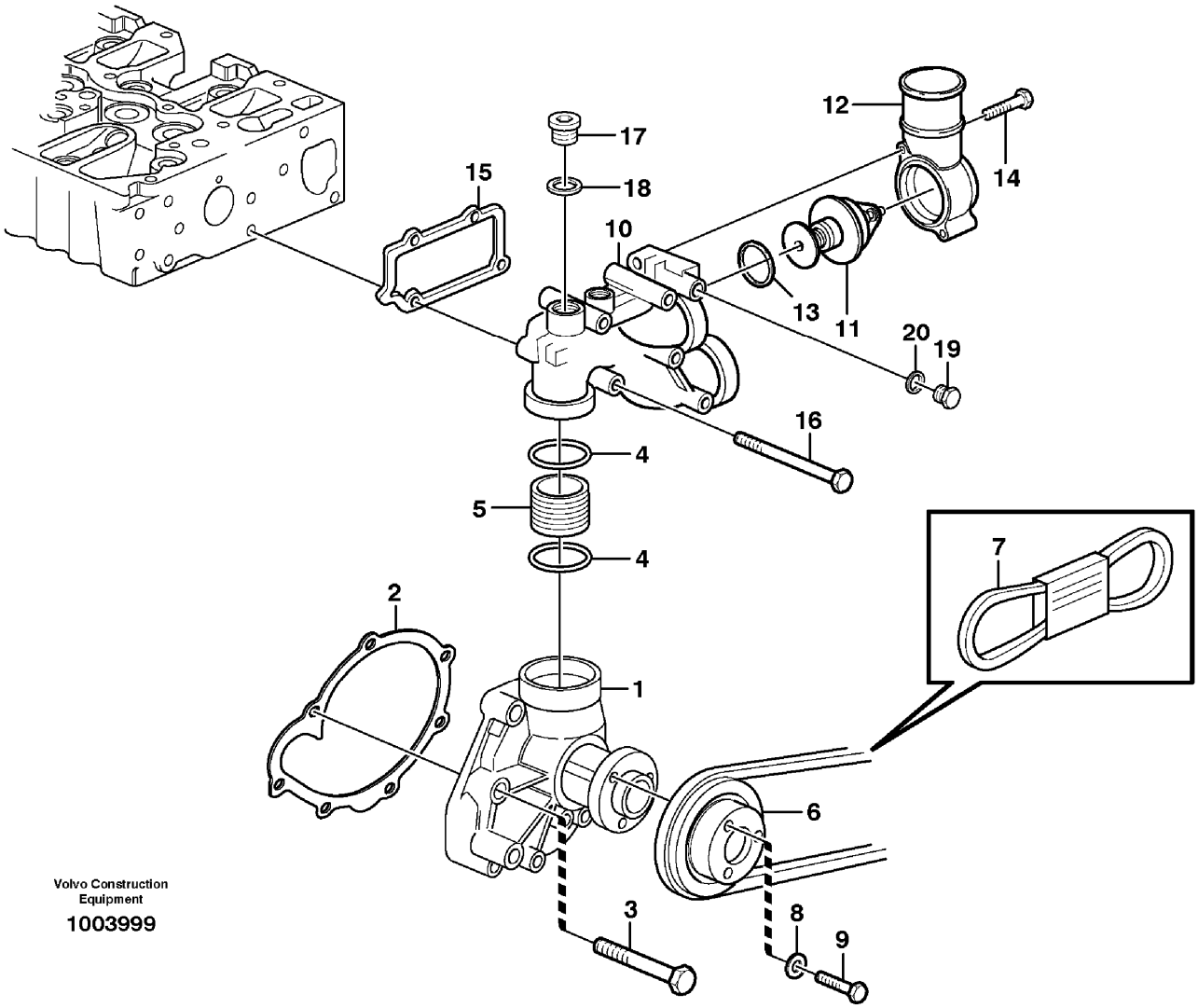

Section option	Kit	Option description
VOE11172410		Engine VOLVO D6D LCE2

Pos	Part	Q1	Q2	Q3	Q4	Q5	PS	Kit	Description	Option(s)	Remark
1	VOE21072752	1					SS		Coolant Pump		REMAN VOE9021404508, VOE9021072752
2	VOE20459948	1							Gasket		
3	VOE20412324	6							Screw		
4	VOE20412325	2							Sealing ring		
5	VOE20405693	1							Plug		(VOE11700521)

6	VOE20496587	1							Pulley		
7	VOE978710	1							V-belt		
8	VOE20450745	3							Washer		
9	VOE20405792	3							Screw		
10	VOE21260018	1							Thermostat housing		(VOE20839090)
11	VOE20450736	1							Thermostat		
12	VOE20450735	1							Outlet		
13	VOE20459961	2							Sealing ring		
14	VOE20405672	2							Screw		
15	VOE20459958	1							Gasket		
16	VOE20534599	4							Screw		
17	VOE20459195	1							Plug		
18	VOE13947628	1							Plane gasket		
19	VOE20459941	1							Plug		
20	VOE20459942	1							Sealing ring		

VOLVO

Construction Equipment

PROSIS Part Information

Date:	Image id:	Catalogue:	Model:
10/09/2018	**1020046**	**20009**	**L60E**
Brand:	Serial:	Group/Section:	Title:
Volvo	**1001-3355, 60001-61214, 70001-70530**	**263/100**	**Fan and fan shroud STD, OPEN ROPS**

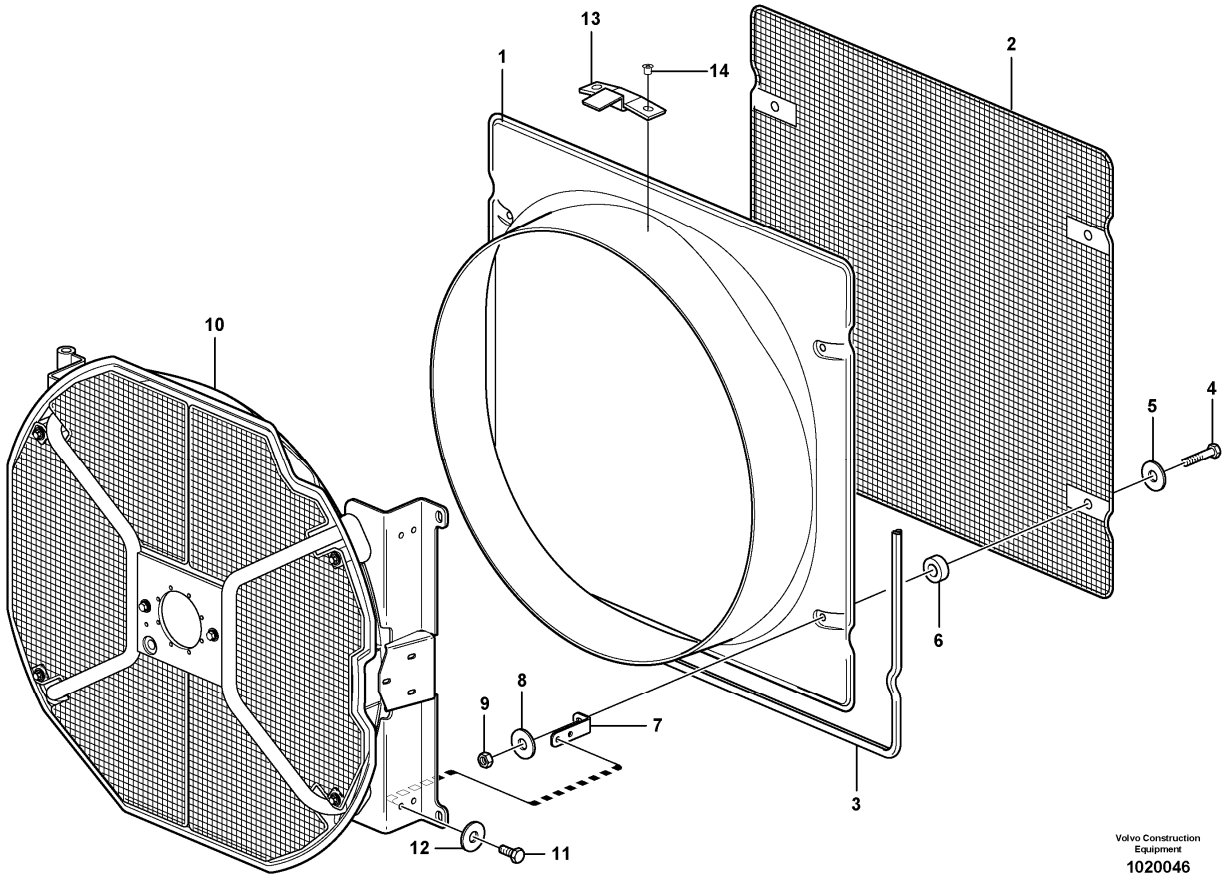

Section option	Kit	Option description
VOE33750		Wheel Loader
VOE33759		Wheel loader L60E OPEN ROPS

Pos	Part	Q1	Q2	Q3	Q4	Q5	PS	Kit	Description	Option(s)	Remark
1	VOE11413819	1							Fan shroud		
2	VOE11175956	1							Fan Protector		
3	VOE4766526	REQ							Sealing strip		L = 3365 MM
4	VOE13947760	4							Screw		
5	VOE11117464	4							Plain washer		(VOE13960141)
6	VOE11175960	4							Spacer		
7	VOE11175961	4							Attachment		
8	VOE11117464	4							Plain washer		(VOE13960141)
9	VOE13945408	4							Nut		

10		1							Fan Housing		See ref 263/150
11	VOE13946173	8							Screw		
12	VOE11117464	7							Plain washer		(VOE13960141)
13	VOE11435434	2							Attachment		S/N 2690 -
14	VOE13944184	4							Blind rivet		S/N 2690 -

VOLVO

Construction Equipment

PROSIS Part Information

Date:	Image id:	Catalogue:	Model:
10/09/2018	**1003943**	**20009**	**L60E**
Brand:	Serial:	Group/Section:	Title:
Volvo	**1001-3355, 60001-61214, 70001-70530**	**263/125**	**Hoses to fan drive STD, OPEN ROPS**

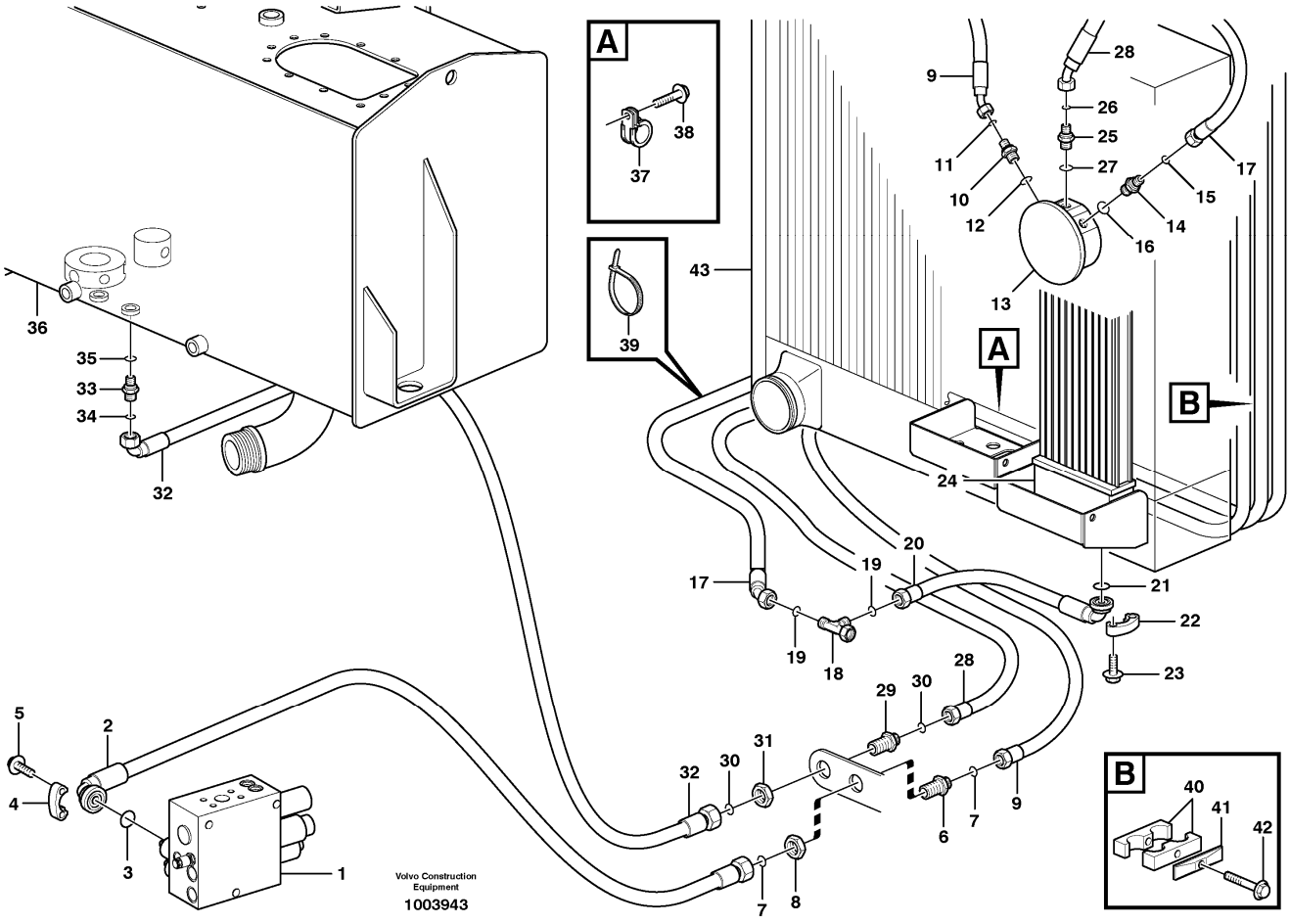

Section option	Kit	Option description
VOE33750		Wheel Loader
VOE33759		Wheel loader L60E OPEN ROPS

Pos	Part	Q1	Q2	Q3	Q4	Q5	PS	Kit	Description	Option(s)	Remark
1		1							Valve block		See ref 912/300
2	VOE11173670	1							Hose assembly		
3	VOE13948699	1							O-ring		
4	VOE11015454	2							Flange half		
5	VOE946472	4							Flange screw		
6	VOE13933922	1							Nipple		
7	VOE990738	2							•O-ring		(VOE4880493)
8	VOE13933867	1							Lock nut		
9	VOE11172932	1							Hose assembly		

10	VOE13933853	1							Nipple		
11	VOE990738	1							•O-ring		(VOE4880493)
12	VOE14211863	1							•Sealing ring		
13		1							Hydraulic motor		See ref 263/200
14	VOE13933853	1							Nipple		
15	VOE990738	1							•O-ring		(VOE4880493)
16	VOE14211863	1							•Sealing ring		
17	VOE11410240	1							Hose assembly		
18	VOE13933878	1							T-nipple		
19	VOE990738	2							•O-ring		(VOE4880493)
20	VOE11410031	1							Hose assembly		
21	VOE990741	1							O-ring		
22	VOE11015453	2							Flange half		
23	VOE13945444	4							Screw		
24		1							Oil cooler		See ref 911/600
25	VOE14345423	1							Nipple		
26	VOE990737	1							•O-ring		(VOE4880492)
27	VOE14211856	1							•Sealing ring		
28	VOE11410241	1							Hose assembly		
29	VOE935425	1							Nipple		
30	VOE990737	1							•O-ring		(VOE4880492)
31	VOE935429	1							Lock nut		
32	VOE11173308	1							Hose assembly		
33	VOE13933855	1							Nipple		
34	VOE990737	1							•O-ring		(VOE4880492)
35	VOE14213676	1							•Sealing ring		
36		1							Hydr fluid tank		See ref 911/100
37	VOE968136	4							Clamp		
	VOE973944	2							Clamp		
38	VOE13946173	3							Screw		
39	VOE4881440	REQ							Cable tie		
40	VOE11411413	2							Clamp		
41	VOE4880578	2							Cover plate		
42	VOE13948217	2							Screw		
43		1							Radiator		

VOLVO

Construction Equipment

PROSIS Part Information

Date:	Image id:	Catalogue:	Model:
10/09/2018	**1015098**	**20009**	**L60E**
Brand:	Serial:	Group/Section:	Title:
Volvo	**1001-3355, 60001-61214, 70001-70530**	**263/135**	**Hoses to fan drive 82646**

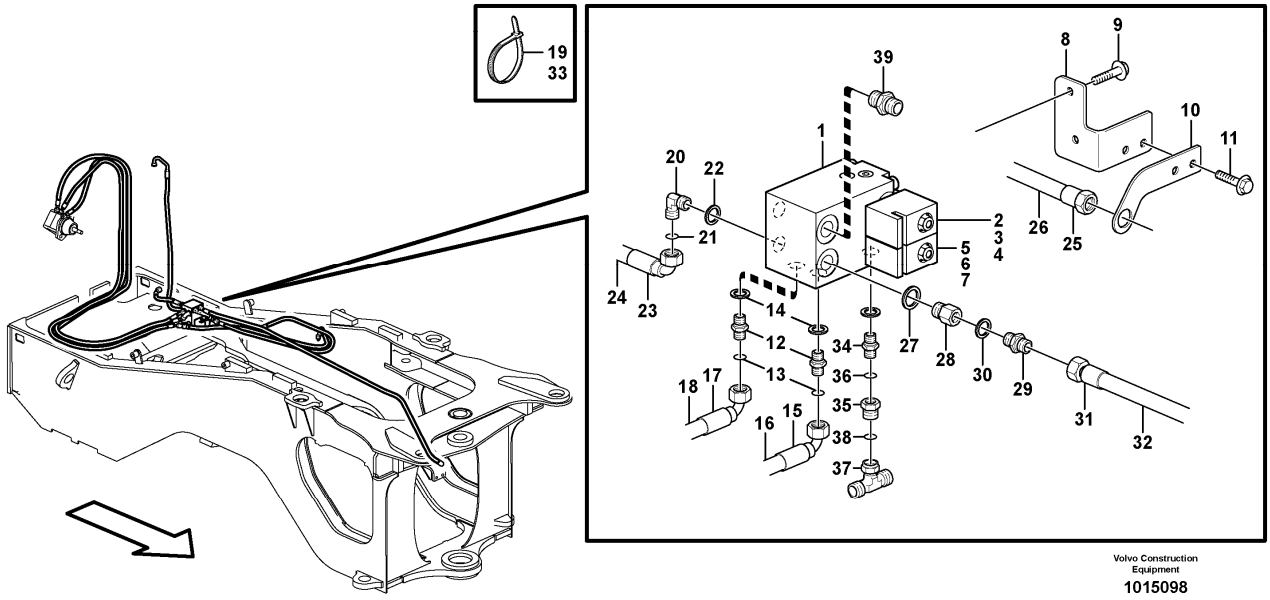

Section option	Kit	Option description
VOE82646	VOE11712305	Reversible fan

Q1-Q5	Option	Option description	
Q1 82646	VOE82646	Reversible fan	

Pos	Part	Q1	Q2	Q3	Q4	Q5	PS	Kit	Description	Option(s)	Remark
1	VOE11173941	1					SS		Valve		SER NO - 2418
	VOE11709807	1							•Sealing kit		
2	VOE11709804	1							•Solenoid valve		MA204
4	VOE11709807	1							••Sealing kit		(VOE11713401)
3	VOE11709806	1							•Coil		
5	VOE11709805	1							•Solenoid valve		MA205
7	VOE11709808	1							••Sealing kit		

6	VOE11709806	1							•Coil		
	VOE17428521	1							•Sealing plug		
	VOE17428535	1							•Sealing plug		
	VOE17428537	1							•Sealing plug		
1	VOE11411727	1							Hydraulic valve		SER NO 2419 - See ref 263/175
8	VOE11410415	1							Attachment		
9	VOE946441	2							Flange screw		
10	VOE11410515	1							Attachment		
11	VOE946671	2							Flange screw		
12	VOE13933853	3							Nipple		
13	VOE990738	1							•O-ring		(VOE4880493)
14	VOE14211863	1							•Sealing ring		
15	VOE11410517	1							Hose assembly		L=2940 MM
16	VOE927504	REQ							•Hydraulic hose		
17	VOE11410516								Hose assembly		L=2760 MM
18	VOE927504	REQ							•Hydraulic hose		
19	VOE4881440	2							Cable tie		
20	VOE13933869	1							Elbow nipple		
21	VOE990738	1							•O-ring		(VOE4880493)
22	VOE967750	1							•O-ring		
23	VOE11410518	1							Hose assembly		L=630 MM
24	VOE927504	REQ							•Hydraulic hose		
25	VOE11173712	1							Hose assembly		L=1500 MM
26	VOE927504	REQ							•Hydraulic hose		
27	VOE948884	1							Gasket		
28	VOE11410059	1							Nipple		
29	VOE935452	1							Adapter		
30	VOE14213676	1							•Sealing ring		
31	VOE11173309	1							Hose assembly		L=1750 MM
32	VOE927504	REQ							•Hydraulic hose		
33	VOE14016673	2							Strip clamp		
34	VOE936166	1							Adapter		
35	VOE935282	1							Reduction nipple		
36	VOE990736	1							•O-ring		
37	VOE935540	1							T-nipple		
38	VOE990737	3							•O-ring		(VOE4880492)
39	VOE13933853								Nipple		

VOLVO

Construction Equipment

PROSIS Part Information

Date:	Image id:	Catalogue:	Model:
10/09/2018	**1001121**	**20009**	**L60E**
Brand:	Serial:	Group/Section:	Title:
Volvo	**1001-3355, 60001-61214, 70001-70530**	**263/150**	**Fan and fan housing STD, OPEN ROPS**

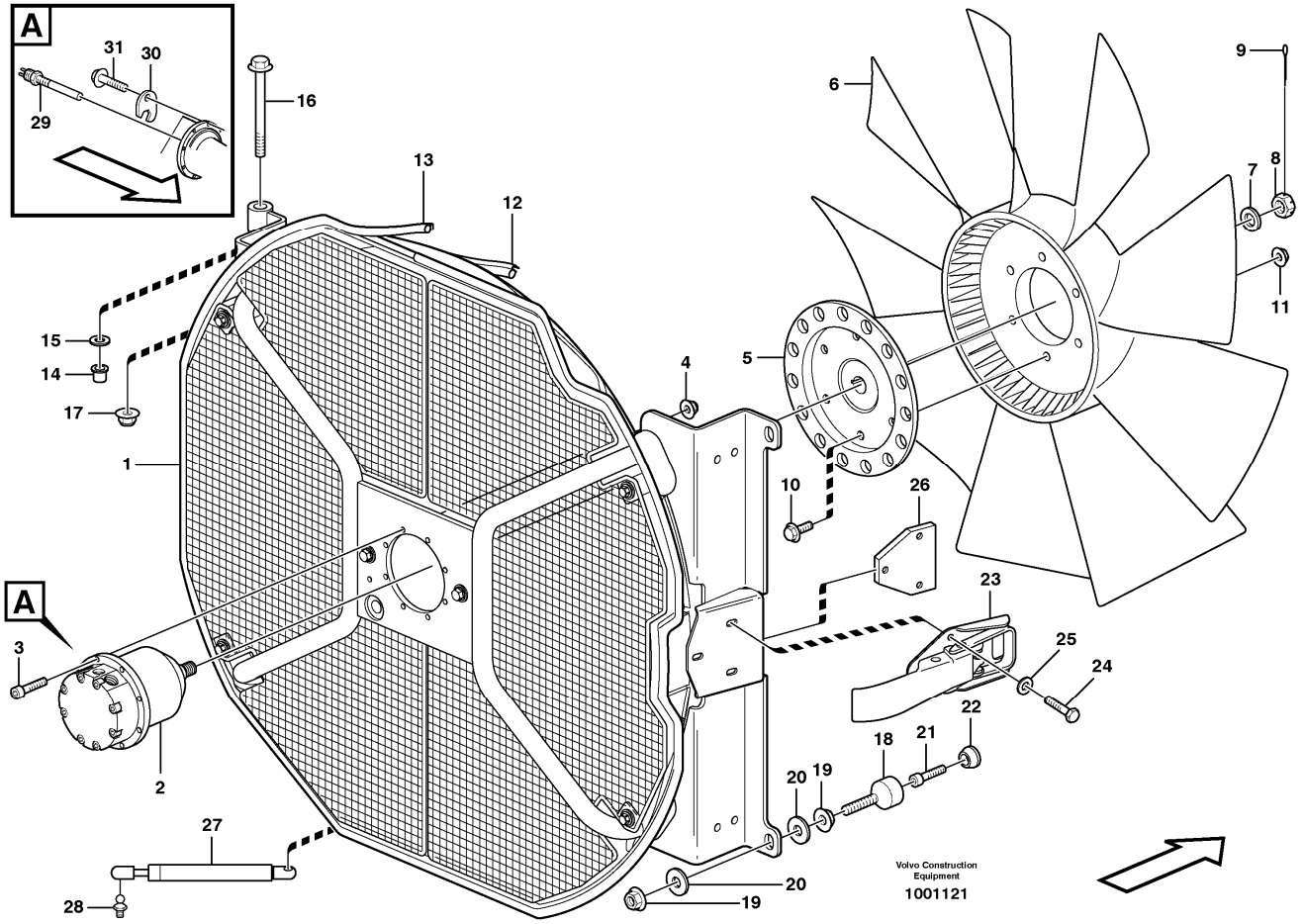

Section option	Kit	Option description
VOE33750		Wheel Loader
VOE33759		Wheel loader L60E OPEN ROPS

Pos	Part	Q1	Q2	Q3	Q4	Q5	PS	Kit	Description	Option(s)	Remark
1		1							Fan Housing		See ref 263/300
2		1							Hydraulic motor		See ref 263/200
3	VOE959207	8							Hex. socket screw		
4	VOE13949278	8							Flange lock nut		
5	VOE11175764	1							Fan hub		
6	VOE3827491	1							Fan		
7	VOE13955900	1							Washer		
8	VOE11174158	1							Castle nut		
9	VOE13907851	1							Cotter Pin		

10	VOE946329	6							Flange screw		
11	VOE13971098	6							Flange nut		
12		REQ							Clamping Strip		See ref 263/300
13		REQ							Sealing strip		See ref 263/300
14	VOE1588548	4							Bushing		
15	VOE13955897	2							Washer		
16	VOE13946474	2							Flange screw		
17	VOE971099	2							Flange lock nut		(VOE13971099)
18	VOE11400658	2							Guide		
19	VOE13971096	4							Flange nut		
20	VOE13960145	4							Washer		
21	VOE959220	2							Hex. socket screw		
22	VOE11174484	2							Set ring		
23	VOE11147562	1							Platform catch		
24	VOE13946934	3							Screw		
25	VOE960139	3							Plain washer		
26	VOE11400632	1							Nut plate		
27	VOE11174619	1							Gas spring		
28	VOE15140510	2							Ball stud		(VOE11174821)
29	VOE11039557	1							Induction sensor		SE211
30	VOE11108557	1							Lock plate		SE211
31	VOE13946173	1							Screw		SE211

VOLVO

Construction Equipment

PROSIS Part Information

Date:	Image id:	Catalogue:	Model:
10/09/2018	**1023113**	**20009**	**L60E**
Brand:	Serial:	Group/Section:	Title:
Volvo	**1001-3355, 60001-61214, 70001-70530**	**263/175**	**Valve 82646, SER NO 2419 -**

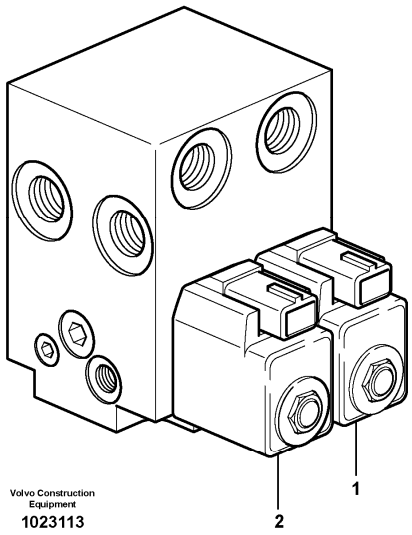

Section option	Kit	Option description
VOE82646	VOE11712305	Reversible fan

Pos	Part	Q1	Q2	Q3	Q4	Q5	PS	Kit	Description	Option(s)	Remark
	VOE11411727	1							Hydraulic valve		
1	VOE11709804	1							•Solenoid valve		MA204
	VOE11709807	1							••Sealing kit		(VOE11713401)
2	VOE11709805	1							•Solenoid valve		MA205
	VOE11709808	1							••Sealing kit		
	VOE11709806	2							•Coil		
	VOE11714323	1							•Sealing kit		
	VOE17428521	1							•Sealing plug		
	VOE17428535	1							•Sealing plug		
	VOE17428537	1							•Sealing plug		

VOLVO

Construction Equipment

PROSIS Part Information

Date:	Image id:	Catalogue:	Model:
10/09/2018	**1000251**	**20009**	**L60E**
Brand:	Serial:	Group/Section:	Title:
Volvo	**1001-3355, 60001-61214, 70001-70530**	**263/200**	**Hydraulic motor STD, OPEN ROPS**

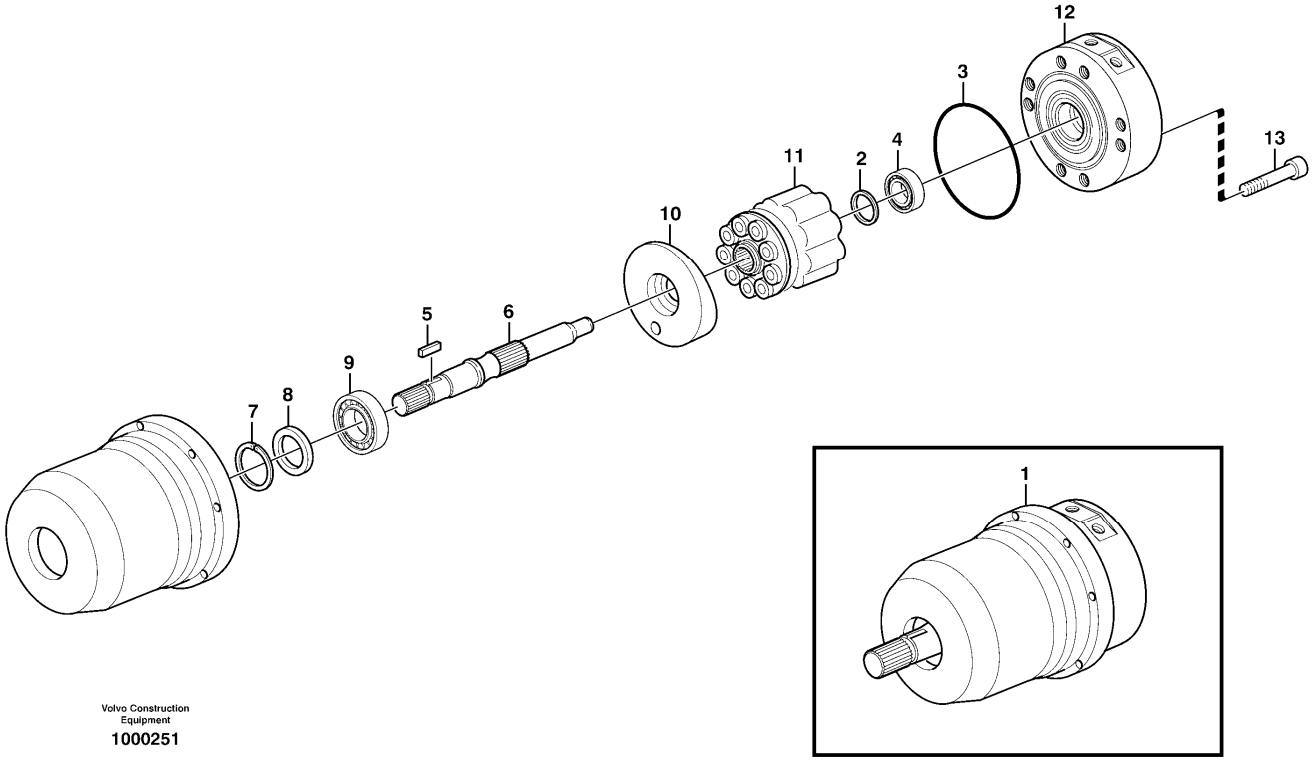

Section option	Kit	Option description
VOE33750		Wheel Loader
VOE33759		Wheel loader L60E OPEN ROPS

Pos	Part	Q1	Q2	Q3	Q4	Q5	PS	Kit	Description	Option(s)	Remark
1	VOE11147935	1							Hydraulic motor		REMAN VOE9011147935
2	VOE11707893	1							•Shim		
3	VOE11707896	1							•O-ring		
4	VOE11707578	1							•Roller bearing		(VOE11707894)
5	VOE11707892	1							•Key		
6	VOE11707891	1							•Shaft		
7	VOE11708755	1							•Lock ring		(VOE11707897)
8	VOE11707895	1							•Sealing ring		
9	VOE11992817	1							•Roller bearing		
10	VOE11707890	1							•Control plate		
11	VOE11707888	1					OP		•Pump element		
12	VOE11707889	1							•End plate		

13	VOE974081	8							•Hex. socket screw		

VOLVO

Construction Equipment

PROSIS Part Information

Date:	Image id:	Catalogue:	Model:
10/09/2018	**1015168**	**20009**	**L60E**
Brand:	Serial:	Group/Section:	Title:
Volvo	**1001-3355, 60001-61214, 70001-70530**	**263/250**	**Pump drive power take-off**

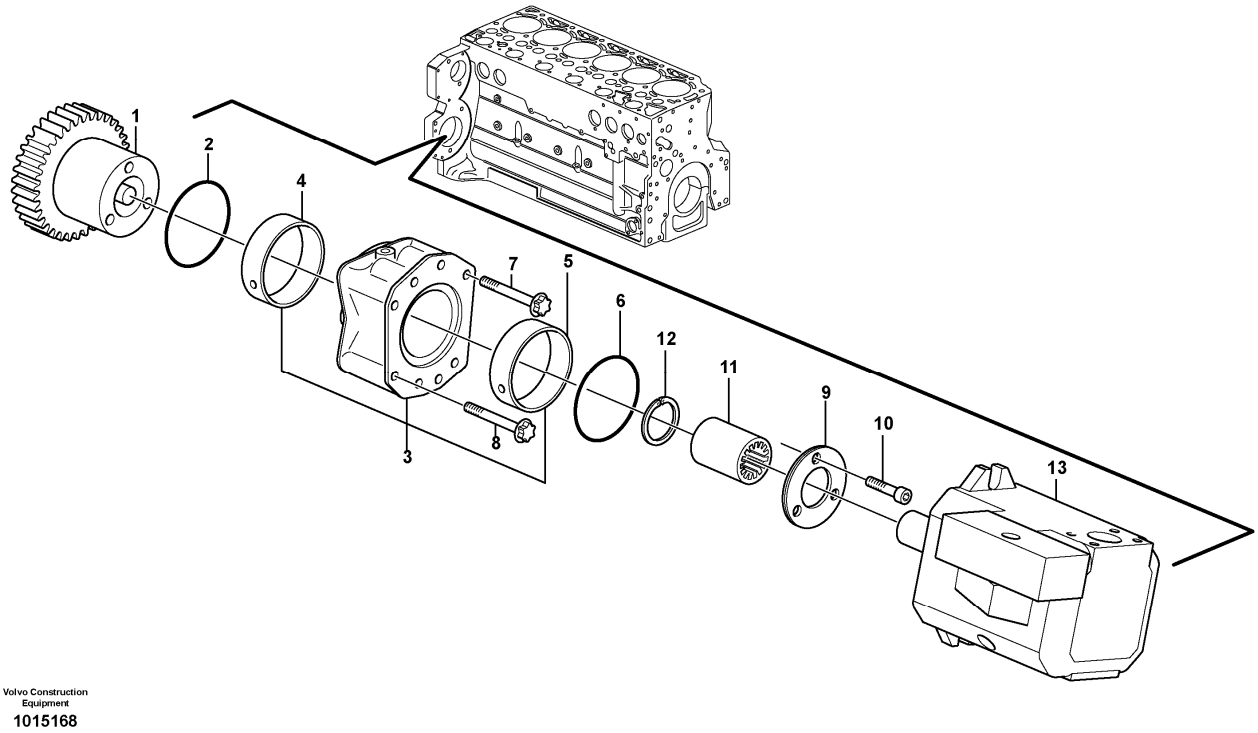

Section option	Kit	Option description
VOE11172410		Engine VOLVO D6D LCE2

Pos	Part	Q1	Q2	Q3	Q4	Q5	PS	Kit	Description	Option(s)	Remark
1	VOE20900806	1							Gear		(VOE20512957)ENG - 01099411
1	VOE21249506	1							Gear		(VOE20900806)ENG 01099412 -
2	VOE20450818	1							O-ring		
3	VOE20450805	1							Bearing flange		
4	VOE20450807	1							•Bushing		
5	VOE20450809	1							•Bushing		
6	VOE20450819	1							O-ring		(VOE11173158)
7	VOE22316512	1							Six point screw		(VOE20450821)
8	VOE20450820	2							Screw		E PROD ENG - 2007/02

8	VOE21077470	2							Hex. socket screw		L PROD ENG 2007/03 -
9	VOE20450811	1							Thrust washer		
10	VOE20450822	3							Screw		
11	VOE20459123	1							Sleeve		
12		1					NS		•Lock ring		
13		1							Hydraulic Pump		See ref 913/100

VOLVO

Construction Equipment

PROSIS Part Information

Date:	Image id:	Catalogue:	Model:
10/09/2018	**1005294**	**20009**	**L60E**
Brand:	Serial:	Group/Section:	Title:
Volvo	**1001-3355, 60001-61214, 70001-70530**	**263/300**	**Fan shroud STD, OPEN ROPS**

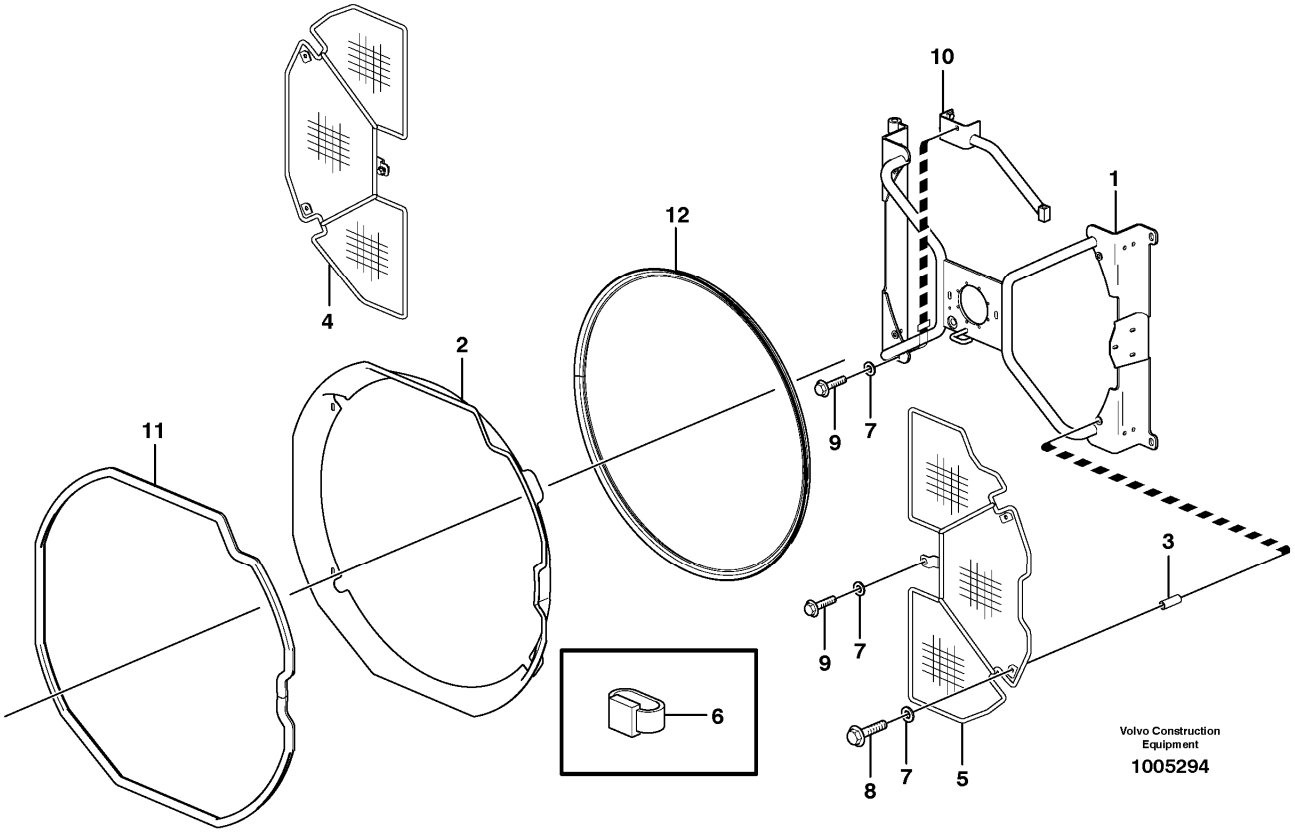

Section option	Kit	Option description
VOE33750		Wheel Loader
VOE33759		Wheel loader L60E OPEN ROPS

Pos	Part	Q1	Q2	Q3	Q4	Q5	PS	Kit	Description	Option(s)	Remark
	VOE11413823	1							Fan housing		
1	VOE11413822	1							•Pipe cross		
2	VOE11435280	1							•Fan ring		
3	VOE11413199	4							•Spacer		
4	VOE11400639	1							•Protecting grating		
5	VOE11400640	1							•Protecting grating		
6	VOE4881440	2							•Cable tie		
7	VOE11117464	8							•Plain washer		(VOE13960141)
8	VOE13965183	4							•Flange screw		
9	VOE13946173	4							•Screw		
10	VOE11400678	1							•Anchorage		

11	VOE11400637	REQ							•Sealing strip		L = 2860 MM
12	VOE14211217	REQ					SS		•Clamping strip		L = 2490 MM

VOLVO

Construction Equipment

PROSIS Part Information

Date:	Image id:	Catalogue:	Model:
10/09/2018	**1013226**	**20009**	**L60E**
Brand:	Serial:	Group/Section:	Title:
Volvo	**1001-3355, 60001-61214, 70001-70530**	**269/150**	**Engine heater.**

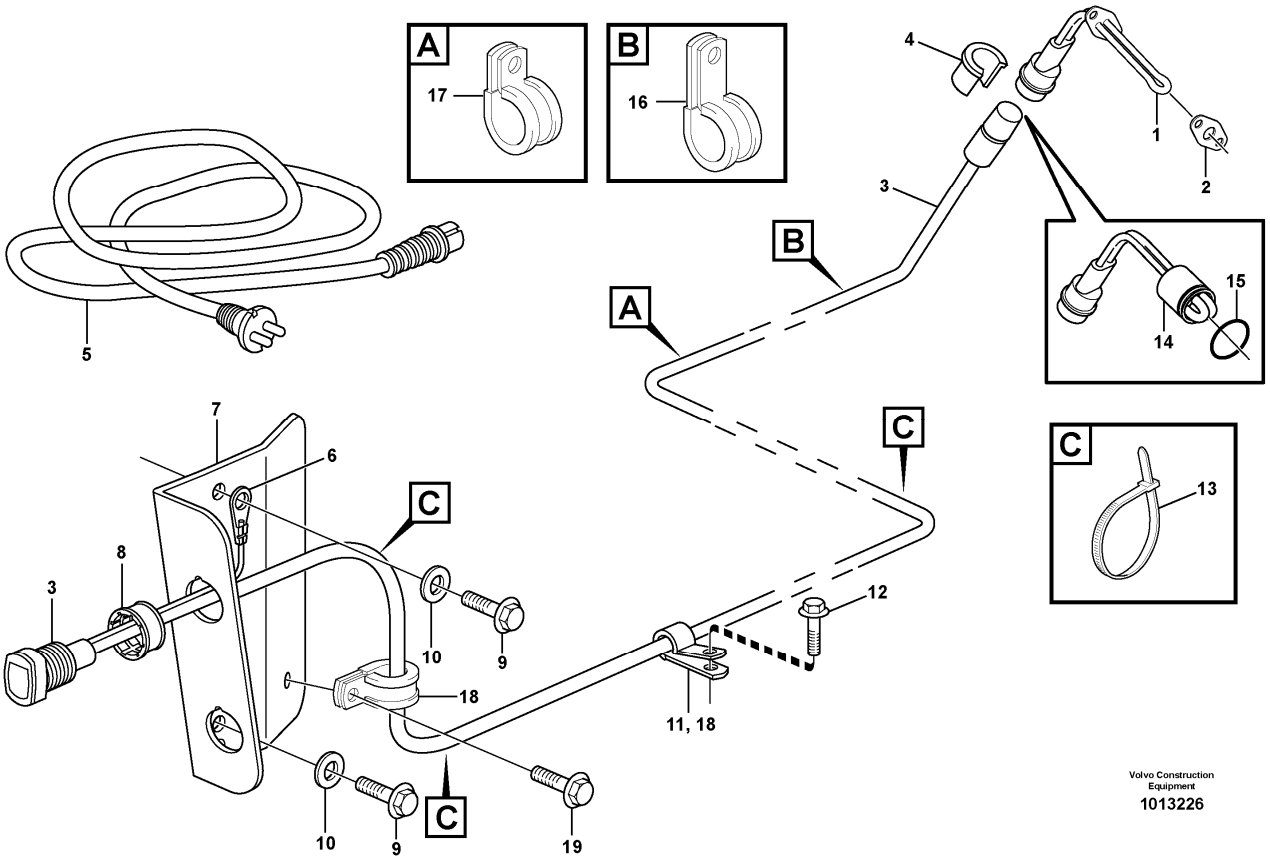

Section option	Kit	Option description
VOE82394	VOE11988218	Engine block heater 220v
VOE82981	VOE11713057	Engine block heater 220v

Q1-Q5	Option	Option description	
Q1 82394	VOE82394	Engine block heater 220v	
Q2 82981	VOE82981	Engine block heater 220v	

Pos	Part	Q1	Q2	Q3	Q4	Q5	PS	Kit	Description	Option(s)	Remark
	VOE11988218	1					SS		Engine Heater		
	VOE11713057		1						Engine heater		
1	VOE11170092	1					SS		•Heater		230V/750W
2	VOE11099238	1							•Gasket		
3	VOE11152167	1							•Cable		L = 2000 MM

3	VOE11152168		1						•Cable		
4	VOE11004943	1	1						•Locking device		
5	VOE3986351	1	1						•Cable		
6	VOE970791	1	1						•Cable terminal		
7	VOE11152160	1	1						•Attachment		
8	VOE11115555	1	1						•Sleeve		
9	VOE946440	2	2						•Flange screw		
10	VOE11117464	2	2						•Plain washer		(VOE13960141)
11	VOE980614	4							•Clamp		14.3 MM
12	VOE946440	3							•Flange screw		
13	VOE4881440	3	6						•Cable tie		
14	VOE11411079		1						•Engine heater		
15	VOE13969220		1						•O-ring		
16	VOE13977600		1						•Clamp		
17	VOE943717		1						•Clamp		
18	VOE980614		1						•Clamp		
19	VOE946440		1						•Flange screw		

VOLVO

Construction Equipment

PROSIS Part Information

Date:	Image id:	Catalogue:	Model:
10/09/2018	**1013218**	**20009**	**L60E**
Brand:	Serial:	Group/Section:	Title:
Volvo	**1001-3355, 60001-61214, 70001-70530**	**269/250**	**Engine heater**

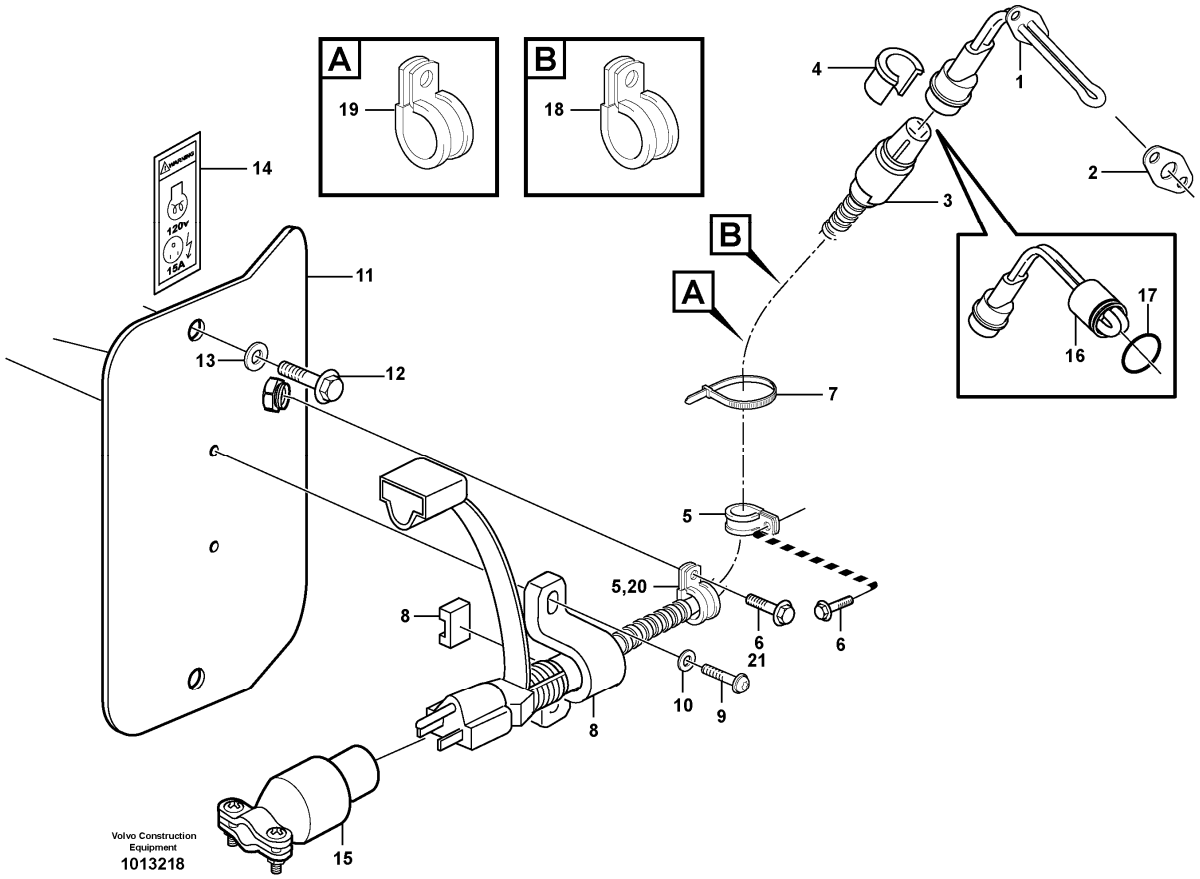

Section option	Kit	Option description
VOE82393	VOE11988661	Engine block heater 120 V USA
VOE83017	VOE11713825	Engine block heater 120 V USA

Q1-Q5	Option	Option description	
Q1 82393	VOE82393	Engine block heater 120 V USA	
Q2 83017	VOE83017	Engine block heater 120 V USA	

Pos	Part	Q1	Q2	Q3	Q4	Q5	PS	Kit	Description	Option(s)	Remark
	VOE11988661	1					SS		Engine heater		KIT USA
	VOE11713825		1						Engine heater kit		KIT USA
1	VOE11170082	1							•Heater		120V/700W
2	VOE11099238	1							•Gasket		
3	VOE11170099	1							•Cable		L = 2000 MM

3	VOE11411155		1						•Cable		L=2500 MM
4	VOE11004943	1	1						•Locking device		
5	VOE980614	4							•Clamp		
6	VOE946440	3							•Flange screw		
7	VOE4881440	1	6						•Cable tie		
8	VOE11170100	1	1						•Attaching brace		
9	VOE969405	2	2						•Six point socket screw		
10	VOE13940090	2	2						•Washer		
11	VOE11413583	1	1						•Attachment		
12	VOE946440	2	2						•Flange screw		
13	VOE11117464	2	2						•Plain washer		(VOE13960141)
14	VOE11302220	1	1				SS		•Decal		
15	VOE11046803	1	1						•Receptacle housing		
16	VOE11411120		1						•Engine heater		120 V / 550 V
17	VOE13969220		1						••O-ring		
18	VOE13977600		1						•Clamp		(VOE977600)
19	VOE943717		1						•Clamp		
20	VOE980614		1						•Clamp		
21	VOE946440		1						•Flange screw		

VOLVO

Construction Equipment

PROSIS Part Information

Date:	Image id:	Catalogue:	Model:
10/09/2018	**1015646**	**20009**	**L60E**
Brand:	Serial:	Group/Section:	Title:
Volvo	**1001-3355, 60001-61214, 70001-70530**	**271/100**	**Accelerator pedal STD, OPEN ROPS**

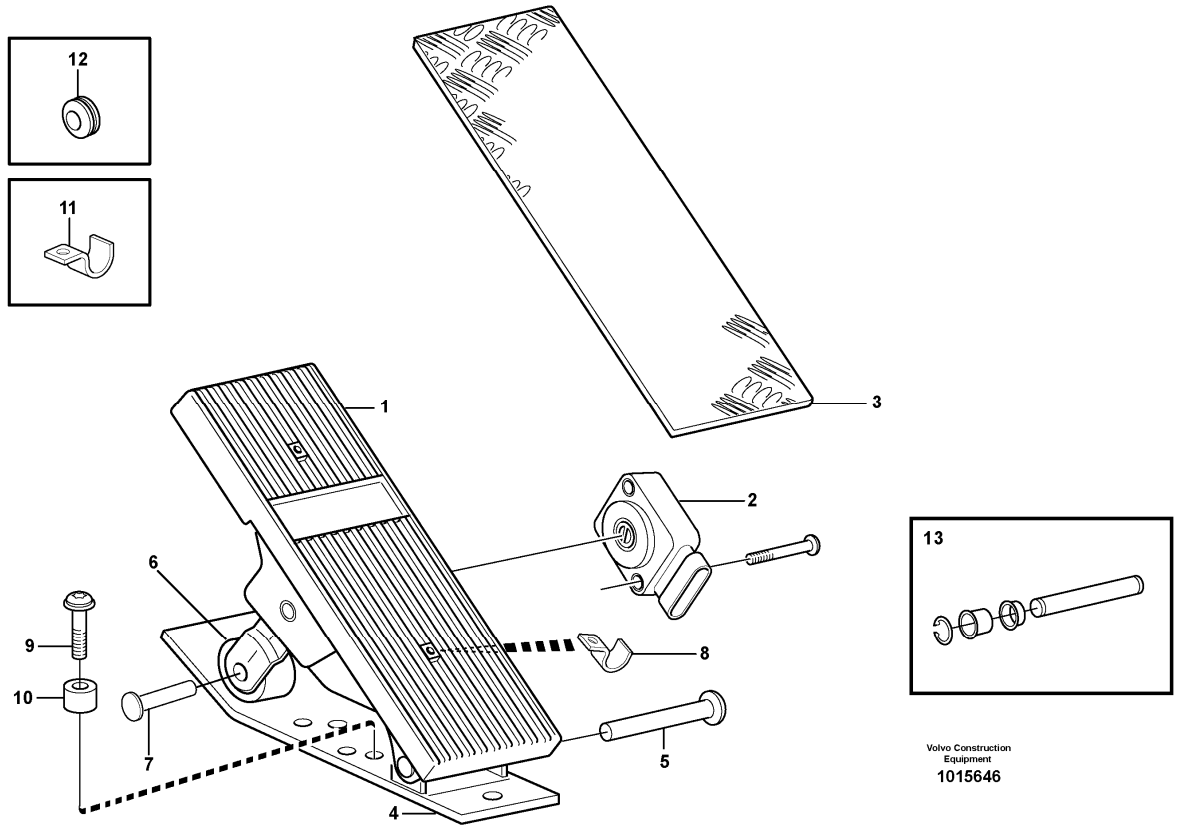

Section option	Kit	Option description
VOE33755		Cab
VOE33756		Cab L60E USA
VOE33760		Cab. Open Rops

Q1-Q5	Option	Option description	
Q1 11170086			
Q2 11170224			
Q3 15038374			

Pos	Part	Q1	Q2	Q3	Q4	Q5	PS	Kit	Description	Option(s)	Remark
1	VOE11170086	1					SS		Accelerator pedal		
1	VOE11170224		1				SS		Accelerator pedal		
1	VOE15038374			1					Accelerator pedal		

2	VOE15038313	1	1						•Sensor		(VOE11708270)SE214, SEE SB WLO 17
2	VOE15038313			1					•Sensor		
3	VOE11708268	1	1	1					•Pedal rubber		
4	VOE11170224	1					SS		•Accelerator pedal		(VOE11709583)
5	VOE11708267	1					SS		•Pin		
6	VOE11708271	1	1	1					•Roller kit		SE 214
7	VOE11709584	1							•Screw		
8	VOE11709585	1							•Clamp		
9	VOE13945444	2	2	2					Screw		
10	VOE930428	2	2	2					Spacer ring		
11	VOE951191	1	1	1					Clamp		
12	VOE13961965	1	1						Protecting plug		
13	VOE11714172	1	1	1					Kit		

VOLVO

Construction Equipment

PROSIS Part Information

Date:	Image id:	Catalogue:	Model:
10/09/2018	**EL188**	**20009**	**L60E**
Brand:	Serial:	Group/Section:	Title:
Volvo	**1001-3355, 60001-61214, 70001-70530**	**272/100**	**Hand throttle control 80520**

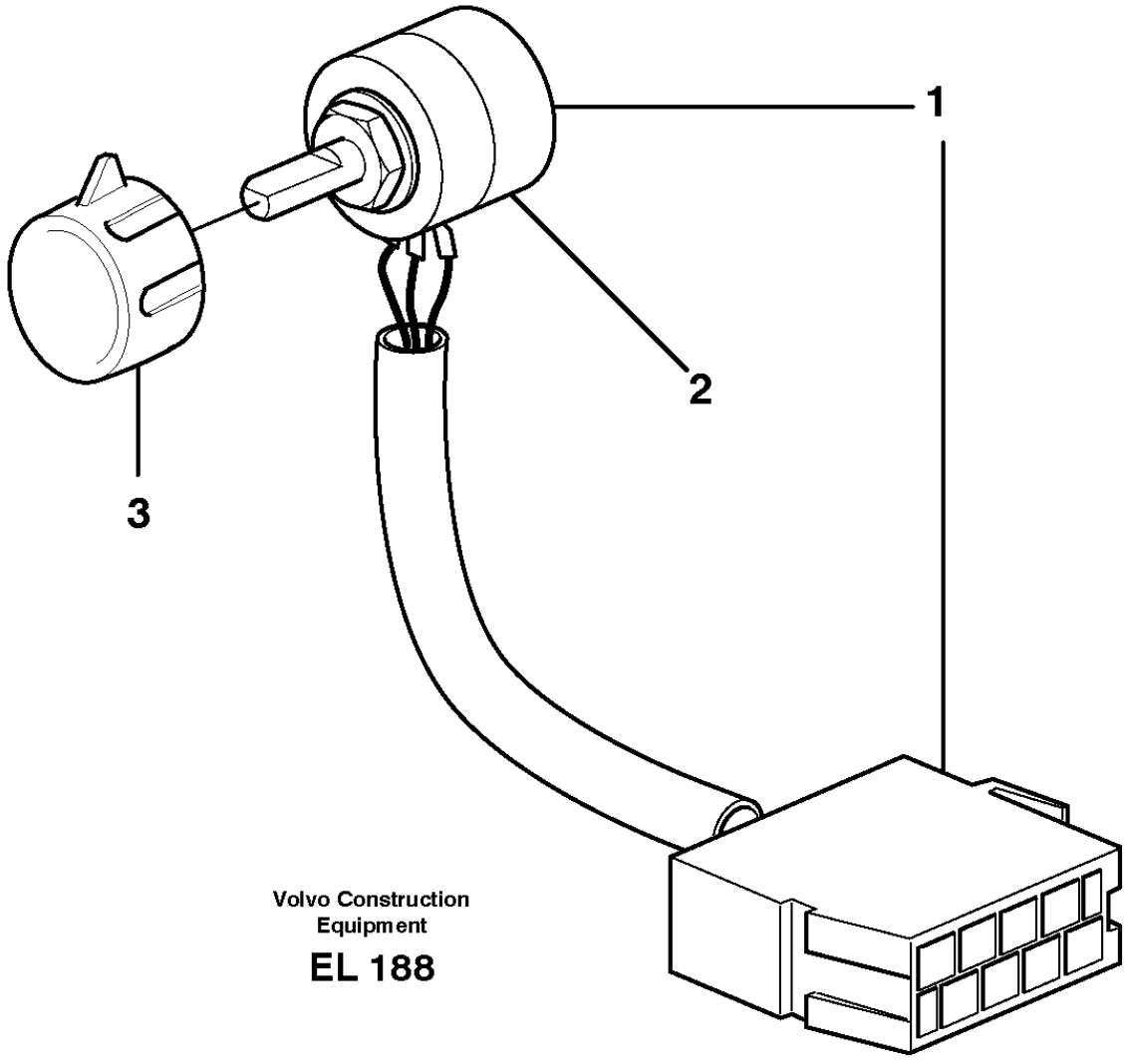

Section option	Kit	Option description
VOE80520	VOE11709506	Hand throttle lockable

Pos	Part	Q1	Q2	Q3	Q4	Q5	PS	Kit	Description	Option(s)	Remark
1	VOE11039727	1							Hand Throt Cont		
2	VOE11709506	1							•Throttle control kit		(VOE11039850)
3	VOE11039800	1							Knob		

VOLVO

Construction Equipment

PROSIS Part Information

Date:	Image id:	Catalogue:	Model:
10/09/2018	**1008919**	**20009**	**L60E**
Brand:	Serial:	Group/Section:	Title:
Volvo	**1001-3355, 60001-61214, 70001-70530**	**313/100**	**Battery box with fitting parts STD, OPEN ROPS**

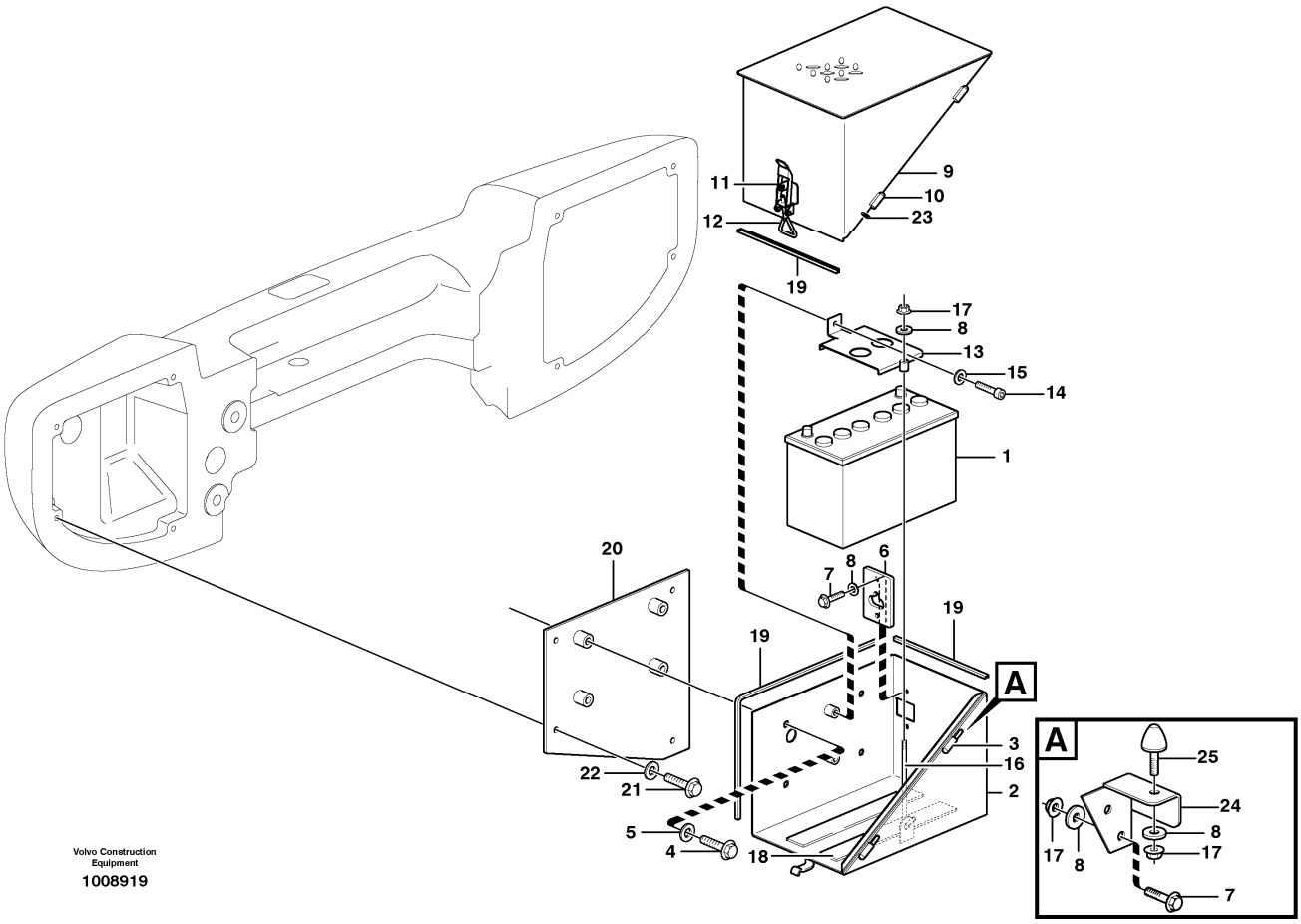

Section option	Kit	Option description
VOE33750		Wheel Loader
VOE33759		Wheel loader L60E OPEN ROPS

Q1-Q5	Option	Option description	
Q1 RH			
Q2 LH			

Pos	Part	Q1	Q2	Q3	Q4	Q5	PS	Kit	Description	Option(s)	Remark
1	VOE20393421	1	1						Battery	VOE33750, VOE33759, VOE82151	
	VOE15638618	1	1						Battery	VOE82562	(VOE11170096)
	VOE11301738	1	1				SS		Battery		82151
2	VOE11413804	1							Battery box		

	VOE11413805		1						Battery box		
3	VOE4936924	2	2						•Weld hinge		
4	VOE13965191	4	4						Screw		
5	VOE13960145	4	4						Washer		
6	VOE11175625	1	1						Rubber cloth		
7	VOE13946173	5	5						Screw		
8	VOE11117464	9	9						Plain washer		(VOE13960141)
9	VOE11413800	1							Battery cover		
	VOE11413801		1						Battery cover		
10	VOE4936925	2	2						•Weld hinge		
11	VOE11015641	1	1						•Eccentric lock		
12	VOE11015640	1	1						Eye bolt		
13	VOE11413008	1	1						Battery retainer		
14	VOE13946173	1	1						Screw		
15	VOE11117464	1	1						Plain washer		(VOE13960141)
16	VOE11024826	1	1						Bolt		
17	VOE948645	4	4						Flange lock nut		
18		2	2				NS		Base		
19	VOE4786044	REQ	REQ						Sealing strip		L = 2600
20	VOE11413810	1							Adapter		
	VOE11413811		1						Adapter		
21	VOE13965186	4	4						Screw		
22	VOE13960145	4	4						Washer		
23	VOE4936344	2	2						Washer		
24	VOE11413741	1							Stop		
	VOE11413757		1						Stop		
25	VOE4881758	1	1						Rubber stop		

VOLVO

Construction Equipment

PROSIS Part Information

Date:	Image id:	Catalogue:	Model:
10/09/2018	**1008313**	**20009**	**L60E**
Brand:	Serial:	Group/Section:	Title:
Volvo	**1001-3355, 60001-61214, 70001-70530**	**321/100**	**Alternator with assembling details**

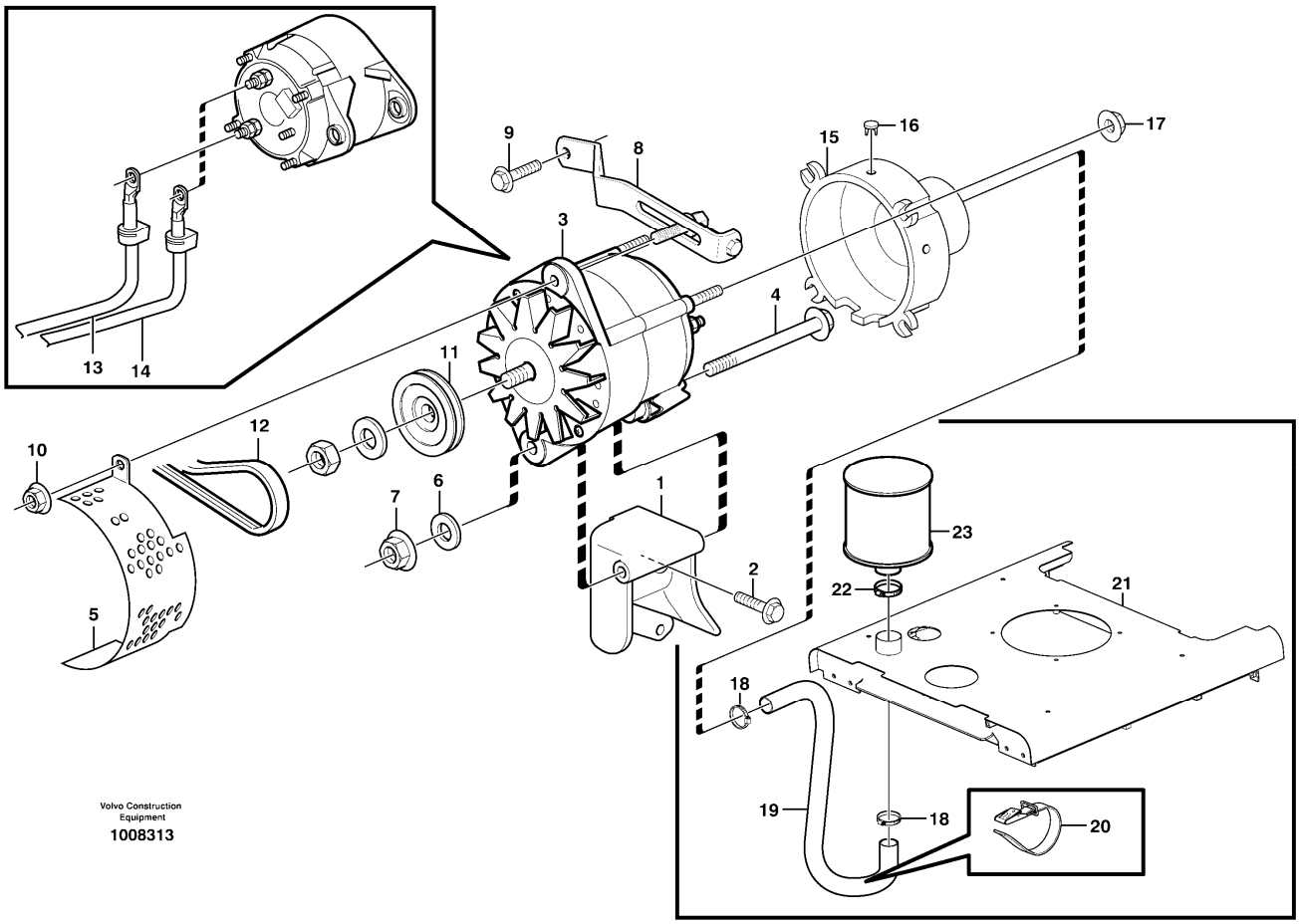

Section option	Kit	Option description
VOE33750		Wheel Loader
VOE33759		Wheel loader L60E OPEN ROPS
VOE82546		Air filter for alternator
VOE83049		Alternator

Q1-Q5	Option	Option description	
Q1 STD OPEN ROPS			
Q2 82546 83049	VOE82546	Air filter for alternator	

Pos	Part	Q1	Q2	Q3	Q4	Q5	PS	Kit	Description	Option(s)	Remark
1	VOE11173300	1							Alternator anchorage		

2	VOE13965181	1							Screw		
3		1							Alternator		55A, S/N - 2260 See ref 321/150
	VOE11170134	1					SS		Alternator		80A, S/N 2261 - 2812, REMAN VOE9011170321, VOE9011170134
	VOE20523391	1							•Charge regulator		S/N 2261 - 2812
	VOE11170321	1							Alternator		80A S/N 2813 -, REMAN VOE9017204355, VOE9011170321
			1						Alternator		83049 80A See ref 321/200
4	VOE970988	1							Hexagon screw		(VOE13970988)
5	VOE11170091	1							Belt protector		
6	VOE13960145	1							Washer		
7	VOE971099	1							Flange lock nut		(VOE13971099)
8	VOE11170042	1							Tensioner		
	VOE977820	1							•Hexagon screw		
	VOE1675830	1							•Flange screw		
9	VOE13946173	1							Screw		
10	VOE13971098	1							Flange nut		
11	VOE11170026		1						Pulley		83049 S/N-2260
	VOE11170105	1							Pulley		S/N 2261 -
12	VOE978710	1							V-belt		
13			1						Wire Assembly		83049 S/N-2260 See ref 371/200
		1							Wire Assembly		S/N 2261 - See ref 371/225
14		1	1						Wire Assembly	VOE83049	S/N - 2260 See ref 371/200
		1	1						Wire Assembly		S/N 2261- See ref 371/225
15	VOE9957941		1						Cover		
16	VOE948665		3						Plug		
17	VOE13965483		4						Nut		
18	VOE943480		2						Hose clamp		
19	VOE9518555		REQ						Hose		L = 1750 MM
20	VOE11104606		3						Retaining strap		
21			1						Top Plate		See ref 821/100
22	VOE14346256		1						Hose clamp		
23	VOE11033214		1						Air filter		

VOLVO

Construction Equipment

PROSIS Part Information

Date:	Image id:	Catalogue:	Model:
10/09/2018	**1011455**	**20009**	**L60E**
Brand:	Serial:	Group/Section:	Title:
Volvo	**1001-3355, 60001-61214, 70001-70530**	**321/150**	**Alternator, 55A S/N - 2260, STD, OPEN ROPS**

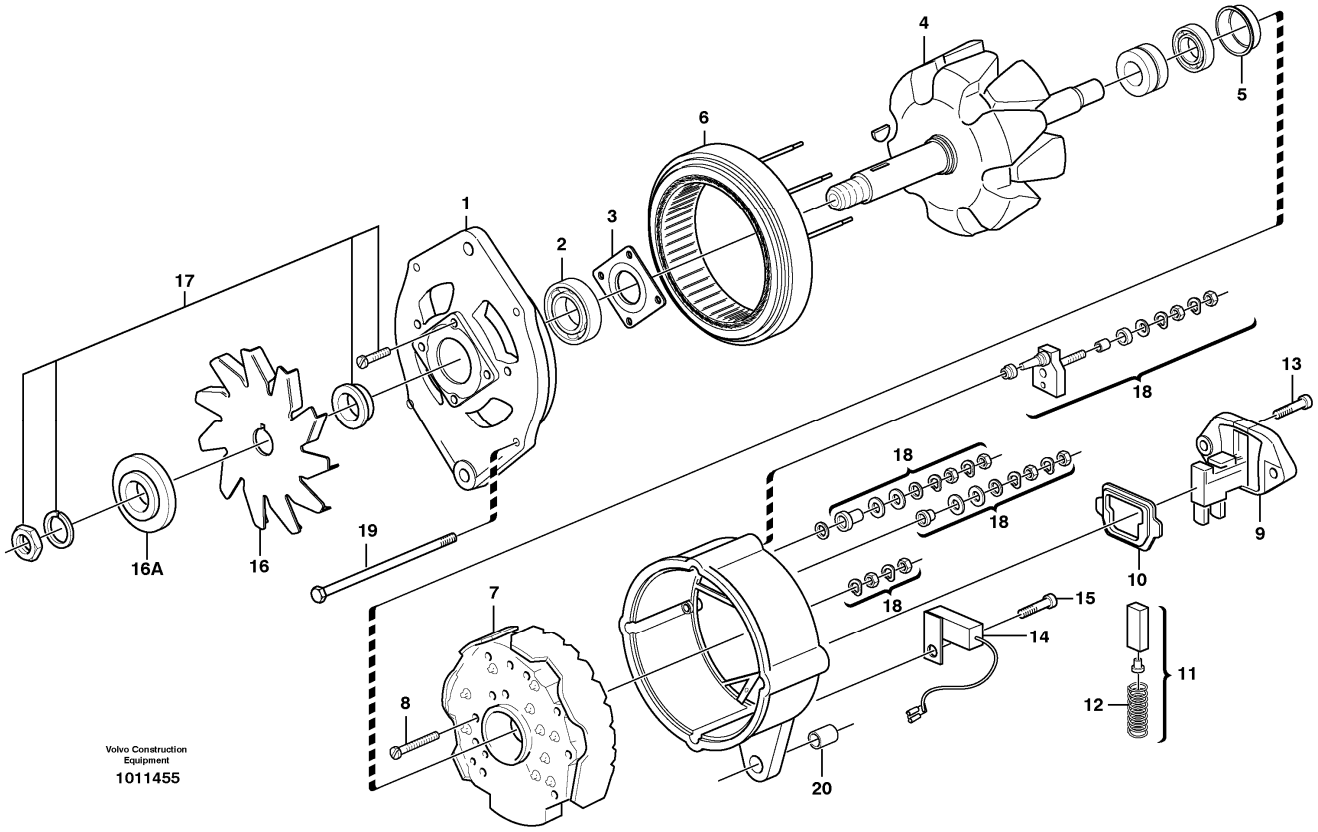

Section option	Kit	Option description
VOE33750		Wheel Loader
VOE33759		Wheel loader L60E OPEN ROPS

Pos	Part	Q1	Q2	Q3	Q4	Q5	PS	Kit	Description	Option(s)	Remark
	VOE11170011	1							Alternator		REMAN VOE9011170011, VOE9009521761
1		1					NS		•Bearing shield		
2	VOE3091567	1							•Ball bearing		
3	VOE3091568	1							•Retainer		
4		1					NS		•Rotor		
5	VOE1698183	1							•Bushing		
6	VOE1697032	1							•Stator		
7	VOE3090431	1							•Rectifier		
8	VOE1698188	2							•Screw		
9	VOE1625880	1							•Regulator		

10	VOE3090261	1							••Gasket		
11	VOE1362710	1							••Carbon Brush Set		
12	VOE1323485	2							•••Spring		
13	VOE3523050	2							•Screw		
14	VOE244347	1							•Capacitor		
15	VOE1697033	1							•Screw		
16	VOE1613241	1							•Fan wheel		
16A	VOE3987785	1							•Washer		(VOE11713024)
17	VOE11000286	1							•Small parts kit		
18	VOE244611	1							•Small parts kit		
19	VOE11708889	4							•Screw		
20	VOE85100100	1					OP		•Bushing		

VOLVO

Construction Equipment

PROSIS Part Information

Date:	Image id:	Catalogue:	Model:
10/09/2018	**EL163**	**20009**	**L60E**
Brand:	Serial:	Group/Section:	Title:
Volvo	**1001-3355, 60001-61214, 70001-70530**	**321/200**	**Alternator, 80A. 80317**

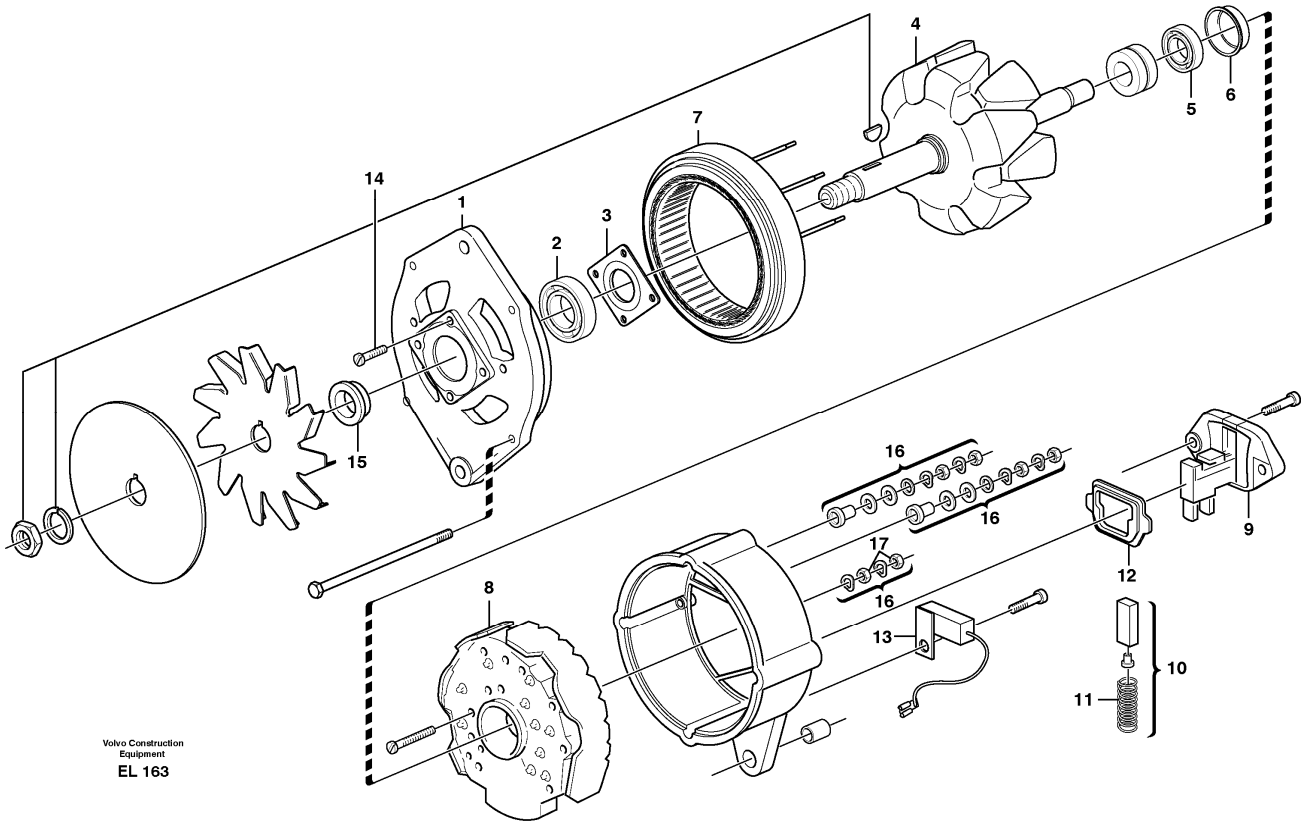

Section option	Kit	Option description
VOE80317		Alternator 80A

Pos	Part	Q1	Q2	Q3	Q4	Q5	PS	Kit	Description	Option(s)	Remark
	VOE15067533	1							Alternator		(VOE9521761), REMAN VOE9009521761, VOE9015067533
1		1					NS		•Bearing shield		
2	VOE3091567	1							•Ball bearing		
3	VOE3091568	1							•Retainer		
4	VOE3091569	1							•Rotor		
5	VOE85100098	1							•Ball Bearing		
6	VOE1698183	1							•Bushing		
7	VOE3090432	1							•Stator		
8	VOE3090431	1							•Rectifier		
9	VOE1625880	1							•Regulator		
10	VOE1362710	1							••Carbon Brush Set		

11	VOE1323485	2							••Spring		
12	VOE3090261	1							••Gasket		
13	VOE244347	1							•Capacitor		
14		1					NS		•Small parts kit		
15	VOE3090426	1							•Bushing		
16	VOE244611	1							•Small parts kit		
17	VOE940197	2							•Hexagon nut		

VOLVO

Construction Equipment

PROSIS Part Information

Date:	Image id:	Catalogue:	Model:
10/09/2018	**1009288**	**20009**	**L60E**
Brand:	Serial:	Group/Section:	Title:
Volvo	**1001-3355, 60001-61214, 70001-70530**	**331/100**	**Starter motor with assembling details E PROD**

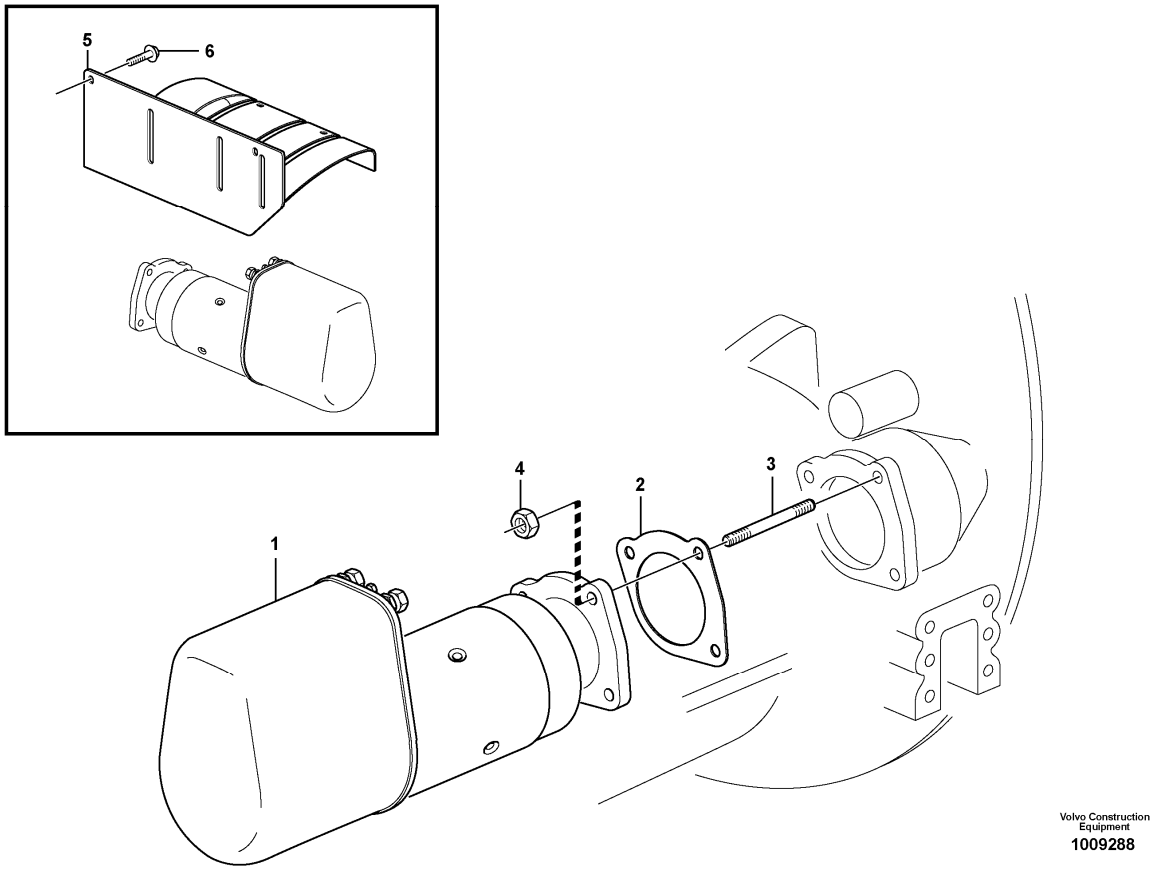

Section option	Kit	Option description
VOE11172410		Engine VOLVO D6D LCE2

Pos	Part	Q1	Q2	Q3	Q4	Q5	PS	Kit	Description	Option(s)	Remark
1		1							Starter motor		See ref 331/150
2	VOE20459065	1							Sealing ring		
3	VOE20459063	3							Stud		(VOE20509407)
4	VOE971071	3							Hexagon nut		
5	VOE20714251	1							Guard Plate		
6	VOE20405898	2							Screw		

VOLVO

Construction Equipment

PROSIS Part Information

Date:	Image id:	Catalogue:	Model:
10/09/2018	**1001297**	**20009**	**L60E**
Brand:	Serial:	Group/Section:	Title:
Volvo	**1001-3355, 60001-61214, 70001-70530**	**331/150**	**Starter motor E PROD**

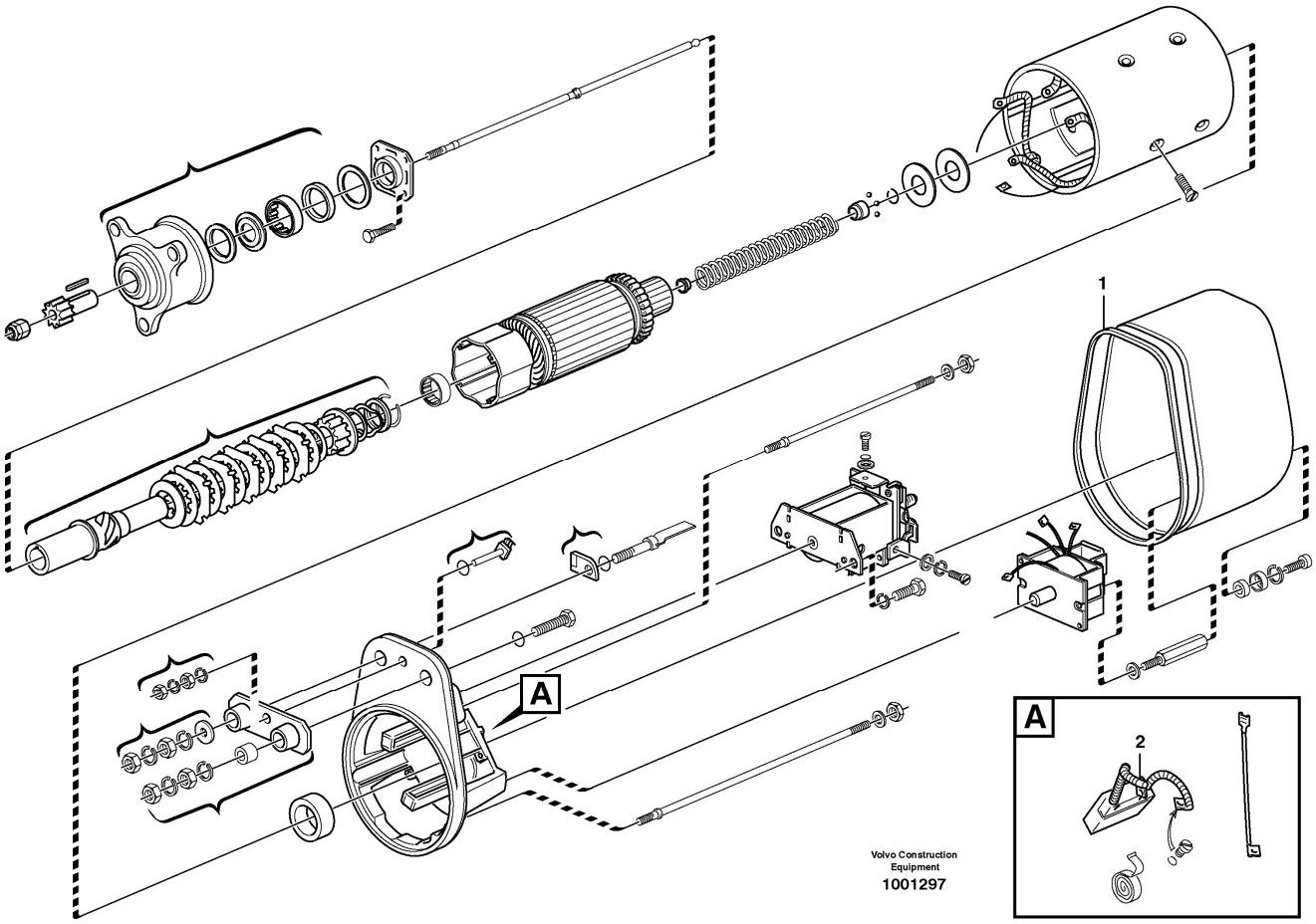

Section option	Kit	Option description
VOE11172410		Engine VOLVO D6D LCE2

Pos	Part	Q1	Q2	Q3	Q4	Q5	PS	Kit	Description	Option(s)	Remark
	VOE20459062	1							Starter motor		REMAN VOE9020459062, VOE9015424353
1	VOE20464779	1							•Sealing ring		
2	VOE20777598	1							•Carbon Brush		(VOE20464778)

VOLVO

Construction Equipment

PROSIS Part Information

Date:	Image id:	Catalogue:	Model:
10/09/2018	**1023999**	**20009**	**L60E**
Brand:	Serial:	Group/Section:	Title:
Volvo	**1001-3355, 60001-61214, 70001-70530**	**331/200**	**Starter motor with assembling details L PROD**

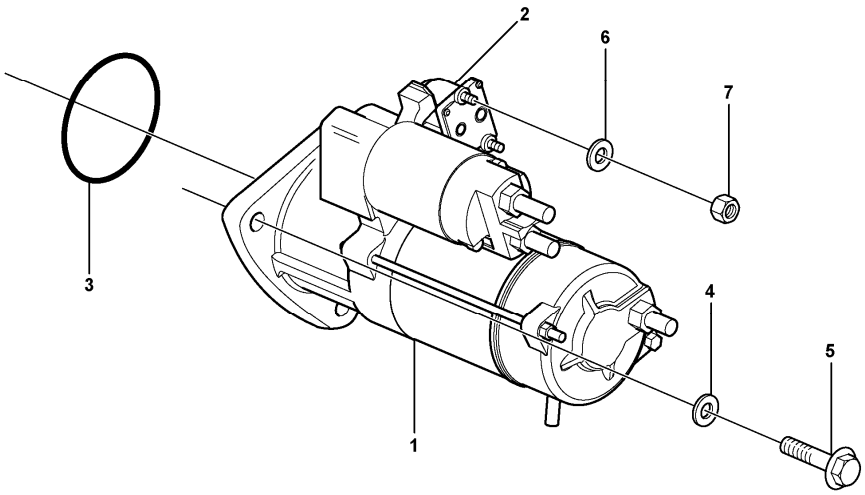

Volvo Construction Equipment
1023999

Section option	Kit	Option description
VOE11172410		Engine VOLVO D6D LCE2

Pos	Part	Q1	Q2	Q3	Q4	Q5	PS	Kit	Description	Option(s)	Remark
1	VOE21314102	1							Starter motor		(VOE20900793), REMAN VOE9021314102, VOE9020900793
2	VOE20796066	1							•Relay		
3	VOE20981752	1							•O-ring		
4	VOE973495	3							Washer		
5	VOE20593357	3							Flange screw		
6	VOE13940090	2							Washer		
7	VOE20459037	2							Nut		

VOLVO

Construction Equipment

PROSIS Part Information

Date:	Image id:	Catalogue:	Model:
10/09/2018	**1020082**	**20009**	**L60E**
Brand:	Serial:	Group/Section:	Title:
Volvo	**1001-3355, 60001-61214, 70001-70530**	**333/100**	**Pre-heater with fitting parts STD, OPEN ROPS**

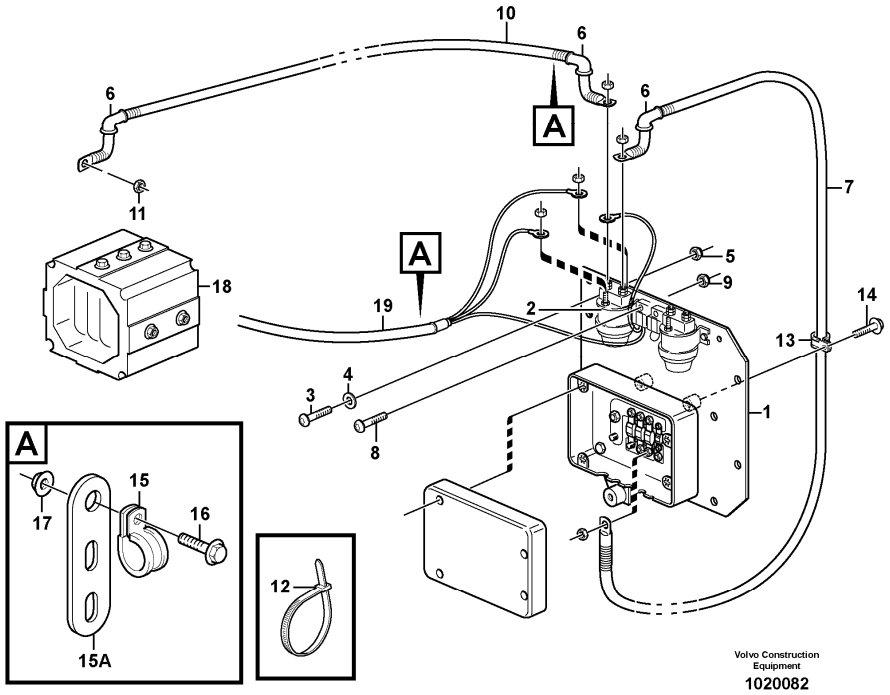

Section option	Kit	Option description
VOE33750		Wheel Loader
VOE33759		Wheel loader L60E OPEN ROPS

Pos	Part	Q1	Q2	Q3	Q4	Q5	PS	Kit	Description	Option(s)	Remark
1		1							Plate		See ref 371/100
2	VOE20367490	1							Relay		RE2501
3	VOE969407	2							Six point socket screw		
4	VOE13960138	2							Washer		
5	VOE949874	2							Flange lock nut		(VOE13949874)
6	VOE241308	3							Protecting cap		
7	VOE11170527	1							Wire		See footnote 1245)
8	VOE969407	1							Six point socket screw		

9	VOE949874	1							Flange lock nut		(VOE13949874)
10	VOE11170733	1							Wire		See footnote 1245)
11	VOE7017624	1							Hexagon nut		
12	VOE4881440	2							Cable tie		
13	VOE980614	1							Clamp		
14	VOE13946173	1							Screw		
15	VOE13949746	2							Clamp		
15A	VOE13965540	1							Bracket		
16	VOE13946173	2							Screw		
17	VOE948645	2							Flange lock nut		
18		1							Heater		See ref 251/100
19		1							Cable harness		See ref 371/250

1245) Including parts: Wire assembly, hose, manifold, cable terminal and insulator See Group 379.

VOLVO

Construction Equipment

PROSIS Part Information

Date:	Image id:	Catalogue:	Model:
10/09/2018	**1022102**	**20009**	**L60E**
Brand:	Serial:	Group/Section:	Title:
Volvo	**1001-3355, 60001-61214, 70001-70530**	**333/200**	**Pre-heater with fitting parts**

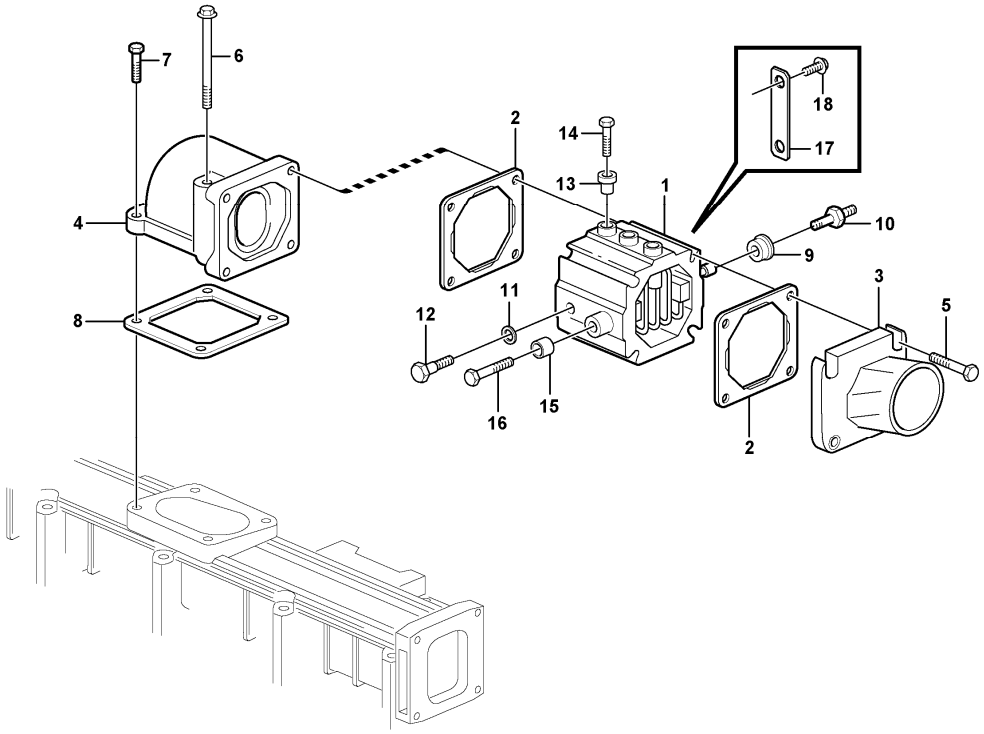

Pos	Part	Q1	Q2	Q3	Q4	Q5	PS	Kit	Description	Option(s)	Remark
1	VOE20498227	1					SS		Heater		ENG - 01047118
	VOE20758403	1							Heater		ENG 01047119 - Part 9-16 Included
2	VOE20531832	2							Gasket		
3	VOE21511601	1							Hose Nipple		(VOE20498528)
4	VOE20460126	1							Elbow		
5	VOE20460124	4							Screw		
6	VOE20460124	2							Screw		
7	VOE20405504	2							Screw		
8	VOE20565204	1							Gasket		
9	VOE20521558	3							Insulator		
10	VOE20572787	1							Connector		ENG - 01099408
10	VOE20726089	1							Connector		ENG 01099409 -

11	VOE20498524	1							Sealing ring		
12	VOE20498498	1							Connector		
13	VOE20550336	3							Insulator		
14	VOE20550356	3							Bolt		
15	VOE20758437	2							Insulator		
16	VOE13949578	2							Screw		
17	VOE20498532	1							Cable		
18	VOE20405898	2							Screw		

VOLVO

Construction Equipment

PROSIS Part Information

Date:	Image id:	Catalogue:	Model:
10/09/2018	**1004875**	**20009**	**L60E**
Brand:	Serial:	Group/Section:	Title:
Volvo	**1001-3355, 60001-61214, 70001-70530**	**352/100**	**Lighting, front**

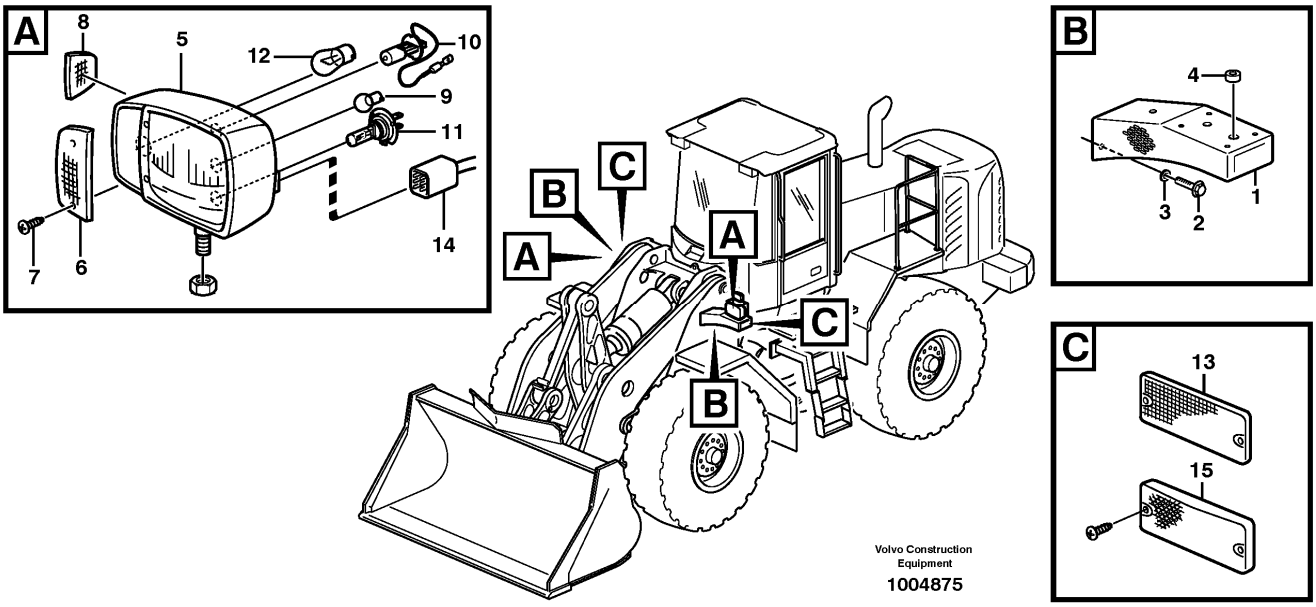

Section option	Kit	Option description
VOE33750		Wheel Loader
VOE33759		Wheel loader L60E OPEN ROPS
VOE82174		Side marker lamps
VOE82175		Asymmetrical headlights left hand drive

Q1-Q5	Option	Option description	
Q1 STD OPEN ROPS			
Q2 82175	VOE82175	Asymmetrical headlights left hand drive	
Q3 82174	VOE82174	Side marker lamps	

Pos	Part	Q1	Q2	Q3	Q4	Q5	PS	Kit	Description	Option(s)	Remark
1	VOE11400898	2					SS		Bracket		
2	VOE946329	8							Flange screw		
3	VOE13960143	8							Washer		
4	VOE941269	2							Plug		OD = 25 MM
5	VOE11170059	1							Headlamp		LH
	VOE11170060	1							Headlamp		RH
	VOE11170062		1						Headlamp		LH
	VOE11170063		1						Headlamp		RH
6	VOE11988200	2	2						•Lens		

7	VOE11988201	4	4						•Screw		
8	VOE11988202	2	2						•Lens		
9	VOE992518	2	2						•Bulb		(VOE967711)4 W
10	VOE992517	2	2						•Bulb		(VOE943903)70 W
11	VOE990037	2	2						•Bulb		(VOE982559)70 W
12	VOE992521	2	2						•Bulb		(VOE967708)21 W
13	VOE1578835	4							Reflector		
14		1							Cable harness		See ref 371/300
15	VOE11170068			2					Side marking lamp		

VOLVO

Construction Equipment

PROSIS Part Information

Date:	Image id:	Catalogue:	Model:
10/09/2018	**1002858**	**20009**	**L60E**
Brand:	Serial:	Group/Section:	Title:
Volvo	**1001-3355, 60001-61214, 70001-70530**	**352/150**	**Work lights, front.**

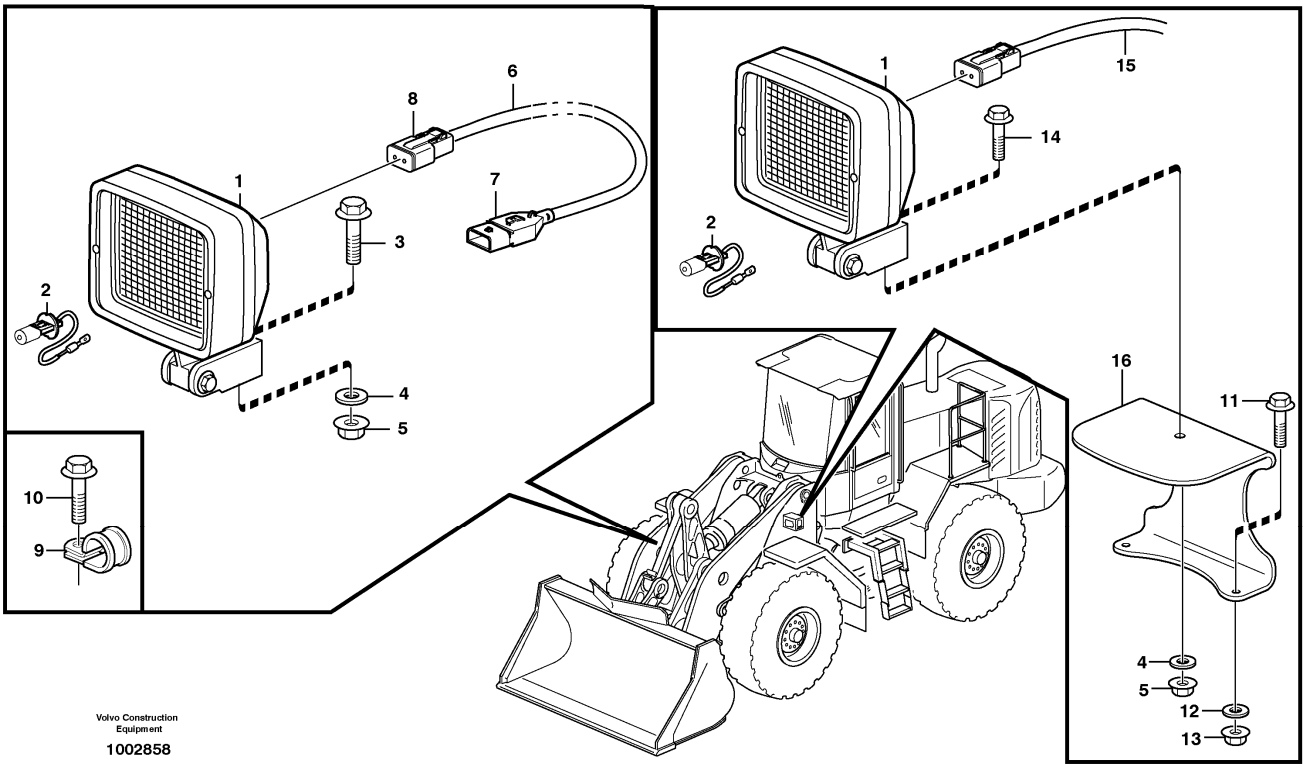

Section option	Kit	Option description
VOE33750		Wheel Loader
VOE82342	VOE11988279	Work lights front, extra
VOE80886	VOE11708782	Attachment lights

Q1-Q5	Option	Option description	
Q1 82342	VOE82342	Work lights front, extra	
Q2 80886	VOE80886	Attachment lights	
Q3 STD			

Pos	Part	Q1	Q2	Q3	Q4	Q5	PS	Kit	Description	Option(s)	Remark
1	VOE11170009	2	1						Work lamp		
2	VOE992517	2	1						•Bulb		(VOE943903)24V/70W
3	VOE946472		1						Flange screw		
4	VOE13960143	2	1						Washer		
5	VOE13971095	2	1						Flange nut		
6	VOE11170528		1						Cable harness		See footnote 1245)

7	VOE8143240		1						•Housing		
8	VOE14370760		1						•Socket		
9	VOE13949746		1						Clamp		
10	VOE13946173		1						Screw		
11	VOE13946173	4							Screw		
12	VOE11117464	4							Plain washer		(VOE13960141)
13	VOE13945408	4							Nut		
14	VOE946329	2							Flange screw		
15				1					Wire harness		See ref 371/300
16	VOE11400768	2					SS		Protecting plate		
	VOE11414308	2							Decal		

1245) Including parts: Wire assembly, hose, manifold, cable terminal and insulator See Group 379.

VOLVO

Construction Equipment

PROSIS Part Information

Date:	Image id:	Catalogue:	Model:
10/09/2018	**1010383**	**20009**	**L60E**
Brand:	Serial:	Group/Section:	Title:
Volvo	**1001-3355, 60001-61214, 70001-70530**	**352/200**	**Work lights, front.**

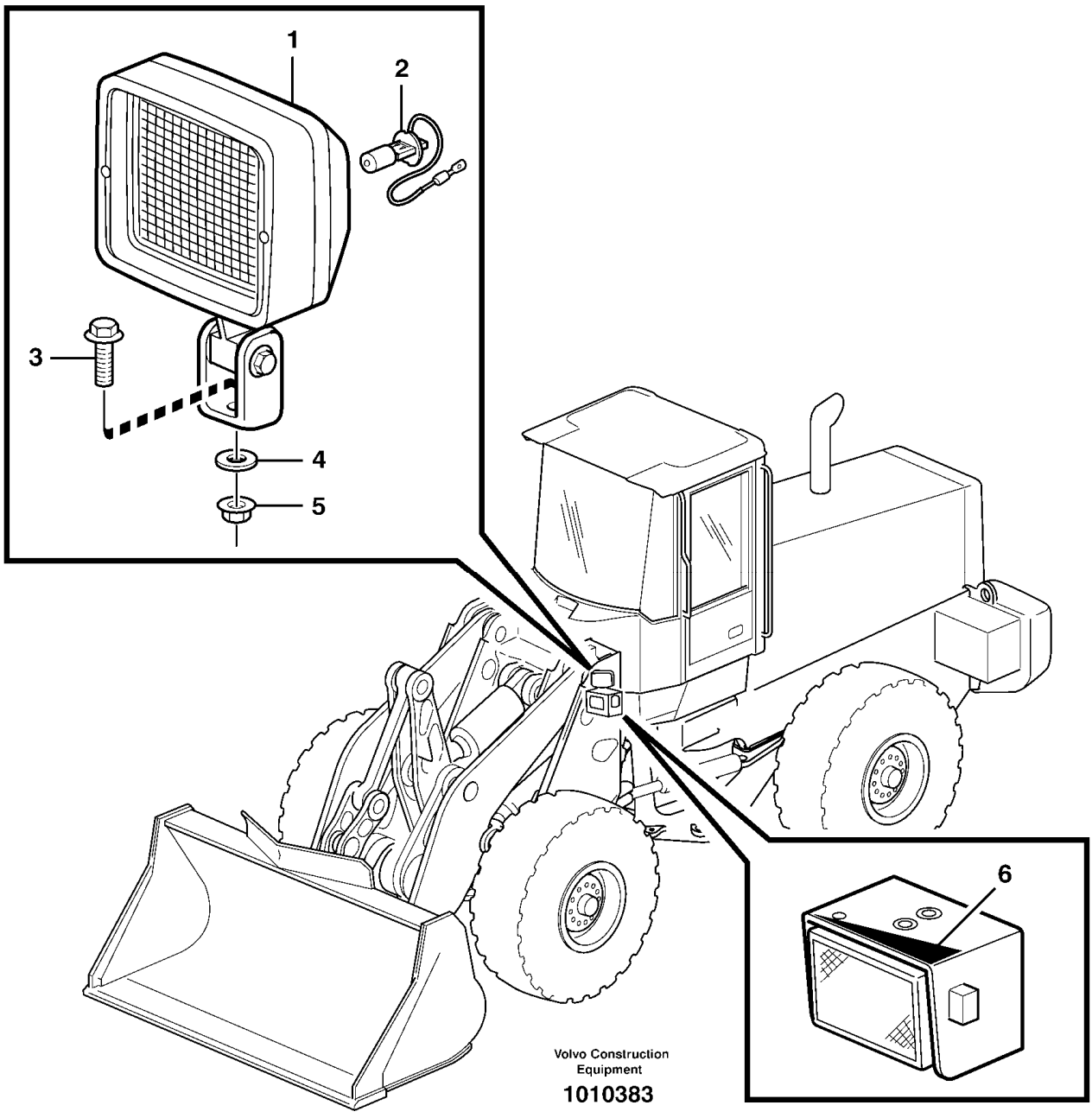

Pos	Part	Q1	Q2	Q3	Q4	Q5	PS	Kit	Description	Option(s)	Remark
1	VOE11170009	2							Work lamp		
2	VOE992517	2							•Bulb		(VOE943903)H3 24V/70W

3	VOE946441	2							Flange screw		
4	VOE13960143	2							Washer		
5	VOE13971098	2							Flange nut		
6	VOE11025735	2							Decal		

VOLVO

Construction Equipment

PROSIS Part Information

Date:	Image id:	Catalogue:	Model:
10/09/2018	**1015659**	**20009**	**L60E**
Brand:	Serial:	Group/Section:	Title:
Volvo	**1001-3355, 60001-61214, 70001-70530**	**352/250**	**Lighting, cab**

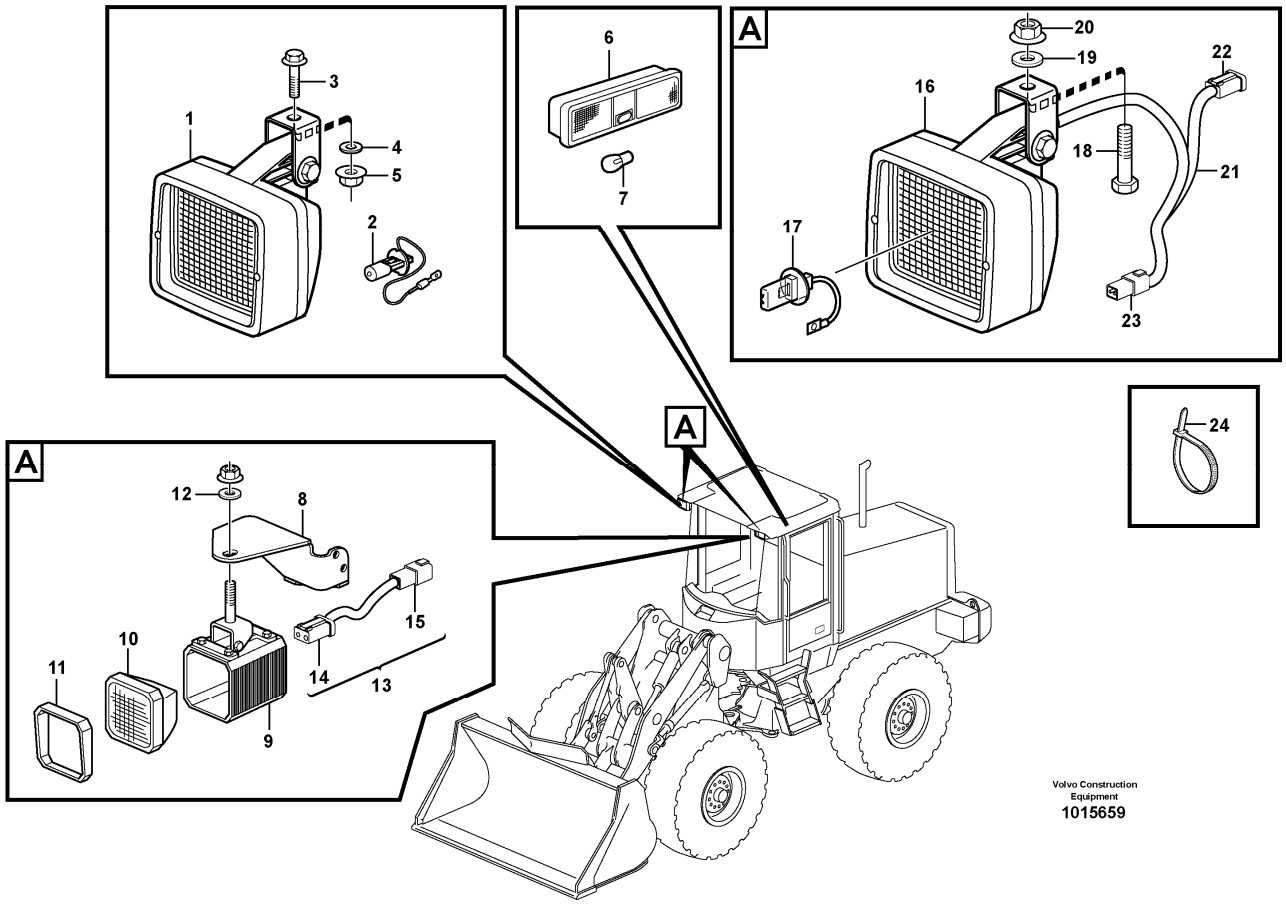

Section option	Kit	Option description
VOE33755		Cab
VOE33756		Cab L60E USA
VOE33760		Cab. Open Rops
VOE82344		Work lights front, cab, double
VOE82414		Discharge light, work lights front cab

Q1-Q5	Option	Option description	
Q1 33755	VOE33755	Cab	
Q2 82414	VOE82414	Discharge light, work lights front cab	
Q3 82344	VOE82344	Work lights front, cab, double	
Q4 33756 33760	VOE33756	Cab L60E USA	

Pos	Part	Q1	Q2	Q3	Q4	Q5	PS	Kit	Description	Option(s)	Remark

1	VOE11170010	2			2				Work lamp		
2	VOE992517	2			2				•Bulb		(VOE943903)24V/70W
3	VOE946329	2			2				Flange screw		
4	VOE13960143	2			2				Washer		
5	VOE13971095	2			2				Flange nut		
6	VOE20438083	1							Interior Lamp	VOE33756	
7	VOE992520	1							•Bulb	VOE33756	(VOE967710)24V/10W
	VOE992521	1							•Bulb	VOE33756	(VOE967708)24V/21W
8	VOE11164420		1						Bulb socket		LH
	VOE11164421		1						Bulb socket		RH
9	VOE11170061		2						Work Light		
10	VOE11988414		1				SS		•Insert		
11	VOE11988413		1						•Rim		
12	VOE13960145		2						Washer		
13	VOE11170854		2						Cable harness		
14	VOE14370760		1						•Socket		
15	VOE14370761		1						•Connector		
16	VOE11170010			2					Work lamp		
17	VOE992517			1					•Bulb		(VOE943903)
18	VOE946329			2					Flange screw		
19	VOE13960143			2					Washer		
20	VOE13971095			2					Flange nut		
21	VOE11170736			1					Cable harness		
22	VOE14370760			2					•Socket		
23	VOE14370761			1					•Connector		
24	VOE4881440				1				Cable tie		

VOLVO

Construction Equipment

PROSIS Part Information

Date:	Image id:	Catalogue:	Model:
10/09/2018	**1000842**	**20009**	**L60E**
Brand:	Serial:	Group/Section:	Title:
Volvo	**1001-3355, 60001-61214, 70001-70530**	**353/100**	**Lighting, rear STD, OPEN ROPS**

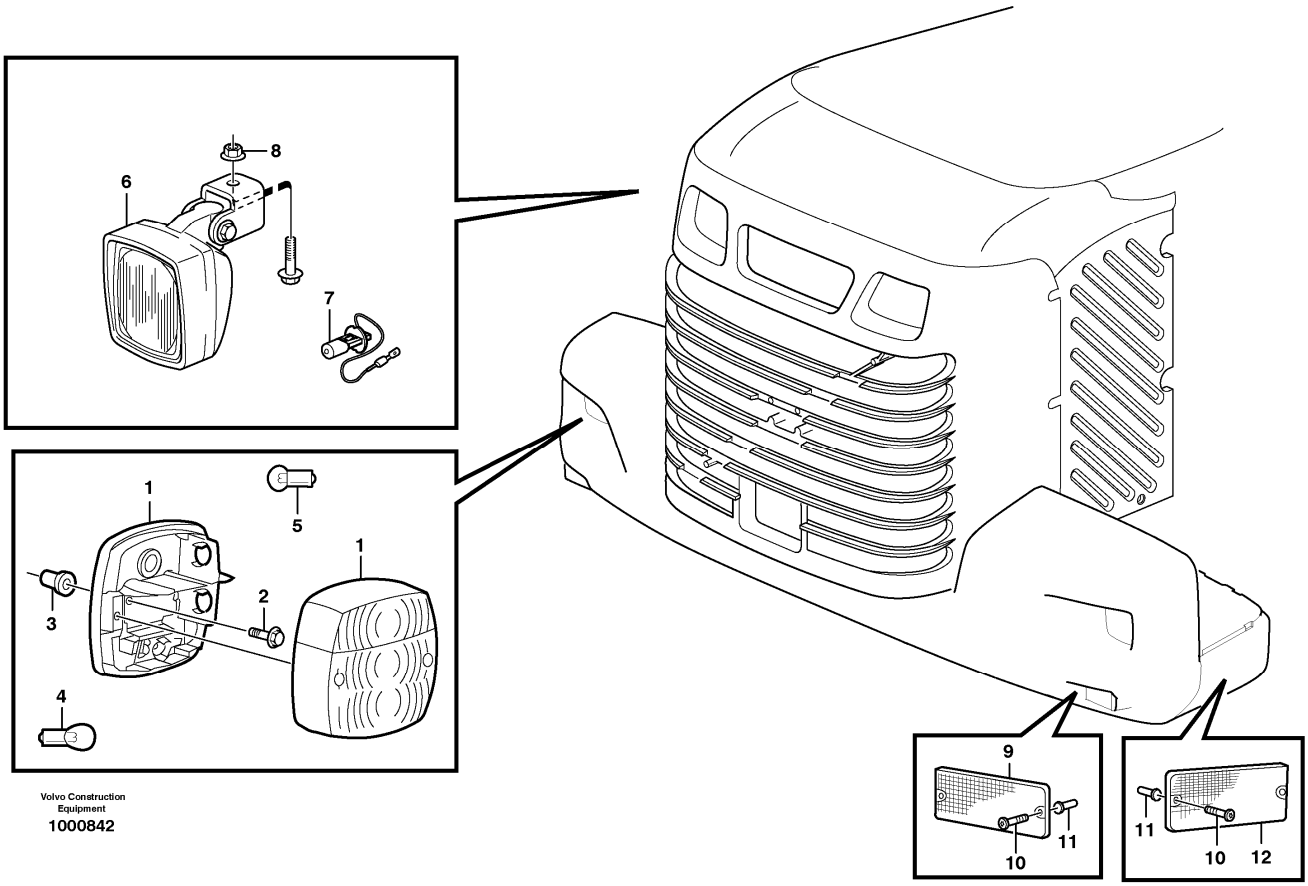

Section option	Kit	Option description
VOE33750		Wheel Loader
VOE33759		Wheel loader L60E OPEN ROPS

Pos	Part	Q1	Q2	Q3	Q4	Q5	PS	Kit	Description	Option(s)	Remark
1	VOE11039553	2							Tail lamp		
2	VOE969587	4							Six point socket screw		
3	VOE930761	4							Expanding nut		
4	VOE992521	4							Bulb		(VOE967708)21W
5	VOE992520	2							Bulb		(VOE967710)10W
6	VOE11039846	2							Work lamp		
7	VOE992517	2							•Bulb		(VOE943903)70W
8	VOE948645	2							Flange lock nut		
9	VOE11039276	4							Reflector		RED

10	VOE13969516	4							Six point socket screw		
11	VOE930757	4							Expanding nut		
12	VOE1578835	2							Reflector		YELL

VOLVO

Construction Equipment

PROSIS Part Information

Date:	Image id:	Catalogue:	Model:
10/09/2018	**1017380**	**20009**	**L60E**
Brand:	Serial:	Group/Section:	Title:
Volvo	**1001-3355, 60001-61214, 70001-70530**	**353/150**	**Work lights, rear.**

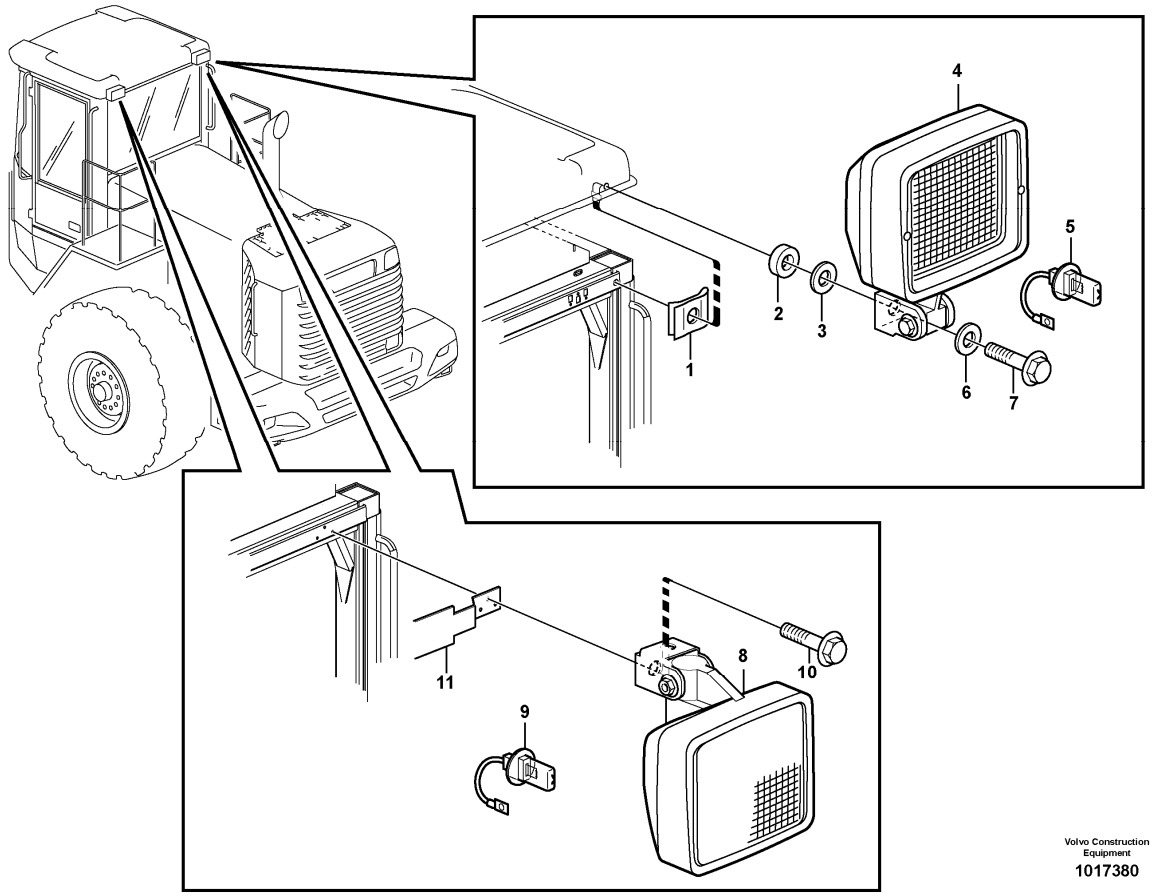

Section option	Kit	Option description
VOE33755		Cab
VOE33760		Cab. Open Rops
VOE80943	VOE11039846	Work lights, cab, rear, extra ORDER 2 PCS OF KIT NO 11170009
VOE83085		Air filter, cyclone USA

Q1-Q5	Option	Option description	
Q1 STD			
Q2 80943	VOE80943	Work lights, cab, rear, extra ORDER 2 PCS OF KIT NO 11170009	
Q3 OPEN ROPS			
Q4 83085	VOE83085	Air filter, cyclone USA	

Pos	Part	Q1	Q2	Q3	Q4	Q5	PS	Kit	Description	Option(s)	Remark
1	VOE13949867	2							Spring nut		

2	VOE930428	2							Spacer ring		
3	VOE11104399	2							Rubber washer		
4	VOE11039846		2						Work lamp		
5	VOE992517		2						•Bulb		(VOE943903)24V/70W
6	VOE11117464	2							Plain washer		(VOE13960141)
7	VOE13945444	2							Screw		
	VOE946440			2					Flange screw		
8	VOE11170010				2				Work lamp		
9	VOE992517				2				•Bulb		(VOE943903)
10	VOE946671				2				Flange screw		
11					1				Plate		See ref 872/170

VOLVO

Construction Equipment

PROSIS Part Information

Date:	Image id:	Catalogue:	Model:
10/09/2018	**1002901**	**20009**	**L60E**
Brand:	Serial:	Group/Section:	Title:
Volvo	**1001-3355, 60001-61214, 70001-70530**	**353/200**	**License plate lamp 80884,83039**

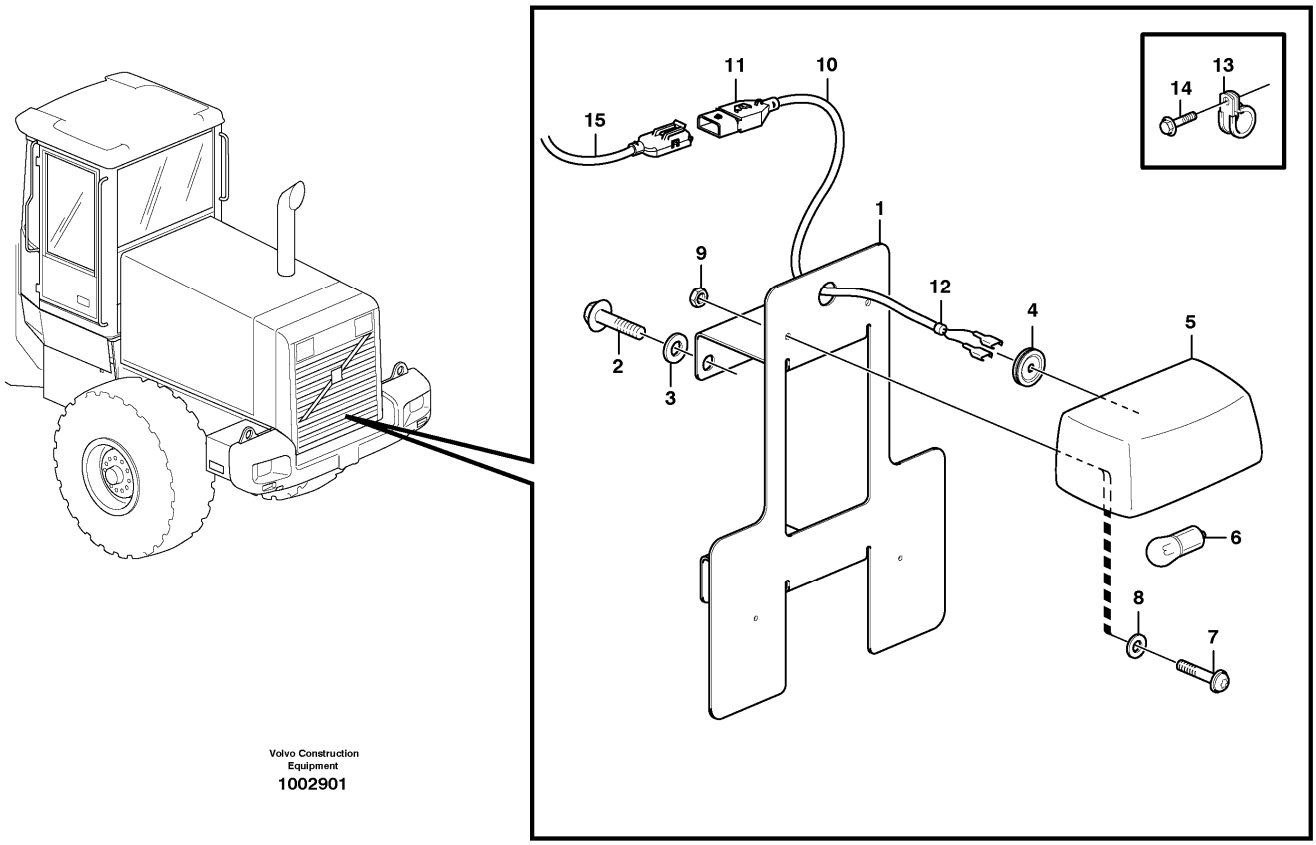

Section option	Kit	Option description
VOE80884		Light, licence plate
VOE83039		Light, license Plate (Italy only)

Q1-Q5	Option	Option description	
Q1 80884	VOE80884	Light, licence plate	
Q2 83039	VOE83039	Light, license Plate (Italy only)	

Pos	Part	Q1	Q2	Q3	Q4	Q5	PS	Kit	Description	Option(s)	Remark
1	VOE11400621	1	1						Number plate retainer		
2	VOE947107	3							Flange screw		
3	VOE11117464	2							Plain washer		(VOE13960141)
4	VOE941267	1	1						Plug		
5	VOE11147756	1	1						Sign lamp		
6	VOE992520	1	1						•Bulb		(VOE967710)

7	VOE13969516	2	2						Six point socket screw		
8	VOE960137	2	2						Washer		
9	VOE13963103	2	2						Lock nut		
10	VOE11170698	1	1						Cable harness		
									•CONNECTED TO:		
									••Cable harness		RE
									••Sign Lamp		LA307
11	VOE8143240	1	1						•Housing		
12	VOE11039397	1	1						•End sleeve		
13	VOE980614	2							Clamp		
14	VOE13946173	1							Screw		
15		1	1						Cable harness		
16	VOE13965179		3						Screw		
17	VOE11117464		3						Plain washer		(VOE13960141)
18	VOE930438		3						Spacer ring		
19	VOE11180880		1						Attaching plate		
20			1						Radiator Casing		
21	VOE947107		3						Flange screw		
22	VOE11117464		3						Plain washer		(VOE13960141)
23	4881440		3								

VOLVO

Construction Equipment

PROSIS Part Information

Date:	Image id:	Catalogue:	Model:
10/09/2018	**1001128**	**20009**	**L60E**
Brand:	Serial:	Group/Section:	Title:
Volvo	**1001-3355, 60001-61214, 70001-70530**	**362/100**	**Back-up warning unit 80883**

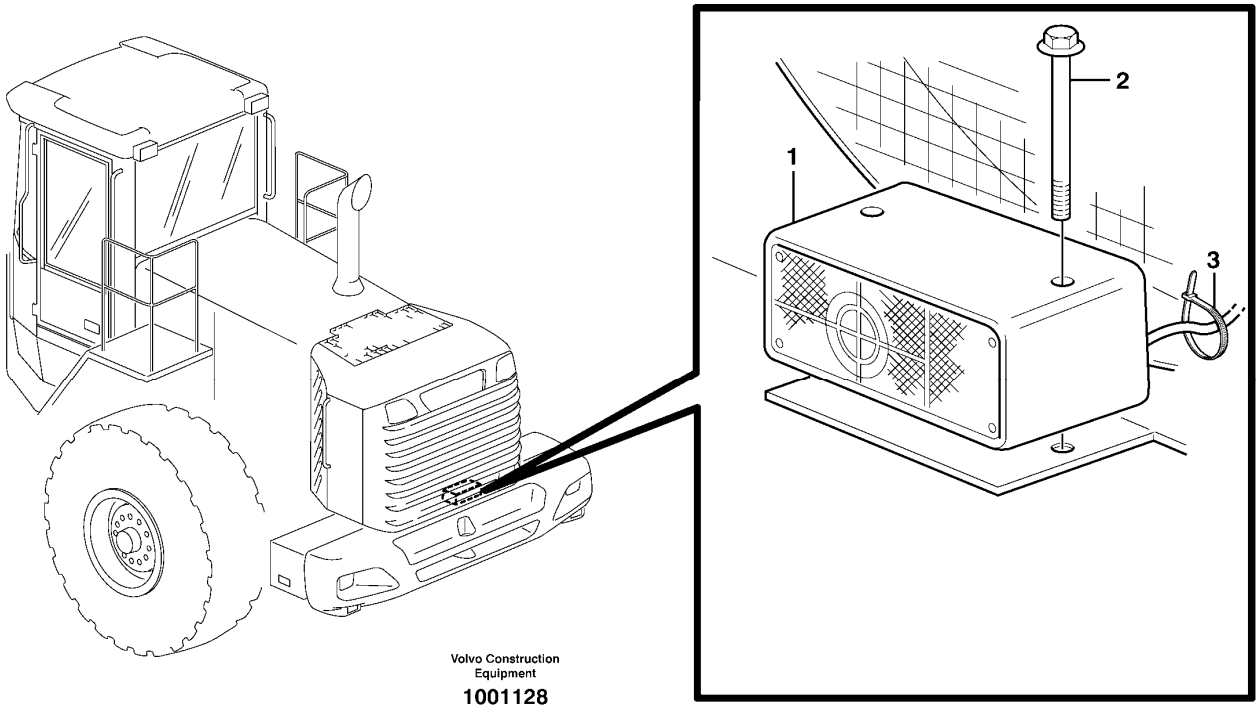

Section option	Kit	Option description
VOE80883		Back-up alarm

Pos	Part	Q1	Q2	Q3	Q4	Q5	PS	Kit	Description	Option(s)	Remark
1	VOE15187356	1					SS		Reversing warning unit		(VOE11039728)
2	VOE13965184	2							Flange screw		
3	VOE4881438	1							Cable tie		

VOLVO

Construction Equipment

PROSIS Part Information

Date:	Image id:	Catalogue:	Model:
10/09/2018	**1005325**	**20009**	**L60E**
Brand:	Serial:	Group/Section:	Title:
Volvo	**1001-3355, 60001-61214, 70001-70530**	**362/150**	**Revolving warning light. 93799**

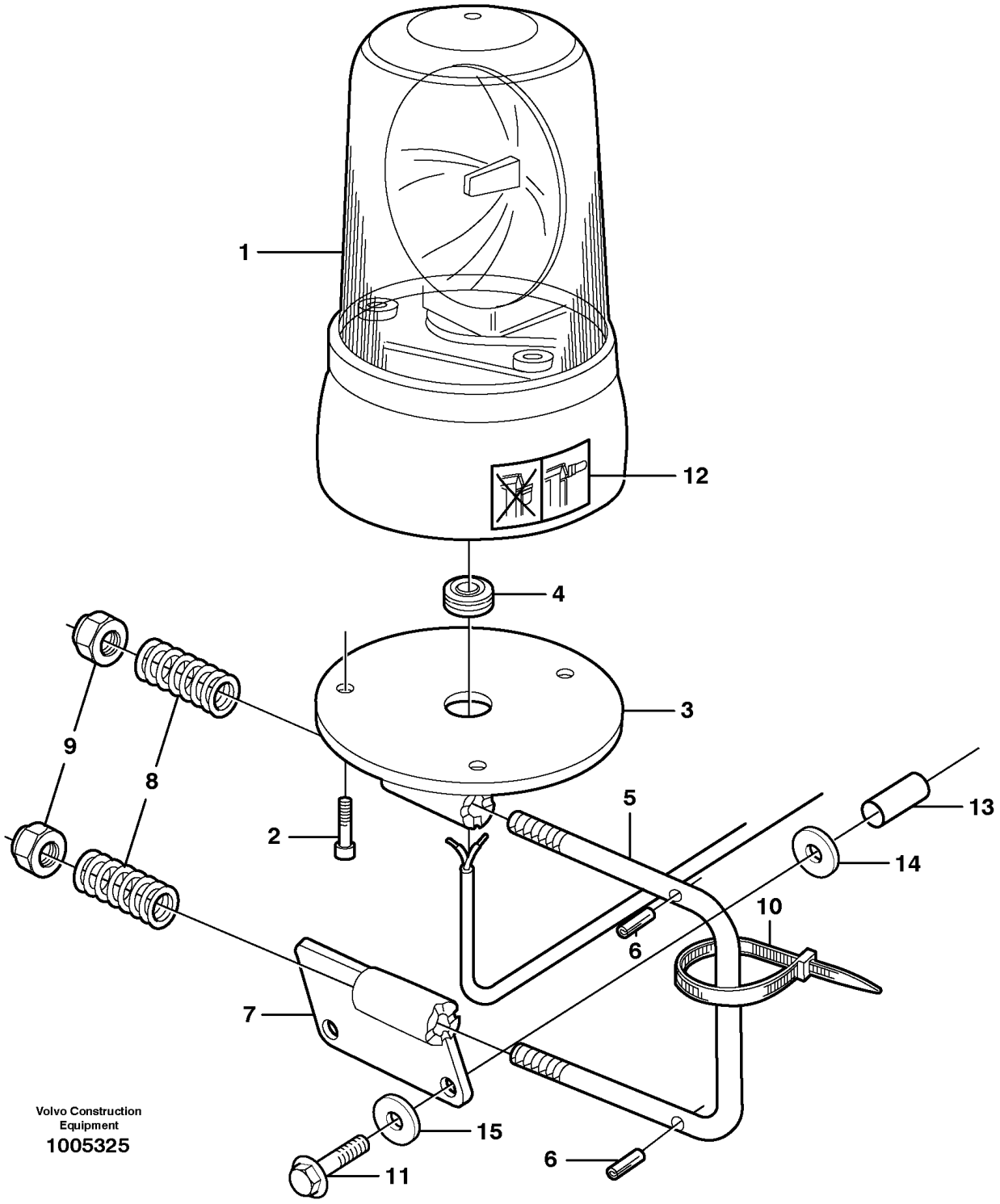

Section option	Kit	Option description

VOE93799	VOE11705492	Rotating beacon with col-lapsible mounting

Pos	Part	Q1	Q2	Q3	Q4	Q5	PS	Kit	Description	Option(s)	Remark
1		1							Lamp		See ref 362/200
2	VOE976155	3							Six point socket screw		
	VOE11164585	1							Release mechanism		
3		1					NS		•Attachment		
4	VOE941267	1							•Plug		
5		1					NS		•Stay		
6	VOE13961647	2							•Pin		
7		1					NS		•Attachment		
8	VOE4935756	2							•Spring		
9	VOE13963110	2							•Lock nut		
10	VOE4881440	2							Cable tie		
11	VOE946671	3							Flange screw		M8 x 30 MM
12	VOE11104111	1							Decal		
13	VOE930428	2							Spacer ring		
14	VOE11104399	2							Rubber washer		
15	VOE11117464	2							Plain washer		(VOE13960141)

VOLVO

Construction Equipment

PROSIS Part Information

Date:	Image id:	Catalogue:	Model:
10/09/2018	**EL189**	**20009**	**L60E**
Brand:	Serial:	Group/Section:	Title:
Volvo	**1001-3355, 60001-61214, 70001-70530**	**362/200**	**Rotating beacon. 93799**

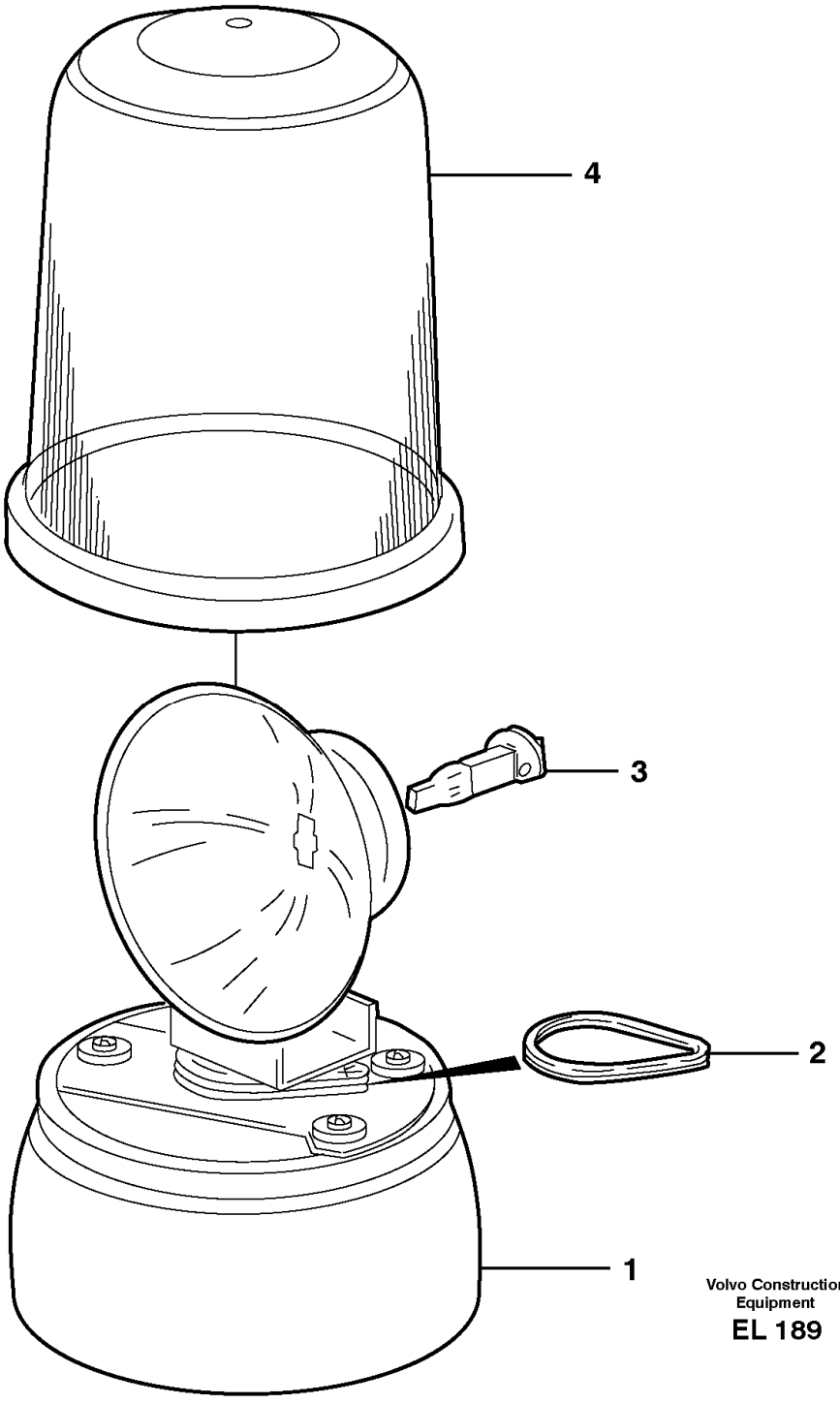

Section option	Kit	Option description

VOE93799	VOE11705492	Rotating beacon with col-lapsible mounting

Pos	Part	Q1	Q2	Q3	Q4	Q5	PS	Kit	Description	Option(s)	Remark
	VOE11170098	1							Rotating beacon		
1		1					NS		•Housing		
2	VOE11994484	1							•Drive belt		2 PCS
3	VOE992516	1							•Bulb		(VOE943904)24V/70W
4	VOE11713980	1							•Lens		

VOLVO

Construction Equipment

PROSIS Part Information

Date:	Image id:	Catalogue:	Model:
10/09/2018	**1003726**	**20009**	**L60E**
Brand:	Serial:	Group/Section:	Title:
Volvo	**1001-3355, 60001-61214, 70001-70530**	**362/225**	**Revolving warning light. 82199**

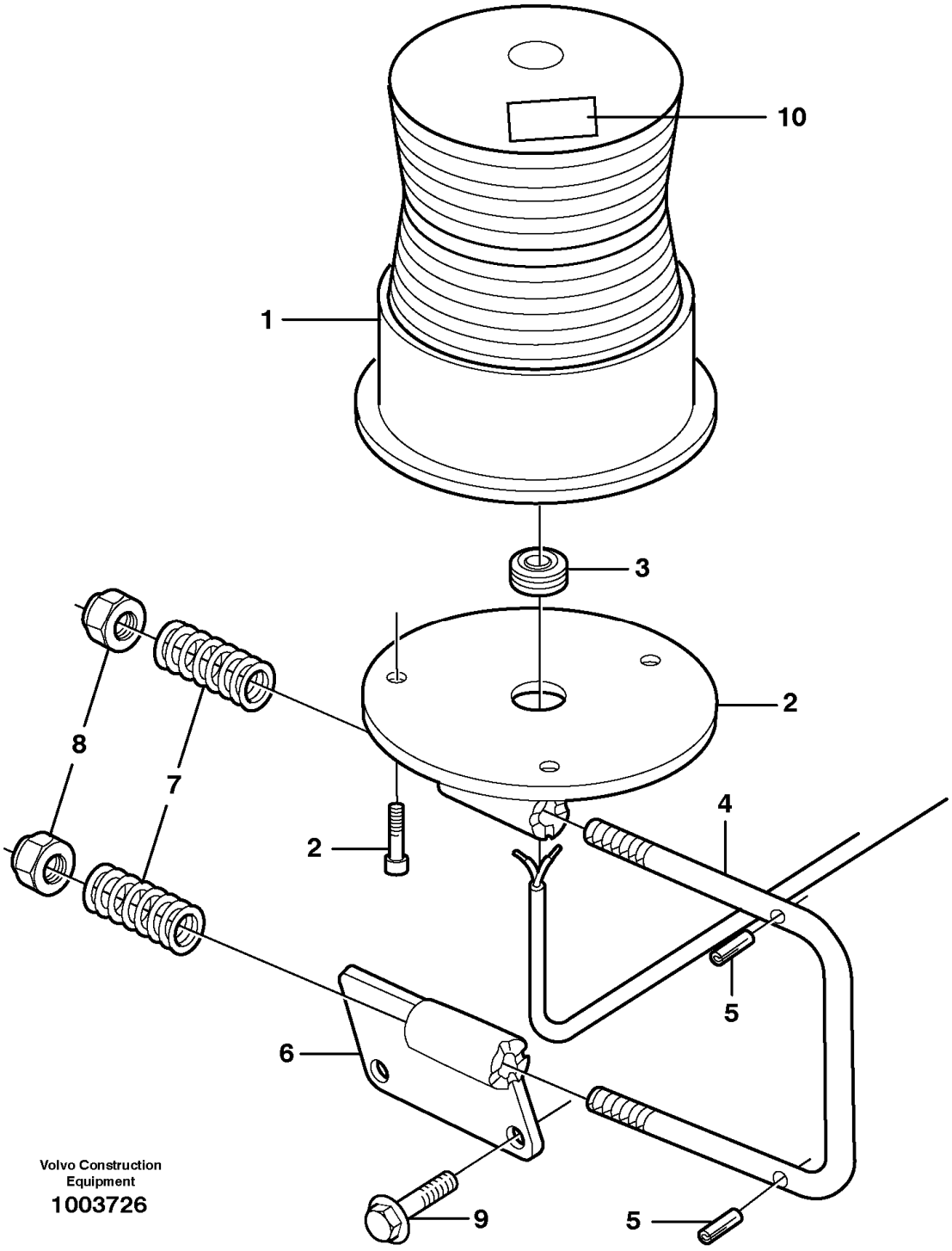

Section option	Kit	Option description

VOE82199		Rotating beacon with col-lapsible mounting

Pos	Part	Q1	Q2	Q3	Q4	Q5	PS	Kit	Description	Option(s)	Remark
1	VOE11170087	1							Rotating beacon		
	VOE11164585	1							Release mechanism		
2	VOE11180439	1					OP		•Attachment		
3	VOE941267	1							•Plug		
4		1					NS		•Stay		
5	VOE13961647	2							•Pin		
6		1					NS		•Attachment		
7	VOE4935756	2							•Spring		
8	VOE13963110	2							•Lock nut		
9	VOE946671	3							Flange screw		
10	VOE11104111	1							Decal		
	VOE4881440	3							Cable tie		

VOLVO

Construction Equipment

PROSIS Part Information

Date:	Image id:	Catalogue:	Model:
10/09/2018	**1016403**	**20009**	**L60E**
Brand:	Serial:	Group/Section:	Title:
Volvo	**1001-3355, 60001-61214, 70001-70530**	**363/100**	**Windshield wiper, front STD, 82790, 33755, 33756**

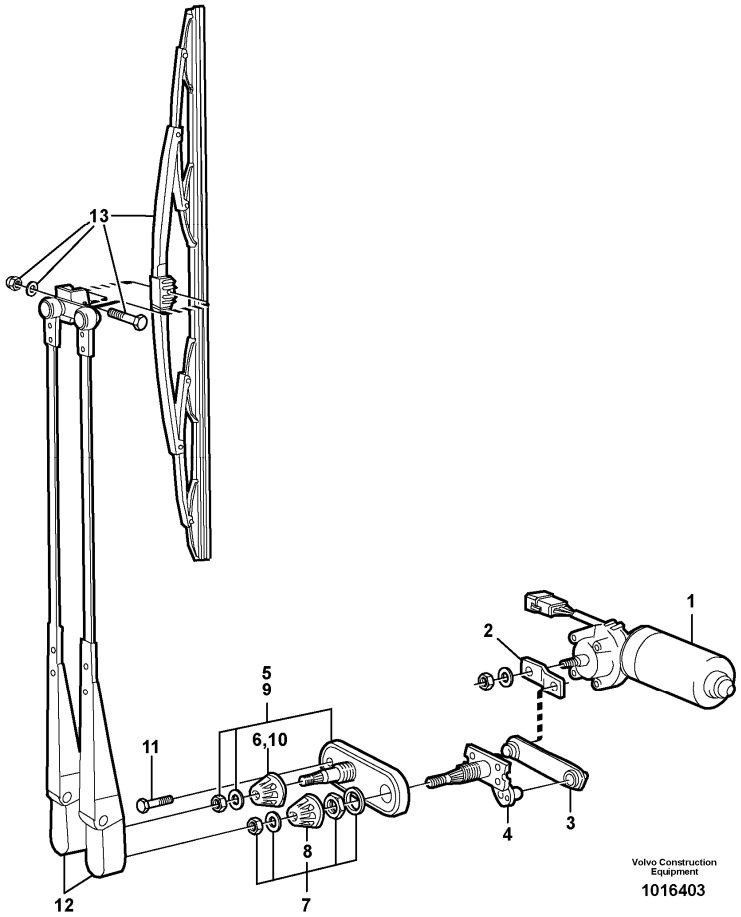

Section option	Kit	Option description
VOE33755		Cab
VOE33756		Cab L60E USA
VOE82790		Semi Open Rops

Q1-Q5	Option	Option description	
Q1 11039527			
Q2 11170239			

Pos	Part	Q1	Q2	Q3	Q4	Q5	PS	Kit	Description	Option(s)	Remark
	VOE11039527	1					SS		Wiper motor		
	VOE11170239		1						Wiper motor		
1	VOE11039529	1	1						•Wiper motor		
2	VOE14341053	1	1						•Arm		

3	VOE11998208	1	1						•Link rod		
4	VOE11701903	1	1						•Wiper shaft		
5	VOE6213452	1					SS		•Wiper shaft		
6	VOE12003786	1							••Cover		
7	VOE2554250	1	1						•Mounting kit		
8	VOE12003786	1	1						••Cover		
9	VOE11170240		1						Set		
10	VOE12003786		1						•Cover		
11	VOE955640	1	1						Hexagon screw		
12	VOE15095429	1	1						Wiper arm		(VOE11039233)
13	VOE11039234	1	1				SS		Wiper blade		

VOLVO

Construction Equipment

PROSIS Part Information

Date:	Image id:	Catalogue:	Model:
10/09/2018	**EL117**	**20009**	**L60E**
Brand:	Serial:	Group/Section:	Title:
Volvo	**1001-3355, 60001-61214, 70001-70530**	**363/150**	**Windshield wiper, rear STD, 82790, 33755, 33756**

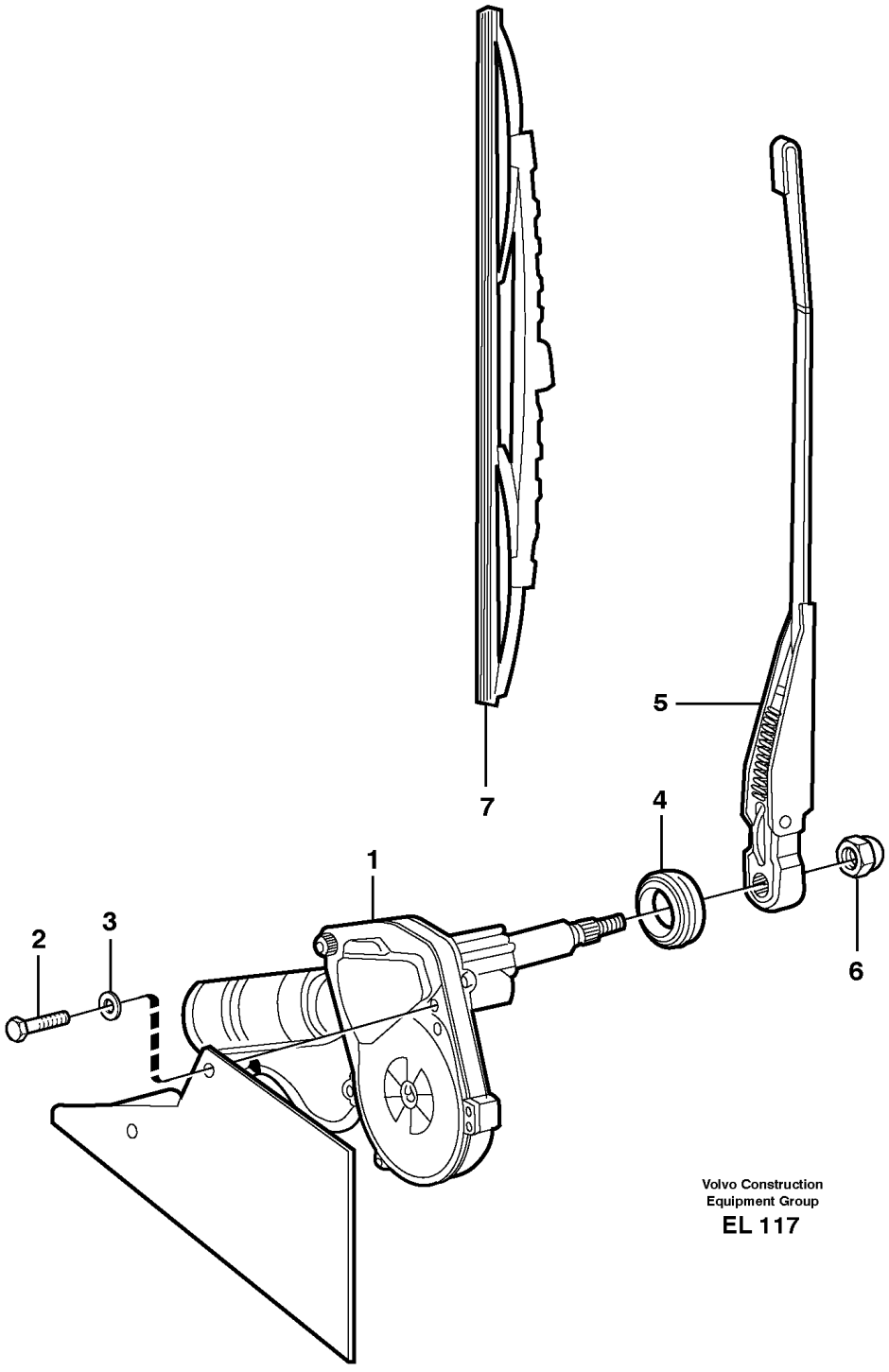

Section option	Kit	Option description

VOE33755		Cab
VOE33756		Cab L60E USA
VOE82790		Semi Open Rops

Pos	Part	Q1	Q2	Q3	Q4	Q5	PS	Kit	Description	Option(s)	Remark
1	VOE11039288	1							Wiper motor		
2	VOE969738	2							Six point socket screw		(VOE13969738)
3	VOE960139	4							Plain washer		
4	VOE11006074	1							Grommet		
5	VOE11039289	1							Wiper arm		
6	VOE948645	1							Flange lock nut		
7	VOE11039290	1							Wiper blade		

VOLVO

Construction Equipment

PROSIS Part Information

Date:	Image id:	Catalogue:	Model:
10/09/2018	**1057209**	**20009**	**L60E**
Brand:	Serial:	Group/Section:	Title:
Volvo	**1001-3355, 60001-61214, 70001-70530**	**363/200**	**Windshield washer**

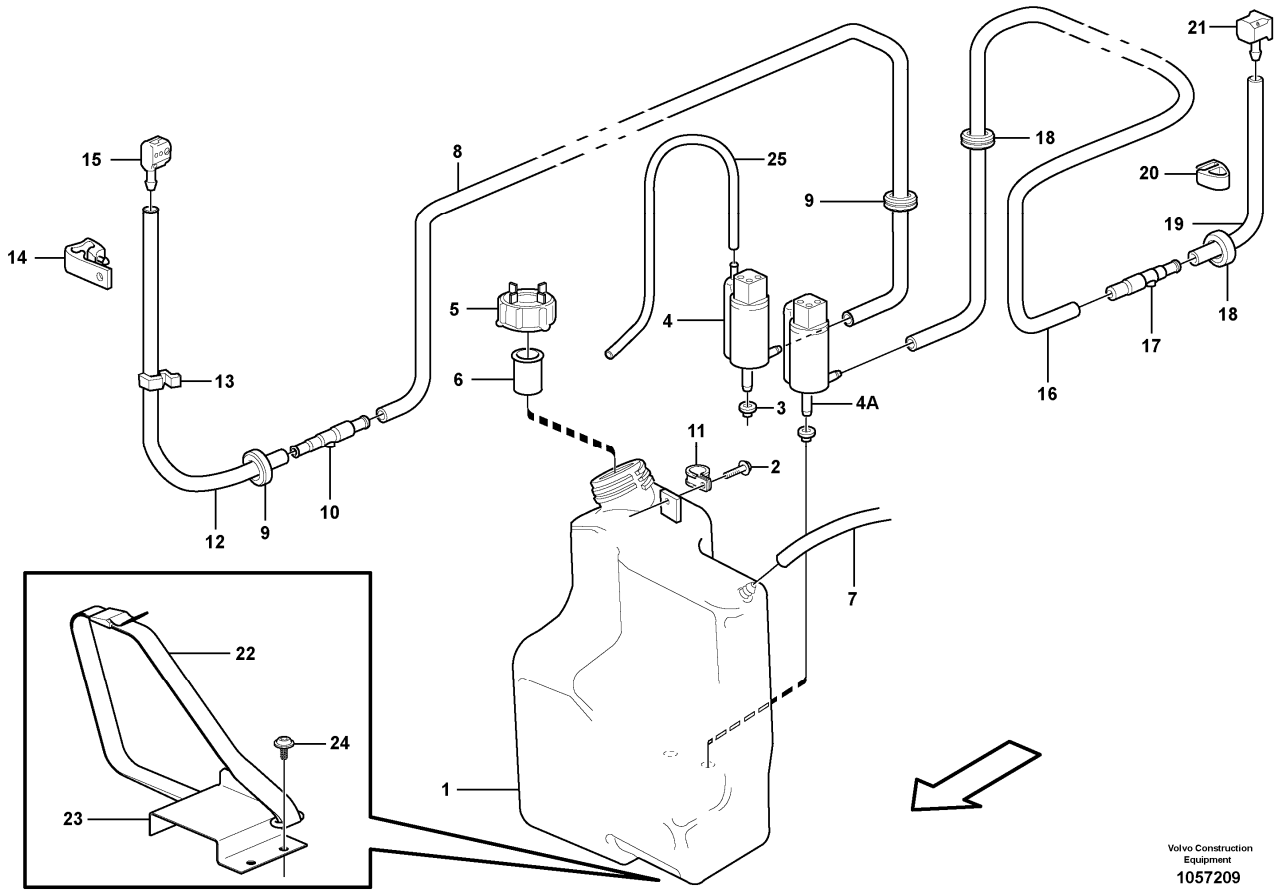

Section option	Kit	Option description
VOE33755		Cab
VOE33756		Cab L60E USA
VOE82790		Semi Open Rops

Q1-Q5	Option	Option description	
Q1 STD 33755 33756			
Q2 82790	VOE82790	Semi Open Rops	

Pos	Part	Q1	Q2	Q3	Q4	Q5	PS	Kit	Description	Option(s)	Remark
1	VOE11104443	1	1						Reservoir		
2	VOE13965354	1	1						Screw		
3	VOE1258140	2	2						Sealing sleeve		
4	VOE21189159	1	1						Washer pump		(VOE11707609)MO802,

											FORW
		1	1				NS		•Level Indicator		
4A	VOE8189171	1	1						Washer pump		MO804, REAR
5	VOE4965040	1	1						Cover		
6	VOE1577712	1	1						Strainer		
7	VOE1304841	REQ	REQ						Hose		L = 500 MM
8	VOE1304841	REQ	REQ						Hose		L = 2600 MM
9	VOE941262	2	2						Grommet		
10	VOE667352	1	1						Non-return valve		
11	VOE952627	1	1						Clamp		
12	VOE943727	REQ	REQ						Hose		L = 700 MM
13	VOE192248	2	2						Retainer		
14	VOE4803208	1	1						Clamp		
15	VOE4803206	1	1						Nozzle		
16	VOE1304841	REQ	REQ						Hose		L = 3400 MM
17	VOE667352	1	1						Non-return valve		
18	VOE941262	2	2						Grommet		
19	VOE943727	REQ	REQ						Hose		L = 450 MM
20	VOE1580822	1	1						Clamp		
21	VOE1580247	1	1						Washer nozzle		
22	VOE11104606	1	1						Retaining strap		
23	VOE11164822		1				OP		Bracket		
24	VOE981208		3						Six point socket screw		
25	VOE192618	REQ	REQ						Hose		L = 500 MM

VOLVO

Construction Equipment

PROSIS Part Information

Date:	Image id:	Catalogue:	Model:
10/09/2018	**1017369**	**20009**	**L60E**
Brand:	Serial:	Group/Section:	Title:
Volvo	**1001-3355, 60001-61214, 70001-70530**	**363/225**	**Windshield washer with air cleaner. 83085**

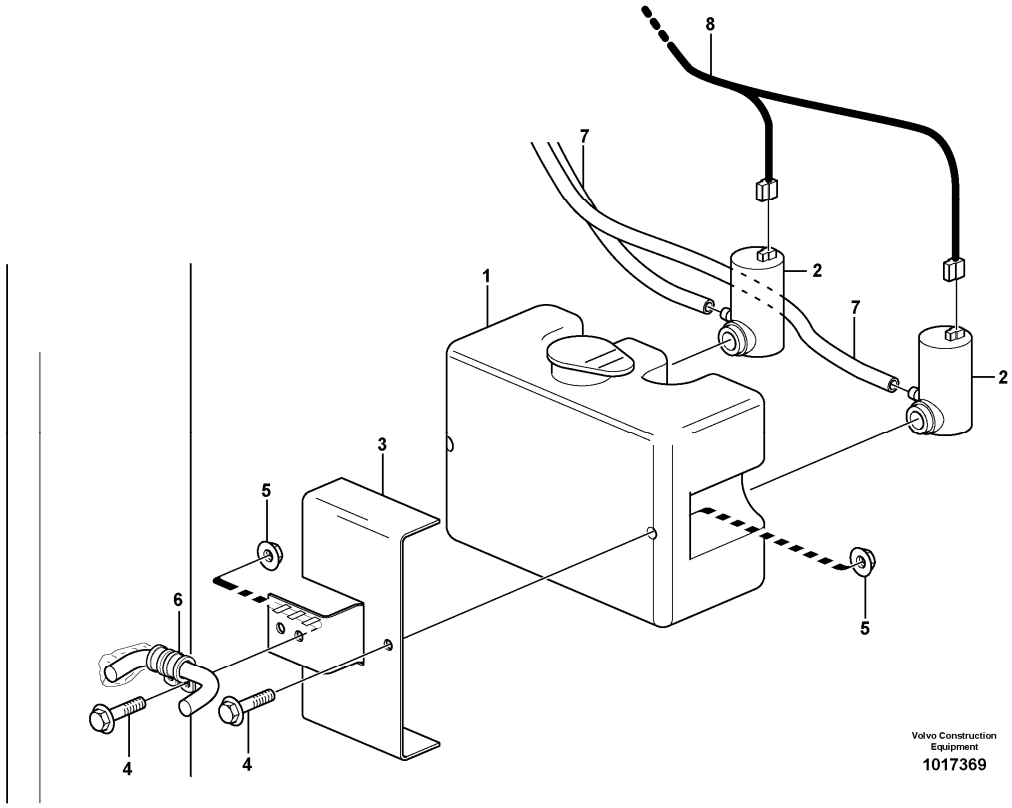

Section option	Kit	Option description
VOE83085		Air filter, cyclone USA

Pos	Part	Q1	Q2	Q3	Q4	Q5	PS	Kit	Description	Option(s)	Remark
	VOE11417613	1							Washer kit		
1	VOE11714687	1							•Reservoir		
2	VOE11707985	2							•Washer pump		(VOE11714686)
3	VOE11417599	1							Plate		
4	VOE13946544	3							Screw		
5	VOE13949278	3							Flange lock nut		
6	VOE952625	2							Clamp		
7		2							Hose		See ref 363/200
8		1							Cable harness		See ref 371/1900

VOLVO

Construction Equipment

PROSIS Part Information

Date:	Image id:	Catalogue:	Model:
10/09/2018	**1023120**	**20009**	**L60E**
Brand:	Serial:	Group/Section:	Title:
Volvo	**1001-3355, 60001-61214, 70001-70530**	**371/100**	**Battery cable and main switch**

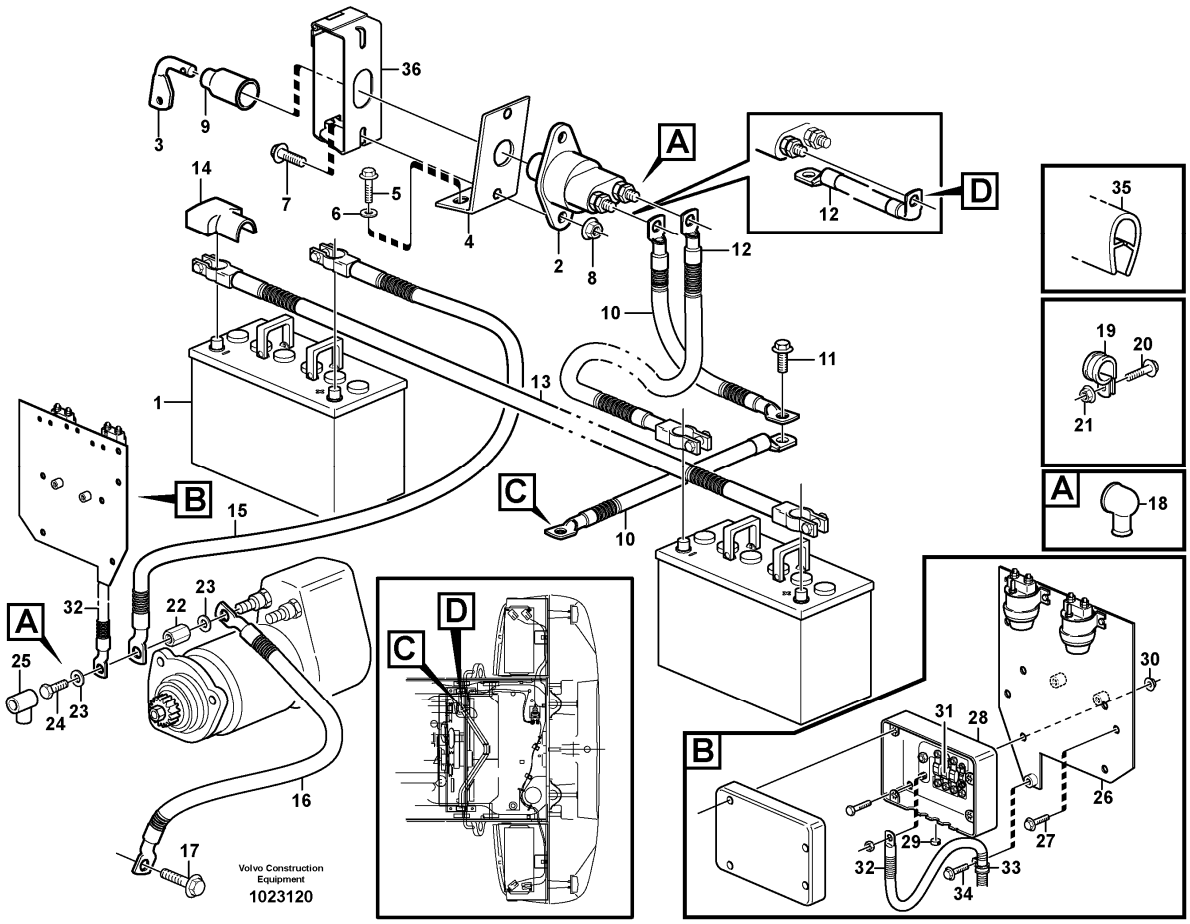

Section option	Kit	Option description
VOE33750		Wheel Loader
VOE33759		Wheel loader L60E OPEN ROPS

Q1-Q5	Option	Option description	
Q1 STD			
Q2 OPEN ROPS			

Pos	Part	Q1	Q2	Q3	Q4	Q5	PS	Kit	Description	Option(s)	Remark
1		2	2						Battery		See ref 313/100
2	VOE3987034	1	1						Main switch		
3	VOE8157766	1	1						•Knob		
4	VOE11174879	1	1						Attachment		
5	VOE13945444	2	2						Screw		

6	VOE11117464	2	2						Plain washer		(VOE13960141)
7	VOE13946934	2	2						Screw		
8	VOE13949278	2	2						Flange lock nut		
9	VOE1582293	1	1						Protecting moulding		
10	VOE11100715	1	1						Battery cable		See footnote 1245)
10	VOE11170935	1							Battery cable	VOE82257	
11	VOE13949888	1	1						Screw		
12	VOE11170713	1	1						Battery cable		
12	VOE11170933	1							Battery cable	VOE82257	
13	VOE11170710	1	1						Battery cable		
14	VOE1259727	3	3						Cover		
15	VOE11170714	1	1				SS		Battery cable		
16	VOE11040804	1	1						Wire		See footnote 1245)
17	VOE13949888	1	1						Screw		
18	VOE7025971	2	2						Protection		
19	VOE977599	1	1						Clamp		(VOE13977599)
20	VOE13945444	1	1						Screw		
21	VOE948645	1	1						Flange lock nut		
22	VOE11171090	1	1						Nut		
23	VOE11170338	2	2						Washer		
24	VOE11170245	1	1						Flange screw		
25	VOE855798	1	1						Protecting sleeve		
26		1	1				NS		Plate		
27	VOE946671	2	2						Flange screw		
28	VOE11170016	1	1						Fuse box		
29	VOE11170020	1	1						Plug		
30	VOE948645	4	4						Flange lock nut		
31	VOE982617	3	3						Fuse		125A
32	VOE11170688	1	1						Wire		See footnote 1245)
33	VOE977599	1	1						Clamp		(VOE13977599)
34	VOE946440	1	1						Flange screw		
35		1					NS		Framework moulding		L = 100 MM
36	VOE11180465	1							Lock	VOE82257	

1245) Including parts: Wire assembly, hose, manifold, cable terminal and insulator See Group 379.

VOLVO

Construction Equipment

PROSIS Part Information

Date:	Image id:	Catalogue:	Model:
10/09/2018	**1009706**	**20009**	**L60E**
Brand:	Serial:	Group/Section:	Title:
Volvo	**1001-3355, 60001-61214, 70001-70530**	**371/150**	**Cable harness, engine**

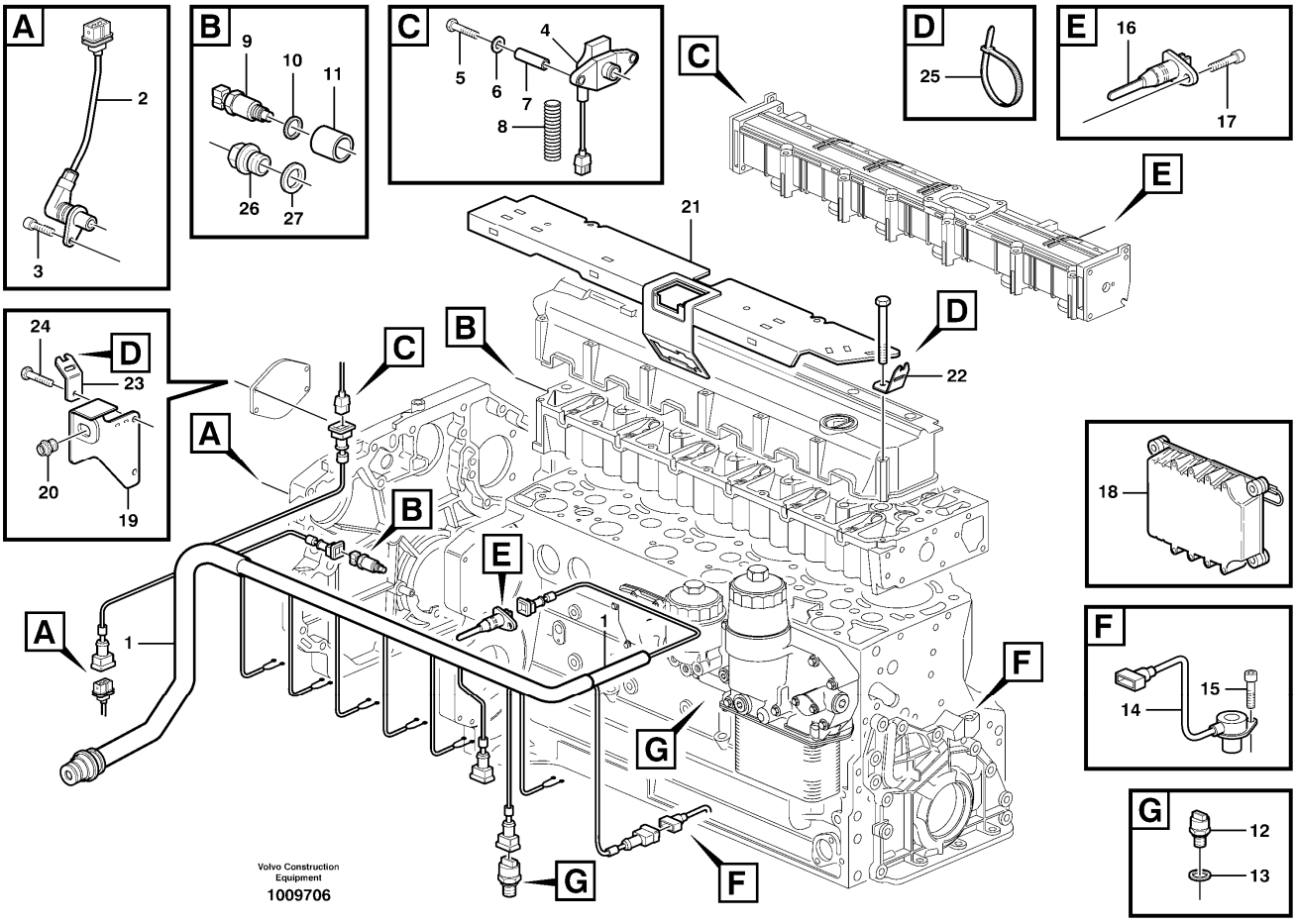

Section option	Kit	Option description
VOE11172410		Engine VOLVO D6D LCE2

Q1-Q5	Option	Option description	
Q1 ENG - 936960			

Pos	Part	Q1	Q2	Q3	Q4	Q5	PS	Kit	Description	Option(s)	Remark
1		1							Cable harness		See ref 371/175
2	VOE20482772	1							Sensor		
3	VOE20459015	1							Screw		
4	VOE20450693	1					SS		Sensor		
5	VOE20459023	2							Screw		
6	VOE973494	2							Washer		(VOE20459183)
7	VOE20450691	2							Spacer		

8	VOE20459024	1							Tube		
9	VOE21531072	1							Temperature sensor		(VOE20450685)
10	VOE13947621	1							Plane gasket		
11	VOE20405788	1							Sleeve		
12	VOE20450687	1					SS		Sensor		
13	VOE13947621	1							Plane gasket		
14	VOE20450707	1							Tachometer		
15	VOE20450694	1							Screw		
16	VOE20450695	1							Temperature sensor		
17	VOE20450694	2							Screw		
18	VOE20577135	1					SS		ECU		REMAN VOE9020577135, VOE9060100002
19		1					NS		Bracket		
20	VOE20459022	1							Nut		
21	VOE20572615	1							Cover Plate		
22	VOE20450700	1							Bracket		
23	VOE20450997	2							Bracket		
24	VOE20405898	1							Screw		
25	VOE4881440	REQ							Cable tie		
26	VOE20450683	1							Adapter		
27	VOE13947628	1							Plane gasket		

VOLVO

Construction Equipment

PROSIS Part Information

Date:	Image id:	Catalogue:	Model:
10/09/2018	**1017614**	**20009**	**L60E**
Brand:	Serial:	Group/Section:	Title:
Volvo	**1001-3355, 60001-61214, 70001-70530**	**371/160**	**Cable harness, engine**

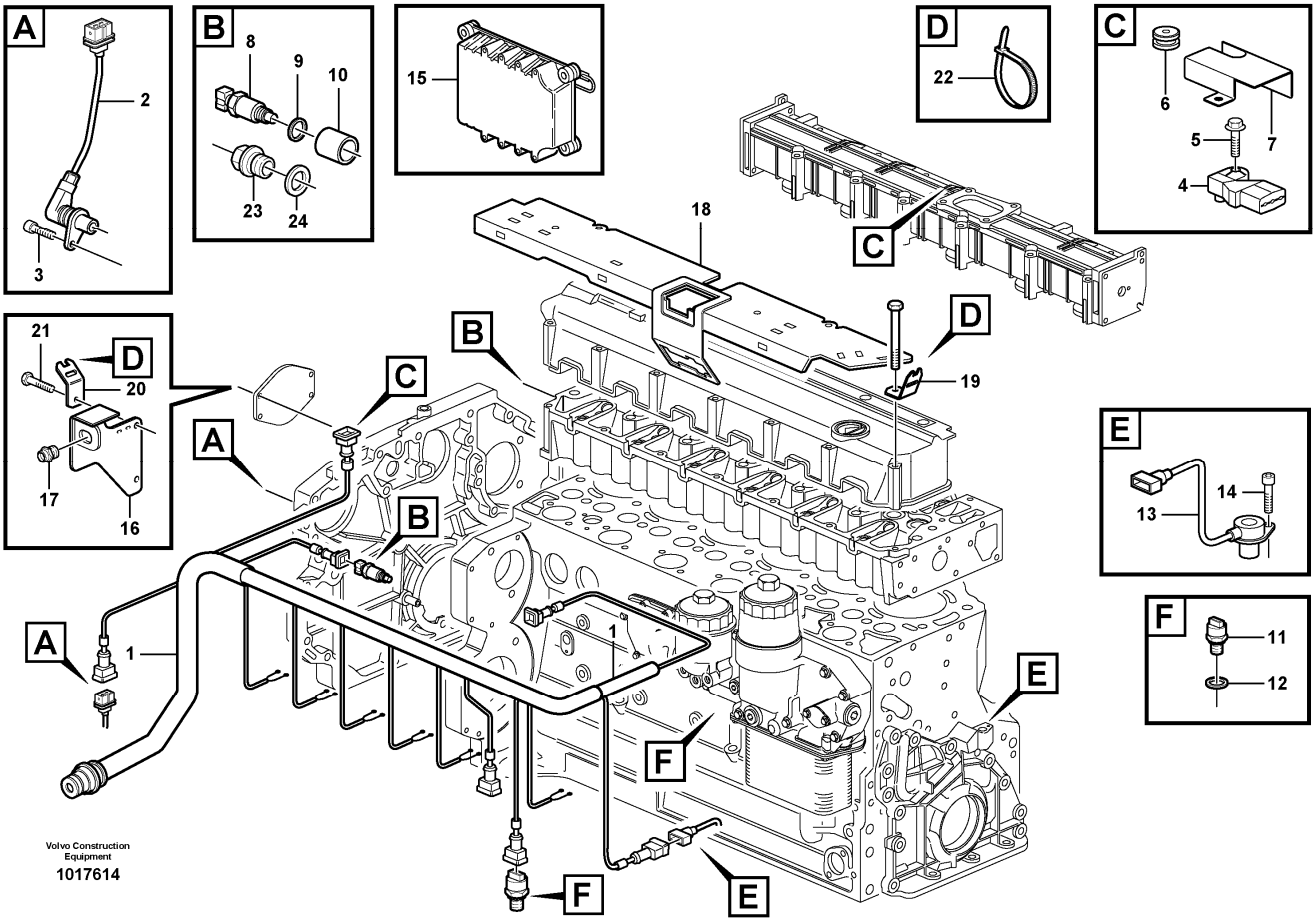

Section option	Kit	Option description
VOE11172410		Engine VOLVO D6D LCE2

Q1-Q5	Option	Option description	
Q1 ENG 936961 -			

Pos	Part	Q1	Q2	Q3	Q4	Q5	PS	Kit	Description	Option(s)	Remark
1		1							Cable harness		See ref 371/175
2	VOE20482772	1							Sensor		
3	VOE20459015	1							Screw		
4	VOE20524936	1							Pressure sensor		(VOE20556500)SE2507, SE2508
5	VOE20450728	1							Bolt		
6	VOE21598195	1							Guard plate		(VOE20726096)
7	VOE20715095	1							Closure		

8	VOE21531072	1							Temperature sensor		(VOE20450685)
9	VOE13947621	1							Plane gasket		
10	VOE20405788	1							Sleeve		
11	VOE21291011	1							Pressure sensor		(VOE20585158)SE2203
12	VOE13947621	1							Plane gasket		
13	VOE20450707	1							Tachometer		
14	VOE20450694	1							Screw		
15	VOE20577135	1					SS		ECU		REMAN VOE9020577135, VOE9060100002
16		1					NS		Bracket		
17	VOE20459022	1							Nut		
18	VOE20715330	1							Cover Plate		
19	VOE20450700	1							Bracket		
20	VOE20450997	2							Bracket		
21	VOE20405898	1							Screw		
22	VOE4881440	REQ							Cable tie		
23	VOE20450683	1							Adapter		
24	VOE13947628	1							Plane gasket		

VOLVO

Construction Equipment

PROSIS Part Information

Date:	Image id:	Catalogue:	Model:
10/09/2018	**1009700**	**20009**	**L60E**
Brand:	Serial:	Group/Section:	Title:
Volvo	**1001-3355, 60001-61214, 70001-70530**	**371/175**	**Cable harness, engine**

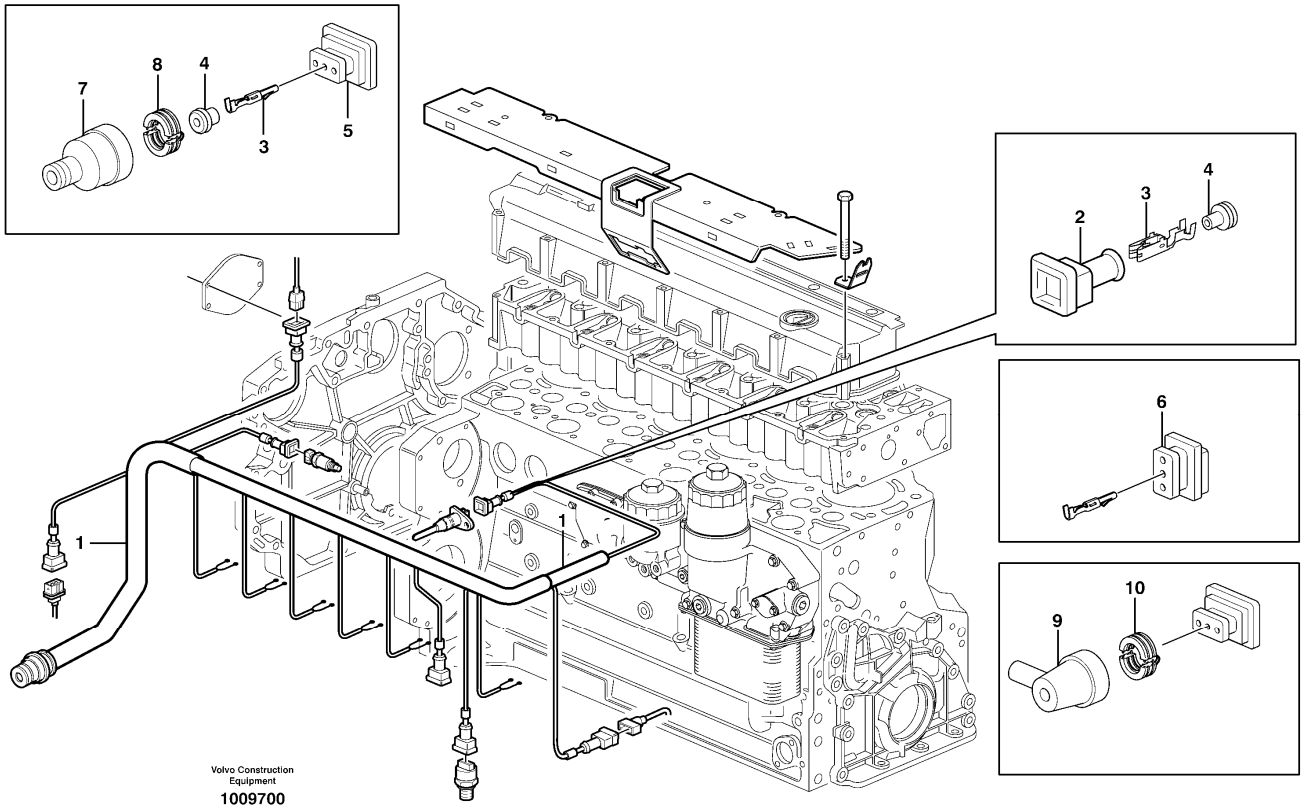

Section option	Kit	Option description
VOE11172410		Engine VOLVO D6D LCE2

Pos	Part	Q1	Q2	Q3	Q4	Q5	PS	Kit	Description	Option(s)	Remark
1	VOE20551332	1							Wire harness		ENG - 931210
	VOE20728258	1							Cable harness		ENG 931211 -
2	VOE20551333	1							•Housing		
3	VOE20482768	14							•Contact		
4	VOE11700587	18					OP		•Insulation		
5	VOE20551334	4							•Housing		
6	VOE20482770	2							•Connector		
7	VOE20551408	3							•Cap		
8	VOE20551428	6							•Reduction		
9	VOE20551409	2							•Cap		
10	VOE20551427	2							•Reduction		

VOLVO

Construction Equipment

PROSIS Part Information

Date:	Image id:	Catalogue:	Model:
10/09/2018	**1009213**	**20009**	**L60E**
Brand:	Serial:	Group/Section:	Title:
Volvo	**1001-3355, 60001-61214, 70001-70530**	**371/200**	**Cable harness, alternator S/N - 2260, STD, OPEN ROPS**

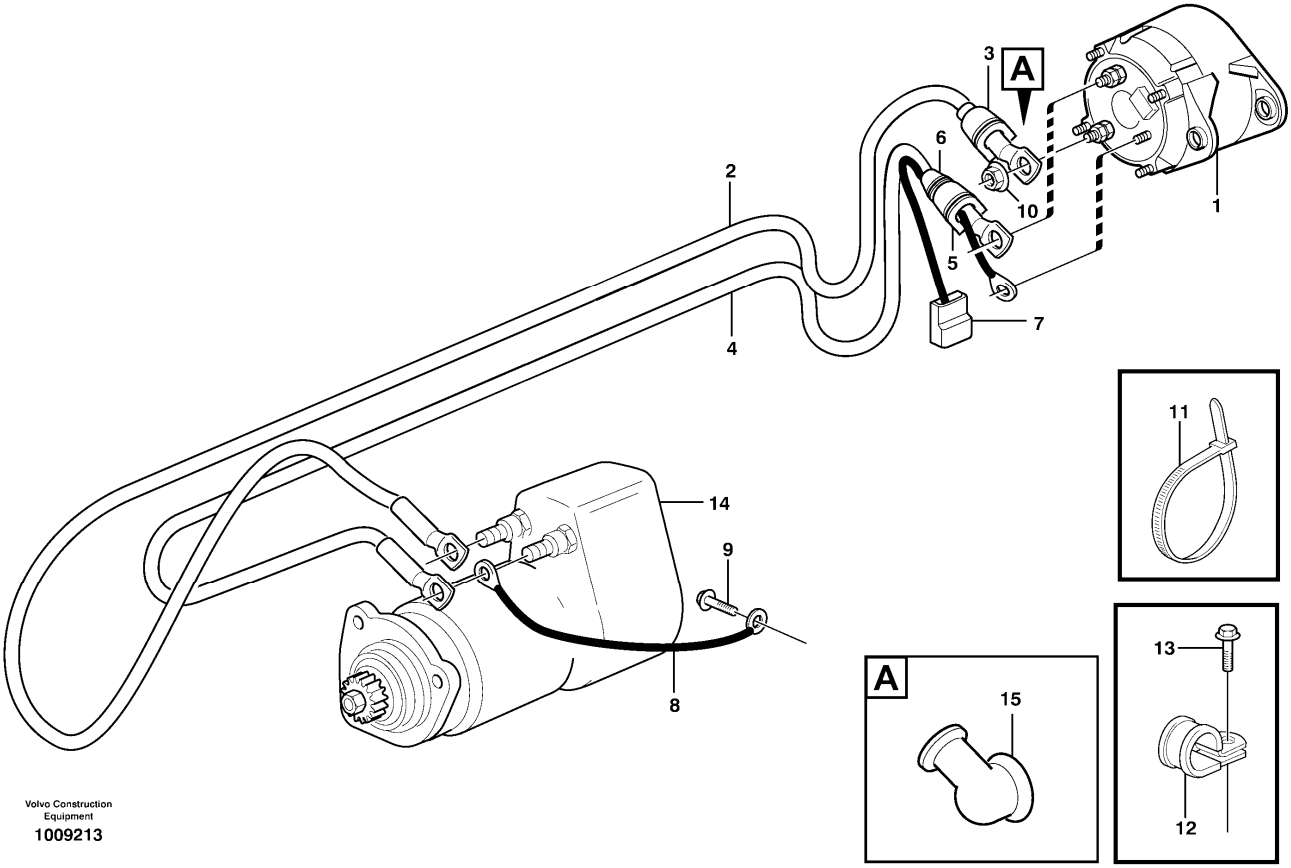

Section option	Kit	Option description
VOE33750		Wheel Loader
VOE33759		Wheel loader L60E OPEN ROPS

Pos	Part	Q1	Q2	Q3	Q4	Q5	PS	Kit	Description	Option(s)	Remark
1		1							Alternator		See ref 321/100
2	VOE11170656	1							Wire		See footnote 1245) B+
3	VOE11039154	1							•Grommet		
4	VOE11170657	1							Wire		See footnote 1245) 31/ RD
5	VOE11039154	1							•Grommet		
6	VOE11039397	1							•End sleeve		
7	VOE1307049	1							•Tab housing		
8	VOE11170554	1							Wire		See footnote 1245) 31
9	VOE13966807	1							Flange screw		
10	VOE13945408	1							Nut		

11	VOE4881440	REQ							Cable tie		
12	VOE977599	2							Clamp		(VOE13977599)ID = 22,2 MM
	VOE942810	1							Clamp		ID = 17,5 MM
	VOE13949746	1							Clamp		ID = 12,7 MM
13	VOE946440	1							Flange screw		M8 X 16 MM
	VOE13946173	1							Screw		M8 X 20 MM
14		1							Starter motor		See ref 331/100
15	VOE241308	1							Protecting cap		

1245) Including parts: Wire assembly, hose, manifold, cable terminal and insulator See Group 379.

VOLVO

Construction Equipment

PROSIS Part Information

Date:	Image id:	Catalogue:	Model:
10/09/2018	**1020121**	**20009**	**L60E**
Brand:	Serial:	Group/Section:	Title:
Volvo	**1001-3355, 60001-61214, 70001-70530**	**371/225**	**Cable harness, alternator S/N 2261 -, STD, OPEN ROPS**

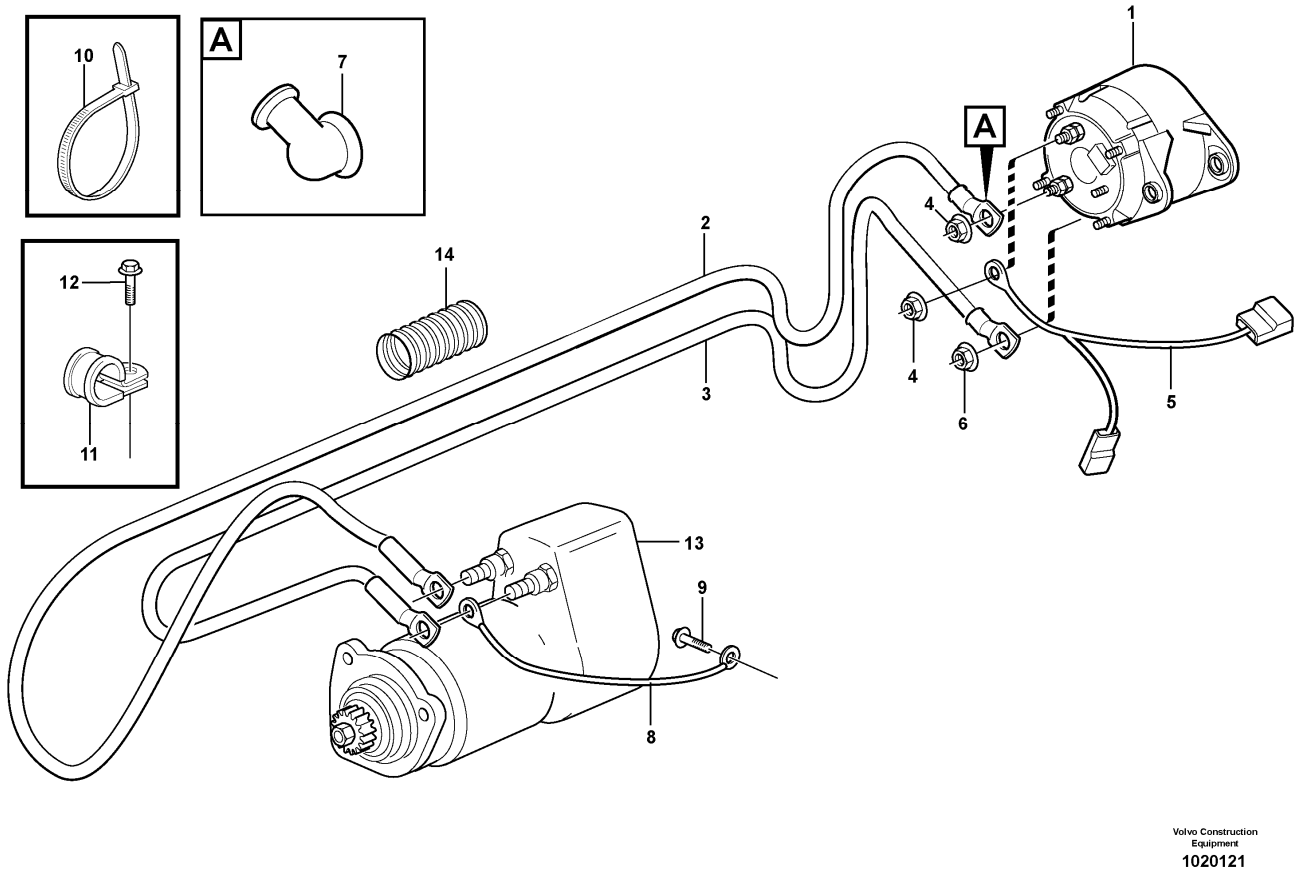

Section option	Kit	Option description
VOE33750		Wheel Loader
VOE33759		Wheel loader L60E OPEN ROPS

Pos	Part	Q1	Q2	Q3	Q4	Q5	PS	Kit	Description	Option(s)	Remark
1		1							Alternator		
2	VOE11108115	1							Wire		See footnote 1245) B+
3	VOE11171100	1							Wire		See footnote 1245) B -
4	VOE983715	2							Sems nut		
5	VOE11171098	1							Cable harness		
6	VOE983714	1							Hexagon nut		
7	VOE20576874	1							Nut cap		See footnote 1245) 31
8	VOE11170554	1							Wire		
9	VOE13966807	1							Flange screw		

10	VOE4881440	REQ							Cable tie		
11	VOE977599	2							Clamp		(VOE13977599)ID = 22,2 MM
	VOE942810	1							Clamp		ID = 17,5 MM
	VOE980614	1							Clamp		ID = 14,3 MM
12	VOE946440	1							Flange screw		M8 X 16 MM
	VOE13946173	1							Screw		M8 X 20 MM
13		1							Starter motor		
14	VOE4803752	REQ							Hose		L = 200 MM

1245) Including parts: Wire assembly, hose, manifold, cable terminal and insulator See Group 379.

VOLVO

Construction Equipment

PROSIS Part Information

Date:	Image id:	Catalogue:	Model:
10/09/2018	**1017853**	**20009**	**L60E**
Brand:	Serial:	Group/Section:	Title:
Volvo	**1001-3355, 60001-61214, 70001-70530**	**371/250**	**Cable harness, electricaldistrib. unit - engine E-ECU STD, OPEN ROPS**

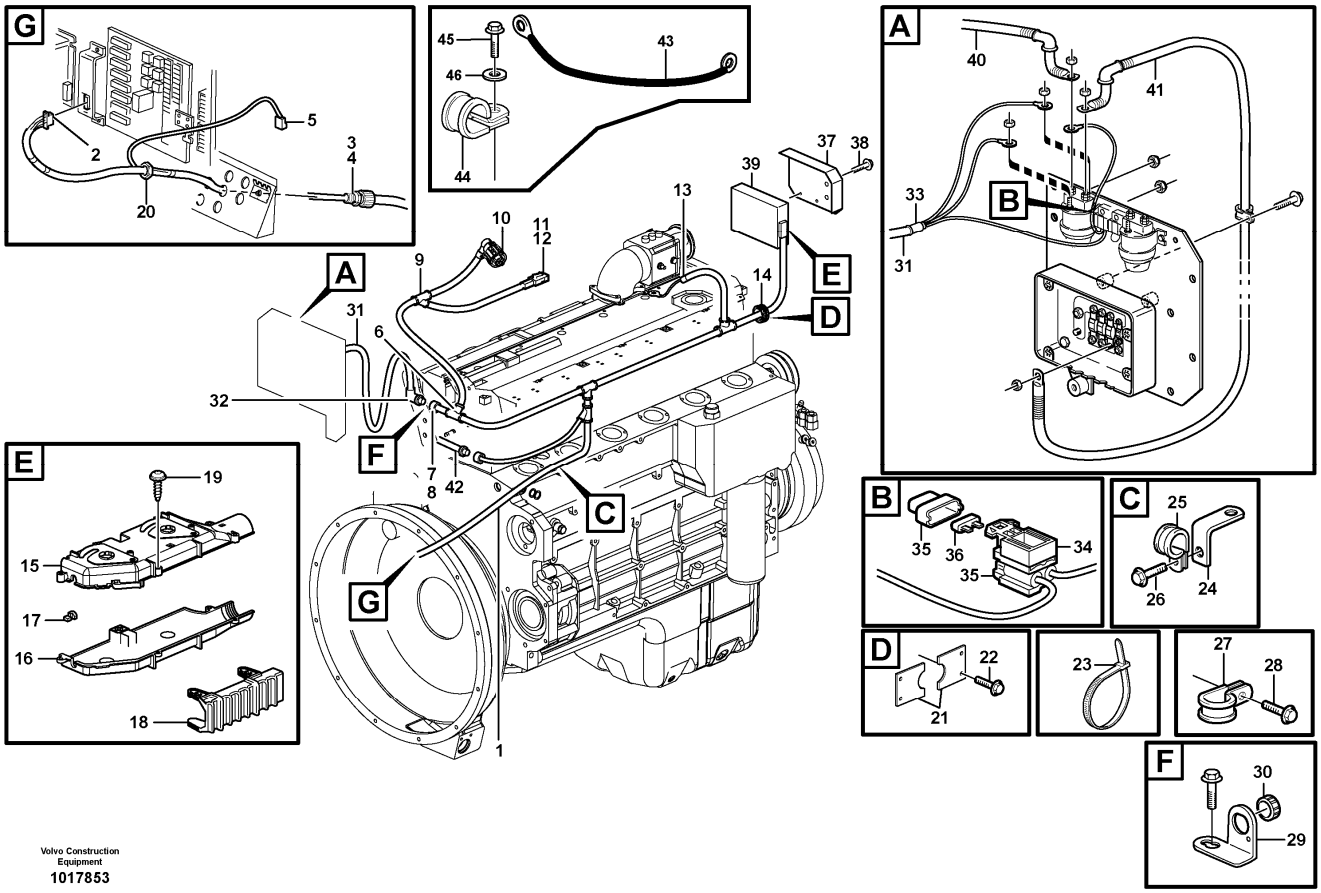

Section option	Kit	Option description
VOE33750		Wheel Loader
VOE33759		Wheel loader L60E OPEN ROPS

Pos	Part	Q1	Q2	Q3	Q4	Q5	PS	Kit	Description	Option(s)	Remark
1	VOE11170926	1							Cable harness		See footnote 1245)
									•CONNECTED TO:		
									••El Distr Unit		ES, 31E
									••Cable harness		ED, RT
									••Pre-heater		HE2501
									••Control Unit		EECU. EA, EB
									••Sensor		SE2502/01
									••Level sensor		SE2603
2	VOE1096619	1							•Housing		

3	VOE4803768	1							•Hose coupling		
4	VOE4803795	1							•Reduction		
5	VOE13949597	1							•Protecting sleeve		
6	VOE14346331	1							•Manifold		
7	VOE3944972	1							•Housing		
8	VOE3985597	1							•Adapter		
9	VOE11039665	1							•Manifold		
10	VOE8159013	1							•Housing		
11	VOE1624477	1							•Receptacle housing		
12	VOE1095059	1							•Joint nipple		
13	VOE11039397	1							•End sleeve		
14	VOE13961962	1							•Protecting bushing		
15	VOE3173910	1							•Cover		
16	VOE3173909	1							•Cover		
17	VOE3173913	4							•Shock absorber		
18	VOE3199185	1							•Handle		
19	VOE975367	5							•Six point socket screw		
20	VOE11147868	1							Plastic nut		
21	VOE11175893	2							Cover plate		
22	VOE13946544	4							Screw		
23	VOE4881440	REQ							Cable tie		
24	VOE11024650	1							Angle plate		
25	VOE977599	1							Clamp		(VOE13977599)
26	VOE13946173	1							Screw		
27	VOE977599	2							Clamp		(VOE13977599)ID = 22,2 MM
28	VOE13946173	2							Screw		
29	VOE3988328	1							Bracket		
30	VOE3963413	1							Ring		
31	VOE11170828	1							Cable harness		See footnote 1245)
									•CONNECTED TO:		
									••Cable harness		RT
									••Fuse		FH1
									••Relay		RE2501
32	VOE8159013	1							•Housing		
33	VOE11039397	1							•End sleeve		
34	VOE11039713	1							•Bracket		
35	VOE11039714	1							•Fuse holder		
36	VOE13969160	1							•Fuse		5A
37	VOE11413327	1							Protection		
38	VOE13948746	4							Screw		
39		1							ECU		See ref 371/150
40		1							Cable harness		See ref 333/100
41		1							Cable harness		See ref 333/100
42		1							Cable harness		See ref 371/150
43	VOE11171253	1							Wire		See footnote 1245)

											GROUNDING FOR E-ECU S/N 2133 - S/N 60568 - USA S/N 70267 - BRA
44	VOE13947191	1							Clamp		S/N 2133 - S/N 60568 - USA S/N 70267 - BRA
45	VOE13966807	1							Flange screw		S/N 2133 - S/N 60568 - USA S/N 70267 - BRA
46	VOE11117464	1							Plain washer		(VOE13960141)S/N 2133 - S/N 60568 - USA S/N 70267 - BRA

1245) Including parts: Wire assembly, hose, manifold, cable terminal and insulator See Group 379.

VOLVO

Construction Equipment

PROSIS Part Information

Date:	Image id:	Catalogue:	Model:
10/09/2018	**1002791**	**20009**	**L60E**
Brand:	Serial:	Group/Section:	Title:
Volvo	**1001-3355, 60001-61214, 70001-70530**	**371/300**	**Cable harness, front STD, OPEN ROPS**

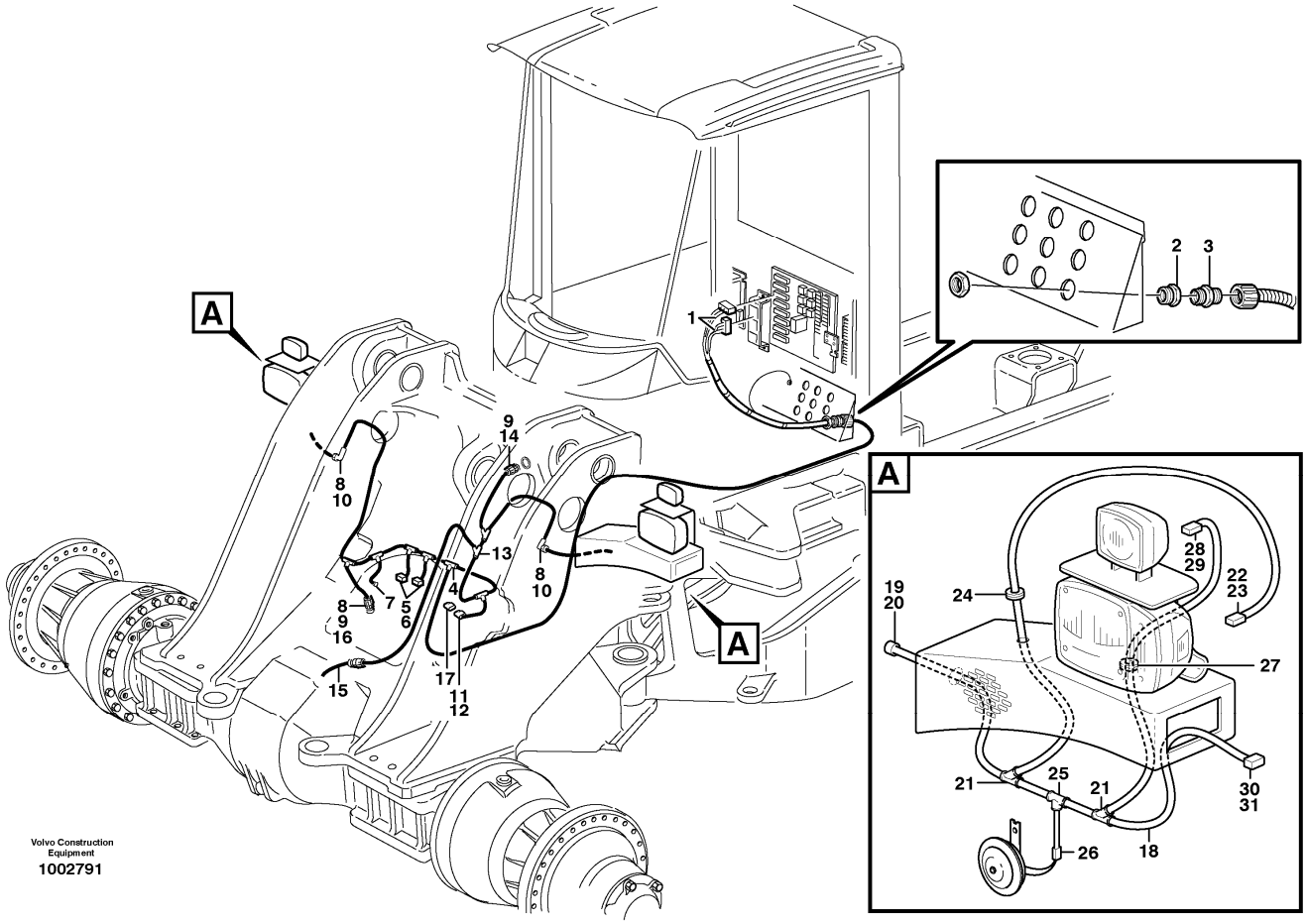

Section option	Kit	Option description
VOE33750		Wheel Loader
VOE33759		Wheel loader L60E OPEN ROPS

Pos	Part	Q1	Q2	Q3	Q4	Q5	PS	Kit	Description	Option(s)	Remark
	VOE11170843	1							Cable harness		See footnote 1245) SER NO - 1461 SER NO - 60261 USA SER NO - 70099 BRA
	VOE11170947	1							Cable harness		See footnote 1245) SER NO 1462 - SER NO 60262 - USA SER NO 70100 - BRA
									•CONNECTED TO:		
									••El Distr Unit		F, FA, 31F

									••Earth		31F1
									••Atch Lock		MA905
									••Differential lock		MA407
									••Boom suspension syst.		FD
									••Tilt automatic		SE901
									••Attachment light		FF
									••Boom kickout		SE902
									••Cable harness		FE, FM
1	VOE1096619	2							•Housing		
2	VOE11039398	1							•Reduction		
3	VOE4803769	1							•Hose coupling		
4	VOE11039663	1							•Manifold		
5	VOE8142100	2							•Adapter		
6	VOE976256	2							•Housing		
7	VOE4803711	1							•End sleeve		
8	VOE3985598	3							•Adapter		
9	VOE3944972	2							•Housing		
10	VOE3963412	2							•Housing		
11	VOE1624477	1							•Receptacle housing		
12	VOE1095059	1							•Joint nipple		
13	VOE14267351	1							•Manifold		
14	VOE3985597	1							•Adapter		See ref 945/450
15									Ind Sensor		(SE901) See ref 945/450
16	VOE20374157	1							Cap		
	VOE8155899	4							Sealing plug		
17	VOE1307049	1							Tab housing		
		2					NS		Plug		
18	VOE11170722	2							Cable harness		
									•CONNECTED TO:		
									••Cable harness		FE, FM
									••Headlamp		LA301, 304, 310-313, 328 LA330
									••Horn		SA801, 805
									••Working light		LA317, 319
									••Side marking lamp		LA302, 305
19	VOE984944	2							•Housing		(VOE3963411)
20	VOE3985597	2							•Adapter		
21	VOE11039665	4							•Manifold		
22	VOE14340957								Socket housing		
23	VOE1620582	2							•Bellows		
24	VOE961970	2							•Plug		
25	VOE11039709	2							•Manifold		
26	VOE11039397	2							•End sleeve		
27	VOE941269	2							•Plug		
28	VOE14370760	2							•Socket		

29	VOE11170005	2							•Adapter		
30	VOE976256	2							•Housing		
31	VOE8142100	2							•Adapter		

1245) Including parts: Wire assembly, hose, manifold, cable terminal and insulator See Group 379.

VOLVO

Construction Equipment

PROSIS Part Information

Date:	Image id:	Catalogue:	Model:
10/09/2018	**1002810**	**20009**	**L60E**
Brand:	Serial:	Group/Section:	Title:
Volvo	**1001-3355, 60001-61214, 70001-70530**	**371/350**	**Front cable harness with assembly parts STD, OPEN ROPS**

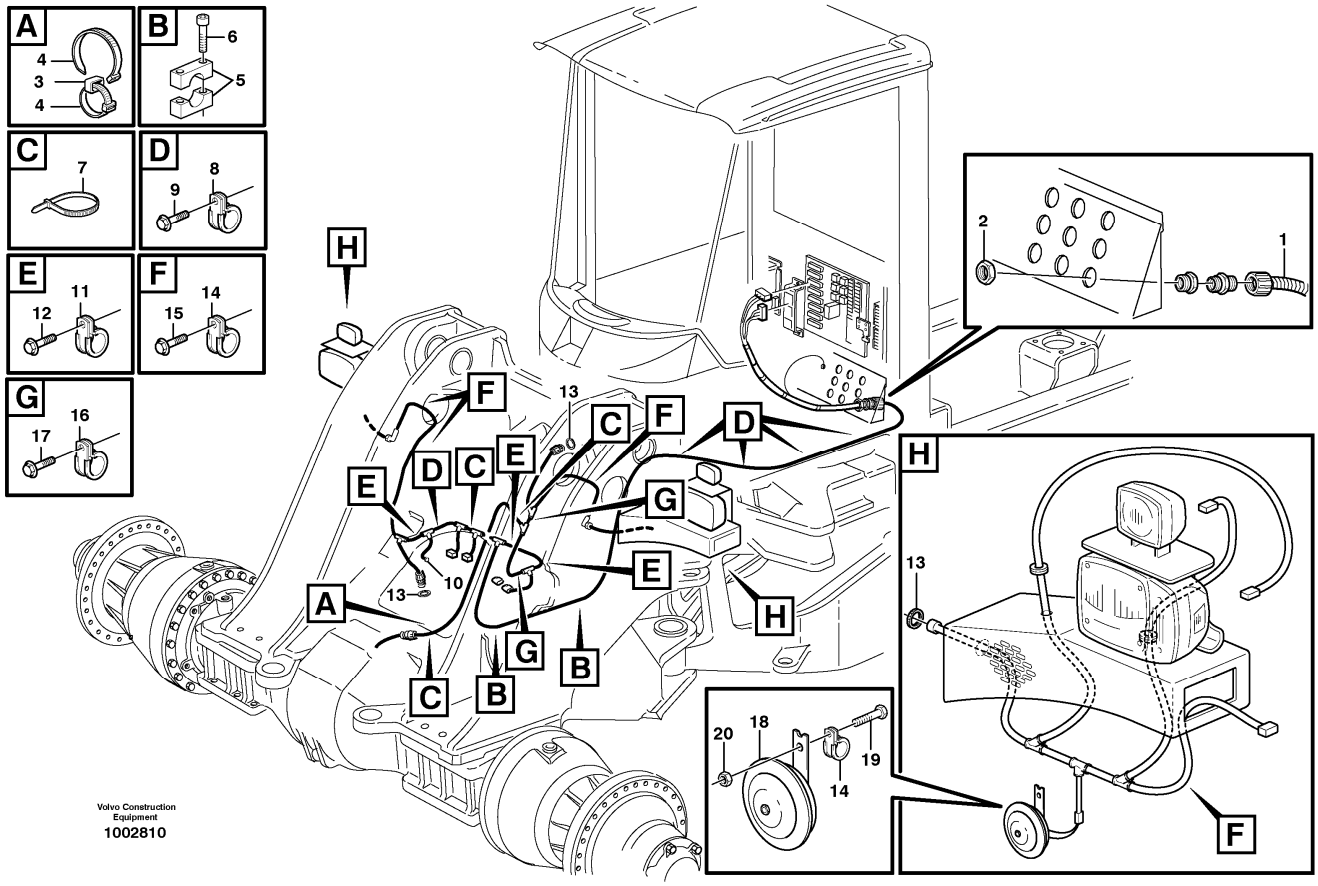

Section option	Kit	Option description
VOE33750		Wheel Loader
VOE33759		Wheel loader L60E OPEN ROPS

Pos	Part	Q1	Q2	Q3	Q4	Q5	PS	Kit	Description	Option(s)	Remark
1		1							Wire harness		See ref 371/300
2	VOE11147868	1							Plastic nut		
3	VOE11003221	5							Mounting ring		
4	VOE4881440	10							Cable tie		
5	VOE4785462	2							Clamp		
6	VOE959207	4							Hex. socket screw		
7	VOE4881440	REQ							Cable tie		
8	VOE13977600	5							Clamp		
9	VOE13946173	4							Screw		
10	VOE13966807	1							Flange screw		

11	VOE977599	3							Clamp		(VOE13977599)
12	VOE13946173	3							Screw		
13	VOE3963413	4							Ring		
14	VOE13949746	7							Clamp		
15	VOE13946173	5							Screw		
16	VOE13949747	2							Clamp		
17	VOE13946173	2							Screw		
18	VOE11170070	2							Horn		(VOE14514356)
19	VOE13945444	2							Screw		
20	VOE13945408	2							Nut		

VOLVO

Construction Equipment

PROSIS Part Information

Date:	Image id:	Catalogue:	Model:
10/09/2018	**1002834**	**20009**	**L60E**
Brand:	Serial:	Group/Section:	Title:
Volvo	**1001-3355, 60001-61214, 70001-70530**	**371/400**	**Cable harness, under cab STD, OPEN ROPS**

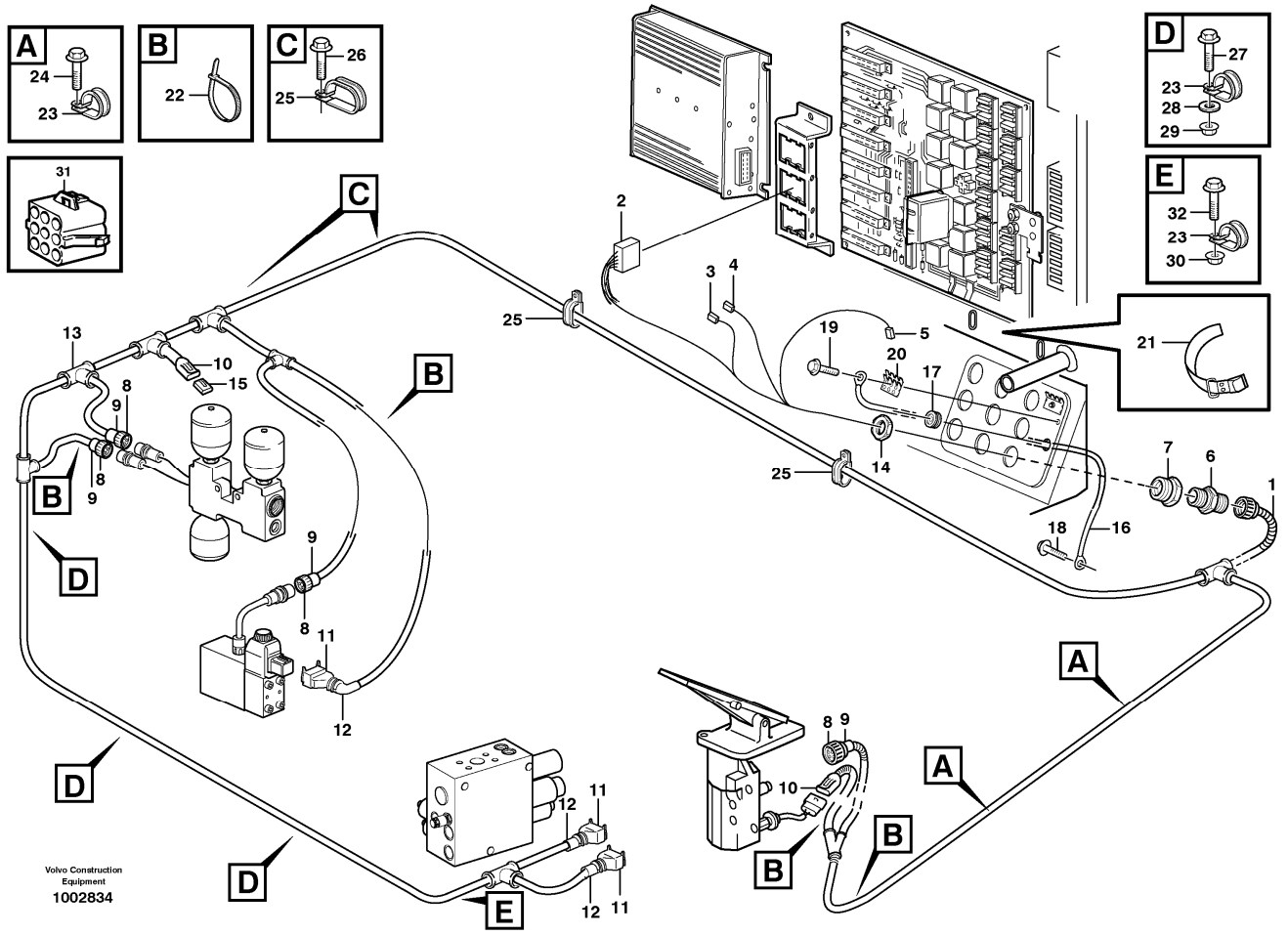

Section option	Kit	Option description
VOE33750		Wheel Loader
VOE33759		Wheel loader L60E OPEN ROPS

Pos	Part	Q1	Q2	Q3	Q4	Q5	PS	Kit	Description	Option(s)	Remark
1	VOE11170623	1							Cable harness		See footnote 1245) SER NO - 1461 SER NO - 60261 USA SER NO - 70099 BRA
	VOE11170884	1							Cable harness		See footnotes 1), 1245) SER NO 1462 - SER NO 60262 - USA SER NO 70100 - BRA
									•CONNECTED TO:		

									••Control unit, V-ECU		UA
									••Earth		31U
									••Parking brake alarm		UB (UBA, UBB)
									••Accumulator block		SE502, SE504
									••Parking brake block		SE503, MA501
									••Attachm. chang., Ahc		UC
									••Central block		MA202, MA502
									••Footbrake Valve		SE301, SE501
2	VOE1096619	1							•Housing		
3	VOE968388	1							•Housing		See ref 371/1050
4		1					NS		•Insulator		See ref 371/1050
5	VOE13949597	1							•Protecting sleeve		
6	VOE4803769	1							•Hose coupling		
7	VOE11039398	1							•Reduction		
8	VOE8159013	4							•Housing		
9	VOE3987767	4							•Adapter		
10	VOE1624477	2							•Receptacle housing		
11	VOE976256	3							•Housing		
12	VOE8142100	3							•Adapter		
13	VOE11039710	1							•Manifold		
14	VOE11147868	1							Plastic nut		
15	VOE1307049	1							Tab housing		SER NO - 1461 SER NO - 60261 USA SER NO - 70099 BRA
		2					NS		Sealing plug		SER NO - 1461 SER NO - 60261 USA SER NO - 70099 BRA
16	VOE11108113	1							Wire		See footnote 1245)
									•CONNECTED TO:		
									••Earth		31R, 31C
17	VOE941264	1							Grommet		
18	VOE13949888	1							Screw		
19	VOE13948746	1							Screw		
20	VOE9148415	2							Terminal block		
21	VOE11104606	1							Retaining strap		
22	VOE4881440	REQ							Cable tie		
23	VOE13949747	6							Clamp		
24	VOE13946173	2							Screw		
25	VOE977599	4							Clamp		(VOE13977599)
26	VOE13946173	2							Screw		
27	VOE946671	3							Flange screw		
28	VOE11117464	3							Plain washer		(VOE13960141)
29	VOE13945408	3							Nut		

30	VOE948645	1							Flange lock nut		
31	VOE948294	1							Insulator		
32	VOE13946173	1							Screw		

1) Replacement version

1245) Including parts: Wire assembly, hose, manifold, cable terminal and insulator See Group 379.

VOLVO

Construction Equipment

PROSIS Part Information

Date:	Image id:	Catalogue:	Model:
10/09/2018	**EL261**	**20009**	**L60E**
Brand:	Serial:	Group/Section:	Title:
Volvo	**1001-3355, 60001-61214, 70001-70530**	**371/450**	**Cable harnesses, cab**

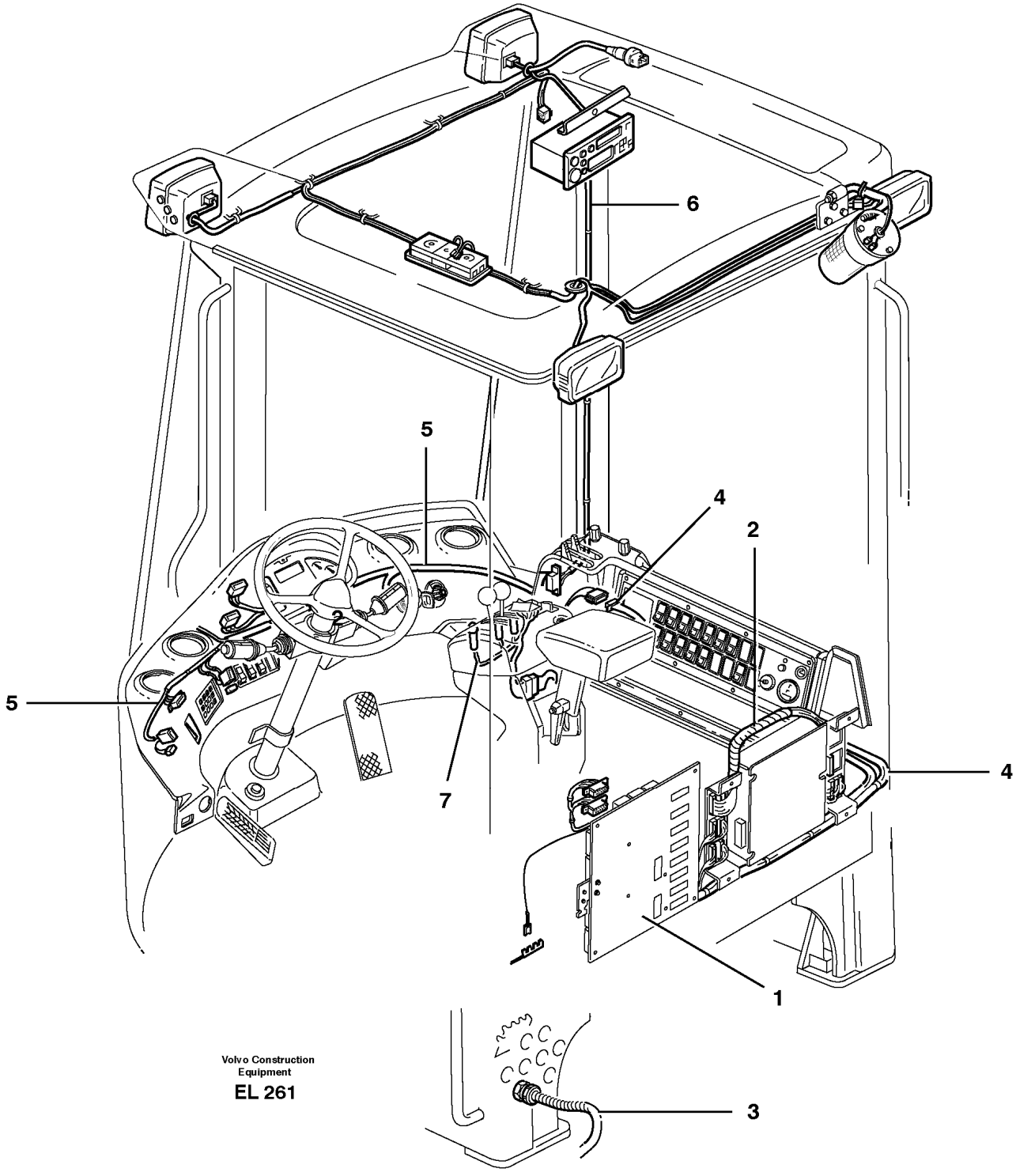

Section option	Kit	Option description

VOE33755		Cab
VOE33760		Cab. Open Rops

Q1-Q5	Option	Option description	
Q1 STD OPEN ROPS			
Q2 .			See footnote 1294)

Pos	Part	Q1	Q2	Q3	Q4	Q5	PS	Kit	Description	Option(s)	Remark
		1							El Distr Unit		See ref 372/100
1		1							Circuit Board		See ref 372/150
									Cable Harness		
2		1							•El Distr Unit		See ref 372/200
3			1						•Under cab		See ref 371/400
4		1							•Control panel		See ref 371/550
5		1							•Instr Panel		STD See ref 371/500
											OPEN ROPS See ref 371/525
6		1							•Headlining		See ref 371/600
7			1						•Cover, gear lever car		See ref 371/850

1294) Not included when cab is ordered

VOLVO

Construction Equipment

PROSIS Part Information

Date:	Image id:	Catalogue:	Model:
10/09/2018	**EN132**	**20009**	**L60E**
Brand:	Serial:	Group/Section:	Title:
Volvo	**1001-3355, 60001-61214, 70001-70530**	**371/500**	**Cable harnesses, instrument panel STD 33755, 33756**

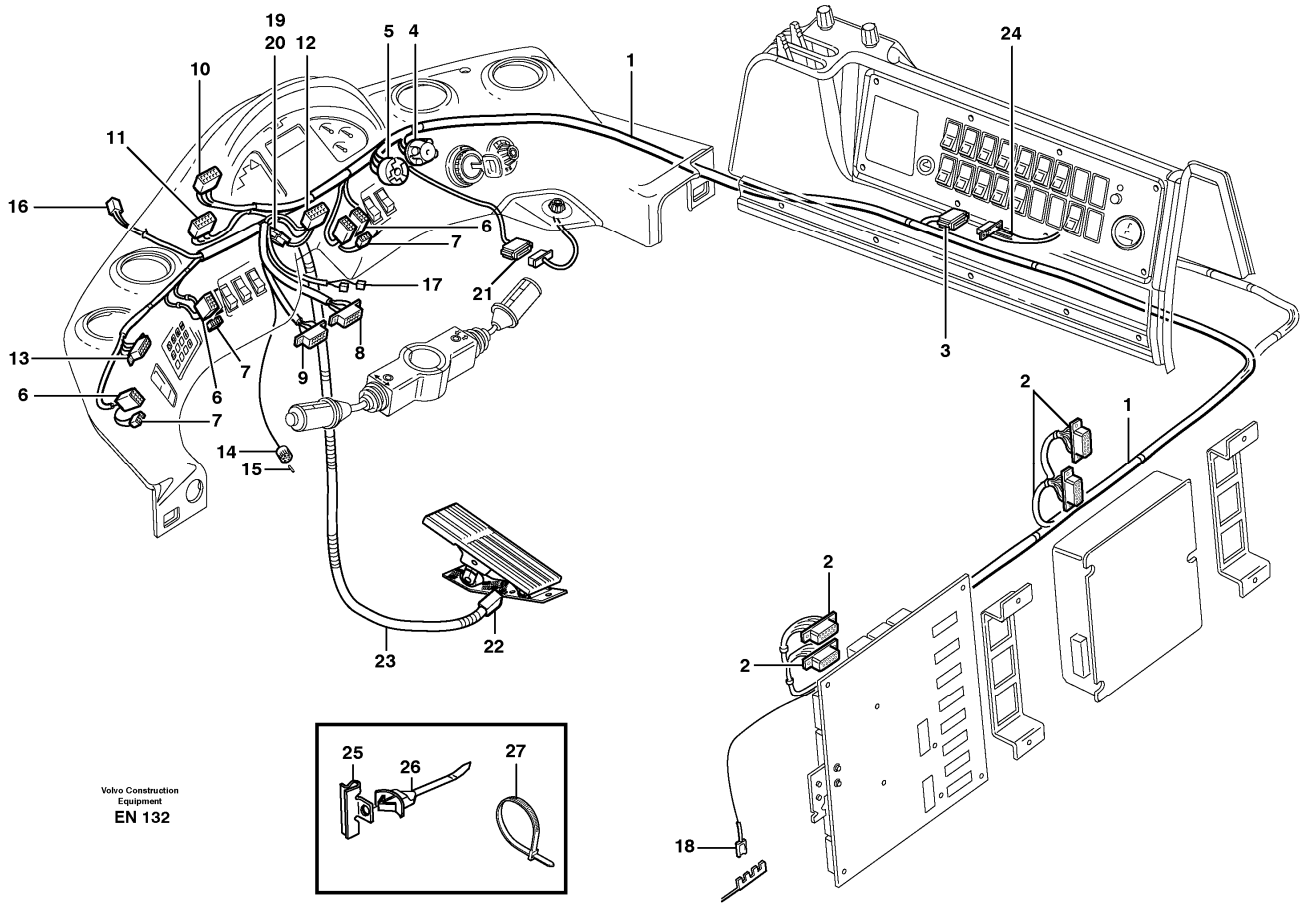

Section option	Kit	Option description
VOE33755		Cab
VOE33756		Cab L60E USA
VOE82597		Cab USA

Pos	Part	Q1	Q2	Q3	Q4	Q5	PS	Kit	Description	Option(s)	Remark
1	VOE11170682	1							Cable harness		See footnote 1245)
									•CONNECTED TO:		
									••Ptd Circuit Bd		DA, DB
									••Wire harness		D, SD, SH
									••Earth		31D
									••Mode selector		SW412
									••Starter switch		SW101
									••Hand throttle control		R205

									••Transmission diseng		SW411
									••Throttle control		SE214
									••Pre heater		SW201
									••Display panel		IECU, P1, P2, P3
									••Flasher		WA
									••Gear selector		GA
									••Buzzer		SA802
									••Diff. lock		SW414
									••Windshield Wiper		MO801
									••Hazard		SW306
									••Attachm. chang., Ahc		SW910
									••Attachment locking		SW904
									••Keybord		SW807
									••Parking brake		SW501
2	VOE1096619	4							•Housing		
3	VOE1096615	1							•Housing		
4	VOE1307600	1							•Housing		
5	VOE1605668	1							•Receptacle housing		
6	VOE4803454	6							•Receptacle housing		
7	VOE4803532	6							•Socket housing		
8		1					NS		•Timerhousing		
9	VOE968408	1							•Housing		
10		1					NS		•Receptacle housing		
11		1					NS		•Receptacle housing		
12	VOE978310	1					OP		•Housing		
13	VOE11039685	1							•Housing		
14	VOE949005	1							•Receptacle housing		
15	VOE11000257	2							•Plug		
16	VOE948294	1							•Insulator		
17	VOE13947848	2							•Housing		
18	VOE13949597	2							•Protecting sleeve		
19	VOE13948996	1							•Insulator		
20	VOE11041349	1							•Resistor Unit		
21	VOE1096618	1							•Housing		
22	VOE11115697	1							•Housing		
23	VOE11039491	REQ							•Hose		
24									Wire harness		See ref 371/550
25	VOE11039688	7							Clip		
26	VOE11039689	7							Strip clamp		
27	VOE4881440	4							Cable tie		

1245) Including parts: Wire assembly, hose, manifold, cable terminal and insulator See Group 379.

VOLVO

Construction Equipment

PROSIS Part Information

Date:	Image id:	Catalogue:	Model:
10/09/2018	**1008894**	**20009**	**L60E**
Brand:	Serial:	Group/Section:	Title:
Volvo	**1001-3355, 60001-61214, 70001-70530**	**371/525**	**Cable harnesses, instrument panel OPEN ROPS**

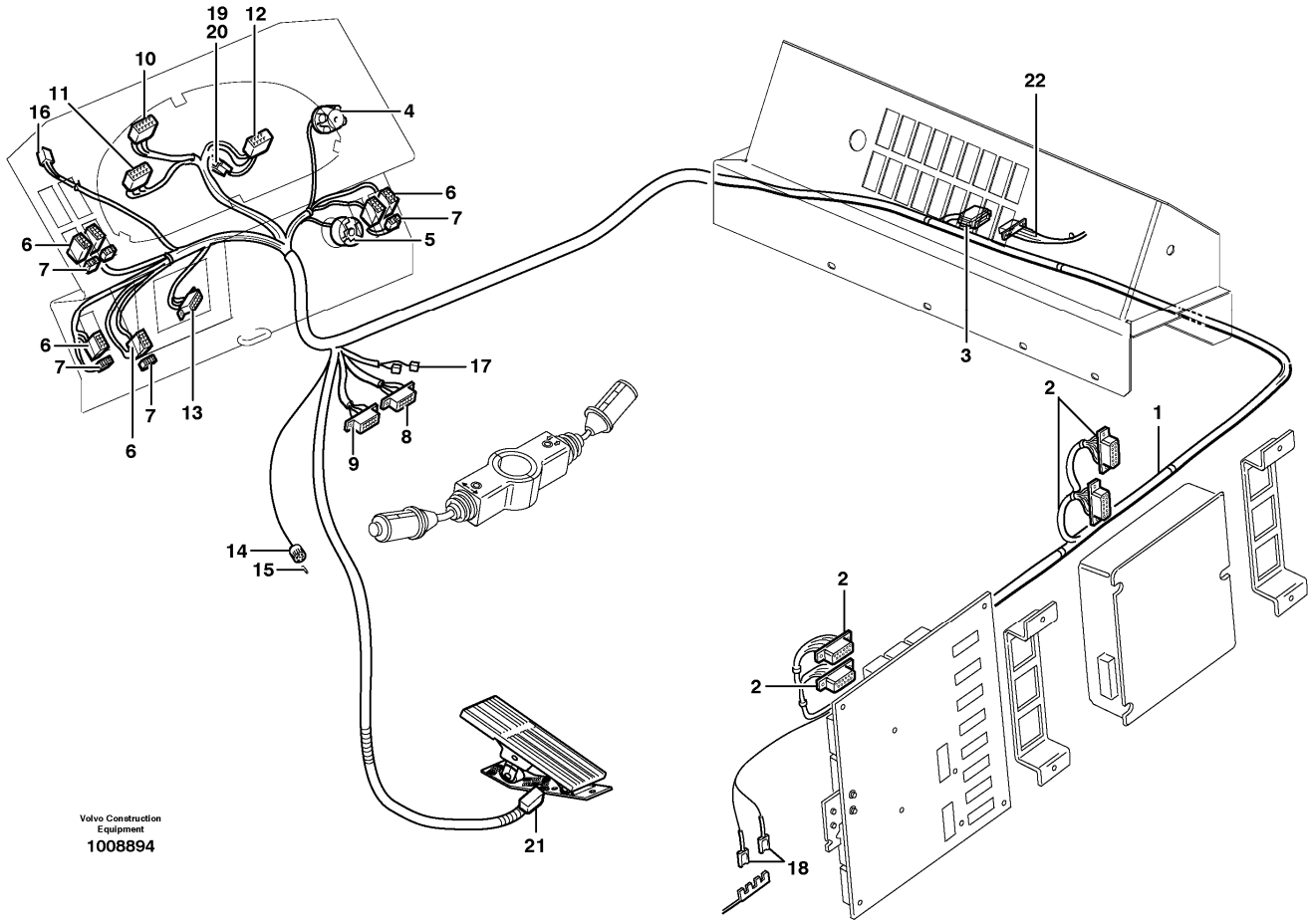

Section option	Kit	Option description
VOE33760		Cab. Open Rops

Pos	Part	Q1	Q2	Q3	Q4	Q5	PS	Kit	Description	Option(s)	Remark
1	VOE11170992	1							Cable harness		See footnote 1245)
									•CONNECTED TO:		
									••Ptd Circuit Bd		DA, DB
									••Wire harness		D, SD, SH
									••Earth		31D, 31I
									••Mode selector		SW412
									••Starter switch		SW101
									••Transmission diseng		SW411, SW417
									••Throttle control		SE214

									••Pre heater		SW201
									••Display panel		IECU, P1, P2, P3
									••Flasher		WA
									••Gear selector		GA
									••Buzzer		SA802
									••Diff. lock		SW414
									••Windshield Wiper		MO801
									••Hazard		SW306
									••Attachm. chang., Ahc		SW910
									••Attachment locking		SW904
									••Keybord		SW807
									••Parking brake		SW501
2	VOE1096619	4							•Housing		
3	VOE1096615	1							•Housing		
4	VOE1307600	1							•Housing		
5	VOE1605668	1							•Receptacle housing		
6	VOE4803454	6							•Receptacle housing		
7	VOE4803532	6							•Socket housing		
8		1					NS		•Timerhousing		
9	VOE968408	1							•Housing		
10		1					NS		•Receptacle housing		
11		1					NS		•Receptacle housing		
12	VOE978310	1					OP		•Housing		
13	VOE11039685	1							•Housing		
14	VOE949005	1							•Receptacle housing		
15	VOE11000257	2							•Plug		
16	VOE948294	1							•Insulator		
17	VOE13947848	2							•Housing		
18	VOE13949597	2							•Protecting sleeve		
19	VOE13948996	1							•Insulator		
20	VOE11041349	1							•Resistor Unit		
21	VOE11115697	1							•Housing		
22									Wire harness		See ref 371/550

1245) Including parts: Wire assembly, hose, manifold, cable terminal and insulator See Group 379.

VOLVO

Construction Equipment

PROSIS Part Information

Date:	Image id:	Catalogue:	Model:
10/09/2018	**1008800**	**20009**	**L60E**
Brand:	Serial:	Group/Section:	Title:
Volvo	**1001-3355, 60001-61214, 70001-70530**	**371/550**	**Cable harnesses, cab**

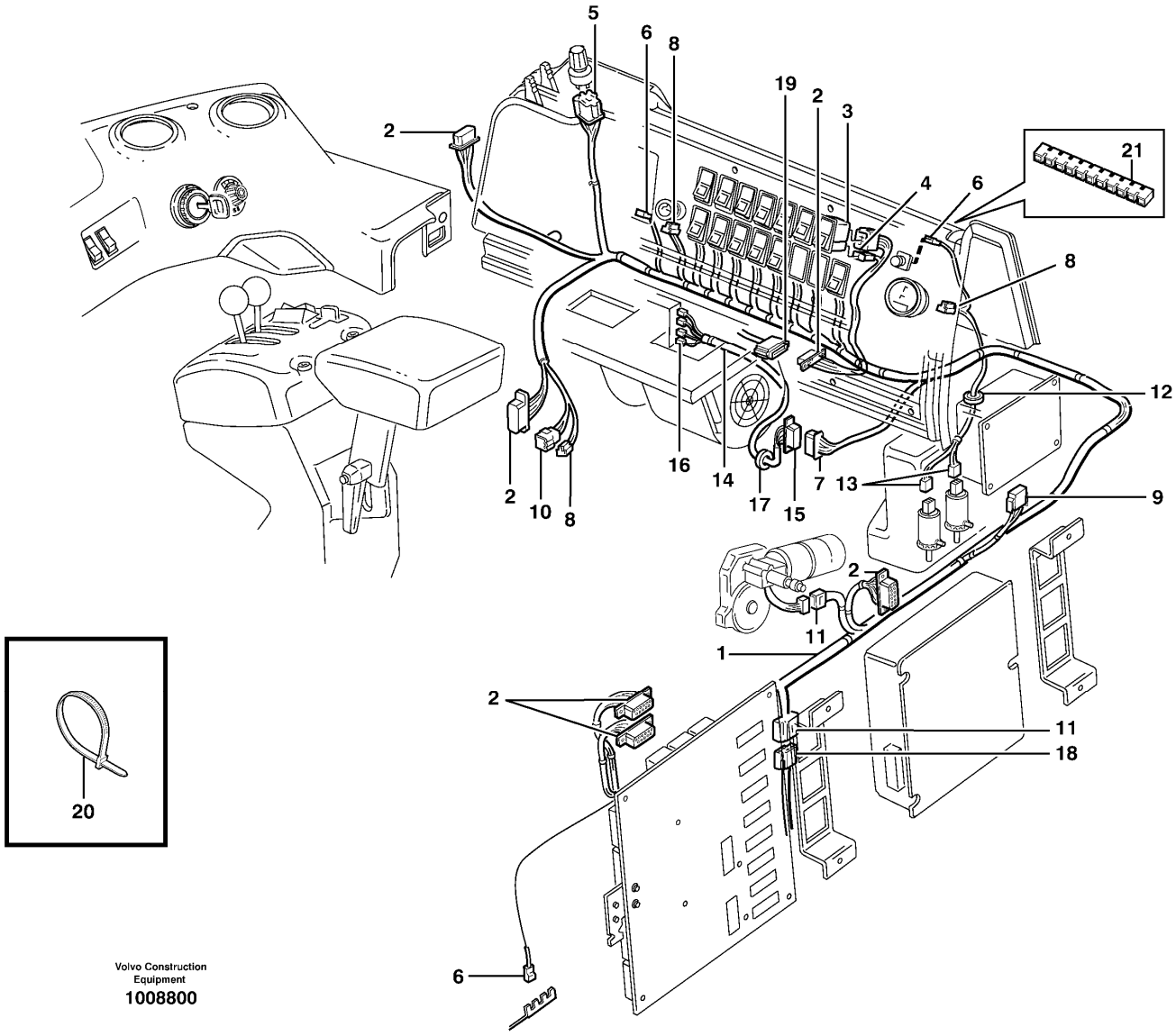

Section option	Kit	Option description
VOE33755		Cab
VOE33756		Cab L60E USA
VOE33760		Cab. Open Rops

Q1-Q5	Option	Option description	
Q1 STD			
Q2 OPEN ROPS			

Pos	Part	Q1	Q2	Q3	Q4	Q5	PS	Kit	Description	Option(s)	Remark
1	VOE11171081	1	1						Cable harness		See footnote 1245)
									•CONNECTED TO:		
									••Ptd Circuit Bd		SA, SB
									••Cable harness		SC
									••Earth		31S
									••Rear window viper		MO803
									••Voltage converter		CU801
									••Hour counter		IM201
									••Rheostat		R301
									••Washer motor		MO802, MO804
									••Fan, cab		SG
									••Switch		SW301 - SW925
									••Fan switch		SW805
									••Servo panel		SE, SF, SJ
									••Air-conditioning		AC
									••Lift single act./ Bss		SW925
									••Switch		SW301 - SW925
									••Roof		ST
									••Thermostat		SE803
									••Cig lighter		HE801
									••Instr Panel		SD
2	VOE1096619	6	6						•Housing		
3	VOE4803454	13	13						•Receptacle housing		
4	VOE4803532	13	13						•Socket housing		
5	VOE1307600	1	1						•Housing		
6	VOE13949597	5	5						•Protecting sleeve		
7	VOE1096618	1	1						•Housing		
8	VOE13958210	4	4						•Receptacle housing		
9	VOE8159086	1	1						•Housing		
10	VOE948295	1	1						•Insulator		
11	VOE968388	2	2						•Housing		
12	VOE961970	1	1						•Plug		
13	VOE1259830	2	2						•Housing		
14	VOE11041350	1							Cable harness		See footnote 1245)
									•CONNECTED TO:		
									••Cable harness		SG
									••Fan, cab		
15	VOE1096614	1							•Housing		
16	VOE13949597	5							•Protecting sleeve		
17	VOE13961962	1							•Protecting bushing		
18		1							Wire harness		Air conditioning
19		1	1						Wire harness		See ref 371/500
20	VOE4881440	REQ	REQ						Cable tie		
21	VOE191910		1						Connector		

1245) Including parts: Wire assembly, hose, manifold, cable terminal and insulator See Group 379.

VOLVO

Construction Equipment

PROSIS Part Information

Date:	Image id:	Catalogue:	Model:
10/09/2018	**1010402**	**20009**	**L60E**
Brand:	Serial:	Group/Section:	Title:
Volvo	**1001-3355, 60001-61214, 70001-70530**	**371/600**	**Cable harness, ceiling**

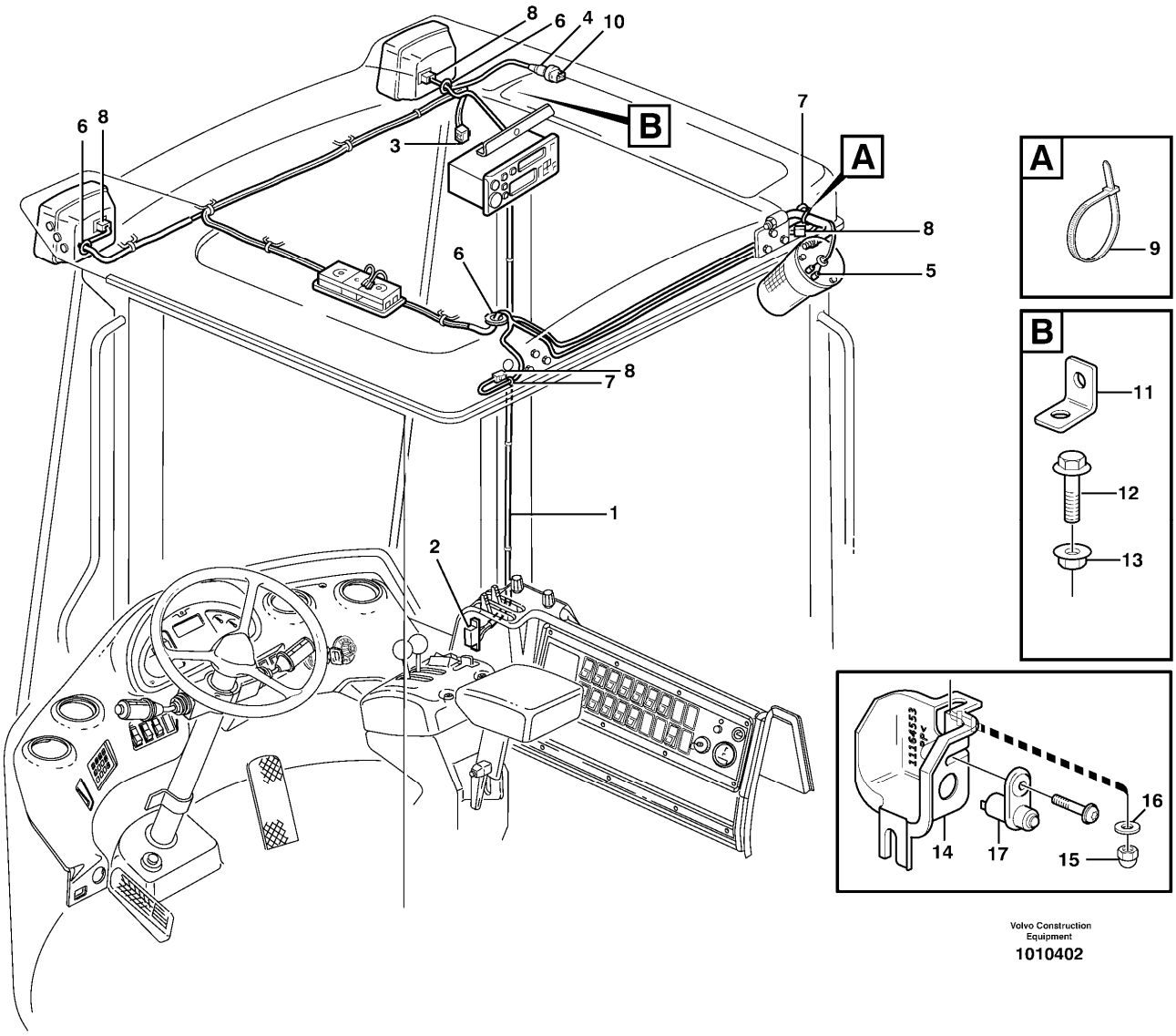

Section option	Kit	Option description
VOE33755		Cab
VOE33756		Cab L60E USA
VOE33760		Cab. Open Rops

Q1-Q5	Option	Option description	
Q1 33755 33756	VOE33755	Cab	
Q2 33760	VOE33760	Cab. Open Rops	

Pos	Part	Q1	Q2	Q3	Q4	Q5	PS	Kit	Description	Option(s)	Remark
1	VOE11040823	1							Cable harness		See footnote 1245)
	VOE11170986		1						Cable harness		
									•CONNECTED TO:		
									••Wire harness		ST
									••Work light, front		LA315, LA316
									••Temp sensor		SE807
									••Radio		CR
									••Interior light		LA314
									••Work light, rear		LA322, LA323
									••Rotating Beacon		LA325
2	VOE1096615	1	1						•Housing		
3	VOE968388	1	1						•Housing		
4	VOE1307048	1	1						•Housing		
5	VOE13949597	4	4						•Protecting sleeve		
6	VOE1259854	3	3						•Grommet		
7	VOE941269	3	3						•Plug		
8	VOE14370760	4	4						•Socket		
	VOE14370880	4	4						•Wedge		
9	VOE4881440	10	10						Cable tie		
10	VOE1347010	1	1						Temperature sensor		SE807
11	VOE11006229	1	1						Anchorage		
12	VOE13948746		1						Screw		
13	VOE13945407		1						Nut		
14	VOE11164553	1							Cover		
15	VOE11005777	1							Cap nut		
16	VOE960139	1							Plain washer		
17	VOE3987417	1							Switch		SE 302

1245) Including parts: Wire assembly, hose, manifold, cable terminal and insulator See Group 379.

VOLVO

Construction Equipment

PROSIS Part Information

Date:	Image id:	Catalogue:	Model:
10/09/2018	**1004643**	**20009**	**L60E**
Brand:	Serial:	Group/Section:	Title:
Volvo	**1001-3355, 60001-61214, 70001-70530**	**371/650**	**Cable harness for transmission**

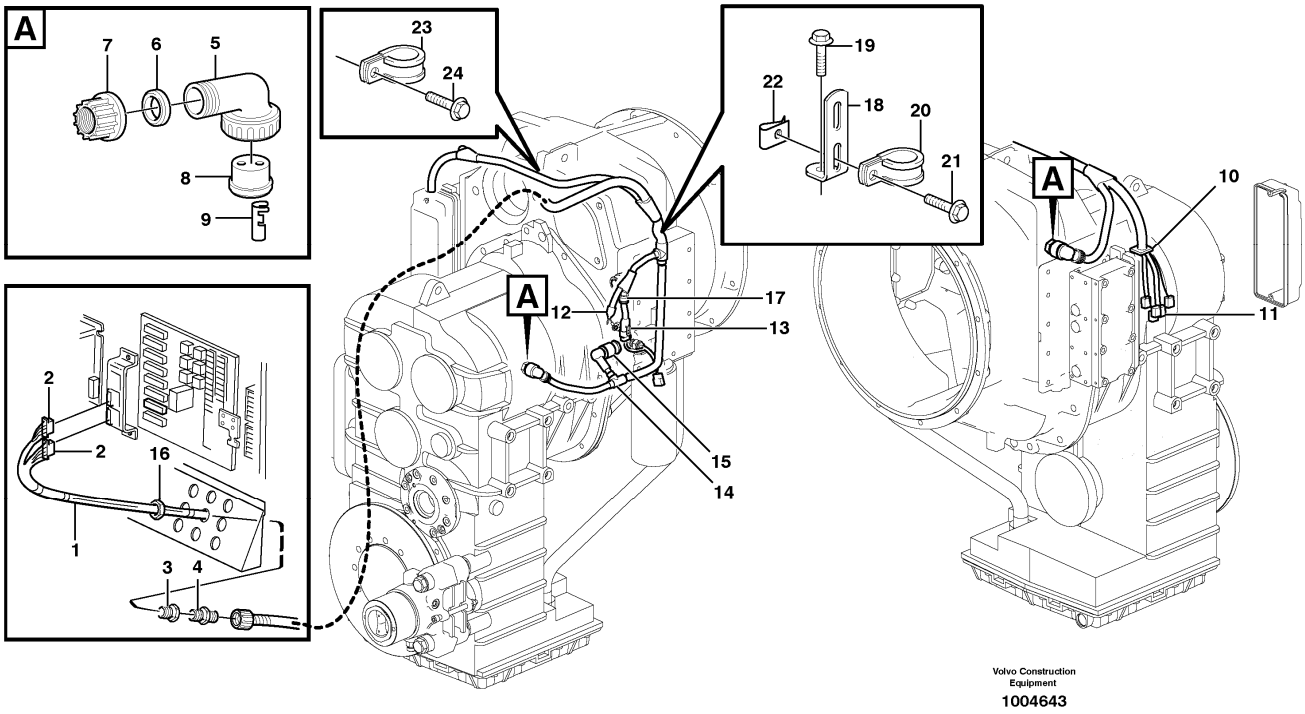

Section option	Kit	Option description
VOE22532		Hytraulic transmission HTE93
VOE33750		Wheel Loader
VOE33759		Wheel loader L60E OPEN ROPS

Q1-Q5	Option	Option description	
Q1 22532	VOE22532	Hytraulic transmission HTE93	
Q2 STD OPEN ROPS			

Pos	Part	Q1	Q2	Q3	Q4	Q5	PS	Kit	Description	Option(s)	Remark
1	VOE11038744	1							Cable harness		See footnote 1245)
									•Connected to:		
									••Circuit Board		TA, TB
									••Speed sensor		SE201, SE402
									••Gear selector valve		S1, S2, S3, S4, S5
									••Temp.sensor		SE406
									••Pressure sensor		SE405, SE401
									••Speed sensor		SE403

2	VOE1096619	2							•Housing		
3	VOE4803795	1							•Reduction		
4	VOE4803768	1							•Hose coupling		
5	VOE4803791	2							•Elbow union		
6	VOE11039262	2							•Sealing ring		
7	VOE4803794	2							•Nut		
8	VOE4803790	2							•Rubber plug		
9	VOE4803799	4							•Cable terminal		
10		1					NS		•Bushing		
11	VOE973123	10							•Cable terminal		
12	VOE11039397	1							•End sleeve		
13	VOE1624477	1							•Receptacle housing		
14	VOE3943091	1							•Manifold		
15	VOE8159013	1							•Housing		
16	VOE11147868		1						Plastic nut		
17	VOE13949746		1						Clamp		
18	VOE13965552		1						Bracket		
19	VOE946440		1						Flange screw		
20	VOE952632		1						Clamp		
21	VOE13946544		1						Screw		
22	VOE949921		1						Spring nut		
23	VOE13949747		1						Clamp		
24	VOE946440		1						Flange screw		

1245) Including parts: Wire assembly, hose, manifold, cable terminal and insulator See Group 379.

VOLVO

Construction Equipment

PROSIS Part Information

Date:	Image id:	Catalogue:	Model:
10/09/2018	**1009347**	**20009**	**L60E**
Brand:	Serial:	Group/Section:	Title:
Volvo	**1001-3355, 60001-61214, 70001-70530**	**371/700**	**Cable harness, rear**

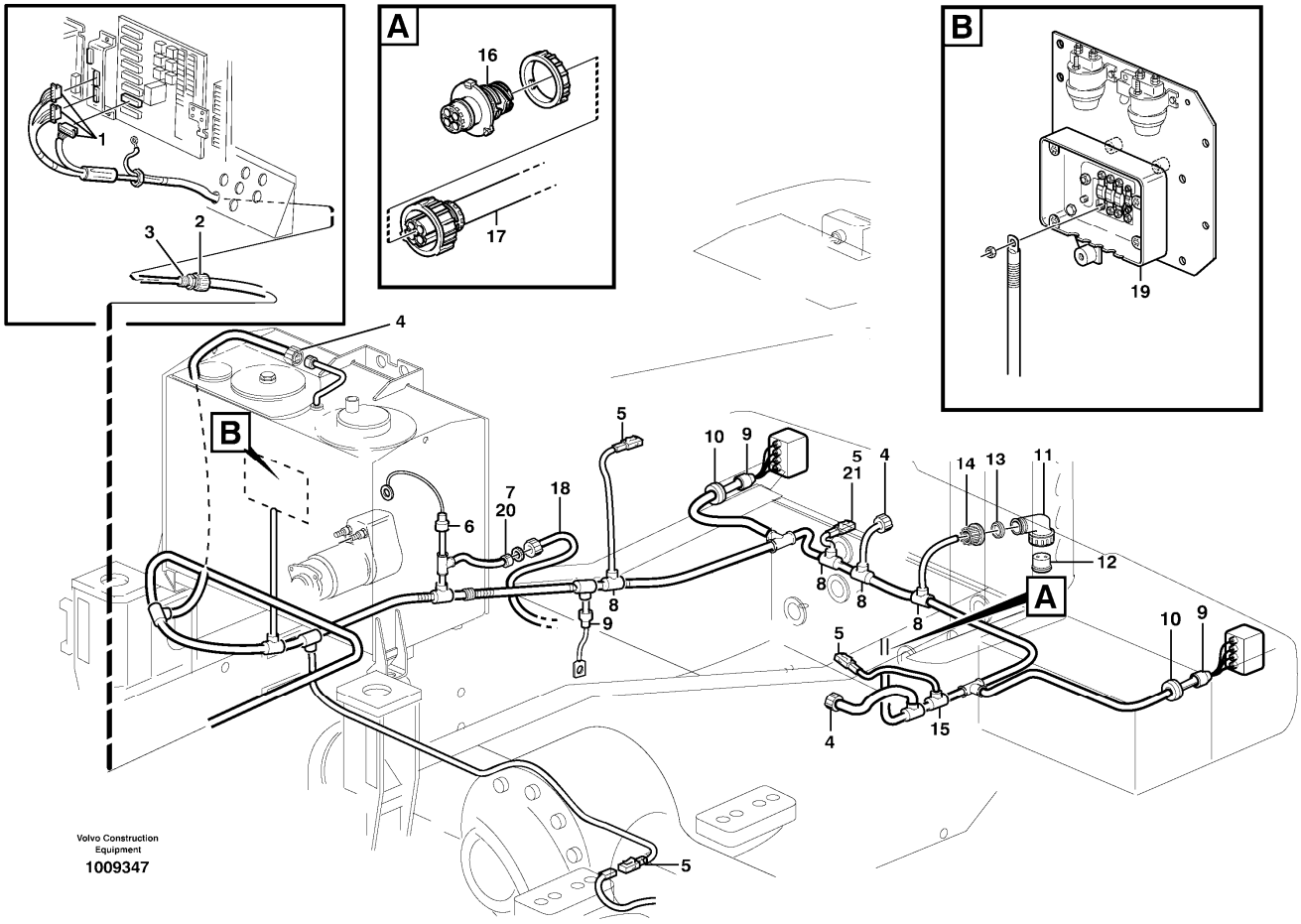

Section option	Kit	Option description
VOE33750		Wheel Loader
VOE33759		Wheel loader L60E OPEN ROPS

Q1-Q5	Option	Option description	
Q1 STD			
Q2 OPEN ROPS			

Pos	Part	Q1	Q2	Q3	Q4	Q5	PS	Kit	Description	Option(s)	Remark
	VOE11170883	1							Cable harness		See footnote 1245) SER NO - 1461 SER NO - 60260 USA SER NO - 70099 BRA
	VOE11170939	1							Cable harness		SER NO 1462 - SER NO 60261 - USA SER NO

											70100 - BRA
	VOE11170883		1						Cable harness		See footnote 1245)
									•CONNECTED TO:		
									••El Distr Unit		R, RB, RA, +30
									••Level sensor,hyd flui		SE906
									••Fuse box		FU70
									••Temp. sensor, shaft		SE411
									••Starter motor		MO201
									••Compressor		RL
									••Alternator		RD
									••Earth		31R2
									••Tail light, RH		LA303, LA327, LA331
									••Insulator		RR, Radio fuse
									••Fan		RP
									••Fan		SE211
									••Tail lamp, LH		LA306, LA326, LA329
									••Level sensor, fuel		SE207
									••Temp sensor,coolant		SE210
									••Radiator casing		RZ
1	VOE1096619	3	3						•Housing		
2	VOE14343156	1	1						•Fitting		
3	VOE11039398	1	1						•Reduction		
4	VOE8159013	3	3						•Housing		
5	VOE1624477	4	4						•Receptacle housing		
6	VOE11039397	1	1						•End sleeve		
7	VOE984944	1	1						•Housing		(VOE3963411)
	VOE3985597	1	1						•Adapter		
8	VOE11039710	4	4						•Manifold		
9	VOE4803711	3	3						•End sleeve		
10	VOE961970	2	2						•Plug		
11	VOE4803791	1	1						•Elbow union		
12	VOE4803790	1	1						•Rubber plug		
13	VOE11039262	1	1						•Sealing ring		
14	VOE4803794	1	1						•Nut		
15	VOE14346331	1	1						•Manifold		
16	VOE3944972	1	1						•Housing		
	VOE3985597	1	1						•Adapter		
17		1	1						Cable harness		See ref 371/800
18		1							Cable harness		AC
19		1	1						Fuse box		See ref 371/100
20	VOE20374157	1	1						Cap		
21	VOE1307049	1	1						Tab housing		
		2	2				NS		Sealing plug		

1245) Including parts: Wire assembly, hose, manifold, cable terminal and insulator See Group 379.

VOLVO

Construction Equipment

PROSIS Part Information

Date:	Image id:	Catalogue:	Model:
10/09/2018	**1020818**	**20009**	**L60E**
Brand:	Serial:	Group/Section:	Title:
Volvo	**1001-3355, 60001-61214, 70001-70530**	**371/725**	**Cable harness, air-suspension seat**

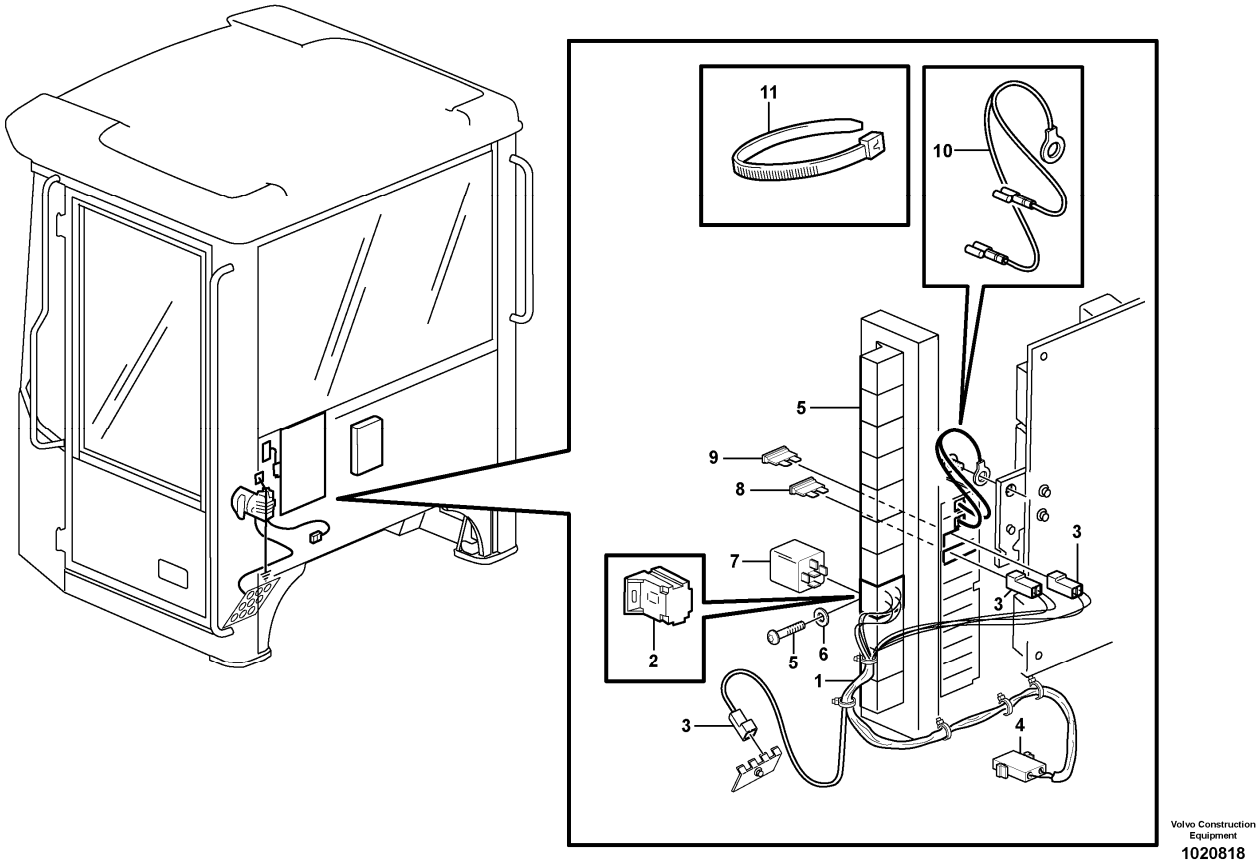

Section option	Kit	Option description
VOE83070	VOE11714942	Operator seat, heated, air suspended

Pos	Part	Q1	Q2	Q3	Q4	Q5	PS	Kit	Description	Option(s)	Remark
1	VOE11040658	1							Cable harness		
									•CONNECTED TO:		
									••Seat		AA
									••Relay		RE803
									••Fuse		FU52, FU54
2	VOE977184	1							•Housing		
3	VOE13949597	3							•Protecting sleeve		
4	VOE13948996	1							•Insulator		
5	VOE969278	1							Six point socket screw		(VOE13969278)
6	VOE13940090	1							Washer		

7	VOE20374662	1							Relay		RE803
8	VOE13969160	1							Fuse		(VOE967851)FU54, 5A
9	VOE969161	1							Fuse		(VOE13967545)FU52, 10A
10	VOE11041913	1							Wire		
									•CONNECTED TO:		
									••Ptd Circuit Bd		+30
									••Fuse Holder		
11	VOE4881438	REQ							Cable tie		

VOLVO

Construction Equipment

PROSIS Part Information

Date:	Image id:	Catalogue:	Model:
10/09/2018	**1009349**	**20009**	**L60E**
Brand:	Serial:	Group/Section:	Title:
Volvo	**1001-3355, 60001-61214, 70001-70530**	**371/750**	**Rear cable harness with assembly parts**

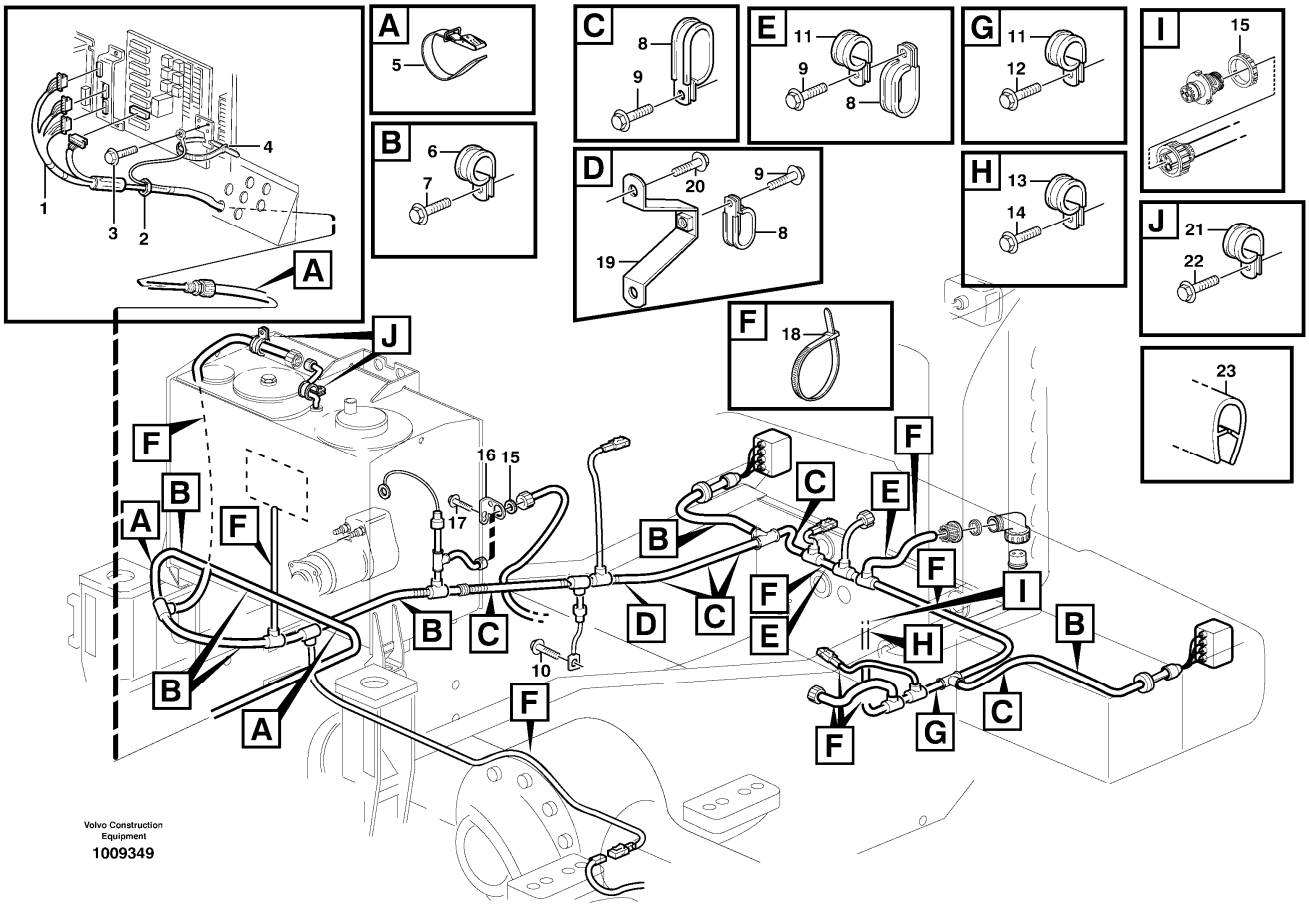

Section option	Kit	Option description
VOE33750		Wheel Loader
VOE33759		Wheel loader L60E OPEN ROPS

Q1-Q5	Option	Option description	
Q1 STD			
Q2 OPEN ROPS			

Pos	Part	Q1	Q2	Q3	Q4	Q5	PS	Kit	Description	Option(s)	Remark
1		1	1						Wire harness		See ref 371/700
2	VOE11147868	1	1						Plastic nut		
3	VOE947107	1	1						Flange screw		
4	VOE4881438	1	1						Cable tie		
5	VOE11104606	3	3						Retaining strap		
6	VOE13949997	6	6						Clamp		

7	VOE13946173	6	6						Screw		
8	VOE11025709	9	9						Clamp		
9	VOE13946173	9	9						Screw		
10	VOE13949888	1	1						Screw		
11	VOE977599	3	3						Clamp		(VOE13977599)
12	VOE13946173	1	1						Screw		
13	VOE980614	2	2						Clamp		
14	VOE13945444	2	2						Screw		
15	VOE3963413	2	2						Ring		
16	VOE3988328	1	1						Bracket		
17	VOE946440	1	1						Flange screw		
18	VOE4881440	REQ	REQ						Cable tie		
19	VOE11173124	1	1						Bracket		
20	VOE13946173	2	2						Screw		
21	VOE13949746	2	2						Clamp		
22	VOE13946173	2	2						Screw		
23			REQ				NS		Framework moulding		L = 100 MM

VOLVO

Construction Equipment

PROSIS Part Information

Date:	Image id:	Catalogue:	Model:
10/09/2018	**1002571**	**20009**	**L60E**
Brand:	Serial:	Group/Section:	Title:
Volvo	**1001-3355, 60001-61214, 70001-70530**	**371/800**	**Cable harness, radiator STD, OPEN ROPS**

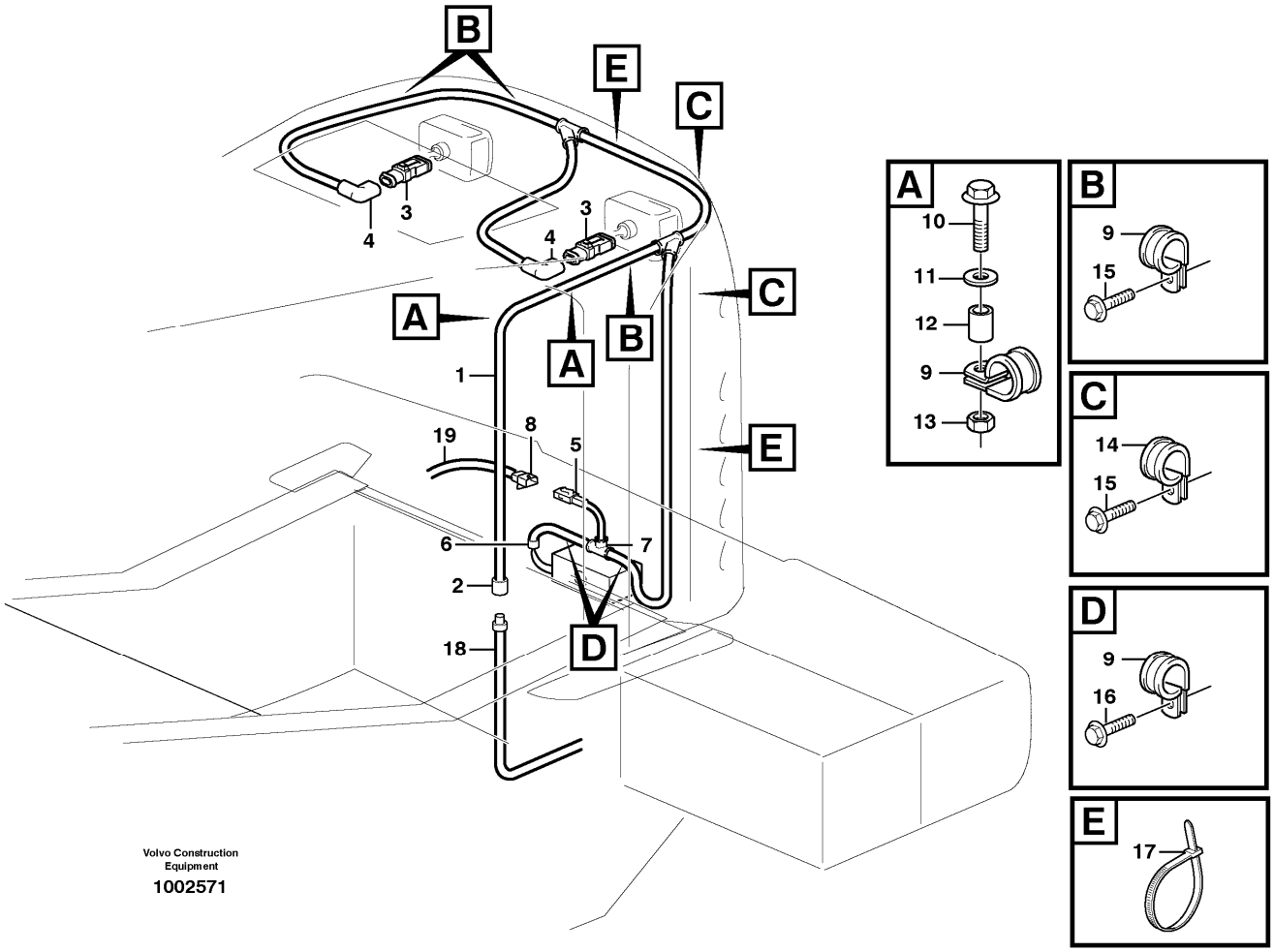

Section option	Kit	Option description
VOE33750		Wheel Loader
VOE33759		Wheel loader L60E OPEN ROPS

Pos	Part	Q1	Q2	Q3	Q4	Q5	PS	Kit	Description	Option(s)	Remark
		1							Radiator Casing		See ref 823/150
1	VOE11170643	1							•Cable harness		See footnote 1245)
									••CONNECTED TO:		
									•••Radiator casing		RZ
									•••B-up Wrn Unit		SA 803
									•••Work Lamp		LA320, LA321
									•••Sign Lamp		RE

2	VOE8159013	1							••Housing		
3	VOE14370760	2							••Socket		
4	VOE11170005	2							••Adapter		
5	VOE1624477	1							••Receptacle housing		
	VOE1095059	1							••Joint nipple		
6	VOE11039397	1							••End sleeve		
7	VOE11039709	1							••Manifold		
8	VOE1307049	1							•Tab housing		
9	VOE13949746	7							•Clamp		
10	VOE13965179	2							•Screw		
11	VOE11117464	2							•Plain washer		(VOE13960141)
12	VOE11174533	2							•Spacer		
13	VOE13945408	2							•Nut		
14	VOE977599	2							•Clamp		(VOE13977599)
15	VOE946671	5							•Flange screw		
16	VOE13946173	2							•Screw		
17	VOE4881440	5							•Cable tie		
18		1							Cable harness		See ref 371/700
19		1							Cable harness		See ref 353/200

1245) Including parts: Wire assembly, hose, manifold, cable terminal and insulator See Group 379.

VOLVO

Construction Equipment

PROSIS Part Information

Date:	Image id:	Catalogue:	Model:
10/09/2018	**1017217**	**20009**	**L60E**
Brand:	Serial:	Group/Section:	Title:
Volvo	**1001-3355, 60001-61214, 70001-70530**	**371/850**	**Cable harnesses, servo valve.**

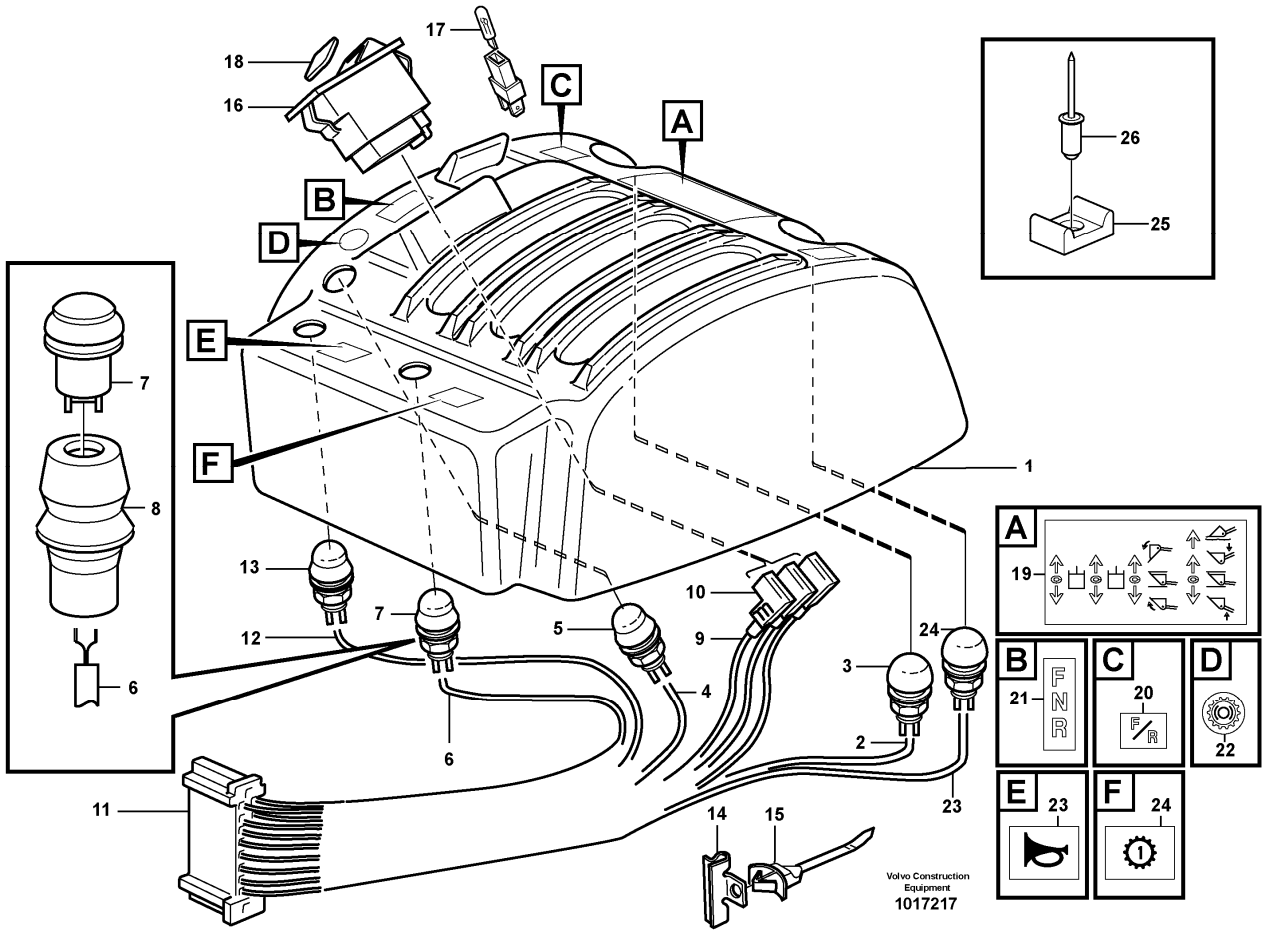

Section option	Kit	Option description
VOE33750		Wheel Loader
VOE82060	VOE11988275	Hydraulic function, 3rd
VOE82063	VOE11988276	Hydraulic system, 3rd and 4th function
VOE83466		Hydraulic function, 3rd
VOE83488	VOE11716051	Hydraulic system, 3rd and 4th function LONG BOOM

Q1-Q5	Option	Option description	
Q1 33750 STD	VOE33750	Wheel Loader	
Q2 82060	VOE82060	Hydraulic function, 3rd	
Q3 82063	VOE82063	Hydraulic system, 3rd and 4th function	
Q4 83466	VOE83466	Hydraulic function, 3rd	
Q5 83488	VOE83488	Hydraulic system, 3rd and 4th function LONG BOOM	

Pos	Part	Q1	Q2	Q3	Q4	Q5	PS	Kit	Description	Option(s)	Remark
		1	1	1		1	NS		Casing		
					1		NS		Casing		
1	VOE11006225	1							•Cover		
1	VOE11006226		1		1				•Cover		
1	VOE11164527			1		1			•Cover		
2	VOE11170674	1	1	1	1	1			•Cable harness		SW403
3	VOE11039681	1	1	1	1	1			••Switch		
	VOE11170040	1	1	1	1	1			••Protecting cap		
4	VOE11170677	1	1	1	1	1			•Cable harness		SW406
5	VOE11039681	1	1	1	1	1			••Switch		
	VOE11170040	1	1	1	1	1			••Protecting cap		
6	VOE11170676	1	1	1	1	1			•Cable harness		SW405
	VOE11170040	1	1	1	1	1			•Protecting cap		
7	VOE11039681	1	1	1	1	1			••Switch		
8	VOE11104727	1	1	1	1	1			••Anchorage		
9	VOE11041399	1	1	1	1	1			•Cable harness		SW404
10	VOE13944221	3	3	3	3	3			••Housing		
11	VOE1096615	1	1	1	1	1			••Housing		
12	VOE11170678	1	1	1	1	1			•Cable harness		SW802
13	VOE11039681	1	1	1	1	1			••Switch		
	VOE11170040	1	1	1	1	1			••Protecting cap		
14	VOE11039688	3	3		3				•Clip		
15	VOE11039689	3	3		3				•Strip clamp		
16	VOE11039439	1	1		1	1			•Switch		SW404
17	VOE11997242	1	1		1	1			••Bulb		
18	VOE4803548	1	1		1	1			•Lens		
19	VOE11714690			1		1			Decal		(VOE11104731)
20	VOE11714690			1		1			Decal		(VOE11104712)
21	VOE11714690			1		1			Decal		(VOE11104711)
22	VOE11705579			1		1			Decal		
23	VOE11714690			1		1			Decal		(VOE11006297)
24	VOE11714690			1		1			Decal		(VOE11006296)
25	VOE11007051			8		8			Retainer		
26	VOE13965593			8		8			Blind rivet		

VOLVO

Construction Equipment

PROSIS Part Information

Date:	Image id:	Catalogue:	Model:
10/09/2018	**1009671**	**20009**	**L60E**
Brand:	Serial:	Group/Section:	Title:
Volvo	**1001-3355, 60001-61214, 70001-70530**	**371/875**	**Cable harnesses, servo valve. OPEN ROPS**

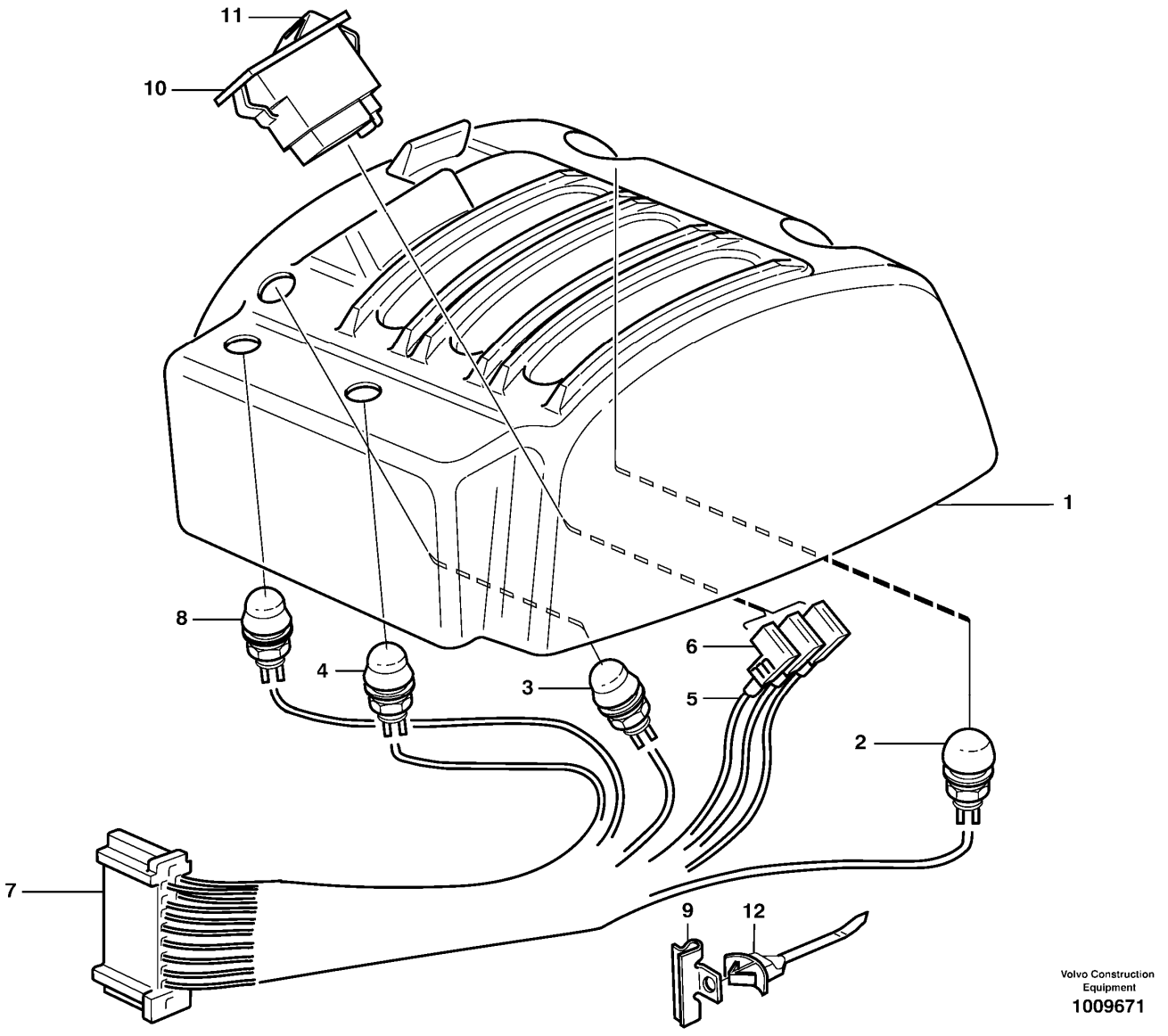

Section option	Kit	Option description
VOE33759		Wheel loader L60E OPEN ROPS

Pos	Part	Q1	Q2	Q3	Q4	Q5	PS	Kit	Description	Option(s)	Remark
	VOE11170993	1					OP		Cover		
1	VOE11006225	1							•Cover		
2	VOE11040800	1							•Switch		
3	VOE11040802	1							•Switch		

4	VOE11040801	1							•Switch		
5	VOE11041399	1							•Cable harness		
6	VOE13944221	3							••Housing		
7	VOE1096615	1							••Housing		
8	VOE11170995	1							•Switch		
9	VOE11039688	3							•Clip		
10	VOE11039813	1							•Switch		
11	VOE11039831	1							•Rocker arm		
12	VOE11039689	3							•Strip clamp		

VOLVO

Construction Equipment

PROSIS Part Information

Date:	Image id:	Catalogue:	Model:
10/09/2018	**EC227A**	**20009**	**L60E**
Brand:	Serial:	Group/Section:	Title:
Volvo	**1001-3355, 60001-61214, 70001-70530**	**371/900**	**Cable harness, air-suspension seat 80506, 80572, 94909**

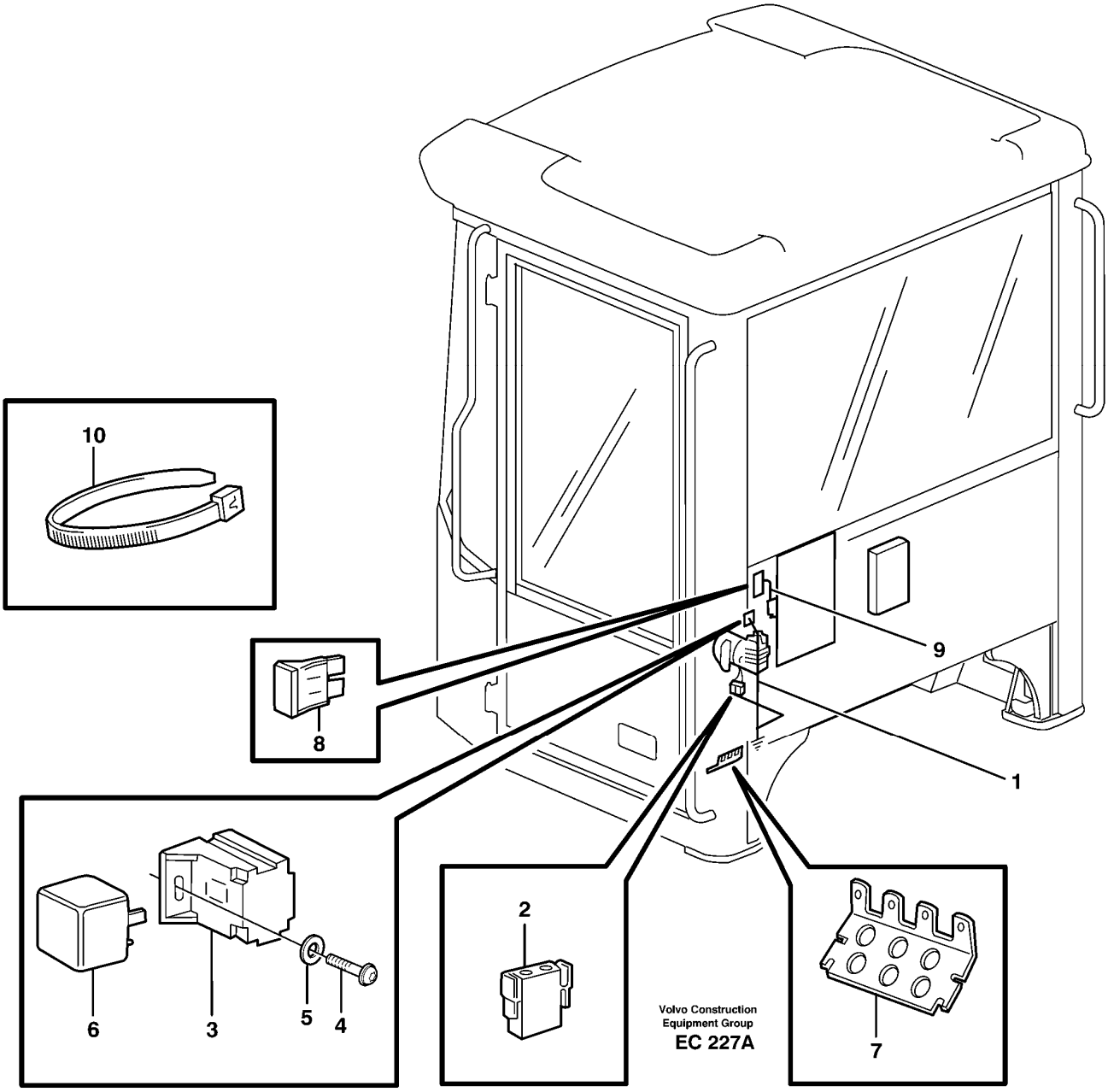

Section option	Kit	Option description
VOE80506		Operator seat, heated, airsuspended ISRI, Kit No: VOE 11104274 + VOE 11707994
VOE80572		Operator's seat, airsuspended, heated Kit No: VOE 11104016 + VOE 11708097
VOE94909	VOE11104015	Operator seat, heated BEGE

Pos	Part	Q1	Q2	Q3	Q4	Q5	PS	Kit	Description	Option(s)	Remark

1	VOE11040658	1							Cable harness		See footnote 1245)
2	VOE13948996	1							•Insulator		
3	VOE977184	1							•Housing		
4	VOE969278	1							Six point socket screw		(VOE13969278)
5	VOE13940090	1							Washer		
6	VOE20374662	1							Relay		RE803
7	VOE9148415	1							Terminal block		EXCL
8	VOE969161	1							Fuse		(VOE13967545)10A
	VOE13969160	1							Fuse		(VOE967851)5A
9	VOE11041913	1							Wire		
10	VOE4881438	REQ							Cable tie		

1245) Including parts: Wire assembly, hose, manifold, cable terminal and insulator See Group 379.

VOLVO

Construction Equipment

PROSIS Part Information

Date:	Image id:	Catalogue:	Model:
10/09/2018	**1015654**	**20009**	**L60E**
Brand:	Serial:	Group/Section:	Title:
Volvo	**1001-3355, 60001-61214, 70001-70530**	**371/950**	**Cable harness, secondary steering system. 82033**

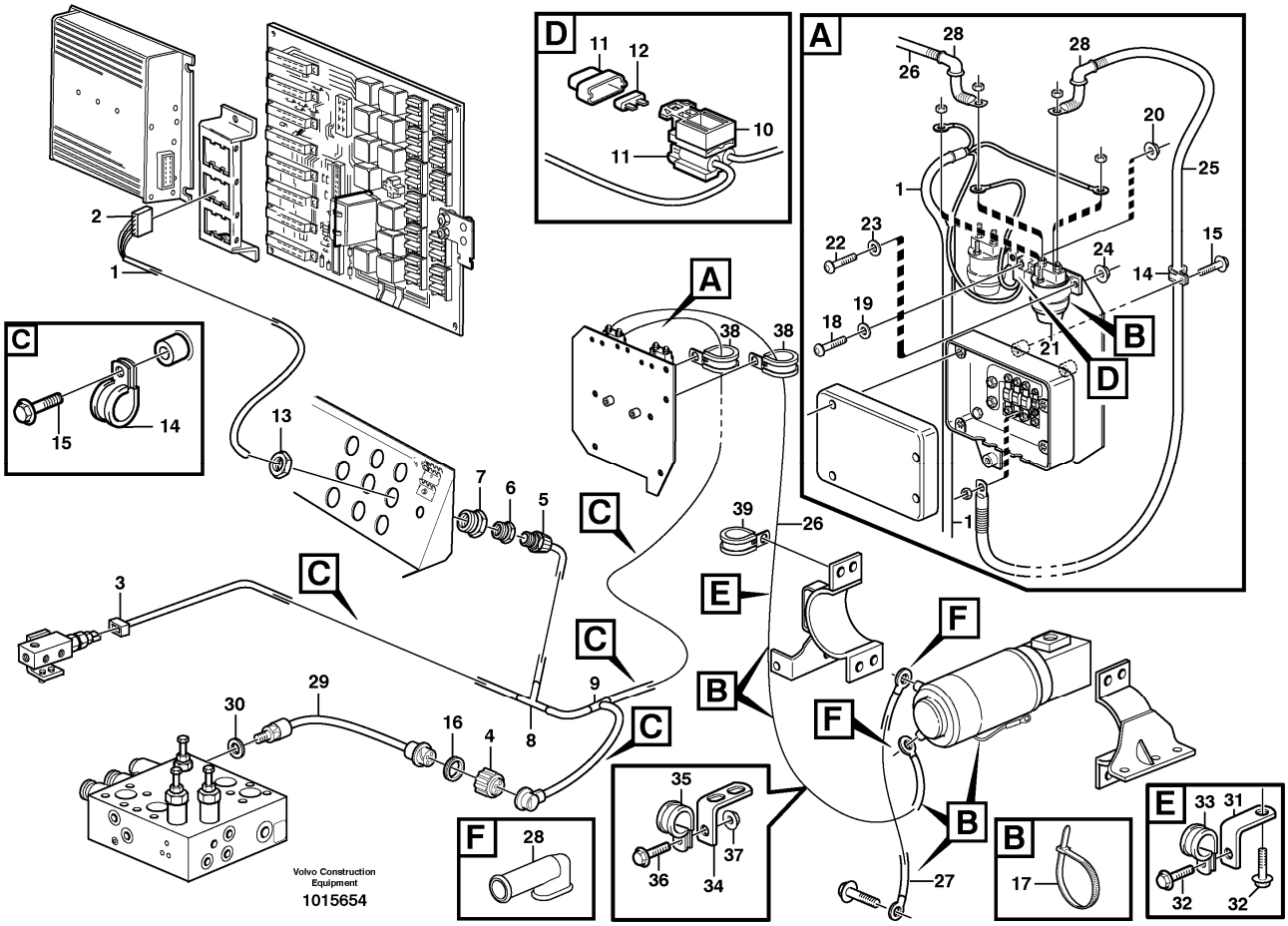

Section option	Kit	Option description
VOE82033		Secondary steering

Q1-Q5	Option	Option description	
Q1 .			
Q2 .			

Pos	Part	Q1	Q2	Q3	Q4	Q5	PS	Kit	Description	Option(s)	Remark
1	VOE11170890	1							Cable harness		See footnote 1245)
									•CONNECTED TO:		
									••El Distr Unit		OA
									••Press monitor		SE 601, SE 602
									••Relay		RE 601
									••Fuse holder		FH 3

2	VOE1096619	1							•Housing		
3	VOE1624477	1							•Receptacle housing		
4	VOE8159013	1							•Housing		
5	VOE4803765	1							•Hose coupling		
6	VOE11039099	1							•Reduction		
7	VOE4803795	1							•Reduction		
8	VOE11039723	1							•Manifold		
9	VOE14346331	1							•Manifold		
10	VOE11039713	1							•Bracket		
11	VOE11039714	1							•Fuse holder		
12	VOE13969160	1							•Fuse		5A
13	VOE11147868	1							Plastic nut		
14	VOE980614	REQ							Clamp		
15	VOE13946173	REQ							Screw		
16	VOE3963413	1							Ring		
17	VOE4881440	REQ							Cable tie		
18	VOE969407	1							Six point socket screw		
19	VOE13960138	1							Washer		
20	VOE949874	1							Flange lock nut		(VOE13949874)
21	VOE20367490	1							Relay		RE601
22	VOE969407	2							Six point socket screw		
23	VOE13960138	2							Washer		
24	VOE949874	2							Flange lock nut		(VOE13949874)
25	VOE11170527	1							Wire		See footnote 1245) , FU71 - RE601
26	VOE11132312	1							Wire		See footnote 1245) , RE601 - MO601
27	VOE11108119	1							Wire		See footnote 1245) , EARTH - JORD
28	VOE241308	4							Protecting cap		
29	VOE11170079	1							Pressure monitor		SE 602
30	VOE13945653	1							Plane gasket		
31	VOE11024650	1							Angle plate		
32	VOE13946173	2							Screw		
33	VOE13949997	1							Clamp		
34	VOE13965558	1							Bracket		
35	VOE977599	1							Clamp		(VOE13977599)
36	VOE13946173	1							Screw		
37	VOE948645	1							Flange lock nut		
38	VOE11132105	2							Clamp		
39	VOE977742	1							Clamp		

1245) Including parts: Wire assembly, hose, manifold, cable terminal and insulator See Group 379.

VOLVO

Construction Equipment

PROSIS Part Information

Date:	Image id:	Catalogue:	Model:
10/09/2018	**1011830**	**20009**	**L60E**
Brand:	Serial:	Group/Section:	Title:
Volvo	**1001-3355, 60001-61214, 70001-70530**	**371/1000**	**Cable harness, CDC - steering. 82057**

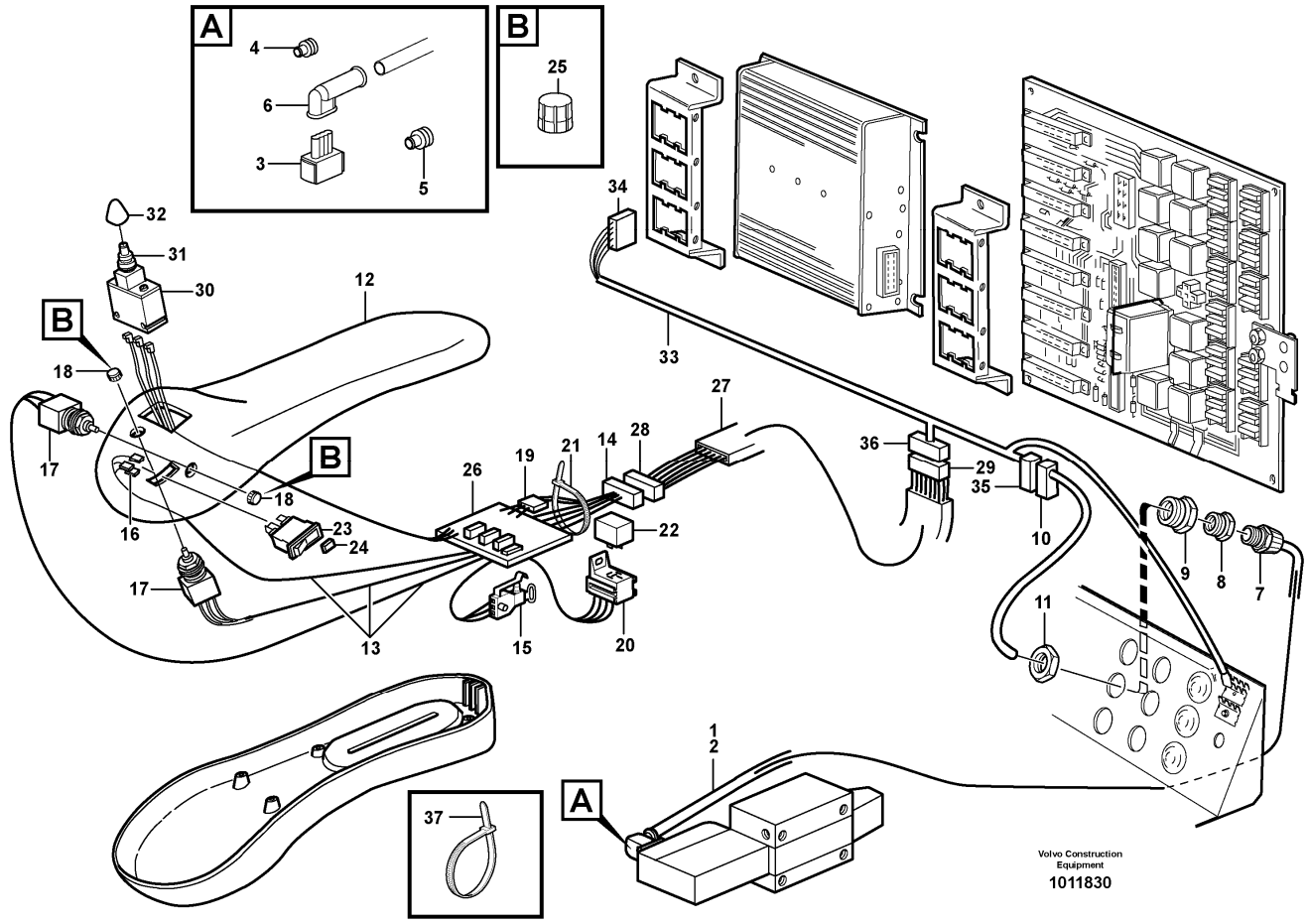

Section option	Kit	Option description
VOE82057		Comfort Drive Control, CDC

Q1-Q5	Option	Option description	
Q1 82057	VOE82057	Comfort Drive Control, CDC	

Pos	Part	Q1	Q2	Q3	Q4	Q5	PS	Kit	Description	Option(s)	Remark
1	VOE11170940	1							Cable harness		
									•CONNECTED TO:		
									••Solenoid valve		MA601
									••Circuit Board		OD
2	VOE11039491	REQ							•Hose		
3	VOE11170109	1							•Housing		
4	VOE970773	3							•Cable seal		

5	VOE970771	1							•Cable seal		
6	VOE241308	1							•Protecting cap		
7	VOE4803765	1							•Hose coupling		
8	VOE11039099	1							•Reduction		
9	VOE4803795	1							•Reduction		
10	VOE968389	1							•Housing		
11	VOE11147868	1							Plastic nut		
12		1							Arm rest		
13	VOE15110544	1							•Wiring harness		(VOE11040512)
									••CONNECTED TO:		
									•••Switch		SW407, SW408, SW409, SW410
									•••Wire harness		OC
									•••Electronic unit		OE
									•••Relay		RE602
14	VOE13968409	1							••Housing		
15	VOE8150651	1							••Contact		SW407
16	VOE4821294	4							••Heat-shrinkable tubing		
17	VOE11997560	2							••Switch		SW408, SW410
18	VOE11992216	2							••Knob		
19	VOE968388	1							••Housing		OE
20	VOE977184	1							••Housing		RE602
21	VOE4821292	8							••Cable tie		
22	VOE20374662	1							•Relay		RE602
23	VOE11039439	1							•Switch		SW409
	VOE11997242	1							••Bulb		
24	VOE4803548	1							•Lens		
25	VOE11003679	2							•Button		
26	VOE11039560	1							•Electronic unit		OE
27	VOE11041397	1							•Cable harness		
									••CONNECTED TO:		
									•••Arm rest		OC
									•••El Distr Unit		OB
28	VOE968408	1							••Housing		
29	VOE13968409	1							••Housing		
30	VOE11007955	1							•Control lever		SE603
31	VOE11997604	1							••Rubber bellows		
32	VOE11007966	1							•Knob		
33	VOE11040513	1							Cable harness		
									•CONNECTED TO:		
									••El Distr Unit		CDC
									••Wire harness		OB, OD
34	VOE1096619	1							•Housing		
35	VOE968388	1							•Housing		

36	VOE968408	1							•Housing		
37	VOE4821292	1							Cable tie		L = 140 MM
	VOE4881440	REQ							Cable tie		L = 365 MM

VOLVO

Construction Equipment

PROSIS Part Information

Date:	Image id:	Catalogue:	Model:
10/09/2018	**1005273**	**20009**	**L60E**
Brand:	Serial:	Group/Section:	Title:
Volvo	**1001-3355, 60001-61214, 70001-70530**	**371/1050**	**Electrical system, parking brake alarm 80348**

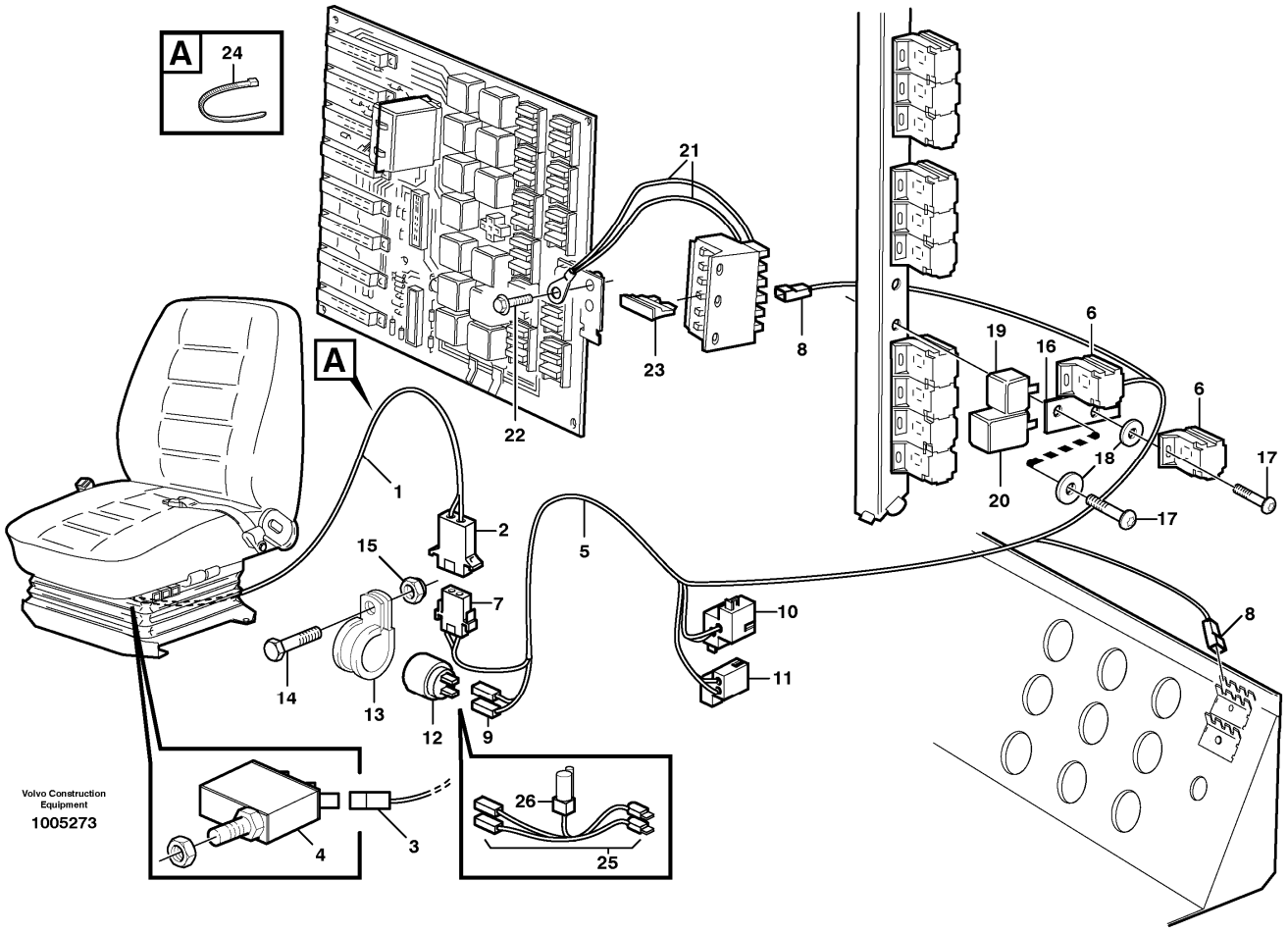

Section option	Kit	Option description
VOE80348		Parking brake alarm USE KIT IN COMBINAT. OF 80380 + 80348 = 1170767680103 + 80348 = 11707677. 80256 + 80348 = 11707722

Pos	Part	Q1	Q2	Q3	Q4	Q5	PS	Kit	Description	Option(s)	Remark
1	VOE11040639	1							Cable harness		
									•CONNECTED TO:		
									••Operator seat		(SE806)
									••Oca		
2	VOE13948995	1							•Pin housing		
3	VOE13949597	2							•Protecting sleeve		
4	VOE4787427	1							Microswitch		SE806
5	VOE11040638	1							Cable harness		

									•CONNECTED TO:		
									••Relais à L'action		(RT802)
									••Relay		(RE804)
									••Parking Brake		
									••Buzzer		(SE804)
6	VOE977184	2							•Housing		
7	VOE13948996	1							•Insulator		
8	VOE13949597	2							•Protecting sleeve		
9	VOE13947848	2							•Housing		
10		1					NS		•Pin housing		
11		1					NS		•Housing		
12	VOE828587	1							Buzzer		SE804
13	VOE13949997	1							Clamp		
14	VOE13946544	1							Screw		
15	VOE13949278	1							Flange lock nut		
16		1					NS		Attaching plate		
17	VOE969278	3							Six point socket screw		
18	VOE13940090	3							Washer		
19	VOE20374662	1							Relay		RE804
20	VOE4803319	1							Delay relay		RT802
21	VOE11041913	1							Wire		
22	VOE947107	1							Flange screw		
23	VOE13969160	1							Fuse		(VOE967851)FU53, 5A
24	VOE4881438	REQ							Cable tie		
25	VOE11170927	1							Cable harness		
26	VOE4940327	1							•Diode		

VOLVO

Construction Equipment

PROSIS Part Information

Date:	Image id:	Catalogue:	Model:
10/09/2018	**1015315**	**20009**	**L60E**
Brand:	Serial:	Group/Section:	Title:
Volvo	**1001-3355, 60001-61214, 70001-70530**	**371/1100**	**Wire harness, single-acting lift function 82075**

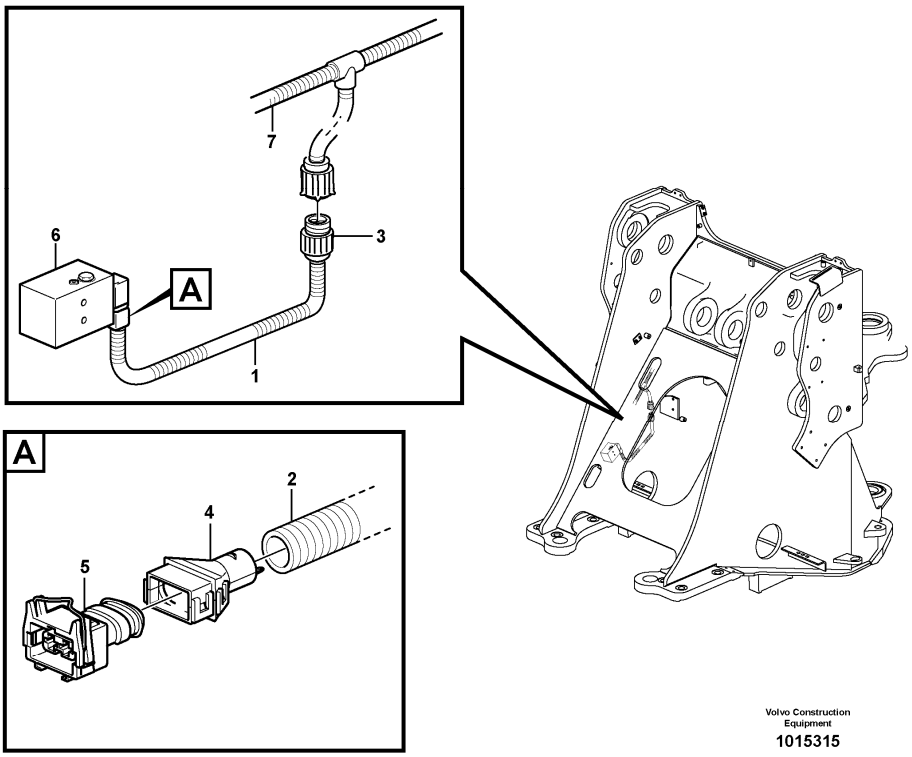

Section option	Kit	Option description
VOE82075		Singel acting lift system

Pos	Part	Q1	Q2	Q3	Q4	Q5	PS	Kit	Description	Option(s)	Remark
1	VOE11170727	1							Cable harness		See footnote 1245)
									•CONNECTED TO:		
									••Solenoid valve		MA908
									••Wire harness		FD
2	VOE4803746	REQ							•Hose		
3	VOE8159013	1							•Housing		
4	VOE8142100	1							•Adapter		
5	VOE976256	1							•Housing		MA908, MA910, MA911
6	VOE11101827	1							•Valve		FD See ref 912/550
7		1							Wire harness		See ref 371/300

1245) Including parts: Wire assembly, hose, manifold, cable terminal and insulator See Group 379.

VOLVO

Construction Equipment

PROSIS Part Information

Date:	Image id:	Catalogue:	Model:
10/09/2018	**1014963**	**20009**	**L60E**
Brand:	Serial:	Group/Section:	Title:
Volvo	**1001-3355, 60001-61214, 70001-70530**	**371/1150**	**Cable harness, boom suspension system. 82058**

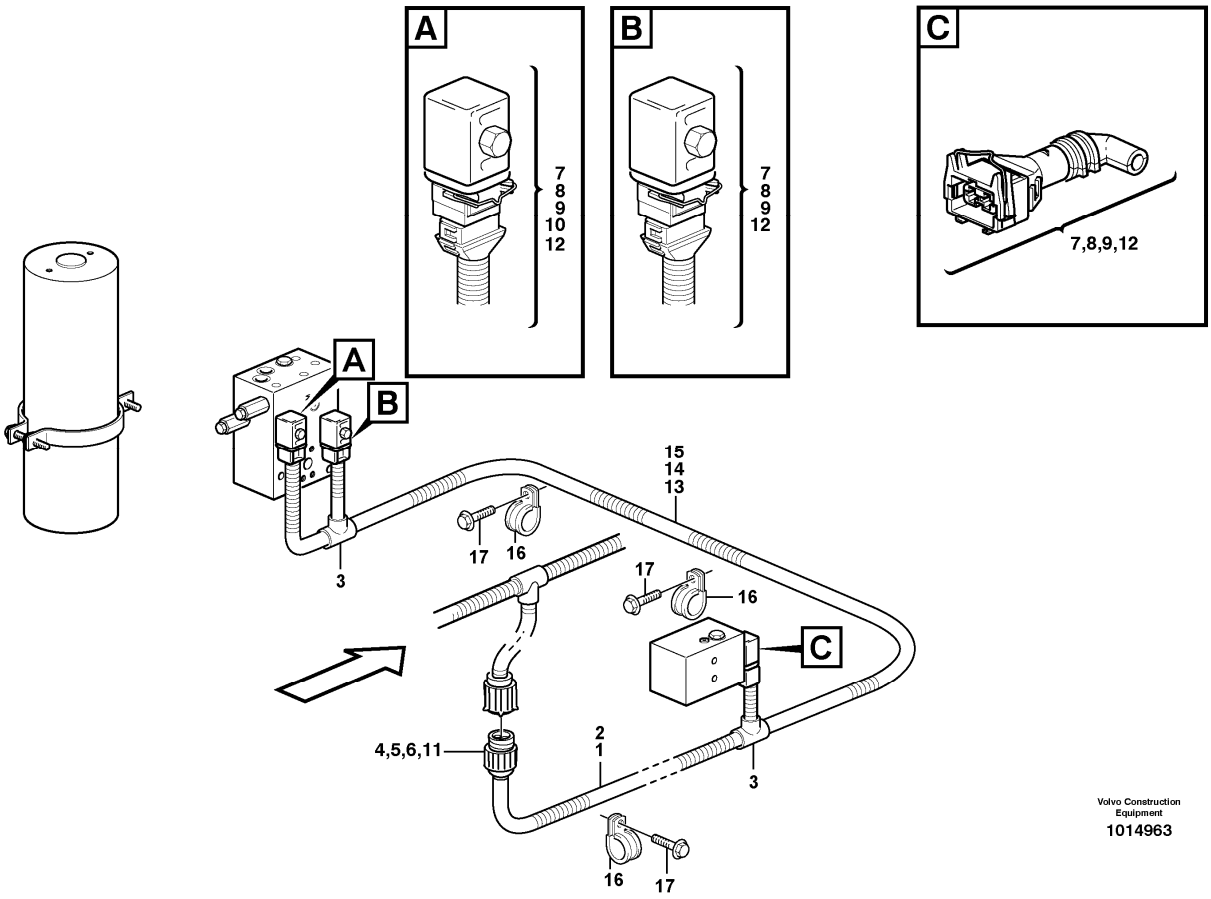

Section option	Kit	Option description
VOE82058		Boom suspension BSS

Pos	Part	Q1	Q2	Q3	Q4	Q5	PS	Kit	Description	Option(s)	Remark
1	VOE11170553	1							Cable harness		See footnote 1245)
									CONNECTED TO:		
									Solenoid valve		MA908, MA910, MA911
									Wire harness		FD
2	VOE4803746	REQ							•Hose		
3	VOE11039709	2							•Manifold		
4	VOE8159013	1							•Housing		FD
5	VOE8159012	3							•Seal		
6	VOE8155899	1							•Sealing plug		
7	VOE976256	3							•Housing		MA908, MA910,

											MA911
8	VOE8142100	3							•Adapter		
9	VOE970773	6							•Cable seal		
10	VOE1095059	1							•Joint nipple		
11	VOE8155903	3							•Cable terminal		
12	VOE970779	6							•Cable terminal		
13	VOE970630	REQ							•Electric cable		
14	VOE970627	REQ							•El Cable		
15	VOE970624	REQ							•El Cable		
16	VOE13949746	3							Clamp		
17	VOE13946173	3							Screw		

1245) Including parts: Wire assembly, hose, manifold, cable terminal and insulator See Group 379.

VOLVO

Construction Equipment

PROSIS Part Information

Date:	Image id:	Catalogue:	Model:
10/09/2018	**1017462**	**20009**	**L60E**
Brand:	Serial:	Group/Section:	Title:
Volvo	**1001-3355, 60001-61214, 70001-70530**	**371/1200**	**Cable harness: Adjustableflow from hydraulic function 3. 82062**

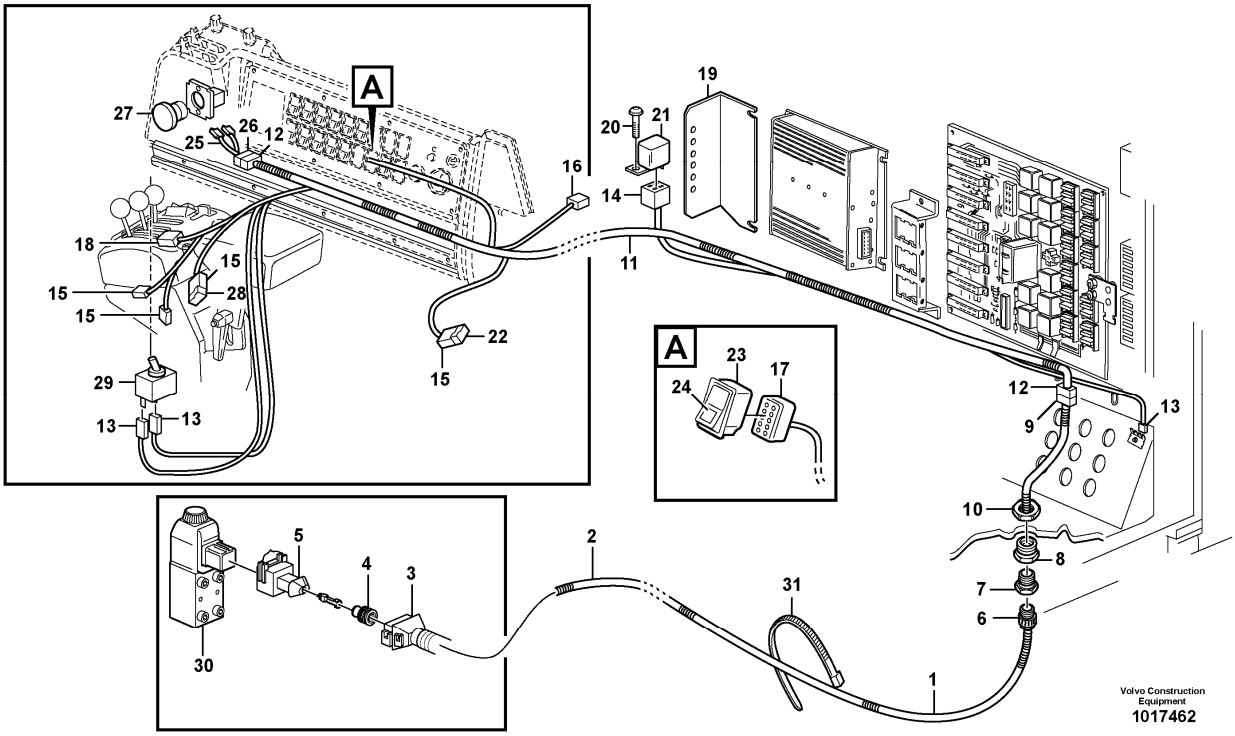

Section option	Kit	Option description
VOE82062		Adjustable flow from hydraulic function 3

Pos	Part	Q1	Q2	Q3	Q4	Q5	PS	Kit	Description	Option(s)	Remark
1	VOE11170814	1							Cable harness		
									CONNECTED TO:		
									Magnet		MA925
2	VOE11039491	REQ							•Hose		
3	VOE8142100	1							•Adapter		
4	VOE970773	2							•Cable seal		
5	VOE976256	1							•Housing		
6	VOE4803765	1							•Hose coupling		
7	VOE11039099	1							•Reduction		
8	VOE4803795	1							•Reduction		

9	VOE13948995	1							•Pin housing		
10	VOE11147868	1							Plastic nut		
11	VOE11040688	1							Cable harness		
									•CONNECTED TO:		
									••Magnet		MA903
									••Switch		SW917, SW918
									••Diode		DI906, DI907
									••Receptacle housing		JO, OJ, SJ, SL
									••Relay		RE903
12	VOE13948996	2							•Insulator		
13	VOE13949597	3							•Protecting sleeve		
14	VOE977184	1							•Housing		
15	VOE13958210	4							•Receptacle housing		
16	VOE4803454	1							•Receptacle housing		
17		1					NS		•Housing		
18	VOE13948995	1							•Pin housing		
19	VOE11104892	1							Attachment		
20	VOE969278	1							Six point socket screw		(VOE13969278)
21	VOE20374662	1							Relay		(VOE3171420)RE903
22	VOE4940327	1							Diode		DI907
	VOE4803274	1							•Diode		
23	VOE11039151	1							Switch		SW917
	VOE11997242	1							•Bulb		
24	VOE11039448	1							•Lens		
25	VOE11100854	1							Cable harness		
									•CONNECTED TO:		
									••Emergency switch		SW913
									••Coupling Piece		
26	VOE13948995	1							•Pin housing		
	VOE969830	2							•Cable terminal		
27	VOE11009043	1							Pressure switch		
	VOE11039341	1							Switch		SW913
28	VOE4940327	1							Diode		DI906
	VOE4803274	1							•Diode		
29	VOE4786696	1							Switch		SW918
30		1							Solenoid valve		MA925 HÄNVISA
31	VOE4881440	REQ							Cable tie		

VOLVO

Construction Equipment

PROSIS Part Information

Date:	Image id:	Catalogue:	Model:
10/09/2018	**1013179**	**20009**	**L60E**
Brand:	Serial:	Group/Section:	Title:
Volvo	**1001-3355, 60001-61214, 70001-70530**	**371/1300**	**Battery main switch 82257**

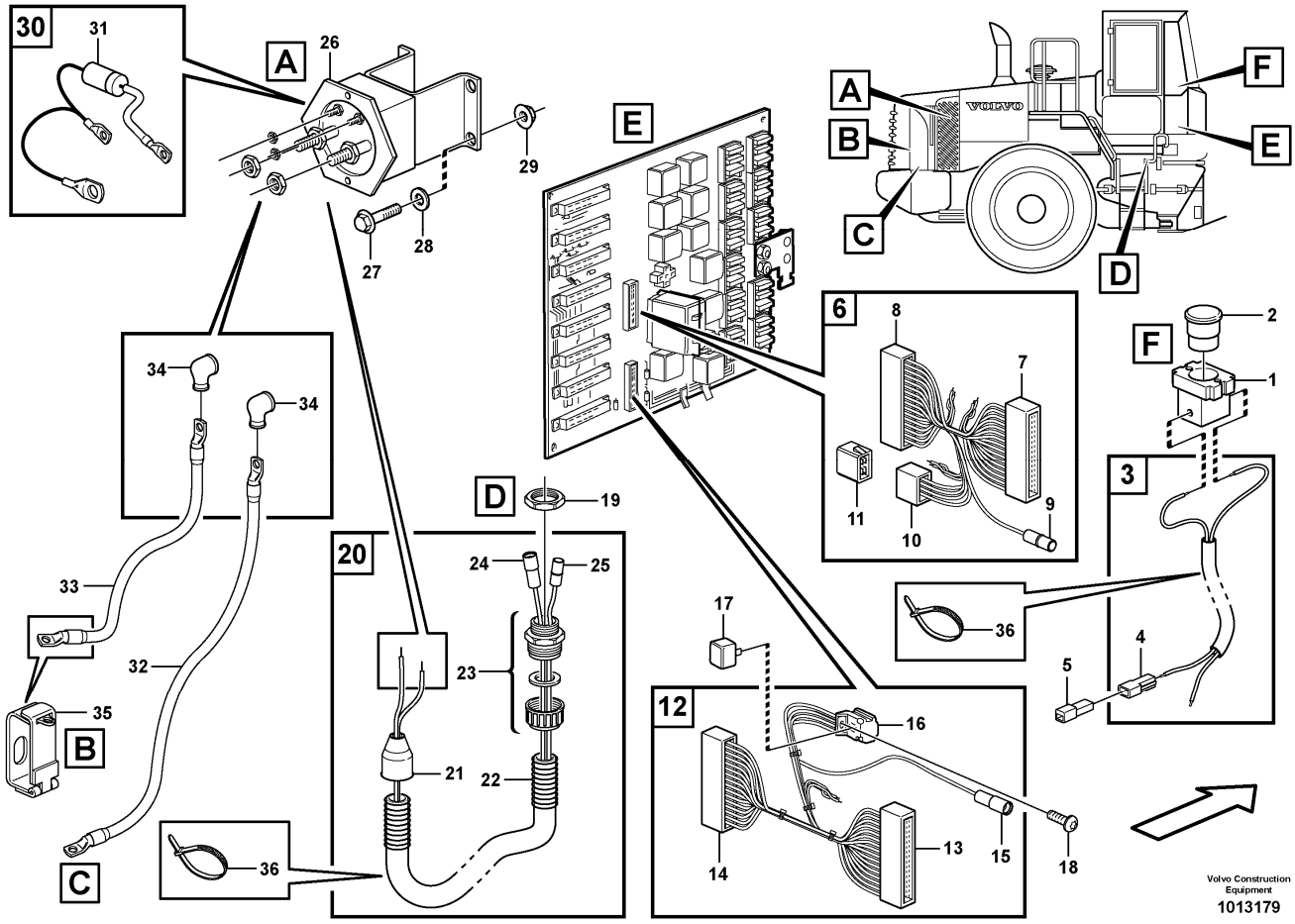

Q1-Q5	Option	Option description	
Q1 82257	VOE82257	Electric battery disconnecting switch in cab	

Pos	Part	Q1	Q2	Q3	Q4	Q5	PS	Kit	Description	Option(s)	Remark
1	VOE11039341	1							Switch		See footnote 1245)
2	VOE11009043	1							Pressure switch		
3	VOE11170898	1							Cable harness		
4	VOE958207	1							•Housing		
5	VOE958208	1							Housing		
6	VOE11170896	1							Cable harness		
									•CONNECTED TO:		
									••Ptd Circuit Bd		DA
7	VOE1096619	1							•Housing		
8	VOE1096615	1							•Housing		

9	VOE13949584	1							•Housing		
10	VOE13958212	1							•Tab housing		
11	VOE4803680	1							•Diode unit		
12	VOE11170943	1							Cable harness		
									•CONNECTED TO:		
									••Ptd Circuit Bd		C
									••Relay		RE105
13	VOE1096619	1							•Housing		
14	VOE1096615	1							•Housing		
15	VOE949583	1							•Housing		
16	VOE977184	1							•Housing		
17	VOE20374662	1							Relay		RE105
18	VOE969278	1							Six point socket screw		(VOE13969278)
19	VOE11039332	1							Nut		
20	VOE11170897	1							Cable harness		
	VOE4821294	2							•Heat-shrinkable tubing		
21	VOE11039397	1							•End sleeve		
22	VOE4803746	1							•Hose		
23	VOE4803765	1							•Hose coupling		
24	VOE949583	1							•Housing		
25	VOE13949584	1							•Housing		
26	VOE70305651	1							Relay		
27	VOE13945444	4							Screw		
28	VOE11117464	4							Plain washer		(VOE13960141)
29	VOE948645	4							Flange lock nut		
30	VOE11170936	1							Cable harness		
31	VOE4803274	1							•Diode		
32	VOE11170933	1							Battery cable		L = 1550 MM
33	VOE11170935	1							Battery cable		L = 1300 MM
34	VOE7025971	2							Protection		
35	VOE11180465	1							Lock		
36	VOE4881440	5							Cable tie		

1245) Including parts: Wire assembly, hose, manifold, cable terminal and insulator See Group 379.

VOLVO

Construction Equipment

PROSIS Part Information

Date:	Image id:	Catalogue:	Model:
10/09/2018	**1013094**	**20009**	**L60E**
Brand:	Serial:	Group/Section:	Title:
Volvo	**1001-3355, 60001-61214, 70001-70530**	**371/1325**	**Cable harness Double Work light 82344**

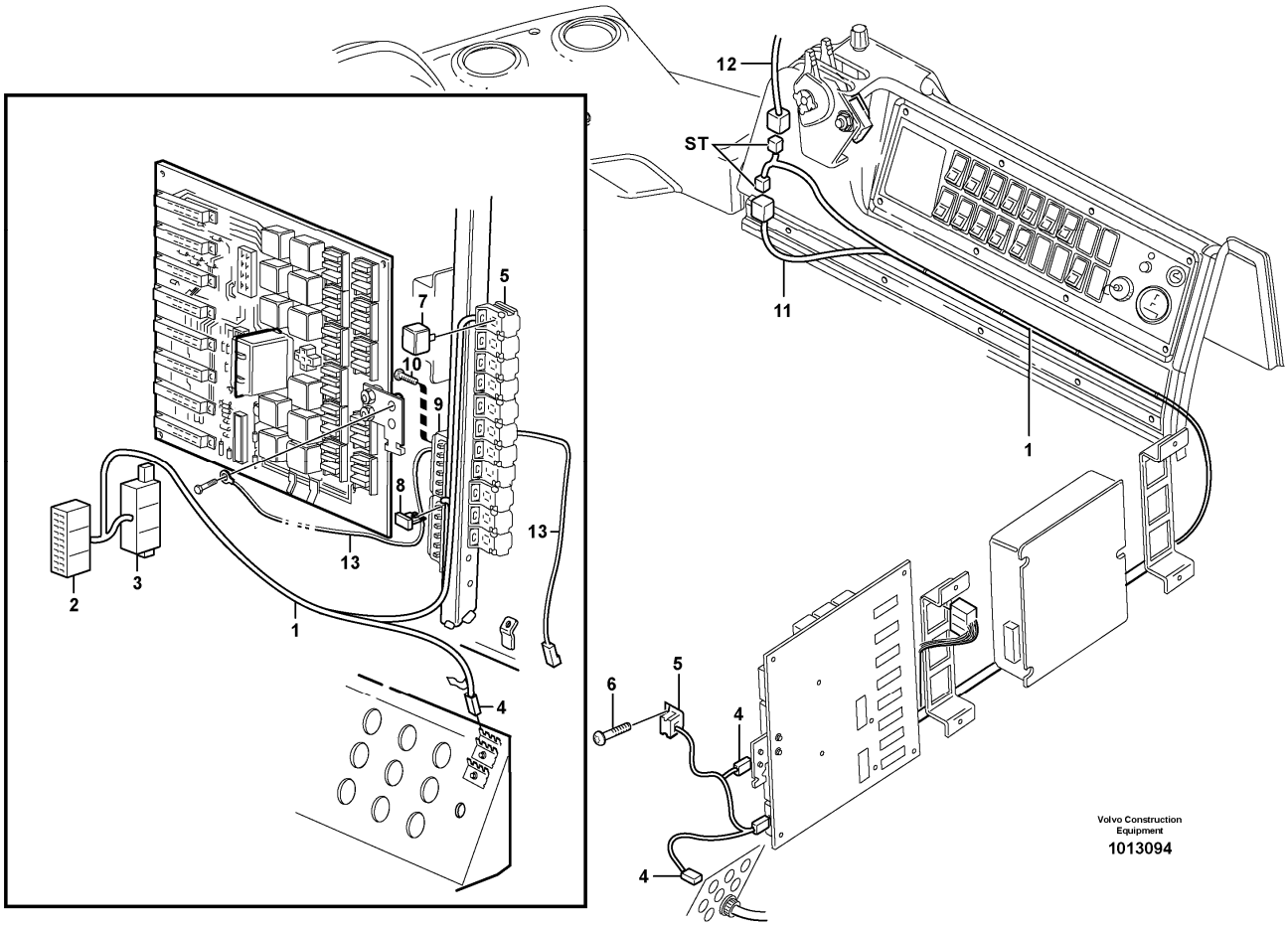

Section option	Kit	Option description
VOE82344		Work lights front, cab, double

Pos	Part	Q1	Q2	Q3	Q4	Q5	PS	Kit	Description	Option(s)	Remark
1	VOE11170715	1							Cable harness		
									•CONNECTED TO:		
									••Roof		ST
									••Relay		RE304
2	VOE1096615	1							•Housing		(ST)
3	VOE1096619	1							•Housing		(ST)
4	VOE13949597	2							•Protecting sleeve		
5	VOE977184	1							•Housing		
6	VOE969278	1							Six point socket screw		(VOE13969278)
7	VOE20374662	1							Relay		RE304

8	VOE978999	1							Fuse		
8	VOE978999	1							Fuse		
9	VOE11039302	1							Fuse holder		
10	VOE969278	2							Six point socket screw		(VOE13969278)
11		1							Cable harness		See ref 371/550
12		1							Cable harness		See ref 371/600
13	VOE11041913	1							Wire		

VOLVO

Construction Equipment

PROSIS Part Information

Date:	Image id:	Catalogue:	Model:
10/09/2018	**1014958**	**20009**	**L60E**
Brand:	Serial:	Group/Section:	Title:
Volvo	**1001-3355, 60001-61214, 70001-70530**	**371/1350**	**Cable harness, 4th function. lock valve. 82063, 83488**

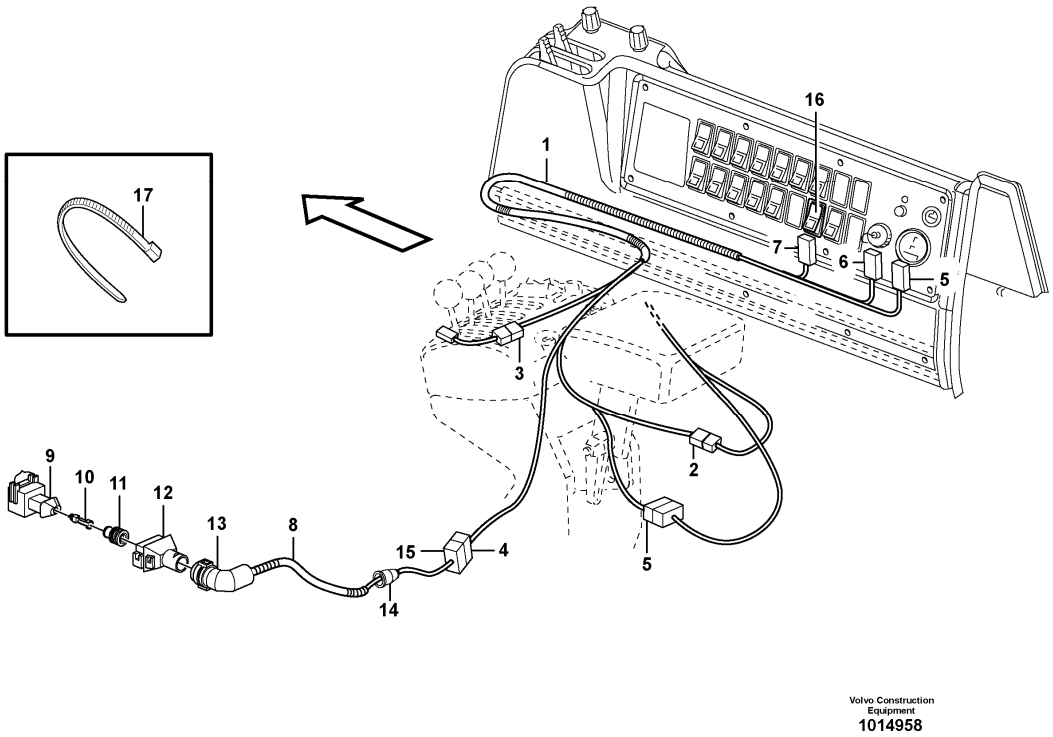

Section option	Kit	Option description
VOE82063	VOE11988276	Hydraulic system, 3rd and 4th function
VOE83488	VOE11716051	Hydraulic system, 3rd and 4th function LONG BOOM

Pos	Part	Q1	Q2	Q3	Q4	Q5	PS	Kit	Description	Option(s)	Remark
1	VOE11040524	1							Cable harness		See footnote 1245)
								2	•CONNECTED TO:		
									•••Coupling Piece		SF
									•••Magnet		MA906
									•••Housing		SK
									•••Housing		SJ
									•••Housing		SL
									•••Housing		SL
									•••Pin housing		SH

									•••Switch		SW911
2	VOE948294	1							••Insulator		
3	VOE948295	1							••Insulator		
4	VOE1307048	1							••Housing		
5	VOE958209	2							••Housing		
6	VOE13958210	1							••Receptacle housing		
7	VOE4803454	1							••Receptacle housing		
8	VOE11170822	1							Cable harness		See footnote 1245)
								2	•CONNECTED TO:		
									•••Housing		SK
									•••Solenoid valve		MA912
9	VOE976256	1							•Housing		
10	VOE970779	2							•Cable terminal		
11	VOE970773	2							•Cable seal		
12	VOE8142100	1							•Adapter		
13	VOE1095059	1							•Joint nipple		
14	VOE11039397	1							•End sleeve		
15	VOE1307049	1							Tab housing		
16		1							Switch		SW911
17	VOE4821292	REQ							Cable tie		(VOE11806483)
	VOE4881440	REQ							Cable tie		

1245) Including parts: Wire assembly, hose, manifold, cable terminal and insulator See Group 379.

VOLVO

Construction Equipment

PROSIS Part Information

Date:	Image id:	Catalogue:	Model:
10/09/2018	**1016244**	**20009**	**L60E**
Brand:	Serial:	Group/Section:	Title:
Volvo	**1001-3355, 60001-61214, 70001-70530**	**371/1375**	**Cable harness, automatic temperature control. 80868, 82772, 82773**

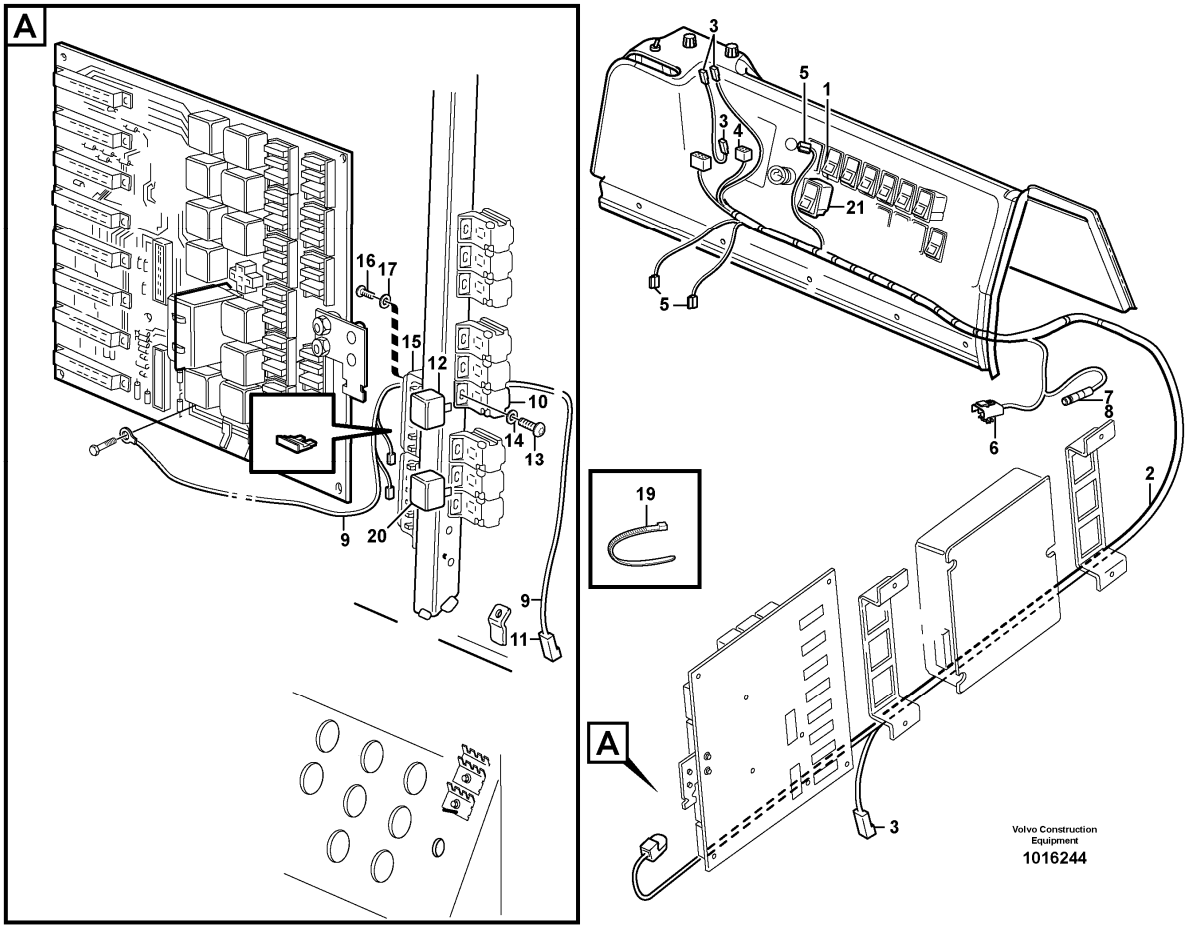

Section option	Kit	Option description
VOE80868	VOE11988237	Air conditioning FOR REFRIGERANT R134A
VOE82772		Air conditioning
VOE82773		Air conditioning CRSN

Pos	Part	Q1	Q2	Q3	Q4	Q5	PS	Kit	Description	Option(s)	Remark
1		1							Switch		
2	VOE11170889	1							Cable harness		
									•CONNECTED TO:		
									••Fuse		FU59C
									••Earth		31ATC
									••Cable harness		SC7
									••Thermo Monitor		SE809
									••Temp Sensor		SE808, SE810, SE811

									••Switch		SW810
									••Valve		MA802
									••Control Unit		CU803
3	VOE13949597	4							•Protecting sleeve		(SW810, CU803-C, 31ATC)
4	VOE958213	1							•Housing		(CU803-A)
5	VOE13958210	3							•Receptacle housing		(SE808, SE810, SE811)
6	VOE1307048	1							•Housing		(MA802)
7	VOE949005	1							•Receptacle housing		(SE809)
8	VOE11000257	2							•Plug		
9	VOE11040641	1							Cable harness		
									•CONNECTED TO:		
									••Relay		RE101
									••Fuse		FU55:6, FU58:3
									••Feeding		30
10	VOE977184	1							•Housing		(RE101)
11	VOE13949597	1							•Protecting sleeve		(31C)
	VOE4821294	3							•Heat-shrinkable tubing		
12	VOE20374662	1							Relay		RE101
13	VOE969278	1							Six point socket screw		(VOE13969278)
14	VOE13940090	1							Washer		
15	VOE11039302	1							Fuse holder		
16	VOE969278	2							Six point socket screw		(VOE13969278)
17	VOE13940090	2							Washer		
18	VOE969161	1							Fuse		10A
19	VOE4881440	REQ							Cable tie		
20	VOE20374662	1							Relay		
21		1							Switch		

VOLVO

Construction Equipment

PROSIS Part Information

Date:	Image id:	Catalogue:	Model:
10/09/2018	**1032855**	**20009**	**L60E**
Brand:	Serial:	Group/Section:	Title:
Volvo	**1001-3355, 60001-61214, 70001-70530**	**371/1400**	**Cable harness for central lubrication 82531, 83380, 83484**

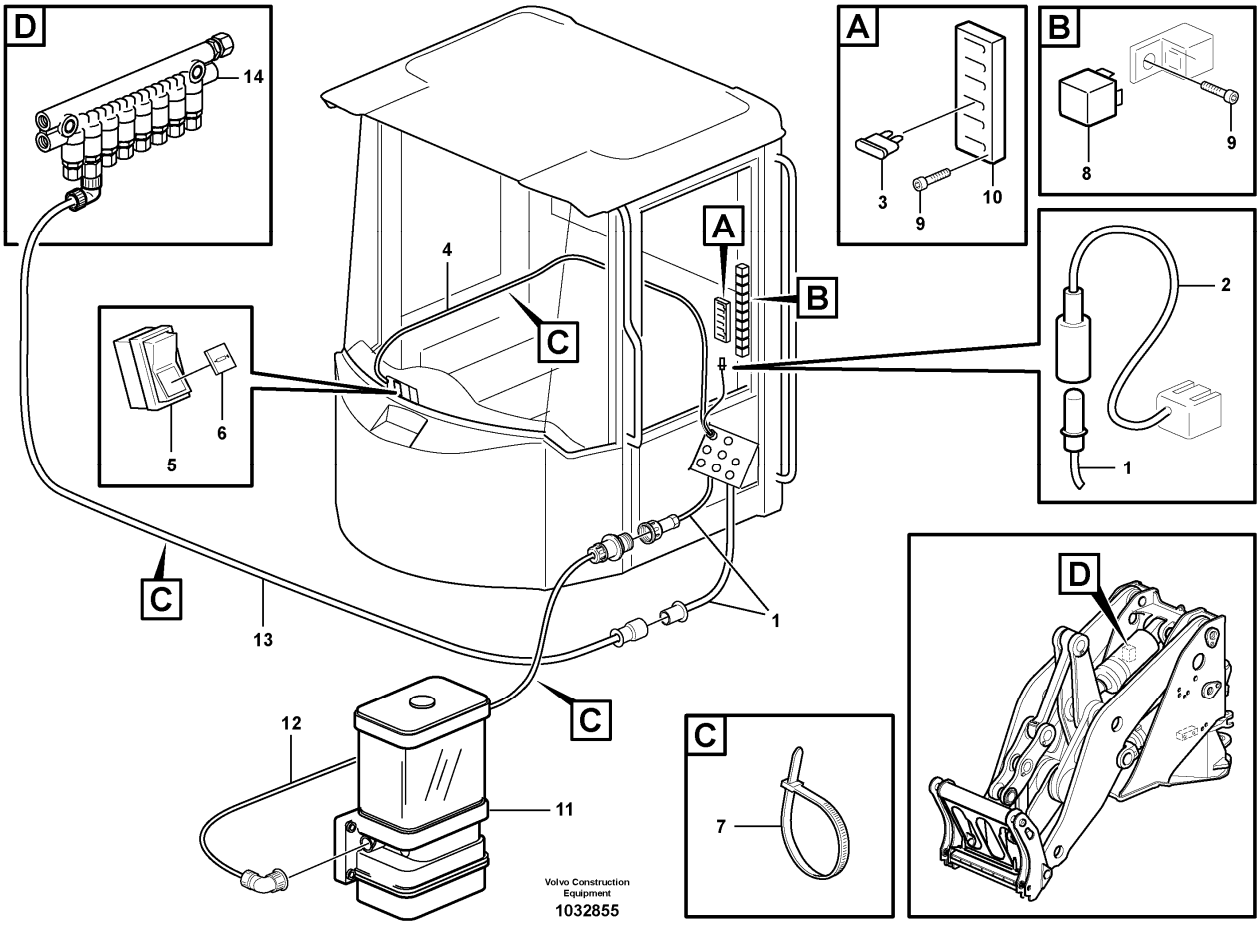

Section option	Kit	Option description
VOE82531		Autom. lubrication system for universal grease NLG1 No. 2
VOE83484		Autom. ctl lub long boom Sst
VOE83380		Extended lifting arms with C-lubrication.

Q1-Q5	Option	Option description	
Q1 82531	VOE82531	Autom. lubrication system for universal grease NLG1 No. 2	
Q2 83380	VOE83380	Extended lifting arms with C-lubrication.	
Q3 83484	VOE83484	Autom. ctl lub long boom Sst	

Pos	Part	Q1	Q2	Q3	Q4	Q5	PS	Kit	Description	Option(s)	Remark
	VOE11177068	1	1	1					Electrical equipment		
1	VOE11716355	1	1	1					•Cable harness		
2	VOE11716354	1	1	1					•Cable harness		

3	VOE969161	1	1	1					•Fuse		10 A
4	VOE11701821	1	1	1					•Cable harness		
5	VOE11705936	1	1	1					•Switch		See footnote 88)
6	VOE11997279	1	1	1					•Lens		
7	VOE4881440	REQ	REQ	REQ					•Cable tie		
8	VOE20374662	1	1	1					•Relay		
9	VOE959186	3	3	3					•Hex. socket screw		
10	VOE11039302	1	1	1					•Fuse holder		
11		1	1						Pump		See ref 993/500
12	VOE11706041	1							Cable harness		
13	VOE11707861	1	1						Cable harness		
14		1							Distr block		See ref 993/300

88) The switch includes the bulb.

VOLVO

Construction Equipment

PROSIS Part Information

Date:	Image id:	Catalogue:	Model:
10/09/2018	**EK374**	**20009**	**L60E**
Brand:	Serial:	Group/Section:	Title:
Volvo	**1001-3355, 60001-61214, 70001-70530**	**371/1450**	**Cable harnesses, single lever control. 82325, 82326, 83316, 83317**

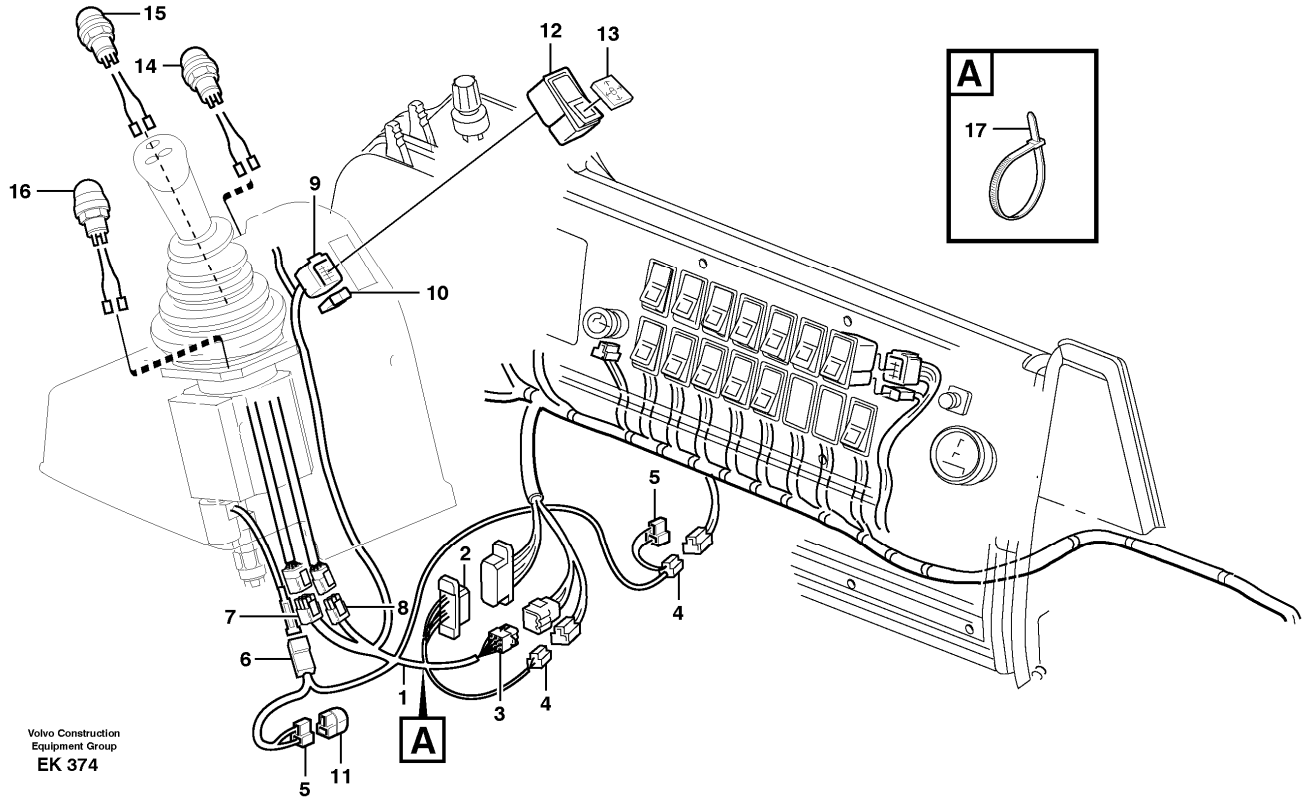

Section option	Kit	Option description
VOE82325	VOE11988198	Single lever hydraulic control, three functions
VOE82326	VOE11988197	Single lever hydraulic control, two functions
VOE83316	VOE11714603	Single lever hydraulic control, two functions
VOE83317	VOE11714604	Single lever hydraulic control, three functions

Pos	Part	Q1	Q2	Q3	Q4	Q5	PS	Kit	Description	Option(s)	Remark
1	VOE11040695	1							Cable harness		See footnote 1245)
									•CONNECTED TO:		
									••Wire harness		SE, SF, SJ, SL
									••Solenoid valve		MA916
									••Single Lever Control		EP, SH
									••Switch		SW920
2	VOE1096615	1							•Housing		
3	VOE948294	1							•Insulator		
4	VOE958209	2							•Housing		

5	VOE13958210	2							•Receptacle housing		
6	VOE11039696	1					OP		•Housing		
7		1					NS		•Housing		
8		1					NS		•Housing		
9	VOE4803454	1							•Receptacle housing		
10	VOE4803532	1							•Socket housing		
11	VOE4940327	1							•Diode		
12	VOE11039380	1							Switch		
	VOE11997242	1							•Bulb		
13	VOE11039700	1							Lens		
14	VOE11170678	1							Cable harness		SW802
									•CONNECTED TO:		
									••Housing		SE
	VOE11039681	1							••Switch		
15	VOE11170677	1							Cable harness		SW406
									•CONNECTED TO:		
									••Housing		SE
	VOE11039681	1							••Switch		
16	VOE11170674	1							Cable harness		SW403
									•CONNECTED TO:		
									••Housing		SE
	VOE11039681	1							••Switch		
17	VOE4881440	5							Cable tie		

1245) Including parts: Wire assembly, hose, manifold, cable terminal and insulator See Group 379.

VOLVO

Construction Equipment

PROSIS Part Information

Date:	Image id:	Catalogue:	Model:
10/09/2018	**1004166**	**20009**	**L60E**
Brand:	Serial:	Group/Section:	Title:
Volvo	**1001-3355, 60001-61214, 70001-70530**	**371/1500**	**Cable harness, automatic back-up light 82307**

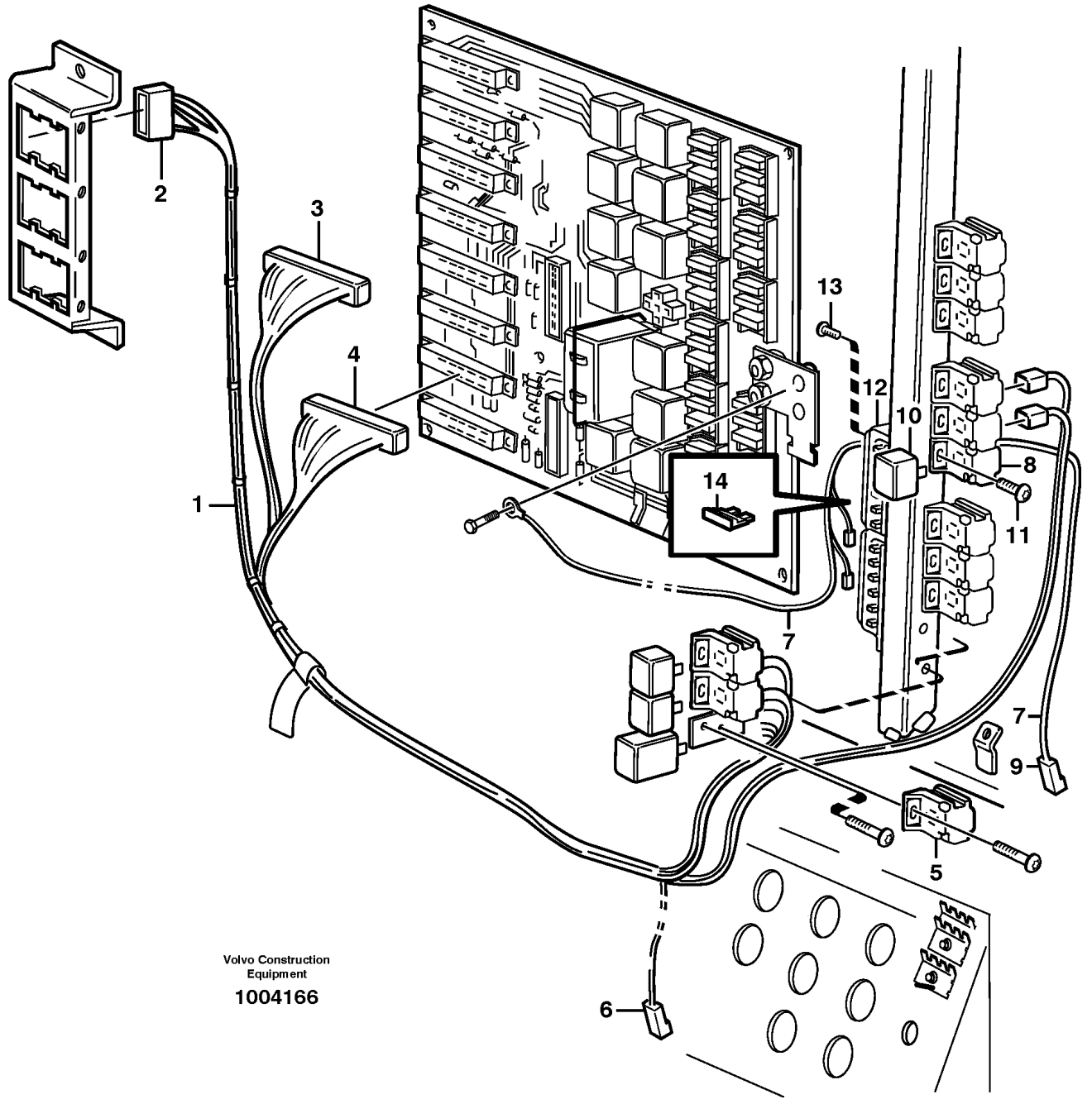

Section option	Kit	Option description
VOE82307		Automatic back-up light

Pos	Part	Q1	Q2	Q3	Q4	Q5	PS	Kit	Description	Option(s)	Remark

1	VOE11170841	1							Cable harness		See footnote 1245)
									•CONNECTED TO:		
									••El Distr Unit		MR
									••Circuit Board		R
									••Relay		RE303
									••Cable harness		R
2	VOE1096619	1							•Housing		
3	VOE1096615	1							•Housing		
4	VOE1096619	1							•Housing		
5	VOE977184	1							•Housing		(RE303)
6	VOE13949597	2							•Protecting sleeve		
7	VOE11041913	1							Wire		See footnote 1245)
									•CONNECTED TO:		
									••Relay		RE101
									••Fuse		FU55:6, FU58:3
									••Feeding		30
8	VOE977184	1							•Housing		(RE101)
9	VOE13949597	1							•Protecting sleeve		(31C)
10	VOE20374662	2							Relay		RE101, RE303
11	VOE969278	2							Six point socket screw		(VOE13969278)
12	VOE11039302	1							Fuse holder		
13	VOE969278	2							Six point socket screw		(VOE13969278)
14	VOE978999	1							Fuse		20A

1245) Including parts: Wire assembly, hose, manifold, cable terminal and insulator See Group 379.

VOLVO

Construction Equipment

PROSIS Part Information

Date:	Image id:	Catalogue:	Model:
10/09/2018	**1002282**	**20009**	**L60E**
Brand:	Serial:	Group/Section:	Title:
Volvo	**1001-3355, 60001-61214, 70001-70530**	**371/1550**	**Cable harness, electr. heated rear-view mirror 80830**

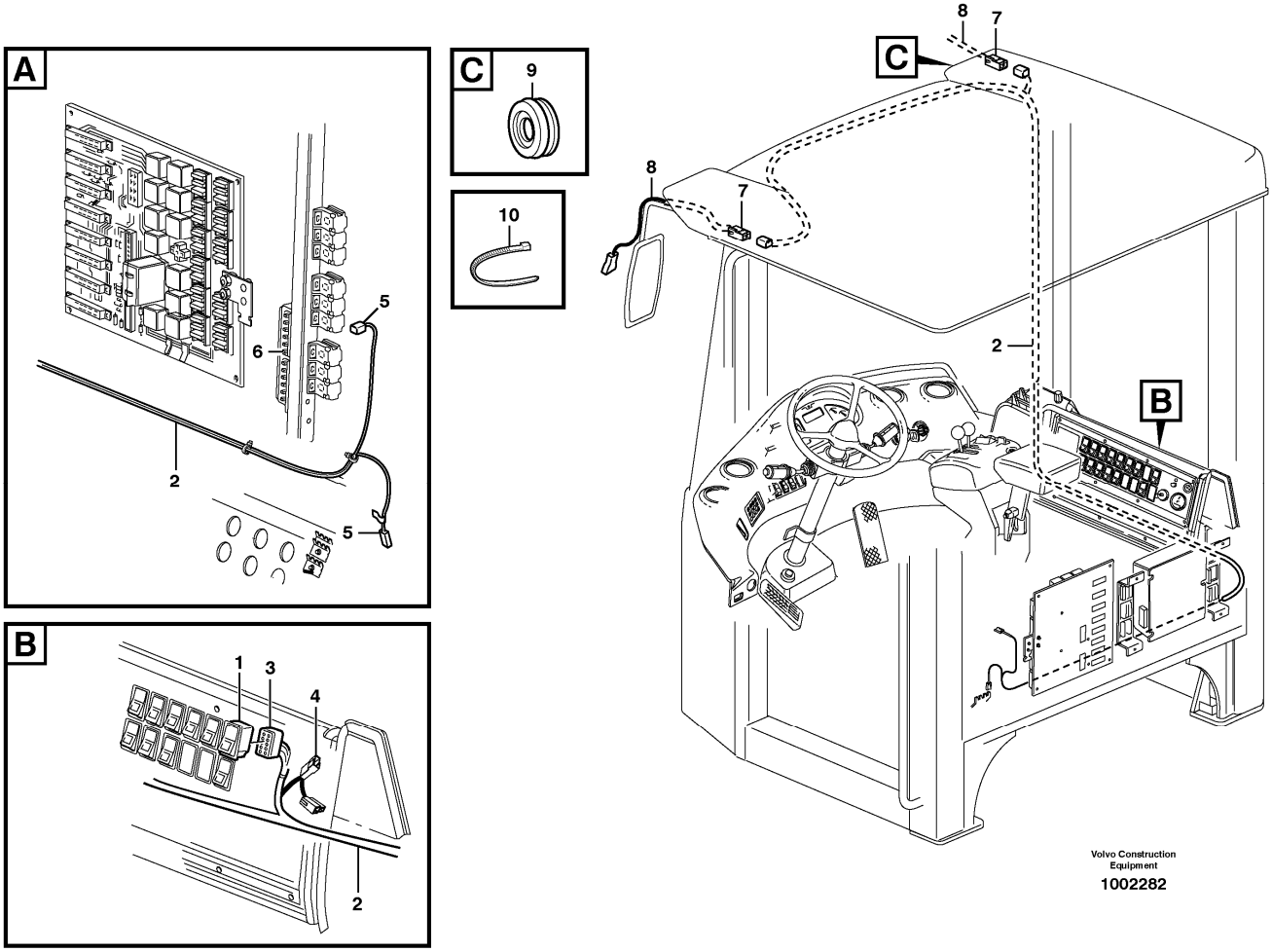

Section option	Kit	Option description
VOE80830	VOE11988158	Mirror

Pos	Part	Q1	Q2	Q3	Q4	Q5	PS	Kit	Description	Option(s)	Remark
1		1							Switch		SW811
2	VOE11040827	1							Cable harness		See footnote 1245)
									•CONNECTED TO:		
									••Cable		HE803, HE804
									••Switch		SW811
									••Cable harness		SL
									••Fuse		FU55:B
3	VOE4803454	1							•Receptacle housing		(SW811)
4	VOE958209	1							•Housing		(SL)

5	VOE13949597	2							•Protecting sleeve		(31C, FU55:B)
6	VOE13969160	1							•Fuse		(VOE969160)
7	VOE968381	2							•Housing		
8	VOE11170075	2							Cable		
9	VOE941262	2							Grommet		
10	VOE4881438	12							Cable tie		

1245) Including parts: Wire assembly, hose, manifold, cable terminal and insulator See Group 379.

VOLVO

Construction Equipment

PROSIS Part Information

Date:	Image id:	Catalogue:	Model:
10/09/2018	**EK394**	**20009**	**L60E**
Brand:	Serial:	Group/Section:	Title:
Volvo	**1001-3355, 60001-61214, 70001-70530**	**371/1600**	**Cable harness for monitor. 82178, 82781**

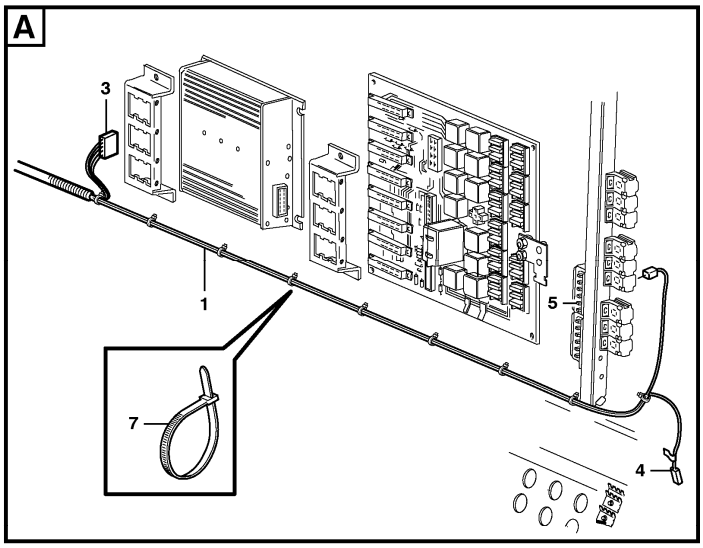

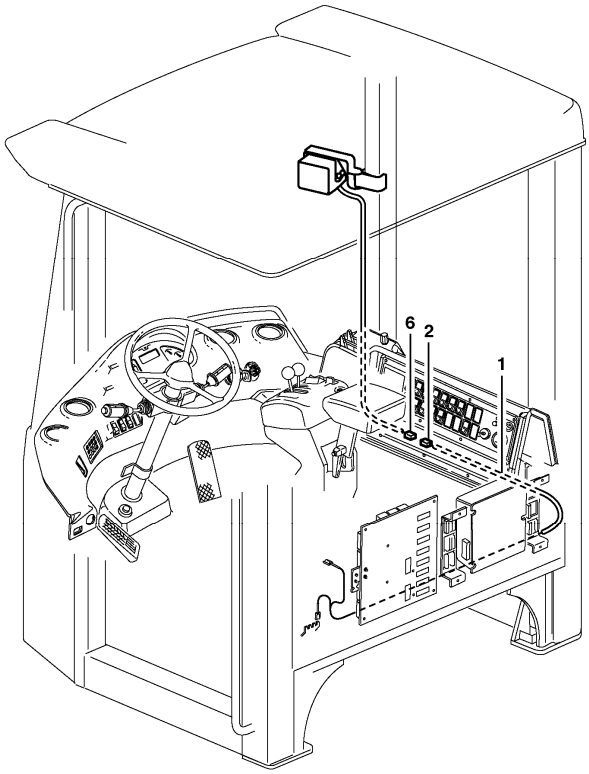

Volvo Construction Equipment Group
EK 394

Section option	Kit	Option description
VOE82781		Rear view camera, colour, Lcd monitor
VOE82178	VOE11708916	Back-up camera incl. monitor

Pos	Part	Q1	Q2	Q3	Q4	Q5	PS	Kit	Description	Option(s)	Remark
1	VOE11170517	1							Cable harness		
									•CONNECTED TO:		
									••Wire harness		TV701, MR:10
									••Fuse		FU 54B
									••Earth		101B
2	VOE968389	1							•Housing		
3	VOE1096619	1							•Housing		
4	VOE13949597	1							•Protecting sleeve		
5	VOE13969160	1							Fuse		
6	VOE968388	1							Housing		TV701
7	VOE4881440	REQ							Cable tie		

VOLVO

Construction Equipment

PROSIS Part Information

Date:	Image id:	Catalogue:	Model:
10/09/2018	**1007177**	**20009**	**L60E**
Brand:	Serial:	Group/Section:	Title:
Volvo	**1001-3355, 60001-61214, 70001-70530**	**371/1650**	**Cable harness, compressor 80868, 82323, 82772, 82773**

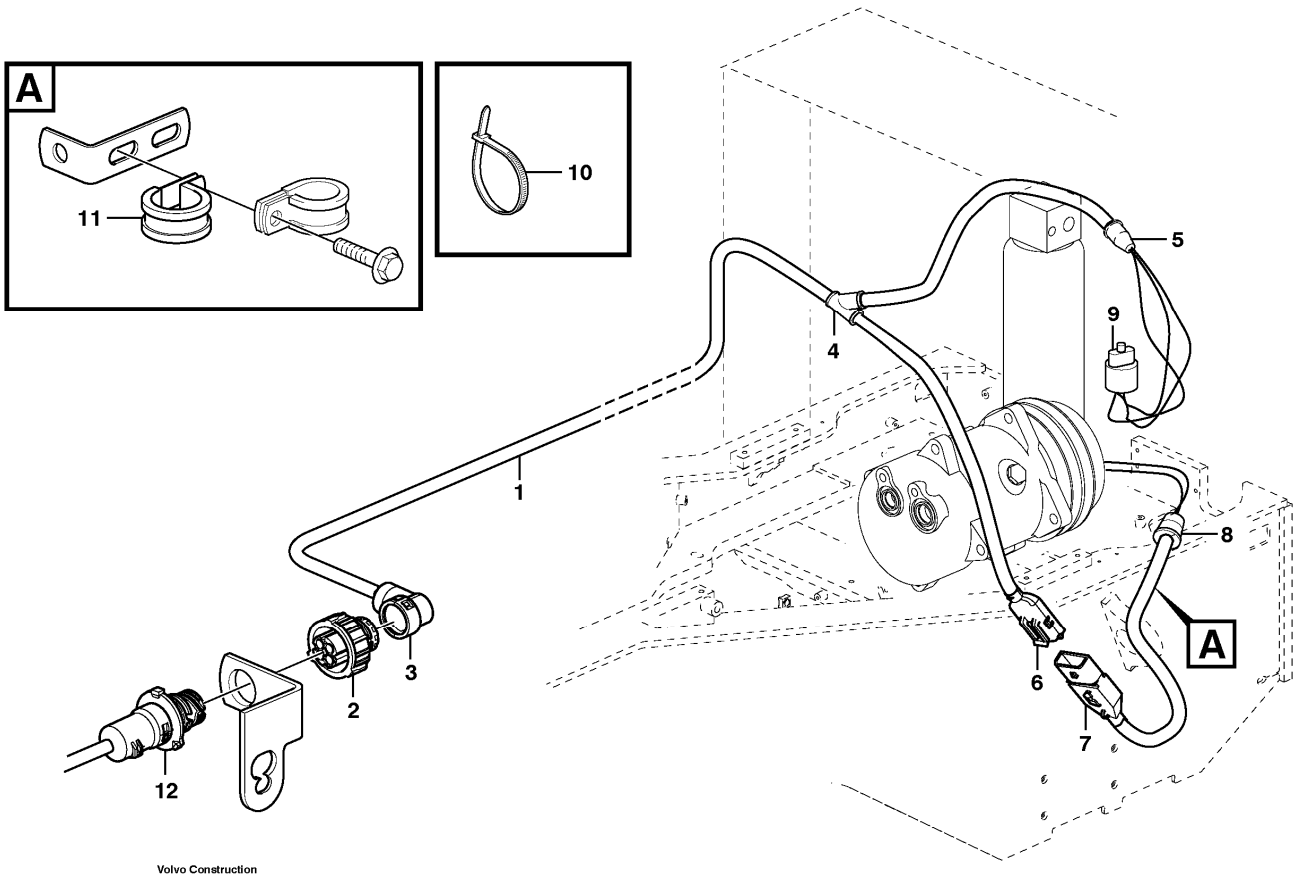

Section option	Kit	Option description
VOE82323	VOE11988247	Air conditioning with corrosion prot. condenser
VOE80868	VOE11988237	Air conditioning FOR REFRIGERANT R134A
VOE82772		Air conditioning
VOE82773		Air conditioning CRSN

Pos	Part	Q1	Q2	Q3	Q4	Q5	PS	Kit	Description	Option(s)	Remark
1	VOE11170881	1							Cable harness		
									•CONNECTED TO:		
									••Cable harness		RL
									••Compressor		MA801
									••Pressure Switch		SE804
2	VOE3963412	1							•Housing		
3	VOE3985598	1							•Adapter		

4	VOE11039665	1							•Manifold		
5	VOE11039397	1							•End sleeve		
6	VOE1624477	1							•Receptacle housing		
7	VOE8143240	1							Housing		
8	VOE11039397	1							End sleeve		
9	VOE11005913	1							Pressure switch		SE804
10	VOE4881440	9							Cable tie		
11	VOE13949746	1							Clamp		
12		1							Cable harness		See ref 371/700

VOLVO

Construction Equipment

PROSIS Part Information

Date:	Image id:	Catalogue:	Model:
10/09/2018	**1015752**	**20009**	**L60E**
Brand:	Serial:	Group/Section:	Title:
Volvo	**1001-3355, 60001-61214, 70001-70530**	**371/1700**	**Cable harness reversible fan 82646**

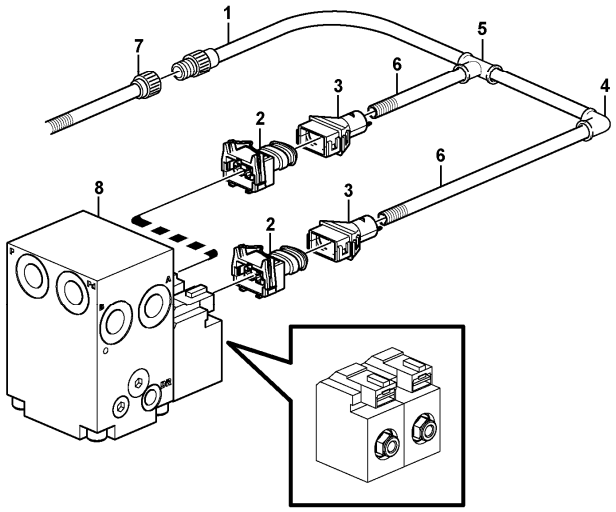

Volvo Construction Equipment
1015752

Section option	Kit	Option description
VOE82646	VOE11712305	Reversible fan

Pos	Part	Q1	Q2	Q3	Q4	Q5	PS	Kit	Description	Option(s)	Remark
1	VOE11170852	1							Cable harness		See footnote 1245)
									•CONNECTED TO:		
									••Cable harness		RP
									••Solenoid valve		MA204, MA205
2	VOE976256	2							•Housing		
3	VOE8142100	2							•Adapter		
4	VOE11039843	1							•Elbow		
5	VOE11039709	1							•Manifold		
6	VOE11039491	1							•Hose		
7		1							Cable harness		RP See ref 371/700

8		1							Valve		See ref 263/135

1245) Including parts: Wire assembly, hose, manifold, cable terminal and insulator See Group 379.

VOLVO

Construction Equipment

PROSIS Part Information

Date:	Image id:	Catalogue:	Model:
10/09/2018	**1015785**	**20009**	**L60E**
Brand:	Serial:	Group/Section:	Title:
Volvo	**1001-3355, 60001-61214, 70001-70530**	**371/1800**	**Cable harness battery disconnector in cab 82257**

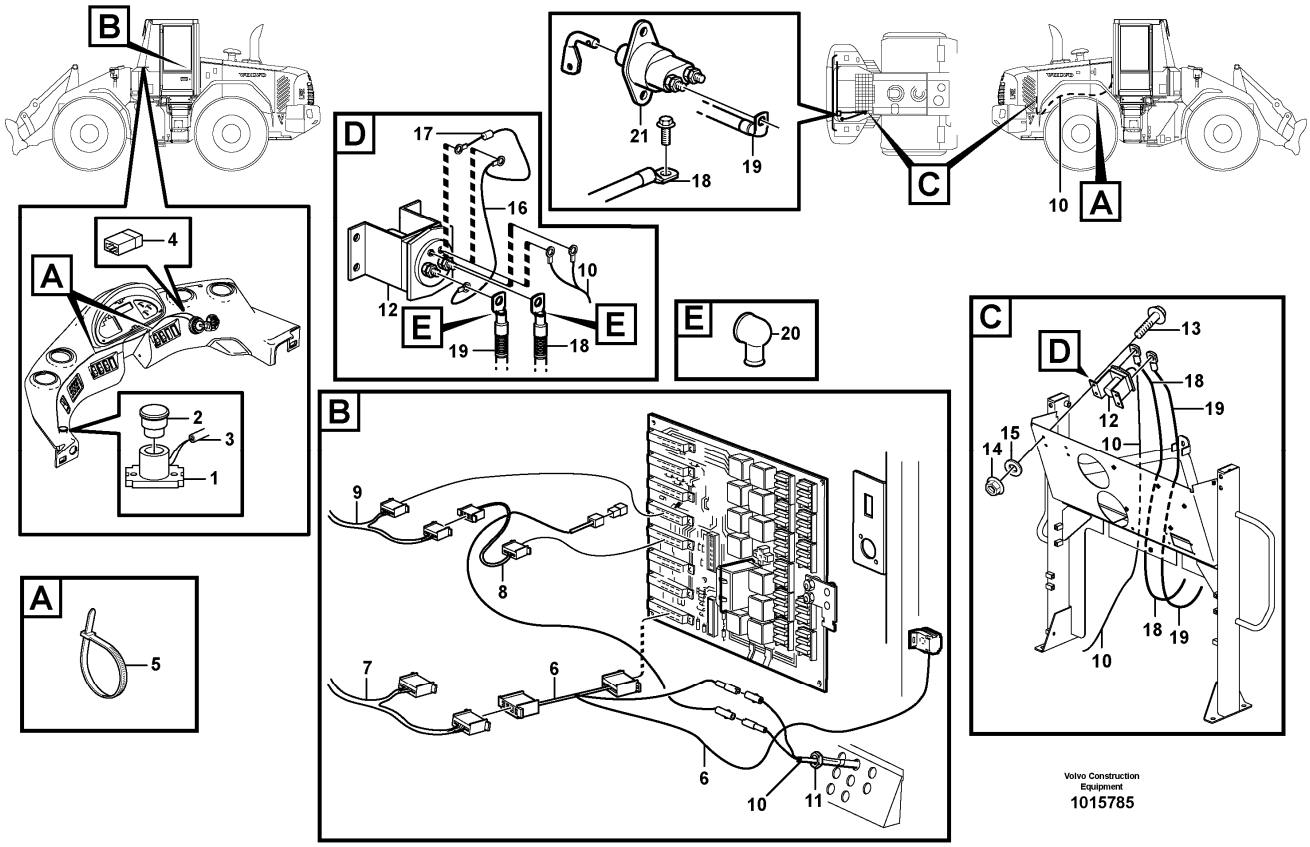

Section option	Kit	Option description
VOE82257		Electric battery disconnecting switch in cab

Pos	Part	Q1	Q2	Q3	Q4	Q5	PS	Kit	Description	Option(s)	Remark
1	VOE11039341	1							Switch		
2	VOE11009043	1							Pressure switch		
3	VOE11170898	1							Cable harness		
	VOE958207	1							•Housing		
4	VOE958208	1							Housing		
5	VOE4881440	REQ							Cable tie		
6		1							Cable harness		See ref 372/200
7		1							Cable harness		See ref 372/200
8		1							Cable harness		See ref 372/200
9		1							Cable harness		See ref 371/500

10		1							Cable harness		See ref 372/200
11	VOE11039332	1							Nut		
12	VOE70305651	1							Relay		
13	VOE13945444	4							Screw		
14	VOE948645	4							Flange lock nut		
15	VOE11117464	4							Plain washer		(VOE13960141)
16	VOE11170936	1							Cable harness		
17	VOE4803274	1							•Diode		
18		1							Battery Cable		See ref 371/100
19		1							Battery Cable		See ref 371/100
20	VOE7025971	2							Protection		
21		1							Battery main switch		See ref 371/100

VOLVO

Construction Equipment

PROSIS Part Information

Date:	Image id:	Catalogue:	Model:
10/09/2018	**1017368**	**20009**	**L60E**
Brand:	Serial:	Group/Section:	Title:
Volvo	**1001-3355, 60001-61214, 70001-70530**	**371/1900**	**Cable harness air cleaner, cab 83085**

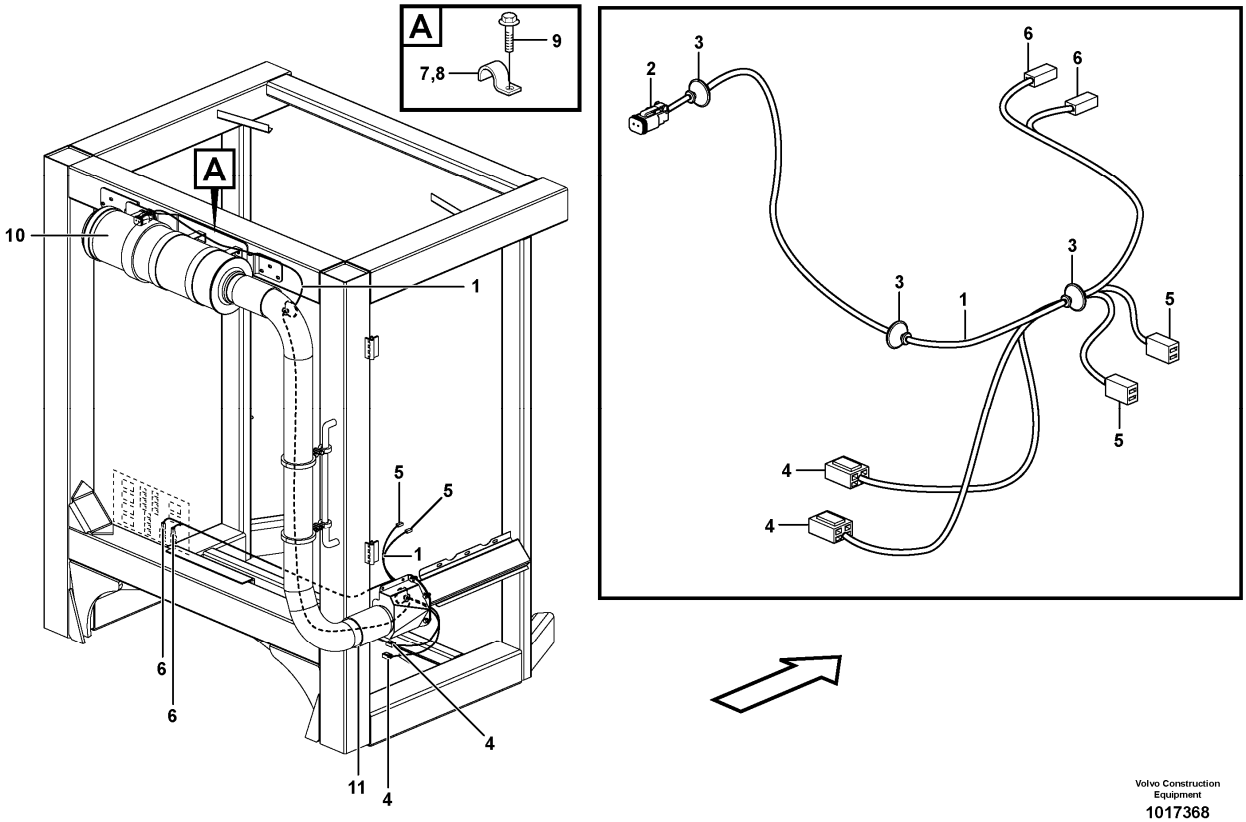

Section option	Kit	Option description
VOE83085		Air filter, cyclone USA

Pos	Part	Q1	Q2	Q3	Q4	Q5	PS	Kit	Description	Option(s)	Remark
1	VOE11171257	1							Cable harness		
2	VOE14370760	1							•Socket		
3	VOE1259854	3							•Grommet		
4	VOE13958210	2							•Receptacle housing		
5	VOE1259831	2							•Tab housing		
6	VOE13949597	2							•Protecting sleeve		
7	VOE990732	2							Clamp		
8	VOE951190	1							Clamp		
9	VOE13946544	1							Screw		
10		1							Primary Filter		See ref 872/170

11		1							Pipe		See ref 872/170

VOLVO

Construction Equipment

PROSIS Part Information

Date:	Image id:	Catalogue:	Model:
10/09/2018	**1032017**	**20009**	**L60E**
Brand:	Serial:	Group/Section:	Title:
Volvo	**1001-3355, 60001-61214, 70001-70530**	**371/1950**	**Cable harness, fire extinguishing system, cab 82231**

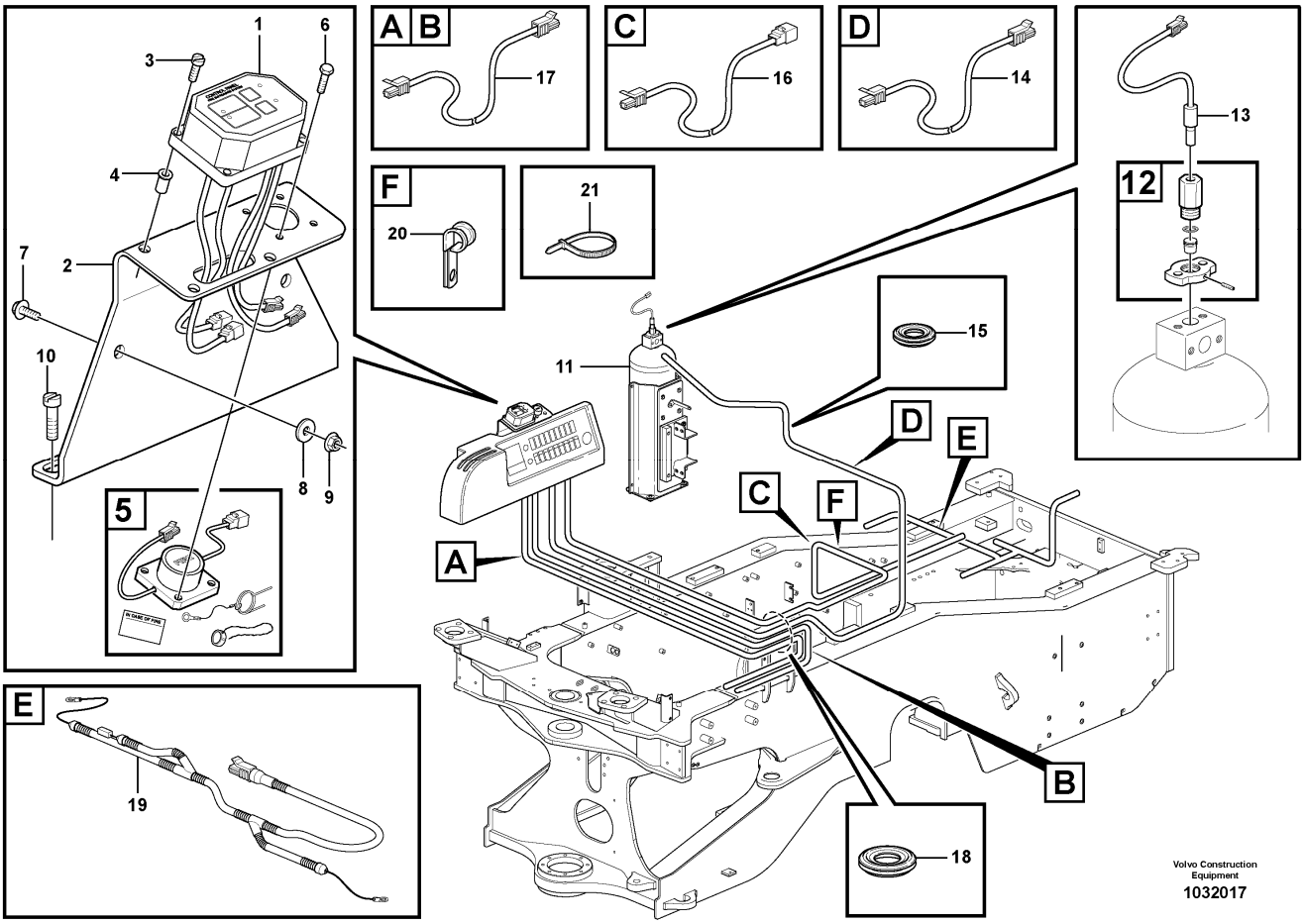

Section option	Kit	Option description
VOE82231		Fire suppression system USA

Pos	Part	Q1	Q2	Q3	Q4	Q5	PS	Kit	Description	Option(s)	Remark
1	VOE11301796	1							Control panel		
2	VOE11301805	1							Bracket		
3	VOE13969516	4							Six point socket screw		
4	VOE930757	4							Expanding nut		
5	VOE11301793	1							Switch		
6	VOE955513	4							Hexagon screw		
7	VOE13946544	2							Screw		
8	VOE13949817	2							Washer		
9	VOE13949278	2							Flange lock nut		
10	VOE969278	3							Six point socket		(VOE13969278)

									screw		
11		1							Tank		See ref 992/250
12	VOE11301768	1							Contact		
13	VOE11301770	1							Actuator		
14	VOE11301791	1							Cable harness		YEL, 20' Activation wire
15	VOE941264	1							Grommet		
16	VOE11301792	1							Cable harness		RED, 20' Power lead
17	VOE11301842	1							Cable harness		GREEN, 20' Sensor cable
	VOE11301790	1							Cable harness		GREEN, 15' Sensor cable
18	VOE13961962	1							Protecting bushing		
19	VOE11301764	1							Cable harness		Fire suppression
									•CONNECTED TO:		
									•Coupling Piece		POS
									•Coupling Piece		NEG
	VOE11039714	1							•Fuse holder		
	VOE873854	2							•Sealing sleeve		
	VOE969161	1							•Fuse		
20	VOE13949746	7							Clamp		
21	VOE4881440	REQ							Cable tie		

VOLVO

Construction Equipment

PROSIS Part Information

Date:	Image id:	Catalogue:	Model:
10/09/2018	**1032049**	**20009**	**L60E**
Brand:	Serial:	Group/Section:	Title:
Volvo	**1001-3355, 60001-61214, 70001-70530**	**371/2000**	**Cable harness, fire extinguishing system, cab 82231**

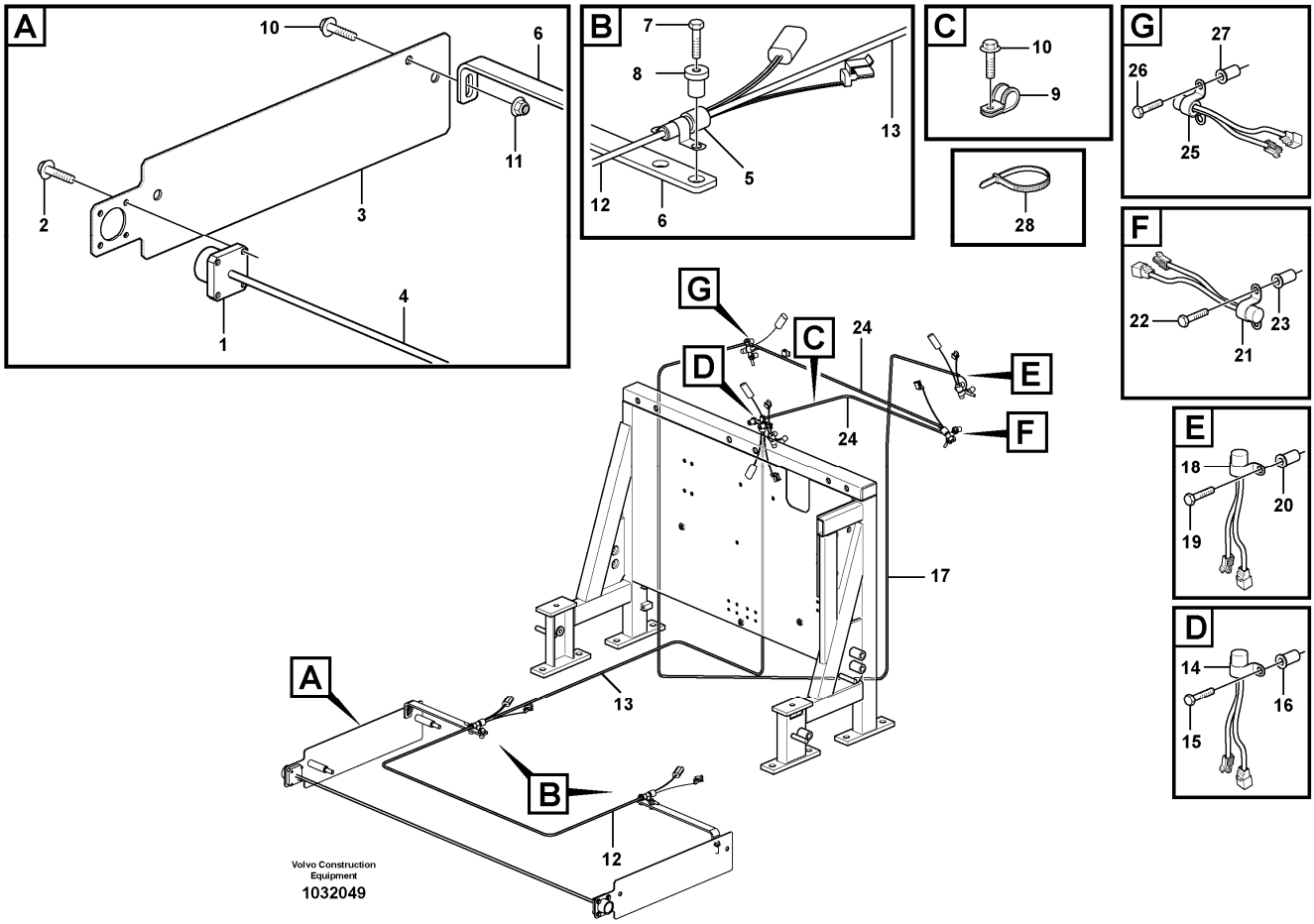

Section option	Kit	Option description
VOE82231		Fire suppression system USA

Pos	Part	Q1	Q2	Q3	Q4	Q5	PS	Kit	Description	Option(s)	Remark
1	VOE11301793	2							Switch		
2	VOE955513	8							Hexagon screw		
3	VOE11301894	2							Plate		
4	VOE11301788	1							Cable harness		
5	VOE11301795	2							Sensor		280 DEG
6	VOE11301965	2							Bracket		
7	VOE13947542	4							Screw		
8	VOE930760	4							Expanding nut		
9	VOE13949746	2							Clamp		
10	VOE13945444	2							Screw		

11	VOE948645	2							Flange lock nut		
12	VOE11301788	1							Cable harness		
13	VOE11301787	1							Cable harness		
14	VOE11301794	1							Sensor		350 DEG
15	VOE13947542	2							Screw		
16	VOE930760	2							Expanding nut		
17	VOE11301790	1							Cable harness		
18	VOE11301794	1							Sensor		350 DEG
19	VOE13947542	2							Screw		
20	VOE930760	2							Expanding nut		
21	VOE11301794	1							Sensor		350 DEG
22	VOE13947542	2							Screw		
23	VOE930760	2							Expanding nut		
24	VOE11301789	2							Cable harness		
25	VOE11301794	1							Sensor		350 DEG
26	VOE13947542	2							Screw		
27	VOE930760	2							Expanding nut		
28	VOE4821292	REQ							Cable tie		

VOLVO

Construction Equipment

PROSIS Part Information

Date:	Image id:	Catalogue:	Model:
10/09/2018	**1023155**	**20009**	**L60E**
Brand:	Serial:	Group/Section:	Title:
Volvo	**1001-3355, 60001-61214, 70001-70530**	**371/2050**	**Cable harness, heating fuel filter 83077**

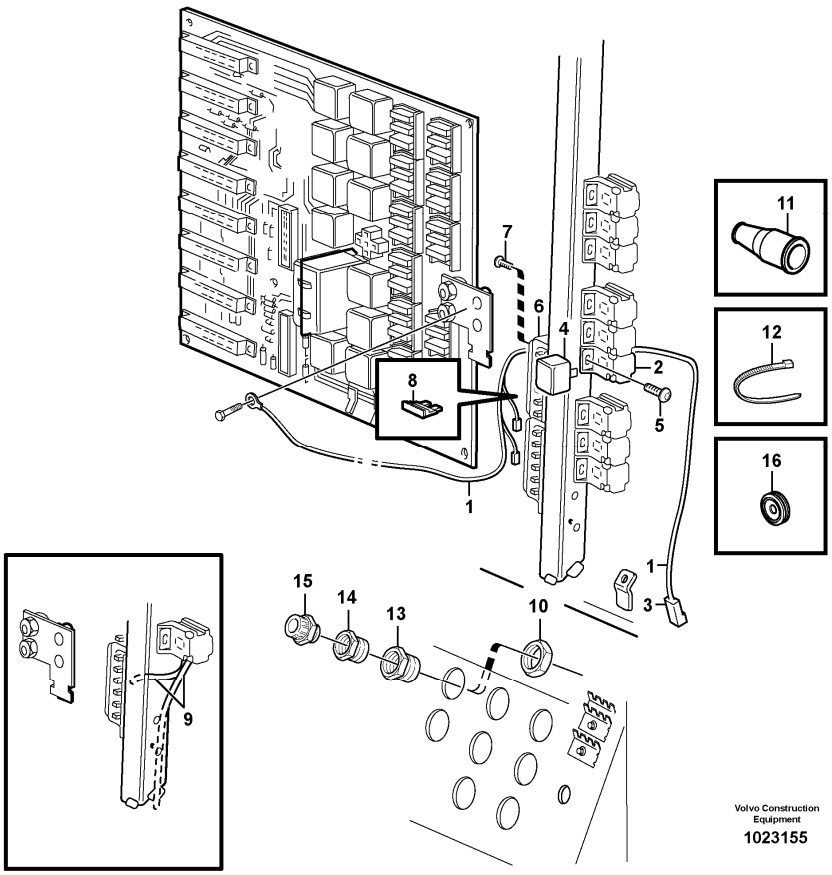

Section option	Kit	Option description
VOE83077		Fuel filter, extra with water trap and heating

Pos	Part	Q1	Q2	Q3	Q4	Q5	PS	Kit	Description	Option(s)	Remark
1	VOE11040641	1							Cable harness		
									•CONNECTED TO:		
									••Relay		RE101
									••Fuse		FU55:6, FU58:3
									••Feeding		30
2	VOE977184	1							•Housing		(RE101)
3	VOE13949597	1							•Protecting sleeve		(31C)
	VOE4821294	3							•Heat-shrinkable tubing		
4	VOE20374662	1							Relay		RE101

5	VOE969278	1							Six point socket screw		(VOE13969278)L = 13 MM
	VOE947107	1							Flange screw		L = 12 MM
6	VOE11039302	1							Fuse holder		
7	VOE969278	4							Six point socket screw		(VOE13969278)
8	VOE13969162	1							Fuse		
9	VOE11170845	1							Cable harness		
10	VOE11147868	1							Plastic nut		
11	VOE11039397	1							End sleeve		
12	VOE4881440	REQ							Cable tie		
13	VOE4803795	1							Reduction		
14	VOE11039050	1							Reduction		
15	VOE4803765	1							Hose coupling		
16	VOE13961962	1							Protecting bushing		

VOLVO

Construction Equipment

PROSIS Part Information

Date:	Image id:	Catalogue:	Model:
10/09/2018	**1008259**	**20009**	**L60E**
Brand:	Serial:	Group/Section:	Title:
Volvo	**1001-3355, 60001-61214, 70001-70530**	**372/100**	**Electrical distribution box STD, OPEN ROPS**

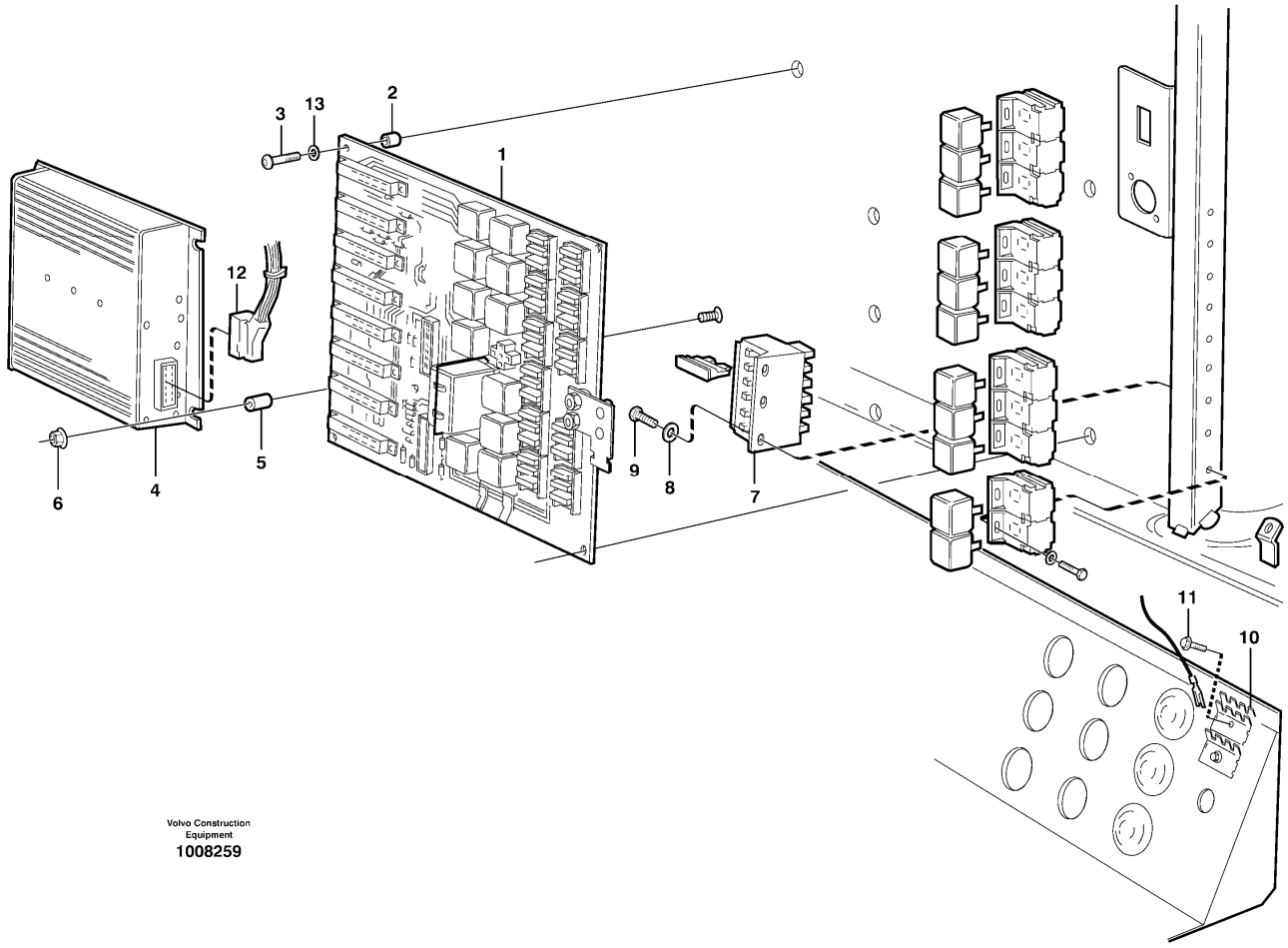

Section option	Kit	Option description
VOE33755		Cab
VOE33760		Cab. Open Rops

Pos	Part	Q1	Q2	Q3	Q4	Q5	PS	Kit	Description	Option(s)	Remark
1		1					NS		Circuit Board		See ref 372/150
2	VOE11006880	8							Spacer sleeve		
3	VOE13980220	8							Six point socket screw		
4	VOE11184401	1							ECU		V-ECU, CAB - 1658 CAB -1855 USA, REMAN VOE9011184401
4	VOE11185050	1							Electronic unit	VOE33756	V-ECU, CAB 1659 - CAB 1856 - USA,

											REMAN VOE9011185050
5	VOE930418	3							Spacer ring		
6	VOE981447	3							Flange lock nut		
7	VOE11039302	1							Fuse holder		
8	VOE13940090	2							Washer		
9	VOE969278	2							Six point socket screw		(VOE13969278)
10	VOE9148415	2							Terminal block		
11	VOE13948746	1							Screw		
12		1							Wire harness		See ref 372/200
13	VOE13962653	8							Washer		

VOLVO

Construction Equipment

PROSIS Part Information

Date:	Image id:	Catalogue:	Model:
10/09/2018	**EL153**	**20009**	**L60E**
Brand:	Serial:	Group/Section:	Title:
Volvo	**1001-3355, 60001-61214, 70001-70530**	**372/150**	**Circuit board STD, OPEN ROPS**

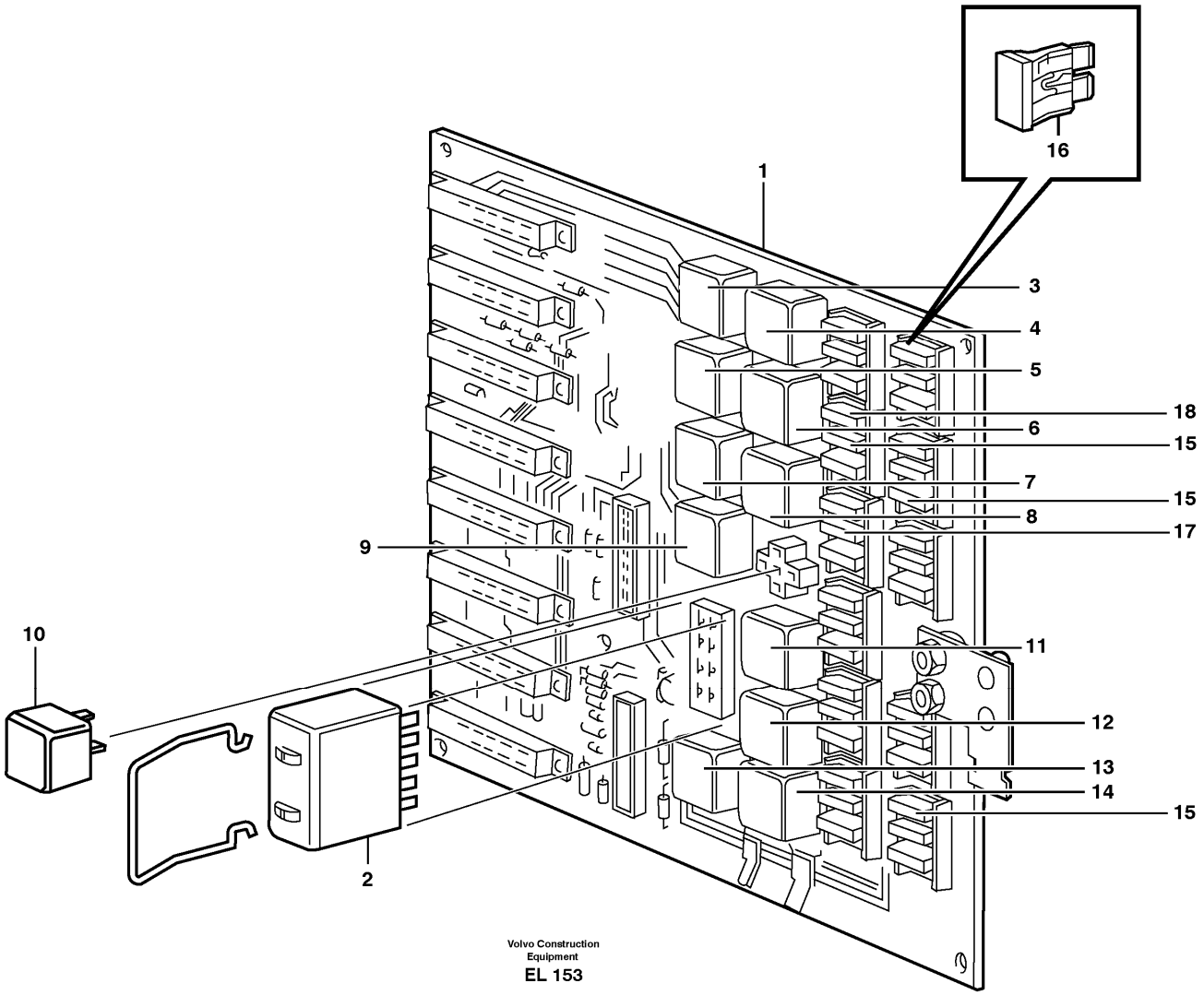

Section option	Kit	Option description
VOE33755		Cab
VOE33760		Cab. Open Rops

Pos	Part	Q1	Q2	Q3	Q4	Q5	PS	Kit	Description	Option(s)	Remark
		1					NS		Ptd Circuit Bd		
1	VOE11170013	1							•Ptd Circuit Bd		
									•Relay:		
2	VOE15048941	1							Flasher unit		(VOE11170048)RF1

3	VOE20374662	1							•Relay		RE1
									••Tilt automatic		
4	VOE20374662	1							•Relay		RE2
									••15A-feed		
5	VOE20374662	1							•Relay		RE3
									••Boom kickout		
6	VOE20374662	1							•Relay		RE4
									••15B-feed		
7	VOE20374662	1							•Relay		RE5
									••Interval wiper, rear		
8	VOE20374662	1							•Relay		RE6
									••Interm.wiper,front		
9	VOE20374662	1							•Relay		RE7
									••Boom suspension		
10	VOE20374662	1							•Relay		RE8
									••Start inhibitor		
11	VOE20374662	1							•Relay		RE9
									••Start inhibitor		
12	VOE20374662	1							•Relay		RE10
									••Work lights	VOE80886, VOE82342	
13	VOE20374662	1							•Relay		RE11
									••30-feed		
14	VOE20374662	1							•Relay		RE12
									••15EA-feed		
									•Fuse:		
15	VOE13969160	15							•Fuse		5A
16	VOE969161	13							•Fuse		10A
17	VOE13969162	2							•Fuse		15A
18	VOE978999	3							•Fuse		20A

VOLVO

Construction Equipment

PROSIS Part Information

Date:	Image id:	Catalogue:	Model:
10/09/2018	**1015783**	**20009**	**L60E**
Brand:	Serial:	Group/Section:	Title:
Volvo	**1001-3355, 60001-61214, 70001-70530**	**372/200**	**Electrical distribut.unit and cable harness**

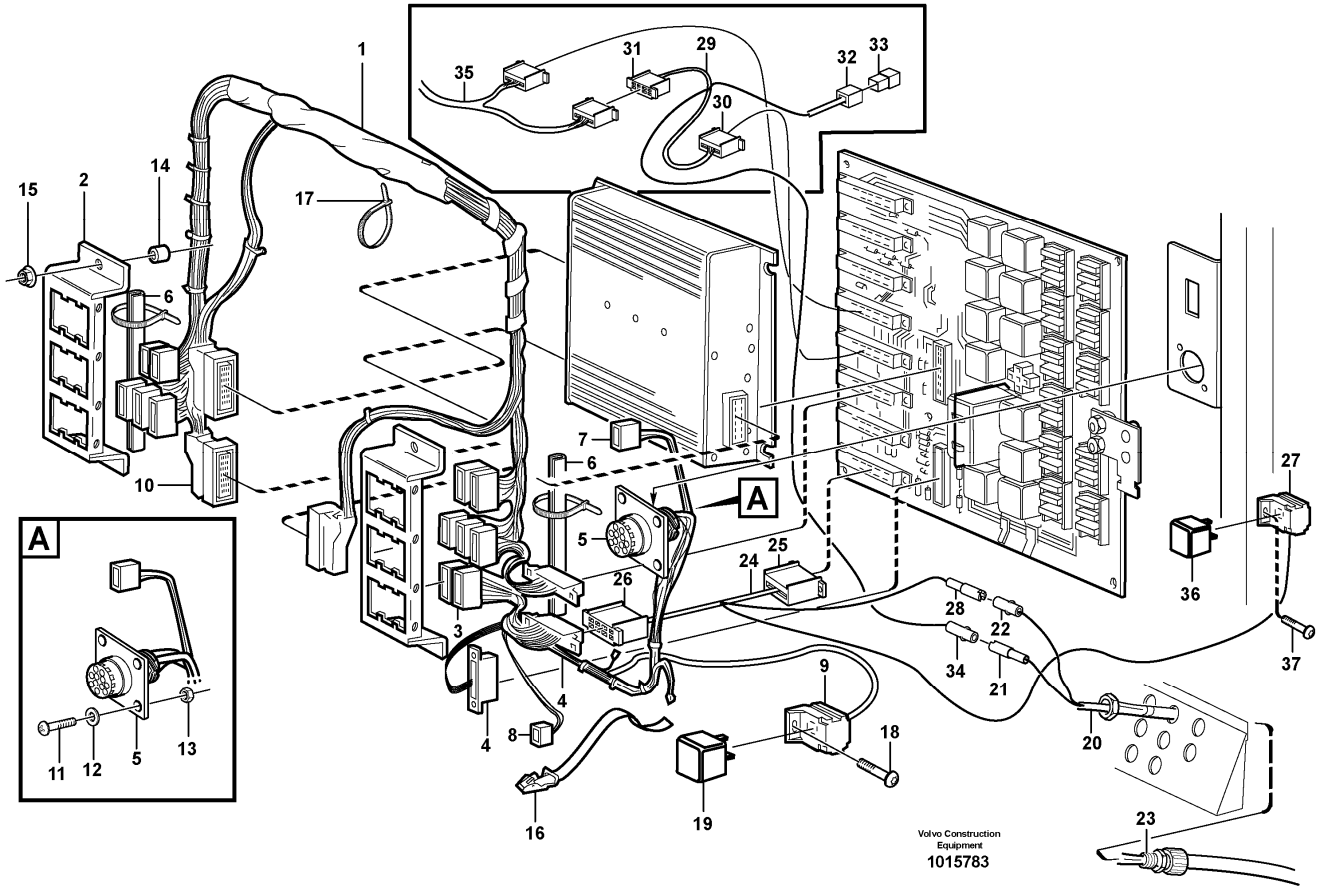

Section option	Kit	Option description
VOE33755		Cab
VOE33760		Cab. Open Rops
VOE82257		Electric battery disconnecting switch in cab
VOE82772		Air conditioning
VOE82773		Air conditioning CRSN

Q1-Q5	Option	Option description	
Q1 STD			
Q2 OPEN ROPS			
Q3 82772 82773	VOE82772	Air conditioning	
Q4 82257	VOE82257	Electric battery disconnecting switch in cab	

Pos	Part	Q1	Q2	Q3	Q4	Q5	PS	Kit	Description	Option(s)	Remark

1	VOE11171600	1	1						Cable harness		(VOE11171290)See footnote 1245)
									•CONNECTED TO:		
									••Electronic unit		V-ECU, EA, EB, EC.
									••Circuit Board		E, C, RD
									••Wire harness		SH, MR, D, SC, CDC, TB, TA, OA, UA, FA, RB, ES, RA, HE802, CL, AC
									••Service display		IA, IB
									••Relay		RE806
									••Fuse		FU54
2	VOE11041346	2	2				OP		•Retainer		
3	VOE1096615	13	13						•Housing		
4	VOE1096619	3	3						•Housing		
5	VOE14340067	1	1						•Socket housing		
6	VOE4785436	REQ	REQ						•Protecting moulding		
7	VOE1096614	1	1						•Housing		
8	VOE13958210	1	1						•Receptacle housing		
9	VOE977184	1	1						•Housing		
10	VOE11039660	1	1						•Housing		
11	VOE956047	2	2						Cross recessed screw		
12	VOE955890	2	2						Plain washer		
13	VOE13966650	2	2						Lock nut		
14	VOE930418	4	4						Spacer ring		
15	VOE981447	4	4						Flange lock nut		
16	VOE11104606	REQ	REQ						Retaining strap		
17	VOE4881440	7	7						Cable tie		
18	VOE969278	1	1						Six point socket screw		(VOE13969278)
19	VOE20374662	1		1					Relay	VOE80868, VOE82772, VOE82773	RE806
20	VOE11170897				1				Cable harness		See footnote 1245)
21	VOE949583				1				•Housing		
22	VOE13949584				1				•Housing		
23	VOE4803765				1				•Hose coupling		
24	VOE11170943				1				Cable harness		See footnote 1245)
									•CONNECTED TO:		
									••Circuit Board		C
									••Wire harness		C, RE105
25	VOE1096615				1				•Housing		
26	VOE1096619				1				•Housing		
27	VOE977184				1				•Housing		
28	VOE949583				1				•Housing		
29	VOE11170896				1				Cable harness		See footnote 1245)
									•CONNECTED TO:		
									••Circuit Board		DA

									••Wire harness		DA
30	VOE1096615				1				•Housing		
31	VOE1096619				1				•Housing		
32	VOE13958212				1				•Tab housing		
33	VOE4803680				1				•Diode unit		
	VOE4803274				1				••Diode		
34	VOE13949584				1				•Housing		
35					1				Cable harness		See ref 371/500
36	VOE20374662				1				Relay		
37	VOE969278				1				Six point socket screw		(VOE13969278)

1245) Including parts: Wire assembly, hose, manifold, cable terminal and insulator See Group 379.

VOLVO

Construction Equipment

PROSIS Part Information

Date:	Image id:	Catalogue:	Model:
10/09/2018	**ST101**	**20009**	**L60E**
Brand:	Serial:	Group/Section:	Title:
Volvo	**1001-3355, 60001-61214, 70001-70530**	**379/100**	**Wires**

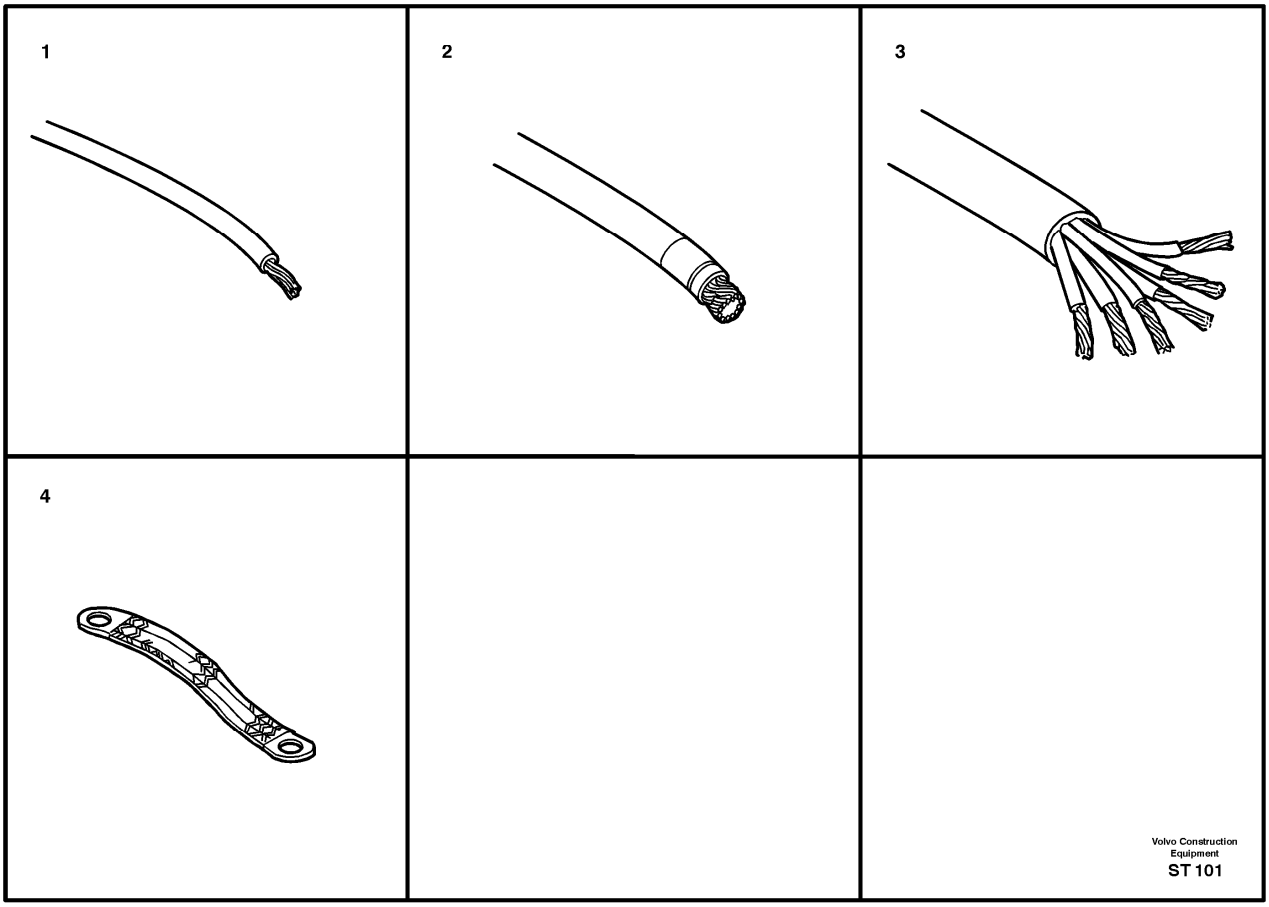

Pos	Part	Q1	Q2	Q3	Q4	Q5	PS	Kit	Description	Option(s)	Remark
1	VOE11171600	1	1						Cable harness		(VOE11171290)See footnote 1245)
									•CONNECTED TO:		
									••Electronic unit		V-ECU, EA, EB, EC.
									••Circuit Board		E, C, RD
									••Wire harness		SH, MR, D, SC, CDC, TB, TA, OA, UA, FA, RB, ES, RA, HE802, CL, AC
									••Service display		IA, IB
									••Relay		RE806
									••Fuse		FU54
2	VOE11041346	2	2				OP		•Retainer		

3	VOE1096615	13	13						•Housing		
4	VOE1096619	3	3						•Housing		
5	VOE14340067	1	1						•Socket housing		
6	VOE4785436	REQ	REQ						•Protecting moulding		
7	VOE1096614	1	1						•Housing		
8	VOE13958210	1	1						•Receptacle housing		
9	VOE977184	1	1						•Housing		
10	VOE11039660	1	1						•Housing		
11	VOE956047	2	2						Cross recessed screw		
12	VOE955890	2	2						Plain washer		
13	VOE13966650	2	2						Lock nut		
14	VOE930418	4	4						Spacer ring		
15	VOE981447	4	4						Flange lock nut		
16	VOE11104606	REQ	REQ						Retaining strap		
17	VOE4881440	7	7						Cable tie		
18	VOE969278	1	1						Six point socket screw		(VOE13969278)
19	VOE20374662	1		1					Relay	VOE80868, VOE82772, VOE82773	RE806
20	VOE11170897				1				Cable harness		See footnote 1245)
21	VOE949583				1				•Housing		
22	VOE13949584				1				•Housing		
23	VOE4803765				1				•Hose coupling		
24	VOE11170943				1				Cable harness		See footnote 1245)
									•CONNECTED TO:		
									••Circuit Board		C
									••Wire harness		C, RE105
25	VOE1096615				1				•Housing		
26	VOE1096619				1				•Housing		
27	VOE977184				1				•Housing		
28	VOE949583				1				•Housing		
29	VOE11170896				1				Cable harness		See footnote 1245)
									•CONNECTED TO:		
									••Circuit Board		DA
									••Wire harness		DA
30	VOE1096615				1				•Housing		
31	VOE1096619				1				•Housing		
32	VOE13958212				1				•Tab housing		
33	VOE4803680				1				•Diode unit		
	VOE4803274				1				••Diode		
34	VOE13949584				1				•Housing		
35					1				Cable harness		See ref 371/500
36	VOE20374662				1				Relay		
37	VOE969278				1				Six point socket screw		(VOE13969278)

1245) Including parts: Wire assembly, hose, manifold, cable terminal and insulator See Group 379.

VOLVO

Construction Equipment

PROSIS Part Information

Date:	Image id:	Catalogue:	Model:
10/09/2018	**1009676**	**20009**	**L60E**
Brand:	Serial:	Group/Section:	Title:
Volvo	**1001-3355, 60001-61214, 70001-70530**	**379/150**	**Hose and manifold**

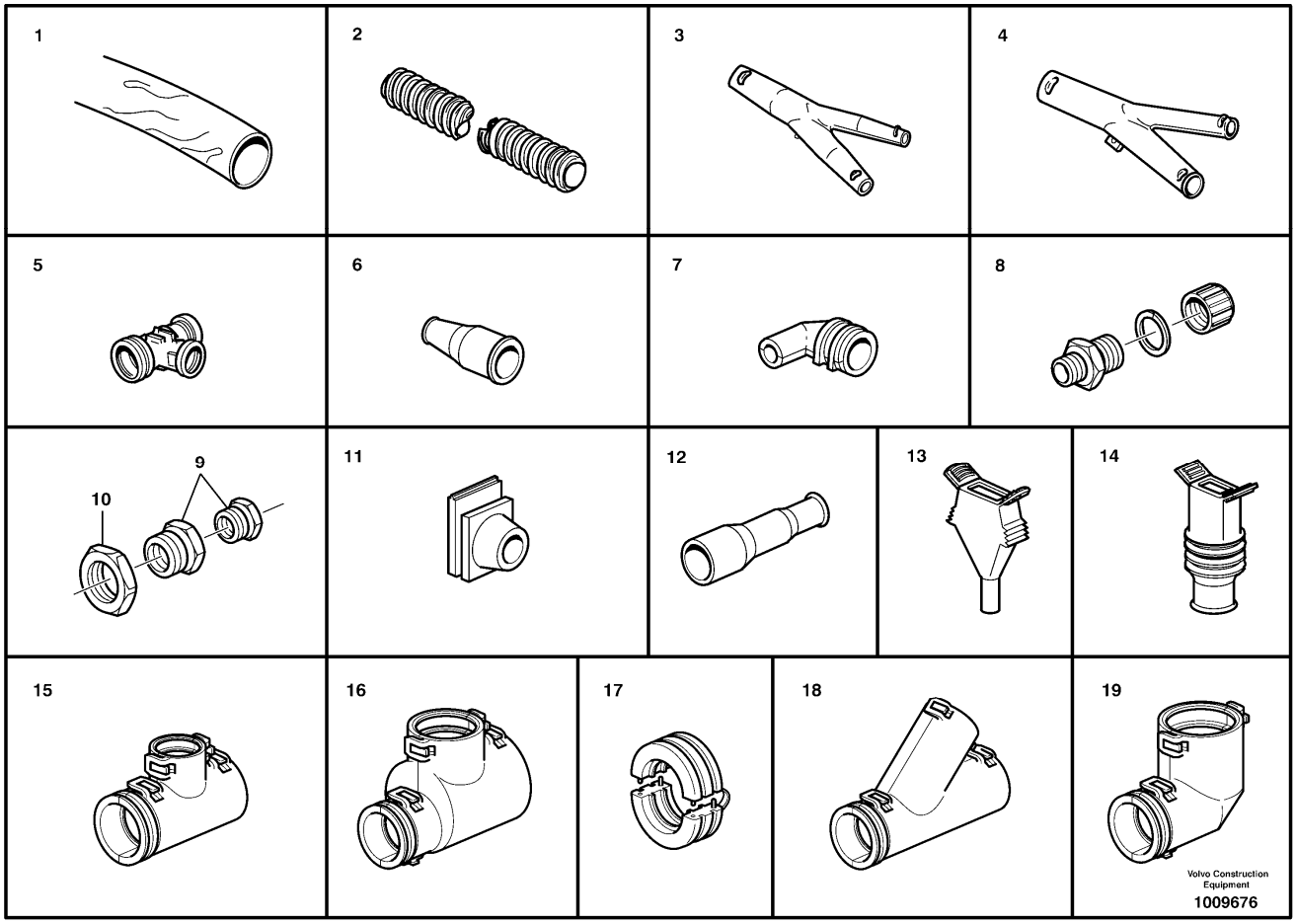

Pos	Part	Q1	Q2	Q3	Q4	Q5	PS	Kit	Description	Option(s)	Remark
1	VOE185506	REQ							Hose		PVC. ID=5MM. OD=6MM
	VOE185501	REQ							Hose		PVC. ID=8MM. OD=9MM
2	VOE4803745	REQ							Hose		ID 8.5MM
	VOE4803746	REQ							Hose		ID 10MM
	VOE11039491	REQ							Hose		ID 10MM
	VOE4803747	REQ							Hose		ID 12MM
	VOE4803748	REQ							Hose		ID 13MM
	VOE4803751	REQ							Hose		ID 17MM
	VOE4803752	REQ							Hose		ID 22MM
	VOE4803754	REQ							Hose		ID 26MM

	VOE4803755	REQ							Hose		ID 29MM
									Manifold		Type N
3	VOE4803730	REQ							Manifold		Tube 17.0-10.0-10.0MM
	VOE4803728	REQ							Manifold		Tube 13.0-10.0-10.0MM
	VOE4803729	REQ							Manifold		Tube 13.0-13.0-10.0MM
	VOE4803731	REQ							Manifold		Tube 17.0-13.0-10.0MM
	VOE4803732	REQ							Manifold		Tube 17.0-13.0-13.0MM
	VOE4803733	REQ							Manifold		Tube 17.0-17.0-10.0MM
	VOE4803736	REQ							Manifold		Tube 22.0-22.0-10.0MM
	VOE4803738	REQ							Manifold		Tube 22.0-22.0-17.0MM
	VOE4803740	REQ							Manifold		Tube 29.0-22.0-22.0MM
	VOE4803739	REQ							Manifold		Tube 22.0-22.0-22.0MM
									Manifold		Type O
4	VOE4803727	REQ							Manifold		Tube 10.0-10.0-10.0MM
	VOE11039109	REQ							Manifold		Tube 17.0-17.0-13.0MM
	VOE11039110	REQ							Manifold		Tube 17.0-17.0-8.5MM
	VOE4803734	REQ							Manifold		Tube 22.0-17.0-13.0MM
	VOE11039117	REQ							Manifold		Tube 22.0-17.0-17.0MM
5	VOE3943086	REQ							Manifold		Tube 7.5-7.5-7.5MM
	VOE3943089	REQ							Manifold		Tube 10-10-10MM
	VOE3943091	REQ							Manifold		Tube 13-10-10MM
									End sleeve		
6	VOE11039397	REQ							End sleeve		ID 10 x 5MM
	VOE4803711	REQ							End sleeve		ID 12-13 x 4-9MM
	VOE4803713	REQ							End sleeve		ID 16-17 x 6-14MM
	VOE4803714	REQ							End sleeve		ID 22 x 7-17MM
7	VOE1095059	REQ							Joint nipple		
									Hose coupling		
8	VOE4803765	REQ							Hose coupling		PG 9 ID A = 10.5MM
	VOE4803766	REQ							Hose coupling		PG 11 ID A = 14MM

	VOE4803768	REQ							Hose coupling		PG 16 ID A = 17MM
	VOE4803769	REQ							Hose coupling		PG 21 ID A = 22MM
	VOE14343156	REQ							Fitting		PG 21 ID = 32MM
	VOE4803771	REQ							Hose coupling		PG 29 ID A = 29.5MM
									Reduction		
9	VOE11039099	REQ							Reduction		RED 16-9MM
	VOE11039050	REQ							Reduction		RED 16-11MM
	VOE4803795	REQ							Reduction		RED 29-16MM
	VOE11039378	REQ							Reduction		RED 21-16MM
	VOE11039398	REQ							Reduction		RED 29-21MM
10	VOE11147868	REQ							Plastic nut		(VOE4803793)PG 29
11	VOE11039005	REQ							Bushing		
	VOE11039275	REQ							Bushing		
12	VOE1573077	REQ							Bellows		
13	VOE945783	REQ							Housing Cover		3-POLE
14	VOE1620582	REQ							Bellows		
15	VOE14346331	REQ							Manifold		Tube 10-10-13MM
	VOE14267351	REQ							Manifold		Tube 13-10-13MM
	VOE14340330	REQ							Manifold		Tube 13-13-10MM
16	VOE11039663	REQ							Manifold		Tube 22-22-17MM
	VOE11039664	REQ							Manifold		Tube 13-13-13MM
	VOE11039709	REQ							Manifold		Tube 10-10-10MM
	VOE11039710	REQ							Manifold		Tube 17-10-17MM
17	VOE14346386	REQ							Fitting		RED 22/17 MM
		REQ					NS		Reduction		RED 13/10 MM
18	VOE11039665	REQ							Manifold		Tube 10-10-10MM
19	VOE11170084	REQ							Elbow		Nw10
	VOE11039843	REQ							Elbow		Nw13

VOLVO

Construction Equipment

PROSIS Part Information

Date:	Image id:	Catalogue:	Model:
10/09/2018	**ST103**	**20009**	**L60E**
Brand:	Serial:	Group/Section:	Title:
Volvo	**1001-3355, 60001-61214, 70001-70530**	**379/200**	**Cable terminal**

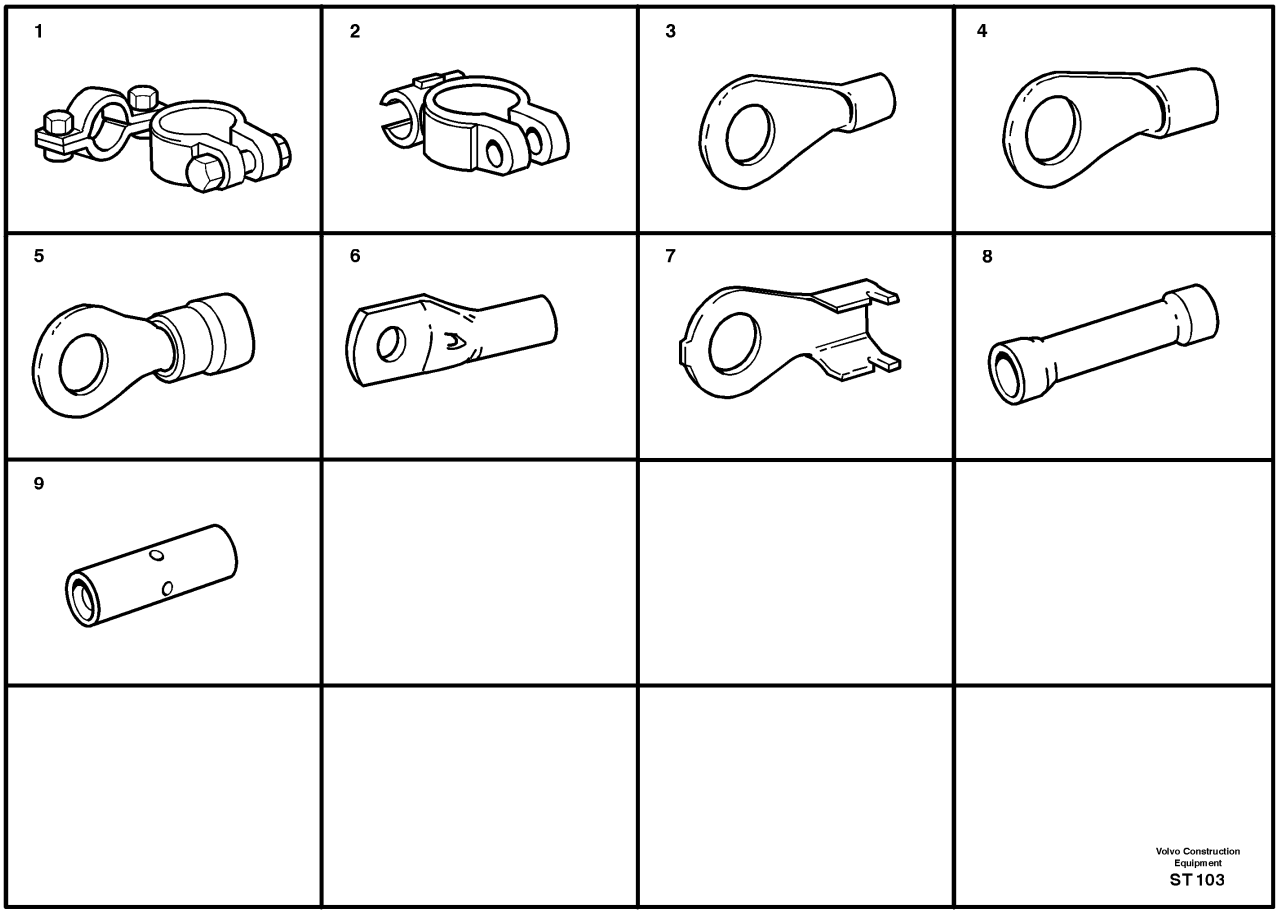

Pos	Part	Q1	Q2	Q3	Q4	Q5	PS	Kit	Description	Option(s)	Remark
1	VOE6600001	REQ							Cable terminal		(-)
	VOE6600002	REQ							Cable terminal		(+)
2	VOE954505	REQ							Cable terminal		70 - 95 SQ MM(-)
	VOE954506	REQ							Cable terminal		70 - 95 SQ MM(+)
3	VOE940333	REQ							Cable terminal		6.5 - 10.5 SQ MM. M8
4	VOE940335	REQ							Cable terminal		16 SQ MM. M6
	VOE940337	REQ							Cable terminal		16 SQ MM. M10
	VOE965792	REQ							Cable terminal		25 SQ MM. M10
	VOE941339	REQ							Cable terminal		50 SQ MM. M10

	VOE954510	REQ							Cable terminal		70 SQ MM. M10
	VOE13965805	REQ							Cable terminal		70.1 - 95 SQ MM. M10
	VOE13965893	REQ							Cable terminal		70.1 - 95 SQ MM. M10
5	VOE956925	REQ							Cable terminal		0.5 - 1.0 SQ MM. M4 RED
	VOE956926	REQ							Cable terminal		0.5 - 1.0 SQ MM. M5 RED
	VOE958220	REQ							Cable terminal		0.5 - 1.0 SQ MM. M6 RED
	VOE956928	REQ							Cable terminal		1.5 - 2.5 SQ MM. M4 BLUE
	VOE956929	REQ							Cable terminal		1.5 - 2.5 SQ MM. M5 BLUE
	VOE956930	REQ							Cable terminal		1.5 - 2.5 SQ MM. M6 BLUE
	VOE956931	REQ							Cable terminal		1.5 - 2.5 SQ MM, M8 BLUE
	VOE956965	REQ							Cable terminal		1.5 - 2.5 SQ MM. M10 BLUE
	VOE956933	REQ							Cable terminal		4 - 6 SQ MM. M5 YELL
	VOE956934	REQ							Cable terminal		4 - 6 SQ MM. M6 YELL
	VOE956936	REQ							Cable terminal		4 - 6 SQ MM. M10 YELL
6	VOE13947459	REQ							Cable terminal		25 SQ MM. M6
	VOE11715595	REQ							Cable terminal		(VOE13967812)35 SQ MM. M6
	VOE11715939	REQ							Cable terminal		(VOE13941935)35 SQ MM. M8
	VOE13968137	REQ							Cable terminal		50 SQ MM. M6
	VOE13965890	REQ							Cable terminal		50 SQ MM. M8
7	VOE958220	REQ							Cable terminal		(VOE970783)0.5 - 1.0 SQ MM. M6
	VOE970795	REQ							Cable terminal		2.6 - 6.0 SQ MM. M8
8	VOE956956	REQ							Splice		0.5 - 1.0 SQ MM. RED
	VOE956958	REQ							Splice		1.5 - 2.5 SQ MM. BLUE
	VOE956960	REQ							Splice		3 - 6 SQ MM. YELL
9	VOE946165	REQ							Splice		0.25 - 1.6 SQ MM

VOLVO

Construction Equipment

PROSIS Part Information

Date:	Image id:	Catalogue:	Model:
10/09/2018	**ST104A**	**20009**	**L60E**
Brand:	Serial:	Group/Section:	Title:
Volvo	**1001-3355, 60001-61214, 70001-70530**	**379/300**	**Insulator for spade terminal**

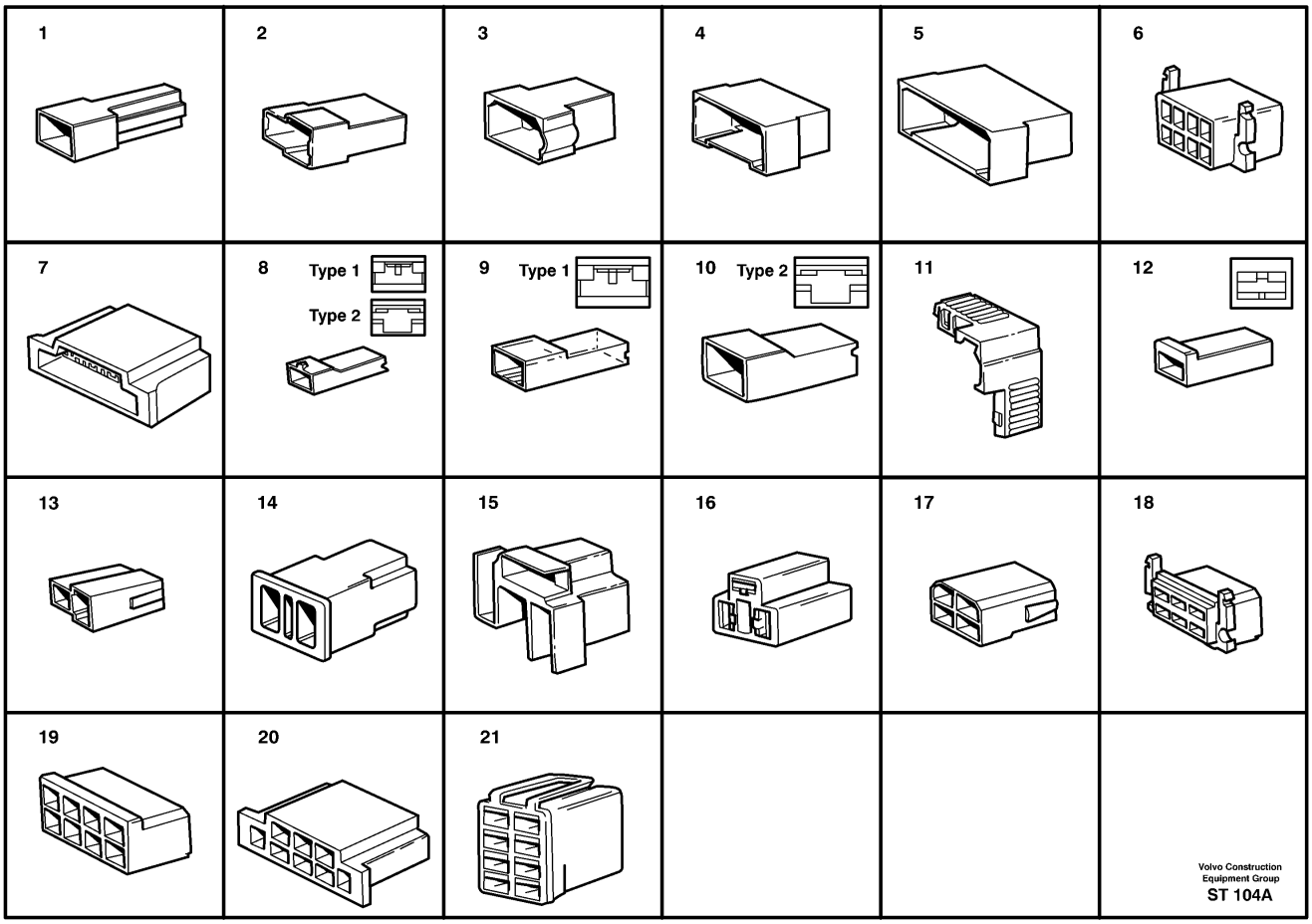

Pos	Part	Q1	Q2	Q3	Q4	Q5	PS	Kit	Description	Option(s)	Remark
									Tab housing		
									•For Cable terminal		6,3 MM
1	VOE958207	REQ							Housing		6.3 x 1-POLE
2	VOE958209	REQ							Housing		6.3 x 2-POLE
3	VOE13958212	REQ							Tab housing		6.3 x 4-POLE
	VOE948855	REQ							Housing		6.3 x 4-POLE
4	VOE13964197	REQ							Housing		6.3 x 6-POLE
5	VOE13965756	REQ							Housing		6,3 x 8-POLE GREY
	VOE1234417	REQ							Housing		6,3 x 8-POLE BL
6	VOE944077	REQ							Tab housing		6.3 x 8-POLE
7	VOE941105	REQ							Housing		6.3 x 8-POLE
									Receptacle Housing		
									•For Cable terminal		4,8/6,3 MM

8	VOE13947848	REQ							Housing		4.8 x 1-POLE Cable area max. 2,5 SQ MM
9	VOE13949597	REQ							Protecting sleeve		6.3 x 1-POLE Cable area max. 2,5 SQ MM
10	VOE943511	REQ							Housing		6.3 x 1-POLE Cable area max. 6,0 SQ MM
11	VOE13944221	REQ							Housing		6.3 x 1-POLE
12	VOE958208	REQ							Housing		See footnote 1252) 6.3 x 1-POLE
13	VOE13964167	REQ							Housing		6.3 x 2-POLE
	VOE13958210	REQ							Receptacle housing		6.3 x 2-POLE
14	VOE4803532	REQ							Socket housing		6.3 x 2-POLE
15	VOE784593	REQ							Housing		6.3x3-POLE. Base P43t-38
16	VOE945469	REQ							Receptacle housing		6.3 x 3-POLE
17	VOE13948856	REQ							Housing		6.3 x 4-POLE
	VOE958213	REQ							Housing		6.3 x 4-POLE
18	VOE958215	REQ							Housing		6.3 x 6-POLE
19	VOE944076	REQ							Housing		6.3 x 8-POLE
	VOE13965757	REQ							Housing		6.3 x 8-POLE
20	VOE941104	REQ							Housing		6.3 x 8-POLE
21	VOE4803454	REQ							Receptacle housing		6.3 x 8-POLE

1252) Mating receptacle part Nos. 949201, 973150.

VOLVO

Construction Equipment

PROSIS Part Information

Date:	Image id:	Catalogue:	Model:
10/09/2018	**1009667**	**20009**	**L60E**
Brand:	Serial:	Group/Section:	Title:
Volvo	**1001-3355, 60001-61214, 70001-70530**	**379/400**	**Spade terminal**

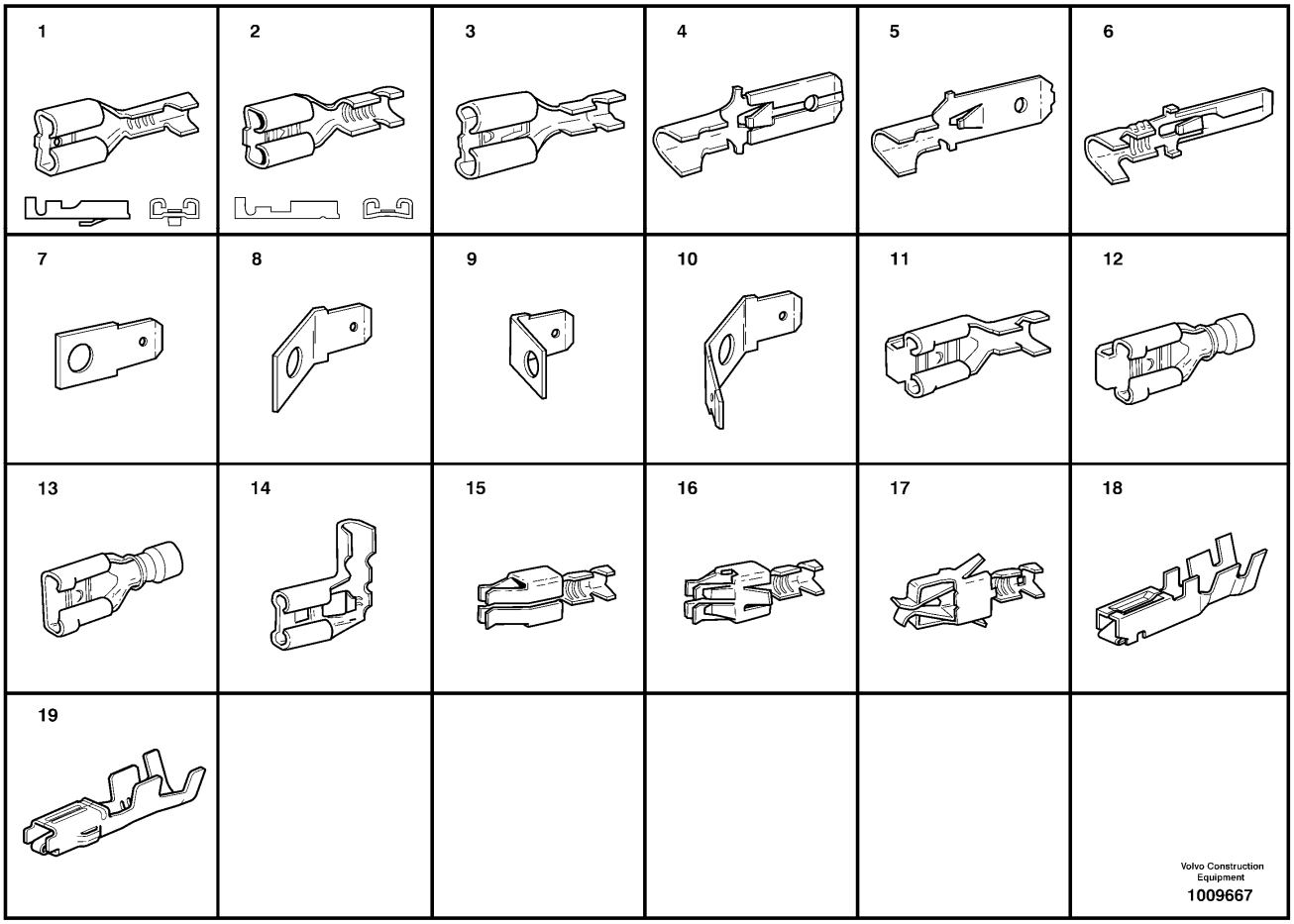

Q1-Q5	Option	Option description	
Q1 .			See footnote 1230)

Pos	Part	Q1	Q2	Q3	Q4	Q5	PS	Kit	Description	Option(s)	Remark
									Cable terminal		See footnote 1251)
1	VOE970745	REQ							Cable terminal		6.3x0.5 - 1.0 SQ MM (FB)
	VOE949400	REQ							Cable terminal		6.3x0.5 - 1.0 SQ MM (FB)
	VOE973149	REQ							Cable terminal		6.3x0,5 - 1,0 SQ MM (FB)
	VOE949201	REQ							Cable terminal		6.3x1.0 - 2.5 SQ MM (FB)
	VOE973150	REQ							Cable terminal		6.3x1.0 - 2.5 SQ MM (FB)

	VOE970746	REQ							Cable terminal		6.3x1.1 - 2.5 SQ MM (FB)
	VOE949489	REQ							Cable terminal		6,3x1.1 - 2.5 SQ MM (FB)
	VOE949401	REQ							Cable terminal		6.3x4.0 - 6.0 SQ MM (FB)
									Cable terminal		See footnote 1250)
2	VOE949404	REQ							Cable terminal		4.8x1.0 - 2.5 SQ MM (FB)
	VOE973119	REQ							Cable terminal		6.3x0,5 - 1,0 SQ MM (M)
	VOE973121	REQ							Cable terminal		6.3x0,5 - 1,0 SQ MM (FB)
	VOE949210	REQ							Cable terminal		6.3x0.75 - 1.0 SQ MM (FB)
	VOE973120	REQ							Cable terminal		6.3x1,1 - 2,5 SQ MM (M)
	VOE973122	REQ							Cable terminal		6,3x1,1 - 2,5 SQ MM (FB)
	VOE973123	REQ							Cable terminal		6.3x0,5 - 1,0 SQ MM (FB)
	VOE973124	REQ							Cable terminal		6.3x1.1 - 2.5 SQ MM (FB)
	VOE949211	REQ							Cable terminal		6.3x1.5 - 2.5 SQ MM (FB)
	VOE881484	REQ							Cable terminal		6.3x4 - 6 SQ MM(FB)
3		REQ					NS		Cable terminal		8.0x1.3 - 3.3 SQ MM (FB)
	VOE949604	REQ							Cable terminal		8.0x1.3 - 3.3 SQ MM (FB)
4	VOE973117	REQ							Cable terminal		6.3x0,5 - 1,0 SQ MM (FB)
	VOE949490	REQ							Cable terminal		6.3x0.75 - 2.5 SQ MM (FB)
	VOE13949473	REQ							Cable terminal		6.3x4.0 - 6.0 SQ MM (FB)
5	VOE949490	REQ							Cable terminal		(VOE13949474) 6.3x0.75 - 2.5 SQ MM (FB)
6	VOE969780	REQ							Cable terminal		2.8x0.2 - 0.5 SQ MM (M)
	VOE969781	REQ							Cable terminal		2.8x1.1 - 2.5 SQ MM (M)
7	VOE944485	REQ							Cable terminal		6,3x. M5
8	VOE13946118	REQ							Tab terminal		6,3x. M3
	VOE941881	REQ							Cable terminal		6,3x. M4
9	VOE941957	REQ							Cable terminal		6,3x. M4
10	VOE1269755	REQ							Tab terminal		6,3x. M6
11	VOE13949606	REQ							Cable terminal		6.3x0.75 - 2.1 SQ MM (FB)
12	VOE941730	REQ							Cable terminal		6.3x1.5 - 2.5 SQ MM (M)

13	VOE940340	REQ							Cable terminal		6.3x0.5-1 SQ MM RED
	VOE940341	REQ							Cable terminal		6.3x1.1-2.5 SQ MM BLUE
	VOE958201	REQ							Cable terminal		6.3x4 - 6 SQ MM YELL
14	VOE965101	REQ							Cable terminal		(VOE13949598)8.0x1.0 - 2.5 SQ MM(FB)
	VOE973132	REQ							Cable terminal		8.0x1.0 - 2.5 SQ MM (FB)
15	VOE13946640	REQ							Cable terminal		4.8x0.5 - 1.0 SQ MM (FB)
	VOE965107	REQ							Cable terminal		4.8x1.0 - 2.5 SQ MM (FB)
16	VOE979001	REQ							Cable terminal		6.3x0.5 - 1.0 SQ MM (FB)
	VOE979002	REQ							Cable terminal		6.3/4.8x1.1-2.5 SQ MM (FB)
17	VOE970776	REQ							Cable terminal		4.8/2.8x0.5-1.0 SQ MM (FB)
	VOE976749	REQ							Cable terminal		4.8/2.8x0.5-1.0 SQ MM (FB)
	VOE13970778	REQ							Cable terminal		4.8/2.8x0.5-1.0 SQ MM (FB)
	VOE970779	REQ							Cable terminal		4.8/2.8x1.1-2.5 SQ MM (FB)
	VOE970777	REQ							Cable terminal		4.8/2.8x1.1-2.5 SQ MM (FB)
	VOE13976750	REQ							Cable terminal		4.8/2.8x1.1-2.5 SQ MM (FB)
18	VOE11704652	REQ							Cable terminal		Type SDL 0,3-0,85 SQ MM (9130228)
	VOE9130230	REQ							Cable terminal		Type SDL 1,25-2,00 SQ MM
19	VOE977539	REQ							Cable terminal		Cu/Ni/Au 0,5 - 2,0 SQ MM

1230) Notes: Cable terminal size Ex.: 3.5 x Area (area - SQ MM). Material-(M) = Brass, material-(FB) = Bronze.

1250) Without locking lance.

1251) With locking lance for receptacle housing.

VOLVO

Construction Equipment

PROSIS Part Information

Date:	Image id:	Catalogue:	Model:
10/09/2018	**ST106**	**20009**	**L60E**
Brand:	Serial:	Group/Section:	Title:
Volvo	**1001-3355, 60001-61214, 70001-70530**	**379/500**	**Pin insulator**

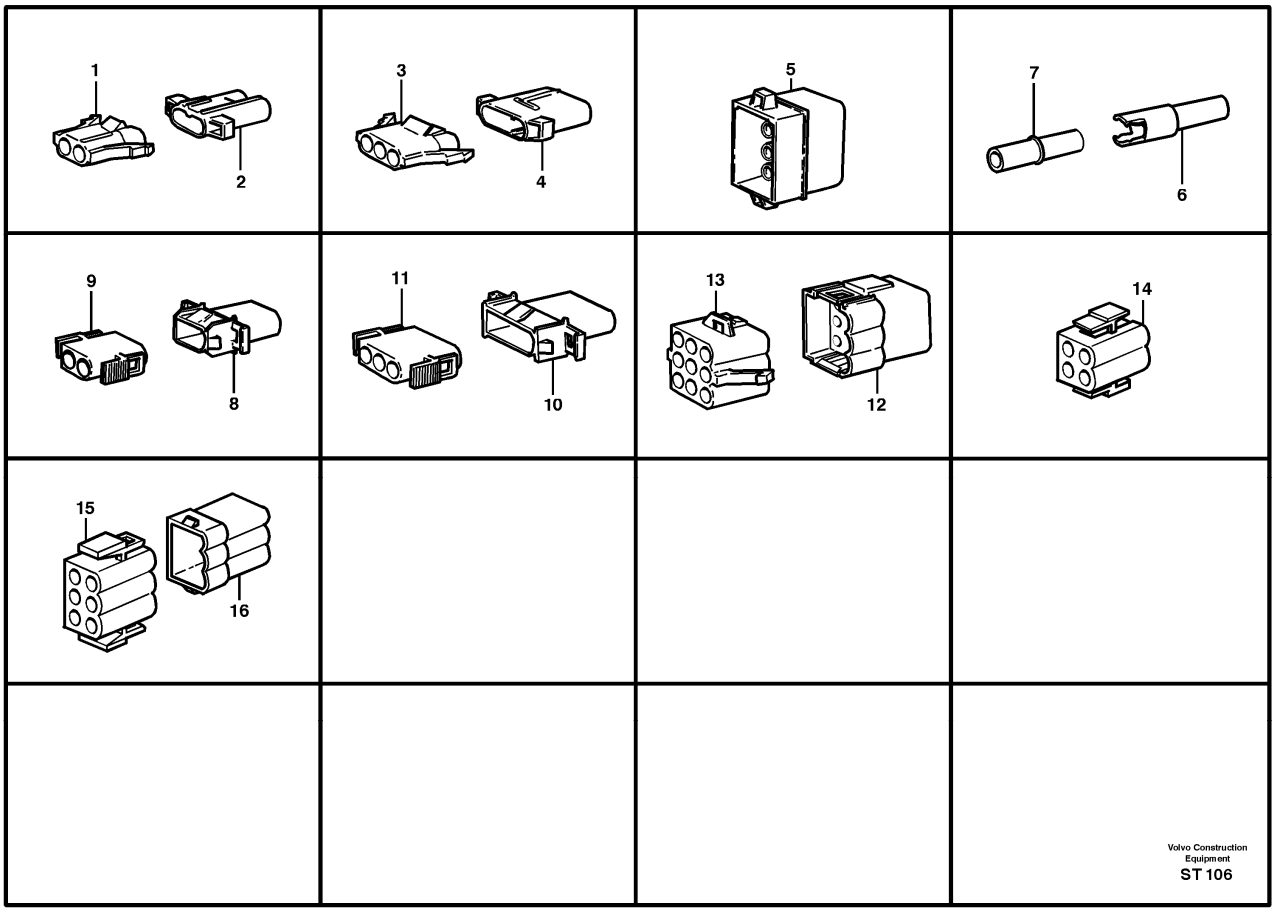

Pos	Part	Q1	Q2	Q3	Q4	Q5	PS	Kit	Description	Option(s)	Remark
									Pin, socket housing		
									•For Cable terminal		2,1 MM
1	VOE944223	REQ							Housing		2-POLE
2	VOE944224	REQ							Housing		2-POLE
3	VOE944225	REQ							Housing		3-POLE
4	VOE13944226	REQ							Housing		3-POLE
5	VOE944229	REQ							Housing		12-POLE
									Pin, socket housing		
									•For Cable terminal		3,5 MM
6	VOE949583	REQ							Housing		
7	VOE13949584	REQ							Housing		

8	VOE13948995	REQ							Pin housing		2-POLE
9	VOE13948996	REQ							Insulator		2-POLE
10	VOE13948297	REQ							Tab housing		3-POLE
11	VOE948296	REQ							Housing		3-POLE
12	VOE948295	REQ							Insulator		9-POLE
13	VOE948294	REQ							Insulator		9-POLE
14	VOE1307052	REQ							Receptacle housing		4-POLE
15		REQ					NS		Receptacle housing		6-POLE
16		REQ					NS		Pin housing		6-POLE

VOLVO

Construction Equipment

PROSIS Part Information

Date:	Image id:	Catalogue:	Model:
10/09/2018	**ST107D**	**20009**	**L60E**
Brand:	Serial:	Group/Section:	Title:
Volvo	**1001-3355, 60001-61214, 70001-70530**	**379/600**	**Pin**

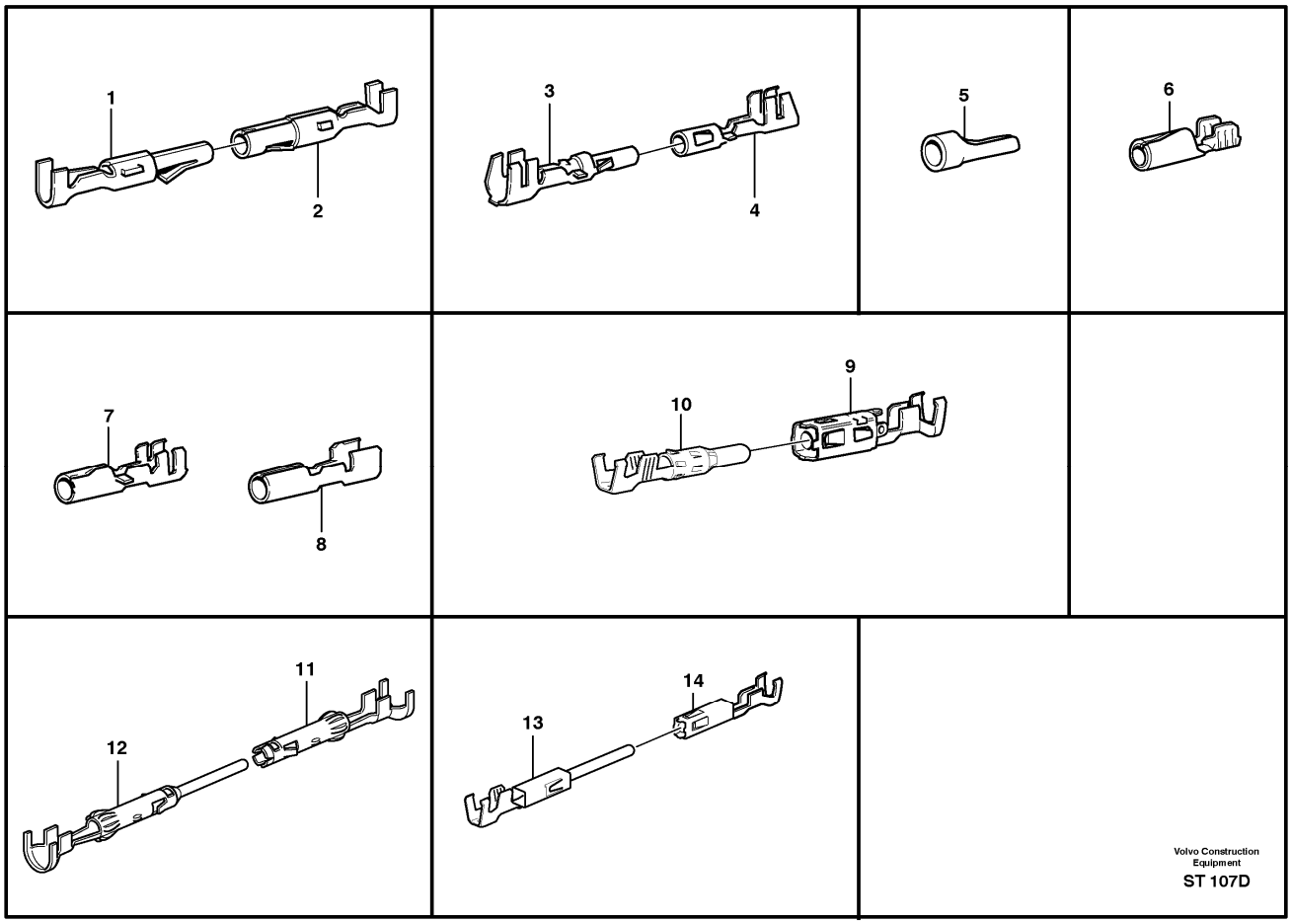

Q1-Q5	Option	Option description	
Q1 .			See footnote 1230)

Pos	Part	Q1	Q2	Q3	Q4	Q5	PS	Kit	Description	Option(s)	Remark
1	VOE946040	REQ							Cable terminal		RS 2.1x0.5 - 1.0 SQ MM
	VOE946041	REQ							Cable terminal		RS 2.1x1.0 - 2.5 SQ MM
2	VOE946038	REQ							Cable terminal		2.1x0.5 - 1.0 SQ MM (FB)
3	VOE969830	REQ							Cable terminal		(VOE969828)3.5x0.5 - 1.0 SQ MM(M)
	VOE969830	REQ							Cable terminal		3.5x0.5 - 1.0 SQ MM (FB)

	VOE965824	REQ							Cable terminal		(VOE969831)3.5x0.5-1.0 SQ MM(FB)
	VOE965824	REQ							Cable terminal		(VOE13968015)3.5x0.5 - 1.0 SQ MM(FB)
	VOE965824	REQ							Cable terminal		(VOE968016)3.5x0.5 - 1.0SQ MM(FB)
	VOE969832	REQ							Cable terminal		3.5x1.1 - 2.5 SQ MM (FB)
	VOE965824	REQ							Cable terminal		3.5x1.0 - 2.5 SQ MM (FB)
	VOE965825	REQ							Cable terminal		3.5x2.5 - 4.0 SQ MM (FB)
4	VOE969836	REQ							Cable terminal		(VOE969834)3.5x0.5 - 1.0 SQ MM(M)
	VOE969836	REQ							Cable terminal		3.5x0.5 - 1.0 SQ MM (FB)
	VOE965824	REQ							Cable terminal		(VOE13968015)3,5x0,5 - 1,0 SQ MM(FB)
	VOE13968018	REQ							Cable terminal		3.5x0.5 - 1.0 SQ MM (FB)
	VOE969838	REQ							Cable terminal		3.5x1.1 - 2.5 SQ MM (FB)
	VOE965822	REQ							Cable terminal		3.5x1.0 - 2.5 SQ MM (FB)
	VOE965823	REQ							Cable terminal		3.5x2.5 - 4.0 SQ MM (FB)
5	VOE970749	REQ							Cable terminal		0.5 - 1.0 SQ MM
	VOE942429	REQ							Cable terminal		1.1 - 2.5 SQ MM
6	VOE13949003	REQ							Cable terminal		3.5x0.75 - 1.5 SQ MM
7	VOE13949371	REQ							Cable terminal		3.5x0.5 - 2.0 SQ MM (FB)
8	VOE4803799	REQ							Cable terminal		
9	VOE8155901	REQ							Cable terminal		0,5 - 1,5 SQ MM
	VOE8155903	REQ							Cable terminal		1,5 - 2,5 SQ MM
10	VOE3963047	REQ							Cable terminal		1,5 - 2,5 SQ MM
11	VOE11039671	REQ							Cable terminal		1,0 - 2,5 SQ MM CuNiSi
12	VOE984946	REQ							Cable terminal		(VOE11039670)1,0 - 2,5 SQ MM CuNiSi
13	VOE3986768	REQ							Cable terminal		1,5 - 2,5 SQ MM (FB)
	VOE3986251	REQ							Cable terminal		0,5 - 1,0 SQ MM (FB)
14	VOE3986767	REQ							Cable terminal		1,5 - 2,5 SQ MM (FB)
	VOE3986252	REQ							Cable terminal		0,5 - 1,0 SQ MM (FB)

1230) Notes: Cable terminal size Ex.: 3.5 x Area (area - SQ MM). Material-(M) = Brass, material-(FB) = Bronze.

VOLVO

Construction Equipment

PROSIS Part Information

Date:	Image id:	Catalogue:	Model:
10/09/2018	**ST108A**	**20009**	**L60E**
Brand:	Serial:	Group/Section:	Title:
Volvo	**1001-3355, 60001-61214, 70001-70530**	**379/700**	**Humidity-proof connections**

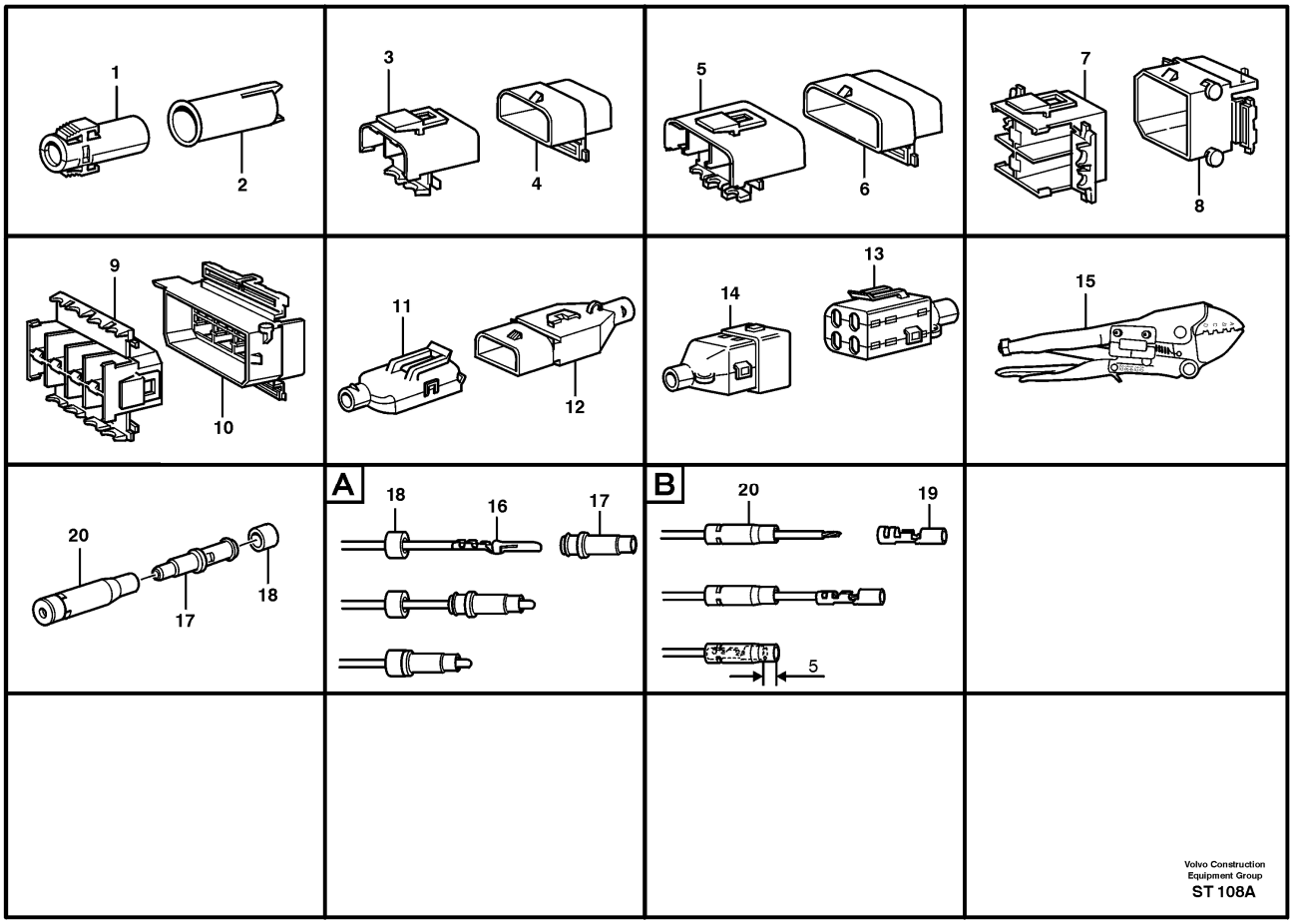

Section footnote 1248) service Solution Parts:ex. Humidity-proof connections for pin and socket terminal. Use service tool 999 9323.

Pos	Part	Q1	Q2	Q3	Q4	Q5	PS	Kit	Description	Option(s)	Remark
1	VOE1307035	REQ							Receptacle housing		1-POLE
2	VOE1308436	REQ							Tab housing		1-POLE
3	VOE1307048	REQ							Housing		2-POLE
4	VOE1307049	REQ							Tab housing		2-POLE
5	VOE1259828	REQ							Socket housing		3-POLE
6	VOE1259829	REQ							Pin housing		3-POLE
7	VOE1259830	REQ							Housing		4-POLE

8	VOE1259831	REQ							Tab housing		4-POLE
9	VOE966812	REQ							Housing		8-POLE
10	VOE977329	REQ							Housing		8-POLE
11	VOE1624477	REQ							Receptacle housing		2-POLE
12	VOE8143240	REQ							Housing		2-POLE
13	VOE8142001	REQ							Receptacle housing		4-POLE
14		REQ					NS		Pin housing		4-POLE
15	VOE9999323	1							Pliers		SERVICE TOOL
A									Pin housing		See footnote 1230)
16	VOE965824	REQ							Cable terminal		(VOE968016)3.5x0.5 - 1.0 SQ MM(FB)
	VOE965824	REQ							Cable terminal		3.5x1.1 - 2.5 SQ MM (FB)
	VOE965825	REQ							Cable terminal		3.5x2.5 - 4.0 SQ MM (FB)
17	VOE1608765	REQ							Tab housing		
18	VOE1608766	REQ							Seal		
B									Receptacle Housing		See footnote 1230)
19	VOE13968018	REQ							Cable terminal		3.5x0.5 - 1.0 SQ MM (FB)
	VOE965822	REQ							Cable terminal		3.5x1.1 - 2.5 SQ MM (FB)
	VOE965823	REQ							Cable terminal		3.5x2.5 - 4.0 SQ MM (FB)
20	VOE1598753	REQ							Insulator		

1230) Notes: Cable terminal size Ex.: 3.5 x Area (area - SQ MM). Material-(M) = Brass, material-(FB) = Bronze.

VOLVO

Construction Equipment

PROSIS Part Information

Date:	Image id:	Catalogue:	Model:
10/09/2018	**1009678**	**20009**	**L60E**
Brand:	Serial:	Group/Section:	Title:
Volvo	**1001-3355, 60001-61214, 70001-70530**	**379/800**	**Connectors**

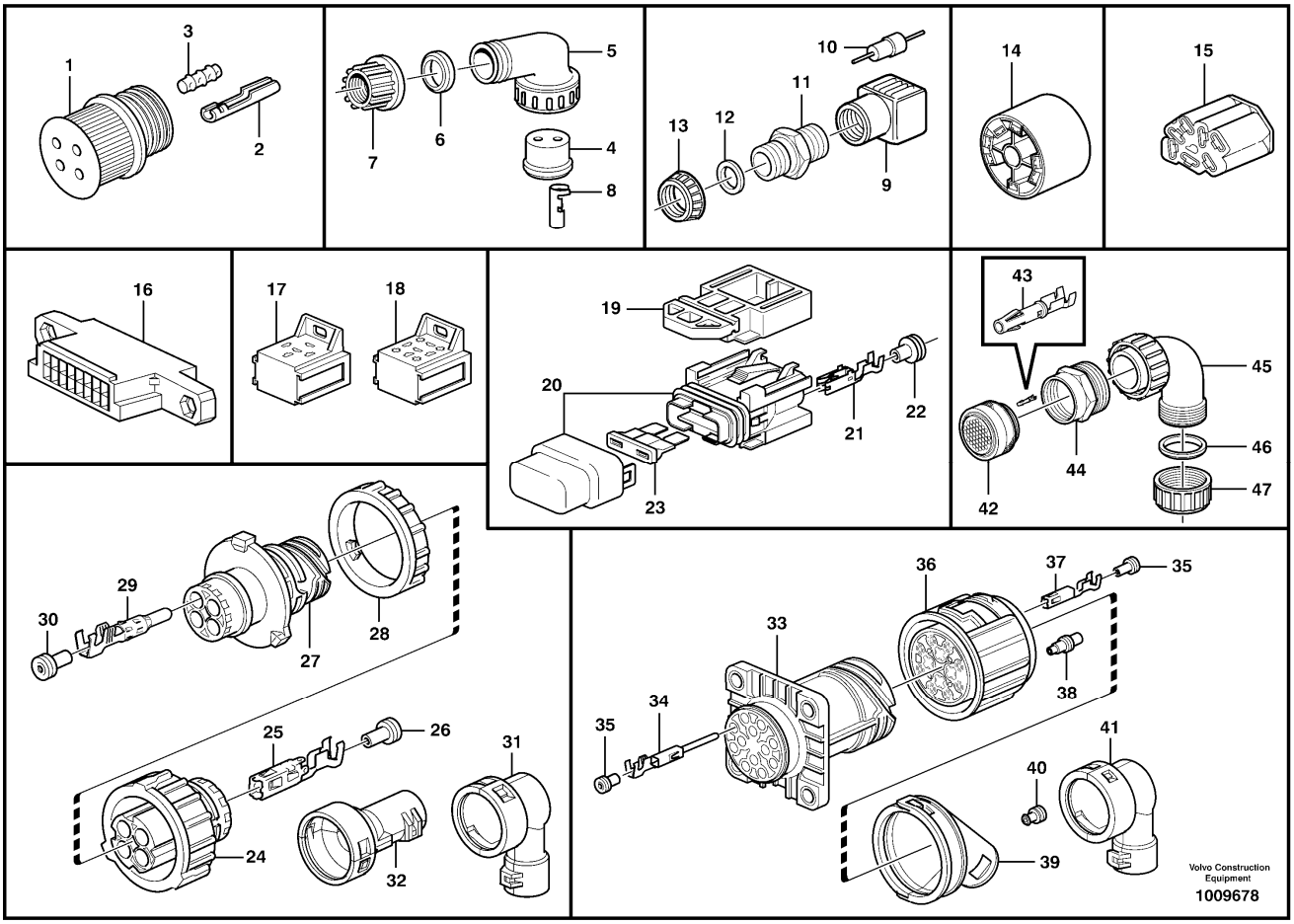

Pos	Part	Q1	Q2	Q3	Q4	Q5	PS	Kit	Description	Option(s)	Remark
1	VOE949005	REQ							Receptacle housing		
2	VOE13949371	REQ							Cable terminal		3.5x0.5 - 2.0 SQ MM (FB)
3	VOE11000257	REQ							Plug		
4	VOE4803790	REQ							Rubber plug		
5	VOE4803791	REQ							Elbow union		
6	VOE4803792	REQ							Sealing ring		
	VOE11039262	REQ							Sealing ring		ALT.
7	VOE4803794	REQ							Nut		
8	VOE4803799	REQ							Cable terminal		4MM (FB)
9	VOE6646637	REQ							Contact housing		

10	VOE4803274	REQ							Diode		
11	VOE11039287	REQ							Hose coupling		
12	VOE11039262	REQ							Sealing ring		
13	VOE4803794	REQ							Nut		
14	VOE1605668	REQ							Receptacle housing		7-POLE
15	VOE1307600	REQ							Housing		7-POLE
16	VOE11039685	REQ							Housing		16-POLE
17	VOE13946556	REQ							Relay socket		6,3x5
18	VOE977184	REQ							Housing		6,3x5 + 4,8/2,8x4
19	VOE11039713	REQ							Bracket		
20	VOE11039714	REQ							Fuse holder		
21	VOE11039715	REQ							Cable terminal		
22	VOE873854	REQ							Sealing sleeve		ID 2,3MM (AMP)
23	VOE13969160	REQ							Fuse		(VOE967851)5A
24	VOE8159013	REQ							Housing		4-POLE
	VOE3963412	REQ							Housing		7-POLE
25		REQ							Cable terminal		
26	VOE8159012	REQ							Seal		ID 1,9 - 3,0MM (GHW)
27	VOE3944972	REQ							Housing		4-POLE
	VOE984944	REQ							Housing		(VOE3963411)7-POLE
28	VOE3963413	REQ							Ring		
29	VOE3963047	REQ							Cable terminal		
30	VOE3986691	REQ							Cable seal		ID 1,1 - 2,5 SQ MM (AMP)
	VOE970771	REQ							Cable seal		DUMMY SEAL
31	VOE8159019	REQ							Adapter		UPPER
	VOE8159020	REQ							Adapter		LOW
32	VOE3985597	REQ							Adapter		NW10
33	VOE3944541								Housing		12-POLE
34	VOE3986768								Cable terminal		
	VOE3986251								Cable terminal		
35	VOE3944654								Seal		ID 1,2 - 2,1 SQ MM
	VOE3944655								Seal		ID 1,9 - 3,0 SQ MM
36	VOE3944540								Housing		12-POLE
37	VOE3986767								Cable terminal		
	VOE3986252								Cable terminal		
38	VOE8155899								Sealing plug		
39	VOE3944543								Adapter		
40	VOE3963410								Cable seal		ID 0,75 SQ MM
41	VOE3985598								Adapter		
42		1					NS		Receptacle housing		48 -POLE
43		REQ					NS		Cable terminal		

44		1					NS		Adapter		M42x2 SIZE 24
45	VOE11039025	1							L-connection		
46	VOE8142515	1					OP		Sealing ring		
47		1					NS		Nut		NW22 M35x1,75

VOLVO

Construction Equipment

PROSIS Part Information

Date:	Image id:	Catalogue:	Model:
10/09/2018	**1015318**	**20009**	**L60E**
Brand:	Serial:	Group/Section:	Title:
Volvo	**1001-3355, 60001-61214, 70001-70530**	**379/900**	**Housings for timers and tabs**

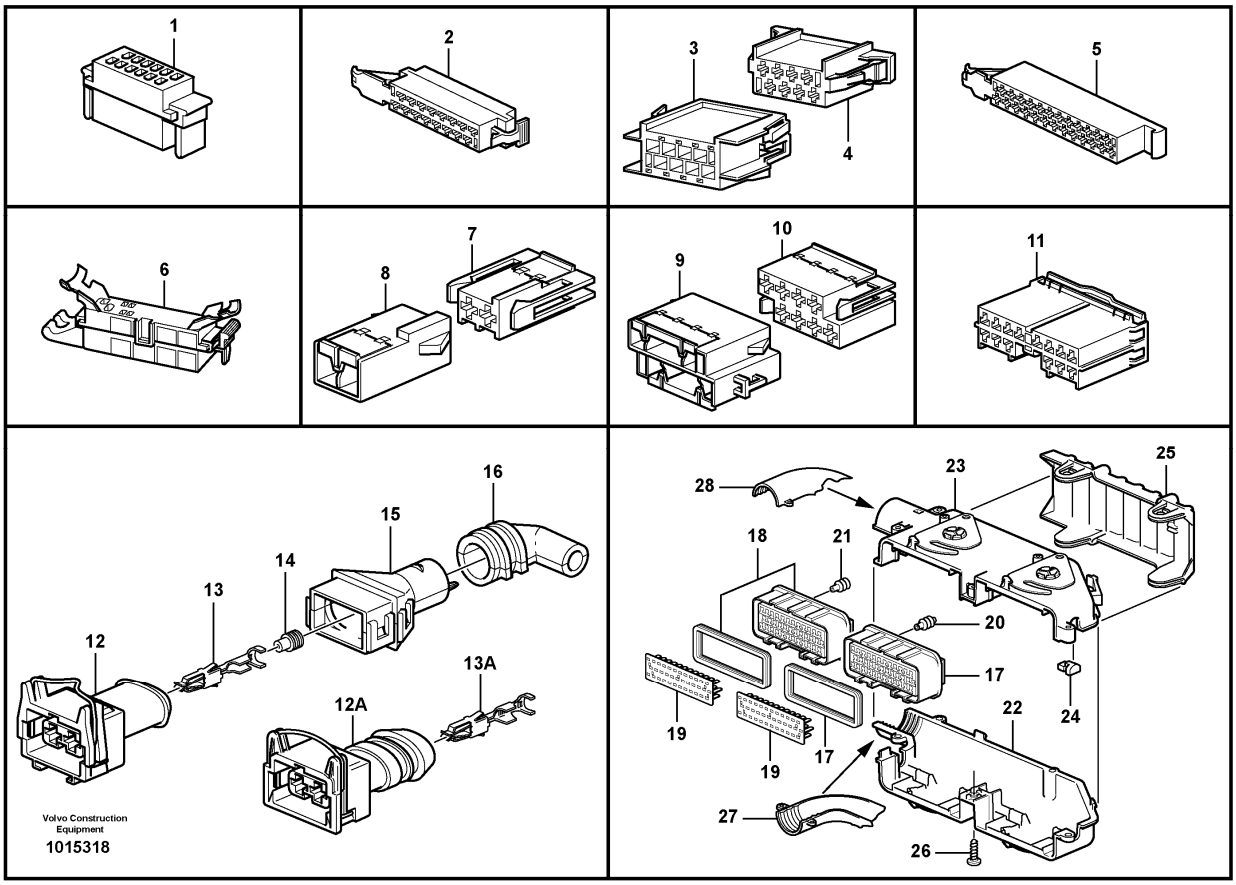

Pos	Part	Q1	Q2	Q3	Q4	Q5	PS	Kit	Description	Option(s)	Remark
									Housing		Type "Timer"
1	VOE11039330	REQ							Receptacle housing		12-POLE
2	VOE969138	REQ							Housing		16-POLE
3	VOE1096614	REQ							Housing		8-POLE
	VOE1096615	REQ							Housing		16-POLE
4	VOE1096618	REQ							Housing		8-POLE
	VOE1096619	REQ							Housing		16-POLE
5	VOE1598662	REQ							Receptacle housing		25-POLE
6	VOE11039443	REQ							Housing		39-POLE
7	VOE968380	REQ							Housing		2-POLE Timer 4,8/2,8
8	VOE968381	REQ							Housing		2-POLE Timer 2,8
9	VOE968389	REQ							Housing		4-POLE Timer 2,8
	VOE968405	REQ							Housing		8-POLE Timer 2,8

10	VOE968388	REQ							Housing		4-POLE Timer 4,8/2,8
	VOE968404	REQ							Housing		8-POLE Timer 4,8/2,8
	VOE968408	REQ							Housing		10-POLE Timer 4,8/2,8
11	VOE9130224	REQ							Housing		SDL Type. 14-POLE
	VOE9130220	REQ							Receptacle housing		SDL Type. 10-POLE
12	VOE979040	REQ							Housing		2-POLE Timer 4,8/2,8 BL
12A	VOE976256	REQ							Housing		2-POLE Timer 4,8/2,8 BL
13	VOE13970778	REQ							Cable terminal		
13A	VOE970779	REQ							Cable terminal		
14	VOE970772	REQ							Cable seal		1,2 - 2,1 x BLUE
15	VOE8142100	REQ							Adapter		
16	VOE1095059	REQ							Joint nipple		
17	VOE977532	1							Housing		
		1					NS		•Seal		
18	VOE977897	1							Housing		
		1					NS		•Seal		
19	VOE977533	2							Housing		
20	VOE977540	37							Cable seal		
21		35					NS		Cable Seal		
22	VOE3173909	1							Cover		
23	VOE3173910	1							Cover		
24	VOE3173913	4							Shock absorber		
25	VOE3199185	1							Handle		
26	VOE975367	5							Six point socket screw		
27	VOE3173907	1							Cover		
28	VOE3173908	1							Cover		

VOLVO

Construction Equipment

PROSIS Part Information

Date:	Image id:	Catalogue:	Model:
10/09/2018	**1008269**	**20009**	**L60E**
Brand:	Serial:	Group/Section:	Title:
Volvo	**1001-3355, 60001-61214, 70001-70530**	**380/100**	**Instrument panel STD, 94638**

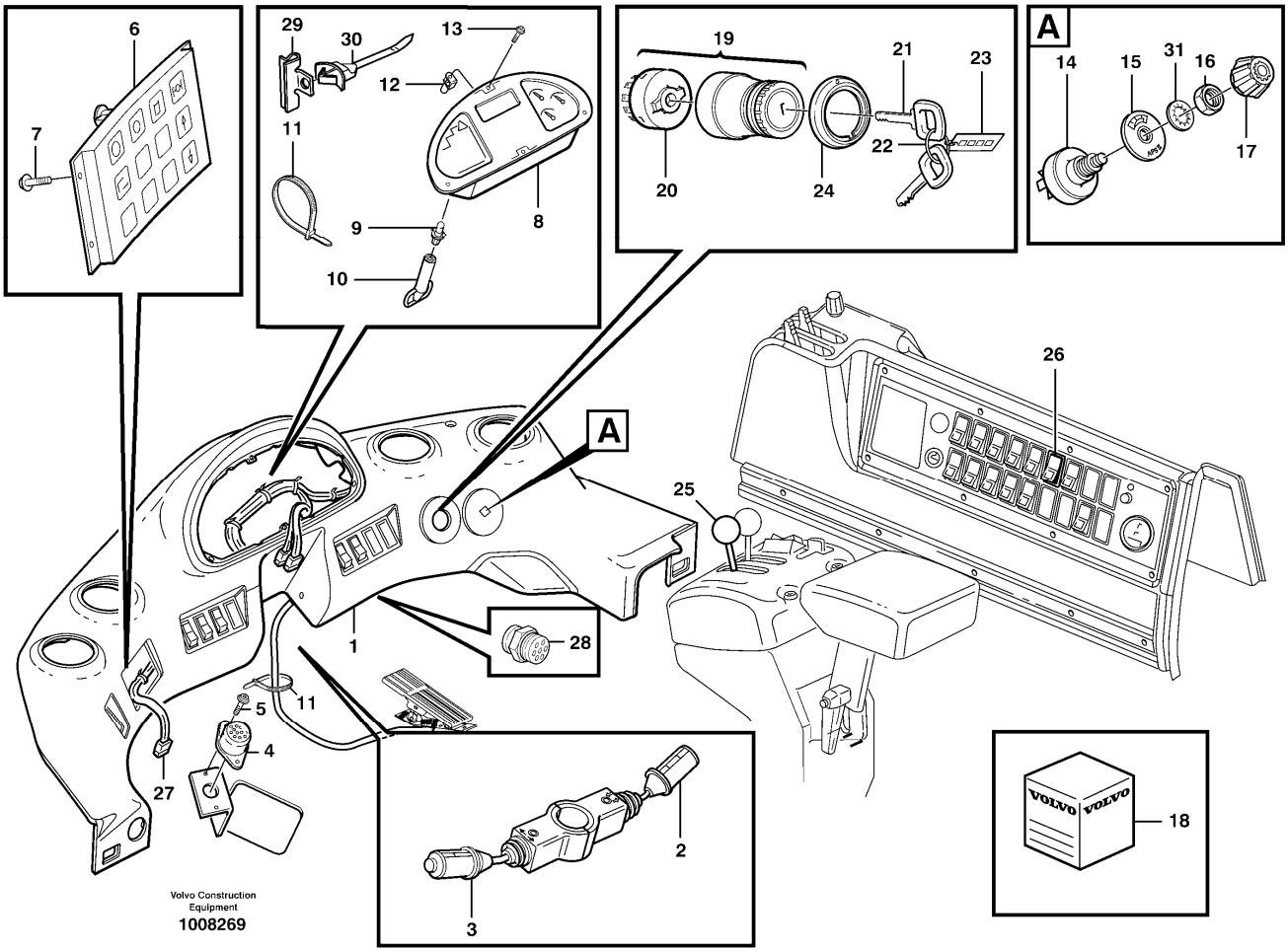

Section option	Kit	Option description
VOE33755		Cab
VOE33756		Cab L60E USA
VOE94638		One Combination lock kit only for USA

Q1-Q5	Option	Option description	
Q1 STD 33755 33756			
Q2 94638	VOE94638	One Combination lock kit only for USA	

Pos	Part	Q1	Q2	Q3	Q4	Q5	PS	Kit	Description	Option(s)	Remark
1		1							Instr panel		See ref 881/100
2	VOE11039248	1							Switch		E PROD SWE

	VOE11171772	1							Switch		L PROD SWE
3	VOE11171771	1							Switch		(VOE11039409)E PROD SWE
	VOE11171771	1							Switch		L PROD SWE
4	VOE1589502	1							Foot operated switch	VOE82698	
	VOE11164620	1							Plug		
5	VOE969278	2							Six point socket screw	VOE82698	
6	VOE11170210	1							Control unit		(VOE11039601)
7	VOE975358	4							Six point socket screw		
8	VOE11443911	1							Electronic unit		I-ECU, REMAN VOE9011443911
9	VOE966327	25							•Bulb		(VOE13966327)
10	VOE1089953	1							Tool		
11	VOE4881440	1							Cable tie		
12	VOE977980	4							Spring nut		
13	VOE975371	4							Six point socket screw		
14	VOE11039224	1							Fan switch		APS II
15	VOE11444280	1							Symbol washer		(VOE11164817)APS II
16	VOE1212859	1							Nut		
17	VOE11039535	1							Knob		
18	VOE11006988	1					SS		Lock kit		
		1	1				NS		Lock Kit		
		1	1						•Door Lock		See ref 831/150
19		1					NS		•Starter switch		
	VOE15082295	1	1						•Starter switch		(VOE11039220)
20	VOE15082297	1	1						••Starter switch		(VOE1626372)
21	VOE11039226	2							••Pass key		See footnote 3) , BLACK
	VOE11039228	2	2						••Pass key		GREEN
22		2	2				NS		••Key strip		
23		1	1				NS		••Key badge		
24	VOE11104514	1							Symbol strip		
25		1							Gear lever carrier		See ref 371/850
26		1							Switch		See ref 380/200
27		1							Wire harness		See ref 371/500
28	VOE828587	1							Buzzer		
29	VOE4881440	1							Cable tie		
30		1					NS		Strip Clamp		
31	VOE13940097	1							Washer		

3) When ordering, the key No. should be stated.

VOLVO

Construction Equipment

PROSIS Part Information

Date:	Image id:	Catalogue:	Model:
10/09/2018	**1017053**	**20009**	**L60E**
Brand:	Serial:	Group/Section:	Title:
Volvo	**1001-3355, 60001-61214, 70001-70530**	**380/125**	**Instrument panel OPEN ROPS**

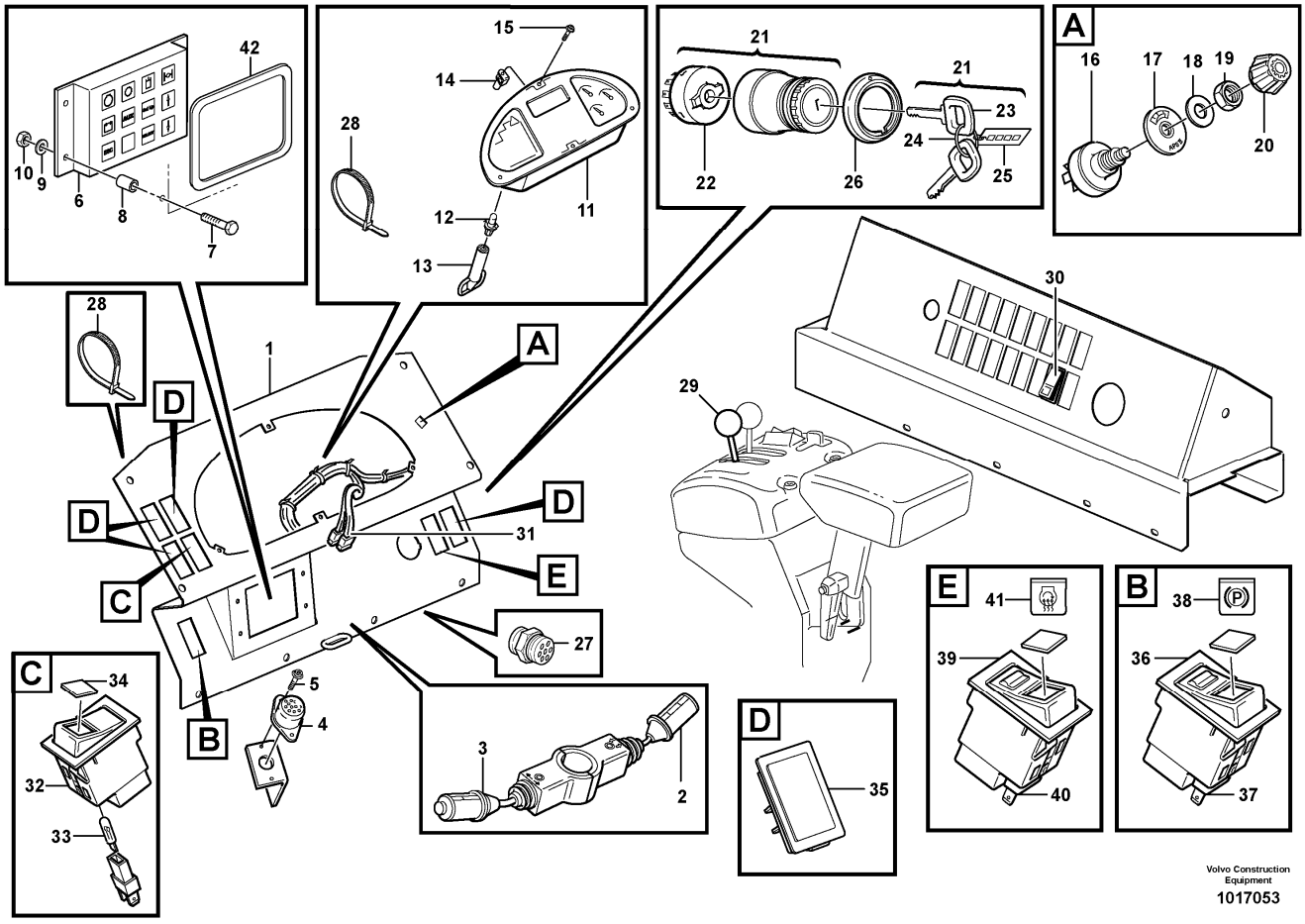

Section option	Kit	Option description
VOE33760		Cab. Open Rops

Pos	Part	Q1	Q2	Q3	Q4	Q5	PS	Kit	Description	Option(s)	Remark
1		1							Instr panel		See ref 881/150
2	VOE11039248	1							Switch		E PROD SWE
	VOE11171772	1							Switch		L PROD SWE
3	VOE11171771	1							Switch		(VOE11039409)E PROD SWE
	VOE11171771	1							Switch		L PROD SWE
4		1					NS		Foot Operated Switch		
5		2					NS		Screw		
6	VOE11170209	1							Control unit		
7	VOE969558	4							Six point socket		(VOE13969558)

									screw		
8	VOE11164878	4							Spacer		
9	VOE955891	4							Plain washer		
10	VOE975237	4							Lock nut		(VOE13975237)
11	VOE11184402	1					SS		ECU		I-ECU, REMAN VOE9011184402, VOE9011443602
12	VOE966327	25							•Bulb		(VOE13966327)
13	VOE1089953	1							Tool		
	VOE4881440	1							Cable tie		
14	VOE977980	4							Spring nut		
15	VOE975371	4							Six point socket screw		
16	VOE11039224	1							Fan switch		APS II
17	VOE11444280	1							Symbol washer		(VOE11164817)APS II
18	VOE13940097	1							Washer		
19	VOE1212859	1							Nut		
20	VOE11039535	1							Knob		
21	VOE15082295	1							Starter switch		(VOE11039220)
22	VOE15082297	1							•Starter switch		(VOE1626372)
23	VOE11039228	2							•Pass key		See footnote 3) , GREEN
24		2					NS		•Key strip		
25		1					NS		•Key badge		
26	VOE11104514	1							Symbol strip		
27	VOE828587	1							Buzzer		
28	VOE4881440	10							Cable tie		
29		1							Gear lever carrier		
30		1							Switch		
31		1							Wire harness		See ref 371/525
32	VOE4803464	1							Switch		SW306
33	VOE11997242	1							•Bulb		
34	VOE11039565	1							Lens		
35	VOE4803467	1							Protecting cover		
36	VOE11039390	1							Switch		SW501
37	VOE11997242	1							•Bulb		
38	VOE11039564	1							Lens		
39	VOE4803456	1							Switch		SW201
40	VOE11997242	1							•Bulb		
41	VOE11039450	1							Lens		
42	VOE762681	REQ							Rubber moulding		L = 340 MM

3) When ordering, the key No. should be stated.

VOLVO

Construction Equipment

PROSIS Part Information

Date:	Image id:	Catalogue:	Model:
10/09/2018	**1002540**	**20009**	**L60E**
Brand:	Serial:	Group/Section:	Title:
Volvo	**1001-3355, 60001-61214, 70001-70530**	**380/150**	**Side panel**

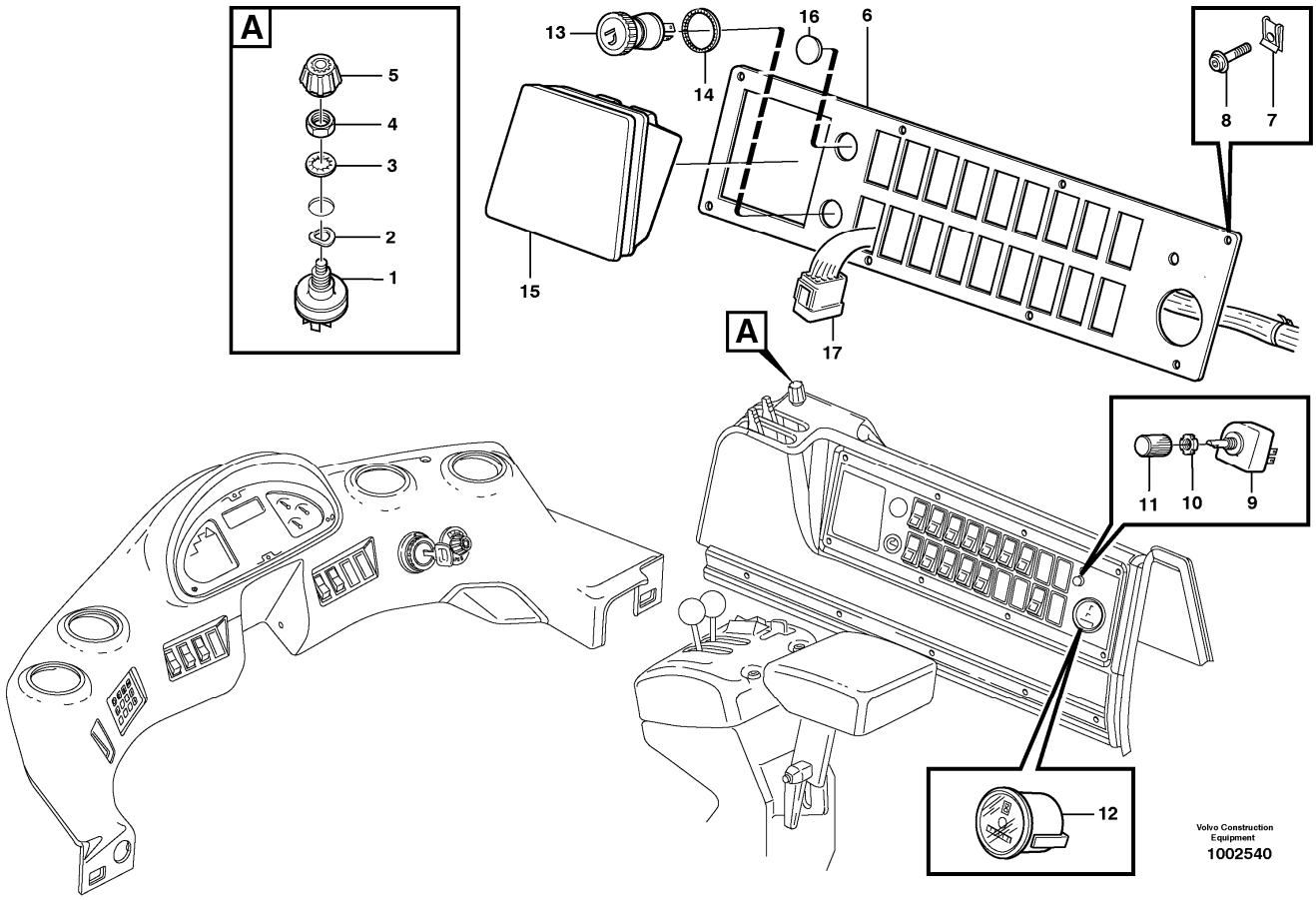

Section option	Kit	Option description
VOE33755		Cab
VOE33756		Cab L60E USA
VOE33760		Cab. Open Rops
VOE82597		Cab USA

Q1-Q5	Option	Option description	
Q1 STD 33755 33756			
Q2 OPEN ROPS 33760			

Pos	Part	Q1	Q2	Q3	Q4	Q5	PS	Kit	Description	Option(s)	Remark
1	VOE11039224	1							Fan switch		
2	VOE941908	1							Spring washer		

3	VOE13940109	1							Lock washer		
4	VOE1212859	1							Nut		
5	VOE11007040	1							Knob		
6	VOE11006145	1							Panel plate		
7	VOE11006973	8							Clip		
8	VOE969278	8							Six point socket screw		(VOE13969278)
9	VOE1578846	1							Rheostat		
10	VOE1212770	1							Nut washer		
11	VOE1258492	1							Knob		
12	VOE4803561	1	1				SS		Hour counter		
13	VOE1586917	1							Cigarette lighter		
14	VOE13946222	1							Retainer		
15	VOE1224102	1							Ashtray		
16	VOE11104995	1							Plug		
17		1	1						Wire harness		See ref 371/550

VOLVO

Construction Equipment

PROSIS Part Information

Date:	Image id:	Catalogue:	Model:
10/09/2018	**1017097**	**20009**	**L60E**
Brand:	Serial:	Group/Section:	Title:
Volvo	**1001-3355, 60001-61214, 70001-70530**	**380/200**	**Switch**

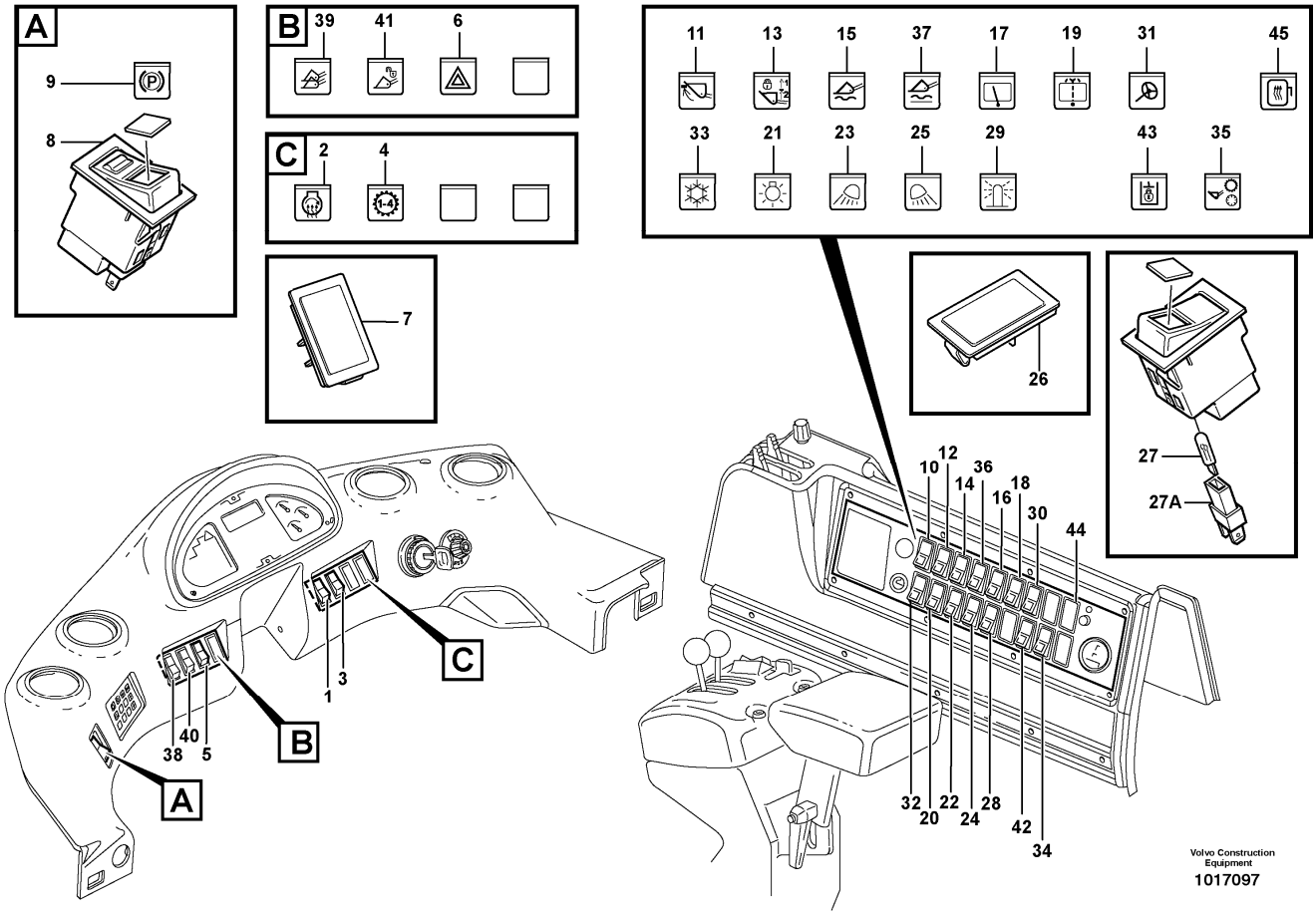

Section option	Kit	Option description
VOE33755		Cab
VOE33756		Cab L60E USA
VOE33760		Cab. Open Rops
VOE82772		Air conditioning
VOE82773		Air conditioning CRSN
VOE82790		Semi Open Rops

Q1-Q5	Option	Option description	
Q1 STD 33755 33756			
Q2 .			See footnote 1294)
Q3 OPEN ROPS			
Q4 82790	VOE82790	Semi Open Rops	
Q5 82772 82773	VOE82772	Air conditioning	

Pos	Part	Q1	Q2	Q3	Q4	Q5	PS	Kit	Description	Option(s)	Remark
1	VOE4803456	1							Switch		See footnote 88)
2	VOE11039450	1							Lens		
3	VOE4803455	1							Switch		See footnote 88)
4	VOE11170154	1							Lens		
5	VOE4803464	1							Switch		See footnote 88)
6	VOE11039565	1							Lens		
7	VOE4803467	5							Protecting cover		
8	VOE11039390	1							Switch		See footnote 88)
9	VOE11039564	1							Lens		
10	VOE4803455	1		1					Switch		See footnote 88)
11	VOE11039477	1		1					Lens		
12	VOE4803534	1		1					Switch		See footnote 88)
13	VOE11039480	1		1					Lens		
14	VOE4803455	1		1					Switch		See footnote 88)
15	VOE11039481	1		1					Lens		
16	VOE4803534	1			1				Switch		See footnote 88)
17	VOE11039694	1			1				Lens		
18	VOE4803456	1			1				Switch		See footnote 88)
19	VOE11039695	1			1				Lens		
20	VOE4803521	1		1					Switch		See footnote 88)
21	VOE4803472	1		1					Lens		
22	VOE4803521	1		1					Switch		See footnote 88)
23	VOE4803694	1		1					Lens		
24	VOE4803521	1		1					Switch		See footnote 88)
25	VOE4803693	1		1					Lens		
26	VOE4803467	10		13					Protecting cover		
27	VOE11997242	REQ		REQ		1			Bulb		See footnote 88) , 28V/40mA
27A	VOE14214082	REQ		REQ					Lamp retainer		See footnote 88)
28	VOE4803455		1						Switch	VOE93799	See footnote 88)
29	VOE11039140		1						Lens	VOE93799	
30	VOE4803530		1						Switch	VOE82033	See footnote 88)
31	VOE11039505		1						Lens	VOE82033	
32	VOE4803455		1			1			Switch	VOE80868	See footnote 88)
33	VOE11039205		1			1			Lens	VOE80868	
34	VOE4803521		1						Switch	VOE82058	See footnote 88)
35	VOE11039816		1						Lens	VOE82058	
36	VOE4803455		1						Switch	VOE82058, VOE82075	See footnote 88)
37	VOE11039482		1						Lens	VOE82058, VOE82075	
38	VOE4803806		1						Switch	VOE82059	See footnote 88)
39	VOE11039585		1						Lens	VOE82059	
40	VOE11039151		1						Switch	VOE82059, VOE82586, VOE83472	See footnote 88) SW904

41	VOE11039566		1						Lens	VOE82059, VOE82586, VOE83472	SW904
42	VOE11039380		1						Switch	VOE82063, VOE83488	See footnote 88) SW911
43	VOE11039706		1						Lens	VOE82063, VOE83488	
44	VOE4803455		1						Switch	VOE80830	See footnote 88) SW811
45	VOE11039141		1						Lens	VOE80830	SW811

88) The switch includes the bulb.

1294) Not included when cab is ordered

VOLVO

Construction Equipment

PROSIS Part Information

Date:	Image id:	Catalogue:	Model:
10/09/2018	**1004285**	**20009**	**L60E**
Brand:	Serial:	Group/Section:	Title:
Volvo	**1001-3355, 60001-61214, 70001-70530**	**386/100**	**Relays, sensors and solenoid valves, reference list**

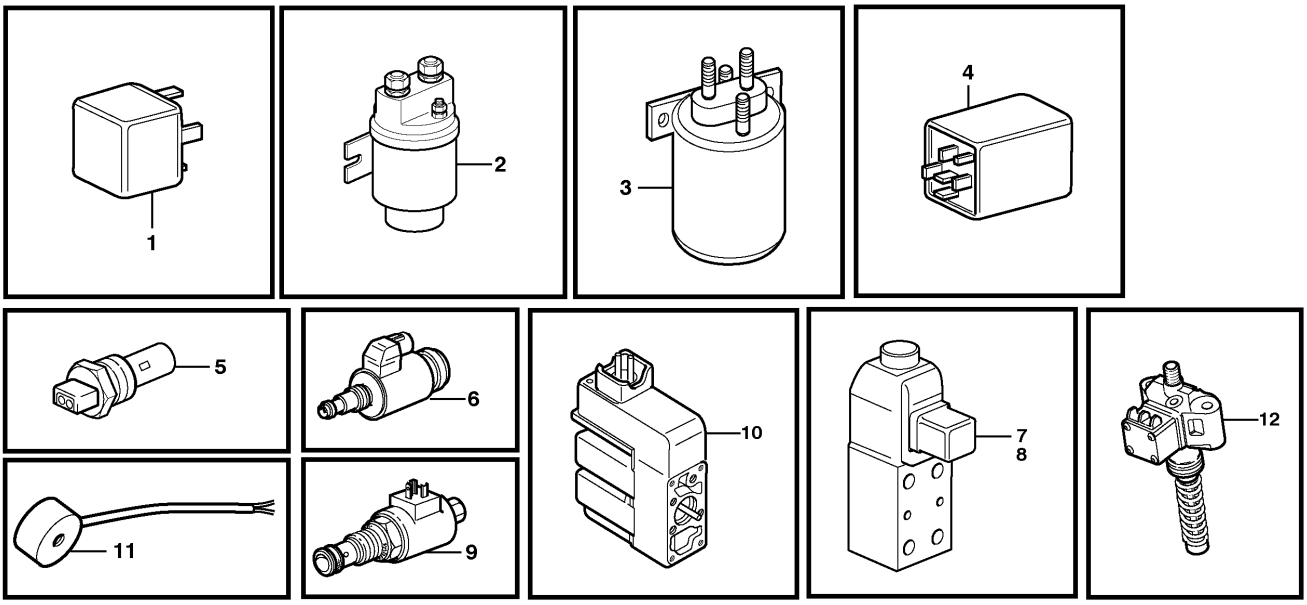

Pos	Part	Q1	Q2	Q3	Q4	Q5	PS	Kit	Description	Option(s)	Remark
1	VOE20374662	1							Relay		RE1
									•Tilt automatic		See ref 372/150
	VOE20374662	1							Relay		RE2
									•15A-feed		See ref 372/150
	VOE20374662	1							Relay		RE3
									•Boom kickout		See ref 372/150
	VOE20374662	1							Relay		RE4
									•15B-feed		See ref 372/150
	VOE20374662	1							Relay		RE5
									•Interval wiper, rear		See ref 372/150
	VOE20374662	1							Relay		RE6
									•Interm.wiper,front		See ref 372/150
	VOE20374662	1							Relay		RE7
									•Boom suspension		See ref 372/150
	VOE20374662	1							Relay		RE8
									•Start inhibitor		See ref 372/150
	VOE20374662	1							Relay		RE9
									•Start inhibitor		See ref 372/150
	VOE20374662	1							Relay		RE10

									•Work lights		See ref 372/150
	VOE20374662	1							Relay		RE11
									•30-feed		See ref 372/150
	VOE20374662	1							Relay		RE12
									•15EA-feed		See ref 372/150
	VOE20374662	1							Relay		RE602
									•CDC-steering		
	VOE20374662	1							Relay		RE803
									•Operator seat		
	VOE20374662	1							Relay		RE804
									•Park Brk Alarm		See ref 371/1050
2	VOE20367490	1							Relay		RE2501
									•Pre-heating		See ref 333/100
3	VOE15048941	1							Flasher unit		(VOE11170048)RF1
									•Flasher relay		See ref 372/150
4	VOE4803319	1							Delay relay		RT802
									•Park Brk Alarm		See ref 371/1050
5									Sensor		See ref 386/150
6	VOE11709879	1							Pressure regulator		MA202
									•Central block		See ref 912/300
7	VOE11173166	1							Solenoid valve		MA407
									•Diff. lock		See ref 468/150
8	VOE11173169	1					SS		Solenoid valve		MA501
									•Parking Brake		See ref 551/100
9	VOE11709633	1					SS		Solenoid valve		MA502
									•Central block		See ref 912/300
10	VOE11701852	1							Electronic unit		MA601
									•CDC-steering		
11	VOE15100027	1							Magnet		(VOE11003153)MA901
									•Tilt automatic		See ref 914/250
	VOE15100027	1							Magnet		(VOE11003153)MA902
									•Boom kickout		See ref 914/250
	VOE15100027	1							Magnet		(VOE11003153)MA904
									•Float position		See ref 914/250
12	VOE20460075	6							Injection pump		MA2301 - MA2306 See ref 237/100, REMAN VOE9020460075

VOLVO

Construction Equipment

PROSIS Part Information

Date:	Image id:	Catalogue:	Model:
10/09/2018	**1027452**	**20009**	**L60E**
Brand:	Serial:	Group/Section:	Title:
Volvo	**1001-3355, 60001-61214, 70001-70530**	**386/150**	**Sensors, reference list**

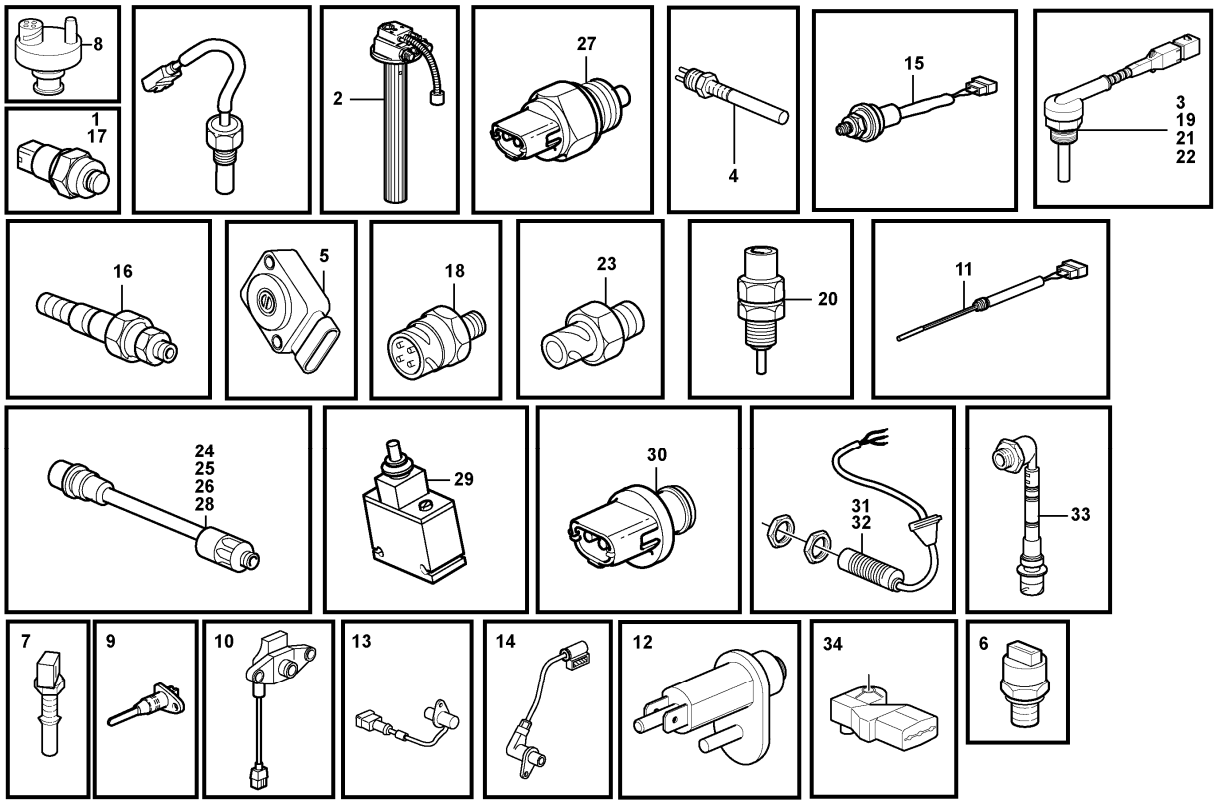

Volvo Construction Equipment
1027452

Pos	Part	Q1	Q2	Q3	Q4	Q5	PS	Kit	Description	Option(s)	Remark
1	VOE4780941	1							Induction sensor		SE201
									•Tachometer sensor		See ref 421/100
2	VOE11039821	1							Tank unit		SE207
									•Fuel level		See ref 234/100
3	VOE11419485	1							Temperature sensor		SE210
									•Coolant temperature		See ref 261/200
4	VOE11039557	1							Induction sensor		SE211
									•Fan		See ref 263/150
5	VOE15038313	1							Sensor		(VOE11708270)SE214, SEE SB WLO 17
									•Accel pedal		See ref 271/100
6	VOE20450687	1					SS		Sensor		SE2203 ENG - 936960
									•Engine oil pressure		See ref 371/150

	VOE21291011	1							Pressure sensor		(VOE20585158)SE2203 ENG 936961 -
									•Oil pressure sensor		See ref 371/160
7	VOE21531072	2							Temperature sensor		(VOE20450685)SE2306, SE2606
									•Temperature sensor		SE2306 See ref 237/100
									•Temperature sensor		SE2606 See ref 371/150
8	VOE20560843	1							Vacuum switch		SE2501, SE2502
									•Temperature gauge		See ref 256/100
9	VOE20450695	1							Temperature sensor		SE2507
									•Charge-air temperature		See ref 371/150
10	VOE20450693	1					SS		Sensor		SE2508
									•Boost pressure		See ref 371/150
11	VOE11170064	1							Level guard		SE2603
									•Coolant level		See ref 261/150
12	VOE3987417	1							Switch		SE 302
									•Wire harness		See ref 371/600
13	VOE20450707	1							Tachometer		SE2701
									•Engine speed		See ref 371/150
14	VOE20459016	1							Sensor		ENG - 0798761
	VOE20482772	1							Sensor		SE2703 ENG 0798762 -
									•Camshaft speed		See ref 371/150
15	VOE11039617	1							Pressure monitor		SE301
									•Brake light		See ref 522/300
16	VOE11038775	1							Sensor		SE401
									•Filter indicator		See ref 421/450
17	VOE4780941	1							Induction sensor		SE403
									•Tachometer sensor		See ref 421/960
18	VOE15047336	1							Pressure sensor		(VOE11039574)SE405
									•Oil pressure sensor		See ref 421/450
19	VOE11419485	1							Temperature sensor		SE406
									•Hydraulic oil temp		See ref 421/450
20		1							Contact		SE408 Not included
									•Differential lock		
21	VOE11419485	1							Temperature sensor		SE410
									•Front axle, temp.		See ref 461/100
22	VOE11419485	1							Temperature sensor		SE411
									•Rear axle		See ref 463/100
23	VOE11039577	1							Pressure sensor		SE501
									•Brake pressure		See ref 522/300
24	VOE11170072	1							Pressure monitor		SE502
									•Brake pressure		See ref 527/200
25	VOE11170071	1							Pressure monitor		SE503
									•Parking brake		See ref 551/100
26	VOE11170090	1							Pressure monitor		SE504

									•Brake press charge		See ref 527/200
27	VOE1594043	1							Switch		SE601
									•Aux Steering		
28	VOE11170079	1							Pressure monitor		SE602
									•Aux Steering		
29	VOE11007955	1							Control lever		SE603
									•CDC-steering		
30	VOE1347010	1							Temperature sensor		SE807
									•Cab		See ref 371/600
31	VOE11112903	1					SS		Induction sensor		SE901
									•Tilt automatic		See ref 945/450
32	VOE11112903	1					SS		Induction sensor		SE902
									•Boom kickout		See ref 945/450
33	VOE11039725	1							Level indicator		SE906
									•Hydraulic oil level		See ref 911/150
34	VOE20524936	1							Pressure sensor		(VOE20556500)SE2507, SE2508
									•Charge-air temperature		See ref 371/160
									•Boost pressure		See ref 371/160

VOLVO

Construction Equipment

PROSIS Part Information

Date:	Image id:	Catalogue:	Model:
10/09/2018	**1008477**	**20009**	**L60E**
Brand:	Serial:	Group/Section:	Title:
Volvo	**1001-3355, 60001-61214, 70001-70530**	**390/100**	**Camera inclusive monitor. 82178**

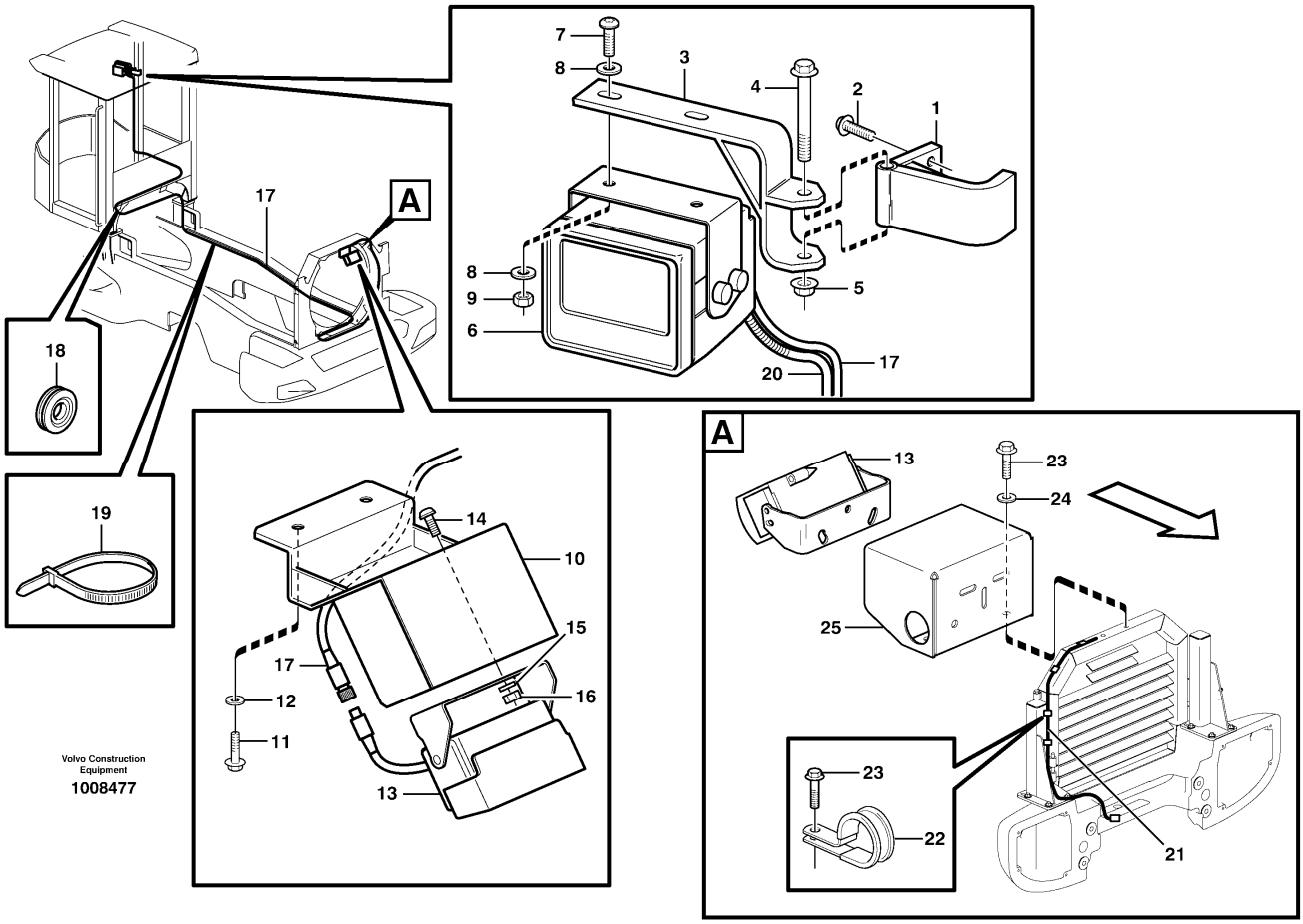

Section option	Kit	Option description
VOE82178	VOE11708916	Back-up camera incl. monitor

Pos	Part	Q1	Q2	Q3	Q4	Q5	PS	Kit	Description	Option(s)	Remark
1	VOE11174720	1							Anchorage		
2	VOE13945444	2							Screw		
3	VOE11174716	1							Bracket		
4	VOE13965181	1							Screw		
5	VOE948645	1							Flange lock nut		
6	VOE11195905	1					SS		Monitor		(VOE11113951)
7	VOE969407	2							Six point socket screw		
8	VOE13960138	4							Washer		
9	VOE13965483	2							Nut		

10	VOE11400584	1							Anchorage		
11	VOE13945444	2							Screw		
12	VOE11117464	2							Plain washer		(VOE13960141)
13	VOE11114903	1					SS		Camera		
14	VOE969407	2							Six point socket screw		
15	VOE13960138	2							Washer		
16	VOE13965483	2							Nut		
17	VOE11170023	1							Cable		
18	VOE961970	1							Plug		OD = 32 MM
	VOE943920	1							Plug		OD = 40 MM
19	VOE4881440	REQ							Cable tie		
20		1							Wire harness		See ref 371/1600
21	VOE190993	REQ							Hose		See footnote 2065) L = 1780 MM
22	VOE952637	5							Clamp		See footnote 2065)
23	VOE13946544	7							Screw		See footnote 2065)
24	VOE960139	2							Plain washer		See footnote 2065)
25	VOE11180688	1							Protecting plate		See footnote 2065)

2065) With radiator guard

VOLVO

Construction Equipment

PROSIS Part Information

Date:	Image id:	Catalogue:	Model:
10/09/2018	**1008481**	**20009**	**L60E**
Brand:	Serial:	Group/Section:	Title:
Volvo	**1001-3355, 60001-61214, 70001-70530**	**390/150**	**Camera inclusive monitor. 82781**

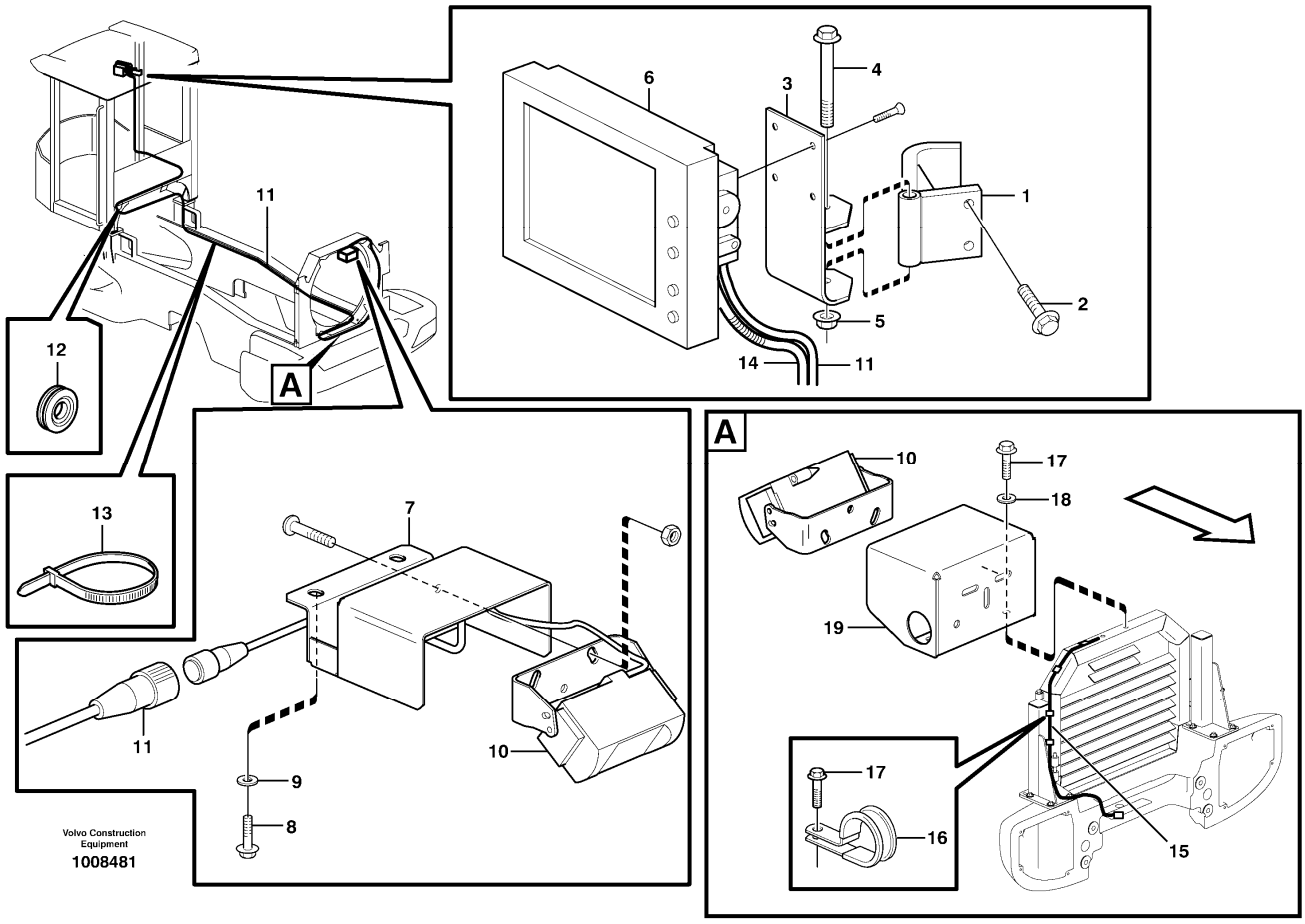

Section option	Kit	Option description
VOE82781		Rear view camera, colour, Lcd monitor

Pos	Part	Q1	Q2	Q3	Q4	Q5	PS	Kit	Description	Option(s)	Remark
1	VOE11174720	1							Anchorage		
2	VOE13945444	2							Screw		
3	VOE11171040	1							Bracket		
4	VOE13965181	1							Screw		
5	VOE948645	1							Flange lock nut		
6	VOE11195905	1					SS		Monitor		(VOE11190733)
7	VOE11171038	1							Anchorage		
8	VOE13945444	2							Screw		
9	VOE11117464	2							Plain washer		(VOE13960141)
10	VOE11190734	1							Camera		

11	VOE11170023	1							Cable		
12	VOE961970	1							Plug		OD = 32 MM
	VOE943920	1							Plug		OD = 40 MM
13	VOE4881440	REQ							Cable tie		
14		1							Wire harness		See ref 371/1600
15	VOE190993	REQ							Hose		See footnote 2065) L = 1780 MM
16	VOE952637	5							Clamp		See footnote 2065)
17	VOE13946544	7							Screw		See footnote 2065)
18	VOE960139	2							Plain washer		See footnote 2065)
19	VOE11171055	1							Protecting plate		See footnote 2065)

2065) With radiator guard

VOLVO

Construction Equipment

PROSIS Part Information

Date:	Image id:	Catalogue:	Model:
10/09/2018	**1013139**	**20009**	**L60E**
Brand:	Serial:	Group/Section:	Title:
Volvo	**1001-3355, 60001-61214, 70001-70530**	**393/100**	**Voltage converter and cable harness for radio.**

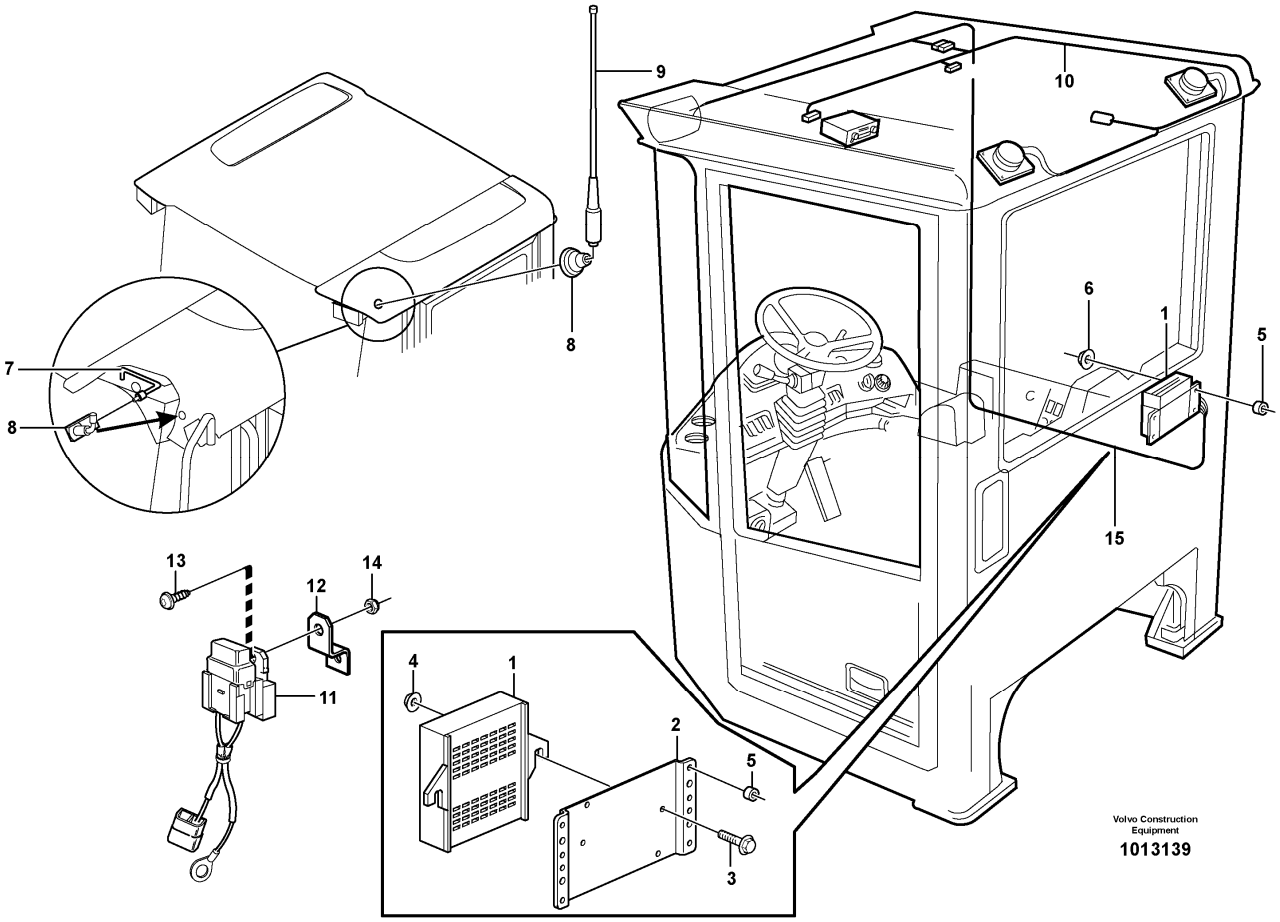

Section option	Kit	Option description
VOE80518	VOE11707277	Radio installation kit incl. loudspeakers etc. REPLACES 93951
VOE82975	VOE11714470	Installation kit for radio, right mounting RH, EXCL RADIO

Pos	Part	Q1	Q2	Q3	Q4	Q5	PS	Kit	Description	Option(s)	Remark
1	VOE20724977	1							Converter		(VOE20555710)
2	VOE24425174	1							Anchorage		
3	VOE971304	2							Six point socket screw		
4	VOE13965483	2							Nut		
5	VOE11006880	4							Spacer sleeve		
6	VOE13945407	4							Nut		
7	VOE941262	1							Grommet		
7	VOE941266	1							Plug		
8	VOE11006079	1					SS		Antenna base		

	VOE15157567	1							•Antenna base		
	VOE15157572	1							•Antenna cable		
9	VOE1083597	1							Antenna		
10	VOE11170724	1							Cable harness		
									•CONNECTED TO:		
									••Radio		
									••Feeding		CR
									••Communikation radio		CRC
									••Power outlet		CRD
									••Speaker		LH, RH
11	VOE11148477	1							Cable harness		
									•CONNECTED TO:		
									••Fuse		FH4
									••Earth		
									••Coupling Piece		RR
12	VOE11006104	1							Anchorage		
13	VOE969407	1							Six point socket screw		
14	VOE949874	1							Flange lock nut		(VOE13949874)
15		1							Wire harness		

VOLVO

Construction Equipment

PROSIS Part Information

Date:	Image id:	Catalogue:	Model:
10/09/2018	**1017501**	**20009**	**L60E**
Brand:	Serial:	Group/Section:	Title:
Volvo	**1001-3355, 60001-61214, 70001-70530**	**393/150**	**Voltage converter and cable harness for radio. 83089**

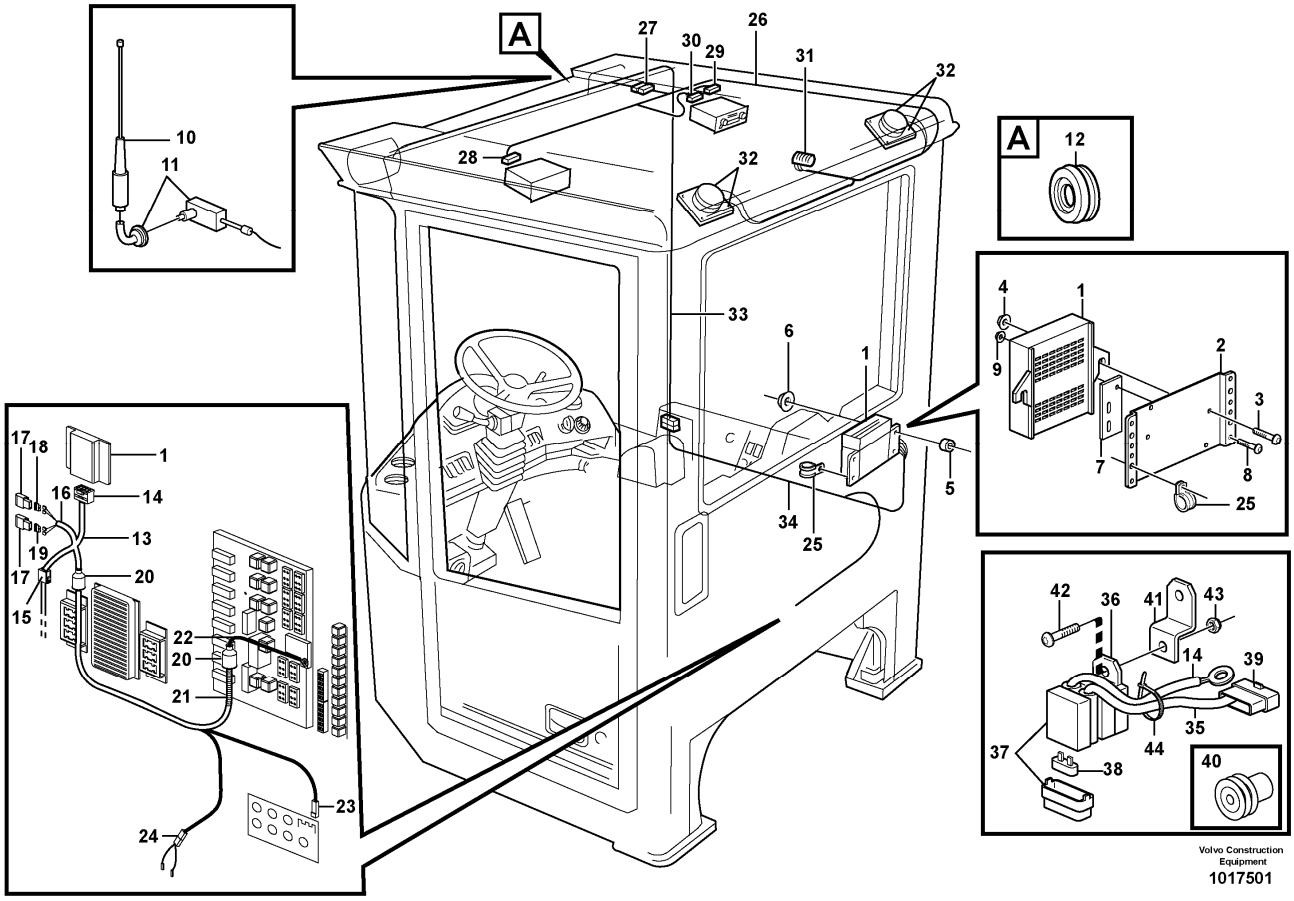

Section option	Kit	Option description
VOE83089		Radio installation kit incl. loudspeakers etc. EXKL RADIO, USA

Pos	Part	Q1	Q2	Q3	Q4	Q5	PS	Kit	Description	Option(s)	Remark
1	VOE20724975	1							Voltage converter		
2	VOE24425174	1							Anchorage		
3	VOE971304	2							Six point socket screw		
4	VOE13965483	2							Nut		
5	VOE11006880	4							Spacer sleeve		
6	VOE13945407	4							Nut		
7	VOE11417626	1					OP		Plate		
8	VOE971304	1							Six point socket screw		
9	VOE13965483	1							Nut		

10	VOE1083597	1							Antenna		
11	VOE11006079	1					SS		Antenna base		
	VOE15157567	1							•Antenna base		
	VOE15157572	1							•Antenna cable		
12	VOE941262	1							Grommet		
13	VOE11171248	1							Cable harness		
									•CONNECTED TO:		
									••Converter		CU801, CU804
									••Fuse		FU66, FU67
									••Earth		30A, 31
									••Coupling Piece		12VDC
14	VOE20367824	1							•Housing		
15	VOE11193753	1							•Housing		
16	VOE4821294	4							•Heat-shrinkable tubing		
17	VOE11039490	2							•Fuse holder		
18	VOE969161	1							•Fuse		
19	VOE13969162	1							•Fuse		
20	VOE11039397	2							•End sleeve		
21	VOE11170006	REQ							•Hose		
22	VOE4821294	1							•Heat-shrinkable tubing		
23	VOE13949597	1							•Protecting sleeve		
24	VOE968381	1							•Housing		
24	VOE968380	1							•Housing		
25	VOE977599	1							Clamp		(VOE13977599)
26	VOE11170724	1							Cable harness		
									•CONNECTED TO:		
									••Feeding		CR
									••Radio		A, B
									••Communikation radio		CRC, 14V
									••Speaker		RH
									••Speaker		LH
									••Power outlet		CRD
27	VOE968389	1							•Housing		
28	VOE13948996	1							•Insulator		14 POL
29	VOE20429801	1							•Housing		
30	VOE20429800	1							•Housing		10 POL
31	VOE13958210	1							•Receptacle housing		
32	VOE4821294	4							•Heat-shrinkable tubing		
33		1							Wire harness		
34		1							Wire harness		
35	VOE11148477	1							Cable harness		
									•CONNECTED TO:		
									••Fuse		FH4
									••Earth		31VC

									••Coupling Piece		RR
36	VOE11039713	1							•Bracket		
37	VOE11039714	1							•Fuse holder		
38	VOE13969160	1							•Fuse		
39	VOE1307049	1							•Tab housing		
40	VOE873854	2							•Sealing sleeve		
41	VOE11006104	1							Anchorage		
42	VOE969407	1							Six point socket screw		
43	VOE949874	1							Flange lock nut		(VOE13949874)
44	VOE4881440	REQ							Cable tie		

VOLVO

Construction Equipment

PROSIS Part Information

Date:	Image id:	Catalogue:	Model:
10/09/2018	**1002863**	**20009**	**L60E**
Brand:	Serial:	Group/Section:	Title:
Volvo	**1001-3355, 60001-61214, 70001-70530**	**414/100**	**Torque converter 22532**

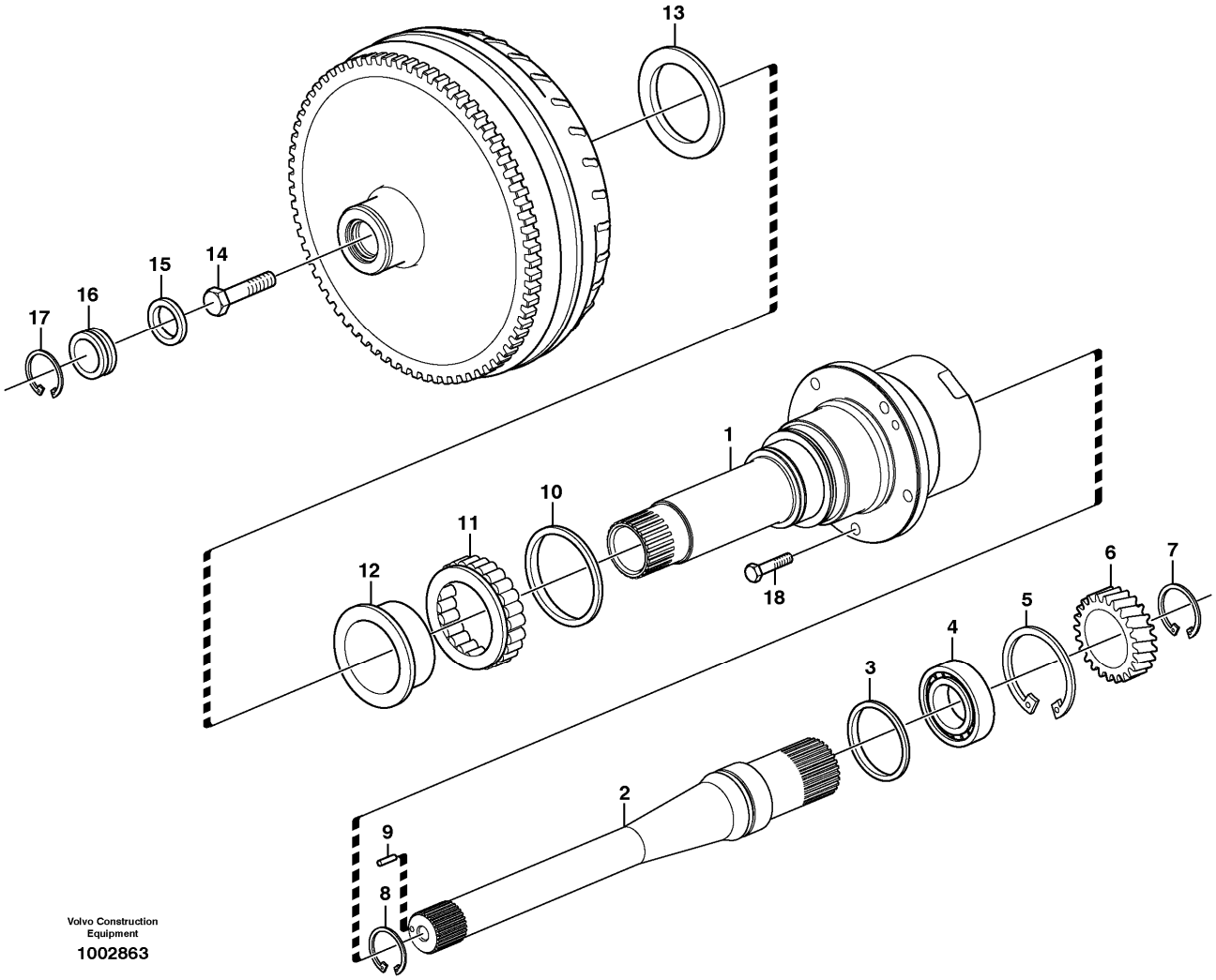

Section option	Kit	Option description
VOE22532		Hytraulic transmission HTE93

Q1-Q5	Option	Option description	
Q1 11145219			
Q2 11038447			

Pos	Part	Q1	Q2	Q3	Q4	Q5	PS	Kit	Description	Option(s)	Remark
	VOE11145219	1							Torque converter		SER NR - 10473
1	VOE11038447		1						Torque converter		SER NR 10474 -
2	VOE11709863	1	1						•Shaft		

3	VOE6213601	1	1						•Lock ring		
4	VOE11709862	1	1						•Bearing		
5	VOE914548	1	1						•Retaining ring		
6	VOE6212817	1							•Gear		
6	VOE11711934		1						•Gear		
7	VOE914474	1	1						•Snap ring		See footnote 2391) 55 X 2 MM
7	VOE11716032		1						•Snap ring		See footnote 2392) 55 X 3 MM
8	VOE13914468	1	1						•Snap ring		
9	VOE13951961	1	1						•Spring pin		
10	VOE6212718	1	1						•Lock ring		
11	VOE6212716	1	1						•Needle bearing		
12	VOE6212717	1	1						•Retainer		
13	VOE6212715	1	1						•Lock ring		
14	VOE6212720	1	1						•Screw		
15	VOE11999328	1	1						•O-ring		
16	VOE11999327	1	1						•Cap		
17	VOE914523	1	1						•Retaining ring		
18	VOE13965185	5	5						Screw		

2391) Cpl Sachs no. (torque converter): - 0745017000

2392) Cpl Sachs no. (torque converter): 0745000015 -

VOLVO

Construction Equipment

PROSIS Part Information

Date:	Image id:	Catalogue:	Model:
10/09/2018	**EC262**	**20009**	**L60E**
Brand:	Serial:	Group/Section:	Title:
Volvo	**1001-3355, 60001-61214, 70001-70530**	**420/50**	**Repair kit for transmission 22532, HT93**

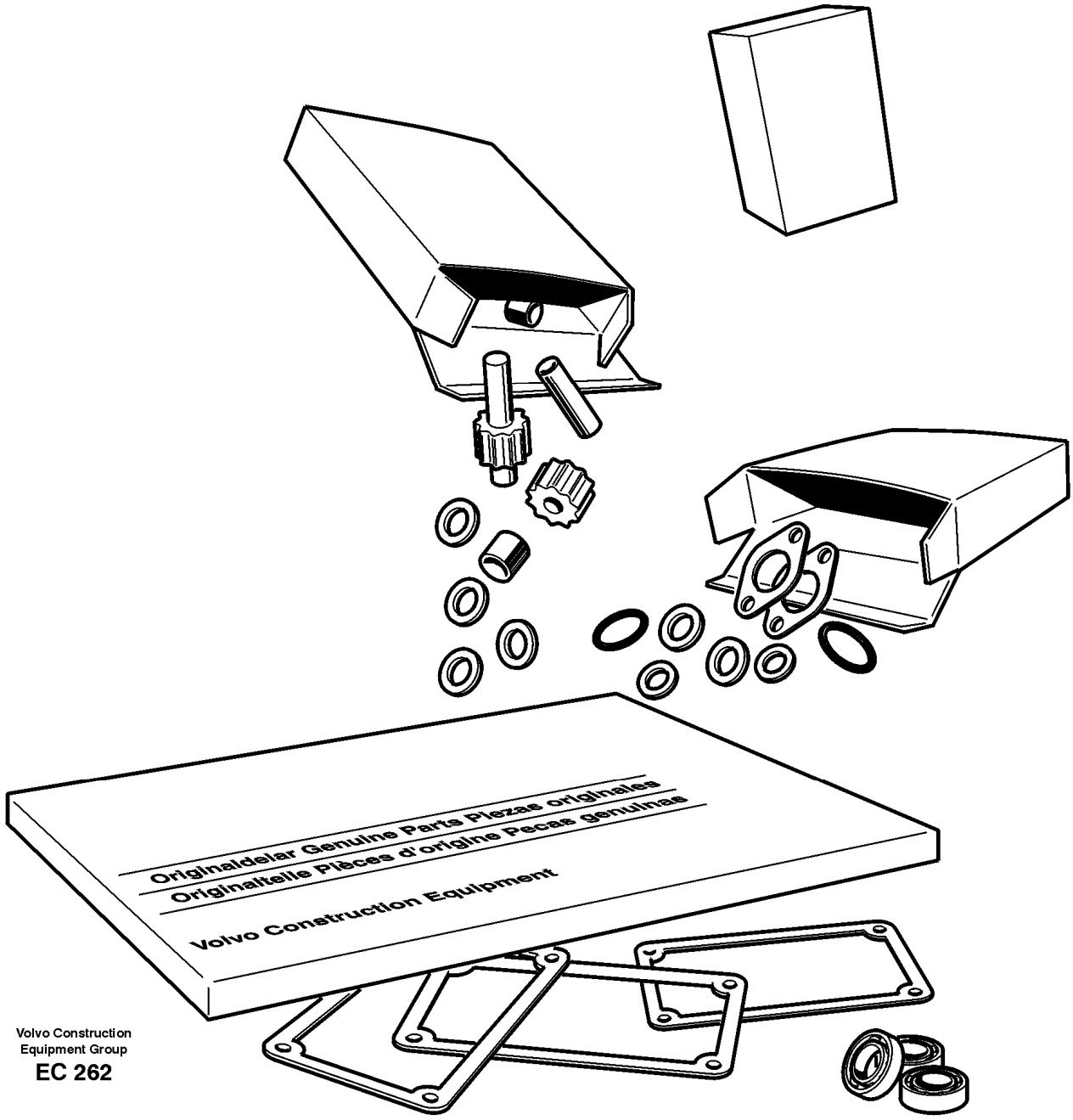

Section option	Kit	Option description
VOE22532		Hytraulic transmission HTE93

Pos	Part	Q1	Q2	Q3	Q4	Q5	PS	Kit	Description	Option(s)	Remark
	VOE11714169	1							Repair kit		
	VOE183444	2							•Needle roller assembly		
	VOE183824	1							•Roller bearing		
	VOE784467	3							•Needle bearing		
	VOE795433	7							•Needle bearing		
	VOE925070	2							•O-ring		
	VOE925094	3							•O-ring		
	VOE925096	1							•O-ring		
	VOE925257	1							•O-ring		
	VOE925261	1							•O-ring		
	VOE925278	1							•O-ring		
	VOE931209	1							•O-ring		
	VOE931216	1							•Back-up ring		
	VOE944126	2							•O-ring		
	VOE944364	12							•O-ring		
	VOE949187	2							•O-ring		
	VOE958228	1							•O-ring		
	VOE968007	2							•O-ring		
	VOE17216281	2							•Sealing ring		(VOE968844)
	VOE4710278	1							•Strainer		
	VOE4720869	2							•Piston ring		
	VOE4785772	4							•Needle bearing		
	VOE4871048	2							•Piston ring		
	VOE4871072	2							•Piston ring		
	VOE4871073	2							•Piston ring		
	VOE4871092	2							•Piston ring		
	VOE4871154	2							•Piston ring		
	VOE4871697	2							•Piston ring		
	VOE4871698	2							•Piston ring		
	VOE6212716	1							•Needle bearing		
	VOE6212717	1							•Retainer		
	VOE6212718	1							•Lock ring		
	VOE6213601	1							•Lock ring		
	VOE7011097	2							•Bearing		
	VOE13947622	6							•Plane gasket		
	VOE13947624	6							•Plane gasket		
	VOE7019283	2							•Ball bearing		
	VOE11036020	1							•Gasket		
	VOE11036023	1							•Gasket		
	VOE11036024	1							•Gasket		
	VOE11036025	1							•Gasket		
	VOE11036370	1							•Gasket		
	VOE11144042	1							•Gasket		
	VOE11038835	9							•Piston ring		
	VOE11144935	1							•Bearing		

	VOE11144936	1							•Bearing		
	VOE11145231	1							•Thrust roller assembly		
	VOE11145380	1							•Needle holder		
	VOE11145522	1							•Gasket		
	VOE11145524	1							•Gasket		
	VOE11709862	1							•Bearing		
	VOE11996130	5							•O-ring		
	VOE11997939	5							•Roller bearing		
	VOE11999328	1							•O-ring		
	VOE13944494	1							•Washer		
	VOE13947282	1							•Gasket		
	VOE13949574	7							•O-ring		
	VOE13949657	2							•O-ring		
	VOE13960177	1							•O-ring		
	VOE13962531	2							•Back-up ring		
	VOE962546	2							•Back-up ring		

VOLVO

Construction Equipment

PROSIS Part Information

Date:	Image id:	Catalogue:	Model:
10/09/2018	**1024495**	**20009**	**L60E**
Brand:	Serial:	Group/Section:	Title:
Volvo	**1001-3355, 60001-61214, 70001-70530**	**420/100**	**Hydraulic transmission with fitting parts**

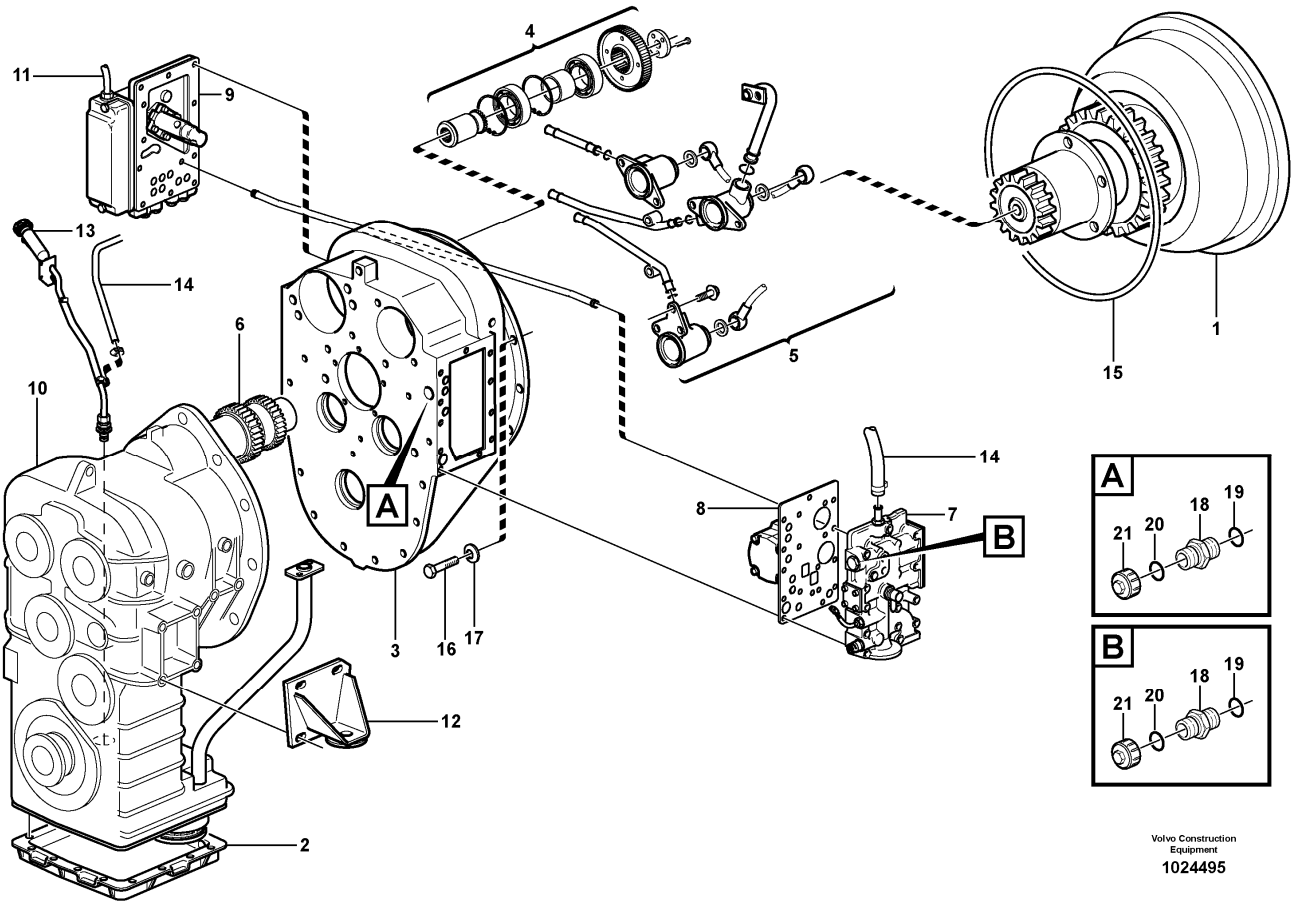

Section option	Kit	Option description
VOE22532		Hytraulic transmission HTE93
VOE33750		Wheel Loader
VOE33759		Wheel loader L60E OPEN ROPS

Q1-Q5	Option	Option description	
Q1 22532 HT93	VOE22532	Hytraulic transmission HTE93	
Q2 33750	VOE33750	Wheel Loader	
Q3 OPEN ROPS			

Pos	Part	Q1	Q2	Q3	Q4	Q5	PS	Kit	Description	Option(s)	Remark
	VOE22532	1							Hydraulic transmission	VOE22532	HT93, REMAN VOE9000022532
1	VOE11038447	1							•Torque converter		See ref 414/100
2		1							•Oil reservoir and str		See ref 421/960

3	VOE11144843	1							•Converter shell		See ref 421/100
4		1							•Pump drive		See ref 421/500
5		1							•Oildistributor, tubes		See ref 421/100
6		1							•Clutch, forward,3:rd		See ref 421/600
		1							•Clutch, reverse,4th s		See ref 421/700
		1							•Clutch, 1st and 2nd		See ref 421/750
7		1							•Pr. limiting valve		See ref 421/450
8		1							•Fuel filling pump		See ref 421/250
9		1							•Gear selector valve		See ref 421/400
10		1							•Transfer case,		See ref 421/200
11		1							•Wire harness		See ref 371/650
12		1							Gearbox mounting		See ref 436/100
13		1							Oil filler, oil dipst		See ref 421/115
14		1							Ventilation for hydr.		See ref 420/300
15	VOE926101	1	1	1					O-ring		
16	VOE13970879	12	12	12					Hexagon screw		
17	VOE941908	12	12	12					Spring washer		
18	VOE13933875	1							Nipple		
19	VOE990740	1							O-ring		
20	VOE14211859	1							Sealing ring		
21		2					NS		Plug		

VOLVO

Construction Equipment

PROSIS Part Information

Date:	Image id:	Catalogue:	Model:
10/09/2018	**1004554**	**20009**	**L60E**
Brand:	Serial:	Group/Section:	Title:
Volvo	**1001-3355, 60001-61214, 70001-70530**	**420/300**	**Ventilation for transmission. 22532, OPEN ROPS**

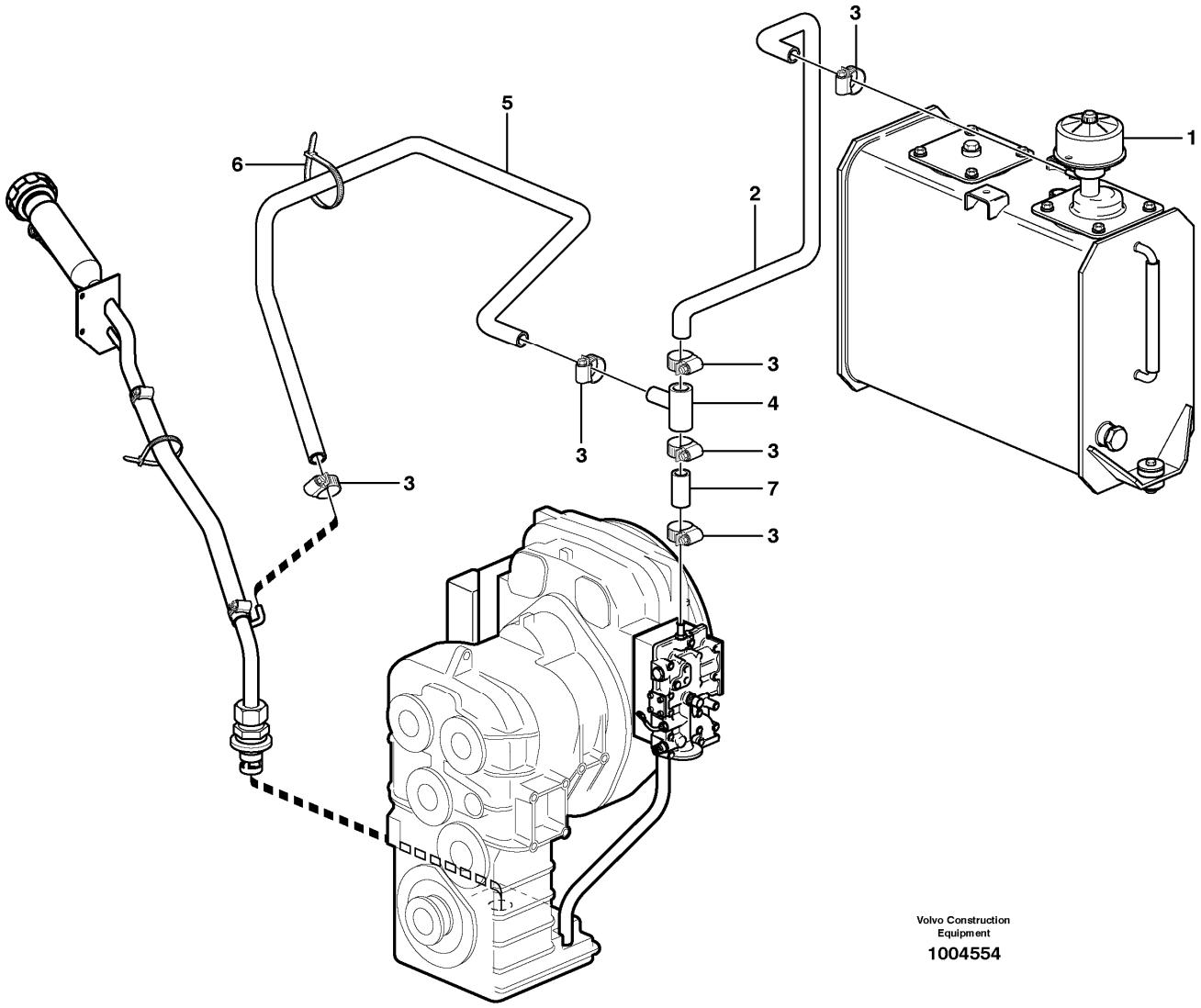

Section option	Kit	Option description
VOE22532		Hytraulic transmission HTE93
VOE33759		Wheel loader L60E OPEN ROPS

Pos	Part	Q1	Q2	Q3	Q4	Q5	PS	Kit	Description	Option(s)	Remark
1									Filter		See ref 911/100
2	VOE13944075	REQ							Rubber hose		L = 1134MM
3	VOE943470	6							Hose clamp		
4	VOE419446	1							Tube		

5	VOE13944075	REQ							Rubber hose		L = 1250MM
6	VOE4881440	6							Cable tie		
7	VOE13944075	1							Rubber hose		L = 60MM

VOLVO

Construction Equipment

PROSIS Part Information

Date:	Image id:	Catalogue:	Model:
10/09/2018	**EC283**	**20009**	**L60E**
Brand:	Serial:	Group/Section:	Title:
Volvo	**1001-3355, 60001-61214, 70001-70530**	**421/100**	**Converter housing with fitting parts 22532**

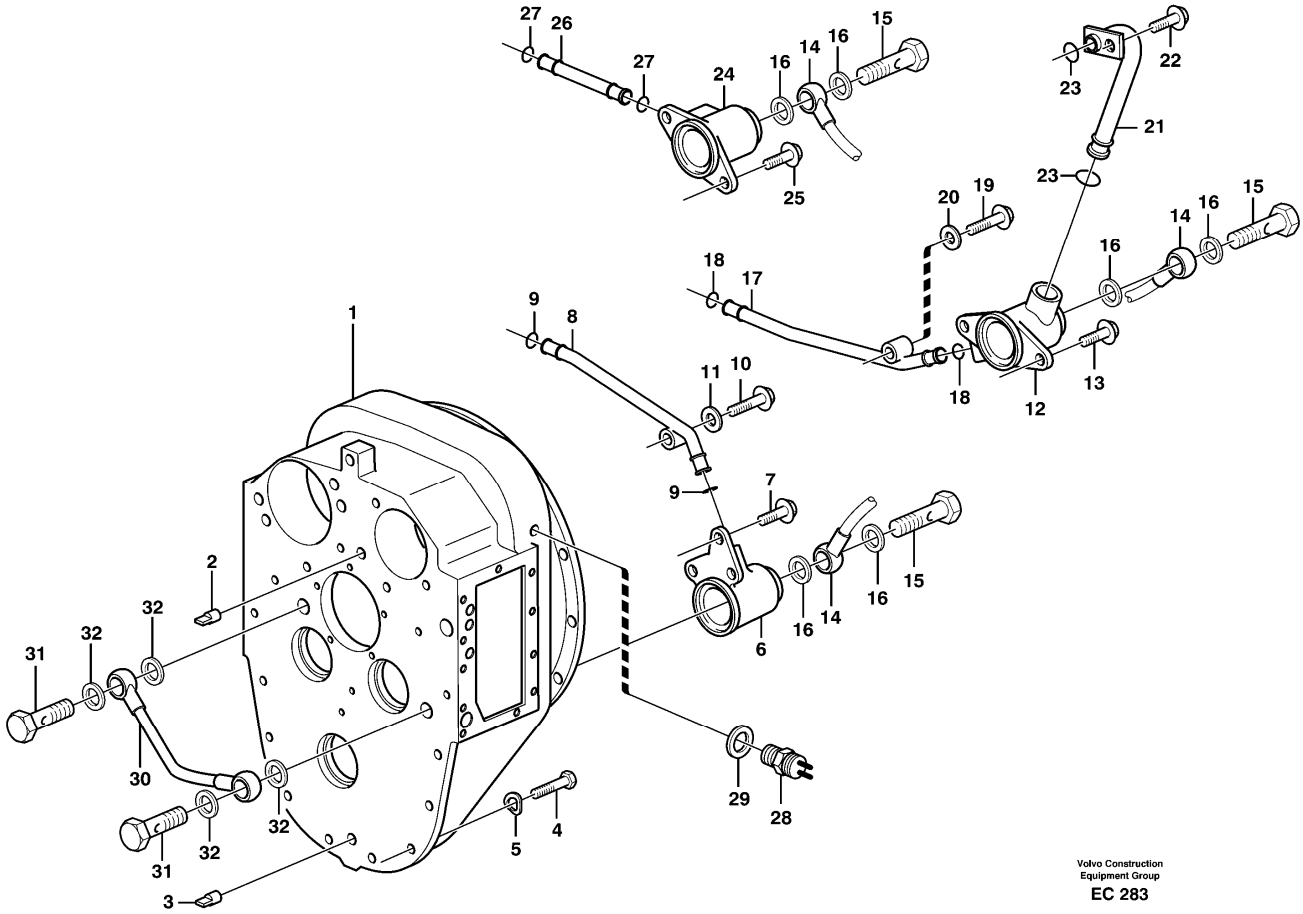

Section option	Kit	Option description
VOE22532		Hytraulic transmission HTE93

Pos	Part	Q1	Q2	Q3	Q4	Q5	PS	Kit	Description	Option(s)	Remark
1		1							Converter Shell		See ref 421/200
2	VOE4718167	1							Pin		
3	VOE950711	1							Pin		
4	VOE13970973	15							Hexagon screw		
5	VOE13949608	15							Washer		
6	VOE11144904	1							Oil distributor		See footnote 2176) TM NO - 11715 TM NO 12008 -
6	VOE11419560	1							Oil distributor		See footnote 2176) TM NO 11716 - 12007

7	VOE13946173	3							Screw		
8	VOE4871210	2							Tube		
9	VOE944364	4							O-ring		
10	VOE13965180	1							Screw		
11	VOE930840	1							Plain washer		
12	VOE11419384	1							Oil distributor		(VOE11144902)See footnote 2176) TM NO - 11715 TM NO 12008 -
12	VOE11419558	1							Oil distributor		See footnote 2176) TM NO 11716 - 12007
13	VOE13946173	2							Screw		
14	VOE4871943	1							Pipe		
15	VOE941686	3							Hollow screw		
16	VOE7011996	6							Gasket		
17	VOE11036001	2							Pipe		
18	VOE944364	4							O-ring		
19	VOE13965180	1							Screw		
20	VOE11117464	1							Plain washer		(VOE13960141)
21	VOE4871940	1							Pipe		
22	VOE13946173	1							Screw		
23	VOE968007	2							O-ring		
24	VOE11144903	1							Oil distributor		See footnote 2176) TM NO - 11715 TM NO 12008 -
24	VOE11419559	1							Oil distributor		See footnote 2176) TM NO 11716 - 12007
25	VOE13946173	2							Screw		
26	VOE11144080	3							Tube		
27	VOE944364	4							O-ring		
28	VOE4780941	1							Induction sensor		SE201
29	VOE13947624	1							Plane gasket		(VOE7011998)
30	VOE4871219	1							Tube		
31	VOE7026013	2							Hollow screw		
32	VOE13947624	4							Plane gasket		(VOE7011998)

2176) See Sb Wlo 104 K

VOLVO

Construction Equipment

PROSIS Part Information

Date:	Image id:	Catalogue:	Model:
10/09/2018	**1019999**	**20009**	**L60E**
Brand:	Serial:	Group/Section:	Title:
Volvo	**1001-3355, 60001-61214, 70001-70530**	**421/115**	**Oil filler and dipstick STD, OPEN ROPS**

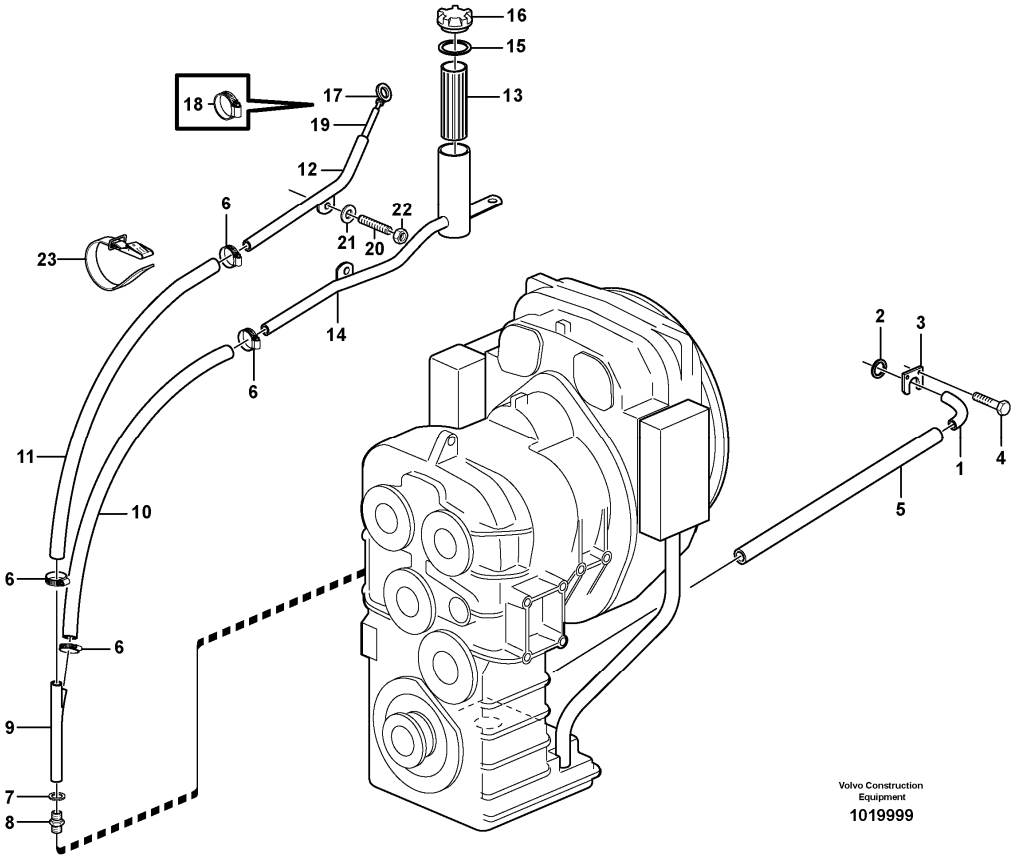

Section option	Kit	Option description
VOE33750		Wheel Loader
VOE33759		Wheel loader L60E OPEN ROPS

Pos	Part	Q1	Q2	Q3	Q4	Q5	PS	Kit	Description	Option(s)	Remark
1	VOE11173175	1							Pipe		L = 850 MM
2	VOE421158	1							Sealing ring		
3	VOE11031769	1							Lock washer		
4	VOE946440	2							Flange screw		
5	VOE13942707	1							Hose		
6	VOE943476	4							Hose clamp		
7	VOE14013071	1							Sealing washer		
8	VOE11014972	1							Nipple		
9	VOE11410279	1							Pipe		

	VOE956990	1							•Fitting nut		
	VOE956976	1							•Ferrule		
10	VOE941799	1							Hose		(VOE940096)L = 800MM
11	VOE941799	1							Hose		L = 800MM
12	VOE11411136	1							Filler pipe		(VOE11410368)
	VOE11411133	1							•Pipe		
13	VOE11018236	1							•Strainer		
14	VOE11410238	1					OP		•Filler pipe		
15	VOE1275379	1							•Gasket		
16	VOE421753	1							•Filler cap		
17	VOE11410865	1							Oil dipstick		(VOE11410491)
18	VOE942458	1					OP		•Clamp		
19	VOE983342	1							•Hose		
20	VOE980157	1							Stud		
21	VOE11117464	1							Plain washer		(VOE13960141)
22	VOE13945408	1							Nut		
23	VOE11104606	1							Retaining strap		

VOLVO

Construction Equipment

PROSIS Part Information

Date:	Image id:	Catalogue:	Model:
10/09/2018	**1016447**	**20009**	**L60E**
Brand:	Serial:	Group/Section:	Title:
Volvo	**1001-3355, 60001-61214, 70001-70530**	**421/200**	**Clutch housing. 4 - speed. 22532**

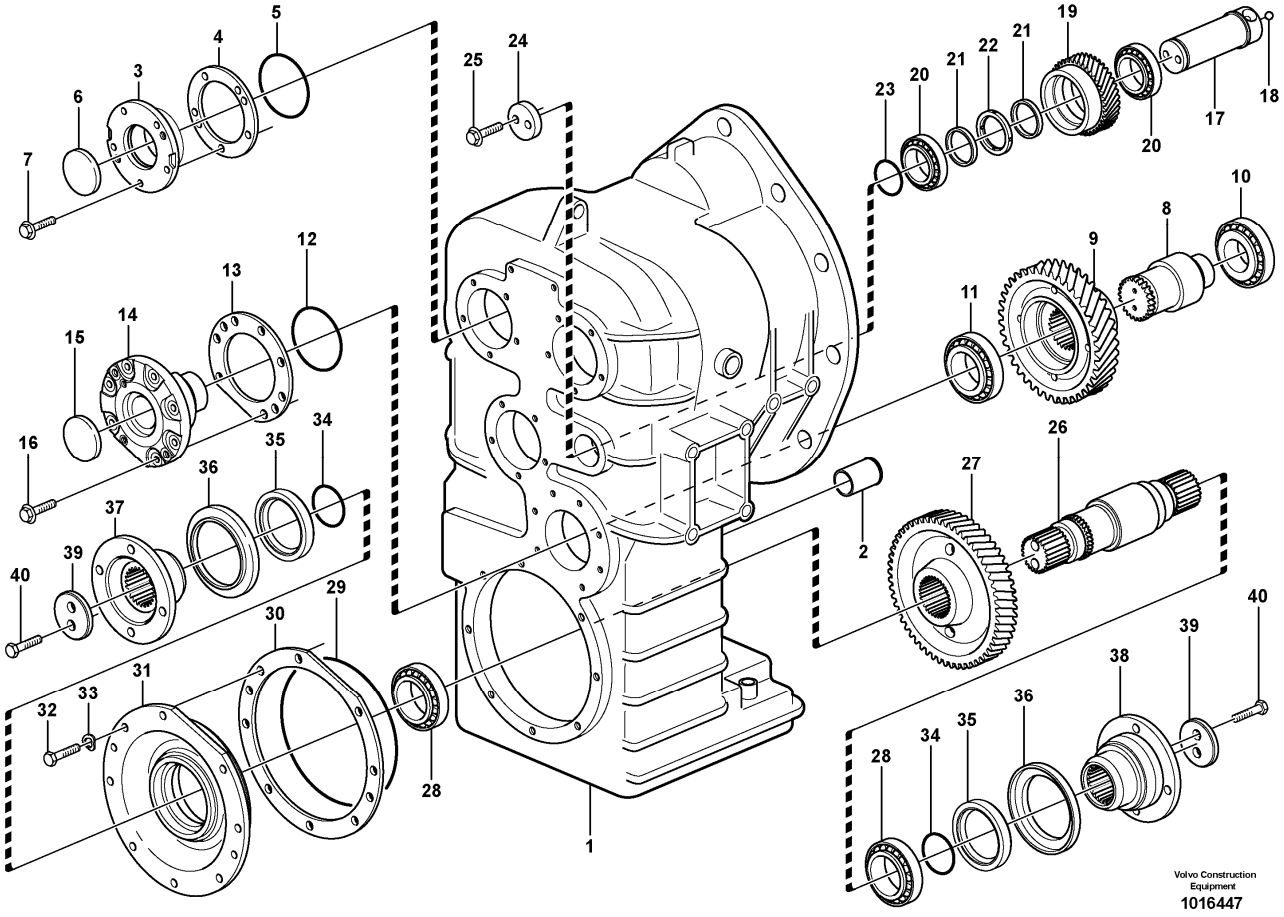

Section option	Kit	Option description
VOE22532		Hytraulic transmission HTE93

Pos	Part	Q1	Q2	Q3	Q4	Q5	PS	Kit	Description	Option(s)	Remark
	VOE22532	1							Hydraulic transmission		HT93, REMAN VOE9000022532
1	VOE11145253	1							•Housing		
2	VOE739393	1							••Tube		
3	VOE11036828	3							•Cover		
4	VOE11036829	REQ							•Shim		THICK=1,0 MM
	VOE11036831	REQ							•Shim		THICK=0,35MM
	VOE11036832	REQ							•Shim		THICK=0,10MM
5	VOE925094	3							•O-ring		
6	VOE4881034	3							•Cover		
7	VOE13945444	15							•Screw		

8	VOE4871551	1							•Shaft		
9	VOE11036894	1							•Gear		
10	VOE183824	1							•Roller bearing		
11	VOE11144935	1							•Bearing		
12	VOE925257	1							•O-ring		
13	VOE11036825	REQ							•Shim		THICK=1,0MM
	VOE11036826	REQ							•Shim		THICK=0,35MM
	VOE11036827	REQ							•Shim		THICK=0,10MM
14	VOE11036824	1							•Stub		S/N - 12456
		1					NS		•Stub		S/N 12457 -
15	VOE4881034	1							•Cover		
16	VOE13945444	7							•Screw		
17	VOE11145361	1							•Shaft		
18	VOE184645	1							••Ball		
19	VOE11145180	1							•Idler gear		
20	VOE11419255	2							•Bearing		(VOE183484)
21	VOE4871610	REQ							•Spacer ring		THICK=5,02MM
	VOE4871611	REQ							•Spacer ring		THICK=5,07MM
	VOE4871612	REQ							•Spacer ring		THICK=5,17MM
	VOE4871613	REQ							•Spacer ring		THICK=5,27MM
	VOE4871614	REQ							•Spacer ring		THICK=5,32MM
22	VOE11036260	1							•Spacer ring		
23	VOE13960177	1							•O-ring		
24	VOE11145371	1							•Washer		
25	VOE967639	2							•Hex. socket screw		
26	VOE4871195	1							•Shaft		
27	VOE11036895	1							•Gear		
28	VOE7011097	2							•Bearing		
29	VOE925278	1							•O-ring		
30	VOE4871190	REQ							•Shim		THICK=1,0MM
	VOE4871191	REQ							•Shim		THICK=0,35MM
	VOE4871192	REQ							•Shim		THICK=0,10MM
31	VOE4871563	1							•Bearing carrier		
32	VOE13970948	8							•Hexagon screw		
33	VOE941908	8							•Spring washer		
34	VOE925070	2							•O-ring		
35	VOE17216281	2							•Sealing ring		(VOE968844)
36	VOE767795	2							•Ring		
37	VOE15148252	1							•Companion flange		(VOE11145739)
38	VOE15148253	1							•Companion flange		(VOE11145740)
39	VOE11145432	2							•Washer		
40	VOE978933	4							•Hexagon screw		

VOLVO

Construction Equipment

PROSIS Part Information

Date:	Image id:	Catalogue:	Model:
10/09/2018	**1004527**	**20009**	**L60E**
Brand:	Serial:	Group/Section:	Title:
Volvo	**1001-3355, 60001-61214, 70001-70530**	**421/250**	**Range selector valve, pressure limiting valve and pump.**

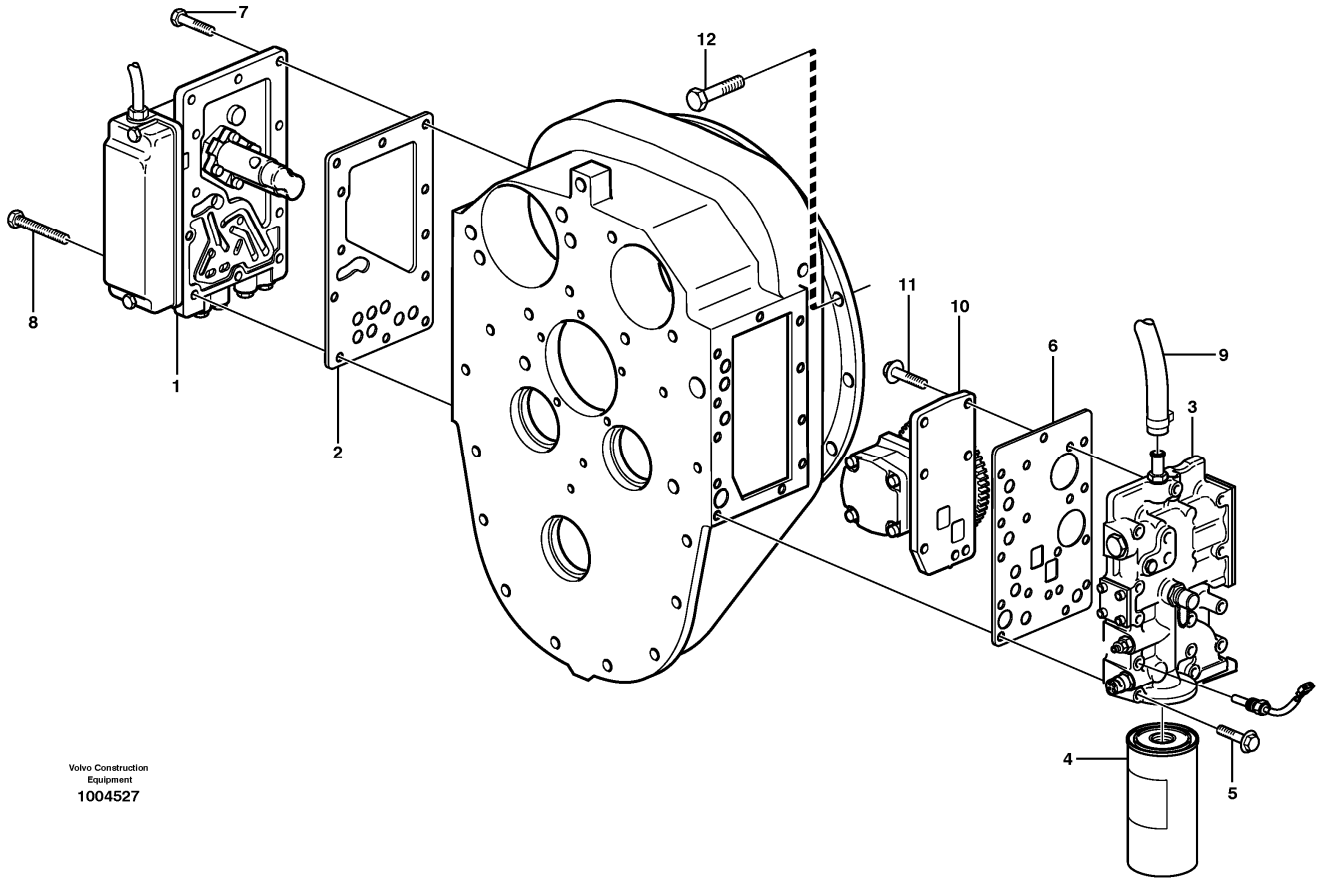

Section option	Kit	Option description
VOE22532		Hytraulic transmission HTE93

Pos	Part	Q1	Q2	Q3	Q4	Q5	PS	Kit	Description	Option(s)	Remark
1		1							Gear selector valve		See ref 421/400
2	VOE11145522	1							Gasket		
3		1							Pr. limiting valve		See ref 421/450
4	VOE4787923	1							Filter cartridge		
5	VOE13965216	13							Screw		
6	VOE11144042	1							Gasket		
7	VOE946671	7							Flange screw		
8	VOE13965184	6							Flange screw		
9		REQ							Rubber hose		See ref 420/300
10	VOE11418086	1							Pump		
	VOE941761	4							•Hex. socket screw		

11	VOE946671	5							Flange screw		
12	VOE13965180	13							Screw		

VOLVO

Construction Equipment

PROSIS Part Information

Date:	Image id:	Catalogue:	Model:
10/09/2018	**1004495**	**20009**	**L60E**
Brand:	Serial:	Group/Section:	Title:
Volvo	**1001-3355, 60001-61214, 70001-70530**	**421/400**	**Range selector valve**

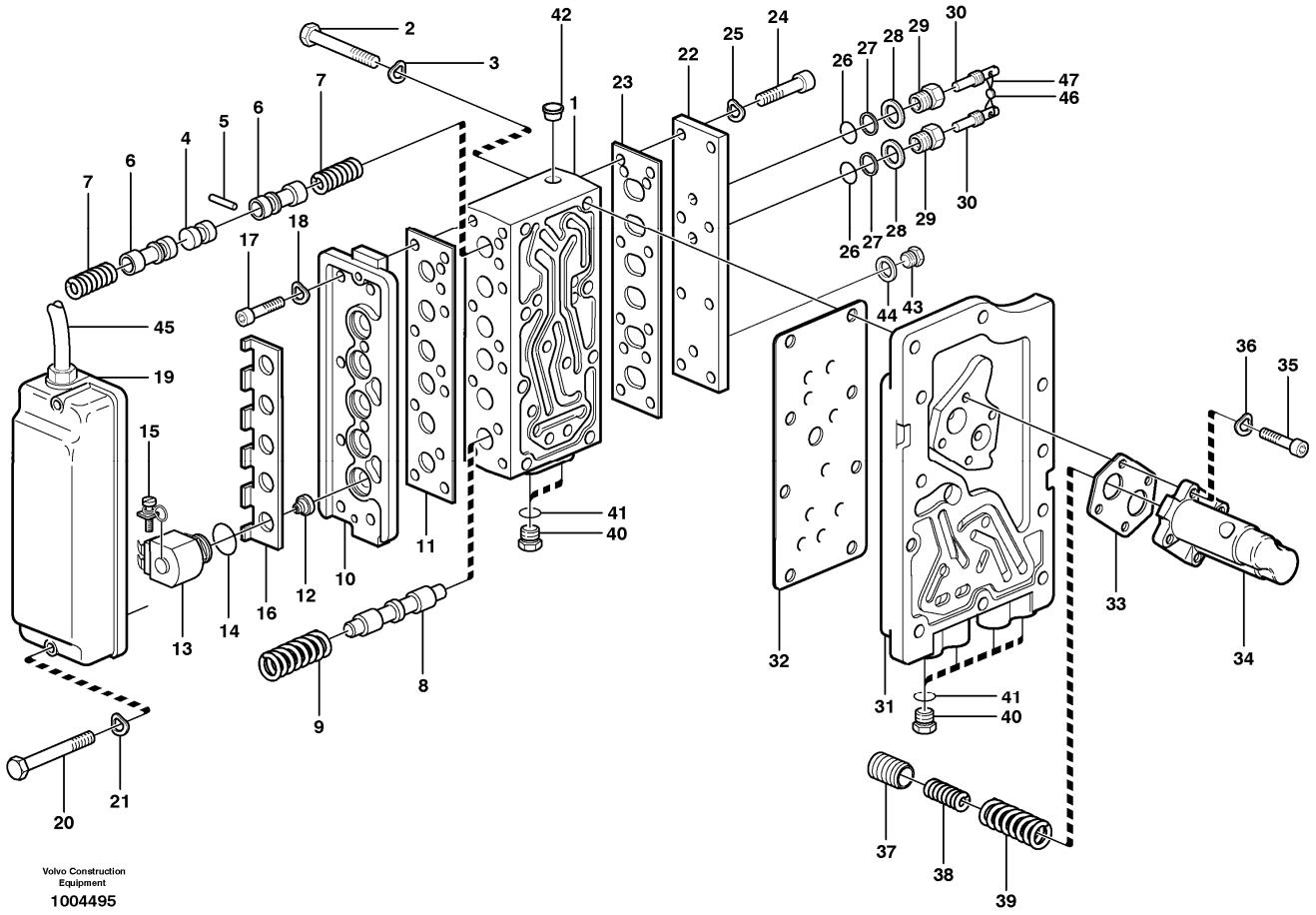

Section option	Kit	Option description
VOE22532		Hytraulic transmission HTE93

Q1-Q5	Option	Option description	
Q1 11145402			
Q2 11419209			

Pos	Part	Q1	Q2	Q3	Q4	Q5	PS	Kit	Description	Option(s)	Remark
	VOE11145402	1					SS		Gear changing unit		HT - 12698
	VOE11419209	1							Control valve		HT 12699 -
1		1	1				NS		•Housing		
2	VOE955304	2	2						•Hexagon screw		
3	VOE13941907	2	2						•Washer		
4	VOE4871510	1	1						•Partition wall		

5	VOE951958	1							•Spring pin		
	VOE951960		1				SS		•Spring pin		
6	VOE11145400	2	2						•Slide		
7	VOE4871506	2	2						•Spring		
8	VOE11036525	5	5						•Control plunger		
9	VOE4718714	5	5						•Spring		
10	VOE4871868	1	1						•Valve Plate		
11	VOE11036020	1	1					K	•Gasket		
12	VOE4720834	5	5						•Valve seat		
13	VOE11992401	5	5						•Solenoid valve		
14	VOE11996130	5	5						••O-ring		
15	VOE11992523	5	5						••Clamp		
16	VOE11036178	1	1						•Retainer		
17	VOE940326	8	8						•Hex. socket screw		
18	VOE13949607	8	8						•Washer		
19	VOE11145134	1	1						•Protecting casing		(VOE4871530)
20	VOE955279	2	2						•Hexagon screw		
21	VOE13949607	2	2						•Washer		
22	VOE4871684	1	1				OP		•Cover		
23	VOE11036019	1	1					K	•Gasket		
24	VOE940326	8	8						•Hex. socket screw		
25	VOE13949607	8	8						•Washer		
26	VOE949187	2	2					K	•O-ring		
27	VOE13962531	2	2					K	•Back-up ring		
28	VOE4719348	2	2						•Washer		
29	VOE4719346	2	2						•Nipple		
30	VOE4719347	2	2						•Screw		
31	VOE11145246	1	1						•Connection plate		
32	VOE11145524	1	1						•Gasket		
33	VOE11036025	1	1					K	•Gasket		
34	VOE4871608	1	1						•Housing		
35	VOE942314	4	4						•Hex. socket screw		
36	VOE13949607	4	4						•Washer		
37	VOE4871606	2	2						•Piston		
38	VOE4871681	2	2						•Spring		
39	VOE4871682	2	2						•Spring		
40	VOE926370	6	6						•Plug		
41	VOE13949574	6	6						•O-ring		
42	VOE940283	1	1						•Plug		
43	VOE914390	1	1						Plug		
44	VOE14013067	1	1						Sealing washer		(VOE943907)
45		1	1						Wire harness		
46	VOE1507304	REQ	REQ						Sealing wire		
47		1	1				NS		Seal		

VOLVO

Construction Equipment

PROSIS Part Information

Date:	Image id:	Catalogue:	Model:
10/09/2018	**1020017**	**20009**	**L60E**
Brand:	Serial:	Group/Section:	Title:
Volvo	**1001-3355, 60001-61214, 70001-70530**	**421/450**	**Pressure limiting valve 22532**

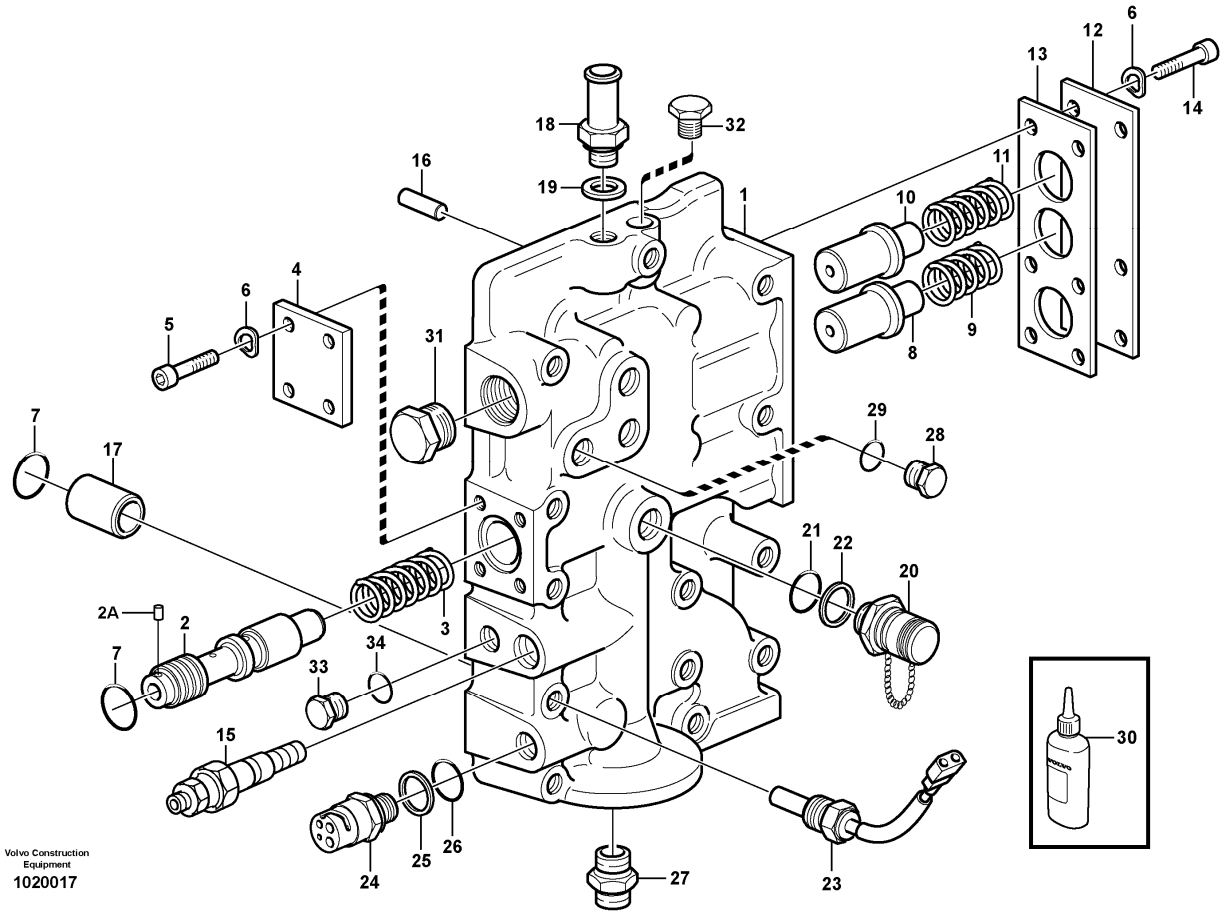

Section option	Kit	Option description
VOE22532		Hytraulic transmission HTE93

Pos	Part	Q1	Q2	Q3	Q4	Q5	PS	Kit	Description	Option(s)	Remark
	VOE11145386	1							Pressure limiting valve		
1		1					NS		•Valve housing		
2	VOE11145369	1							•Slide		
2A	VOE11145381	1							••Spring pin		
3	VOE11145186	1							•Spring		
4	VOE4871308	1					OP		•Cover		
5	VOE942001	4							•Hex. socket screw		
6	VOE13949607	4							•Washer		
7	VOE13949657	2							•O-ring		
8	VOE4871880	1							•Control plunger		

9	VOE4871305	1							•Spring		
10	VOE4871880	1							•Control plunger		
11	VOE4871672	1							•Spring		
12	VOE4871307	1							•Cover		
13	VOE11036024	1							•Gasket		
14	VOE13946544	10							•Screw		
15	VOE11038775	1							•Sensor		SE401
16	VOE950564	2							•Pin		
17	VOE4871151	1							•Pin		
18	VOE947502	1							•Nipple		
19	VOE13947282	1							•Gasket		
20	VOE936441	3							•Testing nipple		
21	VOE983502	3							••O-ring		
22		3							••Back-up ring		DELETED
23	VOE11419485	1							•Temperature sensor		SE406
24	VOE15047336	1							•Pressure sensor		(VOE11039574)SE405 33750 33759
25	VOE931209	1							•O-ring		
26	VOE931216	1							•Back-up ring		
27	VOE4720649	1							•Nipple		
28	VOE926370	1							•Plug		
29	VOE13949574	1							•O-ring		
30	VOE1161053	REQ							Locking fluid		
31		1					NS		Protecting Plug		
32	VOE940284	1							Plug		
33		1					NS		Plugg		
34	VOE13944494	1							Washer		

VOLVO

Construction Equipment

PROSIS Part Information

Date: **10/09/2018**	Image id: **1005397**	Catalogue: **20009**	Model: **L60E**
Brand: **Volvo**	Serial: **1001-3355, 60001-61214, 70001-70530**	Group/Section: **421/500**	Title: **Pump drive 22532**

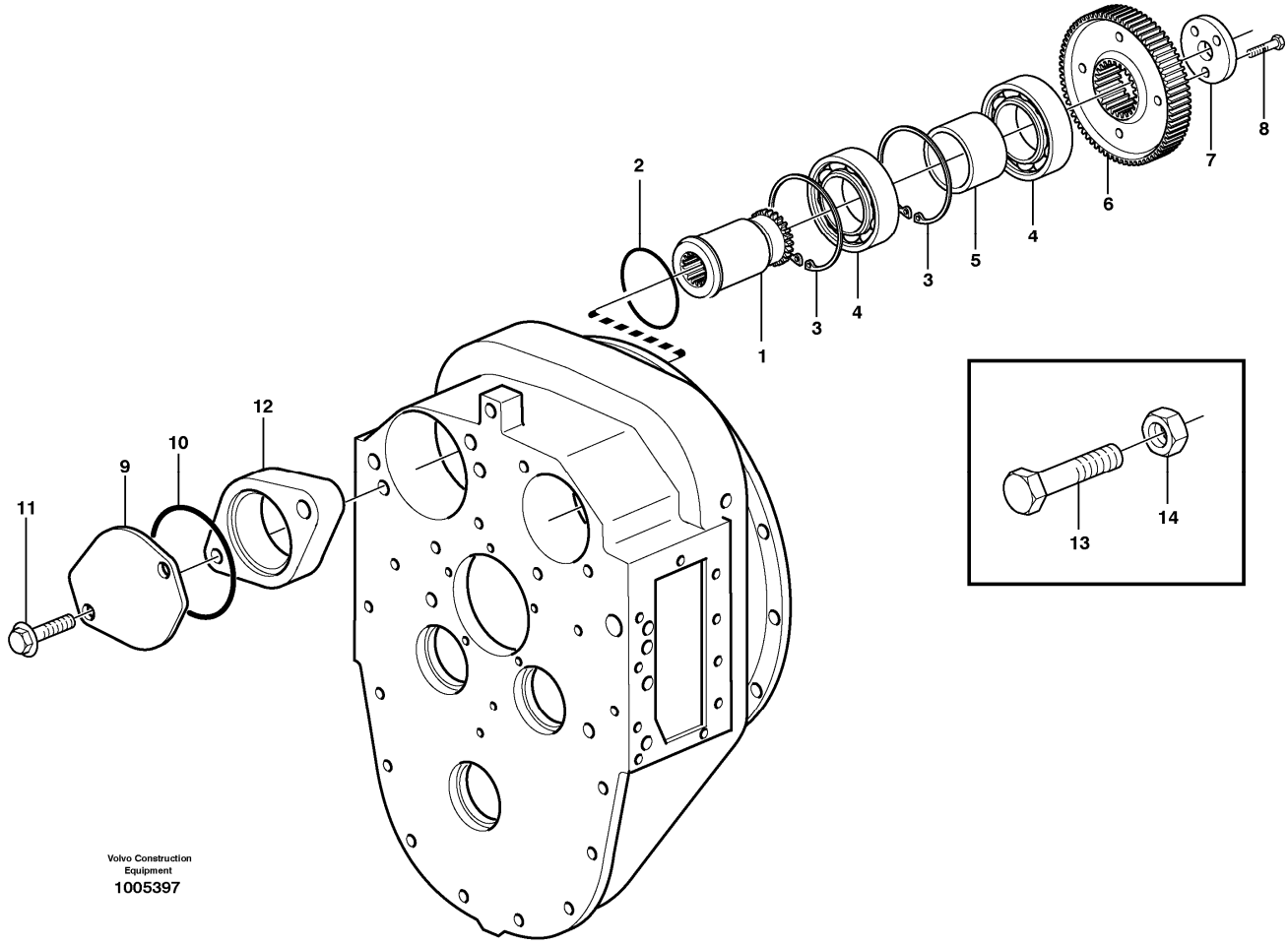

Section option	Kit	Option description
VOE22532		Hytraulic transmission HTE93

Pos	Part	Q1	Q2	Q3	Q4	Q5	PS	Kit	Description	Option(s)	Remark
1	VOE11144861	1							Shaft		
2	VOE925096	1							O-ring		
3	VOE914548	2							Retaining ring		
4	VOE7019283	2							Ball bearing		
5	VOE4871579	1							Spacer sleeve		
6	VOE4871575	1							Gear		
7	VOE4871197	1							Washer		
8	VOE13947760	3							Screw		
9	VOE11144931	1							Cover		
10	VOE925261	1							O-ring		

11	VOE13965193	2							Screw		
12	VOE11144909	1							Spacer		
13	VOE983259	2							Hexagon screw		
14	VOE979022	2							Hexagon nut		

VOLVO

Construction Equipment

PROSIS Part Information

Date:	Image id:	Catalogue:	Model:
10/09/2018	**1013622**	**20009**	**L60E**
Brand:	Serial:	Group/Section:	Title:
Volvo	**1001-3355, 60001-61214, 70001-70530**	**421/600**	**Hydraulic clutch forward/3:rd speeds 22532**

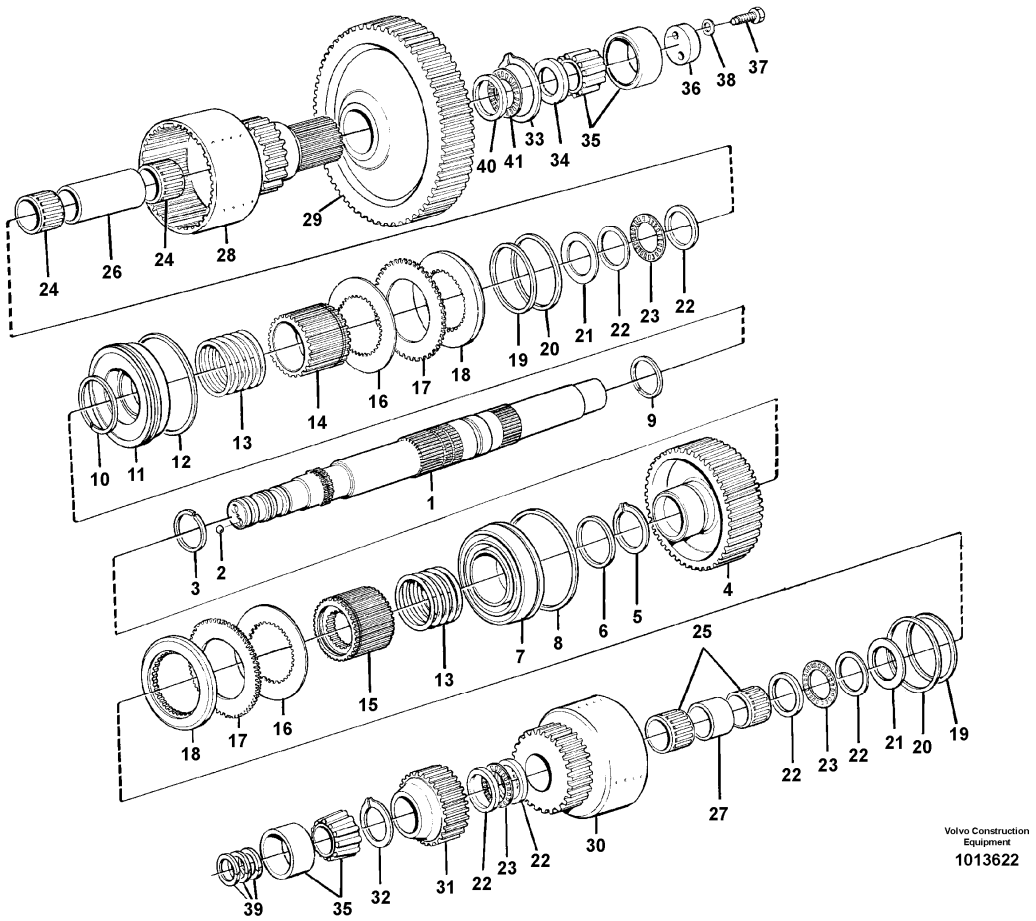

Section option	Kit	Option description
VOE22532		Hytraulic transmission HTE93

Q1-Q5	Option	Option description	
Q1 11145454			
Q2 11145746			

Pos	Part	Q1	Q2	Q3	Q4	Q5	PS	Kit	Description	Option(s)	Remark
	VOE11145444	1							Hydraulic clutch		SER NO-10254
	VOE11145748		1						Hydraulic clutch		SER NO 10255-
1	VOE11145512	1	1						•Clutch shaft		
2	VOE184645	2	2						•Ball		
3	VOE11145451	1	1						•Lock ring		
4	VOE4871694	1	1						•Gear		

5	VOE11145411	1	1						•Snap ring		
6	VOE4871092	1	1						•Piston ring		
7	VOE4871070	1	1						•Piston		
8	VOE4871072	1	1						•Piston ring		
9	VOE4871154	1	1						•Piston ring		
10	VOE4871697	1	1						•Piston ring		
11	VOE4871695	1	1						•Piston		
12	VOE4871073	1	1						•Piston ring		
13	VOE4871696	2	2						•Spring		
14	VOE11036593	1	1						•Clutch hub		
15	VOE11145453	1	1						•Clutch hub		
16	VOE11144487	1	1						•Disc kit		
17	VOE15035800	1	1						•Disc kit		
18	VOE11037153	REQ	REQ						•Pressure plate		
19	VOE11037147	2	2						•Lock ring		
20	VOE4786536	2	2						•Lock ring		
21	VOE11037138	2	2						•Retainer		
22	VOE4871341	6	6						•Thrust washer		
23	VOE795433	3	3						•Needle bearing		
24	VOE183444	2	2						•Needle roller assembly		
25	VOE784467	1	1						•Needle bearing		PAIR
26	VOE11145202	1	1						•Spacer ring		
27	VOE11037108	1	1						•Spacer ring		
28	VOE11145199	1	1						•Gear		
29	VOE11036892	1	1						•Gear		
30	VOE11145746	1							•Gear		(VOE11145454)
	VOE11145746		1						•Gear		FORW/REAR
31	VOE11419578	1	1						•Gear		
32	VOE914472	1	1						•Snap ring		
33	VOE914486	1	1						•Snap ring		
34	VOE4718008	1	1						•Washer		
35	VOE11997939	2	2						•Roller bearing		
36	VOE11144923	1	1						•Washer		
37	VOE13970949	2	2						•Hexagon screw		
38	VOE941908	2	2						•Spring washer		
39	VOE11038835	3	3						•Piston ring		(VOE11144922)See footnote 2176) TM NO - 11715 TM NO 12008 -
39	VOE11037814	3	3						•Piston ring		See footnote 2176) TM NO 11716 - 12007
40	VOE11145223	1	1						•Thrust washer		
41	VOE11145231	1	1						•Thrust roller assembly		

2176) See Sb Wlo 104 K

VOLVO

Construction Equipment

PROSIS Part Information

Date:	Image id:	Catalogue:	Model:
10/09/2018	**EC266**	**20009**	**L60E**
Brand:	Serial:	Group/Section:	Title:
Volvo	**1001-3355, 60001-61214, 70001-70530**	**421/700**	**Hydraulic clutch rear/4:th speeds 22532**

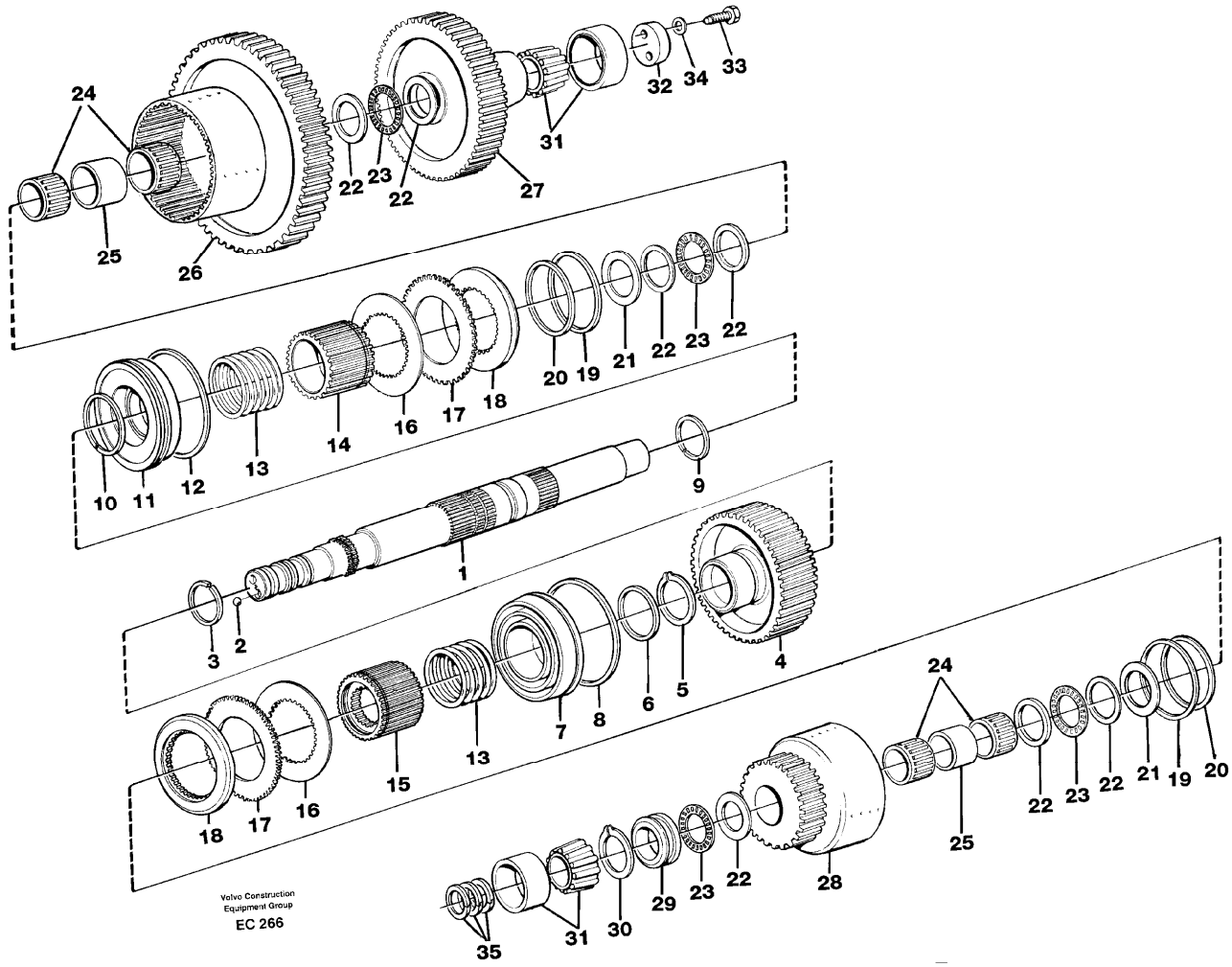

Section option	Kit	Option description
VOE22532		Hytraulic transmission HTE93

Pos	Part	Q1	Q2	Q3	Q4	Q5	PS	Kit	Description	Option(s)	Remark
	VOE11145749	1							Hydraulic clutch		SER NR 10255-
	VOE11145445	1							Hydraulic clutch		SER NR-10254
1	VOE11145513	1							•Clutch shaft		
2	VOE184645	2							•Ball		
3	VOE11145451	1							•Lock ring		
4	VOE4871693	1							•Gear		
5	VOE11145411	1							•Snap ring		

6	VOE4871092	1							•Piston ring		
7	VOE4871070	1							•Piston		
8	VOE4871072	1							•Piston ring		
9	VOE4871154	1							•Piston ring		
10	VOE4871697	1							•Piston ring		
11	VOE4871695	1							•Piston		
12	VOE4871073	1							•Piston ring		
13	VOE4871696	2							•Spring		
14	VOE11036593	1							•Clutch hub		
15	VOE11145453	1							•Clutch hub		
16	VOE11144487	1							•Disc kit		
17	VOE15035800	1							•Disc kit		
18	VOE11037153	REQ							•Pressure plate		
19	VOE4786536	2							•Lock ring		
20	VOE11037147	2							•Lock ring		
21	VOE11037138	2							•Retainer		
22	VOE4871341	7							•Thrust washer		
23	VOE795433	4							•Needle bearing		
24	VOE784467	2							•Needle bearing		
25	VOE11037108	2							•Spacer ring		
26	VOE11037721	1							•Gear		
27	VOE11145185	1							•Gear		
28	VOE11145746	1							•Gear		FORW/REAR
29	VOE4718932	1							•Thrust washer		
30	VOE914472	1							•Snap ring		
31	VOE11997939	2							•Roller bearing		
32	VOE11144923	1							•Washer		
33	VOE13970949	2							•Hexagon screw		
34	VOE941908	2							•Spring washer		
35	VOE11038835	3							•Piston ring		(VOE11144922)See footnote 2176) TM NO - 11715 TM NO 12008 -
35	VOE11037814	3							•Piston ring		See footnote 2176) TM NO 11716 - 12007

2176) See Sb Wlo 104 K

VOLVO

Construction Equipment

PROSIS Part Information

Date:	Image id:	Catalogue:	Model:
10/09/2018	**EC267**	**20009**	**L60E**
Brand:	Serial:	Group/Section:	Title:
Volvo	**1001-3355, 60001-61214, 70001-70530**	**421/750**	**Hydraulic clutch 1:st and 2:nd speeds 22532**

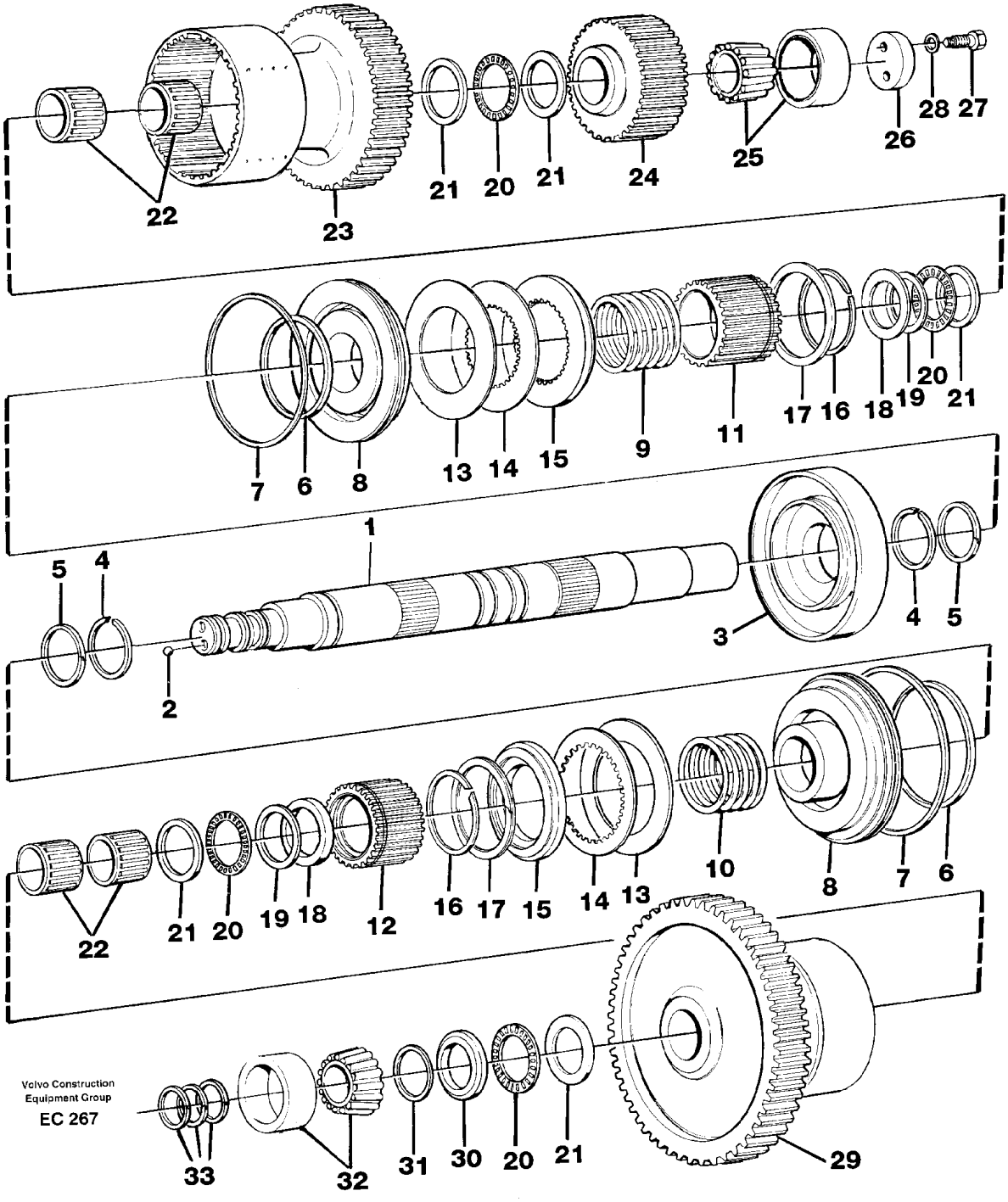

Section option	Kit	Option description

VOE22532		Hytraulic transmission HTE93

Pos	Part	Q1	Q2	Q3	Q4	Q5	PS	Kit	Description	Option(s)	Remark
	VOE11145443	1							Hydraulic clutch		
1	VOE11145441	1							•Clutch shaft		
2	VOE184645	2							•Ball		
3	VOE11037056	1							•Partition wall		
4	VOE11145452	2							•Lock ring		
5	VOE4871048	2							•Piston ring		
6	VOE4871698	2							•Piston ring		
7	VOE4720869	2							•Piston ring		
8	VOE4871699	2							•Piston		
9	VOE4871533	1							•Spring		
10	VOE4871532	1							•Spring		
11	VOE11145103	1							•Clutch hub		
12	VOE11037146	1							•Clutch hub		
13	VOE11144992	1							•Disc kit		
14	VOE11144487	1							•Disc kit		
15	VOE11037153	REQ							•Pressure plate		
16	VOE11037147	2							•Lock ring		
17	VOE4786536	2							•Lock ring		
18	VOE4871337	2							•Retainer		
19	VOE4880972	2							•Thrust washer		
20	VOE4785772	4							•Needle bearing		
21	VOE4871338	5							•Thrust washer		
22	VOE11145380	2							•Needle holder		
23	VOE11145187	1							•Gear		2:ND GEAR
24	VOE11036893	1							•Gear		
25	VOE11144936	1							•Bearing		
26	VOE11144923	1							•Washer		
27	VOE13970949	2							•Hexagon screw		
28	VOE941908	2							•Spring washer		
29	VOE11037723	1							•Gear		1:ST GEAR
30	VOE15175558	1							•Thrust washer		(VOE4718930)
31	VOE13947902	1							•Lock ring		
32	VOE11997939	1							•Roller bearing		
33	VOE11038835	3							•Piston ring		(VOE11144922)See footnote 2176) TM NO - 11715 TM NO 12008 -
33	VOE11037814	3							•Piston ring		See footnote 2176) TM NO 11716 - 12007

2176) See Sb Wlo 104 K

VOLVO

Construction Equipment

PROSIS Part Information

Date:	Image id:	Catalogue:	Model:
10/09/2018	**1003372**	**20009**	**L60E**
Brand:	Serial:	Group/Section:	Title:
Volvo	**1001-3355, 60001-61214, 70001-70530**	**421/960**	**Oil reservoir and strainer HT93**

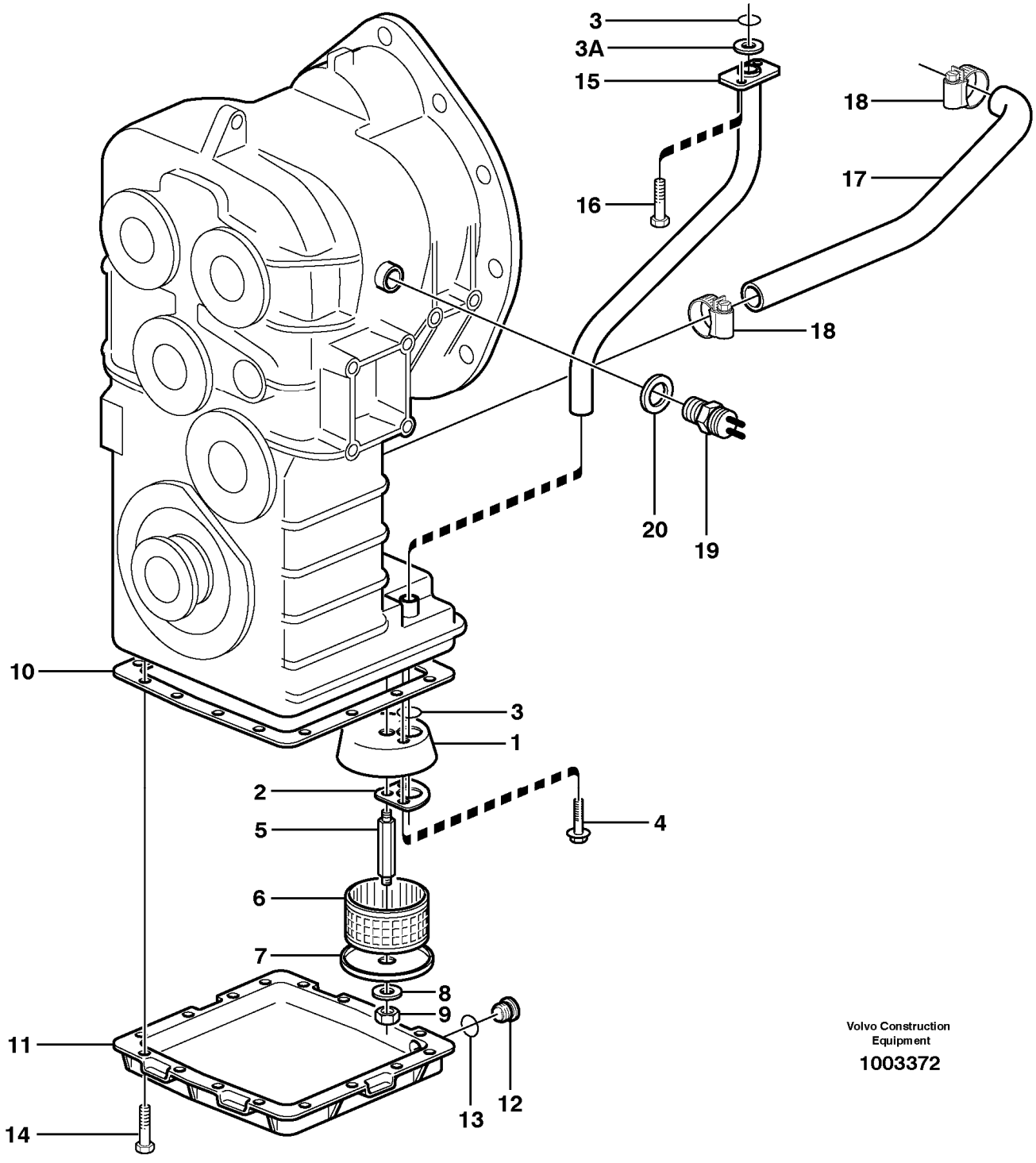

Section option	Kit	Option description

VOE22532		Hytraulic transmission HTE93

Pos	Part	Q1	Q2	Q3	Q4	Q5	PS	Kit	Description	Option(s)	Remark
1	VOE17217949	1							Cover		(VOE4871198)
2	VOE11036023	1							Gasket		
3	VOE944126	2							O-ring		
3A	VOE962546	1							Back-up ring		
4	VOE946440	2							Flange screw		
5	VOE4871199	1							Stud		
6	VOE4710278	1							Strainer		
7	VOE736747	1							End plate		
8	VOE11117464	1							Plain washer		(VOE13960141)HT - 10118
	VOE930840	1							Plain washer		HT 10119 -
9	VOE13945408	1							Nut		
10	VOE11036370	1							Gasket		
11	VOE4871185	1							Cover		
12	VOE11102187	1							Magnetic plug		
13	VOE958228	1							O-ring		
14	VOE13945444	16							Screw		
15	VOE11419262	1							Suction pipe		(VOE4871253)
16	VOE13946173	2							Screw		
17	VOE4939773	1							Return hose		L = 600MM
18	VOE943476	2							Hose clamp		
19	VOE4780941	1							Induction sensor		SE403
20	VOE13947624	1							Plane gasket		(VOE7011998)

VOLVO

Construction Equipment

PROSIS Part Information

Date:	Image id:	Catalogue:	Model:
10/09/2018	**1004607**	**20009**	**L60E**
Brand:	Serial:	Group/Section:	Title:
Volvo	**1001-3355, 60001-61214, 70001-70530**	**436/100**	**Gear box housing with fitting parts 22532, OPEN ROPS**

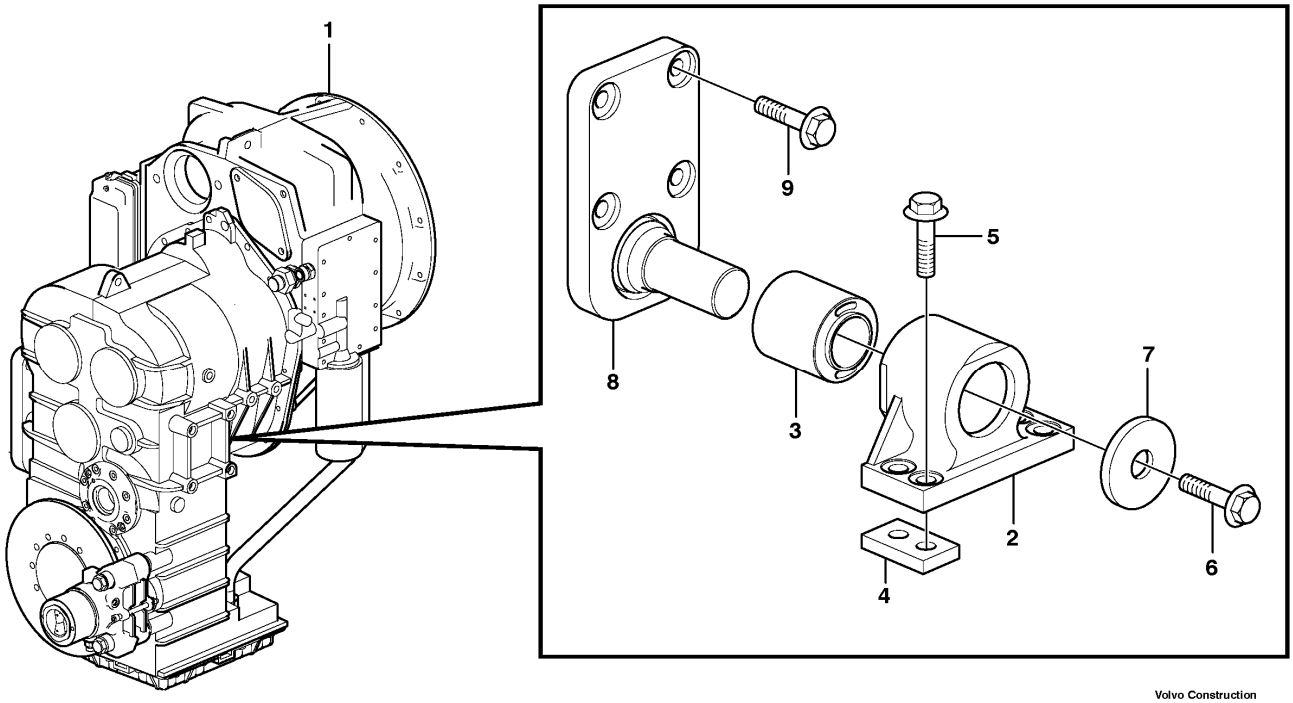

Section option	Kit	Option description
VOE22532		Hytraulic transmission HTE93
VOE33759		Wheel loader L60E OPEN ROPS

Pos	Part	Q1	Q2	Q3	Q4	Q5	PS	Kit	Description	Option(s)	Remark
1		1							Hydr xmsn		22532 HT93
2	VOE11173029	2							Attachment		
3		1					NS		•Anchorage		
4	VOE4898544	4							Nut plate		
5	VOE13968302	8							Flange screw		
6	VOE968435	2							Flange screw		
7	VOE11024597	2							Washer		
8	VOE11173764	2							Attachment		
9	VOE968297	8							Flange screw		

VOLVO

Construction Equipment

PROSIS Part Information

Date:	Image id:	Catalogue:	Model:
10/09/2018	**1004549**	**20009**	**L60E**
Brand:	Serial:	Group/Section:	Title:
Volvo	**1001-3355, 60001-61214, 70001-70530**	**451/100**	**Propeller shafts with fitting parts STD, OPEN ROPS**

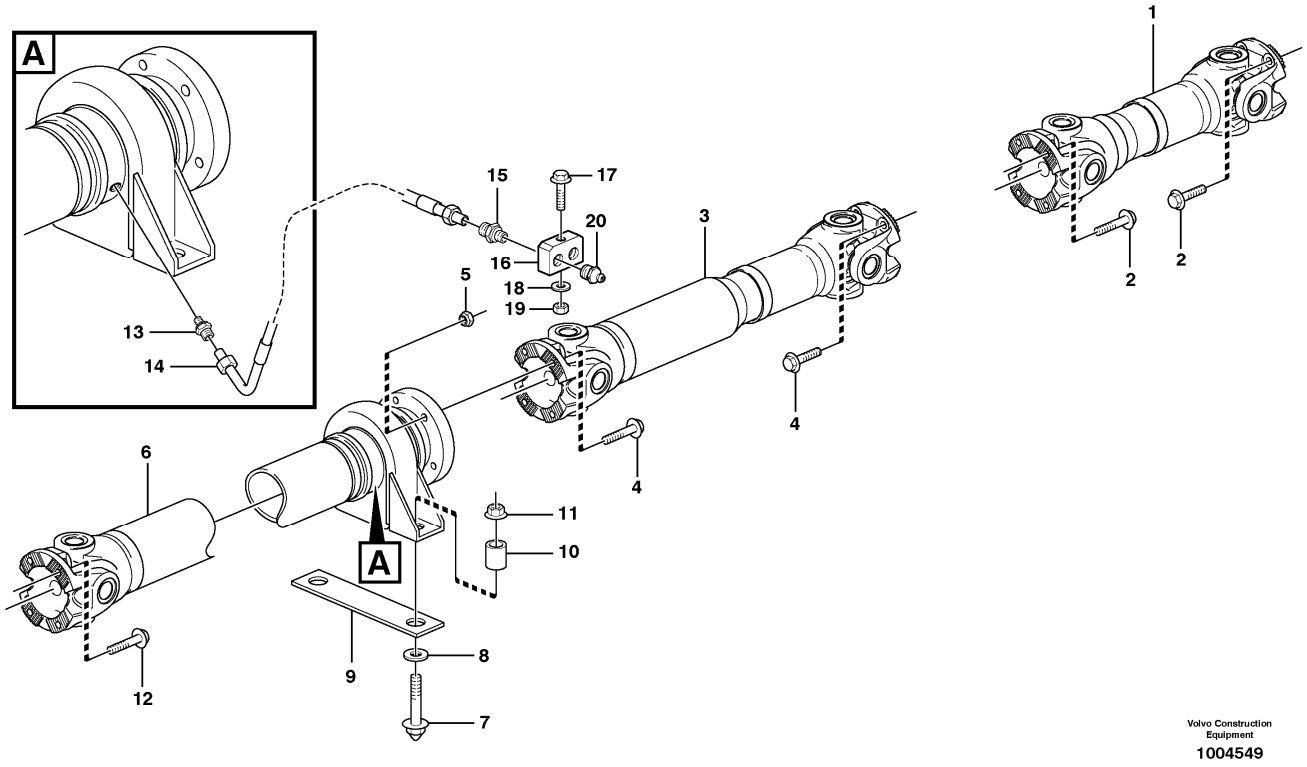

Section option	Kit	Option description
VOE33750		Wheel Loader
VOE33759		Wheel loader L60E OPEN ROPS

Pos	Part	Q1	Q2	Q3	Q4	Q5	PS	Kit	Description	Option(s)	Remark
1	VOE11410846	1					SS		Propeller shaft		See ref 451/150
2	VOE975110	8							Flange screw		
3	VOE11172835	1					SS		Propeller shaft		See ref 451/200
4	VOE975111	8							Flange screw		
5	VOE981315	4							Lock nut		
6	VOE11173086	1							Propeller shaft		See ref 451/250
7	VOE13966366	2							Flange screw		
8	VOE930844	2							Plain washer		
9		2					NS		Shim		ARV SER NO-1913 ASH SER NO-60000
10	VOE4854494	2							Spacer		
11	VOE971100	2							Flange lock nut		
12	VOE975110	4							Flange screw		

13	VOE11027540	2							Nipple		
14	VOE11130675	2							Hose		
15	VOE946089	2							Nipple		
16	VOE11015263	1							Nipple		
17	VOE13965179	1							Screw		
18	VOE11117464	1							Plain washer		(VOE13960141)
19	VOE13945408	1							Nut		
20	VOE11025816	2							Lubricating nipple		
21	VOE4881438	REQ							Cable tie		

VOLVO

Construction Equipment

PROSIS Part Information

Date:	Image id:	Catalogue:	Model:
10/09/2018	**1013096**	**20009**	**L60E**
Brand:	Serial:	Group/Section:	Title:
Volvo	**1001-3355, 60001-61214, 70001-70530**	**451/150**	**Propellershaft rear STD, OPEN ROPS**

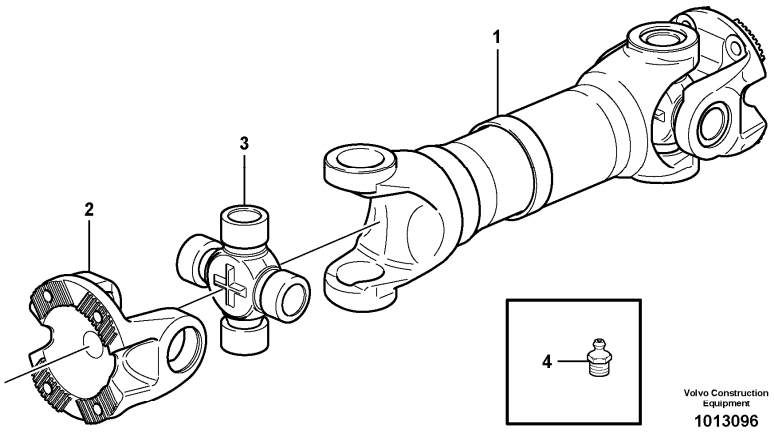

Section option	Kit	Option description
VOE33750		Wheel Loader
VOE33759		Wheel loader L60E OPEN ROPS

Pos	Part	Q1	Q2	Q3	Q4	Q5	PS	Kit	Description	Option(s)	Remark
	VOE11410846	1					SS		Propeller shaft		
1		1					NS		•Propeller shaft		
2	VOE1069507	2							•Flange yoke		
3	VOE11708996	2							•Spider kit		
4	VOE11712222	1							••Lubricating nipple		

VOLVO

Construction Equipment

PROSIS Part Information

Date:	Image id:	Catalogue:	Model:
10/09/2018	**1000706**	**20009**	**L60E**
Brand:	Serial:	Group/Section:	Title:
Volvo	**1001-3355, 60001-61214, 70001-70530**	**451/200**	**Propeller shaft middle STD, OPEN ROPS**

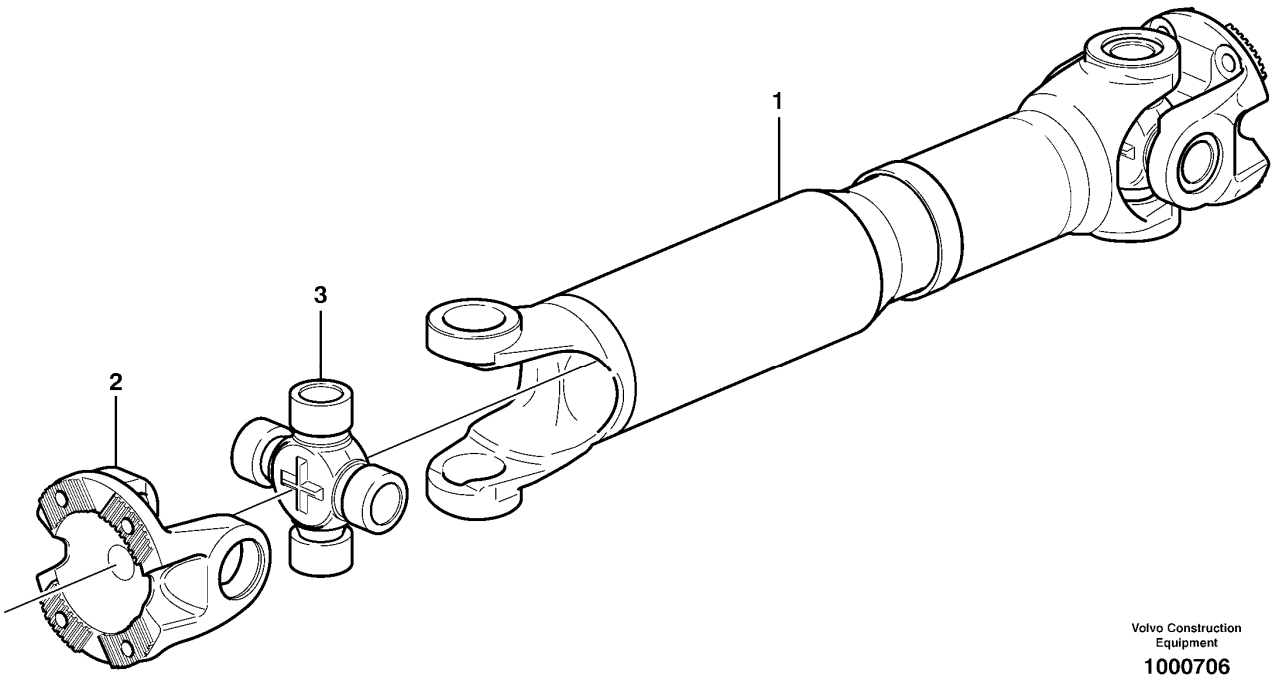

Section option	Kit	Option description
VOE33750		Wheel Loader
VOE33759		Wheel loader L60E OPEN ROPS

Pos	Part	Q1	Q2	Q3	Q4	Q5	PS	Kit	Description	Option(s)	Remark
	VOE11172835	1					SS		Propeller shaft		
1		1					NS		•Propeller shaft		
2	VOE1069507	2							•Flange yoke		
3	VOE11708996	2							•Spider kit		
	VOE11712222	2							••Lubricating nipple		

VOLVO

Construction Equipment

PROSIS Part Information

Date:	Image id:	Catalogue:	Model:
10/09/2018	**1014664**	**20009**	**L60E**
Brand:	Serial:	Group/Section:	Title:
Volvo	**1001-3355, 60001-61214, 70001-70530**	**451/250**	**Power shaft front STD, OPEN ROPS**

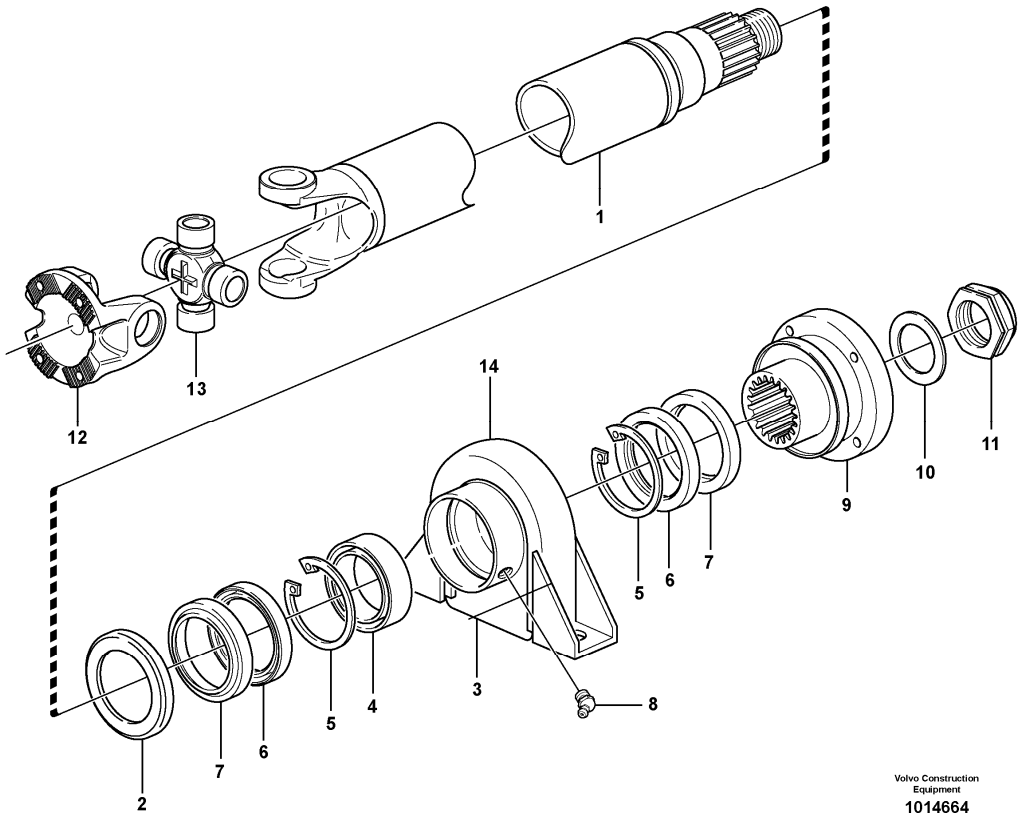

Section option	Kit	Option description
VOE33750		Wheel Loader
VOE33759		Wheel loader L60E OPEN ROPS

Pos	Part	Q1	Q2	Q3	Q4	Q5	PS	Kit	Description	Option(s)	Remark
	VOE11173086	1							Propeller shaft		
1		1					NS		•Propeller shaft		
2	VOE263012	1							•Dust cover		
3	VOE6212888	1							•Support bearing		
4	VOE6212888	1							••Support bearing		
5	VOE914548	2							••Retaining ring		
6	VOE959042	2							••Sealing ring		
7	VOE263005	2							••Protecting ring		
8	VOE13951740	2							••Nipple		

9	VOE11709012	1							•Connection flange		
10	VOE13948269	1							•Washer		
11	VOE13948320	1							•Nut		
12	VOE1069507	1							•Flange yoke		
13	VOE11708996	1							•Spider kit		
	VOE11712222	2							••Lubricating nipple		
14	VOE263006	1							•Clamp		

VOLVO

Construction Equipment

PROSIS Part Information

Date:	Image id:	Catalogue:	Model:
10/09/2018	**1017392**	**20009**	**L60E**
Brand:	Serial:	Group/Section:	Title:
Volvo	**1001-3355, 60001-61214, 70001-70530**	**460/100**	**Planet axles with fitting parts**

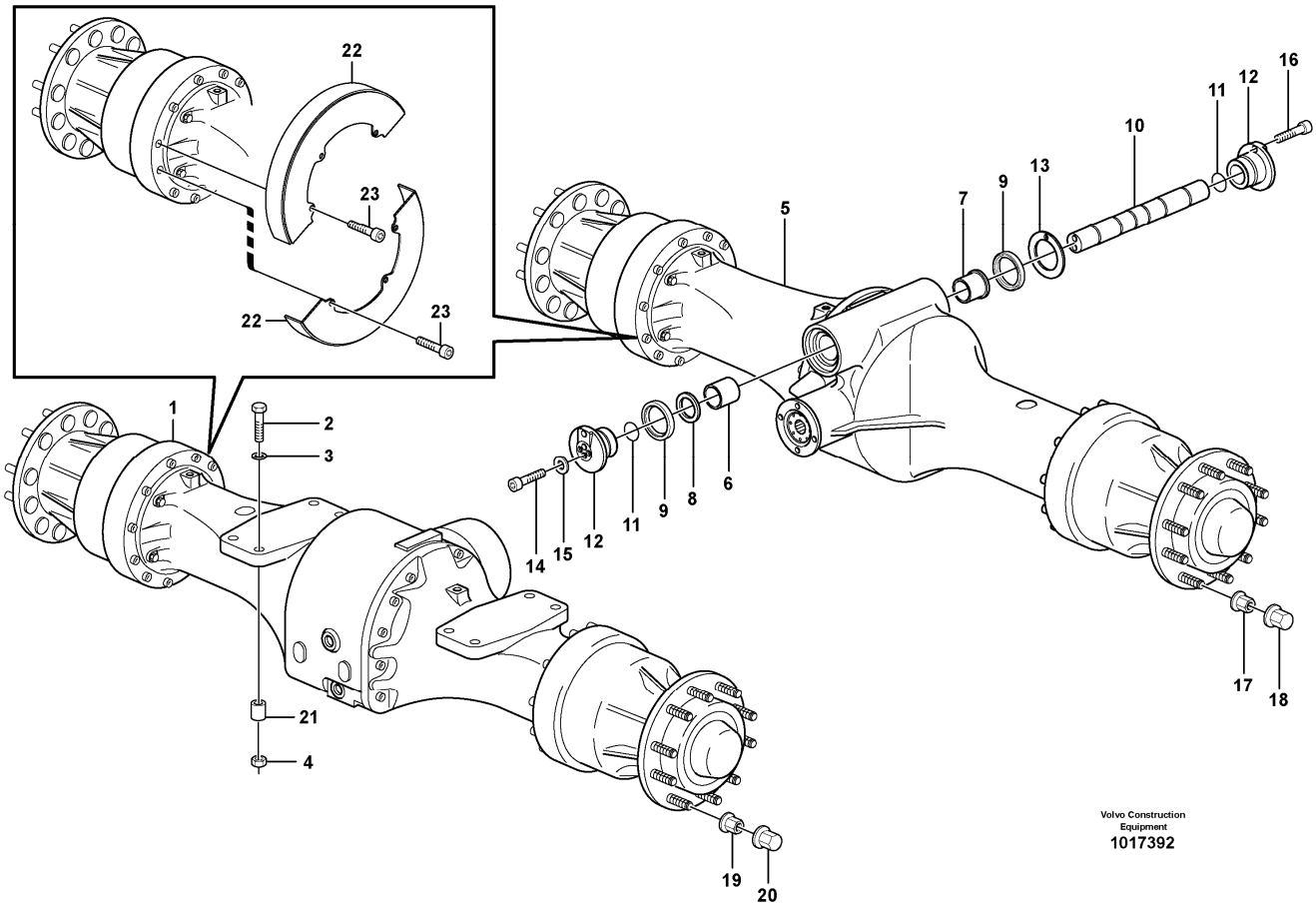

Section option	Kit	Option description
VOE23932		Planetary axle rear, Limited slip. AWB 15 REAR
VOE33750		Wheel Loader
VOE33759		Wheel loader L60E OPEN ROPS
VOE80952		Diff. lock front 100%, Limited Slip rear
VOE82239		Wheel/axle seal guards

Q1-Q5	Option	Option description	
Q1 STD OPEN ROPS			
Q2 82239	VOE82239	Wheel/axle seal guards	
Q3 23932 (80952)	VOE23932	Planetary axle rear, Limited slip. AWB 15 REAR	

Pos	Part	Q1	Q2	Q3	Q4	Q5	PS	Kit	Description	Option(s)	Remark

1	VOE56014	1							Planet shaft		(VOE23929)AWB 15 See ref 461/100, REMAN VOE9000056014
2	VOE13978900	8							Screw		
3	VOE13930885	8							Washer		
4	VOE949732	8							Hexagon nut		
5	VOE56015	1							Planet shaft		(VOE23930)AWB 15 See ref 463/100, REMAN VOE9000056015
5	VOE23932			1					Planet Shaft		AWB 15 See ref 463/100
6	VOE11035379	1		1					Bushing		
7	VOE11035385	1		1					Bushing		
8	VOE15197936	1		1					Washer		(VOE11035427)
9	VOE11035429	2		2					Sealing ring		
10	VOE11035843	1		1					Shaft		
11	VOE925091	2		2					O-ring		
12	VOE11035842	2		2					Sleeve		
13	VOE11090912	REQ		REQ					Shim		THICK=1,0MM
	VOE11090913	REQ		REQ					Shim		THICK=0,35MM
	VOE11090914	REQ		REQ					Shim		THICK=0,1MM
14	VOE949544	4		4					Hex. socket screw		
15	VOE4870206	4		4					Washer		
16	VOE959255	2		2					Hex. socket screw		
17	VOE947972	20		20					Wheel nut		
18	VOE11100354	20		20					Nut cap		
19	VOE947972	20							Wheel nut		
20	VOE11100354	20							Nut cap		
21	VOE13930909	8							Washer		
22	VOE11180540		8						Protection		
23	VOE13947373		24						Screw		

VOLVO

Construction Equipment

PROSIS Part Information

Date:	Image id:	Catalogue:	Model:
10/09/2018	**1004556**	**20009**	**L60E**
Brand:	Serial:	Group/Section:	Title:
Volvo	**1001-3355, 60001-61214, 70001-70530**	**460/150**	**Venting, planetary gear STD, OPEN ROPS**

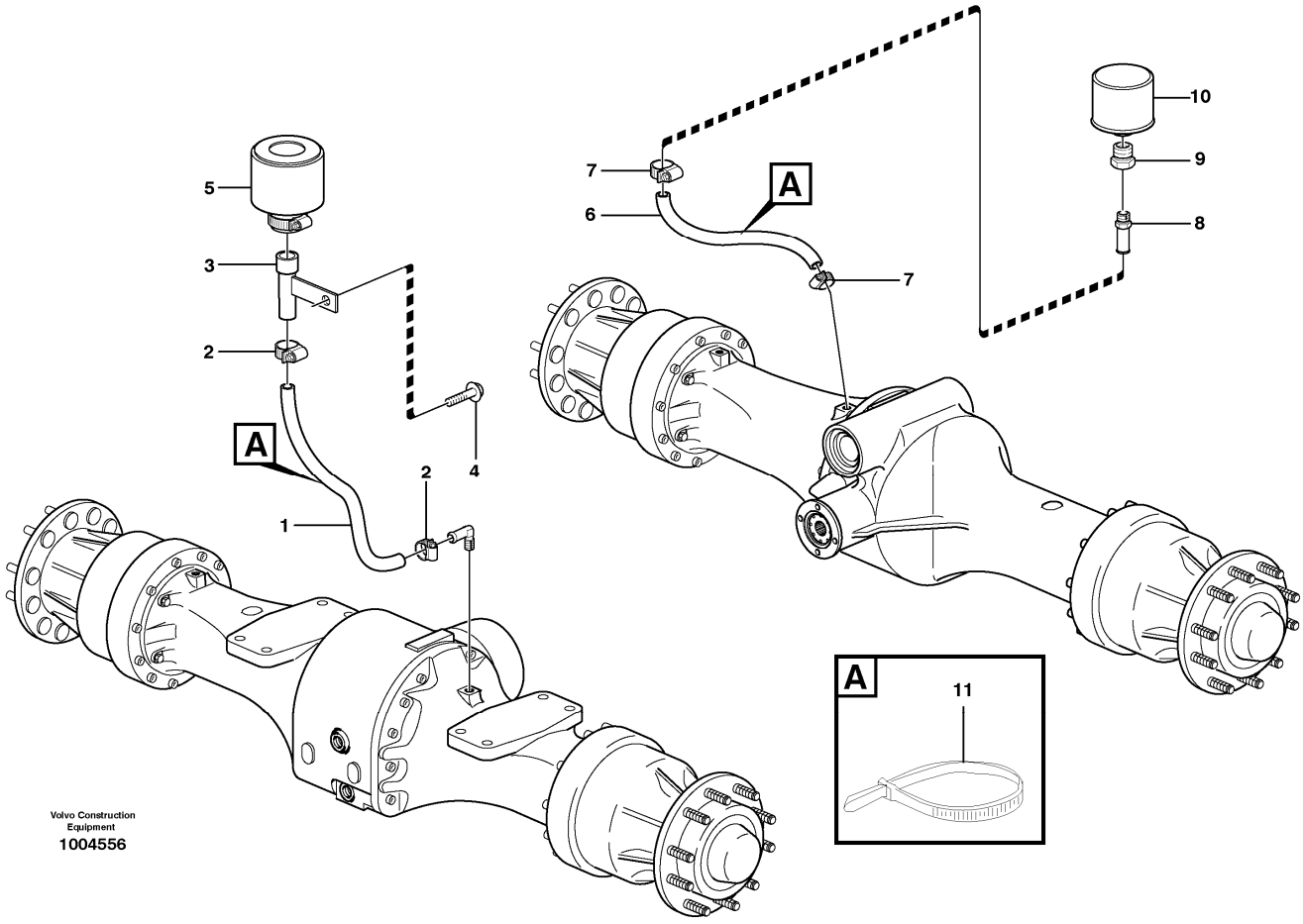

Section option	Kit	Option description
VOE33750		Wheel Loader
VOE33759		Wheel loader L60E OPEN ROPS

Pos	Part	Q1	Q2	Q3	Q4	Q5	PS	Kit	Description	Option(s)	Remark
1	VOE13983629	REQ							Hose		L = 450MM
2	VOE13943472	2							Hose clamp		
3	VOE11132263	1							Attachment bracket		
4	VOE946329	1							Flange screw		
5	VOE11172907	1							Air filter		
6	VOE13961192	REQ							Hydraulic hose		L = 1050MM
7	VOE13943472	2							Hose clamp		
8	VOE11410458	1							Nipple		
9	VOE11055905	1							Nipple		

10	VOE11172907	1							Air filter		
11	VOE4881440	2							Cable tie		

VOLVO

Construction Equipment

PROSIS Part Information

Date:	Image id:	Catalogue:	Model:
10/09/2018	**1004985**	**20009**	**L60E**
Brand:	Serial:	Group/Section:	Title:
Volvo	**1001-3355, 60001-61214, 70001-70530**	**461/100**	**Planetary axle, front 23929**

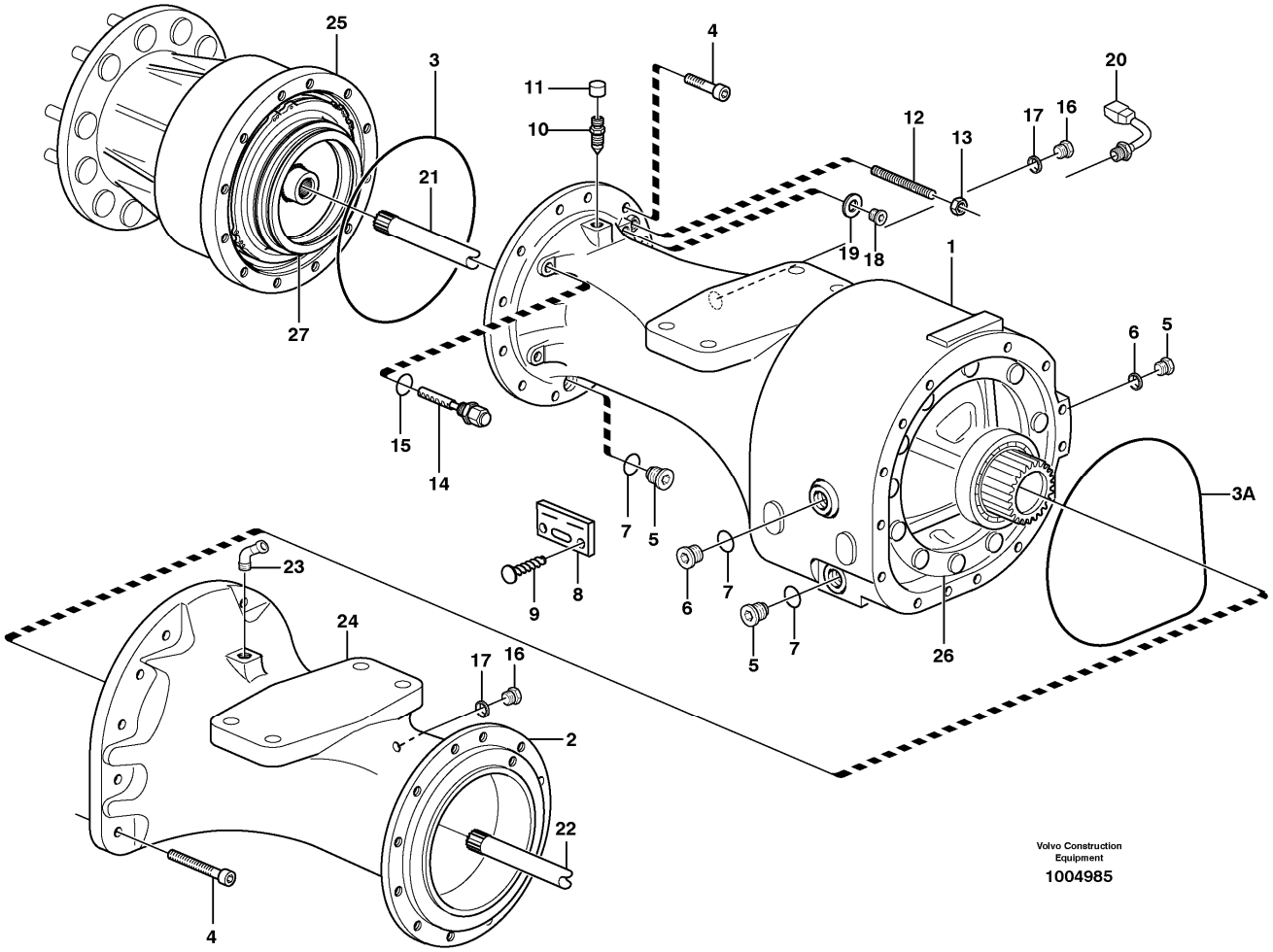

Section option	Kit	Option description
VOE23929		Driving axle AWB 15 FRONT

Pos	Part	Q1	Q2	Q3	Q4	Q5	PS	Kit	Description	Option(s)	Remark
	VOE56014	1							Planet shaft		(VOE23929)AWB 15, REMAN VOE9000056014
1	VOE11168071	1							•Axle casing		
2	VOE11102938	1					SS		•Axle casing		
3	VOE11035032	2							•O-ring		
3A	VOE11035031	2							•O-ring		
4	VOE949544	14							•Hex. socket screw		
5	VOE11102187	3							•Magnetic plug		

6	VOE11034156	1							•Plug		
7	VOE958228	4							•O-ring		
8		1					NS		•Part Plate		
9	VOE950891	2							•Drive screw		
10	VOE4871469	2							•Air vent valve		
11	VOE11034256	2							••Protecting cap		
12	VOE11035586	4							•Screw		
13	VOE955802	4							•Hexagon nut		
14	VOE11102447	2							•Wear Indicator		
15	VOE976970	2							••O-ring		
16	VOE13960632	2							•Plug		
17	VOE13947624	2							•Plane gasket		
18	VOE960630	2							•Plug		
19	VOE976929	2							•Gasket		
20	VOE11419485	1							•Temperature sensor		SE410
21	VOE11035634	1							•Drive shaft		RH
22	VOE11035629	1							•Drive shaft		LH
23	VOE942337	1							•Nipple		
24		1							•Differential lock		See ref 468/100
25		1							•Hub reduction		See ref 461/200
26		1							•Diff Carrier		See ref 461/150
27		1							•Multidisc brake		See ref 516/100

VOLVO

Construction Equipment

PROSIS Part Information

Date:	Image id:	Catalogue:	Model:
10/09/2018	**1004991**	**20009**	**L60E**
Brand:	Serial:	Group/Section:	Title:
Volvo	**1001-3355, 60001-61214, 70001-70530**	**461/150**	**Final drive, front 23929**

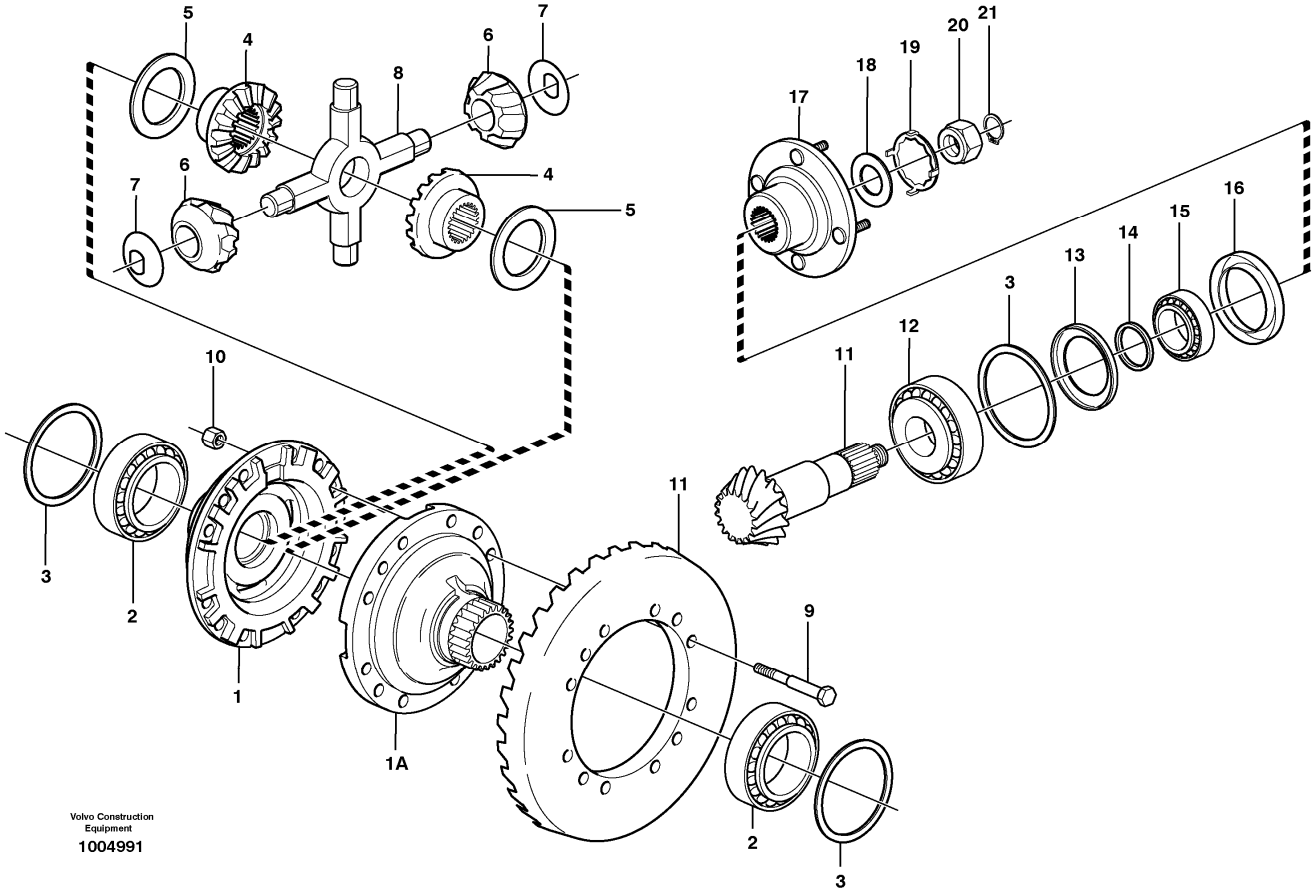

Section option	Kit	Option description
VOE23929		Driving axle AWB 15 FRONT

Pos	Part	Q1	Q2	Q3	Q4	Q5	PS	Kit	Description	Option(s)	Remark
	VOE56014	1							Planet shaft		(VOE23929)AWB 15, REMAN VOE9000056014
1	VOE11102013	1					SS		•Differential housing		TM NO - 14445
1	VOE11168088	1							•Differential housing		TM NO 14446 -
1A	VOE11102914	1							•Differential housing		
2	VOE184688	2							•Roller bearing		
3	VOE11034319	REQ							•Shim		THICK=1,00MM
	VOE11034320	REQ							•Shim		THICK=0,35MM
	VOE11034321	REQ							•Shim		THICK=0,10MM
4	VOE11035625	2							•Differential side gear		

5	VOE11035311	2							•Thrust washer		
6	VOE11102845	4							•Differential side gear		
7	VOE11102856	4							•Thrust washer		
8	VOE11102846	1							•Spider		
9	VOE11035875	12							•Screw		
10	VOE11035850	12							•Nut		
11	VOE15194304	1							•Drive gear set		(VOE11035512)
12	VOE184809	1							•Roller bearing		
13	VOE4870325	1							•Oil plate		
14	VOE11035471	REQ							•Spacer ring		
	VOE11035472	REQ							•Spacer ring		THICK=2,97MM
	VOE11035473	REQ							•Spacer ring		THICK=3,03MM
	VOE11035474	REQ							•Spacer ring		THICK=3,18MM
	VOE11035475	REQ							•Spacer ring		THICK=3,33MM
	VOE11035476	REQ							•Spacer ring		THICK=3,36MM
	VOE11035477	REQ							•Spacer ring		THICK=3,39MM
15	VOE7183405	1							•Roller bearing		
16	VOE4870186	1							•Sealing ring		
17	VOE11168070	1							•Companion flange		
18	VOE4717955	1							•Washer		
19	VOE11035845	1							•Lock washer		ALT
	VOE11035846	1							•Lock washer		ALT
20	VOE11035538	1							•Nut		
21	VOE914472	1							•Snap ring		

VOLVO

Construction Equipment

PROSIS Part Information

Date:	Image id:	Catalogue:	Model:
10/09/2018	**1003733**	**20009**	**L60E**
Brand:	Serial:	Group/Section:	Title:
Volvo	**1001-3355, 60001-61214, 70001-70530**	**461/200**	**Planetary axle, Front 23929**

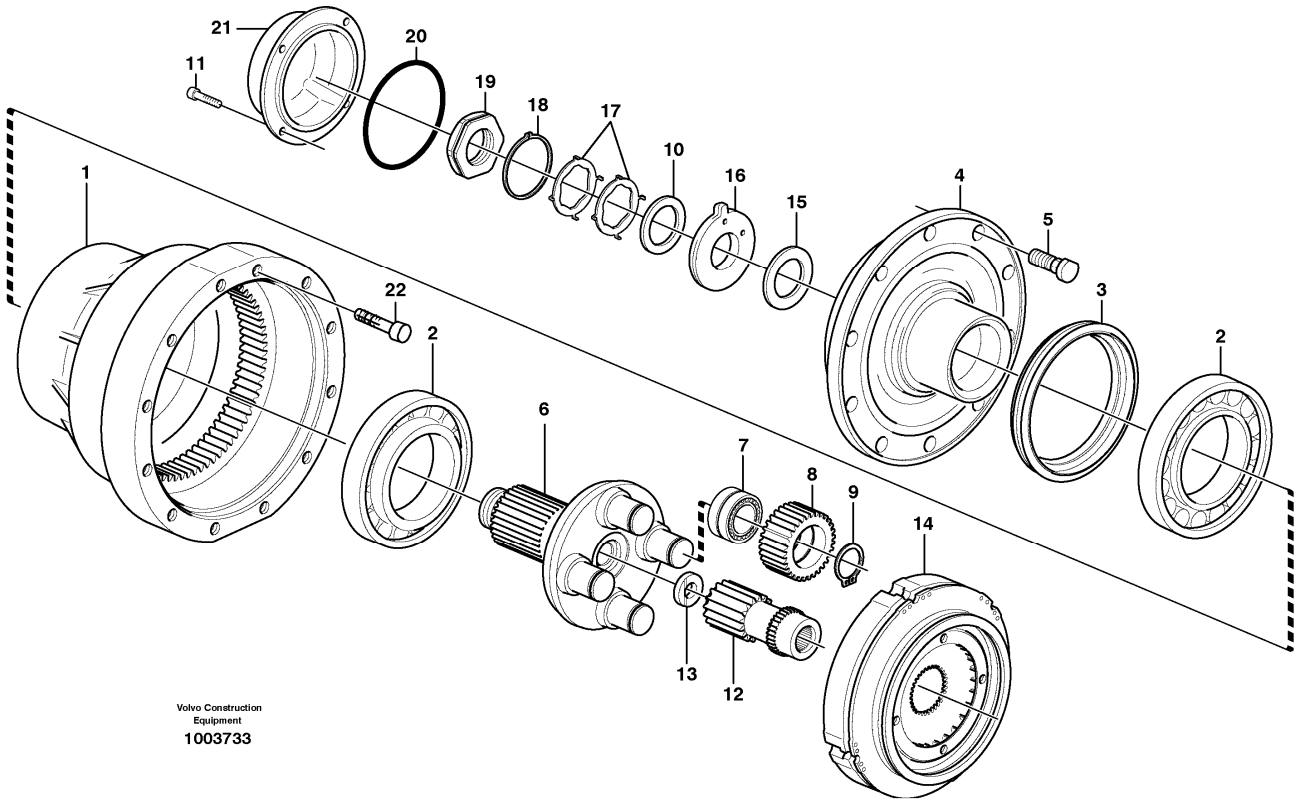

Section option	Kit	Option description
VOE23929		Driving axle AWB 15 FRONT

Pos	Part	Q1	Q2	Q3	Q4	Q5	PS	Kit	Description	Option(s)	Remark
	VOE56014	1							Planet shaft		(VOE23929)AWB 15, REMAN VOE9000056014
1	VOE17204262	2							•Hub retainer		(VOE11168141)
2	VOE184838	4							•Roller bearing		
3	VOE11102861	2							•Sealing ring		
4	VOE15122182	2							•Hub		(VOE11168054)
5	VOE11102586	20							••Wheel stud		
6	VOE17424252	2							•Planet Carrier		(VOE11102858)
7	VOE11035523	8							•Bearing		
8	VOE11035817	8							•Planet gear		
9	VOE914470	8							•Snap ring		
10	VOE1523317	2							•Washer		

11	VOE967634	8							•Hex. socket screw		
12	VOE11035816	2							•Sun gear		
13	VOE11035554	2							•Washer		
14		2							•Multidisc brake		See ref 516/100
15	VOE11102823	REQ							•Shim		THICK=1,0MM
	VOE11034512	REQ							•Shim		THICK=0,35MM
	VOE11034513	REQ							•Shim		THICK=0,25MM
	VOE11034514	REQ							•Shim		THICK=0,20MM
16	VOE11034507	2							•Washer		
17	VOE1523318	REQ							•Lock washer		ALT
	VOE1523319	REQ							•Lock washer		ALT
18	VOE914484	2							•Snap ring		
19	VOE1522293	2							•Nut		
20	VOE13946442	2							•O-ring		
21	VOE11102336	2							•Cover		
22	VOE13968816	24							•Allen Hd Screw		

VOLVO

Construction Equipment

PROSIS Part Information

Date:	Image id:	Catalogue:	Model:
10/09/2018	**1003713**	**20009**	**L60E**
Brand:	Serial:	Group/Section:	Title:
Volvo	**1001-3355, 60001-61214, 70001-70530**	**463/100**	**Planet shaft, rear**

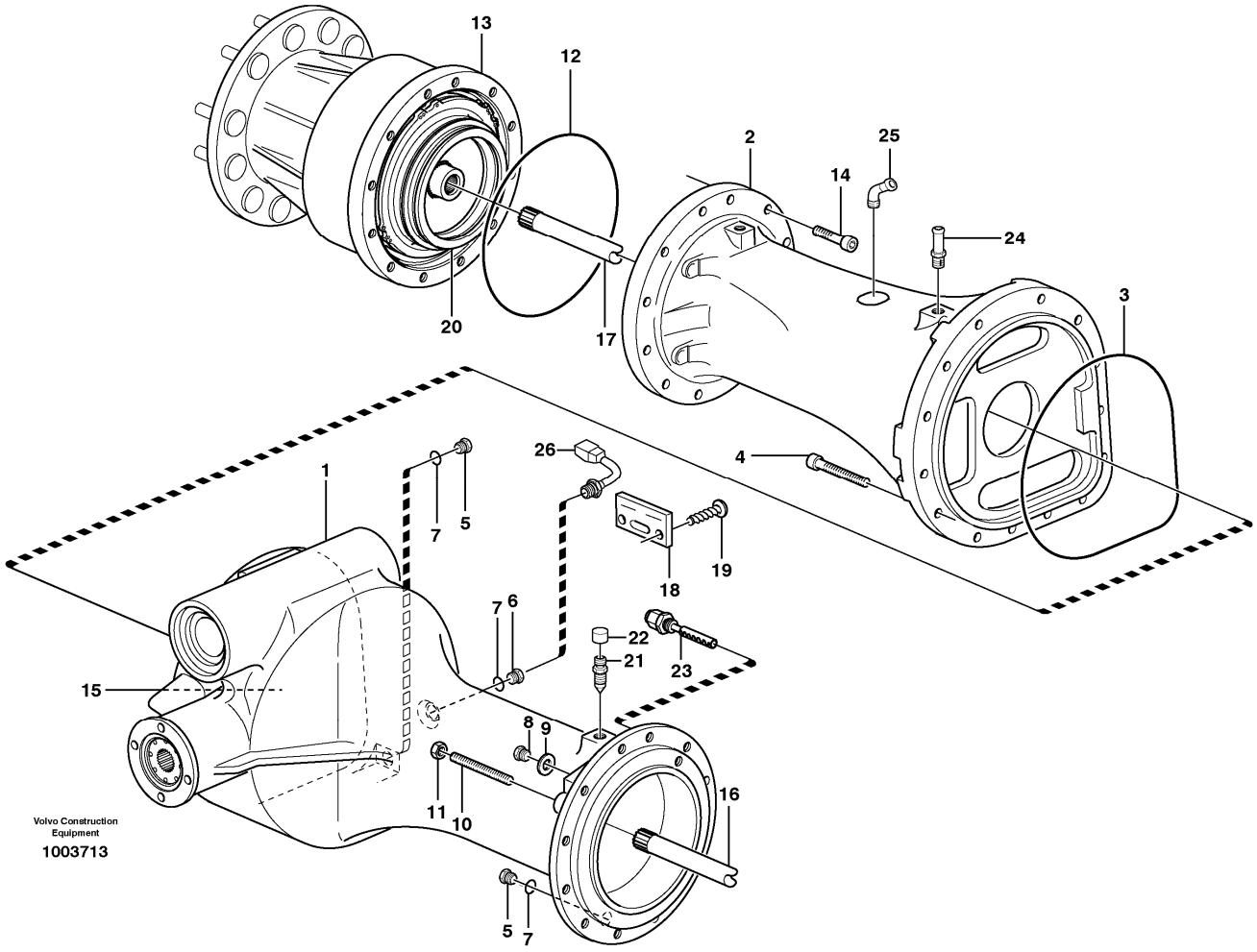

Section option	Kit	Option description
VOE23930		Driving axle AWB 15 REAR
VOE23932		Planetary axle rear, Limited slip. AWB 15 REAR
VOE80952		Diff. lock front 100%, Limited Slip rear

Q1-Q5	Option	Option description	
Q1 23930 STD	VOE23930	Driving axle AWB 15 REAR	
Q2 23932 (80952)	VOE23932	Planetary axle rear, Limited slip. AWB 15 REAR	

Pos	Part	Q1	Q2	Q3	Q4	Q5	PS	Kit	Description	Option(s)	Remark
	VOE56015	1							Planet shaft		(VOE23930)AWB 15, REMAN

											VOE9000056015
	VOE23932		1						Planet Shaft		
1	VOE11168119	1	1						•Axle casing		
2	VOE11035858	1	1				SS		•Axle casing		
3	VOE11035031	1	1						•O-ring		
4	VOE949544	12	12						•Hex. socket screw		
5	VOE11102187	3	3						•Magnetic plug		
6	VOE11034156	2	2						•Plug		
7	VOE958228	5	5						•O-ring		
8	VOE960630	2	2						•Plug		
9	VOE976929	2	2						•Gasket		
10	VOE11035586	4	4						•Screw		
11	VOE955802	4	4						•Hexagon nut		
12	VOE11035032	2	2						•O-ring		
13		2	2						•Planet carrier		See ref 463/200
14	VOE13968816	32							•Allen Hd Screw		
15		1							•Diff Carrier		See ref 463/150
15			1						•Diff Carrier		See ref 463/300
16	VOE11035634	1	1						•Drive shaft		LH
17	VOE11035633	1	1						•Drive shaft		RH
18		1	1				NS		•Sign		
19	VOE950891	2	1						•Drive screw		
20		2	2						•Multidisc brake		See ref 517/100
21	VOE4871469	2	2						•Air vent valve		
22	VOE11034256	2	2						••Protecting cap		
23	VOE11102447	2	2						•Wear Indicator		
	VOE976970	2	2						••O-ring		
24		1	1						Nipple		
25	VOE942337	1	1						Nipple		
26	VOE11419485	1	1						Temperature sensor		SE411

VOLVO

Construction Equipment

PROSIS Part Information

Date:	Image id:	Catalogue:	Model:
10/09/2018	**1003731**	**20009**	**L60E**
Brand:	Serial:	Group/Section:	Title:
Volvo	**1001-3355, 60001-61214, 70001-70530**	**463/150**	**Final drive, rear 23930**

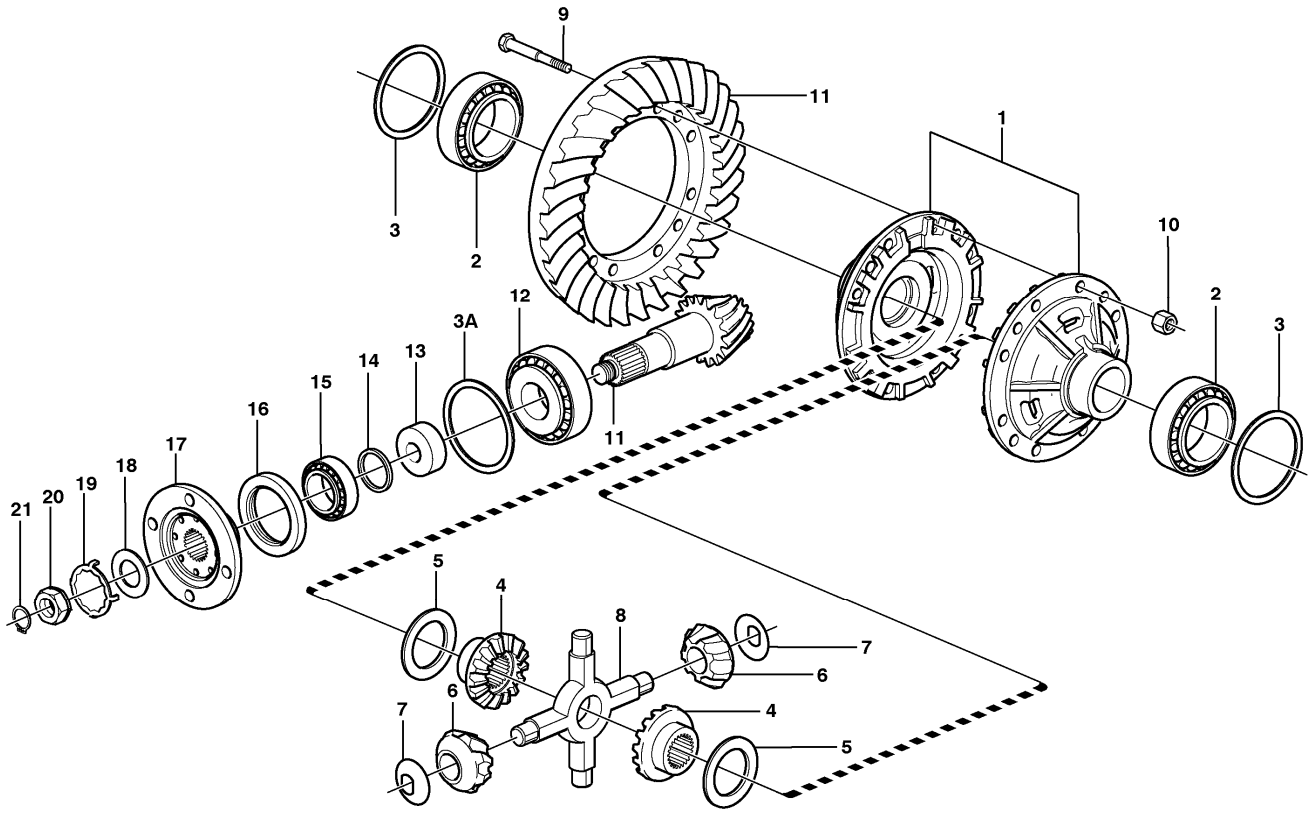

Volvo Construction Equipment
1003731

Section option	Kit	Option description
VOE23930		Driving axle AWB 15 REAR

Pos	Part	Q1	Q2	Q3	Q4	Q5	PS	Kit	Description	Option(s)	Remark
	VOE56015	1							Planet shaft		(VOE23930)AWB 15, REMAN VOE9000056015
1	VOE11102013	2					SS		•Differential housing		TM NO - 14347
1	VOE11168088	2							•Differential housing		TM NO 14348 -
2	VOE184688	2							•Roller bearing		
3	VOE11034319	REQ							•Shim		T = 1,00 MM
	VOE11034320	REQ							•Shim		T = 0,35 MM
	VOE11034321	REQ							•Shim		T = 0,10 MM
3A	VOE4870325	1							Oil plate		
4	VOE11035625	2							•Differential side gear		

5	VOE11035311	2							•Thrust washer		
6	VOE11102845	4							•Differential side gear		
7	VOE11102856	4							•Thrust washer		
8	VOE11102846	1							•Spider		
9	VOE11035875	12							•Screw		
10	VOE11035850	12							•Nut		
11	VOE15194307	1							•Drive gear set		(VOE11035515)
		1					NS		••Drive pinion		
		1					NS		••Crown wheel		
12	VOE184809	1							•Roller bearing		
13	VOE11168042	1							•Spacer sleeve		
14	VOE11035471	REQ							•Spacer ring		THICK=2,94MM
	VOE11035472	REQ							•Spacer ring		THICK=2,97MM
	VOE11035473	REQ							•Spacer ring		THICK=3,03MM
	VOE11035474	REQ							•Spacer ring		THICK=3,18MM
	VOE11035475	REQ							•Spacer ring		THICK=3,33MM
	VOE11035476	REQ							•Spacer ring		THICK=3,36MM
	VOE11035477	REQ							•Spacer ring		THICK=3,39MM
15	VOE7183405	1							•Roller bearing		
16	VOE4870186	1							•Sealing ring		
17	VOE11168070	1							•Companion flange		
18	VOE4717955	1							•Washer		
19	VOE11035845	1							•Lock washer		ALT
	VOE11035846	1							•Lock washer		ALT
20	VOE11035538	1							•Nut		
21	VOE914472	1							•Snap ring		

VOLVO

Construction Equipment

PROSIS Part Information

Date:	Image id:	Catalogue:	Model:
10/09/2018	**1004996**	**20009**	**L60E**
Brand:	Serial:	Group/Section:	Title:
Volvo	**1001-3355, 60001-61214, 70001-70530**	**463/200**	**Planetary axle, rear 23930**

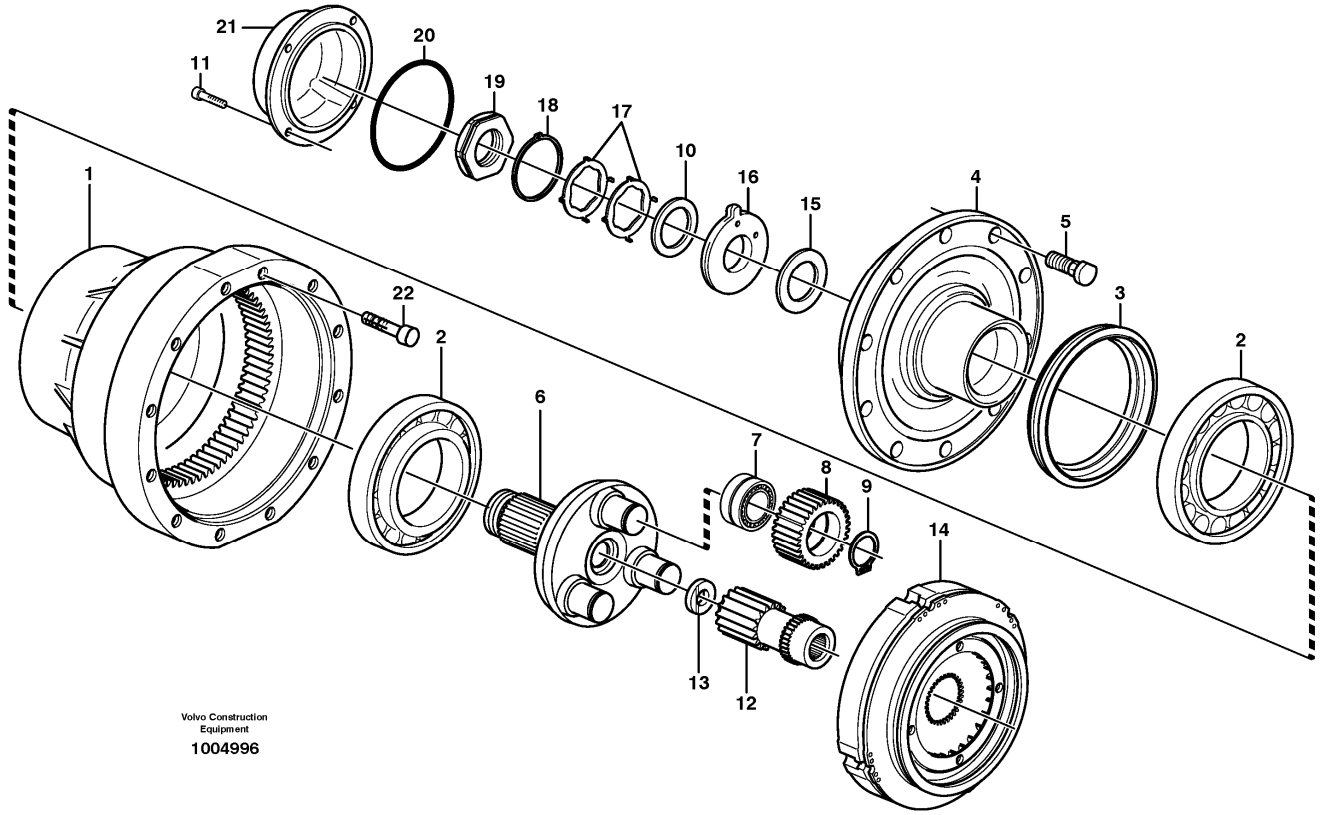

Section option	Kit	Option description
VOE23930		Driving axle AWB 15 REAR

Pos	Part	Q1	Q2	Q3	Q4	Q5	PS	Kit	Description	Option(s)	Remark
	VOE56015	1							Planet shaft		(VOE23930)AWB 15, REMAN VOE9000056015
1	VOE17204262	2							•Hub retainer		(VOE11168141)
2	VOE184838	4							•Roller bearing		
3	VOE11102861	2							•Sealing ring		
4	VOE15122182	2							•Hub		(VOE11168054)
5	VOE11102586	20							••Wheel stud		
6	VOE17415173	2							•Planet Carrier		(VOE11102872)
7	VOE11035523	6							•Bearing		
8	VOE11035817	6							•Planet gear		
9	VOE914470	6							•Snap ring		
10	VOE1523317	2							•Washer		
11	VOE967634	8							•Hex. socket screw		

12	VOE11035816	2							•Sun gear		
13	VOE11035554	2							•Washer		
14		2							•Multidisc brake		See ref 517/100
15	VOE11102823	REQ							•Shim		THICK=1,0MM
	VOE11034512	REQ							•Shim		THICK=0,35MM
	VOE11034513	REQ							•Shim		THICK=0,25MM
	VOE11034514	REQ							•Shim		THICK=0,20MM
16	VOE11034507	2							•Washer		
17	VOE1523318	REQ							•Lock washer		ALT
	VOE1523319	REQ							•Lock washer		ALT
18	VOE914484	2							•Snap ring		
19	VOE1522293	2							•Nut		
20	VOE13946442	2							•O-ring		
21	VOE11102336	2							•Cover		
22	VOE13968816	24							•Allen Hd Screw		

VOLVO

Construction Equipment

PROSIS Part Information

Date:	Image id:	Catalogue:	Model:
10/09/2018	**1003733**	**20009**	**L60E**
Brand:	Serial:	Group/Section:	Title:
Volvo	**1001-3355, 60001-61214, 70001-70530**	**463/250**	**Planetary axle, rear 23932 (80952)**

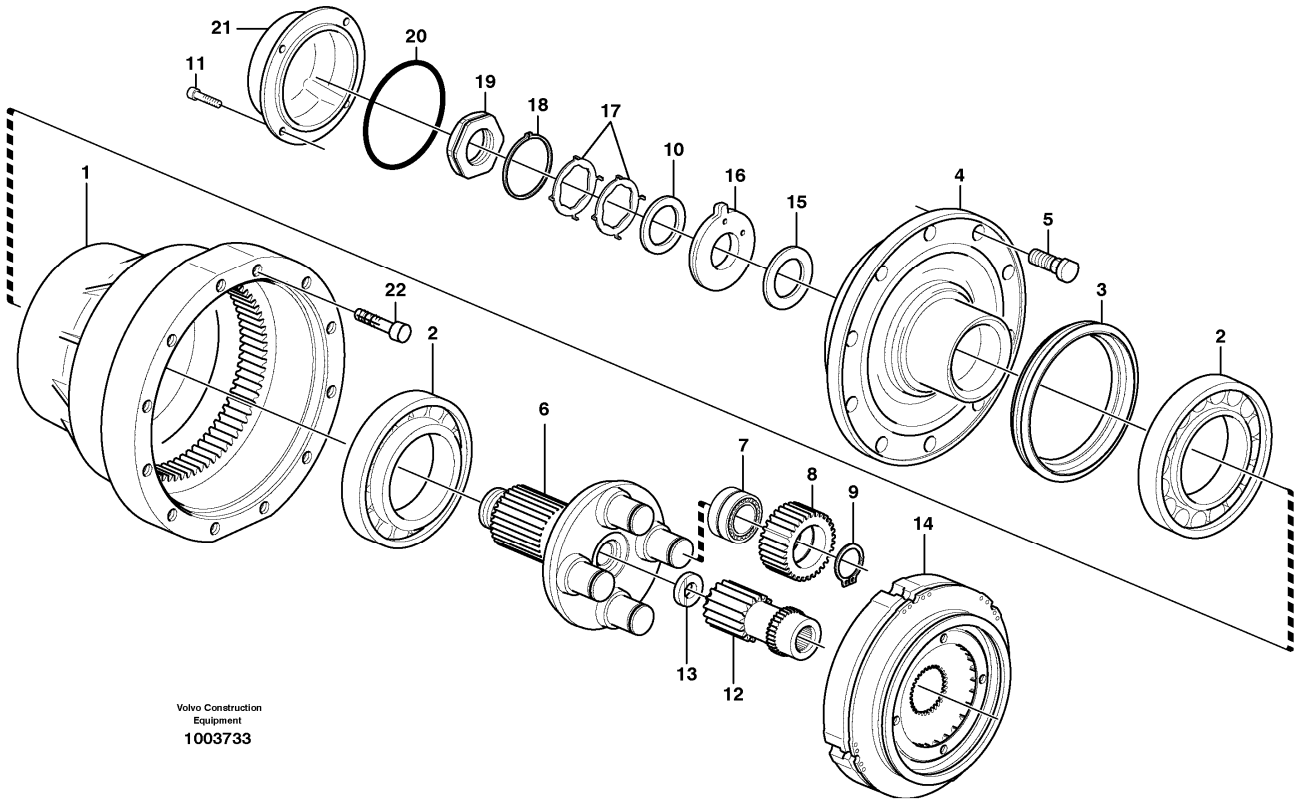

Section option	Kit	Option description
VOE23932		Planetary axle rear, Limited slip. AWB 15 REAR
VOE80952		Diff. lock front 100%, Limited Slip rear

Pos	Part	Q1	Q2	Q3	Q4	Q5	PS	Kit	Description	Option(s)	Remark
	VOE23932	1							Planet Shaft		AWB 15
1	VOE17204262	2							•Hub retainer		(VOE11168141)
2	VOE184838	4							•Roller bearing		
3	VOE11102861	2							•Sealing ring		
4	VOE11168144	2							•Hub		
5	VOE11102586	32							••Wheel stud		
6	VOE17424252	2							•Planet Carrier		(VOE11102858)
7	VOE11035523	8							•Bearing		
8	VOE11035817	8							•Planet gear		
9	VOE914470	8							•Snap ring		
10	VOE1523317	2							•Washer		
11	VOE967634	8							•Hex. socket screw		

12	VOE11035816	2							•Sun gear		
13	VOE11035554	2							•Washer		
14		2							•Multidisc brake		See ref 517/100
15	VOE11102823	REQ							•Shim		THICK=1,0MM
	VOE11034512	REQ							•Shim		THICK=0,35MM
	VOE11034513	REQ							•Shim		THICK=0,25MM
	VOE11034514	REQ							•Shim		THICK=0,20MM
16	VOE11034507	2							•Washer		
17	VOE1523318	REQ							•Lock washer		ALT
	VOE1523319	REQ							•Lock washer		ALT
18	VOE914484	2							•Snap ring		
19	VOE1522293	2							•Nut		
20	VOE13946442	2							•O-ring		
21	VOE11102336	2							•Cover		
22	VOE13968816	32							•Allen Hd Screw		

VOLVO

Construction Equipment

PROSIS Part Information

Date:	Image id:	Catalogue:	Model:
10/09/2018	**EC244**	**20009**	**L60E**
Brand:	Serial:	Group/Section:	Title:
Volvo	**1001-3355, 60001-61214, 70001-70530**	**463/300**	**Final drive, rear 23932 (80952)**

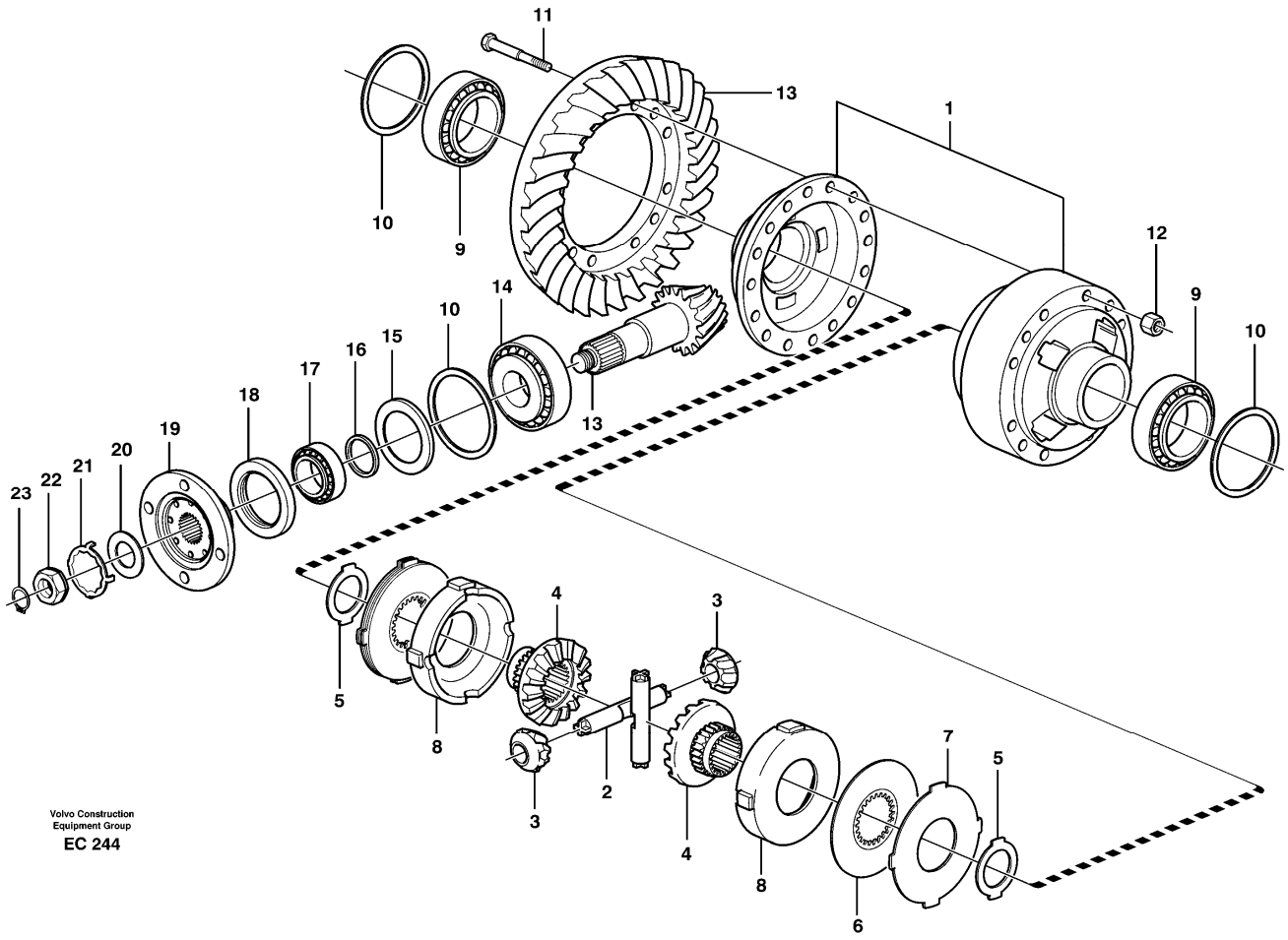

Section option	Kit	Option description
VOE23932		Planetary axle rear, Limited slip. AWB 15 REAR
VOE80952		Diff. lock front 100%, Limited Slip rear

Pos	Part	Q1	Q2	Q3	Q4	Q5	PS	Kit	Description	Option(s)	Remark
	VOE23932	1							Planet Shaft		AWB15
1	VOE11168066	1							•Differential		REMAN VOE9011168066
2	VOE11712143	2							••Spider		
3	VOE11712141	4							••Differential side gear		
4	VOE11712140	2							••Differential side gear		
5	VOE11701900	2							••Thrust washer		

6	VOE11711999	4							••Friction disc		
7	VOE11712000	REQ							••Friction plate		
	VOE11712137	REQ							••Friction plate		
	VOE11712138	REQ							••Friction plate		
8	VOE11712139	2							••Plate		
9	VOE184688	2							•Roller bearing		
10	VOE11034319	REQ							•Shim		THICK=1,00MM
	VOE11034320	REQ							•Shim		THICK=0,35MM
	VOE11034321	REQ							•Shim		THICK=0,10MM
11	VOE11035998	12							•Screw		
12	VOE11035850	12							•Nut		
13	VOE15194307	1							•Drive gear set		(VOE11035515)
13		1					NS		••Drive pinion		
13		1					NS		••Crown wheel		
14	VOE184809	1							•Roller bearing		
15	VOE4870325	1							•Oil plate		
16	VOE11035471	REQ							•Spacer ring		
	VOE11035472	REQ							•Spacer ring		THICK=2,97MM
	VOE11035473	REQ							•Spacer ring		THICK=3,03MM
	VOE11035474	REQ							•Spacer ring		THICK=3,18MM
	VOE11035475	REQ							•Spacer ring		THICK=3,33MM
	VOE11035476	REQ							•Spacer ring		THICK=3,36MM
	VOE11035477	REQ							•Spacer ring		THICK=3,39MM
17	VOE7183405	1							•Roller bearing		
18	VOE4870186	1							•Sealing ring		
19	VOE11168070	1							•Companion flange		
20	VOE4717955	1							•Washer		
21	VOE11035845	1							•Lock washer		ALT
	VOE11035846	1							•Lock washer		ALT
22	VOE11035538	1							•Nut		
23	VOE914472	1							•Snap ring		

VOLVO

Construction Equipment

PROSIS Part Information

Date:	Image id:	Catalogue:	Model:
10/09/2018	**1008797**	**20009**	**L60E**
Brand:	Serial:	Group/Section:	Title:
Volvo	**1001-3355, 60001-61214, 70001-70530**	**468/100**	**Differential lock**

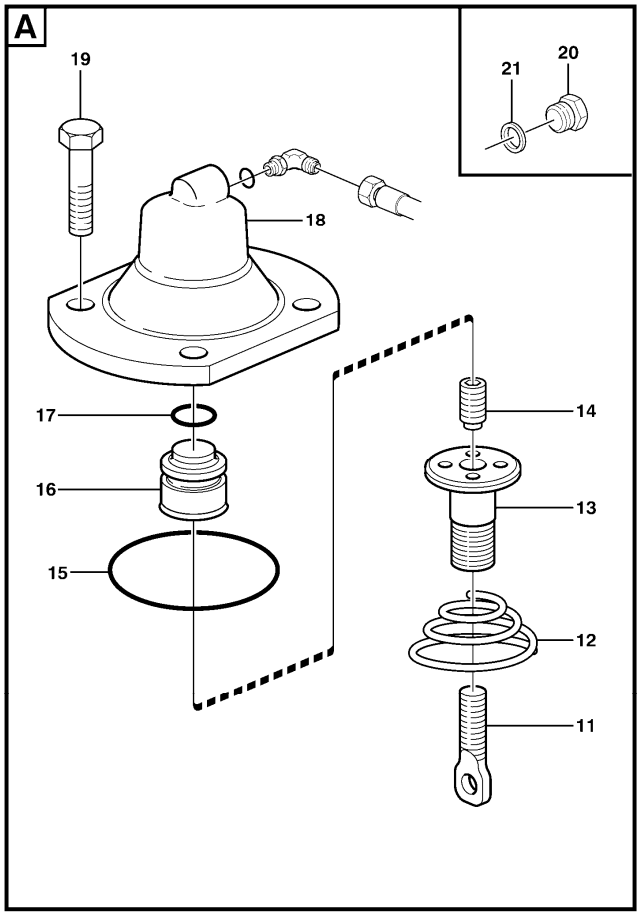

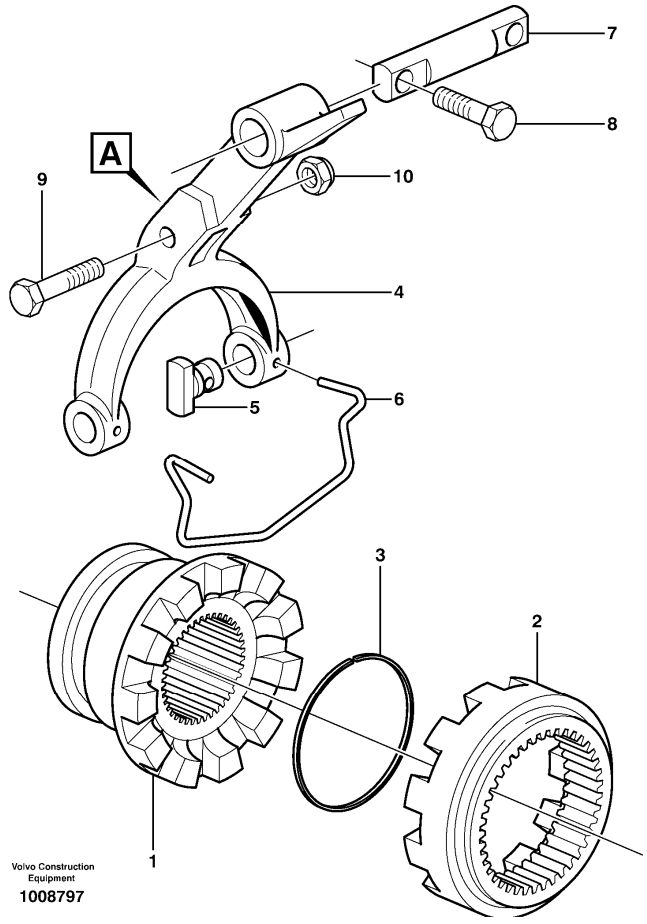

Section option	Kit	Option description
VOE23929		Driving axle AWB 15 FRONT

Q1-Q5	Option	Option description	
Q1 23929	VOE23929	Driving axle AWB 15 FRONT	

Pos	Part	Q1	Q2	Q3	Q4	Q5	PS	Kit	Description	Option(s)	Remark
	VOE56014								Planet shaft		(VOE23929) See ref 461/100, REMAN VOE9000056014
1	VOE11168154	1							•Dog clutch		(VOE4870143)
2	VOE11168155	1							•Dog clutch		(VOE11034137)
3	VOE4881197	1							•Lock ring		
4	VOE11035849	1							•Shift Yoke		
5	VOE1523087	2							•Pin		

6	VOE4870121	1							•Lock brace		
7	VOE11035616	1							•Selector rail		
8	VOE13948060	2							•Screw		
9	VOE13947760	1							•Screw		
10	VOE948645	1							•Flange lock nut		
11	VOE11035445	1							•Selector bar		
12	VOE1523094	1							•Return spring		
13	VOE383971	1							•Diaphragm sleeve		
14	VOE13962985	1							•Set screw		
15	VOE925074	1							•O-ring		
16	VOE11102799	1							•Piston		
17	VOE925059	1							•O-ring		
18	VOE11102798	1							•Cover		
19	VOE946440	4							•Flange screw		
20	VOE960630	1							Plug		
21	VOE976929	1							Gasket		

VOLVO

Construction Equipment

PROSIS Part Information

Date:	Image id:	Catalogue:	Model:
10/09/2018	**1017837**	**20009**	**L60E**
Brand:	Serial:	Group/Section:	Title:
Volvo	**1001-3355, 60001-61214, 70001-70530**	**468/150**	**Differential lock, hydraulic line STD, OPEN ROPS,**

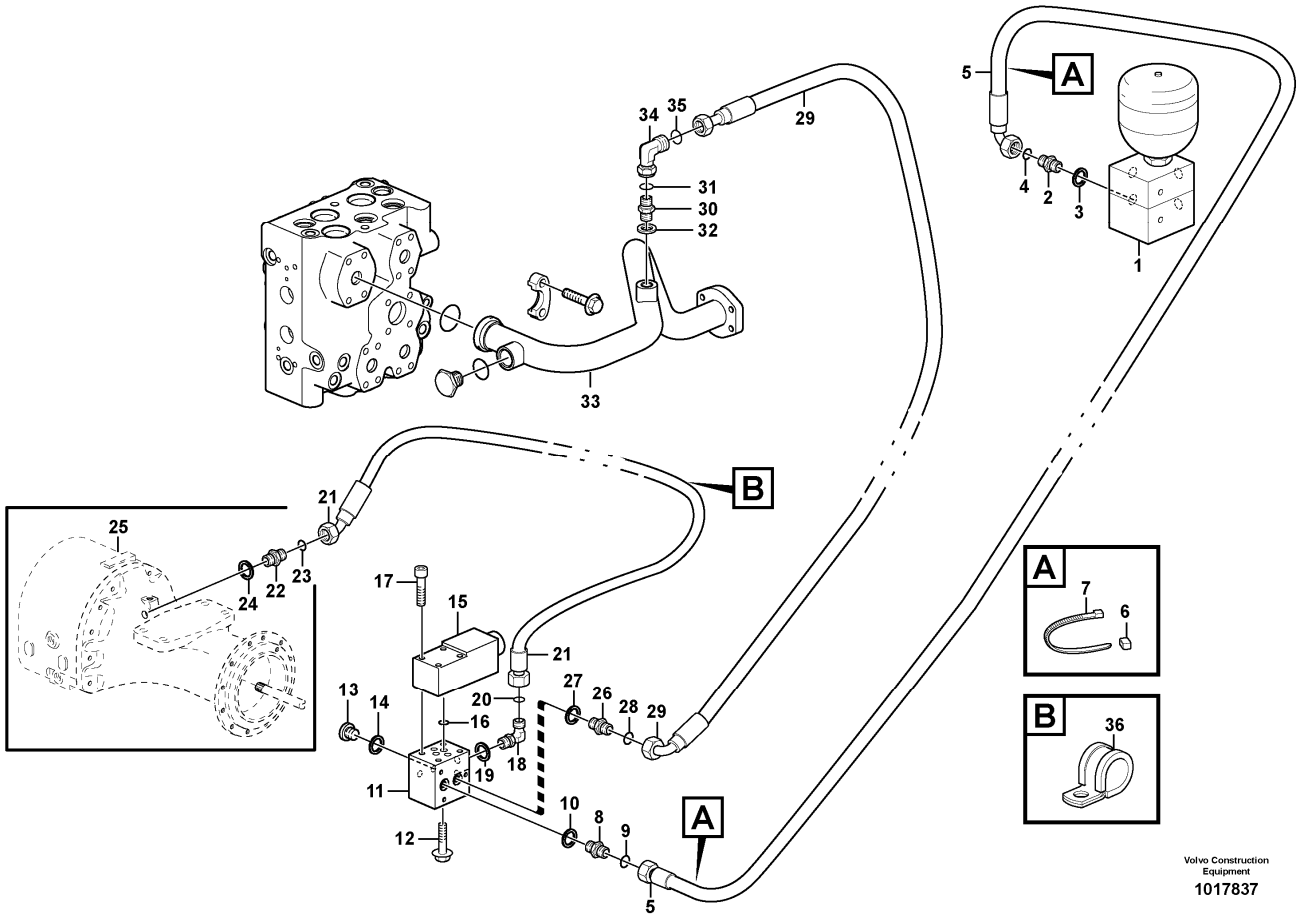

Section option	Kit	Option description
VOE33750		Wheel Loader
VOE33759		Wheel loader L60E OPEN ROPS

Q1-Q5	Option	Option description	
Q1 33750 33759 82698	VOE33750	Wheel Loader	

Pos	Part	Q1	Q2	Q3	Q4	Q5	PS	Kit	Description	Option(s)	Remark
1		1							Connection block		See ref 914/100
2	VOE14345423	1							Nipple		
3	VOE14211856	1							•Sealing ring		
4	VOE990737	1							•O-ring		
5	VOE936655	1							Hose assembly		L = 1800MM
5	VOE11410581	1							Hose assembly	VOE82076	

6	VOE4881457	2							Marking sleeve		GRÖN/GREEN
7	VOE4881438	2							Cable tie		
8	VOE13933897	1							Nipple		
9	VOE990937	1							•O-ring		
10	VOE14211856	1							•Sealing ring		
11	VOE4974291	1							Connection block		
12	VOE13946173	1							Screw		
13	VOE914390	3							Plug		
14	VOE14013067	3							Sealing washer		
15	VOE11173166	1							Solenoid valve		MA407
	VOE11708930	1							•Magnet		
16	VOE11993637	1							•Sealing kit		
17	VOE959193	4							Hex. socket screw		
18	VOE13933913	1							Elbow nipple		
19	VOE14211856	1							•Sealing ring		
20	VOE990737	1							•O-ring		
21	VOE11163103	1							Hose assembly		L = 1050MM
22	VOE14345423	1							Nipple		
23	VOE990737	1							•O-ring		
24	VOE14211856	1							•Sealing ring		
25		1							Front axle		See ref 461/100
26	VOE13933897	1							Nipple		
27	VOE14211856	1							•Sealing ring		
28	VOE990737	1							•O-ring		
29	VOE936702	1							Hose assembly		L = 600MM
30	VOE13933855	1							Nipple		
31	VOE990737	1							•O-ring		
32	VOE14213676	1							•Sealing ring		
33		1							Return Line		See ref 911/400
34	VOE13933900	1							Elbow nipple		
35	VOE990737	1							•O-ring		
36	VOE952631	1							Clamp		

VOLVO

Construction Equipment

PROSIS Part Information

Date:	Image id:	Catalogue:	Model:
10/09/2018	**1013290**	**20009**	**L60E**
Brand:	Serial:	Group/Section:	Title:
Volvo	**1001-3355, 60001-61214, 70001-70530**	**468/200**	**Controls, differential lock 82698**

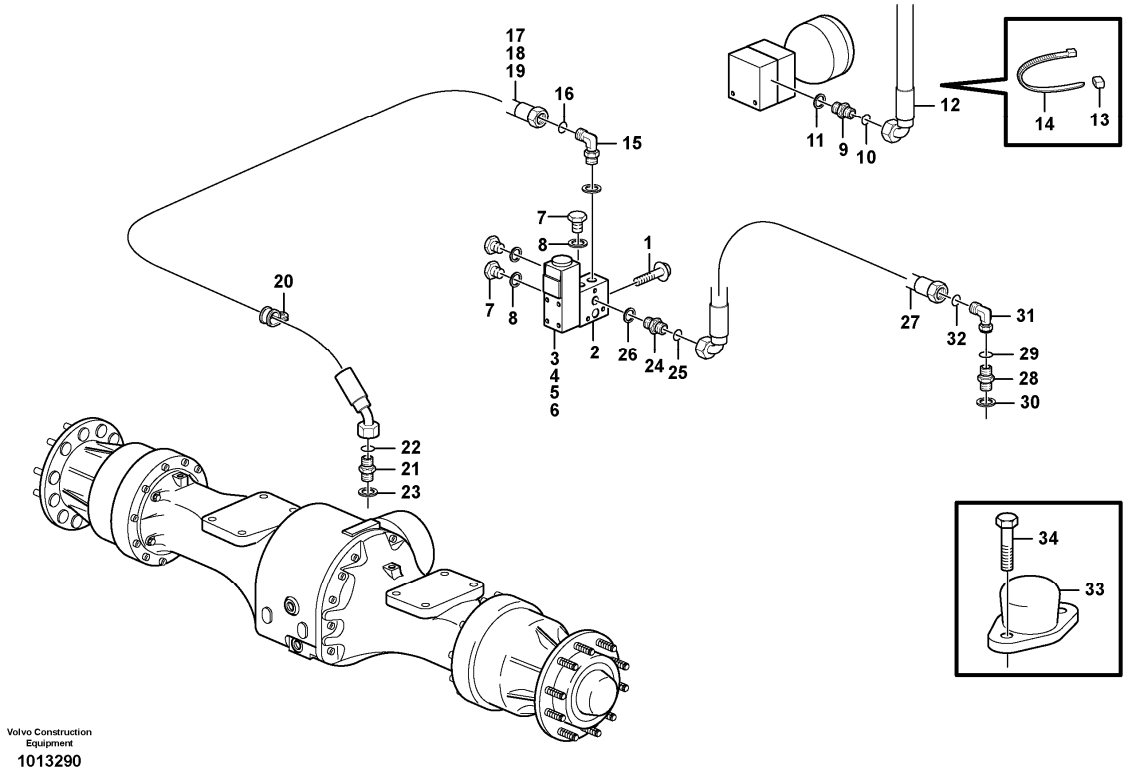

Pos	Part	Q1	Q2	Q3	Q4	Q5	PS	Kit	Description	Option(s)	Remark
1	VOE13946173	1							Screw		
2	VOE4974291	1							Connection block		
3	VOE11173166	1							Solenoid valve		
4	VOE11708930	1							•Magnet		
5	VOE11993637	1							•Sealing kit		
6	VOE959193	4							Hex. socket screw		
7	VOE914390	3							Plug		
8	VOE14013067	3							Sealing washer		
9	VOE14345423	1							Nipple		
10	VOE990737	1							•O-ring		(VOE4880492)
11	VOE14211856	1							•Sealing ring		
12	VOE936655	1							Hose assembly		
13	VOE4881457	2							Marking sleeve		

14	VOE14016673	2							Strip clamp		
15	VOE13933913	1							Elbow nipple		
16	VOE990737	1							•O-ring		(VOE4880492)
17	VOE11163103	1							Hose assembly		
18	VOE927503	REQ							•Hydraulic hose		
19	VOE11172988	1							Hose assembly	VOE82076	
20	VOE952631	1							Clamp		
21	VOE14345423	1							Nipple		
22	VOE990737	1							•O-ring		(VOE4880492)
23	VOE14211856	1							•Sealing ring		
24	VOE13933897	1							Nipple		
25	VOE990737	1							•O-ring		(VOE4880492)
26	VOE14211856	1							•Sealing ring		
27	VOE936702	1							Hose assembly		
27	VOE11410583	1							Hose assembly		
28	VOE13933855	1							Nipple		
29	VOE990737	1							•O-ring		(VOE4880492)
30	VOE14213676	1							•Sealing ring		
31		1					NS		Elbow nipple		
32	VOE990737	1							•O-ring		(VOE4880492)
33		1					NS		Foot Operated Switch		
34		2					NS		Screw		

VOLVO

Construction Equipment

PROSIS Part Information

Date:	Image id:	Catalogue:	Model:
10/09/2018	**1004571**	**20009**	**L60E**
Brand:	Serial:	Group/Section:	Title:
Volvo	**1001-3355, 60001-61214, 70001-70530**	**491/100**	**Oil cooler STD, OPEN ROPS**

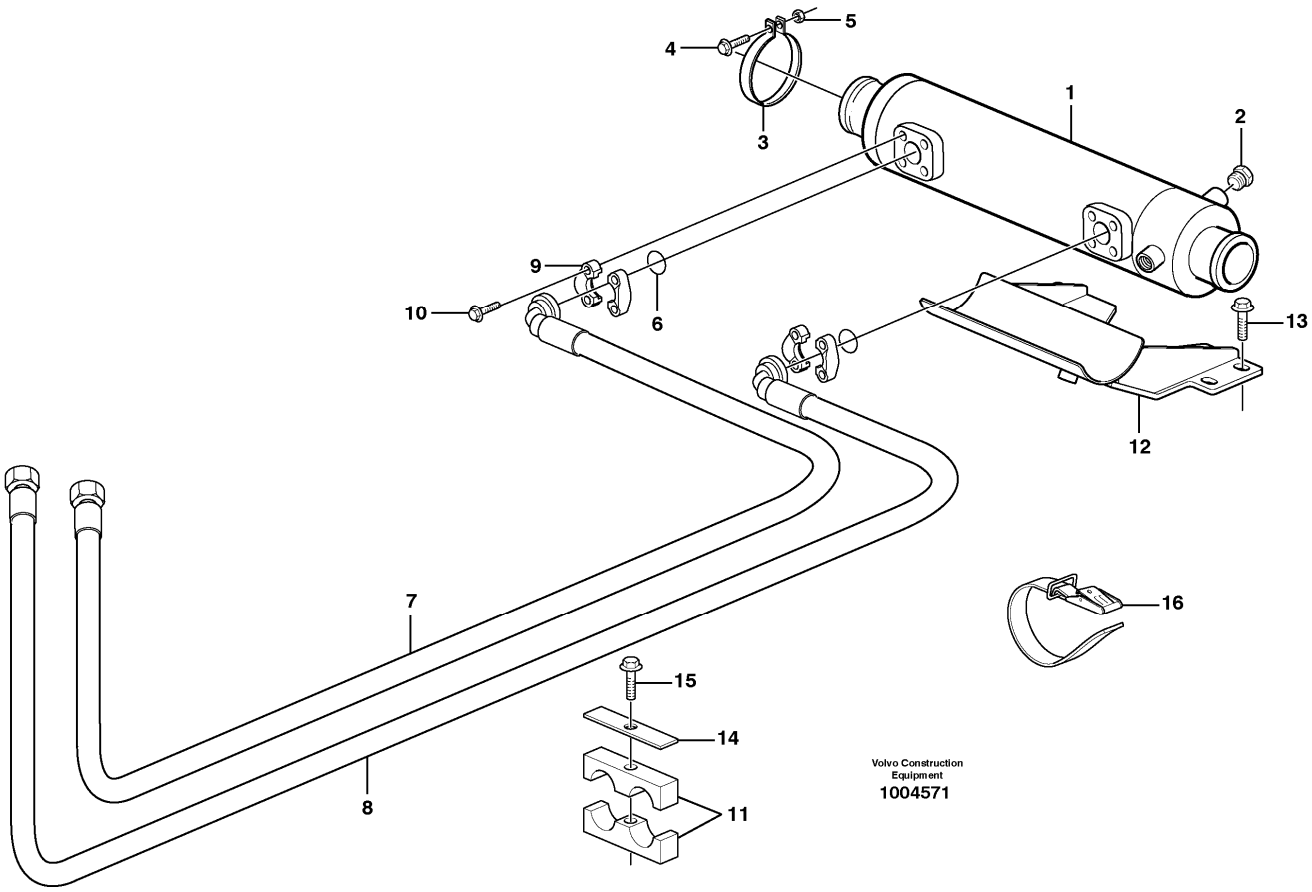

Section option	Kit	Option description
VOE33750		Wheel Loader
VOE33759		Wheel loader L60E OPEN ROPS

Pos	Part	Q1	Q2	Q3	Q4	Q5	PS	Kit	Description	Option(s)	Remark
1	VOE4775421	1							Oil cooler		
2	VOE479956	1							Plug		
3	VOE11090549	2							Tensioning band		
4	VOE13947760	2							Screw		
5	VOE948645	2							Flange lock nut		
6	VOE990756	2							Sealing ring		
7	VOE11410278	1							Hose assembly		
8	VOE11410038	1							Hose assembly		
9	VOE11015455	4							Flange half		
10	VOE946472	8							Flange screw		

11	VOE11411419	2							Clamp		
12	VOE11173008	1							Shelf		
13	VOE946472	4							Flange screw		
14	VOE4880585	2							Cover plate		
15	VOE13965179	2							Screw		
16	VOE11104606	1							Retaining strap		

VOLVO

Construction Equipment

PROSIS Part Information

Date:	Image id:	Catalogue:	Model:
10/09/2018	**EC248A**	**20009**	**L60E**
Brand:	Serial:	Group/Section:	Title:
Volvo	**1001-3355, 60001-61214, 70001-70530**	**516/100**	**Multi-disc brake, front 23929**

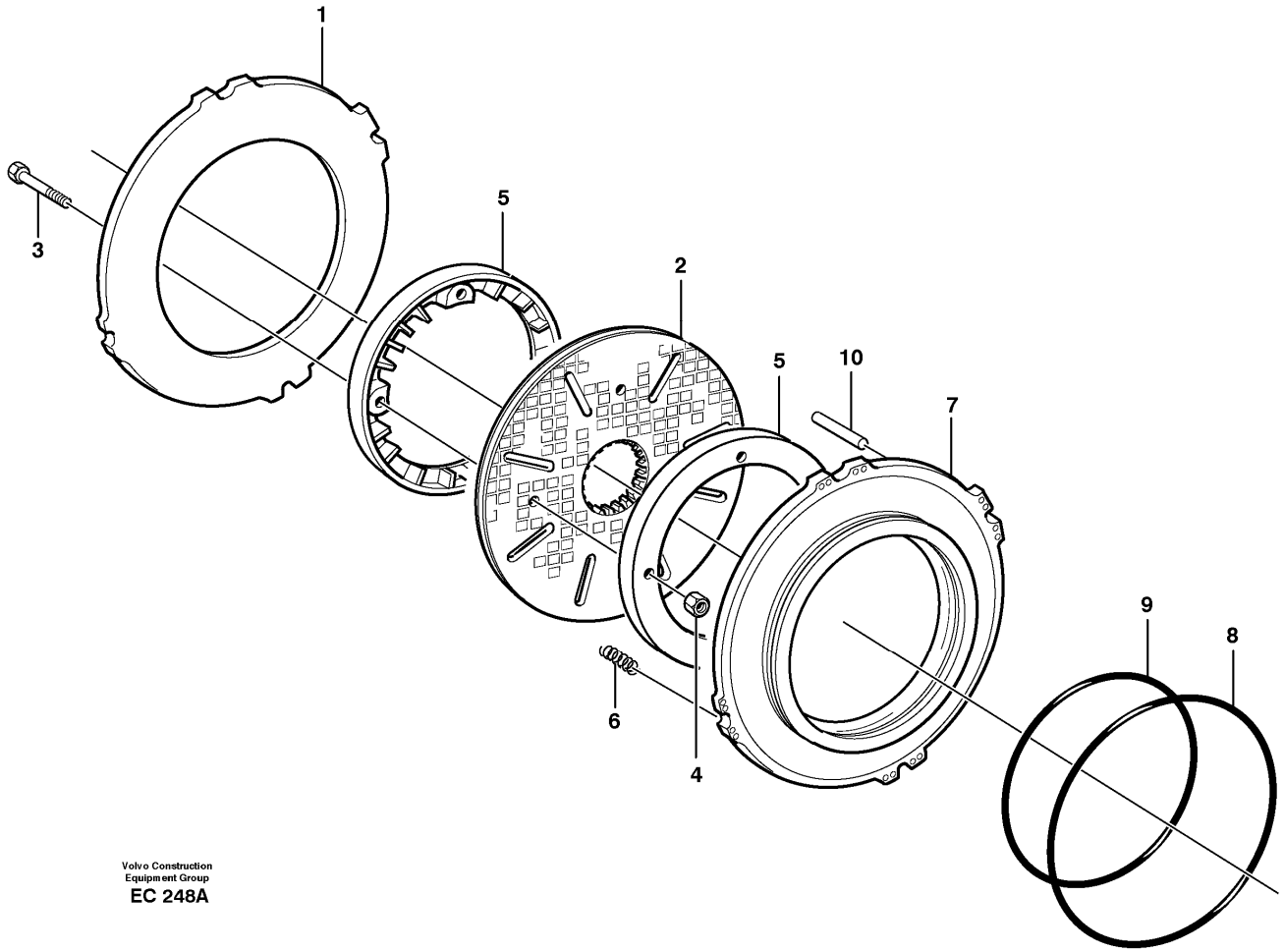

Section option	Kit	Option description
VOE23929		Driving axle AWB 15 FRONT

Q1-Q5	Option	Option description	
Q1 23929	VOE23929	Driving axle AWB 15 FRONT	
Q2 11703590			

Pos	Part	Q1	Q2	Q3	Q4	Q5	PS	Kit	Description	Option(s)	Remark
		1							Planetary axle		See ref 461/100
1	VOE11103424	2							Brake plate		
2	VOE11703590		2						Brake disc		KIT
	VOE11103170	2	1						•Brake disc		(VOE11102322)
	VOE11999976	4	2						•Spring pin		See footnote 1270)

	VOE9993875	1	1						•Gauge		See footnote 1270)
3	VOE13947542	8	4						•Screw		
4	VOE13949278	8	4						•Flange lock nut		
5	VOE11103225	4							Impeller		(VOE11034862)
6	VOE11103402	32							Compression spring		(VOE11035366)
7	VOE11103421	2					SS		Brake piston		
8	VOE11035346	2							Sealing ring		
9	VOE11035345	2							Sealing ring		
10	VOE11035528	8							Pin		

1270) Assembly tool

VOLVO

Construction Equipment

PROSIS Part Information

Date:	Image id:	Catalogue:	Model:
10/09/2018	**EC248A**	**20009**	**L60E**
Brand:	Serial:	Group/Section:	Title:
Volvo	**1001-3355, 60001-61214, 70001-70530**	**517/100**	**Multi-disc brake, rear**

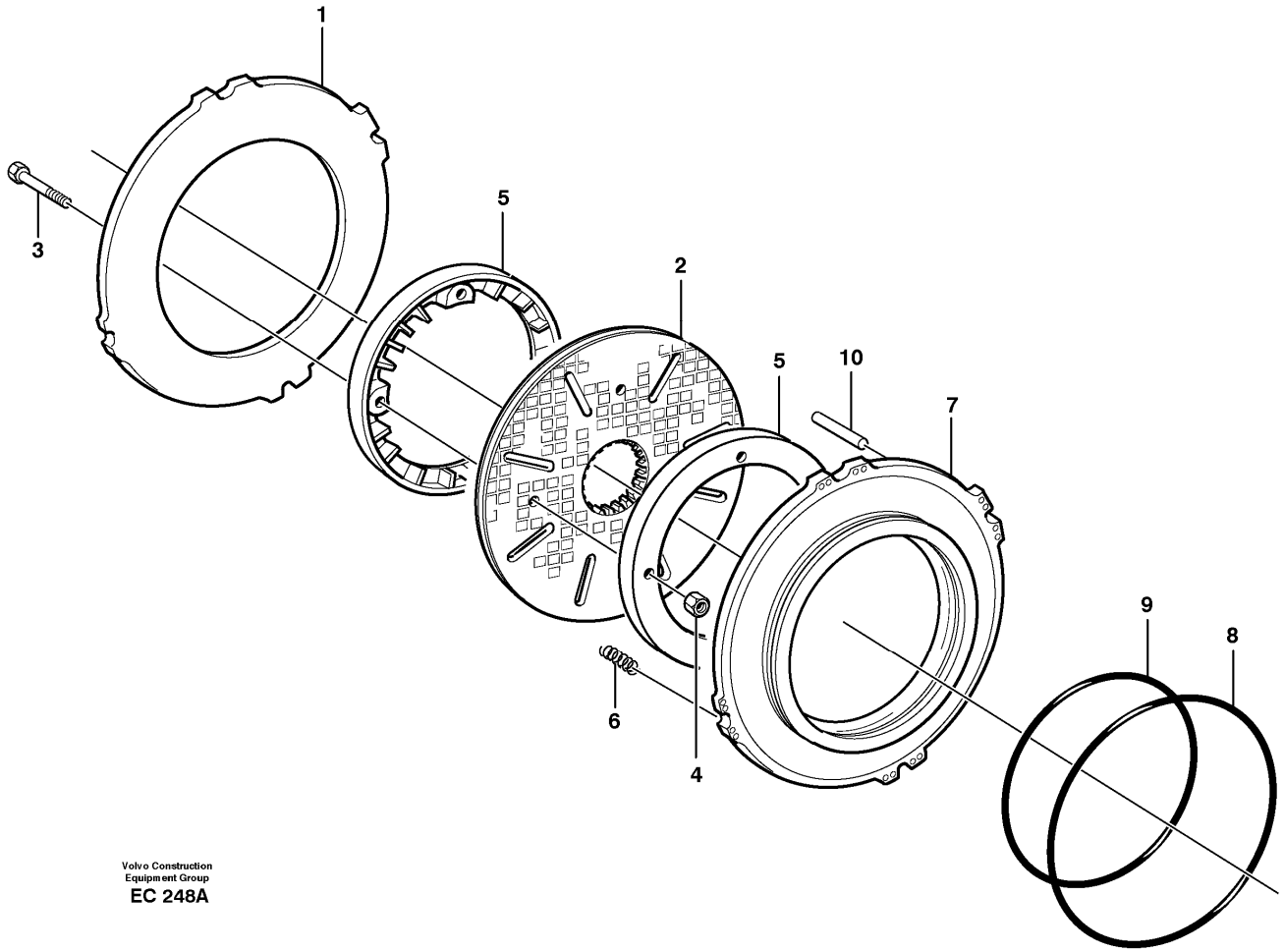

Section option	Kit	Option description
VOE23930		Driving axle AWB 15 REAR
VOE23932		Planetary axle rear, Limited slip. AWB 15 REAR
VOE80952		Diff. lock front 100%, Limited Slip rear

Q1-Q5	Option	Option description	
Q1 23930 STD	VOE23930	Driving axle AWB 15 REAR	
Q2 23932 (80952)	VOE23932	Planetary axle rear, Limited slip. AWB 15 REAR	
Q3 11703590			

Pos	Part	Q1	Q2	Q3	Q4	Q5	PS	Kit	Description	Option(s)	Remark
		1	1						Planetary axle		See ref 460/100

1	VOE11103424	2	2						Brake plate		
2	VOE11703590			2					Brake disc		KIT
	VOE11103170	2	2	1					•Brake disc		
	VOE11999976	4	4	2					•Spring pin		See footnote 1270)
	VOE9993875	1	1	1					•Gauge		See footnote 1270)
3	VOE13947542	8	8	4					•Screw		
4	VOE13949278	8	8	4					•Flange lock nut		
5	VOE11103225	4							Impeller		(VOE11034862)
5	VOE11103225		4						Impeller		
6	VOE11103402	32	32						Compression spring		(VOE11035366)
7	VOE11103421	2	2				SS		Brake piston		
8	VOE11035346	2	2						Sealing ring		
9	VOE11035345	2	2						Sealing ring		
10	VOE11035528	8	8						Pin		

1270) Assembly tool

VOLVO

Construction Equipment

PROSIS Part Information

Date:	Image id:	Catalogue:	Model:
10/09/2018	**1020064**	**20009**	**L60E**
Brand:	Serial:	Group/Section:	Title:
Volvo	**1001-3355, 60001-61214, 70001-70530**	**522/100**	**Brake line, valve body - accumulators - accumulator - footbrake valve STD, OPEN ROPS**

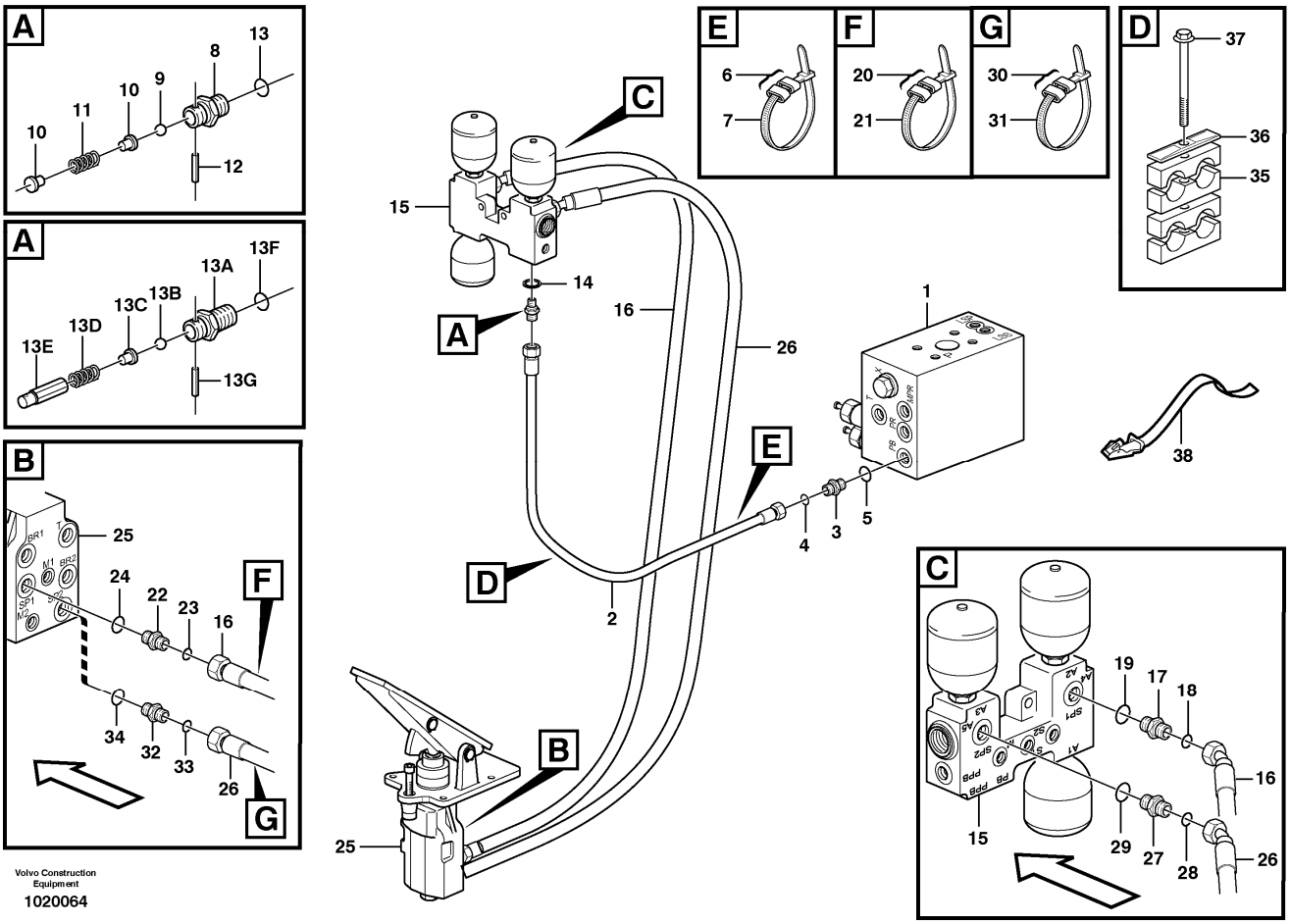

Section option	Kit	Option description
VOE33750		Wheel Loader
VOE33759		Wheel loader L60E OPEN ROPS

Pos	Part	Q1	Q2	Q3	Q4	Q5	PS	Kit	Description	Option(s)	Remark
1		1							Valve block		See ref 912/300
2	VOE11173211	1							Hose assembly		PB, L = 1150MM
2	VOE11173966	1							Hose assembly	VOE82076	
2	VOE11410582	1							Hose assembly	VOE82077	
3	VOE13933855	1							Nipple		
4	VOE990737	1							•O-ring		(VOE4880492)
5	VOE14213676	1							•Sealing ring		
6	VOE4881454	2							Marking sleeve		PINK
	VOE4881455	2							Marking sleeve		RED

7	VOE4881438	2							Cable tie		
	VOE11108697	1					SS		Non-return valve		S/N - 2690
8		1					NS		•Nipple		
9		1					NS		•Ball		
10		2					NS		•Peg		
11		1					NS		•Compression Spring		
12		1					NS		•Spring pin		
13		1					NS		•O-ring		
	VOE11411982	1							Non-return valve		S/N 2691 -
13A	VOE11715517	1					OP		•Nipple		
13B	VOE11715635	1					OP		•Ball		
13C	VOE11715636	1					OP		•Guide		
13D	VOE11715637	1					OP		•Spring		
13E		1					NS		•Guide		
13F	VOE11715638	1					OP		•O-ring		
13G	VOE11715634	1					OP		•Spring pin		
14	VOE13945653	1							Plane gasket		
15		1							Valve housing		See ref 527/200
16	VOE11173213	1							Hose assembly		SP1, L = 1600MM
16	VOE11173969	1							Hose assembly	VOE82076	
17	VOE13933853	1							Nipple		
18	VOE990738	1							•O-ring		(VOE4880493)
19	VOE14211863	1							•Sealing ring		
20	VOE4881451	2							Marking sleeve		YELL
	VOE4881454	2							Marking sleeve		PINK
21	VOE4881438	2							Cable tie		
22	VOE11108730	1							Nipple		
23	VOE990738	1							O-ring		(VOE4880493)
24	VOE967749	1							O-ring		
25		1							Footbrake Valve		See ref 525/100
26	VOE11148988	1							Hose assembly		SP2, L = 1435MM
26	VOE11173970	1							Hose assembly	VOE82076	
27	VOE13933853	1							Nipple		
28	VOE990738	1							•O-ring		(VOE4880493)
29	VOE14211863	1							•Sealing ring		
30	VOE4881454	2							Marking sleeve		PINK
	VOE4881459	2							Marking sleeve		BLUE
31	VOE4881438	2							Cable tie		
32	VOE11108730	1							Nipple		
33	VOE990738	1							O-ring		(VOE4880493)
34	VOE967749	1							O-ring		
35	VOE11411417	4							Clamp		
36	VOE4880578	2							Cover plate		
37	VOE13965182	2							Screw		
38	VOE11104606	1							Retaining strap		

VOLVO

Construction Equipment

PROSIS Part Information

Date:	Image id:	Catalogue:	Model:
10/09/2018	**1013648**	**20009**	**L60E**
Brand:	Serial:	Group/Section:	Title:
Volvo	**1001-3355, 60001-61214, 70001-70530**	**522/250**	**German version 82084**

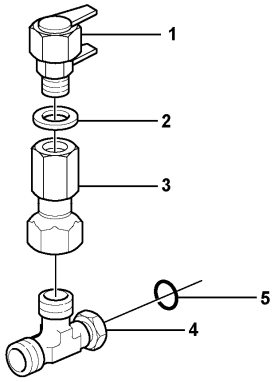

Volvo Construction Equipment
1013648

Section option	Kit	Option description
VOE82084		German version

Q1-Q5	Option	Option description	
Q1 82084	VOE82084	German version	

Pos	Part	Q1	Q2	Q3	Q4	Q5	PS	Kit	Description	Option(s)	Remark
1	VOE4928801	2							Testing nipple		
2	VOE947083	2							Gasket		
3	VOE935040	2							Nipple		
4	VOE13933936	2							T-nipple		
5	VOE990737	2							•O-ring		(VOE4880492)

VOLVO

Construction Equipment

PROSIS Part Information

Date:	Image id:	Catalogue:	Model:
10/09/2018	**1016457**	**20009**	**L60E**
Brand:	Serial:	Group/Section:	Title:
Volvo	**1001-3355, 60001-61214, 70001-70530**	**522/300**	**Brake lines, footbrake valve - axles STD, OPEN ROPS**

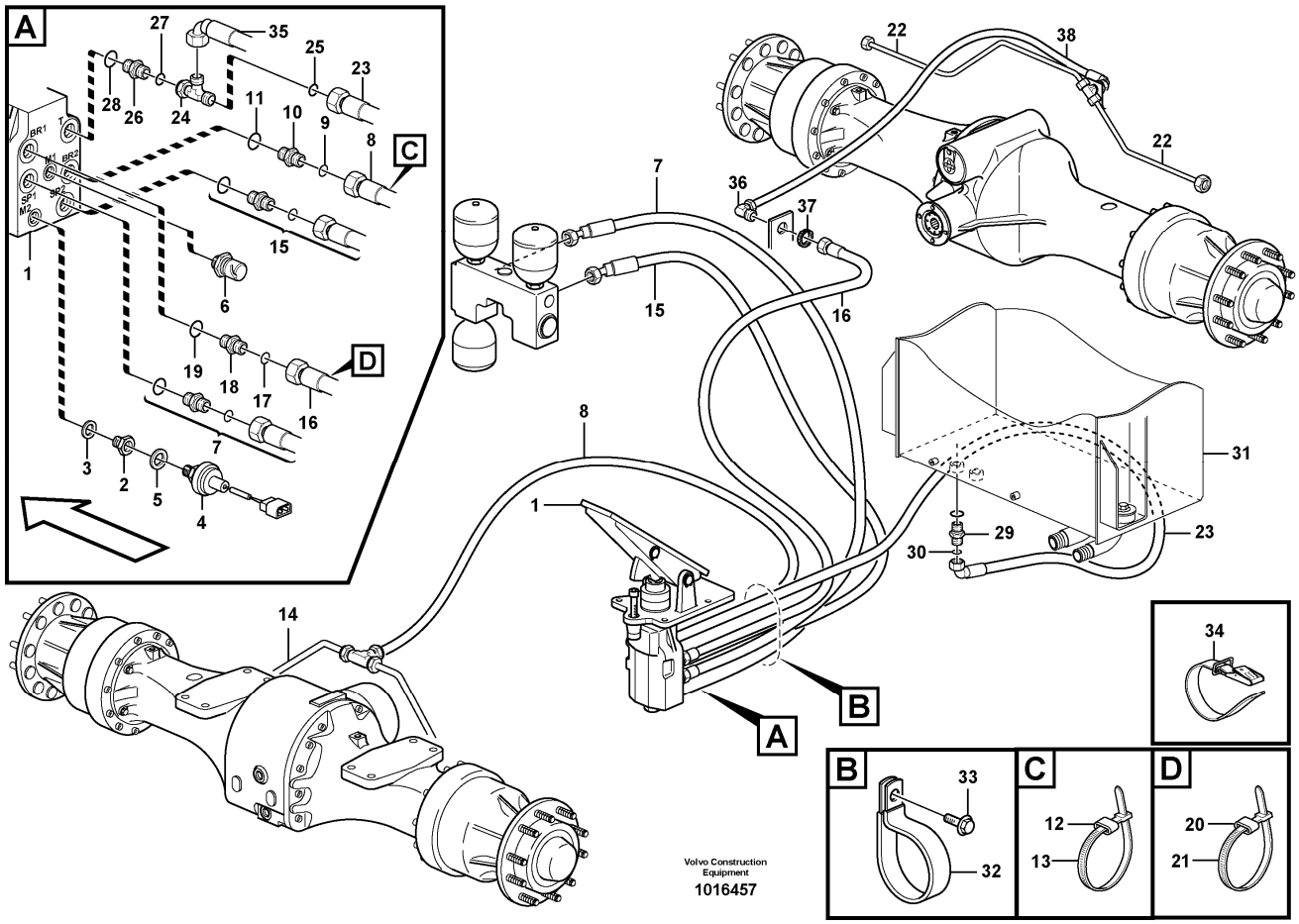

Section option	Kit	Option description
VOE33750		Wheel Loader
VOE33759		Wheel loader L60E OPEN ROPS

Pos	Part	Q1	Q2	Q3	Q4	Q5	PS	Kit	Description	Option(s)	Remark
1		1							Footbrake Valve		See ref 525/100
2	VOE11039658	1							Reduction nipple		
3	VOE947083	1							Gasket		
4	VOE11039617	1							Pressure monitor		SE301
5	VOE13945653	1							Plane gasket		
6	VOE11039577	1							Pressure sensor		SE501, SER NO - 2016 SER NO - 60536 USA SER NO - 70238 BRA
6	VOE11170123	1							Pressure sensor		SE501, SER NO 2017 - SER NO 60537 - USA

											SER NO 70239 - BRA
7		1							Hose assembly		SP1 See ref 522/100
8	VOE11173210	1							Hose assembly		BR1, L = 3050MM
8	VOE11173967	1							Hose assembly	VOE82076	
9	VOE990737	1							O-ring		(VOE4880492)
10	VOE11172920	1							Restrictor		
11	VOE967749	1							O-ring		
12	VOE4881454	2							Marking sleeve		PINK
	VOE4881452	2							Marking sleeve		WHITE
13	VOE4881438	2							Cable tie		
14		2							Brake pipe		See ref 522/325
15		1							Hose assembly		SP2 See ref 522/100
16	VOE11182000	1							Hose assembly		BR2, L = 2200 MM
16	VOE11172996	1							Hose assembly	VOE82076	
17	VOE990737	1							O-ring		(VOE4880492)
18	VOE11172920	1							Restrictor		
19	VOE967749	1							O-ring		
20	VOE4881454	2							Marking sleeve		PINK
	VOE4881457	2							Marking sleeve		GREEN
21	VOE4881438	2							Cable tie		
22		2							Brake pipe		See ref 522/325
23	VOE11172048	1							Hose assembly		T, L = 1600MM
24	VOE13933936	1							T-nipple		
25	VOE990737	2							•O-ring		(VOE4880492)
26	VOE13933856	1							Nipple		
27	VOE990737	1							•O-ring		(VOE4880492)
28	VOE967749	1							•O-ring		
29	VOE13933865	1							Elbow nipple		
30	VOE990737	1							•O-ring		(VOE4880492)
31		1							Hydr fluid tank		See ref 911/150
32	VOE11170546	1							Clamp		
33	VOE946440	1							Flange screw		
34	VOE11104606	1							Retaining strap		
35		1							Hose assembly		See ref 911/450
36	VOE935427	1							Elbow nipple		
37	VOE935429	1							Lock nut		
38	VOE11147978	1							Hose assembly		L = 450MM
38	VOE11173986	1							Hose assembly	VOE82076	

VOLVO

Construction Equipment

PROSIS Part Information

Date:	Image id:	Catalogue:	Model:
10/09/2018	**1004944**	**20009**	**L60E**
Brand:	Serial:	Group/Section:	Title:
Volvo	**1001-3355, 60001-61214, 70001-70530**	**522/325**	**Brake pipes, front axle and rear axle STD, OPEN ROPS**

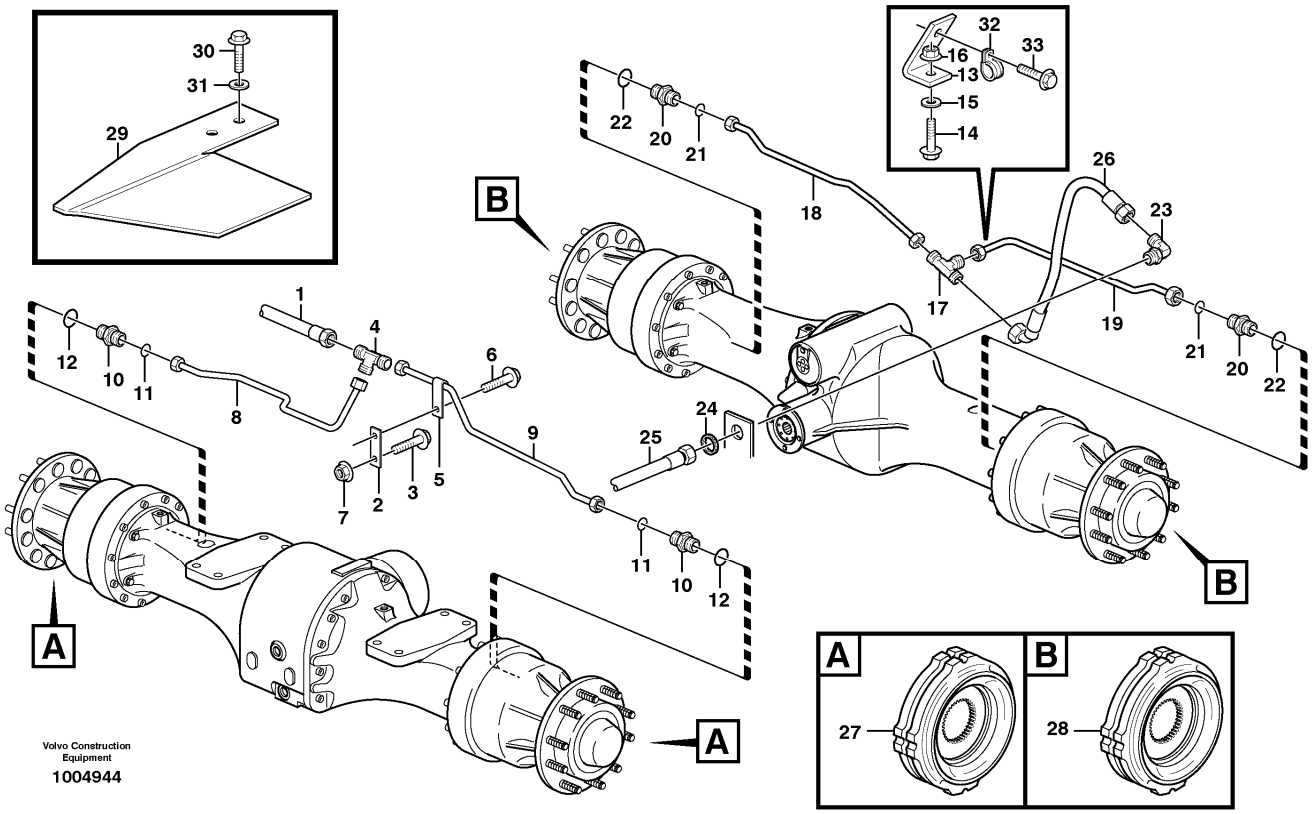

Section option	Kit	Option description
VOE33750		Wheel Loader
VOE33759		Wheel loader L60E OPEN ROPS

Pos	Part	Q1	Q2	Q3	Q4	Q5	PS	Kit	Description	Option(s)	Remark
1		1							Hose assembly		BR2 See ref 522/300
2	VOE11173481	1							Bracket		
3	VOE13946173	1							Screw		
4	VOE935540	1							T-nipple		
	VOE990737	3							•O-ring		(VOE4880492)
5	VOE951190	1							Clamp		
6	VOE13947542	1							Screw		
7	VOE13945407	1							Nut		
8	VOE11172730	1							Brake pipe		RH
9	VOE11172732	1							Brake pipe		LH
10	VOE14345423	2							Nipple		

11	VOE14211856	2							•Sealing ring		
12	VOE990737	2							•O-ring		(VOE4880492)
13	VOE11173489	1							Bracket		
14	VOE946671	1							Flange screw		
15	VOE11117464	1							Plain washer		(VOE13960141)
16	VOE13945408	1							Nut		
17	VOE935540	1							T-nipple		
	VOE990737	3							•O-ring		(VOE4880492)
18	VOE11410556	1							Brake pipe		(VOE11410265)RH
19	VOE11410267	1							Brake pipe		LH
20	VOE14345423	2							Nipple		
21	VOE14211856	2							•Sealing ring		
22	VOE990737	2							•O-ring		(VOE4880492)
23		1							Elbow nipple		See ref 522/300
24		1							Lock nut		See ref 522/300
25		1							Hose assembly		BR1 See ref 522/300
26		1							Hose assembly		See ref 522/300
27		1							Brake Disc		See ref 516/100
28		1							Brake Disc		See ref 517/100
29	VOE11410455	1							Brake Shield		
	VOE11410456	1							Brake Shield		
30	VOE946329	4							Flange screw		
31	VOE13960143	4							Washer		
32	VOE951190	1							Clamp		
33	VOE13946544	1							Screw		

VOLVO

Construction Equipment

PROSIS Part Information

Date:	Image id:	Catalogue:	Model:
10/09/2018	**1006254**	**20009**	**L60E**
Brand:	Serial:	Group/Section:	Title:
Volvo	**1001-3355, 60001-61214, 70001-70530**	**525/100**	**Dual brake pedals STD, OPEN ROPS**

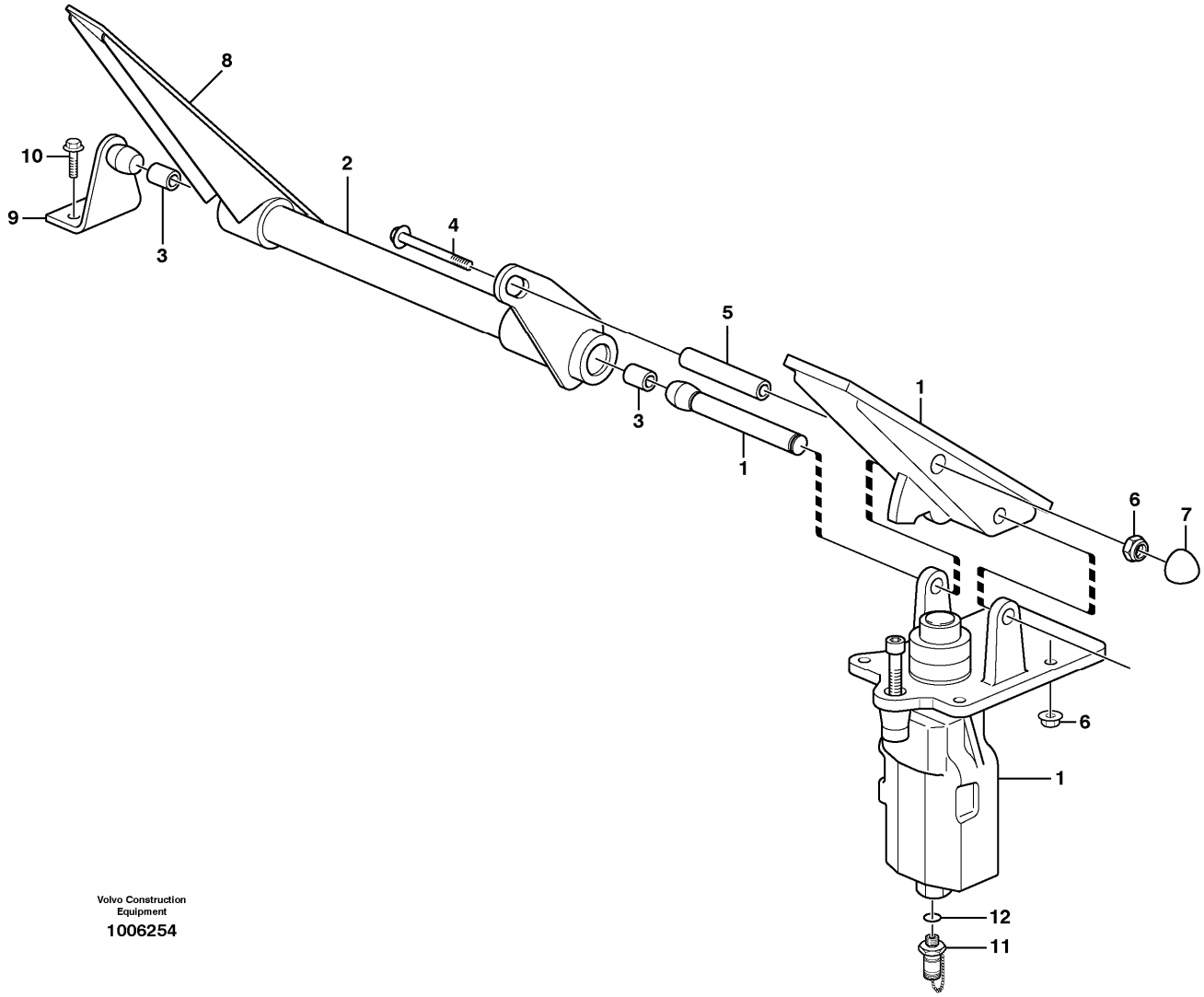

Section option	Kit	Option description
VOE33750		Wheel Loader
VOE33759		Wheel loader L60E OPEN ROPS

Pos	Part	Q1	Q2	Q3	Q4	Q5	PS	Kit	Description	Option(s)	Remark
1		1							Footbrake Valve		See ref 525/150
2	VOE11005990	1							Pedal		
3	VOE958668	2							•Bearing bushing		
4	VOE13965184	1							Flange screw		
5	VOE11006430	1							Spacer		

6	VOE948645	4							Flange lock nut		
7	VOE11006824	1							Protecting cap		
8	VOE11998442	1							Rubber plate		
9	VOE11006248	1							Anchorage		
10	VOE13945444	2							Screw		
11	VOE936443	1							Testing nipple		
12	VOE13960211	1							•O-ring		

VOLVO

Construction Equipment

PROSIS Part Information

Date:	Image id:	Catalogue:	Model:
10/09/2018	**1015758**	**20009**	**L60E**
Brand:	Serial:	Group/Section:	Title:
Volvo	**1001-3355, 60001-61214, 70001-70530**	**525/150**	**Footbrake valve**

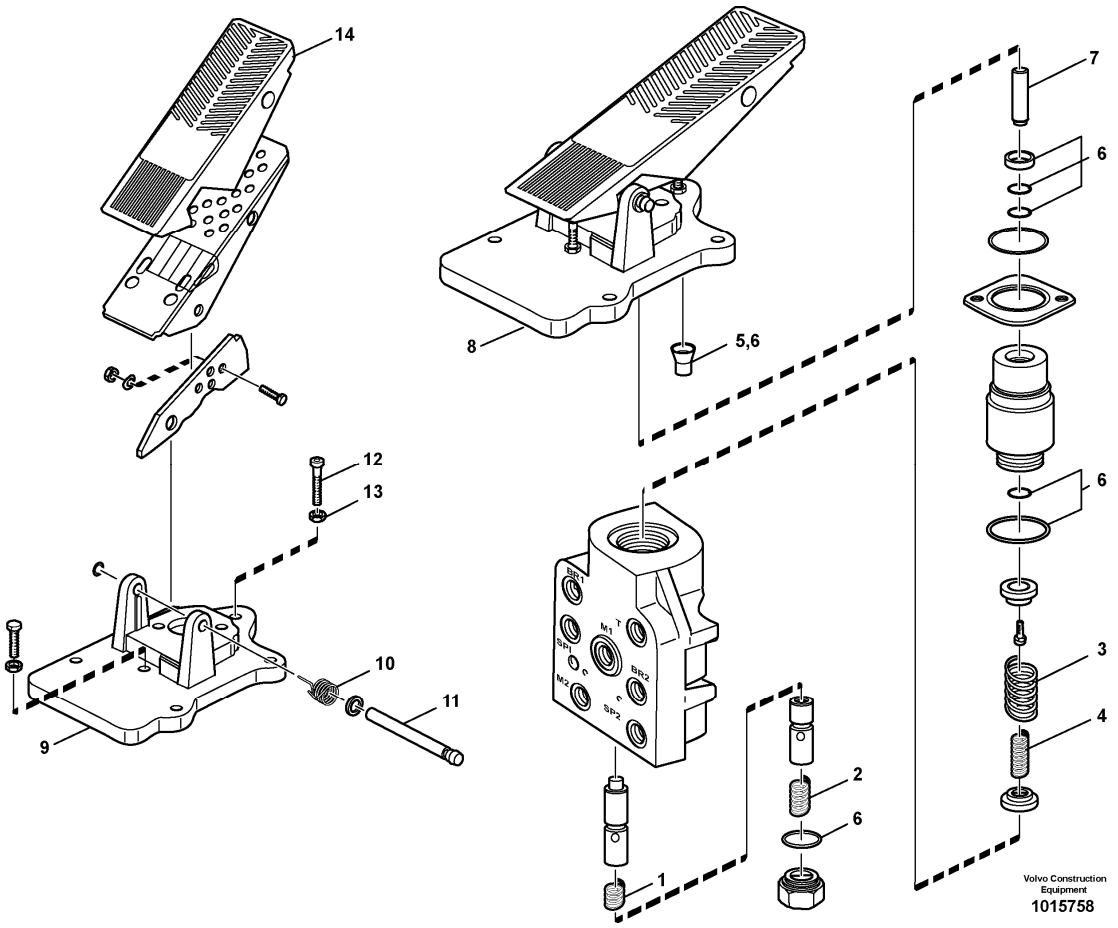

Pos	Part	Q1	Q2	Q3	Q4	Q5	PS	Kit	Description	Option(s)	Remark
	VOE11410418	1					SS		Footbrake valve		
1	VOE11703355	1							•Compression spring		
2	VOE11703356	1					OP		•Compression spring		
3	VOE11997342	1					OP		•Spring		
4	VOE11997343	1							•Spring		
5		1					NS		•Closing stamp		
6	VOE11707055	1							•Sealing kit		
7	VOE15140184	1					OP		•Pin		(VOE11715841)
8	VOE11707078	1							•Pedal arrangement		
9		1					NS		••Attaching plate		
10	VOE11994522	1							••Torsion spring		
11	VOE11708511	1							••Pin		

12	VOE11704319	1							••Adjusting screw		
13	VOE955782	1							••Hexagon nut		
14	VOE11998442	1							••Rubber plate		

VOLVO

Construction Equipment

PROSIS Part Information

Date:	Image id:	Catalogue:	Model:
10/09/2018	**1004970**	**20009**	**L60E**
Brand:	Serial:	Group/Section:	Title:
Volvo	**1001-3355, 60001-61214, 70001-70530**	**527/200**	**Valve and accumulators STD, OPEN ROPS**

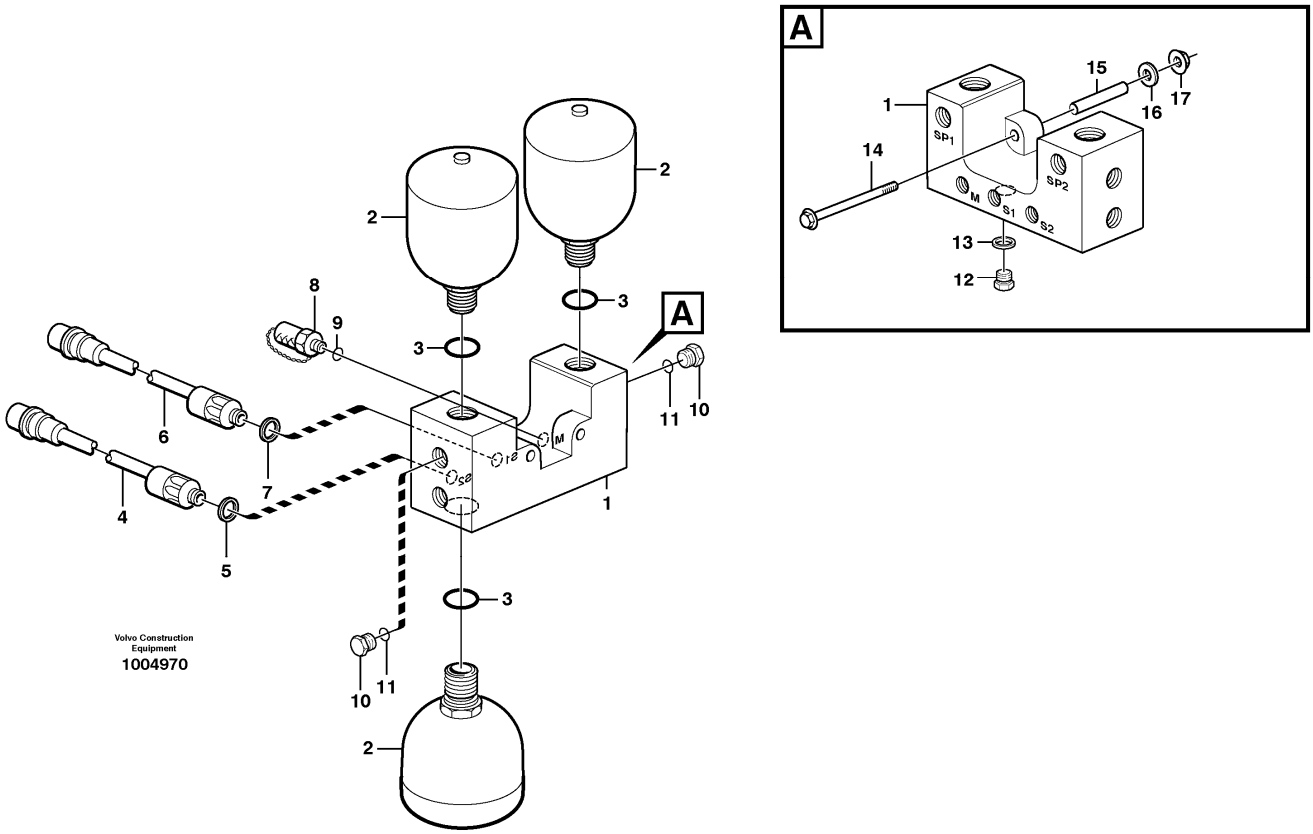

Section option	Kit	Option description
VOE33750		Wheel Loader
VOE33759		Wheel loader L60E OPEN ROPS

Pos	Part	Q1	Q2	Q3	Q4	Q5	PS	Kit	Description	Option(s)	Remark
1	VOE11148622	1							Valve housing		
2	VOE15187036	3					SS		Accumulator		(VOE11173688)
2	VOE15193976	1					SS		Accumulator	VOE82076	(VOE11173689)
3	VOE13967752	3							O-ring		
4	VOE11170090	1							Pressure monitor		SE504
5	VOE13945653	1							Plane gasket		
6	VOE11170072	1							Pressure monitor		SE502
7	VOE13945653	1							Plane gasket		
8	VOE936444	1							Testing nipple		
9	VOE13960213	1							•O-ring		
10	VOE968612	2							Plug		
11	VOE13967752	2							O-ring		

12	VOE960630	1							Plug		
13	VOE13945653	1							Plane gasket		
14	VOE968237	2							Flange screw		
15	VOE11172458	2							Spacer		
16	VOE13960143	2							Washer		
17	VOE13971098	2							Flange nut		

VOLVO

Construction Equipment

PROSIS Part Information

Date:	Image id:	Catalogue:	Model:
10/09/2018	**1004600**	**20009**	**L60E**
Brand:	Serial:	Group/Section:	Title:
Volvo	**1001-3355, 60001-61214, 70001-70530**	**551/100**	**Parking brake system STD, OPEN ROPS**

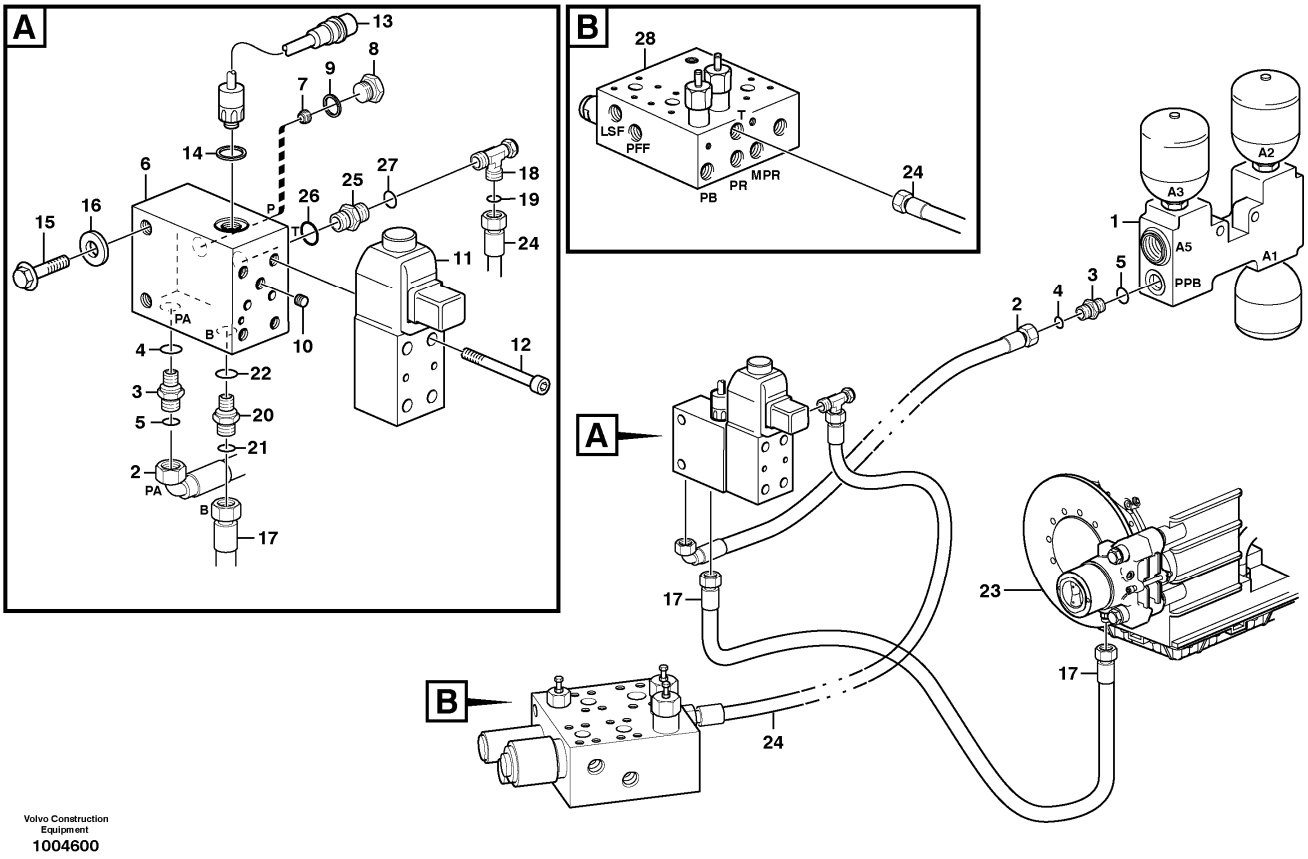

Volvo Construction Equipment
1004600

Section option	Kit	Option description
VOE33750		Wheel Loader
VOE33759		Wheel loader L60E OPEN ROPS

Pos	Part	Q1	Q2	Q3	Q4	Q5	PS	Kit	Description	Option(s)	Remark
1		1							Valve housing		See ref 527/200
2	VOE11148958	1							Hose assembly		PPB - PA, L = 650MM
3	VOE14345423	2							Nipple		
4	VOE990737	2							•O-ring		(VOE4880492)
5	VOE14211856	2							•Sealing ring		
6	VOE11173805	1							Connection block		
7	VOE11130749	1							•Non-return valve		
8	VOE960630	1							Plug		
9	VOE13945653	1							Plane gasket		
10	VOE11994275	1							Restrictor		
11	VOE11173169	1					SS		Solenoid valve		MA501

	VOE11708930	1							•Magnet		
	VOE11993637	1							•Sealing kit		
12	VOE959193	4							Hex. socket screw		
13	VOE11170071	1							Pressure monitor		SE503
14	VOE976928	1							Gasket		
15	VOE13945444	2							Screw		
16	VOE11117464	2							Plain washer		(VOE13960141)
17	VOE11173211	1							Hose assembly		B, L = 1150MM
18	VOE13933936	1							T-nipple		
19	VOE990737	1							•O-ring		(VOE4880492)
20	VOE14345423	1							Nipple		
21	VOE990737	1							•O-ring		(VOE4880492)
22	VOE14211856	1							•Sealing ring		
23		1							Parking brake		See ref 551/150
24	VOE11173259	1							Hose assembly		T, L = 970MM
25	VOE14345423	1							Nipple		
26	VOE990737	1							•O-ring		(VOE4880492)
27	VOE14211856	1							•Sealing ring		
28		1							Valve block		See ref 912/300
29	VOE13933936	1							T-nipple		
30	VOE990737	1							•O-ring		(VOE4880492)

VOLVO

Construction Equipment

PROSIS Part Information

Date:	Image id:	Catalogue:	Model:
10/09/2018	**1004634**	**20009**	**L60E**
Brand:	Serial:	Group/Section:	Title:
Volvo	**1001-3355, 60001-61214, 70001-70530**	**551/150**	**Parking brake 22532, STD, OPEN ROPS**

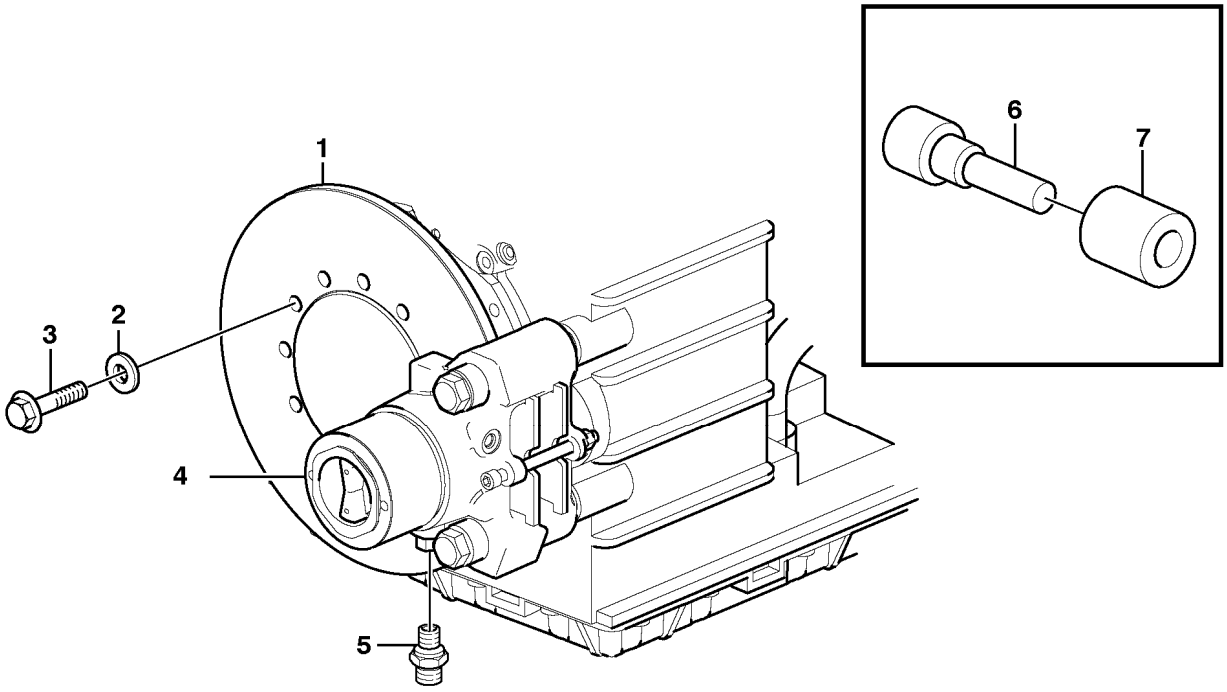

Volvo Construction Equipment
1004634

Section option	Kit	Option description
VOE22532		Hytraulic transmission HTE93
VOE33750		Wheel Loader
VOE33759		Wheel loader L60E OPEN ROPS

Pos	Part	Q1	Q2	Q3	Q4	Q5	PS	Kit	Description	Option(s)	Remark
1	VOE11145280	1							Brake disc		
2	VOE930872	12							Plain washer		
3	VOE978933	12							Hexagon screw		
4		1							Parking Brake		See ref 551/250
5	VOE935084	1							Nipple		
6	VOE11173876	1							Hex Skt Wrench		
7	VOE11173877	1							Sleeve		

VOLVO

Construction Equipment

PROSIS Part Information

Date:	Image id:	Catalogue:	Model:
10/09/2018	**1020061**	**20009**	**L60E**
Brand:	Serial:	Group/Section:	Title:
Volvo	**1001-3355, 60001-61214, 70001-70530**	**551/250**	**Parking brake 22532, STD, OPEN ROPS**

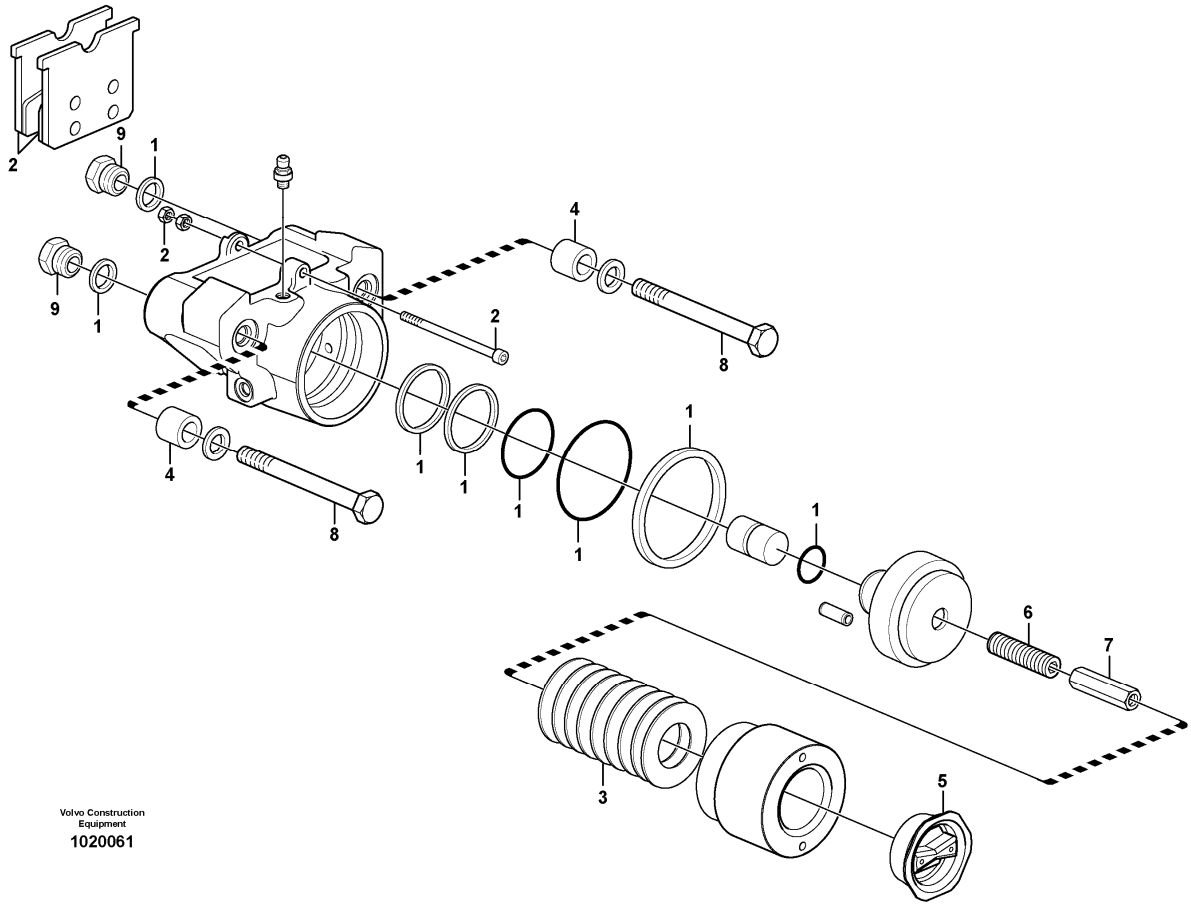

Section option	Kit	Option description
VOE22532		Hytraulic transmission HTE93
VOE33750		Wheel Loader
VOE33759		Wheel loader L60E OPEN ROPS

Q1-Q5	Option	Option description	
Q1 11145278			

Pos	Part	Q1	Q2	Q3	Q4	Q5	PS	Kit	Description	Option(s)	Remark
	VOE11145278	1					SS		Handbrake		
	VOE11708885	1							•Repair kit		
1	VOE11708884	1							••Sealing kit		
2	VOE11708883	1							••Brake lining kit		
3	VOE11708882	1							••Disc kit		

4	VOE11708881	2							••Spring kit		
5	VOE11708979	1							•Cover		
6	VOE11709030	1							•Screw		
7	VOE11709031	1							•Nut		
8	VOE11713849	2							•Screw		
9	VOE11714734	2							•Nut		

VOLVO

Construction Equipment

PROSIS Part Information

Date:	Image id:	Catalogue:	Model:
10/09/2018	**EL248**	**20009**	**L60E**
Brand:	Serial:	Group/Section:	Title:
Volvo	**1001-3355, 60001-61214, 70001-70530**	**641/100**	**Steering column with fitting parts**

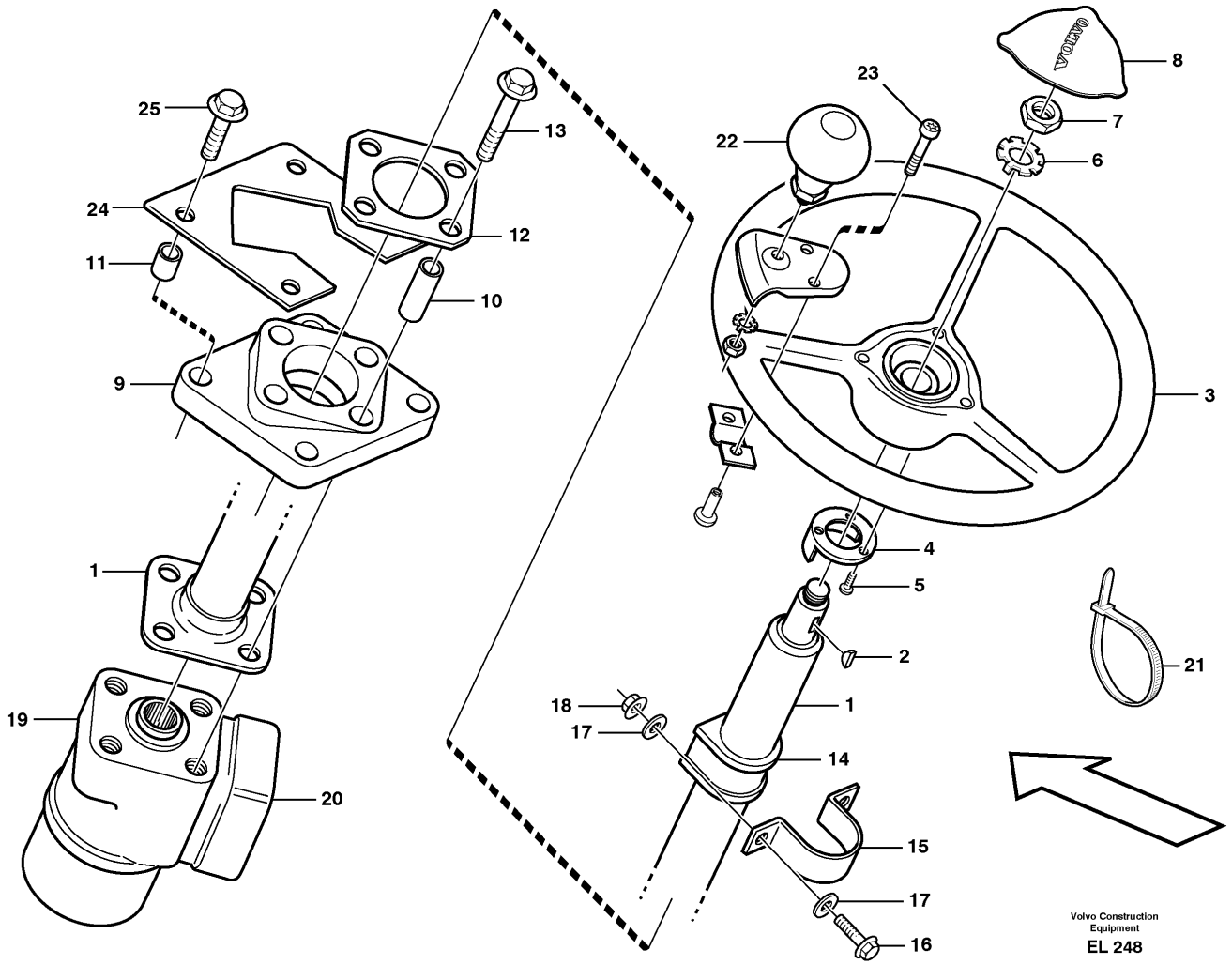

Section option	Kit	Option description
VOE80309		Steering knob
VOE33750		Wheel Loader
VOE33755		Cab
VOE33756		Cab L60E USA
VOE33759		Wheel loader L60E OPEN ROPS
VOE33760		Cab. Open Rops

Q1-Q5	Option	Option description	
Q1 STD			
Q2 80309	VOE80309	Steering knob	
Q3 OPEN ROPS			

Pos	Part	Q1	Q2	Q3	Q4	Q5	PS	Kit	Description	Option(s)	Remark
1	VOE4881493	1							Steering column		
				1					Steering Column		See ref 641/150
2	VOE4760805	1							•Key		
3	VOE11444189	1							Steering wheel		(VOE11104630)
	VOE11005998			1					Steering wheel		
4	VOE4714601	1		1					Ring		
5	VOE4714697	3		3					Screw		
6	VOE11104898	1		1					Lock washer		
7	VOE955822	1		1					Hexagon nut		
8	VOE11104690	1							Cover plate		
	VOE11104110			1					Cover plate		
	VOE11104988								Anchorage		
9		1					NS		•Anchorage		
10	VOE930456	4							•Spacer ring		(VOE13930456)
11	VOE930449	4							•Spacer ring		(VOE13930449)
12	VOE11006554	1							Washer		
13	VOE13965185	4							Screw		
14	VOE11006711	1		1					Rubber bushing		
15	VOE11006712	1		1					Clamp		
16	VOE13946173	2		2					Screw		
17							NS		Washer		
18	VOE13945408	2		2					Nut		
19		1							Shf Cont Valve		See ref 645/400
20		1							Valve block		See ref 645/450
21	VOE4881440	2		2					Cable tie		
22	VOE11006061		1						Knob		
23	VOE969423		2						Six point socket screw		(VOE13969423)
24	VOE11006088	1		1					Plate		
25	VOE13965185	4		4					Screw		

VOLVO

Construction Equipment

PROSIS Part Information

Date:	Image id:	Catalogue:	Model:
10/09/2018	**1000727**	**20009**	**L60E**
Brand:	Serial:	Group/Section:	Title:
Volvo	**1001-3355, 60001-61214, 70001-70530**	**641/150**	**Adjustable steering wheel. 80322, OPEN ROPS**

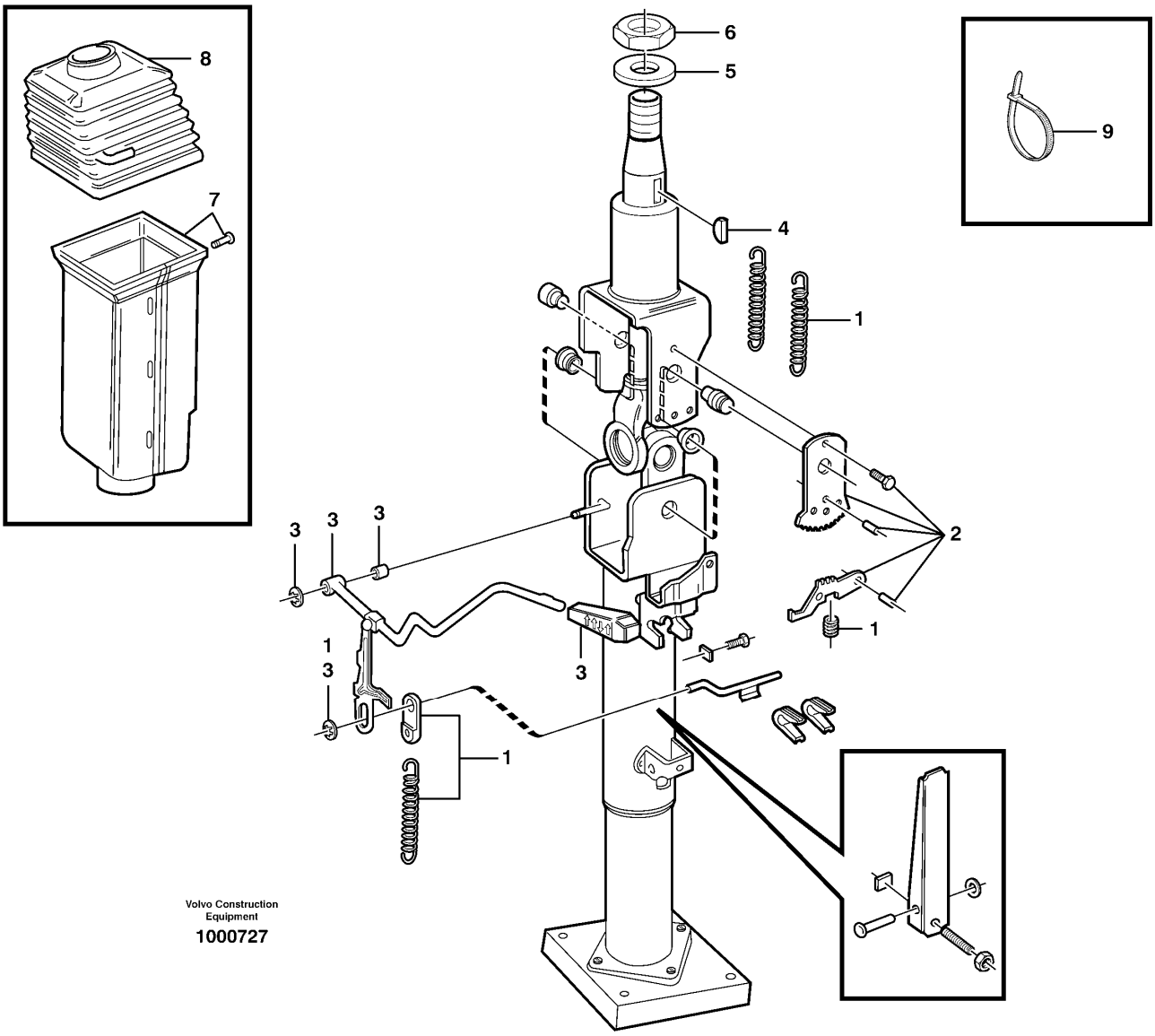

Section option	Kit	Option description
VOE80322		Adjustable steering wheel
VOE33760		Cab. Open Rops

Pos	Part	Q1	Q2	Q3	Q4	Q5	PS	Kit	Description	Option(s)	Remark
	VOE11006235	1					SS		Steering column		33756 CAB - 2003 80322 CAB - 1899
	VOE11164645	1							Steering column		33756 CAB 2004 - 80322 CAB 1990 - See

											ref 641/200
1	VOE11704312	1							•Spring kit		
2	VOE11704313	1							•Locking device		
3	VOE11704314	1					SS		•Lever kit		
4	VOE4760805	1							•Key		
5	VOE955901	1							•Plain washer		
6	VOE955822	1							•Hexagon nut		
7	VOE11704315	1							•Cover		
8	VOE11704316	1							•Gaiter		
9	VOE14016673	2							Strip clamp		L = 220 MM
	VOE4881440	1							Cable tie		L = 530 MM

VOLVO

Construction Equipment

PROSIS Part Information

Date:	Image id:	Catalogue:	Model:
10/09/2018	**1013082**	**20009**	**L60E**
Brand:	Serial:	Group/Section:	Title:
Volvo	**1001-3355, 60001-61214, 70001-70530**	**641/200**	**Adjustable steering wheel. 80322, OPEN ROPS, 33756**

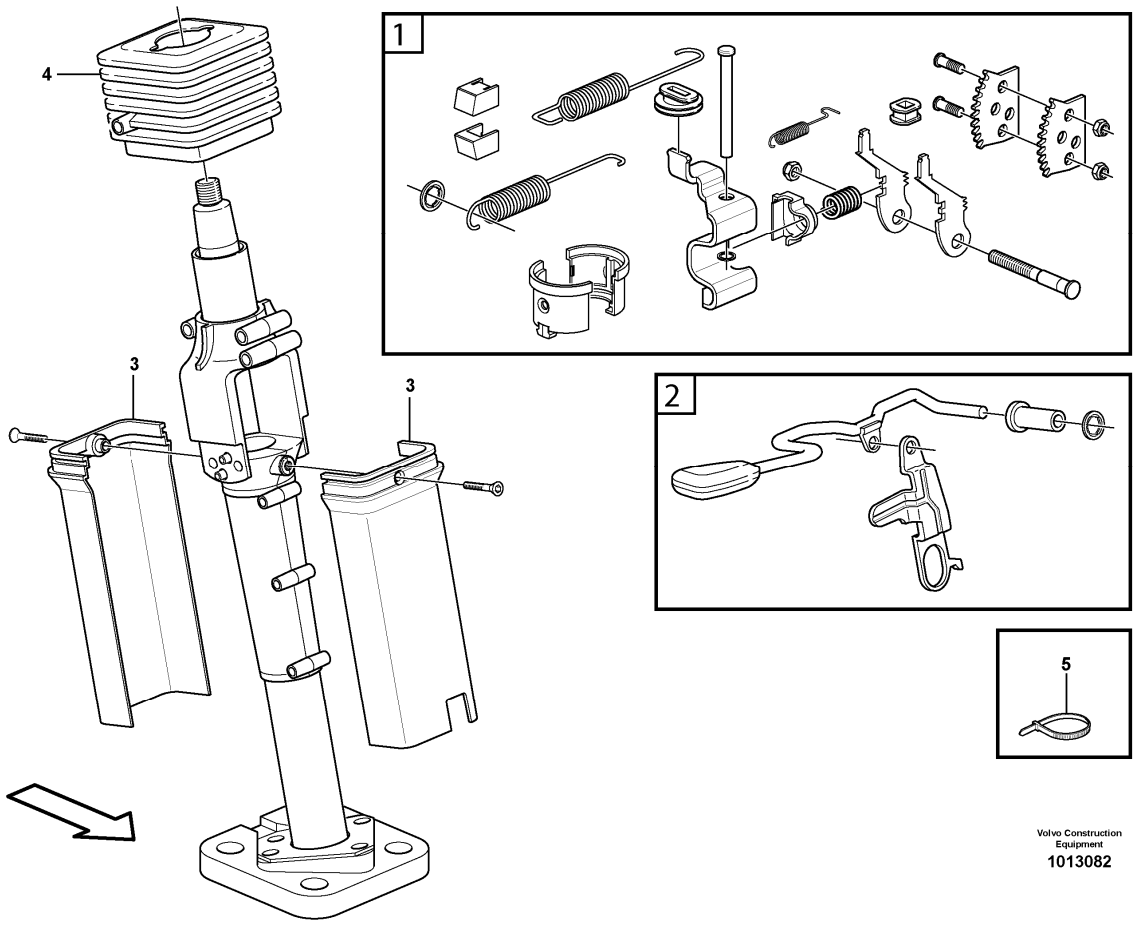

Section option	Kit	Option description
VOE80322		Adjustable steering wheel
VOE33756		Cab L60E USA

Pos	Part	Q1	Q2	Q3	Q4	Q5	PS	Kit	Description	Option(s)	Remark
	VOE11006235	1					SS		Steering column		33756 CAB - 2003 80322 CAB - 1899
	VOE11164645	1							Steering column		33756 CAB 2004 - 80322 CAB 1990 - See ref 641/200
1	VOE11704312	1							•Spring kit		
2	VOE11704313	1							•Locking device		
3	VOE11704314	1					SS		•Lever kit		
4	VOE4760805	1							•Key		
5	VOE955901	1							•Plain washer		

6	VOE955822	1							•Hexagon nut		
7	VOE11704315	1							•Cover		
8	VOE11704316	1							•Gaiter		
9	VOE14016673	2							Strip clamp		L = 220 MM
	VOE4881440	1							Cable tie		L = 530 MM

VOLVO

Construction Equipment

PROSIS Part Information

Date:	Image id:	Catalogue:	Model:
10/09/2018	**1016978**	**20009**	**L60E**
Brand:	Serial:	Group/Section:	Title:
Volvo	**1001-3355, 60001-61214, 70001-70530**	**645/100**	**Steering system, pressure and return lines S/N - 1627 SWE, - 60296 USA, - 70145 BRA.**

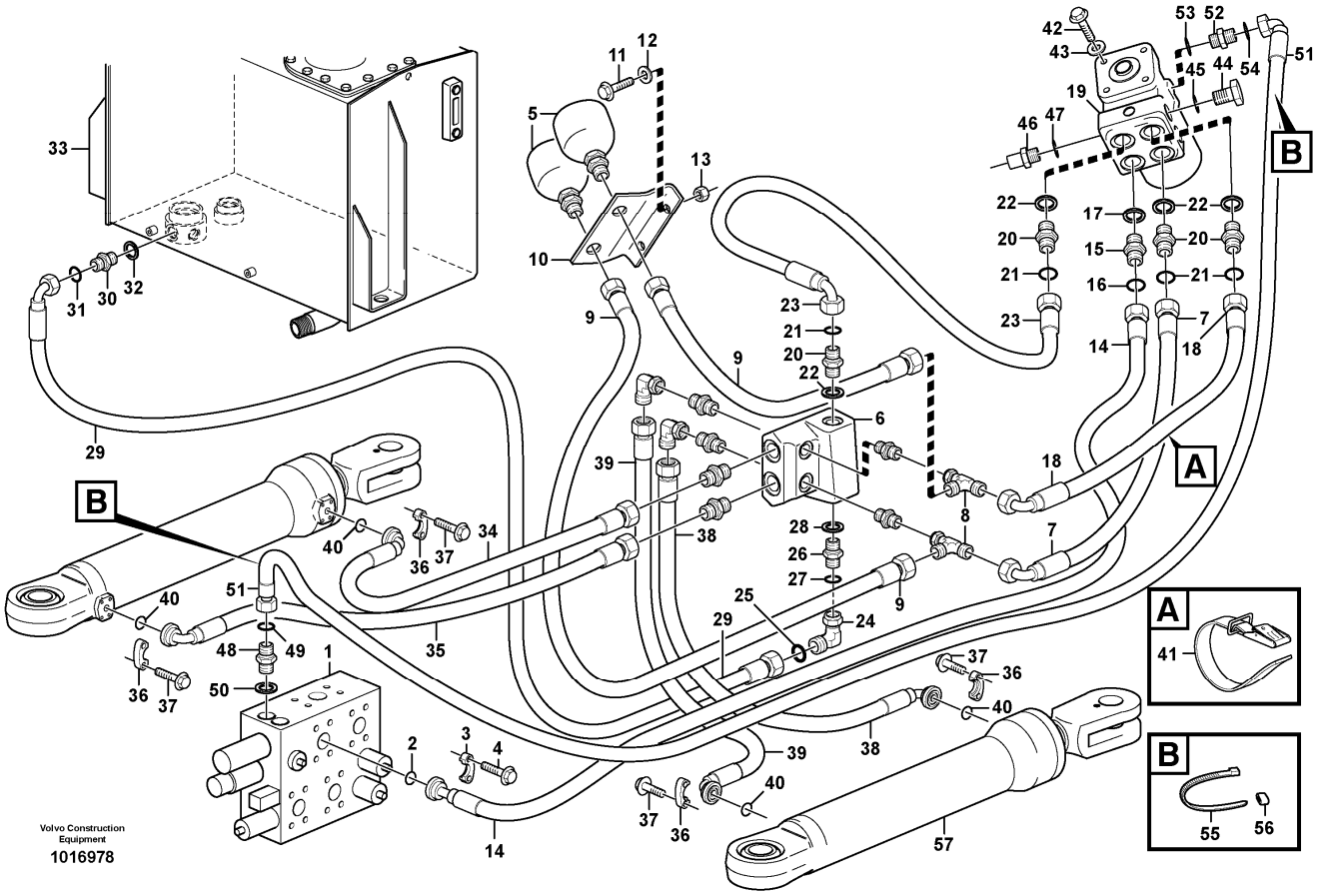

Section option	Kit	Option description
VOE33172		Wheel loader L70E OPEN ROPS

Q1-Q5	Option	Option description	
Q1 STD OPEN ROPS			

Pos	Part	Q1	Q2	Q3	Q4	Q5	PS	Kit	Description	Option(s)	Remark
	VOE11164645	1							Steering column		33756 CAB 2004 - 80322 CAB 1990 -
1	VOE11713580	1							•Overhaul kit		
2	VOE11713574	1							•Lever kit		
3	VOE11713571	1							•Casing		
4	VOE11713567	1							•Bellows		
5	VOE4881440	1							Cable tie		L = 530 MM

VOLVO

Construction Equipment

PROSIS Part Information

Date:	Image id:	Catalogue:	Model:
10/09/2018	**1015304**	**20009**	**L60E**
Brand:	Serial:	Group/Section:	Title:
Volvo	**1001-3355, 60001-61214, 70001-70530**	**645/125**	**Steering system, pressure and return lines S/N 1628 - SWE, 60297 - USA, 70146 - BRA.**

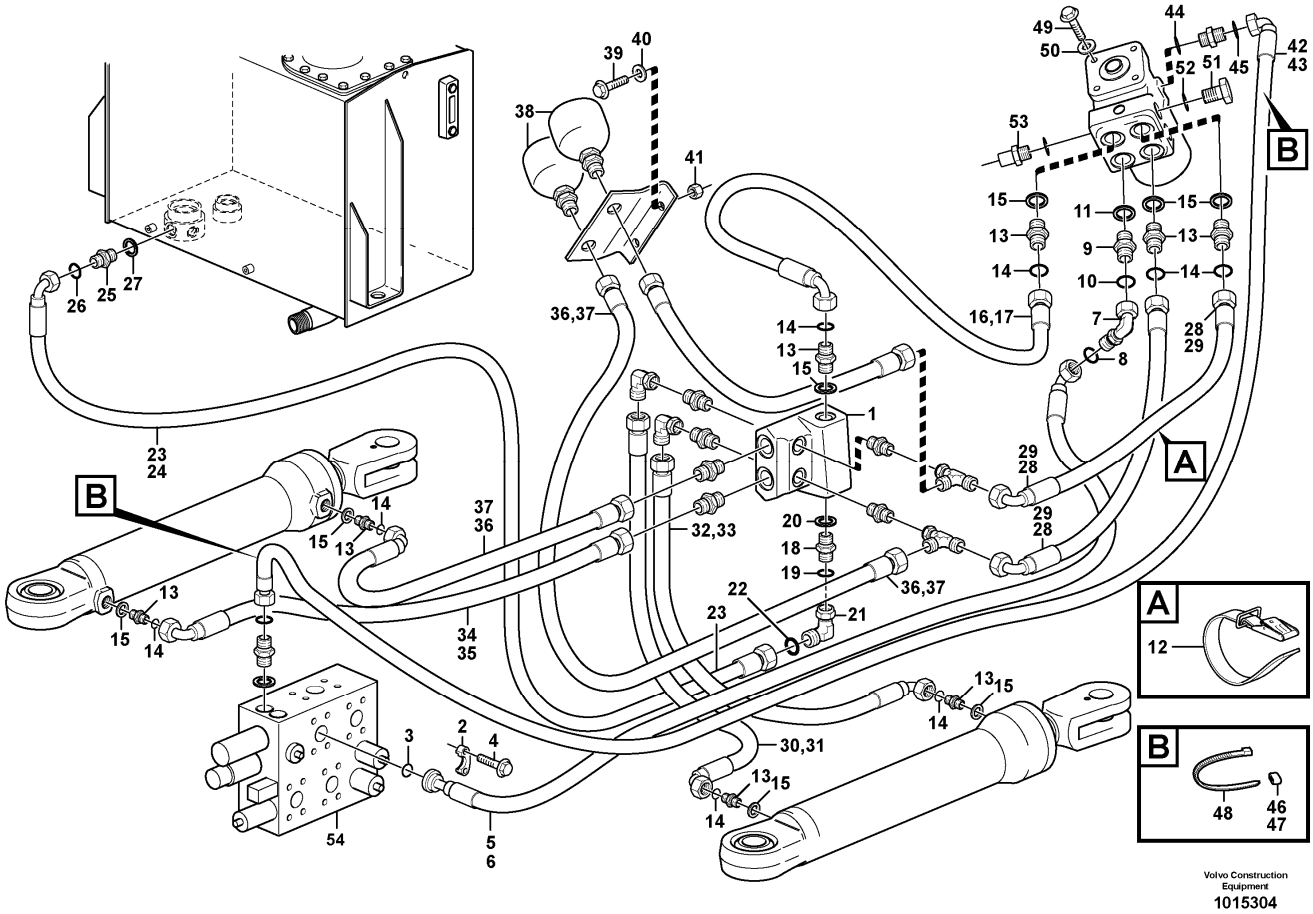

Section option	Kit	Option description
VOE33750		Wheel Loader
VOE33759		Wheel loader L60E OPEN ROPS

Q1-Q5	Option	Option description	
Q1 STD OPEN ROPS			

Pos	Part	Q1	Q2	Q3	Q4	Q5	PS	Kit	Description	Option(s)	Remark
1		1							Valve block		See ref 912/100
2	VOE13948699	1							O-ring		
3	VOE11015454	2							Flange half		
4	VOE946472	4							Flange screw		
5	VOE11172058	2							Accumulator		
6		1							Valve		See ref 645/300

7	VOE11173217	1							Hose assembly		
8		2							Nipple		See ref 645/300
9	VOE11173220	2							Hose assembly		
10		1					NS		Bracket		
11	VOE946671	2							Flange screw		
12	VOE11117464	2							Plain washer		(VOE13960141)
13	VOE948645	2							Flange lock nut		
14	VOE11173215	1							Hose assembly		
15	VOE13933914	1							Nipple		P
16	VOE990739	1							•O-ring		(VOE4880663)
17	VOE14211858	1							•Sealing ring		
18	VOE11173217	1							Hose assembly		
19		1							Valve block		See ref 645/450
20	VOE13933871	4							Nipple		
21	VOE990738	4							•O-ring		(VOE4880493)
22	VOE14211858	4							•Sealing ring		
23	VOE11163005	1							Hose assembly		
24	VOE935423	2							Elbow nipple		T
25	VOE990739	1							•O-ring		(VOE4880663)
26	VOE935203	1							Nipple		
27	VOE990739	1							•O-ring		(VOE4880663)
28	VOE14211860	1							•Sealing ring		
29	VOE11173216	1							Hose assembly		
30	VOE935037	1							Nipple		
31	VOE990739	1							•O-ring		(VOE4880663)
32	VOE14211864	1							•Sealing ring		
33		1							Hydr fluid tank		See ref 911/100
34	VOE11172901	1							Hose assembly		
35	VOE11173503	1							Hose assembly		
36	VOE11015453	8							Flange half		
37	VOE13945444	16							Screw		
38	VOE11410105	1							Hose assembly		
39	VOE11172557	1							Hose assembly		
40	VOE990741	4							O-ring		
41	VOE11104606	3							Retaining strap		
42	VOE984758	4							Flange screw		(VOE13965188)
43	VOE13960143	4							Washer		
44	VOE929359	2							Plug		
45	VOE14013069	2							Sealing washer		
46	VOE936439	1							Testing nipple		
47	VOE955990	1							•O-ring		
48	VOE935548	1							Nipple		
49	VOE990736	1							•O-ring		
50	VOE14211856	1							•Sealing ring		
51	VOE11173214	1					SS		Hose assembly		
52	VOE11173896	1							Restricting reverse valve		

	VOE11019434	1							•Compression spring		
53	VOE14013067	1							Sealing washer		
54	VOE990736	1							O-ring		
55	VOE4881438	2							Cable tie		
56	VOE4881453	2							Marking sleeve		VIOL
	VOE4881456	2							Marking sleeve		ORANGE
57		2							Hydraulic cylinder		

VOLVO

Construction Equipment

PROSIS Part Information

Date:	Image id:	Catalogue:	Model:
10/09/2018	**1005399**	**20009**	**L60E**
Brand:	Serial:	Group/Section:	Title:
Volvo	**1001-3355, 60001-61214, 70001-70530**	**645/150**	**Hydraulic cylinder with fitting parts STD, OPEN ROPS**

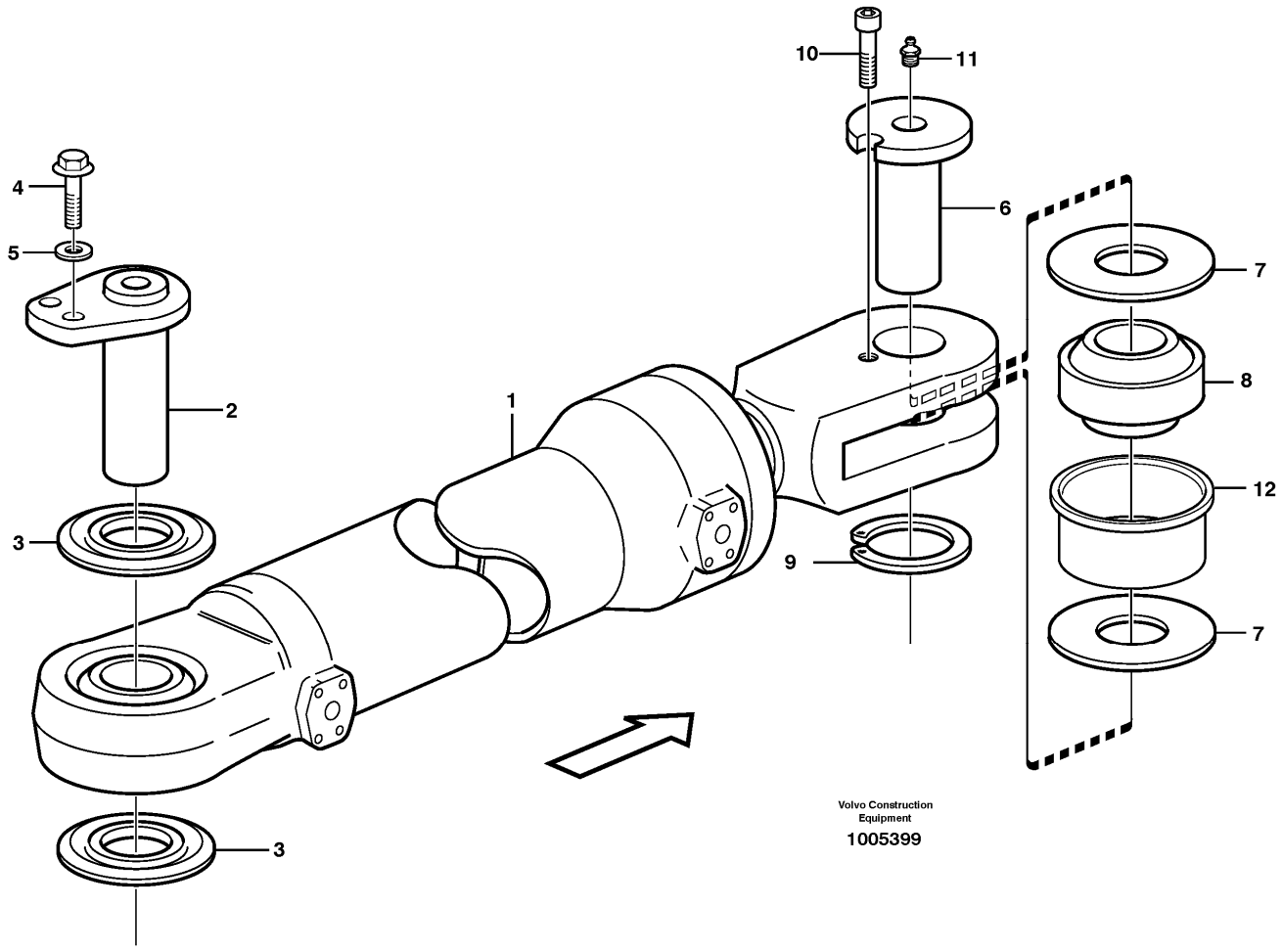

Section option	Kit	Option description
VOE33750		Wheel Loader
VOE33759		Wheel loader L60E OPEN ROPS

Pos	Part	Q1	Q2	Q3	Q4	Q5	PS	Kit	Description	Option(s)	Remark
1		2							Hydraulic cylinder		See ref 645/200
2	VOE11176716	2							Pin		
3	VOE4782479	4							Sealing ring		
4	VOE946671	4							Flange screw		
5	VOE11117464	4							Plain washer		(VOE13960141)
6	VOE11020094	2					SS		Pin		
7	VOE11020098	4							Washer		
8	VOE184428	2							Spherical plain		

									bearing		
9	VOE13914468	2							Snap ring		
10	VOE13941793	2							Screw		
11	VOE914167	2							Lubricating nipple		
12	VOE11176539	2							Bushing		

VOLVO

Construction Equipment

PROSIS Part Information

Date:	Image id:	Catalogue:	Model:
10/09/2018	**1000731**	**20009**	**L60E**
Brand:	Serial:	Group/Section:	Title:
Volvo	**1001-3355, 60001-61214, 70001-70530**	**645/200**	**Hydraulic cylinder S/N - 1627 SWE, - 60296 USA, - 70145 BRA.**

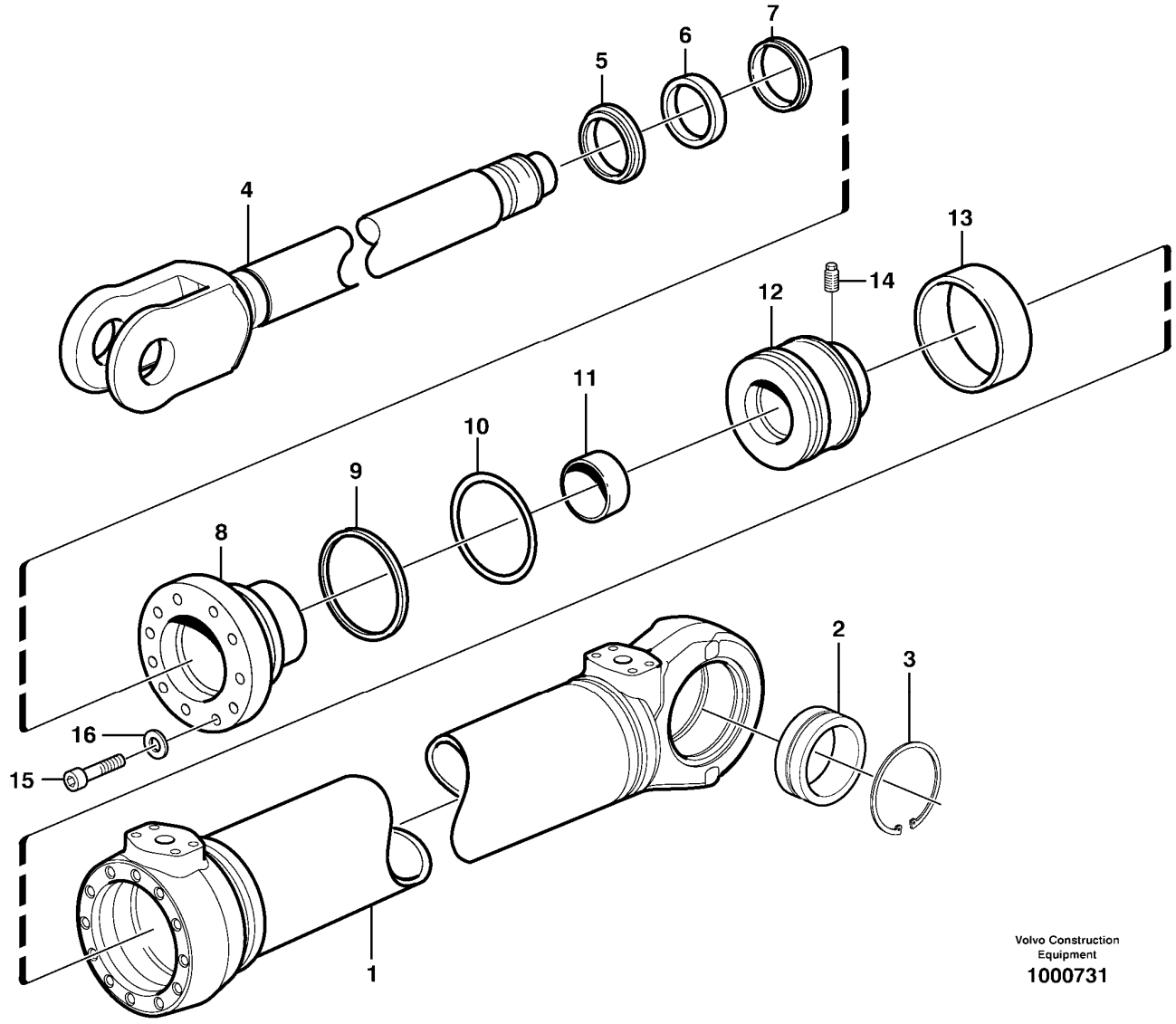

Section option	Kit	Option description
VOE33750		Wheel Loader
VOE33759		Wheel loader L60E OPEN ROPS

Q1-Q5	Option	Option description	
Q1 STD OPEN ROPS			

Pos	Part	Q1	Q2	Q3	Q4	Q5	PS	Kit	Description	Option(s)	Remark

	VOE11107530	1					SS		Hydraulic cylinder		REMAN VOE9011107530
1		1					NS		•Cylinder tube		
2	VOE184062	1					SS		•Spherical plain bearing		
3	VOE914538	2							•Retaining ring		
4	VOE11107389	1							•Piston rod		
5	VOE11005052	1						K	•Scraper ring		
6	VOE11005091	1						K	•Piston rod seal		
7	VOE11107424	1						K	•Piston rod seal		
8	VOE11107395	1					OP		•Piston rod guide		
9	VOE4881099	1						K	•Back-up ring		
10	VOE967343	1						K	•O-ring		
11	VOE11107549	1							•Bushing		
12	VOE4784892	1							•Piston		
13	VOE4833022	1						K	•Seal		
14	VOE4782717	1							•Spring pin		
15	VOE13948400	6							•Screw		
16	VOE13941907	6							•Washer		
	VOE11709872	1							Sealing kit		

VOLVO

Construction Equipment

PROSIS Part Information

Date:	Image id:	Catalogue:	Model:
10/09/2018	**1016973**	**20009**	**L60E**
Brand:	Serial:	Group/Section:	Title:
Volvo	**1001-3355, 60001-61214, 70001-70530**	**645/250**	**Hydraulic cylinder S/N 1628 - SWE, 60297 - USA, 70146 - BRA.**

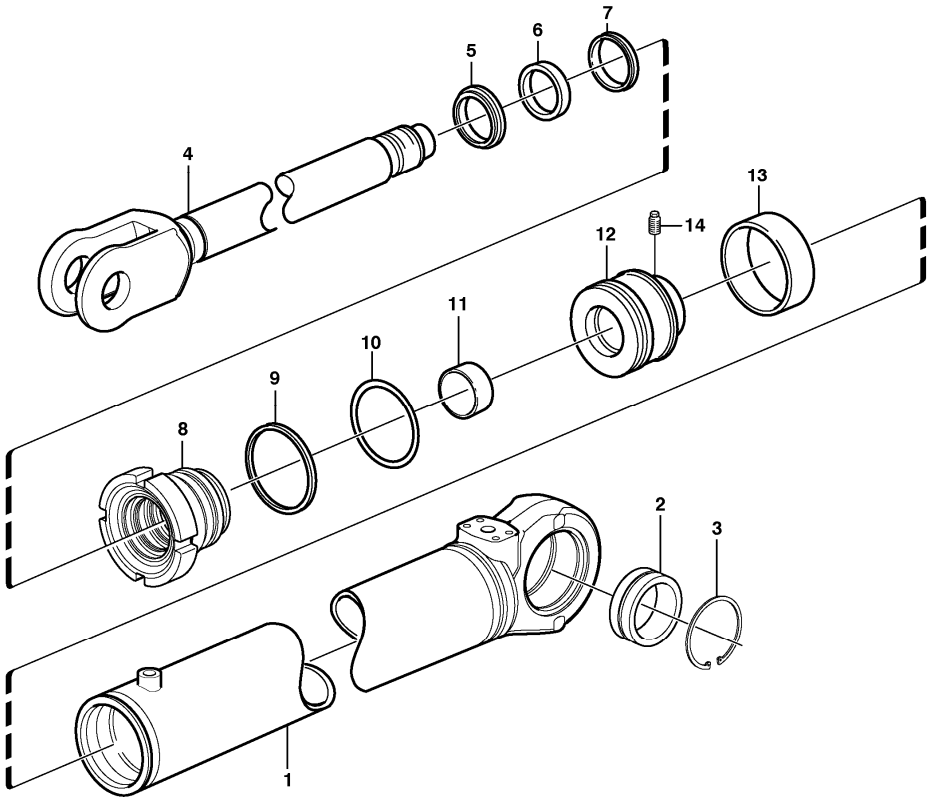

Volvo Construction Equipment
1016973

Section option	Kit	Option description
VOE33750		Wheel Loader
VOE33759		Wheel loader L60E OPEN ROPS

Q1-Q5	Option	Option description	
Q1 STD OPEN ROPS			

Pos	Part	Q1	Q2	Q3	Q4	Q5	PS	Kit	Description	Option(s)	Remark
	VOE11107764	1					SS		Hydraulic cylinder		REMAN VOE9011107837
1		1					NS		•Cylinder tube		
2	VOE184062	1					SS		•Spherical plain bearing		
3	VOE914538	2							•Retaining ring		

4	VOE11107389	1							•Piston rod		
5	VOE11005052	1						K	•Scraper ring		
6	VOE11005091	1						K	•Piston rod seal		
7	VOE11107424	1						K	•Piston rod seal		
8	VOE11107765	1							•Piston rod guide		
9	VOE4881099	1						K	•Back-up ring		
10	VOE967343	1						K	•O-ring		
11	VOE11107549	1							•Bushing		
12	VOE4784892	1							•Piston		
13	VOE4833022	1						K	•Seal		
14	VOE4782717	1							•Spring pin		
	VOE11709872	1							Sealing kit		

VOLVO

Construction Equipment

PROSIS Part Information

Date:	Image id:	Catalogue:	Model:
10/09/2018	**1036092**	**20009**	**L60E**
Brand:	Serial:	Group/Section:	Title:
Volvo	**1001-3355, 60001-61214, 70001-70530**	**645/275**	**Hydraulic cylinder S/N 2385 - SWE, 60721 - USA, 70294 - BRA.**

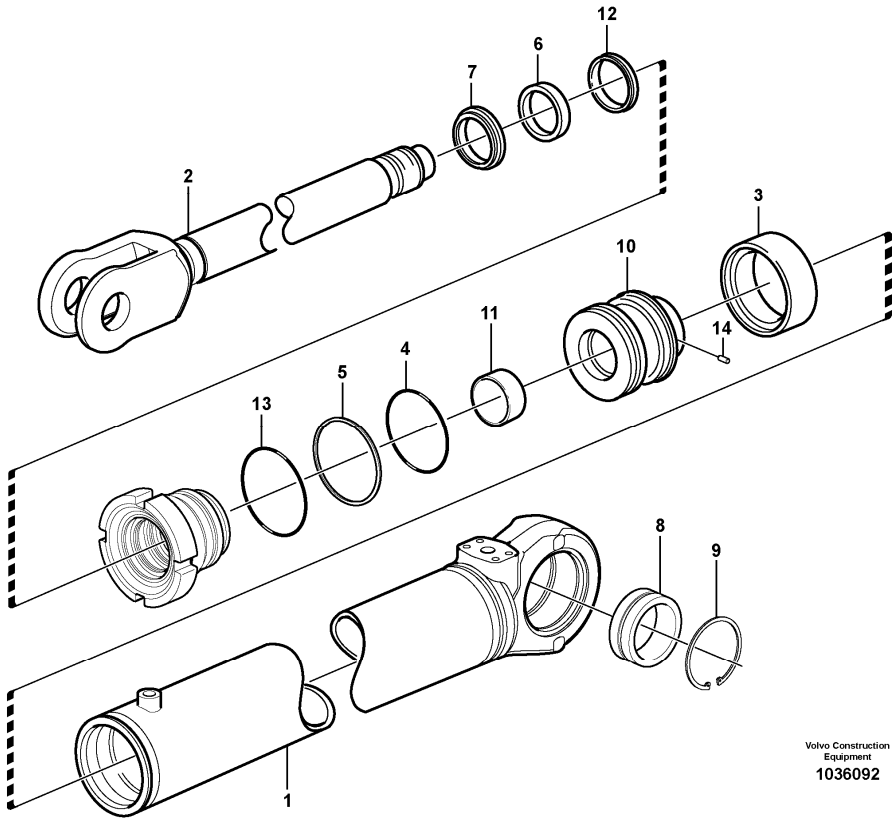

Pos	Part	Q1	Q2	Q3	Q4	Q5	PS	Kit	Description	Option(s)	Remark
1	VOE11107837	2							Hydraulic cylinder		REMAN VOE9011107837, VOE9017225200
2	VOE11107842	1							•Piston rod		
3	VOE4833022	1						K	•Seal		
4	VOE967343	1						K	•O-ring		
5	VOE4881099	1						K	•Back-up ring		
6	VOE11005091	1						K	•Piston rod seal		
7	VOE11005052	1						K	•Scraper ring		
8	VOE184062	1					SS		•Spherical plain bearing		
9	VOE914538	2							•Retaining ring		
10	VOE4784892	1							•Piston		
11	VOE11107549	1							•Bushing		

12	VOE11107424	1						K	•Piston rod seal		
13	VOE983971	1							•O-ring		
14	VOE4782717	1							•Spring pin		
	VOE11709872	1							Sealing kit		

VOLVO

Construction Equipment

PROSIS Part Information

Date:	Image id:	Catalogue:	Model:
10/09/2018	**1004702**	**20009**	**L60E**
Brand:	Serial:	Group/Section:	Title:
Volvo	**1001-3355, 60001-61214, 70001-70530**	**645/300**	**Shift valve with fitting parts STD, OPEN ROPS**

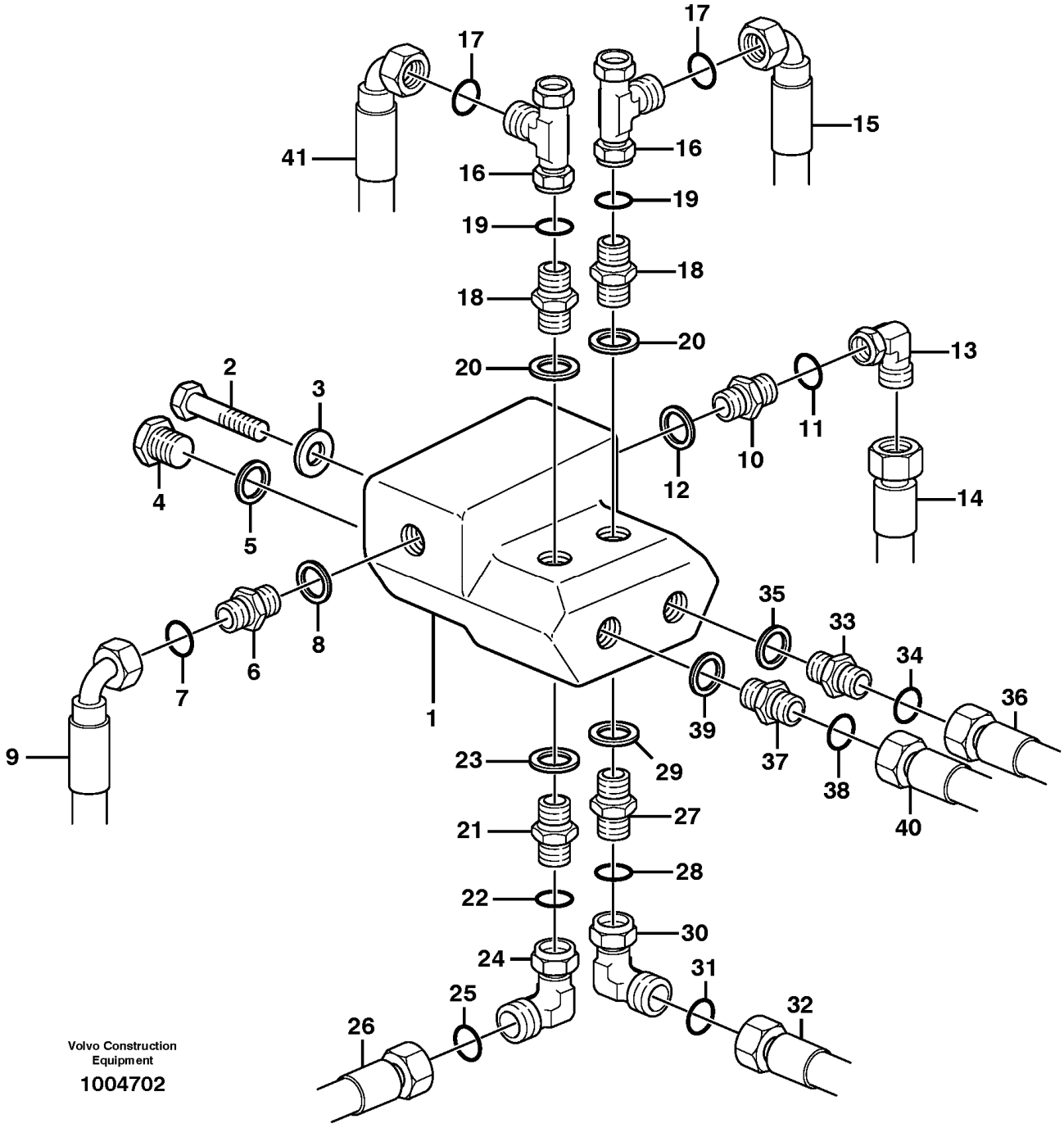

Section option	Kit	Option description
VOE33750		Wheel Loader

VOE33759		Wheel loader L60E OPEN ROPS

Pos	Part	Q1	Q2	Q3	Q4	Q5	PS	Kit	Description	Option(s)	Remark
1		1							Valve		See ref 645/350
2	VOE13945444	2							Screw		
3	VOE11117464	2							Plain washer		(VOE13960141)
4	VOE944507	2							Plug		
5	VOE14013069	2							Sealing washer		
6	VOE13933871	1							Nipple		
7	VOE990738	1							•O-ring		(VOE4880493)
8	VOE14211858	1							•Sealing ring		
9		1							Hose assembly		See ref 645/100
10	VOE935203	1							Nipple		
11	VOE990739	1							•O-ring		(VOE4880663)
12	VOE14211860	1							•Sealing ring		
13	VOE935423	1							Elbow nipple		
14		1							Hose assembly		See ref 645/100
15		1							Hose assembly		See ref 645/100
16	VOE13933878	2							T-nipple		
17	VOE990738	2							•O-ring		(VOE4880493)
18	VOE13933871	2							Nipple		
19	VOE990738	2							•O-ring		(VOE4880493)
20	VOE14211858	2							•Sealing ring		
21	VOE13933871	1							Nipple		
22	VOE990738	1							•O-ring		(VOE4880493)
23	VOE14211858	1							•Sealing ring		
24	VOE13933872	1							Elbow nipple		
25	VOE990738	1							•O-ring		(VOE4880493)
26		1							Hose assembly		See ref 645/100
27	VOE13933871	1							Nipple		
28	VOE990738	1							•O-ring		(VOE4880493)
29	VOE14211858	1							•Sealing ring		
30	VOE13933872	1							Elbow nipple		
31	VOE990738	1							•O-ring		(VOE4880493)
32		1							Hose assembly		See ref 645/100
33	VOE13933917	1							Nipple		
34	VOE990738	1							•O-ring		(VOE4880493)
35	VOE14211859	1							•Sealing ring		
36		1							Hose assembly		See ref 645/100
37	VOE13933917	1							Nipple		
38	VOE990738	1							•O-ring		(VOE4880493)
39	VOE14211859	1							•Sealing ring		
40		1							Hose assembly		See ref 645/100
41		1							Hose assembly		See ref 645/100

VOLVO

Construction Equipment

PROSIS Part Information

Date:	Image id:	Catalogue:	Model:
10/09/2018	**ED270**	**20009**	**L60E**
Brand:	Serial:	Group/Section:	Title:
Volvo	**1001-3355, 60001-61214, 70001-70530**	**645/350**	**Shift valve STD, OPEN ROPS**

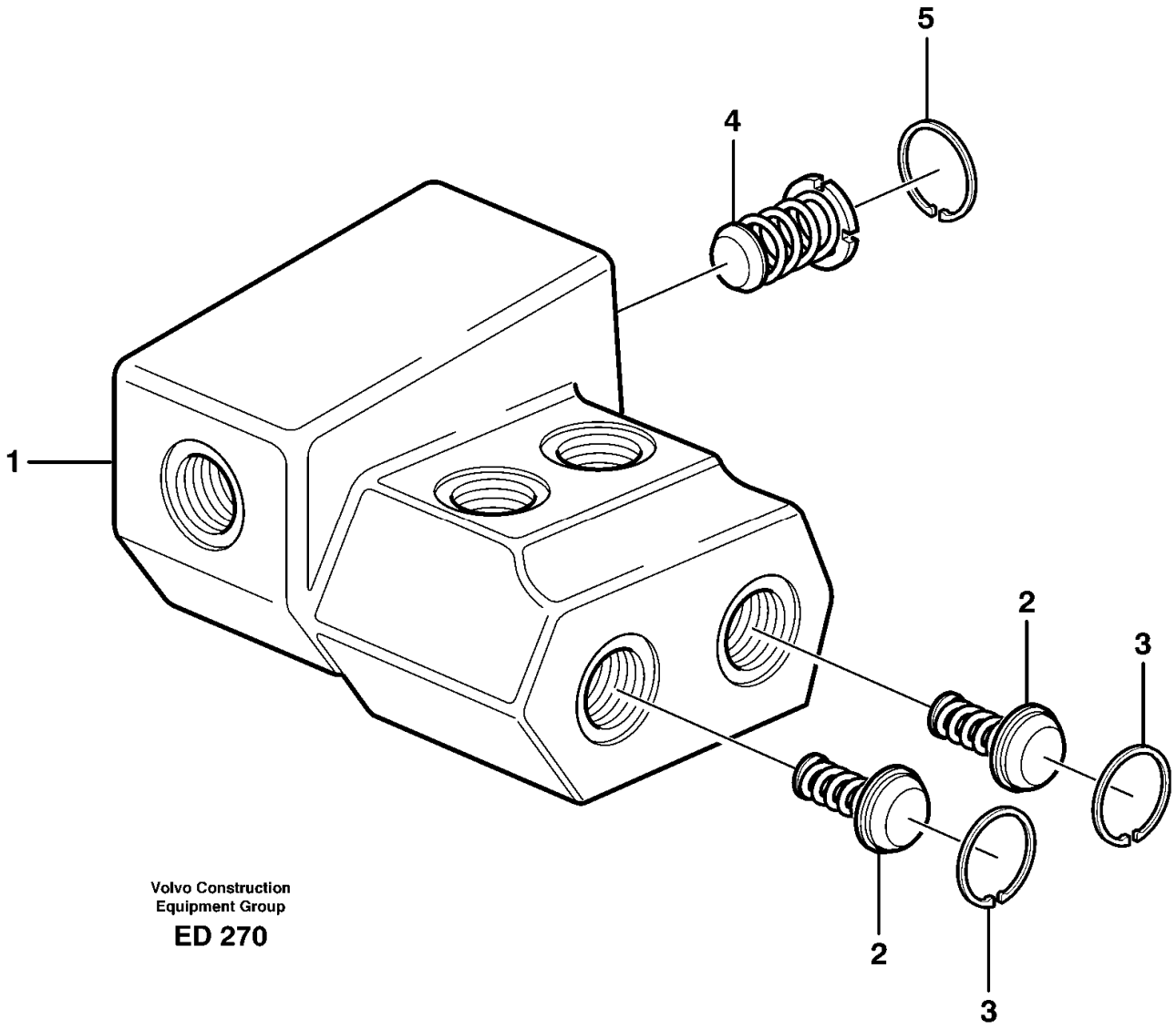

Section option	Kit	Option description
VOE33750		Wheel Loader
VOE33759		Wheel loader L60E OPEN ROPS

Pos	Part	Q1	Q2	Q3	Q4	Q5	PS	Kit	Description	Option(s)	Remark
	VOE11018250	1					SS		Valve		
1		1					NS		•Valve housing		
2	VOE4787060	2							•Non-return valve		
3	VOE914510	2							•Retaining ring		

4	VOE11018248	1							•Non-return valve insert		
5	VOE13948527	1							•Snap ring		

VOLVO

Construction Equipment

PROSIS Part Information

Date:	Image id:	Catalogue:	Model:
10/09/2018	**EF245**	**20009**	**L60E**
Brand:	Serial:	Group/Section:	Title:
Volvo	**1001-3355, 60001-61214, 70001-70530**	**645/400**	**Steering unit STD, OPEN ROPS**

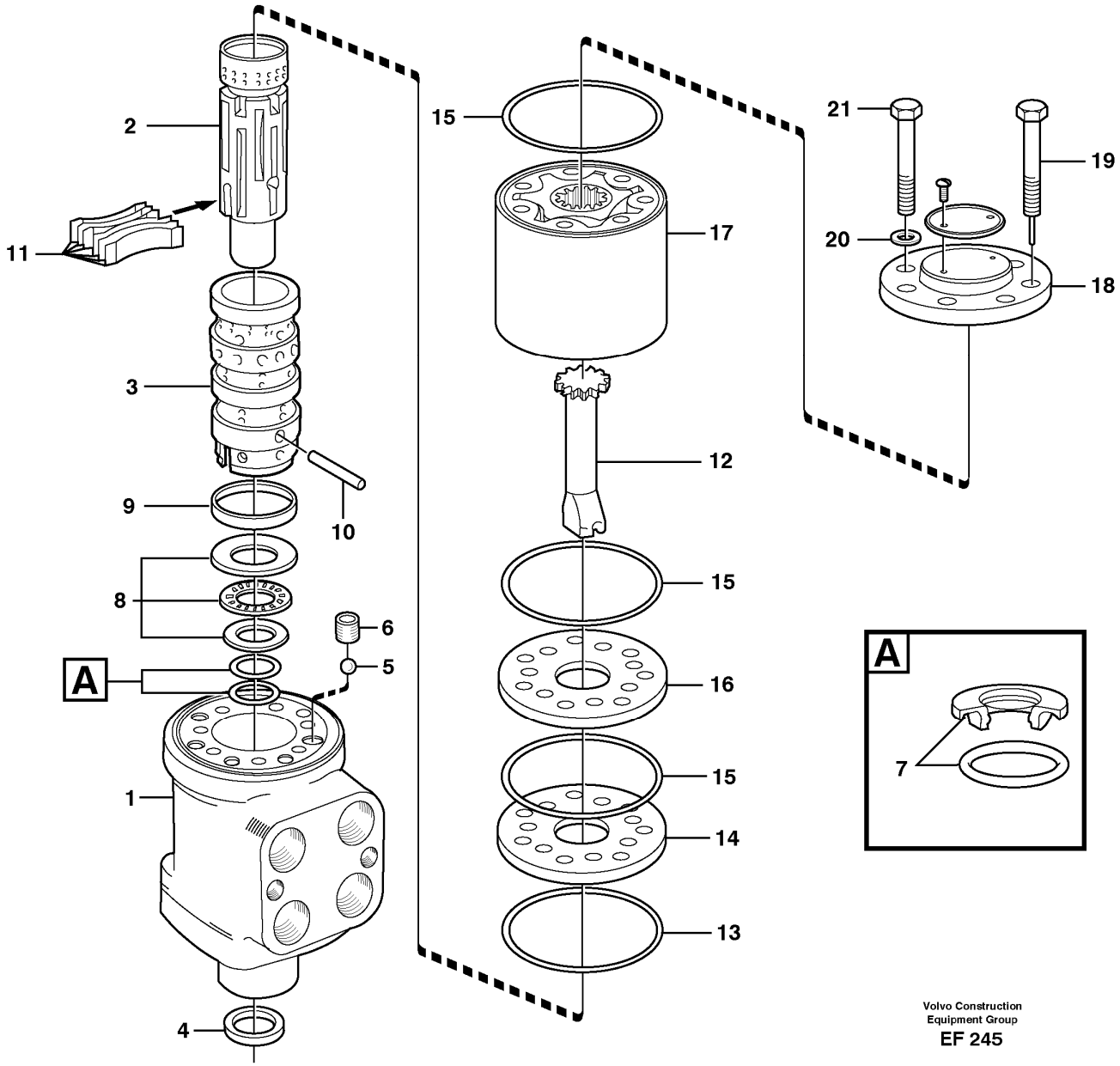

Section option	Kit	Option description
VOE33750		Wheel Loader
VOE33759		Wheel loader L60E OPEN ROPS

Q1-Q5	Option	Option description	
Q1 S/N - 3159			

Pos	Part	Q1	Q2	Q3	Q4	Q5	PS	Kit	Description	Option(s)	Remark
	VOE11999317	1							Control valve		
1		1					NS		•Housing		
2		1					NS		•Slide		
3		1					NS		•Sleeve		
4	VOE6639845	1						K	•Seal		
5	VOE184645	1							•Ball		
6	VOE595380	1							•Bushing		
7	VOE11701273	1						K	•Sealing ring		
	VOE11701272	1						K	•O-ring		
8	VOE6211922	1							•Thrust bearing		
9	VOE6213305	1							•Ring		
10	VOE595377	1							•Pin		
11	VOE11996362	1							•Spring kit		
12	VOE11996374	1							•Shaft		
13	VOE595381	1						K	•O-ring		
14	VOE11988207	1							•Plate		
15	VOE595382	3						K	•O-ring		
16	VOE11988207	1							•Plate		
17	VOE11704428	1							•Rotor kit		
18	VOE595383	1							•Cover		
19	VOE11704429	1							•Screw		
20	VOE6625755	7						K	•Washer		
21	VOE11704430	6							•Screw		
	VOE11701270	1							•Sealing kit		

VOLVO

Construction Equipment

PROSIS Part Information

Date:	Image id:	Catalogue:	Model:
10/09/2018	**1026020**	**20009**	**L60E**
Brand:	Serial:	Group/Section:	Title:
Volvo	**1001-3355, 60001-61214, 70001-70530**	**645/425**	**Steering unit S/N 3160-, S/N 70485 -**

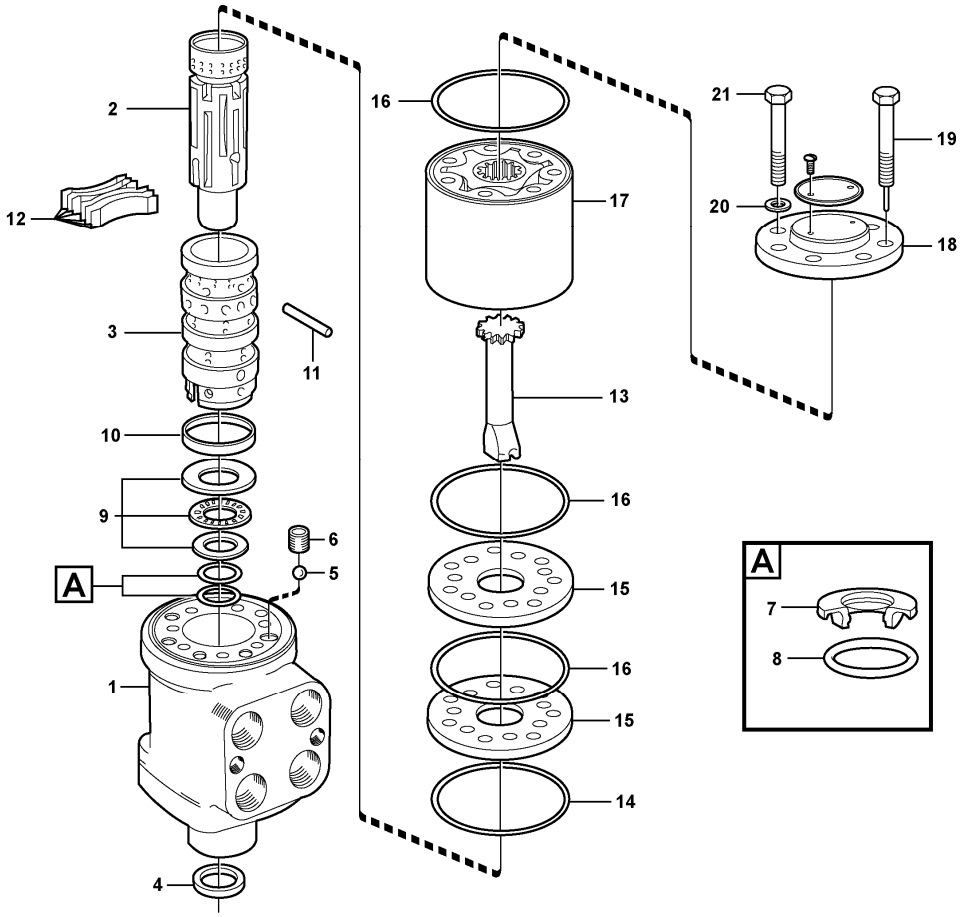

Pos	Part	Q1	Q2	Q3	Q4	Q5	PS	Kit	Description	Option(s)	Remark
	VOE11716760	1							Control valve		
1		1					NS		•Housing		
2		1					NS		•Slide		
3		1					NS		•Sleeve		
4	VOE6639845	1						K	•Seal		
5	VOE184645	1							•Ball		
6	VOE595380	1							•Bushing		
7	VOE11701273	1						K	•Sealing ring		
8	VOE11701272	1						K	•O-ring		
9	VOE6211922	1							•Thrust bearing		
10	VOE6213305	1							•Ring		
11	VOE595377	1							•Pin		
12	VOE11996362	1							•Spring kit		

13	VOE11996374	1							•Shaft		
14	VOE595381	1						K	•O-ring		
15	VOE11988207	1							•Plate		See footnote 2355)
16	VOE595382	3						K	•O-ring		
17	VOE11704428	1							•Rotor kit		
18	VOE595383	1							•Cover		
19	VOE11704429	1							•Screw		
20	VOE6625755	7						K	•Washer		
21	VOE11704430	6							•Screw		
	VOE11701270	1							•Sealing kit		

2355) SE- Includes upper and lower distribution plate

VOLVO

Construction Equipment

PROSIS Part Information

Date:	Image id:	Catalogue:	Model:
10/09/2018	**EL251**	**20009**	**L60E**
Brand:	Serial:	Group/Section:	Title:
Volvo	**1001-3355, 60001-61214, 70001-70530**	**645/450**	**Valve housing STD, OPEN ROPS**

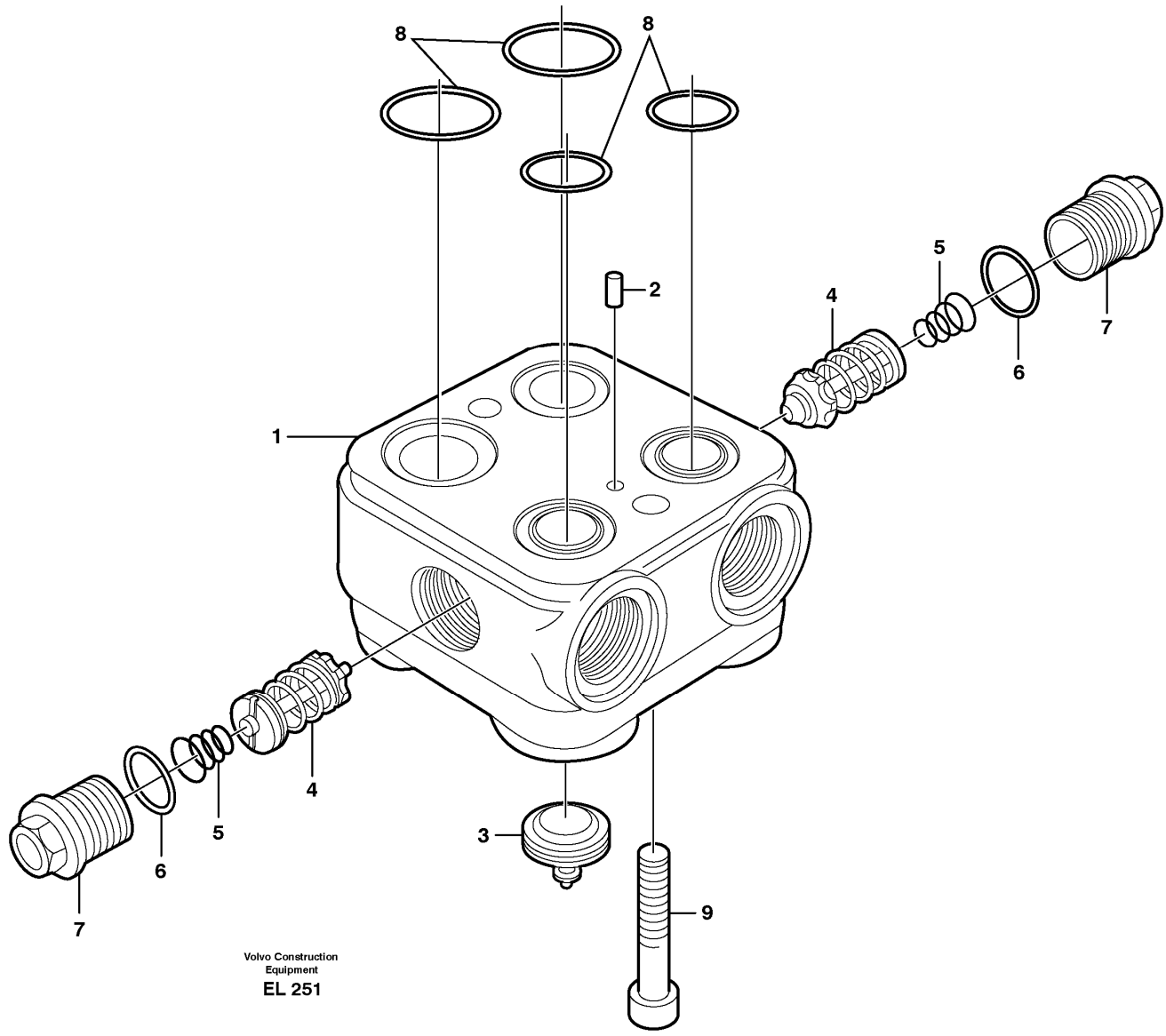

Section option	Kit	Option description
VOE33750		Wheel Loader
VOE33759		Wheel loader L60E OPEN ROPS

Q1-Q5	Option	Option description	
Q1 S/N - 3159 - 70484			
Q2 S/N 3160 - 70485 -			

Pos	Part	Q1	Q2	Q3	Q4	Q5	PS	Kit	Description	Option(s)	Remark
	VOE11701277	1							Valve body		
	VOE11716761		1						Valve body		
1		1	1				NS		•Housing		
2		1	1				NS		•Pin		
3		1	1				NS		•Valve		
4	VOE11712500	2	2						•Shock Valve		
5	VOE11998573	2	2						•Spring		
6	VOE11700195	2	2						•O-ring		
7	VOE11700780	2	2						•Plug		
8	VOE11994428	1	1						•O-ring kit		
9	VOE11994509	2							•Screw		

VOLVO

Construction Equipment

PROSIS Part Information

Date:	Image id:	Catalogue:	Model:
10/09/2018	**1061520**	**20009**	**L60E**
Brand:	Serial:	Group/Section:	Title:
Volvo	**1001-3355, 60001-61214, 70001-70530**	**647/100**	**Secondary steering system. 82033**

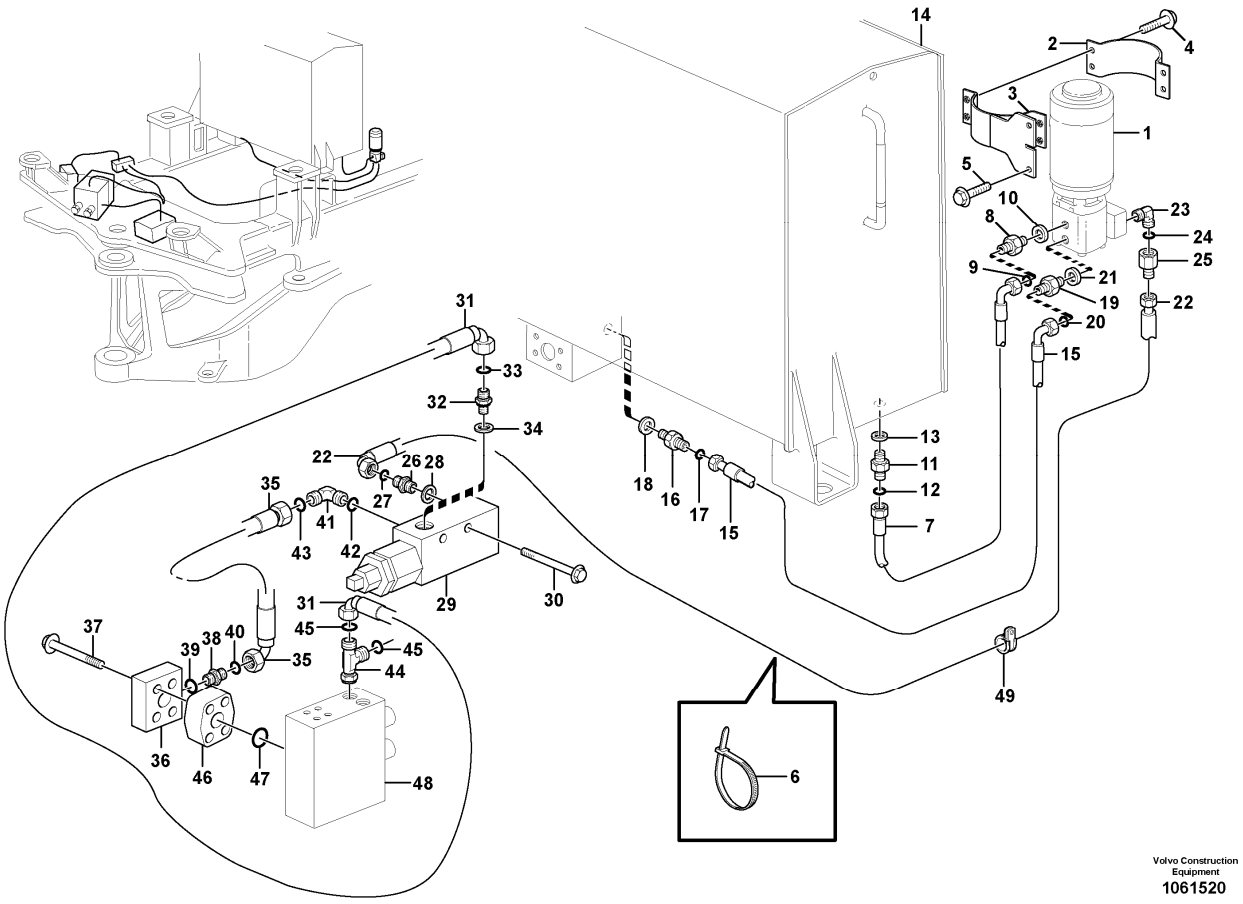

Section option	Kit	Option description
VOE82033		Secondary steering

Pos	Part	Q1	Q2	Q3	Q4	Q5	PS	Kit	Description	Option(s)	Remark
1		1							Pump unit		See ref 647/150
2	VOE11173983	1							Clamp		
3	VOE11173867	1							Attachment		
4	VOE946671	4							Flange screw		
5	VOE13965185	2							Screw		
6	VOE4881440	1							Cable tie		
7	VOE11173209	1							Hose assembly		
8	VOE13933914	1							Nipple		
9	VOE990739	1							•O-ring		(VOE4880663)
10	VOE14211858	1							•Sealing ring		

11	VOE935037	1							Nipple		
12	VOE990739	1							•O-ring		(VOE4880663)
13	VOE14211864	1							•Sealing ring		
14		1							Hydr fluid tank		See ref 911/100
15	VOE11173310	1							Hose assembly		
16	VOE13933855	1							Nipple		
17	VOE990737	1							•O-ring		(VOE4880492)
18	VOE14213676	1							•Sealing ring		
19	VOE13933897	1							Nipple		
20	VOE990737	1							•O-ring		(VOE4880492)
21	VOE14211856	1							•Sealing ring		
22	VOE11173667	1							Hose assembly		
23	VOE13933927	1							Elbow nipple		
24	VOE990738	1							•O-ring		(VOE4880493)
25	VOE11173386	1							Non-return valve		
26	VOE13933853	1							Nipple		
27	VOE990738	1							•O-ring		(VOE4880493)
28	VOE14211863	1							•Sealing ring		
29		1							Press monitor		See ref 647/200
30	VOE13965180	2							Screw		
31	VOE11173651	1							Hose assembly		
32	VOE935548	1							Nipple		
33	VOE990736	1							•O-ring		
34	VOE14211856	1							•Sealing ring		
35	VOE11148978	1							Hose assembly		
36	VOE11173260	1							Connecting block		
37	VOE13965190	4							Screw		
38	VOE13933853	1							Nipple		
39	VOE14211863	1							•Sealing ring		
40	VOE990738	1							•O-ring		(VOE4880493)
41	VOE13933869	1							Elbow nipple		
42	VOE990738	1							•O-ring		(VOE4880493)
43	VOE967750	1							•O-ring		
44	VOE13933859	1							T-nipple		
45	VOE990736	2							•O-ring		
46	VOE11173249	1							Non-return valve		
47	VOE990742	1							O-ring		
48		1							Valve block		See ref 912/300
49	VOE977599	1							Clamp		(VOE13977599)

VOLVO

Construction Equipment

PROSIS Part Information

Date:	Image id:	Catalogue:	Model:
10/09/2018	**1002112**	**20009**	**L60E**
Brand:	Serial:	Group/Section:	Title:
Volvo	**1001-3355, 60001-61214, 70001-70530**	**647/150**	**Pump unit. 82033**

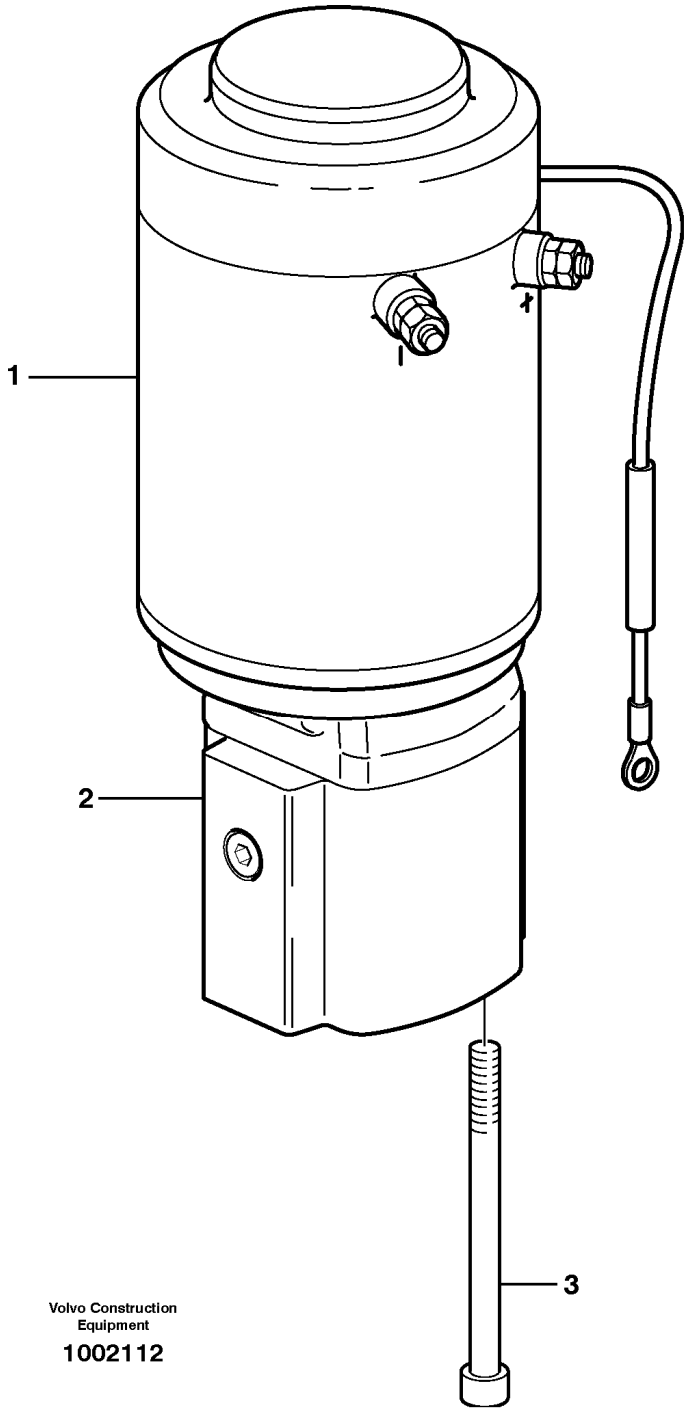

Section option	Kit	Option description

VOE82033		Secondary steering

Pos	Part	Q1	Q2	Q3	Q4	Q5	PS	Kit	Description	Option(s)	Remark
	VOE11173423	1							Pump unit		REMAN VOE9011173423
1	VOE11709637	1							•Electric motor		
2	VOE11706173	1							•Pump		
3	VOE946127	2							•Hex. socket screw		

VOLVO

Construction Equipment

PROSIS Part Information

Date:	Image id:	Catalogue:	Model:
10/09/2018	**EL267**	**20009**	**L60E**
Brand:	Serial:	Group/Section:	Title:
Volvo	**1001-3355, 60001-61214, 70001-70530**	**647/200**	**Pressure monitor. 82033**

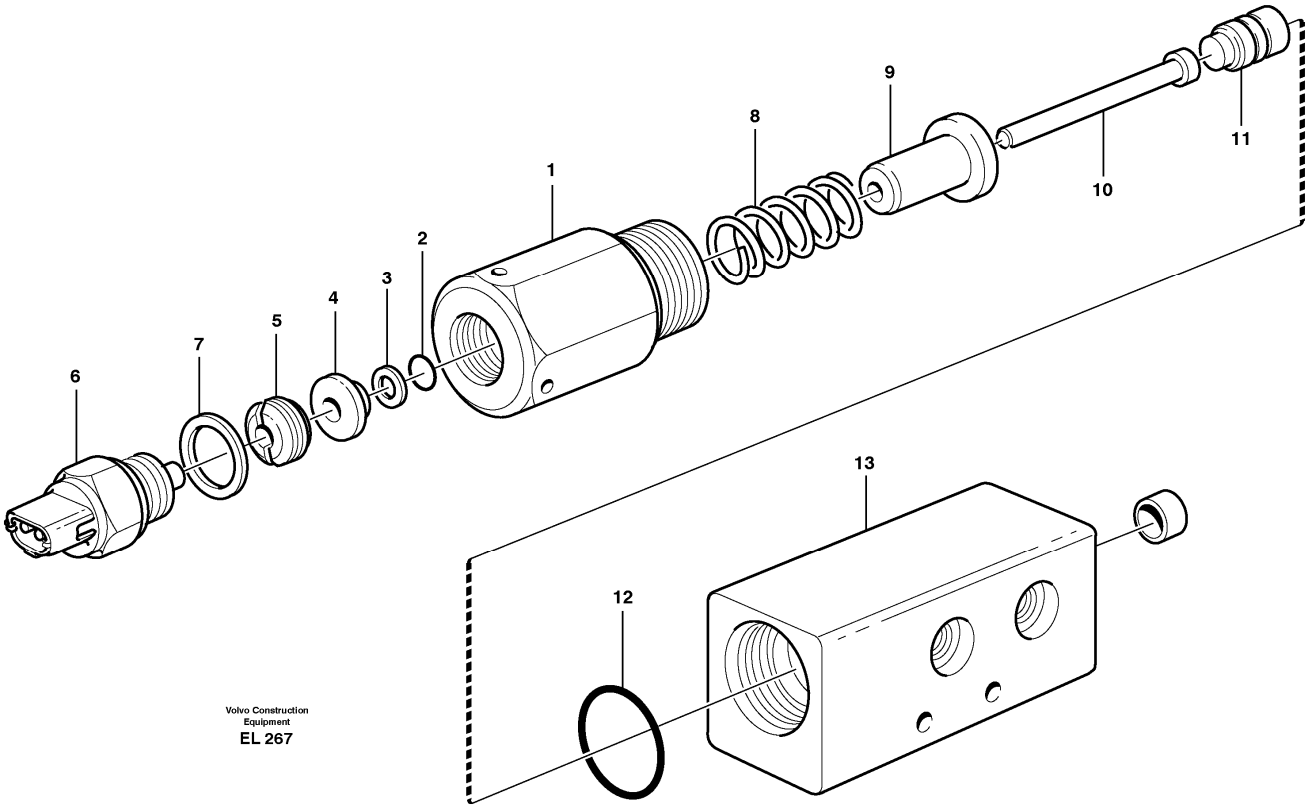

Section option	Kit	Option description
VOE82033		Secondary steering

Q1-Q5	Option	Option description	
Q1 11410315			

Pos	Part	Q1	Q2	Q3	Q4	Q5	PS	Kit	Description	Option(s)	Remark
	VOE11410315	1							Pressure monitor		
1		1					NS		•Nipple		
	VOE925066	1							•O-ring		
2	VOE925051	1							•O-ring		
3	VOE962528	1							•Back-up ring		
4		1					NS		•Washer		
5		1					NS		•Nut		
6	VOE1594043	1							•Switch		SE601
7	VOE948884	1							•Gasket		
8	VOE11048063	1							•Spring		

9		1					NS		•Guide		
10		1					NS		•Piston		
11		1					NS		•Peg		
12	VOE958229	1							•O-ring		
13	VOE11410316	1					OP		•Housing		

VOLVO

Construction Equipment

PROSIS Part Information

Date:	Image id:	Catalogue:	Model:
10/09/2018	**1013682**	**20009**	**L60E**
Brand:	Serial:	Group/Section:	Title:
Volvo	**1001-3355, 60001-61214, 70001-70530**	**660/100**	**CDC - steering 82057**

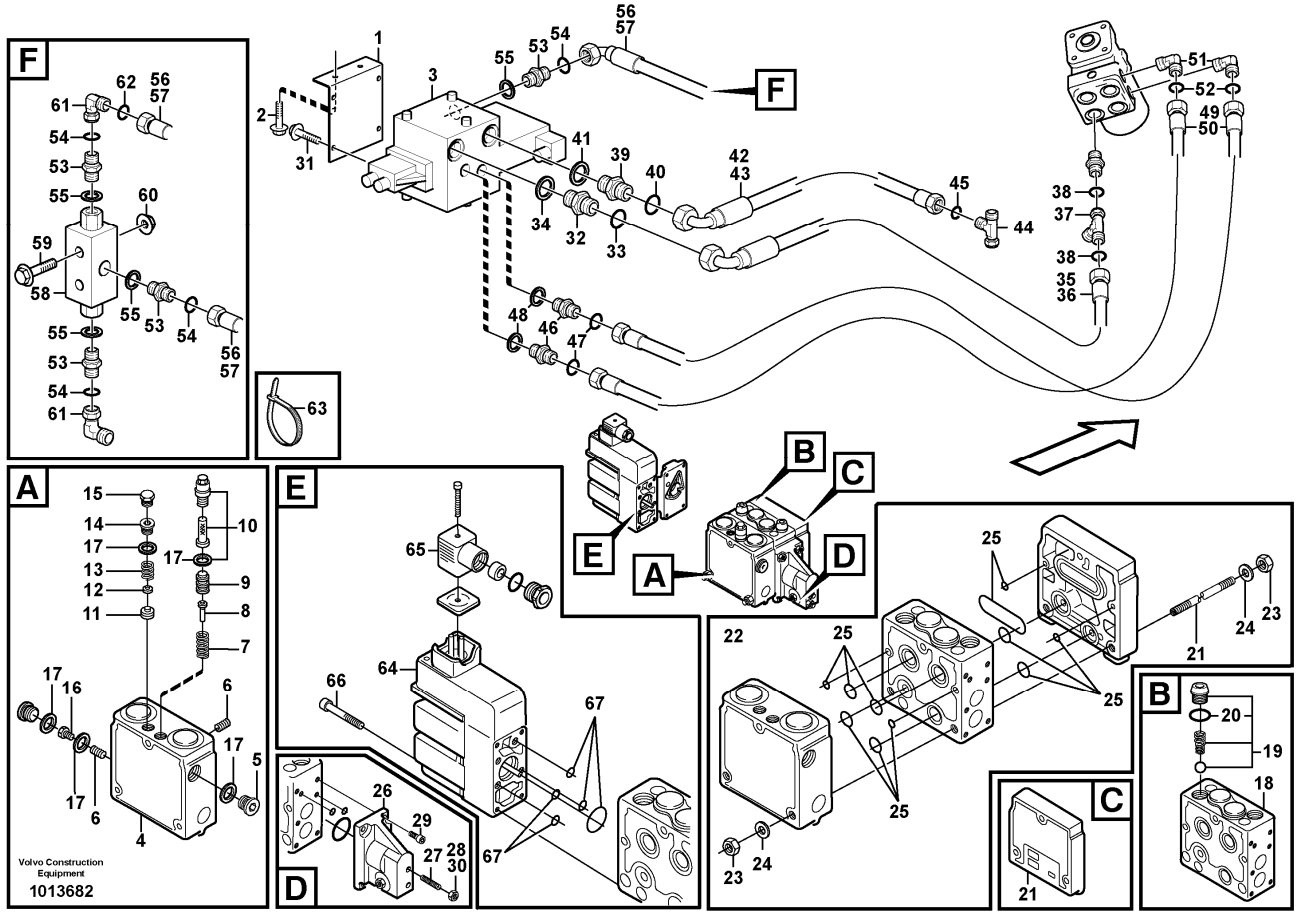

Section option	Kit	Option description
VOE82057		Comfort Drive Control, CDC

Q1-Q5	Option	Option description	
Q1 82057	VOE82057	Comfort Drive Control, CDC	

Pos	Part	Q1	Q2	Q3	Q4	Q5	PS	Kit	Description	Option(s)	Remark
	VOE11410315	1							Pressure monitor		
1		1					NS		•Nipple		
	VOE925066	1							•O-ring		
2	VOE925051	1							•O-ring		
3	VOE962528	1							•Back-up ring		
4		1					NS		•Washer		
5		1					NS		•Nut		

6	VOE1594043	1							•Switch		SE601
7	VOE948884	1							•Gasket		
8	VOE11048063	1							•Spring		
9		1					NS		•Guide		
10		1					NS		•Piston		
11		1					NS		•Peg		
12	VOE958229	1							•O-ring		
13	VOE11410316	1					OP		•Housing		

VOLVO

Construction Equipment

PROSIS Part Information

Date:	Image id:	Catalogue:	Model:
10/09/2018	**1014876**	**20009**	**L60E**
Brand:	Serial:	Group/Section:	Title:
Volvo	**1001-3355, 60001-61214, 70001-70530**	**711/100**	**Frame**

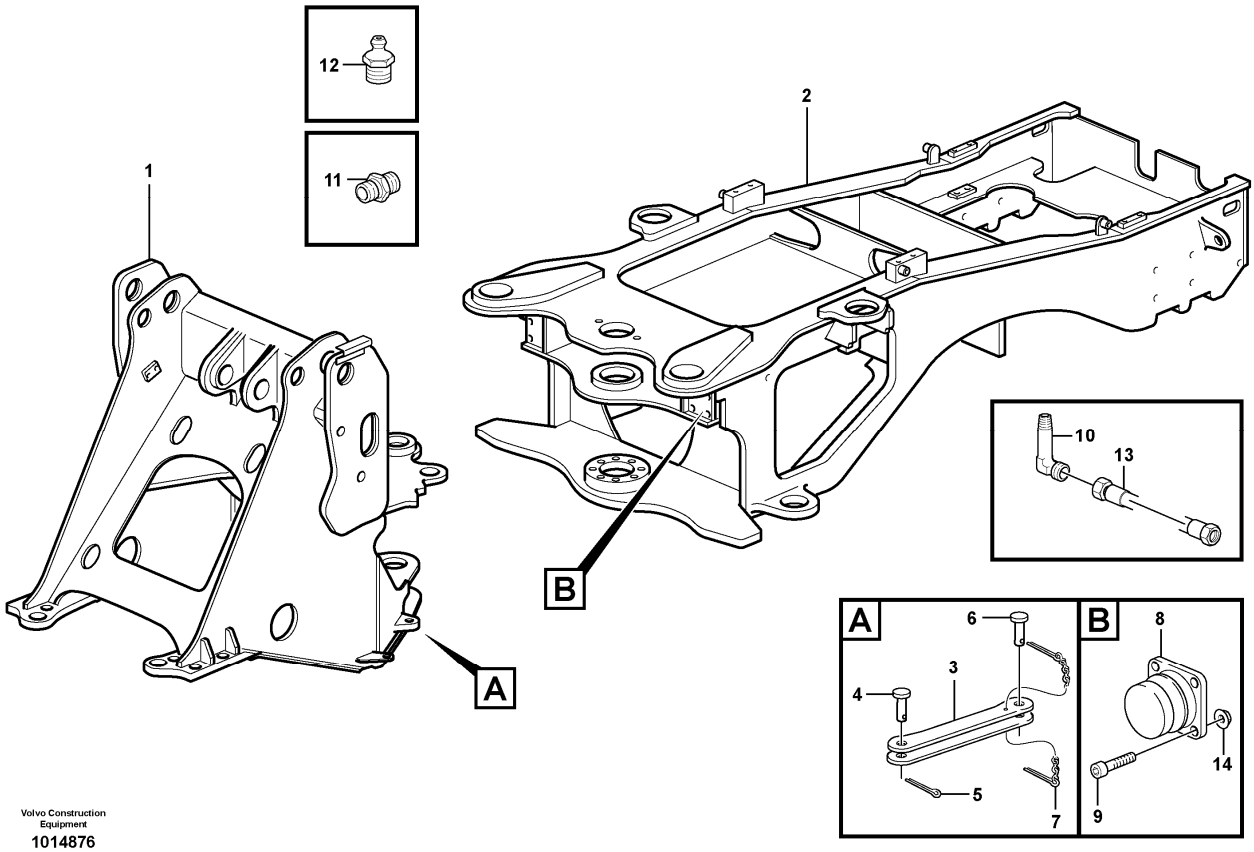

Section option	Kit	Option description
VOE33750		Wheel Loader
VOE33759		Wheel loader L60E OPEN ROPS

Q1-Q5	Option	Option description	
Q1 STD			
Q2 OPEN ROPS			

Pos	Part	Q1	Q2	Q3	Q4	Q5	PS	Kit	Description	Option(s)	Remark
1	VOE11177400	1	1						Front frame		
2	VOE11432200	1	1				OP		Rear frame		(VOE11177550)
3	VOE11177036	1	1				SS		Transport lock		(VOE11099101)SER NO - 1125
	VOE11177036	1	1				SS		Transport lock		SER NO 1126 -
4	VOE11019676	1							Pivot pin		SER NO - 1125

	VOE11177038	1	1						Pin		SER NO 1126 -
5	VOE907884	1	1						Split pin		
6	VOE11019676	1							Pivot pin		SER NO - 1125
	VOE11177038	1	1						Pin		SER NO 1126 -
7	VOE11019682	1	1						Lock Pin		
8	VOE11026989	2	2						Steering damper		
9	VOE13965185	8	8						Screw		
10	VOE4930797	2	2						Nipple		
11	VOE946089	2	2						Nipple		
12	VOE914167	2	2						Lubricating nipple		
13	VOE11176895	2	2						Hose		
14	VOE13971098	8	8						Flange nut		

VOLVO

Construction Equipment

PROSIS Part Information

Date:	Image id:	Catalogue:	Model:
10/09/2018	**1008514**	**20009**	**L60E**
Brand:	Serial:	Group/Section:	Title:
Volvo	**1001-3355, 60001-61214, 70001-70530**	**715/100**	**Protecting plates 82304**

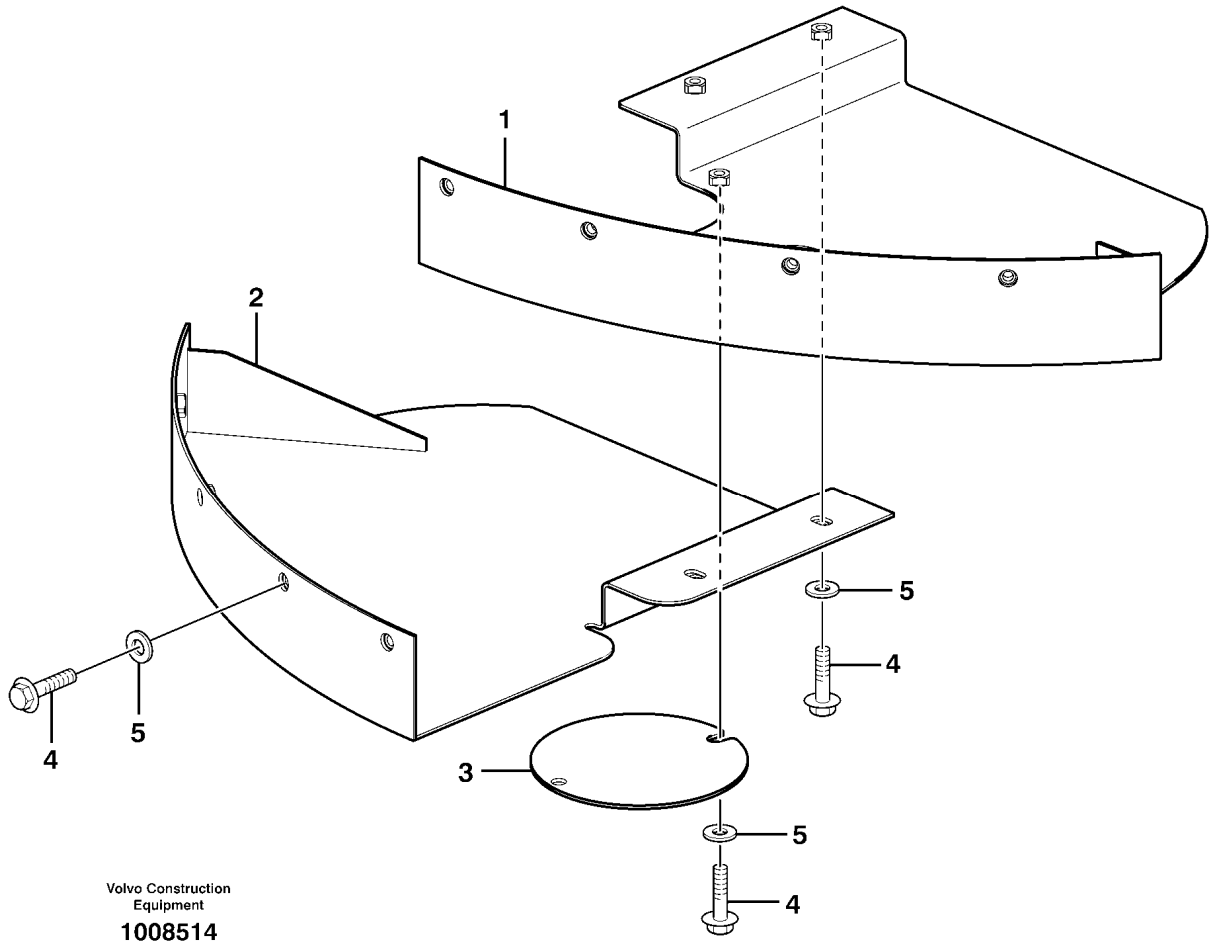

Section option	Kit	Option description
VOE82304		Protective plate under cab

Pos	Part	Q1	Q2	Q3	Q4	Q5	PS	Kit	Description	Option(s)	Remark
1	VOE11180407	1							Protecting plate		
2	VOE11180412	1							Protecting plate		
3	VOE11180416	1							Cover		
4	VOE946441	12							Flange screw		
5	VOE13960143	12							Washer		

VOLVO

Construction Equipment

PROSIS Part Information

Date:	Image id:	Catalogue:	Model:
10/09/2018	**1008042**	**20009**	**L60E**
Brand:	Serial:	Group/Section:	Title:
Volvo	**1001-3355, 60001-61214, 70001-70530**	**715/125**	**Protecting plates 82278**

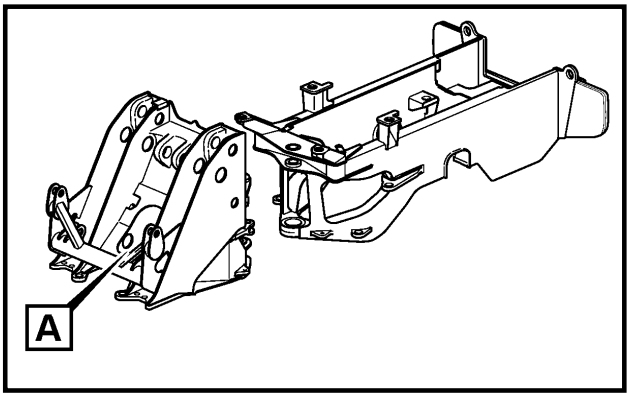

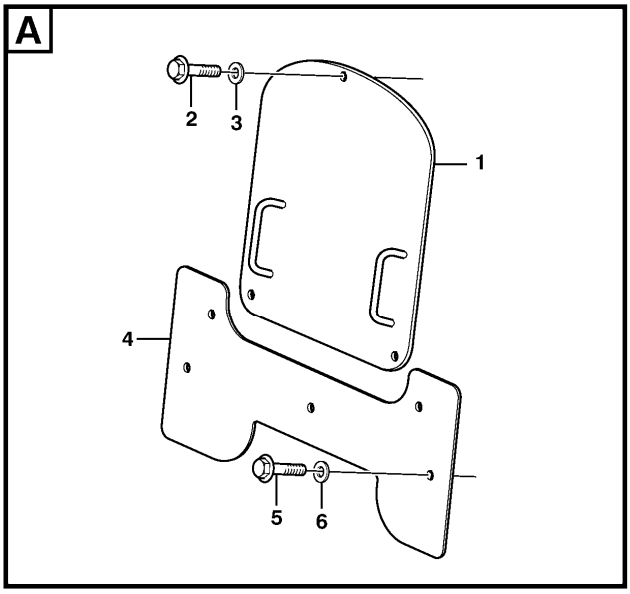

Volvo Construction Equipment
1008042

Section option	Kit	Option description
VOE82278		Valve cover, front frame

Pos	Part	Q1	Q2	Q3	Q4	Q5	PS	Kit	Description	Option(s)	Remark
1	VOE11176935	1							Hatch		
2	VOE946329	3							Flange screw		
3	VOE13960143	3							Washer		
4	VOE11180629	1							Protecting plate		
5	VOE946329	5							Flange screw		
6	VOE13960143	5							Washer		

VOLVO

Construction Equipment

PROSIS Part Information

Date:	Image id:	Catalogue:	Model:
10/09/2018	**1019549**	**20009**	**L60E**
Brand:	Serial:	Group/Section:	Title:
Volvo	**1001-3355, 60001-61214, 70001-70530**	**715/150**	**Protection for lighting**

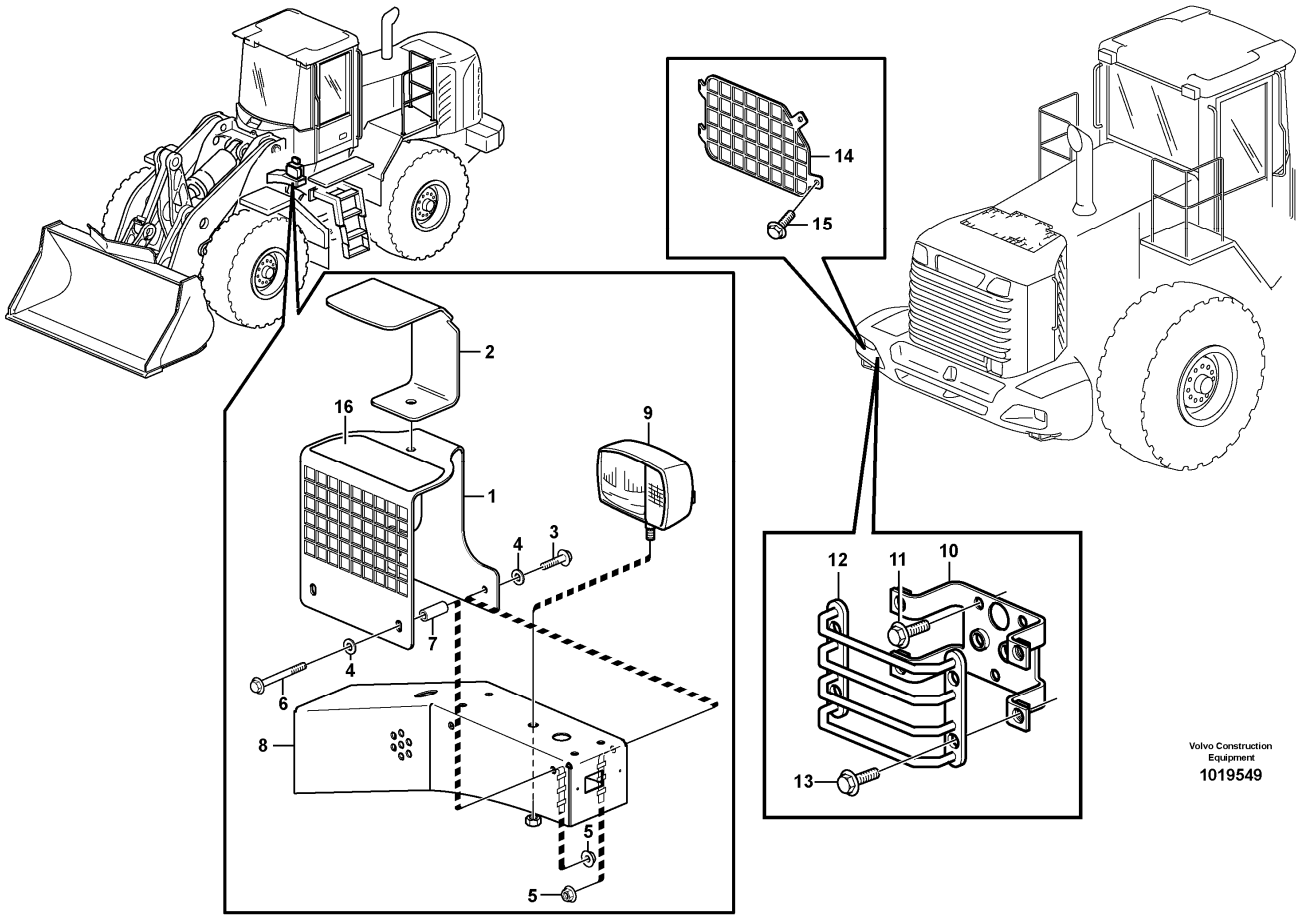

Section option	Kit	Option description
VOE82176	VOE11988663	Protective grating headlights front
VOE82177	VOE11709552	Protection Guards for Tail Lights
VOE82223		Protective grating for Tail Lights, heavy-duty

Q1-Q5	Option	Option description	
Q1 82176	VOE82176	Protective grating headlights front	
Q2 82177	VOE82177	Protection Guards for Tail Lights	
Q3 82223	VOE82223	Protective grating for Tail Lights, heavy-duty	

Pos	Part	Q1	Q2	Q3	Q4	Q5	PS	Kit	Description	Option(s)	Remark
1	VOE11400957	2							Protecting grating		
2	VOE16840105								Protecting plate		
3	VOE13946173	4							Screw		

4	VOE11117464	8							Plain washer		(VOE13960141)
5	VOE13945408	8							Nut		
6	VOE13965181	4							Screw		
7	VOE11130673	4							Spacer		
8		2							Bracket		See ref 352/100
9		2							Headlamp		See ref 352/100
10	VOE11176804		2						Bracket		
11	VOE13946173		6						Screw		
12	VOE11130600		2						Protecting grating		
13	VOE13946173		8						Screw		
14	VOE11180729			1					Protecting grating		LH
15	VOE11180730			1					Protecting grating		RH
16	VOE11414387	2							Decal		

VOLVO

Construction Equipment

PROSIS Part Information

Date:	Image id:	Catalogue:	Model:
10/09/2018	**1027609**	**20009**	**L60E**
Brand:	Serial:	Group/Section:	Title:
Volvo	**1001-3355, 60001-61214, 70001-70530**	**715/200**	**Belly guard, rear.**

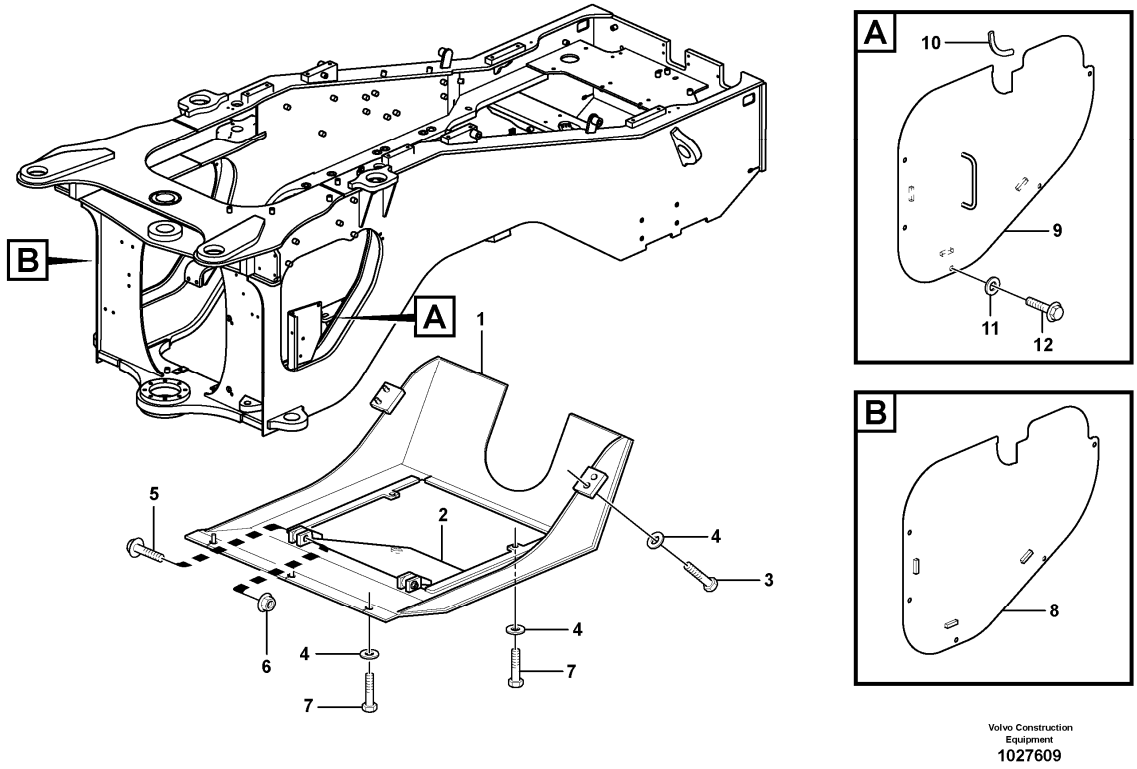

Section option	Kit	Option description
VOE82370		Cover plates rear frame, right and left side
VOE82230		Belly guard, rear

Q1-Q5	Option	Option description	
Q1 82230	VOE82230	Belly guard, rear	
Q2 82370	VOE82370	Cover plates rear frame, right and left side	

Pos	Part	Q1	Q2	Q3	Q4	Q5	PS	Kit	Description	Option(s)	Remark
1	VOE11180585	1							Belly Guard		
2	VOE11148924	1							Hatch		
3	VOE13965192	4							Screw		
4	VOE13960145	9							Washer		
5	VOE965195	2							Flange screw		

6	VOE971099	2							Flange lock nut		(VOE13971099)
7	VOE13965191	5							Screw		
8	VOE11413610		1						Protecting plate		SWE 1614- USA 60316-
9	VOE11413611		1						Protecting plate		SWE 1614- USA 60316-
10	VOE4786031		REQ						Framework moulding		
11	VOE13960143		10						Washer		
12	VOE946472		10						Flange screw		

VOLVO

Construction Equipment

PROSIS Part Information

Date:	Image id:	Catalogue:	Model:
10/09/2018	**1009588**	**20009**	**L60E**
Brand:	Serial:	Group/Section:	Title:
Volvo	**1001-3355, 60001-61214, 70001-70530**	**715/250**	**Bottom-guard plates STD, OPEN ROPS**

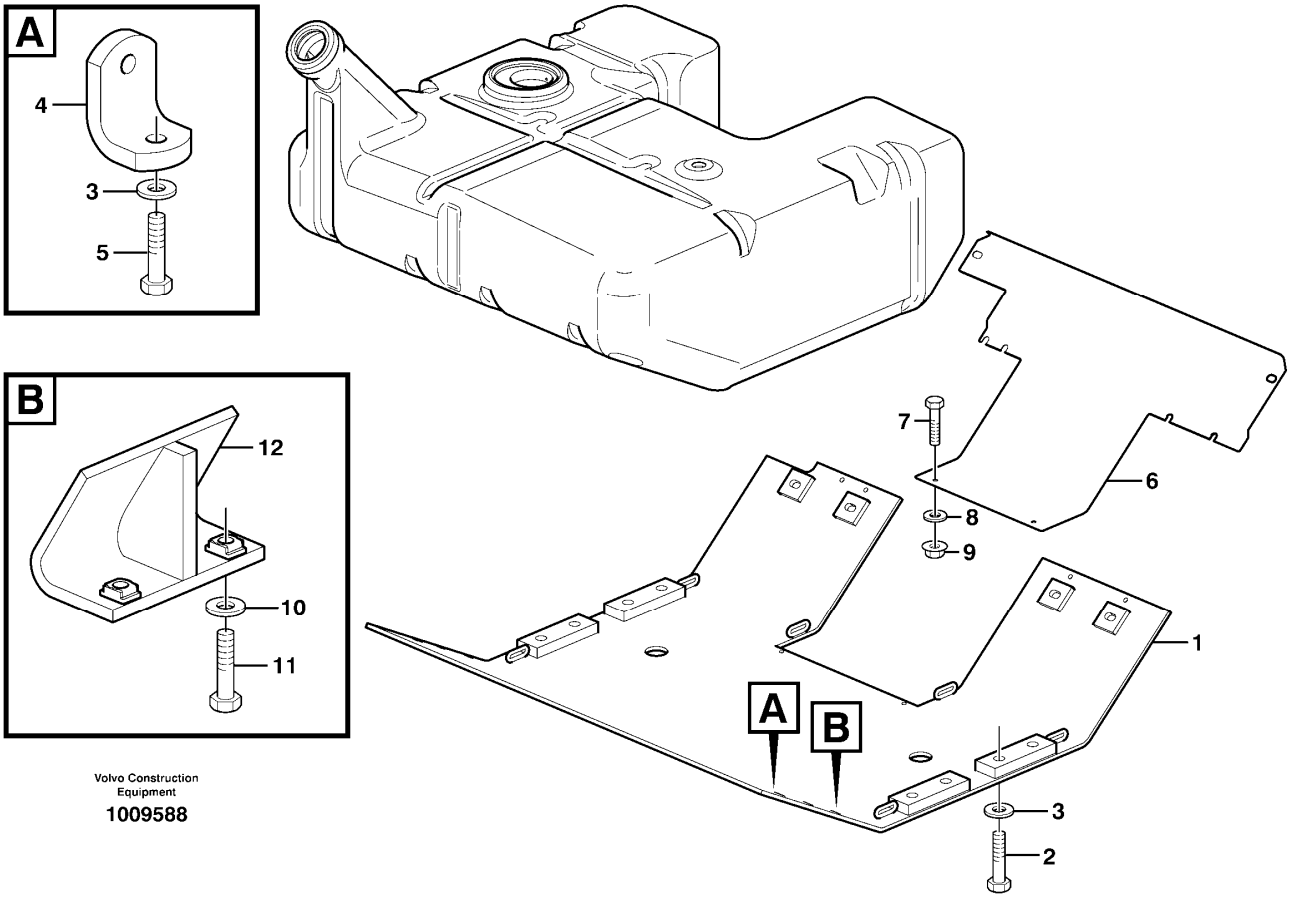

Section option	Kit	Option description
VOE33750		Wheel Loader
VOE33759		Wheel loader L60E OPEN ROPS

Pos	Part	Q1	Q2	Q3	Q4	Q5	PS	Kit	Description	Option(s)	Remark
1	VOE11410140	1							Belly Guard		
2	VOE13965192	12							Screw		
3	VOE13960145	20							Washer		
4	VOE11176456	2							Anchorage		
5	VOE13965191	4							Screw		
6	VOE11177344	1							Protecting plate		
7	VOE946329	8							Flange screw		
8	VOE13960145	8							Washer		
9	VOE971096	4							Flange nut		

10	VOE11117464	4							Plain washer		(VOE13960141)
11	VOE13946173	4							Screw		
12	VOE11410142	2							Support plate		

VOLVO

Construction Equipment

PROSIS Part Information

Date:	Image id:	Catalogue:	Model:
10/09/2018	**1008494**	**20009**	**L60E**
Brand:	Serial:	Group/Section:	Title:
Volvo	**1001-3355, 60001-61214, 70001-70530**	**715/275**	**Protecting plates 80403**

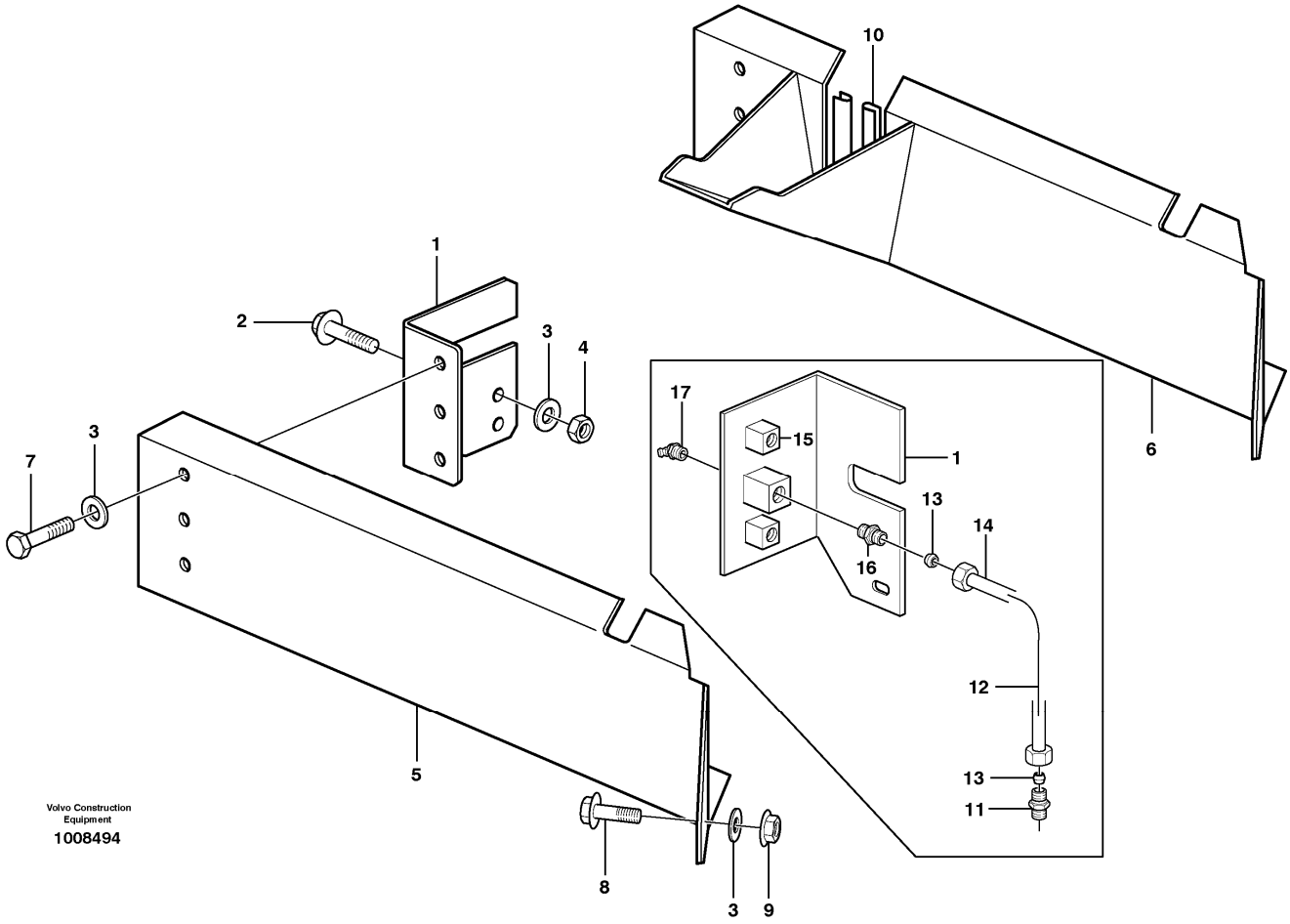

Section option	Kit	Option description
VOE80403		Cover plates under cab

Pos	Part	Q1	Q2	Q3	Q4	Q5	PS	Kit	Description	Option(s)	Remark
1	VOE11147732	1							Anchorage		LH
	VOE11147731	1							Anchorage		RH
2	VOE946671	4							Flange screw		M8 X 30
3	VOE11117464	16							Plain washer		(VOE13960141)
4	VOE13945408	4							Nut		
5	VOE11147365	1							Plate		LH
6	VOE11180007	1							Plate		RH
7	VOE13946173	4							Screw		M8 X 20
8	VOE946671	2							Flange screw		M8 X 30

9	VOE948645	2							Flange lock nut		(VOE13948645)
10	VOE4786031	REQ							Framework moulding		L=235MM
11	VOE4856060	2							Nipple		
12	VOE11100283	2							Tube		
13	VOE13956967	4							Ferrule		
14	VOE956981	4							Fitting nut		
15	VOE961614	4							Weld nut		
16	VOE946089	2							Nipple		
17	VOE914169	2							Lubricating nipple		

VOLVO

Construction Equipment

PROSIS Part Information

Date:	Image id:	Catalogue:	Model:
10/09/2018	**1017639**	**20009**	**L60E**
Brand:	Serial:	Group/Section:	Title:
Volvo	**1001-3355, 60001-61214, 70001-70530**	**715/350**	**Radiator, kylare. 82273**

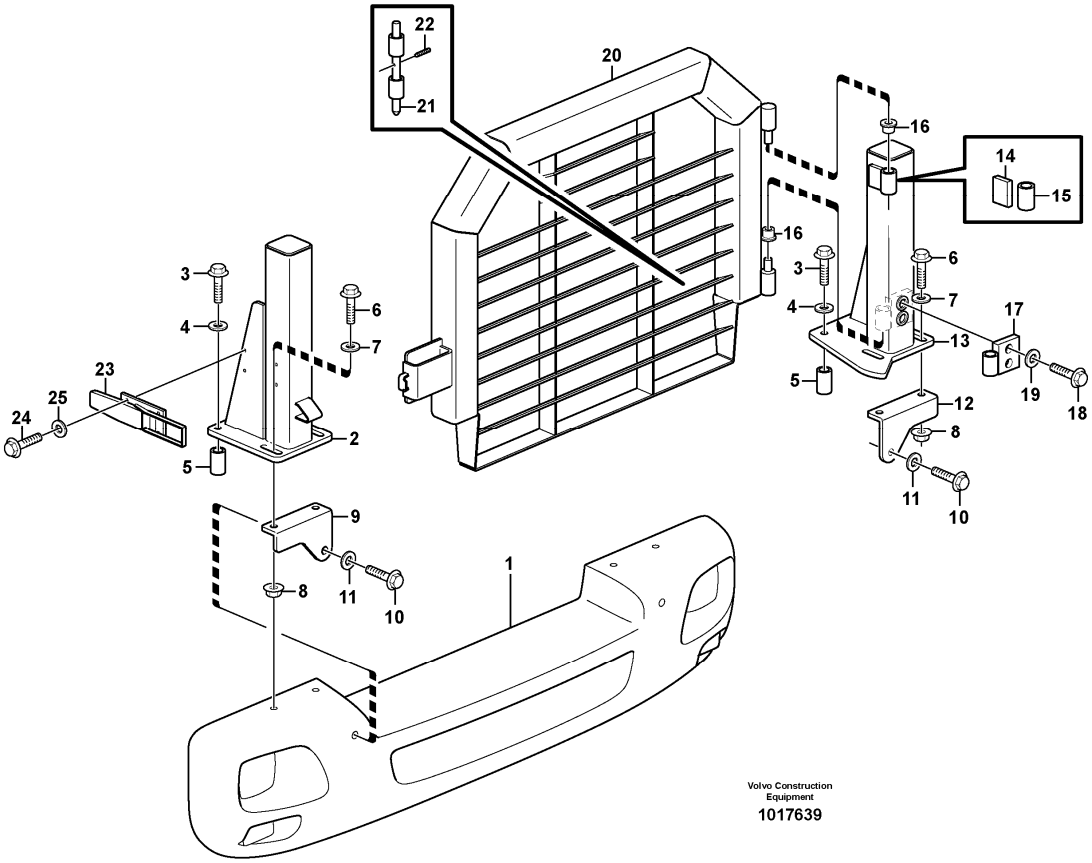

Section option	Kit	Option description
VOE82273		Radiator grill guard

Pos	Part	Q1	Q2	Q3	Q4	Q5	PS	Kit	Description	Option(s)	Remark
1	VOE11180641	1							Counterweight		See ref 716/100
2	VOE11413677	1							Pillar		
3	VOE968591	4							Flange screw		
4	VOE983338	4							Plain washer		
5	VOE11400890	4							Spacer		
6	VOE968297	4							Flange screw		
7	VOE983338	4							Plain washer		
8	VOE13968904	4							Flange nut		
9	VOE11413858	1							Bracket		
10	VOE978952	2							Hexagon screw		

11	VOE955903	2							Plain washer		
12	VOE11413859	1							Bracket		
13	VOE11413678	1							Pillar		
14	VOE11413700	1							•Plate		
15	VOE11413842	1							•Hub		
16	VOE13946474	2							Flange screw		
17	VOE11026547	2							Slide bearing		
18	VOE13960145	2							Washer		
19	VOE11413690	1							Protecting grating		
20	VOE11400568	1							Pin		
21	VOE951985	1							Spring pin		
22	VOE6624867	1							Lock		
23	VOE13946173	4							Screw		
24	VOE11117464	4							Plain washer		(VOE13960141)
25	VOE11413699	1							Hinge		

VOLVO

Construction Equipment

PROSIS Part Information

Date:	Image id:	Catalogue:	Model:
10/09/2018	**1009590**	**20009**	**L60E**
Brand:	Serial:	Group/Section:	Title:
Volvo	**1001-3355, 60001-61214, 70001-70530**	**715/400**	**Belly guard, front.**

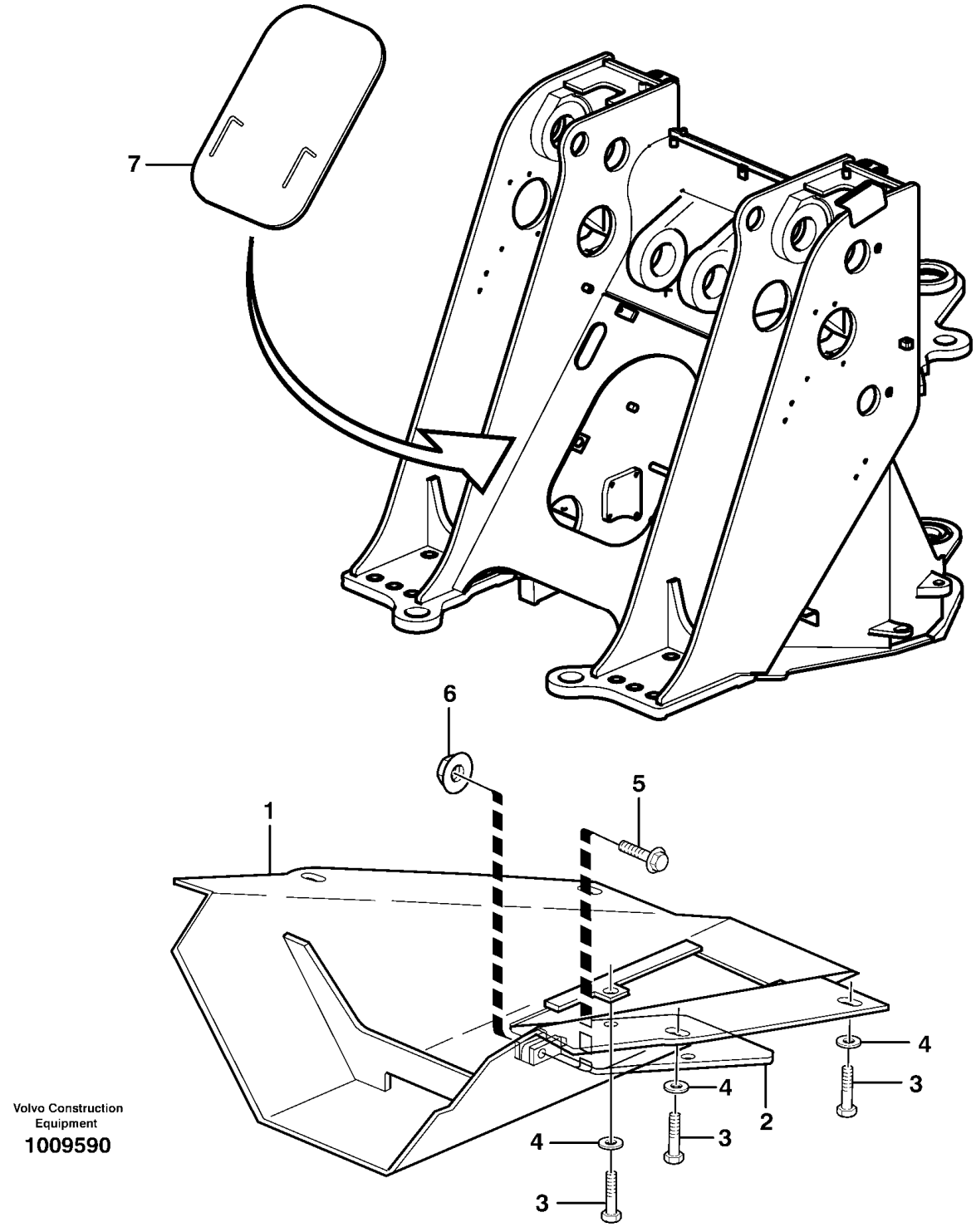

Section option	Kit	Option description

VOE33750		Wheel Loader
VOE33759		Wheel loader L60E OPEN ROPS
VOE82198		Belly guard, front

Q1-Q5	Option	Option description	
Q1 82198	VOE82198	Belly guard, front	
Q2 STD			
Q3 OPEN ROPS			

Pos	Part	Q1	Q2	Q3	Q4	Q5	PS	Kit	Description	Option(s)	Remark
1	VOE11180608	1							Belly Guard		
2	VOE11130393	1							Hatch		
3	VOE13965191	6							Screw		
4	VOE13960145	6							Washer		
5	VOE965195	1							Flange screw		
6	VOE971099	1							Flange lock nut		(VOE13971099)
7	VOE11020102		1	1					Hatch		

VOLVO

Construction Equipment

PROSIS Part Information

Date:	Image id:	Catalogue:	Model:
10/09/2018	**1021884**	**20009**	**L60E**
Brand:	Serial:	Group/Section:	Title:
Volvo	**1001-3355, 60001-61214, 70001-70530**	**716/100**	**Rear hitch and counterweight STD, OPEN ROPS**

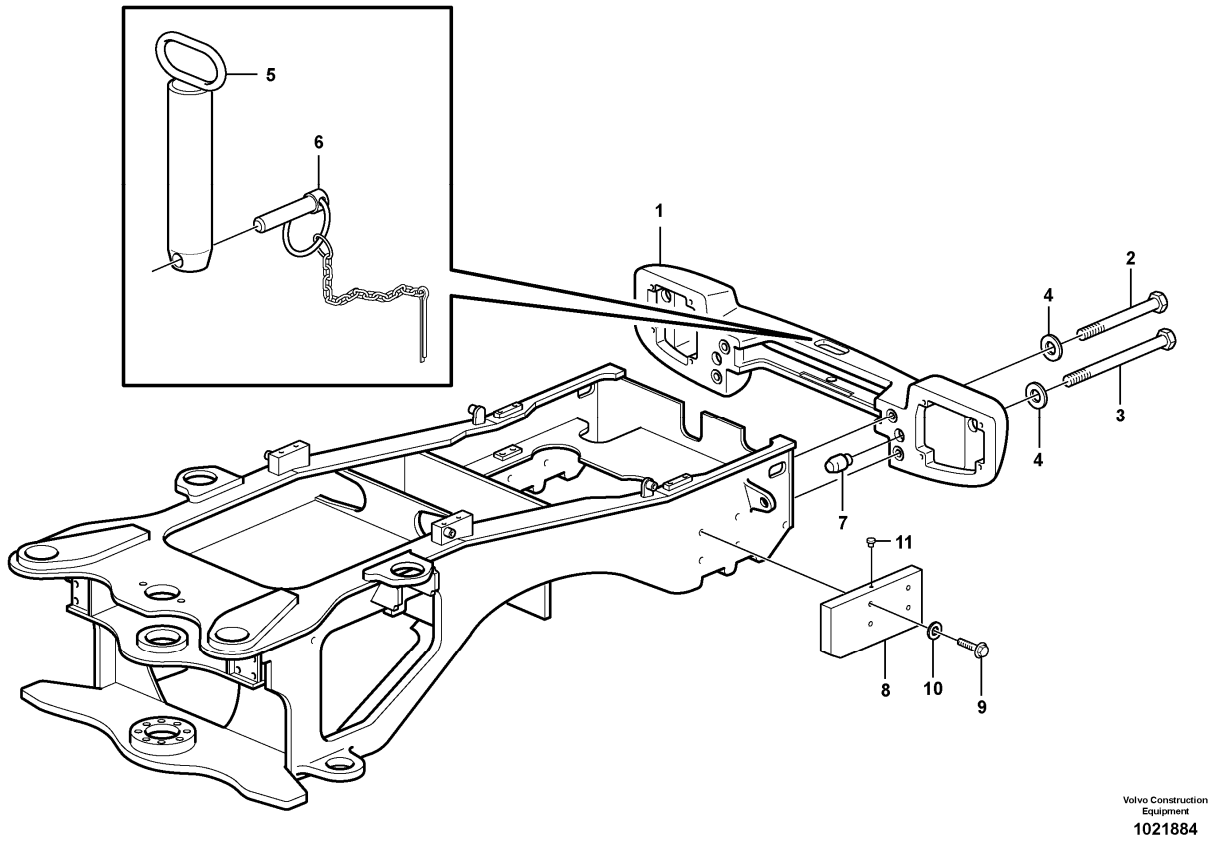

Section option	Kit	Option description
VOE33750		Wheel Loader
VOE33759		Wheel loader L60E OPEN ROPS
VOE82878		

Q1-Q5	Option	Option description	
Q1 33750 33759	VOE33750	Wheel Loader	
Q2 82878	VOE82878		

Pos	Part	Q1	Q2	Q3	Q4	Q5	PS	Kit	Description	Option(s)	Remark
1	VOE11432031	1							Counterweight		(VOE11176214)
	VOE11180641	1							Counterweight	VOE82273	
2	VOE13955390	2							Screw		
3	VOE955396	2							Hexagon screw		

4	VOE955903	4							Plain washer		
5	VOE11176778	1							Towing pin		
6	VOE11093429	1							•Lock Pin		
7	VOE11015459	2							Pin		
8	VOE11180814		2						Plate		
9	VOE968591		8						Flange screw		
10	VOE13955900		8						Washer		
11	VOE13931675		2						Protecting plug		

VOLVO

Construction Equipment

PROSIS Part Information

Date:	Image id:	Catalogue:	Model:
10/09/2018	**1003020**	**20009**	**L60E**
Brand:	Serial:	Group/Section:	Title:
Volvo	**1001-3355, 60001-61214, 70001-70530**	**741/100**	**Frame link STD, OPEN ROPS**

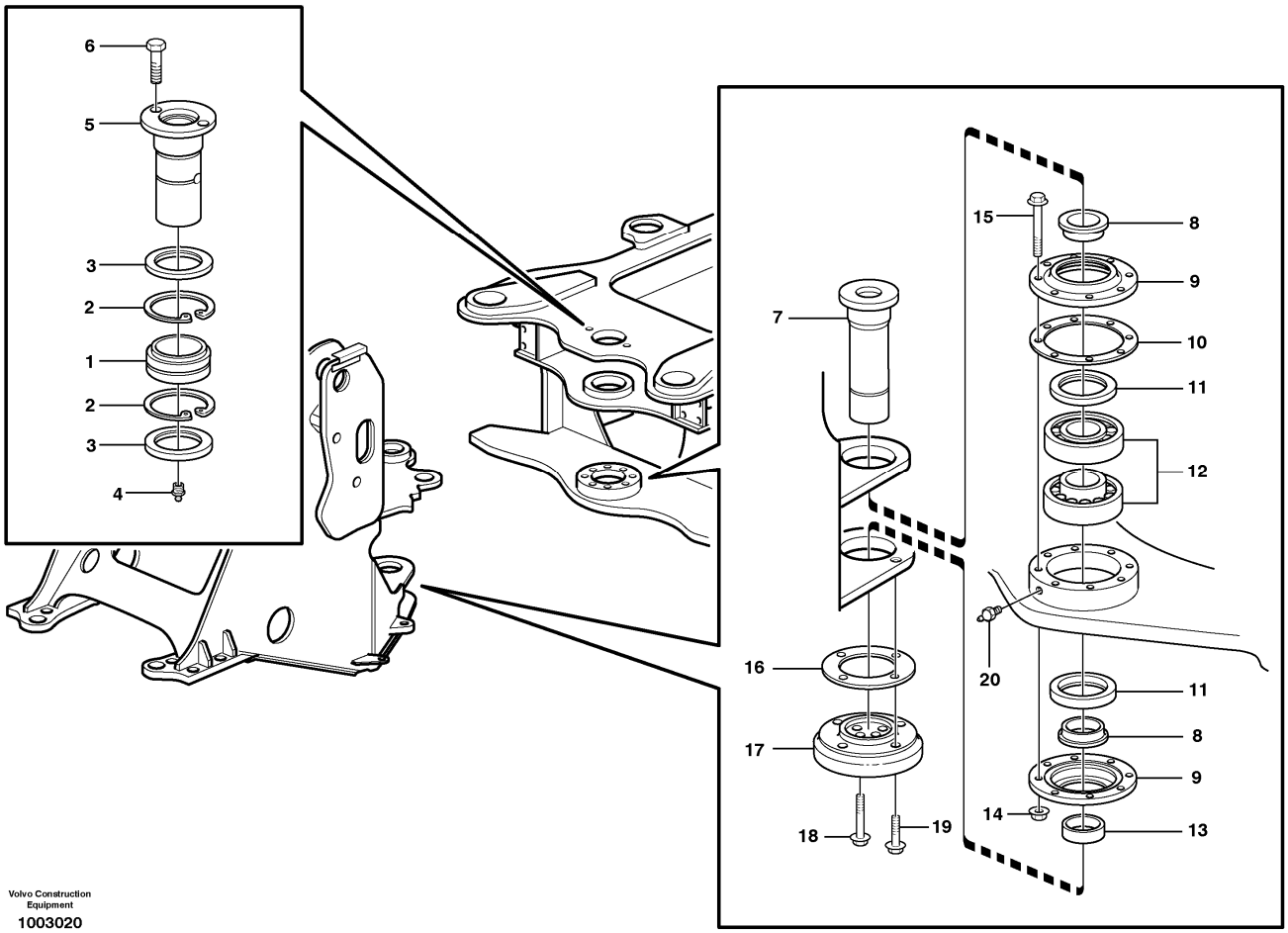

Section option	Kit	Option description
VOE33750		Wheel Loader
VOE33759		Wheel loader L60E OPEN ROPS

Pos	Part	Q1	Q2	Q3	Q4	Q5	PS	Kit	Description	Option(s)	Remark
1	VOE6624649	1							Spherical plain bearing		
2	VOE914552	2							Retaining ring		
3	VOE967941	2							Sealing ring		
4	VOE914170	1							Lubricating nipple		
5	VOE11020095	1							Pin		
6	VOE946472	2							Flange screw		
7	VOE4939926	1							Pin		
8	VOE4945893	2							Bushing		

9	VOE4945894	2							Cover		
10	VOE4945888	REQ							Spacer		
	VOE4945887	REQ							Spacer		
	VOE4945886	REQ							Spacer		
11	VOE958747	2							Sealing ring		
12	VOE17203562	2							Roller bearing		(VOE7011094)
13	VOE4939925	1							Bushing		
14	VOE13971096	8							Flange nut		
15	VOE965197	8							Flange screw		(VOE13965197)
16	VOE4932875	REQ							Shim		
	VOE4932876	REQ							Shim		
	VOE4932877	REQ							Shim		
17	VOE4932882	1							Attaching washer		
18	VOE946473	4							Flange screw		
19	VOE13965192	4							Screw		
20	VOE914167	1							Lubricating nipple		

VOLVO

Construction Equipment

PROSIS Part Information

Date:	Image id:	Catalogue:	Model:
10/09/2018	**AS210A**	**20009**	**L60E**
Brand:	Serial:	Group/Section:	Title:
Volvo	**1001-3355, 60001-61214, 70001-70530**	**771/100**	**Wheel**

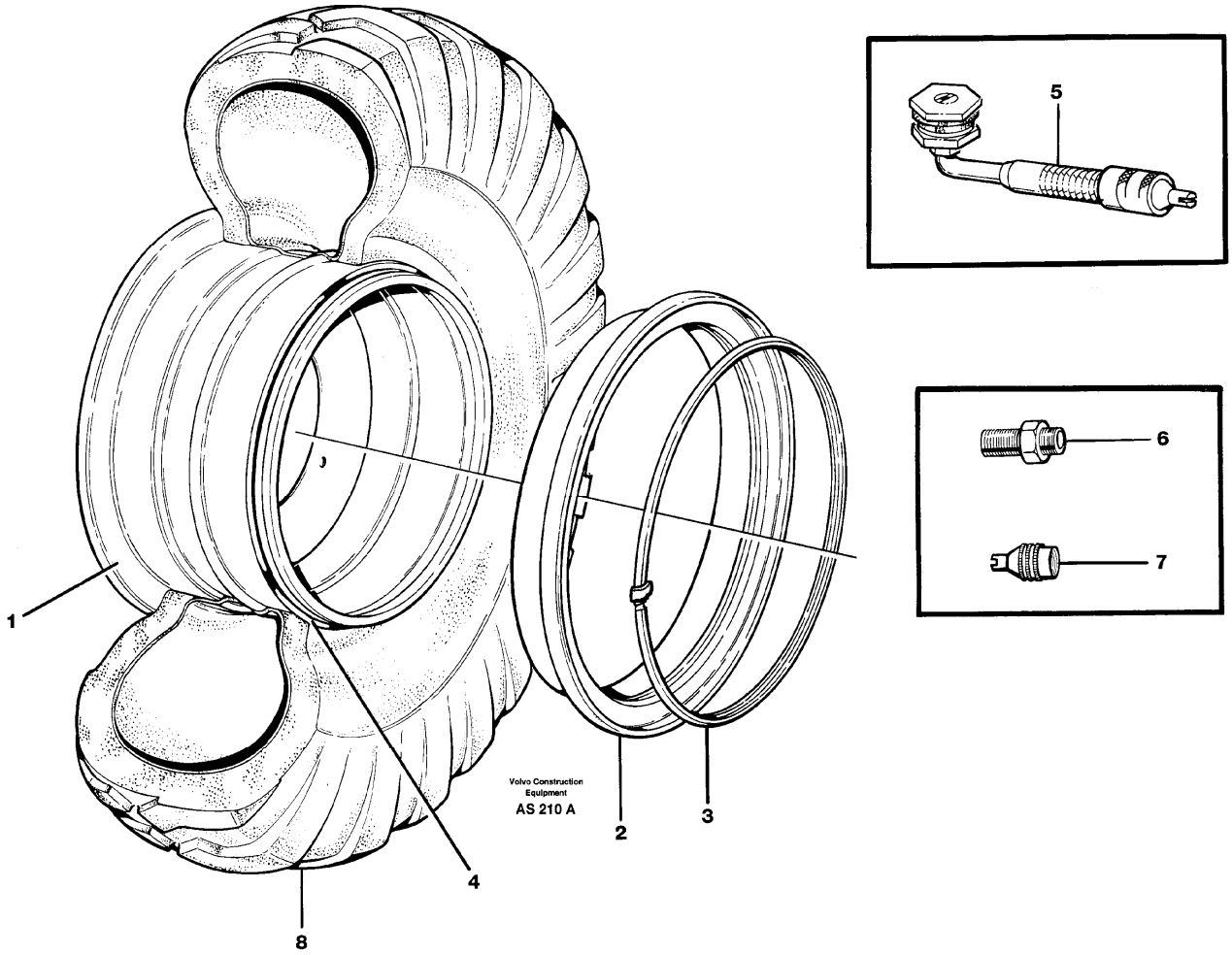

Q1-Q5	Option	Option description	
Q1 92731	VOE92731	Wheels 17.5x25	
Q2 92733	VOE92733	Wheels	
Q3 82365	VOE82365	Wheels	
Q4 82451	VOE82451	Wheels	
Q5 82375	VOE82375	Wheels	

Pos	Part	Q1	Q2	Q3	Q4	Q5	PS	Kit	Description	Option(s)	Remark
1	VOE11091803	4	4						Wheel		14.00 - 25
	VOE11180061			4		4	SS		Wheel		
	VOE11180254				4				Wheel		
2	VOE11091915	1	1						•Rim flange		

	VOE4781648			1		1			•Rim flange		
	VOE11180381				1				•Rim flange		
3	VOE11091914	1	1						•Lock ring		
	VOE4781750			1		1			•Lock ring		
	VOE11180382				1				•Lock ring		
4	VOE4789789	4		4	4	4			O-ring		
5	VOE11000054	4	4	4	4	4			Valve		
6	VOE6633616	4	4			4			Nipple		
7	VOE4789869	4	4			4			Cap		
8							NS		Tire		

VOLVO

Construction Equipment

PROSIS Part Information

Date:	Image id:	Catalogue:	Model:
10/09/2018	**1024475**	**20009**	**L60E**
Brand:	Serial:	Group/Section:	Title:
Volvo	**1001-3355, 60001-61214, 70001-70530**	**771/150**	**Wheel 82620**

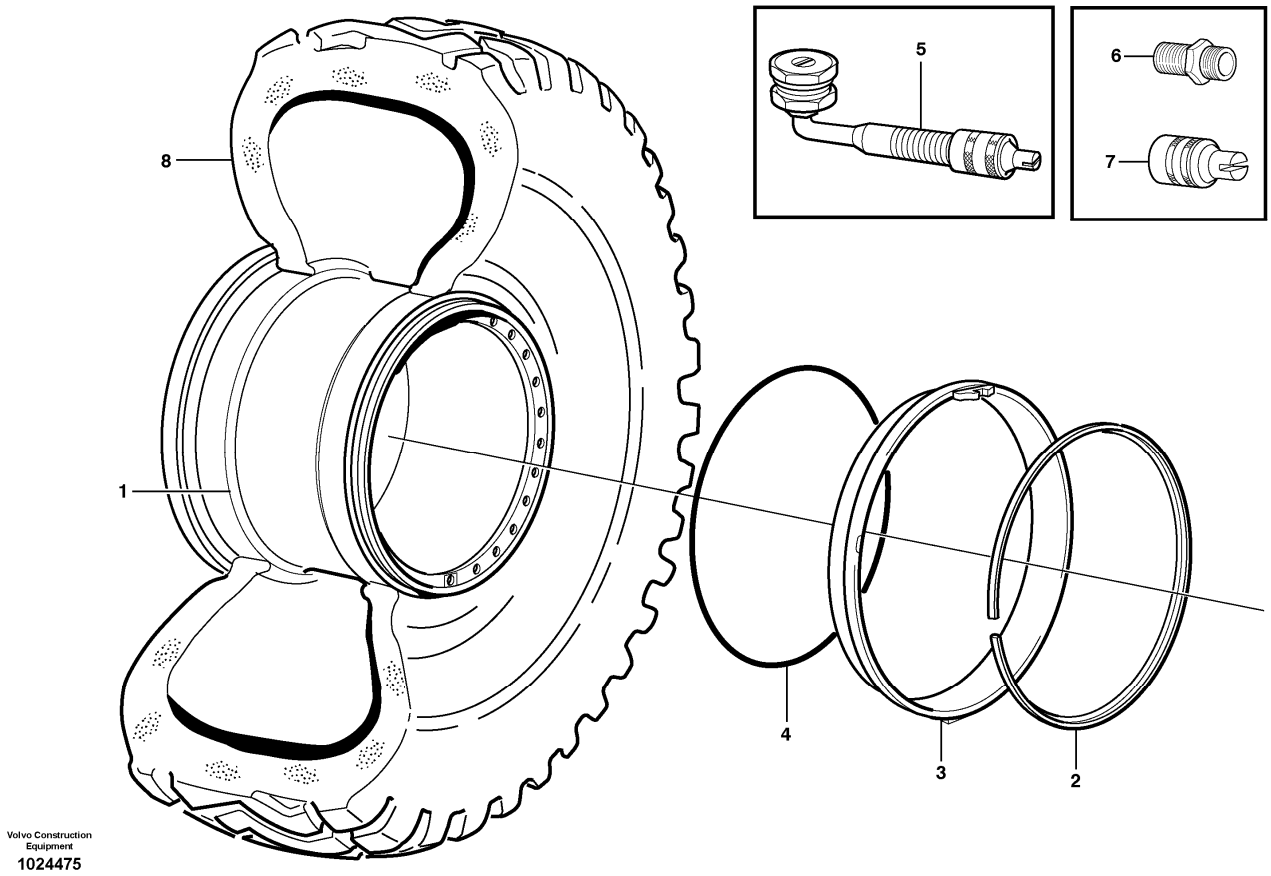

Section option	Kit	Option description
VOE82620		Wheels

Pos	Part	Q1	Q2	Q3	Q4	Q5	PS	Kit	Description	Option(s)	Remark
1	VOE11180544	4							Wheel		
2	VOE11180382	4							•Lock ring		
3	VOE11180383	4							•Rim flange		
4	VOE4789789	4							O-ring		
5	VOE11000054	4							Valve		
6	VOE6633616	4							•Nipple		
7	VOE4789869	4							•Cap		
8		4					NS		Tire	VOE80171, VOE80715, VOE83931, VOE91494,	20.5R25

										VOE91495, VOE92013	
		4					NS		Tire	VOE80979, VOE82315, VOE82316, VOE83139, VOE83214, VOE92905	20.5R25
		4					NS		Tire	VOE83215, VOE83232, VOE83931, VOE84151	20.5R25
		4					NS		Tire	VOE82003, VOE82350	600/65R25

VOLVO

Construction Equipment

PROSIS Part Information

Date:	Image id:	Catalogue:	Model:
10/09/2018	**ED136**	**20009**	**L60E**
Brand:	Serial:	Group/Section:	Title:
Volvo	**1001-3355, 60001-61214, 70001-70530**	**810/100**	**Drivers cab**

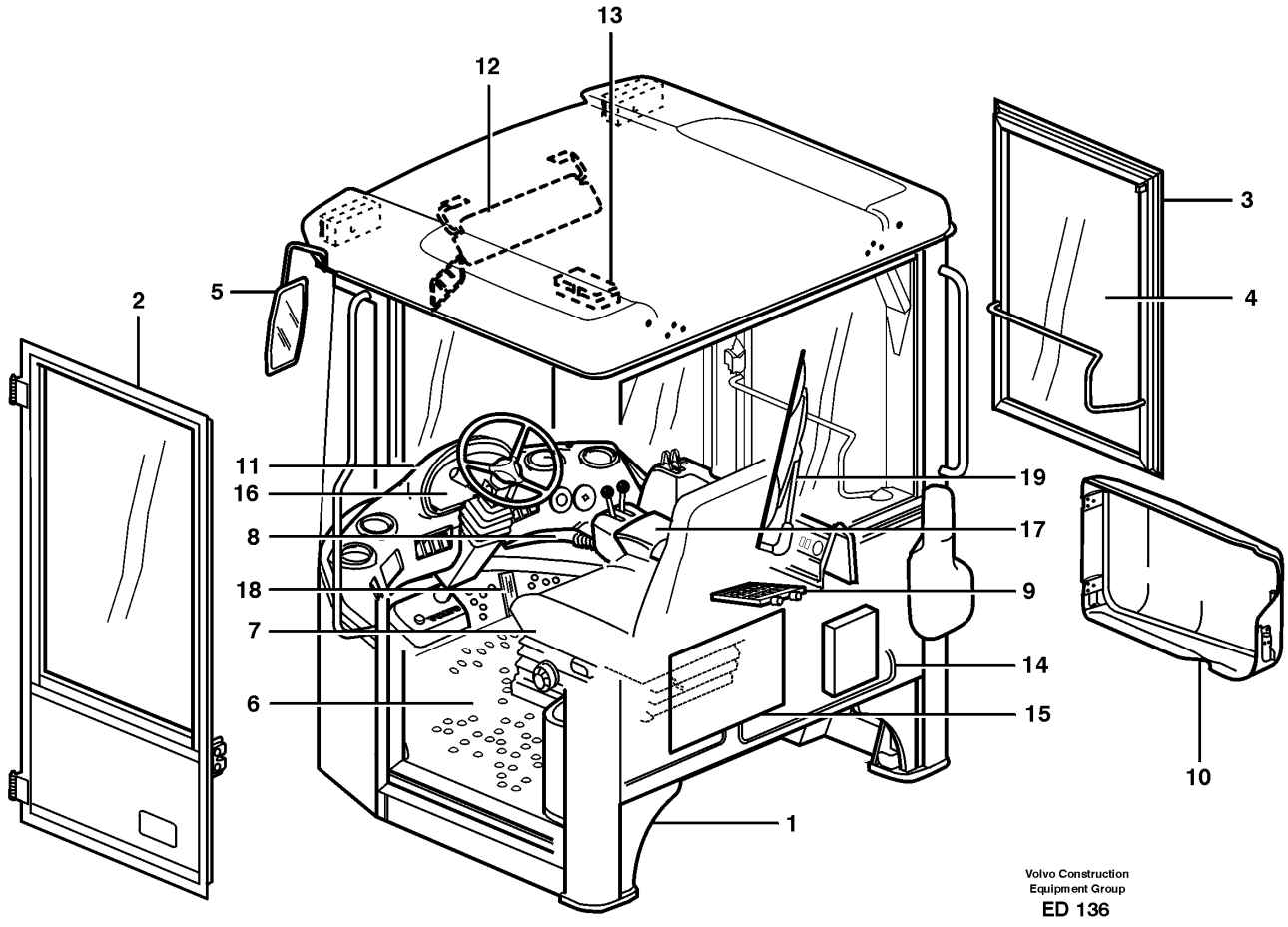

Section option	Kit	Option description
VOE33755		Cab

Pos	Part	Q1	Q2	Q3	Q4	Q5	PS	Kit	Description	Option(s)	Remark
	VOE33755								Cab		
1		1					NS		•Cab Framework		See ref 810/150
2		1							••Door		See ref 831/100
3		1							••Window frame		See ref 843/200
4		1							•Glass panes		See ref 843/100
5		1							•Rear view mirror		See ref 841/100
6		1							•Insulating mats		See ref 851/100
7		1							•Slide Rail		See ref 852/100
8		1							•Air duct		See ref 872/100

9		1							•Heating system		See ref 873/100
10		1							•Filter cover		See ref 837/200
11		1							•Instr Panel		See ref 881/100
12		1							•Interior components		See ref 882/100
13		1							•Lighting,cab		See ref 352/250
14		1							•Cable harnesses, cab		See ref 371/450
15		1							•El Distr Unit		See ref 372/100
16		1							•Instruments		See ref 380/100
17		1							•Arm rest		See ref 882/200
18		1							•Throttle control		See ref 271/100
19		1							•Windshield Wiper		See ref 363/100
		1							Operator's Seat		See ref 852/100

VOLVO

Construction Equipment

PROSIS Part Information

Date:	Image id:	Catalogue:	Model:
10/09/2018	**1015862**	**20009**	**L60E**
Brand:	Serial:	Group/Section:	Title:
Volvo	**1001-3355, 60001-61214, 70001-70530**	**810/150**	**Cab body: roof and floor panel.**

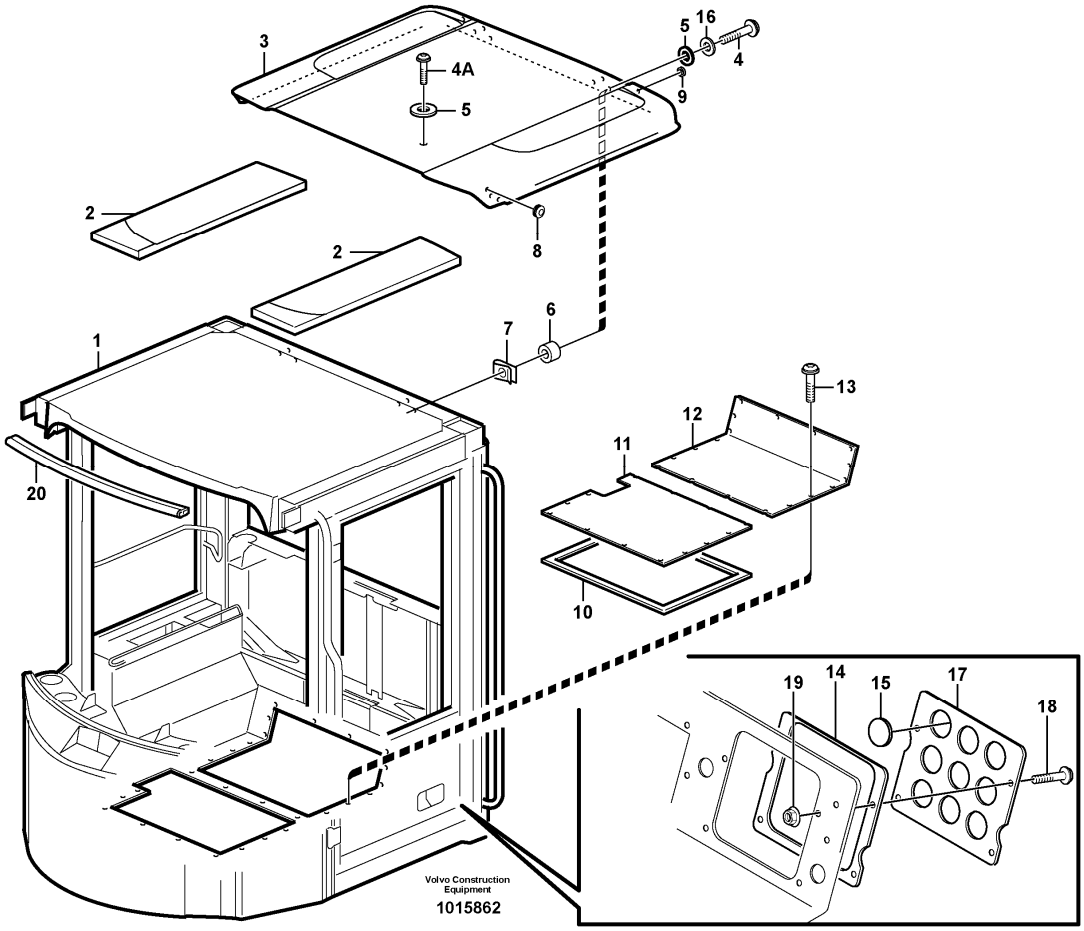

Section option	Kit	Option description
VOE33755		Cab
VOE33756		Cab L60E USA

Q1-Q5	Option	Option description	
Q1 33755	VOE33755	Cab	
Q2 33756	VOE33756	Cab L60E USA	

Pos	Part	Q1	Q2	Q3	Q4	Q5	PS	Kit	Description	Option(s)	Remark
1	VOE11164801	1	1				OP		Cab framework		
2	VOE11164431	2	2						Insulation		
3	VOE11006293	1	1						Roof		See footnote 2013)
4	VOE13945444	4	4						Screw		
4A	VOE13946173	2	2						Screw		

5	VOE11104399	4	4						Rubber washer		
6	VOE930428	4	4						Spacer ring		
7	VOE13949867	2	2						Spring nut		
8	VOE941268	2	2						Plug		20 MM
	VOE941267	4	4						Plug		16 MM
9	VOE11057786	2	2						Plug		
10	VOE11104947	REQ	REQ						Sealing strip		L=3100MM
11	VOE11164338	1	1						Floor plate		
12	VOE11006473	1	1						Floor Panel		
13	VOE981208	12	12						Six point socket screw		
14	VOE11006162	1	1						Gasket		
15	VOE11006971	5							Plug		38x10,3MM
16	VOE13960141	6					SS		Washer		
17	VOE11006159	1	1						Hatch		
18	VOE13946173	4	4						Screw		
19	VOE948645	4	4						Flange lock nut		
20	VOE11104469	REQ							Sealing strip		L=680 MM

2013) Unpainted

VOLVO

Construction Equipment

PROSIS Part Information

Date:	Image id:	Catalogue:	Model:
10/09/2018	**1016603**	**20009**	**L60E**
Brand:	Serial:	Group/Section:	Title:
Volvo	**1001-3355, 60001-61214, 70001-70530**	**810/200**	**Cab body: roof and floor panel. OPEN ROPS,STD**

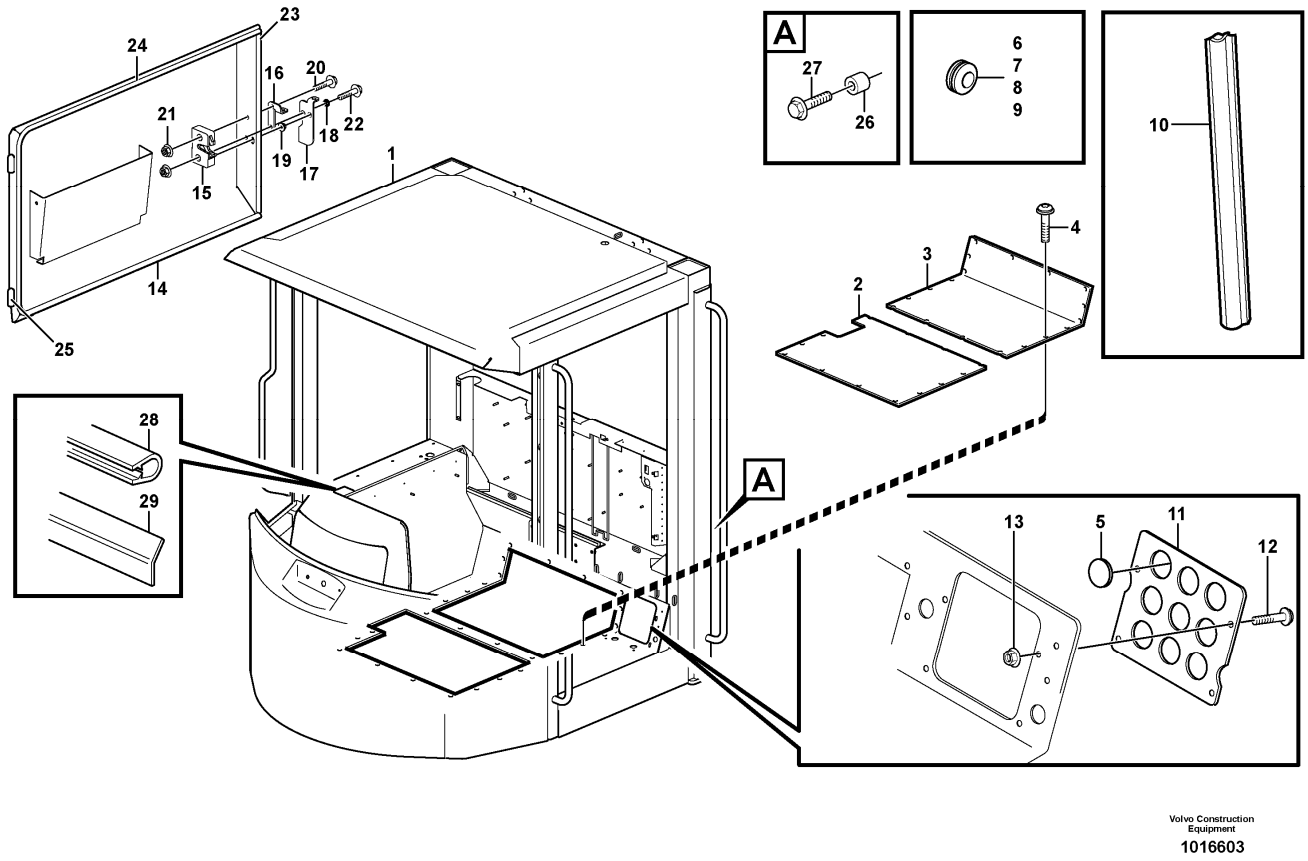

Section option	Kit	Option description
VOE33755		Cab
VOE33760		Cab. Open Rops

Q1-Q5	Option	Option description	
Q1 33760	VOE33760	Cab. Open Rops	
Q2 33755	VOE33755	Cab	

Pos	Part	Q1	Q2	Q3	Q4	Q5	PS	Kit	Description	Option(s)	Remark
1	VOE11164900	1							Cab framework		
			1				NS		Cab framework		
2	VOE11164338	1							Floor plate		
3	VOE11006473	1							Floor Panel		
4	VOE981208	12							Six point socket screw		

5	VOE11006971	5	5						Plug		
6	VOE961970	2							Plug		
7	VOE941266	4							Plug		
8	VOE941268	1							Plug		
9	VOE7081803	1							Rubber button		
10	VOE4785436	REQ							Protecting moulding		
11	VOE11006159	1							Hatch		
12	VOE13946173	4							Screw		
13	VOE948645	4							Flange lock nut		
14	VOE11164827	1							Hatch		
15	VOE11006991	1							•Lock		
16	VOE11104610	1							•Plate		
17	VOE11104609	1							•Handle		
18	VOE11006944	1							•Spacer sleeve		
19	VOE1258140	1							•Sealing sleeve		
20	VOE13947760	1							•Screw		
21	VOE948645	2							•Flange lock nut		
22	VOE13965179	1							•Screw		
23	VOE4786044	REQ							•Sealing strip		
24	VOE4881207	REQ							•Sealing strip		
25	VOE4936925	2							•Weld hinge		
26	VOE4753600	1							•Set ring		
27	VOE946440	2							•Flange screw		
28	VOE11006785	REQ							•Framework moulding		
29	VOE4932353	REQ							•Rubber moulding		

VOLVO

Construction Equipment

PROSIS Part Information

Date:	Image id:	Catalogue:	Model:
10/09/2018	**1005503**	**20009**	**L60E**
Brand:	Serial:	Group/Section:	Title:
Volvo	**1001-3355, 60001-61214, 70001-70530**	**818/100**	**Cab mounting block STD, OPEN ROPS**

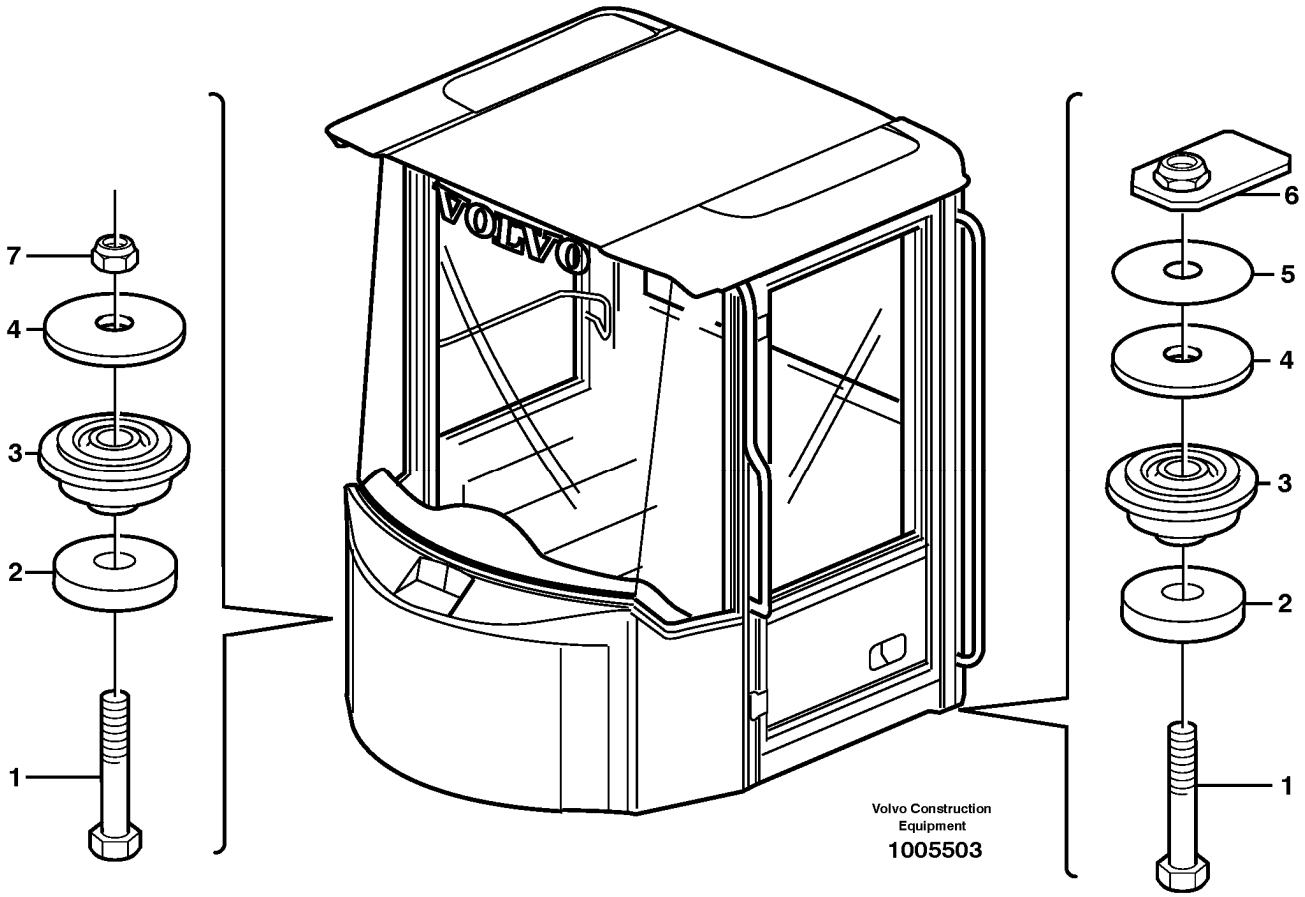

Section option	Kit	Option description
VOE33750		Wheel Loader
VOE33759		Wheel loader L60E OPEN ROPS

Pos	Part	Q1	Q2	Q3	Q4	Q5	PS	Kit	Description	Option(s)	Remark
1	VOE13963364	4							Hexagon screw		
2	VOE11005939	4							Washer		
3	VOE11006889	4							Rubber cushion		
4	VOE11005938	4							Washer		
5	VOE11025671	2							Shim		
6	VOE11006414	2							Nut retainer		
7	VOE948836	2							Lock nut		

VOLVO

Construction Equipment

PROSIS Part Information

Date:	Image id:	Catalogue:	Model:
10/09/2018	**1008207**	**20009**	**L60E**
Brand:	Serial:	Group/Section:	Title:
Volvo	**1001-3355, 60001-61214, 70001-70530**	**821/100**	**Engine cover STD, OPEN ROPS**

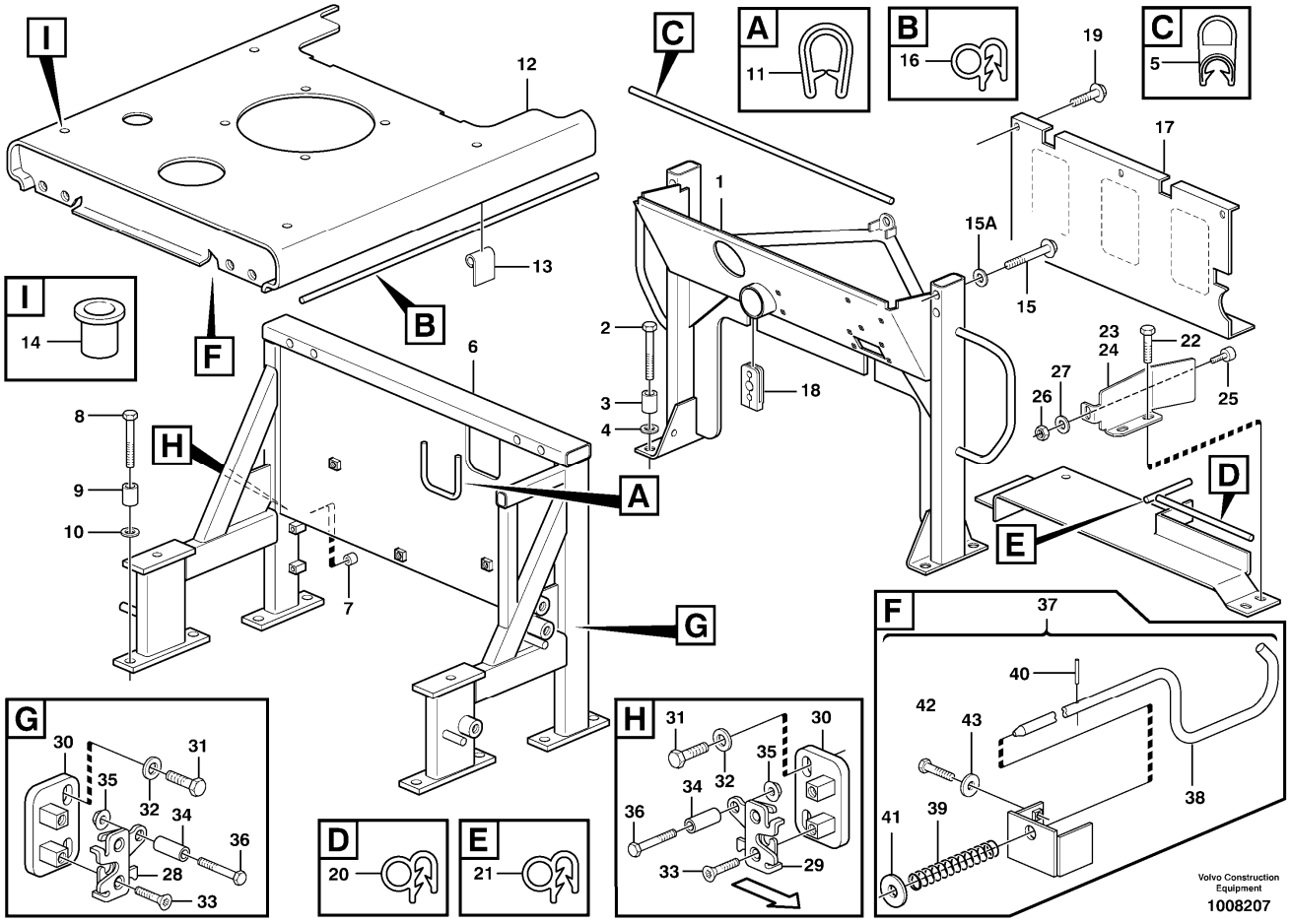

Section option	Kit	Option description
VOE33750		Wheel Loader
VOE33759		Wheel loader L60E OPEN ROPS

Pos	Part	Q1	Q2	Q3	Q4	Q5	PS	Kit	Description	Option(s)	Remark
1	VOE13963364	4							Hexagon screw		
2	VOE11005939	4							Washer		
3	VOE11006889	4							Rubber cushion		
4	VOE11005938	4							Washer		
5	VOE11025671	2							Shim		
6	VOE11006414	2							Nut retainer		
7	VOE948836	2							Lock nut		

VOLVO

Construction Equipment

PROSIS Part Information

Date:	Image id:	Catalogue:	Model:
10/09/2018	**1014896**	**20009**	**L60E**
Brand:	Serial:	Group/Section:	Title:
Volvo	**1001-3355, 60001-61214, 70001-70530**	**821/150**	**Top plate, side hatches, rear S/N - 1913**

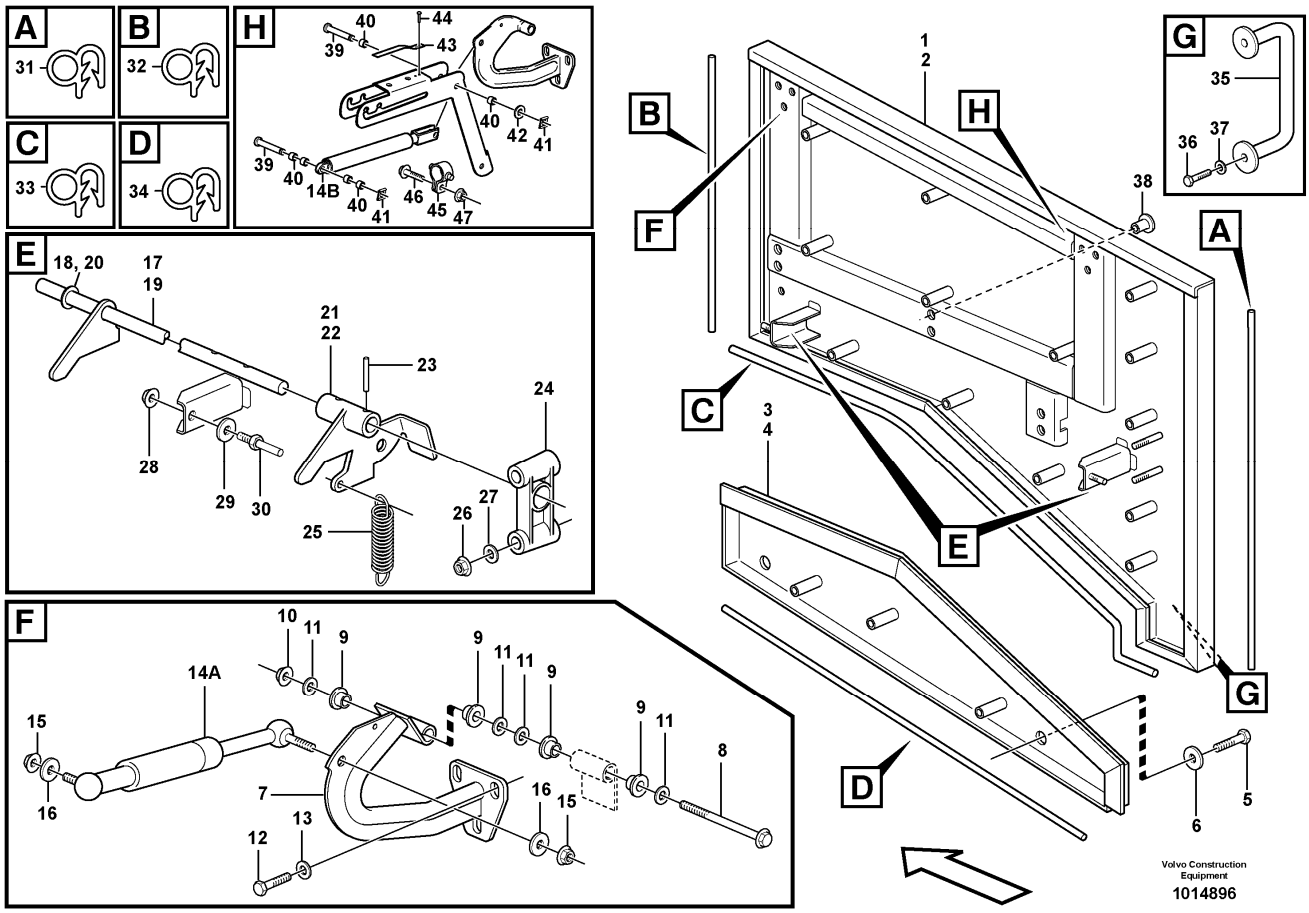

Section option	Kit	Option description
VOE33750		Wheel Loader
VOE33759		Wheel loader L60E OPEN ROPS

Q1-Q5	Option	Option description	
Q1 STD OPEN ROPS			

Pos	Part	Q1	Q2	Q3	Q4	Q5	PS	Kit	Description	Option(s)	Remark
1	VOE11413815	1							Side hatch		RH
2	VOE11413816	1							Side hatch		LH
3	VOE11175875	1							Side plate		RH
4	VOE11175876	1							Side plate		LH
5	VOE965225	4							Flange screw		
6	VOE13960145	4							Washer		

7	VOE11400717	4							Hinge		
8	VOE13946474	4							Flange screw		
9	VOE1588548	16							Bushing		
10	VOE971099	4							Flange lock nut		(VOE13971099)
11	VOE13955897	12							Washer		
12	VOE13947760	12							Screw		
13	VOE11117464	12							Plain washer		(VOE13960141)
14A	VOE11435547	2							Gas spring		(VOE11174325)
14B	VOE11413464	2							Gas spring		
15	VOE13971098	4							Flange nut		
16	VOE13960143	4							Washer		
17	VOE11413867	1							Lock shaft		RH
18	VOE13955897	1							•Washer		
19	VOE11413868	1							Lock shaft		LH
20	VOE13955897	1							•Washer		
21	VOE11413863	1							Handle		RH
22	VOE11413864	1							Handle		LH
23	VOE951955	4							Spring pin		
24	VOE11174317	4							Bearing bracket		
25	VOE4742010	2							Tension spring		
26	VOE981447	8							Flange lock nut		
27	VOE960139	8							Plain washer		
28	VOE13971096	8							Flange nut		
29	VOE13960145	8							Washer		
30	VOE11175472	4							Pin		
31	VOE4766526	REQ							Sealing strip		L = 655 MM x 2
32	VOE4766526	REQ							Sealing strip		L = 890 MM x 2
33	VOE4766526	REQ							Sealing strip		L = 1020 MM x 2
34	VOE4766526	REQ							Sealing strip		L = 1030 MM x 2
35	VOE11413175	2							Handle		
36	VOE946441	4							Flange screw		
37	VOE13960143	4							Washer		
38	VOE11413247	6							Plug		
39	VOE11400371	4							Retaining ring bolt		
40	VOE11400462	8							Spacer sleeve		
41	VOE969159	4							Lock brace		
42	VOE960148	4					SS		Plain washer		
43		2					NS		Spring		
44		4					NS		Blind Rivet		
45		2					NS		Pin Bracket		
46	VOE949755	2							Retaining ring bolt		
47		2					NS		Flange Lock Nut		

VOLVO

Construction Equipment

PROSIS Part Information

Date:	Image id:	Catalogue:	Model:
10/09/2018	**1017822**	**20009**	**L60E**
Brand:	Serial:	Group/Section:	Title:
Volvo	**1001-3355, 60001-61214, 70001-70530**	**821/160**	**Top plate, side hatches, rear S/N 1914 -**

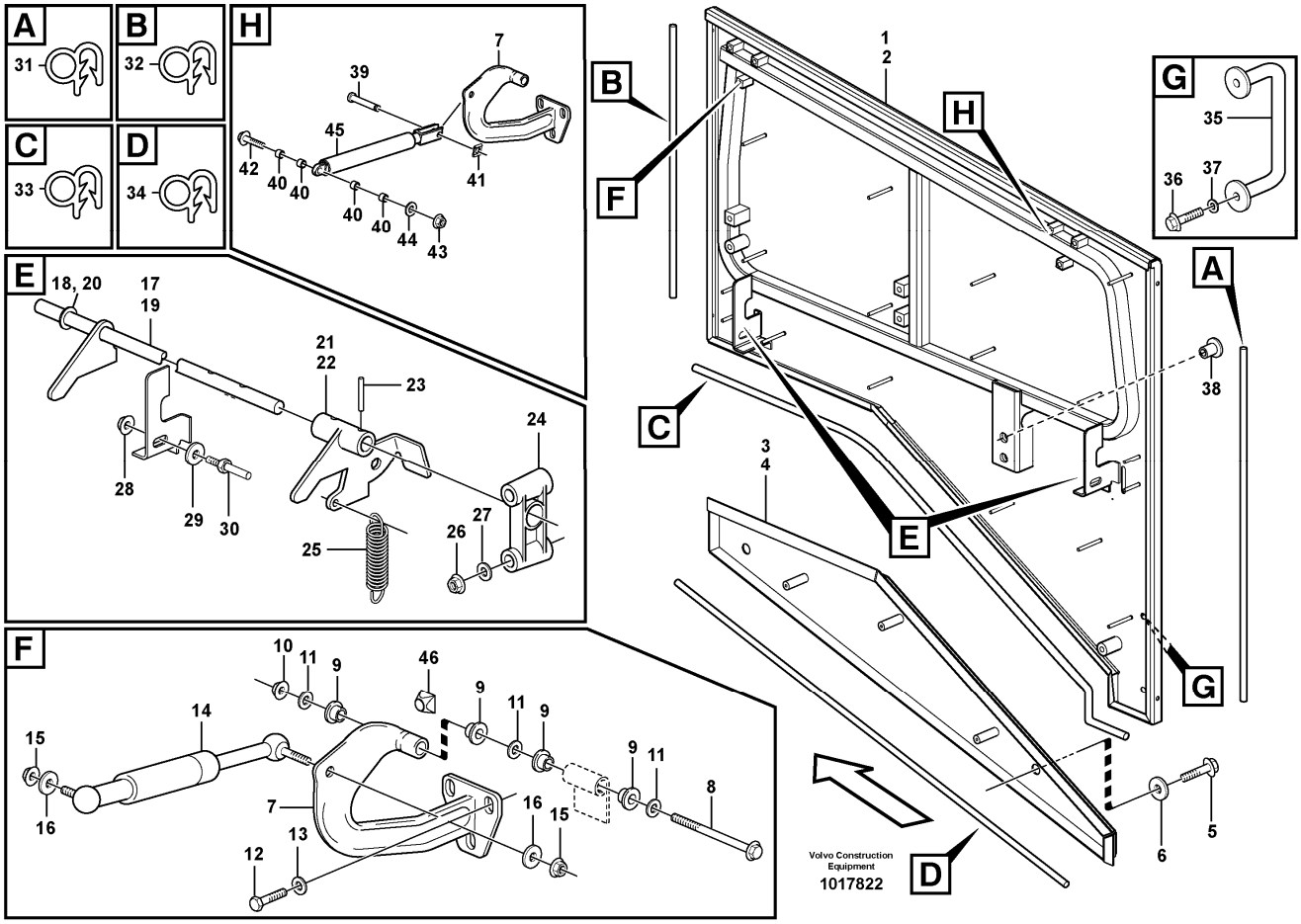

Section option	Kit	Option description
VOE33750		Wheel Loader
VOE33759		Wheel loader L60E OPEN ROPS

Q1-Q5	Option	Option description	
Q1 STD OPEN ROPS			

Pos	Part	Q1	Q2	Q3	Q4	Q5	PS	Kit	Description	Option(s)	Remark
1	VOE11413815	1							Side hatch		RH
2	VOE11413816	1							Side hatch		LH
3	VOE11175875	1							Side plate		RH
4	VOE11175876	1							Side plate		LH
5	VOE965225	4							Flange screw		
6	VOE13960145	4							Washer		

7	VOE11400717	4							Hinge		
8	VOE13946474	4							Flange screw		
9	VOE1588548	16							Bushing		
10	VOE971099	4							Flange lock nut		(VOE13971099)
11	VOE13955897	12							Washer		
12	VOE13947760	12							Screw		
13	VOE11117464	12							Plain washer		(VOE13960141)
14	VOE11435547	2							Gas spring		(VOE11174325)
15	VOE13971098	4							Flange nut		
16	VOE13960143	4							Washer		
17	VOE11413867	1							Lock shaft		RH
18	VOE13955897	1							•Washer		
19	VOE11413868	1							Lock shaft		LH
20	VOE13955897	1							•Washer		
21	VOE11413863	1							Handle		RH
22	VOE11413864	1							Handle		LH
23	VOE951955	4							Spring pin		
24	VOE11174317	4							Bearing bracket		
25	VOE4742010	2							Tension spring		
26	VOE981447	8							Flange lock nut		
27	VOE960139	8							Plain washer		
28	VOE13971096	8							Flange nut		
29	VOE13960145	8							Washer		
30	VOE11175472	4							Pin		
31	VOE4766526	REQ							Sealing strip		L = 655 MM x 2
32	VOE4766526	REQ							Sealing strip		L = 890 MM x 2
33	VOE4766526	REQ							Sealing strip		L = 1020 MM x 2
34	VOE4766526	REQ							Sealing strip		L = 1030 MM x 2
35	VOE11413175	2							Handle		
36	VOE946441	4							Flange screw		
37	VOE13960143	4							Washer		
38	VOE11413247	6							Plug		
39	VOE949755	2							Retaining ring bolt		
40	VOE11400462	8							Spacer sleeve		
41	VOE969159	4							Lock brace		S/N - 2384
	VOE969159	2							Lock brace		S/N 2385 -
42	VOE984758	2							Flange screw		(VOE13965188)
43	VOE13971098	2							Flange nut		
44	VOE13960143	4							Washer		S/N - 2384
45	VOE11413464	2							Gas spring		
46		4					NS		Buffer		

VOLVO

Construction Equipment

PROSIS Part Information

Date:	Image id:	Catalogue:	Model:
10/09/2018	**1014885**	**20009**	**L60E**
Brand:	Serial:	Group/Section:	Title:
Volvo	**1001-3355, 60001-61214, 70001-70530**	**821/175**	**Top plate, side hatches, rear 82173**

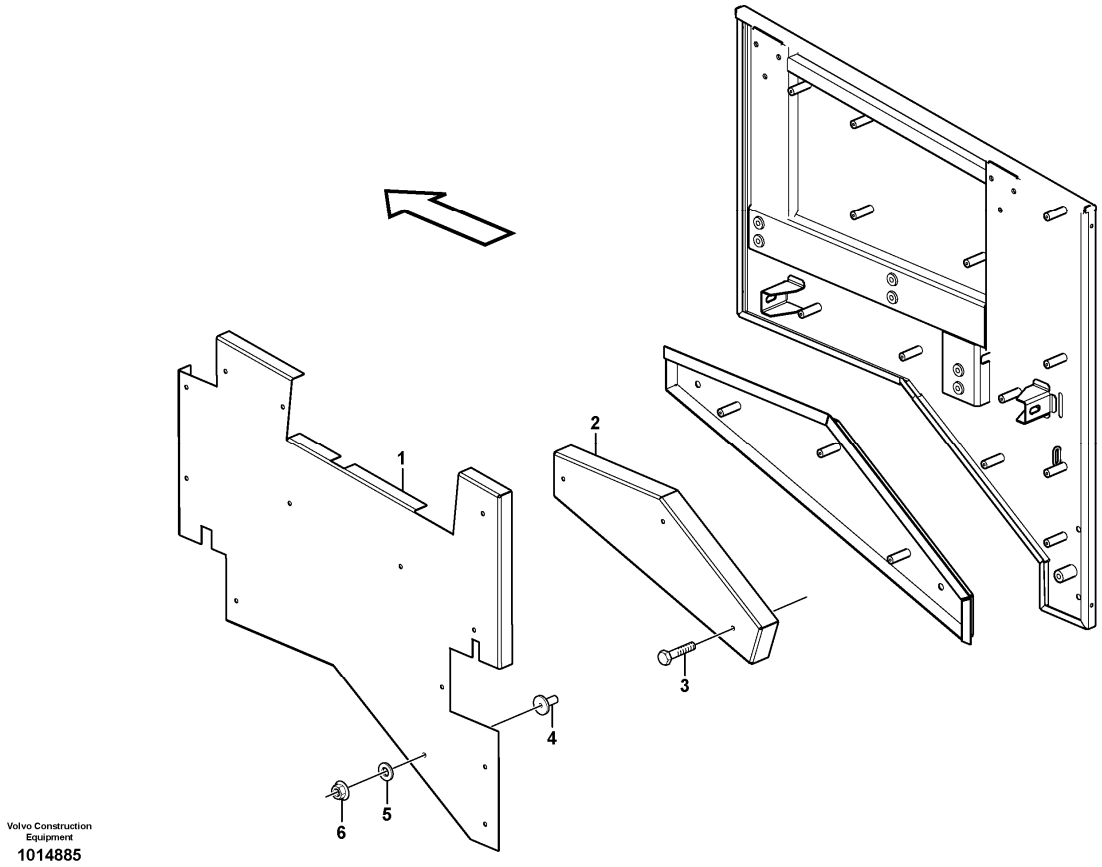

Section option	Kit	Option description
VOE82173		Noise reduction kit

Pos	Part	Q1	Q2	Q3	Q4	Q5	PS	Kit	Description	Option(s)	Remark
1	VOE11414892	1							Sound absorber		RH
	VOE11414893	1							Sound absorber		LH
2	VOE11175881	1							Sound absorber		RH
	VOE11175882	1							Sound absorber		LH
3	VOE971321	6							Six point socket screw		
4	VOE11413269	26							Plastic plug		
5	VOE13949817	26							Washer		
6	VOE981447	26							Flange lock nut		

VOLVO

Construction Equipment

PROSIS Part Information

Date:	Image id:	Catalogue:	Model:
10/09/2018	**1015759**	**20009**	**L60E**
Brand:	Serial:	Group/Section:	Title:
Volvo	**1001-3355, 60001-61214, 70001-70530**	**821/200**	**Side hatches, front STD, OPEN ROPS**

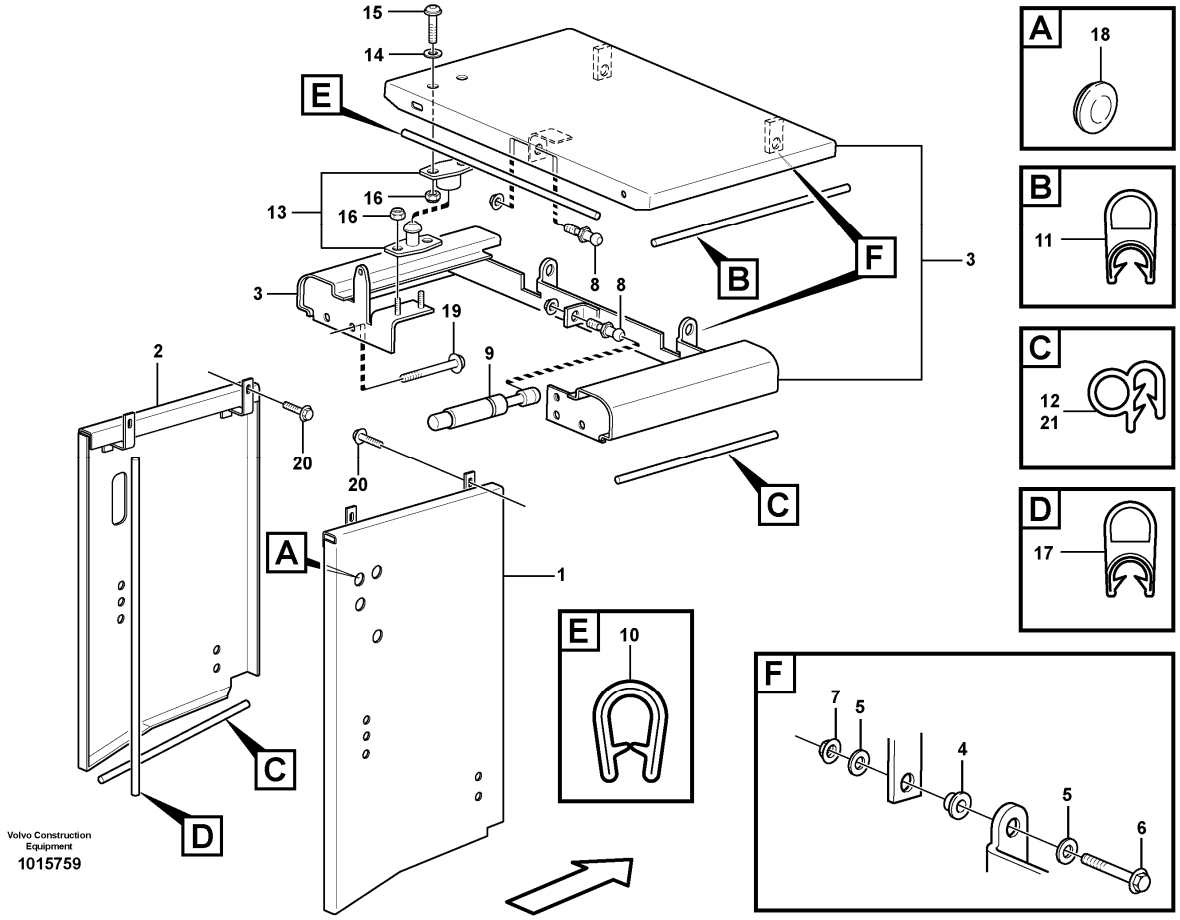

Section option	Kit	Option description
VOE33750		Wheel Loader
VOE33759		Wheel loader L60E OPEN ROPS

Pos	Part	Q1	Q2	Q3	Q4	Q5	PS	Kit	Description	Option(s)	Remark
1	VOE11414885	1							Side plate		
2	VOE11414886	1							Side plate		
3	VOE11414880	1							Top plate		
4	VOE1588548	2							•Bushing		
5	VOE13955897	4							•Washer		
6	VOE13965193	2							•Screw		
7	VOE971099	2							•Flange lock nut		
8	VOE15140510	2							•Ball stud		(VOE11174821)
9	VOE11400816	1							•Gas spring		

10	VOE4786031	REQ							•Framework moulding		L = 560 MM
11	VOE4786044	REQ							•Sealing strip		L = 330MM x2
12	VOE4766526	REQ							•Sealing strip		L = 356MM x2
13	VOE795581	1							•Door stop		
14	VOE13960138	2							•Washer		
15	VOE969405	2							•Six point socket screw		
16	VOE946577	2							•Lock nut		
17	VOE4881656	REQ							Framework moulding		L = 750MM x2
18	VOE11057786	3							Plug		
19	VOE965197	4							Flange screw		(VOE13965197)
20	VOE946671	4							Flange screw		
21	VOE4766526	REQ							Sealing strip		L = 356 MM X 2

VOLVO

Construction Equipment

PROSIS Part Information

Date:	Image id:	Catalogue:	Model:
10/09/2018	**1034994**	**20009**	**L60E**
Brand:	Serial:	Group/Section:	Title:
Volvo	**1001-3355, 60001-61214, 70001-70530**	**823/100**	**Radiator casing, support STD, OPEN ROPS**

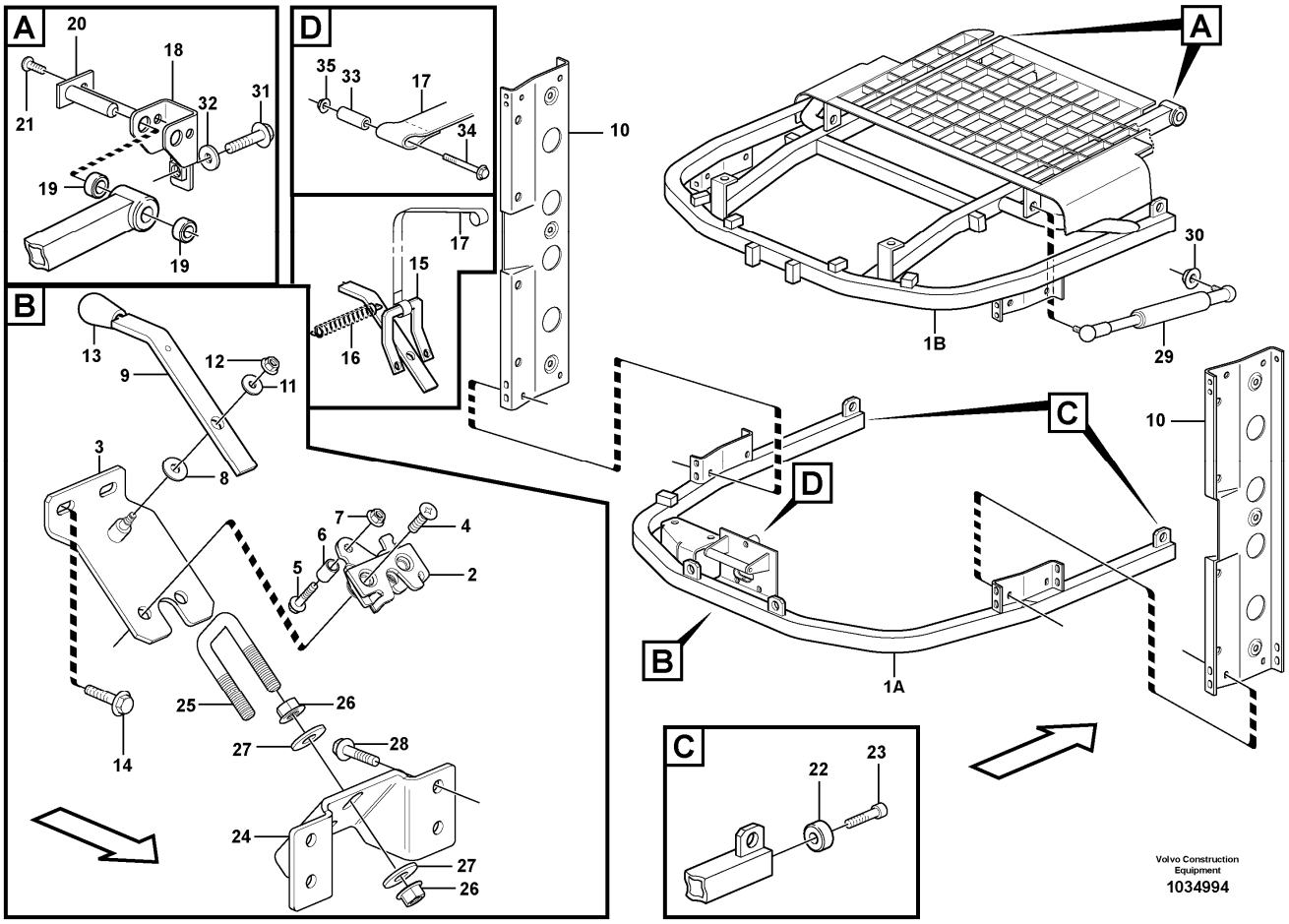

Section option	Kit	Option description
VOE33750		Wheel Loader
VOE33759		Wheel loader L60E OPEN ROPS

Q1-Q5	Option	Option description	
Q1 EPROD			
Q2 LPROD			

Pos	Part	Q1	Q2	Q3	Q4	Q5	PS	Kit	Description	Option(s)	Remark
		1	1						Radiator Casing		See ref 823/150
1A	VOE11413927	1	1						•Frame		(VOE11400553)
	VOE4753600	2							••Set ring		
	VOE946440	2							•••Flange screw		
1B	VOE11400589	1							•Frame		

1B	VOE11413059		1						•Frame		
	VOE11413926	1	1						•Locking device		
2	VOE11175891	1	1						••Lock		
3	VOE11413338	1	1						••Attachment		
4	VOE969373	2	2						••Six point socket screw		
5	VOE965212	1	1						••Flange screw		(VOE13965212)
6	VOE11130641	1	1						••Pipe		
7	VOE13949278	1	1						••Flange lock nut		
8	VOE11117464	1	1						••Plain washer		(VOE13960141)
9		1					NS		••Rod		
9	VOE11413925		1				OP		••Rod		
10	VOE11400593		2						••Intermediate plate		
11	VOE960139	1	1						••Plain washer		
12	VOE13945407	1							••Nut		
13	VOE11175898	1	1						••Handle		
14	VOE946470	2	2						••Flange screw		
15	VOE11413060	1	1						••Attachment		
16	VOE11413653	1	1						••Tension spring		
17	VOE11400879	1	1						•Strap		
18	VOE11175150	2							Hinge anchorage		
19	VOE1588548	4							Bushing		
20	VOE11174479	2							Pin		
21	VOE971319	2							Six point socket screw		
22	VOE11175910	2							Set ring		
23	VOE959223	2							Hex. socket screw		
24	VOE11400520	1	1						Attachment		
25	VOE11400885	1	1						Lock brace		
26	VOE13971096	4							Flange nut		
26	VOE971096		4						Flange nut		
27	VOE13960145	4	4						Washer		
28	VOE946329	4	4						Flange screw		
29	VOE11435548	2	2						Gas spring		(VOE11174326)
30	VOE13971098	2	2						Flange nut		
31	VOE946329	4	4						Flange screw		
32	VOE13960143	4	4						Washer		
33	VOE11400274	2	2						Spacer sleeve		
34	VOE13965179	1	1						Screw		
35	VOE13945408	1	1						Nut		

VOLVO

Construction Equipment

PROSIS Part Information

Date:	Image id:	Catalogue:	Model:
10/09/2018	**1045430**	**20009**	**L60E**
Brand:	Serial:	Group/Section:	Title:
Volvo	**1001-3355, 60001-61214, 70001-70530**	**823/150**	**Radiator casing STD, OPEN ROPS**

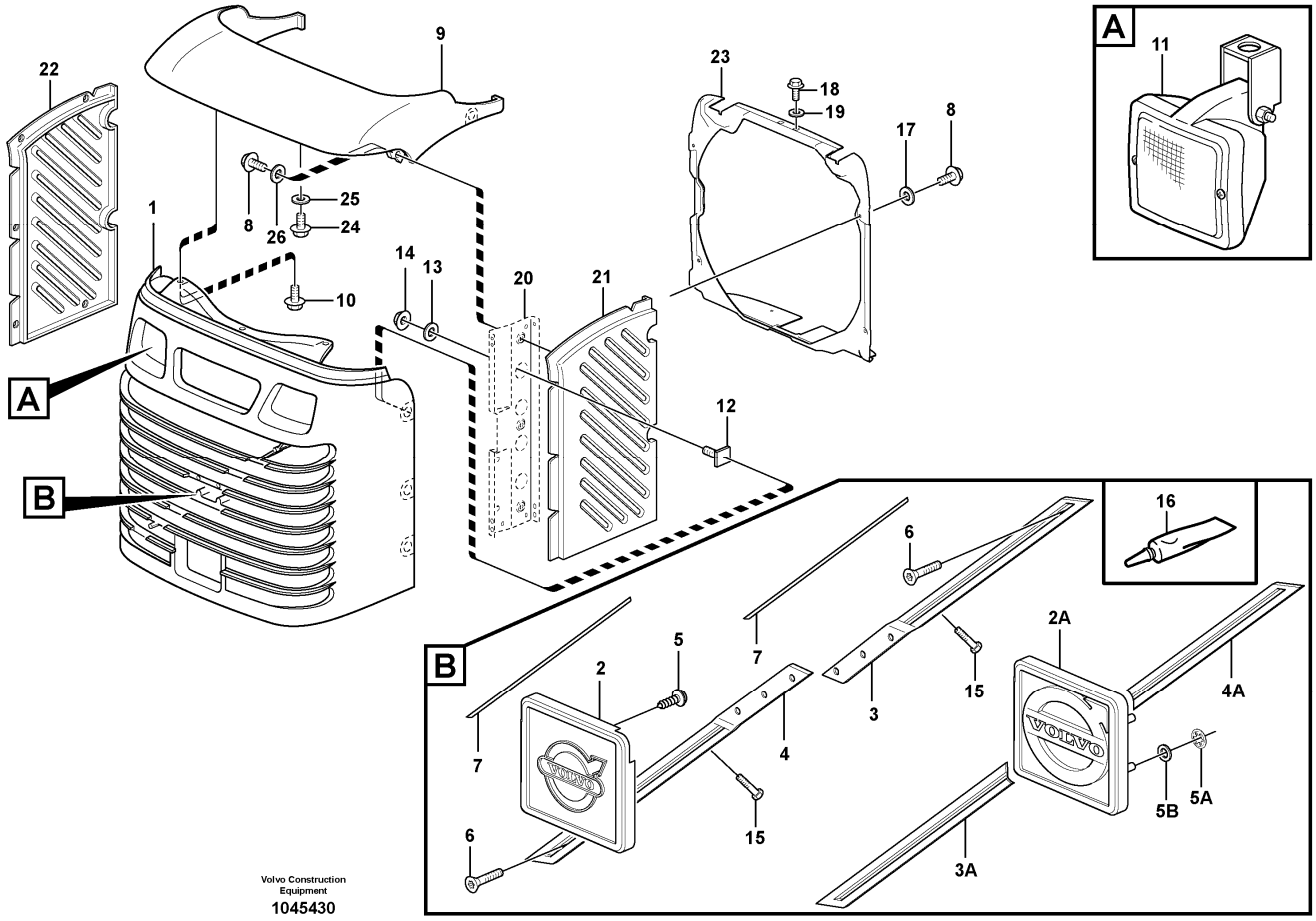

Section option	Kit	Option description
VOE33750		Wheel Loader
VOE33759		Wheel loader L60E OPEN ROPS

Q1-Q5	Option	Option description	
Q1 11400622			
Q2 11413857			

Pos	Part	Q1	Q2	Q3	Q4	Q5	PS	Kit	Description	Option(s)	Remark
		1	1						Radiator Casing		See ref 823/150
1A	VOE11413927	1	1						•Frame		(VOE11400553)
	VOE4753600	2							••Set ring		
	VOE946440	2							•••Flange screw		
1B	VOE11400589	1							•Frame		

1B	VOE11413059		1						•Frame		
	VOE11413926	1	1						•Locking device		
2	VOE11175891	1	1						••Lock		
3	VOE11413338	1	1						••Attachment		
4	VOE969373	2	2						••Six point socket screw		
5	VOE965212	1	1						••Flange screw		(VOE13965212)
6	VOE11130641	1	1						••Pipe		
7	VOE13949278	1	1						••Flange lock nut		
8	VOE11117464	1	1						••Plain washer		(VOE13960141)
9		1					NS		••Rod		
9	VOE11413925		1				OP		••Rod		
10	VOE11400593		2						••Intermediate plate		
11	VOE960139	1	1						••Plain washer		
12	VOE13945407	1							••Nut		
13	VOE11175898	1	1						••Handle		
14	VOE946470	2	2						••Flange screw		
15	VOE11413060	1	1						••Attachment		
16	VOE11413653	1	1						••Tension spring		
17	VOE11400879	1	1						•Strap		
18	VOE11175150	2							Hinge anchorage		
19	VOE1588548	4							Bushing		
20	VOE11174479	2							Pin		
21	VOE971319	2							Six point socket screw		
22	VOE11175910	2							Set ring		
23	VOE959223	2							Hex. socket screw		
24	VOE11400520	1	1						Attachment		
25	VOE11400885	1	1						Lock brace		
26	VOE13971096	4							Flange nut		
26	VOE971096		4						Flange nut		
27	VOE13960145	4	4						Washer		
28	VOE946329	4	4						Flange screw		
29	VOE11435548	2	2						Gas spring		(VOE11174326)
30	VOE13971098	2	2						Flange nut		
31	VOE946329	4	4						Flange screw		
32	VOE13960143	4	4						Washer		
33	VOE11400274	2	2						Spacer sleeve		
34	VOE13965179	1	1						Screw		
35	VOE13945408	1	1						Nut		

VOLVO

Construction Equipment

PROSIS Part Information

Date:	Image id:	Catalogue:	Model:
10/09/2018	**1007185**	**20009**	**L60E**
Brand:	Serial:	Group/Section:	Title:
Volvo	**1001-3355, 60001-61214, 70001-70530**	**823/300**	**Protecting plates 82292**

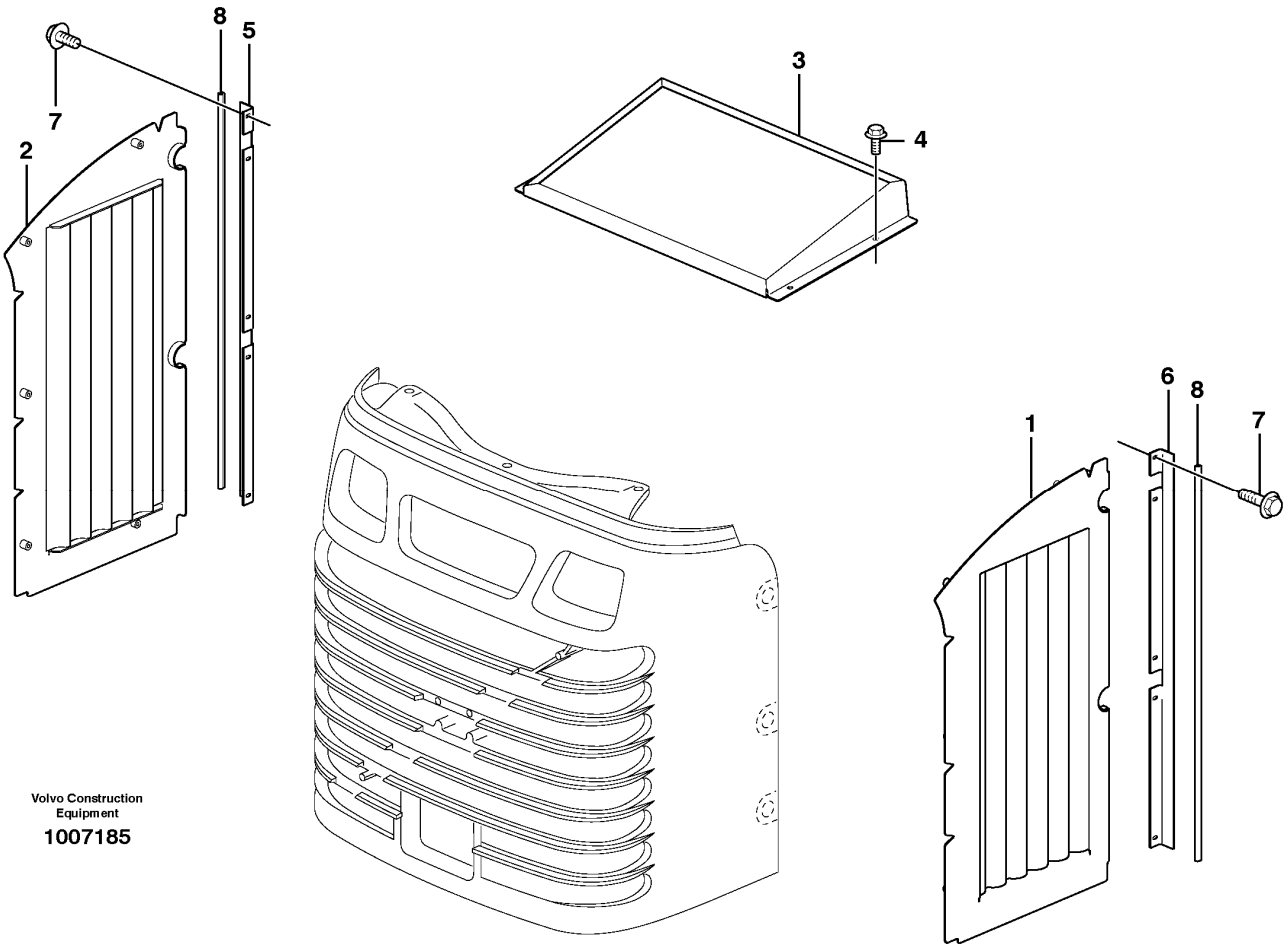

Section option	Kit	Option description
VOE82292		Fan air intake protection extra fine-meshed

Pos	Part	Q1	Q2	Q3	Q4	Q5	PS	Kit	Description	Option(s)	Remark
1	VOE11180419	1							Side panel		RH
2	VOE11180418	1							Side panel		LH
3	VOE11180400	1							Air inlet grille		S/N - 1913
3	VOE11413975	1							Air inlet grille		S/N 1914 -
4	VOE13946173	4							Screw		
5	VOE11180441	1							Angle Iron		LH
6	VOE11180423	1							Angle Iron		RH
7	VOE13946544	10							Screw		M6X16

8	VOE4881207	REQ							Sealing strip		L = 1710MM

VOLVO

Construction Equipment

PROSIS Part Information

Date:	Image id:	Catalogue:	Model:
10/09/2018	**1003761**	**20009**	**L60E**
Brand:	Serial:	Group/Section:	Title:
Volvo	**1001-3355, 60001-61214, 70001-70530**	**825/100**	**Fenders, front and rear. STD, OPEN ROPS**

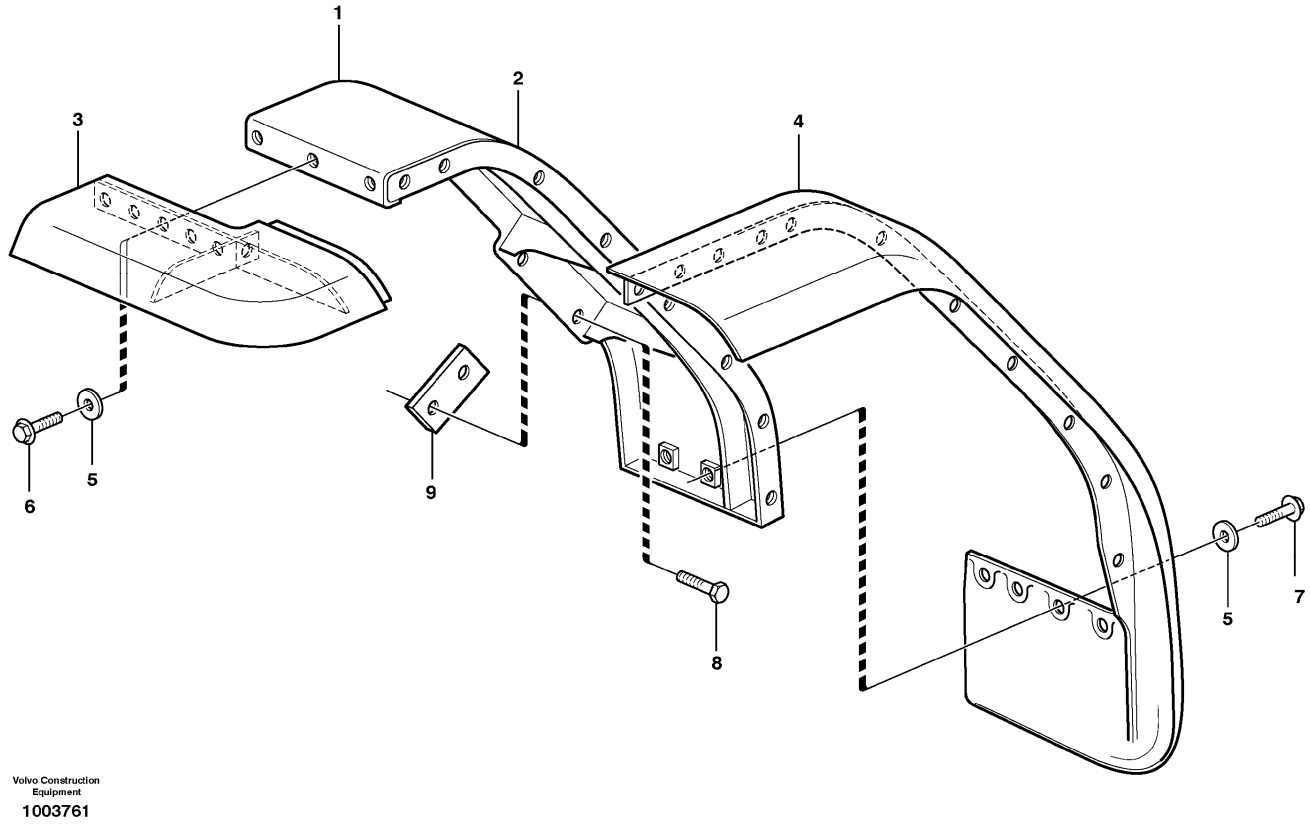

Section option	Kit	Option description
VOE33750		Wheel Loader
VOE33759		Wheel loader L60E OPEN ROPS
VOE80902		Extended mudguards, sheet metal
VOE82543		Extended mudguards, sheet metal

Q1-Q5	Option	Option description	
Q1 33750 33759	VOE33750	Wheel Loader	
Q2 80902 82543	VOE80902	Extended mudguards, sheet metal	

Pos	Part	Q1	Q2	Q3	Q4	Q5	PS	Kit	Description	Option(s)	Remark
1	VOE11400138	1							Front mudguard		RH
	VOE11400139	1							Front mudguard		LH
2	VOE11400126	1							•Front mudguard		RH
	VOE11400127	1							•Front mudguard		LH
3	VOE11174814	1							•Mudguard widener		RH

	VOE11174815	1							•Mudguard widener		LH
4	VOE11174800	1							•Mudguard widener		RH
	VOE11174801	1							•Mudguard widener		LH
5	VOE13960145	26							•Washer		
6	VOE946472	22							•Flange screw		
7	VOE946329	4							•Flange screw		
8	VOE13965192	8							Screw		
	VOE965195		8						Flange screw		
9	VOE11400344	4							Spacer plate		
	VOE11400326		4						Spacer plate		

VOLVO

Construction Equipment

PROSIS Part Information

Date:	Image id:	Catalogue:	Model:
10/09/2018	**1014637**	**20009**	**L60E**
Brand:	Serial:	Group/Section:	Title:
Volvo	**1001-3355, 60001-61214, 70001-70530**	**825/150**	**Fenders, front and rear.**

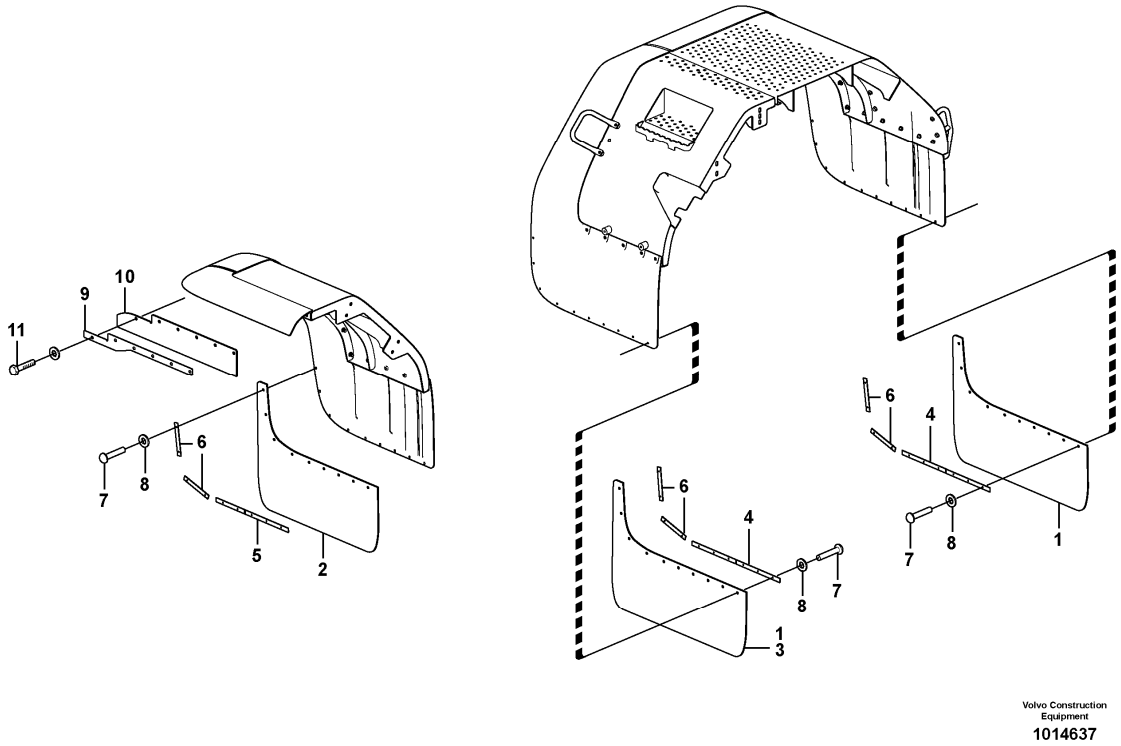

Section option	Kit	Option description
VOE82162	VOE11712152	Mud guard front and rear
VOE82163	VOE11712151	Mud guard front and rear

Q1-Q5	Option	Option description	
Q1 82162	VOE82162	Mud guard front and rear	
Q2 82163	VOE82163	Mud guard front and rear	

Pos	Part	Q1	Q2	Q3	Q4	Q5	PS	Kit	Description	Option(s)	Remark
1	VOE11413287	4							Mudflap		
2	VOE11413289	2	2						Mudflap		
3	VOE11413288		4						Mudflap		
4	VOE11400502	8	8						Attaching rail		
5	VOE11400503	2	2						Attaching rail		

6	VOE11400504	12	12						Attaching rail		
7	VOE13977632	48	48						Blind rivet		
8	VOE120618	48	48						Washer		
9	VOE11413141	2	2						Attaching plate		
10	VOE11413138	2	2						Mudflap		
11	VOE13965185	6	6						Screw		

VOLVO

Construction Equipment

PROSIS Part Information

Date:	Image id:	Catalogue:	Model:
10/09/2018	**1009074**	**20009**	**L60E**
Brand:	Serial:	Group/Section:	Title:
Volvo	**1001-3355, 60001-61214, 70001-70530**	**826/100**	**Swing out rear mudguard STD, OPEN ROPS**

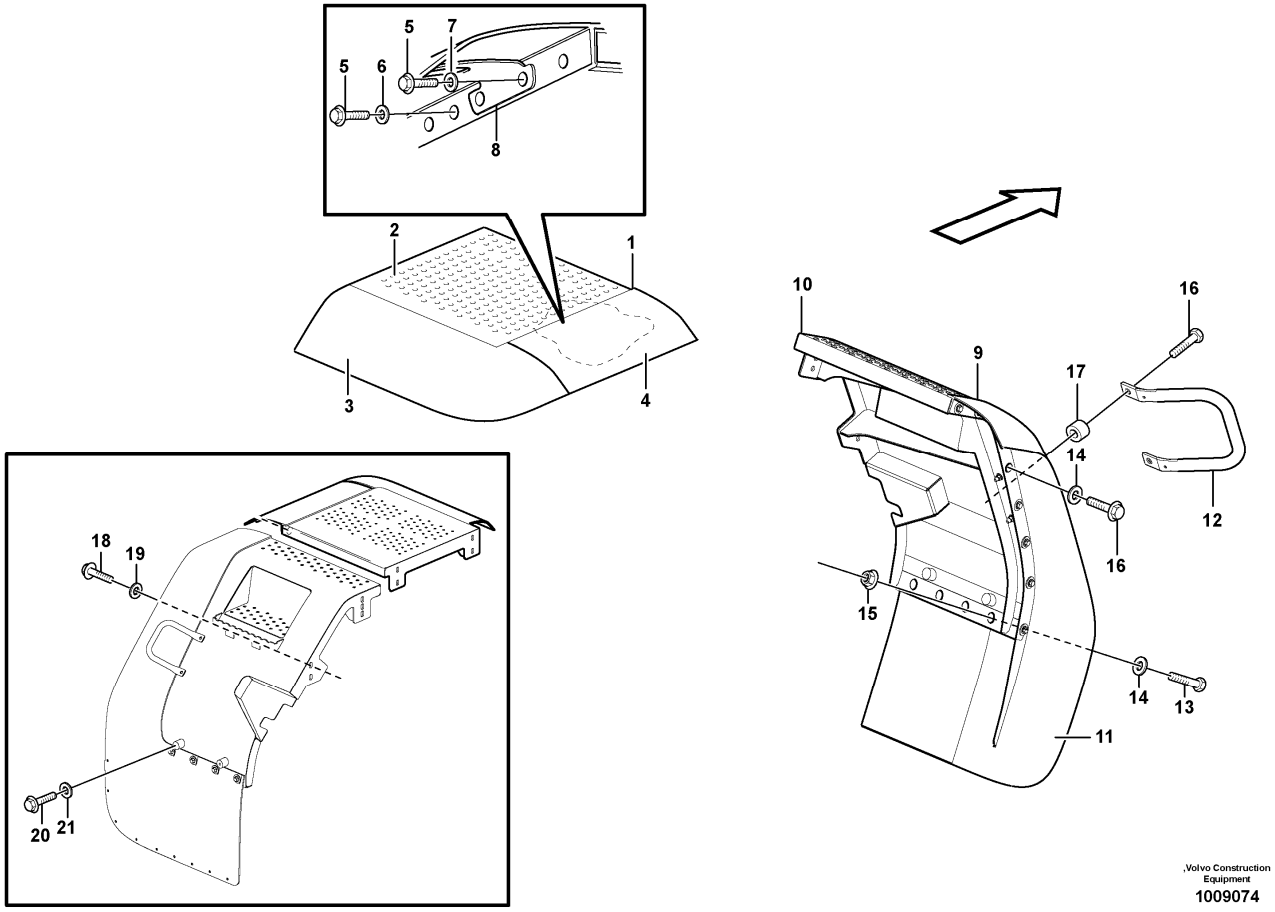

Section option	Kit	Option description
VOE33750		Wheel Loader
VOE33759		Wheel loader L60E OPEN ROPS

Q1-Q5	Option	Option description	
Q1 RH			
Q2 LH			

Pos	Part	Q1	Q2	Q3	Q4	Q5	PS	Kit	Description	Option(s)	Remark
1	VOE11413236	1							Rear fender		
	VOE11413237		1						Rear fender		
2		1					NS		•Rear fender		
			1				NS		•Rear fender		
3	VOE11174768	1							•Mudguard widener		

	VOE11174767		1						•Mudguard widener		
4	VOE11413775	1							•Mudguard widener		
	VOE11413776		1						•Mudguard widener		
5	VOE946472	9	9						•Flange screw		
6	VOE13960145	7	7						•Washer		
7	VOE13960143	2	2						•Washer		
8	VOE11400605	1	1						•Support plate		
9	VOE11400170	1							Rear fender		
	VOE11400171		1						Rear fender		
10	VOE11400166	1					SS		•Rear fender		
	VOE11400167		1				SS		•Rear fender		
11	VOE11174810	1							•Mudguard widener		
	VOE11174811		1						•Mudguard widener		
12	VOE11175869	1	1						•Handle		
13	VOE946329	3	3						•Flange screw		
14	VOE13960145	10	10						•Washer		
15	VOE13971098	3	3						•Flange nut		
16	VOE946472	9	9						•Flange screw		
17	VOE4859489	2	2						•Spacer		
18	VOE13965193	7	7						Screw		
19	VOE13960145	7	7						Washer		
20	VOE946329	2	2						Flange screw		
21	VOE13960143	2	2						Washer		

VOLVO

Construction Equipment

PROSIS Part Information

Date:	Image id:	Catalogue:	Model:
10/09/2018	**1017451**	**20009**	**L60E**
Brand:	Serial:	Group/Section:	Title:
Volvo	**1001-3355, 60001-61214, 70001-70530**	**826/110**	**Fender, rear 82543**

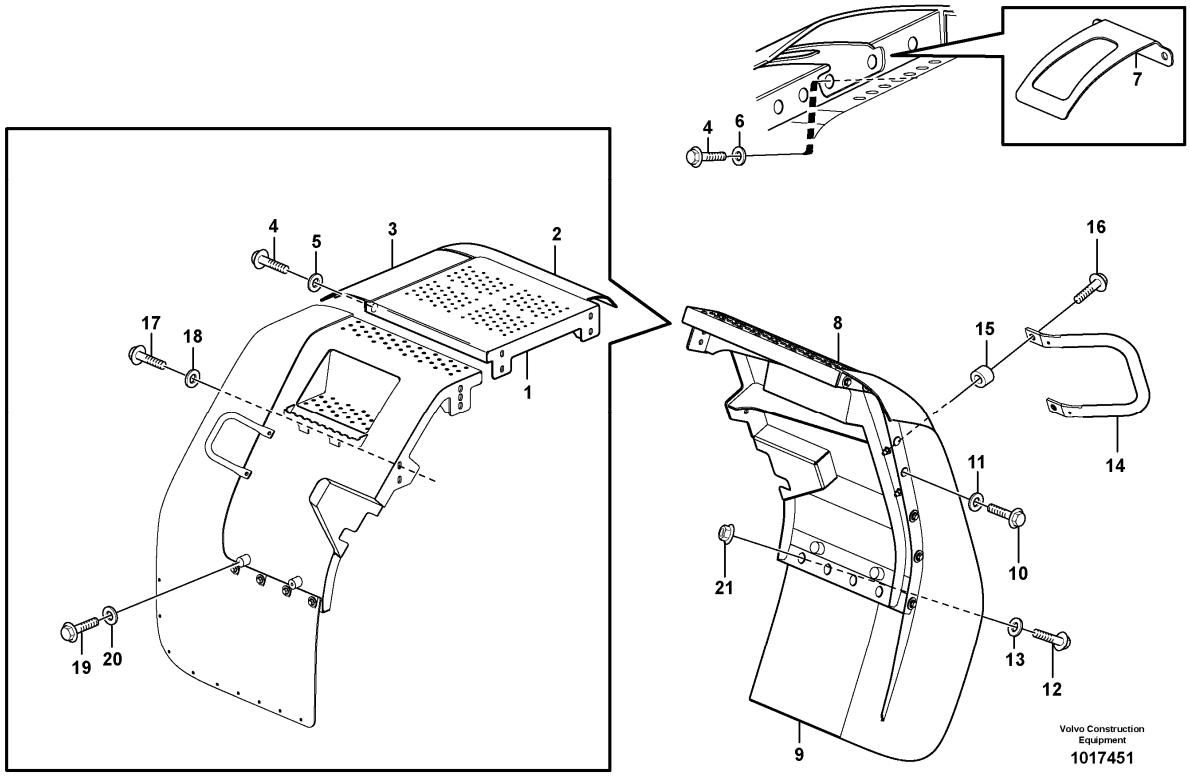

Section option	Kit	Option description
VOE82543		Extended mudguards, sheet metal

Q1-Q5	Option	Option description	
Q1 RH			
Q2 LH			

Pos	Part	Q1	Q2	Q3	Q4	Q5	PS	Kit	Description	Option(s)	Remark
	VOE11413232	1							Rear fender		
	VOE11413233		1						Rear fender		
1	VOE11413022	1							•Rear fender		
	VOE11413023		1						•Rear fender		
2	VOE11174768	1							•Mudguard widener		
	VOE11174767		1						•Mudguard widener		

3	VOE11413775	1							•Mudguard widener		
	VOE11413776		1						•Mudguard widener		
4	VOE946472	9	9						•Flange screw		
5	VOE13960145	7	7						•Washer		
6	VOE13960143	2	2						•Washer		
7	VOE11400605	1	1						•Support plate		
8	VOE11400172	1							Rear fender		
8	VOE11400173		1						Rear fender		
		1					NS		•Rear fender		
			1				NS		•Rear fender		
9	VOE11174808	1							•Mudguard widener		
9	VOE11174809		1						•Mudguard widener		
10	VOE946472	7	7						•Flange screw		
11	VOE13960145	7	7						•Washer		
12	VOE946329	3	3						•Flange screw		
13	VOE13960145	3	3						•Washer		
14	VOE11175869	1	1						•Handle		
15	VOE4859489	2	2						•Spacer		
16	VOE946472	2	2						•Flange screw		
17	VOE946472	7	7						Flange screw		
18	VOE13960145	7	7						Washer		
19	VOE946329	2	2						Flange screw		
20	VOE13960143	2	2						Washer		
21	VOE13971098	3	3						Flange nut		

VOLVO

Construction Equipment

PROSIS Part Information

Date:	Image id:	Catalogue:	Model:
10/09/2018	**1014296**	**20009**	**L60E**
Brand:	Serial:	Group/Section:	Title:
Volvo	**1001-3355, 60001-61214, 70001-70530**	**826/150**	**Fender, rear 82539**

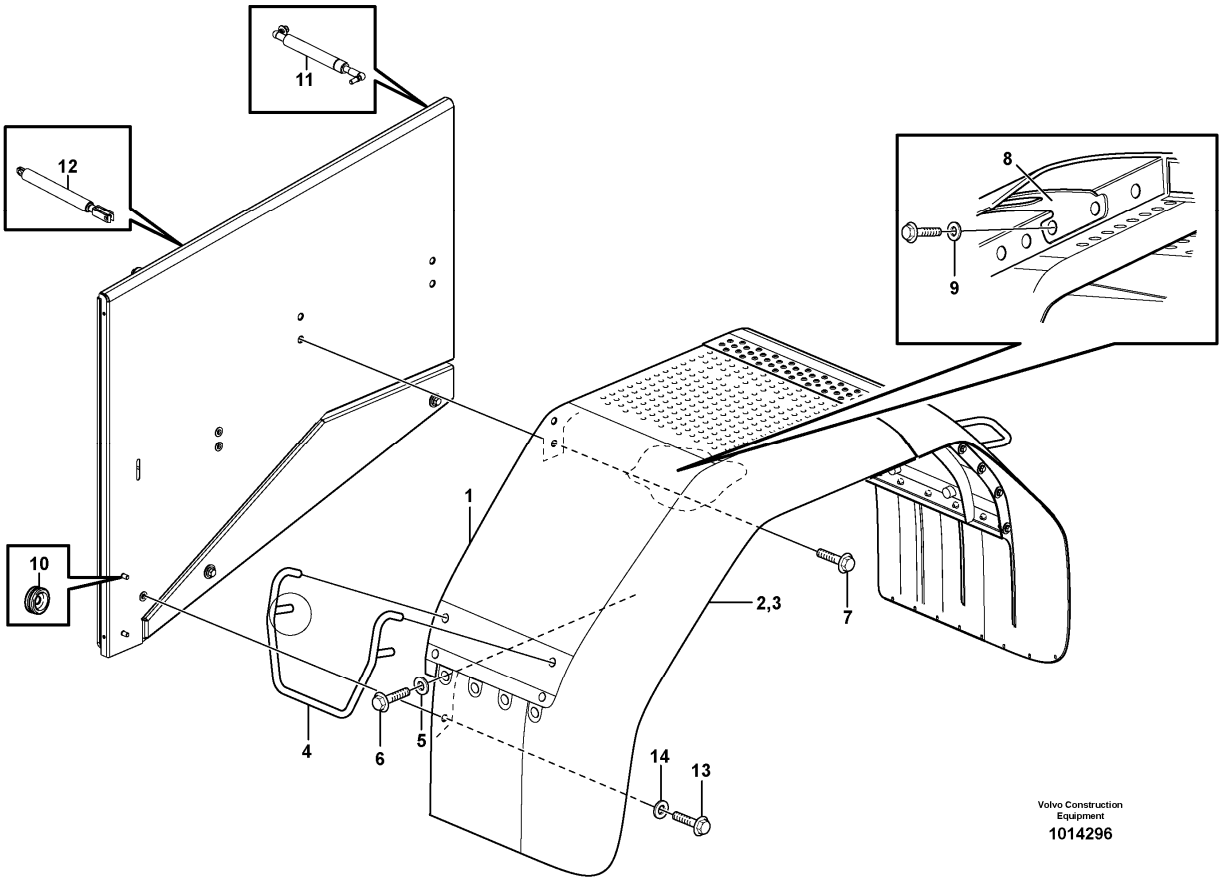

Section option	Kit	Option description
VOE82539		Extended mudguards, sheet metal

Q1-Q5	Option	Option description	
Q1 RH			
Q2 LH			

Pos	Part	Q1	Q2	Q3	Q4	Q5	PS	Kit	Description	Option(s)	Remark
1	VOE11400160	1							Rear fender		
	VOE11400161		1						Rear fender		
2	VOE11174779	1							•Mudguard widener		
3	VOE11174780		1						•Mudguard widener		
4	VOE11175609	1	1						•Handle		
5	VOE13960145	11	11						•Washer		

6	VOE946329	7	7						•Flange screw		
7	VOE946472	10	10						•Flange screw		
8	VOE11400605	1	1						•Support plate		
9	VOE13960143	2	2						•Washer		
10	VOE941266	2	2						Plug		
11	VOE11435549	2	2						Gas spring		(VOE11174327)
12	VOE11413466	2	2						Gas spring		
13	VOE13965193	6	6						Screw		
14	VOE13960145	6	6						Washer		

VOLVO

Construction Equipment

PROSIS Part Information

Date:	Image id:	Catalogue:	Model:
10/09/2018	**1014480**	**20009**	**L60E**
Brand:	Serial:	Group/Section:	Title:
Volvo	**1001-3355, 60001-61214, 70001-70530**	**826/175**	**Fender, rear 80902**

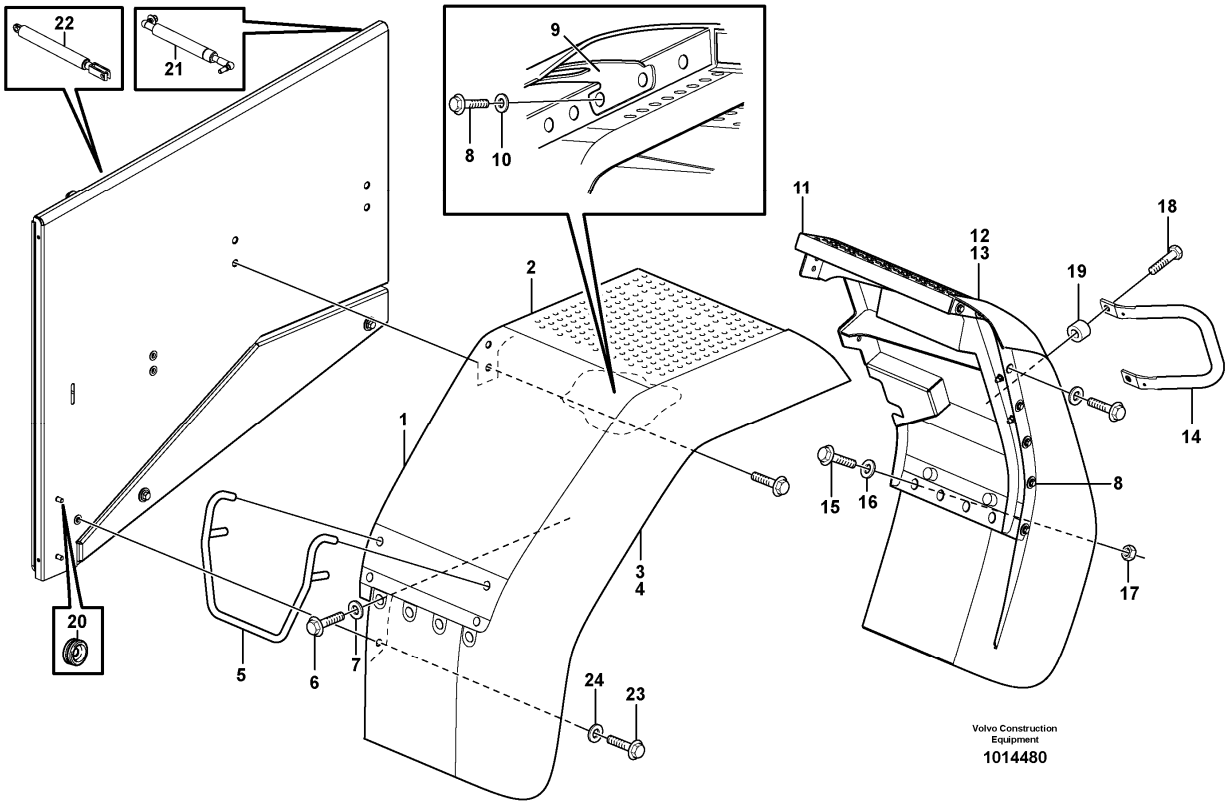

Section option	Kit	Option description
VOE80902		Extended mudguards, sheet metal

Q1-Q5	Option	Option description	
Q1 RH			
Q2 LH			

Pos	Part	Q1	Q2	Q3	Q4	Q5	PS	Kit	Description	Option(s)	Remark
1	VOE11400142	1							Rear fender		
	VOE11400143		1						Rear fender		
2	VOE11400130	1					SS		•Rear fender		
	VOE11400131		1				SS		•Rear fender		
3	VOE11174794	1							•Mudguard widener		
4	VOE11174795		1						•Mudguard widener		

5	VOE11175609	1	1						•Handle		
6	VOE946329	7	7						•Flange screw		
7	VOE13960145	11	11						•Washer		
8	VOE946472	10	10						•Flange screw		
9	VOE11400605	1	1						•Support plate		
10	VOE13960143	2	2						•Washer		
11	VOE11400172	1							Rear fender		
	VOE11400173		1						Rear fender		
12	VOE11174808	1							•Mudguard widener		
13	VOE11174809		1						•Mudguard widener		
14	VOE11175869	1	1						•Handle		
15	VOE946329	3	3						•Flange screw		
16	VOE13960145	10	10						•Washer		
17	VOE13971098	3	3						•Flange nut		
18	VOE946472	9	9						•Flange screw		
19	VOE4859489	2	2						•Spacer		
20	VOE941266	1	1						Plug		
21	VOE11435549	1	1						Gas spring		(VOE11174327)
22	VOE11413466	1	1						Gas spring		
23	VOE13965193	6	6						Screw		
24	VOE13960145	6	6						Washer		

VOLVO

Construction Equipment

PROSIS Part Information

Date:	Image id:	Catalogue:	Model:
10/09/2018	**1026184**	**20009**	**L60E**
Brand:	Serial:	Group/Section:	Title:
Volvo	**1001-3355, 60001-61214, 70001-70530**	**826/250**	**Swing out rear mudguard 82238**

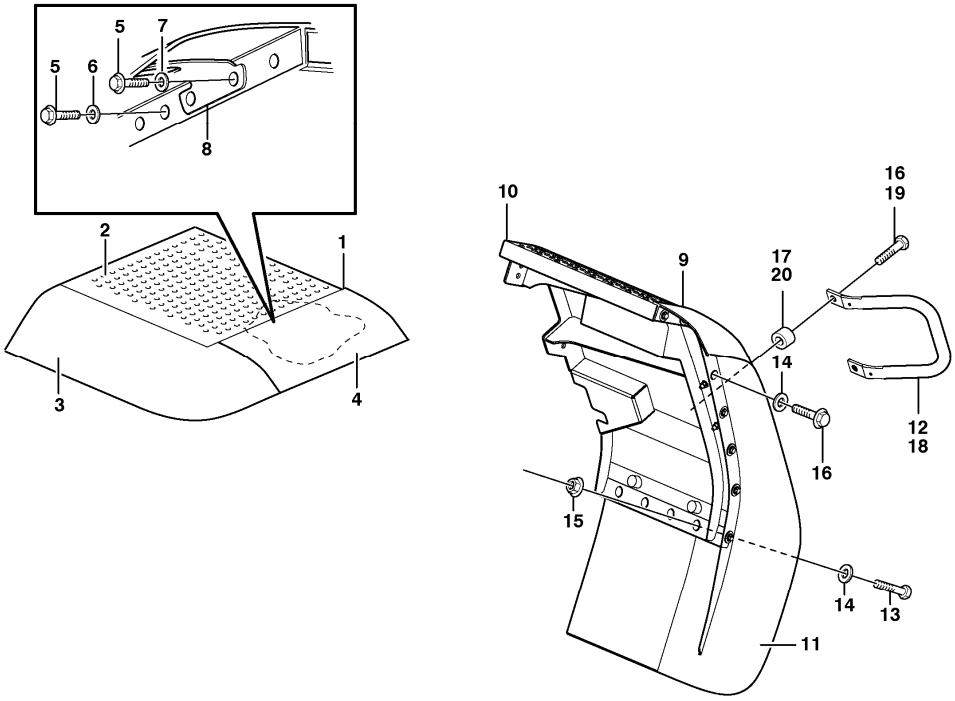

Volvo Construction Equipment
1026184

Section option	Kit	Option description
VOE82238		Rear fender

Q1-Q5	Option	Option description	
Q1 RH			
Q2 LH			

Pos	Part	Q1	Q2	Q3	Q4	Q5	PS	Kit	Description	Option(s)	Remark
1	VOE11413236	1							Rear fender		
	VOE11413237		1						Rear fender		
2	VOE11413236	1							•Rear fender		
	VOE11413237		1						•Rear fender		
3	VOE11174768	1							•Mudguard widener		
	VOE11174767		1						•Mudguard widener		

4	VOE11413775	1							•Mudguard widener		
	VOE11413776		1						•Mudguard widener		
5	VOE946472	9	9						•Flange screw		
6	VOE13960145	7	7						•Washer		
7	VOE13960143	2	2						•Washer		
8	VOE11400605	1	1						•Support plate		
9	VOE11400170	1							Rear fender		
	VOE11400171		1						Rear fender		
10	VOE11400170	1							•Rear fender		
	VOE11400171		1						•Rear fender		
11	VOE11174810	1							•Mudguard widener		
	VOE11174811		1						•Mudguard widener		
12	VOE11175869	1	1						•Handle		
13	VOE946329	3	3						•Flange screw		
14	VOE13960145	10	10						•Washer		
15	VOE13971098	3	3						•Flange nut		
16	VOE946472	9	9						•Flange screw		
17	VOE4859489	2	2						•Spacer		
18	VOE11175869	1	1						•Handle		
19	VOE946472	2	2						•Flange screw		
20	VOE4859489	2	2						•Spacer		

VOLVO

Construction Equipment

PROSIS Part Information

Date:	Image id:	Catalogue:	Model:
10/09/2018	**1016979**	**20009**	**L60E**
Brand:	Serial:	Group/Section:	Title:
Volvo	**1001-3355, 60001-61214, 70001-70530**	**827/100**	**Running board.**

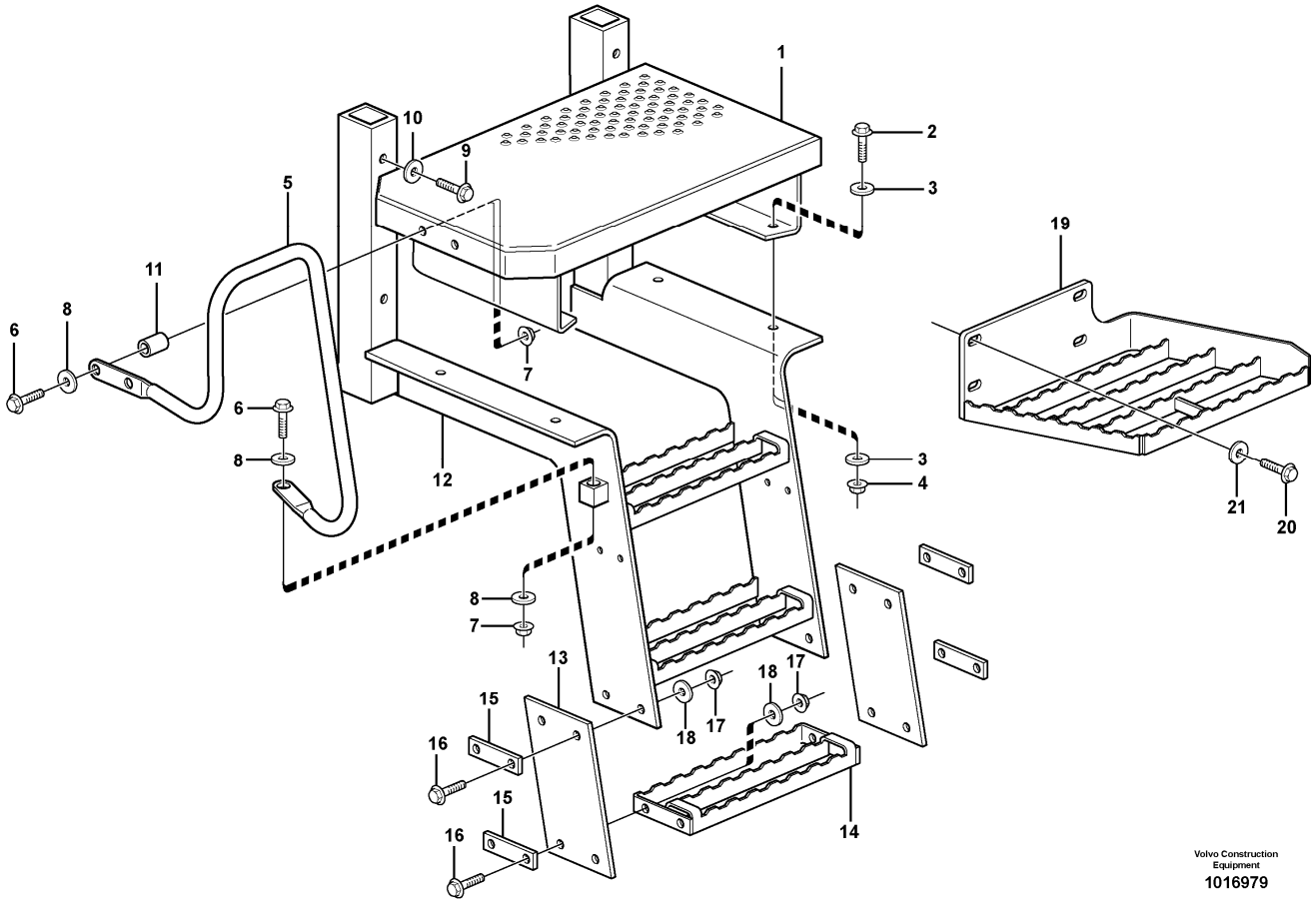

Section option	Kit	Option description
VOE33750		Wheel Loader
VOE33759		Wheel loader L60E OPEN ROPS
VOE82554		Footstep, right side (tool box included)

Q1-Q5	Option	Option description	
Q1 STD			
Q2 82554	VOE82554	Footstep, right side (tool box included)	

Pos	Part	Q1	Q2	Q3	Q4	Q5	PS	Kit	Description	Option(s)	Remark
1	VOE15166131	1							Platform		(VOE11175923)
2	VOE946472	4							Flange screw		
3	VOE13960143	8							Washer		
4	VOE13971098	4							Flange nut		

5	VOE11174954		1						Handle		RH
	VOE11436262	1							Handle		(VOE11174143)LH
6	VOE13965179	3	3						Screw		
7	VOE948645	3	3						Flange lock nut		
8	VOE11117464	6	6						Plain washer		(VOE13960141)
9	VOE13965190	4	4						Screw		
10	VOE13960143	4	4						Washer		
11	VOE11175803	2	2						Spacer sleeve		
12	VOE11174000	2	2						Stairs		
13	VOE11147595	2	2						End plate		
14	VOE11414150	1	1				SS		Foot step		(VOE11130990)
15	VOE11148718	4	4						Plate		
16	VOE13947760	8	8						Screw		
17	VOE948645	8	8						Flange lock nut		
18	VOE11117464	8	8						Plain washer		(VOE13960141)
19	VOE11414271	1					SS		Platform		RH
	VOE11414272	1					SS		Platform		LH
20	VOE968297	8							Flange screw		
21	VOE11108672	8							Spacer		

VOLVO

Construction Equipment

PROSIS Part Information

Date:	Image id:	Catalogue:	Model:
10/09/2018	**1031995**	**20009**	**L60E**
Brand:	Serial:	Group/Section:	Title:
Volvo	**1001-3355, 60001-61214, 70001-70530**	**827/250**	**Foot step 82232**

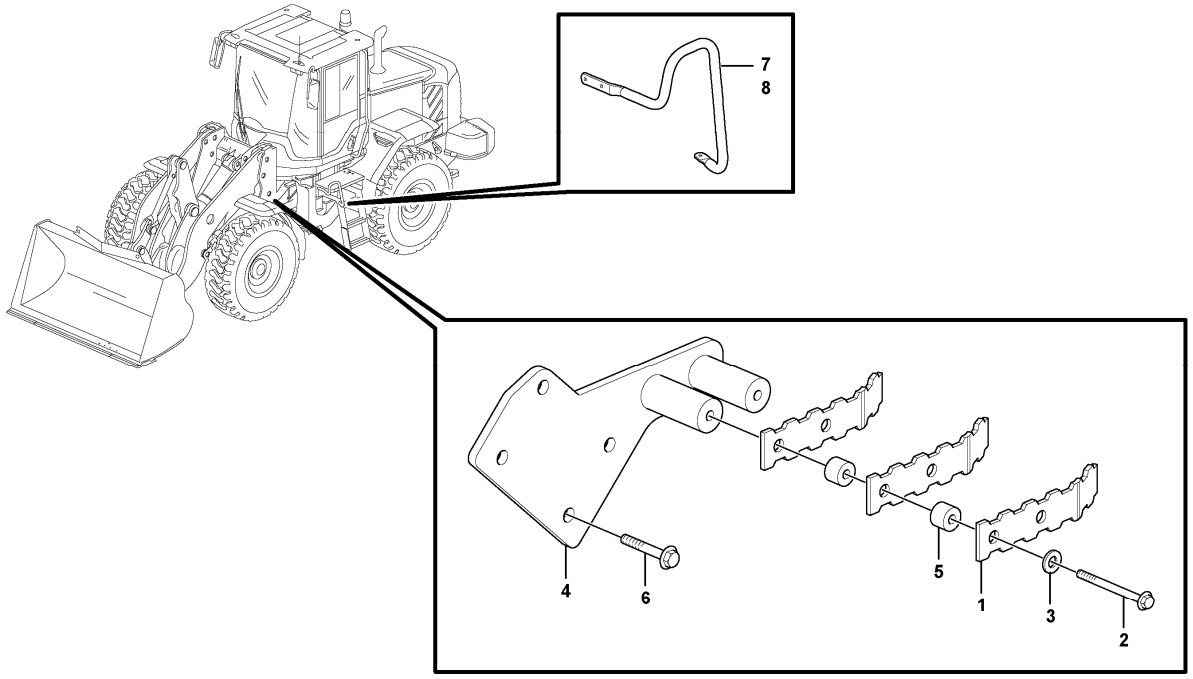

Section option	Kit	Option description
VOE82232		Footsteps

Pos	Part	Q1	Q2	Q3	Q4	Q5	PS	Kit	Description	Option(s)	Remark
1	VOE11413359	6							Foot rest		
2	VOE13946474	4							Flange screw		
3	VOE13960145	4							Washer		
4	VOE11417880	1							Anchorage		RH
	VOE11417881	1							Anchorage		LH
5	VOE11075797	8							Spacer		
6	VOE13965193	8							Screw		L = 50 MM
	VOE13965194	8							Screw		L = 60 MM
	VOE965195	8							Flange screw		L = 70 MM
	VOE13965196	8							Screw		L = 80 MM

7	VOE11438017	1							Handle		
8	VOE11438018	1							Handle		

VOLVO

Construction Equipment

PROSIS Part Information

Date:	Image id:	Catalogue:	Model:
10/09/2018	**ED114**	**20009**	**L60E**
Brand:	Serial:	Group/Section:	Title:
Volvo	**1001-3355, 60001-61214, 70001-70530**	**831/100**	**Door with fitting parts**

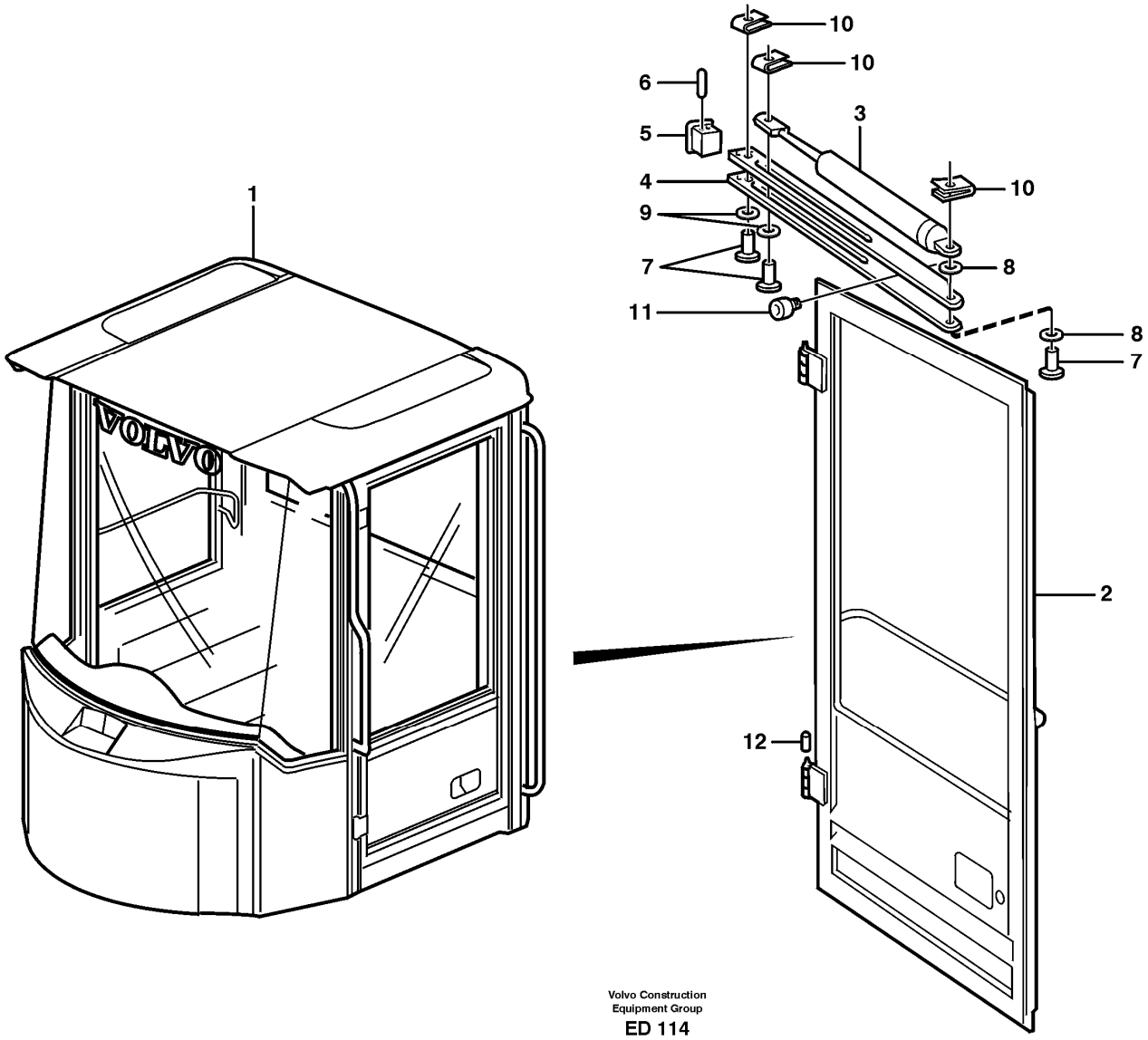

Section option	Kit	Option description
VOE33755		Cab
VOE33756		Cab L60E USA

Q1-Q5	Option	Option description	
Q1 33755	VOE33755	Cab	
Q2 33756	VOE33756	Cab L60E USA	

Pos	Part	Q1	Q2	Q3	Q4	Q5	PS	Kit	Description	Option(s)	Remark
1		1					NS		Cab Framework		
2	VOE11706864	1							•Door		See ref 831/150
3	VOE17208460	1	1						Gas Spring		(VOE11006826)
4	VOE11006706	1	1						Door stop		
5	VOE11005947	1	1						End Piece		
6	VOE13951967	2	2						Spring pin		
7	VOE942290	3	3						Retaining ring bolt		
8	VOE13947757	2	2						Washer		8.4 x 16 MM
9	VOE13962658	2	2						Washer		8.1 x 18 MM
10	VOE13969158	3	3						Lock brace		
11	VOE667751	2							Buffer		
12	VOE11104749	6							Protecting cover		

VOLVO

Construction Equipment

PROSIS Part Information

Date:	Image id:	Catalogue:	Model:
10/09/2018	**1002599**	**20009**	**L60E**
Brand:	Serial:	Group/Section:	Title:
Volvo	**1001-3355, 60001-61214, 70001-70530**	**831/150**	**Door**

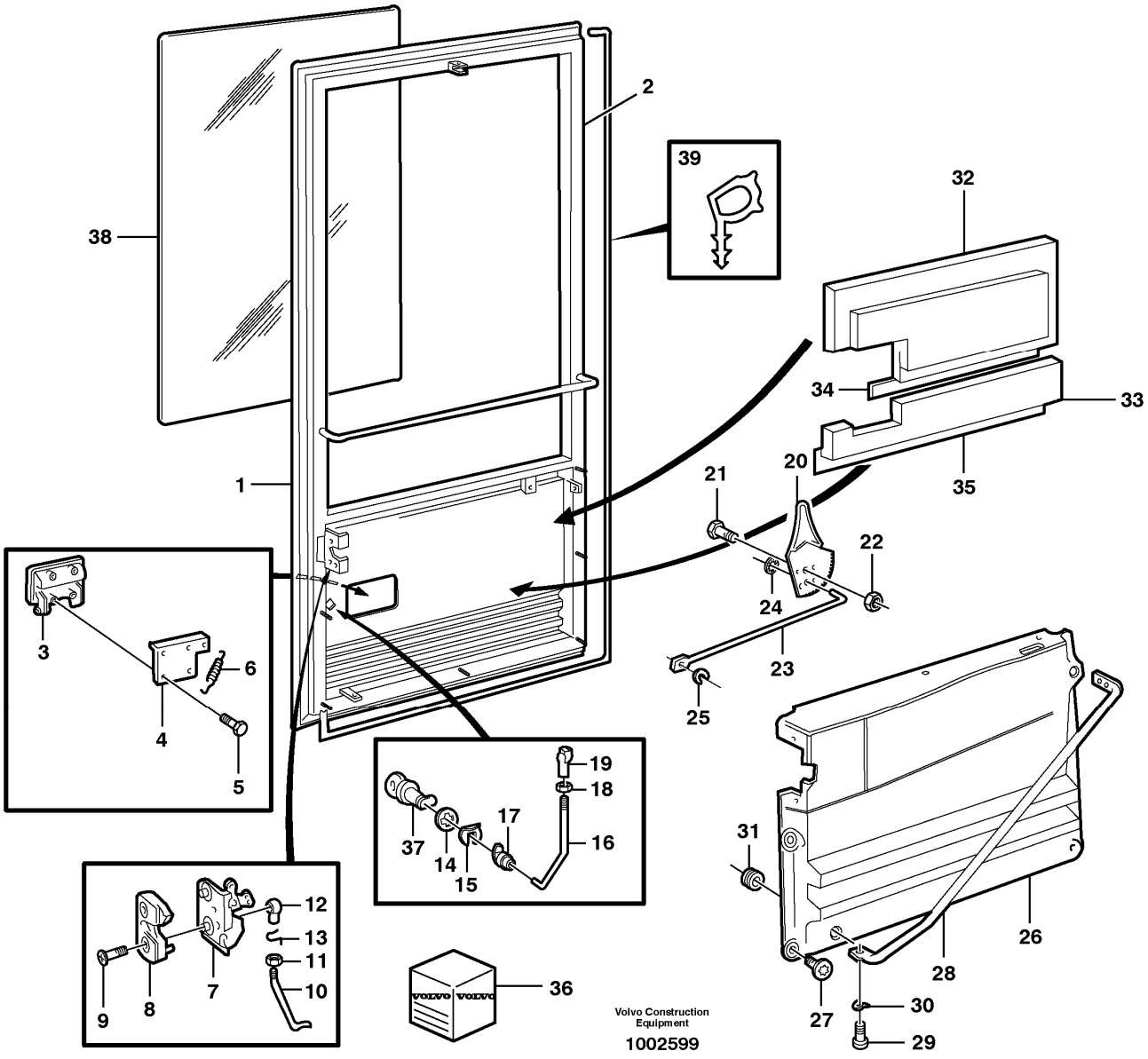

Section option	Kit	Option description
VOE33755		Cab
VOE33756		Cab L60E USA
VOE94638		One Combination lock kit only for USA

Q1-Q5	Option	Option description	
Q1 33755 33756	VOE33755	Cab	
Q2 94638	VOE94638	One Combination lock kit only for USA	

Pos	Part	Q1	Q2	Q3	Q4	Q5	PS	Kit	Description	Option(s)	Remark
1		1					NS		Cab Framework		
2	VOE11706864	1							•Door		See ref 831/150
3	VOE17208460	1	1						Gas Spring		(VOE11006826)
4	VOE11006706	1	1						Door stop		
5	VOE11005947	1	1						End Piece		
6	VOE13951967	2	2						Spring pin		
7	VOE942290	3	3						Retaining ring bolt		
8	VOE13947757	2	2						Washer		8.4 x 16 MM
9	VOE13962658	2	2						Washer		8.1 x 18 MM
10	VOE13969158	3	3						Lock brace		
11	VOE667751	2							Buffer		
12	VOE11104749	6							Protecting cover		

VOLVO

Construction Equipment

PROSIS Part Information

Date:	Image id:	Catalogue:	Model:
10/09/2018	**1014759**	**20009**	**L60E**
Brand:	Serial:	Group/Section:	Title:
Volvo	**1001-3355, 60001-61214, 70001-70530**	**837/100**	**Coverplates 82204**

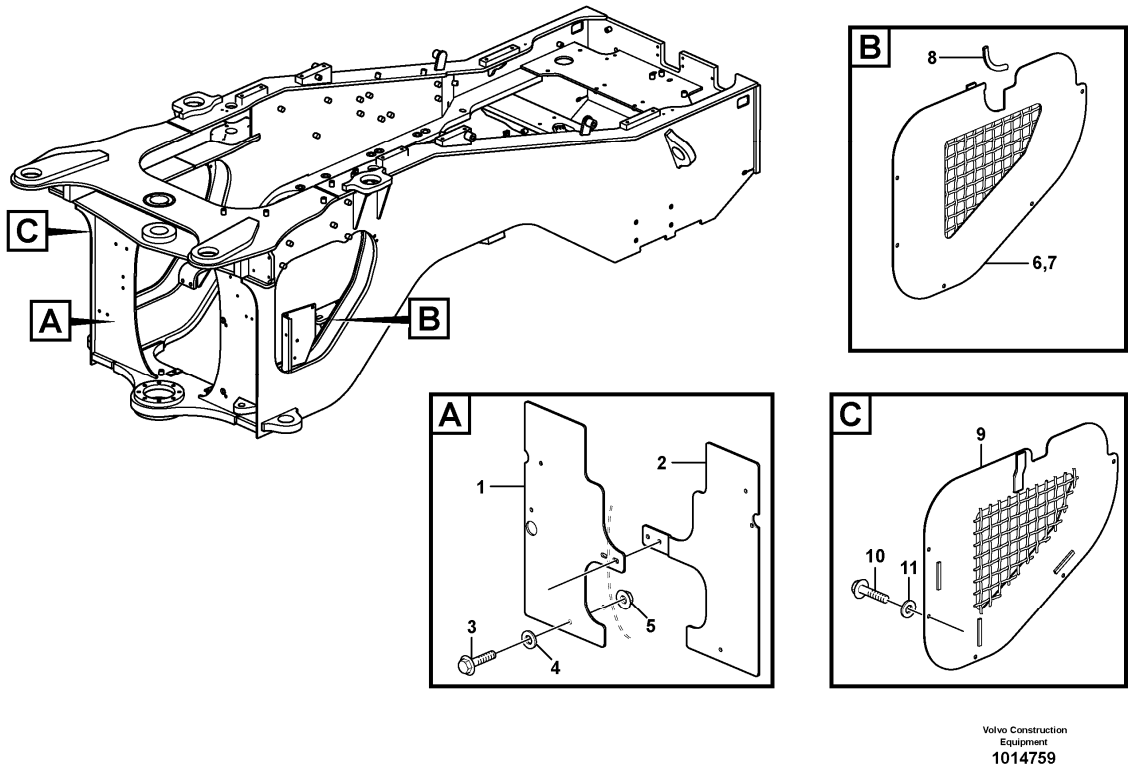

Section option	Kit	Option description
VOE82204		Protective plates at hinge on rear frame

Pos	Part	Q1	Q2	Q3	Q4	Q5	PS	Kit	Description	Option(s)	Remark
1	VOE11180854	1							Protecting plate		SWE 1614- USA 60316-
2	VOE11180852	1							Protecting plate		SWE 1614- USA 60316-
3	VOE13965185	4							Screw		
4	VOE13960143	4							Washer		
5	VOE13971095	2							Flange nut		
6	VOE11180762	1							Protecting plate		
7		1					NS		•Protecting plate		
8	VOE4786031	REQ							•Framework moulding		L=130 MM

9	VOE11180759	1							Protecting plate		
10	VOE946329	10							Flange screw		
11	VOE13960143	10							Washer		

VOLVO

Construction Equipment

PROSIS Part Information

Date:	Image id:	Catalogue:	Model:
10/09/2018	**1015858**	**20009**	**L60E**
Brand:	Serial:	Group/Section:	Title:
Volvo	**1001-3355, 60001-61214, 70001-70530**	**837/200**	**Filter cover**

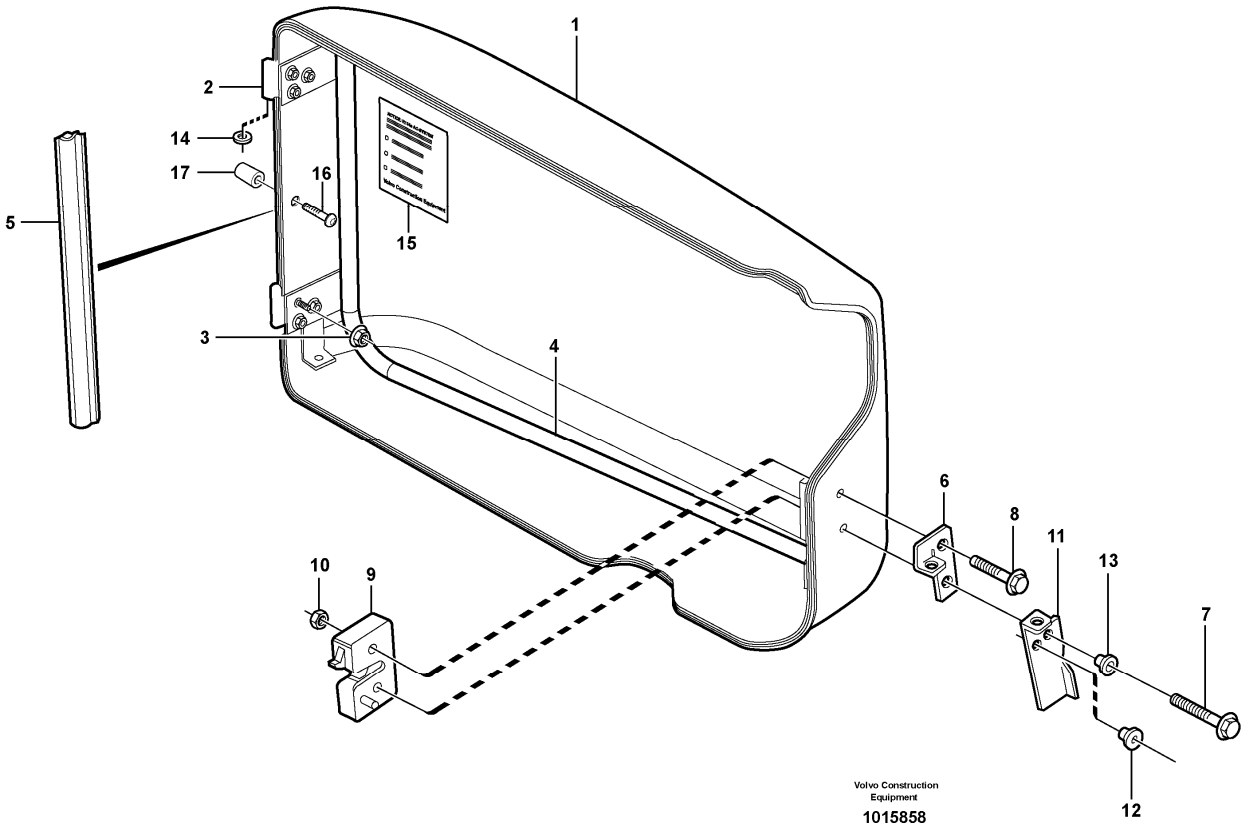

Section option	Kit	Option description
VOE33755		Cab
VOE82323	VOE11988247	Air conditioning with corrosion prot. condenser
VOE80868	VOE11988237	Air conditioning FOR REFRIGERANT R134A
VOE82772		Air conditioning

Q1-Q5	Option	Option description	
Q1 33755	VOE33755	Cab	
Q2 80868 82772	VOE80868	Air conditioning FOR REFRIGERANT R134A	
Q3 82323	VOE82323	Air conditioning with corrosion prot. condenser	

Pos	Part	Q1	Q2	Q3	Q4	Q5	PS	Kit	Description	Option(s)	Remark
1	VOE11104240	1							Hatch		
2	VOE11104523	2							•Hinge		

3	VOE981447	6							•Flange lock nut		
4		1					NS		•Tube assembly		
5	VOE11104519	REQ							•Sealing strip		L=2500MM
6	VOE11104610	1							•Plate		
7	VOE13965179	1							•Screw		
8	VOE13947760	1							•Screw		
9	VOE11006991	1							•Lock		
10	VOE948645	2							•Flange lock nut		(VOE948645)
11	VOE11104609	1							•Handle		
12	VOE1258140	1							•Sealing sleeve		
13	VOE11006944	1							•Spacer sleeve		
14	VOE4936344	2							Washer		
15	VOE11444254		1	1			SS		Decal		
	VOE11164569		1						Decal		
16	VOE981208	1							Six point socket screw		
17	VOE11007497	1							Damper		

VOLVO

Construction Equipment

PROSIS Part Information

Date:	Image id:	Catalogue:	Model:
10/09/2018	**1008641**	**20009**	**L60E**
Brand:	Serial:	Group/Section:	Title:
Volvo	**1001-3355, 60001-61214, 70001-70530**	**841/100**	**Rear view mirror**

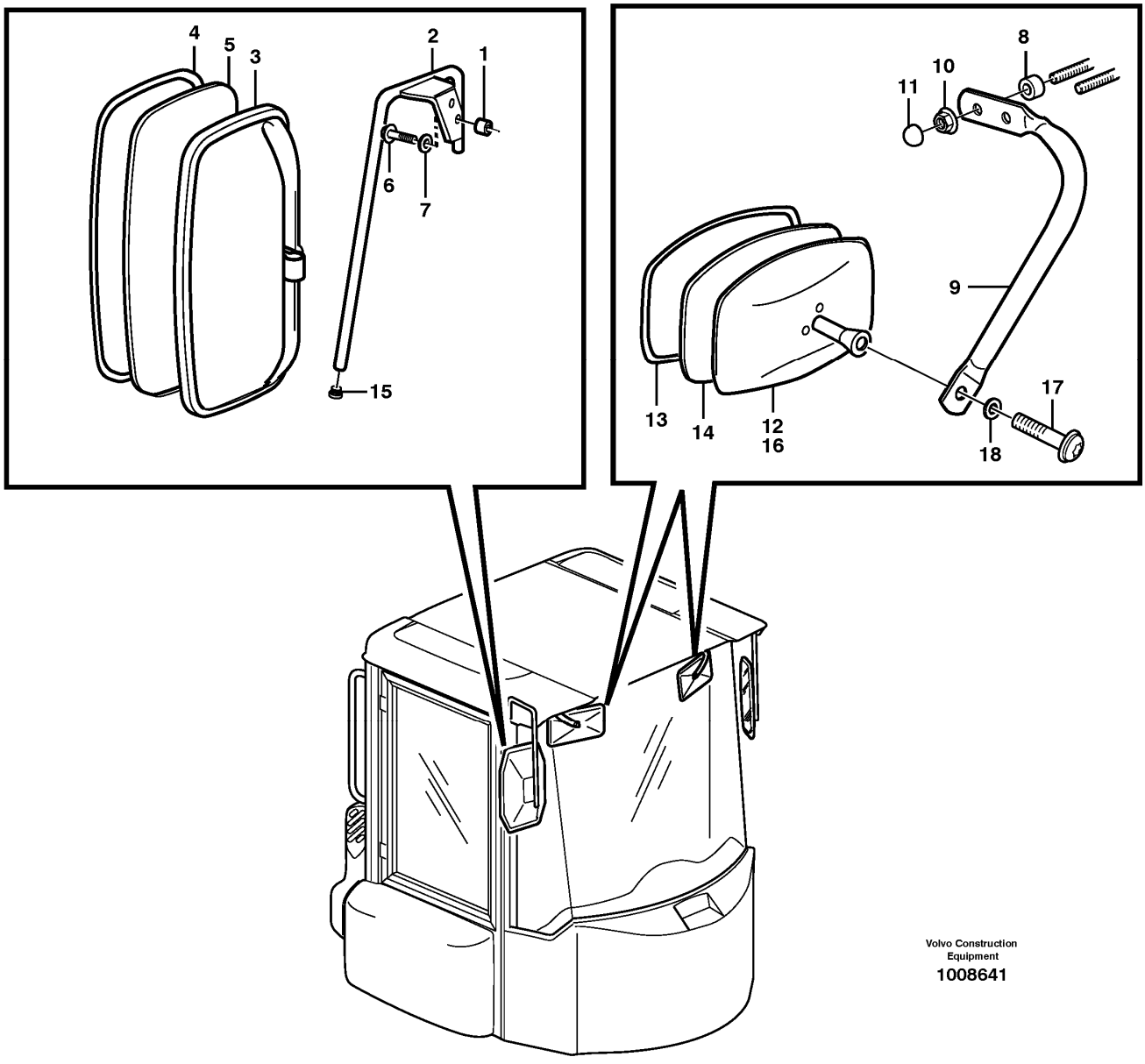

Section option	Kit	Option description
VOE33755		Cab
VOE33756		Cab L60E USA
VOE33760		Cab. Open Rops
VOE80830	VOE11988158	Mirror

Q1-Q5	Option	Option description	

Q1 STD 33755			
Q2 80830	VOE80830	Mirror	
Q3 OPEN ROPS 33760			
Q4 33756	VOE33756	Cab L60E USA	

Pos	Part	Q1	Q2	Q3	Q4	Q5	PS	Kit	Description	Option(s)	Remark
1	VOE930428	4			4				Spacer ring		
2	VOE11006421	1		1	1				Mirror arm		RH
2	VOE11006420	1		1	1				Mirror arm		LH
3	VOE11121152	2		2	2				Rear view mirror		
3	VOE11121153		2						Rear view mirror		
4	VOE11708944	1	1	1					•Rim		
5	VOE11708945	1		1					•Lens		
	VOE11714484		1						•Glass		See footnote 2257)
6	VOE946472	4			4				Flange screw		
6	VOE946329			4					Flange screw		
7	VOE13960143	4		4	4				Washer		
8	VOE930431	4		4	4				Spacer ring		
9	VOE11005984	1		1	1				Mirror arm		RH, CAB - 1019 CAB - 1030 USA
9	VOE11006029	1		1	1				Mirror arm		LH, CAB - 1019 CAB - 1030 USA
10	VOE13945408	4		4	4				Nut		
11	VOE11006824	4		4	4				Protecting cap		
12	VOE11104778	2					SS		Mirror		CAB - 1019 CAB - 1030 USA
13	VOE11707012	1							•Rim		
14	VOE11707013	1							•Mirror glass		
15	VOE11006457	4		4					Plug		
16	VOE11164488	2			2				Rear view mirror		CAB 1020 - CAB 1031 - USA
16	VOE11164488			2					Rear view mirror		
17	VOE969587	2		2	2				Six point socket screw		CAB 1020 - CAB 1031 - USA
18	VOE960139			2					Plain washer		

2257) Heater included

VOLVO

Construction Equipment

PROSIS Part Information

Date:	Image id:	Catalogue:	Model:
10/09/2018	**1008275**	**20009**	**L60E**
Brand:	Serial:	Group/Section:	Title:
Volvo	**1001-3355, 60001-61214, 70001-70530**	**841/150**	**Rear view mirror 80945**

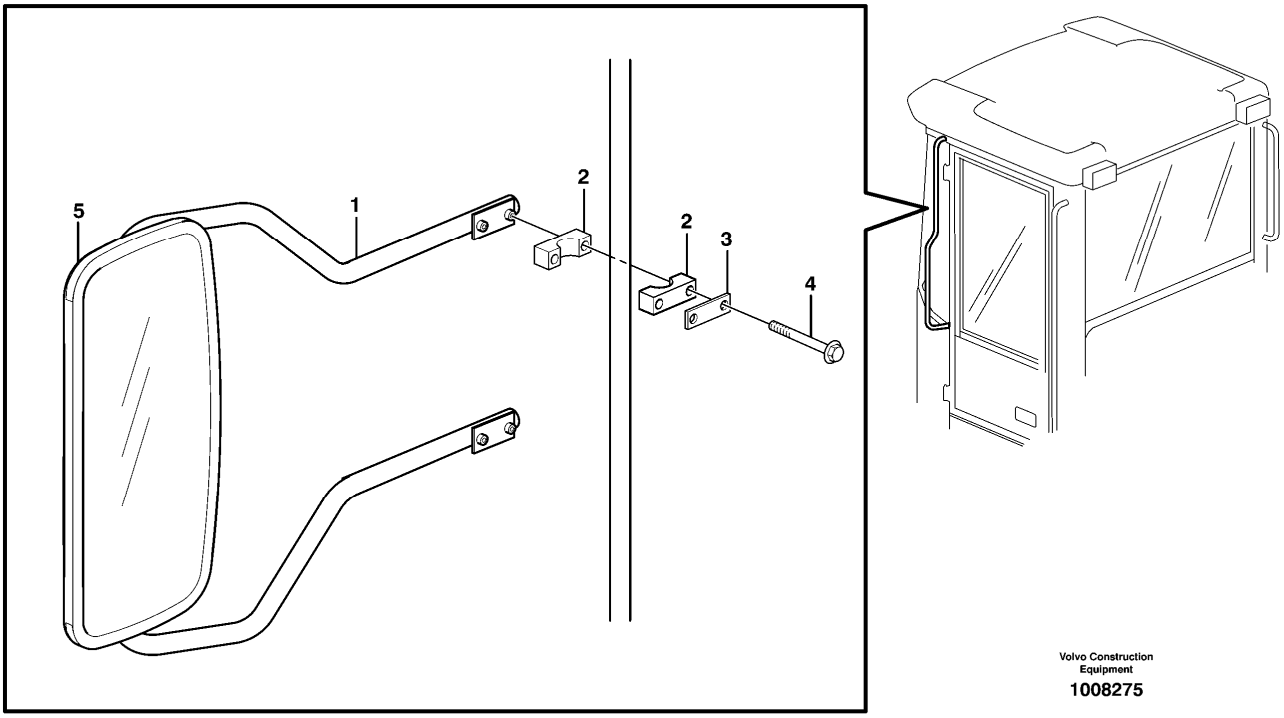

Section option	Kit	Option description
VOE80945	VOE11988660	Pre-cleaner oil bath type

Pos	Part	Q1	Q2	Q3	Q4	Q5	PS	Kit	Description	Option(s)	Remark
1	VOE11164542	1							Mirror arm		
2	VOE4785461	2							Clamp		
3	VOE11003048	2							Cover plate		
4	VOE13965176	4							Screw		
5		1							R V Mirror		See ref 841/100

VOLVO

Construction Equipment

PROSIS Part Information

Date:	Image id:	Catalogue:	Model:
10/09/2018	**1015660**	**20009**	**L60E**
Brand:	Serial:	Group/Section:	Title:
Volvo	**1001-3355, 60001-61214, 70001-70530**	**843/100**	**Glass panes**

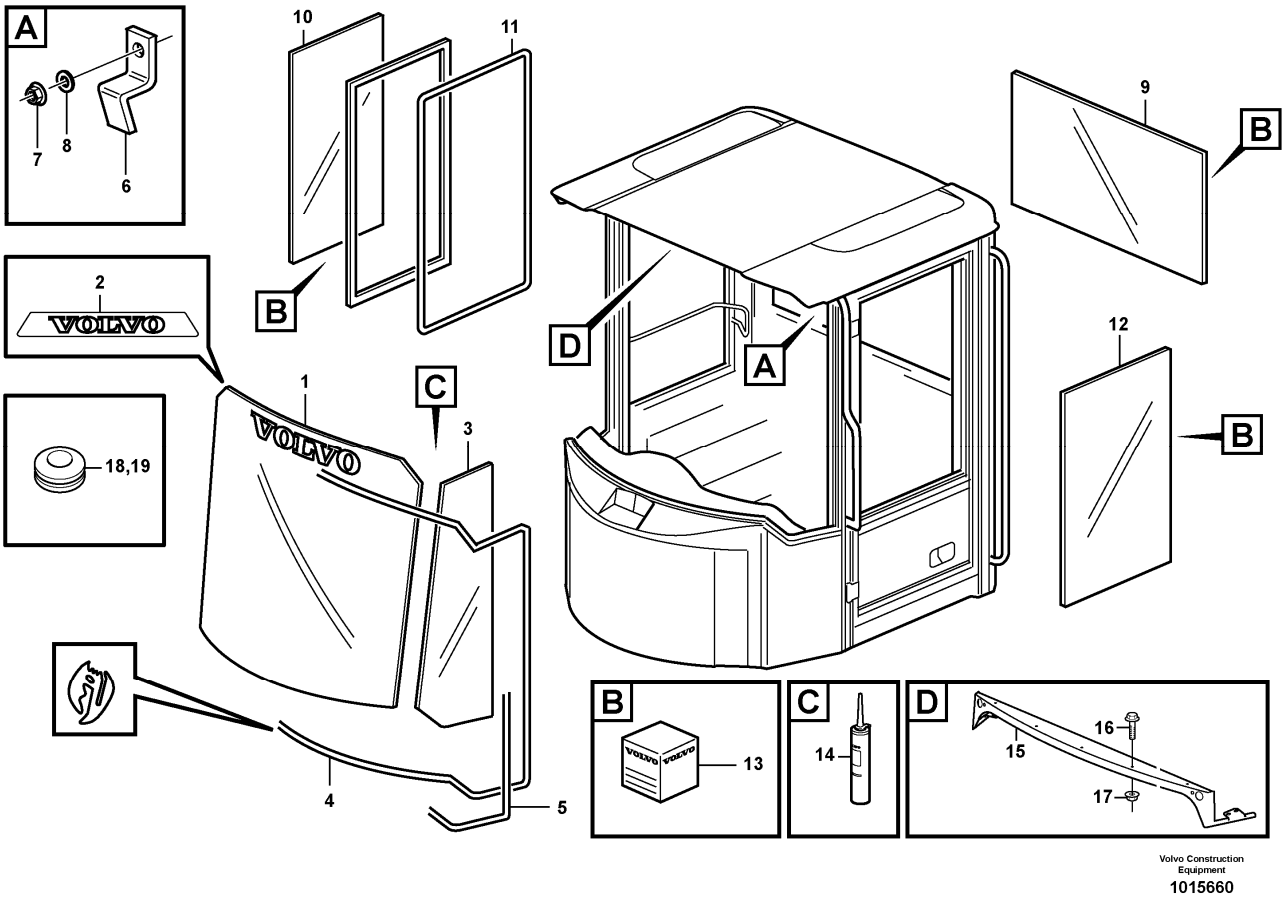

Section option	Kit	Option description
VOE33755		Cab
VOE82790		Semi Open Rops

Q1-Q5	Option	Option description	
Q1 STD 33755			
Q2 82790	VOE82790	Semi Open Rops	
Q3 33756	VOE33756	Cab L60E USA	

Pos	Part	Q1	Q2	Q3	Q4	Q5	PS	Kit	Description	Option(s)	Remark
1	VOE11104449	1	1	1					Windscreen		
2	VOE11007961	1	1	1					•Decal		VOLVO
3	VOE11429056	2	2	2					Side window		
4	VOE11007851	1	1	1					Rubber moulding		

5	VOE11104040	REQ	REQ	REQ					Butyl tape		L=2200MM
6	VOE11007828	4		4					Clip		
7	VOE960139	4		4					Plain washer		
8	VOE13945407	4		4					Nut		
9	VOE11006478	1	1	1					Rear window		
10	VOE11104343	1							Window pane		
11		REQ							Sealing strip		See ref 843/200
12	VOE11104344	1							Door Window		
13	VOE11704359	3	1	REQ					Sealant		
14	VOE11704359	REQ	REQ						Sealant		
15	VOE11164829		1						Window frame		
16	VOE971321		5						Six point socket screw		
17	VOE13949278		5						Flange lock nut		
18	VOE961970		1						Plug		
19	VOE941266		2						Plug		

VOLVO

Construction Equipment

PROSIS Part Information

Date:	Image id:	Catalogue:	Model:
10/09/2018	**1004058**	**20009**	**L60E**
Brand:	Serial:	Group/Section:	Title:
Volvo	**1001-3355, 60001-61214, 70001-70530**	**843/150**	**Sliding window.**

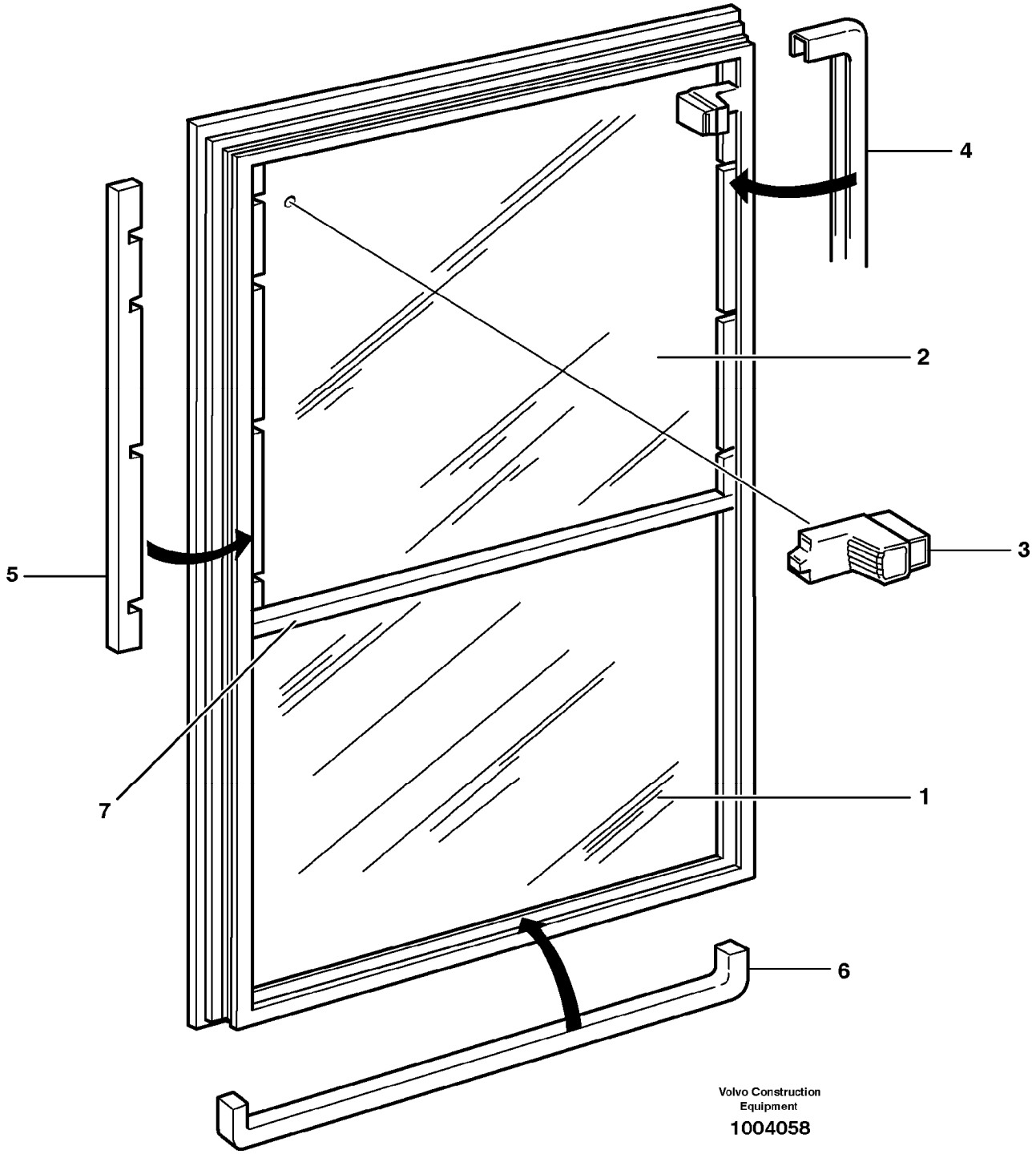

Section option	Kit	Option description

VOE33756		Cab L60E USA
VOE93786	VOE11104593	Sliding window, tinted glass
VOE93787	VOE11104594	Sliding window, door, tinted glass

Q1-Q5	Option	Option description	
Q1 11164640 93786			
Q2 11164641 93787			
Q3 33756	VOE33756	Cab L60E USA	

Pos	Part	Q1	Q2	Q3	Q4	Q5	PS	Kit	Description	Option(s)	Remark
	VOE11164640	1		1					Sliding window		(VOE11104593)RH
	VOE11164641		1						Sliding window		(VOE11104594)LH
1	VOE11704709	1		1					•Window		
1	VOE11704707		1	1					•Window		
2	VOE11704706	1	1	1					•Window		
3	VOE11996337	1	1	1					•Latch		
4	VOE11704728	REQ	REQ	REQ					•Moulding		
5	VOE11704708	2	2						•Lock strip		(VOE11704710)
5	VOE11713008			2					•Profile		
6	VOE11996338	1	1	1					•Rubber moulding		
7	VOE11988386	1	1	1					•Cross member		
	VOE11007421	1	1	1					Sealing strip		See ref 843/200

VOLVO

Construction Equipment

PROSIS Part Information

Date:	Image id:	Catalogue:	Model:
10/09/2018	**ED117**	**20009**	**L60E**
Brand:	Serial:	Group/Section:	Title:
Volvo	**1001-3355, 60001-61214, 70001-70530**	**843/200**	**Windows**

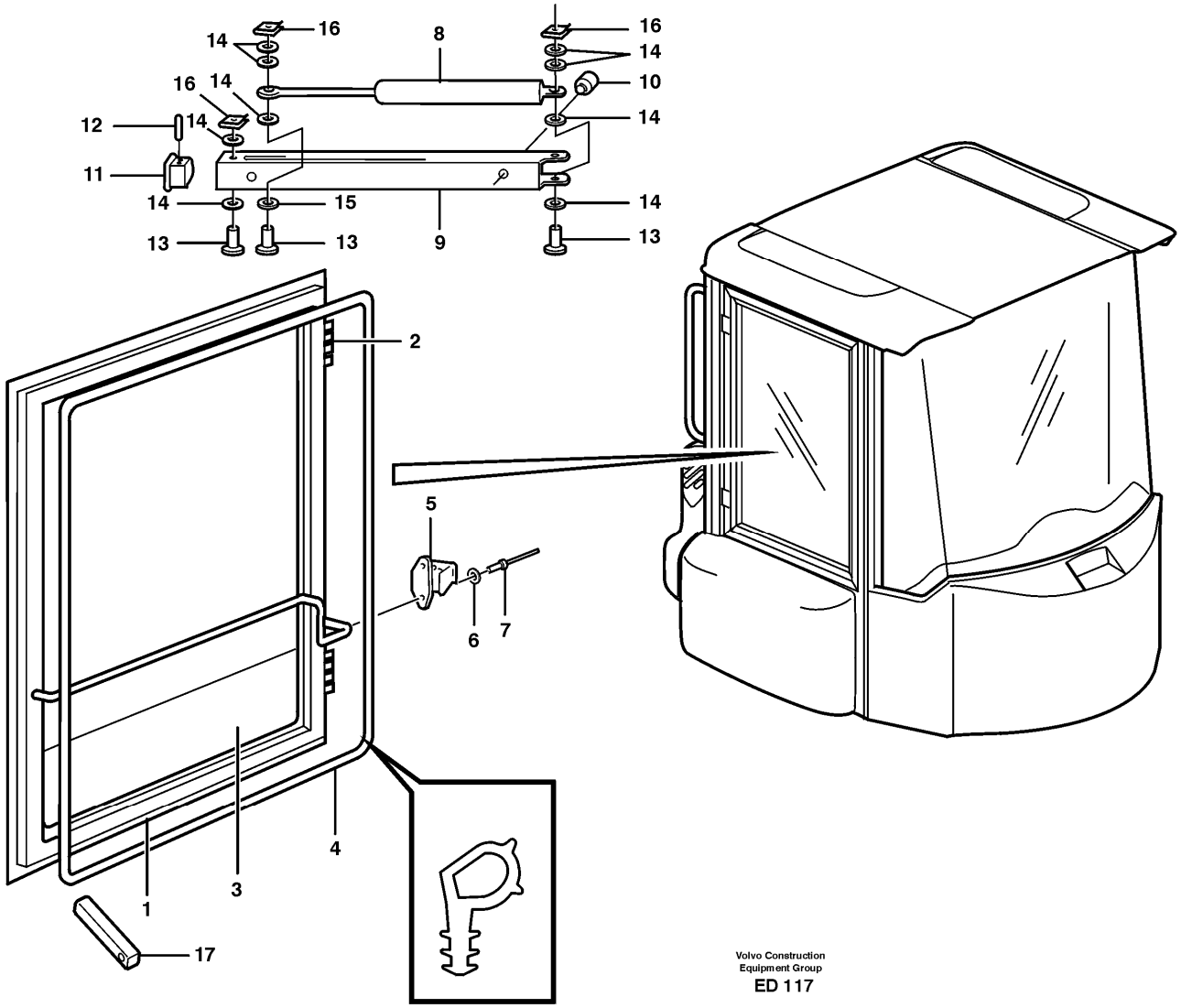

Section option	Kit	Option description
VOE33755		Cab
VOE33756		Cab L60E USA

Q1-Q5	Option	Option description	
Q1 33755	VOE33755	Cab	
Q2 33756	VOE33756	Cab L60E USA	

Pos	Part	Q1	Q2	Q3	Q4	Q5	PS	Kit	Description	Option(s)	Remark
		1	1				NS		Cab Framework		
1	VOE11104451	1							•Window frame		
2	VOE11104509	2							•Hinge		
	VOE11708215	2							••Hinge pin		
3		1							Window		
4	VOE11007421	REQ	REQ						Sealing strip	VOE33756	L=3620MM
5	VOE11104075	1	1						Latch		
6	VOE13940090	2	2						Washer		
7	VOE13965596	2	2						Blind rivet		
8	VOE17208460	1	1						Gas Spring		(VOE11006826)
9	VOE11006706	1	1						Door stop		
10	VOE667751	1	1						Buffer		
11	VOE11147749	1	1						End Piece		
12	VOE13951967	2	2						Spring pin		
13	VOE942290	3	3						Retaining ring bolt		
14	VOE13947757	9	9						Washer		
15	VOE13962658	1	1						Washer		
16	VOE13969158	3	3						Lock brace		
17	VOE11007034	1	1						Window catch		

VOLVO

Construction Equipment

PROSIS Part Information

Date:	Image id:	Catalogue:	Model:
10/09/2018	**1017587**	**20009**	**L60E**
Brand:	Serial:	Group/Section:	Title:
Volvo	**1001-3355, 60001-61214, 70001-70530**	**851/100**	**Insulating matting**

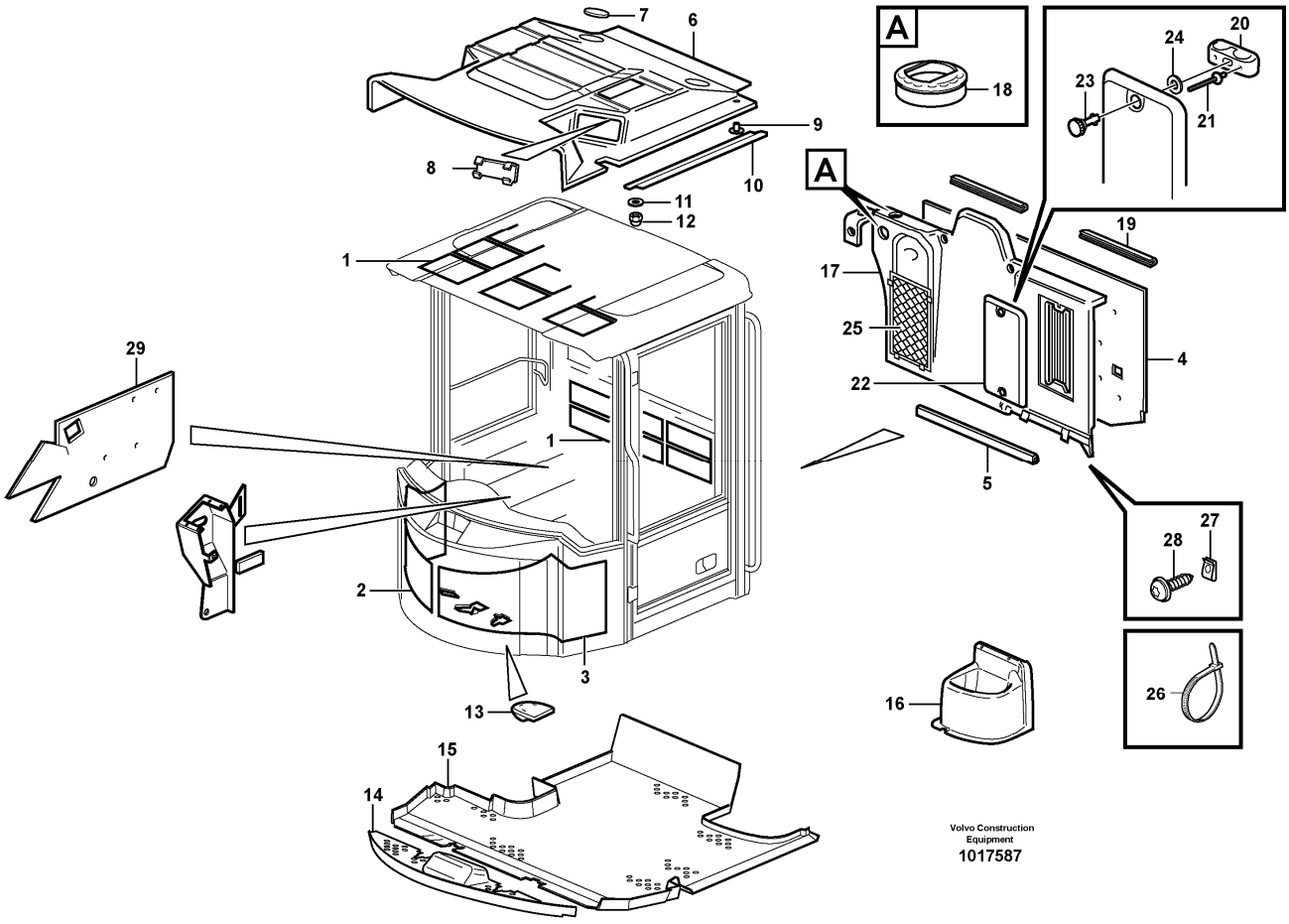

Section option	Kit	Option description
VOE33750		Wheel Loader
VOE33755		Cab
VOE33756		Cab L60E USA

Q1-Q5	Option	Option description	
Q1 33755	VOE33755	Cab	
Q2 33756	VOE33756	Cab L60E USA	

Pos	Part	Q1	Q2	Q3	Q4	Q5	PS	Kit	Description	Option(s)	Remark
1	VOE1321087	26					OP		Insulation		
2	VOE11429248	1	1						Insulation		RH
3	VOE11429249	1	1						Insulation		LH
4	VOE11164477	1	1						Insulation		

5	VOE11006785	REQ	1						Framework moulding		L = 715 MM
6	VOE11104329	1	1						Headlining		
7	VOE11007975	2	2						Cover		
8	VOE11444164	2	2						Lid		(VOE11007493)
9	VOE11006726	3	3						Push button		
10	VOE11104614	2	2						Moulding		
11	VOE960139	4	4						Plain washer		
12	VOE11005777	4	4						Cap nut		
13	VOE11007246	1							Rubber plug		
14	VOE11164307	1							Floor mat		
15	VOE11164308	1							Floor mat		
16		1							Casing		See ref 882/100
17	VOE11429163	1							Cover		(VOE11164497)
18	VOE11104371	2					SS		•Air outlet		
19	VOE4955075	2							•Moulding		
20	VOE11006795	2							•Lock		
21	VOE942669	4							•Blind rivet		
22	VOE11006493	1							•Lid		
23	VOE11006796	2							••Retainer		
24	VOE11006797	2							••Washer		
25	VOE11104572	1							•Baggage Net		
26	VOE4881438	4							•Cable tie		
27	VOE949921	7							Spring nut		
28	VOE971322	7							Six point socket screw		
29	VOE11104759		1						Insulation		

VOLVO

Construction Equipment

PROSIS Part Information

Date:	Image id:	Catalogue:	Model:
10/09/2018	**1009585**	**20009**	**L60E**
Brand:	Serial:	Group/Section:	Title:
Volvo	**1001-3355, 60001-61214, 70001-70530**	**851/150**	**Insulating matting**

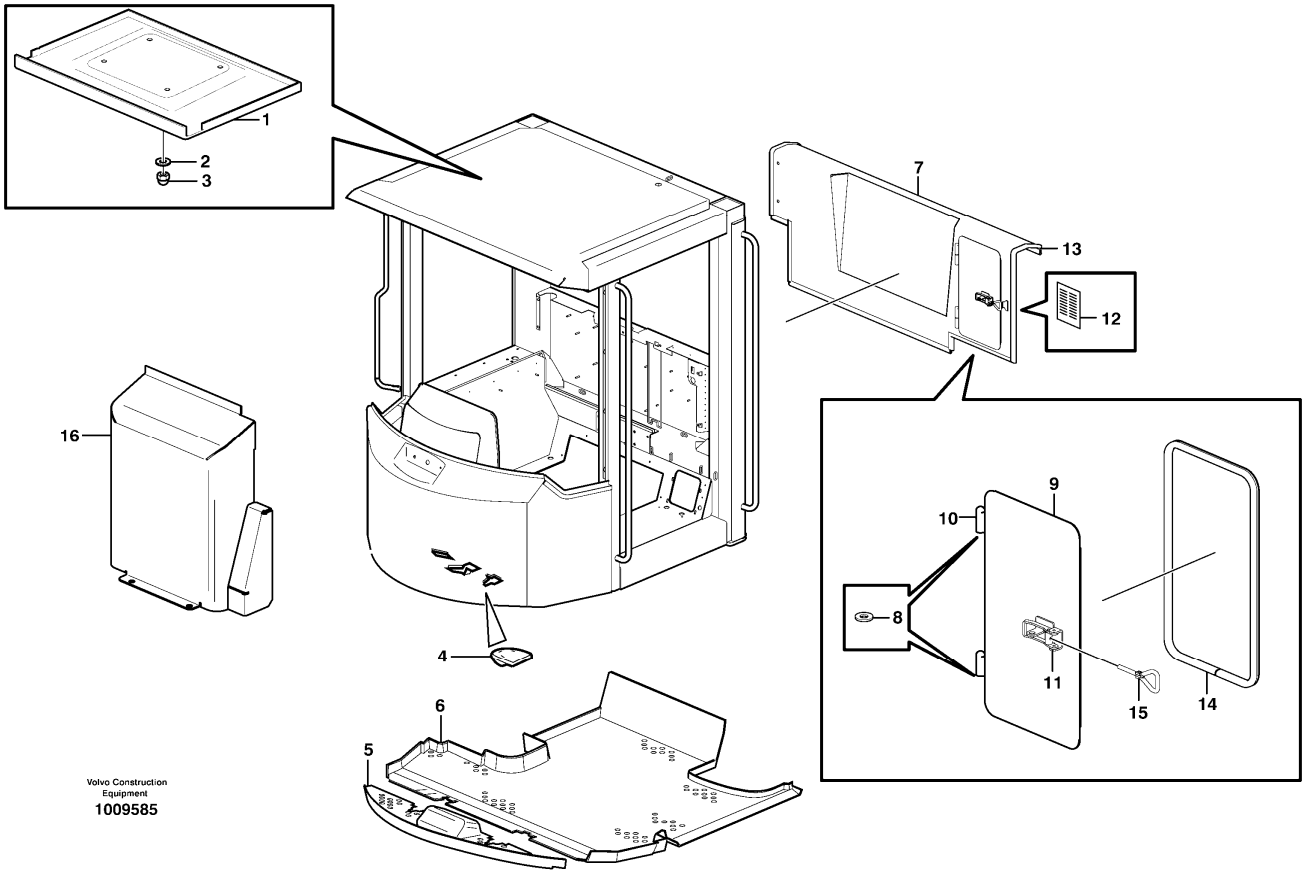

Section option	Kit	Option description
VOE33759		Wheel loader L60E OPEN ROPS
VOE33760		Cab. Open Rops
VOE82790		Semi Open Rops

Q1-Q5	Option	Option description	
Q1 OPEN ROPS			
Q2 82790	VOE82790	Semi Open Rops	

Pos	Part	Q1	Q2	Q3	Q4	Q5	PS	Kit	Description	Option(s)	Remark
1	VOE11164875	1							Headlining		
2	VOE960139	6							Plain washer		
3	VOE11005777	6							Cap nut		
4	VOE11007246	1							Rubber plug		
5	VOE11164307	1							Floor mat		
6	VOE11164308	1							Floor mat		

7	VOE11164849	1							Cover plate		
	VOE11164850		1						Cover plate		
8	VOE4936344	2	2						•Washer		
9	VOE11164861	1	1				OP		•Hatch		
10	VOE4936925	2	2						••Weld hinge		
11	VOE11015639	1	1						••Eccentric lock		
12	VOE11164886	1	1						••Decal		
13	VOE4786044	REQ	REQ						•Sealing strip		
14	VOE4881207	REQ	REQ						•Sealing strip		
15	VOE11015638	1	1						•Eye bolt		
16	VOE11164836	1							Cover plate		

VOLVO

Construction Equipment

PROSIS Part Information

Date:	Image id:	Catalogue:	Model:
10/09/2018	**1070706**	**20009**	**L60E**
Brand:	Serial:	Group/Section:	Title:
Volvo	**1001-3355, 60001-61214, 70001-70530**	**852/100**	**Operator seat with fitting parts**

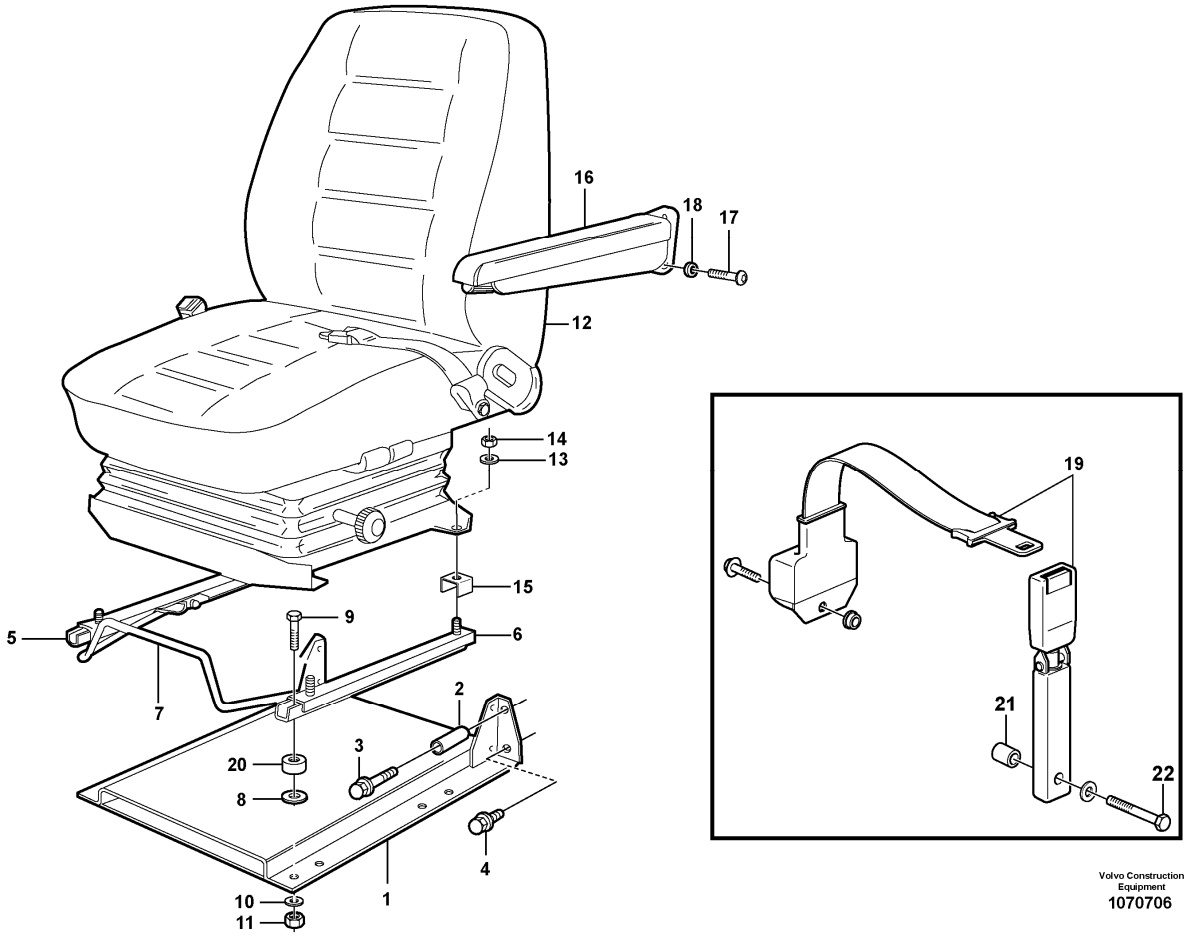

Section option	Kit	Option description
VOE33755		Cab
VOE33756		Cab L60E USA
VOE83376		Armrest

Q1-Q5	Option	Option description	
Q1 33755 33756	VOE33755	Cab	
Q2 .			See footnote 1294)

Pos	Part	Q1	Q2	Q3	Q4	Q5	PS	Kit	Description	Option(s)	Remark
1	VOE11007410	1							Seat Bracket		
2	VOE930457	2							Spacer ring		
3	VOE13947790	2							Screw		
4	VOE946329	2							Flange screw		

5	VOE11104092	1							Slide rail		
6	VOE11104093	1							Slide rail		
7	VOE11006044	1							Handle		
8	VOE11117464	4							Plain washer		(VOE13960141)
9	VOE4870448	4							Screw		
10	VOE11117464	4							Plain washer		(VOE13960141)
11	VOE948645	4							Flange lock nut		
12	VOE11104254		1				SS		Seat	VOE80503	See ref 852/150
	VOE11104254		1				SS		Seat	VOE80504	See ref 852/200
			1				NS		Seat	VOE80505	See ref 852/200
	VOE11104274		1				SS		Seat	VOE80506	See ref 852/250
	VOE11104015		1						Seat	VOE94909	See ref 852/300
	VOE11104016		1						Seat	VOE80572	See ref 852/350
13	VOE11117464	4							Plain washer		(VOE13960141)
14	VOE13945408	4							Nut		
15	VOE11164642	4							Brace		
16	VOE11104014		1						Arm rest	VOE94916	94916
	VOE11429137		1						Arm rest		83376
17	VOE969436		2						Six point socket screw	VOE94916	94916,83376
18	VOE13955894		2						Washer	VOE94916	94916
19	VOE11104125		1						Seat belt	VOE94925	CPL
20	VOE11007399	4							Spacer		
21	VOE17228594		1						Spacer washer	VOE94925	
22	VOE955700		1						Hexagon screw	VOE94925	

1294) Not included when cab is ordered

VOLVO

Construction Equipment

PROSIS Part Information

Date:	Image id:	Catalogue:	Model:
10/09/2018	**1020825**	**20009**	**L60E**
Brand:	Serial:	Group/Section:	Title:
Volvo	**1001-3355, 60001-61214, 70001-70530**	**852/125**	**Operator seat with fitting parts 83070**

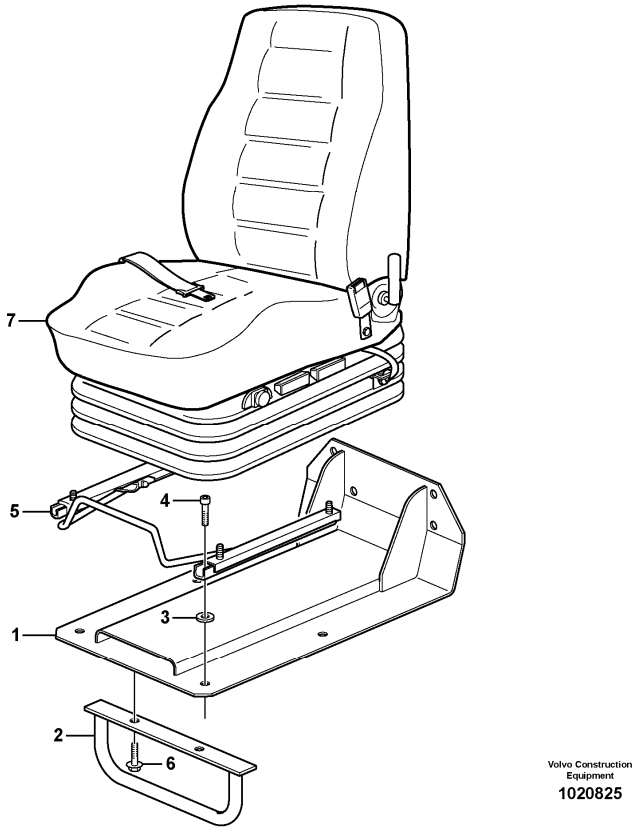

Section option	Kit	Option description
VOE83070	VOE11714942	Operator seat, heated, air suspended

Pos	Part	Q1	Q2	Q3	Q4	Q5	PS	Kit	Description	Option(s)	Remark
1	VOE11007410	1							Seat Bracket		
2	VOE930457	2							Spacer ring		
3	VOE13947790	2							Screw		
4	VOE946329	2							Flange screw		
5	VOE11104092	1							Slide rail		
6	VOE11104093	1							Slide rail		
7	VOE11006044	1							Handle		
8	VOE11117464	4							Plain washer		(VOE13960141)
9	VOE4870448	4							Screw		
10	VOE11117464	4							Plain washer		(VOE13960141)

11	VOE948645	4							Flange lock nut		
12	VOE11104254		1				SS		Seat	VOE80503	See ref 852/150
	VOE11104254		1				SS		Seat	VOE80504	See ref 852/200
			1				NS		Seat	VOE80505	See ref 852/200
	VOE11104274		1				SS		Seat	VOE80506	See ref 852/250
	VOE11104015		1						Seat	VOE94909	See ref 852/300
	VOE11104016		1						Seat	VOE80572	See ref 852/350
13	VOE11117464	4							Plain washer		(VOE13960141)
14	VOE13945408	4							Nut		
15	VOE11164642	4							Brace		
16	VOE11104014		1						Arm rest	VOE94916	94916
	VOE11429137		1						Arm rest		83376
17	VOE969436		2						Six point socket screw	VOE94916	94916,83376
18	VOE13955894		2						Washer	VOE94916	94916
19	VOE11104125		1						Seat belt	VOE94925	CPL
20	VOE11007399	4							Spacer		
21	VOE17228594		1						Spacer washer	VOE94925	
22	VOE955700		1						Hexagon screw	VOE94925	

VOLVO

Construction Equipment

PROSIS Part Information

Date:	Image id:	Catalogue:	Model:
10/09/2018	**1002262**	**20009**	**L60E**
Brand:	Serial:	Group/Section:	Title:
Volvo	**1001-3355, 60001-61214, 70001-70530**	**852/150**	**Operator's seat. 80503**

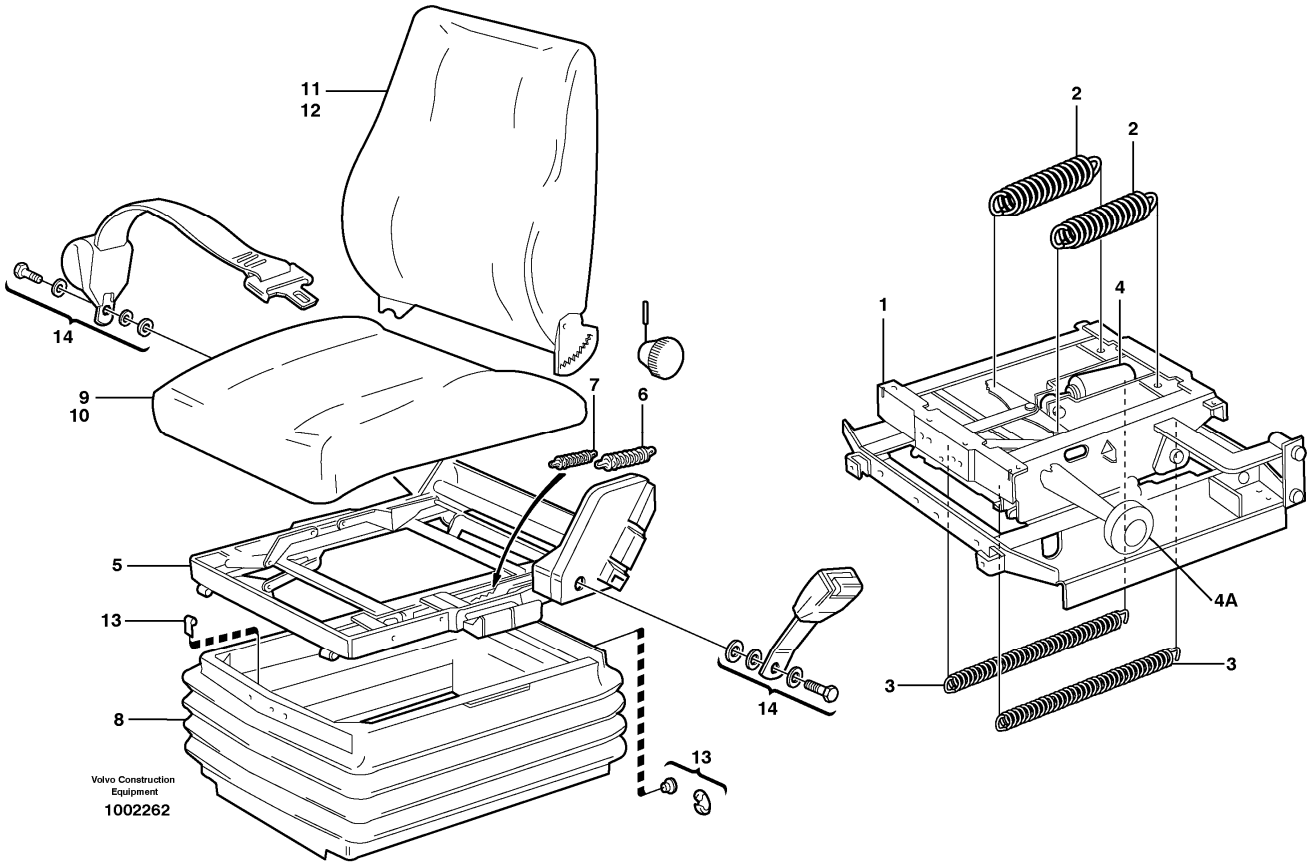

Section option	Kit	Option description
VOE80503		Drivers seat ISRI

Pos	Part	Q1	Q2	Q3	Q4	Q5	PS	Kit	Description	Option(s)	Remark
	VOE11104254	1					SS		Seat		
1	VOE11707355	1							•Spring suspension unit		See ref 852/225
2		2							••Spring		
3		2							••Spring		
4		1							••Shock absorber		
4A		1							••Knob		
5	VOE11707359	1							•Seat frame		
6	VOE1518748	1							••Spring		
7	VOE1696529	2							••Spring		
8	VOE11998550	1							•Bellows		
9	VOE11700708	1							•Seat		

10	VOE11996163	1							••Upholstery		
11	VOE11707357	1							•Backrest		
12	VOE11707358	1							••Upholstery		
13	VOE11998811	1							•Attachment kit		
14	VOE11707348	1							•Hip Belt		

VOLVO

Construction Equipment

PROSIS Part Information

Date:	Image id:	Catalogue:	Model:
10/09/2018	**1003694**	**20009**	**L60E**
Brand:	Serial:	Group/Section:	Title:
Volvo	**1001-3355, 60001-61214, 70001-70530**	**852/200**	**Operator's seat, ISRI. 80504, 80505**

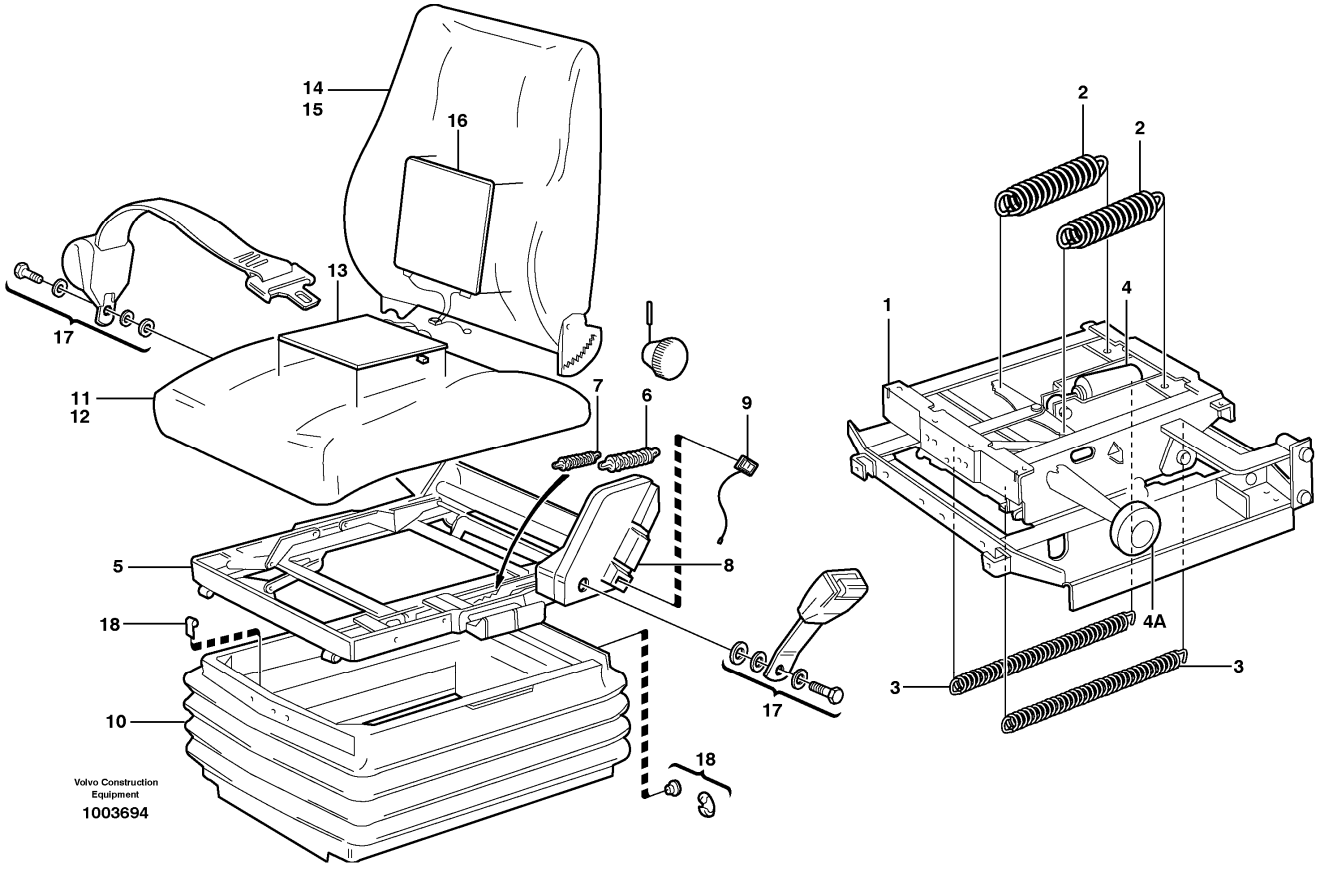

Section option	Kit	Option description
VOE80504		Drivers seat ISRI
VOE80505		Operator's seat, heated, high backrest ISRI

Q1-Q5	Option	Option description	
Q1 11104254			
Q2 11104273			

Pos	Part	Q1	Q2	Q3	Q4	Q5	PS	Kit	Description	Option(s)	Remark
	VOE11104254	1					SS		Seat	VOE80504	
	VOE15186567		1						Seat	VOE80505	(VOE11104273)
1	VOE11707355	1	1						•Spring suspension unit		See ref 852/225
2		2	2						••Spring		
3		2	2						••Spring		

4		1	1						••Shock absorber		
4A		1	1						••Knob		
5	VOE11707355	1	1						•Spring suspension unit		
6	VOE1518748	1	1						••Spring		
7	VOE1696529	2	2						••Spring		
8	VOE15186994	1	1						••Cover		(VOE11708188)
9	VOE11707346	1	1						••Switch		
10	VOE11998550	1	1						•Bellows		
11	VOE11707361		1						•Seat cushion		(VOE11707353)
	VOE11707361	1							•Seat cushion		
12	VOE11996163	1							••Upholstery		
	VOE11998561		1				SS		••Upholstery		
13	VOE11706320	1	1						••Heater		
14	VOE11707360	1					SS		•Backrest		
	VOE11714580		1						•Backrest		(VOE11707352)
15	VOE11707344		1				SS		••Upholstery		
	VOE11707358	1							••Upholstery		
16	VOE11706318	1	1						••Heater		
17	VOE11707348	1	1						•Hip Belt		
18	VOE11998811	1	1						•Attachment kit		

VOLVO

Construction Equipment

PROSIS Part Information

Date:	Image id:	Catalogue:	Model:
10/09/2018	**1075965**	**20009**	**L60E**
Brand:	Serial:	Group/Section:	Title:
Volvo	**1001-3355, 60001-61214, 70001-70530**	**852/225**	**Operator's seat. 80503, 80504, 80505, 33760**

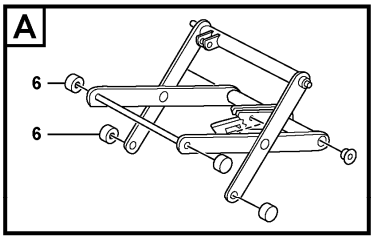

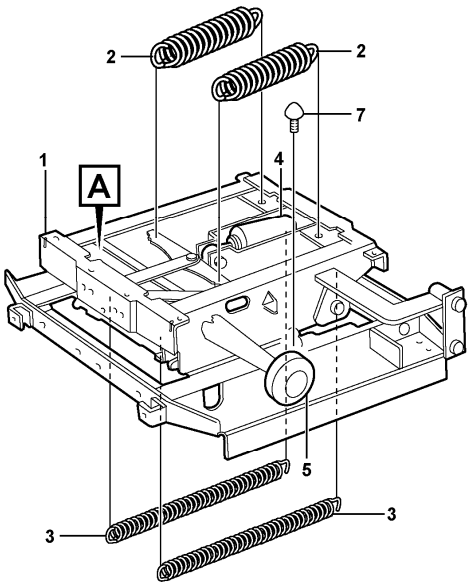

Volvo Construction Equipment
1075965

Section option	Kit	Option description
VOE80503		Drivers seat ISRI
VOE80504		Drivers seat ISRI
VOE80505		Operator's seat, heated, high backrest ISRI
VOE33760		Cab. Open Rops

Pos	Part	Q1	Q2	Q3	Q4	Q5	PS	Kit	Description	Option(s)	Remark
1	VOE11707355	1							Spring suspension unit		
2	VOE6213261	2							•Spring		
3	VOE11707356	2							•Spring		
4	VOE11707351	1							•Shock absorber		
5	VOE3090569	1							•Knob		
6	VOE17240991	4							•Roller		
7	VOE17240994	2							•Buffer		

VOLVO

Construction Equipment

PROSIS Part Information

Date:	Image id:	Catalogue:	Model:
10/09/2018	**1019981**	**20009**	**L60E**
Brand:	Serial:	Group/Section:	Title:
Volvo	**1001-3355, 60001-61214, 70001-70530**	**852/250**	**Operator's seat, heated, air suspensioned. 80506**

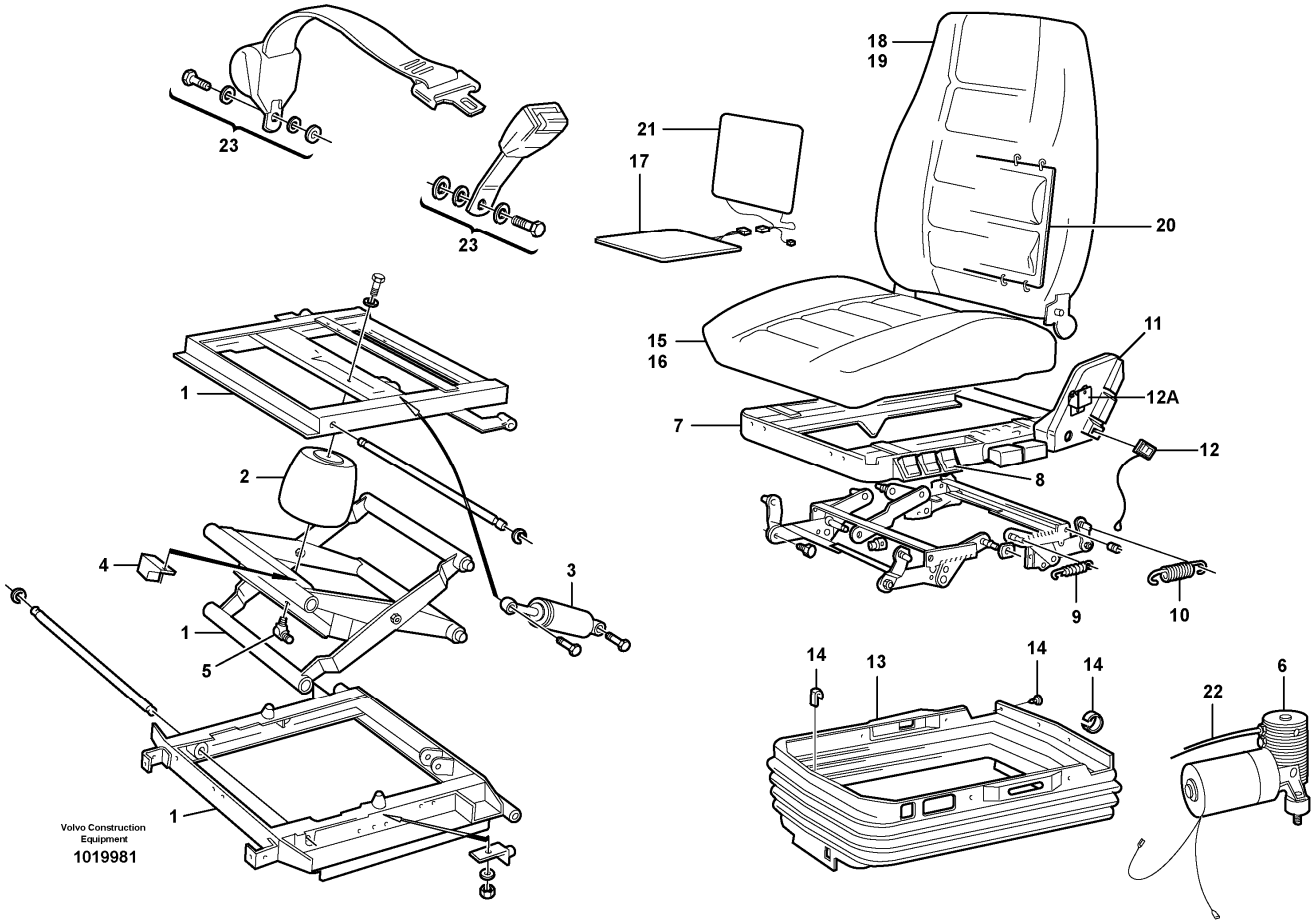

Section option	Kit	Option description
VOE80506		Operator seat, heated, airsuspended ISRI, Kit No: VOE 11104274 + VOE 11707994

Q1-Q5	Option	Option description	
Q1 CAB - 2422			
Q2 CAB 2423 -			

Pos	Part	Q1	Q2	Q3	Q4	Q5	PS	Kit	Description	Option(s)	Remark
	VOE11104274	1					SS		Seat		
	VOE11412638		1				SS		Seat		
1	VOE15054849	1	1						•Spring suspension unit		(VOE11707349)
2	VOE11707350	1	1						••Air bellows		
3	VOE11707351	1	1						••Shock absorber		
4	VOE11993178	1	1						••Relay		

5	VOE3091629	1	1						••Elbow nipple		
6	VOE11709423	1	1						••Compressor		
7	VOE11707345	1							•Seat frame		
	VOE11715430		1						•Seat frame		
8	VOE11707347	1							••Control		
9	VOE1518748	1							••Spring		
10	VOE1696529	2							••Spring		
11	VOE15186994	1							••Cover		(VOE11708188)
12	VOE11707346	1							••Switch		
12A	VOE11715818	2							••Backrest lock		
13	VOE11998842	1	1						•Bellows		
14	VOE11998811	1	1						•Attachment kit		
15	VOE11998831	1	1				SS		•Seat cushion		
16	VOE11998561	1	1				SS		••Upholstery		
17	VOE11706320	1	1						••Heater		
18	VOE11714579	1	1				SS		•Backrest		
19	VOE11707344	1	1				SS		••Upholstery		
20	VOE11997265	1	1						••Lumbar support		
21	VOE11706318	1	1						••Heater		
22	VOE3090544	REQ	REQ						•Plastic hose		
23	VOE11707348	1	1						•Hip Belt		
	VOE11709811	1							•Switch		

VOLVO

Construction Equipment

PROSIS Part Information

Date:	Image id:	Catalogue:	Model:
10/09/2018	**1054895**	**20009**	**L60E**
Brand:	Serial:	Group/Section:	Title:
Volvo	**1001-3355, 60001-61214, 70001-70530**	**852/275**	**Operator's seat, heated, air suspensioned.**

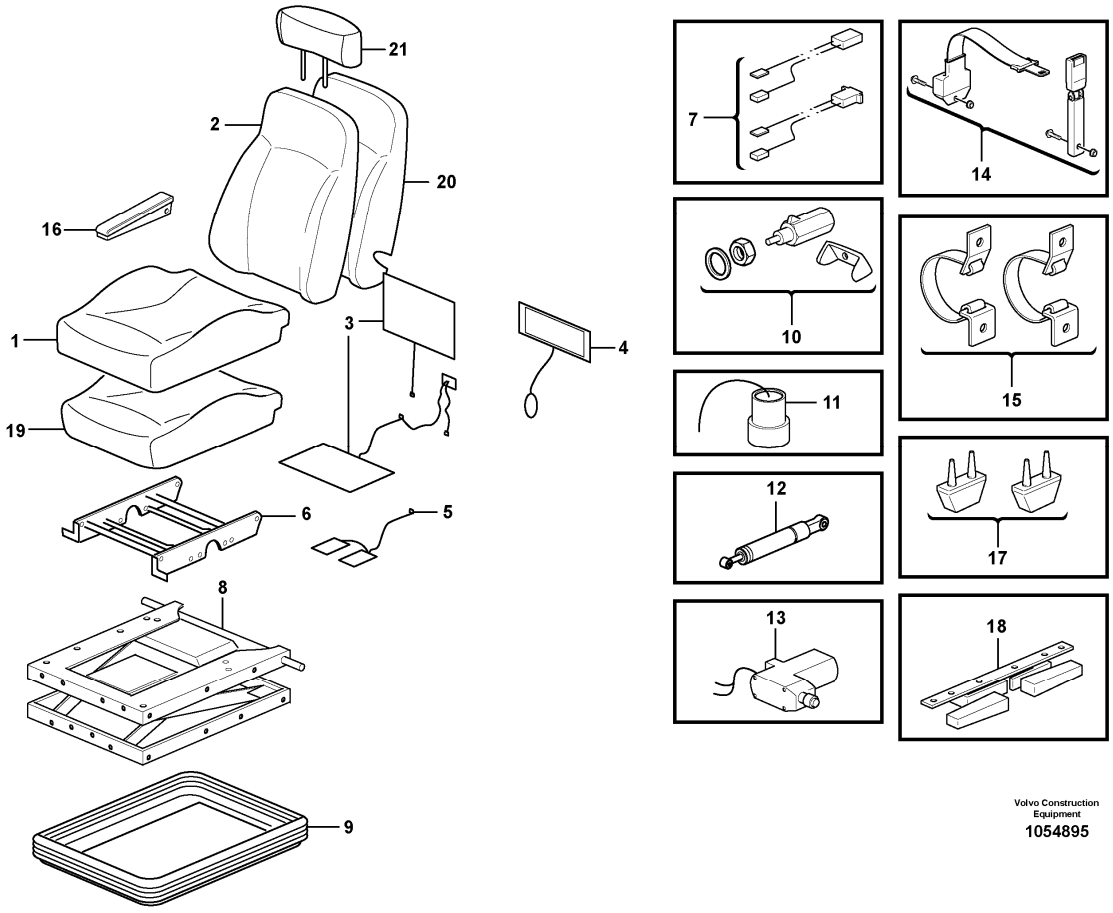

Section option	Kit	Option description
VOE81195		Head restraint
VOE83070	VOE11714942	Operator seat, heated, air suspended

Q1-Q5	Option	Option description	
Q1 83070	VOE83070	Operator seat, heated, air suspended	
Q2 81195	VOE81195	Head restraint	

Pos	Part	Q1	Q2	Q3	Q4	Q5	PS	Kit	Description	Option(s)	Remark
	VOE15186579	1					SS		Seat		(VOE11429033)
1	VOE11714962	1					SS		•Upholstery		
2	VOE11714963	1							•Upholstery		
3	VOE11714964	1							•Heater		
4	VOE11712832	1							•Lumbar support		

5	VOE11714965	1							•Sensor		
6	VOE11712834	1							•Height adjuster		
7	VOE11714966	1							•Wire		
8	VOE11714967	1							•Support		
9	VOE11714968	1							•Protecting bellows		
10	VOE11714969	1							•Valve kit		
11	VOE11712842	1							•Spring suspension unit		
	VOE11715387	1							••Coupling piece		
12	VOE11998654	1							•Shock absorber		
13	VOE11714970	1							•Compressor		
14	VOE11714971	1							•Seat belt kit		
15	VOE11714972	1							•Strap		
16	VOE11714973	1							•Arm rest		
17	VOE11998677	1							•Absorber		(VOE11714974)
18	VOE15065557	1							•Latch		
19	VOE15034479	1							•Seat cushion		
20	VOE15170269	1							•Backrest cushion		
21	VOE17401294		1						Head restraint		(VOE11191411)

VOLVO

Construction Equipment

PROSIS Part Information

Date:	Image id:	Catalogue:	Model:
10/09/2018	**ED241**	**20009**	**L60E**
Brand:	Serial:	Group/Section:	Title:
Volvo	**1001-3355, 60001-61214, 70001-70530**	**852/300**	**Driver's seat. 94909**

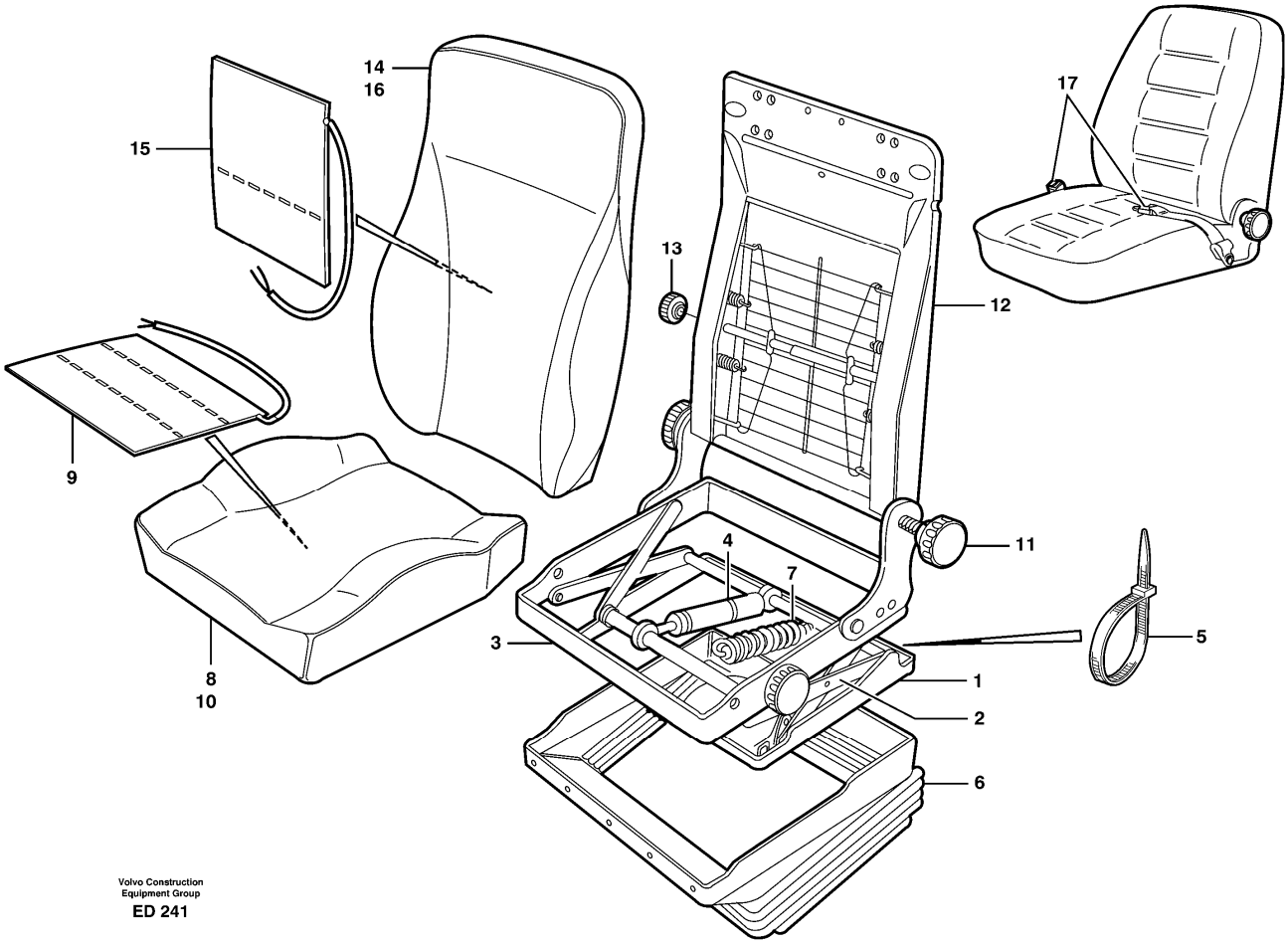

Section option	Kit	Option description
VOE94909	VOE11104015	Operator seat, heated BEGE

Pos	Part	Q1	Q2	Q3	Q4	Q5	PS	Kit	Description	Option(s)	Remark
	VOE11104015	1							Seat		
1	VOE11998619	1							•Frame		
2	VOE11998613	1							•Linkage		
3	VOE11998614	1							•Seat frame		
4	VOE11998615	1							•Shock absorber		
5	VOE11996419	1							•Strip		
6	VOE11996418	1							•Protecting bellows		
7	VOE11996410	2							•Tension spring		
8	VOE11996411	1							•Seat cushion		

9	VOE11996416	1							•Heater		
10	VOE11998617	1							•Upholstery		
11	VOE11708910	6							•Knob		
12	VOE11996407	1							•Backrest frame		
13	VOE11996409	1							•Knob		
14	VOE11996412	1							•Backrest cushion		
15	VOE11996417	1							•Heater		
16	VOE11998618	1							•Upholstery		
17	VOE11104125	1							•Seat belt		

VOLVO

Construction Equipment

PROSIS Part Information

Date:	Image id:	Catalogue:	Model:
10/09/2018	**ED149**	**20009**	**L60E**
Brand:	Serial:	Group/Section:	Title:
Volvo	**1001-3355, 60001-61214, 70001-70530**	**852/350**	**Driver's seat. 80572**

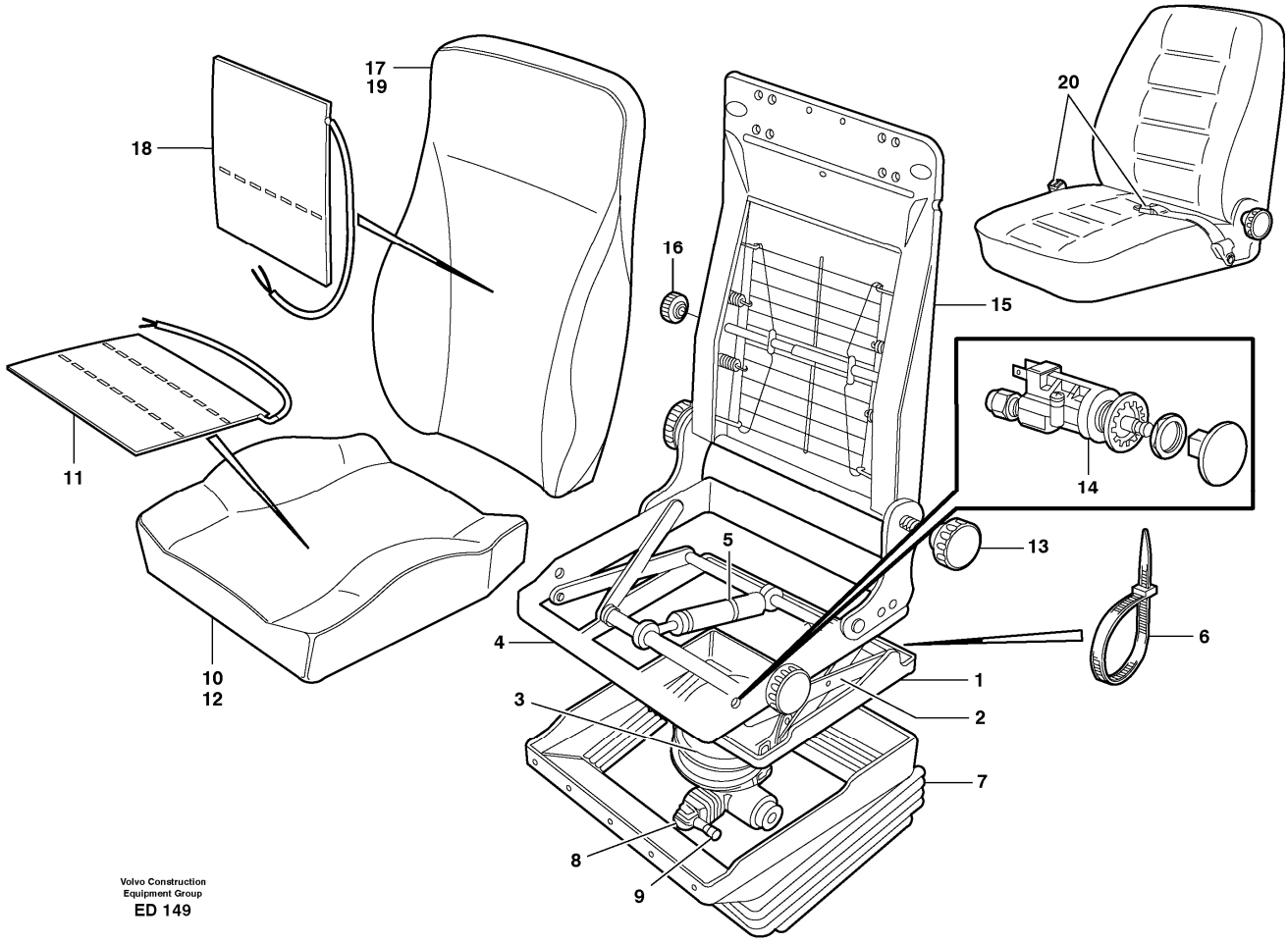

Section option	Kit	Option description
VOE80572		Operator's seat, airsuspended, heated Kit No: VOE 11104016 + VOE 11708097

Pos	Part	Q1	Q2	Q3	Q4	Q5	PS	Kit	Description	Option(s)	Remark
	VOE11104016	1							Seat		
1	VOE11998619	1							•Frame		
2	VOE11998620	1							•Linkage		
3	VOE11996421	1							•Air spring		
4	VOE11998621	1							•Seat frame		
5	VOE11998615	1							•Shock absorber		
6	VOE11996419	1							•Strip		
7	VOE11996418	1							•Protecting bellows		
8	VOE11998622	1							•Compressor		

9	VOE11701683	1							••Non-return valve		
9	VOE15101670	1							••Non-return valve		
10	VOE11996411	1							•Seat cushion		
11	VOE11996416	1							•Heater		
12	VOE11998617	1							•Upholstery		
13	VOE11708910	4							•Knob		
14	VOE11702361	1							•Switch		
15	VOE11996407	1							•Backrest frame		
16	VOE11996409	1							•Knob		
17	VOE11996412	1							•Backrest cushion		
18	VOE11996417	1							•Heater		
19	VOE11998618	1							•Upholstery		
20	VOE11104018	1							•Hip Belt		

VOLVO

Construction Equipment

PROSIS Part Information

Date:	Image id:	Catalogue:	Model:
10/09/2018	**1008479**	**20009**	**L60E**
Brand:	Serial:	Group/Section:	Title:
Volvo	**1001-3355, 60001-61214, 70001-70530**	**852/400**	**Instructor's seat 80556**

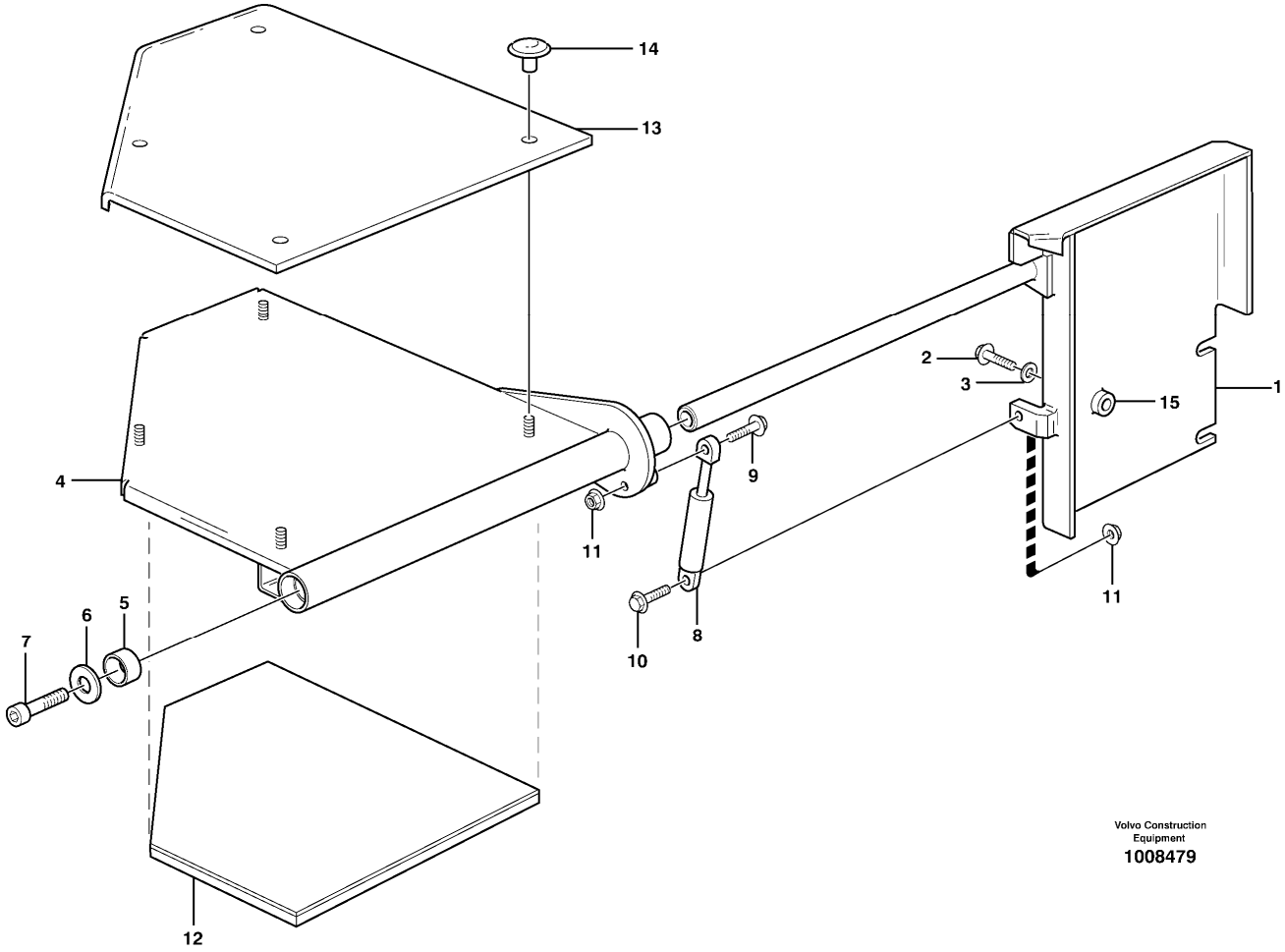

Section option	Kit	Option description
VOE80556	VOE11707315	Instructor seat

Pos	Part	Q1	Q2	Q3	Q4	Q5	PS	Kit	Description	Option(s)	Remark
1	VOE11006129	1							Bracket		
2	VOE946472	2							Flange screw		
3	VOE13960143	2							Washer		
4	VOE11006132	1							Seat		
5	VOE11007110	2							Bushing		
6	VOE4850822	1							Spacer		
7	VOE13965191	1							Screw		
8	VOE11007080	1							Gas spring		
9	VOE13965176	1							Screw		

10	VOE13947542	1							Screw		
11	VOE13949278	2							Flange lock nut		
12	VOE11006133	1							Upholstery		
13	VOE11006134	1							Cushion		
14	VOE11704348	4							Push button		
15	VOE13930087	1							Spacer ring		

VOLVO

Construction Equipment

PROSIS Part Information

Date:	Image id:	Catalogue:	Model:
10/09/2018	**1075968**	**20009**	**L60E**
Brand:	Serial:	Group/Section:	Title:
Volvo	**1001-3355, 60001-61214, 70001-70530**	**852/450**	**Operator seat with fitting parts OPEN ROPS**

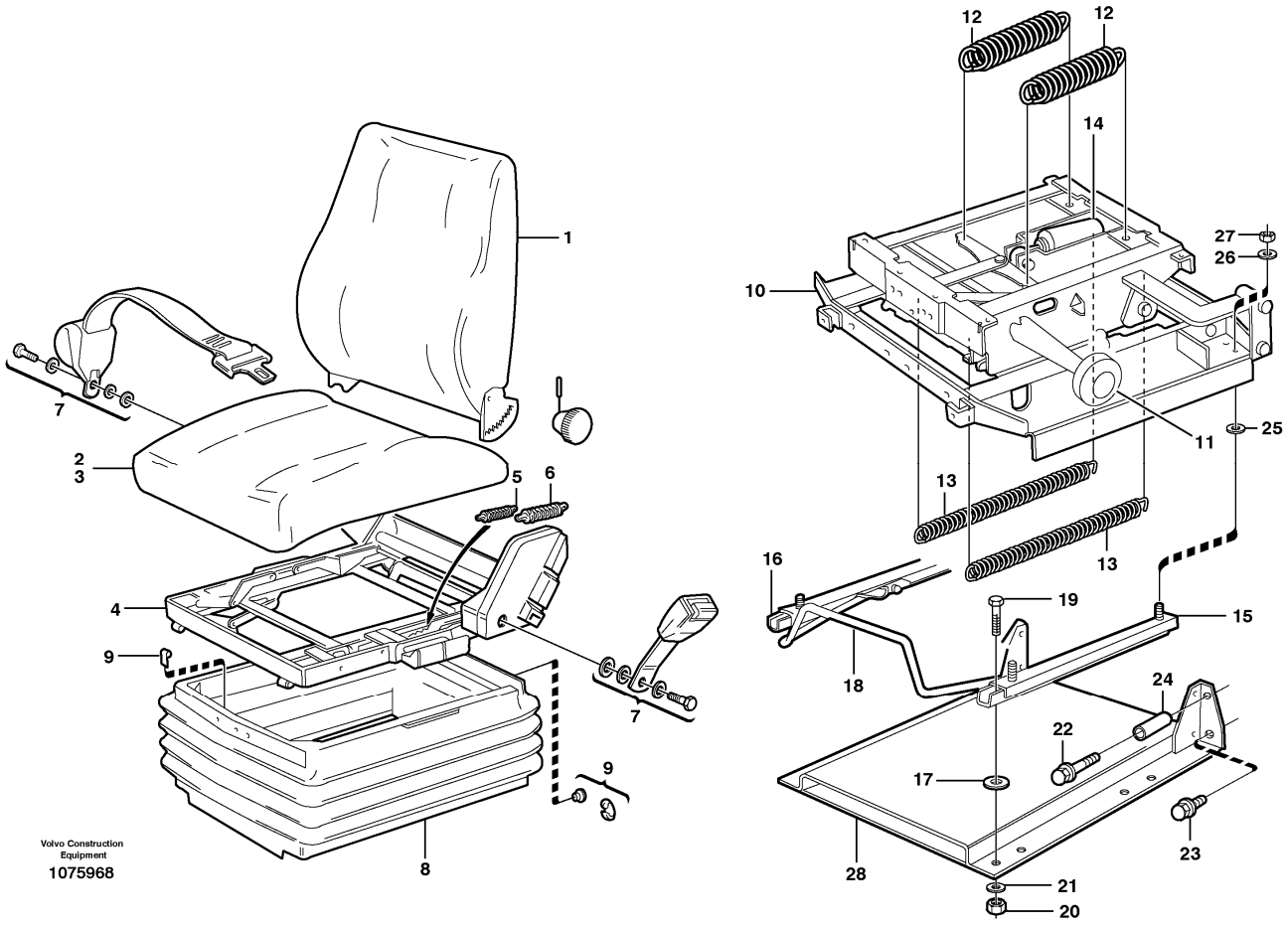

Section option	Kit	Option description
VOE33760		Cab. Open Rops

Pos	Part	Q1	Q2	Q3	Q4	Q5	PS	Kit	Description	Option(s)	Remark
	VOE11104272	1							Seat		
1	VOE11707362	1							•Backrest		
2	VOE11704771	1							•Seat		
3	VOE11704772	1							••Upholstery		
4	VOE11707359	1							•Seat frame		
5	VOE1696529	2							••Spring		
6	VOE1518748	1							••Spring		
7	VOE11707348	1							•Hip Belt		
8	VOE11998550	1							•Bellows		
9	VOE11998811	1							•Attachment kit		

10	VOE11707355	1							•Spring suspension unit		See ref 852/225
11		1							••Knob		
12		2							••Spring		
13		2							••Spring		
14		1							••Shock absorber		
15	VOE11104093	1							Slide rail		LH
16	VOE11104092	1							Slide rail		RH
17	VOE11117464	4							Plain washer		(VOE13960141)
18	VOE11006044	1							Handle		
19	VOE4870448	4							Screw		
20	VOE948645	4							Flange lock nut		
21	VOE11117464	4							Plain washer		(VOE13960141)
22	VOE13947790	2							Screw		
23	VOE946329	2							Flange screw		
24	VOE930457	2							Spacer ring		
25	VOE13960143	4							Washer		
26	VOE11117464	4							Plain washer		(VOE13960141)
27	VOE13945408	4							Nut		
28	VOE11007410	1							Seat Bracket		

VOLVO

Construction Equipment

PROSIS Part Information

Date:	Image id:	Catalogue:	Model:
10/09/2018	**1004202**	**20009**	**L60E**
Brand:	Serial:	Group/Section:	Title:
Volvo	**1001-3355, 60001-61214, 70001-70530**	**860/100**	**Windshild guard for windshield. 82492**

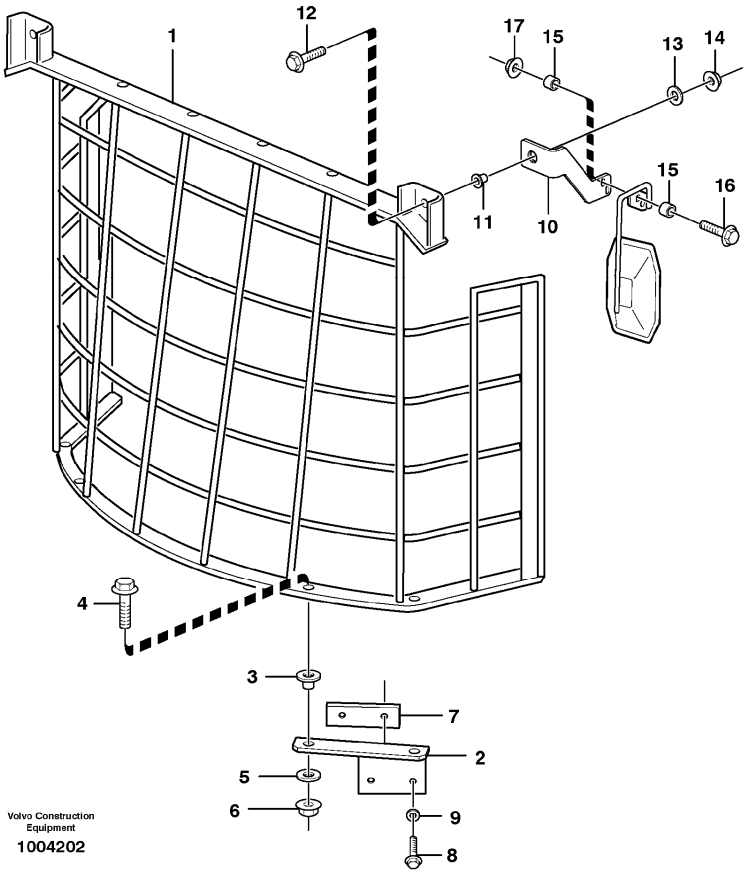

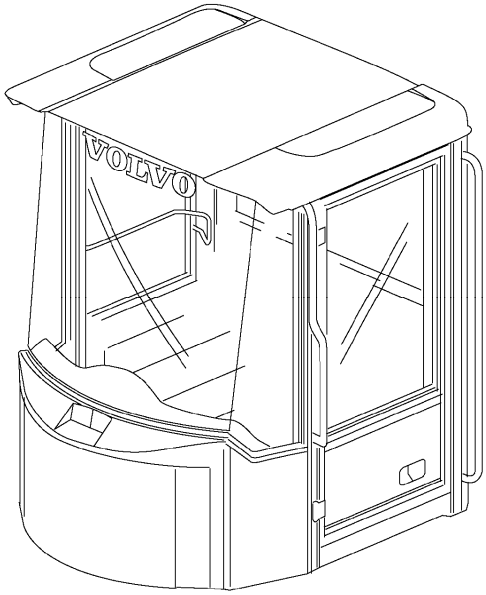

Section option	Kit	Option description
VOE82492	VOE11988664	Windscreen protection

Pos	Part	Q1	Q2	Q3	Q4	Q5	PS	Kit	Description	Option(s)	Remark
1	VOE11164402	1							Protecting grating		
2	VOE11164393	1							Anchorage		LH
	VOE11164416	1							Anchorage		RH
3	VOE6513604	4							Base		
4	VOE13965196	4							Screw		
5	VOE4746301	4							Washer		
6	VOE971099	4							Flange lock nut		(VOE13971099)
7	VOE11079238	2							Plate		
8	VOE13965192	4							Screw		
9	VOE13960145	4							Washer		
10	VOE11164410	1							Bracket		LH

	VOE11164409	1							Bracket		RH
11	VOE6513604	2							Base		
12	VOE13965196	2							Screw		
13	VOE4746301	2							Washer		
14	VOE971099	2							Flange lock nut		(VOE13971099)
15	VOE13930447	4							Spacer ring		
16	VOE13965187	4							Screw		
17	VOE13971098	4							Flange nut		

VOLVO

Construction Equipment

PROSIS Part Information

Date:	Image id:	Catalogue:	Model:
10/09/2018	**1021838**	**20009**	**L60E**
Brand:	Serial:	Group/Section:	Title:
Volvo	**1001-3355, 60001-61214, 70001-70530**	**860/150**	**Window guards, side and rear windows. 80144,82719**

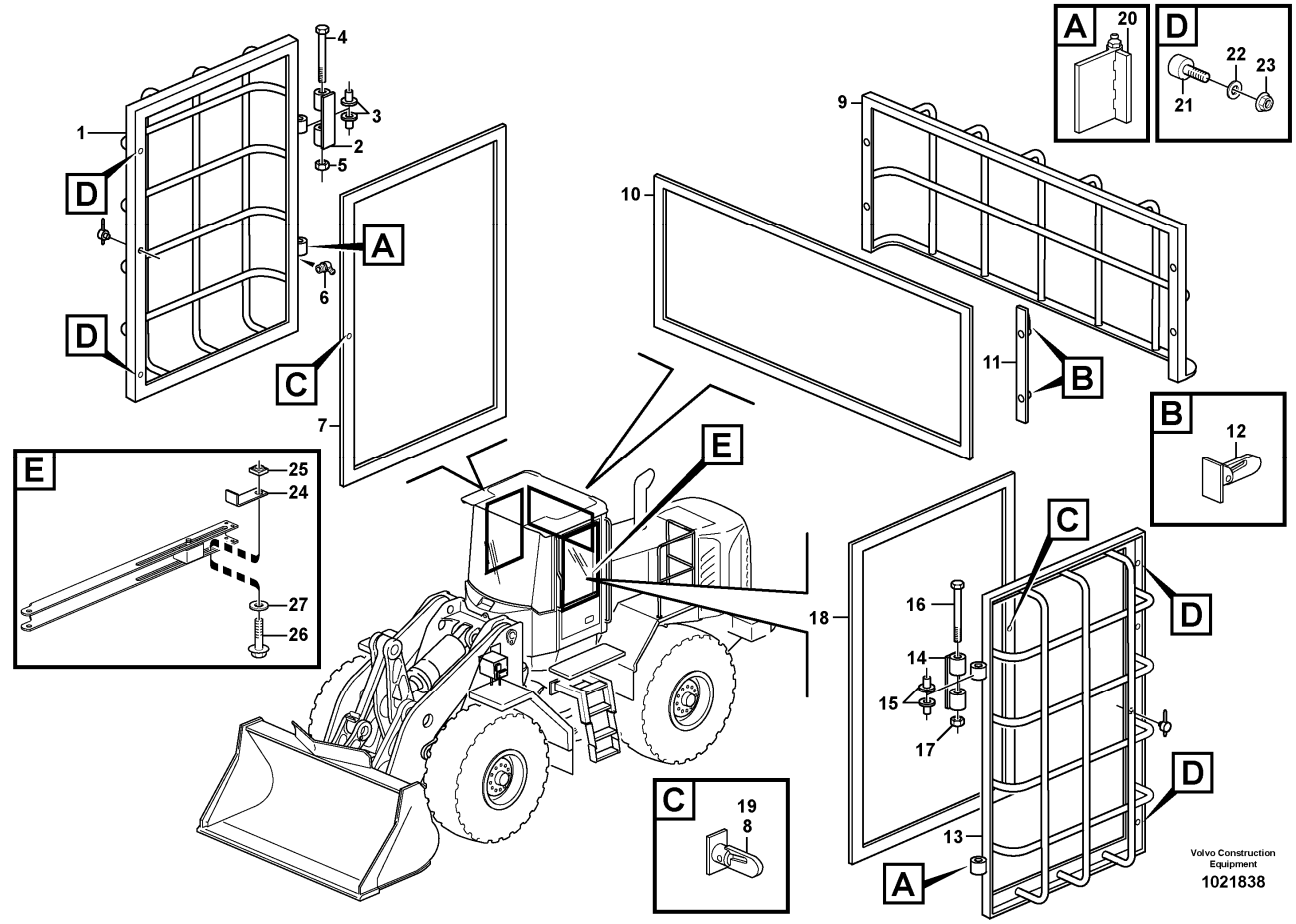

Section option	Kit	Option description
VOE80144		Window guards, side and rear windows REPLACED BY 82719
VOE82719		Window guards, side and rear windows

Q1-Q5	Option	Option description	
Q1 80144	VOE80144	Window guards, side and rear windows REPLACED BY 82719	
Q2 82719	VOE82719	Window guards, side and rear windows	

Pos	Part	Q1	Q2	Q3	Q4	Q5	PS	Kit	Description	Option(s)	Remark
1	VOE11164402	1							Protecting grating		
2	VOE11164393	1							Anchorage		LH
	VOE11164416	1							Anchorage		RH
3	VOE6513604	4							Base		
4	VOE13965196	4							Screw		

5	VOE4746301	4							Washer		
6	VOE971099	4							Flange lock nut		(VOE13971099)
7	VOE11079238	2							Plate		
8	VOE13965192	4							Screw		
9	VOE13960145	4							Washer		
10	VOE11164410	1							Bracket		LH
	VOE11164409	1							Bracket		RH
11	VOE6513604	2							Base		
12	VOE13965196	2							Screw		
13	VOE4746301	2							Washer		
14	VOE971099	2							Flange lock nut		(VOE13971099)
15	VOE13930447	4							Spacer ring		
16	VOE13965187	4							Screw		
17	VOE13971098	4							Flange nut		

VOLVO

Construction Equipment

PROSIS Part Information

Date:	Image id:	Catalogue:	Model:
10/09/2018	**EC380**	**20009**	**L60E**
Brand:	Serial:	Group/Section:	Title:
Volvo	**1001-3355, 60001-61214, 70001-70530**	**865/100**	**Noise reduction. 82553**

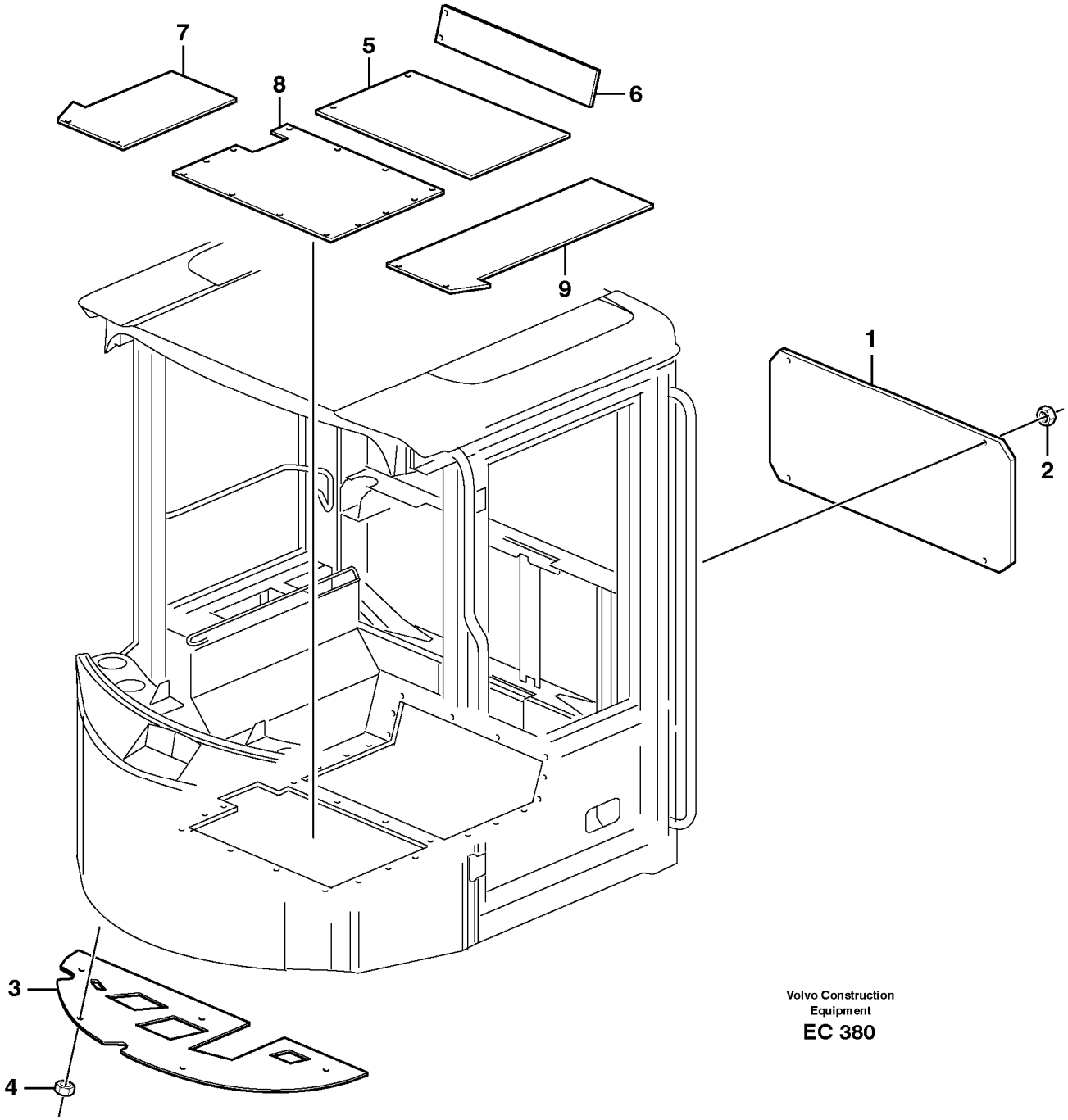

Section option	Kit	Option description
VOE82553		Noise reduction, cab

Pos	Part	Q1	Q2	Q3	Q4	Q5	PS	Kit	Description	Option(s)	Remark
1	VOE11006308	1							Rear panel		
2	VOE13945407	4							Nut		
3	VOE11006085	1							Floor Panel		
4	VOE13945407	5							Nut		
5	VOE11006082	1							Plate		
6	VOE11006081	1							Plate		
7	VOE11006084	1							Plate		
8	VOE11164499	1							Floor Panel		
9	VOE11006083	1							Plate		

VOLVO

Construction Equipment

PROSIS Part Information

Date:	Image id:	Catalogue:	Model:
10/09/2018	**ED137**	**20009**	**L60E**
Brand:	Serial:	Group/Section:	Title:
Volvo	**1001-3355, 60001-61214, 70001-70530**	**872/100**	**Air distribution**

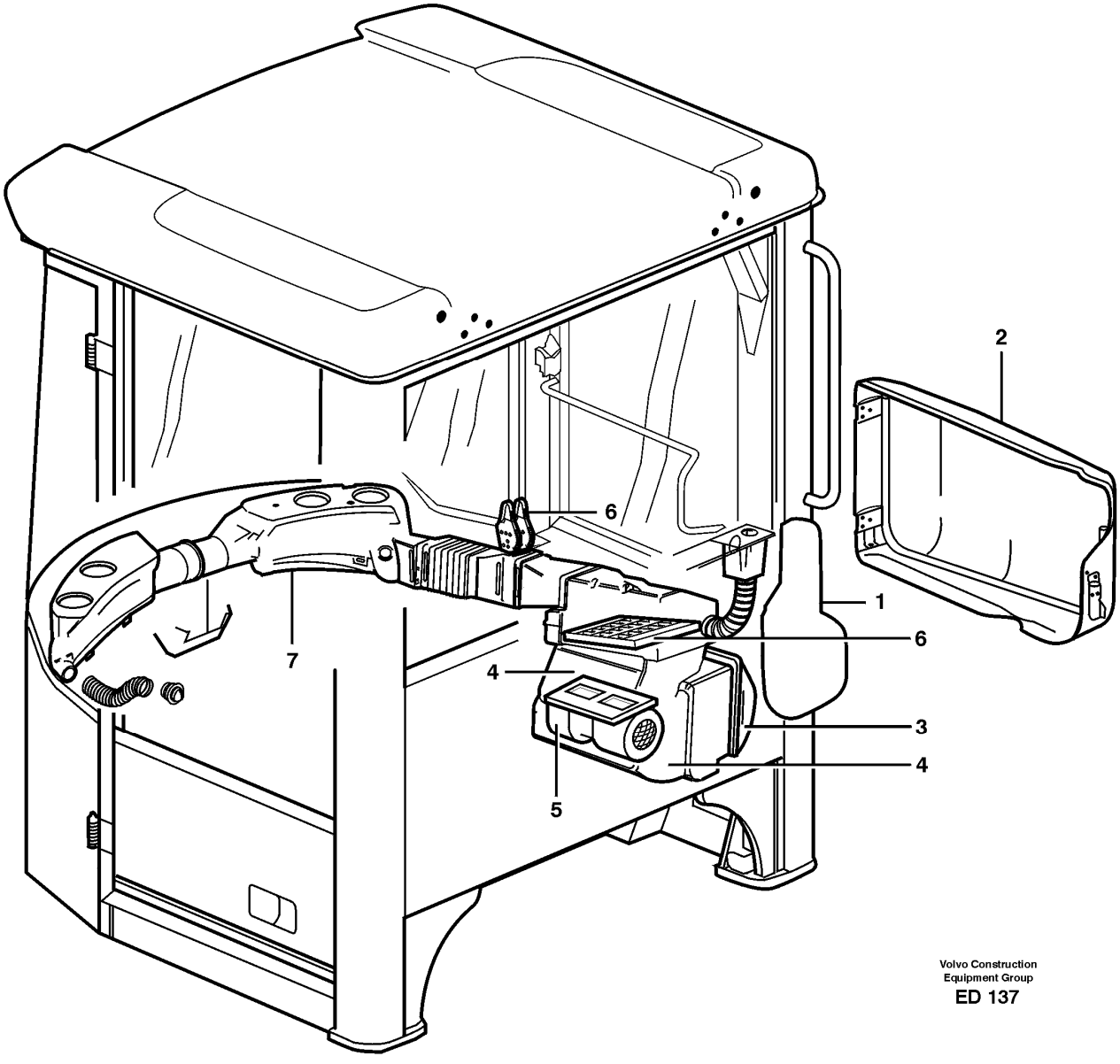

Section option	Kit	Option description
VOE33755		Cab

Pos	Part	Q1	Q2	Q3	Q4	Q5	PS	Kit	Description	Option(s)	Remark
1		1							Fresh air inlet		See ref 872/125
2		1							Filter cover		See ref 837/200

3		1							Air filter		See ref 872/150
4		1							Fan housing		See ref 872/125
5		1							Fan		See ref 872/250
6		1							Heat. unit a. control		See ref 873/150
7		1							Air ducts		See ref 872/200

VOLVO

Construction Equipment

PROSIS Part Information

Date:	Image id:	Catalogue:	Model:
10/09/2018	**ED122**	**20009**	**L60E**
Brand:	Serial:	Group/Section:	Title:
Volvo	**1001-3355, 60001-61214, 70001-70530**	**872/125**	**Fresh air inlet, air filter and fan housing.**

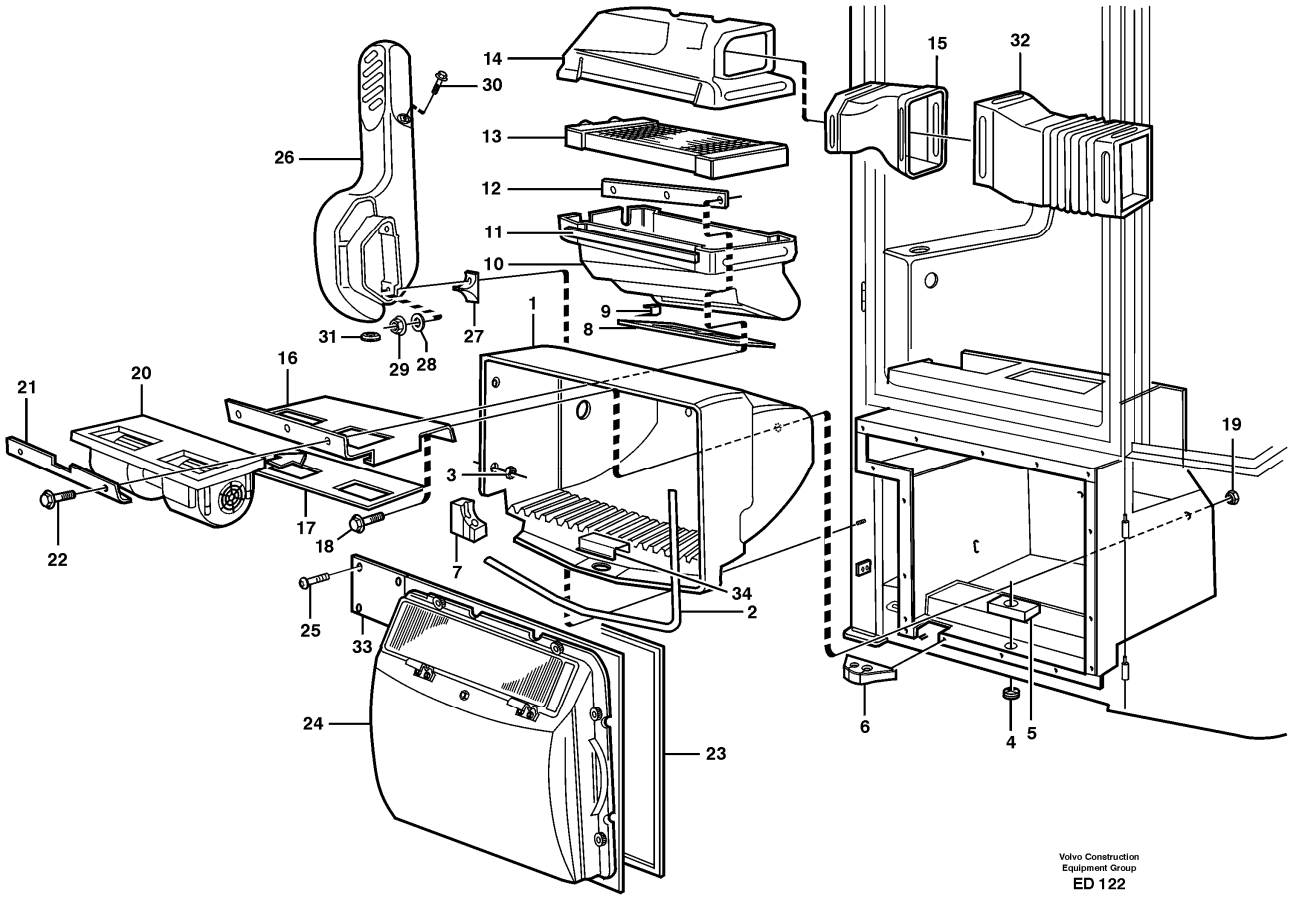

Section option	Kit	Option description
VOE33755		Cab

Pos	Part	Q1	Q2	Q3	Q4	Q5	PS	Kit	Description	Option(s)	Remark
1	VOE11006157	1							Fan housing		(VOE11104337)
2	VOE4881656	REQ							Framework moulding		L=1500MM
3	VOE941266	1							Plug		
4	VOE11007026	1							Non-return valve		
5	VOE11104415	1							Seal		
6	VOE11104894	1							Seal		(VOE11104447)
7	VOE11104411	1							Seal		
8	VOE11006638	2							Seal		
9	VOE11006983	4							Clip		

10	VOE11104661	1							Housing		
11	VOE762681	REQ							Rubber moulding		L=700MM
12	VOE11006635	1							Anchorage		
13		1							Radiator		See ref 873/150
14	VOE11104439	1							Distribution housing		
15	VOE11007208	1							Pipe end		
16	VOE15002231	1							Bracket		(VOE11006952)
17	VOE11006924	1							Gasket		
18	VOE13946934	2							Screw		
19	VOE13949278	2							Flange lock nut		
20		1							Fan		See ref 872/250
21	VOE11006925	1							Rule		
22	VOE13946934	3							Screw		
23	VOE762681	REQ							Rubber moulding		L=2500MM
24		1							Filter		See ref 872/150
25	VOE972092	16							Six point socket screw		
26	VOE11092421	1							Fresh air duct		
27	VOE11104446	2							Seal		
28	VOE11117464	2							Plain washer		(VOE13960141)
29	VOE13945408	2							Nut		(VOE948645)
30	VOE947107	1							Flange screw		
31	VOE979662	1							Plug		
32		1							Air duct		See ref 872/200
33		1							Plate		See ref 872/150
34	VOE11006103	1							Protection		(VOE11104720)

VOLVO

Construction Equipment

PROSIS Part Information

Date:	Image id:	Catalogue:	Model:
10/09/2018	**1015546**	**20009**	**L60E**
Brand:	Serial:	Group/Section:	Title:
Volvo	**1001-3355, 60001-61214, 70001-70530**	**872/150**	**Air filter**

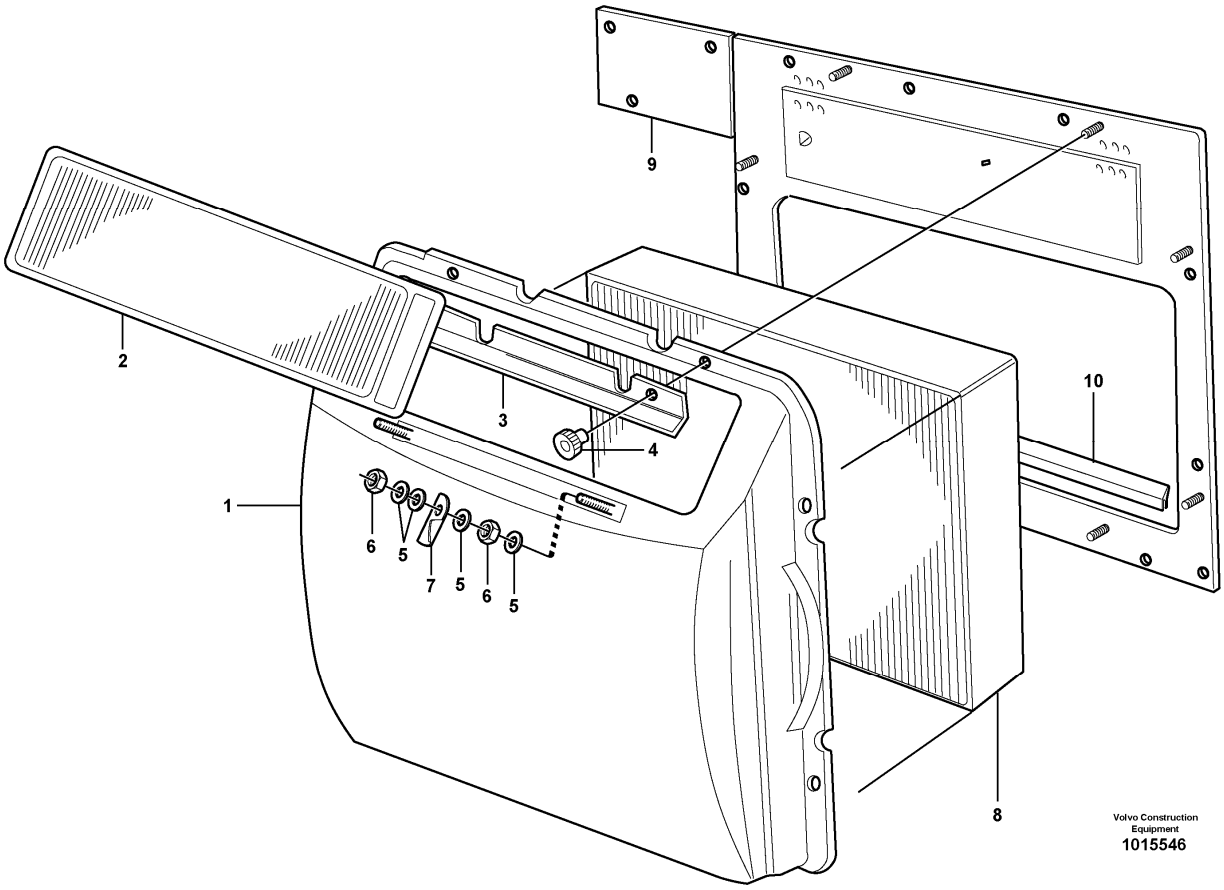

Section option	Kit	Option description
VOE80221	VOE11705485	Asbestos dust protection filter
VOE33750		Wheel Loader

Q1-Q5	Option	Option description	
Q1 33750	VOE33750	Wheel Loader	
Q2 80221	VOE80221	Asbestos dust protection filter	

Pos	Part	Q1	Q2	Q3	Q4	Q5	PS	Kit	Description	Option(s)	Remark
	VOE11164505	1							Filter		
			1				NS		Filter		
1		1	1				NS		•Cover		
2	VOE15052786	1	1						•Primary filter		(VOE11703979)
3	VOE11006467	1	1						•Tab		(VOE11708173)

4	VOE11058193	8	8						•Knurled nut		
5	VOE13940090	8	8						•Washer		
6	VOE11704258	4	4				OP		•Lock nut		
7		2	2				NS		•Spring tab		
8	VOE11703980	1							•Filter		
	VOE11705485		1						•Filter		
9	VOE11104723	1							Plate		
10	VOE4880191	REQ							Rubber moulding		L=465 MM

VOLVO

Construction Equipment

PROSIS Part Information

Date:	Image id:	Catalogue:	Model:
10/09/2018	**1017349**	**20009**	**L60E**
Brand:	Serial:	Group/Section:	Title:
Volvo	**1001-3355, 60001-61214, 70001-70530**	**872/170**	**Air filter 83085**

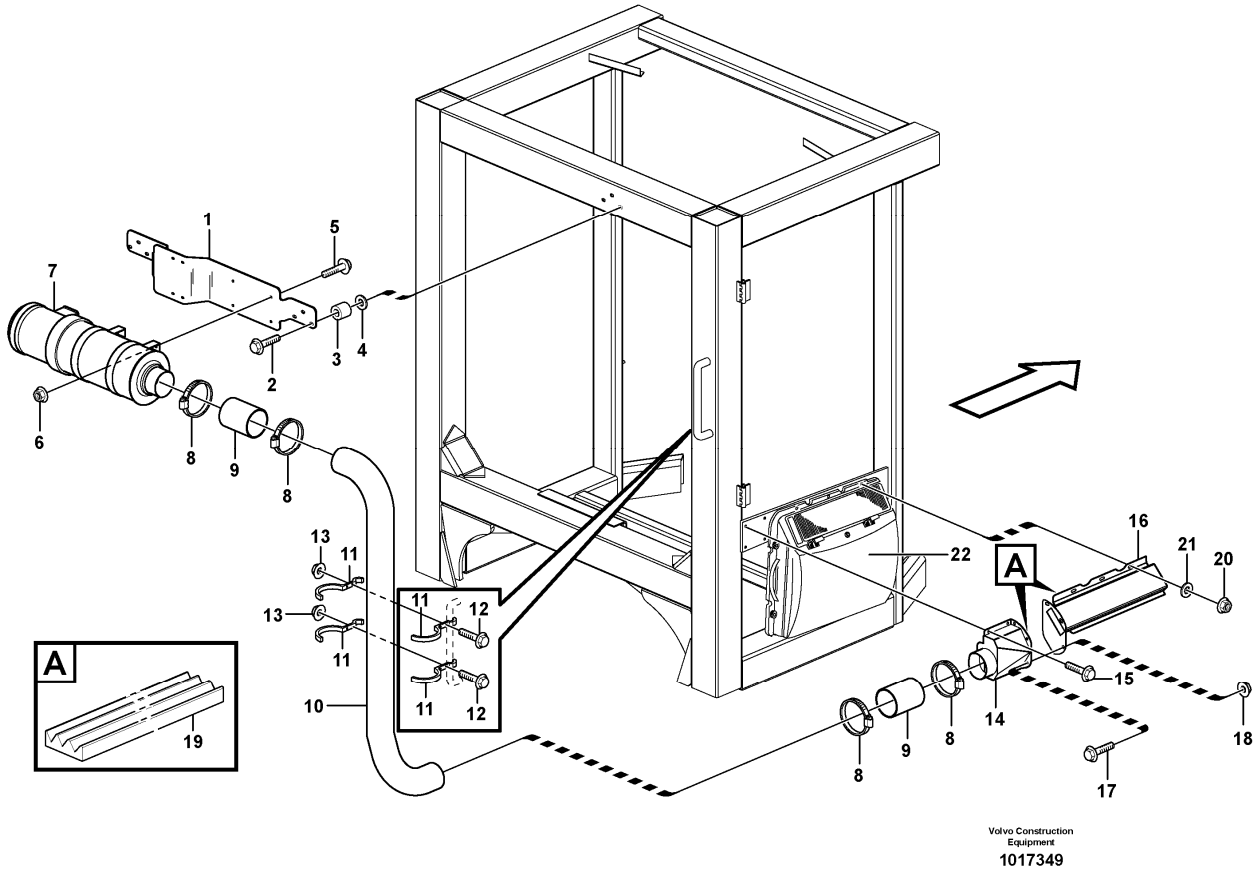

Section option	Kit	Option description
VOE83085		Air filter, cyclone USA

Pos	Part	Q1	Q2	Q3	Q4	Q5	PS	Kit	Description	Option(s)	Remark
1	VOE11417598	1							Plate		
2	VOE946671	6							Flange screw		
3	VOE930428	4							Spacer ring		
4	VOE11104399	4							Rubber washer		
5	VOE13946173	4							Screw		
6	VOE948645	4							Flange lock nut		
7	VOE11417498	1							Primary filter		
	VOE11714627	1							•Filter		
8	VOE943483	4							•Hose clamp		
9	VOE11417593	2							Hose		

10	VOE11417839	1							Pipe		
11	VOE11417587	4							Attaching clamp		
12	VOE13948356	4							Flange screw		
13	VOE13949278	4							Flange lock nut		
14	VOE11417576	1							Air inlet		
15		2							Flange screw		
16	VOE11417583	1							Air inlet		
17	VOE13946173	3							Screw		
18	VOE948645	3							Flange lock nut		
19	VOE11104947	REQ							Sealing strip		L = 1500 MM
20	VOE13949278	3							Flange lock nut		
21	VOE960139	3							Plain washer		
22		1							Cover		See ref 872/150

VOLVO

Construction Equipment

PROSIS Part Information

Date:	Image id:	Catalogue:	Model:
10/09/2018	**ED119**	**20009**	**L60E**
Brand:	Serial:	Group/Section:	Title:
Volvo	**1001-3355, 60001-61214, 70001-70530**	**872/200**	**Air ducts**

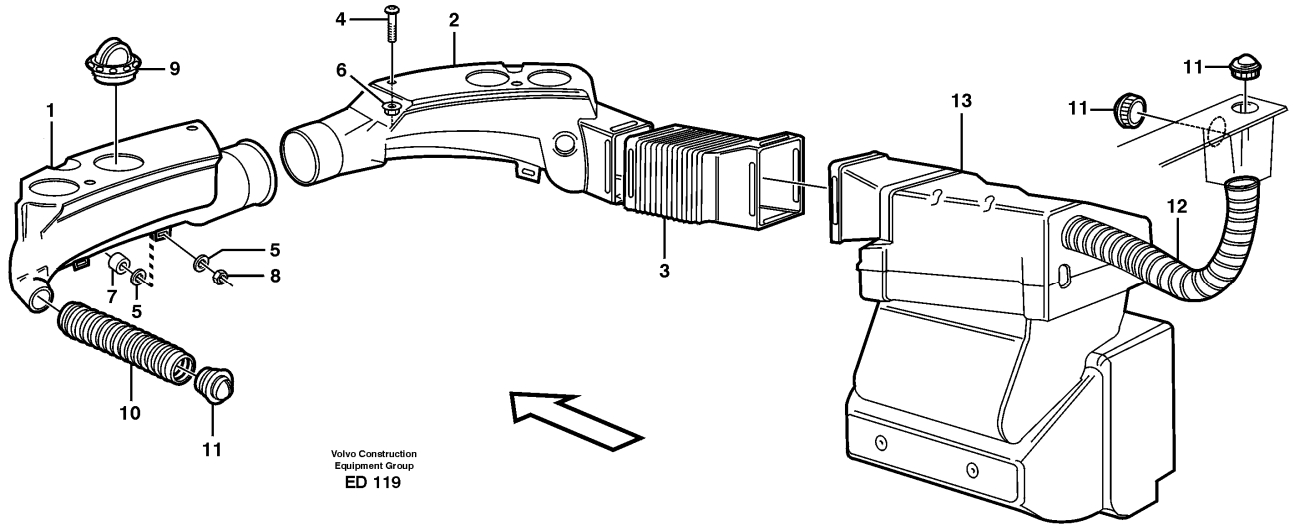

Section option	Kit	Option description
VOE33755		Cab
VOE33756		Cab L60E USA

Pos	Part	Q1	Q2	Q3	Q4	Q5	PS	Kit	Description	Option(s)	Remark
1	VOE11104479	1							Air duct		RH
2	VOE11104478	1							Air duct		LH
3	VOE11007207	1							Air duct		
4	VOE969738	4							Six point socket screw		(VOE13969738)
5	VOE960139	4							Plain washer		
5	VOE13948871	4							Spacer washer		
6	VOE13949278	4							Flange lock nut		
7	VOE930418	4							Spacer ring		
8	VOE13945407	4							Nut		
9	VOE11104372	4							Air outlet		
10	VOE4850665	REQ							Corrugated hose		L=300MM
11	VOE11104371	4					SS		Air outlet		
12	VOE11007345	REQ							Hose		L=700MM
13									Fan housing		See ref 872/125

VOLVO

Construction Equipment

PROSIS Part Information

Date:	Image id:	Catalogue:	Model:
10/09/2018	**ED123**	**20009**	**L60E**
Brand:	Serial:	Group/Section:	Title:
Volvo	**1001-3355, 60001-61214, 70001-70530**	**872/250**	**Fan**

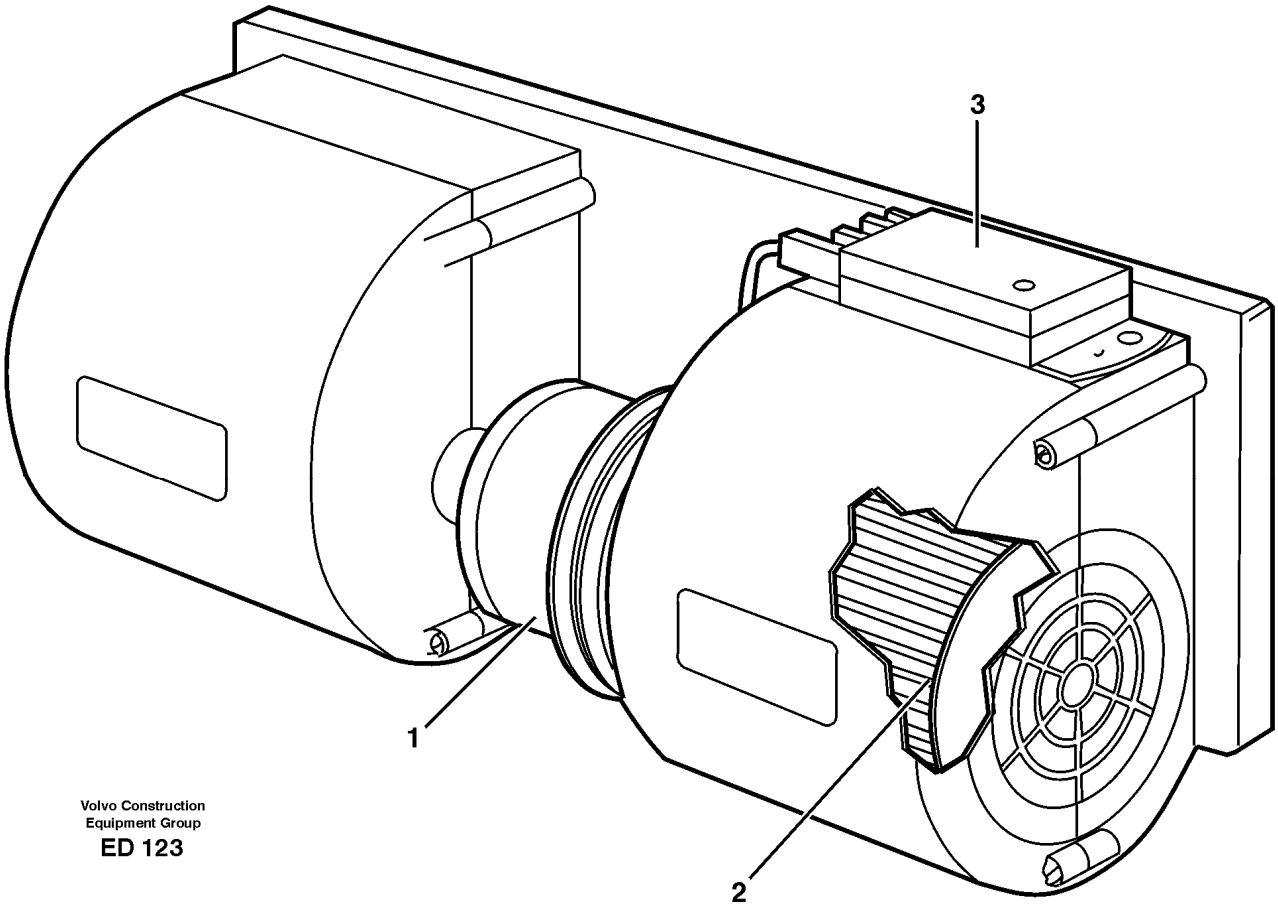

Section option	Kit	Option description
VOE33755		Cab

Pos	Part	Q1	Q2	Q3	Q4	Q5	PS	Kit	Description	Option(s)	Remark
	VOE11006834	1							Fan		
1	VOE11996067	1							•Fan motor		
2	VOE11994455	2							•Fan wheel		
3	VOE11994456	1							•Resistor		

VOLVO

Construction Equipment

PROSIS Part Information

Date:	Image id:	Catalogue:	Model:
10/09/2018	**1022058**	**20009**	**L60E**
Brand:	Serial:	Group/Section:	Title:
Volvo	**1001-3355, 60001-61214, 70001-70530**	**873/100**	**Heating system**

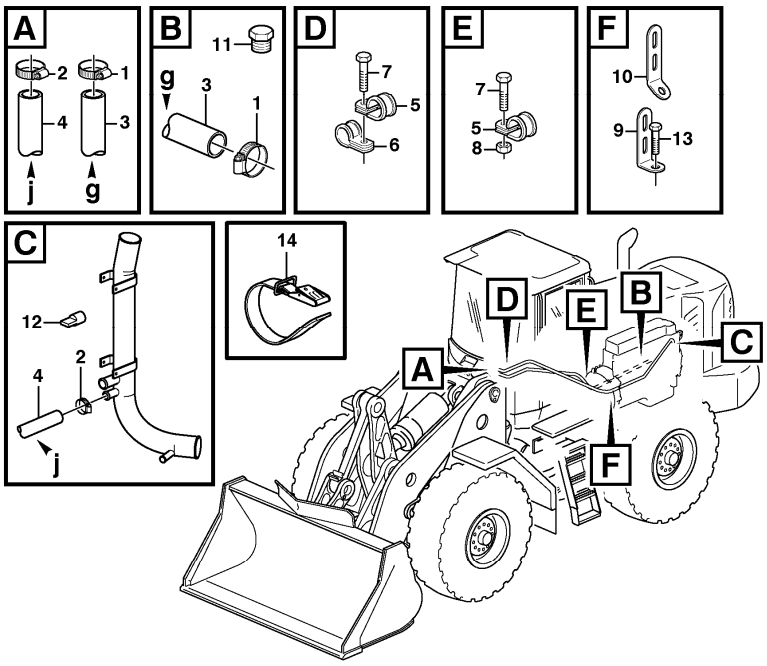

Volvo Construction Equipment
1022058

Section option	Kit	Option description
VOE33750		Wheel Loader
VOE33759		Wheel loader L60E OPEN ROPS

Q1-Q5	Option	Option description	
Q1 STD			
Q2 OPEN ROPS			

Pos	Part	Q1	Q2	Q3	Q4	Q5	PS	Kit	Description	Option(s)	Remark
1	VOE13943472	2							Hose clamp		
2	VOE13943474	2	2						Hose clamp		(VOE943473)
3	VOE943368	1							Hose		L=1750 MM
4	VOE943369	1	1						Hose		L=1600 MM
5	VOE977599	2							Clamp		(VOE13977599)

6	VOE13977600	5							Clamp		
7	VOE13946173	8							Screw		
8	VOE13949867	3	3						Spring nut		
9	VOE965561	1							Bracket		
10	VOE965576	2							Bracket		
11	VOE1698627		1						Plug		
12	VOE950711		1						Pin		
13	VOE946440	1							Flange screw		
14	VOE11104606	REQ							Retaining strap		

VOLVO

Construction Equipment

PROSIS Part Information

Date:	Image id:	Catalogue:	Model:
10/09/2018	**1001271**	**20009**	**L60E**
Brand:	Serial:	Group/Section:	Title:
Volvo	**1001-3355, 60001-61214, 70001-70530**	**873/150**	**Radiator and control**

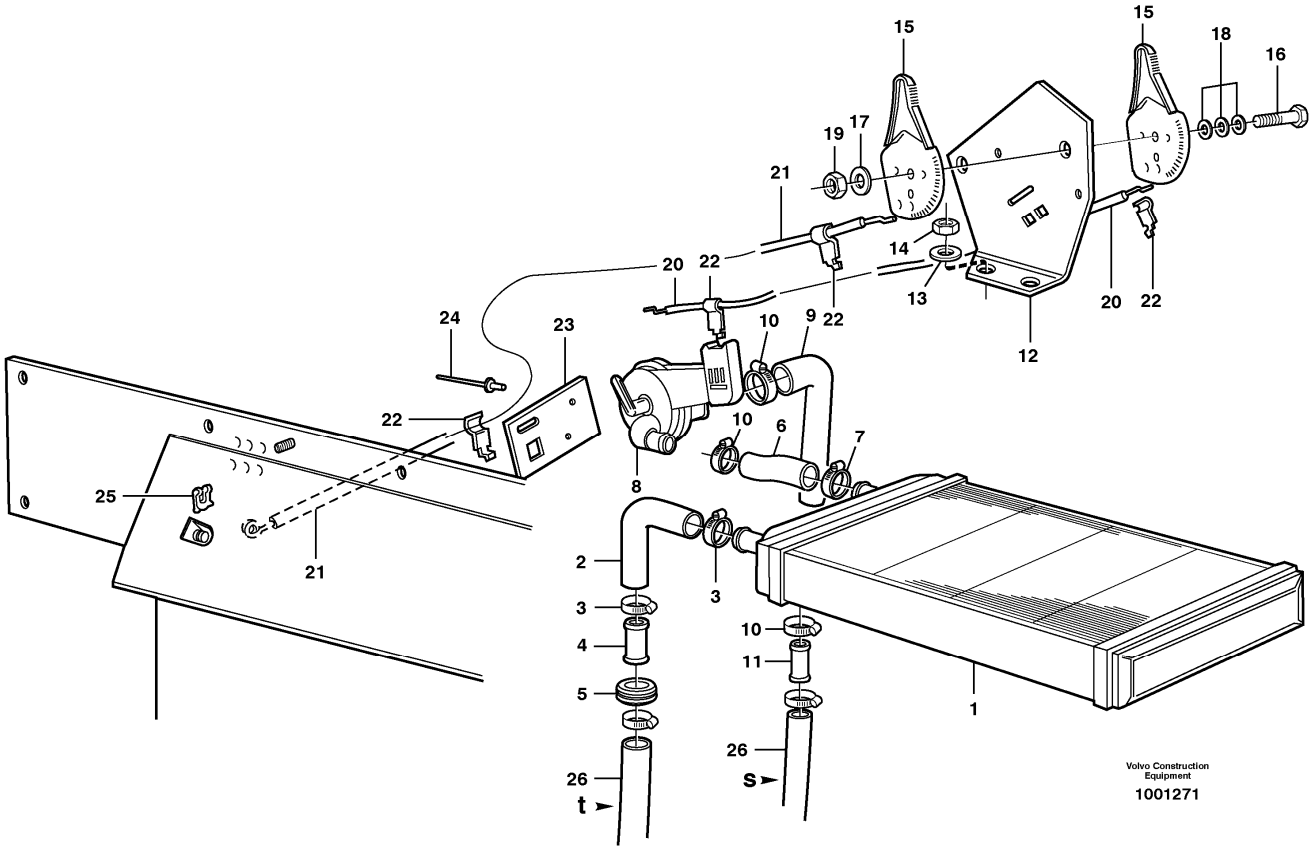

Section option	Kit	Option description
VOE33755		Cab
VOE33756		Cab L60E USA

Pos	Part	Q1	Q2	Q3	Q4	Q5	PS	Kit	Description	Option(s)	Remark
1	VOE1587964	1							Radiator		
2	VOE11104655	1							Hose		
3	VOE13943474	2							Hose clamp		
4	VOE11006631	1							Tube		OD = 20 MM See ref 261/500
5	VOE961970	1							Plug		
6	VOE11006633	1							Hose		
7	VOE13943474	1							Hose clamp		
8	VOE11032552	1							Valve		
9	VOE11104654	1							Hose		
10	VOE968847	3							Hose clamp		

11	VOE11006632	1							Tube		OD = 16 MM See ref 261/500
12	VOE11104993	1							Bracket		
13	VOE960139	1							Plain washer		
14	VOE13949278	2							Flange lock nut		
15	VOE11164653	2							Control		(VOE11006410)
16	VOE13965185	1							Screw		
17	VOE13940090	2							Washer		
18	VOE120789	3							Disc spring		
19	VOE13971098	1							Flange nut		
20	VOE11006800	1							Control wire		
21	VOE11104555	1							Control wire		
22	VOE1211599	4							Clip		
23	VOE11104554	1							Bracket		
24	VOE13942672	2							Blind rivet		
25	VOE11992315	1							Clip		
26									Heating system		See ref 873/100
27	VOE961970	1							Plug		

VOLVO

Construction Equipment

PROSIS Part Information

Date:	Image id:	Catalogue:	Model:
10/09/2018	**1011879**	**20009**	**L60E**
Brand:	Serial:	Group/Section:	Title:
Volvo	**1001-3355, 60001-61214, 70001-70530**	**873/200**	**Automatic temperature control.**

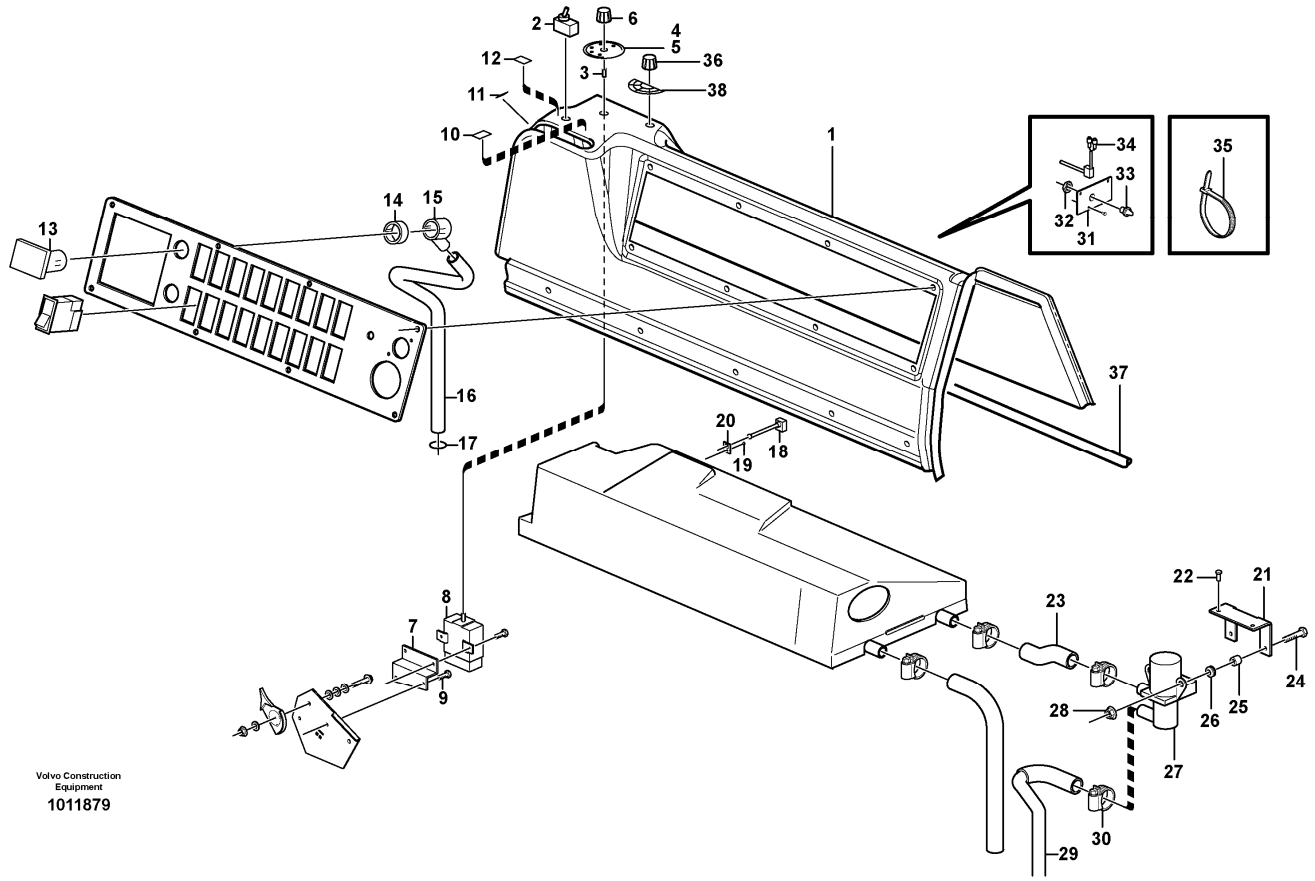

Section option	Kit	Option description
VOE82772		Air conditioning
VOE82773		Air conditioning CRSN

Q1-Q5	Option	Option description	
Q1 82772 82773	VOE82772	Air conditioning	

Pos	Part	Q1	Q2	Q3	Q4	Q5	PS	Kit	Description	Option(s)	Remark
1	VOE11104972	1							Side panel		
2	VOE4786696	1							Switch		
3	VOE11104899	1							Tube		
4	VOE11006142	1							Decal		
5	VOE11006143	1							Decal		
6	VOE1259480	1							Knob		

7	VOE11164979	1							Anchorage		
8	VOE85107965	1							Control unit		
9	VOE972079	4							Six point socket screw		
10	VOE11174080	1							Decal		
11	VOE11174079	1							Decal		
12	VOE11174081	1							Decal		
13	VOE8140938	1							Temperature sensor		SE811
14	VOE1594887	1							Ring		
15	VOE1609043	1							Hose coupling		
16	VOE1088846	REQ							Protecting hose		
17	VOE955977	1							O-ring		
18	VOE3090917	1							Temperature sensor		SE810
19	VOE976119	1							Blind rivet		
20	VOE11006123	1							Anchorage		
21	VOE11104276	1							Anchorage		
22	VOE972079	2							Six point socket screw		
23	VOE11104279	1							Hose		
24	VOE971321	2							Six point socket screw		
25	VOE1594906	2							Anchorage		
26	VOE1594907	2							Rubber Seal		
27	VOE8142797	1							Valve		MA802
28	VOE13945407	2							Nut		
29	VOE11104755	1							Hose		
30	VOE13943474	1							Hose clamp		
31	VOE11104723	1							Plate		
32	VOE4803796	1							Plastic nut		
33	VOE1609046	1							Thermo monitor		SE809
34	VOE1089049	1							Thermo monitor		SE808
35	VOE4821292	2							Cable tie		
36	VOE11007040	1							Knob		
37		1							Cable harness		See ref 371/1375
38	VOE11104573	1							Decal		

VOLVO

Construction Equipment

PROSIS Part Information

Date:	Image id:	Catalogue:	Model:
10/09/2018	**1007181**	**20009**	**L60E**
Brand:	Serial:	Group/Section:	Title:
Volvo	**1001-3355, 60001-61214, 70001-70530**	**874/100**	**Air conditioning. 80868**

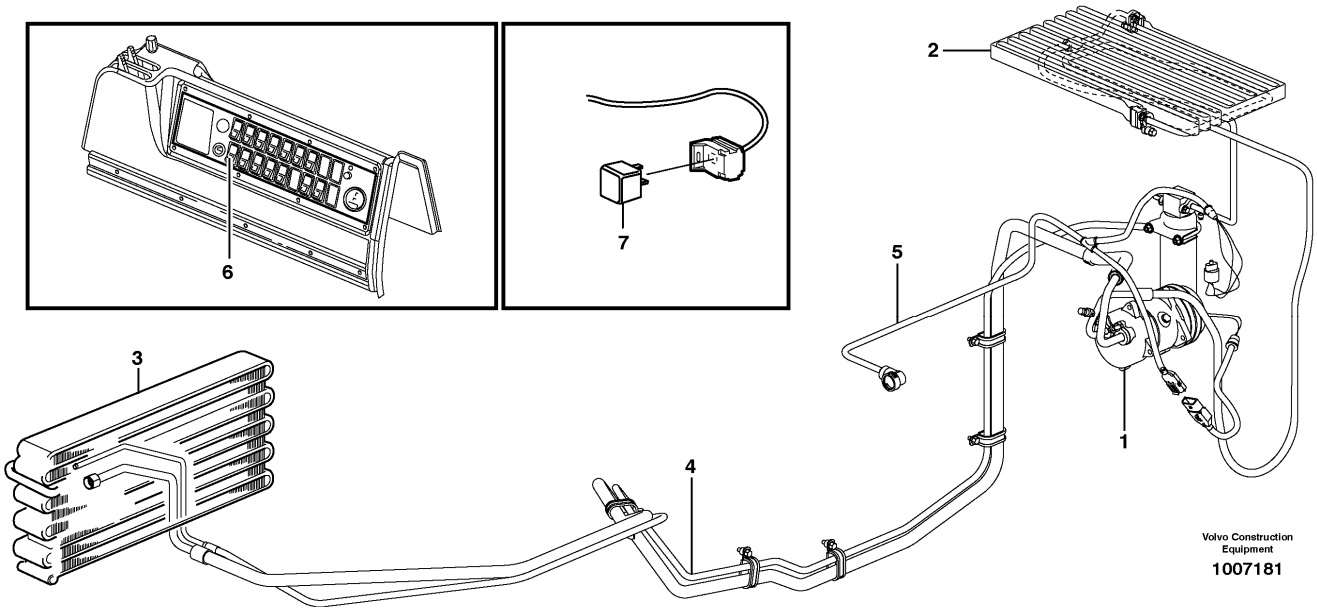

Section option	Kit	Option description
VOE80868	VOE11988237	Air conditioning FOR REFRIGERANT R134A

Pos	Part	Q1	Q2	Q3	Q4	Q5	PS	Kit	Description	Option(s)	Remark
1									Compressor		See ref 874/150
2									Condensor		See ref 874/200
3									Evaporator		See ref 874/250
4									Assembly of hoses		See ref 874/300
5									Wire harness		See ref 371/1650
6									Switch		See ref 380/200
7									Relay		See ref 372/200

VOLVO

Construction Equipment

PROSIS Part Information

Date:	Image id:	Catalogue:	Model:
10/09/2018	**1015269**	**20009**	**L60E**
Brand:	Serial:	Group/Section:	Title:
Volvo	**1001-3355, 60001-61214, 70001-70530**	**874/150**	**Compressor for cooling agent R134a with fitting parts. 80868, 82323, 82772, 82773**

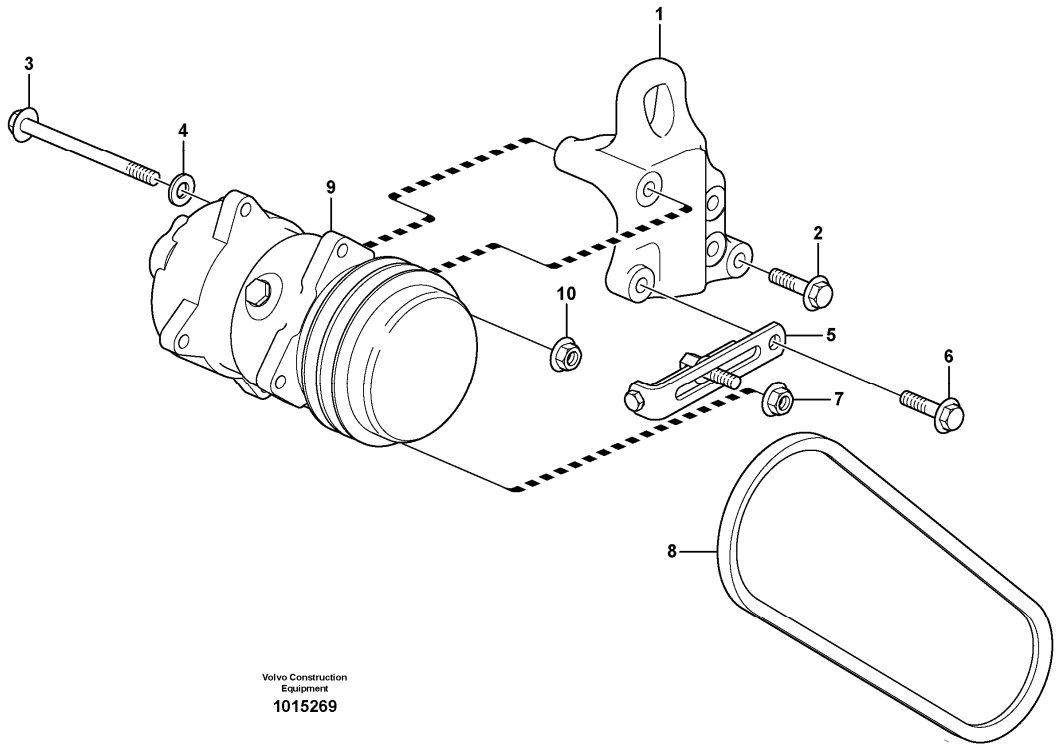

Section option	Kit	Option description
VOE82323	VOE11988247	Air conditioning with corrosion prot. condenser
VOE80868	VOE11988237	Air conditioning FOR REFRIGERANT R134A
VOE82772		Air conditioning
VOE82773		Air conditioning CRSN

Pos	Part	Q1	Q2	Q3	Q4	Q5	PS	Kit	Description	Option(s)	Remark
1	VOE11410464	1							Anchorage		
2	VOE983253	3							Hexagon screw		
3	VOE984160	1							Hexagon screw		
4	VOE930842	1							Plain washer		(VOE13930842)
5	VOE1676586	1							Tensioner		
6	VOE946472	1							Flange screw		
6	VOE13965185	1							Screw	VOE82773	

7	VOE13971098	1							Flange nut		
8	VOE977525	1							V-belt		
9		1							Compressor		See ref 874/350
10	VOE981945	1							Flange lock nut		

VOLVO

Construction Equipment

PROSIS Part Information

Date:	Image id:	Catalogue:	Model:
10/09/2018	**1016265**	**20009**	**L60E**
Brand:	Serial:	Group/Section:	Title:
Volvo	**1001-3355, 60001-61214, 70001-70530**	**874/200**	**Condenser for cooling agent R134a with fitting parts. 80868, 82323, 82772, 82773**

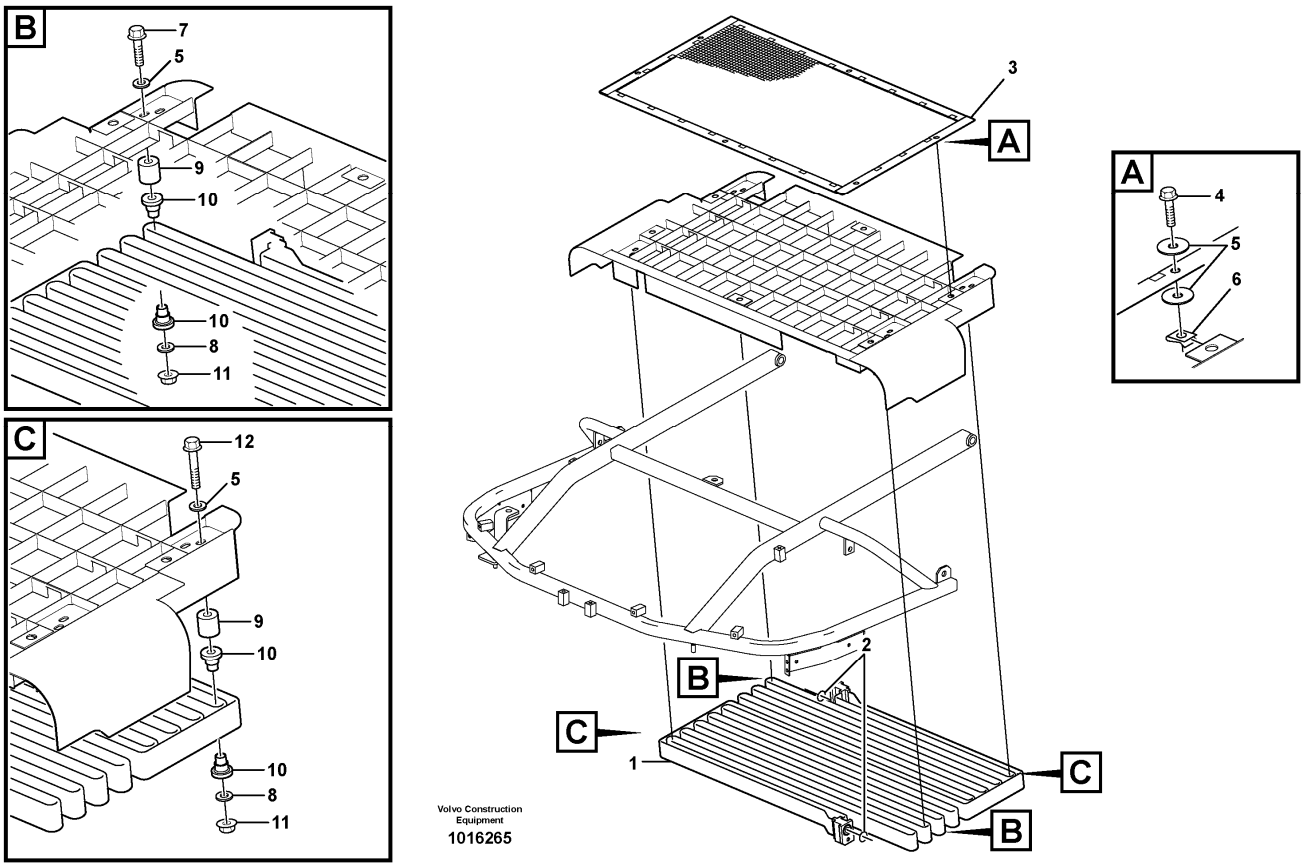

Section option	Kit	Option description
VOE82323	VOE11988247	Air conditioning with corrosion prot. condenser
VOE80868	VOE11988237	Air conditioning FOR REFRIGERANT R134A
VOE82772		Air conditioning
VOE82773		Air conditioning CRSN

Q1-Q5	Option	Option description	
Q1 E-PROD 80868 82772			
Q2 L-PROD 80868 82772			
Q3 E-PROD 82323 82773			
Q4 L-PROD 82323 82773			

Pos	Part	Q1	Q2	Q3	Q4	Q5	PS	Kit	Description	Option(s)	Remark
1	VOE11006435	1	1				SS		Condenser	VOE80868, VOE82772	
	VOE11164324			1	1		SS		Condenser	VOE82323, VOE82773	
2	VOE6848760	2	2	2	2				•O-ring		
3	VOE11400276	1		1					Safety net		
3	VOE11413922		1		1				Safety net		
4	VOE946440	6	6	6	6				Flange screw		
5	VOE13955894	10		10					Washer		
5	VOE13955894		12		12				Washer		
6	VOE13949867	6	6	6	6				Spring nut		
7	VOE13965184	2	4	2	4				Flange screw		
8	VOE11117464		4		4				Plain washer		(VOE13960141)
9	VOE11400274	4		4					Spacer sleeve		
10	VOE11400281	8	8	8	8				Rubber element		
11	VOE948645	4	4	4	4				Flange lock nut		
12	VOE968842	2		2					Flange screw		

VOLVO

Construction Equipment

PROSIS Part Information

Date:	Image id:	Catalogue:	Model:
10/09/2018	**1007138**	**20009**	**L60E**
Brand:	Serial:	Group/Section:	Title:
Volvo	**1001-3355, 60001-61214, 70001-70530**	**874/250**	**Evaporator for cooling agent R134a with fitting parts.**

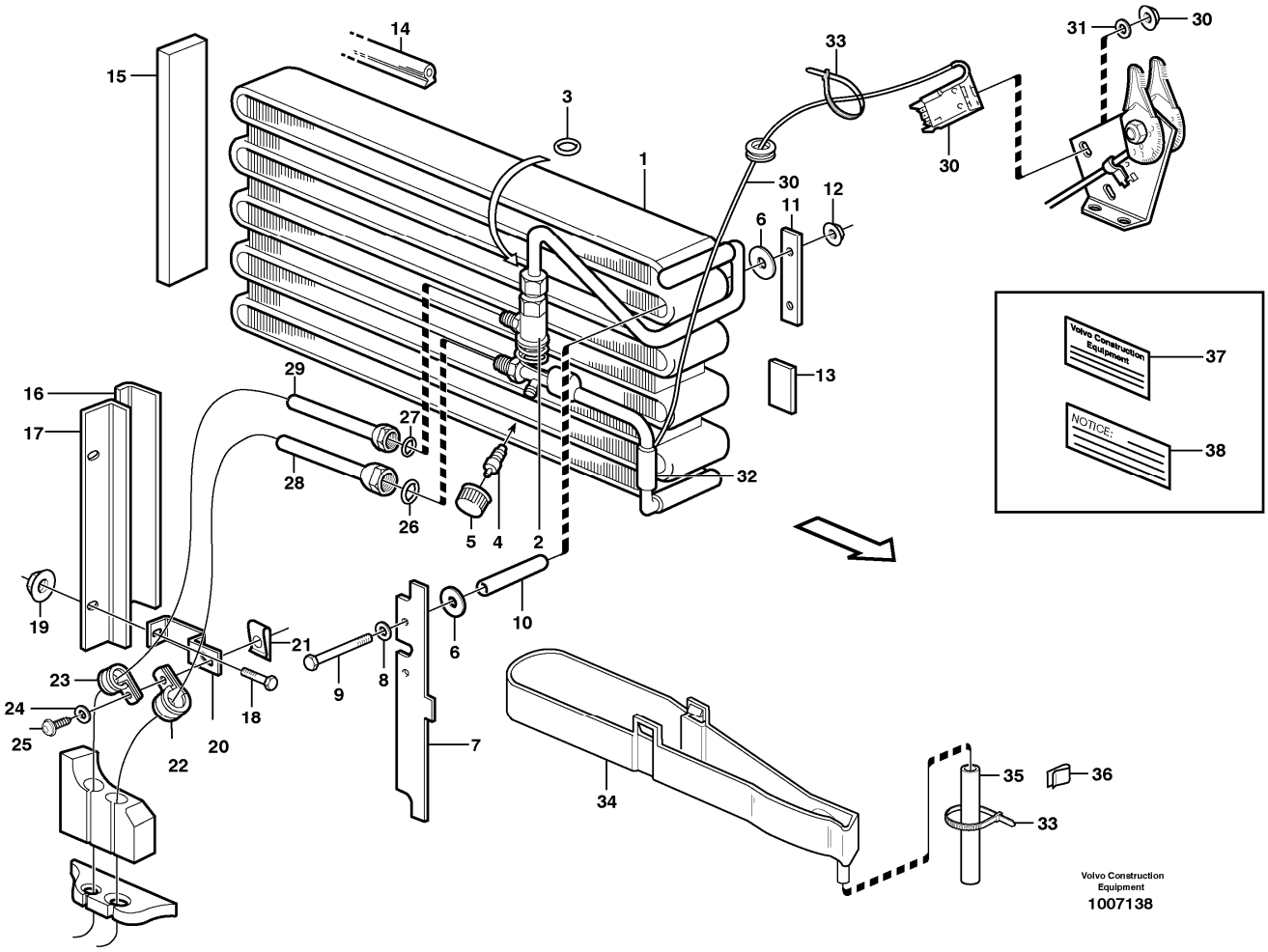

Section option	Kit	Option description
VOE82323	VOE11988247	Air conditioning with corrosion prot. condenser
VOE80868	VOE11988237	Air conditioning FOR REFRIGERANT R134A
VOE82772		Air conditioning
VOE82773		Air conditioning CRSN

Q1-Q5	Option	Option description	
Q1 80868 83323	VOE80868	Air conditioning FOR REFRIGERANT R134A	
Q2 82772	VOE82772	Air conditioning	
Q3 82773	VOE82773	Air conditioning CRSN	

Pos	Part	Q1	Q2	Q3	Q4	Q5	PS	Kit	Description	Option(s)	Remark
1	VOE15042557	1	1	1					Evaporator system		(VOE11412984)

2	VOE15058102	1	1	1					•Expansion valve		(VOE11711958)
3	VOE3537503	1	1	1					•O-ring		
4	VOE11701530	1	1	1					•Needle valve		
5	VOE11701529	1	1	1					•Cap		
6	VOE11007675	4	4						Washer		
6	VOE960139			4					Plain washer		
7	VOE11007291	1	1	1					Anchorage		
8	VOE960139	2	2	2					Plain washer		
9	VOE955286	2	2	2					Hexagon screw		
10	VOE13945461	REQ	REQ	RRE					Plastic pipe		L = 2 x 70 MM
11	VOE11007057	1	1	1					Anchorage		
12	VOE13945407	2	2	2					Nut		
13	VOE4932353	REQ	REQ	REQ					Rubber moulding		L = 40 MM
14	VOE11007005	REQ	REQ	REQ					Sealing strip		L = 500 MM
15	VOE11007137	1	1	1					Gasket		
16	VOE4932353	REQ	REQ	REQ					Rubber moulding		L = 235 MM
17	VOE11104793	1	1	1					Anchorage		
18	VOE13947542	2	2	2					Screw		
19	VOE930760	2	2	2					Expanding nut		
20	VOE11164305	1	1	1					Bracket		
21	VOE949921	1							Spring nut		
21	VOE949278		1	1			SS		Flange lock nut		
22	VOE952630	1	1	1					Clamp		
23	VOE952625	1	1	1					Clamp		
24	VOE955892	1							Plain washer		
24	VOE960139		1	1					Plain washer		
25	VOE971322	1							Six point socket screw		
25	VOE13946544		1	1					Screw		
26	VOE3537507	1	1	1					O-ring		
27	VOE3537499	1	1	1					O-ring		
28		1	1	1					Hose		See ref 874/300
29		1	1	1					Hose		See ref 874/300
30	VOE11196477	1							Thermostat		SE803
31	VOE955896	1							Plain washer		
32	VOE11003291	REQ							Tape		L = 150 MM
33	VOE4881440	5	5	5					Cable tie		
34	VOE11104788	1	1	1					Bowl		
35	VOE11039491	REQ	REQ	REQ					Hose		L = 500 MM
36	VOE11006249	1	1	1					Clip		
37	VOE11164569	1	1						Decal		See ref 837/200
38		1	1	1			NS		Decal		See ref 837/200

VOLVO

Construction Equipment

PROSIS Part Information

Date:	Image id:	Catalogue:	Model:
10/09/2018	**1056738**	**20009**	**L60E**
Brand:	Serial:	Group/Section:	Title:
Volvo	**1001-3355, 60001-61214, 70001-70530**	**874/300**	**Assembly of hose: evaparator, receiver drier and condenser. 80868, 82323, 82772, 82773**

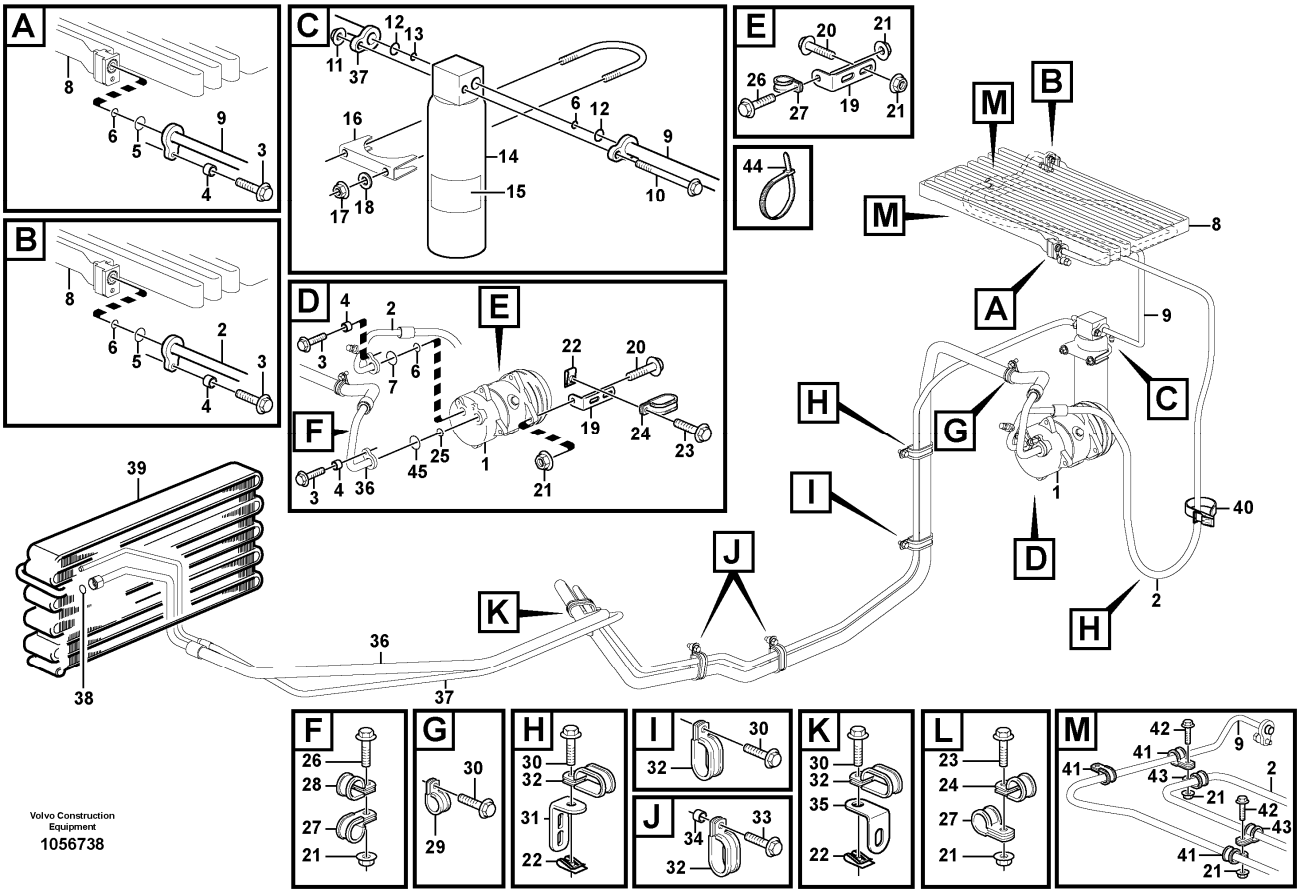

Section option	Kit	Option description
VOE82323	VOE11988247	Air conditioning with corrosion prot. condenser
VOE80868	VOE11988237	Air conditioning FOR REFRIGERANT R134A
VOE82772		Air conditioning
VOE82773		Air conditioning CRSN

Pos	Part	Q1	Q2	Q3	Q4	Q5	PS	Kit	Description	Option(s)	Remark
1		1							Compressor		See ref 874/350
2	VOE11400830	1							Hose assembly		E PROD
	VOE11435903	1							Hose assembly		L PROD
3	VOE946671	4							Flange screw		
4	VOE930431	4							Spacer ring		
5	VOE6848760	2							O-ring		
6	VOE3537507	4							O-ring		

7	VOE11707767	1							O-ring		
8		1							Condenser		See ref 874/200
9	VOE11413510	1							Hose assembly		E PROD
	VOE11435904	1							Hose assembly		(VOE11414390)L PROD
10	VOE13965182	1							Screw		
11	VOE948645	1							Flange lock nut		
12	VOE6848760	2							O-ring		
13	VOE3537507	1							O-ring		
14	VOE11164457	1							Receiver drier		
15	VOE13935003	1							Warning decal		
16	VOE11015720	1							Clamp		
17	VOE13945408	2							Nut		
18	VOE11117464	2							Plain washer		(VOE13960141)
19	VOE965553	2							Bracket		
20	VOE946671	1							Flange screw		
21	VOE13945408	6							Nut		
22	VOE13949867	3							Spring nut		
23	VOE946440	2							Flange screw		
24	VOE13949747	2							Clamp		
25	VOE3537521	1							O-ring		
26	VOE13946173	2							Screw		
27	VOE13949746	4							Clamp		
28	VOE13949747	1							Clamp		
29	VOE13977600	1							Clamp		
30	VOE946440	4							Flange screw		
31	VOE13965558	1							Bracket		
32	VOE11025709	5							Clamp		
33	VOE13945444	2							Screw		
34	VOE930431	2							Spacer ring		
35	VOE11173615	1							Angle plate		
36	VOE11435906	1							Hose assembly		
37	VOE11435905	1							Hose assembly		(VOE11413428)
38	VOE3537507	1							O-ring		
39		1							Evaporator		See ref 874/250
40	VOE4881440	2							Cable tie	VOE80868, VOE82323	
	VOE11104606	1							Retaining strap	VOE82772, VOE82773	
41	VOE942542	3							Clamp		
42	VOE946440	2							Flange screw		
43	VOE13949746	2							Clamp		
44	VOE4881440	REQ							Cable tie		
45	VOE11707766	1							O-ring		

VOLVO

Construction Equipment

PROSIS Part Information

Date:	Image id:	Catalogue:	Model:
10/09/2018	**EE331**	**20009**	**L60E**
Brand:	Serial:	Group/Section:	Title:
Volvo	**1001-3355, 60001-61214, 70001-70530**	**874/350**	**Air compressor 80868, 82323, 82772, 82773**

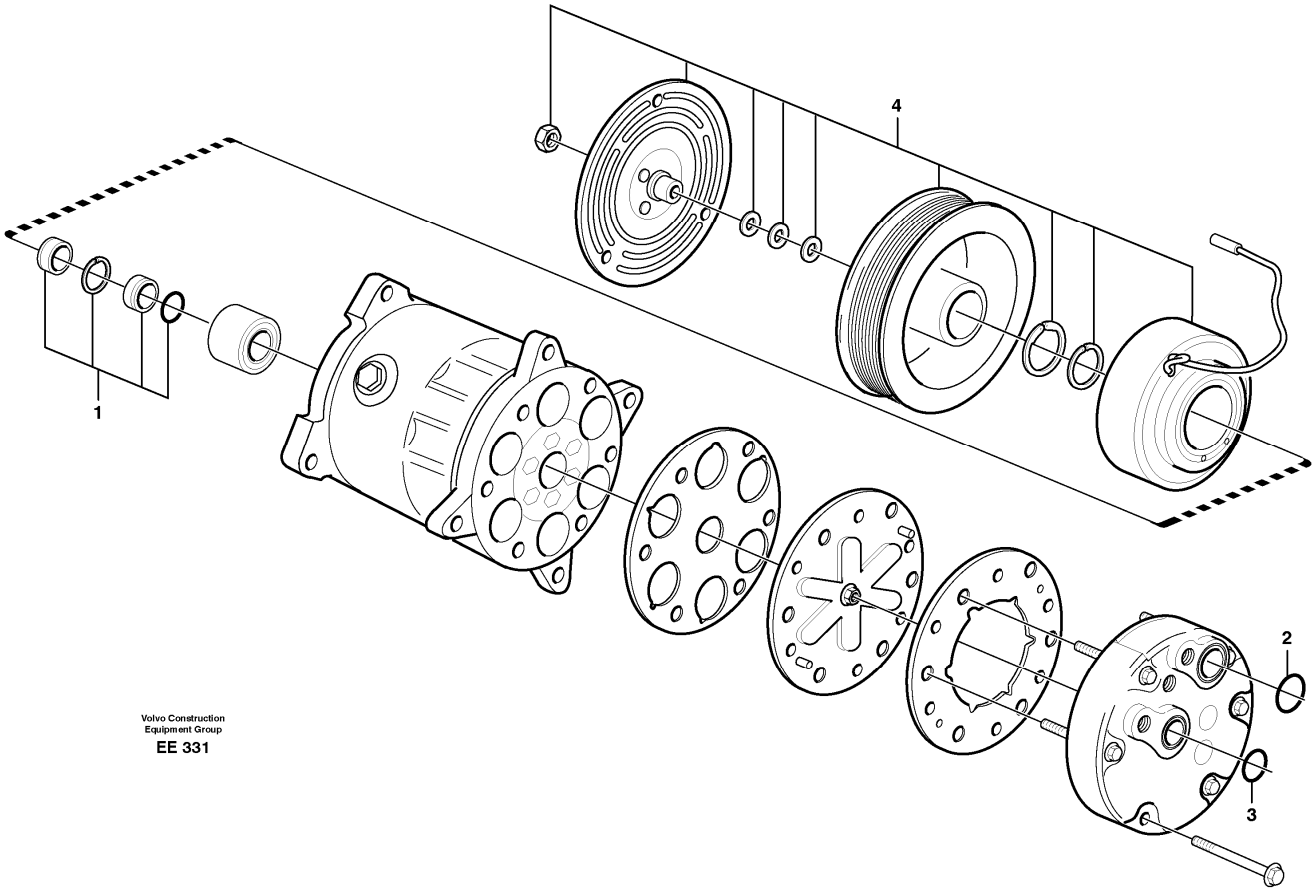

Section option	Kit	Option description
VOE82323	VOE11988247	Air conditioning with corrosion prot. condenser
VOE80868	VOE11988237	Air conditioning FOR REFRIGERANT R134A
VOE82772		Air conditioning
VOE82773		Air conditioning CRSN

Pos	Part	Q1	Q2	Q3	Q4	Q5	PS	Kit	Description	Option(s)	Remark
	VOE11104419	1							Compressor		REMAN VOE9011104419
1	VOE11704565	1							•Sealing kit		
2	VOE11707766	1							•O-ring		"S"
3	VOE11707767	1							•O-ring		"D"
4	VOE11707768	1							•Solenoid clutch		

VOLVO

Construction Equipment

PROSIS Part Information

Date:	Image id:	Catalogue:	Model:
10/09/2018	**1017529**	**20009**	**L60E**
Brand:	Serial:	Group/Section:	Title:
Volvo	**1001-3355, 60001-61214, 70001-70530**	**881/100**	**Instrument panel**

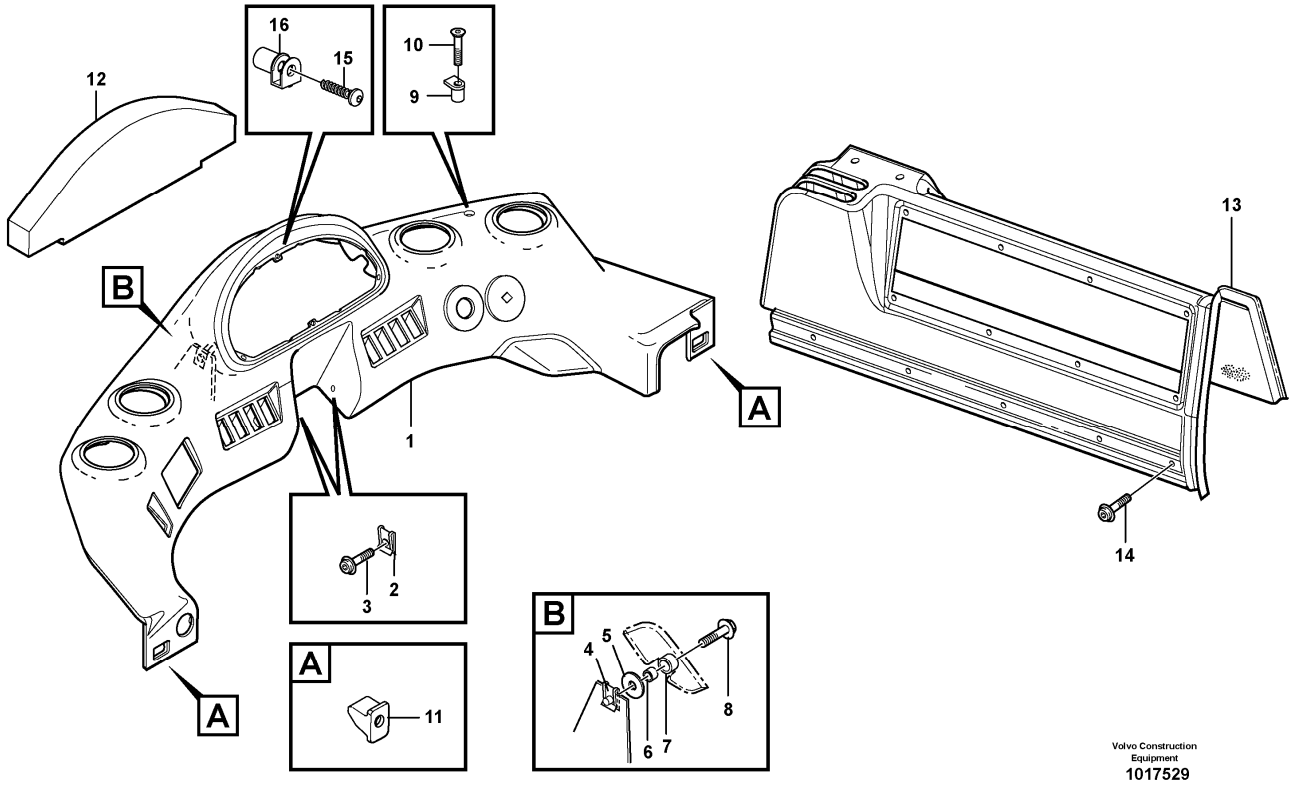

Section option	Kit	Option description
VOE33755		Cab
VOE33756		Cab L60E USA
VOE82597		Cab USA

Pos	Part	Q1	Q2	Q3	Q4	Q5	PS	Kit	Description	Option(s)	Remark
1	VOE11092446	1							Instr Panel		(VOE11164330)
2	VOE13949867	2							Spring nut		
3	VOE971381	2							Six point socket screw		
4	VOE13949867	2							Spring nut		
5	VOE11117464	2							Plain washer		(VOE13960141)
6	VOE930415	2							Spacer ring		
7	VOE11104422	2							Ring		
8	VOE971383	2							Six point socket		

									screw		
9	VOE977984	2							Spring nut		
10	VOE981635	2							Six point socket screw		
11	VOE11104645	2							Support		
12	VOE11104658	1							Insulation		
13	VOE11104349	1							Side panel		
14	VOE972079	8							Six point socket screw		
15	VOE975371	4							Six point socket screw		
16	VOE977980	4							Spring nut		

VOLVO

Construction Equipment

PROSIS Part Information

Date:	Image id:	Catalogue:	Model:
10/09/2018	**1017047**	**20009**	**L60E**
Brand:	Serial:	Group/Section:	Title:
Volvo	**1001-3355, 60001-61214, 70001-70530**	**881/150**	**Instrument panel OPEN ROPS**

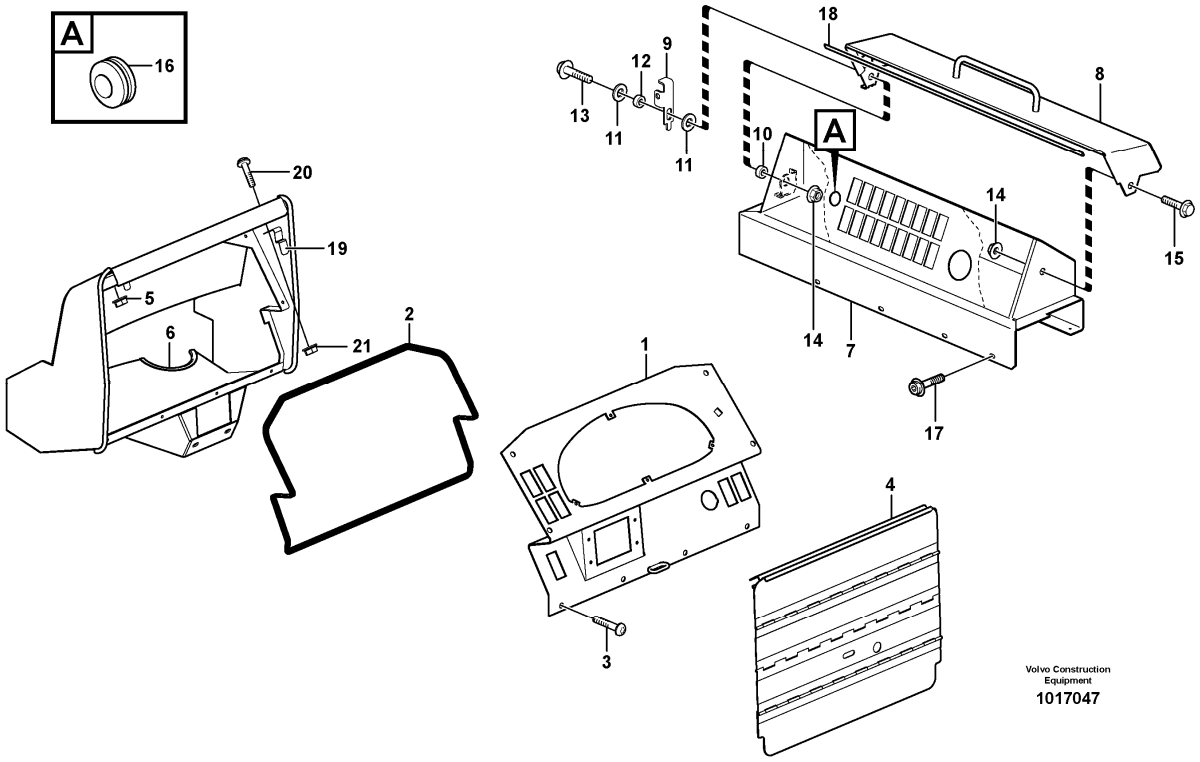

Section option	Kit	Option description
VOE33760		Cab. Open Rops

Pos	Part	Q1	Q2	Q3	Q4	Q5	PS	Kit	Description	Option(s)	Remark
1	VOE11164813	1							Instrument panel		
2	VOE762681	REQ							Rubber moulding		L = 1654 MM
3	VOE972092	8							Six point socket screw		
4	VOE11164805	1					OP		Protecting plate		
5	VOE13945237	4							Nut		
6	VOE11006785	REQ							Framework moulding		L = 157 MM
7	VOE11164831	1							Side panel		
8	VOE11164880	1							•Protecting plate		
9	VOE11164859	1							•Locking		

10	VOE11006944	1							•Spacer sleeve		
11	VOE11117464	2							•Plain washer		(VOE13960141)
12	VOE11164872	1							•Spacer		
13	VOE946671	1							•Flange screw		
14	VOE948645	2							•Flange lock nut		
15	VOE13946173	1							•Screw		
16	VOE941269	1							Plug		
17	VOE972079	8							Six point socket screw		
18	VOE4786031	1							Framework moulding		L=645 MM
19	VOE11164806	2							Spring		
20	VOE969513	4							Six point socket screw		
21	VOE975237	4							Lock nut		(VOE13975237)

VOLVO

Construction Equipment

PROSIS Part Information

Date:	Image id:	Catalogue:	Model:
10/09/2018	**1032084**	**20009**	**L60E**
Brand:	Serial:	Group/Section:	Title:
Volvo	**1001-3355, 60001-61214, 70001-70530**	**881/200**	**Radio bracket.**

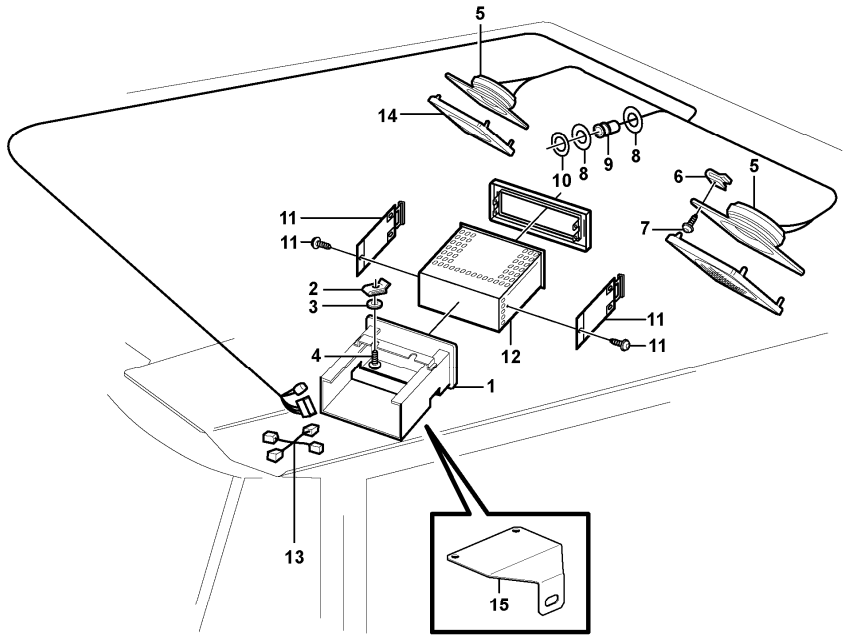

Volvo Construction Equipment
1032084

Section option	Kit	Option description
VOE80390		Radio with tape recorder CR 502, REPLACED BY 82331
VOE80518	VOE11707277	Radio installation kit incl. loudspeakers etc. REPLACES 93951
VOE82331		Radio with tape player
VOE82332		Radio with Cd-player REPLACED BY 82978
VOE82976	VOE11714470	Installation kit for radio, left mounting LH, EXCL RADIO
VOE82977		Radio with tape recorder CR213
VOE83089		Radio installation kit incl. loudspeakers etc. EXKL RADIO, USA
VOE83229		Radio with tape recorder CR213
VOE83230		Radio with Cd-player CD413

Q1-Q5	Option	Option description	
Q1 80518 83089 82976	VOE80518	Radio installation kit incl. loudspeakers etc. REPLACES 93951	
Q2 80390	VOE80390	Radio with tape recorder CR 502, REPLACED BY 82331	

Q3 82331	VOE82331	Radio with tape player	
Q4 82332 83230	VOE82332	Radio with Cd-player REPLACED BY 82978	
Q5 82977 83229	VOE82977	Radio with tape recorder CR213	

Pos	Part	Q1	Q2	Q3	Q4	Q5	PS	Kit	Description	Option(s)	Remark
1	VOE11006914	1							Radio bracket	VOE80518	
	VOE11164554	2							Radio bracket	VOE82976, VOE83089	
2	VOE949921	2							Spring nut		
3	VOE960139	2							Plain washer		
4	VOE13946934	2							Screw		
5	VOE11201898	2							Loudspeaker		
6	VOE11164693	8							Spring nut		
7	VOE969478	8							Six point socket screw	VOE80518	
	VOE13972020	8							Six point socket screw	VOE82976, VOE83089	
8	VOE11006119	2							Washer	VOE80518	
	VOE11198163	1							Washer	VOE82976, VOE83089	
9	VOE11039750	1					SS		Power outlet	VOE80518	
	VOE11170371	1							Power outlet	VOE82976, VOE83089	
10	VOE11006120	1							Decal	VOE80518	
11	VOE1384583				1				Installation kit		
12	VOE20539561			1					Radio		
	VOE20539561		1						Radio		(VOE20442130)
	VOE11886866				1				Radio		(VOE20467842)
	VOE11803635					1	SS		Radio		
13		1	1	1	1				Cable harness		See ref 393/100
14	VOE11201899	2							Loudspeaker grille		
15	VOE11164644	1							Anchorage	VOE82976, VOE83089	

VOLVO

Construction Equipment

PROSIS Part Information

Date:	Image id:	Catalogue:	Model:
10/09/2018	**1008767**	**20009**	**L60E**
Brand:	Serial:	Group/Section:	Title:
Volvo	**1001-3355, 60001-61214, 70001-70530**	**882/100**	**Interior components**

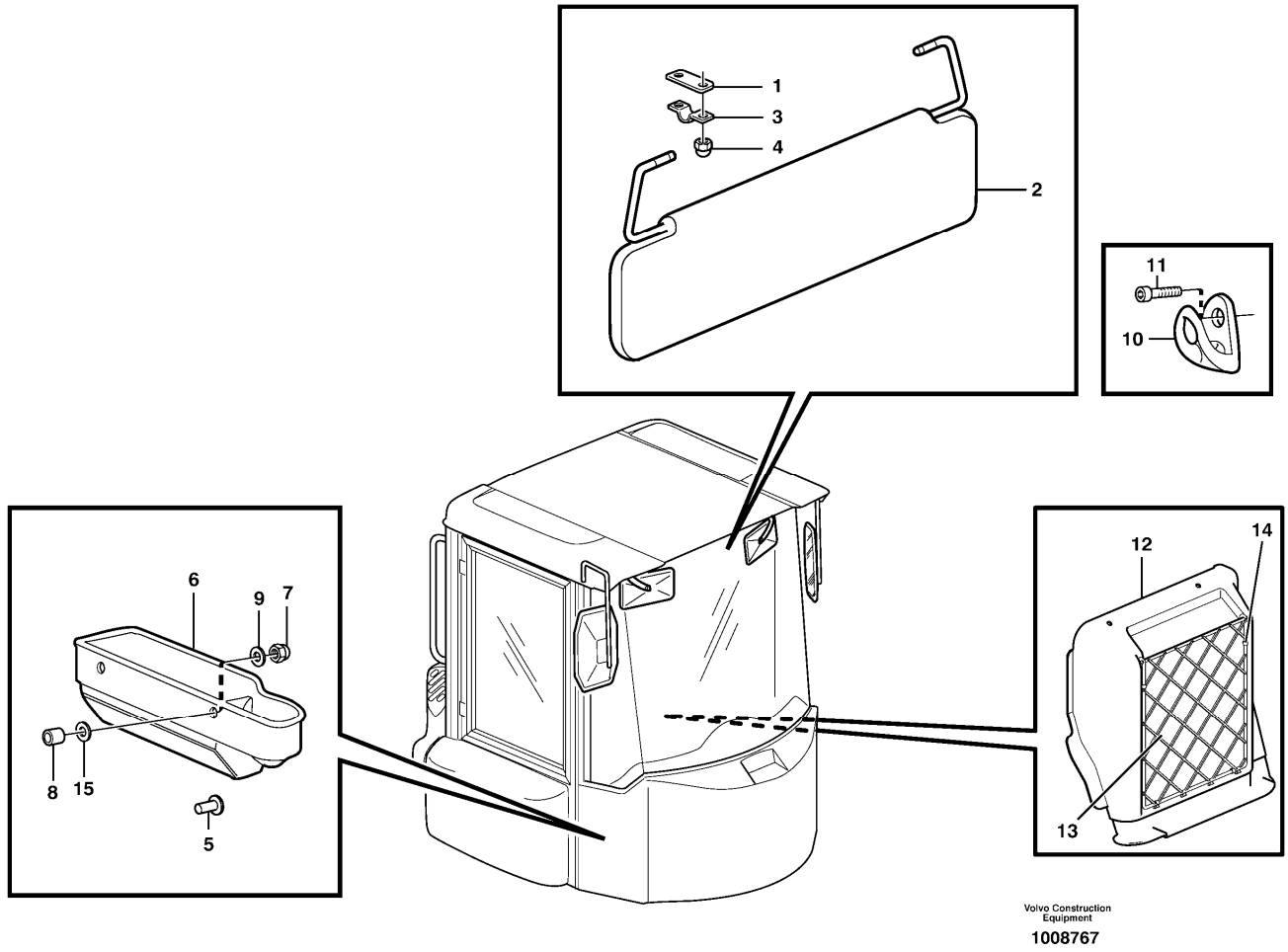

Section option	Kit	Option description
VOE33755		Cab
VOE33756		Cab L60E USA
VOE33760		Cab. Open Rops

Q1-Q5	Option	Option description	
Q1 33755	VOE33755	Cab	
Q2 33760	VOE33760	Cab. Open Rops	
Q3 33756	VOE33756	Cab L60E USA	

Pos	Part	Q1	Q2	Q3	Q4	Q5	PS	Kit	Description	Option(s)	Remark
1	VOE14343207	2	2	2					Spacer		
2	VOE11006992	1	1	1					Sun visor		

3	VOE14343206	2	2	2					Cap		
4	VOE11005777	4	4	4					Cap nut		
5	VOE11006726	1							Push button		
6	VOE11104485	1	1						Storage tray		
7	VOE11005777	2	2						Cap nut		
8	VOE930415	2							Spacer ring		
9	VOE960139	2	2						Plain washer		
10	VOE11078015	2							Clothes hook		
11	VOE969456	4							Six point socket screw		
12	VOE11164380	1							Cover		
13	VOE11104572	1							Baggage Net		
14	VOE4881438	4							Cable tie		
15	VOE960139		2						Plain washer		

VOLVO

Construction Equipment

PROSIS Part Information

Date:	Image id:	Catalogue:	Model:
10/09/2018	**1014407**	**20009**	**L60E**
Brand:	Serial:	Group/Section:	Title:
Volvo	**1001-3355, 60001-61214, 70001-70530**	**882/150**	**Interior components, sun blinds. 80307, 80308**

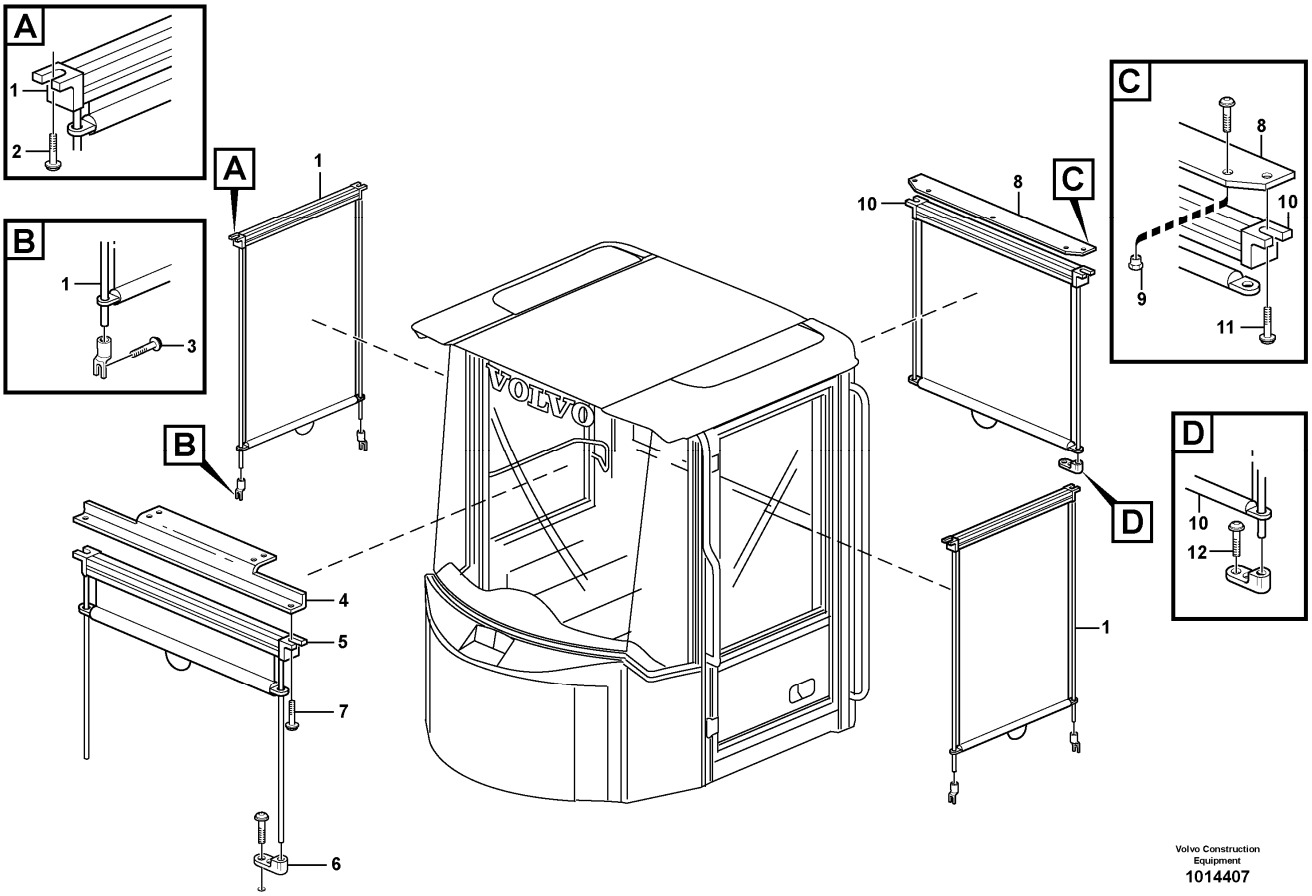

Section option	Kit	Option description
VOE80307		Sun blinds, side windows
VOE80308	VOE11707319	Sun blinds front and rearwindow

Q1-Q5	Option	Option description	
Q1 80307	VOE80307	Sun blinds, side windows	
Q2 80308	VOE80308	Sun blinds front and rearwindow	

Pos	Part	Q1	Q2	Q3	Q4	Q5	PS	Kit	Description	Option(s)	Remark
1	VOE11006035	2							Sun blind		
2	VOE972079	4							Six point socket screw		
3	VOE972071	4							Six point socket screw		
4	VOE11007425		1						Attachment		

5	VOE11006034		1						Sun blind		
6	VOE11712751		2						•Anchorage		
7	VOE972079		2						Six point socket screw		
8	VOE11104180		1						Attaching plate		
9	VOE11104181		3						Nut		
10	VOE11006036		1						Sun blind		
11	VOE972079		2						Six point socket screw		
12	VOE972071		2						Six point socket screw		

VOLVO

Construction Equipment

PROSIS Part Information

Date:	Image id:	Catalogue:	Model:
10/09/2018	**1002937**	**20009**	**L60E**
Brand:	Serial:	Group/Section:	Title:
Volvo	**1001-3355, 60001-61214, 70001-70530**	**882/200**	**Armrest 33755, 33756, 33760**

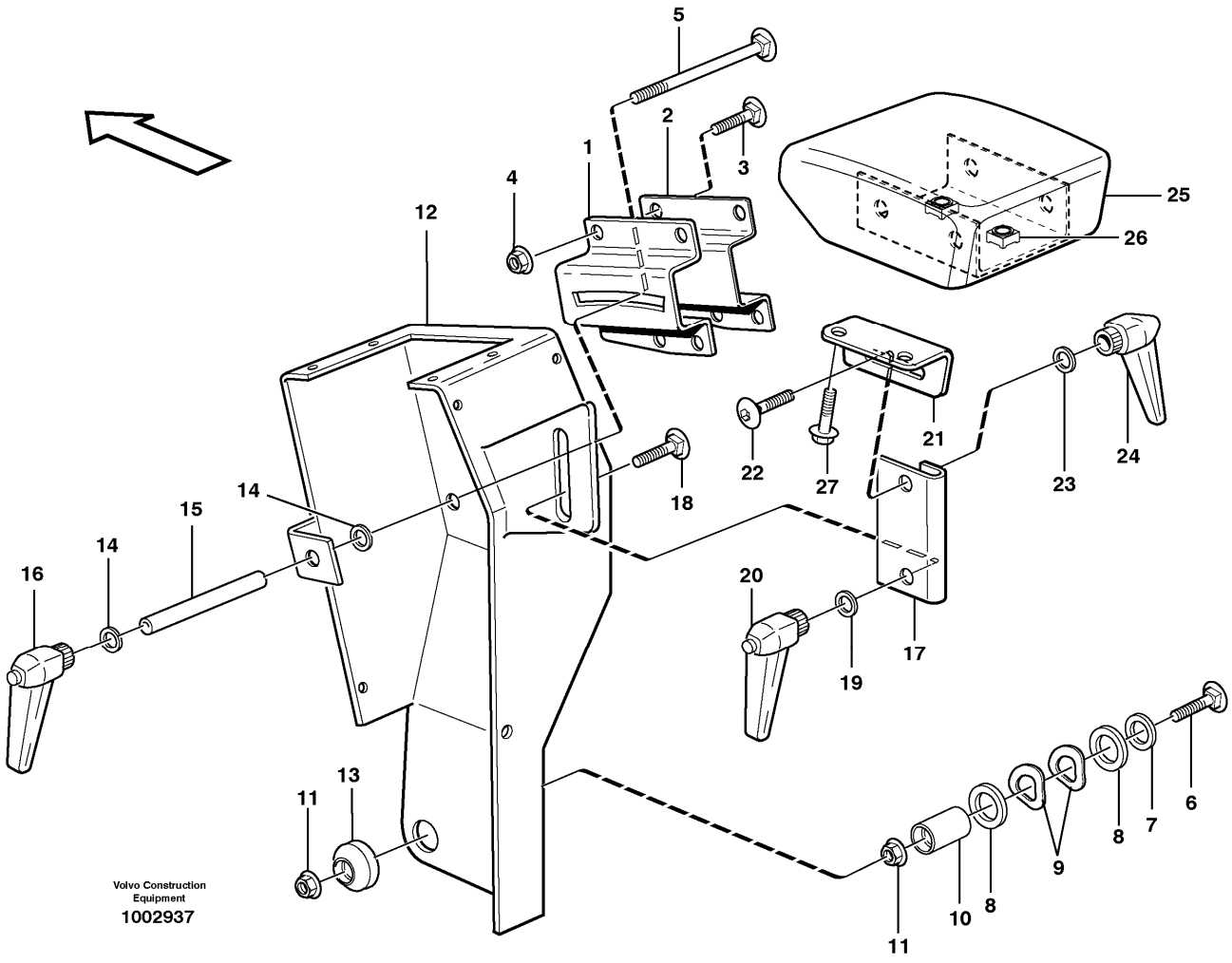

Section option	Kit	Option description
VOE33755		Cab
VOE33756		Cab L60E USA
VOE33760		Cab. Open Rops

Pos	Part	Q1	Q2	Q3	Q4	Q5	PS	Kit	Description	Option(s)	Remark
1	VOE11104649	1							Anchorage		
2	VOE11104650	1							Support		
3	VOE948438	4							Square neck screw		(VOE13948438)
4	VOE13945408	4							Nut		
5	VOE981693	1							Square neck screw		
6	VOE976193	1							Square neck screw		

7	VOE13960145	1							Washer		
8	VOE955905	2							Washer		
9	VOE941916	2							Spring washer		
10	VOE11104664	1							Pin		
11	VOE13945408	2							Nut		
12	VOE11104646	1							Valve attachment		
13	VOE11104665	1							Cap		
14	VOE11117464	2							Plain washer		(VOE13960141)
15	VOE11104653	1							Tube		
16	VOE11104695	1							Lock lever		
17	VOE11164385	1							Rail		
18	VOE948438	1							Square neck screw		(VOE13948438)
19	VOE11117464	1							Plain washer		(VOE13960141)
20	VOE11104695	1							Lock lever		
21	VOE11104603	1							Attaching bracket		
22	VOE948438	1							Square neck screw		(VOE13948438)
23	VOE11117464	1							Plain washer		(VOE13960141)
24	VOE11104695	1							Lock lever		
25	VOE4937914	1							Support		
26	VOE961614	2							••Weld nut		
27	VOE946440	2							Flange screw		

VOLVO

Construction Equipment

PROSIS Part Information

Date:	Image id:	Catalogue:	Model:
10/09/2018	**1016741**	**20009**	**L60E**
Brand:	Serial:	Group/Section:	Title:
Volvo	**1001-3355, 60001-61214, 70001-70530**	**882/250**	**Armrest**

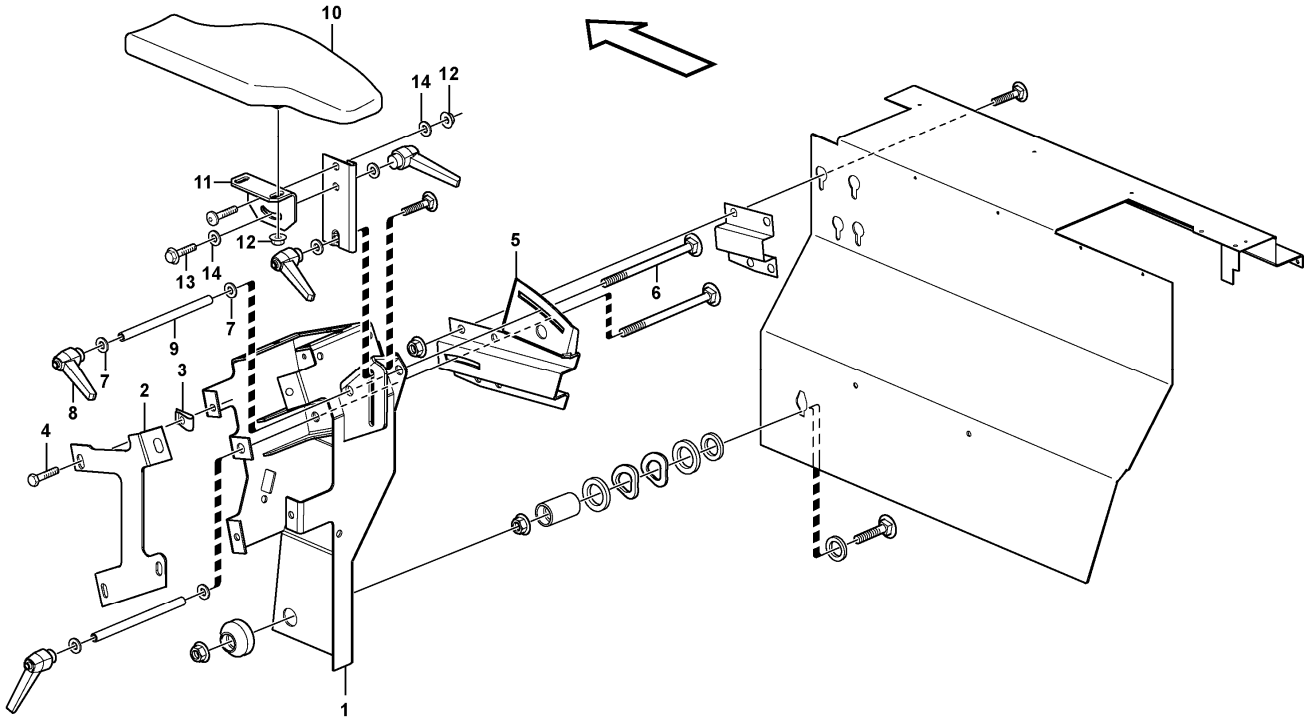

Volvo Construction Equipment
1016741

Section option	Kit	Option description
VOE83316	VOE11714603	Single lever hydraulic control, two functions
VOE83317	VOE11714604	Single lever hydraulic control, three functions

Q1-Q5	Option	Option description	
Q1 83316 83317	VOE83316	Single lever hydraulic control, two functions	

Pos	Part	Q1	Q2	Q3	Q4	Q5	PS	Kit	Description	Option(s)	Remark
1	VOE11180914	1							Valve attachment		
2	VOE11180918	1							Reinforcement		
3	VOE949921	4							Spring nut		
4	VOE971322	4							Six point socket screw		
5	VOE11180920	1							Anchorage		
6	VOE965661	1							Square neck screw		(VOE976202)

7	VOE11117464	2							Plain washer		
8	VOE11104695	1							Lock lever		
9	VOE11104429	1							Tube		
10	VOE11164348	1							Arm rest		
11	VOE11164355	1							Anchorage		
12	VOE948645	3							Flange lock nut		
13	VOE13945444	1							Screw		
14	VOE11117464	2							Plain washer		(VOE13960141)

VOLVO

Construction Equipment

PROSIS Part Information

Date:	Image id:	Catalogue:	Model:
10/09/2018	**1010786**	**20009**	**L60E**
Brand:	Serial:	Group/Section:	Title:
Volvo	**1001-3355, 60001-61214, 70001-70530**	**882/300**	**Cover for servo valves**

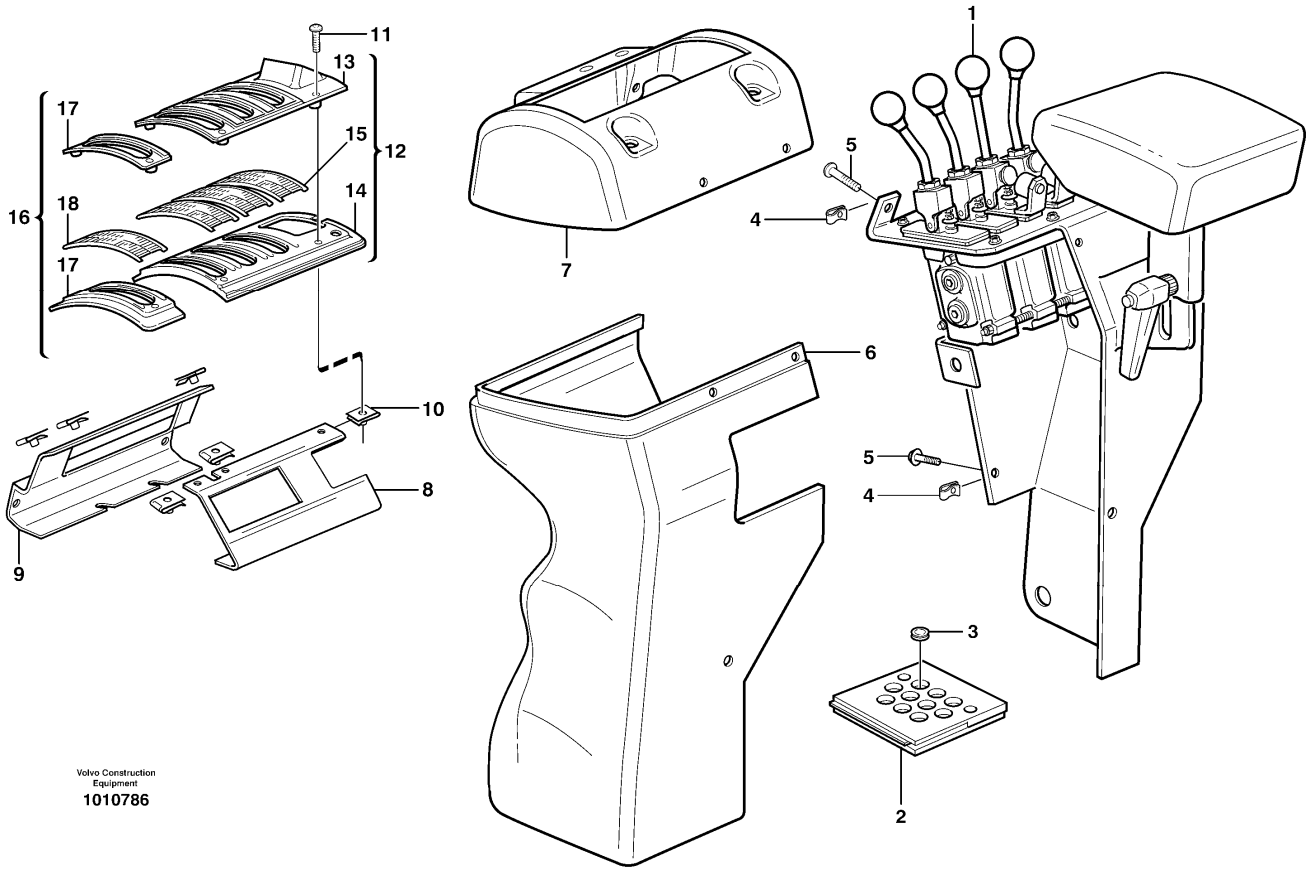

Section option	Kit	Option description
VOE33750		Wheel Loader
VOE33759		Wheel loader L60E OPEN ROPS
VOE82063	VOE11988276	Hydraulic system, 3rd and 4th function
VOE83488	VOE11716051	Hydraulic system, 3rd and 4th function LONG BOOM

Q1-Q5	Option	Option description	
Q1 STD OPEN ROPS			
Q2 82063	VOE82063	Hydraulic system, 3rd and 4th function	
Q3 83488	VOE83488	Hydraulic system, 3rd and 4th function LONG BOOM	

Pos	Part	Q1	Q2	Q3	Q4	Q5	PS	Kit	Description	Option(s)	Remark
1		1							Servo valve		See ref 914/250
2	VOE11164454	1							Hose retainer		
3	VOE941266	4							•Plug		

4	VOE949921	6							Spring nut		
5	VOE971322	6							Six point socket screw		
6	VOE11104642	1							Cover		
	VOE11104987		1	1					Cover		
7		1							Cover		
	VOE11164527		1						Cover		
8	VOE11175063		1	1					Attaching bracket		
9	VOE11104888		1	1					Attaching bracket		
10	VOE949921		6	6					Spring nut		
11	VOE13975980		6	6					Six point socket screw		
12	VOE11040576		1	1			OP		Plate		
13	VOE11104981		1	1					•Plate		
14	VOE11007489		1	1					••Plate		
15	VOE11007308		6	6					•••Brush		
16	VOE11104982		1	1					Plate		
17	VOE11007489		1	1					•Plate		
18	VOE11007308		6	6					••Brush		

VOLVO

Construction Equipment

PROSIS Part Information

Date:	Image id:	Catalogue:	Model:
10/09/2018	**1011826**	**20009**	**L60E**
Brand:	Serial:	Group/Section:	Title:
Volvo	**1001-3355, 60001-61214, 70001-70530**	**882/400**	**CDC - steering. Arm rest with fitting parts. 82057**

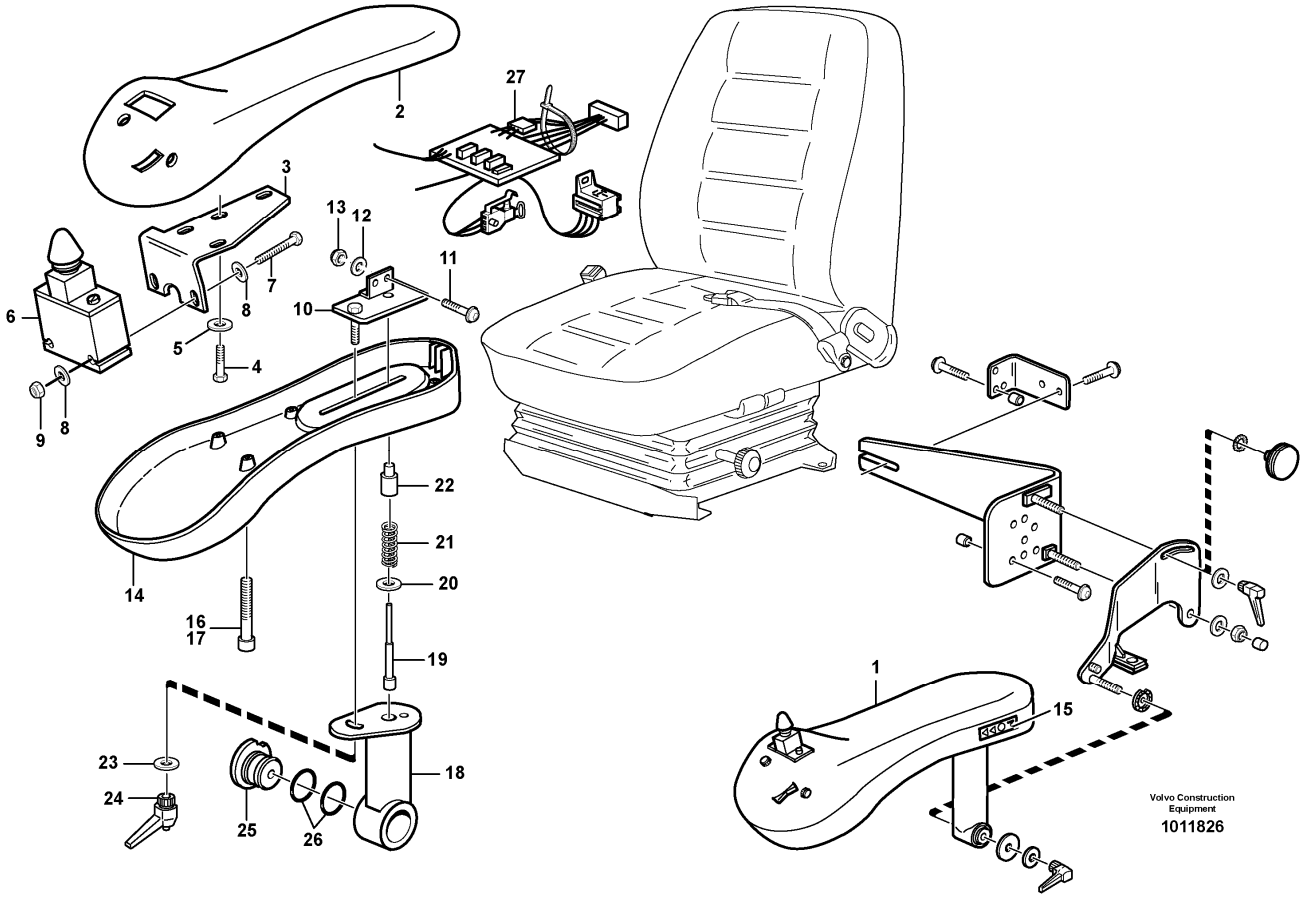

Section option	Kit	Option description
VOE82057		Comfort Drive Control, CDC

Q1-Q5	Option	Option description	
Q1 82057	VOE82057	Comfort Drive Control, CDC	

Pos	Part	Q1	Q2	Q3	Q4	Q5	PS	Kit	Description	Option(s)	Remark
1	VOE11444379	1					SS		Arm rest		
2	VOE11006076	1							•Cover		
3	VOE11006039	1							•Plate		
4	VOE971304	4							•Six point socket screw		
5	VOE13960138	3							•Washer		
	VOE967599	2							•Toothed washer		
6		1							•Control Lever		

7	VOE969440	2							•Six point socket screw		
8	VOE13960138	4							•Washer		
9	VOE13963104	3							•Lock nut		
10	VOE11007860	1							•Bridge		
11	VOE972400	1							•Six point socket screw		
12	VOE955891	1							•Plain washer		
13	VOE13963103	1							•Lock nut		
14	VOE11104146	1							•Cover		
15		1					NS		•Decal		
16	VOE13959212	1							•Allen Hd Screw		L = 55 MM
17	VOE959213	3							•Hex. socket screw		L = 60 MM
18	VOE11007932	1					OP		•Handle		
19	VOE11007871	1							•Pin		
20	VOE955892	1							•Plain washer		
21	VOE659603	1							•Spring		
22	VOE11004157	1							•Sleeve		
23	VOE11117464	1							•Plain washer		(VOE13960141)
24	VOE11104695	1							•Lock lever		
25	VOE11007862	1							•Shaft		
26	VOE13960171	2							•O-ring		
27		1							•Wire harness		

VOLVO

Construction Equipment

PROSIS Part Information

Date:	Image id:	Catalogue:	Model:
10/09/2018	**1013683**	**20009**	**L60E**
Brand:	Serial:	Group/Section:	Title:
Volvo	**1001-3355, 60001-61214, 70001-70530**	**882/500**	**CDC - steering, sheet metal parts. 82057**

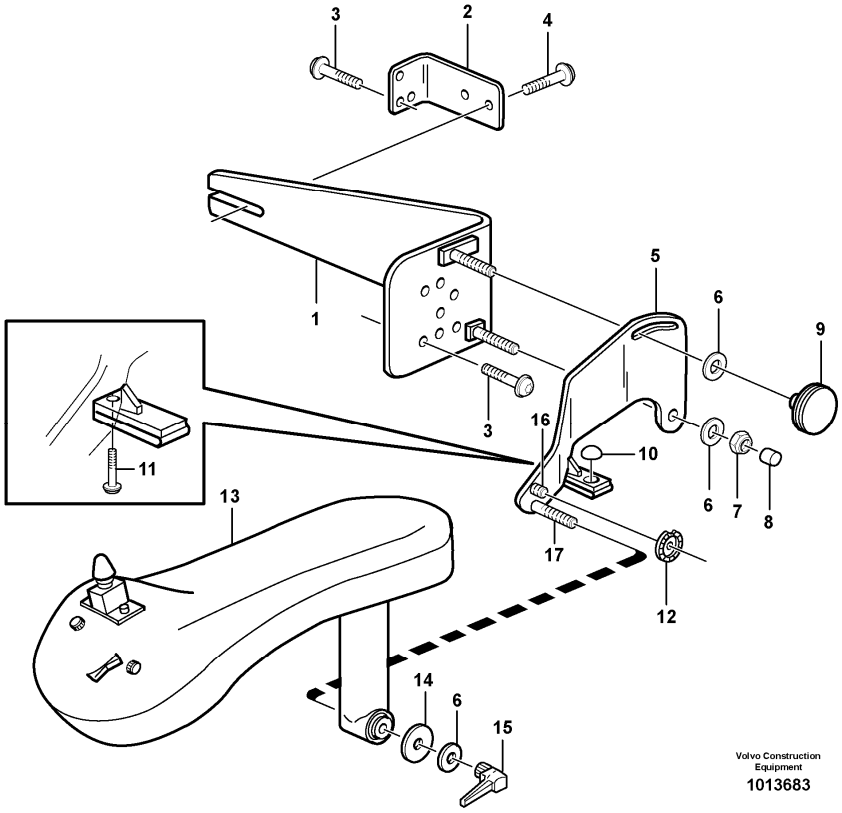

Section option	Kit	Option description
VOE82057		Comfort Drive Control, CDC

Q1-Q5	Option	Option description	
Q1 82057	VOE82057	Comfort Drive Control, CDC	

Pos	Part	Q1	Q2	Q3	Q4	Q5	PS	Kit	Description	Option(s)	Remark
1	VOE11007869	1							Anchorage		
2	VOE11007385	1							Anchorage		
3	VOE969436	3							Six point socket screw		
4	VOE946440	2							Flange screw		
5	VOE11007861	1							Arm		
6	VOE11117464	3							Plain washer		(VOE13960141)
7	VOE948645	1							Flange lock nut		

8	VOE11006824	1							Protecting cap		
9	VOE11104730	1							Knob		
10	VOE11007958	1							Base		
11	VOE971304	1							Six point socket screw		
12	VOE11006059	1							Washer		
13		1							Arm rest		See ref 882/400
14	VOE11007864	1							Cover		
15	VOE11104695	1							Lock lever		
16	VOE955293	1							Hexagon screw		
17	VOE955302	1							Hexagon screw		

VOLVO

Construction Equipment

PROSIS Part Information

Date:	Image id:	Catalogue:	Model:
10/09/2018	**EC366**	**20009**	**L60E**
Brand:	Serial:	Group/Section:	Title:
Volvo	**1001-3355, 60001-61214, 70001-70530**	**882/550**	**Arm rest. 82057**

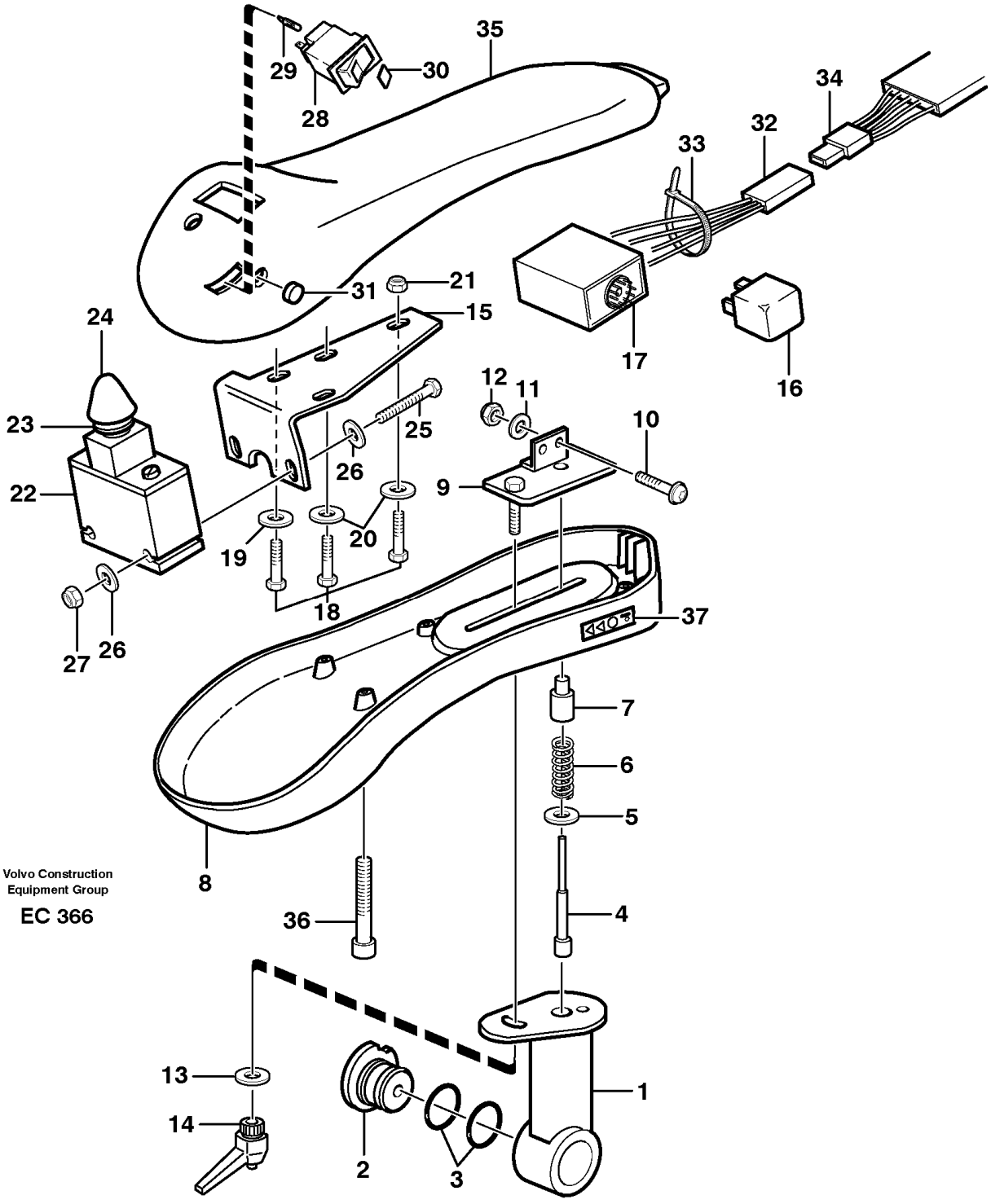

Section option	Kit	Option description

VOE82057		Comfort Drive Control, CDC

Q1-Q5	Option	Option description	
Q1 82057	VOE82057	Comfort Drive Control, CDC	

Pos	Part	Q1	Q2	Q3	Q4	Q5	PS	Kit	Description	Option(s)	Remark
1	VOE11007869	1							Anchorage		
2	VOE11007385	1							Anchorage		
3	VOE969436	3							Six point socket screw		
4	VOE946440	2							Flange screw		
5	VOE11007861	1							Arm		
6	VOE11117464	3							Plain washer		(VOE13960141)
7	VOE948645	1							Flange lock nut		
8	VOE11006824	1							Protecting cap		
9	VOE11104730	1							Knob		
10	VOE11007958	1							Base		
11	VOE971304	1							Six point socket screw		
12	VOE11006059	1							Washer		
13		1							Arm rest		See ref 882/400
14	VOE11007864	1							Cover		
15	VOE11104695	1							Lock lever		
16	VOE955293	1							Hexagon screw		
17	VOE955302	1							Hexagon screw		

VOLVO

Construction Equipment

PROSIS Part Information

Date:	Image id:	Catalogue:	Model:
10/09/2018	**1020589**	**20009**	**L60E**
Brand:	Serial:	Group/Section:	Title:
Volvo	**1001-3355, 60001-61214, 70001-70530**	**882/700**	**Anti-theft 83315**

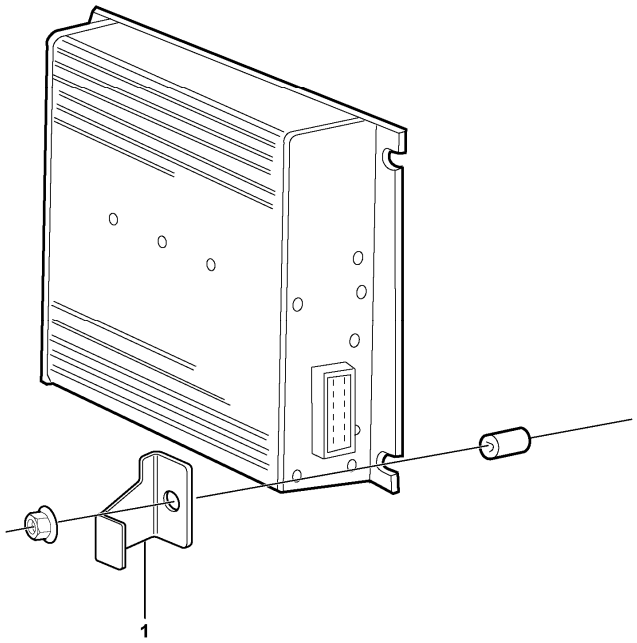

Volvo Construction Equipment
1020589

Section option	Kit	Option description
VOE83315		Anti-theft

Pos	Part	Q1	Q2	Q3	Q4	Q5	PS	Kit	Description	Option(s)	Remark
1	VOE11181001	1							Brace		

VOLVO

Construction Equipment

PROSIS Part Information

Date:	Image id:	Catalogue:	Model:
10/09/2018	**1008554**	**20009**	**L60E**
Brand:	Serial:	Group/Section:	Title:
Volvo	**1001-3355, 60001-61214, 70001-70530**	**896/100**	**Tool box 82555**

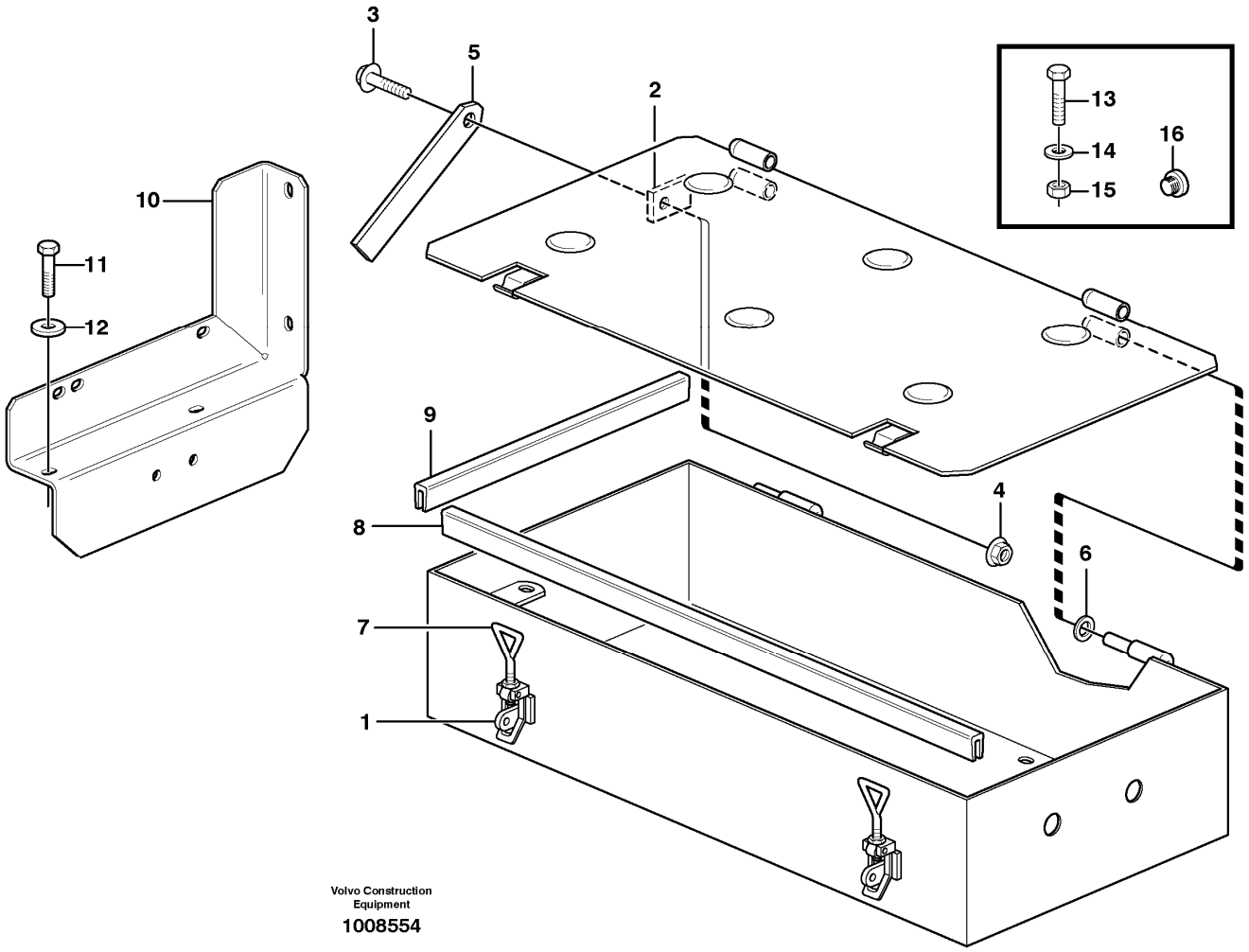

Section option	Kit	Option description
VOE82555		Tool box, lockable

Pos	Part	Q1	Q2	Q3	Q4	Q5	PS	Kit	Description	Option(s)	Remark
	VOE11413764	1							Tool box		
1	VOE11015639	2							••Eccentric lock		
2	VOE4739976	1							••Anchorage		
3	VOE946671	1							•Flange screw		
4	VOE13945408	1							•Nut		
5	VOE11025661	1							•Stay		
6	VOE4936343	4							•Washer		
7	VOE11015638	2							•Eye bolt		

8	VOE4786044	REQ							•Sealing strip		L = 1254 MM
9	VOE4786044	REQ							•Sealing strip		L = 366 MM
10	VOE11413275	1							Stay		
11	VOE13946752	2							Screw		
12	VOE13960143	2							Washer		
13	VOE946472	4							Flange screw		
14	VOE13960143	8							Washer		
15	VOE13971098	4							Flange nut		
16	VOE941266	2							Plug		

VOLVO

Construction Equipment

PROSIS Part Information

Date:	Image id:	Catalogue:	Model:
10/09/2018	**EC345**	**20009**	**L60E**
Brand:	Serial:	Group/Section:	Title:
Volvo	**1001-3355, 60001-61214, 70001-70530**	**896/150**	**Tools**

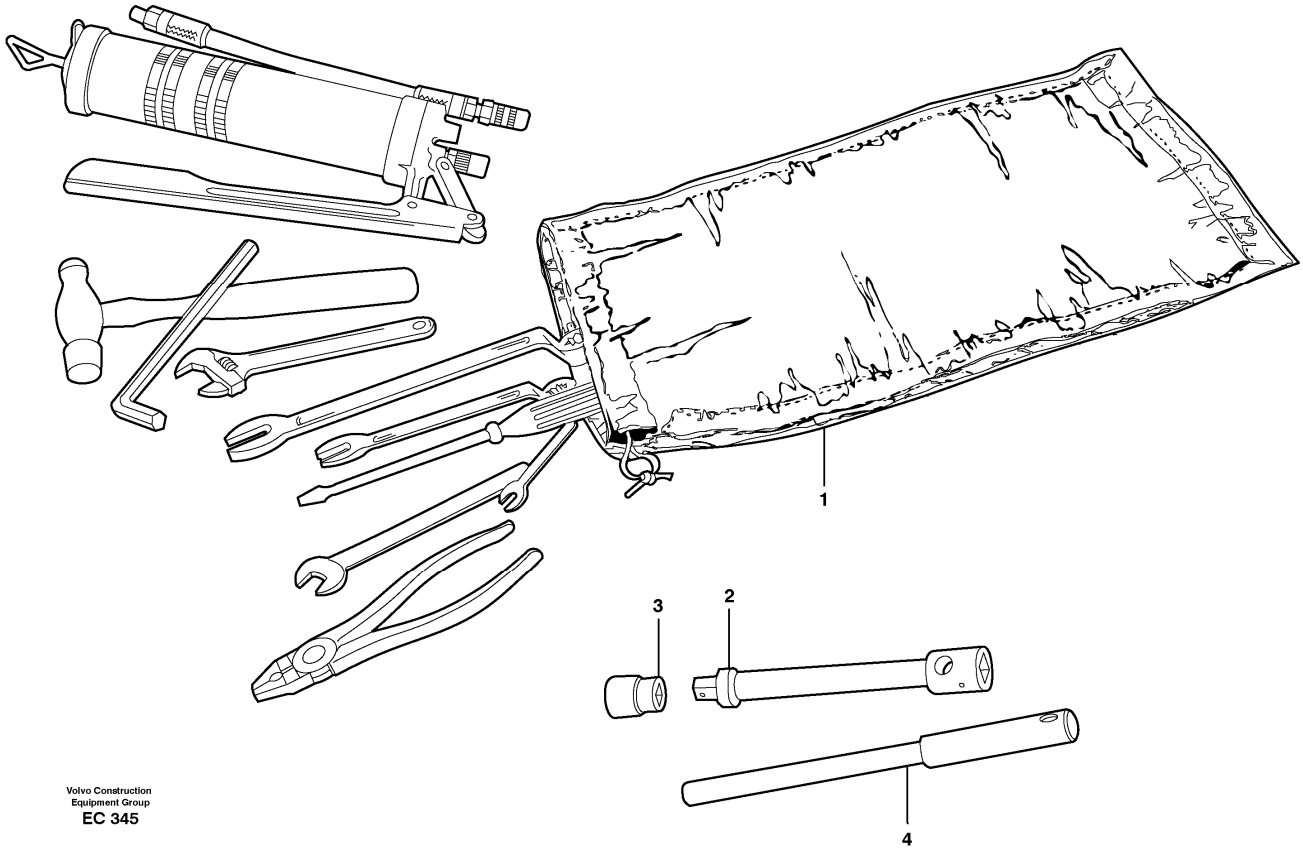

Section option	Kit	Option description
VOE90007		Wheel nut wrench
VOE98192	VOE98192	Tool kit

Q1-Q5	Option	Option description	
Q1 98192	VOE98192	Tool kit	
Q2 90007	VOE90007	Wheel nut wrench	

Pos	Part	Q1	Q2	Q3	Q4	Q5	PS	Kit	Description	Option(s)	Remark
	VOE11413764	1							Tool box		
1	VOE11015639	2							••Eccentric lock		
2	VOE4739976	1							••Anchorage		
3	VOE946671	1							•Flange screw		
4	VOE13945408	1							•Nut		
5	VOE11025661	1							•Stay		
6	VOE4936343	4							•Washer		

7	VOE11015638	2							•Eye bolt		
8	VOE4786044	REQ							•Sealing strip		L = 1254 MM
9	VOE4786044	REQ							•Sealing strip		L = 366 MM
10	VOE11413275	1							Stay		
11	VOE13946752	2							Screw		
12	VOE13960143	2							Washer		
13	VOE946472	4							Flange screw		
14	VOE13960143	8							Washer		
15	VOE13971098	4							Flange nut		
16	VOE941266	2							Plug		

VOLVO

Construction Equipment

PROSIS Part Information

Date:	Image id:	Catalogue:	Model:
10/09/2018	**1000112**	**20009**	**L60E**
Brand:	Serial:	Group/Section:	Title:
Volvo	**1001-3355, 60001-61214, 70001-70530**	**896/200**	**Pump 93988**

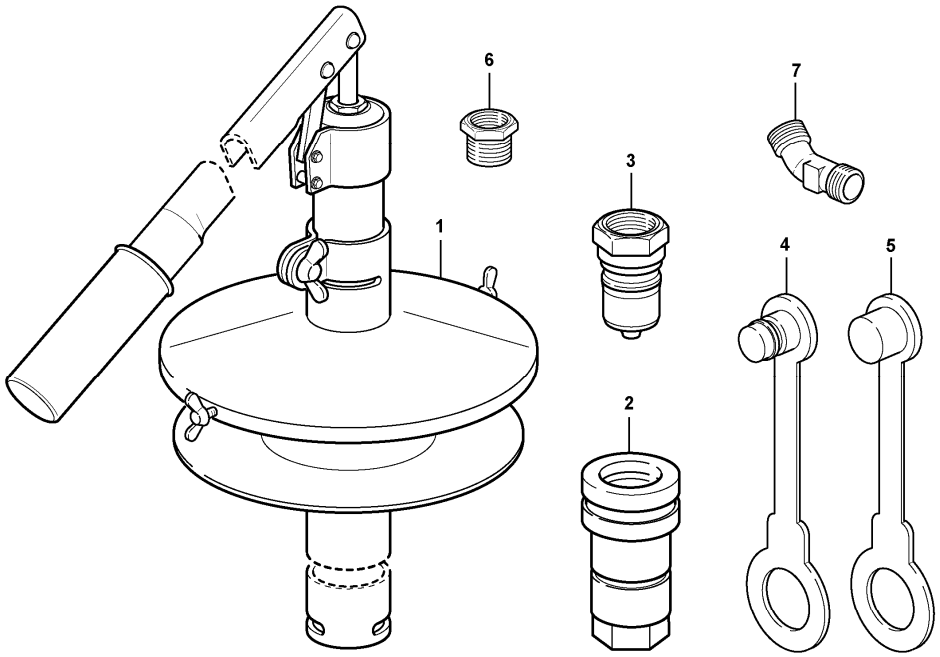

Volvo Construction Equipment
1000112

Section option	Kit	Option description
VOE93988		Refill pump for grease for automatic lube system

Pos	Part	Q1	Q2	Q3	Q4	Q5	PS	Kit	Description	Option(s)	Remark
	VOE11704511	1							Pump		
1	VOE11016075	1							•Pump		
2	VOE11016067	1							•Quick Coupling		
3	VOE11016068	1							•Quick Coupling		
4	VOE11016069	1							•Dust cover		
5	VOE11016070	1							•Dust cover		
6	VOE11016071	1							•Adapter		
7	VOE11016072	1							•Elbow nipple		

VOLVO

Construction Equipment

PROSIS Part Information

Date:	Image id:	Catalogue:	Model:
10/09/2018	**1035525**	**20009**	**L60E**
Brand:	Serial:	Group/Section:	Title:
Volvo	**1001-3355, 60001-61214, 70001-70530**	**896/250**	**Tools oil test**

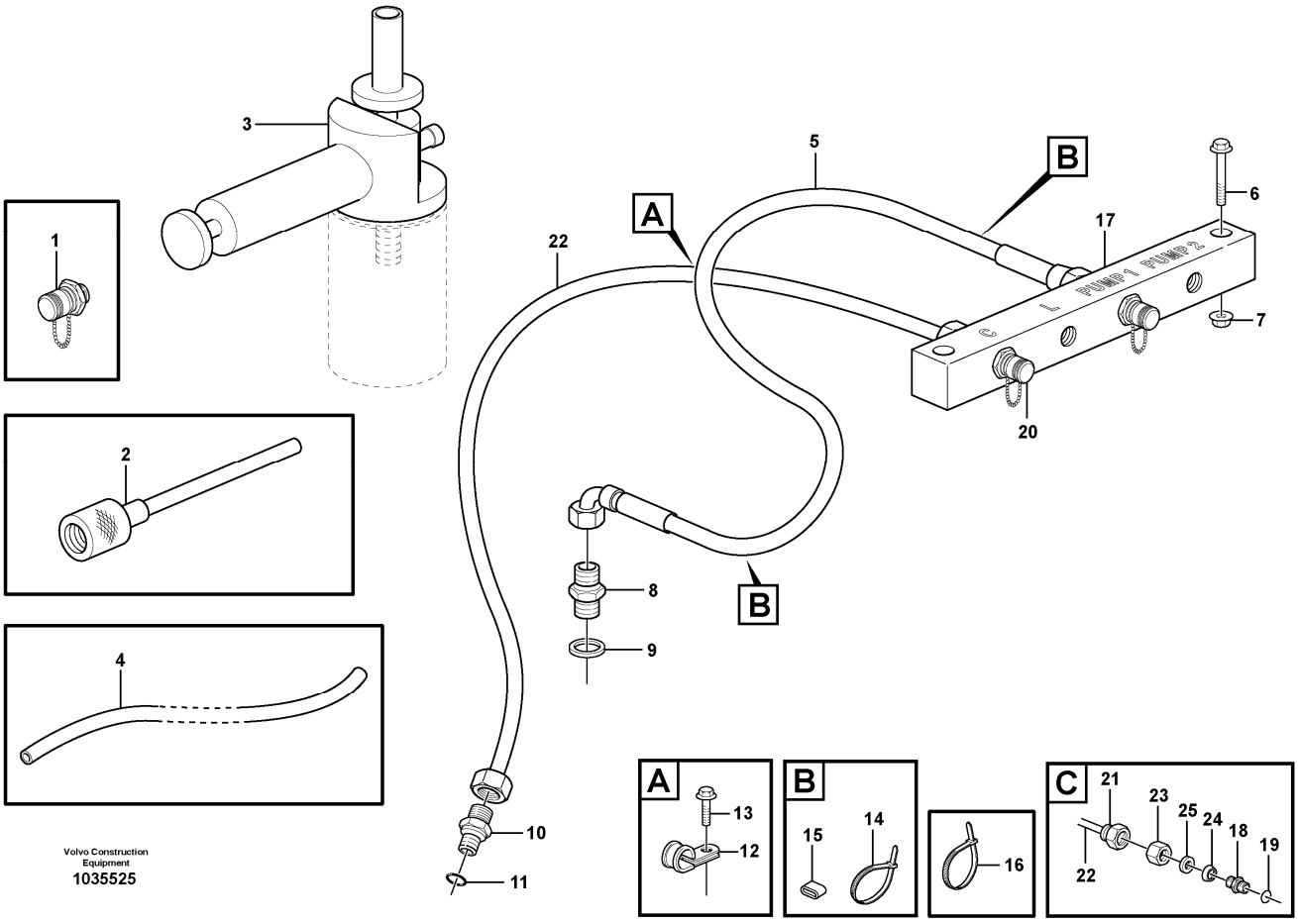

Section option	Kit	Option description
VOE82723		Tools for oil test
VOE83587		Tools for oil test

Q1-Q5	Option	Option description	
Q1 82723	VOE82723	Tools for oil test	
Q2 83587	VOE83587	Tools for oil test	

Pos	Part	Q1	Q2	Q3	Q4	Q5	PS	Kit	Description	Option(s)	Remark
1	VOE936442	1	1						Testing nipple		
2	VOE14025152	1	1						Hose		
3	VOE11411003	1	1						Vacuum pump		
4	VOE941363	1	1						Hose		L = 500MM
5	VOE11173463		1						Hose assembly		

6	VOE13965186		2						Screw		
7	VOE13971098		2						Flange nut		
8	VOE11173290		1						Nipple		
9	VOE13945653		1						Plane gasket		
10	VOE13945355		1						Nipple		(VOE13963968)
11	VOE13949574		1						O-ring		
12	VOE13946834		1						Clamp		
13	VOE946440		1						Flange screw		
14	VOE14016673		2						Strip clamp		
15	VOE4881455		2						Marking sleeve		
16	VOE4881440		REQ						Cable tie		
17	VOE11410758		1						Testing block		
18	VOE11410833		2						Nipple		
19	VOE993320		2						O-ring		(VOE932039)
20	VOE936446		2						Testing nipple		
21	VOE4881453		2						Marking sleeve		
22	VOE944963		REQ						Plastic pipe		L = 1500MM
23	VOE941521		2						Fitting nut		
24	VOE13956967		2						Ferrule		
25	VOE13949361		2						Sleeve		

VOLVO

Construction Equipment

PROSIS Part Information

Date:	Image id:	Catalogue:	Model:
10/09/2018	**1027274**	**20009**	**L60E**
Brand:	Serial:	Group/Section:	Title:
Volvo	**1001-3355, 60001-61214, 70001-70530**	**897/100**	**Sign plates and decals STD, OPEN ROPS**

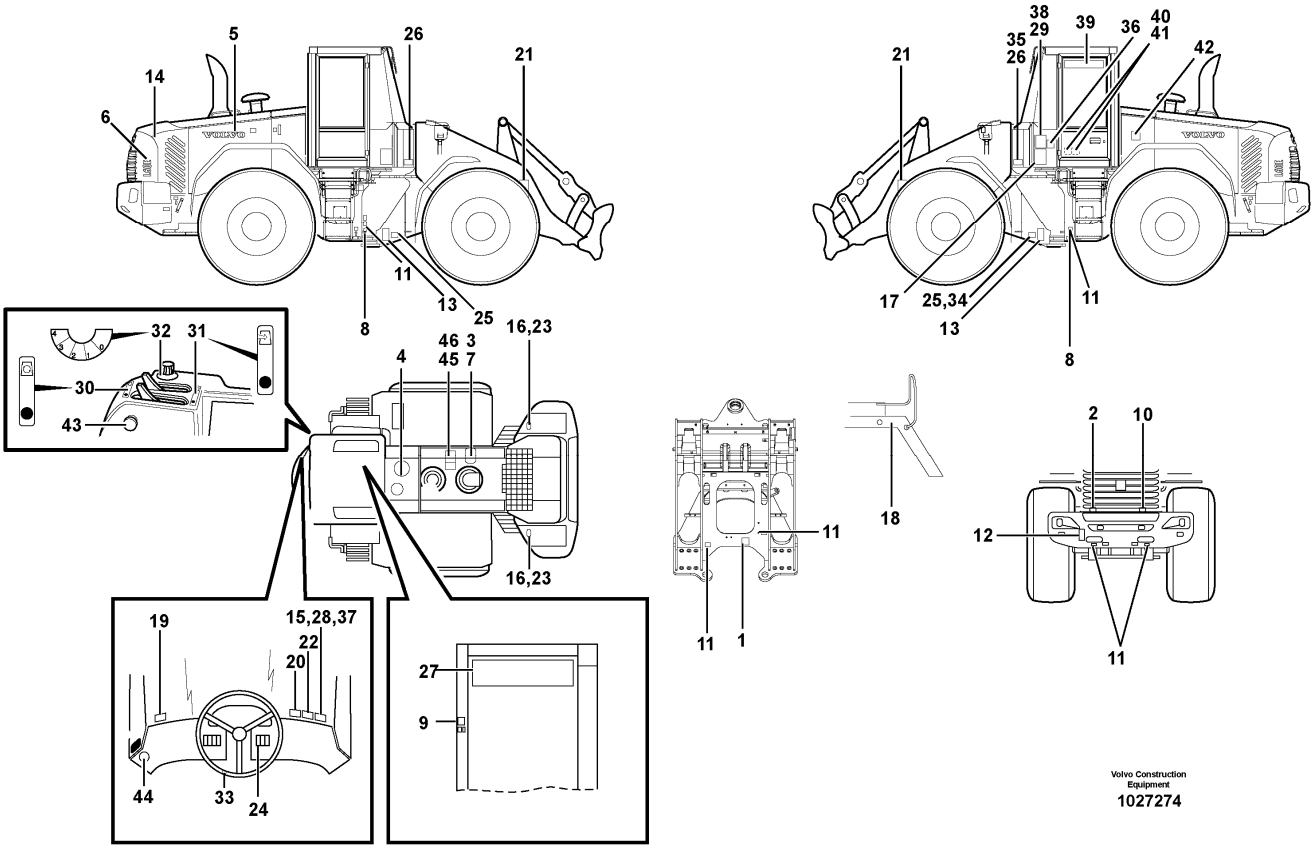

Section option	Kit	Option description
VOE80098	VOE11707329	Detent, 3rd function
VOE33750		Wheel Loader
VOE33755		Cab
VOE33759		Wheel loader L60E OPEN ROPS
VOE82287		Decals, US, Waste Management
VOE80891		Sign 50 km/h
VOE82591		Decals, Brazil
VOE82631		Decals, Brazil
VOE82257		Electric battery disconnecting switch in cab
VOE82089		Decals, US
VOE83173		Hydraulic oil

Q1-Q5	Option	Option description	

Q1 STD OPEN ROPS			
Q2 82287	VOE82287	Decals, US, Waste Management	
Q3 80098	VOE80098	Detent, 3rd function	
Q4 82257	VOE82257	Electric battery disconnecting switch in cab	
Q5 83173	VOE83173	Hydraulic oil	

Pos	Part	Q1	Q2	Q3	Q4	Q5	PS	Kit	Description	Option(s)	Remark
1	VOE936442	1	1						Testing nipple		
2	VOE14025152	1	1						Hose		
3	VOE11411003	1	1						Vacuum pump		
4	VOE941363	1	1						Hose		L = 500MM
5	VOE11173463		1						Hose assembly		
6	VOE13965186		2						Screw		
7	VOE13971098		2						Flange nut		
8	VOE11173290		1						Nipple		
9	VOE13945653		1						Plane gasket		
10	VOE13945355		1						Nipple		(VOE13963968)
11	VOE13949574		1						O-ring		
12	VOE13946834		1						Clamp		
13	VOE946440		1						Flange screw		
14	VOE14016673		2						Strip clamp		
15	VOE4881455		2						Marking sleeve		
16	VOE4881440		REQ						Cable tie		
17	VOE11410758		1						Testing block		
18	VOE11410833		2						Nipple		
19	VOE993320		2						O-ring		(VOE932039)
20	VOE936446		2						Testing nipple		
21	VOE4881453		2						Marking sleeve		
22	VOE944963		REQ						Plastic pipe		L = 1500MM
23	VOE941521		2						Fitting nut		
24	VOE13956967		2						Ferrule		
25	VOE13949361		2						Sleeve		

VOLVO

Construction Equipment

PROSIS Part Information

Date: **10/09/2018**	Image id: **1022014**	Catalogue: **20009**	Model: **L60E**
Brand: **Volvo**	Serial: **1001-3355, 60001-61214, 70001-70530**	Group/Section: **897/125**	Title: **Sign plates and decals**

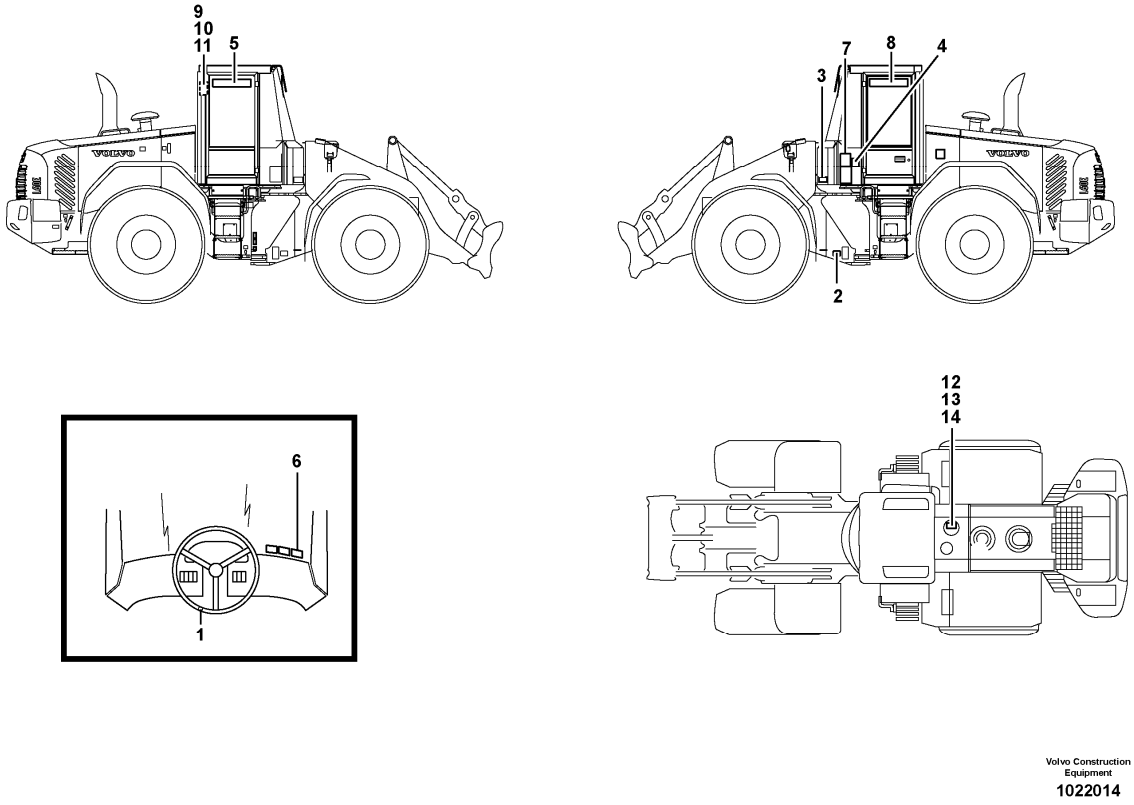

Section option	Kit	Option description
VOE82287		Decals, US, Waste Management
VOE82334		Biodegradable hydraulic fluid BP BIOHYD SE-46
VOE82337		Biodegradable hydr. fluid PANOLIN HLP SYNTH 46
VOE82374		Biodegradable hydr. fluid Agrol Mendo Bio 46 AGROL MENDO BIO 46

Q1-Q5	Option	Option description	
Q1 82287	VOE82287	Decals, US, Waste Management	
Q2 82334	VOE82334	Biodegradable hydraulic fluid BP BIOHYD SE-46	
Q3 82337	VOE82337	Biodegradable hydr. fluid PANOLIN HLP SYNTH 46	
Q4 82374	VOE82374	Biodegradable hydr. fluid Agrol Mendo Bio 46 AGROL MENDO BIO 46	

Pos	Part	Q1	Q2	Q3	Q4	Q5	PS	Kit	Description	Option(s)	Remark
1	VOE11180472	1							Sign		

2	VOE11180471	1							Warning decal		
3	VOE11180470	1							Warning decal		
4	VOE11180484	1							Decal		
5	VOE11414505	1							Decal		
6	VOE11180474	1							Decal		
7	VOE11180617	1							Decal		S/N - 3161
7	VOE11445207	1							Decal		S/N 3162 -
8	VOE11414508	1							Decal		
9	VOE11445051	1							Decal		
10	VOE11445052	1							Decal		
11	VOE11164639	1							Decal		
12	VOE11413642		2						Decal		
13	VOE11413640			2					Decal		
14	VOE11411917				2				Decal		

VOLVO

Construction Equipment

PROSIS Part Information

Date:	Image id:	Catalogue:	Model:
10/09/2018	**1001180**	**20009**	**L60E**
Brand:	Serial:	Group/Section:	Title:
Volvo	**1001-3355, 60001-61214, 70001-70530**	**897/150**	**Slow moving vehicle sign.**

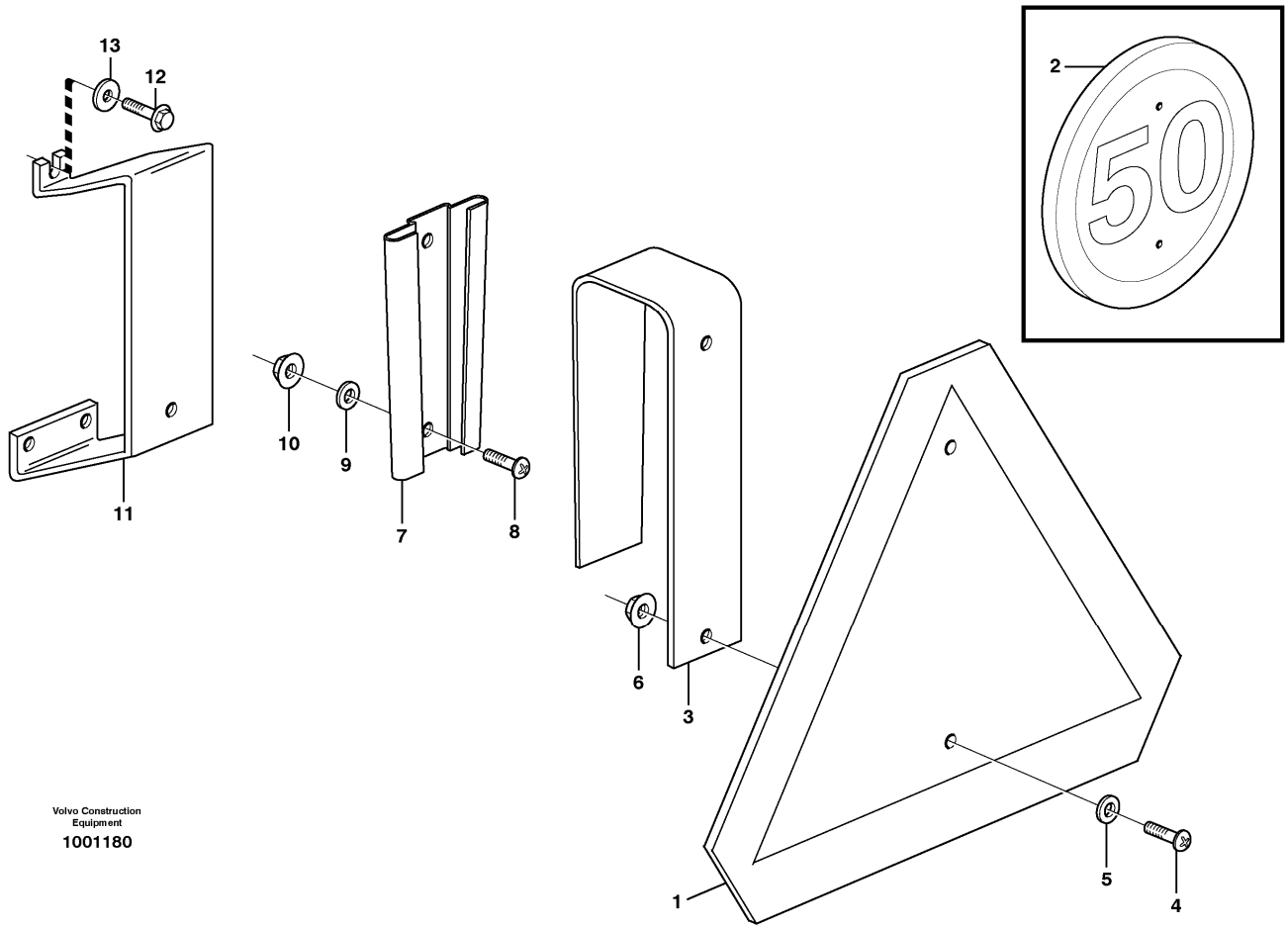

Section option	Kit	Option description
VOE80890		Smm - sign
VOE80891		Sign 50 km/h

Q1-Q5	Option	Option description	
Q1 80890	VOE80890	Smm - sign	
Q2 80891	VOE80891	Sign 50 km/h	

Pos	Part	Q1	Q2	Q3	Q4	Q5	PS	Kit	Description	Option(s)	Remark
1	VOE11715945	1							Slow moving machine plate		(VOE6627784)
	VOE82466757		1						Warning triangle		(VOE9190595)
2	VOE11050490		1						Sign		
3	VOE11153057	1	1						Attachment		

4	VOE971322	2	2						Six point socket screw		
5		2					NS		Washer		
5	VOE960139		2						Plain washer		
6	VOE13949278	2	2						Flange lock nut		
7	VOE4832120	1	1						Retainer		
8	VOE971322	2	2						Six point socket screw		
9		2					NS		Washer		
9	VOE960139		2						Plain washer		
10	VOE13949278	2	2						Flange lock nut		
11	VOE11400033	1	1						Attachment		
12	VOE947107	3	3						Flange screw		
13		3					NS		Washer		
13	VOE11117464		3						Plain washer		(VOE13960141)

VOLVO

Construction Equipment

PROSIS Part Information

Date:	Image id:	Catalogue:	Model:
10/09/2018	**1013647**	**20009**	**L60E**
Brand:	Serial:	Group/Section:	Title:
Volvo	**1001-3355, 60001-61214, 70001-70530**	**897/200**	**German version 82084**

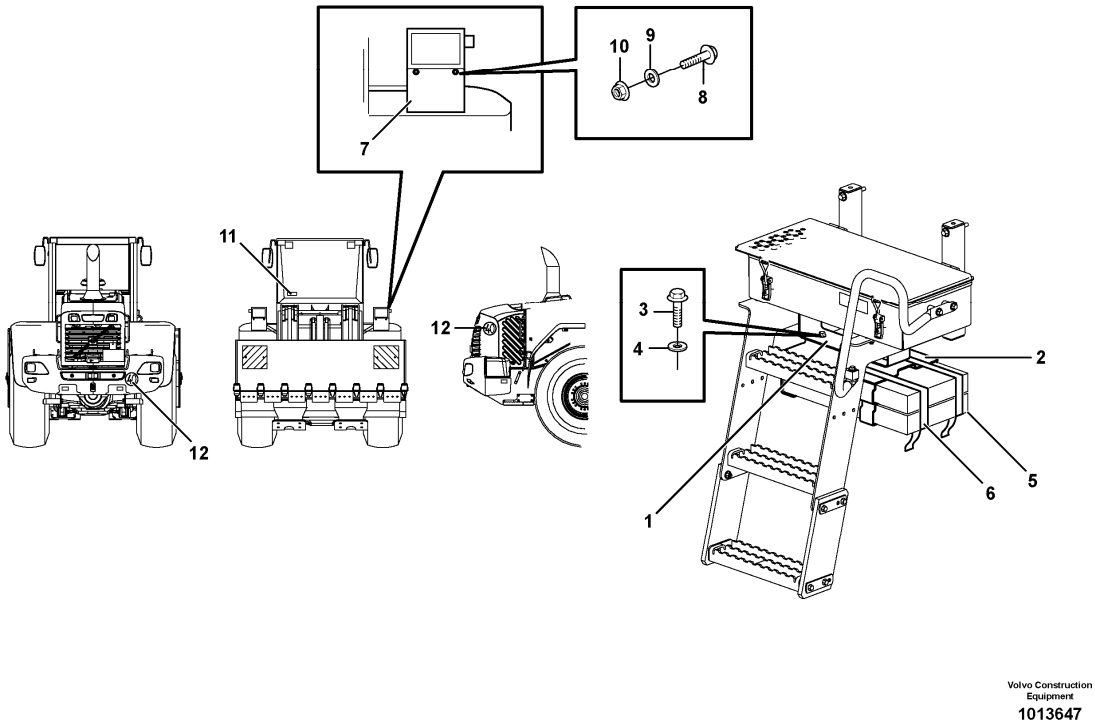

Q1-Q5	Option	Option description	
Q1 82084	VOE82084	German version	

Pos	Part	Q1	Q2	Q3	Q4	Q5	PS	Kit	Description	Option(s)	Remark
1	VOE11174791	1							Attachment		
2	VOE11027417	1							Retainer		
3	VOE946441	6							Flange screw		
4	VOE11117464	6							Plain washer		(VOE13960141)
5	VOE11020526	2							Wedge		
6	VOE11104606	2							Retaining strap		
7	VOE11400788	1					OP		Number plate retainer		
8	VOE13946173	2							Screw		
9	VOE13955894	2							Washer		
10	VOE948645	2							Flange lock nut		

11	VOE4854049	1							Decal		
12	VOE11105304	3							Decal		

VOLVO

Construction Equipment

PROSIS Part Information

Date:	Image id:	Catalogue:	Model:
10/09/2018	**1035041**	**20009**	**L60E**
Brand:	Serial:	Group/Section:	Title:
Volvo	**1001-3355, 60001-61214, 70001-70530**	**897/300**	**Illustrations of sign plates and decals STD, OPEN ROPS**

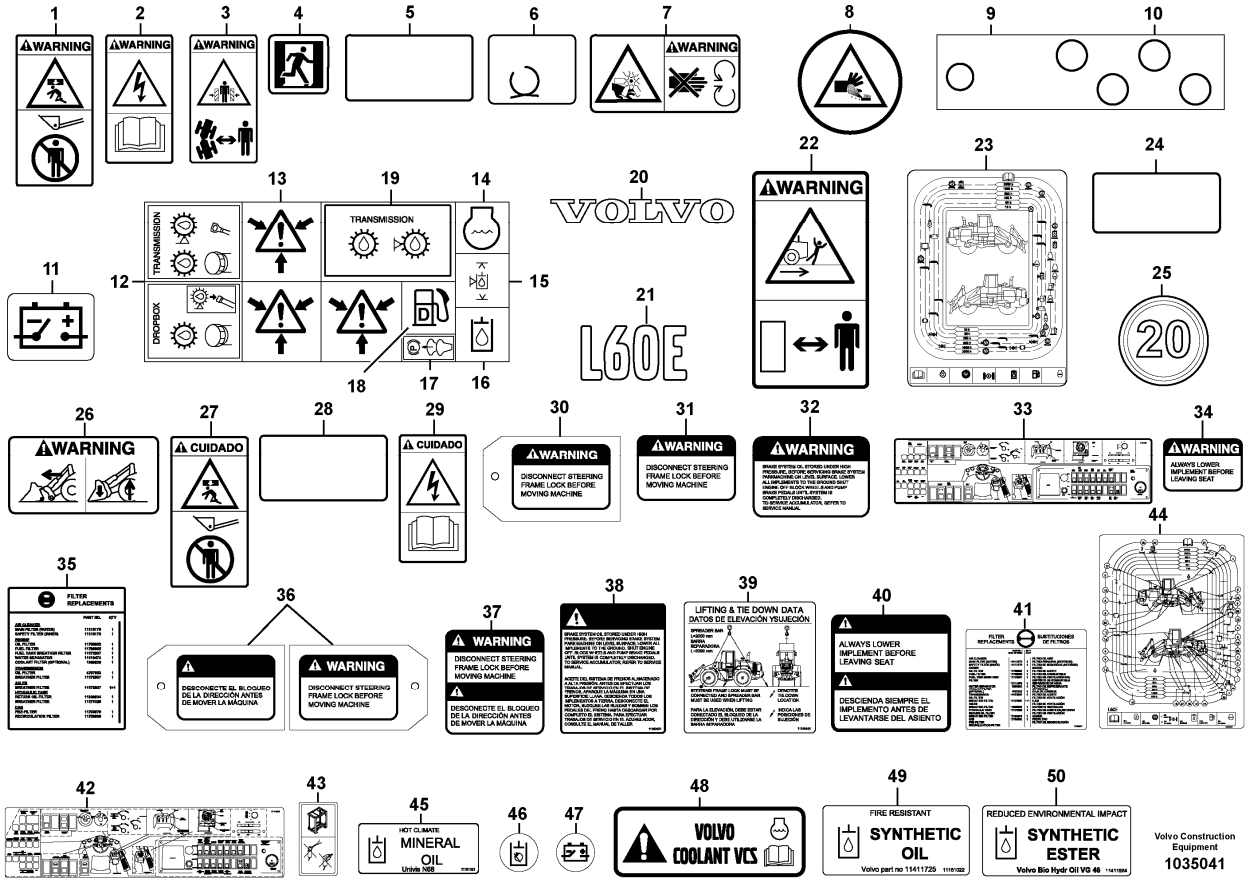

Section option	Kit	Option description
VOE33750		Wheel Loader
VOE33759		Wheel loader L60E OPEN ROPS
VOE82287		Decals, US, Waste Management
VOE80870		Speed limiter (max. 20 km/h)
VOE82591		Decals, Brazil
VOE82631		Decals, Brazil
VOE82089		Decals, US

Q1-Q5	Option	Option description	
Q1 STD OPEN POPS			
Q2 82287	VOE82287	Decals, US, Waste Management	
Q3 80098	VOE80098	Detent, 3rd function	
Q4 82257	VOE82257	Electric battery disconnecting switch in cab	

Q5 83173	VOE83173	Hydraulic oil	

Pos	Part	Q1	Q2	Q3	Q4	Q5	PS	Kit	Description	Option(s)	Remark
1	VOE11027566	REQ							Warning decal		(VOE13935002)NOT TO WALK UNDER BUCKET
2	VOE13935004	REQ							Warning decal		BATTERY
3	VOE13935000	REQ							Warning decal		ARTICULATION
4	VOE13935007	REQ							Decal		EMERGENCY EXIT
5	VOE13935003	REQ							Warning decal		SEE INSTR. BOOK
6	VOE11026730	REQ							Decal		TIE DOWNS
7	VOE13935001	REQ							Warning decal		FAN PROTECTION
8	VOE14526798	REQ					SS		Decal		
	VOE11004094	1							Decal		
9	VOE4952167	1					SS		•Decal		
10	VOE4898495	4					SS		•Decal		
11	VOE11026729	REQ							Decal		BATTERY DISCONNECT
12	VOE11003865	1							Decal		
13	VOE4948092	3					SS		•Decal		WARNING ENCLOSED PRESSURE
14	VOE4932797	1					SS		•Decal		COOLING LIQUID LEVEL
15	VOE4952173	1					SS		•Decal		HYDRAULICFLUID LEVEL
16	VOE4948103	1							•Decal		HYDRAULIC SYSTEM
17	VOE4935704	1					SS		•Decal		
18	VOE11055037	1					SS		•Decal		DIESEL-FUEL
19	VOE4932840	1					SS		•Decal		
20	VOE11174177	2							Decal		
21	VOE11174454	2							Decal		
22	VOE11400920	1							Warning plate		
23	VOE11445051	1							Decal		
24	VOE11130942	1							Decal		
25	VOE11105305	3							Decal		80870
26	VOE16207444	1							Warning decal	VOE82586	(VOE11111506)
27	VOE11027568	2							Warning decal		
28	VOE11015581	1					OP		Warning decal		
29	VOE11015582	2							Warning decal		
30	VOE4952170	1							Decal		
31	VOE4952169	1							Decal		
32	VOE4952166	1							Decal		
33	VOE11414505	1	1			1			Decal		
34	VOE4952179	1							Decal		
35	VOE11410192	1							Decal	VOE82089	S/N - 3161
	VOE11445047	1							Decal	VOE82089	S/N 3162 -
36	VOE11180472		1			1			Sign		
37	VOE11180471		1			1			Warning decal		
38	VOE11180470		1			1			Warning decal		

39	VOE11180484		1			1			Decal		
40	VOE11180474		1			1			Decal		
41	VOE11180617		1			1			Decal		
41	VOE11445207		1						Decal		S/N 3162-
42	VOE11414508		1			1			Decal		
43	VOE11164639		1			1			Decal		
44	VOE11445051		1			1			Decal		
45	VOE11181021		2			2			Decal		
46	VOE11431454			1					Decal		
47	VOE11431453				1				Decal		
48	VOE11445056	1							Decal		
49	VOE11181022	2							Decal	VOE83308	
50	VOE11411924	2							Decal	VOE83449	

VOLVO

Construction Equipment

PROSIS Part Information

Date:	Image id:	Catalogue:	Model:
10/09/2018	**1022015**	**20009**	**L60E**
Brand:	Serial:	Group/Section:	Title:
Volvo	**1001-3355, 60001-61214, 70001-70530**	**897/350**	**Illustrations of sign plates and decals**

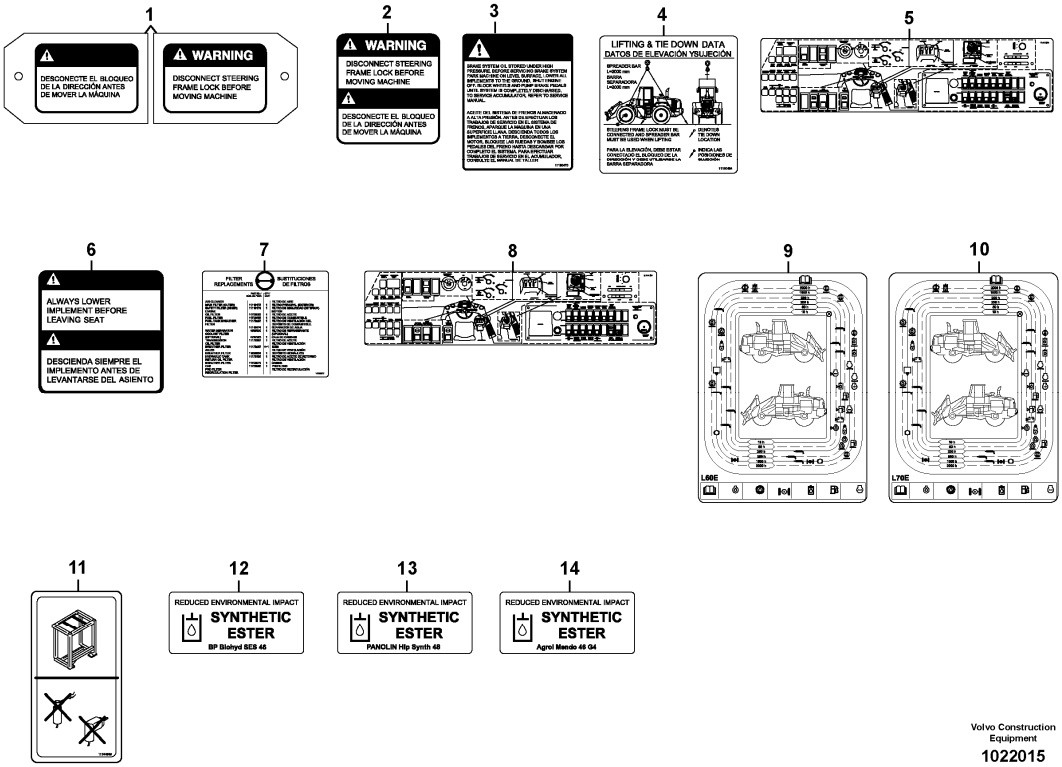

Section option	Kit	Option description
VOE82287		Decals, US, Waste Management
VOE82334		Biodegradable hydraulic fluid BP BIOHYD SE-46
VOE82337		Biodegradable hydr. fluid PANOLIN HLP SYNTH 46
VOE82374		Biodegradable hydr. fluid Agrol Mendo Bio 46 AGROL MENDO BIO 46

Q1-Q5	Option	Option description	
Q1 82287	VOE82287	Decals, US, Waste Management	
Q2 82334	VOE82334	Biodegradable hydraulic fluid BP BIOHYD SE-46	
Q3 82337	VOE82337	Biodegradable hydr. fluid PANOLIN HLP SYNTH 46	
Q4 82374	VOE82374	Biodegradable hydr. fluid Agrol Mendo Bio 46 AGROL MENDO BIO 46	

Pos	Part	Q1	Q2	Q3	Q4	Q5	PS	Kit	Description	Option(s)	Remark
1	VOE11180472	1							Sign		

2	VOE11180471	1							Warning decal		
3	VOE11180470	1							Warning decal		
4	VOE11180484	1							Decal		
5	VOE11414505	1							Decal		
6	VOE11180474	1							Decal		
7	VOE11180617	1							Decal		S/N - 3161
7	VOE11445207	1							Decal		S/N 3162 -
8	VOE11414508	1							Decal		
9	VOE11445051	1							Decal		
10	VOE11445052	1							Decal		
11	VOE11164639	1							Decal		
12	VOE11413642		2						Decal		
13	VOE11413640			2					Decal		
14	VOE11411917				2				Decal		

VOLVO

Construction Equipment

PROSIS Part Information

Date:	Image id:	Catalogue:	Model:
10/09/2018	**1008976**	**20009**	**L60E**
Brand:	Serial:	Group/Section:	Title:
Volvo	**1001-3355, 60001-61214, 70001-70530**	**911/100**	**Hydraulic oil tank, with fitting parts STD, OPEN ROPS**

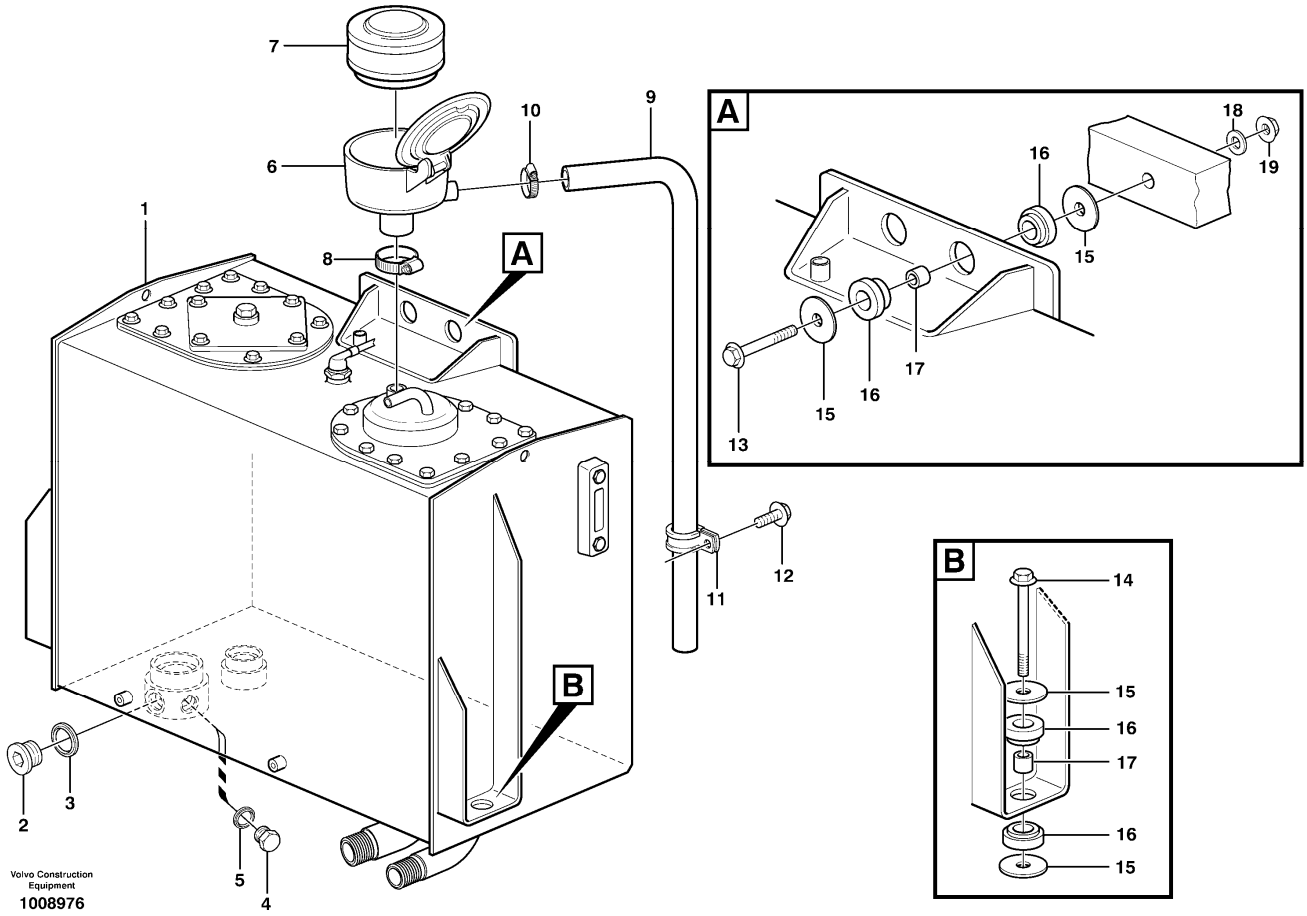

Section option	Kit	Option description
VOE33750		Wheel Loader
VOE33759		Wheel loader L60E OPEN ROPS

Pos	Part	Q1	Q2	Q3	Q4	Q5	PS	Kit	Description	Option(s)	Remark
1		1							Hydr fluid tank		See ref 911/150
2	VOE13966145	1							Plug		
3	VOE948885	1							Plane gasket		
4	VOE960631	1							Plug		
5	VOE948883	1							Gasket		
6	VOE11173325	1							Air filter		
7	VOE11707077	1							•Filter insert		
8	VOE943477	1							•Hose clamp		
9	VOE983418	1							Hose		

10	VOE943476	1							Hose clamp		
11	VOE981904	1							Clamp		
12	VOE946440	1							Flange screw		
13	VOE13965194	2							Screw		
14	VOE13946474	2							Flange screw		
15	VOE11026615	8					SS		Washer		
16	VOE4746300	8							Rubber block		
17	VOE11026256	4							Spacer ring		
18	VOE13960145	2							Washer		
19	VOE971099	2							Flange lock nut		(VOE13971099)

VOLVO

Construction Equipment

PROSIS Part Information

Date:	Image id:	Catalogue:	Model:
10/09/2018	**1008984**	**20009**	**L60E**
Brand:	Serial:	Group/Section:	Title:
Volvo	**1001-3355, 60001-61214, 70001-70530**	**911/150**	**Hydraulic oil tank STD, OPEN ROPS**

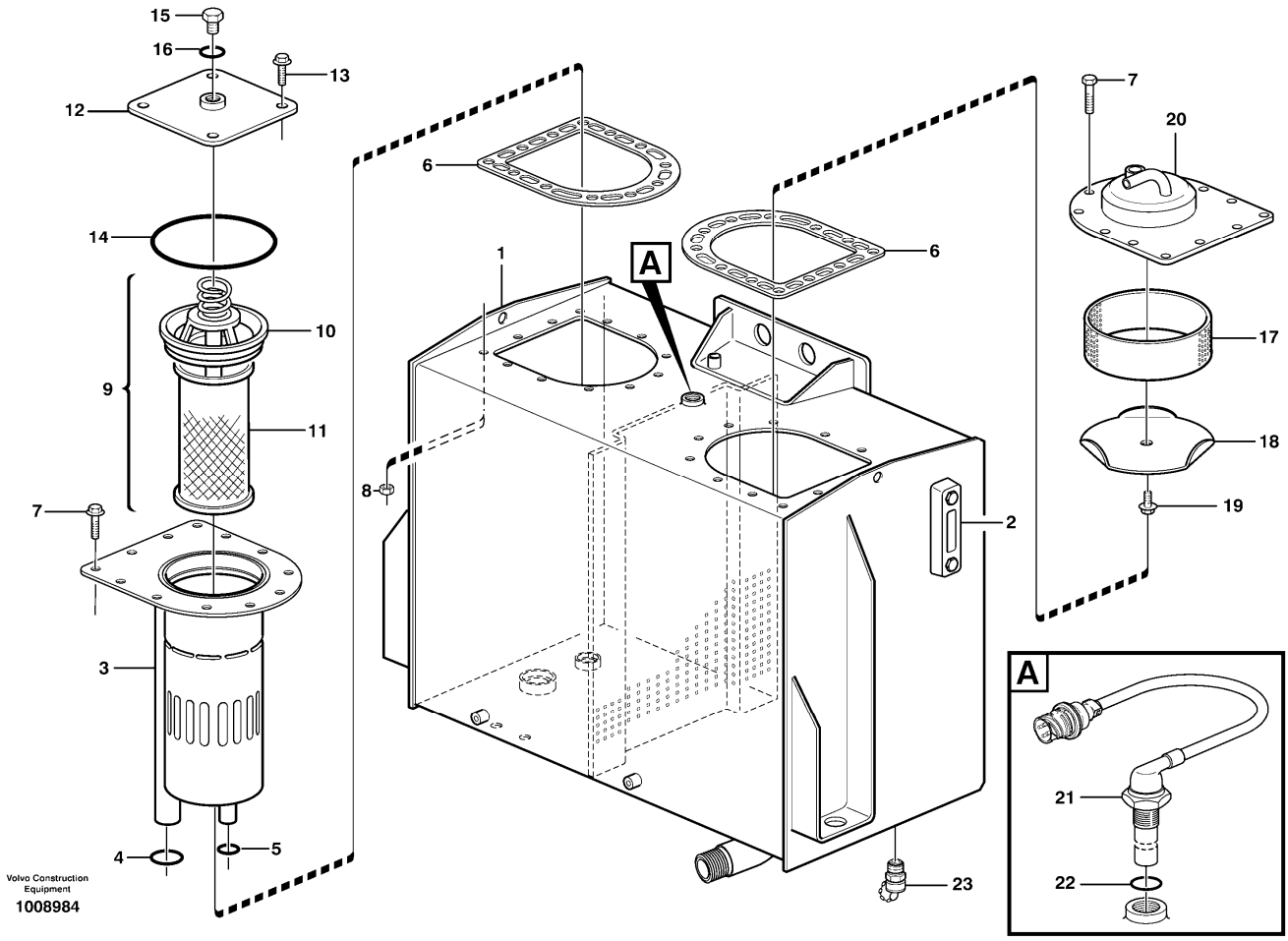

Section option	Kit	Option description
VOE33750		Wheel Loader
VOE33759		Wheel loader L60E OPEN ROPS

Q1-Q5	Option	Option description	
Q1 11410467			
Q2 11410519			

Pos	Part	Q1	Q2	Q3	Q4	Q5	PS	Kit	Description	Option(s)	Remark
	VOE11410467	1							Hydraulic fluid tank		SER NO - 1461 SER NO - 60260 USA SER NO - 70099 BRA
	VOE11410519		1						Hydraulic fluid tank		SER NO 1462 - SER NO 60261 - USA SER NO 70100 - BRA

1	VOE11410468	1	1				OP		•Hydraulic fluid tank		
2	VOE11148801	1	1						•Level Inspection Glass		
3	VOE11410469	1	1						•Filter housing		
4	VOE925072	1	1						•O-ring		
5	VOE930932	1	1						•O-ring		
6	VOE11410471	2	2						•Gasket		
7	VOE13945444	19	19						•Screw		
8	VOE981056	22	22						•Rivet nut		
9	VOE11445024	1	1						•Filter insert		
10		1	1				NS		••Filter Retainer		
	VOE6635976	1	1						•••Spring		
	VOE6210360	1	1						•••O-ring		
	VOE11994043	1	1						•••Sealing ring		
	VOE11993070	1	1				SS		•••Spring kit		
11	VOE11445025	1	1						••Filter cartridge		
	VOE11715947	1	1						••Sleeve		
12	VOE11410470	1	1						•Cover		
13	VOE946671	4	4						•Flange screw		
14	VOE962500	1	1						•O-ring		
15	VOE941375	1	1						•Plug		
16	VOE958229	1	1						•O-ring		
17	VOE4854855	1	1						•Ring		
18	VOE4854856	1	1						•Cover		
19	VOE946440	1	1						•Flange screw		
20	VOE11410472	1	1						•Cover		
21	VOE11039725	1							•Level indicator		SE906
	VOE11039581		1						•Level indicator		SE906
22	VOE958228	1	1						••O-ring		
23	VOE11054692	1	1						•Valve		

VOLVO

Construction Equipment

PROSIS Part Information

Date:	Image id:	Catalogue:	Model:
10/09/2018	**1004947**	**20009**	**L60E**
Brand:	Serial:	Group/Section:	Title:
Volvo	**1001-3355, 60001-61214, 70001-70530**	**911/200**	**Suction line, tank - pump STD, OPEN ROPS**

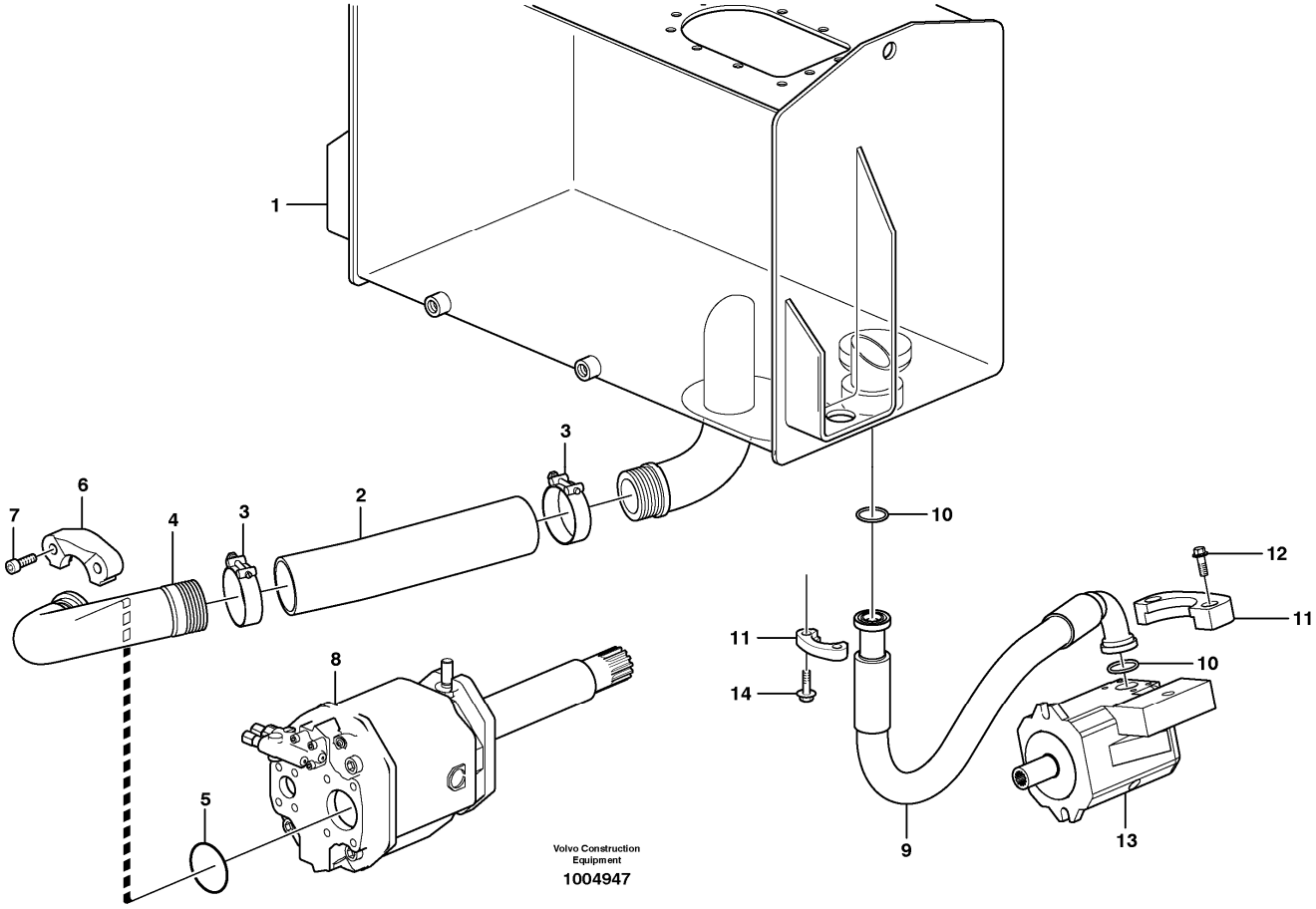

Section option	Kit	Option description
VOE33750		Wheel Loader
VOE33759		Wheel loader L60E OPEN ROPS
VOE83380		Extended lifting arms with C-lubrication.

Pos	Part	Q1	Q2	Q3	Q4	Q5	PS	Kit	Description	Option(s)	Remark
1		1							Hydr fluid tank		See ref 911/100
2	VOE11173492	1							Suction hose		
	VOE11173491	1							Suction hose	VOE83278, VOE83380	
3	VOE11173083	2							Hose clamp		
4	VOE11410255	1							Suction line		
5	VOE980102	1							O-ring		(VOE13980102)
6	VOE13933484	2							Flange half		

7	VOE959256	4							Hex. socket screw		
8		1							Hydraulic Pump		See ref 913/100
9	VOE11173221	1							Hose assembly		
10	VOE990757	2							Sealing ring		
11	VOE935308	4							Flange half		
12	VOE946472	4							Flange screw		
13		1							Hydraulic Pump		See ref 913/100
14	VOE984080	4							Hex. socket screw		

VOLVO

Construction Equipment

PROSIS Part Information

Date:	Image id:	Catalogue:	Model:
10/09/2018	**1004491**	**20009**	**L60E**
Brand:	Serial:	Group/Section:	Title:
Volvo	**1001-3355, 60001-61214, 70001-70530**	**911/250**	**Hydraulic system, feed line STD, OPEN ROPS**

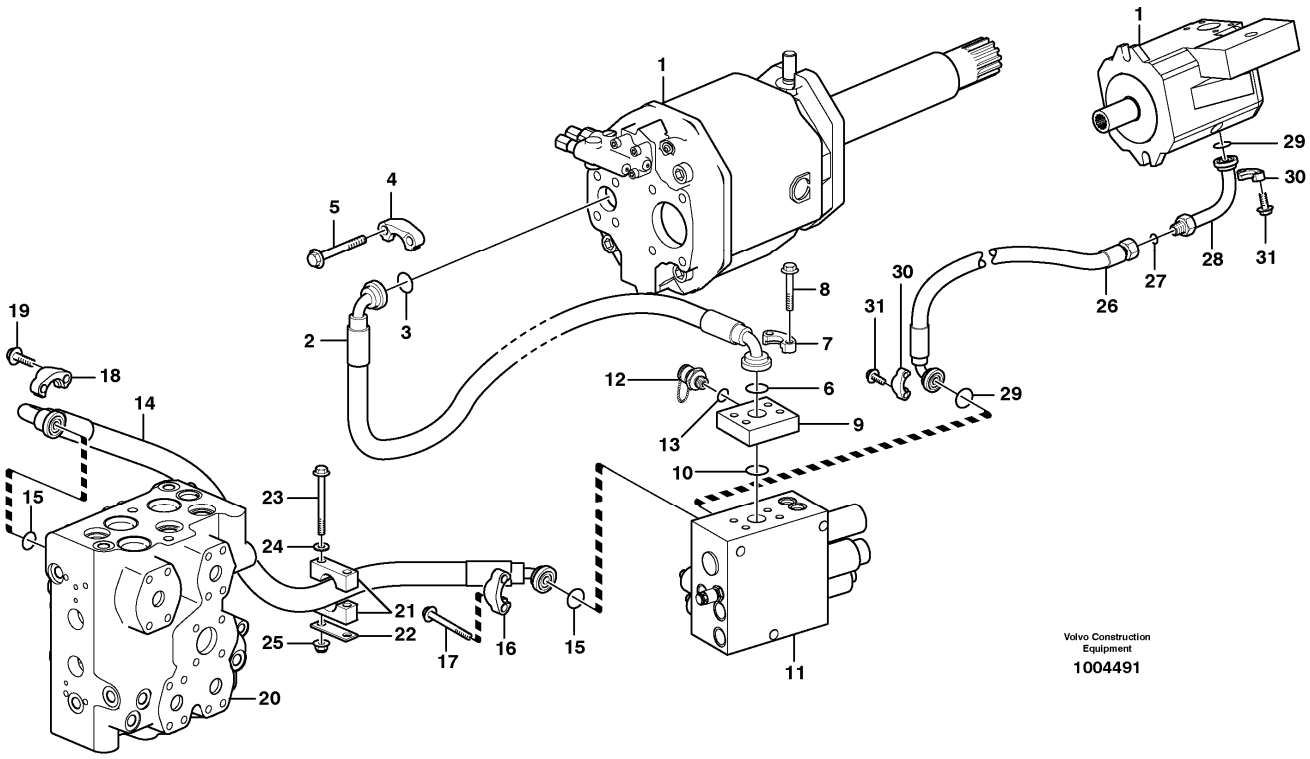

Section option	Kit	Option description
VOE33750		Wheel Loader
VOE33759		Wheel loader L60E OPEN ROPS

Pos	Part	Q1	Q2	Q3	Q4	Q5	PS	Kit	Description	Option(s)	Remark
1		2							Hydraulic Pump		See ref 913/100
2	VOE11173485	1							Hose assembly		L = 885 MM
	VOE11173484	1							Hose assembly	VOE83278, VOE83380	L = 790 MM
3	VOE990757	1							Sealing ring		
4	VOE14236931	2							Flange half		
5	VOE13970997	4							Hexagon screw		
6	VOE990756	1							Sealing ring		
7	VOE14048189	2							Flange half		
8	VOE13948039	4							Flange screw		
9	VOE11172851	1							Connecting block		P
10	VOE990756	1							Sealing ring		
11		1							Valve block		See ref 912/300
12	VOE936444	1							Testing nipple		

13	VOE13960213	1							•O-ring		
14	VOE11173033	1					SS		Hose assembly		
15	VOE990756	2							Sealing ring		
16	VOE14048189	2							Flange half		
17	VOE13965226	4							Screw		(VOE965226)
18		2					NS		Flange Half		
19	VOE13965226	4							Screw		
20		1							Control valve		See ref 912/100
21	VOE11173016	1							Clamp		
22	VOE11172507	1							Plate		
23	VOE979934	2							Flange screw		
24	VOE13955897	2							Washer		
25	VOE971099	2							Flange lock nut		(VOE13971099)
26	VOE11173671	1							Hose assembly		
27	VOE990740	1							O-ring		(VOE981289)
28	VOE11148665	1							Adapter		
29	VOE13948699	2							O-ring		
30	VOE11015454	4							Flange half		
31	VOE946472	8							Flange screw		

VOLVO

Construction Equipment

PROSIS Part Information

Date:	Image id:	Catalogue:	Model:
10/09/2018	**1014873**	**20009**	**L60E**
Brand:	Serial:	Group/Section:	Title:
Volvo	**1001-3355, 60001-61214, 70001-70530**	**911/300**	**Feed line, pump - central block STD, OPEN ROPS**

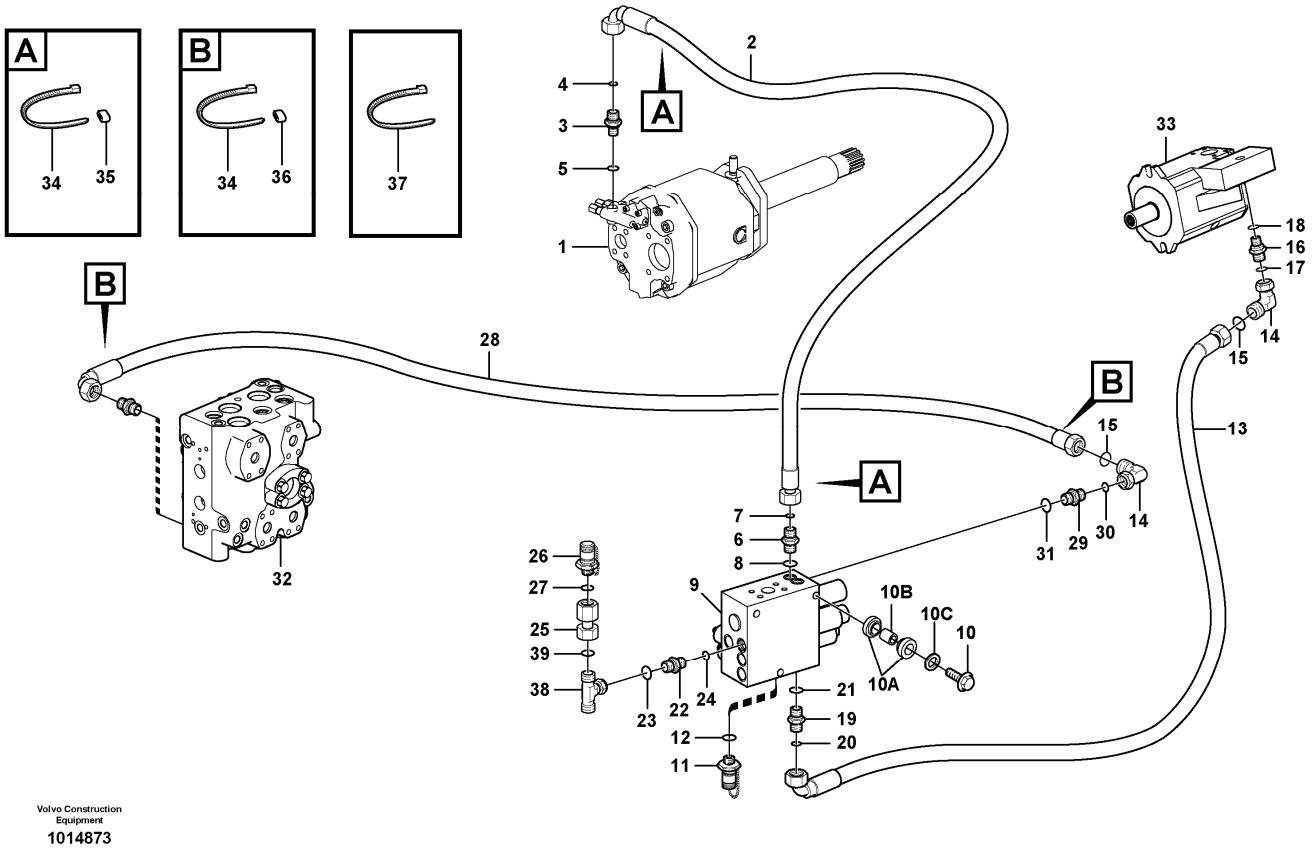

Section option	Kit	Option description
VOE33750		Wheel Loader
VOE33759		Wheel loader L60E OPEN ROPS

Pos	Part	Q1	Q2	Q3	Q4	Q5	PS	Kit	Description	Option(s)	Remark
1		1							Hydraulic Pump	VOE83278, VOE83380	See ref 913/100
2	VOE11148937	1							Hose assembly		
3	VOE935082	1							Nipple		
	VOE935067	1							Elbow nipple	VOE83278, VOE83380	
4	VOE990736	1							•O-ring	VOE83278, VOE83380	
5	VOE993319	1							•O-ring	VOE83278, VOE83380	(VOE932037)

6	VOE935548	1							Nipple		LSP
7	VOE990736	1							•O-ring		
8	VOE14211856	1							•Sealing ring		
9		1							Valve block		See ref 912/300
10	VOE946329	3							Flange screw		S/N - 60818
	VOE13946752	3							Screw		S/N 60819 -
10A	VOE11411143	6							Rubber damper		S/N 60819 -
10B		3					NS		Spacer Ring		S/N 60819 -
10C	VOE925743	3							Washer		S/N 60819 -
11	VOE936444	1							Testing nipple		PFF
12	VOE13960213	1							•O-ring		
13	VOE11163086	1							Hose assembly		
14	VOE13933905	2							Elbow nipple		
15	VOE990736	1							•O-ring		
16	VOE935082	1							Nipple		
17	VOE990736	1							•O-ring		
18	VOE993319	1							•O-ring		(VOE932037)
19	VOE935548	1							Nipple		LSF
20	VOE990736	1							•O-ring		
21	VOE14211856	1							•Sealing ring		
22	VOE14345423	1							Nipple		MPR
23	VOE990737	1							•O-ring		(VOE4880492)
24	VOE14211856	1							•Sealing ring		
25	VOE935331	1							Test nipple		
26	VOE936439	1							Testing nipple		
27	VOE955990	1							•O-ring		
28	VOE11147946	1							Hose assembly		
29	VOE935548	1							Nipple		LSW
30	VOE990736	1							•O-ring		
31	VOE14211856	1							•Sealing ring		
32		1							Control valve		See ref 912/100
33		1							Hydraulic Pump		See ref 913/100
34	VOE4881438	6							Cable tie		
35	VOE4881453	2							Marking sleeve		VIOL
	VOE4881457	2							Marking sleeve		GREEN
36	VOE4881451	2							Marking sleeve		YELL
	VOE4881452	2							Marking sleeve		WHITE
37	VOE4881440	1							Cable tie		
38	VOE13933936	1							T-nipple		
39	VOE990737	1							•O-ring		(VOE4880492)

VOLVO

Construction Equipment

PROSIS Part Information

Date:	Image id:	Catalogue:	Model:
10/09/2018	**1004949**	**20009**	**L60E**
Brand:	Serial:	Group/Section:	Title:
Volvo	**1001-3355, 60001-61214, 70001-70530**	**911/350**	**Hydraulic system, return line STD, OPEN ROPS**

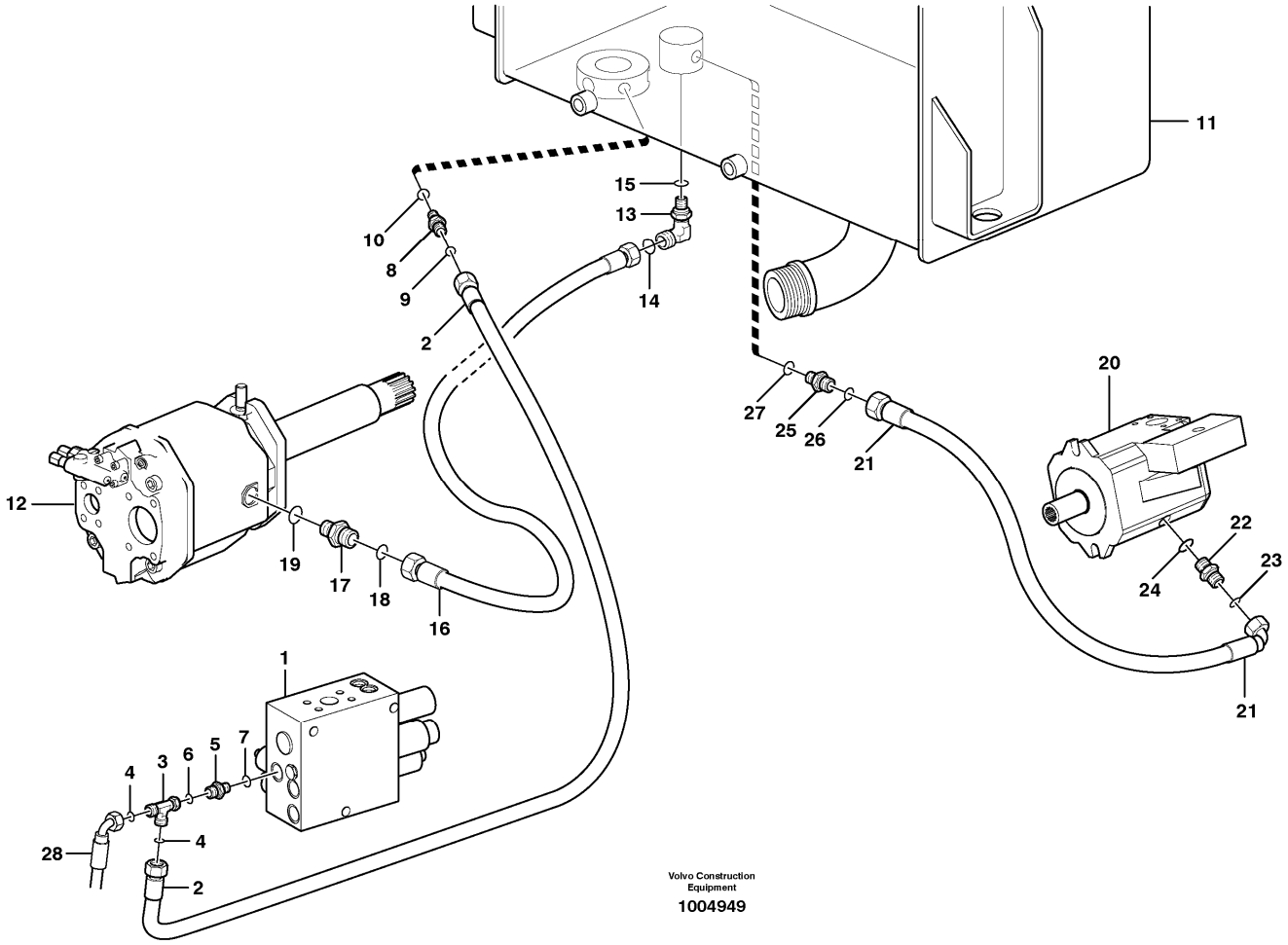

Section option	Kit	Option description
VOE33750		Wheel Loader
VOE33759		Wheel loader L60E OPEN ROPS

Pos	Part	Q1	Q2	Q3	Q4	Q5	PS	Kit	Description	Option(s)	Remark
1		1							Valve block		See ref 912/300
2	VOE11173987	1							Hose assembly		
3	VOE13933936	1							T-nipple		
4	VOE990737	2							•O-ring		(VOE4880492)
5	VOE14345423	1							Nipple		T
6	VOE990737	1							•O-ring		(VOE4880492)
7	VOE14211856	1							•Sealing ring		
8	VOE13933855	1							Nipple		

9	VOE990737	1							•O-ring		(VOE4880492)
10	VOE14213676	1							•Sealing ring		
11		1							Hydr fluid tank		See ref 911/100
12		1							Hydraulic Pump		See ref 913/100
13	VOE935038	1							Elbow nipple		
	VOE936576	1							Nipple	VOE83278, VOE83380	
14	VOE990740	1							•O-ring	VOE83278, VOE83380	
15	VOE967751	1							•O-ring	VOE83278, VOE83380	
16	VOE11172342	1							Hose assembly		L = 670 MM
	VOE11410510	1							Hose assembly	VOE83278, VOE83380	L = 750 MM
17	VOE935032	1							Nipple		
	VOE11410506	1							Nipple	VOE83278, VOE83380	
18	VOE990739	1							•O-ring		(VOE4880663)
	VOE990740	1							•O-ring	VOE83278, VOE83380	
19	VOE993323	1							•O-ring		(VOE932042)
	VOE993323	1							•O-ring	VOE83278, VOE83380	(VOE932042)
20		1							Hydraulic Pump		See ref 913/100
21	VOE11172509	1							Hose assembly		
22	VOE13933923	1							Nipple		
23	VOE990738	1							•O-ring		(VOE4880493)
24	VOE993321	1							•O-ring		(VOE932040)
25	VOE13933853	1							Nipple		
26	VOE990738	1							•O-ring		(VOE4880493)
27	VOE14211863	1							•Sealing ring		
28		1							Hose assembly		See ref 551/100

VOLVO

Construction Equipment

PROSIS Part Information

Date:	Image id:	Catalogue:	Model:
10/09/2018	**1004496**	**20009**	**L60E**
Brand:	Serial:	Group/Section:	Title:
Volvo	**1001-3355, 60001-61214, 70001-70530**	**911/400**	**Hydraulic system, return line STD, OPEN ROPS**

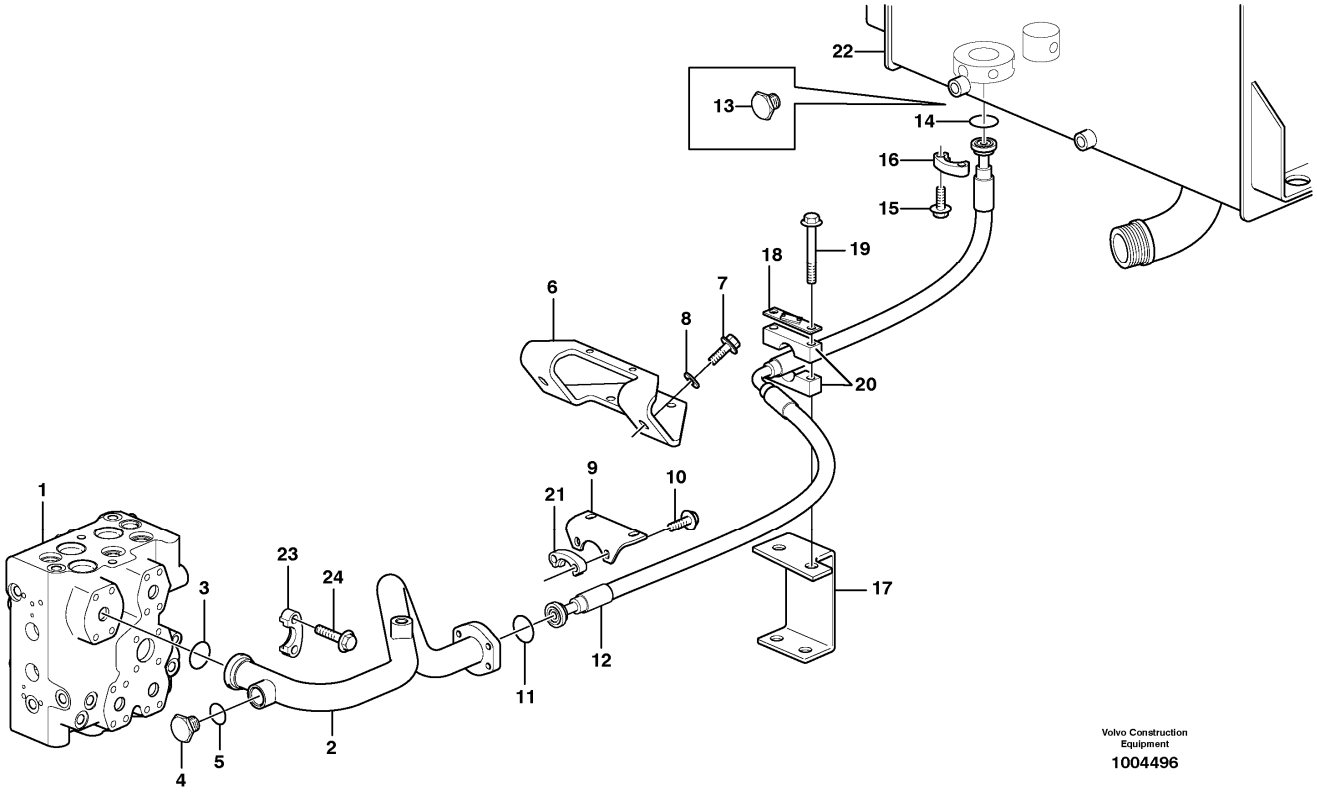

Section option	Kit	Option description
VOE33750		Wheel Loader
VOE33759		Wheel loader L60E OPEN ROPS

Pos	Part	Q1	Q2	Q3	Q4	Q5	PS	Kit	Description	Option(s)	Remark
1		1							Control valve		See ref 912/100
2	VOE11172713	1							Return line		
3	VOE990757	1							Sealing ring		
4	VOE13966146	1							Plug		
5	VOE13964110	1							Gasket		
6	VOE11173886	1							Bracket		
7	VOE13965192	2							Screw		
8	VOE13960145	2							Washer		
9	VOE11410248	1							Plate		
10	VOE947167	4							Hex. socket screw		
11	VOE990757	1							Sealing ring		
12	VOE11410403	1							Hose assembly		

13	VOE932275	1							•Protecting plug		
14	VOE13949239	1					SS		O-ring		
15	VOE959256	4							Hex. socket screw		
16	VOE935309	2							Flange half		
17	VOE11173433	1							Attachment bracket		
18	VOE11172507	1							Plate		
19	VOE13946474	2							Flange screw		
20	VOE14215719	2							Half clamp		
21	VOE935308	2							Flange half		
22		1							Hydr fluid tank		See ref 911/100
23	VOE935308	2							Flange half		
24	VOE946472	4							Flange screw		

VOLVO

Construction Equipment

PROSIS Part Information

Date:	Image id:	Catalogue:	Model:
10/09/2018	**1004400**	**20009**	**L60E**
Brand:	Serial:	Group/Section:	Title:
Volvo	**1001-3355, 60001-61214, 70001-70530**	**911/450**	**Drainage line, control valve STD, OPEN ROPS**

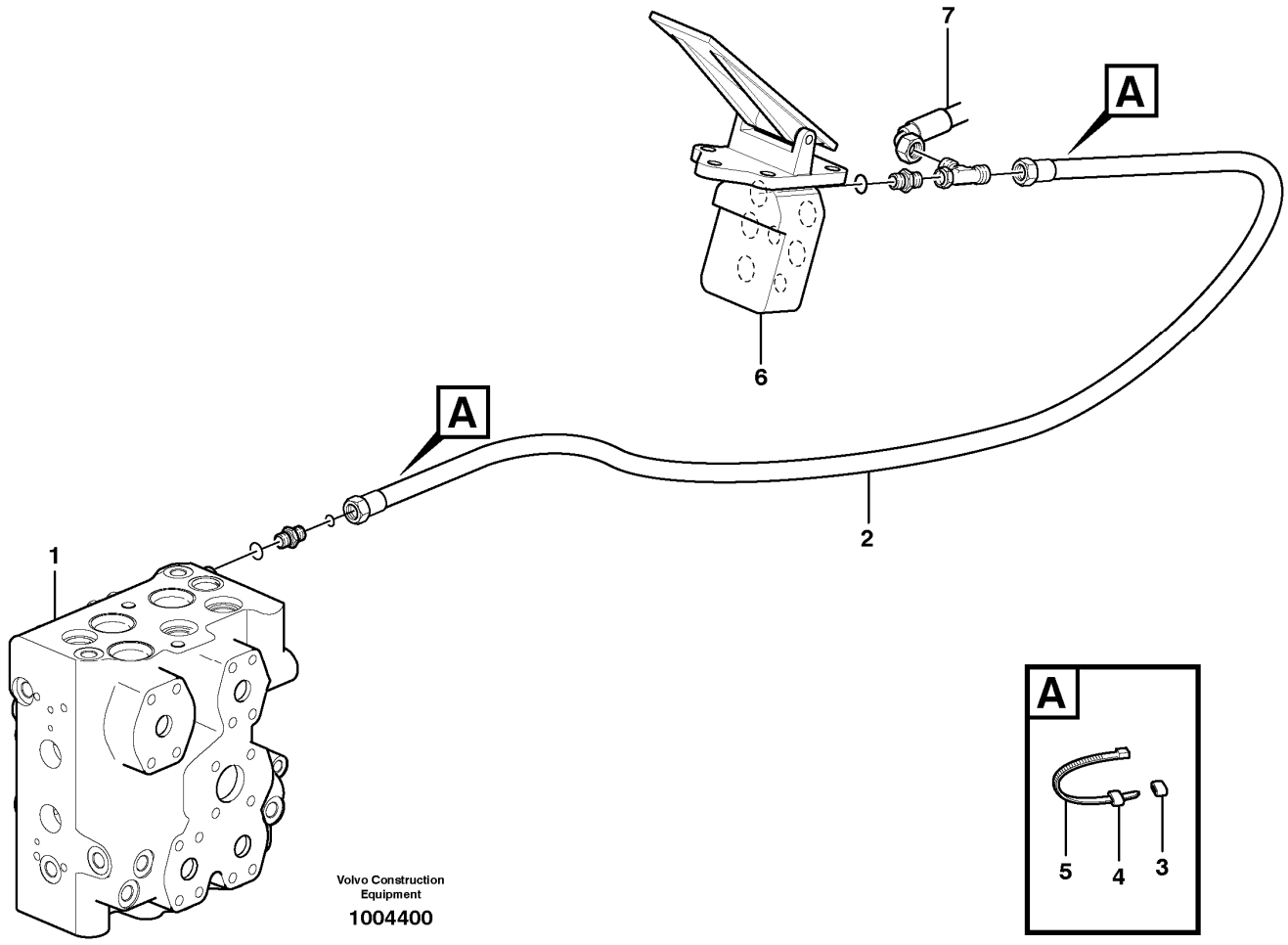

Section option	Kit	Option description
VOE33750		Wheel Loader
VOE33759		Wheel loader L60E OPEN ROPS

Pos	Part	Q1	Q2	Q3	Q4	Q5	PS	Kit	Description	Option(s)	Remark
1		1							Control valve		See ref 912/100
2	VOE11148951	1							Hose assembly		
3	VOE4881451	2							Marking sleeve		YELL
4	VOE4881459	2							Marking sleeve		BLUE
5	VOE4881438	4							Cable tie		
6		1							Footbrake Valve		See ref 525/150
7		1							Hose assembly		See ref 522/300

VOLVO

Construction Equipment

PROSIS Part Information

Date:	Image id:	Catalogue:	Model:
10/09/2018	**1014548**	**20009**	**L60E**
Brand:	Serial:	Group/Section:	Title:
Volvo	**1001-3355, 60001-61214, 70001-70530**	**911/500**	**Hydraulic system, lift function STD, OPEN ROPS**

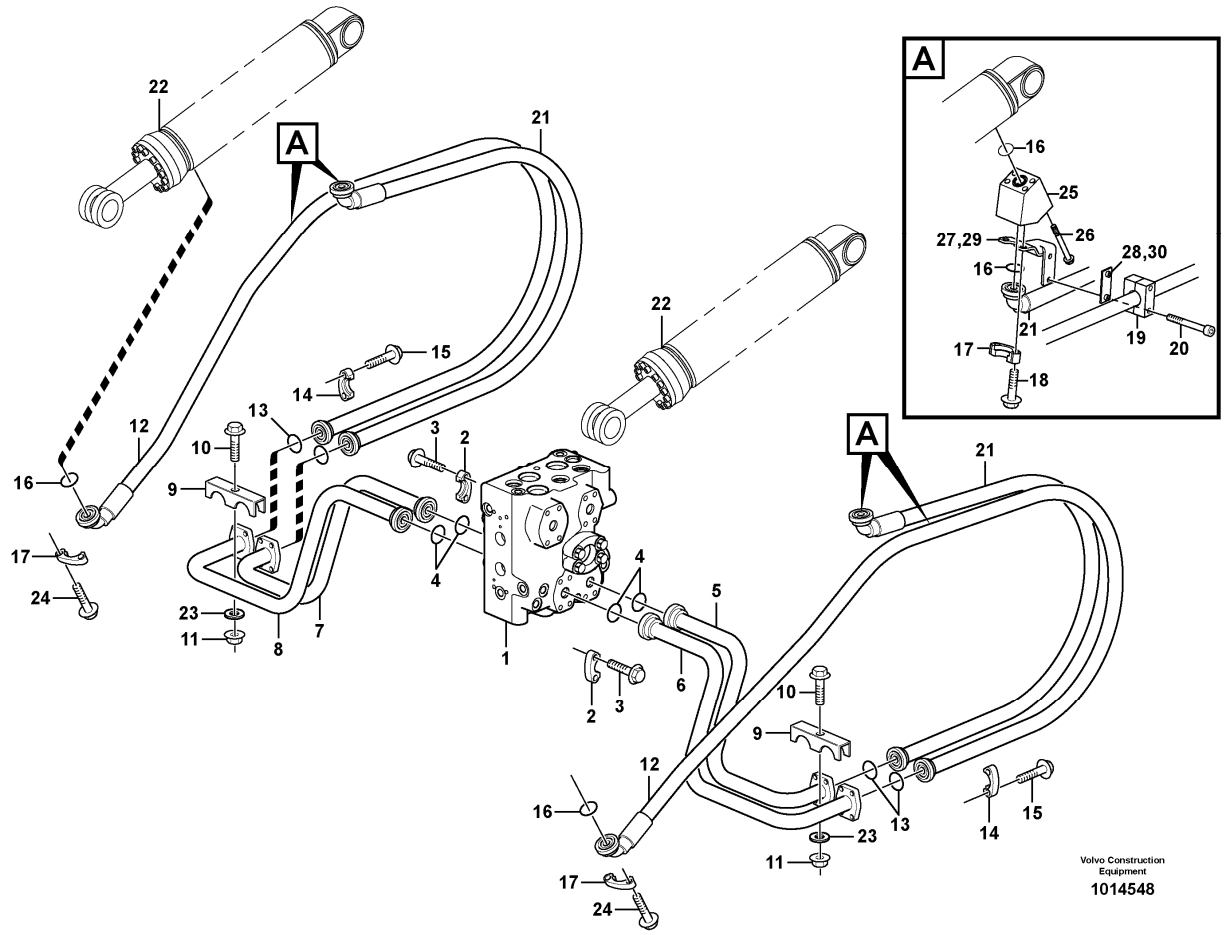

Section option	Kit	Option description
VOE33750		Wheel Loader
VOE33759		Wheel loader L60E OPEN ROPS

Pos	Part	Q1	Q2	Q3	Q4	Q5	PS	Kit	Description	Option(s)	Remark
1		1							Control valve		See ref 912/100
2	VOE11148951	1							Hose assembly		
3	VOE4881451	2							Marking sleeve		YELL
4	VOE4881459	2							Marking sleeve		BLUE
5	VOE4881438	4							Cable tie		
6		1							Footbrake Valve		See ref 525/150
7		1							Hose assembly		See ref 522/300

VOLVO

Construction Equipment

PROSIS Part Information

Date:	Image id:	Catalogue:	Model:
10/09/2018	**1004707**	**20009**	**L60E**
Brand:	Serial:	Group/Section:	Title:
Volvo	**1001-3355, 60001-61214, 70001-70530**	**911/550**	**Hydraulic system, tilt function STD, OPEN ROPS**

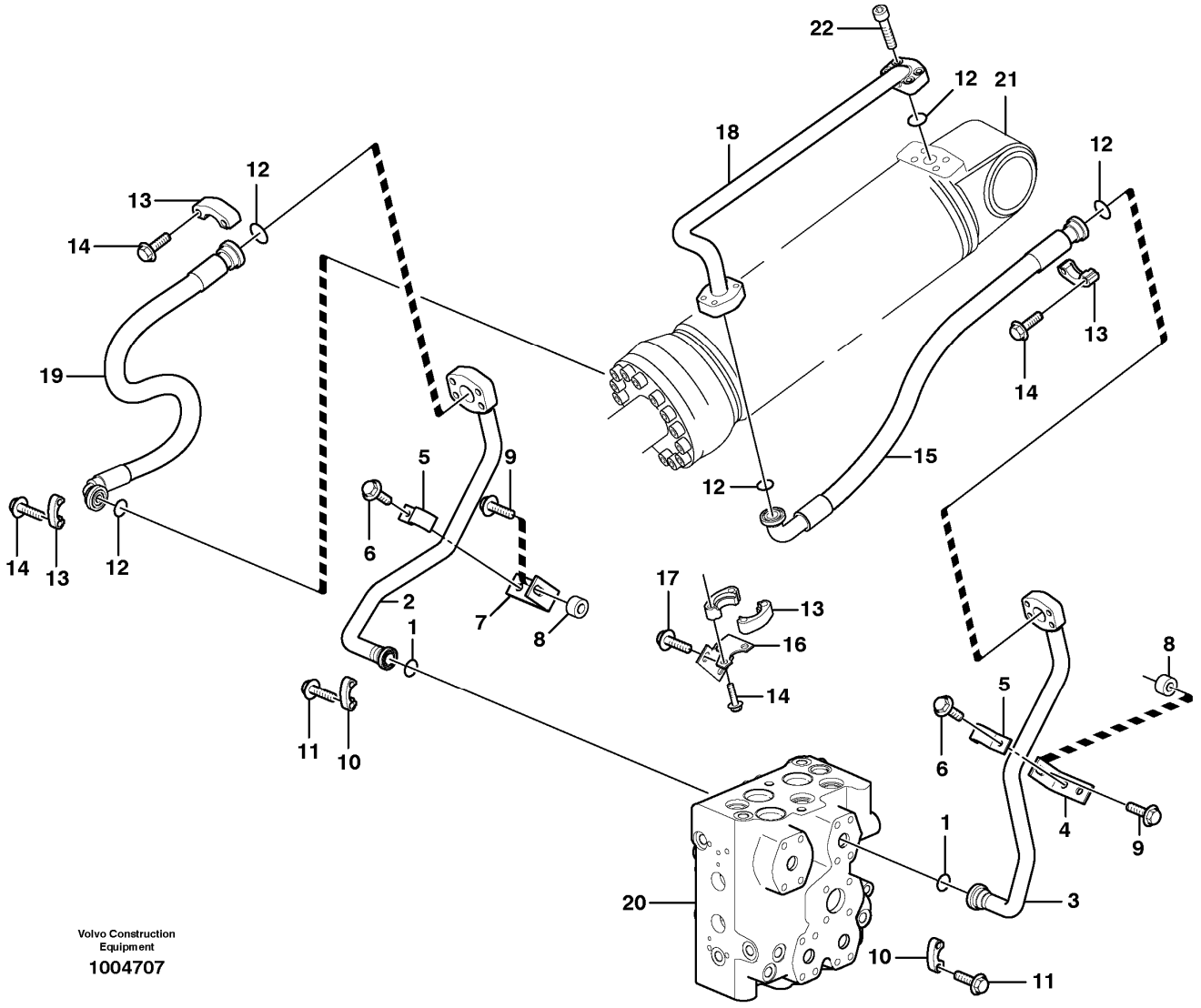

Section option	Kit	Option description
VOE33750		Wheel Loader
VOE33759		Wheel loader L60E OPEN ROPS

Pos	Part	Q1	Q2	Q3	Q4	Q5	PS	Kit	Description	Option(s)	Remark
1	VOE13948699	2							O-ring		
2	VOE15116556	1							Feed line		(VOE11173408)TILT -
3	VOE15116560	1							Feed line		(VOE11173404)TILT +
4	VOE16214080	1							Bracket		(VOE11173420)
5	VOE11075841	2							Clamp		

6	VOE946441	2							Flange screw		
7	VOE11173399	1							Attachment bracket		
8	VOE11025923	2							Spacer		
9	VOE13965192	2							Screw		
10		4					NS		Flange Half		
11		8					NS		Screw		
12	VOE990756	5							Sealing ring		
13	VOE14048189	8							Flange half		
14	VOE13965226	16							Screw		
15	VOE936117	1							Hose assembly		
15	VOE11173982	1							Hose assembly	VOE82076	
16	VOE11410319	1							Anchorage		
17	VOE13946817	2							Screw		
18	VOE15037289	1							Feed line		(VOE11410322)
19	VOE936117	1							Hose assembly		
19	VOE11173982	1							Hose assembly	VOE82076	
20		1							Control valve		See ref 912/100
21		1							Hydraulic cylinder		See ref 945/550
22	VOE13959258	4							Allen Hd Screw		

VOLVO

Construction Equipment

PROSIS Part Information

Date:	Image id:	Catalogue:	Model:
10/09/2018	**1004004**	**20009**	**L60E**
Brand:	Serial:	Group/Section:	Title:
Volvo	**1001-3355, 60001-61214, 70001-70530**	**911/600**	**Oil cooler with hoses**

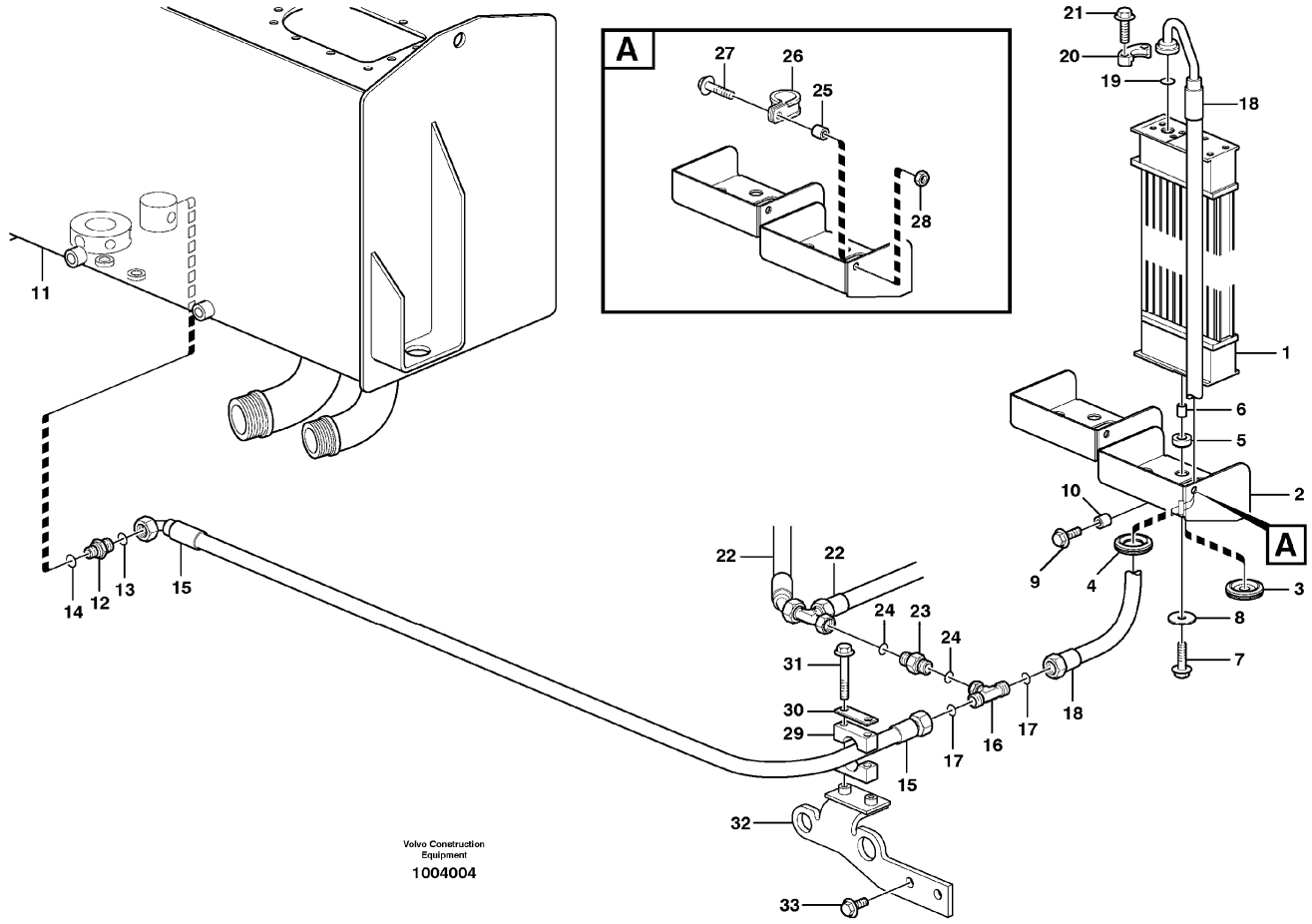

Pos	Part	Q1	Q2	Q3	Q4	Q5	PS	Kit	Description	Option(s)	Remark
1	VOE15175837	1							Hydraulic oil cooler		(VOE11110371)
	VOE15177897	1							Hydraulic oil cooler	VOE82140	(VOE11110389)SER NO 1104 -
2	VOE11410228	1							Shelf		
3	VOE943920	2							Plug		
4	VOE13961962	2							Protecting bushing		
5	VOE11024753	8							Rubber damper		
6	VOE4951048	4							Tube		
7	VOE946671	4							Flange screw		
8	VOE925739	4							Washer		
9	VOE13945444	2							Screw		
10	VOE13948871	2							Spacer washer		
11		1							Hydr fluid tank		See ref 911/100

12	VOE13933853	1							Nipple		
13	VOE990738	1							•O-ring		(VOE4880493)
14	VOE14211863	1							•Sealing ring		
15	VOE11173309	1							Hose assembly		
16	VOE13933935	1							T-nipple		
17	VOE990738	2							•O-ring		(VOE4880493)
18	VOE11173313	1							Hose assembly		
19	VOE990741	1							O-ring		
20	VOE11015453	2							Flange half		
21	VOE13945444	4							Screw		
22		1							Hose assembly		See ref 263/125
23	VOE11172946	1							Non-return valve		
24	VOE982962	2							•O-ring		
25	VOE4973473	1							Spacer sleeve		
26	VOE977599	1							Clamp		(VOE13977599)
27	VOE946671	1							Flange screw		
28	VOE13945408	1							Nut		
29	VOE11411343	1							Clamp		
30	VOE11003048	1							Cover plate		
31	VOE13965176	2							Screw		
32	VOE11173685	1							Retainer		
33	VOE946440	2							Flange screw		

VOLVO

Construction Equipment

PROSIS Part Information

Date:	Image id:	Catalogue:	Model:
10/09/2018	**1072477**	**20009**	**L60E**
Brand:	Serial:	Group/Section:	Title:
Volvo	**1001-3355, 60001-61214, 70001-70530**	**912/100**	**Control valve with fitting parts. STD, OPEN ROPS**

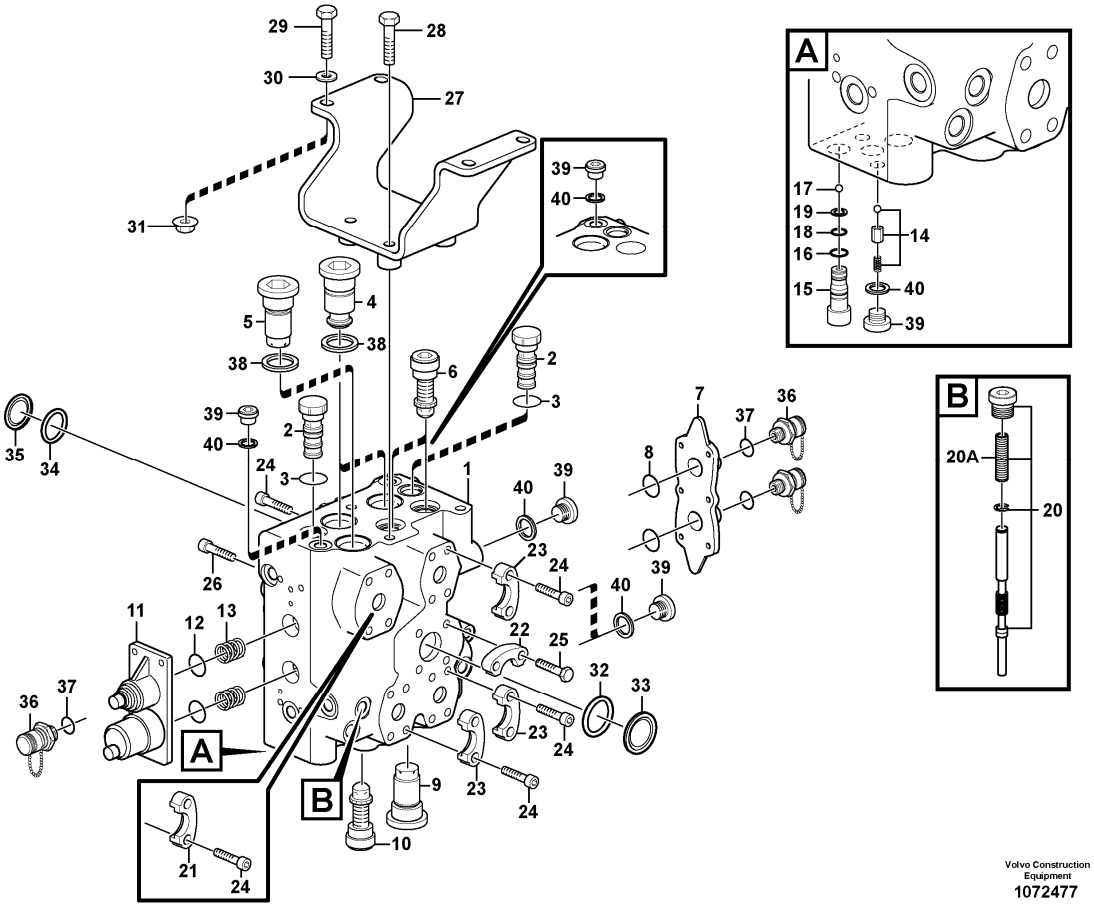

Section option	Kit	Option description
VOE33750		Wheel Loader
VOE33759		Wheel loader L60E OPEN ROPS
VOE83278		Long boom without central lubrication LOAD 33763
VOE83380		Extended lifting arms with C-lubrication.

Q1-Q5	Option	Option description	
Q1 33750 33759	VOE33750	Wheel Loader	
Q2 83278 83380	VOE83278	Long boom without central lubrication LOAD 33763	

Pos	Part	Q1	Q2	Q3	Q4	Q5	PS	Kit	Description	Option(s)	Remark
1	VOE11172248	1							Control valve		
	VOE11411975		1						Control valve		
2	VOE15142603	4							•Valve		(VOE11712703)

3		4					NS		••Sealing Kit		
4	VOE11712705	3							•Non-return valve		
5	VOE11712706	1							•Delivery valve		
6	VOE11712312	2							•Shock Valve		
7	VOE11712707	1							•Cover		
8	VOE11712708	1							••Sealing kit		
9	VOE11713148	1							•Shock Valve		
10	VOE11712709	1							•Valve		
11	VOE11712358	1							•Casing		
12	VOE11712708	1							••Sealing kit		
13	VOE11712710	2							•Spring kit		
14	VOE11712711	1					SS		•Non-return valve		
15	VOE11120104	1							•Shuttle valve		
16	VOE13949657	1							••O-ring		
17	VOE192601	1							••Ball		
18	VOE955972	1							••O-ring		
19	VOE13962531	2							••Back-up ring		
20	VOE15165401	1							•Valve slide		
20A	VOE11712712	1							••Spring		
21	VOE935308	2							•Flange half		
22	VOE11015455	4							•Flange half		
23	VOE11015454	14							•Flange half		
24	VOE959240	32							•Hex. socket screw		
25	VOE13965193	4							•Screw		
26	VOE13959258	4							•Allen Hd Screw		
27	VOE11173199	1							Bracket		
28	VOE13965193	3							Screw		
29	VOE13965194	4							Screw		
30	VOE13960145	4							Washer		
31	VOE13971096	4							Flange nut		
32	VOE990756	1							Sealing ring		
33	VOE11172549	1							Plug		
34	VOE13948699	1							O-ring		
35	VOE11147234	1							Plug		
36	VOE936444	3							Testing nipple		A1, A2, B1
37	VOE13960213	3							•O-ring		
38	VOE14211860	3							Sealing ring		
39	VOE945065	5							Plug		
40	VOE13945653	5							Plane gasket		

VOLVO

Construction Equipment

PROSIS Part Information

Date:	Image id:	Catalogue:	Model:
10/09/2018	**1054828**	**20009**	**L60E**
Brand:	Serial:	Group/Section:	Title:
Volvo	**1001-3355, 60001-61214, 70001-70530**	**912/200**	**Control valve**

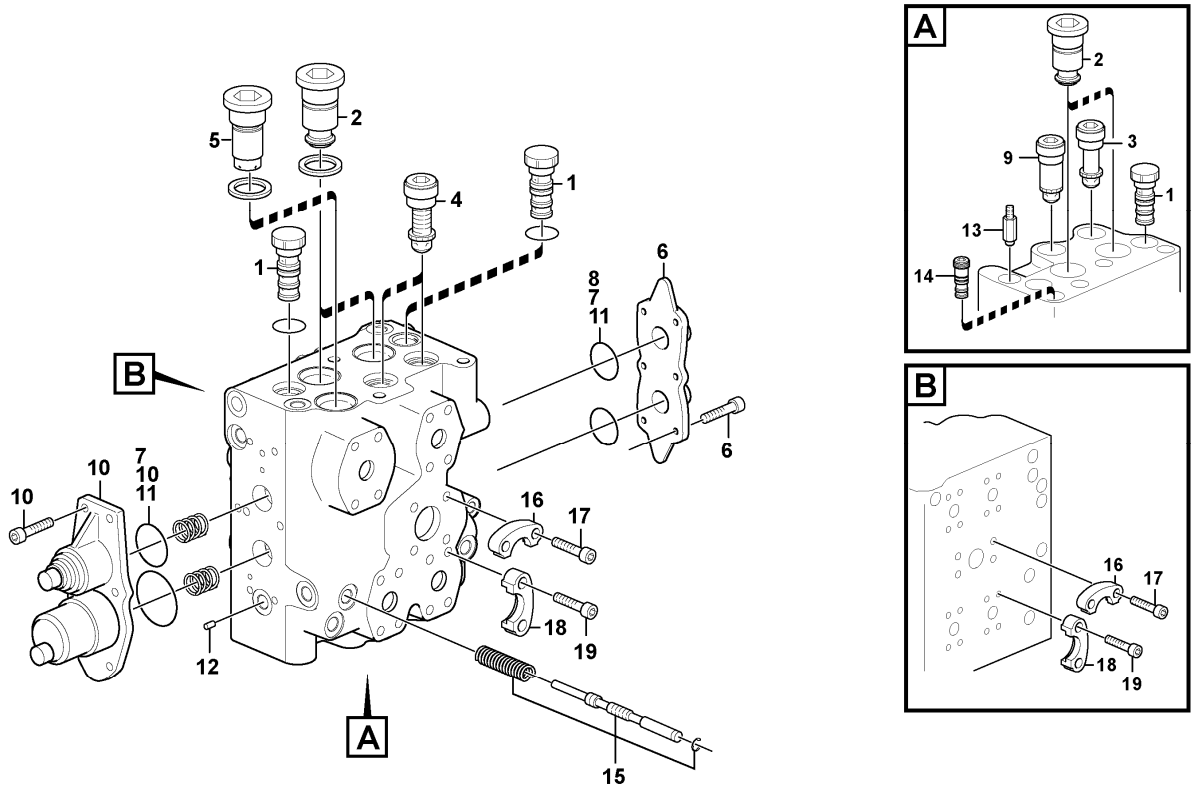

Volvo Construction Equipment
1054828

Section option	Kit	Option description
VOE83278		Long boom without central lubrication LOAD 33763
VOE83380		Extended lifting arms with C-lubrication.

Q1-Q5	Option	Option description	
Q1 83278 83380	VOE83278	Long boom without central lubrication LOAD 33763	

Pos	Part	Q1	Q2	Q3	Q4	Q5	PS	Kit	Description	Option(s)	Remark
	VOE11411975	1							Control valve		
1	VOE15142603	3							•Valve		
2	VOE11712705	4							•Non-return valve		
3	VOE11712709	1							•Valve		
4	VOE15166577	2							•Relief valve		
5	VOE11712706	1							•Delivery valve		

6	VOE11712707	1							•Cover		
7	VOE11712708	1							••Sealing kit		
8	VOE11712708	1							•Sealing kit		
9	VOE11713148	1							•Shock Valve		
10	VOE11712358	1							•Casing		
11	VOE11712708	1							••Sealing kit		
12	VOE15166596	1					SS		•Restrictor		
13	VOE11712711	1					SS		•Non-return valve		
14	VOE11120104	1							•Shuttle valve		
15	VOE15165401	1							•Valve slide		
16	VOE14048189	4							•Flange half		
17	VOE13965192	8							•Screw		
18	VOE935312	10							•Flange half		
19	VOE13946752	20							•Screw		

VOLVO

Construction Equipment

PROSIS Part Information

Date:	Image id:	Catalogue:	Model:
10/09/2018	**1076303**	**20009**	**L60E**
Brand:	Serial:	Group/Section:	Title:
Volvo	**1001-3355, 60001-61214, 70001-70530**	**912/250**	**Control valve 82060, 83466**

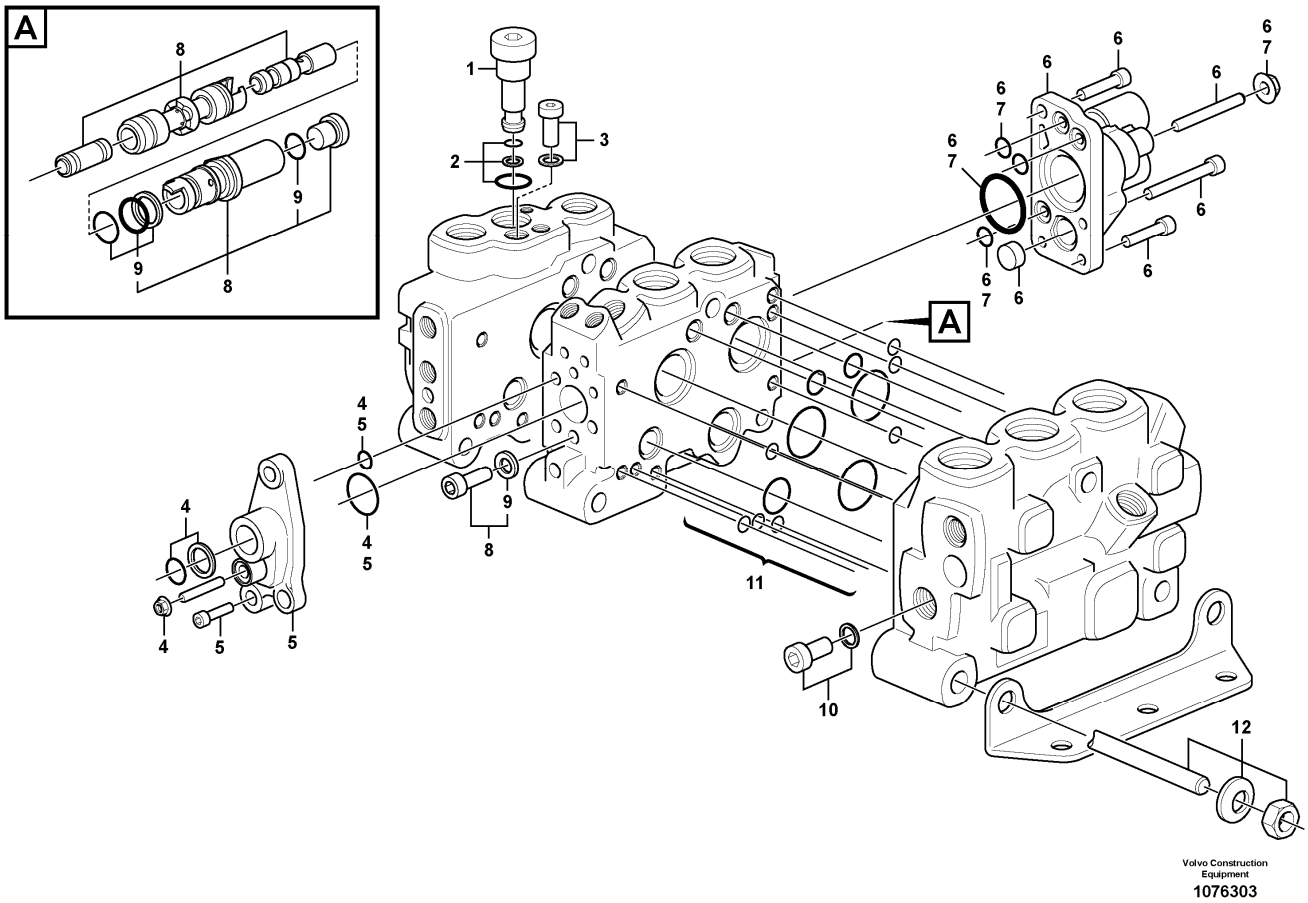

Section option	Kit	Option description
VOE82060	VOE11988275	Hydraulic function, 3rd
VOE83466		Hydraulic function, 3rd

Pos	Part	Q1	Q2	Q3	Q4	Q5	PS	Kit	Description	Option(s)	Remark
	VOE11173319	1					SS		Direction valve		
	VOE11173320	1							Direction valve		
1	VOE11701414	1							•Plug		
2	VOE11701418	1							••Sealing kit		
3	VOE15166752	1							•Screw kit		
4	VOE15183468	1							•Sealing kit		BSP
4	VOE15183461	1							•Sealing kit		UNF
5	VOE11701419	1							•Flange		
5	VOE925053	2							••O-ring		

5	VOE6238998	1							••O-ring		
5	VOE14013067	1							••Sealing washer		
6	VOE11715921	1							•Cover		
7	VOE11713613	1							••Sealing kit		
8	VOE11712365	1							•Spool		
9	VOE11714163	1							••Sealing kit		
10	VOE15166036	1							•Screw kit		
11	VOE11701439	1							•Sealing kit		
12	VOE15166705	1							•Rod		

VOLVO

Construction Equipment

PROSIS Part Information

Date:	Image id:	Catalogue:	Model:
10/09/2018	**1086935**	**20009**	**L60E**
Brand:	Serial:	Group/Section:	Title:
Volvo	**1001-3355, 60001-61214, 70001-70530**	**912/300**	**Valve body: Central block STD, OPEN ROPS**

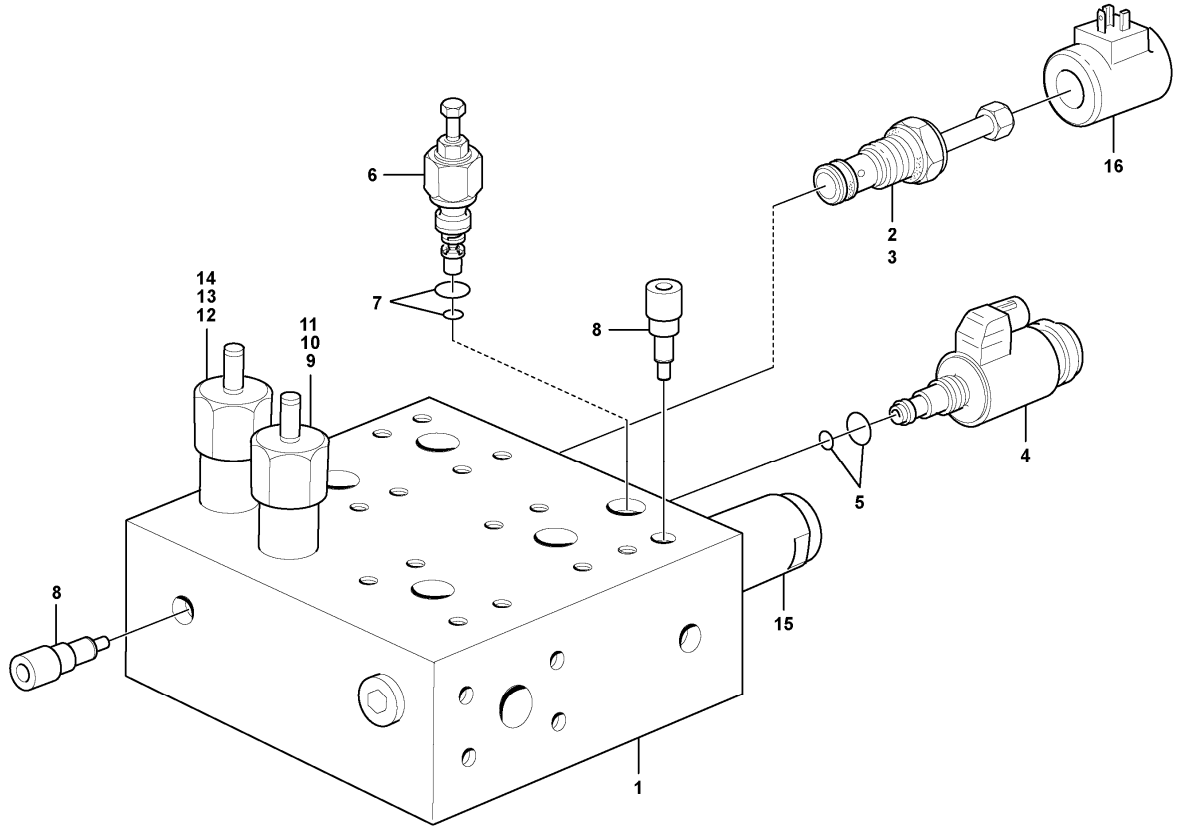

Section option	Kit	Option description
VOE33750		Wheel Loader
VOE33759		Wheel loader L60E OPEN ROPS

Pos	Part	Q1	Q2	Q3	Q4	Q5	PS	Kit	Description	Option(s)	Remark
1	VOE15021479	1					SS		Valve body		
2	VOE17224866	1							•Solenoid valve		MA502
3	VOE11709880	1							••Sealing kit		
4	VOE11709879	1							•Pressure regulator		MA202
5	VOE11709881	1							••Sealing kit		
6	VOE11705961	1							•Pressure limiting valve		
7	VOE11704530	1							••Sealing kit		
8	VOE11707564	2							•Shuttle valve		
9	VOE11709882	1							•Pressure regulator		

10	VOE11709861	1							••Reducing valve		
11	VOE11709883	1							••Sealing kit		
12	VOE11709884	1							•Pressure regulator		
13	VOE11709861	1							••Reducing valve		
14	VOE11709883	1							••Sealing kit		
15	VOE17466350	1							•Non-return valve		
16	VOE15092682	1							•Solenoid		

VOLVO

Construction Equipment

PROSIS Part Information

Date:	Image id:	Catalogue:	Model:
10/09/2018	**EC394**	**20009**	**L60E**
Brand:	Serial:	Group/Section:	Title:
Volvo	**1001-3355, 60001-61214, 70001-70530**	**912/550**	**Valve, circuit body and return valve 82058, 82075**

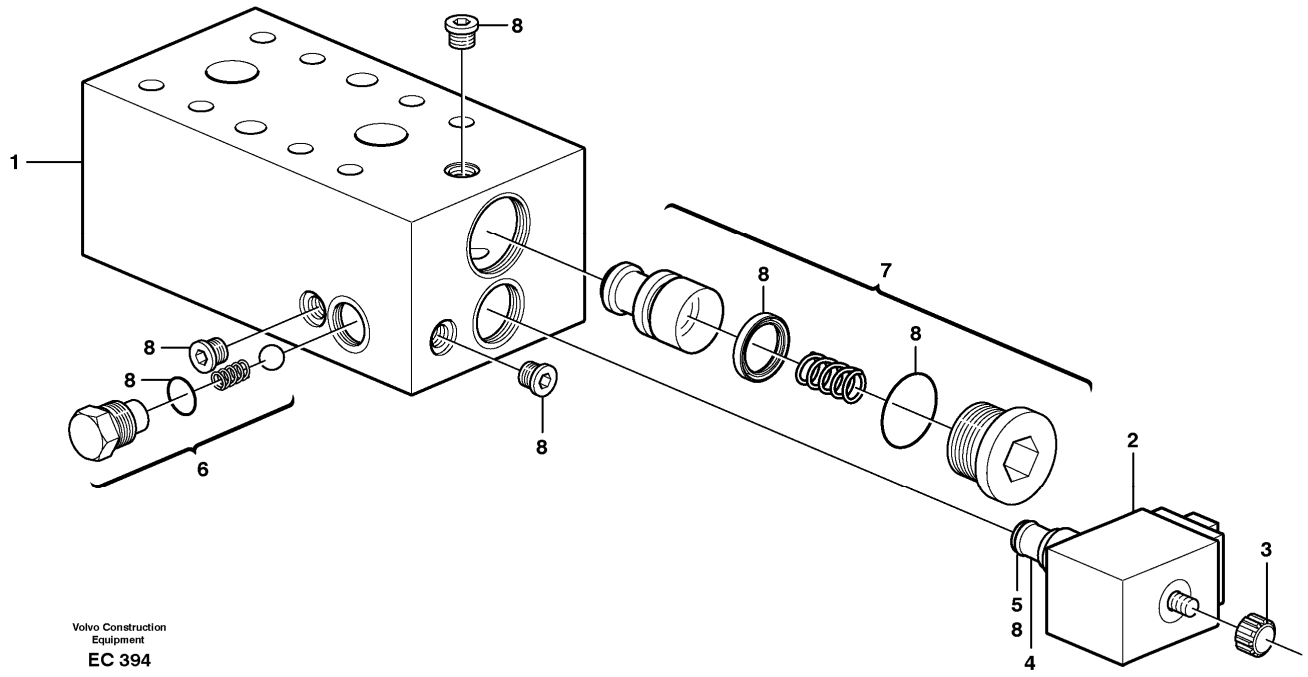

Section option	Kit	Option description
VOE82058		Boom suspension BSS
VOE82075		Singel acting lift system

Pos	Part	Q1	Q2	Q3	Q4	Q5	PS	Kit	Description	Option(s)	Remark
1	VOE11101827								Valve		
2	VOE11705917	1							•Solenoid valve kit		CT1
3	VOE11706062	1							••Nut set		
4	VOE11714081	1							••Coil		
5	VOE11706064	1							••Sealing kit		
6	VOE11706074	1							•Non-return valve kit		CT2
7	VOE11706075	1							•Valve		CT3
8	VOE11706789	1							Sealing kit		

VOLVO

Construction Equipment

PROSIS Part Information

Date:	Image id:	Catalogue:	Model:
10/09/2018	**1075661**	**20009**	**L60E**
Brand:	Serial:	Group/Section:	Title:
Volvo	**1001-3355, 60001-61214, 70001-70530**	**913/100**	**Hydraulic pump with fitting parts STD, OPEN ROPS**

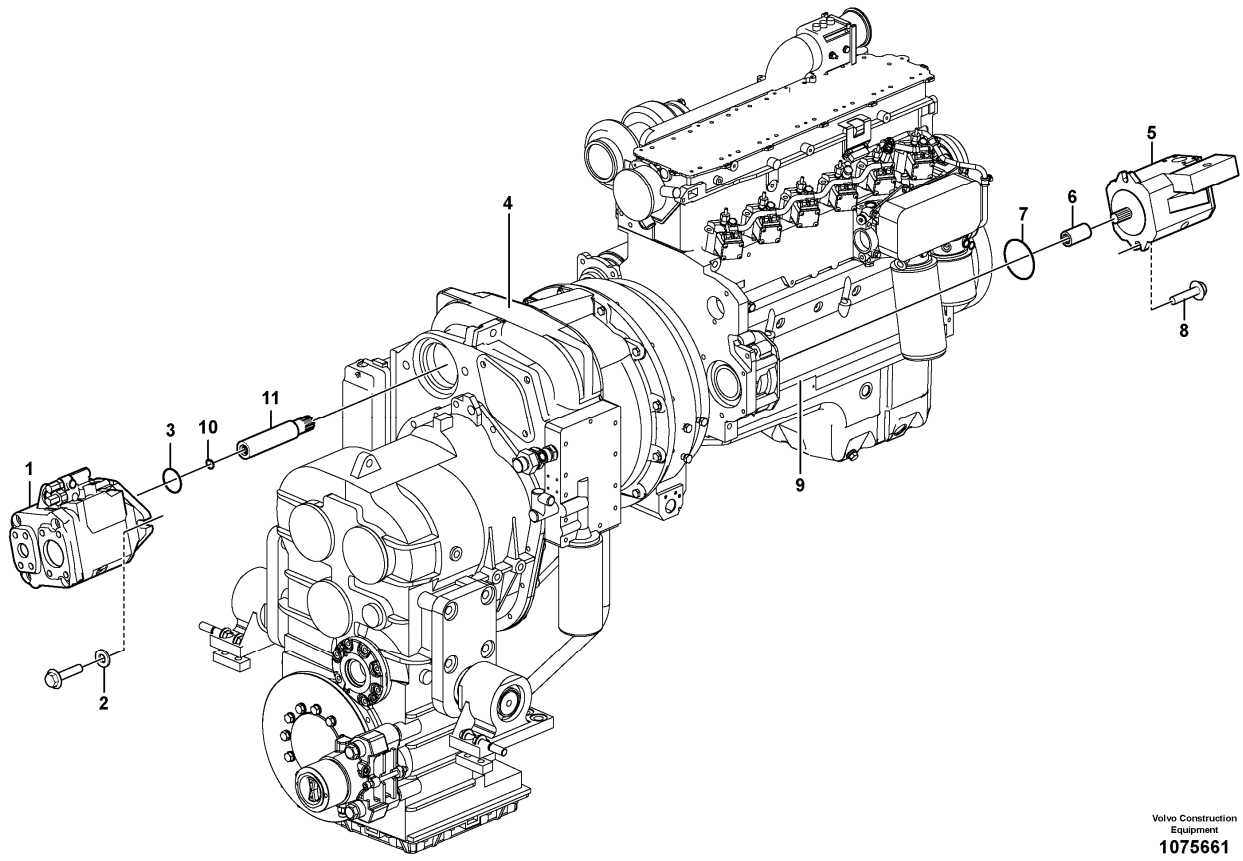

Section option	Kit	Option description
VOE33750		Wheel Loader
VOE33759		Wheel loader L60E OPEN ROPS

Pos	Part	Q1	Q2	Q3	Q4	Q5	PS	Kit	Description	Option(s)	Remark
1		1							Hydraulic Pump		See ref 913/150
		1							Hydraulic Pump	VOE83278, VOE83380	See ref 913/250
2	VOE13955900	2							Washer		
3	VOE960242	1							O-ring		
4		1							Housing		See ref 421/500
5		1							Hydraulic Pump		See ref 913/200
6	VOE20459123	1							Sleeve		
7	VOE20450819	1							O-ring		(VOE11173158)
8	VOE965225	2							Flange screw		

9		1							Engine		See ref 263/250
10	VOE914515	1							Retaining ring		
11	VOE11144861	1							Shaft		

VOLVO

Construction Equipment

PROSIS Part Information

Date:	Image id:	Catalogue:	Model:
10/09/2018	**1004693**	**20009**	**L60E**
Brand:	Serial:	Group/Section:	Title:
Volvo	**1001-3355, 60001-61214, 70001-70530**	**913/150**	**Hydraulic pump STD, OPEN ROPS**

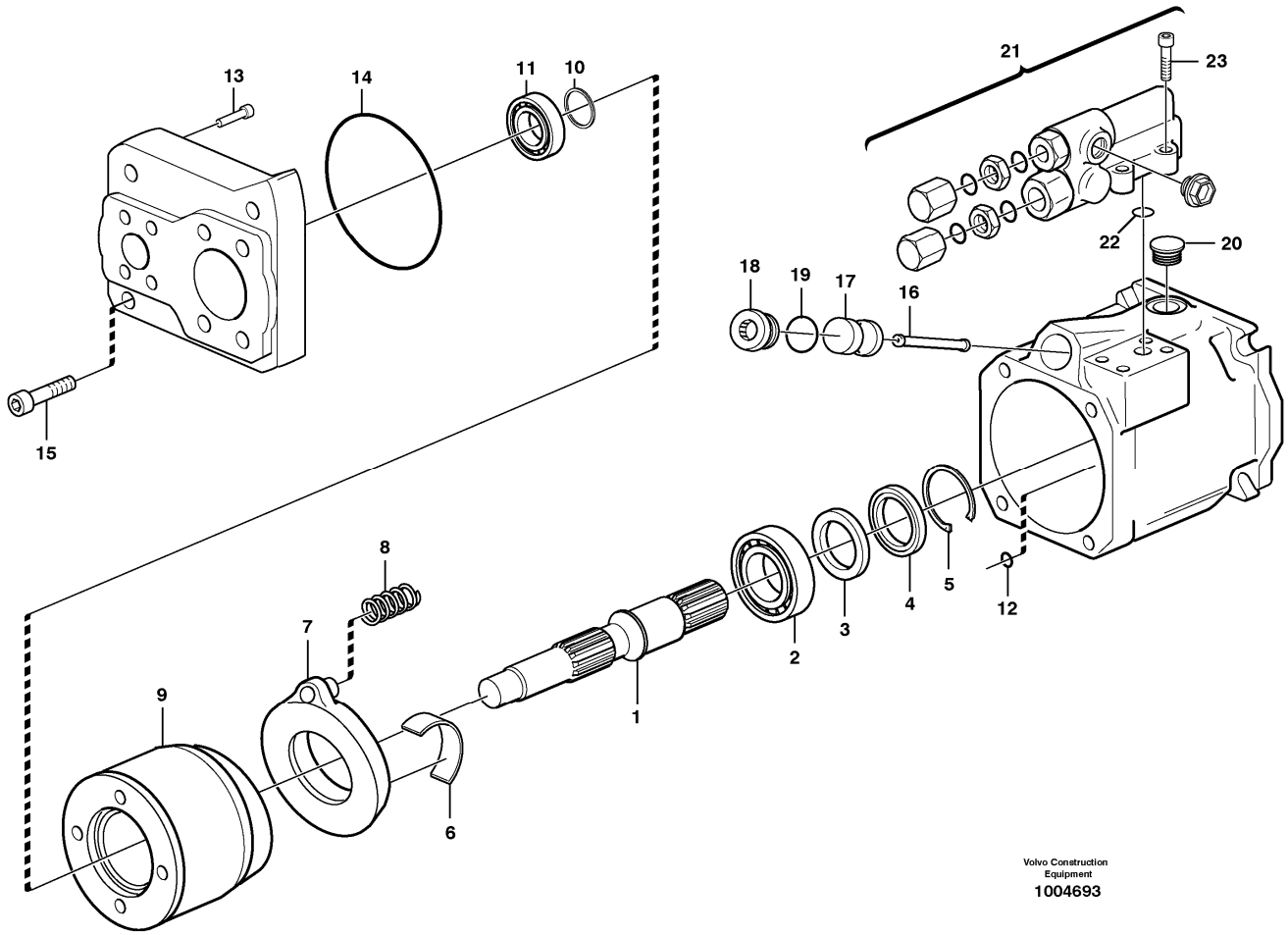

Section option	Kit	Option description
VOE33750		Wheel Loader
VOE33759		Wheel loader L60E OPEN ROPS

Q1-Q5	Option	Option description	
Q1 33750 33759	VOE33750	Wheel Loader	

Pos	Part	Q1	Q2	Q3	Q4	Q5	PS	Kit	Description	Option(s)	Remark
	VOE11172711	1							Hydraulic pump		85CC, REMAN VOE9011172711
1	VOE11708739	1							•Shaft		
2	VOE11997155	1							•Bearing		
3	VOE11708743	1					OP		•Stop ring		
4	VOE11997157	1							•Sealing ring		

5	VOE11708748	1							•Lock ring		
6	VOE11708745	2							•Bearing		
7	VOE11708738	1					SS		•Yoke		
8	VOE11708741	1							•Spring		
9	VOE11708735	1							•Pump unit		
10	VOE11708742	1							•Shim		
11	VOE11708744	1							•Roller bearing		
12	VOE11708257	1							•O-ring		
13	VOE11708101	1							•Non-return valve		
14	VOE11709925	1							•O-ring		
15	VOE11708749	4							•Screw		
16	VOE11708737	1							•Piston rod		
17	VOE11709920	1					OP		•Piston		
18	VOE11709923	1							•Plug		
19	VOE11709926	1							•O-ring		
20		1					NS		•Plug		
21	VOE11709919	1							•Control valve		
22	VOE11708087	3							••O-ring		
23	VOE13974079	4							••Allen Hd Screw		
	VOE17222775	1							•Sealing kit		

VOLVO

Construction Equipment

PROSIS Part Information

Date:	Image id:	Catalogue:	Model:
10/09/2018	**1036053**	**20009**	**L60E**
Brand:	Serial:	Group/Section:	Title:
Volvo	**1001-3355, 60001-61214, 70001-70530**	**913/200**	**Hydraulic pump STD, OPEN ROPS**

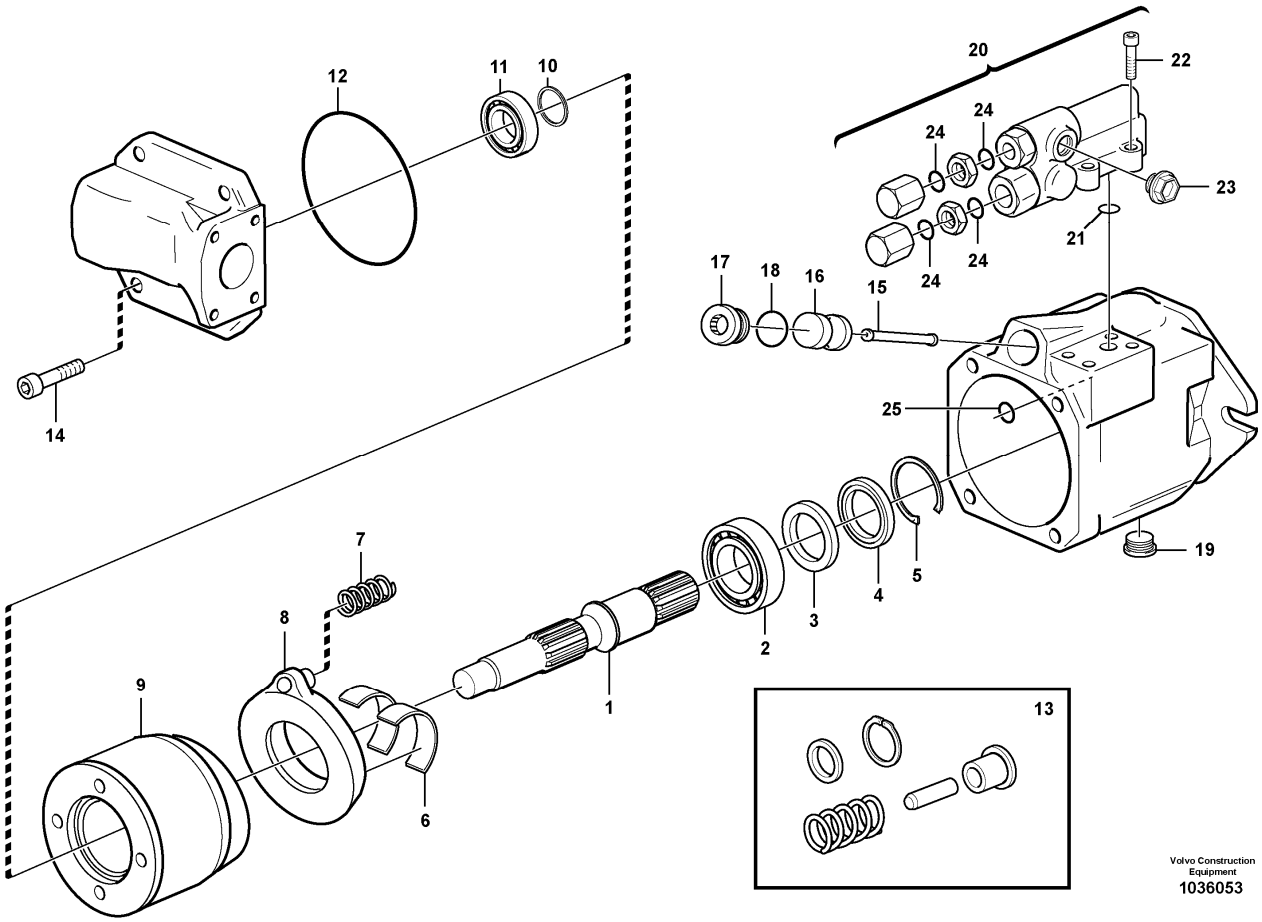

Section option	Kit	Option description
VOE33750		Wheel Loader
VOE33759		Wheel loader L60E OPEN ROPS

Pos	Part	Q1	Q2	Q3	Q4	Q5	PS	Kit	Description	Option(s)	Remark
	VOE11172358	1							Hydraulic pump		18CC, REMAN VOE9011172358
1	VOE11708082	1							•Drive shaft		
2	VOE11704547	1							•Roller bearing		
3	VOE11708754	1							•Stop ring		
4	VOE11704551	1							•Sealing ring		
5	VOE11708755	1							•Lock ring		
6	VOE11704549	2							•Bearing		
7	VOE11704541	1							•Spring		
8	VOE11715719	1							•Yoke		(VOE11708129)

9	VOE11704535	1							•Pump element		
10	VOE11708084	1							•Shim		
11	VOE11704546	1							•Roller bearing		(VOE11708085)
12	VOE11704553	1							•O-ring		
13	VOE11706189	1							•Non-return valve		
14	VOE11704557	4							•Allen Hd Screw		
15	VOE11704538	1							•Piston rod		
16	VOE11703833	1							•Piston		
17	VOE11708753	1							•Plug		
18	VOE11708231	1							•O-ring		
19	VOE11704559	1							•Plug		
20	VOE11998863	1							•Valve		
21	VOE11708087	3							••O-ring		
22	VOE13974079	4							••Allen Hd Screw		
23	VOE11992833	1							••Plug		
24	VOE7190187	4							••O-ring		
25	VOE11708257	1							•O-ring		

VOLVO

Construction Equipment

PROSIS Part Information

Date:	Image id:	Catalogue:	Model:
10/09/2018	**1043515**	**20009**	**L60E**
Brand:	Serial:	Group/Section:	Title:
Volvo	**1001-3355, 60001-61214, 70001-70530**	**913/250**	**Hydraulic pump 83278, 83380**

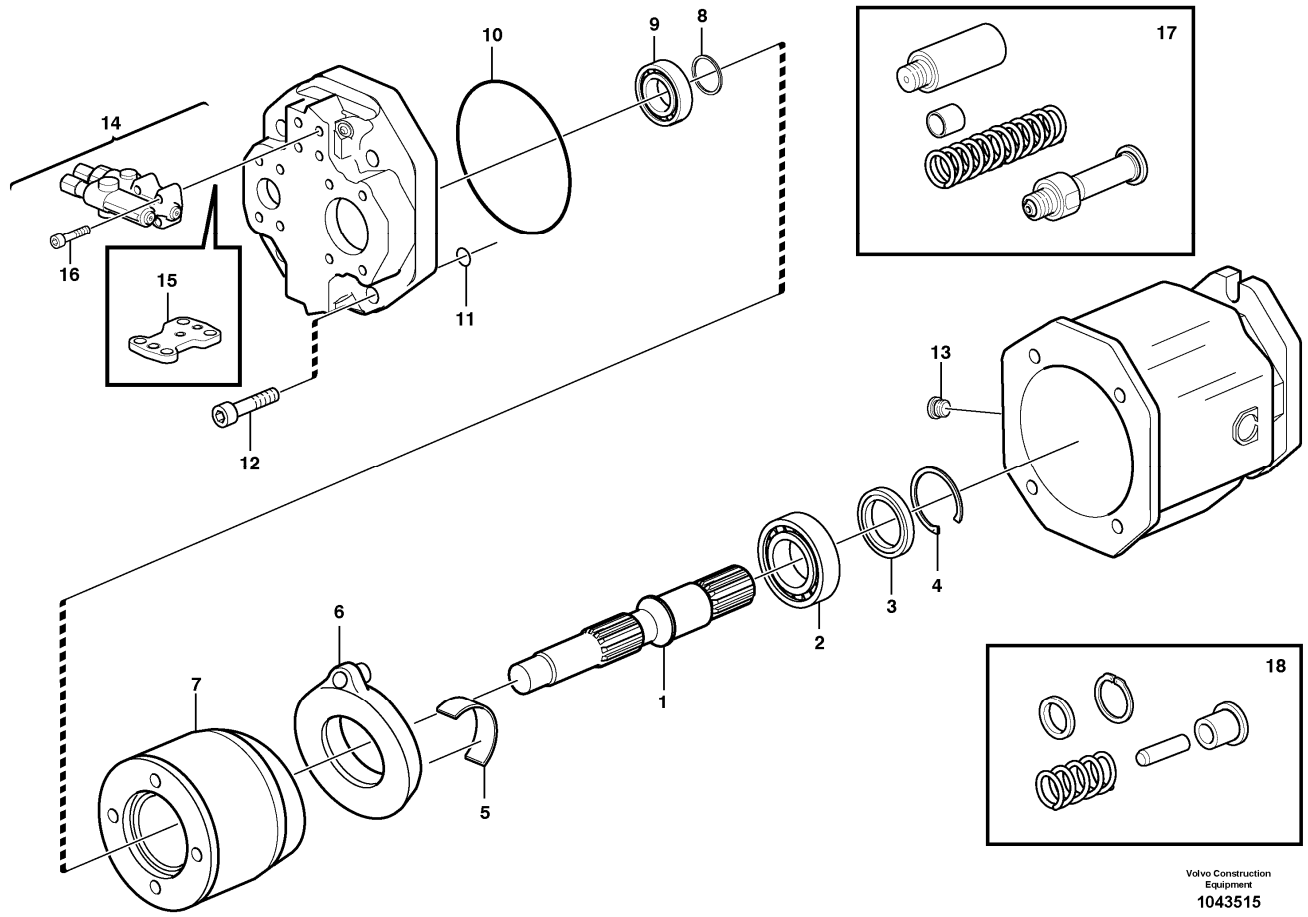

Section option	Kit	Option description
VOE83278		Long boom without central lubrication LOAD 33763
VOE83380		Extended lifting arms with C-lubrication.

Pos	Part	Q1	Q2	Q3	Q4	Q5	PS	Kit	Description	Option(s)	Remark
	VOE11411977	1							Hydraulic pump		85CC, REMAN VOE9011411977
1	VOE11709857	1							•Drive shaft		
2	VOE11997155	1							•Bearing		
3	VOE11997157	1							•Sealing ring		
4	VOE11708748	1							•Lock ring		
5	VOE11997156	2							•Bearing		
6	VOE11709856	1							•Yoke		
7	VOE11709854	1							•Pump element		
8	VOE11708742	1							•Shim		

9	VOE11708744	1							•Roller bearing		
10	VOE11709859	1							•O-ring		
11	VOE3583078	4							•O-ring		
12	VOE973574	4							•Hex. socket screw		
13	VOE11709860	1							•Plug		
14	VOE11716015	1							•Control valve		
15	VOE11715266	1							••Gasket		
16	VOE13974079	4							••Allen Hd Screw		
17	VOE11709855	1							•Control unit		
18	VOE11706189	1							•Non-return valve		

VOLVO

Construction Equipment

PROSIS Part Information

Date:	Image id:	Catalogue:	Model:
10/09/2018	**1014871**	**20009**	**L60E**
Brand:	Serial:	Group/Section:	Title:
Volvo	**1001-3355, 60001-61214, 70001-70530**	**914/100**	**Servo - hydraulic STD, OPEN ROPS**

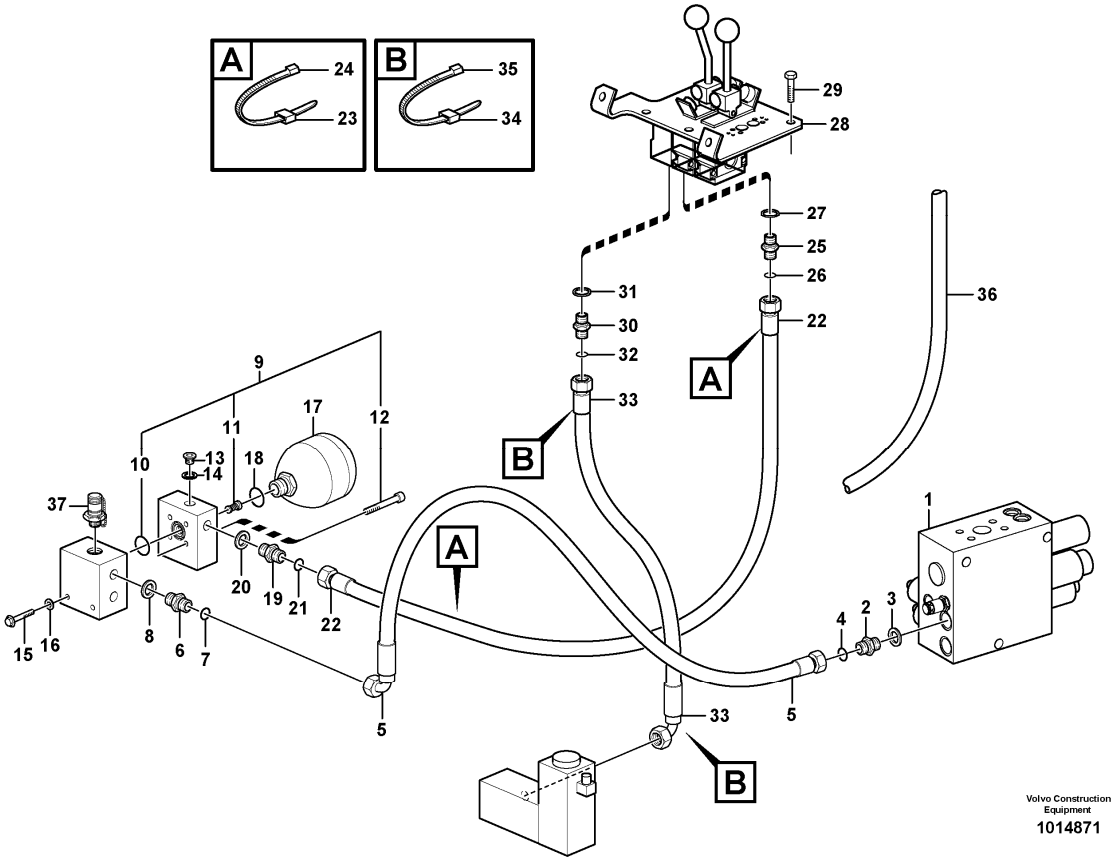

Section option	Kit	Option description
VOE33750		Wheel Loader
VOE33759		Wheel loader L60E OPEN ROPS

Pos	Part	Q1	Q2	Q3	Q4	Q5	PS	Kit	Description	Option(s)	Remark
1		1							Valve block		See ref 912/300
2	VOE13933855	1							Nipple		
3	VOE14213676	1							•Sealing ring		
4	VOE990737	1							•O-ring		(VOE4880492)
5	VOE11148962	1							Hose assembly		
5	VOE11130862	1							Hose assembly	VOE82076	
6	VOE14345423	1							Nipple		
7	VOE990737	1							•O-ring		(VOE4880492)
8	VOE14211856	1							•Sealing ring		

9	VOE11173806	1							Connection block		
10	VOE13948699	1							•O-ring		
11	VOE11709718	1							•Non-return valve		
	VOE983489	1							•O-ring		
12	VOE959227	4							•Hex. socket screw		
13	VOE960630	1							Plug		
14	VOE13945653	1							Plane gasket		
15	VOE946671	2							Flange screw		
16	VOE11117464	2							Plain washer		(VOE13960141)
17	VOE11173690	1							Accumulator		
17	VOE17262258	1							Accumulator	VOE82076	(VOE11173691)
18	VOE13967752	1							O-ring		
19	VOE14345423	1							Nipple		
20	VOE14211856	1							•Sealing ring		
21	VOE990737	1							•O-ring		(VOE4880492)
22	VOE936706	1							Hose assembly		(VOE936110)
22	VOE11410002	1							Hose assembly	VOE82076	
23	VOE4881458	2							Marking sleeve		
24	VOE4881438	2							Cable tie		
25	VOE14345423	1							Nipple		
26	VOE990737	1							•O-ring		(VOE4880492)
27	VOE14211856	1							•Sealing ring		
28		1							Servo valve		See ref 914/150
29	VOE13976479	4							Six point socket screw		
30	VOE14345423	1							Nipple		
31	VOE14211856	1							•Sealing ring		
32	VOE990737	1							•O-ring		(VOE4880492)
33	VOE936704	1							Hose assembly		
33	VOE11172989	1							Hose assembly	VOE82076	
34	VOE4881455	2							Marking sleeve		
35	VOE4881438	2							Cable tie		
36	VOE927503	REQ							Hydraulic hose		
37	VOE936444	1							Testing nipple		

VOLVO

Construction Equipment

PROSIS Part Information

Date:	Image id:	Catalogue:	Model:
10/09/2018	**1005284**	**20009**	**L60E**
Brand:	Serial:	Group/Section:	Title:
Volvo	**1001-3355, 60001-61214, 70001-70530**	**914/150**	**Servo valve with fitting parts STD, OPEN ROPS**

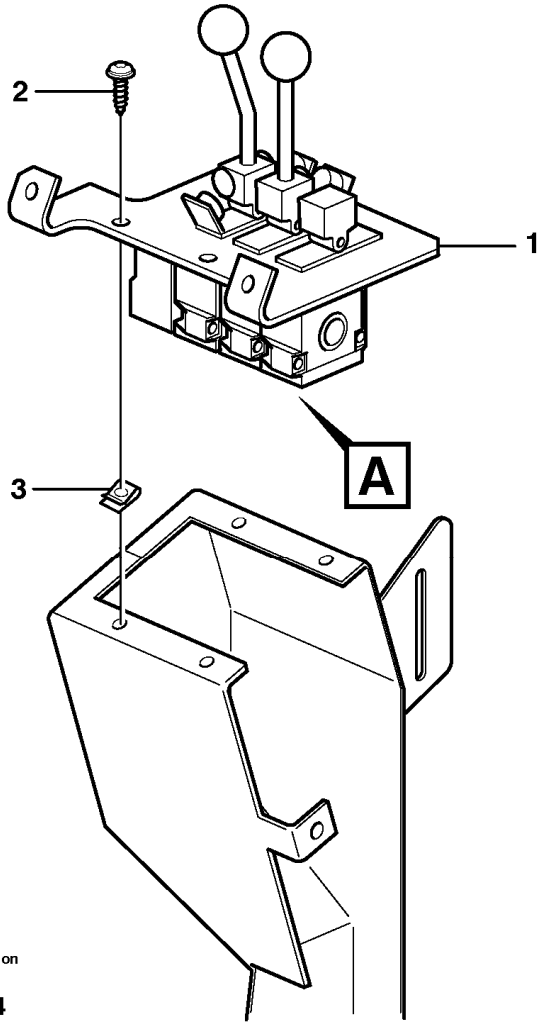

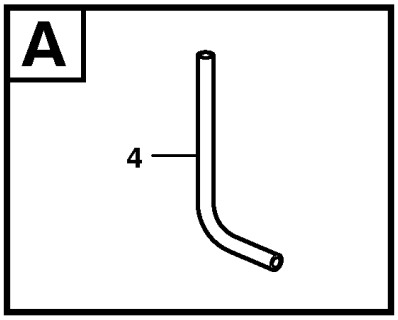

Section option	Kit	Option description
VOE33750		Wheel Loader
VOE33759		Wheel loader L60E OPEN ROPS

Pos	Part	Q1	Q2	Q3	Q4	Q5	PS	Kit	Description	Option(s)	Remark
1	VOE11172599	1							Servo valve		See ref 914/250
2	VOE13976479	4							Six point socket screw		
3	VOE13949867	4							Spring nut		

4	VOE943369	1							Hose		L = 500 MM

VOLVO

Construction Equipment

PROSIS Part Information

Date:	Image id:	Catalogue:	Model:
10/09/2018	**1020012**	**20009**	**L60E**
Brand:	Serial:	Group/Section:	Title:
Volvo	**1001-3355, 60001-61214, 70001-70530**	**914/200**	**Control lines STD, OPEN ROPS**

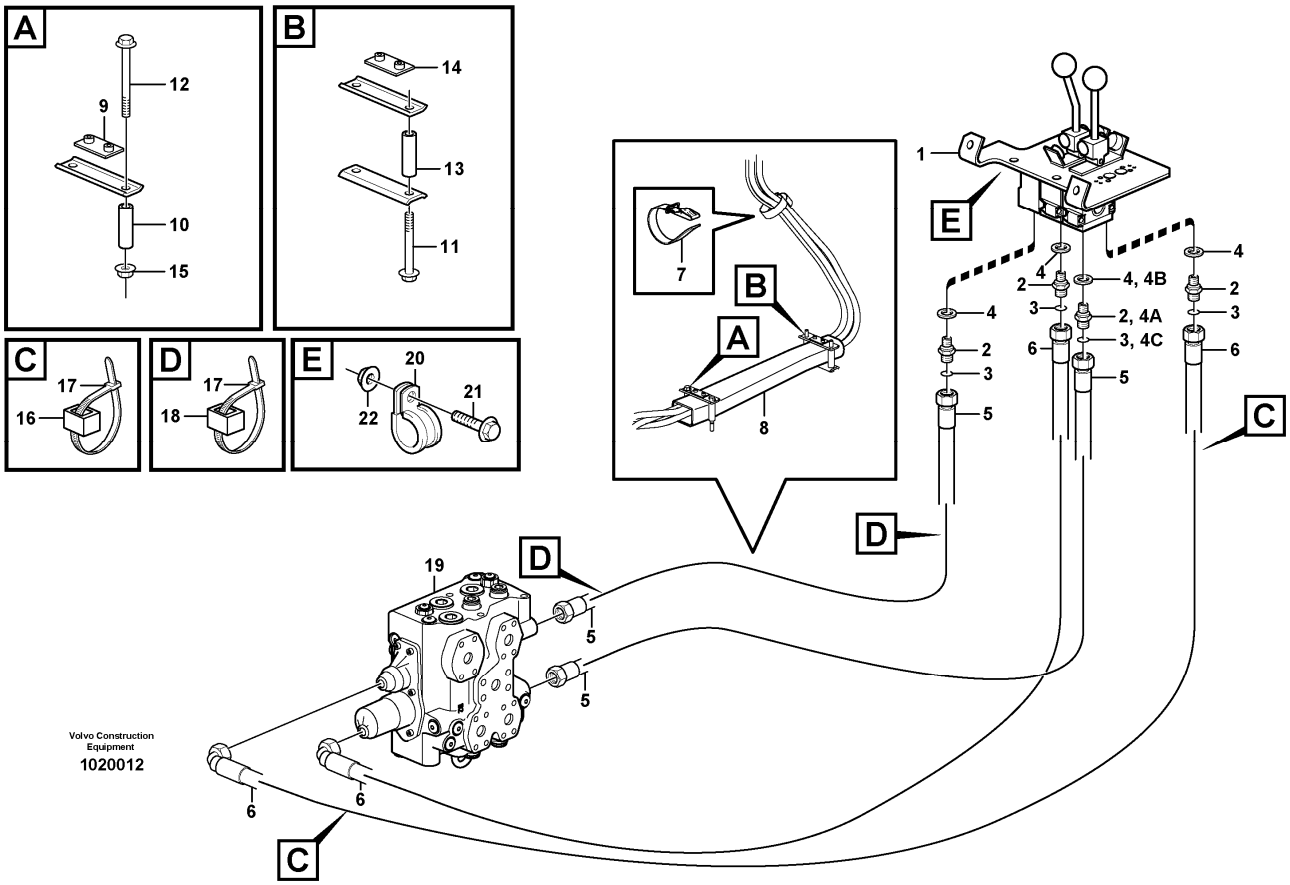

Section option	Kit	Option description
VOE33750		Wheel Loader
VOE33759		Wheel loader L60E OPEN ROPS
VOE33760		Cab. Open Rops

Pos	Part	Q1	Q2	Q3	Q4	Q5	PS	Kit	Description	Option(s)	Remark
1		1							Servo valve		See ref 914/250
2	VOE14345423	4							Nipple		S/N - 2690
2	VOE14345423	3							Nipple		S/N 2691 -
3	VOE990737	3-4							•O-ring		(VOE4880492)
4	VOE14211856	3-4							•Sealing ring		
4A	VOE11411803	1							Restricting coupling		S/N 2691 -
4B	VOE976929	1							Gasket		S/N 2691 -
4C	VOE990737	1							O-ring		S/N 2691 -

5	VOE936697	2							Hose assembly		L=2100 MM
5	VOE11173972	2							Hose assembly	VOE82076	
6	VOE936713	2							Hose assembly		L=2700 MM
6	VOE11130855	2							Hose assembly	VOE82076	
7	VOE11104606	1							Retaining strap	VOE83466	
8	VOE11173522	1							Protecting hose		
9	VOE4785466	1							Attaching plate		
10	VOE11025954	2							Spacer sleeve		
10	VOE11173924	2							Spacer sleeve	VOE82060, VOE82063, VOE83466	
11	VOE13965189	2							Screw		
12	VOE13965190	2							Screw		
13	VOE11025954	2							Spacer sleeve		
13	VOE11173924	2							Spacer sleeve	VOE83466, VOE83488	
14	VOE4785466	1							Attaching plate		
15	VOE13971095	2							Flange nut		
16	VOE4881452	2							Marking sleeve		
17	VOE4881438	4							Cable tie		
18	VOE4881459	2							Marking sleeve		
19		1							Control valve		See ref 912/100
20	VOE952627	1							Clamp		
21	VOE13946544	1							Screw		
22	VOE13945407	1							Nut		

VOLVO

Construction Equipment

PROSIS Part Information

Date:	Image id:	Catalogue:	Model:
10/09/2018	**EC291A**	**20009**	**L60E**
Brand:	Serial:	Group/Section:	Title:
Volvo	**1001-3355, 60001-61214, 70001-70530**	**914/250**	**Servo valve**

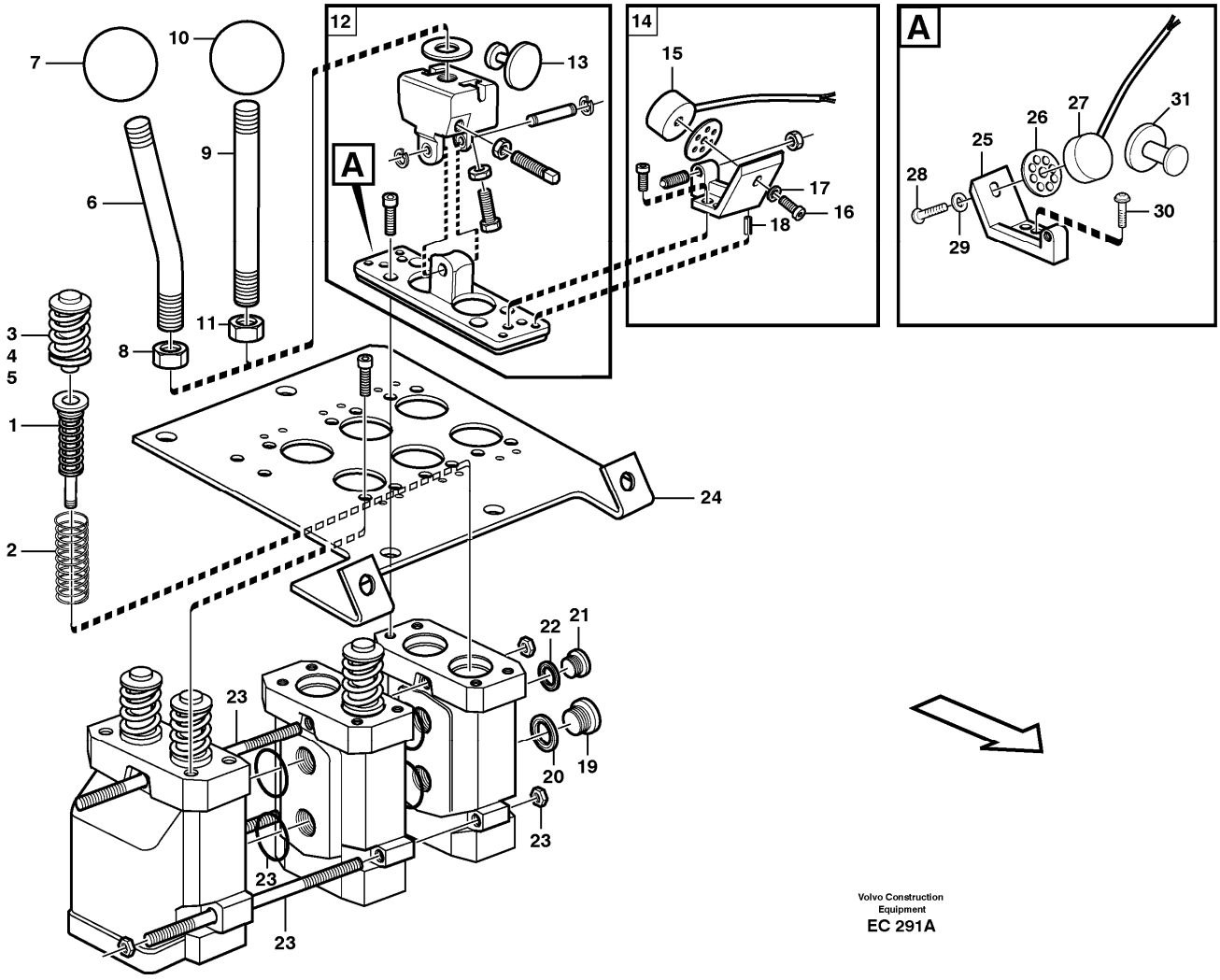

Section option	Kit	Option description
VOE80098	VOE11707329	Detent, 3rd function
VOE33750		Wheel Loader
VOE33759		Wheel loader L60E OPEN ROPS

Q1-Q5	Option	Option description	
Q1 STD OPEN ROPS			
Q2 80098	VOE80098	Detent, 3rd function	

Pos	Part	Q1	Q2	Q3	Q4	Q5	PS	Kit	Description	Option(s)	Remark

1		1							Servo valve		See ref 914/250
2	VOE14345423	4							Nipple		S/N - 2690
2	VOE14345423	3							Nipple		S/N 2691 -
3	VOE990737	3-4							•O-ring		(VOE4880492)
4	VOE14211856	3-4							•Sealing ring		
4A	VOE11411803	1							Restricting coupling		S/N 2691 -
4B	VOE976929	1							Gasket		S/N 2691 -
4C	VOE990737	1							O-ring		S/N 2691 -
5	VOE936697	2							Hose assembly		L=2100 MM
5	VOE11173972	2							Hose assembly	VOE82076	
6	VOE936713	2							Hose assembly		L=2700 MM
6	VOE11130855	2							Hose assembly	VOE82076	
7	VOE11104606	1							Retaining strap	VOE83466	
8	VOE11173522	1							Protecting hose		
9	VOE4785466	1							Attaching plate		
10	VOE11025954	2							Spacer sleeve		
10	VOE11173924	2							Spacer sleeve	VOE82060, VOE82063, VOE83466	
11	VOE13965189	2							Screw		
12	VOE13965190	2							Screw		
13	VOE11025954	2							Spacer sleeve		
13	VOE11173924	2							Spacer sleeve	VOE83466, VOE83488	
14	VOE4785466	1							Attaching plate		
15	VOE13971095	2							Flange nut		
16	VOE4881452	2							Marking sleeve		
17	VOE4881438	4							Cable tie		
18	VOE4881459	2							Marking sleeve		
19		1							Control valve		See ref 912/100
20	VOE952627	1							Clamp		
21	VOE13946544	1							Screw		
22	VOE13945407	1							Nut		

VOLVO

Construction Equipment

PROSIS Part Information

Date:	Image id:	Catalogue:	Model:
10/09/2018	**1021329**	**20009**	**L60E**
Brand:	Serial:	Group/Section:	Title:
Volvo	**1001-3355, 60001-61214, 70001-70530**	**914/300**	**Servo valve**

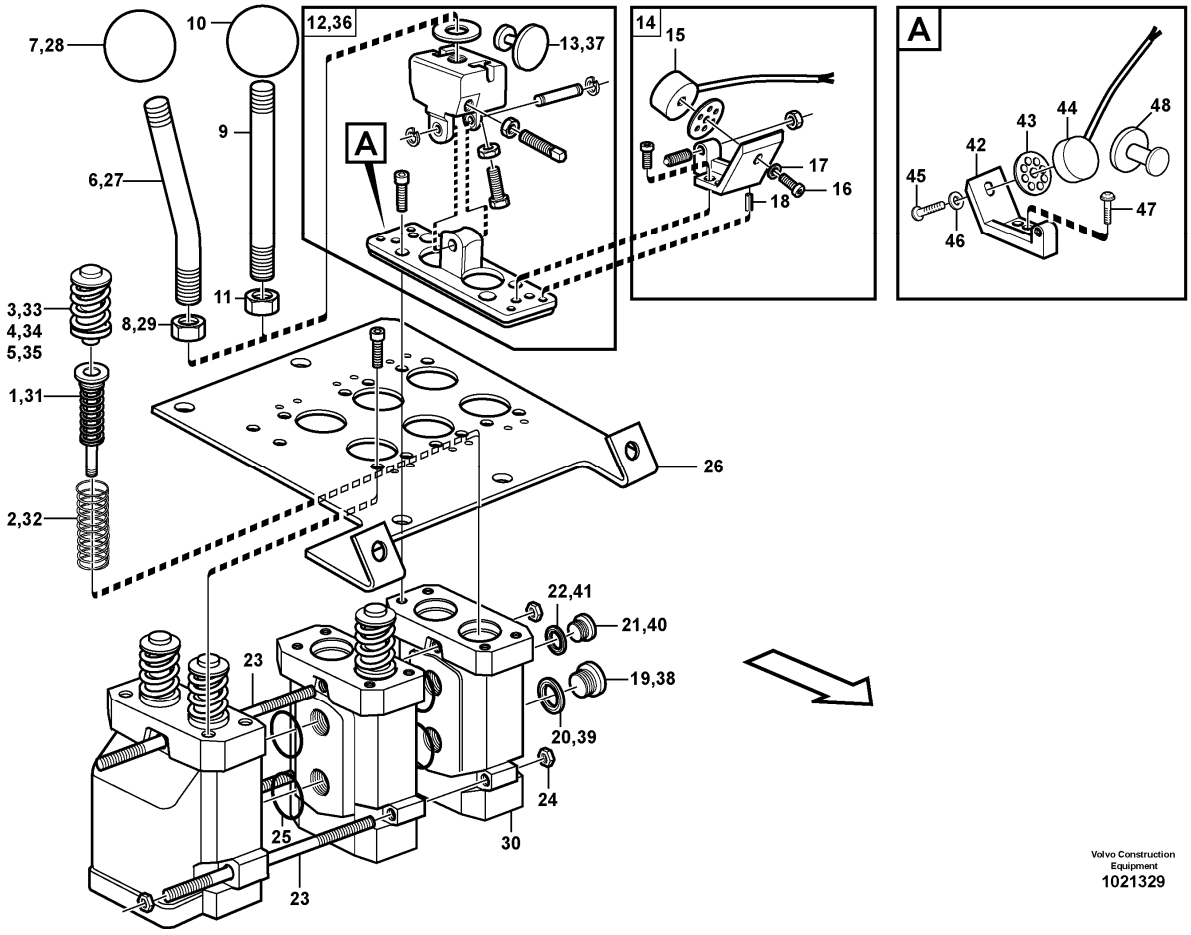

Section option	Kit	Option description
VOE82060	VOE11988275	Hydraulic function, 3rd
VOE82062		Adjustable flow from hydraulic function 3
VOE82063	VOE11988276	Hydraulic system, 3rd and 4th function
VOE83466		Hydraulic function, 3rd
VOE83488	VOE11716051	Hydraulic system, 3rd and 4th function LONG BOOM

Q1-Q5	Option	Option description	
Q1 82060	VOE82060	Hydraulic function, 3rd	
Q2 82063	VOE82063	Hydraulic system, 3rd and 4th function	
Q3 82062	VOE82062	Adjustable flow from hydraulic function 3	
Q4 83466	VOE83466	Hydraulic function, 3rd	
Q5 83488	VOE83488	Hydraulic system, 3rd and 4th function LONG BOOM	

Pos	Part	Q1	Q2	Q3	Q4	Q5	PS	Kit	Description	Option(s)	Remark
		1			1		NS		Servo Valve		
	VOE11172598		1			1			Servo valve		
	VOE11172599	1	1		1	1			•Servo valve		See ref 914/250
1	VOE11705921	4	4		4	4			••Spring assembly		
2	VOE11994393	4	4		4	4			••Return spring		
3	VOE11991323	4	4		4	4			••Valve		
4	VOE11991047	1	1		1	1			•••Sealing kit		
5	VOE11991048	1	1		1	1			•••Spacer washer		THICK = 0.2 MM
5	VOE11991049	1	1		1	1			•••Spacer washer		THICK = 0.3 MM
5	VOE11991316	1	1		1	1			•••Spacer washer		THICK = 0.5 MM
6	VOE11172595	1	1		1	1			••Hand lever		(VOE11708826)
7	VOE11708308	1	1		1	1			•••Ball		
8	VOE13971080	1	1		1	1			•••Hexagon nut		
9	VOE11708827	1	1		1	1			••Lever kit		
10	VOE11708308	1	1		1	1			•••Ball		
11	VOE13971080	1	1		1	1			•••Hexagon nut		
12	VOE11705078	2	2		2	2			••Hand lever		
13	VOE11003417	1	1		1	1			•••Anchor plate		
14	VOE11705079	3	3		3	3			••Magnet		
15	VOE15100027	1	1		1	1			•••Magnet		(VOE11003153)MA901, MA902, MA904
16	VOE959174	1	1		1	1			•••Hex. socket screw		
17	VOE13960146	1	1		1	1			•••Washer		
18	VOE951940	2	2		2	2			•••Spring pin		
19	VOE945065	1	1		1	1			••Plug		
20	VOE13945653	1	1		1	1			••Plane gasket		
21	VOE13965768	1	1		1	1			••Plug		
22	VOE947083	1	1		1	1			••Gasket		
23	VOE11991319	1			1				•Pull rod		
23	VOE11706176		1						•Track rod kit		
23	VOE11705080				1	1			•Track rod kit		
24	VOE13955781	6	6		6	6			••Nut		
25	VOE955994	4	6		4	2			••O-ring		
26	VOE11715961	1							•Valve plate		(VOE11104702)
26	VOE11104986		1		1	1			•Attaching plate		
27	VOE11998151	1	1		1	1			•Lever kit		
27	VOE11706177		1						•Lever kit		
28	VOE11991321	1	2		1	1			••Ball		
29	VOE13971080	1	2		1	1			••Hexagon nut		
30	VOE11706174	1	2		1	1			•Servo valve		
31	VOE11706175	2	4		2	2			••Spring assembly		
32	VOE11994393	2	4		2	2			••Return spring		
33	VOE11991323	2	4		2	2			••Valve		
34	VOE11991047	1	2		1	1			•••Sealing kit		
35	VOE11991048	1	2		1	1			•••Spacer washer		
35	VOE11991049	1	2		1	1			•••Spacer washer		

35	VOE11991316	1	2		1	1			•••Spacer washer		
36	VOE11705078	1	2		1	1			••Hand lever		
37	VOE11003417	1	1		1	1			•••Anchor plate		
38	VOE945065				1	1			••Plug		
39	VOE13945653				1	1			••Plane gasket		
40	VOE13965768				1	1			••Plug		
41	VOE947083				1	1			••Gasket		
42	VOE11003531			1					Bracket		
43	VOE11003158			RQE					Spacer ring		
44	VOE15100027			1					Magnet		(VOE11003153)
	VOE13948996			1					Insulator		
45	VOE969513			2					Six point socket screw		
46	VOE960137			2					Washer		
47	VOE969556			2					Six point socket screw		
48	VOE11003417			1					Anchor plate		

VOLVO

Construction Equipment

PROSIS Part Information

Date:	Image id:	Catalogue:	Model:
10/09/2018	**1016737**	**20009**	**L60E**
Brand:	Serial:	Group/Section:	Title:
Volvo	**1001-3355, 60001-61214, 70001-70530**	**914/350**	**Servo valve with fitting parts.**

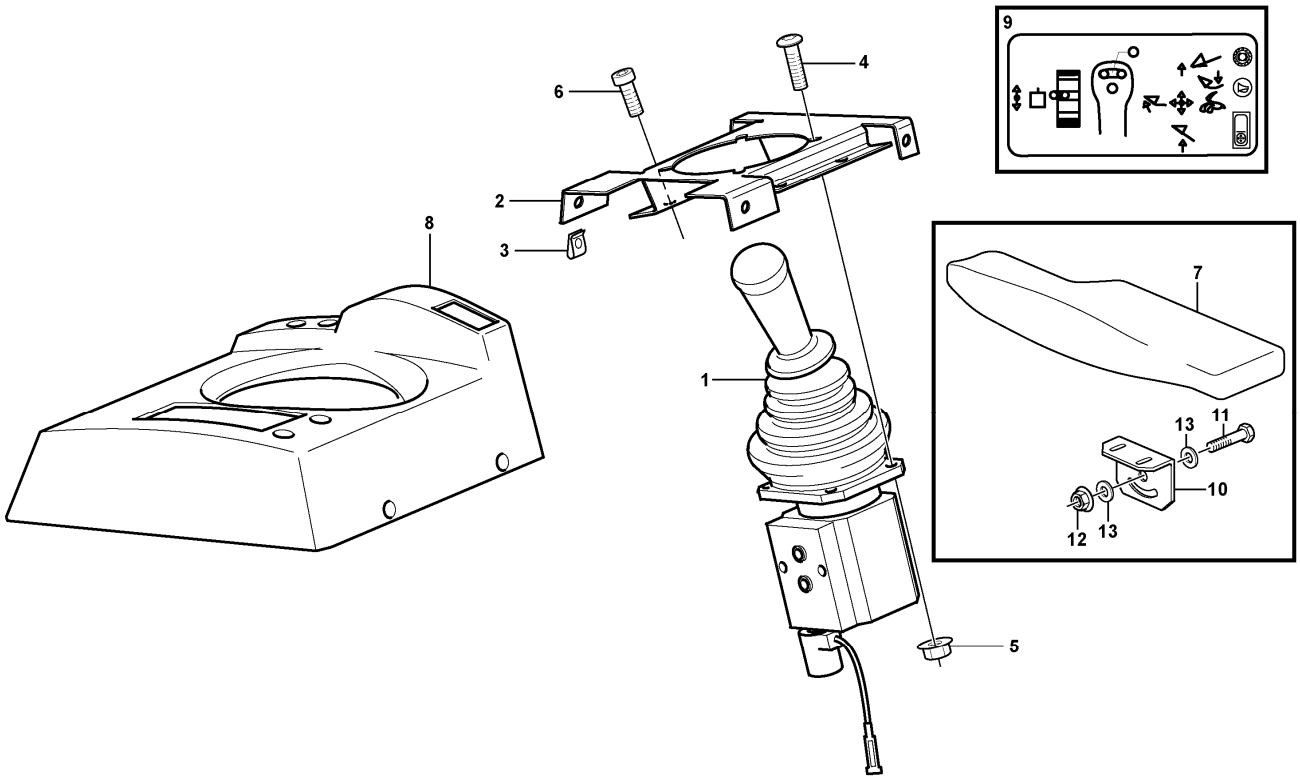

Volvo Construction Equipment
1016737

Section option	Kit	Option description
VOE82325	VOE11988198	Single lever hydraulic control, three functions
VOE82326	VOE11988197	Single lever hydraulic control, two functions
VOE83316	VOE11714603	Single lever hydraulic control, two functions
VOE83317	VOE11714604	Single lever hydraulic control, three functions

Q1-Q5	Option	Option description	
Q1 82325 82326	VOE82325	Single lever hydraulic control, three functions	
Q2 83316 83317	VOE83316	Single lever hydraulic control, two functions	

Pos	Part	Q1	Q2	Q3	Q4	Q5	PS	Kit	Description	Option(s)	Remark
1	VOE11173915	1	1						Single Lever Control		
2	VOE11104742	1	1						Attaching plate		
3	VOE949921	2	2						Spring nut		

4	VOE13975980	4	4						Six point socket screw		
5	VOE13949278	4	4						Flange lock nut		
6	VOE959223	4	4						Hex. socket screw		
7	VOE11164348	1	1						Arm rest		
8	VOE11104643	1	1						Cover		
9	VOE11006299	1	1						Decal		
10	VOE11164355	1	1						Anchorage		
11	VOE13946173	1							Screw		
11	VOE13945444		1						Screw		
12	VOE948645	1	1						Flange lock nut		
13	VOE11117464		2						Plain washer		(VOE13960141)

VOLVO

Construction Equipment

PROSIS Part Information

Date:	Image id:	Catalogue:	Model:
10/09/2018	**1017393**	**20009**	**L60E**
Brand:	Serial:	Group/Section:	Title:
Volvo	**1001-3355, 60001-61214, 70001-70530**	**914/375**	**Servo valve, single levercontrol**

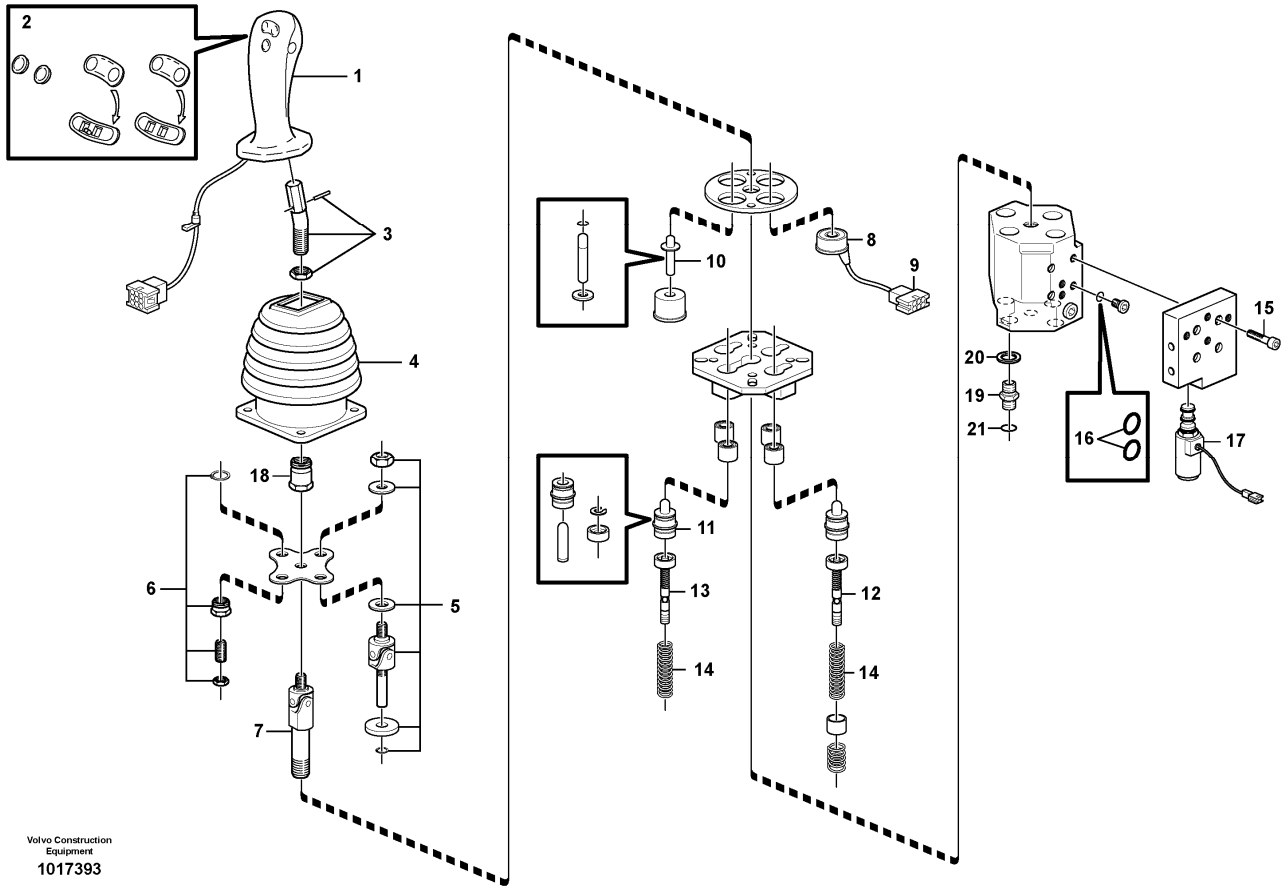

Section option	Kit	Option description
VOE82325	VOE11988198	Single lever hydraulic control, three functions
VOE82326	VOE11988197	Single lever hydraulic control, two functions
VOE83316	VOE11714603	Single lever hydraulic control, two functions
VOE83317	VOE11714604	Single lever hydraulic control, three functions

Q1-Q5	Option	Option description	
Q1 82325 82326	VOE82325	Single lever hydraulic control, three functions	
Q2 83316 83317	VOE83316	Single lever hydraulic control, two functions	

Pos	Part	Q1	Q2	Q3	Q4	Q5	PS	Kit	Description	Option(s)	Remark
	VOE11173915	1	1						Single Lever Control		
1	VOE11706972	1	1						•Handle		
2	VOE11988545	1	1				SS		••Button		

3	VOE11370672	1	1						•Adapter		
4	VOE11706973	1	1						•Bellows		
5	VOE11706974	3	3						•Repair kit		
6	VOE11706975	1	1						•Repair kit		
7	VOE11706976	1	1						•Universal joint		
8	VOE11988141	3	3						•Solenoid		
9	VOE11706985	3	3						•Socket		
10	VOE11706978	1	1						•Control plunger		
11	VOE11988142	4	4						•Control plunger		
12		3	3				NS		•Control Slide		
13		1	1				NS		•Control Slide		
14	VOE11988145	1	1						•Spring kit		
15	VOE942314	4	4						•Hex. socket screw		
16	VOE13955985	2	2						•O-ring		
17	VOE11988146	1	1						•Solenoid valve		(VOE11706984)
18		1	1				NS		•Lock nut		
19	VOE11411762		1						Restrictor		
20	VOE13945653		1						Plane gasket		
21	VOE990737		1						O-ring		

VOLVO

Construction Equipment

PROSIS Part Information

Date:	Image id:	Catalogue:	Model:
10/09/2018	**EK349**	**20009**	**L60E**
Brand:	Serial:	Group/Section:	Title:
Volvo	**1001-3355, 60001-61214, 70001-70530**	**914/400**	**Control valve. 82325, 83317**

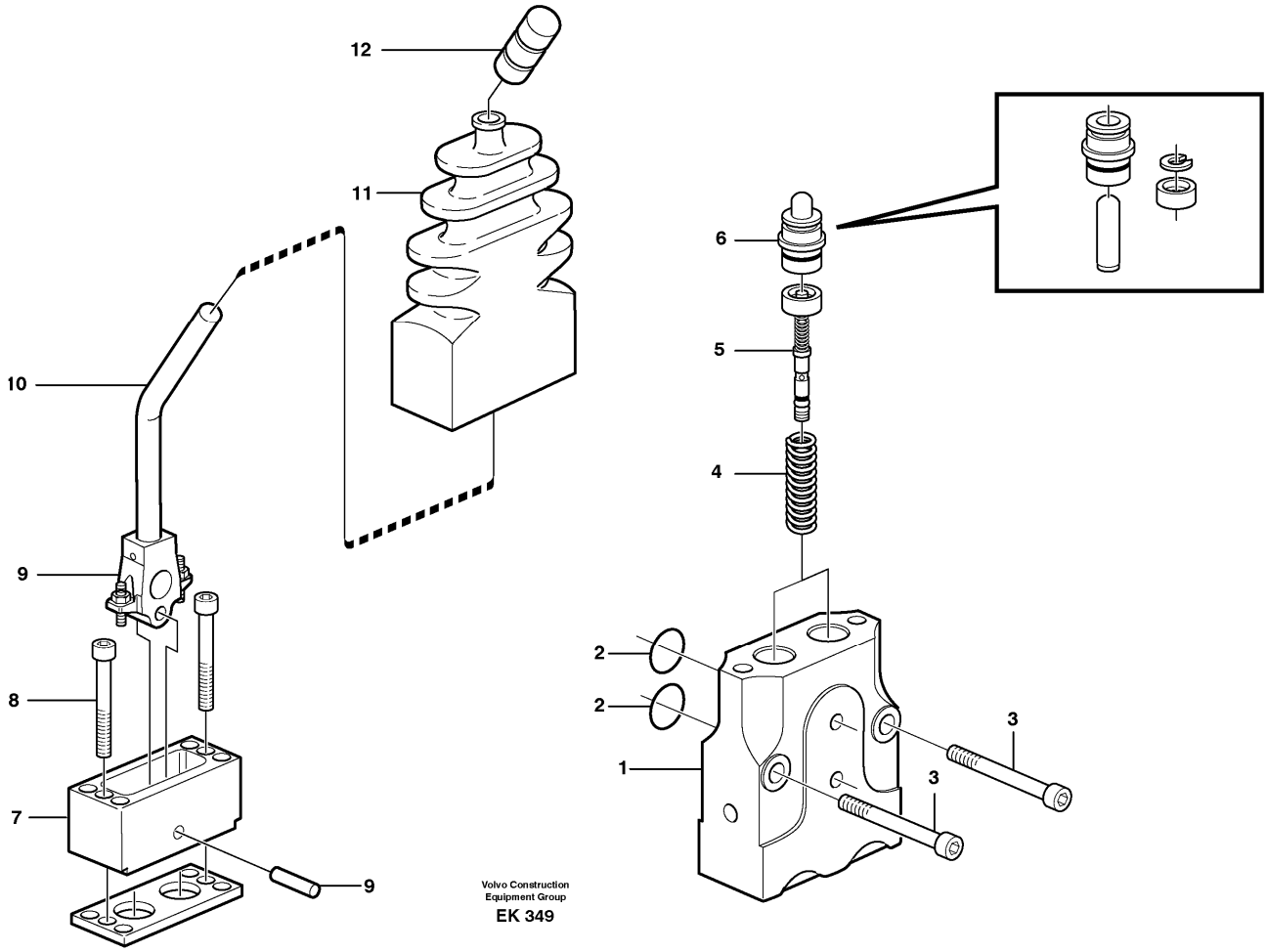

Section option	Kit	Option description
VOE82325	VOE11988198	Single lever hydraulic control, three functions
VOE83317	VOE11714604	Single lever hydraulic control, three functions

Pos	Part	Q1	Q2	Q3	Q4	Q5	PS	Kit	Description	Option(s)	Remark
	VOE11006043	1							Valve		
1		1					NS		•Housing		
2	VOE955991	1							•O-ring		
3	VOE959226	2							•Allen Hd Screw		
4	VOE11706994	1							•Spring kit		
5	VOE11706997	1							•Control slide		
6	VOE11701184	1							•Control plunger		
7		1					NS		•Housing		

8	VOE13941747	2							•Screw		
9	VOE11706990	1							•Repair kit		
10	VOE11713533	1							•Lever kit		
11	VOE11706989	1							•Bellows		
12	VOE11706184	1							•Knob		

VOLVO

Construction Equipment

PROSIS Part Information

Date:	Image id:	Catalogue:	Model:
10/09/2018	**1014938**	**20009**	**L60E**
Brand:	Serial:	Group/Section:	Title:
Volvo	**1001-3355, 60001-61214, 70001-70530**	**916/100**	**Boom suspension system**

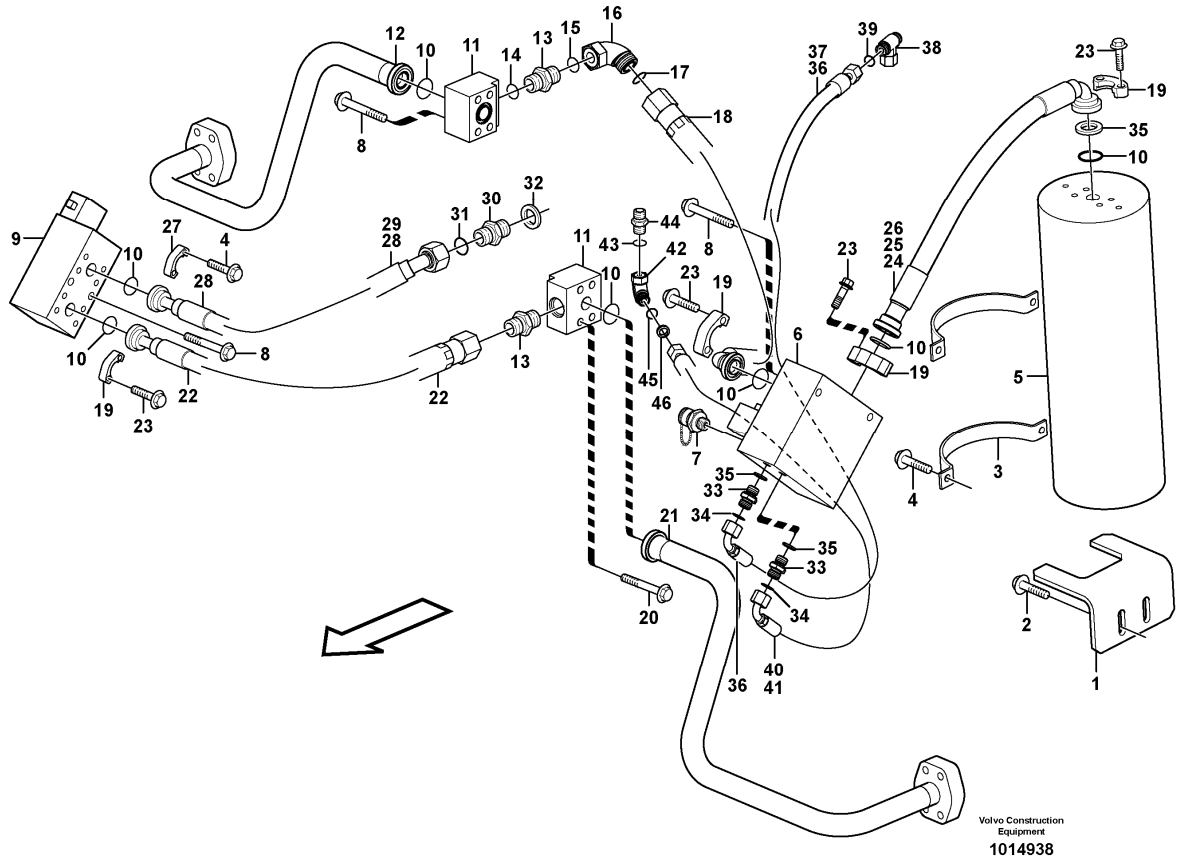

Section option	Kit	Option description
VOE82058		Boom suspension BSS
VOE82075		Singel acting lift system

Q1-Q5	Option	Option description	
Q1 82058	VOE82058	Boom suspension BSS	
Q2 82075	VOE82075	Singel acting lift system	

Pos	Part	Q1	Q2	Q3	Q4	Q5	PS	Kit	Description	Option(s)	Remark
1	VOE15161059	1							Attaching bracket		(VOE11148028)
2	VOE946441	2							Flange screw		
3	VOE11130843	2							Clamp		
4	VOE946472	8	4						Flange screw		
5	VOE11716860	1							Accumulator		

	VOE11716862	1							•Sealing Kit		See footnote 35)
	VOE11716861	1							•Sealing Kit		See footnote 38)
	VOE11702538	1							•Decal		
6		1							Valve		See ref 916/650
7	VOE936444	1							Testing nipple		
8	VOE13965189	8	2						Screw		
9	VOE11101827	1	1						Valve		See ref 912/550
10	VOE990742	9	4						O-ring		
11	VOE11411597	2	1						Connecting block		
12	VOE15037766	1							Feed line		(VOE11172976)
13	VOE13933862	2	1						Nipple		
14	VOE990740	2	1						•O-ring		
15	VOE993323	2	1						•O-ring		(VOE932042)
16	VOE13933910	1							Elbow nipple		
17	VOE990740	1							•O-ring		
18	VOE11173231	1							Hose assembly		L=720 MM
19	VOE935312	8	2						Flange half		
20	VOE13965189	4	4						Screw		
21	VOE15037772	1	1						Feed line		(VOE11172979)
22	VOE11173232	1	1						Hose assembly		L=600 MM
23	VOE13946752	16	4						Screw		
24	VOE11173487	1							Hose assembly		L=535 MM
25	VOE932469	REQ					OP		•Hydraulic hose		
26	VOE6209469	2							•Sleeve		
27	VOE11015454	2	2						Flange half		
28	VOE11173234	1	1						Hose assembly		L=570 MM
29	VOE927506	REQ	REQ						•Hydraulic hose		
30	VOE13933906	1	1						Nipple		
31	VOE990740	1	1						•O-ring		
32	VOE14211859	1	1						•Sealing ring		
33	VOE13933855	2							Nipple		
34	VOE990737	1							•O-ring		
35	VOE14213676	1							•Sealing ring		
36	VOE11148960	1							Hose assembly		L=870 MM
37	VOE927503	REQ							•Hydraulic hose		
38	VOE13933912	1							T-nipple		
39	VOE990737	2							•O-ring		
40	VOE11148958	1							Hose assembly		L=650 MM
41	VOE927503	REQ							•Hydraulic hose		
42	VOE13933900	1							Elbow nipple		
43	VOE990737	1							•O-ring		
44	VOE14345423	1							Nipple		
45	VOE990737	1							•O-ring		
46	VOE14211856	1							•Sealing ring		

35) Sealing kit with piston

38) Sealing kit without piston

PROSIS Part Information

Construction Equipment

Date:	Image id:	Catalogue:	Model:
10/09/2018	**1017122**	**20009**	**L60E**
Brand:	Serial:	Group/Section:	Title:
Volvo	**1001-3355, 60001-61214, 70001-70530**	**916/150**	**Hydraulic system, 3rd and 4th function. Feed and return lines.**

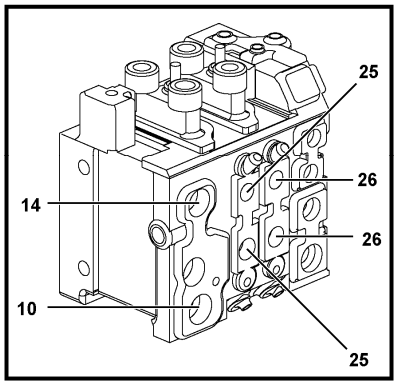

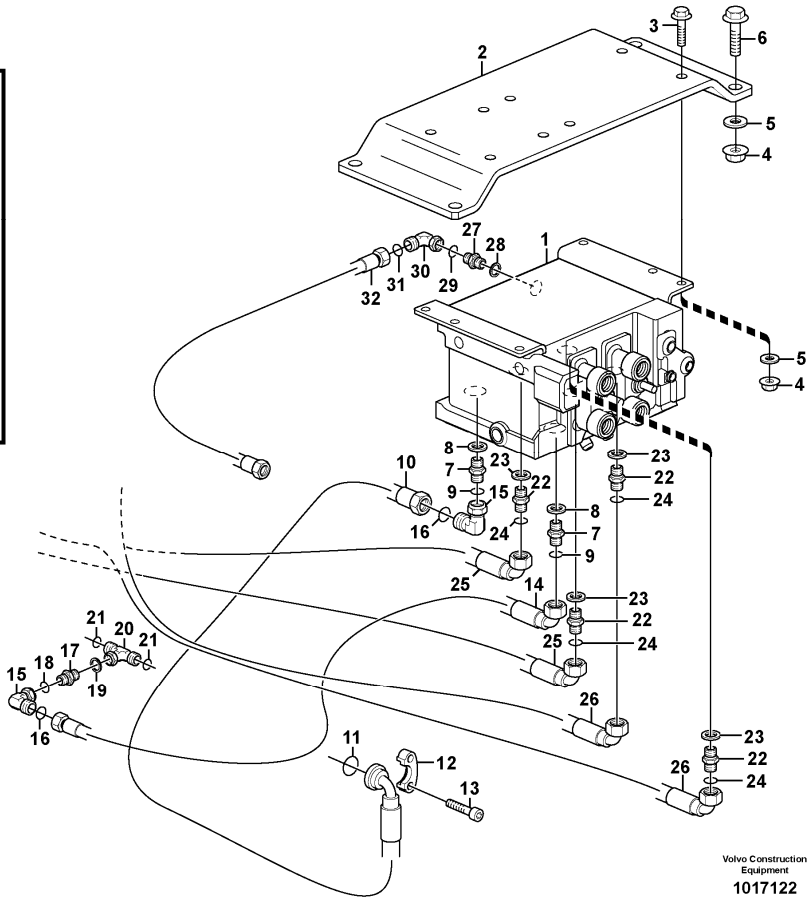

Section option	Kit	Option description
VOE82060	VOE11988275	Hydraulic function, 3rd
VOE82063	VOE11988276	Hydraulic system, 3rd and 4th function
VOE83466		Hydraulic function, 3rd
VOE83488	VOE11716051	Hydraulic system, 3rd and 4th function LONG BOOM

Q1-Q5	Option	Option description	
Q1 82063	VOE82063	Hydraulic system, 3rd and 4th function	
Q2 82060	VOE82060	Hydraulic function, 3rd	
Q3 83466	VOE83466	Hydraulic function, 3rd	
Q4 83488	VOE83488	Hydraulic system, 3rd and 4th function LONG BOOM	

Pos	Part	Q1	Q2	Q3	Q4	Q5	PS	Kit	Description	Option(s)	Remark
1	VOE11173320	1			1				Direction valve		See ref 912/250

1	VOE11173319		1	1			SS		Direction valve		See ref 912/250
2	VOE11410558	1	1	1	1				Attachment		
3	VOE946472	4	4	4	4				Flange screw		
4	VOE13971098	8	8	8	8				Flange nut		
5	VOE13960143	8	8	8	8				Washer		
6	VOE13965187	4	4		4				Screw		
7	VOE13933875	2	2						Nipple		
8	VOE14211859	1	1						•Sealing ring		
9	VOE990740	1	1						•O-ring		(VOE981289)
10	VOE11173745	1	1	1	1				Hose assembly		L = 1280 MM
11	VOE990756	1	1	1	1				Sealing ring		
12	VOE11015455	2	2						Flange half		
13	VOE13965193	4	4						Screw		
14	VOE11173746	1	1	1	1				Hose assembly		L = 1000 MM
15	VOE13933910	2	2	2	2				Elbow nipple		
16	VOE990740	2	2	2	2				•O-ring		(VOE981289)
17	VOE13933906	1	1	1	1				Nipple		
18	VOE990740	1	1	1	1				•O-ring		(VOE981289)
19	VOE14211859	1	1	1	1				•Sealing ring		
20	VOE13933874	1	1	1	1				T-nipple		
21	VOE990740	2	2	2	2				•O-ring		(VOE981289)
22	VOE13933871	4	2						Nipple		
23	VOE14211858	4	2						•Sealing ring		
24	VOE990738	4	2						•O-ring		(VOE4880493)
25	VOE11173872	2	2						Hose assembly		
26	VOE11173875	2							Hose assembly		
27	VOE13933883	1	1						Nipple		
28	VOE14211856	1	1						•Sealing ring		
29	VOE990736	1	1						•O-ring		
30	VOE13933905	1	1	1	1				Elbow nipple		
31	VOE990736	1	1	1	1				•O-ring		
32	VOE11148936	1	1	1	1				Hose assembly		L = 900 MM

VOLVO

Construction Equipment

PROSIS Part Information

Date:	Image id:	Catalogue:	Model:
10/09/2018	**1017200**	**20009**	**L60E**
Brand:	Serial:	Group/Section:	Title:
Volvo	**1001-3355, 60001-61214, 70001-70530**	**916/200**	**Hydraulic Control 3rd-4th**

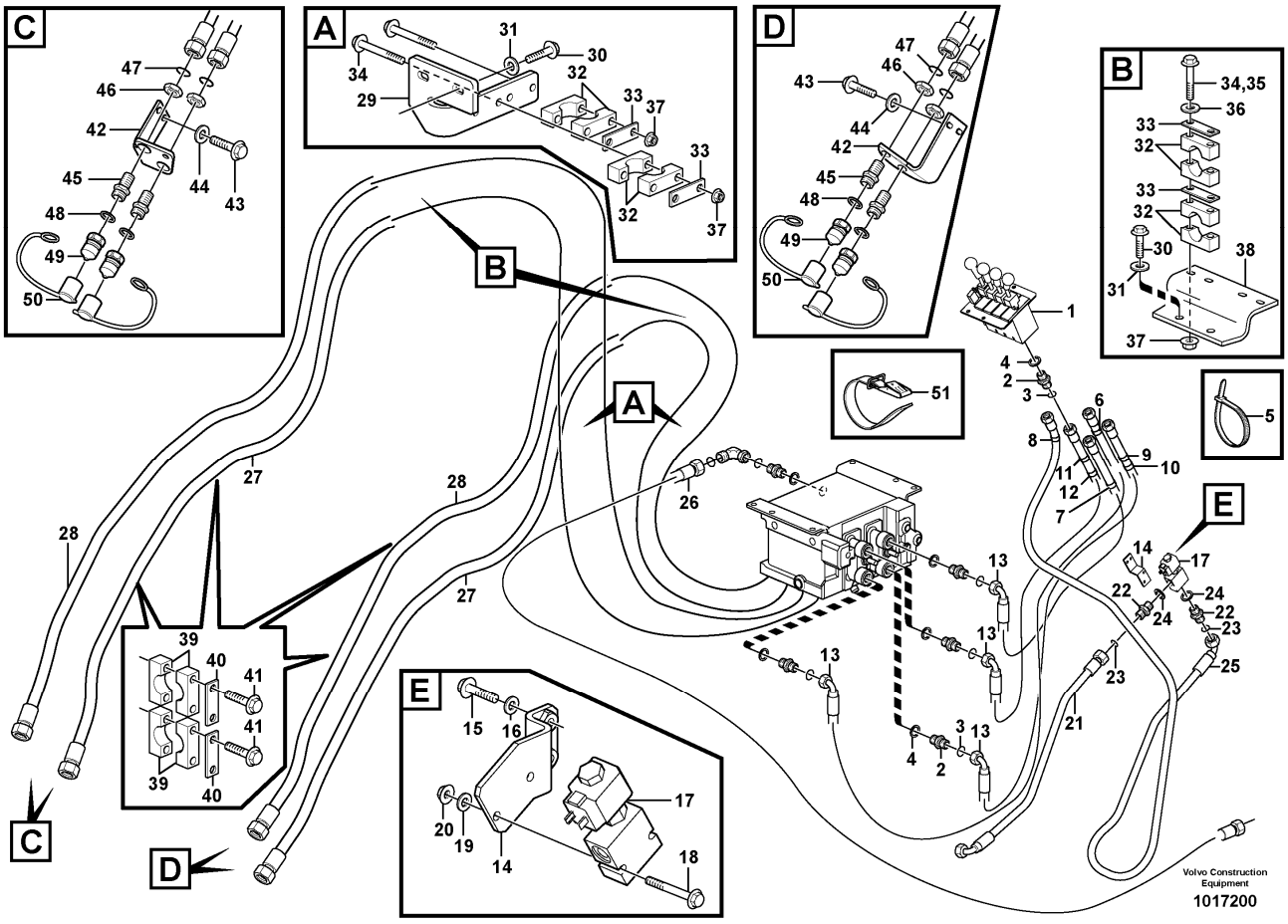

Section option	Kit	Option description
VOE82060	VOE11988275	Hydraulic function, 3rd
VOE82063	VOE11988276	Hydraulic system, 3rd and 4th function
VOE83466		Hydraulic function, 3rd
VOE83488	VOE11716051	Hydraulic system, 3rd and 4th function LONG BOOM

Q1-Q5	Option	Option description	
Q1 82063	VOE82063	Hydraulic system, 3rd and 4th function	
Q2 82060	VOE82060	Hydraulic function, 3rd	
Q3 83466	VOE83466	Hydraulic function, 3rd	
Q4 83488	VOE83488	Hydraulic system, 3rd and 4th function LONG BOOM	

Pos	Part	Q1	Q2	Q3	Q4	Q5	PS	Kit	Description	Option(s)	Remark
1	VOE11173320	1			1				Direction valve		See ref 912/250

1	VOE11173319		1	1			SS		Direction valve		See ref 912/250
2	VOE11410558	1	1	1	1				Attachment		
3	VOE946472	4	4	4	4				Flange screw		
4	VOE13971098	8	8	8	8				Flange nut		
5	VOE13960143	8	8	8	8				Washer		
6	VOE13965187	4	4		4				Screw		
7	VOE13933875	2	2						Nipple		
8	VOE14211859	1	1						•Sealing ring		
9	VOE990740	1	1						•O-ring		(VOE981289)
10	VOE11173745	1	1	1	1				Hose assembly		L = 1280 MM
11	VOE990756	1	1	1	1				Sealing ring		
12	VOE11015455	2	2						Flange half		
13	VOE13965193	4	4						Screw		
14	VOE11173746	1	1	1	1				Hose assembly		L = 1000 MM
15	VOE13933910	2	2	2	2				Elbow nipple		
16	VOE990740	2	2	2	2				•O-ring		(VOE981289)
17	VOE13933906	1	1	1	1				Nipple		
18	VOE990740	1	1	1	1				•O-ring		(VOE981289)
19	VOE14211859	1	1	1	1				•Sealing ring		
20	VOE13933874	1	1	1	1				T-nipple		
21	VOE990740	2	2	2	2				•O-ring		(VOE981289)
22	VOE13933871	4	2						Nipple		
23	VOE14211858	4	2						•Sealing ring		
24	VOE990738	4	2						•O-ring		(VOE4880493)
25	VOE11173872	2	2						Hose assembly		
26	VOE11173875	2							Hose assembly		
27	VOE13933883	1	1						Nipple		
28	VOE14211856	1	1						•Sealing ring		
29	VOE990736	1	1						•O-ring		
30	VOE13933905	1	1	1	1				Elbow nipple		
31	VOE990736	1	1	1	1				•O-ring		
32	VOE11148936	1	1	1	1				Hose assembly		L = 900 MM

VOLVO

Construction Equipment

PROSIS Part Information

Date:	Image id:	Catalogue:	Model:
10/09/2018	**1015103**	**20009**	**L60E**
Brand:	Serial:	Group/Section:	Title:
Volvo	**1001-3355, 60001-61214, 70001-70530**	**916/250**	**Servo hydraulic: hydraulic lines 82062**

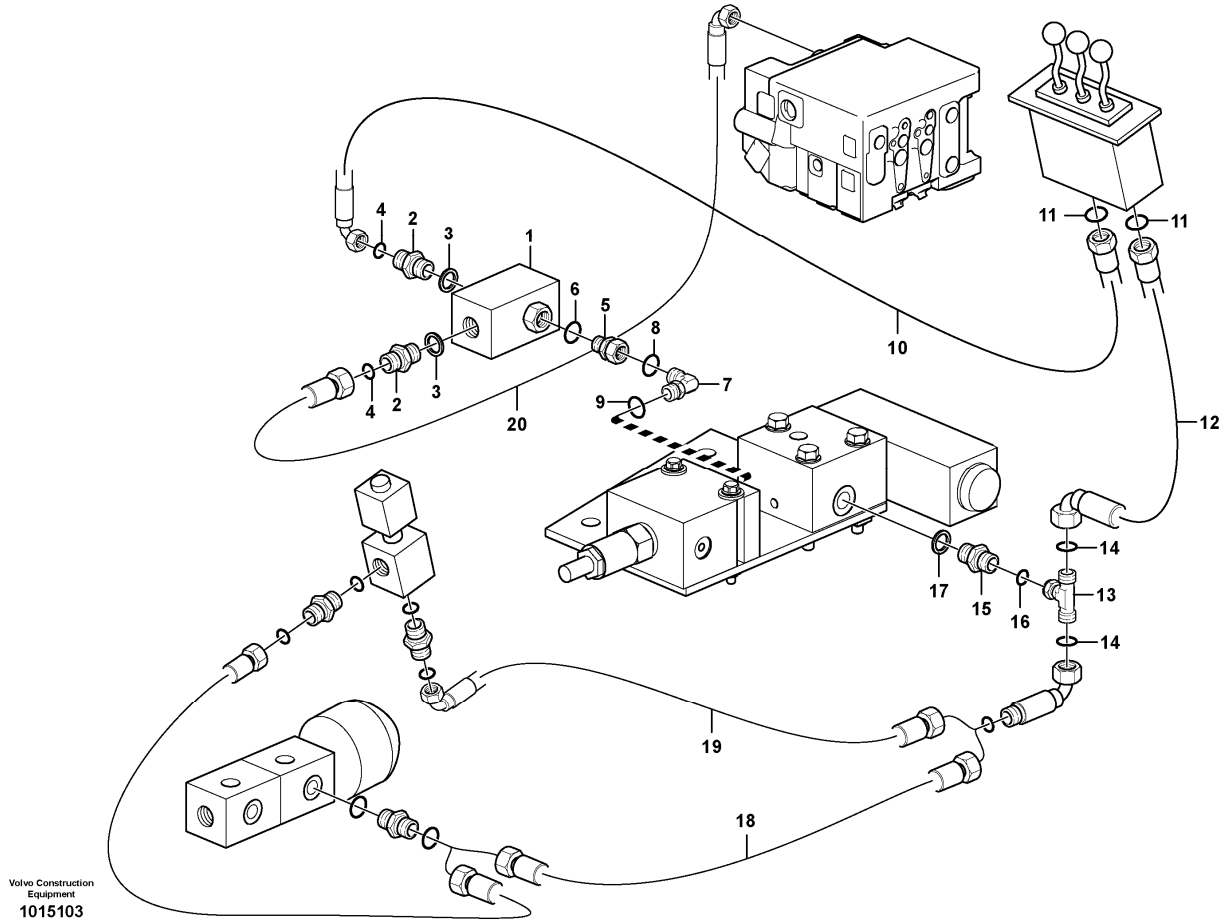

Section option	Kit	Option description
VOE82062		Adjustable flow from hydraulic function 3

Pos	Part	Q1	Q2	Q3	Q4	Q5	PS	Kit	Description	Option(s)	Remark
1	VOE4864314	1							Shuttle valve		
2	VOE13933897	2							Nipple		
3	VOE14211856	1							•Sealing ring		
4	VOE990737	1							•O-ring		
5	VOE13933843	1							Adapter		
6	VOE14211856	1							•Sealing ring		
7	VOE13933925	1							Elbow nipple		
8	VOE990736	1							•O-ring		
9	VOE931209	1							•O-ring		
10	VOE11147947	1							Hose assembly		

11	VOE990737	2							O-ring		
12	VOE11148960	1							Hose assembly		
13	VOE13933912	1							T-nipple		
14	VOE990737	2							•O-ring		(VOE4880492)
15	VOE14345423	1							Nipple		
16	VOE990737	1							•O-ring		
17	VOE14211856	1							•Sealing ring		
18	VOE11148962	1							Hose assembly		See footnote 2160)
19	VOE11172048	1							Hose assembly		See footnote 2161)
20	VOE11172048	1							Hose assembly		

2160) 3rd Function

2161) 3rd - 4th Function

VOLVO

Construction Equipment

PROSIS Part Information

Date:	Image id:	Catalogue:	Model:
10/09/2018	**1015084**	**20009**	**L60E**
Brand:	Serial:	Group/Section:	Title:
Volvo	**1001-3355, 60001-61214, 70001-70530**	**916/300**	**Servo hydraulic: Control and valves 82062**

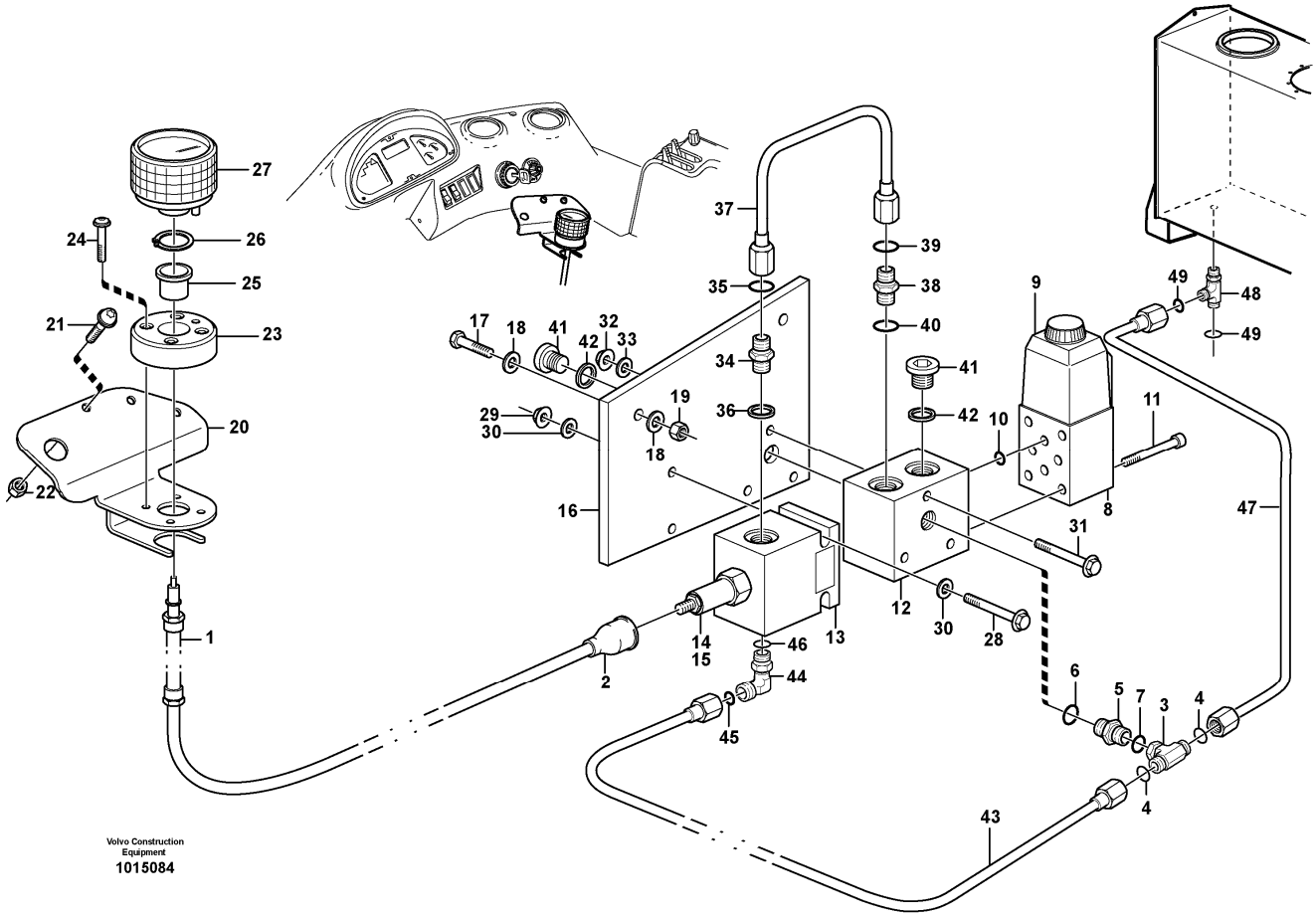

Section option	Kit	Option description
VOE82062		Adjustable flow from hydraulic function 3

Pos	Part	Q1	Q2	Q3	Q4	Q5	PS	Kit	Description	Option(s)	Remark
1	VOE4864314	1							Shuttle valve		
2	VOE13933897	2							Nipple		
3	VOE14211856	1							•Sealing ring		
4	VOE990737	1							•O-ring		
5	VOE13933843	1							Adapter		
6	VOE14211856	1							•Sealing ring		
7	VOE13933925	1							Elbow nipple		
8	VOE990736	1							•O-ring		
9	VOE931209	1							•O-ring		
10	VOE11147947	1							Hose assembly		

11	VOE990737	2							O-ring		
12	VOE11148960	1							Hose assembly		
13	VOE13933912	1							T-nipple		
14	VOE990737	2							•O-ring		(VOE4880492)
15	VOE14345423	1							Nipple		
16	VOE990737	1							•O-ring		
17	VOE14211856	1							•Sealing ring		
18	VOE11148962	1							Hose assembly		See footnote 2160)
19	VOE11172048	1							Hose assembly		See footnote 2161)
20	VOE11172048	1							Hose assembly		

2160) 3rd Function

2161) 3rd - 4th Function

VOLVO

Construction Equipment

PROSIS Part Information

Date:	Image id:	Catalogue:	Model:
10/09/2018	**1009615**	**20009**	**L60E**
Brand:	Serial:	Group/Section:	Title:
Volvo	**1001-3355, 60001-61214, 70001-70530**	**916/500**	**Hydraulic system, attachment bracket. 82059**

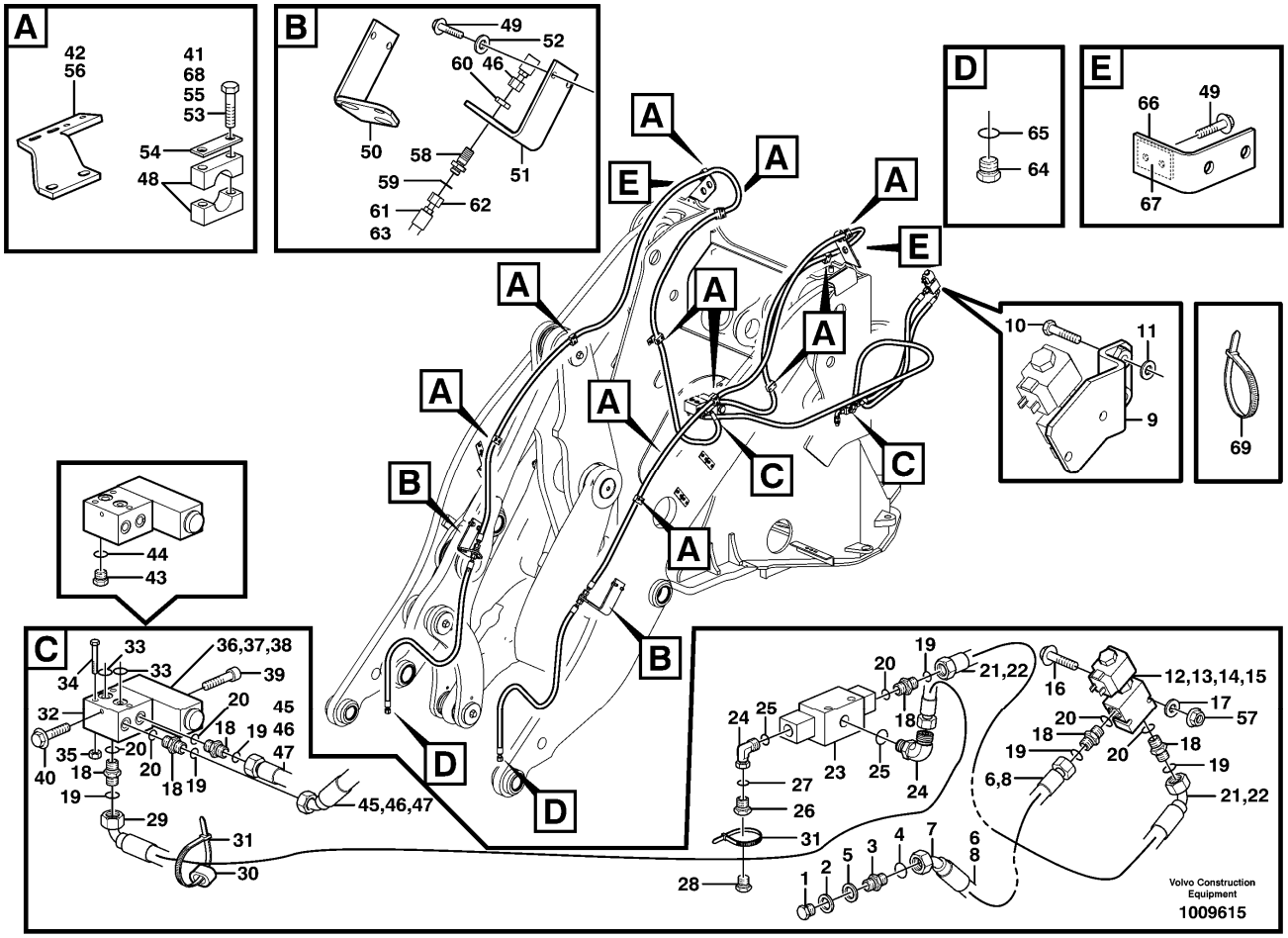

Section option	Kit	Option description
VOE82059		Separate attachment locking, STD Boom

Pos	Part	Q1	Q2	Q3	Q4	Q5	PS	Kit	Description	Option(s)	Remark
1	VOE11147890	1							Control shaft		
2	VOE1504807	1							•Bellows		
3	VOE13933912	1							T-nipple		
4	VOE990737	2							•O-ring		
5	VOE14345423	1							Nipple		
6	VOE14211856	1							•Sealing ring		
7	VOE990737	1							•O-ring		
8	VOE11173166	1							Solenoid valve		MA925
9	VOE11708930	1							•Magnet		
10	VOE11993637	1							•Sealing kit		

11	VOE959193	4							Hex. socket screw		
12	VOE11090363	1							Connection block		
13	VOE11100558	1							Valve		
14	VOE11705001	1							Valve		
15	VOE11704015	1							•Sealing kit		
16	VOE11173995	1							Attachment		
17	VOE13965192	2							Screw		
18	VOE13960145	4							Washer		
19	VOE971099	2							Flange lock nut		
20	VOE11006106	1							Attachment		
21	VOE971322	3							Six point socket screw		
22	VOE13945407	3							Nut		
23	VOE11100185	1							Bracket		
24	VOE969739	4							Six point socket screw		
25	VOE326347	1							Bushing		
26	VOE914446	1							Snap ring		
27	VOE11100559	1							Control		
28	VOE973871	2							Flange screw		
29	VOE946035	2							Lock nut		
30	VOE960139	4							Plain washer		
31	VOE13965181	3							Screw		
32	VOE948645	3							Flange lock nut		
33	VOE976944	3							Washer		
34	VOE13933897	1							Nipple		
35	VOE990737	1							•O-ring		
36	VOE14211856	1							•Sealing ring		
37	VOE11173991	1							Pipe		
38	VOE14345423	1							Nipple		
39	VOE990737	1							•O-ring		
40	VOE14211856	1							•Sealing ring		
41	VOE945065	2							Plug		
42	VOE13945653	2							Plane gasket		
43	VOE11173992	1							Pipe		
44	VOE13933913	1							Elbow nipple		
45	VOE990737	1							•O-ring		
46	VOE931209	1							•O-ring		
47	VOE11173514	1							Hose assembly		
48	VOE13933936	1							T-nipple		
49	VOE990737	2							•O-ring		

VOLVO

Construction Equipment

PROSIS Part Information

Date:	Image id:	Catalogue:	Model:
10/09/2018	**1021378**	**20009**	**L60E**
Brand:	Serial:	Group/Section:	Title:
Volvo	**1001-3355, 60001-61214, 70001-70530**	**916/550**	**Hydraulic system, attachment bracket. 82586**

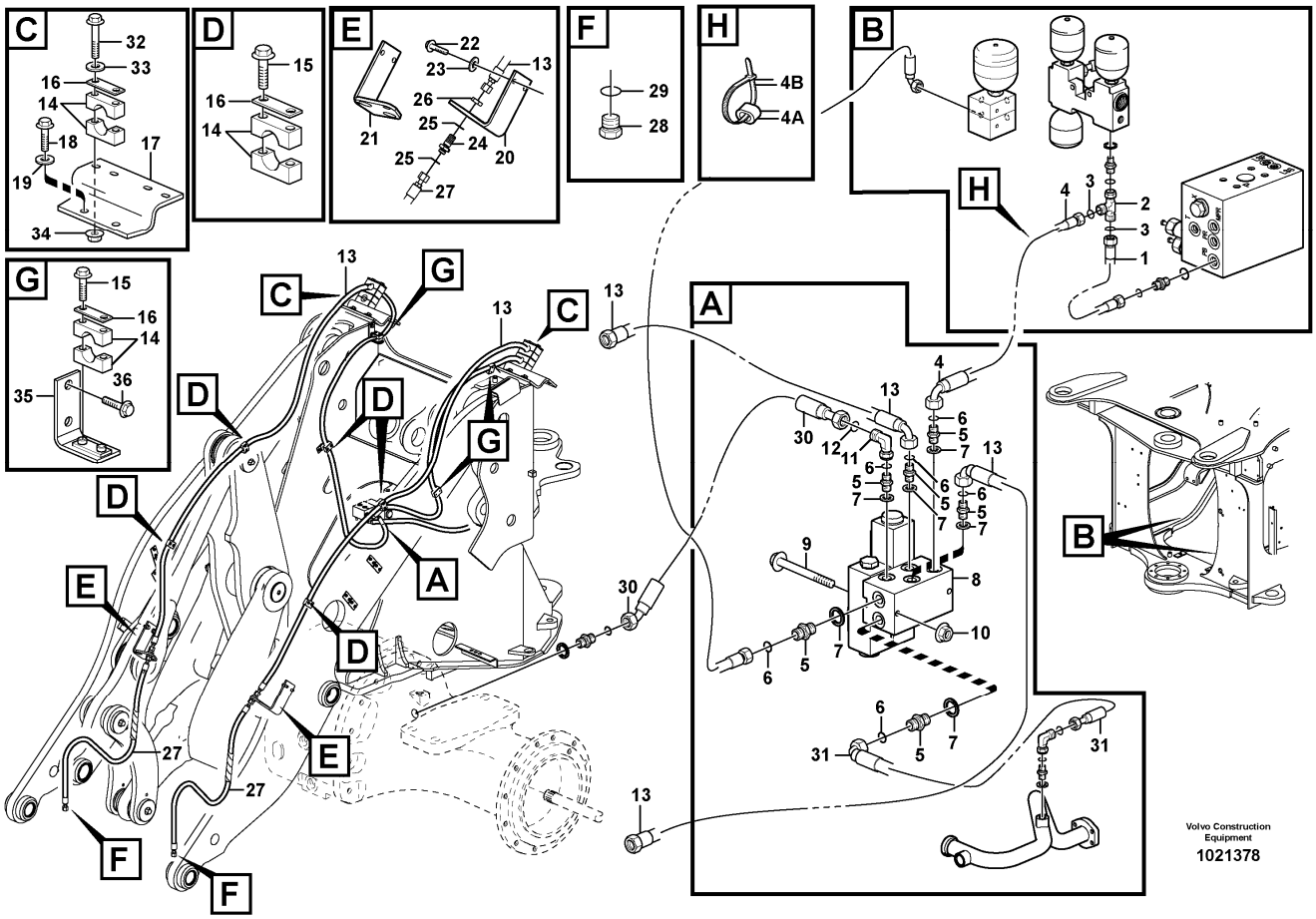

Section option	Kit	Option description
VOE82586		Separate attachment locking, STD Boom
VOE83472		Separate attachment locking, long boom

Q1-Q5	Option	Option description	
Q1 82586	VOE82586	Separate attachment locking, STD Boom	
Q2 83472	VOE83472	Separate attachment locking, long boom	

Pos	Part	Q1	Q2	Q3	Q4	Q5	PS	Kit	Description	Option(s)	Remark
1	VOE960630	1							Plug		
2	VOE13945653	2							Plane gasket		
3	VOE14345423	1							Nipple		
4	VOE990737	1							•O-ring		(VOE4880492)
5	VOE14211856	1							•Sealing ring		

6	VOE11172008	1							Hose assembly		
7	VOE11148915	1							•Hose nipple		
8	VOE927503	REQ							•Hydraulic hose		
9	VOE11173569	1							Attachment		
10	VOE13945444	6							Screw		
11	VOE11117464	6							Plain washer		(VOE13960141)
12	VOE11173930	1							Valve		
13	VOE11709837	1							•Coil		
14	VOE11709838	1							•Sealing kit		
15	VOE11709839	1							•Nut		
16	VOE13965177	2							Screw		
17	VOE960139	4							Plain washer		
18	VOE13933897	6							Nipple		
19	VOE990737	1							•O-ring		(VOE4880492)
20	VOE14211856	1							•Sealing ring		
21	VOE11148959	1							Hose assembly		
22	VOE927503	REQ							•Hydraulic hose		
23	VOE4880701	1							Shuttle valve		
24	VOE13933913	2							Elbow nipple		
25	VOE990737	2							•O-ring		(VOE4880492)
26	VOE935879	1							Nipple		
27	VOE14211856	1							•Sealing ring		
28	VOE960630	1							Plug		
29	VOE11173227	1							Hose assembly		
30	VOE4881454	2							Marking sleeve		
31	VOE4881438	2							Cable tie		
32	VOE11025316	1							Connection block		
33	VOE13960168	2							O-ring		
34	VOE955309	3							Hexagon screw		
35	VOE13945408	3							Nut		
36	VOE11173166	1							Solenoid valve		
37	VOE11708930	1							•Magnet		
38	VOE11993637	1							•Sealing kit		
39	VOE959193	4							Hex. socket screw		
40	VOE13946173	1							Screw		
41	VOE968877	1							Flange screw		
42	VOE11180889	1							Anchorage		(VOE11410689)
43	VOE926370	1							Plug		
44	VOE13949574	1							O-ring		
45	VOE11173668	2							Hose assembly		
46	VOE11148915	1							Hose nipple		
47	VOE927503	REQ							Hydraulic hose		
48	VOE11410602	10							Clamp		(VOE11173899)
49	VOE946441	4							Flange screw		
50	VOE11173643	1							Attachment		
51	VOE11173642	1							Attachment		
52	VOE13960143	4							Washer		

53	VOE13965176	16							Screw		
54	VOE11003048	10							Cover plate		
55	VOE13965178	4							Screw		
56	VOE11180889	1							Anchorage		(VOE11410688)
	VOE11180889	1							Anchorage		(VOE11410688)
57	VOE13949278	6							Flange lock nut		
58	VOE935425	2							Nipple		
59	VOE990737	2							•O-ring		(VOE4880492)
60	VOE935429	2							Lock nut		
61	VOE11148953	2							Hose assembly		
62	VOE11148915	1							•Hose nipple		
63	VOE927503	REQ							•Hydraulic hose		
64	VOE935651	2							Plug		
65	VOE990737	1							•O-ring		(VOE4880492)
66	VOE11410379	2							Attachment		
67	VOE4785466	1							•Attaching plate		
68	VOE946471	4							Flange screw		
69	VOE4881440	7							Cable tie		

VOLVO

Construction Equipment

PROSIS Part Information

Date:	Image id:	Catalogue:	Model:
10/09/2018	**1011582**	**20009**	**L60E**
Brand:	Serial:	Group/Section:	Title:
Volvo	**1001-3355, 60001-61214, 70001-70530**	**916/600**	**Valve 82586, 83472**

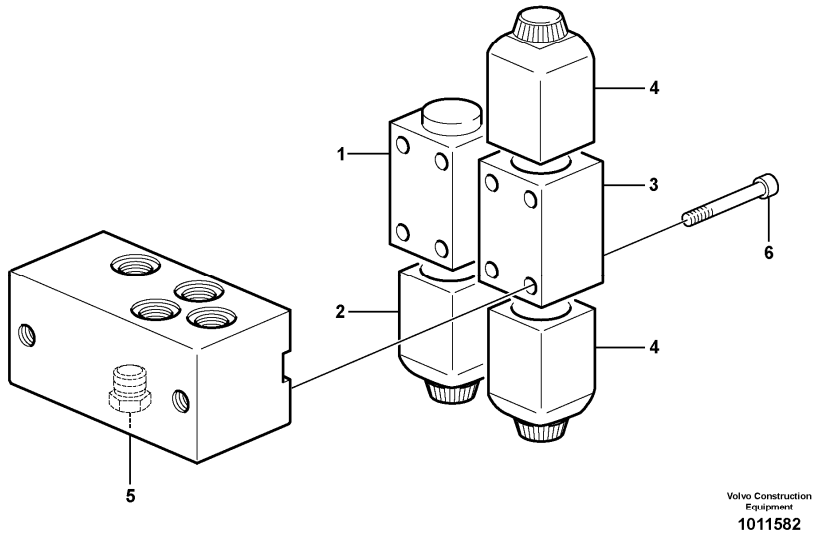

Section option	Kit	Option description
VOE82586		Separate attachment locking, STD Boom
VOE83472		Separate attachment locking, long boom

Pos	Part	Q1	Q2	Q3	Q4	Q5	PS	Kit	Description	Option(s)	Remark
	VOE11411998	1							Hydraulic valve		
1	VOE11173166	1							•Solenoid valve		
2	VOE11708930	1							••Magnet		MA407
	VOE11993637	1							••Sealing kit		
3	VOE11716831	1							•Solenoid valve		
4	VOE11708930	2							••Magnet		MA946, MA947
	VOE11993637	1							••Sealing kit		
5	VOE11716832	1							•Non-return valve		
6	VOE959193	4							•Hex. socket screw		

VOLVO

Construction Equipment

PROSIS Part Information

Date:	Image id:	Catalogue:	Model:
10/09/2018	**1057972**	**20009**	**L60E**
Brand:	Serial:	Group/Section:	Title:
Volvo	**1001-3355, 60001-61214, 70001-70530**	**916/650**	**Relief valve. 82058**

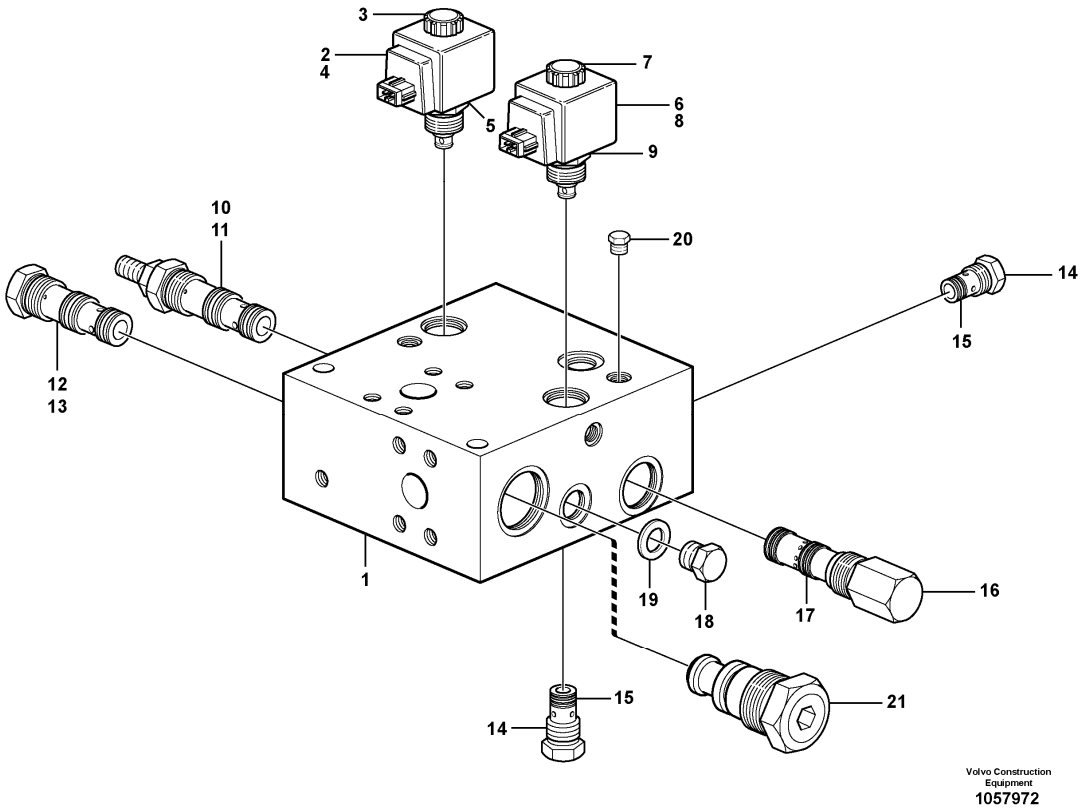

Section option	Kit	Option description
VOE82058		Boom suspension BSS

Pos	Part	Q1	Q2	Q3	Q4	Q5	PS	Kit	Description	Option(s)	Remark
1	VOE11410639	1							Valve		
2	VOE11705917	1							•Solenoid valve kit		CT1
3	VOE11706062	1							••Nut set		
4	VOE11714081	1							••Coil		
5	VOE11706064	1							••Sealing kit		
6	VOE11705918	1							•Solenoid valve kit		CT4
7	VOE11706065	1							••Nut set		
8	VOE11714081	1							••Coil		
9	VOE11706064	1							••Sealing kit		
10	VOE11706070	1							•Valve		CT8

11	VOE11706071	1							••Sealing kit		
12	VOE11714082	1							•Shuttle valve		CT3
13	VOE11714083	1							••Sealing kit		
14	VOE11714080	2							•Non-return valve		CT5, CT6
15	VOE11706067	2							••Sealing kit		
16	VOE11706068	1							•Pressure regulator		CT7
17	VOE11706069	1							••Sealing kit		
18	VOE15057390	1							•Plug		
19	VOE15057393	1							•Seal		
20	VOE15093981	9							•Plug		
21	VOE15195265	1							•Valve		

VOLVO

Construction Equipment

PROSIS Part Information

Date:	Image id:	Catalogue:	Model:
10/09/2018	**1014449**	**20009**	**L60E**
Brand:	Serial:	Group/Section:	Title:
Volvo	**1001-3355, 60001-61214, 70001-70530**	**920/100**	**Bucket tooth protection 80581**

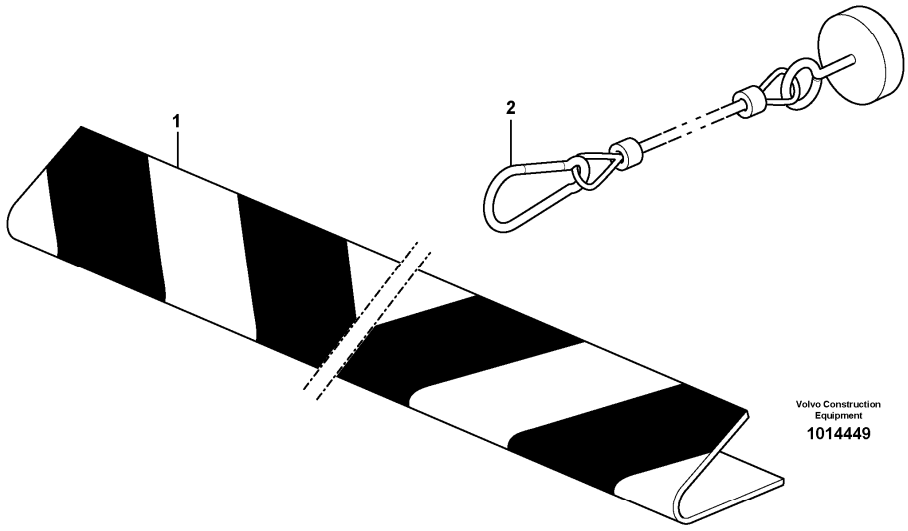

Section option	Kit	Option description
VOE80581		Bucket tooth protection

Pos	Part	Q1	Q2	Q3	Q4	Q5	PS	Kit	Description	Option(s)	Remark
									Bucket Tooth Protection		
1	VOE11156246	1							•Bucket tooth protection		
2	VOE11156312	1							•Cable		

VOLVO

Construction Equipment

PROSIS Part Information

Date:	Image id:	Catalogue:	Model:
10/09/2018	**1015372**	**20009**	**L60E**
Brand:	Serial:	Group/Section:	Title:
Volvo	**1001-3355, 60001-61214, 70001-70530**	**924/100**	**Hydraulic cylinder**

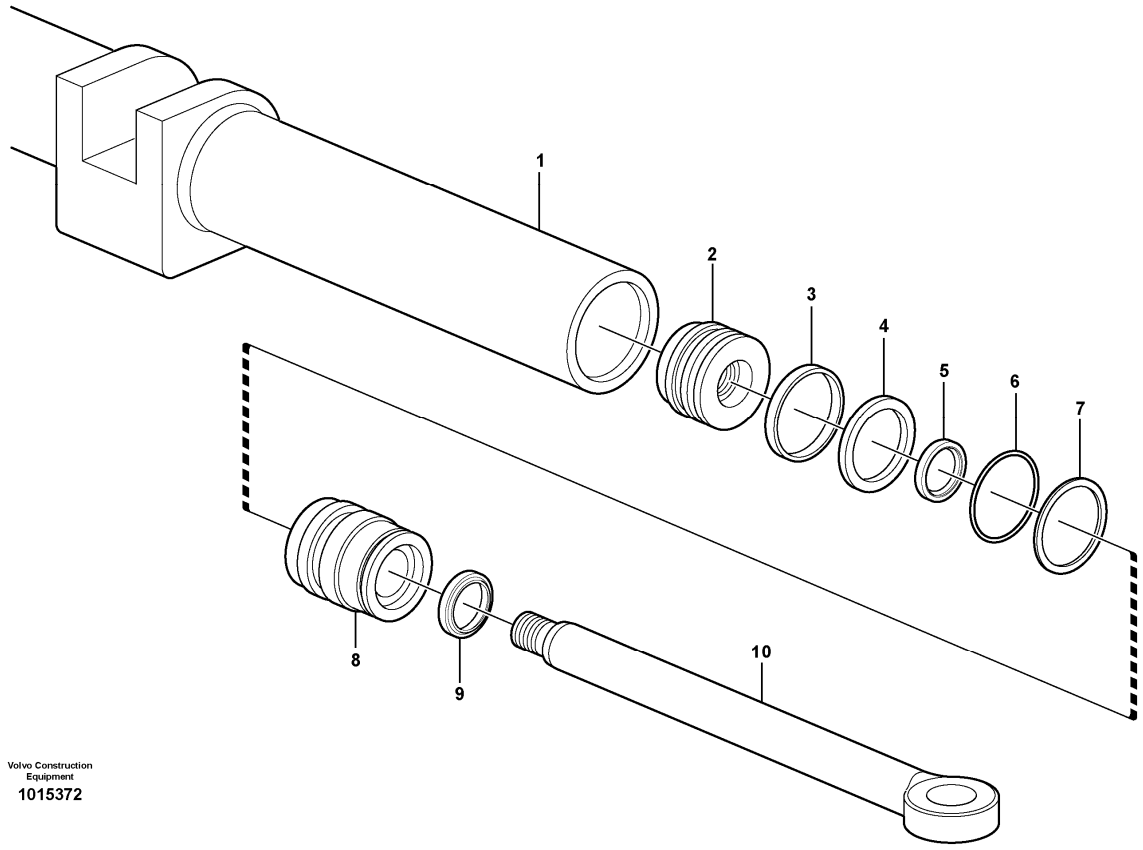

Section option	Kit	Option description
VOE83168		Attachment bracket, rotary. Pin-on
VOE83169		Attachment bracket, rotary. Hook-on

Pos	Part	Q1	Q2	Q3	Q4	Q5	PS	Kit	Description	Option(s)	Remark
	VOE15188515	1					SS		Cylinder		
1		1					NS		•Cylinder Tube		
2	VOE11988543	2					OP		•Piston		
3		2					NS	K	•Back-up ring		
4		2					NS	K	•Piston seal		
5		2					NS	K	•Piston Rod Seal		
6		2					NS	K	•O-ring		
7		2					NS	K	•Back-up ring		
8	VOE11709110	2							•Guide		

9		2					NS	K	•Scraper		
10	VOE11708993	2							•Piston rod		
	VOE11709111	2							Sealing kit		

VOLVO

Construction Equipment

PROSIS Part Information

Date:	Image id:	Catalogue:	Model:
10/09/2018	**1058766**	**20009**	**L60E**
Brand:	Serial:	Group/Section:	Title:
Volvo	**1001-3355, 60001-61214, 70001-70530**	**924/150**	**Attachment bracket 80856**

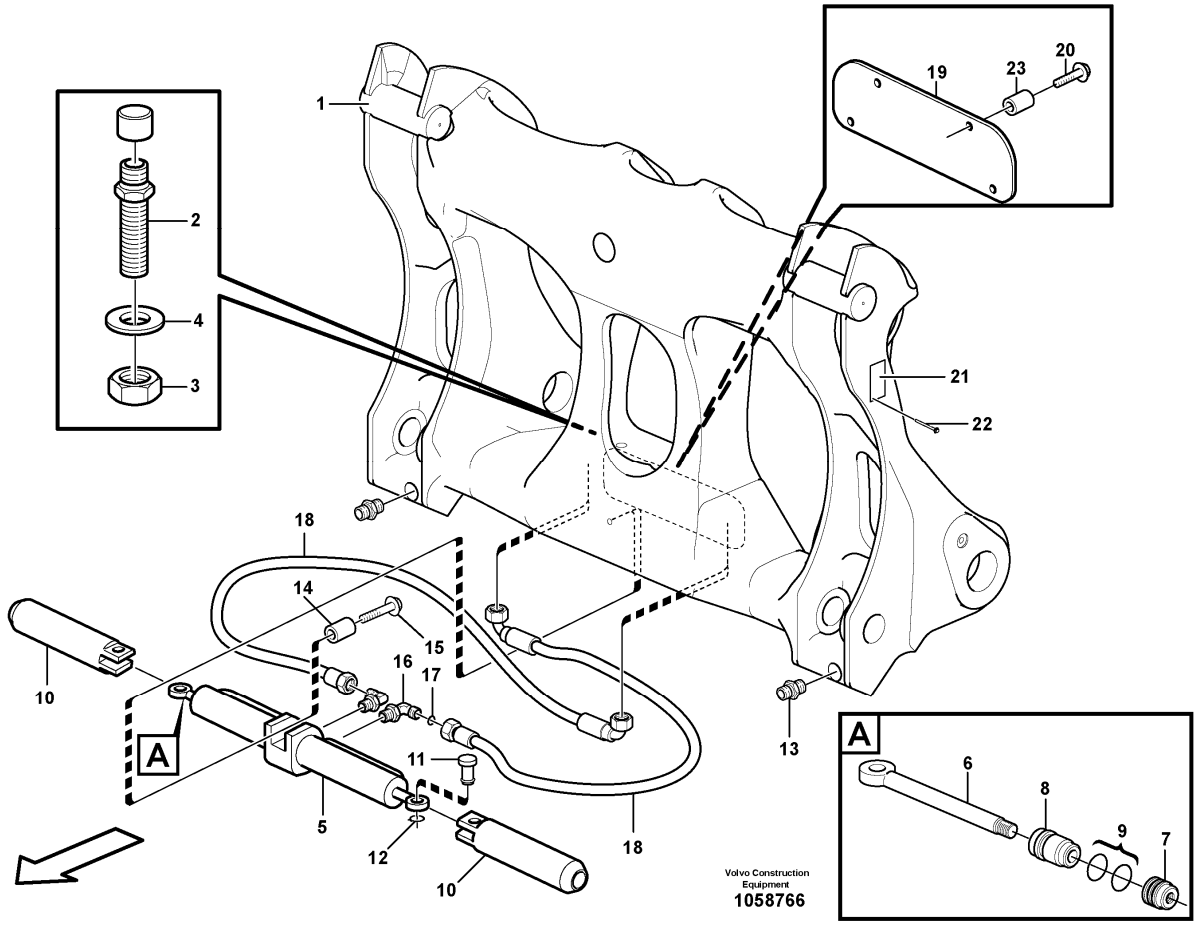

Section option	Kit	Option description
VOE80856		Attachment bracket, hydr.

Pos	Part	Q1	Q2	Q3	Q4	Q5	PS	Kit	Description	Option(s)	Remark
	VOE11157840	1					SS		Attachment bracket		
1	VOE15157502	2							••Pin		(VOE11156114)
2	VOE935929	2							•Nipple		
3	VOE935428	2							•Lock nut		
4	VOE13955900	2							•Washer		
5	VOE15188515	1					SS		•Cylinder		
6	VOE15196585	2							••Piston rod		
7	VOE11988543	2					OP		••Piston		
8	VOE11709110	2							••Guide		
9	VOE15196615	2							••Sealing kit		

10	VOE11157191	2							•Pin		
11	VOE11142687	2							•Pin		
12	VOE914450	2							•Snap ring		
13	VOE914167	2							•Lubricating nipple		
14	VOE11157678	1							•Spacer		
15	VOE13965196	1							•Screw		
16	VOE935538	2							•Elbow nipple		
17	VOE990736	1							••O-ring		
18	VOE935628	2							•Hose assembly		
18	VOE11173848	2							•Hose assembly	VOE82077	
19	VOE11156757	1							•Plate		
20	VOE13970948	4							•Hexagon screw		
21		1					NS		•Sign		
22	VOE11045750	4							•Rivet		
23	VOE930430	4							•Spacer ring		

VOLVO

Construction Equipment

PROSIS Part Information

Date:	Image id:	Catalogue:	Model:
10/09/2018	**1015345**	**20009**	**L60E**
Brand:	Serial:	Group/Section:	Title:
Volvo	**1001-3355, 60001-61214, 70001-70530**	**924/200**	**Attachment bracket, rotary.**

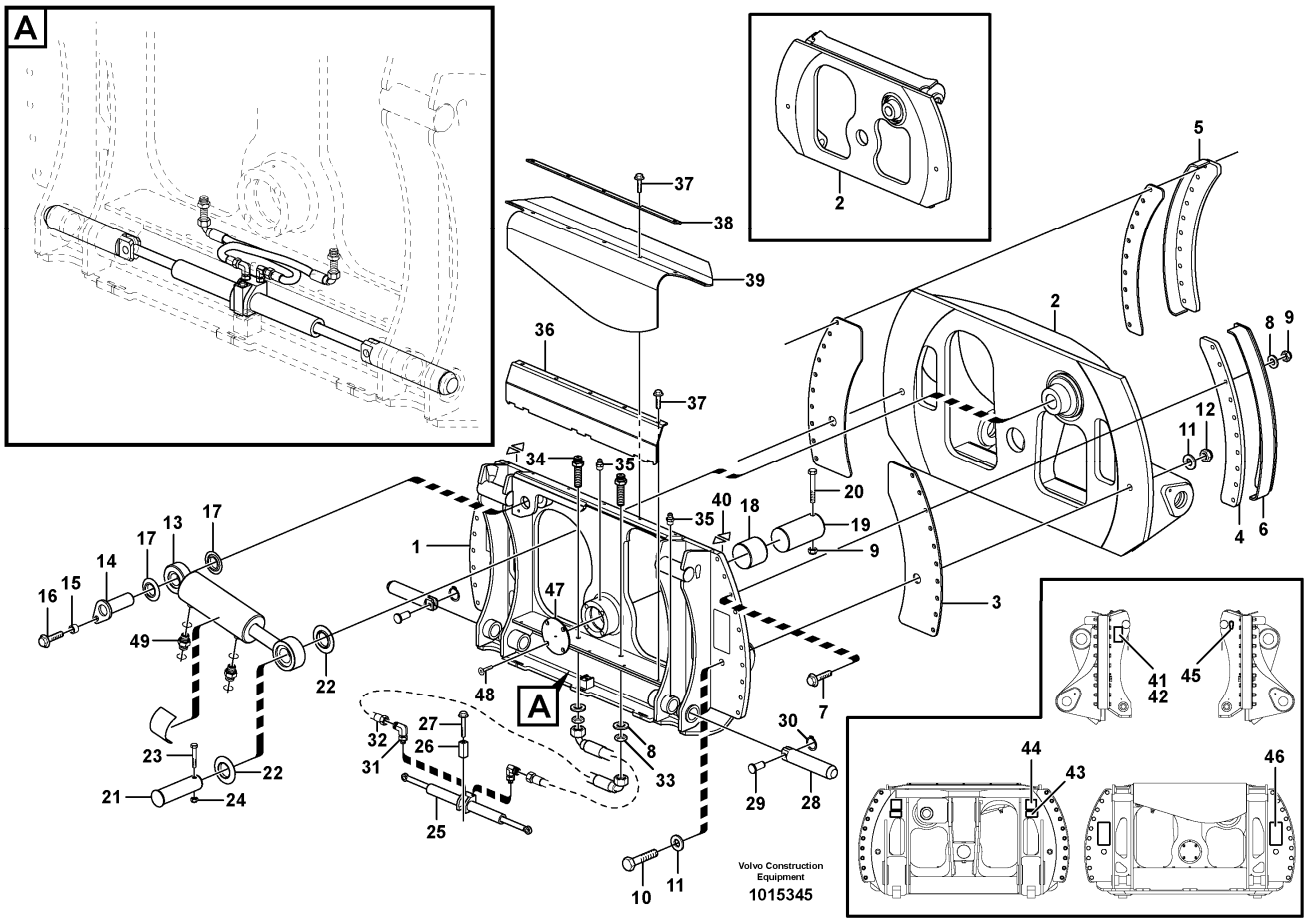

Section option	Kit	Option description
VOE83168		Attachment bracket, rotary. Pin-on
VOE83169		Attachment bracket, rotary. Hook-on

Q1-Q5	Option	Option description	
Q1 83169	VOE83169	Attachment bracket, rotary. Hook-on	
Q2 83168	VOE83168	Attachment bracket, rotary. Pin-on	

Pos	Part	Q1	Q2	Q3	Q4	Q5	PS	Kit	Description	Option(s)	Remark
	VOE11157840	1					SS		Attachment bracket		
1	VOE15157502	2							••Pin		(VOE11156114)
2	VOE935929	2							•Nipple		
3	VOE935428	2							•Lock nut		
4	VOE13955900	2							•Washer		

5	VOE15188515	1					SS		•Cylinder		
6	VOE15196585	2							••Piston rod		
7	VOE11988543	2					OP		••Piston		
8	VOE11709110	2							••Guide		
9	VOE15196615	2							••Sealing kit		
10	VOE11157191	2							•Pin		
11	VOE11142687	2							•Pin		
12	VOE914450	2							•Snap ring		
13	VOE914167	2							•Lubricating nipple		
14	VOE11157678	1							•Spacer		
15	VOE13965196	1							•Screw		
16	VOE935538	2							•Elbow nipple		
17	VOE990736	1							••O-ring		
18	VOE935628	2							•Hose assembly		
18	VOE11173848	2							•Hose assembly	VOE82077	
19	VOE11156757	1							•Plate		
20	VOE13970948	4							•Hexagon screw		
21		1					NS		•Sign		
22	VOE11045750	4							•Rivet		
23	VOE930430	4							•Spacer ring		

VOLVO

Construction Equipment

PROSIS Part Information

Date:	Image id:	Catalogue:	Model:
10/09/2018	**1015384**	**20009**	**L60E**
Brand:	Serial:	Group/Section:	Title:
Volvo	**1001-3355, 60001-61214, 70001-70530**	**924/250**	**Hydraulic system rotary pin-on attachment bracket 83168**

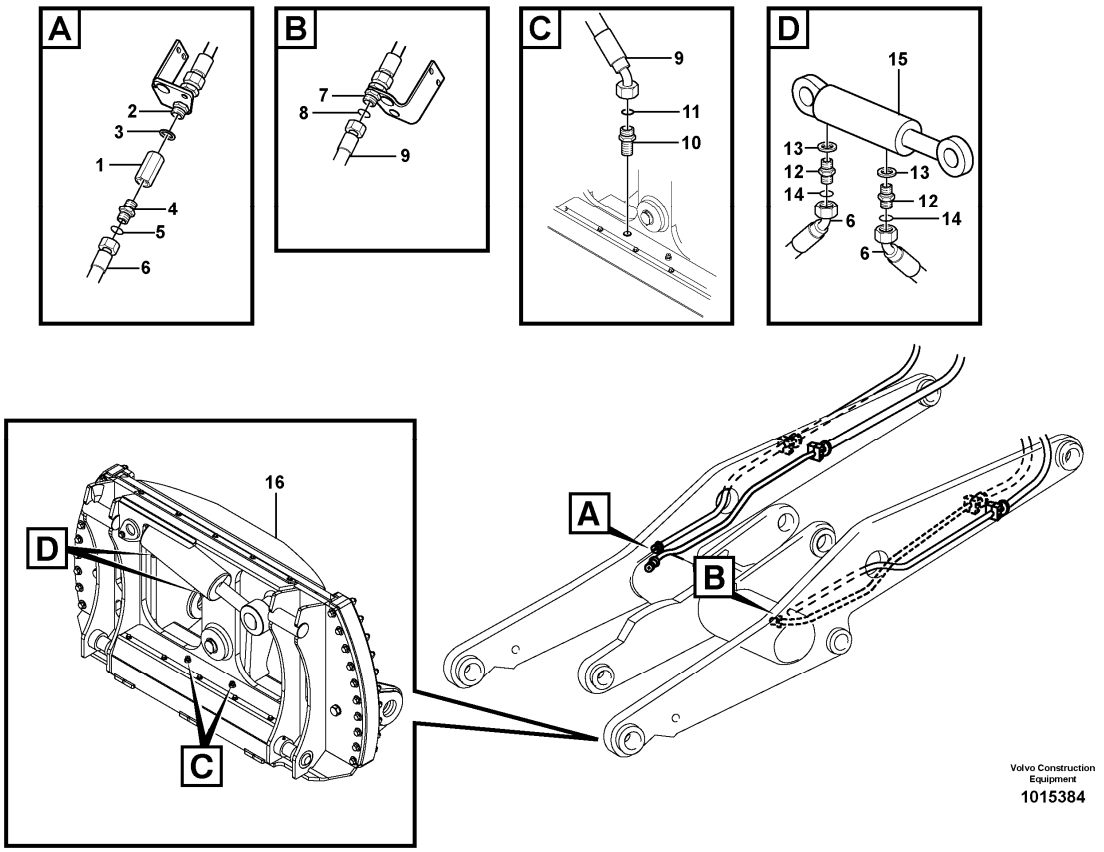

Section option	Kit	Option description
VOE83168		Attachment bracket, rotary. Pin-on

Pos	Part	Q1	Q2	Q3	Q4	Q5	PS	Kit	Description	Option(s)	Remark
1	VOE11990625	2							Nipple		
2		2							Nipple		See ref 916/200
3	VOE14013070	2							•Sealing washer		
4	VOE13933882	2							Nipple		
5	VOE990737	2							•O-ring		
6	VOE11172006	2							Hose assembly		
7		2							Nipple		See ref 916/200
8	VOE990737	4							•O-ring		
9	VOE11163066	2							Hose assembly		
10		2							Nipple		See ref 924/200

11	VOE990737	2							•O-ring		
12	VOE13933915	2							Nipple		See ref 924/200
13	VOE14211857	2							•Sealing ring		
14	VOE990737	2							•O-ring		
15		1							Hydraulic cylinder		See ref 924/200
16		1							Attachment bracket		See ref 924/200

VOLVO

Construction Equipment

PROSIS Part Information

Date:	Image id:	Catalogue:	Model:
10/09/2018	**1021824**	**20009**	**L60E**
Brand:	Serial:	Group/Section:	Title:
Volvo	**1001-3355, 60001-61214, 70001-70530**	**924/300**	**Hydraulic system rotary hook-on attachment bracket**

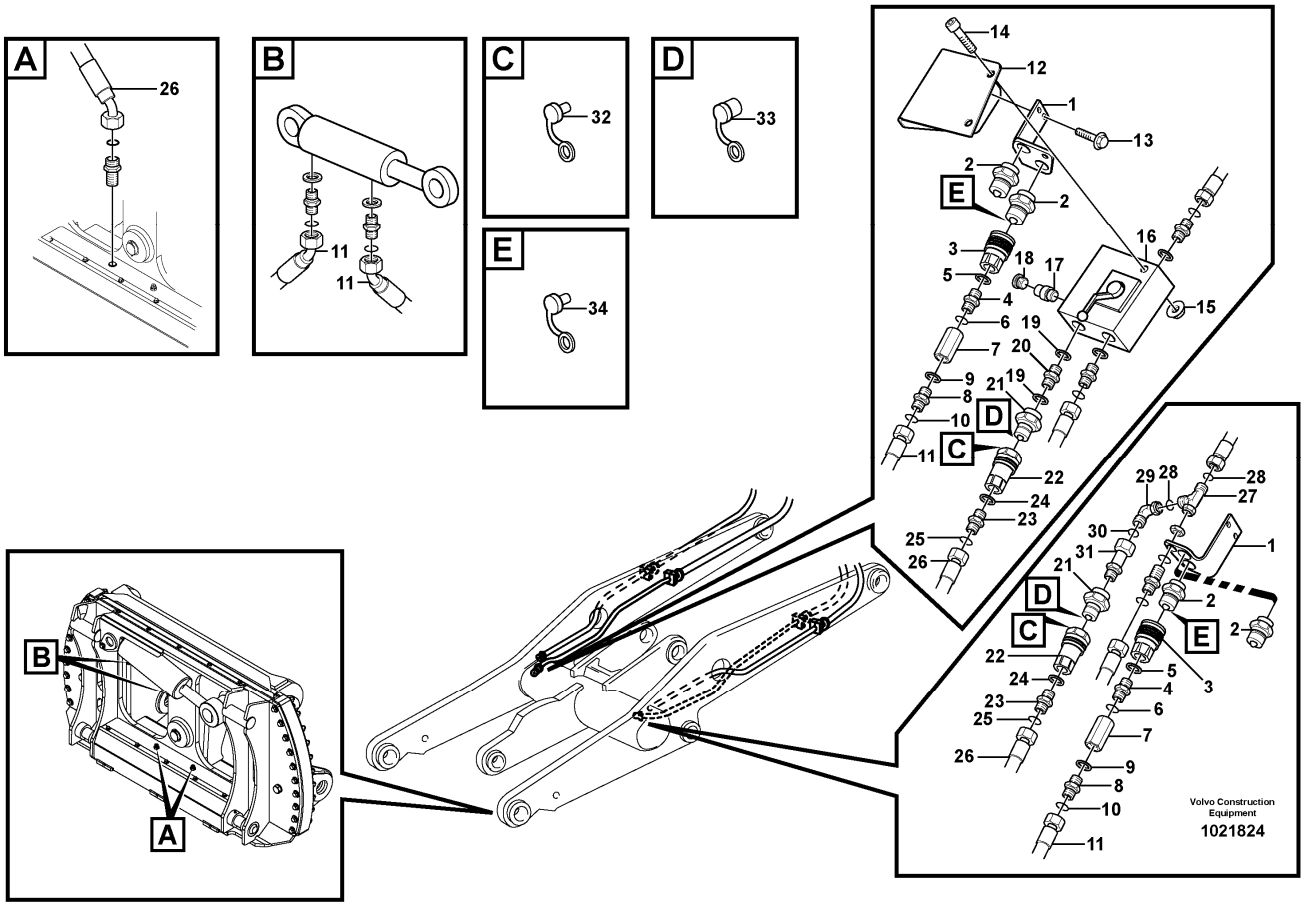

Section option	Kit	Option description
VOE82892		Installation kit rotary attachment bracket
VOE83169		Attachment bracket, rotary. Hook-on

Q1-Q5	Option	Option description	
Q1 82892	VOE82892	Installation kit rotary attachment bracket	
Q2 83169	VOE83169	Attachment bracket, rotary. Hook-on	

Pos	Part	Q1	Q2	Q3	Q4	Q5	PS	Kit	Description	Option(s)	Remark
1		2							Attachment		See ref 916/200
2		4							Quick Coupling		See ref 916/200
3	VOE11043021	2	2						Sleeve		
	VOE11993255	2							•O-ring		
	VOE11993256	2							•O-ring		

	VOE11993257	2					SS		•Back-up ring		
4	VOE13933875	2	2						Nipple		
5	VOE14211859	2							•Sealing ring		
6	VOE990740	2							•O-ring		
7	VOE13933877	2	2						Nut		(VOE11713600)
8	VOE11713599	2	2				SS		Reduction nipple		
9	VOE14211859	2							•Sealing ring		
10	VOE990737	2							•O-ring		
11	VOE11172006	2	2						Hose assembly		See ref 924/250
12	VOE11713605	1							Attachment		
13	VOE946472	2							Flange screw		
14	VOE959245	2							Hex. socket screw		
15	VOE13971095	2							Flange nut		
16	VOE11713604	1							Valve body		
17	VOE11714037	1							Non-return valve		
18	VOE11713606	1							Plug		
19	VOE14042936	2							Sealing washer		
20	VOE11713607	1							Nipple		
21	VOE11713598	2	1						Coupling piece		
22	VOE11713597	2	1						Coupling piece		
23	VOE13933915	2	2						Nipple		
24	VOE14211857	2							•Sealing ring		
25	VOE990737	2							•O-ring		
26	VOE11163066	2	2						Hose assembly		See ref 924/250
27	VOE13933936	1							T-nipple		
28	VOE990737	1							•O-ring		
29	VOE13933900	1							Elbow nipple		
30	VOE990737	1							•O-ring		
31	VOE11713608	1							Nipple		
32	VOE11713609	1					OP		Dust cover		
33	VOE11713611	1					OP		Dust cover		
34	VOE11713601	2	2						Dust cover		

VOLVO

Construction Equipment

PROSIS Part Information

Date:	Image id:	Catalogue:	Model:
10/09/2018	**1005106**	**20009**	**L60E**
Brand:	Serial:	Group/Section:	Title:
Volvo	**1001-3355, 60001-61214, 70001-70530**	**945/100**	**Loading unit.**

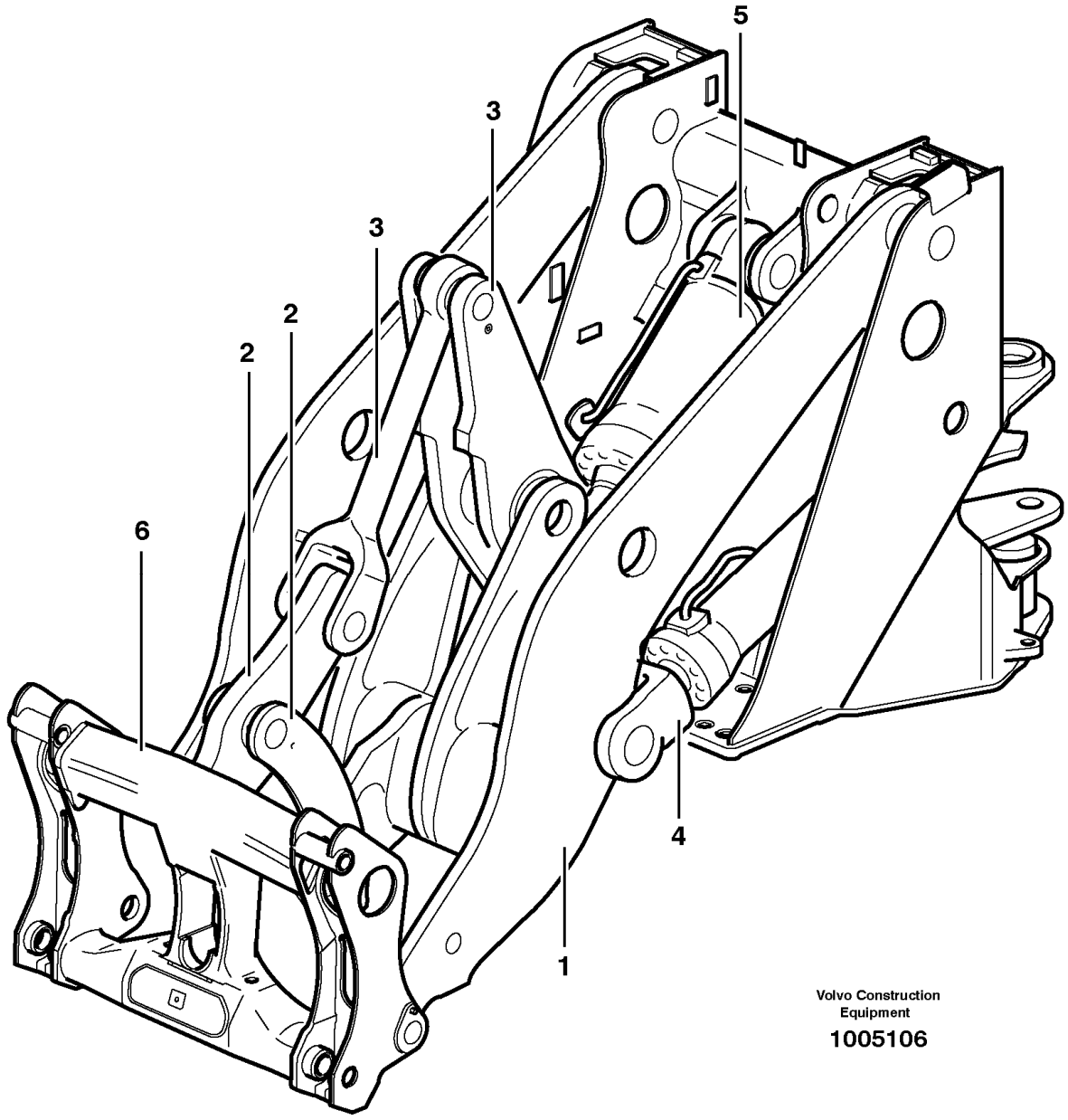

Section option	Kit	Option description
VOE33176		Loading unit
VOE33751		Loading unit
VOE33759		Wheel loader L60E OPEN ROPS
VOE80856		Attachment bracket, hydr.

VOE83380		Extended lifting arms with C-lubrication.

Q1-Q5	Option	Option description	
Q1 33751	VOE33751	Loading unit	
Q2 STD OPEN ROPS			
Q3 80856	VOE80856	Attachment bracket, hydr.	
Q4 33176 83380	VOE33176	Loading unit	

Pos	Part	Q1	Q2	Q3	Q4	Q5	PS	Kit	Description	Option(s)	Remark
1		1			1				Lft frame work		See ref 945/150
2		1			1				Link, forward		See ref 945/200
3		1			1				Link, rear		See ref 945/250
4			2						Lifting cylinder		See ref 945/500
5			1		1				Tilt cylinder		See ref 945/550
6				1					Atch bracket		See ref 924/150

VOLVO

Construction Equipment

PROSIS Part Information

Date:	Image id:	Catalogue:	Model:
10/09/2018	**1003776**	**20009**	**L60E**
Brand:	Serial:	Group/Section:	Title:
Volvo	**1001-3355, 60001-61214, 70001-70530**	**945/150**	**Lifting frame work with assembly parts**

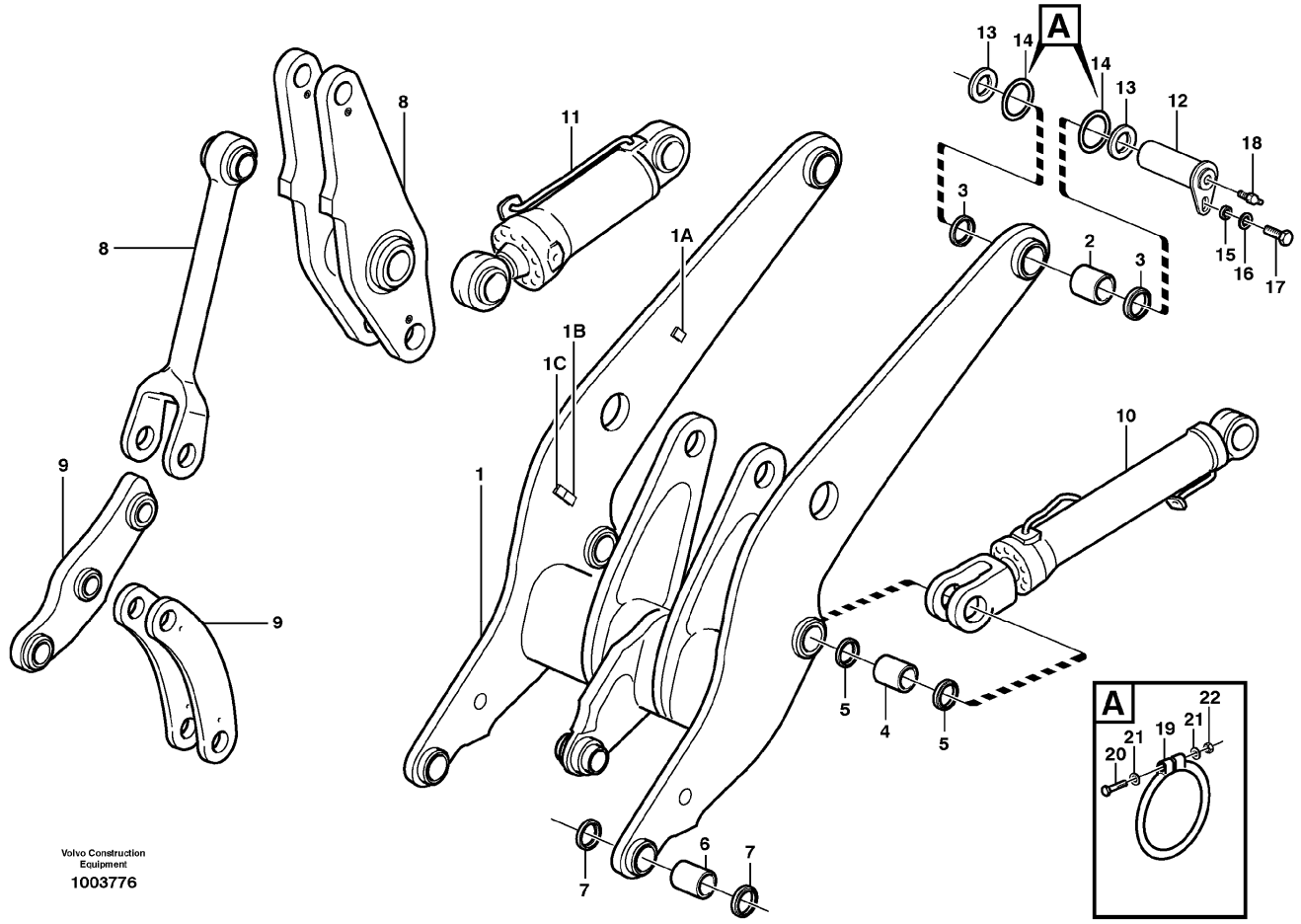

Section option	Kit	Option description
VOE33176		Loading unit
VOE33750		Wheel Loader
VOE33751		Loading unit
VOE33759		Wheel loader L60E OPEN ROPS
VOE33763		Loading unit
VOE83380		Extended lifting arms with C-lubrication.

Q1-Q5	Option	Option description	
Q1 33751 33763	VOE33751	Loading unit	
Q2 STD OPEN ROPS			
Q3 33176 83380	VOE33176	Loading unit	

Pos	Part	Q1	Q2	Q3	Q4	Q5	PS	Kit	Description	Option(s)	Remark
1	VOE11177127	1							Lifting frame work		
1	VOE11432227	1		1					Lifting frame work		33176 SWE, USA 33176 S/N - 71517 BRA 33763
	VOE11432116	1		1			OP		•Lifting frame work		
1A	VOE4763685	2		2					••Weld plate		
1B		2		2			NS		••Weld plate		
1C	VOE4785466	8		8					••Attaching plate		
1	VOE16811294			1					Framework		33176 S/N 71518 - BRA
				1			NS		•Framework		
				1			NS		••Framework		
1A	VOE4763685			2					•••Weld plate		
	VOE11177711			8					•Screw		
2	VOE11101058	2		2					Bushing		
3	VOE11005017	4		4					Scraper ring		
4	VOE11107406	2		2					Bushing		
5	VOE11005014	4		4					Scraper ring		
6	VOE11101299	2	2						Bushing		
7	VOE11005012	4	4	2					Scraper		
8		1							Link, rear		See ref 945/250
9		1							Link, forward		See ref 945/200
10			2						Lifting cylinder		See ref 945/500
11			2						Tilt cylinder		See ref 945/550
12	VOE11090112		2						Pin		
13	VOE14043289		4						Spacer		
14	VOE11048020		4						Sealing ring		
15	VOE11025923		2						Spacer		
16	VOE13947355		2						Washer		
17	VOE13965192		2						Screw		
18	VOE11025816		2						Lubricating nipple		
19	VOE4824484		1						O-ring		
20	VOE955260		1						Hexagon screw		
21	VOE13963104		1						Lock nut		
22	VOE13940090		2						Washer		

VOLVO

Construction Equipment

PROSIS Part Information

Date:	Image id:	Catalogue:	Model:
10/09/2018	**1021532**	**20009**	**L60E**
Brand:	Serial:	Group/Section:	Title:
Volvo	**1001-3355, 60001-61214, 70001-70530**	**945/200**	**Forward links with fitting parts 33751**

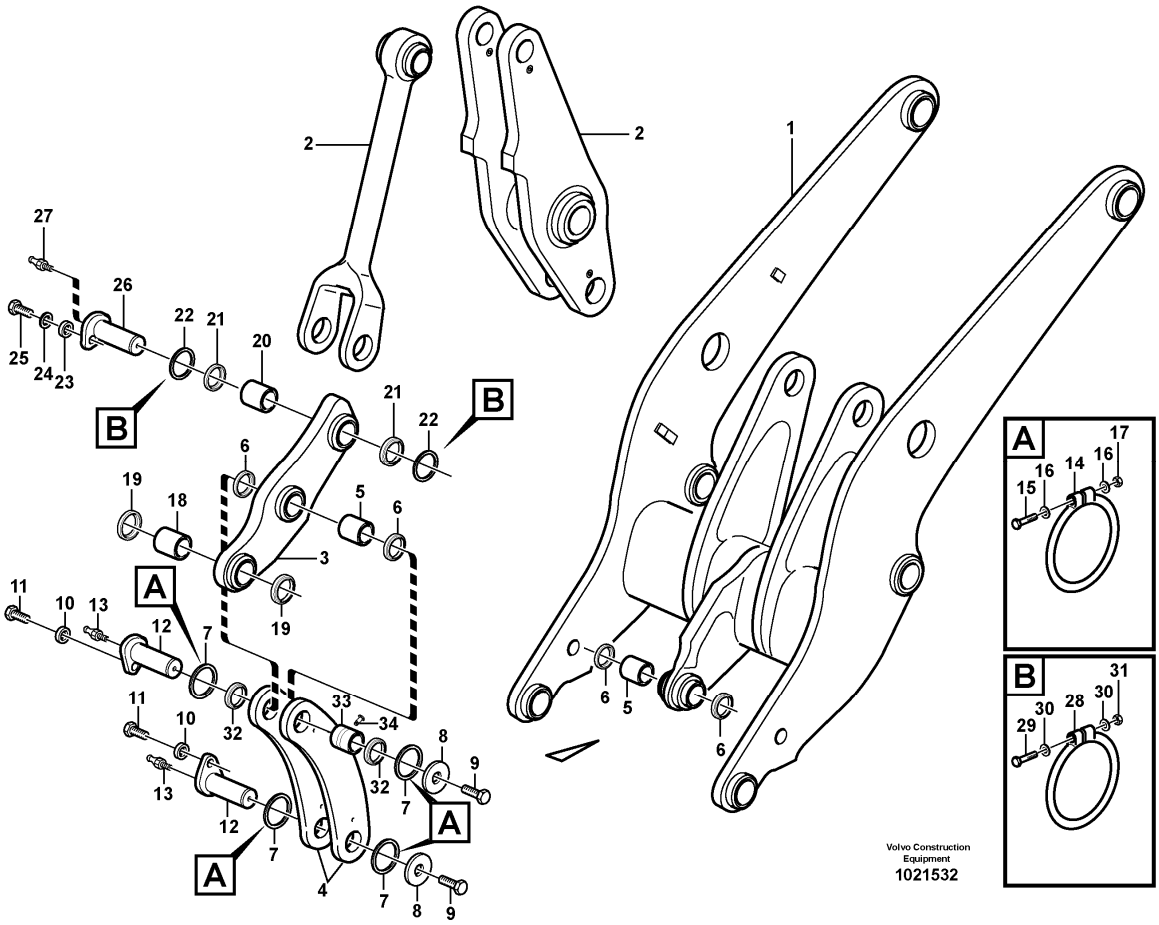

Section option	Kit	Option description
VOE33176		Loading unit
VOE33751		Loading unit
VOE33763		Loading unit

Q1-Q5	Option	Option description	
Q1 33751 33763	VOE33751	Loading unit	
Q2 33176	VOE33176	Loading unit	

Pos	Part	Q1	Q2	Q3	Q4	Q5	PS	Kit	Description	Option(s)	Remark
1		1	1						Lft frame work		See ref 945/150
2		1							Link		See ref 945/250
3	VOE11177084	1							Link		
	VOE11177711	2							•Screw		

3	VOE11432217	1	1				SS		Link	VOE33763	
4	VOE11432389	2							Link		(VOE11100785)
	VOE11432389	2	2						Link	VOE33763	
5	VOE11100994	2	1						Bushing		
6	VOE11005012	4	2						Scraper		
7	VOE11176531	4	4						Sealing ring		
8	VOE11004396	2	2						Washer		
9	VOE968435	2	2						Flange screw		
9	VOE11177711		2						Screw		
10	VOE11025923	2	1						Spacer		
11	VOE13965192	2	1						Screw		
12	VOE11100984	2	1						Pin		
13	VOE11025816	2	1						Lubricating nipple		
14	VOE4824483	4							O-ring		
15	VOE955259	4							Hexagon screw		
16	VOE13940090	8							Washer		
17	VOE13963104	4							Lock nut		
18	VOE11177045	1							Bushing		
19	VOE11005014	2	2						Scraper ring		
20	VOE11101059	1	1						Bushing		
21	VOE11005015	2							Scraper ring		
22	VOE11048020	2	2						Sealing ring		
23	VOE11025923	1	1						Spacer		
24	VOE13947355	1	1						Washer		
25	VOE13965192	1	1						Screw		
26	VOE11090116	1	1						Pin		
27	VOE11025816	1	1						Lubricating nipple		
28	VOE4824484	2							O-ring		
29	VOE955260	2							Hexagon screw		
30	VOE13940090	4							Washer		
31	VOE13963104	2							Lock nut		
32	VOE11005014		2						Scraper ring		
33	VOE11177045		1						Bushing		
34	VOE180759		1						Plug		

VOLVO

Construction Equipment

PROSIS Part Information

Date:	Image id:	Catalogue:	Model:
10/09/2018	**1087338**	**20009**	**L60E**
Brand:	Serial:	Group/Section:	Title:
Volvo	**1001-3355, 60001-61214, 70001-70530**	**945/250**	**Rear links with assembly parts 33751**

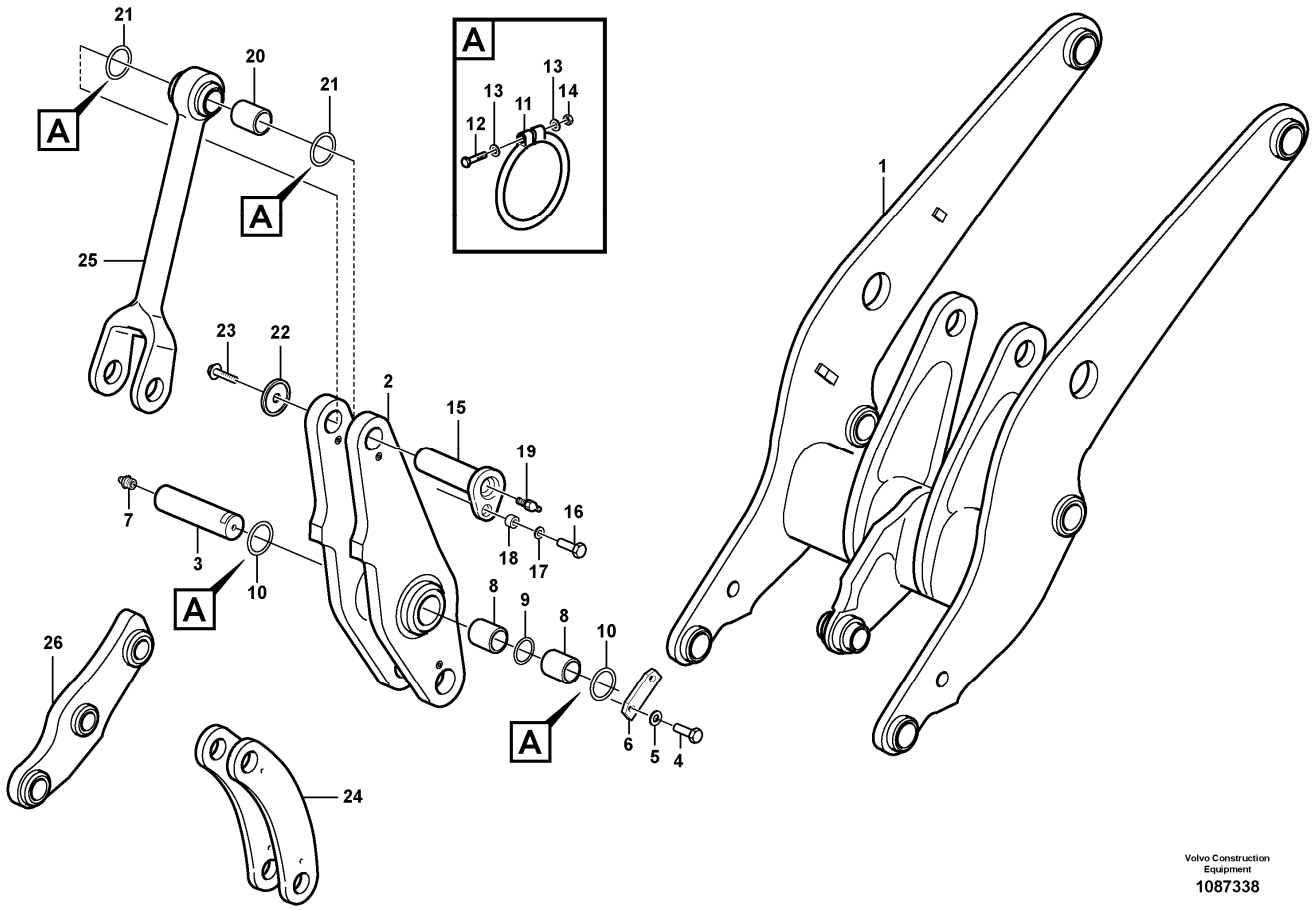

Section option	Kit	Option description
VOE33176		Loading unit
VOE33751		Loading unit
VOE83380		Extended lifting arms with C-lubrication.

Q1-Q5	Option	Option description	
Q1 33751	VOE33751	Loading unit	
Q2 33176 83380	VOE33176	Loading unit	

Pos	Part	Q1	Q2	Q3	Q4	Q5	PS	Kit	Description	Option(s)	Remark
1		1	1						Lft frame work		See ref 945/150
2	VOE11176427	1	1						Link		
3	VOE11147008	1	1						Pin		
4	VOE13965192	2	2						Screw		

5	VOE13960145	2	2						Washer		
6	VOE11100903	1	1						Striker plate		
7	VOE11025816	1	1						Lubricating nipple		
8	VOE11090106	2	2						Bushing		
9	VOE11090105	1	1						Spacer ring		
10	VOE11048020	2	2						Sealing ring		
11	VOE4824484	2							O-ring		
12	VOE955260	2							Hexagon screw		
13	VOE13940090	4							Washer		
14	VOE13963104	2							Lock nut		
15	VOE11090115	1	1						Pin		
16	VOE13965192	1	1						Screw		
17	VOE13960145	1							Washer		
18	VOE11025923	1	1						Spacer		
19	VOE11025816	1	1						Lubricating nipple		
20	VOE11003910	1	1						Bearing bushing		
21	VOE11048020	2	2						Sealing ring		
22	VOE11004396	1	1						Washer		
23	VOE968435	1	1						Flange screw		
24		1							Link		See ref 945/200
25	VOE11100612	1	1						Link		
26		1							Link		See ref 945/200

VOLVO

Construction Equipment

PROSIS Part Information

Date:	Image id:	Catalogue:	Model:
10/09/2018	**1004710**	**20009**	**L60E**
Brand:	Serial:	Group/Section:	Title:
Volvo	**1001-3355, 60001-61214, 70001-70530**	**945/300**	**Lifting- and tilt cylinder with assembly parts. STD, OPEN ROPS, 82532**

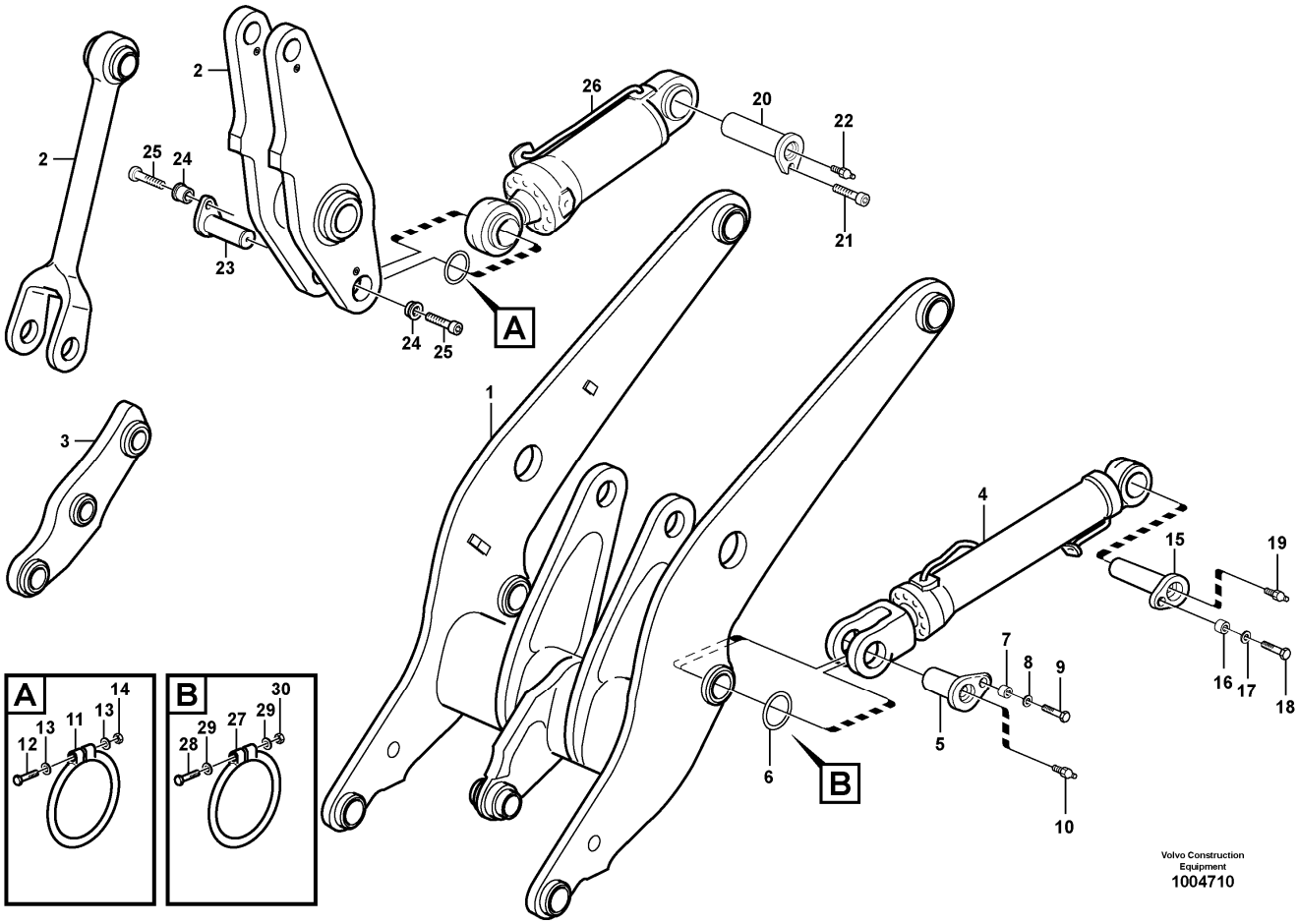

Section option	Kit	Option description
VOE33176		Loading unit
VOE33750		Wheel Loader
VOE33759		Wheel loader L60E OPEN ROPS
VOE82532		Autom. lubrication system for universal grease NLG1 No. 2
VOE83380		Extended lifting arms with C-lubrication.

Pos	Part	Q1	Q2	Q3	Q4	Q5	PS	Kit	Description	Option(s)	Remark
1		1							Lft frame work		See ref 945/150
2									•Link		See ref 945/250
3									•Link		See ref 945/200
4		2							Lifting cylinder		See ref 945/500
5	VOE11176379	2							Pin		
5	VOE11177044	2							Pin	VOE82532, VOE83380,	

										VOE83484	
6	VOE11048019	4							Sealing ring		
7	VOE11025923	2							Spacer		
8	VOE13947355	2							Washer		
9	VOE13965192	2							Screw		
10	VOE11025816	2							Lubricating nipple		
11	VOE4824484	2							O-ring		
12	VOE955260	2							Hexagon screw		
13	VOE13940090	2							Washer		
14	VOE13963104	2							Lock nut		
15	VOE11176441	2							Pin		
16	VOE11025923	2							Spacer		
17	VOE13947355	2							Washer		
18	VOE13965192	2							Screw		
19	VOE11025816	2							Lubricating nipple		
20	VOE11176579	1							Pin		
21	VOE959254	1							Hex. socket screw		
22	VOE11025816	1							Lubricating nipple		
23	VOE11090114	1							Pin		
24	VOE11091337	2							Spacer		
25	VOE959254	2							Hex. socket screw		
26		1							Tilt cylinder		See ref 945/550
27	VOE4824483	2							O-ring		
28	VOE955259	2							Hexagon screw		
29	VOE13940090	4							Washer		
30	VOE13963104	2							Lock nut		

VOLVO

Construction Equipment

PROSIS Part Information

Date:	Image id:	Catalogue:	Model:
10/09/2018	**1004717**	**20009**	**L60E**
Brand:	Serial:	Group/Section:	Title:
Volvo	**1001-3355, 60001-61214, 70001-70530**	**945/350**	**Assemble attachment bracket. STD, OPEN ROPS**

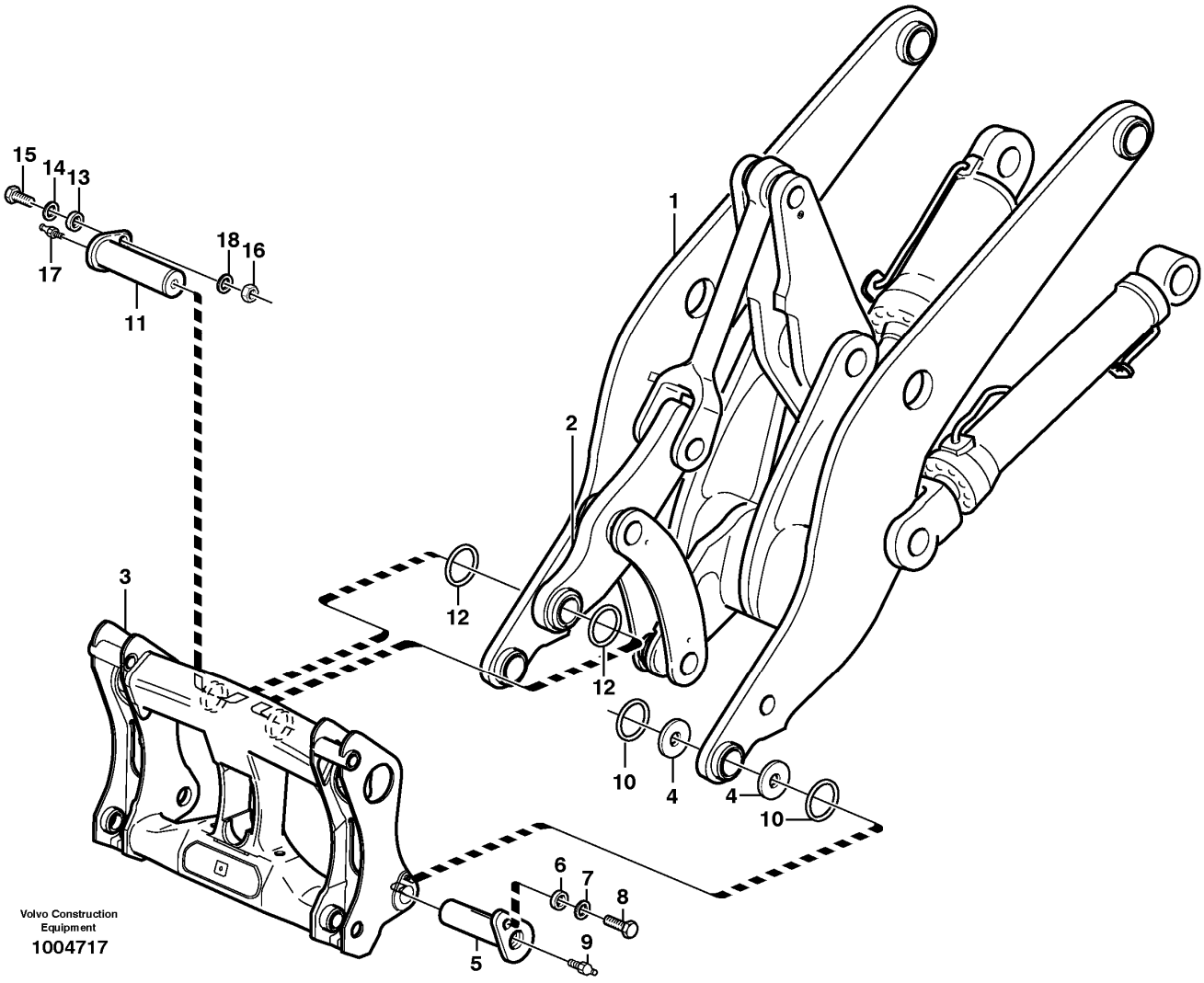

Section option	Kit	Option description
VOE33750		Wheel Loader
VOE33759		Wheel loader L60E OPEN ROPS

Pos	Part	Q1	Q2	Q3	Q4	Q5	PS	Kit	Description	Option(s)	Remark
1		1							Lft frame work		See ref 945/150
2		1							•Link		See ref 945/150
3		1							Atch bracket		See ref 924/150
4	VOE11176802	4							Shim		
5	VOE11091998	2							Pin		

6	VOE11025923	2							Spacer		
7	VOE13947355	2							Washer		
8	VOE13965192	2							Screw		
9	VOE11025816	2							Lubricating nipple		
10	VOE11176531	4							Sealing ring		
11	VOE11101699	1							Pin		
12	VOE11176531	2							Sealing ring		
13	VOE11091312	1							Spacer		
14	VOE13960145	1							Washer		
15	VOE965195	1							Flange screw		
16	VOE13971096	1							Flange nut		
17	VOE11025816	1							Lubricating nipple		
18	VOE13955897	2							Washer		

VOLVO

Construction Equipment

PROSIS Part Information

Date:	Image id:	Catalogue:	Model:
10/09/2018	**1008203**	**20009**	**L60E**
Brand:	Serial:	Group/Section:	Title:
Volvo	**1001-3355, 60001-61214, 70001-70530**	**945/450**	**Bucket positioner and boom kickout STD, OPEN ROPS**

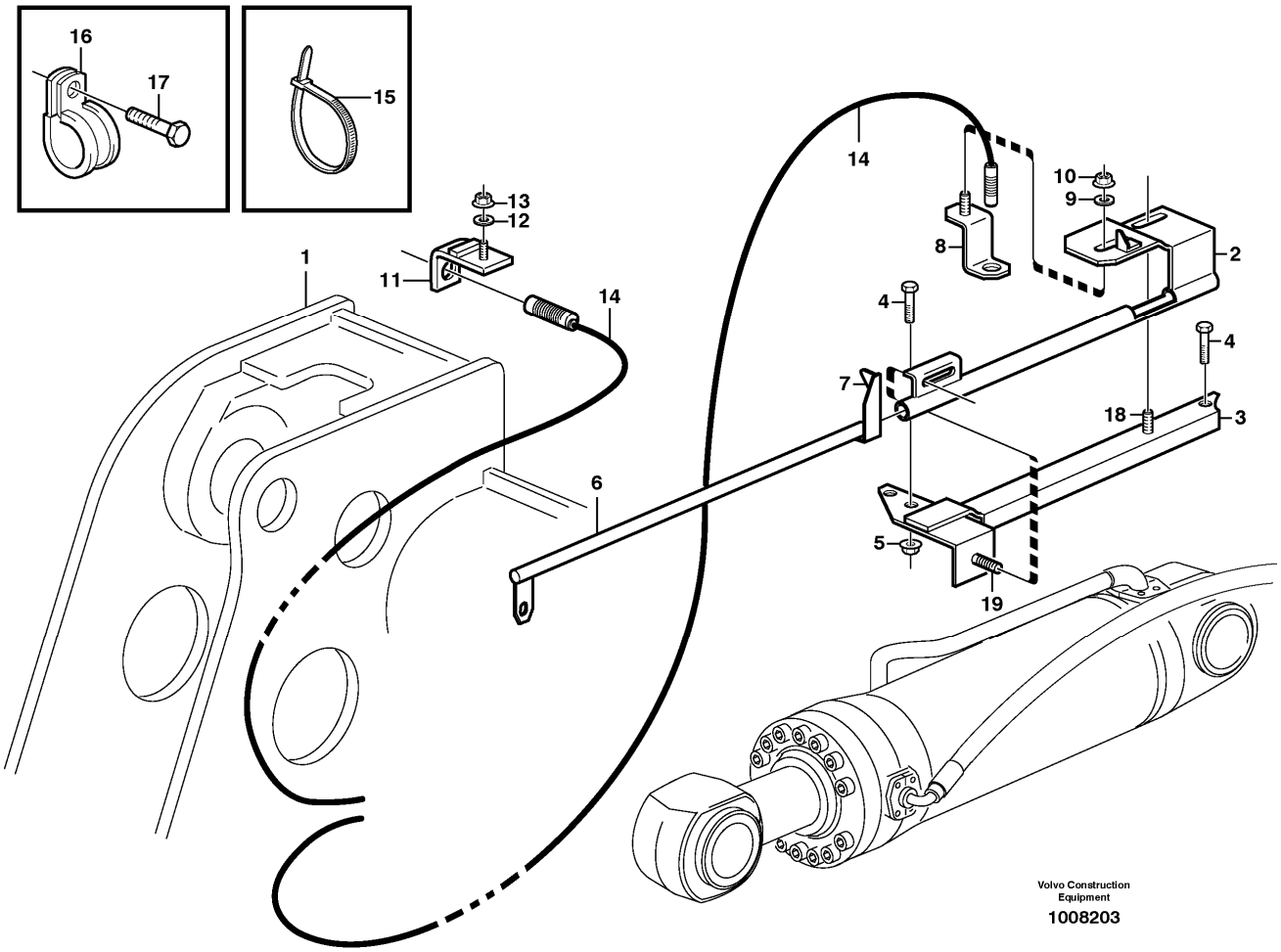

Section option	Kit	Option description
VOE33750		Wheel Loader
VOE33759		Wheel loader L60E OPEN ROPS

Pos	Part	Q1	Q2	Q3	Q4	Q5	PS	Kit	Description	Option(s)	Remark
1		1							Front frame		See ref 711/100
2	VOE11177646	1							Bracket		(VOE11176321)
3	VOE11176320	1							Bracket		
4	VOE13946817	3							Screw		
5	VOE13971098	2							Flange nut		
6	VOE11177025	1							Indicator		
	VOE11432280	1							Indicator	VOE83278, VOE83380	

7	VOE11027212	1							Decal		
8	VOE11177645	1							Attachment		(VOE11020538)
9	VOE11117464	1							Plain washer		(VOE13960141)
10	VOE948645	1							Flange lock nut		
11	VOE11024585	1							Retainer		
12	VOE11117464	1							Plain washer		(VOE13960141)
13	VOE948645	1							Flange lock nut		
14	VOE11112903	1					SS		Induction sensor		SE901, SE902
15	VOE4881440	4							Cable tie		
16	VOE13949746	3							Clamp		
17	VOE13946173	2							Screw		
18	VOE13970947	1							Hexagon screw		
19	VOE13970949	1							Hexagon screw		(VOE970807)

VOLVO

Construction Equipment

PROSIS Part Information

Date:	Image id:	Catalogue:	Model:
10/09/2018	**1015244**	**20009**	**L60E**
Brand:	Serial:	Group/Section:	Title:
Volvo	**1001-3355, 60001-61214, 70001-70530**	**945/500**	**Hydraulic cylinder, lifting. STD, OPEN ROPS**

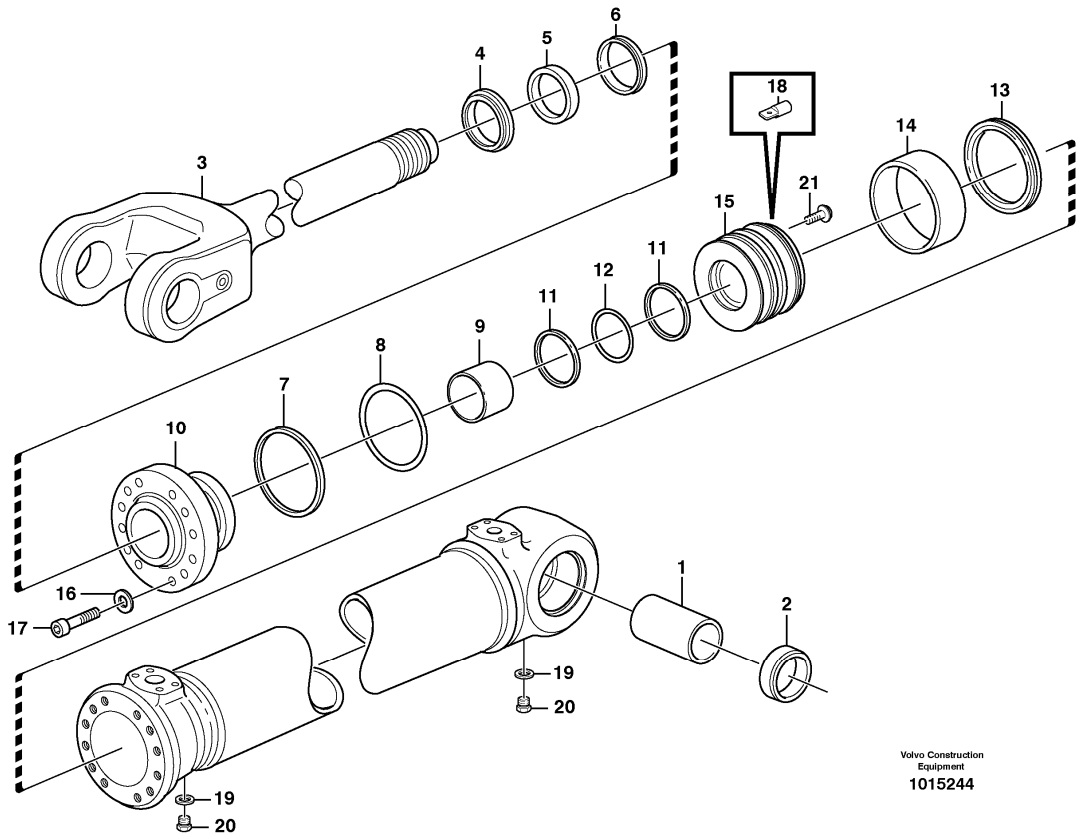

Section option	Kit	Option description
VOE33750		Wheel Loader
VOE33759		Wheel loader L60E OPEN ROPS

Q1-Q5	Option	Option description	
Q1 11107645			
Q2 11709998			

Pos	Part	Q1	Q2	Q3	Q4	Q5	PS	Kit	Description	Option(s)	Remark
	VOE17225205	2							Hydraulic cylinder		REMAN VOE9017225205
1	VOE11107406	1						K	•Bushing		
2	VOE11005014	2						K	•Scraper ring		
3	VOE17318291	1							•Piston rod		
4	VOE11005057	1						K	•Scraper ring		

5	VOE4784048	1						K	•Piston rod seal		
6	VOE11088175	1						K	•Piston rod seal		
7	VOE4786742	1						K	•Back-up ring		
8	VOE925081	1						K	•O-ring		
9	VOE11088054	2							•Bushing		
10	VOE11107404	1							•Piston rod guide		
11	VOE11088600	2						K	•Back-up ring		
12	VOE925093	1						K	•O-ring		
13	VOE11107805	1						K	•Piston seal		
14	VOE11107528	2							•Guide ring		
15	VOE11107520	1					OP		•Piston		
16	VOE941908	12							•Spring washer		
17	VOE14014661	12							•Allen Hd Screw		
18	VOE2552116	1							•Pin		
19	VOE13945653	2							•Plane gasket		
20	VOE960630	2							•Plug		
21	VOE11088650	1							•Screw		
	VOE15162235	1							Sealing kit		(VOE11709998)

VOLVO

Construction Equipment

PROSIS Part Information

Date:	Image id:	Catalogue:	Model:
10/09/2018	**1004854**	**20009**	**L60E**
Brand:	Serial:	Group/Section:	Title:
Volvo	**1001-3355, 60001-61214, 70001-70530**	**945/550**	**Hydraulic cylinder, tilt STD, OPEN ROPS**

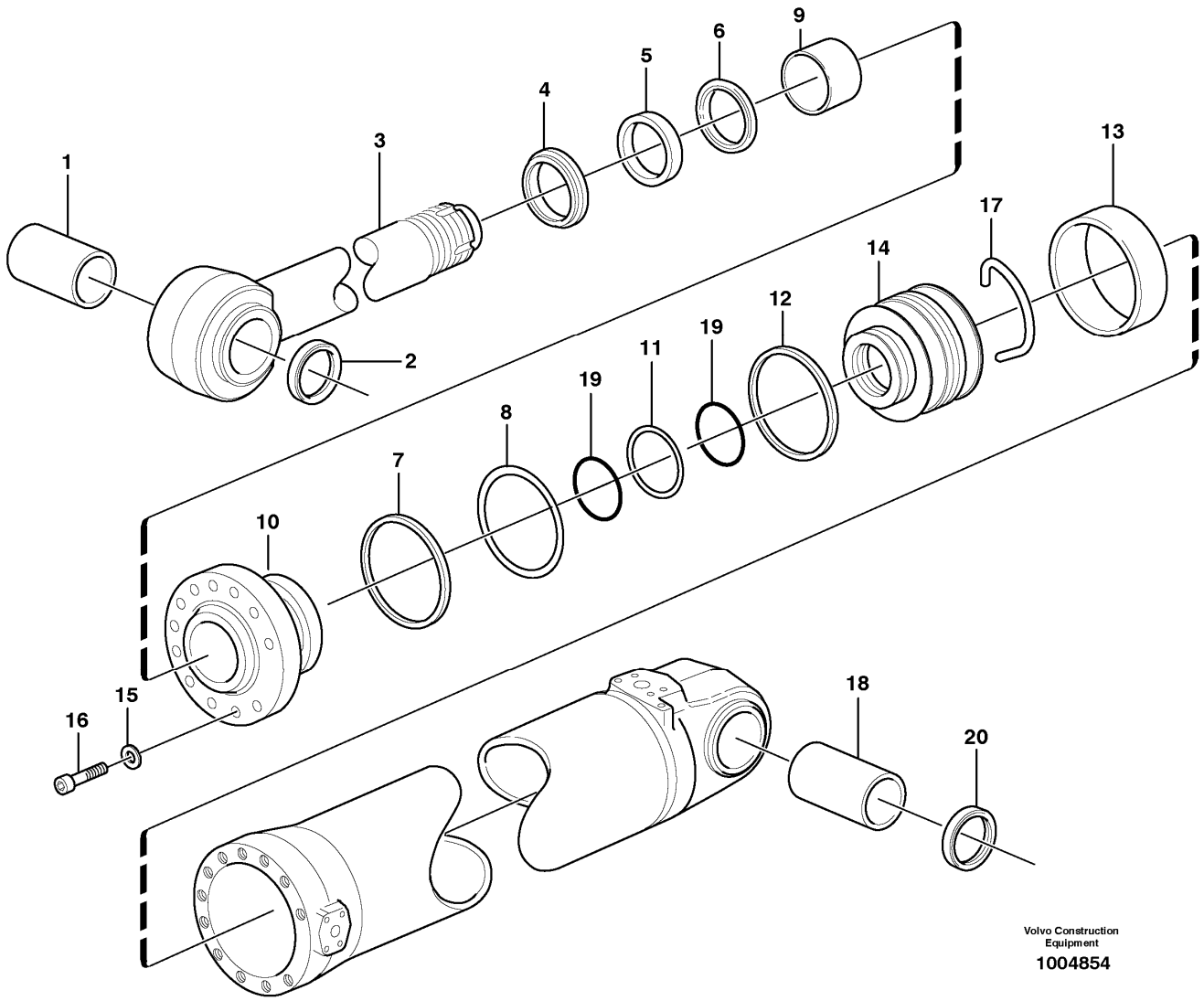

Section option	Kit	Option description
VOE33750		Wheel Loader
VOE33759		Wheel loader L60E OPEN ROPS
VOE83278		Long boom without central lubrication LOAD 33763
VOE83380		Extended lifting arms with C-lubrication.

Q1-Q5	Option	Option description	
Q1 11107474			
Q2 11107850			
Q3 11107845			

Pos	Part	Q1	Q2	Q3	Q4	Q5	PS	Kit	Description	Option(s)	Remark
	VOE11107474	1					SS		Hydraulic cylinder		S/N - 2260 S/N - 60650 USA S/N - 70284 BRA, REMAN VOE9011107474, VOE9011107850
	VOE17225208		1						Hydraulic cylinder		(VOE11107850)S/N 2261 - S/N 60651 - USA S/N 70285 - BRA, REMAN VOE9011107850, VOE9017225208
	VOE17225209			1					Hydraulic cylinder	VOE83278, VOE83380	(VOE11107845), REMAN VOE9011107845, VOE9017225209
1	VOE11101377	1	1	1					•Bushing		
2	VOE11005017	2	2	2				K	•Scraper ring		
3	VOE17318295	1	1						•Piston rod		(VOE11107477)
	VOE17318297			1					•Piston rod		(VOE11107869)
4	VOE11005059	1	1	1				K	•Scraper ring		
5	VOE11088173	1	1	1				K	•Piston rod seal		
6	VOE11088174	1	1	1				K	•Piston rod seal		
7	VOE4880855	1	1	1				K	•Back-up ring		
8	VOE925032	1	1	1				K	•O-ring		
9	VOE11088150	3	3	3					•Bushing		
10	VOE11107479	1	1	1					•Piston rod guide		
11	VOE925256	1	1	1				K	•O-ring		
	VOE11107810	1							•Piston seal		(VOE11107276)
12	VOE11107810		1	1					•Piston seal		
13	VOE11107289	2	2	2					•Guide ring		
14	VOE11107286	1	1	1			OP		•Piston		
15	VOE941912	12	12	12					•Spring washer		
16	VOE4782860	12	12	12					•Hex. socket screw		
17	VOE11107285	1	1	1					•Lock brace		
18	VOE11101378	1	1	1					Bushing		
19	VOE11088601	2	2	2				K	•Back-up ring		
20	VOE11005015	2	2	2				K	•Scraper ring		
	VOE11709868	1	1	1					Sealing kit		

VOLVO

Construction Equipment

PROSIS Part Information

Date:	Image id:	Catalogue:	Model:
10/09/2018	**1024229**	**20009**	**L60E**
Brand:	Serial:	Group/Section:	Title:
Volvo	**1001-3355, 60001-61214, 70001-70530**	**945/600**	**Extended lube points for lift arm system 33750, 33759**

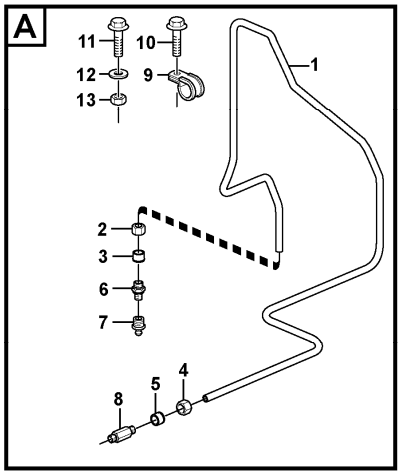

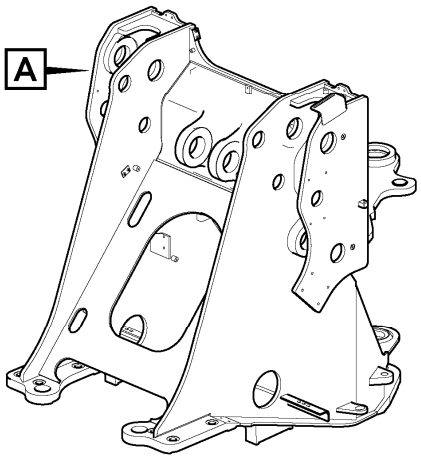

Volvo Construction Equipment
1024229

Section option	Kit	Option description
VOE33750		Wheel Loader
VOE33759		Wheel loader L60E OPEN ROPS

Pos	Part	Q1	Q2	Q3	Q4	Q5	PS	Kit	Description	Option(s)	Remark
1	VOE11176592	1							Pipe		
2	VOE956981	1							•Fitting nut		
3	VOE13956967	1							•Ferrule		
4	VOE956981	1							Fitting nut		
5	VOE13956967	1							Ferrule		
6	VOE946089	1							Nipple		
7	VOE914167	1							Lubricating nipple		
8	VOE11015258	1							Nipple		
9	VOE952623	1							Clamp		

10	VOE13965175	1							Screw		
11	VOE13945444	2							Screw		
12	VOE11117464	4							Plain washer		
13	VOE13945408	2							Nut		

VOLVO

Construction Equipment

PROSIS Part Information

Date:	Image id:	Catalogue:	Model:
10/09/2018	**1007327**	**20009**	**L60E**
Brand:	Serial:	Group/Section:	Title:
Volvo	**1001-3355, 60001-61214, 70001-70530**	**945/700**	**Hose protection, lift cylinder 82212**

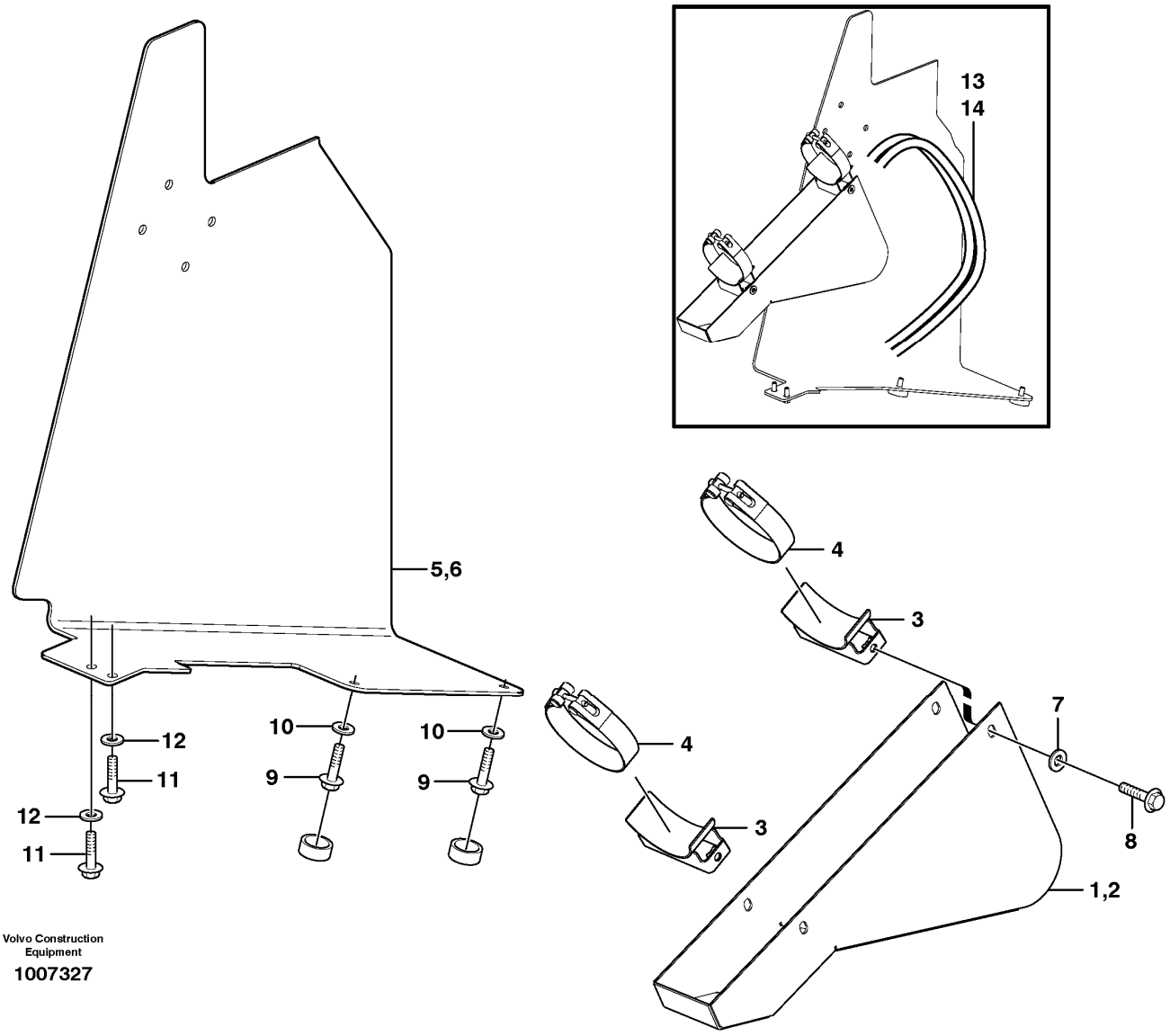

Section option	Kit	Option description
VOE82212		Guards for pipes and lift cylinder hoses

Pos	Part	Q1	Q2	Q3	Q4	Q5	PS	Kit	Description	Option(s)	Remark
1	VOE11180588	1							Guard		RH
2	VOE11180589	1							Guard		LH
3	VOE15013533	4							Bracket		
4	VOE11180506	4							Tensioning band		

5	VOE11180698	1							Guard		RH
6	VOE11180699	1							Guard		LH
7	VOE960148	8					SS		Plain washer		
8	VOE946441	8							Flange screw		
9	VOE13965191	4							Screw		
10	VOE13960145	4							Washer		
11	VOE946472	4							Flange screw		
12	VOE13960143	4							Washer		
13	VOE11438111	2							Hose assembly		L = 1800MM
14	VOE936559	2							Hose assembly		L = 1900MM

VOLVO

Construction Equipment

PROSIS Part Information

Date:	Image id:	Catalogue:	Model:
10/09/2018	**1018130**	**20009**	**L60E**
Brand:	Serial:	Group/Section:	Title:
Volvo	**1001-3355, 60001-61214, 70001-70530**	**992/100**	**Fire suppression system 82231**

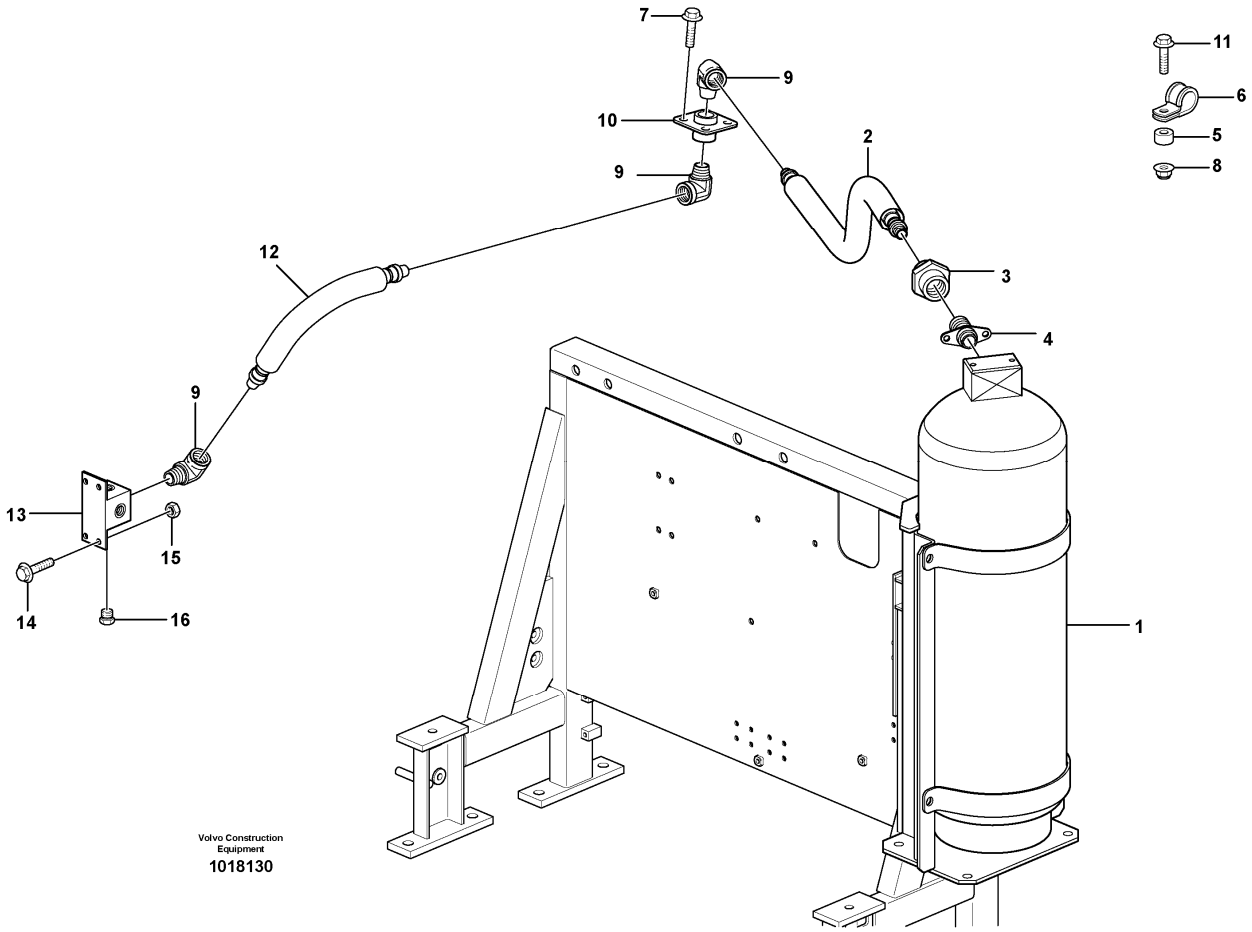

Section option	Kit	Option description
VOE82231		Fire suppression system USA

Pos	Part	Q1	Q2	Q3	Q4	Q5	PS	Kit	Description	Option(s)	Remark
1		1							Tank		See ref 992/250
2	VOE11301779	1							Hose assembly		L = 898 MM
3	VOE11301772	1							Clutch		
4	VOE11301771	1							Fitting		
5	VOE930417	1							Spacer ring		
6	VOE981656	1							Clamp		
7	VOE13945444	4							Screw		
8	VOE948645	1							Flange lock nut		
9	VOE11301774	3							Elbow		
10	VOE11301777	1							Bracket		

11	VOE946671	1							Flange screw		
12	VOE11301781	1							Hose assembly		L = 350 MM
13	VOE11301784	1							Block		
14	VOE946440	4							Flange screw		
15	VOE948645	4							Flange lock nut		
16	VOE479956	1							Plug		

VOLVO

Construction Equipment

PROSIS Part Information

Date:	Image id:	Catalogue:	Model:
10/09/2018	**1021930**	**20009**	**L60E**
Brand:	Serial:	Group/Section:	Title:
Volvo	**1001-3355, 60001-61214, 70001-70530**	**992/150**	**Fire suppression system 82231**

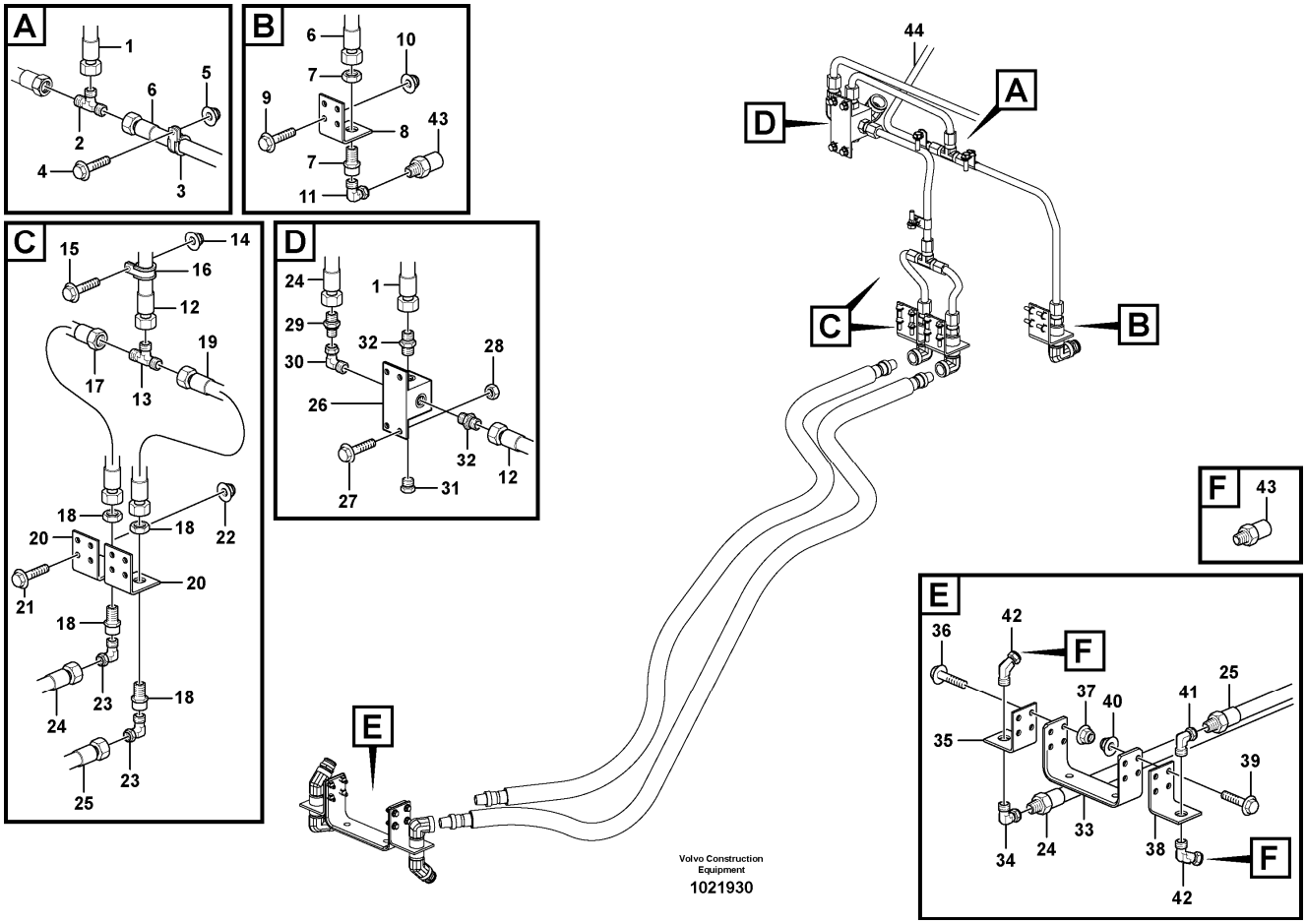

Section option	Kit	Option description
VOE82231		Fire suppression system USA

Pos	Part	Q1	Q2	Q3	Q4	Q5	PS	Kit	Description	Option(s)	Remark
1	VOE11301981	1							Tube		
2	VOE11301898	1							Fitting		
3	VOE13949746	1							Clamp		
4	VOE13945444	1							Screw		
5	VOE948645	1							Flange lock nut		
6	VOE11301983	1							Tube		
7	VOE11301813	1							Fitting		
8	VOE11301783	1							Bracket		
9	VOE13946544	4							Screw		
10	VOE13949278	4							Flange lock nut		

11	VOE11301799	1							Elbow		
12	VOE11301980	1							Tube		
13	VOE11301898	1							Fitting		
14	VOE948645	2							Flange lock nut		
15	VOE13945444	2							Screw		
16	VOE13949746	2							Clamp		
17	VOE11301979	1							Tube		
18	VOE11301813	2							Fitting		
19	VOE11301978	1							Tube		
20	VOE11301783	2							Bracket		
21	VOE13946544	8							Screw		
22	VOE13949278	8							Flange lock nut		
23	VOE11301799	2							Elbow		
24	VOE11301977	1							Hose assembly		
25	VOE11301976	1							Hose assembly		
26		1							Block		See ref 992/100
27	VOE946440	4							Flange screw		
28	VOE948645	4							Flange lock nut		
29	VOE11301813	1							Fitting		
30	VOE11301799	1							Elbow		
31	VOE479956	1							Plug		
32	VOE11301813	2							Fitting		
33	VOE11302018	1							Anchorage		
34	VOE11301799	1							Elbow		
35	VOE11301783	2							Bracket		
36	VOE13946934	4							Screw		
37	VOE13949278	4							Flange lock nut		
38	VOE11301783	1							Bracket		
39	VOE13946934	4							Screw		
40	VOE13949278	4							Flange lock nut		
41	VOE11301799	1							Elbow		
42	VOE11301801	2							Elbow		
43	VOE11301769	3							Nozzle		
44		1							Tube		See ref 992/200

VOLVO

Construction Equipment

PROSIS Part Information

Date:	Image id:	Catalogue:	Model:
10/09/2018	**1018180**	**20009**	**L60E**
Brand:	Serial:	Group/Section:	Title:
Volvo	**1001-3355, 60001-61214, 70001-70530**	**992/200**	**Fire suppression system 82231**

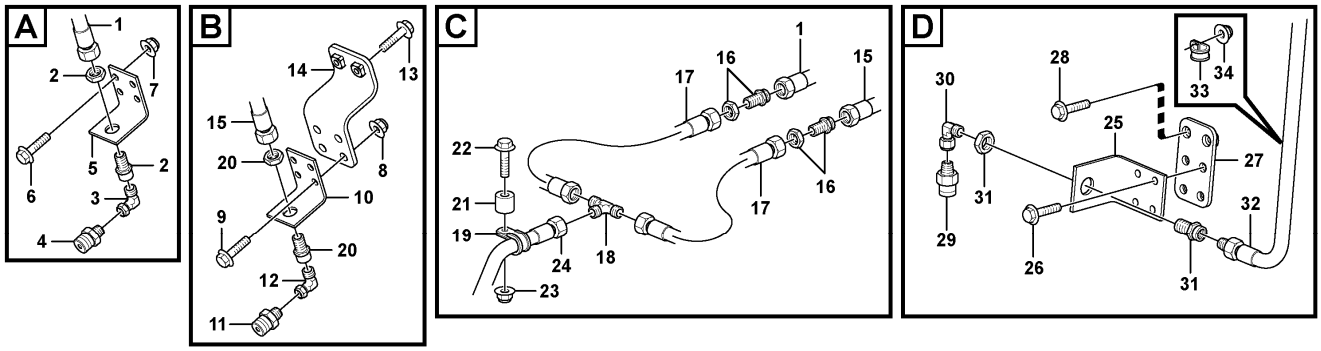

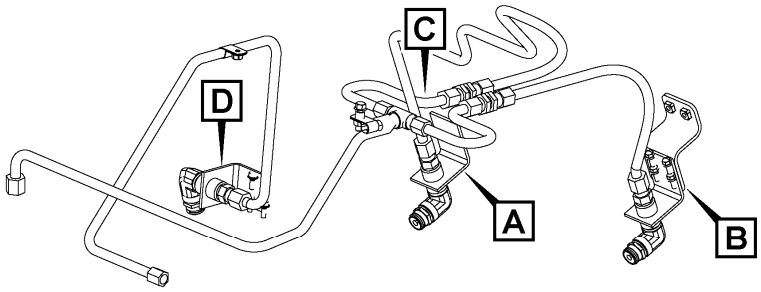

Volvo Construction Equipment
1018180

Section option	Kit	Option description
VOE82231		Fire suppression system USA

Pos	Part	Q1	Q2	Q3	Q4	Q5	PS	Kit	Description	Option(s)	Remark
1	VOE11302731	1							Tube		
2	VOE11301813	1							Fitting		
3	VOE11301799	1							Elbow		
4	VOE11301769	1							Nozzle		
5	VOE11301783	1							Bracket		
6	VOE13946544	4							Screw		
7	VOE13949278	4							Flange lock nut		
8	VOE13949278	4							Flange lock nut		
9	VOE13946544	4							Screw		
10	VOE11301783	1							Bracket		

11	VOE11301769	1							Nozzle		
12	VOE11301799	1							Elbow		
13	VOE13946173	2							Screw		
14	VOE11302723	1							Bracket		
15	VOE11302732	1							Tube		
16	VOE11301815	2							Fitting		
17	VOE11301986	2							Tube		
18	VOE11301898	1							Fitting		
19	VOE13949746	1							Clamp		
20	VOE11301813	1							Fitting		
21	VOE930417	1							Spacer ring		
22	VOE946671	1							Flange screw		
23	VOE948645	1							Flange lock nut		
24	VOE11302013	1							Tube		
25	VOE11301783	1							Bracket		
26	VOE13946544	4							Screw		
27	VOE11301808	1							Bracket		
28	VOE13946173	2							Screw		
29	VOE11301769	1							Nozzle		
30	VOE11301799	1							Elbow		
31	VOE11301813	1							Fitting		
32	VOE11301999	1							Tube		
33	VOE13949746	2							Clamp		
34	VOE948645	2							Flange lock nut		

VOLVO

Construction Equipment

PROSIS Part Information

Date:	Image id:	Catalogue:	Model:
10/09/2018	**1018113**	**20009**	**L60E**
Brand:	Serial:	Group/Section:	Title:
Volvo	**1001-3355, 60001-61214, 70001-70530**	**992/250**	**Tank with fitting parts 82231**

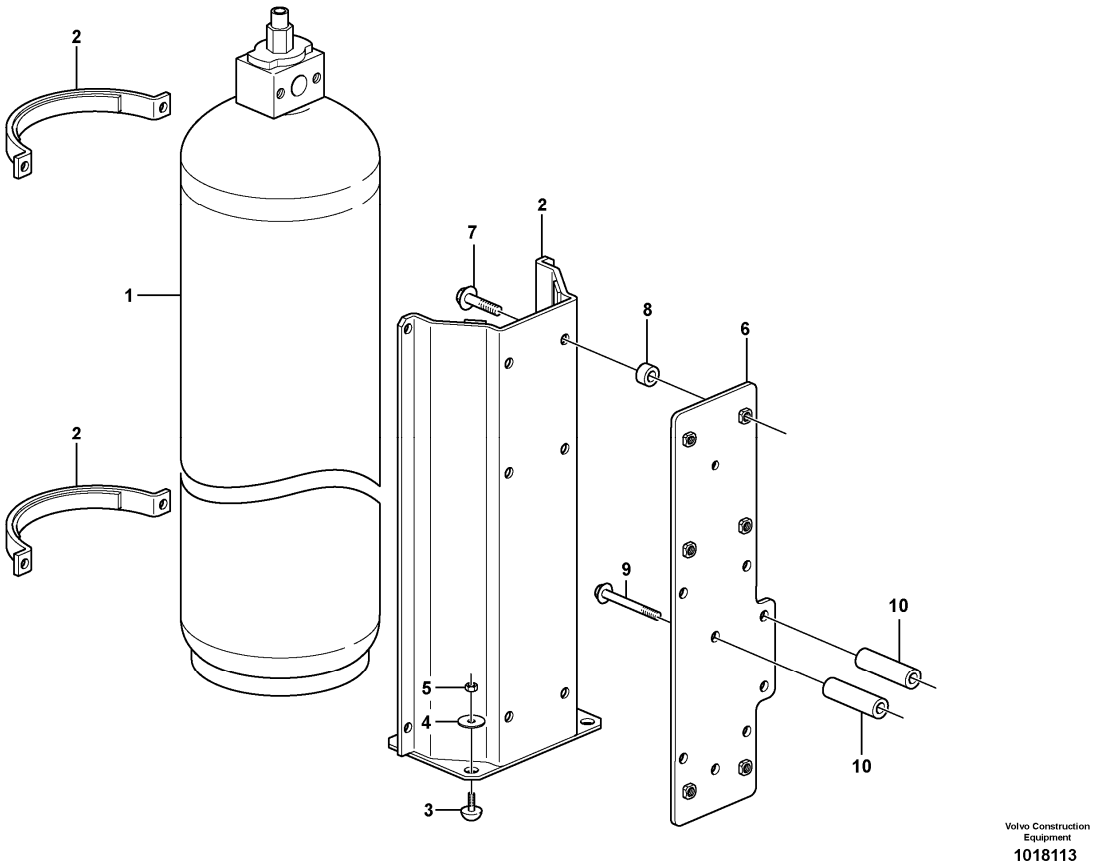

Section option	Kit	Option description
VOE82231		Fire suppression system USA

Pos	Part	Q1	Q2	Q3	Q4	Q5	PS	Kit	Description	Option(s)	Remark
1	VOE11301765	1							Tank		
2	VOE11301767	1							Bracket		
3	VOE11091363	2							Buffer		
4	VOE13949817	2							Washer		
5	VOE13945407	2							Nut		
6	VOE11302015	1							Plate		
7	VOE13965192	6							Screw		
8	VOE4974453	6							Spacer		
9	VOE13965190	3							Screw		L = 100 MM
10	VOE11302029	3							Spacer		

VOLVO

Construction Equipment

PROSIS Part Information

Date:	Image id:	Catalogue:	Model:
10/09/2018	**1016366**	**20009**	**L60E**
Brand:	Serial:	Group/Section:	Title:
Volvo	**1001-3355, 60001-61214, 70001-70530**	**993/100**	**Central lubrication 82531, 83380**

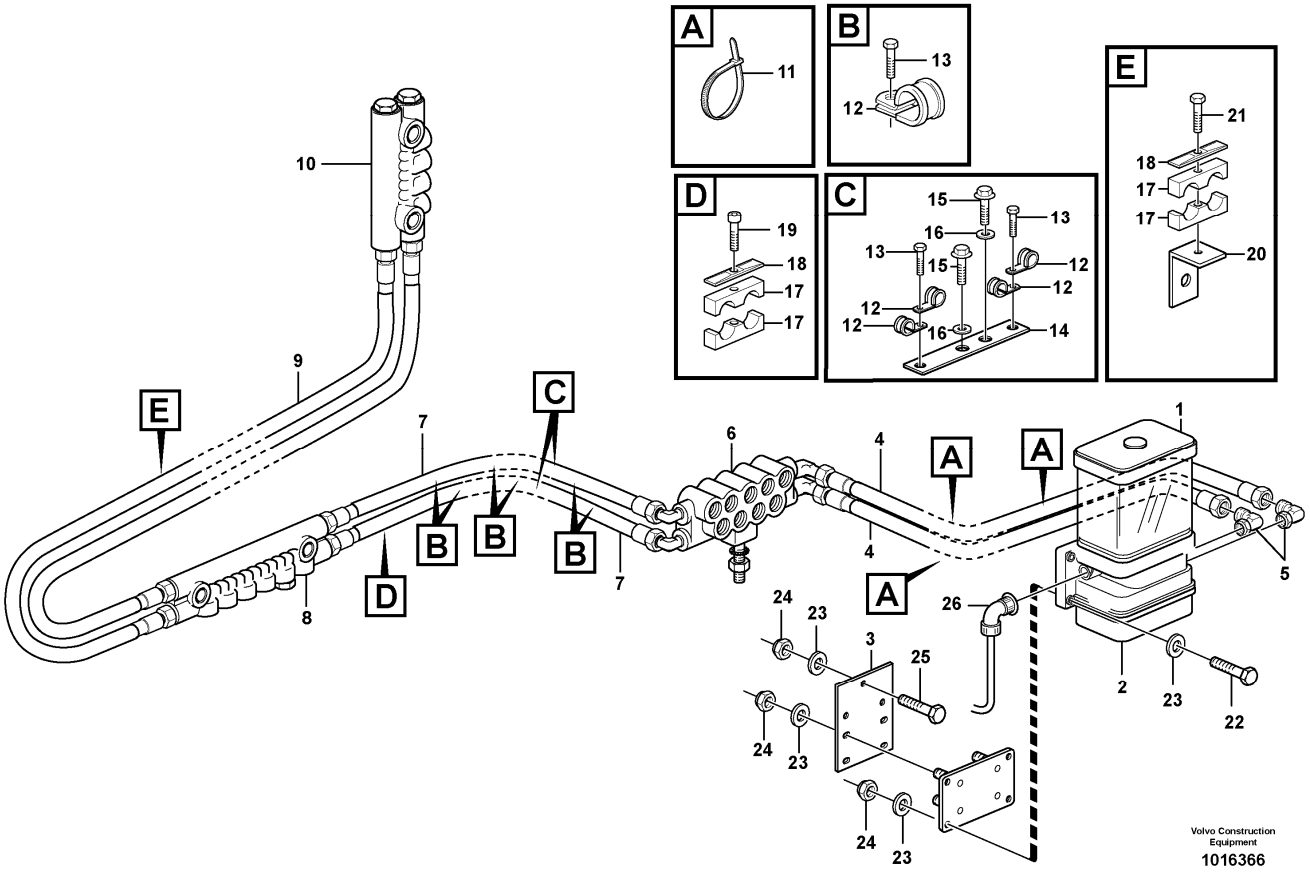

Section option	Kit	Option description
VOE82531		Autom. lubrication system for universal grease NLG1 No. 2
VOE83380		Extended lifting arms with C-lubrication.

Q1-Q5	Option	Option description	
Q1 82531	VOE82531	Autom. lubrication system for universal grease NLG1 No. 2	
Q2 83380	VOE83380	Extended lifting arms with C-lubrication.	

Pos	Part	Q1	Q2	Q3	Q4	Q5	PS	Kit	Description	Option(s)	Remark
1	VOE11301765	1							Tank		
2	VOE11301767	1							Bracket		
3	VOE11091363	2							Buffer		
4	VOE13949817	2							Washer		
5	VOE13945407	2							Nut		

6	VOE11302015	1							Plate		
7	VOE13965192	6							Screw		
8	VOE4974453	6							Spacer		
9	VOE13965190	3							Screw		L = 100 MM
10	VOE11302029	3							Spacer		

VOLVO

Construction Equipment

PROSIS Part Information

Date:	Image id:	Catalogue:	Model:
10/09/2018	**1016387**	**20009**	**L60E**
Brand:	Serial:	Group/Section:	Title:
Volvo	**1001-3355, 60001-61214, 70001-70530**	**993/150**	**Central lubrication with fitting parts. B1 82531, 83380**

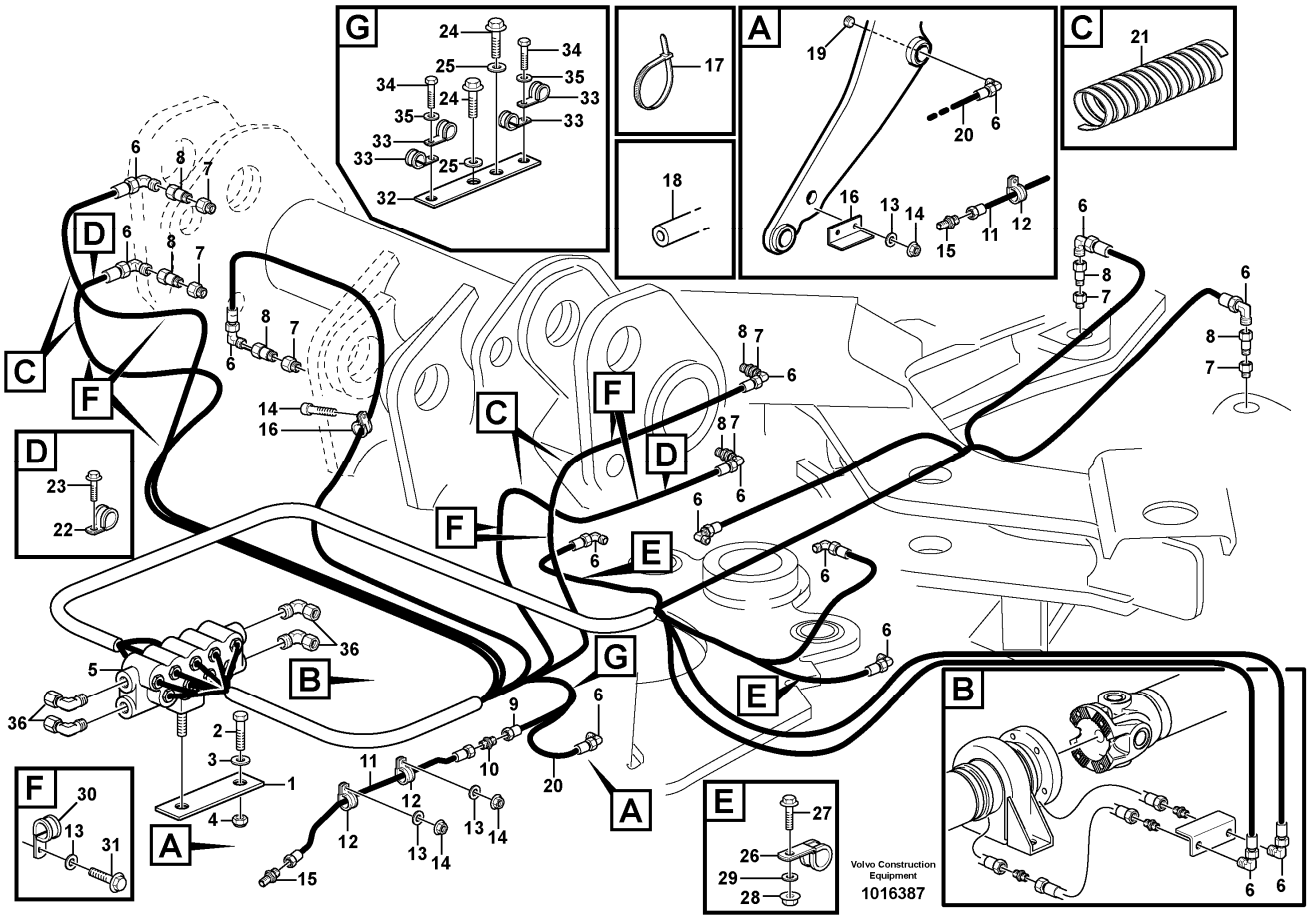

Section option	Kit	Option description
VOE82531		Autom. lubrication system for universal grease NLG1 No. 2
VOE83380		Extended lifting arms with C-lubrication.

Q1-Q5	Option	Option description	
Q1 82531	VOE82531	Autom. lubrication system for universal grease NLG1 No. 2	
Q2 83380	VOE83380	Extended lifting arms with C-lubrication.	

Pos	Part	Q1	Q2	Q3	Q4	Q5	PS	Kit	Description	Option(s)	Remark
1	VOE11177039	1							Central lubrication		CPL
2	VOE11707439	1	1				SS		•Pump		See ref 993/500
3	VOE11177137	1	1						•Bracket		
4	VOE11177716	2	2						•Hose		L = 2 x 2750 MM
5	VOE11177717	2	2						•Connector		

6	VOE11177334	1							•Distribution block		B1 S/N - 3118 See ref 993/200
6	VOE11432373	1							•Distribution block		S/N 3119 -
6	VOE11177334		1						•Distribution block		
7	VOE11988895	2							•Lubricating hose		L = 2 X 4000 MM S/N - 3118
7	VOE11432381	2							•Hose		S/N 3119 -
	VOE11432376		2						•Hose		(VOE11716040)L = 3400 MM
8	VOE11177335	1	1						•Distribution block		B2 See ref 993/300
9	VOE11707371	2	2						•Lubricating hose		L = 2 X 600 MM
10	VOE11701959	1	1						•Distribution block		B3 See ref 993/400
11	VOE4881440	25	25						•Cable tie		
12	VOE952627	10							•Clamp		
13	VOE955269	5							•Hexagon screw		
14	VOE11177155	1					OP		•Plate		
15		2					NS		•Flange screw		
16		2					NS		•Washer		
17	VOE11701854	1	4						•Clamp		
18	VOE11707381	1	4						•Cover Plate		
19	VOE959208	2	2						•Hex. socket screw		
20	VOE11707384	1	1						•Washer		
21	VOE13959209	1	2						•Screw		
22	VOE13965179	4	4						•Screw		
23	VOE11117464	7	7						•Plain washer		(VOE13960141)
24	VOE948645	7	7						•Flange lock nut		
25	VOE946671	3	3						•Flange screw		
26		1	1						•Wire harness		See ref 371/1400

VOLVO

Construction Equipment

PROSIS Part Information

Date:	Image id:	Catalogue:	Model:
10/09/2018	**1021681**	**20009**	**L60E**
Brand:	Serial:	Group/Section:	Title:
Volvo	**1001-3355, 60001-61214, 70001-70530**	**993/200**	**Distribution block, B1 82531, 83380**

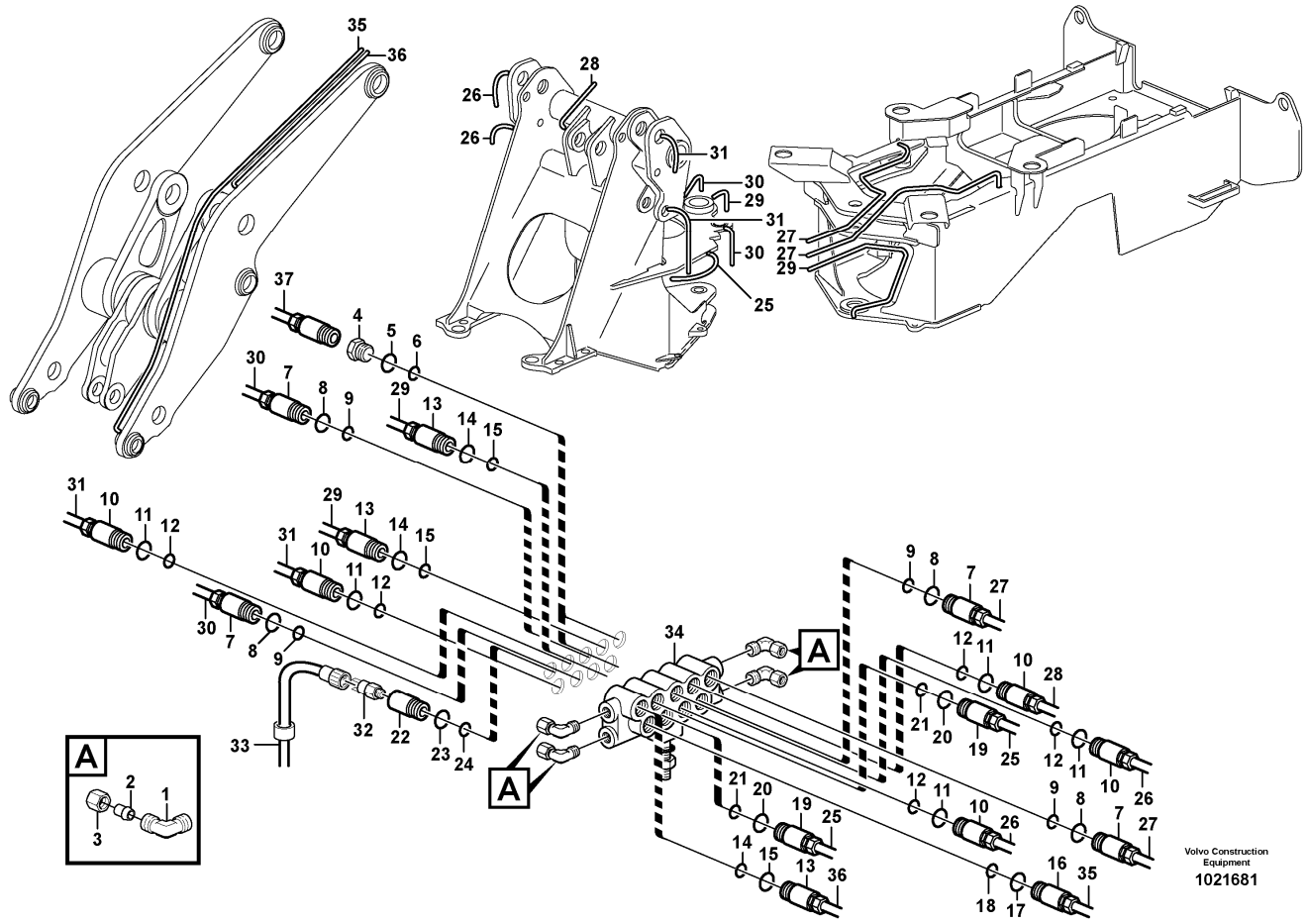

Section option	Kit	Option description
VOE82531		Autom. lubrication system for universal grease NLG1 No. 2
VOE83380		Extended lifting arms with C-lubrication.

Q1-Q5	Option	Option description	
Q1 82531	VOE82531	Autom. lubrication system for universal grease NLG1 No. 2	
Q2 83380	VOE83380	Extended lifting arms with C-lubrication.	

Pos	Part	Q1	Q2	Q3	Q4	Q5	PS	Kit	Description	Option(s)	Remark
	VOE11177334	1							Distribution block		S/N - 3118
	VOE11432373	1							Distribution block		S/N 3119 -
	VOE11432373		1						Distribution block		
1	VOE11713081	4							•Nipple		
1	VOE11713082		4						•Nipple		

2	VOE11704713	4							•Ferrule		
3	VOE11713082	4	4						•Nipple		
4	VOE11702150	2	2						•Plug		
	VOE11704711	2	2						••Ferrule		
	VOE11704712	2	2						••Nut		
5	VOE990740	2	2						••O-ring		(VOE981289)
6	VOE11705432	2	2						••O-ring		
7	VOE11702151	4	4						•Dosage valve		
	VOE11704711	4	4						••Ferrule		
	VOE11704712	4	4						••Nut		
8	VOE990740	4	4						••O-ring		(VOE981289)
9	VOE11705432	4	4						••O-ring		
10	VOE11702152	5	5						•Dosage valve		
	VOE11704711	5	5						••Ferrule		
	VOE11705712	5	5						••Field winding		
11	VOE990740	5	5						••O-ring		(VOE981289)
12	VOE11705432	5	5						••O-ring		
13	VOE11702153	3	3						•Dosage valve		
	VOE11704711	3	3						••Ferrule		
	VOE11704712	3	3						••Nut		
14	VOE990740	3	3						••O-ring		(VOE981289)
15	VOE11705432	3	3						••O-ring		
16	VOE11702154	1	1						•Dosage valve		
	VOE11704711	1	1						••Ferrule		
	VOE11704712	1	1						••Nut		
17	VOE990740	1	1						••O-ring		(VOE981289)
18	VOE11705432	1	1						••O-ring		
19	VOE11702371	2	2						•Dosage valve		
	VOE11704711	2	2						••Ferrule		
	VOE11704712	2	2						••Nut		
20	VOE990740	2	2						••O-ring		(VOE981289)
21	VOE11705432	2	2						••O-ring		
22	VOE11702156	1							•Valve		
	VOE11704711	1							••Ferrule		
	VOE11704712	1							••Nut		
23	VOE990740	1							••O-ring		(VOE981289)
24	VOE11705432	1							••O-ring		
25	VOE11701834	REQ							•Lubricant line		L = 2000 MM
25	VOE11701834		REQ						•Lubricant line		L = 2100 MM
26	VOE11701834	REQ							•Lubricant line		L = 2000 MM
26	VOE11701834		REQ						•Lubricant line		L = 4000 MM
27	VOE11701834	REQ	REQ						•Lubricant line		L = 4000 MM
28	VOE11701833	REQ	REQ						•Lubricant line		L = 1000 MM
29	VOE11701834	REQ	REQ						•Lubricant line		L = 2000 MM
30	VOE11701834	REQ							•Lubricant line		L = 3000 MM
30	VOE11701834		REQ						•Lubricant line		L = 2100 MM
31	VOE11701834	REQ							•Lubricant line		L = 2000 MM

32	VOE11702174	1							•Pressure switch		
33	VOE11707861	1	1						•Cable harness		
34	VOE11706044	1	1						•Distribution block		(VOE11714210)
35	VOE11177330	1							•Hose		L = 3500 MM
35	VOE11432340		1						•Hose		(VOE11716039)L = 700 MM
36	VOE11177329	1							•Hose		L = 3500 MM
36	VOE11432339		1						•Hose		(VOE11716038)L = 700 MM
37	VOE11701834		REQ						•Lubricant line		L = 1750 MM

VOLVO

Construction Equipment

PROSIS Part Information

Date:	Image id:	Catalogue:	Model:
10/09/2018	**1016443**	**20009**	**L60E**
Brand:	Serial:	Group/Section:	Title:
Volvo	**1001-3355, 60001-61214, 70001-70530**	**993/250**	**Central lubrication with fitting parts. B2 82531, 83380**

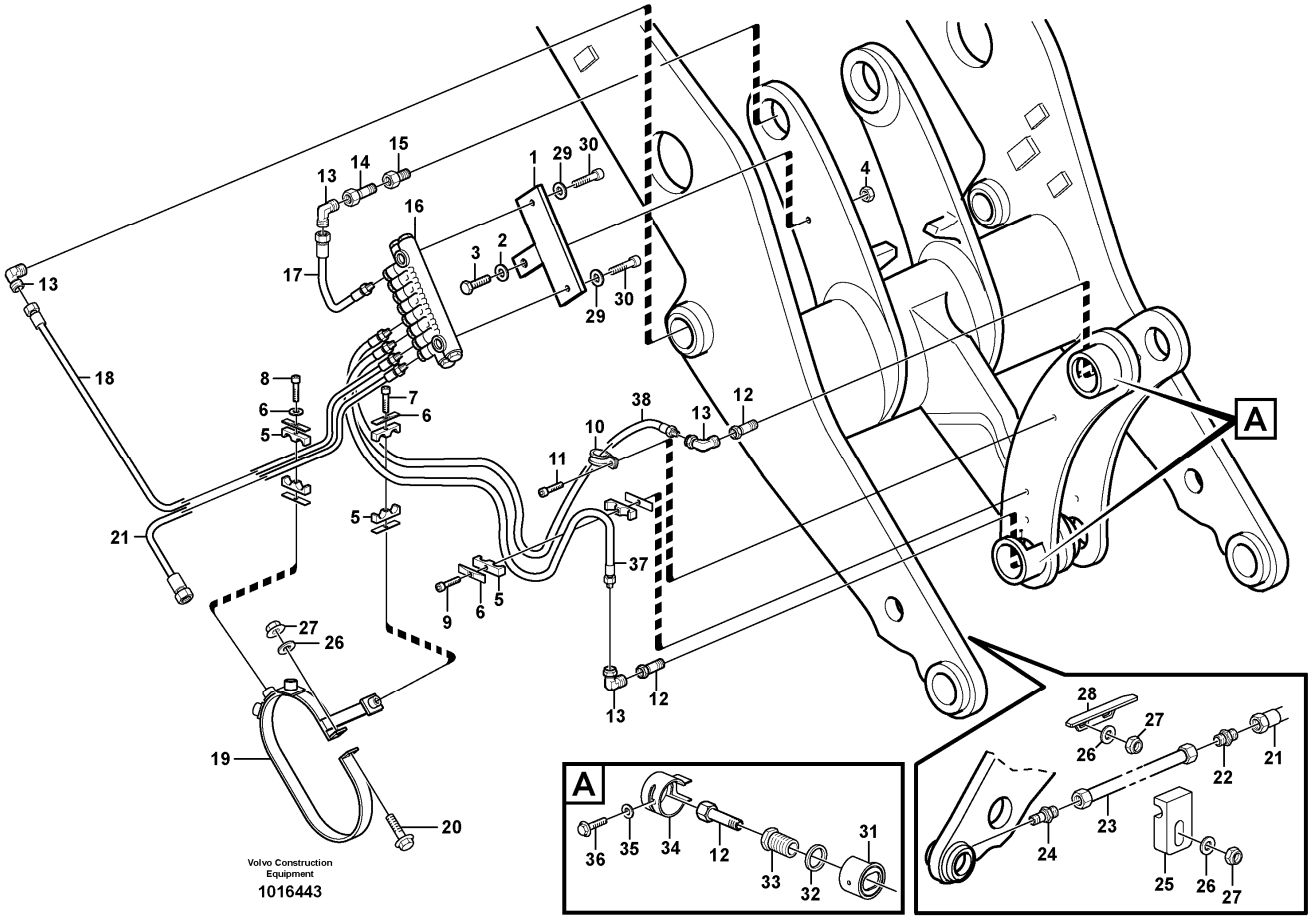

Section option	Kit	Option description
VOE82531		Autom. lubrication system for universal grease NLG1 No. 2
VOE83380		Extended lifting arms with C-lubrication.

Q1-Q5	Option	Option description	
Q1 82531	VOE82531	Autom. lubrication system for universal grease NLG1 No. 2	
Q2 83380	VOE83380	Extended lifting arms with C-lubrication.	

Pos	Part	Q1	Q2	Q3	Q4	Q5	PS	Kit	Description	Option(s)	Remark
1	VOE11707386	1	1						Attachment		
2	VOE13960143	3	1						Washer		
3	VOE13970951	1							Hexagon screw		
4	VOE13971098	1	1						Flange nut		
5	VOE11701854	3	3						Clamp		ID=12

6	VOE11707381	3	3						Cover Plate		
7	VOE13959209	1	1						Screw		
8	VOE959208	1	1						Hex. socket screw		
9	VOE11177111	1	1						Screw		
10	VOE11177136	1	1						Clamp		
11	VOE946671	1	1						Flange screw		
12	VOE11701842	1	2						Adapter		
13	VOE11701837	4	4						Connector		
14	VOE11701850	1	1						Adapter		
15	VOE11701838	1	1						Adapter		
16	VOE11177335	1							Distribution block		B2 See ref 993/300
16	VOE11432375		1						Distribution block		
17	VOE11714230	1							Lubricating hose		L = 200 MM
18	VOE11714218	1							Lubricating hose		L = 650 MM
19	VOE11708530	1	1						Retaining clamp		
20	VOE13955298	1							Screw		
21	VOE11714183	1							Lubricating hose		L = 550 MM
22	VOE11177105	1							Connector		
23	VOE11177112	1	1						Tube		
24	VOE11177103	1	1						Connector		
25	VOE11177023	2	2						Clamp		
26	VOE11117464	5	5						Plain washer		
27	VOE948645	3	5						Flange lock nut		
28	VOE11177006	1	1						Protecting moulding		
29	VOE11176859	2	2						Washer		
30	VOE959207	2	2						Hex. socket screw		
31	VOE11176963	3	2						Ring		
32	VOE11176961	3	2						Washer		
33	VOE11176956	3	2						Screw		
34	VOE11176959	3	2						Protecting ring		
35	VOE11117464	3	3						Plain washer		(VOE13960141)
36	VOE983241	3	2						Hexagon screw		
37	VOE11707372	1							Lubricating hose		L = 1400 MM
38	VOE11707373	1							Lubricating hose		L = 1600 MM

VOLVO

Construction Equipment

PROSIS Part Information

Date:	Image id:	Catalogue:	Model:
10/09/2018	**1016400**	**20009**	**L60E**
Brand:	Serial:	Group/Section:	Title:
Volvo	**1001-3355, 60001-61214, 70001-70530**	**993/300**	**Distribution block, B2 82531, 83380**

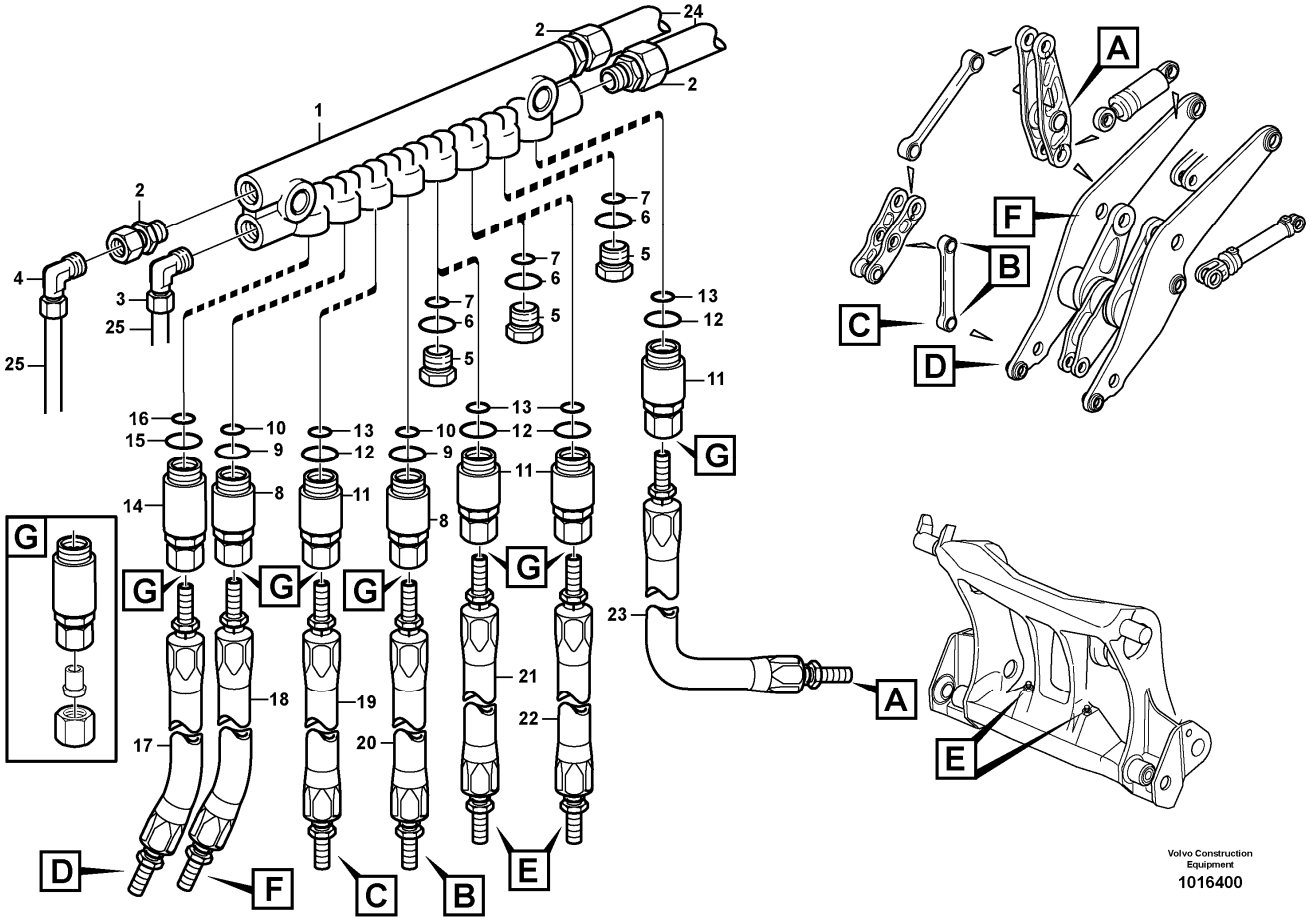

Section option	Kit	Option description
VOE82531		Autom. lubrication system for universal grease NLG1 No. 2
VOE83380		Extended lifting arms with C-lubrication.

Q1-Q5	Option	Option description	
Q1 82531	VOE82531	Autom. lubrication system for universal grease NLG1 No. 2	
Q2 83380	VOE83380	Extended lifting arms with C-lubrication.	

Pos	Part	Q1	Q2	Q3	Q4	Q5	PS	Kit	Description	Option(s)	Remark
	VOE11177335	1							Distribution block		CPL B2
	VOE11432375		1						Distribution block		
1	VOE11702177	1	1						•Valve body		
2	VOE11713081	3	3						•Nipple		
3	VOE11713082	1	1						•Nipple		

4	VOE11702476	1	1						•L-connection		
5	VOE11702150	3	3						•Plug		
	VOE11704711	3	3						••Ferrule		
	VOE11704712	3	3						••Nut		
6	VOE990740	1	1						••O-ring		(VOE981289)
7	VOE11705432	1	1						••O-ring		
8	VOE11702153	2	2						•Dosage valve		NO 4
	VOE11704711	2	2						••Ferrule		
	VOE11704712	2	2						••Nut		
9	VOE990740	2	2						••O-ring		(VOE981289)
10	VOE11705432	2	2						••O-ring		
11	VOE11702155	4	2						•Dosage valve		NO 8
	VOE11704711	4	2						••Ferrule		
	VOE11704712	4	2						••Nut		
12	VOE990740	4	2						••O-ring		(VOE981289)
13	VOE11705432	4	2						••O-ring		
14	VOE11702154	1	1						•Dosage valve		NO 9
	VOE11704711	1	1						••Ferrule		
	VOE11704712	1	1						••Nut		
15	VOE990740	1	1						••O-ring		(VOE981289)
16	VOE11705432	1	1						••O-ring		
17	VOE11714183	1							•Lubricating hose		L = 550 MM
									••CONNECTED TO:		
									••Brg arr D		
18	VOE11714218	1							•Lubricating hose		L = 650 MM
									••CONNECTED TO:		
									••Bearing F		
	VOE11708065		1						•Lubricating hose		L = 1200 MM
19	VOE11707372	1							•Lubricating hose		L = 1500 MM
19	VOE11707372		1						•Lubricating hose		L = 1400 MM
									••CONNECTED TO:		
									••Brg arr C		
20	VOE11707373	1							•Lubricating hose		L = 1700 MM
20	VOE11707373		1						•Lubricating hose		L = 1600 MM
									••CONNECTED TO:		
									••Brg arr B		
21	VOE11706037	1	1						Lubricating hose		L = 2500 MM E-PROD
21	VOE11707376	1							Lubricating hose	VOE82529	L = 2700 MM L-PROD
									••Connected To:e		
									••Atch bracket E		
22	VOE11706037	1							•Lubricating hose		L = 2500 MM E-PROD
22	VOE11707376	1							•Lubricating hose	VOE82529	L = 2700 MM L-PROD
									••Connected To:e		
									••Atch bracket E		
23	VOE11714230	REQ	1						Lubricating hose		L = 200 MM
									••CONNECTED TO:		
									••Brg arr A		

24	VOE11707371	2	2						Lubricating hose		L = 600 MM
									••CONNECTED TO:		
									••Distribution block		B3
25	VOE11988895	2							Lubricating hose		L = 4000 MM
25	VOE11432380		2						Hose		L = 3400 MM
									CONNECTED TO:		
									Distribution block		B1

VOLVO

Construction Equipment

PROSIS Part Information

Date:	Image id:	Catalogue:	Model:
10/09/2018	**1016433**	**20009**	**L60E**
Brand:	Serial:	Group/Section:	Title:
Volvo	**1001-3355, 60001-61214, 70001-70530**	**993/350**	**Central lubrication with fitting parts. B3 82531, 83380**

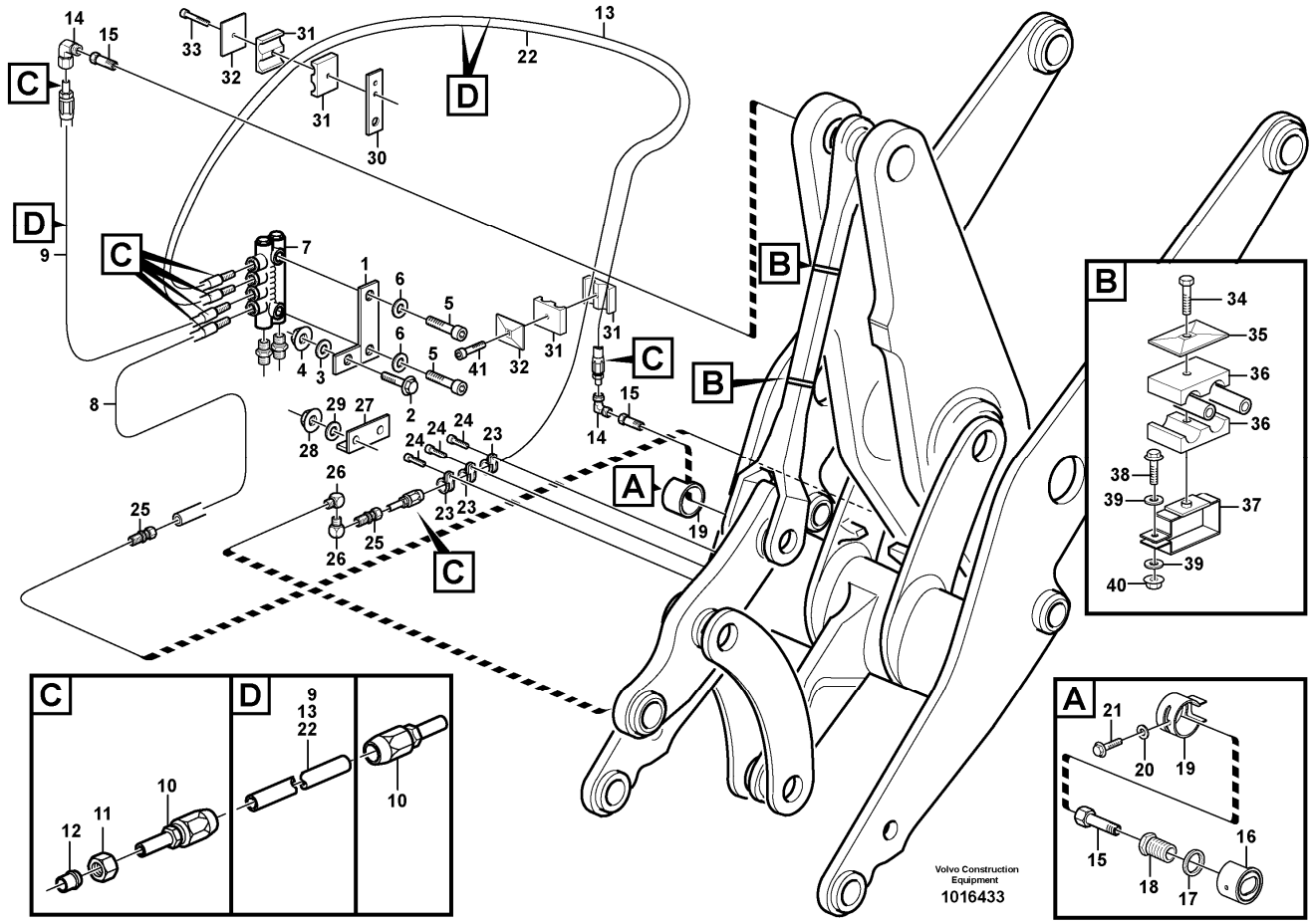

Section option	Kit	Option description
VOE82531		Autom. lubrication system for universal grease NLG1 No. 2
VOE83380		Extended lifting arms with C-lubrication.

Q1-Q5	Option	Option description	
Q1 82531	VOE82531	Autom. lubrication system for universal grease NLG1 No. 2	
Q2 83380	VOE83380	Extended lifting arms with C-lubrication.	

Pos	Part	Q1	Q2	Q3	Q4	Q5	PS	Kit	Description	Option(s)	Remark
1	VOE11707382	1	1						Bracket		
2	VOE13965180	1							Screw		
3	VOE11117464	1							Plain washer		(VOE13960141)
4	VOE948645	1	1						Flange lock nut		
5	VOE959207	2	2						Hex. socket screw		

6	VOE11176859	2	2						Washer		
7		1	1						Distr block		B3 See ref 993/400
8	VOE11177336	1	2						Tube		
9	VOE11702806	1	1						Hose		L = 450 MM
10	VOE11702808	6							Fitting		
11	VOE11704712	6							Nut		
12	VOE11704711	6							Ferrule		
13	VOE11702806	1	1						Hose		L = 1800 MM
14	VOE11701837	2	2						Connector		
15	VOE11701842	2	1						Adapter		
16	VOE11176963	1	1						Ring		
17	VOE11176961	1	1						Washer		
18	VOE11176956	1	1						Screw		
19	VOE11176959	1	1						Protecting ring		
20	VOE11117464	2							Plain washer		(VOE13960141)
21		1	1				NS		Hexagon screw		
22	VOE11702806	1	1						Hose		L = 2350 MM
23	VOE952627	1							Clamp		
24	VOE13946501	1	3						Screw		
25		1	2				NS		Connector		
26		2	2				NS		Connector		
27	VOE11177006	1	1						Protecting moulding		
28	VOE948645	2	2						Flange lock nut		
29	VOE11117464	2	2						Plain washer		(VOE13960141)
30	VOE11707383	1	1						Bracket		
31	VOE11701854	1	2						Clamp		
32	VOE11707381	2							Cover Plate		
33	VOE13959209	1	1						Screw		
34	VOE940326	2							Hex. socket screw		
35	VOE11707381	1	2						Cover Plate		
36	VOE11701854	2	2						Clamp		
37	VOE11707390	2	2						Retaining clamp		
38		2					NS		Flange screw		
38	VOE13965179		2						Screw		
39	VOE11117464	4	5						Plain washer		(VOE13960141)
40	VOE948645	2	2						Flange lock nut		
41	VOE11177111	1	1						Screw		

VOLVO

Construction Equipment

PROSIS Part Information

Date:	Image id:	Catalogue:	Model:
10/09/2018	**1016407**	**20009**	**L60E**
Brand:	Serial:	Group/Section:	Title:
Volvo	**1001-3355, 60001-61214, 70001-70530**	**993/400**	**Distribution block, B3 82531, 83380**

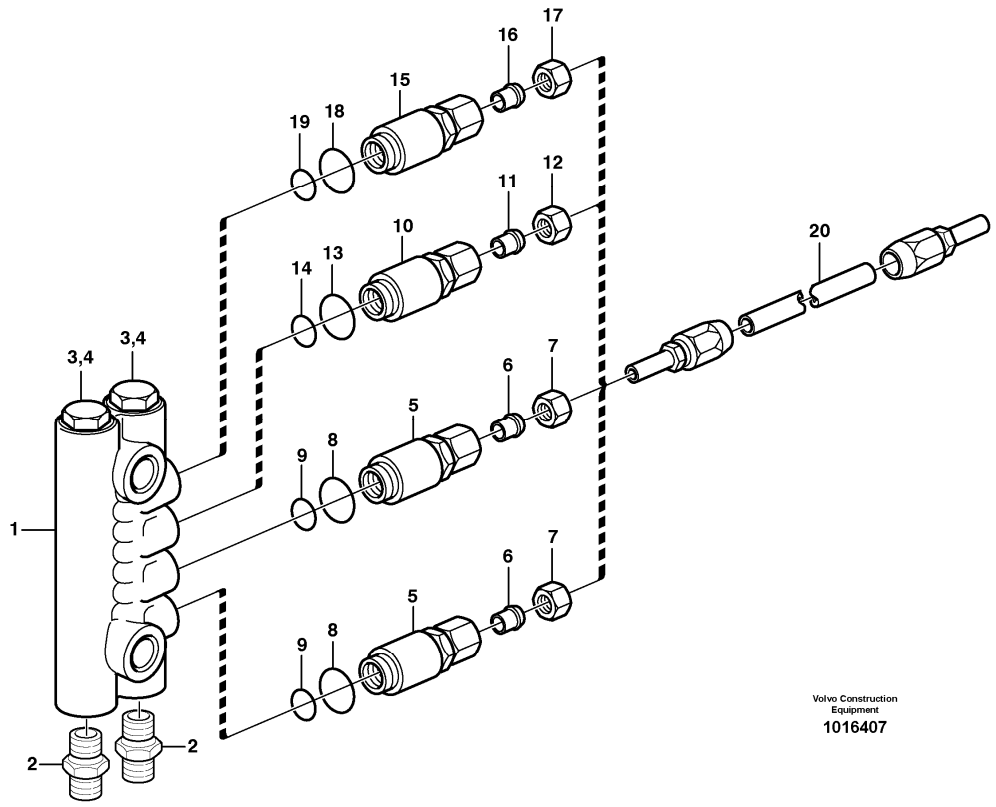

Section option	Kit	Option description
VOE82531		Autom. lubrication system for universal grease NLG1 No. 2
VOE83380		Extended lifting arms with C-lubrication.

Q1-Q5	Option	Option description	
Q1 82531	VOE82531	Autom. lubrication system for universal grease NLG1 No. 2	
Q2 83380	VOE83380	Extended lifting arms with C-lubrication.	

Pos	Part	Q1	Q2	Q3	Q4	Q5	PS	Kit	Description	Option(s)	Remark
	VOE11701959	1	1						Distribution block		
1	VOE11702178	1	1						•Valve body		
2	VOE11700972	2	2						•Nipple		
3	VOE11702149	2	2						•Plug		
4	VOE11702148	2	2						•Gasket		

5	VOE11702151	2	2						•Dosage valve		NO 2
6	VOE11704711	2	2						••Ferrule		
7	VOE11704712	2	2						••Nut		
8	VOE990740	2							••O-ring		(VOE981289)
	VOE990740		2						••O-ring		
9	VOE11705432	1	1						••O-ring		
10	VOE11702152	1	1						•Dosage valve		NO 3
11	VOE11704711	1	1						••Ferrule		
12	VOE11704712	1	1						••Nut		
13	VOE990740	2							••O-ring		(VOE981289)
	VOE990740		1						••O-ring		
14	VOE11705432	2	1						••O-ring		
15	VOE11702155	1	1						•Dosage valve		NO 8
16	VOE11704711	1	1						••Ferrule		
17	VOE11704712	1	1						••Nut		
18	VOE990740	1							••O-ring		(VOE981289)
	VOE990740		1						••O-ring		
19	VOE11705432	1	1						••O-ring		
20		1	1						Hose		See ref 993/350

VOLVO

Construction Equipment

PROSIS Part Information

Date:	Image id:	Catalogue:	Model:
10/09/2018	**1016157**	**20009**	**L60E**
Brand:	Serial:	Group/Section:	Title:
Volvo	**1001-3355, 60001-61214, 70001-70530**	**993/450**	**Central lubrication, tool bar 82529, 83380**

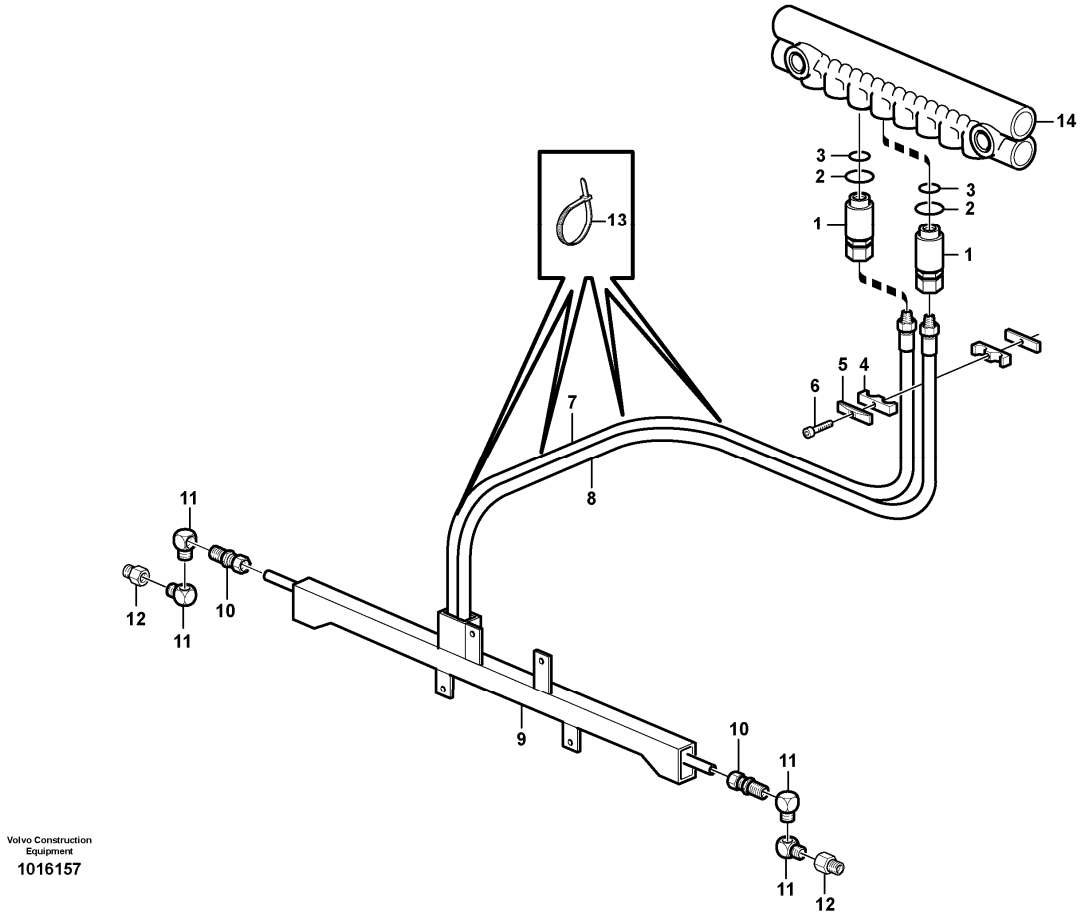

Section option	Kit	Option description
VOE82529		Automatic lubrication system for Att. bracket
VOE83380		Extended lifting arms with C-lubrication.

Pos	Part	Q1	Q2	Q3	Q4	Q5	PS	Kit	Description	Option(s)	Remark
1	VOE11702155	2							Dosage valve		NO.8 See ref 993/300
	VOE11704711	2							•Ferrule		
	VOE11704712	2							•Nut		
2	VOE990740	2							•O-ring		(VOE981289)
3	VOE11705432	2							•O-ring		
4	VOE11701854	1							Clamp		
5	VOE11707381	1							Cover Plate		
6	VOE959208	1							Hex. socket screw		
7	VOE11176847	1							Hose		L = 2300 MM

8	VOE11707375	1							Lubricating hose		L = 2600 MM
9	VOE11432496	1					SS		Protecting casing		
10	VOE11701843	2							Connector		
11	VOE11701845	4							Connector		
12	VOE11701850	2							Adapter		
12	VOE11701838	2							Adapter	VOE83380	
13	VOE4881440	10							Cable tie		
14		1							Distr Block		See ref 993/300

VOLVO

Construction Equipment

PROSIS Part Information

Date:	Image id:	Catalogue:	Model:
10/09/2018	**1021950**	**20009**	**L60E**
Brand:	Serial:	Group/Section:	Title:
Volvo	**1001-3355, 60001-61214, 70001-70530**	**993/500**	**Pump:central lubrication 82531, 83380**

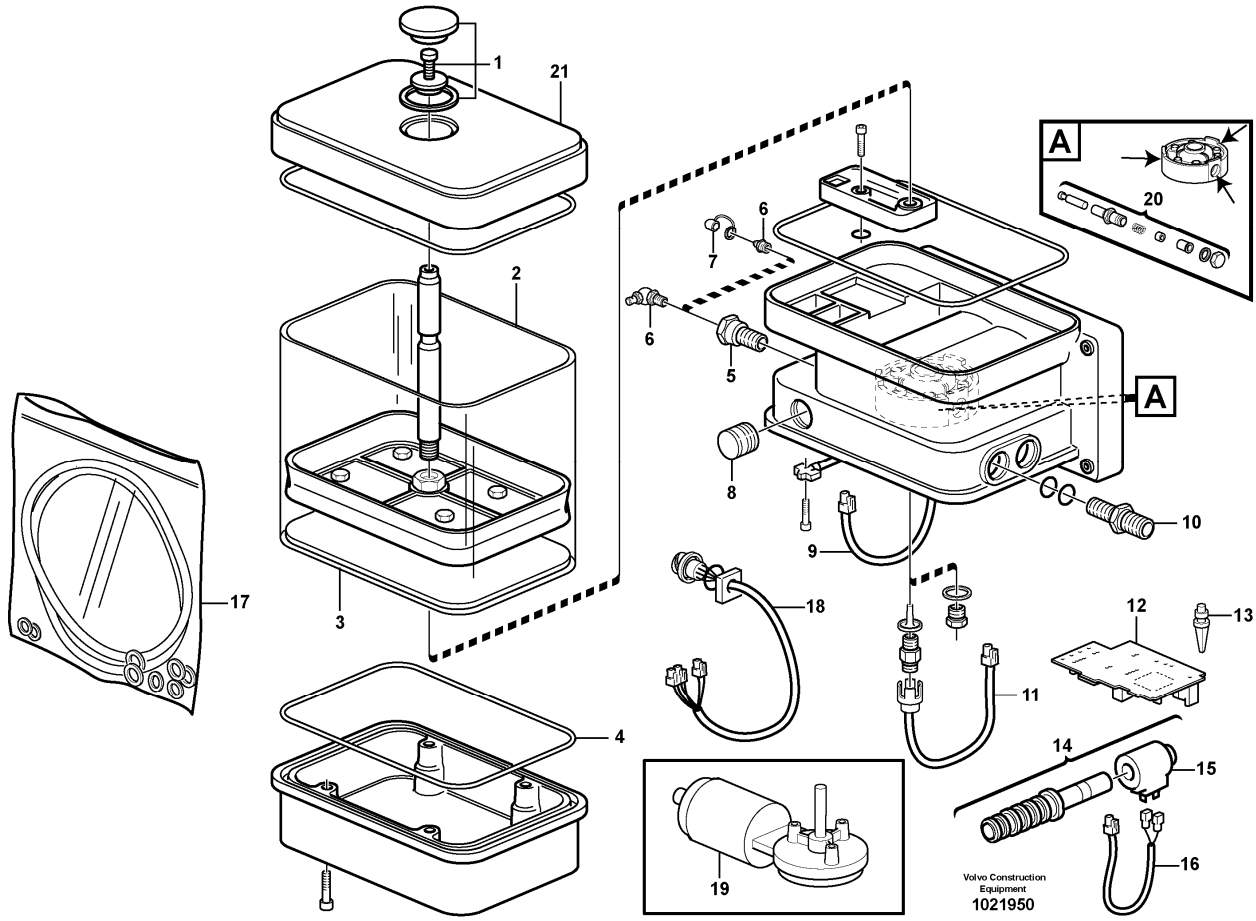

Section option	Kit	Option description
VOE82531		Autom. lubrication system for universal grease NLG1 No. 2
VOE83380		Extended lifting arms with C-lubrication.

Pos	Part	Q1	Q2	Q3	Q4	Q5	PS	Kit	Description	Option(s)	Remark
	VOE11707439	1					SS		Pump		
1	VOE11702188	1							•Lock kit		
2	VOE11707569	1							•Reservoir		
3	VOE11708130	1							•Diaphragm		
4	VOE11704363	1							•Gasket		
5	VOE11707827	1							•Filler nipple		
6	VOE11707827	1							•Filler nipple		(VOE11988199)
6	VOE914170	1							•Lubricating nipple		
7	VOE11703533	1							•Rubber cap		

8	VOE11703650	1							•Rubber cap		
9	VOE11710875	1							•Switch		
10	VOE11702187	2							•Connector		
11	VOE11709582	1							•Cable harness		
12	VOE11708673	1							•Ptd Circuit Bd		
13	VOE11708249	1							•Anchorage		
14	VOE11707607	1							•Solenoid valve		
15	VOE11702185	1							••Solenoid coil		
16	VOE11988441	1					OP		••Cable		
17	VOE11715918	1							•Sealing kit		(VOE11702184)
18	VOE11708248	1							•Cable harness		
19	VOE11712713	1							•Electric motor		
20	VOE11707567	3							•Piston kit		
21	VOE11716339	1							•Cover		

VOLVO

Construction Equipment

PROSIS Part Information

Date:	Image id:	Catalogue:	Model:
10/09/2018	**1032075**	**20009**	**L60E**
Brand:	Serial:	Group/Section:	Title:
Volvo	**1001-3355, 60001-61214, 70001-70530**	**993/750**	**Central lubrication, tool bar. 82933**

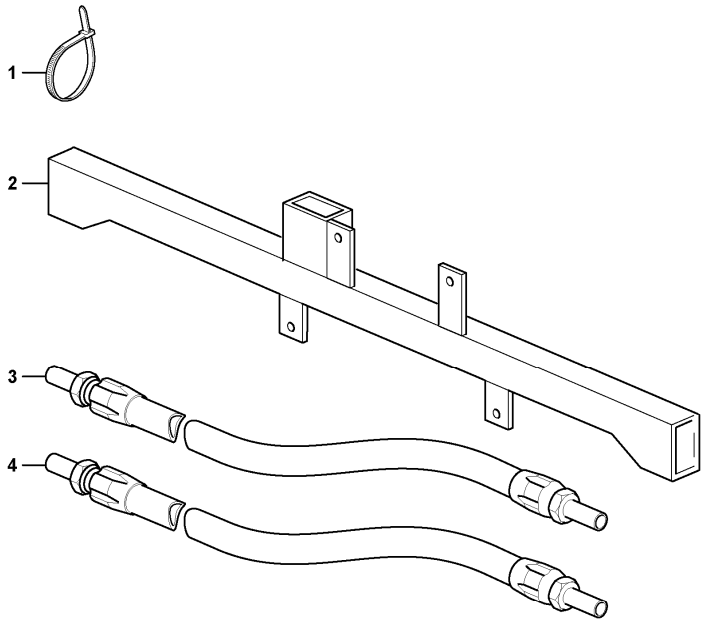

Volvo Construction Equipment
1032075

Section option	Kit	Option description
VOE82933		Central lubrication for attachm bracket, cast

Pos	Part	Q1	Q2	Q3	Q4	Q5	PS	Kit	Description	Option(s)	Remark
									Ctl Lubrication		
1	VOE4881440	6							•Cable tie		
2	VOE11716526	1							•Attachment		
3	VOE11716527	1							•Hose		
4	VOE11716528	1							•Hose		

VOLVO

Construction Equipment

PROSIS Part Information

Date:	Image id:	Catalogue:	Model:
10/09/2018	**DD284**	**20070**	**L60E**
Brand:	Serial:	Group/Section:	Title:
Volvo	**1004-99999**	**92512/150**	**Bucket, straight with teeth L60E**

LAMINA NORMAL DA L60F TEM AS MEDIDAS
2404 X 9" X 1.1/4
CONFERIR SEMPRE COM O CLIENTE POIS
TEM CAÇAMBAS MAIORES E MENORES

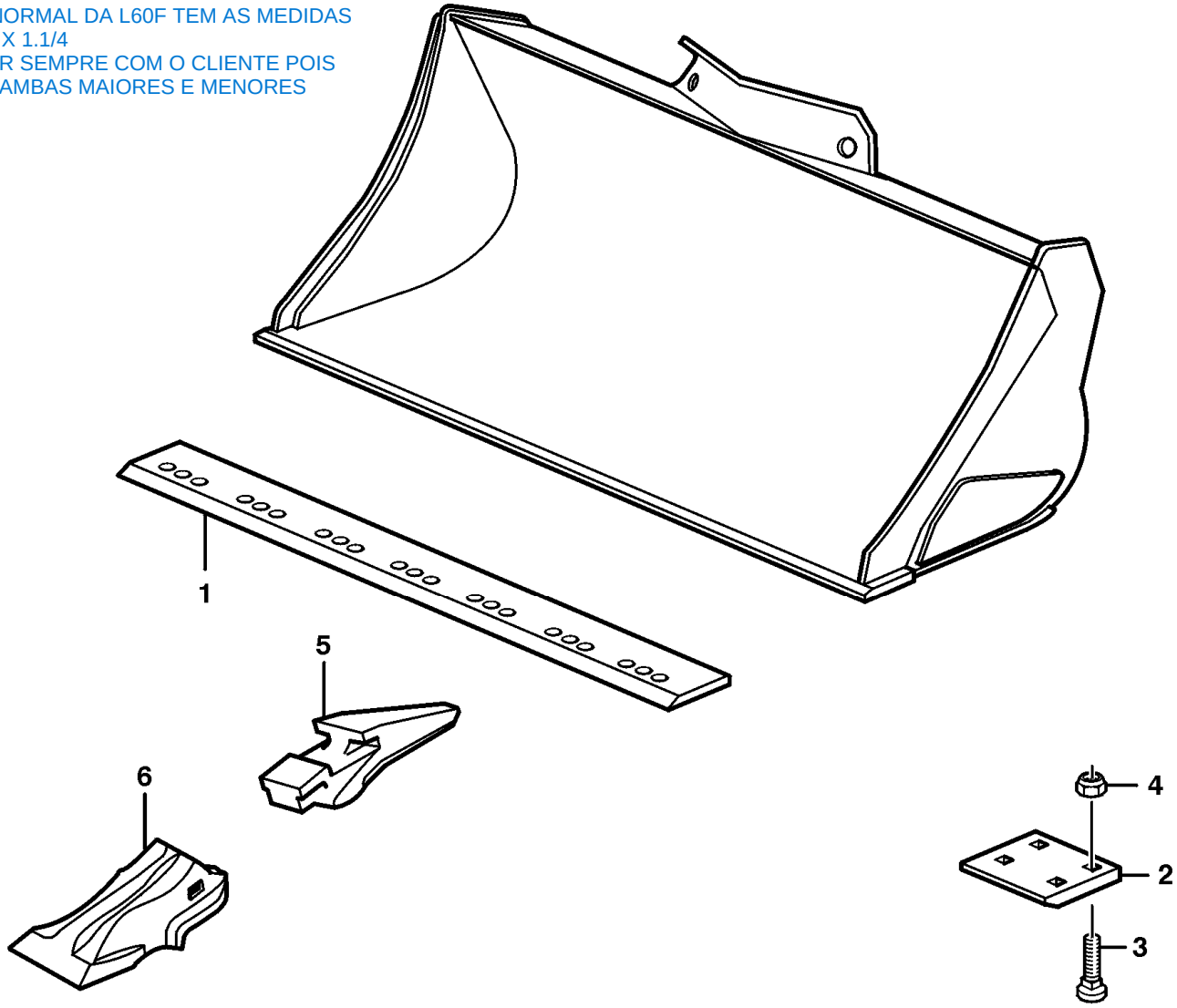

Volvo Construction Equipment
DD 284

Section option	Kit	Option description
VOE82037		Bucket 2.0 m3, hook-on straight for welded system
VOE93821		Bucket 1.8 m3, hook on straight for welded system
VOE93824		Bucket 1.8 m3, pin on straight for welded system
VOE93826		Bucket 2.0 m3, pin on straight for welded system

Q1-Q5	Option	Option description	
Q1 93821	VOE93821	Bucket 1.8 m3, hook on straight for welded system	
Q2 93824	VOE93824	Bucket 1.8 m3, pin on straight for welded system	
Q3 93826	VOE93826	Bucket 2.0 m3, pin on straight for welded system	
Q4 82037	VOE82037	Bucket 2.0 m3, hook-on straight for welded system	

Pos	Part	Q1	Q2	Q3	Q4	Q5	PS	Kit	Description	Option(s)	Remark
		1							Bucket		See footnote 68) WID=2500 MM
			1						Bucket		See footnote 50) WID=2500 MM
				1					Bucket		See footnote 50) WID=2500 MM
					1				Bucket		See footnote 68) WID=2500 MM
1	VOE11990992	1	1	1	1				•Cutting edge		
2	VOE11142174	2	2	2	2				•Wear plate		
3	VOE13930787	8	8	8					•Screw		
	VOE930914	8	8	8	8				•Square neck screw		L PROD
4	VOE13968904	8	8	8	8				•Flange nut		
5		8	8	8	8				Adapter	VOE94994	See ref 92691/5050
		8	8	8	8				Adapter	VOE94855	See ref 92691/5400
		8	8	8	8				Adapter	VOE82736	See ref 92691/5600
6		8	8	8	8				Tooth	VOE80086	See ref 92691/5900
		8	8	8	8				Tooth	VOE94856	See ref 92691/6300
		8	8	8	8				Tooth	VOE82734, VOE82735	See ref 92691/6500

50) Direct-mounted (pin-on).

68) Bracket-mounted (hook-on).

VOLVO

Construction Equipment

PROSIS Part Information

Date:	Image id:	Catalogue:	Model:
10/09/2018	**DD466**	**20070**	**L60E**
Brand:	Serial:	Group/Section:	Title:
Volvo	**1004-99999**	**92512/200**	**Bucket, straight with teeth L60E**

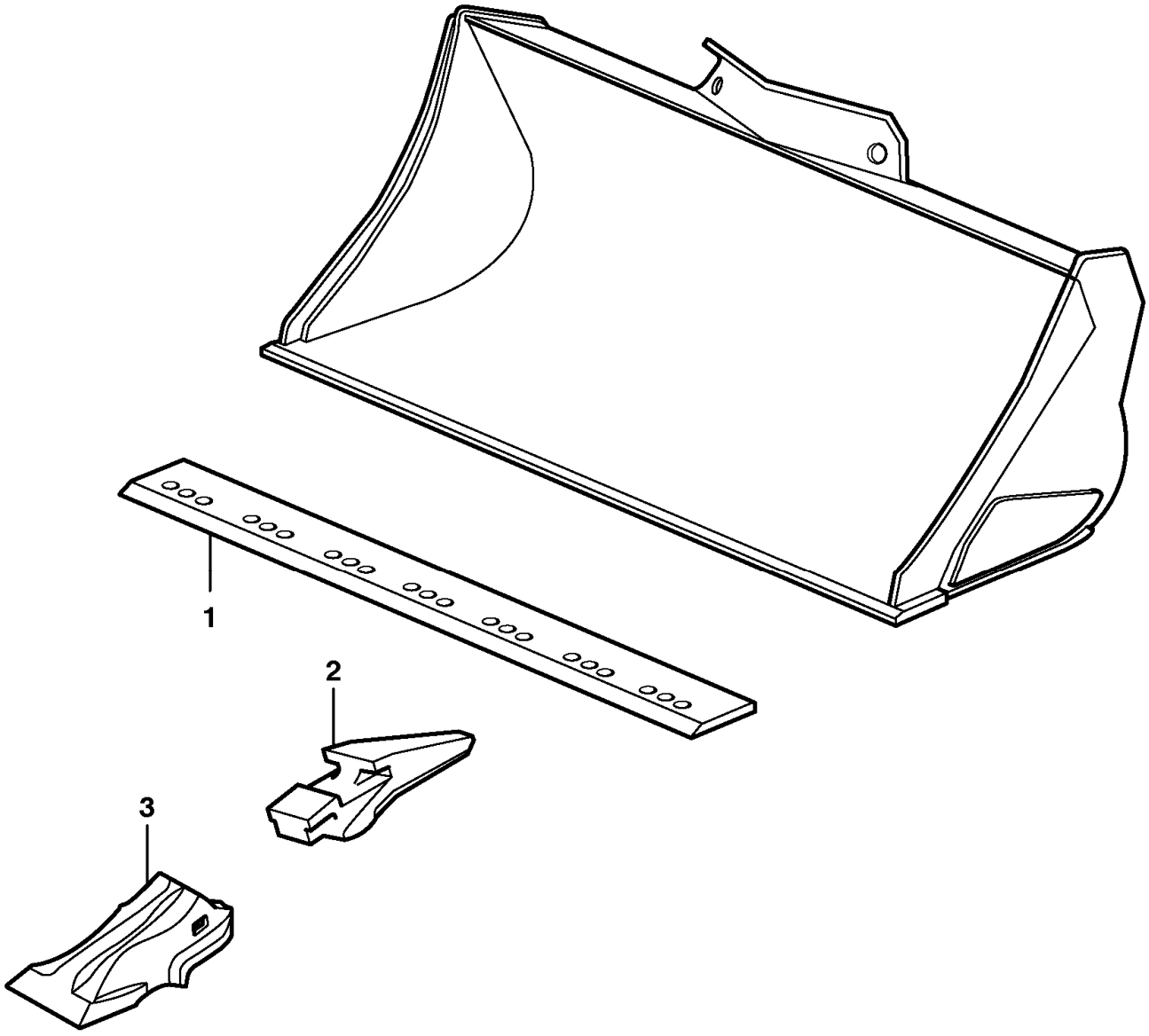

Volvo Construction Equipment
DD 466

Section option	Kit	Option description
VOE80178		Bucket 1.9 m3, hook-on straight for welded system
VOE80180		Bucket 1.9 m3, pin-on straight for welded system
VOE82625		Bucket 1.9 m3, hook-on straight for welded system
VOE82627		Bucket 1.9 m3, pin-on straight for welded system

Q1-Q5	Option	Option description	

Q1 80178	VOE80178	Bucket 1.9 m3, hook-on straight for welded system	
Q2 80180	VOE80180	Bucket 1.9 m3, pin-on straight for welded system	
Q3 82625	VOE82625	Bucket 1.9 m3, hook-on straight for welded system	
Q4 82627	VOE82627	Bucket 1.9 m3, pin-on straight for welded system	

Pos	Part	Q1	Q2	Q3	Q4	Q5	PS	Kit	Description	Option(s)	Remark
		1							Bucket		See footnote 68) WID=2500 MM REPL BY 82625
			1						Bucket		See footnote 50) WID=2500 MM REPL BY 82627
				1					Bucket		See footnote 68) WID=2500 MM
					1				Bucket		See footnote 50) WID=2500 MM
1	VOE11990992	1	1	1	1				•Cutting edge		
2		8	8	8	8				Adapter	VOE94994	See ref 92691/5050
		8	8	8	8				Adapter	VOE94855	See ref 92691/5400
				8	8				Adapter	VOE82736	See ref 92691/5750
3		8	8	8	8				Tooth	VOE80086	See ref 92691/5900
		8	8	8	8				Tooth	VOE93896	See ref 92691/5900
		8	8	8	8				Tooth	VOE94856, VOE94857	See ref 92691/6300
				8	8				Tooth	VOE82734	See ref 92691/6500

50) Direct-mounted (pin-on).

68) Bracket-mounted (hook-on).

VOLVO

Construction Equipment

PROSIS Part Information

Date:	Image id:	Catalogue:	Model:
10/09/2018	**DD317**	**20070**	**L60E**
Brand:	Serial:	Group/Section:	Title:
Volvo	**1004-99999**	**92513/150**	**Bucket, straight lip, alt. edge savers or teeth L60E**

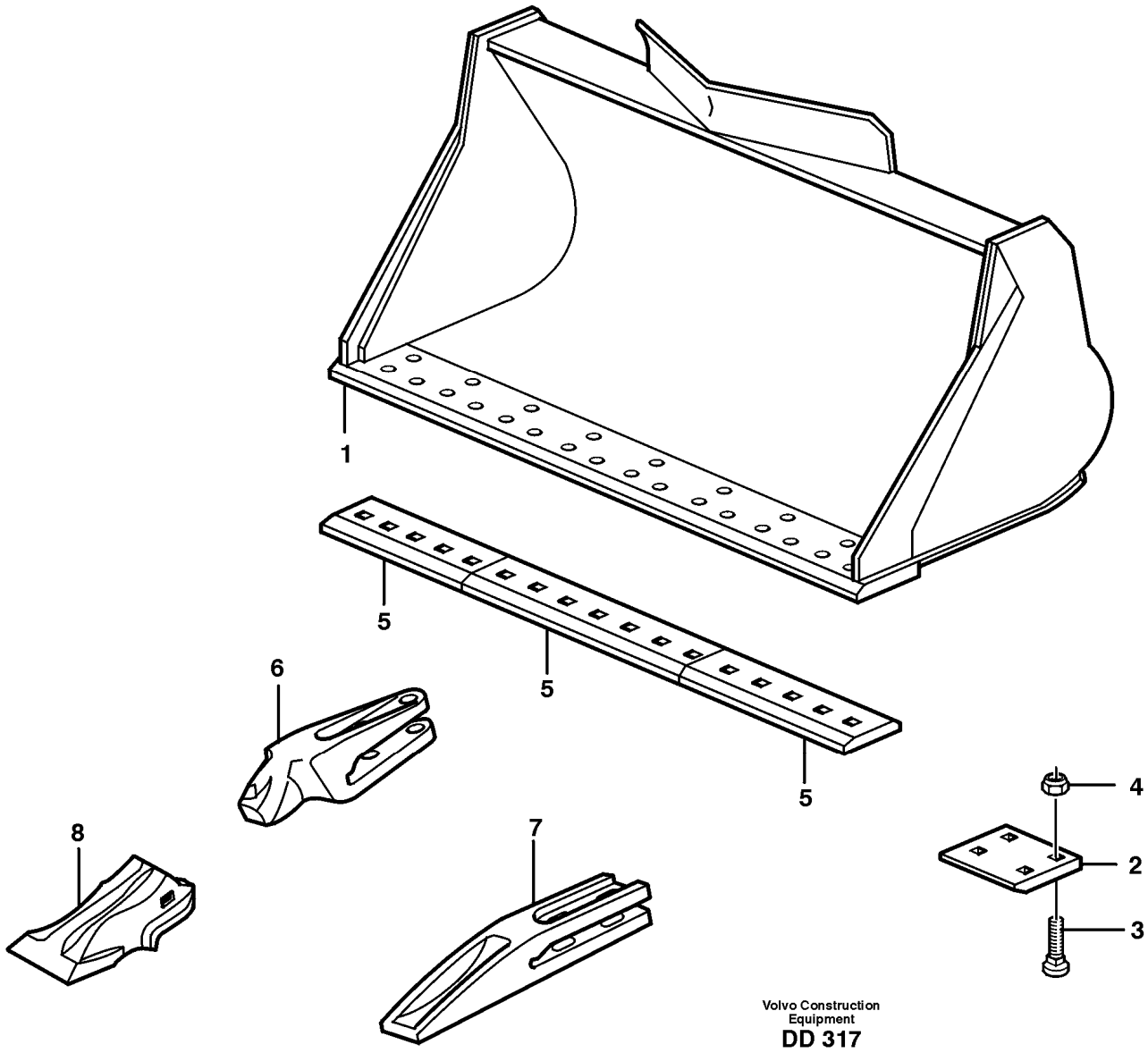

Section option	Kit	Option description
VOE82036		Bucket 2.0 m3, hook-on straight for Bolt-on system
VOE93817		Bucket 1.6 m3, hook on straight for Bolt-on system
VOE93820		Bucket 1.8 m3, hook on straight for Bolt-on system
VOE93823		Bucket 1.8 m3, pin on straight for Bolt-on system
VOE93825		Bucket 2.0 m3, pin on straight for Bolt-on system

Q1-Q5	Option	Option description	

Q1 93817	VOE93817	Bucket 1.6 m3, hook on straight for Bolt-on system	
Q2 93820	VOE93820	Bucket 1.8 m3, hook on straight for Bolt-on system	
Q3 93823	VOE93823	Bucket 1.8 m3, pin on straight for Bolt-on system	
Q4 93825	VOE93825	Bucket 2.0 m3, pin on straight for Bolt-on system	
Q5 82036	VOE82036	Bucket 2.0 m3, hook-on straight for Bolt-on system	

Pos	Part	Q1	Q2	Q3	Q4	Q5	PS	Kit	Description	Option(s)	Remark
		1							Bucket		See footnote 68) WID=2500 MM
			1						Bucket		See footnote 68) WID=2500 MM
				1					Bucket		See footnote 50) WID=2500 MM
					1				Bucket		See footnote 50) WID=2500 MM
						1			Bucket		See footnote 68) WID=2500 MM
1	VOE11011438	1	1	1	1	1			•Cutting edge		
2	VOE11142174	2	2	2	2	2			•Wear plate		
3	VOE13930787	8	8	8	8				•Screw		
	VOE930914	8	8	8	8	8			•Square neck screw		L PROD
4	VOE13968904	8	8	8	8	8			•Flange nut		
5		1	1	1	1	1			Bolt on edge	VOE80134	See ref 92691/3350
6		8	8	8	8	8			Adapter	VOE94932	See ref 92691/5300
		8	8	8	8	8			Adapter	VOE82737	See ref 92691/5750
7		8	8	8	8	8			Tooth	VOE92976	See ref 92691/6100
8		8	8	8	8	8			Tooth	VOE94856, VOE94857	See ref 92691/6300
		8	8	8	8	8			Tooth	VOE82734, VOE82735	See ref 92691/6500

50) Direct-mounted (pin-on).

68) Bracket-mounted (hook-on).

VOLVO

Construction Equipment

PROSIS Part Information

Date:	Image id:	Catalogue:	Model:
10/09/2018	**DD465**	**20070**	**L60E**
Brand:	Serial:	Group/Section:	Title:
Volvo	**1004-99999**	**92513/200**	**Bucket, straight lip, alt. edge savers or teeth L60E**

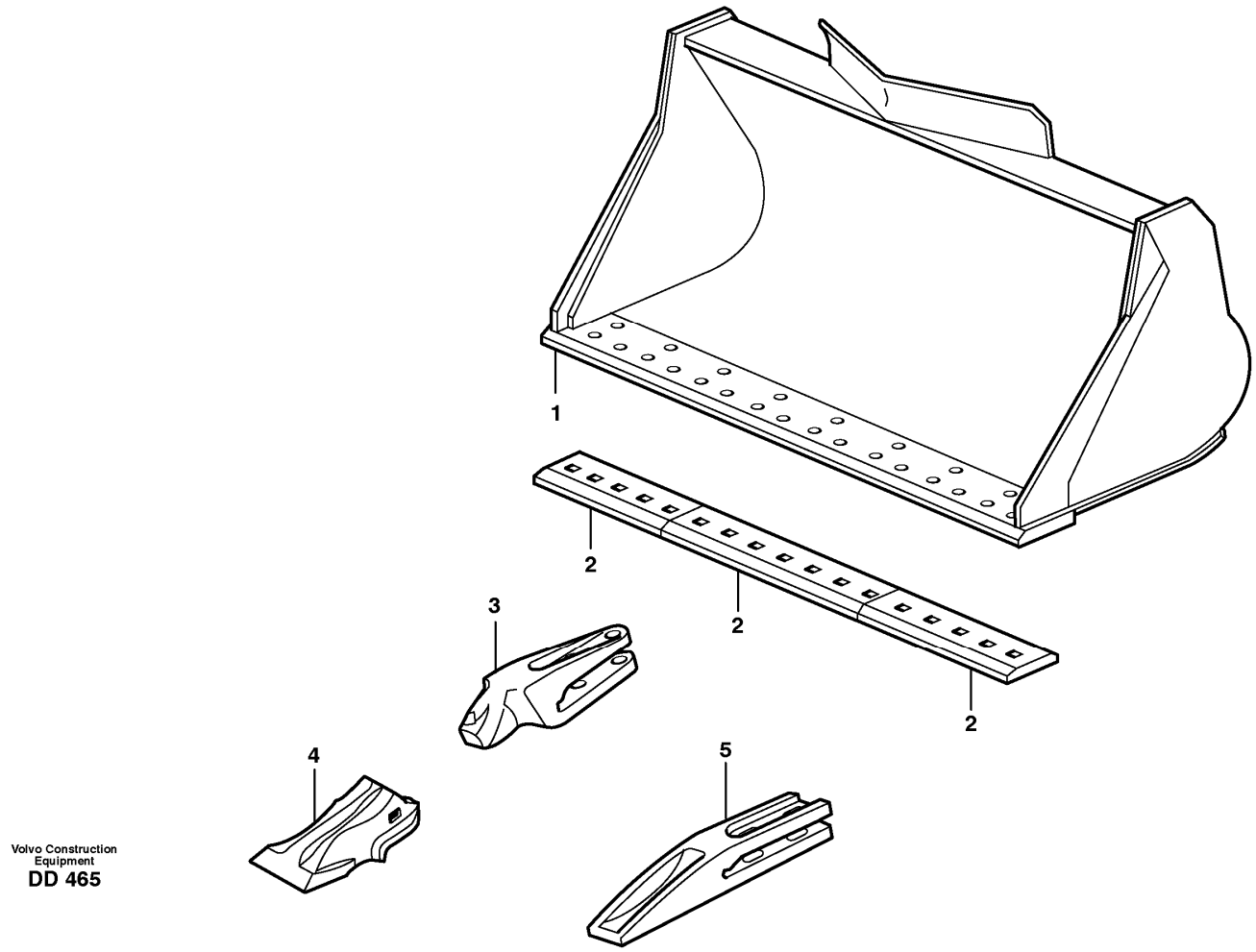

Section option	Kit	Option description
VOE80177		Bucket 1.9 m3, hook-on straight for bolt-on system
VOE80179		Bucket 1.9 m3, pin-on straight for bolt-on system
VOE82624		Bucket 1.9 m3, hook-on straight for bolt-on system
VOE82626		Bucket 1.9 m3, pin-on straight for bolt-on system

Q1-Q5	Option	Option description	
Q1 80177	VOE80177	Bucket 1.9 m3, hook-on straight for bolt-on system	
Q2 80179	VOE80179	Bucket 1.9 m3, pin-on straight for bolt-on system	
Q3 82624	VOE82624	Bucket 1.9 m3, hook-on straight for bolt-on system	
Q4 82626	VOE82626	Bucket 1.9 m3, pin-on straight for bolt-on system	

Pos	Part	Q1	Q2	Q3	Q4	Q5	PS	Kit	Description	Option(s)	Remark
		1							Bucket		See footnote 68)

											WID=2500 MM REPL BY 82624
			1						Bucket		See footnote 50) WID=2500 MM REPL BY 82626
				1					Bucket		See footnote 68) WID=2500 MM
					1				Bucket		See footnote 50) WID=2500 MM
1	VOE11011438	1	1	1	1				•Cutting edge		
2		1	1	1	1				Bolt on edge	VOE80134	See ref 92691/3350
3		8	8	8	8				Adapter	VOE94932	See ref 92691/5300
4		8	8	8	8				Tooth	VOE94856, VOE94857	See ref 92691/6300
5		8	8	8	8				Tooth	VOE92976	See ref 92691/6100

50) Direct-mounted (pin-on).

68) Bracket-mounted (hook-on).

VOLVO

Construction Equipment

PROSIS Part Information

Date:	Image id:	Catalogue:	Model:
10/09/2018	**DD317**	**20070**	**L60E**
Brand:	Serial:	Group/Section:	Title:
Volvo	**1004-99999**	**92513/250**	**Bucket, straight lip, alt. edge savers or teeth L60E**

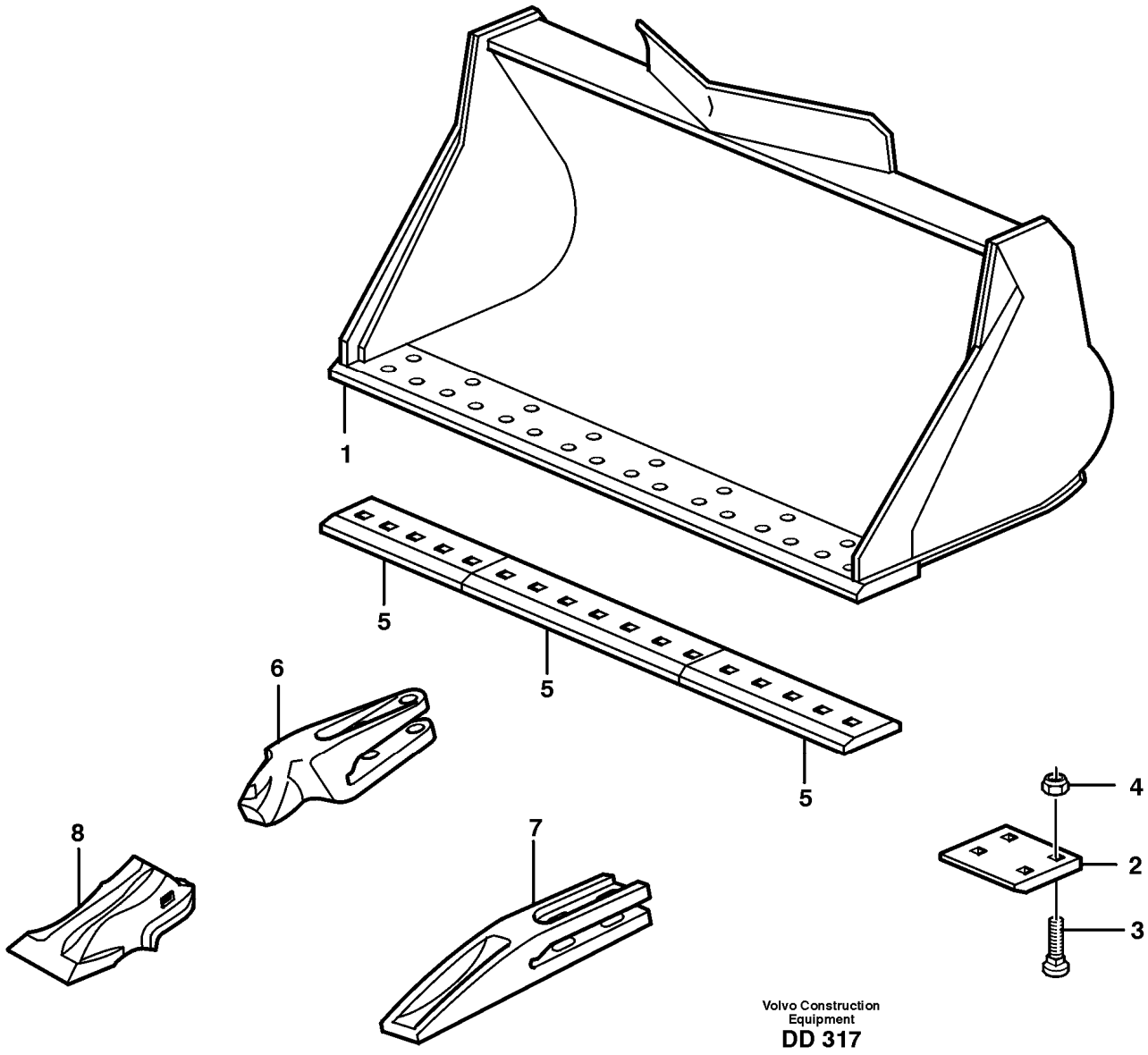

Section option	Kit	Option description
VOE80924		Bucket 2.3 m3, hook-on straight for Bolt-on system
VOE80925		Bucket 2.0 m3, pin on straight for Bolt-on system

Q1-Q5	Option	Option description	
Q1 80924	VOE80924	Bucket 2.3 m3, hook-on straight for Bolt-on system	
Q2 80925	VOE80925	Bucket 2.0 m3, pin on straight for Bolt-on system	

Pos	Part	Q1	Q2	Q3	Q4	Q5	PS	Kit	Description	Option(s)	Remark
		1							Bucket		See footnote 68) WID=2550 MM
			1						Bucket		See footnote 50) WID=2550 MM
1	VOE11156508	1	1						•Cutting edge		
2	VOE11142174	2	2						•Wear plate		
3	VOE930914	8	8						•Square neck screw		
4	VOE13968904	8	8						•Flange nut		
5		1	1						Bolt on edge	VOE80669	See ref 92691/3600
6		8	8						Adapter	VOE94932	See ref 92691/5300
		8	8						Adapter	VOE82737	See ref 92691/5750
7		8	8						Tooth	VOE92976	See ref 92691/6100
8		8	8						Tooth	VOE94856, VOE94857	See ref 92691/6300
		8	8						Tooth	VOE82734, VOE82735	See ref 92691/6500

50) Direct-mounted (pin-on).

68) Bracket-mounted (hook-on).

VOLVO

Construction Equipment

PROSIS Part Information

Date:	Image id:	Catalogue:	Model:
10/09/2018	**1004664**	**20070**	**L60E**
Brand:	Serial:	Group/Section:	Title:
Volvo	**1004-99999**	**92514/100**	**Light material bucket L60E**

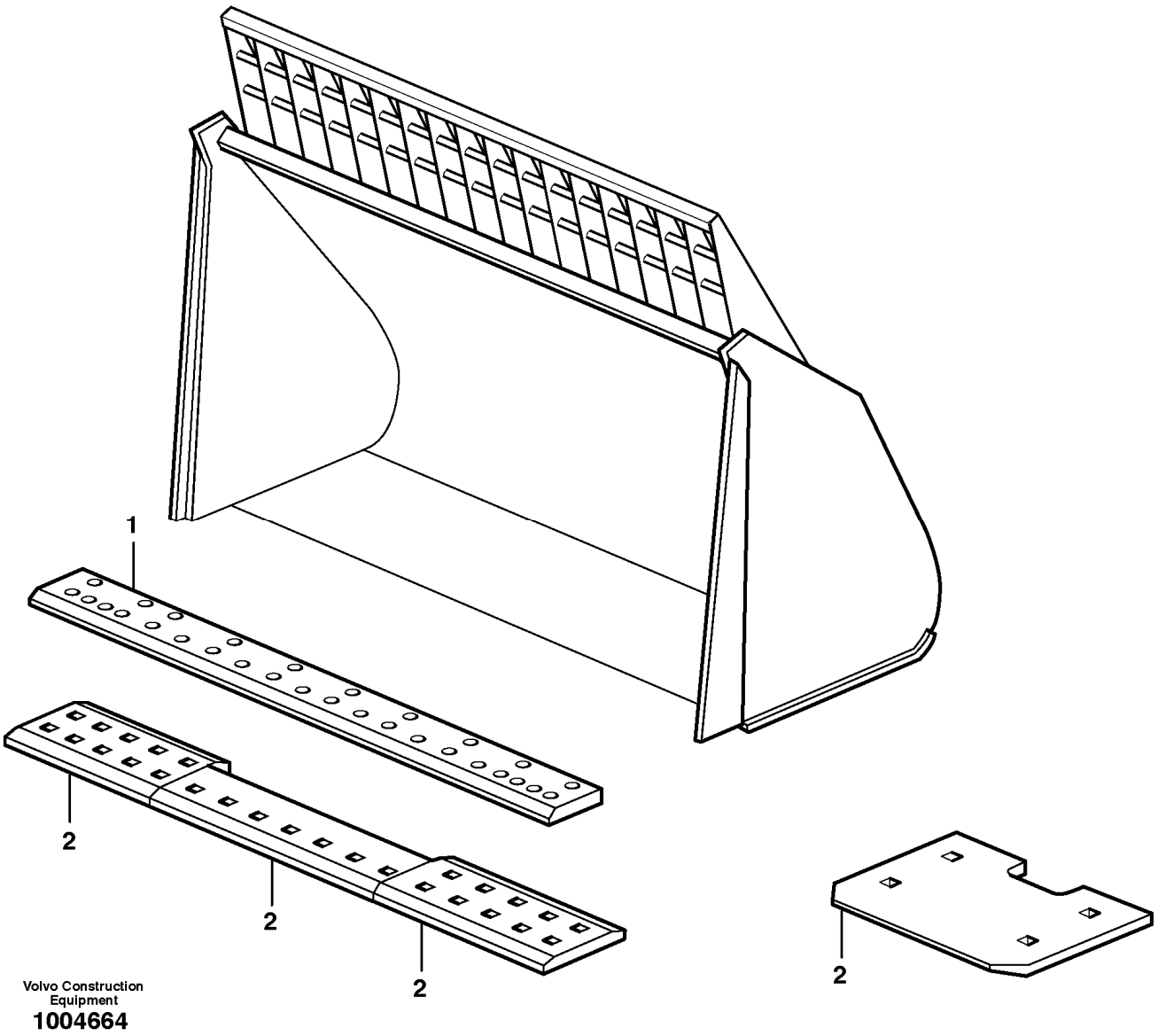

Section option	Kit	Option description
VOE82515		Light material bucket 3,1 M3, BW=2550
VOE82516		Light material bucket 3,1 M3, BW=2550

Q1-Q5	Option	Option description	
Q1 82516	VOE82516	Light material bucket 3,1 M3, BW=2550	
Q2 82515	VOE82515	Light material bucket 3,1 M3, BW=2550	

Pos	Part	Q1	Q2	Q3	Q4	Q5	PS	Kit	Description	Option(s)	Remark

		1							Bucket, 3,1 Cu M		See footnote 68) WID=2550 MM
			1						Bucket, 3,1 Cu M		See footnote 50) WID=2550 MM
1	VOE11082121	1	1						•Cutting edge		
2		1	1						Bolt on edge kit	VOE82576	See ref 92691/3400
		1	1						Bolt on edge kit	VOE82570	See ref 92691/3500

50) Direct-mounted (pin-on).

68) Bracket-mounted (hook-on).

VOLVO

Construction Equipment

PROSIS Part Information

Date:	Image id:	Catalogue:	Model:
10/09/2018	**DD166A**	**20070**	**L60E**
Brand:	Serial:	Group/Section:	Title:
Volvo	**1004-99999**	**92514/150**	**Light material bucket L60E**

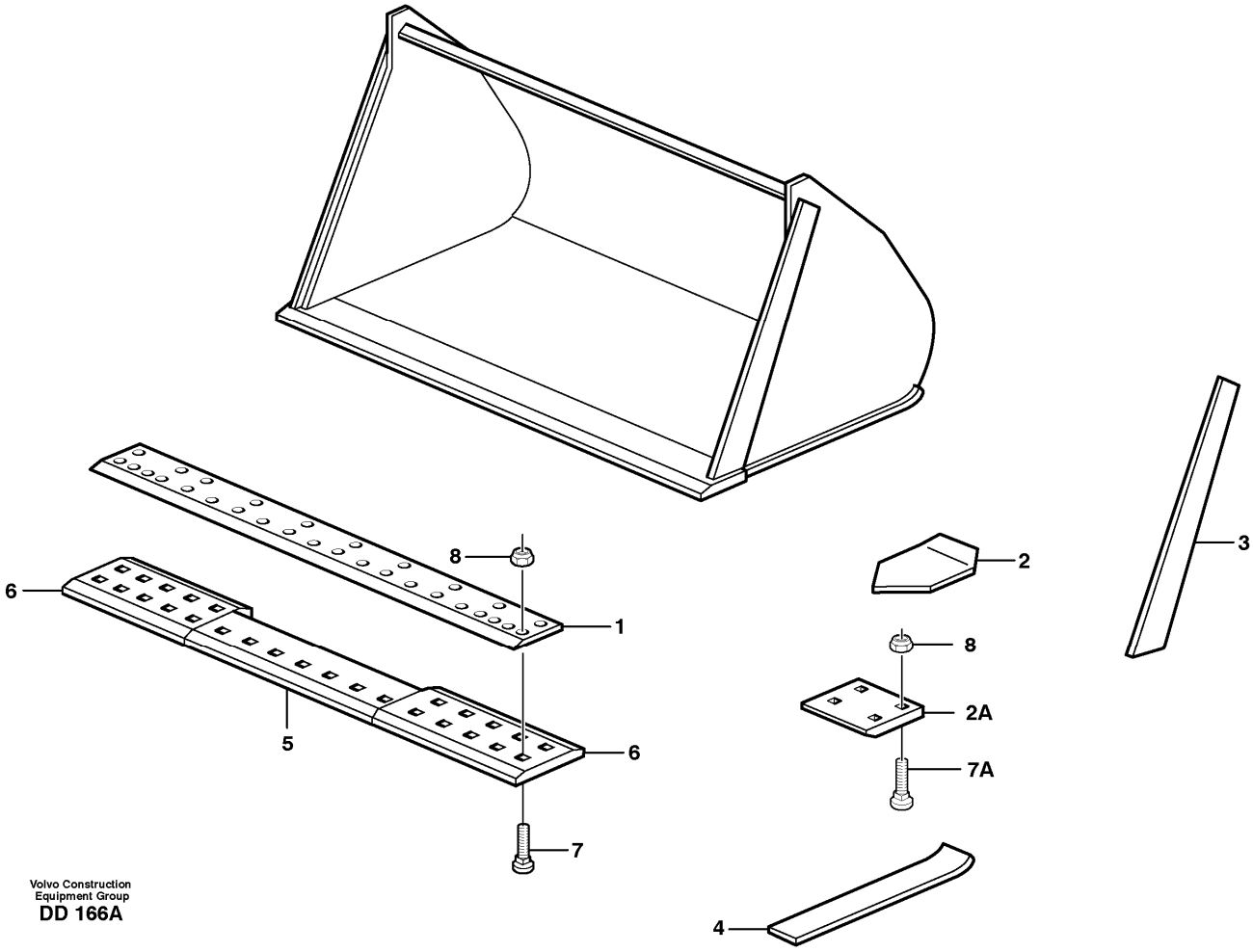

Section option	Kit	Option description
VOE80160		Light material bucket 3.1 m3, pin-on
VOE92564		Light material bucket 3.0 m3, hook on
VOE92565		Light material bucket, hook-on for bolted system 5.0 M3

Q1-Q5	Option	Option description	
Q1 92564 E PROD	VOE92564	Light material bucket 3.0 m3, hook on	
Q2 92564 L PROD	VOE92564	Light material bucket 3.0 m3, hook on	
Q3 92565	VOE92565	Light material bucket, hook-on for bolted system 5.0 M3	
Q4 80160	VOE80160	Light material bucket 3.1 m3, pin-on	

Pos	Part	Q1	Q2	Q3	Q4	Q5	PS	Kit	Description	Option(s)	Remark
		1							Snow Bucket		See footnote 68)

											WID=2550 MM SER NO - 7024/218
			1						Snow Bucket		See footnote 68) WID=2550 MM SER NO 7024/219 -
				1					Chip Bucket		See footnote 68) WID=2650 MM
					1				Bucket		See footnote 50) WID=2550 MM
1	VOE11082121	1	1		1				•Cutting edge		
	VOE11012803			1					•Cutting edge		(VOE11012169)
2	VOE11081406	2		2					•Wear plate		92565 SER NO - 7024/139
2A	VOE11142174		2	2	2				•Wear plate		92565 SER NO 7024/140 -
3		2					NS		•Edge steel		
4		REQ	REQ	REQ					•Wearing plate		
5	VOE11081625	1							Bolt On Edge		
	VOE11081625		1		1				•Bolt On Edge		
	VOE11012832			1					•Bolt On Edge		(VOE11012171)
6	VOE11011413	2							Bolt On Edge		
	VOE11011413		2	2	2				•Bolt On Edge		
7	VOE928919	21							Square neck screw		
	VOE928919		21		21				•Square neck screw		
	VOE13930787			22					•Screw		(VOE928918)
7A	VOE930914		8	8	8				•Square neck screw		92565 SER NO 7024/140 -
8	VOE13968904	21							Flange nut		
	VOE13968904		29	22	29				•Flange nut		92565 SER NO - 7024/139
	VOE13968904			30					•Flange nut		92565 SER NO 7024/140 -

50) Direct-mounted (pin-on).

68) Bracket-mounted (hook-on).

VOLVO

Construction Equipment

PROSIS Part Information

Date:	Image id:	Catalogue:	Model:
10/09/2018	**DD281**	**20070**	**L60E**
Brand:	Serial:	Group/Section:	Title:
Volvo	**1004-99999**	**92514/200**	**Light material bucket L60E**

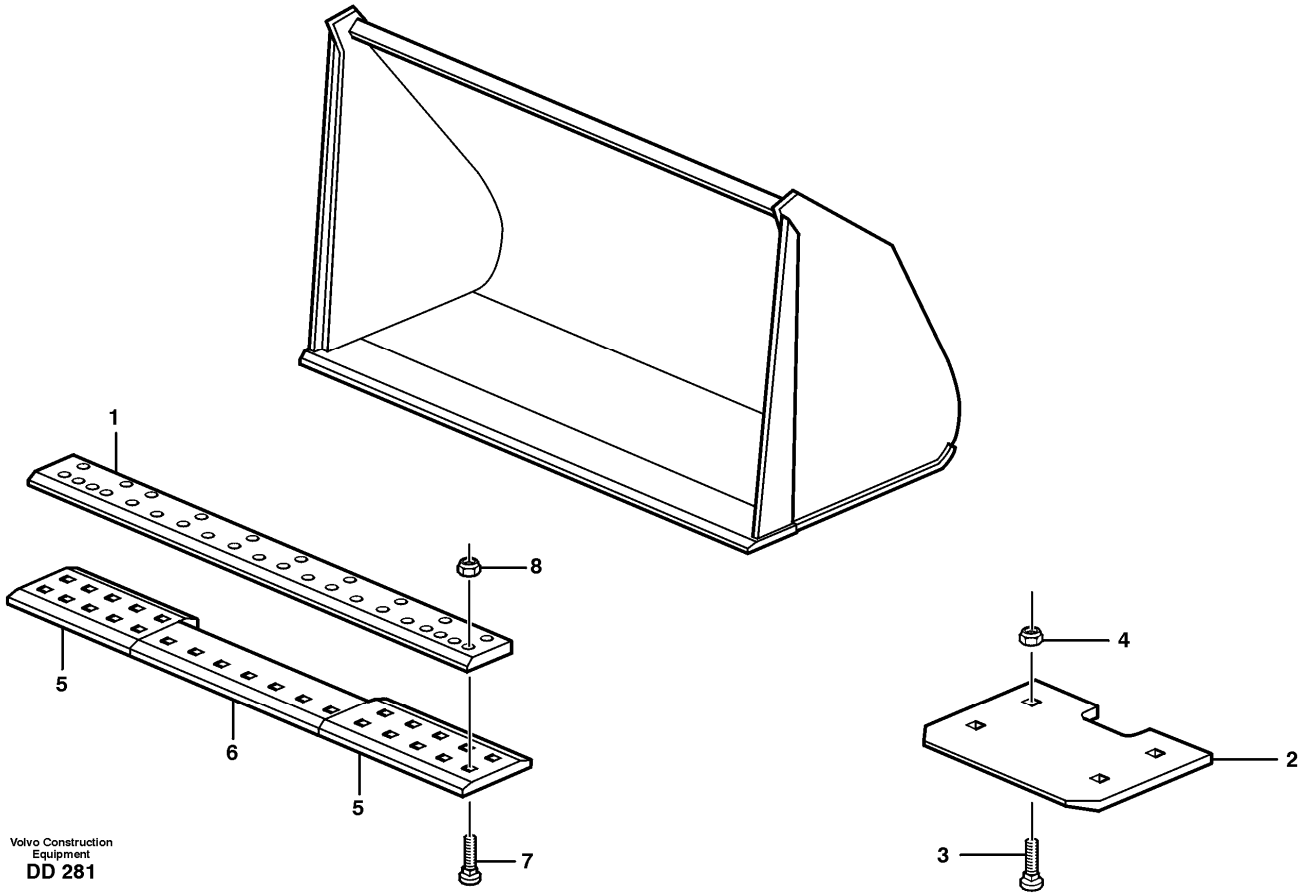

Section option	Kit	Option description
VOE82364		Light material bucket, hook-on 5,0 M3

Q1-Q5	Option	Option description	
Q1 82364	VOE82364	Light material bucket, hook-on 5,0 M3	

Pos	Part	Q1	Q2	Q3	Q4	Q5	PS	Kit	Description	Option(s)	Remark
		1							Bucket		See footnote 50) WID=2650 MM
1	VOE11012803	1							•Cutting edge		
2	VOE11142174	2							•Wear plate		
3	VOE930914	8							•Square neck screw		
4	VOE13968904	8							•Flange nut		

5	VOE11011413	2							•Bolt On Edge		
6	VOE11012832	1							•Bolt On Edge		
7	VOE13930787	22							•Screw		
8	VOE13968904	22							•Flange nut		

50) Direct-mounted (pin-on).

VOLVO

Construction Equipment

PROSIS Part Information

Date:	Image id:	Catalogue:	Model:
10/09/2018	**1001478**	**20070**	**L60E**
Brand:	Serial:	Group/Section:	Title:
Volvo	**1004-99999**	**92515/200**	**High-tipping bucket L60E**

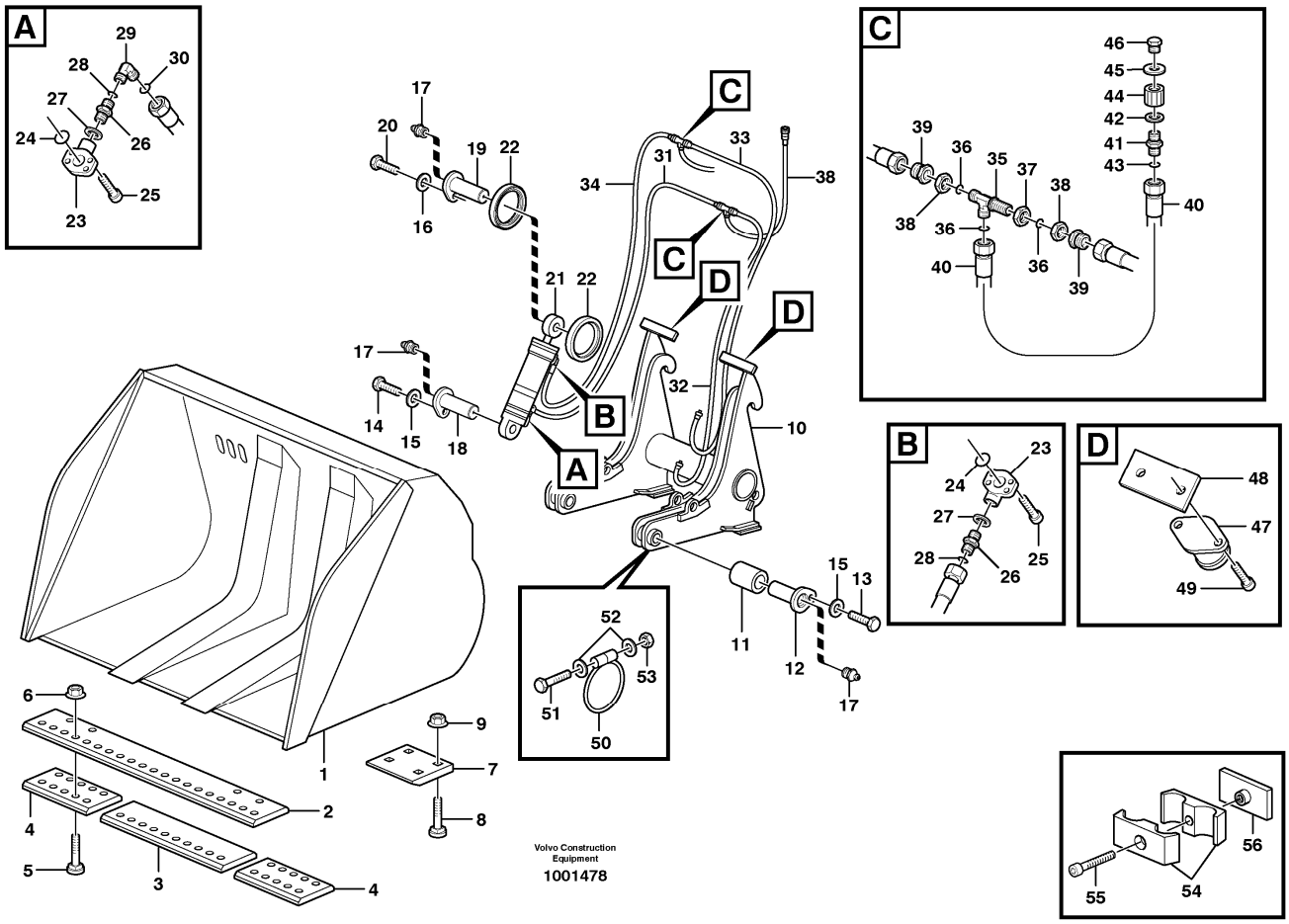

Section option	Kit	Option description
VOE82096		High-tipping bucket, pin-on for bolt-on system 4.8 M3

Q1-Q5	Option	Option description	
Q1 82096	VOE82096	High-tipping bucket, pin-on for bolt-on system 4.8 M3	

Pos	Part	Q1	Q2	Q3	Q4	Q5	PS	Kit	Description	Option(s)	Remark
		1					NS		Bucket		See footnote 50) WID=2650 MM
1		1					NS		•Bucket		
2	VOE11012803	1							••Cutting edge		
3	VOE11012832	1							•Bolt On Edge		
4	VOE11011413	2							•Bolt On Edge		
5	VOE13930787	22							•Screw		(VOE928918)
6	VOE13968904	22							•Flange nut		
7	VOE11156221	2							•Wear plate		

8	VOE13930787	8							•Screw		(VOE928918)
9	VOE13968904	8							•Flange nut		
10	VOE11157527	1							•Frame		
11	VOE4787328	8							••Bushing		
12	VOE11081378	2							•Pin		
13	VOE13973144	2							•Hexagon screw		
14	VOE13973144	2							•Hexagon screw		
15	VOE4849069	4							•Spacer washer		
16	VOE4849069	2							•Spacer washer		
17	VOE784323	6							•Nipple		
18	VOE4849662	2							•Pin		
19	VOE11081378	2							•Pin		
20	VOE13973144	2							•Hexagon screw		
21	VOE11045355	2							•Hydraulic cylinder		See ref 92691/200
22	VOE4782563	8							•Link bearing seal		
23	VOE11156848	4							•Connector		
24	VOE13948698	4							•O-ring		
25	VOE959222	16							•Hex. socket screw		
26	VOE13933873	4							•Nipple		
27	VOE14211858	4							••Sealing ring		
28	VOE990737	4							••O-ring		(VOE4880492)
29	VOE13933900	2							•Elbow nipple		
30	VOE990737	2							••O-ring		(VOE4880492)
31	VOE936029	1							•Hose assembly		
32	VOE936094	1							•Hose assembly		
33	VOE936093	1							•Hose assembly		
34	VOE935789	1							•Hose assembly		
35	VOE935290	2							•T-nipple		
36	VOE990740	6							••O-ring		(VOE981289)
37	VOE935286	2							•Lock nut		
38	VOE13933877	4							•Nut		
39	VOE13933946	4							•Reduction nipple		
40	VOE936091	2							•Hose assembly		
41	VOE13933875	2							•Nipple		
42	VOE14211859	2							••Sealing ring		
43	VOE990740	2							••O-ring		(VOE981289)
44	VOE11990625	2							•Nipple		
45	VOE944252	2					SS		•Gasket		
46	VOE914394	2							•Plug		
47	VOE4911933	2							•Rubber cushion		
48	VOE11012665	2							•Shim		
49	VOE13965191	4							•Screw		
50	VOE4824480	4							•O-ring		
51	VOE955257	4							•Hexagon screw		
52	VOE13940090	8							•Washer		
53	VOE13963104	4							•Lock nut		
54	VOE11411417	6							•Clamp		

55	VOE13947760	2							•Screw		
56	VOE4880654	2					OP		•Weld plate		

50) Direct-mounted (pin-on).

VOLVO

Construction Equipment

PROSIS Part Information

Date:	Image id:	Catalogue:	Model:
10/09/2018	**1079762**	**20070**	**L60E**
Brand:	Serial:	Group/Section:	Title:
Volvo	**1004-99999**	**92515/250**	**High-tipping bucket L60E**

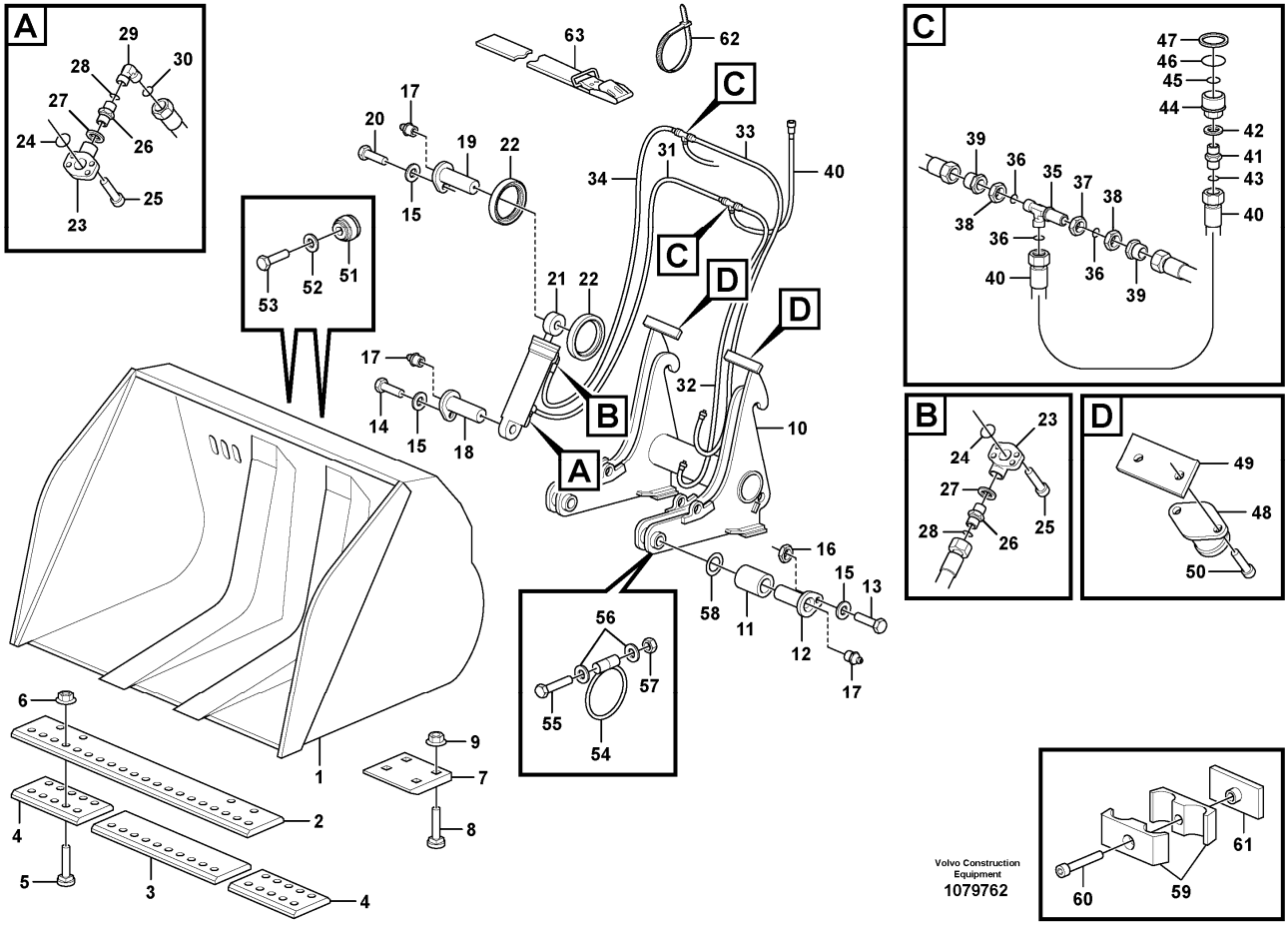

Section option	Kit	Option description
VOE82097		High-tipping light material bucket, hook-on for bolt-on system 4.8 M3
VOE82098		High-tipping light material bucket, hook-on for bolt-on system 2.5 M3

Q1-Q5	Option	Option description	
Q1 82098	VOE82098	High-tipping light material bucket, hook-on for bolt-on system 2.5 M3	
Q2 82097	VOE82097	High-tipping light material bucket, hook-on for bolt-on system 4.8 M3	

Pos	Part	Q1	Q2	Q3	Q4	Q5	PS	Kit	Description	Option(s)	Remark
		1					NS		Bucket		See footnote 68) WID=2550 MM
			1				NS		Bucket		See footnote 68) WID=2650 MM
1		1	1				NS		•Bucket		
2	VOE11082121	1							••Cutting edge		

	VOE11012803		1						••Cutting edge		
3	VOE11081625	1							•Bolt On Edge		
	VOE11012832		1						•Bolt On Edge		
4	VOE11011413	2	2						•Bolt On Edge		
5	VOE13930787	21	22						•Screw		(VOE928918)
6	VOE13968904	21	22						•Flange nut		
7	VOE11156221		2						•Wear plate		
8	VOE13930787		8						•Screw		(VOE928918)
9	VOE13968904		8						•Flange nut		
10		1	1				NS		•Frame		
11	VOE14210664	8							••Bushing		
	VOE4787328		8						••Bushing		
12	VOE11081606	2							•Pin		
	VOE11081378		2						•Pin		
13	VOE13967820	2							•Allen Hd Screw		
	VOE13973144		2						•Hexagon screw		
14	VOE13973144	2	2						•Hexagon screw		
15	VOE4849069	4	6						•Spacer washer		
16	VOE971099	2							•Flange lock nut		(VOE13971099)
17	VOE784323	6	6						•Nipple		
18	VOE4926571	2							•Pin		
	VOE4849662		2						•Pin		
19	VOE4926571	2							•Pin		
	VOE11081378		2						•Pin		
20	VOE13973144	2	2						•Hexagon screw		
21	VOE11045355	2	2						•Hydraulic cylinder		See ref 92691/200
22	VOE4782563	8	8						•Link bearing seal		
23	VOE11156848	4	4						•Connector		
24	VOE13948698	4	4						•O-ring		
25	VOE959222	16	16						•Hex. socket screw		
26	VOE13933873	4	4						•Nipple		
27	VOE14211858	4	4						••Sealing ring		
28	VOE990737	4	4						••O-ring		(VOE4880492)
29	VOE13933900	2	2						•Elbow nipple		
30	VOE990737	2	2						••O-ring		(VOE4880492)
31	VOE936097	1							•Hose assembly		
	VOE935701		1						•Hose assembly		
32	VOE936096	1							•Hose assembly		
	VOE936095		1						•Hose assembly		
33	VOE935704	1							•Hose assembly		
	VOE936032		1						•Hose assembly		
34	VOE936059	1							•Hose assembly		
	VOE936092		1						•Hose assembly		
35	VOE935290	2	2						•T-nipple		
36	VOE990740	6	6						••O-ring		(VOE981289)
37	VOE935286	2	2						•Lock nut		
38	VOE13933877	4	4						•Nut		

39	VOE11141272	4							•Reduction nipple		
	VOE13933946		4						•Reduction nipple		
40	VOE935304	2	2						•Hose assembly		
41	VOE13933875	2	2						•Nipple		
42	VOE14211859	2	2						••Sealing ring		
43	VOE990740	2	2						••O-ring		(VOE981289)
44	VOE11043021	2	2						•Sleeve		
45	VOE11993255	2	2						••O-ring		INNER
46	VOE71993256	2	2						••O-ring		OUTER
47	VOE11993257	2	2				SS		••Back-up ring		
48	VOE4911933	2	2						•Rubber cushion		
49	VOE11012665	2	2						•Shim		
50	VOE13965191	4	4						•Screw		
51	VOE11010599	2							•Plug		
	VOE4885042		2						Plug		
52	VOE4885043	2	2						•Washer		
53	VOE946440	2							•Flange screw		
	VOE13945444		2						•Screw		
54	VOE4824480	4	4						•O-ring		
55	VOE955257	4	4						•Hexagon screw		
56	VOE13940090	8	8						•Washer		
57	VOE13963104	4	4						•Lock nut		
58	VOE11045161	REQ							•Shim		
59	VOE4880595	2							•Clamp		
	VOE11411417		6						•Clamp		
60	VOE946671	2	6						•Flange screw		
61	VOE4880579	2							•Cover plate		
	VOE4880654		6				OP		•Weld plate		
62	VOE4881440	8	2						•Cable tie		
63	VOE11104606		2						•Retaining strap		

68) Bracket-mounted (hook-on).

VOLVO

Construction Equipment

PROSIS Part Information

Date:	Image id:	Catalogue:	Model:
10/09/2018	**1024604**	**20070**	**L60E**
Brand:	Serial:	Group/Section:	Title:
Volvo	**1004-99999**	**92522/200**	**Bucket, truncated vec lip with teeth L60E**

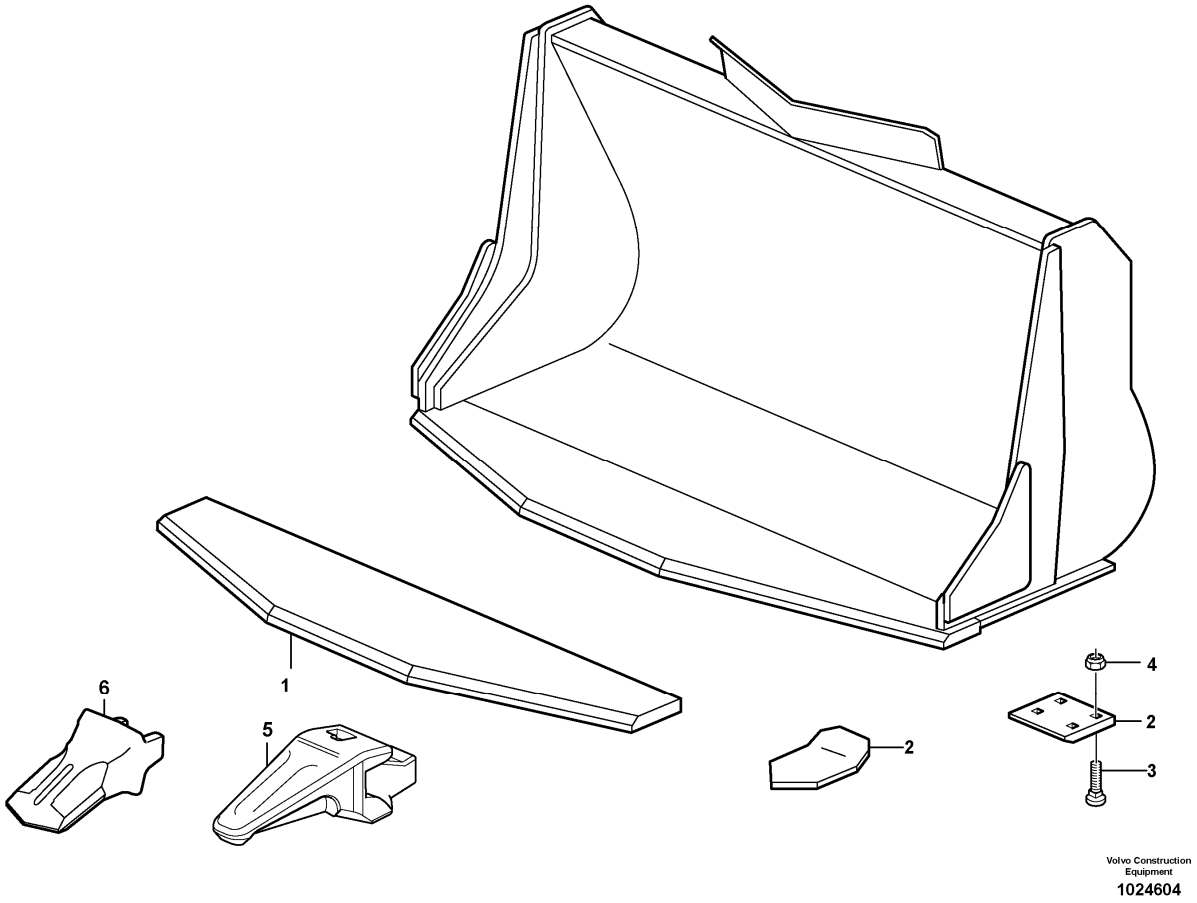

Section option	Kit	Option description
VOE93827		Bucket 1.6 m3, hook on v-lip for Bolt-on system

Q1-Q5	Option	Option description	
Q1 93827	VOE93827	Bucket 1.6 m3, hook on v-lip for Bolt-on system	

Pos	Part	Q1	Q2	Q3	Q4	Q5	PS	Kit	Description	Option(s)	Remark
		1							Bucket		See footnote 50) WID=2500 MM
1	VOE11142206	1							•Cutting edge		RS8/93
2	VOE11142174	2							•Wear plate		
3	VOE930914	8							•Square neck screw		
4	VOE13968904	8							•Flange nut		
5		8							Adapter	VOE82736	See ref 92691/5600
6		8							Tooth	VOE82734, VOE82735	See ref 92691/6500

50) Direct-mounted (pin-on).

VOLVO

Construction Equipment

PROSIS Part Information

Date:	Image id:	Catalogue:	Model:
10/09/2018	**1001168**	**20070**	**L60E**
Brand:	Serial:	Group/Section:	Title:
Volvo	**1004-99999**	**92612/100**	**Sorting grapple L60E, L70D/E, L90D/E, L110E, L120D/E**

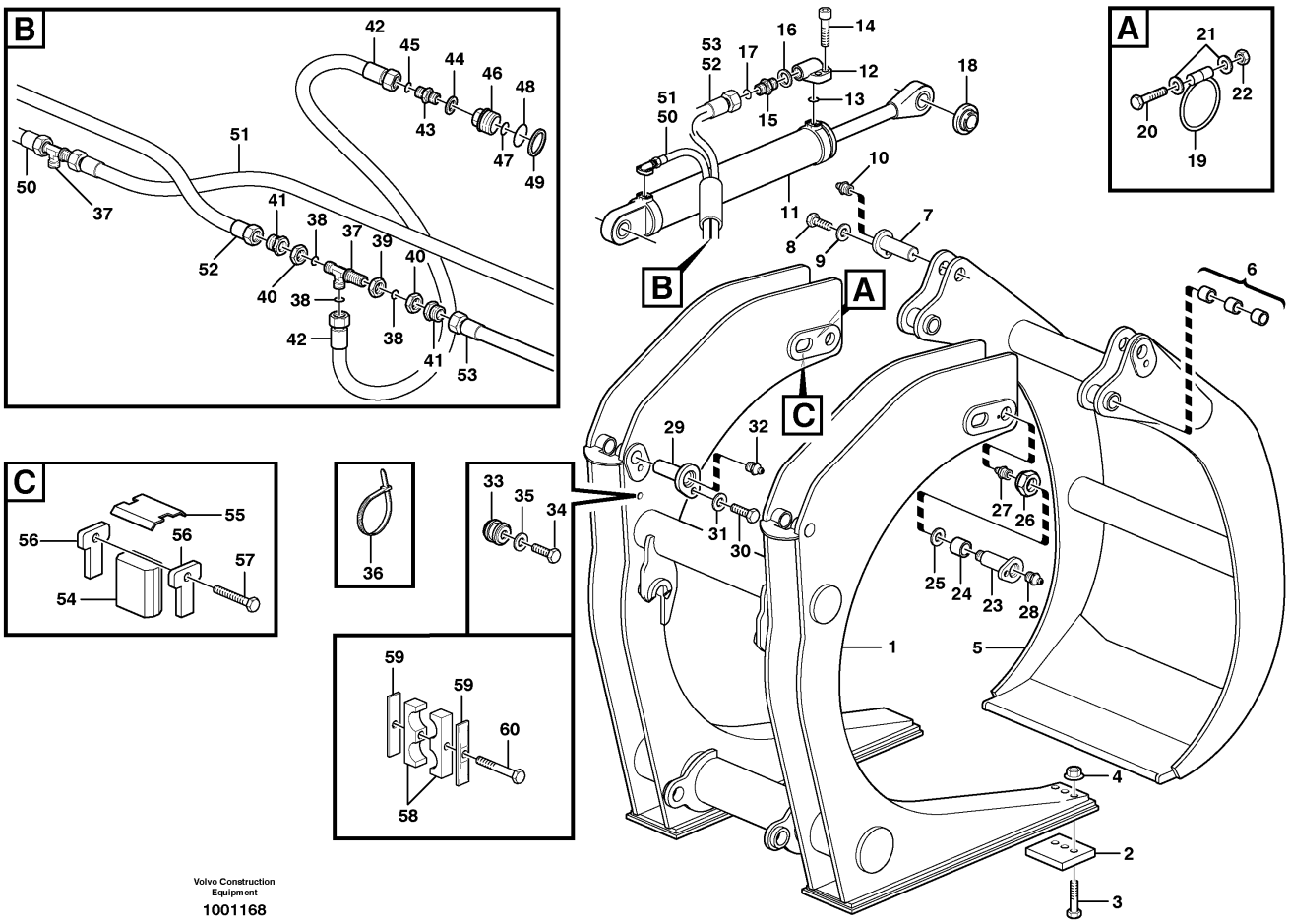

Section option	Kit	Option description
VOE80153		Sorting grapple 1.5 M2
VOE80832		Sorting grapple 2.4 M2
VOE80835		Sorting grapple 1.8 M2
VOE82194		Sorting grapple 1.3 m2, hook on

Q1-Q5	Option	Option description	
Q1 80832	VOE80832	Sorting grapple 2.4 M2	
Q2 80835	VOE80835	Sorting grapple 1.8 M2	
Q3 82194	VOE82194	Sorting grapple 1.3 m2, hook on	
Q4 80153	VOE80153	Sorting grapple 1.5 M2	

Pos	Part	Q1	Q2	Q3	Q4	Q5	PS	Kit	Description	Option(s)	Remark
		1							Sorting grapple		See footnote 68) L90D/E, L110E, L120D/E
			1						Sorting grapple		See footnote 68) L90D/

											E, L110E, L120D/E
				1					Sorting grapple		See footnote 68) L60E, L70D
					1				Sorting grapple		See footnote 68) L70E
1		1					NS		•Frame		
			1				NS		•Frame		
				1			NS		•Frame		
					1		NS		•Frame		
2	VOE11156049	2	2						••Wear plate		
	VOE11157146			2	2				••Wear tip		
3	VOE13930787	6	6	6	6				••Screw		
4	VOE13968904	6	6	6	6				••Flange nut		
5		1					NS		•Catch arm		
	VOE4858931		1						•Catch arm		
	VOE4859249			1					•Top Clamp		
					1		NS		•Top Clamp		
6	VOE4890051	8	8	8	8				••Bushing		
	VOE4880464	2	2						••Bushing		
7	VOE4761320	2	2						•Pin		
	VOE4805989			2	2				•Pin		
8	VOE13973144	2	2	2	2				•Hexagon screw		
9	VOE4849069	2	2	2	2				•Spacer washer		
10	VOE784323	2	2	2	2				•Nipple		
11	VOE11045363	2							•Cylinder		See ref 92691/450
	VOE11045357		2						•Cylinder		See ref 92691/450
	VOE11045361			2	2				•Cylinder		See ref 92691/550
12	VOE11156849	4	4						•Connector		
	VOE11156848			4	4				•Connector		
13	VOE13948699	4	4						•O-ring		
	VOE948698			4	4				•O-ring		
14	VOE959238	16	16						•Hex. socket screw		
	VOE959222			16	16				•Hex. socket screw		
15	VOE13933871	4	4	4	4				•Nipple		
16	VOE14211858	4	4	4	4				••Sealing ring		
17	VOE990738	4	4	4	4				••O-ring		(VOE4880493)
18	VOE4782564	8	8						•Link bearing seal		
19	VOE4824481	4	4	4	4				•O-ring		
20	VOE955259	4	4						•Hexagon screw		
	VOE955257			4	4				•Hexagon screw		
21	VOE13940090	8	8	8	8				•Washer		
22	VOE13963104	4	4	4	4				•Lock nut		
23	VOE4887206	2	2						•Pin		
	VOE4858642			2	2				•Pin		
24	VOE16269043	2	2	2	2				•Spacer		
25	VOE4809212	2	2	2	2				•Washer		
26	VOE13963112	2	2	2	2				•Lock nut		
27	VOE914167	2	2	2	2				•Lubricating nipple		

28	VOE784323	2	2	2	2				•Nipple		
29	VOE4763267	2	2						•Pin		
	VOE4858587			2	2				•Pin		
30	VOE13973144	2	2	2	2				•Hexagon screw		
31	VOE4849069	2	2	2	2				•Spacer washer		
32	VOE784323	2	2	2	2				•Nipple		
33	VOE11010599	2	2	2	2				•Plug		
34	VOE13946173	2	2	2	2				•Screw		
35	VOE4885043	2	2	2	2				•Washer		
36	VOE4881440	REQ	REQ	REQ	REQ				•Cable tie		
37	VOE935290	2	2	2	2				•T-nipple		
38	VOE990740	6	6	6	6				••O-ring		(VOE981289)
39	VOE935286	2	2	2	2				•Lock nut		
40	VOE13933877	4	4	4	4				•Nut		
41	VOE13933946	4	4	4	4				•Reduction nipple		
42	VOE935678	2	2						•Hose assembly		
	VOE935682			2	2				•Hose assembly		
43	VOE13933875	2	2	2	2				•Nipple		
44	VOE14211859	2	2	2	2				••Sealing ring		
45	VOE990740	2	2	2	2				••O-ring		(VOE981289)
46	VOE11043021	2	2	2	2				•Sleeve		
47	VOE11993255	2	2	2	2				••O-ring		
48	VOE11993256	2	2	2	2				••O-ring		
49	VOE11993257	2	2	2	2		SS		••Back-up ring		
50	VOE936134	1							•Hose assembly		
	VOE936138		1						•Hose assembly		
	VOE935684			1					•Hose assembly		
	VOE935950				1				•Hose assembly		
51	VOE936136	1							•Hose assembly		
	VOE935918		1						•Hose assembly		
	VOE935342			1					•Hose assembly		
	VOE935703				1				•Hose assembly		
52	VOE936137	1							•Hose assembly		
	VOE935685		1						•Hose assembly		
	VOE935342			1					•Hose assembly		
	VOE935703				1				•Hose assembly		
53	VOE936135	1							•Hose assembly		
	VOE935642		1						•Hose assembly		
	VOE935684			1					•Hose assembly		
	VOE935950				1				•Hose assembly		
54	VOE4859480	2	2	2	2				•Absorber		
55	VOE4859482	2	2						•Clamp		
	VOE4859481			2	2				•Clamp		
56	VOE4859483	4	4	4	4				•Anchorage		
57	VOE946329	4	4	4	4				•Flange screw		
58	VOE4880595	4	4	2	2				•Clamp		
59	VOE4880578	4	4	2	2				•Cover plate		

60	VOE13965179	4	4	2	2				•Screw		
61	VOE11157954			1					•Decal		
	VOE11157954	1	1		1				•Decal		80832 SER NO 33095/125 - 80835 SER NO 33095/110 - 80153 SER NO 33095/103 -

68) Bracket-mounted (hook-on).

VOLVO

Construction Equipment

PROSIS Part Information

Date:	Image id:	Catalogue:	Model:
10/09/2018	**1001168**	**20070**	**L60E**
Brand:	Serial:	Group/Section:	Title:
Volvo	**1004-99999**	**92613/250**	**Allround- / tree-length grapple L50D/E, L60E, L70E, L90D/E, L110E, L120D/E**

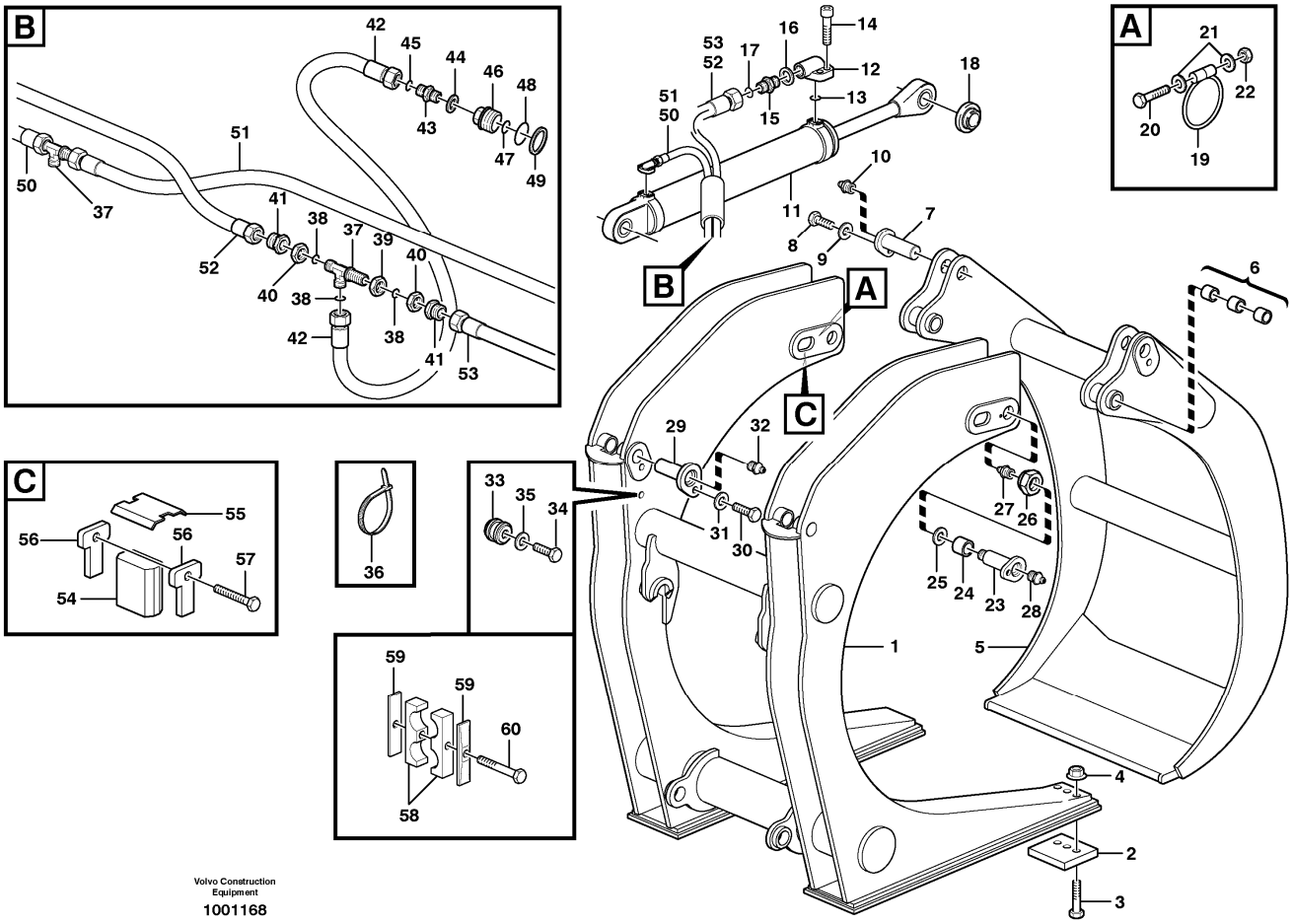

Section option	Kit	Option description
VOE82339		General purpose grapple 1.3 m2, hook-on
VOE82340		General purpose grapple 1.3 m2, hook-on
VOE82028		General Purpose fork 0.9 m2, hook-on
VOE82192		General purpose grapple 0.7 m2, hook-on

Q1-Q5	Option	Option description	
Q1 82028	VOE82028	General Purpose fork 0.9 m2, hook-on	
Q2 82192	VOE82192	General purpose grapple 0.7 m2, hook-on	
Q3 82339	VOE82339	General purpose grapple 1.3 m2, hook-on	
Q4 82340	VOE82340	General purpose grapple 1.3 m2, hook-on	

Pos	Part	Q1	Q2	Q3	Q4	Q5	PS	Kit	Description	Option(s)	Remark
		1							General Purpose Grapple		L70E

			1						General Purpose Grapple		L50D/E, L60E
				1					General Purpose Grapple		L90D/E, L110E, L120D/E
					1				General Purpose Grapple		L90D/E, L110E, L120D/E
1		1					NS		•Frame		
			1				NS		•Frame		
				1			NS		•Frame		
					1		NS		•Frame		
2	VOE11157146	2	2						••Wear tip		
	VOE11156049			2	2				••Wear plate		
3	VOE13930787	6	6	6	6				••Screw		
4	VOE13968904	6	6	6	6				••Flange nut		
5	VOE11157420	1							•Top Clamp		
	VOE4859012		1						•Top Clamp		
				1			NS		•Top Clamp		
					1		NS		•Top Clamp		
6	VOE4890051	8	8	8	8				••Bushing		
	VOE4880464			2	2				••Bushing		
7	VOE4805989	2	2						•Pin		
	VOE4761320			2	2				•Pin		
8	VOE13973144	2	2	2	2				•Hexagon screw		
9	VOE4849069	2	2						•Spacer washer		
10	VOE784323	2	2	2	2				•Nipple		
11	VOE11045361	2							•Cylinder		See ref 92691/550
	VOE11045360		2						•Cylinder		See ref 92691/550
	VOE11045357			2	2				•Cylinder		See ref 92691/450
12	VOE11156848	4	4						•Connector		
	VOE11156849			4	4				•Connector		
13	VOE948698	4	4						•O-ring		
	VOE13948699			4	4				•O-ring		
14	VOE959222	16	16						•Hex. socket screw		
	VOE959238			16	16				•Hex. socket screw		
15	VOE13933871	4	4	4	4				•Nipple		
16	VOE14211858	4	4	4	4				••Sealing ring		
17	VOE990738	4	4	4	4				••O-ring		(VOE4880493)
18	VOE4782564			8	8				•Link bearing seal		
19	VOE4824481	4	4	4	4				•O-ring		
20	VOE955259	4	4	4	4				•Hexagon screw		
21	VOE13940090	8	8	8	8				•Washer		
22	VOE13963104	4	4	4	4				•Lock nut		
23	VOE4809148	2	2						•Pin		
	VOE4887206			2	2				•Pin		
24	VOE4858716	2	2						•Spacer		
24	VOE16269043			2	2				•Spacer		
25	VOE4809212	2	2	2	2				•Washer		

26	VOE13963112	2	2	2	2				•Lock nut		
27	VOE914167			2	2				•Lubricating nipple		
28	VOE784323	2	2	2	2				•Nipple		
29	VOE4858587	2	2						•Pin		
	VOE4763267			2	2				•Pin		
30	VOE13973144	2	2	2	2				•Hexagon screw		
31	VOE4849069	2	2	2	2				•Spacer washer		
32	VOE784323	2	2	2	2				•Nipple		
33	VOE11010599	2	2	2	2				•Plug		
34	VOE13946173	2	2	2	2				•Screw		
35	VOE4885043	2	2	2	2				•Washer		
36	VOE4881440	REQ	REQ	REQ	REQ				•Cable tie		
37	VOE935290	2	2	2	2				•T-nipple		
38	VOE990740	6	6	6	6				••O-ring		(VOE981289)
39	VOE935286	2	2	2	2				•Lock nut		
40	VOE13933877	4	4	4	4				•Nut		
41	VOE13933946	4	4	4	4				•Reduction nipple		
	VOE13933872				2				•Elbow nipple		
42	VOE935682	2	2						•Hose assembly		
	VOE935678			2	2				•Hose assembly		
43	VOE13933875	2	2	2	2				•Nipple		
44	VOE14211859	2	2	2	2				••Sealing ring		
45	VOE990740	2	2	2	2				••O-ring		(VOE981289)
46	VOE11043021	2	2	2	2				•Sleeve		
47	VOE11993255	2	2	2	2				••O-ring		
48	VOE11993256	2	2	2	2				••O-ring		
49	VOE11993257	2	2	2	2		SS		••Back-up ring		
50	VOE936105	1							•Hose assembly		
	VOE935694		1						•Hose assembly		
	VOE935817			1					•Hose assembly		
	VOE11163003				1				•Hose assembly		
51	VOE936106	1							•Hose assembly		
	VOE935642		1		1				•Hose assembly		
	VOE935818			1					•Hose assembly		
52	VOE936106	1							•Hose assembly		
	VOE935642		1		1				•Hose assembly		
	VOE935818			1					•Hose assembly		
53	VOE936105	1							•Hose assembly		
	VOE935694		1						•Hose assembly		
	VOE935817			1					•Hose assembly		
	VOE11163003				1				•Hose assembly		
54	VOE4859480	2	2	2	2				•Absorber		
55	VOE4859481	2	2						•Clamp		
	VOE4859482			2	2				•Clamp		
56	VOE4859483	4	4	4	4				•Anchorage		
57	VOE946329	4	4						•Flange screw		
	VOE946472			4	4				•Flange screw		

58	VOE4880595	2	2	2	2				•Clamp		
59	VOE4880578	2	2	2	2				•Cover plate		
60	VOE13965179	2	2	2	2				•Screw		
61	VOE11157954	1		1	1				•Decal		82028 SER NO 33095/101 - 82339 SER NO 33095/104 - 82340 SER NO 33095/101 -

VOLVO

Construction Equipment

PROSIS Part Information

Date:	Image id:	Catalogue:	Model:
10/09/2018	**1000921**	**20070**	**L60E**
Brand:	Serial:	Group/Section:	Title:
Volvo	**1004-99999**	**92621/150**	**Fork spreader L50D/E, L60E, L70D/E, L90D/E, L110E, L120D/E**

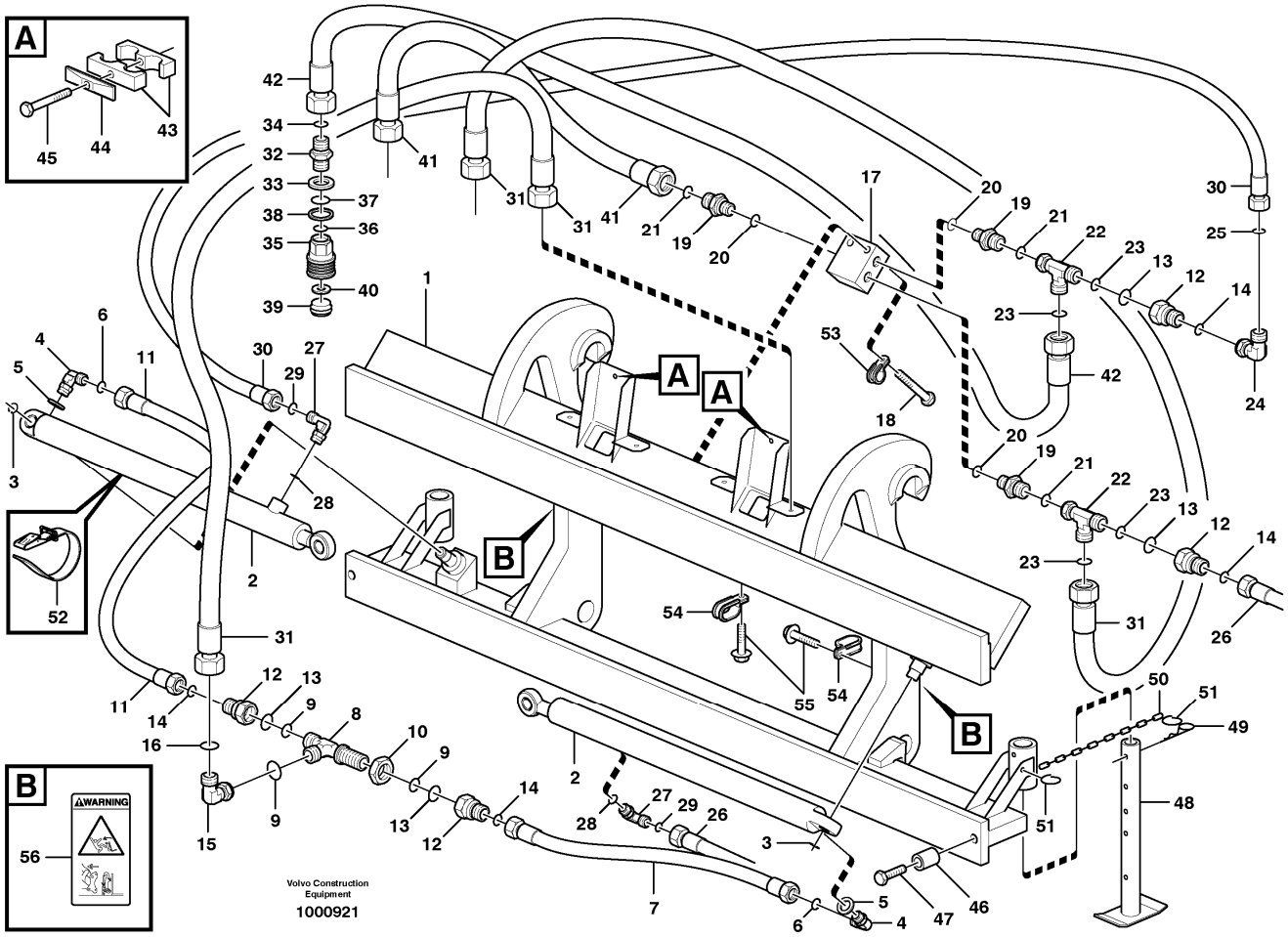

Section option	Kit	Option description
VOE80335		Fork positioner 1500 MM
VOE80336		Fork positioner 2000 MM

Q1-Q5	Option	Option description	
Q1 80335	VOE80335	Fork positioner 1500 MM	
Q2 80336	VOE80336	Fork positioner 2000 MM	

Pos	Part	Q1	Q2	Q3	Q4	Q5	PS	Kit	Description	Option(s)	Remark
		1							Fork Spreader		
			1						Fork Spreader		
1		1					NS		•Fork retainer		
			1				NS		•Fork retainer		
2	VOE11156699	2							•Hydraulic cylinder		See ref 92691/600

	VOE11156701		2						•Hydraulic cylinder		See ref 92691/600
3	VOE914459	2	2						•Snap ring		
4	VOE13933883	2							•Nipple		
	VOE13933925		2						•Elbow nipple		
5	VOE14211856	2							••Sealing ring		
	VOE931209		2						••O-ring		
6	VOE990736	2							••O-ring		
	VOE990736		2						••O-ring		
7	VOE935526	1							•Hose assembly		
	VOE935992		1						•Hose assembly		
8	VOE935816	1	1						•T-nipple		
9	VOE990738	3	3						••O-ring		(VOE4880493)
10	VOE13933867	1	1						•Lock nut		
11	VOE935947	1							•Hose assembly		
	VOE935991		1						•Hose assembly		
12	VOE935847	4	4						•Reduction nipple		
13	VOE990738	4	4						••O-ring		(VOE4880493)
14	VOE990736	4	4						••O-ring		
15	VOE13933872	1	1						•Elbow nipple		
16	VOE990738	1	1						••O-ring		(VOE4880493)
17	VOE11045067	1	1						•Flow distributor		
	VOE11704357	1	1				OP		••Valve		
	VOE11704358	1	1				OP		••Sealing kit		
18	VOE13965180	2	2						•Screw		
19	VOE13933871	3	3						•Nipple		
20	VOE14211858	3	3						••Sealing ring		
21	VOE990738	3	3						••O-ring		(VOE4880493)
22	VOE13933878	2	2						•T-nipple		
23	VOE990738	4	4						••O-ring		(VOE4880493)
24	VOE13933905	1	1						•Elbow nipple		
25	VOE990736	1	1						••O-ring		
26	VOE935628	1	1						•Hose assembly		
27	VOE13933925	2	2						•Elbow nipple		
28	VOE931209	2	2						••O-ring		
29	VOE990736	2	2						••O-ring		
30	VOE11160032	1	1						•Hose assembly		
31	VOE13933972	2	2						•Hose assembly		
32	VOE13933917	4	4						•Nipple		
33	VOE14211859	4	4						••Sealing ring		
34	VOE990738	4	4						••O-ring		(VOE4880493)
35	VOE11043021	4	4						•Sleeve		
36	VOE11993255	4	4						••O-ring		INNER
37	VOE11993256	4	4						••O-ring		OUTER
38	VOE11993257	4	4				SS		••Back-up ring		
39	VOE11010599	4	4						•Plug		
40	VOE4885043	4	4						•Washer		
41	VOE935981	1	1						•Hose assembly		

42	VOE13933838	1	1						•Hose assembly		
43	VOE4881125	2	2						•Clamp		
44	VOE4880578	2	2						•Cover plate		
45	VOE13948217	2	2						•Screw		
46	VOE11111318	2	2						•Spacer		DELETED
47	VOE955362	2	2						•Hexagon screw		DELETED
48	VOE11157684	2	2						•Strut		
49	VOE982367	2	2						•Cotter Pin		
50	VOE4880283	2	2						•Chain		
51	VOE729895	4	4				OP		•Lock Spring		
	VOE4747089	4	4						•Lock ring		
52	VOE11104606	1	1						•Retaining strap		
53	VOE952629	1	1						•Clamp		
54	VOE13949386	2	2						•Clamp		
55	VOE946440	6	6						•Flange screw		
56	VOE11157955	2	2						•Decal		