RUTHZIL TRATOR COMERCIAL DE PEÇAS LTDA 11 97083-6812 ROLANDO CITRANGULO

VOLVO
Construction Equipment

L90F

OUTUBRO 2011

Service Information

Document Title:	Function Group:	Information Type: **Service Information**	Date: **12/10/2011**
Profile: **WLO, L90F (Volvo) [GB]**	MANUAL DE SERVIÇO		

Safety concerns everybody!

Always follow the instructions in the machine's operator's manual which supplements this Service Manual.

The Operator's Manual **must always** be kept in the cab for easy reference.

Volvo designs and manufactures machines with a high level of safety as well as effectiveness. All this work may be wasted if anyone who is about to perform service on any of our machines does not read the safety instructions, or does not follow them, e.g., does not replace guards, climbs on slippery machine parts instead of using a ladder, grabs a hold of hoses instead of handles or uses the wrong tools for the job.

In order to maintain safe and efficient function, always use genuine Volvo spare parts intended and adapted for the machine. If other spare parts than genuine Volvo are used then Volvo CE cannot be held responsible for machine damage, and warranty claims will be denied.

Machines seldom cause accidents, instead people often do.

A safety-conscious person and a well-maintained machine make for a safe, effective and profitable combination.

Those who do not follow the safety instructions and observe the warnings in this manual must make sure that their work method is safe. Otherwise, there is a great risk of accidents, perhaps even accidents that result in fatalities.



WARNING SYMBOL

This symbol is shown at various points throughout the manual. The appearance of it means "Warning, stay alert! Your safety may be involved!"

Get to know the capacity and limits of your machine!

VOLVO
Construction Equipment

Service Information

Document Title:	Function Group:	Information Type: **Service Information**	Date: **12/10/2011**
Profile: **WLO, L90F (Volvo) [GB]**			

CE-marking, EMC-directive

CE-marking

(Declaration of Conformity, and CE–marking, only machines marketed within the EU/EEA). This machine is CE–marked. This means that when delivered the machine meets the applicable "Essential Health and Safety Requirements", as stated in EU's so-called Machine Safety Directive, 98/37/EC. Any person who makes changes that affect machine safety is also responsible for the same, and that governing legislation/standards are fulfilled.

As proof that the requirements are met, an **EU Declaration of Conformity**, issued by Volvo CE, is supplied with each separate machine. This EU declaration also covers attachments and equipment manufactured by Volvo CE. The documentation is a valuable document, which should be kept safe and retained for at least 10 years. **The document should always accompany the machine when it is sold.**

If the machine is used for other purposes or with other attachments than described in this manual, safety must be maintained at all times and in each individual case. The person carrying out such action is also responsible for the action which, in some cases, may require a new CE-marking and the issue of a new EU Declaration of Conformity.

The EU's EMC–directive

The electronic equipment of the machine may in some cases cause interference with other electronic equipment, or the equipment may be adversely affected by external electromagnetic interference, which may constitute safety risks.

The EU's EMC–directive on "Electromagnetic compatibility" provides a general description of what demands can be made of the machine from a safety perspective, where permitted limit values have been determined and stated according to international standards.

A machine or device which meets the requirements should be CE-marked. Our machines have been specifically tested for electromagnetic interference. The CE marking of the machine and the declaration of conformity also cover the EMC directive.

If other electronic equipment is fitted to this machine, the equipment must be CE-marked and tested on the machine with regard to electromagnetic interference.

EU's noise directive

Within the EU there is a noise directive, dictating that the machine may not have noise values that exceed a certain level. Values are given on a decal that can be read from the outside of the machine. Also, every machine is delivered with a noise certificate where Volvo CE ensures that the machine meets governing legislation. **It is also important that this certificate accompanies the machine when it is sold.** It is also important that no changes are made to the machine's noise-damping components in order to meet the limit values.

NOTE	**Modification of or removal of material which affects sound, e.g., noise-insulating, noise-dampening, or noise-absorbing materials, is not allowed. Also, it is not permitted to make openings/holes in the cab or engine compartment as this may increase the noise level in the cab.**

Unauthorized modifications to the cab's roll-over protective structure (ROPS/FOPS)

Never make any unauthorized modifications to the ROPS, such as lowering the roof height, drilling, welding on fire extinguisher brackets, radio antenna or other equipment.

Such unauthorized modifications will affect the structural strength of the ROPS cab and will void the certification.

The Roll Over Protective Structure (ROPS) has been approved following testing and meets standards according to ISO 3471-1.

The cab's roof is also tested and approved according to the standard for FOPS (Falling object protective structure, protection from falling objects) according to ISO 3449.

All planned modifications of the cab's supporting construction must be discussed in advance with Volvo CE's engineering department to determine if the modification can be performed without affecting the approval.

It is important that all persons in your organization, including management, are made fully aware of these rules involving ROPS.

If anyone in your company discovers that a certain machine has been modified in a non-approved manner, your company must notify the customer and manufacturer in writing regarding the applicable machine and how it was modified.

VOLVO
Construction Equipment

Service Information

Document Title:	Function Group:	Information Type: **Service Information**	Date: **12/10/2011**
Profile: **WLO, L90F (Volvo) [GB]**			

Checking function

After work in a safety-related electrical system, a function check shall be performed to meet the requirements in ISO 15998.

Safety-related electrical system

Systems covered by function check for safety-related electrical system are:

- Comfort Drive Control (CDC). For check, see Comfort Drive Control (CDC), function check
  .
- Parking brake. For check, see Parking brake, function check
  .
- Service brake. For check, see Wheel brakes, function check
  .
- Transmission. For check, see Transmission, function check
  .
- Differential lock. For check, see Differential lock, function check
- Lift function (electric servo). For check, see Lift, function check
- Tilt function (electric servo). For check, see Tilt, function check
- Attachment lock. For check, see Attachment lock, function check
- Boom Suspension System. For check, see Boom Suspension System, function check
- 3rd/4th function (electric servo). For check, see 3rd/4th hydraulics, function check

More than one document matches the current profile:

Service position 2
Product Line: WLO
Model Variant: L70F, L90F, L60F, L220F, L180F, L150F, L350F, L120F, L110F, L180F HL

Service position 1
Product Line: WLO
Model Variant: L70F, L90F, L60F, L220F, L180F HL, L180F, L150F, L350F, L120F, L110F

VOLVO
Construction Equipment

Service Information

Document Title:	Function Group:	Information Type: **Service Information**	Date: **12/10/2011**
Profile: **WLO, L90F (Volvo) [GB]**			

Service position 2

Op nbr 191-022

9993831 Support

1. Park the machine on a level and hard surface and prepare it for service by placing it in the service position according to figure:

Service position

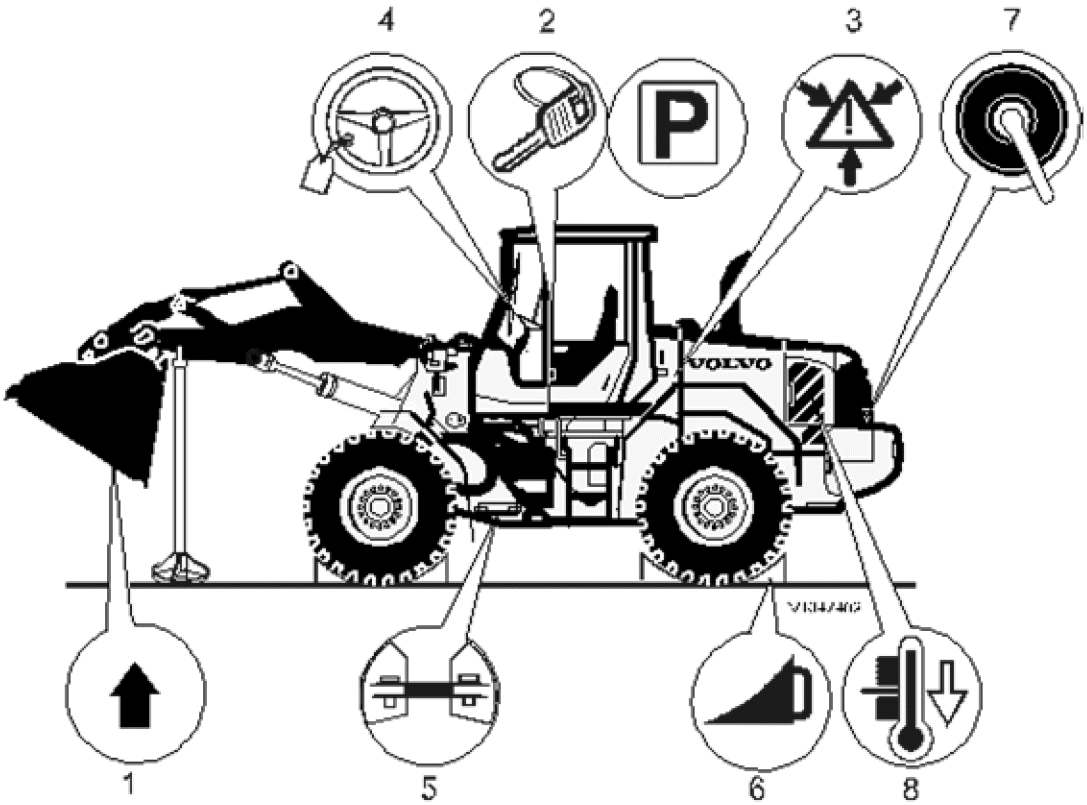

Figure 1
Service position

1. Lift up and tilt the bucket forward. Secure the boom on the support. See Arbete under upplyft lyftramverk .
2. Engine off and ignition key removed. (Does not apply for special checks, when the parking brake also should be applied).
3. **If the pressure is not released before opening the system, oil under high**

3. **WARNING!** **pressure will jet out, resulting in serious personal injuries.**

   Pressurized lines and tanks shall be depressurized so that the high pressure is released without risk. See Säkerhet vid arbete med hydrauliska system

4. Yellow-black warning flag should be attached to the steering wheel (USA - a red flag may be used instead)
5. Frame joint lock connected.
6. Wheels blocked with wedges or similar.
7. Switch off the battery connection switch.
8. Allow the machine to cool down.

WARNING! **If work must be done on the machine before it has cooled down; beware of hot fluids and hot components that can cause severe burns.**

VOLVO
Construction Equipment

Service Information

Document Title:	Function Group:	Information Type: **Service Information**	Date: **12/10/2011**
Profile: **WLO, L90F (Volvo) [GB]**			

Service position 1

Op nbr 191-021

1. Park the machine on a level and hard surface and prepare it for service by placing it in the service position according to figure:

Service position

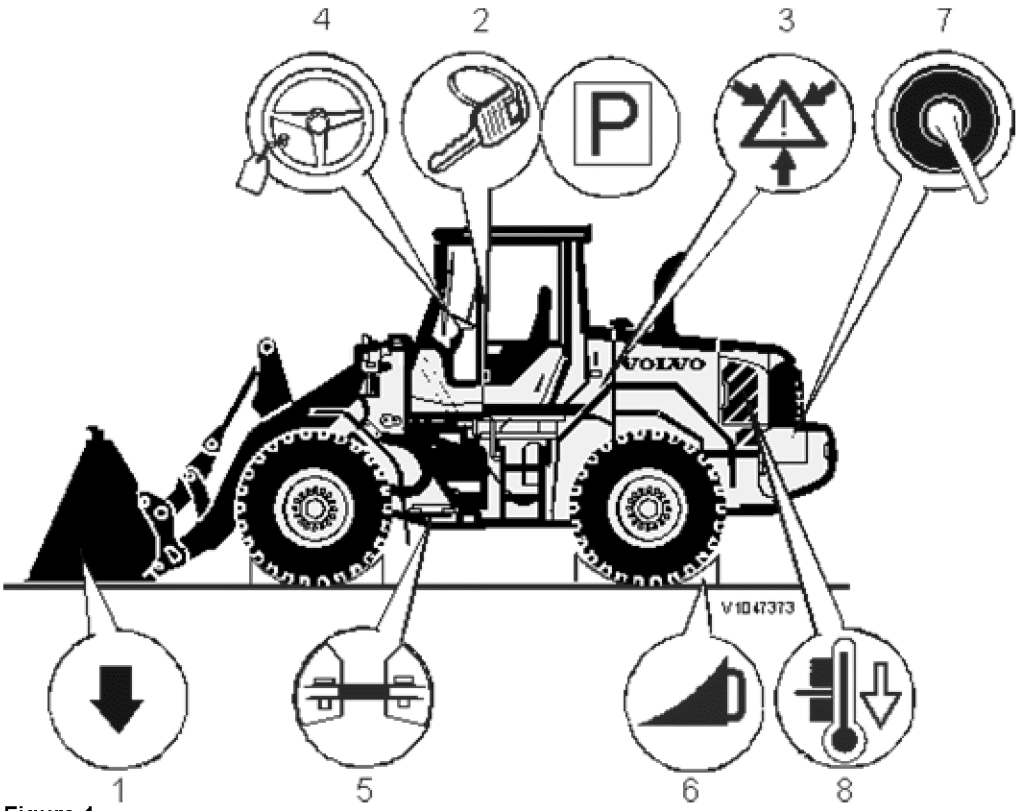

Figure 1
Service position

1. Attachment resting on the ground.
2. Engine off and ignition key removed. (Does not apply for special checks, when the parking brake also should be applied).

> **WARNING!** **If the pressure is not released before opening the system, oil under high pressure will jet out, resulting in serious personal injuries.**

3.

Pressurized lines and tanks shall be depressurized so that the high pressure is released without risk. See Säkerhet vid arbete med hydrauliska system

4. Yellow-black warning flag should be attached to the steering wheel (USA - a red flag may be used instead)
5. Frame joint lock connected.
6. Wheels blocked with wedges or similar.
7. Switch off the battery connection switch.
8. Allow the machine to cool down.

WARNING! **If work must be done on the machine before it has cooled down; beware of hot fluids and hot components that can cause severe burns.**

VOLVO
Construction Equipment

Service Information

Document Title:	Function Group:	Information Type: **Service Information**	Date: **12/10/2011**
Profile: **WLO, L90F (Volvo) [GB]**			

Working under raised boom

Always secure the loader linkage with Support 999 3831 (2 pcs. L330, L350) before starting to work. Position the support on an even and firm ground surface.

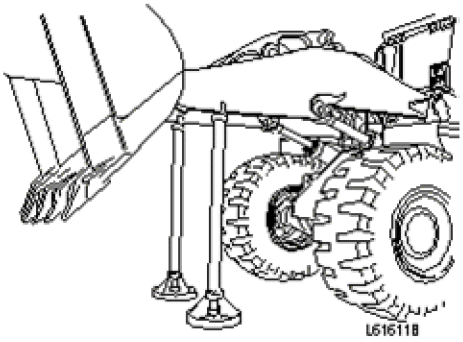

Figure 1
Securing the boom (L330, L350)

- 999 3831 Support (2 pcs.)

WARNING! **Note the exact positioning of the support against the lifting arm! If the support is positioned too far forward, it may be knocked out of position when the attachment bracket is tilted forward.**

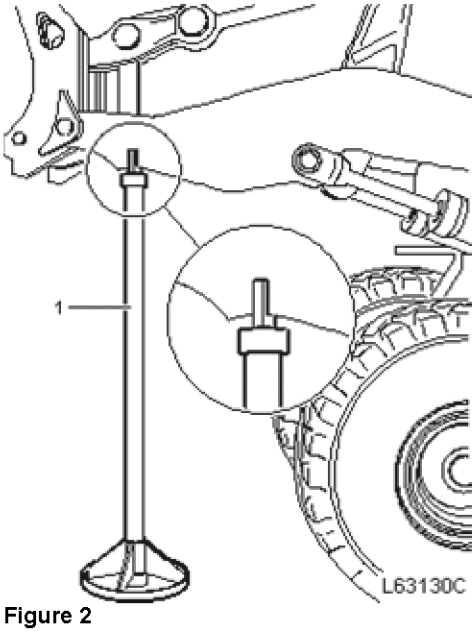

Figure 2
Securing the boom

1. 999 3831 Support

VOLVO
Construction Equipment

Service Information

Document Title:	Function Group:	Information Type: **Service Information**	Date: **12/10/2011**
Profile: **WLO, L90F (Volvo) [GB]**			

Safety when handling oils and fuel

WARNING! **Risk of burns! Use protective work gloves.**

- When changing oil in engine, hydraulic system or transmission: Keep in mind that the oil may be hot and can cause scalding or burn injuries.
- Engine, hydraulic and transmission oils as well as diesel fuel have a corrosive effect on mucous membranes, for example, in eyes and throat and on skin. Therefore, take special care to keep such oils away from these sensitive body parts.
- When emptying/draining oils or fuel, steps must be taken to avoid unnecessary spills. In places where a container for collecting the liquid cannot be used, use a pump or connect a hose to ensure safe handling. Oil released or spilled on the ground will harm the environment and could also cause a fire.
  Waste oils/fluids shall always be taken care of by a company authorized for this work. See Environmentally safe handling
- Remember the fire hazard!

VOLVO
Construction Equipment

Service Information

Document Title:	Function Group:	Information Type: **Service Information**	Date: **12/10/2011**
Profile: **WLO, L90F (Volvo) [GB]**			

Safety when handling the machine

Volvo Construction Equipment is only responsible if:

- the machine has been used correctly and has been maintained according to recommendations in the service manuals and the machine's Operator's manual.
- prescribed service and inspections have been performed at the specified intervals.
- lubricant recommendations in the manual have been followed.
- no safety seals have been opened by an unauthorized person.
- all modifications and repairs have been performed in the manner prescribed by Volvo.
- only genuine Volvo parts/accessories, or attachments that fulfil Volvo's requirements have been used.

WARNING!

Machine operators must have sufficient skills and knowledge of the content in the operator's manual before operating the machine.
It is important that the operator reads and follows the instructions in the machine's operator's manual.
An untrained operator may cause serious injuries and fatalities.
Never operate a machine for which there is no Operator's Manual available.
Learn to understand the warning plates, symbols and operating instructions for the machine before you start operating.

A few simple safety rules

General

- Repair malfunctions or defects that affect safety as soon as possible.

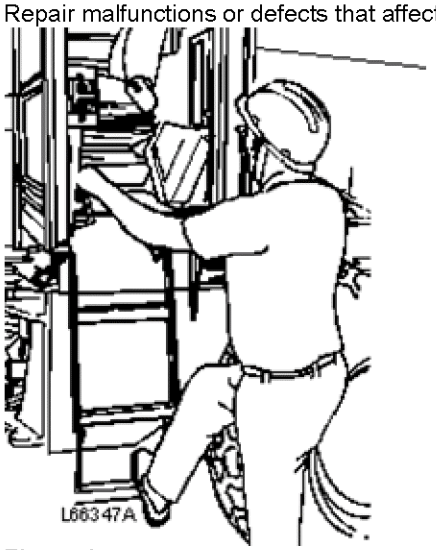

Figure 1
Entering/leaving the machine

- Always wear a hard hat, protective goggles, gloves, work shoes and other safety items that your work requires.
- Avoid standing in front of or behind the machine when the engine is running.
- Always use a rubber window scraper or brush with a long handle when cleaning the outside of the windows in order to avoid unnecessary climbing on the machine.
- When servicing the machine, i.e. changing light bulbs, a ladder may be needed.
- Make sure that stepping surfaces, service areas, handles and slip-protection are clean and free from oil, diesel fuel, dirt and ice and that they're replaced if they are defective or missing.
- Check at regular intervals that all slip-protection is firmly attached. If not, these shall be attached or replaced.
- Always face the machine and use the steps and handrails when entering or leaving the machine. Use two hands and one foot, or two feet and one hand. Do not jump!

Before operating



Figure 2
Read the Operator's Manual, plates and instructions before you operate the machine.

- Read the Operator's manual before you operate the machine! Follow the instructions for operating and perform the indicated recommended actions before operating.
  Some important rules below:
- Perform a control light test before starting the engine by turning the ignition key to position I, see Operator's Manual.
- Perform all safety checks prescribed in the Operator's manual.

> **WARNING!** **Never operate the machine if you are tired or under the influence of alcohol, medicine or other drugs.**

- Before starting the engine indoors, make sure that the extraction capacity of the ventilation system is sufficient. The machine is equipped with a diesel engine and the exhausts may be hazardous to your health. Make sure that ventilation is sufficient, and avoid running the engine indoors for longer than necessary where ventilation is insufficient.
- Read all plates and instructions on the machine and in the Operator's manual before you operate or perform service on the machine. Each one of these contains important information regarding safety, handling and service.
- Use the seat belt during all operation.
- Always sit in the operator's seat when you start the engine.
- The machine must be fully functional before it's put into operation, that is, all defects that may cause eventual

accidents must have been repaired.

- Never operate the machine for long periods without ventilation, or with a completely closed cab without the fan on (to avoid lack of oxygen).
- Only step and stand on surfaces with slip-protected treads and hold on to the available handles and handrails.

Hip-type seatbelt



Figure 3
Use the seat belt during all operation

- If the seatbelt needs washing: Use a mild soap solution when washing and let the belt dry while it's fully pulled out before it's rolled up. Make sure that the belt is installed correctly.
- Replace the seatbelt immediately if it's worn, damaged or the machine has been involved in an accident where the belt had to take some strain.
- Modifications of the belt or its mountings is never permitted.
- The hip-type seatbelt is intended for one adult, not more.
- Always keep the belt rolled up when not in use.

When the engine is running

- Respect the warning lights. The red lights require immediate attention or consideration, see instructions in the Operator's manual in the section Instruments.
- Apply the parking brake and make sure that the attachment/attachment bracket rests on the ground.
- Move the gear selector to neutral before you leave the machine.

WARNING! **Risk of injuries caused by crushing**

- Do not stand near the frame joint unless it has been locked with the frame joint lock.
- Empty and tilt back the attachment before operating the machine on a road.
- Stop the engine and lower the attachment so that it rests on the ground before you leave the machine unattended.

When there is a risk of roll-over

The cab is the operator's protection and meets the standards for roll-over protection according to test standards, (ROPS), see further CE-märkning, EMC-direktiv
Prerequisite for protection is that the operator uses the lap-type seat belt and remains in the cab in case of a roll-over. Therefore, hold on to the steering wheel if the machine rolls over. **Do not jump!**

Falling objects

The cab is dimensioned to fulfill the requirements for objects falling on to the cab roof according to given test methods (that is, FOPS, see further CE-märkning, EMC-direktiv

Emergency exits from cab

The cab has two emergency exits, the door and the right side window.

Actions before recovering and towing

See Section 1, Towing

Actions after recovering and towing

WARNING! **Do not forget to unlock the frame joint lock and secure it in the running position when the machine is to be operated again.**

See Section 1, Service and Maintenance

VOLVO
Construction Equipment

Service Information

Document Title:	Function Group:	Information Type: **Service Information**	Date: **12/10/2011**
Profile: **WLO, L90F (Volvo) [GB]**			

Safety rules when servicing

This section covers general safety rules when checking and servicing.
Other rules, information and warning texts are given in the Operator's manual.

CE marking

This machine is CE-marked. This means that, when delivered, the machine meets the applicable "Essential Health and Safety Requirements", which are given in the EU Machine Safety Directive. If changes are made that affect the safety of the machine, the person making the changes is responsible for the same.
Therefore, the following applies:

- Install communication equipment (two-way radio), mobile phone unit, etc. according to the manufacturer's instructions in order to eliminate interference with electronic systems and components intended for the machine's function. See further CE-märkning, EMC-direktiv
  .
- When retro-fitting equipment in or on the cab; do not drill, weld or cut in the cab structure since such actions may impair the operator's protection in case of roll-over. See further CE-märkning, EMC-direktiv
  .

Before you begin any service work:

Service work done incorrectly is dangerous.
Make sure that you have sufficient knowledge, correct information, the right tools and the correct equipment to perform the service in a correct manner.
Repair or replace damaged tools and defective equipment.

Place the machine in service position 1 or 2 acc. to: Servicepositioner

Caution!
When lifting the machine, the frame joint should be locked and the marked eyes intended for lifting should be used.

NOTE	**No work may be done on the machine until you have the correct skills and knowledge of the machine to do the work.**



Figure 1
Read the Operator's manual, plates and instructions before you operate the machine.

General

- Machine working in a environmentally contaminated area, see Arbete i miljöförorenat område

  See also Checklista efter brand eller annan upphettning
  .
- If someone is to take over the job that you have started, make sure that this person is informed about what part of the work has been completed and what remains to be done.
- When high-pressure washing the machine, do not aim the water jet directly at anti-slip surfaces or decals that are glued on.

> **WARNING!** **Only walk or step on the machine's prepared stepping surfaces, see operator's manual.**



Figure 2
Do not step on engine covers.

- Never wear loose fitting clothing, for example, a scarf or jewellery, that can get caught and cause injury when working on the machine.
- Always use a hard hat, safety glasses, gloves, protective work shoes and other protective items as required by the work situation.

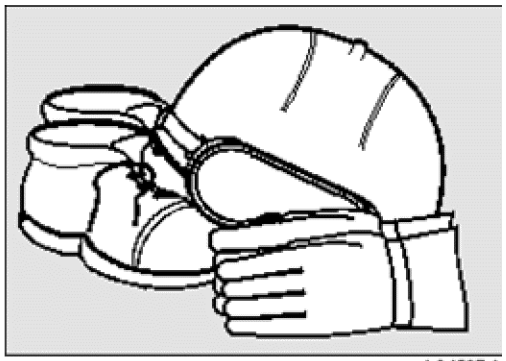

Figure 3
Protective equipment

- Always stop the engine when servicing the machine unless instructions on plates or in this manual state otherwise.
- Do not stand near the frame joint unless it has been locked with the frame joint lock.
  Caution!
  There is a risk of crushing even with the engine off if the machine is equipped with an electric secondary steering pump.
- Turn off the engine before opening engine covers, radiator casing, etc. Make sure that no tools or other objects that can cause damage are forgotten in the machine.



Figure 4
Keep engine covers, etc. closed when the engine is running and when the machine is operating.

VOLVO
Construction Equipment

Service Information

Document Title:	Function Group:	Information Type: **Service Information**	Date: **12/10/2011**
Profile: **WLO, L90F (Volvo) [GB]**			

Safety when using lifting equipment

WARNING! **Do not work under a hanging or suspended load!**

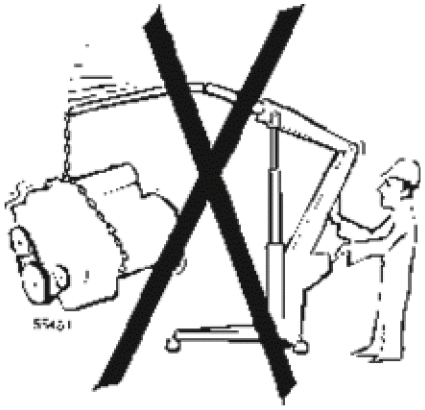

Figure 1
Do not overload lifting or support equipment.

- All lifting devices, e.g., slings, straps, ratchet blocks, etc., must meet governing national regulations for lifting devices.
  We will not accept any responsibility if other lifting devices, tools or work methods are used, other than those described in this publication.
- Make sure that the ground surface is flat and has sufficient strength to support the expected load for lifting device with load.
- When lifting or supporting machine parts, use equipment with a lifting capacity that at least equals the weight of the part in question.
- Use the lifting eyes or lifting points that are located on certain machine components.

VOLVO
Construction Equipment

Service Information

Document Title:	Function Group:	Information Type: **Service Information**	Date: **12/10/2011**
Profile: **WLO, L90F (Volvo) [GB]**			

Checklist after a fire or heat exposure

- As a precaution, seal rings (O-rings or axle/shaft seals) should always be handled as if they were made of fluor rubber, see also section “Fluor rubber”.

> **WARNING!** **Avoid splashing when washing a machine damaged by fire. For this reason, never use high-pressure washing equipment.**

- Never touch burned components or parts with your bare hands when there is a risk that you may be exposed to contact with melted polymers. First, wash thoroughly with plenty of lime water (a solution or a suspension of calcium hydroxide, i.e. slaked lime).
  Use thick, protective gloves made of rubber and wear goggles that are certain to protect your eyes.
- Seek medical attention if your skin may have come in contact with burnt fluor rubber. The skin should be treated with Hydrofluoric Acid Burn Jelly or similar.
  Symptoms may not appear until several hours after contact with burnt fluor rubber.
- Discard protective gloves, rags and other items that may have come into contact with burnt fluor rubber.
- Ensure good ventilation during the work.
- In case of splash in eyes: rinse immediately with plenty of water for at least 15 minutes. Contact a doctor.

VOLVO
Construction Equipment

Service Information

Document Title:	Function Group:	Information Type: **Service Information**	Date: **12/10/2011**
Profile: **WLO, L90F (Volvo) [GB]**			

Health hazards with paint, plastics and rubber

Work on painted surfaces

Never weld or cut with a torch on painted surfaces. All paint decomposes when heated and generates a vast number of different substances that may be irritating and, in case of repeated exposure, be very hazardous to health

The following safety actions must be taken:

- Remove the paint by sandblasting at least 10 cm (4 in) around the welding or cutting point (use breathing mask).
  If the paint cannot be removed by sandblasting, it must be removed in another way, such as with paint solvent.

  NOTE **If the paint is removed with a paint solvent, use an air extractor, face mask/breathing protection and protective gloves.**

- Grinding machines with high-speed grinding discs also heat the paint and should only be used if equipped with an air extractor. Also wear a face mask or other breathing protection.

Rubber and plastics

WARNING! **When heated, rubber and plastics can give off substances that are hazardous to personal health and the environment.**

The following safety rules must be followed:

- Do not weld or cut with a torch near polymer materials (plastics and rubber) without first protecting them from the heat.
- Never burn polymer materials when scrapping them.
- Be careful when handling machines that have been exposed to fire or other intense heat. See also Checklist after a fire or other exposure to high heat
  .
- Always use gloves, safety goggles and a face mask or other breathing protection.

Fluor rubber

WARNING! **Risk of serious corrosive injuries!**

When hydrogen fluoride rubber is heated, there is a risk of hydrogen fluoride

WARNING! **gas build-up already at approx. 320 °C (610 °F). When inhaled, the gas is extremely corrosive to respiratory tracts.**

Certain seals designed to withstand high operating temperatures (i.e. in engines, transmissions, axles, brakes, hydraulic motors and pumps) may be made of fluor rubber which, when heated to high temperatures, forms hydrogen fluoride and hydrofluoric acid.

Hydrofluoric acid is highly acidic and corrosive. It cannot be rinsed or washed off the skin and causes very severe burn and corrosive injuries that take a very long time to heal. As a rule, injures tissue must be removed surgically.

Hydrofluoric acid may remain on machine parts for a very long time (several years) after a fire.

NOTE **In case of contact with hydrofluoric acid, it may take several hours before any symptoms appear.**

If swelling, redness, or burning pain appears, and contact with heated fluor rubber is suspected as the cause, seek immediate medical attention.
If a machine or a component for a machine has been burnt in a fire or has been exposed to other intense heat, it may only be handled by specially trained service personnel.

For all handling of machines after a fire, wear heavy-duty, neoprene rubber gloves and effective protective goggles. See Checklist after a fire or other exposure to high heat
.

WARNING! **Burning of painted parts, plastic or rubber parts constitutes a health hazard.**

See Environment-friendly handling

Decontamination

The area around a heated machine part that is suspected to be made of fluor rubber shall be decontaminated by thorough and ample washing with lime water (a solution or suspension of calcium hydroxide, that is, slaked lime) in water. After completing the decontamination work, wash the gloves in the lime water and then discard them.

If the machine has been exposed to a fire or other intense heat, the safety actions in the following checklist shall be followed unconditionally at all times: Checklist after a fire or other exposure to high heat

Asbestos information

The components in Volvo CE's machines are free from asbestos, that is why it is important to use genuine Volvo spare parts.

VOLVO
Construction Equipment

Service Information

Document Title:	Function Group:	Information Type: **Service Information**	Date: **12/10/2011**
Profile: **WLO, L90F (Volvo) [GB]**			

Fire prevention measures

General

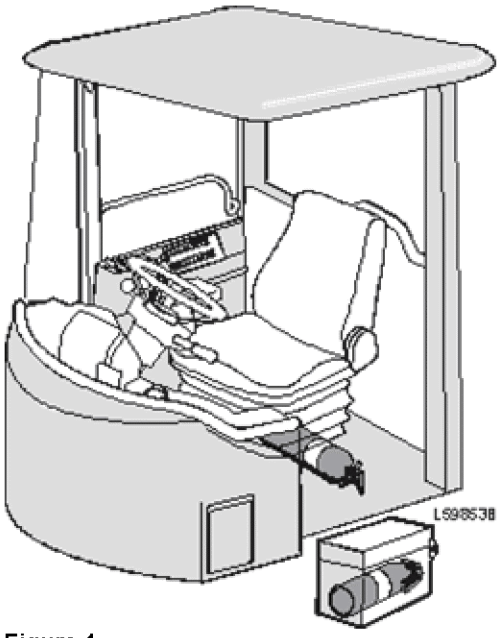

Figure 1
Recommended location of fire extinguisher in the machine

- There is always a risk of fire. Find out which type of fire extinguisher to use, where it is located and how to use it.
  The fire extinguisher in the machine should be located according to the figure or in an external box that can be locked.
- Fire-fighting equipment installed in or on the machine must be maintained in working order. Such equipment should be regarded as a complement to the operator's own efforts in case of a fire.
  The equipment should not be considered as a replacement of the operator's own fire fighting efforts.
- Fire extinguishers mounted on the machine or used when working on the machine must fulfil certain requirements. See the Operator's Manual.
- At the slightest sign of fire, if the situation allows it and keeping in mind your own safety, take the following action:
  - drive the machine away from the danger area.
  - lower the lift arms to their bottom position so that the attachment rests on the ground.
  - stop the engine by turning the ignition key to the "0" position.
  - leave the cab.
  - turn off the battery disconnect switch.
  - start fighting the fire and call the fire department if necessary.



Figure 2
Smoking and open flames are absolutely forbidden when filling fuel or any time diesel fuel is in contact with the open air.

- Smoking or open flames are absolutely forbidden close to the machine when filling fuel or at any time the fuel system is in contact with the open air.
- Diesel fuel is flammable and must not be used for cleaning. Use an approved solvent instead.
- Remember that certain solvents can cause skin rashes and are usually flammable. Avoid inhaling solvent vapour.
- Engine starting aids are flammable. Store such items in cool and adequately ventilated areas. Remember that such aids must not be used in combination with electric preheating of induction air.

Cleanliness

- Cleanliness is a decisive factor for operational reliability of the machine's systems. Therefore, keep the servicing area clean. Oil or water make floors and steps slippery and are also dangerous in combination with electrical systems or tools. Oily clothes or clothes drenched in grease constitute a serious fire hazard.
- Check daily that the machine and equipment, such as underbody skid plates, are free from dirt and oil. This reduces the risk of fire and makes it easier to detect defective components or loose parts.
  Caution!
  If a high-pressure washer is used when cleaning, work carefully since damage may be caused to electrical components and insulation of the electrical cabling even at relatively moderate water pressure and temperature. Protect electrical cabling in a suitable manner.

- Keep the machine especially clean when operating in environments with fire hazards, such as saw mills, garbage dumps, etc. In such environments, suitable equipment to reduce the risk of accumulation of material and spontaneous combustion should be fitted (for example muffler guard, radiator screen, heavy-duty cyclone pre-cleaner, etc.).

Electrical system

- Check electrical cables with regard to chafing damage and make sure that they cannot be damaged in such a way. This applies particularly to unfused electrical cables, which are red.
  For example, electrical cables between:
  - Batteries
  - Battery–starter motor
  - Alternator–starter motor
  - Cable to engine preheating coil.
- When unfused cables have been disconnected, it is important to check that they are re-connected and clamped in such a way that they cannot be exposed to chafing. Unfused cables must not rest against oil and fuel hoses.
- When fitting any optional equipment, make sure that all cables (circuits) are connected across a fuse and routed and clamped so that there is no risk of chafing.

Fuel, hydraulic and brake systems

- Check to make sure that there is no chafing damage to fuel, hydraulic and brake hoses.

Welding and grinding

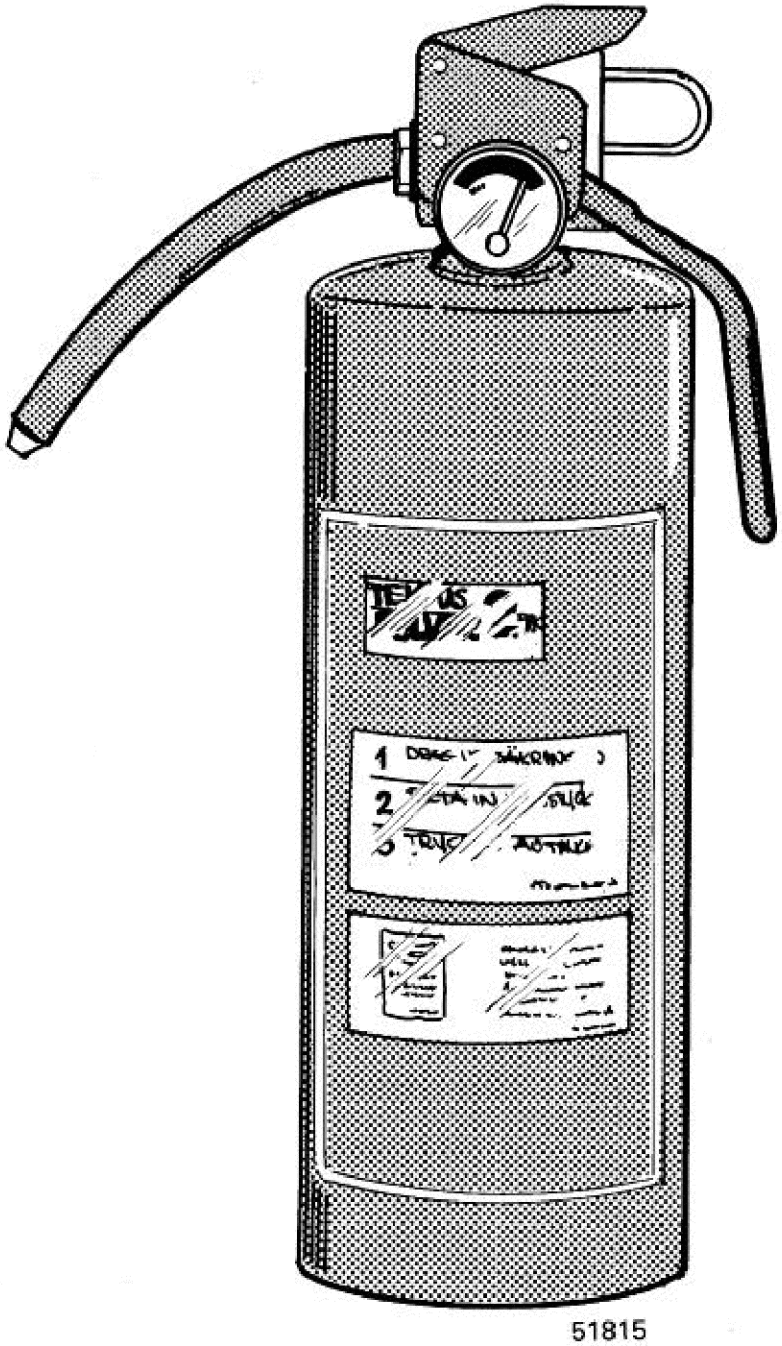

Figure 3
Fire extinguisher

Caution!
A fire extinguisher should be easily accessible during all welding work.

- Welding and grinding on the machine may only be performed on well-cleaned areas and not in places filled with combustible fluids, e.g., tanks, hydraulic pipes.
  Work with extra care when welding and grinding near flammable objects.
- Never weld on a painted surface without first removing the paint. Welding on a painted surface generates, in addition to health-hazardous vapours, technically inferior welds which may lead to future failures, with subsequent accidents.
  Use personal protective equipment and, where possible, air extraction shall be used to handle gases from

welding and grinding.

Actions after a fire: see Checklist after a fire or exposure to other heat

.

VOLVO
Construction Equipment

Service Information

Document Title:	Function Group:	Information Type: **Service Information**	Date: **12/10/2011**
Profile: **WLO, L90F (Volvo) [GB]**			

Some simple rules regarding tyre handling

WARNING! **Tires installed on a split rim may explode and cause very severe injuries.**

Inflating



Figure 1
Never stand to the side of the tyre while inflating.

- Never stand to the side of the tyre while inflating which is fitted on a split rim. Use a self-locking outlet with a hose long enough to allow you to stand outside of the hazard zone during inflation, see the illustration.
- Make sure that the hazard zone is clear when the tyre is inflated.
- The machine must be unladen when checking tyre pressure.
- Spare tyres should only be filled with enough air to allow the rim parts to be held in place.
- Secure a loose wheel with an inflation cage, cable or chains before inflating. Before removing the inflation cage, check that the tyre is properly fitted to the rim. Adjustments should be made before the wheel is inflated.
- Do not attempt to adjust side rings or lock rings when the tyre is inflated.
- Tyres used at less than 80% of normal pressure and rims or tyres suspected of being damaged should not be inflated with the wheel attached to the machine.

Fitting of tyres and rims

- Handling of tyres should be performed by authorised personnel only.
- The tyre should be deflated before removal from the machine.
- Never install a tyre on a rim that has not been recommended for that tyre.
- Never assemble rim parts for different dimensions or use damaged or faulty parts.
- Exercise caution if using reconditioned wheel details. Welding errors, faulty heating or soldering may have weakened the parts and may cause the detail to break.
- Make sure the lock ring groove in the rim is cleaned from foreign matter and rust before fitting the lock ring.
- Use a lubricant recommended by the tyre manufacturer when fitting onto the rim.

Repairing tyres and rims

- Never cut, weld nor heat the wheel parts in any manner.
- Exercise caution when using bead breakers and hydraulic jacks. Remain outside the hazard zone when removing foreign objects from the tyres. A bead breaker that releases can cause severe personal injury and may result in death.

VOLVO
Construction Equipment

Service Information

Document Title:	Function Group:	Information Type: **Service Information**	Date: **12/10/2011**
Profile: **WLO, L90F (Volvo) [GB]**			

Safety when lifting and supporting complete machine

Place the machine in service position, see Safety rules for service

Always use jacks and support equipment with sufficient capacity.

It is important to support the front and/or rear axle in a safe way before doing other work.

WARNING!

Entering or working under the machine is not allowed when the machine is only supported on jacks.

Always work on one axle at a time, e.g., when changing wheel, changing brakes.

Method for front axle

Lift the machine with the machine's lift arms.
Place supports at the designated support points according to the example.

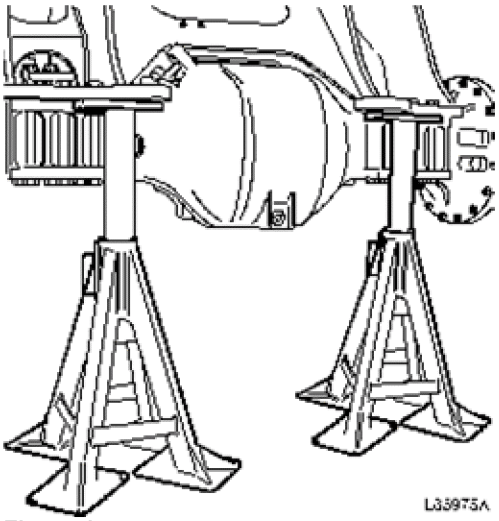

Figure 1
Before E-models

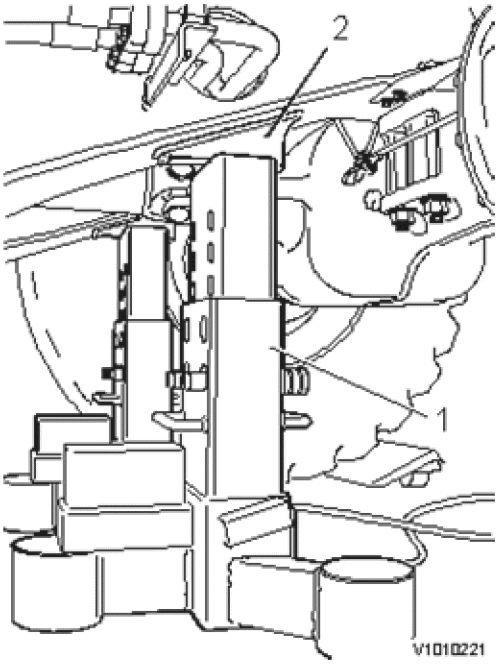

Figure 2
E-models

1. 11668007 Stand jack
2. Support point

Recommended method for rear axle

Prevent the rear axle from oscillating by locking it with jacks or wooden blocks between the frame and axle on both sides.

NOTE **Do not forget to remove the oscillation lock before lowering the machine.**

The machine must be secured with axle stands or stand jacks with sufficient capacity, 5–15 tons.
Support on each side under the rear frame's edge (not the belly plate) on an even and sufficiently large surface, see example in figure.

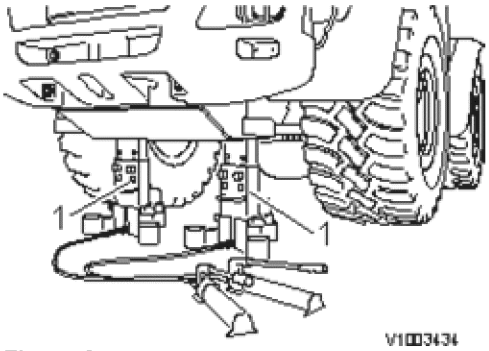

Figure 3
Support points

1. 11668007 Stand jack

With both wheels raised it is easier to rotate the hubs to get the wheel nuts in place.

Alternative method for rear axle

If there is no stand jack available, two garage jacks can be used instead (L150–L220).

NOTE **Make sure that there is enough room for positioning axle stands.**

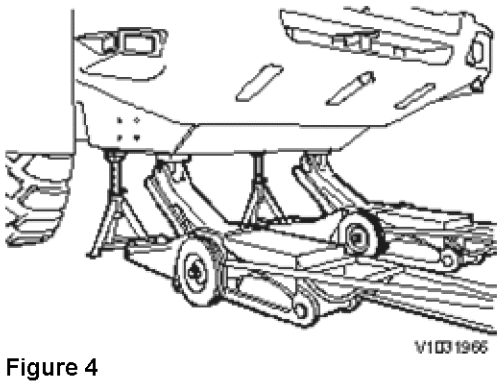

Figure 4
V1031966

On smaller machines (L50–L120), use a garage jack under the differential carrier assembly. Do not forget to lock the axle to prevent oscillation. Place the axle stands under the frame's rear edge.

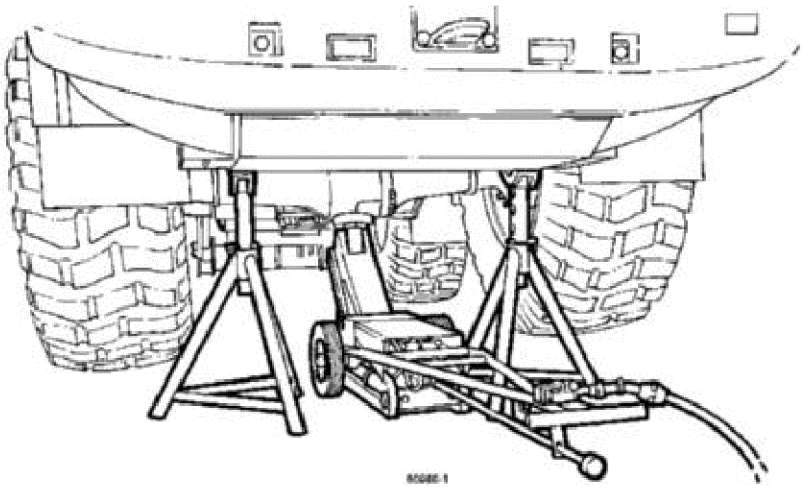

Figure 5
Support points

Do not use a jack with a small lifting surface under the differential carrier assembly.

Use a wheel trolley for safe handling of the wheels.

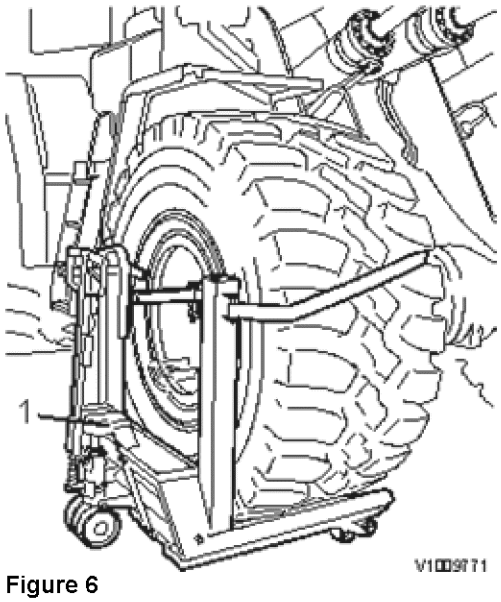

Figure 6

1. 11668010 Wheel trolley

VOLVO
Construction Equipment

Service Information

Document Title:	Function Group:	Information Type: **Service Information**	Date: **12/10/2011**
Profile: **WLO, L90F (Volvo) [GB]**			

Safety when working with batteries

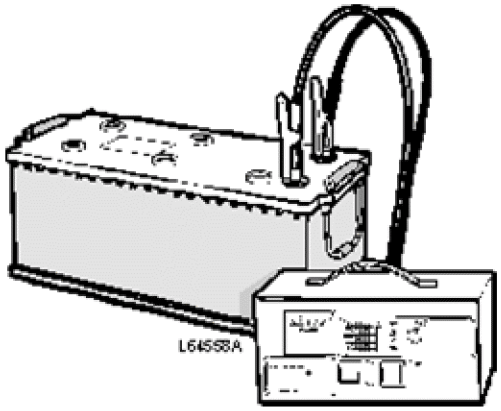

Figure 1
Battery charging

WARNING! **Risk of serious corrosive injuries!**

Batteries contain sulphuric acid which is very corrosive to the human body and parts of the machine. In addition, batteries give off hydrogen gas when they are loaded (supplying electricity) or being charged.
Together with the oxygen in the air, hydrogen gas forms a very explosive mixture.

This combination, **corrosive acid and explosive gas**, means a high risk of accidents during all work with batteries used in vehicles.
Therefore, it is very important that you take great care and follow the rules below when you are working with batteries.

Follow these instructions when charging batteries:

- Batteries give off explosive gases. Never smoke near batteries.

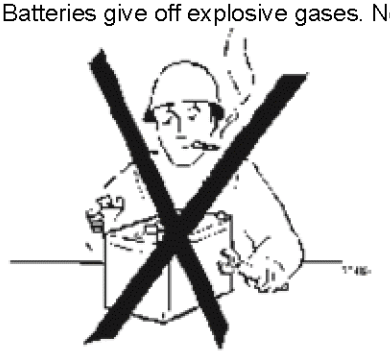

Figure 2
Do not smoke near batteries!

- Begin by disconnecting the ground lead when removing a battery. In order to reduce the risk of sparks that can cause fire, always connect the ground lead last when fitting a battery.

- Never tilt a battery to any great extent in any direction. Battery electrolyte may leak out.
- Do not connect a discharged battery in series with a fully charged battery. The current surge can cause the batteries to explode.
- Do not allow metal objects (such as tools, rings, wristwatches) to come in contact with battery terminals. Risk of fire and personal injury.
- Always cover the top of the battery with a rag or other non-conducting material when you work close to the batteries.
- Always refit the terminal caps on the batteries.
- Batteries contain substances hazardous to health and the environment. Therefore, discarded batteries be handled according to governing local/national regulations. See Environmentally safe handling

Charging batteries

Explosion hazard
When a battery is being charged, an explosive mixture of oxygen and hydrogen is formed. A short circuit, open flame or spark near the battery can cause a powerful explosion. Always turn off the charging current before disconnecting the charging clamps. Ventilate well, especially if the battery is charged in a confined space.

WARNING! **Risk of serious corrosive injuries!**



Figure 3
Corrosive acid

Corrosive sulphuric acid
The battery electrolyte contains corrosive sulphuric acid. Electrolyte spilled on bare skin must be removed immediately. Wash with soap and plenty of water. If electrolyte gets into your eyes or any other sensitive body part, rinse immediately with plenty of water and seek immediate medical attention.

VOLVO
Construction Equipment

Service Information

Document Title:	Function Group:	Information Type: **Service Information**	Date: **12/10/2011**
Profile: **WLO, L90F (Volvo) [GB]**			

Starting with booster batteries

When starting with booster batteries, the following must be observed:

Check that the booster batteries or other power source have **the same voltage** as the standard batteries.

WARNING! **The batteries could explode due to the current surge if a fully charged battery is connected to a completely discharged battery. Since the batteries contain sulphuric acid, this could result in personal injuries.**

Follow these steps:

1. Move the gear selector to neutral.
2. Apply the parking brake.
3. Check that the booster batteries or other power source have the same voltage as the standard batteries.
4. Do not disconnect the cables to the standard batteries!
5. Connect (+) on the booster battery to (+) on the battery nearest the starter motor.
6. Connect the other start cable from (-) on the booster battery to the machine chassis, such as on the frame member close to the starter motor.
7. Start the engine with the ignition key in the cab.
8. Once the engine has started, remove the start cable between the chassis and the booster battery negative terminal (-). Then remove the start cable between the positive terminals (+).
9. Refit the terminal caps on the battery terminals.

VOLVO
Construction Equipment

Service Information

Document Title:	Function Group:	Information Type: **Service Information**	Date: **12/10/2011**
Profile: **WLO, L90F (Volvo) [GB]**			

Safety when working with air conditioning refrigerant

General

Special competence is required for service work and more involved work which requires opening of the air conditioning system.
Many countries also require special training and official authority approval. Find out about governing regulations for your country and follow them!

Refrigerant R134a is used in the air conditioning unit, see also Section 8.
The type of refrigerant and the amount to be filled are shown on the type plate.

NOTE **R134a adds to the greenhouse effect and should never be intentionally released into the open air.**

Personal protective equipment



Figure 1
Protective goggles and gloves should be worn when there is a risk of contact with refrigerant.

When there is a risk of skin contact with refrigerant, use:
Tight-fitting protective goggles and protective gloves, and protect other bare skin (risk of frostbite).

Risks

WARNING! **The gases have no smell and may cause serious damage to the lungs already at low concentrations.**

Refrigerant R134a may, if incorrectly handled, cause serious personal injuries as well as damage to the environment. Therefore, great care must be taken in all work with air conditioning units! The rules given below may be a great help to avoid injuries to all who come into contact with refrigerants.

WARNING! **Risk of frostbite! Wear protective work gloves.**

- In liquid form the refrigerant may cause:
  Frostbite.
- When in the form of a gas and at low concentration, the gas may:
  Have some effect, especially on the nervous system.
- When in the form of a gas and at high concentration it may:
  Have an anaesthetic effect.
- The air conditioning unit is pressurized and the refrigerant can unintentionally leak out. **Never disconnect hoses or remove the filler plug on the compressor.**
  If you suspect a leak, certified and trained personnel at a licensed workshop should be contacted for troubleshooting and repair.
- The refrigerant gas is heavier than air and will sink to the floor. Therefore, make sure that any escaped gas is ventilated before work is started in any low-lying areas.

Smoking, welding or other open flames are not allowed in a workplace where work with refrigerant is in progress. The refrigerant gas will then burn and form a toxic gas which is very dangerous to inhale. The gases formed when heating the refrigerant have a pungent smell at high concentrations.
The symptoms may appear several hours (perhaps up to 24 hours) after exposure to the gases.

Action in case of accidents

Inhalation
If escape of gas is suspected, leave the area, try to find fresh air and move affected persons out of the danger area. Small amounts of vapour from refrigerant R134a may have some effect especially on the nervous system. In large amounts, the gas may have an anaesthetic effect. In serious cases, seek immediate medical attention.

Skin contact
In case of frostbite, flush with lukewarm water for a long time. If a large amount of liquid refrigerant comes into contact with unprotected skin, the injured area should be carefully warmed with lukewarm water or warm clothes. Seek medical attention immediately if symptoms persist.

Splash in eyes
Flush with warm water until the irritation ceases. Seek immediate medical attention.

VOLVO
Construction Equipment

Service Information

Document Title:	Function Group:	Information Type: **Service Information**	Date: **12/10/2011**
Profile: **WLO, L90F (Volvo) [GB]**			

Safety when handling accumulators

WARNING! **If the pressure is not released before opening the system, oil under high pressure will jet out, resulting in serious personal injuries.**

Before an accumulator is removed from the machine, the system must first always be depressurized, see Säkerhet vid arbete med hydrauliska system
.

Some accumulators contain pressure even if they are removed from the machine, so-called pre-charge pressure. Therefore, be very careful during all handling and work with accumulators.

The pre-charge pressure must be lowered to atmospheric pressure before working on a piston accumulator.

Avoid exposing the accumulator to high temperatures and careless handling.

WARNING! **A discarded accumulator which is not punctured may still contain high pressure and must always be handled with great care.**

Discarded accumulators shall be punctured before they are scrapped to avoid the risk of explosion. See Accumulator, discarding
.

VOLVO
Construction Equipment

Service Information

Document Title:	Function Group:	Information Type: **Service Information**	Date: **12/10/2011**
Profile: **WLO, L90F (Volvo) [GB]**			

Safety when working on hydraulic systems

The hydraulic systems in our loaders operate at very **high pressures, up to approx. 42 MPa (6090 psi)**. To avoid serious personal injuries it is very important that the systems are maintained in the right way, and that all persons who come into contact with the machines are very careful in their work and are very attentive to any defects.

Those who follow the simple rules below have laid a good foundation for avoiding accidents.

General

- Never adjust a pressure limiting valve to a higher pressure than that recommended by the manufacturer.
- A hydraulic hose that swells, e.g., at a connection, shows that it is about to rupture. Replace the hose as soon as possible! Pay attention to leaks from hydraulic hoses and connection. Repair the leak before the part ruptures!
- Discarded pressure accumulators shall be punctured before they are scrapped to avoid the risk of explosion. See Discarded accumulators
  .

WARNING! **If the pressure is not released before opening the system, oil under high pressure will jet out, resulting in serious personal injuries.**

Releasing pressure (depressurizing)

An accumulated pressure remains in the system when the engine has been stopped. Before loosening or opening hose couplings, plugs, etc. in the hydraulic system or brake system, the residual pressure in the system must be released by so-called depressurizing.
In case the engine stops, the accumulators for lowering the lift arms are depressurized by moving the lift lever back and forth several times.

- Accumulators for the boom suspension system are depressurized as follows:
  1. Place two supports 999 3831 under the boom.
     Place the supports on an even and firm surface

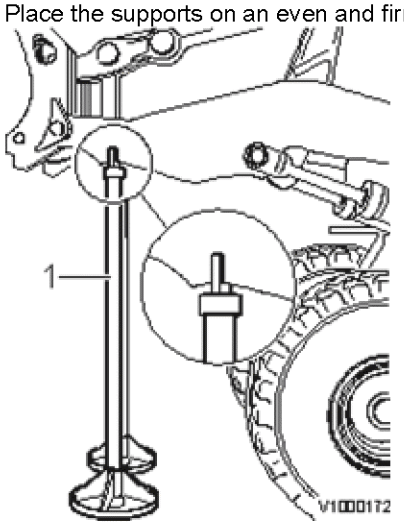

Figure 1
Securing the boom

1. 999 3831, Support, 2 pcs.

2. Start the engine and engage float mode with the switch SW903 on the instrument panel
3. Activate the boom suspension system in gear-dependent position.
4. Move the control lever (lift/lower) forward to float position and wait for 30 seconds.
   NOTE! The engine shall run at idle since there is a risk that the machine lifts in case float mode is not activated. Since the lever has to pass the lowering position to reach float position, the lever shall be pulled quickly to the float position to minimize the lowering function.
5. Hold the servo lever in float position and turn off the engine at the same time.
   Now the accumulators shall be drained and the boom suspension system should be pressureless. Only a residual pressure of approx. 300 kPa (44 psi) shall be left in the system. To make sure that the system is depressurized before starting any service work, proceed as follows:
6. Connect a loose pressure check connection on a hose.
7. Place the end with the loose pressure check connection in a suitable container and connect the other end of the hose to the pressure check connection on the boom suspension system's valve block. In case the hose cannot be connected to the boom suspension system's valve, the residual pressure in the system may be too high. Repeat steps 1 up to and incl. 5.
8. Any residual pressure in the system is drained through the hose.

- All pressurized tanks/vessels shall be opened carefully so that any residual pressure is released.
- Check-tightening of leaking couplings and connections shall only be performed after the system is completely depressurized.

WARNING! **Leaking high-pressure hydraulic hoses may cause severe injuries. Fine jets have high penetrating capacity on bare skin.**

- To check for leaks, use a steel plate or a stiff board, **never use your hand**.

VOLVO
Construction Equipment

Service Information

Document Title:	Function Group:	Information Type: **Service Information**	Date: **12/10/2011**
Profile: **WLO, L90F (Volvo) [GB]**			

Environmental handling for the future



Figure 1

The world stands before gigantic challenges on environmental matters where clean water, climate change, and use of chemicals are some of the most important issues. Volvo has an important function in meeting these challenges and contributing to a more ecologically sustainable development. Quality, safety and environment are Volvo core values and have for a long time been integral parts of our company and our products.
Volvo Construction Equipment works with continuous improvement of the machines' environmental performance. An important factor to retain the machine's performance is the service offered by the workshops. This service manual contains recommendations, warning texts, etc. to facilitate your work for the environment.

VOLVO
Construction Equipment

Service Information

Document Title:	Function Group:	Information Type: **Service Information**	Date: **12/10/2011**
Profile: **WLO, L90F (Volvo) [GB]**			

Waste handling

Contribute to careful use of natural resources by following the steps below when handling waste.
If possible, deposit the waste for recycling.

REUSE of products is the best from an environmental aspect.

MATERIAL RECYCLING for use in new products is a good environmental alternative.

ENERGY RECOVERY by burning combustible materials is a good alternative when recycling is not possible.

DESTRUCTION is used for hazardous waste. Destruction is performed in special facilities.

DEPOSITION is the worst from an environmental aspect and should be avoided as much as possible.

STORAGE is a temporary measure until a suitable recycling method has been developed.

VOLVO
Construction Equipment

Service Information

Document Title:	Function Group:	Information Type: **Service Information**	Date: **12/10/2011**
Profile: **WLO, L90F (Volvo) [GB]**			

Environmentally safe handling

Always choose an environmentally friendly alternative where one is available, e.g., biodegradable oils.

Always follow national and local environmental regulations.

All waste shall be brought to a waste handling company, approved by the authorities.

Oils and fluids

Oils and fluids, e.g., coolant, that are not reused shall be collected in tight-sealing containers and left for destruction.

Filters

Oil and fuel filters shall be drained and put into sealed containers before they are left for destruction.

Refrigerant R134a

Refrigerant R134a contains substances that affect the greenhouse effect and may never be released into the open air. Shall be recycled according to instructions in separate component manual for the air conditioning.

Batteries

WARNING! **Risk of serious corrosive injuries!**



Figure 1
Corrosive acid

Batteries contain environmentally hazardous substances and corrosive acid. Shall be left for recycling.

Chemicals

Chemicals, paints, glue, cleaning agents, etc. shall be left for recycling and destruction.

Rubber and plastics

Rubber materials and plastics may not be burned. Shall be left for recycling.
Tires shall be handled according to special rules.

Electronics

Electrical and electronic waste, e.g., circuit boards and bulbs, shall be left for recycling.

VOLVO
Construction Equipment

Service Information

Document Title:	Function Group:	Information Type: **Service Information**	Date: **12/10/2011**
Profile: **WLO, L90F (Volvo) [GB]**			

Environmentally hazardous fluids

Pay attention to leakage of fuel, oils and other fluids from the machine that may contaminate the environment.

Take appropriate actions to seal the leak immediately and decontaminate contaminated ground as soon as possible. SeeDecontamination

Oils and fuels

When emptying/draining oils and fuels, take appropriate actions so that unnecessary spills are avoided. In places where containers for draining cannot be used, use a pump or hose for safe handling.

Air conditioning

Refrigerant R134a contains substances that affect the greenhouse effect and may never be released into the open air.

Service personnel who work with refrigerants must know the laws/rules that apply in the local country but also international rules.

Special training is recommended for all service work on the air conditioning. Many countries require certification from an authority for such work. See also Safety when working with air conditioning refrigerant

VOLVO
Construction Equipment

Service Information

Document Title:	Function Group:	Information Type: **Service Information**	Date: **12/10/2011**
Profile: **WLO, L90F (Volvo) [GB]**			

Working in environmentally contaminated areas

Machines that are used in environmentally contaminated and/or health-hazardous areas shall be specially equipped for operation in such an environment.

Used cab and engine air filters from machines working in environments with asbestos or other hazardous dust shall be put into tight-sealing plastic bags that the new filters come in, then leave the used filters for destruction.

VOLVO
Construction Equipment

Service Information

Document Title:	Function Group:	Information Type: **Service Information**	Date: **12/10/2011**
Profile: **WLO, L90F (Volvo) [GB]**			

Decontamination

Start decontamination as soon as possible. Certain substances spread quickly in the environment.

Decontamination after leaks/spills

Use suitable absorbing materials to collect leaking oil or fuel, e.g., absorbent mats.

Prevent leaking oil/fuel from draining into rain water/storm water drains.

Contaminated soils and ground materials must be removed and collected in suitable containers.

Collected soils and absorbent materials shall be left for destruction.

Decontamination after accident

If possible, seal leaks from the machine.

Isolate the leakage area using banks drain booms.

Add absorbent materials, e.g., absorbent sand or bark cuttings.

Stop leaking fluids so that they do not drain into rain water/storm water drains or ditches.

Collect the absorbent materials and the top layer of soil, put it into sealed containers for transport to destruction.

Decontamination after fire

First of all, put out the fire.

Decontaminate in the same way as after an accident.

NOTE	**Pay attention and be aware that certain substances may be poisonous after a fire. See** Health hazards with paint, plastics and rubber

See also Checklist after a fire or exposure to other heat

VOLVO
Construction Equipment

Service Information

Document Title:	Function Group:	Information Type: **Service Information**	Date: **12/10/2011**
Profile: **WLO, L90F (Volvo) [GB]**			

Safety when working on hydraulic systems

The hydraulic systems in our loaders operate at very **high pressures, up to approx. 42 MPa (6090 psi)**. To avoid serious personal injuries it is very important that the systems are maintained in the right way, and that all persons who come into contact with the machines are very careful in their work and are very attentive to any defects.

Those who follow the simple rules below have laid a good foundation for avoiding accidents.

General

- Never adjust a pressure limiting valve to a higher pressure than that recommended by the manufacturer.
- A hydraulic hose that swells, e.g., at a connection, shows that it is about to rupture. Replace the hose as soon as possible! Pay attention to leaks from hydraulic hoses and connection. Repair the leak before the part ruptures!
- Discarded pressure accumulators shall be punctured before they are scrapped to avoid the risk of explosion. See Discarded accumulators
  .

WARNING! **If the pressure is not released before opening the system, oil under high pressure will jet out, resulting in serious personal injuries.**

Releasing pressure (depressurizing)

An accumulated pressure remains in the system when the engine has been stopped. Before loosening or opening hose couplings, plugs, etc. in the hydraulic system or brake system, the residual pressure in the system must be released by so-called depressurizing.
In case the engine stops, the accumulators for lowering the lift arms are depressurized by moving the lift lever back and forth several times.

- Accumulators for the boom suspension system are depressurized as follows:
  1. Place two supports 999 3831 under the boom.
     Place the supports on an even and firm surface

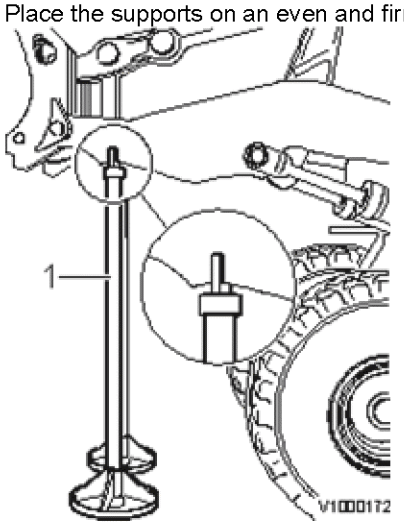

Figure 1
Securing the boom

1. 999 3831, Support, 2 pcs.

2. Start the engine and engage float mode with the switch SW903 on the instrument panel
3. Activate the boom suspension system in gear-dependent position.
4. Move the control lever (lift/lower) forward to float position and wait for 30 seconds.
   NOTE! The engine shall run at idle since there is a risk that the machine lifts in case float mode is not activated. Since the lever has to pass the lowering position to reach float position, the lever shall be pulled quickly to the float position to minimize the lowering function.
5. Hold the servo lever in float position and turn off the engine at the same time.
   Now the accumulators shall be drained and the boom suspension system should be pressureless. Only a residual pressure of approx. 300 kPa (44 psi) shall be left in the system. To make sure that the system is depressurized before starting any service work, proceed as follows:
6. Connect a loose pressure check connection on a hose.
7. Place the end with the loose pressure check connection in a suitable container and connect the other end of the hose to the pressure check connection on the boom suspension system's valve block. In case the hose cannot be connected to the boom suspension system's valve, the residual pressure in the system may be too high. Repeat steps 1 up to and incl. 5.
8. Any residual pressure in the system is drained through the hose.

- All pressurized tanks/vessels shall be opened carefully so that any residual pressure is released.
- Check-tightening of leaking couplings and connections shall only be performed after the system is completely depressurized.

WARNING! **Leaking high-pressure hydraulic hoses may cause severe injuries. Fine jets have high penetrating capacity on bare skin.**

- To check for leaks, use a steel plate or a stiff board, **never use your hand**.

VOLVO
Construction Equipment

Service Information

Document Title:	Function Group:	Information Type: **Service Information**	Date: **12/10/2011**
Profile: **WLO, L90F (Volvo) [GB]**			

E 1708, Checking point

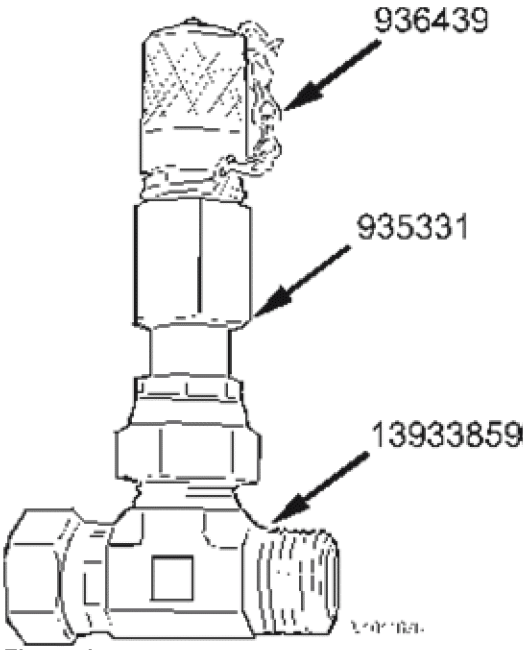

Figure 1

VOLVO
Construction Equipment

Service Information

Document Title:	Function Group:	Information Type: **Service Information**	Date: **12/10/2011**
Profile: **WLO, L90F (Volvo) [GB]**			

E1706

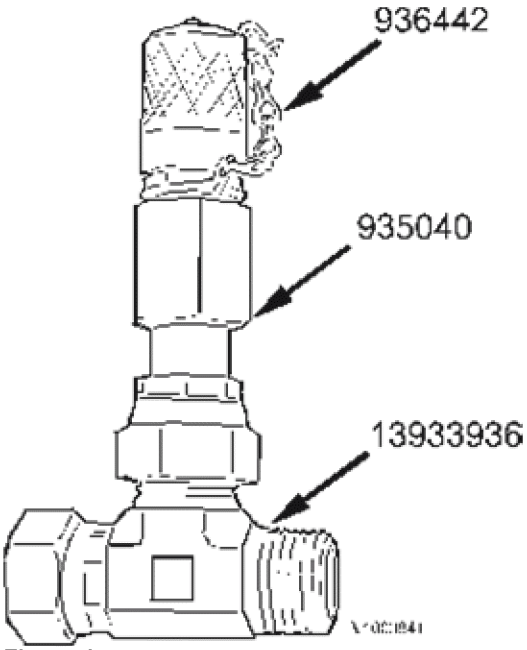

Figure 1

VOLVO
Construction Equipment

Service Information

Document Title:	Function Group:	Information Type: **Service Information**	Date: **12/10/2011**
Profile: **WLO, L90F (Volvo) [GB]**			

E-2000

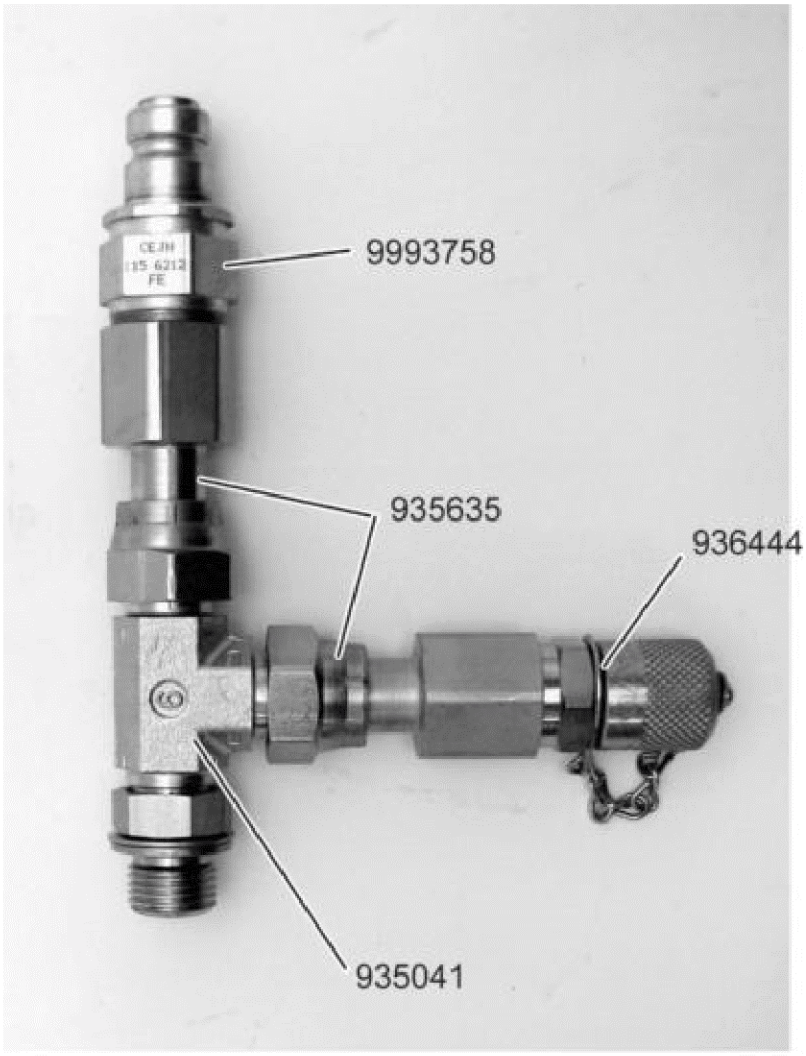

Figure 1

VOLVO
Construction Equipment

Service Information

Document Title:	Function Group:	Information Type: **Service Information**	Date: **12/10/2011**
Profile: **WLO, L90F (Volvo) [GB]**			

E-2001

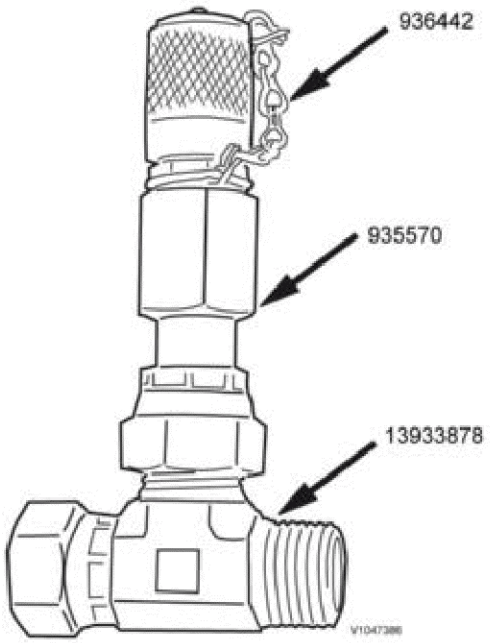

Figure 1

VOLVO
Construction Equipment

Service Information

Document Title:	Function Group:	Information Type: **Service Information**	Date: **12/10/2011**
Profile: **WLO, L90F (Volvo) [GB]**			

Recommended lubricants, oils

	Oil grade	Recommended viscosity at various outdoor temperatures
Engine	**Volvo Ultra Diesel Engine Oil** or engine oil VDS-3 or Global DHD-1 + VDS-2 or ACEA-E5 + VDS-2 or API CH-4 + VDS-2 or API CI-4 + VDS-2	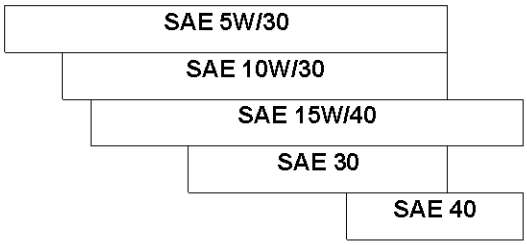
Axles **Hub reductions**	**Volvo WB 101** Brand names and requirements for the oil, see specifications, axles, in the operator's manual for each machine.	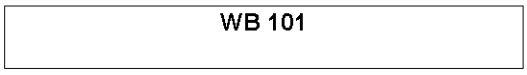
Transmission **Dropbox**	**Volvo Automatic Transmission Fluid** Volvo standard 97341	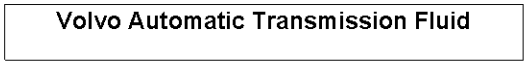
Hydraulic system	**Volvo Super hydraulic Oil** Swedish norm SS 15 54 34 alt. international standard Vickers 35 VQ/25 test viscosity acc. to ISO 3448 class acc. to ISO 6743–4	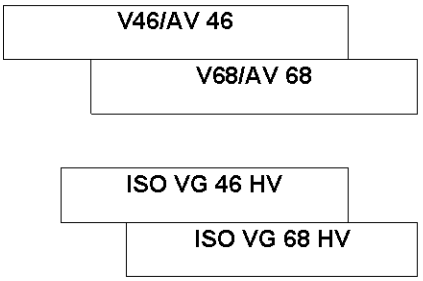

	°C	-30	-20	-10	0	+10	+20	+30	+40	+50
	°F	-22	-4	+14	+32	+50	+68	+86	+104	+122

VOLVO
Construction Equipment

Service Information

Document Title:	Function Group:	Information Type: **Service Information**	Date: **12/10/2011**
Profile: **WLO, L90F (Volvo) [GB]**			

Working on the electrical system of the machine

- Only use test instruments with a light-emitting diode, never a test light with a light bulb, for example, during trouble-shooting of the electrical system!
  The high firing voltage of the bulb can destroy expensive electronic components.
- When installing a two-way radio, mobile phone, etc., installation must be performed according to manufacturer's instructions in order to eliminate interference with electronic systems and components intended for the function of the machine.

VOLVO
Construction Equipment

Service Information

Document Title:	Function Group:	Information Type: **Service Information**	Date: **12/10/2011**
Profile: **WLO, L90F (Volvo) [GB]**			

Cleanliness, brake and hydraulic systems

Maintain the best possible cleanliness when working on these systems. Wipe off all pipe and hose connections before disconnecting and remove paint flakes, etc. Plug all pipes, hoses, cylinders, etc. immediately after disconnecting. Never install a hydraulic hose which has not been plugged until it has been thoroughly cleaned.

VOLVO
Construction Equipment

Service Information

Document Title:	Function Group:	Information Type: **Service Information**	Date: **12/10/2011**
Profile: **WLO, L90F (Volvo) [GB]**			

Repairing hydraulic system

When replacing a pump or after other repair work to the hydraulic system, where air may have entered the system, the points below should be followed:

1. The pumps must be filled with oil.
2. Start the engine and run it at **low idling** for approx. 10 minutes without actuating any hydraulic functions.
3. Actuate all hydraulic functions a few times with the engine running at **low idling**.
   Caution!
   The hydraulic cylinders must not go against their end-of-stroke positions.

4. Operate all hydraulic functions (the hydraulic cylinders against their end-of-stroke positions) a few times without causing overflow at a raised engine speed, approx. 20–25 r/s (1200–1500 rpm).

VOLVO
Construction Equipment

Service Information

Document Title:	Function Group:	Information Type: **Service Information**	Date: **12/10/2011**
Profile: **WLO, L90F (Volvo) [GB]**			

Electric welding

For electric welding on the machine or on attachments on machine:

- voltage feed turned off with battery disconnect switch
- all connectors in the cab's rear wall shall be unplugged to avoid damaging the machine's electronics.

NOTE **Ground the welding unit as close as possible to the welding point.**
Welding on the cab is not permitted, it affects the cab's approval for FOPS and ROPS .

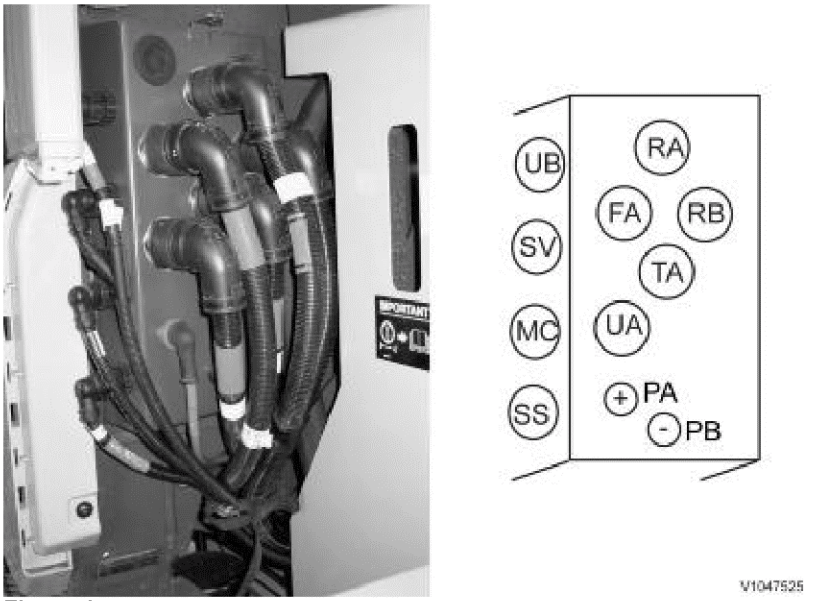

Figure 1
Connectors on the rear of the cab wall

VOLVO
Construction Equipment

Service Information

Document Title:	Function Group:	Information Type: **Service Information**	Date: **12/10/2011**
Profile: **WLO, L90F (Volvo) [GB]**			

Charging of batteries

Explosion hazard

When a battery is being charged, an explosive mixture of oxygen and hydrogen is formed. A short circuit, open flame or spark near the battery can cause a powerful explosion. Always turn off the charging current before disconnecting the charging clamps. Ventilate well, especially if the battery is charged in a confined space.

Corrosive sulphuric acid

The battery electrolyte contains corrosive sulphuric acid. Electrolyte spilled on bare skin must be removed immediately. Wash with soap and plenty of water. If electrolyte gets into your eyes or any other sensitive body part, rinse immediately with plenty of water and seek immediate medical attention.

VOLVO
Construction Equipment

Service Information

Document Title:	Function Group:	Information Type: **Service Information**	Date: **12/10/2011**
Profile: **WLO, L90F (Volvo) [GB]**			

Charging batteries

Explosion hazard

Charging produces hydrogen in the battery, which mixes with oxygen to produce an explosive mixture. A short circuit, naked flame or spark near a battery can cause a powerful explosion. Always switch off the charging current before removing the charger clamps. Ensure appropriate ventilation, especially if the battery is charged in a confined area.

Corrosive sulphuric acid

The battery electrolyte contains corrosive sulphuric acid. Electrolyte spilled on bare skin must be removed immediately. Wash with soap and plenty of water. If electrolyte gets into your eyes or onto any other sensitive part of the body, rinse immediately with plenty of water and seek immediate medical attention.

VOLVO
Construction Equipment

Service Information

Document Title:	Function Group:	Information Type: **Service Information**	Date: **12/10/2011**
Profile: **WLO, L90F (Volvo) [GB]**			

Transporting a wheel loader on another vehicle

If the wheel loader is transported on another vehicle or by rail, it is important to cover the exhaust pipe outlet with a cap or other suitable protection. This applies especially when the exhaust pipe outlet faces the direction of travel. This prevents damage to the turbocharger bearing, which may be damaged if the turbo rotates without any lubrication.

VOLVO
Construction Equipment

Service Information

Document Title:	Function Group:	Information Type: **Service Information**	Date: **12/10/2011**
Profile: **WLO, L90F (Volvo) [GB]**			

Warranty inspection 100 hours

The service points where "optional equipment" is stated are not included in the accounted time for the interval.

Op nbr 172-002

11666051 Pressure gauge
14290266 Hose
9993831 Support

Oil filter pliers	
Air pressure gauge	
Torque wrenches	min. 120 Nm (89 lbf ft) - max. 800 Nm (590 lbf ft)
Extension	min. 250 mm (10 in)
Sleeves	32 mm
Collection container	
Grease gun	

Test-run and check

1. How to perform methods, see Operator's manual
   - Start and stop function
   - Instruments, lighting, direction indicators, reflectors, flashing hazard lights, wipers, washers, horn, and back-up alarm (if installed).
   - Climate control unit, fan and controls incl. AC-compressor
   - Leakage, general
   - Pipes and hoses, condition
2. **Place the machine in service position 1 acc. to** Service positions

Drive belt, coolant and fuel feed pump, checking and adjusting

3. Check belt tension and condition. Adjust as needed.
   Adjusting
   Tension the belt by moving the fuel feed pump. At correct tension it should be possible to press down the belt approx. 10 mm (0.39 in) in the middle between the pulleys. Tighten the bolts.

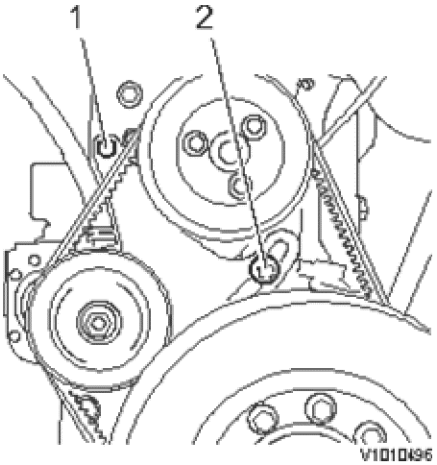

Figure 1

1. Attaching bolt
2. Tensioning bolt

Drive belt, AC-compressor, checking and adjusting

4. Check belt tension and condition. Adjust as needed.

Adjustment

1. Loosen the alternator's attaching bolt
2. Adjust to correct belt tension with the adjusting screw. Check the belt tension and tighten the attaching bolt. At correct belt tension it should be possible to press down the belt between the belt pulleys approx. 10 mm (0.39 in).

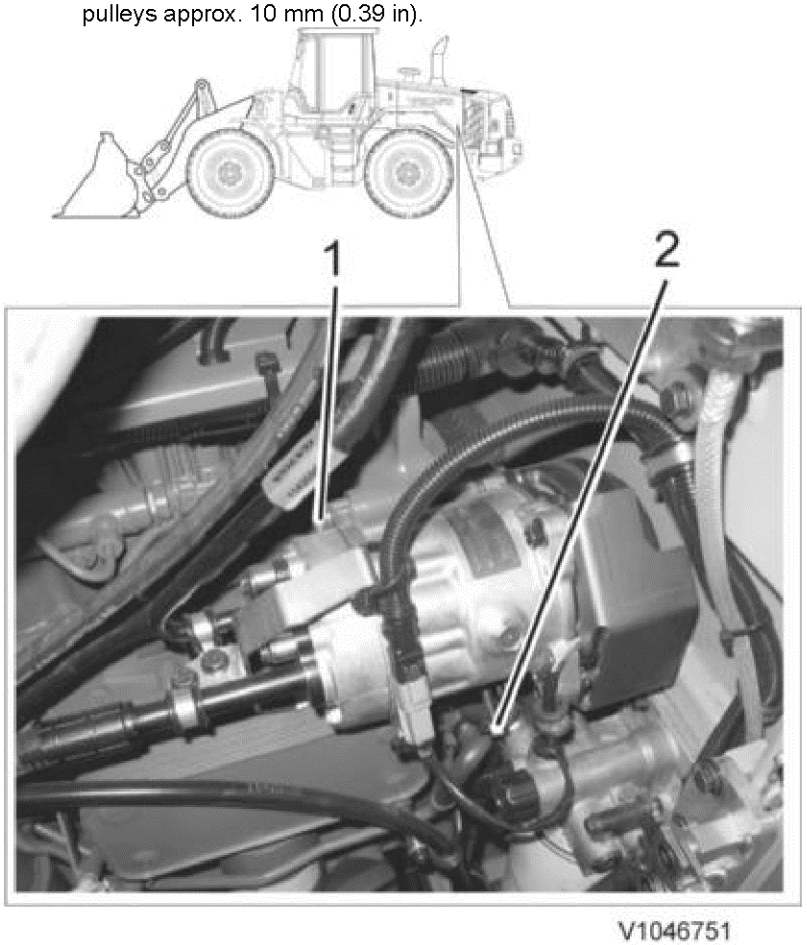

Figure 2
Drive belt, AC-compressor

1. Attaching bolt
2. Adjusting screw

Batteries' electrolyte level, cables and connections, check

WARNING!

The battery electrolyte contains corrosive sulphuric acid. Electrolyte spilled on bare skin should be removed immediately. Wash the affected area with soap and plenty of water. If electrolyte gets into your eyes or any other sensitive body part, rinse immediately with plenty of water and seek immediate medical attention.

5. The battery electrolyte shall be 10 mm (0.4 in) over the plates in the battery.

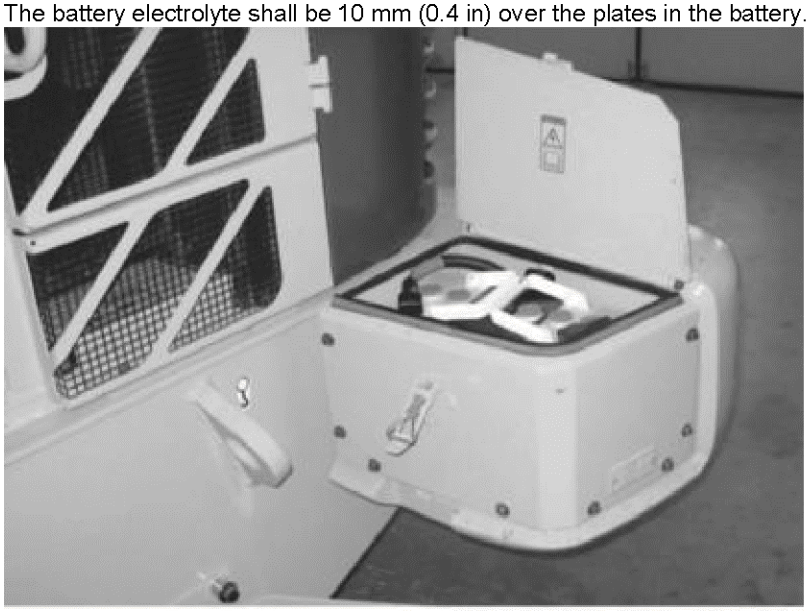

V1046755

Figure 3
Battery box, right side

Top up with distilled water as needed.
Check

1. Cable terminals and terminal studs must be well cleaned, tightened and greased externally with, e.g., vaseline as corrosion protection.
2. That the batteries are securely tightened.

Drive belt, alternator, checking and adjusting

6. Check belt tension and condition. Adjust as needed.

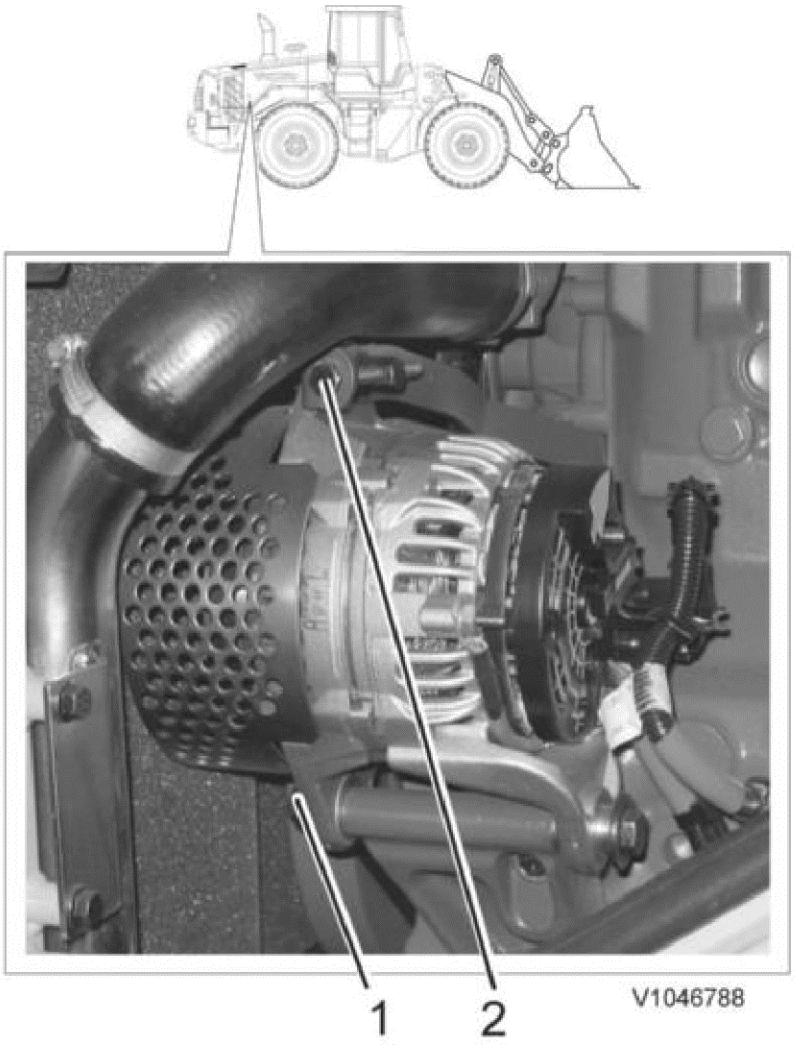

Figure 4
Drive belt, alternator

1. Attaching bolt
2. Adjusting screw

Adjustment

1. Loosen the alternator's attaching bolt
2. Adjust to correct belt tension with the adjusting screw. Check the belt tension and tighten the attaching bolt. At correct belt tension it should be possible to press down the belt between the belt pulleys approx. 10 mm (0.39 in).

Oil-bath pre-cleaner (optional equipment)

7. Check the oil level. Change oil as needed.
   For more information, see Operator's manual.

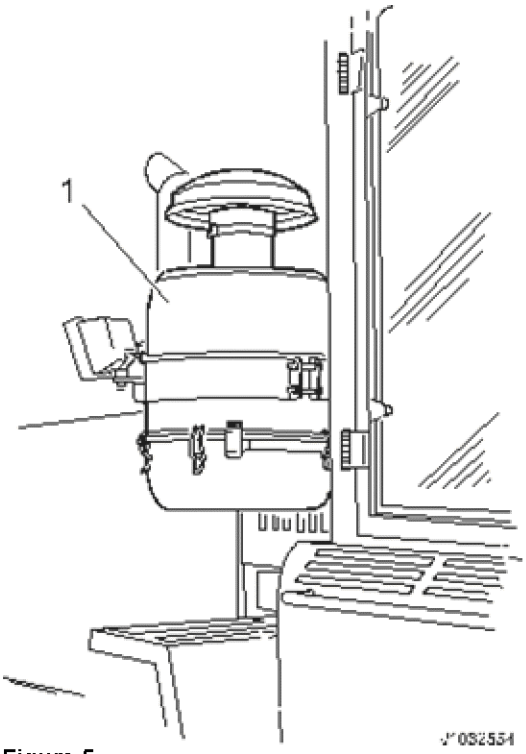

Figure 5

1. Oil-bath air cleaner

Volume: **5.5 litres (1.5 US gal).**

Boom, grease

8. Grease the boom's pivot pins according to the lubrication chart.

Frame and cab, grease

9. Grease the frame's and cab's lubrication points according to the lubrication chart.

Coolant system, checking level

WARNING! **Open the expansion tank cap slowly and carefully. The cooling system operates at high pressure and hot coolant may rush out and cause severe burns.**

10. Level check
Fill if needed.

NOTE **Use genuine Volvo coolant**

The coolant level shall be between max. and min.

Anti-freeze protection down to	Content of concentrated coolant
-25 °C (-13 F°)	40%
-35 °C (-31 F°)	50%
-46 °C (-51 F°)	60%

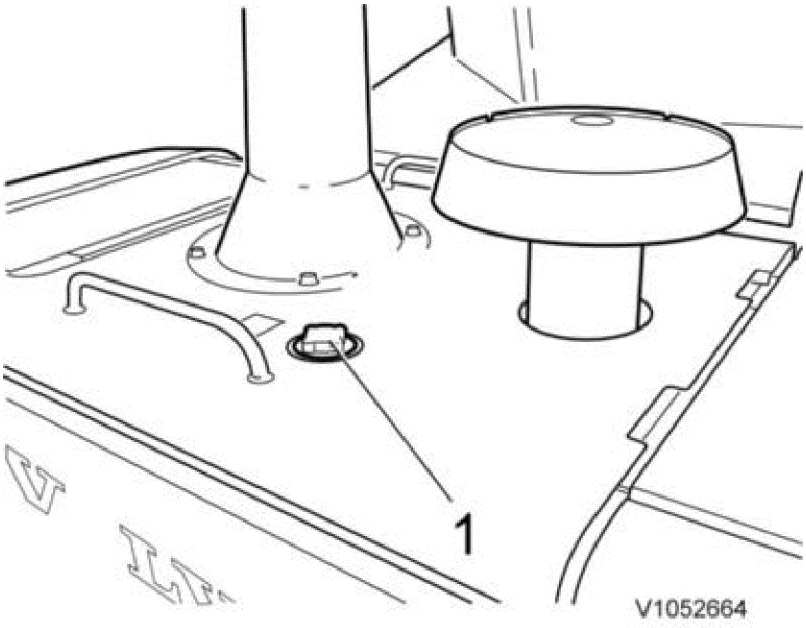

Figure 6

1. Filling point

Hydraulic oil, check the level

11. The hydraulic oil level shall be between max. and min.

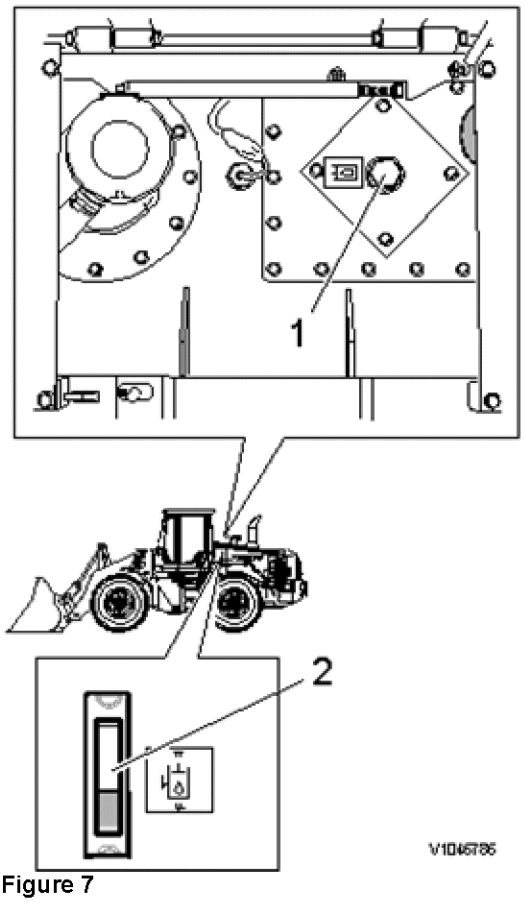

Figure 7
Hydraulic oil, checking level

1. Plug, filling point
2. Sight glass

Engine, oil level, check

12. Turn off the engine and check the engine oil level. Top up as needed.

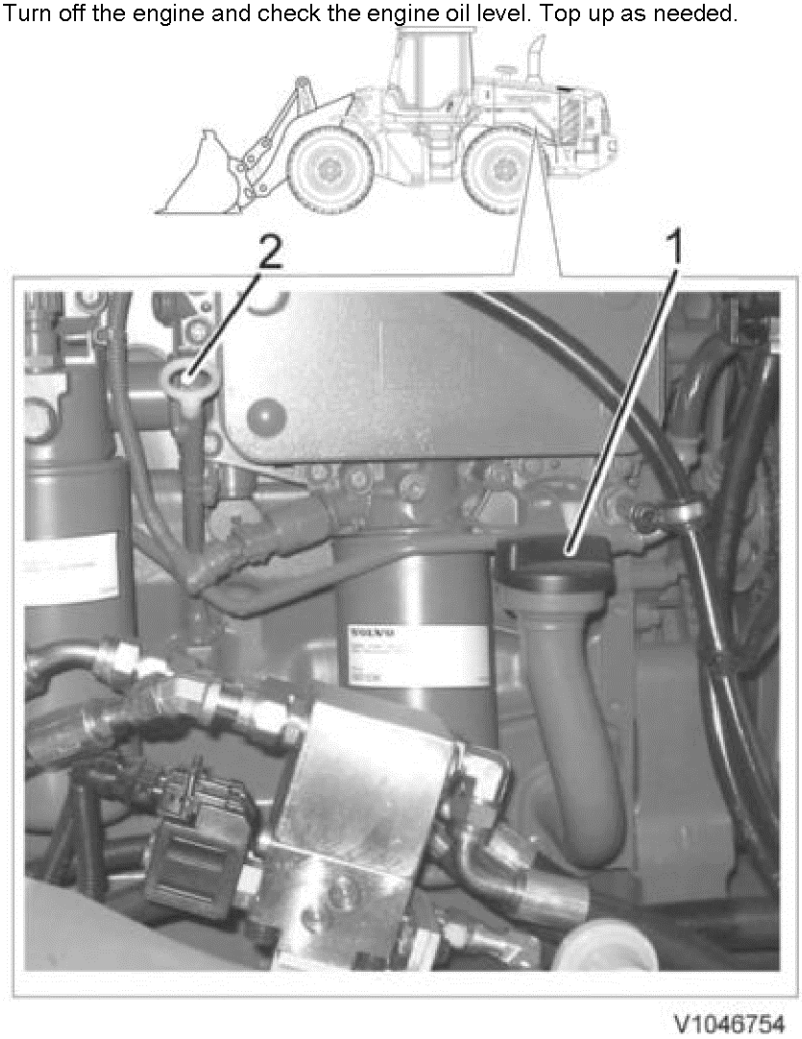

Figure 8

1. Filling point, engine oil
2. Oil dipstick

Steering pressure, check

13. **See:** Steering system, checking and adjusting working pressure

14. **Place the machine in service position2 acc. to:** Service positions

Axles, attaching bolts, tightening torques, check

15. Front axle

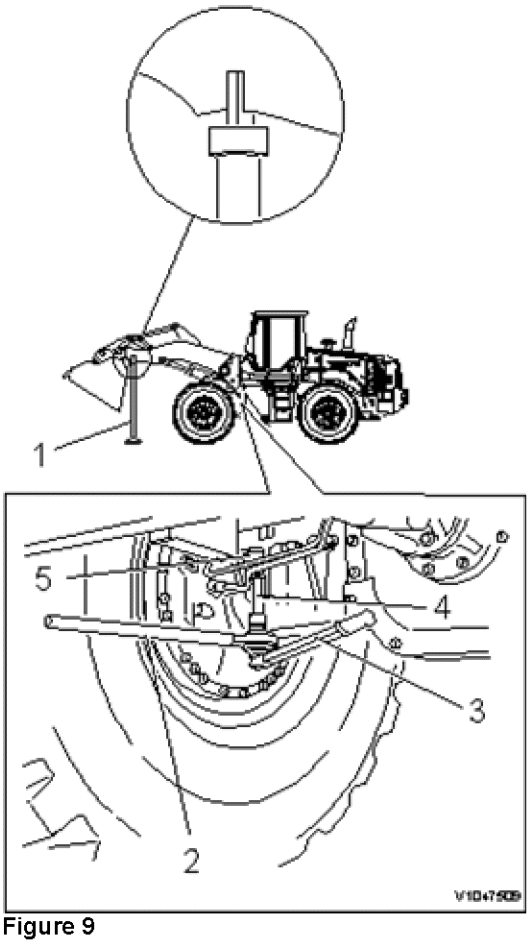

Figure 9
Front axle

1. Support 9993831
2. Torque amplifier
3. Torque wrench
4. Extension
5. Socket 36 mm

Tightening torques, see: Front axle, tightening torque

16. Rear axle

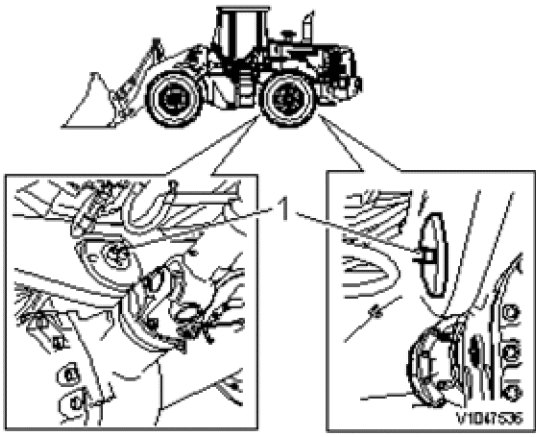

Figure 10
Rear axle

1. Attaching bolts

Tightening torques, see: Rear axle, tightening torque

Tires as well as inflation pressure in tires, check

17. **See:** A few simple rules when handling tires

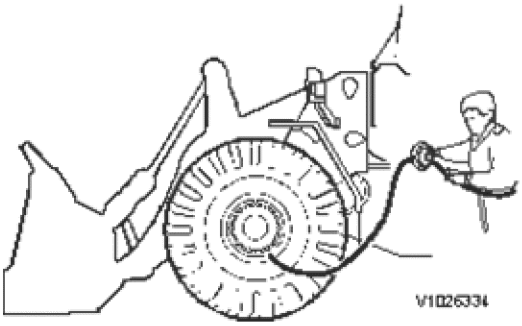

Figure 11
Inflation pressure in tires, check

For inflation pressure in tires. See operator's manual.

Wheel nuts and tightening torques, check

18. **Tightening torques, see:** Wheels, tightening torques

Propeller shafts and support bearing, tightening torques, check

19. Back-up bearing

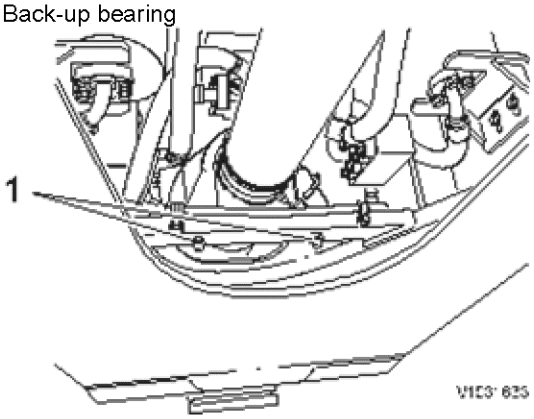

Figure 12
Propeller shaft

1. Bolt

Tightening torques, see: Propeller shaft, tightening torque

20. Bolted flange

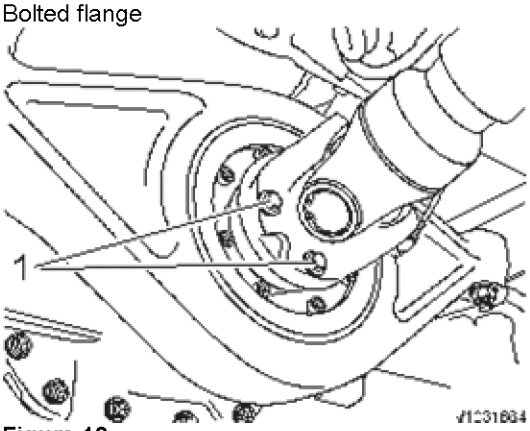

Figure 13
Propeller shaft

1. Bolt

Tightening torques, see: Propeller shaft, tightening torque

Restore the machine.

21. Test run

VOLVO
Construction Equipment

Service Information

Document Title:	Function Group:	Information Type: **Service Information**	Date: **12/10/2011**
Profile: **WLO, L90F (Volvo) [GB]**			

Warranty inspection 1000 hours

The service points where "optional equipment" is stated are not included in the accounted time for the interval.

Op nbr 172-004

11666051 Pressure gauge
14290266 Hose
9993892 Electronic unit
88890020 Interface
9993832 Adapter
9993886 Adapter
11666167 Disassembly tool
936441 Testing nipple
9993831 Support
88890105 Refractometer

Equipment for Matris read-out	
Air pressure gauge	
Torque wrenches	min. 120 Nm (89 lbf ft) - max. 800 Nm (590 lbf ft)
Extension	min. 250 mm (10 in)
Sleeves	36 mm and 32 mm
Collection container	
Grease gun	
Required materials	
Engine oil	21 litres (5.55 US gal)
Engine oil filter	1 pc.
Transmission oil	18 litres (4.76 US gal)
Transmission oil filter	1 pc.
O-ring for the transmission's suction strainer	
Axle oil L60F	48 litres (12.7 US gal)
Axle oil L70F and L90F	55 litres (14.53 US gal)
Air cleaner, main filter	1 pc.
Coolant filter	1 pc.
Fuel filter: Primary filter	1 pc.
Fuel filter: Secondary filter	1 pc.
Cab: pre-filter	1 pc.
Cab: Main filter	1 pc.

Test-run and check

1. How to perform methods, see Operator's manual
   Start and stop function

   Instruments, lighting, direction indicators, reflectors, flashing hazard lights, wipers, washers, horn, and back-up alarm (if installed).

Climate control unit, fan and controls incl. AC-compressor.
Leakage, general
Pipes and hoses, condition

2. **Place the machine in service position2 acc. to:** Service positions

Matris read-off

3. Matris read-off is performed to follow up the machine's history

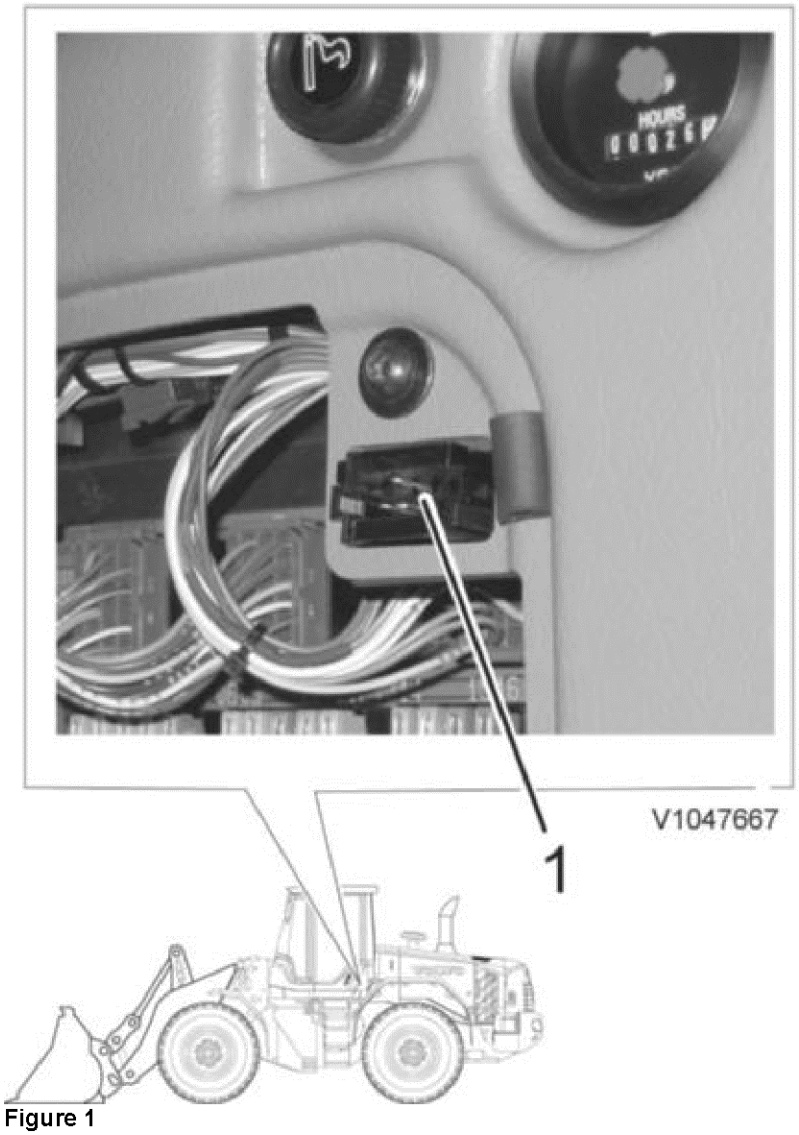

Figure 1
Matris read-off

1. Connection point

The read-off shall be exported to Volvo CE-server

Brake discs, checking wear

4. **See:** Brake disc wear, checking

Engine oil, draining

Risk of burns! Use protective work gloves.

WARNING!

5. Draining engine oil

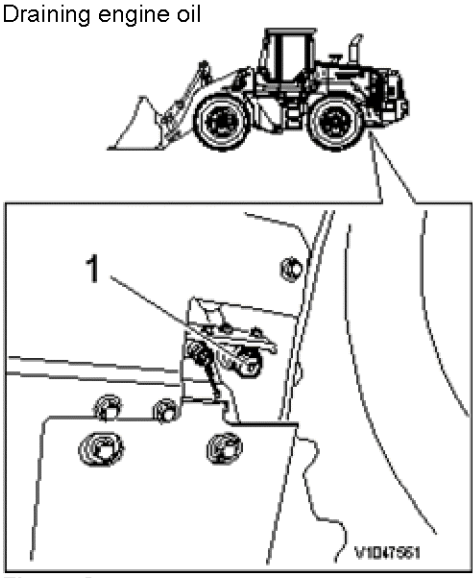

Figure 2
Draining point

1. Drain for engine oil.

Oil volume, see: Engine, capacities

Drain the oil when the engine is warm.
Connect drain hose and drain the oil in a collection container.
The hose is located in the battery box.

NOTE **Handle the oil in an environmentally safe way.**

Front axle oil, draining

WARNING! **Risk of burns! Use protective work gloves.**

6. **Oil volume, see:** Front axle, capacities

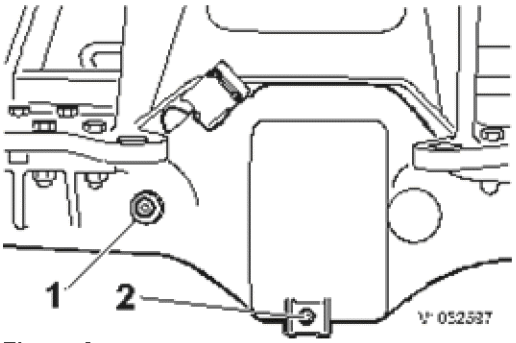

Figure 3
Front axle

1. Filler and level plug
2. Drain plug

Transmission oil, draining

WARNING! **Risk of burns! Use protective work gloves.**

7. The oil is drained at the drain point when the machine is at operating temperature.

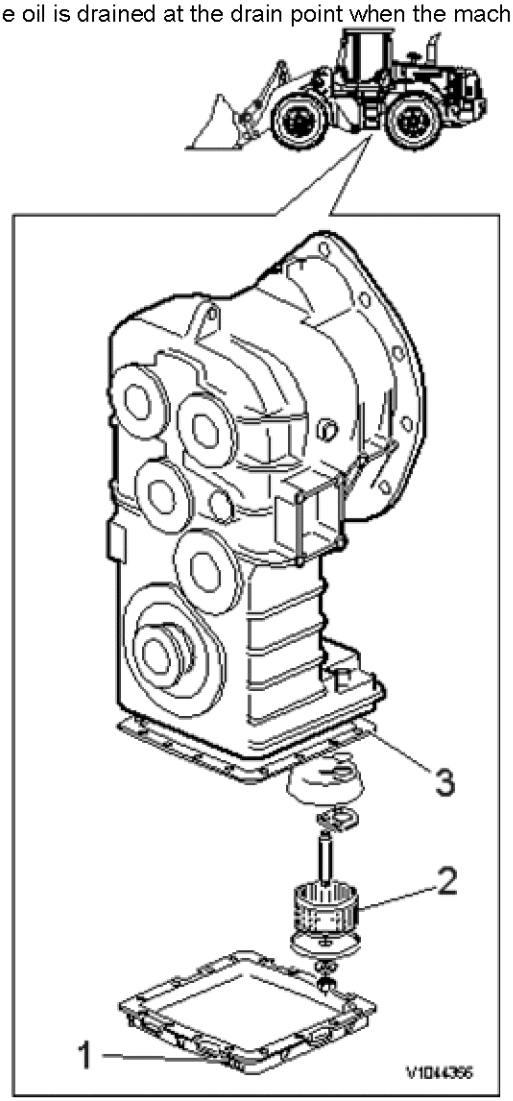

Figure 4
Transmission

1. Drain plug
2. Suction strainer
3. Gasket

Cleaning

1. Remove the drain plug and drain the oil.
2. Remove the cover and clean the suction strainer
3. Install a new gasket between the cover and transmission
4. Reinstall the suction strainer with associated parts and the cover

Oil volume, see: Hydraulic transmission, volume

NOTE **Handle the waste oil in an environmentally safe way.**

Rear axle oil, draining

8. 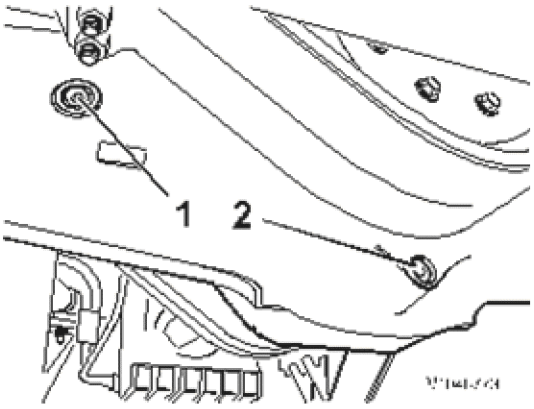

Figure 5
Rear axle

1. Filler and level plug
2. Drain plug

WARNING! **Risk of burns! Use protective work gloves.**

Oil volume, see: Rear axle, capacities

NOTE **Handle the waste oil in an environmentally safe way.**

Hydraulic oil, draining sludge

9. Draining sediment

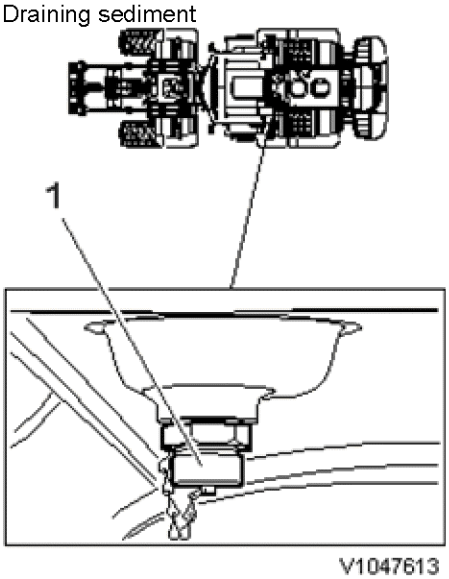

Figure 6
Hydraulic oil, drain point for sludge

1. Drain plug

1. Drain sediment and condensation water from the hydraulic oil tank through the drain. Use the drain hose that is located in the battery box
2. Reinstall the left side panel and rear mudguard.

Transmission oil filter, changing

WARNING! **Risk of burns! Use protective work gloves.**

10. Use oil filter pliers when removing the oil filter.

Installing the filter

1. Brush new oil on the filter
2. Spin on the filter until the gasket just touches the sealing surface. Tighten another 1/2 to 3/4 turn by hand

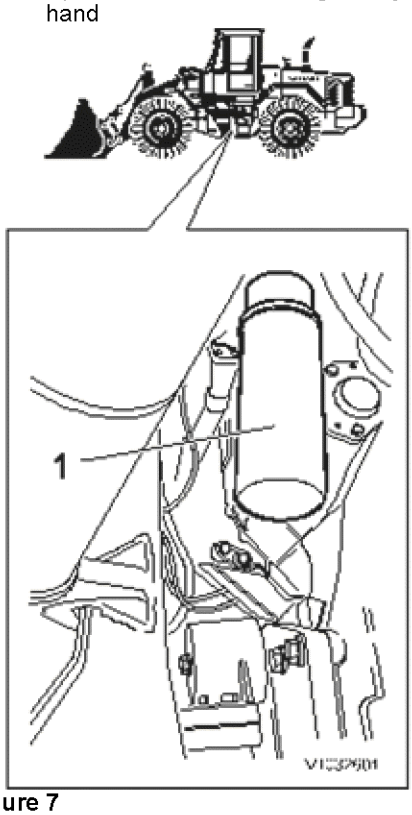

Figure 7

1. Transmission oil filter

Fuel filter, primary and secondary filter, change

11. When installing, only tighten the filters by hand.

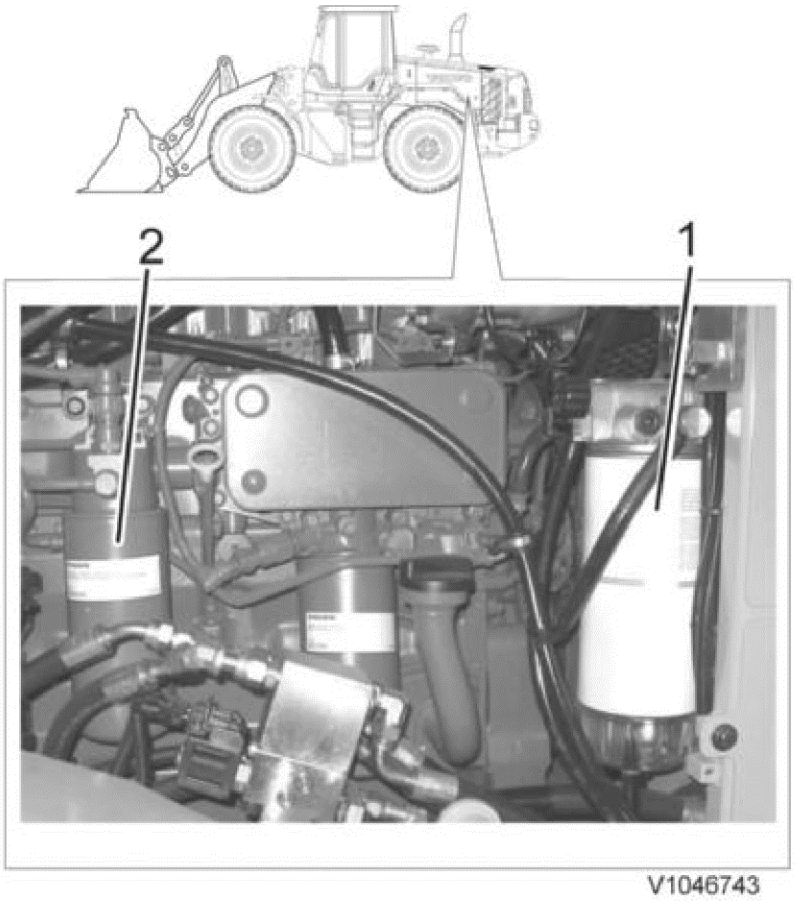

Figure 8

1. Primary fuel filter
2. Secondary fuel filters

For removing and installing bowl, use tool 11666167.
Bleed the system, see Fuel system, air bleeding

Engine oil filter, replacing

12. Removing oil filters

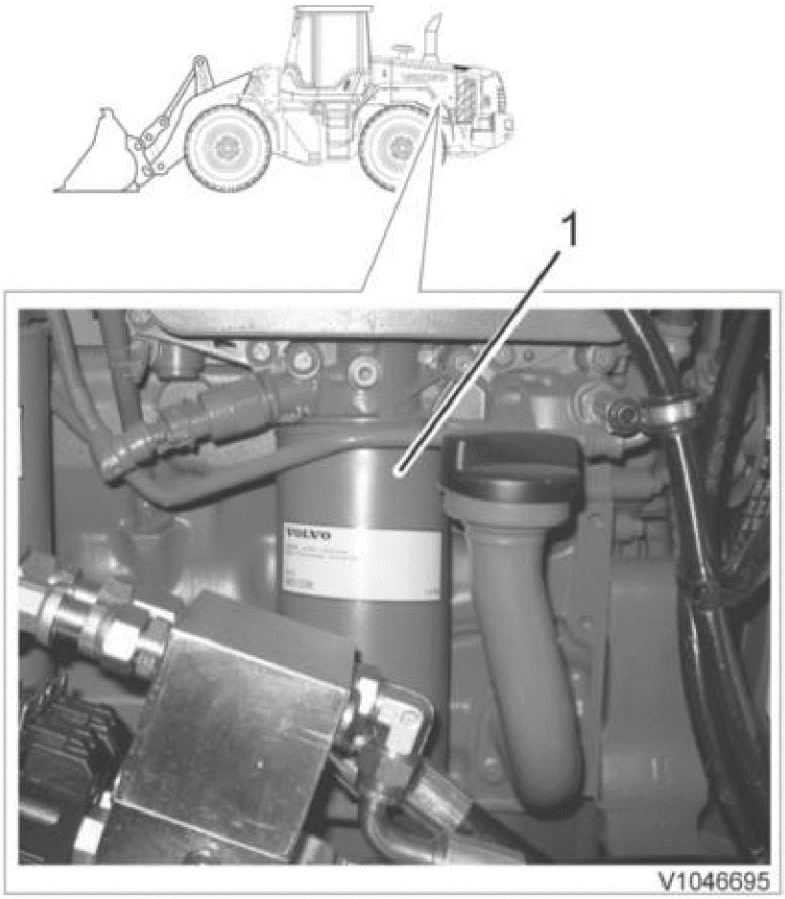

Figure 9

1. Engine oil filter

WARNING! **Risk of burns! Use protective work gloves.**

1. Open left engine cover.
2. Use oil filter pliers when removing the oil filter.

Installing oil filters

1. Fill the filters with engine oil and apply oil to the gasket.

   NOTE **New oil shall be used.**

2. Screw on the filter so that the gaskets just touch the sealing surface. Then tighten another half turn by hand.

Engine oil, filling

13. Filling engine oil

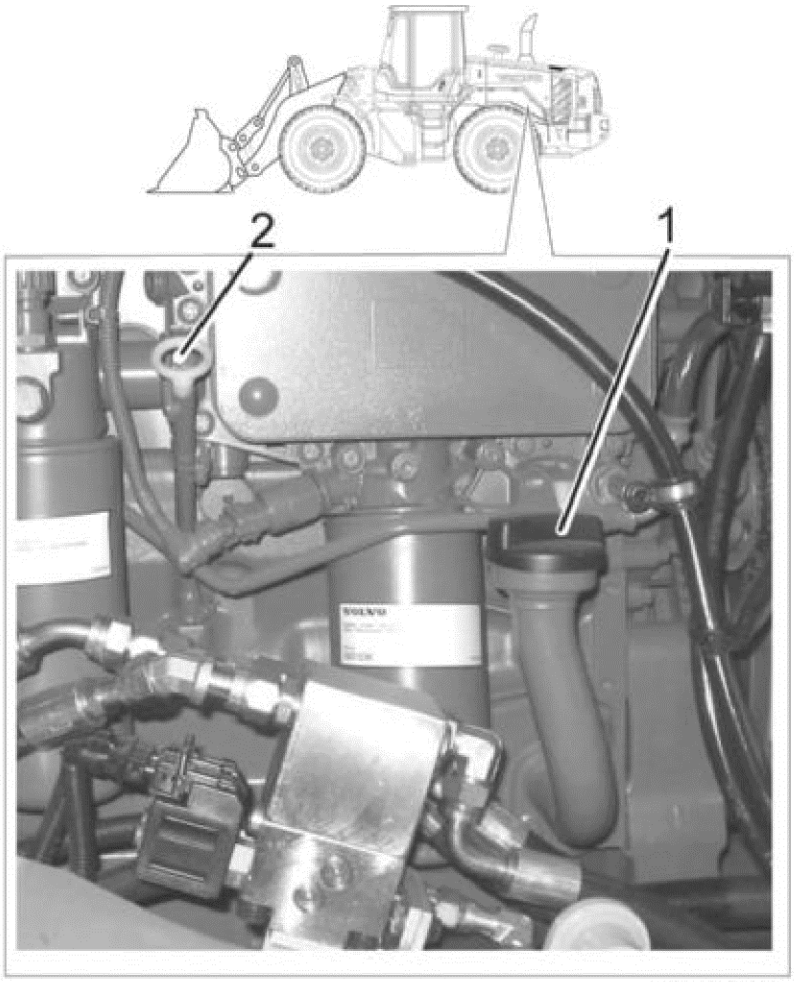

Figure 10

1. Filling point, engine oil
2. Oil dipstick

Oil volume, see: Engine, capacities

Fill the indicated oil volume.

Transmission oil, filling

14. **Oil volume, see:** Hydraulic transmission, volume

    1. Fill up with oil
    2. Check that there are no leaks

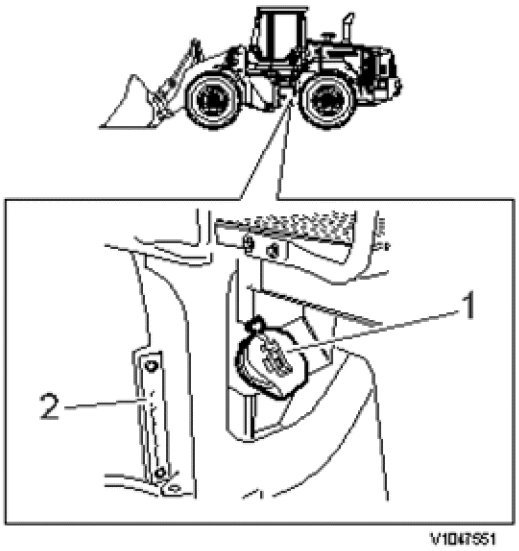

Figure 11
Transmission oil, filling and checking level

1. Filling, transmission oil
2. Sight-glass

Rear axle oil, filling

15. **Oil volume, see:** Rear axle, capacities

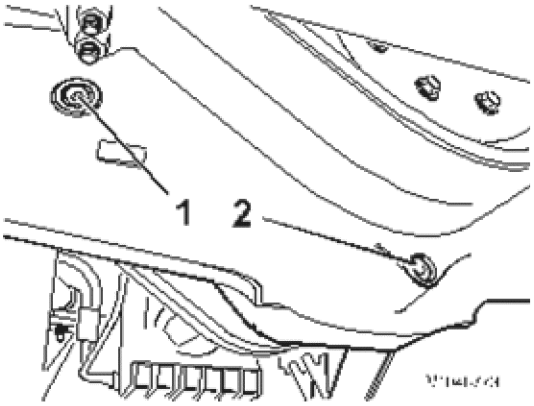

Figure 12
Rear axle

1. Filler and level plug
2. Drain plug

Front axle, oil, filling

16. **Oil volume, see:** Front axle, capacities

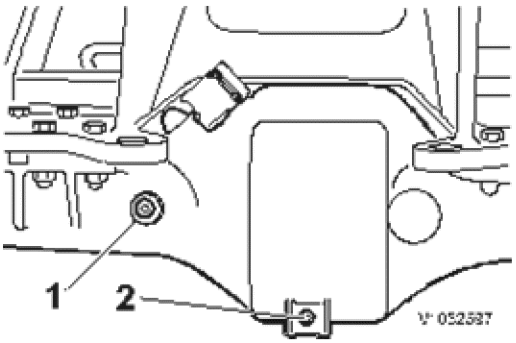

Figure 13
Front axle

1. Filler and level plug
2. Drain plug

Drive belts, coolant pump and fuel feed pump, checking and adjusting

17. Check belt tension and condition. Adjust as needed
Adjustment
    1. Tension the belt by moving the fuel feed pump.
    2. At correct belt tension, it should be possible to press down the belt approx. 10 mm (0.39 in) between the pulleys.

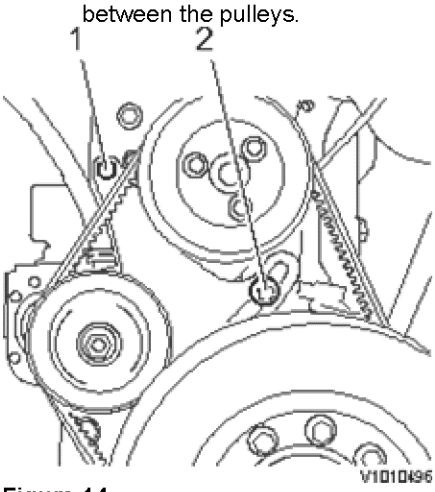

Figure 14

1. Attaching bolt
2. Adjusting screw

Drive belt AC-compressor, checking and adjusting

18. At correct belt tension, it should be possible to press down the belt approx. 10 mm (0.39 in) between the belt pulleys.

Adjustment
1. Loosen the alternator's attaching bolt
2. Adjust to the correct belt tension. Check the belt tension and tighten the attaching bolt.

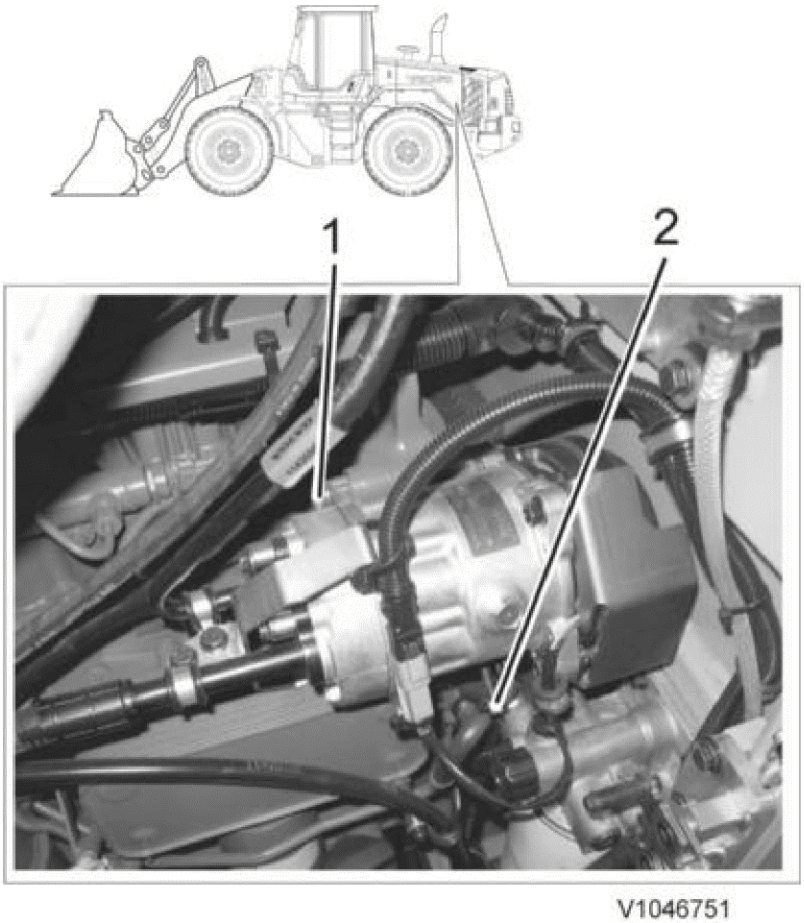

Figure 15
Drive belt, air conditioning

1. Attaching bolt
2. Adjusting screw

Batteries' electrolyte level, cables and connections, check

WARNING!

The battery electrolyte contains corrosive sulphuric acid. Electrolyte spilled on bare skin should be removed immediately. Wash the affected area with soap and plenty of water. If electrolyte gets into your eyes or any other sensitive body part, rinse immediately with plenty of water and seek immediate medical attention.

19. The battery electrolyte shall be 10 mm (0.4 in) over the plates in the battery.



V1046755

Figure 16
Battery box, right side

Top up with distilled water as needed.
Check

1. Cable terminals and terminal studs must be well cleaned, tightened and greased externally with, e.g., vaseline as corrosion protection.
2. That the batteries are securely tightened.

Condenser, check

20. Clean as needed

High-pressure washer may not be used.

NOTE

Cleaning

1. **Open the radiator casing**
2. **Blow clean with compressed air.**

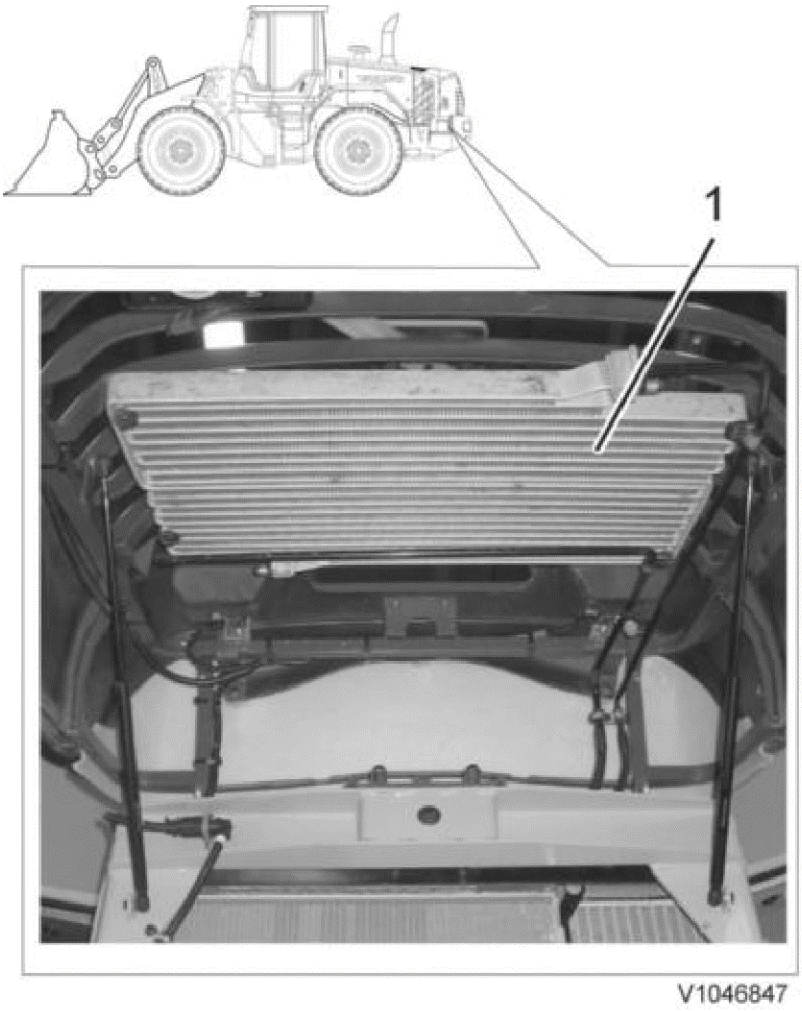

Figure 17

1. Condenser

Radiator, engine, check

WARNING! **Beware of rotating parts. Keep a safe distance.**

21. Clean as needed.
    1. Unlock and raise the engine cover
    2. Open the radiator grill
    3. Blow clean the radiator with compressed air from the inside
    4. Close the radiator grill, engine cover, and radiator casing

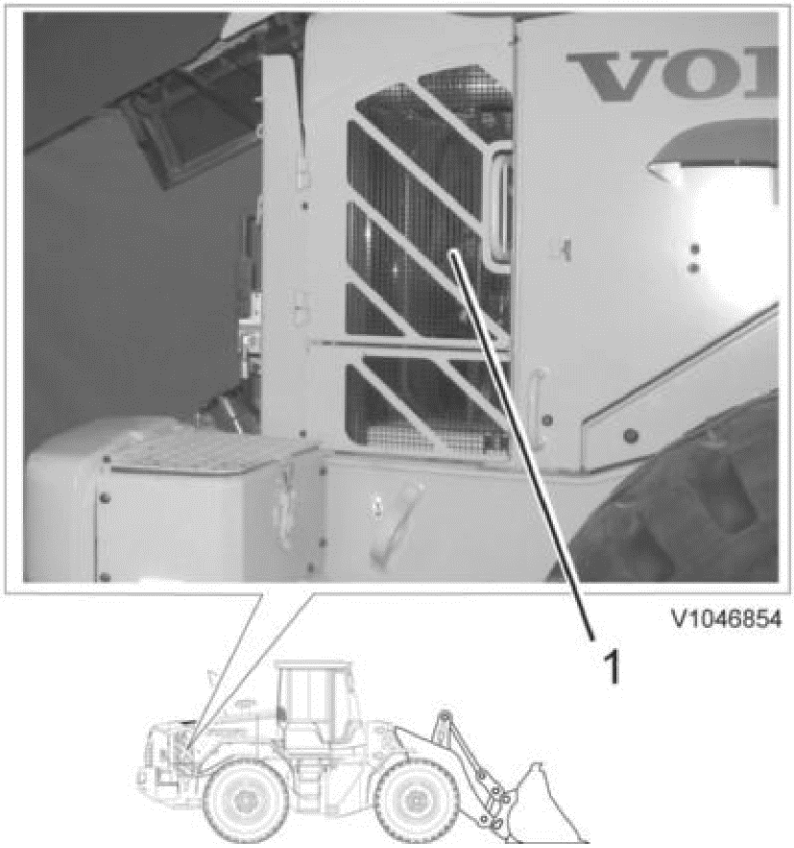

Figure 18

1. Radiator grill

Drive belt, alternator, checking and adjusting

22. At correct belt tension, it should be possible to press down the belt approx. 10 mm (0.39 in) between the belt pulleys.

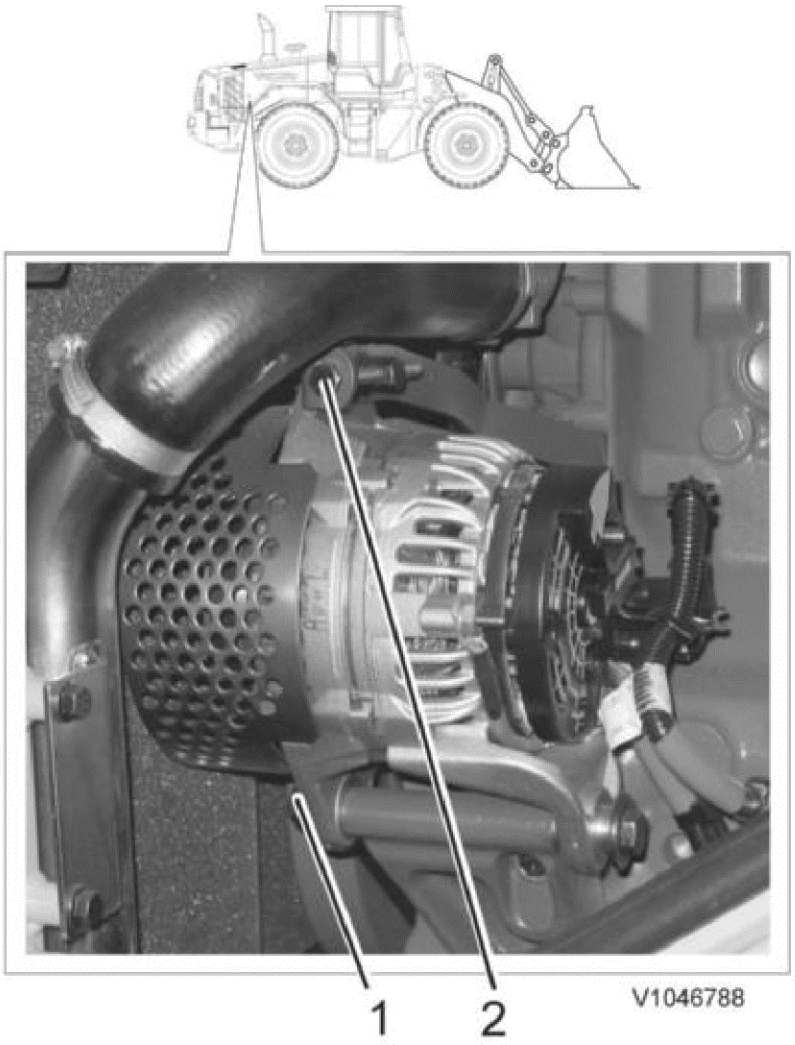

Figure 19
Drive belt, alternator

1. Attaching bolt
2. Adjusting screw

Adjustment

1. Loosen the alternator's attaching bolt
2. Adjust to the correct belt tension. Check the belt tension and tighten the attaching bolt.

Oil-bath air cleaner (optional equipment)

23. Change oil.
Volume: 5.5 litres (1.5 US Gal)

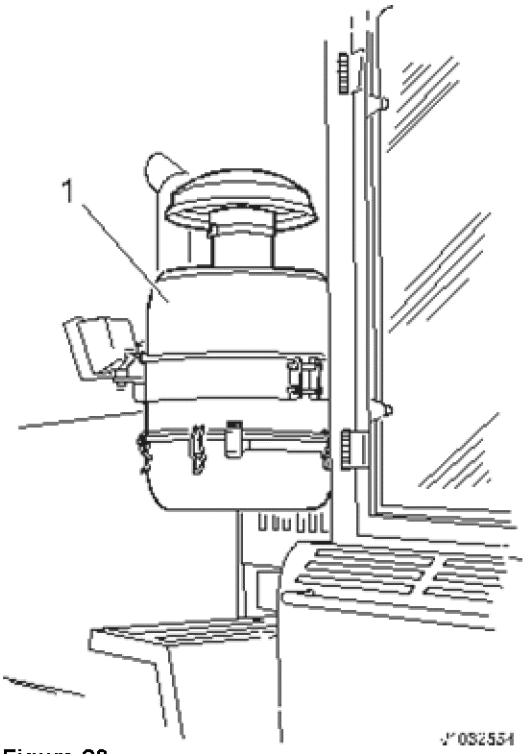

Figure 20
Oil-bath air cleaner

Air cleaner

24. Primary filter, change. For other change conditions, see Service program.
In connection with filter change, also clean the cover for the air cleaner since it acts as a reservoir for particles that are not trapped in the filter.
Check that all hose and pipe connections from the air cleaner to the engine inlet manifold are tight.
Check-tighten hose clamps.

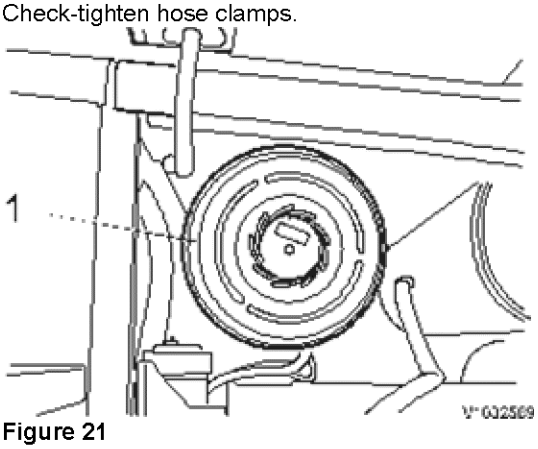

Figure 21

1. Primary filter

Cab ventilation unit

25. Primary filter check. Clean as needed.
Pre-filter, change.

NOTE **Use breathing protection when handling filters**

1. Open the side cover
2. Remove the pre-filter and change it
3. Remove the nuts that hold the plastic casing for the main filter

NOTE **Keep track of the sheet metal strip that is located at the top of the plastic casing**

4. Remove the primary filter. Clean as needed.
5. Reinstall the plastic casing with the sheet metal strip at the top

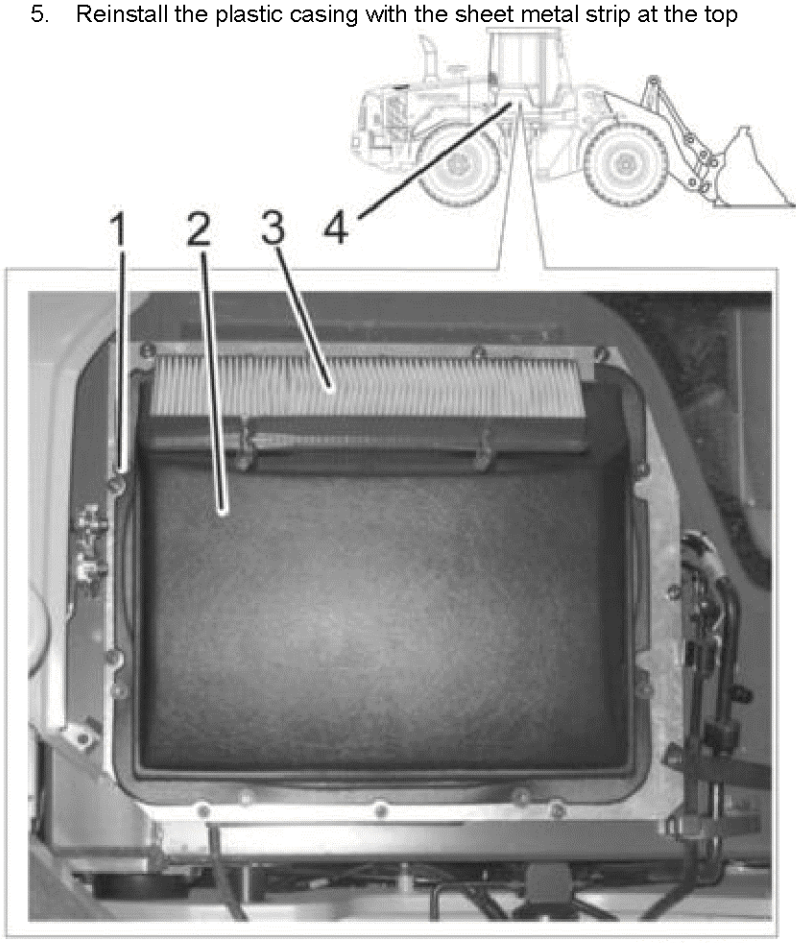

Figure 22
Primary filter

1. Plastic nuts, 9 pcs.
2. Primary filter. Inside plastic casing
3. Pre-filter
4. Side cover

Boom, grease

26. Grease the boom's pivot pins according to the lubrication chart

Frame and cab

27. Grease the cab's and frame's grease points according to the lubrication chart.

Cooling system, checking level and freezing point

WARNING! **Open the expansion tank cap slowly and carefully. The cooling system operates at high pressure and hot coolant may rush out and cause severe burns.**

28. Level check

NOTE **Use Volvo Coolant VCS**

The coolant level shall be between max. and min. in the expansion tank.

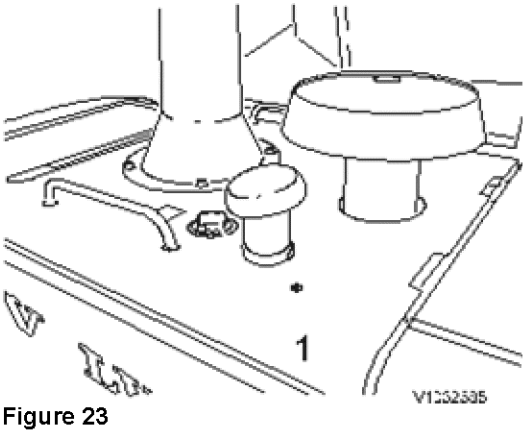

Figure 23
Coolant level

1. Filling point

Fill coolant in the expansion tank.

29. Coolant, freezing point, check

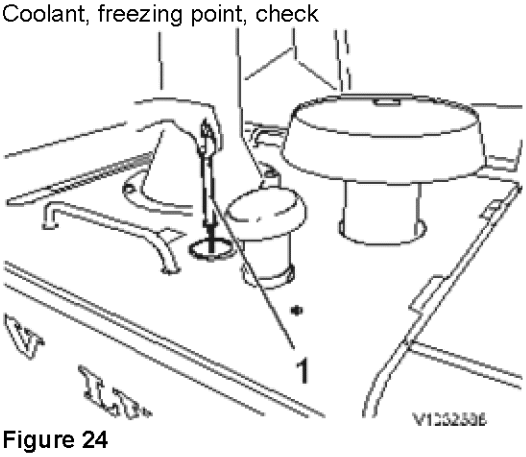

Figure 24
Filling point, coolant

1. Refractometer 88890105

Check the freezing point with a refractometer at the expansion tank. The refractometer's value should show approx. -35 °C (-31 °F)
The machine is delivered with a coolant mixture of 40% glycol and 60% water for optimal cooling and corrosion characteristics. That is why the same coolant mixture shall be filled, regardless of ambient temperature conditions.

Anti-freeze protection down to	Content of concentrated coolant
–25 °C (–13 °F)	40%
–35 °C (–31 °F)	50%
-45 °C (-51 °F)	60%

Axles, attaching bolts, tightening torques, check

30. Front axle

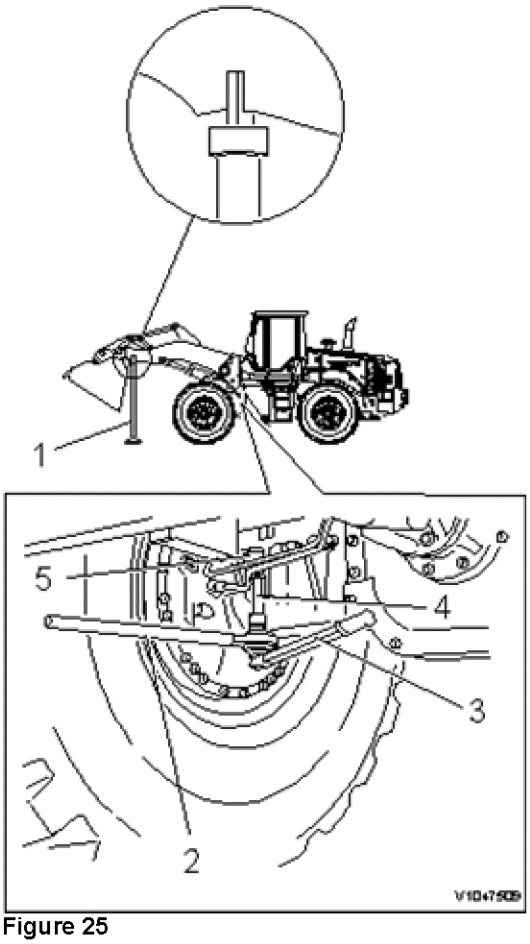

Figure 25
Front axle

1. Support 9993831
2. Torque amplifier
3. Torque wrench
4. Extension
5. Socket 36 mm

Start the engine and raise the boom. Use support 9993831 to secure the boom.

Tightening torques, see: Front axle, tightening torque

31. Rear axle

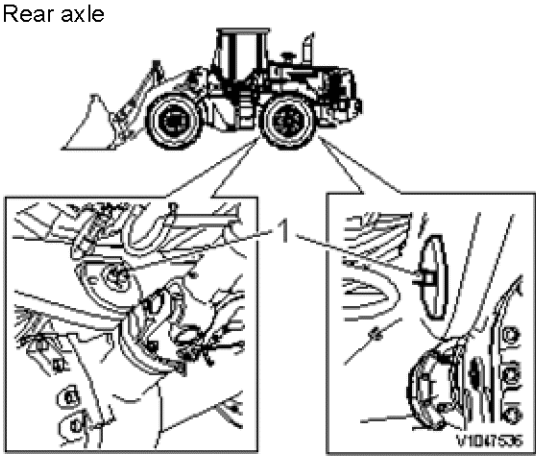

Figure 26
Rear axle

1. Attaching bolts

Tightening torques, see: Rear axle, tightening torque

Steering cylinders, locks for pivot pins, left and right side, check

32.

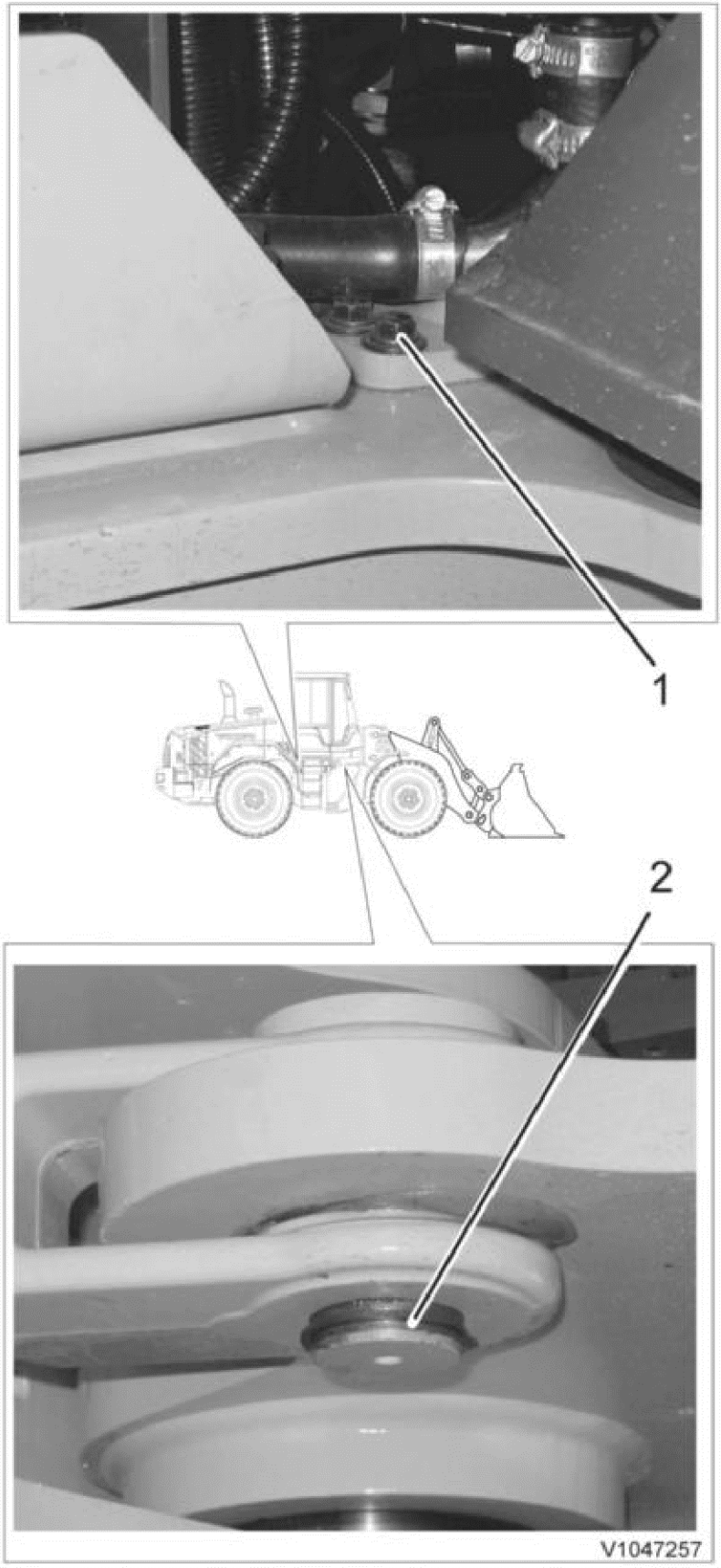

Figure 27
Steering cylinders

1. Bolt
2. Lock ring

1. Remove the rear mudguards and the side panels.
2. Check the tightening torque.
3. Reinstall the right side panel and mudguard.

Tightening torques, see: Steering cylinder, tightening torque

Wheel nuts and tightening torques, check

33. **Tightening torques, see:** Wheels, tightening torques

Propeller shafts and support bearing, tightening torques, check

34. Support bearing

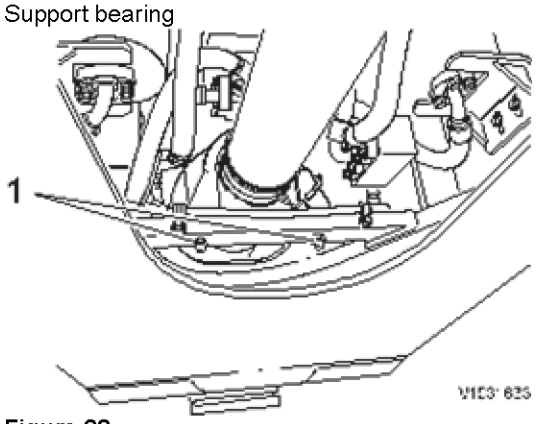

Figure 28
Propeller shaft

1. Bolt

Tightening torques, see: Propeller shaft, tightening torque

35. Bolted flange

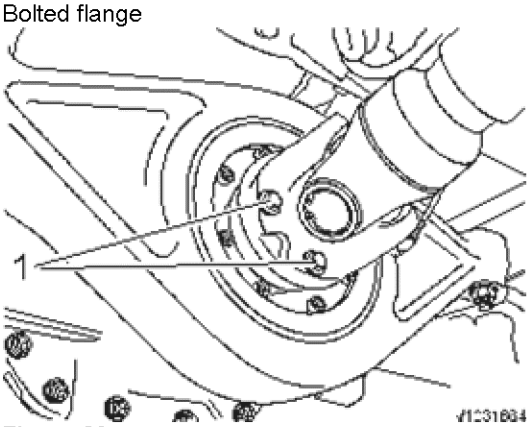

Figure 29
Propeller shaft

1. Bolt

Tightening torques, see: Propeller shaft, tightening torque

36. **Place the machine in service position 1.**

Transmission, oil level, check

37. When checking, the machine should be parked on a level ground surface.
The gear selector must be in neutral position and the parking brake must be applied.
At operating temperature and with machine on, the level should be between the markings High and Low on the **lower** part of the glass.

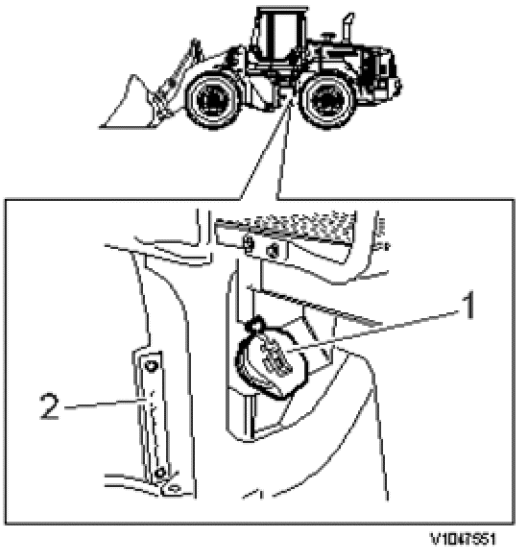

Figure 30

1. Filling, transmission oil
2. Sight-glass

Hydraulic oil level, level check

38. The hydraulic oil level shall be between max. and min.

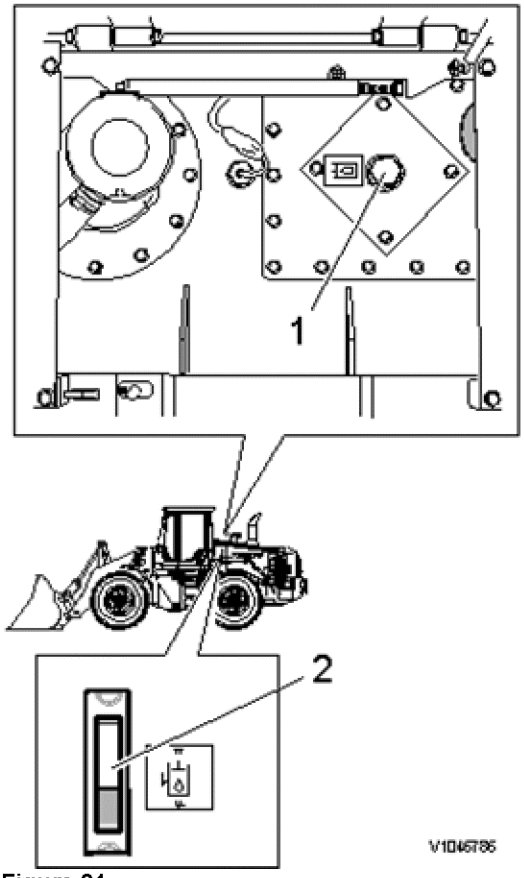

Figure 31

1. Plug, filling point
2. Sight-glass

The boom shall be lowered and the bucket flat on the ground when checking.

Engine, oil level, check

39. Turn off the engine and check the engine oil level. Top up as needed.

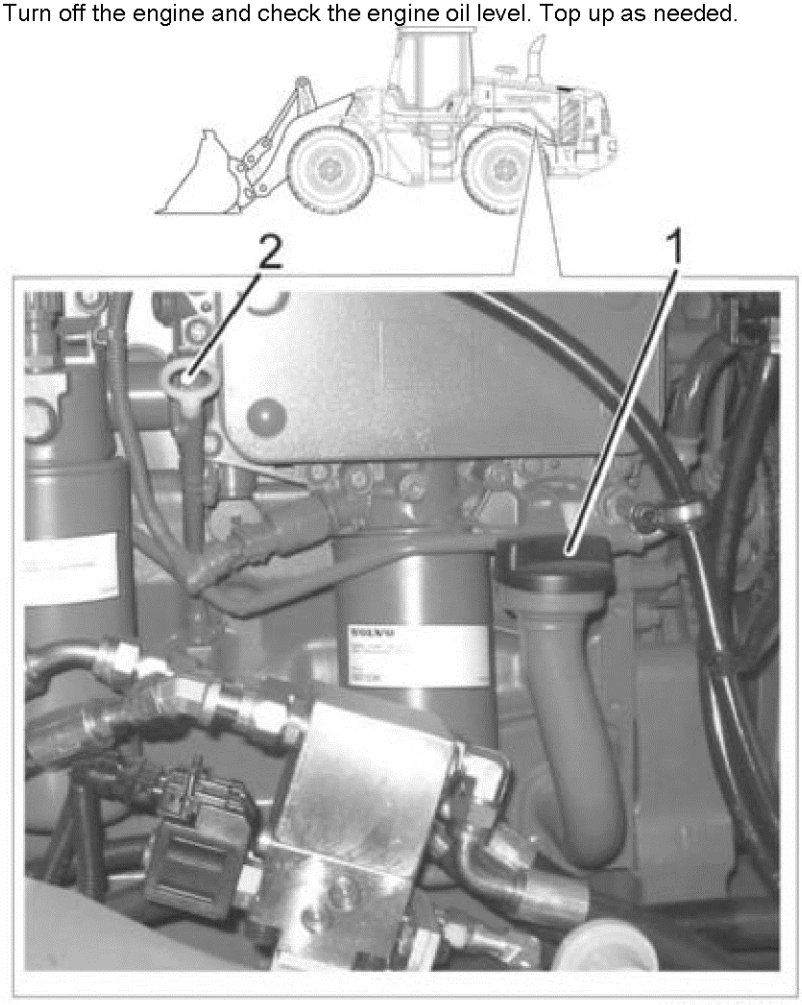

Figure 32

1. Filling point, engine oil
2. Oil dipstick

Brakes, pressure and function check

40. **See:** Pressure in circuit, checking and adjusting

Steering pressure, check

41. **See:** Steering system, checking and adjusting working pressure

Hydraulic pressure, check

42. **See:** Hydraulic transmission, checking oil pressure

and
Hydraulic pump, checking and adjusting max. working pressure

Transmission incl. torque converter, pressure check

43. **See:** Hydraulic transmission, checking oil pressure

Tires as well as inflation pressure in tires, check

44. **See:** A few simple rules when handling tires

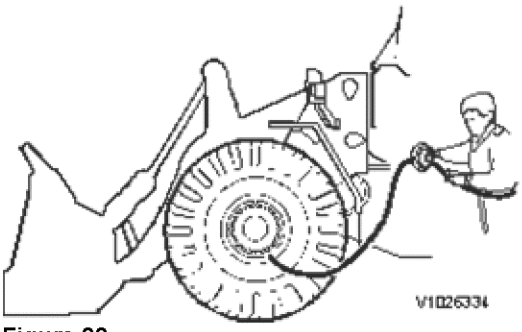

Figure 33
Inflation pressure in tires, check

For inflation pressure in tires. See operator's manual.

Restore the machine.

45. Test run

VOLVO
Construction Equipment

Service Information

Document Title:	Function Group:	Information Type: **Service Information**	Date: **12/10/2011**
Profile: **WLO, L90F (Volvo) [GB]**			

Maintenance service, every 4000 hours

The 4000 hr service interval includes daily as well as the 50 hr, 250 hr, 500 hr, 1000 hr, and 2000 hr service interval

The service points where "optional equipment" is stated are not included in the accounted time for the interval.

Op nbr 173-018

11666051 Pressure gauge
14290266 Hose
9993892 Electronic unit
88890020 Interface
9993832 Adapter
9993886 Adapter
11666167 Disassembly tool
9993831 Support
88890105 Refractometer

Equipment for Matris read-out	
Air pressure gauge	
Torque wrench	800 Nm (590 lbf ft)
Extension	approx. 250 mm (10 in)
Sleeve	32 mm
Collection container	
Grease gun	
Required materials	
Engine oil	20 litres (5.3 US gal)
Axle oil L60F	48 litres (12.7 US gal)
Axle oil L70F and L90F	55 litres (14.53 US gal)
Transmission oil L60E and L70E	18 litres (4.76 US gal)
Hydraulic oil, change volume	102 litres (26.9 US gal)
Air cleaner, primary filter	1 pc.
Engine oil filter	1 pc.
Transmission oil filter	1 pc.
Hydraulic system's return oil filter	1 pc.
Coolant filter	1 pc.
Fuel filter: Primary filter	1 pc.
Fuel filter: Secondary filter	1 pc.
Cab: Pre-filter	1 pc.
Cab: Main filter	1 pc.
Hydraulic system and transmission: Breather filters	1 pc.
Other breather filters	3 pcs.

Test-run and check

1. How to perform methods, see Operator's manual
   Start and stop function

Instruments, lighting, direction indicators, reflectors, flashing hazard lights, wipers, washers, horn, and back-up alarm (if installed).

Climate control unit, fan and controls incl. AC-compressor
Leakage, general
Pipes and hoses, condition
Warning decals and plates. Check that they are legible and not damaged

2. **Place the machine in service position 1 acc. to:** Service positions

Matris read-off

3. Matris read-off is performed to follow up the machine's history

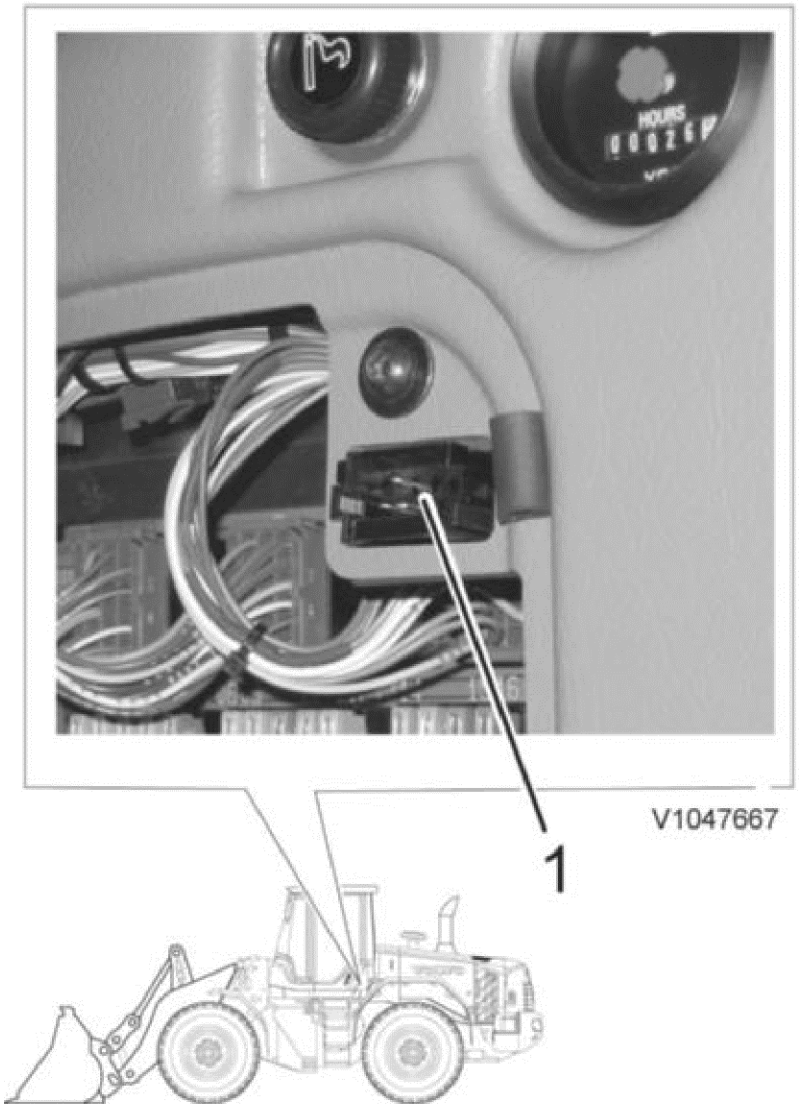

Figure 1
Matris read-off

1. Connection point

The read-off shall be exported to Volvo CE-server

Brake discs, checking wear

4.

See: Brake disc wear, checking

Engine oil, drain

WARNING! Work carefully when changing oil as hot oil can cause severe burns to unprotected skin.

5. Draining

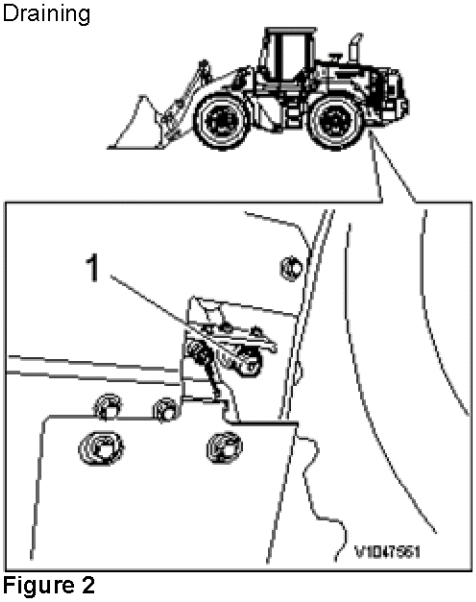

Figure 2
Draining point

1. Drain for engine oil

Drain the oil when the engine is warm.
Connect drain hose and drain the oil in a collection container.
The hose is located in the battery box.
Oil volume, see: Engine, capacities

NOTE **Handle the oil in an environmentally safe way.**

Front axle oil, draining

WARNING! Work carefully when changing oil as hot oil can cause severe burns to unprotected skin.

6. Oil, draining

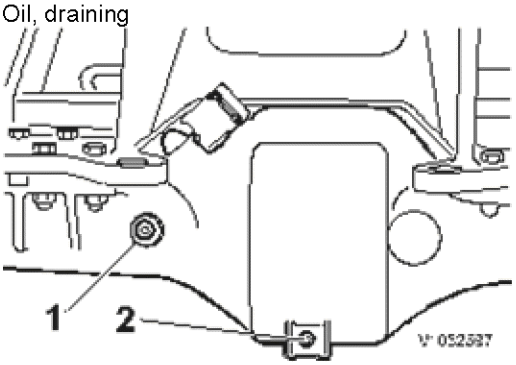

Figure 3
Front axle

1. Filler and level plug
2. Drain plug

Oil volume, see: Front axle, capacities

NOTE **Handle the waste oil in an environmentally friendly way**

Transmission, oil, draining

WARNING! **Work carefully when changing oil as hot oil can cause severe burns to unprotected skin.**

7. The oil is drained at the drain plug when the machine is at operating temperature.

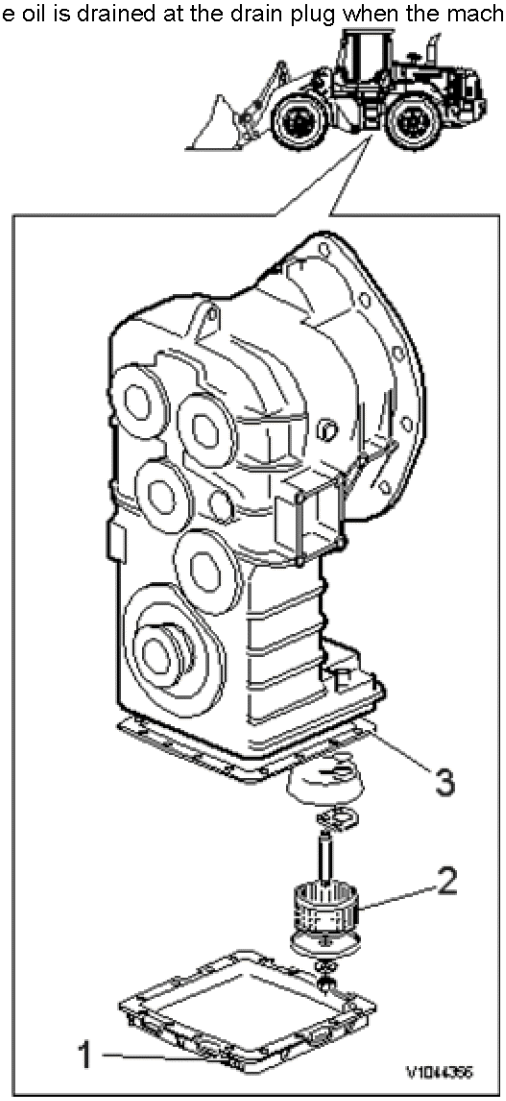

Figure 4
Transmission

1. Drain plug
2. Suction strainer
3. Gasket

Oil volume, see: Hydraulic transmission, volume

Cleaning:
1. Remove the drain plug and drain the oil.
2. Remove the cover and clean the suction strainer.
3. Install a new gasket between the cover and transmission.

4. Reinstall the suction strainer with associated parts and the cover.

NOTE **Handle the waste oil in an environmentally safe way.**

Rear axle oil, draining

WARNING! **Work carefully when changing oil as hot oil can cause severe burns to unprotected skin.**

8. Oil, draining

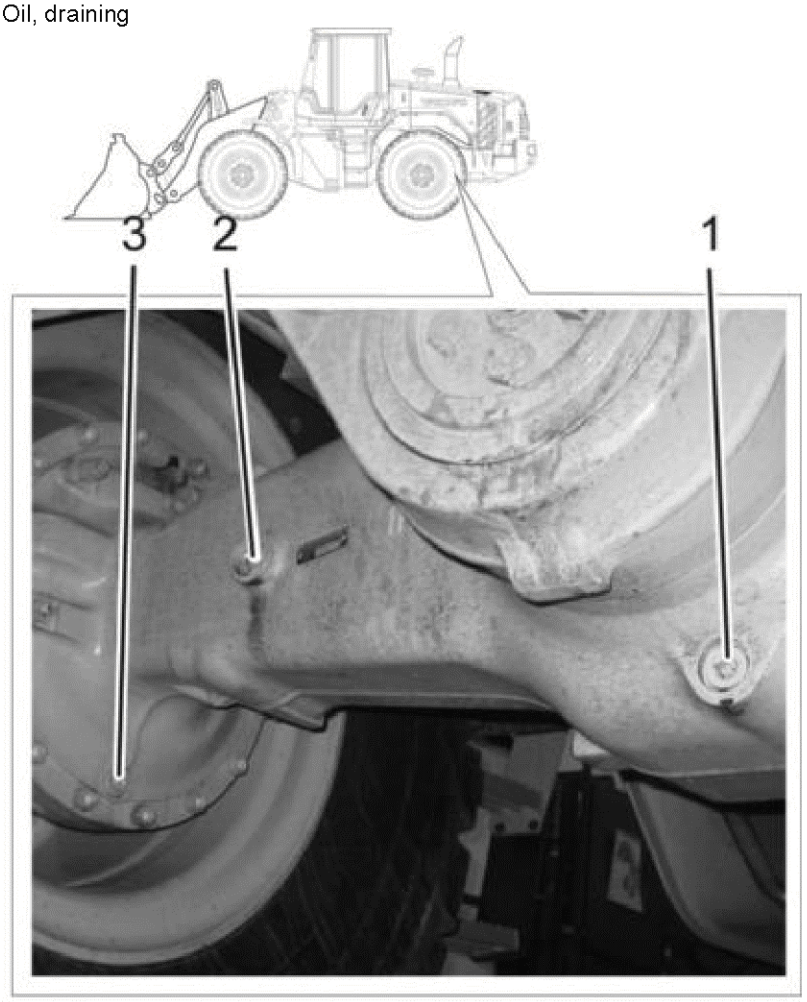

Figure 5
Rear axle

1. Drain plug
2. Filler and level plug
3. Drain plug

Oil volume, see: Rear axle, capacities

NOTE **Handle the waste oil in an environmentally safe way.**

Hydraulic oil, draining

WARNING! **Work carefully when changing oil as hot oil can cause severe burns to unprotected skin.**

9. **If the hydraulic tank is filled with engine oil or bio-oil, the oil shall be changed at 2000 hours. Machines filled with hydraulic oil, change at 4000 hours**

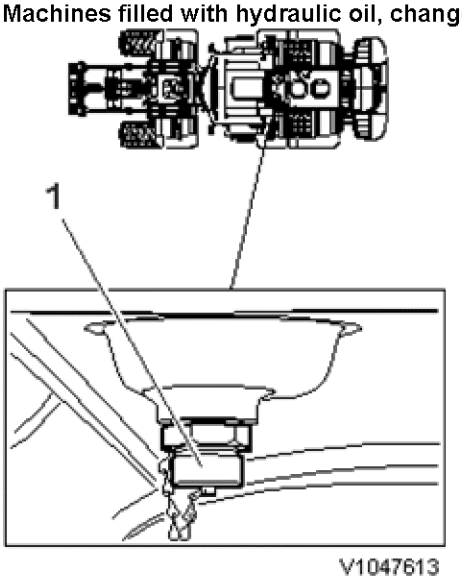

Figure 6
Hydraulic oil, draining

1. Plug

NOTE **When changing hydraulic oil, use the hose that is used for draining engine oil. The hose is located in the battery box. Temporarily replace the rubber hose with a 3/4" hose. Length = 3.5 metres.**

Hydraulic oil volume, see: Hydraulic system, volume

1. Spin off the protective cap for draining.
2. Place the end of the hose in a suitable collection container and screw the hose to the drain point.

Transmission oil filter, changing

WARNING! **Risk of burns! Use protective work gloves.**

10. Use oil filter pliers when removing the oil filter.



Figure 7

1. Transmission oil filter

Installing filter:

1. Brush new oil on the rubber seal.
2. Screw the filter into place so that the gasket just touches the sealing surface. Tighten another 1/2 to 3/4 turns by hand.

Valve clearance, checking and adjusting

11. **See:** Valves, adjusting

Fuel filter, primary and secondary filter, change

12. When installing, only tighten the filters by hand.

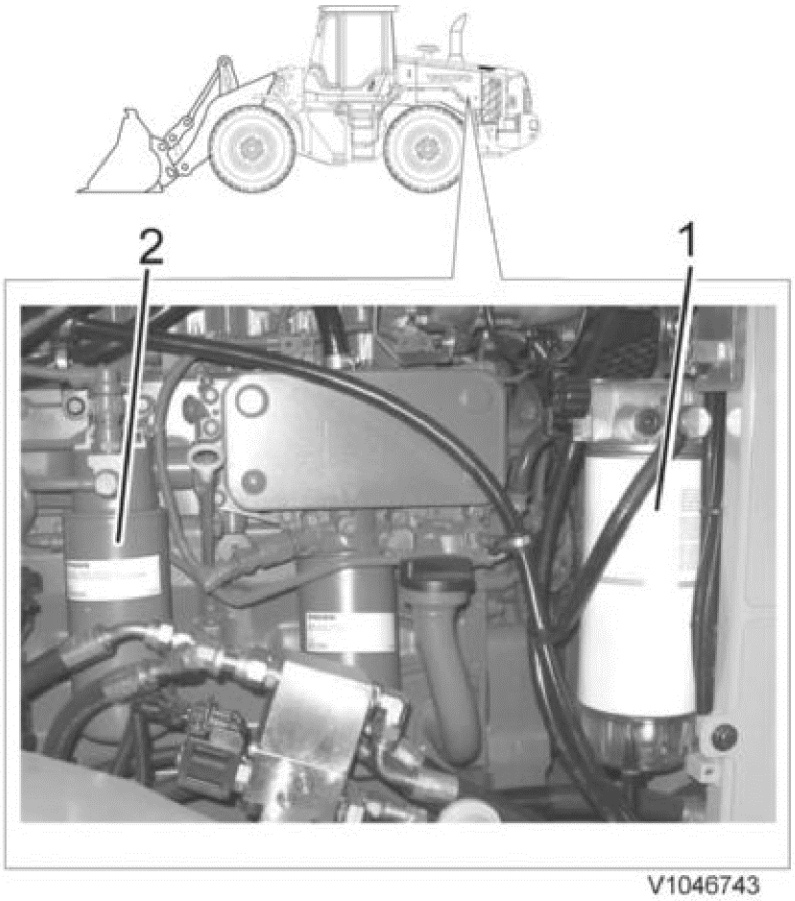

Figure 8

1. Primary fuel filter
2. Secondary fuel filters

For removing and installing bowl, use tool 11666167.
Bleed the system. **See:** Fuel system, air bleeding

Hydraulic system's return oil filter, change

13. **Perform the following:**

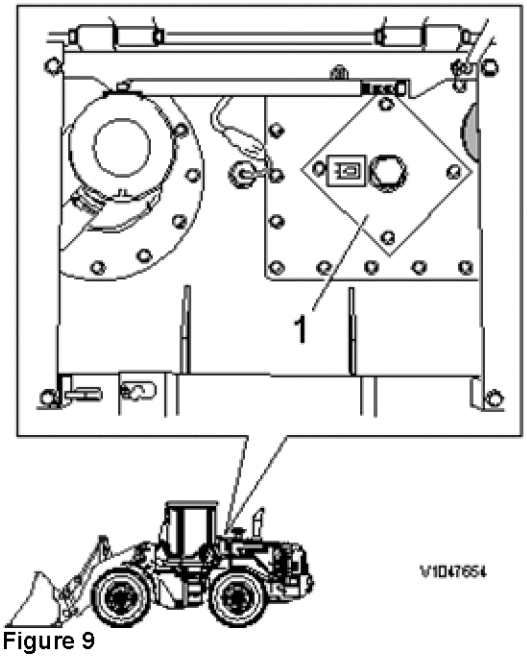

Figure 9
Hydraulic system's return oil filter

1. Cap, return oil filter

1. Remove the cap.
2. Lift out and dismantle the filter insert.
3. Remove the filter and install a new filter.

NOTE **The filter is for 'one-time' use only and must be changed.**

4. Clean the magnetic rod.
5. Check the seal rings when installing.

Breather filters, hydraulic system, and transmission

14. The filter cannot be cleaned, it must be replaced.

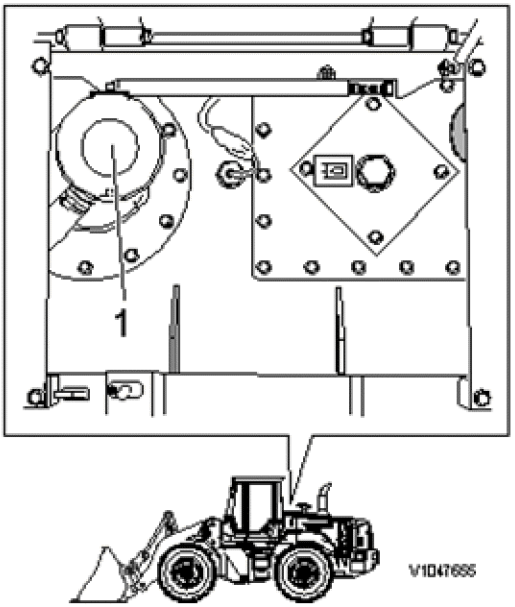

Figure 10
Breather filter, transmission

1. Breather filter

Engine oil filter, replacing

WARNING! **Risk of burns! Use protective work gloves.**

15. **Removing oil filters**

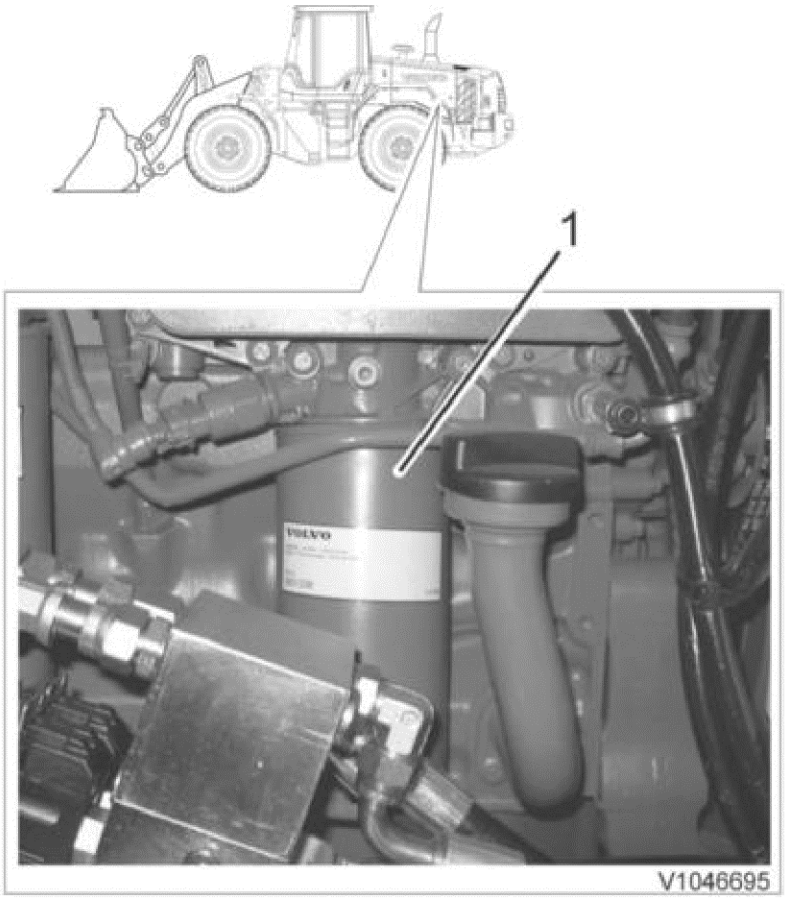

Figure 11

1. Engine oil filter

1. Open left engine cover
2. Use oil filter pliers when removing the oil filter

Installing oil filters

1. Fill the filter with engine oil and apply oil to the gasket
2. Screw on the filter until the gaskets just touch the sealing surface. Then tighten the filter another half turn by hand.

Engine oil, filling

16. **Oil volume, see:** Engine, capacities

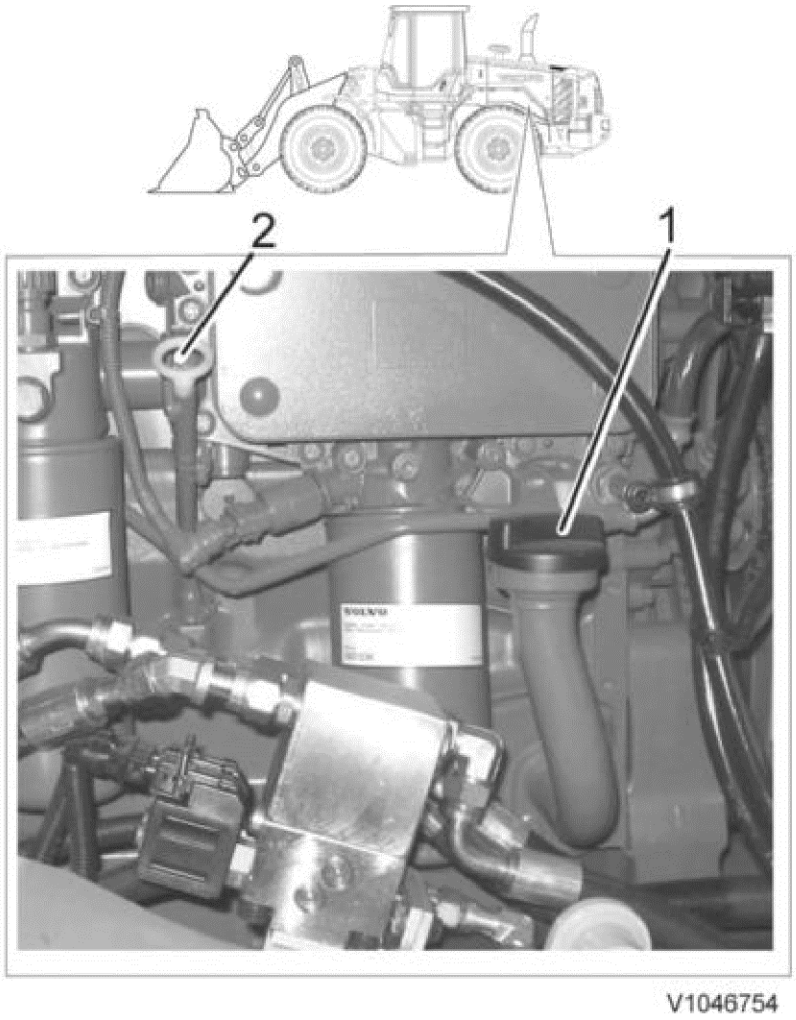

Figure 12

1. Filling point, engine oil
2. Oil dipstick

Fill the indicated oil volume.

Transmission oil, filling

17. **Oil volume, see:** Hydraulic transmission, volume

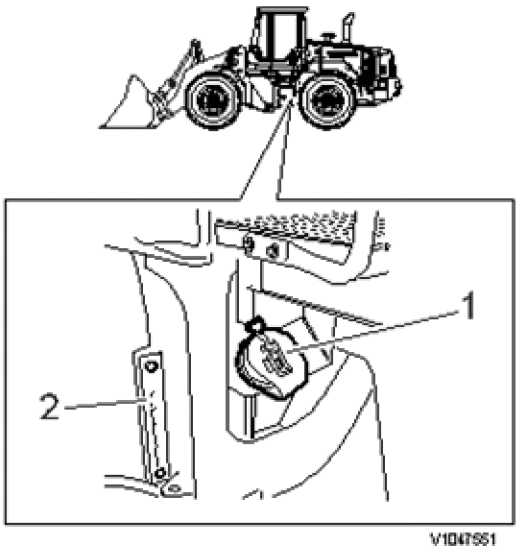

Figure 13
Transmission oil, checking level

1. Filling, transmission oil
2. Sight-glass

1. Fill up with oil.
2. Check that there are no leaks.

Rear axle oil, filling

18. **Oil volume, see:** Rear axle, capacities

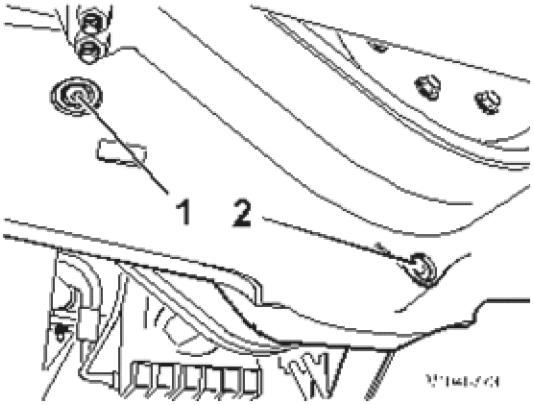

Figure 14
Rear axle

1. Filler and level plug
2. Drain plug

Front axle oil, filling

19. **Oil volume, see:** Front axle, capacities

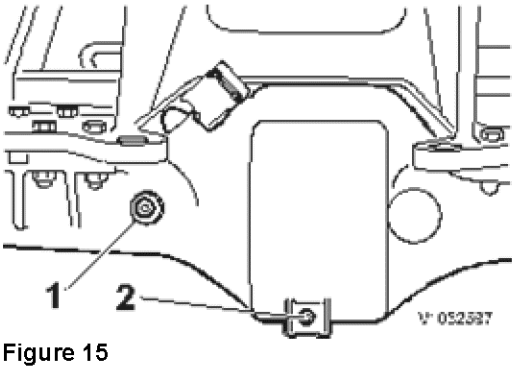

Figure 15
Front axle

1. Filler and level plug
2. Drain plug

Hydraulic oil, filling

20. **Hydraulic oil volume, see:** Hydraulic system, volume

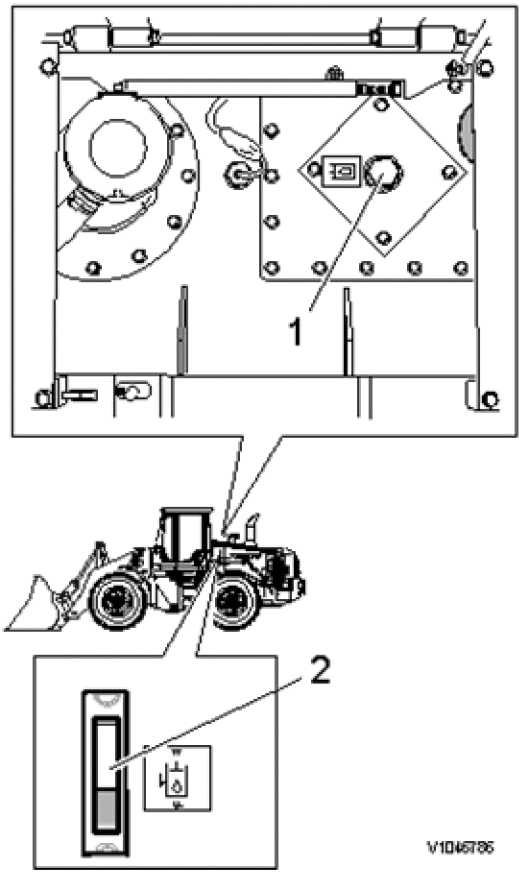

Figure 16
Hydraulic oil, level glass

1. Plug, filling point
2. Sight-glass

The boom shall be lowered and the bucket flat on the ground when filling!
The hydraulic oil level shall be between max. and min.

Breather filter, fuel tank

21. The filter cannot be cleaned, it must be replaced.

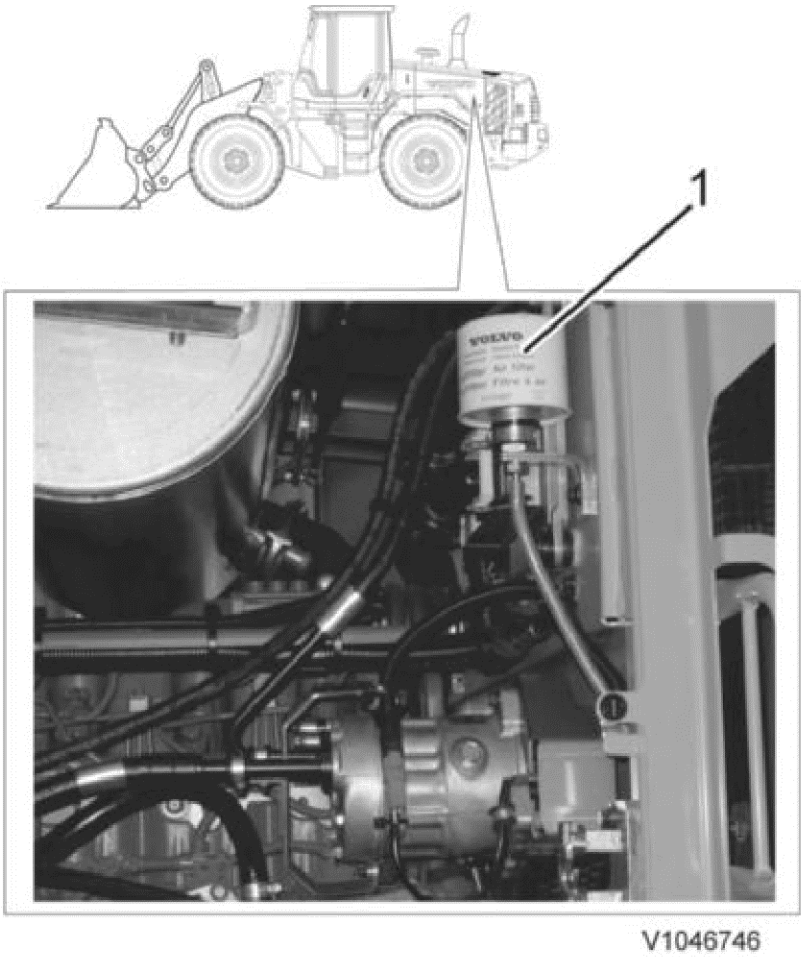

Figure 17
Breather filter, fuel tank

1. Breather filter

Breather filter, rear axle, change

22. Rear axle

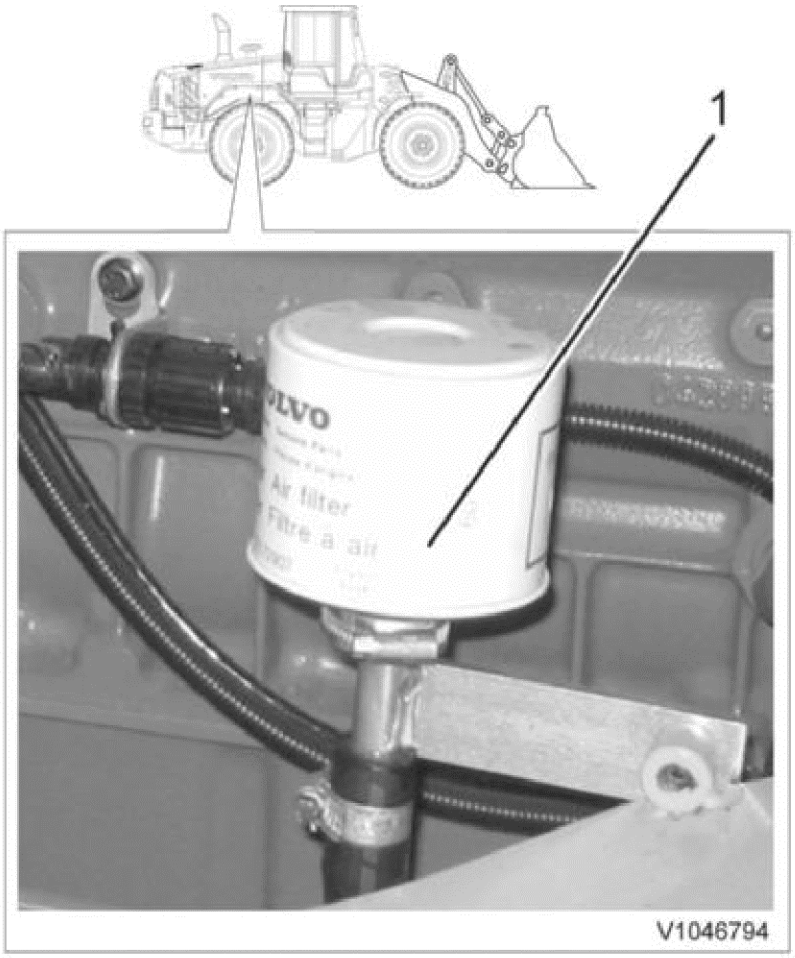

Figure 18
Breather filter, rear axle

1. Breather filter

The filter cannot be cleaned, it must be replaced.

Air cleaner

23. Secondary filter, change. For other change conditions, see Service program

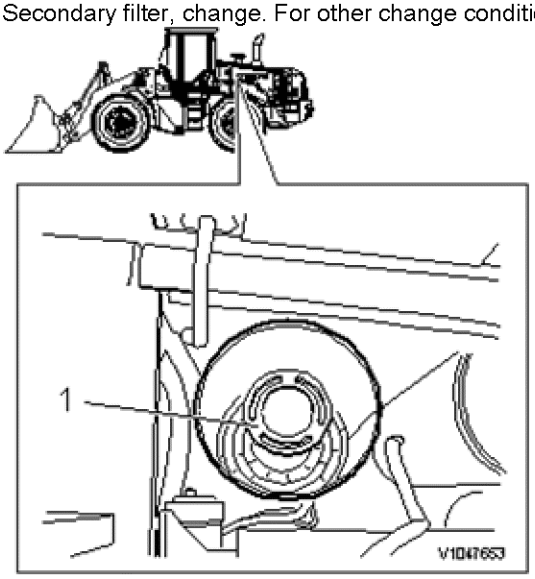

Figure 19

1. Air cleaner, safety filter

24. Primary filter, change. For other change conditions, see Service program.

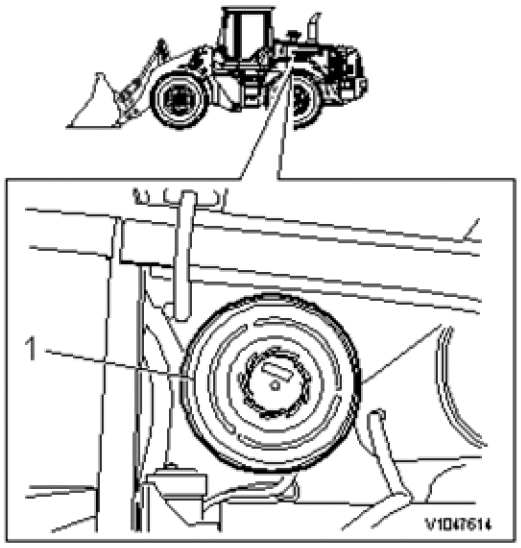

Figure 20

1. Air cleaner, primary filter

In connection with filter change, also clean the cover for the air cleaner since it acts as a reservoir for particles that are not trapped in the filter.
Check that all hose and pipe connections from the air cleaner to the engine inlet manifold are tight. Check-tighten hose clamps.

Drive belt, coolant pump and fuel feed pump, checking and adjusting

25. Check belt tension and condition. Adjust as needed.
Adjustment
    1. Tension the belt by moving the fuel feed pump.
    2. At correct belt tension, it should be possible to press down the belt approx. 10 mm (0.39 in) between the belt pulleys.

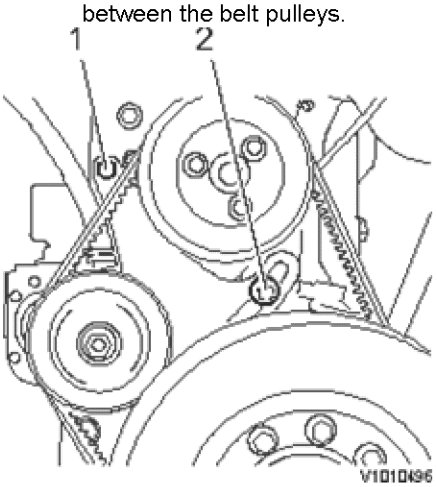

Figure 21

1. Attaching bolt
2. Adjusting screw

Drive belt, AC-compressor, checking and adjusting

26. At correct belt tension, it should be possible to press down the belt approx. 10 mm (0.39 in) between the belt pulleys.
Adjustment
    1. Loosen the AC compressor's attaching bolt.
    2. Adjust to correct belt tension with the adjusting screw. Check the belt tension and tighten the bolt. At correct belt tension it should be possible to press down the belt between the pulleys approx. 10 mm (0.39 in).

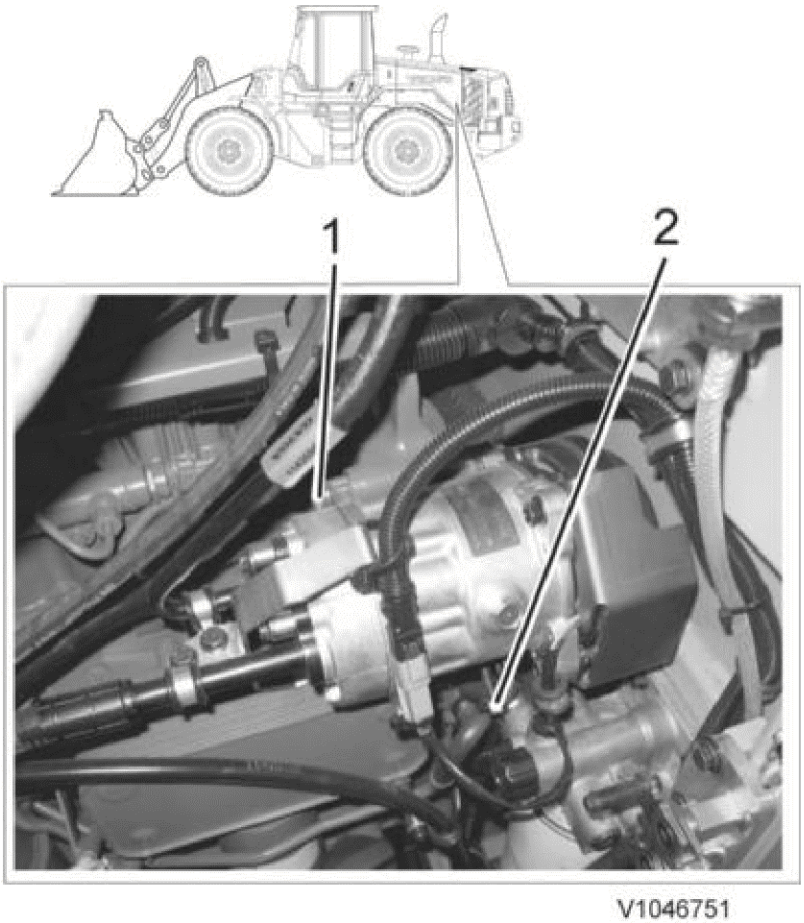

Figure 22
Drive belt, air conditioning

1. Attaching bolt
2. Adjusting screw

Adjustment

1. Loosen the AC compressor's attaching bolt
2. Adjust to the correct belt tension. Check the belt tension and tighten the attaching bolt.

Batteries' electrolyte level, cables and connections, check

WARNING! **The battery electrolyte contains corrosive sulphuric acid. Electrolyte spilled on bare skin should be removed immediately. Wash the affected area with soap and plenty of water. If electrolyte gets into your eyes or any other sensitive body part, rinse immediately with plenty of water and seek immediate medical attention.**

27. The battery electrolyte shall be 10 mm (0.4 in) over the plates in the battery.



V1046755

Figure 23
Battery box, left side

Top up with distilled water as needed.
Check that cable terminals and terminal studs are well cleaned, tightened, and lubricated with e.g., acid-free vaseline.

Condenser, check

28. Clean as needed

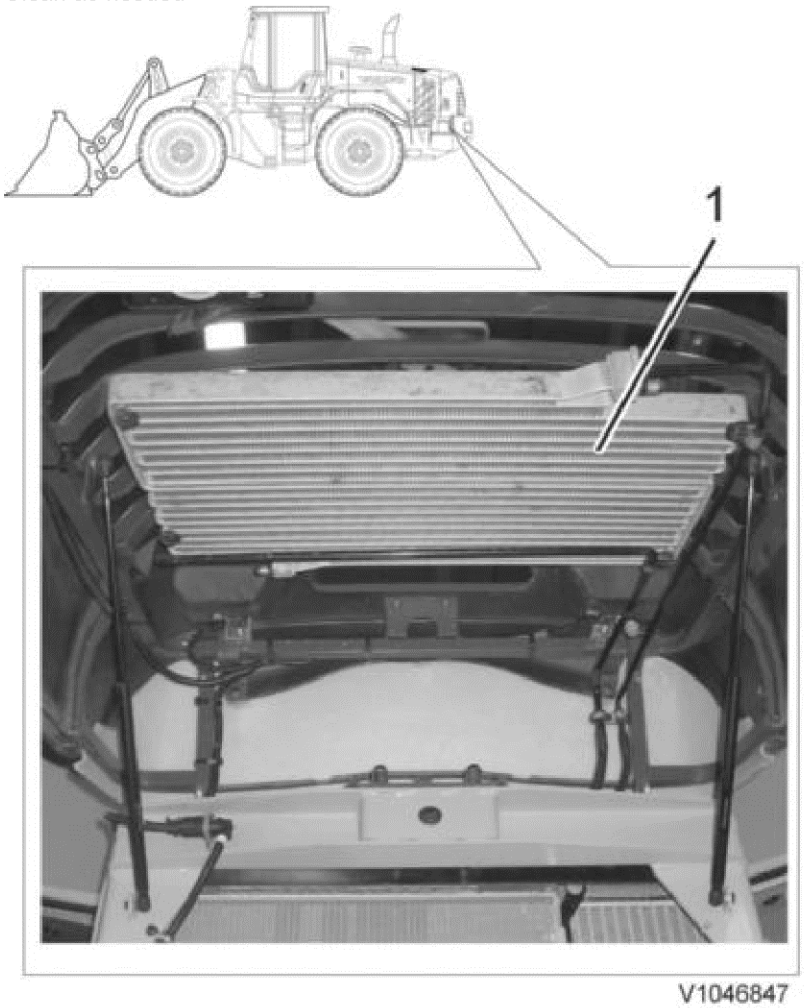

V1046847

Figure 24

1. Condenser

NOTE **High-pressure washer may not be used**

Cleaning

1. Open the radiator casing
2. Blow clean with compressed air

Radiator, engine, check

WARNING! **Beware of rotating parts. Keep a safe distance.**

29. Clean as needed

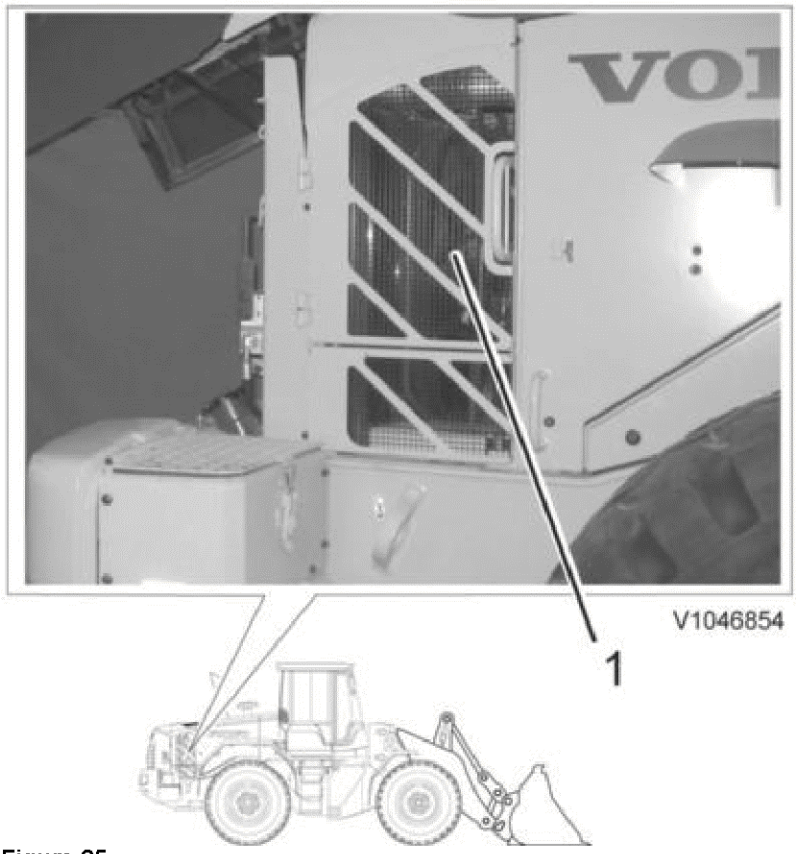

Figure 25
Radiator

1. Radiator grill

NOTE **The radiator should be cleaned at regular intervals to ensure cooling of the engine. If the machine's operating site is dusty, the radiator should be checked daily.**

1. Unlock and raise the engine cover
2. Open the radiator grill
3. Blow clean the radiator with compressed air from the inside
4. Close the radiator grill, engine cover, and radiator casing

NOTE **The radiator's fins may be damaged if handled carelessly**

Drive belt, alternator, checking and adjusting

30. At correct belt tension, it should be possible to press down the belt approx. 10 mm (0.39 in) between the belt pulleys.
Adjustment
    1. Loosen the alternator's attaching bolt
    2. Adjust to the correct belt tension. Check the belt tension and tighten the attaching bolt.

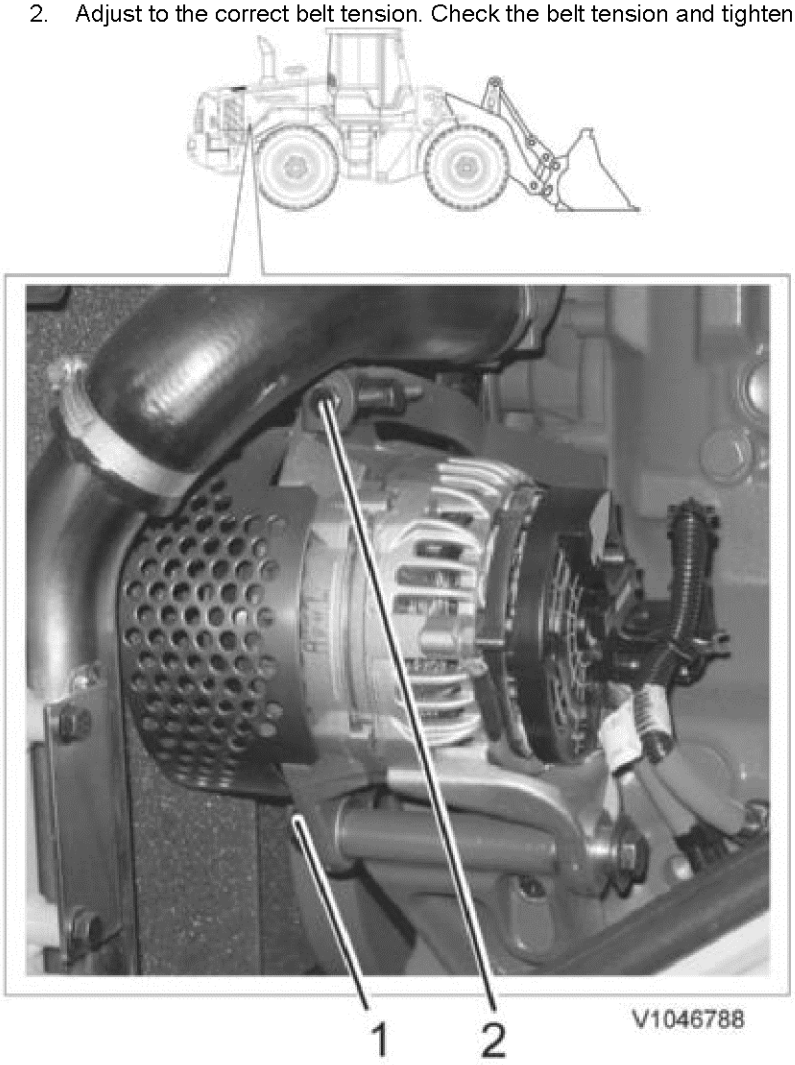

Figure 26
Alternator, drive belt

1. Attaching bolt
2. Adjusting screw

Oil-bath pre-cleaner (optional equipment)

31. Change oil and clean the insert.

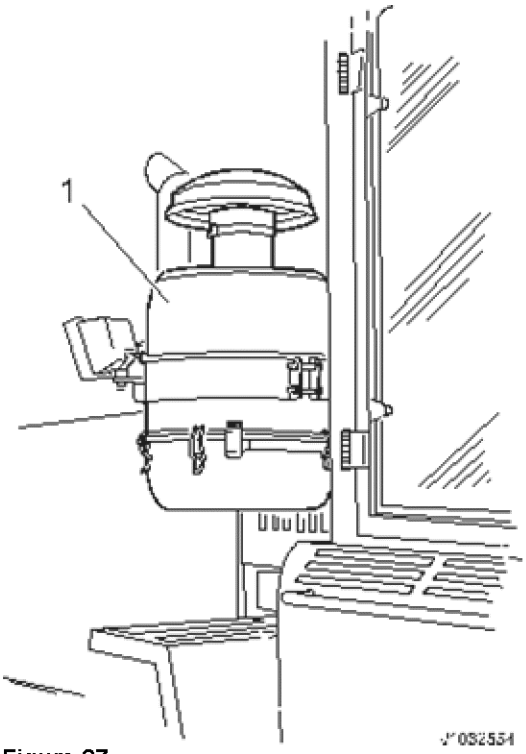

Figure 27
Oil-bath air cleaner

For more information, see Operator's manual.
Volume: **5.5 litres (1.5 US gal)**

Cab, ventilation unit

32. Main filter and pre-filter, change

NOTE **Use breathing protection when handling filters**

1. Open the side cover
2. Remove the pre-filter and change it
3. Remove the nuts that hold the plastic casing for the primary filter

NOTE **Keep track of the sheet metal strip that is located at the top of the plastic casing**

4. Remove the main filter and change it
5. Reinstall the plastic casing with the sheet metal strip at the top
6. Install the pre-filter and close the side cover

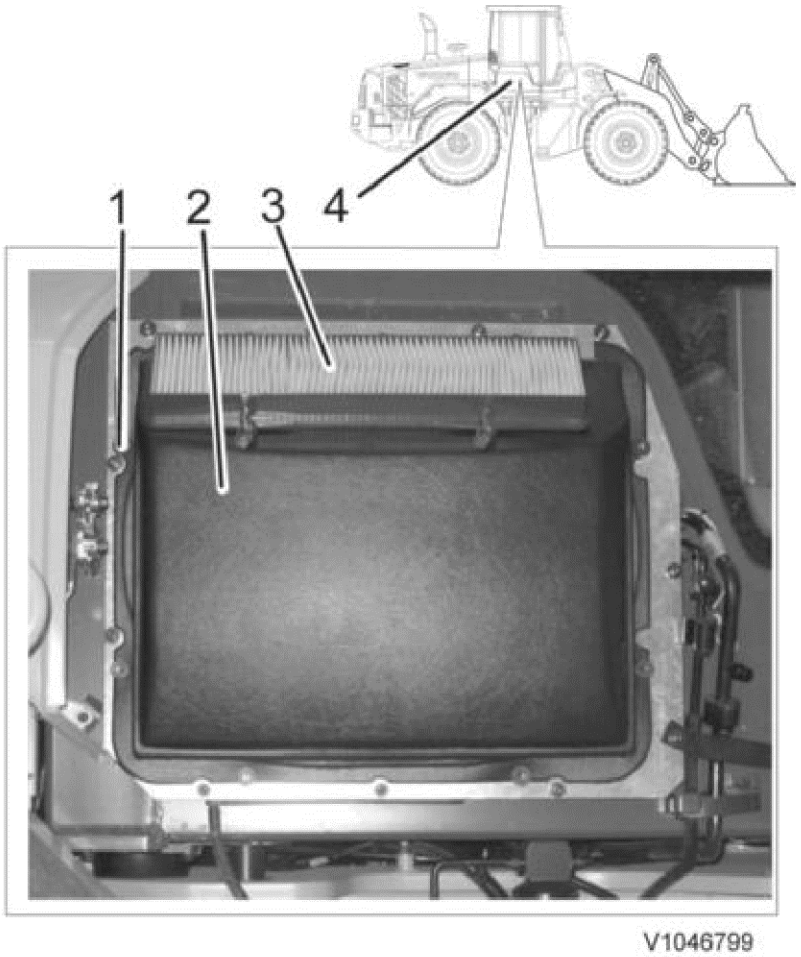

Figure 28
Primary filter

1. Plastic nuts, 9 pcs.
2. Primary filter. Inside plastic casing
3. Pre-filter
4. Side cover

Boom, grease

33. Grease the boom's pivot pins according to lubrication chart

Frame and cab

34. Grease the cab's and frame's grease points according to the lubrication chart.
35. **Set the machine in service position 2, see:** Service positions

Breather filters, changes, Front axle

36. Start the engine and raise the boom. Use support 9993831 to secure the boom.

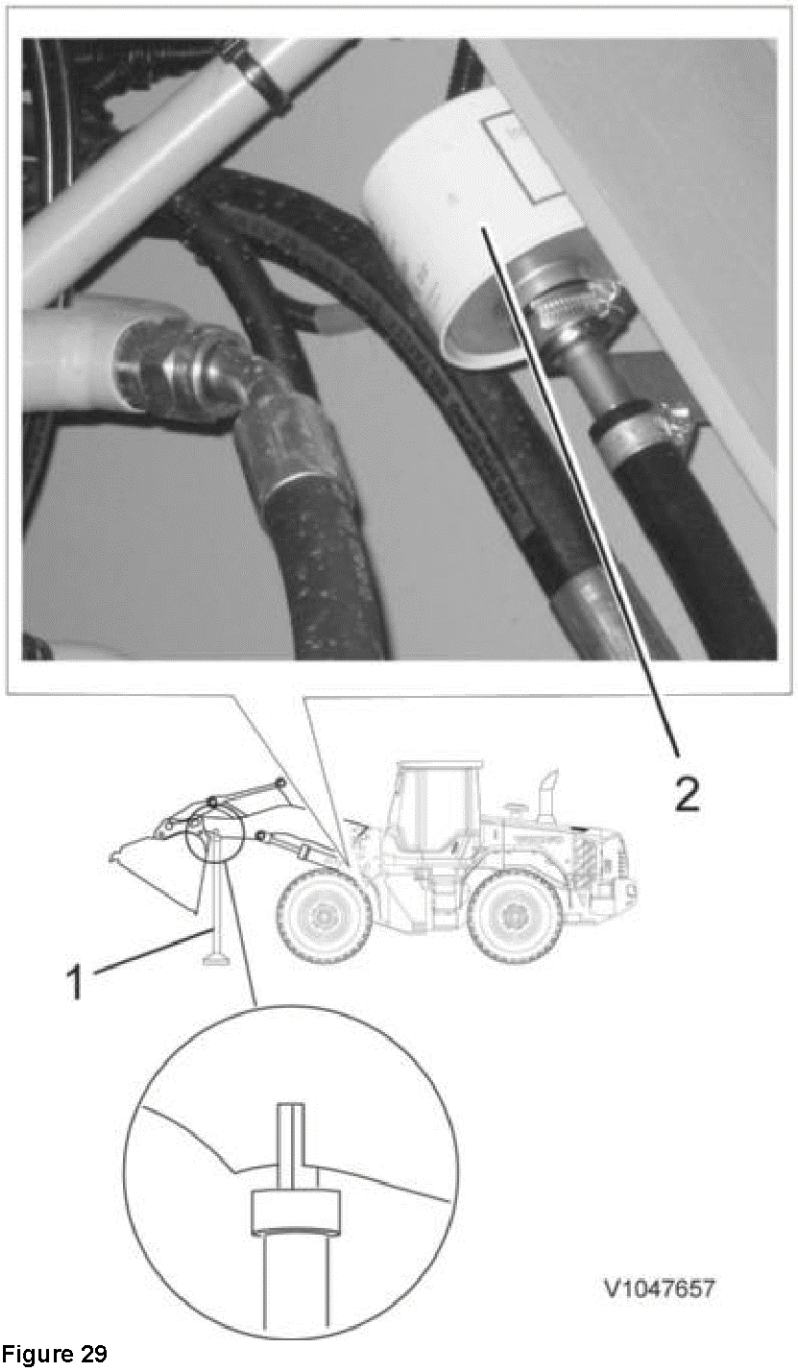

Figure 29
Breather filter, front axle

1. Support 9993831
2. Breather filter

The filter cannot be cleaned, it must be replaced.

Cooling system, checking level and freezing point

WARNING! **Open the expansion tank cap slowly and carefully. The cooling system operates at high pressure and hot coolant may rush out and cause severe burns.**

37. Level check.

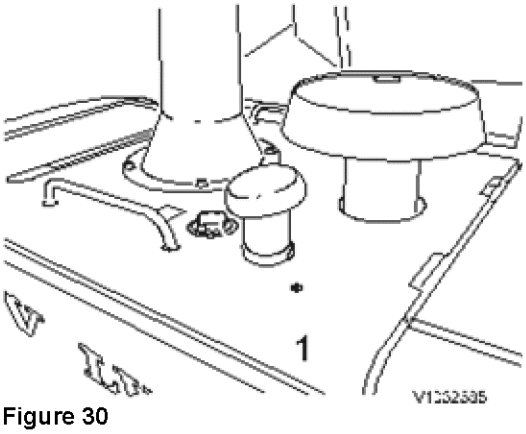

Figure 30
Coolant level

1. Filling point

Fill coolant in the expansion tank.

NOTE **Use Volvo Coolant VCS.**

The coolant level shall be between max. and min.

38. Coolant, freezing point, check
Check the freezing point with a refractometer at the expansion tank.
The machine is delivered with a coolant mixture of 40% glycol and 60% water for optimal cooling and corrosion characteristics. That is why the same coolant mixture shall be filled, regardless of ambient temperature conditions.

Anti-freeze protection down to	Content of concentrated coolant
–25 °C (–13 °F)	40%
–35 °C (–31 °F)	50%
-45 °C (-51 °F)	60%

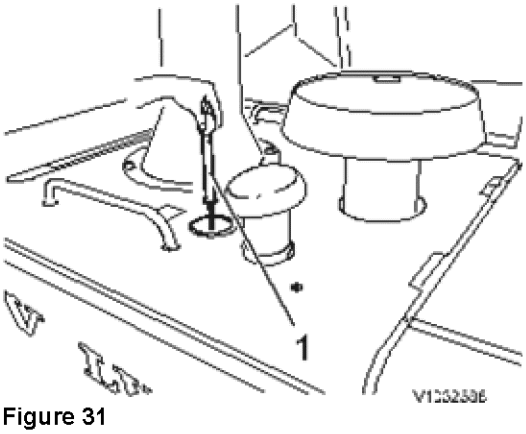

Figure 31
Filling point, coolant

1. 88890105 Refractometer

Parking brake, check.

39. **See:** Parking brake, brake pads change, checking and adjusting

40. **Place the machine in service position 1 acc. to:** Service positions

Transmission, oil level, checking

41. When checking, the machine shall be parked on a level ground surface.

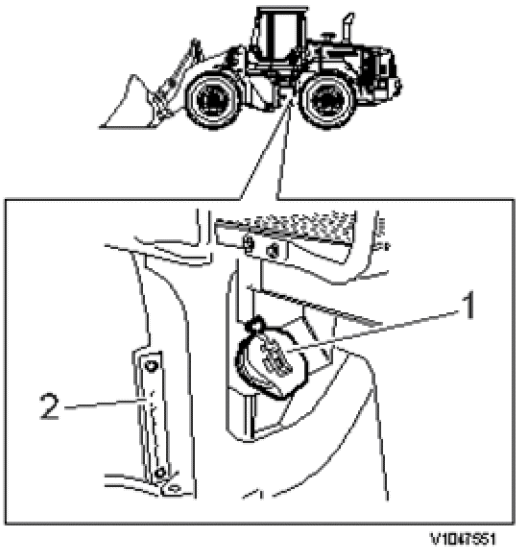

Figure 32

1. Filling, transmission oil
2. Level glass

The gear selector shall be in neutral position and the parking brake shall be applied.
The machine should be at operating temperature and the machine should be on, and the level should be between the markings High and Low on the lower part of the glass.

Hydraulic oil level, check

42. The hydraulic oil level shall be between max. and min.

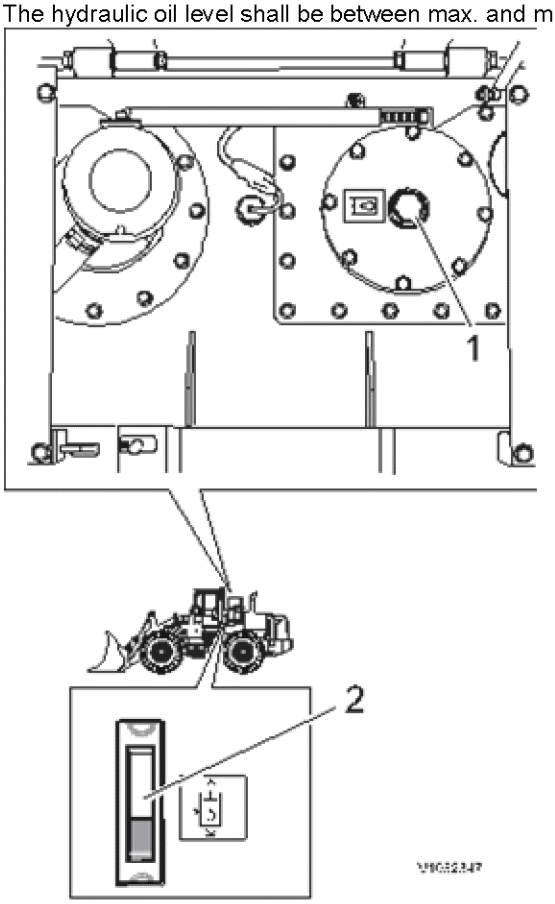

Figure 33

1. Plug, filling point
2. Sight-glass

Engine oil level, check

43. Turn off the engine and check the engine oil level. Top up as needed.

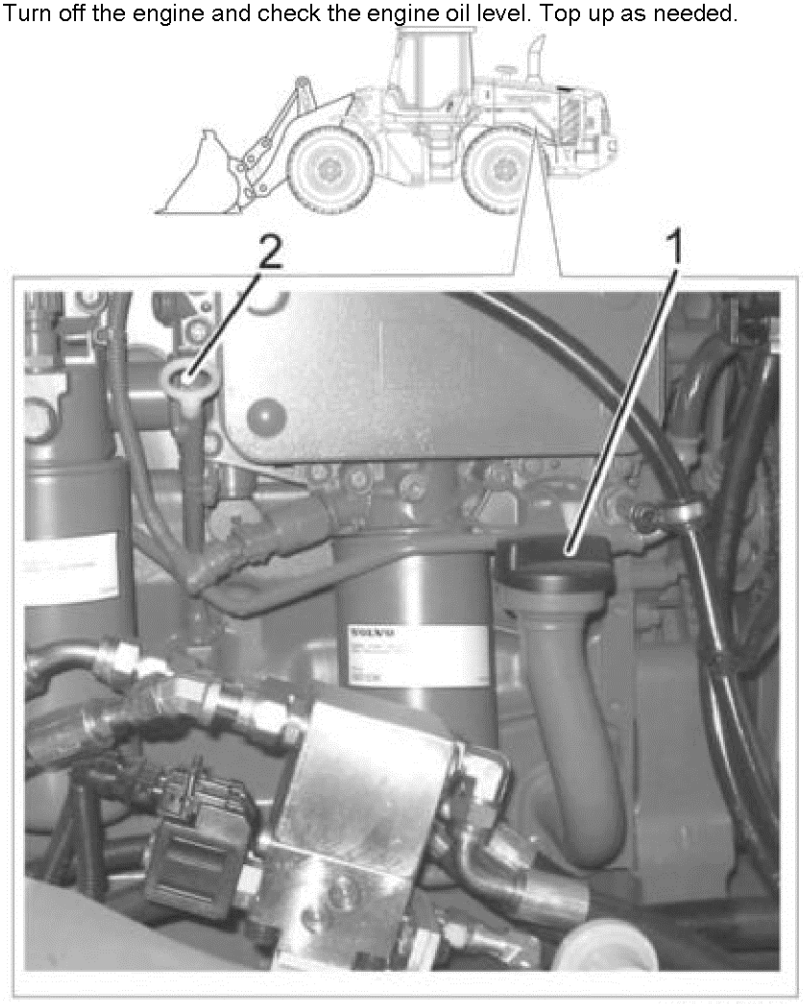

Figure 34

1. Filling point, engine oil
2. Oil dipstick

Brakes, pressure and function check

44. **See:** Pressure in circuit, checking and adjusting

Brake accumulators, checking precharge pressure

45. **See:** Brake system, function check hydraulics

Steering pressure, check

46. **See:** Steering system, checking and adjusting working pressure

Hydraulic pressure, check

47. See: Hydraulic pump, checking and adjusting max. working pressure

Boom Suspension System, accumulator, check

48. See, Boom Suspension System accumulator, checking and adjusting

Tires as well as inflation pressure in tires, check

49. **See:** A few simple rules when handling tires

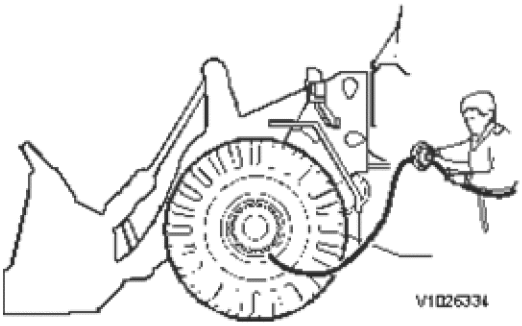

Figure 35
Inflation pressure in tires, check

For inflation pressure in tires, see operator's manual.

Wheel nuts and tightening torques, check

50. **Tightening torques, see:** Wheels, tightening torques

Restoring the machine

51. Test run

VOLVO
Construction Equipment

Service Information

Document Title:	Function Group:	Information Type: **Service Information**	Date: **12/10/2011**
Profile: **WLO, L90F (Volvo) [GB]**			

Maintenance service, every 6000 hours

NOTE **Time interval 6000 hours or max. 4 years**

Op nbr 173-022

11666051 Pressure gauge
11666135 Gas filling kit
11666167 Disassembly tool
14290266 Hose
9993831 Support
9993831 Support
9996672 Oil filter wrench
9996864 Oil filter wrench

11054692 Valve 1 pc.
VCADS Pro/ Matris computer

1. Perform first 2000–hour service according to Maintenance service, 2,000 hrs

Coolant, changing

WARNING! **Open the expansion tank cap slowly and carefully. The cooling system operates at high pressure and hot coolant may rush out and cause severe burns.**

2. Draining

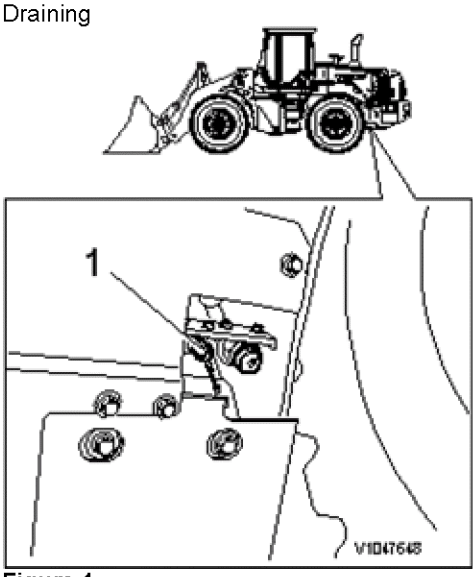

Figure 1
Draining point

1. Drain point for coolant

Coolant volume, see: Cooling system, volume

1. Remove the cap from the expansion tank.
2. Loosen the cover inside the left rear wheel and swing it to the side.
3. Get the drain hose from the battery box. Place the end of the hose in a suitable container and connect the hose to the drain nipple.

NOTE **Drain from the engine oil cooler as well.**

NOTE **Take care of the coolant in an environmentally friendly manner.**

3. Filling

NOTE **Use Volvo Coolant VCS.**

Caution!
Volvo Coolant VCS must never be mixed with any other coolant or corrosion protection to avoid damage to the engine.

Anti-freeze protection down to	Content of concentrated coolant
–25 °C (–13 °F)	40%
–35 °C (–31 °F)	50%
–46 °C (–51 °F)	60%

The machine is delivered with a coolant mixture of 50% glycol and 50% water for optimal cooling and corrosion characteristics. That is why the same coolant mixture shall be filled, regardless of ambient temperature conditions.

1. Fill the system to max. level in the expansion tank. Fit the cap for the expansion tank.
2. Run the engine warm and set the control to “warm”.
3. Stop the engine and let it cool down.
4. Run the engine warm and top up so that the cooling system is completely filled and bled free from air.

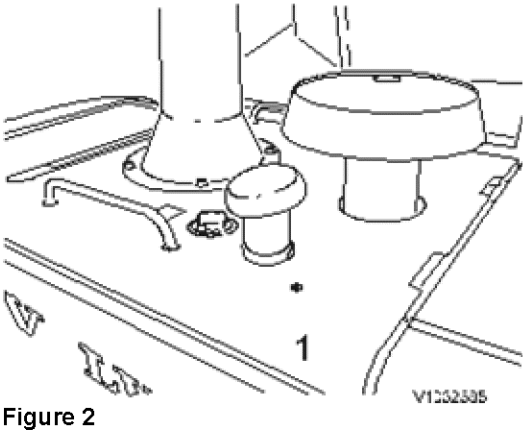

Figure 2
Coolant level

1. Filling point

VOLVO
Construction Equipment

Service Information

Document Title:	Function Group:	Information Type: **Service Information**	Date: **12/10/2011**
Profile: **WLO, L90F (Volvo) [GB]**			

Maintenance service, daily

The service points where "optional equipment" is stated are not included in the accounted time for the interval.

Op nbr 173-002

Grease gun

Test-run and check

1. How to perform methods, see Operator's manual
   Instruments, lighting, direction indicators, reflectors, flashing hazard lights, wipers, washers, horn, and back-up alarm (if installed).

2. **Place the machine in service position 1 acc. to:** Service positions

Oil-bath pre-cleaner (optional equipment)

3. Check the oil level.

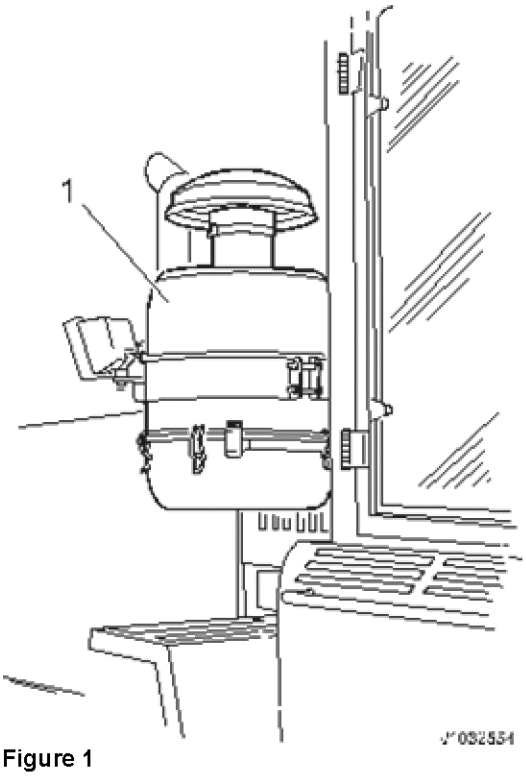

Figure 1
Oil-bath air cleaner

For more information, see Operator's manual.
Volume: **5.5 litres (1.5 US gal)**

Framework, grease

4. Grease the boom's pivot pins according to the lubrication chart.

Restore the machine.

5. Test run

VOLVO
Construction Equipment

Service Information

Document Title:	Function Group:	Information Type: **Service Information**	Date: **12/10/2011**
Profile: **WLO, L90F (Volvo) [GB]**			

Maintenance service, every 50 hours

The 50 hr service interval includes the daily service interval.

The service points where "optional equipment" is stated are not included in the accounted time for the interval.

Op nbr 173-004

Air pressure gauge
Grease gun

Test-run and check

1. How to perform methods, see Operator's manual
   - Start and stop function
   - Instruments, lighting, direction indicators, reflectors, flashing hazard lights, wipers, washers, horn, and back-up alarm (if installed).
   - Climate control unit, fan and controls incl. AC-compressor.
   - Leakage, general
   - Pipes and hoses, condition
   - Warning decals and plates. Check that they are legible and not damaged
2. **Place the machine in service position 1 acc. to:** Service positions

Oil-bath pre-cleaner (optional equipment)

3. Check the oil level.

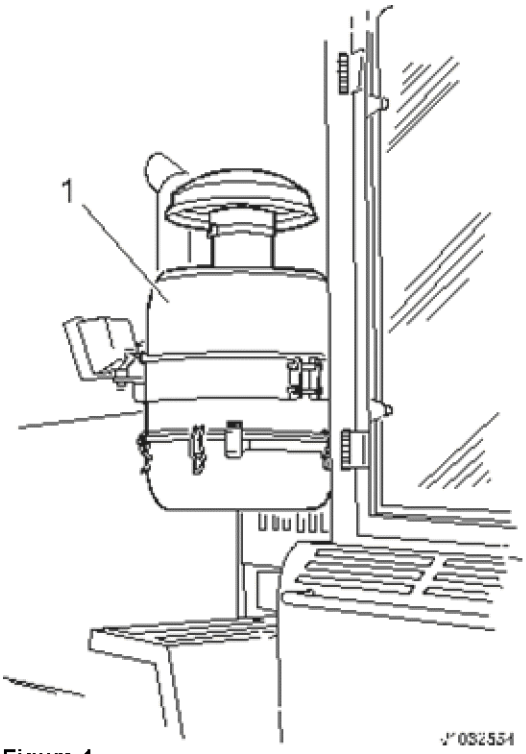

Figure 1
Oil-bath air cleaner

For more information, see Operator's manual.
Volume: **5.5 litres (1.5 US gal)**

Framework, grease

4. Grease the boom's pivot pins according to the lubrication chart.

Frame and cab

5. Grease the cab's and frame's grease points according to the lubrication chart

Coolant system, checking level

WARNING! **Open the expansion tank cap slowly and carefully. The cooling system operates at high pressure and hot coolant may rush out and cause severe burns.**

6. Level check.
Fill coolant in the expansion tank.

NOTE **Use Volvo Coolant VCS.**

The coolant level shall be between max. and min.
The machine is delivered with a coolant mixture of 40% glycol and 60% water for optimal cooling and corrosion characteristics. That is why the same coolant mixture shall be filled, regardless of ambient temperature conditions.

Anti-freeze protection down to	Content of concentrated coolant
–25 °C (–13 °F)	40%
–35 °C (–31 °F)	50%
-45 °C (-51 °F)	60%

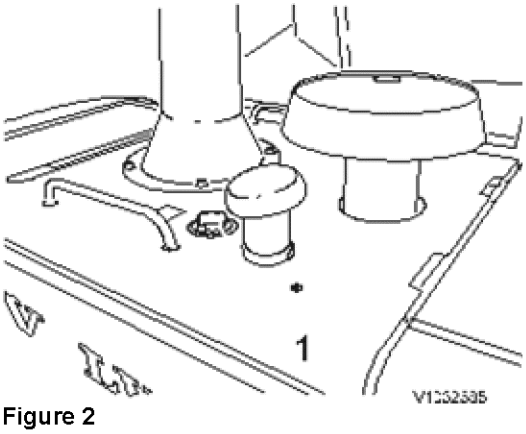

Figure 2
Coolant level

1. Filling point

Engine, oil level, checking

7. Turn off the engine and check the engine oil level. Top up as needed.

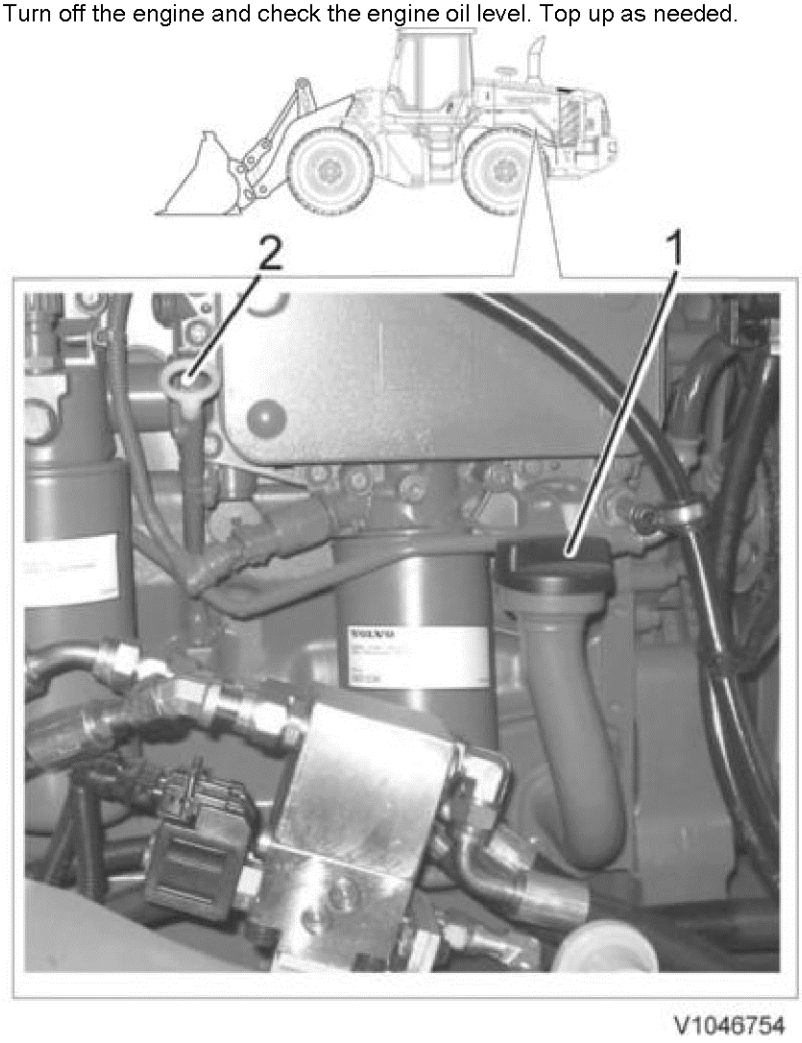

Figure 3

1. Filling point, engine oil
2. Oil dipstick

Tires as well as inflation pressure in tires, check

8. **See:** A few simple rules when handling tires

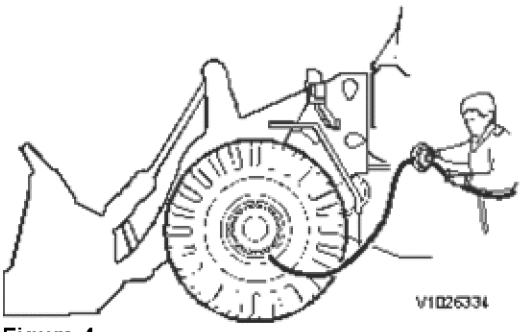

Figure 4
Inflation pressure in tires, check

For inflation pressure in tires, see operator's manual.

Restore the machine.

9. Test run

VOLVO
Construction Equipment

Service Information

Document Title:	Function Group:	Information Type: **Service Information**	Date: **12/10/2011**
Profile: **WLO, L90F (Volvo) [GB]**			

Maintenance service, every 250 hours

The 250 hr service interval includes daily as well as the 50 hr service interval.

The service points where "optional equipment" is stated are not included in the accounted time for the interval.

Op nbr 173-007

Air pressure gauge	
Torque wrench	800 Nm (590 lbf ft)
Extension	approx. 250 mm (10 in)
Sleeve	32 mm
Collection container	
Grease gun	

Test-run and check

1. How to perform methods, see Operator's manual
   - Start and stop function
   - Instruments, lighting, direction indicators, reflectors, flashing hazard lights, wipers, washers, horn, and back-up alarm (if installed).
   - Leakage, general
   - Pipes and hoses, condition
   - Climate control unit, fan and controls incl. AC-compressor.
   - Warning decals and plates. Check that they are legible and not damaged
2. **Place the machine in service position 1 acc. to:** Service positions

Batteries' electrolyte level, cables and connections, check

WARNING! **The battery electrolyte contains corrosive sulphuric acid. Electrolyte spilled on bare skin should be removed immediately. Wash the affected area with soap and plenty of water. If electrolyte gets into your eyes or any other sensitive body part, rinse immediately with plenty of water and seek immediate medical attention.**

3. The battery electrolyte shall be 10 mm (0.4 in) over the plates in the battery.



V1046755

Figure 1
Battery box, left side

Top up with distilled water as needed.
Check that cable terminals and terminal studs are well cleaned, tightened, and lubricated with e.g., acid-free vaseline.

Radiator, engine, check

WARNING! **Beware of rotating parts. Keep a safe distance.**

4. Clean as needed

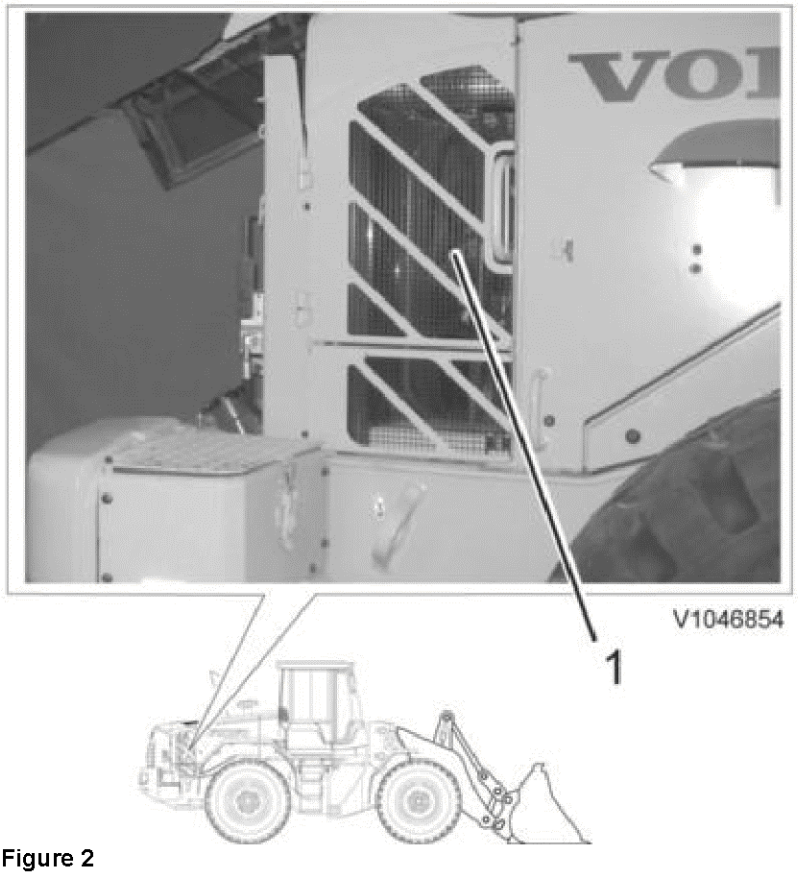

Figure 2

Radiator

1. Radiator grill

NOTE **The radiator should be cleaned at regular intervals to ensure cooling of the engine. If the machine's operating site is dusty, the radiator should be checked daily.**

1. Unlock and raise the engine cover
2. Open the radiator grill
3. Blow clean the radiator with compressed air from the inside
4. Close the radiator grill, engine cover, and radiator casing

NOTE **The radiator's fins may be damaged if handled carelessly**

Oil-bath pre-cleaner (optional equipment)

5. Change oil.

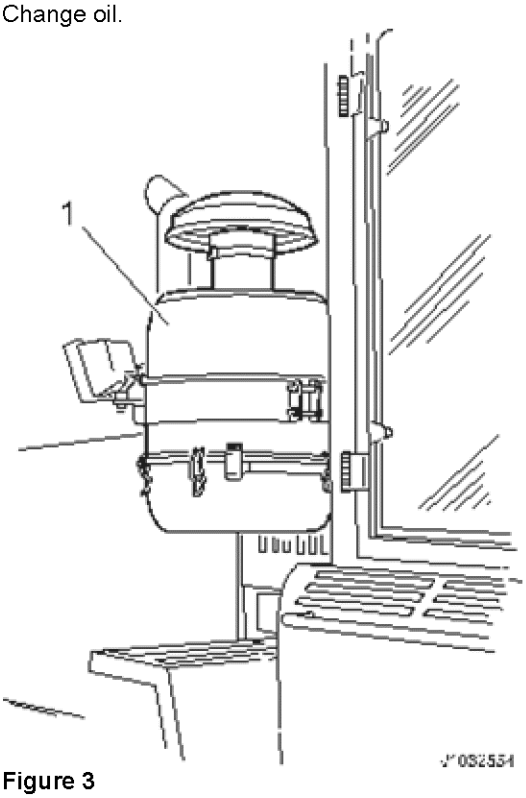

Figure 3
Oil-bath air cleaner

For more information, see Operator's manual.
Volume: **5.5 litres (1.5 US gal)**

Cab, ventilation unit

6. Primary filter, check. Clean as needed.

NOTE **Use breathing protection when handling filters**

1. Open the side cover
2. Remove the pre-filter
3. Remove the nuts that hold the plastic casing for the primary filter

NOTE **Keep track of the sheet metal strip that is located at the top of the plastic casing**

4. Remove the primary filter
5. Shake the filter carefully, without damaging it. Avoid compressed air, vacuum cleaners and water.
6. Reinstall the plastic casing with the sheet metal strip at the top
7. Install the pre-filter and close the side cover

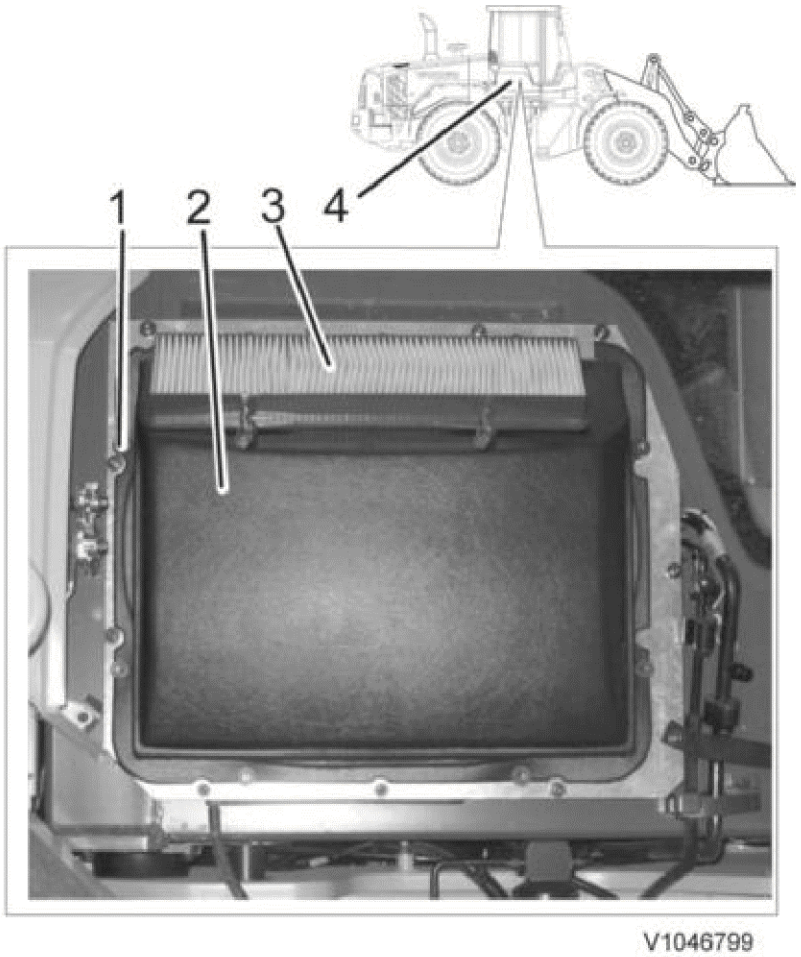

Figure 4
Primary filter

1. Plastic nuts, 9 pcs.
2. Primary filter. Inside plastic casing
3. Pre-filter
4. Side cover

Framework, grease

7. Grease the boom's pivot pins according to lubrication chart

Frame and cab

8. Grease the cab's and frame's grease points according to the lubrication chart

Coolant system, checking level

WARNING! **Open the expansion tank cap slowly and carefully. The cooling system operates at high pressure and hot coolant may rush out and cause severe burns.**

9. Level check.
Fill coolant in the expansion tank.
The machine is delivered with a coolant mixture of 40% glycol and 60% water for optimal cooling and corrosion characteristics. That is why the same coolant mixture shall be filled, regardless of ambient temperature conditions.

Anti-freeze protection down to	Content of concentrated coolant
-25 °C (-13 F°)	40%

-35 °C (-31 F°)	50%
-46 °C (-51 F°)	60%

NOTE **Use Volvo Coolant VCS.**

The coolant level shall be between max. and min.

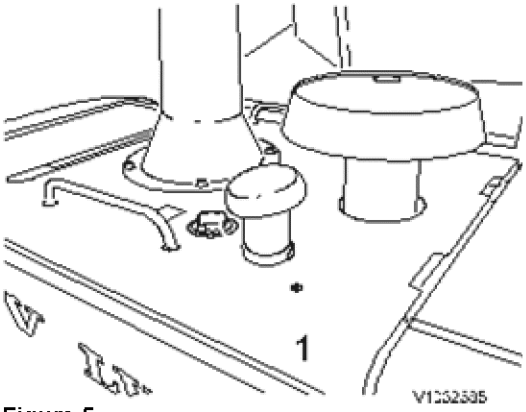

Figure 5
Coolant level

1. Filling point

Transmission oil, checking level

10. When checking, the machine should be parked on a level ground surface.
The gear selector must be in neutral position and the parking brake must be applied.
The machine should be at operating temperature and the machine should be on, and the level should be between the markings High and Low on the lower part of the scale.

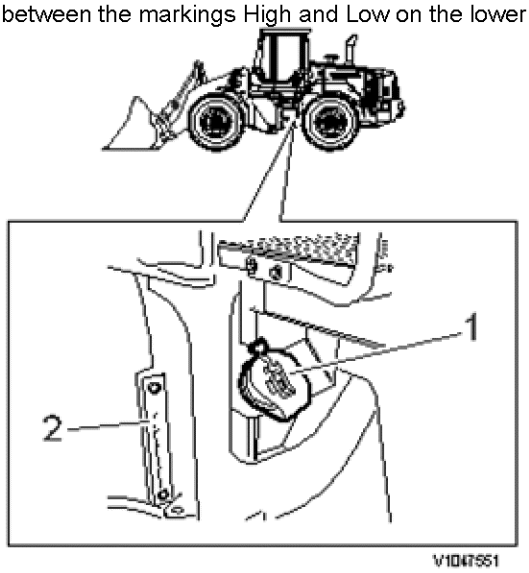

Figure 6

1. Filling, transmission oil
2. Sight-glass

Hydraulic system, checking hydraulic oil level

11. The boom shall be lowered and the bucket flat on the ground when filling!
The hydraulic oil level shall be between max. and min.

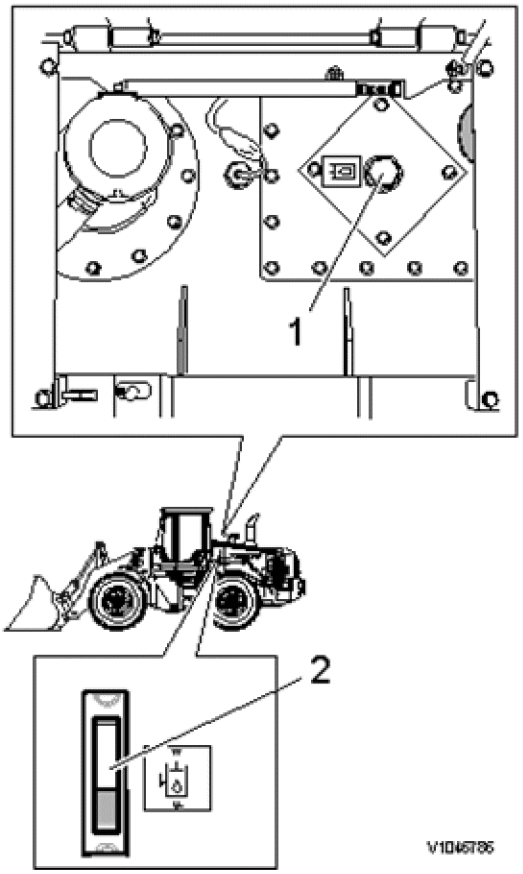

Figure 7
Hydraulic oil, level glass

1. Plug, filling point
2. Sight-glass

Engine, oil level, checking

12. Turn off the engine and check the engine oil level. Top up as needed.

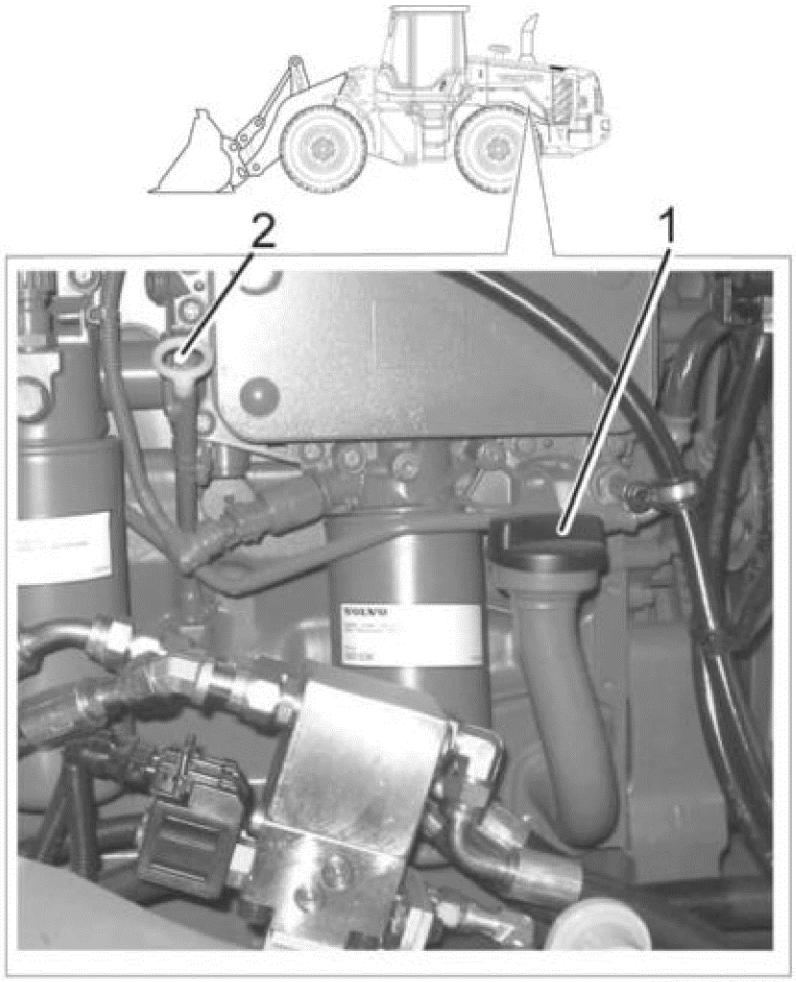

Figure 8

1. Filling point, engine oil
2. Oil dipstick

Water trap, check

13. Drain as needed

NOTE **Collect fuel spills by using a collection container or a plastic hose.**

Caution!
Always handle oils and other environmentally hazardous fluids in an environmentally safe manner.

Draining of water from the fuel must be performed manually. A non-return valve in the filter head prevents the fuel from draining back to tank. Since no fuel can drain back, the pressure will remain and thus water will not drain unless new fuel is pumped in.

Drain

1. Place the end of the hose in a container
2. Loosen the drain nipple
3. Pump with the hand pump until all water has been forced out from the water trap
4. Tighten the drain nipple



Figure 9
Water trap

1. Hand pump
2. Draining nipple

Tires as well as inflation pressure in tires, check

14. **See:** A few simple rules when handling tires

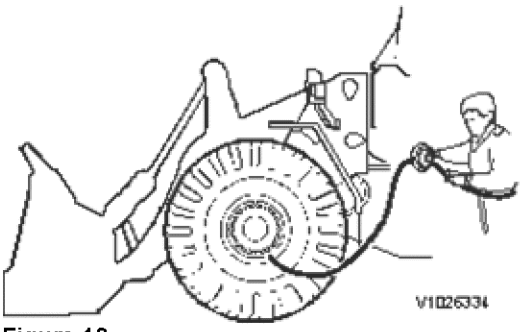

Figure 10
Inflation pressure in tires, check

For inflation pressure in tires, see operator's manual.

Restore the machine.

15. Test run

VOLVO
Construction Equipment

Service Information

Document Title:	Function Group:	Information Type: **Service Information**	Date: **12/10/2011**
Profile: **WLO, L90F (Volvo) [GB]**			

Maintenance service, every 500 hours

The 500 hr service interval includes daily, 50 hr, and 250 hr service intervals.

The service points where "optional equipment" is stated are not included in the accounted time for the interval.

Op nbr 173-010

11666051 Pressure gauge
14290266 Hose
11666167 Disassembly tool

Air pressure gauge	
Torque wrench	800 Nm (590 lbf ft)
Extension	approx. 250 mm (10 in)
Sleeve	32 mm
Collection container	
Grease gun	

Required materials	
Engine oil	20 litres (5.3 US gal)
Engine oil filter	1 pc.
Fuel filter: Primary filter	1 pc.
Fuel filter: Secondary filter	1 pc.

Test-run and check

1. How to perform methods, see Operator's manual
   Start and stop function
   Instruments, lighting, direction indicators, reflectors, flashing hazard lights, wipers, washers, horn, and back-up alarm (if installed).
   Climate control unit, fan and controls incl. AC-compressor.
   Leakage, general
   Pipes and hoses, condition
   Warning decals and plates. Check that they are legible and not damaged
2. **Place the machine in service position 1 acc. to:** Service positions

Brakes, checking

3. Brake accumulators, checking precharge pressure
   See: Brake system, function check hydraulics

Engine oil, drain

WARNING! Work carefully when changing oil as hot oil can cause severe burns to unprotected skin.

4.

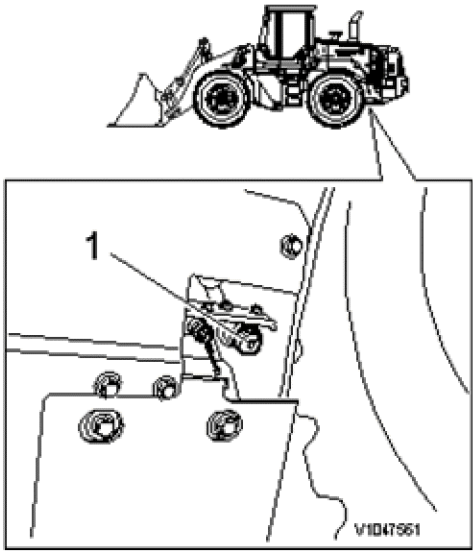

Figure 1
Draining point

1. Drain for engine oil

Drain the oil when the engine is warm.
Connect drain hose and drain the oil in a collection container.
The hose is located in the battery box.
Oil volume, see: Engine, capacities

NOTE **Handle the oil in an environmentally safe way.**

Engine oil filter, replacing

WARNING! Risk of burns! Use protective work gloves.

5. **Removing oil filters**

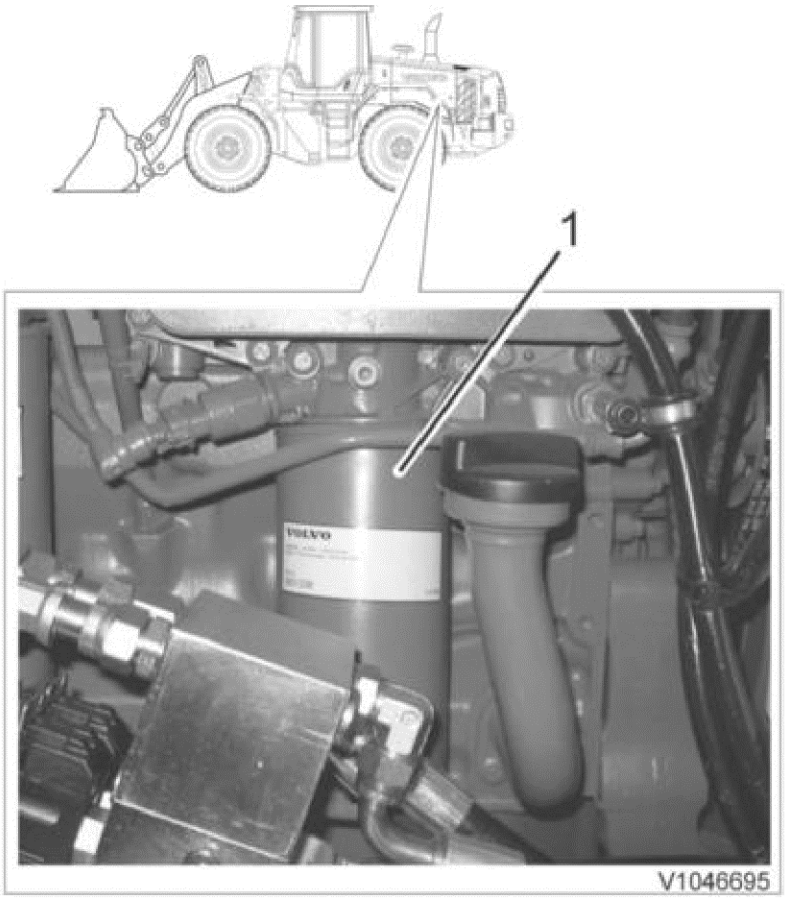

Figure 2

1. Engine oil filter

1. Open left engine cover
2. Use oil filter pliers when removing the oil filter

Installing oil filters

1. Fill the filter with engine oil and apply oil to the gasket
2. Screw on the filter until the gaskets just touch the sealing surface. Then tighten the filter another half turn by hand.

Fuel filter, primary and secondary filter, change

6. When installing, only tighten the filters by hand.

VOLVO
Construction Equipment

Service Information

Document Title:	Function Group:	Information Type: **Service Information**	Date: **12/10/2011**
Profile: **WLO, L90F (Volvo) [GB]**			

Maintenance service, every 1000 hours

The 1000 hr service interval includes daily, 50 hr, 250 hr, and 500 hr service intervals.

The service points where "optional equipment" is stated are not included in the accounted time for the interval.

Op nbr 173-012

11666051 Pressure gauge
14290266 Hose
9993892 Electronic unit
88890020 Interface
9993832 Adapter
9993886 Adapter
11666167 Disassembly tool
9993831 Support

Equipment for Matris read-out	
Air pressure gauge	
Torque wrench	800 Nm (590 lbf ft)
Extension	approx. 250 mm (10 in)
Sleeve	32 mm
Collection container	
Grease gun	

Required materials	
Engine oil	20 litres (5.3 US gal)
Axle oil L60F	48 litres (12.7 US gal)
Axle oil L70F and L90F	55 litres (14.53 US gal)
Transmission oil L60E and L70E	18 litres (4.76 US gal)
Air cleaner, primary filter	1 pc.
Engine oil filter	1 pc.
Fuel filter: Primary filter	1 pc.
Fuel filter: Secondary filter	1 pc.
Cab: Pre-filter	1 pc.
Cab: Main filter	1 pc.

Test-run and check

1. How to perform methods, see Operator's manual
   - Start and stop function
   - Instruments, lighting, direction indicators, reflectors, flashing hazard lights, wipers, washers, horn, and back-up alarm (if installed).
   - Climate control unit, fan and controls incl. AC-compressor
   - Leakage, general
   - Pipes and hoses, condition
   - Warning decals and plates. Check that they are

legible and not damaged

Matris read-off

2. Matris read-off is performed to follow up the machine's history

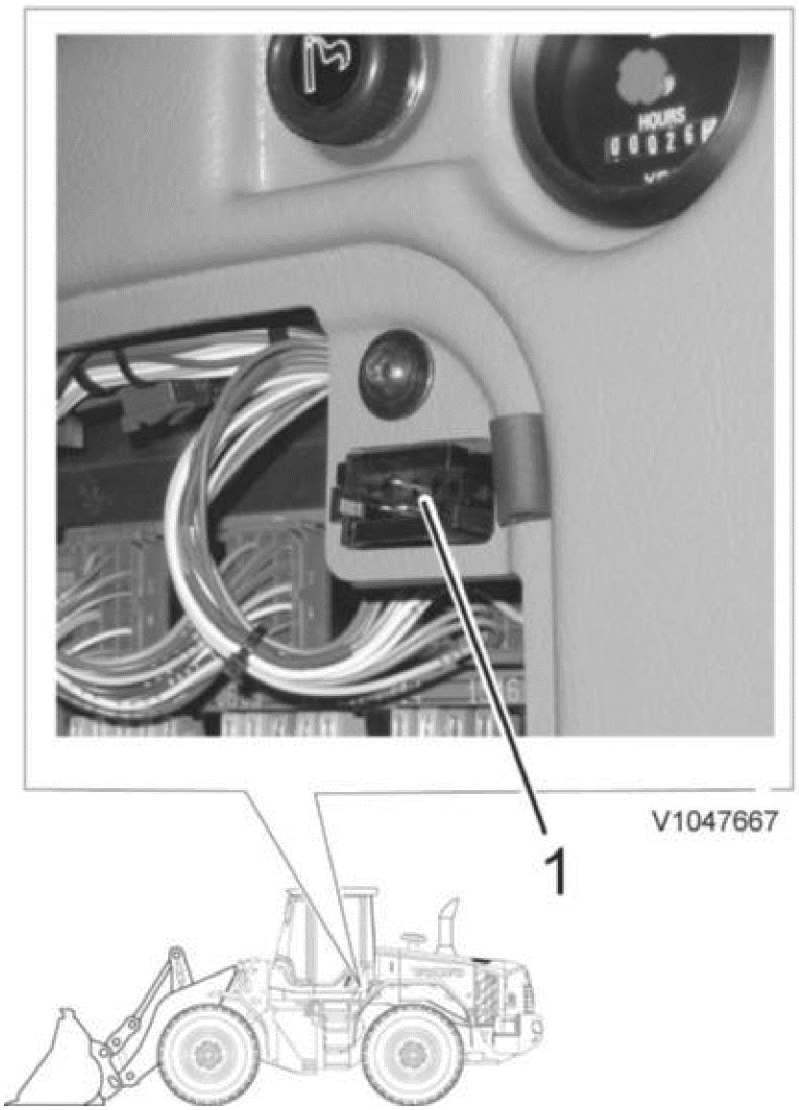

Figure 1
Matris read-off

1. Connection point

The read-off shall be exported to Volvo CE-server

3. **Place the machine in service position 1 acc. to:** Service positions

Brake discs, checking wear

4. **See:** Brake disc wear, checking

Engine oil, drain

WARNING! **Work carefully when changing oil as hot oil can cause severe burns to unprotected skin.**

5. Drain the oil when the engine is warm.

Connect drain hose and drain the oil in a collection container.
The hose is located in the battery box.
Oil volume, see: Engine, capacities

NOTE **Handle the oil in an environmentally safe way.**

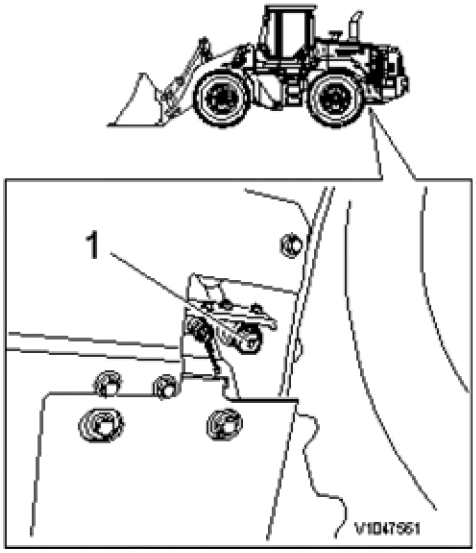

Figure 2
Draining point

1. Drain for engine oil

Front axle oil, draining

WARNING! **Work carefully when changing oil as hot oil can cause severe burns to unprotected skin.**

6. Oil volume, see: Front axle, volume

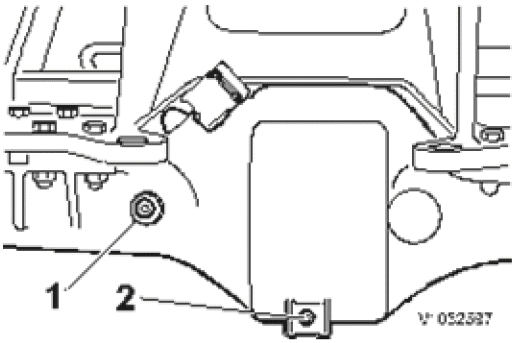

Figure 3
Front axle

1. Filler and level plug
2. Drain plug

Rear axle oil, draining

WARNING! **Work carefully when changing oil as hot oil can cause severe burns to unprotected skin.**

7. Oil, draining

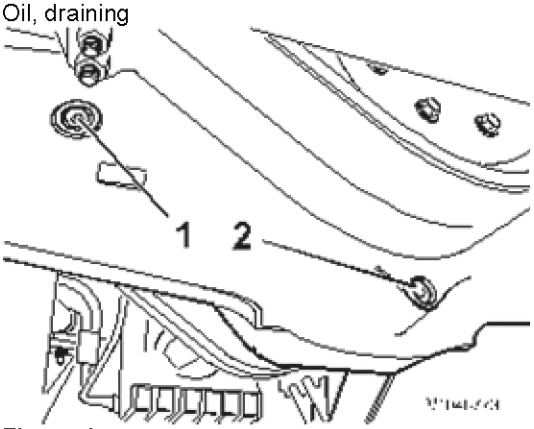

Figure 4
Rear axle

1. Filler and level plug
2. Drain plug

Oil volume, see: Rear axle, capacities

NOTE **Handle the waste oil in an environmentally safe way.**

Hydraulic oil tank, draining sediment and checking level

WARNING! **Work carefully when changing oil as hot oil can cause severe burns to unprotected skin.**

8. Draining sediment
Connect the drain hose and drain the sediment.
Use the drain hose that is located in the battery box.

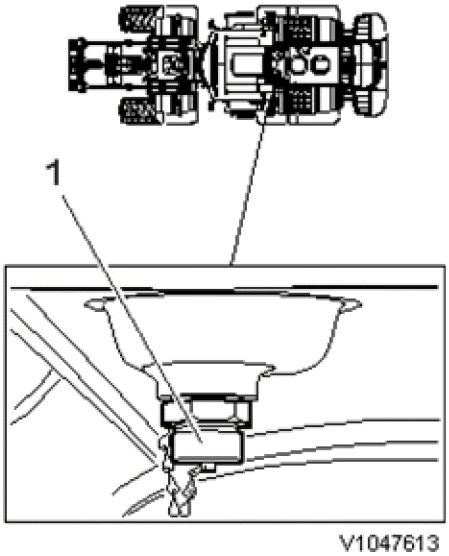

Figure 5
Hydraulic oil, drain point

1. Plug

Fuel filter, primary and secondary filter, change

9. When installing, only tighten the filters by hand.
For removing and installing bowl, use tool 11666167.

Bleed the system. **See:** Fuel system, air bleeding

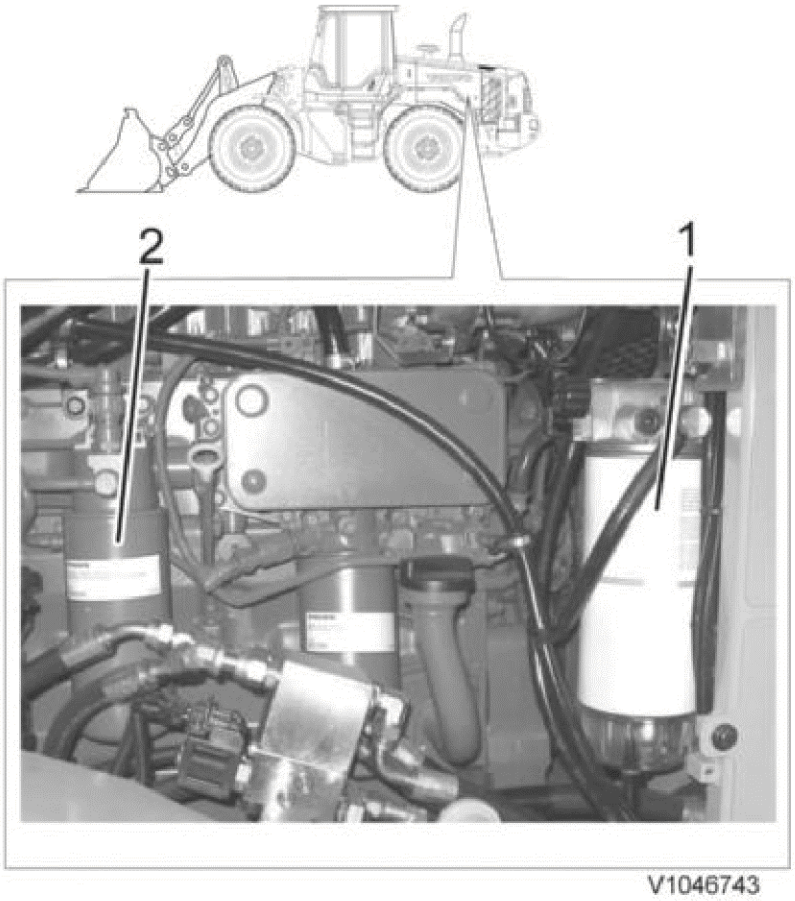

Figure 6

1. Primary fuel filter
2. Secondary fuel filters

Engine oil filter, replacing

WARNING! **Risk of burns! Use protective work gloves.**

10. **Removing oil filters**

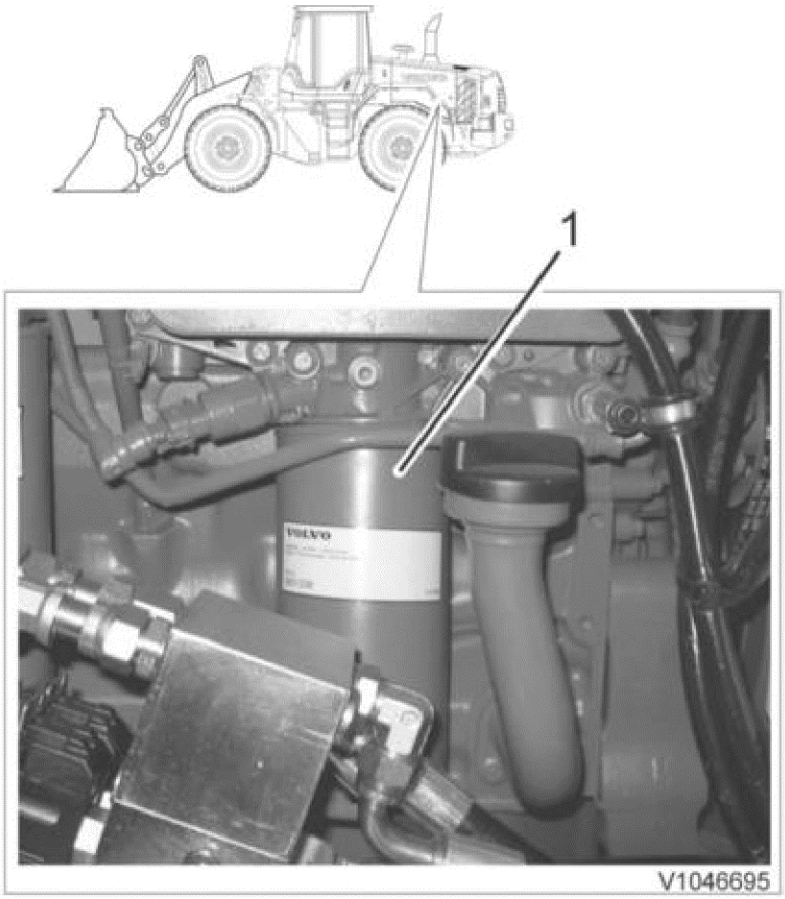

Figure 7

1. Engine oil filter

1. Open left engine cover
2. Use oil filter pliers when removing the oil filter

Installing oil filters

1. Fill the filter with engine oil and apply oil to the gasket
2. Screw on the filter until the gaskets just touch the sealing surface. Then tighten the filter another half turn by hand.

Engine oil, filling

11. **Oil volume, see:** Engine, capacities

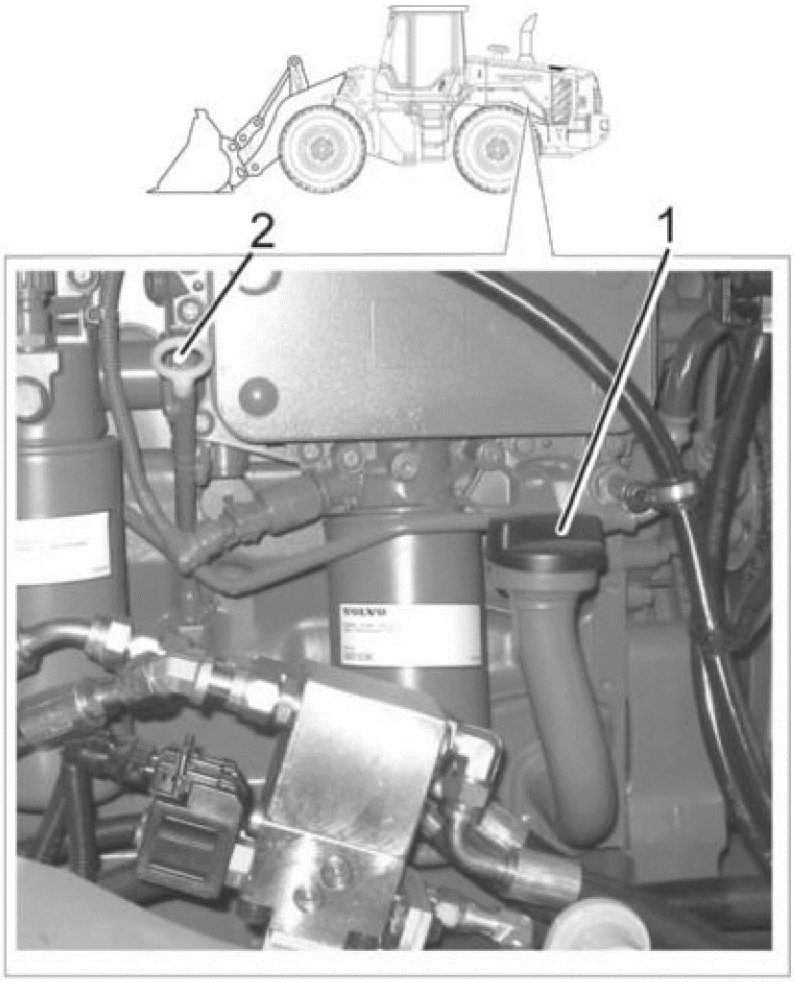

Figure 8

1. Filling point, engine oil
2. Oil dipstick

Fill the indicated oil volume.

Rear axle oil, filling

12. **Oil volume, see:** Front and rear axle, volume

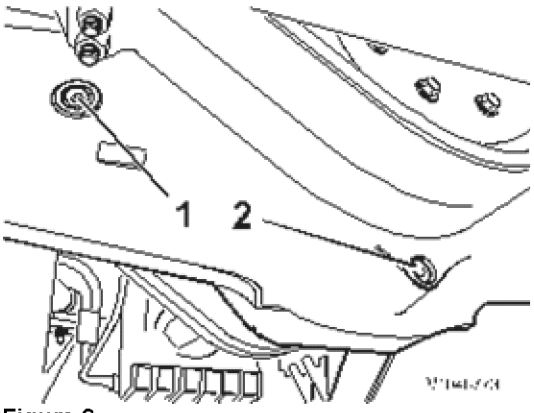

Figure 9

1. Filler and level plug
2. Drain plug

Front axle, topping up

13. **Oil volume, see:** Front and rear axle, volume

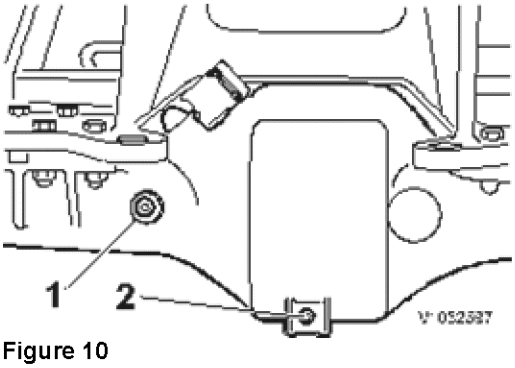

Figure 10

1. Filler and level plug
2. Drain plug

Air cleaner

14. Primary filter, change. For other change conditions, see Service program
In connection with filter change, also clean the cover for the air cleaner since it acts as a reservoir for particles that are not trapped in the filter.
Check that all hose and pipe connections from the air cleaner to the engine inlet manifold are tight. Check-tighten hose clamps.

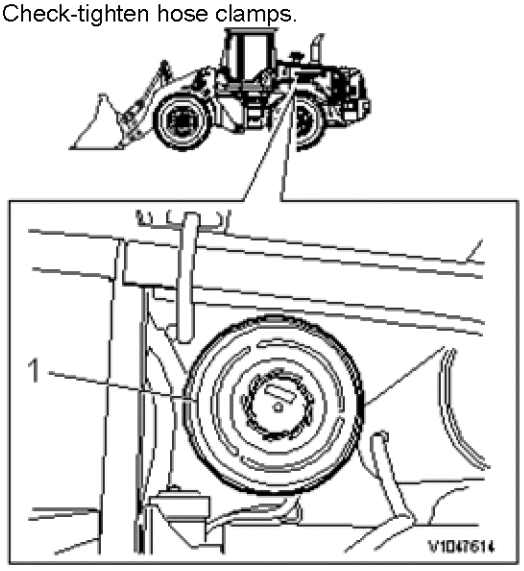

Figure 11

1. Air cleaner, primary filter

Drive belt, coolant pump and fuel feed pump, checking and adjusting

15. Check belt tension and condition. Adjust as needed.
Adjustment
   1. Tension the belt by moving the fuel feed pump
   2. At correct belt tension, it should be possible to press down the belt approx. 10 mm (0.39 in) between the belt pulleys.

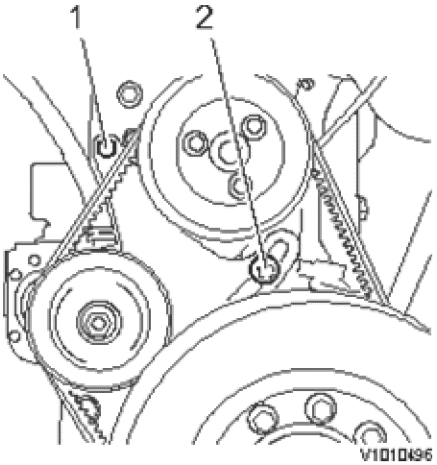

Figure 12

1. Attaching bolt
2. Adjusting screw

Drive belt, AC-compressor, checking and adjusting

16. At correct belt tension, it should be possible to press down the belt approx. 10 mm (0.39 in) between the belt pulleys.
Adjustment
    1. Loosen the AC compressor's attaching bolt
    2. Adjust to the correct belt tension. Check the belt tension and tighten the attaching bolt.

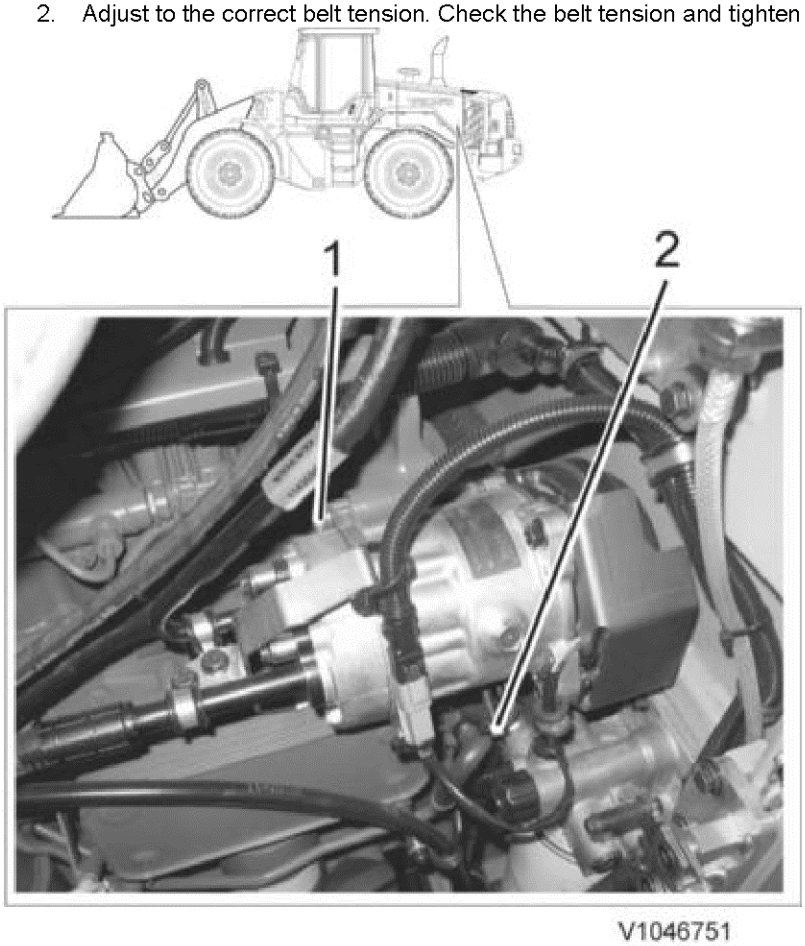

Figure 13
Drive belt, air conditioning

1. Attaching bolt
2. Adjusting screw

Batteries' electrolyte level, cables and connections, check

WARNING!

The battery electrolyte contains corrosive sulphuric acid. Electrolyte spilled on bare skin should be removed immediately. Wash the affected area with soap and plenty of water. If electrolyte gets into your eyes or any other sensitive body part, rinse immediately with plenty of water and seek immediate medical attention.

17. The battery electrolyte shall be 10 mm (0.4 in) over the plates in the battery.

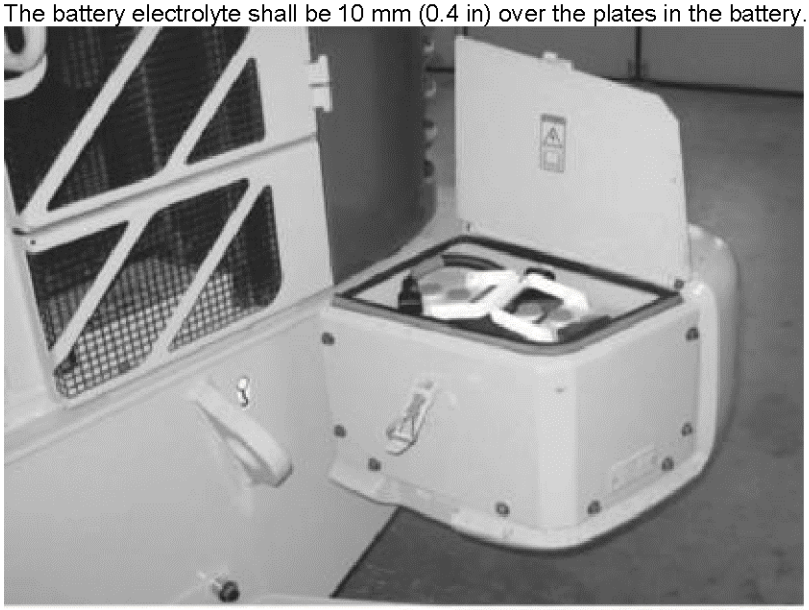

V1046755

Figure 14
Battery box, left side

Top up with distilled water as needed.
Check that cable terminals and terminal studs are well cleaned, tightened, and lubricated with e.g., acid-free vaseline.

Condenser, check

18. Clean as needed

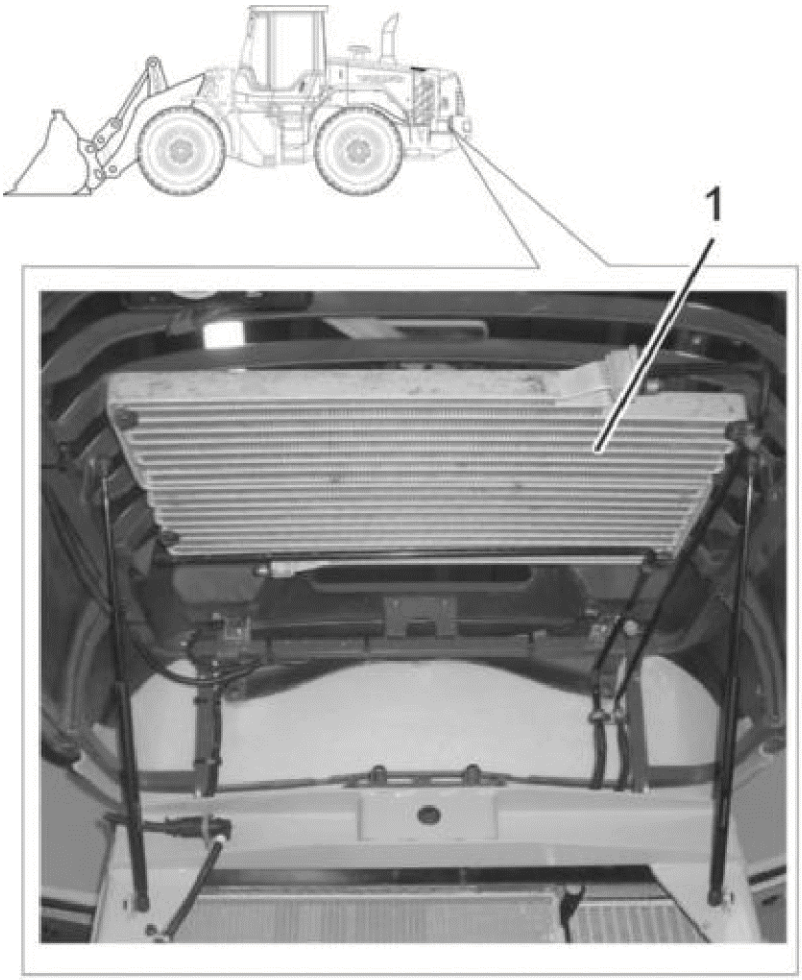

Figure 15

1. Condenser

NOTE **High-pressure washer may not be used**

Cleaning

1. Open the radiator casing
2. Blow clean with compressed air

Radiator, engine, check

WARNING! **Beware of rotating parts. Keep a safe distance.**

19. Clean as needed

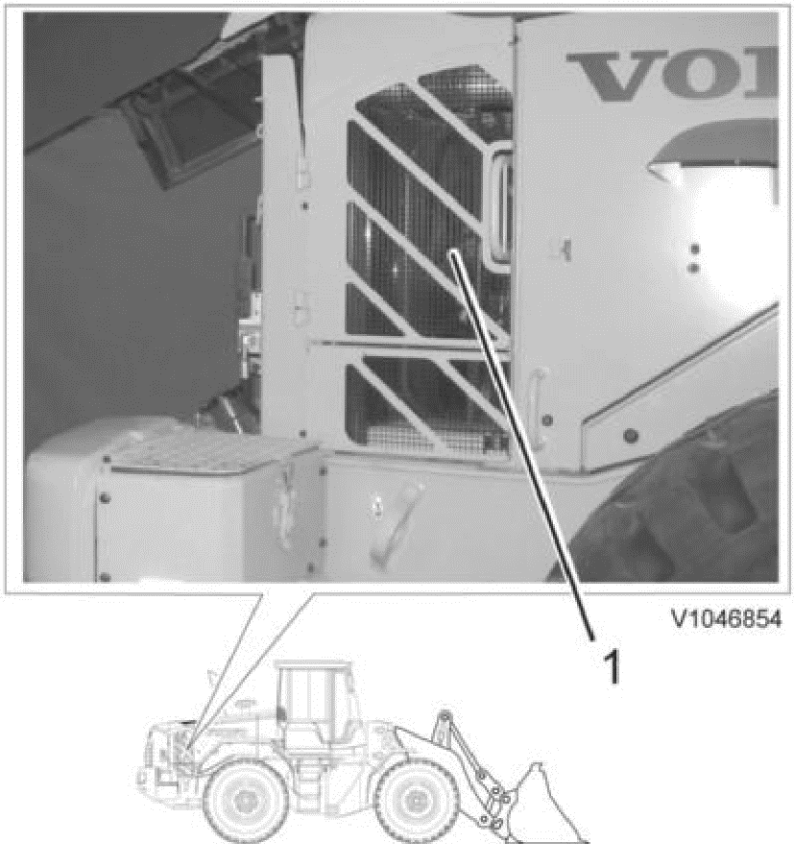

Figure 16
Radiator

1. Radiator grill

NOTE **The radiator should be cleaned at regular intervals to ensure cooling of the engine. If the machine's operating site is dusty, the radiator should be checked daily.**

1. Unlock and raise the engine cover
2. Open the radiator grill
3. Blow clean the radiator with compressed air from the inside
4. Close the radiator grill, engine cover, and radiator casing

NOTE **The radiator's fins may be damaged if handled carelessly**

Drive belt, alternator, checking and adjusting

20. At correct belt tension, it should be possible to press down the belt approx. 10 mm (0.39 in) between the belt pulleys.
Adjustment
    1. Loosen the alternator's attaching bolt
    2. Adjust to the correct belt tension. Check the belt tension and tighten the attaching bolt.

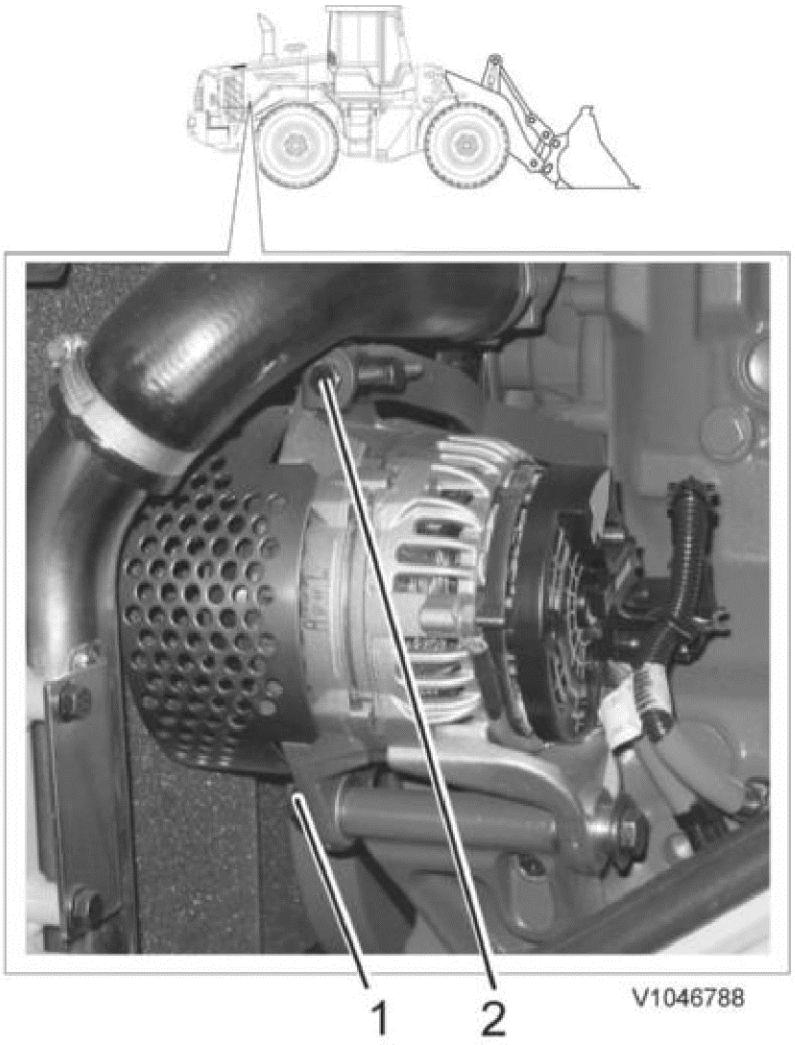

Figure 17
Alternator, drive belt

1. Attaching bolt
2. Adjusting screw

Oil-bath pre-cleaner (optional equipment)

21. Change oil.

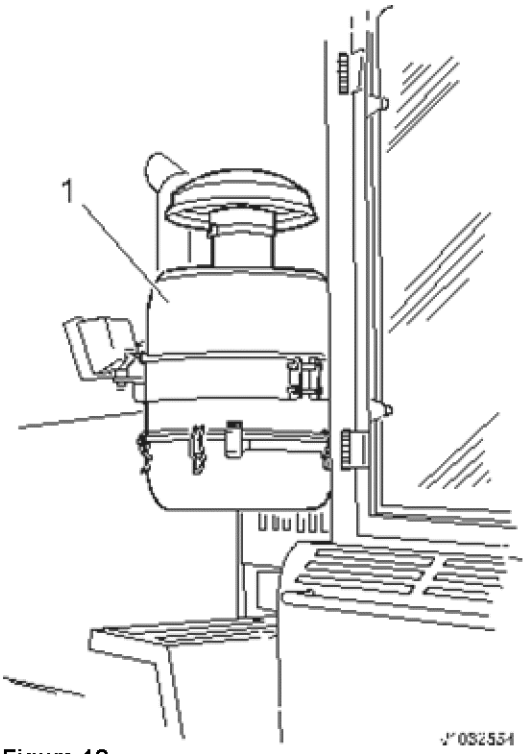

Figure 18
Oil-bath air cleaner

For more information, see Operator's manual.
Volume: **5.5 litres (1.5 US gal)**

Cab, ventilation unit

22. Primary filter, check. Clean as needed.
Pre-filter, change
    1. Open the side cover
    2. Remove the pre-filter and change it
    3. Remove the nuts that hold the plastic casing for the primary filter

    NOTE **Keep track of the sheet metal strip that is located at the top of the plastic casing**

    4. Remove the primary filter and check it. Clean as needed.
    5. Reinstall the plastic casing with the sheet metal strip at the top
    6. Install the pre-filter and close the side cover

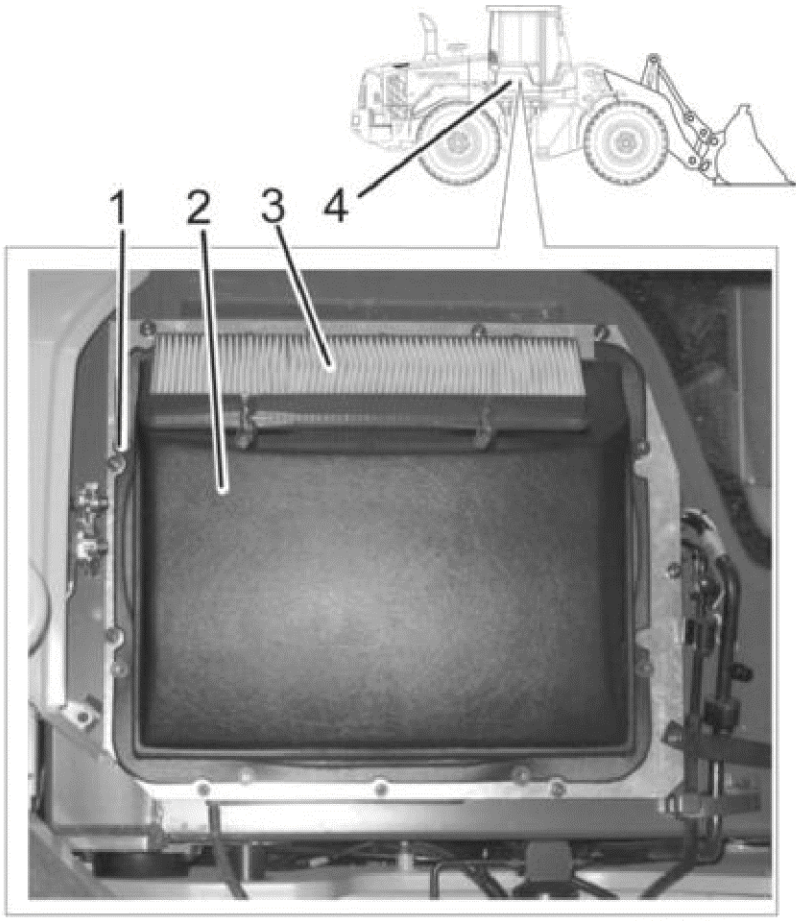

Figure 19
Primary filter

1. Plastic nuts, 9 pcs.
2. Primary filter. Inside plastic casing
3. Pre-filter
4. Side cover

NOTE **Use breathing protection when handling filters**

Boom, grease

23. Grease the boom's pivot pins according to lubrication chart.

Frame and cab, grease

24. Grease the cab's and frame's grease points according to the lubrication chart.

Coolant system, checking level

WARNING! **Open the expansion tank cap slowly and carefully. The cooling system operates at high pressure and hot coolant may rush out and cause severe burns.**

25. Level check.
Fill coolant in the expansion tank.
The machine is delivered with a coolant mixture of 40% glycol and 60% water for optimal cooling and corrosion characteristics. That is why the same coolant mixture shall be filled, regardless of ambient

VOLVO
Construction Equipment

Service Information

Document Title:	Function Group:	Information Type: **Service Information**	Date: **12/10/2011**
Profile: **WLO, L90F (Volvo) [GB]**			

Maintenance service, every 2000 hours

The 2000 hr service interval includes daily as well as the 50 hr, 250 hr, 500 hr, and 1000 hr service interval.

The service points where "optional equipment" is stated are not included in the accounted time for the interval.

Op nbr 173-014

11666051 Pressure gauge
14290266 Hose
9993892 Electronic unit
88890020 Interface
9993832 Adapter
9993886 Adapter
11666167 Disassembly tool
9993831 Support
88890105 Refractometer

Equipment for Matris read-out	
Air pressure gauge	
Torque wrench	800 Nm (590 lbf ft)
Extension	approx. 250 mm (10 in)
Sleeve	32 mm
Collection container	
Grease gun	

Required materials	
Engine oil	20 litres (5.3 US gal)
Axle oil L60F	48 litres (12.7 US gal)
Axle oil L70F and L90F	55 litres (14.53 US gal)
Transmission oil L60E and L70E	18 litres (4.76 US gal)
Air cleaner, primary filter	1 pc.
Engine oil filter	1 pc.
Transmission oil filter	1 pc.
Hydraulic system's return oil filter	1 pc.
Fuel filter: Primary filter	1 pc.
Fuel filter: Secondary filter	1 pc.
Cab: Pre-filter	1 pc.
Cab: Main filter	1 pc.
Hydraulic system and transmission: Breather filters	1 pc.
Other breather filters	3 pcs.

Test-run and check

1. How to perform methods, see Operator's manual
   Start and stop function
   Instruments, lighting, direction indicators, reflectors, flashing hazard lights, wipers, washers, horn, and back-up alarm (if installed).

Climate control unit, fan and controls incl. AC-compressor
Leakage, general
Pipes and hoses, condition
Warning decals and plates. Check that they are legible and not damaged

2. **Place the machine in service position 1 acc. to.** Service positions

Matris read-off

3. Matris read-off is performed to follow up the machine's history

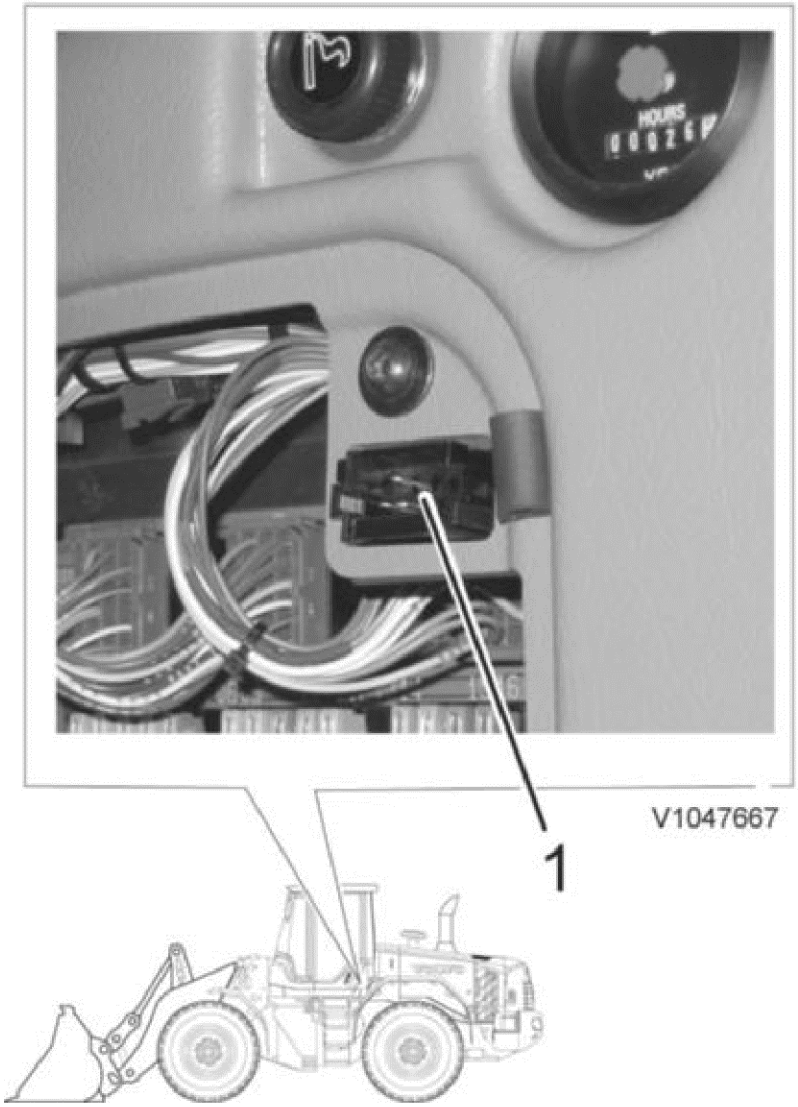

Figure 1
Matris read-off

1. Connection point

The read-off shall be exported to Volvo CE-server

Brake discs, checking wear

4. **See:** Brake disc wear, checking

Engine oil, drain

WARNING! **Work carefully when changing oil as hot oil can cause severe burns to unprotected skin.**

5. Draining

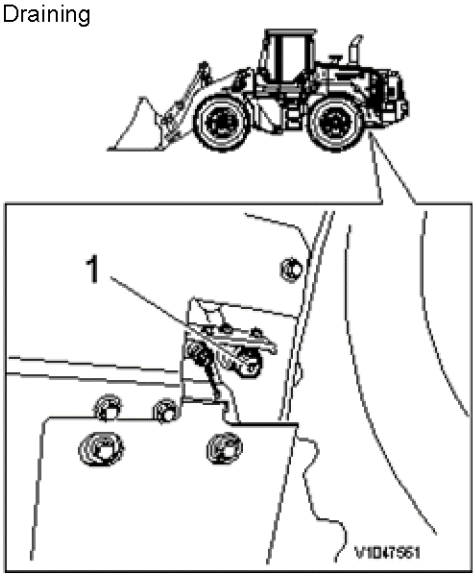

Figure 2
Draining point

1. Drain for engine oil

Drain the oil when the engine is warm.
Connect drain hose and drain the oil in a collection container.
The hose is located in the battery box.
Oil volume, see: Engine, capacities

NOTE **Handle the oil in an environmentally safe way.**

Front axle oil, draining

WARNING! **Work carefully when changing oil as hot oil can cause severe burns to unprotected skin.**

6. Oil, draining

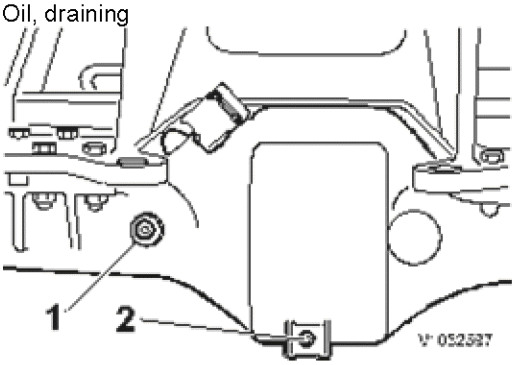

Figure 3
Front axle

1. Filler and level plug
2. Drain plug

Oil volume, see: Front axle, capacities

NOTE **Handle the waste oil in an environmentally friendly way**

Transmission oil, draining

WARNING! **Work carefully when changing oil as hot oil can cause severe burns to unprotected skin.**

7. The oil is drained at the drain plug when the machine is at operating temperature.

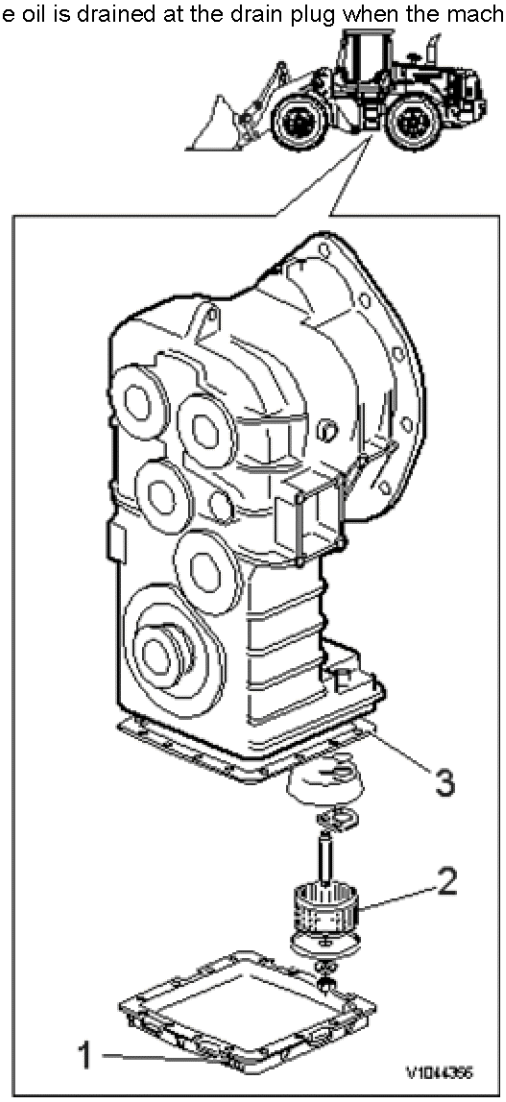

Figure 4
Transmission

1. Drain plug
2. Suction strainer
3. Gasket

Oil volume, see: Hydraulic transmission, volume

Cleaning:
1. Remove the drain plug and drain the oil.
2. Remove the cover and clean the suction strainer.
3. Install a new gasket between the cover and transmission.
4. Reinstall the suction strainer with associated parts and the cover.

NOTE Handle the waste oil in an environmentally safe way.

Rear axle oil, draining

WARNING! Work carefully when changing oil as hot oil can cause severe burns to unprotected skin.

8. Oil, draining

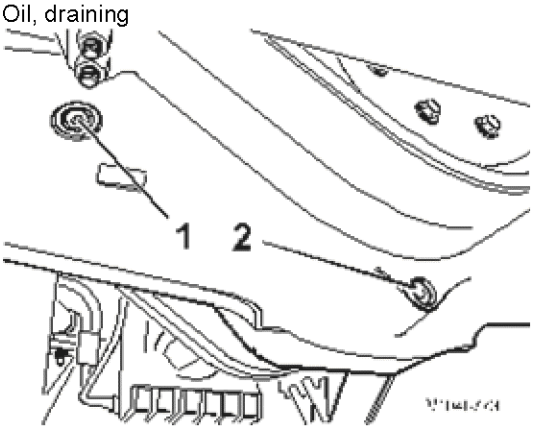

Figure 5
Rear axle

1. Filler and level plug
2. Drain plug

Oil volume, see: Rear axle, capacities

NOTE Handle the waste oil in an environmentally safe way.

Hydraulic oil tank, drain sediment and condensation water

9.

1. Spin off the protective cap for draining.
2. Place the end of the hose in a suitable collection container and screw the hose to the drain point.

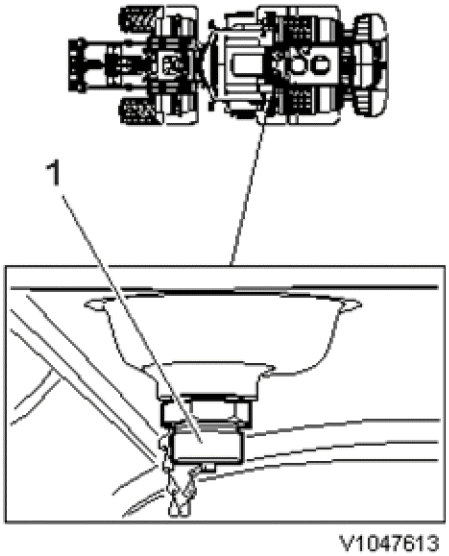

Figure 6
Hydraulic oil, draining

1. Plug

NOTE **When changing hydraulic oil, use the hose that is used for draining engine oil. The hose is located in the battery box. Temporarily replace the rubber hose with a 3/4" hose. Length = 3.5 metres.**

Hydraulic oil volume, see: Hydraulic system, volume

Hydraulic oil, draining

WARNING! **Work carefully when changing oil as hot oil can cause severe burns to unprotected skin.**

10. **If the hydraulic tank is filled with engine oil or bio-oil, the oil shall be changed at 2000 hours. Machines filled with hydraulic oil, change at 4000 hours**
For change, see the 4000 hr interval

Transmission oil filter, changing

WARNING! **Risk of burns! Use protective work gloves.**

11. Use oil filter pliers when removing the oil filter.

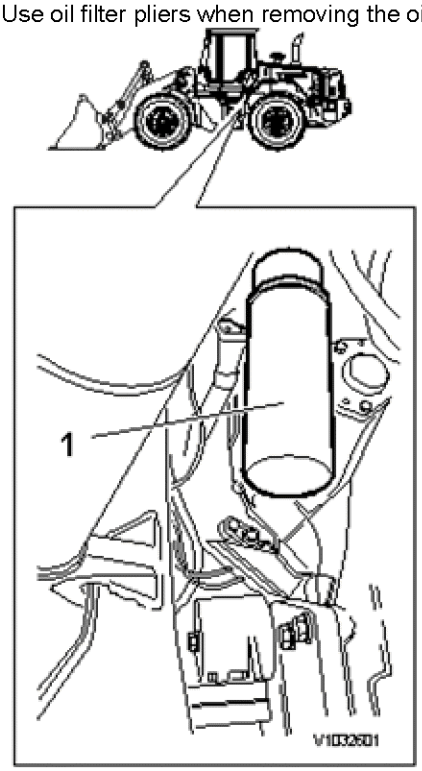

Figure 7

1. Transmission oil filter

Installing filter:
1. Brush new oil on the rubber seal.
2. Screw the filter into place so that the gasket just touches the sealing surface. Tighten another 1/2 to 3/4 turns by hand.

Valve clearance, checking and adjusting

12. **See:** Valves, adjusting

Fuel filter, primary and secondary filter, change

13. When installing, only tighten the filters by hand.

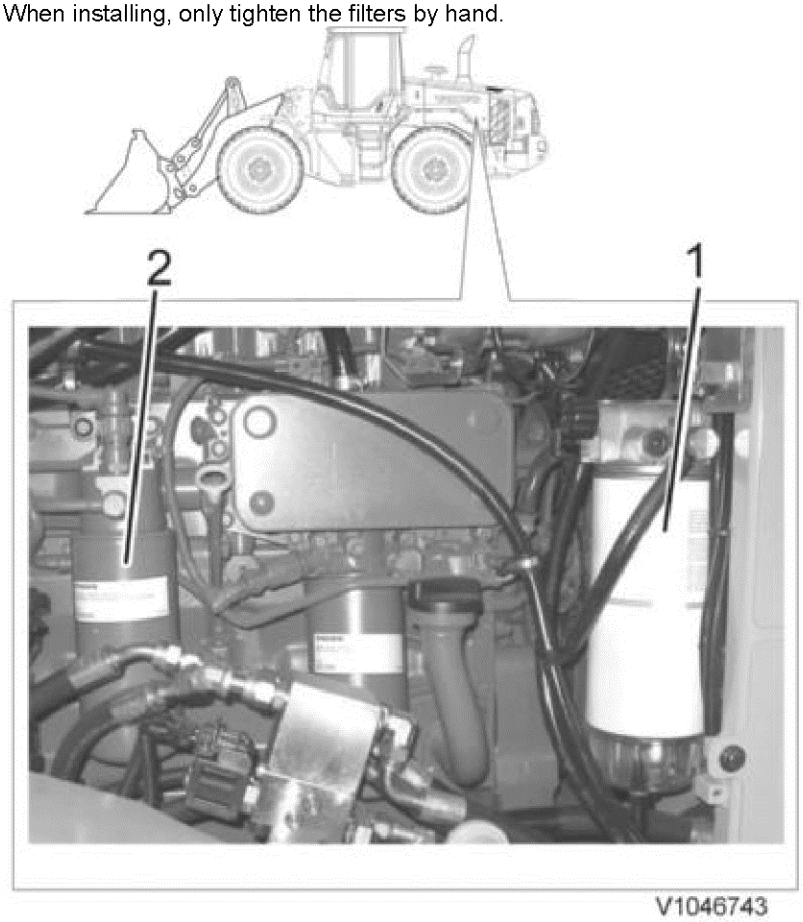

Figure 8

1. Primary fuel filter
2. Secondary fuel filters

For removing and installing bowl, use tool 11666167.
Bleed the system. **See:** Fuel system, air bleeding

Hydraulic system's return oil filter, change

14. **Perform the following:**

VOLVO
Construction Equipment

Service Information

Document Title:	Function Group:	Information Type: **Service Information**	Date: **12/10/2011**
Profile: **WLO, L90F (Volvo) [GB]**			

Mechanical release of parking brake

Op nbr 176-001

If the parking brake cannot be released with the standard switch it can be released manually.
Tools required for releasing the parking brake are included in the machine's tool kit.

- Socket 13/16"
- Allen socket 5/16"
- Ratchet handle
- Adjustable wrench, for removing cover.

NOTE **This may only be done to permit towing. The parking brake must be restored immediately after towing has been completed.**

For restoring manually released parking brake see, Parking brake, brake pads changing, checking and adjusting

WARNING! **Park the machine on a level surface. Fit blocks in front of and behind the wheels in order to prevent the machine from rolling.**

Remove the brake caliper's cover.

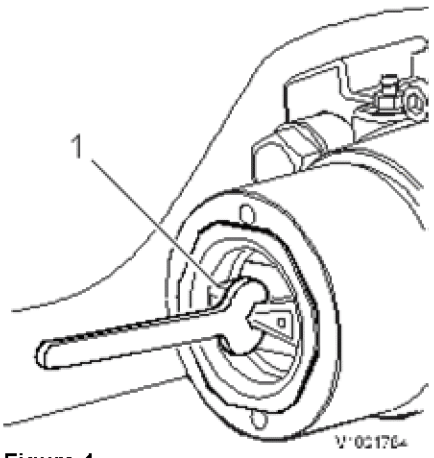

Figure 1

Loosen the lock nut and screw it out 1/2 turn.

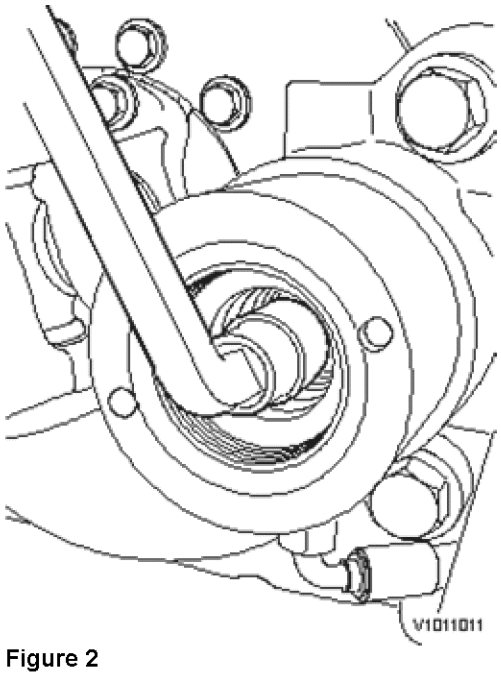

Figure 2

Screw out the brake piston's adjusting screw (approx. two turns) until the brake pads' contact releases from the brake disc.

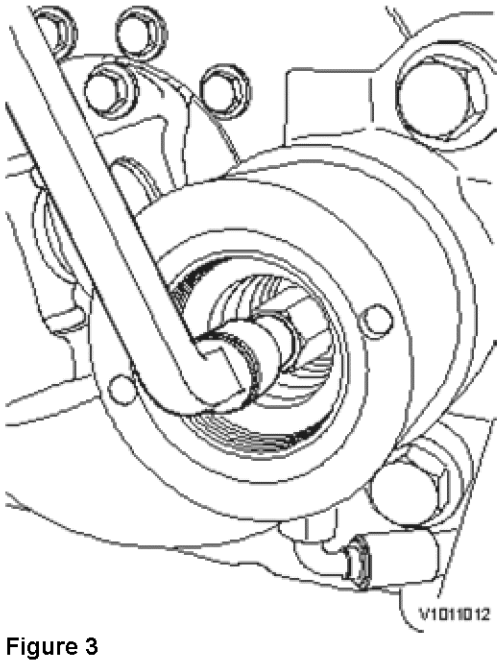

Figure 3

Now the machine can be moved, but the parking brake does not work.

VOLVO
Construction Equipment

Service Information

Document Title:	Function Group:	Information Type: **Service Information**	Date: **12/10/2011**
Profile: **WLO, L90F (Volvo) [GB]**			

Towing

NOTE **Towing of machine may not take place other than in exceptional cases, then a tow bar must be used and towing speed may be max. 10 km/h (6.2 mph).**

The tow bar shall be connected to the tow hitch at the rear of the machine and must not be connected to the lifting eyes.

The speed and towing vehicle must be adapted with consideration of the grades that have to be passed.
An operator must operate the towed machine.

Towing distance should not exceed 10 km (6.2 miles). Towing for longer distances may damage the hydraulic transmission as the oil pump is not driven and lubrication is unsatisfactory.
When towing over longer distances, both the front and rear propeller shaft drive flanges must be disconnected at the axles in order to disengage the transmission.

WARNING! **When the diesel engine cannot be started:**

After a few manoeuvres the brake and steering functions will be lost in this situation, and that is why towing should only be performed in emergencies and according to a competent/ trained person's instructions and guidance.

The following shall be performed:

- Secure the machine so that it cannot start to roll.
- Unload any load.
- Release the parking brake. Follow instructions in Manual release of parking brake.
- Take any other required actions so that the machine can be towed.
- When disconnecting the tow vehicle, ensure that the towed machine cannot start to roll.

VOLVO
Construction Equipment

Service Information

Document Title:	Function Group:	Information Type: **Service Information**	Date: **12/10/2011**
Profile: **WLO, L90F (Volvo) [GB]**			

Engine, description

D6E

D6E is a straight six-cylinder, four-stroke, turbocharged diesel engine with direct injection and intercooler, as well as wet, replaceable cylinder liners. The engine is equipped to meet governing legislation according to Tier 3/stage IIIA for exhaust emissions.

Engine D6E has a fuel system with Common Rail, which is controlled by the software in the engine's electronic control unit (E-ECU).

The D6E uses V-ACT (Volvo Advanced Combustion Technology). Engine D6EV with ACT features split injection, optimized air handling and, turbocharger with wastegate. Electronically controlled IEGR (Internal Exhaust Gas Recirculation) reduces NO_X contents and reduces emissions without the need for after-treatment of exhausts. All electronic functions in the engine are controlled by Volvo's latest engine management system, EMS2.

The engine's serial number is stamped on the name plate, on the cylinder block's side and on the valve cover. The engine's model designation and serial number must be indicated when ordering spare parts.

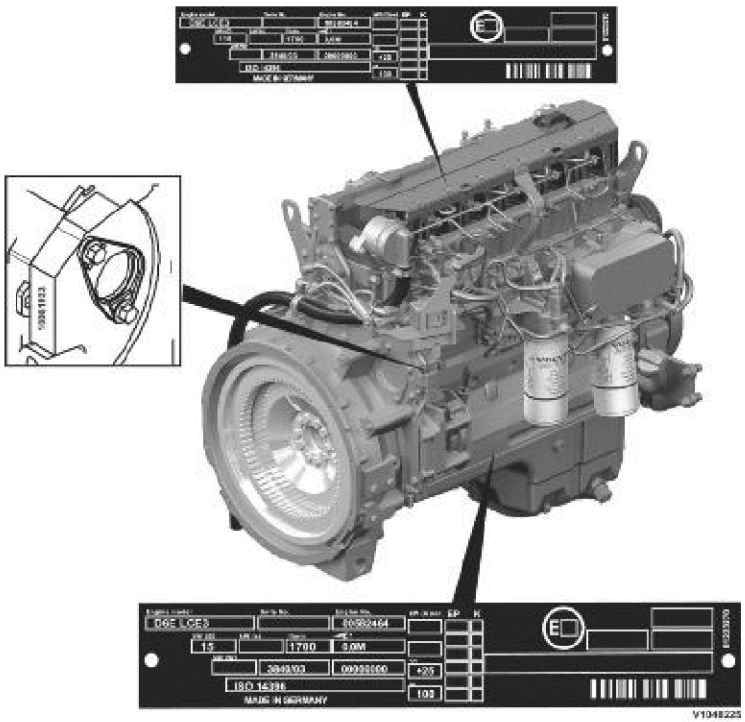

Figure 1

The cylinders are numbered in sequence, starting at the flywheel. Ignition order: 1-5-3-6-2-4. The engine's rotational direction is counter-clockwise, seen from the flywheel.

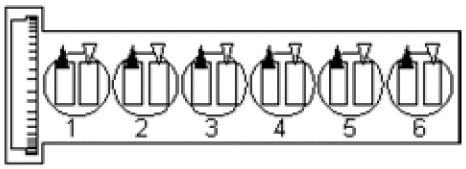

Figure 2
Cylinder orientation

Engine protection — Software

The function informs the operator and limits the engine's rpm and torque as well as machine speed to prevent any engine damage. Engine shut-off takes place first when speed is below 2 km/h (1.2 mph). This makes it possible to move the machine away from hazardous situations before engine shut-off takes place.

The function is monitored by the engine control unit E-ECU and, depending on which component is generating the alarm, then any of the following functions is activated:

- reduction of engine's torque
- limitation of engine's rpm
- limitation of machine speed
- engine shut-down

See also Elschema 202 , Elschema 203 , Elschema 204 and Elschema 206

Input signals	Conditions for output functions	Output functions
o Engine oil pressure, SE2203	o (Critical) Low engine oil pressure	o Red central warning o Warning — Low engine oil press. o Warning — Stop vehicleTurn Off Engine o Reduction of engine's torque
	o Low engine oil pressure o No or incorrect signal from the sensor	o Amber central warning o Check — Engine failure
o Fuel control valve (FCV), PWM2303	o Electrical malfunction.	o Red central warning o Warning — Stop vehicleTurn Off Engine o Check — Injection system failure o Reduction of engine's torque o Reduces rail pressure with pressure relief valve (PRV)
o Rail pressure, SE2309	o No or incorrect signal from the sensor	o Red central warning o Warning — Stop vehicleTurn Off Engine o Check — Injection system failure o Limitation of engine rpm to 1100 rpm o Reduces rail pressure with pressure relief valve (PRV)
o EGR-valve, MA2504	o Mechanical or electrical malfunction	o Amber central warning o Check — Engine system failure o Reduction of engine's torque by max. 7% (to reduce the turbo's rpm)
o Charge air temperature, SE2507	o (Critical) High charge-air temperature 92–100 °C (198–212 °F)	o Red central warning o Warning — Stop vehicleTurn Off Engine o Warning — High charge-air temp. engine o Reduction of engine's torque

		dependent on charge-air temperature and engine rpm
	o High charge-air temperature > 92° C / No or incorrect signal from the sensor	o Amber central warning o Check — High charge-air temp. engine o Reduction of engine's torque dependent on charge-air temperature and engine rpm
o Coolant level, SE2603	o (Critical) Low coolant level	o Red central warning o Warning — Coolant level low
	o Low coolant level	o Amber central warning o Check — Coolant level lowCheck at next stop
o Coolant temperature, SE2606	o (Critical) High coolant temperature 103–105 °C (217–221 °F)	o Red central warning o Warning — Stop vehicleTurn Off Engine o Warning — High coolant temp. engine o Reduction of engine's torque dependent on coolant temperature and engine rpm
	o High coolant temperature >100 °C (212 °F)	o Amber central warning o Check — High coolant temp. engine o Reduction of engine's torque dependent on coolant temperature and engine rpm
	o Electrical malfunction.	o Amber central warning o Check — Engine failure
o Engine rpm flywheel, SE2701	o No or incorrect signal from the sensor	o Amber central warning o Check — Engine failure o Reduction of engine's torque by 2% per second o Max. torque engine 90%
o System error common rail	o Defective functionality in the system	o Red central warning o Warning — Stop vehicleTurn Off Engine o Check — Injection system failure o Reduction of engine's torque o Limitation of rail pressure to 80 MPa (800 bar), (11600 PSI) o Limitation of engine rpm to 1100 rpm
o System error power and torque output	o Defective functionality in the system	o Red central warning o Warning — Stop vehicleTurn Off Engine o Check — Injection system failure o Reduction of engine's torque o Limitation of rail pressure to 80 MPa (800 bar), (11600 PSI) o Limitation of engine rpm to 1100 rpm
o Pressure reducing valve (PRV) rail pressure	o Defective functionality in the system	o Red central warning o Warning — Stop vehicleTurn Off Engine o Check — Injection system failure o Reduction of engine's torque o Limitation of engine rpm to 1100 rpm o Engine shut-off after 5 seconds if speed is < 2 km/h (1.2 mph)
o Monitoring transmission oil temperature	o See Hydraultransmission, beskrivning	o Red central warning o Warning — High transmission oil temp. o Limitation of engine rpm to 1500

VOLVO
Construction Equipment

Service Information

Document Title:	Function Group:	Information Type: **Service Information**	Date: **12/10/2011**
Profile: **WLO, L90F (Volvo) [GB]**			

E-ECU, MID 128, changing non-programmed ECU

Op nbr 200-068

VCADS Pro VCADS Pro Service Tool
88890020 Interface
88890027 Cable

1. Place the machine in service position 1, see Servicepositioner
.
2. Connect VCADS Pro and perform the operation 28423-3 MID 128 ECU, programming.
3. Open the engine hood on the left side.
4. Unplug connectors from the E-ECU and loosen the cable harness clamps.

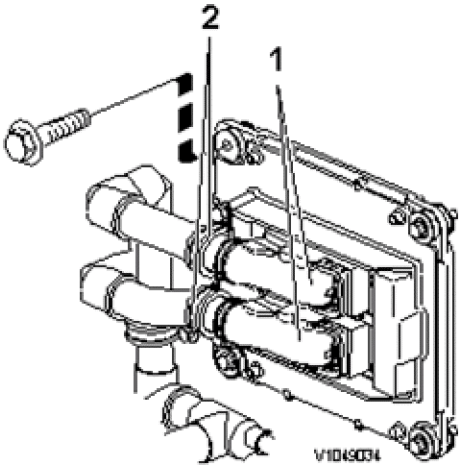

Figure 1

1. Connectors
2. Cable harness clamps

5. Change E-ECU.
6. Plug in the connectors for the E-ECU and install the cable harness clamps.
7. Turn on the voltage with the battery disconnector.
8. Finish VCADS Pro operation 28423-3 MID 128 ECU, programming.
9. Start the machine and check that no error messages appear.
10. Restore the machine to operating condition.

VOLVO
Construction Equipment

Service Information

Document Title:	Function Group:	Information Type: **Service Information**	Date: **12/10/2011**
Profile: **WLO, L90F (Volvo) [GB]**			

E-ECU, MID 128, changing pre-programmed ECU

Op nbr 200-070

VCADS Pro VCADS Pro Service Tool
88890020 Interface
88890027 Cable

1. Place the machine in service position 1, see Servicepositioner
.
2. The new control unit has basic set parameters for the machine. If it is possible to read out customer parameters, connect VCADS Pro and perform the operation 17030-3 Parameter, programming. Save all read parameters to job card.
The operation is used to read out customer parameters from the old control unit to enable later comparison with parameters in the new control unit.
3. Open the engine hood on the left side.
4. Unplug connectors from the E-ECU and loosen the cable harness clamps.

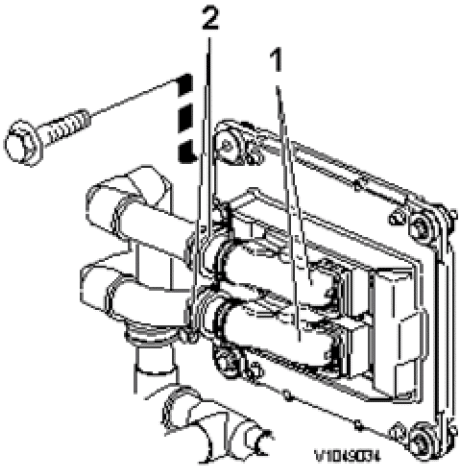

Figure 1

1. Connectors
2. Cable harness clamps

5. Change E-ECU.
6. Plug in the connectors for the E-ECU and install the cable harness clamps.
7. Turn on the voltage with the battery disconnector.
8. If customer parameters have been read out from the old control unit, compare these to the parameters in the new control unit.
   - Connect VCADS Pro and perform the operation 17030-3 Parameter, programming. Save all read parameters to job card.
   - Compare parameter settings on the job cards.
   - Perform operation 17030-3 Parameter, programming and change customer parameters according to

job card for the old control unit.

9. Start the machine and check that no error messages appear.
10. Restore the machine to operating condition.

VOLVO
Construction Equipment

Service Information

Document Title:	Function Group:	Information Type: **Service Information**	Date: **12/10/2011**
Profile: **WLO, L90F (Volvo) [GB]**			

Engine, removing

Op nbr 210-070

9998547 Lifting tool

Sling 1 m (3.3 ft)
Sling 3 m (9.8 ft), 2 pcs.
Lifting eyes M12, 4 pcs.
Ratchet block 750 kg (1653 lb)
Lift ring
Shackle, 4 pcs
Starter motor wrench 17 mm

1. Remove the engine hood, see Motorhuv, borttagning
.
2. Drain the engine oil at the drain point. Volume, see: Motor, rymduppgifter
.

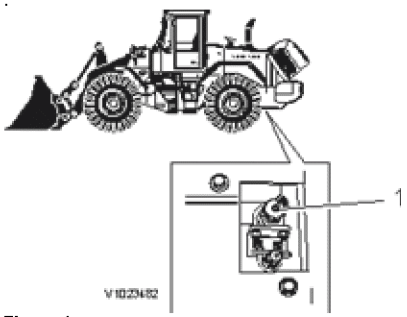

Figure 1

1. Drain point for engine oil

3. Drain the transmission oil. Volume, hydraulic transmission, see Hydraultransmission, volym
4. Remove the mudguards and the side panels on the hydraulic tank. Weight, fender: **approx. 30 kg (66 lbs)**.



Figure 2

1. Side panel
2. Sling 1 m
3. Mudguard

5. Drain the hydraulic oil. Volume, hydraulic tank: see Hydraulsystem, volym

6. Remove the lower engine covers (3), lower grating covers (1) and the bottom plates (2) on both sides. Disconnect the ground cable (4) from the intermediate wall.

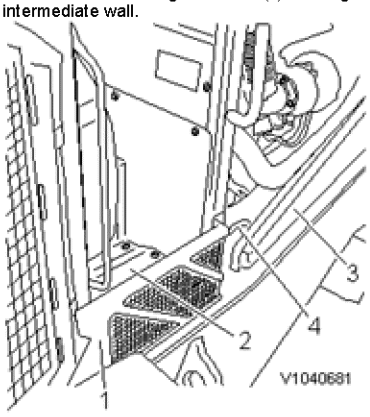

Figure 3

7. Disconnect the upper coolant hose from the engine and radiator.
Remove the bolts for the bracket for coolant pipe.
Disconnect the coolant hose from the engine.
Disconnect the hoses from the engine and intercooler.
Disconnect the air hose from the alternator.
Disconnect the clamping from the frame.

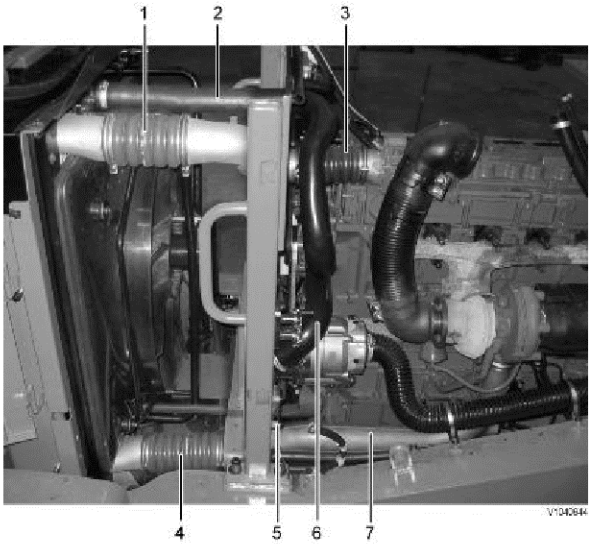

Figure 4

1. Charge air pipe
2. Coolant hose
3. Charge air pipe
4. Charge air pipe
5. Bracket, coolant hose
6. Coolant hose
7. Charge air pipe

8. Caution!
Refrigerant under pressure. Do not disconnect any hoses or connections on the air conditioning, thereby involuntary releasing refrigerant.

Unplug connector MA8701 on the AC-compressor. Remove the belt guard and loosen the belt from the AC-compressor. Disconnect the adjusting rod from the engine.
Remove the AC compressor from its bracket and lay the compressor on the wheel and the condenser on the hydraulic oil tank.

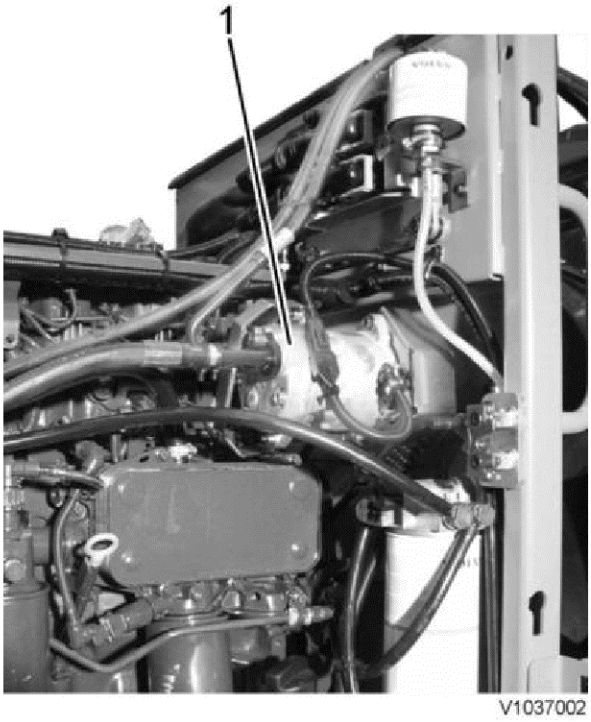

Figure 5

1. AC Compressor

9. Unplug the connectors (1) for E-ECU. Disconnect the cable harness from the intermediate wall.
Disconnect the hose from the air filter (2).
Mark the connections for the fuel filter bracket (3). Disconnect the fuel hoses from the fuel filter bracket. Plug opened connections.
Disconnect the sensor for water in fuel (SE2302).

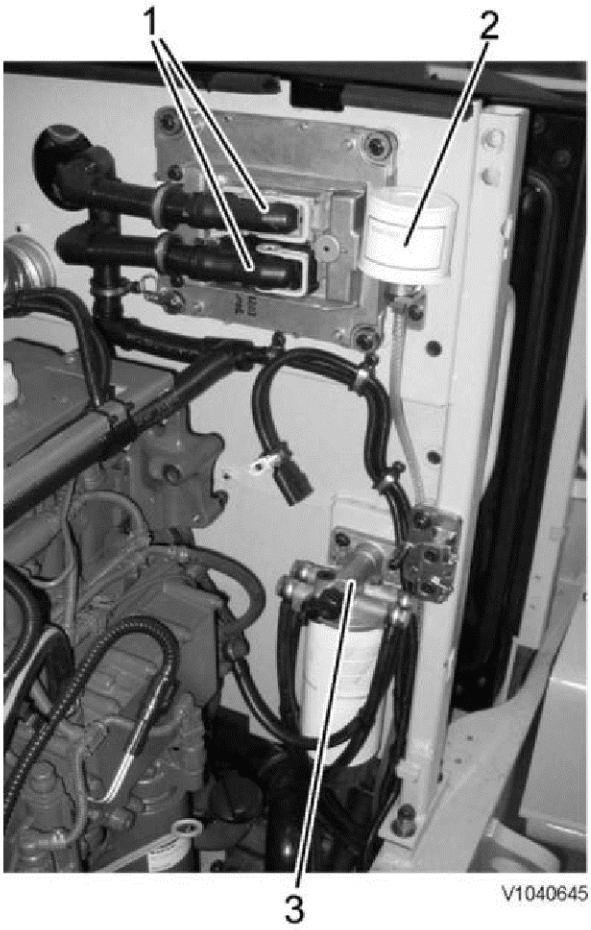

Figure 6

10. Secure the intermediate wall. Remove the attaching bolts on both sides. Remove the intermediate wall. Weight, intermediate wall: approx. **50 kg (110 lbs)**

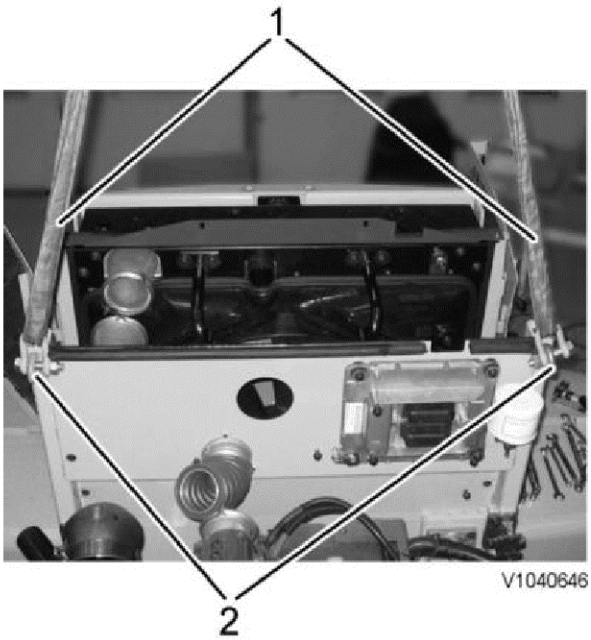

Figure 7

1. Sling 3 m (9.8 ft)
2. Lifting eye M12 (2 pcs.), Nut M12 (2 pcs.), Shackle (2 pcs.)

Left side

11. Disconnect the electric connections for the preheating coil.
12. Unplug the connector for the oil level/oil temperature sensor (SE2202/2205). Disconnect the engine heater cable, if installed. Disconnect the coolant hose from the oil cooler
13. Remove the attaching clamp (1) for the AC hoses on the flywheel housing.

Unplug the connector ED by lifting the catch with a screwdriver on the connector's underside and at the same time loosen the centre screw.

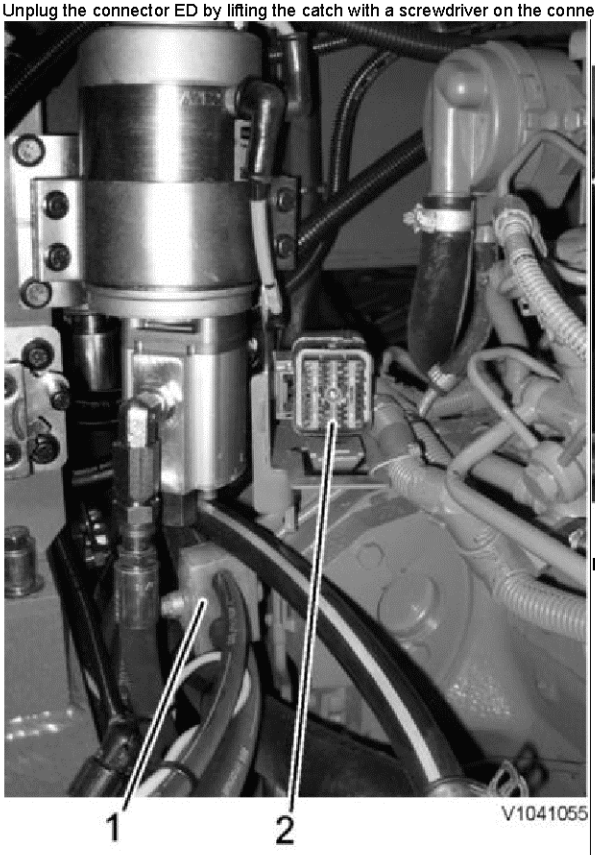

Figure 8

1. Attaching clamp
2. Connector ED

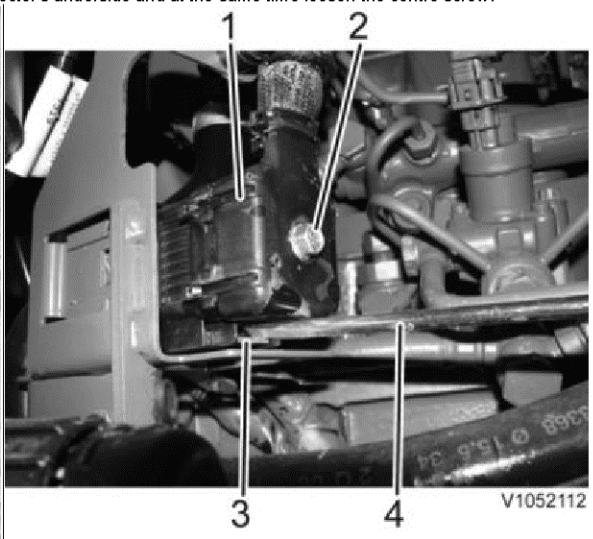

Figure 9

1. Connector ED
2. Centre screw
3. Mounting
4. Screwdriver

14. If the machine is equipped with reversible fan:
Remove the fuel filter.

15. Disconnect the hose connections form the pump (1) and plug the connections. Remove the pump. Weight, pump: **approx. 16 kg (35 lbs)**.

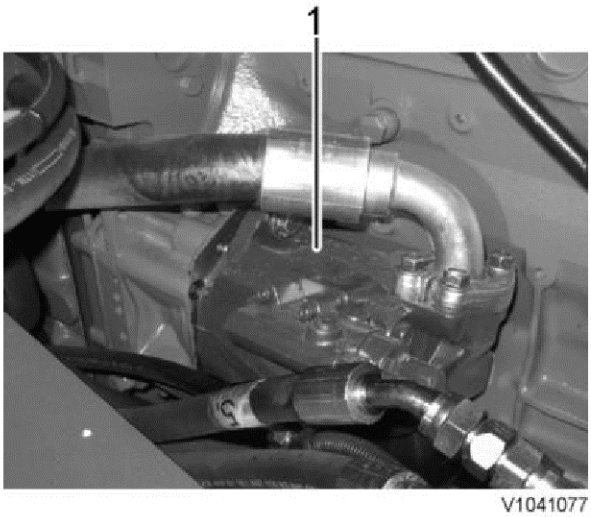

Figure 10

Right side

16. Remove the alternator's rear cover. Disconnect the cable harness and air hose for the alternator.

17. Remove the starter motor's (1) protective plate. Mark and disconnect the cable harness from the starter motor and from the grounding point (2). Disconnect the hose from the air filter (3).

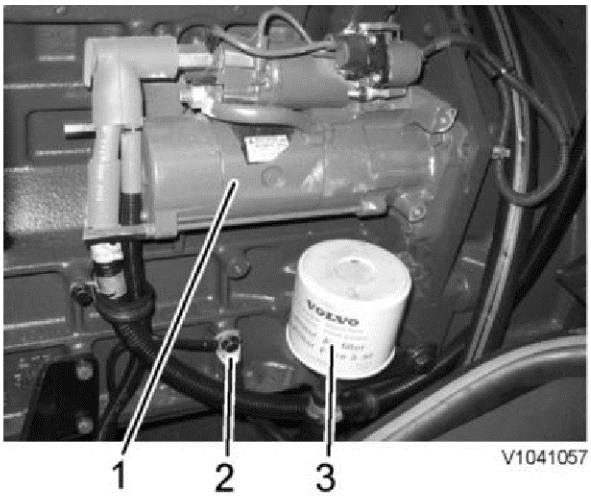

Figure 11

18. Remove the lower charge-air pipe.
19. Remove the front plate on the fan bracket's bottom plate.

Under the machine

20. Remove the return pipe between the transmission and flywheel housing.

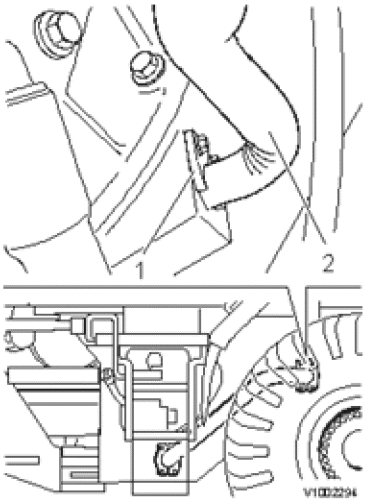

Figure 12

1. Clamp bracket
2. Return pipe

21. Disconnect the coolant hose in front of the engine mount.
22. Remove the brace for the engine's oil drain hose.
23. Connect the lifting device. Adjust the lifting device to the correct angle.
Take up the slack in the lifting device .

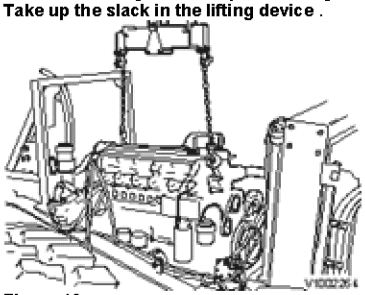

Figure 13

1. 9998547

24. Remove the bolts for the engine mount. Turn the mount aside.

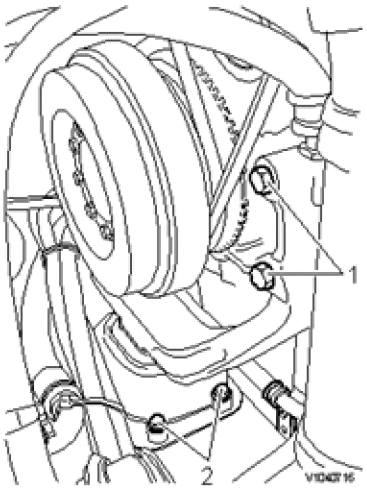

Figure 14

1. Attaching bolt, engine mounting
2. Attaching bolt, engine pad

25. Lift the engine approx. 30 mm (1.2 in) and place a spacer of approx. 110 mm (4.3 in) between the transmission and the rear axle bridge. Lower until the transmission is resting on the spacer.

26. Detach the engine from the transmission.

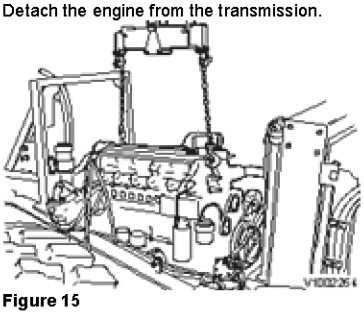

Figure 15

27. Lift away the engine. Weight approx. **600 kg (1323 lbs)**.

VOLVO
Construction Equipment

Service Information

Document Title:	Function Group:	Information Type: **Service Information**	Date: **12/10/2011**
Profile: **WLO, L90F (Volvo) [GB]**			

Engine, installing

Op nbr 210-072

9998547 Lifting tool

Sling 1 m (3.3 ft)
Sling 3 m (9.8 ft), 2 pcs.
Lifting eyes, 4 pcs.
Ratchet block 750 kg (1653 lb)
Shackle, 4 pcs
Lift ring
Starter motor wrench 17 mm

1. Check that the O-ring in the hydraulic transmission is free from damages. Change the O-ring if needed.
2. Connect the engine to the lifting device. Lift and align the engine with the transmission. Weight, engine: approx. **600 kg (1323 lbs)**

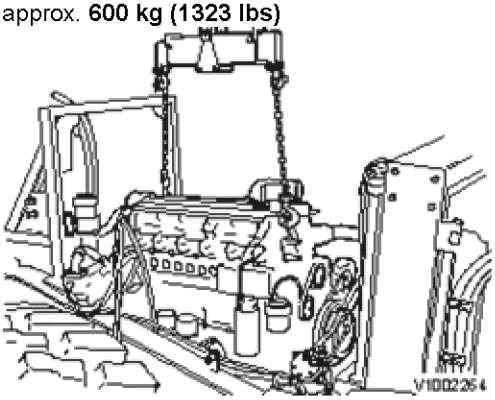

Figure 1

3. Fit the engine-to-transmission screws.
4. Install the engine mount on the engine. Tightening torque: see Motor, åtdragningsmoment
.

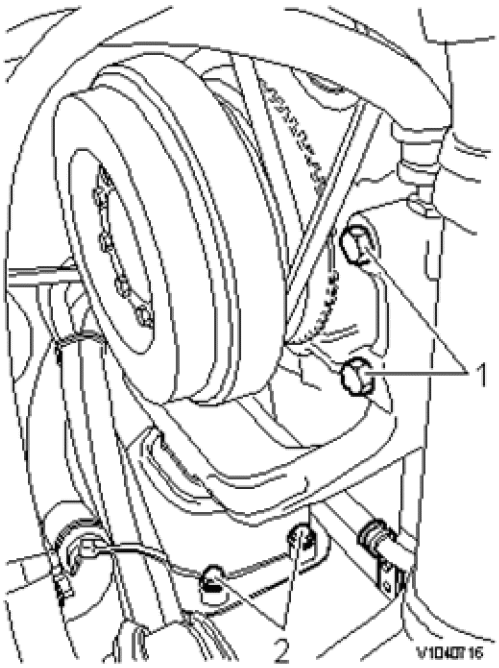

Figure 2

1. Attaching bolt, engine mounting
2. Attaching bolt, engine pad

5. Lift up the engine and transmission approx. **10 mm (0.5 in)**. Remove the block between the rear axle cradle and the transmission.
6. Bolt down the engine pad against the frame member. Tightening torque, see:Motor, åtdragningsmoment .
7. Remove the lifting device.

Right side

8. Install the cabling on the starter motor (1). Connect the two cables to the engine's grounding point (2). Connect the hose to the air filter (3).

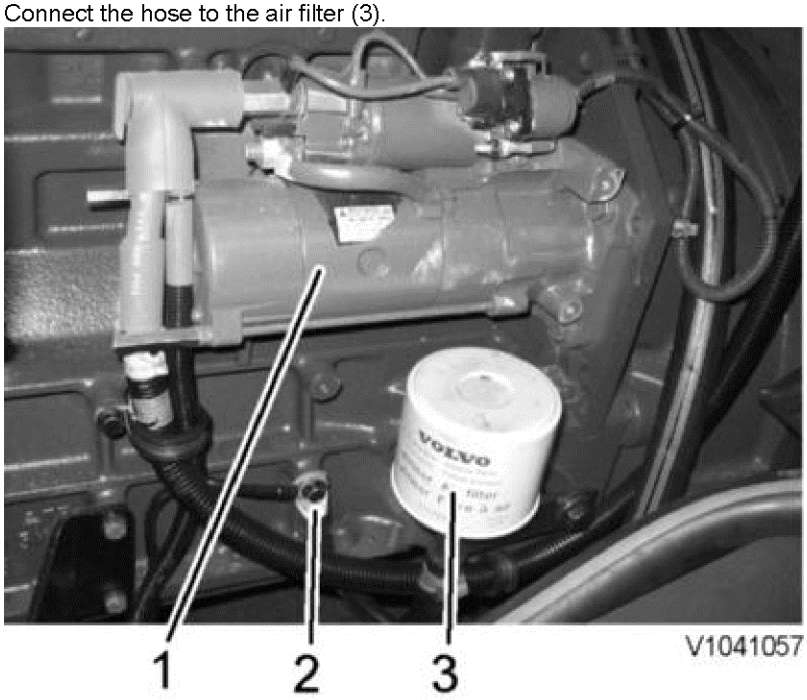

Figure 3

9. Install the starter motor's protective plate.

10. Connect the cabling to the alternator. Install the alternator's rear cover.
11. Install the lower charge-air pipe.
12. Clamp the coolant hose over the flywheel housing.

Left side

13. Check that the O-rings on the pump (1) and on the connections for the pump are free from damages. Install the pump. Connect the hoses to the pump. Weight, pump: approx. **16 kg (35 lbs)**

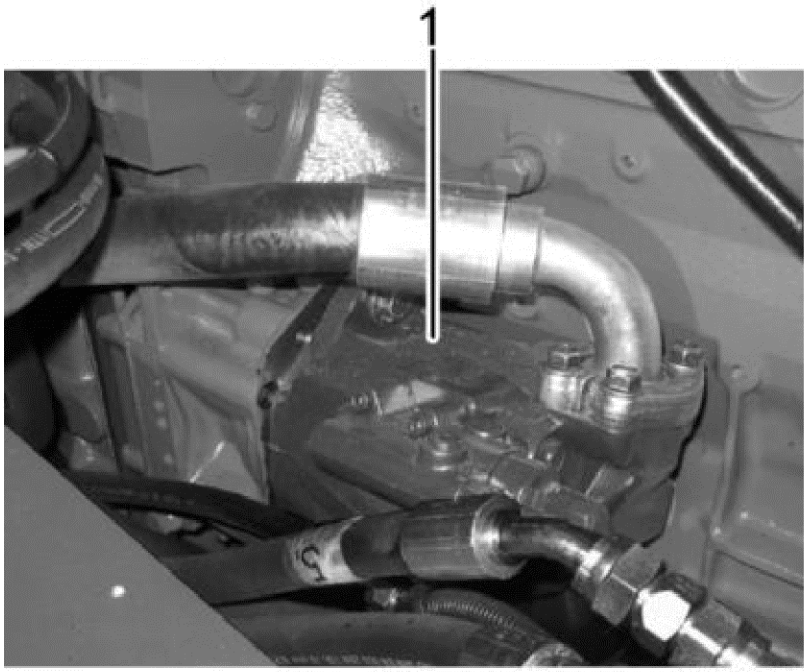

Figure 4

14. If the machine is equipped with reversible fan: Install the fuel filter.
15. Connect the coolant hose to the oil cooler. Plug in the connector for the oil level/oil temperature sensor (SE2202/2205). Connect the engine heater cable, if one is installed.
16. Plug in connector ED (2). Clamp the hoses for the AC-compressor in the flywheel housing (1).

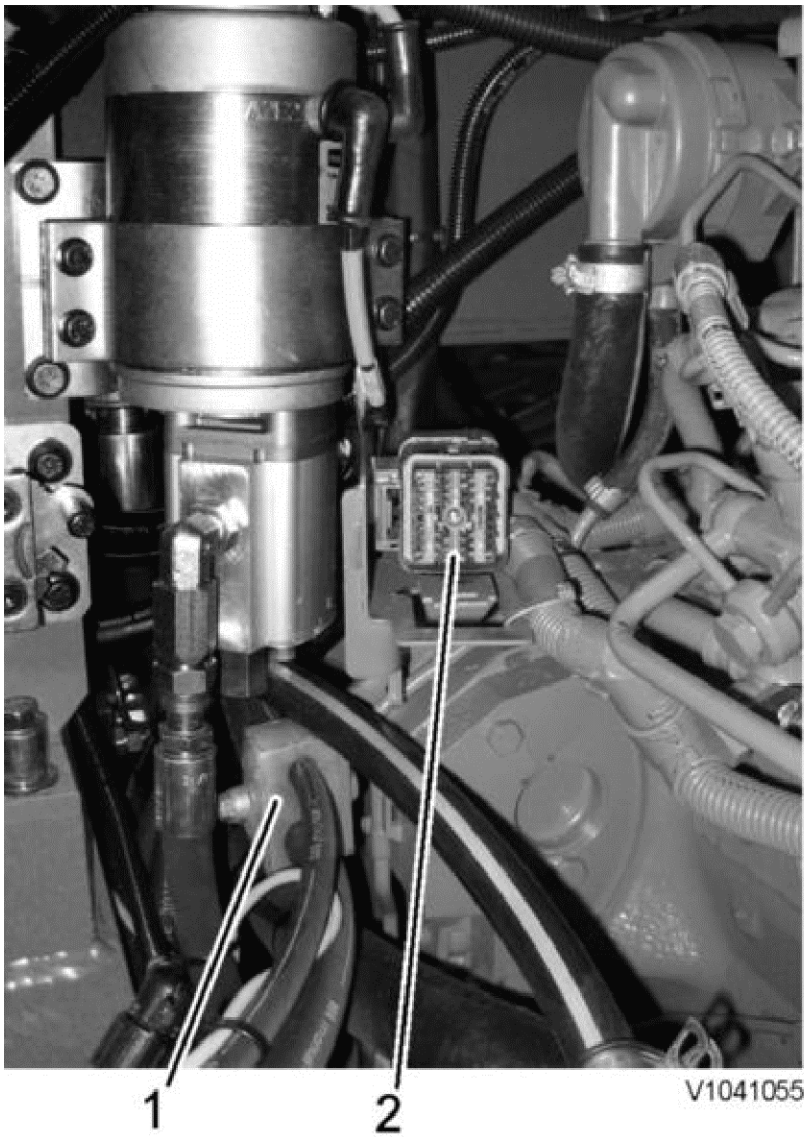

Figure 5

17. Install the bottom plate (1) on the fan bracket.

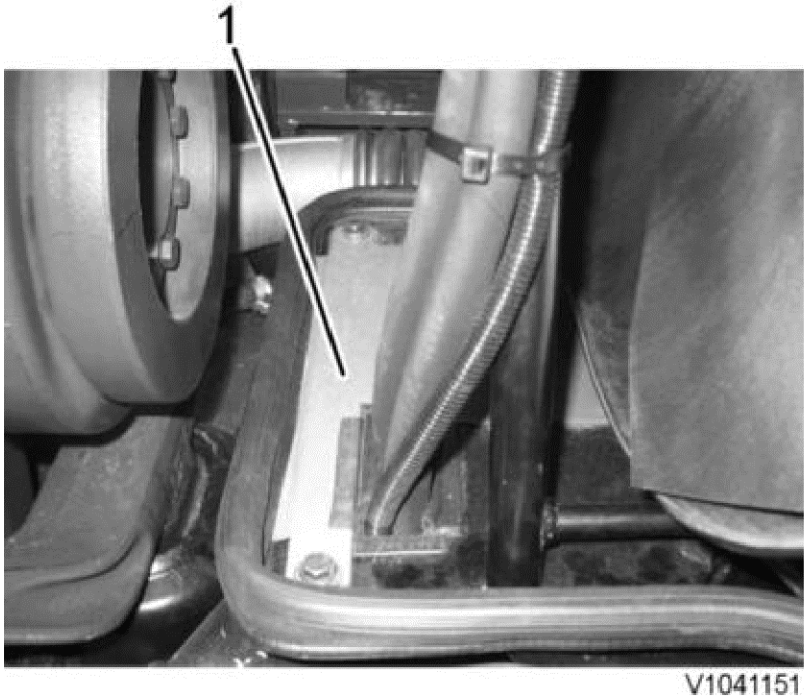

Figure 6

18. Install the intermediate wall. Weight, intermediate wall approx. **50 kg (110 lbs)**.

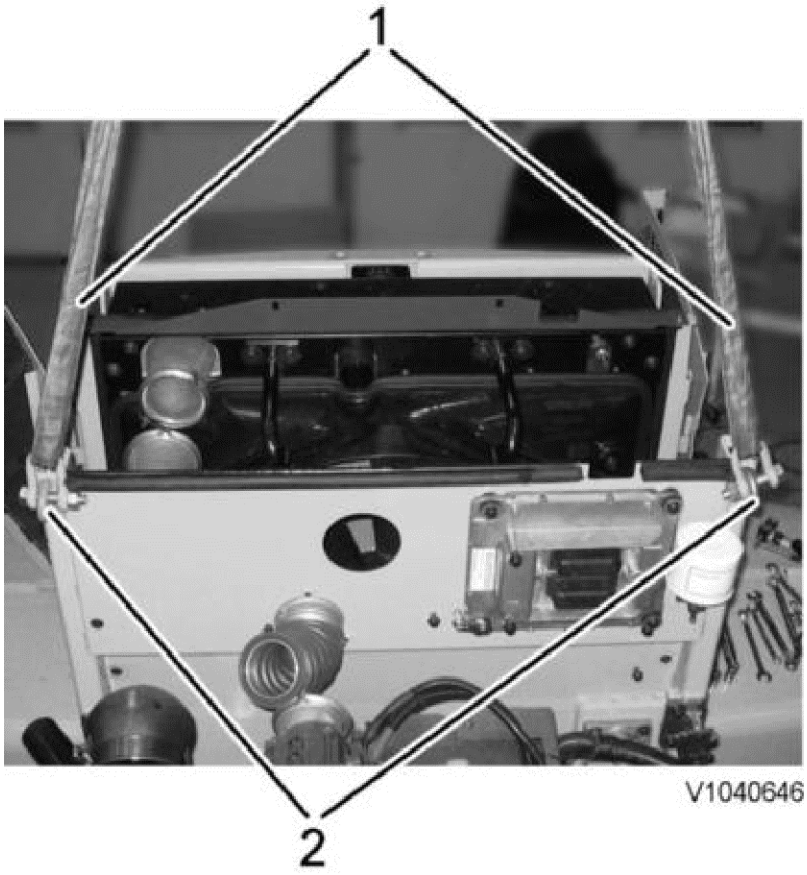

Figure 7

1. Sling 3 m (9.8 ft)
2. Lifting eye M12 (2 pcs.), Nut M12 (2 pcs.), Shackle (2 pcs.)

19. Install the cable harness on the intermediate wall and valve cover. Plug in connectors (1) for the E-ECU. Plug in the connector for water in fuel (SE2302). Connect the hose to the air filter (2).

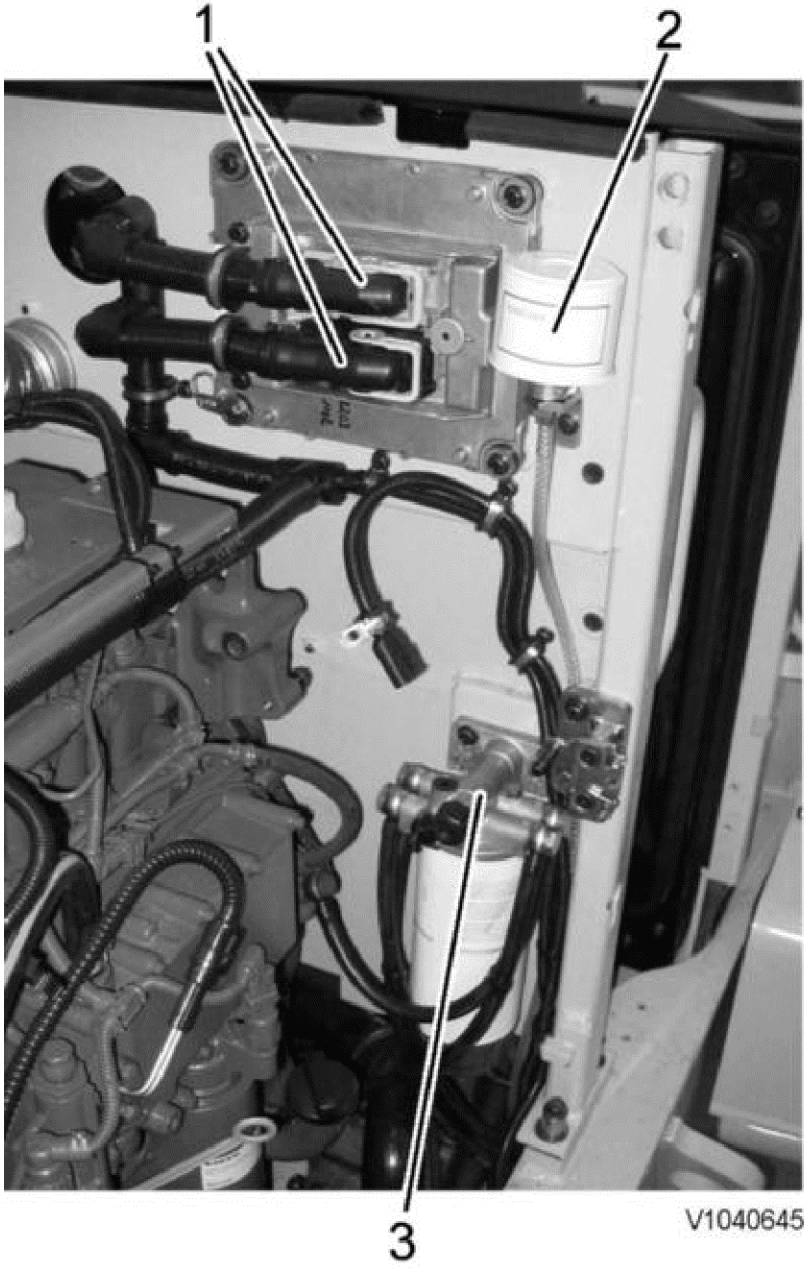

Figure 8

20. Connect the fuel hoses to the fuel filter bracket (3).

21. Connect the cables to the preheating coil.

22. Caution!
Refrigerant under pressure. Do not disconnect any hoses or connections on the air conditioning, thereby involuntary releasing refrigerant.

Install the AC-compressor (1) and tighten up the belt. Plug in the connector (MA8701) on the AC-compressor. Install the belt guard.
Lift the condenser over the radiator frame.

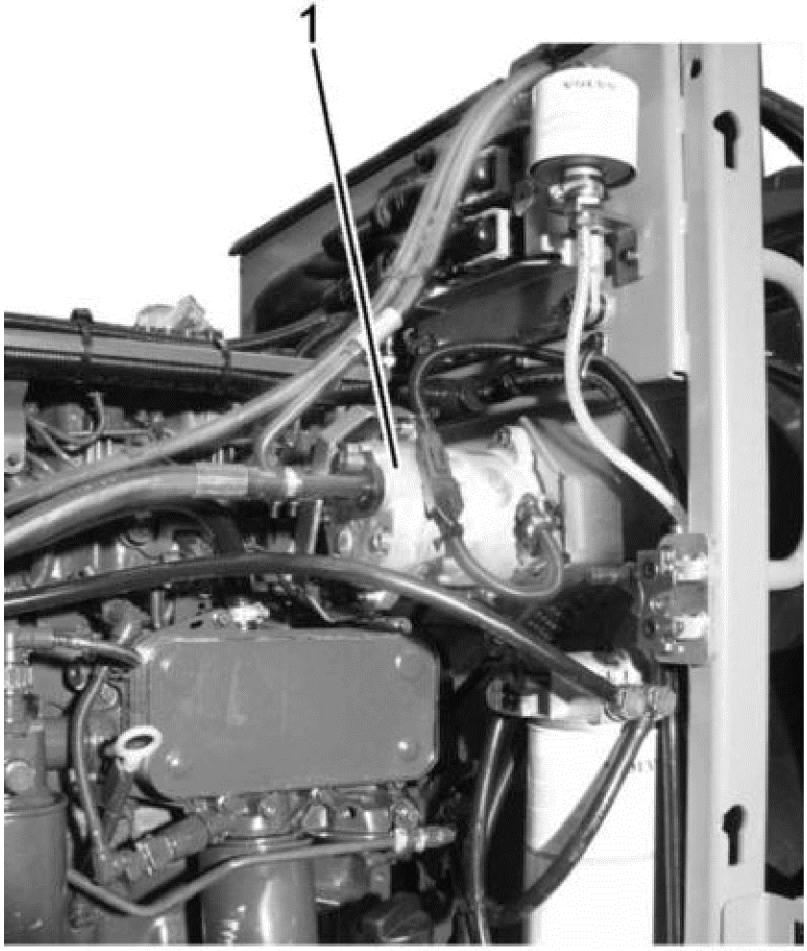

Figure 9

23. Install the upper coolant hose from the engine and radiator. Install the bracket for the coolant pipe. Connect the coolant hose to the engine. Connect the hoses to the engine and intercooler. Connect the air hose to the alternator.

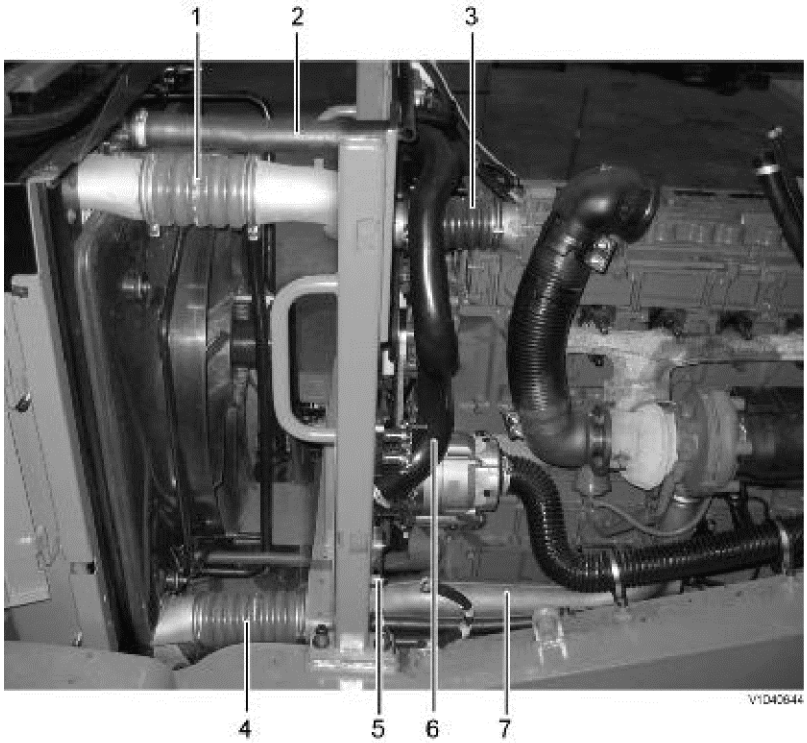

Figure 10

1. Charge air pipe
2. Coolant hose
3. Charge air pipe
4. Charge air pipe
5. Bracket, coolant hose
6. Coolant hose
7. Charge air pipe

24. Install the hose for the oil draining on the oil pan.

25. Install the return oil pipe between the hydraulic transmission and the flywheel housing.

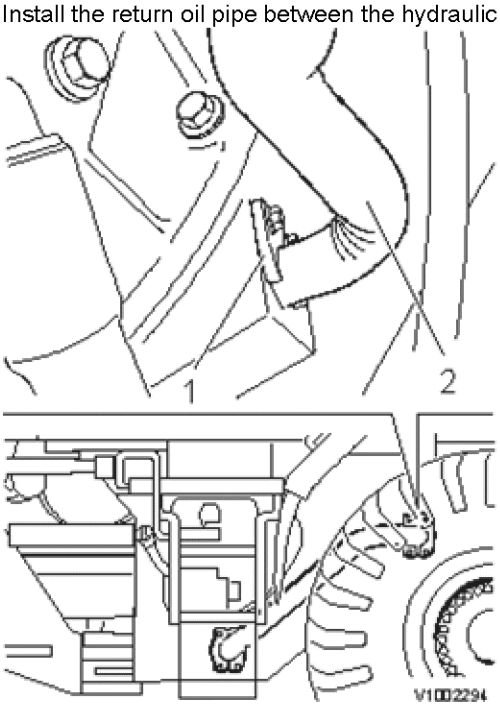

Figure 11

1. Clamp bracket
2. Return oil pipe

26. Install the side panels on the hydraulic tank and the mudguards. Weight, fender: approx. **30 kg (66 lbs)**.



Figure 12

1. Side panel
2. Sling 1 m
3. Mudguard

27. Fit the engine hood. See Motorhuv, ditsättning
28. Fill engine oil. Volume, see: Motor, rymduppgifter
29. Fill transmission oil. Volume, see: Hydraultransmission, volym
30. Fill hydraulic oil. Volume, see: Hydraulsystem, volym
31. Bleed the fuel system. See Bränslesystem, luftning
32. Start the engine and check that there are not any leaks.
33. Install the lower engine covers (3), the lower grating covers(1) and the bottom plates (2) on both sides. Connect the ground cable (4) to the intermediate wall.

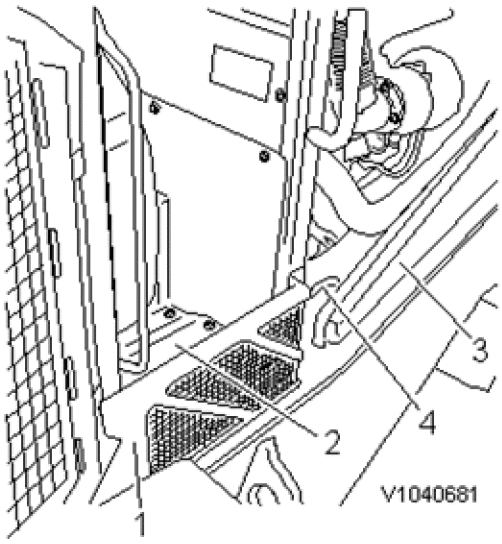

Figure 13

34. Check the oil level in the engine, hydraulic transmission and hydraulic oil tank.
When changing to an engine that is not pre-programmed, then the E—ECU must be programmed. Programming is done with the service tool VCADS Pro (Op. no. 17057–3 and 28423–3) and is necessary to, among others, safeguard the engine's function and emission requirements.

35. If the engine has been replaced, perform VCADS Pro, uppdatering av det centrala systemet, byte av komponent
and VCADS Pro, MID 128, programmering av E-ECU
.

36. Warm up the machine. Check the coolant level. Adjust the mudguards' position, if needed.

VOLVO
Construction Equipment

Service Information

Document Title:	Function Group:	Information Type: **Service Information**	Date: **12/10/2011**
Profile: **WLO, L90F (Volvo) [GB]**			

Compression test

Op nbr 210-002

9988539 Pressure gauge
9998665 Adapter
88830026 Adapter

1 pc. Hose (approx. 3 m, Ø 10 mm)
943471 Hose clamp

Caution!
Maintain greatest possible cleanliness when working on the fuel system.

1. Place the machine in service position, see Säkerhetsregler vid service
.

2. Check that the valve clearances are correct, adjust as needed, see Ventiler, justering
.

3. Caution!
Plug all pipes, hoses and connections when removing.

Disconnect the output fuel hose from the fuel feed pump. Connect a hose (1) between the fuel feed pump and the fuel tank.

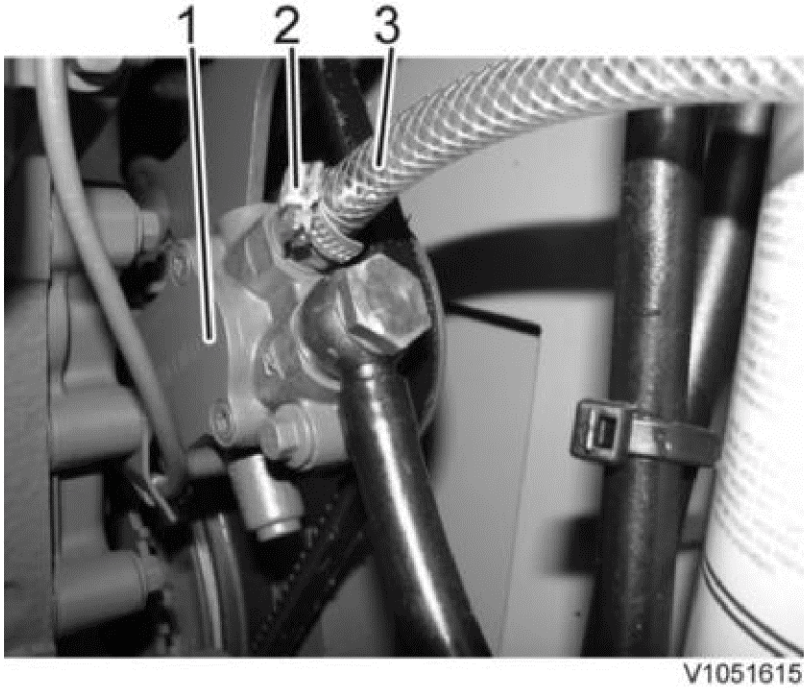

Figure 1

1. Fuel feed pump
2. 943471 Hose clamp

3. Hose Ø 10 mm x 3 m

4. Caution!
Plug all pipes, hoses and connections when removing.

Remove the fuel pipes between the fuel rail and the injectors.

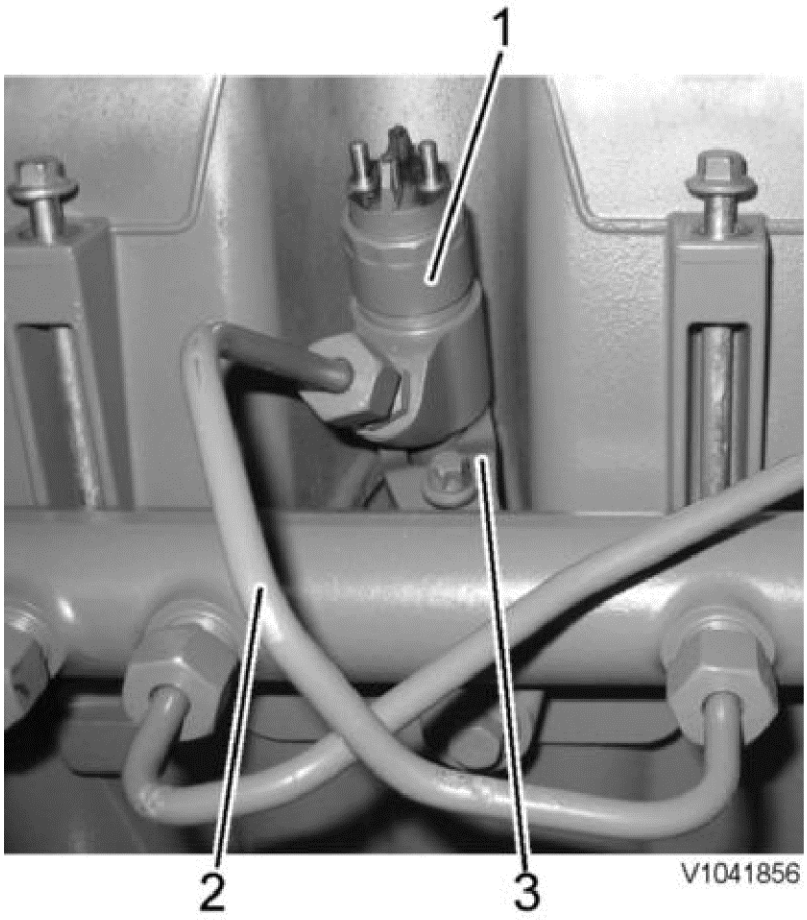

Figure 2

1. Injectors
2. Fuel rail
3. Attaching yoke

5. Disconnect the electric connections from the injectors. Remove the injectors.

6. Install 88830026Adapter with copper gasket in the hole for the injector. Install the attaching yoke.
Tightening torque: see Bränslesystem, åtdragningsmoment
. Connect 9998665Adapter and 9988539Pressure gauge



Figure 3

1. 9988539Pressure gauge
2. 88830026Adapter
3. 9998665Adapter

WARNING! **Make sure that high-pressure fuel cannot come into contact with unprotected parts of the body when working with injection equipment.**

7. Run the engine with the starter motor 4–6 seconds. Repeat the procedure for the other cylinders. The difference in compression pressure should not exceed 15 %,

   NOTE **Do not run the starter motor for longer than 15 seconds at a time, with intervals of 60 seconds.**

8. Remove the compression test equipment.
9. Install the injectors with new copper gaskets. Tightening torque, attaching yoke, see: Bränslesystem, åtdragningsmoment

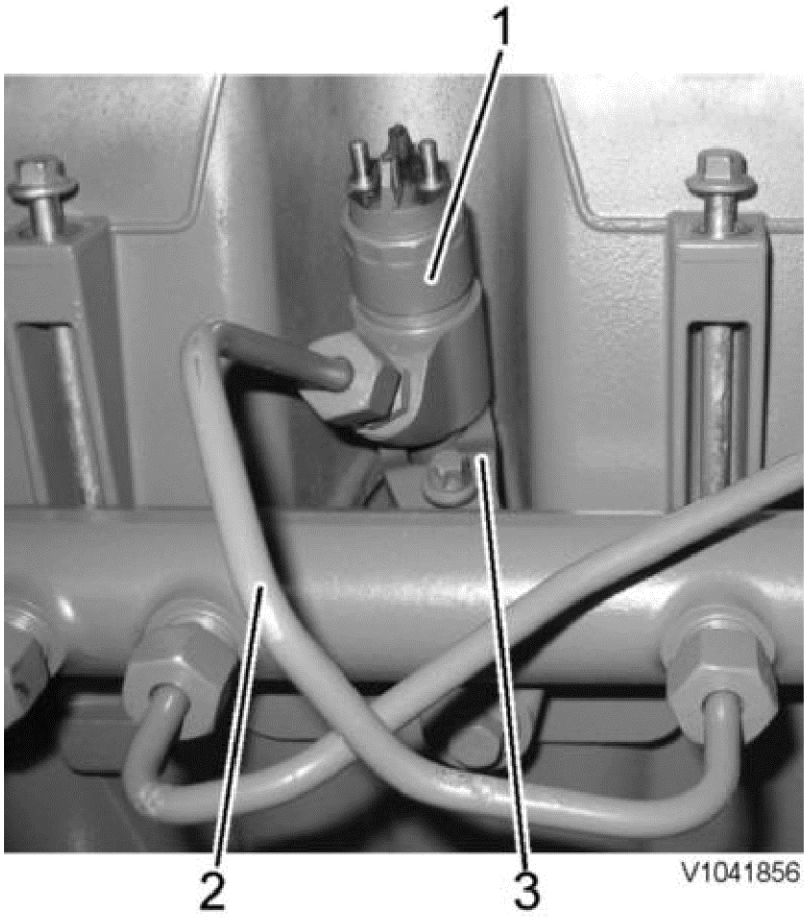

Figure 4

1. Injectors
2. Fuel delivery line
3. Attaching yoke

10. Caution!
The fuel pressure lines are pre-shaped and must never be altered in any way.

    Install new fuel delivery lines. Tightening torque, see: Bränslesystem, åtdragningsmoment

11. Remove the hose between the fuel feed pump and the fuel tank. Connect the fuel hose to the fuel feed pump.

12. Install the cable bracket on the valve cover.

13. Bleed the fuel system, see Bränslesystem, luftning

14. Restore the machine to operating condition.

VOLVO
Construction Equipment

Service Information

Document Title:	Function Group:	Information Type: **Service Information**	Date: **12/10/2011**
Profile: **WLO, L90F (Volvo) [GB]**			

Camshaft and flywheel signals, checking with VCADS Pro and oscilloscope

Op nbr 210-090

9990014 Adapter
9990062 Cable
9998699 Adapter
88890040 Oscilloscope
VCADS Pro VCADS Pro Service Tool

1. Connect 88890040Oscilloscope to the VCADS Pro computer and perform 28420-3, Flywheel and camshaft signals, test.

NOTE **Instructions for how to connect the equipment are described in the VCADS Pro operation.**

NOTE **To be able to start the oscilloscope operation when USB-interface is default in VCADS Pro, then 88890020Interface must be connected to the computer. However, in this case the interface does not have to be connected to the machine.**

NOTE **For computers with only one USB-port, the interface configuration must be changed to 9998555. However, in this cases the interface does not have to be connected to the machine.**

Detailed user support is available under the menu Help in the software.

NOTE **The function "Save" overwrites the original file. Therefore, choose "Save as..." to save the read-off.**

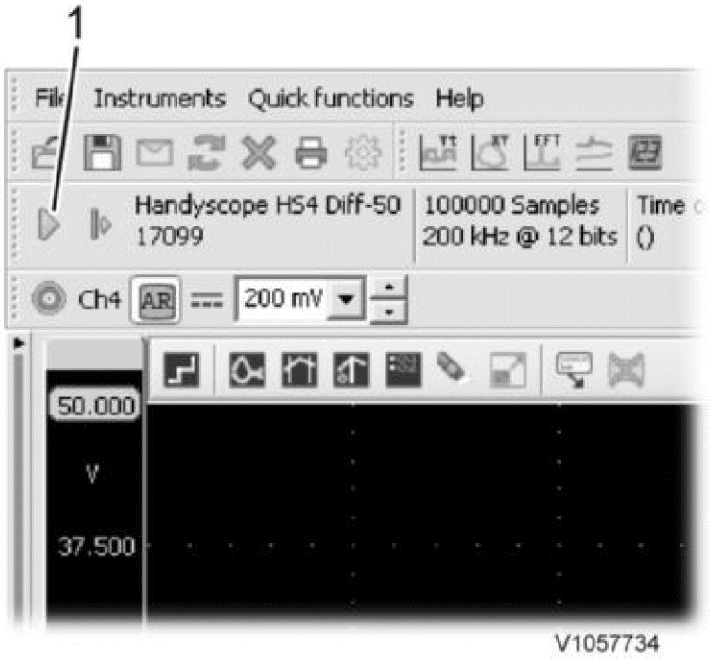

Figure 1

1. Click to start and stop the read-off

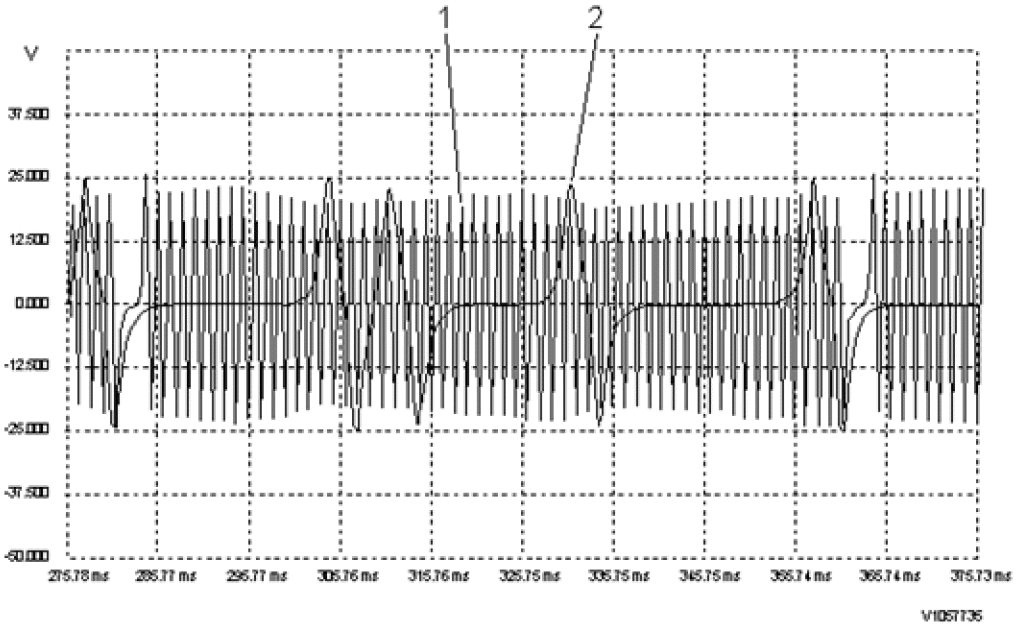

Figure 2
Example of read-off of sensor signals with oscilloscope

1. Signal from flywheel sensor
2. Signal from camshaft sensor

2. Check that the signal from the camshaft sensor's signal coincides with the signal from the flywheel sensor within the marked area in the figure.
   - If the signal for the camshaft sensor is displaced **to the left** the camshaft is displaced **one gear tooth in the camshaft's rotational direction**.
   - If the signal for the camshaft sensor is displaced **to the right** the camshaft is displaced **one gear tooth opposite to the camshaft's rotational direction**.

   For adjusting the camshaft's position, see service manual for respective engine.

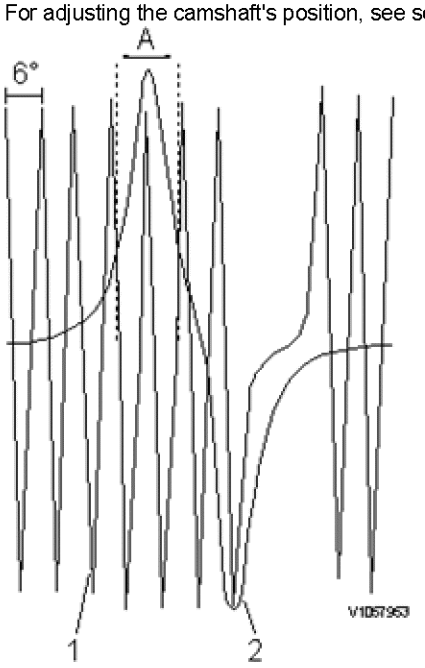

Figure 3
Relationship between camshaft signal and flywheel signal

A. Area where the signal from the camshaft shall coincide with the signal from the flywheel sensor
1. Flywheel sensor
2. Camshaft sensor

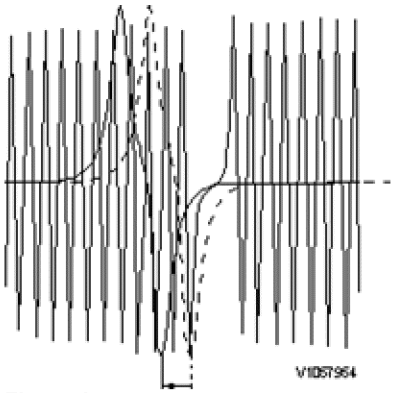

Figure 4
Example of incorrect signal

In this case, the signal for the camshaft sensor is displaced to the left.

3. Check that the curves are not mirror-imaged (see figure). If the curves are mirror-imaged:
   - Check the connection to the oscilloscope.
   - If the connection to the oscilloscope is correct, check that the connections for the crankshaft sensor are installed correctly. If needed, unplug the connector for the flywheel sensor and change place of the cable connections.

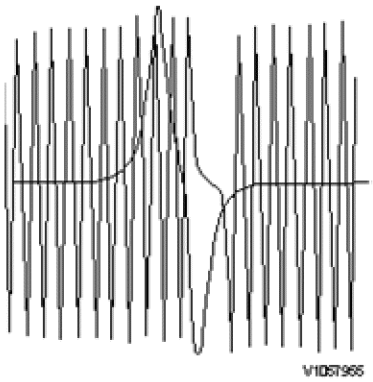

Figure 5
Example of incorrect signal

In this case, the signal for the flywheel sensor is mirror-imaged

4. Check the voltage across the camshaft sensor.
   To ensure reliable start and operation of the engine, the voltage across the sensors shall be according to SE2703, beskrivning och mätning
   .
   If the signal is too low:
   - Check that the sensor is correctly installed and adjusted.
   - Remove the sensor and check that it is not damaged. Check the distance between the sensor and the sensor ring gear is according to Kamaxelgivare, byte
     . Install the sensor and check the signal again.
     If the sensor is damaged, rotate the crankshaft and check if the camshaft gear has any damage that has caused damage to the sensor.

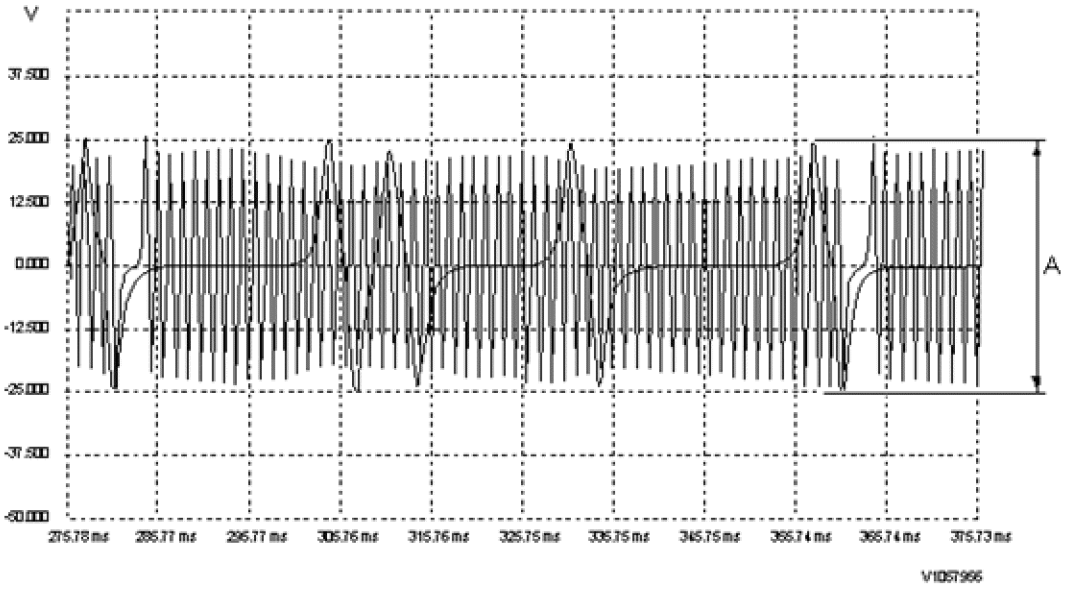

Figure 6

A. Signal voltage camshaft sensor (V)

5. Check the voltage across the flywheel sensor.
To ensure reliable start and operation of the engine, the voltage across the sensors shall be according to SE2701, beskrivning och mätning
.
If the signal is too low:
   - Check that the sensor is correctly installed and adjusted.
   - Remove the sensor and check that it is not damaged. Check the distance between the sensor and the sensor ring gear/flywheel is according to Motorvarvtalsgivare, byte
. Install the sensor and check the signal again.
If the sensor is damaged, rotate the crankshaft and check if the flywheel has any damage that has caused damage to the sensor.

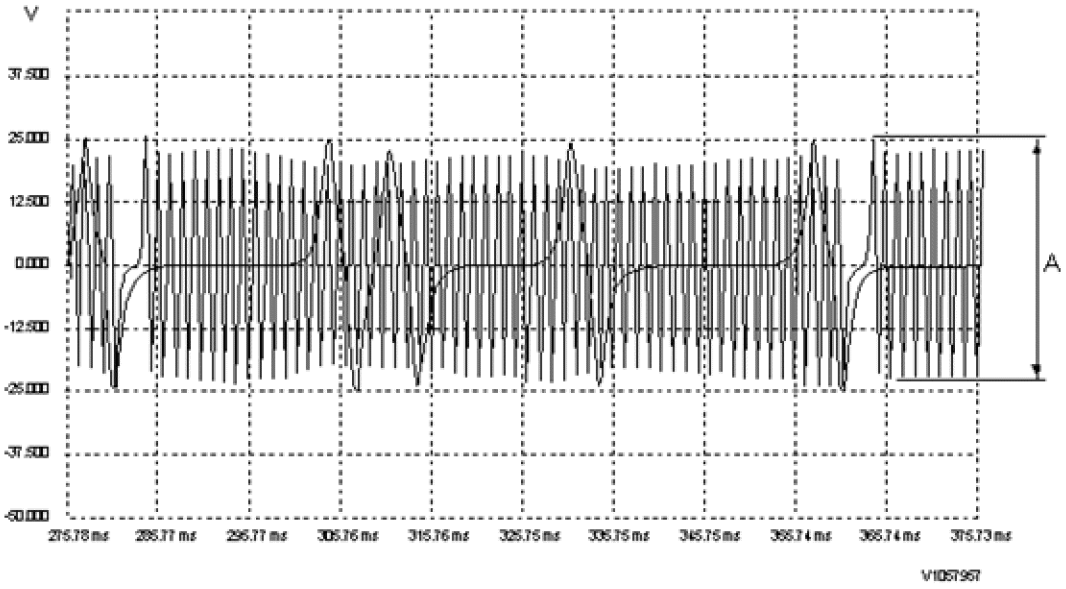

Figure 7

A. Signal voltage flywheel sensor (V)

VOLVO
Construction Equipment

Service Information

Document Title:	Function Group:	Information Type: **Service Information**	Date: **12/10/2011**
Profile: **WLO, L90F (Volvo) [GB]**			

Cylinder compression, VCADS Pro

Connect VCADS Pro computer and perform 21006-3 Cylinder compression, test.
(21006-3) This test indicates if there is any deviation in compression in any cylinder in relation to the other cylinders.

VOLVO
Construction Equipment

Service Information

Document Title:	Function Group:	Information Type: **Service Information**	Date: **12/10/2011**
Profile: **WLO, L90F (Volvo) [GB]**			

Stall speed, VCADS Pro

Connect VCADS Pro computer and perform 28407-8, Sensor values check.

(28407-8) This test shows the instantaneous values of the sensors.

VOLVO
Construction Equipment

Service Information

Document Title:	Function Group:	Information Type: **Service Information**	Date: **12/10/2011**
Profile: **WLO, L90F (Volvo) [GB]**			

Stall speed, checking

Op nbr 236-002

1. Warm up the machine until engine and transmission have reached working temperature, approx. 70°–90°C. All major current consuming equipment and air conditioning (if fitted) must be switched off when conducting this check.

NOTE **Checking speed readings should only be conducted from the cab for safety reasons and should last for a maximum duration of 10 seconds. Longer checks imply risk for overheating in the torque converter.**

WARNING! **Risk of personal injury! Make sure that no persons are in front of or behind the machine.**

2. Turn the ignition key to position 1.
3. Hold button 8, service, on the keypad pressed in for approx. 4 seconds.

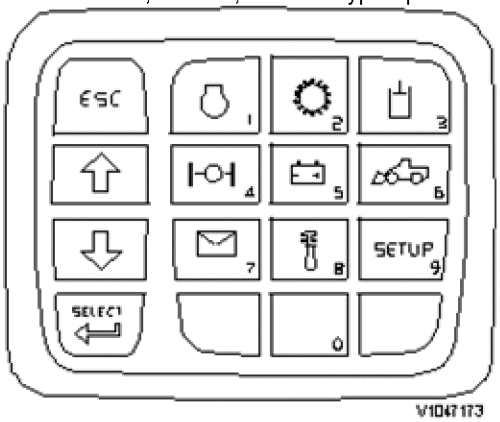

Figure 1
Keypad

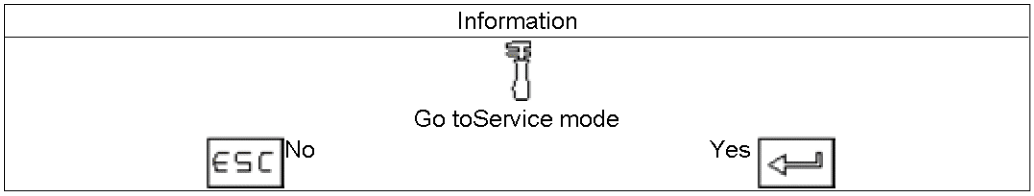

4. When asked if you want to enter Service mode, press Select.
5. Start the engine.

6. Check that the function transmission disengagement is not activated. The function is activated/deactivated with the keypad.

7. Check the high idle speed, see Motor, specifikation

8. Apply the parking brake. Also apply the service brake so that the wheels lock and the machine cannot move. Set the gearshift mode selector in position man/service. Engage third gear, forward or reverse.

9. Rev up the engine to full speed. Read off engine speed, see stall speed with torque converter Motor, specifikation

   A deviating stall speed is not in itself a problem that is a cause for repairs, but should be used as helpful information during troubleshooting.
   If the measured engine speed is higher than the given stall speed, it may be due to the torque converter, hydraulic transmission, or the hydraulic system, e.g., too low pressures. If the measured engine speed is lower than the given, it may be due to the torque converter or engine (or its associated equipment) is in poor condition, as well as, e.g., too high working pressure in the hydraulic system. A deviating stall speed is not in itself a problem that is a cause for repairs, but should be used as helpful information during troubleshooting.

VOLVO
Construction Equipment

Service Information

Document Title:	Function Group:	Information Type: **Service Information**	Date: **12/10/2011**
Profile: **WLO, L90F (Volvo) [GB]**			

Idle, VCADS Pro

Connect VCADS Pro computer and perform 17030-2, parameter, programming.

(17030-2) This test shows, among others, the parameter value for the set speed interval.

VOLVO
Construction Equipment

Service Information

Document Title:	Function Group:	Information Type: **Service Information**	Date: **12/10/2011**
Profile: **WLO, L90F (Volvo) [GB]**			

Engine rotation speed sensor, replacing

Op nbr 386-038

1. Place the machine in service position 1, see Servicepositioner
.
2. Open the side covers.
3. Unplug the sensor's connector (1) from the cable harness.

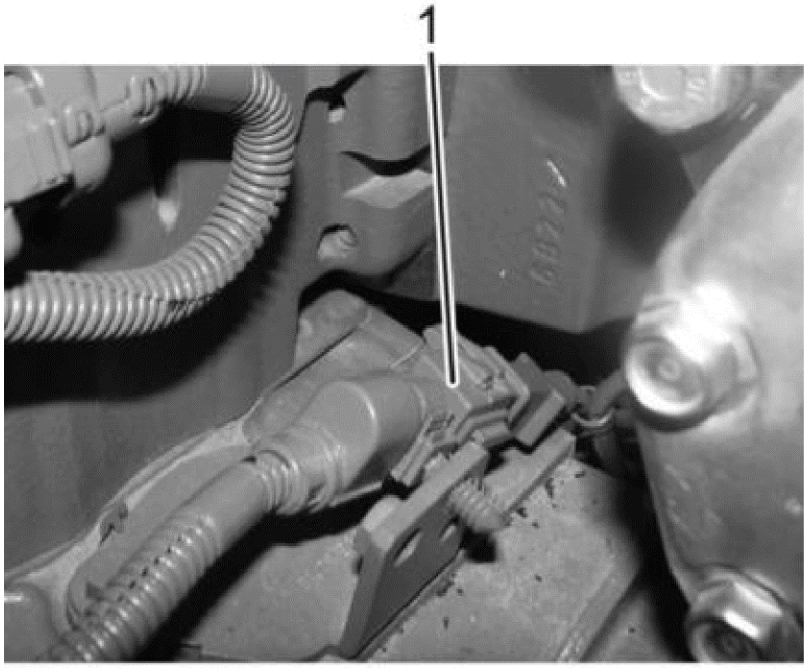

Figure 1

4. Cut the clamp (2) that holds the sensor's cable in the engine block. Remove the speed (rpm) sensor.

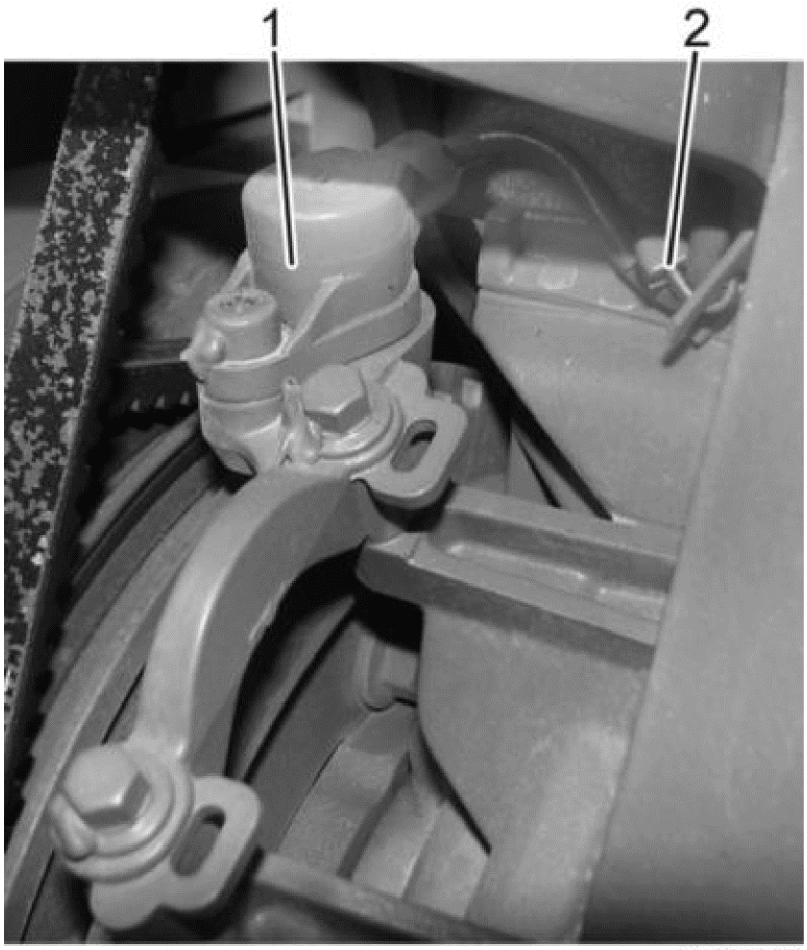

Figure 2

1. Speed sensor
2. Clamp

5. Install a new speed (rpm) sensor. Tightening torque, see Motor, åtdragningsmoment .
6. Clamp the cable in the engine block.
7. Plug in the connector for the cable harness.
8. Restore the machine to operating condition.

VOLVO
Construction Equipment

Service Information

Document Title:	Function Group:	Information Type: **Service Information**	Date: **12/10/2011**
Profile: **WLO, L90F (Volvo) [GB]**			

VCADS Pro, central systems updating, replace component

Op nbr 170-006

The operation is used to update Volvo's central system when replacing a component that is controlled by software. The operation ensures that the correct information for the machine in question is stored in the central systems.

1. Connect VCADS Pro computer and perform 17057-3, Central systems, update, replace component.

VOLVO
Construction Equipment

Service Information

Document Title:	Function Group:	Information Type: **Service Information**	Date: **12/10/2011**
Profile: **WLO, L90F (Volvo) [GB]**			

VCADS Pro, MID 128, programming E-ECU

Op nbr 200-009

(28423-3) This operation transfers software and parameter settings from Volvo's central systems to E-ECU.

1. Connect VCADS Pro computer and perform 28423-3, MID 128, programming E-ECU.

VOLVO
Construction Equipment

Service Information

Document Title:	Function Group:	Information Type: **Service Information**	Date: **12/10/2011**
Profile: **WLO, L90F (Volvo) [GB]**			

VCADS Pro, MID 128, programming E-ECU

Op nbr 200-009

(28423-3) This operation transfers software and parameter settings from Volvo's central systems to E-ECU.

1. Connect VCADS Pro computer and perform 28423-3, MID 128, programming E-ECU.

VOLVO
Construction Equipment

Service Information

Document Title:	Function Group:	Information Type: **Service Information**	Date: **12/10/2011**
Profile: **WLO, L90F (Volvo) [GB]**			

Valves, adjusting

Op nbr 214-012

885530 Rotation tool
885812 Timing tool

1. Set the machine in service position, see Säkerhetsregler vid service
2. Remove the engine hood, see Motorhuv, borttagning
3. Remove the lower side gratings (2). Remove the bottom plates (3) and the plate on the intermediate wall (1).

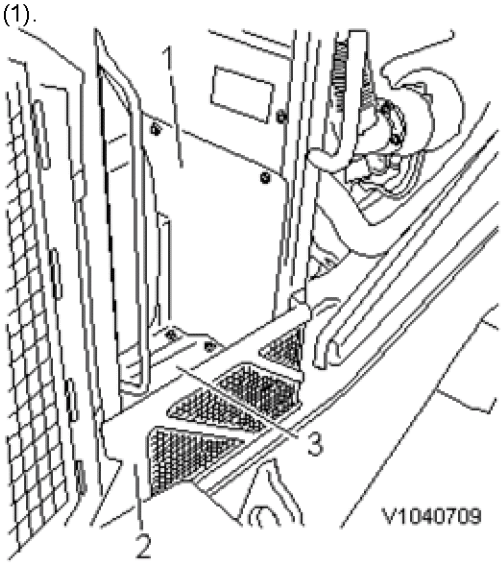

Figure 1

Caution!
Always cover open air connections with a plastic bag and rubber bands. Gravel, dust and other particles in these connections may result in engine failure!

4. Caution!
Clean round the valve cover, intercooler and turbo to avoid oil residue and the like from getting into the engine while work is in progress.

Disconnect the cable connections from the preheating coil. Disconnect the cable bracket from the valve cover and carefully lay the bracket aside. Disconnect the oil trap from the valve cover. Cover the connections with plastic bags and rubber bands.

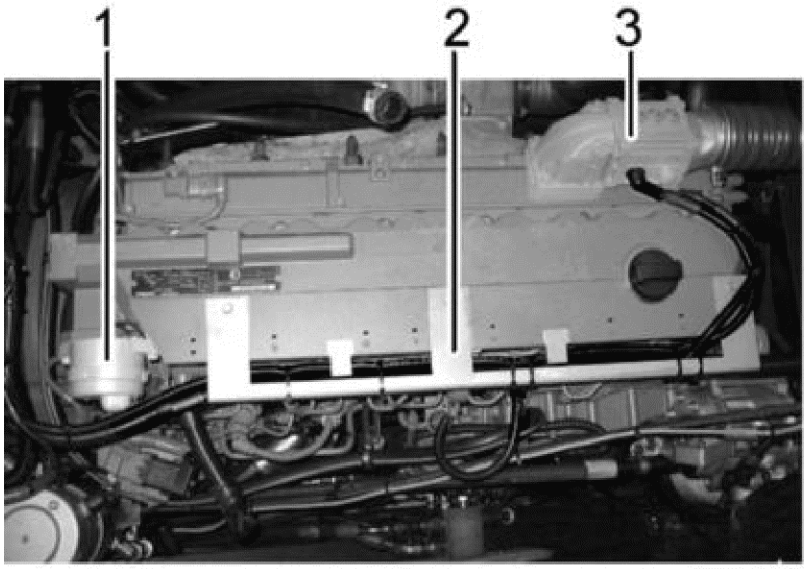

V1040678

Figure 2

1. Oil trap
2. Cable bracket
3. Preheating coil

5. Remove the valve cover.
6. Remove the IEGR-unit.

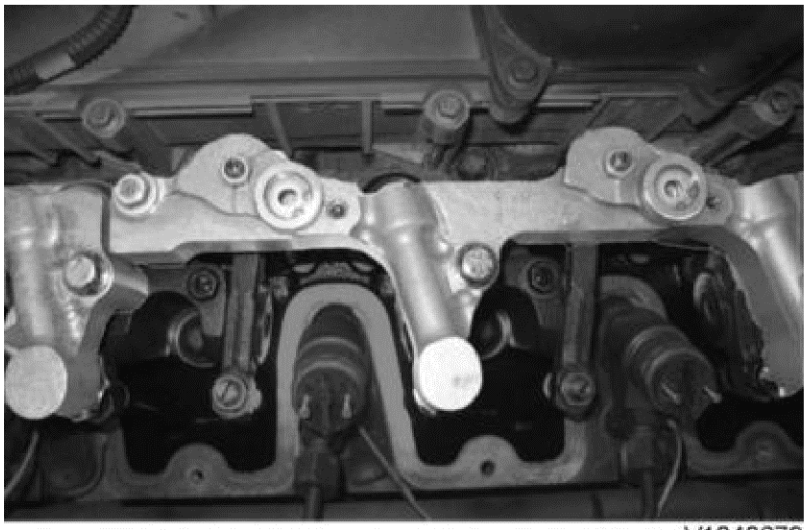

V1040679

Figure 3

7. Install M6x75 mm —10.9 bolts in the holes for the IEGR-unit on the rocker arm holders.
8. Rotate the engine until the position where the valves on cylinder 1 overlap.

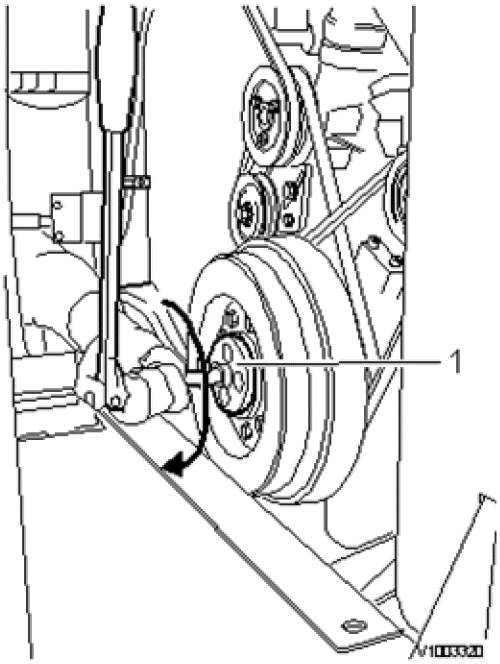

Figure 4

Overlapping means that the exhaust valve is about to open and the inlet valve is about to close. It should not be possible to rotate any push rods by hand for the cylinder in question in this position.

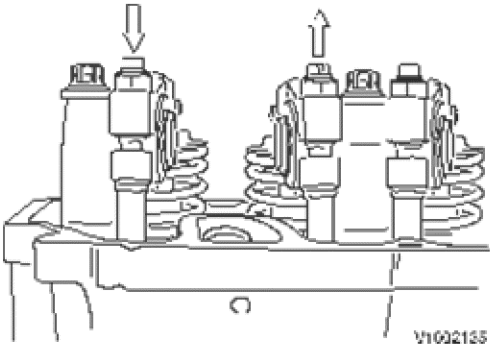

Figure 5
Overlapping

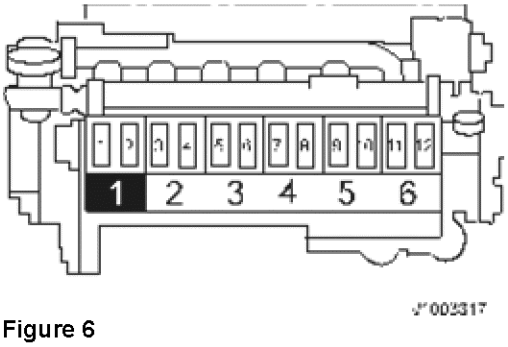

Figure 6

1, 3, 5, 7, 9 and 11 are exhaust valves
2, 4, 6, 8, 10 are 12 inlet valves

9. Mark the position on the vibration damper.

10. Adjust the valve clearance for each cylinder according to **the black markings** in the figure. Procedure for adjusting:

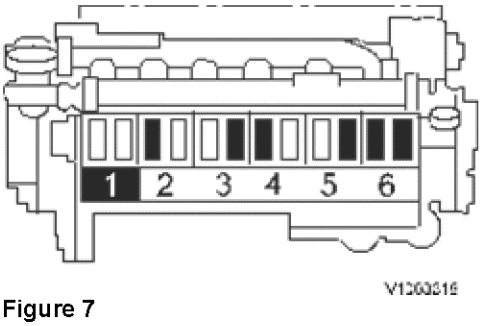

Figure 7

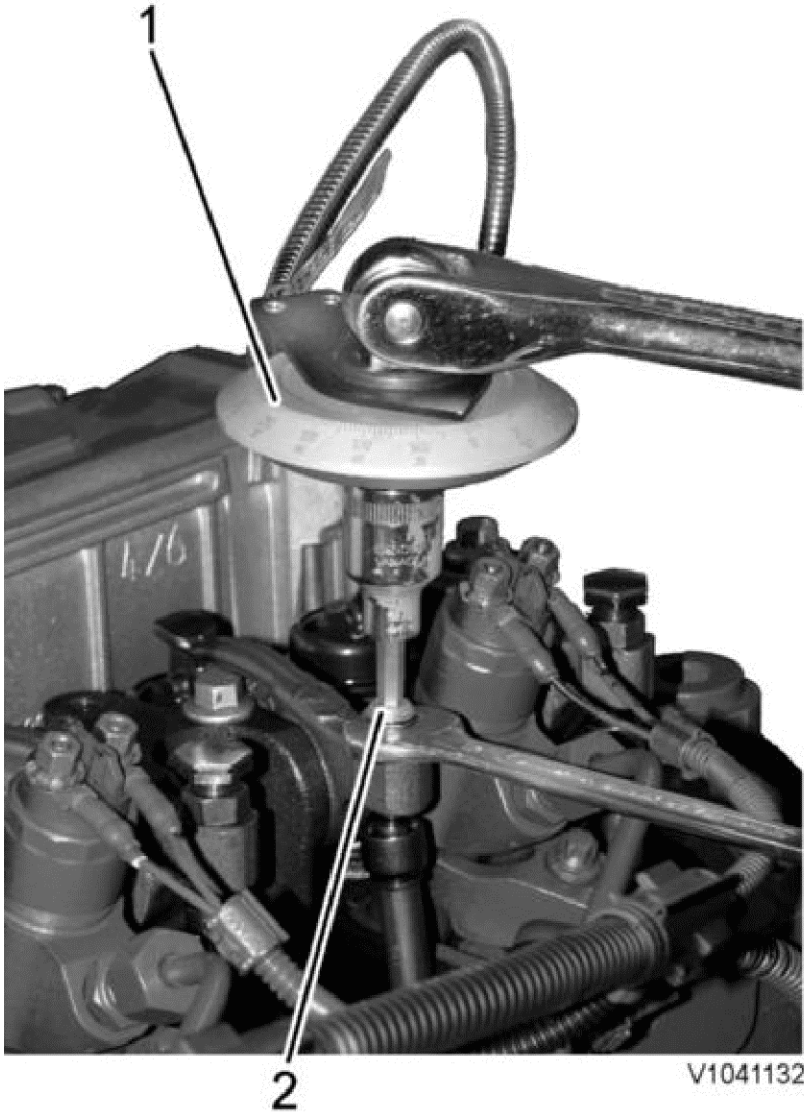

Figure 8

1. 885812Timing tool
2. Adjusting screw

1. Loosen the adjusting screw's lock bolt on the rocker arm.
2. Install 885812Timing tool on the adjusting screw.
3. Turn the adjusting screw until zero clearance is obtained between rocker arm and valve. Reset the protractor to zero.
4. Turn the adjusting screw **counter-clockwise 75° for inlet valve** and **120° for exhaust valve**.
5. Hold the adjusting screw and tighten the lock nut at the same time. Tightening torque: see Motor, åtdragningsmoment

11. Rotate the crankshaft 360° until the valves for cylinder 6 overlap. Adjust the valve clearance for each cylinder according to **the black markings** in the figure.

NOTE **When all valves are adjusted, do not rotate the engine. Continue directly with installing and adjusting the IEGR-unit.**

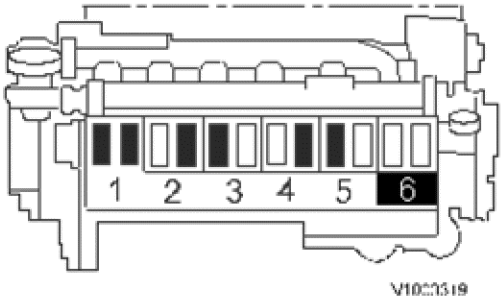

Figure 9

Installing and adjusting IEGR-unit

12. Install a new pipe between the two IEGR-sections. Lube the O-rings.
13. Remove the replacement bolts from the IEGR-unit's installation holes.
14. Install the IEGR-unit.
15. With **overlapping valves for cylinder 6**, adjust IEGR—opening piston for **cylinder 1, 3 and 5**. Procedure for adjusting IEGR-opening piston:
    1. Loosen the adjusting screw's lock bolt on the IEGR-unit.
    2. Install 885812Timing tool on the adjusting screw.
    3. Turn the adjusting screw until zero clearance is obtained between the IEGR-opening piston and exhaust rocker arm. Reset the protractor to zero.
    4. Turn the adjusting screw **counter-clockwise 144°**.
    5. Hold the adjusting screw and tighten the lock nut at the same time. Tightening torque: see Motor, åtdragningsmoment

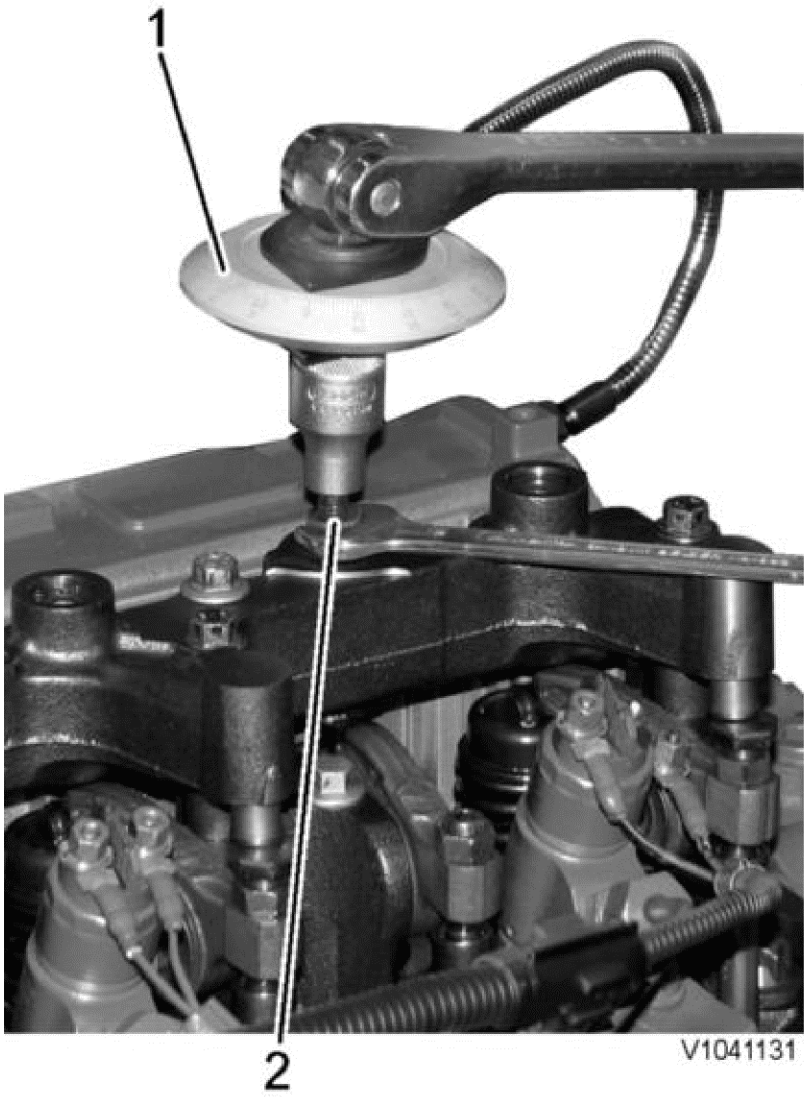

Figure 10

1. 885812Timing tool
2. Adjusting screw

16. Rotate the crankshaft another full turn until the **valves for cylinder 1 overlap**. Adjust IEGR—opening piston for **cylinder 2, 4 and 6**.

17. Install the gasket on the valve cover.

NOTE **Make sure that the tab (1) on the gasket is positioned correctly.**

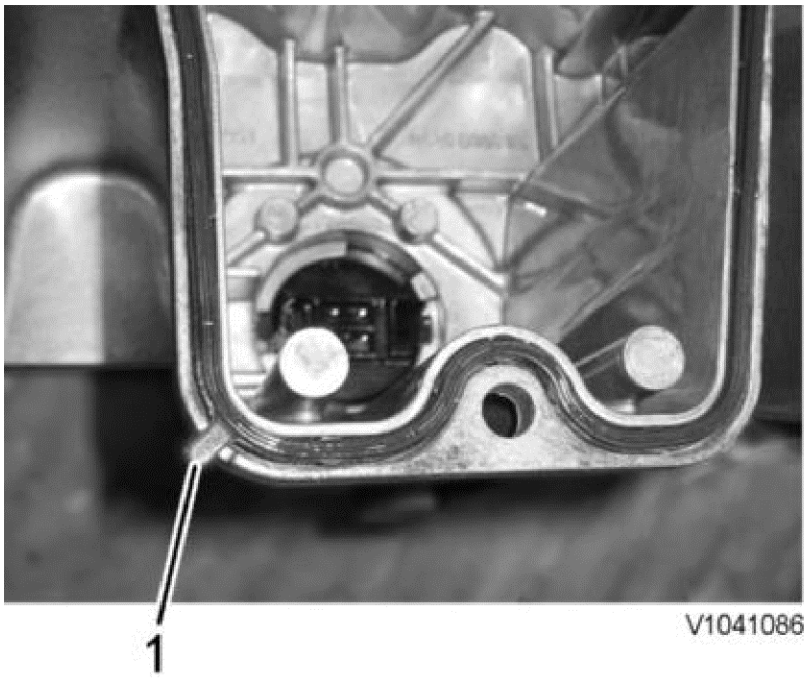

Figure 11

18. Install the valve cover. Tightening torque: see Motor, åtdragningsmoment
19. Install the oil trap.
20. Install the cable bracket.
21. Install the plate in the intermediate wall (1), the bottom plates (3) and the lower side gratings (2).

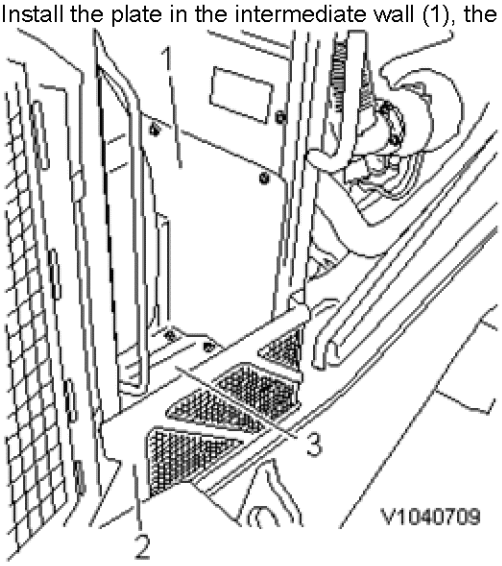

Figure 12

22. Install the engine hood in accordance with Motorhuv, ditsättning

VOLVO
Construction Equipment

Service Information

Document Title:	Function Group:	Information Type: **Service Information**	Date: **12/10/2011**
Profile: **WLO, L90F (Volvo) [GB]**			

Crankshaft, replacing front oil seal

Op nbr 216-014

9992634 Counterhold
11668400 Installation tool

1. Park the machine in service position.
2. Open the hood covers.
3. Turn off the current with the battery disconnect switch.
4. Remove the lower side gratings (3) and the bottom plates (2) on both sides. Remove the plate in the intermediate wall (1).

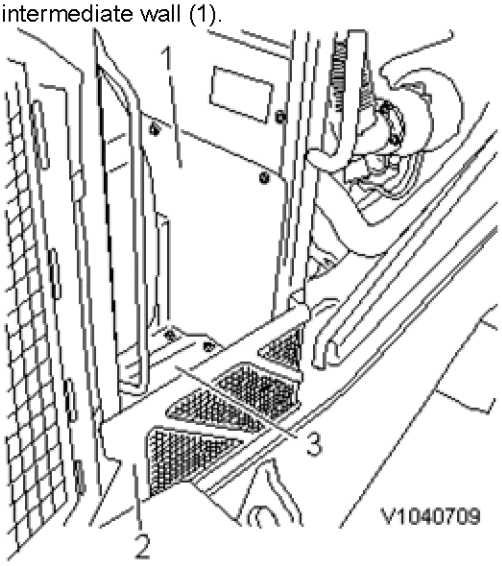

Figure 1

5. ## Removing

   Remove the drive belt for the AC compressor. Loosen the fuel pump belt and remove the drive belt for the alternator.

6. Mark the vibration damper and the belt pulley to facilitate reinstallation. Remove attaching bolts and remove outer vibration damper. Weight: **9 kg (20 lbs).**

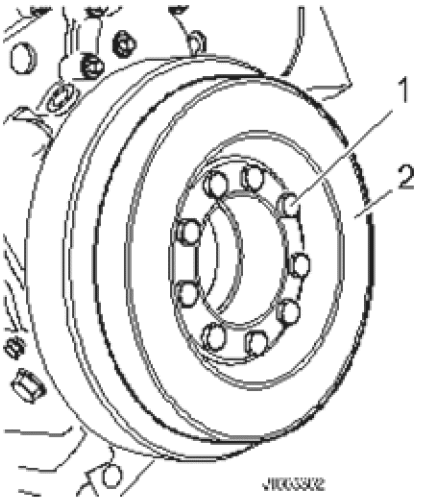

Figure 2

1. Attaching bolts
2. Outer oscillation damper

7. Lift away spacer and inner vibration damper. Weight **13 kg (29 lbs).**

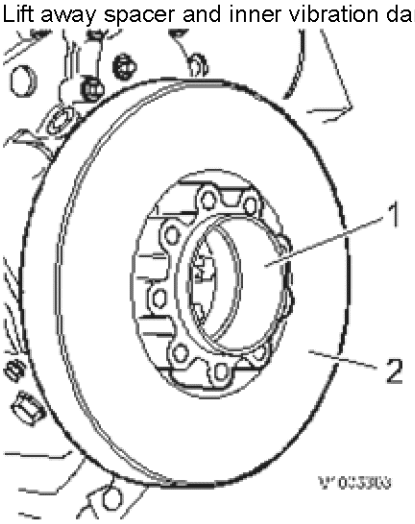

Figure 3

1. Spacer
2. Inner vibration damper

8. Install tool 9992634Counterhold with 2 pcs. M10x30 as counterhold and remove the bolts for the belt pulley. Check that the handle on the tool has good counterhold without damaging other components.

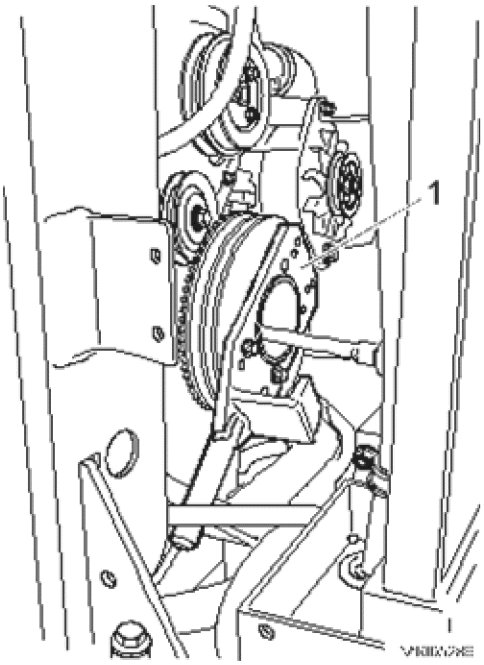

Figure 4

1. 9992634Counterhold

9. Remove the sensor gear (toothed wheel) and the double belt pulley. Weight: approx. **10 kg (22 lbs)**
10. Remove the spring pin on the crankshaft.
11. Remove the crankshaft seal.
12. Check the sealing surface on the crankshaft.

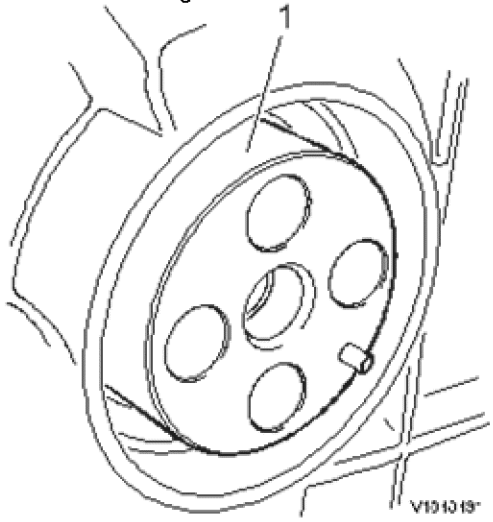

Figure 5

1. Wear surface

13. Install guide and inner part of mounting tool 11668400Installation tool. Lubricate the crankshaft seal with oil and install it with the felt side facing out.



Figure 6

1. Crankshaft oil seal
2. Guide (11668400Installation tool)

14. Install any washers, the thrust sleeve, bearing and the nut. If there is wear on the sealing surface, use the required number of washers needed so that the new crankshaft seal does not end up in the same position as the old one. Screw the nut until it stops. Check that the seal ends up in the right position.

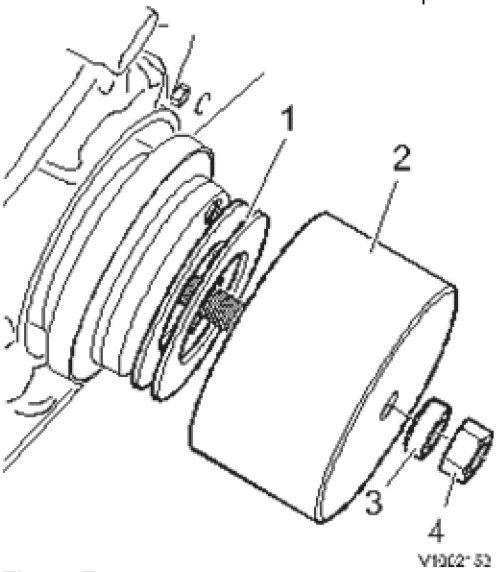

Figure 7

1. Washers
2. Press sleeve
3. Bearing
4. Nut

15. Remove the tool.

16. ## Installing

Align the guide sleeve and guide pin. Install the sensor gear (toothed wheel) and the V-belt pulley.

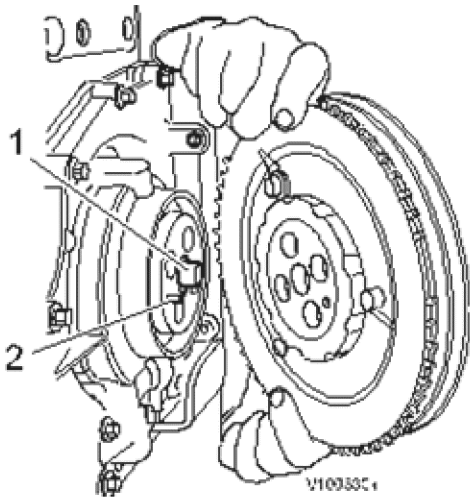

Figure 8

1. Guide sleeve
2. Guide pin

17. Install tool 9992634 together with 2 pcs. M10x30 bolts as counterhold. Check that the handle on the tool has counterhold without damaging other components. Install and tighten down the bolts for the toothed wheel (sensor gear). Tightening torque, see Motor, åtdragningsmoment

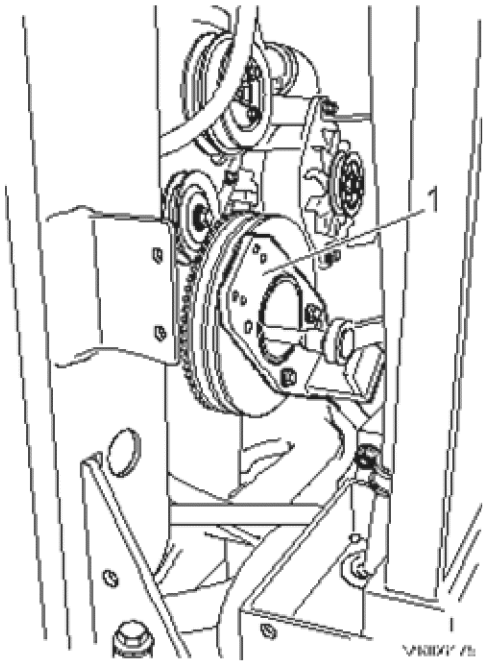

Figure 9

1. 9992634Counterhold

18. Check that the oscillation dampers are free from external damage.
Install inner vibration damper and spacer. Make sure that the boltholes align with the holes in the belt pulley.

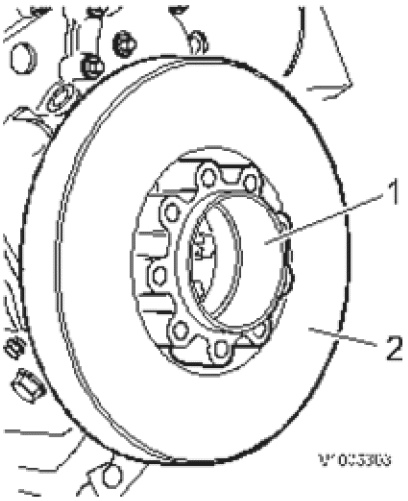

Figure 10

1. Spacer
2. Inner vibration damper

19. Install outer vibration damper and the washer. Tighten down the bolts.
Tightening torque: see Motor, åtdragningsmoment

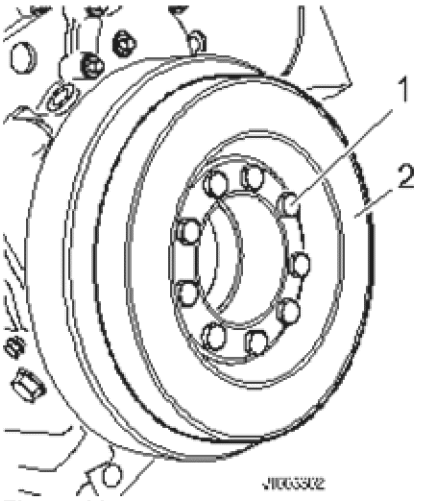

Figure 11

1. Attaching bolts
2. Outer oscillation damper

20. Install the drive belts and tighten them.

21. Install the plate in the intermediate wall (1). Install the bottom plates (2) and the lower side gratings (3) on both sides.

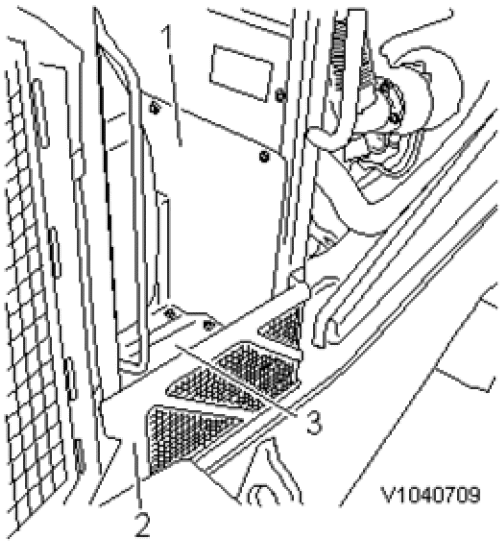

Figure 12

22. Turn on the electric power with the battery disconnect switch.
23. Start the engine and check for any defects.
24. Turn off the engine. Close the hood covers.

VOLVO
Construction Equipment

Service Information

Document Title:	Function Group:	Information Type: **Service Information**	Date: **12/10/2011**
Profile: **WLO, L90F (Volvo) [GB]**			

Lubricating system, description

The lube oil system is a forced-feed circulation system with lube oil cooler and lube oil filter arranged in a full flow circuit.

The lube oil pump is a rotary pump integrated with the front cover. The inner rotor is seated on and driven by a crankshaft drive.
A pressure regulating valve is mounted in the cylinder block. Lubricating oil is delivered by the oil pump through the oil cooler to the oil filter and on to the main oil gallery.
Oil exiting the oil cooler is regulated by the pressure regulating valve before entering the oil filter or main gallery.
The oil filter is mounted on the oil cooler housing, which is located on the engine block's right side. From the filter, the oil flows into the main distribution channel that supplies oil to the engine's crankshaft, camshaft, and rocker arms via tappets and push rods, as well as the turbocharger.
The engine is also equipped with piston cooling nozzles that spray oil on the underside of the pistons to maintain a stable operating temperature.

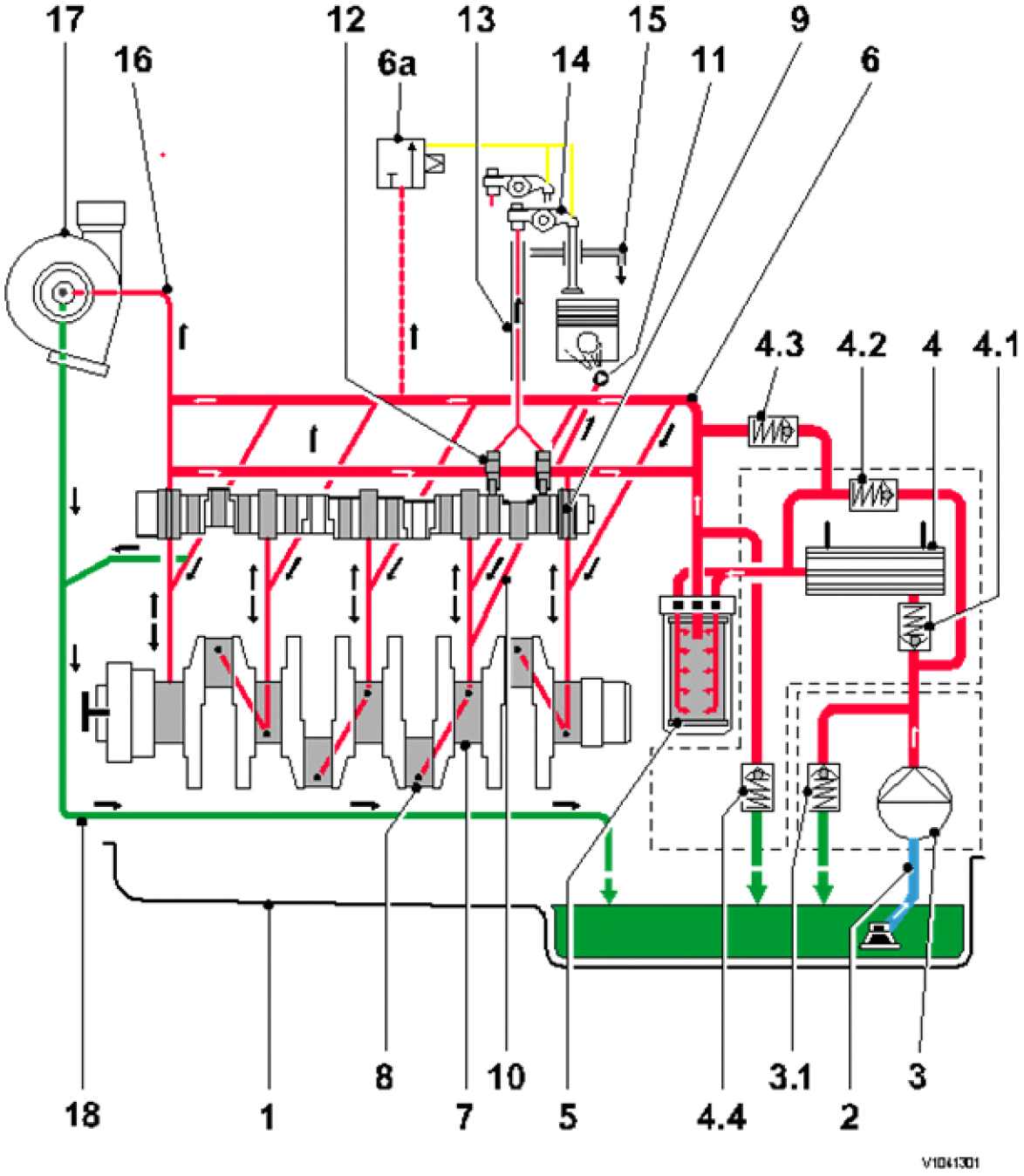

Figure 1
Lubrication system

1 Oil tray	7 Crankshaft bearing
2 Intake pipe	8 Con rod bearing
3 Lube oil pump	9 Camshaft bearing
3.1 Safety valve	10 Line to injection nozzle
4 Lube oil cooler	11 Injection nozzle for piston cooling
4.1 Return shutoff valve	12 Tappet with rocker arm pulse lubrication
4.2 By-pass valve	13 Stop rod, oil supply for rocker arm lubrication
4.3 By-pass valve (oil filter)	14 Rocker arm
4.4 Pressure control valve	15 Return line to oil tray
5 Exchangeable lube oil filter	16 Lube oil line to exhaust turbocharger
6 Main oil pipe	17 Exhaust turbocharger
6a IEGR Solenoid — on/off	18 Return line from exhaust turbocharger

Software, engine oil pressure

This function monitors engine oil pressure and informs the operator if the pressure is too low or if system error

occurs.

Engine oil pressure is also used as input signal for Engine protection, see Motor, beskrivning
.

See also Elschema 203
.

Input signals	Conditions for output functions	Output functions
o Engine oil pressure, SE2203 o Directional gear	o Low engine oil pressure Warning limits for low engine oil pressure: < 50 kPa (0.5 bar) (7.3 psi) at engine speed 500 rpm < 100 kPa (1 bar) (14.5 psi) at engine speed 1000 rpm < 150 kPa (1.5 bar) (21.8 psi) at engine speed 1300 rpm < 150 kPa (1.5 bar) (21.8 psi) at engine speed 1500 rpm	o Warning light o Red central warning o Warning — Low engine oil press. o Reduction of engine's torque (engine protection)
	According to the above information and including: o Directional gear in Forward or Reverse	o Buzzer
o Monitoring, SE2203	o System error, signal outside limits See Diagnostics	o Amber central warning o Check — Engine failure

VOLVO
Construction Equipment

Service Information

Document Title:	Function Group:	Information Type: **Service Information**	Date: **12/10/2011**
Profile: **WLO, L90F (Volvo) [GB]**			

Lubrication oil pressure, checking with pressure gauge

Op nbr 221-022

11666037 Hose
11666017 Pressure gauge

936442 Nipple M10x1

1. Place the machine in service position, see Säkerhetsregler vid service
.

WARNING! **Risk of burns! Use protective work gloves.**

2.
- Change the plug on the filter head for 936442 Nipple M10x1
- Connect 11666037Hose and pressure gauge 11666017Pressure gauge
- Start the engine and warm up to operating temperature. At high idle, the oil pressure should be according to Smörjsystem, specifikation

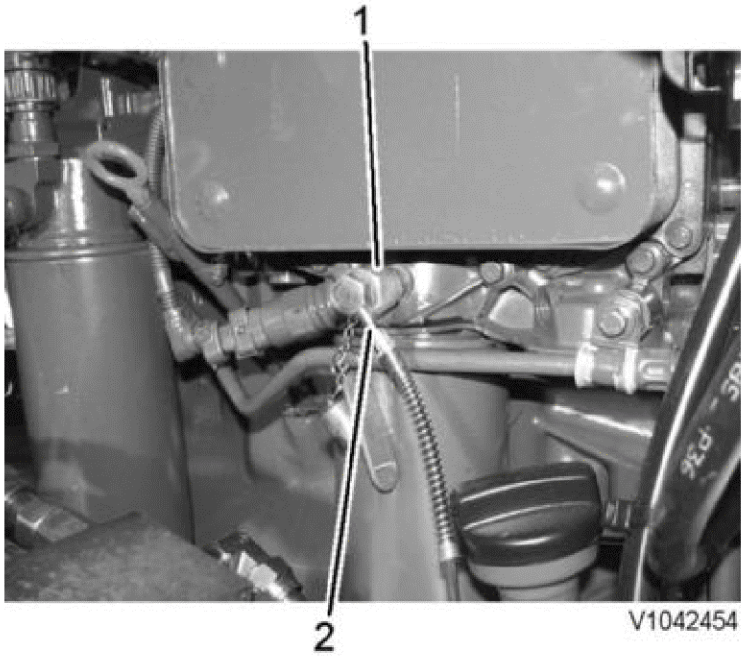

Figure 1

1. 936442 Nipple M10x1
2. 11666037Hose

3. Remove 11666037Hose, 11666017Pressure gauge and 936442 and install the plug on the filter head.

VOLVO
Construction Equipment

Service Information

Document Title:	Function Group:	Information Type: **Service Information**	Date: **12/10/2011**
Profile: **WLO, L90F (Volvo) [GB]**			

Fuel system, description

D6E

The D6E-engines for Tier 3/stage IIIA feature a system with pressure accumulators called fuel injection with Common rail. The main advantage of the common-rail system is its ability to vary injection pressure and timing over a broad scale. This is made possible by separating the functions of pressure generation and fuel injection.

The fuel delivery system is made up of a low pressure and high pressure circuit.
The low-pressure circuit consists of a fuel tank, primary filter with water trap, belt-driven fuel feed pump, secondary fuel filter, and a fuel control valve (FCV).
The high-pressure circuit consists of two high-pressure pumps driven by the engine's camshaft, a fuel rail, high-pressure lines, high-pressure sensor (for fuel in fuel rail), and electronically controlled fuel injectors.

The low-pressure circuit's fuel feed pump pumps fuel from the tank through the primary filter with water trap and in to the pump's inlet. Then the fuel is forced from the pump through the secondary filter to the fuel control valve (FCV), which is located between the high-pressure pumps.
The high-pressure pumps work all the time and create the desired injection pressure which is stored in the fuel rail.
The fuel control valve (FCV) is a PWM-controlled solenoid valve which controls fuel volume to the high-pressure pumps. The fuel control valve makes sure that the high-pressure pumps are filled so that the pressure that has been indicated as distribution pressure is maintained.
High-pressure fuel from the fuel rail is available to the injectors at all times. The electronically controlled fuel injectors control injection timing and injection volume.

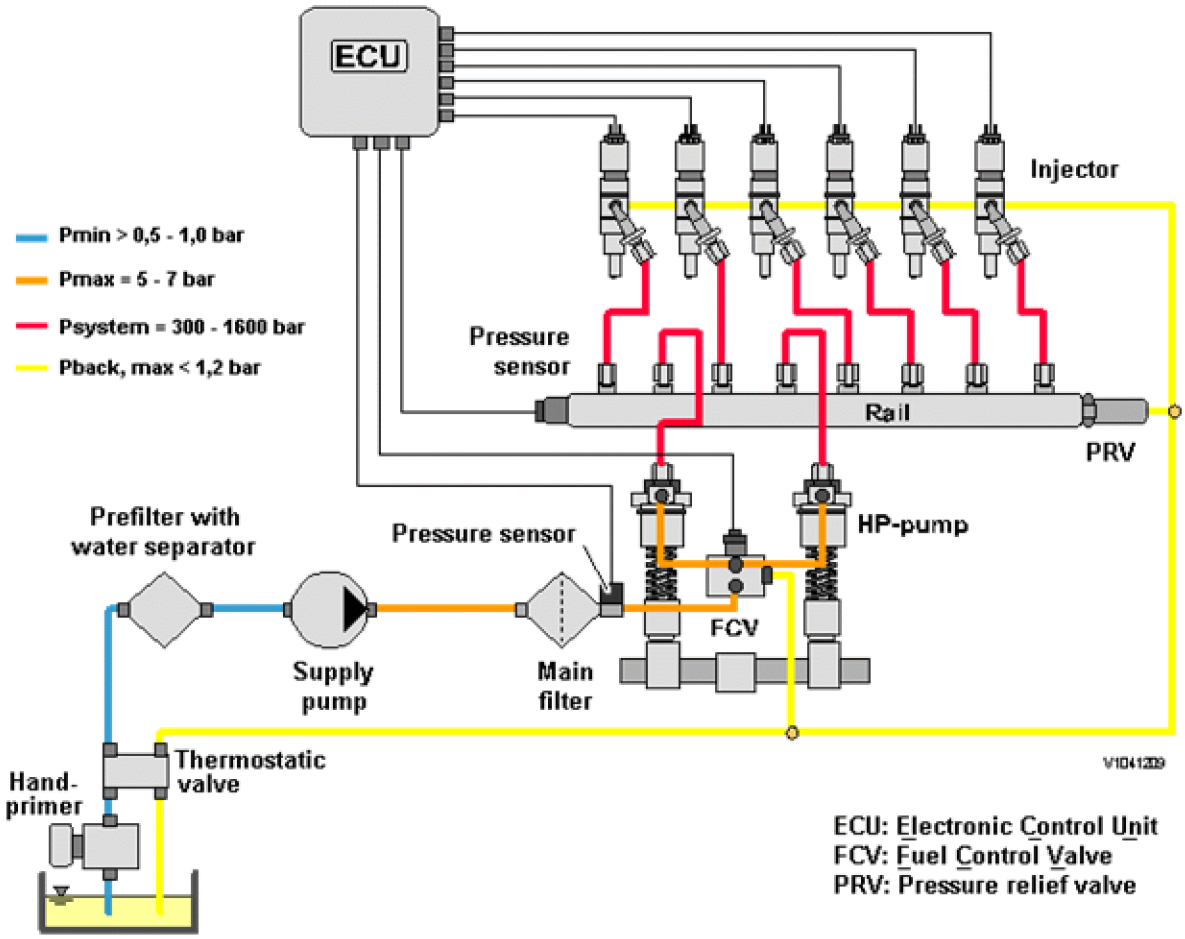

Figure 1
Fuel system

Software

The fuel control valve (PWM2303) and rail pressure (SE2309), are used as input signal for Engine protection, see Motor, beskrivning
.

Fuel level

This function monitors fuel level in the fuel tank and informs the operator if the level is too low or if there is a system malfunction.

Fuel for approximately 1 hour of operation remains after low fuel level is indicated.

See also Elschema 201
.

Input signals	Conditions for output functions	Output functions
o Monitoring, SE2303	o Low fuel level for > 60 seconds o No or incorrect signal See Diagnostics	o Warning light — Fuel level low o Amber central warning o Check — Fuel level low

VOLVO
Construction Equipment

Service Information

Document Title:	Function Group:	Information Type: **Service Information**	Date: **12/10/2011**
Profile: **WLO, L90F (Volvo) [GB]**			

Instructions for working with electronic fuel injection

- Never disconnect any cables from the control unit or from the sensors, when the engine is running. The ignition key must be in position 0 and the engine stopped.
- Never disconnect a battery cable while the engine is running.
- Before carrying out welding work, the control unit connectors must be disconnected from the control unit.

  NOTE **The main current supply must be switched off when the connectors are disconnected.**

- Only batteries must be used as staring aid. Starting aid units may supply overvoltage and damage the electronics.
- During rapid charging of the batteries, the battery cables must be disconnected. (This does not apply during normal trickle charging.)
- If a connector has been disconnected, make sure it is correctly reconnected, and that it is completely free from oil or other contamination, which may cause a poor contact.

VOLVO
Construction Equipment

Service Information

Document Title:	Function Group:	Information Type: **Service Information**	Date: **12/10/2011**
Profile: **WLO, L90F (Volvo) [GB]**			

Fuel system, bleeding

Op nbr 233-001

1. Loosen the pump piston on the hand pump by pressing and at the same time turning the handle (1) counter-clockwise.
2. Pump with the hand pump until a resistance is felt in the hand pump (approx. 150–200 pump strokes).

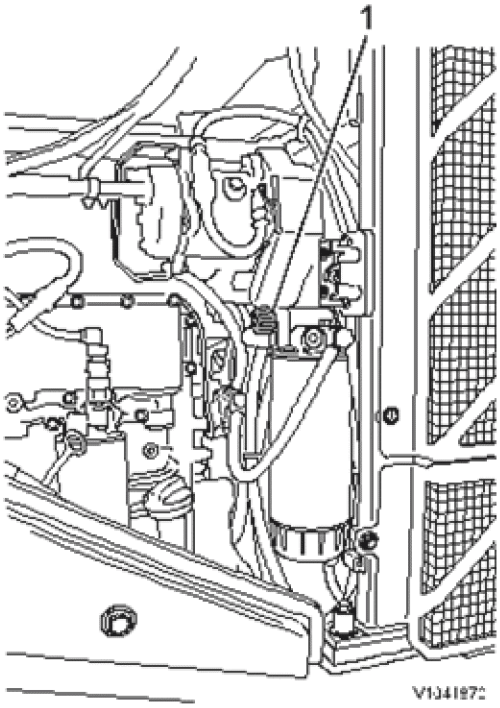

Figure 1

1. Hand pump on filter head

3. Lock the pump piston on the hand pump by pressing and at the same time turning the handle (2) clockwise.
4. Start the engine and let it run at low idle for at least 10 minutes to bleed out any remaining air in the system.
5. If the engine is difficult to start, pump again with the hand pump until a resistance is felt.

   NOTE **The hand pump must not be used when the engine is running.**

6. Check for leaks after starting.

VOLVO
Construction Equipment

Service Information

Document Title:	Function Group:	Information Type: **Service Information**	Date: **12/10/2011**
Profile: **WLO, L90F (Volvo) [GB]**			

Carbon monoxide in fuel system, check

Carbon monoxide in fuel tank, check with carbon monoxide tester

Op nbr 230-001

9808038 Leak detector

1. Run the engine until it is warm.
2. Dismantle 9808038Leak detector.
   Lubricate the O-rings with silicone grease or clean vaseline.
3. Fill both chambers with reaction fluid up to the indicated line.
4. Cover the inlet hole at the same time as the carbon monoxide tester is assembled so that no fluid is pressed out.

   NOTE **The carbon monoxide tester and its fluids may not be exposed to cigarette smoke, exhausts, or similar.**

   Conduct the test on a machine that is not recently refuelled.
5. Rev up the engine several times.
6. Turn off the engine and open the tank cap.
   Place 9808038Leak detector over the tank opening and pump 3–5 times on the rubber bulb to suck in air from the tank. Wait 10–15 seconds to see if the reaction fluid reacts.

   NOTE **Fuel may not be sucked into the carbon monoxide tester.**

   If the reaction fluid in 9808038Leak detector changes colour, this indicates that there is carbon monoxide in the tank.

   Very small quantities of carbon monoxide are often present in the machine's systems, that is why the measurement should be repeated if the first measurement generates a reaction.
7. Suck fresh air into 9808038Leak detector by pumping a few times on the bulb. Pump until the reaction fluid has returned to its original colour.
8. Ventilate the air above the filler hole to the tank and repeat the test.

   NOTE **Do not blow with exhaled air as it contain carbon dioxide.**
9. Reinstall the tank cap.

VOLVO
Construction Equipment

Service Information

Document Title:	Function Group:	Information Type: **Service Information**	Date: **12/10/2011**
Profile: **WLO, L90F (Volvo) [GB]**			

Fuel feed pump, description

The feed pump is of the gear type and is driven by the same belt as the coolant pump. There is a pressure relief valve (1) integrated in the pump, and its function is to return the fuel to tank, e.g., in case of clogged fuel filter.
If the fuel lines have been run dry of fuel, the fuel system should be filled and bled with the hand pump located on the primary filter housing. The non-return valve (2) opens and allows fuel to circulate in the entire circuit. In this way, the high-pressure pumps are supplied with fuel free from air.

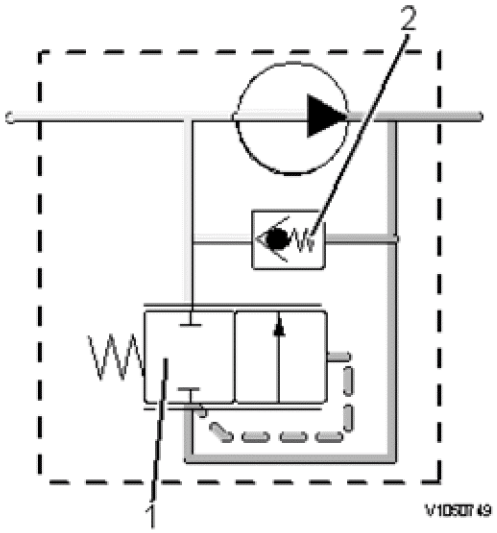

Figure 1

VOLVO
Construction Equipment

Service Information

Document Title:	Function Group:	Information Type: **Service Information**	Date: **12/10/2011**
Profile: **WLO, L90F (Volvo) [GB]**			

Fuel filter, description

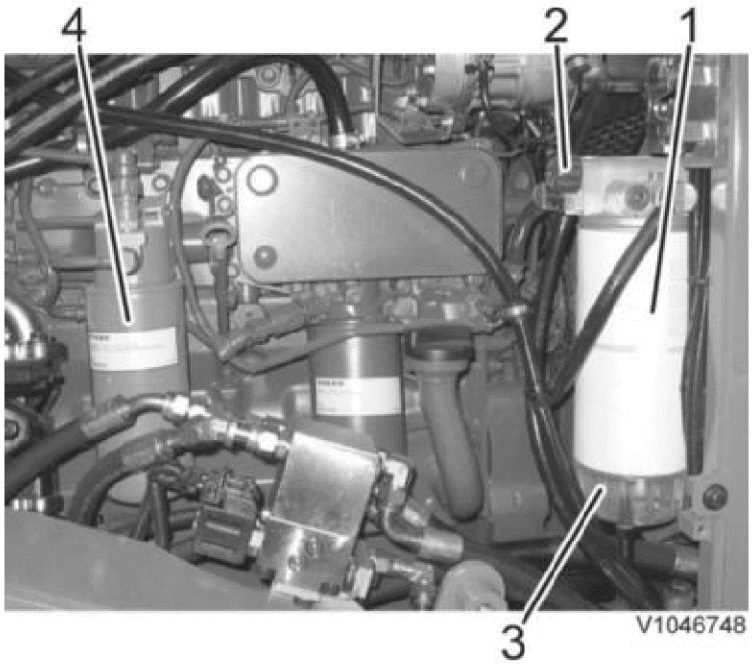

Figure 1

1. Primary filter
2. Hand pump
3. Water trap
4. Secondary filter

The fuel system is equipped with two fuel filters, a primary filter (1) with water trap, and a secondary filter (4).
On the secondary filter side, there is a fuel pressure sensor that measures the fuel feed pressure to the unit injectors. In the water trap (3), there is a drain valve and a level sensor.

The filter insert consists of a folded filter made of special paper with very good filtration capacity.

On the suction line in the fuel tank, there's also a fine filter (net type) that separates any coarse solid impurities before the fuel is drawn into the system.

Water in fuel — software

The function monitors fuel in the water trap and informs the operator when water is detected.

See also Elschema 202
.

Input signals	Conditions for output functions	Output functions
o Sensor, SE2302	o Water in fuel	o Amber central warning o Check — Engine failure

VOLVO
Construction Equipment

Service Information

Document Title:	Function Group:	Information Type: **Service Information**	Date: **12/10/2011**
Profile: **WLO, L90F (Volvo) [GB]**			

Feed pump, checking feed pressure

Op nbr 233-004

9993720 Nipple
11666052 Pressure gauge
14290262 Adapter
14290266 Hose

1. Remove the plug by the fuel filter and install 9993720, 14290262, 14290266 and 11666052 on the connection for outgoing fuel (2).

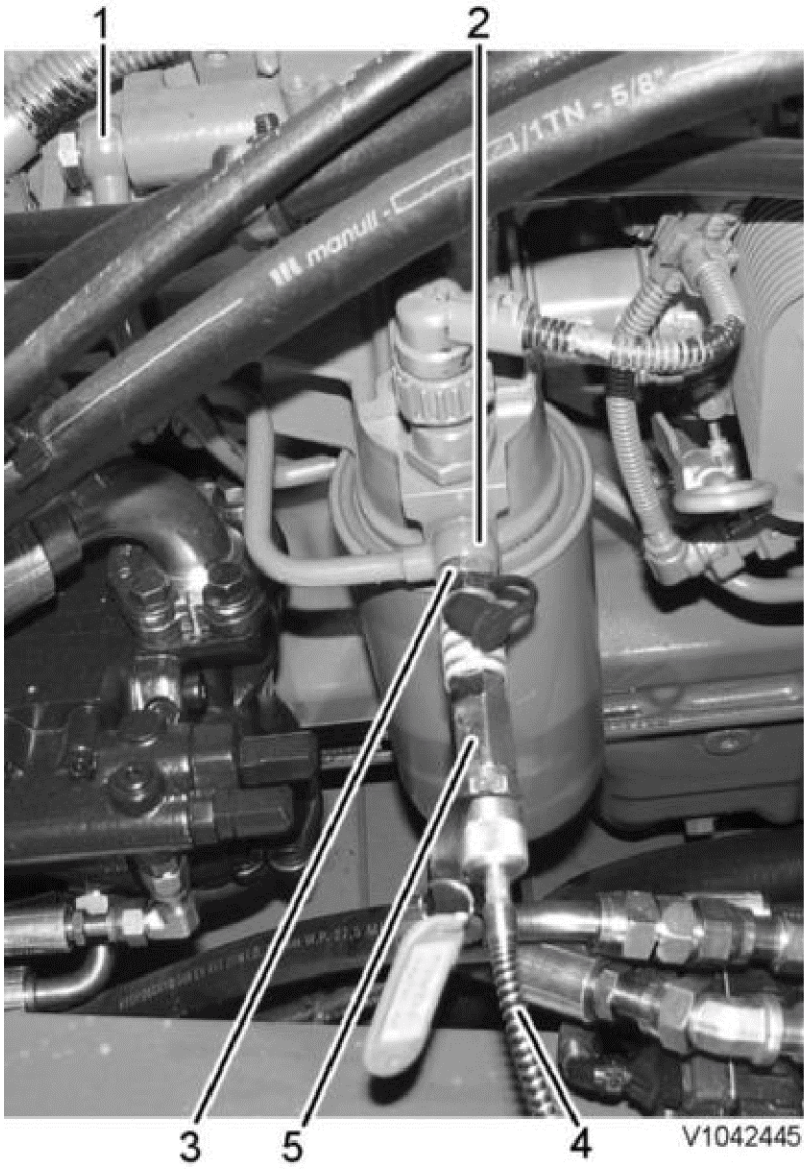

Figure 1

1. Connection, incoming fuel
2. Connection, outgoing fuel
3. 9993720
4. 14290266
5. 14290262

2. Bleed the fuel system according to Bränslesystem, luftning
.

3. Read off the fuel feed pressure and check that it is acc. to Bränslematarpump, specifikation

If the measured pressure is too low:
Connect the tools on the connection for incoming fuel (1). Bleed the fuel system acc. to Bränslesystem, luftning
. Read off the fuel feed pressure. If the pressure is acc. to Bränslematarpump, specifikation
, the fuel filter may be clogged. Change filter and check the fuel feed pressure again on the outgoing fuel line acc. to step 1–2.

If the pressure still is too low, it may be due to a defective overflow valve, fuel pump or fuel supply. Check the fuel feed pump and that fuel can reach the pump.

4. Remove 9993720, 14290262, 14290266 and 11666052 and install the plug at the fuel filter.

5. Bleed the fuel system according to Bränslesystem, luftning
.

VOLVO
Construction Equipment

Service Information

Document Title:	Function Group:	Information Type: **Service Information**	Date: **12/10/2011**
Profile: **WLO, L90F (Volvo) [GB]**			

Fuel filter, check

Op nbr 233-020

1. Check that the fuel is not contaminated in the bowl under the primary filter. The check is performed to make sure that the primary filter is not clogged.
   In case of impurities, the filter is probably clogged. Change primary filter and clean the water collection bowl.
   In winter, one can also check if any water in the water collection bowl has frozen and thus causes a clog.
   In case of suspected impurities in the tank, clean the tank.

Draining water collection bowl

2. Open the valve (1) on the water collection bowl and collect waste fuel in a suitable container.



Figure 1

VOLVO
Construction Equipment

Service Information

Document Title:	Function Group:	Information Type: **Service Information**	Date: **12/10/2011**
Profile: **WLO, L90F (Volvo) [GB]**			

Fuel level sender, replacing

Op nbr 386-011

1. Place the machine in service position 1, see Säkerhetsregler vid service
.
2. Remove the lower grating (2) and bottom plate (3). Remove the bottom plate from the fan frame (1).

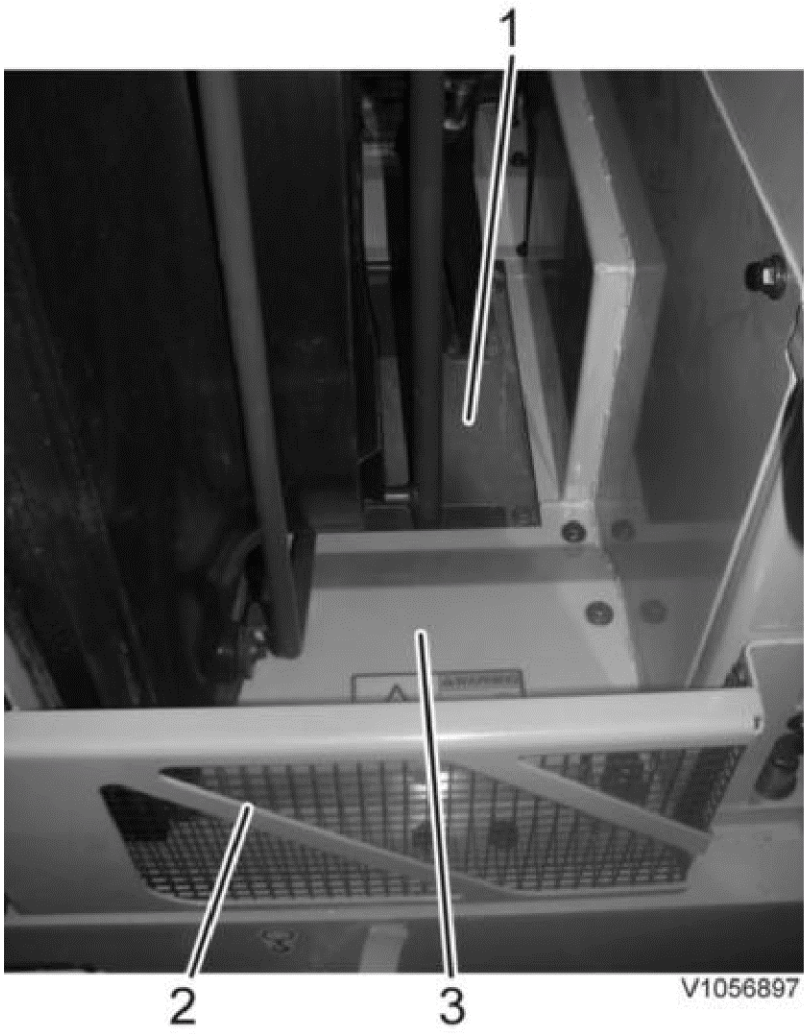

Figure 1

3. Mark the fuel suction hose (3) and the return fuel hose (4). Disconnect the fuel hoses, the air hose (2) and the connector (1) from the fuel level sensor. Remove the fuel level sensor by turning the sensor housing slightly counter-clockwise and pulling it straight up.

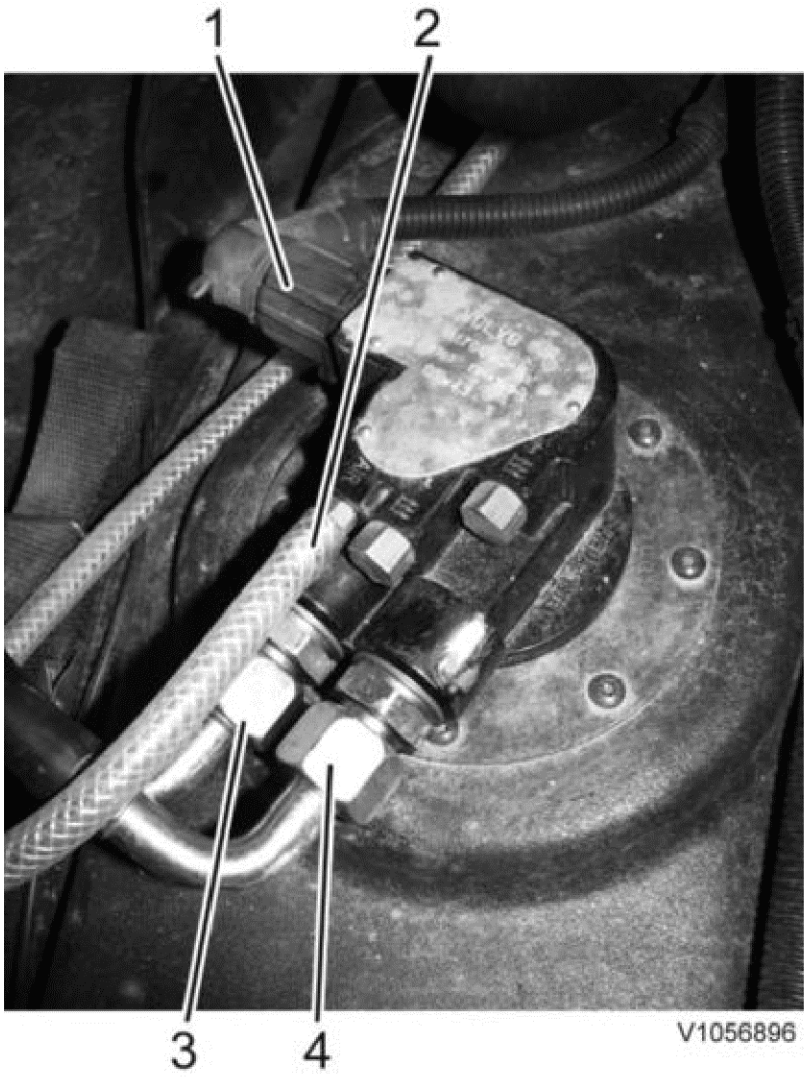

Figure 2

Installing

4. Install a new O-ring. Install the new fuel level sensor.
5. Caution!
   Make sure that the marked hoses end up in the correct position.

   Connect the fuel hoses, air hose, and the connector.
6. Bleed the fuel system, see Bränslesystem, luftning
7. Install the bottom plate on the fan frame. Install the lower bottom plate and the grating.

VOLVO
Construction Equipment

Service Information

Document Title:	Function Group:	Information Type: **Service Information**	Date: **12/10/2011**
Profile: **WLO, L90F (Volvo) [GB]**			

Fuel tank, removal

Op nbr 234-011

Lifting eye, 4 pcs.
Ratchet block, 2 pcs.
Jack

NOTE **Note the amount of fuel in the tank.**

1. Place the machine in service position 1, see Servicepositioner
.
2. Remove the lower grating (2) and bottom plate (3). Remove the bottom plate from the fan frame (1).

NOTE **To access the bottom plate's attaching bolts, disconnect the ground cable from the frame.**

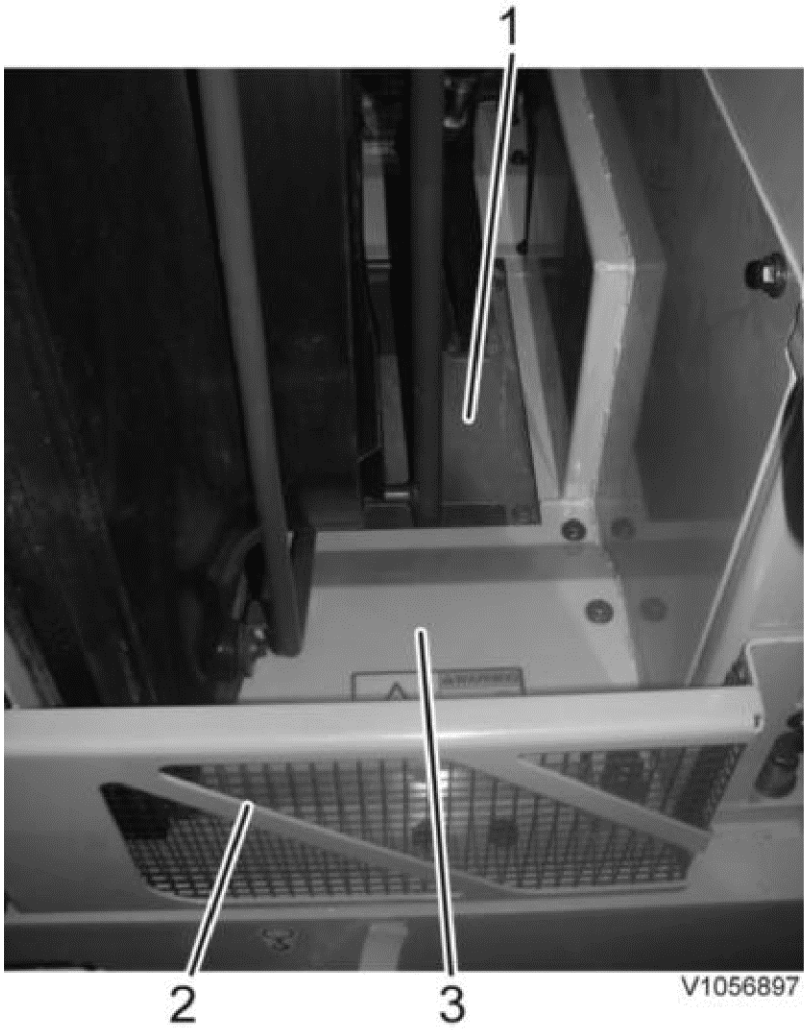

Figure 1

3. Mark the fuel suction hose (3) and the return fuel hose (4). Disconnect the fuel hoses, air hose (2) and the connector (3) from the fuel level sensor.

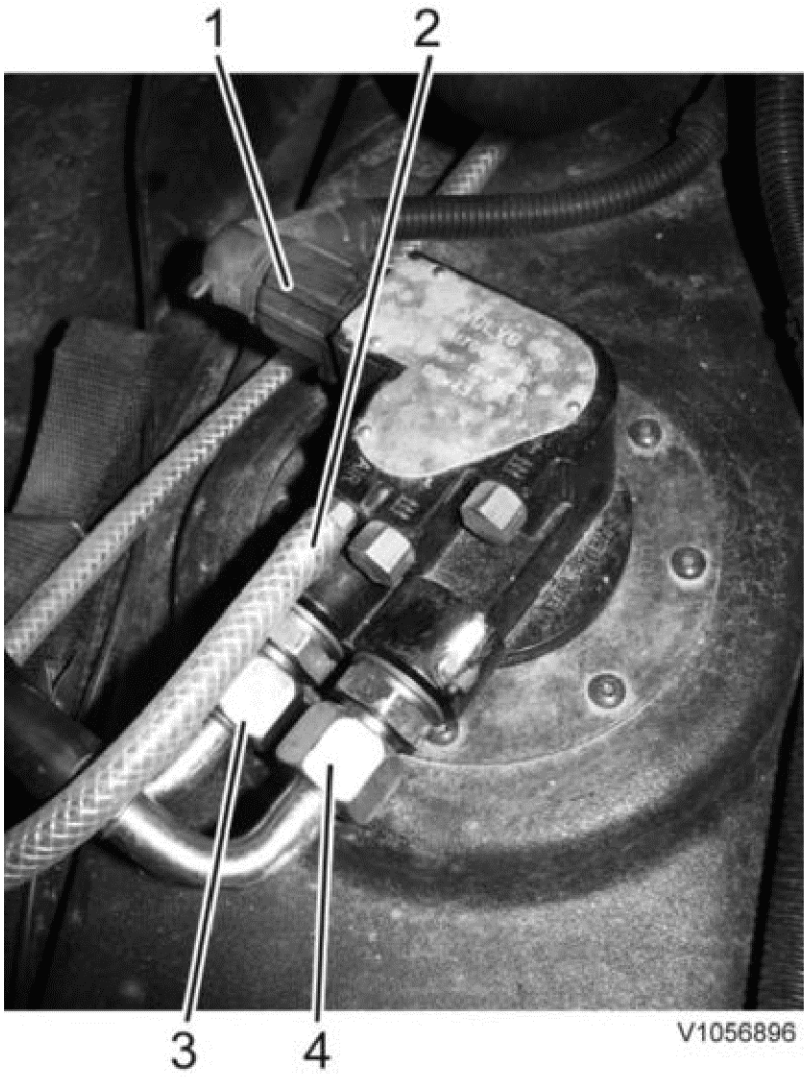

Figure 2

4. Caution!
   Maintain greatest possible cleanliness when working on the fuel system.

   Clean the surfaces around the filler pipe. Remove the filler pipe.

5. Remove the bracket for the oil and coolant drain (1) from the underbody skid plate.
   Remove the attaching bolts for the protective plate.

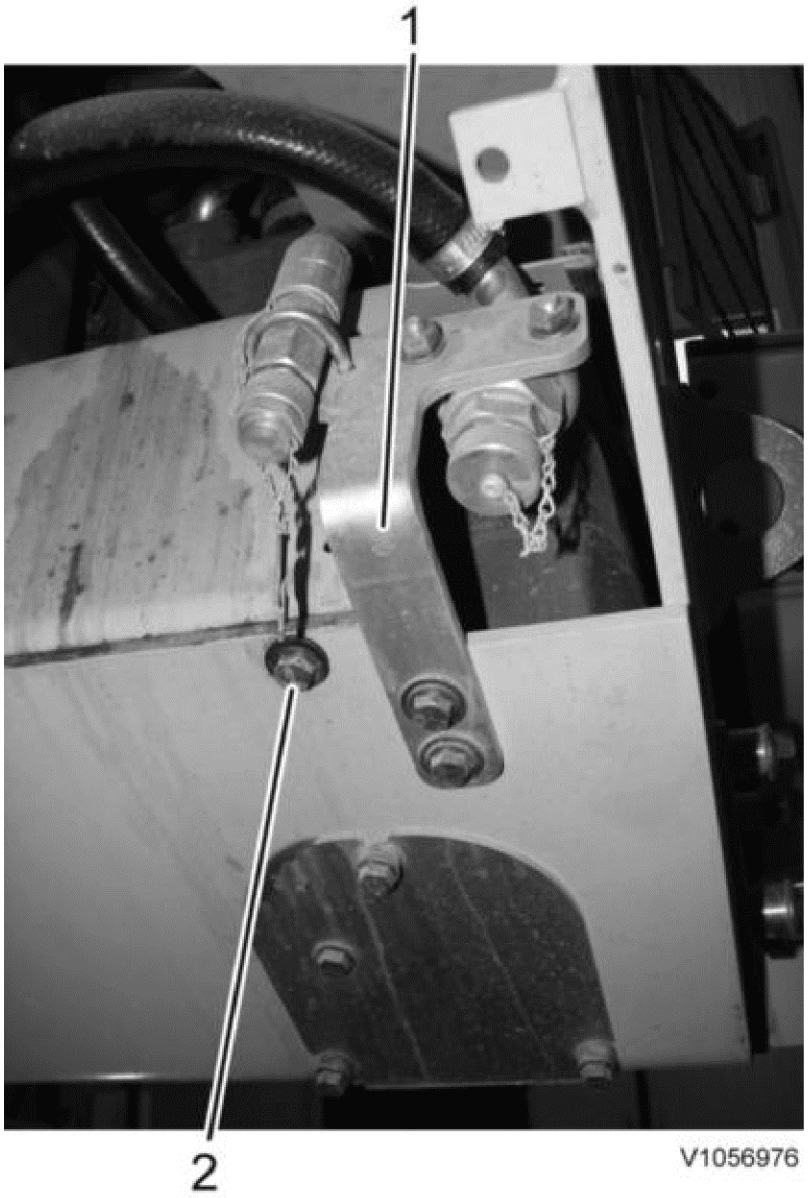

Figure 3

1. Bracket, oil and coolant drain
2. Attaching bolt, protective plate

NOTE **To facilitate work, first drain fuel from the fuel tank.**

6. Place a jack or stand jacks with a suitable number of axle stands under the underbody skid plate.

7. Replace the four middle attaching bolts that hold the underbody skid plate against the frame with 4 bolts M12x80. Loosen the attaching bolts for the underbody skid plate that hold the fuel tank approx. 2 cm. Install lifting eyes and ratchet blocks on both sides.

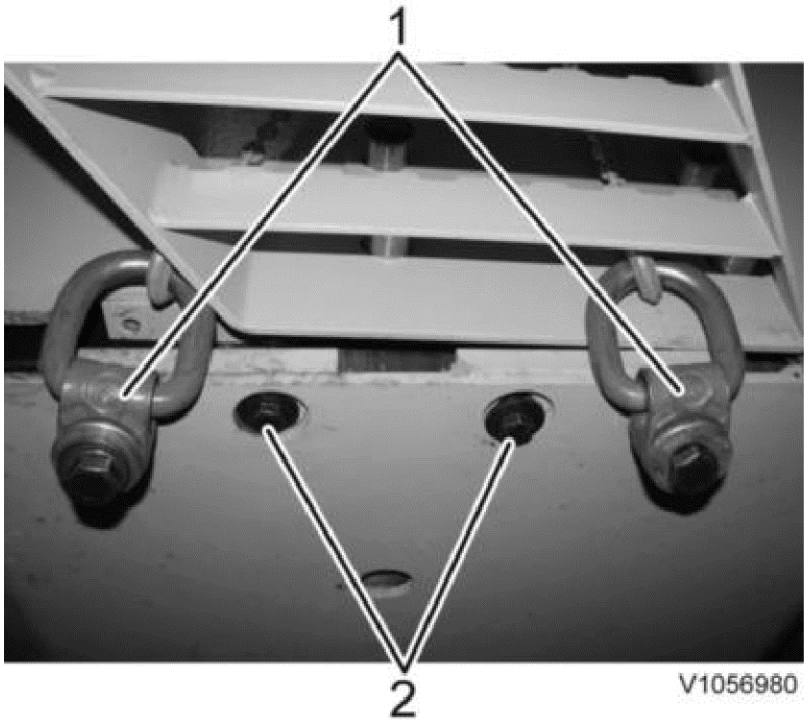

Figure 4

1. Lifting eyes
2. Bolt M12x80

8. Remove the attaching bolts and carefully lower the fuel tank.
Weight fuel tank (empty) and underbody skid plate: **approx. 90 kg (198 lbs)**. Volume fuel tank: Bränsletank, volym

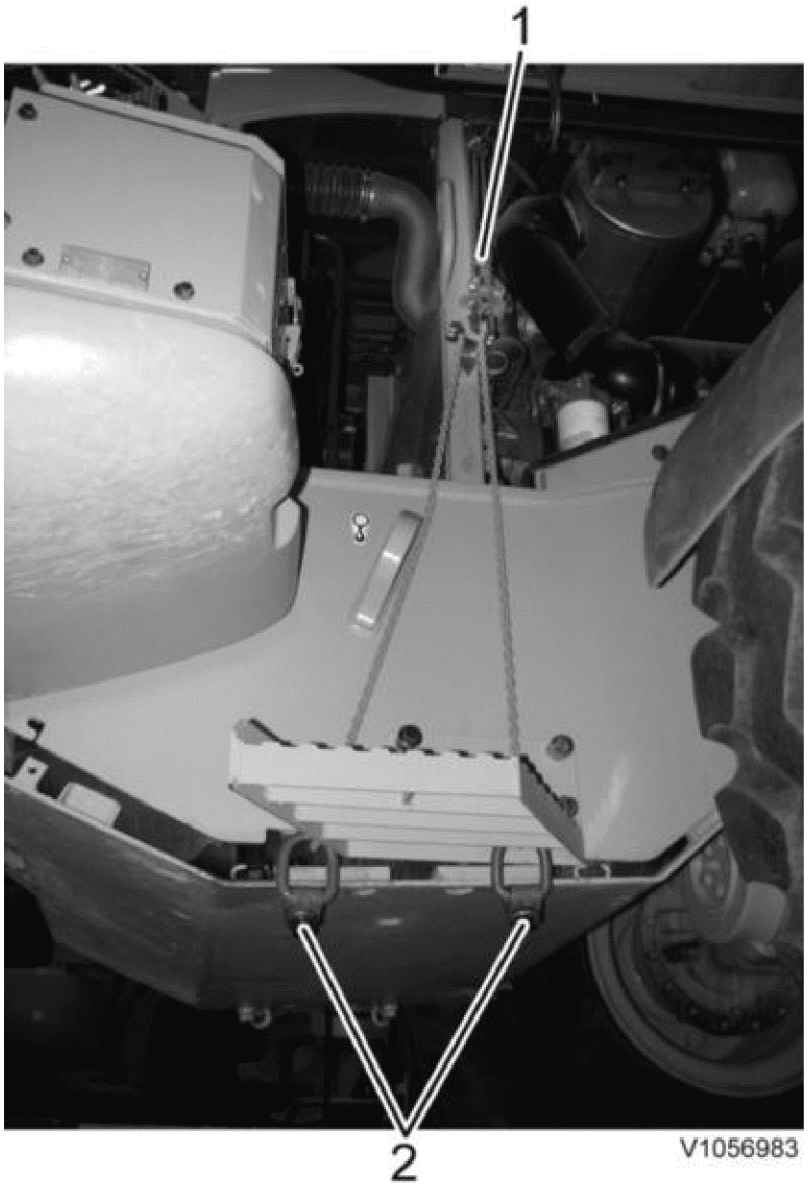

Figure 5

1. Ratchet block
2. Lifting eyes

VOLVO
Construction Equipment

Service Information

Document Title:	Function Group:	Information Type: **Service Information**	Date: **12/10/2011**
Profile: **WLO, L90F (Volvo) [GB]**			

Fuel tank, installation

Op nbr 234-012

1. Lift up the fuel tank.
   Weight fuel tank (empty) and underbody skid plate: **approx. 90 kg (198 lbs)**. Volume fuel tank: Bränsletank, volym
   .

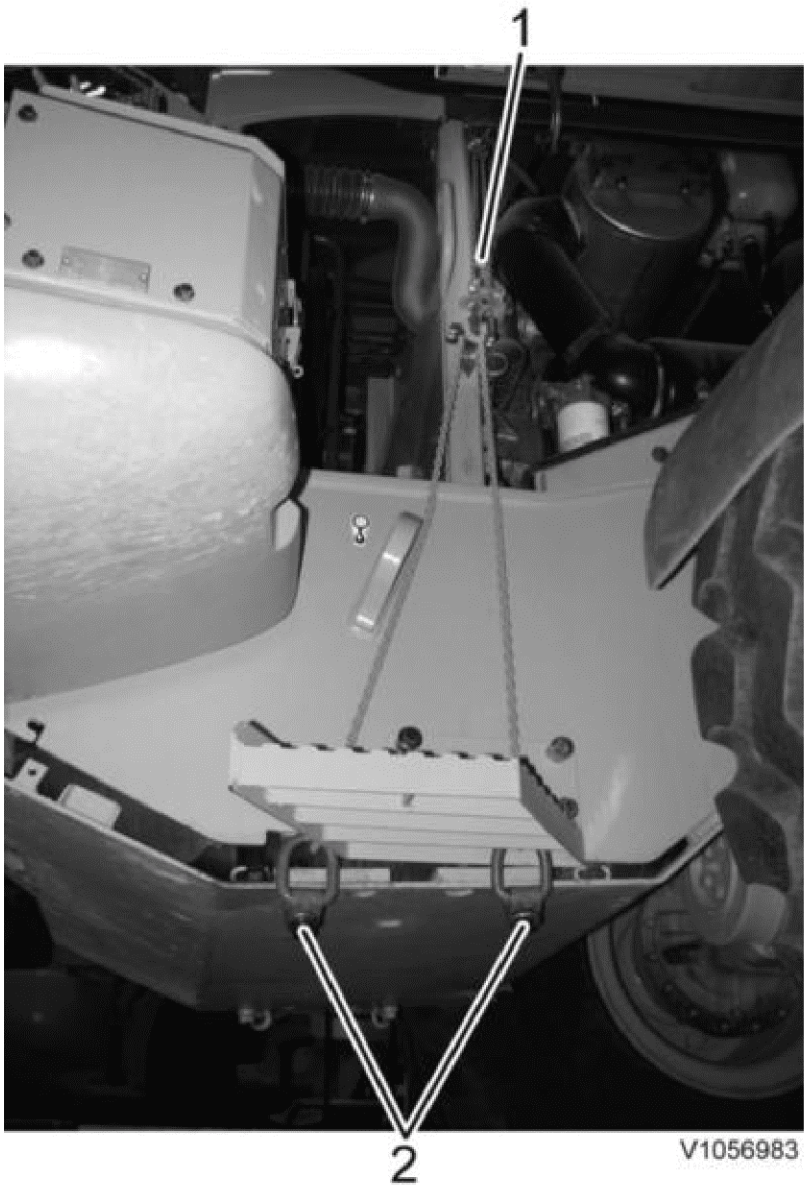

Figure 1

1. Lifting eyes
2. Ratchet block

2. Secure the fuel tank with 2 bolts M12x80 in the middle holes on both sides.

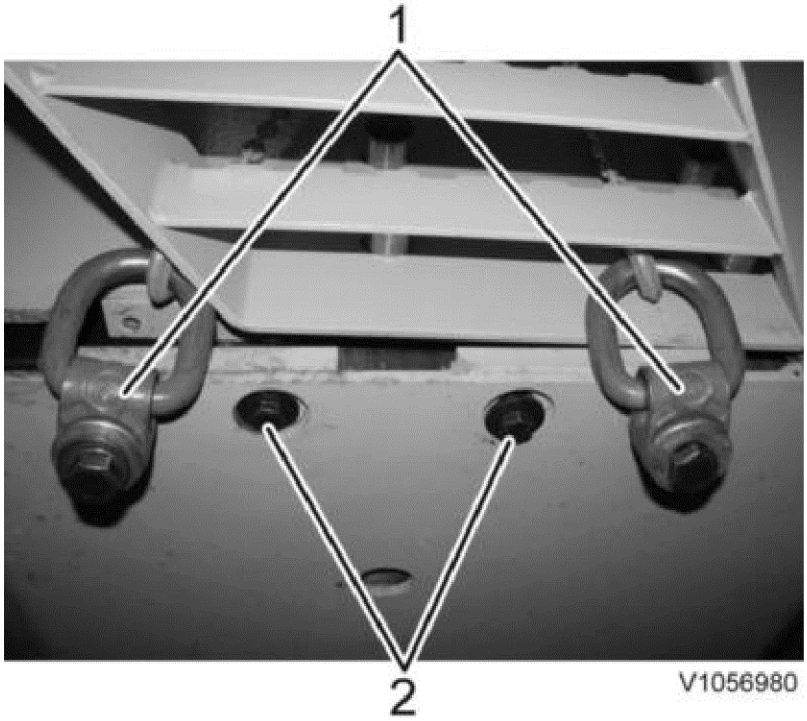

Figure 2

1. Lifting eyes
2. Bolt M12x80

3. Remove the lifting eyes. Lift the tank into place using a jack or stand jacks with a suitable number of axle stands. Install the remaining attaching bolts. Remove the M12x80 bolts and install the attaching bolts.

4. Install the bracket for the oil and coolant drain (1) on the bottom plate.
Install the attaching bolts for the protective plate.

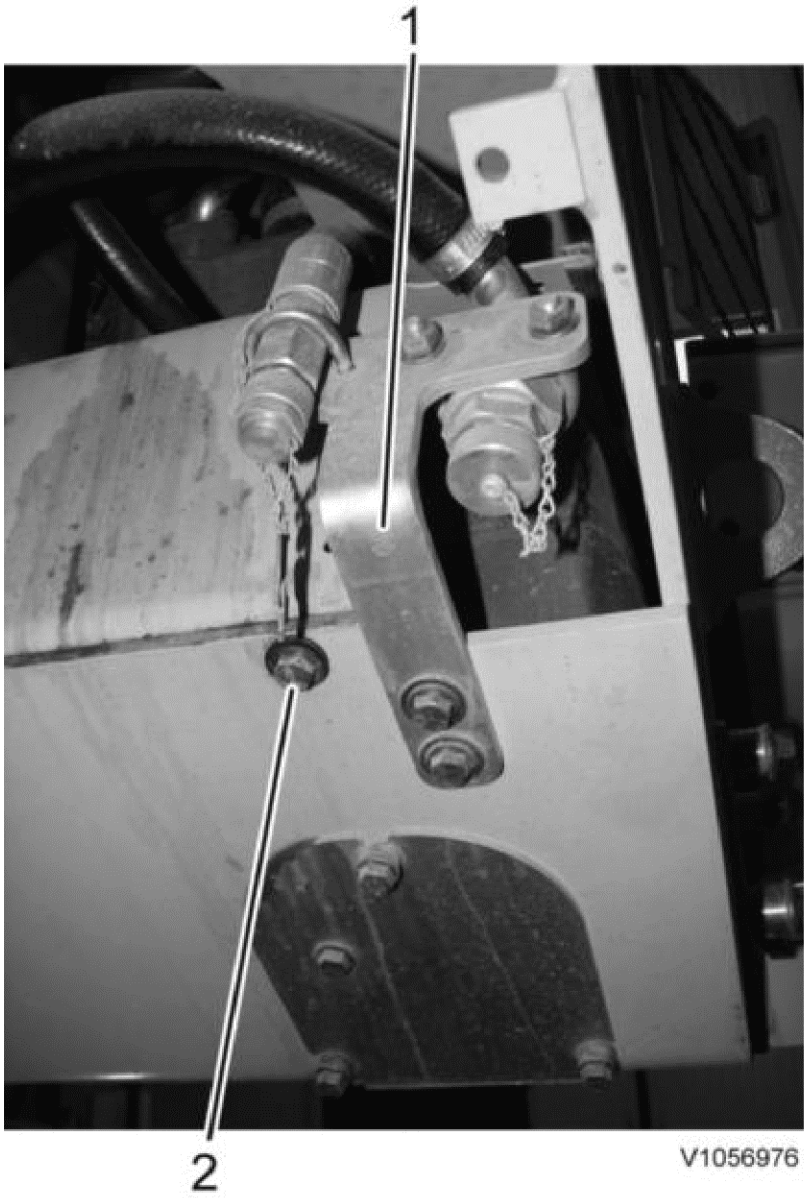

Figure 3

1. Bracket, oil and coolant drain
2. Attaching bolt, protective plate

5. Caution!
   Maintain greatest possible cleanliness when working on the fuel system.

   Install the fuel filler pipe.

6. Caution!
   Make sure that the marked hoses end up in the correct position.

   Connect the fuel hoses, air hose, and the connector.

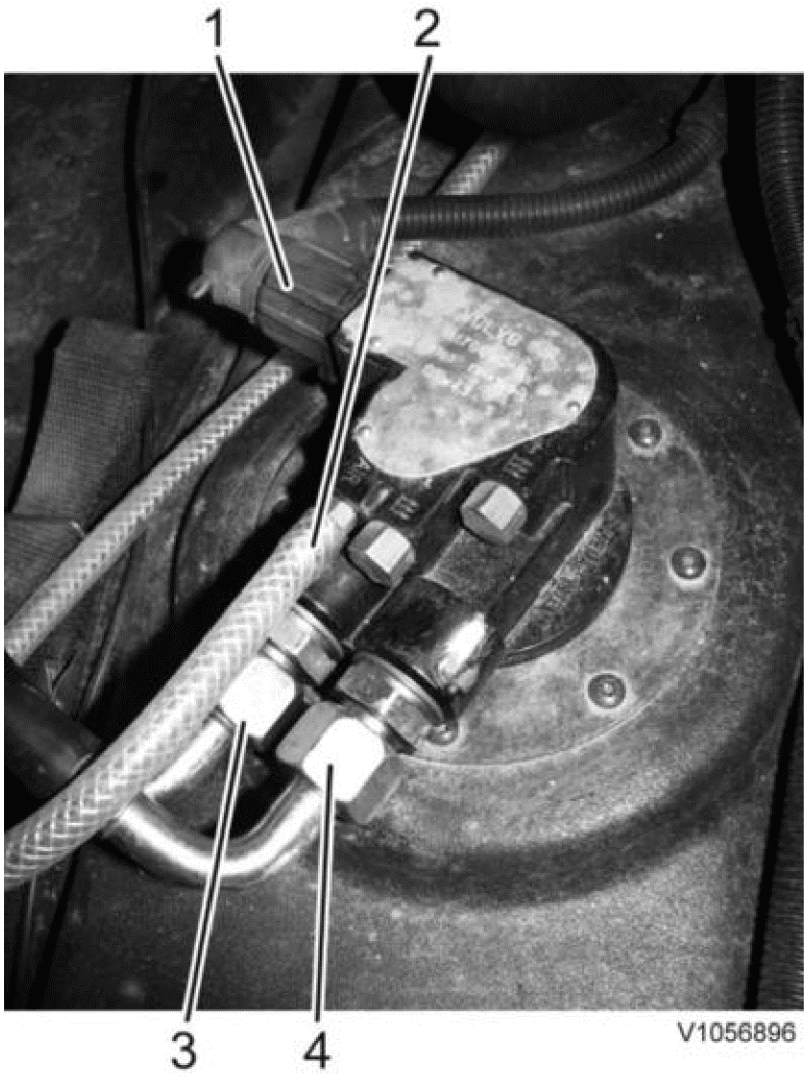

Figure 4

1. Connector
2. Air hose
3. Fuel suction hose
4. Return fuel hose

7. Bleed the fuel system, see Bränslesystem, luftning
.

8. Install the bottom plate (1) on the fan frame. Install the lower bottom plate (3) and the grating (2). Connect the ground cable if it was disconnected when removing.

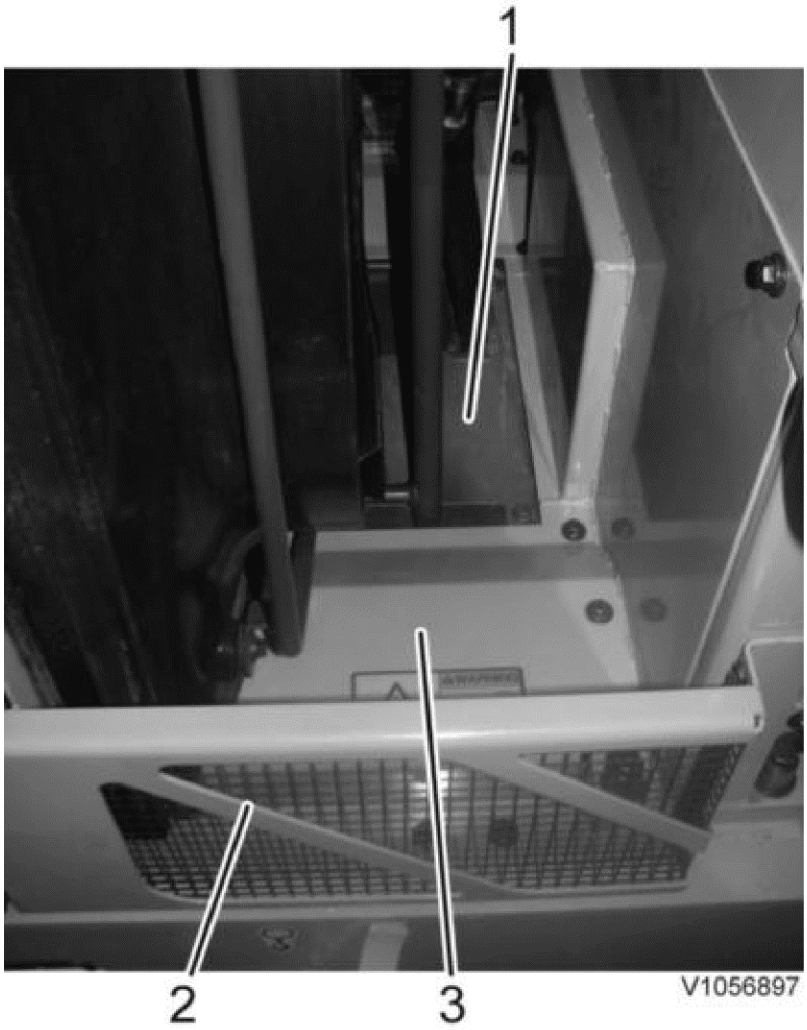

Figure 5

VOLVO
Construction Equipment

Service Information

Document Title:	Function Group:	Information Type: **Service Information**	Date: **12/10/2011**
Profile: **WLO, L90F (Volvo) [GB]**			

Injectors, description

Injection timing and the fuel amount to be injected is determined by the control unit E-ECU, which gives signals to the electro-magnetically controlled fuel valve in the injector's valve housing. The duration of the injection time determines the amount of fuel that is injected into the cylinder. The 'common rail' system enables more than one injection during the piston's working phase, thus giving flexible control of the combustion process.
The injection pressure is determined by the pressure in the rail and can vary between 500 bar to 1400 bar (7252–20305 PSI).
The injector nozzles have six holes and are designed to give a uniform spray pattern, despite the angled injector nozzle.

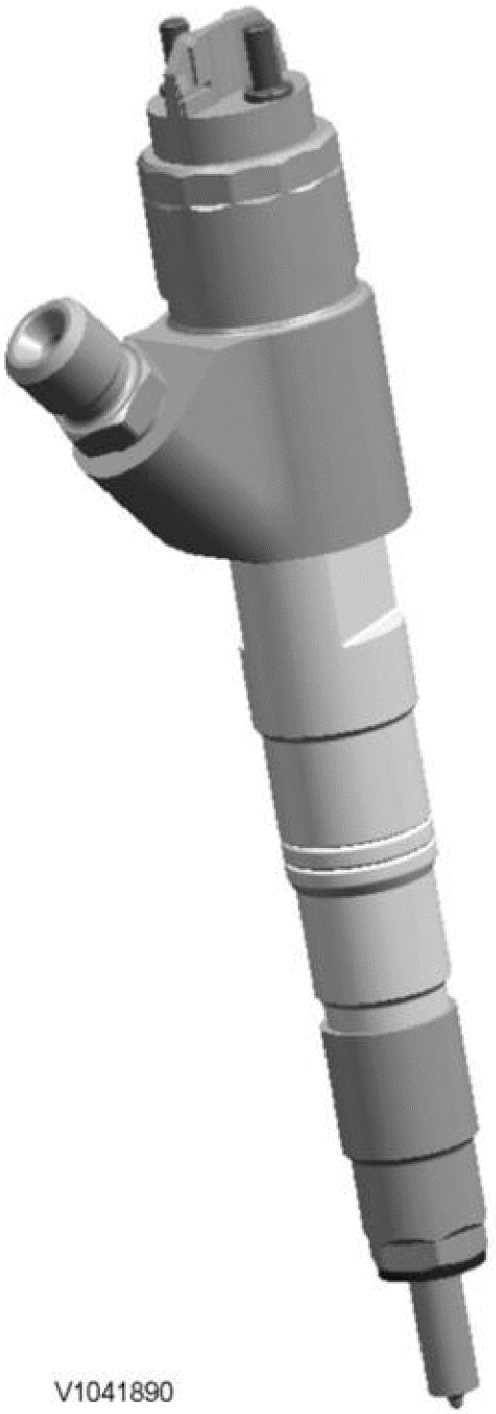

Figure 1

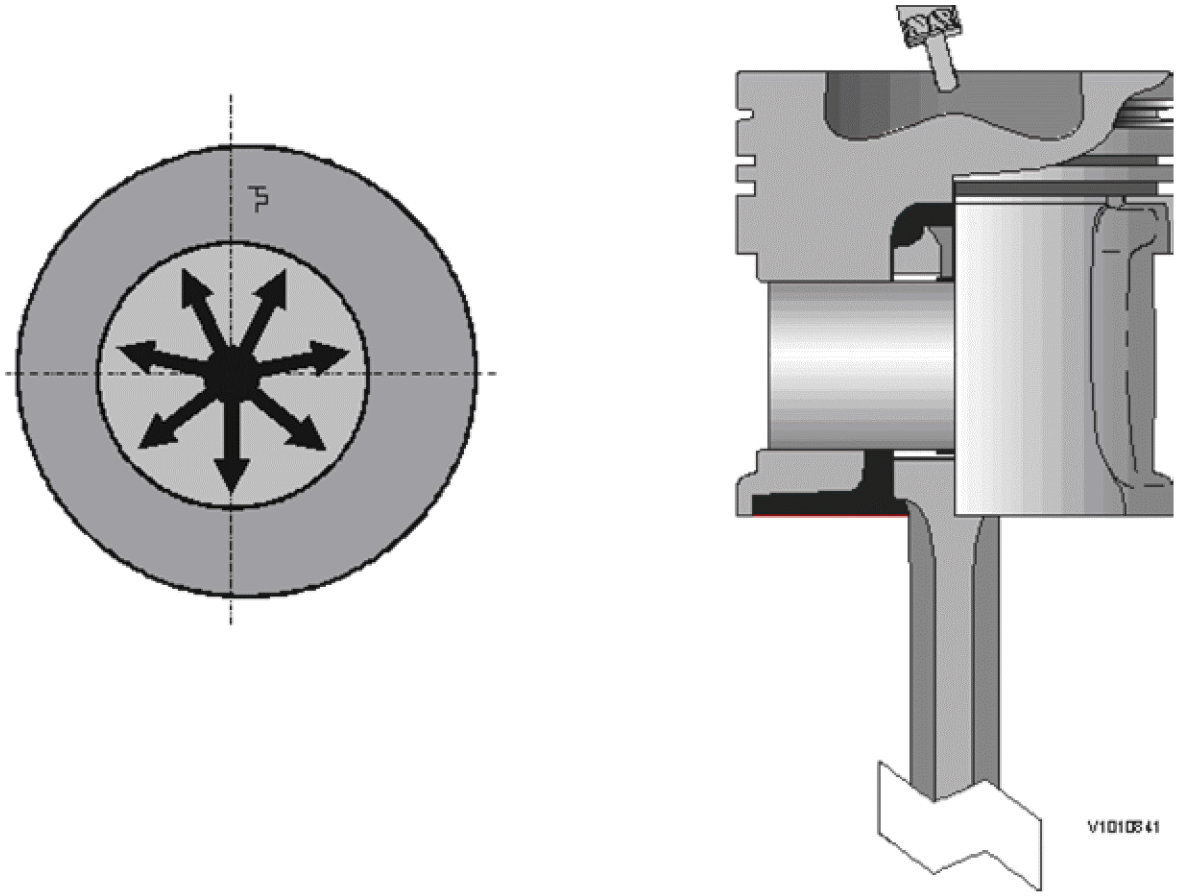

Figure 2

Software

The function monitors the fuel injectors and informs the operator if there is a system malfunction.

Input signals	Conditions for output functions	Output functions
o Monitoring, injectors MA2301-2306	o Mechanical problem, system error, open circuit or short-circuiting MA2301-MA2306 (SID1–6) See Diagnostics	o Amber central warning o Check — Engine failure o Reduction of engine's torque o Limitation of engine rpm to 1100 rpm o Reduces rail pressure with pressure relief valve (PRV)

VOLVO
Construction Equipment

Service Information

Document Title:	Function Group:	Information Type: **Service Information**	Date: **12/10/2011**
Profile: **WLO, L90F (Volvo) [GB]**			

High pressure fuel pump, checking

WARNING! **High pressure. Wait 30 seconds after switching off the engine before working on the fuel system.**

Caution!
Maintain greatest possible cleanliness when working on the fuel system.

Op nbr 237-030

88890080 Pressure checking set

1. Unplug the connector ED by lifting the catch with a screwdriver on the connector's underside and at the same time loosen the centre screw.

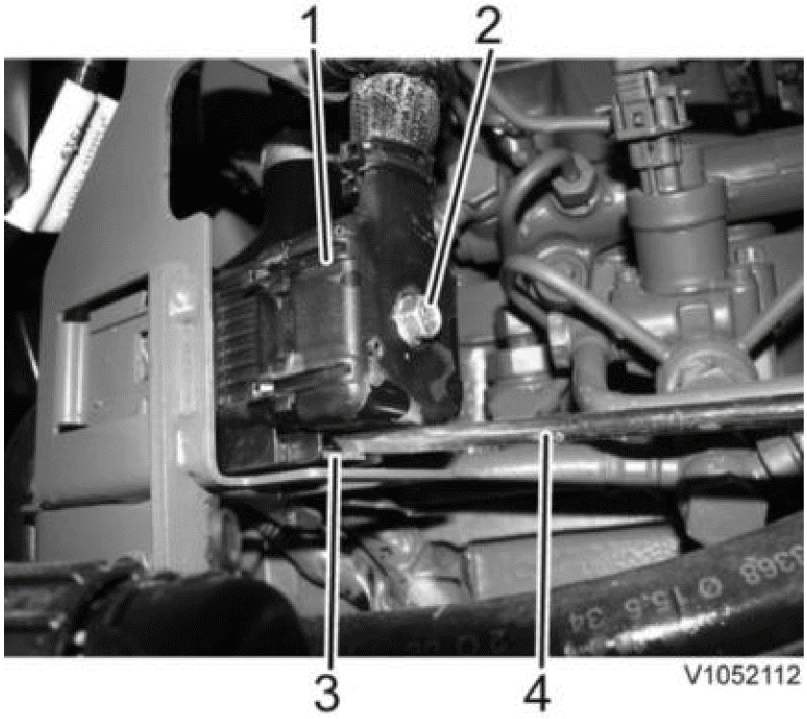

Figure 1

1. Connector ED
2. Centre screw
3. Mounting
4. Screwdriver

2. Remove the delivery lines between the high-pressure pumps and the common rail (fuel rail).
Right high-pressure pump

3. Caution!
   Exceeding the tightening torque can cause damage on the component.

   To prevent damage to the fuel system, use counterhold tools on the adapters when pressure hoses are connected and disconnected.

   NOTE **Tightening torque for input pressure pipes in 88890080Pressure checking set: 17 Nm (12.5 lbf ft).**

   Fit:
   - Delivery pipe (10, angle: 50°) on the right high-pressure pump.
   - Delivery pipe (8, angle: 170°) on the left high-pressure pump.
   - Adapter and the plug (3) on the connection on the common rail (fuel rail) (2).
   - Adapter (4) on the connection on the common rail (fuel rail).

   Connect:
   - Delivery hose between the delivery pipe on the right high-pressure pump and the measuring tool (1)
   - Delivery hose between the adapter (4) on the common rail (fuel rail) and the measuring tool (1)
   - Rubber hose to the measuring tool's (1) drain nipple
   - Rubber hose to the delivery pipe (8)

   Collect the excess fuel in a suitable container (5).

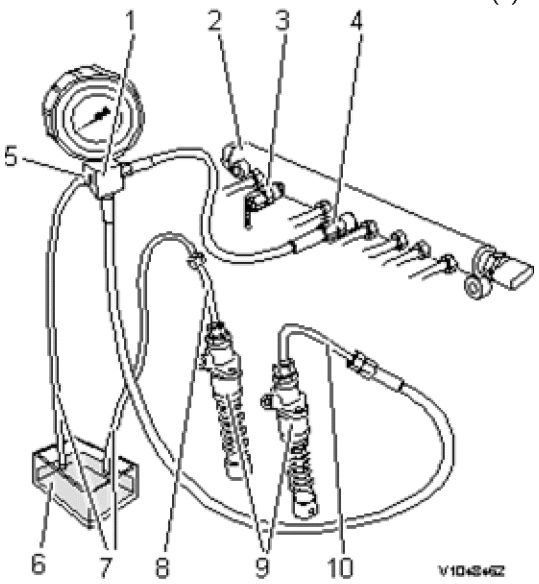

Figure 2
Checking right high-pressure pump (principle illustration), 88890080Pressure checking set

1. Pressure gauge
2. Common rail (fuel rail)
3. Adapter for connecting plug
4. Adapter for connecting delivery hose
5. Draining nipple
6. Collection container waste fuel
7. Rubber hoses
8. Delivery pipe (170° between openings)
9. High-pressure pumps
10. Delivery pipe (50° between openings)

4. Plug in connector ED. Tightening torque, centre screw: Motor, åtdragningsmoment

   NOTE **Collect the excess fuel in a suitable container (6)**

5. Open the drain nipple (5) on the measuring tool. Run the starter motor until fuel free of air flows out of the measuring tool. Close the drain nipple on the measuring tool.

6. Check that there are no leaks on the measuring equipment.

7. Connect VCADS Pro computer and start 28407-3, Sensor values check.

8. Start the engine and check that the pressure is according to Bränslesystem, specifikation

.
If the rail pressure sensor does not show the same value as 88890080, the rail pressure sensor should be changed before the left high-pressure pump is tested. Changing rail pressure sensor, see Tryckgivare för fuel rail, byte

9. Release any pressurize by opening the drain nipple (5) on the measuring tool.
Left high-pressure pump

Caution!
Exceeding the tightening torque can cause damage on the component.

To prevent damage to the fuel system, use counterhold tools on the adapters when pressure hoses are connected and disconnected.

NOTE **Tightening torque for input pressure pipes in 88890080Pressure checking set: 17 Nm (12.5 lbf ft).**

10.
Connect:
- Delivery hose between the delivery pipe (8) on the left high-pressure pump and the measuring tool.
- Rubber hose to the right high-pressure pump's delivery pipe (10).

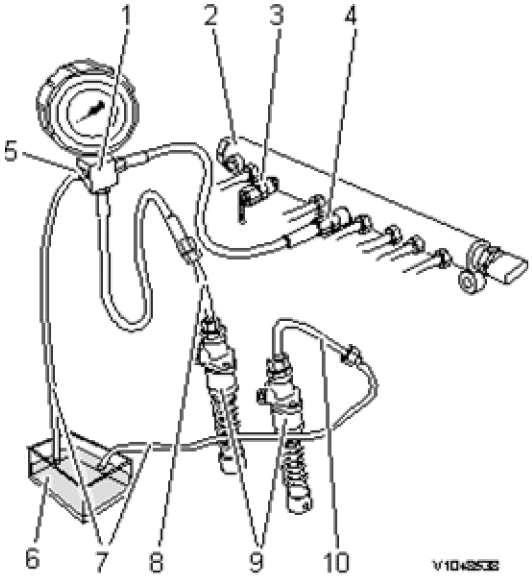

Figure 3
Checking left high-pressure pump (principle illustration), 88890080Pressure checking set

1. Pressure gauge
2. Common rail (fuel rail)
3. Adapter for connecting plug
4. Adapter for connecting delivery hose
5. Draining nipple
6. Collection container waste fuel
7. Rubber hoses
8. Delivery pipe (170° between openings)
9. High-pressure pumps
10. Delivery pipe (50° between openings)

11. Repeat steps 5 – 8.

12. Remove the checking equipment.
If any of the high-pressure pumps delivers a lower fuel pressure than Bränslesystem, specifikation , the pump/pumps should be changed, see Högtrycksbränslepump, byte
.

13. Install **new** delivery pipes between the high-pressure pumps and the common rail (fuel rail). Tightening torque, see Bränslesystem, åtdragningsmoment
.

14. Plug in connector ED. Tightening torque, centre screw: Motor, åtdragningsmoment
.

15. Start the engine and check that there aren't any leaks.

VOLVO
Construction Equipment

Service Information

Document Title:	Function Group:	Information Type: **Service Information**	Date: **12/10/2011**
Profile: **WLO, L90F (Volvo) [GB]**			

Fuel rail pressure sensor, replacing

Op nbr 237-035

WARNING! **High pressure. Wait 30 seconds after switching off the engine before working on the fuel system.**

Caution!
Maintain greatest possible cleanliness when working on the fuel system.

1. Place the machine in service position, see Säkerhetsregler vid service
.

2. Remove the cable tie (2) and unplug the connector (1) from the rail pressure sensor.

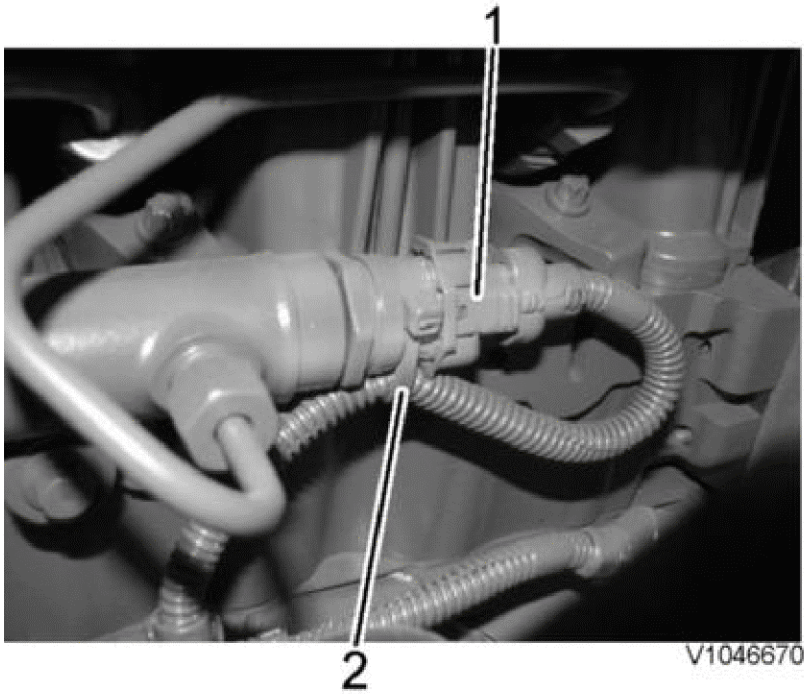

Figure 1

NOTE **Collect the excess fuel in a container.**

3. Remove the high-pressure sensor.

4. Check that the threads on the high-pressure sensor and the internal threads in the fuel rail are free from damage. Oil the threads lightly and install the new sensor. Tightening torque, see: Bränslesystem, åtdragningsmoment



Figure 2

5. Plug in the connector and install the cable tie.
6. Start the engine, and check that there are no leaks.

VOLVO
Construction Equipment

Service Information

Document Title:	Function Group:	Information Type: **Service Information**	Date: **12/10/2011**
Profile: **WLO, L90F (Volvo) [GB]**			

Fuel control valve (FCV), replacing

Op nbr 237-033

WARNING! **High pressure. Wait 30 seconds after switching off the engine before working on the fuel system.**

Caution!
Maintain greatest possible cleanliness when working on the fuel system.

1. Place the machine in service position, see Säkerhetsregler vid service
.

2. Unplug the connector ED by lifting the catch with a screwdriver on the connector's underside and at the same time loosen the centre screw.

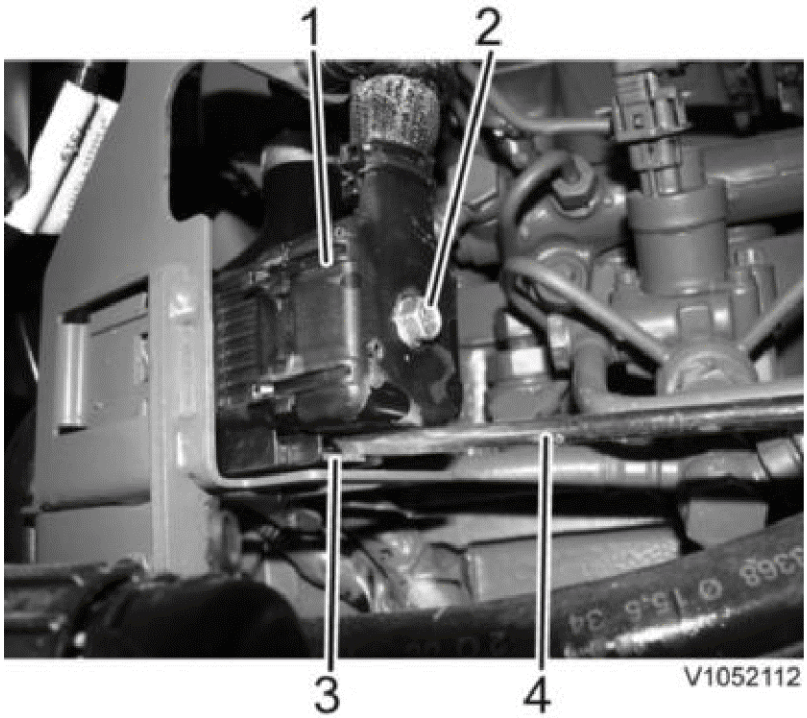

Figure 1

1. Connector ED
2. Centre screw
3. Mounting
4. Screwdriver

3. Unplug the connector from the fuel control valve.

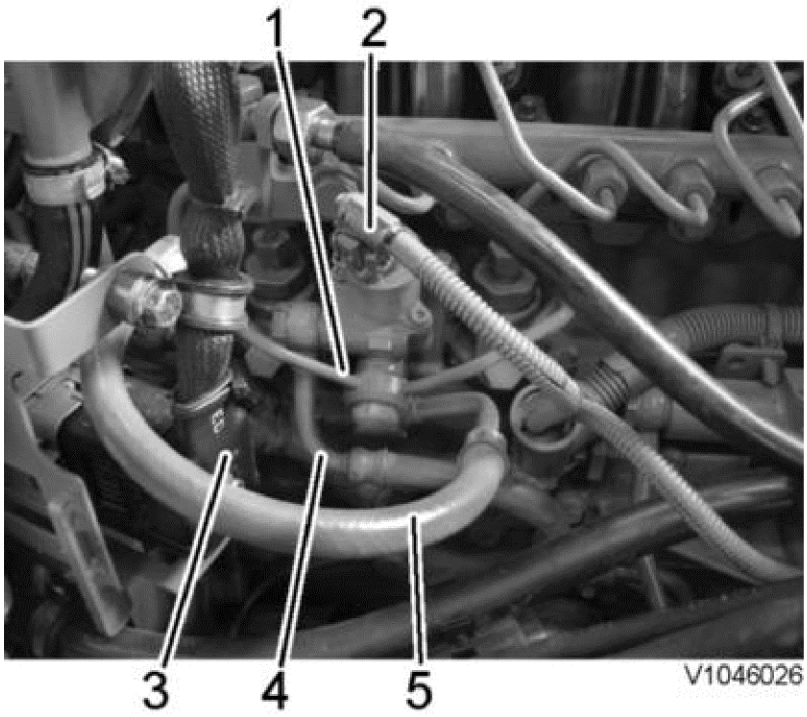

Figure 2

1. Feed pipe
2. Connector
3. Connector ED
4. Feed line
5. Return line

4. Remove the feed pipes.
5. Disconnect:
   - The feed line (from the fuel filter) from the fuel control valve.
   - Return line from the fuel control valve.
6. Remove the fuel control valve.

Installing

7. Check that the fuel control valve is free from damage.
8. Install the fuel control valve. Only tighten the bolts by hand.
9. Connect the feed line with new gaskets (from the fuel filter) to the fuel control valve. Tightening torque, see: Bränslesystem, åtdragningsmoment
10. Connect the return line to the fuel control valve with new gaskets. Tightening torque, see: Bränslesystem, åtdragningsmoment
11. Install the feed pipes with new gaskets. Tightening torque, see: Bränslesystem, åtdragningsmoment

    Caution!
    The pressure lines may not be bent.
12. Tighten the bolts for the fuel control valve. Tightening torque, see: Bränslesystem, åtdragningsmoment
13. Plug in the connector ED. Tightening torque, centre screw:
14. Plug in the connector for the fuel control valve.
15. Bleed the fuel system, see Motor, åtdragningsmoment
    Bränslesystem, luftning
    . Check that there are no leaks.

VOLVO
Construction Equipment

Service Information

Document Title:	Function Group:	Information Type: **Service Information**	Date: **12/10/2011**
Profile: **WLO, L90F (Volvo) [GB]**			

Injectors, replacing all

Op nbr 237-002

WARNING! **High pressure. Wait 30 seconds after switching off the engine before working on the fuel system.**

Caution!
Maintain greatest possible cleanliness when working on the fuel system.

1. Set the machine in service position, see Säkerhetsregler vid service
2. Disconnect the cable bracket from the valve cover and carefully fold aside the cable bracket.
3. Disconnect the electric connections for the injectors.
4. Remove the fuel delivery lines between the rail and injectors.

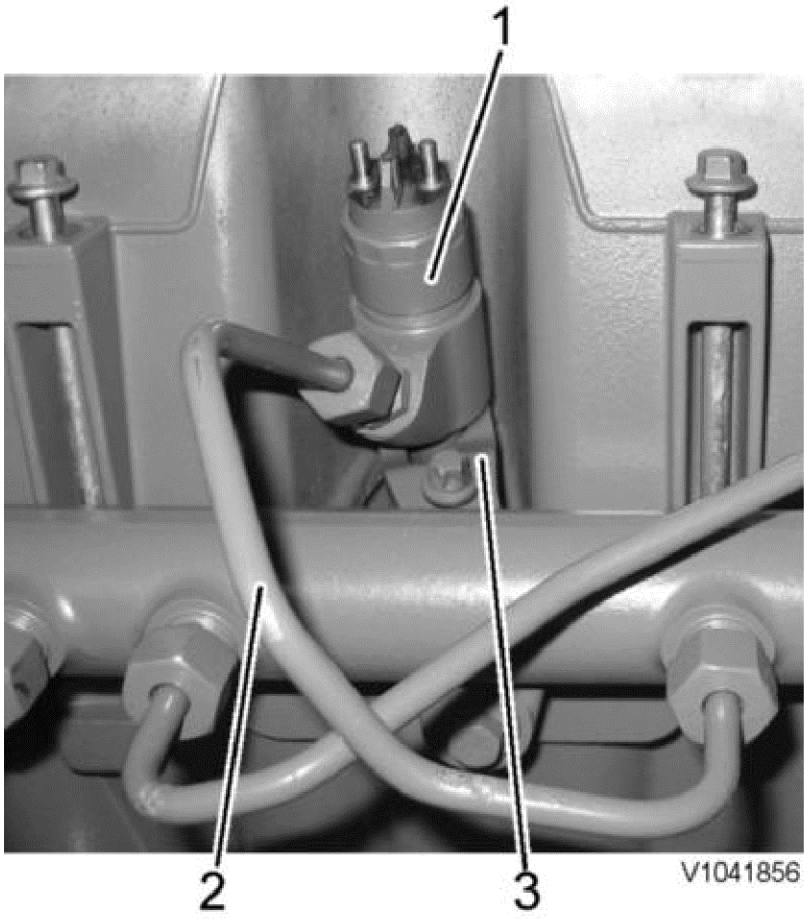

Figure 1

1. Injectors
2. Fuel delivery line
3. Attaching yoke

5. Remove the injectors' attaching yokes and carefully remove the injectors.

   NOTE **Make sure that the copper washer on the injectors' lower part also comes out.**

6. Install new O-rings on the injectors. Lube the O-rings sparingly with oil.
7. Install the new copper washers on the injectors. Install the injectors and attaching yokes. Tightening torque, see Bränslesystem, åtdragningsmoment
8. Connect the cable harness to the injectors. Tightening torque, see Bränslesystem, åtdragningsmoment .
9. Install new fuel delivery lines between the rail and the injectors. Tightening torque, see: Bränslesystem, åtdragningsmoment .
10. Bleed the fuel system according to Bränslesystem, luftning .
11. Start the engine and check that there aren't any leaks.

VOLVO
Construction Equipment

Service Information

Document Title:	Function Group:	Information Type: **Service Information**	Date: **12/10/2011**
Profile: **WLO, L90F (Volvo) [GB]**			

Fuel rail, description

Fuel rail

The high-pressure accumulator consists of a fuel rail, also called 'rail'. It is made of forged steel. The stored volume is calibrated and works like a damper for any pressure variations that occur due to pulsating feed of the fuel pump to the high-pressure pump or temporary, high fuel usage during injection through the injectors. The fuel rail is dimensioned to supply full fuel volume without any noticeable pressure-drop.The fuel rail is equipped with a pressure sensor and a relief valve.

If a malfunction is detected, the E-ECU can force the pressure relief valve (PRV) to open by increasing the rail pressure. The rail pressure sensor SE2309 measures the pressure in the rail and delivers data to the E-ECU, which compares the actual pressure with a reference value, which is dependent on engine speed and injection volume. The pressure relief valve, installed on the rail, limits the system pressure to avoid damage to the circuit.

The pressure relief valve is a mechanical safety device which opens at 1900 (±50) bar and protects the system against excessive pressure caused by any problems or malfunctions. If the valve is open, the rail pressure within the range 650 — 850 bar (depending on engine speed and load). The engine continues to run, but with lower performance (limp home). In normal operating conditions, the pressure relief valve (PRV) does not open.

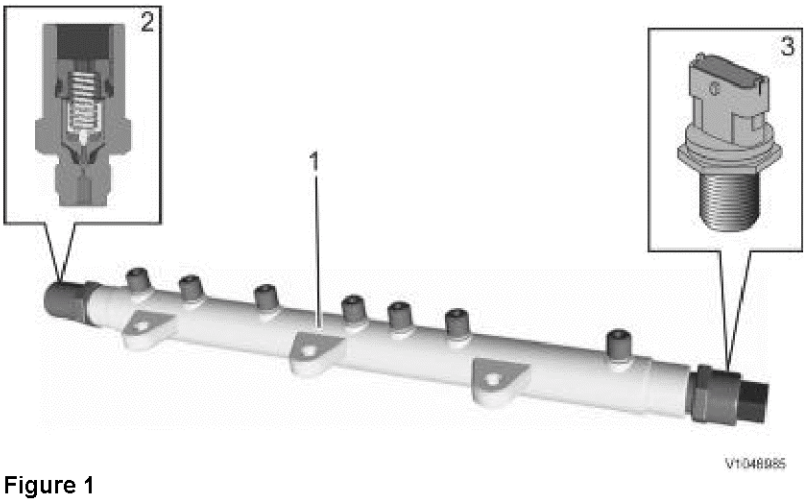

Figure 1

1. Fuel rail
2. Relief valve (PRV)
3. Rail pressure sensor SE2309

Software

Rail pressure (SE2309) is used as input signal for Engine protection, see Motor, beskrivning

VOLVO
Construction Equipment

Service Information

Document Title:	Function Group:	Information Type: **Service Information**	Date: **12/10/2011**
Profile: **WLO, L90F (Volvo) [GB]**			

Fuel control valve (FCV), description

The fuel control valve controls fuel flow to the high-pressure pumps. It delivers the fuel volume needed to reach or maintain the fuel pressure in the distribution pipe (the rail).

Software

Fuel control valve (PWM2303) is used as input signal for Engine protection, see Motor, beskrivning

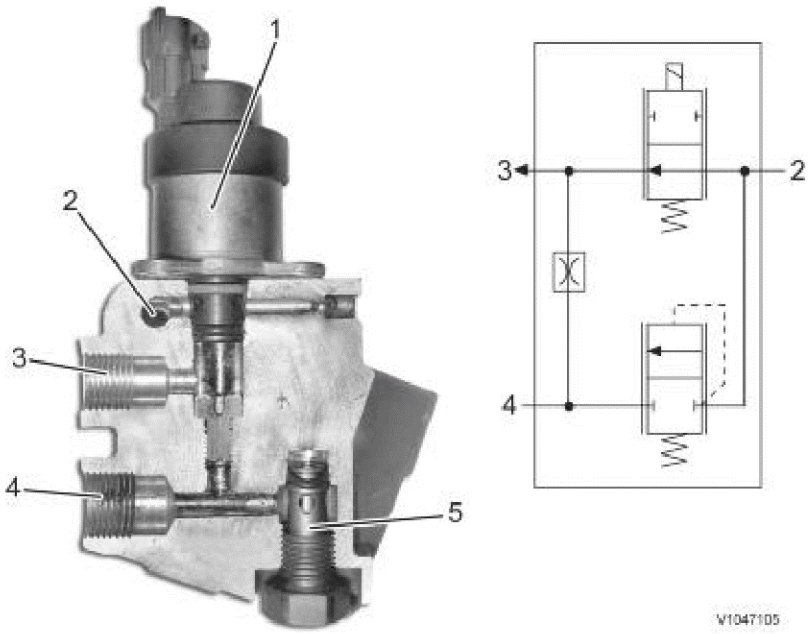

Figure 1

1. Solenoid valve
2. Fuel inlet
3. Fuel to high-pressure pumps
4. Return fuel to tank
5. Overflow valve

VOLVO
Construction Equipment

Service Information

Document Title:	Function Group:	Information Type: **Service Information**	Date: **12/10/2011**
Profile: **WLO, L90F (Volvo) [GB]**			

Fuel control valve (FCV), checking

Op nbr 237-038

11666052 Pressure gauge
11666027 Adapter
9993720 Nipple
11666037 Hose

WARNING! **High pressure. Wait 30 seconds after switching off the engine before working on the fuel system.**

Caution!
Maintain greatest possible cleanliness when working on the fuel system.

Testing conditions

- Fuel feed pressure is according to the specifications. See Bränslesystem, specifikation .
- Batteries are in good conditions and fully charged.

Pressure checking procedures

1. Place the machine in service position, see Säkerhetsregler vid service .
2. Connect 9993720Nipple, 11666027Adapter, 11666037Hose and 11666052Pressure gauge to the fuel control valve's outlet connection (1).

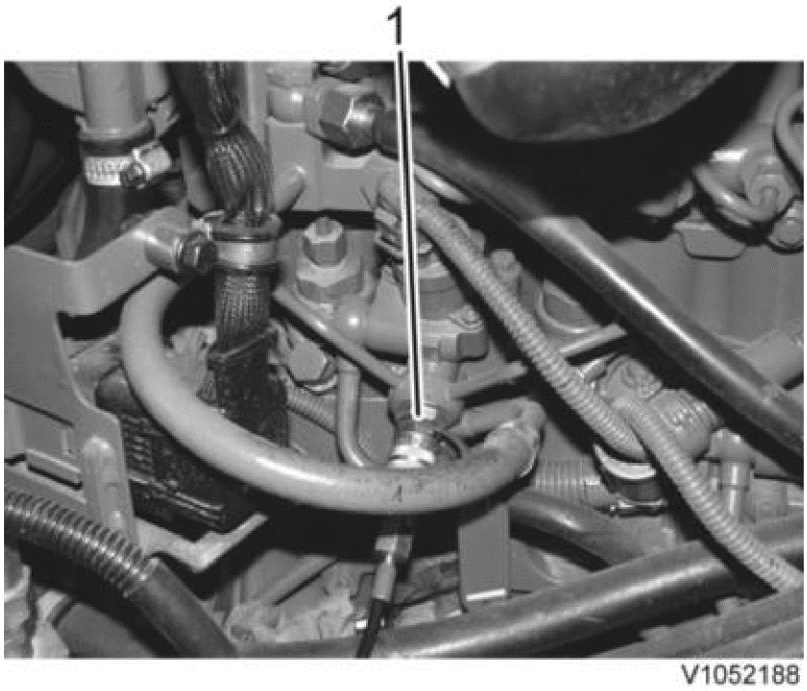

Figure 1

1. Fuel control valve's outlet connection

3. Connect VCADS Pro computer and perform 23017-3, checking fuel feed pressure.

NOTE **Compare the pressure in the common rail (fuel rail) during the test with** [Bränslesystem, specifikation]
.

Checking fuel control valve's output pressure at start

4. Disconnect the cable bracket (1) from the valve cover and carefully move aside the cable bracket, disconnect all electric connections (2) from the injectors.

NOTE **Isolate the disconnected cables.**

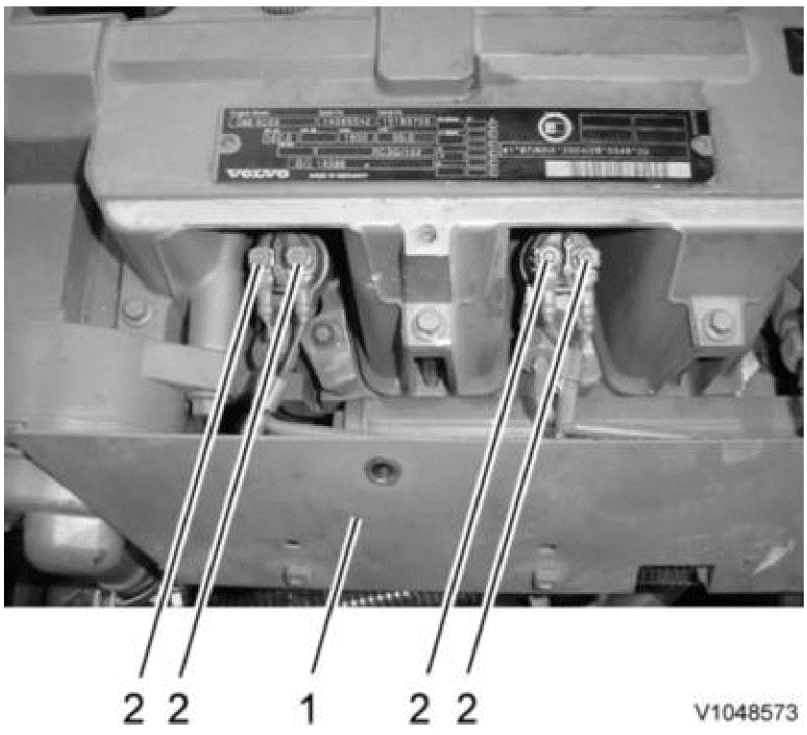

Figure 2

Injector cables, disconnection

1. Cable bracket
2. Electric connections

5. Connect VCADS Pro computer and perform 23017-3, checking fuel feed pressure.

NOTE **Compare the pressure in the common rail (fuel rail) during the test with Bränslesystem, specifikation**
.

6. Crank the engine with the starter motor for 15 to 20 seconds, check if the measured values for the fuel control valve's output pressure matches with Bränslesystem, specifikation
.

In case the output pressure is not normal
- Replace fuel control valve, see Bränsleregleringsventil (Fuel control valve, FCV), byte
.
- When the engine is running, check the pressure according to the following.

In case the pressure is normal
- Check the common rail's (fuel rail's) pressure relief valve and the high-pressure pumps, see Högtrycksbränslepump, kontroll
.

7. Connect the cables to the injectors and install the cable bracket on the valve cover.

Checking fuel control valve's output pressure at low and high idle

8. Connect VCADS Pro computer and start 23017-3, checking fuel feed pressure.

NOTE **Compare the pressure in the common rail (fuel rail) during the test with Bränslesystem, specifikation**
.

9. Start the engine. Place the gear selector in position “N”.

10. Check if the measured values for the fuel control valve's output pressure at low and high idle match with Bränslesystem, specifikation
.

If the fuel control valve's output pressure is too high and the pressure in the common rail (fuel rail) is low:
- Check the common rail's (fuel rail's) pressure relief valve and the high-pressure pumps. See Högtrycksbränslepump, kontroll.
.

If the fuel control valve's output pressure is too low or unstable:
Also check the pressure at stall speed, see Stallvarvtal, kontroll
.
Replace fuel control valve, see Bränsleregleringsventil (Fuel control valve, FCV), byte
.

If the fuel control valve's output pressure is normal and the pressure in the common rail (fuel rail) is low:
- Also check the pressure at the engine running condition with load.
- Check the high-pressure pumps, see Högtrycksbränslepump, kontroll
.
- Check the pressure relief valve.

Checking fuel control valve's output pressure at stall speed

11. Check the pressure with the engine at stall speed, see Stallvarvtal, kontroll

Check if the values for the fuel control valve's output pressure match with Bränslesystem, specifikation
.

If the fuel control valve's output pressure is normal and the pressure in the common rail (fuel rail) is normal:
- Check the fuel rail pressure relief vale and the high-pressure pump.

If the fuel control valve's output pressure is normal and the test result without load is low or unstable:

- Replace fuel control valve, see Bränsleregleringsventil (Fuel control valve, FCV), byte

If the fuel control valve's output pressure is not normal:

- Replace fuel control valve, see Bränsleregleringsventil (Fuel control valve, FCV), byte

12. Save the labour card and disconnect the VCADS Pro cable. Remove the measuring tools.
13. Restore the machine to operating condition.

VOLVO
Construction Equipment

Service Information

Document Title:	Function Group:	Information Type: **Service Information**	Date: **12/10/2011**
Profile: **WLO, L90F (Volvo) [GB]**			

Pressure relief valve (PRV), checking

Op nbr 237-036

11666052 Pressure gauge
11666037 Hose
11666027 Adapter
9993720 Nipple

WARNING! **High pressure. Wait 30 seconds after switching off the engine before working on the fuel system.**

Caution!
Maintain greatest possible cleanliness when working on the fuel system.

The pressure relief valve is a mechanical safety device that opens at 1900 (±50) bar. In case of any malfunction in the circuit, the fuel control valve (FCV) opens fully to open the pressure relief valve and protect the system against excessive pressures.

Caution!
The pressure relief valve (PRV) is only allowed to remain open for a total time of 30 minutes. After that time the component must be replaced.

Testing conditions

- Fuel feed pressure is according to the specifications. See Bränslesystem, specifikation
  .
- Batteries are in good conditions and fully charged.
- Abnormal value for pressure in common rail (fuel rail) measured with VCADS Pro. See Bränslesystem, specifikation
  .
- The pressure relief valve (PRV) has not been open for more than a total of 30 minutes. Check this with VCADS Pro, 17030–3 Parameter programming.

Pressure checking procedures

1. Place the machine in service position, see Säkerhetsregler vid service
   .
2. Unplug the connector (1) from the fuel control valve.

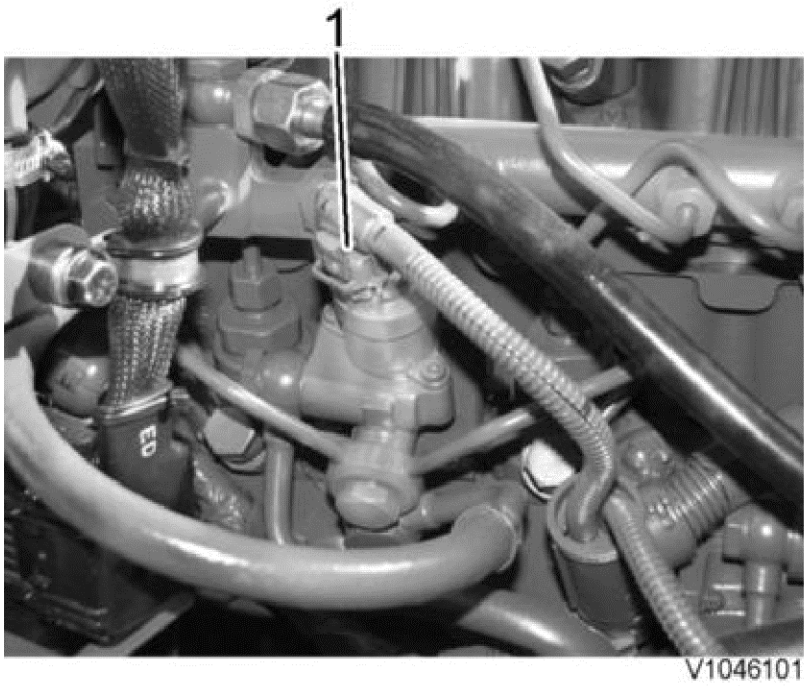

Figure 1

3. Connect 11666027Adapter, 11666037Hose, 9993720Nipple and 11666052Pressure gauge to the fuel control valve (1).

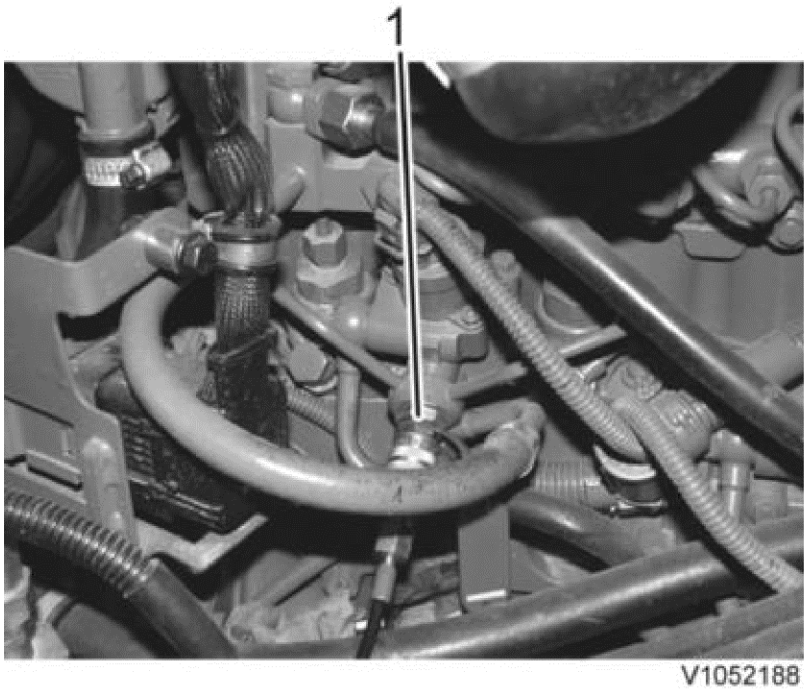

Figure 2
Fuel control valve

1. Fuel control valve pressure checking point

4. Connect VCADS Pro computer and start 23017-3, checking fuel feed pressure.

Checking fuel control valve's output pressure at start

NOTE **This test is used only if there are the engine starting problems.**

5. Disconnect the cable bracket (1) from the valve cover and carefully move aside the cable bracket. Disconnect all cables (2) for the injectors.

NOTE **Isolate the disconnected cables.**

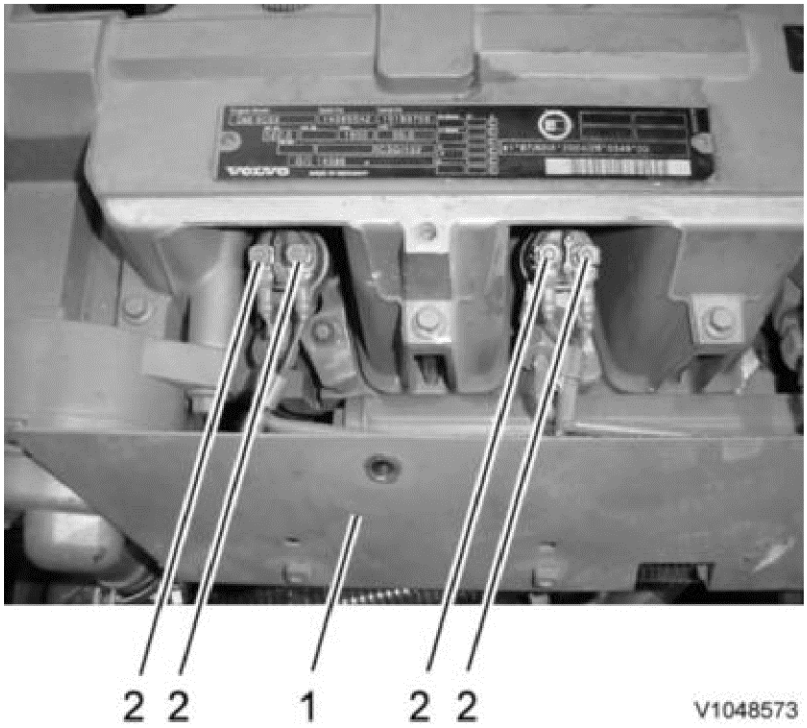

Figure 3
Injector cables, disconnection

1. Cable bracket
2. Electric connections

6. Crank the engine with the starter motor for 15 to 20 seconds, and check if the measured values for the fuel control valve's output pressure matches with Bränslesystem, specifikation
.
7. Stop the engine.
8. Connect the cables to the injectors and install the cable bracket.

Checking fuel control valve's output pressure at low and high idle

NOTE **Due to the software function 'engine protection', engine rpm will be restricted after approx. 30 s.**

9. Check if the measured values for the fuel control valve's output pressure at low and high idle match with Bränslesystem, specifikation
.

In case the injector control unit's pressure is too low in all situations:

- Check or replace fuel control valve, see Bränsleregleringsventil (Fuel control valve, FCV), byte
.

In case the rail pressure is too low at all conditions, and FCU pressure is normal

- Check or replace common rail's (fuel rail's) pressure relief valve according to Övertrycksventil, byte
.

10. Save the labour card and disconnect the VCADS Pro cable. Remove the measuring tools.
11. Plug in the connector for the fuel control valve.
12. Restore the machine to operating condition.

VOLVO
Construction Equipment

Service Information

Document Title:	Function Group:	Information Type: **Service Information**	Date: **12/10/2011**
Profile: **WLO, L90F (Volvo) [GB]**			

High pressure fuel pump, description

The fuel system has two high-pressure pumps that are driven by the camshaft via roller tappets. The function of the high-pressure pumps is to pressurize the distribution pipe (the rail). The high-pressure pumps' low-pressure side and high-pressure side are hydraulically separate. Three camshaft cams give six pump strokes per camshaft revolution (three strokes per pump).

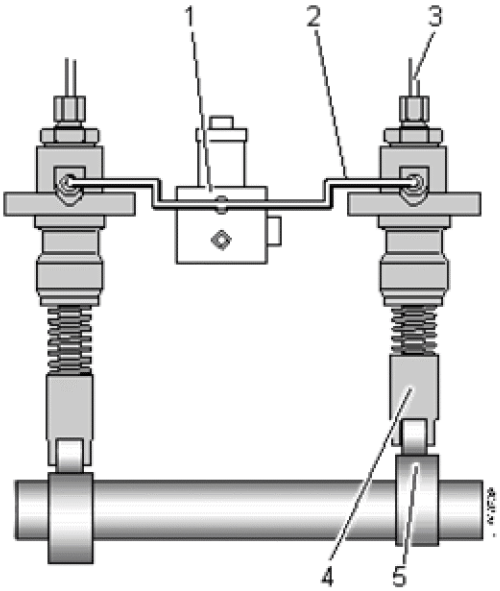

Figure 1

1. Fuel control valve (FCV)
2. Fuel to high-pressure pump
3. Fuel to distribution delivery pipe (rail)
4. Roller tappet
5. Camshaft cam

VOLVO
Construction Equipment

Service Information

Document Title:	Function Group:	Information Type: **Service Information**	Date: **12/10/2011**
Profile: **WLO, L90F (Volvo) [GB]**			

Pressure relief valve (PRV), replacing

Op nbr 237-034

WARNING! **High pressure. Wait 30 seconds after switching off the engine before working on the fuel system.**

Caution!
Maintain greatest possible cleanliness when working on the fuel system.

1. Place the machine in service position, see Säkerhetsregler vid service
.

NOTE **Collect the excess fuel in a container.**

2. Remove the pressure relief valve. Use socket 18 and extension.

If the machine is equipped with secondary steering:
Remove the oil trap. Remove the pressure relief valve. Use socket 18.

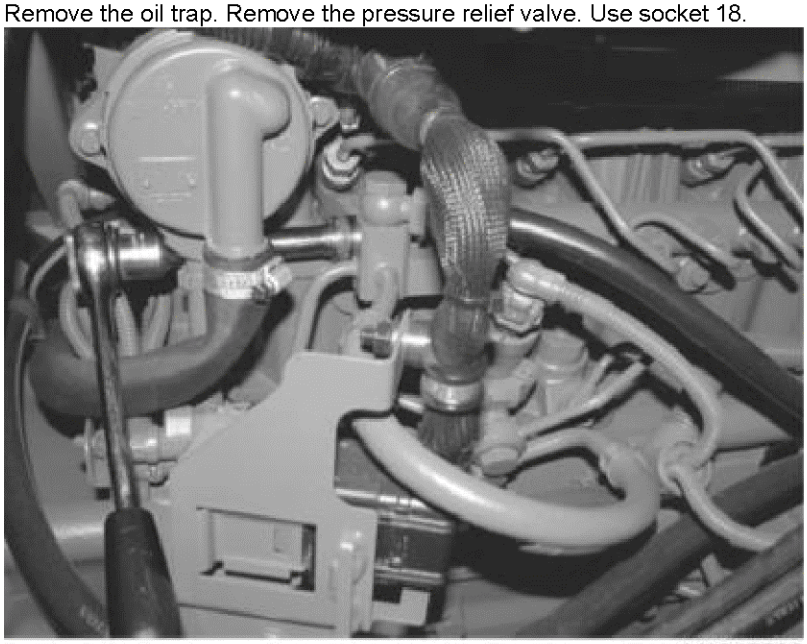

V1047592

Figure 1

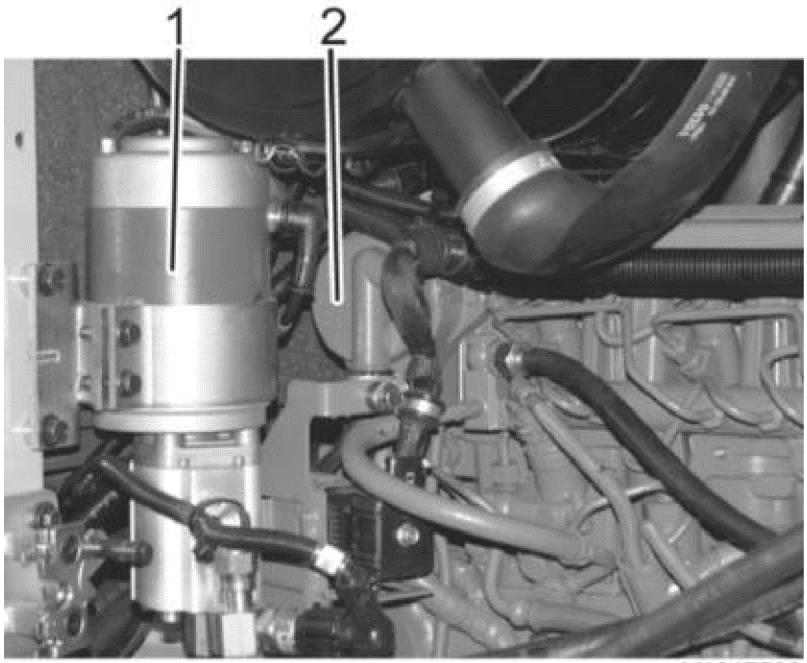

Figure 2
Machine equipped with secondary steering

1. Motor for secondary steering
2. Oil trap

3. Check that the pressure relief valve is free from damage. Check that the pressure relief valve's threads and the internal threads on the fuel rail are free from damage. Oil the threads lightly and install the new pressure relief valve. Tightening torque, see: Bränslesystem, åtdragningsmoment

If the machine is equipped with secondary steering:
Install the pressure relief valve. Install the oil trap.



Figure 3

4. Start the engine, and check that there are no leaks.

VOLVO
Construction Equipment

Service Information

Document Title:	Function Group:	Information Type: **Service Information**	Date: **12/10/2011**
Profile: **WLO, L90F (Volvo) [GB]**			

High pressure fuel pump, replacing

Op nbr 237-032

WARNING! **High pressure. Wait 30 seconds after switching off the engine before working on the fuel system.**

Caution!
Maintain greatest possible cleanliness when working on the fuel system.

Clean around the connections. Plug all open connections immediately since the fuel system is sensitive to impurities.

1. Set the machine in service position, see Säkerhetsregler vid service
2. Remove the lower side gratings (2). Remove the bottom plates (3) and the plate on the intermediate wall (1).

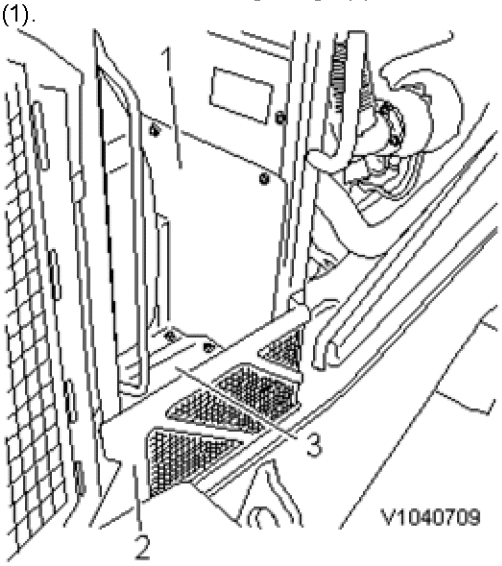

Figure 1

3. Disconnect the cable bracket (1) from the valve cover and carefully lay the bracket aside.

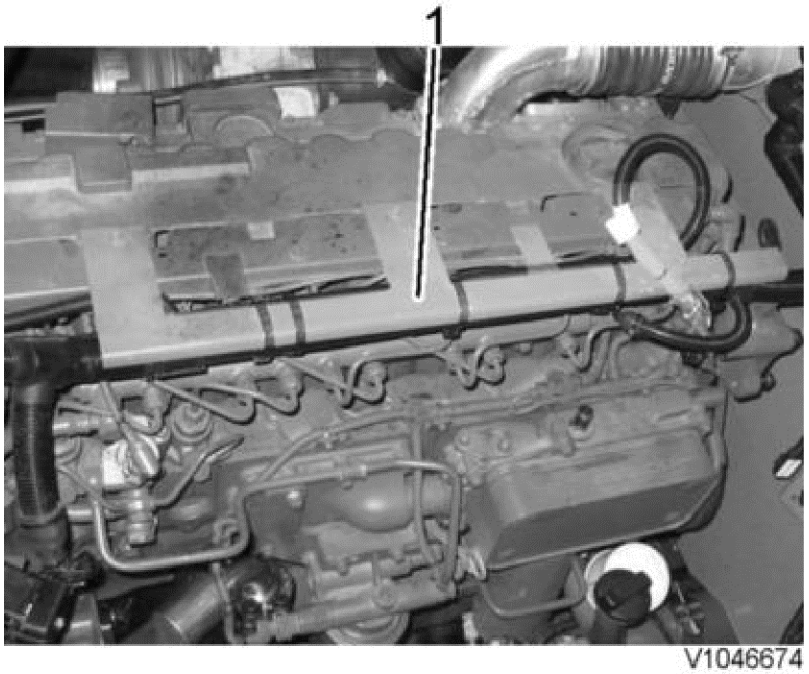

Figure 2

4. Disconnect the fuel connections (1 and 2) from the fuel rail. Unplug the connector (3) from the fuel control valve.

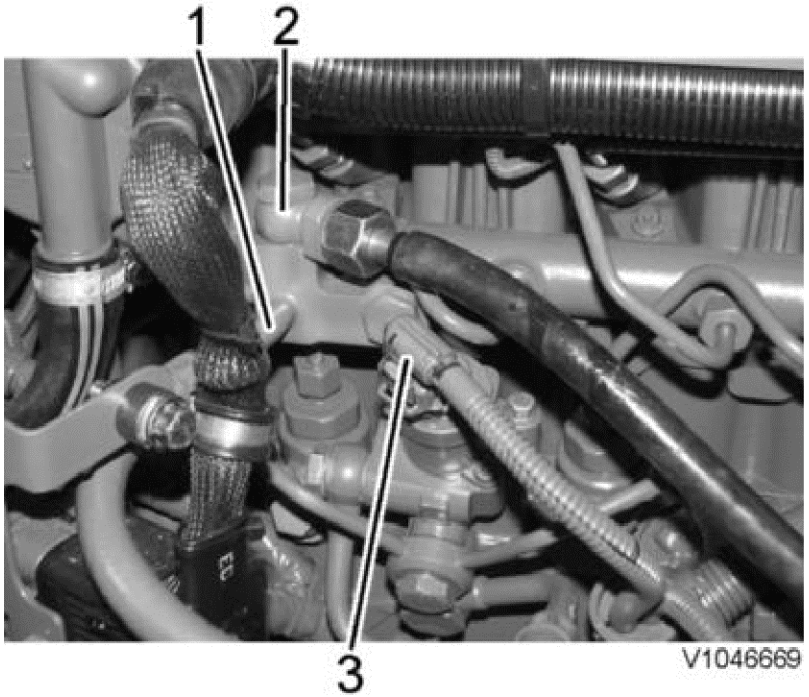

Figure 3

5. Remove the cable tie (2) and unplug the connector (1) from the rail pressure sensor.

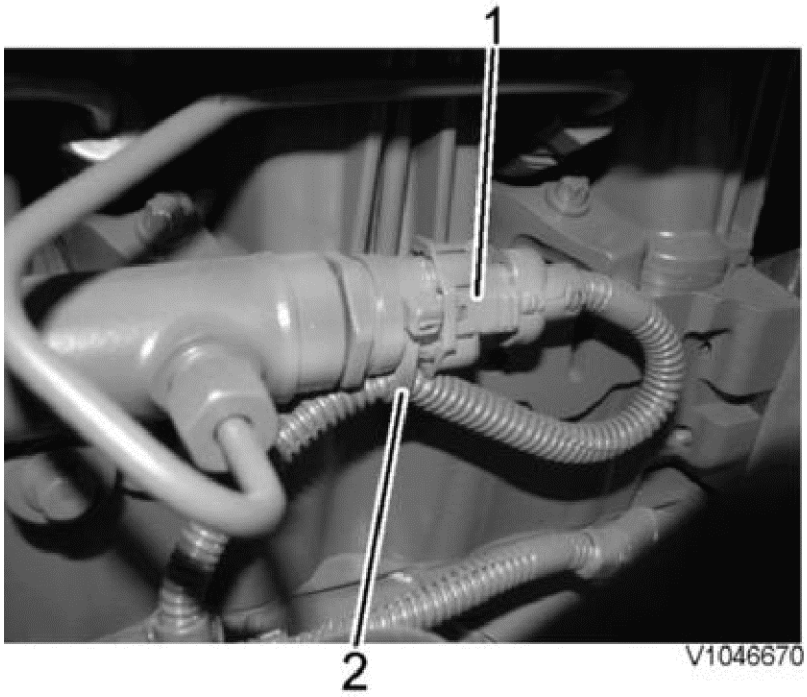

Figure 4

6. Remove all fuel delivery lines (1). Plug the connections against impurities.

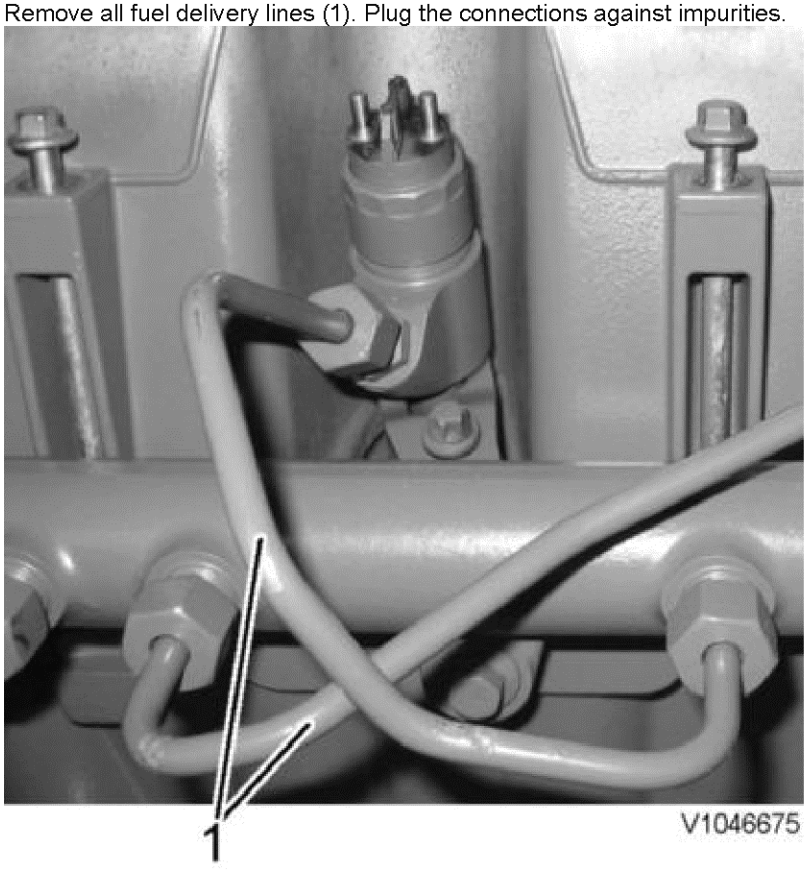

Figure 5

7. Remove the rail.
8. Remove the feed pipe.

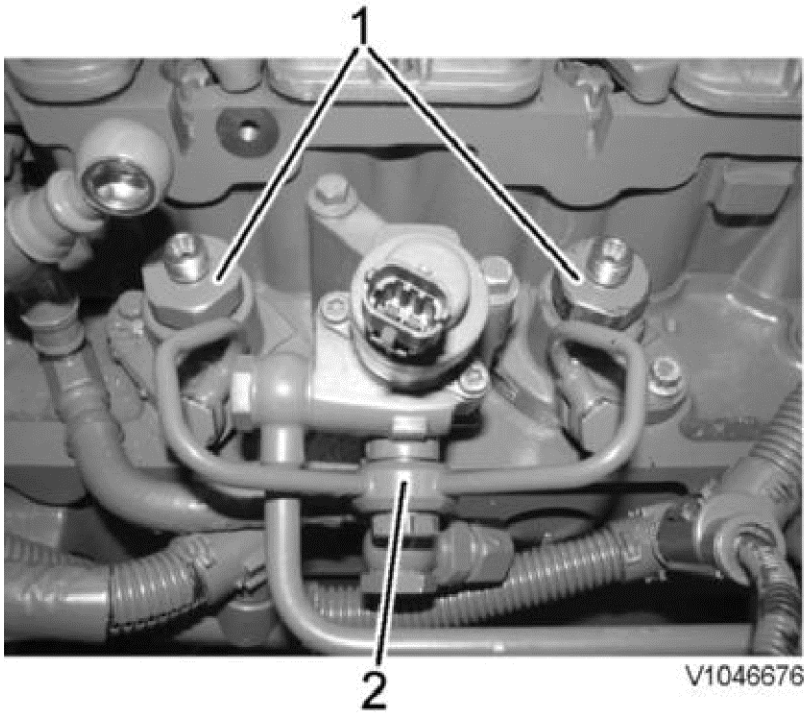

Figure 6

1. High-pressure pumps
2. Feed pipe

9. Rotate the engine's crankshaft with 9998681Rotation tool until fuel flows from the pump that **is not** to be removed. Then the fuel pump that is to be removed is unloaded. Loosen the high-pressure pump's attaching bolts alternately. Remove the high-pressure pump.

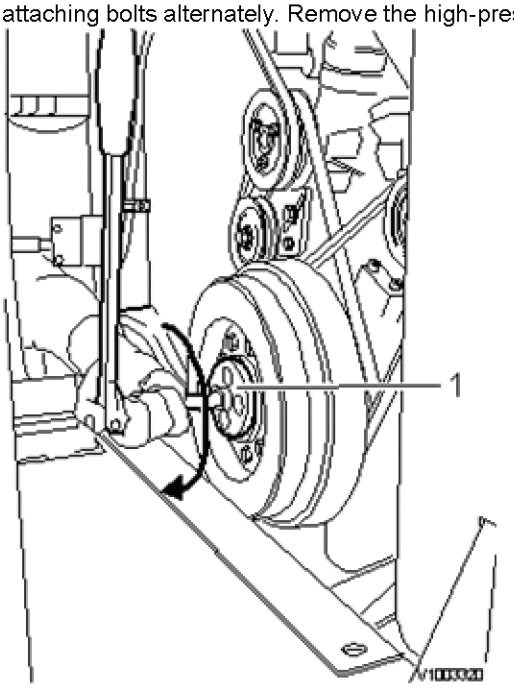

Figure 7

1. 9998681Rotation tool

Installing

10. Oil in and install a new o-ring on the high-pressure pump.



Figure 8

1. O-ring

11. Install the high-pressure pump. Fasten the attaching bolts alternately. Tightening torque, see: Bränslesystem, åtdragningsmoment

    If the other pump has been removed: rotate the engine's crankshaft so that the roller lifter is in its lowest position. Install the high-pressure pump.

12. Install the feed pipe. Tightening torque, see: Bränslesystem, åtdragningsmoment

NOTE **Use new copper washers.**

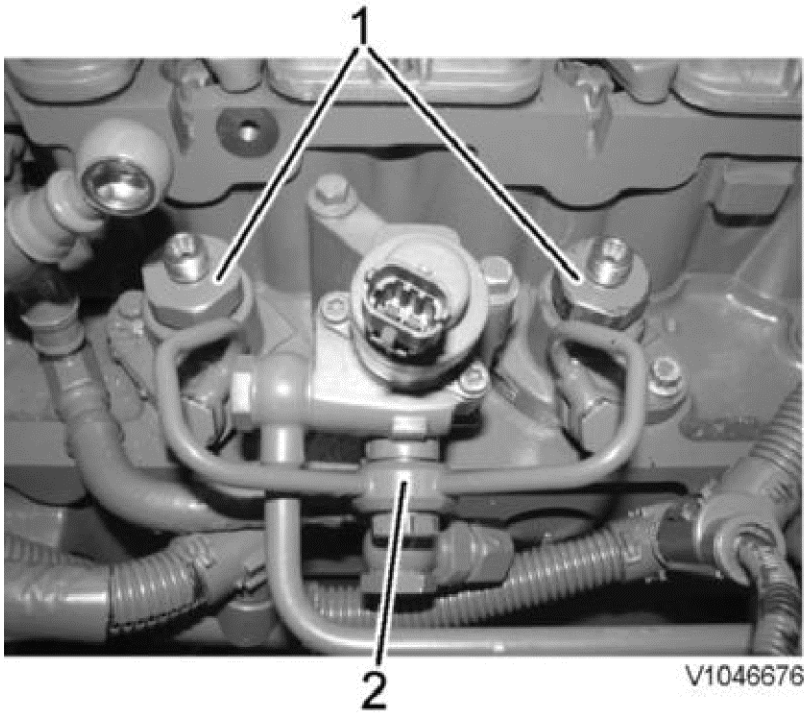

Figure 9

1. High-pressure pumps
2. Feed pipe

13. Install the fuel rail. Tightening torque, see: Bränslesystem, åtdragningsmoment

14. Caution!
The pressure lines may not be bent.

Install new fuel delivery lines. Tightening torque, see: Bränslesystem, åtdragningsmoment

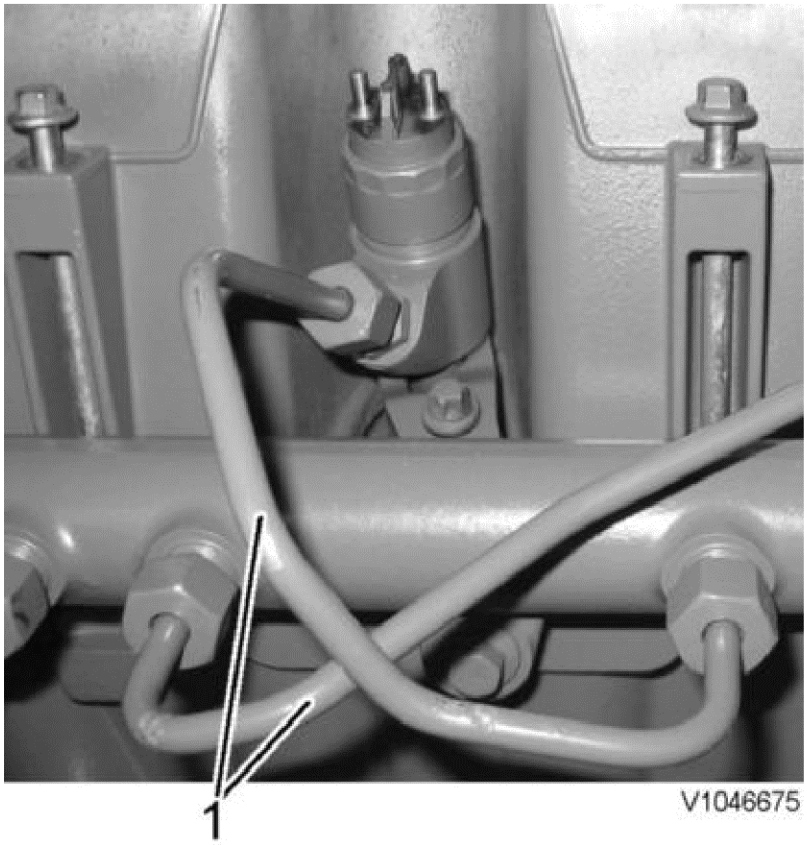

Figure 10

VOLVO
Construction Equipment

Service Information

Document Title:	Function Group:	Information Type: **Service Information**	Date: **12/10/2011**
Profile: **WLO, L90F (Volvo) [GB]**			

Intake and exhaust system, description

Inlet system

The air is drawn in through the air cleaner (1) and flows to the turbo (2). Then the air is cooled in the intercooler (charge-air cooler) (3). Before the air finally is drawn into the cylinders via the inlet valves (5), it passes the preheating coil (4). The preheating coil, the function of which is to warm the induction air at engine start, is engaged if needed with a switch in the cab.

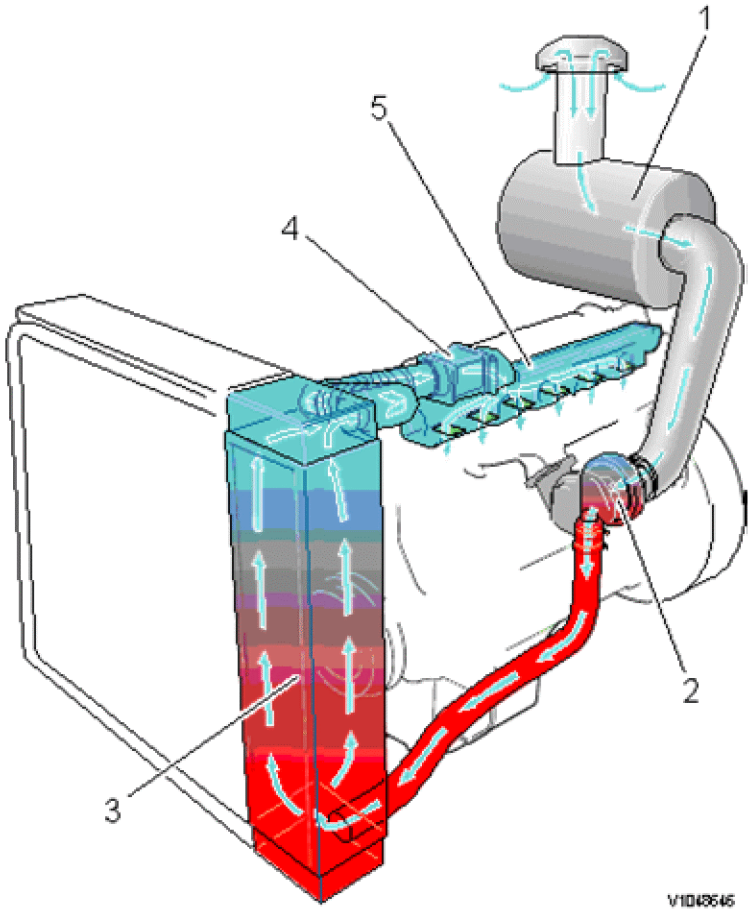

Figure 1
Inlet system (principle illustration)

Air filter pressure — Software

The function monitors the extent to which the air filter is blocked and informs the operator when changing is required or if system malfunction occurs.

See also Elschema 202

Input signals	Conditions for output functions	Output functions

o Air filter pressure, SE2502	o High vacuum pressure (clogged filter)	o Amber central warning o Check — Clogged air filter engine
o Monitoring, SE2502	o No or incorrect signal. See Diagnostics	o Amber central warning o Check — Engine failure

Temperature induction air — Software

The function monitors the temperature of the induction air and informs the operator if system malfunction occurs.

The temperature is used internally in the E-ECU for engine control.

Temperature induction air is also used as input signal for cooling fan control, Cooling fan, description
.

See also Elschema 202
.

Input signals	Conditions for output functions	Output functions
o Monitoring, SE2501	o System error, signal outside limits See Diagnostics	o Amber central warning o Check — Engine system failure

Exhaust system

The exhausts pass via the exhaust valves out in the exhaust manifold (1) and then through the turbocharger (2) to the muffler (3). In the muffler, the exhausts are mixed with air from the air cleaner before passing out through the exhaust pipe.

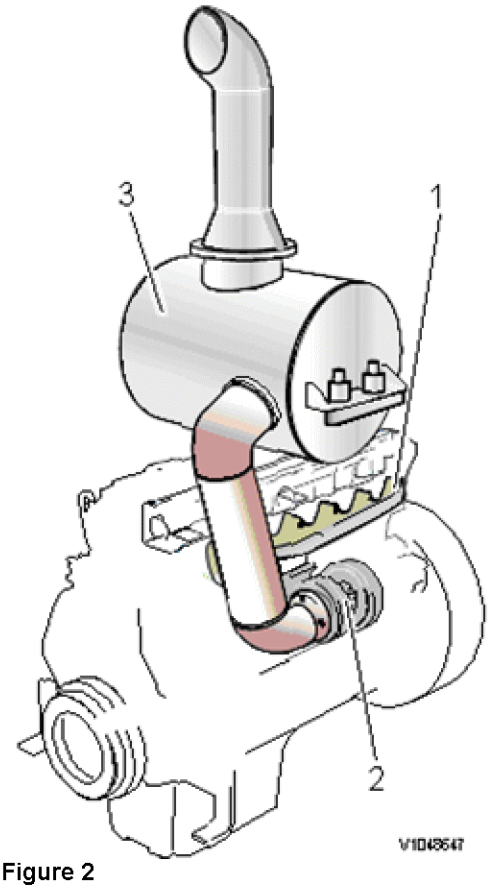

Figure 2
Exhaust system (principle illustration)

For descriptions of each component, see:

- Luftrenare, beskrivning

- Turbokompressor, beskrivning
- Förvärmningselement, beskrivning
- Laddluftkylare, beskrivning

VOLVO
Construction Equipment

Service Information

Document Title:	Function Group:	Information Type: **Service Information**	Date: **12/10/2011**
Profile: **WLO, L90F (Volvo) [GB]**			

Turbocharger, description

The turbocharger is driven by the exhaust gasses, which pass through the turbine housing on their way out into exhaust system (1).

The exhaust gas flow causes the turbine rotor in the turbine housing (2) to rotate. The compressor rotor is located on the same shaft as the turbine rotor. The compressor rotor is located in a housing (3) which is connected between the air cleaner and the engine's induction manifold.

When the compressor rotor turns, air is sucked from air cleaner (4). The air is compressed and forced into the engine cylinders after having first been cooled while passing through the intercooler.

The turbocharger is equipped with a wastegate valve (5).
The waste-gate valve, which is controlled by the charge-air pressure, allows a small amount of the exhaust gasses to by-pass the turbine rotor at high engine speeds (high charge-air pressure).
This design makes the turbocharger efficient at low engine speeds.

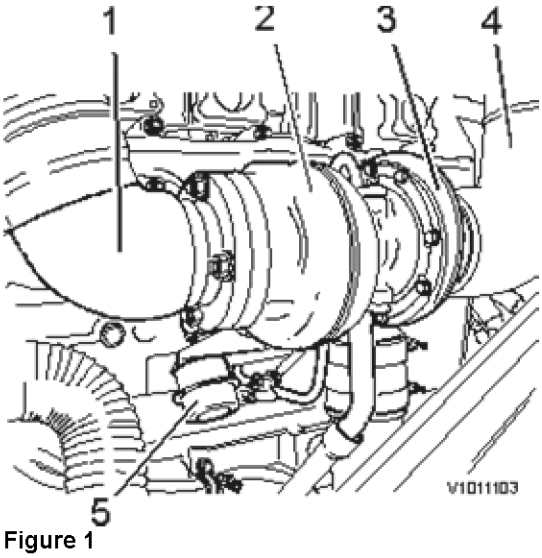

Figure 1
Turbocharger (principle diagram)

Boost pressure — Software

This function monitors boost pressure and informs the operator if there is a system malfunction.

The boost pressure is used internally in the E-ECU for engine control.

See also Elschema 203

Input signals	Conditions for output functions	Output functions
o Monitoring, SE2508	o System error, no signal or signal outside limit values. See Diagnostics	o Amber central warning o Check — Engine failure

Charge-air temperature — Software

This function monitors charge-air temperature and informs the operator if the temperature is too high or if there is a system malfunction.

Charge-air temperature is also used as an input signal for:

- Cooling fan control, see Cooling fan, description
  .
- Engine protection, see Motor, beskrivning

See also Elschema 203
.

Input signals	Conditions for output functions	Output functions
○ Charge air temperature, SE2507	○ High charge-air temperature 90–100 °C (194–212 °F)	○ Red central warning ○ Warning — Stop vehicleTurn Off Engine ○ Warning — High charge-air temp. engine ○ Reduction of engine's torque dependent on coolant temperature and engine rpm
○ Monitoring, SE2507	○ High charge-air temperature / No signal or incorrect signal from the sensor See Diagnostics	○ Amber central warning ○ Check — High charge-air temp. engine ○ Reduction of engine's torque dependent on charge-air temperature and engine rpm.

VOLVO
Construction Equipment

Service Information

Document Title:	Function Group:	Information Type: **Service Information**	Date: **12/10/2011**
Profile: **WLO, L90F (Volvo) [GB]**			

Turbocharger, description

The turbocharger is driven by the exhaust gasses, which pass through the turbine housing on their way out into exhaust system (1).

The exhaust gas flow causes the turbine rotor in the turbine housing (2) to rotate. The compressor rotor is located on the same shaft as the turbine rotor. The compressor rotor is located in a housing (3) which is connected between the air cleaner and the engine's induction manifold.

When the compressor rotor turns, air is sucked from air cleaner (4). The air is compressed and forced into the engine cylinders after having first been cooled while passing through the intercooler.

The turbocharger is equipped with a wastegate valve (5).
The waste-gate valve, which is controlled by the charge-air pressure, allows a small amount of the exhaust gasses to by-pass the turbine rotor at high engine speeds (high charge-air pressure).
This design makes the turbocharger efficient at low engine speeds.

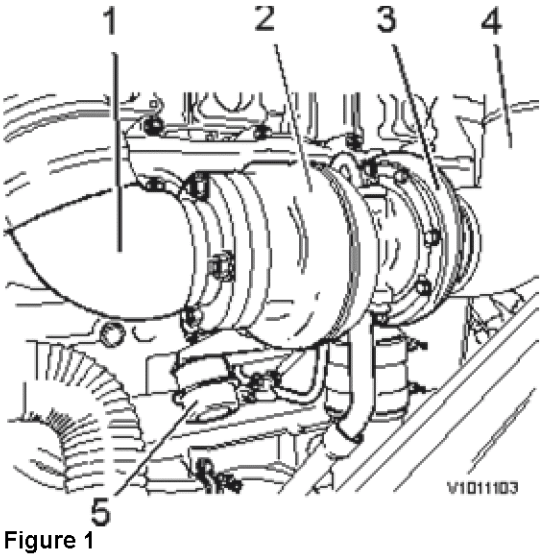

Figure 1
Turbocharger (principle diagram)

Boost pressure — Software

This function monitors boost pressure and informs the operator if there is a system malfunction.

The boost pressure is used internally in the E-ECU for engine control.

See also Elschema 203

Input signals	Conditions for output functions	Output functions
o Monitoring, SE2508	o System error, no signal or signal outside limit values. See Diagnostics	o Amber central warning o Check — Engine failure

Charge-air temperature — Software

This function monitors charge-air temperature and informs the operator if the temperature is too high or if there is a system malfunction.

Charge-air temperature is also used as an input signal for:

- Cooling fan control, see Cooling fan, description
  .
- Engine protection, see Motor, beskrivning

See also Elschema 203
.

Input signals	Conditions for output functions	Output functions
○ Charge air temperature, SE2507	○ High charge-air temperature 90–100 °C (194–212 °F)	○ Red central warning ○ Warning — Stop vehicleTurn Off Engine ○ Warning — High charge-air temp. engine ○ Reduction of engine's torque dependent on coolant temperature and engine rpm
○ Monitoring, SE2507	○ High charge-air temperature / No signal or incorrect signal from the sensor See Diagnostics	○ Amber central warning ○ Check — High charge-air temp. engine ○ Reduction of engine's torque dependent on charge-air temperature and engine rpm.

VOLVO
Construction Equipment

Service Information

Document Title:	Function Group:	Information Type: **Service Information**	Date: **12/10/2011**
Profile: **WLO, L90F (Volvo) [GB]**			

Turbocharger, inspection

Op nbr 255-002

If the engine looses a lot of charge pressure, it becomes weak. The best way of checking the engine performance is to check the stall speed of the machine. If the engine looses a little charge pressure, this will not noticeably affect the performance. The engine may possibly emit a little more black smoke. A slightly impaired charge, because of a small air leakage in the charge-air system, may manifest itself as a high-frequency whistling noise at full load. This may be confused with a bearing noise.

1. Remove any plate, heat shields or similar, which may prevent detachment of hoses and pipes to and from the turbocharger.
2. Disconnect the inlet hose from the turbocharger.

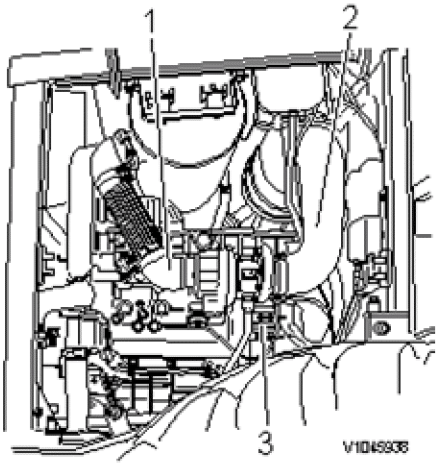

Figure 1
Principle illustration

1. Exhaust pipe
2. Inlet hose
3. Charge air pipe

3. Check the compressor rotor. In case of damage to the compressor rotor, replace turbocharger. See Turbocharger, replacing
.
4. Remove charge air hose between the charge air pipe and intercooler.
5. Check if there is oil in a fluid form in the charge air hose, as this would be an indication of worn bearings and seals in the turbocharger.
6. Detach the exhaust pipe from the turbocharger.
7. Check the turbine rotor. If the turbine rotor is damaged, replace turbocharger, see Turbocharger, replacing
.
8. Restore the machine.

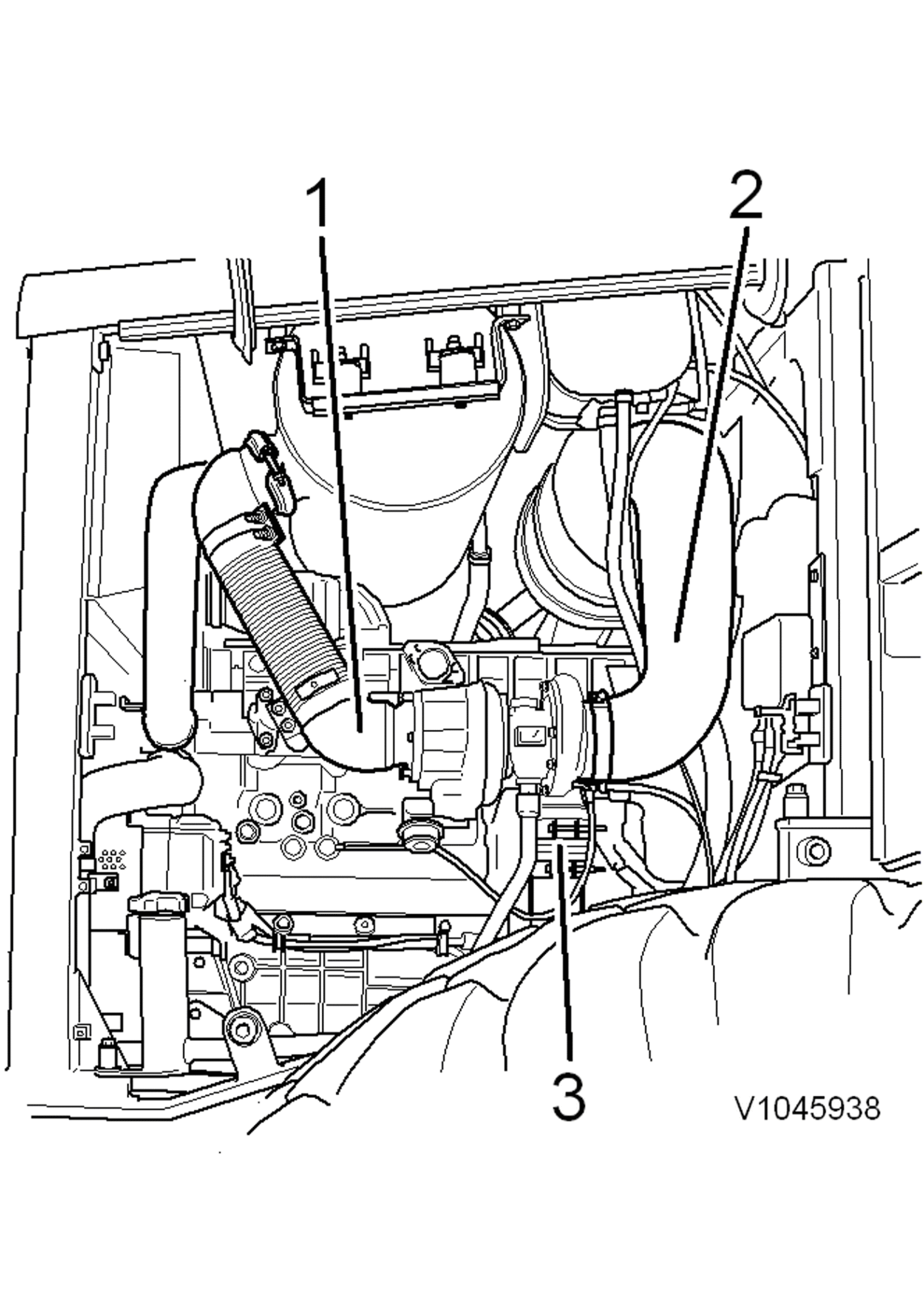
1
2
3
V1045938

VOLVO
Construction Equipment

Service Information

Document Title:	Function Group:	Information Type: **Service Information**	Date: **12/10/2011**
Profile: **WLO, L90F (Volvo) [GB]**			

Turbocharger, replacing

Op nbr 255-071

1. Set the machine in service position, see Säkerhetsregler vid service
2. Remove the lower side plate (4).

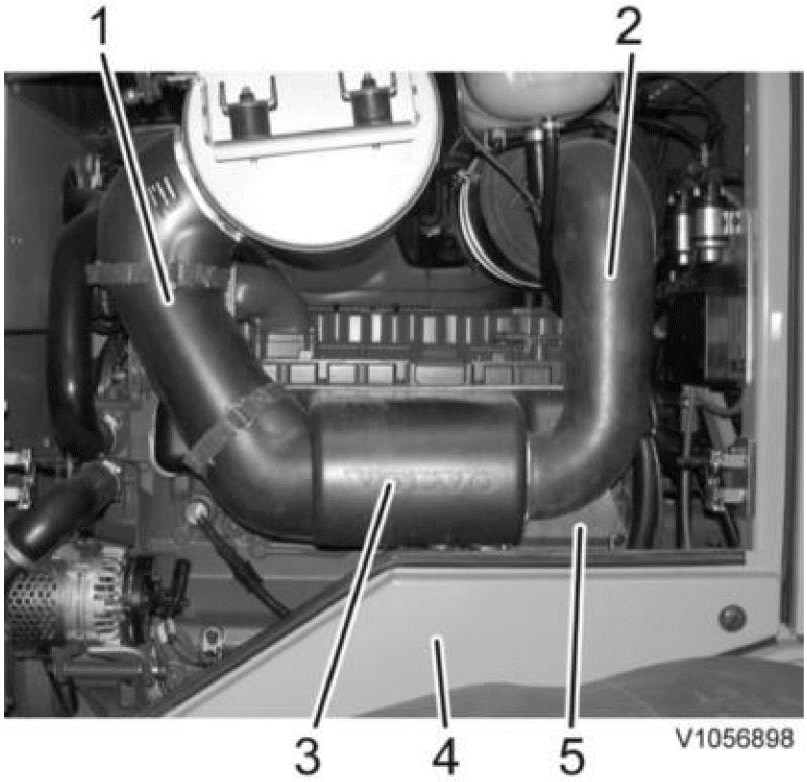

Figure 1

1. Heat shield, exhaust pipe
2. Heat shield, inlet manifold
3. Heat shield, turbocharger
4. Side panel
5. Protective plate, starter motor.

3. Remove the protective plate for the starter motor (5).
4. Remove the heat shield on the inlet manifold and exhaust pipe. Remove the heat shield over the turbocharger.
5. Disconnect exhaust pipe and inlet manifold from the turbocharger.
6. Remove the oil pressure pipe (1) and the return pipe (2).
   Remove the hose connection (3) between the charge-air pipe and the turbocharger.

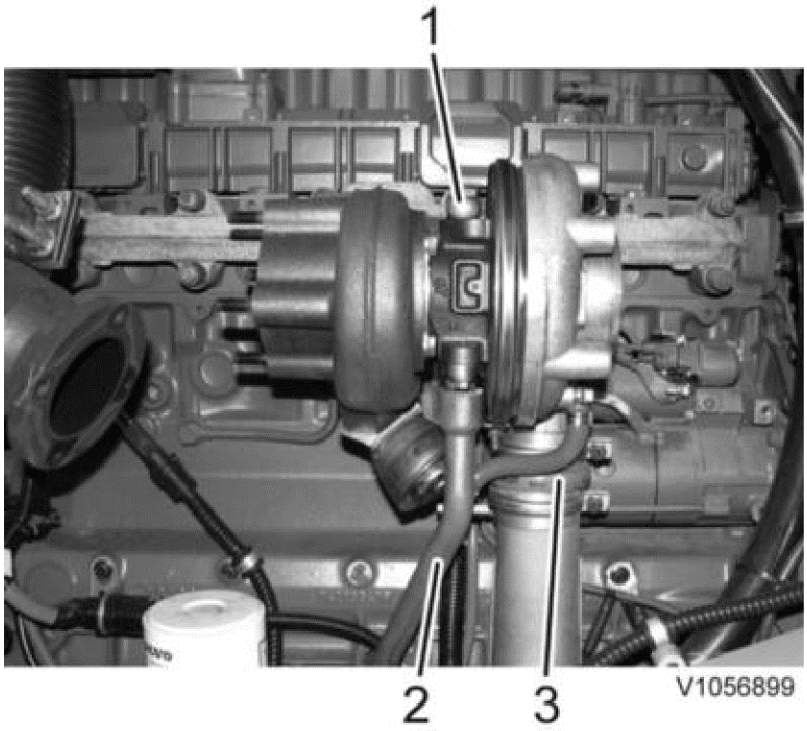

Figure 2

7. Remove the turbocharger.

Installing

8. Install a new gasket between the turbocharger and exhaust manifold. Install the turbocharger. Tightening torque, see Turbokompressor, åtdragningsmoment
.

9. Fill clean oil from an oil can in the turbocharger. Make sure that no dirt gets in to the connection. Use a strainer when filling.

10. Install new O-rings on the oil pressure pipe. Install the oil pressure pipe (1). Tightening torque, see Turbokompressor, åtdragningsmoment
.

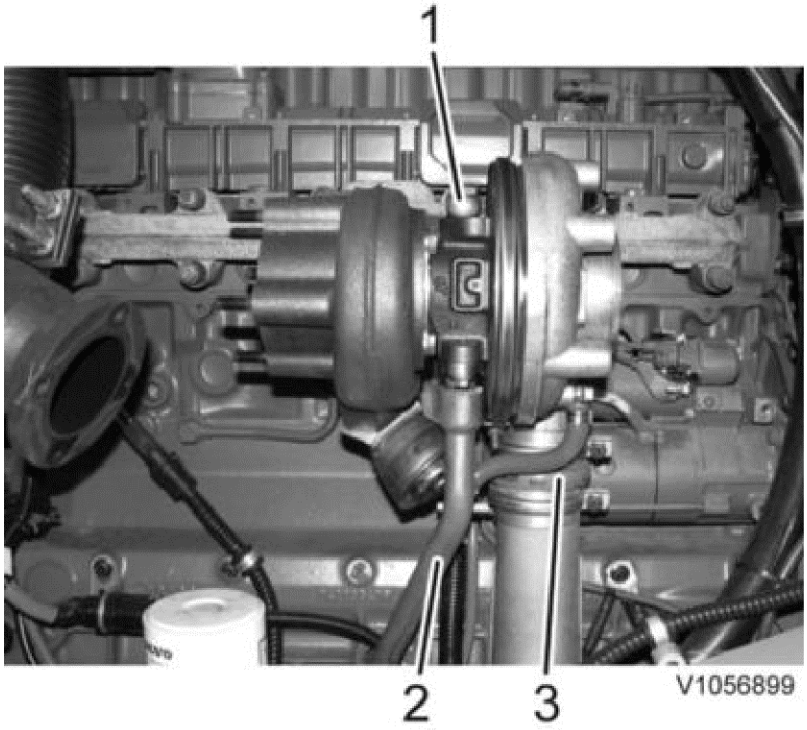

Figure 3

11. Install the hose connection between the charge-air pipe and the turbocharger (3).

12. Install new O-rings on the oil return pipe. Install the oil return pipe(2). Tightening torque, see Turbokompressor, åtdragningsmoment
.

13. Install a new gasket and connect the exhaust pipe to the turbocharger.

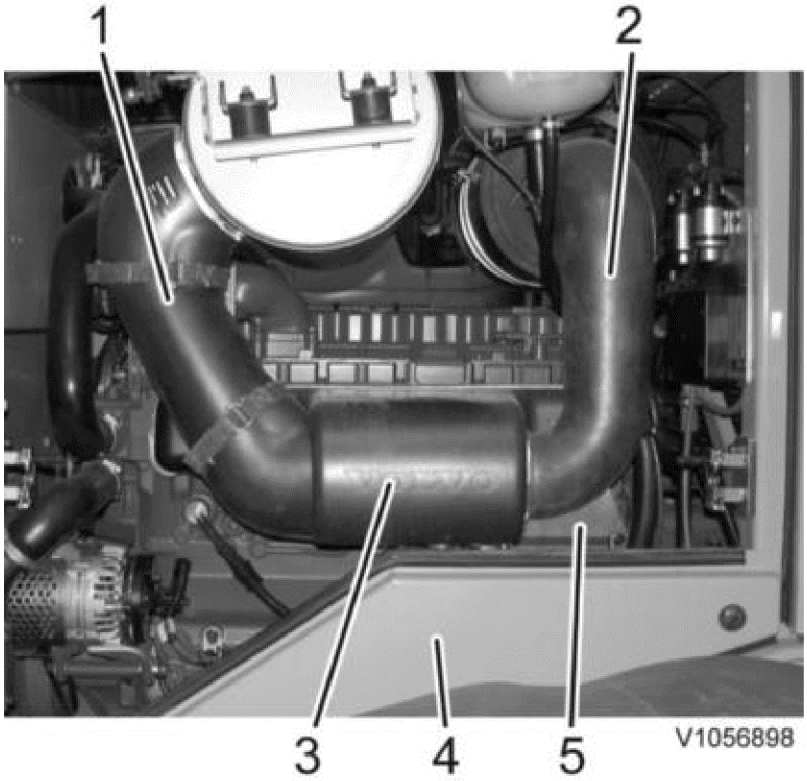

Figure 4

1. Heat shield, exhaust pipe
2. Heat shield, inlet manifold
3. Heat shield, turbocharger
4. Side panel
5. Protective plate, starter motor.

14. Install the heat shield for the turbocharger (3) by tightening it down with tensioning straps at the top and around the exhaust manifold.
Install the heat shield (5) for the starter motor.
Tighten down the heat shield around the turbocharger with the lower tensioning strap.

15. Connect the inlet manifold to the turbocharger.

16. Install the heat shield on the inlet manifold and exhaust pipe.

17. Start the engine and check for leaks.

18. Install the lower side panel.

19. Restore the machine to operating condition.

VOLVO
Construction Equipment

Service Information

Document Title:	Function Group:	Information Type: **Service Information**	Date: **12/10/2011**
Profile: **WLO, L90F (Volvo) [GB]**			

Air cleaner, description

The air cleaner prevents dust and other contaminants from entering the engine. The air passes after having circulated in the pre-cleaner through the main filter and then the safety filter. There is a combined pressure-drop and air temperature sensor at the inlet between the filter housing and the turbo. The pressure-drop function shows when the filter starts to clog up with a symbol on the information panel.

Air filter pressure — Software

The function monitors the extent to which the air filter is blocked and informs the operator when changing is required or if system malfunction occurs.

See also Elschema 202

Input signals	Conditions for output functions	Output functions
o Air filter pressure, SE2502	o High vacuum pressure (clogged filter)	o Amber central warning o Check — Clogged air filter engine
o Monitoring, SE2502	o No or incorrect signal. See Diagnostics	o Amber central warning o Check — Engine failure

Temperature induction air — Software

The function monitors the temperature of the induction air and informs the operator if system malfunction occurs.

The temperature is used internally in the E-ECU for engine control.

Temperature induction air is also used as input signal for cooling fan control, Kylfläkt, beskrivning
.

See also Elschema 202
.

Input signals	Conditions for output functions	Output functions
o Monitoring, SE2501	o System error, signal outside limits See Diagnostics	o Amber central warning o Check — Engine system failure

VOLVO
Construction Equipment

Service Information

Document Title:	Function Group:	Information Type: **Service Information**	Date: **12/10/2011**
Profile: **WLO, L90F (Volvo) [GB]**			

Preheating, description

On the inlet side there is an electrical preheating element. The element will be connected when the operator has turned the ignition key to running position and if the coolant temperature is below 0 °C. If the engine is started, the preheating ends. Additional preheating will start after the engine has started, if required for temperature reasons and if the operator initiates preheating. The pre- and after-heating time is controlled by the engine control system. The advantage is easier start and less white smoke in the exhaust.
The control light on the instrument panel lights up when the preheating coil is engaged.

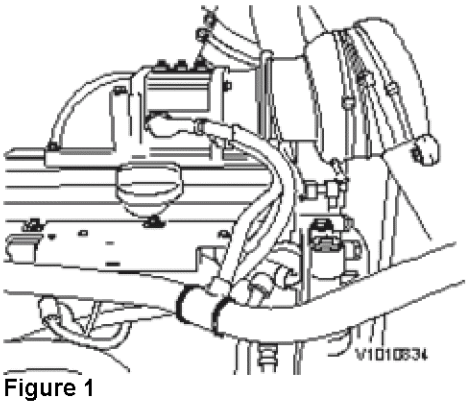

Figure 1

NOTE **The preheating coil must not be grounded.**

VOLVO
Construction Equipment

Service Information

Document Title:	Function Group:	Information Type: **Service Information**	Date: **12/10/2011**
Profile: **WLO, L90F (Volvo) [GB]**			

Intercooler, description

The engine is equipped with an intercooler which lowers the temperature of the air before it is forced into the engine cylinders.

Engine overcharging, or air forced into the cylinders by the turbocharger, raises air temperature. When the air is cooled after the turbocharger, air volume is reduced and more air (oxygen) can be forced into the cylinders.

The intercooler lowers the air temperature by approximately 100 °C (212 °F), which increases engine efficiency by approximately 10%. Engine torque is increased and fuel consumption is decreased.

VOLVO
Construction Equipment

Service Information

Document Title:	Function Group:	Information Type: **Service Information**	Date: **12/10/2011**
Profile: **WLO, L90F (Volvo) [GB]**			

Charge air system, inspection

Op nbr 258-030

1. Check if the intercooler has damage in cells and connections. If there is damage, replace the intercooler.
   See Kylare, borttagning
   and Kylare, ditsättning
   .
2. Check if the intercooler is clogged externally.
   If the intercooler is clogged, clean the intercooler externally.
3. Disconnect the lower and the upper charge-air hose from the intercooler.

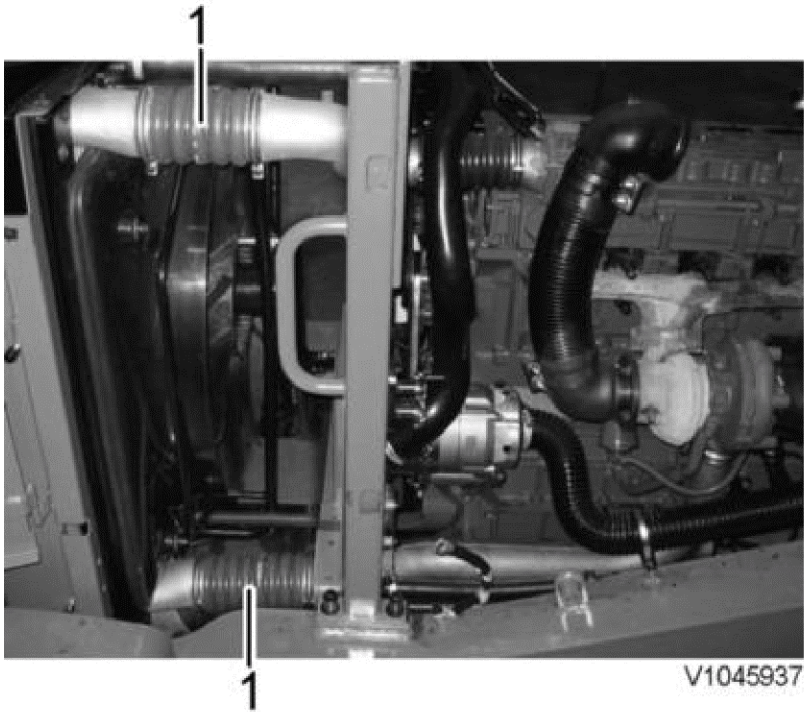

Figure 1
Principle illustration

1. Intercooler hose

4. Remove the connecting pipe between the turbocharger and the charge-air pipe.

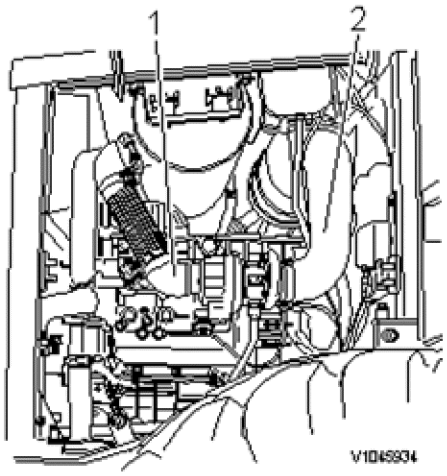

Figure 2
Principle illustration

1. Connection pipe
2. Intercooler hose

5. Check that the intercooler is clean internally by the charge-air hoses. If there is oil, check the turbocharger, see Turbokompressor kontroll
.

6. Check the charge-air pipes and charge-air hoses for visible cracks and external damage.

7. Check that there is no oil in the charge-air pipes.
If the pipes are damaged or have leaks in the connections' seal rings, the boost pressure may become too low and the engine's performance will be reduced.

8. In case of oil, check the turbocharger, see turbocharger, checking.

NOTE

If there is oil in charge-air pipes and charge-air hoses, then all pipes and hoses in the charge-air system shall be wiped clean internally before the engine is started.

9. Restore the machine to operating condition.

VOLVO
Construction Equipment

Service Information

Document Title:	Function Group:	Information Type: **Service Information**	Date: **12/10/2011**
Profile: **WLO, L90F (Volvo) [GB]**			

Cooling system, description

Engine D6E is provided with a closed cooling system. The coolant pump (4) delivers the coolant to the engine via the lubrication oil cooler (5) and into the engine, around the cylinder liners (6) and up to the cylinder head and through the thermostat housing (3). The thermostat, which starts to open at 83°C, controls the coolant flow out to the radiator or in by-pass flow into the engine again, depending on the coolant temperature.
The coolant is cooled in the radiator (1) and is then transported in coolant hoses to the heat exchanger for transmission oil (2) and back to the engine again via the thermostat housing and on to the coolant pump (4).

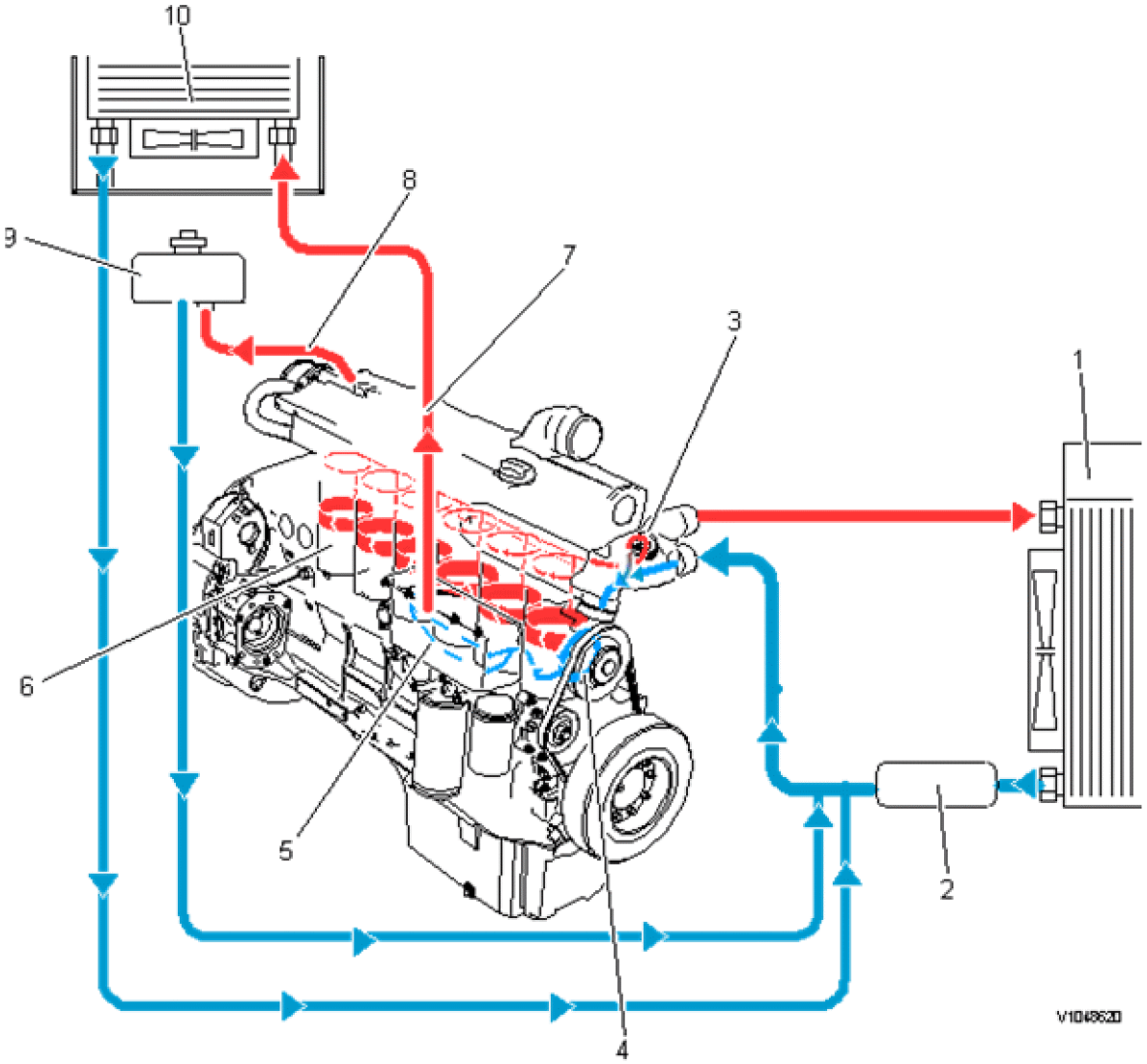

Figure 1
Cooling system

1 Radiator	6 Cylinder liner
2 Transmission oil cooler	7 To heating coil
3 Thermostat	8 To expansion tank

4 Coolant pump	9 Expansion tank
5 Oil cooler	10 Heater

Software

Coolant temperature outlet radiator, SE2602, functions as input signal for:

- Temperature control, see Cooling fan, description
- Hydraulic pressure, see Cooling fan, description

See also Elschema 201

.

Coolant temperature engine, SE2606, functions as input signal for:

- Engine protection, see Motor, beskrivning
- Temperature control, see Cooling fan, description

See also Elschema 203

.

Coolant level, SE2603, functions as input signal for:

- Engine protection, see Motor, beskrivning

See also Elschema 202

.

VOLVO
Construction Equipment

Service Information

Document Title:	Function Group:	Information Type: **Service Information**	Date: **12/10/2011**
Profile: **WLO, L90F (Volvo) [GB]**			

Carbon monoxide in coolant system, check

Op nbr 260-001

9808038 Leak detector

1. Check the coolant level according to the machine's operator's manual.
2. Warm up the engine, and let the engine run during the entire test.
3. Dismantle 9808038Leak detector.
   Lubricate the O-rings with silicone grease or clean vaseline.
4. Fill both chambers with reaction fluid up to the marked line.
5. Cover the inlet hole at the same time as the carbon monoxide detector is assembled so that no fluid is pressed out.

   NOTE **The carbon monoxide detector and its fluids must not be exposed to cigarette smoke, exhausts, or similar.**

   WARNING! **Open the radiator cap carefully if the engine is warm. High pressure in the radiator may cause hot coolant to jet out.**

6. Open the radiator cap.
7. Install 9808038Leak detector over the opening on the expansion tank and pump 3–5 times with the rubber bulb to suck in air from the tank. Wait 10–15 seconds to see if the reaction fluid changes colour.

   NOTE **Coolant may not be sucked in to the carbon monoxide detector.**

   If the reaction fluid changes colour, it means that there is carbon monoxide in the cooling system. Often there are very small quantities in the machine's systems, and that is why the measurement should be repeated if the first measurement produces a reaction.
8. Suck fresh air in to 9808038Leak detector by pumping a few times on the rubber bulb. Pump until the reaction fluid has returned to its original colour.
9. Ventilate the air above the expansion tank.

   NOTE **Do not blow by exhaling since exhaled air contains carbon dioxide.**

   Repeat the test.
   Carbon monoxide in the coolant indicates that exhausts are forced into the cooling system. This may be due to leakage by a unit injector's copper sleeve, leaking cylinder head gasket, or cracks in the cylinder head. These defects may also cause low compression.

   To determine if compression is low, perform a compression test with VCADS Pro.

10. Reinstall the radiator cap.
    Stop the engine.

VOLVO
Construction Equipment

Service Information

Document Title:	Function Group:	Information Type: **Service Information**	Date: **12/10/2011**
Profile: **WLO, L90F (Volvo) [GB]**			

Radiator, removal

Op nbr 261-011

Sling, 1 m, 2 pcs.
Shackle, 2 pcs.
Lifting eye M12, 2 pcs.

1. Place the machine in service position. Se Safety rules when servicing
2. Remove the engine hood, see Engine hood, removing
   .
3. Remove the bottom plates (2) and the plate in the intermediate wall (1). Remove the middle plate (3).

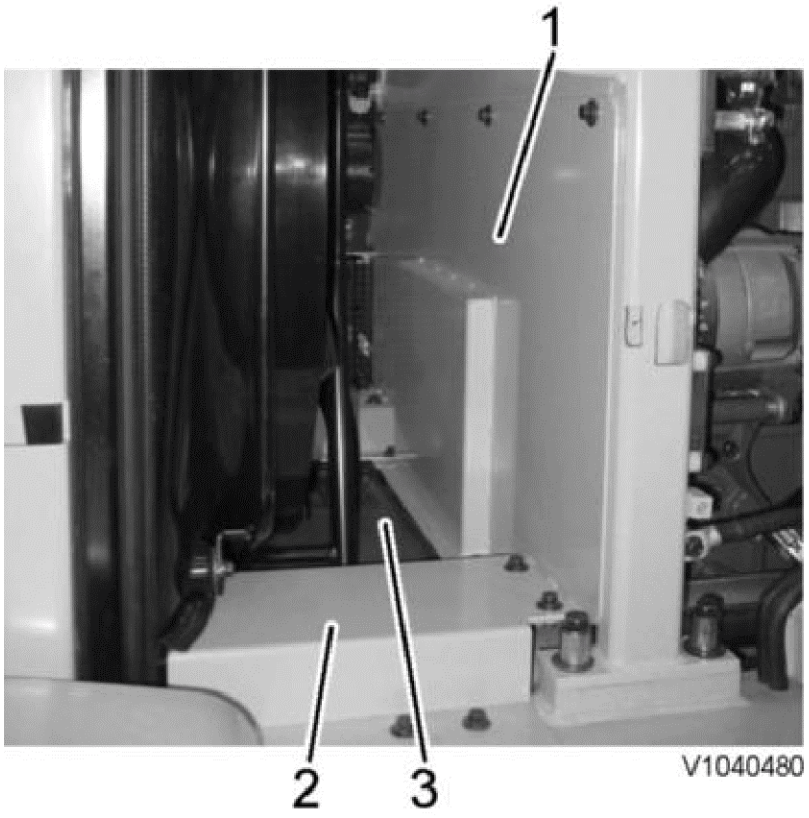

Figure 1

4. Caution!
   Refrigerant under pressure. Do not disconnect any hoses or connections on the air conditioning, thereby involuntary releasing refrigerant.

   Move aside the condenser without folding the AC hoses. Remove the plate.

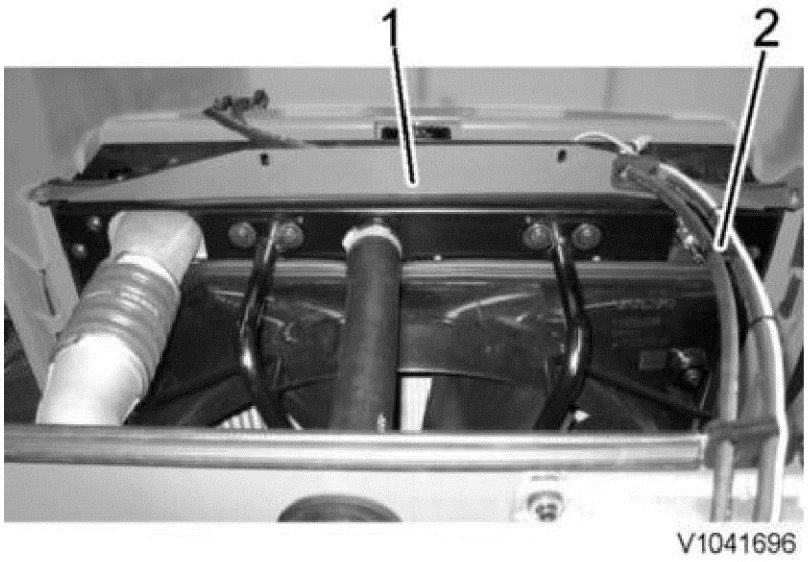

Figure 2

1. Plate
2. AC hoses

5. Remove the middle part on the upper charge-air pipe (1) and disconnect the upper radiator hose (2).
Remove the middle part on the lower charge-air pipe (3) and disconnect the lower radiator hose (4).
Plug the lower radiator opening.

NOTE **Coolant will leak out by the belly plate's sides. Place suitable containers under the machine.**

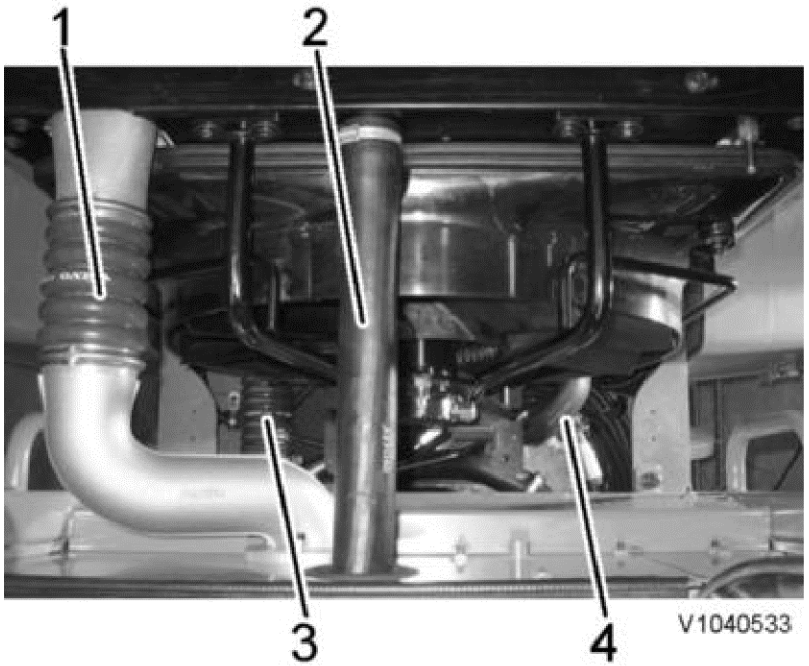

Figure 3

6. Disconnect the frame for the hydraulic oil cooler. Lay the frame on the counterweight without loosening the hose connections.
Disconnect the cable harness for connector RZ and fuse FH4. Unplug the connector for temperature sensor SE2602.

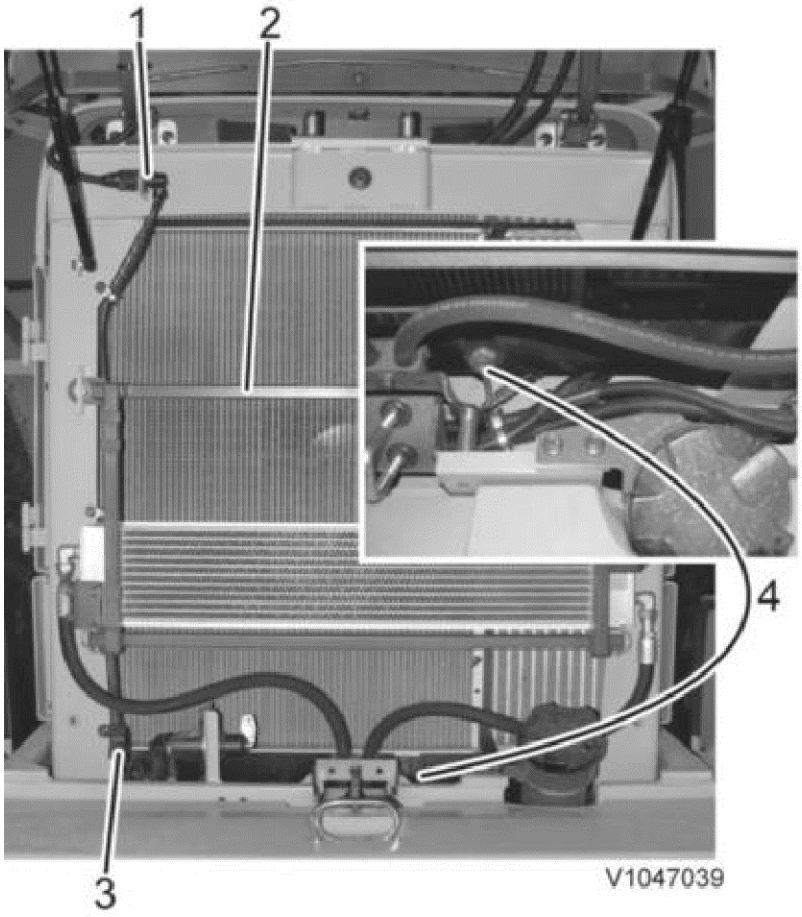

Figure 4

1. Connector RZ
2. Frame for hydraulic oil cooler
3. Fuse FH4
4. Temperature sensor SE2602

7. Connect the vacuum pump.
   See Hydraulic oil tank, setting vacuum, connecting and disconnecting pump

8. Disconnect the cable for the speed sensor (SE2601). Mark and disconnect the hydraulic hoses on the fan motor. Plug the connections. Turn off the vacuum pump.



Figure 5

1. Speed sensor SE2601

9. Secure the radiator housing.

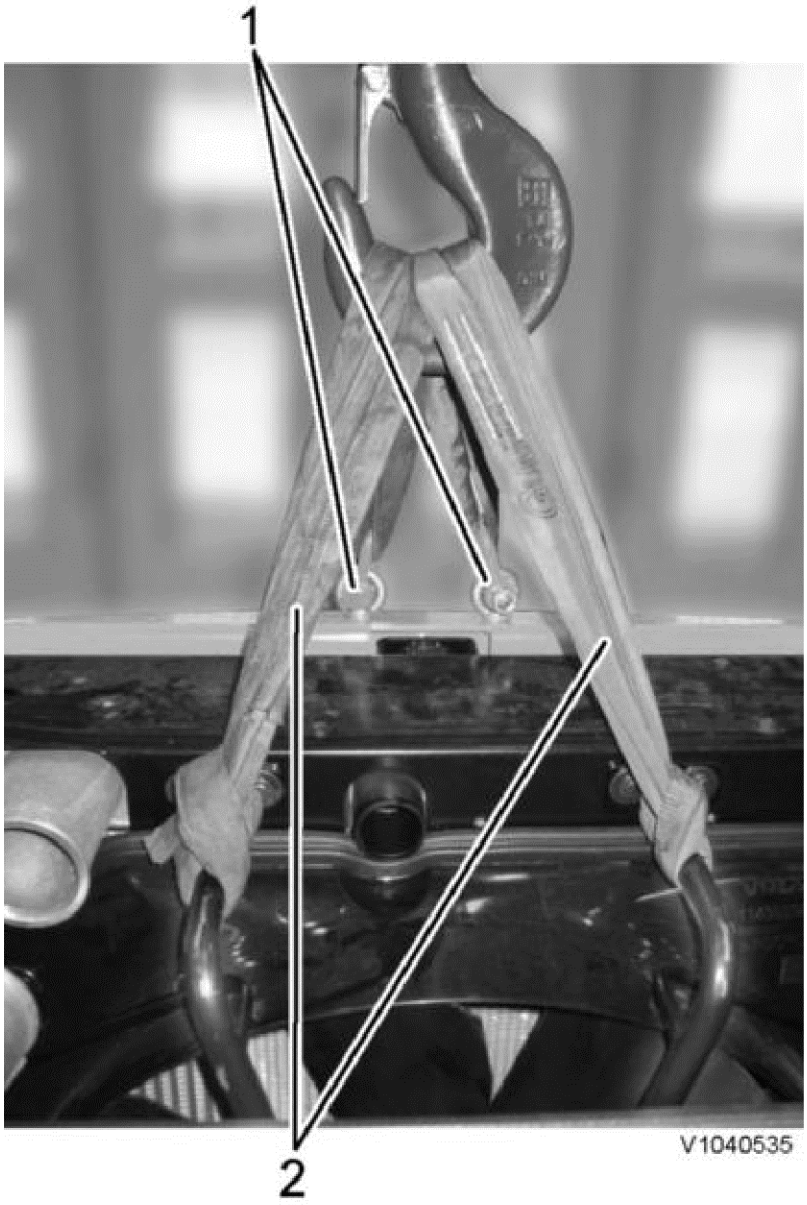

Figure 6

1. Lifting eye M12 (2 pcs.), shackle (2 pcs.)
2. Sling, 1 m, 2 pcs.

10. Remove the attaching bolts and lift away the radiator housing.
Weight approx.: **170 kg (375 lbs)**



V1040536

Figure 7

11. Lay the radiator housing on a flat surface with blocks underneath. Remove the lifting device.



V1040537

Figure 8

12. Remove the fan unit. Weight approx.: **30 kg (66 lbs)**

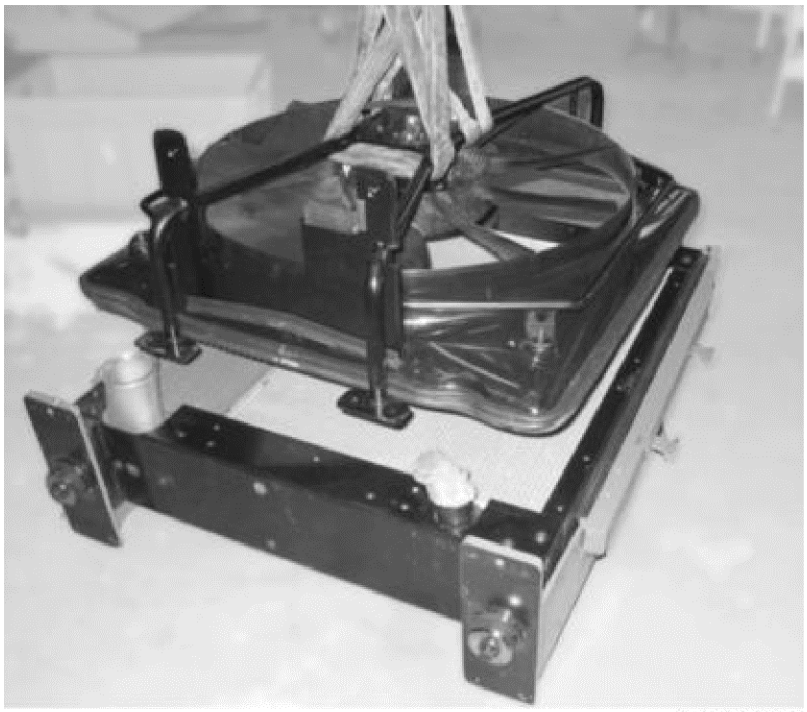

V1041678

Figure 9

13. Remove the end plates and attaching bolts for the radiator unit and lift to standing position. Weight approx.: **85 kg (187 lbs)**

14. Remove the radiator frame panels.

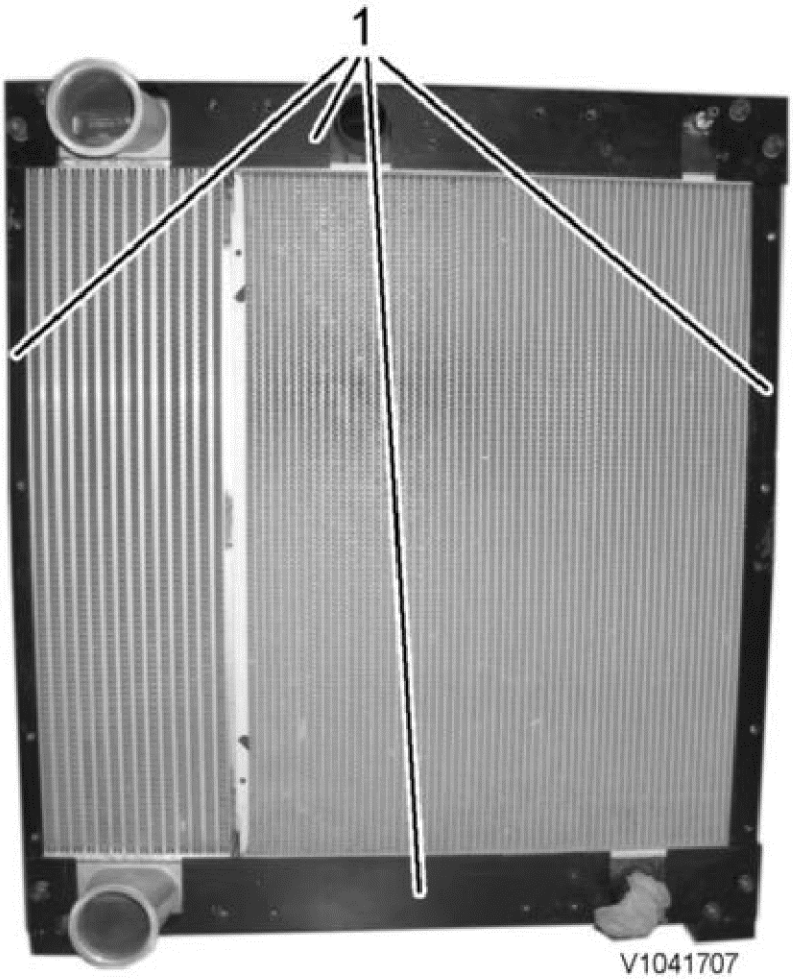

V1041707

Figure 10

1. Radiator frame panels

15. Disconnect the radiator from the frame.
16. Transfer required parts.

VOLVO
Construction Equipment

Service Information

Document Title:	Function Group:	Information Type: **Service Information**	Date: **12/10/2011**
Profile: **WLO, L90F (Volvo) [GB]**			

Cooling fan, description

The cooling fan is driven by hydraulic oil from P3 (Pump 3) , which also supplies hydraulic oil to the brake pressure charging. The brake pressure charging has priority. The cooling fan speed is controlled by the V-ECU, which receives signals from a number of temperature sensors about the temperature of the different systems. If cooling, i.e. increased cooling fan speed, is required, the V-ECU sends a current to PWM2601, which makes sure that the required hydraulic oil flow is supplied to the cooling fan.

When none of the temperature sensors requests increased cooling, the V-ECU will send sufficient voltage to PWM2601 to keep the fan at the so called basic speed.Kylfläktens varvtal, specifikation

The flow from P3 is conducted into the central valve via connection PF and is conducted on to the cooling fan via MA5502 and connection PFF. The pressure from the pump is also supplied to PWM2601 via a restriction. PWM2601 can, if the current is increased, close the connection to tank, and thereby create a higher LS-pressure. The flow from P3 varies with the LS-pressure and thereby also the cooling fan speed. The function is proportional. Through feed-back from the fan revolution sensor SE2601 the V-ECU receives information about whether the signal to PWM2601 has resulted in the correct fan speed.

To prevent the radiator from clogging up, the machine may be equipped with a reversible cooling fan, see Reversibel kylfläkt, beskrivning
[1] ⓘ .

See also Elschema 201
, Hydraulschema, komplett
, Kylsystem, beskrivning
, Bromssystem, beskrivning
.

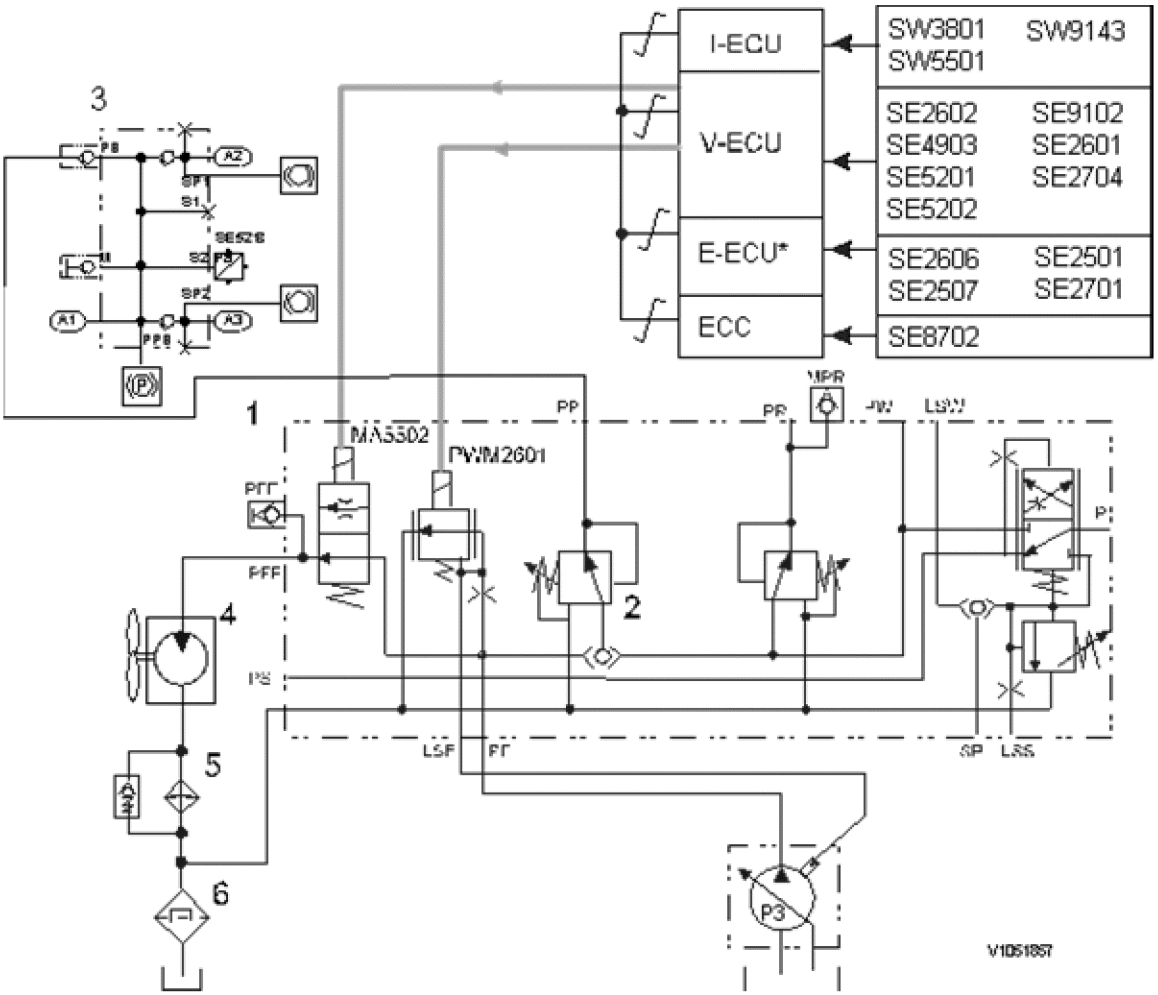

Figure 1
Cooling fan system

1 Central valve	SE2601 Cooling fan speed
2 Pressure reducing valve, brake	SE2602 Cooling circuit temperature, radiator outlet - Requests cooling
3 Brake accumulator block	SE2606 Coolant temperature, engine
4 Cooling fan motor	SE2701 Engine speed
5 Hydraulic oil cooler	SE2704 Engine speed
6 Filter	SE4903 Transmission oil temperature - Requests cooling if the engine has reached working temperature
MA5502 Brake pressure charging	SE5201 Axle oil temperature, front axle - Requests cooling
PWM2601 Control, cooling fan	SE5202 Axle oil temperature, rear axle - Requests cooling
SW3801 Keyboard	SE5205 Output brake pressure
SW5501 Parking brake	SE5218 Brake pressure charging, low brake pressure - Requests brake charging
SW9143 Attachment locking	SE8702 Temperature, evaporator
SE2501 Temperature, induction air	SE9102 Temperature, hydraulic oil tank - Requests cooling if the engine has reached working temperature
SE2507 Charge air temperature - Requests cooling	* Atmospheric pressure sensor

Software

NOTE **The brake charging has priority.**

Temperature control		
Input signals	**Conditions for output functions**	**Output functions**
o Cooling fan speed, SE2601 o Coolant temperature, SE2602 o Transmission oil temperature, SE4903 o Hydraulic oil temperature, SE9102 o Axle oil temperature front axle, SE5201 o Axle oil temperature rear axle, SE5202 o Coolant temperature engine, SE2606 o Charge air temperature, SE2507 o Temperature induction air, SE2501 o Engine On/Off o Engine speed, SE2701	o In order to determine which system controls the cooling fan speed, a fan coefficient, which is dependent on the temperature, has been introduced. See Temperaturgränser för kylfläktvarvtal, specifikation The value of the coefficient from the different sensors varies linearly between 0.0 and 1.0. The sensor, which sends the highest value, controls the requested cooling fan speed.	o Requested cooling fan speed within selected speed range o PWM2601 energised

The following applies in case of incorrect input signals:

Input signal	Assumed value in case of malfunction
Maximum cooling fan speed	2000 rpm
Coolant temperature	1 = 80 °C (176 °F)
Transmission oil temperature	0 = 90 °C (194 °F)
Hydraulic oil temperature	0 = 70 °C (158 °F)
Axle oil temperature, front axle	0 = 90 °C (194 °F)
Axle oil temperature, rear axle	0 = 90 °C (194 °F)
Coolant temperature, engine	1 = 95 °C (203 °F)
Charge air temperature	1 = 60 °C (140 °F)
Temperature induction air, SE2501	20 °C (68 °F)
Engine On/Off	On
Engine speed, SE2701	800 rpm

If any of the temperature sensors is not connected, the temperature is considered to be 0 °C

Fan control		
Input signals	**Conditions for output functions**	**Output functions**
o VCADS Pro parameter GDW o Requested cooling fan speed within selected speed range o Requested cooling fan speed with auxiliary brake o Requested cooling fan speed with reversible cooling fan o Requested cooling fan speed with AC	o The highest input signal requests increased fan speed for cooling o The maximum cooling fan pressure that can be requested is controlled by the current engine speed o Engine On	o Requested cooling fan pressure o PWM2601 energised

○ Requested cooling fan speed during sound test ○ Engine speed, SE2701 ○ Fan speed, SE2601 ○ Engine On/Off	○ Engine Off	○ Requested cooling fan speed = 0 ○ PWM2601 energised

The following applies in case of incorrect input signals:

Input signal	Assumed value in case of malfunction
Engine speed	Sufficiently high to permit the requested cooling fan speed
Requested cooling fan speed within selected speed range	2000 rpm
Requested cooling fan speed with auxiliary brake	0
Requested cooling fan speed with reversible cooling fan	-
Requested cooling fan speed with AC	0
Requested cooling fan speed during sound test	0
Engine On/Off	On
Fan speed, SE2601	Requested cooling fan speed

Output hydraulic pressure, checking		
Input signals	**Conditions for output functions**	**Output functions**
○ Pressure test cooling fan pump requested ○ Requested pressure for cooling fan ○ Requested brake charging pressure ○ Requested attachment locking pressure ○ Requested pressure for hydraulic oil warming ○ Engine On/Off [T1] ○ Atmospheric pressure (sensor positioned in E-ECU) ○ Coolant temperature engine, SE2606 ○ Possible load at current engine speed ○ Position switch parking brake	○ Position switch parking brake Released	○ Hydraulic valve brake pressure charging On ○ Pressure control valve = requested pressure ○ PWM2601 energised
	○ Requested brake charging pressure is not 0 or ○ Requested attachment bracket locking pressure is not 0 or ○ Requested pressure for hydraulic oil heating is not 0	
	○ Pressure test cooling fan pump requested On or ○ Requested pressure for cooling fan is not 0	○ Hydraulic valve brake pressure charging Off ○ Pressure control valve = requested pressure ○ PWM2601 energised

[T1] To avoid overloading the engine, brake pressure charging is delayed, when Engine changes over to On

The following applies in case of incorrect input signals:

Input signal	Assumed value in case of malfunction
Pressure test cooling fan pump requested	Off
Requested pressure for cooling fan	18 MPa (2610 psi)
Requested brake charging pressure	18 MPa (2610 psi)
Requested attachment locking pressure	0
Requested pressure for hydraulic oil warming	0
Engine On/Off	On
Atmospheric pressure (sensor positioned in E-ECU)	0.09 MPa (13 psi)
Coolant temperature engine, SE2602	40 °C

Percentage loading at current engine speed	Not 0 %
Position switch parking brake	Released

Cooling fan mode (reference)		
Input signals	**Conditions for output functions**	**Output functions**
○ VCADS Pro parameter GDR = A ○ VCADS Pro parameter GDR = B ○ VCADS Pro parameter GDR=C ○ VCADS Pro parameter GDR = 0	Low sound level	○ Maximum cooling fan speed within selected speed range ○ PWM2601 energised
	Standard cooling	
	Maximal cooling	
	Cooling fan Off	○ Maximum cooling fan speed incorrect ○ Maximum cooling fan speed within selected speed range incorrect ○ Check Parameter error Check setting of parameter GDR

In case of a fault with the input signals, Maximum cooling fan speed is considered to be incorrect.
In case of a fault with the input signals, Maximum cooling fan speed within selected speed range is considered to be incorrect.

Cooling fan, sound test		
Input signals	**Conditions for output functions**	**Output functions**
○ Maximum cooling fan speed within selected speed range ○ Sound test requested On/Off	○ Sound test requested via the display unit, which leads to Sound test requested On	○ Requested cooling fan speed for sound test = 70 % of Maximum cooling fan speed within selected speed range
	○ Sound test requested Off	○ Requested cooling fan speed for sound test = 0 % of Maximum cooling fan speed within selected speed range

In case of a fault with the input signal Sound test requested, it is considered to be Off.
In case of a fault with the input signal Maximum cooling fan speed within selected speed range, Sound test requested is considered to be Off.

Auxiliary brake (engine braking) [T1] ⓘ		
Input signals	**Conditions for output functions**	**Output functions**
○ VCADS Pro parameter HWT ○ Maximum cooling fan speed ○ Directional status ○ Gear selector position ○ Engine speed, SE2701	**General conditions for the function:** ○ VCADS Pro parameter HWT not 0	
	○ Engine speed higher than 1400 rpm	○ Requested cooling fan speed with auxiliary brake = Maximum cooling fan speed
	○ Engine speed lower than 1400 rpm	○ Requested cooling fan speed with auxiliary brake = 0

[T1] The function prevents upshifting when the machine is driven downhill.

In case of a fault with any of the input signals, requested cooling fan speed with auxiliary brake will be = 0.

---

[1] Optional equipment

VOLVO
Construction Equipment

Service Information

Document Title:	Function Group:	Information Type: **Service Information**	Date: **12/10/2011**
Profile: **WLO, L90F (Volvo) [GB]**			

Reversible cooling fan, description

To prevent the radiator from clogging up, the machine may be equipped with a reversible cooling fan. With the reversible valve block it is possible to change which side is to be the pressure side and which is to be the return side on the cooling fan. Thereby, it is possible to change the direction of rotation of the cooling fan.

The valve block for the reversible cooling fan consists of four pressure-controlled directional valves and two solenoid valves:

- When MA2601 is activated, all directional valves are drained, causing the flow from Pump 3 to be conducted to tank and the fan slows down or stops.
- MA2602 controls the direction of flow to the fan

See also Kylfläkt, beskrivning

.

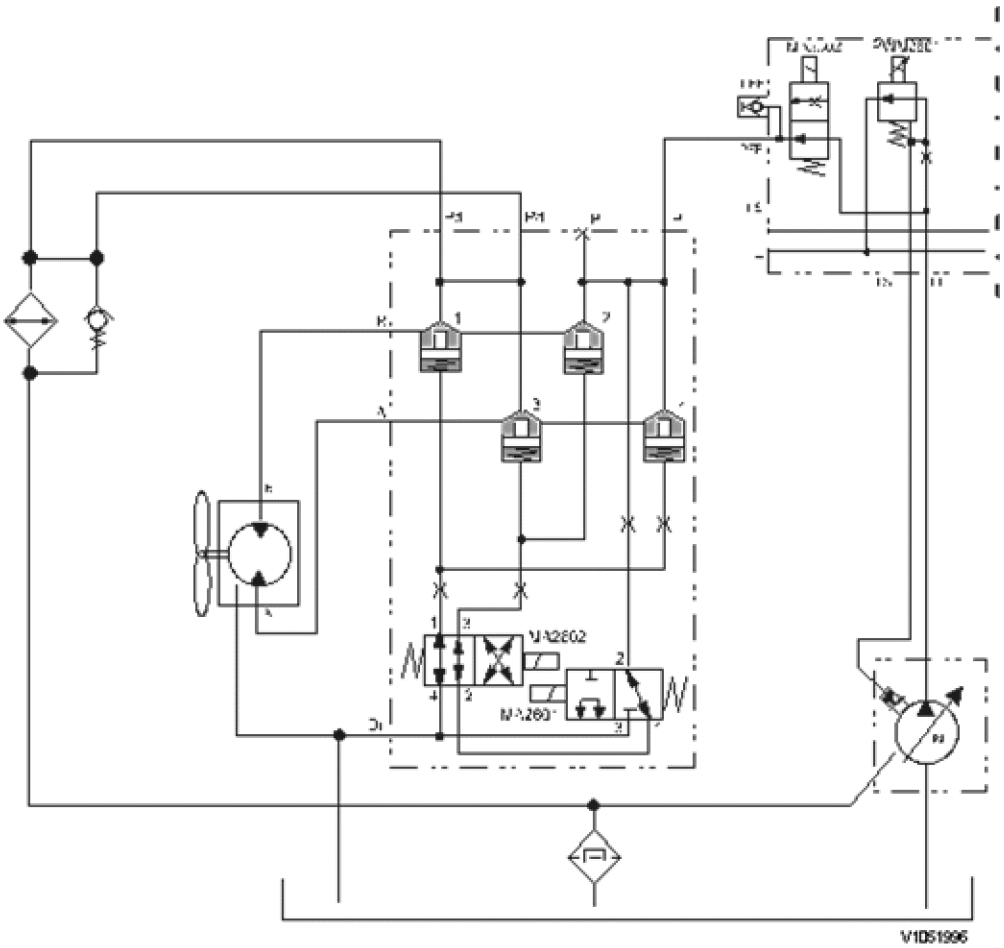

Figure 1

The reversible cooling fan works in different phases:

1. **Normal phase**
   The hydraulic oil enters the valve block via connection P. Part of the flow is diverted via a restriction and via

MA2601 to MA2602. When MA2602 is not activated, a control pressure is conducted to the back of directional valves 2 and 3, which then are kept closed. The back of directional valves 1 and 4 are drained. The hydraulic oil from connection P opens directional valve 4 and flows on through directional valve 3 to the cooling fan. The return oil from the cooling fan opens directional valve 1 and the hydraulic oil is conducted to the hydraulic oil cooler and the hydraulic oil tank.

2. **Retardation phase**
   The V-ECU lowers the current to PWM2601 and the flow from P3 reduces. MA2601 is activated and the back of all directional valves is drained to tank. The hydraulic oil flow is conducted directly to tank via the directional valves. Because of the inertia of the cooling fan, the lowering of the speed takes place slowly. The retardation phase lasts until the speed of the cooling fan has dropped to 100 rpm or 13 seconds have passed.
3. **Reversing phase**
   MA2602 is activated and MA2601 is deactivated. The pressure is conducted to the back of dirctional valves 1 and 4, which close. The back of directional valves 2 and 3 are drained to tank. The V-ECU raises the current to PWM2601 to maximum. Oil from connection P opens directional valve 2 and the flow is conducted on through the directional valve 1 to the cooling fan. The return oil from the cooling fan opens directional valve 3 and the hydraulic oil is conducted to the hydraulic oil cooler and the hydraulic oil tank.
4. **Return phase**
   The V-ECU lowers the current to PWM2601 and the flow from P3 reduces. MA2601 is activated and the back of all directional valves is drained to tank. The hydraulic oil flow is conducted directly to tank via the directional valves. Because of the inertia of the cooling fan, the lowering of the speed takes place slowly. The retardation phase lasts until the speed of the cooling fan has dropped to 100 rpm or 13 seconds have passed. MA2602 and MA2601 are deactivated and the reversible cooling fan is now in Normal phase.

Software

<table>
<tr><th colspan="3">Reversible cooling fan</th></tr>
<tr><th>Input signals</th><th>Conditions for output functions</th><th>Output functions</th></tr>
<tr><td rowspan="4">o VCADS Pro parameter GEI
o VCADS Pro parameter GEJ
o VCADS Pro parameter GEK
o VCADS Pro parameter GEL
o VCADS Pro parameter GEM
o VCADS Pro parameter GEN
o VCADS Pro parameter GEO
o Maximum cooling fan speed
o Pressure test cooling fan pump requested On/Off</td><td>General conditions for the function:
o GEI = 1
o GEJ = MANUAL, SHORT or LONG
o GEK = 60–180 seconds
o GEL = 20–180 seconds
o GEL = 20–180 seconds
o GEM = 15–180 minutes
o GEN = 20–180 seconds
o GEO = 15–180 minutes
o Engine On
o Hydraulic oil temperature above 0 °C (32 °F)</td><td>o MA2601 ON/OFF
o MA2602 ON/OFF
o requested fan speed
o Fan is reversing TRUE/FALSE</td></tr>
<tr><td rowspan="3">o Sound test requested On/Off
o Engine On/Off
o Reversible cooling fan Manual reversing On/Off</td><td>o Retardation phase
o Charge air temperature above 90 °C (194 °F)
o Auxiliary brake requested</td><td>No reversal</td></tr>
<tr><td rowspan="2">o Charge air temperature, SE2507
o Hydraulic oil temperature, SE9102</td><td>o Return phase
o Charge air temperature above 90 °C (194 °F)
o Auxiliary brake requested</td><td>o MA2601 deactivated
o PWM2601 receives maximum current</td></tr>
<tr><td>o Cooling fan speed, SE2601
o Control cooling fan, PWM2601
o Requested cooling</td><td>o Reversing phase
o Pressure test cooling fan pump requested On
o Sound test On</td><td>o Reversing is interrupted and returns to Normal phase</td></tr>
</table>

fan speed with auxiliary brake o Raised cooling fan speed with AC requested	o Raised cooling fan speed with AC requested TRUE	
o Monitoring MA2601 o Monitoring MA2602	o Faulty signal, see Diagnostics	o Check Cooling fan reversal failure

The following applies in case of faulty input signals:

Input signal	Assumed value in case of a fault
VCADS Pro parameter GEI	"OFF"
VCADS Pro parameter GEJ	"OFF"
Pressure test cooling fan pump requested	Off
Sound test requested	Off
Raised cooling fan speed with AC requested	False
Reversible cooling fan Manual reversing On/Off	"OFF"
Charge air temperature, SE2507	<90 °C
Engine On/Off	On
Cooling fan speed, SE2601	>100 rpm
Maximum cooling fan speed	2000 rpm
Requested cooling fan speed with auxiliary brake	0 r/min
Hydraulic oil temperature, SE9102	<0 °C
Control cooling fan, PWM2601	0 MPa

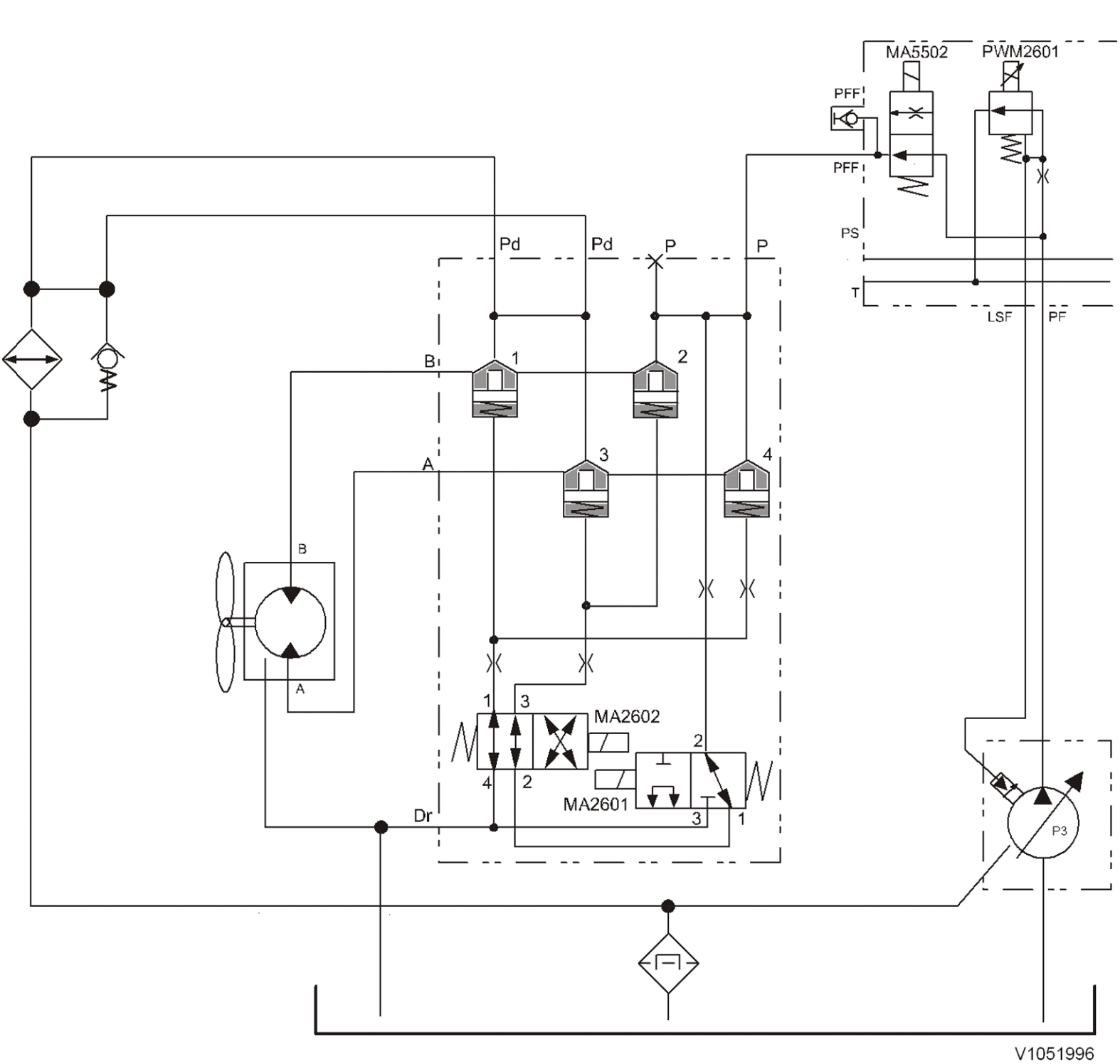
MA5502
PWM2601
PFF
PFF
PS
T
LSF
PF
Pd
Pd
P
P
B
1
2
A
3
4
B
A
1
3
MA2602
4
2
2
MA2601
3
1
Dr
P3
V1051996

VOLVO
Construction Equipment

Service Information

Document Title:	Function Group:	Information Type: **Service Information**	Date: **12/10/2011**
Profile: **WLO, L90F (Volvo) [GB]**			

Cooling fan motor, description

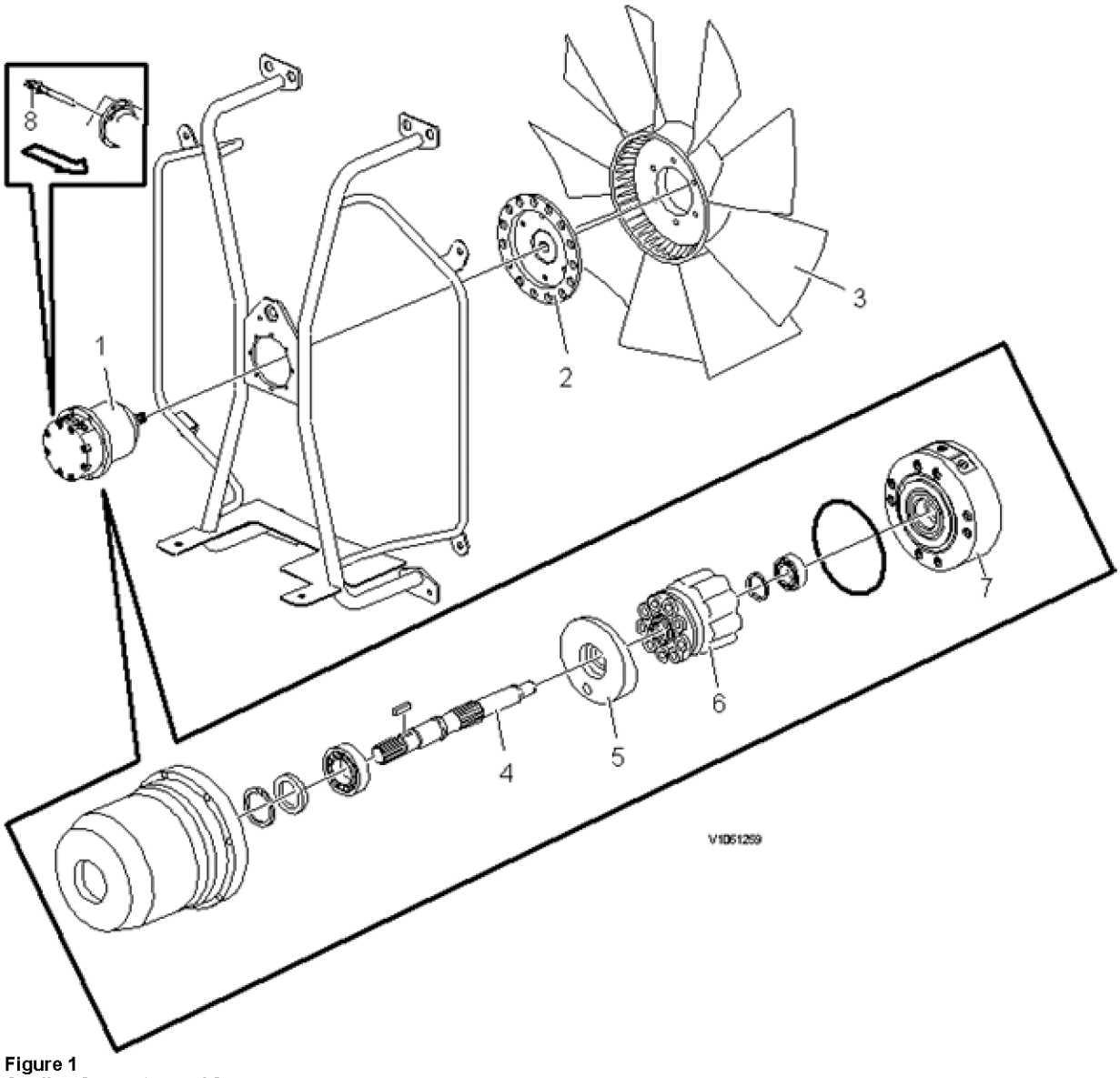

Figure 1
Cooling fan motor and fan

1. Cooling fan motor
2. Fan hub
3. Fan
4. Shaft
5. Control plate
6. Pump element
7. End plate
8. SE2601, speed sensor, cooling fan

VOLVO
Construction Equipment

Service Information

Document Title:	Function Group:	Information Type: **Service Information**	Date: **12/10/2011**
Profile: **WLO, L90F (Volvo) [GB]**			

Cooling fan, component location

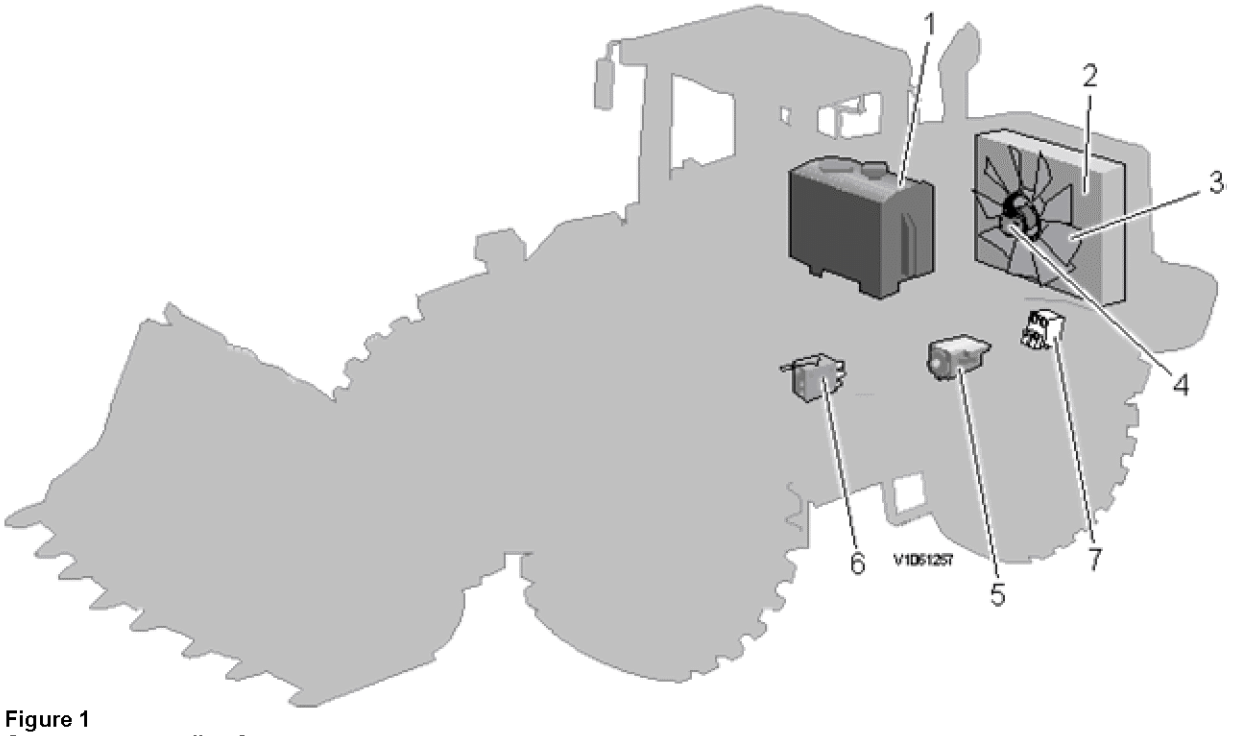

Figure 1
Components, cooling fan system

1. Hydraulic oil tank
2. Hydraulic oil cooler
3. Cooling fan
4. Fan motor
5. Hydraulic pump P3
6. Central valve
7. Valve block, reversible cooling fan, [1] ⓘ MA2601, MA2602

For description of components, see

- Hydraulic oil tank, description
- Cooling fan motor, description
- Hydraulic pumps, description
- Central valve, description
- Reversible cooling fan, description

[1] Optional equipment

VOLVO
Construction Equipment

Service Information

Document Title:	Function Group:	Information Type: **Service Information**	Date: **12/10/2011**
Profile: **WLO, L90F (Volvo) [GB]**			

Fan control valve, removing

Op nbr 263-071

14360000 Vacuum pump / 24V

Plug 935756
Plug 935650
Plug 935574, 5 pcs
Plug 935486, 5 pcs

1. Place the machine on level ground and position blocks in front of and behind the wheels.
2. Connect the vacuum pump according to Hydrauloljetank, vakuumsättning, inkoppling och urkoppling av pump
.
3. Open the cover for the engine compartment on the left side of the machine.
Remove the cover plate below the cover for the engine compartment.
4. Mark and disconnect the hoses from the directional valve.
Plug the hoses and the connections.
5. Turn off the vacuum pump.
6. Detach the connectors from PWM2602 (inner) and PWM2601 (outer).

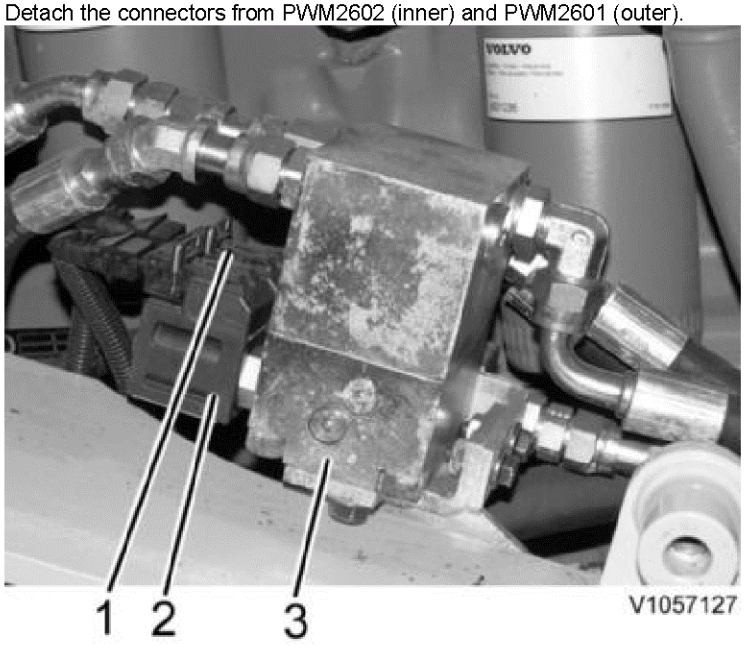

Figure 1

1. PWM2601
2. PWM2602
3. Directional valve

7. Remove the bolts retaining the directional valve and remove the directional valve.

VOLVO
Construction Equipment

Service Information

Document Title:	Function Group:	Information Type: **Service Information**	Date: **12/10/2011**
Profile: **WLO, L90F (Volvo) [GB]**			

Fan control valve, seal replacement

Op nbr 263-072

Plug 935756
Plug 935650
Plug 935574, 5 pcs
Plug 935486, 5 pcs

1. Remove the solenoids.

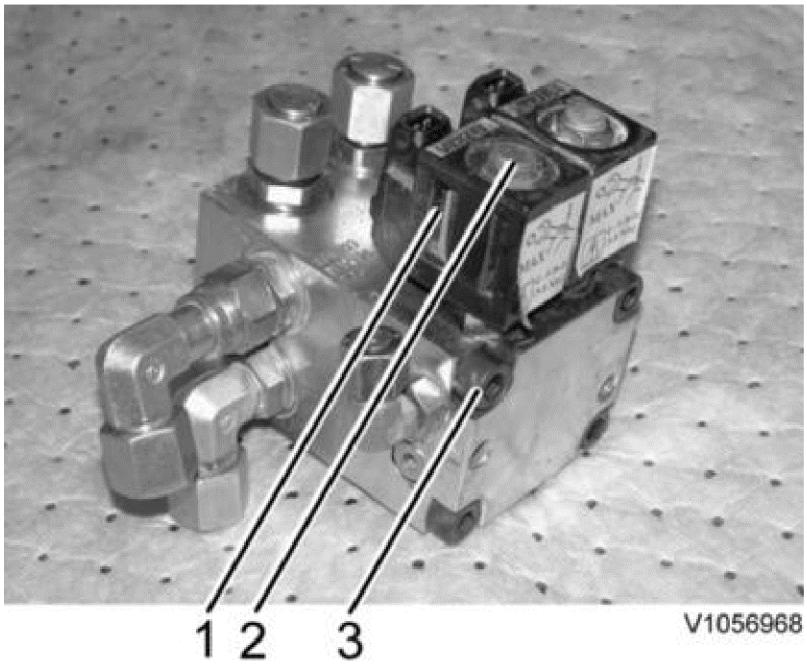

Figure 1

1. Solenoid
2. Valve
3. Bolt

Remove the valves.
Remove the four bolts, which keep the directional valve together, and part the valve.

2. Replace all support rings and O-rings on the spools and the O-rings between the directional valve halves.

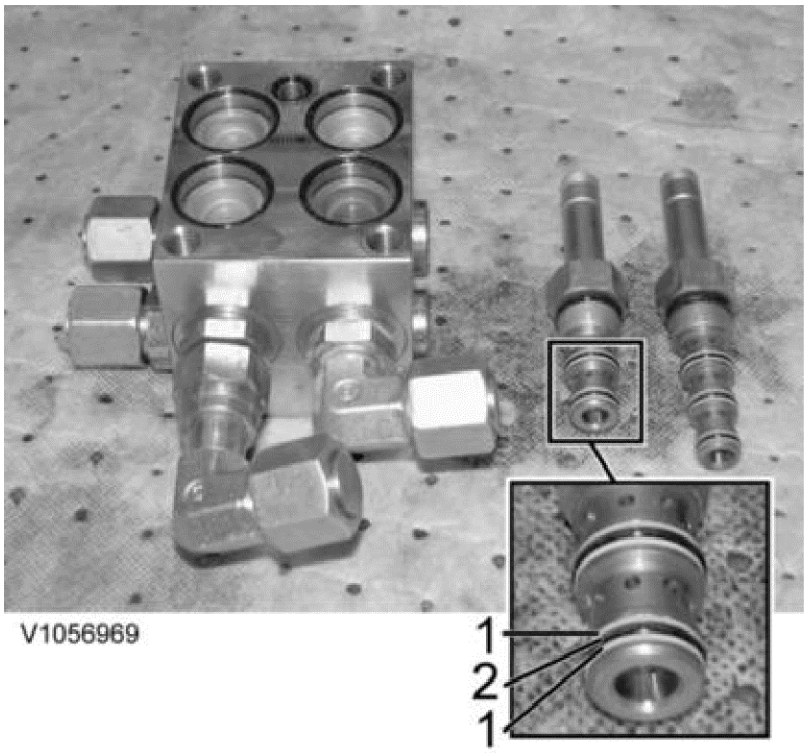

Figure 2

1. Support ring
2. O-ring

3. Assemble the directional valve.
Install the valves.

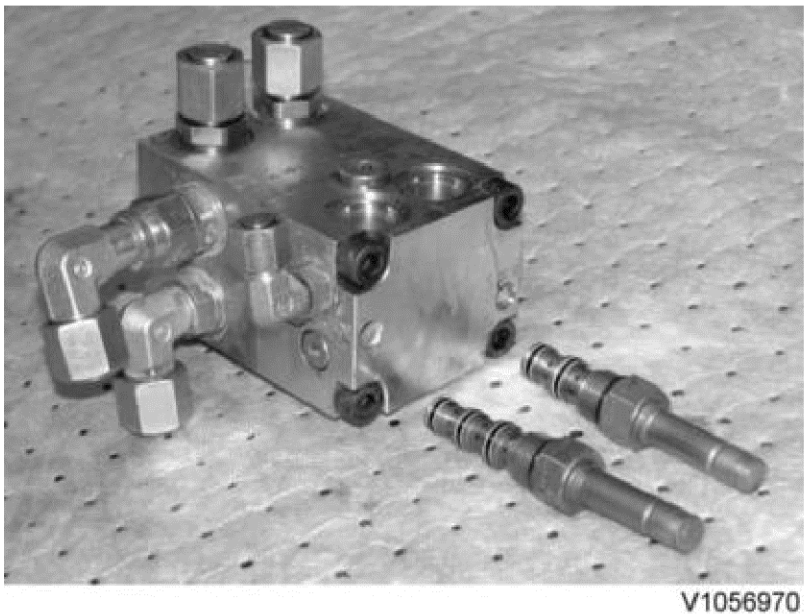

Figure 3

Install the solenoids and the nuts.
Tightening torque nuts, see Reversibel kylfläkt
.

VOLVO
Construction Equipment

Service Information

Document Title:	Function Group:	Information Type: **Service Information**	Date: **12/10/2011**
Profile: **WLO, L90F (Volvo) [GB]**			

Cooling fan hydraulics, funktion check

Op nbr 263-051

14290266 Hose
11666051 Pressure gauge

The cooling fan circuit and the brake charging circuit have many components in common and, if any of these components are faulty, both systems may be affected. It is therefore advisable to treat both systems as one when checking. Any error messages should be rectified first.

Carry out the checks in the following order:

1. Check the stand-by pressure according to Pump 3 (P3), kontroll av hålltryck
   .
2. Check the maximum pressure according to Pump 3 (P3) Kylfläktpump/Bromspump Kylfläkt, kontroll maxtryck
   .
3. Check the brake system according to Bromssystem, funktionskontroll hydraulik

VOLVO
Construction Equipment

Service Information

Document Title:	Function Group:	Information Type: **Service Information**	Date: **12/10/2011**
Profile: **WLO, L90F (Volvo) [GB]**			

Fan control valve, installing

Op nbr 263-073

14360000 Vacuum pump / 24V

Plug 935756
Plug 935650
Plug 935574, 5 pcs
Plug 935486, 5 pcs

1. Install the directional valve together with the attaching bolts.

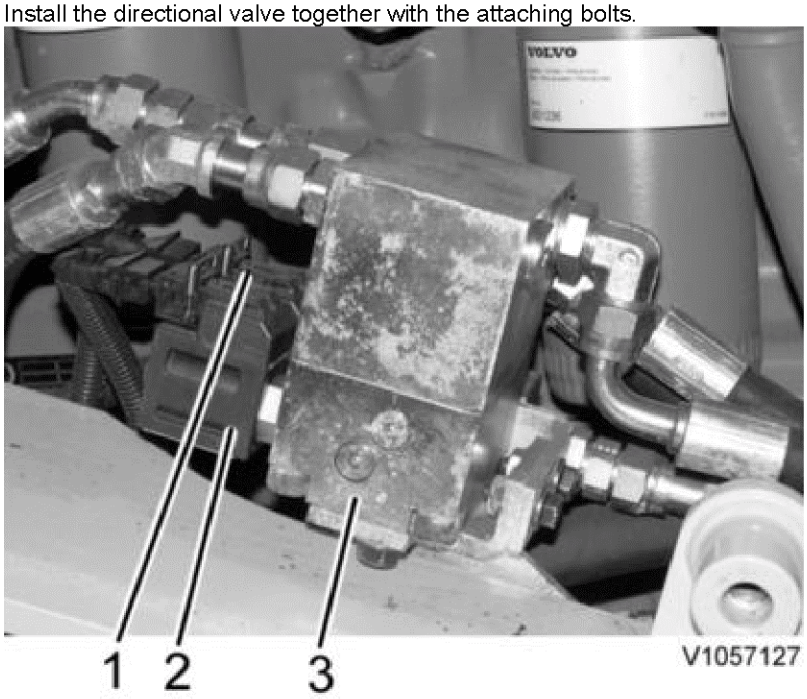

Figure 1

1. PWM2601
2. PWM2602
3. Directional valve

Remove the plugs and connect the hoses to the directional valve.
Connect the connectors to PWM2601 and PWM2602.

2. Install the cover plate below the cover for the engine compartment.
3. Close the cover for the engine compartment.

VOLVO
Construction Equipment

Service Information

Document Title:	Function Group:	Information Type: **Service Information**	Date: **12/10/2011**
Profile: **WLO, L90F (Volvo) [GB]**			

Pump 3 (P3) standby pressure, checking and adjusting (LS-line removed)

Op nbr 263-011

14290266 Hose
11666052 Pressure gauge

Part no. 935750 Plug

The stand-by pressure with disconnected LS-line is a product of the setting on the flow compensator. The stand-by pressure is normally not checked or adjusted unless a malfunction has occurred in the fan/brake charging circuit.

1. Lock the frame joint with the frame joint lock. Place blocks in front of and behind the wheels.

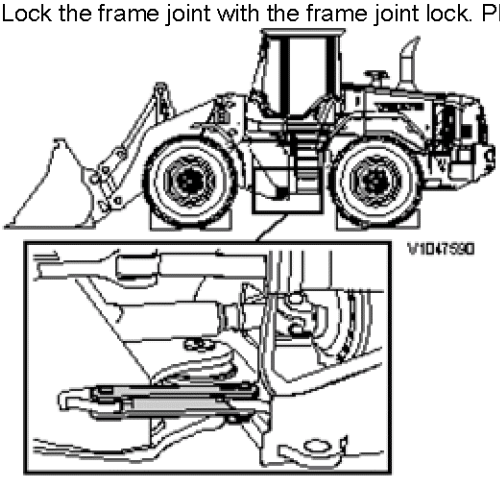

Figure 1

Checking

2. Open the left engine cover and remove the side panel.
Disconnect the LS-hose from P3. Plug the hose. Collect any oil from the disconnected hose end in a suitable container.
Connect the pressure gauge to the measuring connection marked "PFF" on the central block.
To avoid interference with the measurement from brake charging, unplug the connector for MA5502.

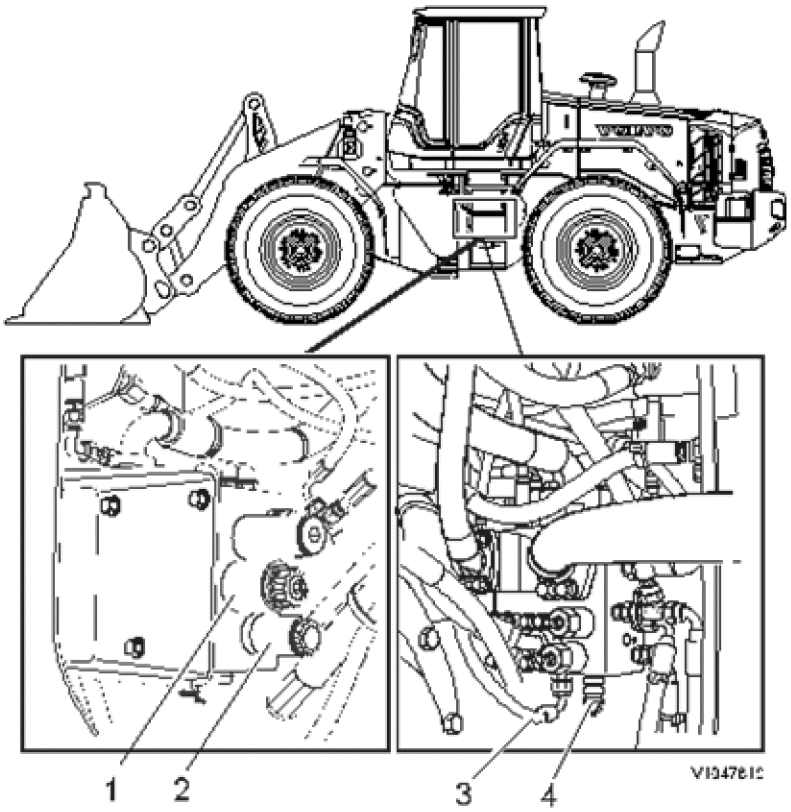

Figure 2

1. MA2601 (not affected)
2. MA5502
3. LS-hose (not affected)
4. Pressure check connection

3. Warm up the machine until the hydraulic system is at operating temperature.

4. Read off the stand-by pressure for the cooling fan at high idle speed.
Stand-by pressure, see Hydraulpump (P3), specifikation
.

Adjustment

5. Adjust the stand-by pressure on the flow compensator (1).

NOTE **Adjust the stand-by pressure with the engine off.**

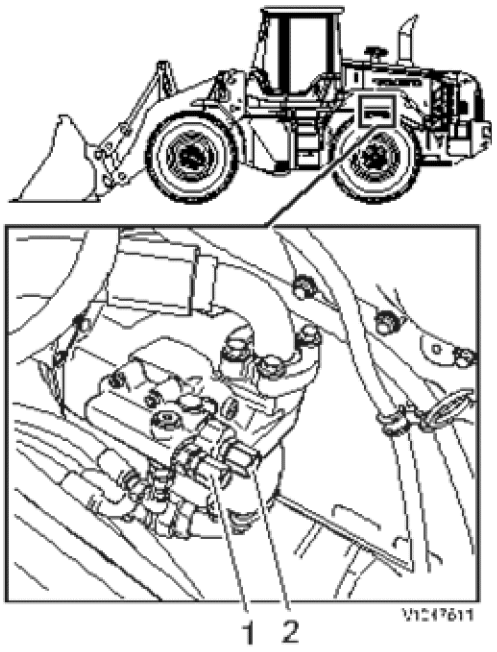

Figure 3

1. Flow compensator
2. Pressure compensator
3. LS-hose, plugged with plug, part no. 935750

NOTE **If the pressure cannot be adjusted, it may be due to a defective flow compensator.**

6. Remove the pressure gauge.
7. Plug in the connector for MA5502. Install the LS-hose on P3.
8. Restore the machine to operating condition.

VOLVO
Construction Equipment

Service Information

Document Title:	Function Group:	Information Type: **Service Information**	Date: **12/10/2011**
Profile: **WLO, L90F (Volvo) [GB]**			

Pump 3 (P3), max pressure and fan speed, checking and adjusting

Op nbr 263-021

11666051 Pressure gauge
14290266 Hose

Output pressure, checking

1. Warm up the machine until the hydraulic systems have reached operating temperature, approx. 60–80 °C (140–176 °F).
   Check and when necessary adjust the stand-by pressure on P3, see Pump 3 (P3) standby pressure, checking and adjusting
   .
2. Lock the frame joint with the frame joint lock. Place blocks in front of and behind the wheels.

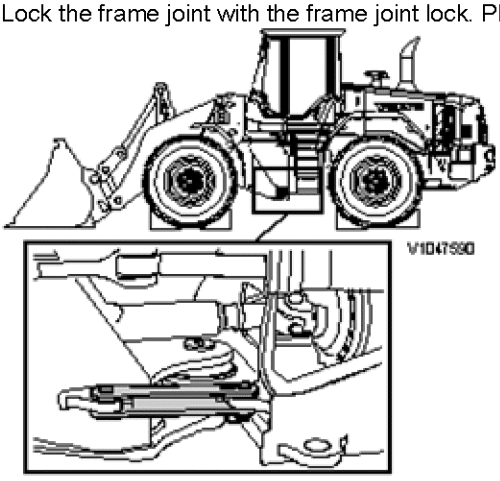

Figure 1

3. Connect the pressure gauge to the checking point (4) on the central valve.

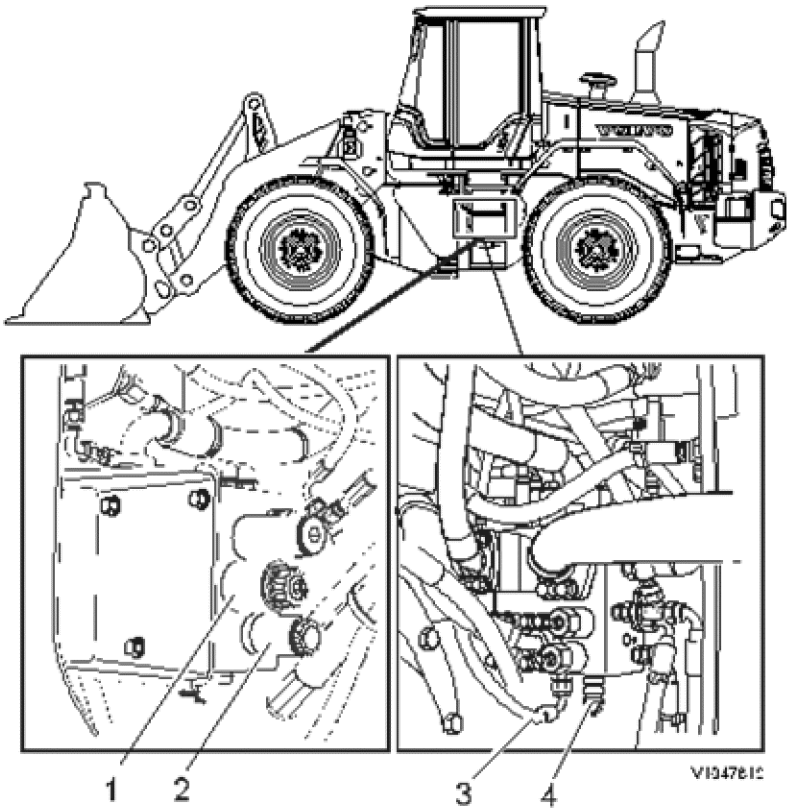

Figure 2

1. PWM2601
2. MA5502 (is not affected)
3. LS-line (is not affected)
4. Checking point

4. Turn the ignition key to position 1.
5. Keep button 8, service, on the keyboard pressed in for approx. 4 seconds.

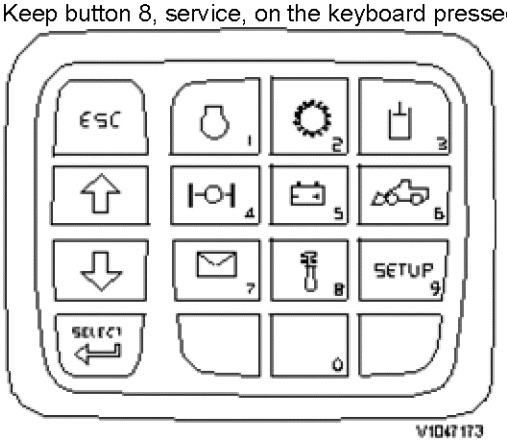

Figure 3
Keyboard

Information
Go toService mode No ESC Yes ⏎

6. In respons to the question if you want to enter Service mode, press Select.
7. Start the engine.
8. Find Test and press Select.

9. Find Pressure test fan pump in the menu and press Select.

Pressure test fan pump
Engine rpm xxxx rpm Fan rpm xxxx rpm

10. Read off the fan revolutions at high idling, see Hydraulpump (P3), specifikation
.

11. Read off the maximum pressure for the cooling fan, see Hydraulpump (P3), specifikation
.

Maximum pressure, adjusting

12. Open the left engine cover.

13. Adjust the maximum pressure on the pressure compensator (2). A quarter of a turn of the adjusting screw corresponds to approx. 1.2 MPa (12 bar) (174 psi), see Hydraulpump (P3), specifikation
.

NOTE **The engine must be turned off when adjusting.**

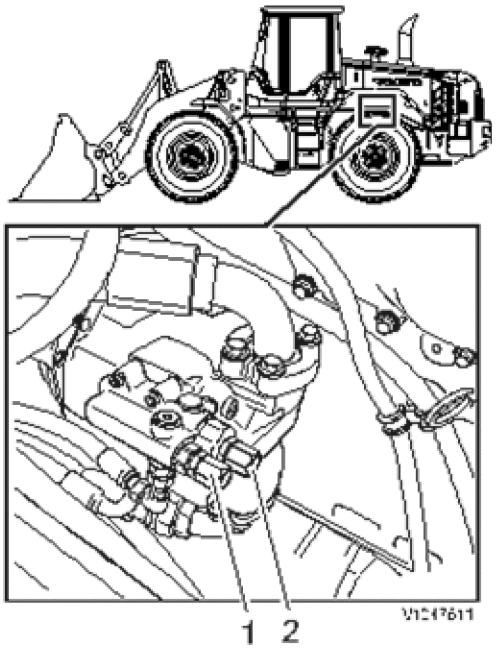

Figure 4

1. Flow compensator
2. Pressure compensator

14. If adjusting does not help, the central valve and PWM2601 must be checked.

15. Restore the machine.

VOLVO
Construction Equipment

Service Information

Document Title:	Function Group:	Information Type: **Service Information**	Date: **12/10/2011**
Profile: **WLO, L90F (Volvo) [GB]**			

Cooling fan motor, changing

Op nbr 263-062

14360000 Vacuum pump / 24V
9809685 Cable

Puller Kukko 17–2
Bolt M10 (60 mm) 2 pcs.
Nut M10, 2 pcs.

Removing

1. Place the machine in service position, see Safety rules when servicing
2. Open the hood covers and grating covers. Remove the lower side gratings.

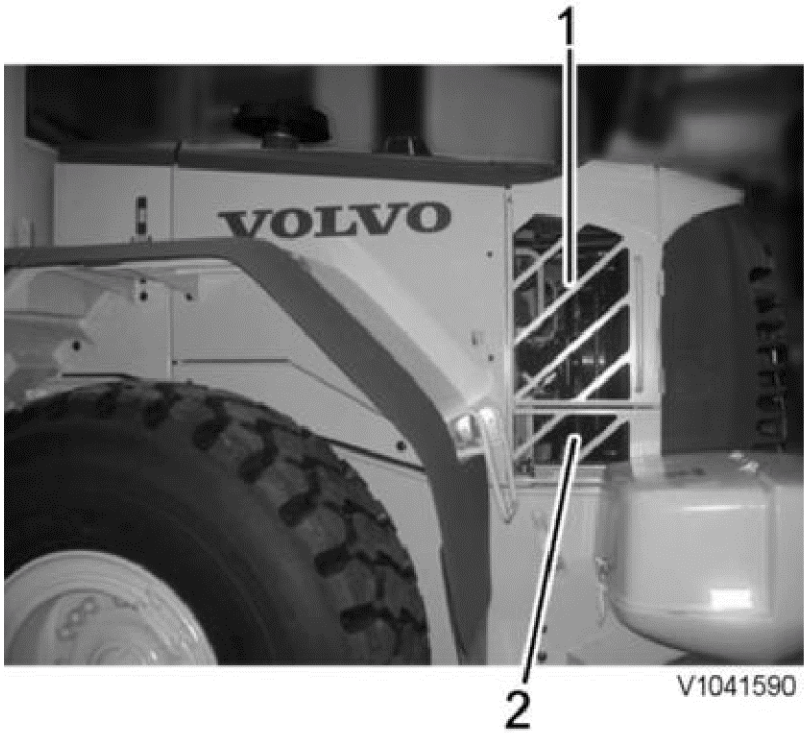

Figure 1

1. Cover
2. Side grating

3. Remove the plates.

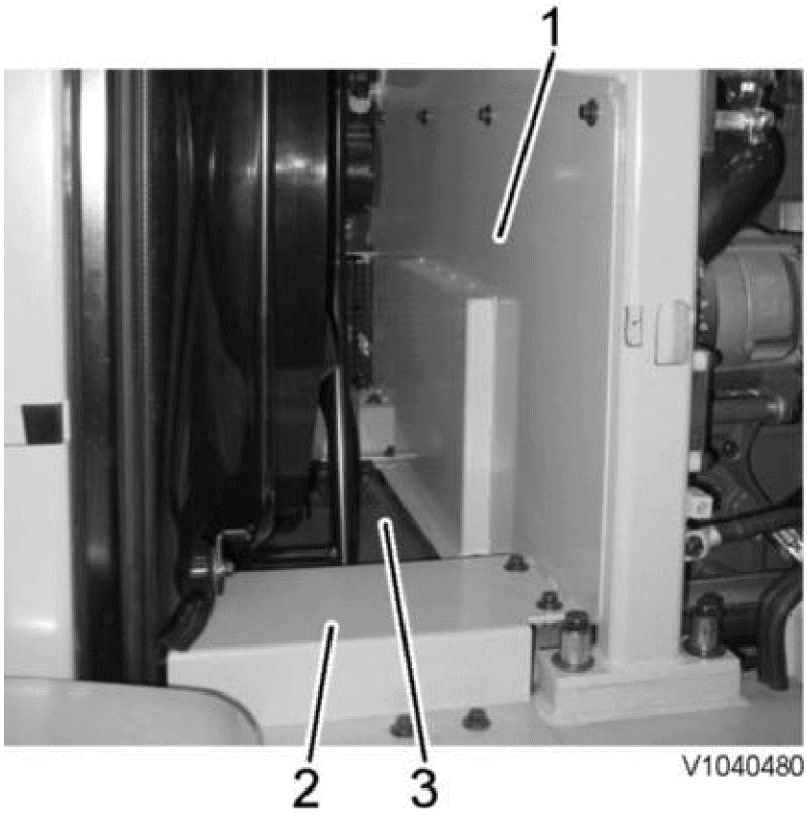

Figure 2

1. Plate in intermediate wall
2. Bottom plate, 2 pcs.
3. Bottom plate, fan bracket.

4. Connect the vacuum pump, see Hydraulic oil tank, setting vacuum, connecting and disconnecting pump

5. Mark positions of the hydraulic oil hoses. Disconnect and plug the hydraulic hoses. Disconnect the connection on the speed (rpm) sensor and remove the sensor.
Turn off the vacuum pump.



Figure 3

1. Speed sensor

6. Disconnect the stays for the fan motor and fan shroud and angle it forward.



Figure 4

1. Stay

7. Remove the lock pin, the nut and washer from the hub.

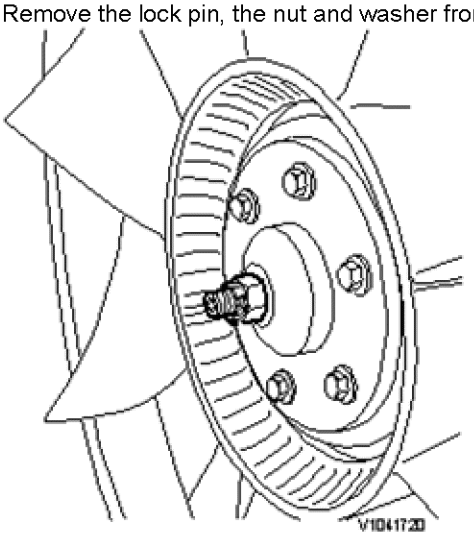

Figure 5

8. Disconnect the fan motor from the stay.

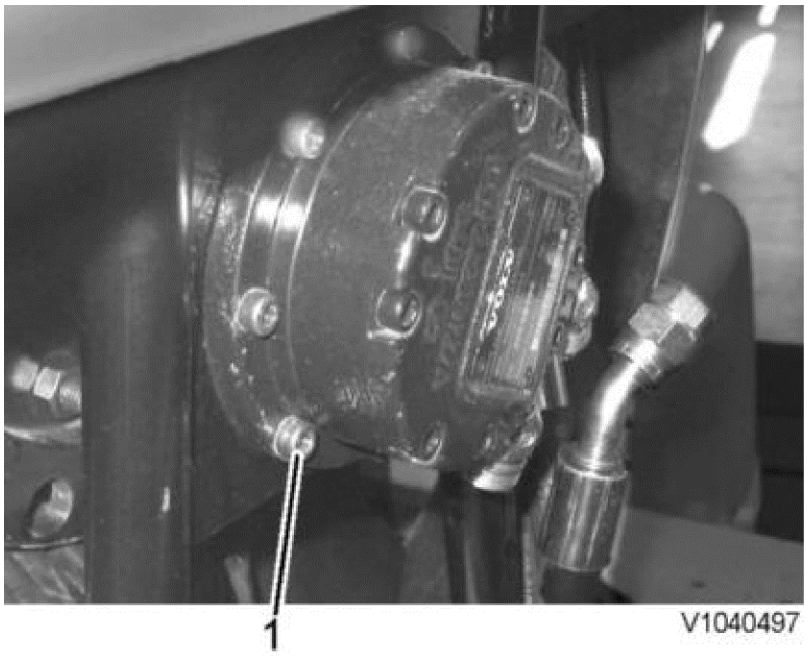

Figure 6

1. Attaching bolt

9. Remove two opposing bolts that hold the fan against the hub and install the tool. Press out the cooling fan motor.
Weight approx.: **7 kg (16 lbs)**

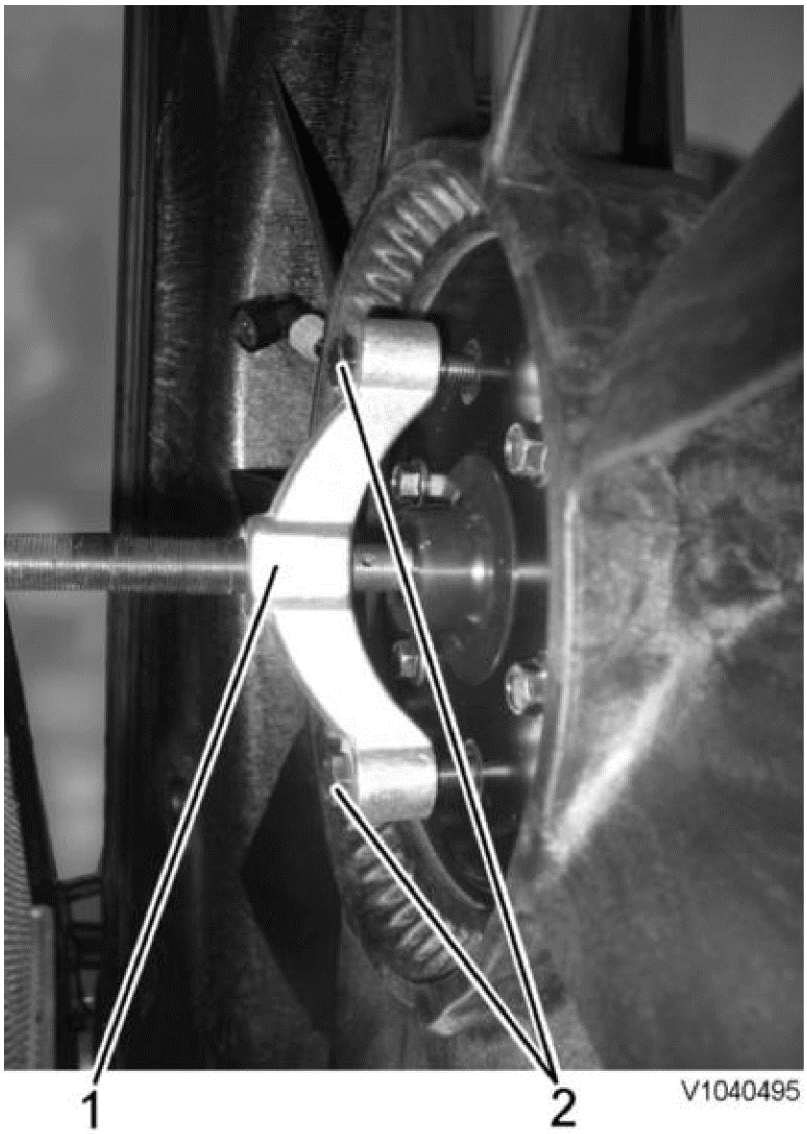

Figure 7

1. Puller Kukko 17–2
2. Bolt M10 (60 mm), 2 pcs.

Installing

10. Install the fan motor.
    Weight approx.: **7 kg (16 lbs)**

11. Fit the washer and the nut.
    Tightening torque: see Cooling fan motor, changing
    . Install the lock pin.

12. Install the two bolts and nuts that hold the fan against the hub.

13. Install the stay and fan shroud.

VOLVO
Construction Equipment

Service Information

Document Title:	Function Group:	Information Type: **Service Information**	Date: **12/10/2011**
Profile: **WLO, L90F (Volvo) [GB]**			

Accelerator Pedal

The function transfers the throttle pedal's position to a throttle application on the engine and engages the secondary function 'Limp Home' in case of a system error/malfunction.

Throttle pedal SE2702 consists of two sensors signals; position primary and position secondary. position secondary works like a back-up if the signal from position primary is incorrect.

NOTE **If hand throttle is installed, it will work even if there is a system error/malfunction.**

See also Elschema 205

Input signals	Conditions for output functions	Output functions
o Throttle pedal, SE2702	o 3-100% o throttle pedal applied	o Desired throttle setting
o Monitoring, SE2702	o System error, signal position primary outside limit values	o Limp Home — function o Amber central warning o Check — Accelerator failure
o Monitoring, SE2702	o System error, signal position primary and position secondary outside limit values	o Limp Home — function o Amber central warning o Check — Acc. pedal sensor

VOLVO
Construction Equipment

Service Information

Document Title:	Function Group:	Information Type: **Service Information**	Date: **12/10/2011**
Profile: **WLO, L90F (Volvo) [GB]**			

Hand Throttle

Software

The function makes it possible to set a working rpm for the engine and informs the operator if there is a system malfunction.

When starting the machine, the hand throttle is disengaged regardless of the hand throttle's position. For re-engaging hand throttle, the control is turned counter-clockwise to position 0 and then to the desired rpm.

The hand throttle is disengaged when the brake pedal is applied or if the hand throttle is turned counter-clockwise to position 0.

See also Elschema 205

.

Input signals	Conditions for output functions	Output functions
o VCADS Pro parameter FVL o Brake pedal applied, SE5205 o Hand throttle position, R2701	**Overall conditions for the function** o VCADS Pro parameter FVL "1"	
	Engagement hand throttle o Desired working rpm[T1] o Brake pedal not applied < 0.5 MPa (5 bar) (72.5 psi)	o Hand throttle rpm range 800–2100 rpm
	Hand throttle is disengaged if any of the following conditions is fulfilled: o Start of machine o Desired working rpm = 0 o Brake pedal applied ≥ 0.5 MPa (5 bar) (72.5 psi) o Incorrect input signal hand throttle	o Disengaging hand throttle
o Monitoring, R2701	o System malfunction, open circuit or short circuit See Diagnostics	o Amber central warning o Check — Hand throttle failure

[T1] Mechanical stop counter-clockwise.

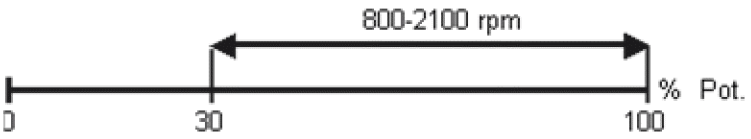

Figure 1
Speed range

VOLVO
Construction Equipment

Service Information

Document Title:	Function Group:	Information Type: **Service Information**	Date: **12/10/2011**
Profile: **WLO, L90F (Volvo) [GB]**			

Electrical system, work instructions

Batteries

1. Fully charged and otherwise satisfactory batteries must always be used when working on the electrical system.
2. Test the batteries with an acid tester. The battery disconnect switch should be turned off.
3. When installing a battery, make sure that the battery is connected with the correct polarity.
4. When changing batteries connected in series, make sure they are of equal capacity, for example, 2 batteries of 105 Ah. The batteries should have the same age (same quality), since the charging current required to reach a certain voltage varies with the battery's age.
5. If booster battery is required when starting, the following instructions must be followed at all times; Säkerhet vid arbete med batterier and Start med hjälpstartbatterier .

Charging

1. Before performing any tests of the alternator or regulator, the batteries must be checked regarding insulation, loose fit, and corrosion. Check the alternator belts.
2. "Safe" connections shall be used to prevent sparks and voltage transients. A disconnected cable may result in destruction of both alternator and regulator.
3. Never disconnect the alternator leads while the engine is running. This could damage both the alternator and regulator.
4. If the current alternator output socket should be connected to the chassis, damage may occur to the alternator and regulator.

Components

When removing or installing components in the electrical system, turn off the voltage supply with the battery disconnector.

Welding

For electric welding on the machine or on attachments on machine:

- voltage feed turned off with battery disconnect switch
- all connectors in the cab's rear wall shall be unplugged to avoid damaging the machine's electronics.

NOTE

- **Ground the welding unit as close as possible to the welding point.**
- **Welding on the cab is not permitted, it affects the cab's approval for FOPS and ROPS .**



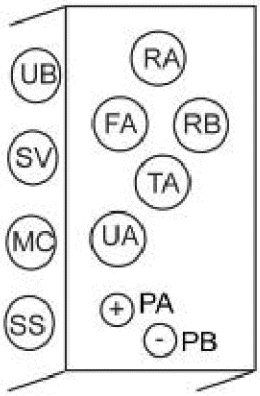

V1047525

Figure 1
Connectors on the rear of the cab wall

VOLVO
Construction Equipment

Service Information

Document Title:	Function Group:	Information Type: **Service Information**	Date: **12/10/2011**
Profile: **WLO, L90F (Volvo) [GB]**			

Electrical system, description

The machine has a 24 V electrical system with two 12 volt batteries connected in series, located on each side of the rear frame in the counterweight.

The battery disconnector is located under the radiator casing. Fuse FU74 is next to the battery disconnector and supplies voltage to certain components (e.g., voltage converter for radio), even when the battery disconnector is turned off.

Voltage feed takes place via a fuse box located in the engine compartment. The fuse box contains main fuse as well as fuses for preheating coil and secondary steering pump.

Relays and fuses are mainly located in the electrical distribution box behind the operator's seat and are accessed by removing the cover for the electrical distribution box. The cover's inside is provided with a decal that informs which power-consuming component is connected to each relay and fuse. There is a built-in terminal for fuse test in the electrical distribution box. The relays in the electrical distribution box are interchangeable.

Components are marked according to which function group they belong. The first two digits indicate function group and the other digits are running numbers, e.g., SE2203.

NOTE **For working on the electrical system, follow the instructions in section Elsystem, anvisningar vid ingrepp**
.

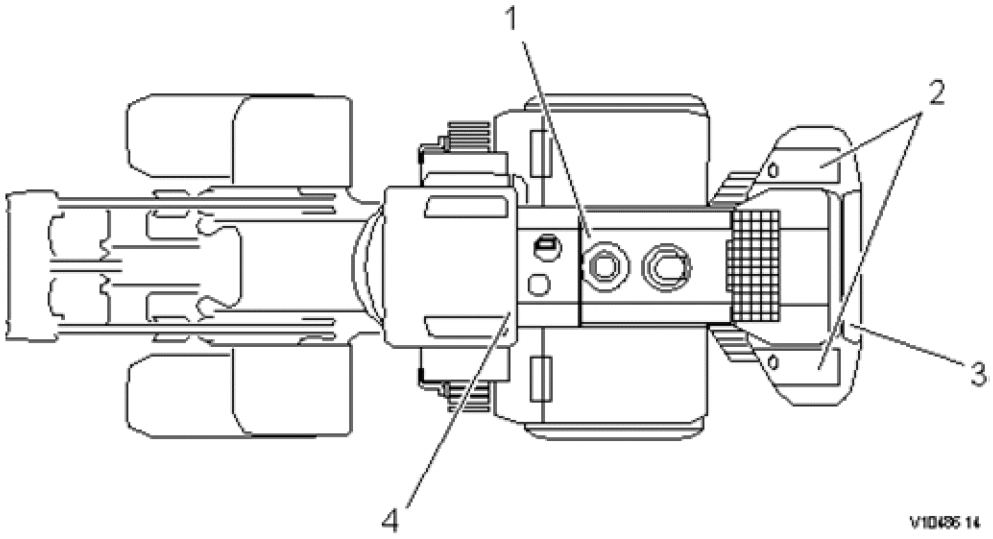

Figure 1
Position

1. Fuse box
2. Batteries
3. Battery disconnector, fuse FU74
4. Electrical distribution box

VOLVO
Construction Equipment

Service Information

Document Title:	Function Group:	Information Type: **Service Information**	Date: **12/10/2011**
Profile: **WLO, L90F (Volvo) [GB]**			

Electronic control system, description

Vehicle electronics, general

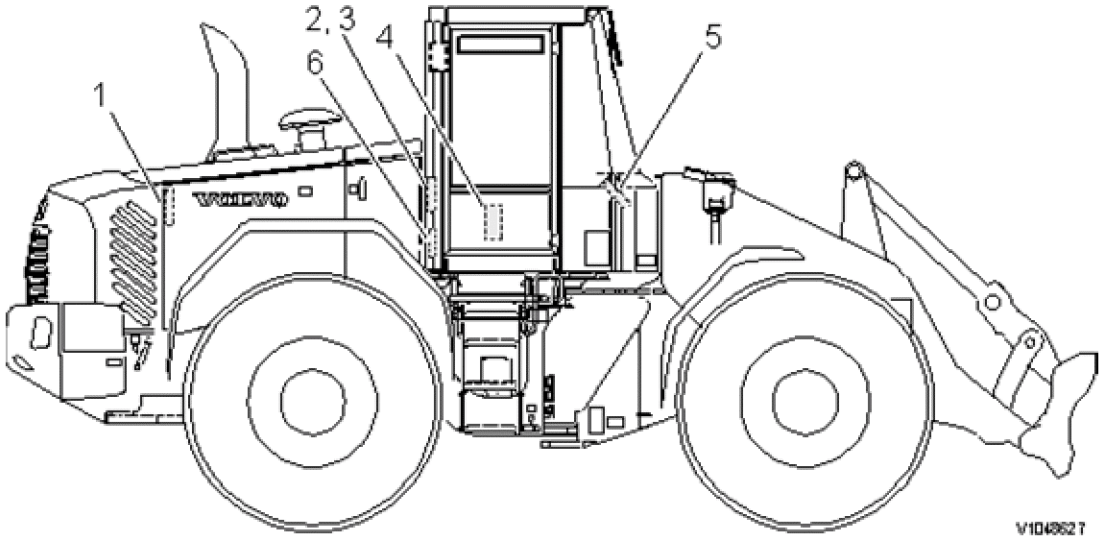

Figure 1
Position of control units

1. Engine control unit E-ECU (MID128)
2. Vehicle control unit V-ECU (MID187)
3. Vehicle control unit V2-ECU (MID249)
4. Climate control unit ECC (MID146)
5. Instrument control unit I-ECU (MID140)
6. CareTrack W-ECU (MID142)

The machine electronics contain five control units that communicate with each other via two data buses. Each control unit processes values from sensors and operating controls, and controls components so that desired function is obtained.

Control units included in the system are the instrument control unit I-ECU, vehicle control unit V-ECU, vehicle control unit V2-ECU, engine control unit E-ECU, and climate control unit ECC.

Machine electronics facilitate troubleshooting with a well-designed and expansive diagnostic system. In case of electrical malfunctions/errors, the operator receives a message on the information panel.
For service personnel, the service tool VCADS Pro can be plugged into sockets located by the electrical distribution box behind the operator's seat.

Instrument control unit I-ECU is located in the instrument panel and contains software for presenting operator information on the display panel, including warning and control lights. The control unit receives information from the other control units via data bus.

Engine control unit E-ECU is located on intermediate wall in the engine compartment and contains software for controlling engine functions. The control unit receives information from the engine's own sensors as well as from a data bus. The control unit also sends information to the other control units via data bus.

Vehicle control units V-ECU and V2-ECU are located by the electrical distribution box behind the operator's seat

and contains software for controlling components and handling information from sensors located outside the cab. The vehicle control unit is connected to the other control units via data bus.

NOTE	**From December 2008, ferrites (iron cores) have been fitted around wiring at the connections to the V-ECU and V2-ECU to protect the control units from undesirable electromagnetic interference.**

Climate control unit ECC is located inside the right side panel in the cab and contain software for controlling heating, cooling, and ventilation. The climate control unit is connected to the other control units via data bus.

CareTrack W-ECU is located by the electrical distribution box behind the operator's seat and contains software for information exchange via GSM/GPRS and satellite. The CareTrack-unit is connected to the other control units via data bus.

Communication for programming, changing parameters, and reading out error codes, testing and checking components, etc. is done with VCADS Pro. In VCADS Pro, MID-designations (Message Identification Description) are used for the control units.
Reading of input and output signals, setting certain functions, reading off machine information, etc. can be performed with the information panel.
If a malfunction occurs in any system, information is sent via the data bus, which makes it possible to read off the information on the information panel or by using VCADS Pro.

VOLVO
Construction Equipment

Service Information

Document Title:	Function Group:	Information Type: **Service Information**	Date: **12/10/2011**
Profile: **WLO, L90F (Volvo) [GB]**			

Communication with data buses

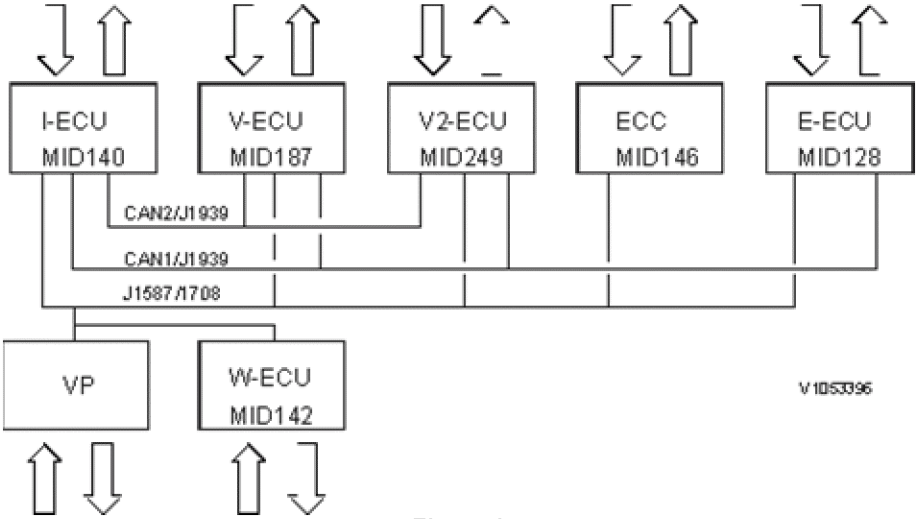

Figure 1
Communication

ECC	Electronic climate control unit
E-ECU	Engine control unit
I-ECU	Instrument control unit
V-ECU	Vehicle control unit
V2-ECU	Vehicle control unit
W-ECU	CareTrack
VP	Service socket for VCADS Pro

General

In principle, the machine electronics are based on all communication between control units in the system taking place via two data buses. The machine's control units are connected to the buses to enable communication with each other.

Communication between the different control units as well as reporting from control units to service sockets takes place on data buses CAN1/J1939 and J1587/1708.

The buses follow SAE standards and consist of two pair-twisted cables. The purpose of the twisted cabling is to protect the bus from electrical interference.

If an error or malfunction should occur in any system, a signal is sent out on the information bus which makes it possible to read off the information either in the information display or with VCADS Pro. In VCADS Pro, MID-designations (Message Identification Description) are used for the control units.

The figure above shows the principle for how the control units and service sockets are connected to the buses.

CAN1/J1939 control bus

System control signals are sent via this bus. The control bus is very quick, which is necessary for control of the entire system to work and quickly adapt to changing conditions.

The main communication alternative is the CAN1/J1939-bus. However, for E-ECU, some control data is only sent on the J1587/J1708-bus.

CAN2/J1939 control bus

CAN2/J1939 is used to obtain redundancy for CAN-communication.

J1587/1708 information bus

The information bus is connected to the control units and service socket. Information and diagnostic signals are sent on this bus. In addition, some control data is sent from the engine control unit via this bus.

The bus also acts as a “back-up” for the control bus if it does not work for some reason. The system's status is continuously updated and available for reading via the information bus.

By connecting VCADS Pro to service socket VP, it is possible to read error codes, perform test, delete logged information, download parameters, and download software.

Information exchange for machine owners takes place using the telematic system CareTrack, communicating with GSM/GPRS or satellite.

VOLVO
Construction Equipment

Service Information

Document Title:	Function Group:	Information Type: **Service Information**	Date: **12/10/2011**
Profile: **WLO, L90F (Volvo) [GB]**			

Software, description

Software is stored in the control units. To determine which software is in the control units, the part number of the software (Main software) is read in the information panel or with the service tool VCADS Pro.

Updating of the machine's software is handled through release of a new edition. The releases are designated with Year:edition, for example, R2006:5 and gets a new part number.

Updating of software for control units takes place through downloading of new software from VOLVO with VCADS Pro.

VOLVO
Construction Equipment

Service Information

Document Title:	Function Group:	Information Type: **Service Information**	Date: **12/10/2011**
Profile: **WLO, L90F (Volvo) [GB]**			

Instrument control unit I-ECU, description

The instrument control unit is integrated with the main instrument and receives information from the data bus. The information is processed and shown on gauges, control lights, warning lights and information display.

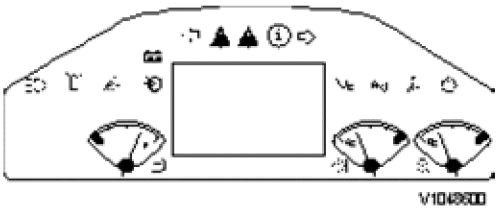

Figure 1
Instrument control unit with information display

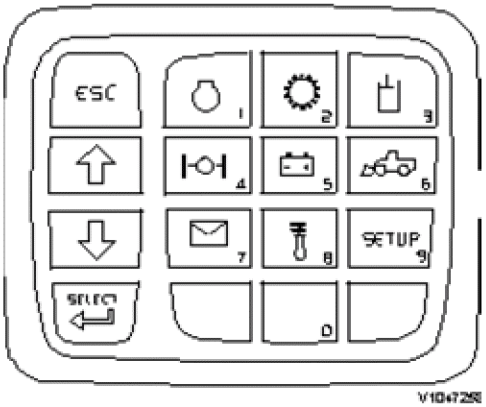

Figure 2
Keypad for information display

Functions

- Values for gear position, operating hours as well as status values for parking brake and warning messages are processed and result in a number of figures on the information panel.
- Special warnings, e.g., central warnings, low engine oil pressure are detected and the corresponding warning lights are activated.
- Values for transmission oil temperature, coolant temperature engine and fuel level are shown on gauges.
- Setting of display alternatives and parameter alternatives for information panel.
- Storage and display of operating hours.
- PIN-code for theft protection via keypad

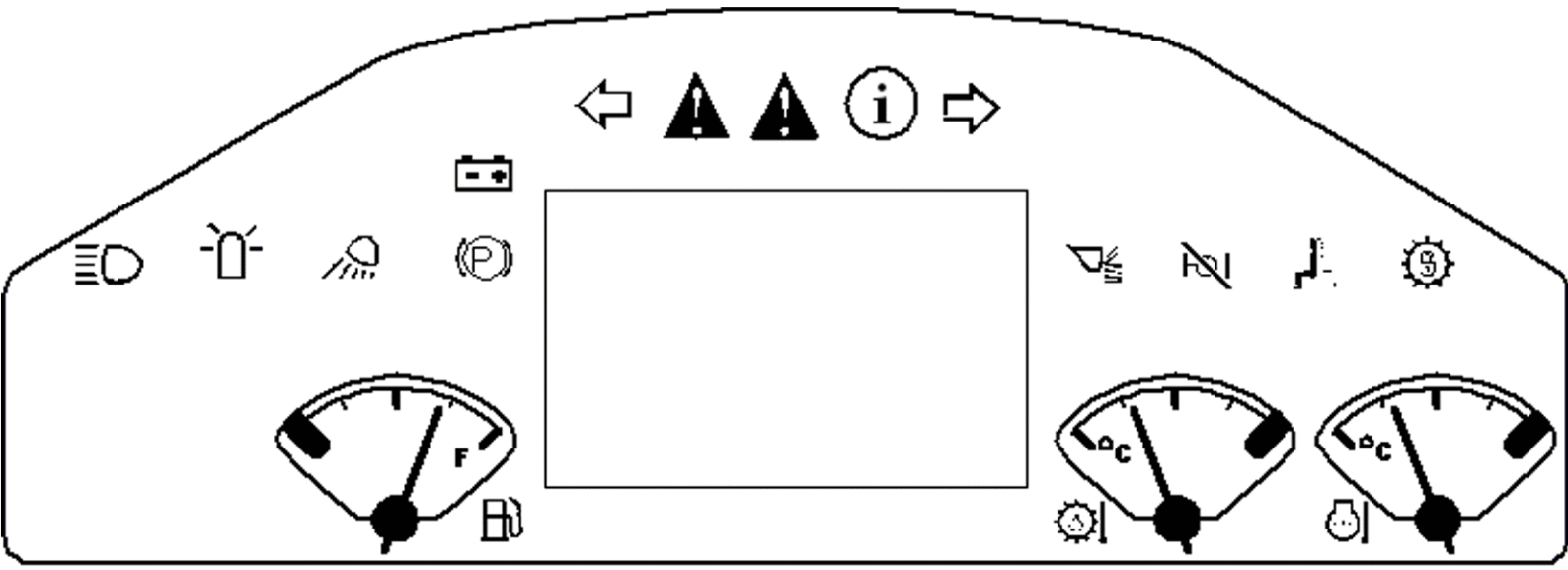

V1048600

VOLVO
Construction Equipment

Service Information

Document Title:	Function Group:	Information Type: **Service Information**	Date: **12/10/2011**
Profile: **WLO, L90F (Volvo) [GB]**			

I-ECU, MID 140, changing non-programmed ECU

Op nbr 300-072

VCADS Pro VCADS Pro Service Tool
88890020 Interface
88890027 Cable

1. Place the machine in service position 1, see Service positions
.
2. Connect VCADS Pro and perform the operation 38145-3 MID 140 ECU, programming.
3. Loosen the instrument panel and lift it up.

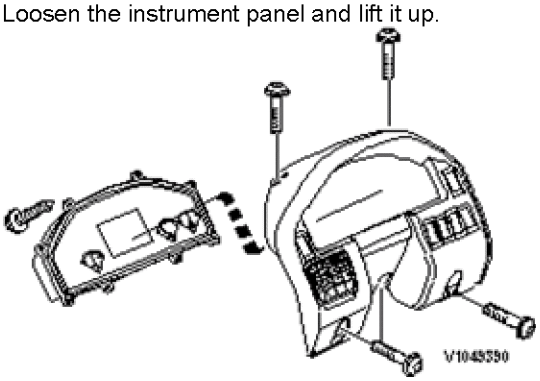

Figure 1
Instrument panel with instrument control unit I-ECU

4. Part the connectors for the keypad and switch attachment lock.
5. Move aside the instrument panel.
6. Unplug the connectors from the I-ECU
7. Change I-ECU.
8. Plug in the connectors for the I-ECU.
9. Plug in the connectors for the keypad and switch attachment lock, and install the instrument panel.
10. Turn on the voltage with the battery disconnector.
11. Finish VCADS Pro operation 38145-3 MID 140 ECU, programming.

NOTE **After working in safety-related systems, the functionality of all applicable systems must be checked as per Functionality check**
.

12.
13. Restore the machine after all functionality checks are acceptable.

VOLVO
Construction Equipment

Service Information

Document Title:	Function Group:	Information Type: **Service Information**	Date: **12/10/2011**
Profile: **WLO, L90F (Volvo) [GB]**			

I-ECU, MID 140, changing pre-programmed ECU

Op nbr 300-074

VCADS Pro VCADS Pro Service Tool
88890020 Interface
88890027 Cable

1. Place the machine in service position 1, see Service positions
.
2. The new control unit has basic set parameters for the machine. If it is possible to read out customer parameters, connect VCADS Pro and perform the operation 17030-3 Parameter, programming. Save all read parameters to job card.
The operation is used to read out customer parameters from the old control unit to enable later comparison with parameters in the new control unit.
3. Loosen the instrument panel and lift it up.

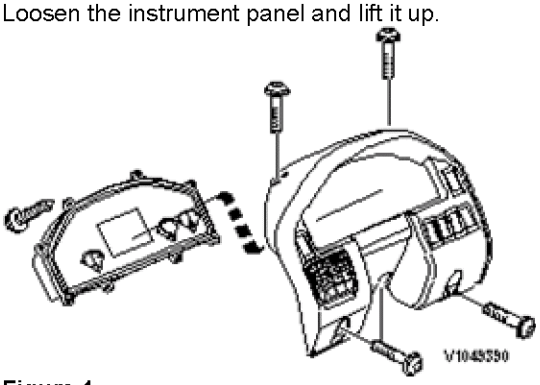

Figure 1
Instrument panel with instrument control unit I-ECU

4. Part the connectors for the keypad and switch attachment lock.
5. Move aside the instrument panel.
6. Unplug the connectors from the I-ECU.
7. Change I-ECU.
8. Plug in the connectors for the I-ECU.
9. Plug in the connectors for the keypad and switch attachment lock, and install the instrument panel.
10. Turn on the voltage with the battery disconnector.
11. If customer parameters have been read out from the old control unit, compare these to the parameters in the new control unit.
    - Connect VCADS Pro and perform the operation 17030-3 Parameter, programming. Save all read parameters to job card.
    - Compare parameter settings on the job cards.
    - Perform operation 17030-3 Parameter, programming and change customer parameters according to job card for the old control unit.

NOTE	**After working in safety-related systems, the functionality of all applicable systems must be checked as per Functionality check** .

12.

13. Restore the machine after all functionality checks are acceptable.

VOLVO
Construction Equipment

Service Information

Document Title:	Function Group:	Information Type: **Service Information**	Date: **12/10/2011**
Profile: **WLO, L90F (Volvo) [GB]**			

Vehicle control unit V-ECU, description

The vehicle control unit has superior machine-related functionality and contains the following functions.
The vehicle control unit is located by the electrical distribution box behind the operator's seat, and is connected to the other control units via data link for communication with the other control units.

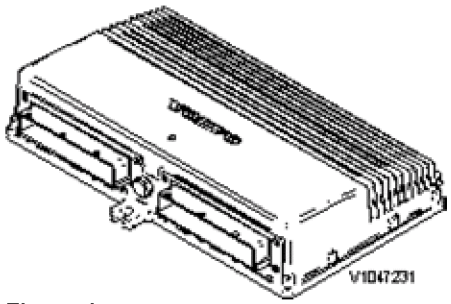

Figure 1
Vehicle control unit V-ECU

Functions

- Monitoring fuel level
- Monitoring of starter motor engagement
- Monitoring of system voltage
- Monitoring of pressure, temperature, level and filter for transmission oil
- Monitoring brake pressure
- Monitoring of level and temperature for hydraulic oil
- Monitoring of lubrication oil level for central lubrication
- Calculation of vehicle travel speed
- Parking brake
- Gear shifting strategy
- Request for engine rpm and/or torque limitation
- Transmission disengagement
- Engagement of differential lock
- Warming of hydraulic oil
- Boom Suspension System
- Secondary steering
- Cooling fan adjustment
- Reversal of cooling fan
- Attachment locking
- Brake pressure charging

VOLVO
Construction Equipment

Service Information

Document Title:	Function Group:	Information Type: **Service Information**	Date: **12/10/2011**
Profile: **WLO, L90F (Volvo) [GB]**			

Vehicle control unit V2-ECU, description

The vehicle control unit is the controlling unit in the system for the following functions.
The vehicle control unit is located by the electrical distribution box behind the operator's seat, and is connected to the other control units via data link for communication with the other control units.

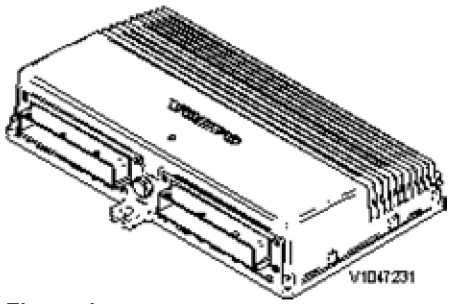

Figure 1
Vehicle control unit V2-ECU

Functions

- Lever steering (CDC)

VOLVO
Construction Equipment

Service Information

Document Title:	Function Group:	Information Type: **Service Information**	Date: **12/10/2011**
Profile: **WLO, L90F (Volvo) [GB]**			

Engine control unit E-ECU, description

The engine control unit is the central part of the injection system. It is located on the partition wall in the engine compartment installed in rubber-damper mounts.
The control unit continuously receives information from the accelerator pedal and sensors on the engine as well as calculating the fuel quantity and at which point in time the fuel shall be injected into the cylinders via the injectors.

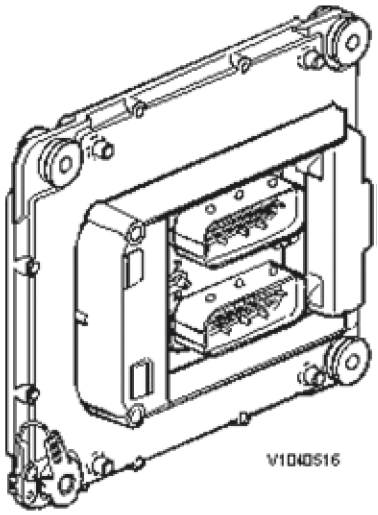

Figure 1
Engine control unit

The control unit stores information if a malfunction should occur or if any part of the system reacts abnormally. Sporadic malfunctions are stored in the control unit and can then be traced at a later time.

Functions

- Control of fuel injection (Common Rail)
- Temperature monitoring
- Engagement of preheating
- Detecting engaged preheating
- Monitoring of water in fuel
- Monitoring of EGR-valve
- Automatic fuel shut-off at risk of high fuel temperature in the return line when PRV-valve is open.

VOLVO
Construction Equipment

Service Information

Document Title:	Function Group:	Information Type: **Service Information**	Date: **12/10/2011**
Profile: **WLO, L90F (Volvo) [GB]**			

Climate control unit ECC, description

ECC, Electronic Climate Control, is a fully automatic climate control system that controls fan speed, heat, cooling, fresh air inlet, and air distribution. Desired temperature is set on the climate control system's control panel , and the control unit handles all other control.

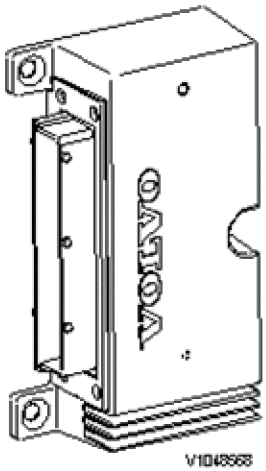

Figure 1
Control unit ECC

The control unit receives continuous information about temperatures, pressure, rpm, etc. from a number of sensors. The control unit is connected to the other control units via data link J1587/1708 for communication. The control unit is located inside of the right side panel in the cab.

Functions

- Control of temperature, air distribution, and ventilation in cab
- Control of soft start, AC-compressor
- Monitoring of temperatures and pressure

VOLVO
Construction Equipment

Service Information

Document Title:	Function Group:	Information Type: **Service Information**	Date: **12/10/2011**
Profile: **WLO, L90F (Volvo) [GB]**			

CareTrack W-ECU, description

CareTrack is a telematic system making it possible for machine owners to remote-monitor machines from their offices.

CareTrack combines two systems, independent of each other; GPS and cell phone network, or via satellite. The GPS-receiver receives signals from satellites and calculates the position for the machine using triangulation. Data from the machine is transferred via the cell phone network or via satellite in areas where there is no coverage from cell phone networks.

CareTrack is available in two versions, “Basic” and “Advanced”.

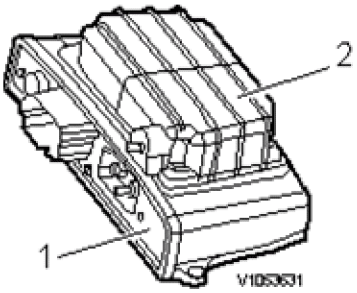

Figure 1

1. W-ECU
2. Satellite modem

CareTrack “Basic”

- Machine position
- Real-time machine data
- Geographic restriction
- Time limit
- Location Report
- Reports on daily use
- Service reminders
- Service history
- Forwarding of service reminders
- Service reports
- Message when it's time to replace parts

CareTrack “Advanced”
Contains everything in CareTrack “Basic” as well as the following functions:

- Machine utilization
- Incident reports/reports on daily use
- Performance report/productivity report
- Alarms and Warnings
- History of alarms and warnings

- Error codes
- History of error codes
- Forwarding of alarms, warnings, and error codes
- Matris, complete download
- Matris, partial download

VOLVO
Construction Equipment

Service Information

Document Title:	Function Group:	Information Type: **Service Information**	Date: **12/10/2011**
Profile: **WLO, L90F (Volvo) [GB]**			

Bus communication supervision

General

Monitoring of the data buses is based on checking of periodic messages that are sent by the different control units. Each control unit in the system sends out a periodic message on every data bus that the unit is connected to. To simplify monitoring, only the Instrument control unit (I-ECU) has information about how the system looks with connection of control units and data buses. The other control units only have information that there is an I-ECU. The advantage is that only I-ECU needs to monitor several messages, the other control units only have to check that the message from the I-ECU arrives at the correct periodic interval.

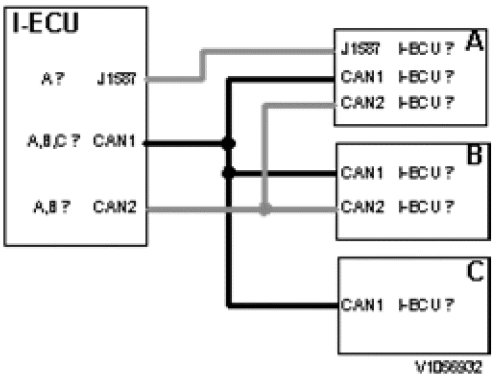

Figure 1
Bus monitoring

Control units

Vehicle control unit V2–ECU is only installed on machines with Comfort Drive Control, CDC (joystick steering).

Error codes

If the I-ECU is missing the periodic message from a control unit, then error code MID140 SID216 will be generated. By checking the error code's FMI, it is possible to decide how serious the problem is in the system.
FMI 9 indicates minor problem in the system that does not affect safety-related functions.
FMI 14 indicates that the safety margin has been reduced and therefore operation of the machine is limited to second gear (Limp Home).
FMI 12 indicates problem in the system that seriously affects safety and the system's ability to handle basic functions. As a safety feature, the gear is shifted to neutral.

In order to obtain more information about the problem, a VCADS Pro read-out of error codes must be performed (17012-3 Error codes). The table below shows the error codes that may appear when the I-ECU has lost contact with a control unit.

Error code	FMI	Bus	Missing control unit
MID140 PSID200	9	CAN1	E-ECU
MID140 PSID214	9	CAN1	V2-ECU
MID140 PSID216	9	CAN1	V-ECU
MID140 PSID214	10	CAN2	V2-ECU
MID140 PSID216	10	CAN2	V-ECU
MID140 PSID200	12	J1587	E-ECU
MID140 PSID214	12	J1587	V2-ECU
MID140 PSID216	12	J1587	V-ECU

MID140 PSID238	12	J1587	ECC

If the periodic messages from the I-ECU do not reach the other control units the following error messages may appear. Which error codes are generated depends on which control units have no contact with the I-ECU.

Error code	FMI	Bus	Control unit
MID187 PSID202	9	CAN1	V-ECU
MID249 PSID202	9	CAN1	V2-ECU
MID187 PSID202	10	CAN2	V-ECU
MID249 PSID202	10	CAN2	V2-ECU
MID128 PID91	9	J1587	E-ECU
MID146 PSID202	12	J1587	ECC
MID187 PSID202	12	J1587	V-ECU
MID249 PSID202	12	J1587	V2-ECU

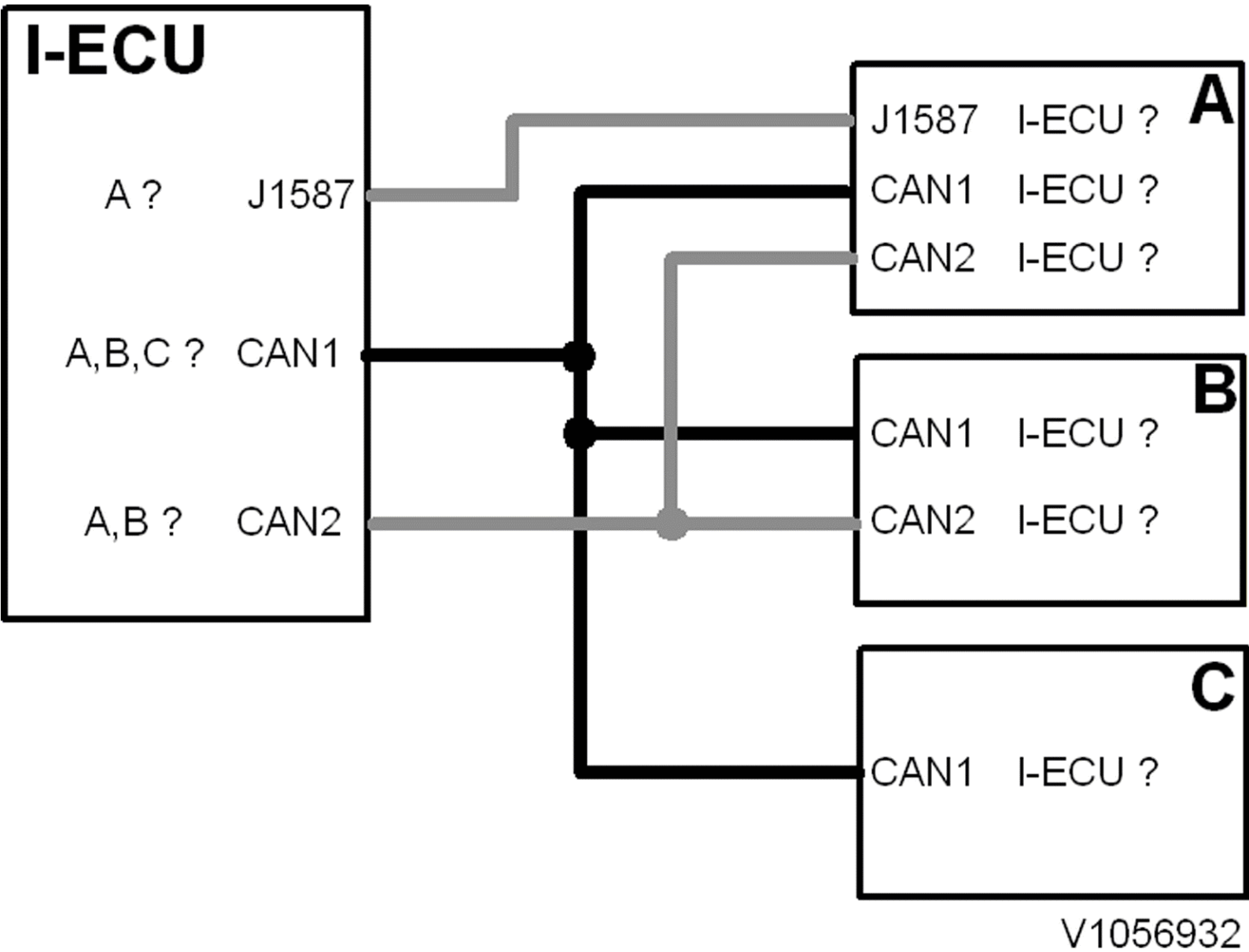
I-ECU
A ?
J1587
A,B,C ?
CAN1
A,B ?
CAN2
A
J1587 I-ECU ?
CAN1 I-ECU ?
CAN2 I-ECU ?
B
CAN1 I-ECU ?
CAN2 I-ECU ?
C
CAN1 I-ECU ?
V1056932

VOLVO
Construction Equipment

Service Information

Document Title:	Function Group:	Information Type: **Service Information**	Date: **12/10/2011**
Profile: **WLO, L90F (Volvo) [GB]**			

Information display, check

Read-out of information from the figure "Check"

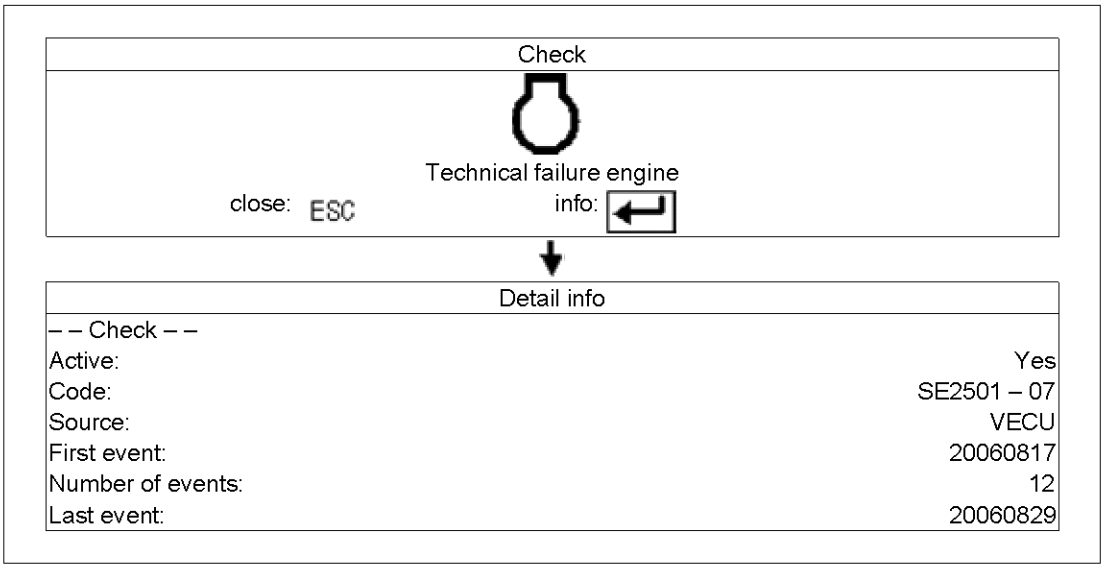

Example – Check Technical failure engine

Check

In the figure "Check", information is shown about which systems or functions to check/troubleshoot. The information is presented with symbol and explaining text.
To return to previous figure, press [ESC].
For more information, press SELECT, which gives a new figure "Detail info".

Detail info

The following information is shown under Detail info:

- Active: indicates if the malfunction/error is active or inactive
- Code: shows any error code in the form of component designation followed by FMI (failure/error cause). If the problem cannot be associated to a component designation, the error code is shown instead according to SAE-standard (e.g., MID128 PID123 FMI12).
- Source: shows which control unit detected the error/failure
- First event: logged date for first time that the failure/error occurred
- Number of events: number of times that the failure/error has been detected
- Last event: last date for failure/error detection

VOLVO
Construction Equipment

Service Information

Document Title:	Function Group:	Information Type: **Service Information**	Date: **12/10/2011**
Profile: **WLO, L90F (Volvo) [GB]**			

RE02, description and measuring

Op nbr 302-129

9812519 Multimeter
9998699 Adapter
9993893 Adapter
9990062 Cable
9990008 Measuring equipment

Description

Function	Controls engagement of back-up alarm.	
References	Komponentförteckning: Reläer Elschema 315	
VCADS Pro Test	—	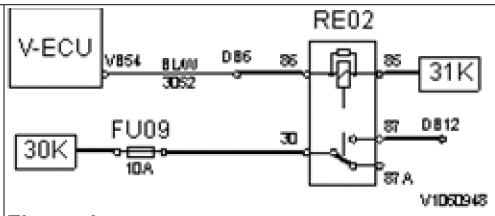 **Figure 1** VB54, control voltage relay

Measuring

Measuring point	**Correct value**	**Condition**	**Test method**
86 – 85	≈ 220 Ω		Measure directly on the relay.
VB54 –	≈ U_{bat}[T1]		
VB54 – 86 RE02 removed	≈ 0 Ω		
VB54 – RE02 removed	≈ ∞ Ω		

			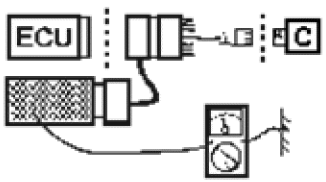
85–  RE02 removed	≈ 0 Ω		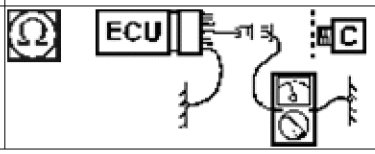

[T1] With directional gear in reverse.

Verifying

Measuring point	Correct value	Condition	Test method
VB54 – 	≈ 220 Ω		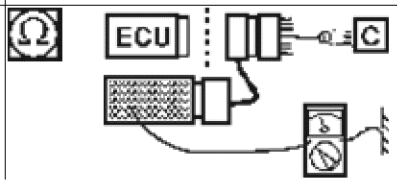

VOLVO
Construction Equipment

Service Information

Document Title:	Function Group:	Information Type: **Service Information**	Date: **12/10/2011**
Profile: **WLO, L90F (Volvo) [GB]**			

SW5501, description and measuring

Op nbr 302-131

88890074 Multimeter
9998699 Adapter
9993893 Adapter
9990062 Cable

Description

Function	Releasing/applying parking brake.
References	Component list: Switches Wiring diagram 501
VCADS Pro Test	—
	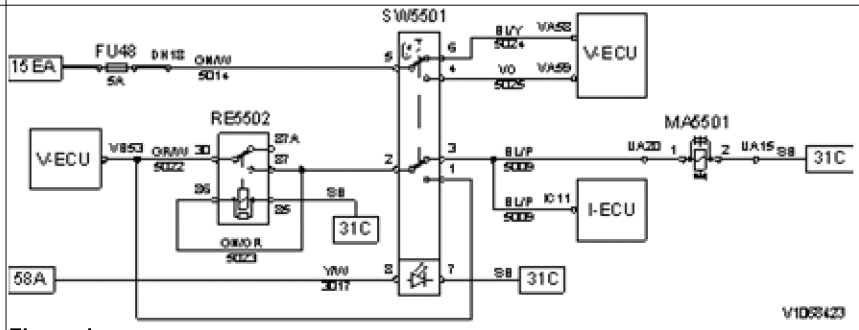 **Figure 1**

Measuring

Measuring point	Correct value	Condition	Test method
VA58 – VA59 –	Voltage values according to table		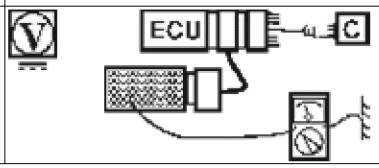

SW5501 voltage values

SW5501 in position;	VA58	VA59
Applied	≈ 0 V	≈ U_{bat}
Released	≈ U_{bat}	≈ 0 V

Functional check

After finished troubleshooting, perform the following checks;
Parking brake, function check

VOLVO
Construction Equipment

Service Information

Document Title:	Function Group:	Information Type: **Service Information**	Date: **12/10/2011**
Profile: **WLO, L90F (Volvo) [GB]**			

General fault diagnosis information

The section entitled "Troubleshooting" describes how troubleshooting is performed of symptoms and malfunctions related the electrical system. Information regarding the different functions of electrical components, measurement values, and possible malfunction detection is also available.

The basis for all fault diagnosis is that a fault, symptom or function disturbance has been recorded.

Faults can be indicated by:

- flashing red central warning lamp
- buzzer sounding
- flashing amber central warning lamp
- error texts in the display panel
- an error symptom is detected.

Different actions should be taken depending on the manner in which the fault is indicated.

- For faults resulting in:
  Flashing amber central warning lamp - promptly inspect the cause during following stop.
- For faults resulting in:
  Flashing red central warning lamp - stop the machine immediately and investigate the cause of the fault!

> **WARNING!** **Continued operation following a malfunction indication may result in damage to persons and property.**

It is of the utmost importance to determine the cause of the fault as quickly as possible when one is suspected or found.

The first step in fault diagnosis is to collect information from the operator regarding the fault symptom. Afterwards, attempt to localise the cause of the fault by performing checks in a specific order, see Strategi för felsökning
.

To facilitate and make troubleshooting more effective, there is a number of tools available, e.g., diagnostics section in PROSIS and VCADS Pro service tool, see Hjälpmedel för felsökning
.

> **WARNING!** **During troubleshooting and all work with the electrical system, carefully follow all instructions in Electrical system, work instructions.**

VOLVO
Construction Equipment

Service Information

Document Title:	Function Group:	Information Type: **Service Information**	Date: **12/10/2011**
Profile: **WLO, L90F (Volvo) [GB]**			

Troubleshooting strategy

The basis for all troubleshooting is that a malfunction, symptom or defect is noticed. Troubleshooting strategy and procedures are illustrated in the following flow chart.

<table>
<tr><td colspan="3">Start
↓</td></tr>
<tr><td colspan="3">Basic data collection, see Basdatainsamling
.
↓</td></tr>
<tr><td colspan="3">Check for error messages. Error texts found?</td></tr>
<tr><td colspan="2">YES↓</td><td rowspan="3">NO
↓
↓</td></tr>
<tr><td colspan="2">• Note error messages.
• Troubleshoot using error code description, see diagnostics section in PROSIS.
• Repair the defect/malfunction.
• Activate the concerned component or function.
• Read-out of error messages. Problem solved?</td></tr>
<tr><td>YES↓</td><td>NO↓</td></tr>
<tr><td rowspan="5">OK</td><td colspan="2">Perform parameter check, see Inställning av mjukvaruparametrar
. Any parameters incorrectly set?</td></tr>
<tr><td colspan="2">YES↓</td><td rowspan="3">NO
↓</td></tr>
<tr><td colspan="2">Re-program parameter. Problem solved?</td></tr>
<tr><td>YES↓</td><td>NO↓</td></tr>
<tr><td>OK</td><td colspan="2">Troubleshoot using additional information.[1] ⓘ</td></tr>
</table>

The included steps in the troubleshooting strategy are described below.

1. **Basic data collection**. The basis for all troubleshooting is a symptom or malfunction. In order to establish a basis for troubleshooting, data should be collected about the symptom/malfunction.
   A data collection model is available as Basdatainsamling
   .
2. **Error messages** give a clear indication of what has caused the symptom or malfunction. Therefore, read off error messages from the information display unit before troubleshooting is started. For information about error messages' design, see Informationspanel, kontrollera
   .

   NOTE **If new or repeated error messages are generated during troubleshooting, then these must be solved first before continuing to troubleshoot.**

   A. If error message is generated, troubleshooting shall be performed according to the diagnostics section in PROSIS.
   B. Error messages are registered and compared with new or recurring error messages.
   C. To verify that the problem has been repaired, the appropriate machine components/functions must be activated to allow the control unit to conduct a self-diagnosis and display new or recurring error messages. The machine should be started and the component/function should be activated in order to ensure that a self-diagnosis is conducted.
   D. Error messages are examined to verify that the symptom/malfunction has been repaired and to ensure that no additional defects have occurred as a result of the repair procedure.

3. **Parameters** are checked to make sure that reasonable values are set. See Inställning av mjukvaruparametrar
.

---

[1] Additional information includes wiring diagrams, function descriptions and component troubleshooting.

VOLVO
Construction Equipment

Service Information

Document Title:	Function Group:	Information Type: **Service Information**	Date: **12/10/2011**
Profile: **WLO, L90F (Volvo) [GB]**			

Troubleshooting tools

Service manual

Service information for troubleshooting is available in the service manual. The different types of information are listed below:

- **Instructions for lead and connector checks**
  A general description of these checks can be found in Kontroll av elledningar och kopplingsstycken
  .
- **Wiring diagrams**
  Wiring diagrams are an important aid during troubleshooting and provide lead designation, lead colours and component and connector designations, etc.
- **Component diagram**
  Supplemental information to the wiring diagrams is available in the form of component lists that illustrate the location machine components.
- **Function descriptions**
  The purpose of function descriptions is to explain the machine's sub-functions with regards to input and output signals and association to other functions. Function descriptions are found in the different function groups.
- **Error messages and troubleshooting information**
  The PROSIS diagnostics section contains the error messages' conditions, possible causes, reactions from control unit, and noticeable symptoms/malfunctions.

VCADS Pro

VCADS Pro is a PC-based service tool which has been developed in order to facilitate the troubleshooting procedure. Components/functions can be activated and values can be examined with VCADS Pro through the use of tests. Error text examination can also be conducted using VCADS Pro.
For a description of VCADS Pro, see the separate operator's manual and VCADS Pro serviceverktyg
.

Display unit

The information display unit is used to read error texts, see Informationspanel, kontrollera
.

Special tools

Specialverktyg för felsökning
includes tools that recommended when conducting troubleshooting.

VOLVO
Construction Equipment

Service Information

Document Title:	Function Group:	Information Type: **Service Information**	Date: **12/10/2011**
Profile: **WLO, L90F (Volvo) [GB]**			

Collection of basic data

General

Collection of basic data is the first step in all troubleshooting. This is done to get a quick and improved overall picture of how the malfunction shows up.

In addition to information about machine and customer, it is important to get as much information as possible about events in connection with the occurrence of the malfunction.

The operator can often have valuable information on the circumstances when the malfunction occurred. The operator is almost always the person who notices the problem first.

Since it's seldom possible to recreate the experienced problems, without having exactly the same conditions, information from the operator is of vital importance for correct assessments in continued troubleshooting.

Interview the operator using the following questions.
The answers should be noted and saved together with the work order.

The operator should be able to answer the following questions:

General information

- Customer information
- Dealer information
- Operator
- Machine specifications:
  - Machine
  - Serial number
  - Machine hours
  - Engine type
  - Engine number
  - Model year
  - Delivery date
  - Transmission type
  - Transmission serial number
- Have you detected any error messages?
- Has any new electrical equipment been installed on the machine?

Description of malfunction or symptom

- Describe the problem.
- When did the problem occur?
- How was the problem discovered and what happened just before?
- Does the problem reappear?
- How often does the problem occur?
- For how long does the problem last when it occurs?
- Does the problem always occur during the same conditions, if so, what are the conditions?

- Does the operator have any idea of what the probable cause of the problem may be?
- Does the problem still exist?

Engine data

- Under what operating conditions does the problem occur?
- External circumstances that affect the problem?
- Is the engine difficult to start?
- Is there abnormal smoke?
- Is there any abnormal engine noise?
- Have you detected/confirmed any changes in fuel consumption, oil consumption or engine power?
- What type of fuel is used?
- Any additives used in the fuel? If yes, which ones?
- What repairs or other work has been performed on the engine?
- Other information?

Power transmission, data

- Under what operating conditions does the problem occur?
- External circumstances that affect the problem?
- What type of oil is used?
- Any additives used in the oil? If yes, which ones?
- When was the last oil change performed?
- Is difference in rolling circumference between tyres more than 1.5%?
- Other information?

VOLVO
Construction Equipment

Service Information

Document Title:	Function Group:	Information Type: **Service Information**	Date: **12/10/2011**
Profile: **WLO, L90F (Volvo) [GB]**			

Information display, check

Read-out of information from the figure "Check"

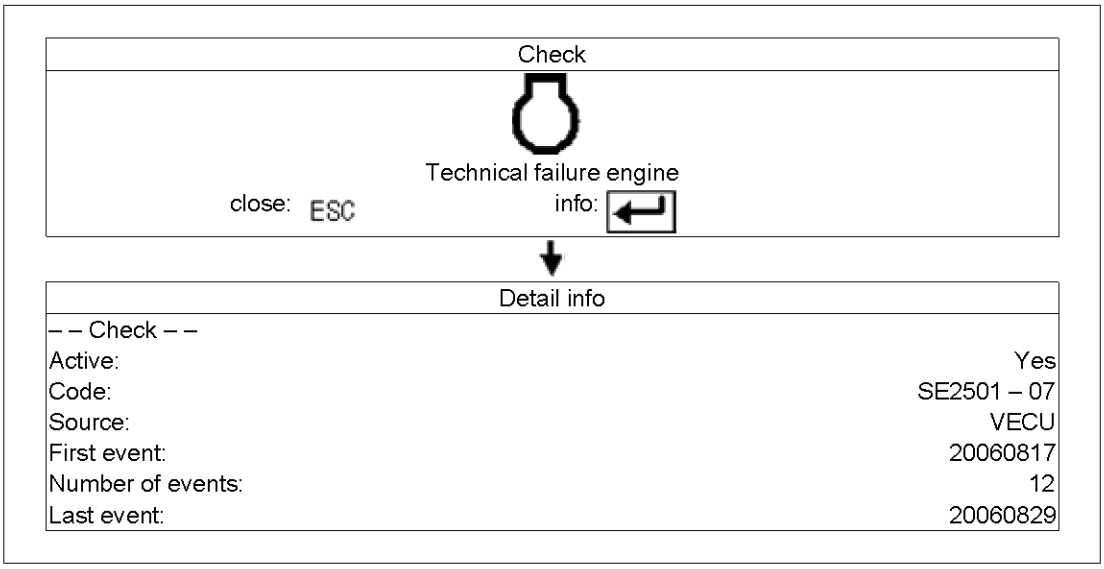

Example – Check Technical failure engine

Check

In the figure "Check", information is shown about which systems or functions to check/troubleshoot. The information is presented with symbol and explaining text.
To return to previous figure, press [ESC].
For more information, press SELECT, which gives a new figure "Detail info".

Detail info

The following information is shown under Detail info:

- Active: indicates if the malfunction/error is active or inactive
- Code: shows any error code in the form of component designation followed by FMI (failure/error cause). If the problem cannot be associated to a component designation, the error code is shown instead according to SAE-standard (e.g., MID128 PID123 FMI12).
- Source: shows which control unit detected the error/failure
- First event: logged date for first time that the failure/error occurred
- Number of events: number of times that the failure/error has been detected
- Last event: last date for failure/error detection

VOLVO
Construction Equipment

Service Information

Document Title:	Function Group:	Information Type: **Service Information**	Date: **12/10/2011**
Profile: **WLO, L90F (Volvo) [GB]**			

VCADS Pro service tool

General



Figure 1
VCADS Pro computer

The following is a brief description of the VCADS Pro service tool.
The name VCADS Pro is short for **V**ehicle **C**omputer **A**ided **D**iagnostic **S**ystem **Pro**fessional.

Design of VCADS Pro



Figure 2
Initial display

VCADS Pro contains programs for:

- Testing components and functions
- Downloading software for control units
- Storing performed work operations on job card

Operations

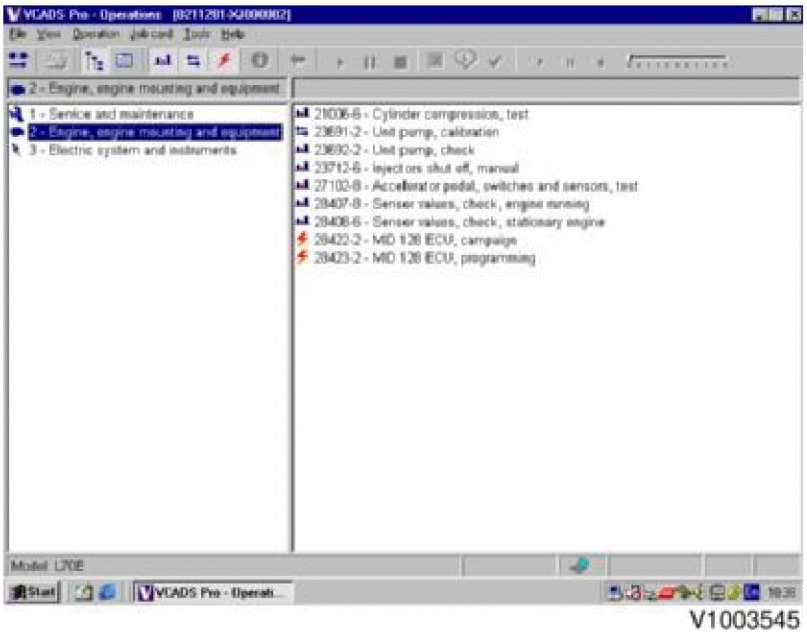

V1003545

Figure 3
Example, tests and programming possibilities

Under Operations, there are several tests and programming possibilities divided according to function group.

The tests show, for example, sensor values, as well as graphic display of how a signal varies in time.

Programming is used to reprogram control units.

Read-out of error codes

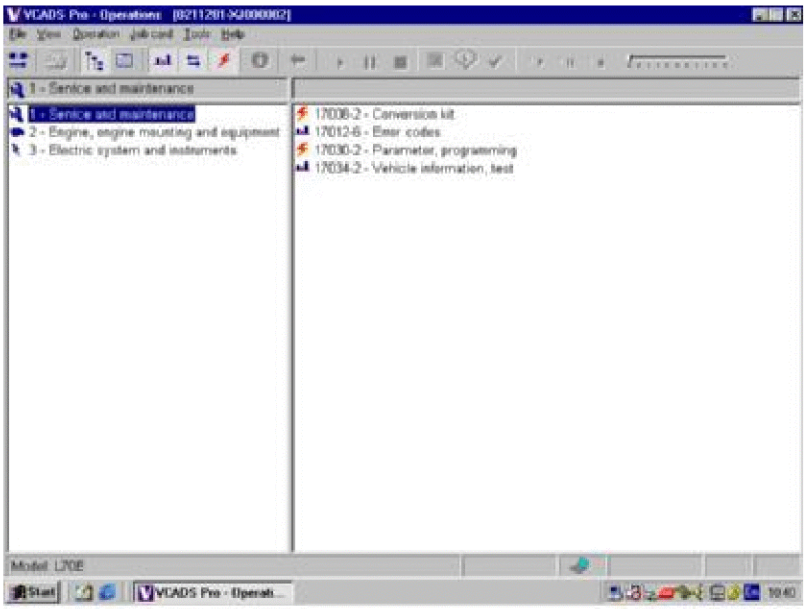

V1003546

Figure 4
Operations, read-out of error codes

Read-out of error codes from operations, function group 1 - Service and maintenance. To pin-point malfunction causes, it's advantageous to use the service tool VCADS Pro. From VCADS Pro, it's possible to obtain error codes

of the SAE-type, from which the malfunction cause can be determined, see SAE-felkoder, översättning till felmeddelanden, allmänt
.

Parameters

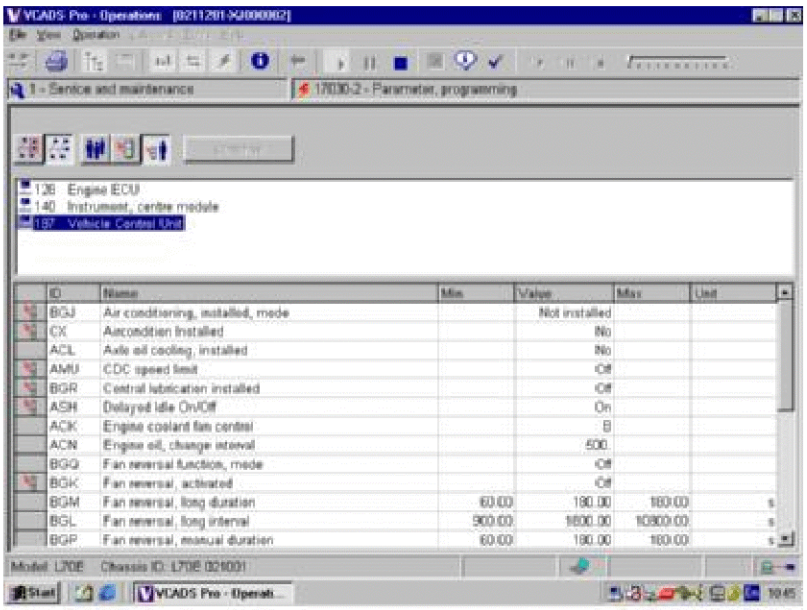

Figure 5
Example, read-out parameters

Reading out and programming of parameters is done from operation, function group 1 - Service and maintenance. For more information on parameters, see Inställning av mjukvaruparametrar
.

Job card

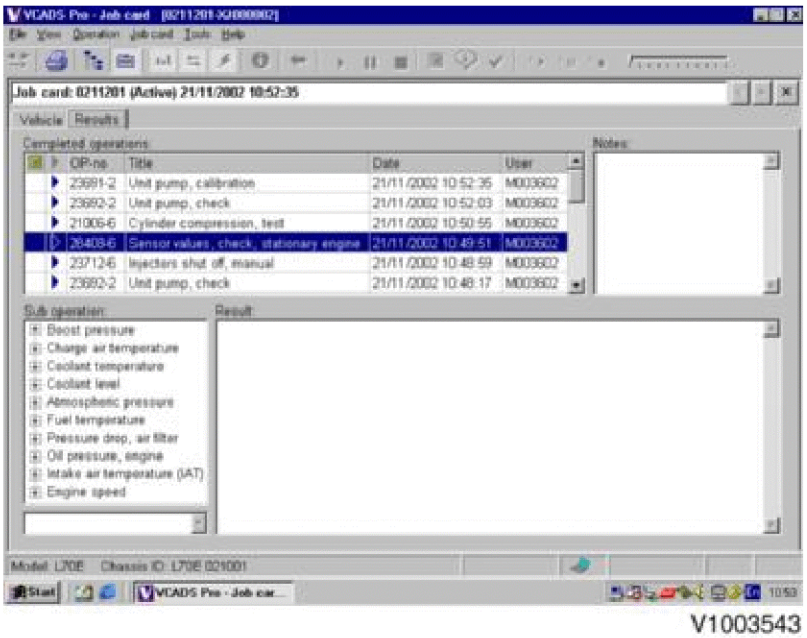

Figure 6
Example, job card

The job card function is used to store work operations that have been performed with VCADS Pro, for example, test results and results of error code read-outs and programming of parameters. The job card is stored locally in the computer in question.

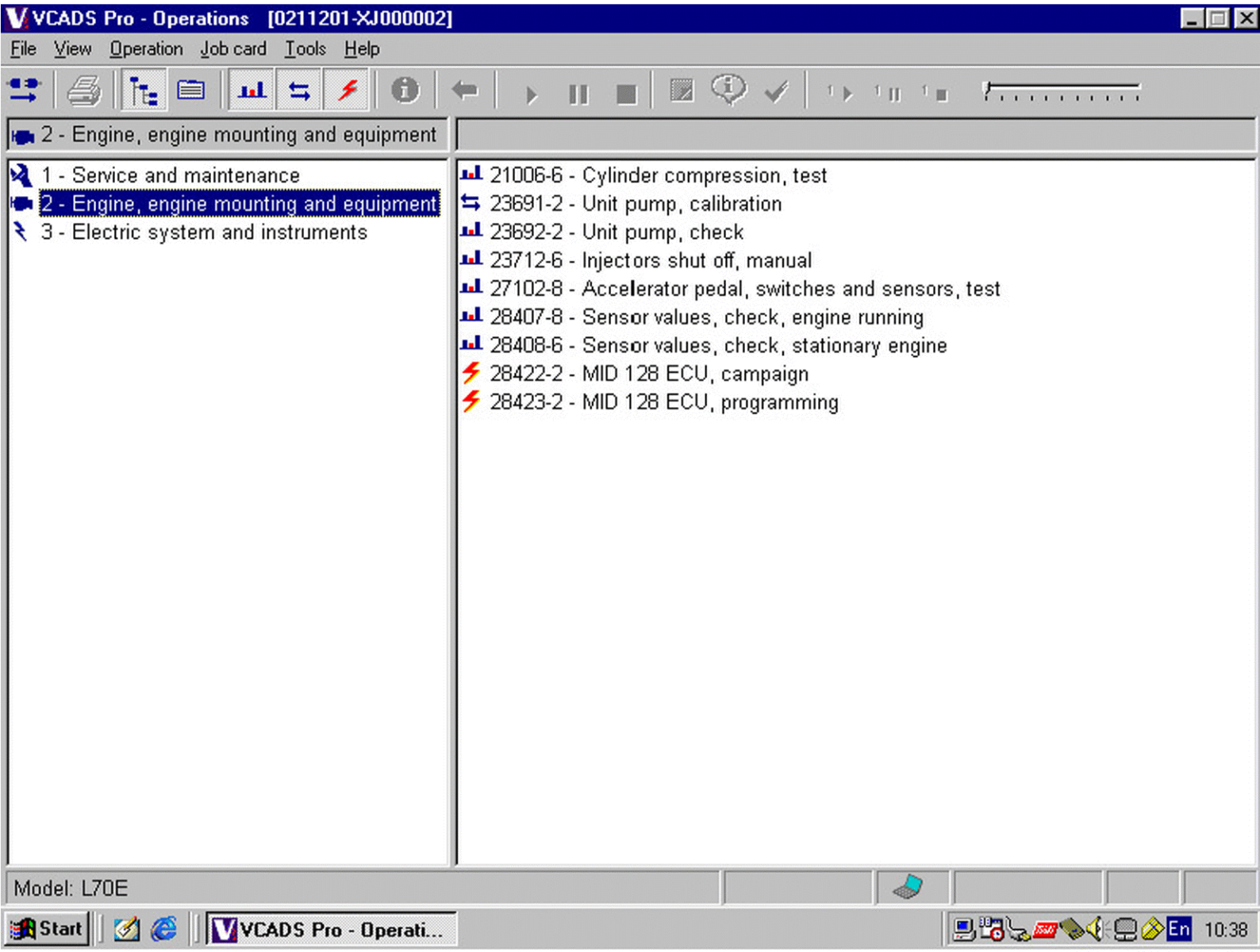
VCADS Pro - Operations [0211201-XJ000002]
File View Operation Job card Tools Help
2 - Engine, engine mounting and equipment
1 - Service and maintenance
2 - Engine, engine mounting and equipment
3 - Electric system and instruments
21006-6 - Cylinder compression, test
23691-2 - Unit pump, calibration
23692-2 - Unit pump, check
23712-6 - Injectors shut off, manual
27102-8 - Accelerator pedal, switches and sensors, test
28407-8 - Sensor values, check, engine running
28408-6 - Sensor values, check, stationary engine
28422-2 - MID 128 ECU, campaign
28423-2 - MID 128 ECU, programming
Model: L70E
Start
VCADS Pro - Operati...
En
10:38

V1003545

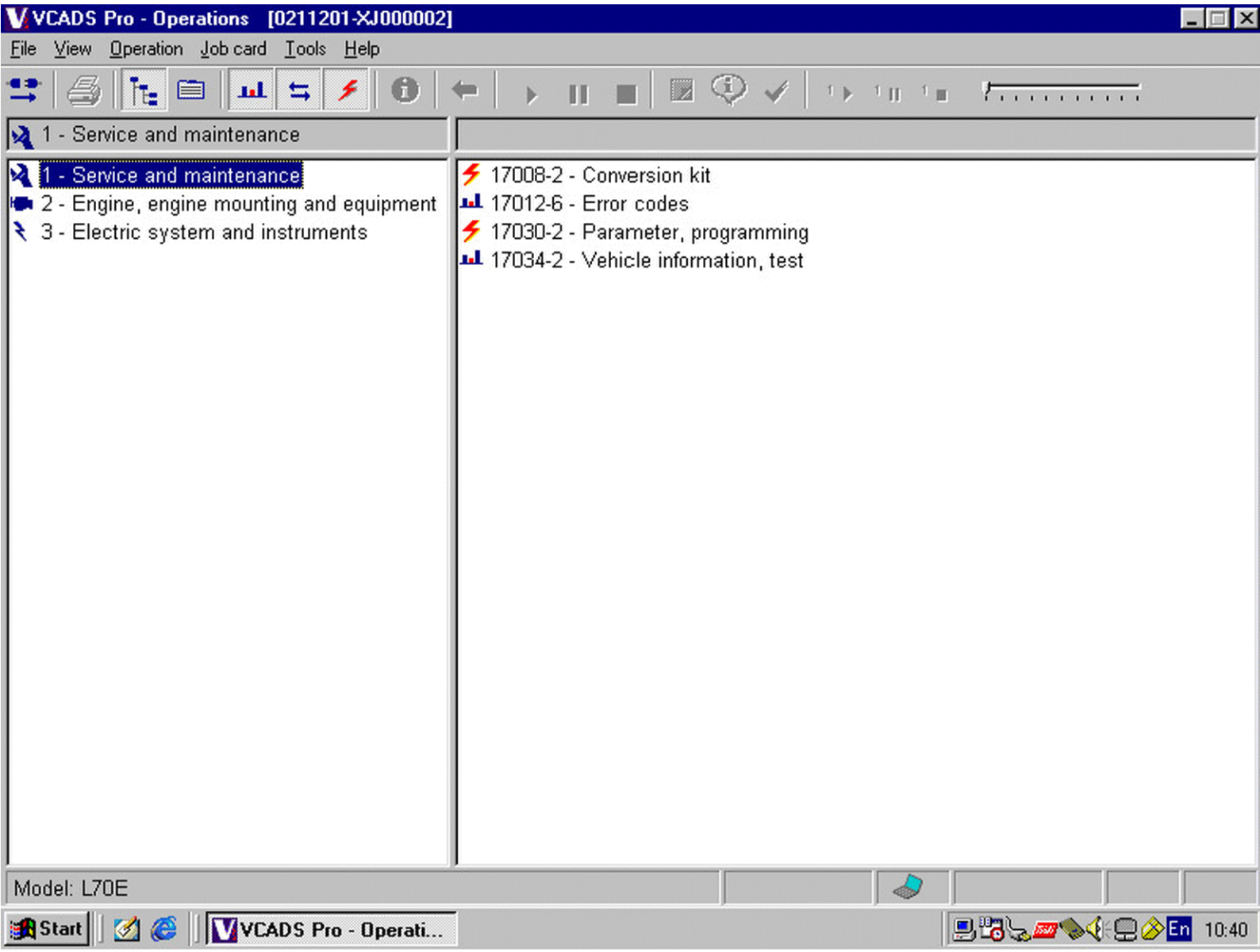
VCADS Pro - Operations [0211201-XJ000002]
File View Operation Job card Tools Help
1 - Service and maintenance
1 - Service and maintenance
2 - Engine, engine mounting and equipment
3 - Electric system and instruments
17008-2 - Conversion kit
17012-6 - Error codes
17030-2 - Parameter, programming
17034-2 - Vehicle information, test
Model: L70E
Start
VCADS Pro - Operati...
En
10:40

V1003546

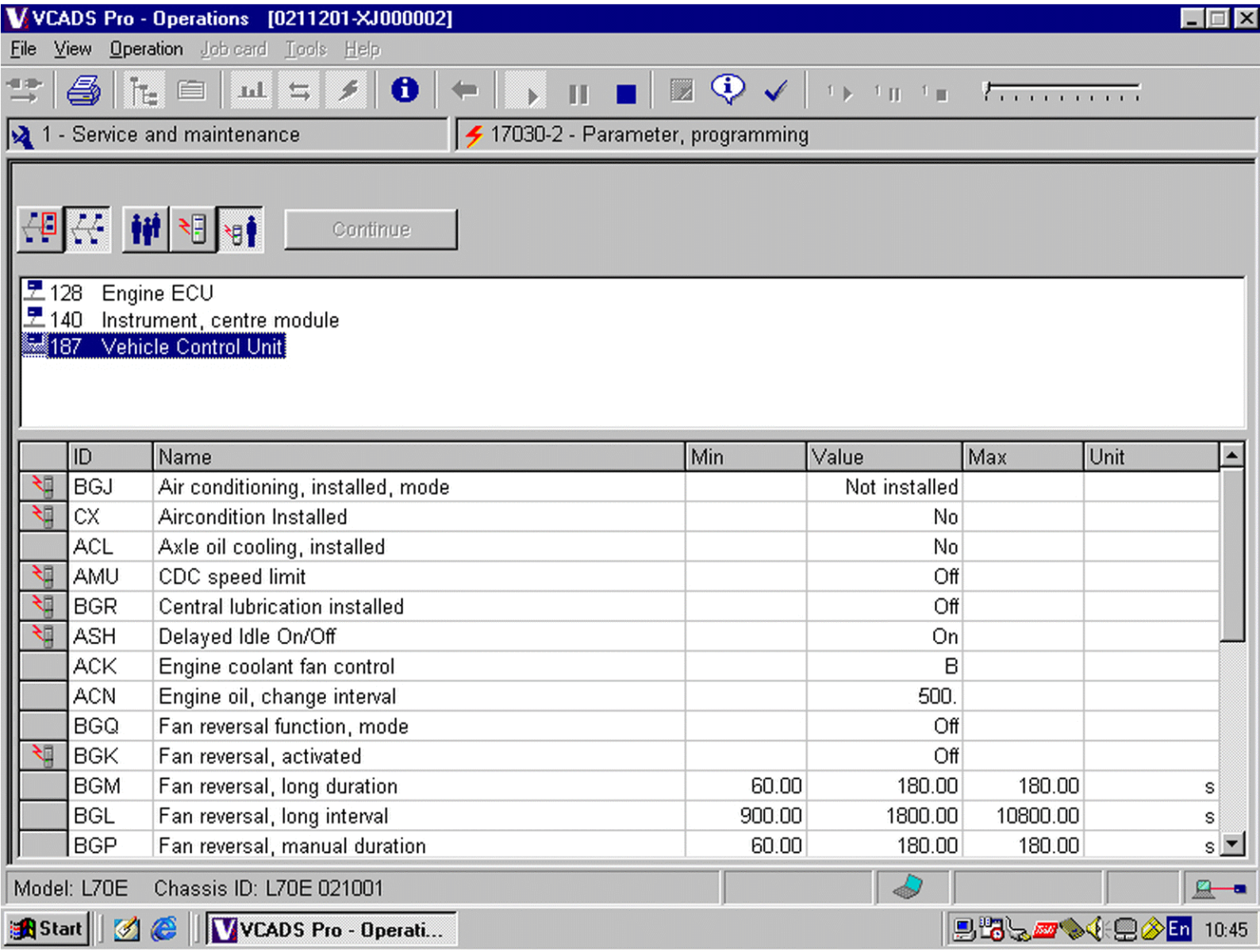
VCADS Pro - Operations [0211201-XJ000002]
File View Operation Job card Tools Help
1 - Service and maintenance
17030-2 - Parameter, programming
Continue
128 Engine ECU
140 Instrument, centre module
187 Vehicle Control Unit
ID Name Min Value Max Unit
BGJ Air conditioning, installed, mode Not installed
CX Aircondition Installed No
ACL Axle oil cooling, installed No
AMU CDC speed limit Off
BGR Central lubrication installed Off
ASH Delayed Idle On/Off On
ACK Engine coolant fan control B
ACN Engine oil, change interval 500.
BGQ Fan reversal function, mode Off
BGK Fan reversal, activated Off
BGM Fan reversal, long duration 60.00 180.00 180.00 s
BGL Fan reversal, long interval 900.00 1800.00 10800.00 s
BGP Fan reversal, manual duration 60.00 180.00 180.00 s
Model: L70E Chassis ID: L70E 021001
Start
VCADS Pro - Operati...
En 10:45

V1003547

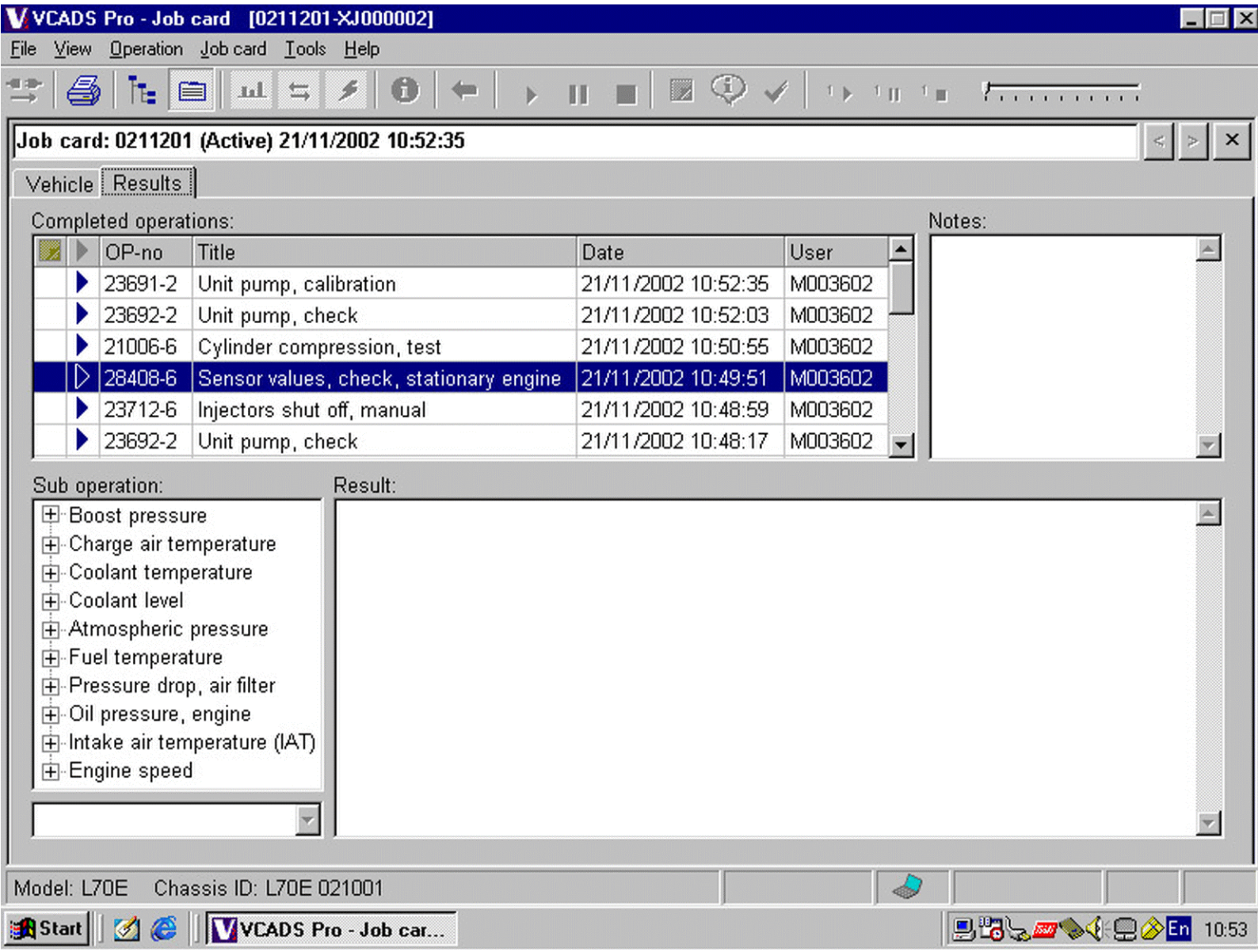
VCADS Pro - Job card [0211201-XJ000002]
File View Operation Job card Tools Help
Job card: 0211201 (Active) 21/11/2002 10:52:35
Vehicle Results
Completed operations:
OP-no Title Date User
23691-2 Unit pump, calibration 21/11/2002 10:52:35 M003602
23692-2 Unit pump, check 21/11/2002 10:52:03 M003602
21006-6 Cylinder compression, test 21/11/2002 10:50:55 M003602
28408-6 Sensor values, check, stationary engine 21/11/2002 10:49:51 M003602
23712-6 Injectors shut off, manual 21/11/2002 10:48:59 M003602
23692-2 Unit pump, check 21/11/2002 10:48:17 M003602
Notes:
Sub operation:
Boost pressure
Charge air temperature
Coolant temperature
Coolant level
Atmospheric pressure
Fuel temperature
Pressure drop, air filter
Oil pressure, engine
Intake air temperature (IAT)
Engine speed
Result:
Model: L70E Chassis ID: L70E 021001
Start
VCADS Pro - Job car...
10:53

V1003543

VOLVO
Construction Equipment

Service Information

Document Title:	Function Group:	Information Type: **Service Information**	Date: **12/10/2011**
Profile: **WLO, L90F (Volvo) [GB]**			

Conditions when checking

The following checks (measurements) are mostly described using symbols, in order to clarify the conditions and to reduce reading time. The symbols are described below.

Caution!
When checking components, i.e. relays and solenoid valves controlled by a control unit, certain conditions must be fulfilled.

Conditions are described in the function group to which the component belongs.

Caution!
To avoid changing **functioning components**, check the connectors with regards to loose connections and oxidation.

See Kontroll av elledningar och kopplingsstycken
.

General symbols

Symbol	Description	Symbol	Description
	Battery disconnect switch in position **Off**.		Ignition in position **0**, **1**, or **3**.
	Engine at idle speed, ignition in position 1.		Resistance measurement
	Diode measurement		Voltage measurement (DC)
	Voltage measurement (AC)		Component
	Ground connection		

Measuring control unit and cable harness, symbols

Measuring through cable harness to ECU. Component disconnected.

Symbol	Description	Symbol	Description
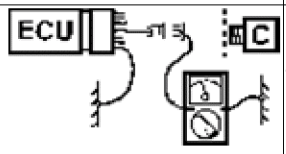	Measuring in connector with test pin.	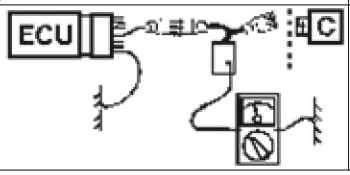	Measuring with adapter.

Checking cable harness, symbols

Measuring cable harness only. Component and ECU disconnected.

Symbol	Description	Symbol	Description
	Measuring with multi-pin		Measuring with multi-pin

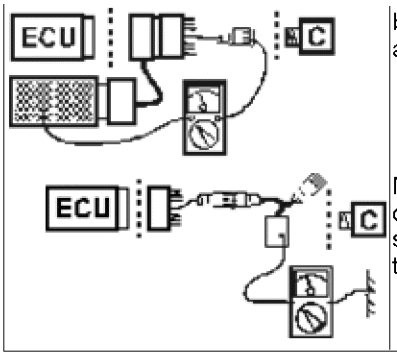	breaker box and test pin.	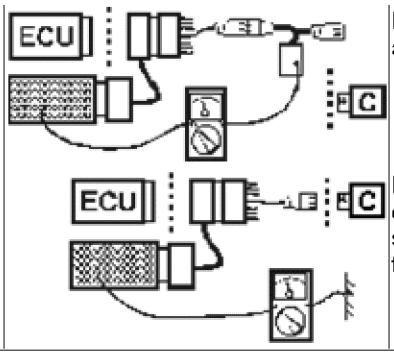	breaker box and adapter.
	Measuring of cable harness, short-circuiting to ground.		Measuring of cable harness, short-circuiting to ground.

Checking component/cable harness, symbols

Measuring component with or without connected cable harness.

Symbol	Description	Symbol	Description
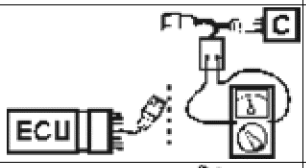	Measuring with adapter.	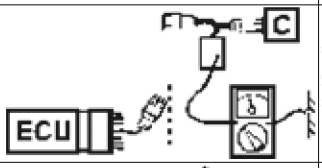	Measuring short-circuiting to ground with adapter.
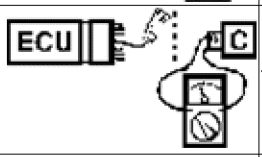	Measuring against component with test pins.	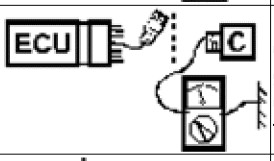	Measuring short-circuiting to ground in component with test pin.
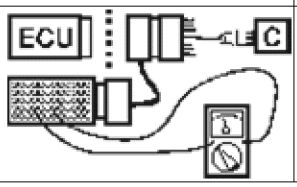	Measuring component with connected cable harness. ECU disconnected.	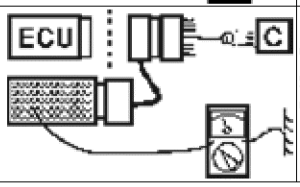	Measuring short-circuiting to ground through cable harness.

Checking sub-system, symbols

Symbol	Description	Symbol	Description
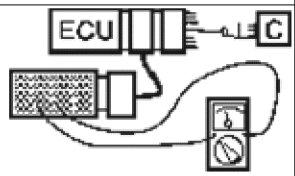	Multi-pin breaker box and adapter connected between ECU and cable harness.	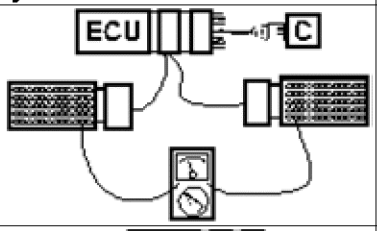	Two multi-pin breaker boxes and adapter connected between ECU and cable harness.
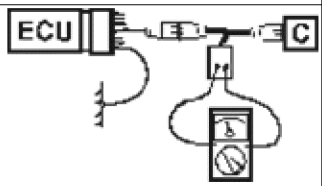	Adapter connected between component and cable harness. ECU connected.	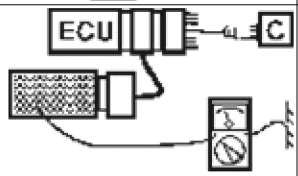	Multi-pin breaker box and adapter connected between ECU and cable harness. Test instrument ground to ground connection.

VOLVO
Construction Equipment

Service Information

Document Title:	Function Group:	Information Type: **Service Information**	Date: **12/10/2011**
Profile: **WLO, L90F (Volvo) [GB]**			

Lead and connector checks

General

An important part of electrical system fault diagnosis is lead and connector checks, which can provide the cause of malfunctions in the form of loose connections or damaged electrical leads.

NOTE **Before troubleshooting leads and connectors is conducted, the appropriate fuses should be checked.**

Checking should be performed with multimeter, multi-pin breakout box, and cable adapters, see Specialverktyg för felsökning
.

For repairs of electrical cabling and connectors, see separate Service manual: CABLES AND CONNECTORS.

Refer to the wiring diagrams to find suitable test points.

Caution!
The following should be observed when working on electrical systems.

- Testing should not be conducted by sticking objects through electrical lead insulation.
- Exercise caution while testing with a test cable in connectors to avoid damage to or widening of connector pins and sleeves.

NOTE **For troubleshooting of information bus and control bus, see diagnostics section in PROSIS.**

Connector and cable terminal checks

For all tests and checks during which connectors are dismantled, connectors and cable terminals should be visually checked as follows:

1. Look for cable terminal oxidation. Oxidation can impair the contact.
2. Check for cable terminal damage, correct placement in the insulator and that the leads are correctly connected to the terminals.
3. Check for good mechanical contact in the cable terminals. Use a separate cable terminal for checking.

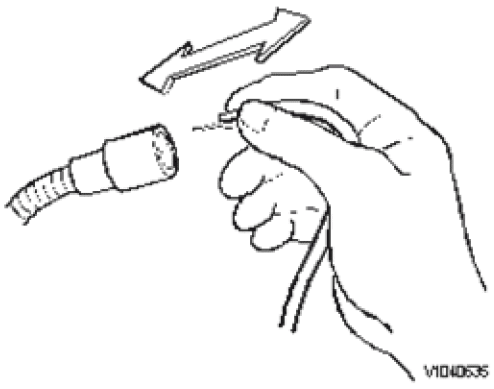

Figure 1

Connector, mechanical contact check

Open circuit, check

Open circuits in electrical cables and cable harnesses can be caused by chafing due to friction, pressure due to squeezing and tension load. Checks for open circuits are conducted as follows:

1. Dismantle the appropriate connector in both ends of the cable harness.
2. Conduct a resistance test between the lead ends. The resistance should be ≈ 0 Ω for an open circuit.
3. Shake the cable harness and pull lightly on the connectors simultaneously during testing to find possible open circuits.

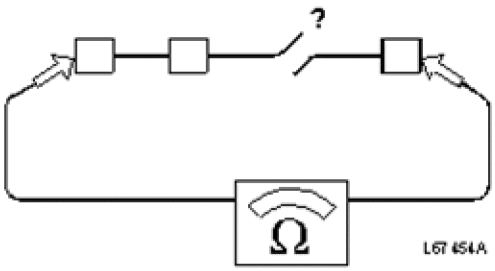

Figure 2
Check for open circuit with resistance testing

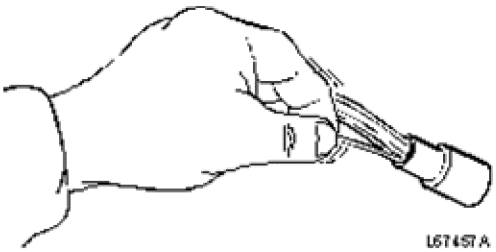

Figure 3
Troubleshooting open circuit

Short circuit to ground, check

A short circuit between the power supply lead and ground often leads to fuse failure. A check for short circuit to ground is conducted as follows:

1. Ignition in position 1.
2. Close all breakers, activate circuit functions and check if any fuses are tripped.
3. Dismantle the appropriate connector to the circuit components so they do not to affect the test.
4. Resistance test between lead and ground. The resistance should be ∞ Ω for a lead without short circuit to ground.

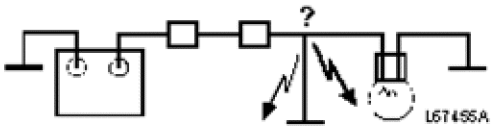

Figure 4
Check for short circuit to ground (frame ground connection) with resistance testing

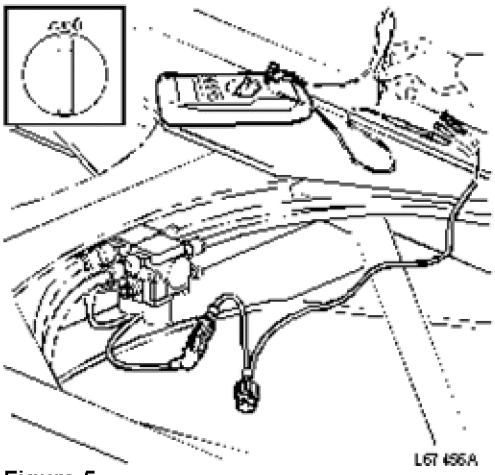

Figure 5
Basis for test of short circuit to ground (frame ground connection)

Short circuit to voltage, check

A short circuit between a lead and voltage often leads to fuse failure.

1. Test the voltage with a multimeter on suitable circuit points while the switch is connected and the sensor is activated.
   The voltage value is dependent on several parameters. See wiring diagram, signal description and component information.
2. Dismantle the appropriate connector in both ends of the cable harness.
   Resistance test between the leads that can be short-circuited with each other. The resistance should be ∞ Ω for leads which are not cross short-circuited.

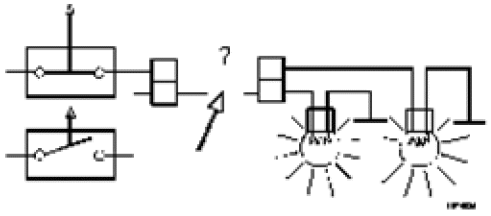

Figure 6
Check for short circuit to voltage with resistance testing

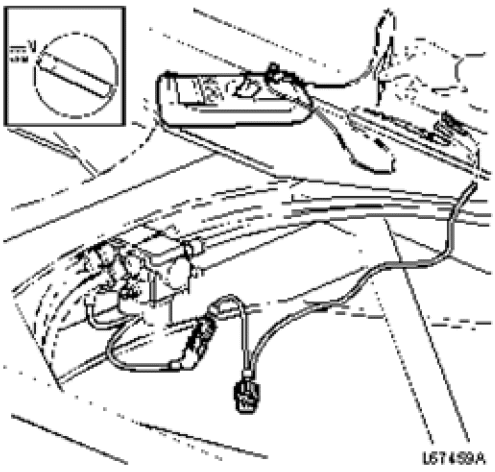

Figure 7
Basis for test of short circuit to voltage

Contact resistance and oxidation, check

Loose contacts or temporary recurring malfunctions can be difficult to diagnose and are often caused by corrosion, vibrations of poorly connected leads.

Dampness in the connectors can also cause contact problems as well as damaged pins or sleeves.

Resistance in the connectors and leads should be ≈ 0 Ω. Some resistance, however, can occur due to corrosion in the cable terminals.

If the contact resistance is too large, function disruption can occur. The amount of resistance that may occur without disruption varies according to the circuit load.

To check contact resistance and oxidation, see Connector and cable terminal checks.

Caution!
Shake the cable harness and pull lightly on the connectors while measuring to find eventual loose connections.

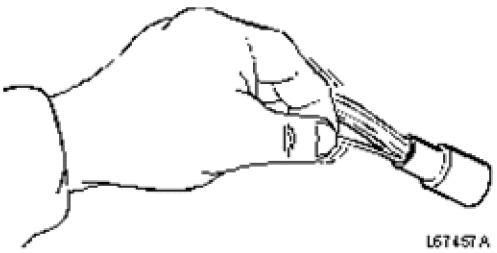

Figure 8

Pins and sleeves, cleaning

1. Open the battery disconnect switch.
2. Clean the connectors using compressed air.
3. Spray the connectors with contact spray. Avoid spraying for preventive purposes.
4. Use compressed air once again on the connectors.

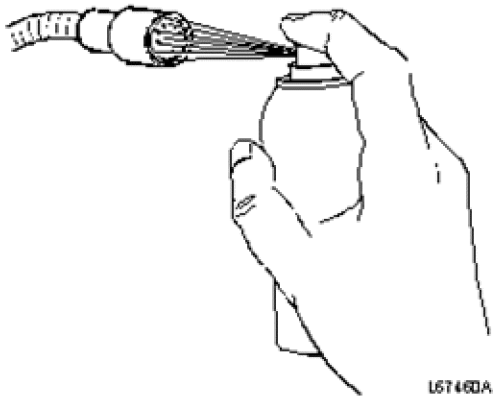

Figure 9
Connectors, spraying with contact spray

VOLVO
Construction Equipment

Service Information

Document Title:	Function Group:	Information Type: **Service Information**	Date: **12/10/2011**
Profile: **WLO, L90F (Volvo) [GB]**			

Special tools for troubleshooting

The recommended measuring tools for checking electrical leads and components, for example, are listed below.

Part no./Designation	Specification
9812519Multimeter	Multimeter for use when troubleshooting.
9990008Measuring equipment	Test pins that are used together with multimeter when there is no adapter cable.
9990014Adapter	Adapter cable for measuring on engine control unit (E-ECU).
9990062Cable	Extension cable for multi-pin breaker box 9998699.
9990191Adapter	Adapter cable for measuring against component with 2- or 3-pin connectors.
9990216Adapter	Adapter cable for measuring against component with 2-, 3-, or 4-pin connectors.
9993893Adapter	Adapter cable for measuring on vehicle control unit (V-ECU), vehicle control unit 2 (V2–ECU), or for climate control unit (ECC).
9993894Template	Template for multi-pin breaker box 9998699. Adapted to adapter cable 9993893.
9998534Adapter	Adapter cable for measuring against component with 4-pin connectors.
9998567Adapter	Adapter cable for measuring against component with 7-pin connectors.
9998699Adapter	62–pin breaker box.
88830027Adapter	Adapter cable for measuring on instrument control unit (I-ECU).
88890016Break out harness	Adapter cable for measuring against component with 2–, 3–, 4–, 6–, 8–, or 12–pin connectors. Used together with multi-pin breaker box 9998699 and template 88890019.
88890019Template	Template for multi-pin breaker box 9998699. Adapted to adapter cable 88890016.

VOLVO
Construction Equipment

Service Information

Document Title:	Function Group:	Information Type: **Service Information**	Date: **12/10/2011**
Profile: **WLO, L90F (Volvo) [GB]**			

SAE error codes, translation to error messages, general

The service tool VCADS Pro uses error codes of SAE–type according to the standard J1587. Error codes presented in this way also appear on the information display unit.
SAE–error codes are made up of identification numbers that give information about the malfunction.

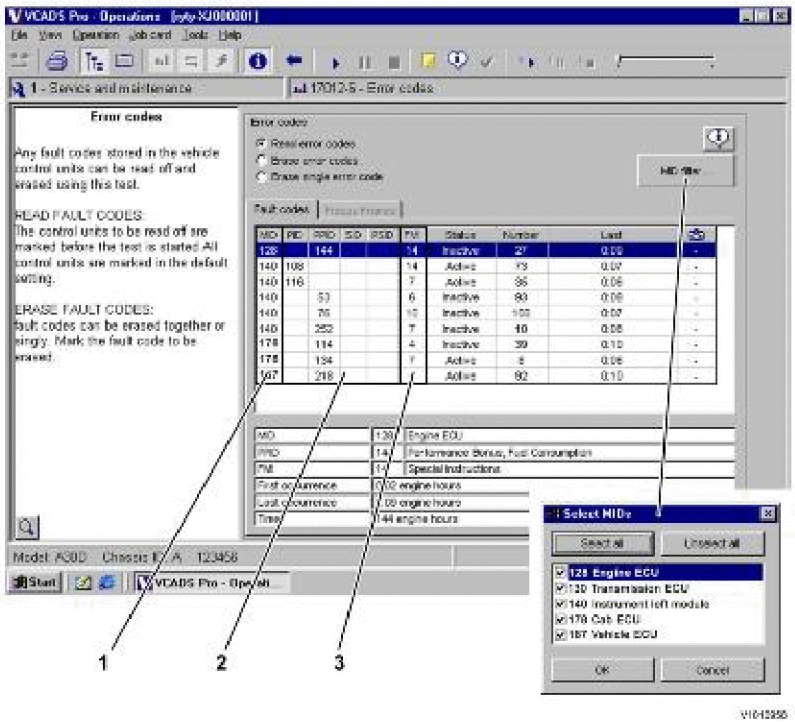

Figure 1

Reading out error codes in VCADS Pro

Control unit

The column designated MID (1) indicates which control unit generated the error code. MID is an abbreviation of Message Identification Description (identification of control unit).
The following control units may be installed in F-series wheel loaders.

- Engine control unit, MID128
- Information display unit, MID140
- W-ECU (CareTrack), MID142
- ECC-ECU (air conditioning/climate control unit), MID146
- Vehicle control unit, MID187
- V2ECU (vehicle control unit 2), MID249

Component/parameter

Columns PID, PPID, SID, and PSID (2) indicate which component or parameter generated the error code.
The abbreviations have the following meanings;

- PID, Parameter Identification Description (identification of parameter/value).
- PPID, Proprietary Parameter Identification Description (identification of Volvo-unique parameter/value).
- SID, Subsystem Identification Description (identification of component).
- PSID, Proprietary Subsystem Identification Description (identification of Volvo-unique component).

Error type

The column FMI (3) indicates which type of error has been detected. FMI is an abbreviation of Failure Mode Identifier (identification of error type).
According to the J1587–standard, there are the following error types.

FMI	Error type
0	Data applicable, but above normal working range
1	Data applicable, but below normal working range
2	Intermittent or incorrect data
3	Abnormally high voltage or short-circuiting to higher voltage
4	Abnormally low voltage or short-circuit to lower voltage
5	Abnormally low current or open circuit
6	Abnormally high current or short-circuiting to ground
7	Incorrect response from mechanical system
8	Abnormal frequency
9	Abnormal updating rate
10	Abnormally large variations
11	Non-identifiable error/malfunction.
12	Defective unit or component
13	Calibration values outside limits
14	Special instructions

Fault diagnosis

All error codes available in the machine are presented together with a suitable action in the Diagnostics section. Prosis is recommended in order to be able to take advantage of continuous improvements, and for access to guided troubleshooting.

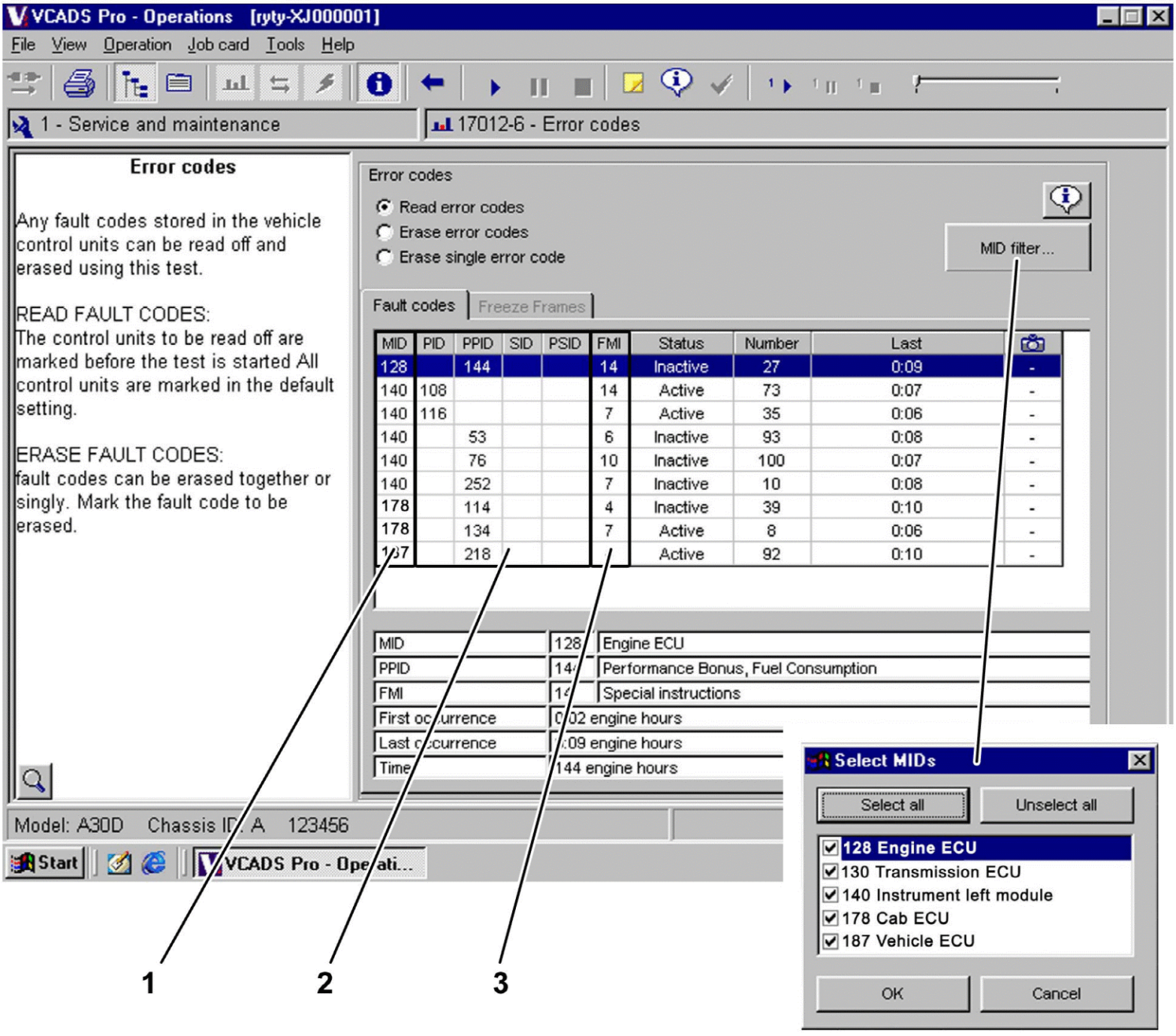
VCADS Pro - Operations [ryty-XJ000001]
File View Operation Job card Tools Help
1 - Service and maintenance
17012-6 - Error codes
Error codes
Any fault codes stored in the vehicle control units can be read off and erased using this test.
READ FAULT CODES:
The control units to be read off are marked before the test is started All control units are marked in the default setting.
ERASE FAULT CODES:
fault codes can be erased together or singly. Mark the fault code to be erased.
Error codes
Read error codes
Erase error codes
Erase single error code
MID filter...
Fault codes
Freeze Frames
MID PID PPID SID PSID FMI Status Number Last
128 144 14 Inactive 27 0:09 -
140 108 14 Active 73 0:07 -
140 116 7 Active 35 0:06 -
140 53 6 Inactive 93 0:08 -
140 76 10 Inactive 100 0:07 -
140 252 7 Inactive 10 0:08 -
178 114 4 Inactive 39 0:10 -
178 134 7 Active 8 0:06 -
187 218 Active 92 0:10 -
MID 128 Engine ECU
PPID 14 Performance Bonus, Fuel Consumption
FMI 14 Special instructions
First occurrence 0 02 engine hours
Last occurrence 09 engine hours
Time 144 engine hours
Model: A30D Chassis ID: A 123456
Start
VCADS Pro - Operati...
Select MIDs
Select all
Unselect all
128 Engine ECU
130 Transmission ECU
140 Instrument left module
178 Cab ECU
187 Vehicle ECU
OK
Cancel
1
2
3

V1010958

VOLVO
Construction Equipment

Service Information

Document Title:	Function Group:	Information Type: **Service Information**	Date: **12/10/2011**
Profile: **WLO, L90F (Volvo) [GB]**			

SAE error codes MID 128 Engine control unit (E-ECU)

All error codes available in the machine are presented together with a suitable action in the Diagnostics section. Prosis is recommended in order to be able to take advantage of continuous improvements, and for access to guided troubleshooting.

VOLVO
Construction Equipment

Service Information

Document Title:	Function Group:	Information Type: **Service Information**	Date: **12/10/2011**
Profile: **WLO, L90F (Volvo) [GB]**			

SAE error codes MID 140 Instrument control unit (I-ECU)

All error codes available in the machine are presented together with a suitable action in the Diagnostics section. Prosis is recommended in order to be able to take advantage of continuous improvements, and for access to guided troubleshooting.

VOLVO
Construction Equipment

Service Information

Document Title:	Function Group:	Information Type: **Service Information**	Date: **12/10/2011**
Profile: **WLO, L90F (Volvo) [GB]**			

SAE error codes MID 146 Electronic climate control unit (ECC)

All error codes available in the machine are presented together with a suitable action in the Diagnostics section. Prosis is recommended in order to be able to take advantage of continuous improvements, and for access to guided troubleshooting.

VOLVO
Construction Equipment

Service Information

Document Title:	Function Group:	Information Type: **Service Information**	Date: **12/10/2011**
Profile: **WLO, L90F (Volvo) [GB]**			

SAE error codes MID 187 Vehicle control unit (V-ECU)

All error codes available in the machine are presented together with a suitable action in the Diagnostics section. Prosis is recommended in order to be able to take advantage of continuous improvements, and for access to guided troubleshooting.

VOLVO
Construction Equipment

Service Information

Document Title:	Function Group:	Information Type: **Service Information**	Date: **12/10/2011**
Profile: **WLO, L90F (Volvo) [GB]**			

SAE error codes MID 249 Vehicle control unit 2 (V2-ECU)

All error codes available in the machine are presented together with a suitable action in the Diagnostics section. Prosis is recommended in order to be able to take advantage of continuous improvements, and for access to guided troubleshooting.

VOLVO
Construction Equipment

Service Information

Document Title:	Function Group:	Information Type: **Service Information**	Date: **12/10/2011**
Profile: **WLO, L90F (Volvo) [GB]**			

CU9901, description and measuring

Op nbr 302-117

9812519 Multimeter
9998699 Adapter
9993893 Adapter
9990062 Cable
9990008 Measuring equipment

Description

Function	The electronic unit controls and monitors the central lubrication system. When voltage is turned on, a pulse train is sent to the vehicle control unit (V-ECU) which indicates pre-selected lubrication cycle, see table.
References	Komponentförteckning: Generator, batterier, kondensatorer, elektronikenheter Elschema 913
VCADS Pro Test	—
	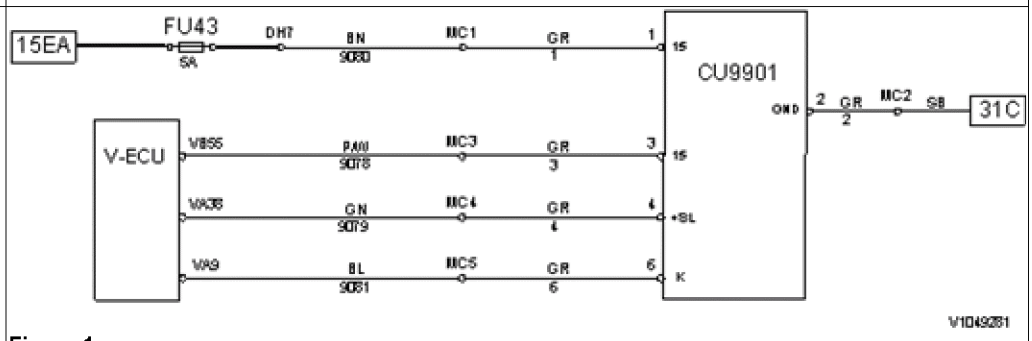 **Figure 1** VB55, signal VA38, signal VA9, signal

Measuring

Measuring point	Correct value	Condition	Test method
1 –	≈ U_{bat}		
2 –	≈ 0 Ω		
VA9 – VA38 – VB55 –	≈ ∞ Ω		

			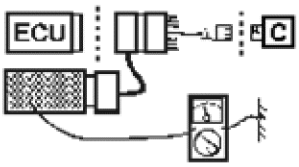
VA9 – 6 VA38 – 4 VB55 – 3	≈ 0 Ω		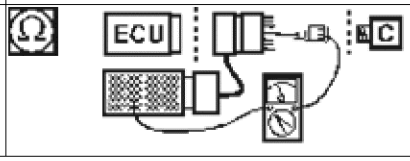

Verifying

Measuring point	Correct value	Condition	Test method
VA38 – 	According to the table below		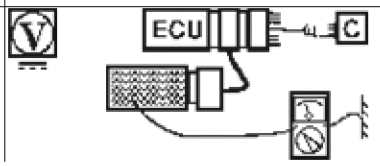

CU9901 indication of lubrication cycle

Lubrication cycle	Time, high signal[T1]	Time, low signal[T2]	Number of pulses	Number of repetitions[T3]
Heavy	0.5 second	0.5 second	1	4
Normal	0.5 second	0.5 second	2	4
Light	0.5 second	0.5 second	3	4

[T1] High signal corresponds to a voltage level above 8 Volt.

[T2] Low signal corresponds to a voltage level below 3 Volt.

[T3] Time between repetitions is 5 seconds.

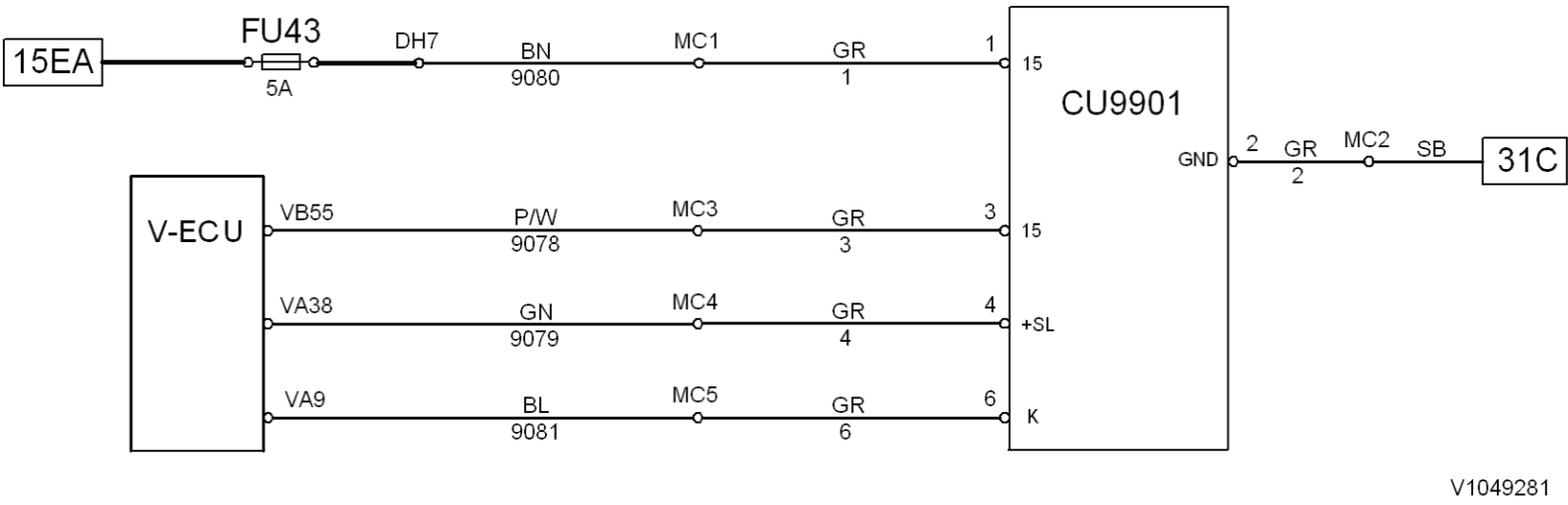
15EA
FU43
5A
DH7
BN
9080
MC1
GR
1
1
15
CU9901
GND
2
GR
2
MC2
SB
31C
V-ECU
VB55
P/W
9078
MC3
GR
3
3
15
VA38
GN
9079
MC4
GR
4
4
+SL
VA9
BL
9081
MC5
GR
6
6
K
V1049281

VOLVO
Construction Equipment

Service Information

Document Title:	Function Group:	Information Type: **Service Information**	Date: **12/10/2011**
Profile: **WLO, L90F (Volvo) [GB]**			

E-ECU PID158, description and measuring

Op nbr 302-003

9812519 Multimeter
9998699 Adapter
9990014 Adapter
9990062 Cable
9990008 Measuring equipment

Description

Function	Monitors the battery voltage.
References	Komponentförteckning: Säkringar Elschema 204
VCADS Pro Test	—
	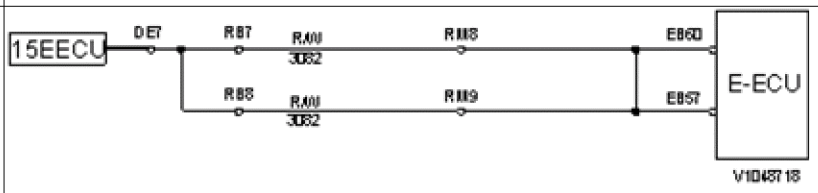 **Figure 1** EB60, feed EB57, feed

Measuring

Measuring point	Correct value	Condition	Test method
Feed FU74 – FU74 removed	≈ U_{bat}		Measure in fuse holder
EB57 – EB60 –	≈ U_{bat}		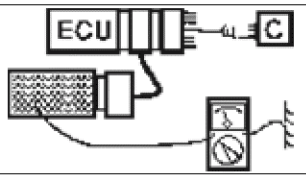
EB57 – EB60 –	< 31 V		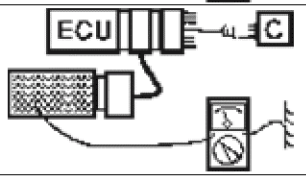

Verifying

Measuring point	Correct value	Condition	Test method
EB57 – EB60 –	< 31 V		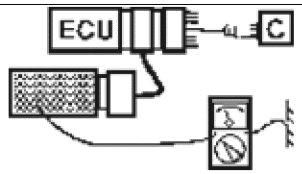

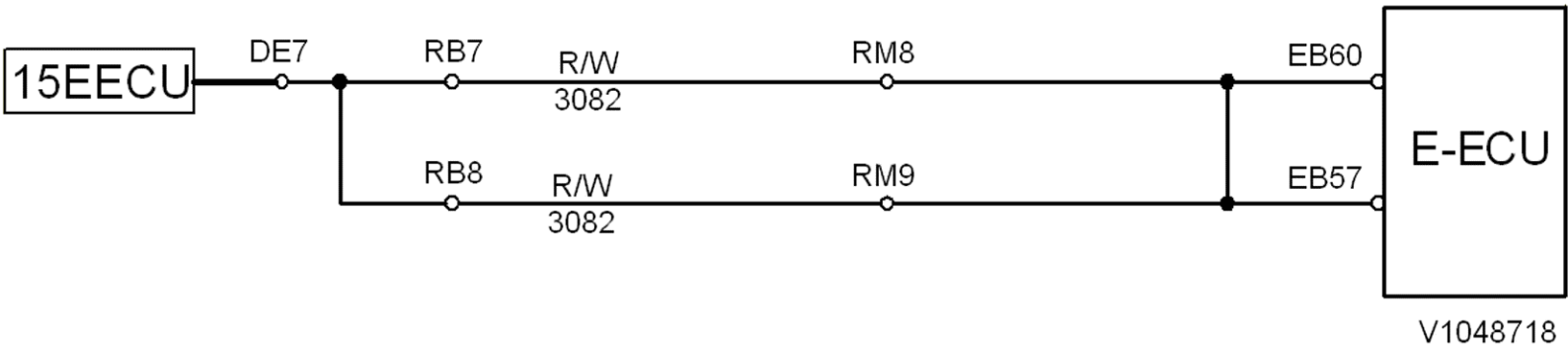
15EECU
DE7
RB7
R/W
3082
RM8
EB60
E-ECU
RB8
R/W
3082
RM9
EB57
V1048718

VOLVO
Construction Equipment

Service Information

Document Title:	Function Group:	Information Type: **Service Information**	Date: **12/10/2011**
Profile: **WLO, L90F (Volvo) [GB]**			

HE2501, description and measuring

Op nbr 302-001

9812519 Multimeter
9998699 Adapter
9990014 Adapter
9990062 Cable

Description

Function	Preheats the induction air for the engine.
References	Komponentförteckning: Värmeslingor, instrument, serviceanslutningar Elschema 204
VCADS Pro Test	—
	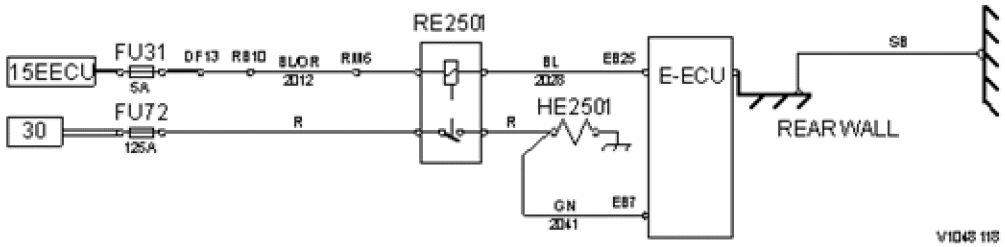 **Figure 1** EB7, diagnostic signal

Measuring

Measuring point	Correct value	Condition	Test method
HE2501 –	≈ 0.5 Ω		Measure directly on the heating coil
Big screw on relay RE2501 (voltage feed) –	≈ U_{bat}		
EB7 – Big screw on relay RE2501	≈ 0 Ω		

Verifying

Measuring point	Correct value	Condition	Test method
EB7 –	≈ 0.5 Ω		

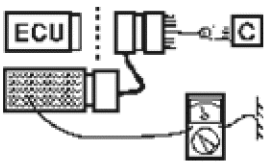
ECU
C

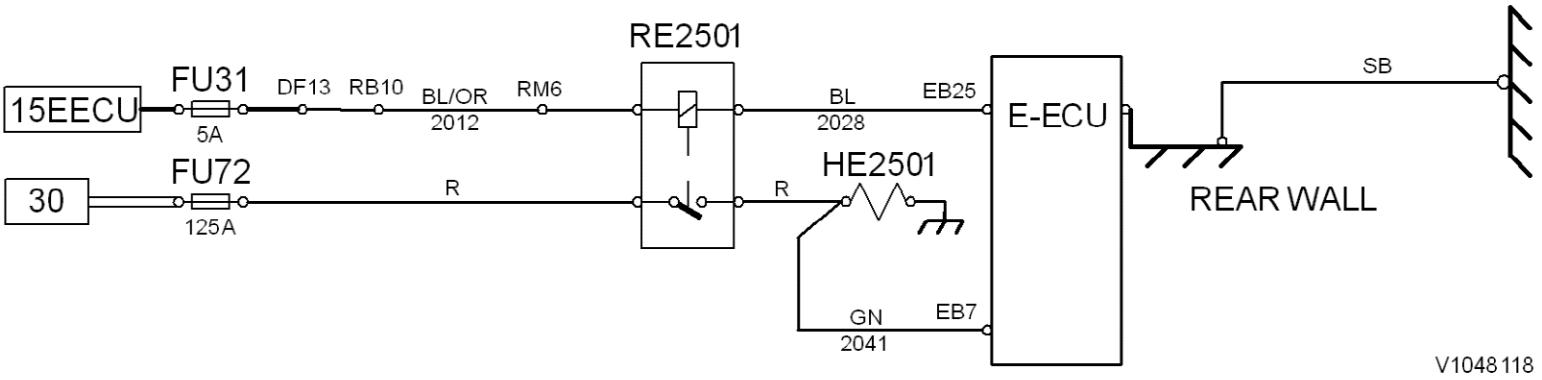
RE2501
15EECU
FU31
5A
DF13
RB10
BL/OR
2012
RM6
BL
2028
EB25
E-ECU
SB
REAR WALL
30
FU72
125A
R
R
HE2501
GN
2041
EB7
V1048118

VOLVO
Construction Equipment

Service Information

Document Title:	Function Group:	Information Type: **Service Information**	Date: **12/10/2011**
Profile: **WLO, L90F (Volvo) [GB]**			

MA2301-MA2306, description and measuring

Op nbr 302-002

9812519 Multimeter
9998699 Adapter
9990014 Adapter
9990062 Cable

Description

Function	Controls the injection sequence.	
References	Komponentförteckning: Magnetventiler Elschema 206	
VCADS Pro Test	23712-3 Injectors shut off, manual	
	EA56, return cable EA52, return cable EA48, return cable EA44, return cable EA40, return cable EA36, return cable EA60, feed MA2304–MA2306 EA59, feed MA2301–MA2303	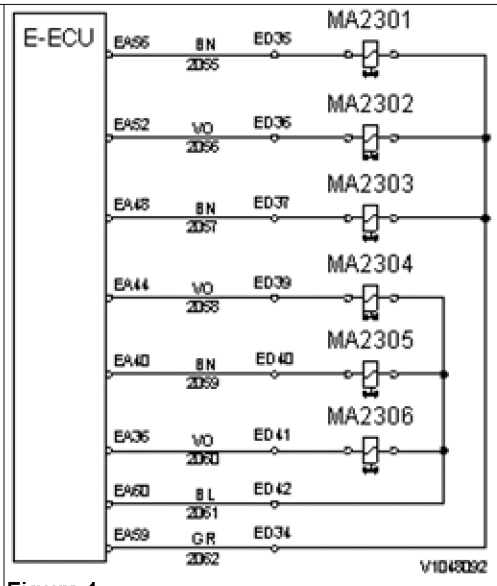 Figure 1

Measuring

Measuring point	Correct value	Condition	Test method
Injectors	≈ 0.5 Ω		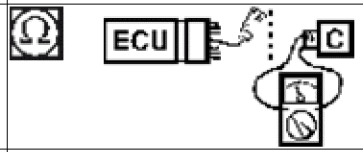
Injectors – 	≈ ∞ Ω		

			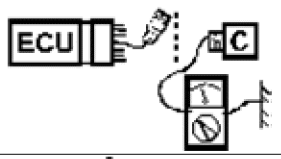
EA56 – EA59 EA52 – EA59 EA48 – EA59 EA44 – EA60 EA40 – EA60 EA36 – EA60	≈ 1,0 Ω		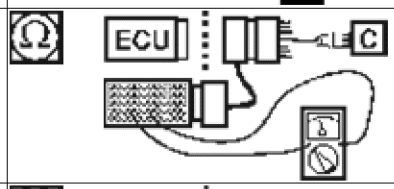
EA56 –  EA52 –  EA48 –  EA44 –  EA40 –  EA36 – 	≈ ∞ Ω		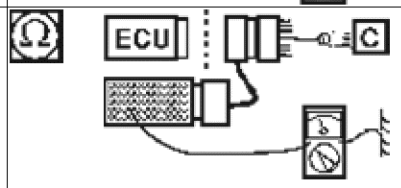

Verifying

Measuring point	Correct value	Condition	Test method
EA56 – EA59 EA52 – EA59 EA48 – EA59 EA44 – EA60 EA40 – EA60 EA36 – EA60	≈ 1,0 Ω		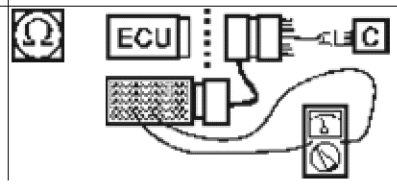

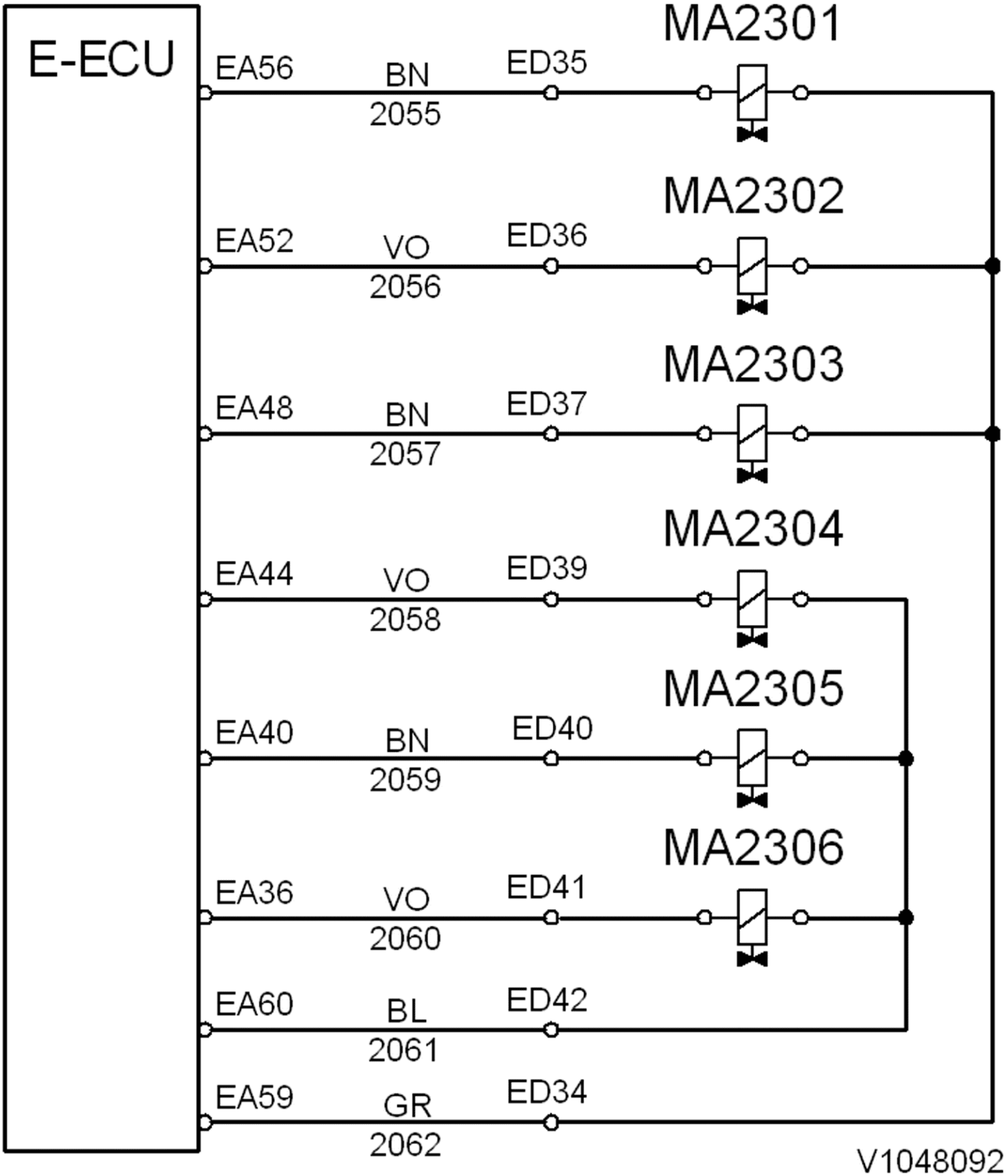
E-ECU
EA56
BN
2055
ED35
MA2301
EA52
VO
2056
ED36
MA2302
EA48
BN
2057
ED37
MA2303
EA44
VO
2058
ED39
MA2304
EA40
BN
2059
ED40
MA2305
EA36
VO
2060
ED41
MA2306
EA60
BL
2061
ED42
EA59
GR
2062
ED34
V1048092

VOLVO
Construction Equipment

Service Information

Document Title:	Function Group:	Information Type: **Service Information**	Date: **12/10/2011**
Profile: **WLO, L90F (Volvo) [GB]**			

MA2504, description and measuring

Op nbr 302-008

9812519 Multimeter
9998699 Adapter
9990014 Adapter
9990062 Cable
9990008 Measuring equipment

Description

Function	Returns exhausts for maximal combustion.
References	Komponentförteckning: Magnetventiler Elschema 204
VCADS Pro Test	—
	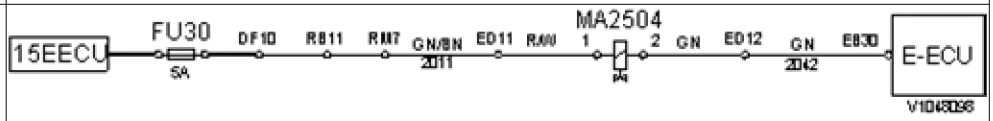 **Figure 1** EB30, signal activation

Measuring

Measuring point	Correct value	Condition	Test method
EB30 – FU30	≈ 40 Ω		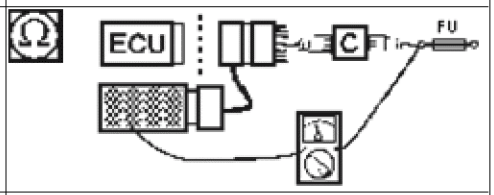
EB30 – ⏚	≈ U_{bat} (inaktiv) ≈ 0 V (active)		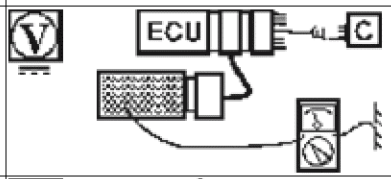
EB30 – ⏚	≈ ∞ Ω		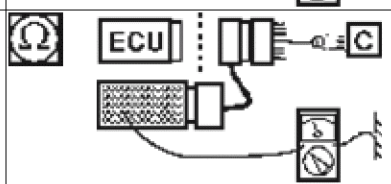 FU30 removed

Verifying

Measuring point	Correct value	Condition	Test method
EB30 –	≈ U_{bat} (inaktiv) ≈ 0 V (active)		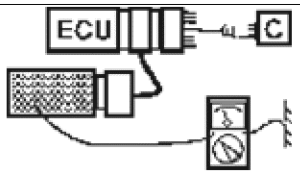

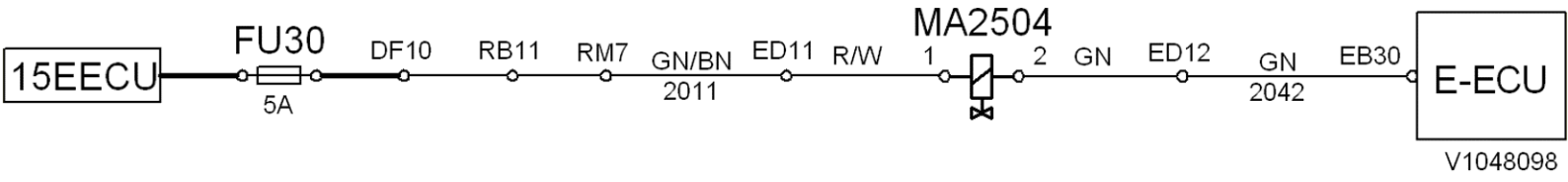
15EECU
FU30
5A
DF10
RB11
RM7
GN/BN
2011
ED11
R/W
MA2504
1
2
GN
ED12
GN
2042
EB30
E-ECU
V1048098

VOLVO
Construction Equipment

Service Information

Document Title:	Function Group:	Information Type: **Service Information**	Date: **12/10/2011**
Profile: **WLO, L90F (Volvo) [GB]**			

MA2601, description and measuring

Op nbr 302-009

9812519 Multimeter
9998699 Adapter
9993893 Adapter
9990062 Cable
9990191 Adapter

Description

Function	Controls disengagement of cooling fan.	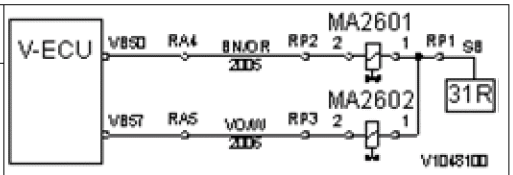
References	Komponentförteckning: Magnetventiler Elschema 201	**Figure 1** VB50, feed
VCADS Pro Test	—	

Measuring

Measuring point	Correct value	Condition	Test method
1 – 2	≈ 30 Ω		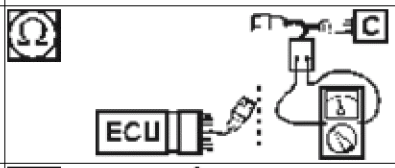
VB50 – 2	≈ 0 Ω		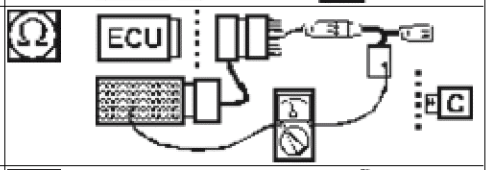
1 – ⏚	≈ 0 Ω		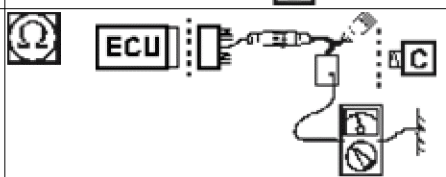
2 – ⏚	≈ ∞ Ω		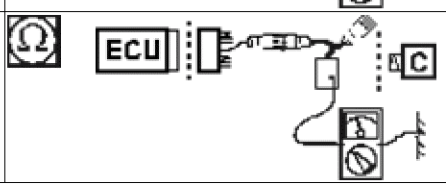

Verifying

Measuring point	Correct value	Condition	Test method
VB50 –	≈ 30 Ω		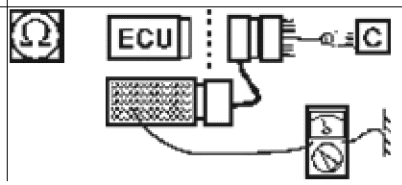

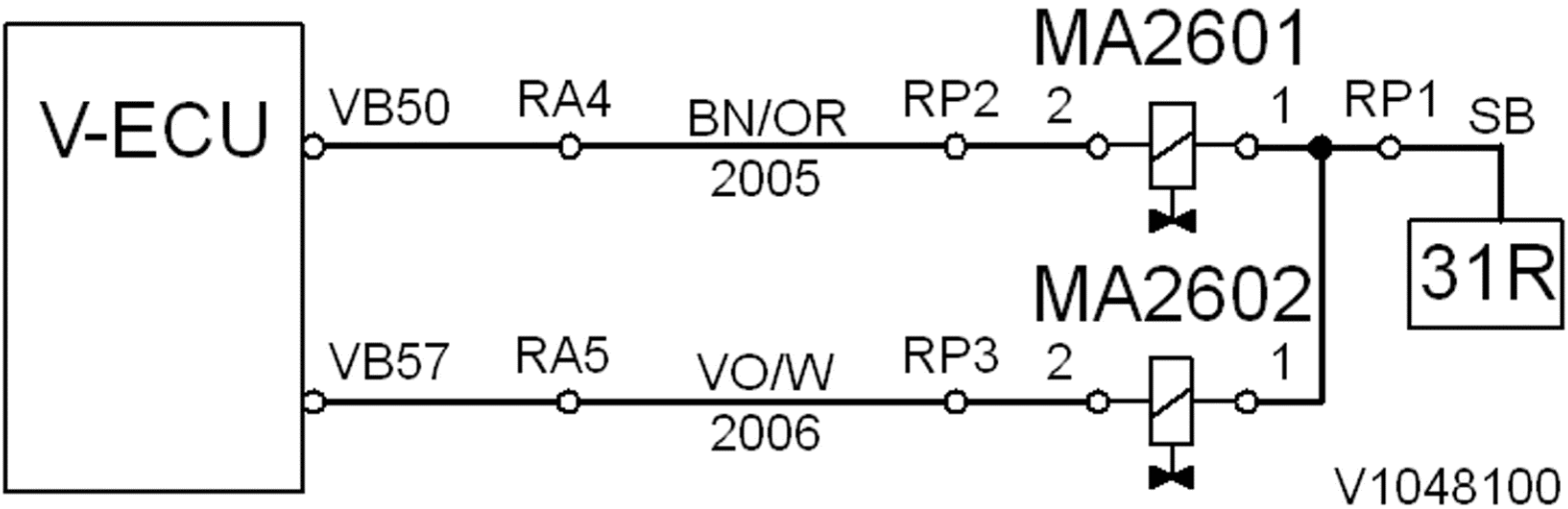
V-ECU
VB50
RA4
BN/OR
2005
RP2
MA2601
2
1
RP1
SB
31R
VB57
RA5
VO/W
2006
RP3
MA2602
2
1
V1048100

VOLVO
Construction Equipment

Service Information

Document Title:	Function Group:	Information Type: **Service Information**	Date: **12/10/2011**
Profile: **WLO, L90F (Volvo) [GB]**			

MA2602, description and measuring

Op nbr 302-010

9812519 Multimeter
9998699 Adapter
9993893 Adapter
9990062 Cable
9990191 Adapter

Description

Function	Controls rotational direction of cooling fan.	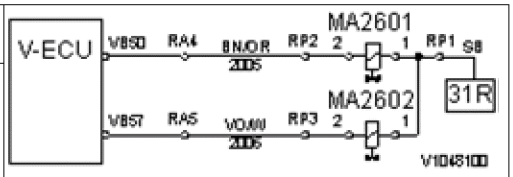
References	Komponentförteckning: Magnetventiler Elschema 201	**Figure 1** VB57, feed
VCADS Pro Test	—	

Measuring

Measuring point	Correct value	Condition	Test method
1 – 2	≈ 30 Ω		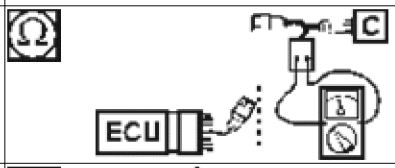
VB57 – 2	≈ 0 Ω		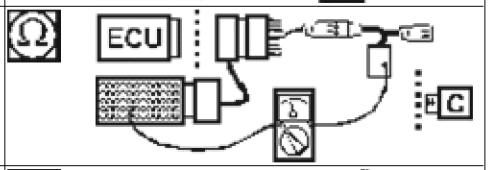
1 – ⏚	≈ 0 Ω		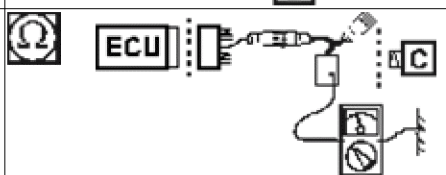
2 – ⏚	≈ ∞ Ω		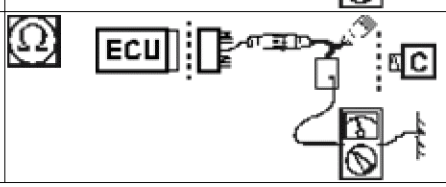

Verifying

Measuring point	Correct value	Condition	Test method
VB57 –	≈ 30 Ω		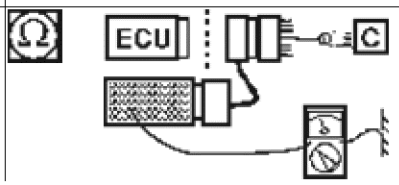

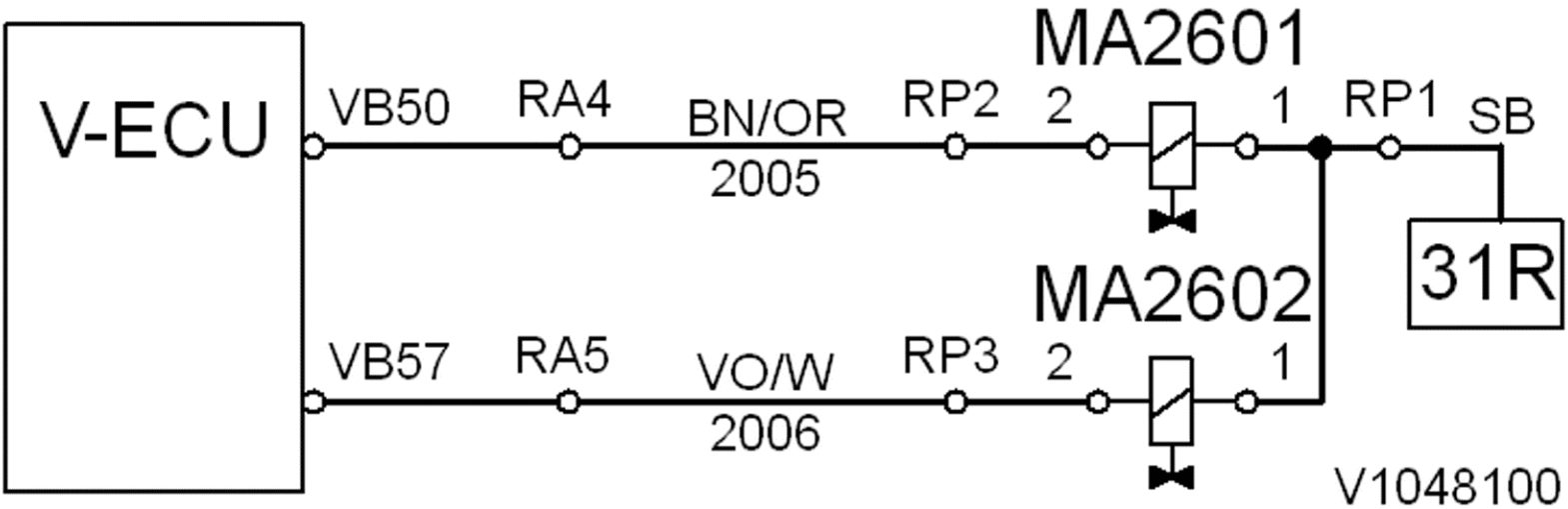
V-ECU
VB50
RA4
BN/OR
2005
RP2
MA2601
2
1
RP1
SB
31R
VB57
RA5
VO/W
2006
RP3
MA2602
2
1
V1048100

More than one document matches the current profile:

MA4603, description and measuring
Product Line: WLO
Model Variant: L90F
Site: Arvika
Serial Number Start: 25001
Serial Number End: 26953

MA4603, description and measuring
Product Line: WLO
Model Variant: L90F
Site: Arvika
Serial Number Start: 26954
Serial Number End: 49999

VOLVO
Construction Equipment

Service Information

Document Title:	Function Group:	Information Type: **Service Information**	Date: **12/10/2011**
Profile: **WLO, L90F (Volvo) [GB]**			

MA4603, description and measuring

Op nbr 302-011

9812519 Multimeter
9990191 Adapter

Description

Function	Controls engagement of differential lock.	
References	Komponentförteckning: Magnetventiler Elschema 403	
VCADS Pro Test	—	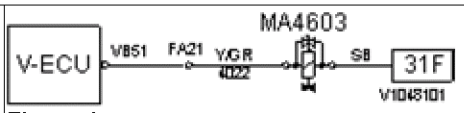 **Figure 1** VB51, feed

Measuring

Measuring point	Correct value	Condition	Test method
1 – 2	≈ 20 Ω		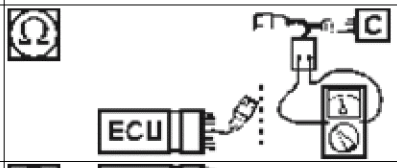
1 – 2	≈ U_{bat}[T1] ⓘ		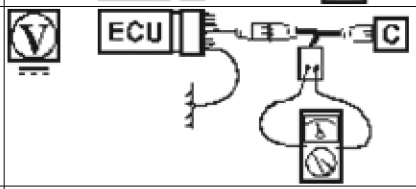
2 – ⏚	≈ 0 Ω		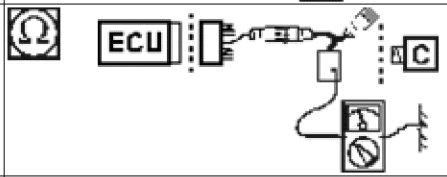
1 – ⏚	≈ ∞ Ω		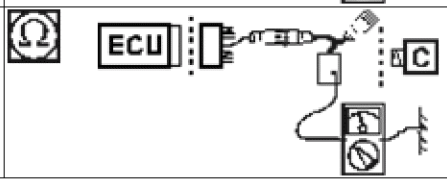

[T1] With differential lock activated.

Verifying

Measuring point	Correct value	Condition	Test method
1 – 2	≈ U_{bat}[T1] ⓘ		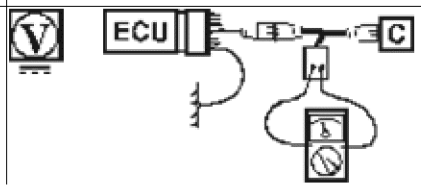

[T1] With differential lock activated.

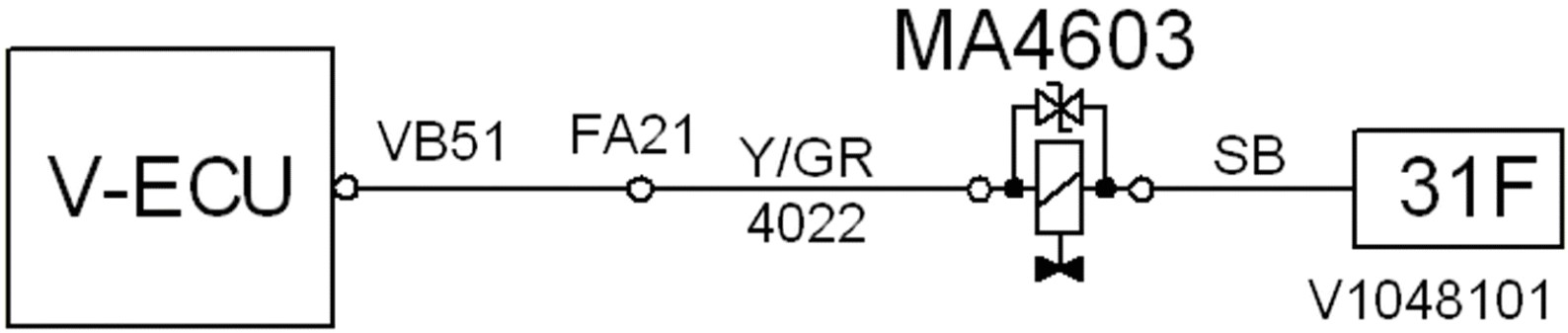
MA4603
V-ECU
VB51
FA21
Y/GR
4022
SB
31F
V1048101

VOLVO
Construction Equipment

Service Information

Document Title:	Function Group:	Information Type: **Service Information**	Date: **12/10/2011**
Profile: **WLO, L90F (Volvo) [GB]**			

MA4603, description and measuring

Op nbr 302-011

88890074 Multimeter
9990191 Adapter
9990062 Cable
9993893 Adapter
9993894 Template
9998699 Adapter

Description

Function	Controls engagement of differential lock.
References	Component list: Solenoid valves Wiring diagram 403
VCADS Pro Test	—
	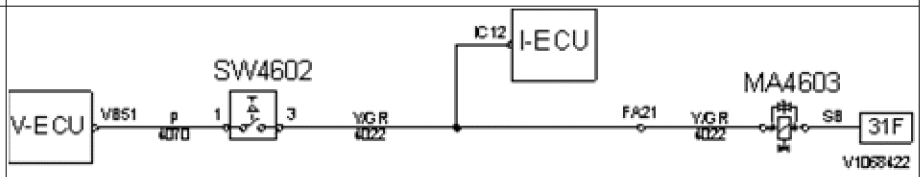 **Figure 1** VB51, feed

Measuring

Measuring point	Correct value	Condition	Test method
1 – 2	≈ 22 Ω		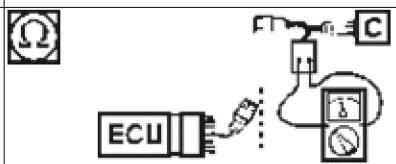
2 – ⏚	≈ 0 Ω		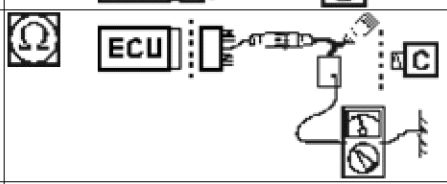
1 – ⏚	≈ ∞ Ω [T1] ⓘ		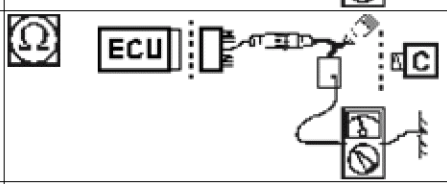

VB51 –	≈ 22 Ω[T2]		

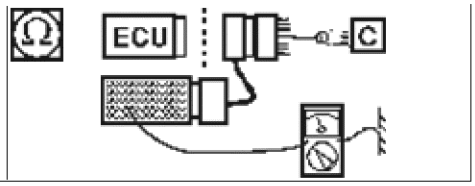

[T1] I-ECU disconnected

[T2] I-ECU disconnected, SW4602 in position disengaged differential lock

Functional check

After finished troubleshooting, perform the following checks;
Differential lock, function check

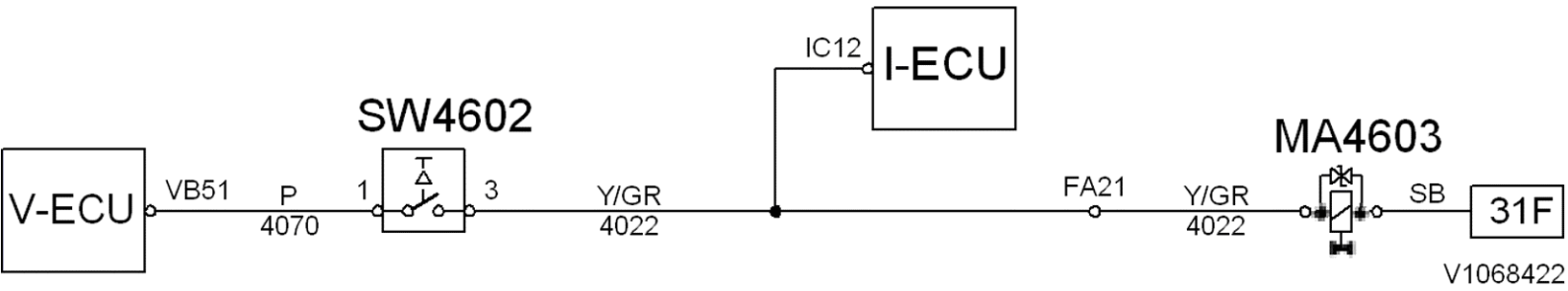
V-ECU
VB51
P
4070
SW4602
1
3
Y/GR
4022
IC12
I-ECU
FA21
Y/GR
4022
MA4603
SB
31F
V1068422

More than one document matches the current profile:

MA5501, description and measuring
Product Line: WLO
Model Variant: L90F
Site: Arvika
Serial Number Start: 25001
Serial Number End: 26953

MA5501, description and measuring
Product Line: WLO
Model Variant: L90F
Site: Arvika
Serial Number Start: 26954
Serial Number End: 49999

VOLVO
Construction Equipment

Service Information

Document Title:	Function Group:	Information Type: **Service Information**	Date: **12/10/2011**
Profile: **WLO, L90F (Volvo) [GB]**			

MA5501, description and measuring

Op nbr 302-012

9812519 Multimeter
9990191 Adapter

Description

Function	Controls release of parking brake.
References	Komponentförteckning: Magnetventiler Elschema 501
VCADS Pro Test	—

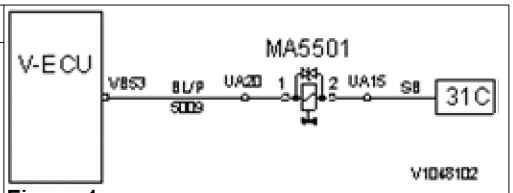

Figure 1

VB53, feed

Measuring

Measuring point	Correct value	Condition	Test method
1 – 2	≈ 20 Ω		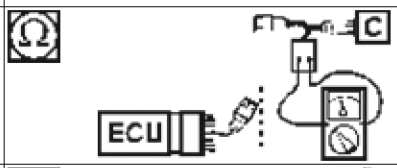
2 – ⏚	≈ 0 Ω		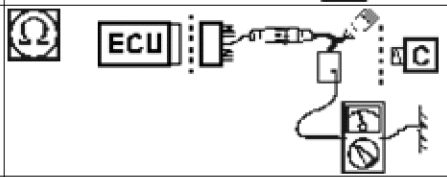
1 – ⏚	≈ ∞ Ω		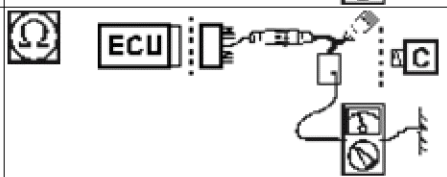
1 – 2	≈ U_{bat}[T1] ⓘ		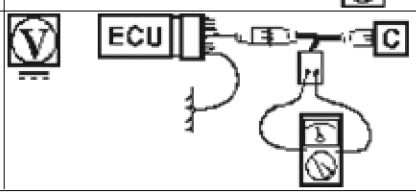

[T1] Released parking brake.

Verifying

Measuring point	Correct value	Condition	Test method
1 – 2	≈ U_{bat}[T1] ⓘ		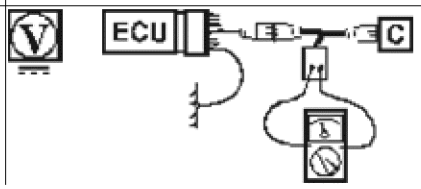

[T1] Released parking brake.

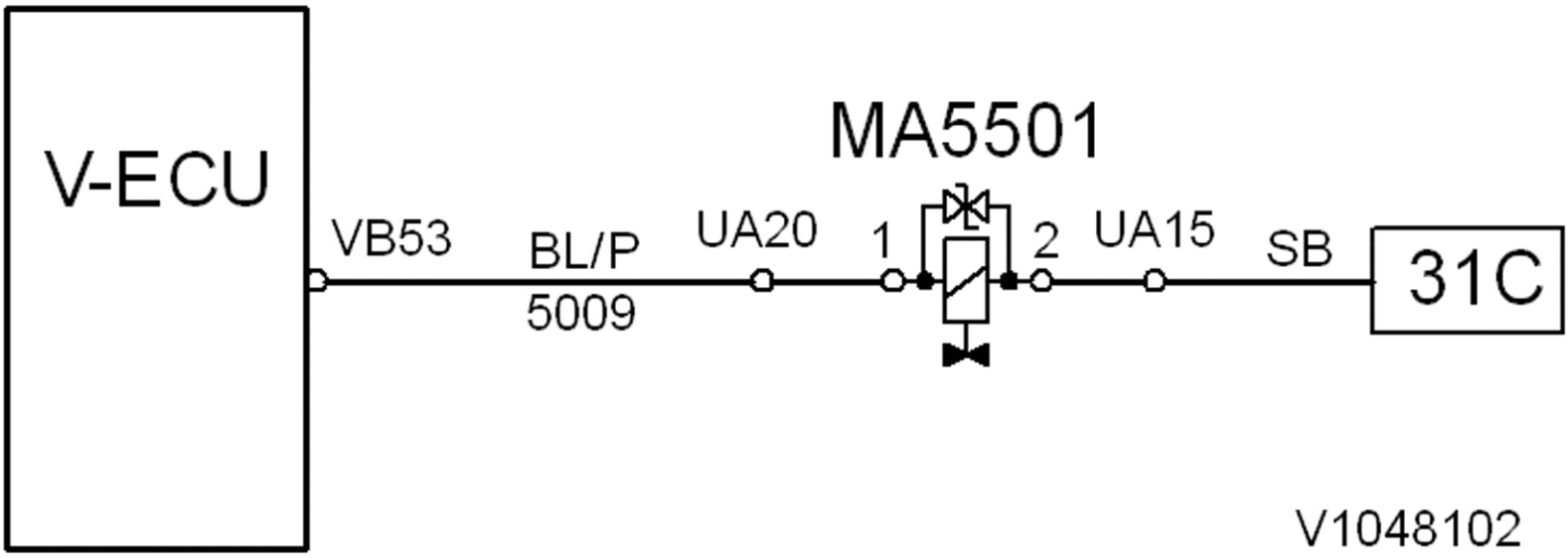
V-ECU
MA5501
VB53
BL/P
5009
UA20
1
2
UA15
SB
31C
V1048102

VOLVO
Construction Equipment

Service Information

Document Title:	Function Group:	Information Type: **Service Information**	Date: **12/10/2011**
Profile: **WLO, L90F (Volvo) [GB]**			

MA5501, description and measuring

Op nbr 302-012

88890074 Multimeter
9990191 Adapter
9998699 Adapter
9990062 Cable
9990008 Measuring equipment
9993893 Adapter
9993894 Template

Description

Function	Controls release of parking brake.	
References	Component list: Solenoid valves Wiring diagram 501	
VCADS Pro Test	—	
	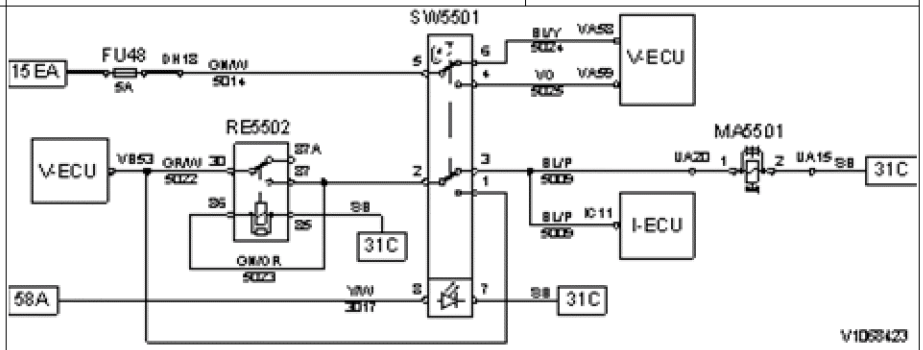 **Figure 1** VB53, feed	

Measuring

Measuring point	Correct value	Condition	Test method
1 – 2	≈ 22 Ω		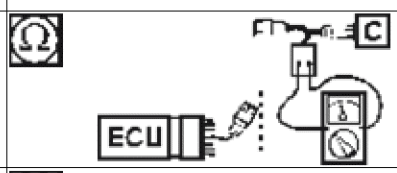
2 – 	≈ 0 Ω		

			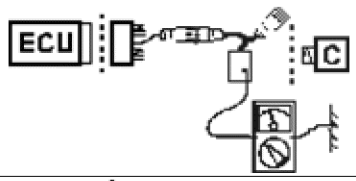
VB53 – VB53 –	≈ 220 Ω [T1] ⓘ ≈ ∞ Ω [T2] ⓘ		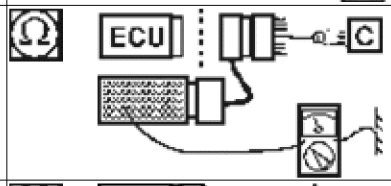
RE5502 (87) –	≈ 22 Ω [T3] ⓘ		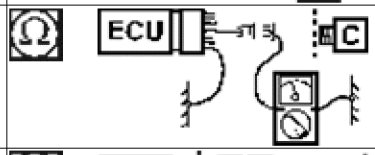
VB53 – RE5502 (30)	≈ 0 Ω [T4] ⓘ		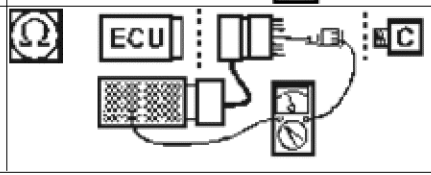

[T1] V-ECU disconnected, SW5501 in position applied parking brake

[T2] V-ECU disconnected, SW5501 in position released parking brake

[T3] C = RE5502 (removed), SW5501 in position released parking brake, I-ECU removed

[T4] C = RE5502 (removed), V-ECU disconnected

Functional check

After finished troubleshooting, perform the following checks;
Parking brake, function check

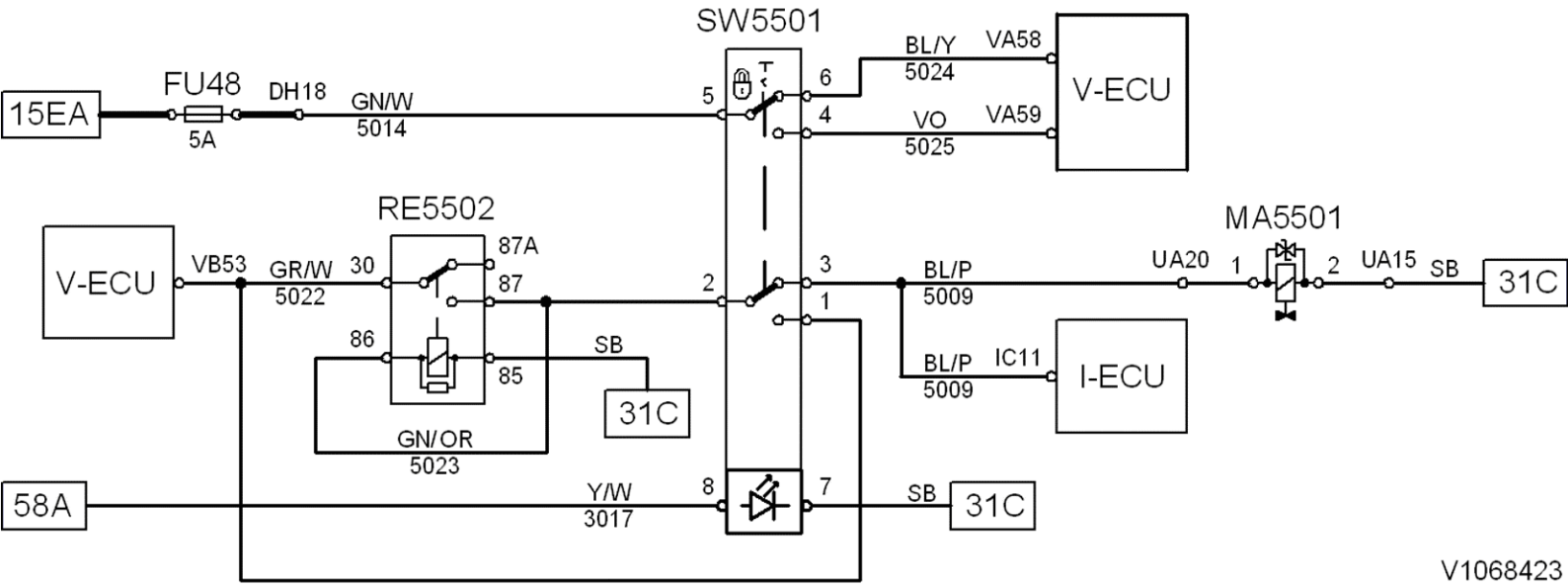
SW5501
15EA
FU48
5A
DH18
GN/W
5014
5
6
BL/Y
5024
VA58
V-ECU
4
VO
5025
VA59
RE5502
V-ECU
VB53
GR/W
5022
30
87A
87
86
85
SB
31C
GN/OR
5023
2
3
1
BL/P
5009
MA5501
UA20
1
2
UA15
SB
31C
BL/P
5009
IC11
I-ECU
58A
Y/W
3017
8
7
SB
31C
V1068423

VOLVO
Construction Equipment

Service Information

Document Title:	Function Group:	Information Type: **Service Information**	Date: **12/10/2011**
Profile: **WLO, L90F (Volvo) [GB]**			

MA5502, description and measuring

Op nbr 302-013

88890074 Multimeter
9998699 Adapter
9993893 Adapter
9990062 Cable
9990191 Adapter

Description

Function	Controls brake pressure charging.
References	Component list: Solenoid valves Wiring diagram 501
VCADS Pro Test	—

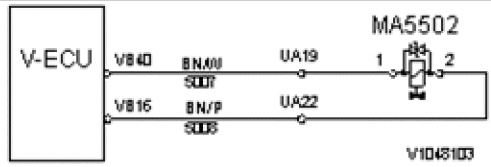

Figure 1

VB40, feed cable
VB16, return cable

Measuring

Measuring point	Correct value	Condition	Test method
1 – 2	≈ 26 Ω		
VB16 – 2 VB40 – 1	≈ 0 Ω		
1 – 2 –	≈ ∞ Ω		

Verifying

Measuring point	Correct value	Condition	Test method
1 – 2	≈ U_{bat}[T1]		

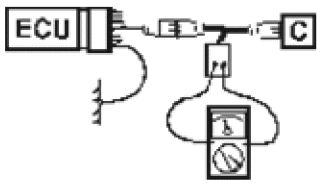

[T1] When brake pressure charging is needed.

Functional check

After finished troubleshooting, perform the following checks;
Wheel brakes, function check

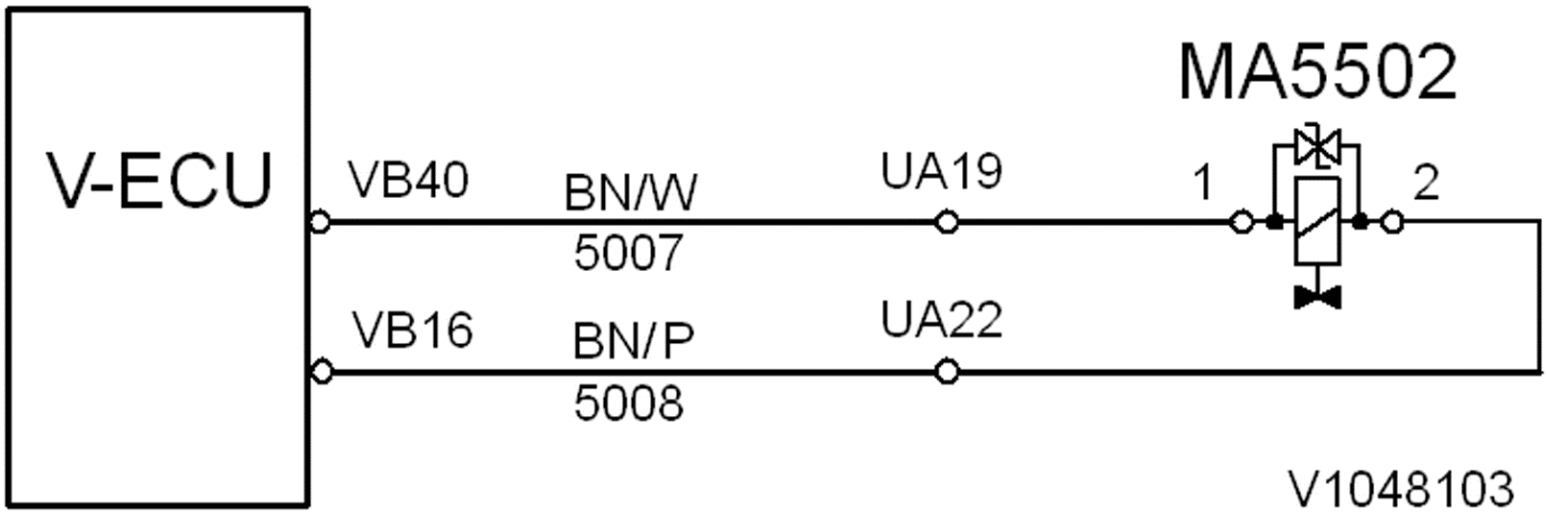
V-ECU
VB40
BN/W
5007
UA19
MA5502
1
2
VB16
BN/P
5008
UA22
V1048103

VOLVO
Construction Equipment

Service Information

Document Title:	Function Group:	Information Type: **Service Information**	Date: **12/10/2011**
Profile: **WLO, L90F (Volvo) [GB]**			

MA9106, description and measuring

Op nbr 302-014

88890074 Multimeter
9990191 Adapter

Description

Function	Controls attachment locking.	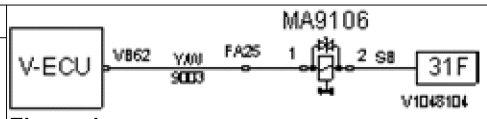 Figure 1 VB62, feed
References	Component list: Solenoid valves Wiring diagram 904	
VCADS Pro Test	—	

Measuring

Measuring point	Correct value	Condition	Test method
1 – 2	≈ 20 Ω		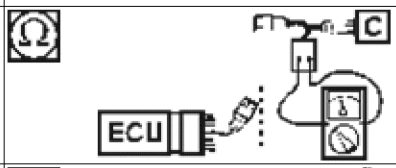
2 – ⏚	≈ 0 Ω		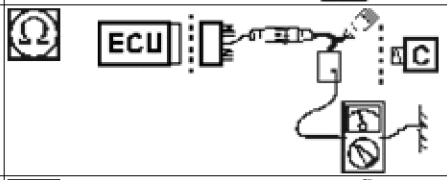
1 – ⏚	≈ ∞ Ω		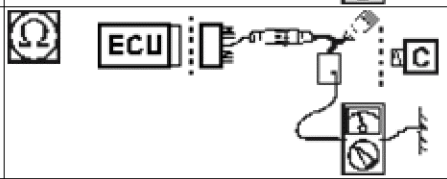
1 – 2	≈ U_{bat}[T1] ⓘ		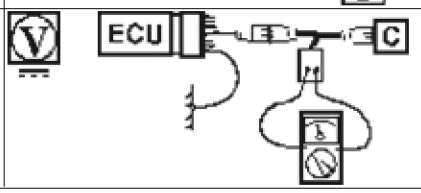

[T1] Attachment lock in locked position.

Verifying

Measuring	Correct value	Condition	Test method

point				
1 – 2	≈ U_{bat}[T1]			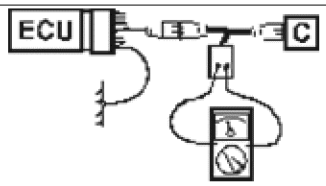

[T1] Attachment lock in locked position.

Functional check

After finished troubleshooting, perform the following checks;
Attachment lock, function check

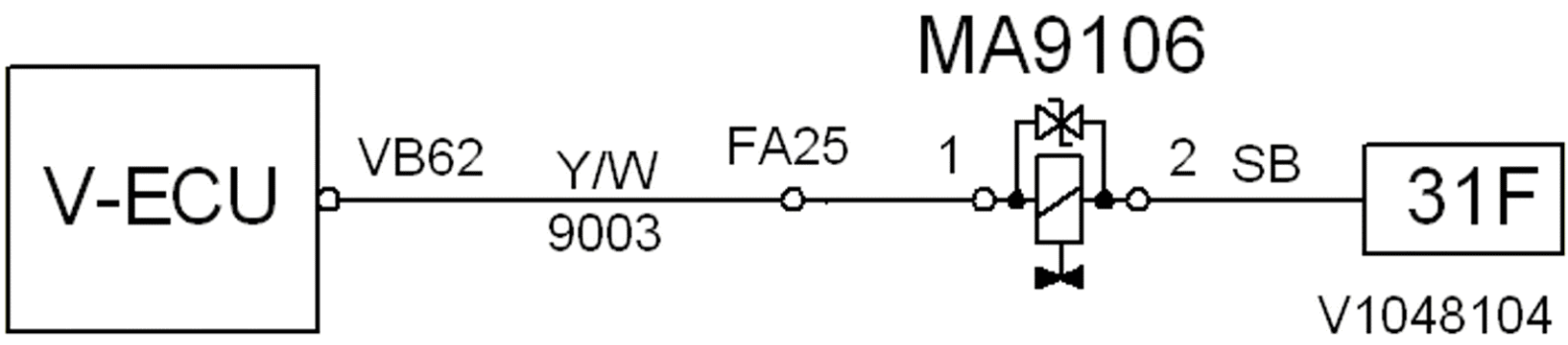
MA9106
V-ECU
VB62
Y/W
9003
FA25
1
2
SB
31F
V1048104

VOLVO
Construction Equipment

Service Information

Document Title:	Function Group:	Information Type: **Service Information**	Date: **12/10/2011**
Profile: **WLO, L90F (Volvo) [GB]**			

MO3301, description and measuring

Op nbr 302-017

9812519 Multimeter
9998699 Adapter
9990014 Adapter
9993893 Adapter
9990062 Cable
9990008 Measuring equipment

Description

Function	Starter motor.
References	Komponentförteckning: Motorer, resistorer, övervakningssystem Elschema 303
VCADS Pro Test	—
	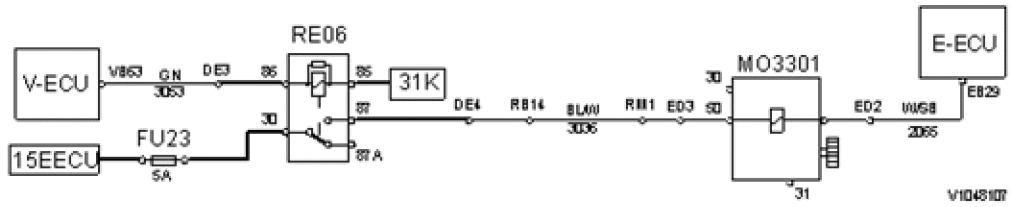 **Figure 1** VB63, control voltage relay EB29, return cable

Measuring

Measuring point	Correct value	Condition	Test method
RE06 (30) –  RE06 removed	≈ U_{bat}		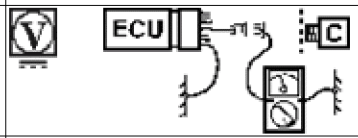
VB63 – 	≈ 220 Ω		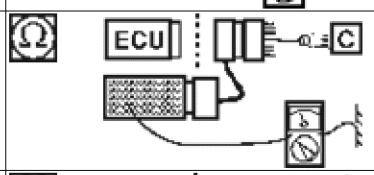
EB29 – RE06 (87) RE06 removed	≈ 14 Ω		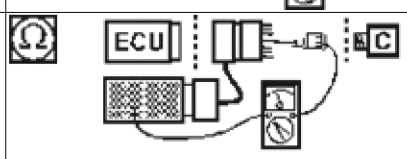
Small screws starter motor	≈ 14 Ω		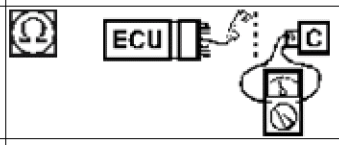

EB29 –	≈ ∞ Ω		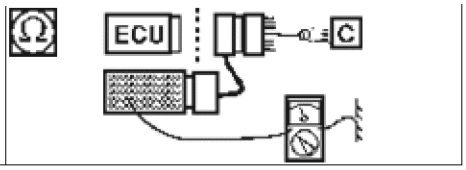

Verifying

Measuring point	Correct value	Condition	Test method
EB29 – RE06 (87) RE06 removed	≈ 14 Ω		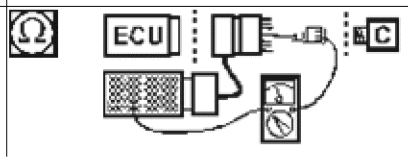

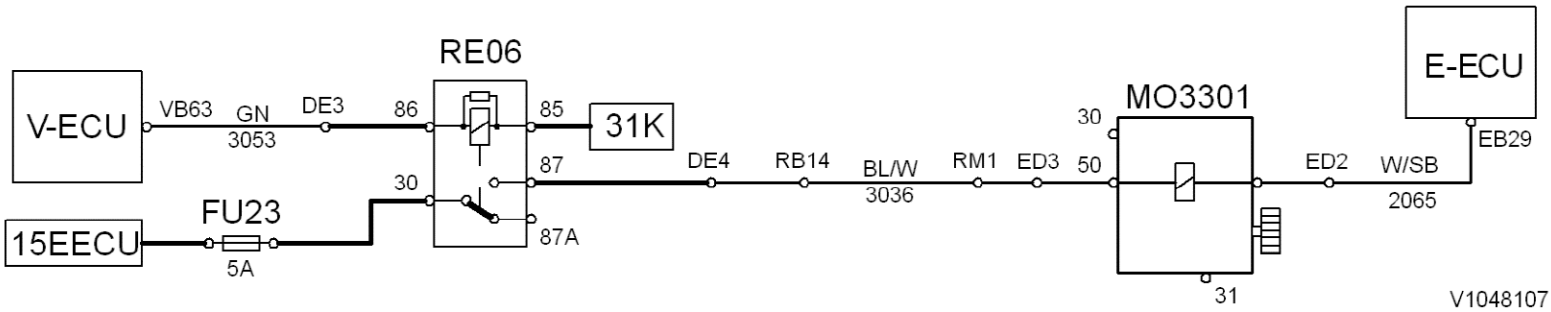
RE06
V-ECU
VB63
GN
3053
DE3
86
85
31K
87
30
87A
FU23
15EECU
5A
DE4
RB14
BL/W
3036
RM1
ED3
MO3301
30
50
31
ED2
W/SB
2065
E-ECU
EB29
V1048107

VOLVO
Construction Equipment

Service Information

Document Title:	Function Group:	Information Type: **Service Information**	Date: **12/10/2011**
Profile: **WLO, L90F (Volvo) [GB]**			

MO6401, description and measuring

Op nbr 302-072

9812519 Multimeter

Description

Function	Indicates that secondary steering pump is not functioning.
References	Komponentförteckning: Motorer, resistorer, övervakningssystem Komponentförteckning: Reläer Elschema 604
VCADS Pro Test	—
	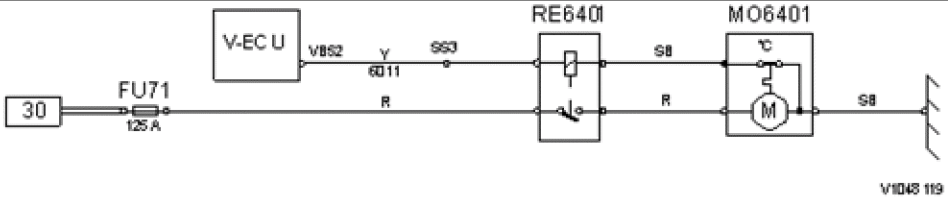 **Figure 1** VB52, control voltage relay

Measuring

Measuring point	Correct value	Condition	Test method
Big screw on RE6401 (voltage feed) –	≈ U_{bat}	1	Measure directly on the relay.
Big screw on RE6401 – Big screw on MO6401 (voltage feed)	≈ 0 Ω		Measure directly on the components.
Big screw on RE6401 –	≈ ∞ Ω Voltage feed MO6401 disconnected		Measure directly on the relay.

Verifying

Measuring point	Correct value	Condition	Test method
Big screw on RE6401 (voltage feed) –	≈ U_{bat}	1	Measure directly on the relay.

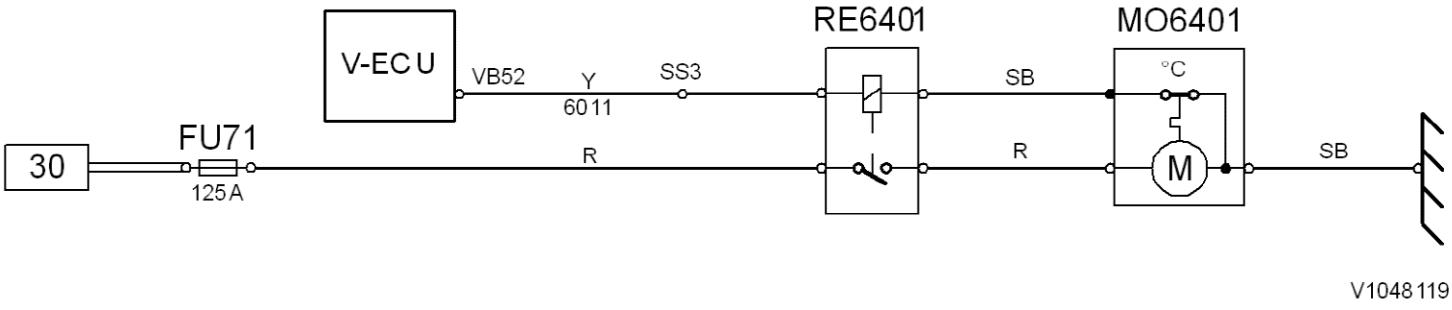
V-ECU
VB52
Y
6011
SS3
RE6401
SB
MO6401
°C
30
FU71
125A
R
R
M
SB
V1048119

VOLVO
Construction Equipment

Service Information

Document Title:	Function Group:	Information Type: **Service Information**	Date: **12/10/2011**
Profile: **WLO, L90F (Volvo) [GB]**			

MO8707, description and measuring

Op nbr 302-019

9812519 Multimeter
9998699 Adapter
9993893 Adapter
9993894 Template
9990062 Cable
9990008 Measuring equipment

Description

Function	Controls coolant flow to climate control system.	
References	Komponentförteckning: Motorer, resistorer, övervakningssystem Elschema 806	
VCADS Pro Test	87375-3 Heat control valve actuator, test	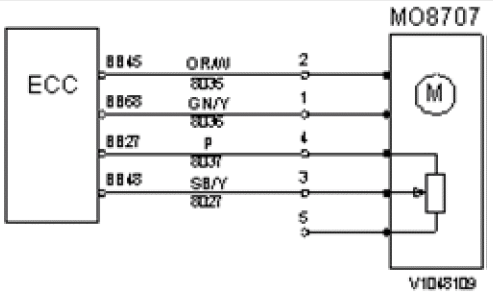 **Figure 1** BB45, feed actuator BB68, feed actuator BB27, signal BB48, ground

Measuring

Measuring point	Correct value	Condition	Test method
3 – 4	0–5 kΩ[T1] ⓘ		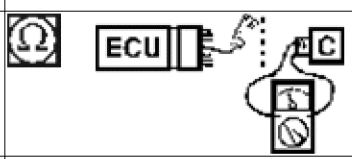
4 – ⏚	≈ 5 V		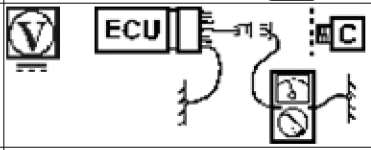
3 – ⏚	≈ 0 Ω		

			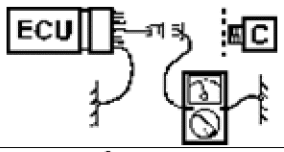
BB45 – 2 BB68 – 1	≈ 0 Ω		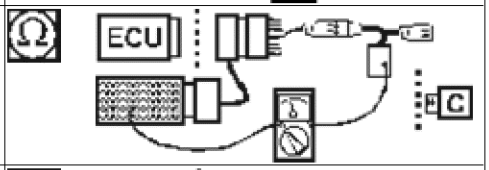
BB45 – BB68 –	≈ ∞ Ω		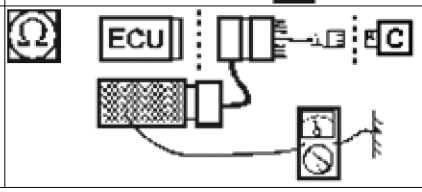

[T1] Depends on actuator's position.

Verifying

Measuring point	Correct value	Condition	Test method
BB27 – BB48	≈ 0–3.2 V[T1]		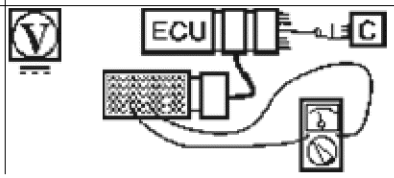

[T1] Voltage changes when the temperature control's setting is changed.

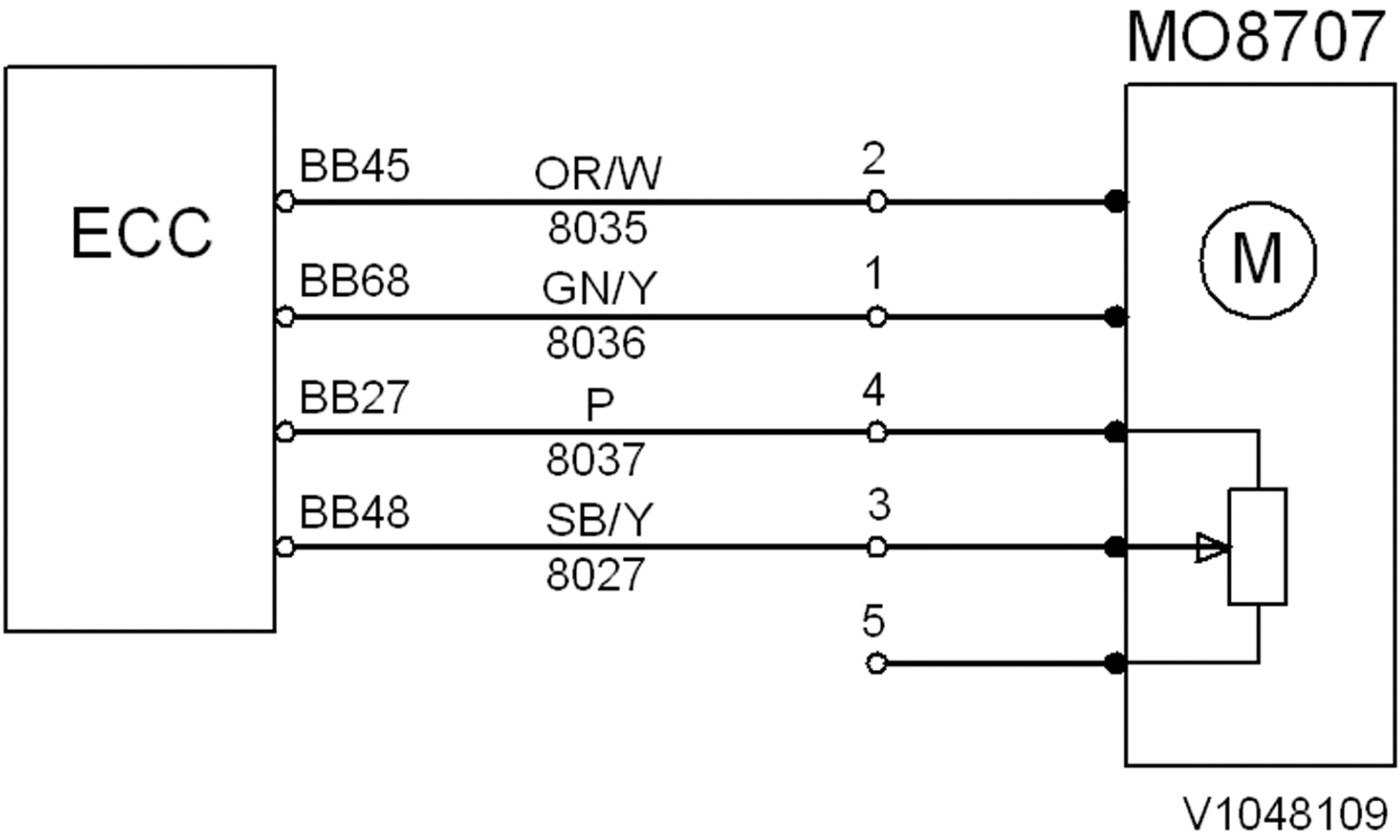
MO8707
ECC
BB45
OR/W
8035
2
BB68
GN/Y
8036
1
BB27
P
8037
4
BB48
SB/Y
8027
3
5
M
V1048109

VOLVO
Construction Equipment

Service Information

Document Title:	Function Group:	Information Type: **Service Information**	Date: **12/10/2011**
Profile: **WLO, L90F (Volvo) [GB]**			

PWM2303, description and measuring

Op nbr 302-020

9812519 Multimeter
9998699 Adapter
9990014 Adapter
9990062 Cable
9990216 Adapter

Description

Function	Controls amount of fuel to high-pressure pumps.	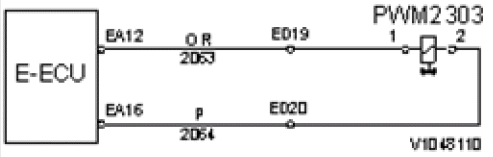
References	Komponentförteckning: PWM-ventiler Elschema 206	**Figure 1** EA12, feed EA16, return cable
VCADS Pro Test	—	

Measuring

Measuring point	Correct value	Condition	Test method
1 – 2	≈ 4 Ω		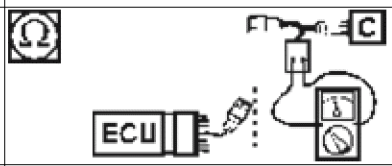
EA12 – EA16	4.5 V at constant rpm. Increasing at quick throttle application.		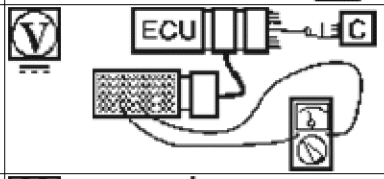
EA12 – 1 EA16 – 2	≈ 0 Ω		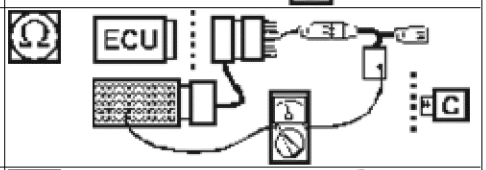
1 – 2 –	≈ ∞ Ω		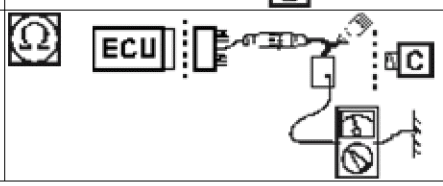

Verifying

Measuring point	Correct value	Condition	Test method
EA12 – EA16	4.5 V at constant rpm. Increasing at quick throttle application.		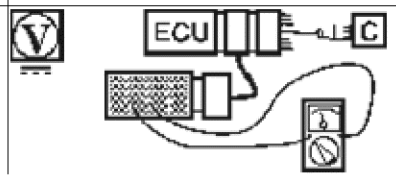

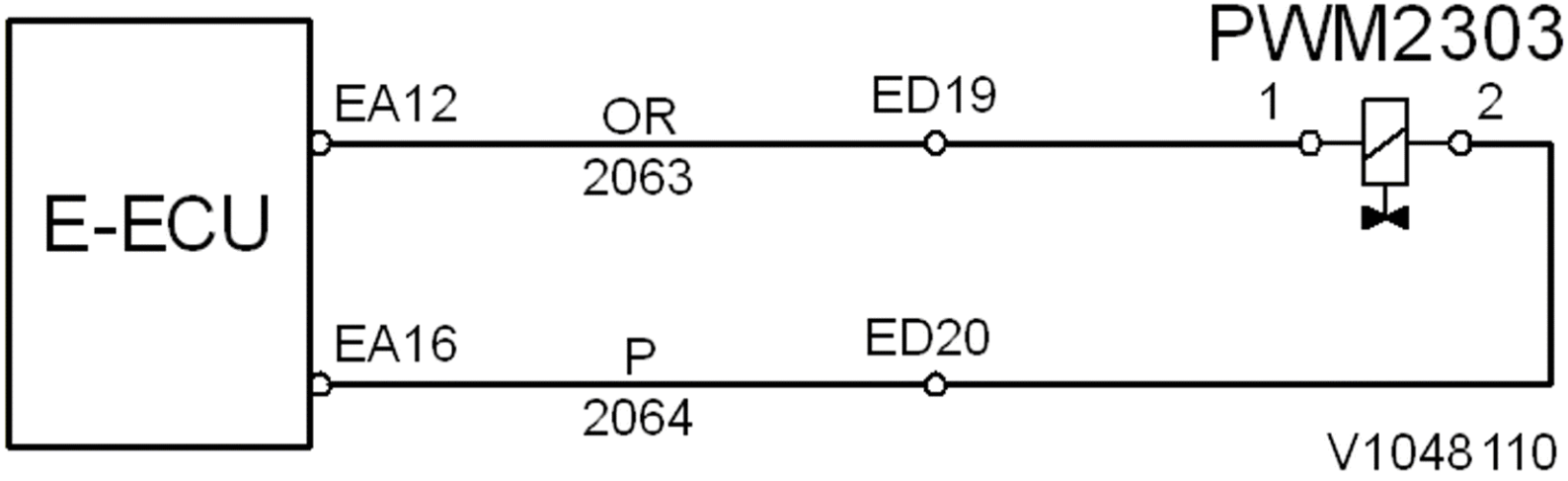
PWM2303
E-ECU
EA12
OR
2063
ED19
1
2
EA16
P
2064
ED20
V1048110

VOLVO
Construction Equipment

Service Information

Document Title:	Function Group:	Information Type: **Service Information**	Date: **12/10/2011**
Profile: **WLO, L90F (Volvo) [GB]**			

PWM2601, description and measuring

Op nbr 302-021

9812519 Multimeter
9998699 Adapter
9993893 Adapter
9990062 Cable
9990191 Adapter

Description

Function	Controls cooling fan rpm.
References	Komponentförteckning: PWM-ventiler Elschema 201
VCADS Pro Test	—

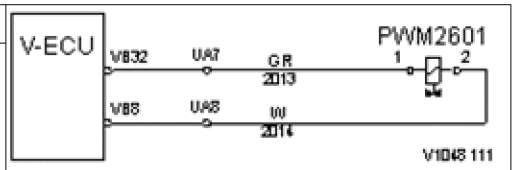

Figure 1

VB32, feed
VB8, return cable

Measuring

Measuring point	Correct value	Condition	Test method
1 – 2	≈ 20 Ω		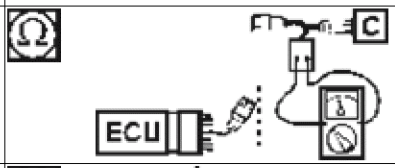
VB8 – 2 VB32 – 1	≈ 0 Ω		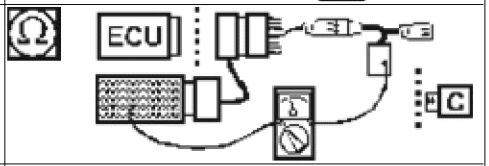
1 – 2 –	≈ ∞ Ω		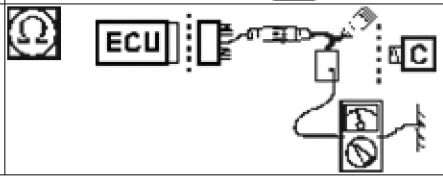

Verifying

Measuring point	Correct value	Condition	Test method
VB32 – VB8	≈ 20 Ω		

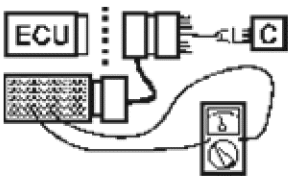
ECU
C

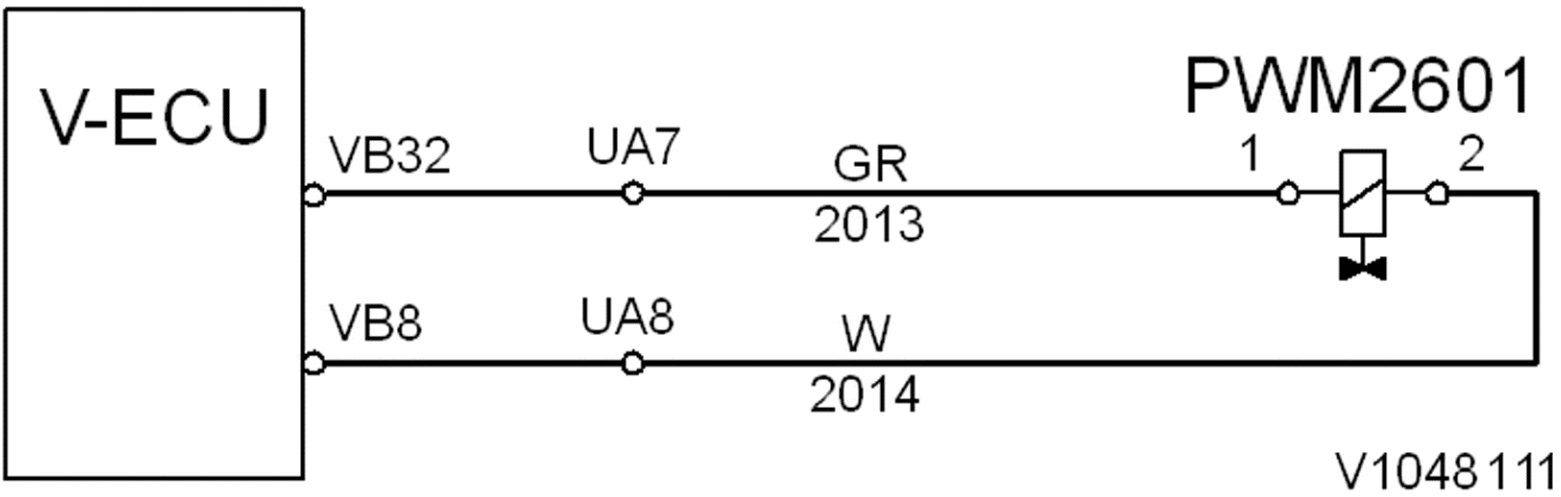
V-ECU
VB32
UA7
GR
2013
PWM2601
1
2
VB8
UA8
W
2014
V1048111

VOLVO
Construction Equipment

Service Information

Document Title:	Function Group:	Information Type: **Service Information**	Date: **12/10/2011**
Profile: **WLO, L90F (Volvo) [GB]**			

PWM6601, description and measuring

Op nbr 302-022

88890074 Multimeter
9998699 Adapter
9993893 Adapter
9990062 Cable
9990191 Adapter

Description

Function	Proportional valve lever steering, steering left.	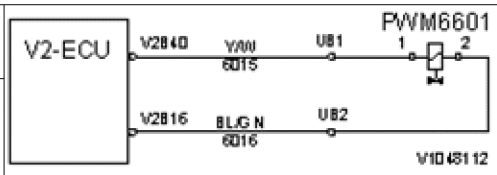 **Figure 1** V2B40, feed V2B16, return cable
References	Component list: PWM-valves Wiring diagram 601	
VCADS Pro Test	64595-3 Electric servo lever steering, test	

Measuring

Measuring point	Correct value	Condition	Test method
1 – 2	≈ 22 Ω		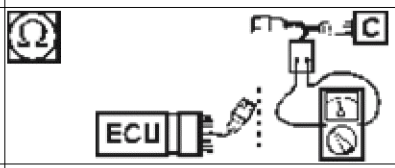
V2B16 – 2 V2B40 – 1	≈ 0 Ω		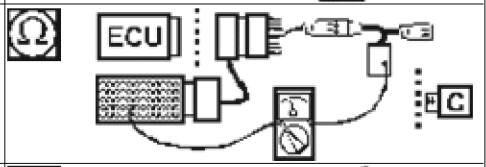
1 – 2 –	≈ ∞ Ω		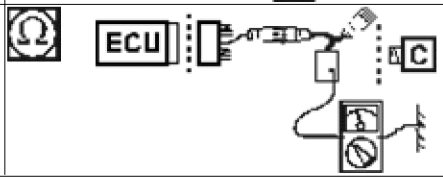

Verifying

Measuring point	Correct value	Condition	Test method
V2B40 – V2B16	≈ 22 Ω		



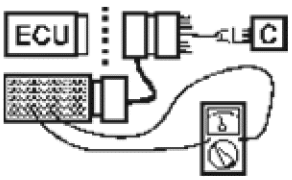

Functional check

After finished troubleshooting, perform the following checks;
Comfort Drive Control (CDC)/Lever steering, function check

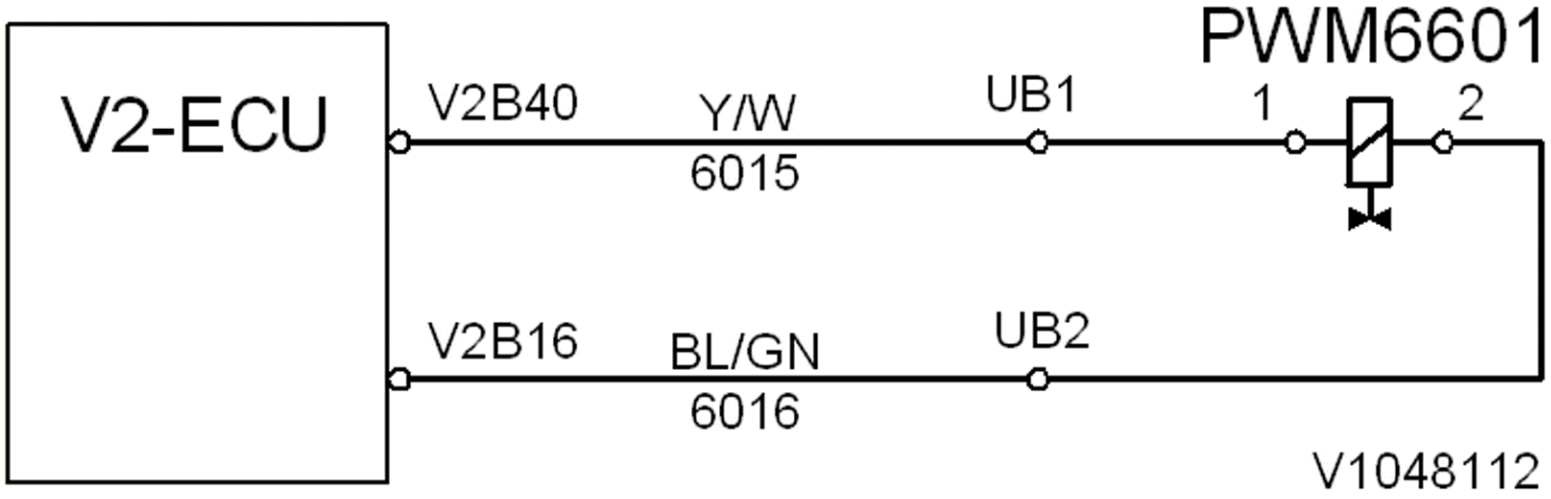
V2-ECU
V2B40
Y/W
6015
UB1
PWM6601
1
2
V2B16
BL/GN
6016
UB2
V1048112

VOLVO
Construction Equipment

Service Information

Document Title:	Function Group:	Information Type: **Service Information**	Date: **12/10/2011**
Profile: **WLO, L90F (Volvo) [GB]**			

PWM6602, description and measuring

Op nbr 302-023

88890074 Multimeter
9998699 Adapter
9993893 Adapter
9990062 Cable
9990191 Adapter

Description

Function	Proportional valve lever steering, steering right.	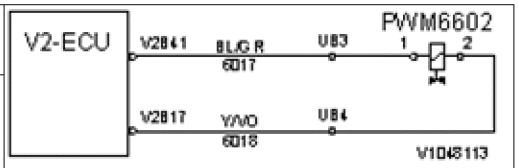 **Figure 1** V2B41, feed V2B17, return cable
References	Component list: PWM-valves Wiring diagram 601	
VCADS Pro Test	64595-3 Electric servo lever steering, test	

Measuring

Measuring point	Correct value	Condition	Test method
1 – 2	≈ 22 Ω		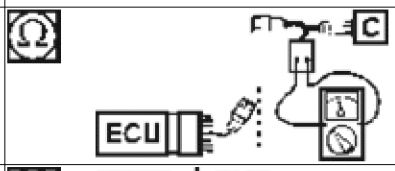
V2B17 – 2 V2B41 – 1	≈ 0 Ω		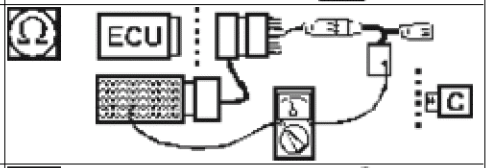
1 – 2 –	≈ ∞ Ω		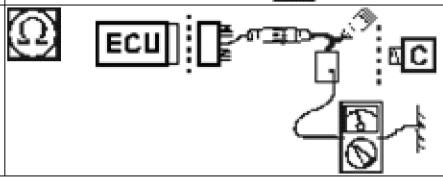

Verifying

Measuring point	Correct value	Condition	Test method
V2B41 – V2B17	≈ 22 Ω		

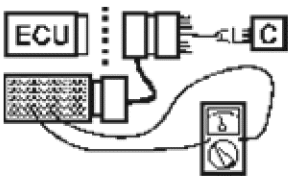

Functional check

After finished troubleshooting, perform the following checks;
Comfort Drive Control (CDC)/Lever steering, function check

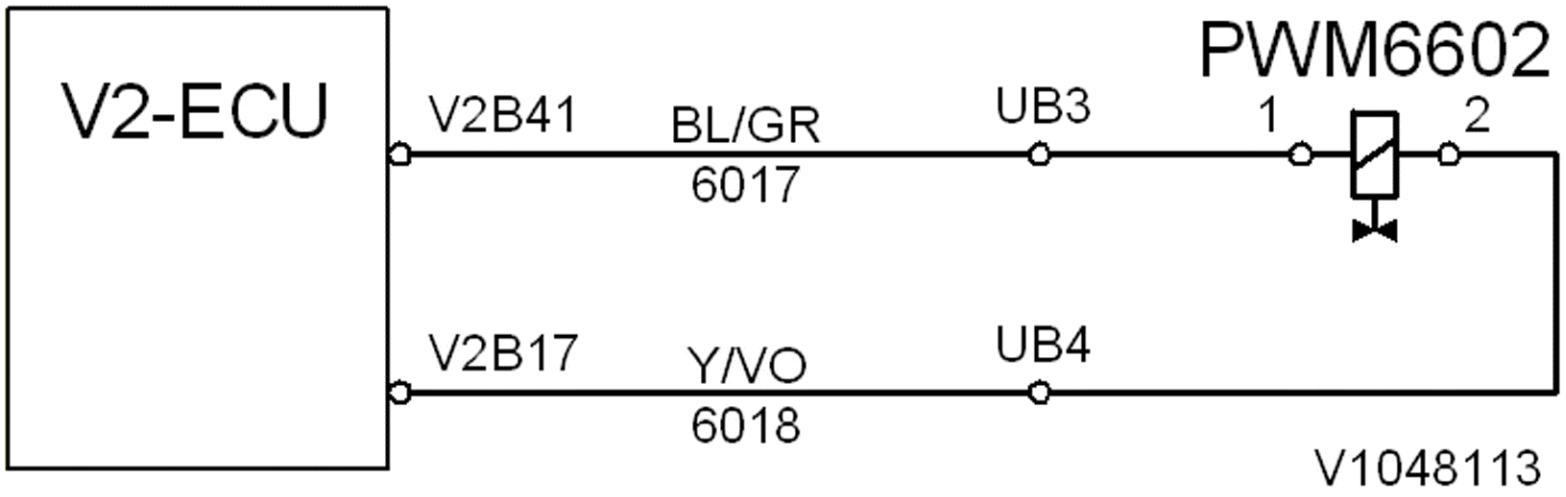
V2-ECU
V2B41
BL/GR
6017
UB3
PWM6602
1
2
V2B17
Y/VO
6018
UB4
V1048113

VOLVO
Construction Equipment

Service Information

Document Title:	Function Group:	Information Type: **Service Information**	Date: **12/10/2011**
Profile: **WLO, L90F (Volvo) [GB]**			

R2701, description and measuring

Op nbr 302-024

9812519 Multimeter
9998699 Adapter
88830027 Adapter
9990062 Cable
9990008 Measuring equipment

Description

Function	Hand throttle.	
References	Komponentförteckning: Motorer, resistorer, övervakningssystem Elschema 205	
VCADS Pro Test	—	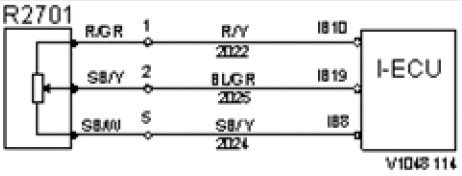 **Figure 1** IB10, supply 5V IB19, signal IB8, ground

Measuring

Measuring point	Correct value	Condition	Test method
1 – 2	≈ 70–850 Ω		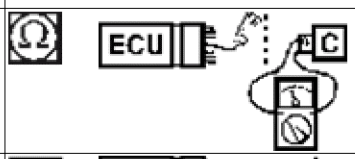
1 – 	≈ 5 V		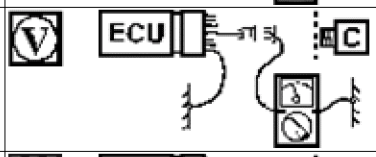
5 – 	≈ 0 Ω		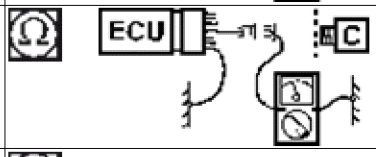
IB19 – 2	≈ 0 Ω		

			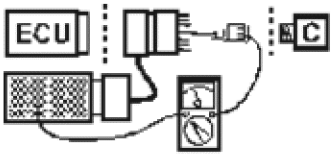
IB19 – 	≈ ∞ Ω		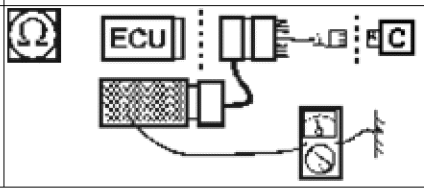

Verifying

Measuring point	Correct value	Condition	Test method
IB19 – IB8	≈ 0.4–4.6 V		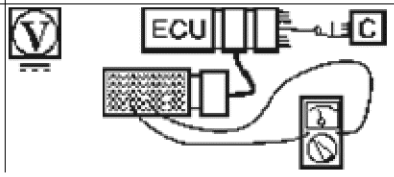

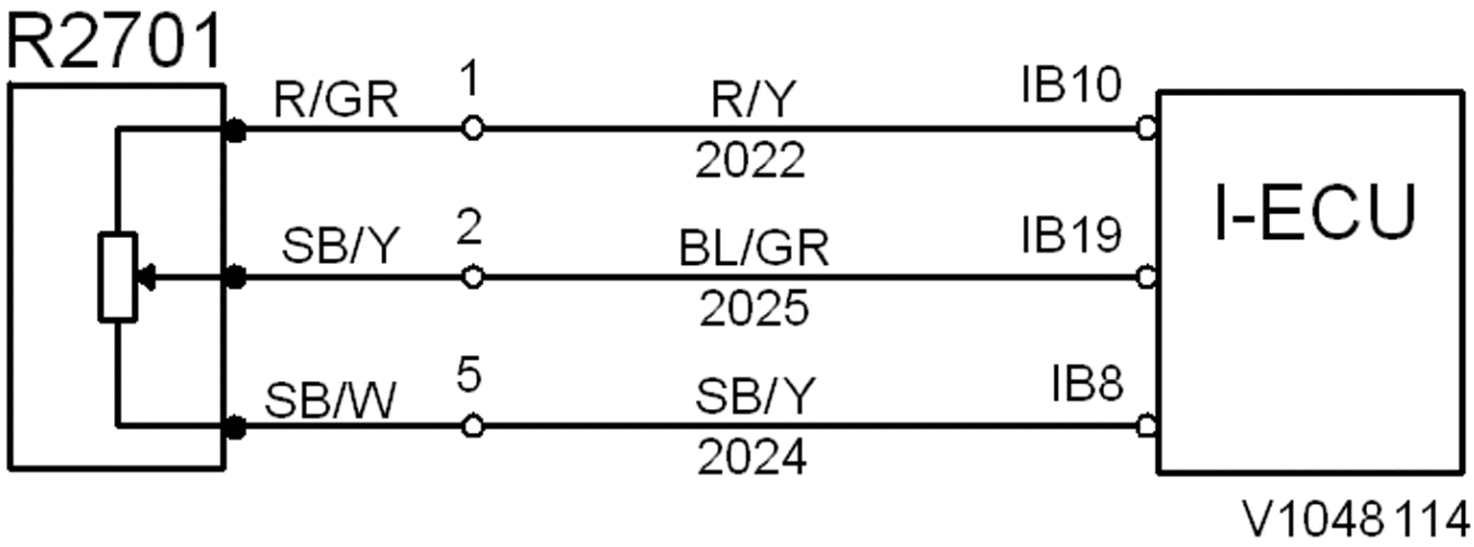
R2701
R/GR
1
R/Y
2022
IB10
SB/Y
2
BL/GR
2025
IB19
SB/W
5
SB/Y
2024
IB8
I-ECU
V1048114

VOLVO
Construction Equipment

Service Information

Document Title:	Function Group:	Information Type: **Service Information**	Date: **12/10/2011**
Profile: **WLO, L90F (Volvo) [GB]**			

RE08, description and measuring

Op nbr 302-025

9812519 Multimeter
9998699 Adapter
9993893 Adapter
9990062 Cable
9990008 Measuring equipment

Description

Function	Controls voltage feed to solenoid valves for the boom suspension system.	
References	Komponentförteckning: Reläer Elschema 903	
VCADS Pro Test	—	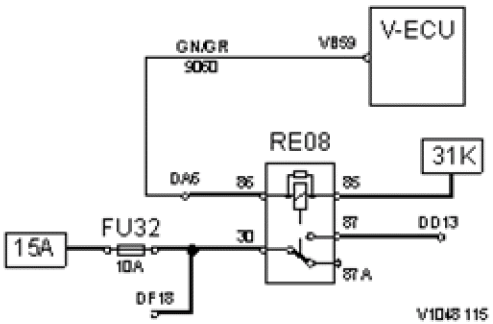 **Figure 1** VB59, control voltage relay

Measuring

Measuring point	Correct value	Condition	Test method
86 – 85	≈ 220 Ω		Measure directly on the relay.
VB59 –	≈ U_{bat}[T1]		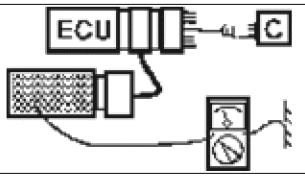
VB59 – 86 RE08 removed	≈ 0 Ω		

			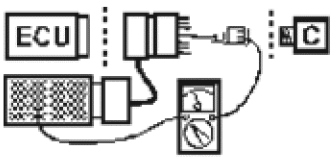
VB59 –  RE08 removed	≈ ∞ Ω		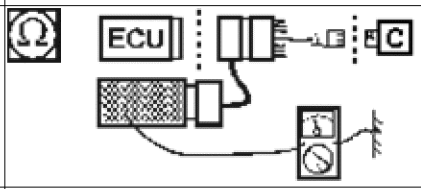
85–  RE08 removed	≈ 0 Ω		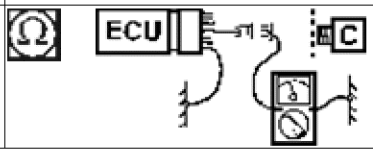

[T1] With boom suspension system activated.

Verifying

Measuring point	Correct value	Condition	Test method
VB59 – 	≈ 220 Ω		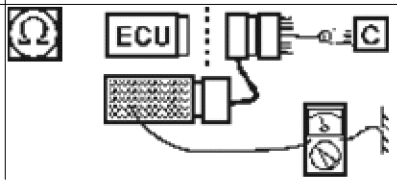

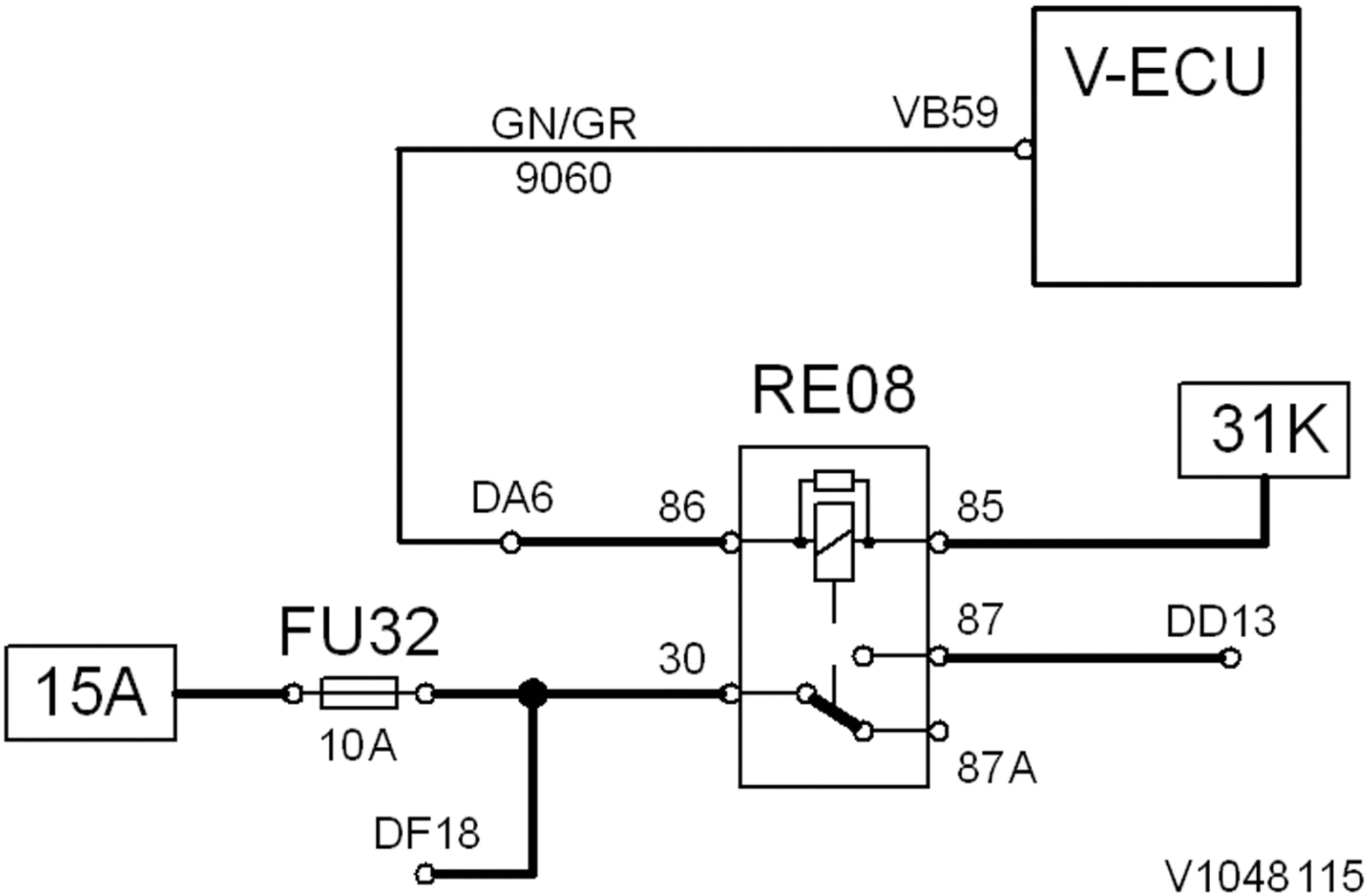
V-ECU
GN/GR
9060
VB59
RE08
31K
DA6
86
85
FU32
87
DD13
15A
30
10A
87A
DF18
V1048115

VOLVO
Construction Equipment

Service Information

Document Title:	Function Group:	Information Type: **Service Information**	Date: **12/10/2011**
Profile: **WLO, L90F (Volvo) [GB]**			

RE09, description and measuring

Op nbr 302-026

9812519 Multimeter
9998699 Adapter
9993893 Adapter
9990062 Cable
9990008 Measuring equipment

Description

Function	Controls interval wiping of rear window.	
References	Komponentförteckning: Reläer Elschema 801	
VCADS Pro Test	—	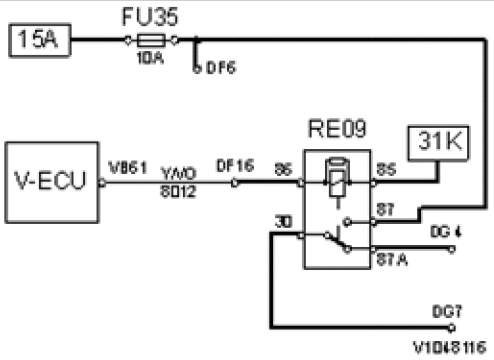 **Figure 1** VB61, control voltage relay

Measuring

Measuring point	Correct value	Condition	Test method
86 – 85	≈ 220 Ω		 Measure directly on the relay.
VB61 – 	≈ U_{bat}[T1] ⓘ		 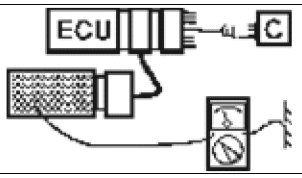
VB61 – 86 RE09 removed	≈ 0 Ω		

			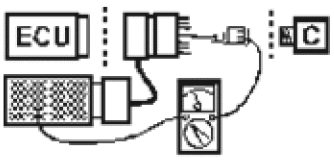
VB61 –  RE09 removed	≈ ∞ Ω		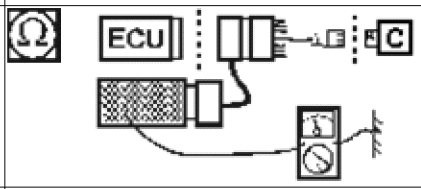
85 –  RE09 removed	≈ 0 Ω		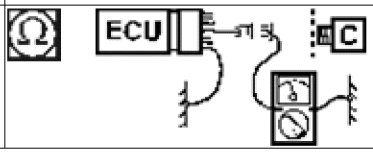

[T1] With rear window wiper activated.

Verifying

Measuring point	Correct value	Condition	Test method
VB61 – 	≈ 220 Ω		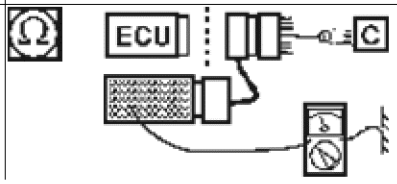

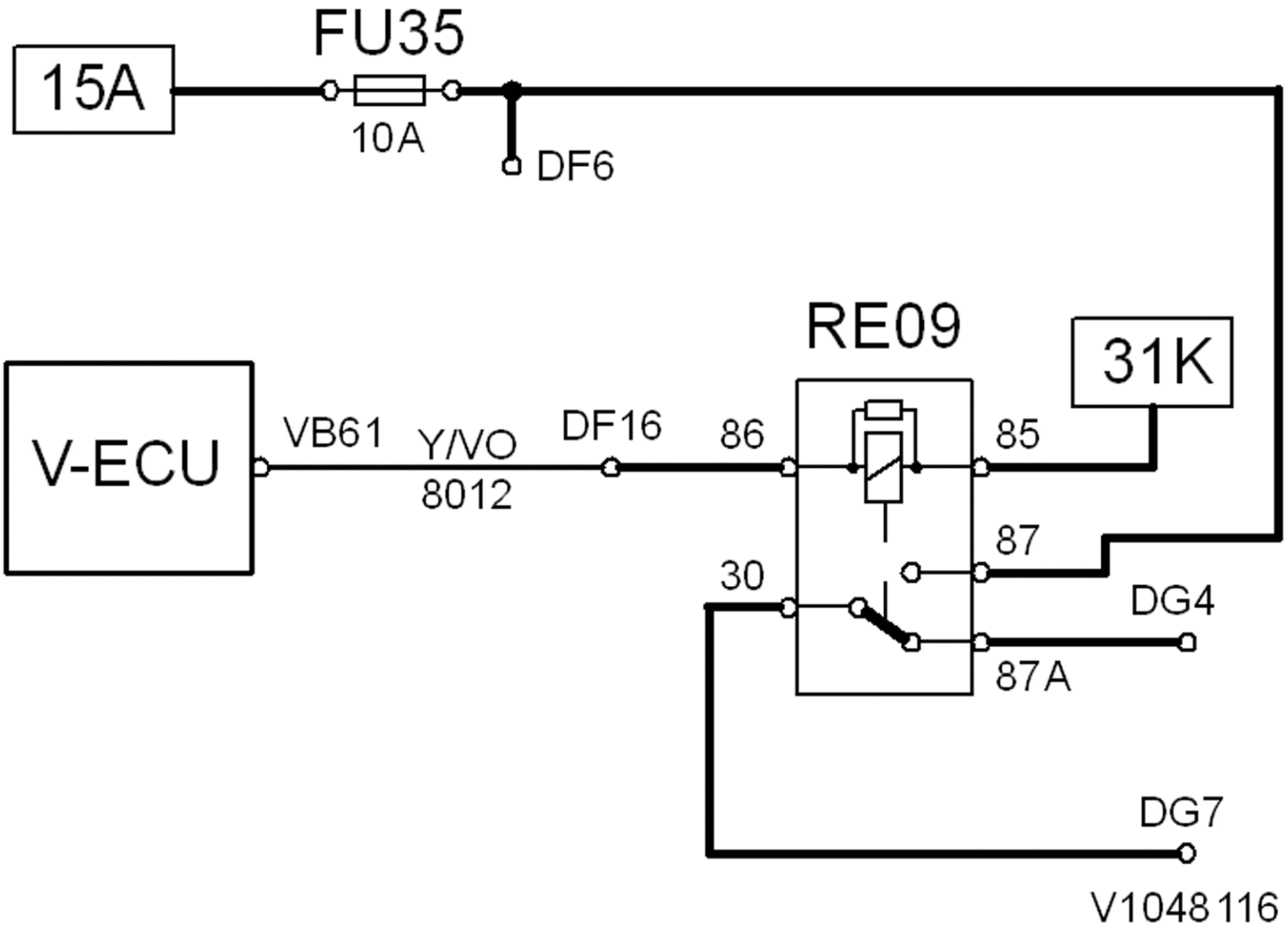
FU35
15A
10A
DF6
RE09
31K
V-ECU
VB61
Y/VO
8012
DF16
86
85
87
30
DG4
87A
DG7
V1048116

VOLVO
Construction Equipment

Service Information

Document Title:	Function Group:	Information Type: **Service Information**	Date: **12/10/2011**
Profile: **WLO, L90F (Volvo) [GB]**			

RE10, description and measuring

Op nbr 302-075

9812519 Multimeter
9998699 Adapter
9993893 Adapter
9990062 Cable
9990008 Measuring equipment

Description

Function	Controls engagement of brake lights.	
References	Komponentförteckning: Reläer Elschema 501	
VCADS Pro Test	—	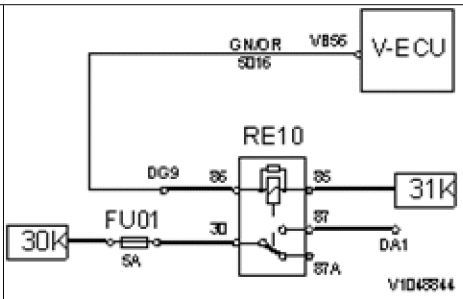 **Figure 1** VB56, control voltage relay

Measuring

Measuring point	Correct value	Condition	Test method
86 – 85	≈ 220 Ω		 Measure directly on the relay.
VB56 – ⏚	≈ U_{bat}[T1] ⓘ		 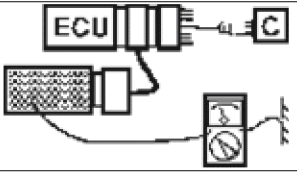
VB56 – 86 RE10 removed	≈ 0 Ω		 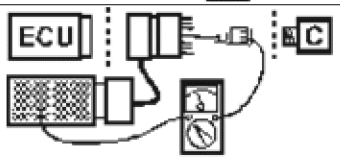
VB56 – ⏚	≈ ∞ Ω		

RE10 removed			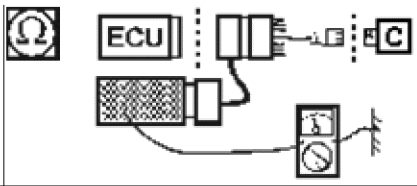
85–  RE10 removed	≈ 0 Ω		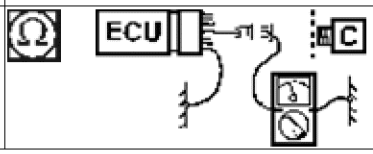

[T1] With applied brake pedal.

Verifying

Measuring point	Correct value	Condition	Test method
VB56 – 	≈ 220 Ω		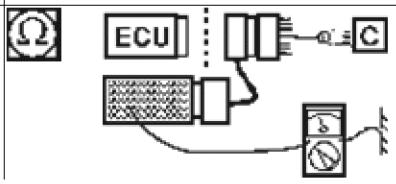

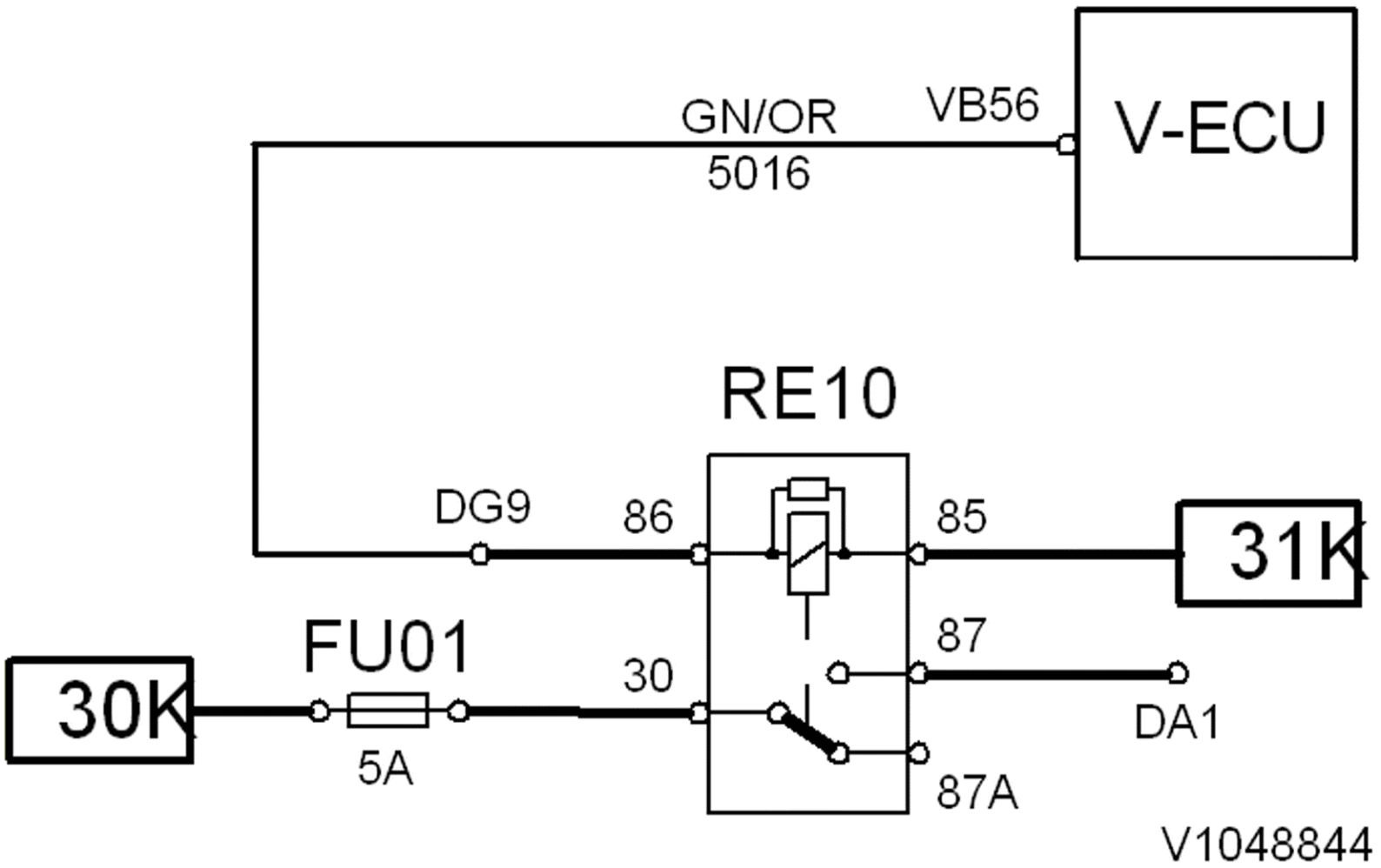
V-ECU
VB56
GN/OR
5016
RE10
DG9
86
85
31K
FU01
87
30K
30
DA1
5A
87A
V1048844

VOLVO
Construction Equipment

Service Information

Document Title:	Function Group:	Information Type: **Service Information**	Date: **12/10/2011**
Profile: **WLO, L90F (Volvo) [GB]**			

RE15, description and measuring

Op nbr 302-027

9812519 Multimeter
9998699 Adapter
9993893 Adapter
9990062 Cable
9990008 Measuring equipment

Description

Function	Controls interval wiping of front windshield.	
References	Komponentförteckning: Reläer Elschema 801	
VCADS Pro Test	—	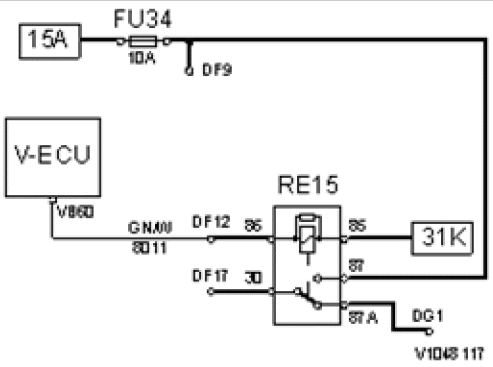 **Figure 1** VB60, control voltage relay

Measuring

Measuring point	Correct value	Condition	Test method
86 – 85	≈ 220 Ω		Measure directly on the relay.
VB60 –	≈ U_{bat}[T1] ⓘ		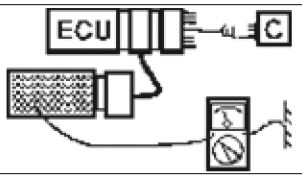
VB60 – 86 RE15 removed	≈ 0 Ω		

			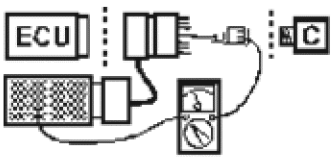
VB60 –  RE15 removed	≈ ∞ Ω		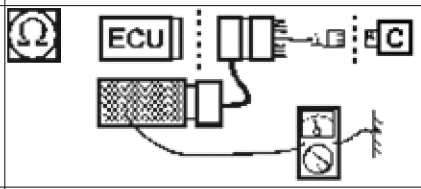
85 –  RE15 removed	≈ 0 Ω		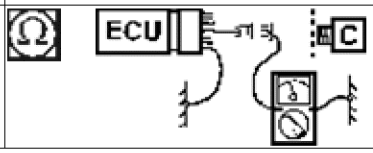

[T1] Changes between 0 V and Ubat with interval wiping activated.

Verifying

Measuring point	Correct value	Condition	Test method
VB60 – 	≈ 220 Ω		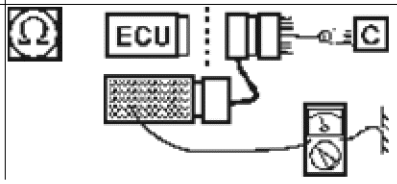

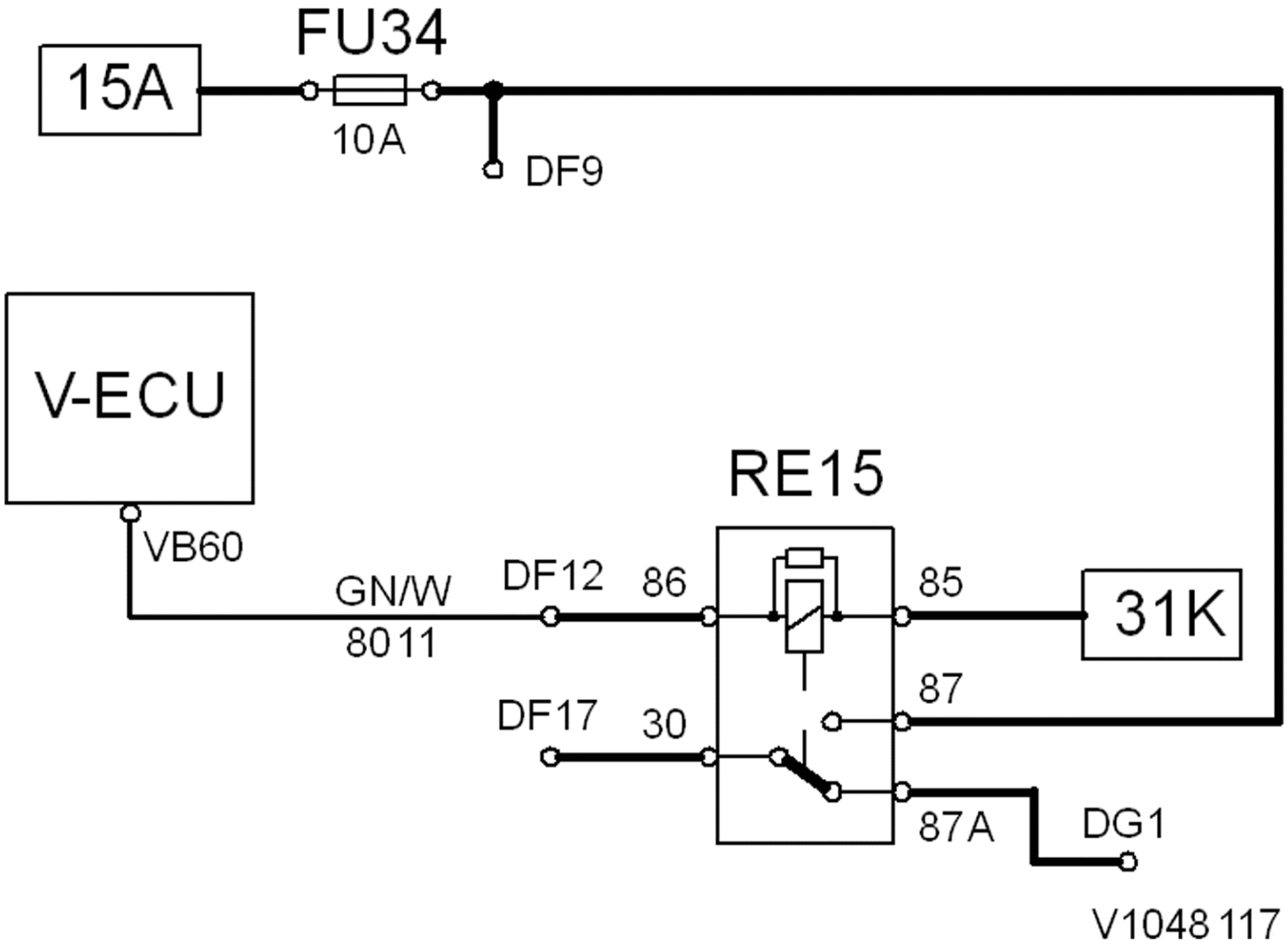
FU34
15A
10A
DF9
V-ECU
VB60
GN/W
80 11
DF12
86
RE15
85
31K
87
DF17
30
87A
DG1
V1048 117

VOLVO
Construction Equipment

Service Information

Document Title:	Function Group:	Information Type: **Service Information**	Date: **12/10/2011**
Profile: **WLO, L90F (Volvo) [GB]**			

RE2501, description and measuring

Op nbr 302-028

9812519 Multimeter
9998699 Adapter
9990014 Adapter
9990062 Cable
9990008 Measuring equipment

Description

Function	Controls engagement of preheating coil.
References	Komponentförteckning: Reläer Elschema 204
VCADS Pro Test	—
	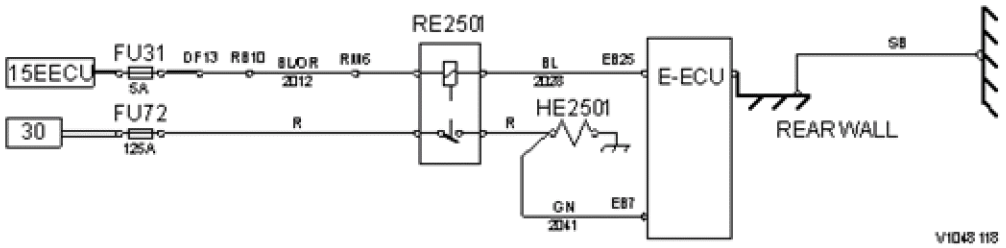 **Figure 1** EB25, control voltage relay

Measuring

Measuring point	Correct value	Condition	Test method
Small screw on relay (voltage feed) –	≈ U_{bat}	1	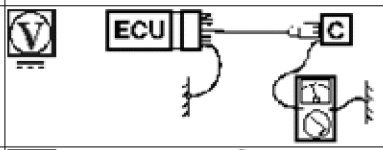
Small screws on relay	≈ 20 Ω		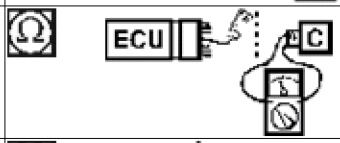
EB25 –	≈ ∞ Ω		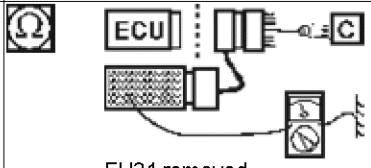 FU31 removed
EB25 –	≈ 0 V	1	

			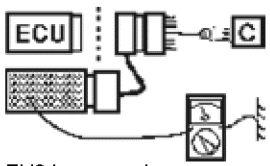 FU31 removed

Verifying

Measuring point	Correct value	Condition	Test method
EB25 – FU31	≈ 20 Ω		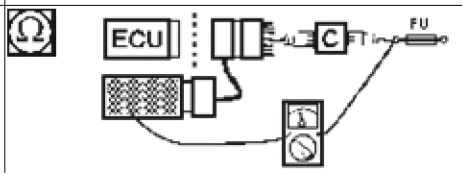

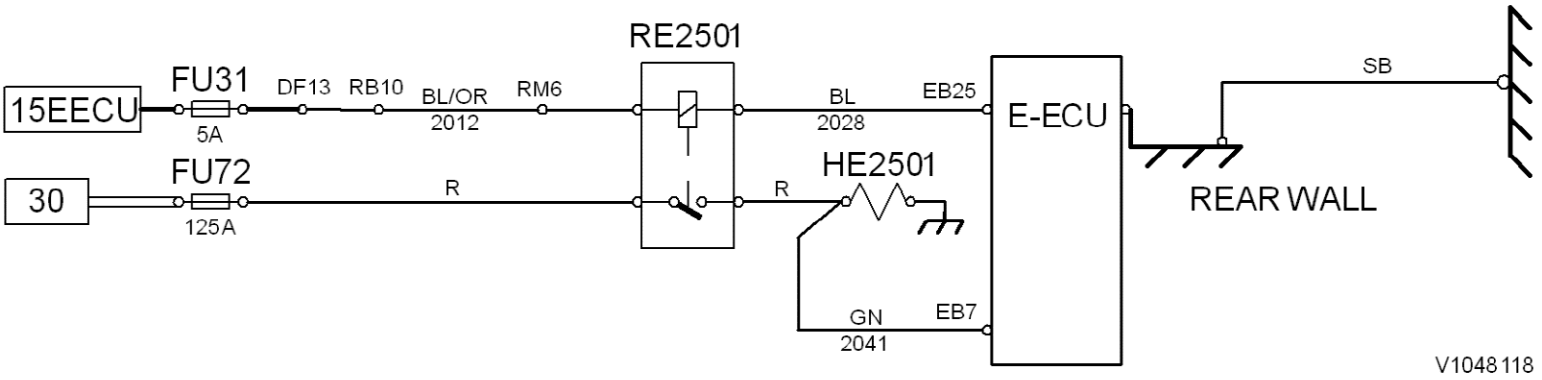
RE2501
15EECU
FU31
5A
DF13
RB10
BL/OR
2012
RM6
BL
2028
EB25
E-ECU
SB
REAR WALL
30
FU72
125A
R
R
HE2501
GN
2041
EB7
V1048118

VOLVO
Construction Equipment

Service Information

Document Title:	Function Group:	Information Type: **Service Information**	Date: **12/10/2011**
Profile: **WLO, L90F (Volvo) [GB]**			

RE6401, description and measuring

Op nbr 302-029

9812519 Multimeter
9998699 Adapter
9993893 Adapter
9990062 Cable

Description

Function	Controls engagement of secondary steering pump.
References	Komponentförteckning: Reläer Elschema 604
VCADS Pro Test	—
	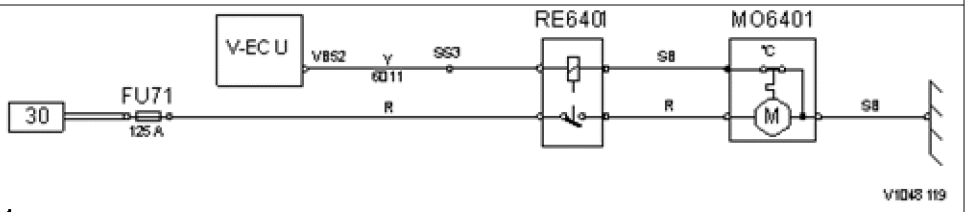 **Figure 1** VB52, control voltage relay

Measuring

Measuring point	Correct value	Condition	Test method
Small screws on relay	≈ 20 Ω		 Measure directly on the relay.
VB52 – Small screw on relay (control voltage)	≈ 0 Ω		 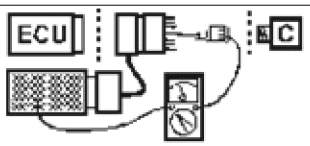
VB52 – ⏚	≈ 20 Ω		 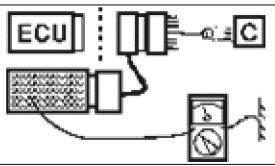
VB52 – ⏚	≈ ∞ Ω		 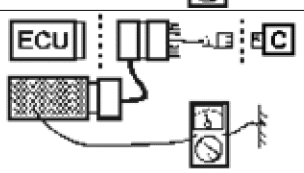

Verifying

Measuring point	Correct value	Condition	Test method

VB52 –	≈ 20 Ω			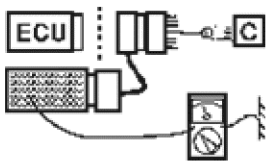

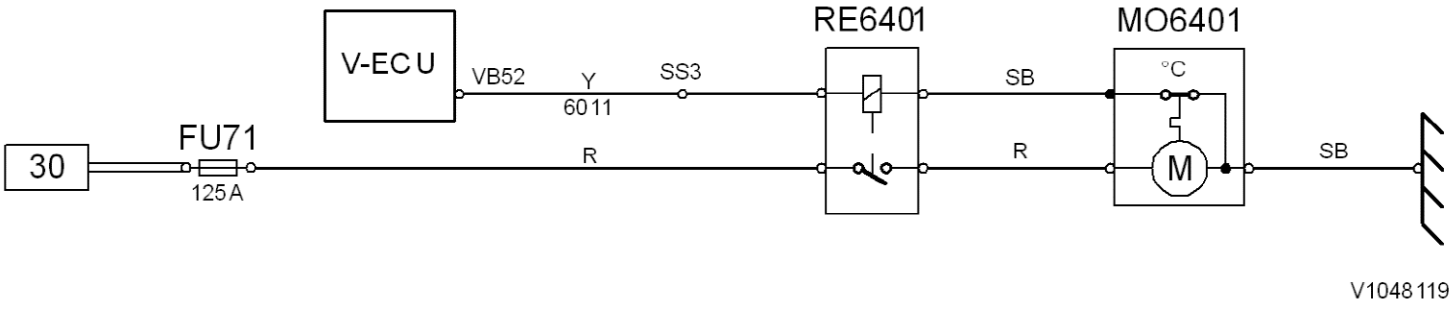
V-ECU
VB52
Y
6011
SS3
RE6401
SB
MO6401
°C
30
FU71
125A
R
R
M
SB
V1048119

VOLVO
Construction Equipment

Service Information

Document Title:	Function Group:	Information Type: **Service Information**	Date: **12/10/2011**
Profile: **WLO, L90F (Volvo) [GB]**			

RE8701, description and measuring

Op nbr 302-030

9812519 Multimeter
9998699 Adapter
9993893 Adapter
9990062 Cable
9990008 Measuring equipment

Description

Function	Controls engagement of pause heating pump.	
References	Komponentförteckning: Reläer Elschema 806	
VCADS Pro Test	—	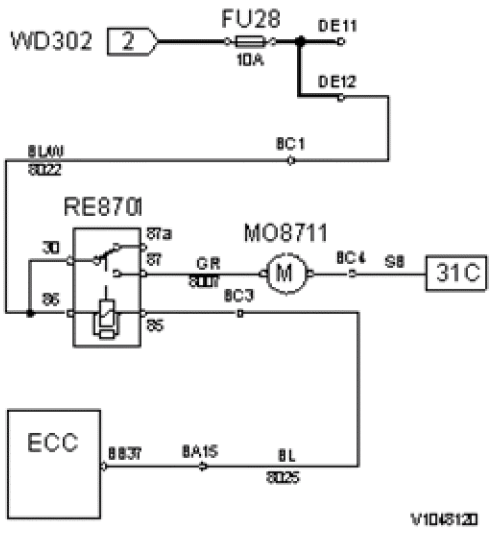 **Figure 1** BB37, control voltage relay

Measuring

Measuring point	Correct value	Condition	Test method
86 – 85	≈ 220 Ω		Measure directly on the relay.
86 – ⏚ RE8701 removed	≈ U_{bat}	1	

			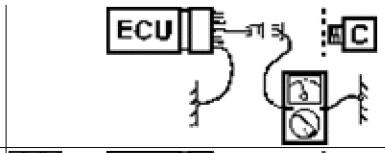
85 –  RE8701 removed	≈ 0 Ω		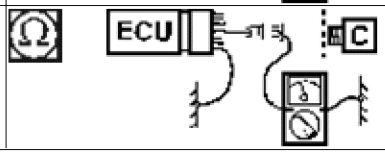

Verifying

Measuring point	Correct value	Condition	Test method
BB37 – FU28	≈ 220 Ω		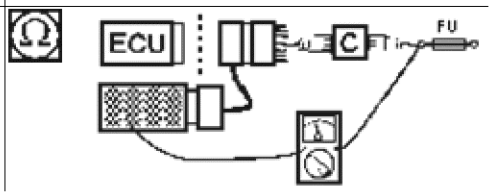

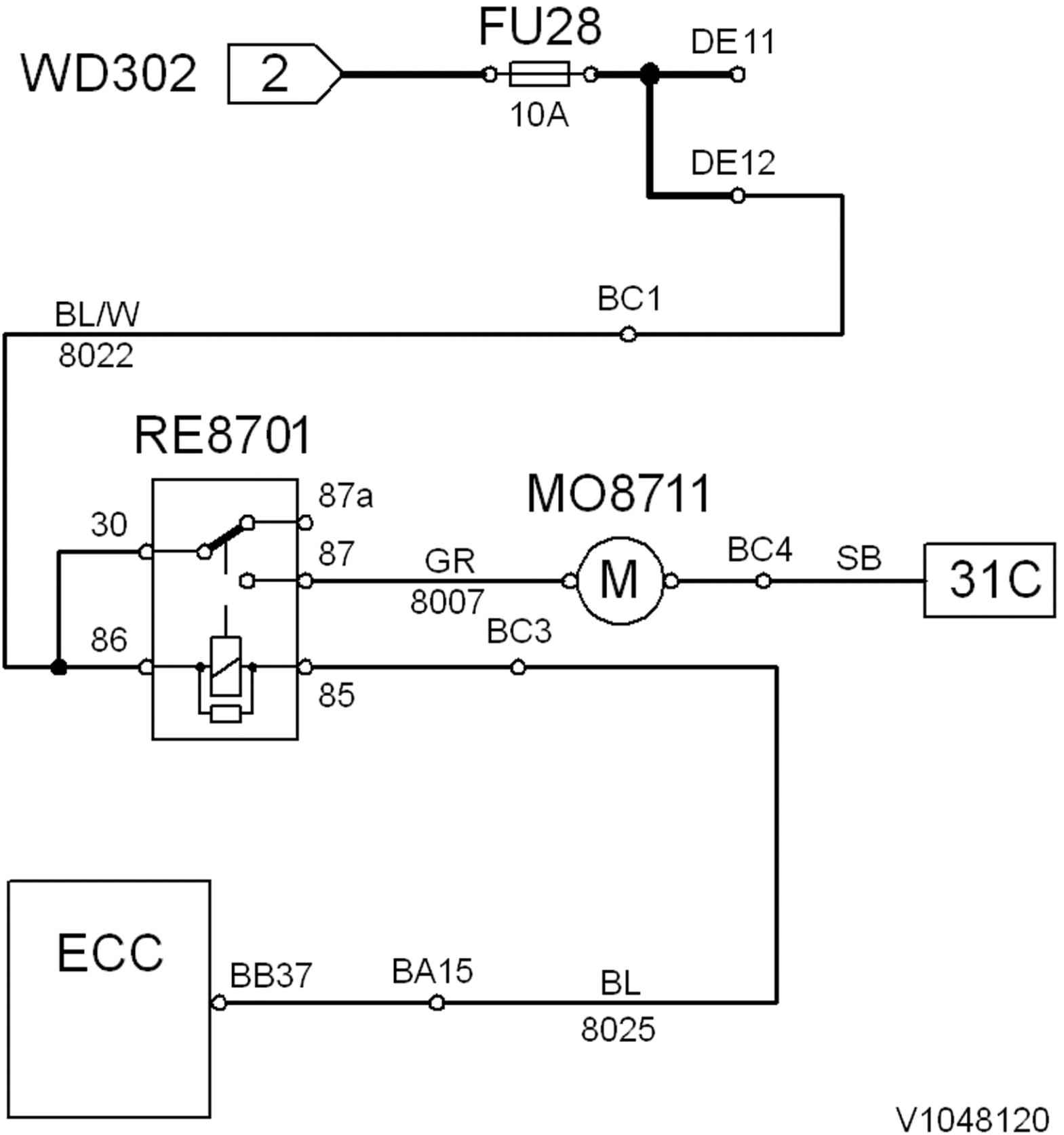
WD302
2
FU28
10A
DE11
DE12
BL/W
8022
BC1
RE8701
30
87a
87
86
85
MO8711
GR
8007
M
BC4
SB
31C
BC3
ECC
BB37
BA15
BL
8025
V1048120

VOLVO
Construction Equipment

Service Information

Document Title:	Function Group:	Information Type: **Service Information**	Date: **12/10/2011**
Profile: **WLO, L90F (Volvo) [GB]**			

SA-SF, description and measuring

Op nbr 302-074

9812519 Multimeter
9998699 Adapter
9998699 Adapter
9993893 Adapter
9990062 Cable
88890016 Break out harness

Description

Function	Control shifting in the transmission.	
References	Komponentförteckning: Signaler, växlingsventiler Elschema 402	
VCADS Pro Test	—	
	VB33, feed VB09, return cable VB34, feed VB10, return cable VB35, feed VB11, return cable VB36, feed VB12, return cable VB37, feed VB13, return cable VB38, feed VB14, return cable	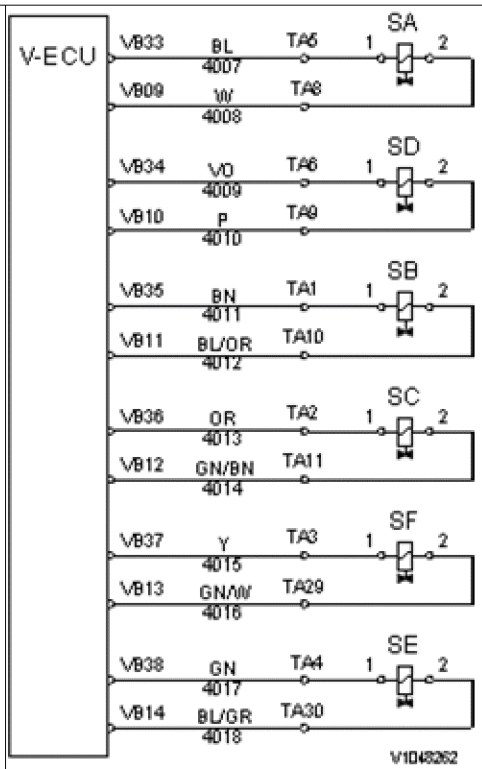 **Figure 1**

Measuring

Measuring point	Correct value	Condition	Test method
1 – 2	≈ 29 Ω		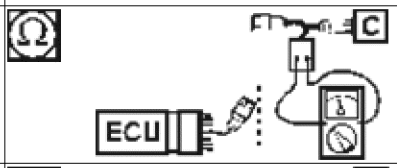
1 –  2 – 	≈ ∞ Ω		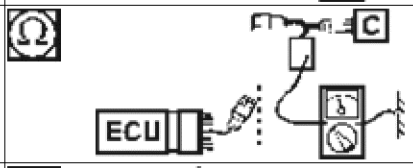
Feed –  Return cable – 	≈ ∞ Ω		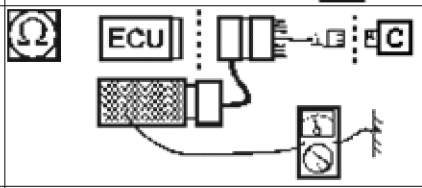
VB33 – 1 VB34 – 1 VB35 – 1 VB36 – 1 VB37 – 1 VB38 – 1	≈ 0 Ω		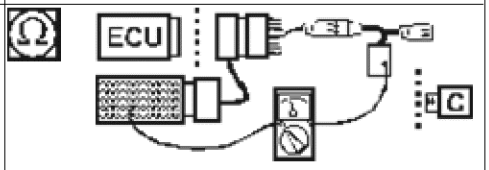
VB9 – 2 VB10 – 2 VB11 – 2 VB12 – 2 VB13 – 2 VB14 – 2	≈ 0 Ω		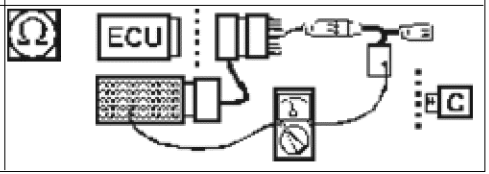

Verifying

Measuring point	Correct value	Condition	Test method
VB33 – VB9 VB34 – VB10 VB35 – VB11 VB36 – VB12 VB37 – VB13 VB38 – VB14	≈ 29 Ω		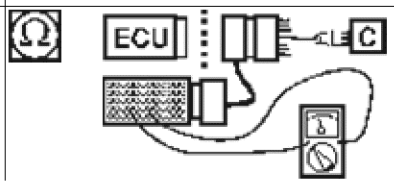

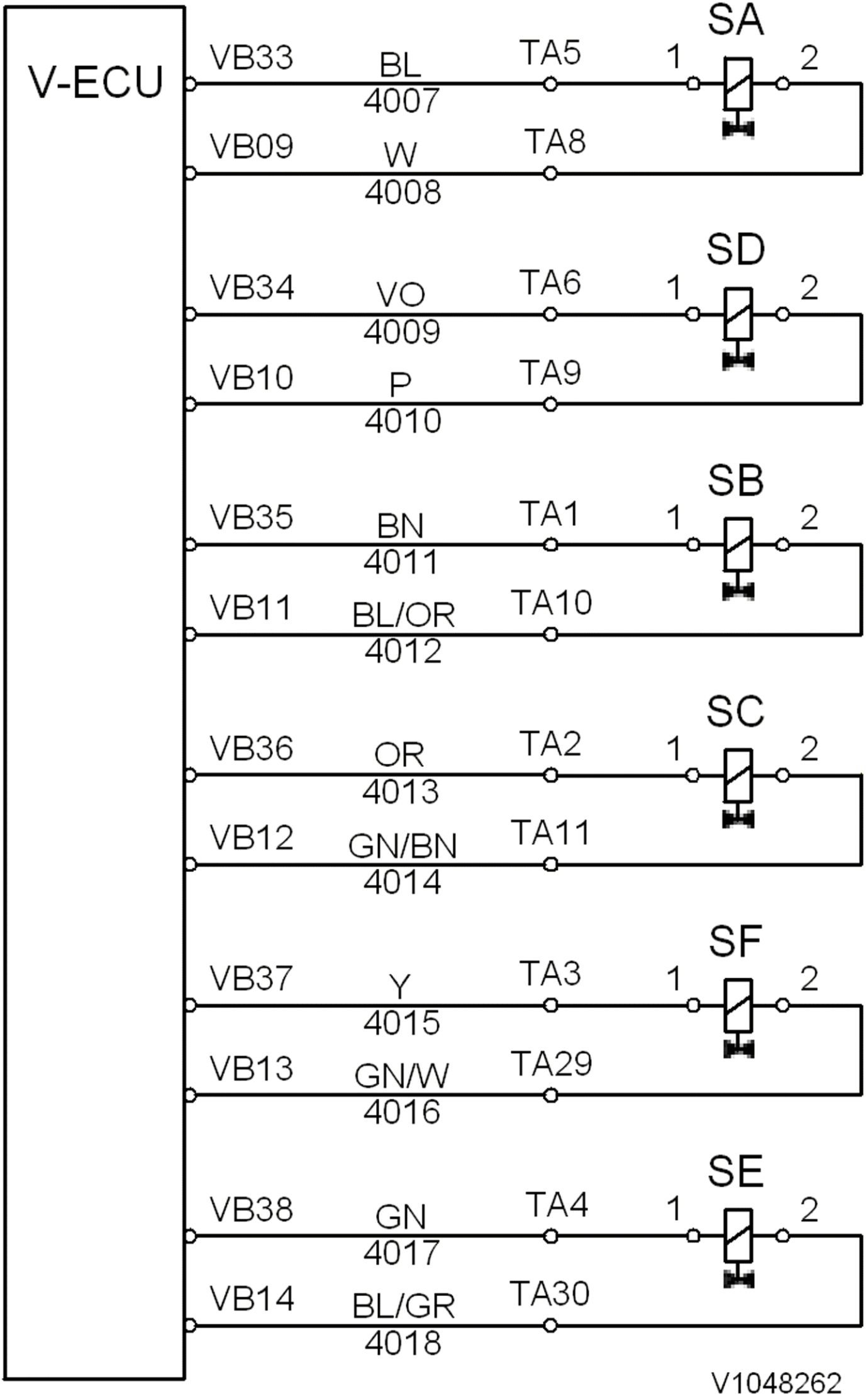
V-ECU
VB33
BL
4007
TA5
SA
1
2
VB09
W
4008
TA8
VB34
VO
4009
TA6
SD
1
2
VB10
P
4010
TA9
VB35
BN
4011
TA1
SB
1
2
VB11
BL/OR
4012
TA10
VB36
OR
4013
TA2
SC
1
2
VB12
GN/BN
4014
TA11
VB37
Y
4015
TA3
SF
1
2
VB13
GN/W
4016
TA29
VB38
GN
4017
TA4
SE
1
2
VB14
BL/GR
4018
TA30
V1048262

VOLVO
Construction Equipment

Service Information

Document Title:	Function Group:	Information Type: **Service Information**	Date: **12/10/2011**
Profile: **WLO, L90F (Volvo) [GB]**			

PWM9133, description and measuring

Op nbr 302-118

9812519 Multimeter
9998699 Adapter
9993893 Adapter
9990062 Cable
88890016 Break out harness
88890019 Template

Description

Function	Controls LS-pressure to the electrically controlled hydraulic pump.	
References	Komponentförteckning: PWM-ventiler Elschema 908	
VCADS Pro Test	—	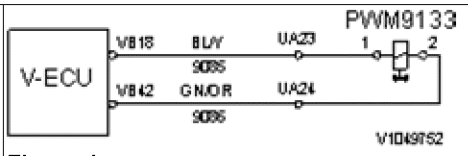 **Figure 1** VB 18, return cable VB 42, feed

Measuring

Measuring point	Correct value	Condition	Test method
1 – 2	≈ 22 Ω		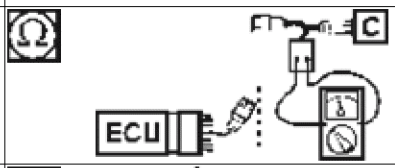
VB 18 – 1 VB 42 – 2	≈ 0 Ω		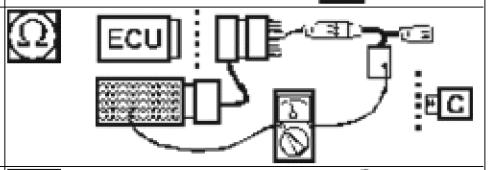
1 – 2 –	≈ ∞ Ω		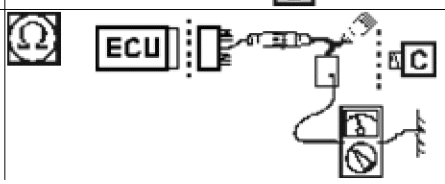

Verifying

Measuring point	Correct value	Condition	Test method
VB18 – VB 42	≈ 22 Ω		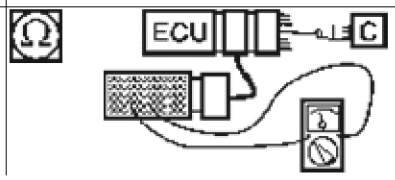

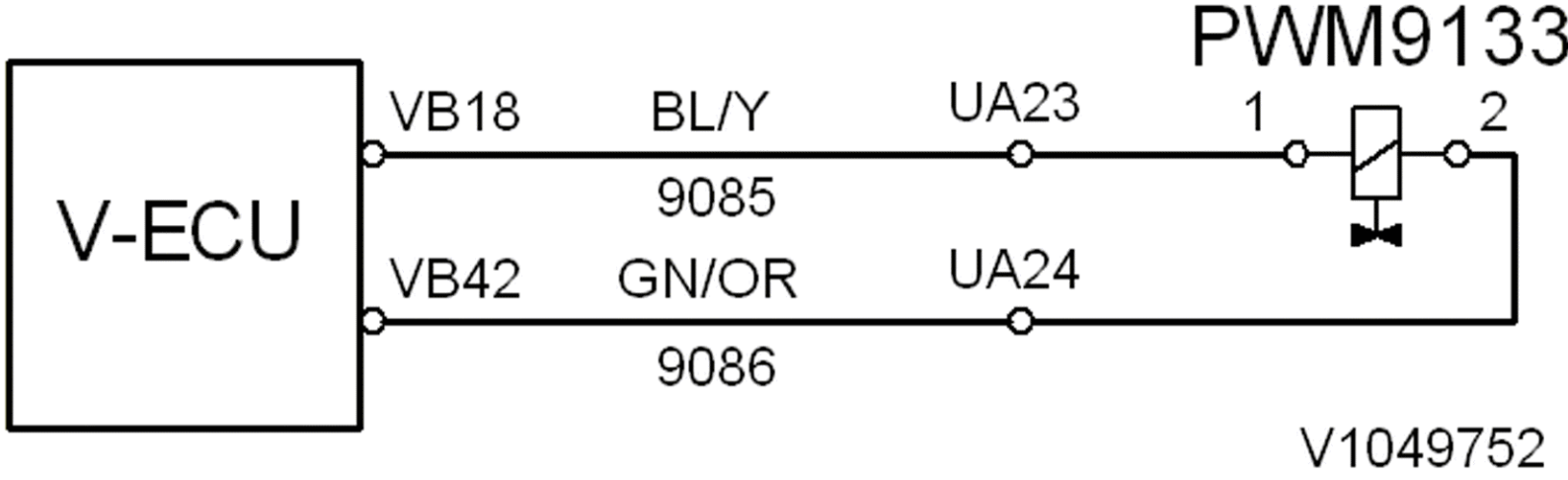
PWM9133
V-ECU
VB18
BL/Y
UA23
1
2
9085
VB42
GN/OR
UA24
9086
V1049752

VOLVO
Construction Equipment

Service Information

Document Title:	Function Group:	Information Type: **Service Information**	Date: **12/10/2011**
Profile: **WLO, L90F (Volvo) [GB]**			

SE2203, description and measuring

Op nbr 302-031

9812519 Multimeter
9998699 Adapter
9990014 Adapter
9990062 Cable
9990216 Adapter

Description

Function	Measures engine oil pressure.	
References	Komponentförteckning: Givare Elschema 203	
VCADS Pro Test	28407-3 Sensor values, monitoring	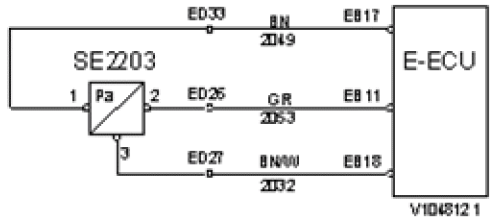 **Figure 1** EB17, feed 5 V EB11, signal EB18, ground

Measuring

Measuring point	Correct value	Condition	Test method
1 – ⏚	≈ 5 V		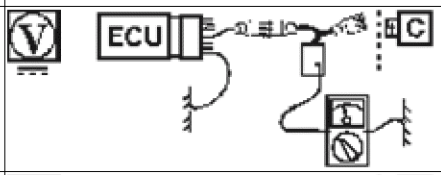
3 – ⏚	≈ 0 Ω		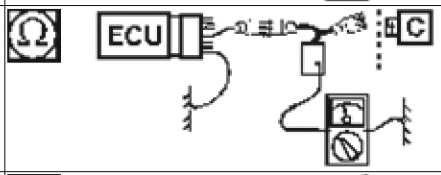
1 – ⏚ 2 – ⏚	≈ ∞ Ω		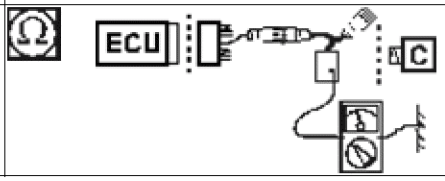

EB11 – 2	≈ 0 Ω		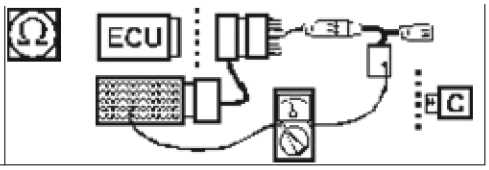

Verifying

Measuring point	Correct value	Condition	Test method
EB11 – EB18	≈ 0.5 V		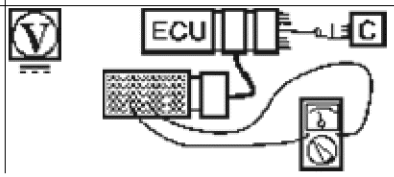

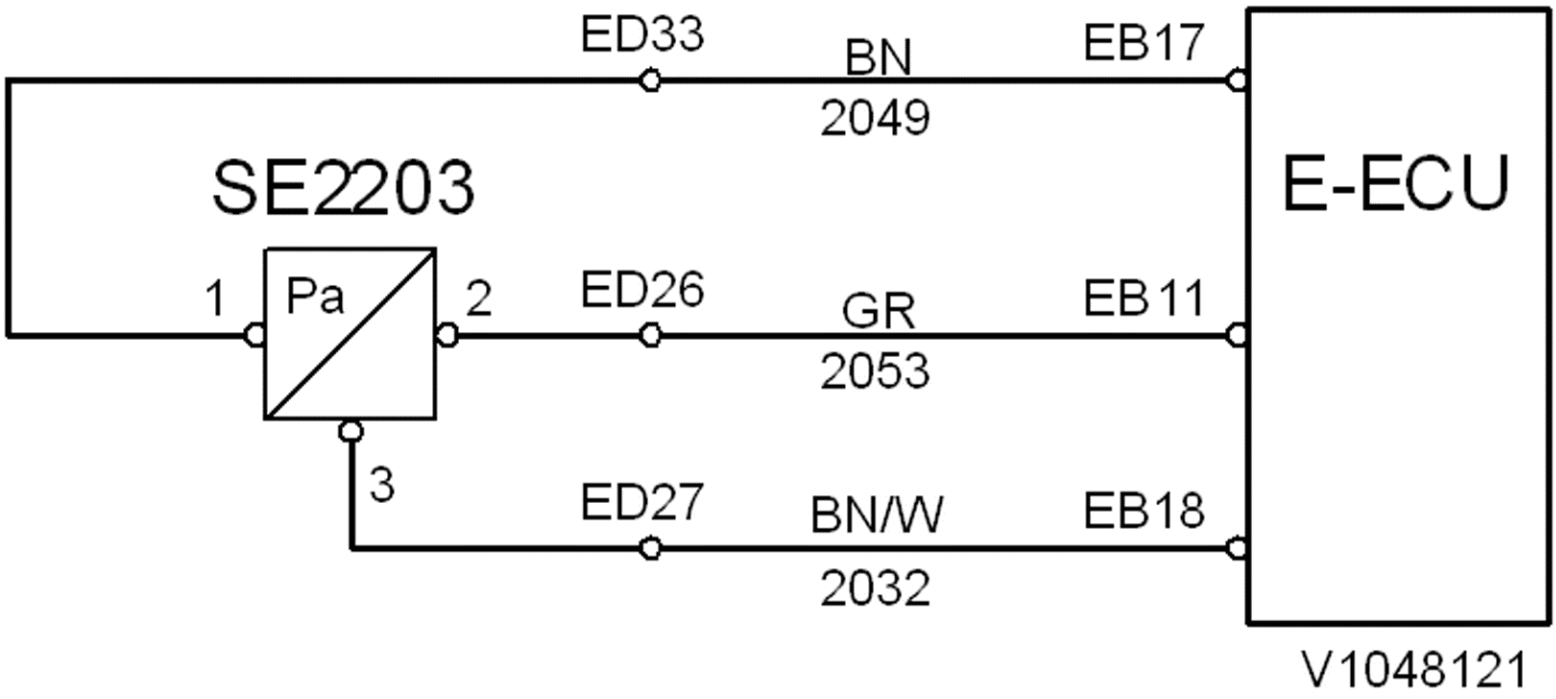
ED33
BN
2049
EB17
SE2203
E-ECU
1
Pa
2
ED26
GR
2053
EB11
3
ED27
BN/W
2032
EB18
V1048121

VOLVO
Construction Equipment

Service Information

Document Title:	Function Group:	Information Type: **Service Information**	Date: **12/10/2011**
Profile: **WLO, L90F (Volvo) [GB]**			

SE2301, description and measuring

Op nbr 302-032

9812519 Multimeter
9998699 Adapter
9990014 Adapter
9990062 Cable
9998534 Adapter

Description

Function	Measures feed pressure after the fuel filter.	
References	Komponentförteckning: Givare Elschema 203	
VCADS Pro Test	28407-3 Sensor values, monitoring	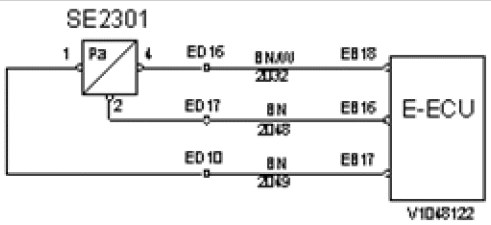 **Figure 1** EB18, ground EB16, signal EB17, feed 5 V

Measuring

Measuring point	Correct value	Condition	Test method
1 –	≈ 5 V		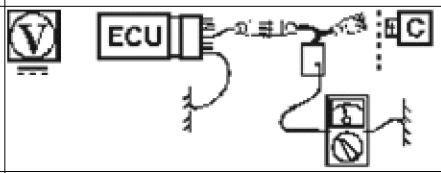
4 –	≈ 0 Ω		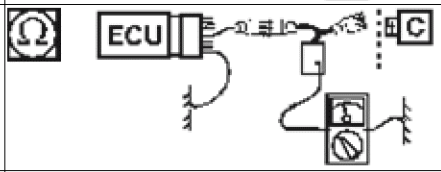
1 – 2 –	≈ ∞ Ω		

			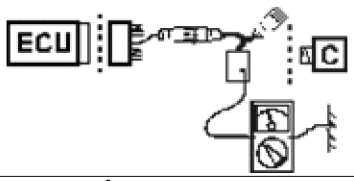
EB16 – 2	≈ 0 Ω		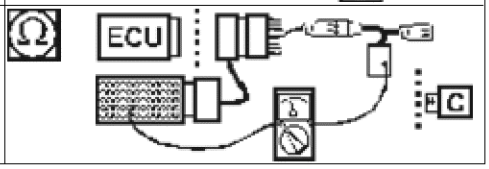

Verifying

Measuring point	Correct value	Condition	Test method
EB16 – EB18	≈ 0.5 V		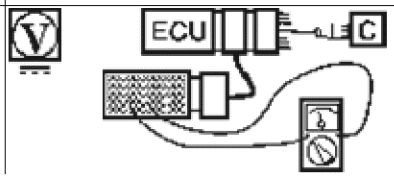

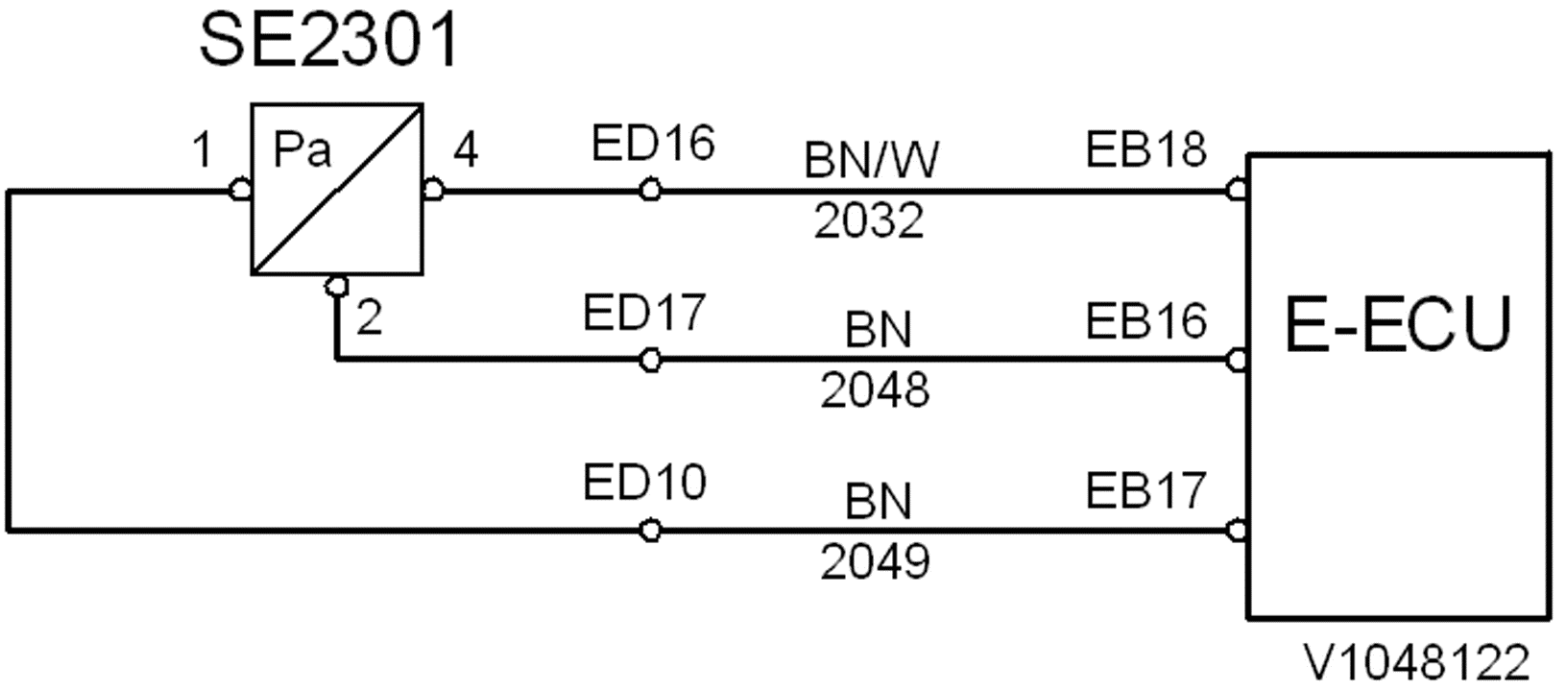
SE2301
1
Pa
4
2
ED16
BN/W
2032
EB18
ED17
BN
2048
EB16
ED10
BN
2049
EB17
E-ECU
V1048122

VOLVO
Construction Equipment

Service Information

Document Title:	Function Group:	Information Type: **Service Information**	Date: **12/10/2011**
Profile: **WLO, L90F (Volvo) [GB]**			

RE06, description and measuring

Op nbr 302-120

9812519 Multimeter
9998699 Adapter
9993893 Adapter
9993894 Template
9990062 Cable
9990008 Measuring equipment

Description

Function	Controls voltage feed to the starter motor's solenoid.
References	Komponentförteckning: Reläer Elschema 303
VCADS Pro Test	—
	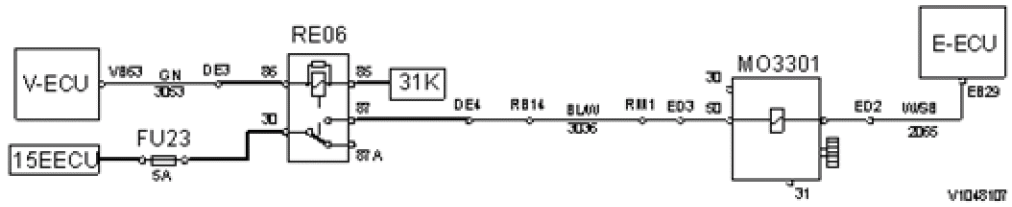 **Figure 1** VB63, control voltage relay

Measuring

Measuring point	Correct value	Condition	Test method
86 – 85	≈ 220 Ω		 Measure directly on the relay.
86 –  RE06 removed	≈ U_{bat}		 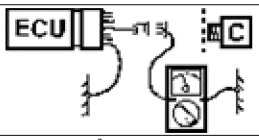
VB63 –  RE06 removed	≈ ∞ Ω		 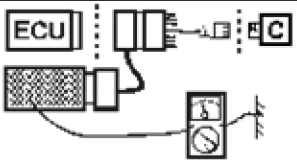
85–  RE06 removed	≈ 0 Ω		 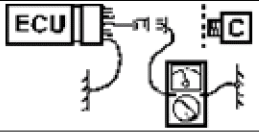

Verifying

Measuring point	Correct value	Condition	Test method

VB63 –	≈ 220 Ω			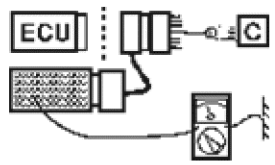

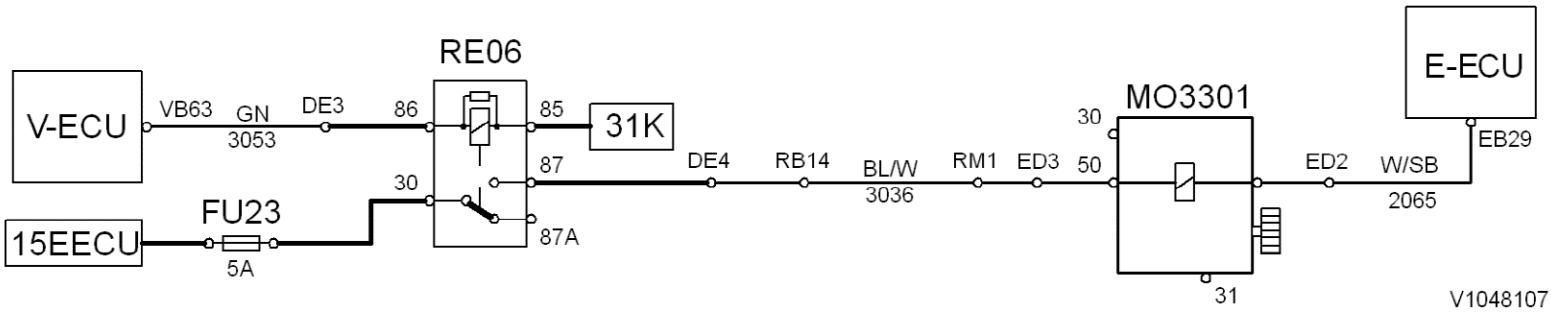
RE06
V-ECU
VB63
GN
3053
DE3
86
85
31K
87
30
87A
FU23
15EECU
5A
DE4
RB14
BL/W
3036
RM1
ED3
MO3301
30
50
31
ED2
W/SB
2065
E-ECU
EB29
V1048107

VOLVO
Construction Equipment

Service Information

Document Title:	Function Group:	Information Type: **Service Information**	Date: **12/10/2011**
Profile: **WLO, L90F (Volvo) [GB]**			

SE2302, description and measuring

Op nbr 302-033

9812519 Multimeter
9998567 Adapter

Description

Function	Monitors water level in the fuel filter.	SE2302 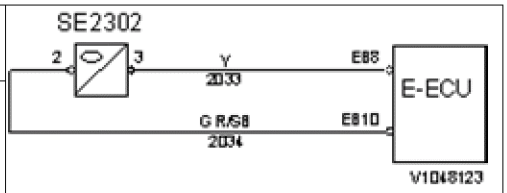 **Figure 1** EB8, feed EB10, ground
References	Komponentförteckning: Givare Elschema 202	
VCADS Pro Test	—	

Measuring

Measuring point	Correct value	Condition	Test method
2 – 3	≈ ∞ Ω[T1] ⓘ		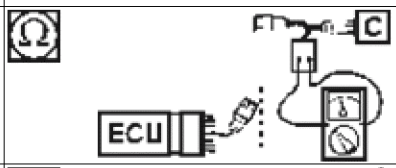
3 – ⏚	≈ 0.8 x U_{bat}		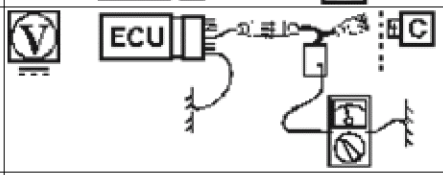
2 – ⏚	≈ 0 Ω		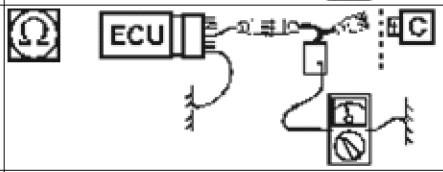
3 – ⏚	≈ ∞ Ω		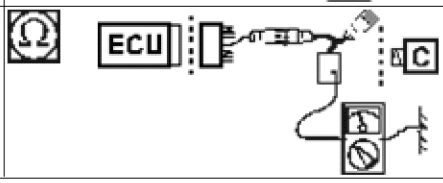

[T1] Fuel filter drained of water.

Verifying

Measuring point	Correct value	Condition	Test method
3 – 2	≈ 0.8 x U_{bat}		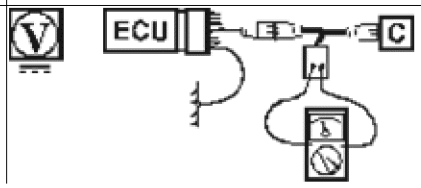

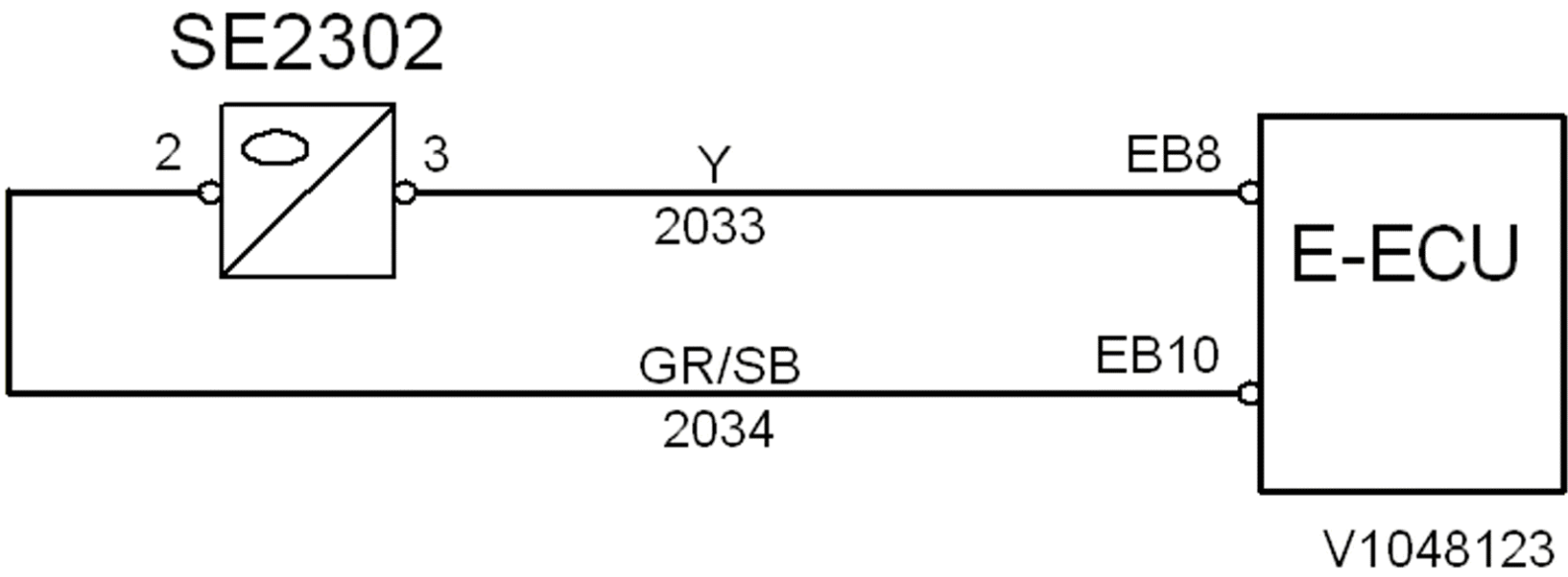
SE2302
2
3
Y
2033
EB8
E-ECU
GR/SB
2034
EB10
V1048123

VOLVO
Construction Equipment

Service Information

Document Title:	Function Group:	Information Type: **Service Information**	Date: **12/10/2011**
Profile: **WLO, L90F (Volvo) [GB]**			

SE2303, description and measuring

Op nbr 302-034

9812519 Multimeter
9998699 Adapter
9993893 Adapter
9990062 Cable
9998534 Adapter

Description

Function	Measures fuel level in the tank.	
References	Komponentförteckning: Givare Elschema 201	
VCADS Pro Test	—	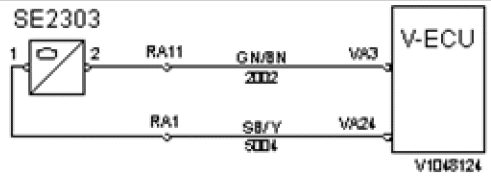 **Figure 1** VA3, feed 5 V VA24, ground

Measuring

Measuring point	Correct value	Condition	Test method
1 – 2	Resistance values according to table		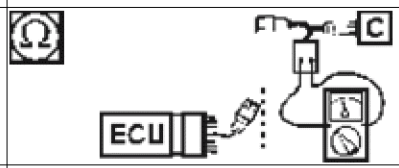
2 – ⏚	≈ 5 V		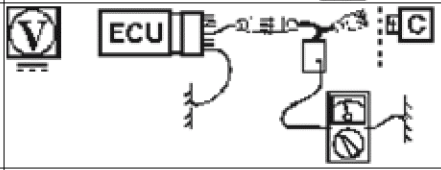
1 – ⏚	≈ 0 Ω		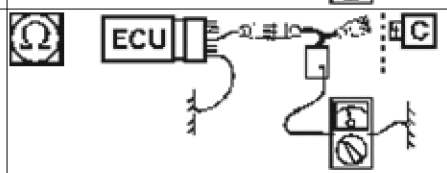
2 – ⏚	≈ ∞ Ω		

			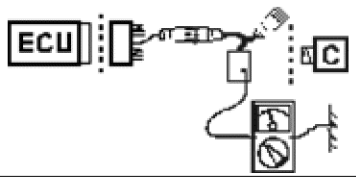

Verifying

Measuring point	Correct value	Condition	Test method
VA3 – VA24	Resistance values according to table		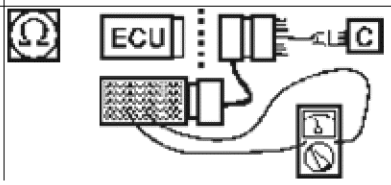

Resistance values SE2303

Display in machine	Fuel volume (litres)	Fuel level[T1] (mm)	Resistance (Ω)
Full tank	213	>294	≤53
		273	71
		252	79
	164	231	88
		210	96
		189	104
	110	168	112
		147	127
		126	142
	59	105	157
		84	181
		63	211
Empty tank	19[T2]	42	241

[T1] Distance from bottom edge of sensor to current fuel level.

[T2] At indication of empty tank, there is fuel for approx. 1 hour of operation.

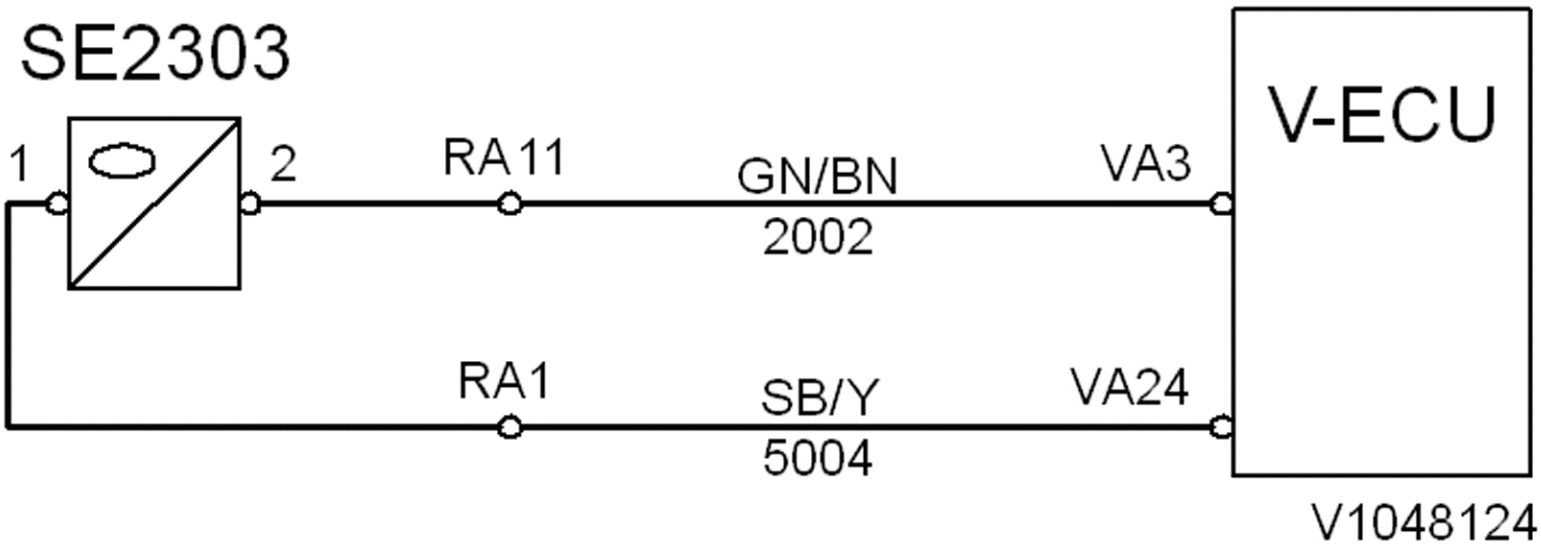
SE2303
1
2
RA11
GN/BN
2002
VA3
V-ECU
RA1
SB/Y
5004
VA24
V1048124

VOLVO
Construction Equipment

Service Information

Document Title:	Function Group:	Information Type: **Service Information**	Date: **12/10/2011**
Profile: **WLO, L90F (Volvo) [GB]**			

SE2309, description and measuring

Op nbr 302-035

88890074 Multimeter
9998699 Adapter
9990014 Adapter
9990062 Cable
9990216 Adapter

Description

Function	Measures pressure in fuel rail.	
References	Komponentförteckning: Givare Elschema 203	
VCADS Pro Test	28407-3 Sensor values, monitoring	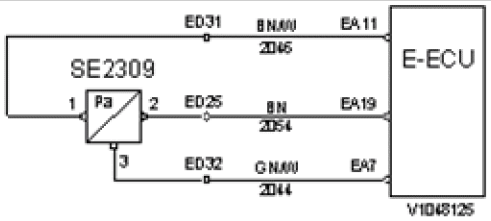 **Figure 1** EA11, ground EA19, signal EA7, feed 5V

Measuring

Measuring point	Correct value	Condition	Test method
3 – ⏚	≈ 5 V		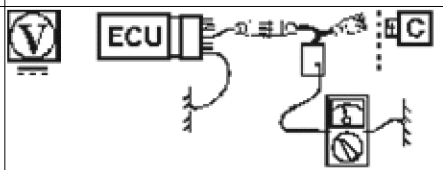
1 – ⏚	≈ 0 Ω		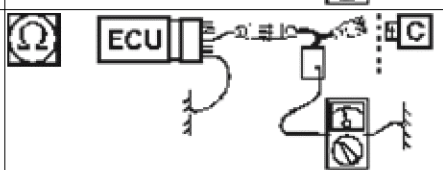
2 – ⏚ 3 – ⏚	≈ ∞ Ω		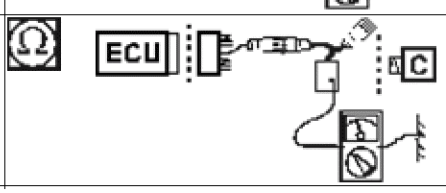

EA19 – 2	≈ 0 Ω		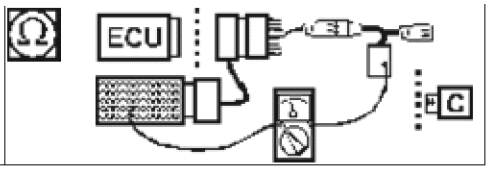

Verifying

Measuring point	Correct value	Condition	Test method
EA19 – EA11	≈ 0.5 V		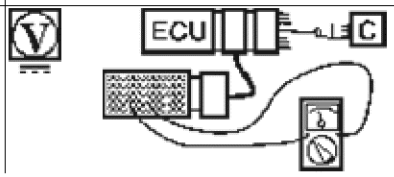

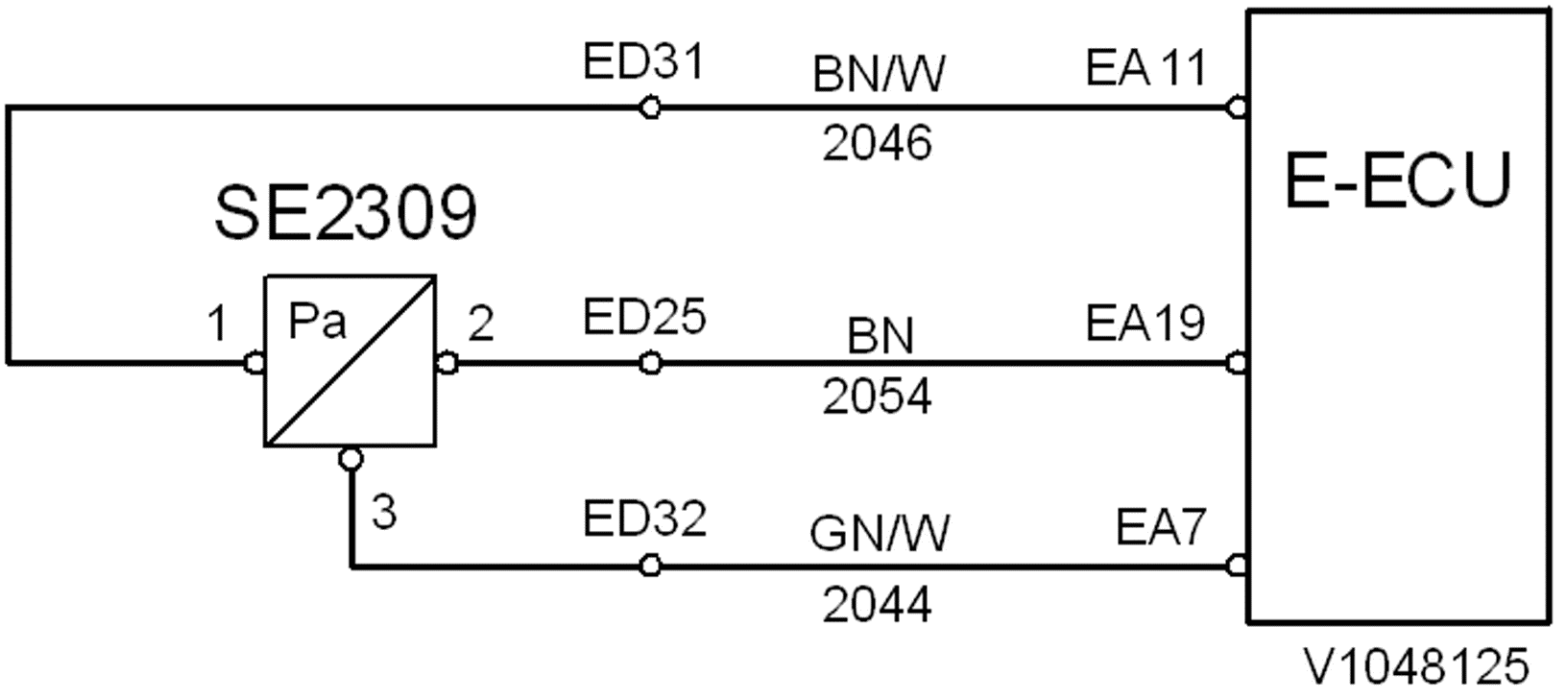
ED31
BN/W
2046
EA 11
E-ECU
SE2309
1
Pa
2
ED25
BN
2054
EA19
3
ED32
GN/W
2044
EA7
V1048125

VOLVO
Construction Equipment

Service Information

Document Title:	Function Group:	Information Type: **Service Information**	Date: **12/10/2011**
Profile: **WLO, L90F (Volvo) [GB]**			

SE2501, description and measuring

Op nbr 302-036

9812519 Multimeter
9998699 Adapter
9990014 Adapter
9990062 Cable
9998534 Adapter

Description

Function	Measures temperature of the induction air after the air cleaner. The sensor is combined with SE2502, air filter monitor.	
References	Komponentförteckning: Givare Elschema 202	
VCADS Pro Test	28407-3 Sensor values, monitoring	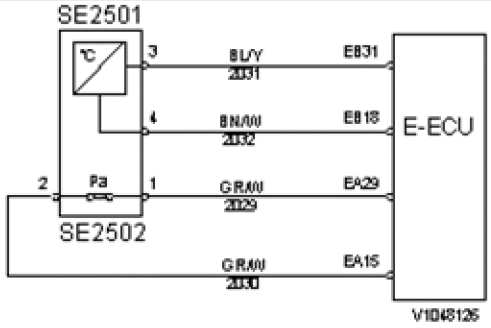 **Figure 1** EB31, signal EB18, ground

Measuring

Measuring point	Correct value	Condition	Test method
3 – 4	Resistance values according to table		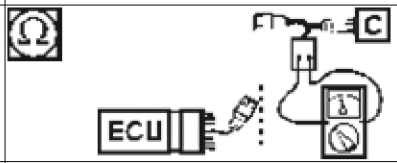
3 – ⏚	≈ 5 V		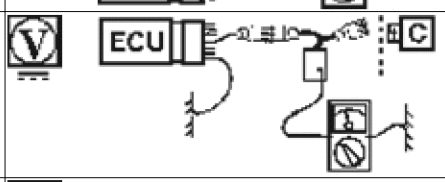
4 – ⏚	≈ 0 Ω		

			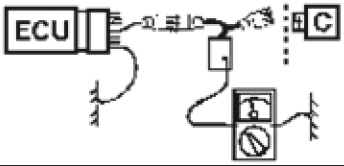
3 – 	≈ ∞ Ω		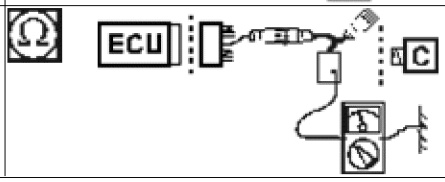

Verifying

Measuring point	Correct value	Condition	Test method
EB31 – EB18	Resistance values according to table		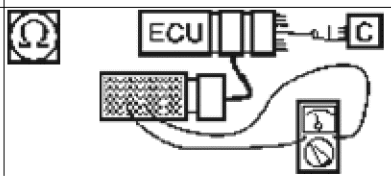

SE2501 resistance values

Air temp. (°C)	Air temp. (°F)	Resistance
0	32	16.4 kΩ
30	86	4.0 kΩ
60	140	1.2 kΩ
90	194	460 Ω
120	248	200 Ω

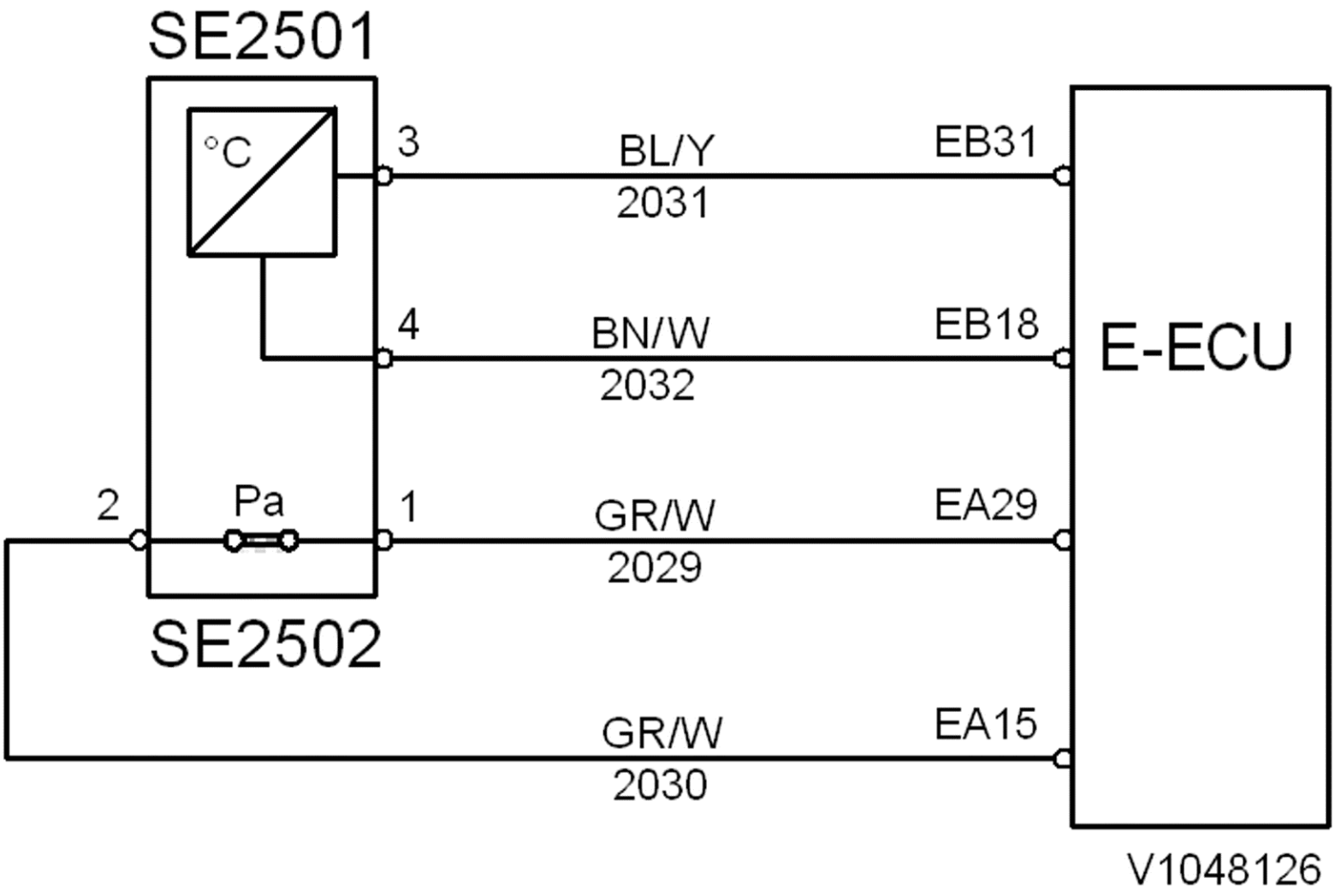
SE2501
°C
3
BL/Y
2031
EB31
4
BN/W
2032
EB18
E-ECU
2
Pa
1
GR/W
2029
EA29
SE2502
GR/W
2030
EA15
V1048126

VOLVO
Construction Equipment

Service Information

Document Title:	Function Group:	Information Type: **Service Information**	Date: **12/10/2011**
Profile: **WLO, L90F (Volvo) [GB]**			

SE2502, description and measuring

Op nbr 302-037

9812519 Multimeter
9998699 Adapter
9990014 Adapter
9990062 Cable
9998534 Adapter

Description

Function	Detects clogged air filter. Combined with SE2501, temperature induction air.	
References	Komponentförteckning: Givare Elschema 202	
VCADS Pro Test	28407-3 Sensor values, monitoring	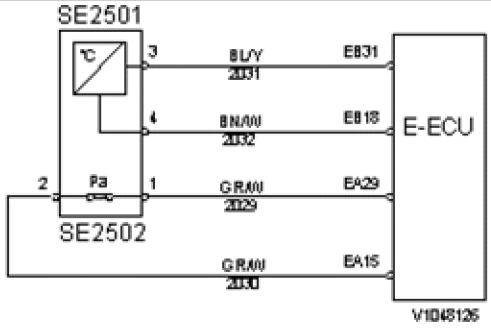 **Figure 1** EA29, signal EA15, ground

Measuring

Measuring point	Correct value	Condition	Test method
1 – 2	≈ 330 Ω		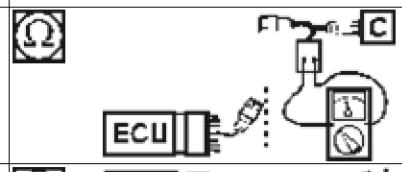
1 – ⏚	≈ 0.8 x U_{bat}		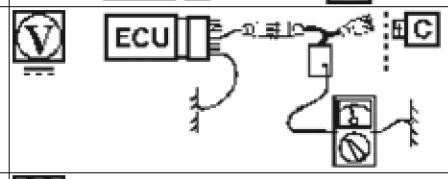
2 – ⏚	≈ 0 Ω		

			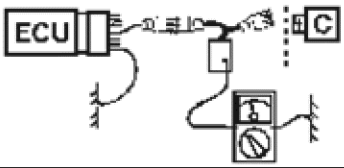
1 – 	≈ ∞ Ω		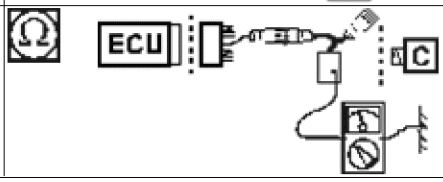

Verifying

Measuring point	Correct value	Condition	Test method
EA29 – EA15	≈ 3 V		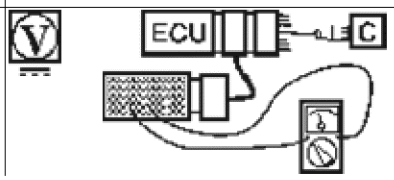

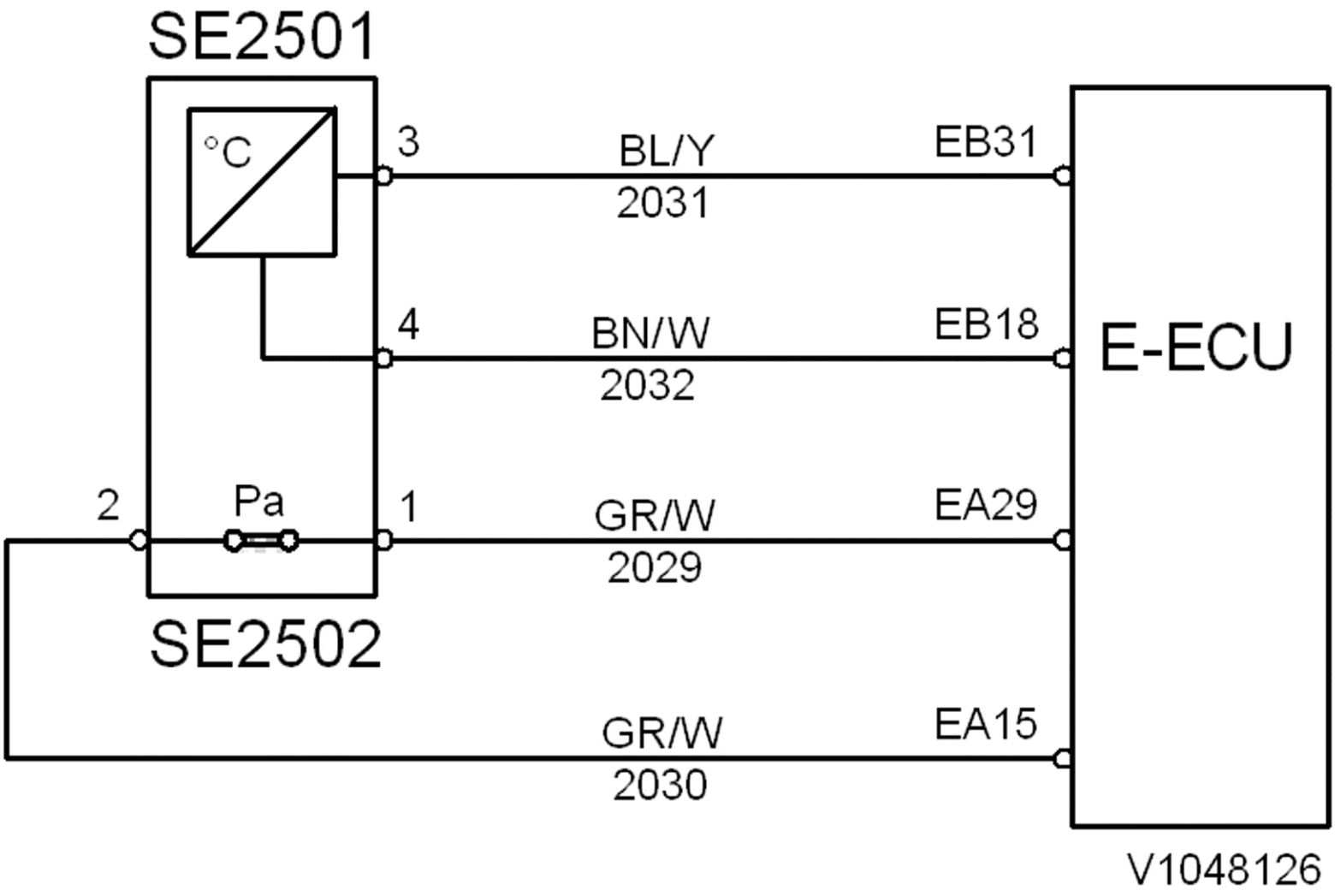
SE2501
°C
3
BL/Y
2031
EB31
4
BN/W
2032
EB18
E-ECU
2
Pa
1
GR/W
2029
EA29
SE2502
GR/W
2030
EA15
V1048126

VOLVO
Construction Equipment

Service Information

Document Title:	Function Group:	Information Type: **Service Information**	Date: **12/10/2011**
Profile: **WLO, L90F (Volvo) [GB]**			

SE2507, description and measuring

Op nbr 302-038

9812519 Multimeter
9998699 Adapter
9990014 Adapter
9990062 Cable
9990216 Adapter

Description

Function	Measures temperature of the charge-air. The sensor is combined with SE2508, boost pressure.	
References	Komponentförteckning: Givare Elschema 203	
VCADS Pro Test	28407-3 Sensor values, monitoring	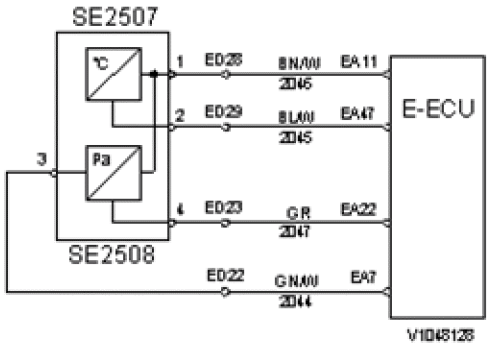 **Figure 1** EA11, ground EA47, signal

Measuring

Measuring point	**Correct value**	**Condition**	**Test method**
1 – 2	Resistance values according to table		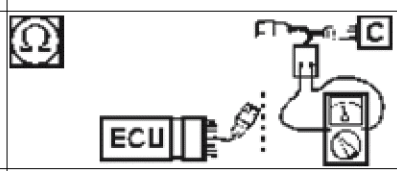
2 – 	≈ 5 V		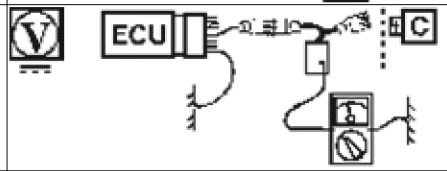
1 – 	≈ 0 Ω		

			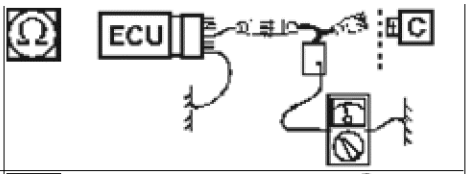
2 – 	≈ ∞ Ω		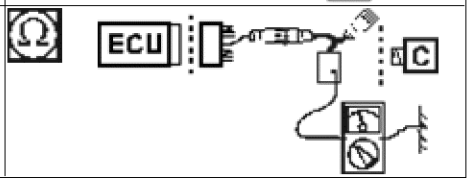

Verifying

Measuring point	Correct value	Condition	Test method
EA11 – EA47	Resistance values according to table		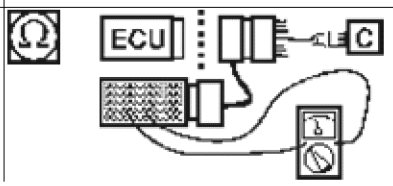

SE2507 resistance values

Air temp. (° C)	Air temp. (° F)	Resistance		Air temp. (° C)	Air temp. (° F)	Resistance
-40	-40	48.1 kΩ		60	140	0.6 kΩ
-20	-4	15.6 kΩ		80	176	330 Ω
0	32	5.9 kΩ		100	212	190 Ω
20	68	2.5 kΩ		120	248	110 Ω
40	104	1.2 kΩ				

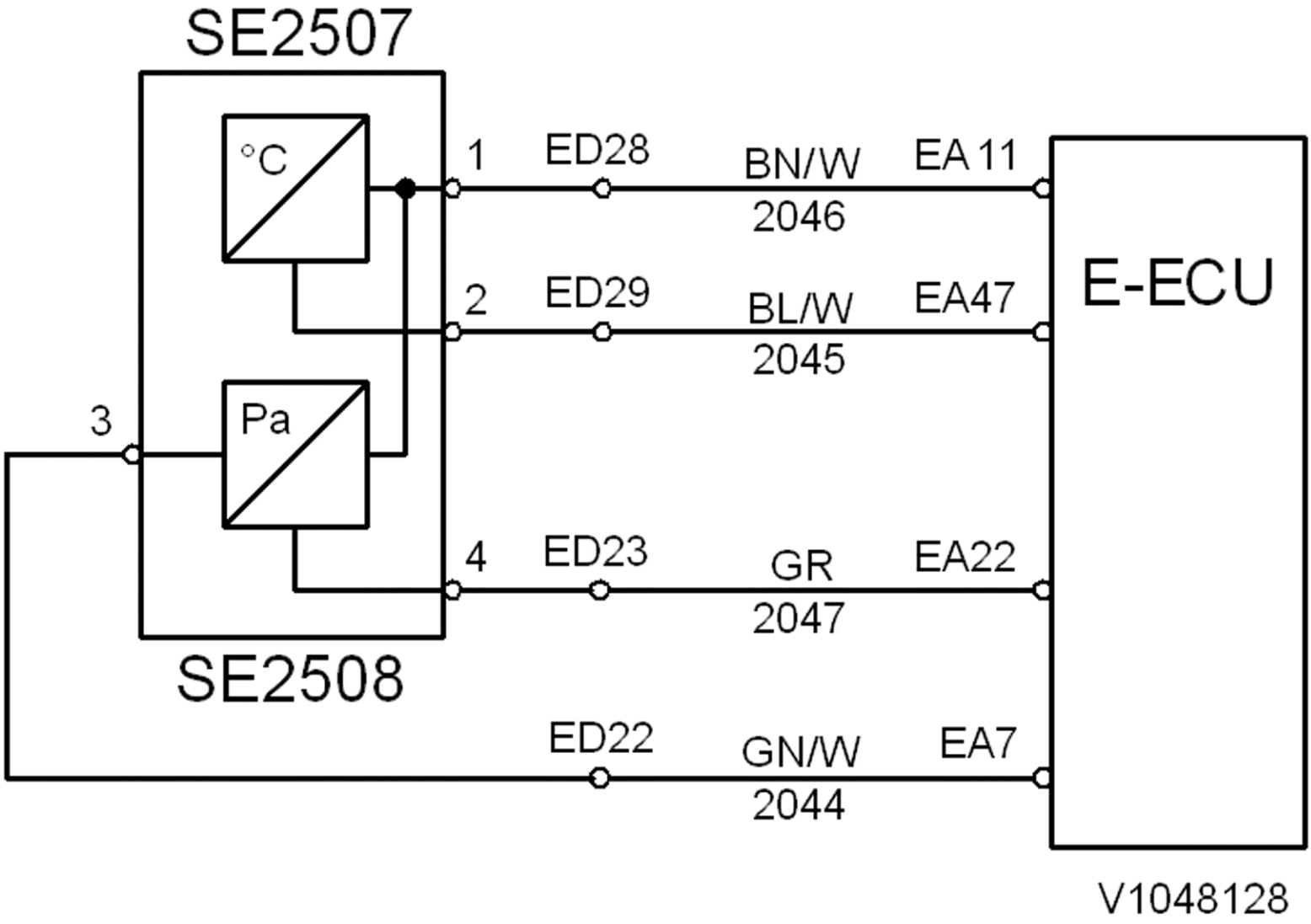
SE2507
°C
Pa
3
1
2
4
ED28
ED29
ED23
ED22
BN/W
2046
BL/W
2045
GR
2047
GN/W
2044
EA 11
EA47
EA22
EA7
E-ECU
SE2508
V1048128

VOLVO
Construction Equipment

Service Information

Document Title:	Function Group:	Information Type: **Service Information**	Date: **12/10/2011**
Profile: **WLO, L90F (Volvo) [GB]**			

SE2508, description and measuring

Op nbr 302-039

9812519 Multimeter
9998699 Adapter
9990014 Adapter
9990062 Cable
9990216 Adapter

Description

Function	Measures pressure of charge-air. The sensor is combined with SE2507, charge-air temperature.	
References	Komponentförteckning: Givare Elschema 203	
VCADS Pro Test	28407-3 Sensor values, monitoring	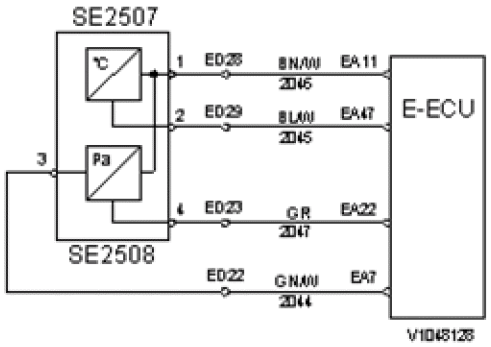 **Figure 1** EA11, ground EA22, signal EA7, feed 5V

Measuring

Measuring point	Correct value	Condition	Test method
4–1	≈ 1.1 V (at normal air pressure 101 kPa)		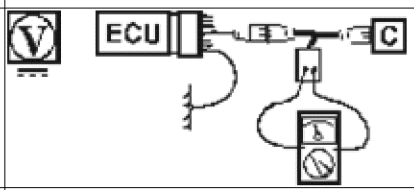
3 – 	≈ 5 V		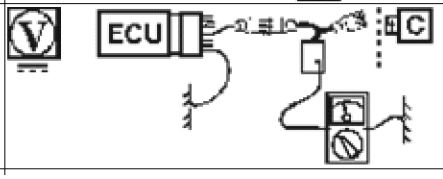

1 –	≈ 0 Ω		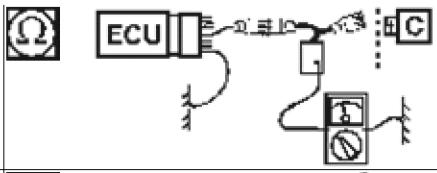
3 – 4 –	≈ ∞ Ω		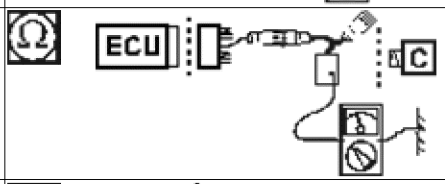
EA22 – 4	≈ 0 Ω		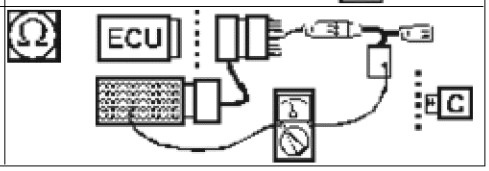

Verifying

Measuring point	Correct value	Condition	Test method
EA22 – EA11	≈ 1.1 V (at normal air pressure 101 kPa)		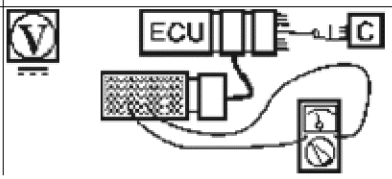

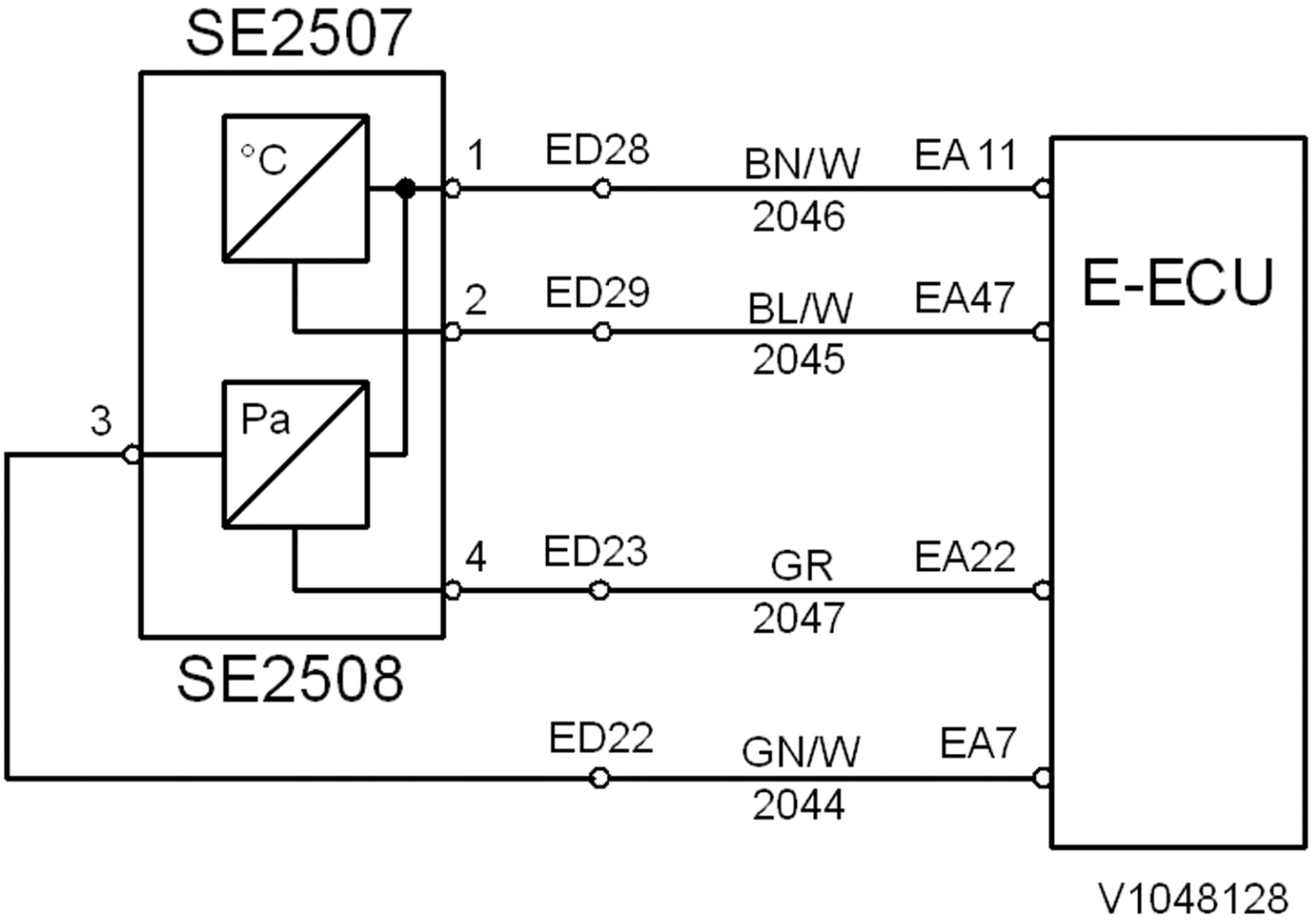
SE2507
°C
Pa
3
1
2
4
ED28
ED29
ED23
ED22
BN/W
2046
BL/W
2045
GR
2047
GN/W
2044
EA 11
EA47
EA22
EA7
E-ECU
SE2508
V1048128

VOLVO
Construction Equipment

Service Information

Document Title:	Function Group:	Information Type: **Service Information**	Date: **12/10/2011**
Profile: **WLO, L90F (Volvo) [GB]**			

SE2601, description and measuring

Op nbr 302-040

9812519 Multimeter
9998699 Adapter
9993893 Adapter
9990062 Cable
9990008 Measuring equipment

Description

Function	Measures rpm of cooling fan.
References	Komponentförteckning: Givare Elschema 201
VCADS Pro Test	—

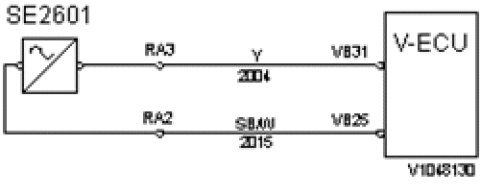

Figure 1

VB31, signal
VB25, frequency ground

Measuring

Measuring point	Correct value	Condition	Test method
1 – 2	≈ 1050±100 Ω		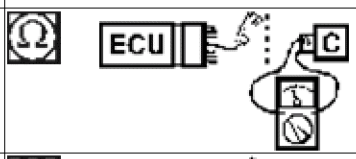
1 – 2 –	≈ ∞ Ω		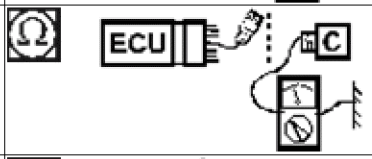
VB31 – VB25 –	≈ ∞ Ω		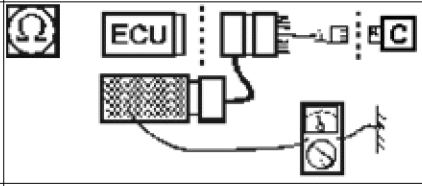
VB25 – VB31	≈ 1050±100 Ω		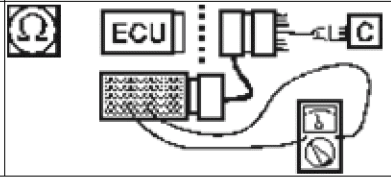

Verifying

Measuring point	Correct value	Condition	Test method
VB25 – VB31	≈ 1050±100 Ω		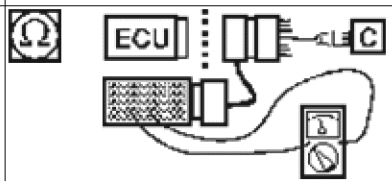

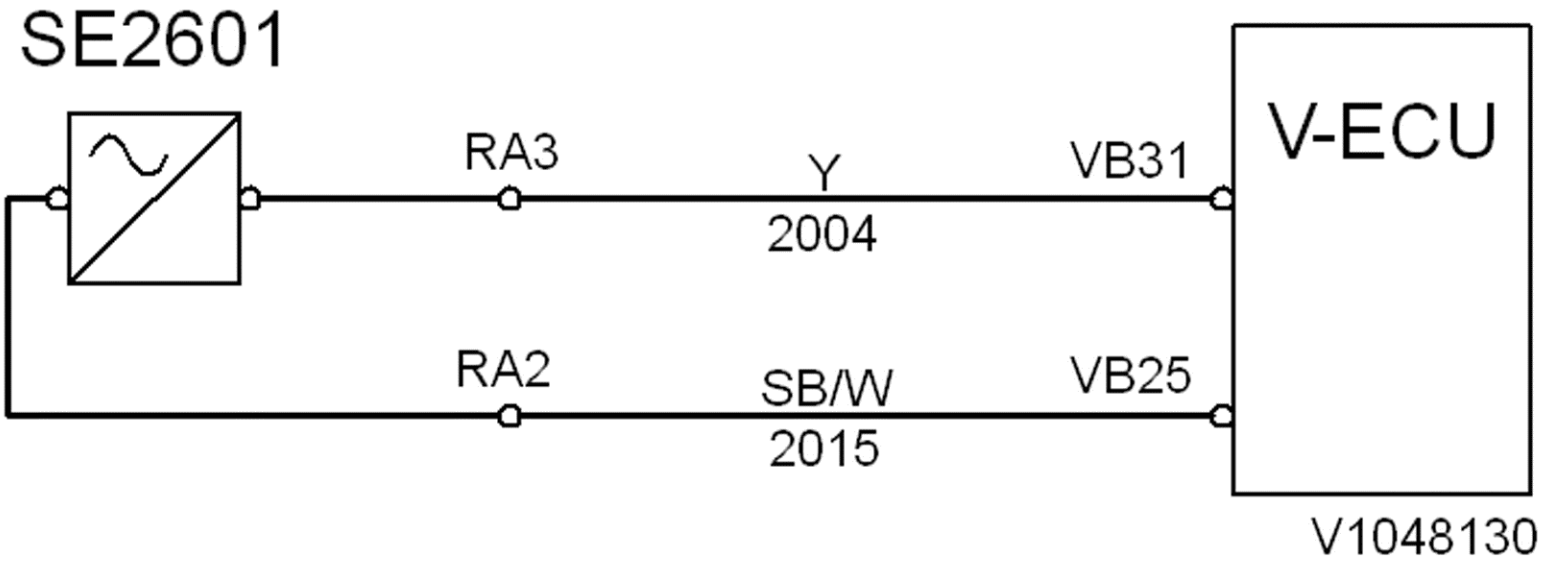
SE2601
RA3
Y
2004
VB31
V-ECU
RA2
SB/W
2015
VB25
V1048130

VOLVO
Construction Equipment

Service Information

Document Title:	Function Group:	Information Type: **Service Information**	Date: **12/10/2011**
Profile: **WLO, L90F (Volvo) [GB]**			

SE2602, description and measuring

Op nbr 302-041

9812519 Multimeter
9998699 Adapter
9993893 Adapter
9990062 Cable
88890016 Break out harness

Description

Function	Measures coolant temperature at the radiator's outlet.	
References	Komponentförteckning: Givare Elschema 201	
VCADS Pro Test	—	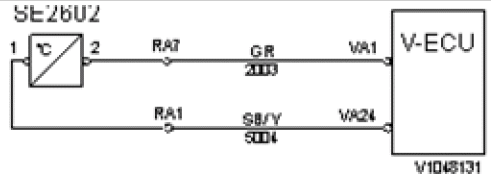 **Figure 1** VA1, signal VA24, ground

Measuring

Measuring point	Correct value	Condition	Test method
1 – 2	Resistance values according to table		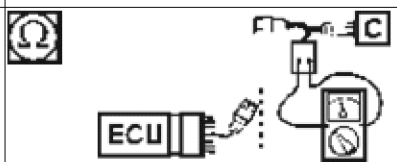
2 – ⏚	≈ 5 V		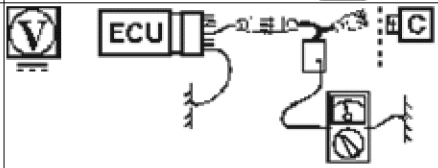
1 – ⏚	≈ 0 Ω		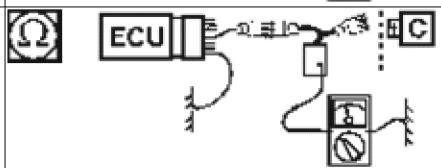
2 – ⏚	≈ ∞ Ω		

			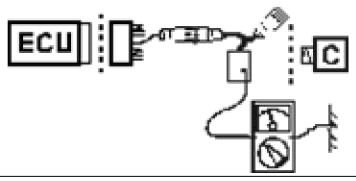

Verifying

Measuring point	Correct value	Condition	Test method
VA1 – VA24	Voltage values according to table		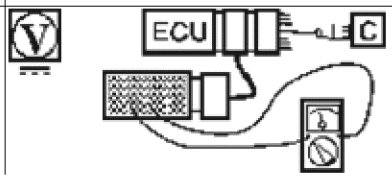

SE2602 resistance and voltage values

Temp. (°C)	Temp. (°F)	Resistance	Voltage (V)	Temp. (°C)	Temp. (°F)	Resistance	Voltage (V)
-40	-40	3.8 kΩ	4.64	60	140	470 Ω	3.04
-20	-4	3.4 kΩ	4.59	80	176	250 Ω	2.27
0	32	2.6 kΩ	4.48	100	212	140 Ω	1,59
20	68	1.6 kΩ	4.22	120	248	80 Ω	1,09
40	104	0.9 kΩ	3.74	140	284	50 Ω	0.73

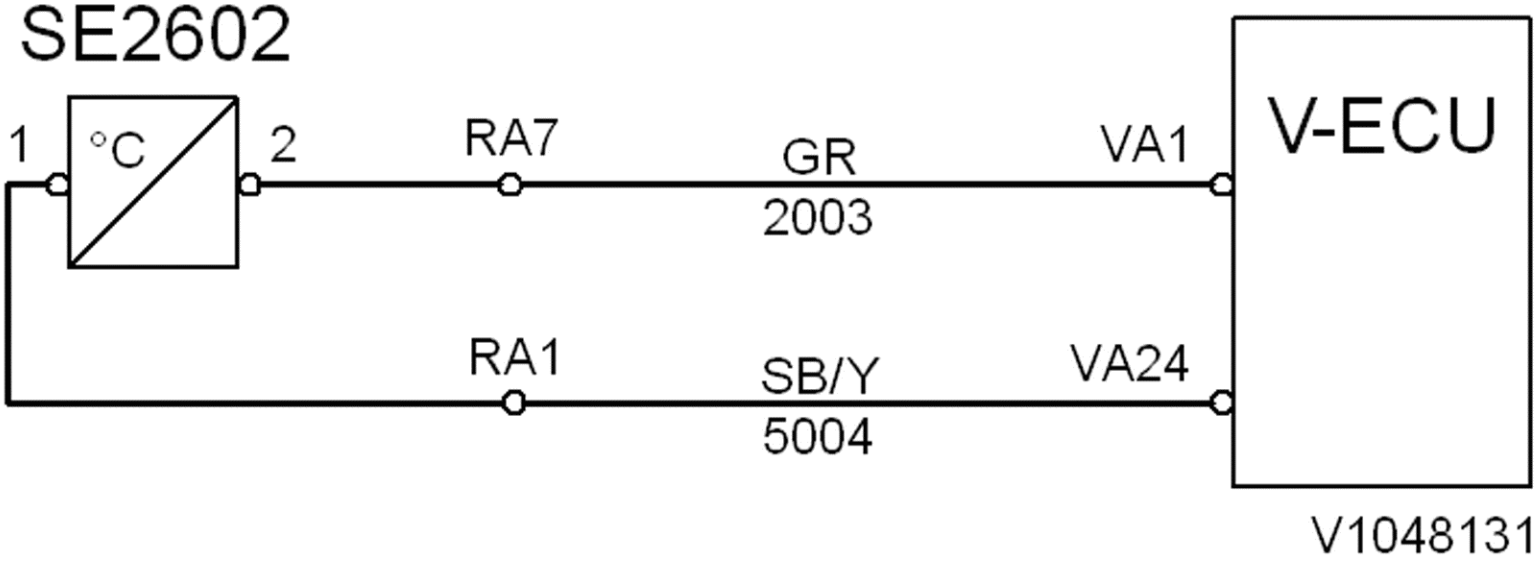
SE2602
1
°C
2
RA7
GR
2003
VA1
V-ECU
RA1
SB/Y
5004
VA24
V1048131

VOLVO
Construction Equipment

Service Information

Document Title:	Function Group:	Information Type: **Service Information**	Date: **12/10/2011**
Profile: **WLO, L90F (Volvo) [GB]**			

SE2603, description and measuring

Op nbr 302-042

9812519 Multimeter
9998699 Adapter
9990014 Adapter
9990062 Cable
9990008 Measuring equipment

Description

Function	Monitors coolant level.	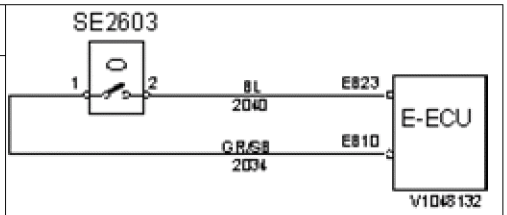 **Figure 1** EB23, signal EB10, ground
References	Komponentförteckning: Givare Elschema 202	
VCADS Pro Test	28407-3 Sensor values, monitoring	

Measuring

Measuring point	Correct value	Condition	Test method
1 – 2	≈ ∞ Ω (normal level) ≈ 0 Ω (low level)		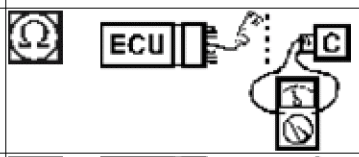
2 – ⏚	≈ 0.8 x U_{bat}		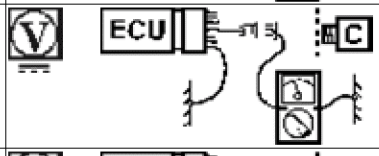
1 – ⏚	≈ 0 Ω		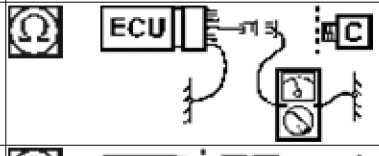
EB23 – ⏚	≈ ∞ Ω		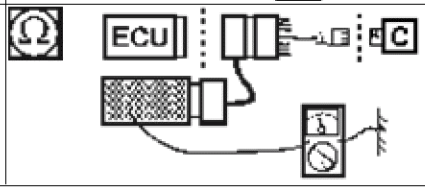

Verifying

Measuring point	Correct value	Condition	Test method
EB23–EB10	≈ 0.8 x U_{bat} (normal level)		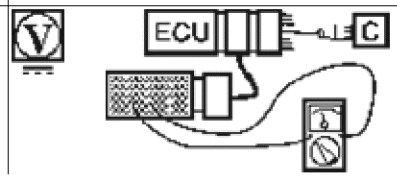

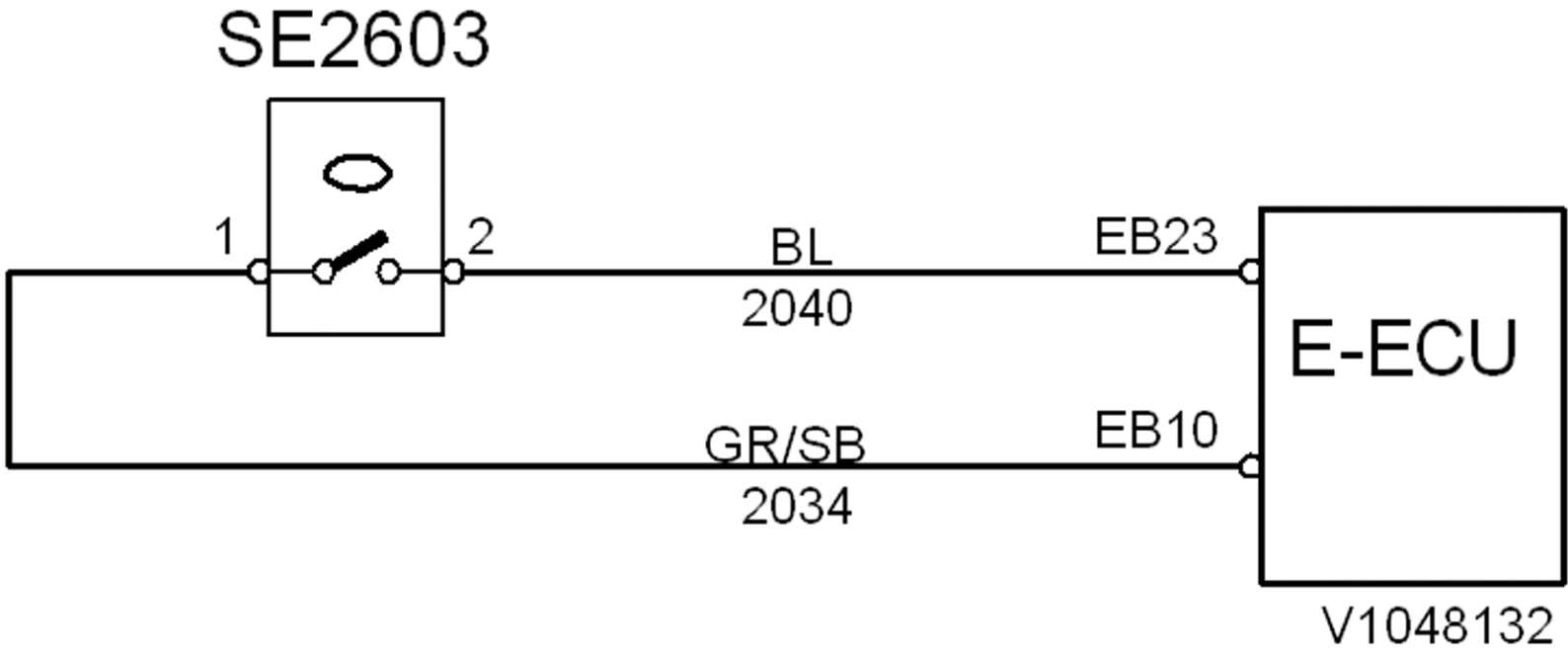
SE2603
1
2
BL
2040
EB23
E-ECU
GR/SB
2034
EB10
V1048132

VOLVO
Construction Equipment

Service Information

Document Title:	Function Group:	Information Type: **Service Information**	Date: **12/10/2011**
Profile: **WLO, L90F (Volvo) [GB]**			

SE2606, description and measuring

Op nbr 302-043

9812519 Multimeter
9998699 Adapter
9990014 Adapter
9990062 Cable
9990216 Adapter

Description

Function	Measures coolant temperature in the engine	
References	Komponentförteckning: Givare Elschema 203	
VCADS Pro Test	28407-3 Sensor values, monitoring	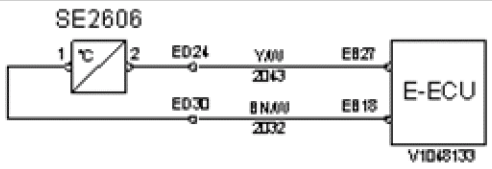 **Figure 1** EB27, signal EB18, ground

Measuring

Measuring point	Correct value	Condition	Test method
1 – 2	Resistance values according to table		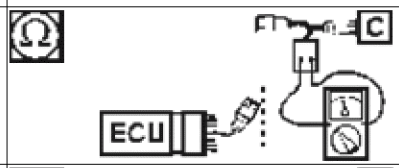
1 – ⏚ 2 – ⏚	≈ ∞ Ω		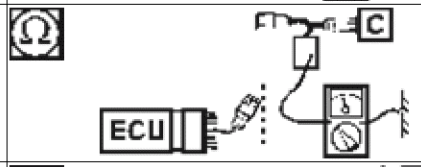
2 – ⏚	≈ 5 V		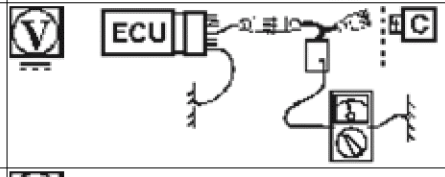
1 – ⏚	≈ 0 Ω		

			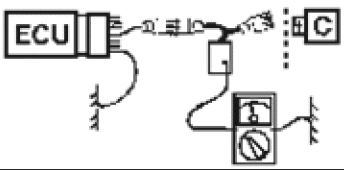
2 – 	≈ ∞ Ω		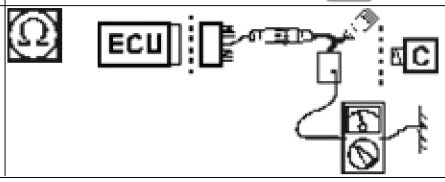

Verifying

Measuring point	Correct value	Condition	Test method
EB27 – EB18	Resistance values according to table		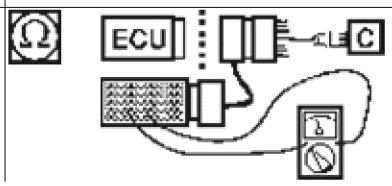

SE2606 resistance values

Temp (°C)	Temp (°F)	Resistance	Temp (°C)	Temp (°F)	Resistance
-40	-40	45.3 kΩ	60	140	0.6 kΩ
-20	-4	15.5 kΩ	80	176	320 Ω
0	32	5.9 kΩ	100	212	190 Ω
20	68	2.5 kΩ	120	248	110 Ω
40	104	1.2 kΩ	140	284	70 Ω

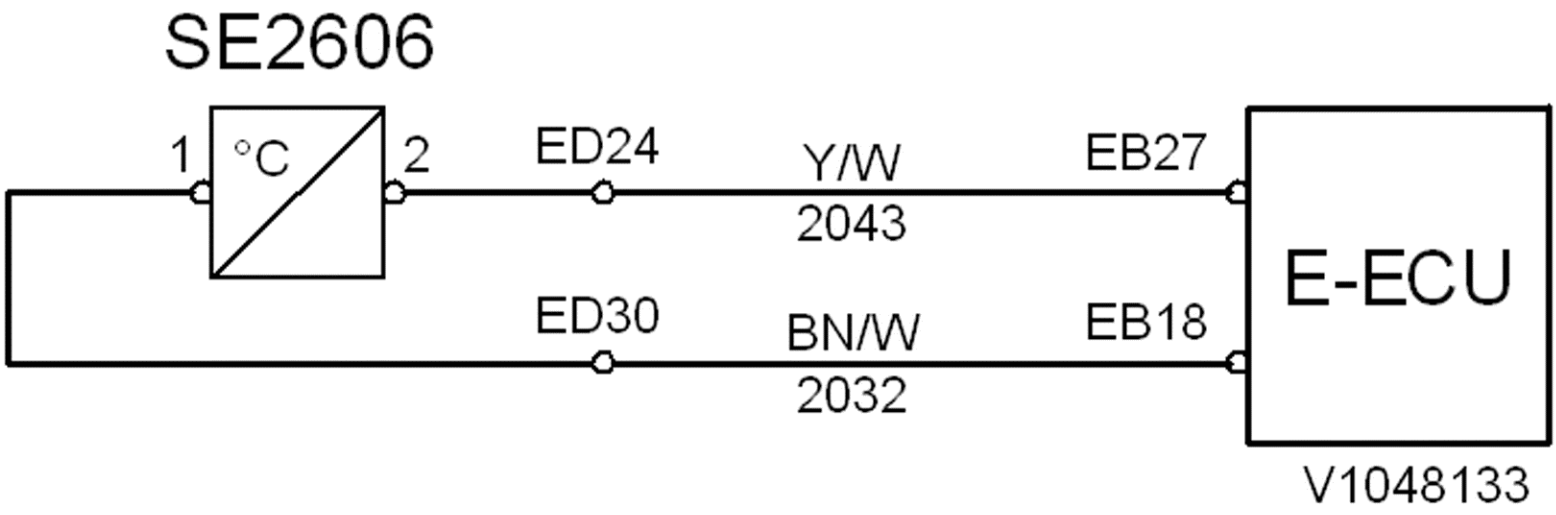
SE2606
1
°C
2
ED24
Y/W
2043
EB27
E-ECU
ED30
BN/W
2032
EB18
V1048133

VOLVO
Construction Equipment

Service Information

Document Title:	Function Group:	Information Type: **Service Information**	Date: **12/10/2011**
Profile: **WLO, L90F (Volvo) [GB]**			

SE2701, description and measuring

Op nbr 302-044

9812519 Multimeter
9998699 Adapter
9990014 Adapter
9990062 Cable
9990191 Adapter

Description

Function	Measures engine rpm on crankshaft.	
References	Komponentförteckning: Givare Elschema 202	
VCADS Pro Test	28407-3 Sensor values, monitoring	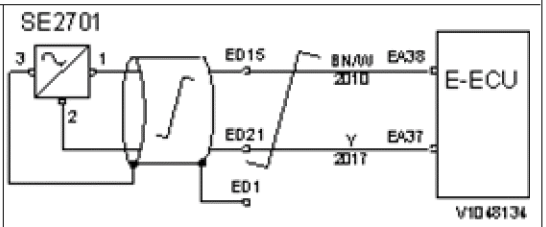 **Figure 1** EA38, frequency + EA37, frequency –

Measuring

Measuring point	Correct value	Condition	Test method
1 – 2	≈ 0.9 kΩ		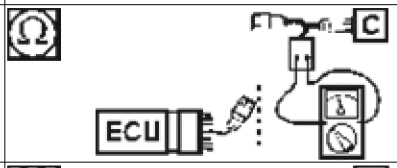
1 – ⏚ 2 – ⏚	≈ ∞ Ω		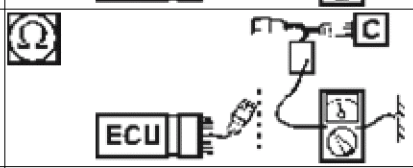
EA38 – 1 EA37 – 2	≈ 0 Ω		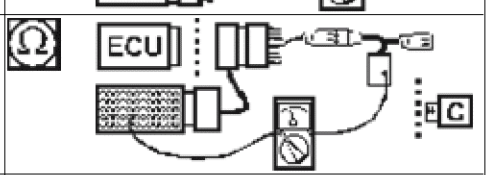
1 – ⏚	≈ ∞ Ω		

2 –			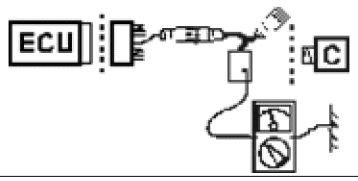

Verifying

Measuring point	Correct value	Condition	Test method
EA37 – EA38	≈ 17 V AC	1000 rpm	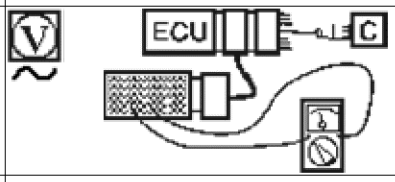
EA37 – EA38	min. 1 V AC min. 30 V AC	starter motor rpm low idle	Camshaft and flywheel signals, checking with VCADS Pro and oscilloscope .

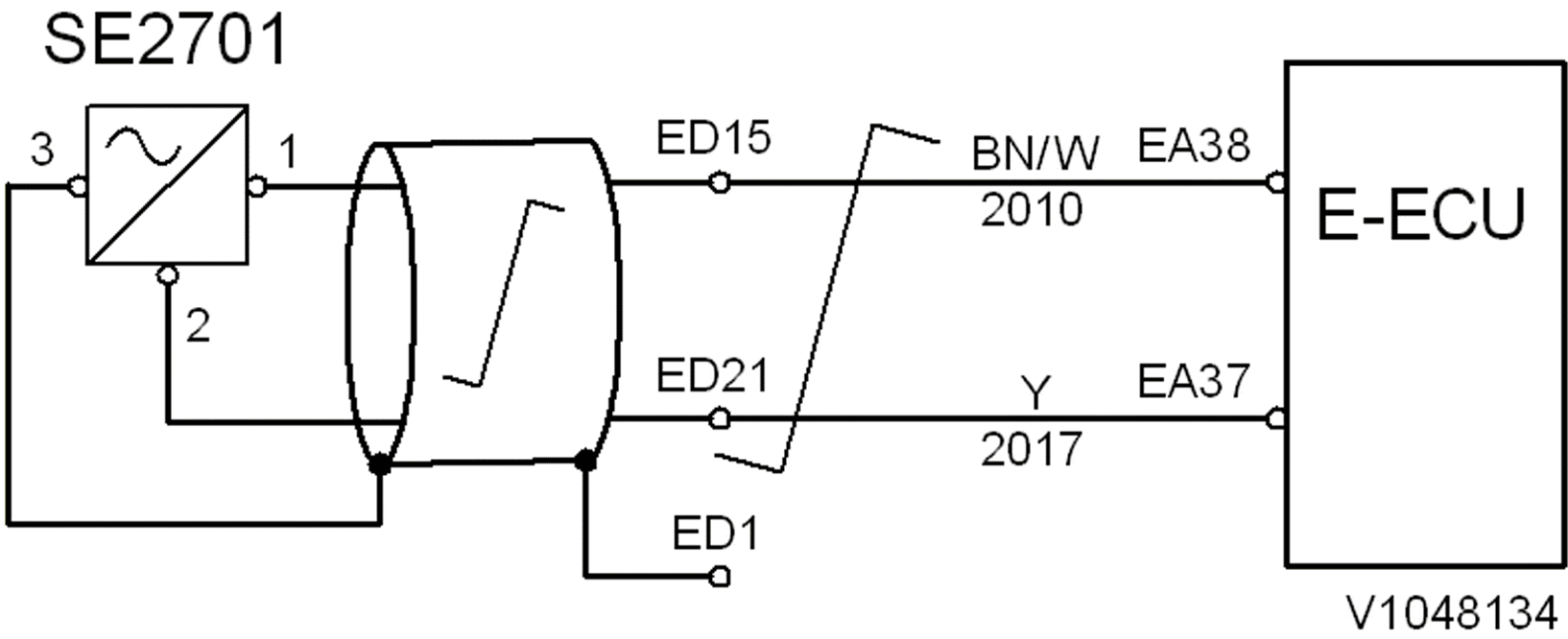
SE2701
3
1
2
ED15
BN/W
2010
EA38
E-ECU
ED21
Y
2017
EA37
ED1
V1048134

VOLVO
Construction Equipment

Service Information

Document Title:	Function Group:	Information Type: **Service Information**	Date: **12/10/2011**
Profile: **WLO, L90F (Volvo) [GB]**			

SE2702, description and measuring

Op nbr 302-073

9812519 Multimeter
9998699 Adapter
9998699 Adapter
88830027 Adapter
9990062 Cable
88890016 Break out harness
88890019 Template

Description

Function	Measures accelerator pedal's position.	
References	Komponentförteckning: Givare Elschema 205	
VCADS Pro Test	27102-3 Accelerator pedal, test	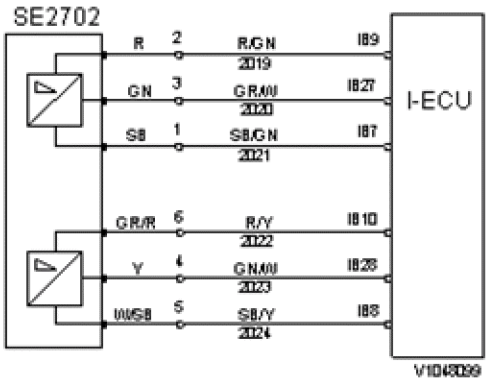 **Figure 1** IB9, feed 5 V IB27, signal IB7, ground IB10, supply 5V IB28, signal IB8, ground

Measuring

Measuring point	Correct value	Condition	Test method
IB27 –	0.4–4.6 V		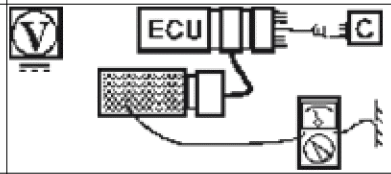
	4.6–0.4 V		

IB28 –		1	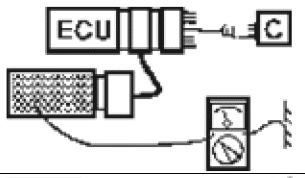
2 – 6 –	≈ 5 V	1	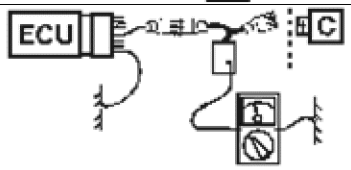
1 – 5 –	≈ 0 Ω		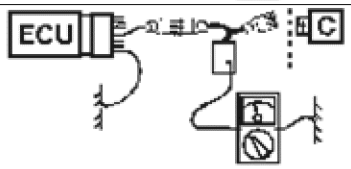
IB27 – 3 IB28 – 4	≈ 0 Ω		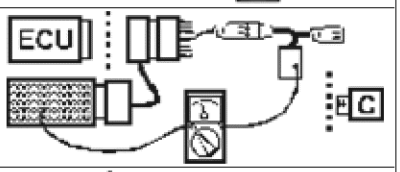
IB27 – IB28 –	≈ ∞ Ω		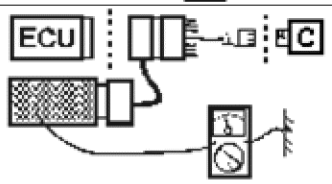

Verifying

Measuring point	Correct value	Condition	Test method
IB27 – IB7	0.4–4.6 V[T1] ⓘ	1	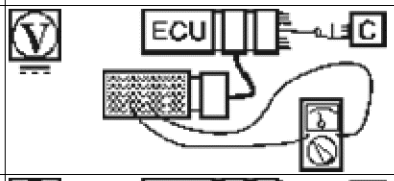
IB28 – IB8	4.6–0.4 V(a)	1	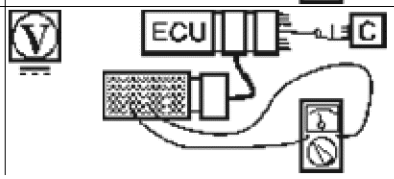

[T1] Signals shall fulfill the following conditions, IB27 + IB28 = 4.5–5.5 V.

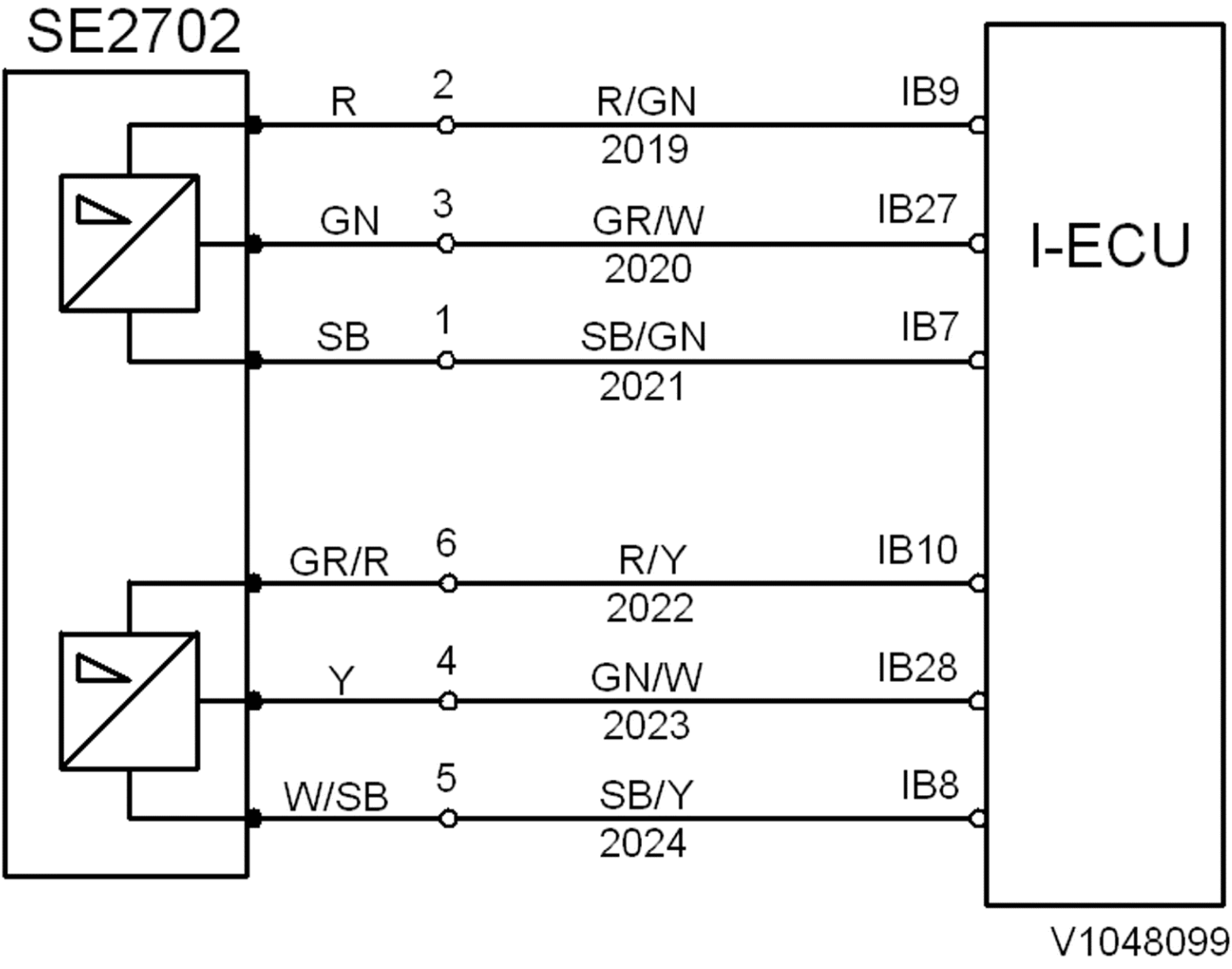
SE2702
R
2
R/GN
2019
IB9
GN
3
GR/W
2020
IB27
SB
1
SB/GN
2021
IB7
GR/R
6
R/Y
2022
IB10
Y
4
GN/W
2023
IB28
W/SB
5
SB/Y
2024
IB8
I-ECU
V1048099

VOLVO
Construction Equipment

Service Information

Document Title:	Function Group:	Information Type: **Service Information**	Date: **12/10/2011**
Profile: **WLO, L90F (Volvo) [GB]**			

SE2703, description and measuring

Op nbr 302-045

9812519 Multimeter
9998699 Adapter
9990014 Adapter
9990062 Cable
9990191 Adapter

Description

Function	Measures camshaft rpm.	
References	Komponentförteckning: Givare Elschema 202	
VCADS Pro Test	—	SE2703 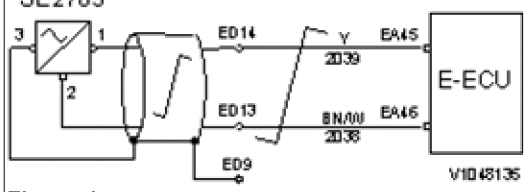 **Figure 1** EA45, frequency + EA46, frequency –

Measuring

Measuring point	Correct value	Condition	Test method
1 – 2	≈ 3.5 kΩ		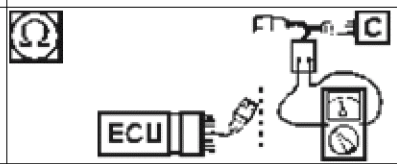
1 – ⏚ 2 – ⏚	≈ ∞ Ω		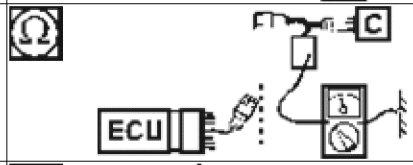
EA45 – 1 EA46 – 2	≈ 0 Ω		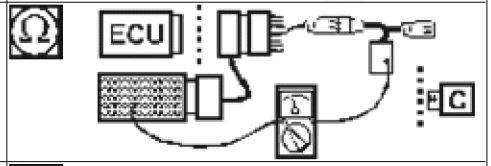
1 – ⏚	≈ ∞ Ω		

2 –			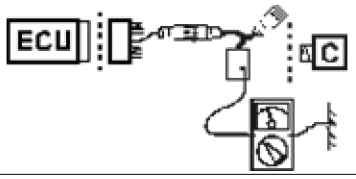

Verifying

Measuring point	Correct value	Condition	Test method
EA45 – EA46	≈ 5 V AC	 1000 rpm	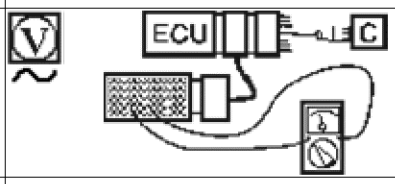
EA45 – EA46	min. 1 V AC min. 30 V AC	starter motor rpm low idle	Camshaft and flywheel signals, checking with VCADS Pro and oscilloscope .

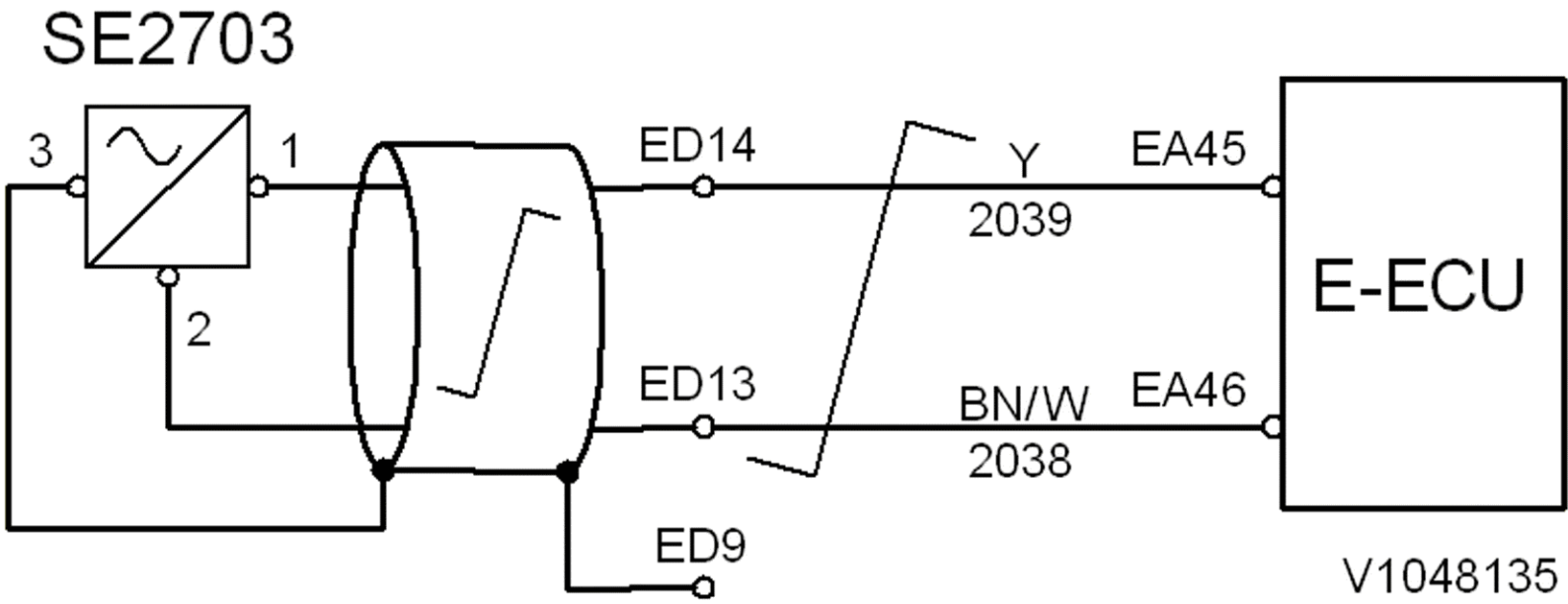
SE2703
3
1
2
ED14
Y
2039
EA45
E-ECU
ED13
BN/W
2038
EA46
ED9
V1048135

VOLVO
Construction Equipment

Service Information

Document Title:	Function Group:	Information Type: **Service Information**	Date: **12/10/2011**
Profile: **WLO, L90F (Volvo) [GB]**			

SE4213, description and measuring

Op nbr 302-046

9812519 Multimeter
9998699 Adapter
9993893 Adapter
9990062 Cable

Description

Function	Measures turbine rpm in the transmission.	SE4213 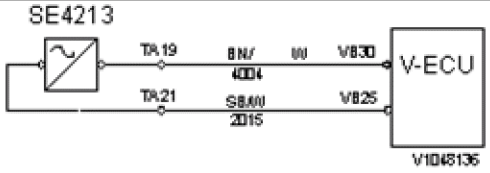 **Figure 1** VB30, signal VB25, frequency ground
References	Komponentförteckning: Givare Elschema 404	
VCADS Pro Test	40901-3 - Sensor, transmission, test	

Measuring

Measuring point	Correct value	Condition	Test method
1 – 2	≈ 1050±100 Ω		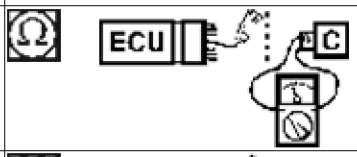
1 –  2 – 	≈ ∞ Ω		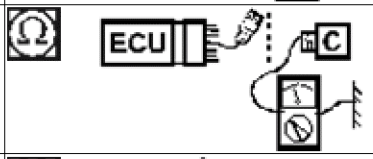
VB30 –  VB25 – 	≈ ∞ Ω		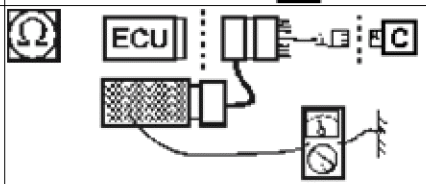
VB30 – VB25	≈ 1050±100 Ω		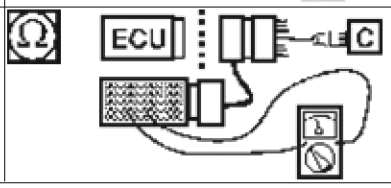

Verifying

Measuring point	Correct value	Condition	Test method
VB30 – VB25	≈ 1050±100 Ω		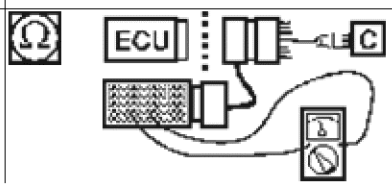

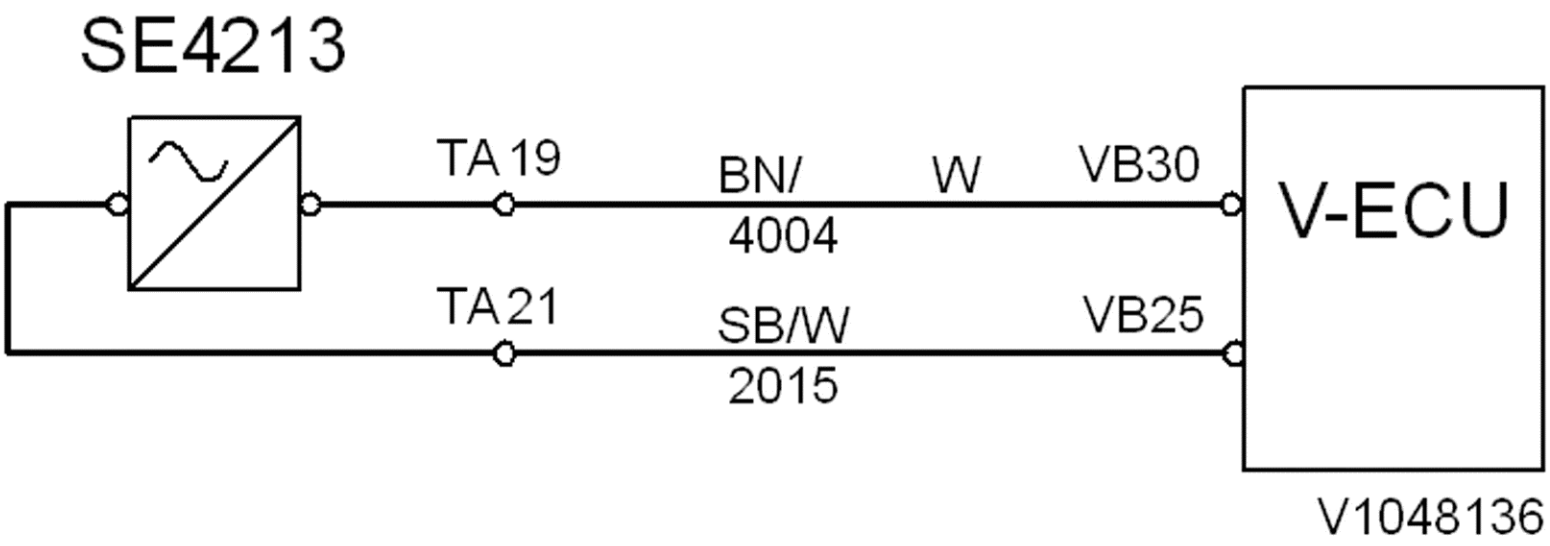
SE4213
TA 19
BN/
W
4004
VB30
V-ECU
TA 21
SB/W
2015
VB25
V1048136

VOLVO
Construction Equipment

Service Information

Document Title:	Function Group:	Information Type: **Service Information**	Date: **12/10/2011**
Profile: **WLO, L90F (Volvo) [GB]**			

SE4307, description and measuring

Op nbr 302-047

9812519 Multimeter
9998699 Adapter
9993893 Adapter
9990062 Cable

Description

Function	Measures rpm on output shaft in the transmission.	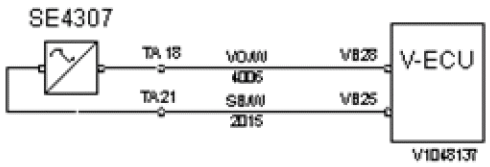
References	Komponentförteckning: Givare Elschema 404	**Figure 1** VB28, signal VB25, frequency ground
VCADS Pro Test	40901-3 - Sensor, transmission, test	

Measuring

Measuring point	Correct value	Condition	Test method
1 – 2	≈ 1050±100 Ω		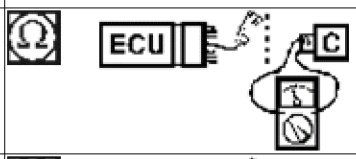
1 – 2 –	≈ ∞ Ω		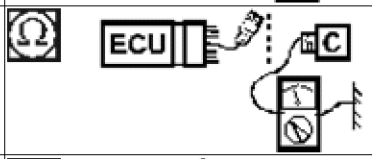
VB28 – VB25 –	≈ ∞ Ω		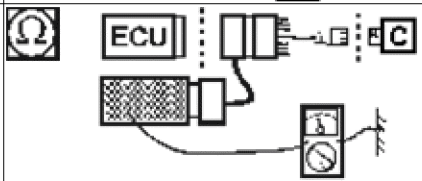
VB28 – VB25	≈ 1050±100 Ω		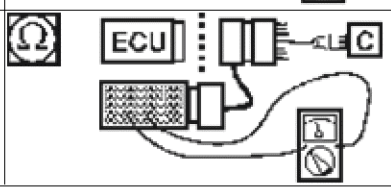

Verifying

Measuring point	Correct value	Condition	Test method
VB28 – VB25	≈ 1050±100 Ω		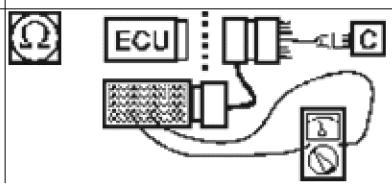

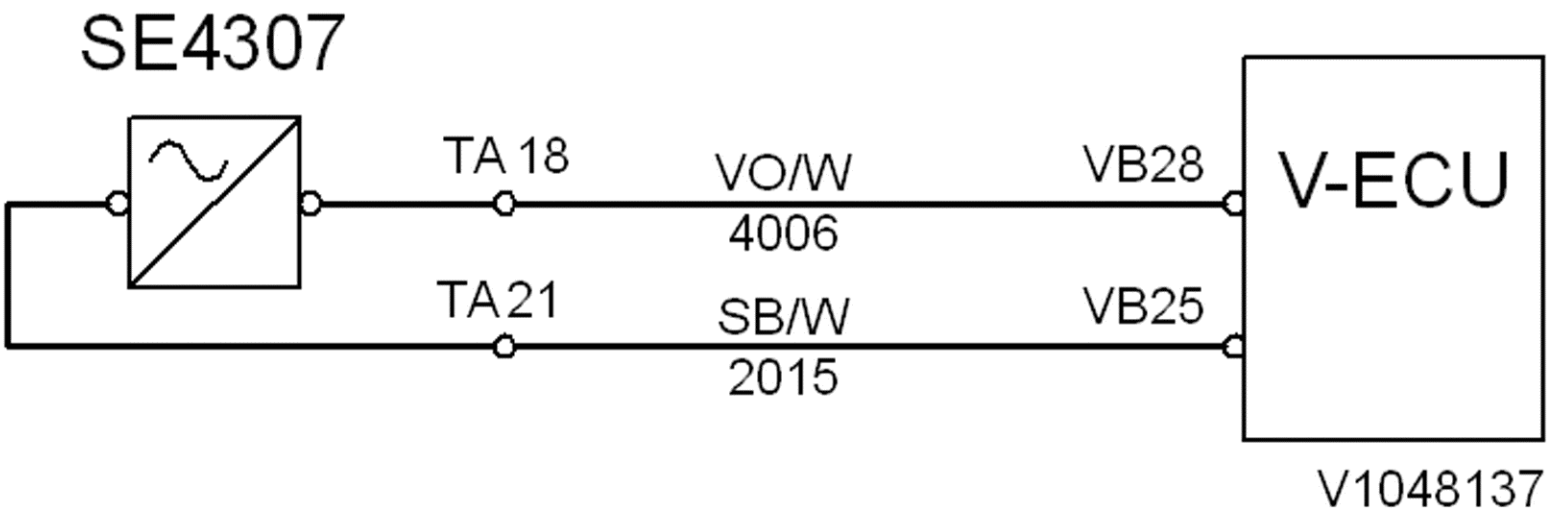
SE4307
TA 18
VO/W
4006
VB28
V-ECU
TA 21
SB/W
2015
VB25
V1048137

VOLVO
Construction Equipment

Service Information

Document Title:	Function Group:	Information Type: **Service Information**	Date: **12/10/2011**
Profile: **WLO, L90F (Volvo) [GB]**			

SE4901, description and measuring

Op nbr 302-048

9812519 Multimeter
9998699 Adapter
9993893 Adapter
9990062 Cable
9998534 Adapter

Description

Function	Measures oil pressure in the transmission.	
References	Komponentförteckning: Givare Elschema 403	
VCADS Pro Test	40901-3 - Sensor, transmission, test	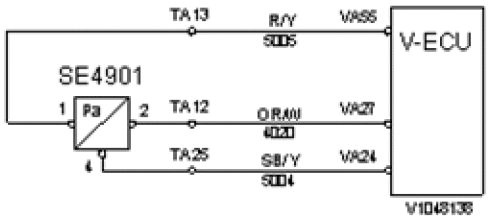 **Figure 1** VA55, feed 5 V VA27, signal VA24, ground

Measuring

Measuring point	Correct value	Condition	Test method
VA27 – VA24	≈ 0.5 V		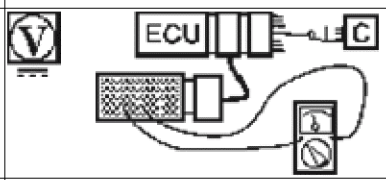
1 –	≈ 5 V		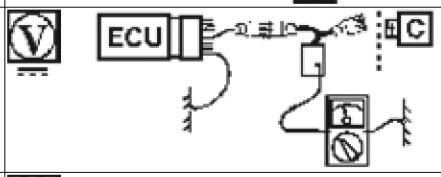
4 –	≈ 0 Ω		

			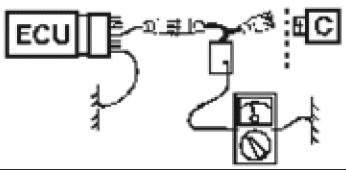
1 –  2 – 	≈ ∞ Ω		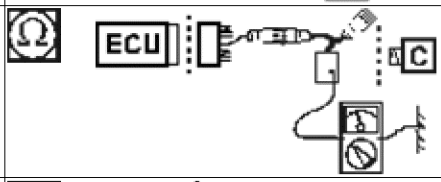
VA27 – 2	≈ 0 Ω		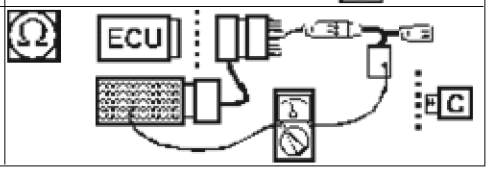

Verifying

Measuring point	Correct value	Condition	Test method
VA27 – VA24	≈ 0.5 V		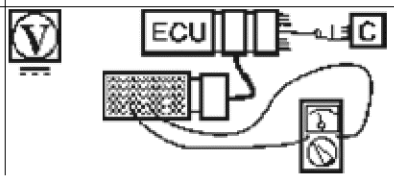

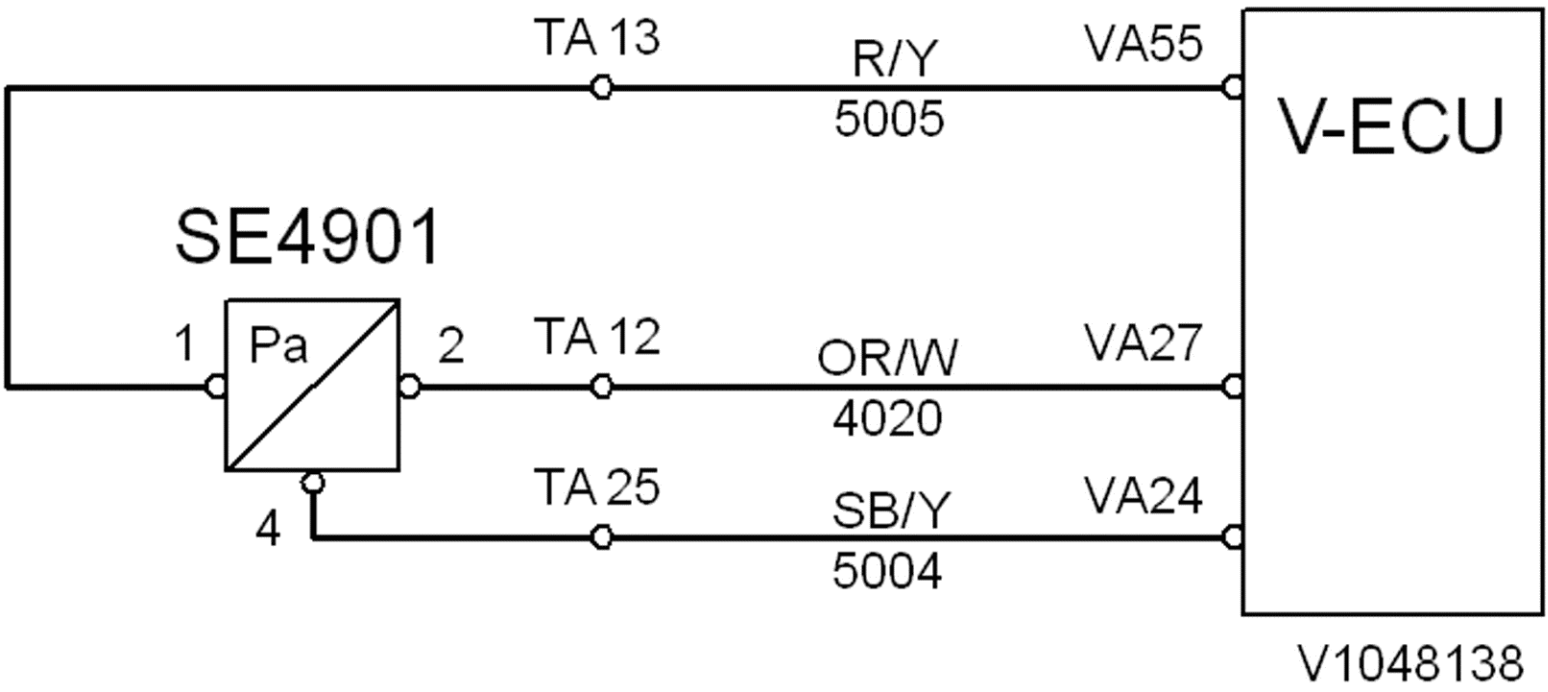
TA 13
R/Y
5005
VA55
V-ECU
SE4901
1
Pa
2
TA 12
OR/W
4020
VA27
4
TA 25
SB/Y
5004
VA24
V1048138

VOLVO
Construction Equipment

Service Information

Document Title:	Function Group:	Information Type: **Service Information**	Date: **12/10/2011**
Profile: **WLO, L90F (Volvo) [GB]**			

SE4903, description and measuring

Op nbr 302-049

9812519 Multimeter
9998699 Adapter
9993893 Adapter
9990062 Cable
88890016 Break out harness

Description

Function	Measures oil temperature in the transmission.	
References	Komponentförteckning: Givare Elschema 403	
VCADS Pro Test	40901-3 - Sensor, transmission, test	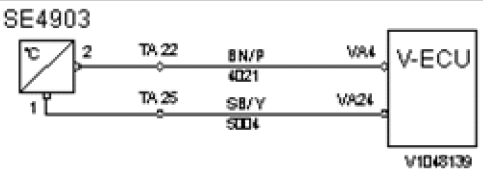 **Figure 1** VA4, signal VA24, ground

Measuring

Measuring point	Correct value	Condition	Test method
1 – 2	Resistance values according to table		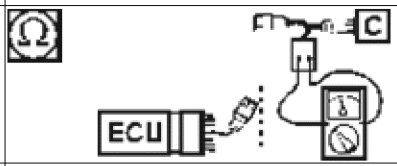
2 – ⏚	≈ 5 V		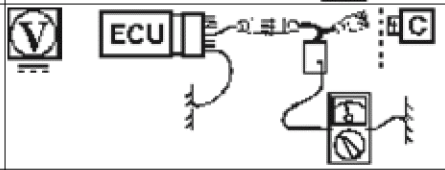
1 – ⏚	≈ 0 Ω		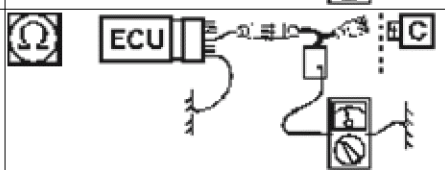
2 – ⏚	≈ ∞ Ω		

			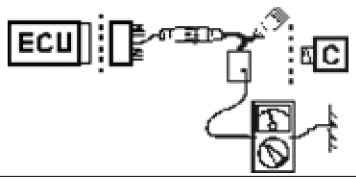

Verifying

Measuring point	Correct value	Condition	Test method
VA4 – VA24	Voltage values according to table		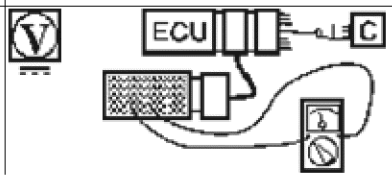

SE4903 resistance and voltage values

Temp. (°C)	Temp. (°F)	Resistance	Voltage (V)	Temp. (°C)	Temp. (°F)	Resistance	Voltage (V)
-40	-40	3.8 kΩ	4.64	60	140	470 Ω	3.04
-20	-4	3.4 kΩ	4.59	80	176	250 Ω	2.27
0	32	2.6 kΩ	4.48	100	212	140 Ω	1,59
20	68	1.6 kΩ	4.22	120	248	80 Ω	1,09
40	104	0.9 kΩ	3.74	140	284	50 Ω	0.73

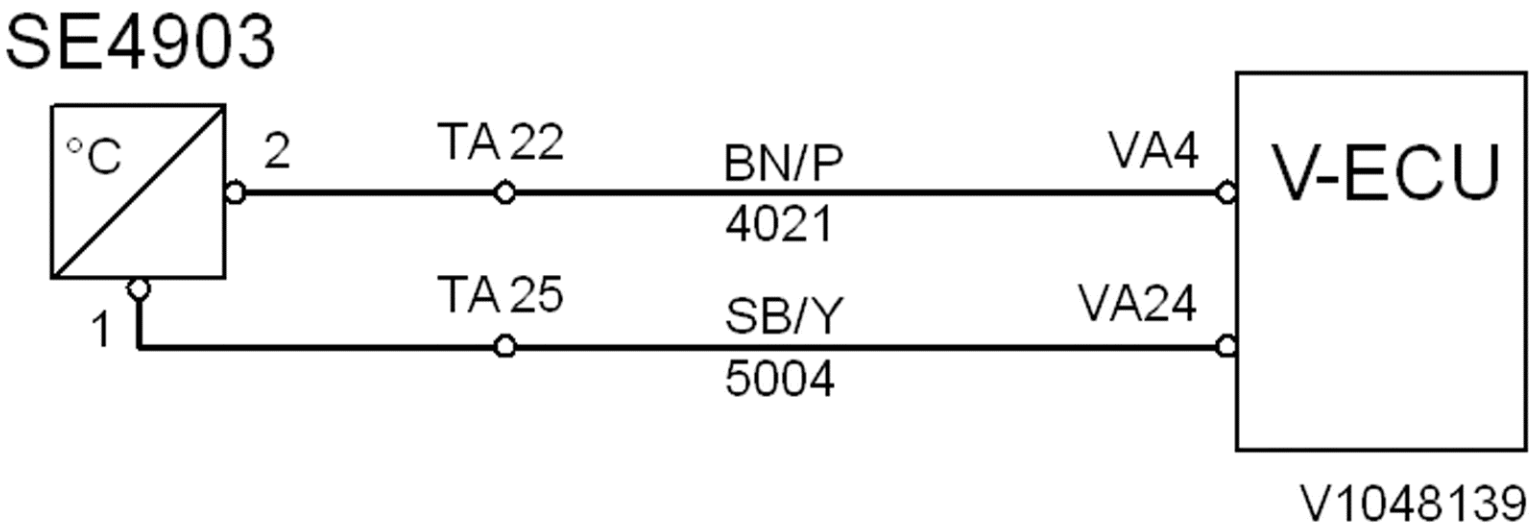
SE4903
°C
2
1
TA 22
TA 25
BN/P
4021
SB/Y
5004
VA4
VA24
V-ECU
V1048139

VOLVO
Construction Equipment

Service Information

Document Title:	Function Group:	Information Type: **Service Information**	Date: **12/10/2011**
Profile: **WLO, L90F (Volvo) [GB]**			

SE5201, description and measuring

Op nbr 302-050

9812519 Multimeter
9998699 Adapter
9993893 Adapter
9990062 Cable
88890016 Break out harness

Description

Function	Measures oil temperature in the front axle.	
References	Komponentförteckning: Givare Elschema 404	
VCADS Pro Test	—	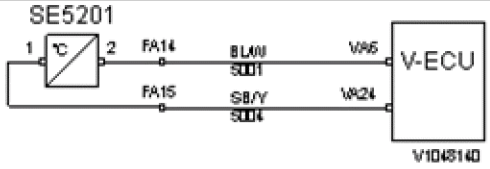 **Figure 1** VA6, signal VA24, ground

Measuring

Measuring point	Correct value	Condition	Test method
1 – 2	Resistance values according to table		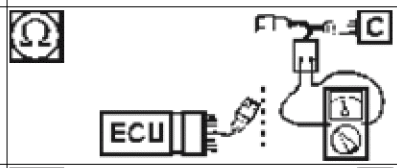
1 –  2 – 	≈ ∞ Ω		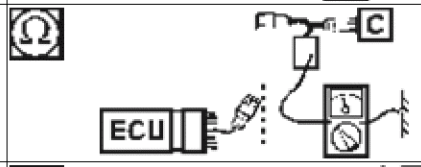
2 – 	≈ 5 V		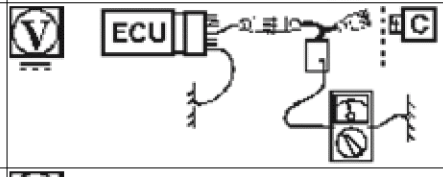
1 – 	≈ 0 Ω		

			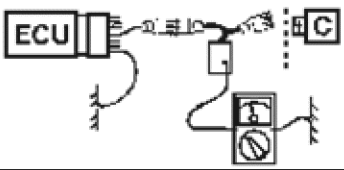
2 –	≈ ∞ Ω		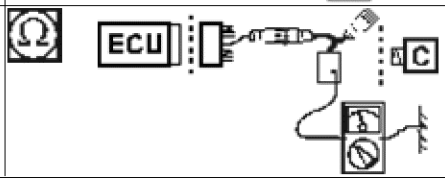

Verifying

Measuring point	Correct value	Condition	Test method
VA6 – VA24	Voltage values according to table		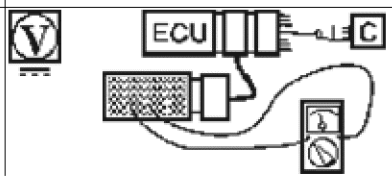

SE5201 resistance and voltage values

Temp. (°C)	Temp. (°F)	Resistance	Voltage (V)	Temp. (°C)	Temp. (°F)	Resistance	Voltage (V)
-40	-40	3.8 kΩ	4.64	60	140	470 Ω	3.04
-20	-4	3.4 kΩ	4.59	80	176	250 Ω	2.27
0	32	2.6 kΩ	4.48	100	212	140 Ω	1,59
20	68	1.6 kΩ	4.22	120	248	80 Ω	1,09
40	104	0.9 kΩ	3.74	140	284	50 Ω	0.73

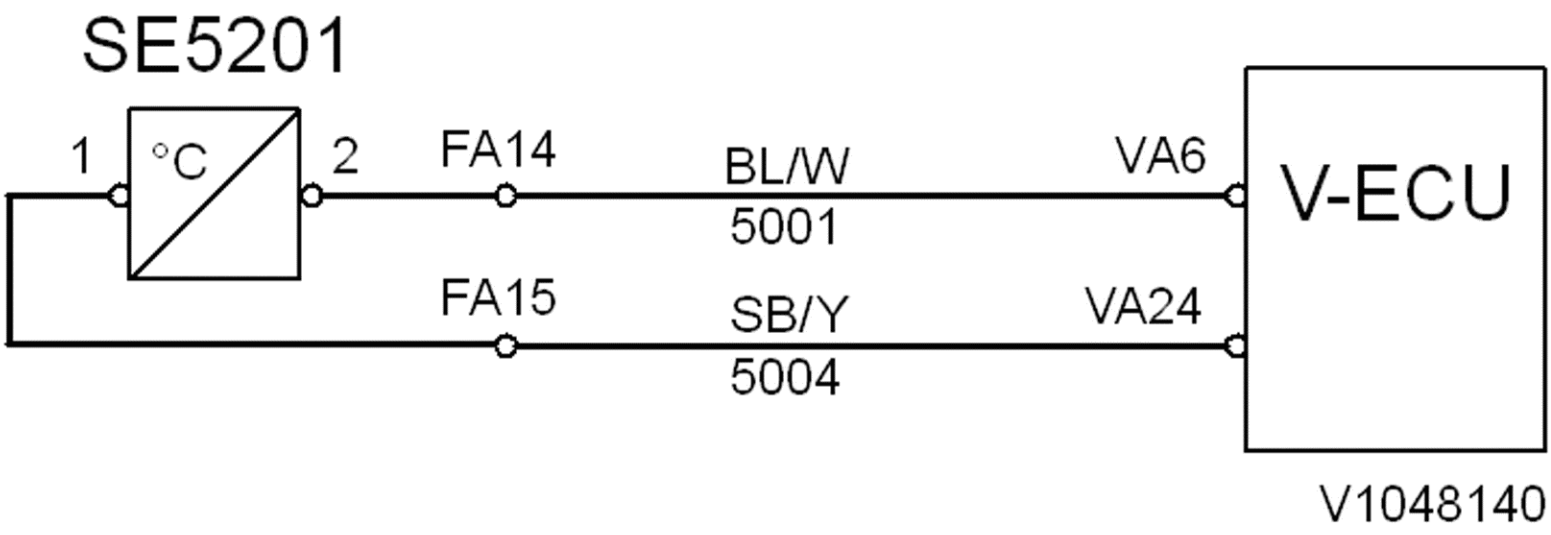
SE5201
1
°C
2
FA14
BL/W
5001
VA6
V-ECU
FA15
SB/Y
5004
VA24
V1048140

VOLVO
Construction Equipment

Service Information

Document Title:	Function Group:	Information Type: **Service Information**	Date: **12/10/2011**
Profile: **WLO, L90F (Volvo) [GB]**			

SE5202, description and measuring

Op nbr 302-051

9812519 Multimeter
9998699 Adapter
9993893 Adapter
9990062 Cable
88890016 Break out harness

Description

Function	Measures oil temperature in the rear axle.	
References	Komponentförteckning: Givare Elschema 404	
VCADS Pro Test	—	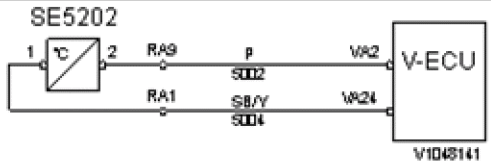 **Figure 1** VA2, signal VA24, ground

Measuring

Measuring point	Correct value	Condition	Test method
1 – 2	Resistance values according to table		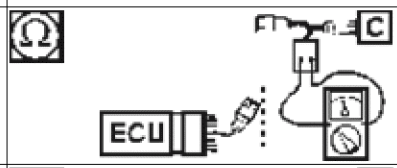
1 – ⏚ 2 – ⏚	≈ ∞ Ω		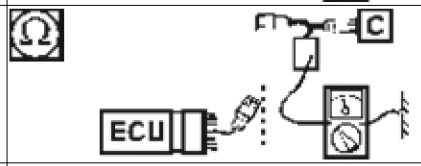
2 – ⏚	≈ 5 V		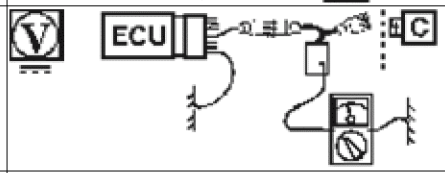
1 – ⏚	≈ 0 Ω		

			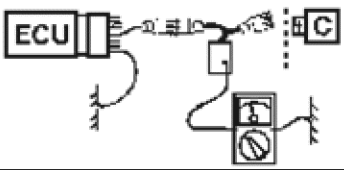
2 – 	≈ ∞ Ω		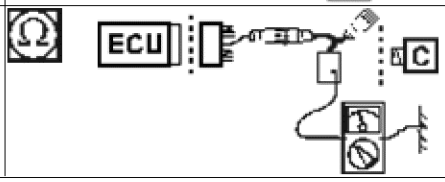

Verifying

Measuring point	Correct value	Condition	Test method
VA2 – VA24	Voltage values according to table		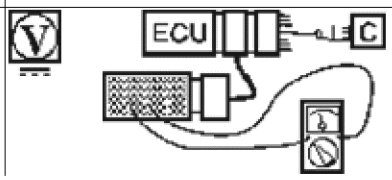

SE5202 resistance and voltage values

Temp. (°C)	Temp. (°F)	Resistance	Voltage (V)	Temp. (°C)	Temp. (°F)	Resistance	Voltage (V)
-40	-40	3.8 kΩ	4.64	60	140	470 Ω	3.04
-20	-4	3.4 kΩ	4.59	80	176	250 Ω	2.27
0	32	2.6 kΩ	4.48	100	212	140 Ω	1,59
20	68	1.6 kΩ	4.22	120	248	80 Ω	1,09
40	104	0.9 kΩ	3.74	140	284	50 Ω	0.73

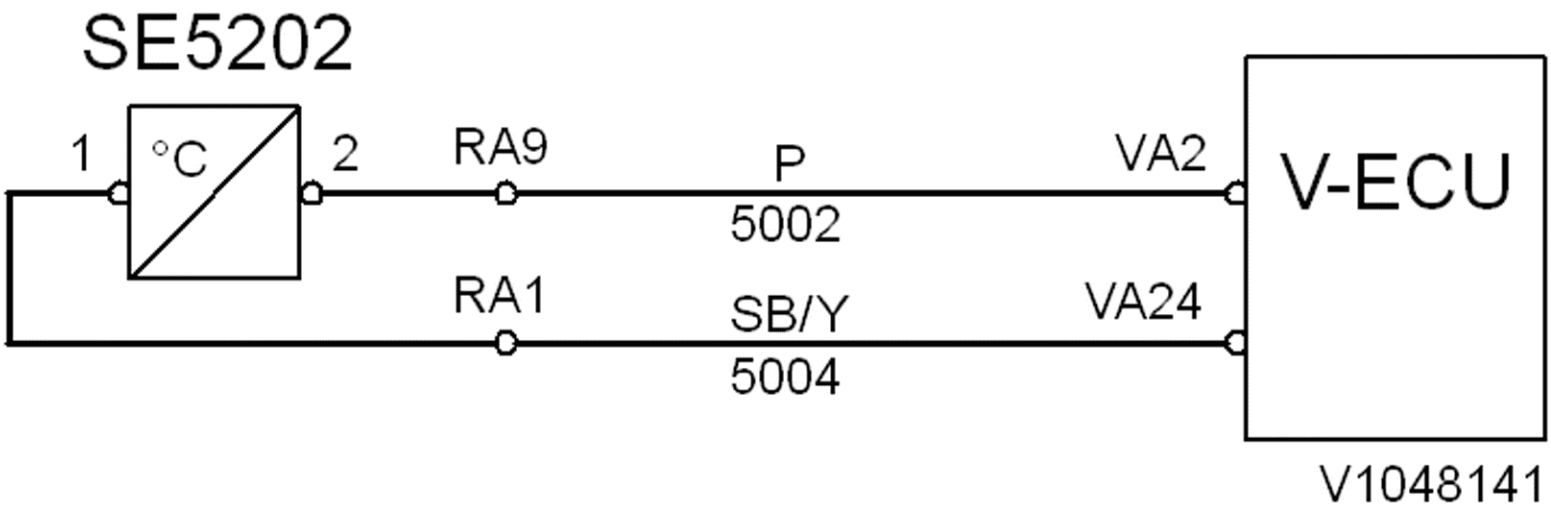
SE5202
1
°C
2
RA9
P
5002
VA2
V-ECU
RA1
SB/Y
5004
VA24
V1048141

VOLVO
Construction Equipment

Service Information

Document Title:	Function Group:	Information Type: **Service Information**	Date: **12/10/2011**
Profile: **WLO, L90F (Volvo) [GB]**			

SE5205, description and measuring

Op nbr 302-052

88890074 Multimeter
9998699 Adapter
9993893 Adapter
9990062 Cable
9998534 Adapter

Description

Function	Measures brake pressure to brakes.	
References	Component list: Sensors Wiring diagram 501	
VCADS Pro Test	—	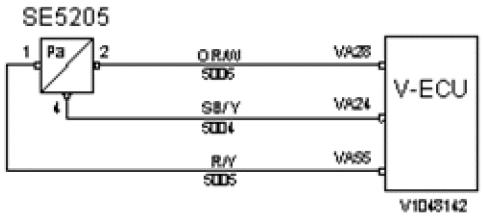 **Figure 1** VA28, signal VA24, ground VA55, feed 5 V

Measuring

Measuring point	Correct value	Condition	Test method
2 – 4	≈ 0.5 V when brake is not actuated (0 bar) ≈ 3.9 V when brake is fully actuated (100 bar)		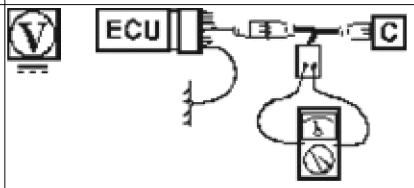
1 – 	≈ 5 V		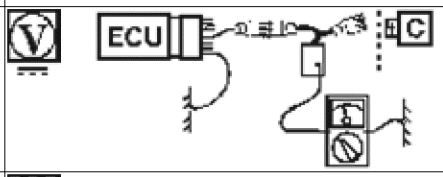
4 – 	≈ 0 Ω		

			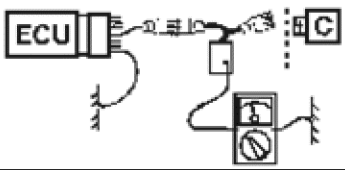
1 –  2 – 	≈ ∞ Ω		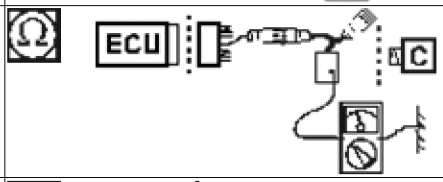
VA28 – 2	≈ 0 Ω		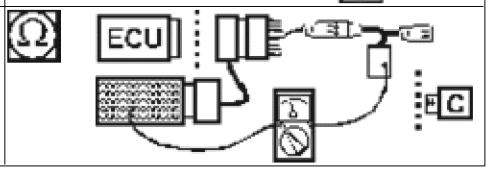

Verifying

Measuring point	Correct value	Condition	Test method
VA28 – VA24	≈ 0.5 V when brake is not actuated (0 bar) ≈ 3.9 V when brake is fully actuated (100 bar)		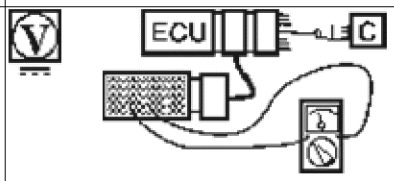

Functional check

After finished troubleshooting, perform the following checks;
Wheel brakes, function check

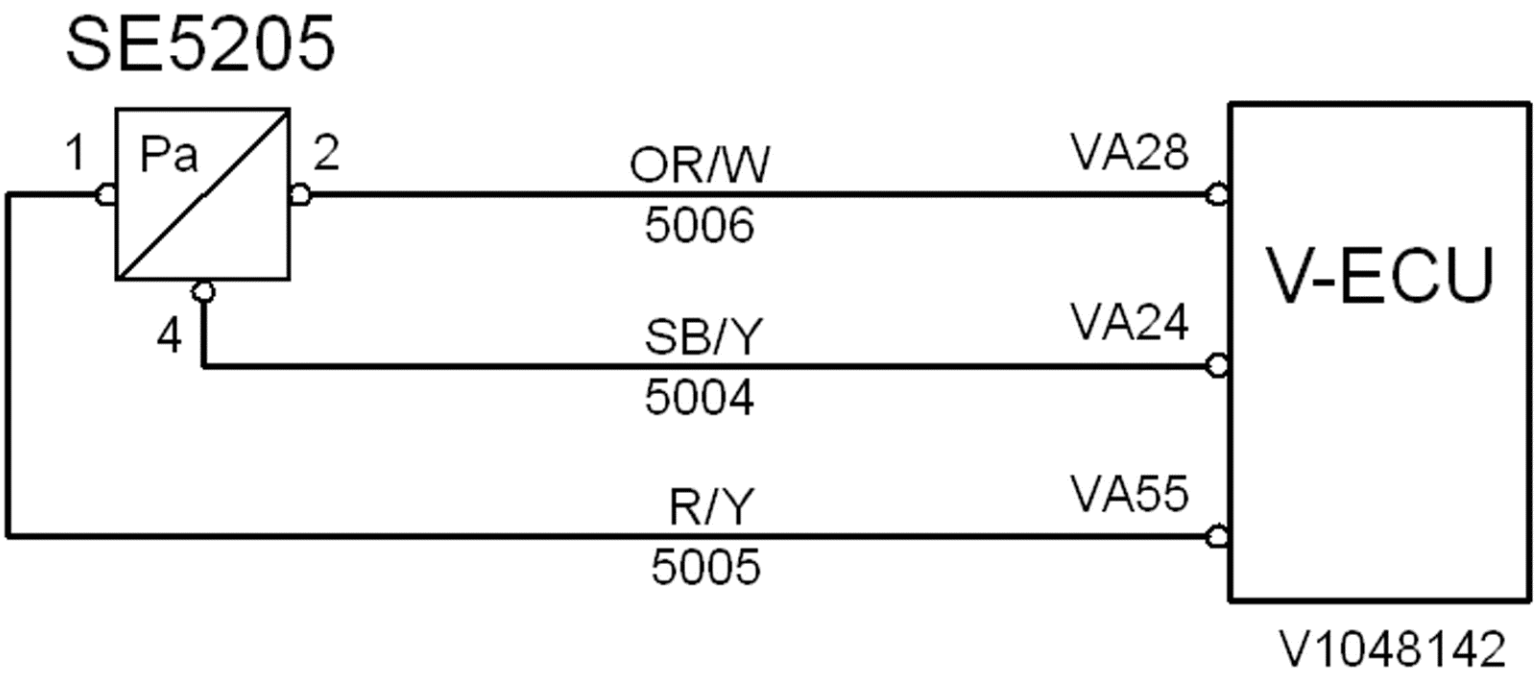
SE5205
1
Pa
2
4
OR/W
5006
SB/Y
5004
R/Y
5005
VA28
VA24
VA55
V-ECU
V1048142

VOLVO
Construction Equipment

Service Information

Document Title:	Function Group:	Information Type: **Service Information**	Date: **12/10/2011**
Profile: **WLO, L90F (Volvo) [GB]**			

SE5218, description and measuring

Op nbr 302-053

88890074 Multimeter
9998699 Adapter
9993893 Adapter
9990062 Cable
9998534 Adapter

Description

Function	Measures pressure at the brake pressure accumulator.	
References	Component list: Sensors Wiring diagram 501	
VCADS Pro Test	—	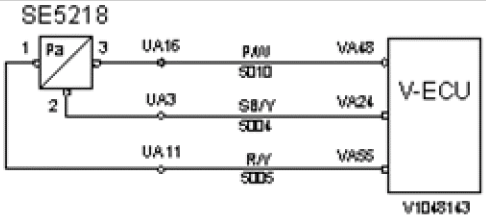 **Figure 1** VA48, signal VA24, ground VA55, feed 5 V

Measuring

Measuring point	Correct value	Condition	Test method
3 – 2	≈ 0.5 V		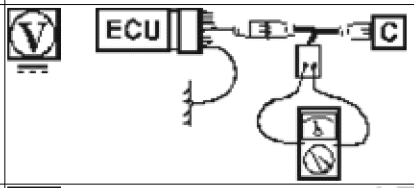
1 – 	≈ 5 V		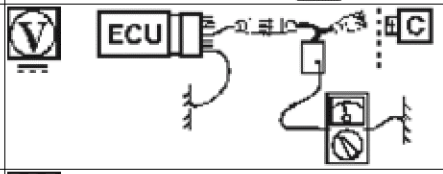
2 – 	≈ 0 Ω		

			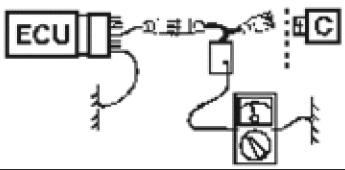
1 –  3 – 	≈ ∞ Ω		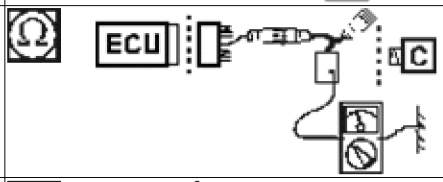
VA48 – 3	≈ 0 Ω		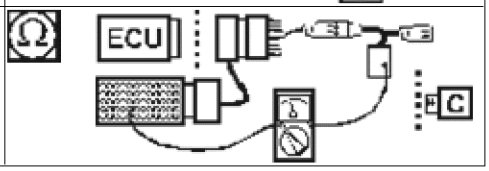

Verifying

Measuring point	Correct value	Condition	Test method
VA48 – VA24	≈ 0.5 V		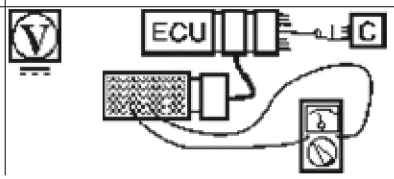

Functional check

After finished troubleshooting, perform the following checks;
Wheel brakes, function check

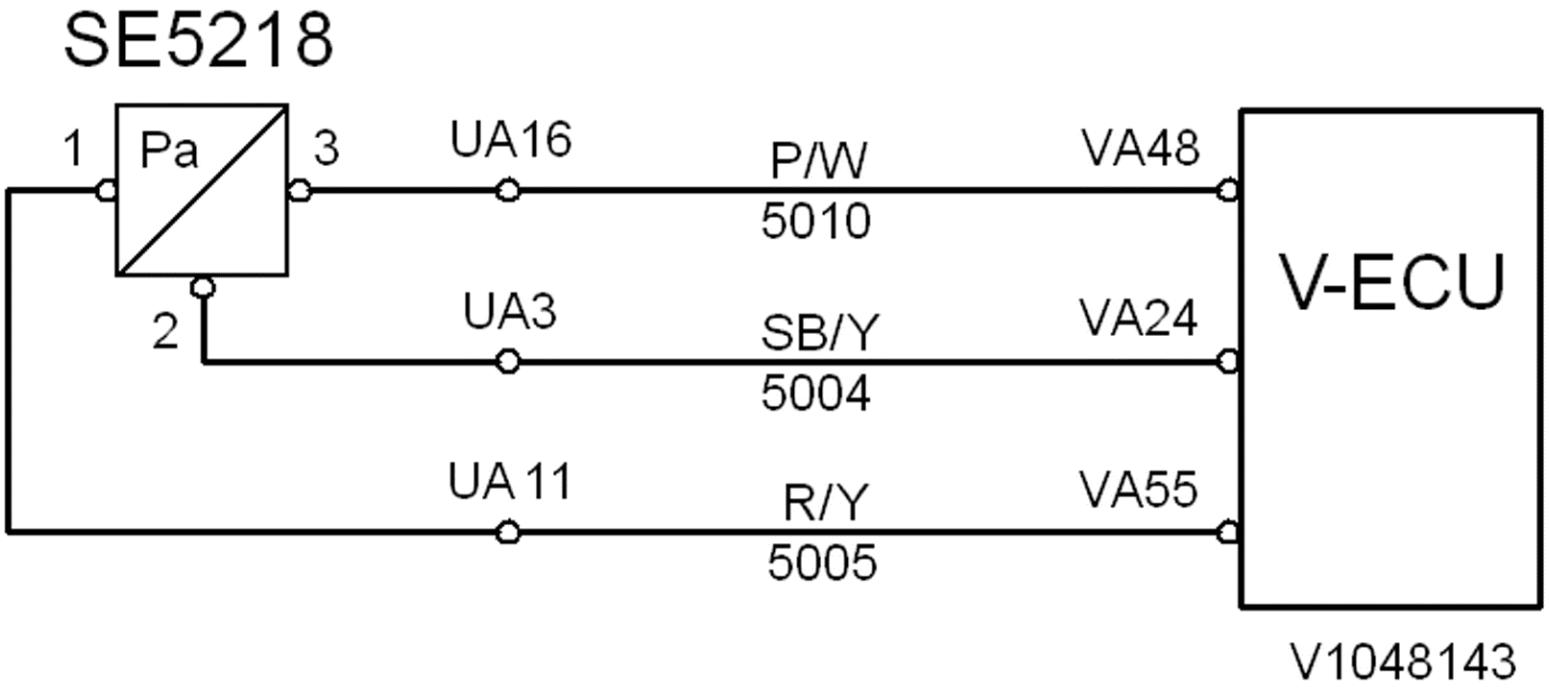
SE5218
1
Pa
3
2
UA16
P/W
5010
VA48
UA3
SB/Y
5004
VA24
UA 11
R/Y
5005
VA55
V-ECU
V1048143

More than one document matches the current profile:

SE5503, description and measuring
Product Line: WLO
Model Variant: L90F
Site: Arvika
Serial Number Start: 25001
Serial Number End: 26953

SE5503, description and measuring
Product Line: WLO
Model Variant: L90F
Site: Arvika
Serial Number Start: 26954
Serial Number End: 49999

VOLVO
Construction Equipment

Service Information

Document Title:	Function Group:	Information Type: **Service Information**	Date: **12/10/2011**
Profile: **WLO, L90F (Volvo) [GB]**			

SE5503, description and measuring

Op nbr 302-054

9812519 Multimeter
9998699 Adapter
9993893 Adapter
9990062 Cable
9998534 Adapter

Description

Function	Measures pressure on the parking brake.	
References	Komponentförteckning: Givare Elschema 501	
VCADS Pro Test	—	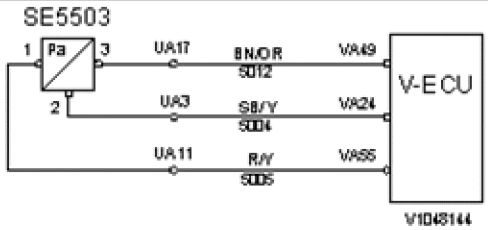 **Figure 1** VA49, signal VA24, ground VA55, feed 5 V

Measuring

Measuring point	Correct value	Condition	Test method
3 – 2	≈ 0.5 V [T1] ⓘ		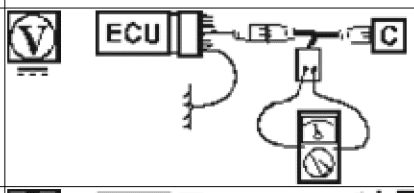
1 – ⏚	≈ 5 V		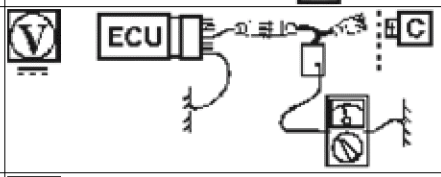
2 – ⏚	≈ 0 Ω		

			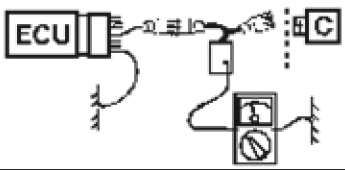
1 –  3 – 	≈ ∞ Ω		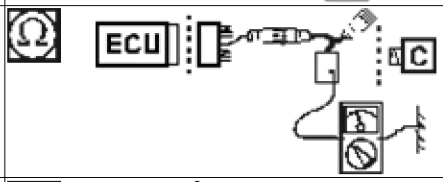
VA49 – 3	≈ 0 Ω		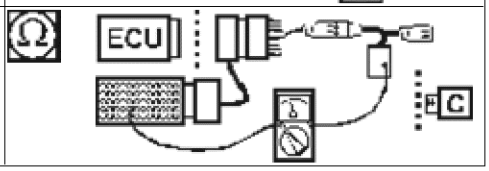

[T1] Applied parking brake.

Verifying

Measuring point	Correct value	Condition	Test method
VA49 – VA24	≈ 2.5 V [T1]		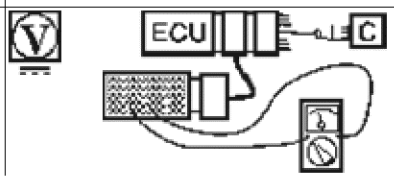

[T1] Released parking brake.

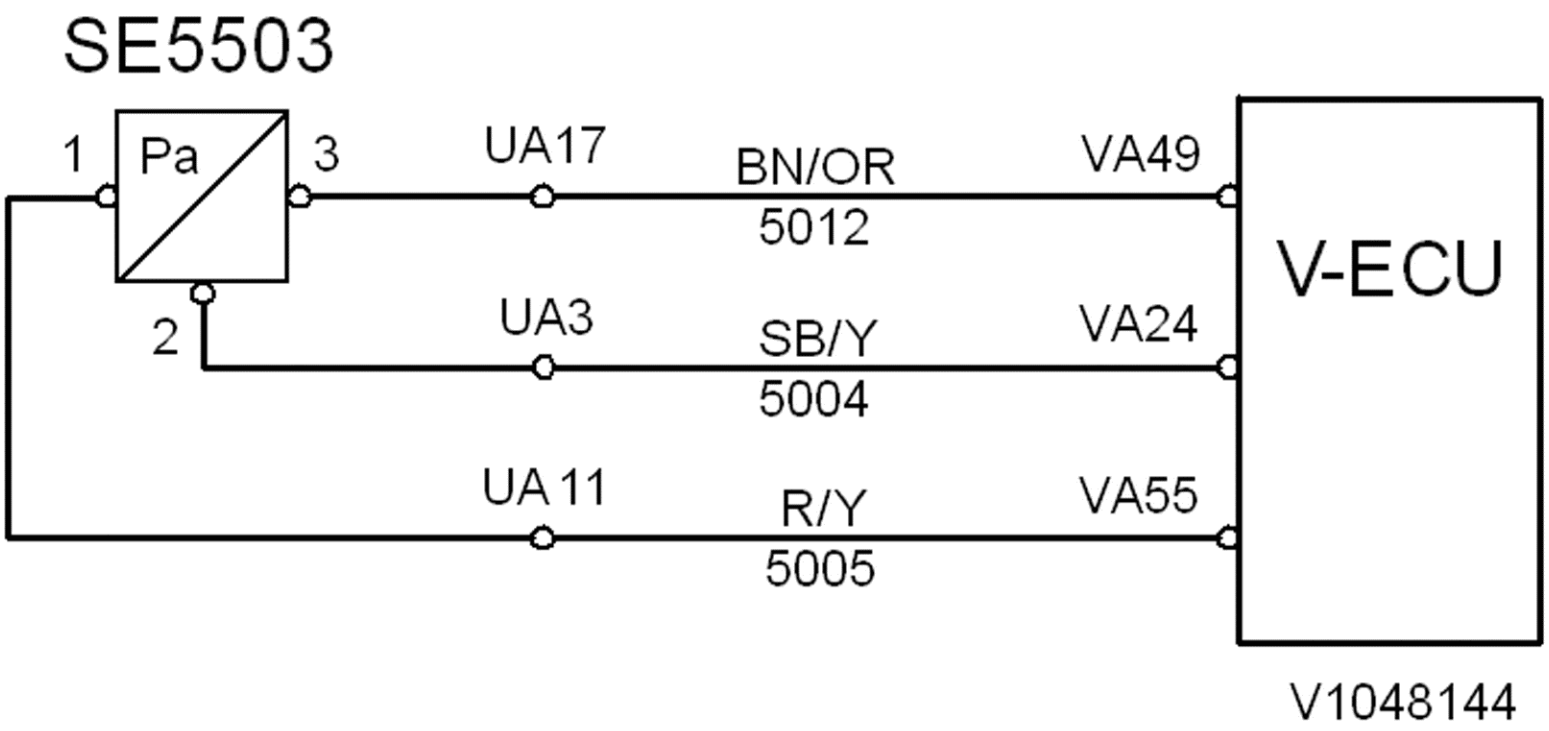
SE5503
1
Pa
3
2
UA17
BN/OR
5012
VA49
UA3
SB/Y
5004
VA24
UA 11
R/Y
5005
VA55
V-ECU
V1048144

VOLVO
Construction Equipment

Service Information

Document Title:	Function Group:	Information Type: **Service Information**	Date: **12/10/2011**
Profile: **WLO, L90F (Volvo) [GB]**			

SE5503, description and measuring

Op nbr 302-054

88890074 Multimeter
9998699 Adapter
9993893 Adapter
9990062 Cable
9998534 Adapter

Description

Function	Measures pressure on the parking brake.	
References	Component list: Sensors Wiring diagram 501	
VCADS Pro Test	—	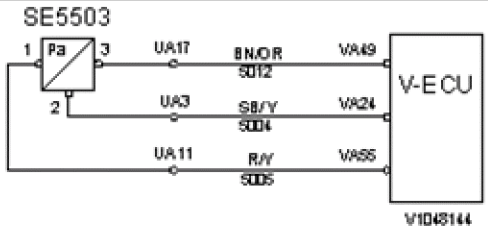 **Figure 1** VA49, signal VA24, ground VA55, feed 5 V

Measuring

Measuring point	Correct value	Condition	Test method
3 – 2	≈ 0.5 V [T1] ⓘ		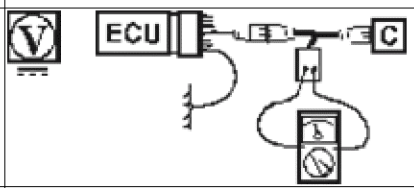
1 – ⏚	≈ 5 V		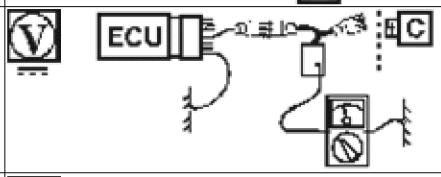
2 – ⏚	≈ 0 Ω		

			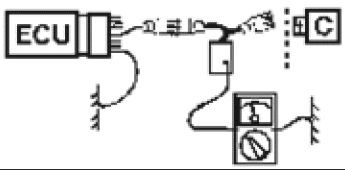
1 – 3 –	≈ ∞ Ω		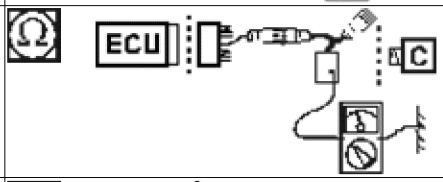
VA49 – 3	≈ 0 Ω		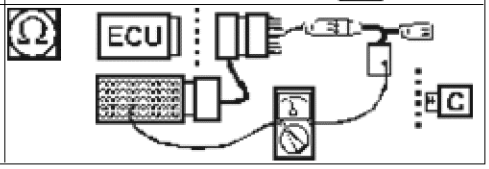

[T1] Applied parking brake.

Verifying

Measuring point	Correct value	Condition	Test method
VA49 – VA24	≈ 2.5 V [T1]		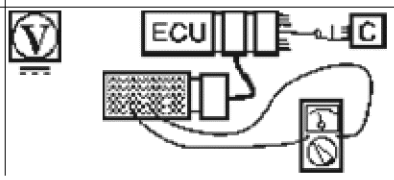

[T1] Released parking brake.

Functional check

After finished troubleshooting, perform the following checks;
Parking brake, function check

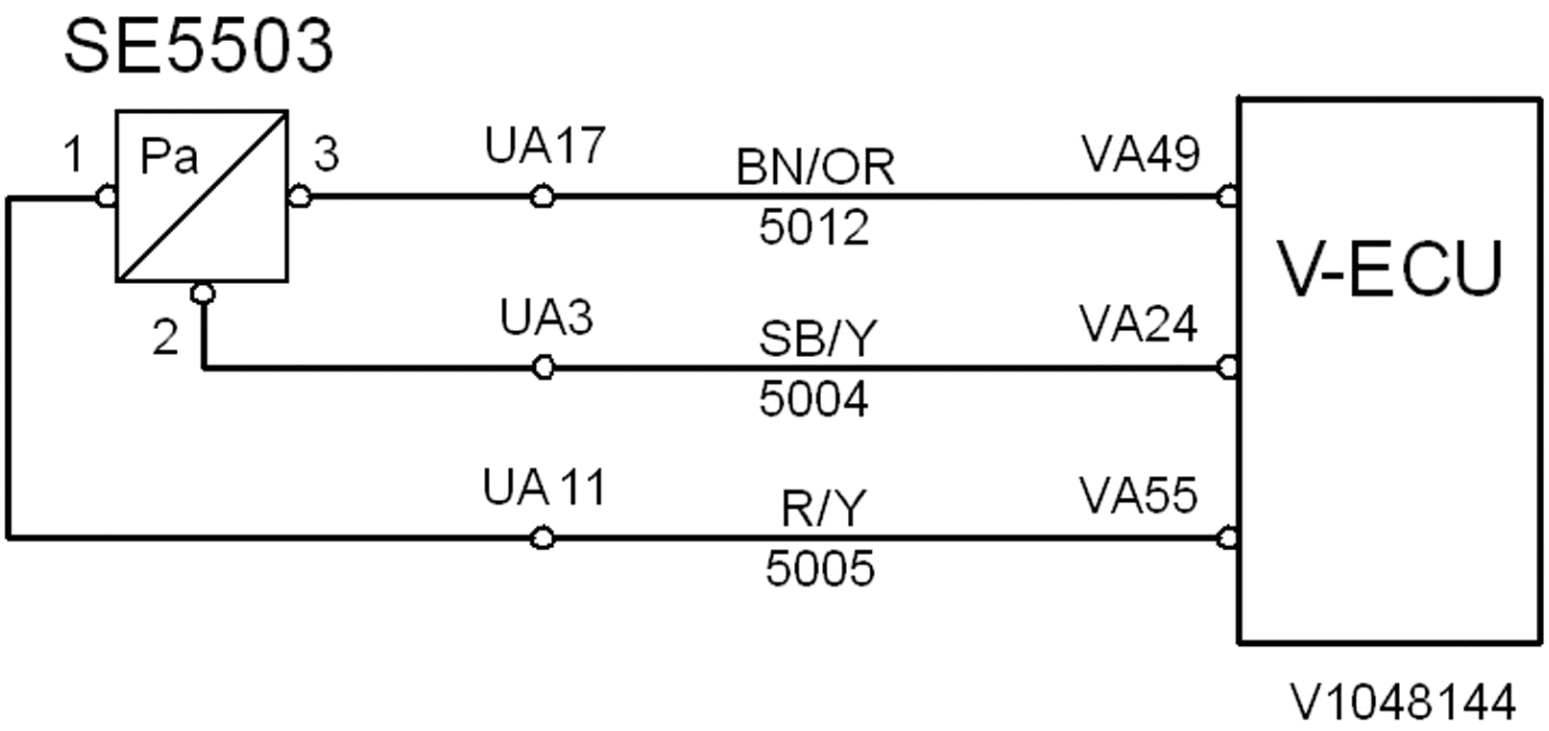
SE5503
1
Pa
3
2
UA17
BN/OR
5012
VA49
UA3
SB/Y
5004
VA24
UA 11
R/Y
5005
VA55
V-ECU
V1048144

VOLVO
Construction Equipment

Service Information

Document Title:	Function Group:	Information Type: **Service Information**	Date: **12/10/2011**
Profile: **WLO, L90F (Volvo) [GB]**			

SE6401, description and measuring

Op nbr 302-055

88890074 Multimeter
9998699 Adapter
9993893 Adapter
9990062 Cable
9990008 Measuring equipment

Description

Function	Angle sensor for joystick steering (CDC). The sensor's outputs are galvanically separate and the output signals have a mutual offset of 200 mV.
References	Component list: Sensors Wiring diagram 602
VCADS Pro Test	64595-3 Electric servo lever steering, test
	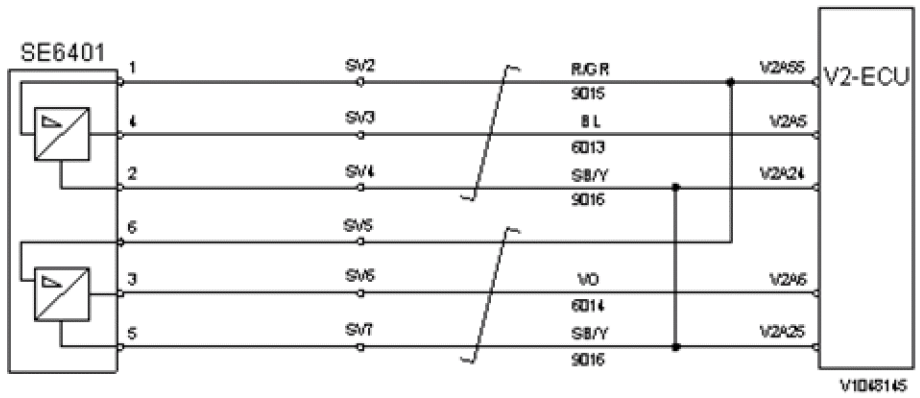 **Figure 1** V2A55, feed 5 V V2A5, signal V2A24, ground V2A6, signal V2A25, ground

Measuring

Measuring point	Correct value	Condition	Test method
1 –  6 – 	≈ 5 V		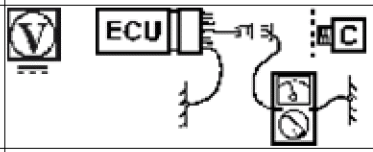
	≈ 0 Ω		

2 – 5 –			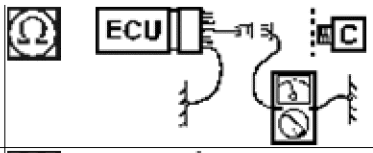
V2A55 – V2A5 – V2A6 –	≈ ∞ Ω		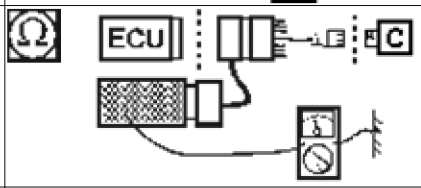
V2A5 – 4 V2A6 – 3	≈ 0 Ω		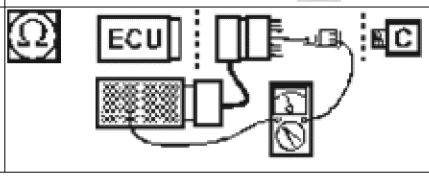

Verifying

Measuring point	Correct value	Condition	Test method
V2A5 – V2A24	0.5–4.5 V[T1]		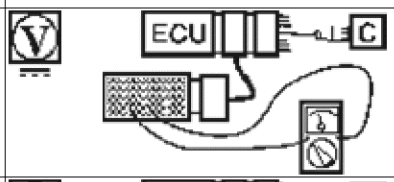
V2A6 – V2A24	0.3–4.3 V(a)		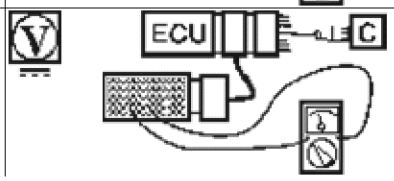

[T1] The signals shall meet the following conditions, V2A5 – V2A6 = 200 ±100 mV.

Functional check

After finished troubleshooting, perform the following checks;
Comfort Drive Control (CDC)/Lever steering, function check

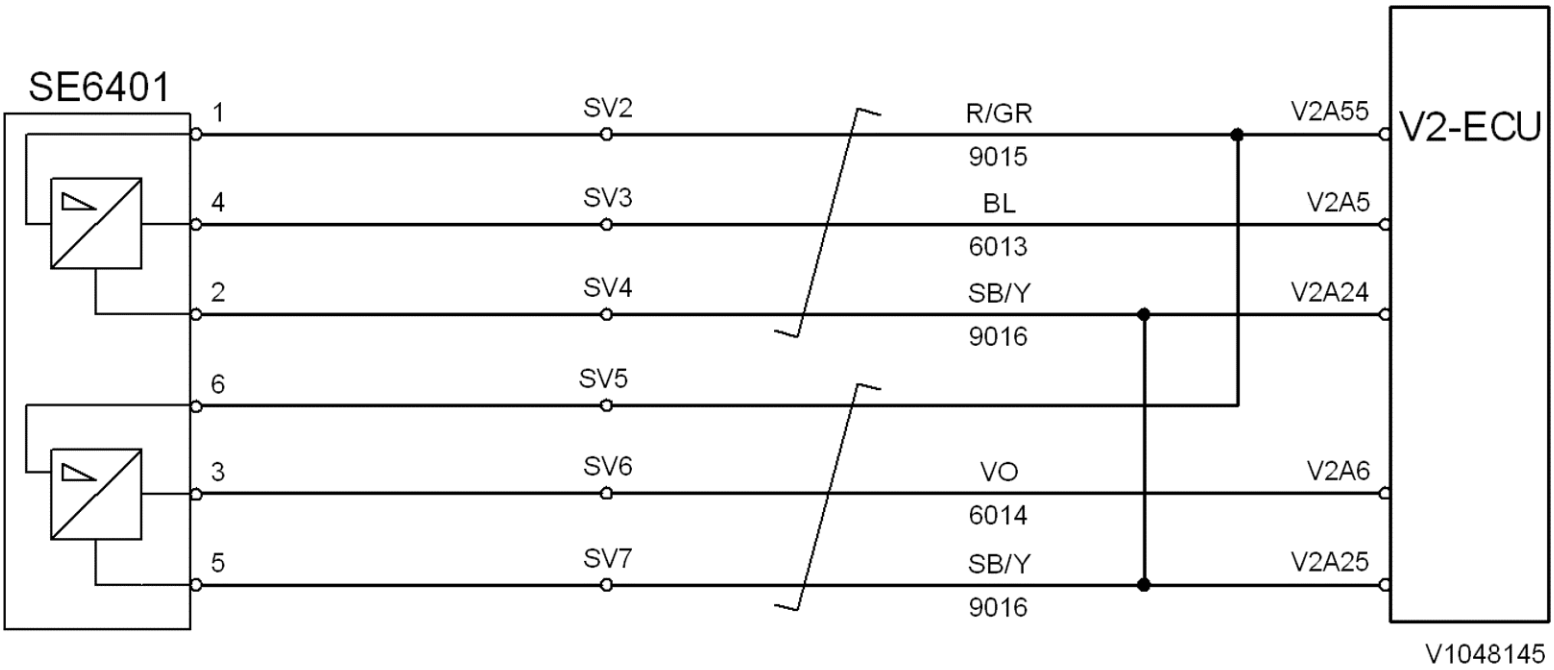
SE6401
1
4
2
6
3
5
SV2
SV3
SV4
SV5
SV6
SV7
R/GR
9015
BL
6013
SB/Y
9016
VO
6014
SB/Y
9016
V2A55
V2A5
V2A24
V2A6
V2A25
V2-ECU
V1048145

VOLVO
Construction Equipment

Service Information

Document Title:	Function Group:	Information Type: **Service Information**	Date: **12/10/2011**
Profile: **WLO, L90F (Volvo) [GB]**			

SE6403, description and measuring

Op nbr 302-102

9812519 Multimeter
9998699 Adapter
9993893 Adapter
9993894 Template
9990062 Cable
9990008 Measuring equipment

Description

Function	Indicates differential pressure in secondary steering.
References	Komponentförteckning: Givare Elschema 604
VCADS Pro Test	—
	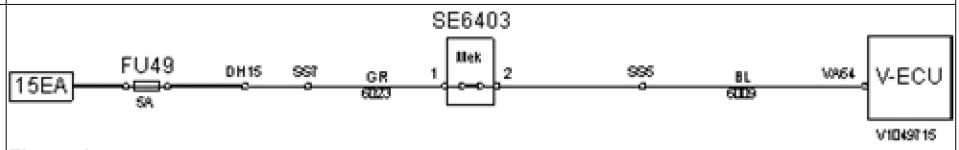 **Figure 1** VA64, signal

Measuring

Measuring point	Correct value	Condition	Test method
1 –	≈ U_{bat}		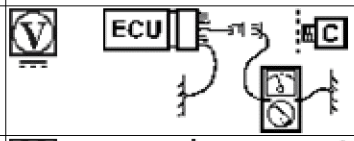
VA64 – 2	≈ 0 Ω		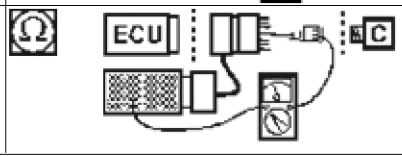

Verifying

Measuring point	Correct value	Condition	Test method
VA64 –	≈ 0 V[T1]		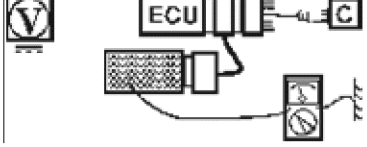

[T1] Voltage level shifts from Ubat to 0 V when the engine is started.

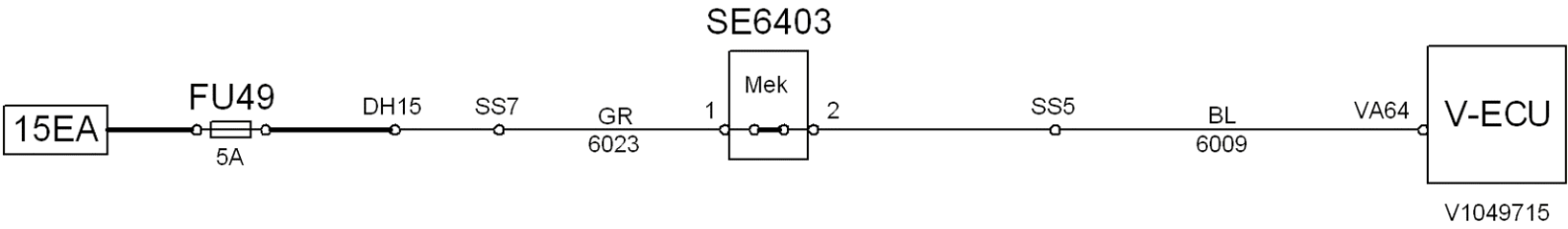
SE6403
15EA
FU49
5A
DH15
SS7
GR
6023
1
Mek
2
SS5
BL
6009
VA64
V-ECU
V1049715

VOLVO
Construction Equipment

Service Information

Document Title:	Function Group:	Information Type: **Service Information**	Date: **12/10/2011**
Profile: **WLO, L90F (Volvo) [GB]**			

SE6407, description and measuring

Op nbr 302-056

9812519 Multimeter
9998699 Adapter
9993893 Adapter
9990062 Cable
9998534 Adapter

Description

Function	Measures secondary steering pressure.	
References	Komponentförteckning: Givare Elschema 604	
VCADS Pro Test	—	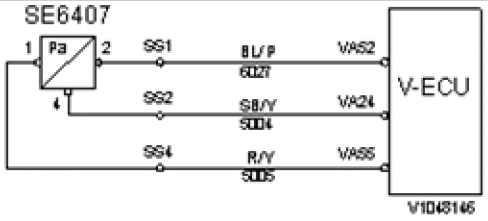 **Figure 1** VA52, signal VA24, ground VA55, feed 5 V

Measuring

Measuring point	Correct value	Condition	Test method
2 – 4	≈ 0.5 V		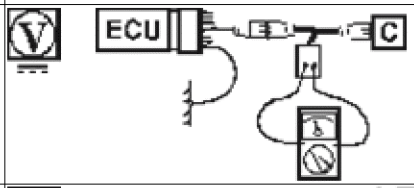
1 –	≈ 5 V		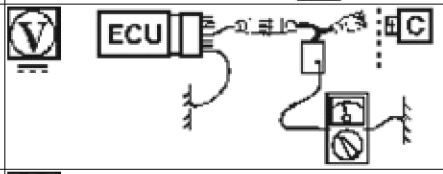
4 –	≈ 0 Ω		

			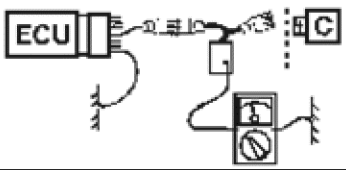
1 –  2 – 	≈ ∞ Ω		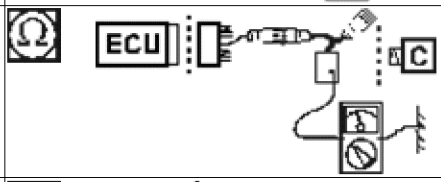
VA52 – 2	≈ 0 Ω		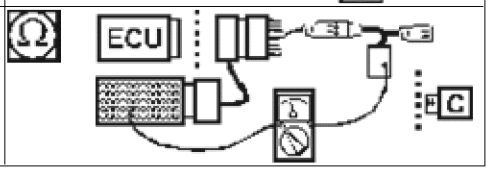

Verifying

Measuring point	Correct value	Condition	Test method
VA52 – VA24	≈ 0.5 V		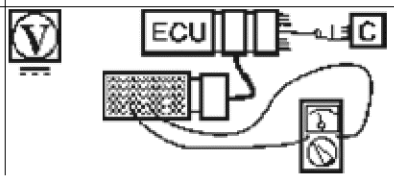

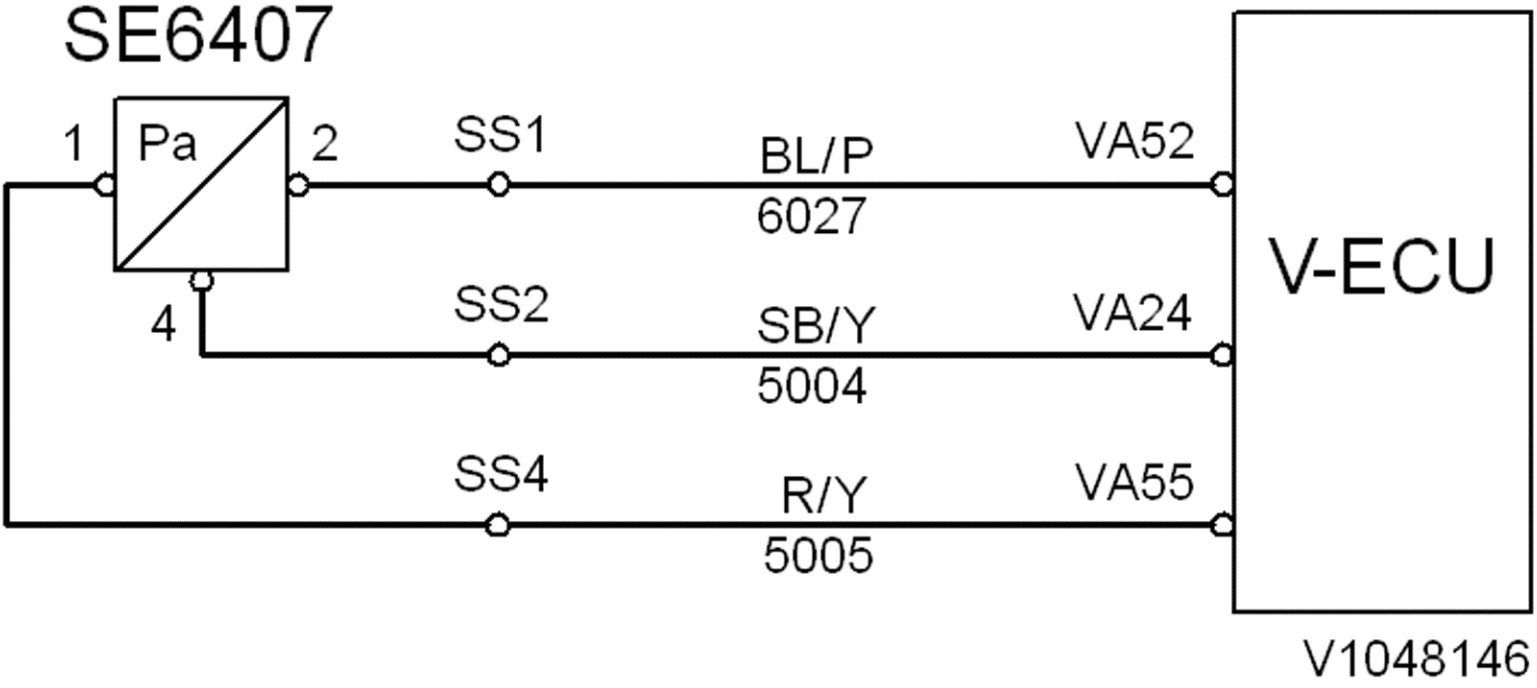
SE6407
1
Pa
2
4
SS1
BL/P
6027
VA52
SS2
SB/Y
5004
VA24
SS4
R/Y
5005
VA55
V-ECU
V1048146

VOLVO
Construction Equipment

Service Information

Document Title:	Function Group:	Information Type: **Service Information**	Date: **12/10/2011**
Profile: **WLO, L90F (Volvo) [GB]**			

SE6601, description and measuring

Op nbr 302-057

88890074 Multimeter
9998699 Adapter
9993893 Adapter
9990062 Cable
88890016 Break out harness
88890019 Template

Description

Function	Control lever for Comfort Drive Control/lever steering (CDC).	
References	Component list: Sensors Wiring diagram 601	
VCADS Pro Test	64595-3 Electric servo lever steering, test	
	V2A32, feed 5 V V2A51, signal V2A52, signal V2A24, ground V2A25, ground	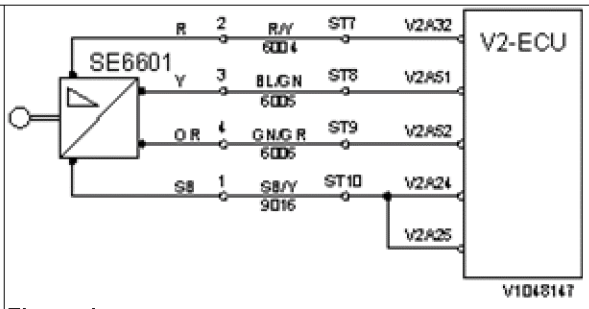 **Figure 1**

Measuring

Measuring point	Correct value	Condition	Test method
V2A51 –	2.3–2.7 V (lever in middle position)		
V2A52 –	2.6–2.36 V (lever in middle position)		
2 –	≈ 5 V		

			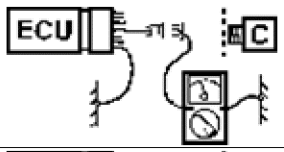
1 –	≈ 0 Ω		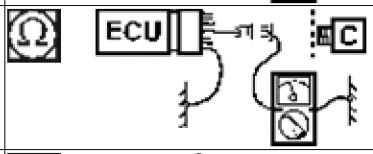
V2A32 – V2A51 – V2A52 –	≈ ∞ Ω		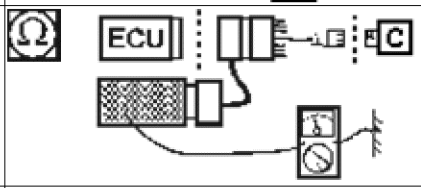
V2A51 – 3 V2A52 – 4	≈ 0 Ω		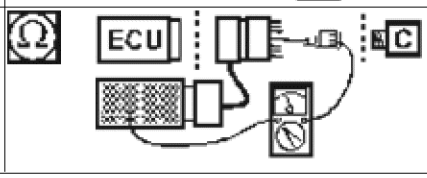

Verifying

Measuring point	Correct value	Condition	Test method
V2A51 –	0.5–4.5 V[T1] ⓘ		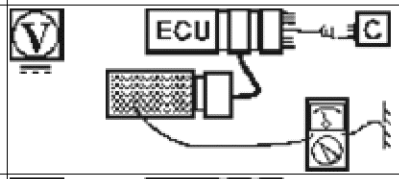
V2A52 –	4.5–0.5 V(a)		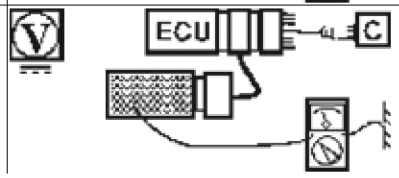

[T1] Voltage shall change uniformly and continuously at slow lever movement.

Functional check

After finished troubleshooting, perform the following checks;
Comfort Drive Control (CDC)/Lever steering, function check

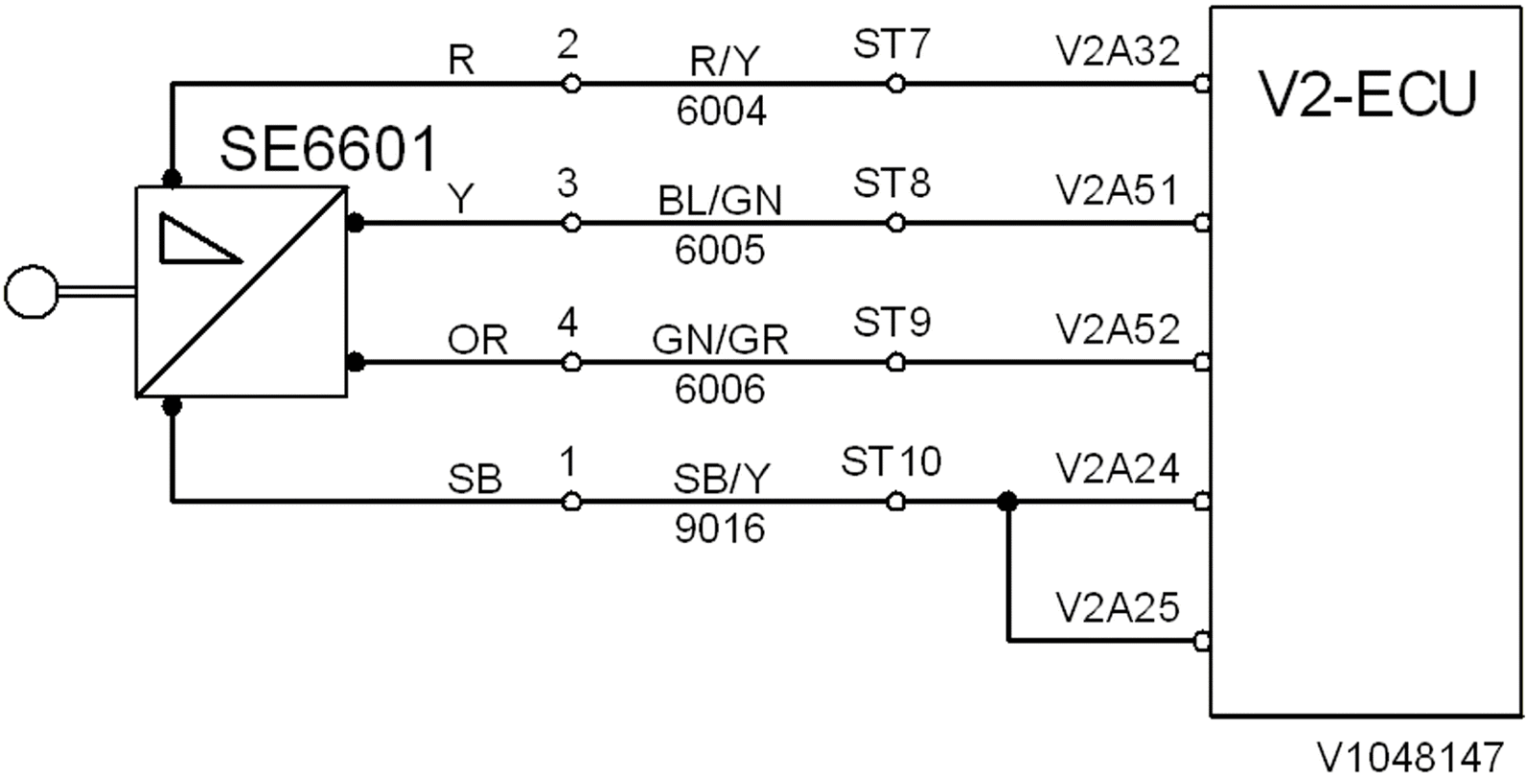
SE6601
R
2
R/Y
6004
ST7
V2A32
V2-ECU
Y
3
BL/GN
6005
ST8
V2A51
OR
4
GN/GR
6006
ST9
V2A52
SB
1
SB/Y
9016
ST10
V2A24
V2A25

V1048147

VOLVO
Construction Equipment

Service Information

Document Title:	Function Group:	Information Type: **Service Information**	Date: **12/10/2011**
Profile: **WLO, L90F (Volvo) [GB]**			

SE8503, description and measuring

Op nbr 302-058

9812519 Multimeter
9998699 Adapter
9993893 Adapter
9990062 Cable
9990008 Measuring equipment

Description

Function	Measures ambient temperature.	
References	Komponentförteckning: Givare Elschema 802	
VCADS Pro Test	—	SE8503 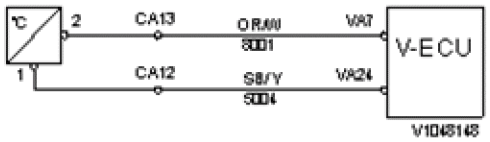 **Figure 1** VA7, signal VA24, ground

Measuring

Measuring point	Correct value	Condition	Test method
1 – 2	Resistance values according to table		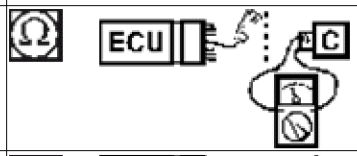
2 – 	≈ 5 V		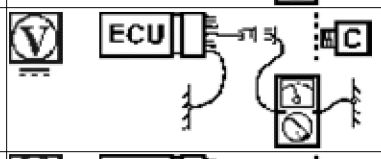
1 –	≈ 0 Ω		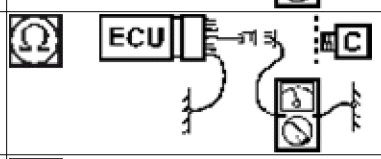
VA7 –	≈ ∞ Ω		

			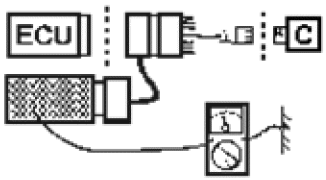

Verifying

Measuring point	Correct value	Condition	Test method
VA7 – VA27	Voltage values according to table		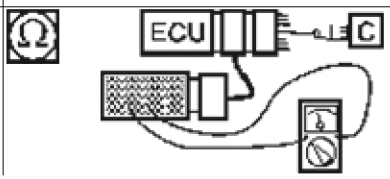

SE8503 resistance and voltage values

Temp (° C)	Temp (° F)	Resistance	Voltage (V)	Temp (° C)	Temp (° F)	Resistance	Voltage (V)
-30	-22	6.1 kΩ	4,77	+20	+68	0.6 kΩ	3,35
-20	-4	3.6 kΩ	4.62	+30	+86	410 Ω	2,90
-10	+14	2.2 kΩ	4,41	+40	+104	290 Ω	2,45
0	+32	1.4 kΩ	4,12	+50	+122	200 Ω	2,02
+10	+50	0.9 kΩ	3,76	+60	+140	150 Ω	1,65

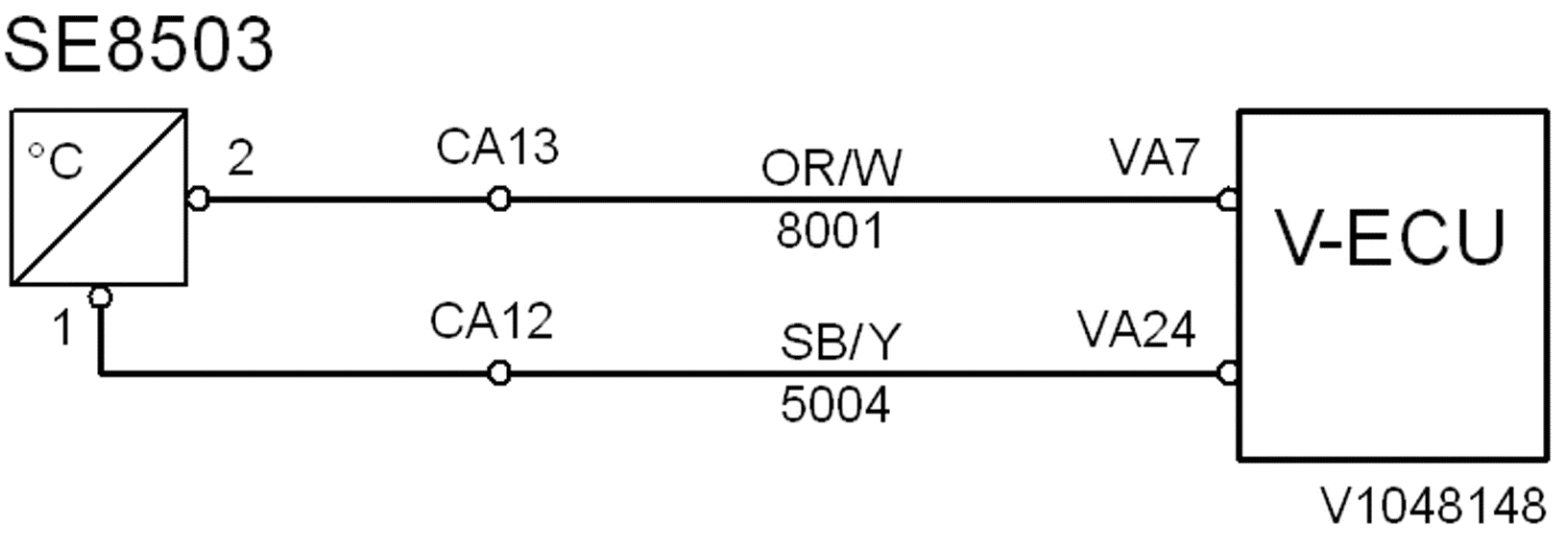
SE8503
°C
2
1
CA13
CA12
OR/W
8001
SB/Y
5004
VA7
VA24
V-ECU
V1048148

VOLVO
Construction Equipment

Service Information

Document Title:	Function Group:	Information Type: **Service Information**	Date: **12/10/2011**
Profile: **WLO, L90F (Volvo) [GB]**			

SE8702, description and measuring

Op nbr 302-059

9812519 Multimeter
9998699 Adapter
9993893 Adapter
9990062 Cable
9990008 Measuring equipment

Description

Function	Measures temperature of the evaporator.	
References	Komponentförteckning: Givare Elschema 805	
VCADS Pro Test	—	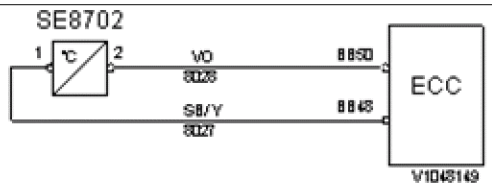 **Figure 1** BB50, signal BB48, ground

Measuring

Measuring point	Correct value	Condition	Test method
1 – 2	Resistance values according to table		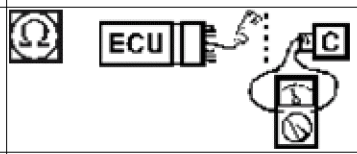
2 – ⏚	≈ 5 V		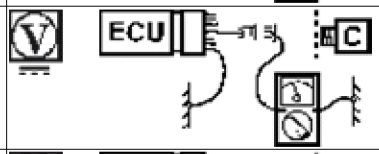
1 – ⏚	≈ 0 Ω		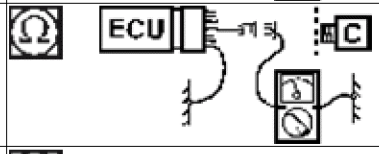
BB50 – ⏚	≈ ∞ Ω		

			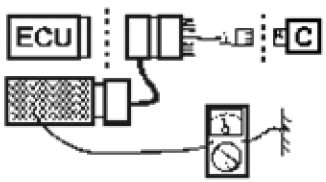

Verifying

Measuring point	Correct value	Condition	Test method
BB50 – BB48	Resistance values according to table		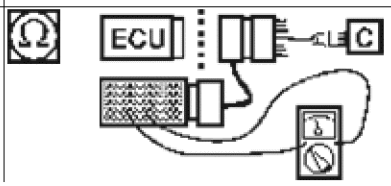

SE8702 resistance values

Air temp. (° C)	Air temp. (° F)	Resistance		Air temp. (° C)	Air temp. (° F)	Resistance
-40	-40	83.1 kΩ		+30	+86	2.0 kΩ
-30	-22	43.4 kΩ		+40	+104	1.3 kΩ
-20	-4	23.7 kΩ		+50	+122	0.9 kΩ
-10	+14	13.5 kΩ		+60	+140	0.6 kΩ
0	+32	8.0 kΩ		+70	+158	430 Ω
+10	+50	4.9 kΩ		+80	+176	310 Ω
+20	+68	3.1 kΩ		+90	+194	230 Ω

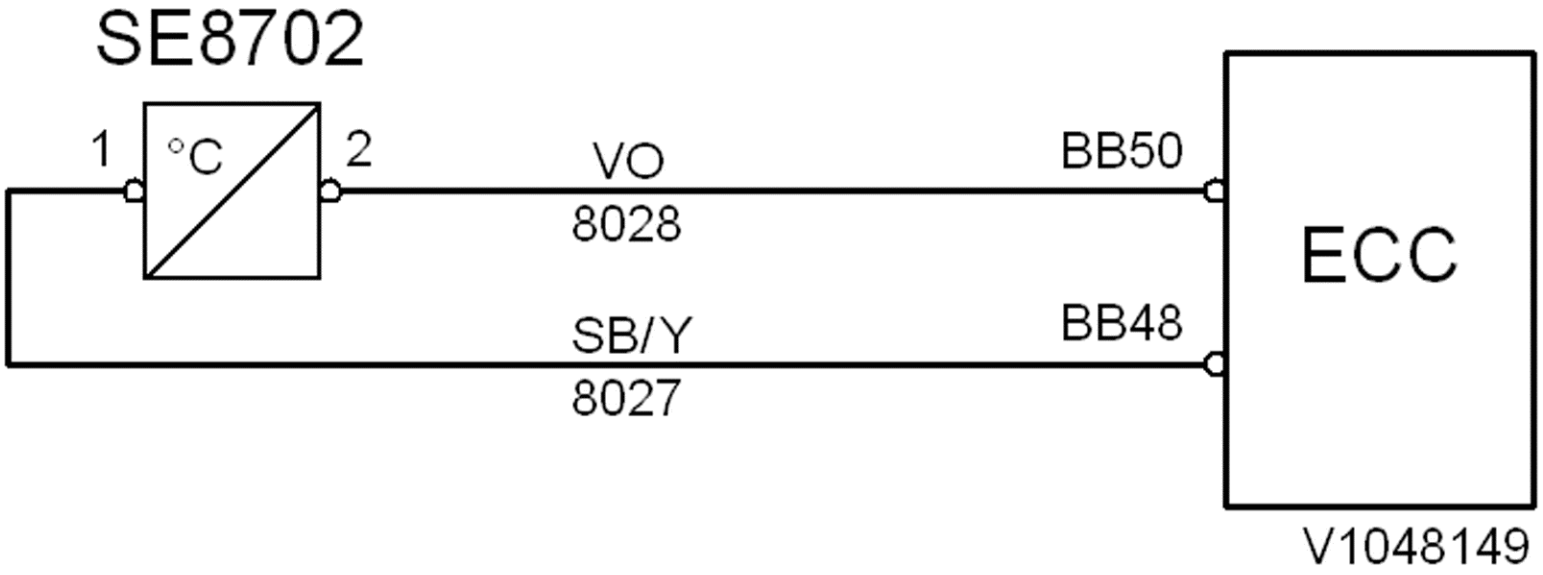
SE8702
1
°C
2
VO
8028
BB50
ECC
SB/Y
8027
BB48
V1048149

VOLVO
Construction Equipment

Service Information

Document Title:	Function Group:	Information Type: **Service Information**	Date: **12/10/2011**
Profile: **WLO, L90F (Volvo) [GB]**			

SE2704, description and measuring

Op nbr 302-123

9812519 Multimeter
9998699 Adapter
9993893 Adapter
9990062 Cable

Description

Function	Measures input rpm into the transmission.	SE2704 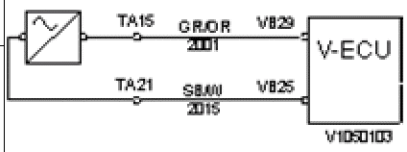 **Figure 1** VB29, signal VB25, frequency ground
References	Komponentförteckning: Givare Elschema 201	
VCADS Pro Test	40901-3 - Sensor, transmission, test	

Measuring

Measuring point	Correct value	Condition	Test method
1 – 2	≈ 1050±100 Ω		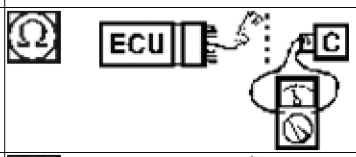
1 –  2 – 	≈ ∞ Ω		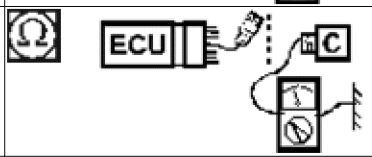
VB29 –  VB25 – 	≈ ∞ Ω		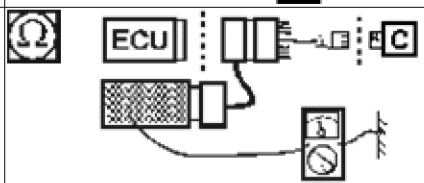
VB29 – VB25	≈ 1050±100 Ω		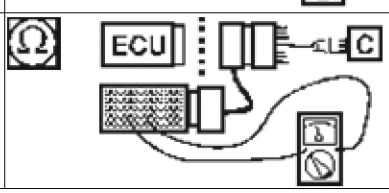

Verifying

Measuring point	Correct value	Condition	Test method
VB29 – VB25	≈ 1.0 V AC		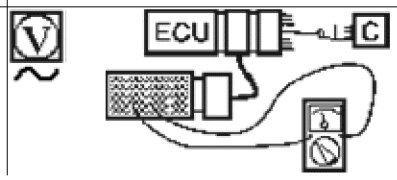

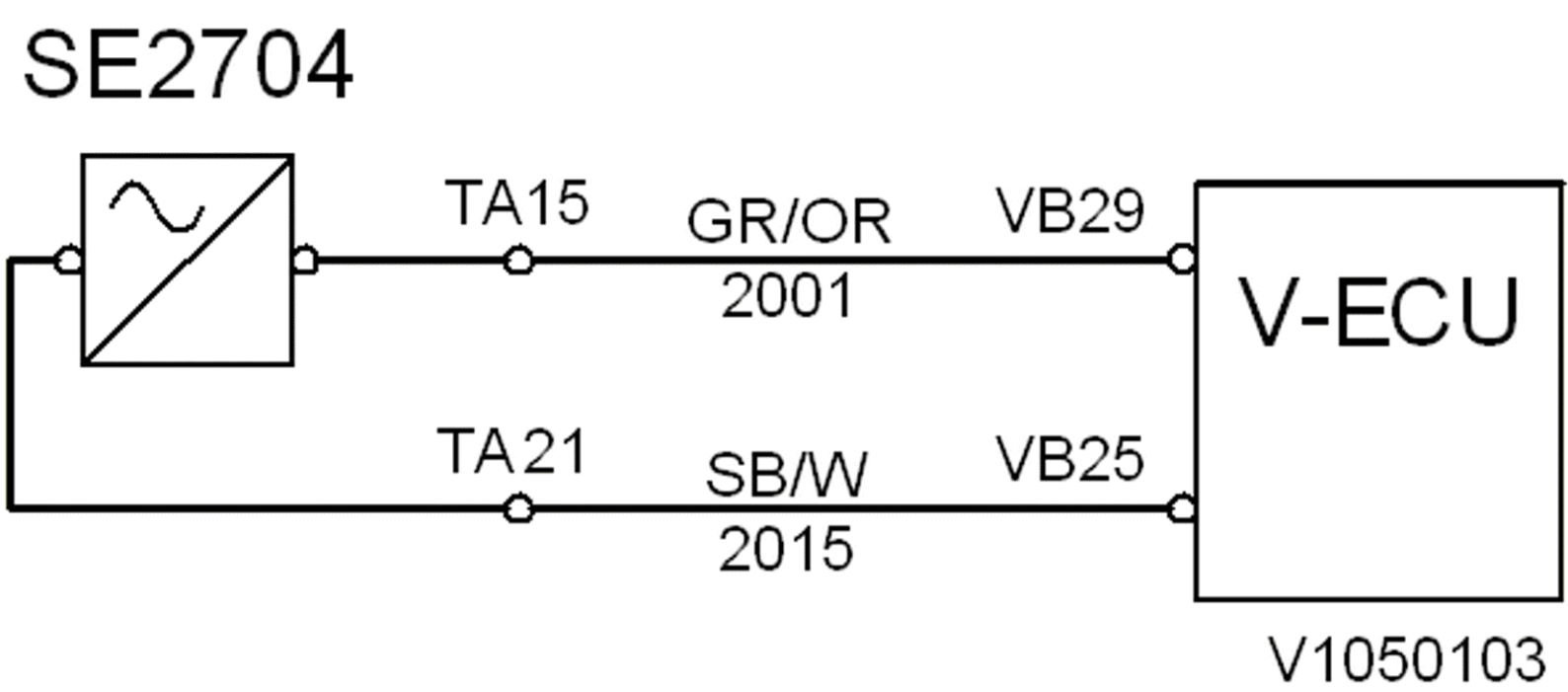
SE2704
TA15
GR/OR
2001
VB29
V-ECU
TA21
SB/W
2015
VB25
V1050103

VOLVO
Construction Equipment

Service Information

Document Title:	Function Group:	Information Type: **Service Information**	Date: **12/10/2011**
Profile: **WLO, L90F (Volvo) [GB]**			

SE8706, description and measuring

Op nbr 302-060

9812519 Multimeter
9998699 Adapter
9993893 Adapter
9990062 Cable
9990008 Measuring equipment

Description

Function	Measures temperature in the cab.	
References	Komponentförteckning: Givare Elschema 805	
VCADS Pro Test	87376-3 Sensor values, ECC, check	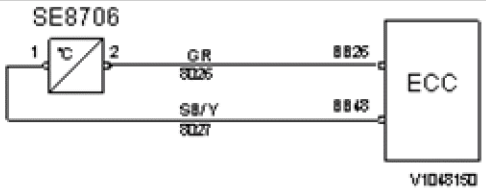 **Figure 1** BB26, signal BB48, ground

Measuring

Measuring point	Correct value	Condition	Test method
1 – 2	Resistance values according to table		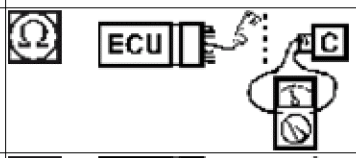
2 – ⏚	≈ 5 V		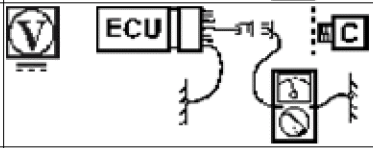
1 – ⏚	≈ 0 Ω		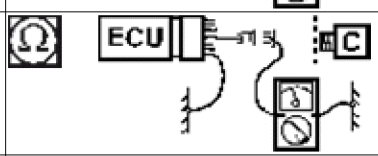
BB50 – ⏚	≈ ∞ Ω		

			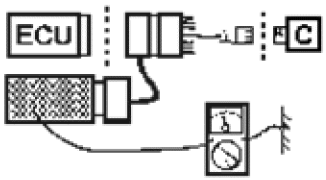

Verifying

Measuring point	Correct value	Condition	Test method
BB26 – BB48	Resistance values according to table		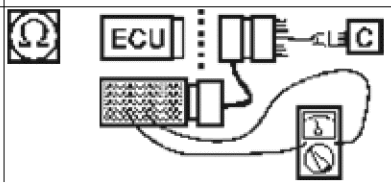

SE8706 resistance values

Air temp. (° C)	Air temp. (° F)	Resistance		Air temp. (° C)	Air temp. (° F)	Resistance
-30	-22	44.3 kΩ		+20	+68	3.1 kΩ
-20	-4	24.2 kΩ		+30	+86	2.0 kΩ
-10	+14	13.8 kΩ		+40	+104	1.3 kΩ
0	+32	8.1 kΩ		+50	+122	0.9 kΩ
+10	+50	5.0 kΩ		+60	+140	0.6 kΩ

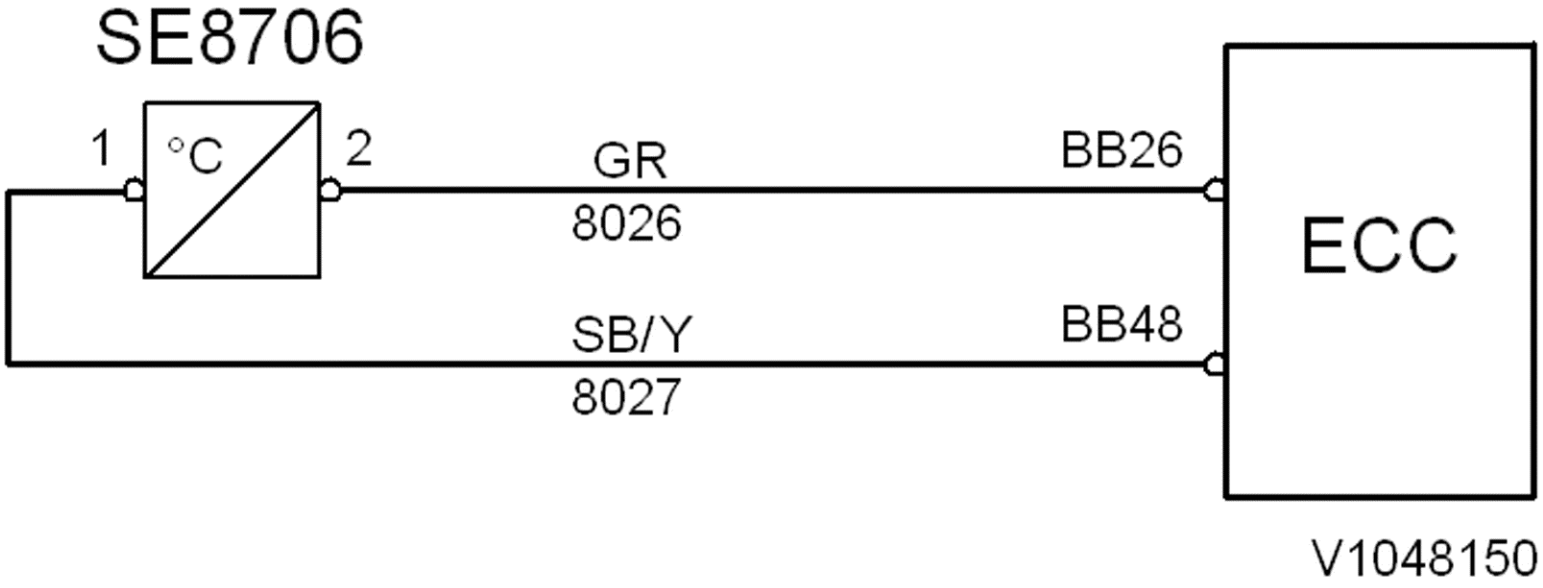

V1048150

VOLVO
Construction Equipment

Service Information

Document Title:	Function Group:	Information Type: **Service Information**	Date: **12/10/2011**
Profile: **WLO, L90F (Volvo) [GB]**			

SE8708, description and measuring

Op nbr 302-061

9812519 Multimeter
9998699 Adapter
9993893 Adapter
9990062 Cable
9990008 Measuring equipment

Description

Function	Measures temperature in the air channel.	
References	Komponentförteckning: Givare Elschema 805	
VCADS Pro Test	87376-3 Sensor values, ECC, check	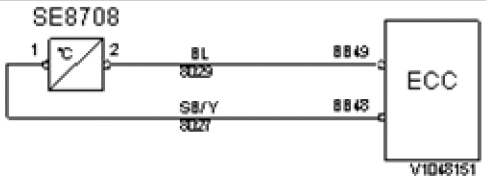 **Figure 1** BB49, signal BB48, ground

Measuring

Measuring point	Correct value	Condition	Test method
1 – 2	Resistance values according to table		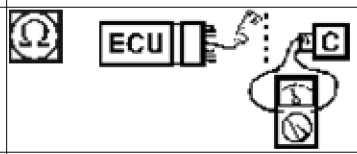
2 – ⏚	≈ 5 V		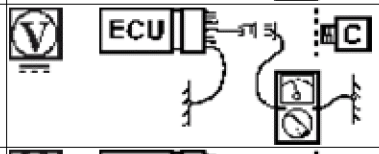
1 – ⏚	≈ 0 Ω		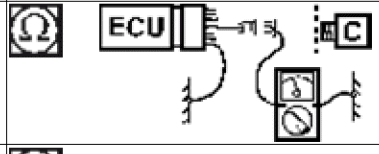
BB49 – ⏚	≈ ∞ Ω		

			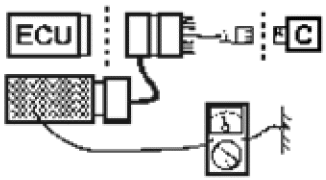

Verifying

Measuring point	Correct value	Condition	Test method
BB49 – BB48	Resistance values according to table		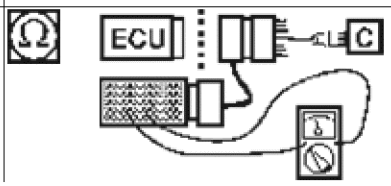

SE8708 resistance values

Air temp. (° C)	Air temp. (° F)	Resistance		Air temp. (° C)	Air temp. (° F)	Resistance
-40	-40	83.1 kΩ		+30	+86	2.0 kΩ
-30	-22	43.4 kΩ		+40	+104	1.3 kΩ
-20	-4	23.7 kΩ		+50	+122	0.9 kΩ
-10	+14	13.5 kΩ		+60	+140	0.6 kΩ
0	+32	8.0 kΩ		+70	+158	430 Ω
+10	+50	4.9 kΩ		+80	+176	310 Ω
+20	+68	3.1 kΩ		+90	+194	230 Ω

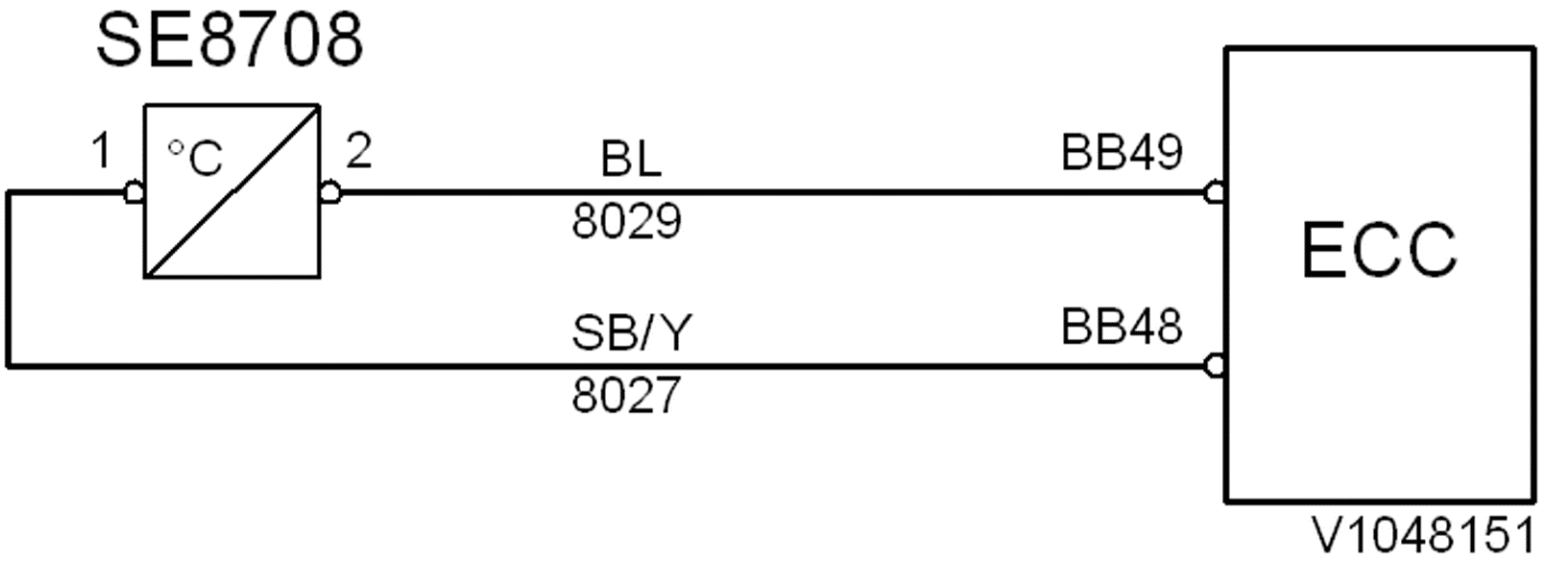
SE8708
1
°C
2
BL
8029
BB49
ECC
SB/Y
8027
BB48
V1048151

VOLVO
Construction Equipment

Service Information

Document Title:	Function Group:	Information Type: **Service Information**	Date: **12/10/2011**
Profile: **WLO, L90F (Volvo) [GB]**			

SE8709, description and measuring

Op nbr 302-007

9812519 Multimeter
9998699 Adapter
9993893 Adapter
9990062 Cable
9990191 Adapter
9812512 Refrigerant unit

Description

Function	Measures pressure of the refrigerant in the air conditioning (AC).	
References	Komponentförteckning: Givare Elschema 805	
VCADS Pro Test	87376-3 Sensor values, ECC, check	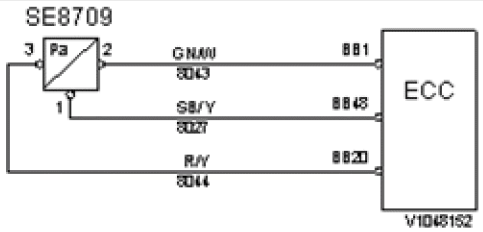 **Figure 1** BB1, signal BB48, ground BB20, feed 5 V

Measuring

Measuring point	Correct value	Condition	Test method
2 – 1	Voltage values according to table[T1] ⓘ		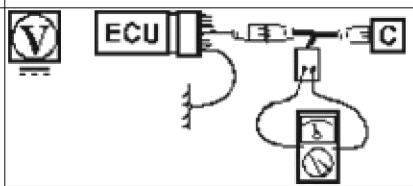
3 – ⏚	≈ 5 V		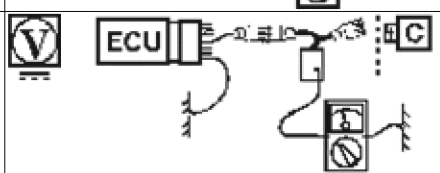
1 – ⏚	≈ 0 Ω		

			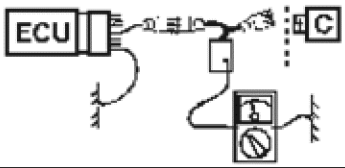
BB1 – 2	≈ 0 Ω		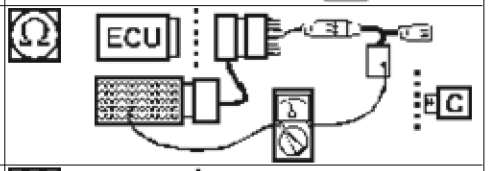
BB1 – 	≈ ∞ Ω		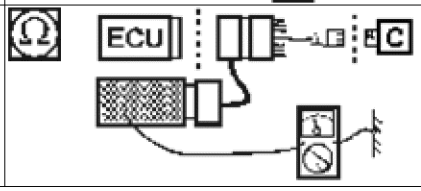

[T1] Use the refrigerant unit for reference measurement of the pressure.

Verifying

Measuring point	Correct value	Condition	Test method
BB1 – BB48	Voltage values according to table [T1] ⓘ		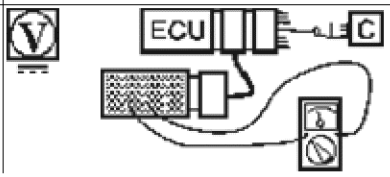

[T1] Use the refrigerant unit for reference measurement of the pressure.

SE8709 voltage values

Pressure (kPa)	Pressure (psi)	Voltage		Pressure (kPa)	Pressure (psi)	Voltage
0	0	0.1 V		2000	290,1	3.0 V
500	72,5	0.8 V		2500	362,6	3.7 V
1000	145,0	1.6 V		3000	435,1	4.5 V
1500	217,6	2.3 V				

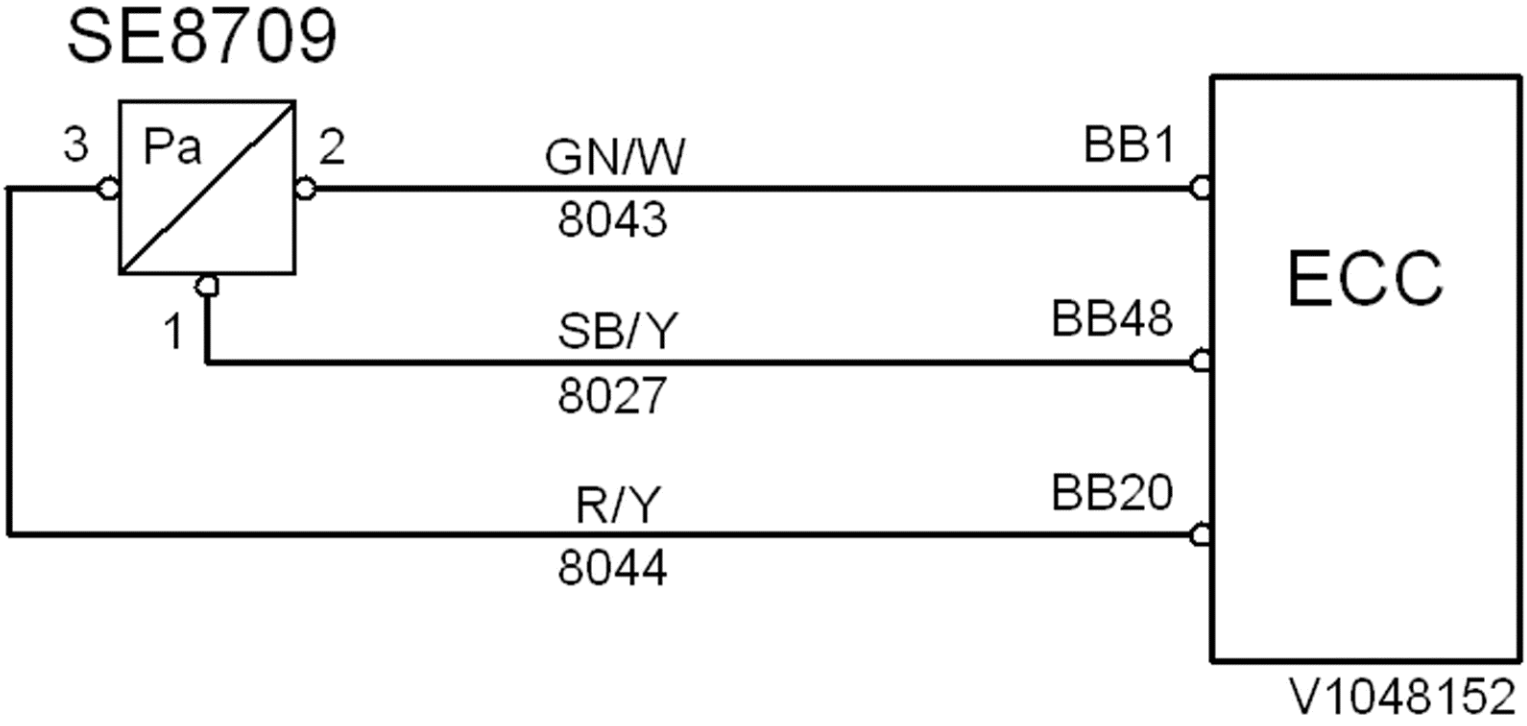
SE8709
3
Pa
2
1
GN/W
8043
SB/Y
8027
R/Y
8044
BB1
BB48
BB20
ECC
V1048152

VOLVO
Construction Equipment

Service Information

Document Title:	Function Group:	Information Type: **Service Information**	Date: **12/10/2011**
Profile: **WLO, L90F (Volvo) [GB]**			

SE9101/SE9102, description and measuring

Op nbr 302-062

9812519 Multimeter
9998699 Adapter
9993893 Adapter
9990062 Cable
9998534 Adapter

Description

Function	Monitors level and oil temperature in the hydraulic oil tank.	
References	Komponentförteckning: Givare Elschema 903	
VCADS Pro Test	—	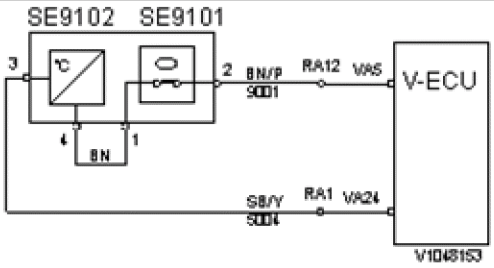 **Figure 1** VA5, signal VA24, ground

Measuring

Measuring point	Correct value	Condition	Test method
1 – 2	≈ 0 Ω[T1] ⓘ		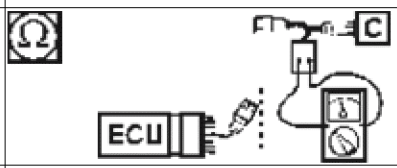
3 – 4	Resistance values according to table		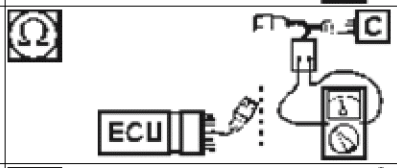
2 – 	≈ 5 V		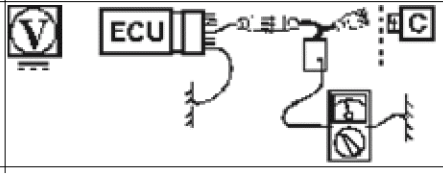

3 – ⏚	≈ 0 Ω		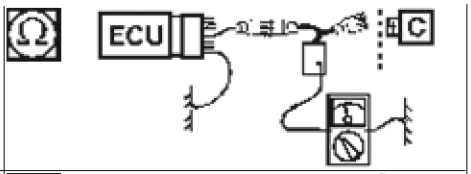
1 – 4	≈ 0 Ω		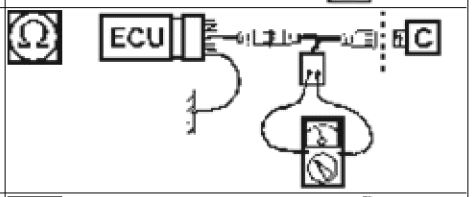
1 – ⏚ 2 – ⏚	≈ ∞ Ω		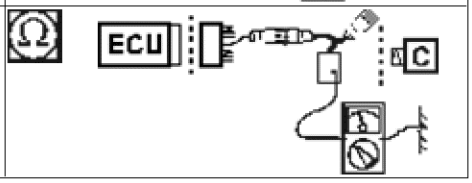

[T1] At normal hydraulic oil level.

Verifying

Measuring point	Correct value	Condition	Test method
VA5 – VA24	Voltage values according to table		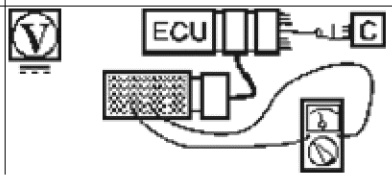

SE9101/SE9102 resistance and voltage values

Temp. (°C)	Temp. (°F)	Resistance	Voltage (V)
-40	-40	3.8 kΩ	4.64
-20	-4	3.4 kΩ	4.60
0	32	2.6 kΩ	4.48
20	68	1.7 kΩ	4.22
40	104	0.9 kΩ	3.74
60	140	490 Ω	3.04
80	176	260 Ω	2.27
100	212	150 Ω	1.60
120	248	86 Ω	1.08
140	284	52 Ω	0.73

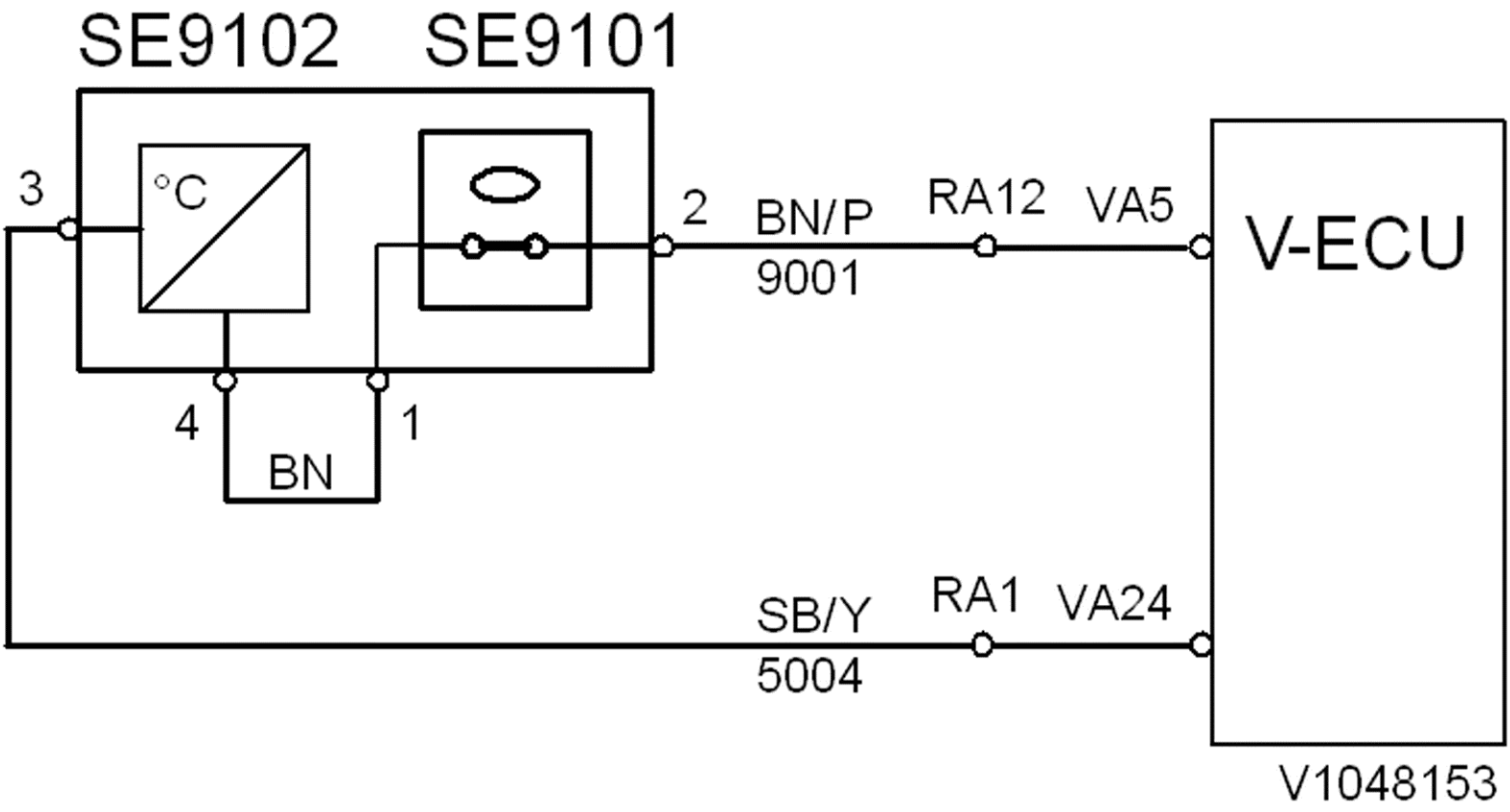
SE9102
SE9101
°C
3
4
BN
1
2
BN/P
9001
RA12
VA5
V-ECU
SB/Y
5004
RA1
VA24
V1048153

VOLVO
Construction Equipment

Service Information

Document Title:	Function Group:	Information Type: **Service Information**	Date: **12/10/2011**
Profile: **WLO, L90F (Volvo) [GB]**			

SE9107, description and measuring

Op nbr 302-063

9812519 Multimeter
9998699 Adapter
9993893 Adapter
9990062 Cable
9998534 Adapter

Description

Function	Measures LS pressure to the electrically controlled hydraulic pump.	
References	Komponentförteckning: Givare Elschema 908	
VCADS Pro Test	—	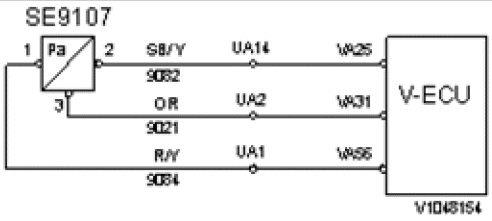 **Figure 1** VA25, ground VA31, signal VA56, feed 5 V

Measuring

Measuring point	Correct value	Condition	Test method
3 – 2	≈ 0.5 V		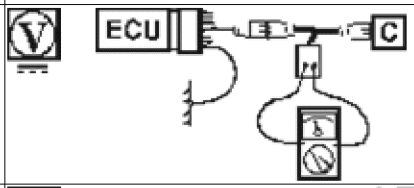
1 – 	≈ 5 V		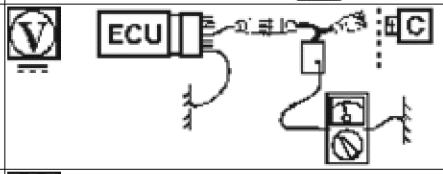
2 – 	≈ 0 Ω		

			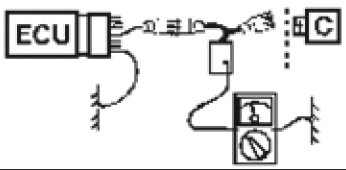
1 –  3 – 	≈ ∞ Ω		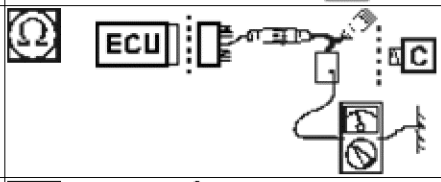
VA31 – 3	≈ 0 Ω		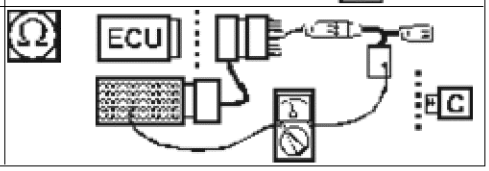

Verifying

Measuring point	Correct value	Condition	Test method
VA31 – VA25	≈ 0.5 V		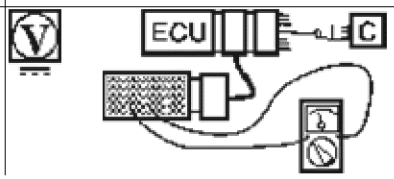

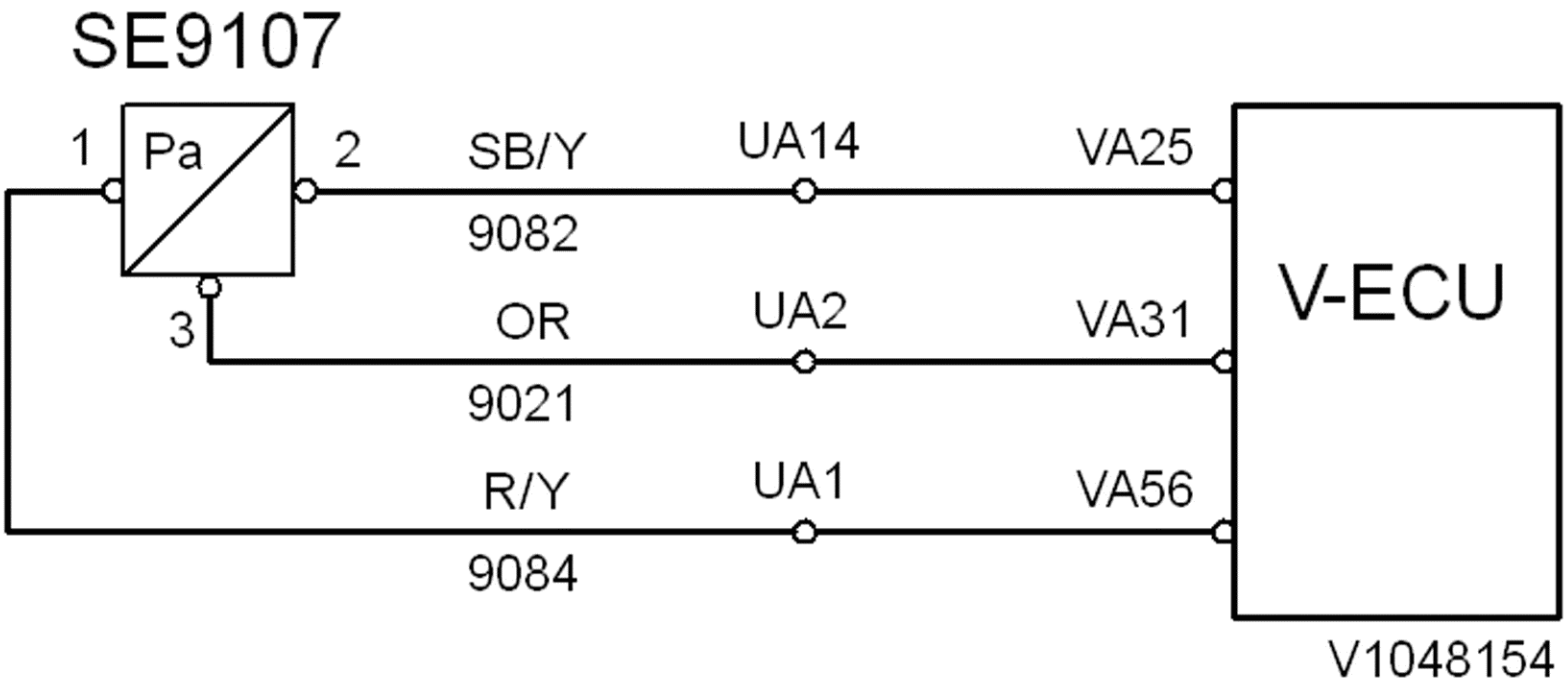
SE9107
1
Pa
2
3
SB/Y
9082
OR
9021
R/Y
9084
UA14
UA2
UA1
VA25
VA31
VA56
V-ECU
V1048154

More than one document matches the current profile:

SE4608, description and measuring
Product Line: WLO
Model Variant: L90F
Site: Arvika
Serial Number Start: 25001
Serial Number End: 26953

SE4608, description and measuring
Product Line: WLO
Model Variant: L90F
Site: Arvika
Serial Number Start: 26954
Serial Number End: 49999

VOLVO
Construction Equipment

Service Information

Document Title:	Function Group:	Information Type: **Service Information**	Date: **12/10/2011**
Profile: **WLO, L90F (Volvo) [GB]**			

SE4608, description and measuring

Op nbr 302-124

9812519 Multimeter
9998699 Adapter
9993893 Adapter
9993894 Template
9990062 Cable
9990008 Measuring equipment

Description

Function	Indicates engagement of differential lock.	
References	Komponentförteckning: Givare Elschema 403	
VCADS Pro Test	—	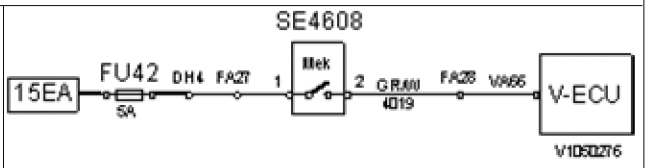 **Figure 1** VA66, signal

Measuring

Measuring point	Correct value	Condition	Test method
1 –	≈ U_{bat}		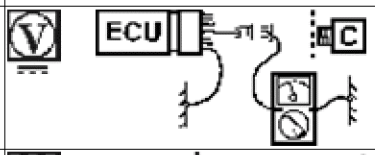
VA66 – 2	≈ 0 Ω		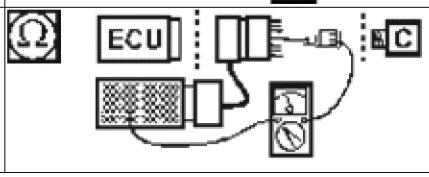

Verifying

Measuring point	Correct value	Condition	Test method
VA64 –	≈ 0 V[T1] ⓘ		

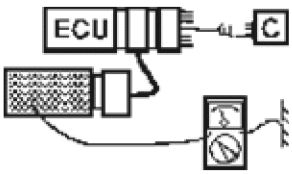

[T1] Voltage level switches from 0 V to Ubat when differential lock is engaged.

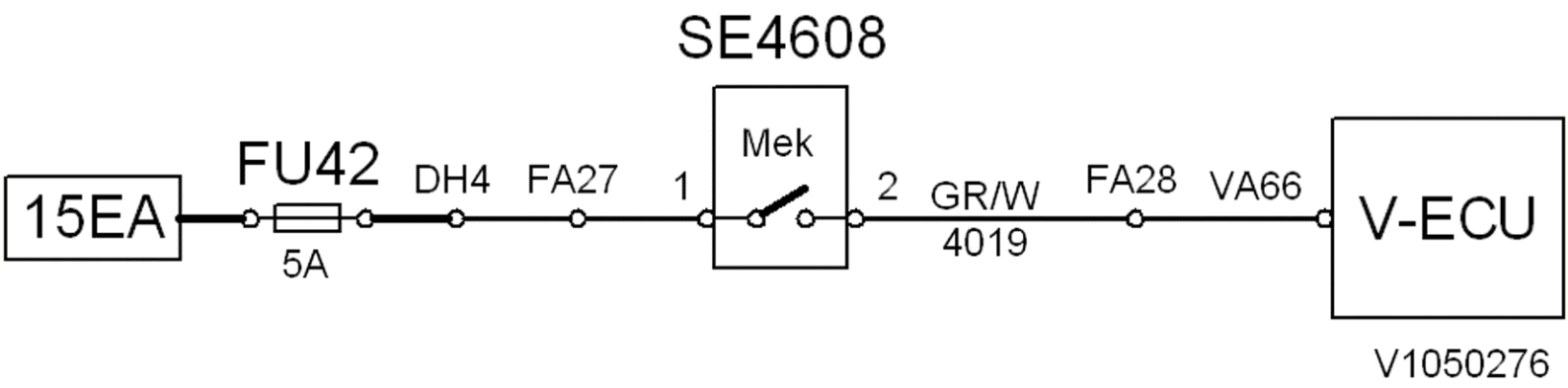
SE4608
15EA
FU42
5A
DH4
FA27
1
Mek
2
GR/W
4019
FA28
VA66
V-ECU
V1050276

VOLVO
Construction Equipment

Service Information

Document Title:	Function Group:	Information Type: **Service Information**	Date: **12/10/2011**
Profile: **WLO, L90F (Volvo) [GB]**			

SE4608, description and measuring

Op nbr 302-124

88890074 Multimeter
9998699 Adapter
9993893 Adapter
9993894 Template
9990062 Cable
9990008 Measuring equipment

Description

Function	Indicates engagement of differential lock.	
References	Component list: Sensors Wiring diagram 403	
VCADS Pro Test	—	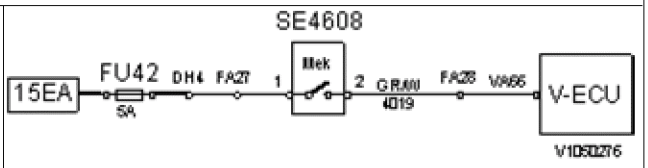 **Figure 1** VA66, signal

Measuring

Measuring point	Correct value	Condition	Test method
1 –	≈ U_{bat}		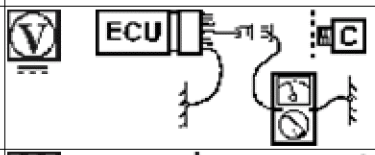
VA66 – 2	≈ 0 Ω		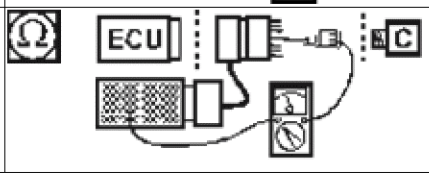

Verifying

Measuring point	Correct value	Condition	Test method
VA64 –	≈ 0 V[T1] ⓘ		

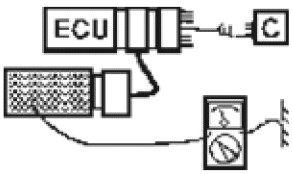

[T1] Voltage level switches from 0 V to Ubat when differential lock is engaged.

Functional check

After finished troubleshooting, perform the following checks;
Differential lock, function check

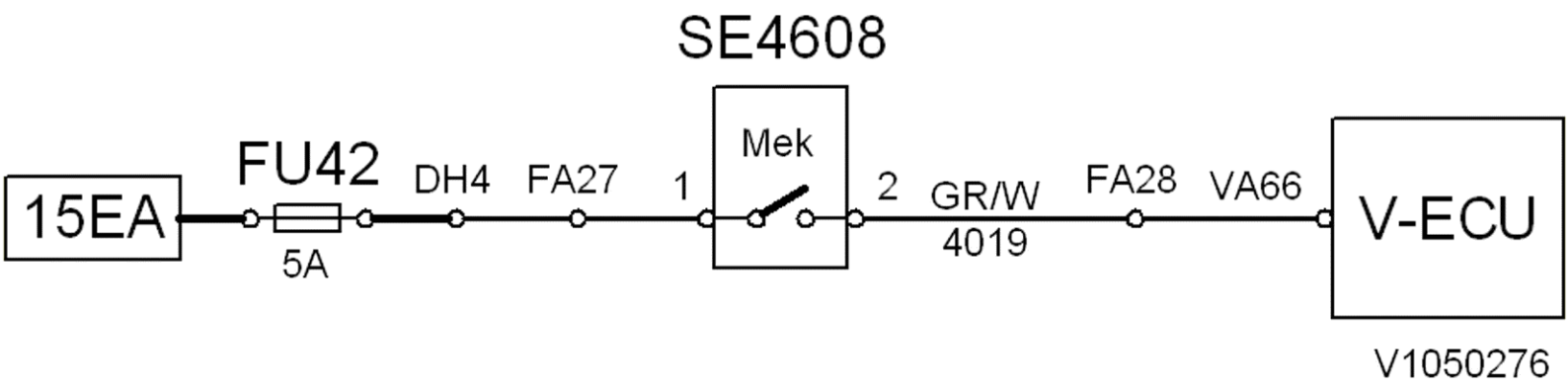
SE4608
15EA
FU42
5A
DH4
FA27
1
Mek
2
GR/W
4019
FA28
VA66
V-ECU
V1050276

More than one document matches the current profile:

SW4205/SW4206, description and measuring
Product Line: WLO
Model Variant: L90F
Site: Arvika
Serial Number Start: 25001
Serial Number End: 26953

SW4205/SW4206, description and measuring
Product Line: WLO
Model Variant: L90F
Site: Arvika
Serial Number Start: 26954
Serial Number End: 49999

VOLVO
Construction Equipment

Service Information

Document Title:	Function Group:	Information Type: **Service Information**	Date: **12/10/2011**
Profile: **WLO, L90F (Volvo) [GB]**			

SW4205/SW4206, description and measuring

Op nbr 302-065

9812519 Multimeter
9998699 Adapter
88830027 Adapter
9990062 Cable

Description

Function	Gear selector steering column. SW4205 determines directional gear and SW4206 determines speed gear.
References	Komponentförteckning: Strömställare Elschema 408
VCADS Pro Test	40012-3 Gear selector position sensor, test

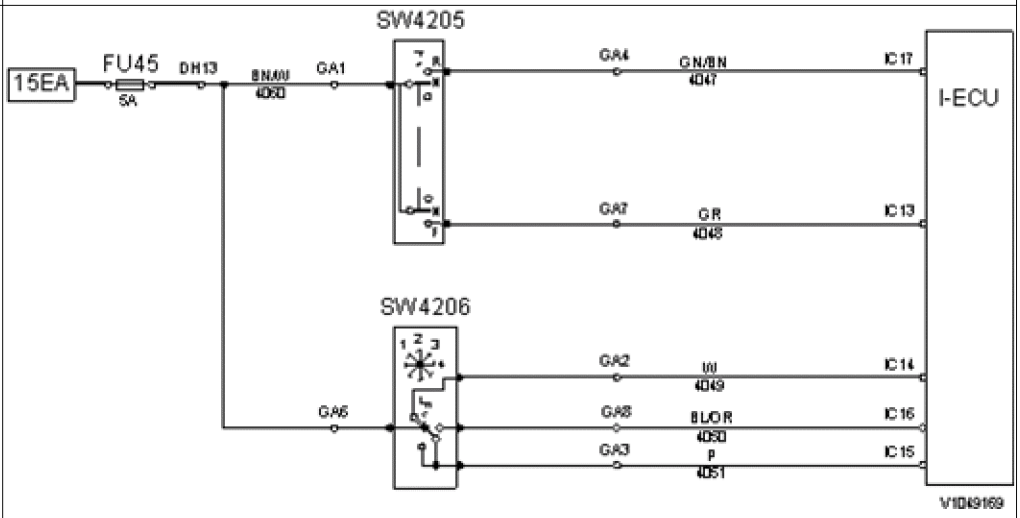

Figure 1

IC17, signal forward
IC13, signal reverse
IC14, signal
IC16, signal
IC15, signal

Measuring

Measuring point	Correct value	Condition	Test method
IC13 – IC17 –	Voltage values according to table for SW4205		
	Voltage values		

IC14 – IC15 – IC16 –	according to table for SW4206	1	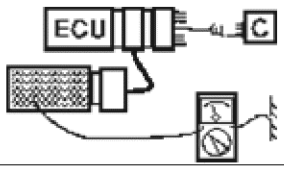

Verifying

Measuring point	Correct value	Condition	Test method
IC13 – IC17 –	Voltage values according to table for SW4205	1	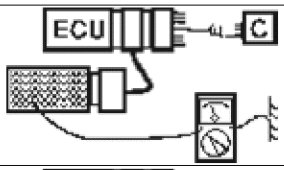
IC14 – IC15 – IC16 –	Voltage values according to table for SW4206	1	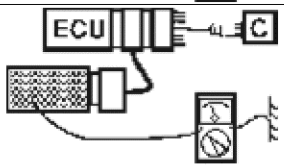

SW4205 voltage values

Directional gear	IC13	IC17
F	≈ U_{bat}	≈ 0 V
N	≈ 0 V	≈ 0 V
R	≈ 0 V	≈ U_{bat}

SW4206 voltage values

Gear	IC14	IC15	IC16
1	≈ U_{bat}	≈ U_{bat}	≈ 0 V
2	≈ 0 V	≈ U_{bat}	≈ 0 V
3	≈ 0 V	≈ 0 V	≈ 0 V
4	≈ 0 V	≈ 0 V	≈ U_{bat}

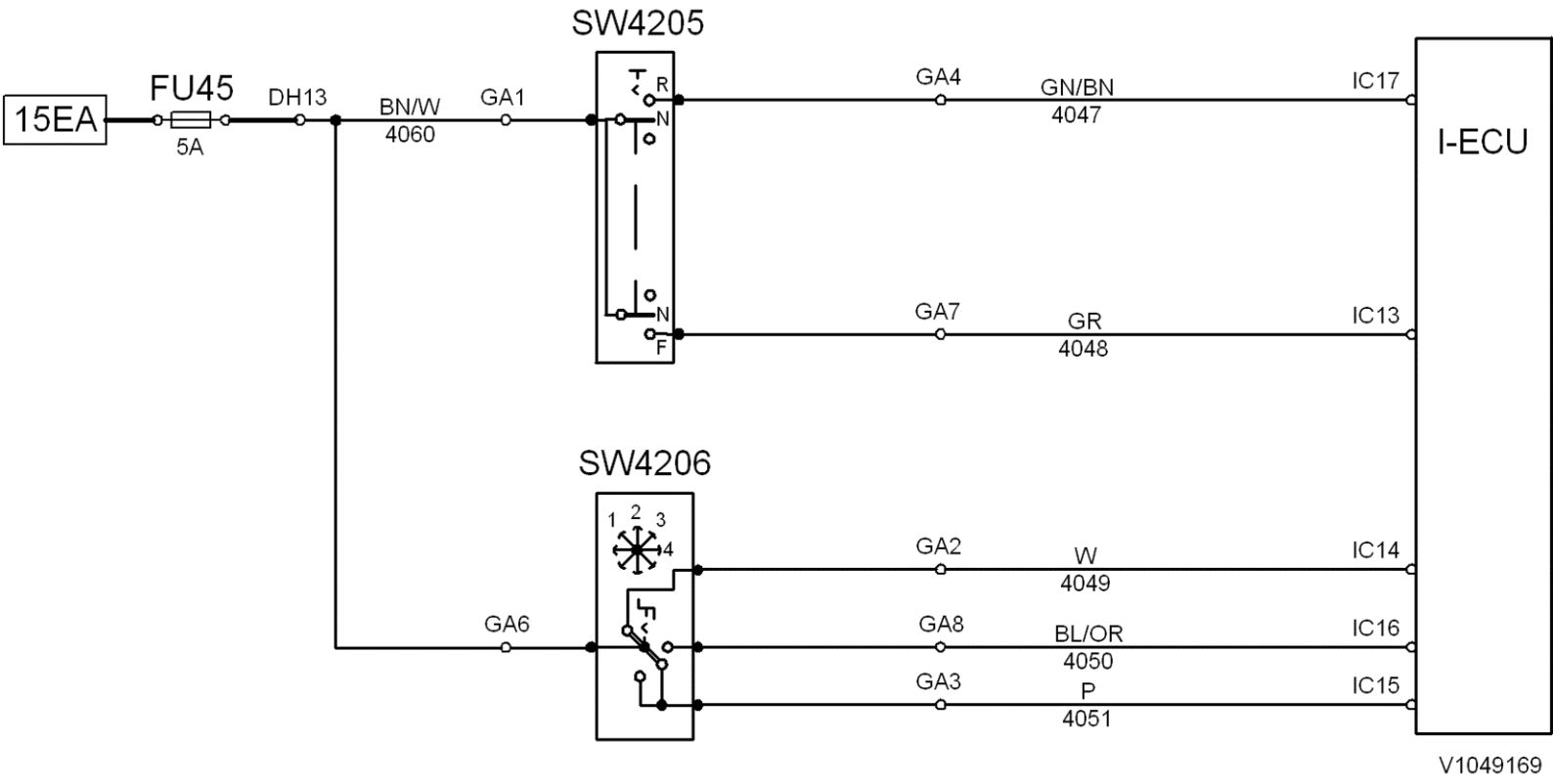
SW4205
15EA
FU45
5A
DH13
BN/W
4060
GA1
R
N
N
F
GA4
GN/BN
4047
IC17
GA7
GR
4048
IC13
I-ECU
SW4206
1
2
3
4
GA6
GA2
W
4049
IC14
GA8
BL/OR
4050
IC16
GA3
P
4051
IC15
V1049169

VOLVO
Construction Equipment

Service Information

Document Title:	Function Group:	Information Type: **Service Information**	Date: **12/10/2011**
Profile: **WLO, L90F (Volvo) [GB]**			

SW4205/SW4206, description and measuring

Op nbr 302-065

88890074 Multimeter
9998699 Adapter
88830027 Adapter
9990062 Cable

Description

Function	Gear selector steering column. SW4205 determines directional gear and SW4206 determines speed gear.
References	Component list: Switches Wiring diagram 408
VCADS Pro Test	40012-3 Gear selector position sensor, test

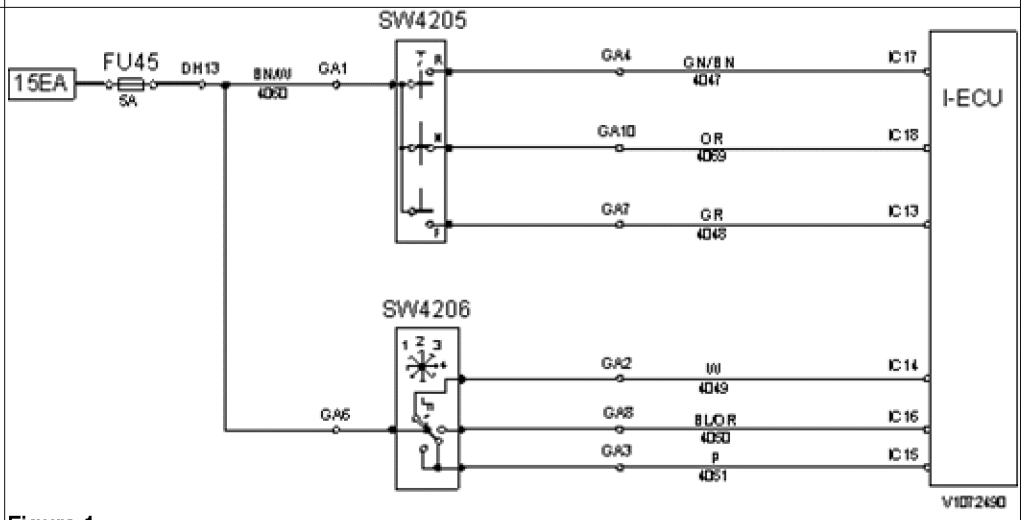

Figure 1

IC17, signal forward
IC18, neutral
IC13, signal reverse
IC14, signal
IC16, signal
IC15, signal

Measuring

Measuring point	Correct value	Condition	Test method
IC13 – IC17 – IC18 –	Voltage values according to table for SW4205	1	V ECU C

IC14 – IC15 – IC16 –	Voltage values according to table for SW4206	1	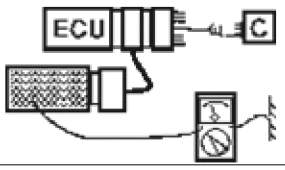

Verifying

Measuring point	Correct value	Condition	Test method
IC13 – IC17 –	Voltage values according to table for SW4205	1	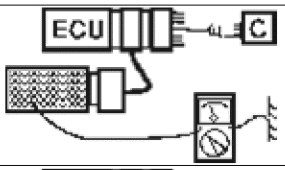
IC14 – IC15 – IC16 –	Voltage values according to table for SW4206	1	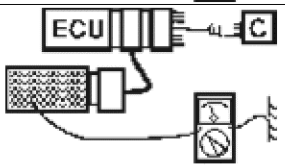

SW4205 voltage values

Directionalgear	IC13	IC17	IC18
F	≈ U_{bat}	≈ 0 V	≈ 0 V
N	≈ 0 V	≈ 0 V	≈ U_{bat}
R	≈ 0 V	≈ U_{bat}	≈ 0 V

SW4206 voltage values

Gear	IC14	IC15	IC16
1	≈ U_{bat}	≈ U_{bat}	≈ 0 V
2	≈ 0 V	≈ U_{bat}	≈ 0 V
3	≈ 0 V	≈ 0 V	≈ 0 V
4	≈ 0 V	≈ 0 V	≈ U_{bat}

Functional check

After finished troubleshooting, perform the following checks;
Transmission, function check

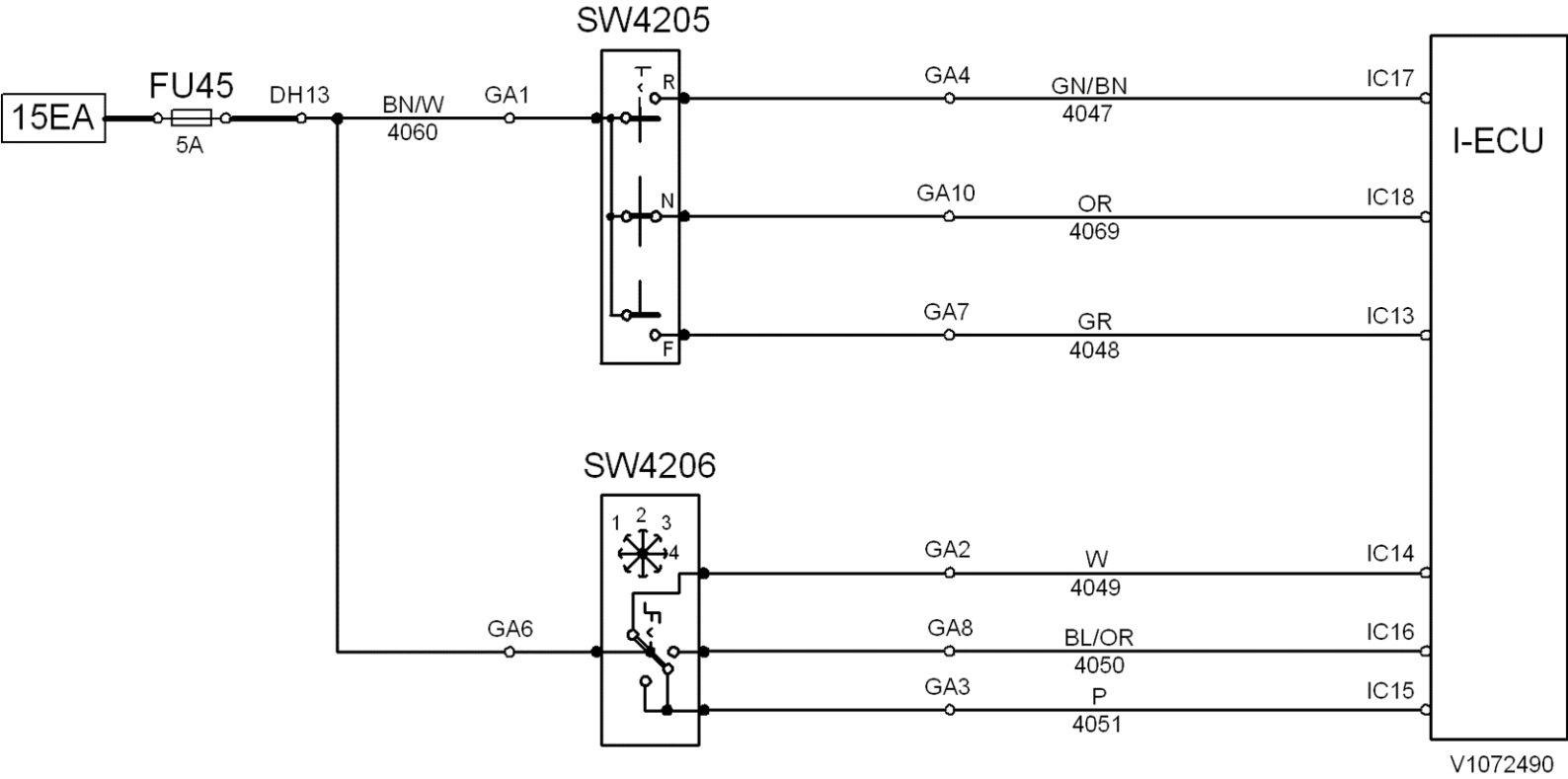
SW4205
15EA
FU45
5A
DH13
BN/W
4060
GA1
R
N
F
GA4
GN/BN
4047
IC17
GA10
OR
4069
IC18
GA7
GR
4048
IC13
I-ECU
SW4206
1
2
3
4
GA6
GA2
W
4049
IC14
GA8
BL/OR
4050
IC16
GA3
P
4051
IC15
V1072490

VOLVO
Construction Equipment

Service Information

Document Title:	Function Group:	Information Type: **Service Information**	Date: **12/10/2011**
Profile: **WLO, L90F (Volvo) [GB]**			

SW4208, description and measuring

Op nbr 302-066

9812519 Multimeter
9998699 Adapter
9993893 Adapter
9990062 Cable

Description

Function	Gear lever F/R lever carrier.
References	Komponentförteckning: Strömställare Elschema 408
VCADS Pro Test	40012-3 Gear selector position sensor, test
	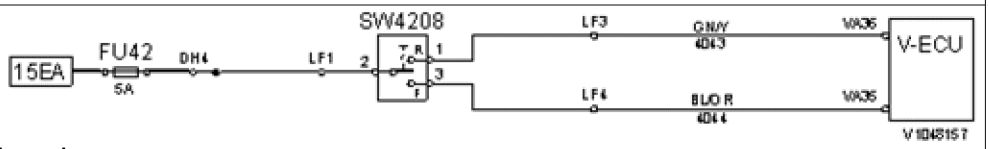 **Figure 1** VA36, signal reverse VA35, signal forward

Measuring

Measuring point	Correct value	Condition	Test method
VA36 – VA35 –	Voltage values according to table	1	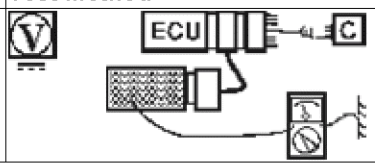

Verifying

Measuring point	Correct value	Condition	Test method
VA36 – VA35 –	Voltage values according to table	1	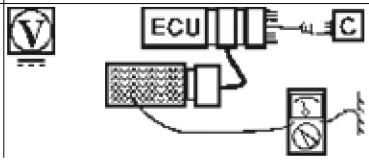

SW4208 voltage values

Directional gear	VA35	VA36
F	≈ U_{bat}	≈ 0 V
N	≈ 0 V	≈ 0 V
R	≈ 0 V	≈ U_{bat}

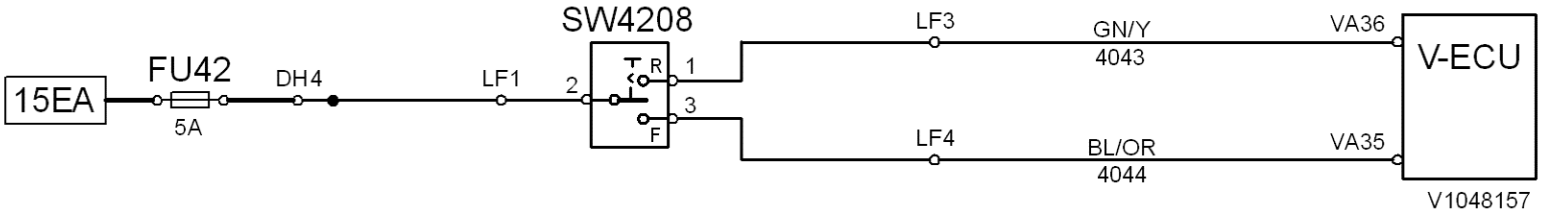
SW4208
15EA
FU42
5A
DH4
LF1
2
R
F
1
3
LF3
GN/Y
4043
LF4
BL/OR
4044
VA36
VA35
V-ECU
V1048157

VOLVO
Construction Equipment

Service Information

Document Title:	Function Group:	Information Type: **Service Information**	Date: **12/10/2011**
Profile: **WLO, L90F (Volvo) [GB]**			

SW4212, description and measuring

Op nbr 302-067

9812519 Multimeter
9998699 Adapter
88830027 Adapter
9990062 Cable

Description

Function	Mode selector APS.
References	Komponentförteckning: Strömställare Elschema 403
VCADS Pro Test	40012-3 Gear selector position sensor, test
	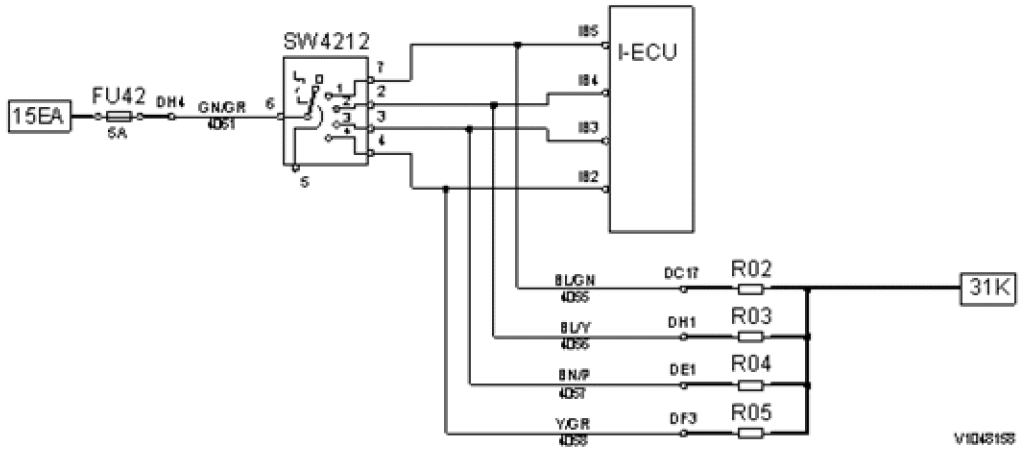 **Figure 1** IB5, signal APS1 IB4, signal APS2 IB3, signal APS3 IB2, signal APS4

Measuring

Measuring point	Correct value	Condition	Test method
IB5 – IB4 – IB3 – IB2 –	≈ 800 Ω[T1] ⓘ		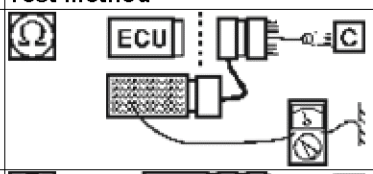
IB5 – IB4 – IB3 – IB2 –	Voltage values according to table		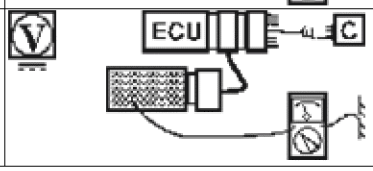

[T1] With mode selector in position L (light).

Verifying

Measuring point	Correct value	Condition	Test method
IB5 – IB4 – IB3 – IB2 –	Voltage values according to table	T1	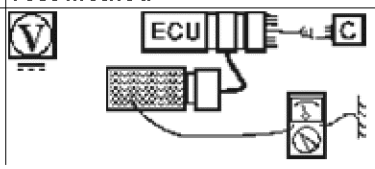

SW4212 voltage values

Selected program	IB5	IB4	IB3	IB2
Light	≈ 0 V	≈ 0 V	≈ 0 V	≈ 0 V
Medium	≈ U_{bat}	≈ 0 V	≈ 0 V	≈ 0 V
Heavy	≈ 0 V	≈ U_{bat}	≈ 0 V	≈ 0 V
Auto	≈ 0 V	≈ 0 V	≈ U_{bat}	≈ 0 V
Service	≈ 0 V	≈ 0 V	≈ 0 V	≈ U_{bat}

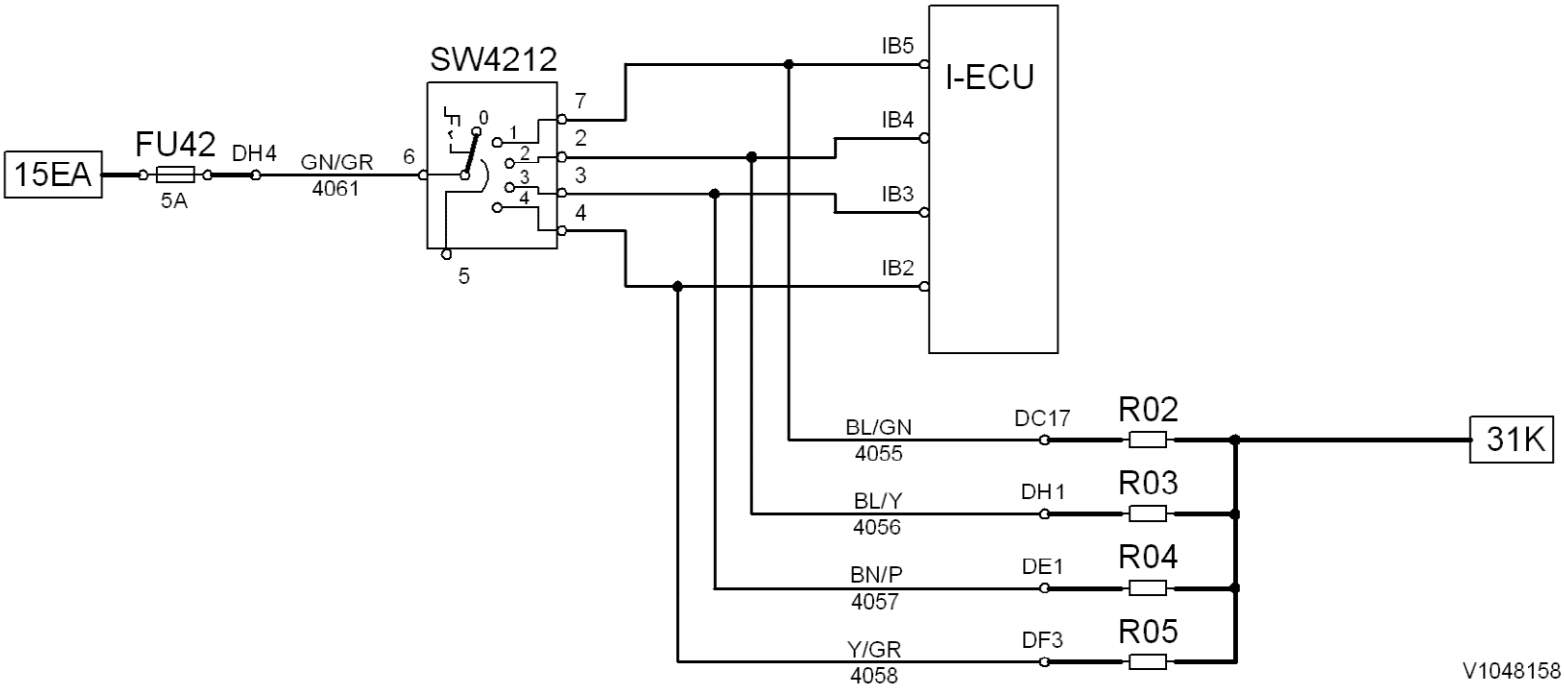
SW4212
15EA
FU42
5A
DH4
GN/GR
4061
6
0
1
2
3
4
5
7
2
3
4
IB5
IB4
IB3
IB2
I-ECU
BL/GN
4055
DC17
R02
BL/Y
4056
DH1
R03
BN/P
4057
DE1
R04
Y/GR
4058
DF3
R05
31K
V1048158

VOLVO
Construction Equipment

Service Information

Document Title:	Function Group:	Information Type: **Service Information**	Date: **12/10/2011**
Profile: **WLO, L90F (Volvo) [GB]**			

SW4217, description and measuring

Op nbr 302-068

88890074 Multimeter
9998699 Adapter
9993893 Adapter
9993894 Template
9990062 Cable

Description

Function	Gear selector F/R on CDC armrest.
References	Component list: Switches Wiring diagram 601
VCADS Pro Test	40012-3 Gear selector position sensor, test
	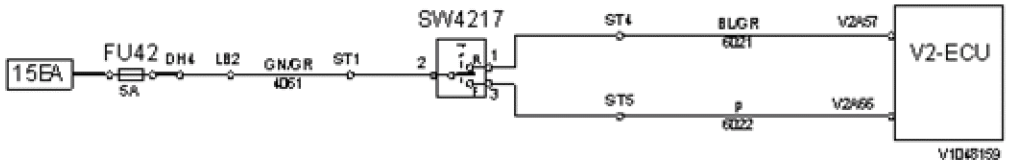 **Figure 1** V2A57, signal reverse V2A66, signal forward

Measuring

Measuring point	Correct value	Condition	Test method
V2A57 – V2A66 –	Voltage values according to table	1	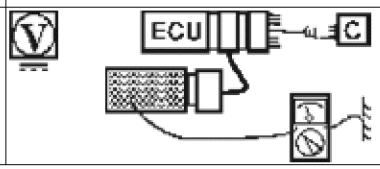

Verifying

Measuring point	Correct value	Condition	Test method
V2A57 – V2A66 –	Voltage values according to table	1	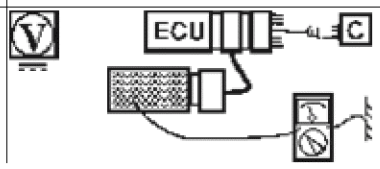

SW4217 voltage values

Directional gear	V2A57	V2A66
F	≈ 0 V	≈ U_{bat}
N	≈ 0 V	≈ 0 V
R	≈ U_{bat}	≈ 0 V

Functional check

After finished troubleshooting, perform the following checks;
Transmission, function check

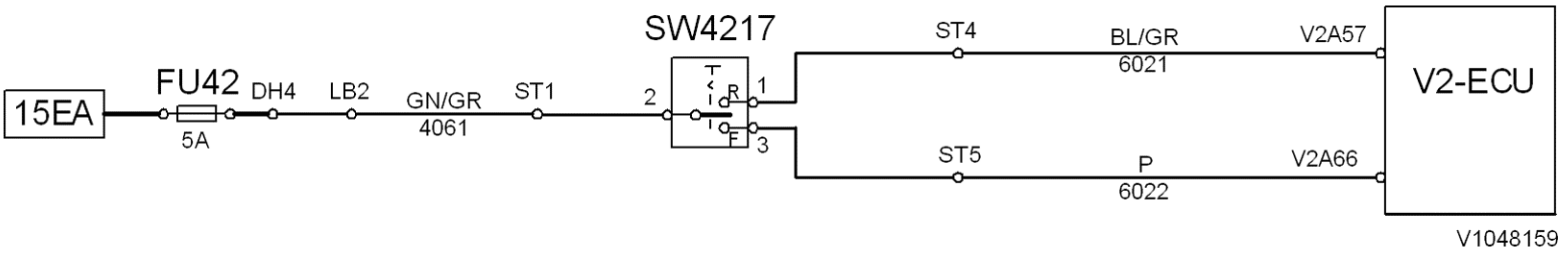
15EA
FU42
5A
DH4
LB2
GN/GR
4061
ST1
SW4217
2
R
F
1
3
ST4
BL/GR
6021
V2A57
ST5
P
6022
V2A66
V2-ECU
V1048159

VOLVO
Construction Equipment

Service Information

Document Title:	Function Group:	Information Type: **Service Information**	Date: **12/10/2011**
Profile: **WLO, L90F (Volvo) [GB]**			

SW8701, description and measuring

Op nbr 302-069

9812519 Multimeter
9998699 Adapter
9998699 Adapter
9993893 Adapter
9993894 Template
9990062 Cable
9990008 Measuring equipment

Description

Function	Control panel for climate control system. In case of communication problems between the climate control unit (ECC) and the control panel, the control panel is restarted repeatedly until communication is re-established.	
References	Komponentförteckning: Strömställare Elschema 805	
VCADS Pro Test	—	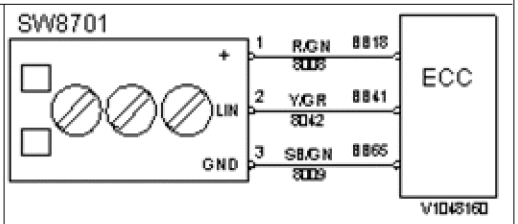 **Figure 1** BB18, feed BB41, communication cable BB65, return cable

Measuring

Measuring point	Correct value	Condition	Test method
BB18 – BB65	≈ 17 V[T1] ⓘ		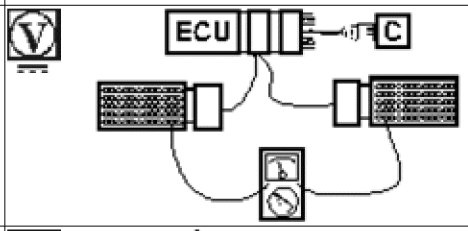
BB18 – 1 BB41 – 2 BB65 – 3	≈ 0 Ω		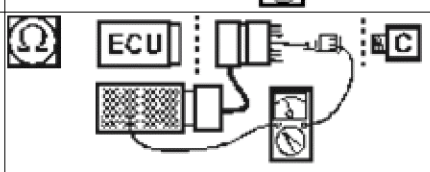

BB18 – BB41 – BB65 –	≈ ∞ Ω		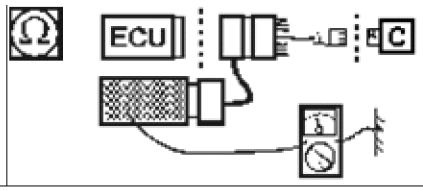

[T1] Shifts between 0 and 17 V when ECC is unable to communicate with the control panel.

Verifying

Measuring point	Correct value	Condition	Test method
BB18 – BB65	≈ 17 V		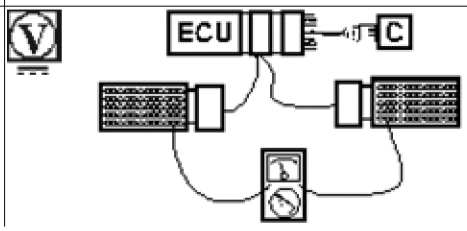

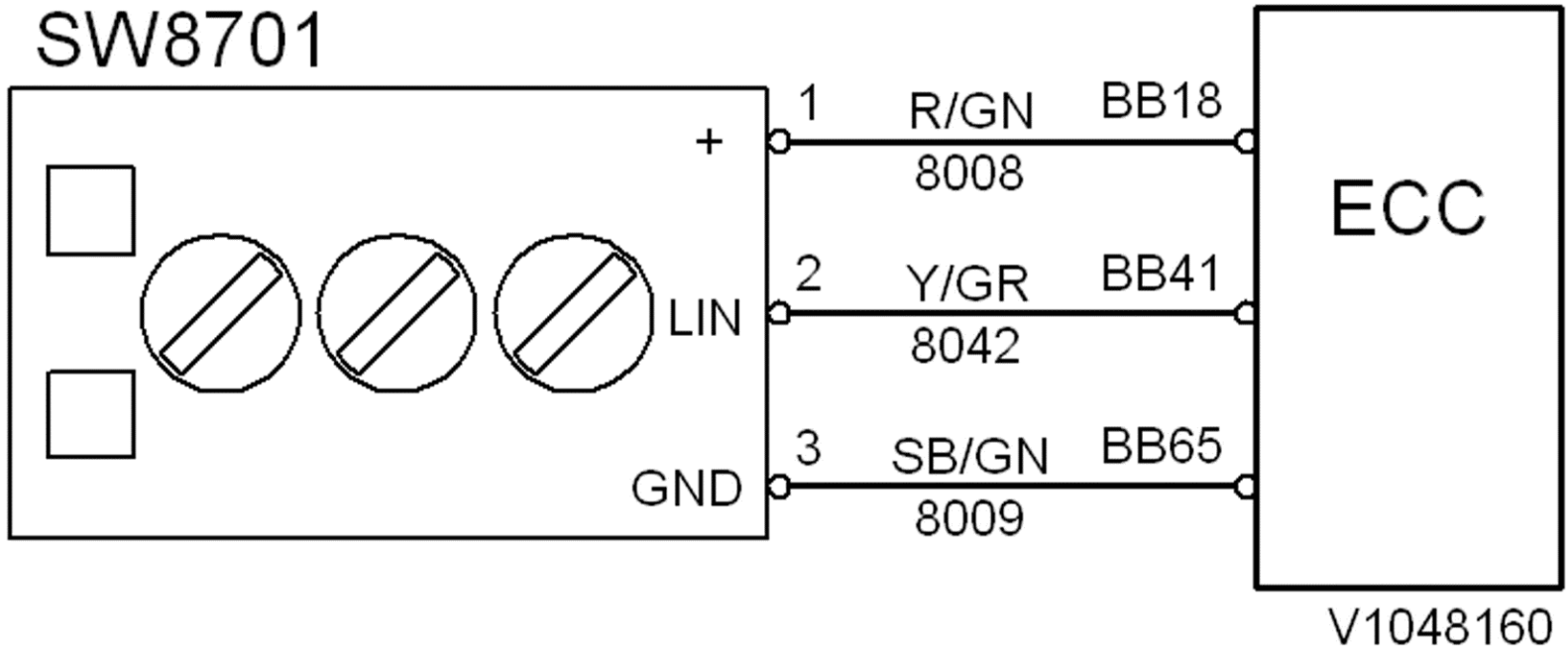
SW8701
+
LIN
GND
1
R/GN
8008
BB18
2
Y/GR
8042
BB41
3
SB/GN
8009
BB65
ECC
V1048160

VOLVO
Construction Equipment

Service Information

Document Title:	Function Group:	Information Type: **Service Information**	Date: **12/10/2011**
Profile: **WLO, L90F (Volvo) [GB]**			

SAE J1708/1587 Information link, description and measuring

Op nbr 302-006

88890074 Multimeter
9998699 Adapter
9998699 Adapter
9993893 Adapter
88830027 Adapter
9990014 Adapter
9990062 Cable
9990062 Cable

Description

Function	Information and diagnostic signals are sent on the information link.
References	Komponentförteckning: Generator, batterier, kondensatorer, elektronikenheter Elschema 310
VCADS Pro Test	—

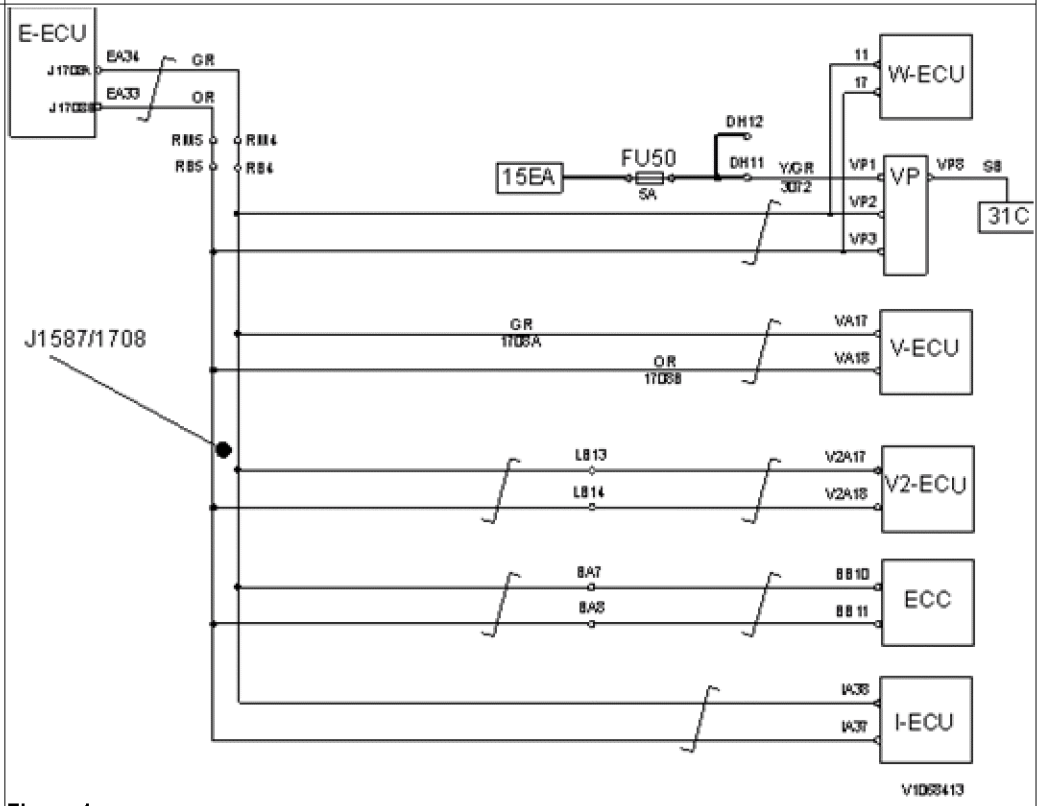

Figure 1

Measuring

Measuring point	Correct value	Condition	Test method
IA37 – IA38	≈ ∞ Ω[T1]		
IA37 – VA18 IA38 – VA17 (I-ECU – V-ECU)	≈ 0 Ω		
IA37 – V2A18 IA38 – V2A17 (I-ECU – V2-ECU)	≈ 0 Ω		
IA37 – BB11 IA38 – BB10 (I-ECU – ECC)	≈ 0 Ω		
IA37 – EA33 IA38 – EA34 (I-ECU – E-ECU)	≈ 0 Ω		
IA37 – IA38 –	≈ ∞ Ω(a)		

[T1] ECC, W-ECU, E-ECU, V-ECU, and V2–ECU are disconnected from the information link.

Verifying

Measuring point	Correct value	Condition	Test method
IA38 – IA37	0–5 V		
IA37 –	< 4 V		
IA38 –	> 1 V		

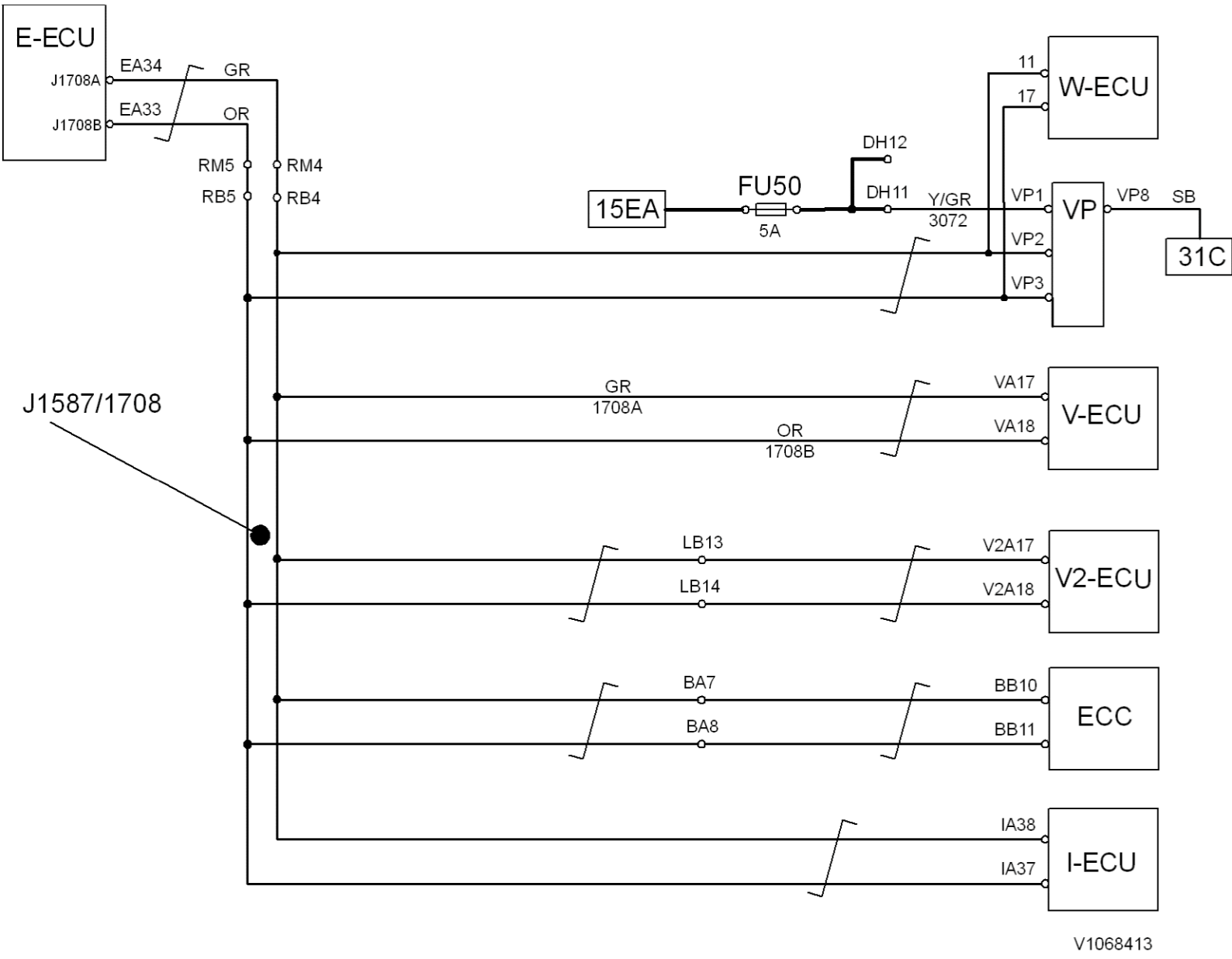
E-ECU
J1708A
J1708B
EA34
EA33
GR
OR
RM5
RB5
RM4
RB4
15EA
FU50
5A
DH12
DH11
Y/GR
3072
11
17
W-ECU
VP1
VP2
VP3
VP
VP8
SB
31C
J1587/1708
GR
1708A
OR
1708B
VA17
VA18
V-ECU
LB13
LB14
V2A17
V2A18
V2-ECU
BA7
BA8
BB10
BB11
ECC
IA38
IA37
I-ECU
V1068413

VOLVO
Construction Equipment

Service Information

Document Title:	Function Group:	Information Type: **Service Information**	Date: **12/10/2011**
Profile: **WLO, L90F (Volvo) [GB]**			

SAE J1939/CAN1 Control link, description and measuring

Op nbr 302-004

9812519 Multimeter
9998699 Adapter
9998699 Adapter
9993893 Adapter
88830027 Adapter
9990062 Cable
9990062 Cable

Description

Function	The system control signals are sent on the control link.
References	Komponentförteckning: Generator, batterier, kondensatorer, elektronikenheter Elschema 310
VCADS Pro Test	—

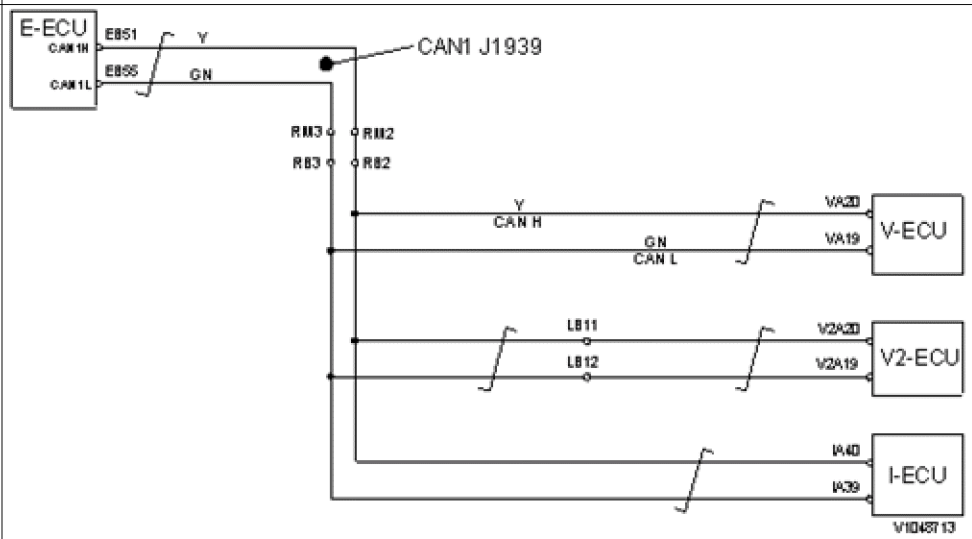

Figure 1

Measuring

Measuring point	Correct value	Condition	Test method
IA39 – IA40	≈ 60 Ω[T1] ⓘ		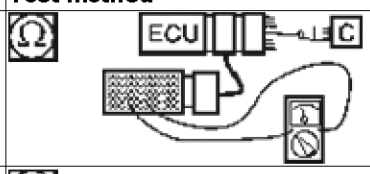
IA39 – IA40 (I-ECU – E-ECU)	≈ 120 Ω		

			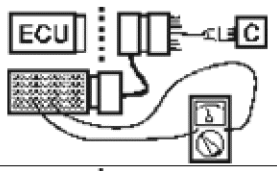
IA39 – VA19 IA40 – VA20 (I-ECU – V-ECU)	≈ 0 Ω		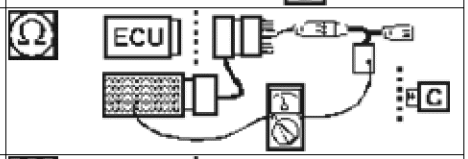
IA39 – V2A19 IA40 – V2A20 (I-ECU – V2-ECU)	≈ 0 Ω		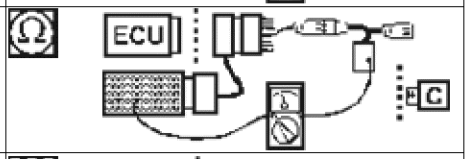
IA39 – IA40 –	≈ ∞ Ω[T2] ⓘ		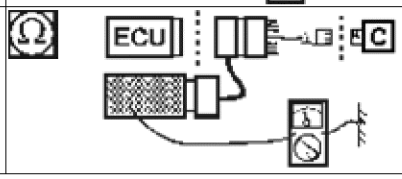

[T1] Terminating resistors (120 Ω) located internally in E-ECU and I-ECU.

[T2] E-ECU, V-ECU, and V2–ECU are disconnected from the control link.

Verifying

Measuring point	Correct value	Condition	Test method
IA40 – IA39	0–5 V		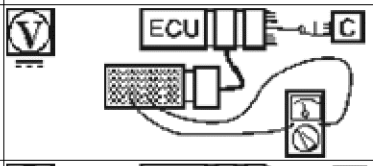
IA39 –	0–3 V		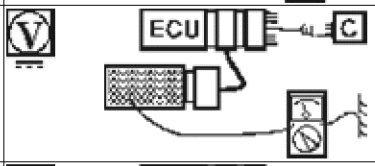
IA40 –	2–5 V		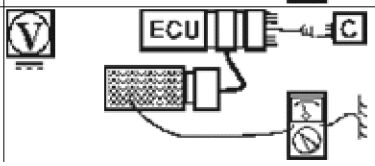

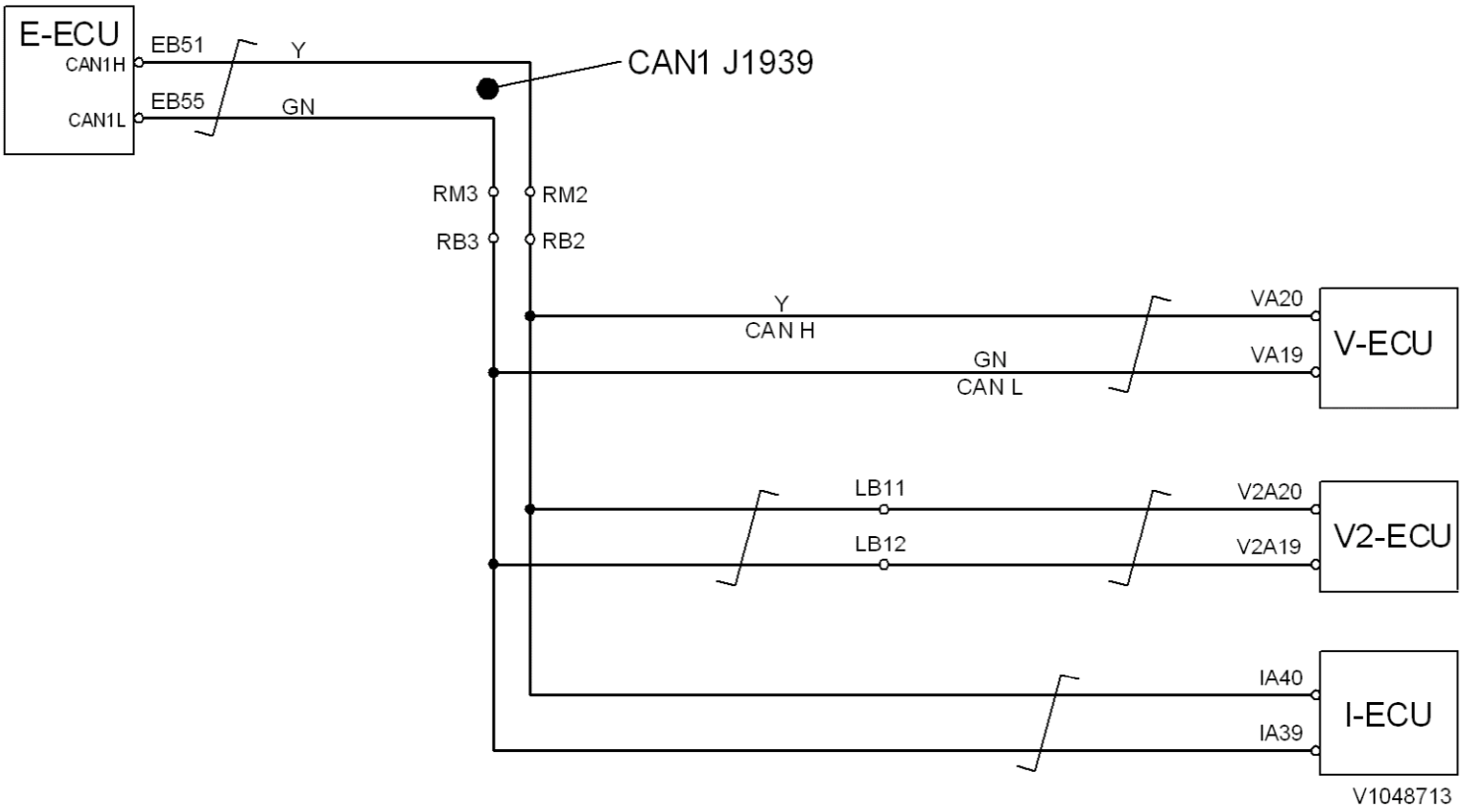
E-ECU
CAN1H
CAN1L
EB51
EB55
Y
GN
CAN1 J1939
RM3
RM2
RB3
RB2
Y
CAN H
GN
CAN L
VA20
VA19
V-ECU
LB11
LB12
V2A20
V2A19
V2-ECU
IA40
IA39
I-ECU
V1048713

VOLVO
Construction Equipment

Service Information

Document Title:	Function Group:	Information Type: **Service Information**	Date: **12/10/2011**
Profile: **WLO, L90F (Volvo) [GB]**			

SAE J1939/CAN2 Control link, description and measuring

Op nbr 302-005

9812519 Multimeter
9998699 Adapter
9998699 Adapter
9993893 Adapter
88830027 Adapter
9990062 Cable
9990062 Cable

Description

Function	CAN2 acts as a back-up for the CAN1-control link.
References	Komponentförteckning: Generator, batterier, kondensatorer, elektronikenheter Elschema 310
VCADS Pro Test	—
	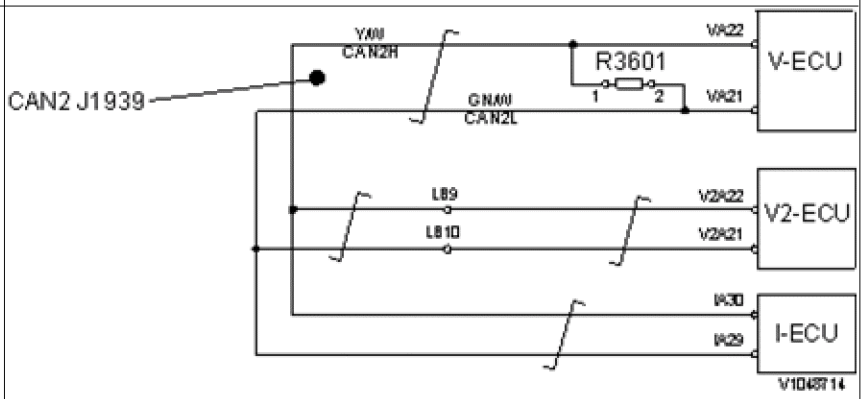 **Figure 1**

Measuring

Measuring point	Correct value	Condition	Test method
IA29 – IA30	≈ 60 Ω[T1] ⓘ		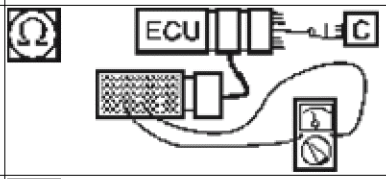
IA29 – VA21 IA30 – VA22 (I-ECU – V-ECU)	≈ 0 Ω		

			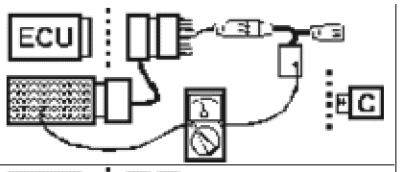
IA29 – V2A21 IA30 – V2A22 (I-ECU – V2-ECU)	≈ 0 Ω		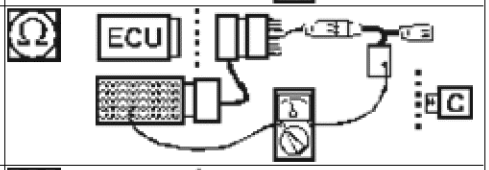
IA29 – IA30 –	≈ ∞ Ω[T2] ⓘ		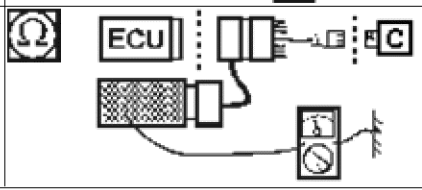

[T1] Terminating resistors (120 Ω) located internally in I-ECU and externally at V-ECU (R3601).

[T2] V–ECU and V2-ECU are disconnected from the control link.

Verifying

Measuring point	Correct value	Condition	Test method
IA30 – IA29	0–5 V		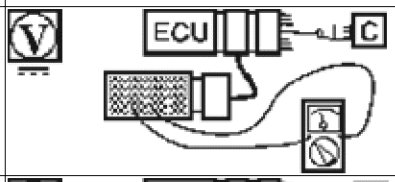
IA29 –	0–3 V		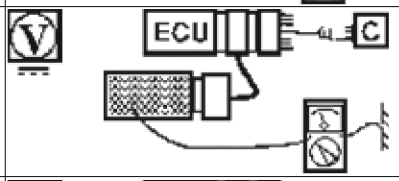
IA30 –	2–5 V		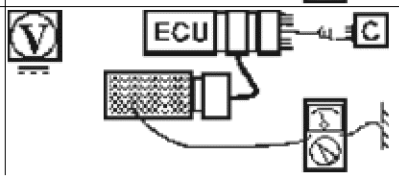

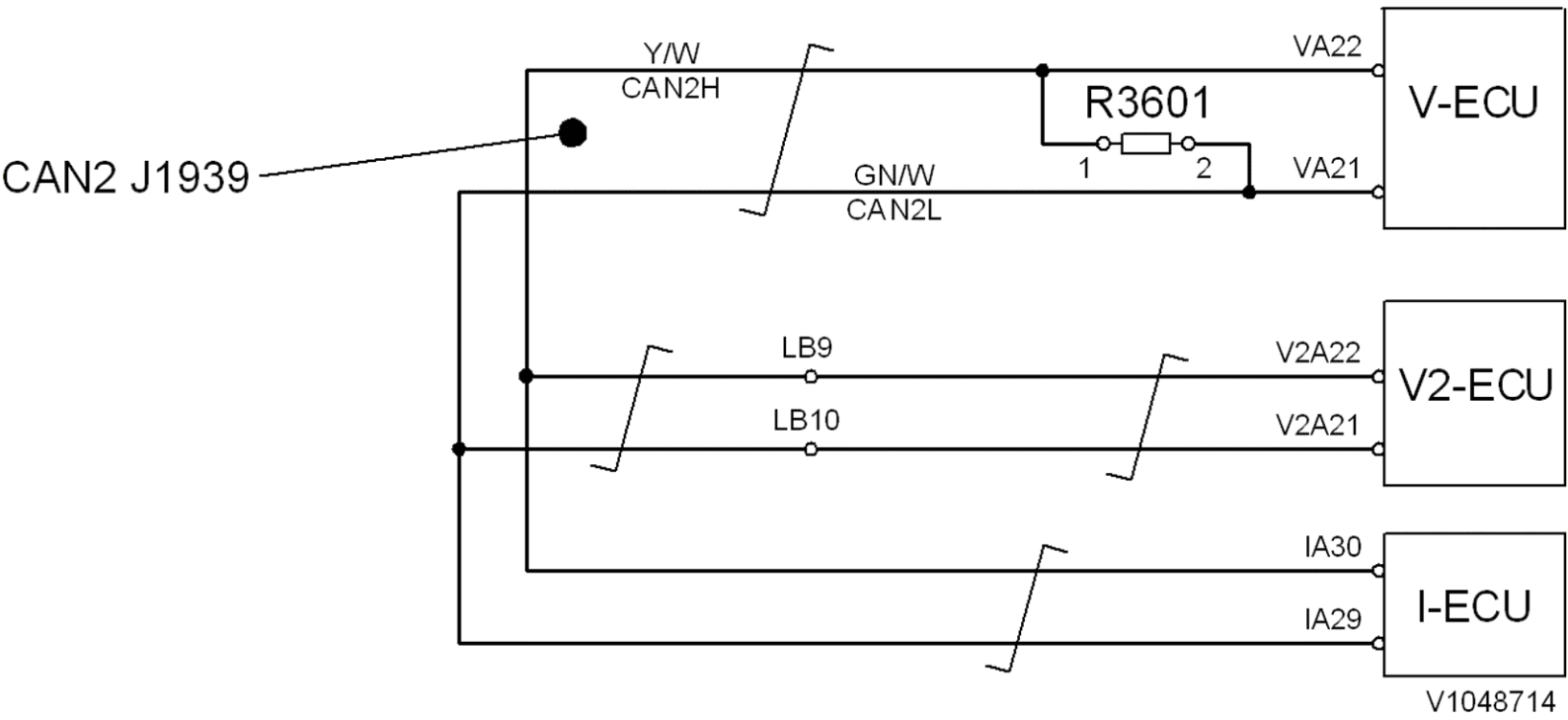
CAN2 J1939
Y/W
CAN2H
GN/W
CAN2L
R3601
1
2
VA22
VA21
V-ECU
LB9
LB10
V2A22
V2A21
V2-ECU
IA30
IA29
I-ECU
V1048714

VOLVO
Construction Equipment

Service Information

Document Title:	Function Group:	Information Type: **Service Information**	Date: **12/10/2011**
Profile: **WLO, L90F (Volvo) [GB]**			

Power supply ECC, description and measuring

Op nbr 302-113

9812519 Multimeter
9998699 Adapter
9993893 Adapter
9993894 Template
9990062 Cable

Description

Function	Voltage feed to climate control unit (ECC).
References	Komponentförteckning: Generator, batterier, kondensatorer, elektronikenheter Elschema 302 Elschema 806
VCADS Pro Test	—
	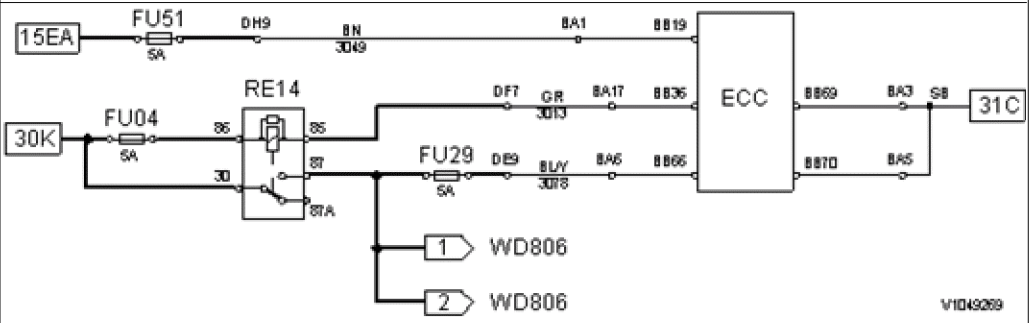 **Figure 1** BB19, feed BB66, feed BB69, ground BB70, ground

Measuring

Measuring point	Correct value	Condition	Test method
BB19 – BB66 –	≈ U_{bat}	1	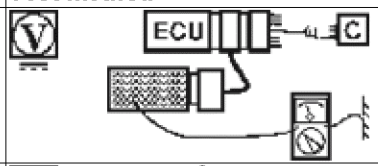
BB69 – BB70 –	≈ 0 Ω		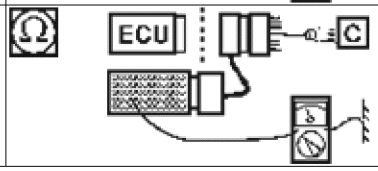

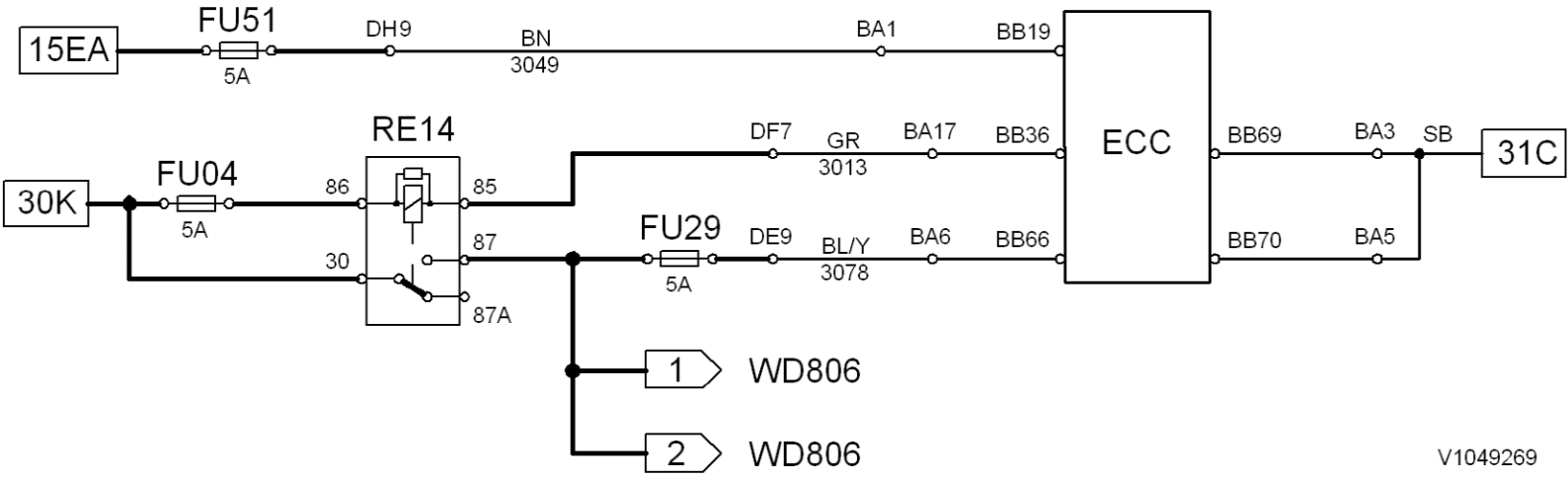
15EA
FU51
5A
DH9
BN
3049
BA1
BB19
ECC
30K
FU04
5A
RE14
86
85
87
30
87A
DF7
GR
3013
BA17
BB36
FU29
5A
DE9
BL/Y
3078
BA6
BB66
BB69
BA3
SB
31C
BB70
BA5
1
WD806
2
WD806
V1049269

VOLVO
Construction Equipment

Service Information

Document Title:	Function Group:	Information Type: **Service Information**	Date: **12/10/2011**
Profile: **WLO, L90F (Volvo) [GB]**			

Power supply E-ECU, description and measuring

Op nbr 302-110

9812519 Multimeter
9998699 Adapter
9990014 Adapter
9990062 Cable

Description

Function	Voltage feed to engine control unit (E-ECU). 15EECU also supplies voltage to other components, see references.
References	Komponentförteckning: Generator, batterier, kondensatorer, elektronikenheter Elschema 302 Elschema 204 Elschema 303
VCADS Pro Test	—
	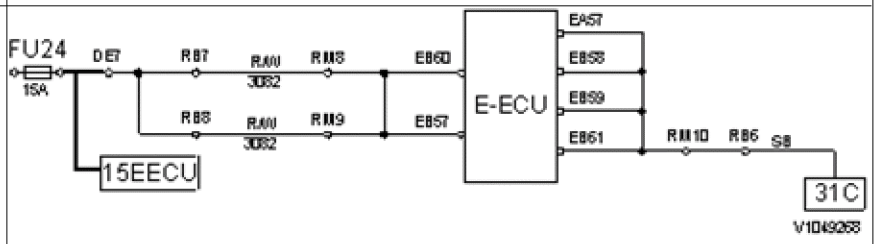 **Figure 1** EB60, feed EB57, feed EA57, ground EB58, ground EB59, ground EB61, ground

Measuring

Measuring point	Correct value	Condition	Test method
EB57 – EB60 –	≈ U_{bat}	1	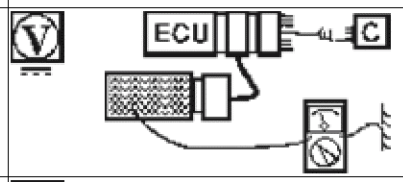
EA57 –	≈ 0 Ω		Ω

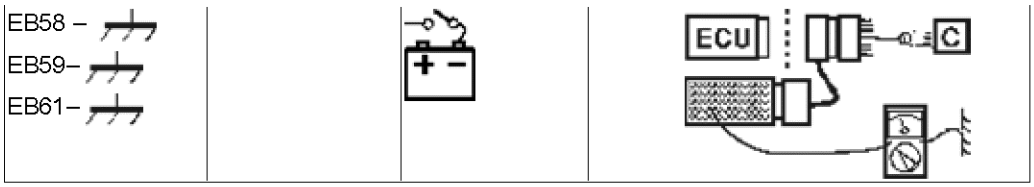
EB58 –
EB59–
EB61–
ECU
C

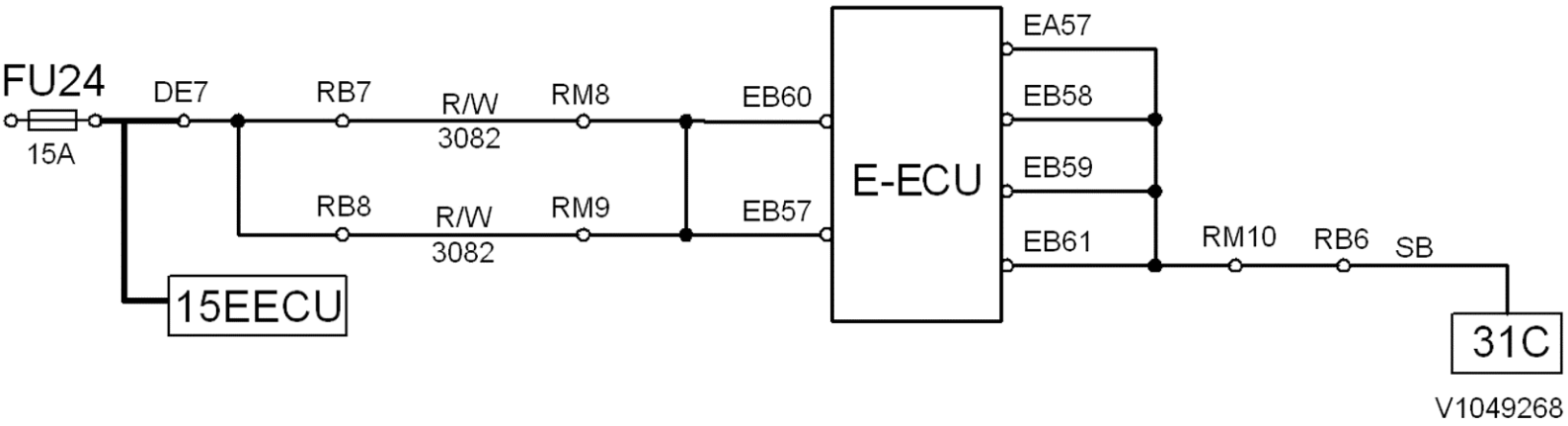
FU24
15A
DE7
RB7
R/W
3082
RM8
EB60
RB8
R/W
3082
RM9
EB57
E-ECU
EA57
EB58
EB59
EB61
RM10
RB6
SB
15EECU
31C
V1049268

VOLVO
Construction Equipment

Service Information

Document Title:	Function Group:	Information Type: **Service Information**	Date: **12/10/2011**
Profile: **WLO, L90F (Volvo) [GB]**			

Power supply I-ECU, description and measuring

Op nbr 302-112

9812519 Multimeter
9998699 Adapter
88830027 Adapter
9990062 Cable

Description

Function	Voltage feed to instrument control unit (I-ECU).
References	Komponentförteckning: Generator, batterier, kondensatorer, elektronikenheter Elschema 302
VCADS Pro Test	—

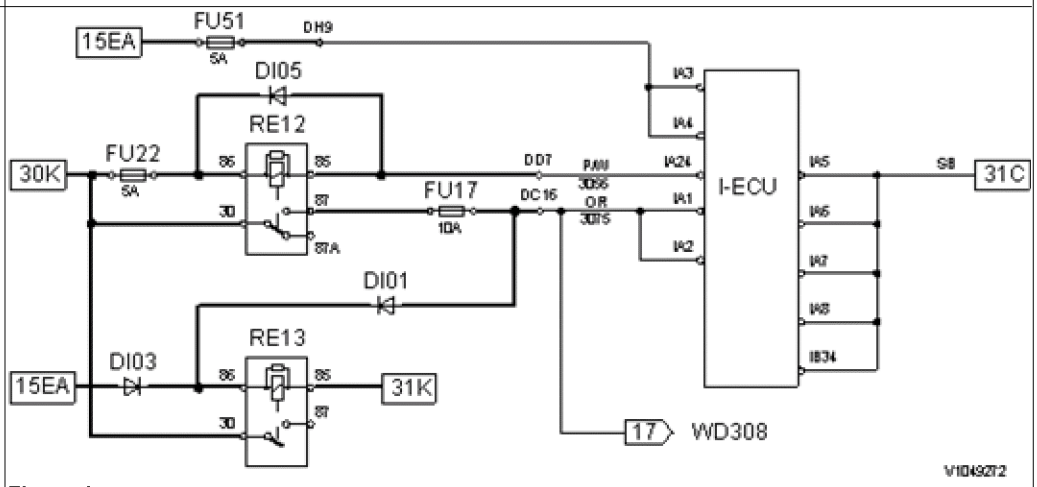

Figure 1

IA3, feed
IA4, feed
IA1, feed
IA2, feed
IA5, ground
IA6, ground
IA7, ground
IA8, ground
IB34, ground

Measuring

Measuring point	Correct value	Condition	Test method
IA1 – IA2 – IA3 – IA4 –	≈ U_{bat}	1	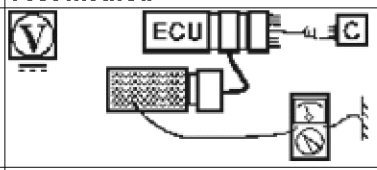
	≈ 0 Ω		

IA5 – IA6 – IA7 – IA8 – IB34 –			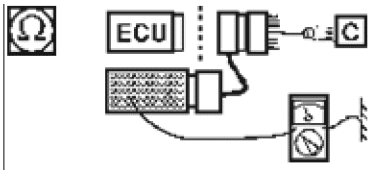

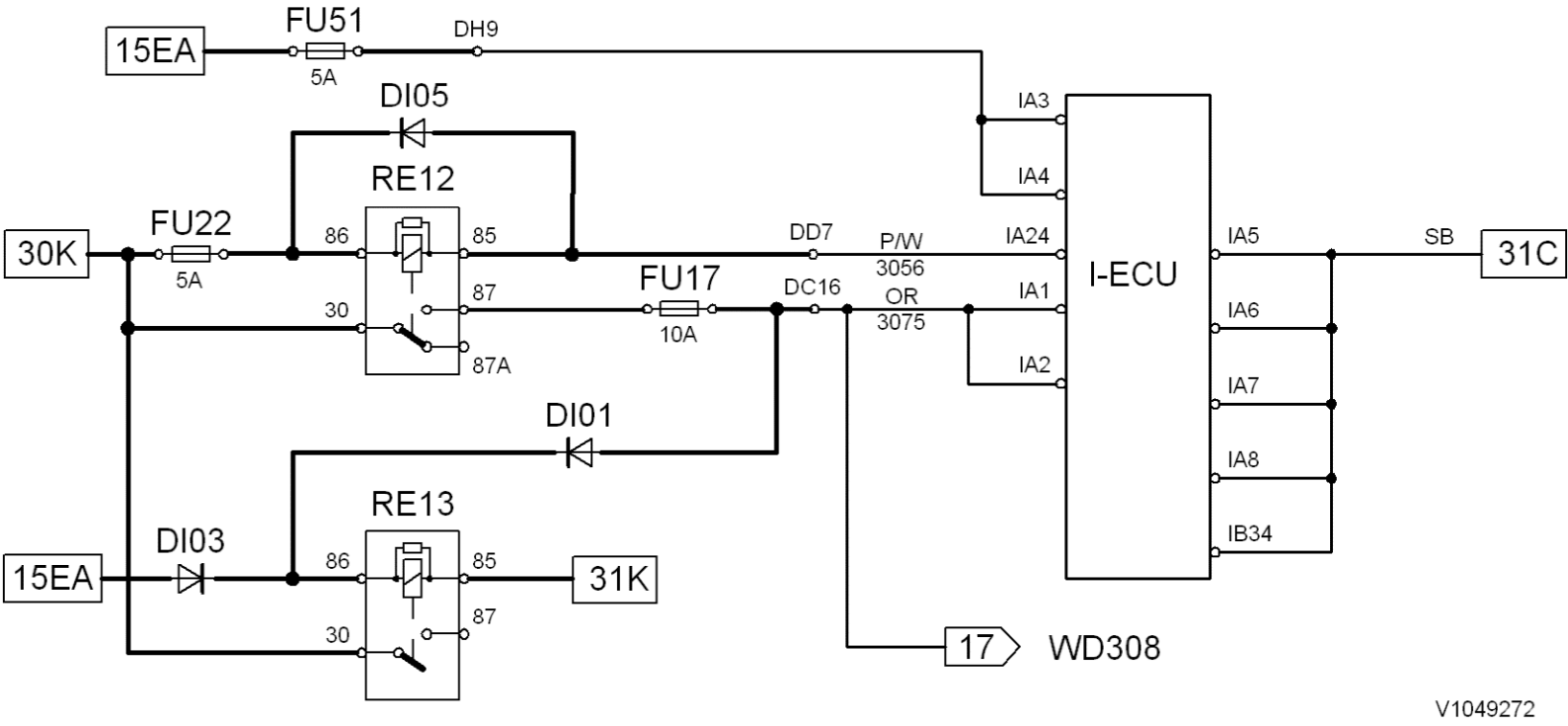
15EA
FU51
5A
DH9
DI05
RE12
30K
FU22
5A
86
85
30
87
87A
FU17
10A
DC16
DD7
P/W
3056
OR
3075
IA3
IA4
IA24
IA1
IA2
I-ECU
IA5
IA6
IA7
IA8
IB34
SB
31C
DI01
RE13
DI03
15EA
31K
17
WD308
V1049272

VOLVO
Construction Equipment

Service Information

Document Title:	Function Group:	Information Type: **Service Information**	Date: **12/10/2011**
Profile: **WLO, L90F (Volvo) [GB]**			

Power supply V-ECU, description and measuring

Op nbr 302-114

9812519 Multimeter
9998699 Adapter
9993893 Adapter
9993894 Template
9990062 Cable

Description

Function	Voltage feed to vehicle control unit (V-ECU).
References	Komponentförteckning: Generator, batterier, kondensatorer, elektronikenheter Elschema 302
VCADS Pro Test	—
	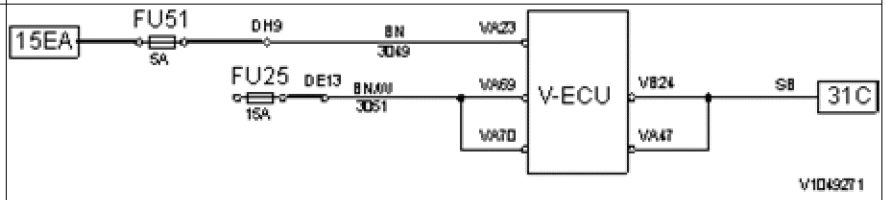 **Figure 1** VA23, feed VA69, feed VA70, feed VB24, ground VA47, ground

Measuring

Measuring point	Correct value	Condition	Test method
VA23 – VA69 – VA70 –	≈ U_{bat}		
VA47 – VB24 –	≈ 0 Ω		

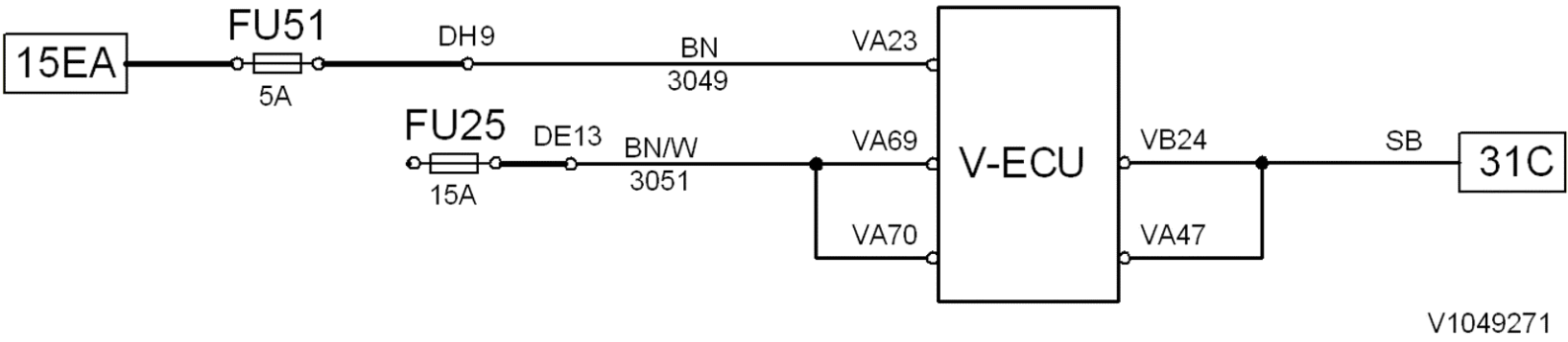
15EA
FU51
5A
DH9
BN
3049
VA23
FU25
15A
DE13
BN/W
3051
VA69
VA70
V-ECU
VB24
VA47
SB
31C
V1049271

VOLVO
Construction Equipment

Service Information

Document Title:	Function Group:	Information Type: **Service Information**	Date: **12/10/2011**
Profile: **WLO, L90F (Volvo) [GB]**			

Power supply V2-ECU, description and measuring

Op nbr 302-115

9812519 Multimeter
9998699 Adapter
9993893 Adapter
9993894 Template
9990062 Cable

Description

Function	Voltage feed to vehicle control unit 2 (V2-ECU).
References	Komponentförteckning: Generator, batterier, kondensatorer, elektronikenheter Elschema 302
VCADS Pro Test	—
	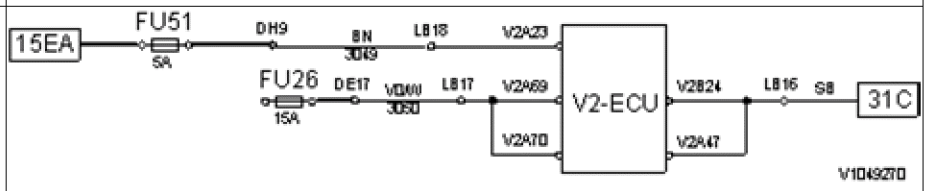 **Figure 1** V2A23, feed V2A69, feed V2A70, feed V2B24, ground V2A47, ground

Measuring

Measuring point	Correct value	Condition	Test method
V2A23 – V2A69 – V2A70 –	≈ U_{bat}		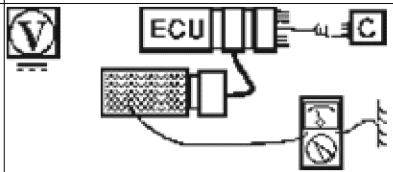
V2A47 – V2B24 –	≈ 0 Ω		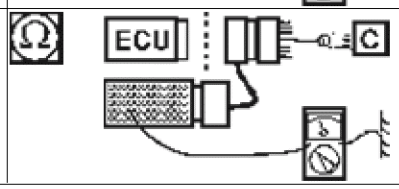

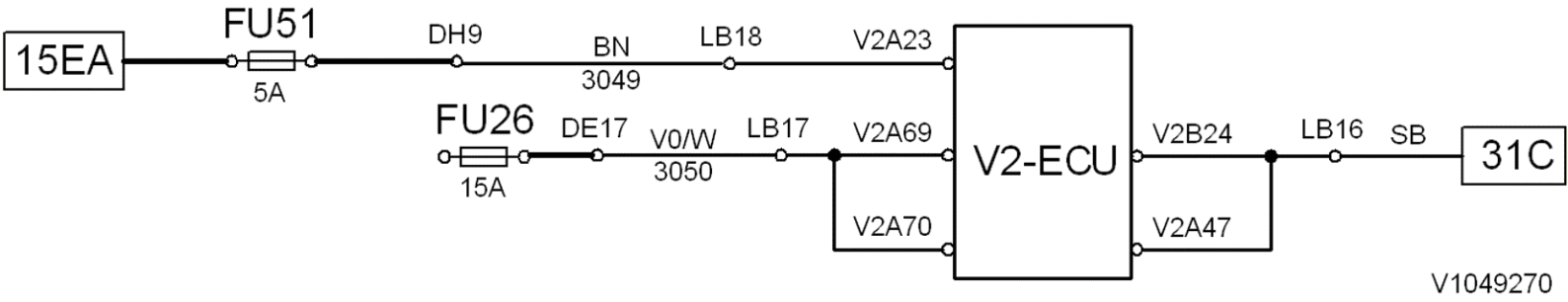
15EA
FU51
5A
DH9
BN
3049
LB18
V2A23
FU26
15A
DE17
V0/W
3050
LB17
V2A69
V2A70
V2-ECU
V2B24
V2A47
LB16
SB
31C
V1049270

VOLVO
Construction Equipment

Service Information

Document Title:	Function Group:	Information Type: **Service Information**	Date: **12/10/2011**
Profile: **WLO, L90F (Volvo) [GB]**			

Battery, description

The battery consists of two 12 V batteries connected in a series, which together provide 24 V with a capacity of 110 Ah. The batteries are located behind the rear wheels on either side of the rear frame. The battery disconnect switch is located under the radiator casing at the rear of the machine on the right side.

The batteries should be in good condition when troubleshooting the system. If needed, charge the batteries with a battery charger. If the batteries do not take the charge, replace the batteries.

VOLVO
Construction Equipment

Service Information

Document Title:	Function Group:	Information Type: **Service Information**	Date: **12/10/2011**
Profile: **WLO, L90F (Volvo) [GB]**			

Battery, charging

WARNING!

Hydrogen gas is formed during battery charging. Hydrogen gas is flammable and may be explosive. A short circuit, open flame or spark near the battery can cause a powerful explosion. Therefore, ventilate well. Never smoke near batteries.

- Batteries must only be charged using a battery charger.
- Check the battery terminal connections and make sure that they are adequately tightened and free from corrosion and dirt.
- Check the battery voltage when the batteries are at rest (before starting). Each battery must be at least half-charged.

Caution!
Always turn off the current to the battery charger before disconnecting the charging clamps.

WARNING!

Corrosive sulphuric acid
The battery electrolyte includes corrosive sulphuric acid. Electrolyte spilled on bare skin must be removed immediately. Wash with soap and plenty of water. If electrolyte gets into your eyes or any other sensitive body part, rinse immediately with plenty of water and seek immediate medical attention.

VOLVO
Construction Equipment

Service Information

Document Title:	Function Group:	Information Type: **Service Information**	Date: **12/10/2011**
Profile: **WLO, L90F (Volvo) [GB]**			

Batteries, replacing

WARNING! **Batteries contain corrosive acid. Handle batteries according to instructions in Section 3 and Section Safety.**

Op nbr 311-002

Removing

1. Place the machine in service position 1, see Servicepositioner
.
2. Open the battery cover.
3. Remove the terminal caps.

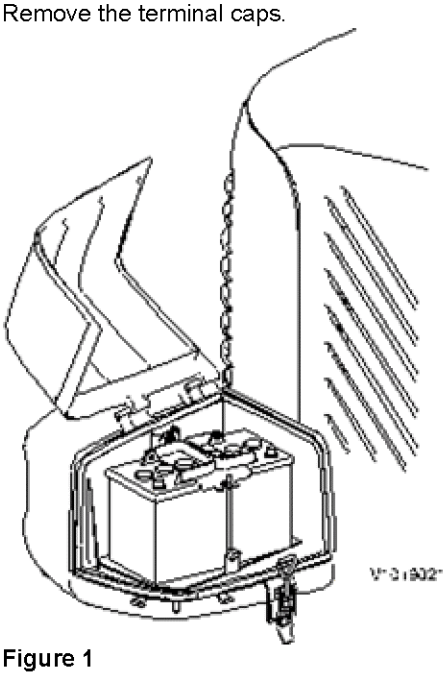

Figure 1

4. Loosen and remove the cable terminals from the battery terminals.

   NOTE **Start by removing the cable terminal from the minus terminal.**

5. Loosen the clamp and remove the battery.
   Weight approx. **20 kg (44 lbs).**
   Installing
6. Lift the battery into place and fit the clamp.

7. Clean the battery terminals and cable terminals.
8. Install the cable terminals and lube with acid-free vaseline.
9. Restore the machine to operating condition.
10. Start the machine and check that no error messages appear.

VOLVO
Construction Equipment

Service Information

Document Title:	Function Group:	Information Type: **Service Information**	Date: **12/10/2011**
Profile: **WLO, L90F (Volvo) [GB]**			

System voltage

The function monitors the system voltage and informs the operator when the system voltage is too high or too low.

Input signals	Conditions for output functions	Output functions
o Engine On/Off o System voltage	o Voltage level > 31 V	o Amber central warning o Check High system voltage
	o Engine On o Voltage level < 19 V	o Amber central warning o Check Low system voltage

VOLVO
Construction Equipment

Service Information

Document Title:	Function Group:	Information Type: **Service Information**	Date: **12/10/2011**
Profile: **WLO, L90F (Volvo) [GB]**			

Key feed

Key feed is used as a condition in software functions to define when voltage feed considered to be On and Off, respectively.

Input signals	Conditions for output functions	Output functions
o System voltage	o Voltage < 8 V	o Key feed Off
	o Voltage > 12 V	o Key feed On

VOLVO
Construction Equipment

Service Information

Document Title:	Function Group:	Information Type: **Service Information**	Date: **12/10/2011**
Profile: **WLO, L90F (Volvo) [GB]**			

Alternator 80 A, description

The alternator is a 80 A alternating current generator with a normal charge voltage of 28.3 V and a built-in charge regulator.

When the engine is turned off, the batteries normally give a voltage of approx. 24-26 V, depending on their charging status. When the engine is running, the batteries are normally charged by the alternator, since the alternator's normal charging voltage is higher than the battery voltage.

If the batteries do not seem to take a charge, this may be due to incorrect charge voltage from the alternator. Also check the acidity in the battery electrolyte, see Battery, charging
.

VOLVO
Construction Equipment

Service Information

Document Title:	Function Group:	Information Type: **Service Information**	Date: **12/10/2011**
Profile: **WLO, L90F (Volvo) [GB]**			

Booting sequence

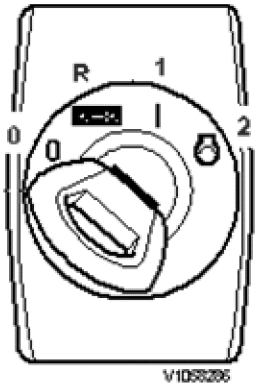

Figure 1
Ignition (SW3301)

1. Battery disconnector off.
2. Set the gear selector in neutral position.
3. Turn the key in the ignition to running position (1) so that system test takes place for 4–5 seconds.
   (If the machine is equipped with theft protection, deactivate the theft protection by entering the code. See Informationspanel, stöldskydd
).
4. Turn the key in the ignition to start position (2) and the starter motor will be engaged, and the engine starts.
   If starting fails, the start key must be turned back to position 0 before a new start attempt can be made.

Error messages

- When Forward or Reverse gear is engaged, engagement of the starter motor is prevented and the message “InformationGear sel. not in neutral” will be shown on the information panel in case of start attempt.
- If the starter motor is overheated, the message “CheckHigh temp. starter motorWait 5 min. before start” will be shown on the information panel.
- In case of any other malfunction in the start circuit, the message “CheckEngine failure” will be shown on the information panel.

See Elschema 303
.

VOLVO
Construction Equipment

Service Information

Document Title:	Function Group:	Information Type: **Service Information**	Date: **12/10/2011**
Profile: **WLO, L90F (Volvo) [GB]**			

Lighting, description

Headlights
Headlights are operated with switch SW3501 located on the pillar panel.

- Switch upper part pressed in = Headlights on.
- Switch in middle position = Parking and instrument lights on.
- Switch lower part pressed in = Headlights off.

Main and dipped beams are controlled with SW3502, the right-hand stalk switch on the steering column

- Away from steering wheel = High beams.
- Neutral position = Low beams.
- Towards steering wheel = Headlight flash.

Control light on the front instrument panel indicates that high beams are on.

SeeWiring diagram 304
.

Work lights front
Work lights front are operated with switch SW3504 located on the pillar panel.

- Switch upper part pressed in = Work lights front, cab, and attachment on.
- Switch in middle position = Work lights cab on.
- Switch lower part pressed in = Work lights off.

Control light on the front instrument panel indicates that work lights are on.

See Wiring diagram 305
.
For double work lights cab, see Wiring diagram 312
.

Work lights roof
Work lights rear are operated with switch SW3505 located on the pillar panel.

- Switch upper part pressed in = Work lights cab and radiator casing on when reverse gear is engaged.
- Switch in middle position = Work lights cab and radiator casing on.
- Switch lower part pressed in = Work lights off.

Control light on the front instrument panel indicates that work lights are on.

See Wiring diagram 305
.
For double work lights cab, see Wiring diagram 312
.

Work lights rear, continuous/gear-dependent (optional equipment)
With this function it is only possible to select continuous or gear-dependent engagement of rear work lights.
Selection of function is done with switch SW3505 located on the pillar panel.

- Switch upper part pressed in = Work lights cab and radiator casing on when reverse gear is engaged.
- Switch in middle position = Continuous work lights cab and radiator casing on.

- Switch lower part pressed in = Continuous work lights cab and radiator casing on.

Control light on the front instrument panel indicates that work lights are on.

See Wiring diagram 313

.

Guide lights in switches and lighting in climate control system's panel
Light intensity for guide lights in switches and lighting in climate control system's panel are controlled with rheostat R3502.

- Rheostat's upper part pressed in = light intensity increases.
- Rheostat's lower part pressed in = light intensity decreases.

See Wiring diagram 304

.

Rotating beacon
Rotating beacon LA3624 is controlled with switch SW3624 located on the pillar panel.

Control light on the front instrument panel indicates that rotating beacon is on.

See Wiring diagram 306

.

Strobe light (optional equipment)
Strobe light LA3625 is on continuously as long as the battery disconnector is on.

Control light on the front instrument panel indicates that the strobe light is on.

See Wiring diagram 306

.

VOLVO
Construction Equipment

Service Information

Document Title:	Function Group:	Information Type: **Service Information**	Date: **12/10/2011**
Profile: **WLO, L90F (Volvo) [GB]**			

Reduced computer communication

This function informs the operator in the event of ECU system communication malfunction and continued operation with reduced performance.

Input signals	Conditions for output functions	Output functions
o Network monitoring o VCADS Pro parameter HKP o VCADS Pro parameter HKQ o VCADS Pro parameter HKO o VCADS Pro parameter HKN	o VCADS Pro parameter HKP "1" o No communication via J1587 on ECC	o Reduced function On o Check ECU Network Reduced Communication
	o VCADS Pro parameter HKQ "1" o No communication via J1587 on V2-ECU or o No communication via CAN1 on V2-ECU or o No communication via CAN2 on V2-ECU	o Fail-safe mode On o Check ECU Network Reduced Communication
	o VCADS Pro parameter HKQ "1" o No communication via J1587 and CAN1 on V2-ECU or o No communication via J1587 and CAN2 on V2-ECU or o No communication via CAN1 and CAN2 on V2-ECU	o Interruption in communication between the ECUs On o Check ECU Network Communication Interrupt
	o No communication via J1587 on E-ECU or o No communication via CAN1 on E-ECU	o Fail-safe mode On o Check ECU Network Reduced Communication
	o No communication via J1587 and CAN1 on E-ECU	o Interruption in communication between the ECUs On o Check ECU Network Communication Interrupt
	o No communication via J1587 on V-ECU or o No communication via CAN1 on V-ECU or o No communication via CAN2 on V-ECU	o Fail-safe mode On o Check ECU Network Reduced Communication
	o No communication via J1587 and CAN1 on V-ECU or o No communication via J1587 and CAN2 on V-ECU or o No communication via CAN1 and CAN2 on V-ECU	o Interruption in communication between the ECUs On o Check ECU Network Communication Interrupt

VOLVO
Construction Equipment

Service Information

Document Title:	Function Group:	Information Type: **Service Information**	Date: **12/10/2011**
Profile: **WLO, L90F (Volvo) [GB]**			

Interruption in computer communication

The function informs the operator about existing system errors as regards the communications between the ECUs, continued operation may lead to risk of damage.

Input signals	Conditions for output functions	Output functions
o Interrupted communications between the ECUs	o Interrupted communications	o Check ECU Network Communication Interrupt o Gear is moved to Neutral

VOLVO
Construction Equipment

Service Information

Document Title:	Function Group:	Information Type: **Service Information**	Date: **12/10/2011**
Profile: **WLO, L90F (Volvo) [GB]**			

Limp Home

"Limp Home" means that the machine can only be operated in 2nd gear.

Input signals	Conditions for output functions	Output functions
o Requested gear o Engine On/Off o Accelerator pedal o Computer communication	o Engine On o Requested gear falure or o Accelerator pedal sensor falure (SE2702) or o Reduced computer communication	o Requested gear ≤2 o Check 'Limp Home' safety related failure

VOLVO
Construction Equipment

Service Information

Document Title:	Function Group:	Information Type: **Service Information**	Date: **12/10/2011**
Profile: **WLO, L90F (Volvo) [GB]**			

Intermittent wiper and washer

The interval for the front wiper can be set with the aid of SW3602 as follows:
If SW3602 is set in position On, then Off and then again in position On after X seconds, the time between the wiping actions will be X seconds.

NOTE **The time between wiping actions cannot be shorter than 5 seconds or longer than 25 seconds. If an attempt is made at setting the time between wiping actions to more than 60 seconds, no new time will be set and instead the previous time interval will continue to apply.**

Intermittent wiper and front washer		
Input signals	**Conditions for output functions**	**Output functions**
o Intermittent wiper front, SW3602 o Washer front, SW3608	o Intermittent wiper front On	o Intermittent wiper front active On for 0.5 second and then Off for X seconds[T1] ⓘ The sequence will be repeated until Intermittent wiper front is Off
	o Intermittent wiper front Off o Washer front Off	o Intermittent wiper front active Off
	o Washer front On	o Intermittent wiper front active On after 1 second. o Washer front
	o Washer front Off	o Intermittent wiper front active Off after 5 seconds.

[T1] If no interval has been set with SW3602, X = 7 seconds.

The following applies in case of faulty input signals:

Input signal	**Assumed value in case of a fault**
Intermittent wiper front, SW3602	Off
Washer front, SW3608	Off

Intermittent wiper and rear washer		
Input signals	**Conditions for output functions**	**Output functions**
o Wiper rear, SW3612 o Washer rear, SW3612 o Wiper front, SW3602 o Intermittent wiper front, SW3602 o Requested gear	o Wiper rear On and o Intermittent wiper front On or Wiper front On and o Requested gear ≠ R	o Wiper rear active On for 0.5 seconds and then Off for 7 seconds. The sequence is repeated until Wiper rear is Off or until Wiper front and Intermittent wiper front is Off
	o Wiper rear On and o Intermittent wiper front On or	o Wiper rear active On

	Wiper front On and o Requested gear = R	
	o Washer rear On	o Wiper rear active On after 1 second. o Washer rear
	o Washer front Off	o Wiper rear active Off after 5 seconds.

The following applies in case of faulty input signals:

Input signal	Assumed value in case of a fault
Wiper rear, SW3612	Off
Washer rear, SW3612	Off
Intermittent wiper front, SW3602	Off
Windscreen washer, SW3608	Off
Requested gear	"N"

VOLVO
Construction Equipment

Service Information

Document Title:	Function Group:	Information Type: **Service Information**	Date: **12/10/2011**
Profile: **WLO, L90F (Volvo) [GB]**			

Theft protection

The purpose of the function is to prevent theft of the machine. The function is activated with VCADS Pro.

When the anti-theft device is activated, a correct four-digit code must be entered via the keyboard and the "SELECT" button pressed before the engine can be started, the parking brake released and a directional gear selected.

Selection and change of anti-theft code is done with the VCADS Pro parameter ABQ. The code is stored in control units I-ECU and V-ECU.

NOTE **When a starting attempt is made while the anti-theft device is activated, the starter motor can crank the engine, but the engine will not start.**

The engine can be restarted without having to enter the code within the delay time.

Input signals	Conditions for output functions	Output functions
o VCADS Pro parameter ABP o VCADS Pro parameter ABQ o Keyboard o Key feed o Time since latest ignition switch Off	**General conditions for the function** o VCADS Pro parameter ABP "On" (activation of function) o VCADS Pro parameter ABQ "****" (anti-theft code)	
	Deactivation of anti-theft device o Ignition switch On (running position) Display unit shows Start lockout Enter code **** o Enter correct four-digit code via the keyboard and then press "SELECT"	o The anti-theft device is deactivated The engine can now be started, the parking brake released and directional gear selected.
	Activation of anti-theft device o Ignition switch Off (position 0)	o Directional gear N o Engine shutdown o Parking brake applied, MA5501 de-energised [T1] ⓘ

[T1] Prevents operation of the parking brake via switch SW5501.

The following applies in case of faulty input signals:

Input signal	Assumed value in case of a fault
VCADS Pro parameter ABP	"ON"

VOLVO
Construction Equipment

Service Information

Document Title:	Function Group:	Information Type: **Service Information**	Date: **12/10/2011**
Profile: **WLO, L90F (Volvo) [GB]**			

Connectors, overview

Designation	Plug-in side (female)
EA, EB (E-ECU)	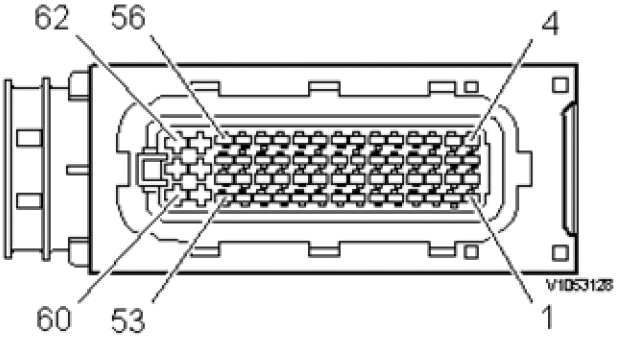
VA, VB (V-ECU) V2A, V2B (V2–ECU) BB (ECC)	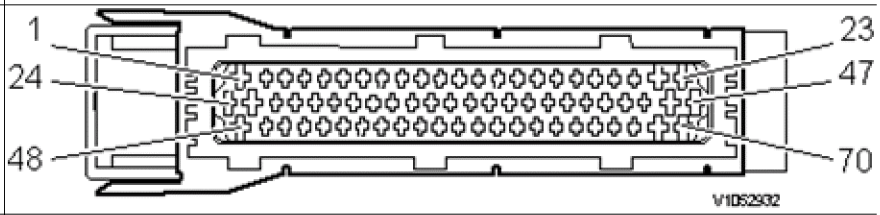
IA, IB, IC (I-ECU)	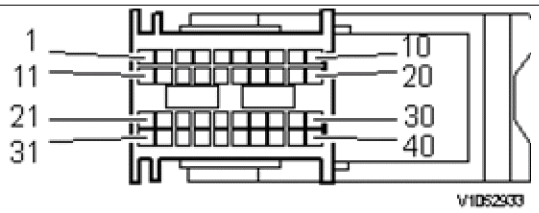

Designation	Plug-in side (female)	Pin-side (male)
FA, RA, RB, TA, UA	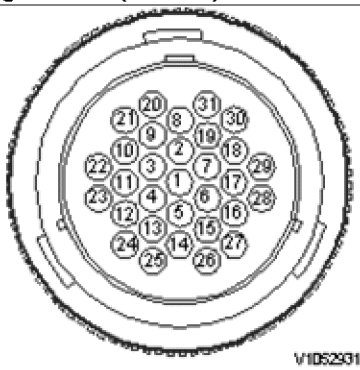	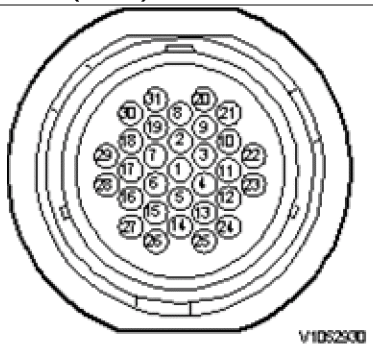
RM		

	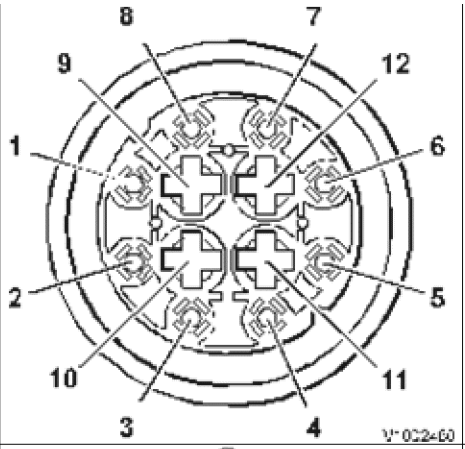	
FD, RP, RZ	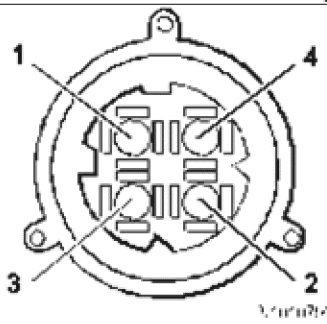	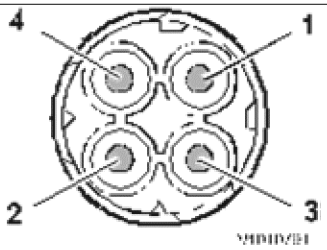
CF, CG, FE, FM, MC, RD, RW, SS, UB	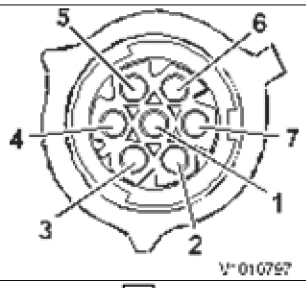	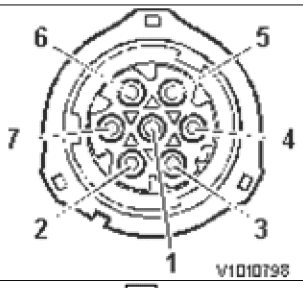
HE	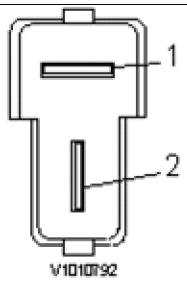	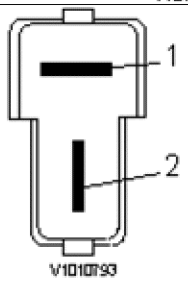
ML	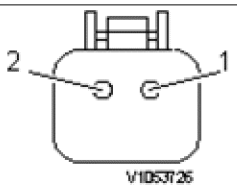	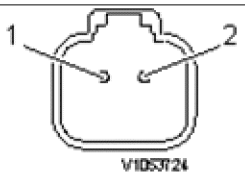
FF, RE	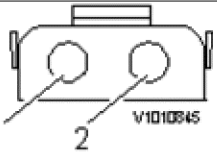	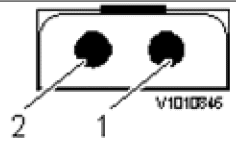
LJ	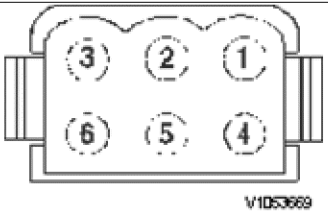	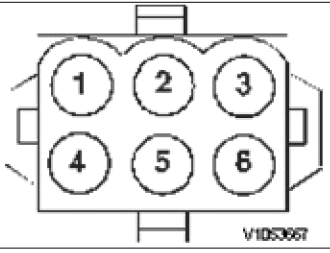
LD, LE, LK		

	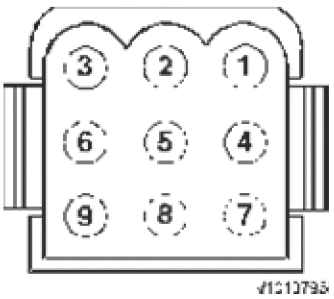	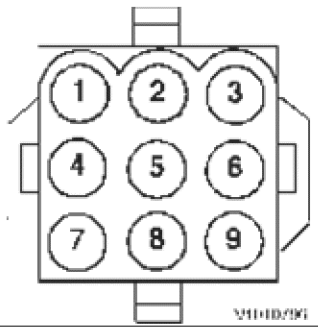
AA, OCA	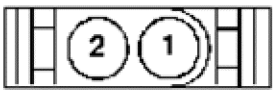	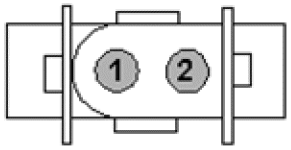
BA, CA, DA, DB, DC, DD, DE, DF, DG, DH, LB, LF, ST, WA	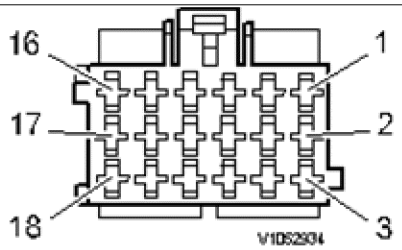	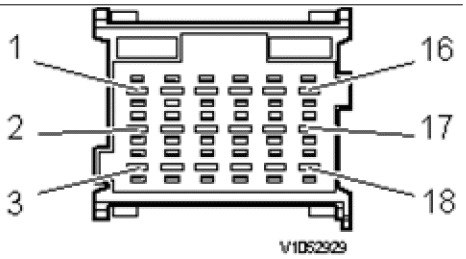
CK, GA	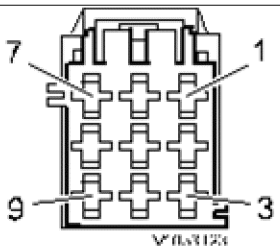	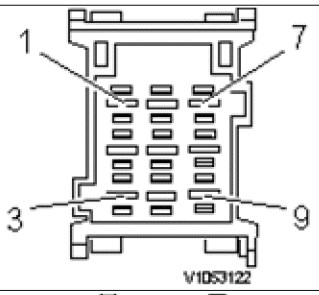
BC, CC, MB, ME, MF, MG, SU	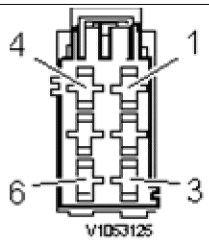	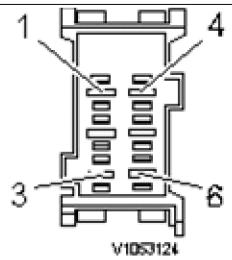
ED	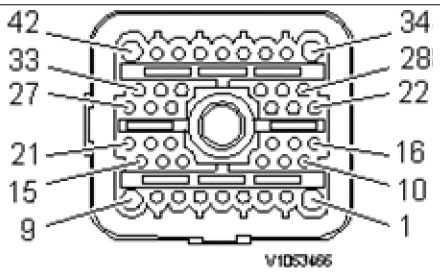	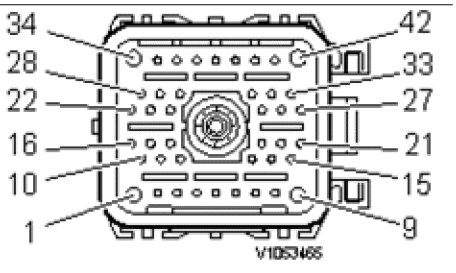

Designation	Pin-side (male)
VP (VCADS Pro)	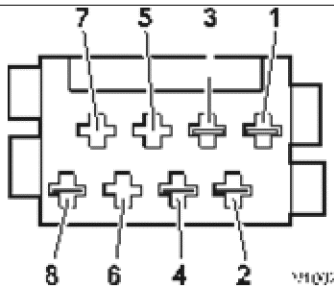

Designation	Bushing (leadthrough) cab
PA, PB	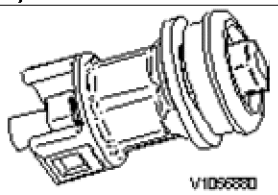

VOLVO
Construction Equipment

Service Information

Document Title:	Function Group:	Information Type: **Service Information**	Date: **12/10/2011**
Profile: **WLO, L90F (Volvo) [GB]**			

V-ECU, MID 187, changing pre-programmed ECU

Op nbr 366-066

VCADS Pro VCADS Pro Service Tool
88890020 Interface
88890027 Cable

1. Place the machine in service position 1, see Service positions
.
2. Fold the backrest forward and remove the rear cab panel.
3. The new control unit has basic set parameters for the machine. If it is possible to read out customer parameters, connect VCADS Pro and perform the operation 17030-3 Parameter, programming. Save all read parameters to job card.
The operation is used to read out customer parameters from the old control unit to enable later comparison with parameters in the new control unit.
4. Unplug the connectors from the V-ECU.

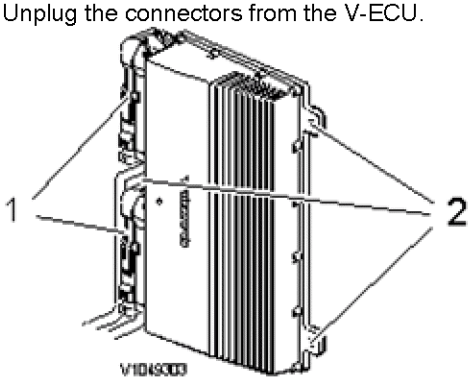

Figure 1

1. Connectors
2. Bolts

5. Change V-ECU.
6. Plug in the connectors for the V-ECU.
7. Turn on the voltage with the battery disconnector.
8. If customer parameters have been read out from the old control unit, compare these to the parameters in the new control unit.
   - Connect VCADS Pro and perform the operation 17030-3 Parameter, programming. Save all read parameters to job card.
   - Compare parameter settings on the job cards.
   - Perform operation 17030-3 Parameter, programming and change customer parameters according to job card for the old control unit.
9. Perform operation 42101-3 Transmission, calibration.
10.

NOTE **After working in safety-related systems, the functionality of all applicable systems must be checked as per Functionality check**
.

10.

11. Restore the machine after all functionality checks are acceptable.

VOLVO
Construction Equipment

Service Information

Document Title:	Function Group:	Information Type: **Service Information**	Date: **12/10/2011**
Profile: **WLO, L90F (Volvo) [GB]**			

V-ECU, MID 187, changing non-programmed ECU

Op nbr 366-064

VCADS Pro VCADS Pro Service Tool
88890020 Interface
88890027 Cable

1. Place the machine in service position 1, see Service positions
.
2. Fold the backrest forward and remove the rear cab panel.
3. Connect VCADS Pro and perform the operation 36646-3 MID 187 ECU, programming.
4. Unplug the connectors from the V-ECU.

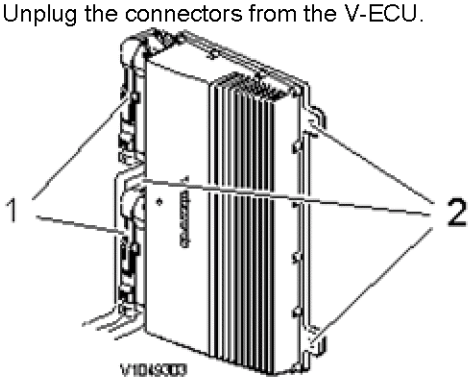

Figure 1

1. Connectors
2. Bolts

5. Change V-ECU.
6. Plug in connectors for the V-ECU.
7. Turn on the voltage with the battery disconnector.
8. Finish VCADS Pro operation 36646-3 MID 187 ECU, programming.
9. Perform operation 42101-3 Transmission, calibration.

NOTE **After working in safety-related systems, the functionality of all applicable systems must be checked as per Functionality check**
.

10.
11. Restore the machine after all functionality checks are acceptable.

VOLVO
Construction Equipment

Service Information

Document Title:	Function Group:	Information Type: **Service Information**	Date: **12/10/2011**
Profile: **WLO, L90F (Volvo) [GB]**			

Chassis connection

Pos.	Serves
1	Battery
2	Engine, starter motor, and alternator
3	Front frame (31F)
4	Rear frame and secondary steering pump
5	Cab (31C)

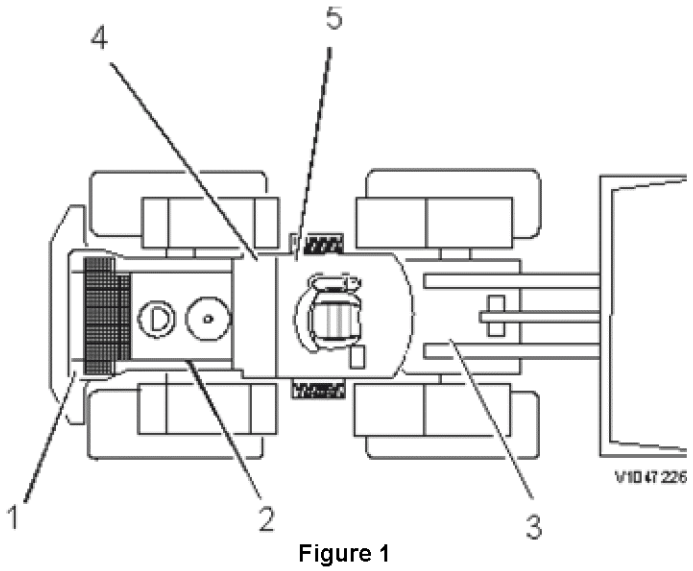

Figure 1
Frame ground connections

VOLVO
Construction Equipment

Service Information

Document Title:	Function Group:	Information Type: **Service Information**	Date: **12/10/2011**
Profile: **WLO, L90F (Volvo) [GB]**			

Chassis connection

Pos.	Serves
1	Battery
2	Engine, starter motor, and alternator
3	Front frame (31F)
4	Rear frame and secondary steering pump
5	Cab (31C)

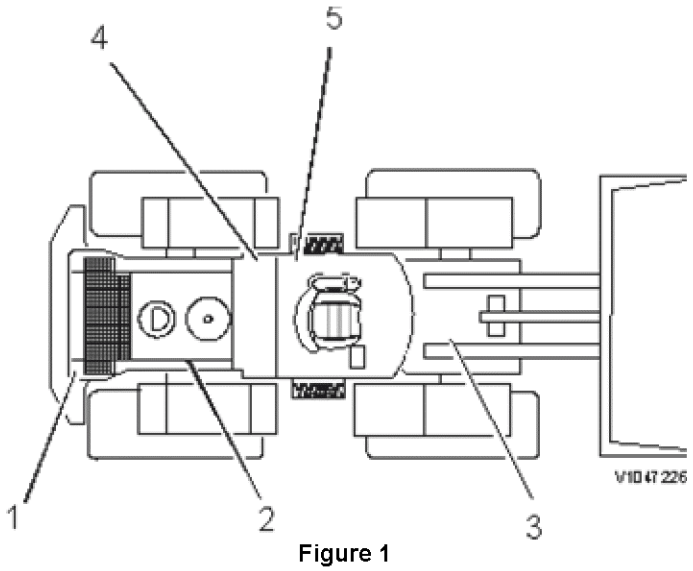

Figure 1
Frame ground connections

VOLVO
Construction Equipment

Service Information

Document Title:	Function Group:	Information Type: **Service Information**	Date: **12/10/2011**
Profile: **WLO, L90F (Volvo) [GB]**			

Component list: Diodes

Designation	Function	Wiring diagram
DI01	Lock-out diode	Elschema 302
DI02	—	Elschema 317
DI03	Lock-out diode	Elschema 302
DI04	—	Elschema 317
DI05	Quench diode	Elschema 302
DI06	Lock-out diode	Elschema 305 Elschema 312
DI07	Lock-out diode	Elschema 305 Elschema 312
DI08	Lock-out diode	Elschema 305 Elschema 312
DI09	Lock-out diode	Elschema 305 Elschema 312
DI10	Quench diode	Elschema 901 Elschema 902 Elschema 912
DI11	Delayed cut-out RE18	Elschema 303
DI12	Quench diode	Elschema 901 Elschema 902 Elschema 912
DI13	Quench diode	Elschema 901

		Elschema 902
		Elschema 912
DI14	Quench diode	Elschema 901
		Elschema 902
		Elschema 912
DI15	Quench diode	Elschema 901
		Elschema 902
		Elschema 912
DI16	Lock-out diode	Elschema 303
DI17	Lock-out diode	Elschema 901
		Elschema 902
		Elschema 912
DI18	Lock-out diode	Elschema 901
		Elschema 902
		Elschema 912
DI19	Lock-out diode	Elschema 901
		Elschema 902
		Elschema 912
DI20	Lock-out diode	Elschema 903
DI21	Lock-out diode	Elschema 903
DI22	Lock-out diode	Elschema 801
DI23	Lock-out diode	Elschema 801
DI3101	Lock-out diode	Elschema 308
DI3102	Lock-out diode	Elschema 308
DI3103	Lock-out diode	Elschema 308
DI3104	Quench diode	Elschema 308
DI9101[T1]	Quench diode	Elschema 904
DI9102[a]	Quench diode	Elschema 912
DI9103[a]	Lock-out diode	Elschema 902
		Elschema 912

DI9104[(a)]	Lock-out diode	Elschema 901 Elschema 902 Elschema 912
LC3701	Fuse test	Elschema 317

[T1] Located in lever carrier

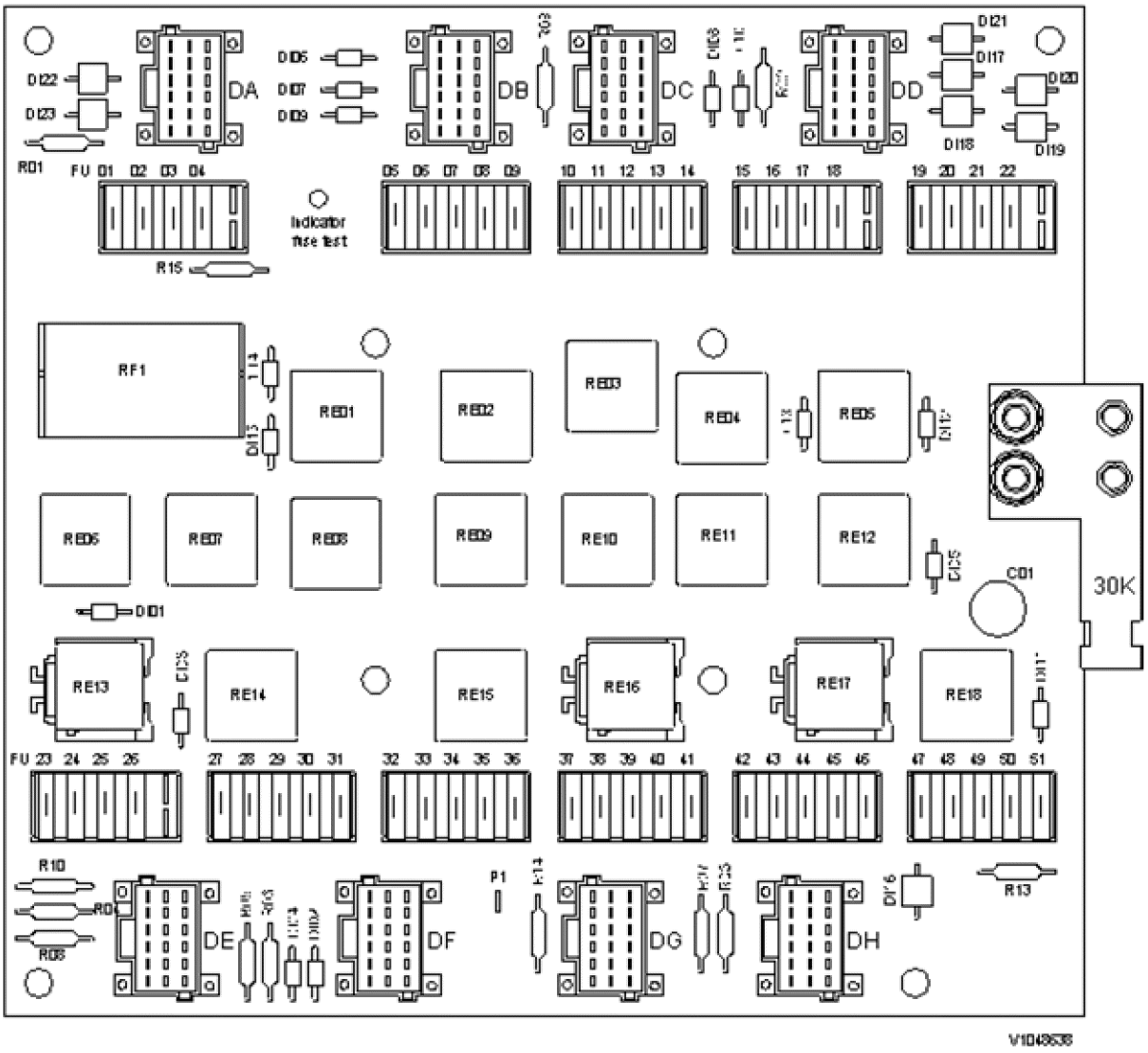

Figure 1
Circuit board in electrical distribution box

VOLVO
Construction Equipment

Service Information

Document Title:	Function Group:	Information Type: **Service Information**	Date: **12/10/2011**
Profile: **WLO, L90F (Volvo) [GB]**			

Component list: Fuses

Caution!
Always use a fuse with correct rating.

Designation	A	Function	Wiring diagram
FU01	5	Brake lights	Elschema 501
FU03	15	Work lights cab front	Elschema 305
		Double work lights cab front	Elschema 312
FU04	5	Voltage feed RE14	Elschema 302
FU05	5	Instrument lighting Parking light left front Left front side light Parking light right rear	Elschema 304
FU06	5	Parking light right front Right front side light Parking light left rear Lighting license plate	Elschema 304
FU07	5	Low beam, left	Elschema 304
FU08	5	Low beam, right	Elschema 304
FU09	10	Back-up alarm	Elschema 315
FU10	5	High beam, right	Elschema 304
FU11	5	High beam, left	Elschema 304
FU12	5	15RA feed for voltage converter (20A)	Elschema 314
		15RA feed for voltage converter	Elschema 315
FU13	15	Work lights front Work lights attachment	Elschema 305
FU14	5	Direction indicators	Elschema 306

FU15	15	Work lights cab, rear	Elschema 305
		Double work lights cab rear	Elschema 312
		Work lights, automatic back-up light	Elschema 313
FU16	15	Work lights radiator casing	Elschema 305
FU17	10	Voltage feed I–ECU, hold voltage RE13	Elschema 302
FU18	10	Voltage socket 24 V	Elschema 315
FU19	15	Headlights	Elschema 304
FU20	10	Voltage feed ignition	Elschema 303
		Voltage feed ignition with electrically controlled battery disconnector	Elschema 308
FU21	10	Rotating beacon, strobe light, interior lighting	Elschema 306
FU22	5	Voltage feed RE12	Elschema 302
FU23	5	Voltage feed starter motor	Elschema 303
FU24	15	Voltage feed E–ECU	Elschema 302
FU25	15	Voltage feed V–ECU	Elschema 302
FU26	15	Voltage feed for V2-ECU	Elschema 302
FU27	20	Cab fan	Elschema 872
FU28	10	Magnet clutch AC compressor, pause coolant pump	Elschema 872
FU29	5	Voltage feed ECC	Elschema 302
FU30	5	EGR-valve	Elschema 204
FU31	5	Voltage feed RE2501	Elschema 204
FU32	10	Boom Suspension System	Elschema 903
		Attachment locking[1] ⓘ	Elschema 904
		Hold function, 3rd hydraulic function	Elschema 904
		Hold function 3rd hydraulic function with electric lever lock 4th function	Elschema 904

FU33	10	Working hydraulics	Elschema 901
		Working hydraulics, electric lever lock	Elschema 902
		Working hydraulics with joystick	Elschema 912
FU34	10	Headlight flasher	Elschema 304
		Windshield wiper and windshield washer front	Elschema 801
FU35	10	Windshield wiper and windshield washer rear, level monitor washer fluid	Elschema 801
FU36	5	Magnetization alternator, hour meter	Elschema 301
		Fan gideon filter	Elschema 807
FU37	5	Hazard flashers	Elschema 306
FU38	5	Voltage feed RE2301	Elschema 204
		Work lights	Elschema 305
		Double work lights cab	Elschema 312
		Work lights, automatic back-up light	Elschema 313
FU39	10	Horn	Elschema 315
		Kick-down	Elschema 601
		Screen, back-up camera, electric heat rear-view mirrors, operation rear-view mirrors	Elschema 804
FU40		—	Elschema 317
FU41	10	Air-suspension operator's seat with seat heating	Elschema 802
		Position sensor air-suspension operator's seat	Elschema 802
		Seat heating mechanically suspended operator's seat	Elschema 802
		Position sensor mechanically suspended operator's seat	Elschema 802
FU42	5	Mode selector, differential lock	Elschema 403
		Fully automatic downshifting	Elschema 404
		Single lever control	Elschema 407
		Gear selector lever carrier	Elschema 408
		Lever steering	Elschema 601
		Boom Suspension System, activation/function selection	Elschema 903
FU43	5	Central lubrication	Elschema 803

FU44		Floating position	Elschema 901 Elschema 902 Elschema 912
FU45	5	Gear lever steering column	Elschema 408
FU48	5	Parking brake	Elschema 501
FU49	5	Secondary steering	Elschema 604
FU50	5	Voltage feed VCADS Pro communication socket Attachment locking[2] ⓘ	Elschema 310 Elschema 904
FU51	5	Ignition-dependent voltage feed I-ECU, V-ECU, V2–ECU, ECC	Elschema 302
FU61	15	Electrically heated fuel filter	Elschema 204 Elschema 317 Elschema 807
FU62[T1] ⓘ	5	Screen, back-up camera	Elschema 804
FU63[a]	5	Activation of back-up camera when reversing	Elschema 804
FU64	5	Voltage feed W-ECU	Elschema 316 Elschema 807
FU65	—	—	Elschema 317 Elschema 807
FU66[T2] ⓘ	15	Radio with voltage converter SO3902	Elschema 314
FU67[b]	15	30A feed for voltage converter SO3902	Elschema 314
FU70[T3] ⓘ	125	Main fuse	Elschema 301
FU71[c]	125	Secondary steering pump	Elschema 604
FU72[C]	125	Preheating coil	Elschema 204
FU74[T4] ⓘ	10	Sensing of battery voltage, Voltage converter SO3901 Electrically controlled battery disconnect	Elschema 301 Elschema 308

		switch	
FU85	15	Fan cyclone filter	Elschema 317 Elschema 807
FU86	—	—	Elschema 317 Elschema 807
FU87	—	—	Elschema 317 Elschema 807

[T1] Located by screen

[T2] Located by voltage converter

[T3] Located in fuse box in engine compartment

[T4] Located by battery disconnector

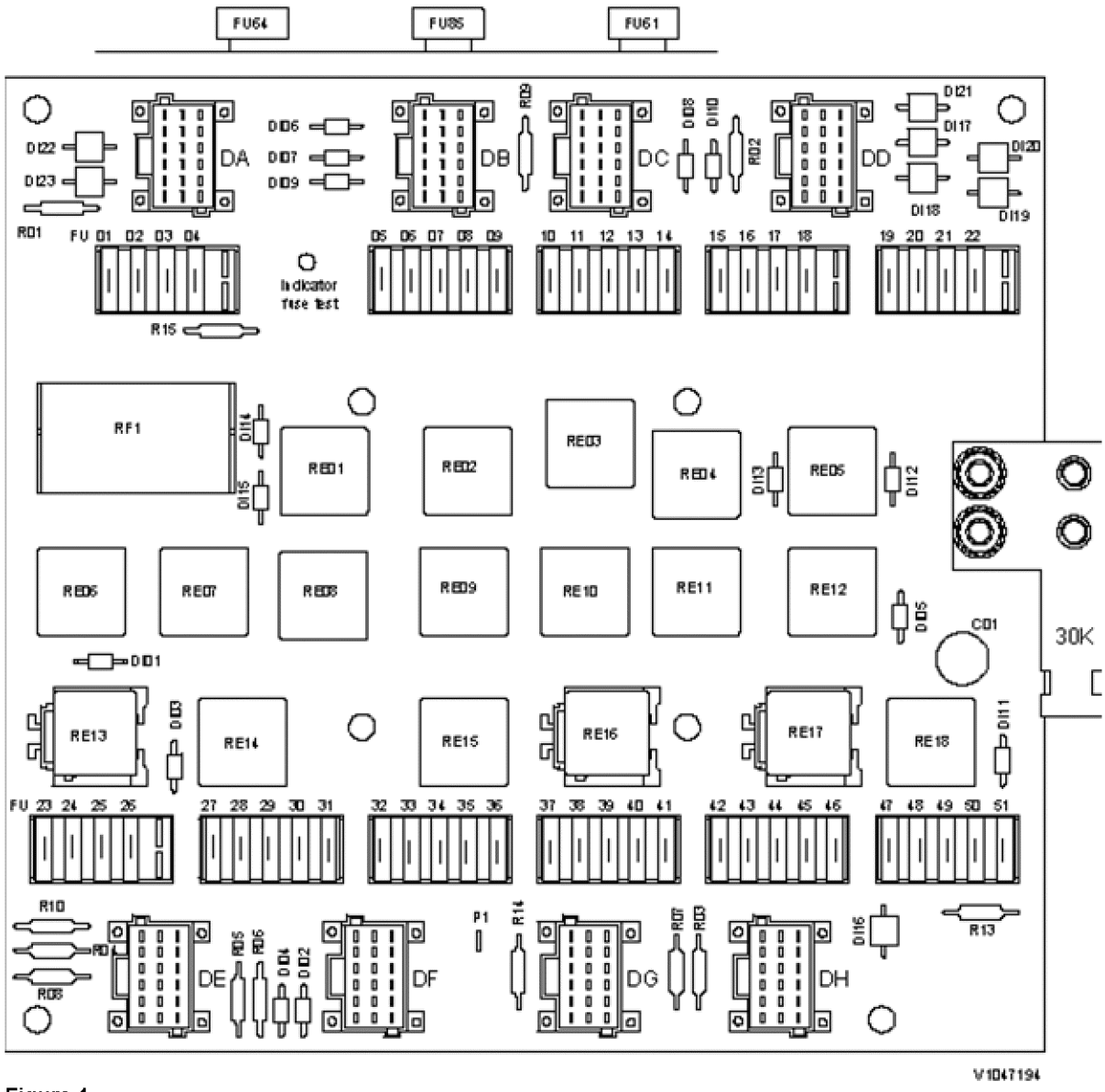

Figure 1
Circuit board in electrical distribution box

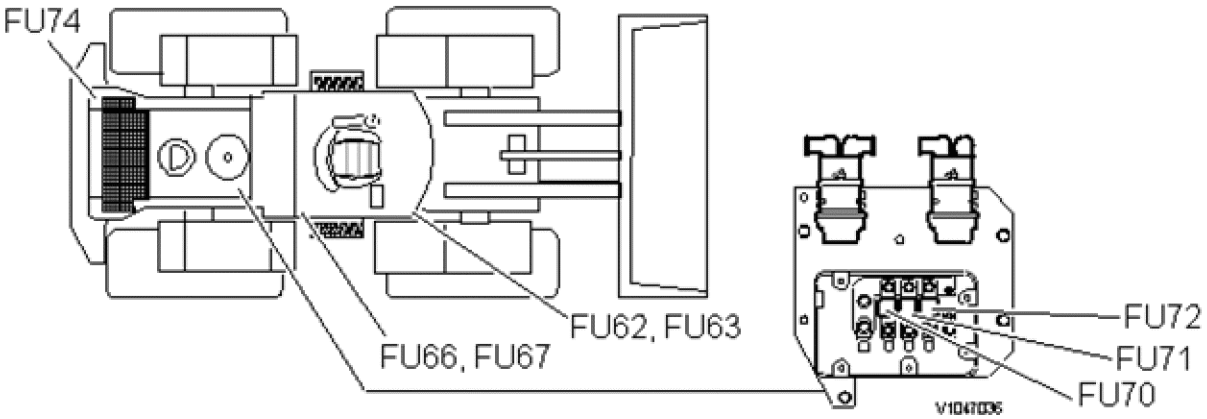

Figure 2
Fuses outside electrical distribution box

---

[1] From 2007–06–15 fuse FU50

[2] From 2007–06–15

VOLVO
Construction Equipment

Service Information

Document Title:	Function Group:	Information Type: **Service Information**	Date: **12/10/2011**
Profile: **WLO, L90F (Volvo) [GB]**			

Cable and component marking explanations

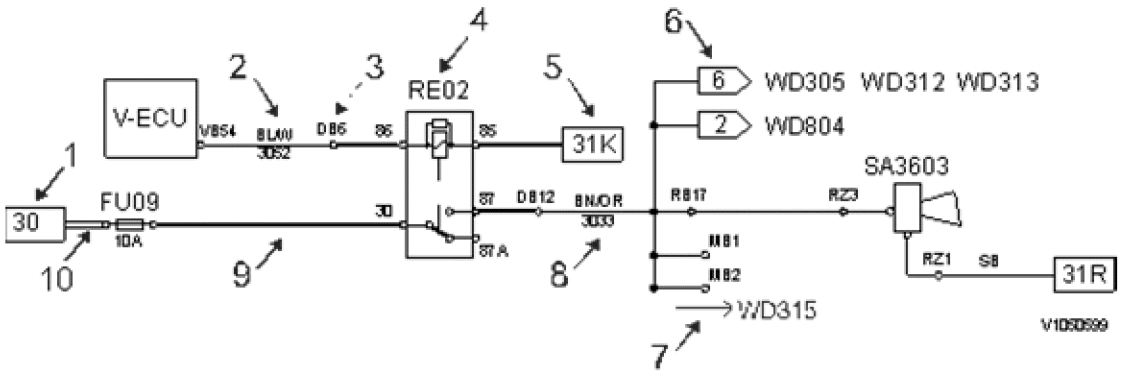

Figure 1
Principle diagram, wiring diagram

1. Voltage feed (30, 15, 15E, etc.)
2. Cable colour
3. Connector, connector pin
4. Component designation
5. Ground connection (31K, 31F, etc)
6. Reference to other diagram (WDxxx), same reference number is found in indicated diagram. The flag's point indicates the current's direction.
7. Reference to other diagram (WDxxx), more information is found in indicated diagram
8. Lead number, made up of function group (e.g., 3) and running number (e.g., 033)
9. A lead drawn with a thick line means that it is a printed circuit on circuit board
10. Connection block

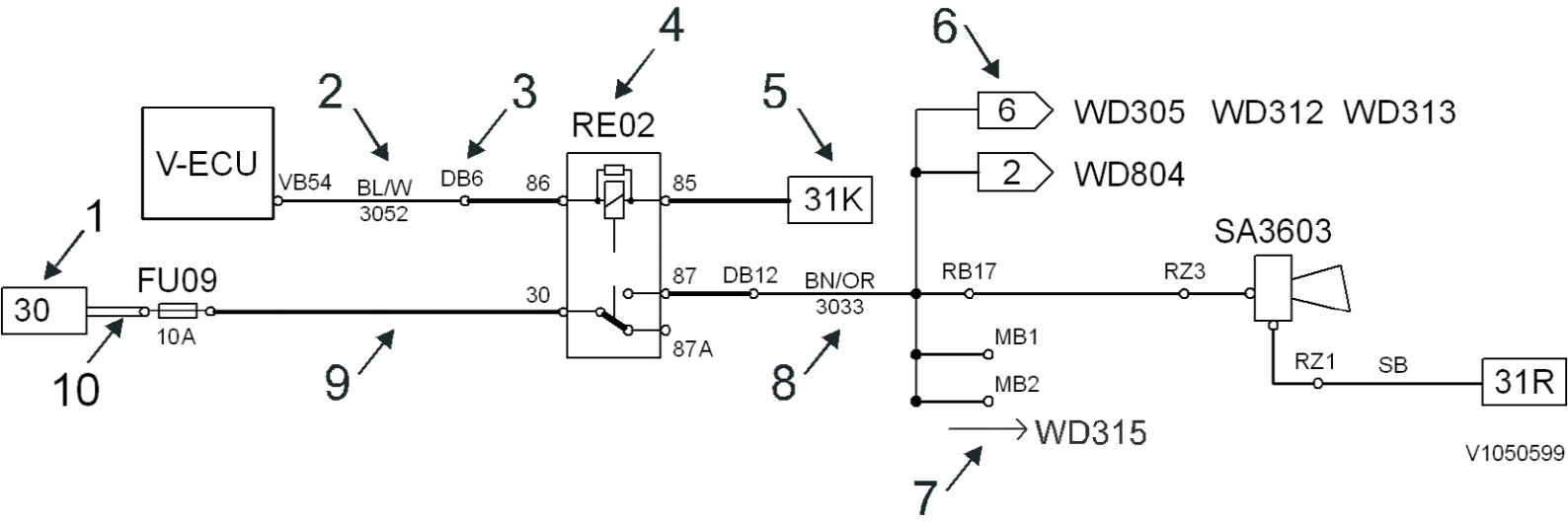
1
2
3
4
5
6
7
8
9
10
V-ECU
VB54
BL/W
3052
DB6
86
RE02
85
31K
6
WD305 WD312 WD313
2
WD804
SA3603
30
FU09
10A
30
87
DB12
BN/OR
3033
RB17
RZ3
87A
MB1
MB2
RZ1
SB
31R
WD315
V1050599

VOLVO
Construction Equipment

Service Information

Document Title:	Function Group:	Information Type: **Service Information**	Date: **12/10/2011**
Profile: **WLO, L90F (Volvo) [GB]**			

Cable and component designations

Leads and components

Cables and components on wiring diagrams are designated by function group division.

Lead marked, e.g., 3033, indicates that it is function group 3 and running number is 033.

Component marked, e.g., SW3601, means that it is a switch (SW), function group 36 and running number is 01.

NOTE **Relays and fuses located on the circuit board are not marked according to function group division.**

Function group division

2	Engine
3	Electrical system, lighting, etc.
4	Power transmission
5	Brakes
6	Steering
8	Cab
9	Hydraulics

Voltage feed (supply)

30	Battery feed
30A	Battery feed via main fuse FU70
30AL	Charging voltage to battery from alternator
30C	Battery feed via main fuse FU70 (not used)
30K	Battery feed to electrical distribution box via main fuse FU70
15A	Ignition-dependent voltage feed via relay RE16
15B	Ignition-dependent voltage feed via relay RE17
15 EECU	Ignition-dependent voltage feed for E-ECU via relay RE13 with delayed cut-out
15EA	Ignition-dependent voltage feed for ECU-controlled functions via RE18
15RA	Ignition-dependent voltage feed to radio
58A	Voltage feed for instrument lighting in switches via dimmer R3501

Ground connection

Ground connections designation 31xx, e.g., 31C, 31CR, 31F, 31FR, 31FL, 31R, and 31K. For ground connections' location, see Stomanslutning
. The leads from ground connections are black.

Colour marking of leads

Leads in wiring diagrams have colour codes with meaning as follows.

BL	Blue	OR	Orange	VO	Violet
BN	Brown	P	Pink	W	White
GN	Green	R	Red	Y	Yellow
GR	Grey	SB	Black		

VOLVO
Construction Equipment

Service Information

Document Title:	Function Group:	Information Type: **Service Information**	Date: **12/10/2011**
Profile: **WLO, L90F (Volvo) [GB]**			

Electrical symbols and designations

Designation	Symbol	Explanation
AL	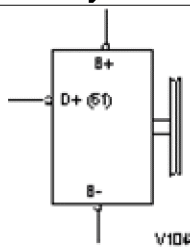	Alternator with charging regulator
	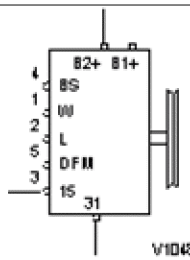	Alternator with charging regulator
BA	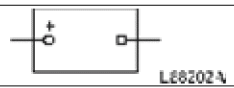	Battery
C		Capacitor
CR	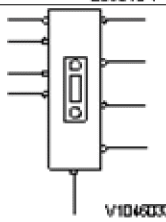	Radio
CU	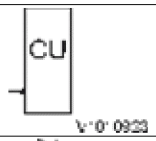	Electronic unit
DI	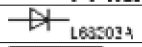	Diode
ECC	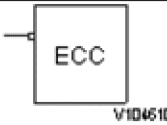	Climate control unit
E-ECU	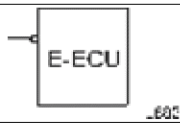	Engine control unit
FC FH FU	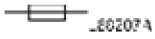	Fuse
HE	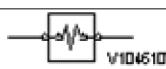	Heating element

		Heating coil seat heating
I-ECU	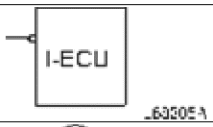	Instrument control unit
IM		Instrument, i.e. hour meter
LA		Light, fixed light
		Light, flashing light
LC	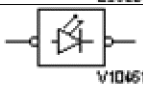	Light-emitting diode
MA	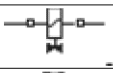	Solenoid valve or PWM-valve for control of oil
MO		Electric motor
	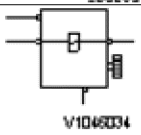	Starter motor
PO	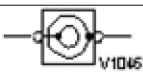	Voltage socket 12 V / 24V
R	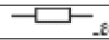	Resistor
	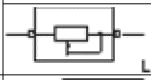	Rheostat
RC	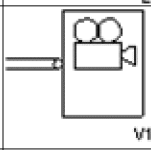	Back-up camera
RE	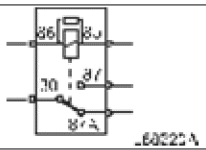	Relay
RF	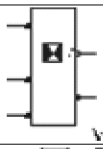	Flasher relay
SA	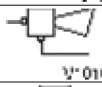	Audible signal
		Audible signal
		Speaker
SE	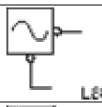	Frequency sensor
	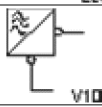	Inductive sensor
	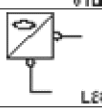	Level sensor
	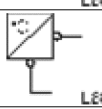	Temperature sensor

VOLVO
Construction Equipment

Service Information

Document Title:	Function Group:	Information Type: **Service Information**	Date: **12/10/2011**
Profile: **WLO, L90F (Volvo) [GB]**			

ECC, I/O list

Pin	Component	Function	Wiring diagram
BB1	SE8709	Pressure refrigerant	Elschema 805
BB2	—	—	
BB3	—	—	
BB4	—	—	
BB5	—	Instrument lighting (58A)	Elschema 805
BB6	—	—	
BB7	SE8301	Position monitor, door	Elschema 805
BB8	—	—	
BB9	—	—	
BB10	ECC	J1708A	Elschema 310
BB11	ECC	J1708B	Elschema 310
BB12	—	—	
BB13	—	—	
BB14	—	—	
BB15	—	—	
BB16	—	—	
BB17	—	—	
BB18	SE8701	Voltage feed (supply)	Elschema 805
BB19	ECC	Voltage feed (supply) (15EA)	Elschema 302
BB20	SE8709	Voltage feed (supply) 5 V	Elschema 805
BB21	—	—	
BB22	MO8703	Actuator air mixing damper Ground	Elschema 806
BB23	MA8701	Magnet clutch AC compressor	Elschema 806
BB24	—	—	
BB25	—	—	
BB26	SE8706	Temperature, cab	Elschema 805
BB27	MO8707	Actuator water mixture, feedback	Elschema 806
BB28	—	—	
BB29	—	—	
BB30	—	—	
BB31	—	—	
BB32	—	—	
BB33	—	—	
BB34	—	—	
BB35	—	—	

BB36	RE14	Voltage feed ECC	Elschema 302
BB37	RE8701	Pause coolant pump	Elschema 806
BB38	—	—	
BB39	—	—	
BB40	—	—	
BB41	SE8701	Communication	Elschema 805
BB42	—	—	
BB43	—	—	
BB44	—	—	
BB45	MO8707	Actuator water mixture	Elschema 806
BB46	MO8701	Cab fan	Elschema 806
BB47	MO8701	Cab fan	Elschema 806
BB48	MO8707, SE8702, SE8706, SE8708, SE8709	Ground	Elschema 805
BB49	SE8708	Temperature air channel	Elschema 805
BB50	SE8702	Temperature evaporator	Elschema 805
BB51	—	—	
BB52	—	—	
BB53	—	—	
BB54	—	—	
BB55	—	—	
BB56	—	—	
BB57	—	—	
BB58	—	—	
BB59	—	—	
BB60	MO8703	Actuator inlet 1/4	Elschema 806
BB61	MO8703	Actuator inlet 1/2	Elschema 806
BB62	MO8703	Actuator inlet 3/4	Elschema 806
BB63	MO8703	Actuator inlet open	Elschema 806
BB64	—	—	
BB65	SE8701	Ground	Elschema 805
BB66	ECC	Voltage feed (supply)	Elschema 302
BB67	MO8703	Voltage feed (supply)	Elschema 806
BB68	MO8707	Actuator water mixture	Elschema 806
BB69	ECC	Ground	Elschema 302
BB70	ECC	Ground	Elschema 302

VOLVO
Construction Equipment

Service Information

Document Title:	Function Group:	Information Type: **Service Information**	Date: **12/10/2011**
Profile: **WLO, L90F (Volvo) [GB]**			

E-ECU, I/O list

Pin	Component	Function	Wiring diagram
EA1	—	—	—
EA2	—	—	—
EA3	—	—	—
EA4	—	—	—
EA5	—	—	—
EA6	—	—	—
EA7	SE2508 SE2309	Voltage feed (supply) 5 V	Elschema 203
EA8	—	—	—
EA9	—	—	—
EA10	—	—	—
EA11	SE2507 SE2508 SE2309	Ground	Elschema 203
EA12	PWM2303	Fuel pressure valve	Elschema 206
EA13	—	—	—
EA14	—	—	—
EA15	SE2502	Air filter monitor	Elschema 202
EA16	PWM2303	Fuel pressure valve	Elschema 206
EA17	—	—	—
EA18	—	—	—
EA19	SE2309	Fuel pressure Common Rail	Elschema 203
EA20	—	—	—
EA21	—	—	—
EA22	SE2508	Boost pressure	Elschema 203
EA23	—	—	—
EA24	—	—	—
EA25	—	—	—
EA26	—	—	—
EA27	—	—	—
EA28	—	—	—
EA29	SE2502	Air filter monitor	Elschema 202
EA30	—	—	—
EA31	—	—	—
EA32	—	—	—
EA33	—	—	—
EA34	—	—	—
EA35	—	—	—
EA36	MA2306	Injector 6	Elschema 206
EA37	SE2701	Engine rpm crankshaft	Elschema 202

EA38	SE2701	Engine rpm crankshaft	Elschema 202
EA39	—	—	—
EA40	MA2305	Injector 5	Elschema 206
EA41	—	—	—
EA42	—	—	—
EA43	—	—	—
EA44	MA2304	Injector 4	Elschema 206
EA45	SE2703	Camshaft speed	Elschema 202
EA46	SE2703	Camshaft speed	Elschema 202
EA47	SE2507	Charge-air temperature	Elschema 203
EA48	MA2303	Injector 3	Elschema 206
EA49	—	—	—
EA50	—	—	—
EA51	—	—	—
EA52	MA2302	Injector 2	Elschema 206
EA53	—	—	—
EA54	—	—	—
EA55	—	—	—
EA56	MA2301	Injector 1	Elschema 206
EA57	E-ECU	Ground	Elschema 204
EA58	—	—	—
EA59	MA2301 MA2302 MA2303	Voltage feed (supply)	Elschema 206
EA60	MA2304 MA2305 MA2306	Voltage feed (supply)	Elschema 206
EA61	—	—	—
EA62	—	—	—
EB1	—	—	—
EB2	—	—	—
EB3	—	—	—
EB4	—	—	—
EB5	—	—	—
EB6	—	—	—
EB7	HE2501	Preheating coil	Elschema 204
EB8	SE2302	Water level in fuel	Elschema 202
EB9	—	—	—
EB10	SE2302 SE2603	Ground	Elschema 202
EB11	SE2203	Engine oil pressure	Elschema 203
EB12	—	—	—
EB13	—	—	—
EB14	—	—	—
EB15	—	—	—
EB16	SE2301	Fuel pressure	Elschema 203
EB17	SE2509	Voltage feed (supply) 5 V	Elschema 202
	SE2203	Voltage feed (supply) 5 V	Elschema 203

	SE2301		
EB18	SE2501 SE2509	Ground	Elschema 202
	SE2203 SE2301 SE2606	Ground	Elschema 203
EB19	—	—	—
EB20	—	—	—
EB21	—	—	—
EB22	—	—	—
EB23	SE2603	Coolant level	Elschema 202
EB24	—	—	—
EB25	RE2501	Preheating	Elschema 204
EB26	—	—	—
EB27	SE2606	Coolant temperature, engine	Elschema 203
EB28	SE2509	Crankcase pressure	Elschema 202
EB29	MO3301	Starter motor	Elschema 303
EB30	MA2504	EGR-valve	Elschema 204
EB31	SE2501	Temperature induction air	Elschema 202
EB32	—	—	—
EB33	—	—	—
EB34	—	—	—
EB35	—	—	—
EB36	—	—	—
EB37	—	—	—
EB38	—	—	—
EB39	—	—	—
EB40	—	—	—
EB41	—	—	—
EB42	—	—	—
EB43	—	—	—
EB44	—	—	—
EB45	—	—	—
EB46	—	—	—
EB47	—	—	—
EB48	—	—	—
EB49	—	—	—
EB50	—	—	—
EB51	—	—	—
EB52	—	—	—
EB53	—	—	—
EB54	—	—	—
EB55	—	—	—
EB56	—	—	—
EB57	E-ECU	Voltage feed (supply) 24 V	Elschema 204
EB58	E-ECU	Ground	Elschema 204
EB59	E-ECU	Ground	Elschema 204
EB60	E-ECU	Voltage feed (supply) 24 V	Elschema 204
EB61	E-ECU	Ground	Elschema 204
EB62	—	—	—

VOLVO
Construction Equipment

Service Information

Document Title:	Function Group:	Information Type: **Service Information**	Date: **12/10/2011**
Profile: **WLO, L90F (Volvo) [GB]**			

I-ECU, I/O list

Pin	Component	Function	Wiring diagram
IA1	I-ECU	Voltage feed (supply) 30K	Wiring diagram 302
IA2	I-ECU	Voltage feed (supply) 30K	Wiring diagram 302
IA3	I-ECU	Voltage feed (supply) 15EA	Wiring diagram 302
IA4	I-ECU	Voltage feed (supply) 15EA	Wiring diagram 302
IA5	I-ECU	Ground	Wiring diagram 302
IA6	I-ECU	Ground	Wiring diagram 302
IA7	I-ECU	Ground	Wiring diagram 302
IA8	I-ECU	Ground	Wiring diagram 302
IA9	—	—	
IA10	—	—	
IA11	—	—	
IA12	SW3801	Column 4	Wiring diagram 309
IA13	SW3801	Column 3	Wiring diagram 309
IA14	SW3801	Column 2	Wiring diagram 309
IA15	SW3801	Column 1	Wiring diagram 309
IA16	—	—	
IA17	SW3801	Row 4	Wiring diagram 309
IA18	SW3801	Row 3	Wiring diagram 309
IA19	SW3801	Row 2	Wiring diagram 309
IA20	SW3801	Row 1	Wiring diagram 309
IA21	SW3801	Ground	Wiring diagram 309
IA22	SW3801	Background lighting	Wiring diagram 309
IA23	SW3801	Background lighting	Wiring diagram 309
IA24	RE12	Voltage feed (supply)	Wiring diagram 302
IA25	—	—	
IA26	—	—	
IA27	—	—	
IA28	—	—	

IA29	I-ECU	CAN2 L J1939	Wiring diagram 310
IA30	I-ECU	CAN2 H J1939	Wiring diagram 310
IA31	—	—	
IA32	—	—	
IA33	—	—	
IA34	—	—	
IA35	—	—	
IA36	—	—	
IA37	J1587/1708	J1587/1708 inverted	Wiring diagram 310
IA38	J1587/1708	J1587/1708 non-inverted	Wiring diagram 310
IA39	I-ECU	CAN1 L J1939	Wiring diagram 310
IA40	I-ECU	CAN1 H J1939	Wiring diagram 310
IB1	—	—	
IB2	SW4212	Position 4 (APS)	Wiring diagram 403
IB3	SW4212	Position 3 (APS)	Wiring diagram 403
IB4	SW4212	Position 2 (APS)	Wiring diagram 403
IB5	SW4212	Position 2 (APS)	Wiring diagram 403
IB6	—	—	
IB7	SE2702 (primary)	Ground	Wiring diagram 205
IB8	SE2702 (secondary)	Ground	Wiring diagram 205
IB9	SE2702 (primary)	5 V	Wiring diagram 205
IB10	SE2702 (secondary)	5 V	Wiring diagram 205
IB11	—	—	
IB12	—	—	
IB13	—	—	
IB14	—	—	
IB15	—	—	
IB16	—	—	
IB17	—	—	
IB18	—	—	
IB19	R2701	Horn	Wiring diagram 205
IB20	—	—	
IB21	—	—	
IB22	—	—	
IB23	—	—	
IB24	—	—	
IB25	—	—	
IB26	—	—	
IB27	SE2702 (primary)	Horn	Wiring diagram 205
IB28	SE2702 (secondary)	Horn	Wiring diagram 205
IB29	—	—	
IB30	—	—	
IB31	—	—	
IB32	—	—	
IB33	—	—	

IB34	I-ECU	Ground	Wiring diagram 302
IB35	—	—	
IB36	—	—	
IB37	—	—	
IB38	—	—	
IB39	—	—	
IB40	—	—	
IC1	—	—	
IC2	MO3603	Windshield washer rear	Wiring diagram 801
IC3	SW3612	Activation windshield washer rear	Wiring diagram 801
IC4	MO3601	Windshield washer front	Wiring diagram 801
IC5	SW3602	Interval windshield wiper front	Wiring diagram 801
IC6	SW3602	Constant windshield wiper front	Wiring diagram 801
IC7	SW3502	Indication of activated high beams	Wiring diagram 304
IC8	SW3624	Indication of activated rotating beacon	Wiring diagram 306
IC9	SW3504	Indication of activated work lights	Wiring diagram 312
IC10	AL3201	Indication of charging	Wiring diagram 301
IC11	SW5501	Parking brake	Wiring diagram 501
IC12	SW4602	Differential lock	Wiring diagram 403
IC13	SW4205	Directional gear steering column, forward (F)	Wiring diagram 401 Wiring diagram 408
IC14	SW4206	Gear selector steering column, 1st gear	Wiring diagram 401 Wiring diagram 408
IC15	SW4206	Gear selector steering column, 2nd gear	Wiring diagram 401 Wiring diagram 408
IC16	SW4206	Gear selector steering column, 4th gear	Wiring diagram 401 Wiring diagram 408
IC17	SW4205	Directional gear steering column, reverse (R)	Wiring diagram 401 Wiring diagram 408
IC18	SW4205	Directional gear steering column, neutral (N)	Wiring diagram 401 Wiring diagram 408
IC19	—	—	
IC20	SW9143	Attachment lock	Wiring diagram 904
IC21	SW3301	Crank signal	Wiring diagram 303
IC22	SW3605	Direction indicators right	Wiring diagram 306
IC23	SW3605	Direction indicators left	Wiring diagram 306
IC24	SW4211	Fully automatic downshifting	Wiring diagram 404

IC25	—	—	
IC26	—	—	
IC27			
IC28	—	—	
IC29	—	—	
IC30			
IC31	—	—	
IC32	—	—	
IC33	—	—	
IC34	—	—	
IC35	—	—	
IC36	—	—	
IC37	—	—	
IC38			
IC39	—	—	
IC40	—	—	

VOLVO
Construction Equipment

Service Information

Document Title:	Function Group:	Information Type: **Service Information**	Date: **12/10/2011**
Profile: **WLO, L90F (Volvo) [GB]**			

I-ECU, I/O list

Pin	Component	Function	Wiring diagram
IA1	I-ECU	Voltage feed (supply) 30K	Wiring diagram 302
IA2	I-ECU	Voltage feed (supply) 30K	Wiring diagram 302
IA3	I-ECU	Voltage feed (supply) 15EA	Wiring diagram 302
IA4	I-ECU	Voltage feed (supply) 15EA	Wiring diagram 302
IA5	I-ECU	Ground	Wiring diagram 302
IA6	I-ECU	Ground	Wiring diagram 302
IA7	I-ECU	Ground	Wiring diagram 302
IA8	I-ECU	Ground	Wiring diagram 302
IA9	—	—	
IA10	—	—	
IA11	—	—	
IA12	SW3801	Column 4	Wiring diagram 309
IA13	SW3801	Column 3	Wiring diagram 309
IA14	SW3801	Column 2	Wiring diagram 309
IA15	SW3801	Column 1	Wiring diagram 309
IA16	—	—	
IA17	SW3801	Row 4	Wiring diagram 309
IA18	SW3801	Row 3	Wiring diagram 309
IA19	SW3801	Row 2	Wiring diagram 309
IA20	SW3801	Row 1	Wiring diagram 309
IA21	SW3801	Ground	Wiring diagram 309
IA22	SW3801	Background lighting	Wiring diagram 309
IA23	SW3801	Background lighting	Wiring diagram 309
IA24	RE12	Voltage feed (supply)	Wiring diagram 302
IA25	—	—	
IA26	—	—	
IA27	—	—	
IA28	—	—	

IA29	I-ECU	CAN2 L J1939	Wiring diagram 310
IA30	I-ECU	CAN2 H J1939	Wiring diagram 310
IA31	—	—	
IA32	—	—	
IA33	—	—	
IA34	—	—	
IA35	—	—	
IA36	—	—	
IA37	J1587/1708	J1587/1708 inverted	Wiring diagram 310
IA38	J1587/1708	J1587/1708 non-inverted	Wiring diagram 310
IA39	I-ECU	CAN1 L J1939	Wiring diagram 310
IA40	I-ECU	CAN1 H J1939	Wiring diagram 310
IB1	—	—	
IB2	SW4212	Position 4 (APS)	Wiring diagram 403
IB3	SW4212	Position 3 (APS)	Wiring diagram 403
IB4	SW4212	Position 2 (APS)	Wiring diagram 403
IB5	SW4212	Position 2 (APS)	Wiring diagram 403
IB6	—	—	
IB7	SE2702 (primary)	Ground	Wiring diagram 205
IB8	SE2702 (secondary)	Ground	Wiring diagram 205
IB9	SE2702 (primary)	5 V	Wiring diagram 205
IB10	SE2702 (secondary)	5 V	Wiring diagram 205
IB11	—	—	
IB12	—	—	
IB13	—	—	
IB14	—	—	
IB15	—	—	
IB16	—	—	
IB17	—	—	
IB18	—	—	
IB19	R2701	Horn	Wiring diagram 205
IB20	—	—	
IB21	—	—	
IB22	—	—	
IB23	—	—	
IB24	—	—	
IB25	—	—	
IB26	—	—	
IB27	SE2702 (primary)	Horn	Wiring diagram 205
IB28	SE2702 (secondary)	Horn	Wiring diagram 205
IB29	—	—	
IB30	—	—	
IB31	—	—	
IB32	—	—	
IB33	—	—	

IB34	I-ECU	Ground	Wiring diagram 302
IB35	—	—	
IB36	—	—	
IB37	—	—	
IB38	—	—	
IB39	—	—	
IB40	—	—	
IC1	—	—	
IC2	MO3603	Windshield washer rear	Wiring diagram 801
IC3	SW3612	Activation windshield washer rear	Wiring diagram 801
IC4	MO3601	Windshield washer front	Wiring diagram 801
IC5	SW3602	Interval windshield wiper front	Wiring diagram 801
IC6	SW3602	Constant windshield wiper front	Wiring diagram 801
IC7	SW3502	Indication of activated high beams	Wiring diagram 304
IC8	SW3624	Indication of activated rotating beacon	Wiring diagram 306
IC9	SW3504	Indication of activated work lights	Wiring diagram 312
IC10	AL3201	Indication of charging	Wiring diagram 301
IC11	SW5501	Parking brake	Wiring diagram 501
IC12	SW4602	Differential lock	Wiring diagram 403
IC13	SW4205	Directional gear steering column, forward (F)	Wiring diagram 401 Wiring diagram 408
IC14	SW4206	Gear selector steering column, 1st gear	Wiring diagram 401 Wiring diagram 408
IC15	SW4206	Gear selector steering column, 2nd gear	Wiring diagram 401 Wiring diagram 408
IC16	SW4206	Gear selector steering column, 4th gear	Wiring diagram 401 Wiring diagram 408
IC17	SW4205	Directional gear steering column, reverse (R)	Wiring diagram 401 Wiring diagram 408
IC18	SW4205	Directional gear steering column, neutral (N)	Wiring diagram 401 Wiring diagram 408
IC19	—	—	
IC20	SW9143	Attachment lock	Wiring diagram 904
IC21	SW3301	Crank signal	Wiring diagram 303
IC22	SW3605	Direction indicators right	Wiring diagram 306
IC23	SW3605	Direction indicators left	Wiring diagram 306
IC24	SW4211	Fully automatic downshifting	Wiring diagram 404

IC25	—	—	
IC26	—	—	
IC27			
IC28	—	—	
IC29	—	—	
IC30			
IC31	—	—	
IC32	—	—	
IC33	—	—	
IC34	—	—	
IC35	—	—	
IC36	—	—	
IC37	—	—	
IC38			
IC39	—	—	
IC40	—	—	

VOLVO
Construction Equipment

Service Information

Document Title:	Function Group:	Information Type: **Service Information**	Date: **12/10/2011**
Profile: **WLO, L90F (Volvo) [GB]**			

V2-ECU, I/O list

Pin	Component	Function	Wiring diagram
V2A1	—	—	—
V2A2	—	—	—
V2A3	—	—	—
V2A4	—	—	—
V2A5	SE9401 (first angle)	Angle frame joint	Wiring diagram 602
V2A6	SE9401 (second angle)	Angle frame joint	Wiring diagram 602
V2A7	—	—	—
V2A8	—	—	—
V2A9	—	—	—
V2A10	—	—	—
V2A11	—	—	—
V2A12	—	—	—
V2A13	—	—	—
V2A14	—	—	—
V2A15	—	—	—
V2A16	—	—	—
V2A17	1587/J1708A	Non-inverted	Wiring diagram 310
V2A18	1587/J1708A	Inverted	Wiring diagram 310
V2A19	CAN1 J1939	CAN1 L	Wiring diagram 310
V2A20	CAN1 J1939	CAN1 H	Wiring diagram 310
V2A21	CAN2 J1939	CAN2 L	Wiring diagram 310
V2A22	CAN2 J1939	CAN2 H	Wiring diagram 310
V2A23		Voltage feed (supply) 15EA	Wiring diagram 302
V2A24	SE6601	Ground	Wiring diagram 601
	SE6401	Ground	Wiring diagram 604
	SE9145 SE9546 SE9147	Ground	Wiring diagram 909
	SE9104 SE9105	Ground	Wiring diagram 910
V2A25	SE6601	Ground	Wiring diagram 601
	SE6401	Ground	Wiring diagram 602
	SE9145 SE9546 SE9147	Ground	Wiring diagram 909

	SE9104 SE9105	Ground	Wiring diagram 910
V2A26	—	—	—
V2A27	—	—	—
V2A28	—	—	—
V2A29	—	—	—
V2A30	—	—	—
V2A31	—	—	—
V2A32	SE6601	Voltage feed (supply) 5 V	Wiring diagram 601
V2A33	—	—	—
V2A34	—	—	—
V2A35	—	—	—
V2A36	—	—	—
V2A37	SW4216	Activating CDC	Wiring diagram 601
V2A38	—	—	—
V2A39	—	—	—
V2A40	—	—	—
V2A41	—	—	—
V2A42	—	—	—
V2A43	—	—	—
V2A44	—	—	—
V2A45	—	—	—
V2A46	—	—	—
V2A47	V2-ECU	Ground	Wiring diagram 302
V2A48	—	—	—
V2A49	—	—	—
V2A50	—	—	—
V2A51	SE6601 (first)	Steering lever	Wiring diagram 601
V2A52	SE6601 (second)	Steering lever	Wiring diagram 601
V2A53	—	—	—
V2A54	—	—	—
V2A55	SE6401	Voltage feed (supply) 5 V	Wiring diagram 602
V2A56	—	—	—
V2A57	SW4217	Reverse	Wiring diagram 601
V2A58	—	—	—
V2A59	—	—	—
V2A60	—	—	—
V2A61	—	—	—
V2A62	—	—	—
V2A63	SE4218	Position monitor armrest	Wiring diagram 601
V2A64	—	—	—
V2A65	—	—	—
V2A66	SW4217	Forward	Wiring diagram 601
V2A67	SW9144	Floating position	Wiring diagram 911
V2A68	—	—	—
V2A69	V2-ECU	Voltage feed (supply) 24 V	Wiring diagram 302
V2A70	V2-ECU	Voltage feed (supply) 24 V	Wiring diagram 302
V2B1	—	—	—
V2B2	—	—	—
V2B3	—	—	—

V2B4	—	—	—
V2B5	—	—	—
V2B6	—	—	—
V2B7	—	—	—
V2B8	—	—	—
V2B9	—	—	—
V2B10	—	—	—
V2B11	—	—	—
V2B12	—	—	—
V2B13	—	—	—
V2B14	—	—	—
V2B15	—	—	—
V2B16	—	—	—
V2B17	—	—	—
V2B18	—	—	—
V2B19	—	—	—
V2B20	—	—	—
V2B21	—	—	—
V2B22	—	—	—
V2B23	—	—	—
V2B24	—	—	—
V2B25	—	—	—
V2B26	—	—	—
V2B27	—	—	—
V2B28	—	—	—
V2B29	—	—	—
V2B30	—	—	—
V2B31	—	—	—
V2B32		—	—
V2B33	—	—	—
V2B34	—	—	—
V2B35	—	—	—
V2B36	—	—	—
V2B37	—	—	—
V2B38	—	—	—
V2B39	—	—	—
V2B40	—	—	—
V2B41	—	—	—
V2B42	—	—	—
V2B43	—	—	—
V2B44	—	—	—
V2B45	—	—	—
V2B46	—	—	—
V2B47	—	—	—
V2B48	—	—	—
V2B49	—	—	—
V2B50	—	—	—
V2B51	—	—	—
V2B52	—	—	—
V2B53	—	—	—
V2B54	—	—	—
V2B55	—	—	—
V2B56	—	—	—
V2B57	—	—	—
V2B58	—	—	—
V2B59	—	—	—
V2B60	—	—	—
V2B61	—	—	—
V2B62	—	—	—
V2B63	—	—	—
V2B64			

	—	—	—
V2B65	—	—	—
V2B66	—	—	—
V2B67	—	—	—
V2B68	—	—	—
V2B69	—	—	—
V2B70	—	—	—

VOLVO
Construction Equipment

Service Information

Document Title:	Function Group:	Information Type: **Service Information**	Date: **12/10/2011**
Profile: **WLO, L90F (Volvo) [GB]**			

Component list: Heating coils, instruments, service socket

Component	Designation	Function	Wiring diagram
Heating element	HE2301	Electric heater fuel filter	Elschema 204
	HE2501	Preheating coil	Elschema 204
	HE3605	Electric heat rear-view mirror left	Elschema 804
	HE3606	Electric heat rear-view mirror right	Elschema 804
	HE8501	Seat heating	Elschema 802
Instruments	IM3812	Hour meter	Elschema 301
Service socket	VP	VCADS Pro communication socket	Elschema 310

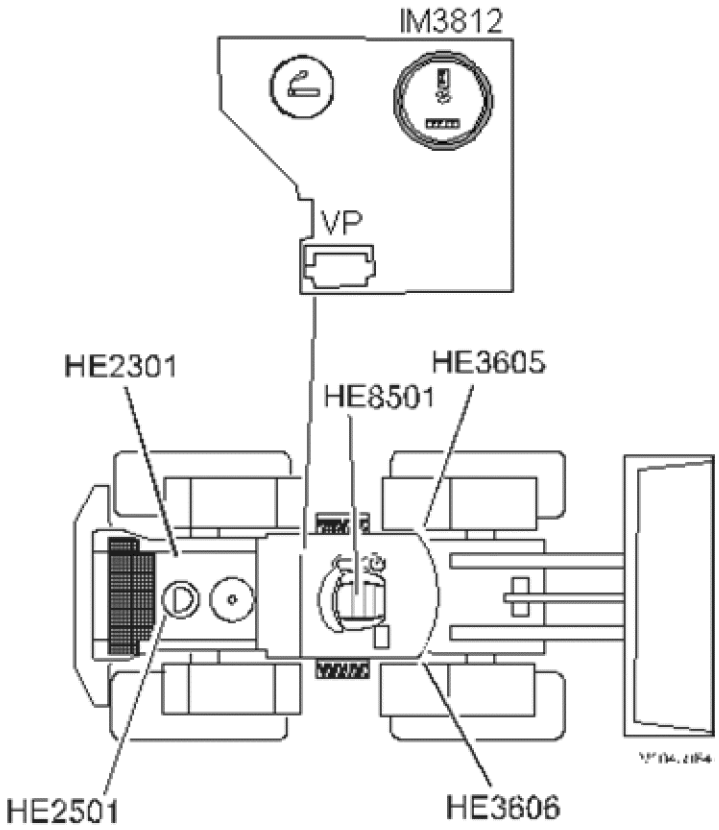

Figure 1
Heating coil, instruments, and service socket

VOLVO
Construction Equipment

Service Information

Document Title:	Function Group:	Information Type: **Service Information**	Date: **12/10/2011**
Profile: **WLO, L90F (Volvo) [GB]**			

Component list: Lights

Designation	Function	Wiring diagram
LA3501	Low beam, left	Elschema 304
LA3502	Low beam, right	Elschema 304
LA3503	High beam, left	Elschema 304
LA3504	High beam, right	Elschema 304
LA3505	Left front side light	Elschema 304
LA3506	Right front side light	Elschema 304
LA3507	Parking light left rear	Elschema 304
LA3508	Parking light right rear	Elschema 304
LA3509	Work light left front	Elschema 305
LA3510	Work light right front	Elschema 305
LA3511	Work light radiator casing, left	Elschema 305
LA3513	Work light radiator casing, right	Elschema 305
LA3515	Work light cab front left	Elschema 305 Elschema 312
LA3516	Work light cab front left	Elschema 312
LA3517	Work light cab front right	Elschema 305 Elschema 312
LA3518	Work light cab front right	Elschema 312
LA3519	Work light, cab, rear left	Elschema 305 Elschema 312 Elschema 313
LA3520	Work light, cab, rear right	Elschema 305

		Elschema 312
		Elschema 313
LA3521	Parking light left front	Elschema 304
LA3522	Parking light right front	Elschema 304
LA3523	Interior lighting front	Elschema 306
LA3524	Interior lighting front (spotlight)	Elschema 306
LA3525	Interior lighting right	Elschema 306
LA3526	Work lights attachment	Elschema 305
LA3527	Number plate lighting	Elschema 304
LA3528	Interior lighting right (spotlight)	Elschema 306
LA3529	Work light, cab, rear left	Elschema 312
		Elschema 313
LA3530	Work light, cab, rear right	Elschema 312
		Elschema 313
LA3602	Direction indicator, left front	Elschema 306
LA3603	Direction indicator, right front	Elschema 306
LA3604	Direction indicator, left rear	Elschema 306
LA3605	Direction indicator, right rear	Elschema 306
LA3624	Rotating beacon	Elschema 306
LA3625	Strobe light	Elschema 306
LA3627	Strobe light (back-up warning)	Elschema 311
LA5201	Brake light, left	Elschema 501
LA5202	Brake light, right	Elschema 501

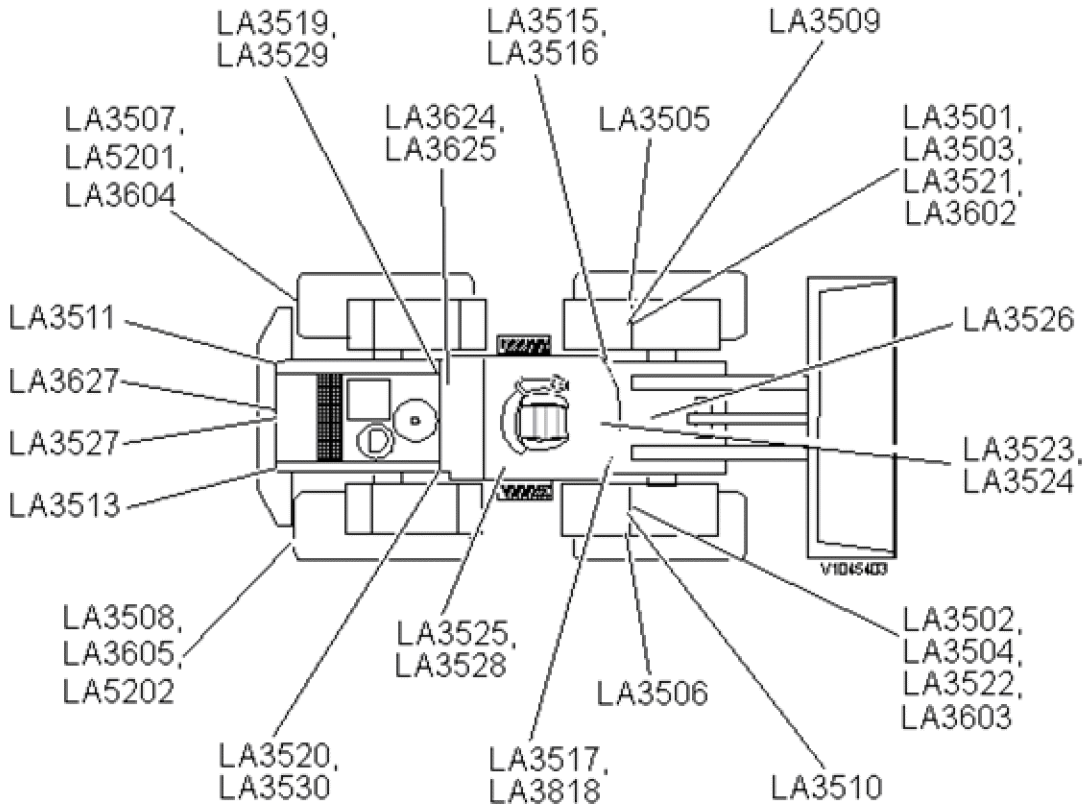

Figure 1
Lamps

VOLVO
Construction Equipment

Service Information

Document Title:	Function Group:	Information Type: **Service Information**	Date: **12/10/2011**
Profile: **WLO, L90F (Volvo) [GB]**			

Component list: Solenoid valves

Designation	Type	Function	Wiring diagram
MA2301	Injectors	Injector 1	Elschema 206
MA2302	Injectors	Injector 2	Elschema 206
MA2303	Injectors	Injector 3	Elschema 206
MA2304	Injectors	Injector 4	Elschema 206
MA2305	Injectors	Injector 5	Elschema 206
MA2306	Injectors	Injector 6	Elschema 206
MA2504	Solenoid valve	EGR-valve	Elschema 204
MA2601	Hydraulic valve	Reversible cooling fan, disengagement	Elschema 201
MA2602	Hydraulic valve	Reversible cooling fan, rotation direction	Elschema 201
MA4603	Hydraulic valve	Differential lock	Elschema 403
MA5501	Hydraulic valve	Parking brake	Elschema 501
MA5502	Hydraulic valve	Brake pressure charging	Elschema 501
MA8701	Magnet clutch	Engagement and disengagement of cooling compressor	Elschema 872
MA9101	Hydraulic valve	Attachment lock, open	Elschema 904
MA9102	Hydraulic valve	Boom Suspension System	Elschema 903
MA9103	Hydraulic valve	Boom Suspension System	Elschema 903
MA9104	Hydraulic valve	Single-acting lift function	Elschema 903
MA9106	Hydraulic valve	Attachment lock, close	Elschema 904
MA9112	Hydraulic valve	Electric lever lock	Elschema 902
MA9113	Hydraulic valve	Lever lock single lever	Elschema 912
MA9141	Hold solenoid	Bucket positioner	Elschema 901 Elschema 902 Elschema 912

MA9142	Hold solenoid	Boom kick-out	Elschema 901 Elschema 902 Elschema 912
MA9144	Hold solenoid	3rd hydraulic function	Elschema 904 Elschema 905

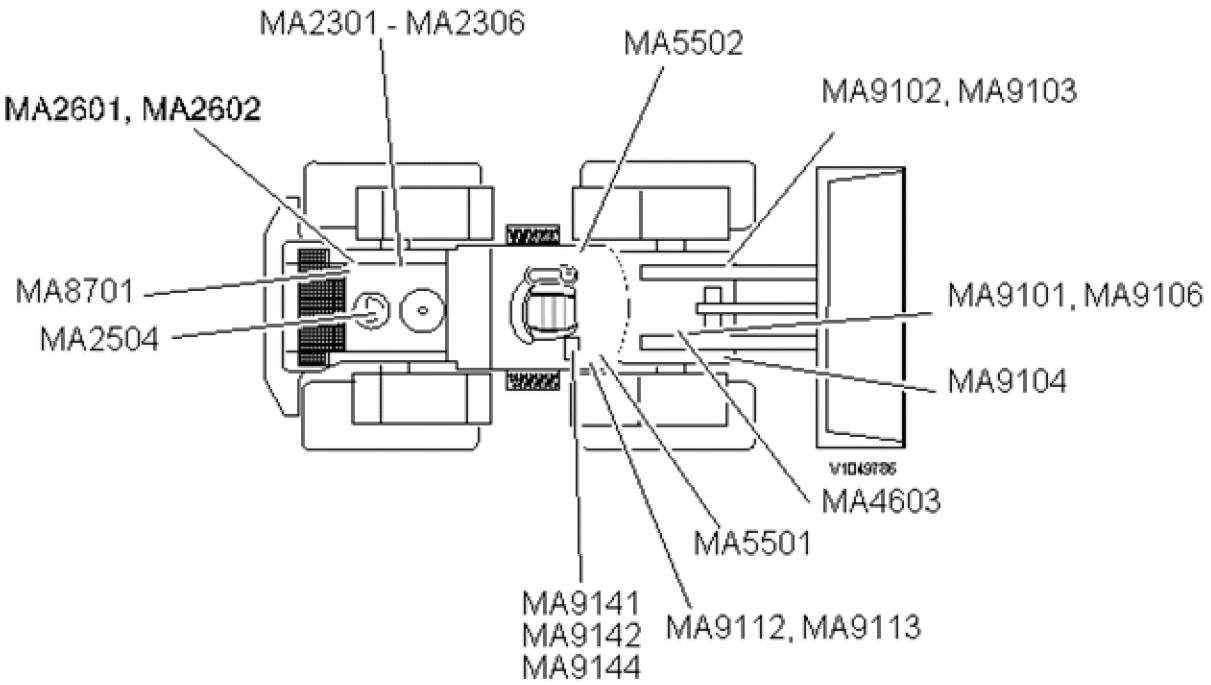

Figure 1
Solenoid valves

VOLVO
Construction Equipment

Service Information

Document Title:	Function Group:	Information Type: **Service Information**	Date: **12/10/2011**
Profile: **WLO, L90F (Volvo) [GB]**			

Component list: PWM valves

Designation	Function	Wiring diagram
PWM2303	Fuel pressure valve	Elschema 206
PWM2601	Control pump 3 (P3)	Elschema 201
PWM6601	Lever steering left	Elschema 601
PWM6602	Lever steering right	Elschema 601
PWM9133	Output control pump 2 (P2)	Elschema 908

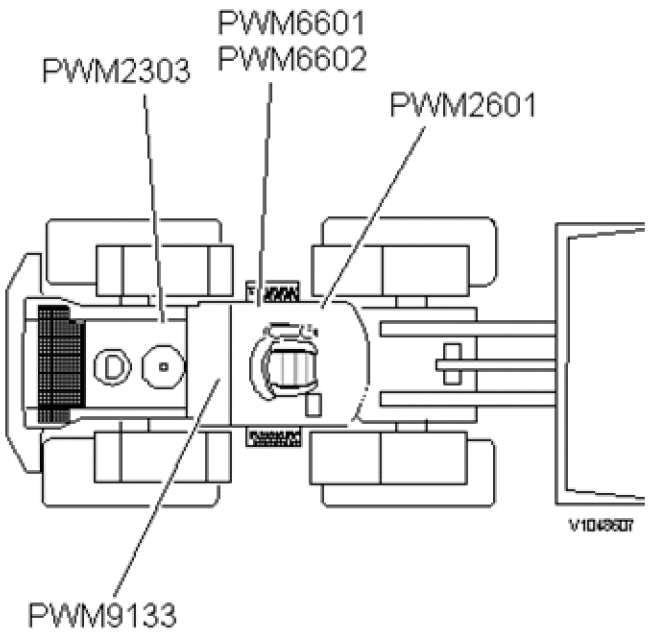

Figure 1
PWM valves

VOLVO
Construction Equipment

Service Information

Document Title:	Function Group:	Information Type: **Service Information**	Date: **12/10/2011**
Profile: **WLO, L90F (Volvo) [GB]**			

Component list: Motors, resistors, monitoring system

Component	Designation	Function	Wiring diagram
Motors	MO3301	Starter motor	Elschema 301
			Elschema 303
	MO3601	Windshield washer front	Elschema 801
	MO3602	Windshield wiper front	Elschema 801
	MO3603	Windshield washer rear	Elschema 801
	MO3604	Windshield wiper rear	Elschema 801
	MO3605	Electrically controlled rear-view mirror, left horizontal	Elschema 804
	MO3606	Electrically controlled rear-view mirror, left vertical	Elschema 804
	MO3607	Electrically controlled rear-view mirror, right horizontal	Elschema 804
	MO3608	Electrically controlled rear-view mirror, right vertical	Elschema 804
	MO6401	Secondary steering pump	Elschema 604
	MO8501	Compressor for air-suspension operator's seat	Elschema 802
	MO8701	Cab fan	Elschema 872
	MO8702	Fan cyclone filter	Elschema 807
	MO8703	Actuator air mixing damper	Elschema 872
	MO8707	Actuator heat valve	Elschema 872
	MO8711	Pause coolant pump	Elschema 872
Resistors	R01[a]	—	Elschema 317
	R02–R05[T1] ⓘ	Load resistor for mode selector	Elschema 403
	R06–R10[a]	—	Elschema 317
	R13[a]	Delayed cut-out RE18	Elschema 303
	R14[a]	Pre-magnetisation, alternator	Elschema 301
	R15[a]	Fuse test	Elschema 317

	R2701	Hand throttle	Elschema 205
	R3201[T2] ⓘ	Pre-magnetisation, alternator	Elschema 301
	R3502	Dimmer instrument lighting	Elschema 304
	R3601[T3] ⓘ	Terminating resistor V-ECU	Elschema 310
Monitoring system	RC8401	Back-up camera	Elschema 804
	RM8401	Display window	Elschema 804

[T1] Located on circuit board

[T2] Located by connector DG

[T3] Located by connector VA on V-ECU

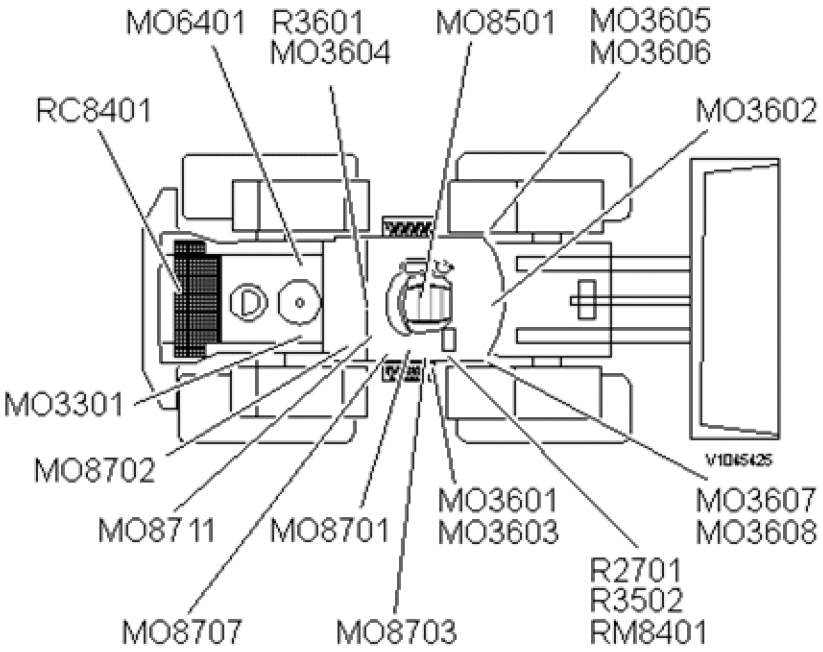

Figure 1
Motors, resistors, monitoring system

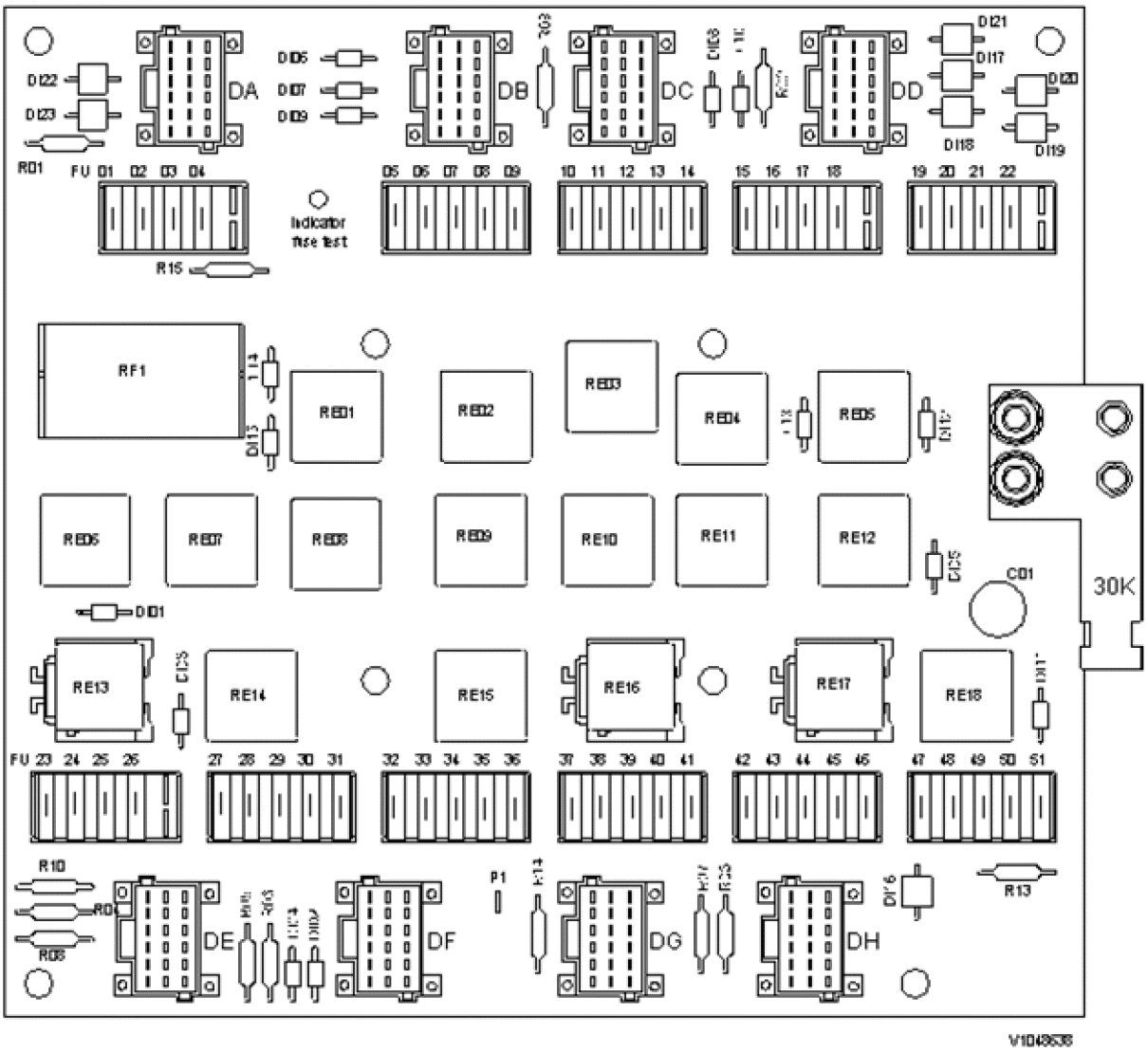

Figure 2
Resistors located on circuit board in electrical distribution box

VOLVO
Construction Equipment

Service Information

Document Title:	Function Group:	Information Type: **Service Information**	Date: **12/10/2011**
Profile: **WLO, L90F (Volvo) [GB]**			

Component list: Relays

Designation	Function	Wiring diagram
RE01	Bucket positioner	Wiring diagram 901
		Wiring diagram 902
		Wiring diagram 912
RE02	Reversing alarm	Wiring diagram 315
RE03	Work lights front	Wiring diagram 305
RE04	Work lights cab, rear	Wiring diagram 305
	Double work lights cab, rear	Wiring diagram 312
	Continuous work lights rear	Wiring diagram 313
RE05	Boom kick-out	Wiring diagram 901
	Boom kick-out (automatic lift) with 4th hydraulic function	Wiring diagram 902
	Boom kick-out (automatic lift) with single lever	Wiring diagram 912
RE06	Starter relay	Wiring diagram 303
RE07	Work lights cab front	Wiring diagram 305
	Double work lights cab front	Wiring diagram 312
RE08	Boom Suspension System, engagement	Wiring diagram 903
RE09	Windshield wiper rear	Wiring diagram 801
RE10	Brake lights	Wiring diagram 501
RE11	Work lights radiator casing	Wiring diagram 305
RE12	30 supply controlled by I-ECU Hold voltage RE13	Wiring diagram 302
RE13	Voltage feed E-ECU, V-ECU, V2–ECU	Wiring diagram 302
RE14	Voltage feed ECC	Wiring diagram 302
RE15	Windshield wiper front	Wiring diagram 801
RE16	15A supply	Wiring diagram 303

RE17	15B feed	Wiring diagram 303
RE18	15EA supply	Wiring diagram 303
RE2301	Electrically heated fuel filter	Wiring diagram 204
RE2501	Preheating	Wiring diagram 204
RE3101	Electrically controlled battery disconnect switch	Wiring diagram 308
RE3102	Function relay for electrically controlled battery disconnector,	Wiring diagram 308
RE3601	Fan cyclone filter	Wiring diagram 807
RE5502	Parking brake	Wiring diagram 501
RE6401	Secondary steering	Wiring diagram 604
RE8701	Pause coolant pump	Wiring diagram 872
RF1	Flasher relay	Wiring diagram 306

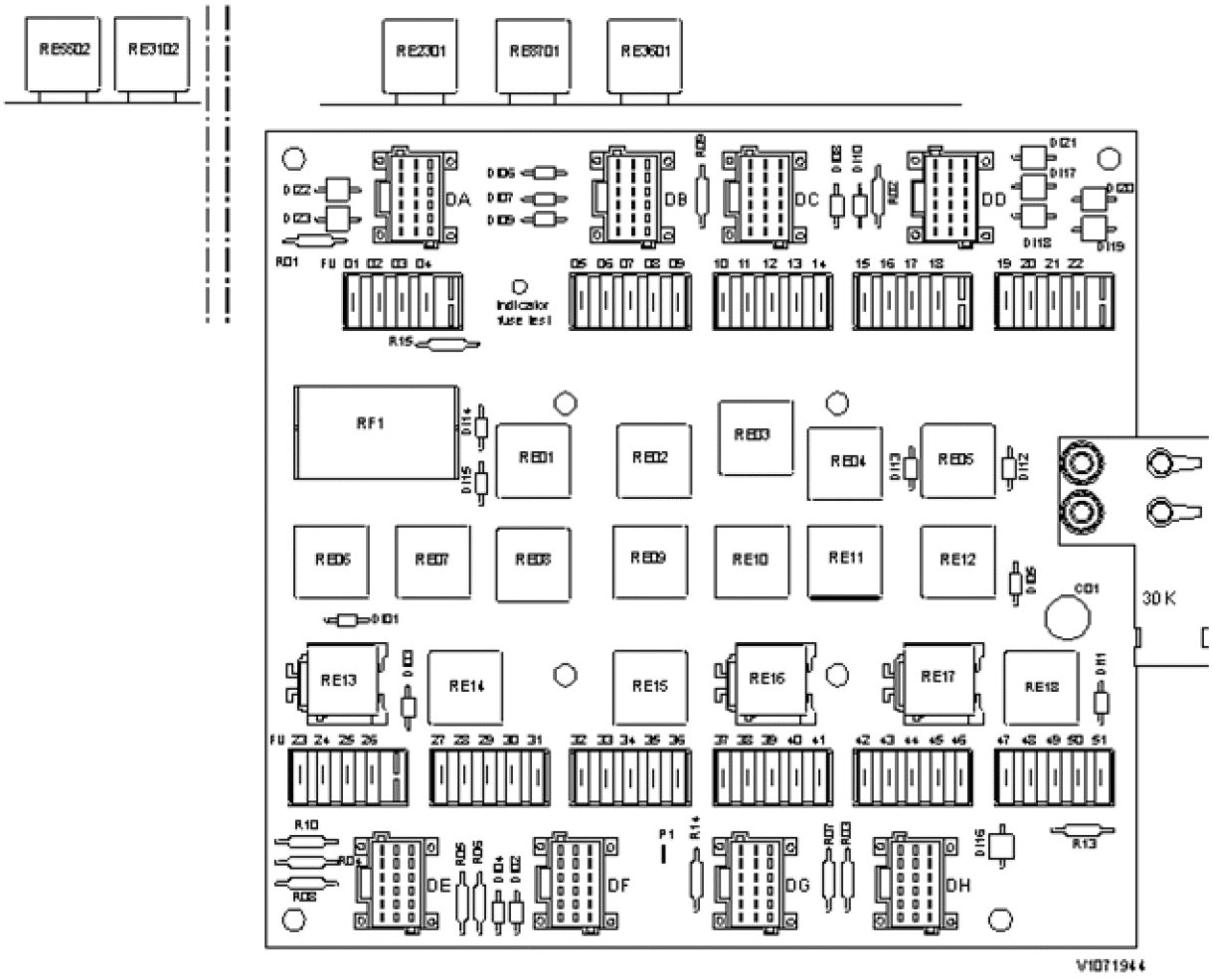

Figure 1
Relays located on circuit board and can wall

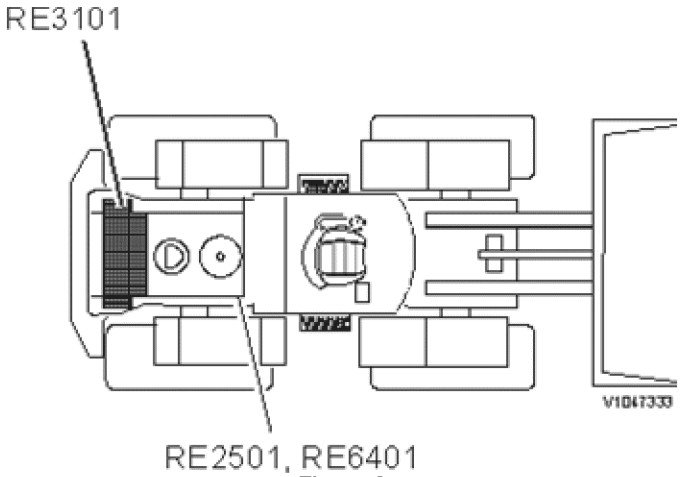

Figure 2
Relays located outside cab

VOLVO
Construction Equipment

Service Information

Document Title:	Function Group:	Information Type: **Service Information**	Date: **12/10/2011**
Profile: **WLO, L90F (Volvo) [GB]**			

Component list: Signals, shift solenoids

Component	Designation	Function	Wiring diagram
Signals	SA3601	Horn left	Elschema 315
	SA3602	Horn right	Elschema 315
	SA3603	Back-up alarm	Elschema 315
	SA3901	Loudspeaker left	Elschema 314
			Elschema 315
	SA3902	Loudspeaker right	Elschema 314
			Elschema 315
Gear shifting solenoids			
	SA	Forward gear	Elschema 402
	SB	1st gear	Elschema 402
	SC	2nd gear	Elschema 402
	SD	Reverse gear	Elschema 402
	SE	4th gear	Elschema 402
	SF	3rd gear	Elschema 402

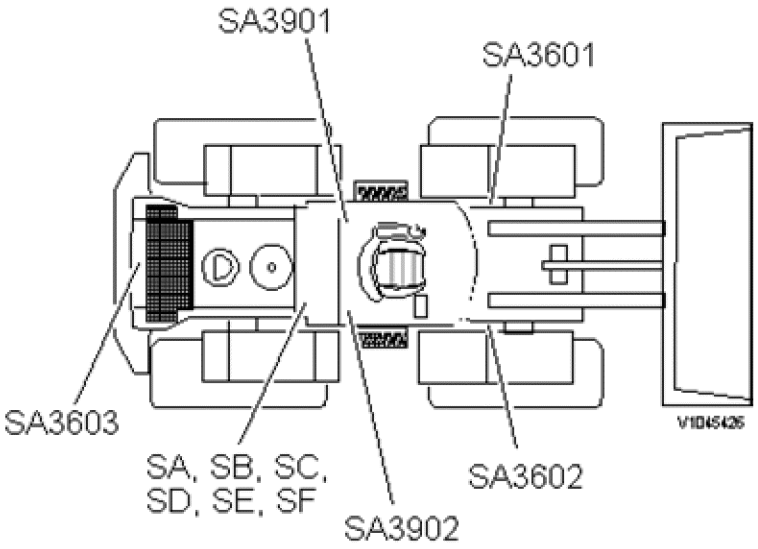

Figure 1
Signals, gear shifting solenoids

VOLVO
Construction Equipment

Service Information

Document Title:	Function Group:	Information Type: **Service Information**	Date: **12/10/2011**
Profile: **WLO, L90F (Volvo) [GB]**			

Component list: Sensors

Designation	Sensor type	Function	Wiring diagram
SE2203	Pressure	Engine oil pressure	Elschema 203
SE2301	Pressure	Fuel pressure	Elschema 203
SE2302	Level	Water level in fuel	Elschema 202
SE2303	Level	Fuel level	Elschema 201
SE2309	Pressure	Fuel pressure Common Rail	Elschema 203
SE2501	Temperature	Temperature induction air	Elschema 202
SE2502	Pressure monitor	Air filter monitor	Elschema 202
SE2507	Temperature	Charge-air temperature	Elschema 203
SE2508	Pressure	Boost pressure	Elschema 203
SE2601	Frequency	Cooling fan speed	Elschema 201
SE2602	Temperature	Cooling circuit temperature outlet radiator	Elschema 201
SE2603	Level monitor	Coolant level	Elschema 202
SE2606	Temperature	Coolant temperature, engine	Elschema 203
SE2701	Frequency	Engine rpm crankshaft	Elschema 202
SE2702	Position	Throttle pedal	Elschema 205
SE2703	Frequency	Camshaft speed	Elschema 202
SE2704	Frequency	Engine rpm flywheel	Elschema 201
SE3601	Level	Washer fluid level	Elschema 801
SE4213	Frequency	Turbine rpm	Elschema 404
SE4218	Position monitor	Armrest lever steering	Elschema 601
SE4307	Frequency	Output speed transmission	Elschema 404
SE4608	Mechanical	Feedback for engaged differential lock	Elschema 403
SE4901	Pressure	Transmission oil pressure	Elschema 403
SE4902	Pressure	Pressure monitor transmission oil filter	Elschema 404
SE4903	Temperature	Transmission oil temperature	Elschema 403
SE5201	Temperature	Axle oil temperature, front axle	Elschema 404

SE5202	Temperature	Axle oil temperature, rear axle	Elschema 404
SE5205	Pressure	Output brake pressure	Elschema 501
SE5218	Pressure	Brake pressure charging, low brake pressure	Elschema 501
SE5503	Pressure	Applied parking brake	Elschema 501
SE6401	Angle	Angle sensor frame joint	Elschema 602
SE6403	Mechanical	Secondary steering, differential pressure	Elschema 604
SE6407	Pressure	Secondary steering test	Elschema 604
SE6601	Angle	Steering lever	Elschema 601
SE8301	Mechanical	Position monitor, door	Elschema 306
SE8502	Mechanical	Position monitor loading operator's seat	Elschema 802
SE8503	Temperature	Ambient temperature	Elschema 802
SE8702	Temperature	Temperature evaporator	Elschema 871
SE8706	Temperature	Temperature, cab	Elschema 871
SE8708	Temperature	Temperature air channel	Elschema 871
SE8709	Pressure	Pressure refrigerant	Elschema 871
SE9101	Level	Hydraulic oil tank	Elschema 903
SE9102	Temperature	Hydraulic oil tank	Elschema 903
SE9107	Pressure	LS pressure sensor	Elschema 908
SE9141	Position sensor	Bucket positioner	Elschema 901
			Elschema 902
			Elschema 912
SE9142	Position sensor	Boom kick-out	Elschema 901
			Elschema 902
			Elschema 912
SE9901	Pressure monitor	Central lubrication	Elschema 803

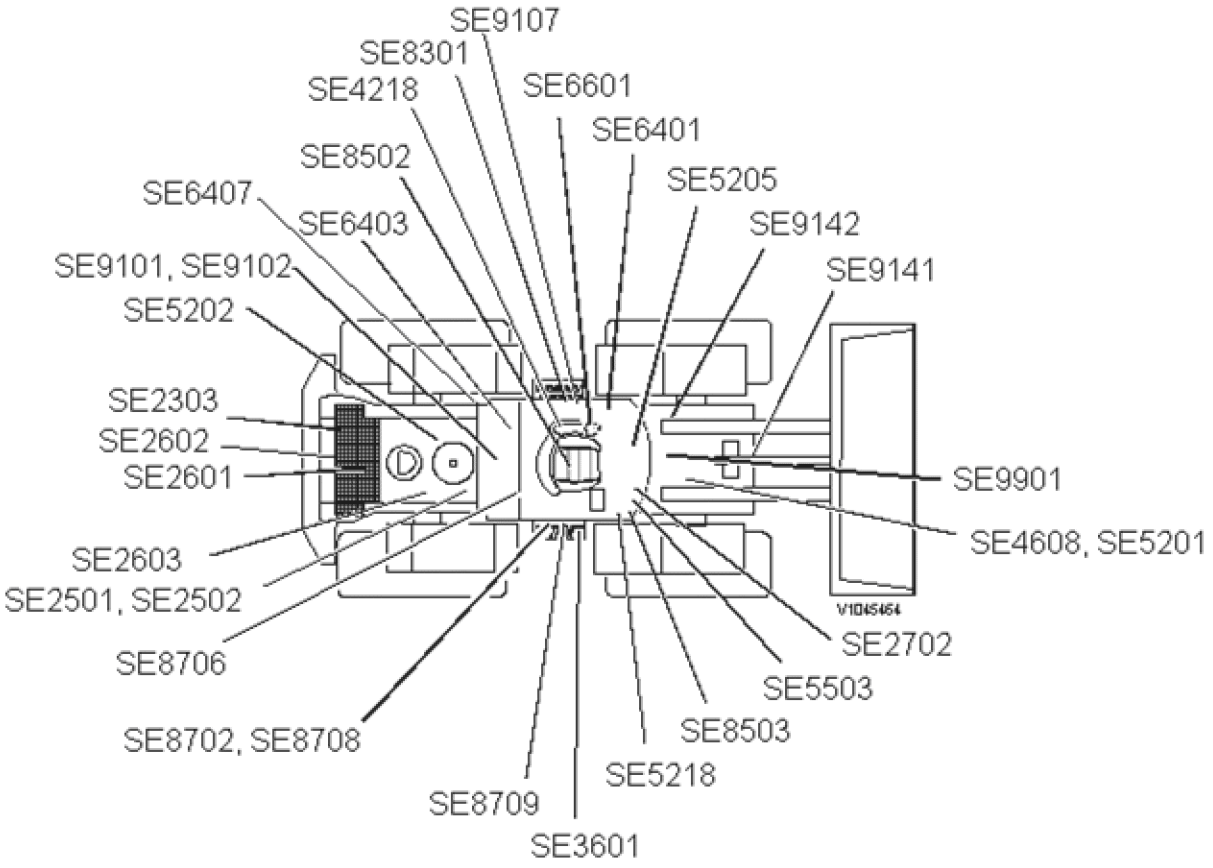

Figure 1
Sensor

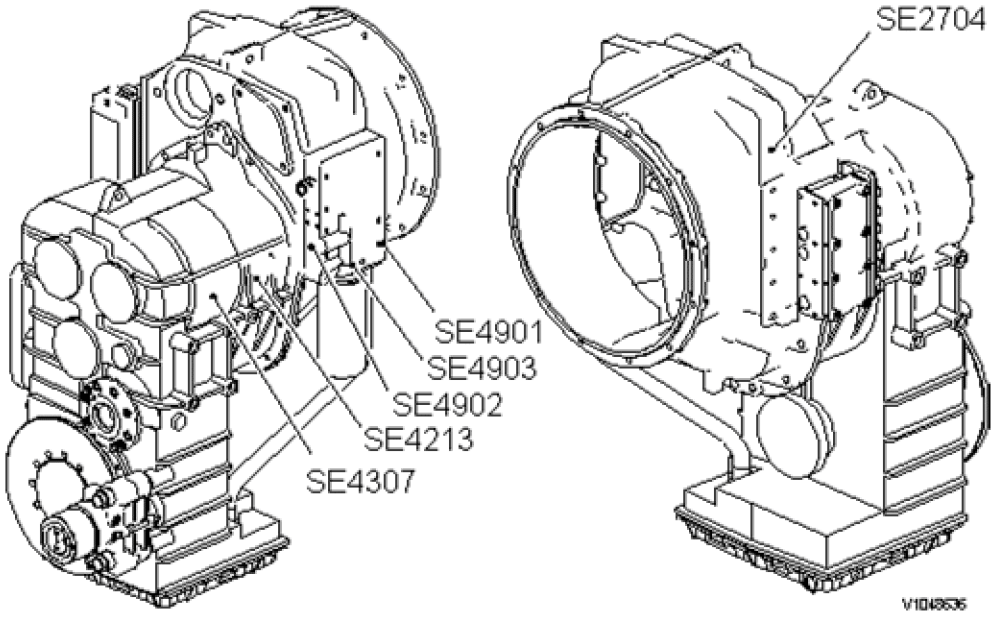

Figure 2
Sensor

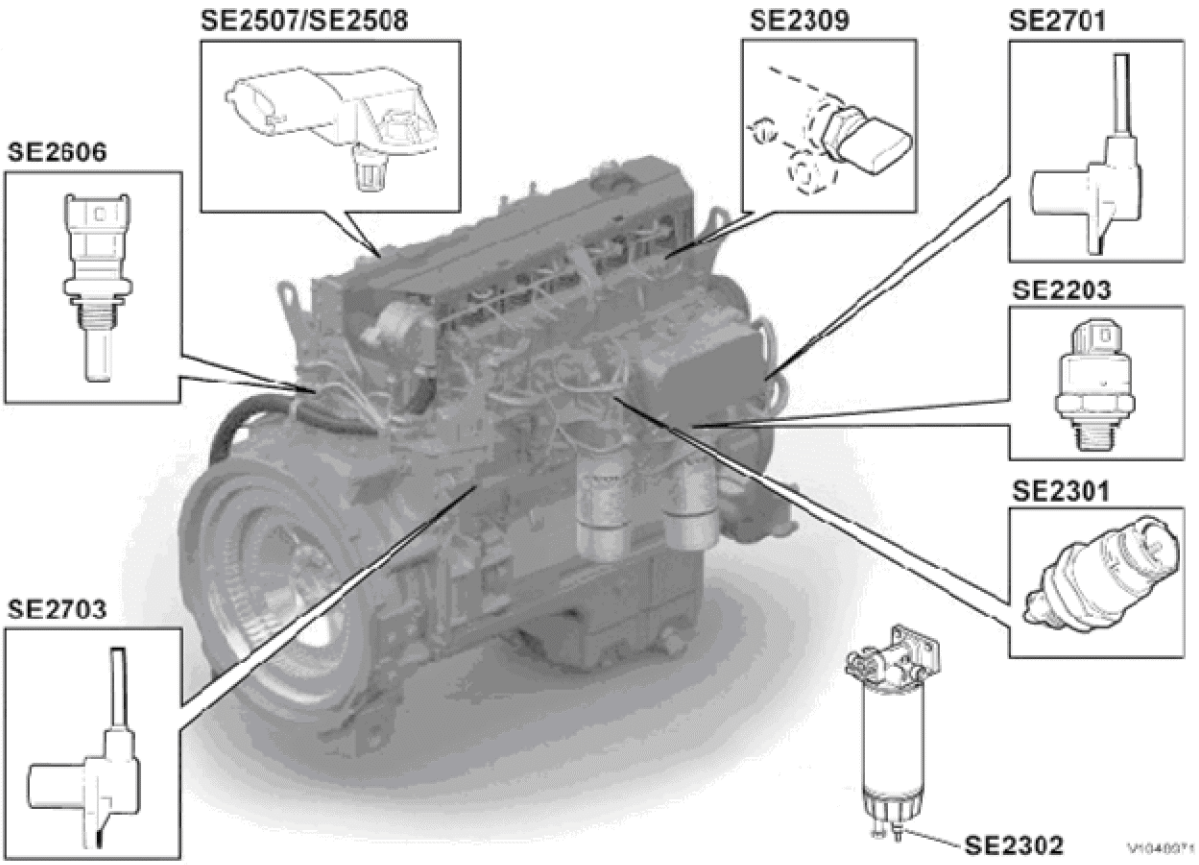

Figure 3
Sensor

VOLVO
Construction Equipment

Service Information

Document Title:	Function Group:	Information Type: **Service Information**	Date: **12/10/2011**
Profile: **WLO, L90F (Volvo) [GB]**			

Component list: Switches

Designation	Function	Wiring diagram
SW3101	Battery disconnect switch	Elschema 301 Elschema 308
SW3102	Emergency stop for electric battery disconnector	Elschema 308
SW3301	Ignition switch	Elschema 303 Elschema 308
SW3501	Switch headlights	Elschema 304
SW3502	High and low beam, headlight flasher	Elschema 304
SW3504	Work lights, front	Elschema 305 Elschema 312
SW3505	Working lights, rear	Elschema 305 Elschema 312 Elschema 313
SW3601	Electrically heated rear-view mirrors	Elschema 804
SW3602	Windshield wiper front	Elschema 801
SW3604	Horn	Elschema 315
SW3605	Direction indicators	Elschema 306
SW3606	Hazard flashers	Elschema 306
SW3608	Windshield washer front	Elschema 801
SW3612	Windshield wiper rear Windshield washer rear	Elschema 801
SW3614	Electrically controlled rear-view mirrors	Elschema 804
SW3615	Horn (lever carrier)	Elschema 315
SW3624	Rotating beacon	Elschema 306

SW3801	Keypad	Elschema 309
SW4205	Forward/reverse	Elschema 408
SW4206	Gear selector	Elschema 408
SW4207	Activation forward/reverse lever carrier	Elschema 407
		Elschema 408
SW4208	Forward/reverse lever carrier	Elschema 408
SW4209	Kick-down lever carrier	Elschema 408
SW4210	Engine brake lever carrier	Elschema 407
		Elschema 408
SW4211	Fully automatic downshifting	Elschema 404
SW4212	Mode selector	Elschema 403
SW4216	Activating CDC	Elschema 601
SW4217	Forward/reverse lever steering	Elschema 601
SW4220	Kick-down lever steering	Elschema 601
SW4221	Forward-neutral-reverse single lever	Elschema 407
SW4222	Kick-down single lever	Elschema 407
SW4602	Differential lock	Elschema 403
SW5501	Parking brake	Elschema 501
SE8701	Controls climate control system	Elschema 871
SW9140	Lever lock single lever	Elschema 912
SW9141	Bucket positioner	Elschema 901
		Elschema 902
		Elschema 912
SW9142	Boom kick-out	Elschema 901
		Elschema 902
		Elschema 912
SW9143	Attachment locking	Elschema 904
SW9144	Floating position	Elschema 901
		Elschema 902
		Elschema 912

SW9145	Lever lock 4th function	Elschema 902 Elschema 904
SW9146	Emergency stop 3rd hydraulic function	Elschema 904 Elschema 905
SW9147	Hold function, 3rd hydraulic function	Elschema 904
SW9148	Boom Suspension System, activation/function selection	Elschema 903
SW9149	Single-acting lift function	Elschema 903

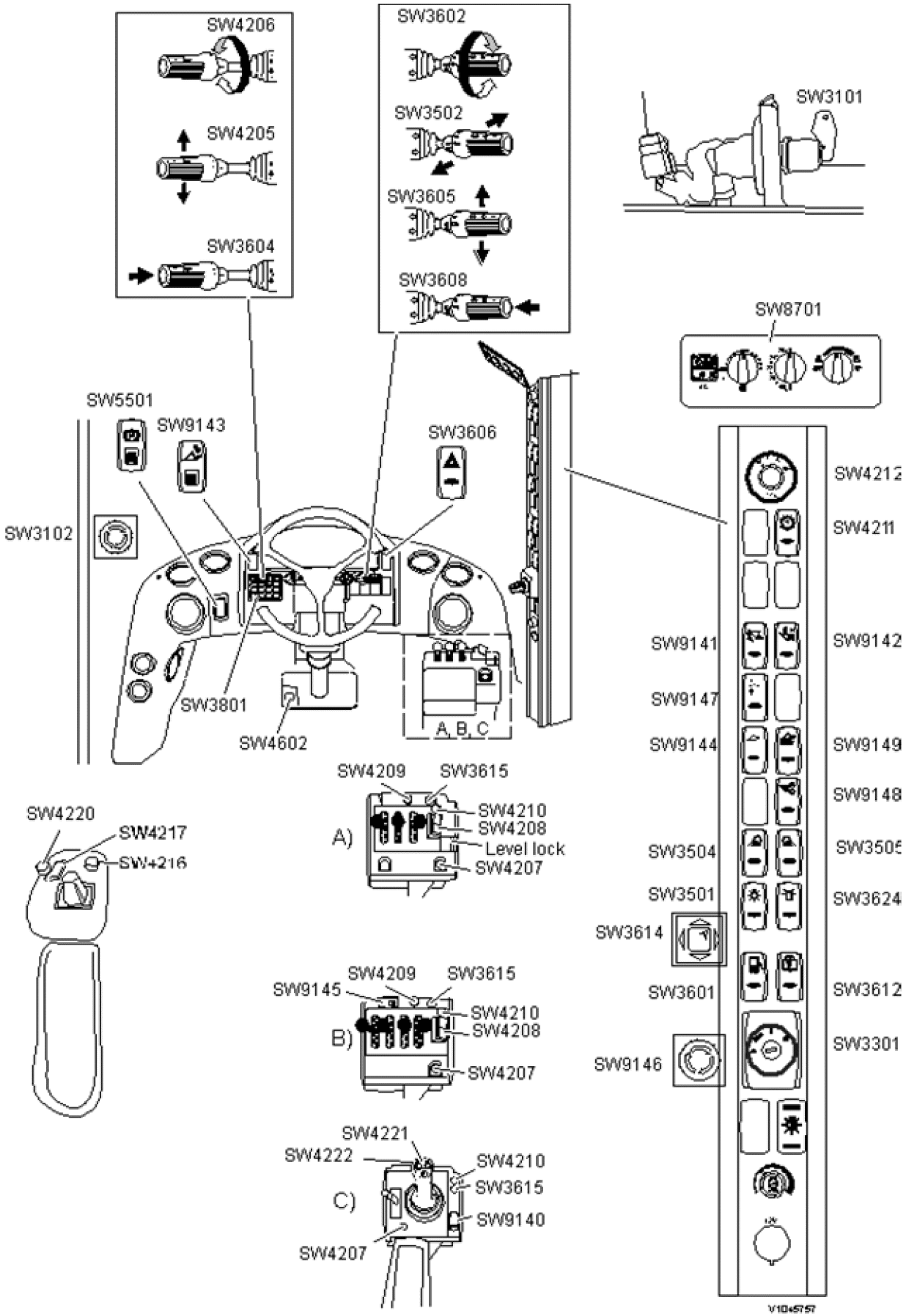

Figure 1
Switches

VOLVO
Construction Equipment

Service Information

Document Title:	Function Group:	Information Type: **Service Information**	Date: **12/10/2011**
Profile: **WLO, L90F (Volvo) [GB]**			

Table of contents, wiring diagrams

Wiring diagram	Function
Elschema 201	Engine cooling, fuel level, reversal cooling fan
Elschema 202	Sensors connected to E-ECU
Elschema 203	Sensors connected to E-ECU
Elschema 204	Preheating, EGR-valve, electrically heated fuel filter
Elschema 205	Accelerator pedal, hand throttle
Elschema 206	Injection
Elschema 301	Voltage supply
Elschema 302	Voltage feed control units
Elschema 303	Start circuit
Elschema 304	Lighting
Elschema 305	Work lights
Elschema 306	Flashing hazard lights, direction indicators, interior lighting
Elschema 308	Electrically controlled battery disconnect switch
Elschema 309	Keypad
Elschema 310	Communication control units
Elschema 312	Double work lights cab
Elschema 313	Work lights rear, continuous/gear-dependent
Elschema 314	Radio, voltage converter 20A
Elschema 315	Radio, voltage socket, audible signals
Elschema 316	CareTrack
Elschema 317	Fuse test, unoccupied connections
Elschema 402	Gear shifting solenoids
Elschema 403	Sensor transmission, mode selector, differential lock
Elschema 404	Sensor transmission, fully automatic downshifting
Elschema 407	Single lever control

Elschema 408	Gear selector
Elschema 501	Brakes
Elschema 601	Lever steering (CDC)
Elschema 602	Lever steering (CDC) Angle sensor
Elschema 604	Secondary steering
Elschema 801	Windshield wiper and windshield washer
Elschema 802	Operator's seat, ambient temperature
Elschema 804	Back-up camera, rear-view mirrors
Elschema 805	Air conditioning
Elschema 806	Air conditioning
Elschema 807	Fan cyclone filter
Elschema 901	Working hydraulics
Elschema 902	Working hydraulics
Elschema 903	Boom Suspension System, hydraulic oil temperature / level
Elschema 904	Working hydraulics, attachment locking, 3rd hydraulic function, 3rd hydraulic function together with 4th hydraulic function
Elschema 908	Output control pump 2 (P2)
Elschema 912	Working hydraulics with joystick
Elschema 913	Central lubrication

VOLVO
Construction Equipment

Service Information

Document Title:	Function Group:	Information Type: **Service Information**	Date: **12/10/2011**
Profile: **WLO, L90F (Volvo) [GB]**			

Wiring diagram 202

Sensors connected to E-ECU

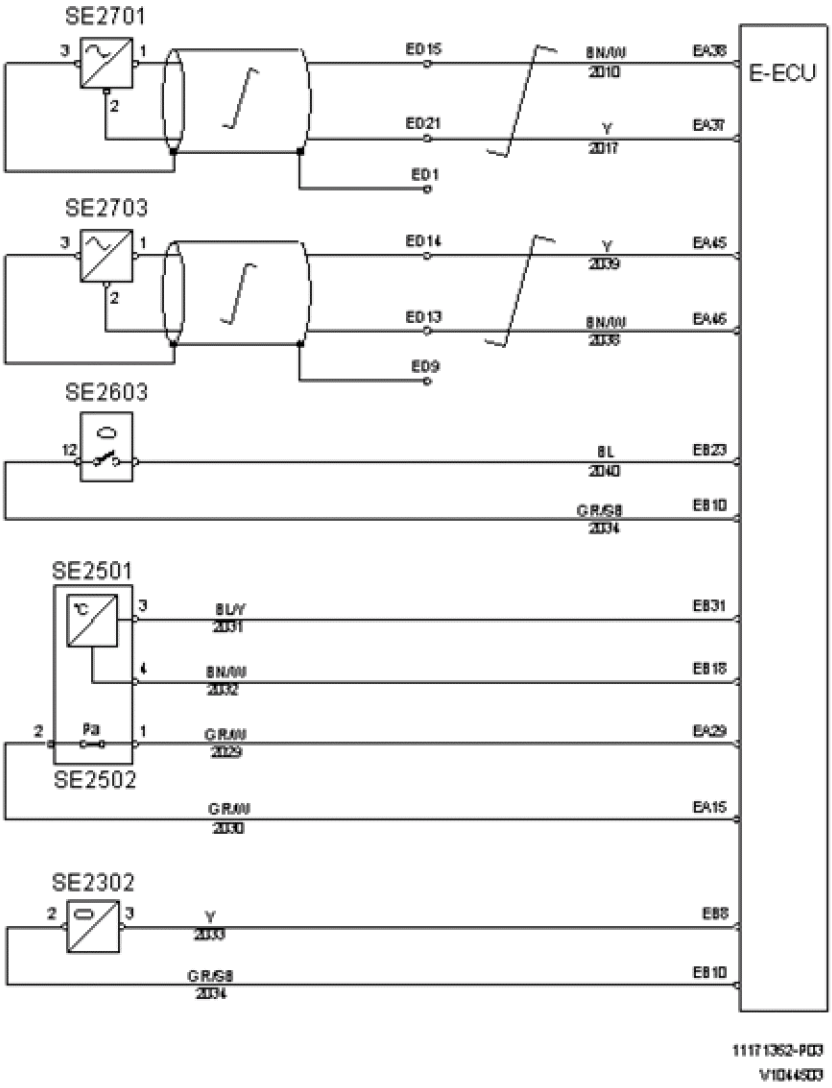

Figure 1

Designation	Function
SE2302	Water level in fuel
SE2501	Temperature induction air
SE2502	Air filter monitor
SE2603	Coolant level

SE2701	Engine rpm crankshaft
SE2703	Camshaft speed

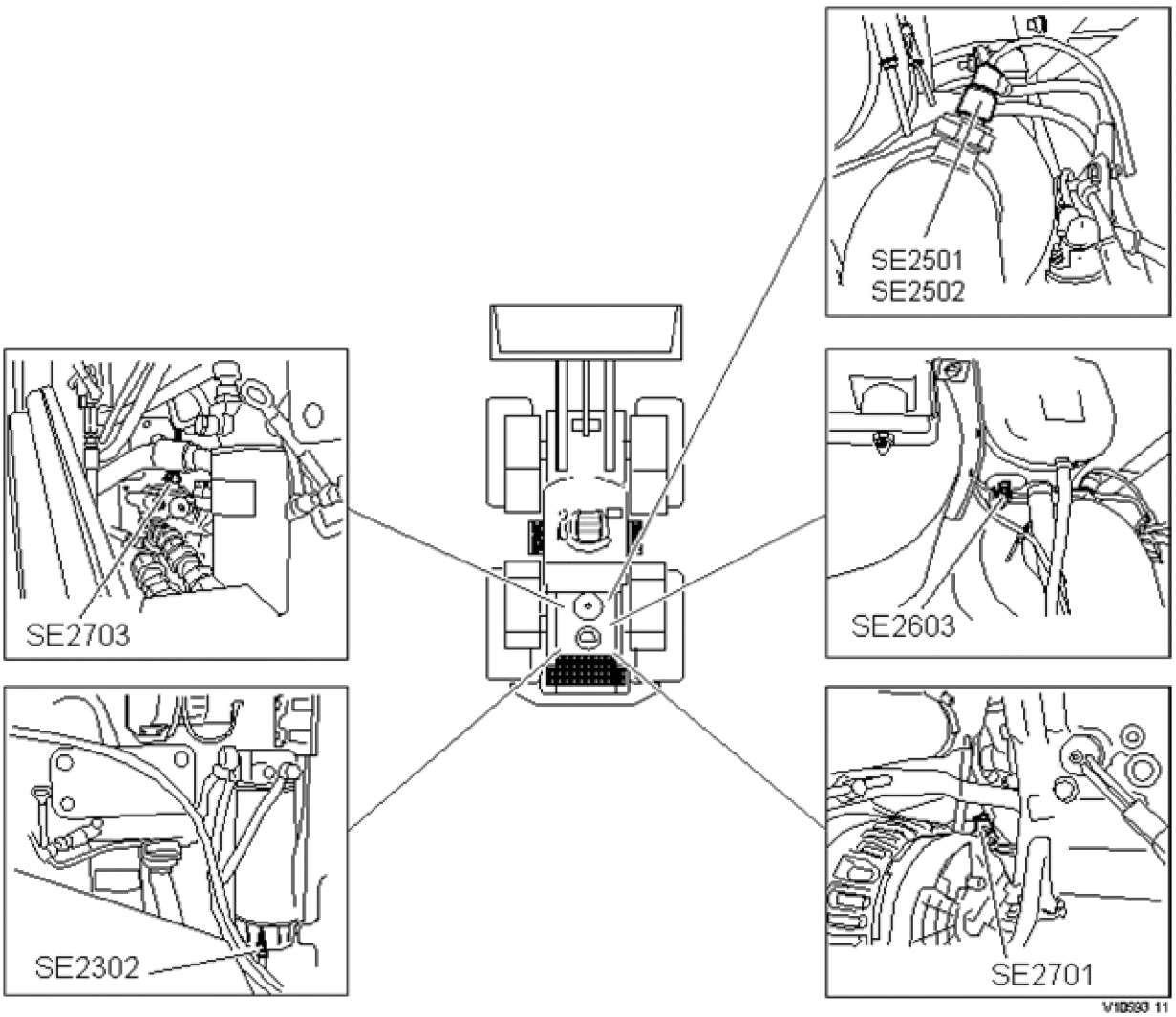

Figure 2
Component position

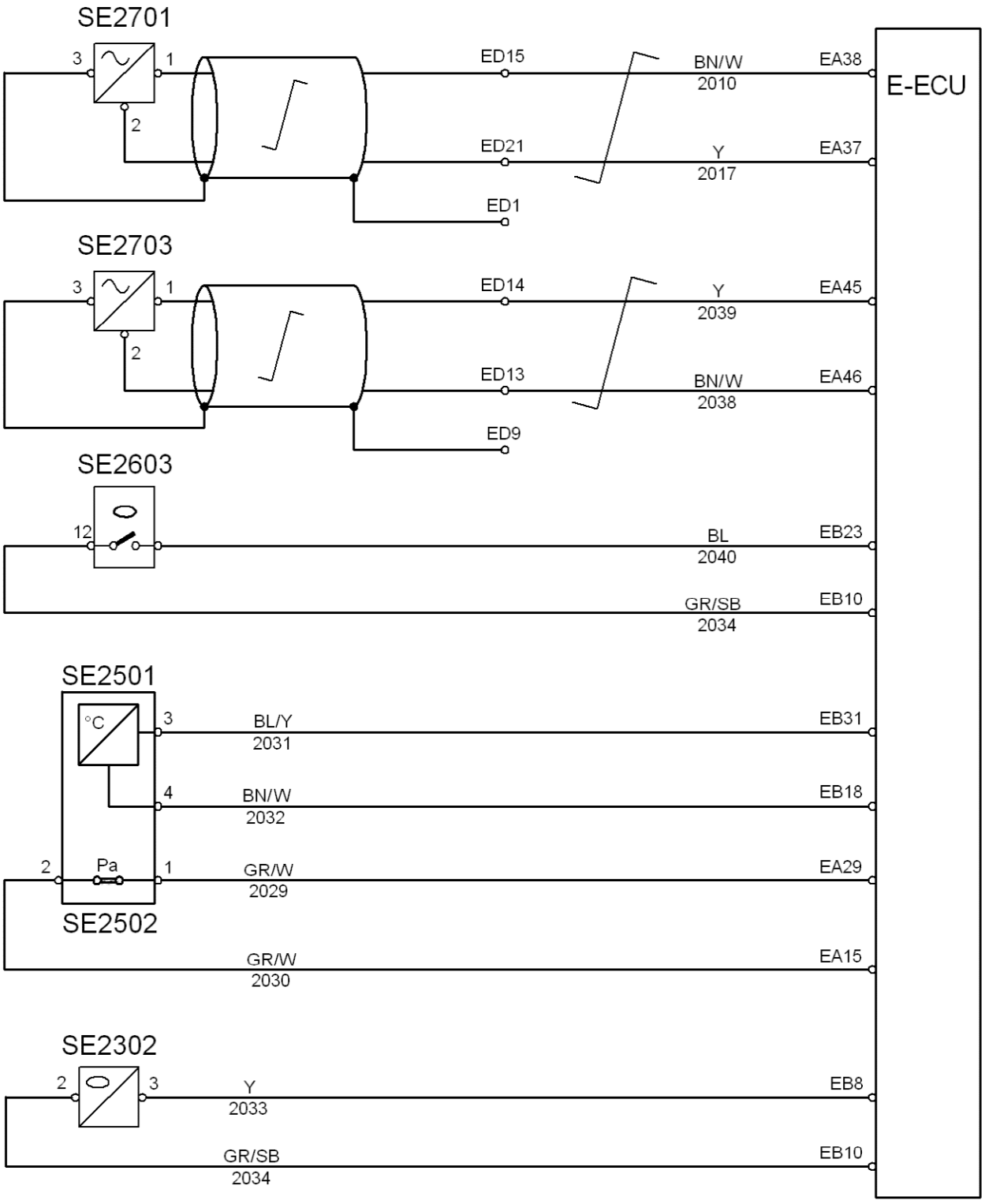

11171352-P03
V1044503

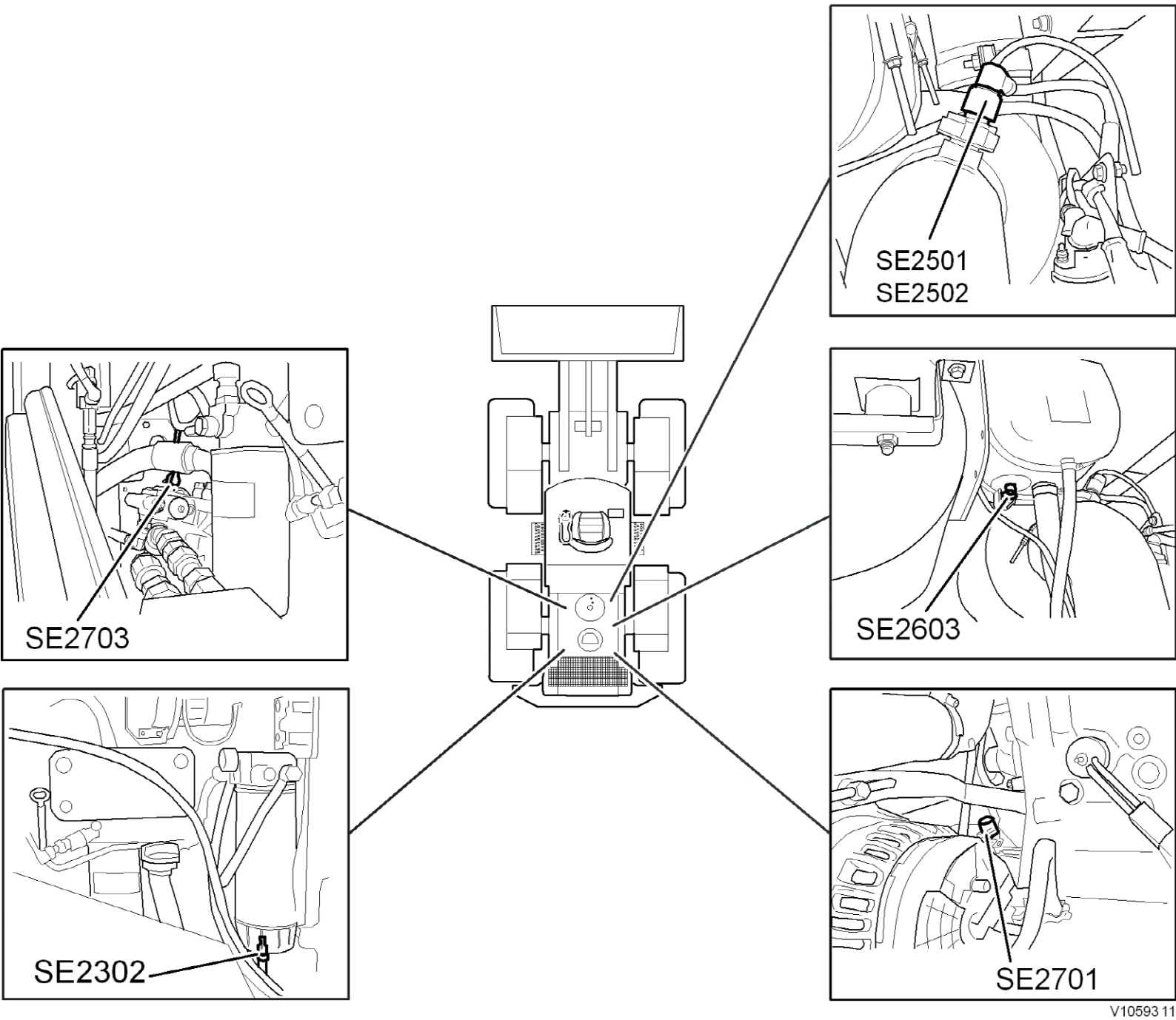
SE2501
SE2502
SE2703
SE2603
SE2302
SE2701
V10593 11

VOLVO
Construction Equipment

Service Information

Document Title:	Function Group:	Information Type: **Service Information**	Date: **12/10/2011**
Profile: **WLO, L90F (Volvo) [GB]**			

Wiring diagram 201

Engine cooling, fuel level, reversal cooling fan

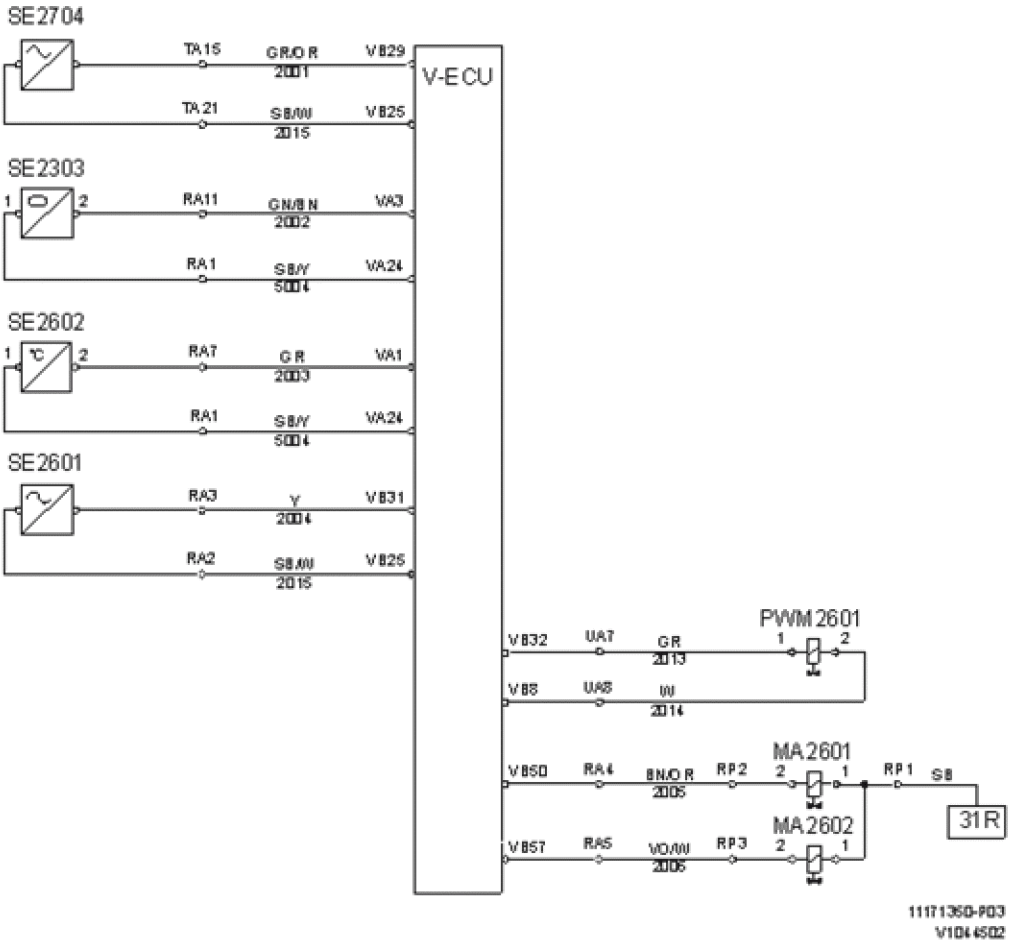

Figure 1

Designation	Function
MA2601	Reversal cooling fan, disengagement
MA2602	Reversal cooling fan, rotation direction
PWM2601	Control pump 3 (P3)
SE2303	Fuel level
SE2601	Fan speed
SE2602	Coolant temperature, outlet radiator
SE2704	Engine rpm flywheel

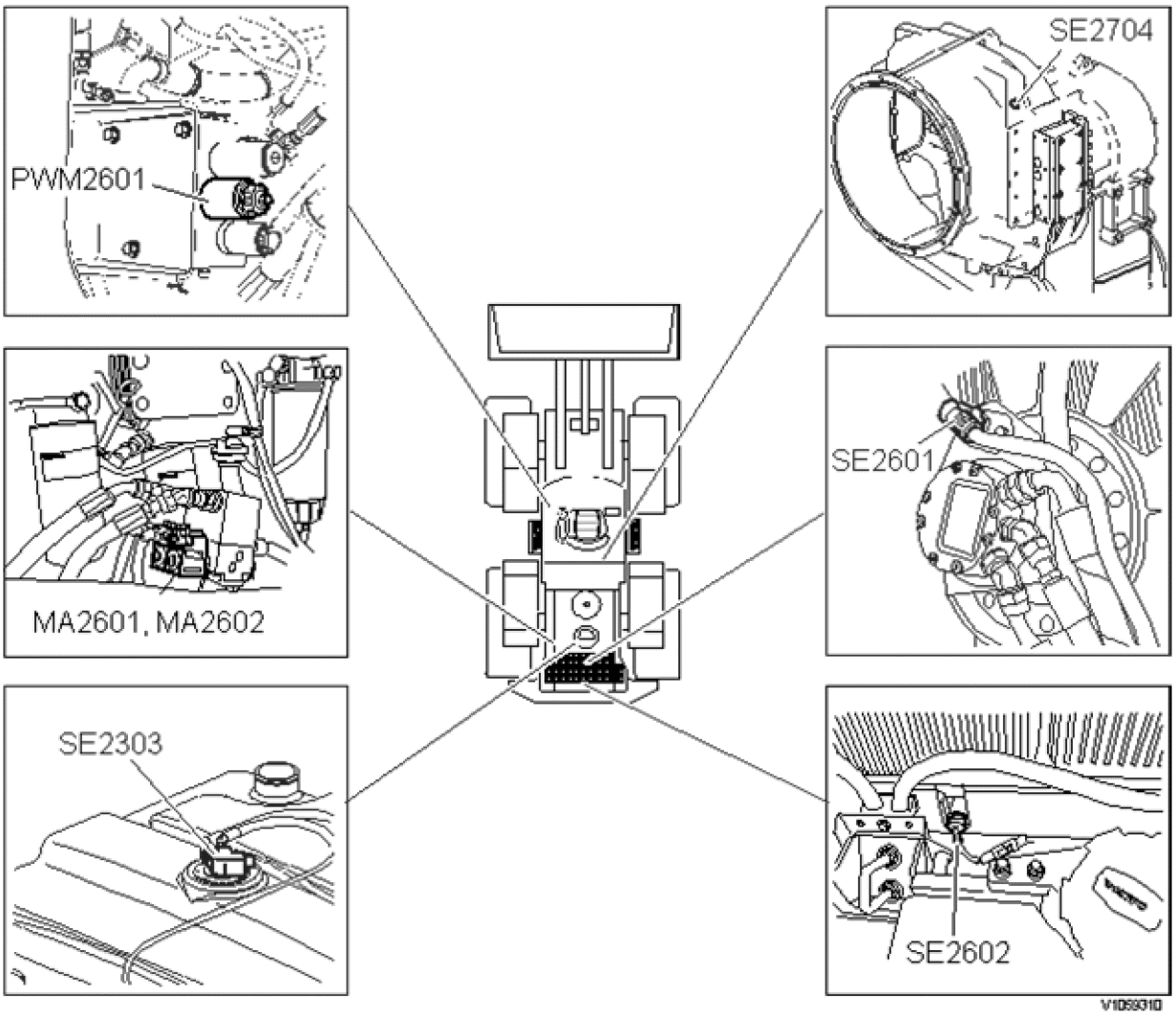

Figure 2
Component position

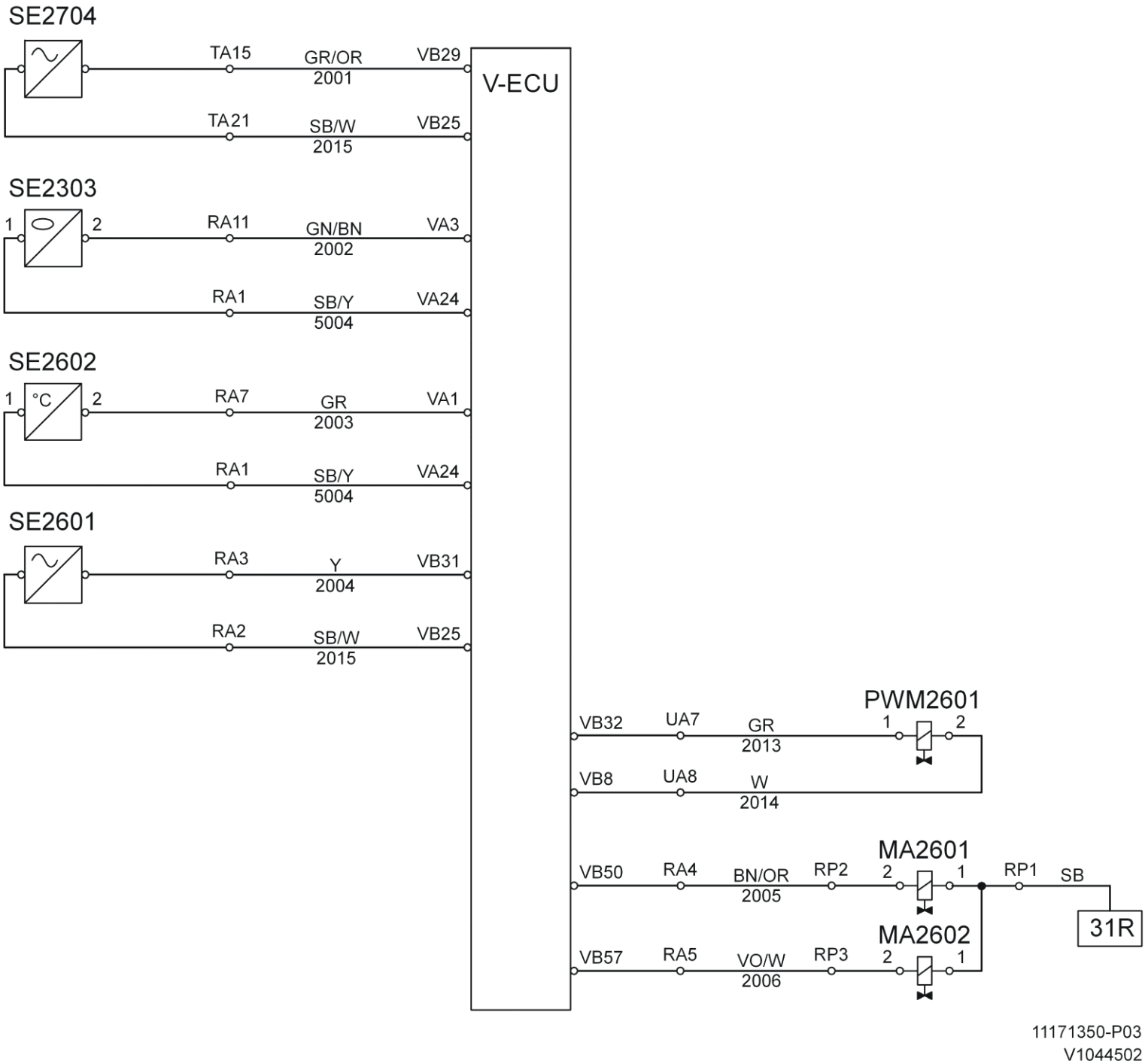
SE2704
TA15
GR/OR
2001
VB29
TA21
SB/W
2015
VB25
V-ECU
SE2303
1
2
RA11
GN/BN
2002
VA3
RA1
SB/Y
5004
VA24
SE2602
°C
RA7
GR
2003
VA1
SE2601
RA3
Y
2004
VB31
RA2
SB/W
VB32
UA7
GR
2013
PWM2601
VB8
UA8
W
2014
VB50
RA4
BN/OR
2005
RP2
MA2601
RP1
SB
31R
VB57
RA5
VO/W
2006
RP3
MA2602
11171350-P03
V1044502

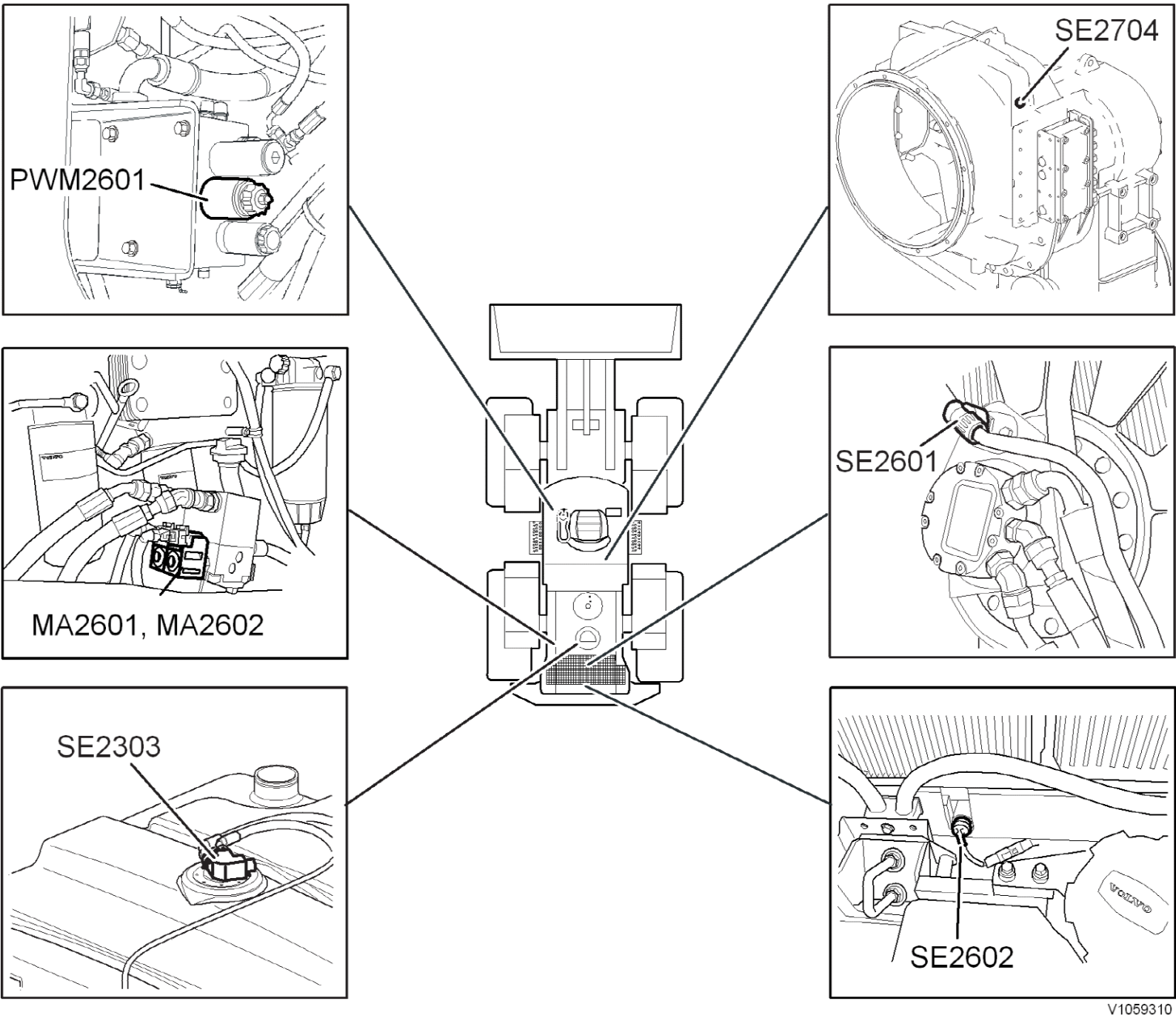
PWM2601
SE2704
MA2601, MA2602
SE2601
SE2303
SE2602
V1059310

VOLVO
Construction Equipment

Service Information

Document Title:	Function Group:	Information Type: **Service Information**	Date: **12/10/2011**
Profile: **WLO, L90F (Volvo) [GB]**			

Wiring diagram 203

Sensors connected to E-ECU

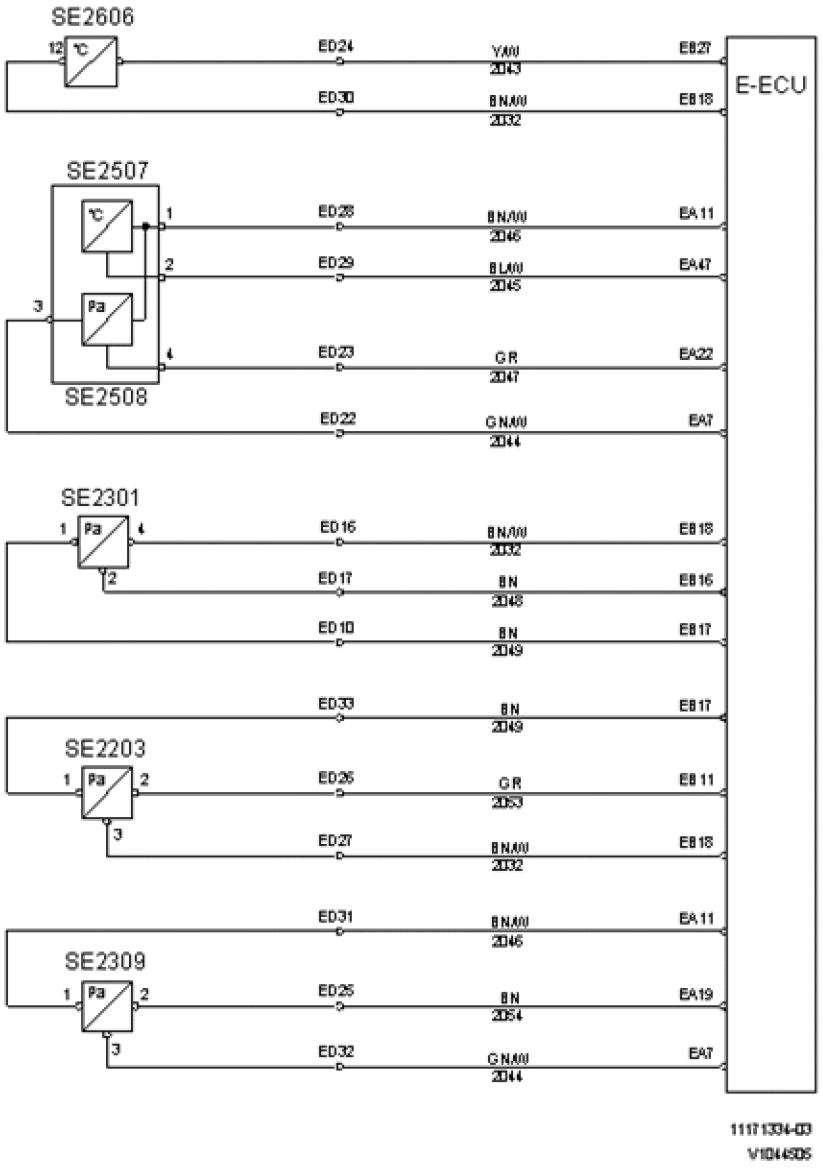

Figure 1

Designation	Function
SE2203	Engine oil pressure
SE2301	Fuel pressure
SE2309	Fuel pressure Common Rail

SE2507	Charge-air temperature
SE2508	Boost pressure
SE2606	Coolant temperature, engine

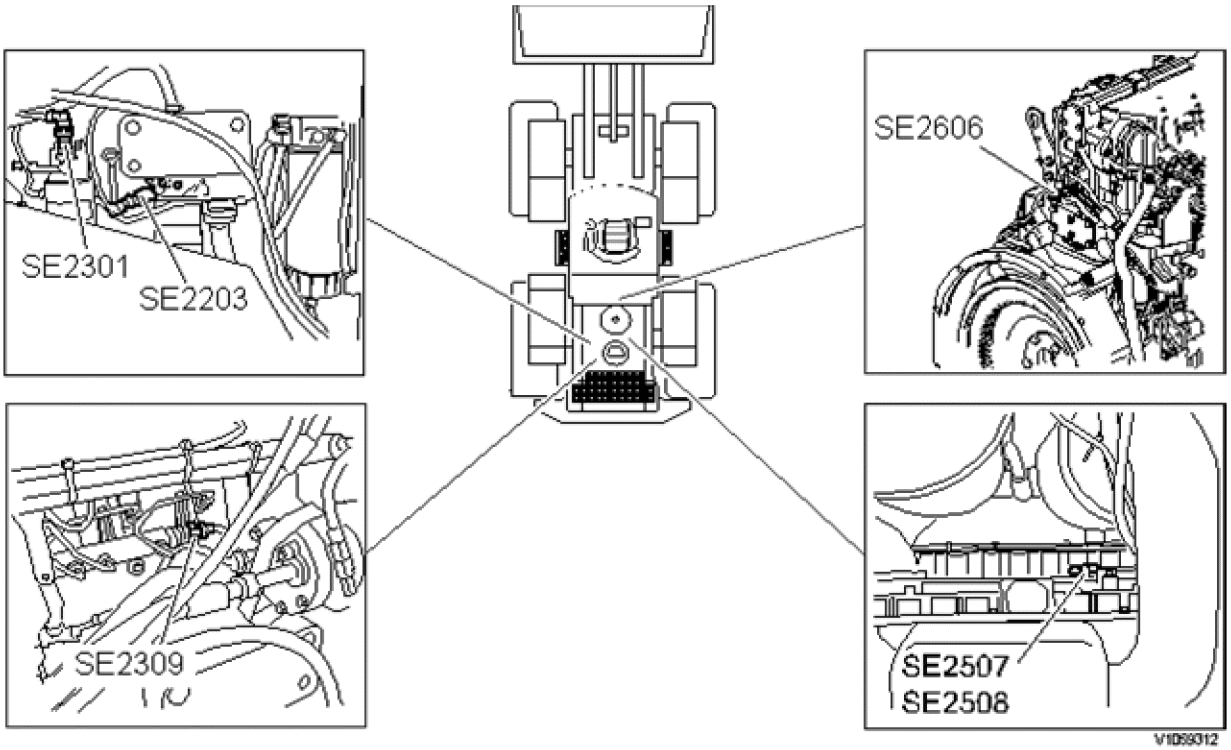

Figure 2
Component position

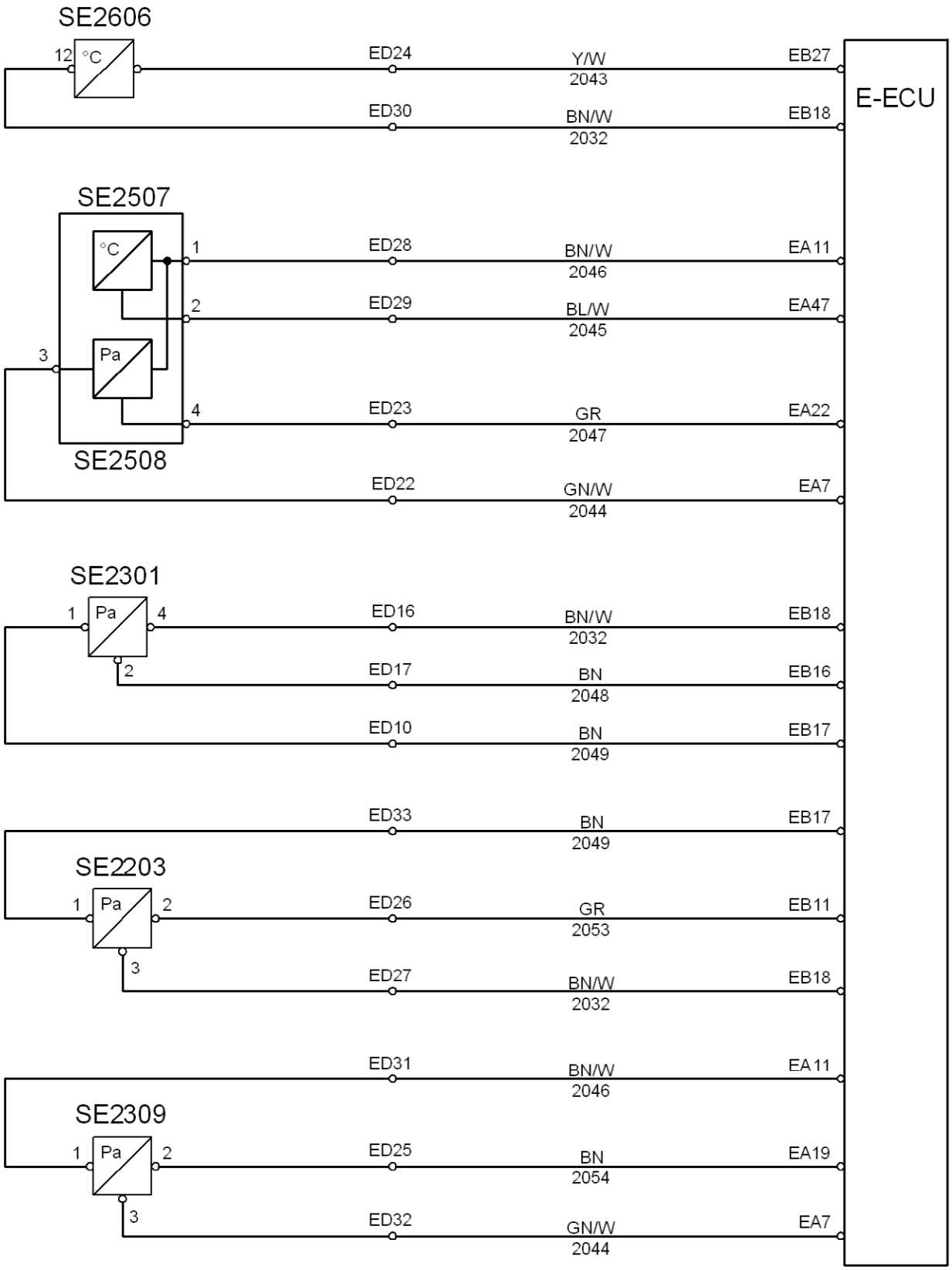

11171334-03

V1044505

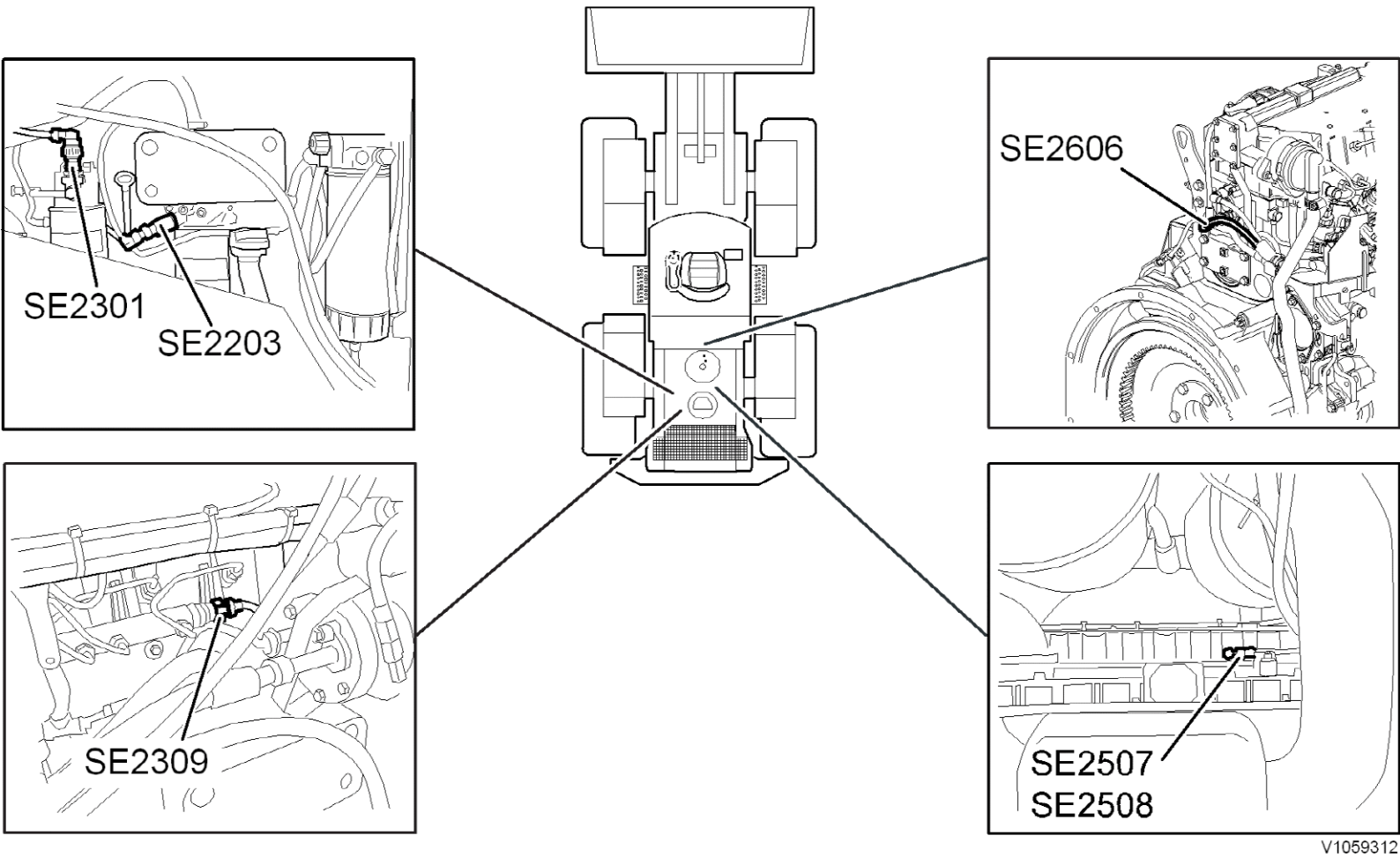
SE2301
SE2203
SE2606
SE2309
SE2507
SE2508
V1059312

VOLVO
Construction Equipment

Service Information

Document Title:	Function Group:	Information Type: **Service Information**	Date: **12/10/2011**
Profile: **WLO, L90F (Volvo) [GB]**			

Wiring diagram 204

Preheating, EGR-valve, electrically heated fuel filter

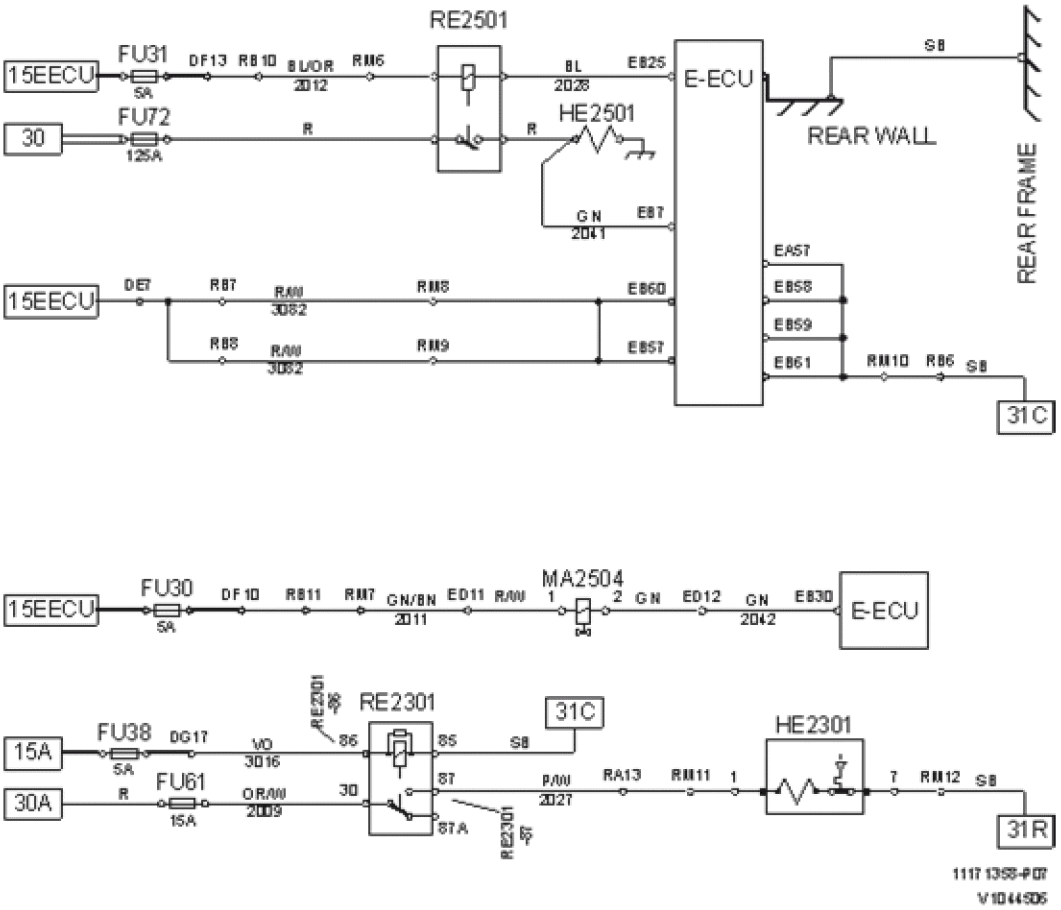

Figure 1

Designation	Function
FU30	EGR-valve
FU31	Voltage feed RE2501
FU38	Voltage feed RE2301
FU61	Electrically heated fuel filter RE2301
FU72	Preheating coil
HE2301	Electric heater fuel filter
HE2501	Preheating coil
MA2504	EGR-valve
RE2301	Electrically heated fuel filter
RE2501	Preheating

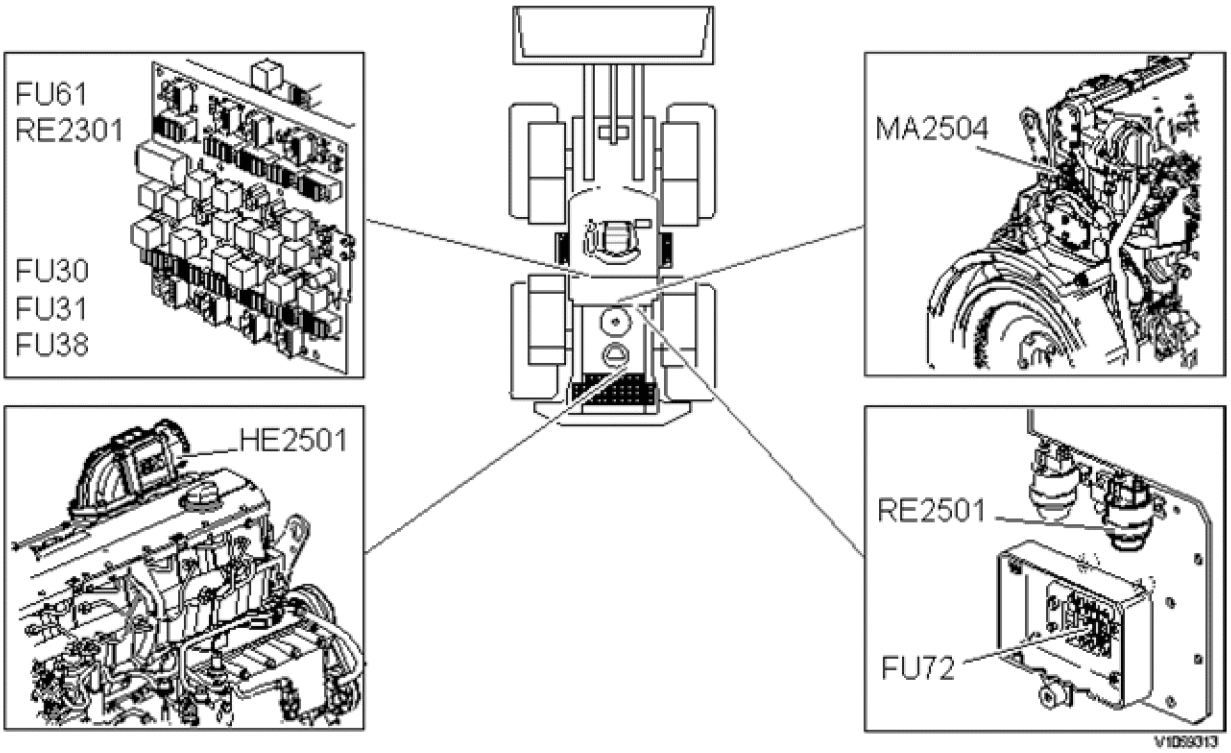

Figure 2
Component position

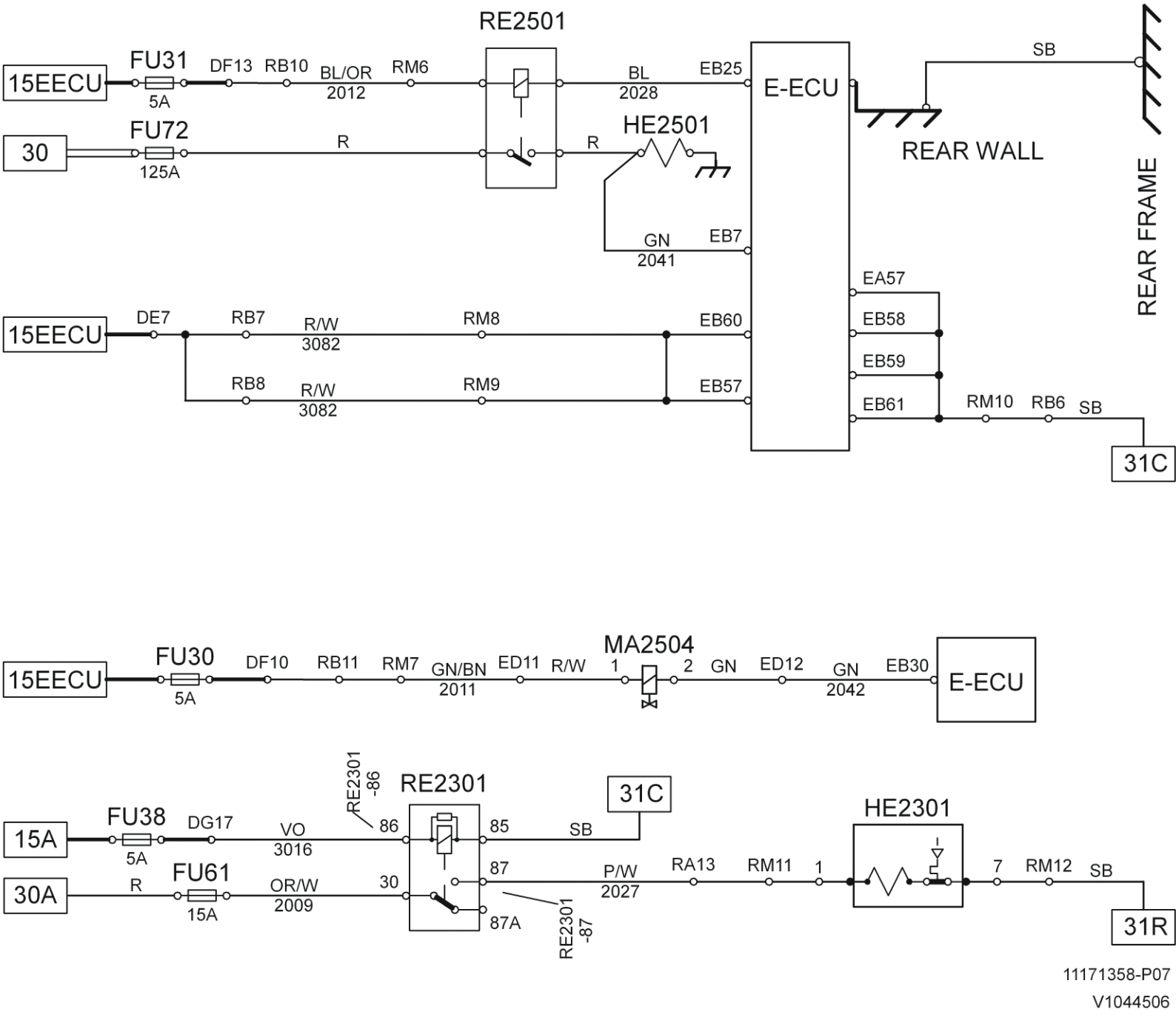

11171358-P07
V1044506

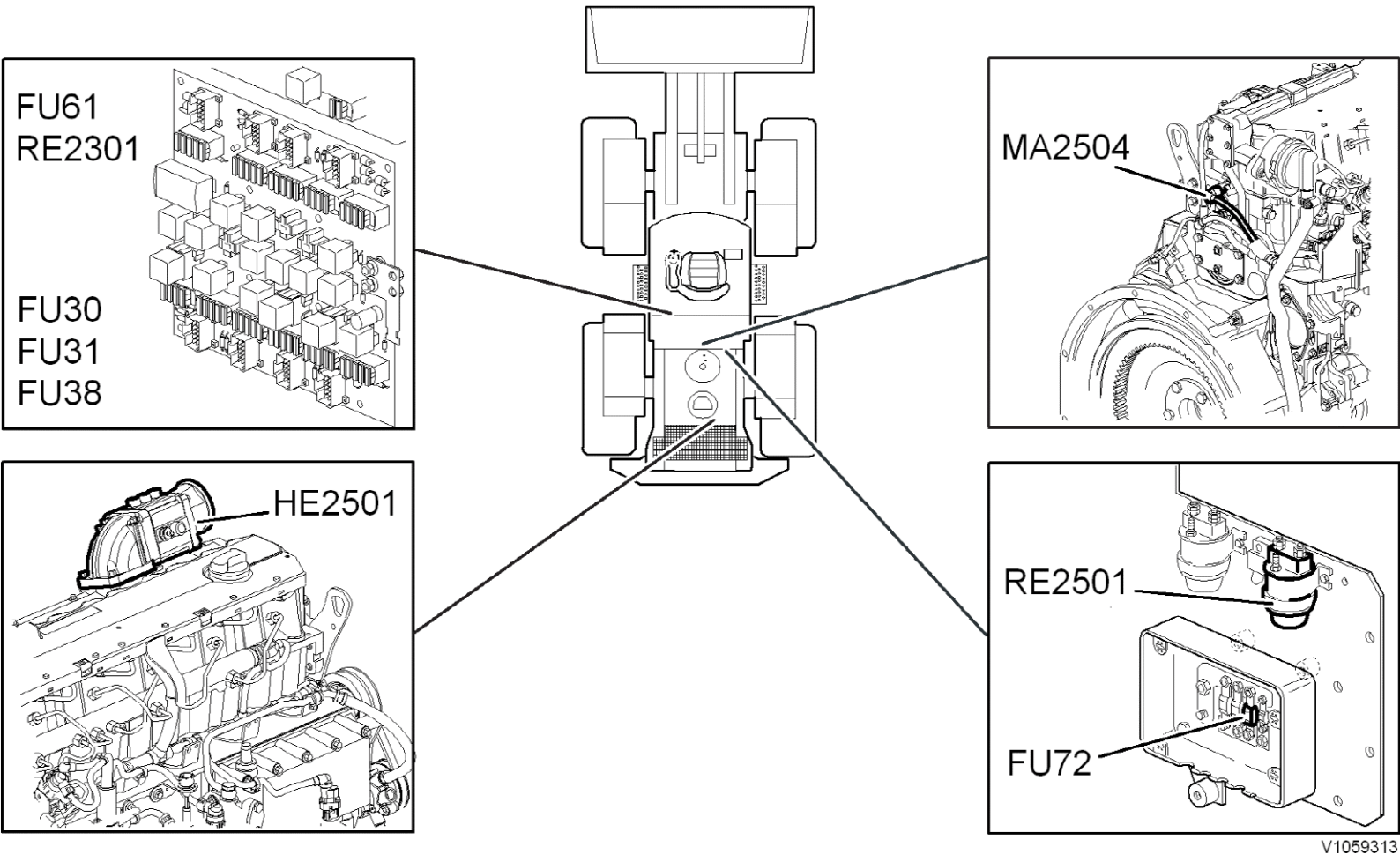
FU61
RE2301
FU30
FU31
FU38
MA2504
HE2501
RE2501
FU72
V1059313

VOLVO
Construction Equipment

Service Information

Document Title:	Function Group:	Information Type: **Service Information**	Date: **12/10/2011**
Profile: **WLO, L90F (Volvo) [GB]**			

Wiring diagram 205

Accelerator pedal, hand throttle

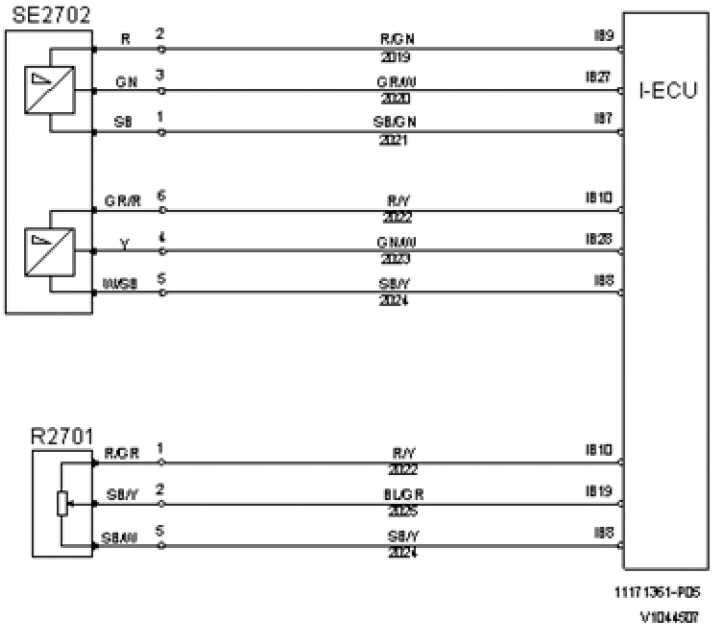

Figure 1

Designation	Function
R2701	Hand throttle
SE2702	Throttle pedal

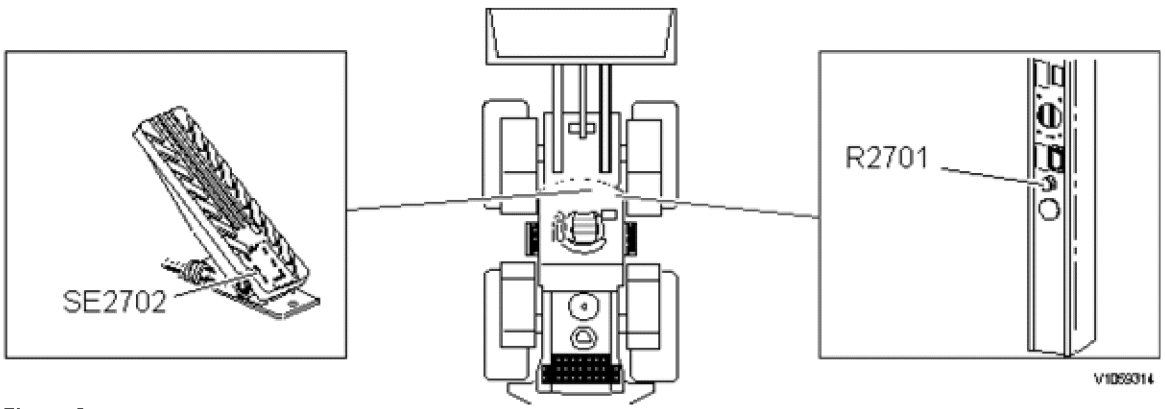

Figure 2
Component position

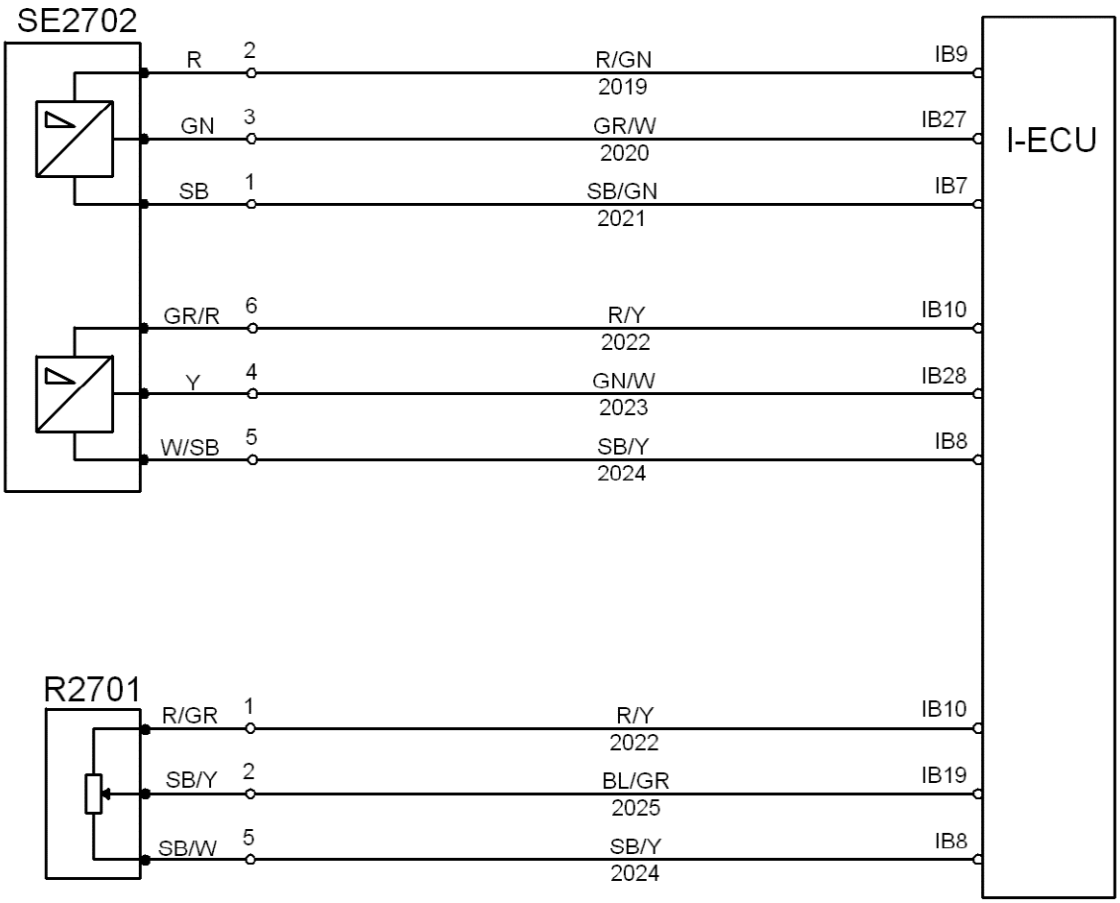

11171361-P05

V1044507

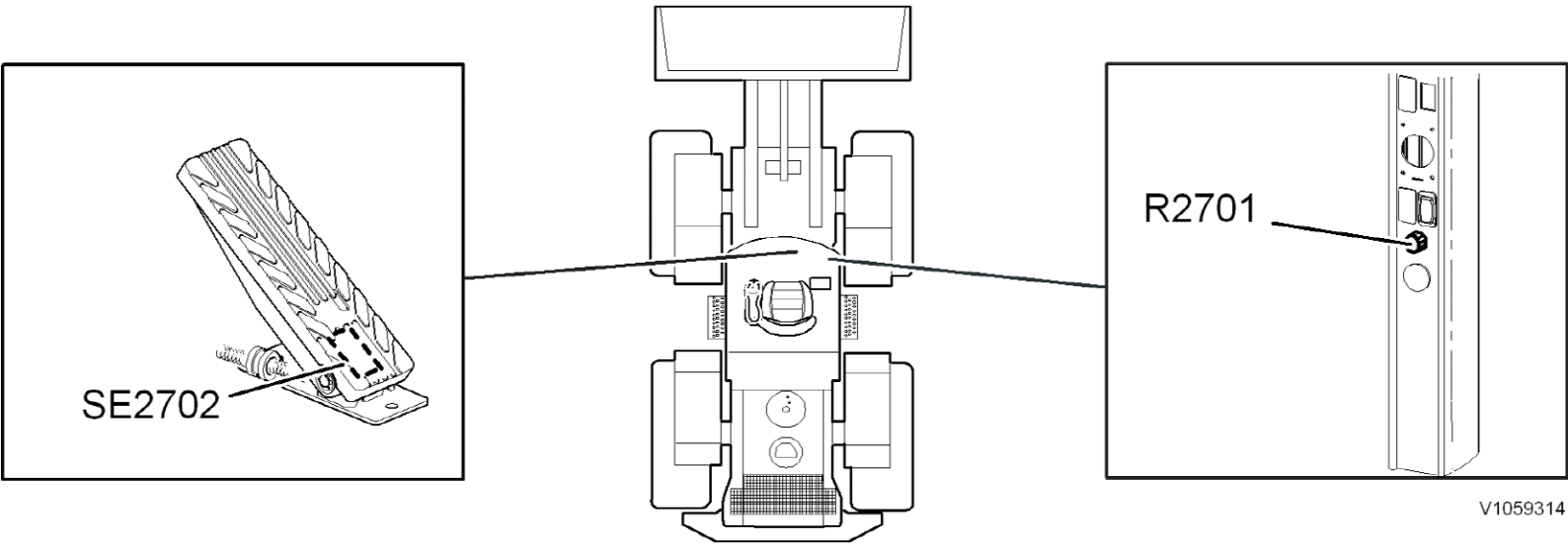
SE2702
R2701
V1059314

VOLVO
Construction Equipment

Service Information

Document Title:	Function Group:	Information Type: **Service Information**	Date: **12/10/2011**
Profile: **WLO, L90F (Volvo) [GB]**			

Wiring diagram 206

Injection

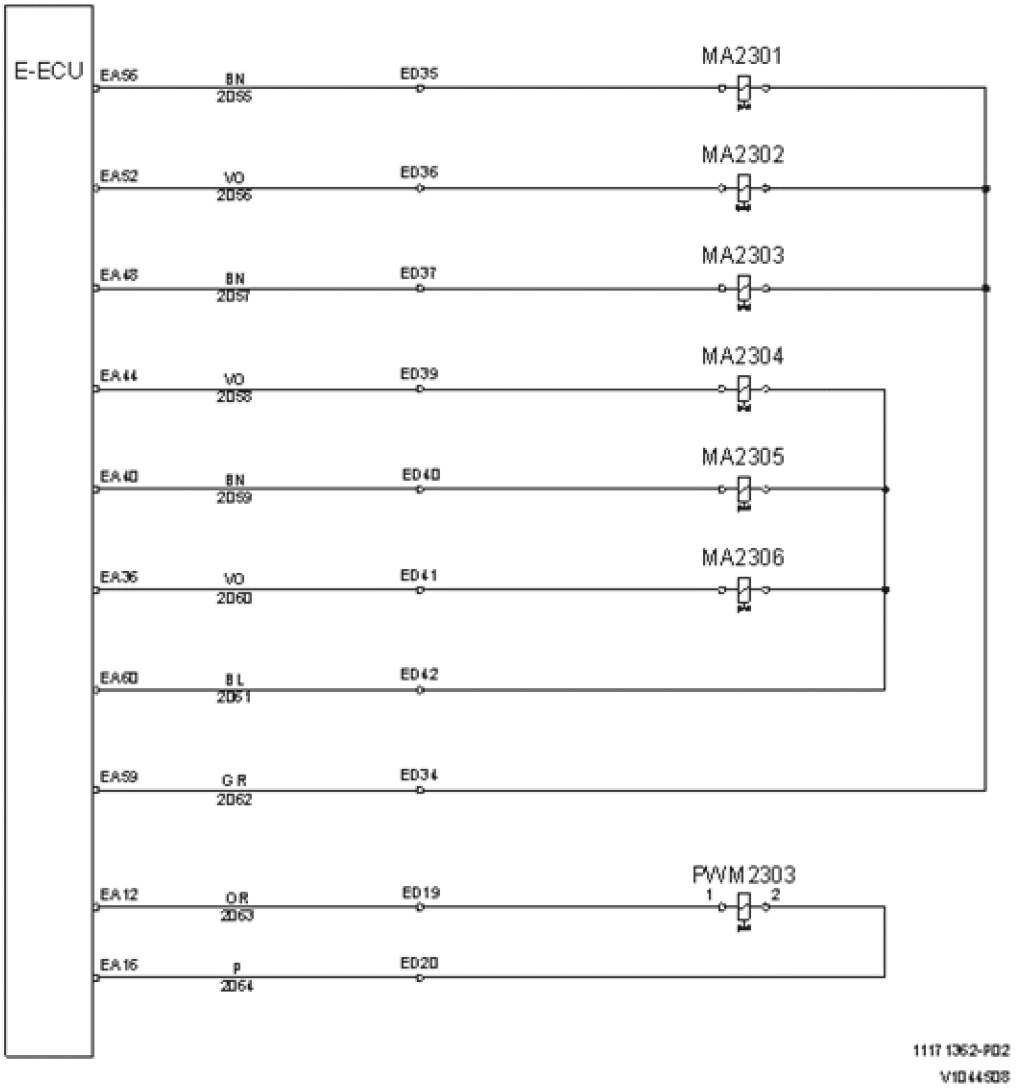

Figure 1

Designation	Function
MA2301	Injector 1
MA2302	Injector 2
MA2303	Injector 3

MA2304	Injector 4
MA2305	Injector 5
MA2306	Injector 6
PWM2303	Fuel pressure valve

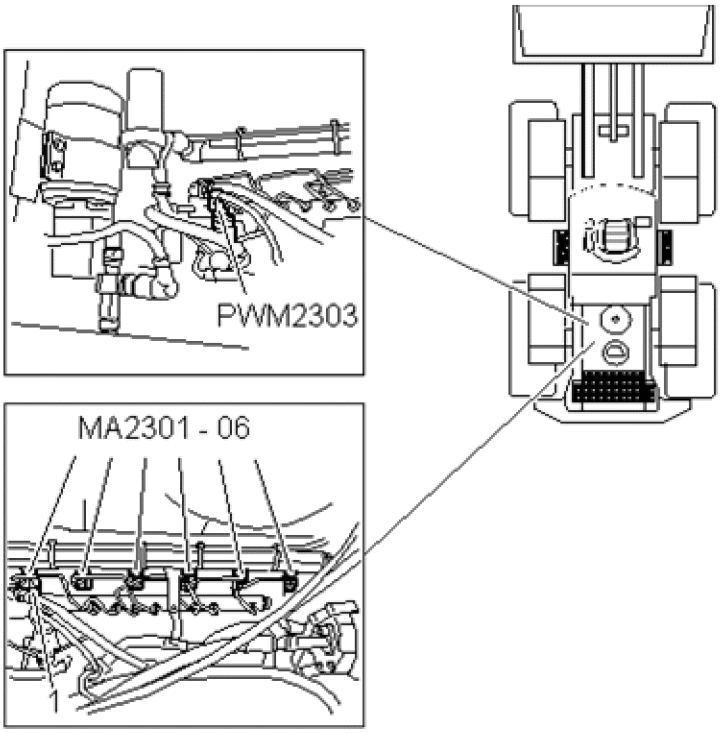

V1059015

Figure 2
Component position

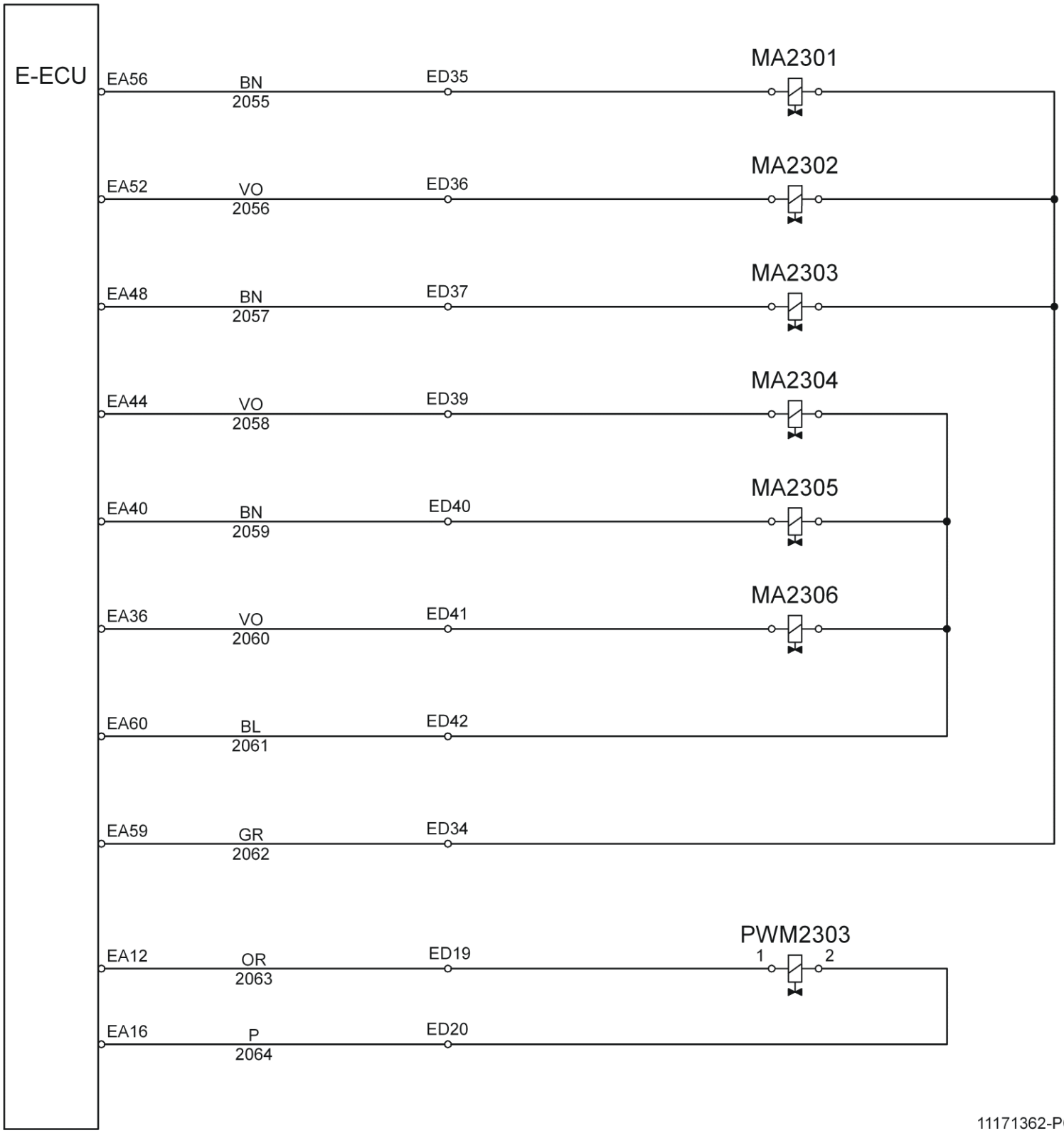

11171362-P02

V1044508

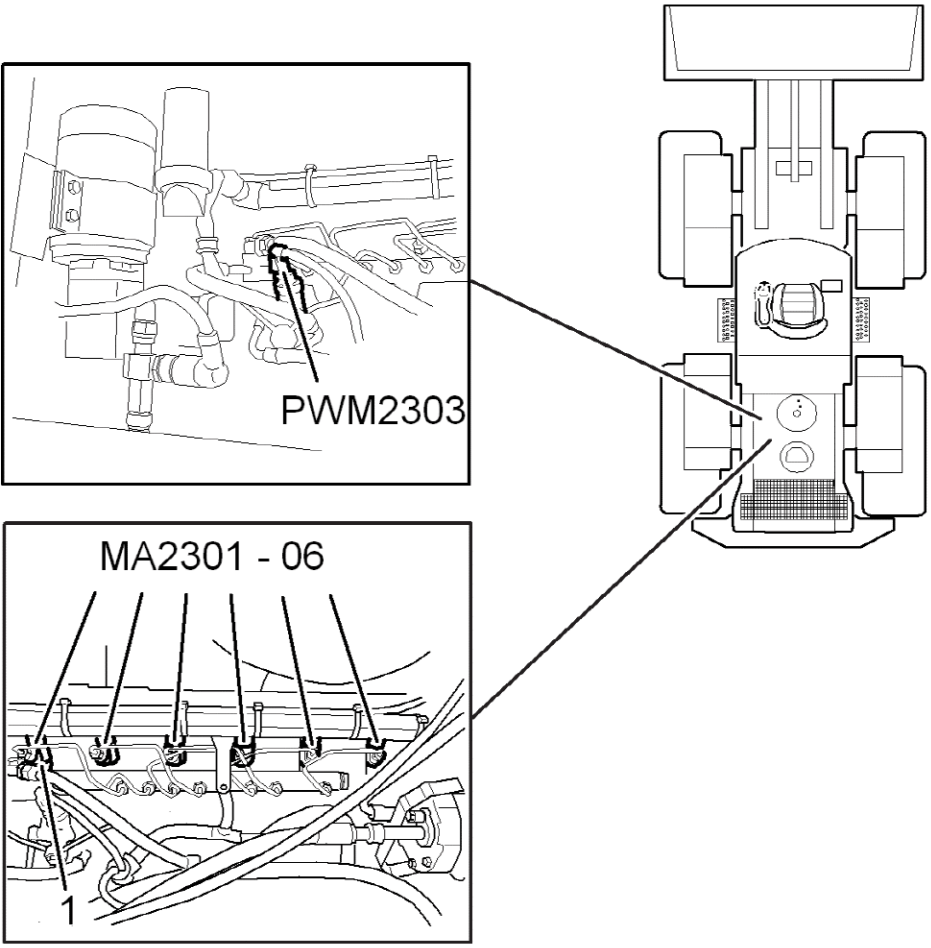

V1059315

More than one document matches the current profile:

Wiring diagram 301
Product Line: WLO
Model Variant: L90F
Site: Pederneiras, Asheville, Arvika
Serial Number Start: 71501, 68101, 25001
Serial Number End: 71569, 68491, 26491

Wiring diagram 301
Product Line: WLO
Model Variant: L90F
Site: Pederneiras, Asheville, Arvika
Serial Number Start: 71567, 68492, 26492
Serial Number End: 79999, 69999, 49999

VOLVO
Construction Equipment

Service Information

Document Title:	Function Group:	Information Type: **Service Information**	Date: **12/10/2011**
Profile: **WLO, L90F (Volvo) [GB]**			

Wiring diagram 301

Voltage supply

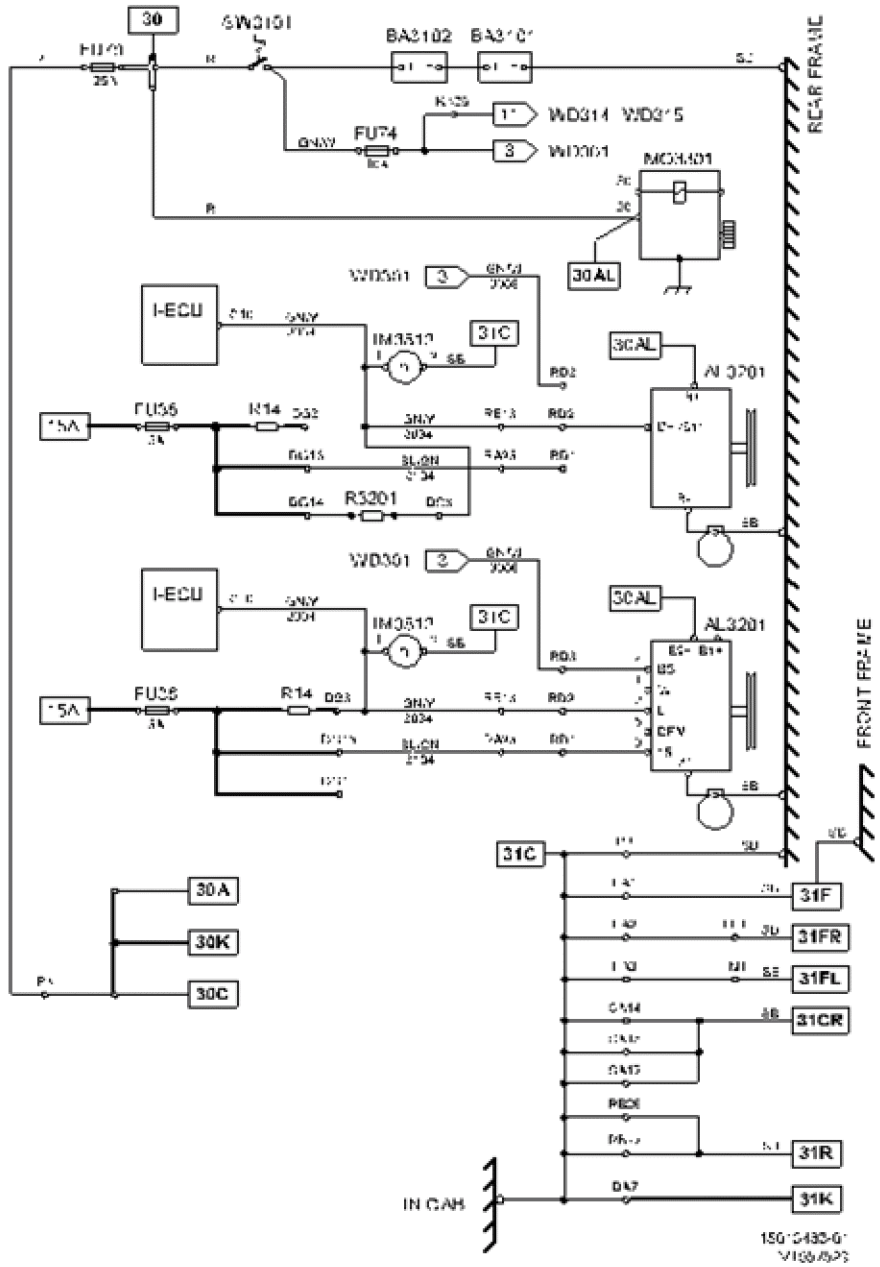

Figure 1

Designation	Function
AL3201	Alternator

BA3101	Battery
BA3102	Battery
FU36	Magnetization alternator, hour meter
FU70	Main fuse
FU74	Sensing of battery voltage, voltage converter
IM3812	Hour meter
MO3301	Starter motor
R14	Pre-magnetisation, alternator
R3201[T1] ⓘ	Pre-magnetisation, alternator
SW3101	Battery disconnect switch

[T1] R3201 is located on connector DG.

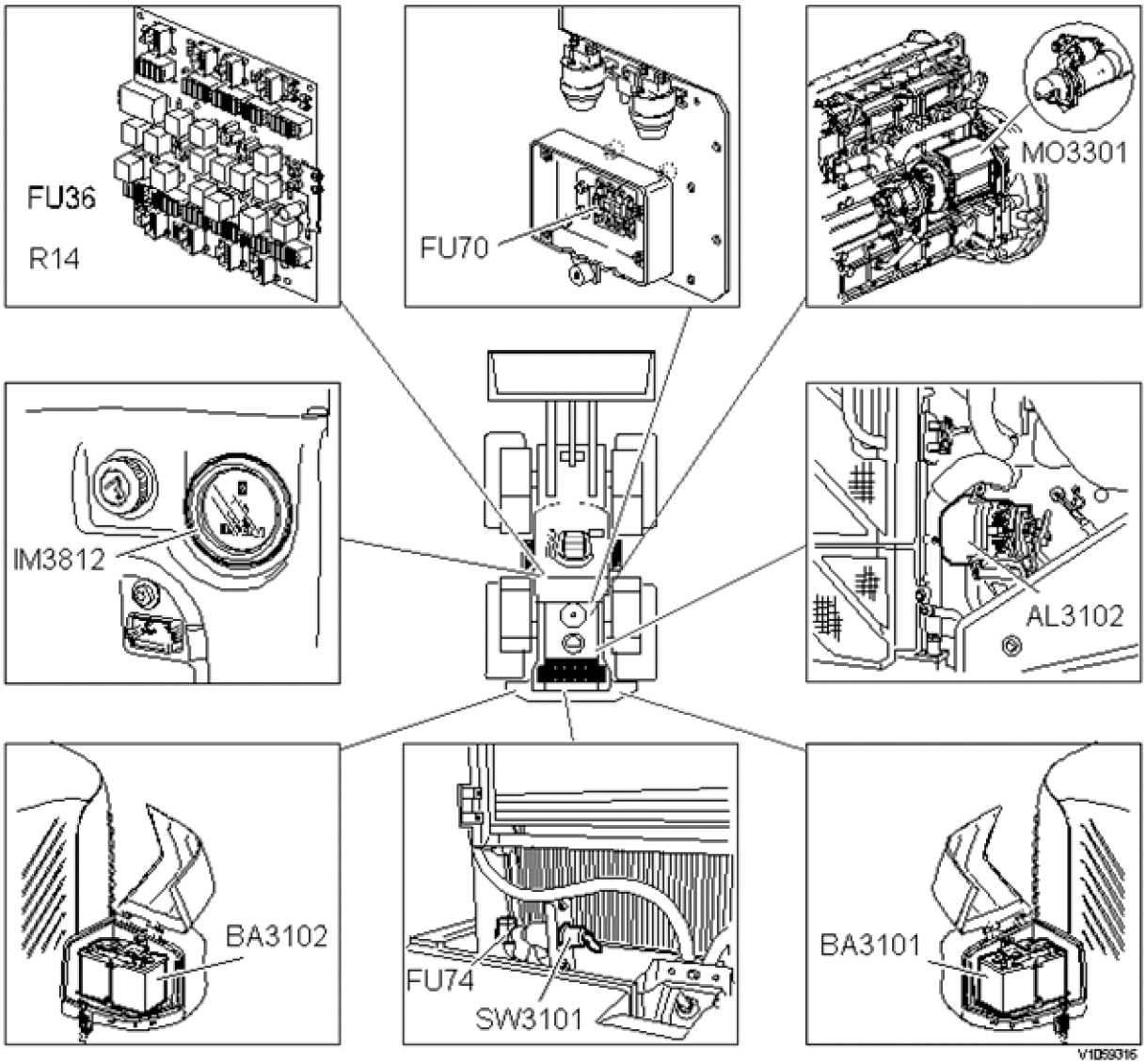

Figure 2
Component position

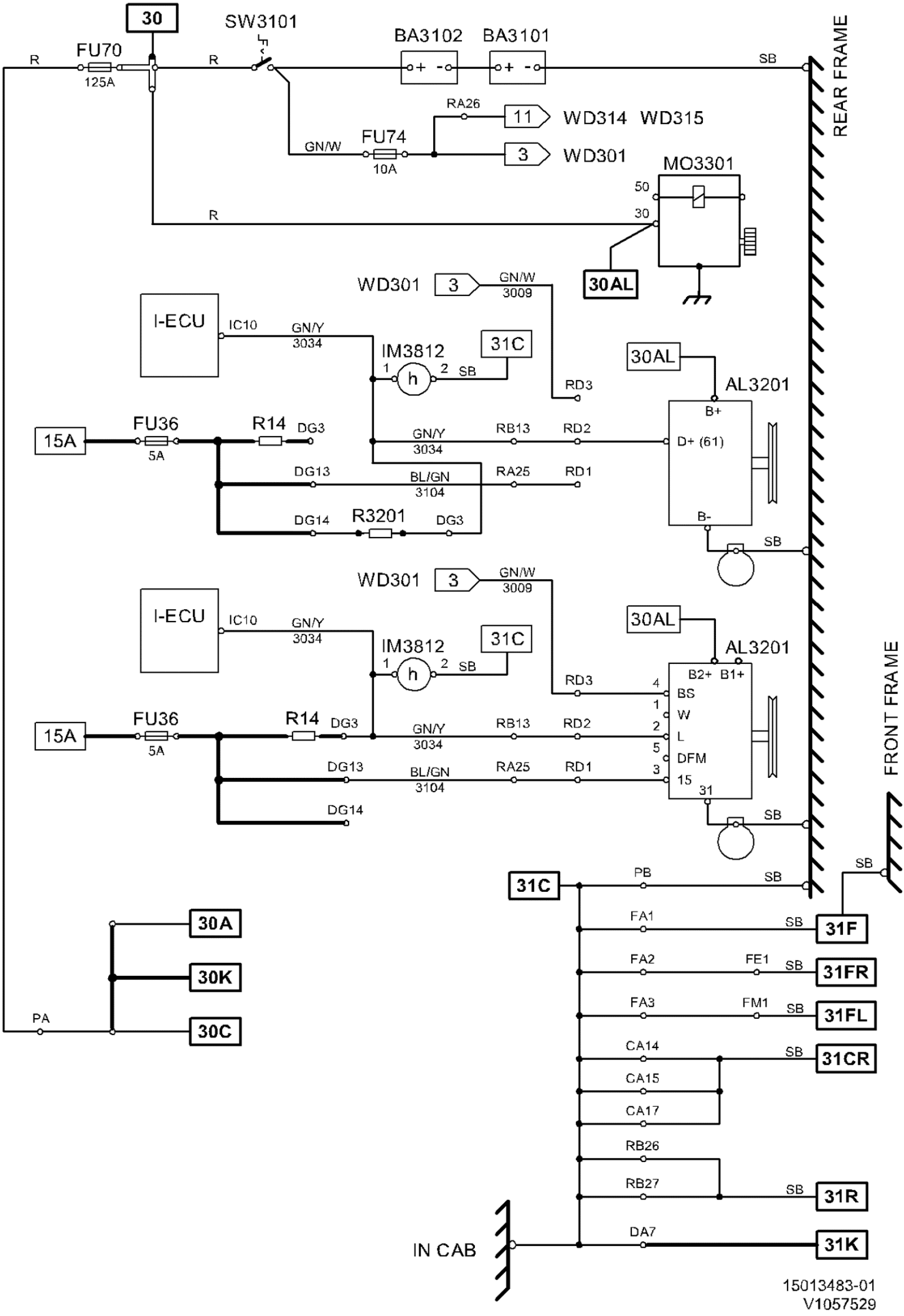
30
SW3101
FU70
125A
R
BA3102
BA3101
SB
REAR FRAME
RA26
11
WD314 WD315
GN/W
FU74
10A
3
WD301
MO3301
50
30
30AL
WD301
GN/W
3009
I-ECU
IC10
GN/Y
3034
IM3812
31C
SB
RD3
AL3201
B+
D+ (61)
B-
15A
FU36
5A
R14
DG3
RB13
RD2
DG13
BL/GN
3104
RA25
RD1
DG14
R3201
FRONT FRAME
B2+
B1+
BS
W
L
DFM
15
31
PB
FA1
FA2
FE1
FA3
FM1
CA14
CA15
CA17
RB26
RB27
DA7
31F
31FR
31FL
31CR
31R
31K
30A
30K
30C
PA
IN CAB
15013483-01
V1057529

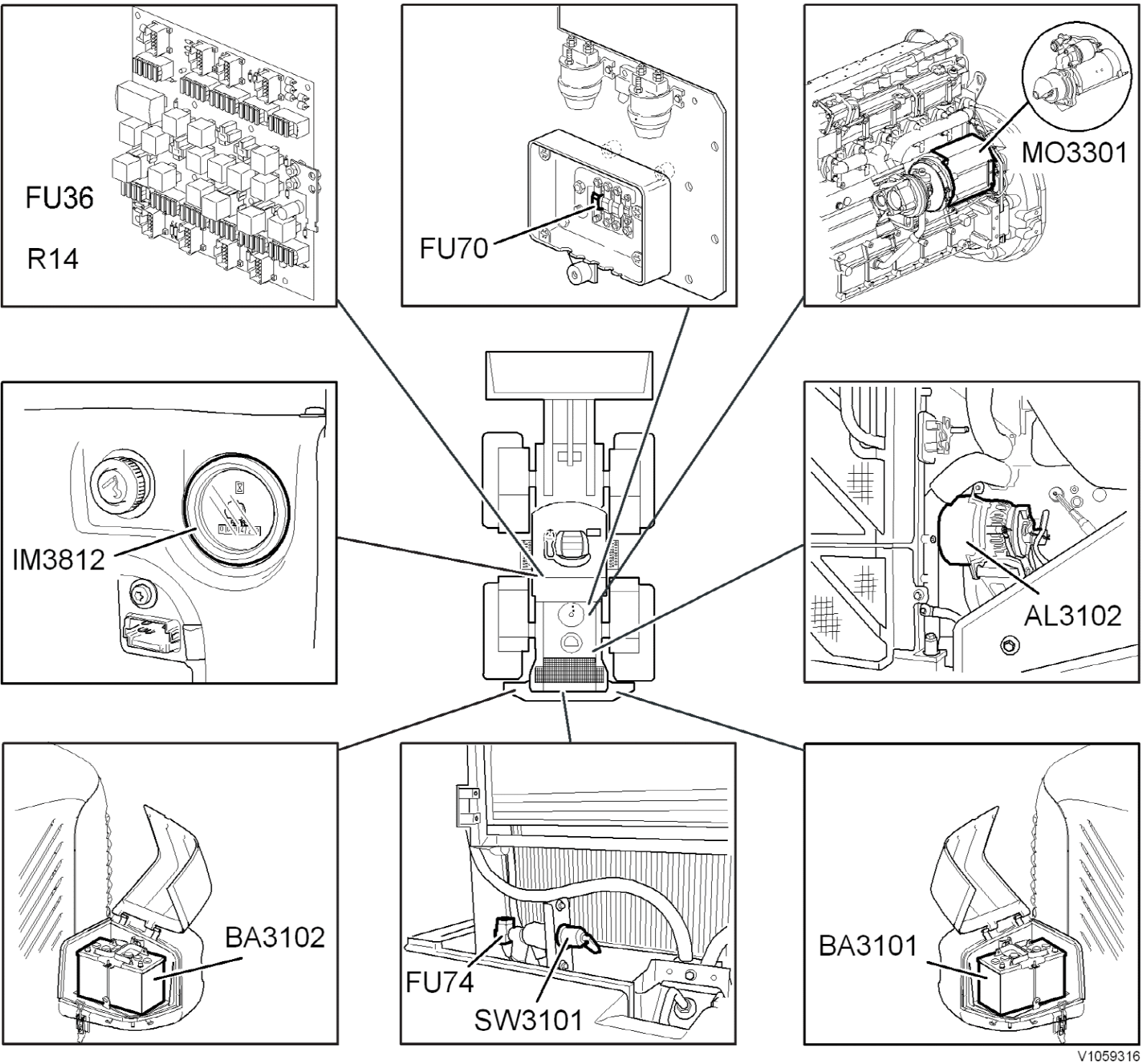
FU36
R14
FU70
MO3301
IM3812
AL3102
BA3102
FU74
SW3101
BA3101
V1059316

VOLVO
Construction Equipment

Service Information

Document Title:	Function Group:	Information Type: **Service Information**	Date: **12/10/2011**
Profile: **WLO, L90F (Volvo) [GB]**			

Wiring diagram 301

Voltage supply

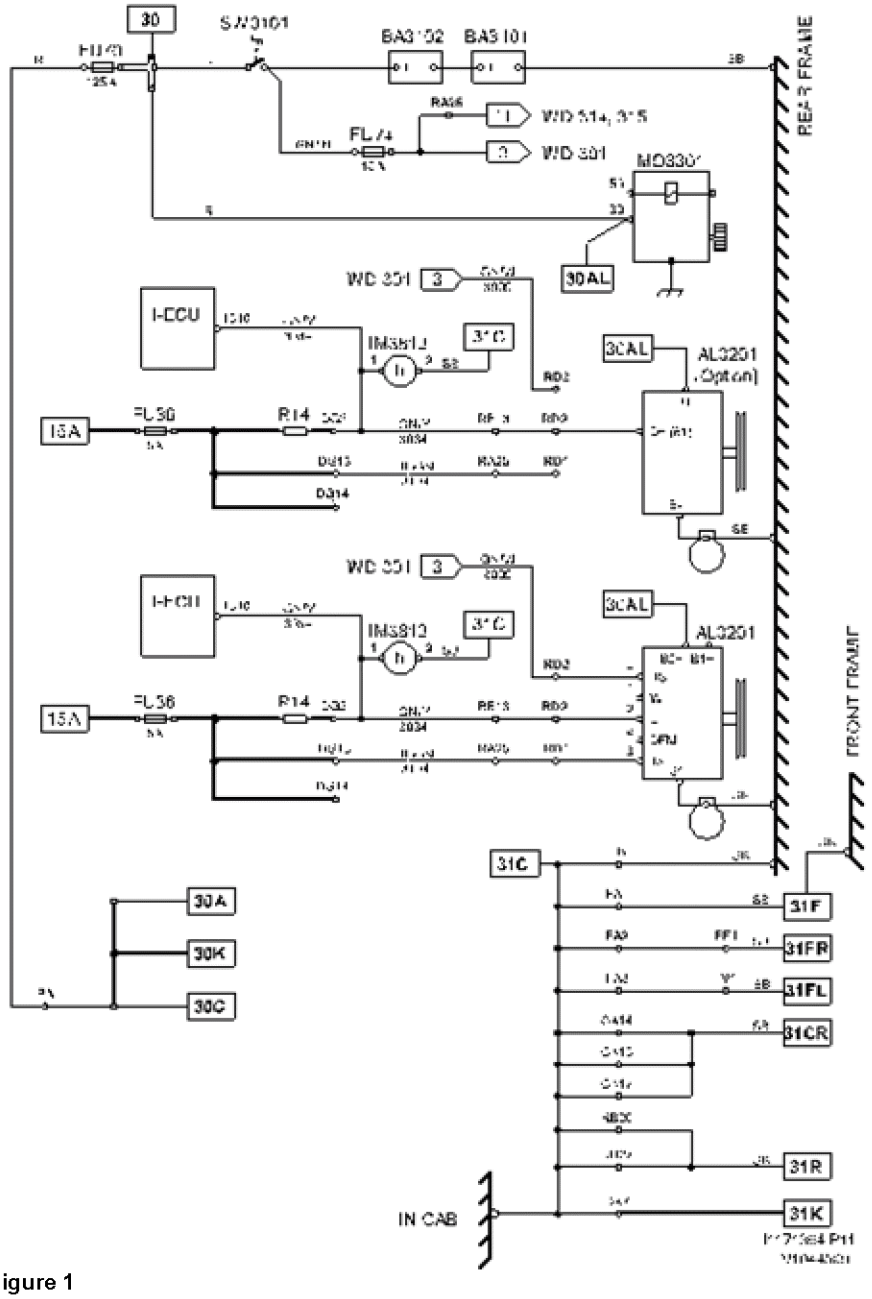

Figure 1

Designation	Function
AL3201	Alternator

BA3101	Battery
BA3102	Battery
FU36	Magnetization alternator, hour meter
FU70	Main fuse
FU74	Sensing of battery voltage, voltage converter
IM3812	Hour meter
MO3301	Starter motor
R14	Pre-magnetisation, alternator
SW3101	Battery disconnect switch

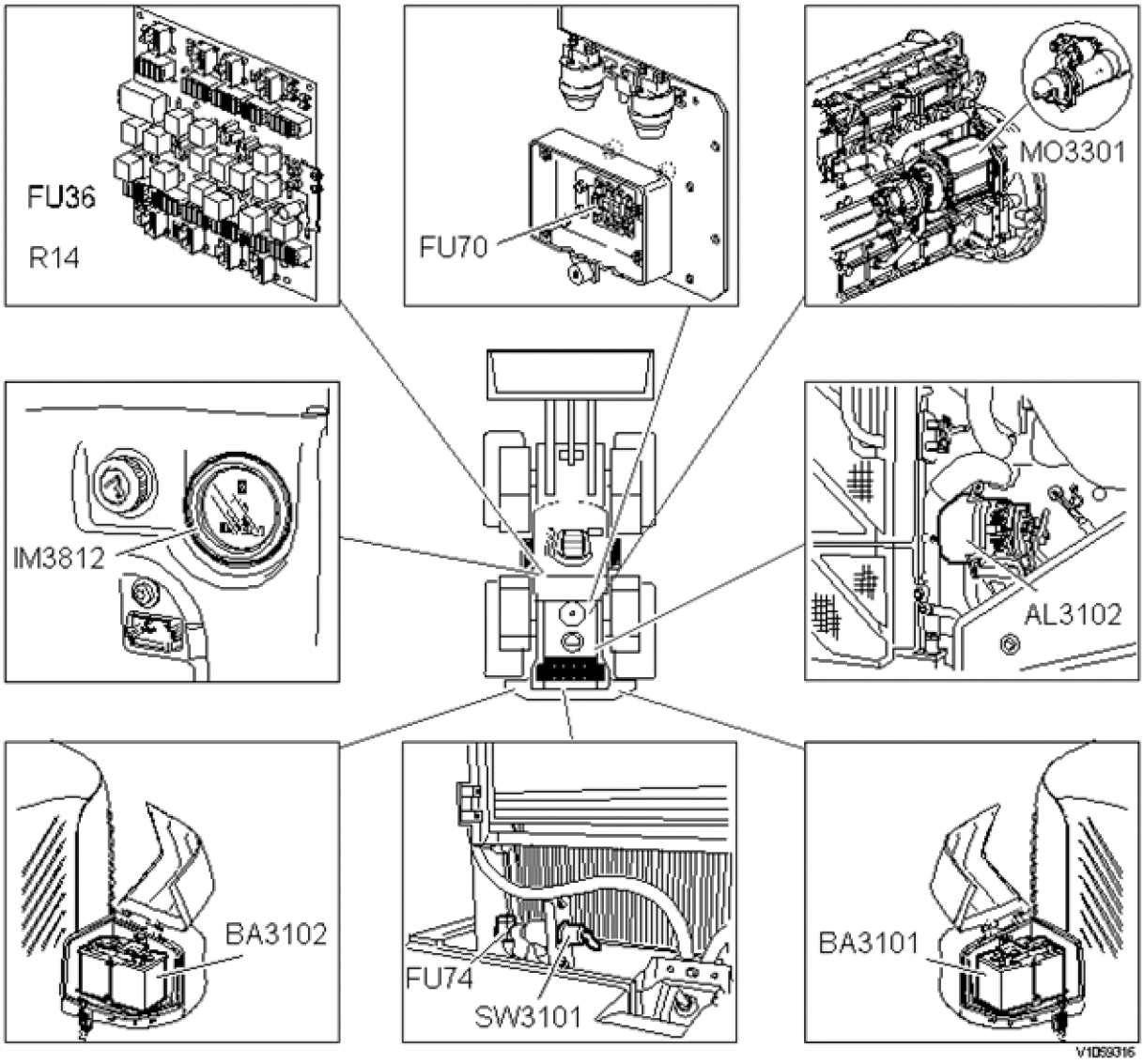

Figure 2
Component position

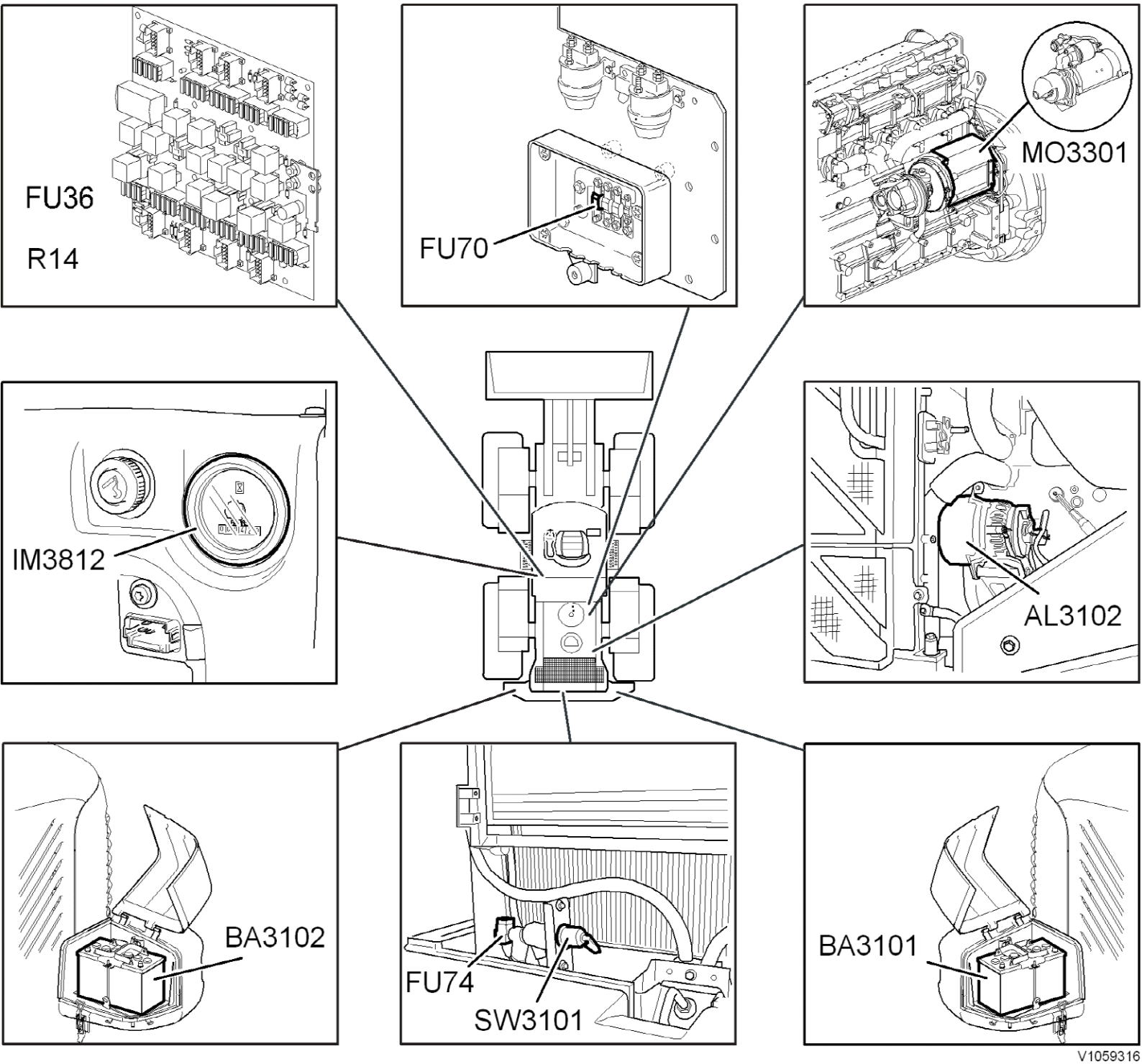
FU36
R14
FU70
MO3301
IM3812
AL3102
BA3102
FU74
SW3101
BA3101
V1059316

More than one document matches the current profile:

Wiring diagram 302
Product Line: WLO
Model Variant: L90F
Site: Arvika, Asheville
Serial Number Start: 25001, 68101
Serial Number End: 27667, 68895

Wiring diagram 302
Product Line: WLO
Model Variant: L90F
Site: Arvika, Asheville
Serial Number Start: 27668, 68896
Serial Number End: 49999, 69999

VOLVO
Construction Equipment

Service Information

Document Title:	Function Group:	Information Type: **Service Information**	Date: **12/10/2011**
Profile: **WLO, L90F (Volvo) [GB]**			

Wiring diagram 302

Voltage feed control units

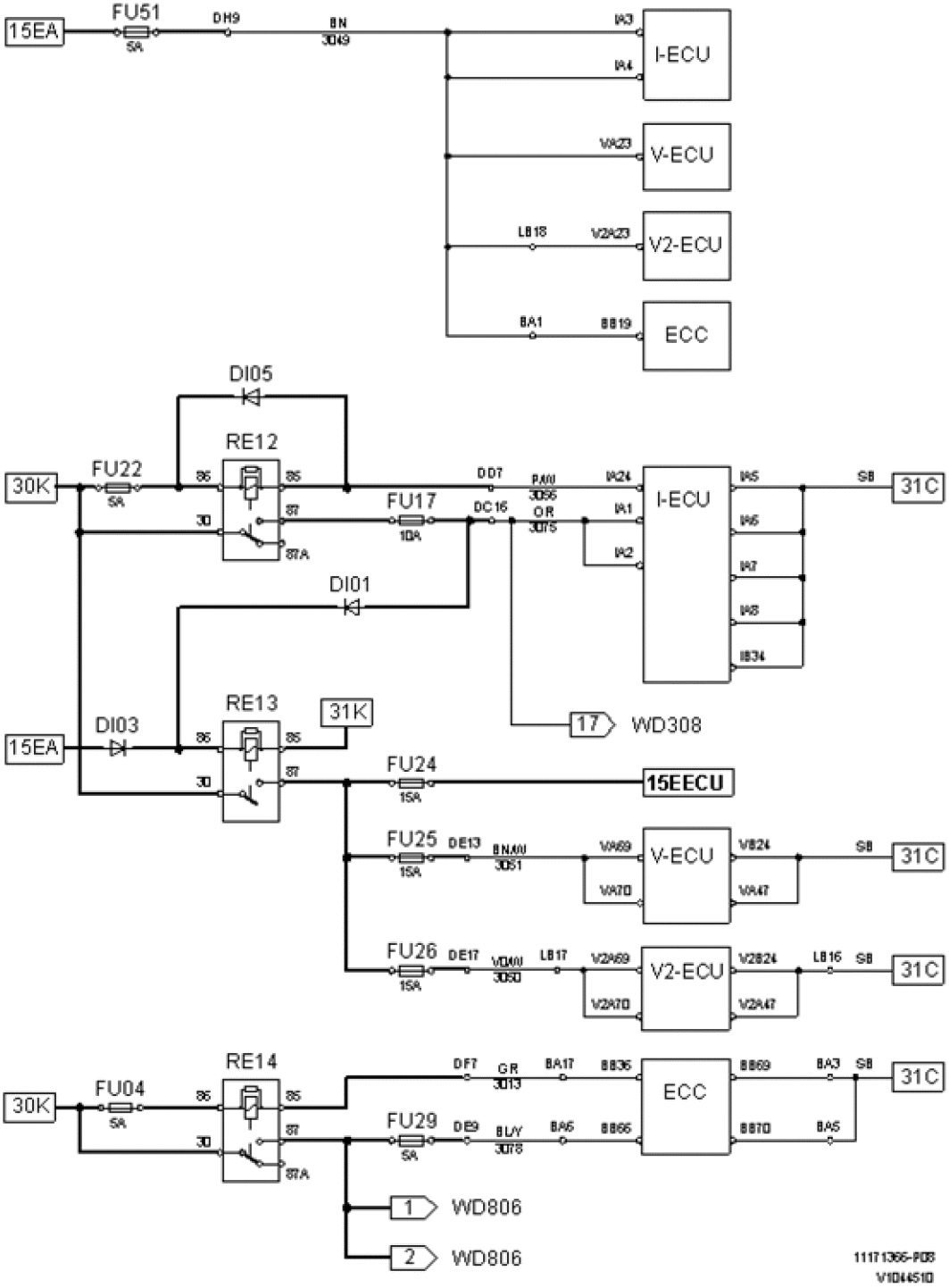

Figure 1

Designation	Function	Designation	Function
DI01	Lock-out diode	ECC	Climate control unit
DI03	Lock-out diode	I-ECU	Instrument control unit
DI05	Quench diode	V-ECU	Vehicle control unit
FU04	Voltage feed RE14	V2-ECU	Vehicle control unit
FU17	Voltage feed I–ECU, hold voltage RE13		
FU22	Voltage feed RE12		
FU24	Voltage feed E–ECU		
FU25	Voltage feed V–ECU		
FU26	Voltage feed for V2-ECU		
FU29	Voltage feed ECC		
FU51	Ignition-dependent voltage feed		

RE12	30-feed controlled by I-ECU, hold voltage RE13		
RE13	Voltage feed E-ECU, V-ECU, V2–ECU		
RE14	Voltage feed ECC		

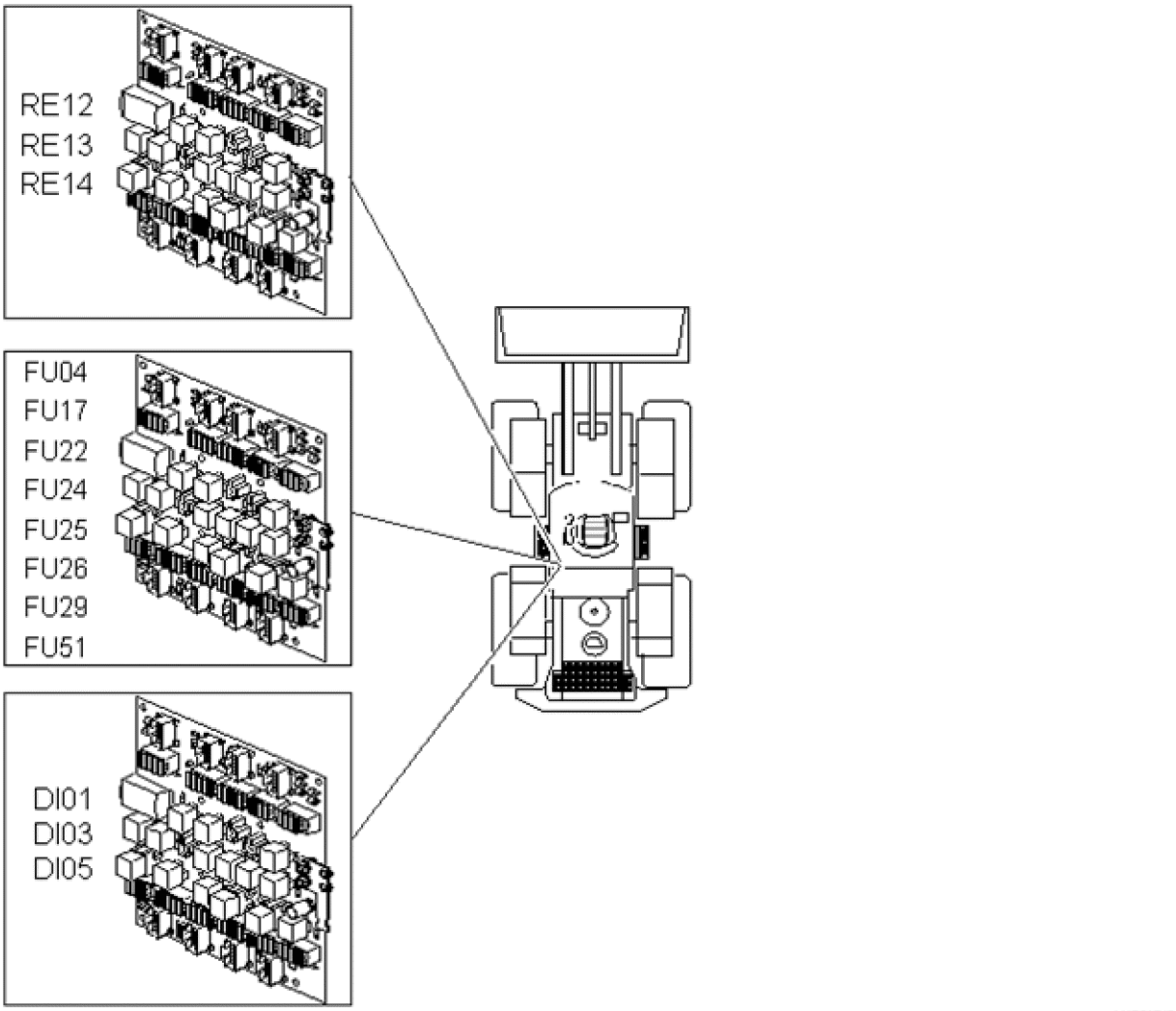

Figure 2
Component position

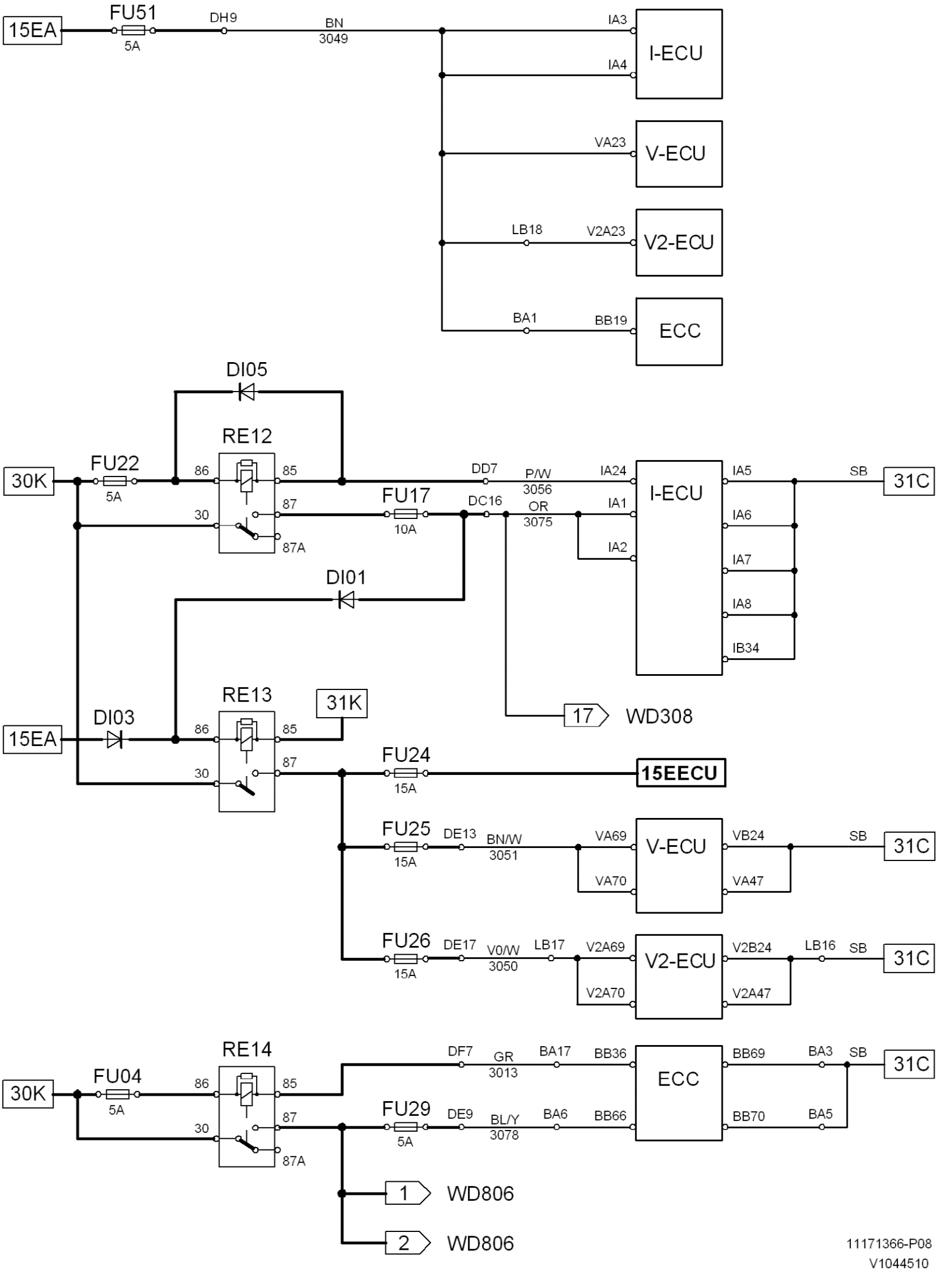

11171366-P08
V1044510

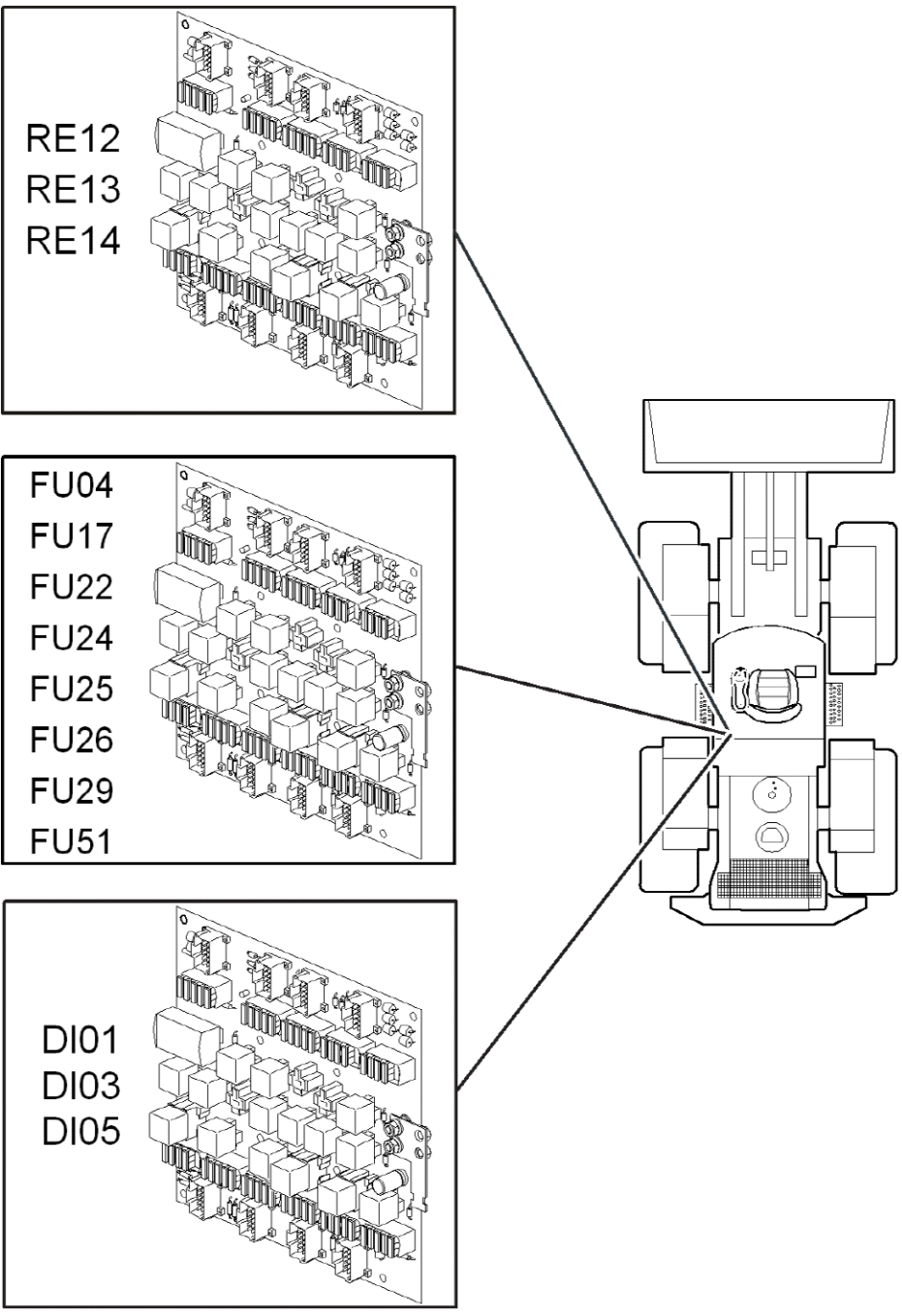
RE12
RE13
RE14
FU04
FU17
FU22
FU24
FU25
FU26
FU29
FU51
DI01
DI03
DI05

V1059317

VOLVO
Construction Equipment

Service Information

Document Title:	Function Group:	Information Type: **Service Information**	Date: **12/10/2011**
Profile: **WLO, L90F (Volvo) [GB]**			

Wiring diagram 302

Voltage feed control units

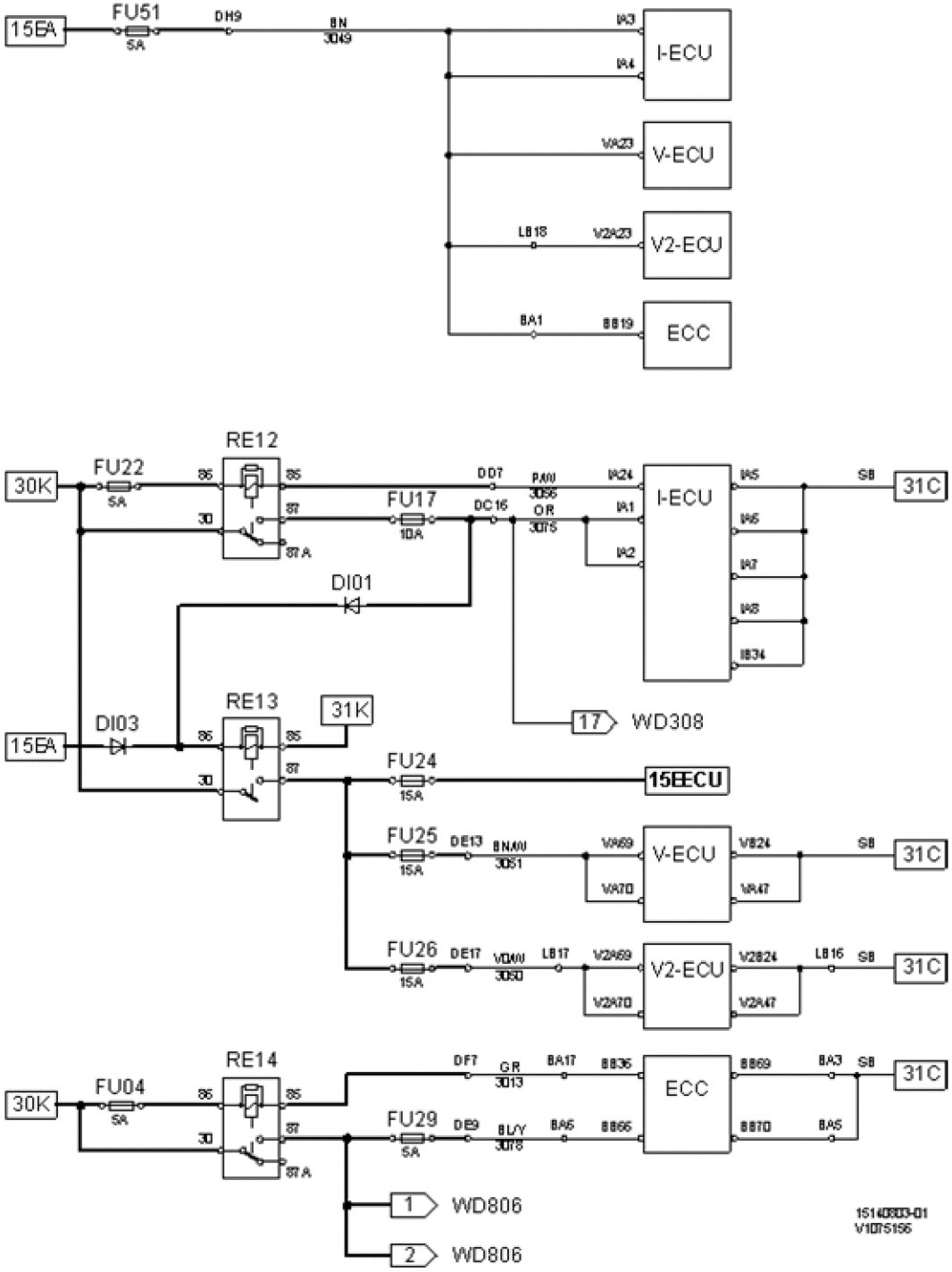

Figure 1

Designation	Function	Designation	Function
DI01	Lock-out diode	ECC	Climate control unit
DI03	Lock-out diode	I-ECU	Instrument control unit
FU04	Voltage feed RE14	V-ECU	Vehicle control unit
FU17	Voltage feed I–ECU, hold voltage RE13	V2-ECU	Vehicle control unit
FU22	Voltage feed RE12		
FU24	Voltage feed E–ECU		
FU25	Voltage feed V–ECU		
FU26	Voltage feed for V2-ECU		
FU29	Voltage feed ECC		
FU51	Ignition-dependent voltage feed		
RE12	30-feed controlled by I-ECU, hold		

	voltage RE13		
RE13	Voltage feed E-ECU, V-ECU, V2–ECU		
RE14	Voltage feed ECC		

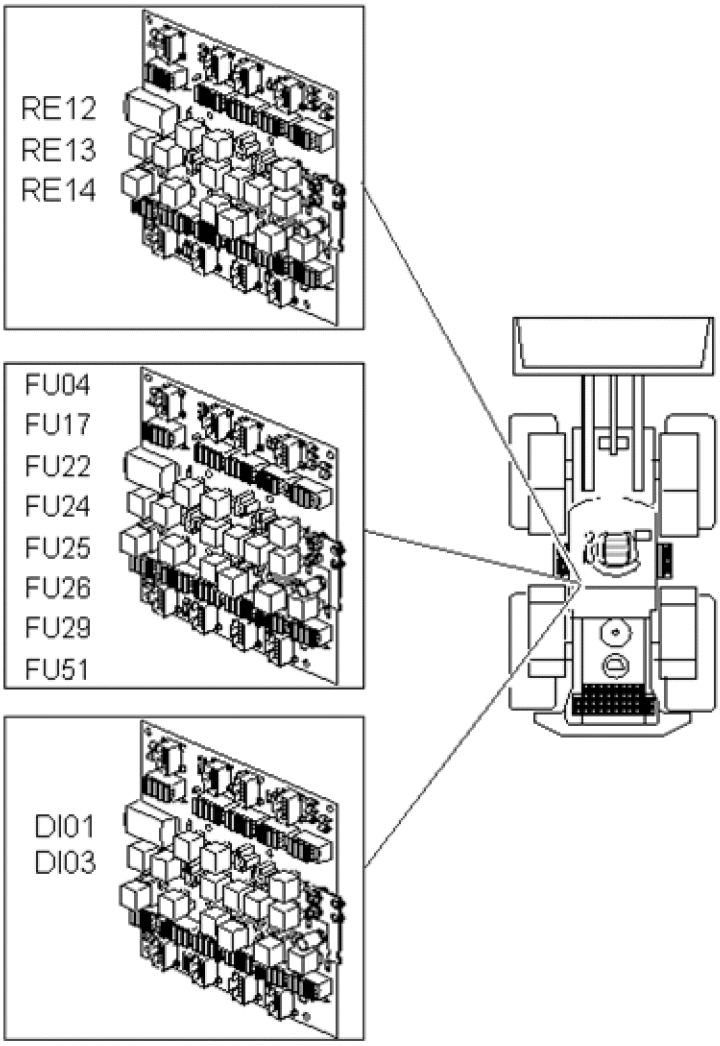

V1075157

Figure 2
Component position

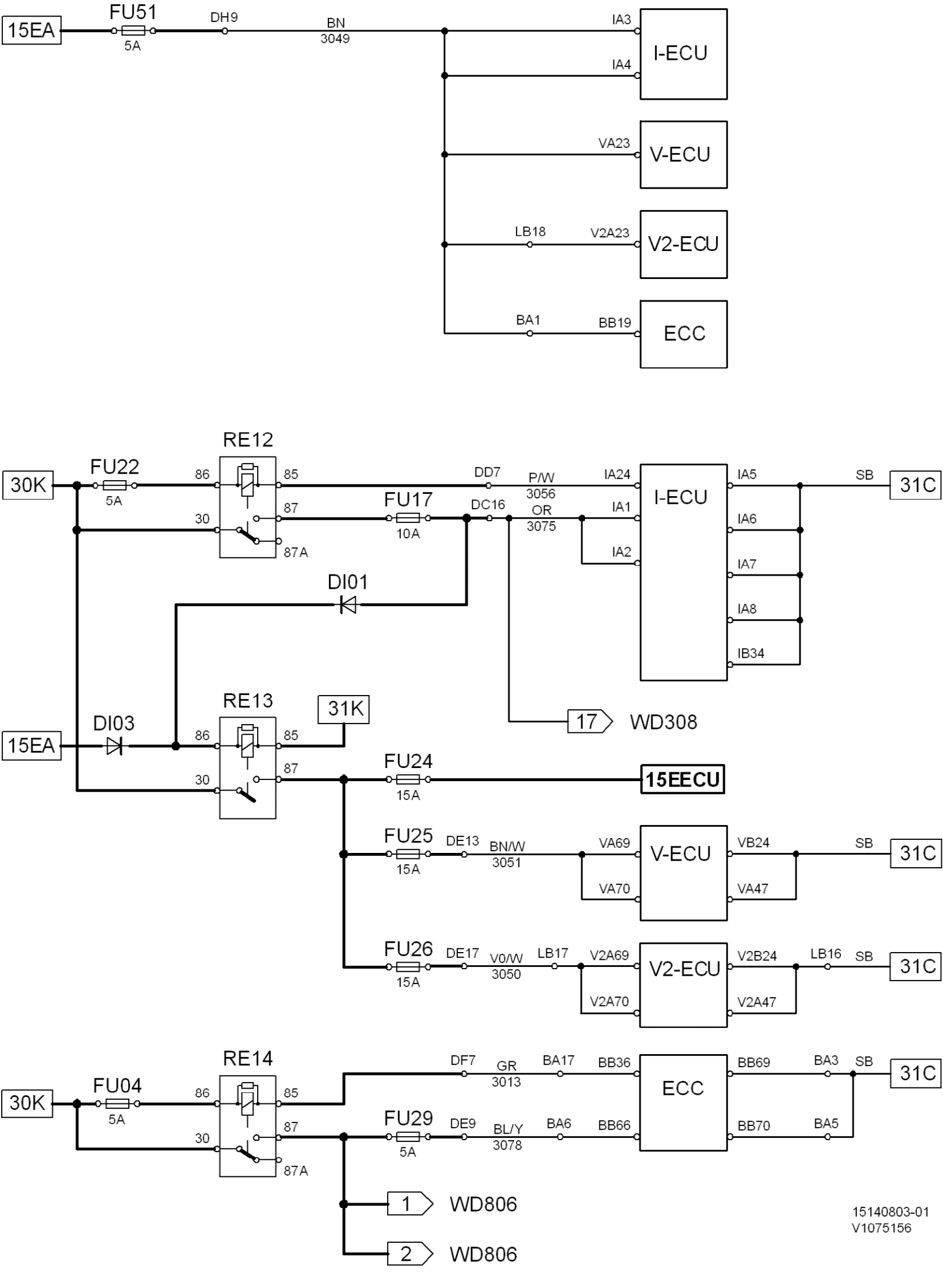
15EA
FU51
5A
DH9
BN
3049
IA3
IA4
I-ECU
VA23
V-ECU
LB18
V2A23
V2-ECU
BA1
BB19
ECC
30K
FU22
5A
RE12
86
85
87
30
87A
DD7
P/W
3056
IA24
IA5
SB
31C
FU17
10A
DC16
OR
3075
IA1
IA2
IA6
IA7
IA8
IB34
DI01
17
WD308
DI03
RE13
31K
FU24
15A
15EECU
FU25
DE13
BN/W
3051
VA69
VA70
VB24
VA47
FU26
DE17
V0/W
3050
LB17
V2A69
V2A70
V2B24
V2A47
LB16
RE14
FU04
DF7
GR
3013
BA17
BB36
BB69
BA3
FU29
DE9
BL/Y
3078
BA6
BB66
BB70
BA5
1
WD806
2
WD806
15140803-01
V1075156

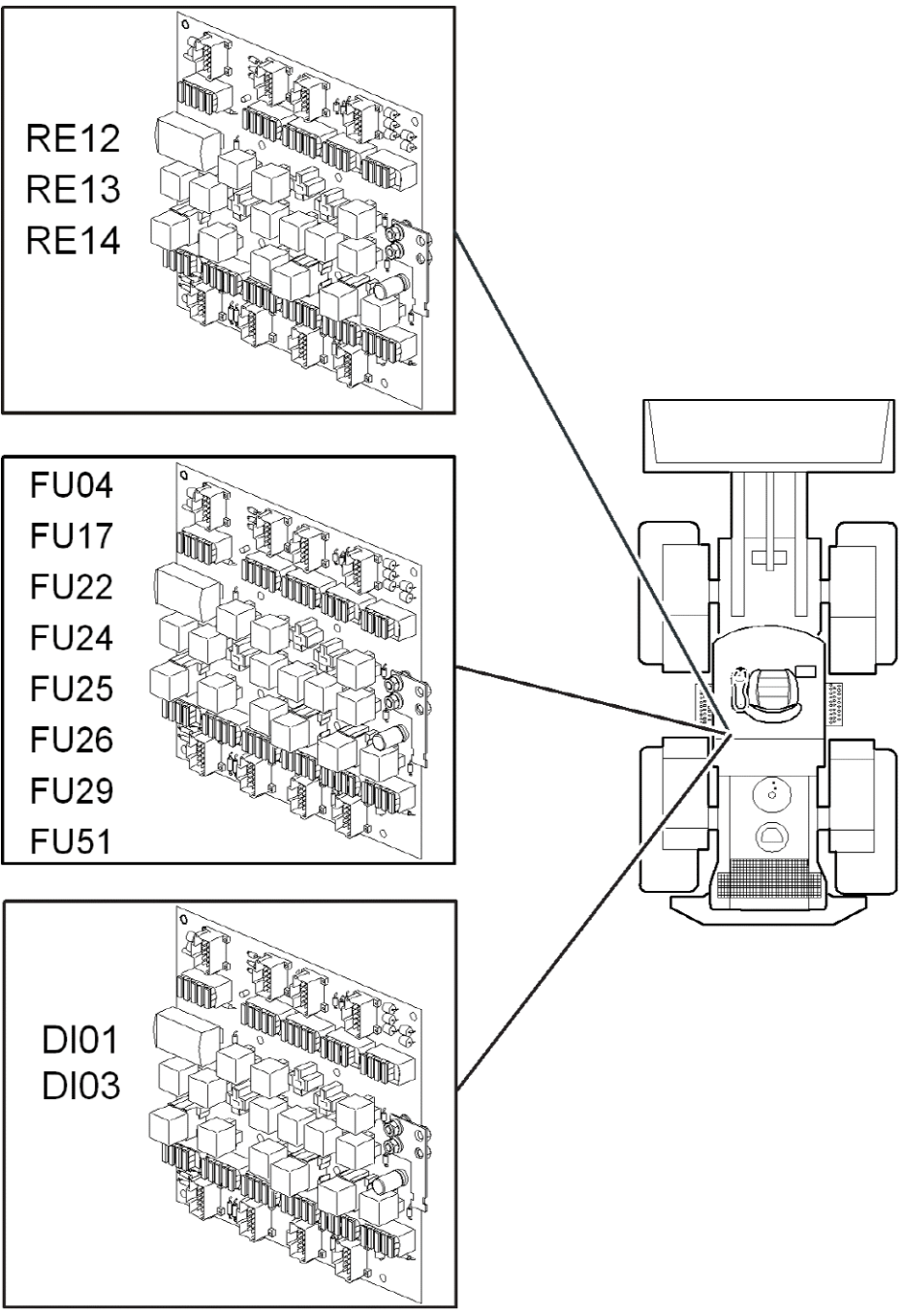
RE12
RE13
RE14
FU04
FU17
FU22
FU24
FU25
FU26
FU29
FU51
DI01
DI03

V1075157

VOLVO
Construction Equipment

Service Information

Document Title:	Function Group:	Information Type: **Service Information**	Date: **12/10/2011**
Profile: **WLO, L90F (Volvo) [GB]**			

Wiring diagram 303

Start circuit

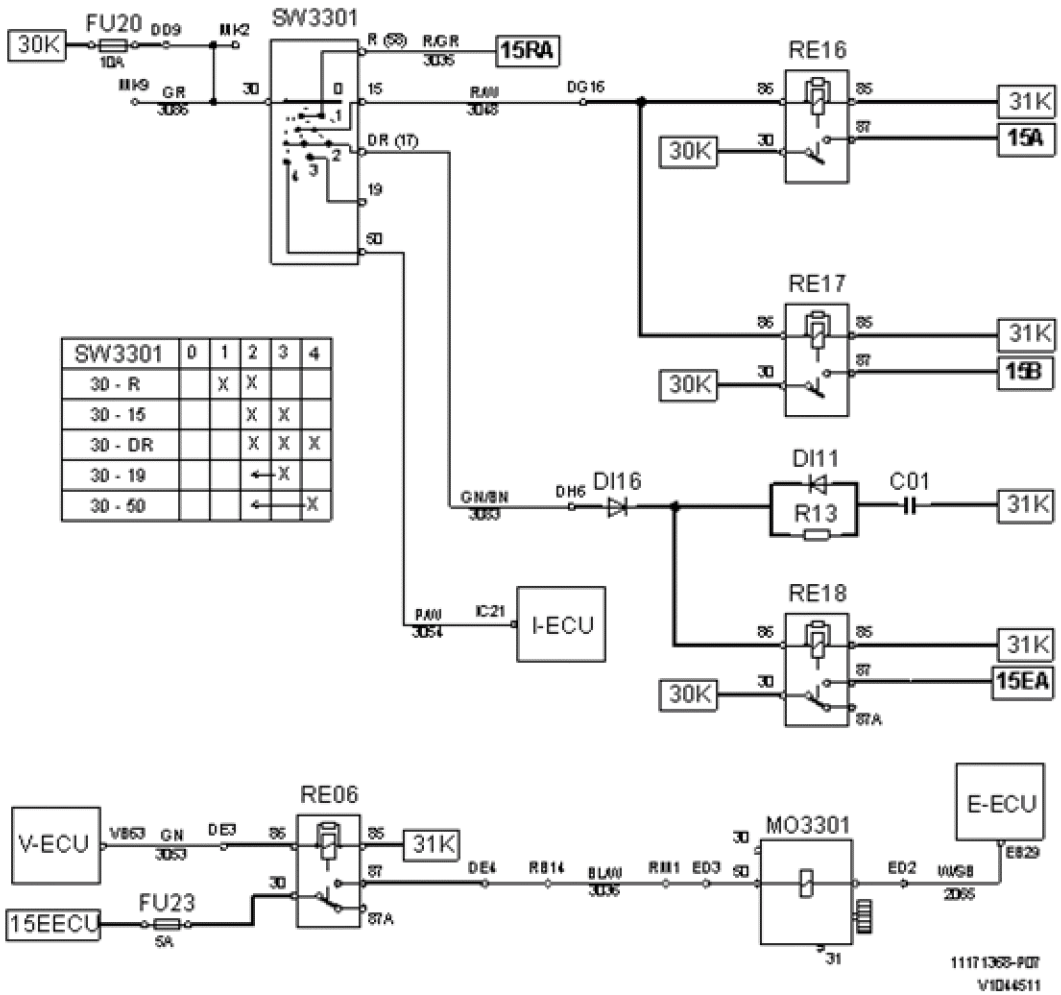

Figure 1

Designation	Function
C01	Delayed cut-out RE18
DI11	Delayed cut-out RE18
DI16	Lock-out diode
FU20	Voltage feed ignition
FU23	Voltage feed starter motor
MO3301	Starter motor
R13	Delayed cut-out RE18
RE06	Starter relay

RE16	15A supply
RE17	15B supply
RE18	15EA supply
SW3301	Ignition switch

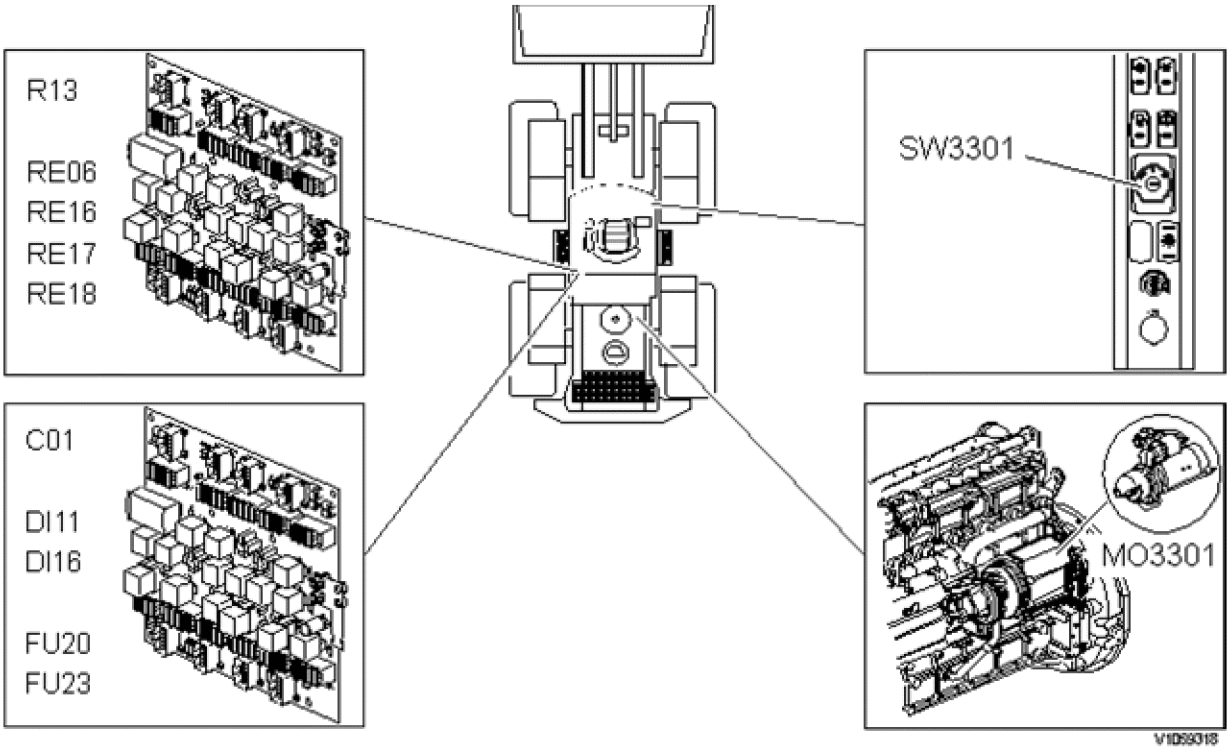

Figure 2
Component position

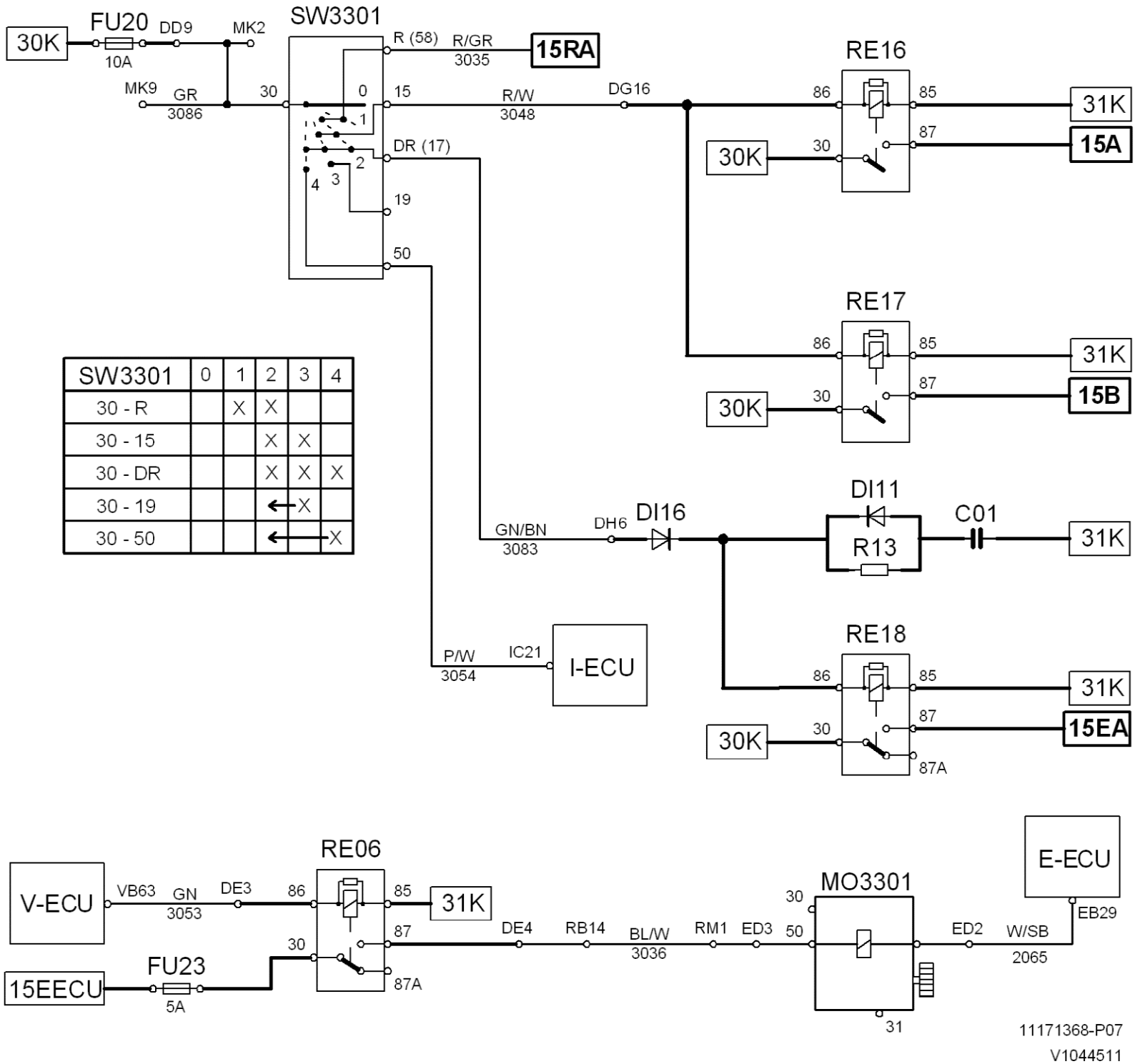
30K
FU20
10A
DD9
MK2
SW3301
MK9
GR
3086
30
0
1
2
3
4
15
R (58)
R/GR
3035
15RA
R/W
3048
DG16
DR (17)
19
50
RE16
86
85
87
30
30K
31K
15A
RE17
15B
DI11
R13
C01
GN/BN
3083
DH6
DI16
P/W
3054
IC21
I-ECU
RE18
15EA
87A
SW3301 | 0 | 1 | 2 | 3 | 4
30 - R | | X | X | | |
30 - 15 | | | X | X | |
30 - DR | | | X | X | X
30 - 19 | | | ← | X | |
30 - 50 | | | ← | | X
V-ECU
VB63
GN
3053
DE3
RE06
FU23
5A
15EECU
87A
DE4
RB14
BL/W
3036
RM1
ED3
MO3301
ED2
W/SB
2065
E-ECU
EB29
31
11171368-P07
V1044511

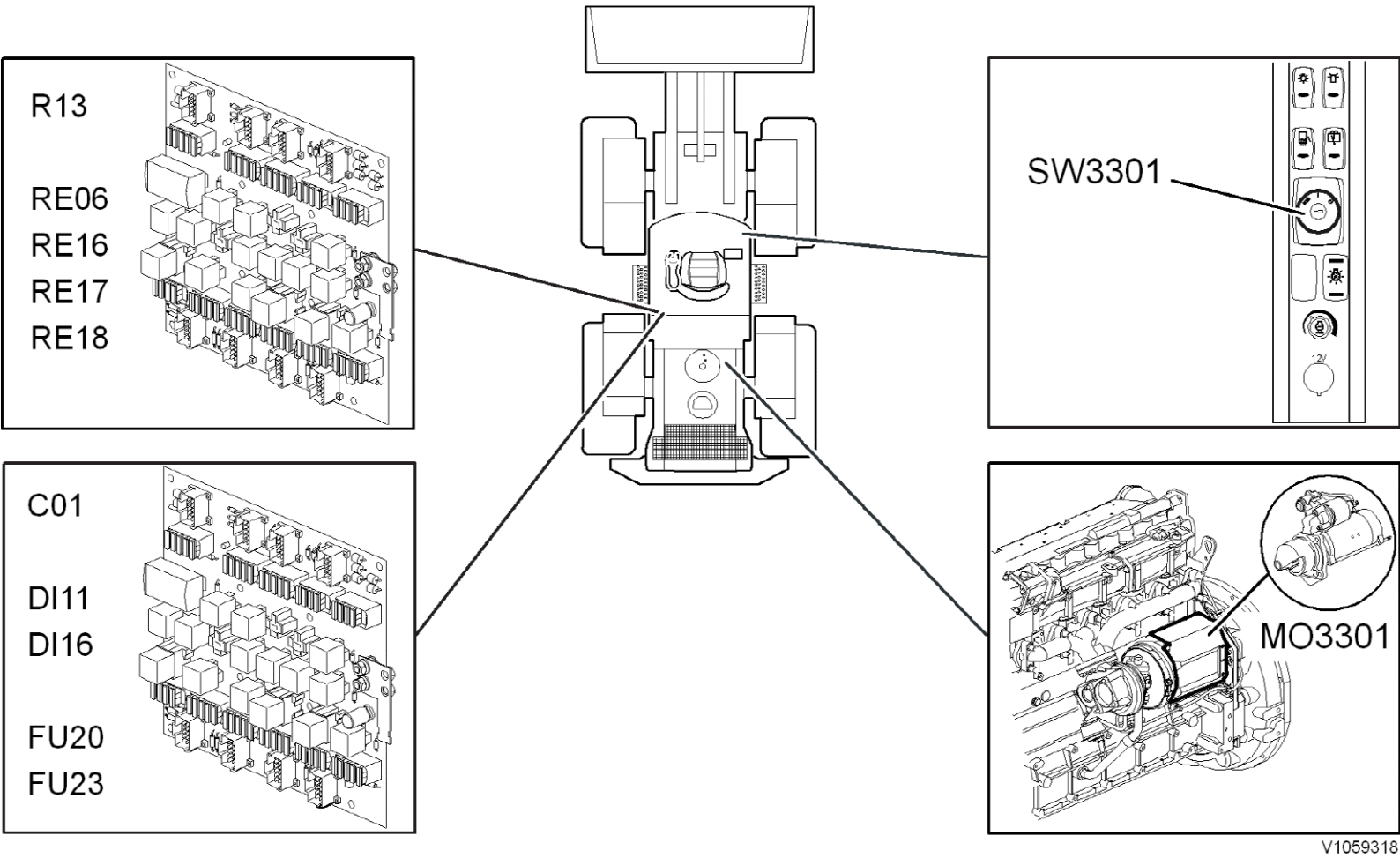
R13
RE06
RE16
RE17
RE18
C01
DI11
DI16
FU20
FU23
SW3301
MO3301
12V
V1059318

VOLVO
Construction Equipment

Service Information

Document Title:	Function Group:	Information Type: **Service Information**	Date: **12/10/2011**
Profile: **WLO, L90F (Volvo) [GB]**			

Wiring diagram 304

Lighting

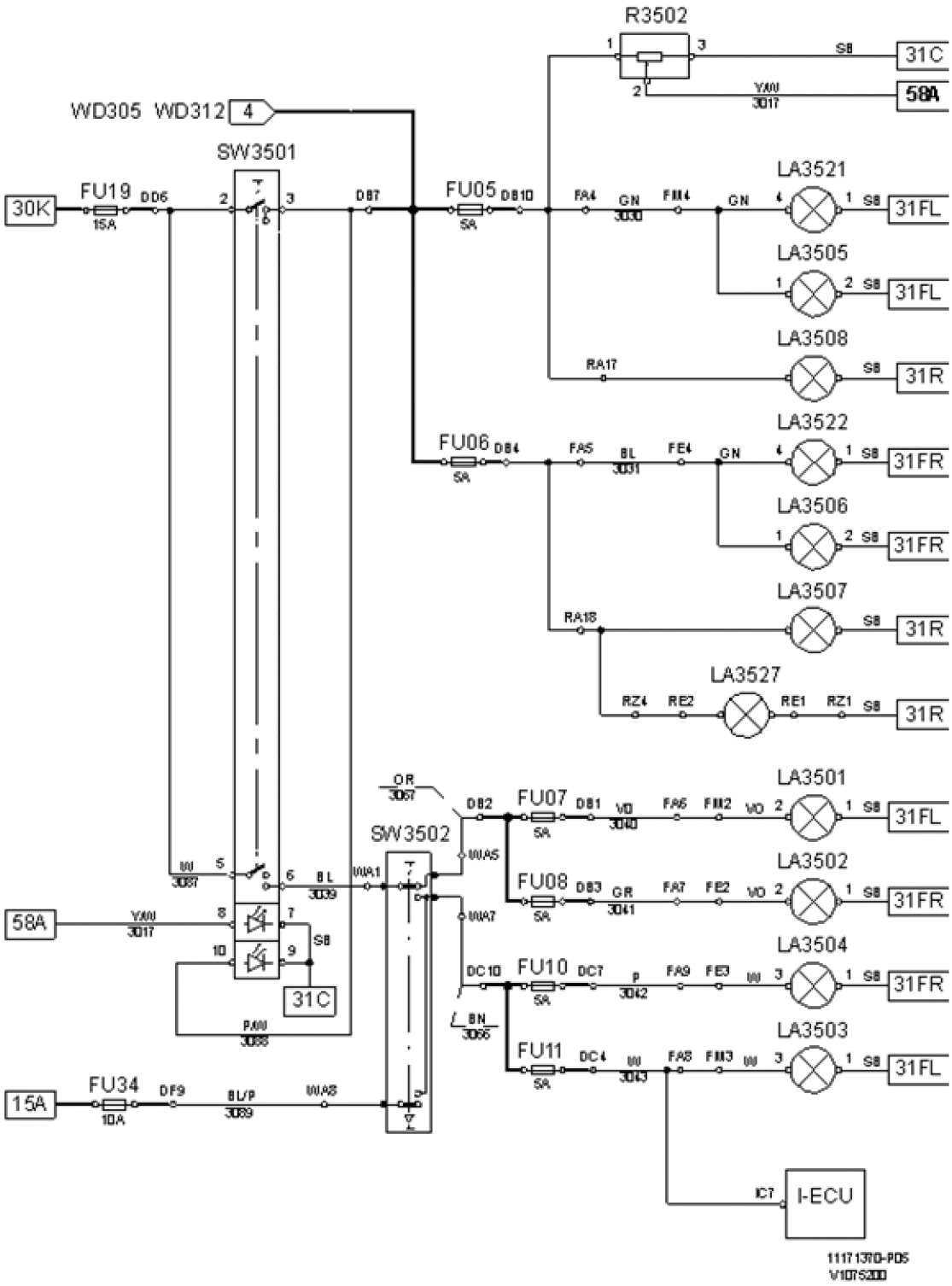

Figure 1

Designation	Function	Designation	Function
FU05	Instrument lighting Parking light left front Left front side light Parking light right rear	LA3501	Low beam, left
		LA3502	Low beam, right
		LA3503	High beam, left
		LA3504	High beam, right
FU06	Parking light right front Right front side light Parking light left rear Lighting license plate	LA3505	Left front side light
		LA3506	Right front side light
		LA3507	Parking light left rear
		LA3508	Parking light right rear

FU07	Low beam, left	LA3521	Parking light left front
FU08	Low beam, right	LA3522	Parking light right front
FU10	High beam, right	LA3527	Number plate lighting
FU11	High beam, left	R3502	Dimmer instrument lighting
FU19	Headlights	SW3501	Switch headlights
FU34	Headlight flasher	SW3502	High and low beam, headlight flasher

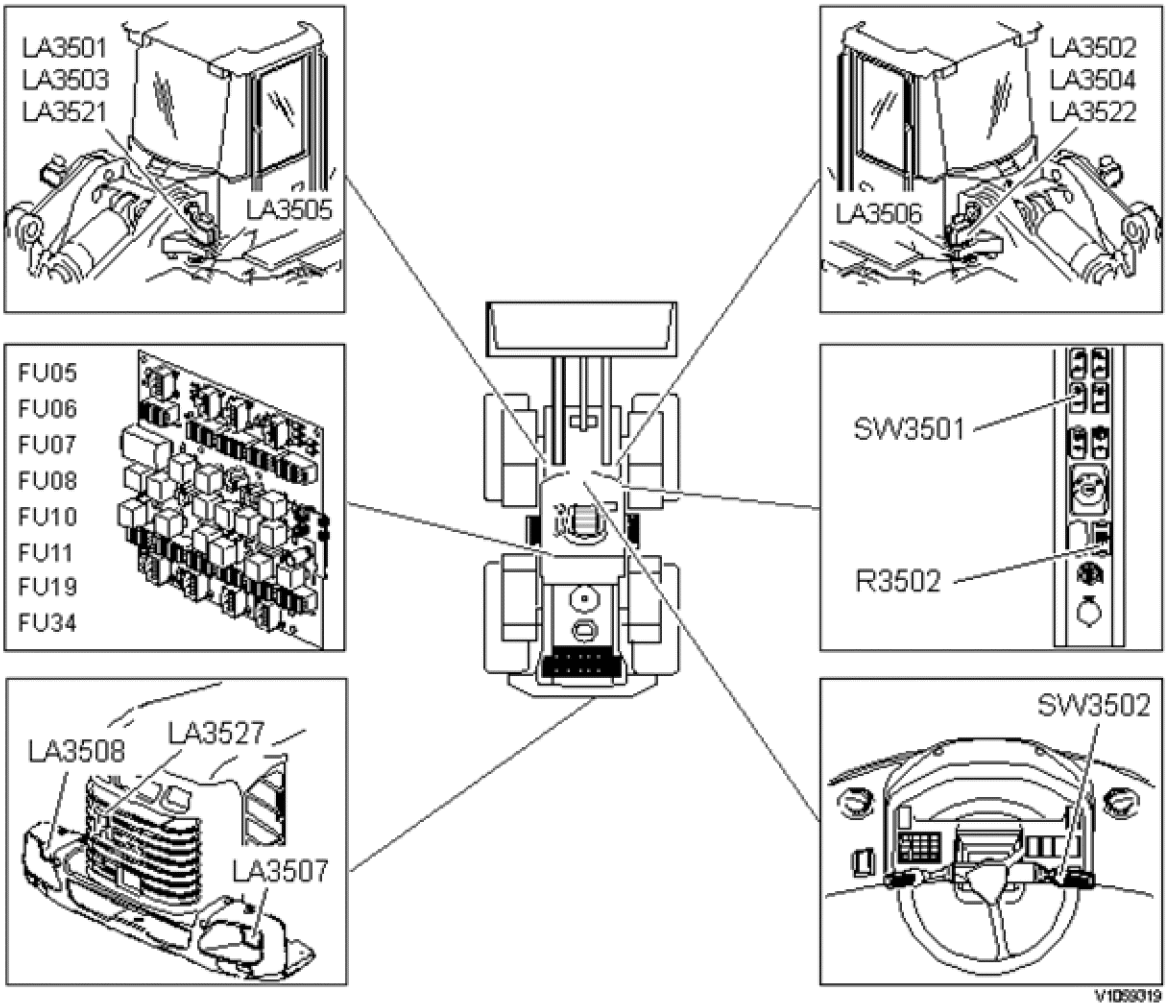

Figure 2
Component position

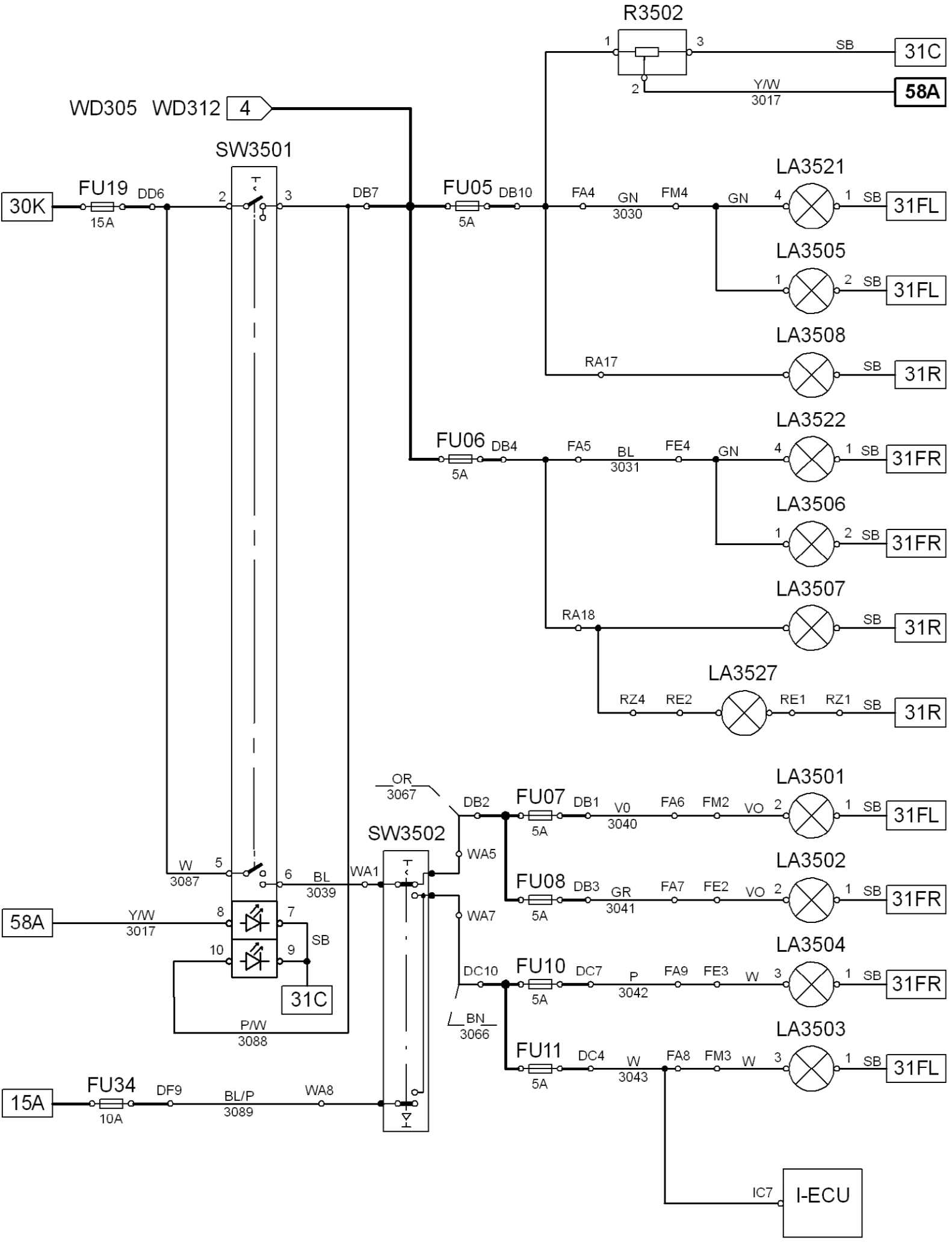

11171370-P05
V1075200

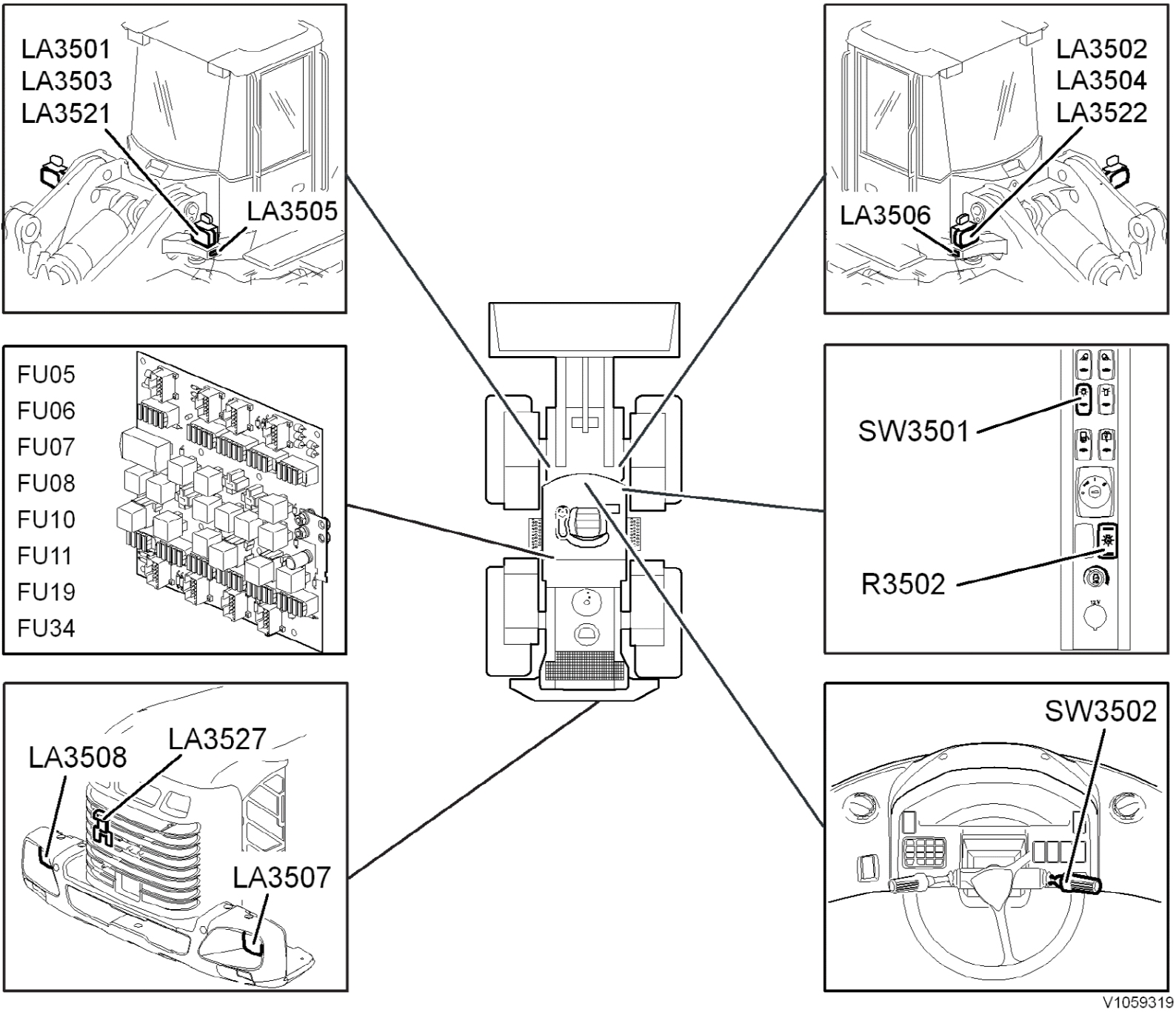
LA3501
LA3503
LA3521
LA3505
LA3502
LA3504
LA3522
LA3506
FU05
FU06
FU07
FU08
FU10
FU11
FU19
FU34
SW3501
R3502
LA3508
LA3527
LA3507
SW3502
V1059319

VOLVO
Construction Equipment

Service Information

Document Title:	Function Group:	Information Type: **Service Information**	Date: **12/10/2011**
Profile: **WLO, L90F (Volvo) [GB]**			

Wiring diagram 305

Work lights

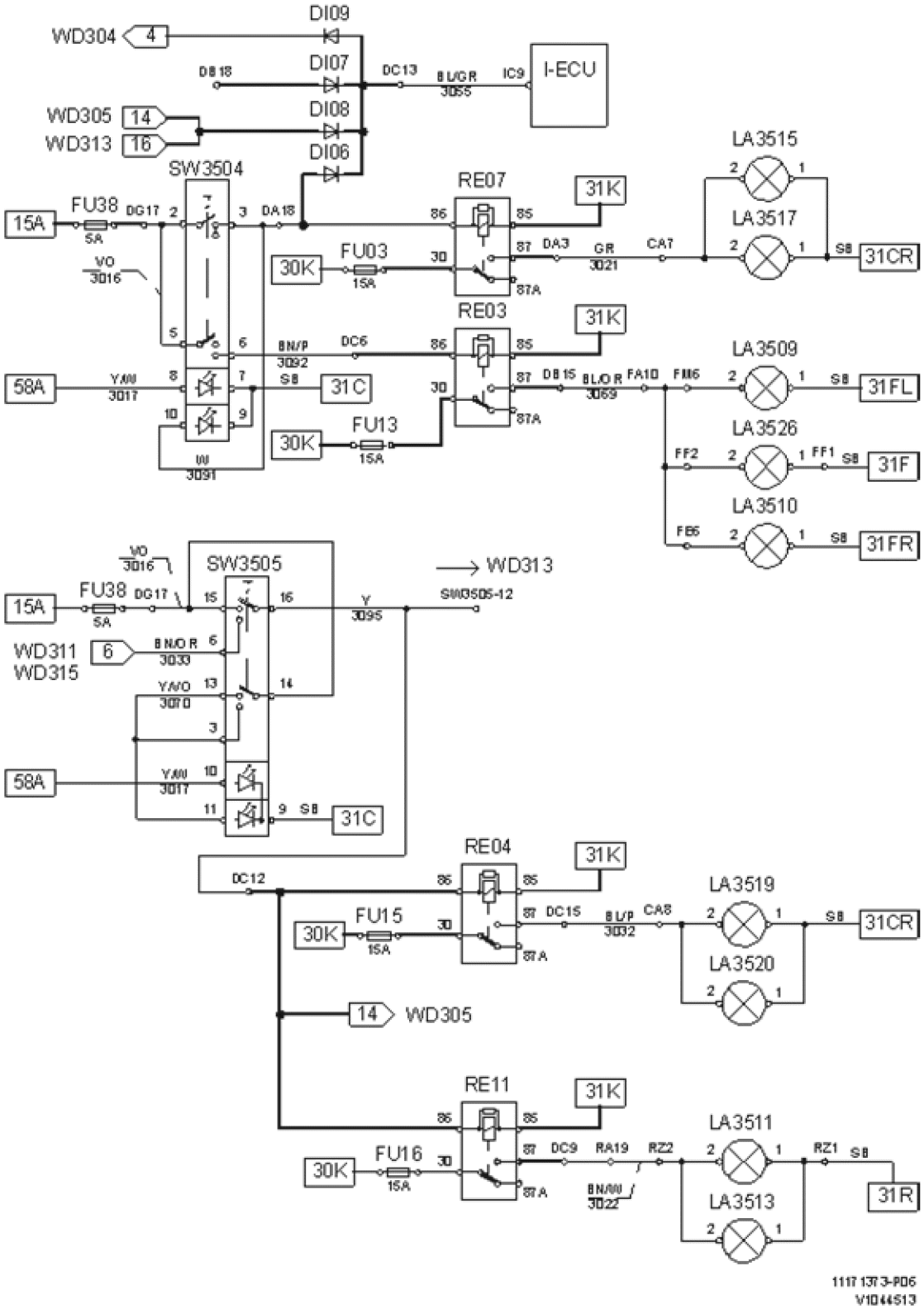

Figure 1

Designation	Function	Designation	Function
DI06	Lock-out diode	SW3504	Work lights front
DI07	Lock-out diode	SW3505	Work lights roof
DI08	Lock-out diode	LA3509	Work light left front
DI09	Lock-out diode	LA3510	Work light right front
FU03	Work lights cab front	LA3511	Work light, radiator casing, left
FU13	Work lights front Work lights attachment	LA3513	Work light, radiator casing, right
		LA3515	Work light cab front left

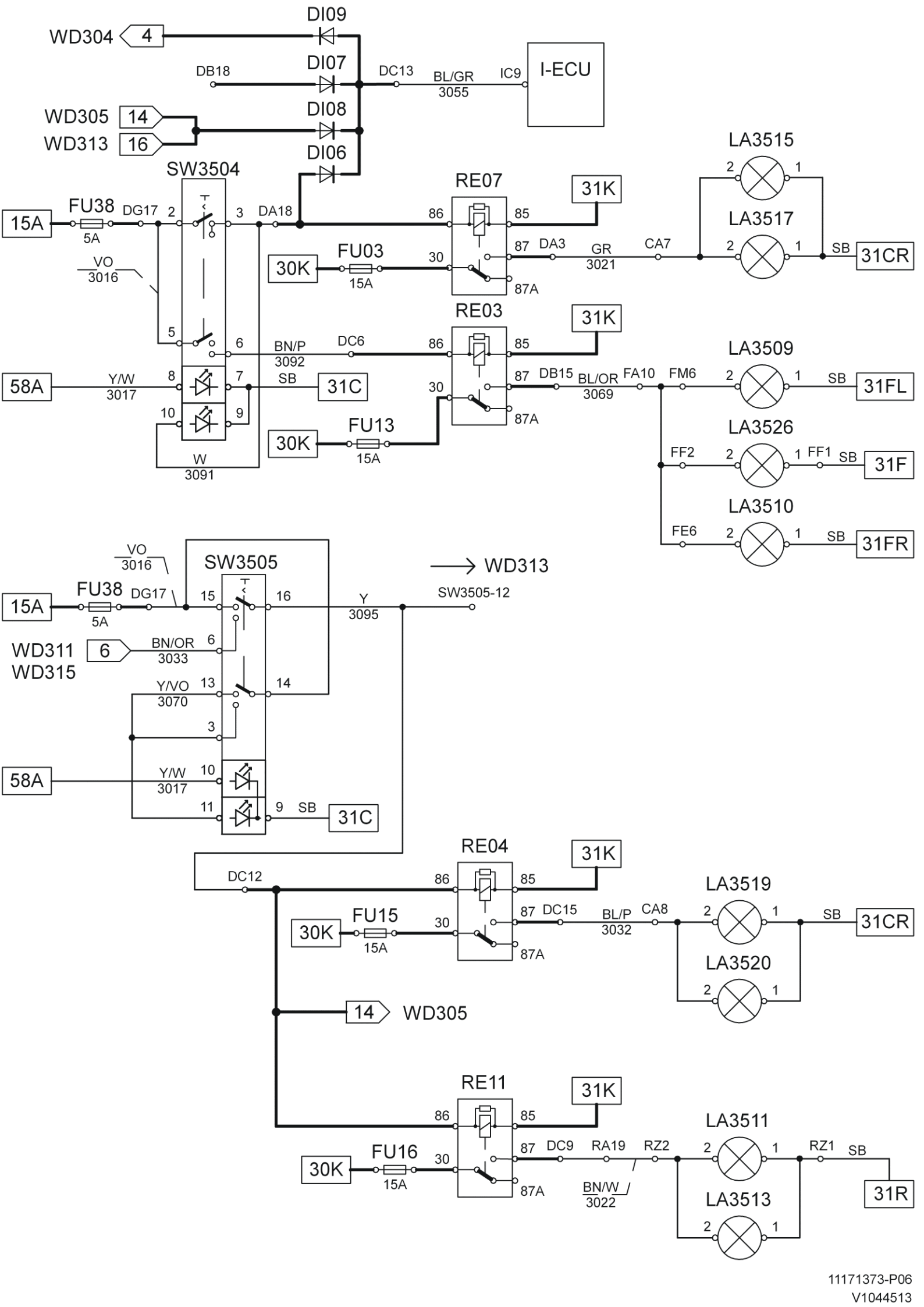
WD304
4
DI09
DB18
DI07
DC13
BL/GR
3055
IC9
I-ECU
WD305
14
WD313
16
DI08
DI06
SW3504
FU38
15A
5A
DG17
2
3
DA18
VO
3016
5
6
BN/P
3092
DC6
8
Y/W
3017
7
SB
10
9
W
3091
RE07
86
85
87
DA3
GR
3021
CA7
30
87A
30K
FU03
15A
31K
LA3515
LA3517
SB
31CR
RE03
LA3509
DB15
BL/OR
3069
FA10
FM6
31FL
FU13
LA3526
FF2
FF1
31F
LA3510
FE6
31FR
58A
31C
SW3505
WD313
SW3505-12
Y
3095
WD311
WD315
6
BN/OR
3033
Y/VO
3070
13
14
RE04
DC12
DC15
BL/P
3032
CA8
LA3519
LA3520
14
WD305
RE11
DC9
RA19
RZ2
RZ1
LA3511
LA3513
BN/W
3022
31R
11171373-P06
V1044513

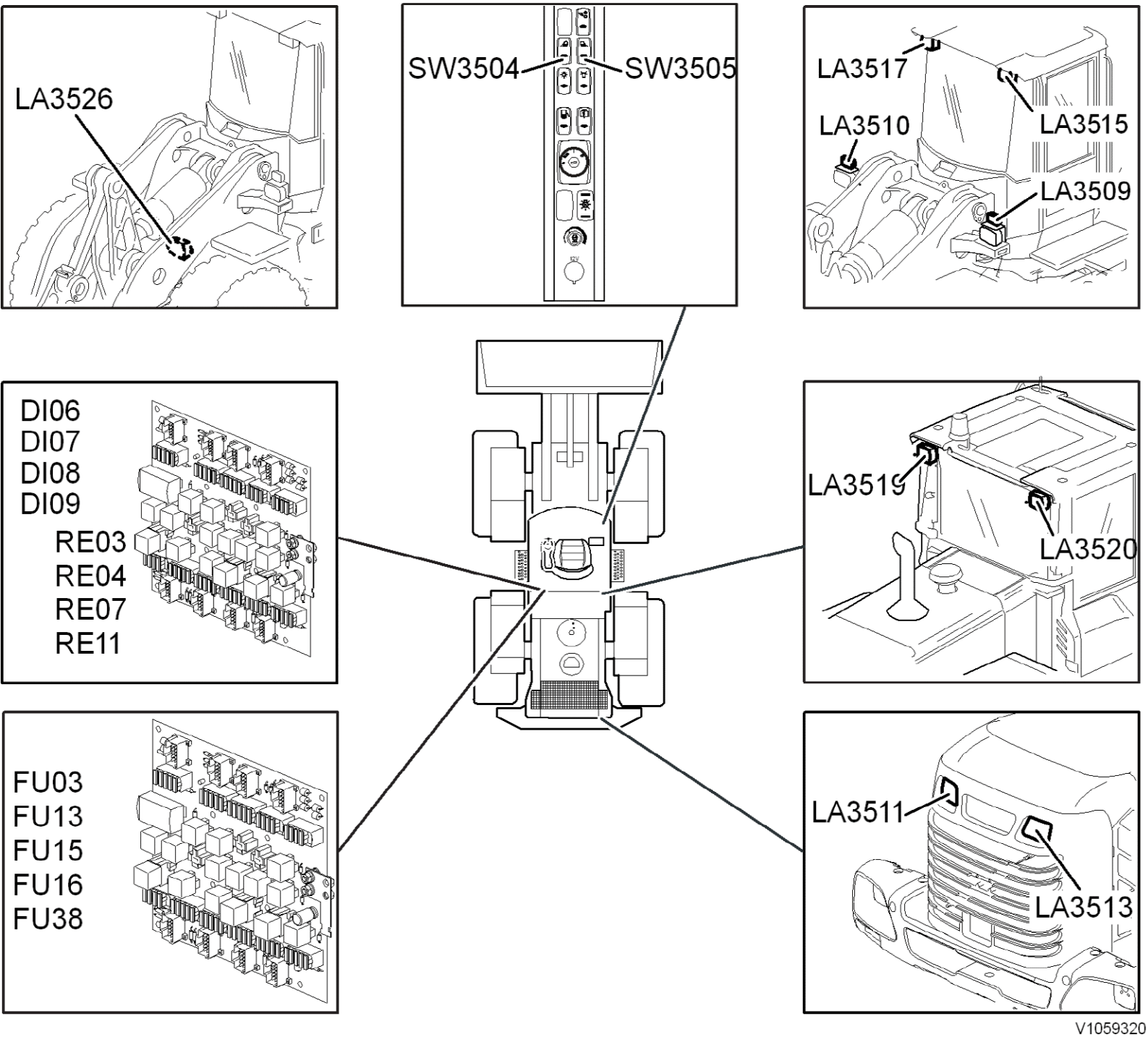
LA3526
SW3504
SW3505
LA3517
LA3510
LA3515
LA3509
DI06
DI07
DI08
DI09
RE03
RE04
RE07
RE11
LA3519
LA3520
FU03
FU13
FU15
FU16
FU38
LA3511
LA3513
V1059320

VOLVO
Construction Equipment

Service Information

Document Title:	Function Group:	Information Type: **Service Information**	Date: **12/10/2011**
Profile: **WLO, L90F (Volvo) [GB]**			

Wiring diagram 306

Flashing hazard lights, direction indicators, interior lighting

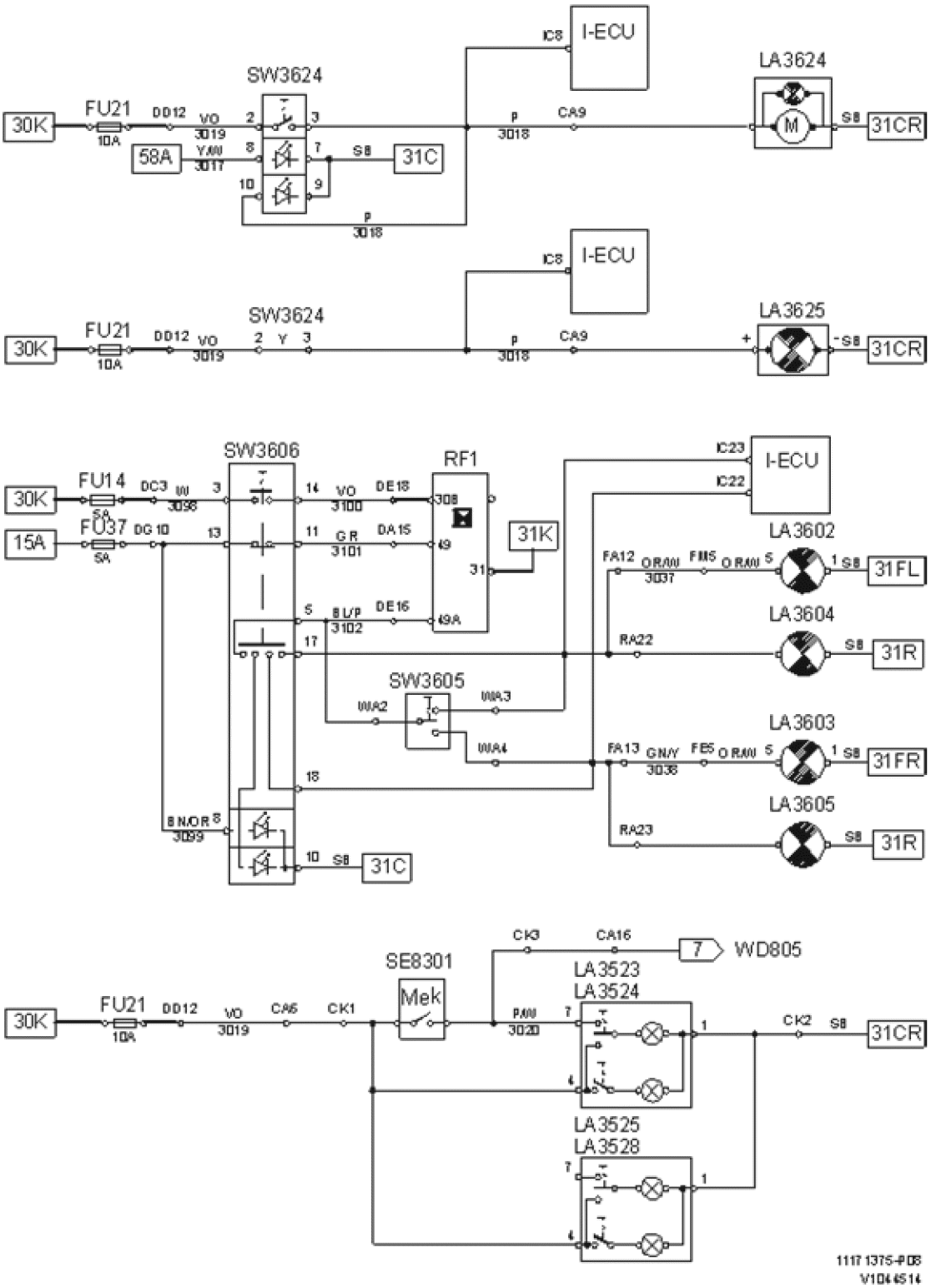

Figure 1

Designation	Function	Designation	Function
FU14	Direction indicators	RF1	Flasher relay
FU21	Rotating beacon Strobe light Interior lighting	SE8301	Position monitor, door
		SW3605	Direction indicators
		SW3606	Hazard flashers
FU37	Hazard flashers	SW3624	Rotating beacon
LA3523	Interior lighting front		
LA3524	Interior lighting front (spotlight)		

LA3525	Interior lighting right		
LA3528	Interior lighting right (spotlight)		
LA3602	Direction indicator, left front		
LA3603	Direction indicator, right front		
LA3604	Direction indicator, left rear		
LA3605	Direction indicator, right rear		
LA3624	Rotating beacon		
LA3625	Strobe light		

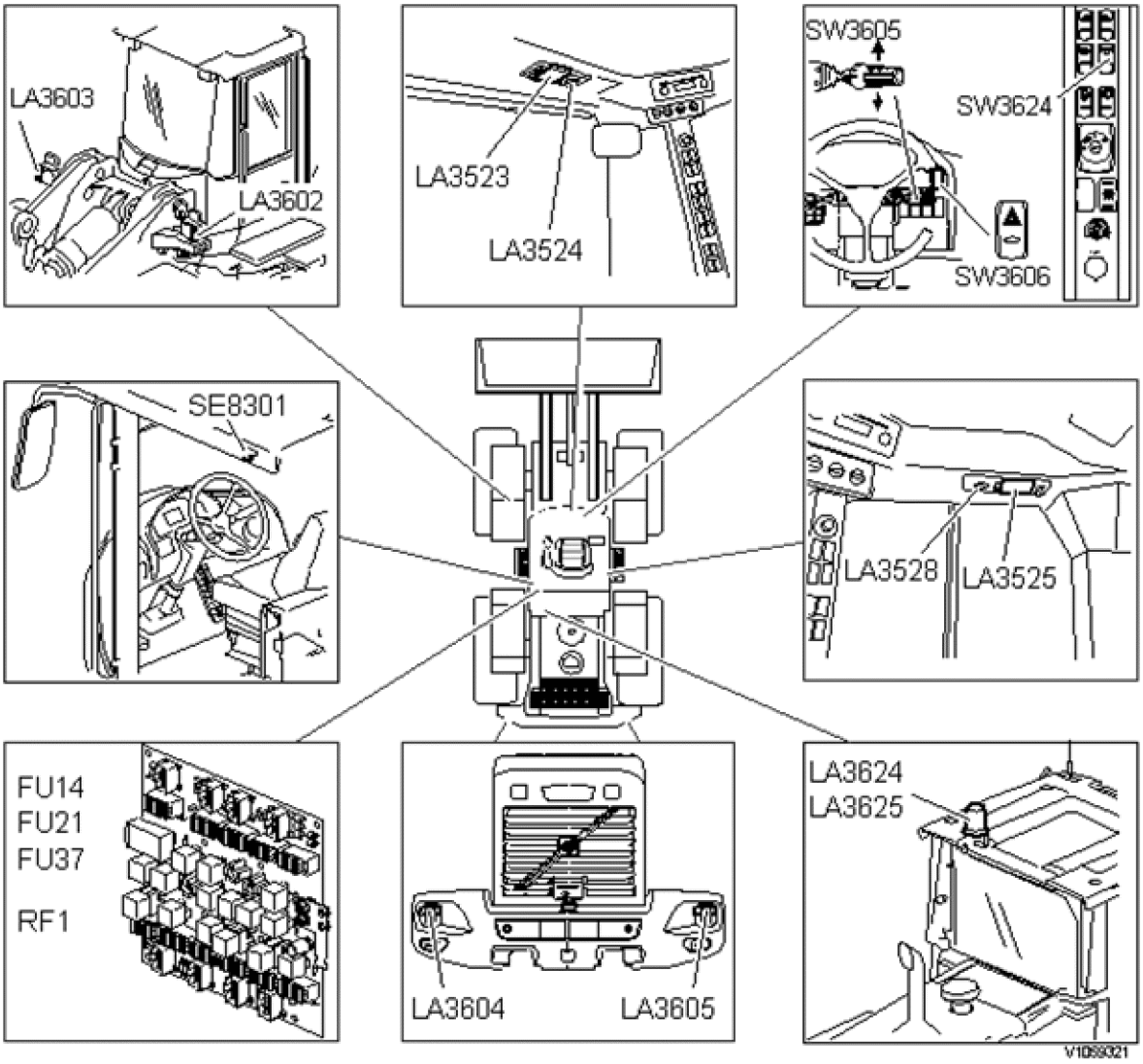

Figure 2
Component position

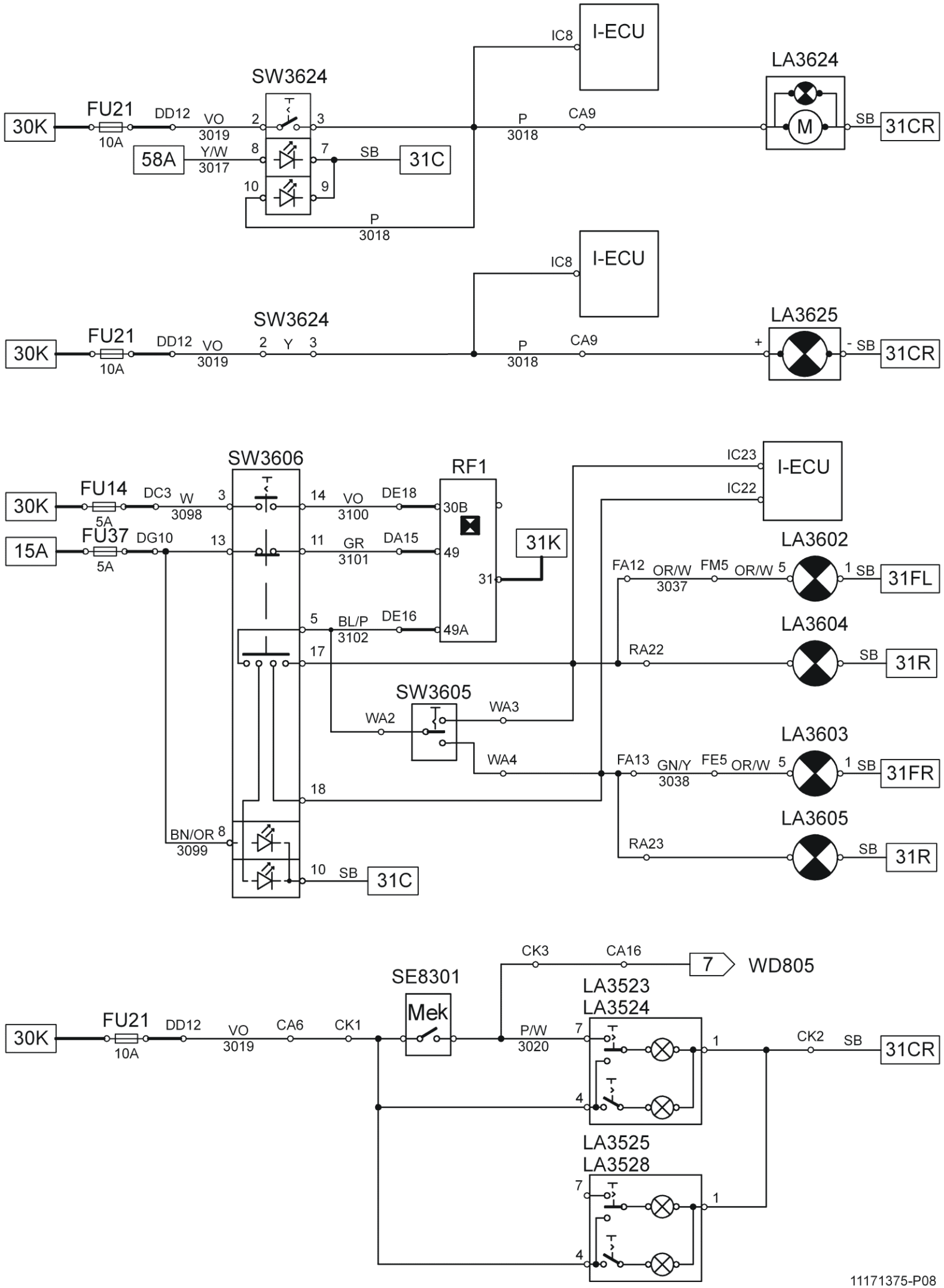

11171375-P08
V1044514

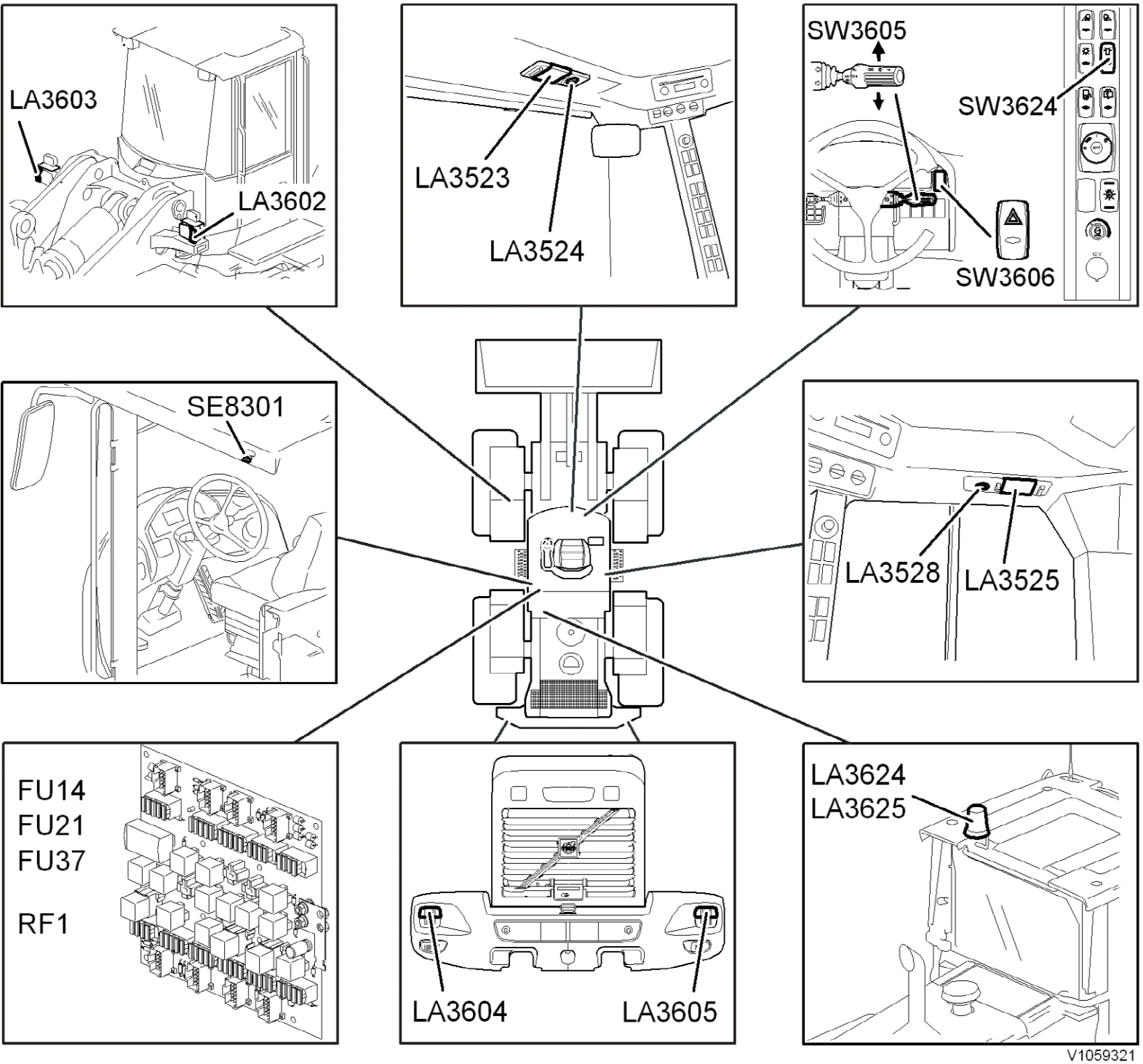
LA3603
LA3602
LA3523
LA3524
SW3605
SW3624
SW3606
SE8301
LA3528
LA3525
FU14
FU21
FU37
RF1
LA3604
LA3605
LA3624
LA3625
V1059321

VOLVO
Construction Equipment

Service Information

Document Title:	Function Group:	Information Type: **Service Information**	Date: **12/10/2011**
Profile: **WLO, L90F (Volvo) [GB]**			

Wiring diagram 308

Electrically controlled battery disconnect switch

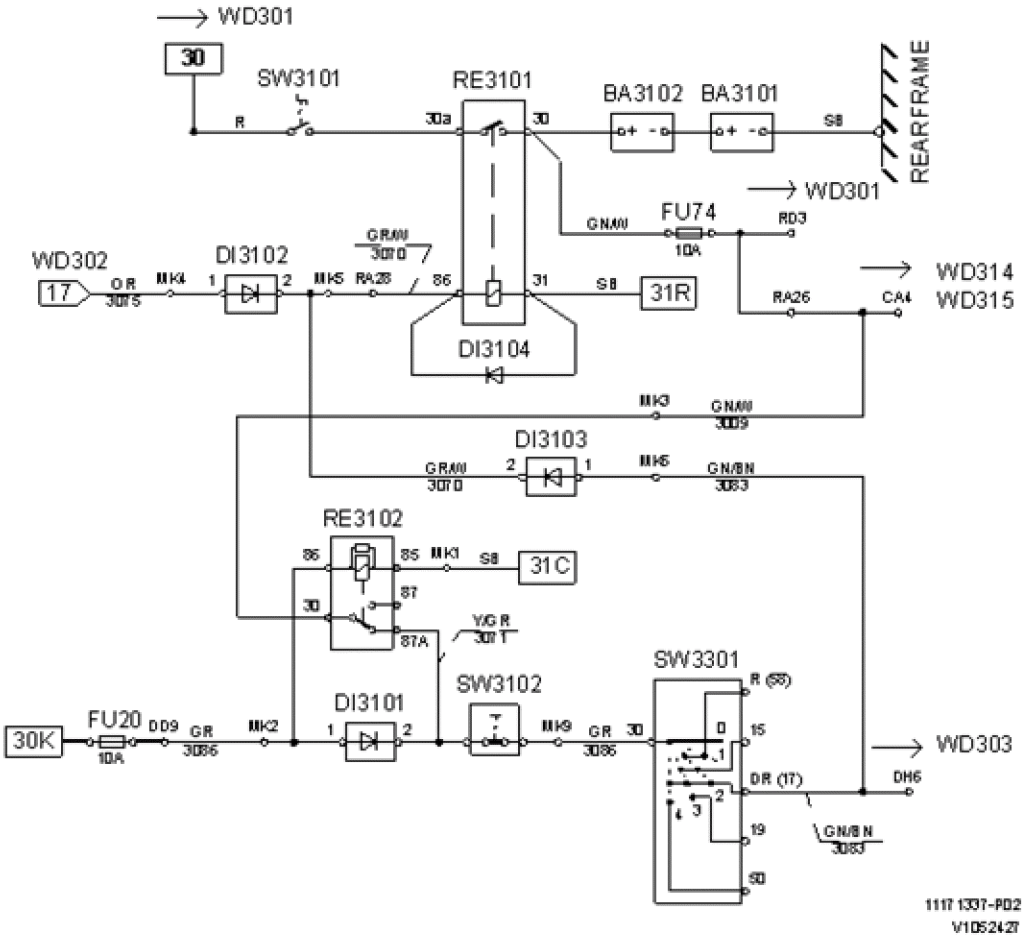

Figure 1

Designation	Function
BA3101	Battery
BA3102	Battery
DI3101	Lock-out diode
DI3102	Lock-out diode
DI3103	Lock-out diode
DI3104	Quench diode
FU20	Voltage feed ignition
FU74	Electrically controlled battery disconnect switch
RE3101	Electrically controlled battery disconnect switch
RE3102	Function relay for electrically controlled battery disconnector

SW3101	Battery disconnect switch
SW3102	Emergency stop for electrically controlled battery disconnector
SW3301	Ignition switch

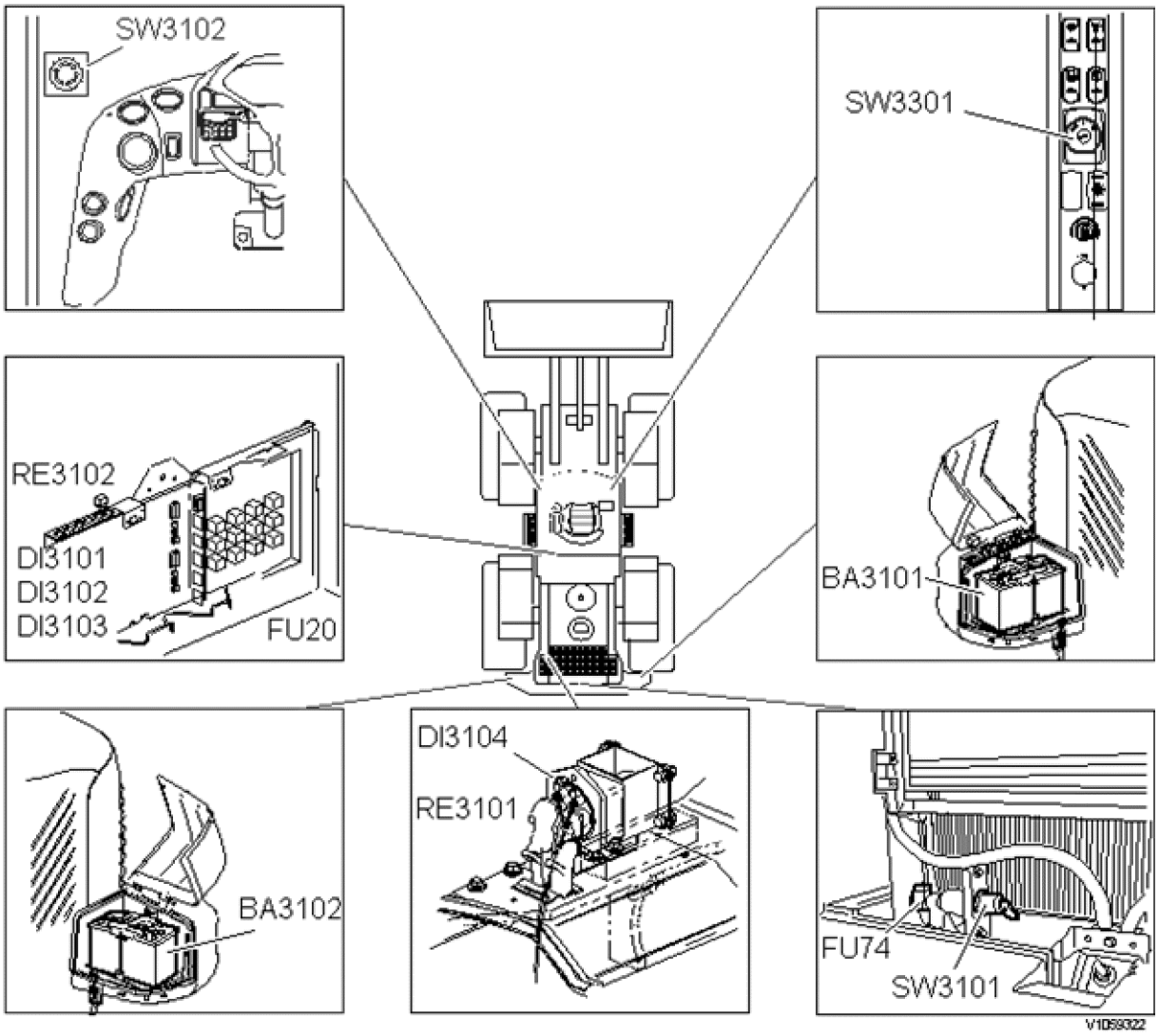

Figure 2
Component position

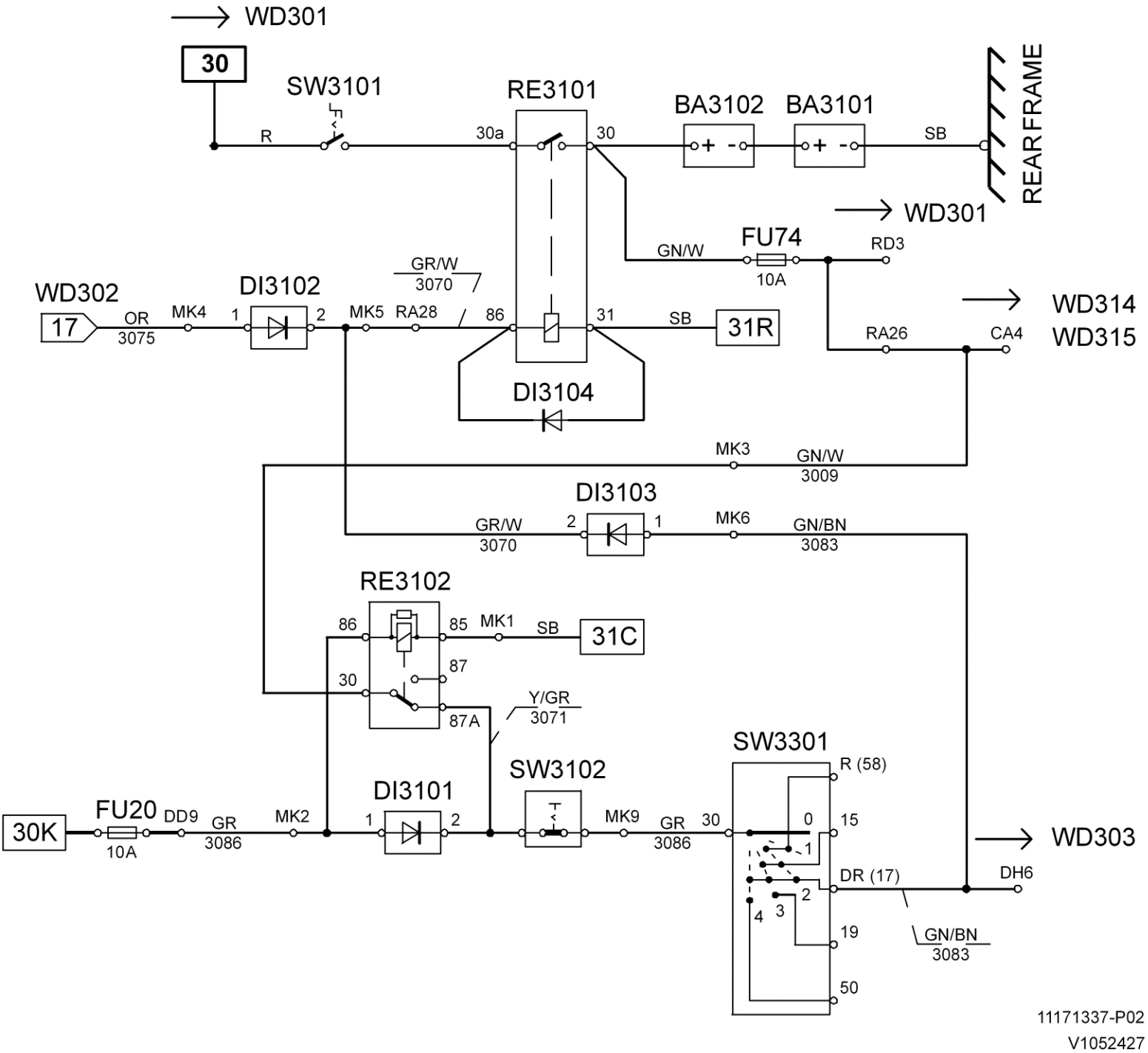
WD301
30
SW3101
R
RE3101
30a
30
BA3102
BA3101
SB
REAR FRAME
WD301
GN/W
FU74
10A
RD3
GR/W
3070
WD302
17
OR
3075
MK4
DI3102
MK5
RA28
86
31
SB
31R
RA26
CA4
WD314
WD315
DI3104
MK3
GN/W
3009
DI3103
GR/W
3070
MK6
GN/BN
3083
RE3102
86
85
MK1
SB
31C
87
30
87A
Y/GR
3071
SW3301
R (58)
SW3102
DI3101
30K
FU20
10A
DD9
GR
3086
MK2
MK9
GR
3086
30
0
15
1
DR (17)
DH6
2
4
3
19
GN/BN
3083
50
WD303
11171337-P02
V1052427

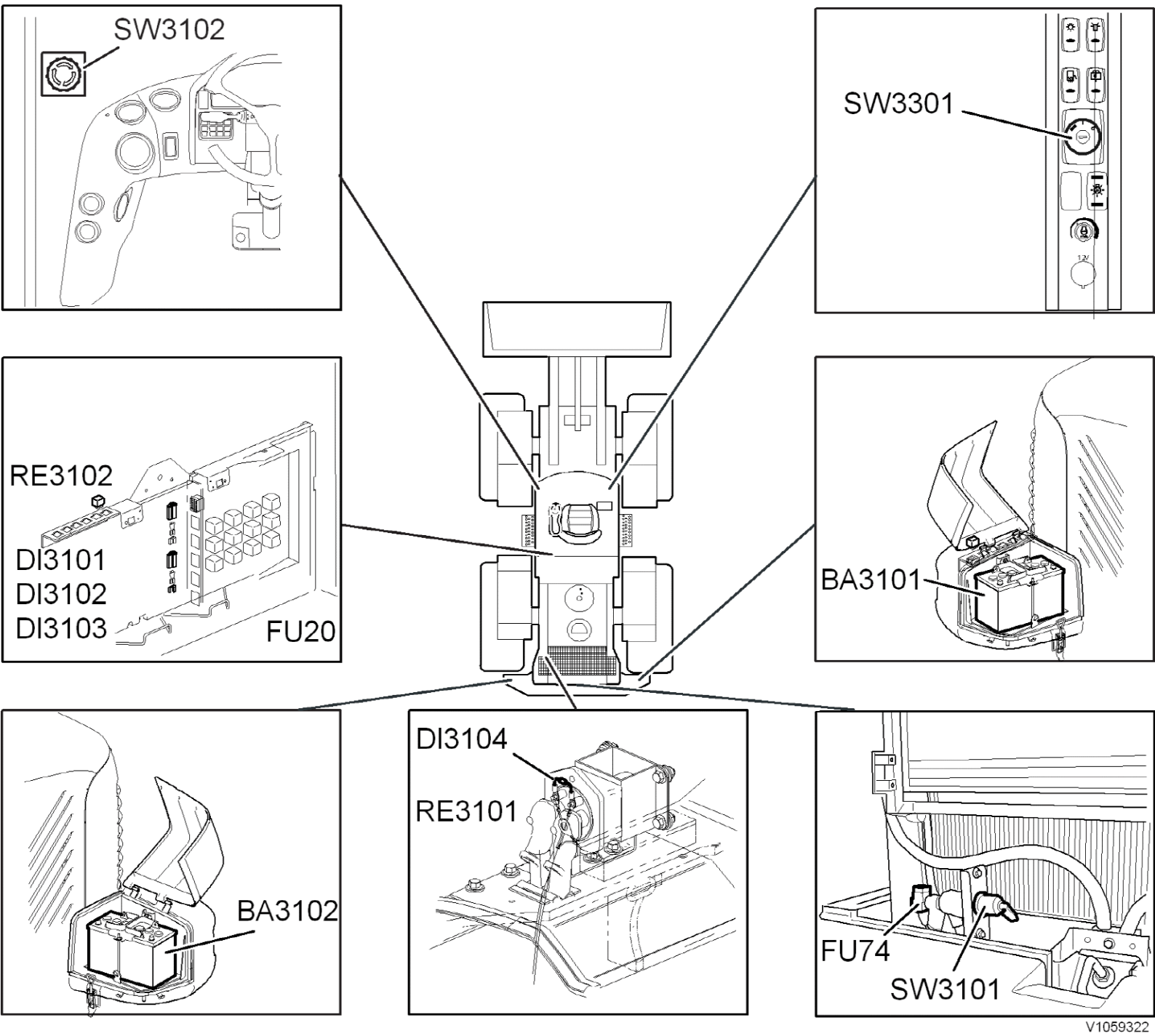
SW3102
SW3301
RE3102
DI3101
DI3102
DI3103
FU20
BA3101
BA3102
DI3104
RE3101
FU74
SW3101
V1059322

VOLVO
Construction Equipment

Service Information

Document Title:	Function Group:	Information Type: **Service Information**	Date: **12/10/2011**
Profile: **WLO, L90F (Volvo) [GB]**			

Wiring diagram 309

Keypad

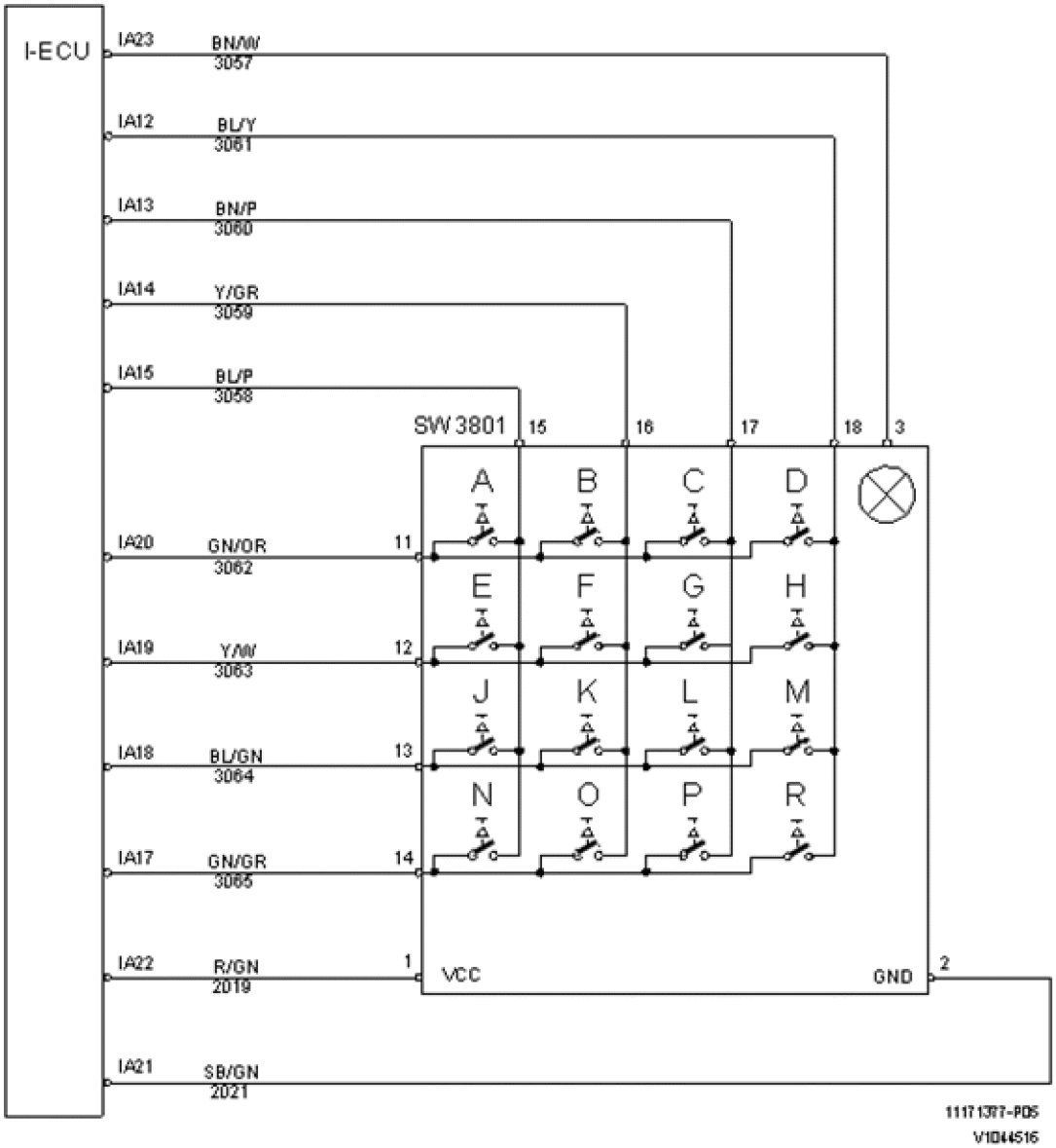

Figure 1

Designation	Function
SW3801	Keypad
I-ECU	Instrument control unit

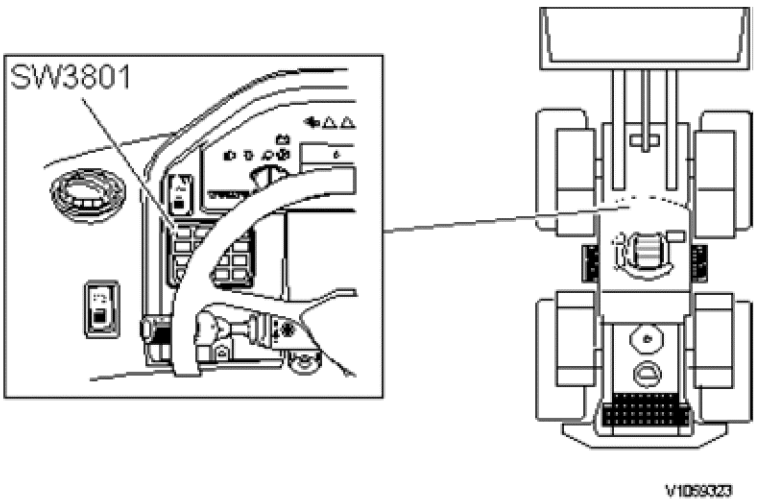

Figure 2
Component position

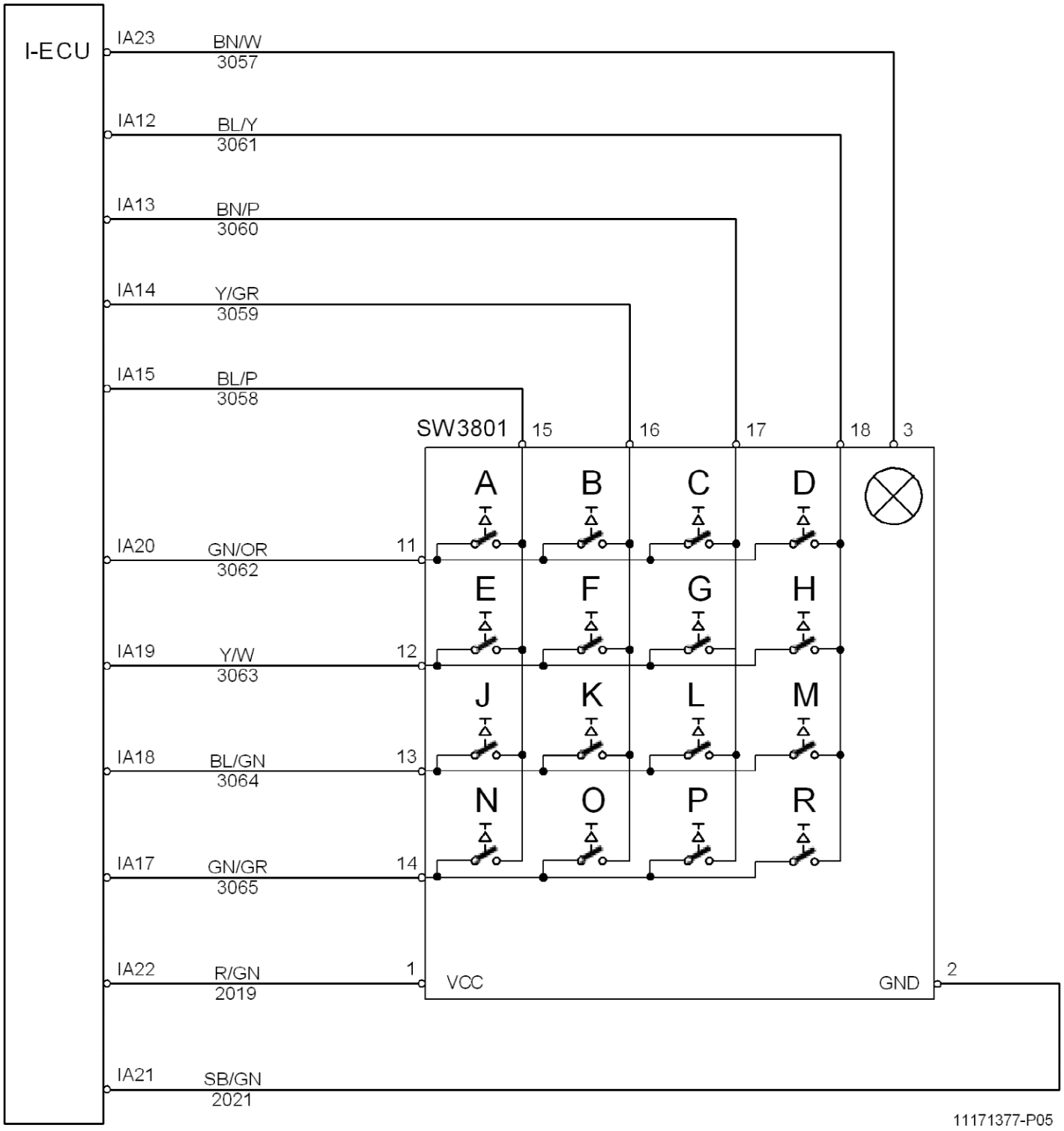
I-ECU
IA23
BN/W
3057
IA12
BL/Y
3061
IA13
BN/P
3060
IA14
Y/GR
3059
IA15
BL/P
3058
SW3801
15
16
17
18
3
A
B
C
D
E
F
G
H
J
K
L
M
N
O
P
R
IA20
GN/OR
3062
11
IA19
Y/W
3063
12
IA18
BL/GN
3064
13
IA17
GN/GR
3065
14
IA22
R/GN
2019
1
VCC
GND
2
IA21
SB/GN
2021
11171377-P05
V1044516

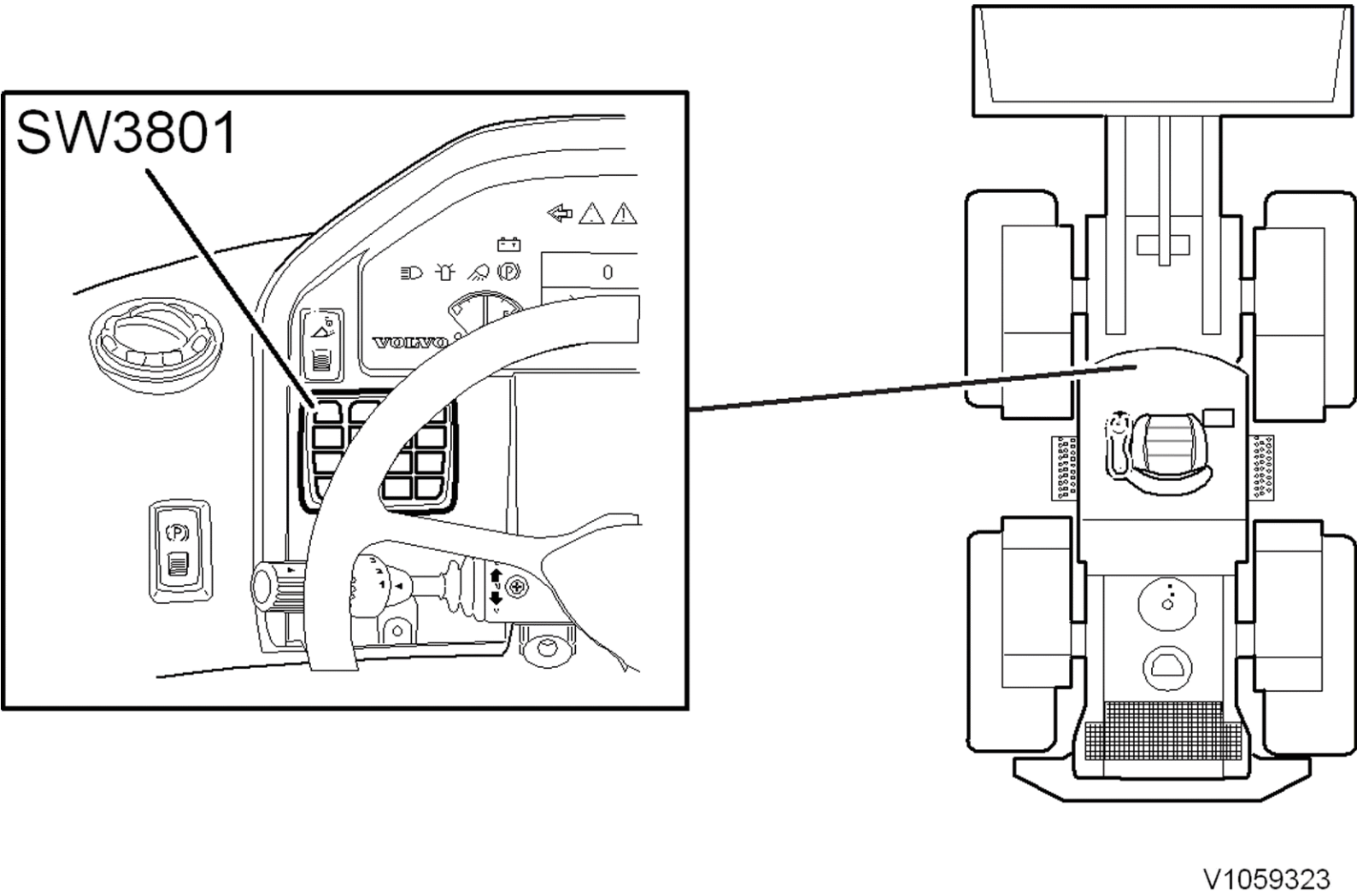

V1059323

VOLVO
Construction Equipment

Service Information

Document Title:	Function Group:	Information Type: **Service Information**	Date: **12/10/2011**
Profile: **WLO, L90F (Volvo) [GB]**			

Wiring diagram 310

Communication control units

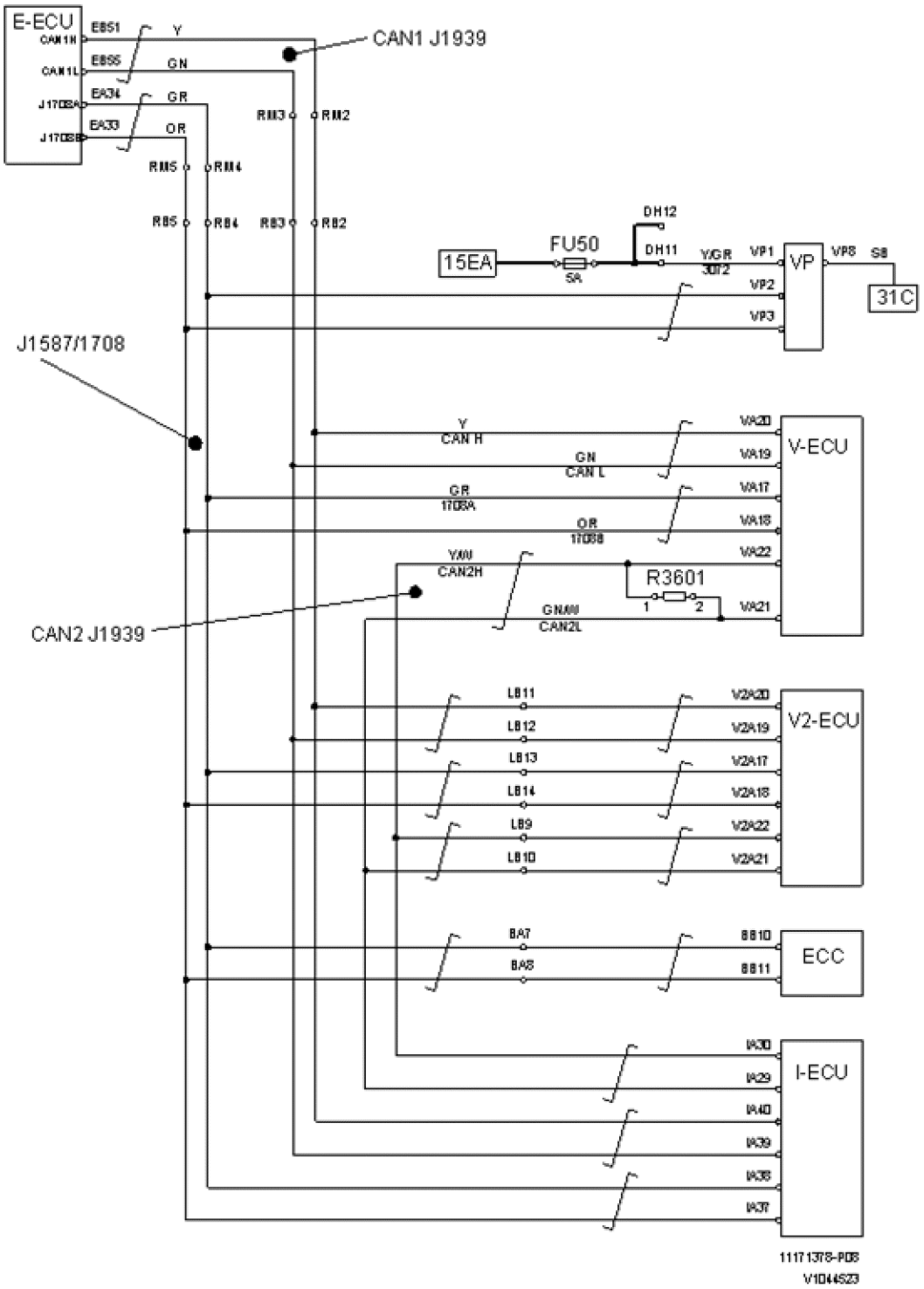

Figure 1

Designation	Function
FU50	Voltage feed VCADS Pro communication socket
R3601	Terminating resistor V-ECU
VP	VCADS Pro communication socket
E-ECU	Engine control unit
ECC	Climate control unit
I-ECU	Instrument control unit
V-ECU	Vehicle control unit
V2-ECU	Vehicle control unit

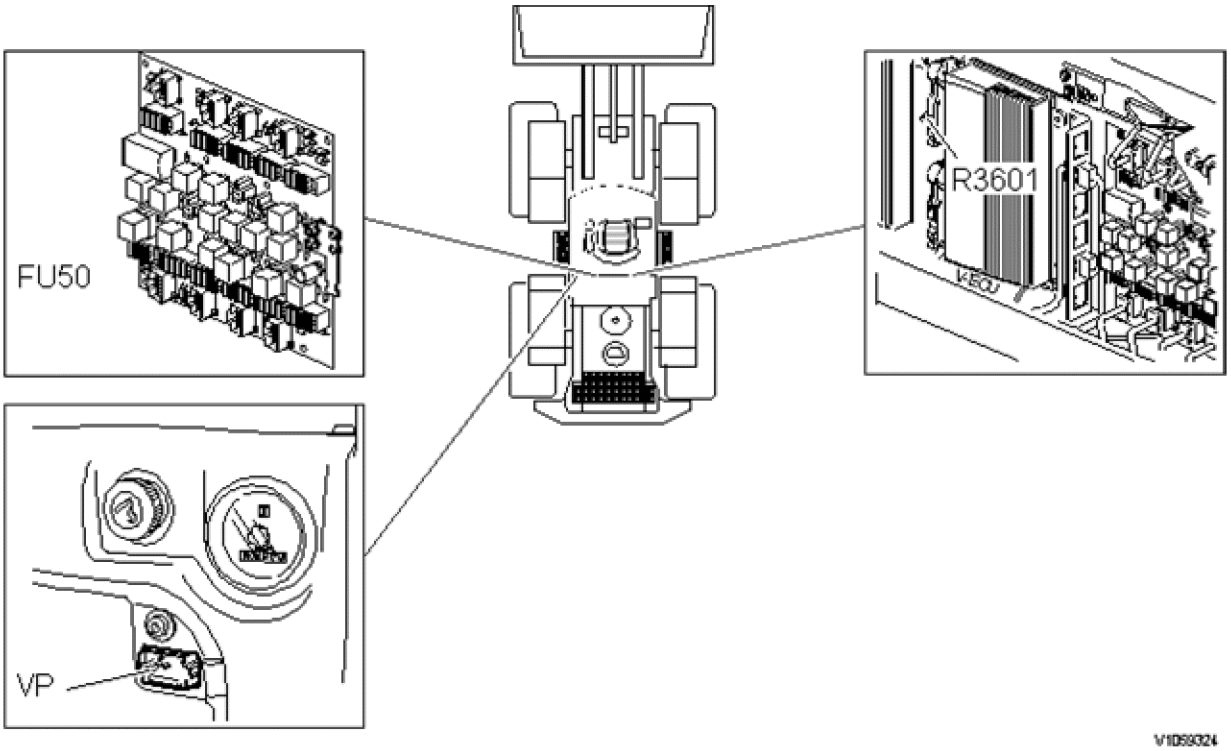

Figure 2
Component position

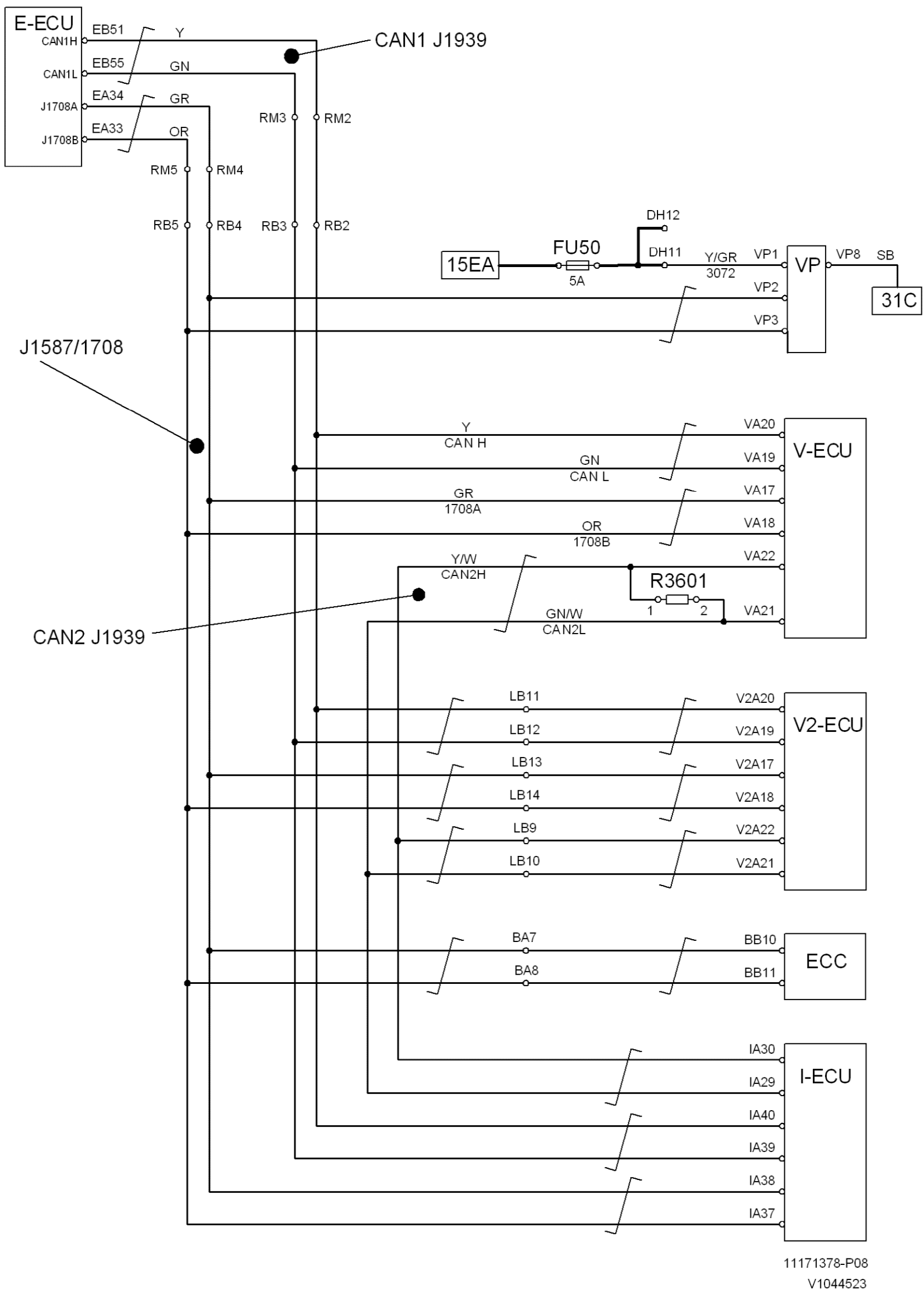
E-ECU
CAN1H
CAN1L
J1708A
J1708B
EB51
EB55
EA34
EA33
Y
GN
GR
OR
CAN1 J1939
RM3
RM2
RM5
RM4
RB5
RB4
RB3
RB2
DH12
15EA
FU50
5A
DH11
Y/GR
3072
VP1
VP2
VP3
VP
VP8
SB
31C
J1587/1708
Y
CAN H
GN
CAN L
GR
1708A
OR
1708B
VA20
VA19
VA17
VA18
V-ECU
Y/W
CAN2H
GN/W
CAN2L
R3601
1
2
VA22
VA21
CAN2 J1939
LB11
LB12
LB13
LB14
LB9
LB10
V2A20
V2A19
V2A17
V2A18
V2A22
V2A21
V2-ECU
BA7
BA8
BB10
BB11
ECC
IA30
IA29
IA40
IA39
IA38
IA37
I-ECU
11171378-P08
V1044523

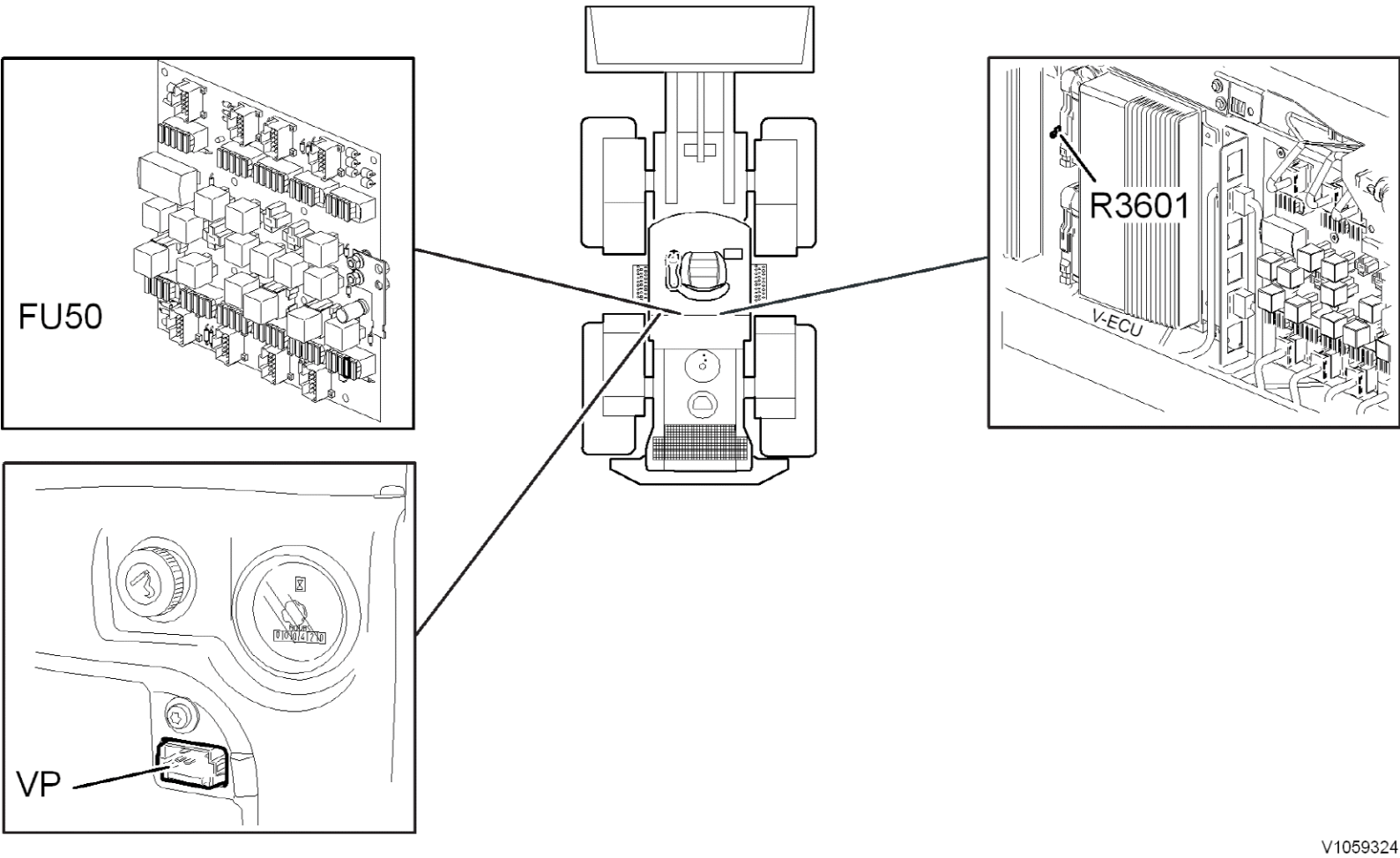

V1059324

VOLVO
Construction Equipment

Service Information

Document Title:	Function Group:	Information Type: **Service Information**	Date: **12/10/2011**
Profile: **WLO, L90F (Volvo) [GB]**			

Wiring diagram 312

Double work lights cab

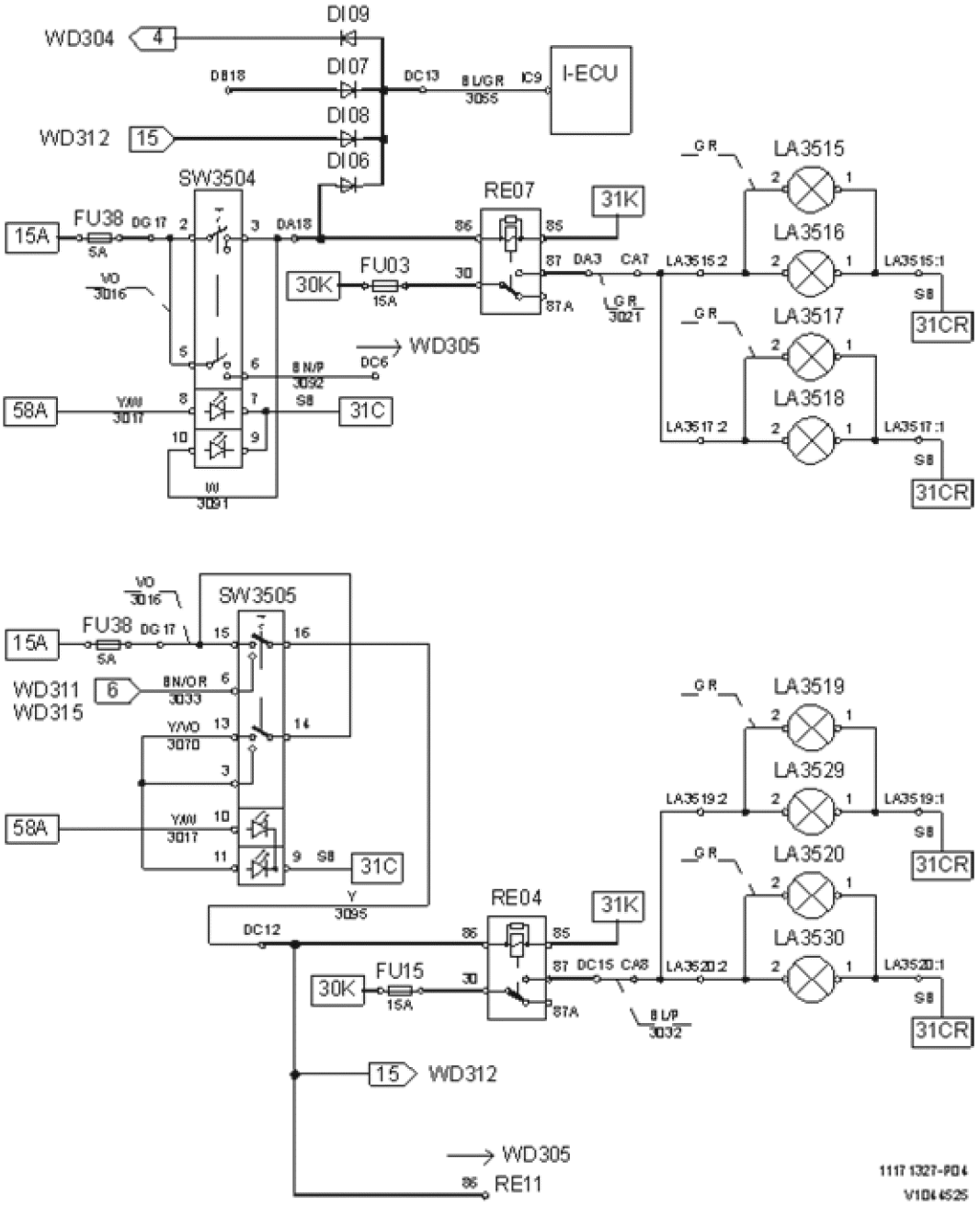

Figure 1

Designation	Function	Designation	Function
DI06	Lock-out diode	LA3518	Work light cab front right
DI07	Lock-out diode	LA3519	Work light, cab, rear left
DI08	Lock-out diode	LA3520	Work light, cab, rear right
DI09	Lock-out diode	LA3529	Work light, cab, rear left
FU03	Work lights cab front	LA3530	Work light, cab, rear right
FU15	Work lights cab, rear	RE04	Work lights cab, rear
FU38	Work lights	RE07	Work lights cab front
LA3515	Work light cab front left	SW3504	Work lights front
LA3516	Work light cab front left	SW3505	Work lights roof
LA3517	Work light cab front right		

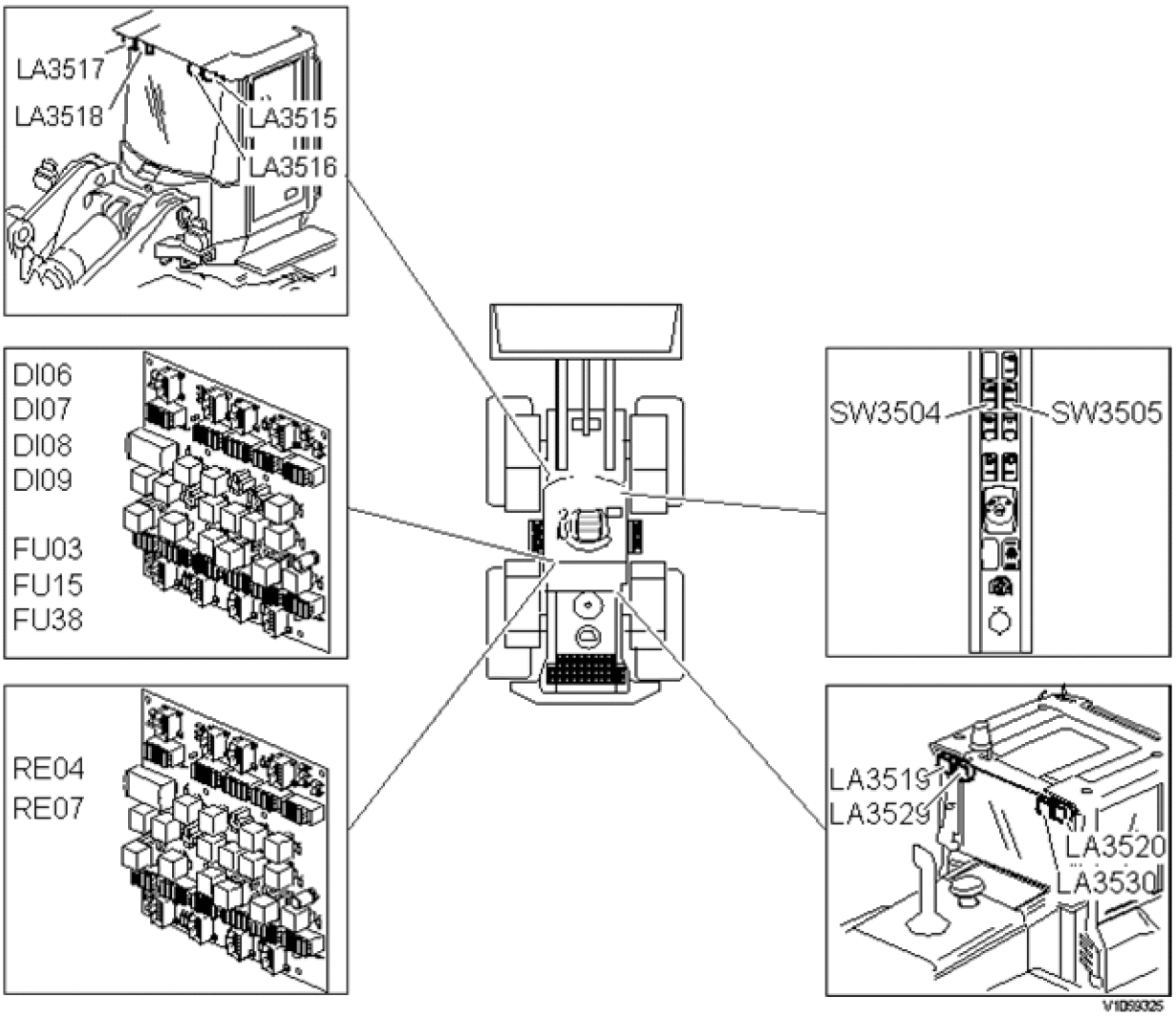

Figure 2
Component position

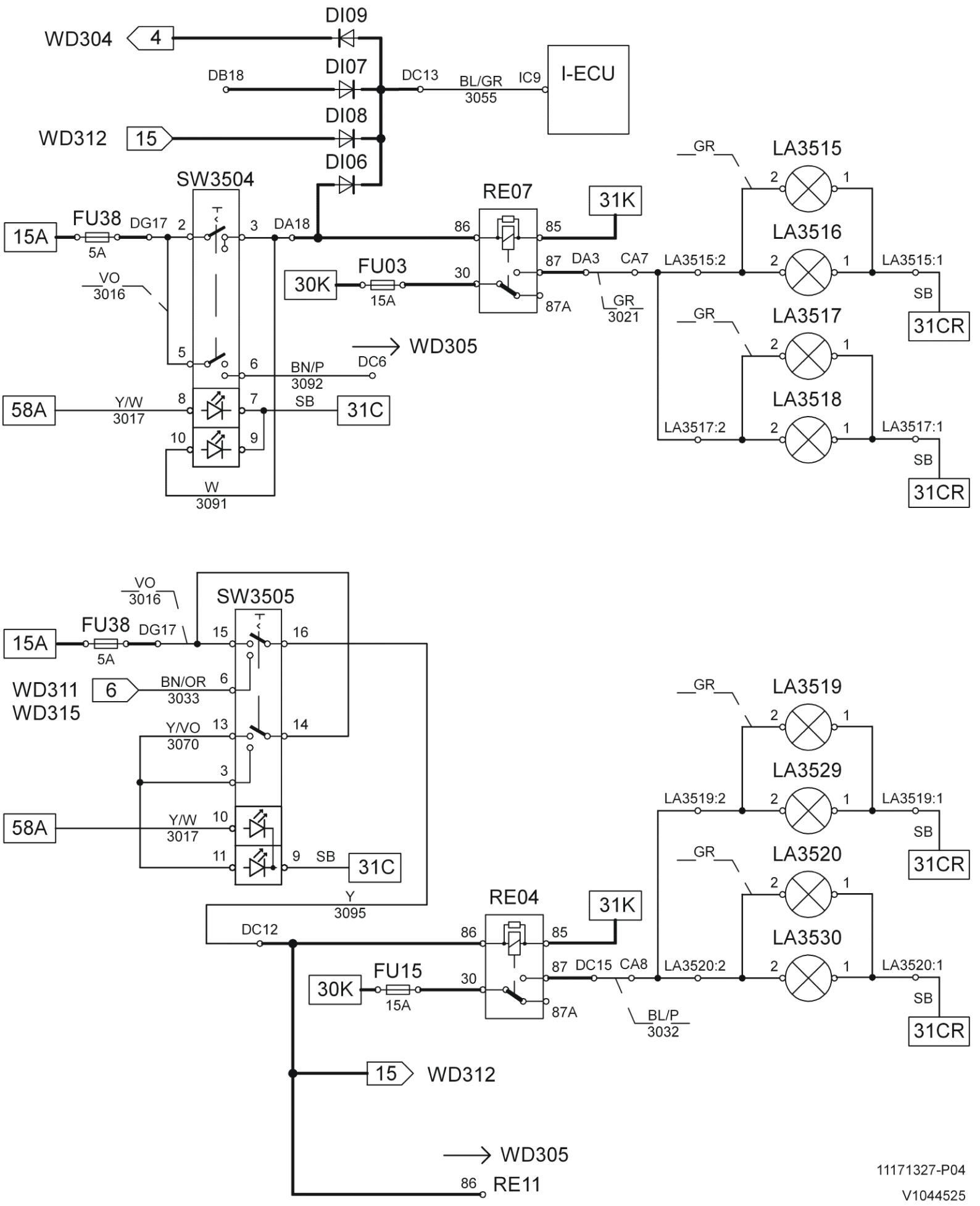
WD304
4
DI09
DI07
DI08
DI06
DB18
DC13
BL/GR
3055
IC9
I-ECU
WD312
15
SW3504
RE07
31K
15A
FU38
5A
DG17
2
3
DA18
86
85
30K
FU03
15A
30
87
87A
DA3
CA7
GR
3021
LA3515
LA3516
LA3517
LA3518
LA3515:2
LA3515:1
LA3517:2
LA3517:1
SB
31CR
VO
3016
5
6
BN/P
3092
DC6
WD305
58A
Y/W
3017
8
7
SB
31C
10
9
W
3091
SW3505
15
16
WD311
WD315
6
BN/OR
3033
Y/VO
3070
13
14
3
Y
3095
RE04
DC12
DC15
CA8
BL/P
3032
LA3519
LA3529
LA3520
LA3530
LA3519:2
LA3519:1
LA3520:2
LA3520:1
11
WD305
RE11
11171327-P04
V1044525

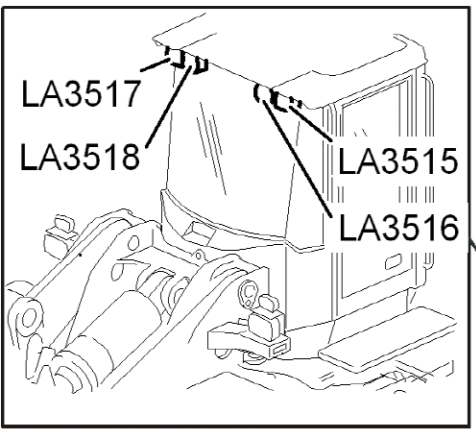
LA3517
LA3518
LA3515
LA3516

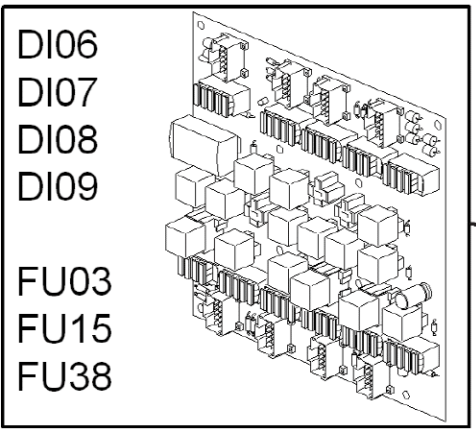
DI06
DI07
DI08
DI09
FU03
FU15
FU38

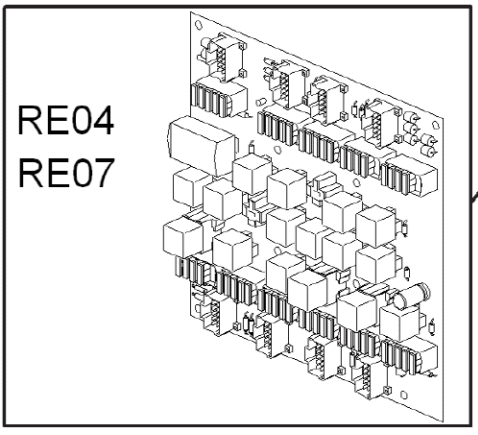
RE04
RE07

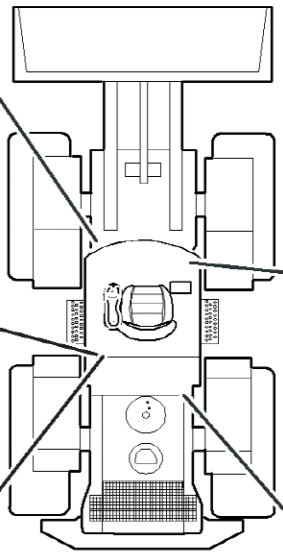

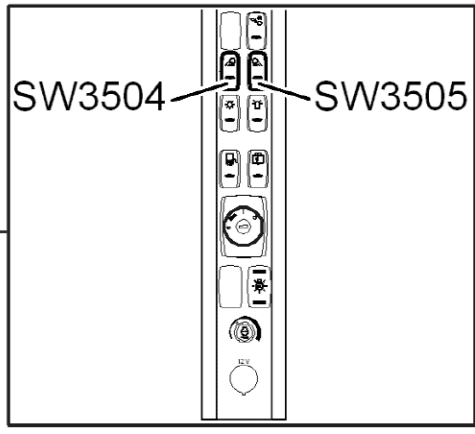
SW3504
SW3505

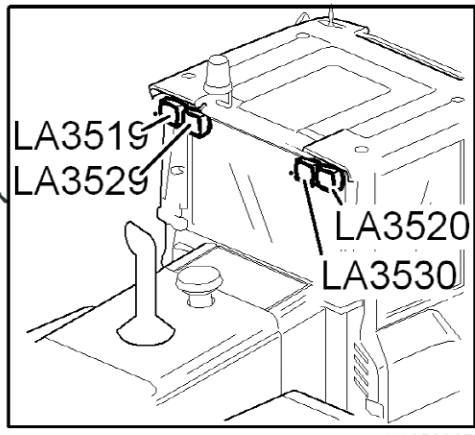
LA3519
LA3529
LA3520
LA3530

V1059325

VOLVO
Construction Equipment

Service Information

Document Title:	Function Group:	Information Type: **Service Information**	Date: **12/10/2011**
Profile: **WLO, L90F (Volvo) [GB]**			

Wiring diagram 313

Work lights rear, continuous/gear-dependent

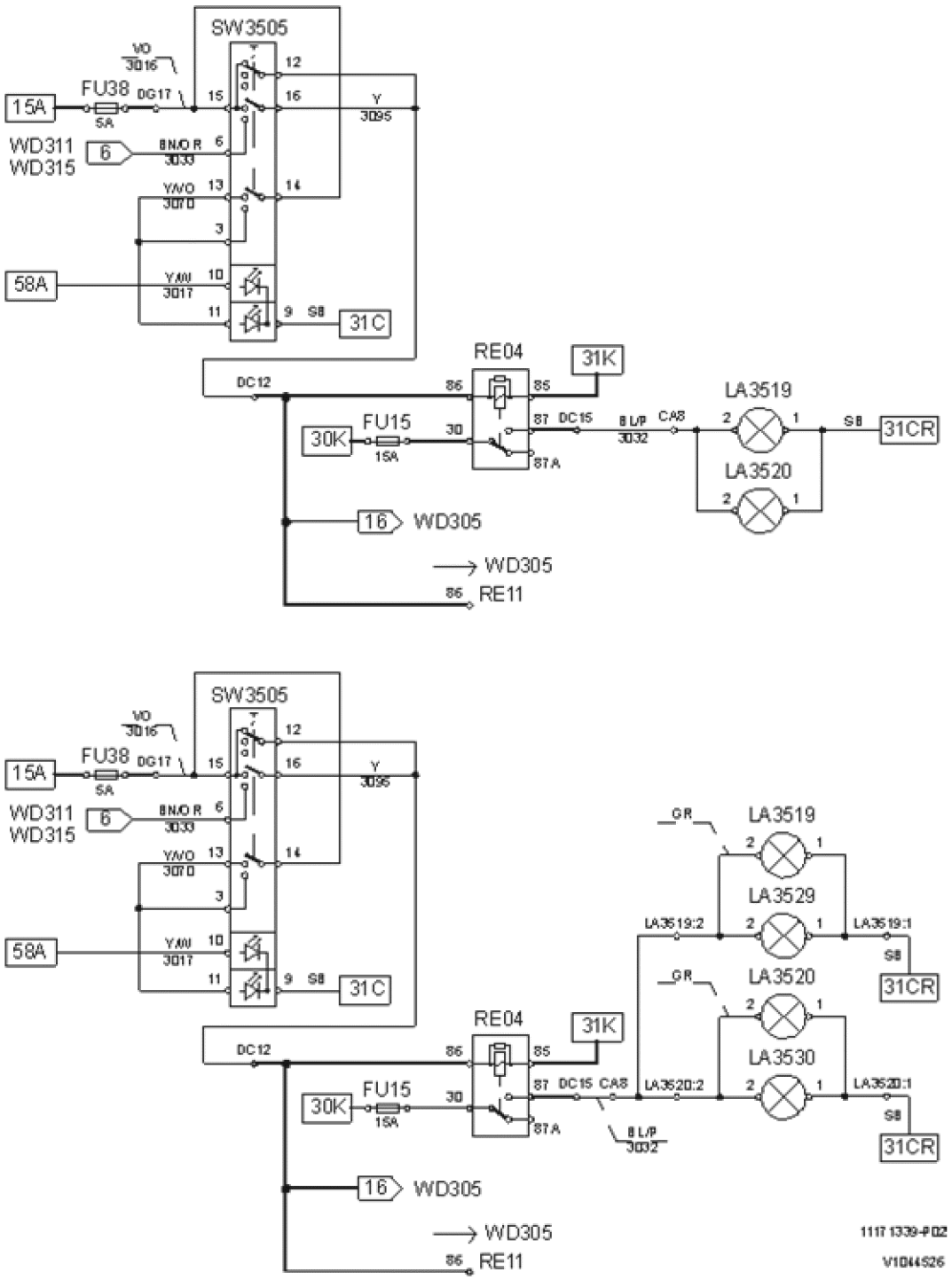

Figure 1

Designation	Function
FU15	Work lights cab, rear
FU38	Work lights
LA3519	Work light, cab, rear left
LA3520	Work light, cab, rear right
LA3529	Work light cab left rear[T1] ⓘ
LA3530	Work light cab right rear[(a)]
RE04	Work lights cab, rear
SW3505	Work lights roof

[T1] Double option

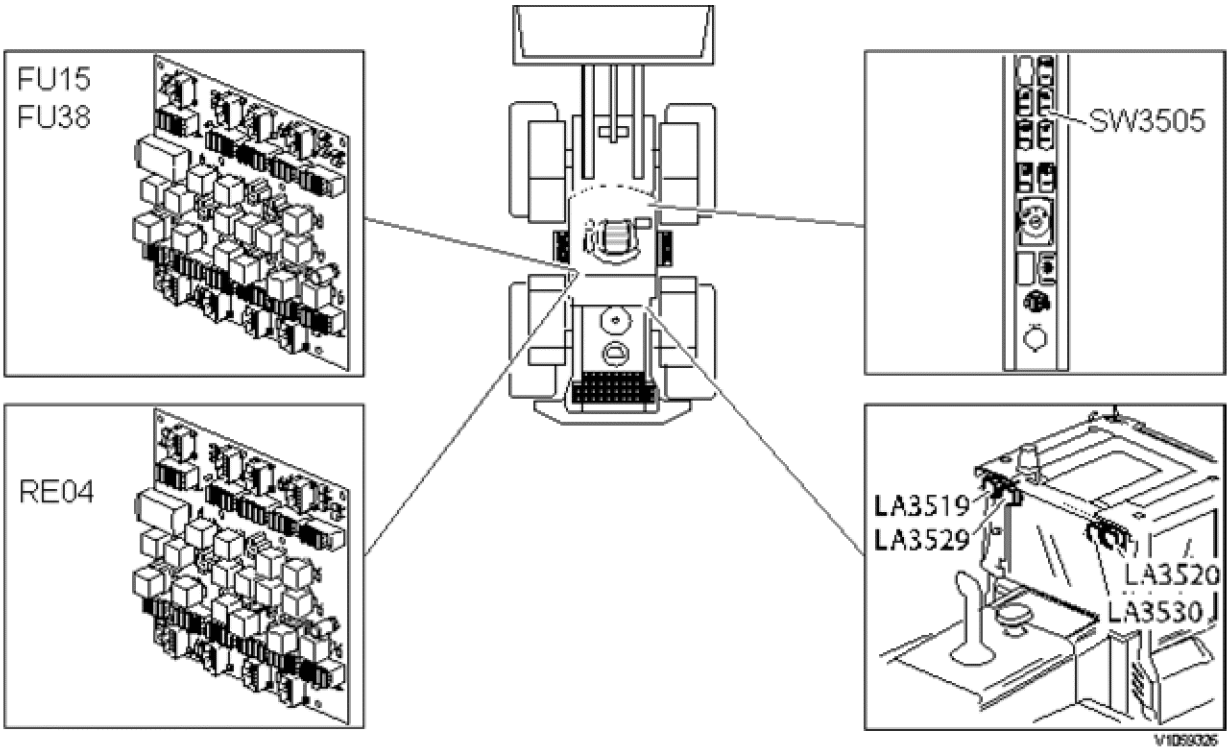

Figure 2
Component position

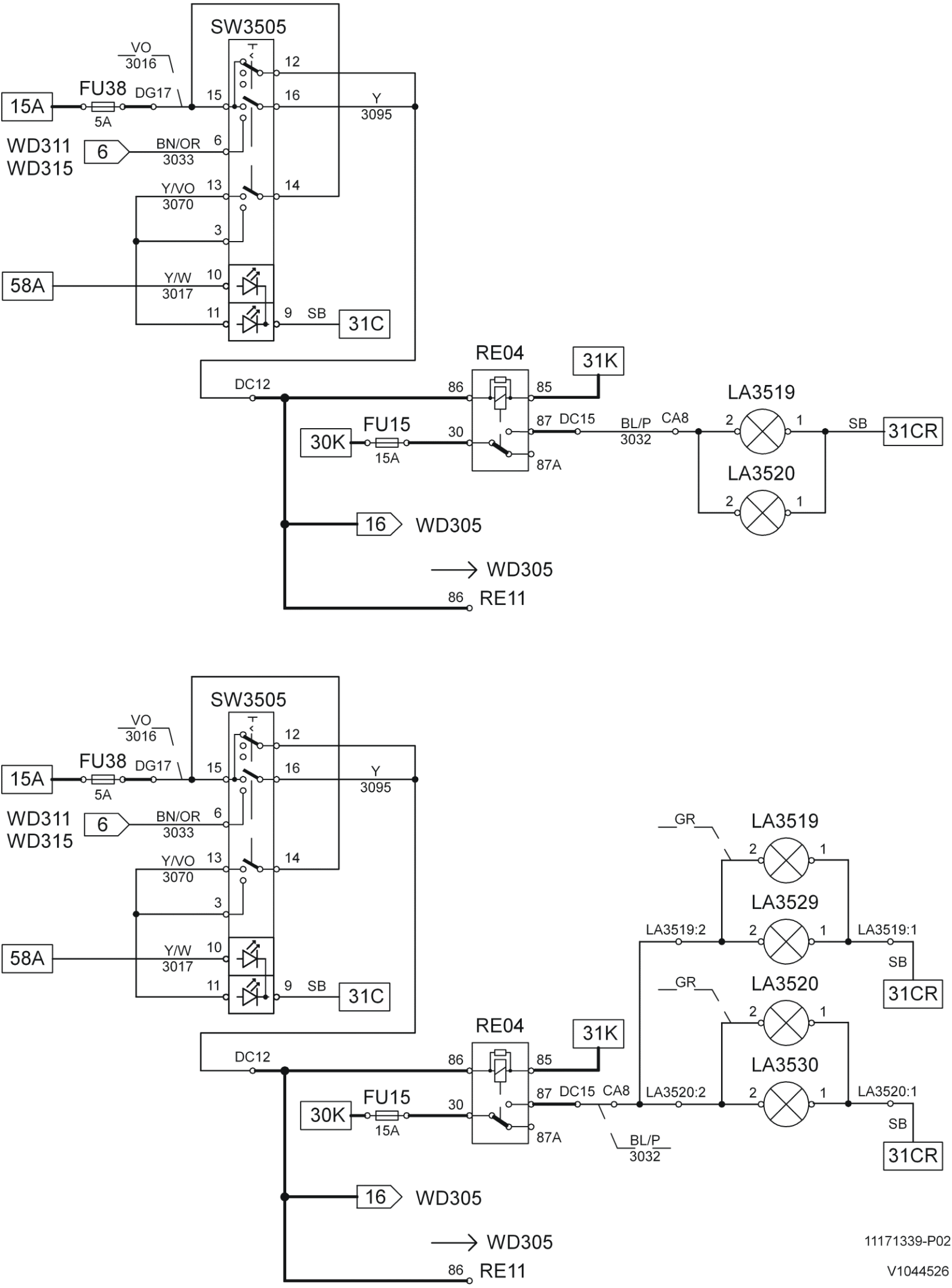
SW3505
VO
3016
FU38
DG17
5A
15A
WD311
WD315
6
BN/OR
3033
Y/VO
3070
58A
Y/W
3017
31C
SB
Y
3095
RE04
31K
DC12
30K
FU15
15A
DC15
BL/P
3032
CA8
LA3519
LA3520
31CR
16
WD305
WD305
86
RE11
GR
LA3529
LA3519:2
LA3519:1
LA3530
LA3520:2
LA3520:1
11171339-P02
V1044526

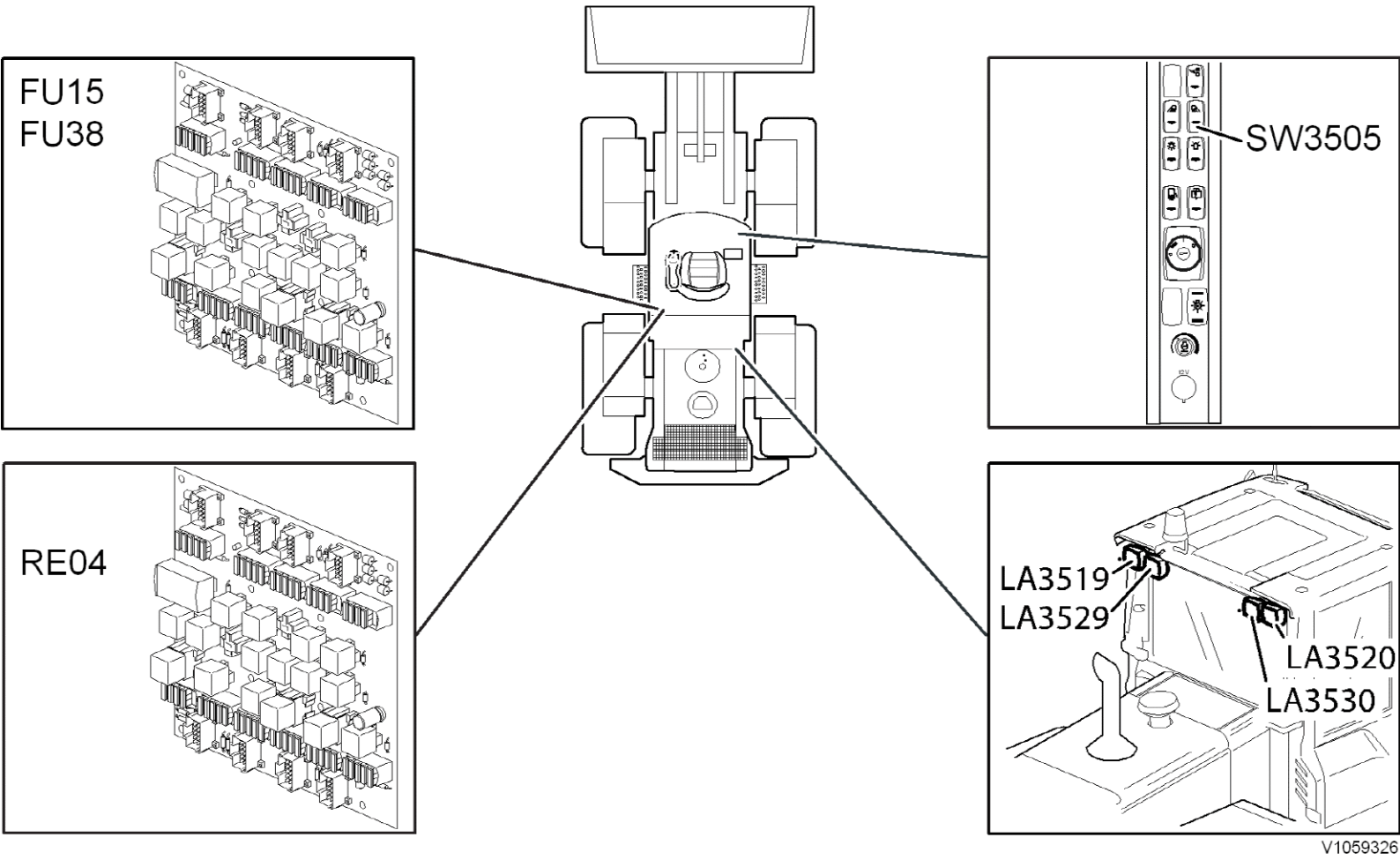
FU15
FU38
RE04
SW3505
LA3519
LA3529
LA3520
LA3530
V1059326

VOLVO
Construction Equipment

Service Information

Document Title:	Function Group:	Information Type: **Service Information**	Date: **12/10/2011**
Profile: **WLO, L90F (Volvo) [GB]**			

Wiring diagram 314

Radio, voltage converter 20A

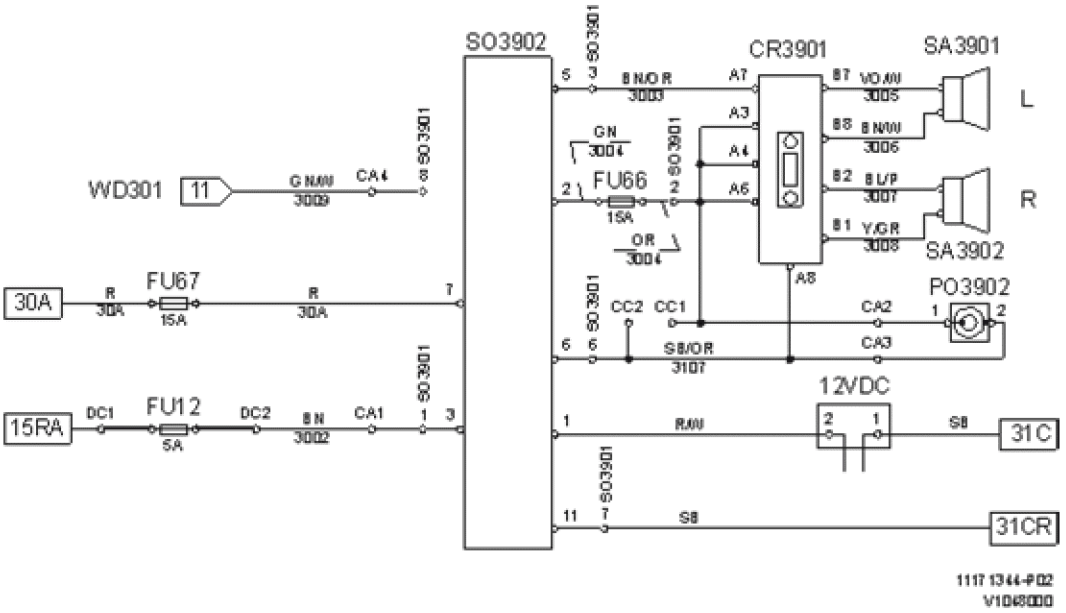

Figure 1

Designation	Function
CR3901	Radio
FU12	15 RA feed
FU66	Radio
FU67	30A feed
PO3902	Voltage socket 12 V
SA3901	Loudspeaker left
SA3902	Loudspeaker right
SO3902	Voltage converter 20A

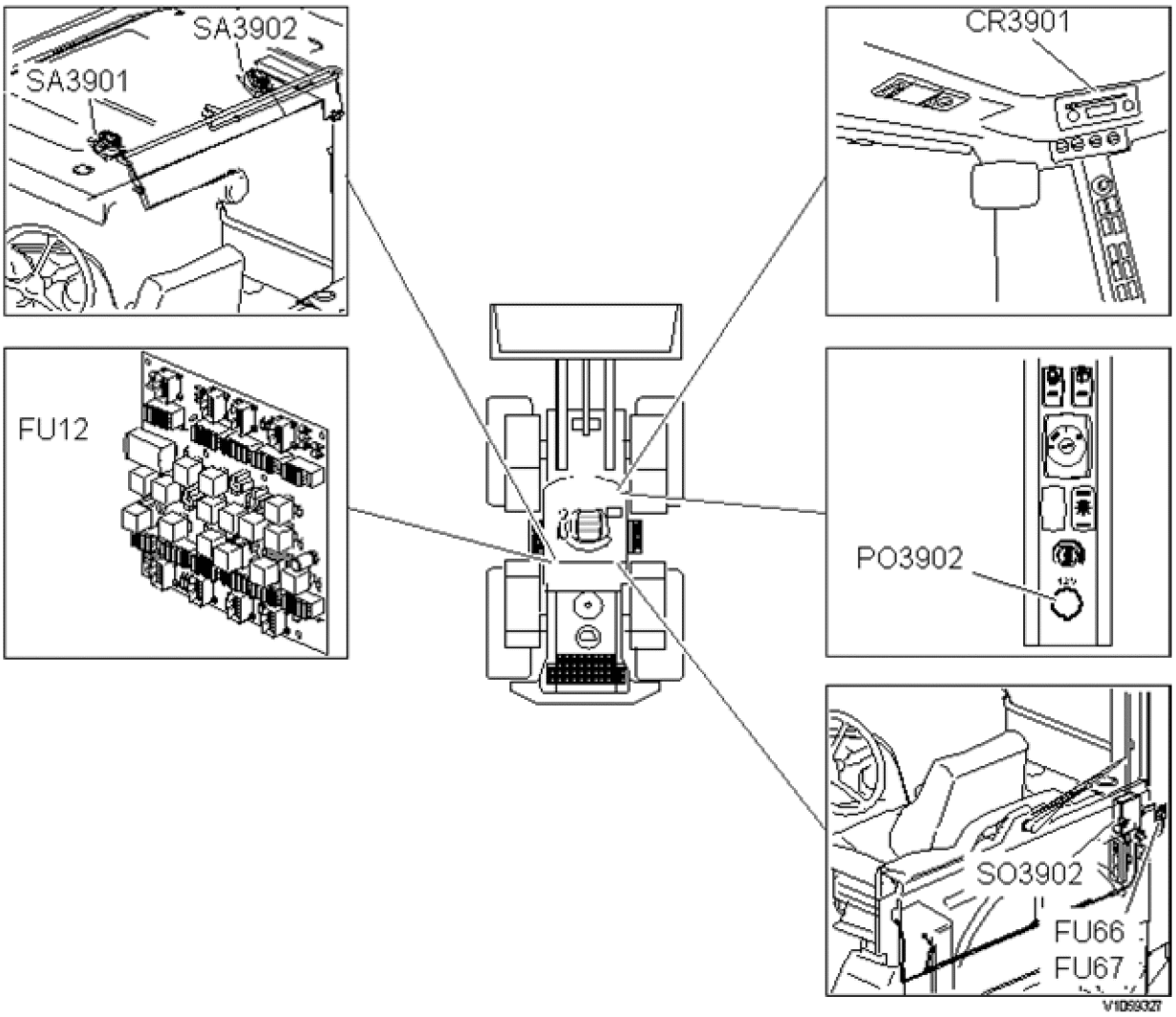

Figure 2
Component position

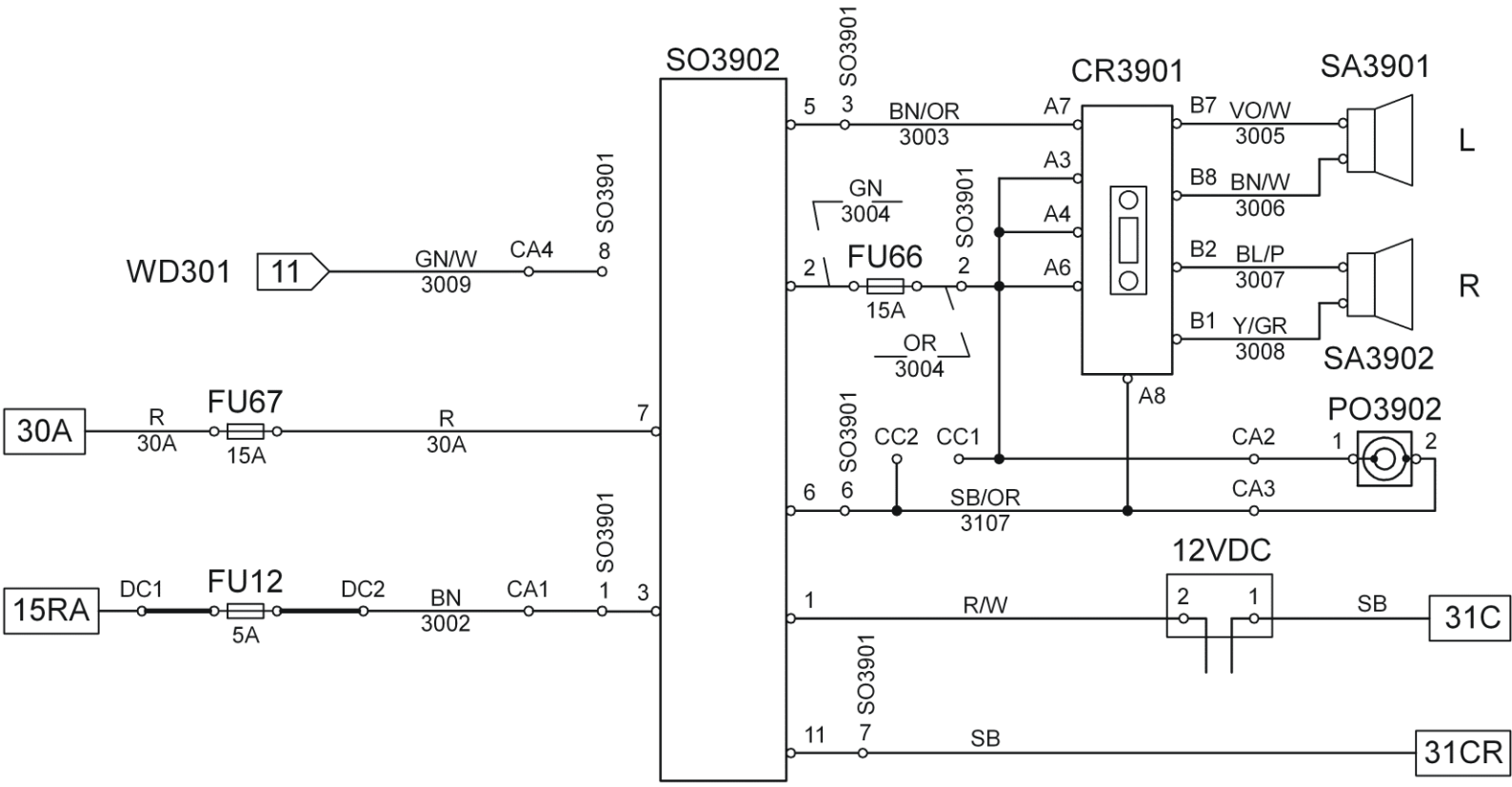

11171344-P02
V1048000

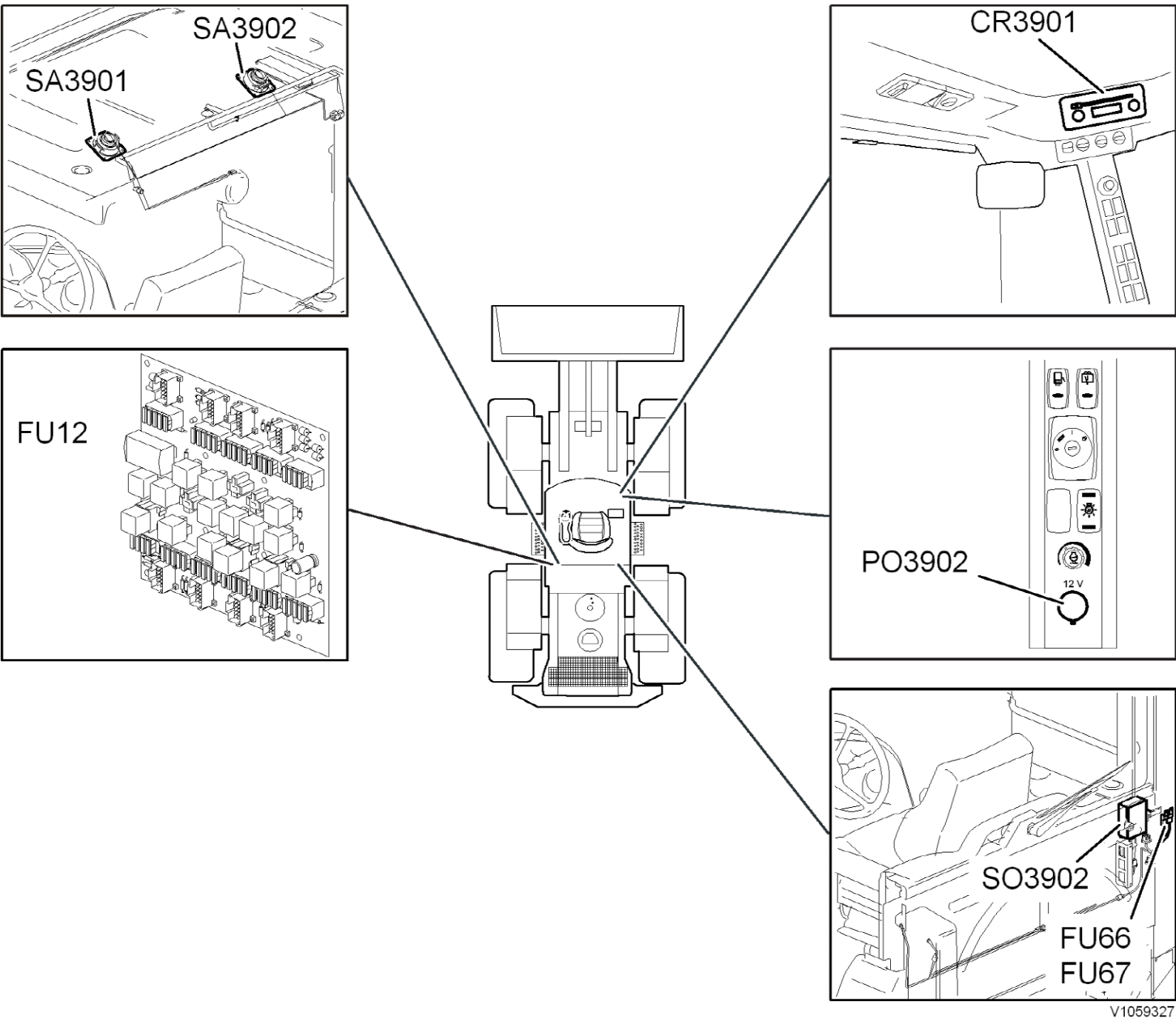
SA3902
SA3901
CR3901
FU12
PO3902
12 V
SO3902
FU66
FU67
V1059327

More than one document matches the current profile:

Wiring diagram 315
Product Line: WLO
Model Variant: L90F
Site: Arvika
Serial Number Start: 25001
Serial Number End: 26953

Wiring diagram 315
Product Line: WLO
Model Variant: L90F
Site: Arvika
Serial Number Start: 26954
Serial Number End: 49999

VOLVO
Construction Equipment

Service Information

Document Title:	Function Group:	Information Type: **Service Information**	Date: **12/10/2011**
Profile: **WLO, L90F (Volvo) [GB]**			

Wiring diagram 315

Radio, voltage socket, audible signals

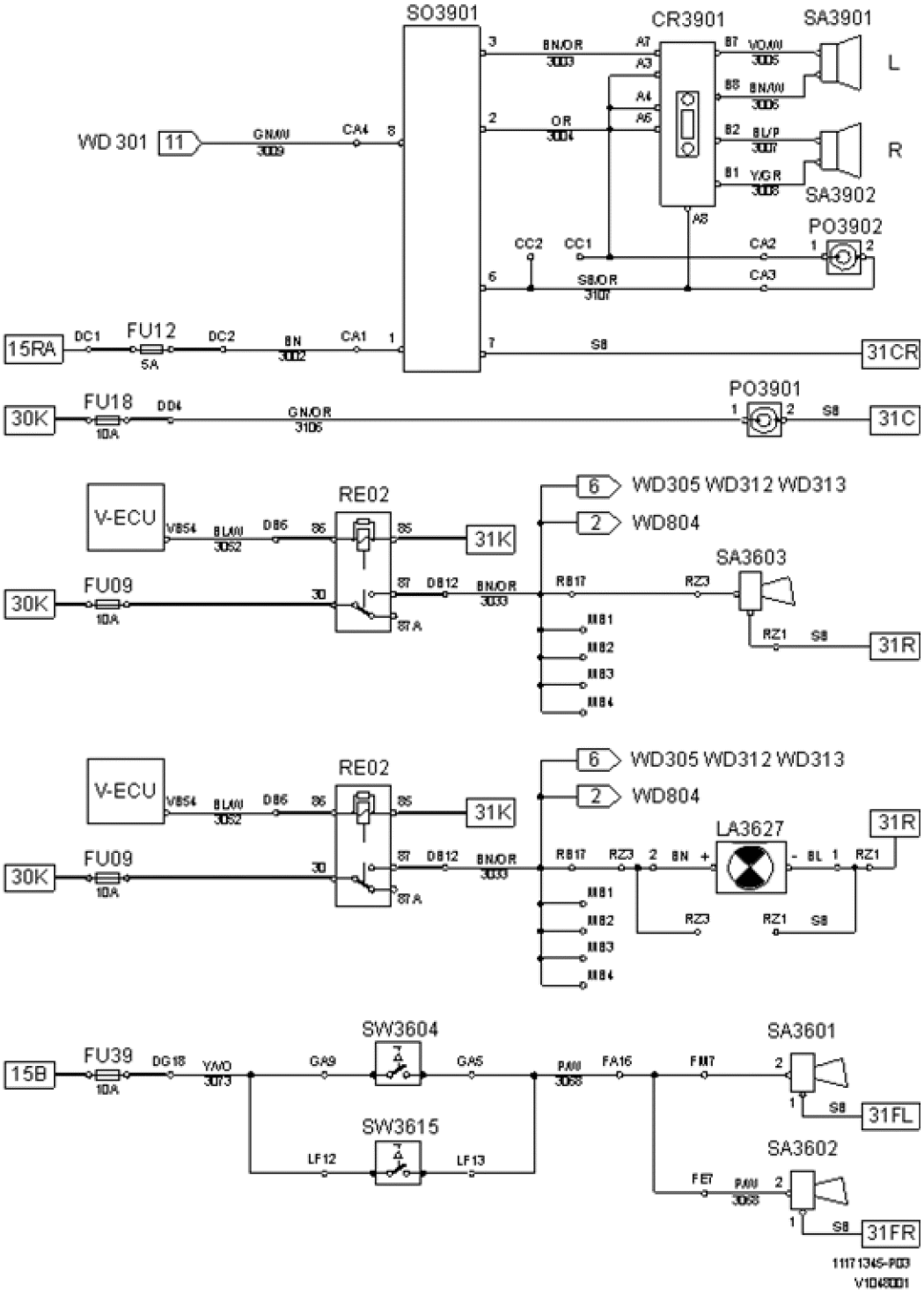

Figure 1

Designation	Function	Designation	Function
CR3901	Radio	SA3601	Horn left
FU09	Back-up alarm	SA3602	Horn right
FU12	Voltage converter	SA3603	Back-up alarm
FU18	Voltage socket 24 V	SA3901	Loudspeaker left
FU39	Horn	SA3902	Loudspeaker right
LA3627	Strobe light (back-up warning)	SO3901	Voltage converter
PO3901	Voltage socket 24 V	SW3604	Horn
PO3902	Voltage socket 12 V	SW3615	Horn (lever carrier)
RE02	Reversing alarm	V-ECU	Vehicle control unit

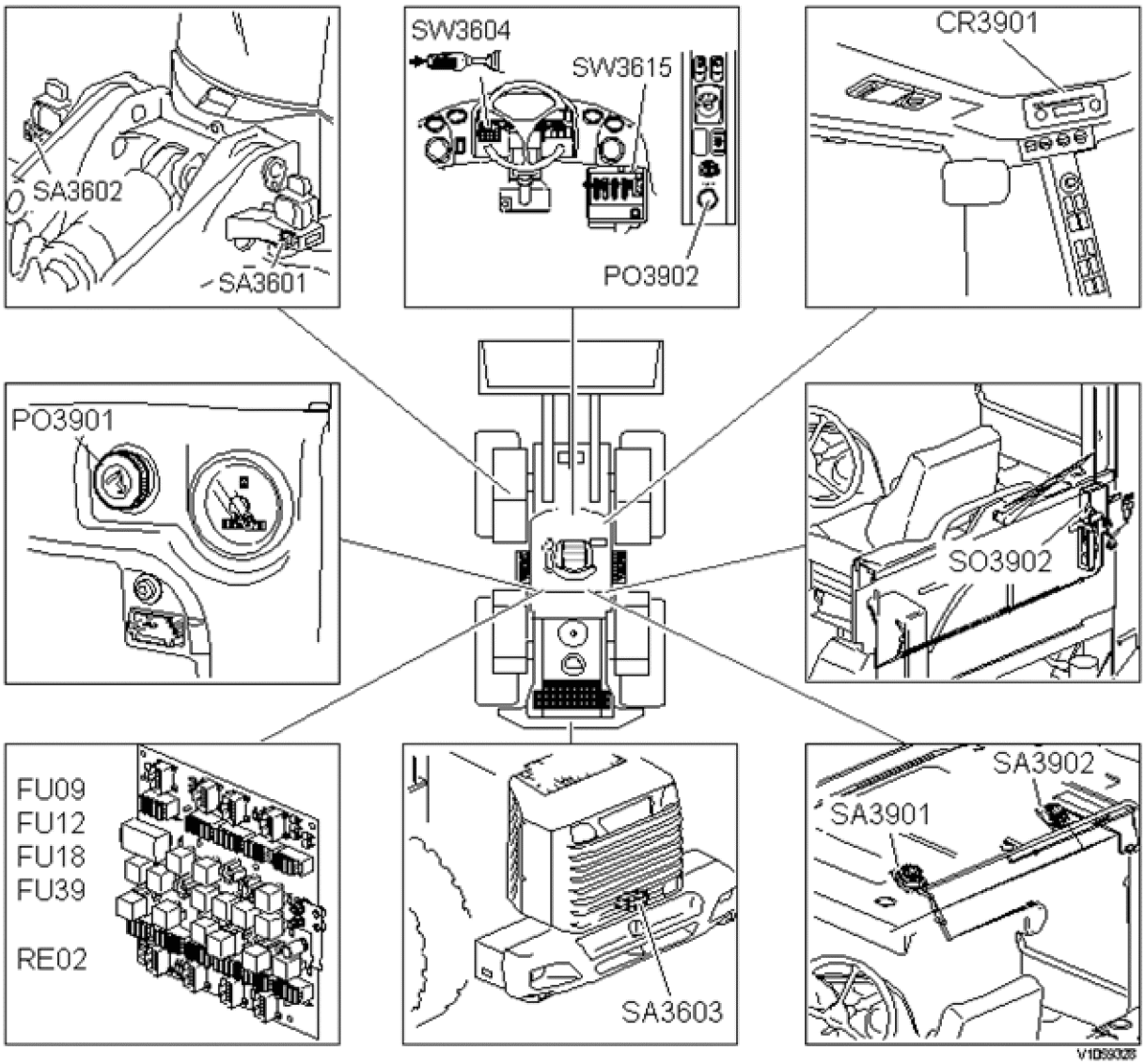

Figure 2
Component position

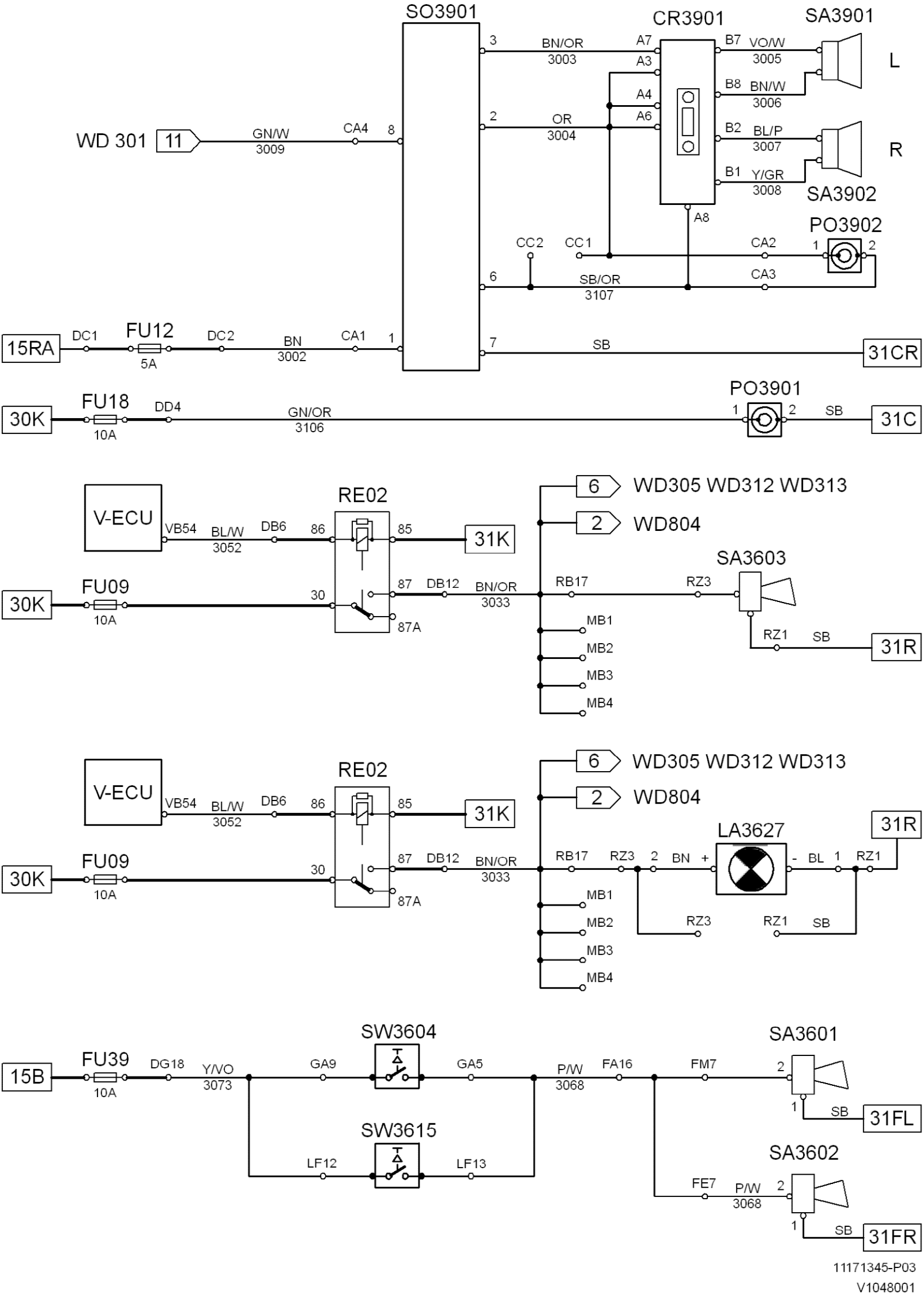

11171345-P03
V1048001

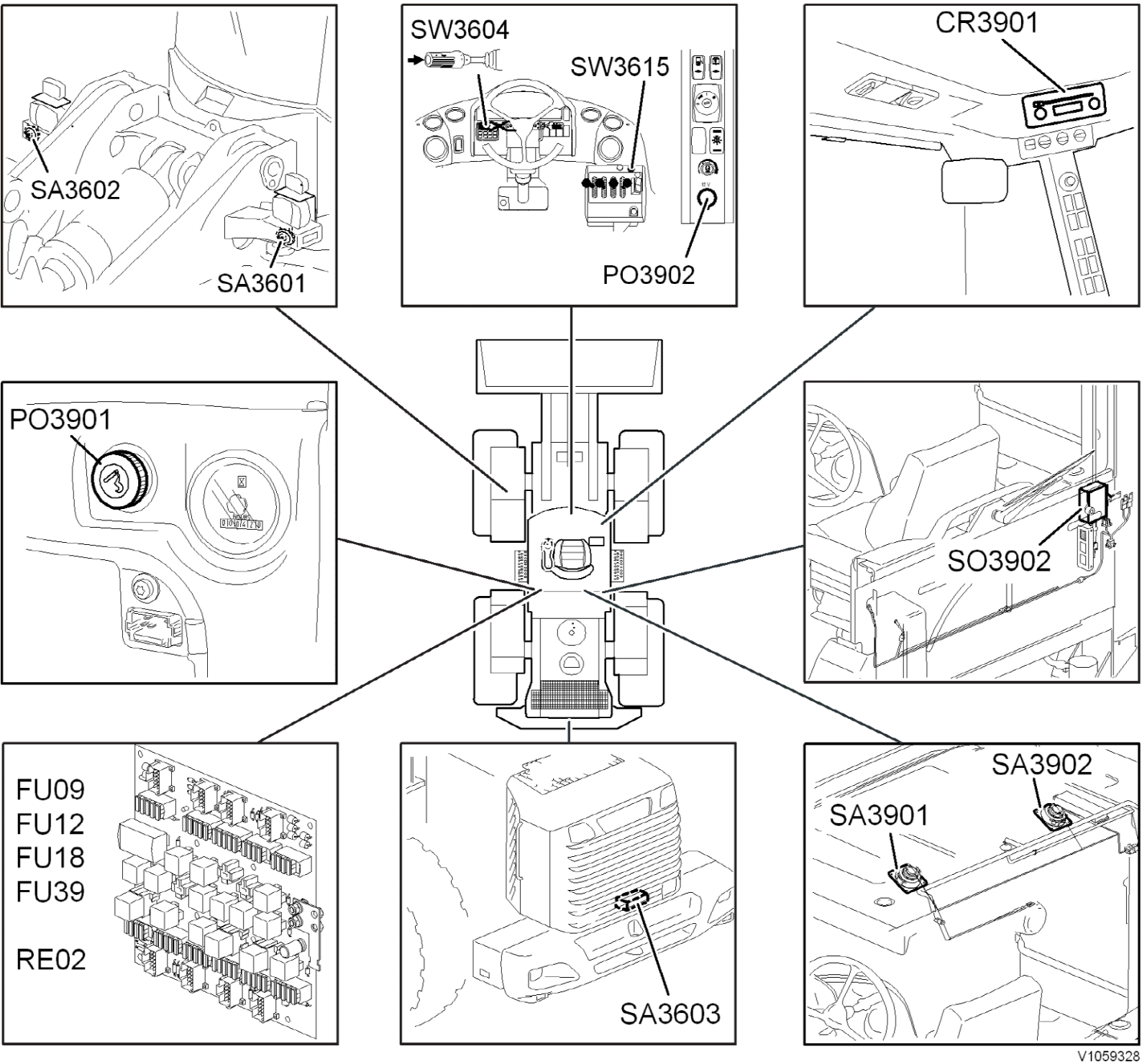
SA3602
SA3601
SW3604
SW3615
PO3902
CR3901
PO3901
SO3902
FU09
FU12
FU18
FU39
RE02
SA3603
SA3902
SA3901
V1059328

VOLVO
Construction Equipment

Service Information

Document Title:	Function Group:	Information Type: **Service Information**	Date: **12/10/2011**
Profile: **WLO, L90F (Volvo) [GB]**			

Wiring diagram 315

Radio, voltage socket, audible signals

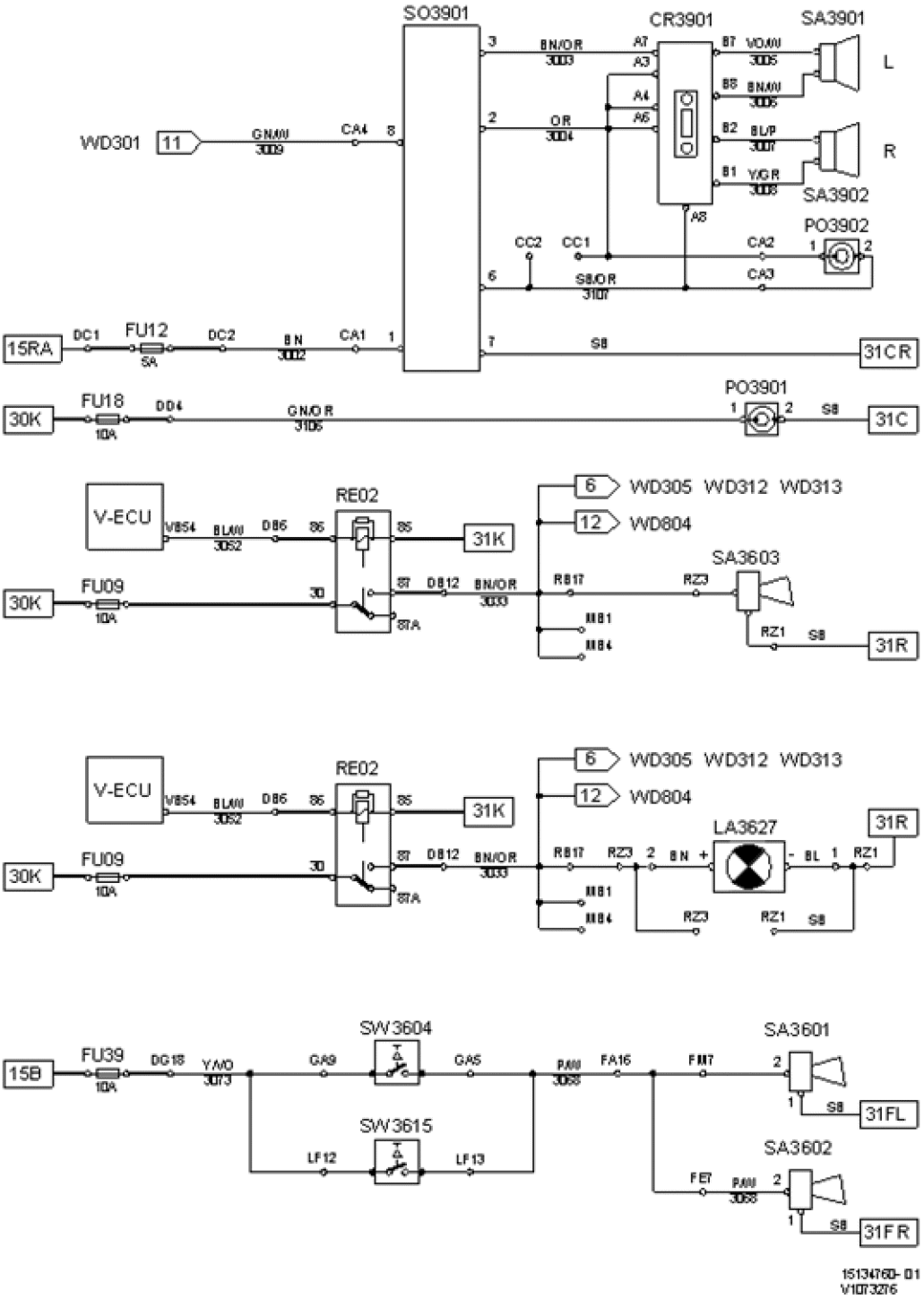

Figure 1

Designation	Function	Designation	Function
CR3901	Radio	SA3601	Horn left
FU09	Back-up alarm	SA3602	Horn right
FU12	Voltage converter	SA3603	Back-up alarm
FU18	Voltage socket 24 V	SA3901	Loudspeaker left
FU39	Horn	SA3902	Loudspeaker right
LA3627	Strobe light (back-up warning)	SO3901	Voltage converter
PO3901	Voltage socket 24 V	SW3604	Horn
PO3902	Voltage socket 12 V	SW3615	Horn (lever carrier)
RE02	Reversing alarm	V-ECU	Vehicle control unit

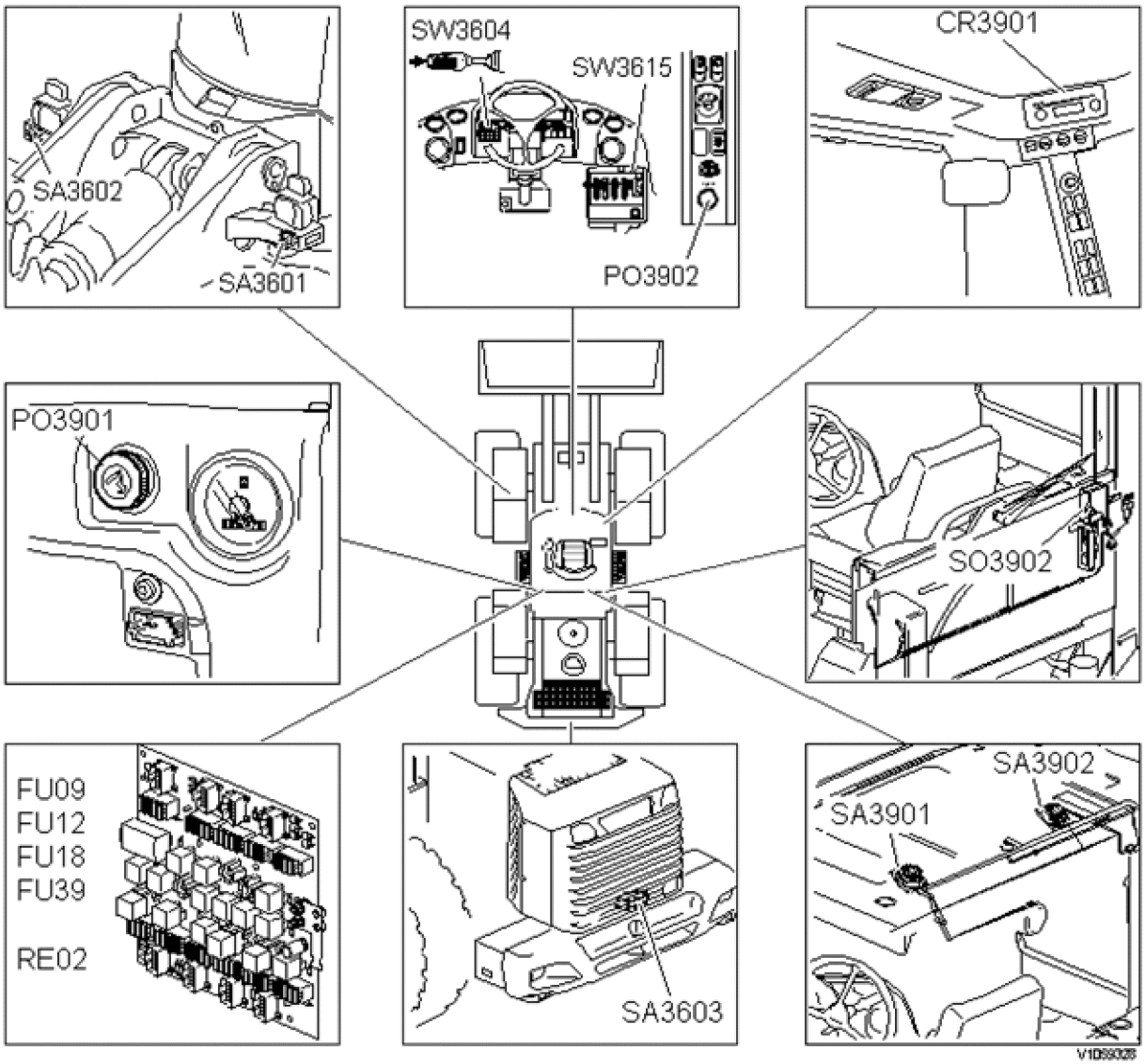

Figure 2
Component position

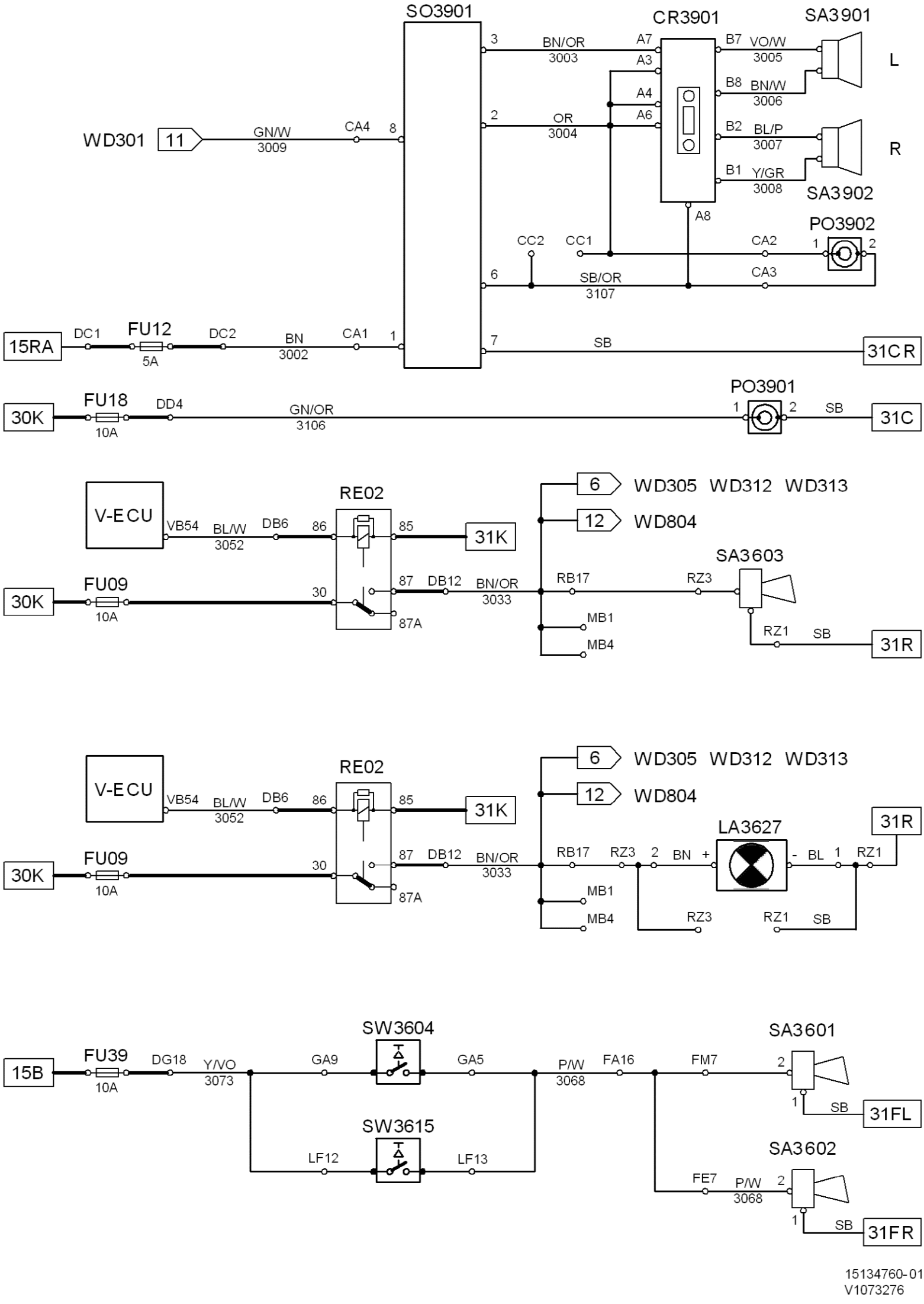
SO3901
CR3901
SA3901
WD301
11
GN/W
3009
CA4
8
3
BN/OR
3003
2
OR
3004
A7
A3
A4
A6
A8
B7
VO/W
3005
B8
BN/W
3006
B2
BL/P
3007
B1
Y/GR
3008
L
R
SA3902
PO3902
CC2
CC1
CA2
CA3
1
2
6
SB/OR
3107
15RA
DC1
FU12
5A
DC2
BN
3002
CA1
1
7
SB
31CR
30K
FU18
10A
DD4
GN/OR
3106
PO3901
SB
31C
V-ECU
VB54
BL/W
3052
DB6
RE02
86
85
31K
6
WD305 WD312 WD313
12
WD804
SA3603
FU09
30
87
DB12
BN/OR
3033
87A
RB17
RZ3
MB1
MB4
RZ1
SB
31R
LA3627
2
BN
+
-
BL
1
SW3604
SW3615
15B
FU39
DG18
Y/VO
3073
GA9
GA5
LF12
LF13
P/W
3068
FA16
FM7
SA3601
SA3602
FE7
31FL
31FR
15134760-01
V1073276

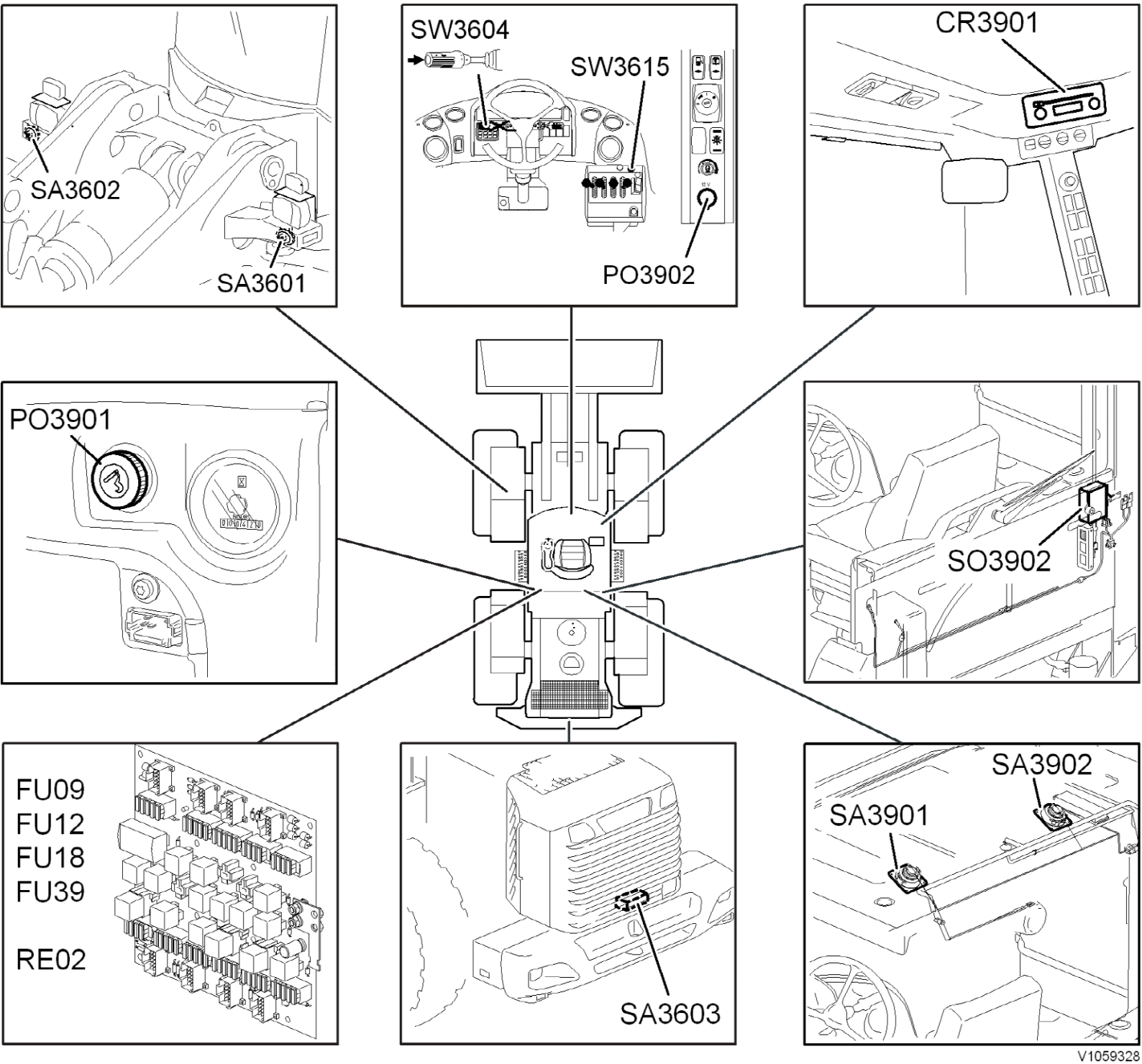
SA3602
SA3601
SW3604
SW3615
PO3902
CR3901
PO3901
SO3902
FU09
FU12
FU18
FU39
RE02
SA3603
SA3902
SA3901
V1059328

VOLVO
Construction Equipment

Service Information

Document Title:	Function Group:	Information Type: **Service Information**	Date: **12/10/2011**
Profile: **WLO, L90F (Volvo) [GB]**			

Wiring diagram 402

Gear shifting solenoids

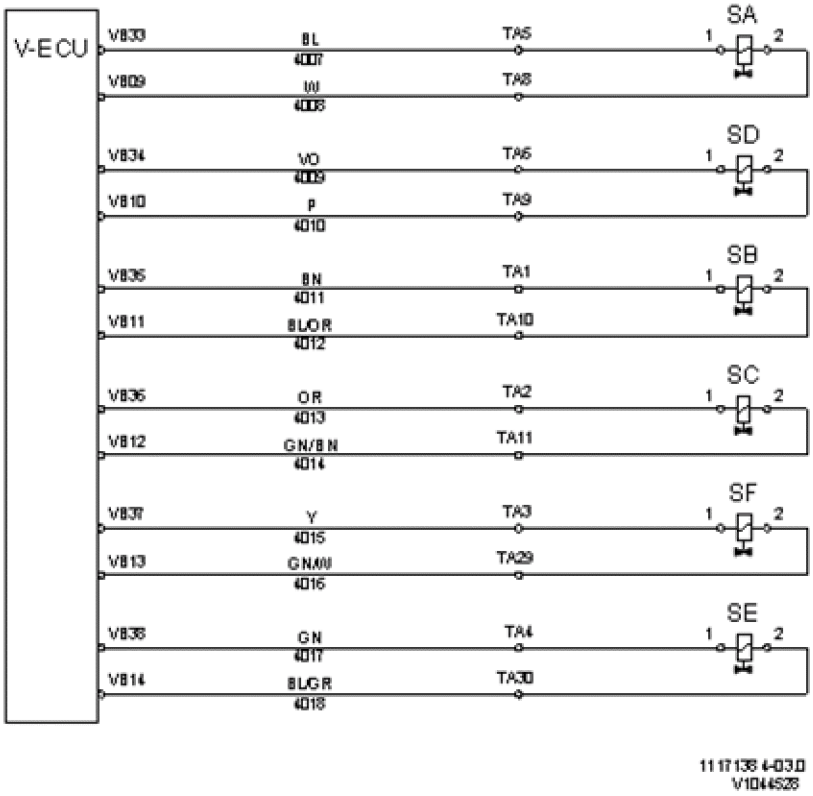

Figure 1

Designation	Function
SA	Forward gear
SB	1st gear
SC	2nd gear
SD	Reverse gear
SE	4th gear
SF	3rd gear

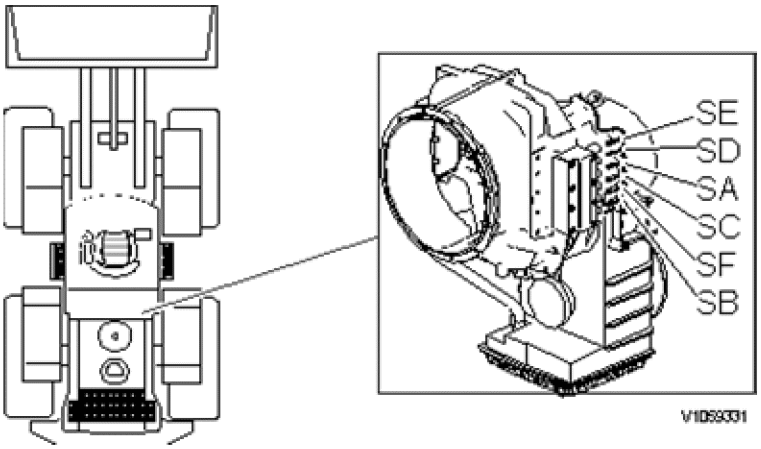

Figure 2
Component position

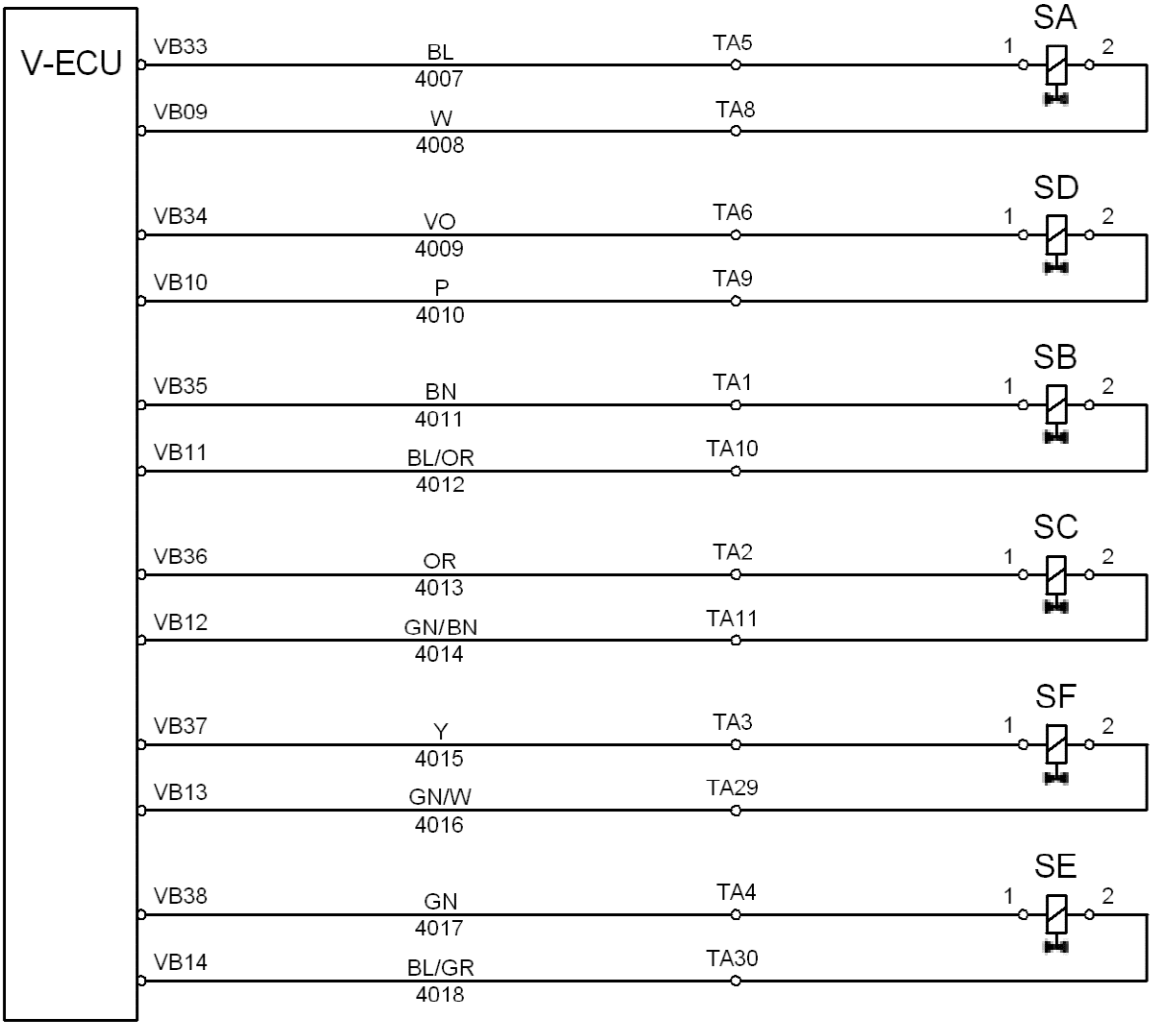

11171384-03.0
V1044528

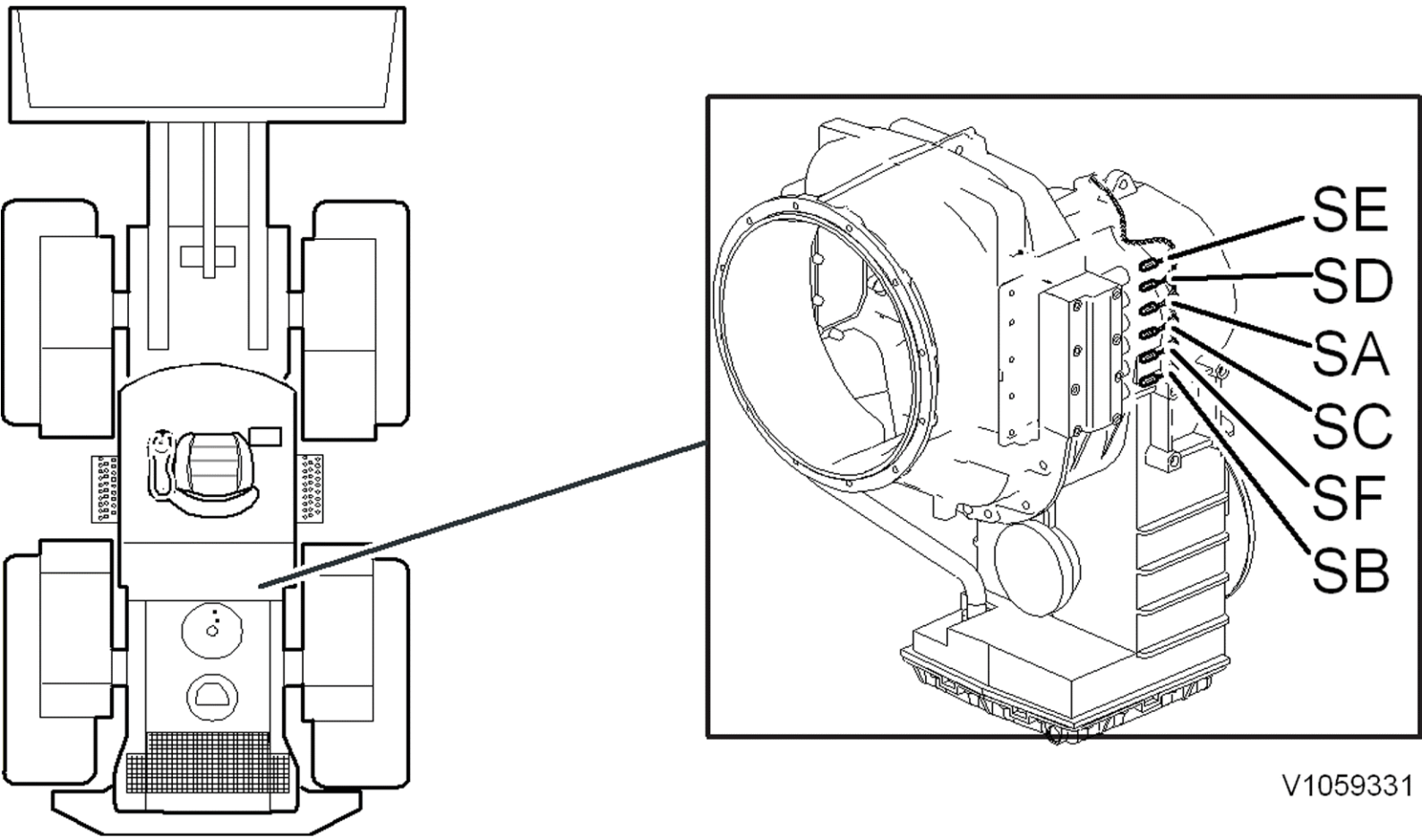

V1059331

More than one document matches the current profile:

Wiring diagram 403
Product Line: WLO
Model Variant: L90F
Site: Arvika, Asheville
Serial Number Start: 25001, 68101
Serial Number End: 26953, 68916

Wiring diagram 403
Product Line: WLO
Model Variant: L90F
Site: Arvika, Asheville
Serial Number Start: 26954, 68917
Serial Number End: 49999, 69999

VOLVO
Construction Equipment

Service Information

Document Title:	Function Group:	Information Type: **Service Information**	Date: **12/10/2011**
Profile: **WLO, L90F (Volvo) [GB]**			

Wiring diagram 403

Sensor transmission, mode selector, differential lock

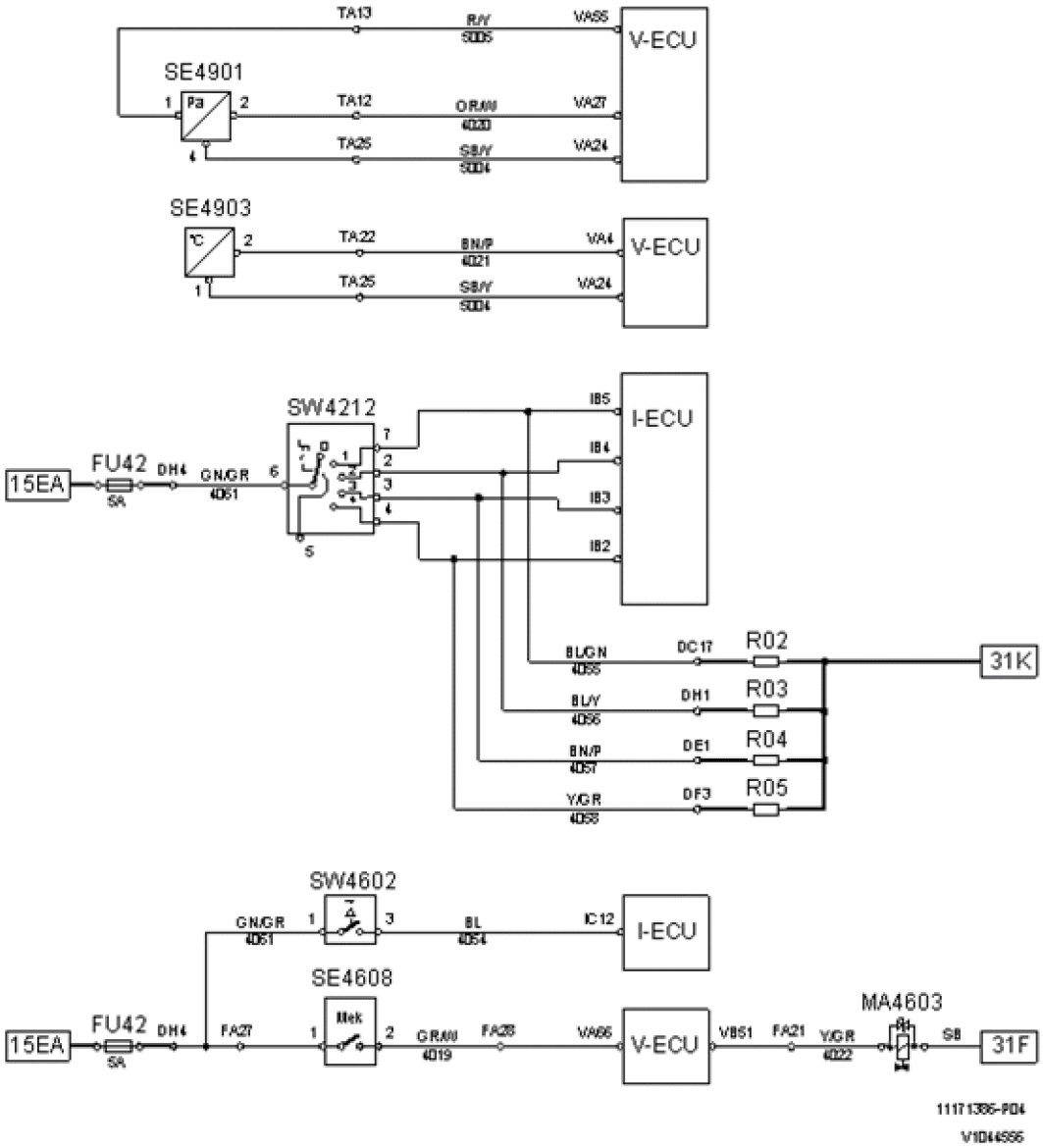

Figure 1

Designation	Function
FU42	Mode selector, differential lock
MA4603	Differential lock

R02–R05	Loading resistor
SE4608	Feedback for engaged differential lock
SE4901	Transmission oil pressure
SE4903	Transmission oil temperature
SW4212	Mode selector
SW4602	Differential lock

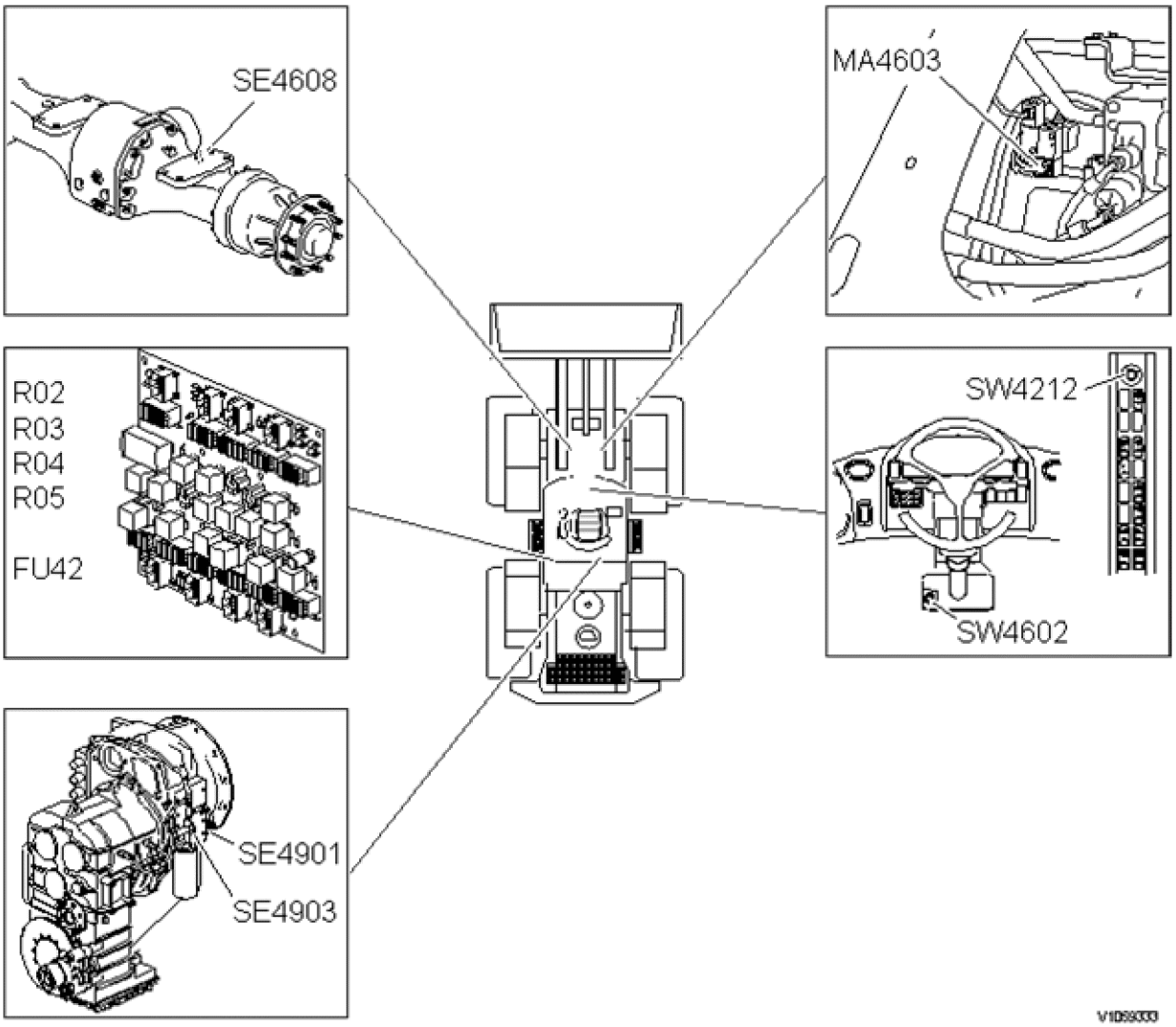

Figure 2
Component position

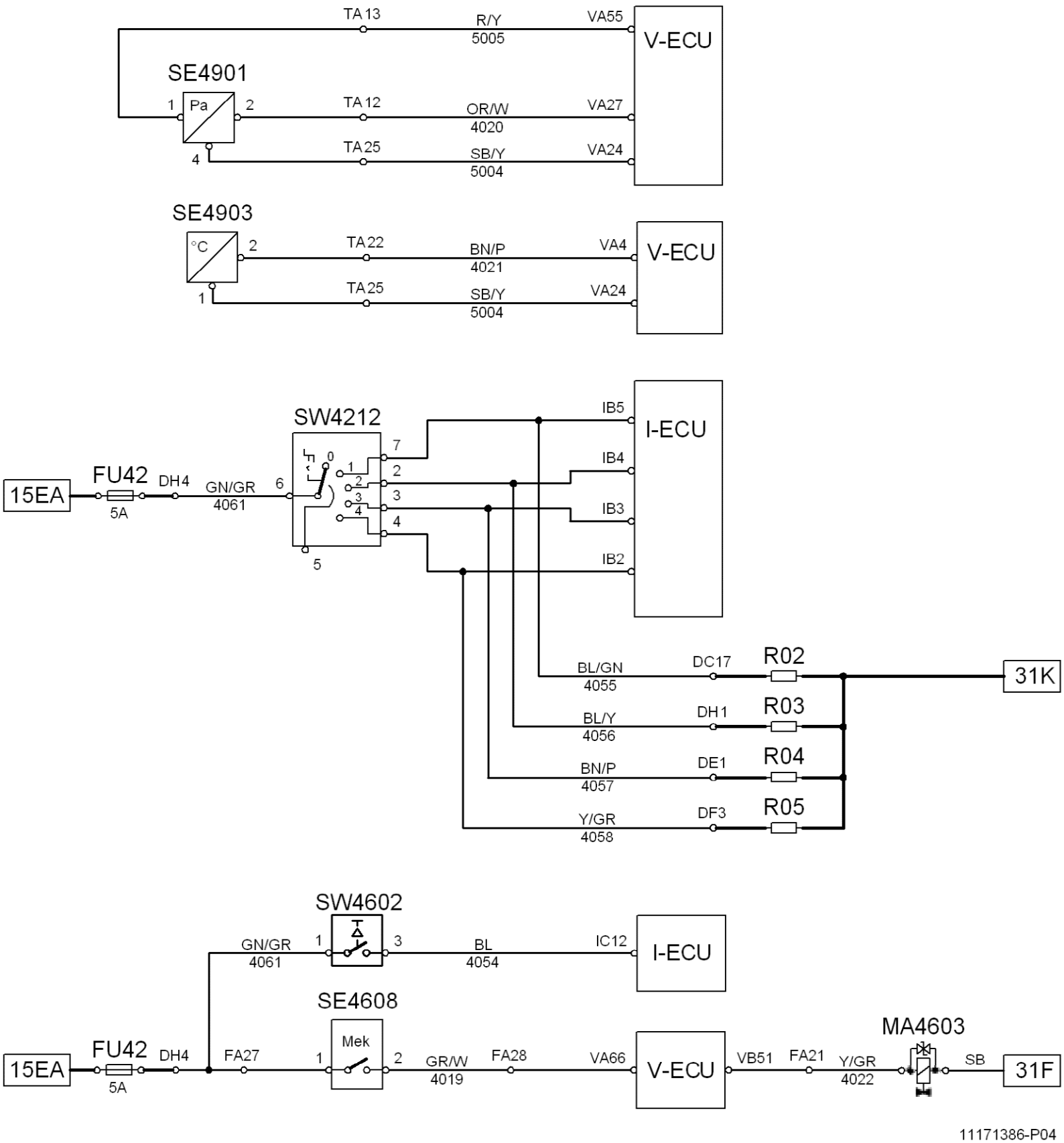

11171386-P04

V1044556

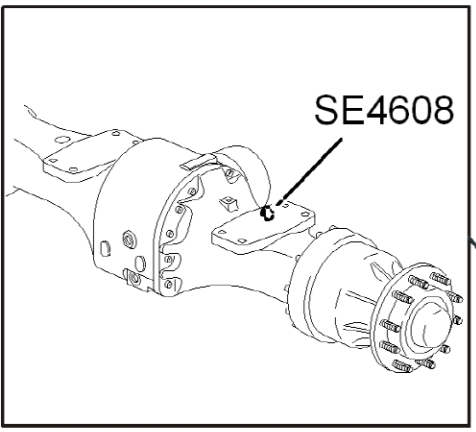
SE4608

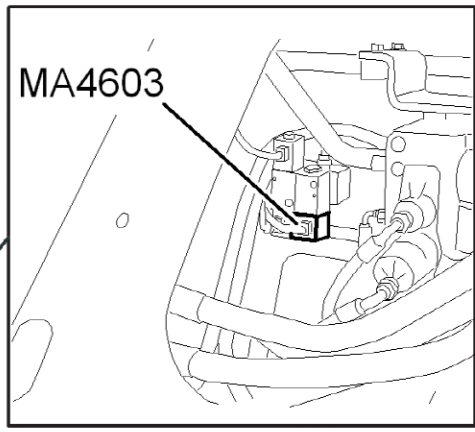
MA4603

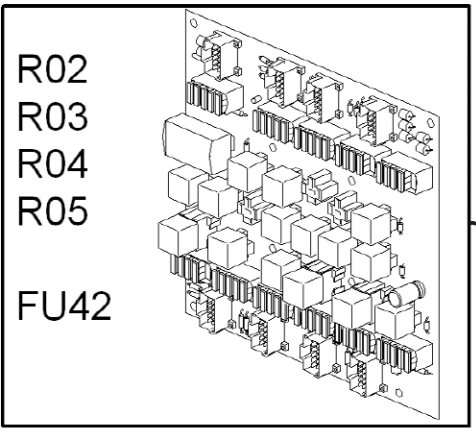
R02
R03
R04
R05
FU42

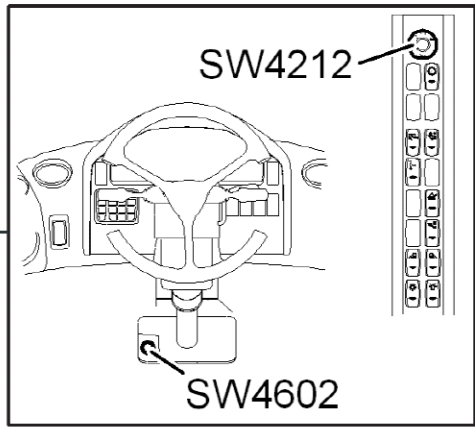
SW4212
SW4602

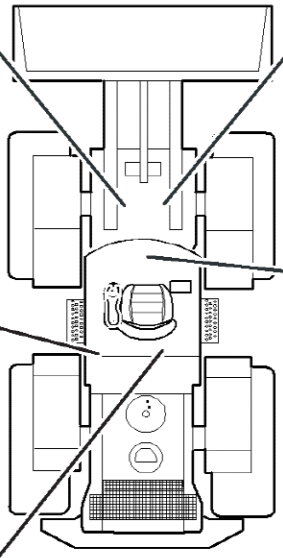

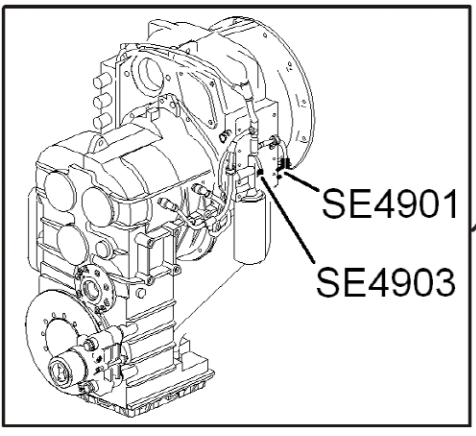
SE4901
SE4903

V1059333

VOLVO
Construction Equipment

Service Information

Document Title:	Function Group:	Information Type: **Service Information**	Date: **12/10/2011**
Profile: **WLO, L90F (Volvo) [GB]**			

Wiring diagram 403

Sensor transmission, mode selector, differential lock

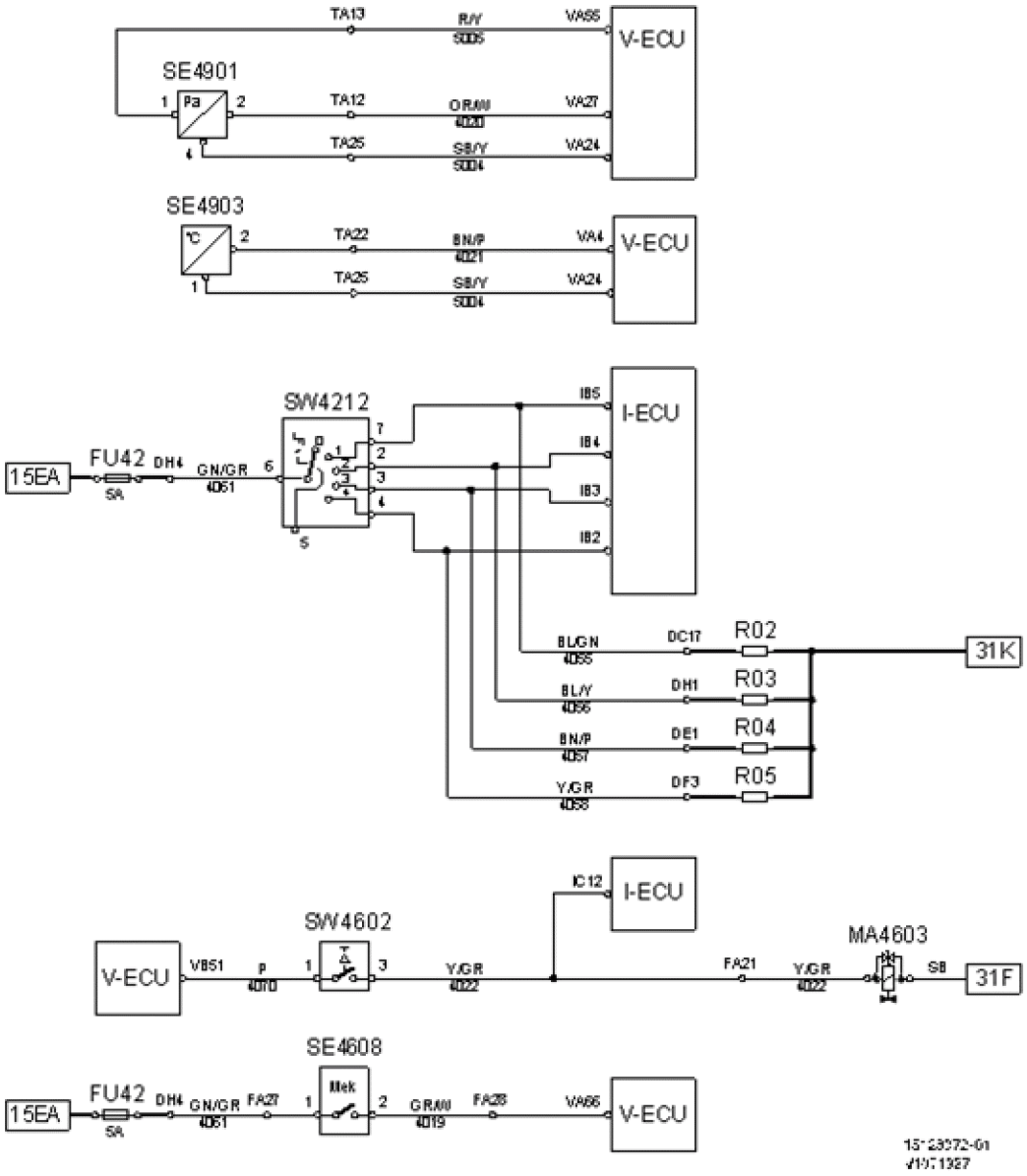

Figure 1

Designation	Function
FU42	Mode selector, differential lock
MA4603	Differential lock

R02–R05	Loading resistor
SE4608	Feedback for engaged differential lock
SE4901	Transmission oil pressure
SE4903	Transmission oil temperature
SW4212	Mode selector
SW4602	Differential lock

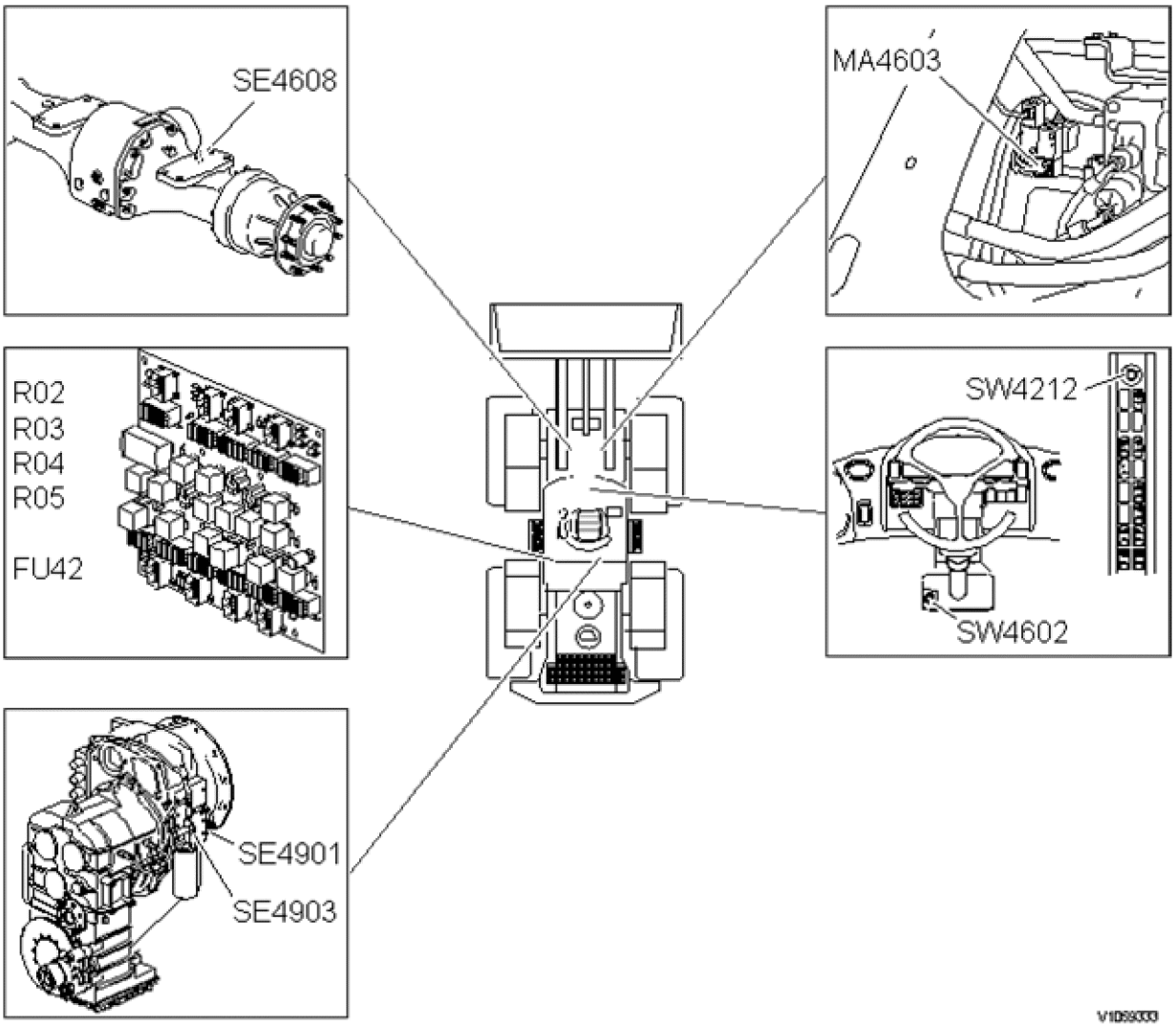

Figure 2
Component position

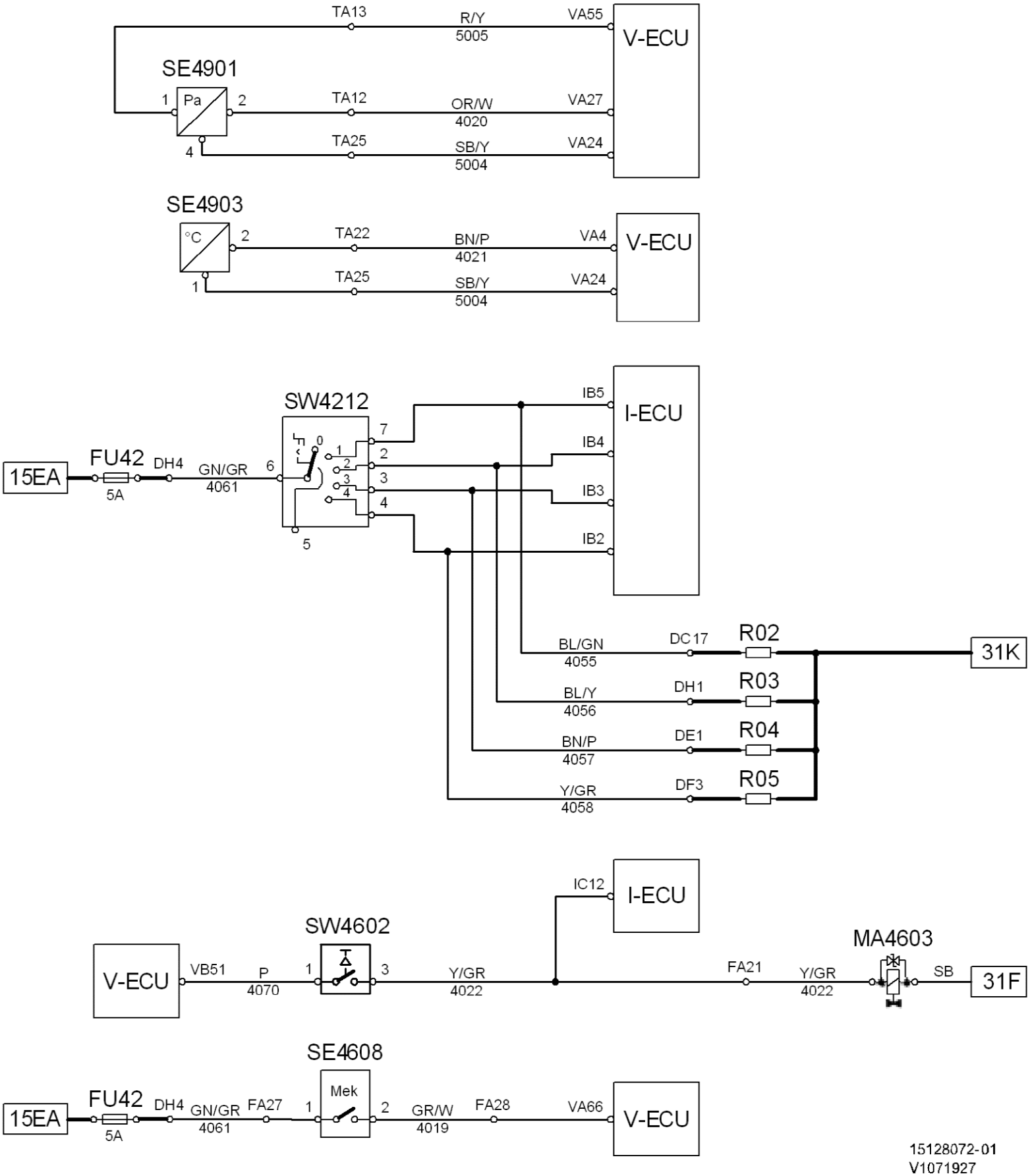

15128072-01
V1071927

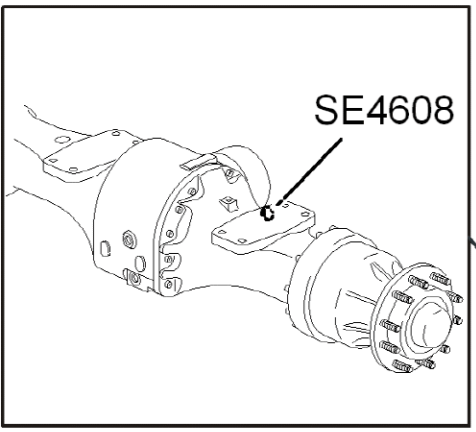
SE4608

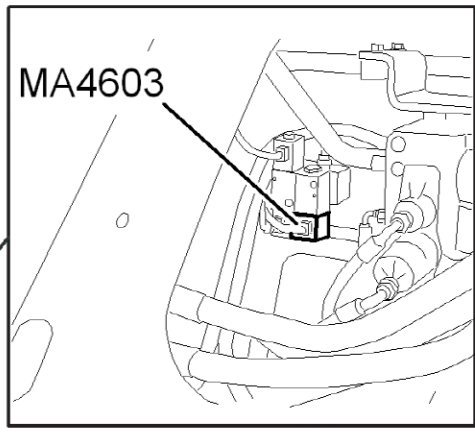
MA4603

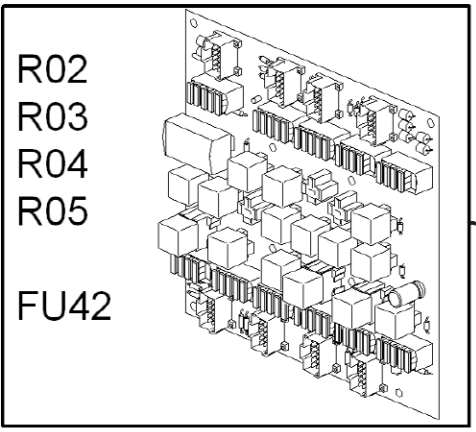
R02
R03
R04
R05
FU42

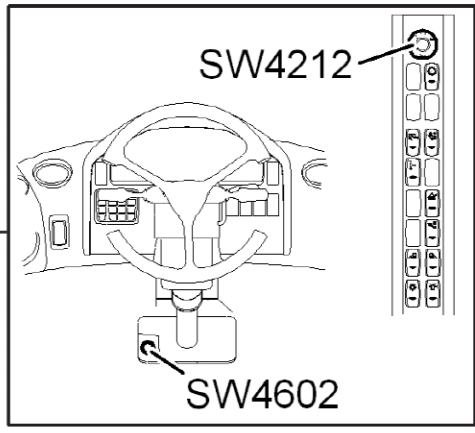
SW4212
SW4602

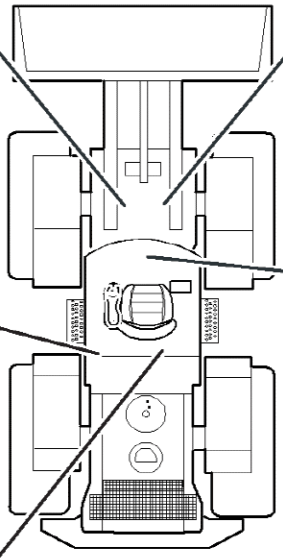

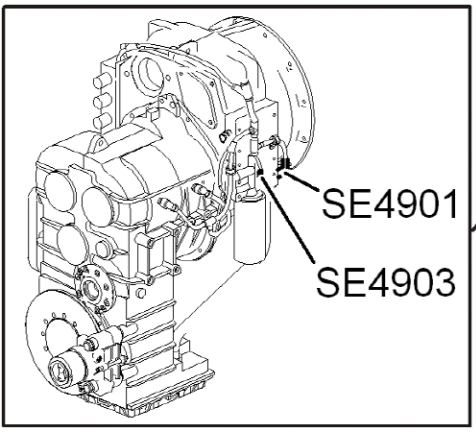
SE4901
SE4903

V1059333

VOLVO
Construction Equipment

Service Information

Document Title:	Function Group:	Information Type: **Service Information**	Date: **12/10/2011**
Profile: **WLO, L90F (Volvo) [GB]**			

Wiring diagram 404

Axle oil temperature, sensor transmission, fully automatic downshifting

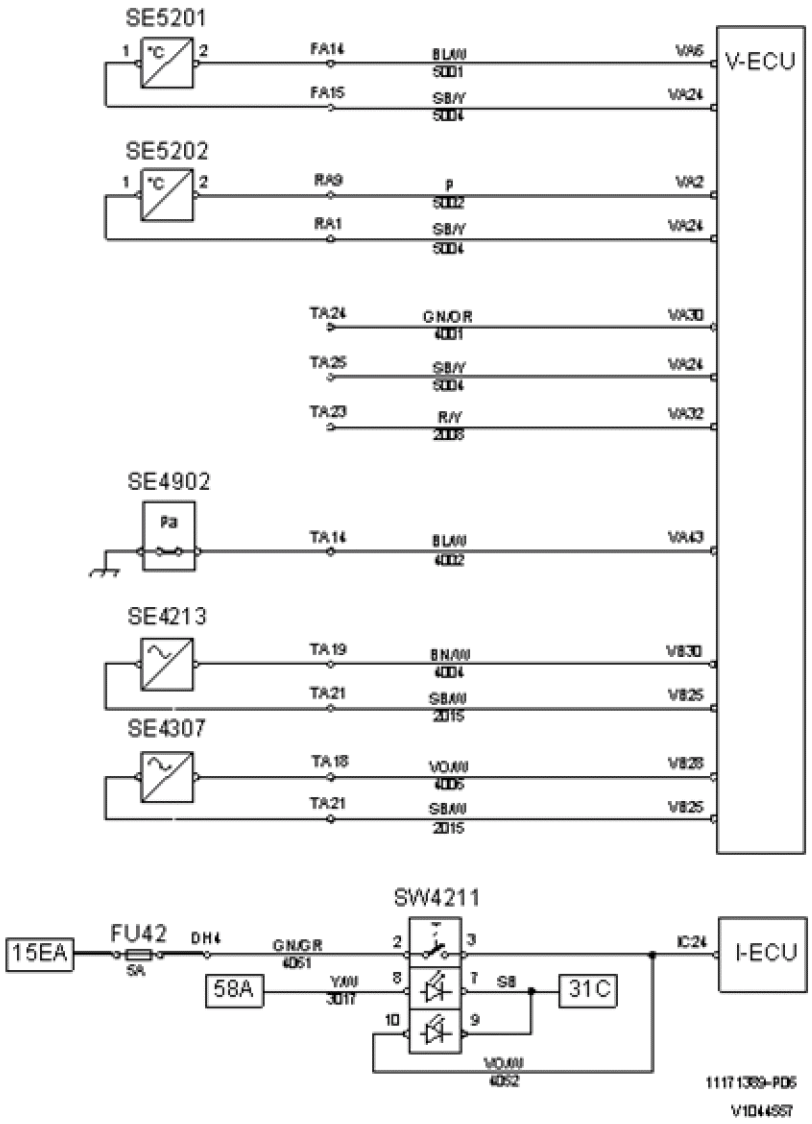

Figure 1

Designation	Function
FU42	Fully automatic downshifting
SE4213	Turbine rpm
SE4307	Output speed transmission
SE4902	Pressure monitor, transmission oil filter

SE5201	Axle oil temperature, front axle
SE5202	Axle oil temperature, rear axle
SW4211	Fully automatic downshifting

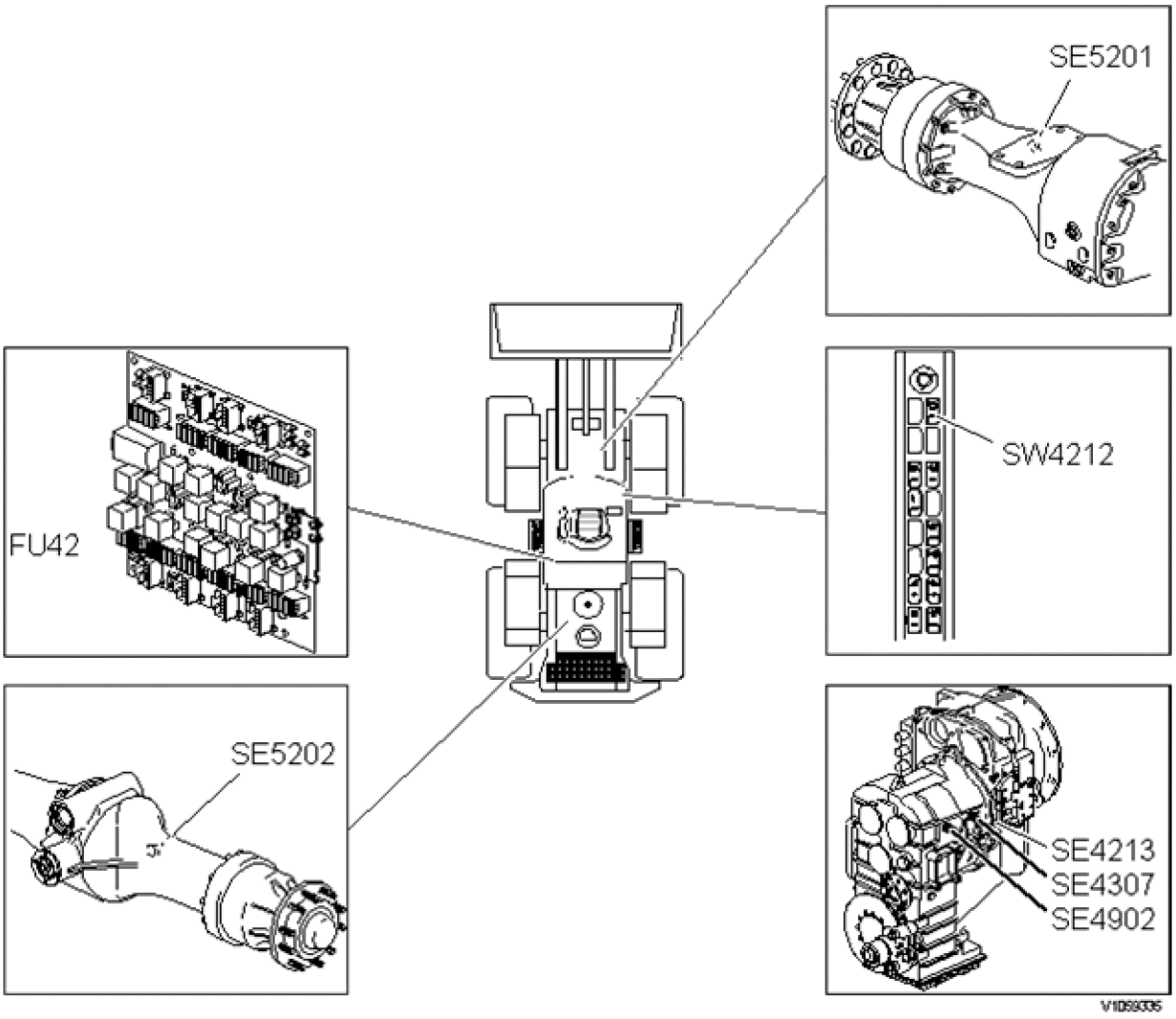

Figure 2
Component position

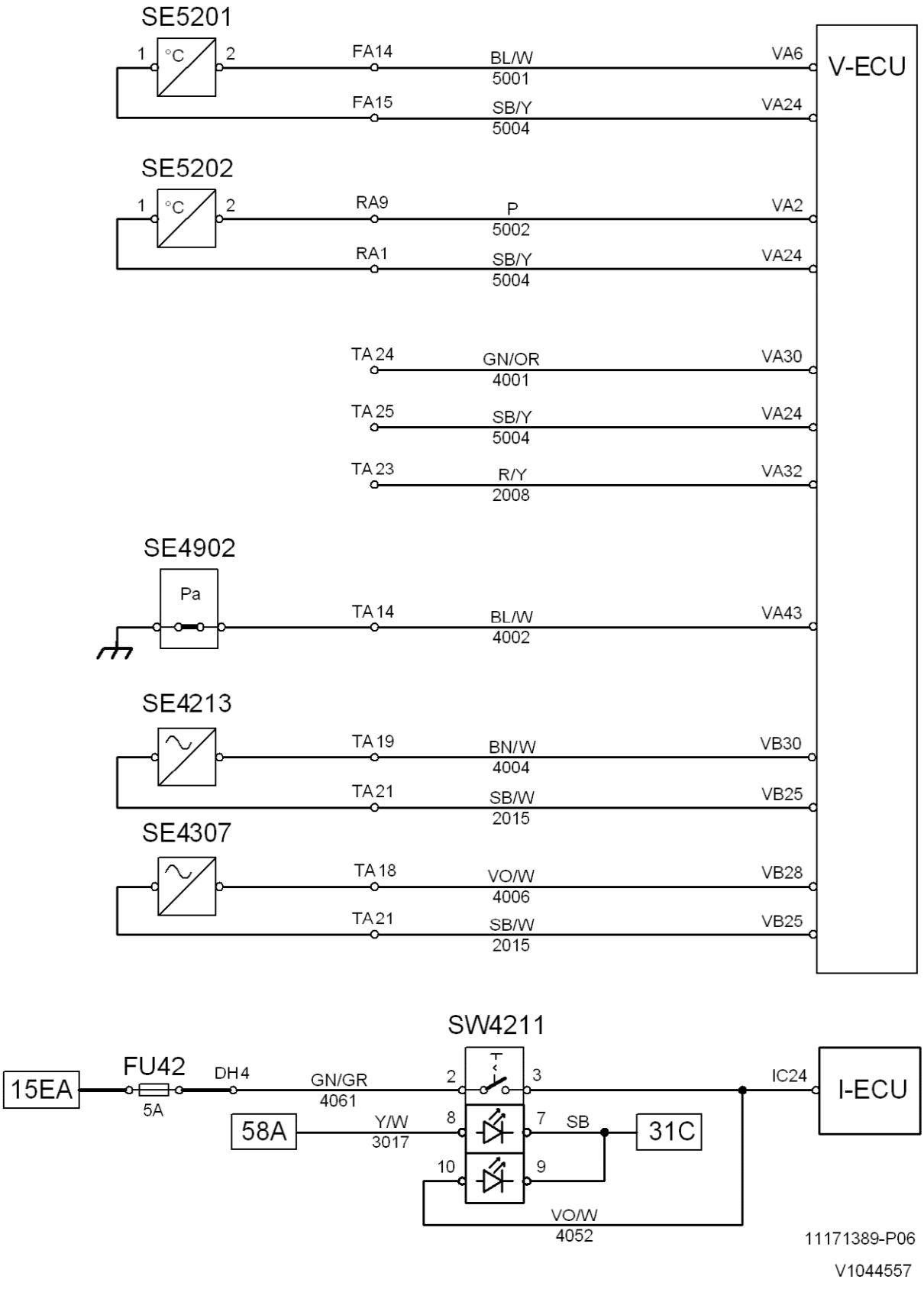

11171389-P06

V1044557

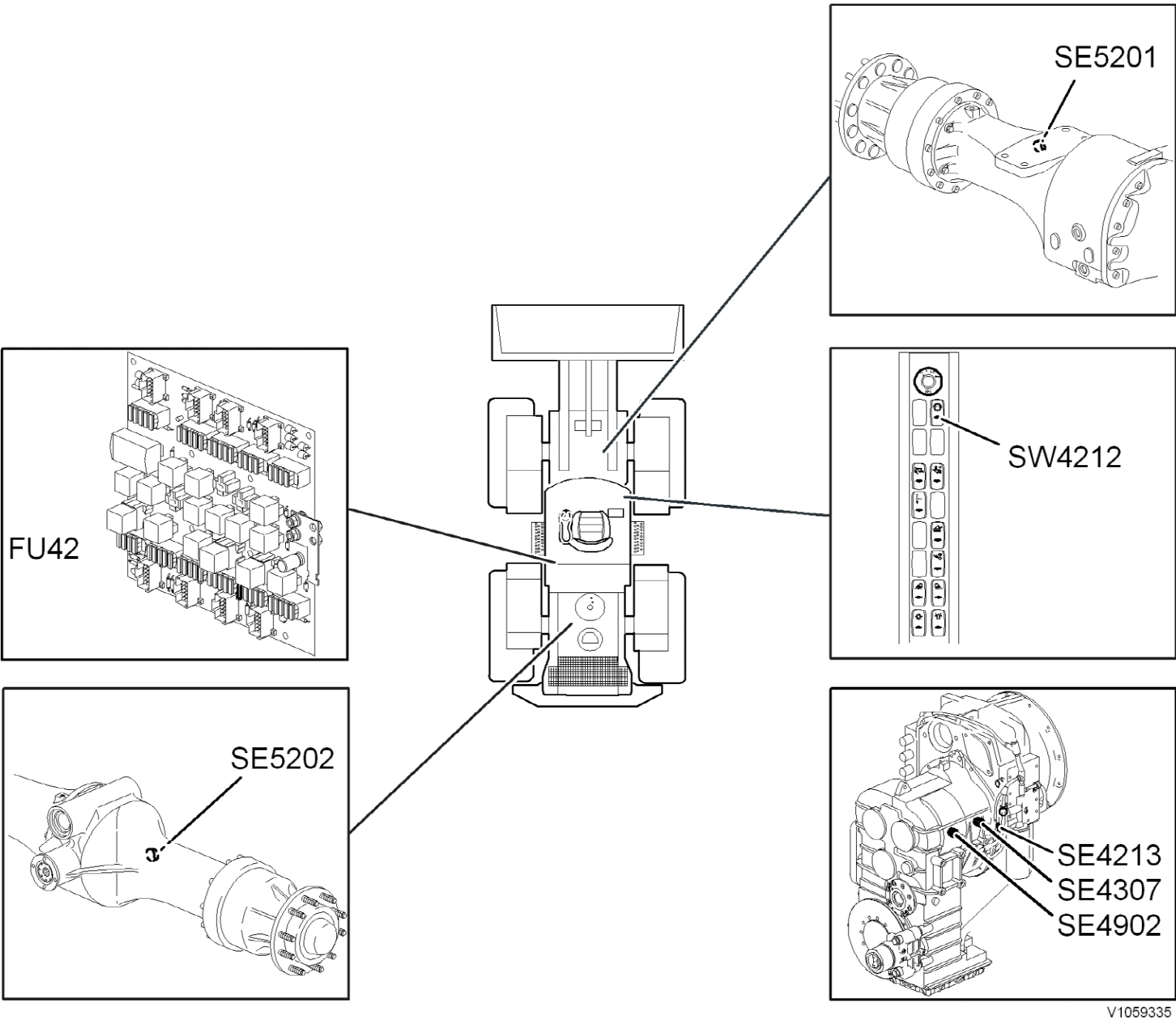
SE5201
FU42
SW4212
SE5202
SE4213
SE4307
SE4902
V1059335

VOLVO
Construction Equipment

Service Information

Document Title:	Function Group:	Information Type: **Service Information**	Date: **12/10/2011**
Profile: **WLO, L90F (Volvo) [GB]**			

Wiring diagram 316

CareTrack

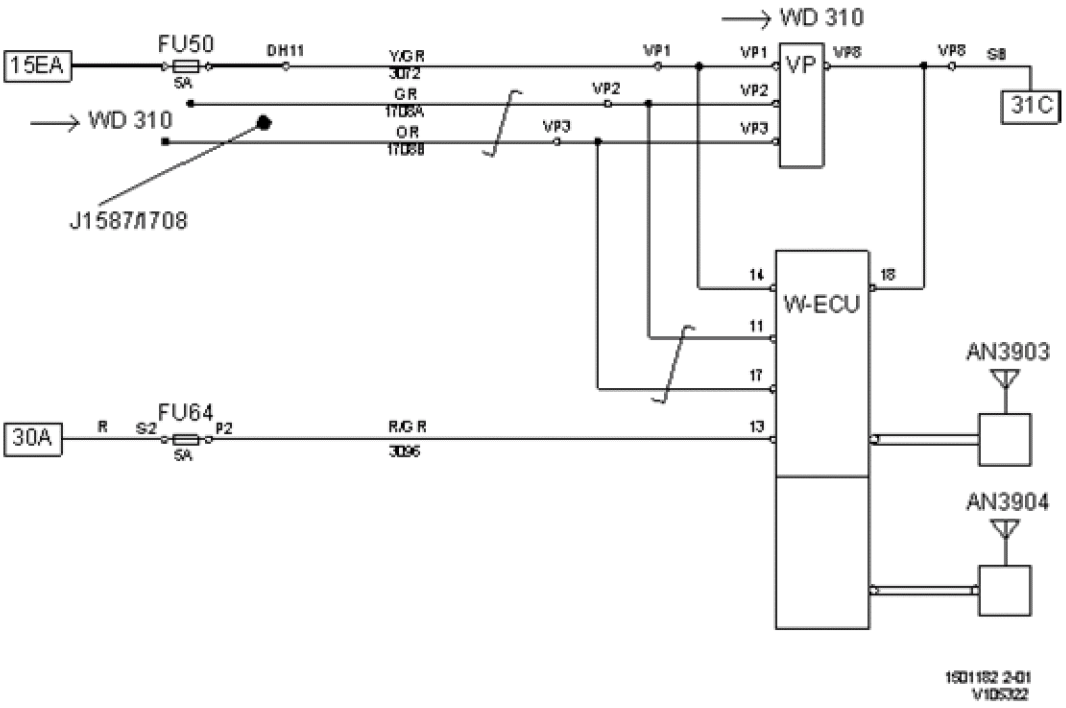

Figure 1

Designation	Function
AN3903	Antenna GPS/GPRS
AN3904	Antenna Satellite
FU50	Voltage feed VCADS Pro communication socket
FU64	Voltage feed W-ECU
VP	VCADS Pro communication socket

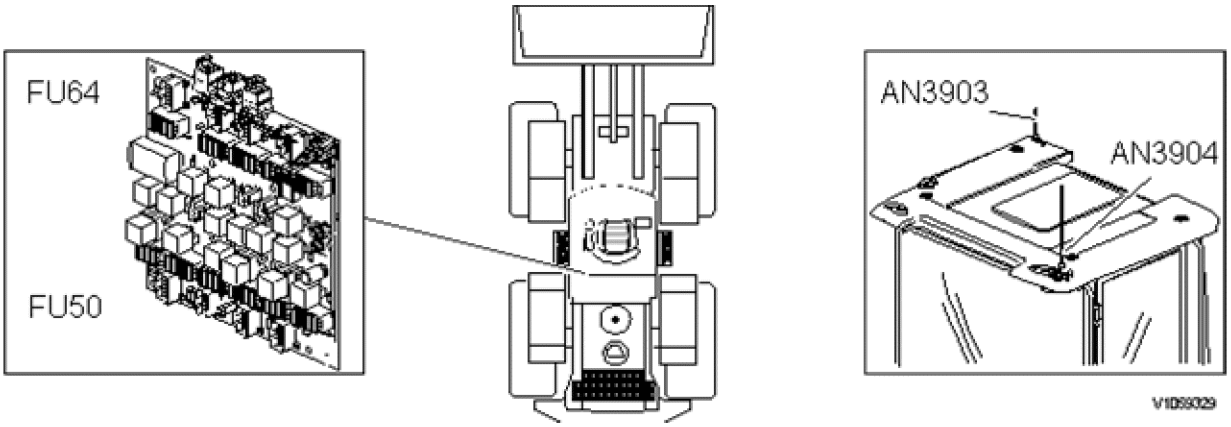

Figure 2
Component position

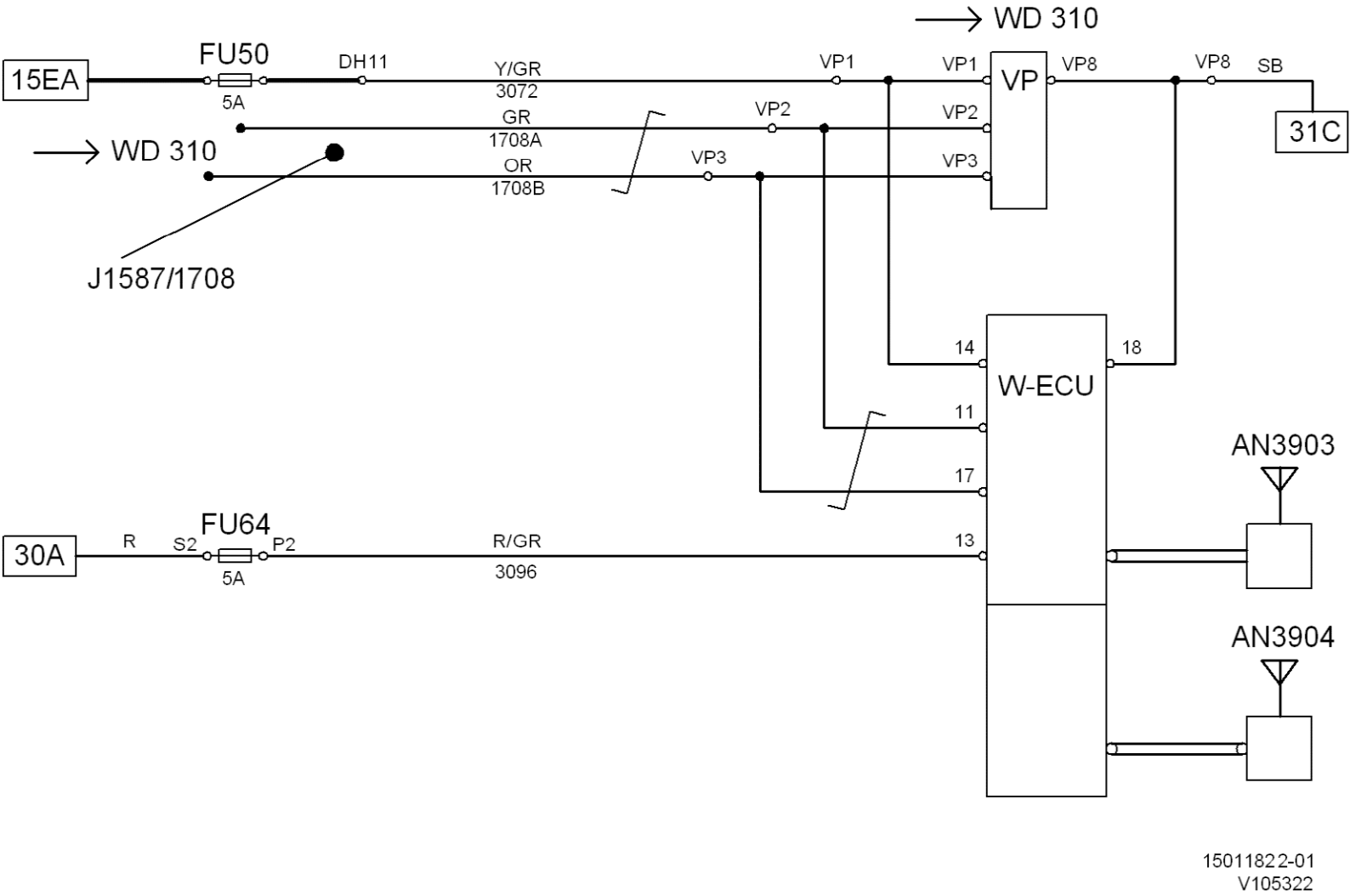

15011822-01
V105322

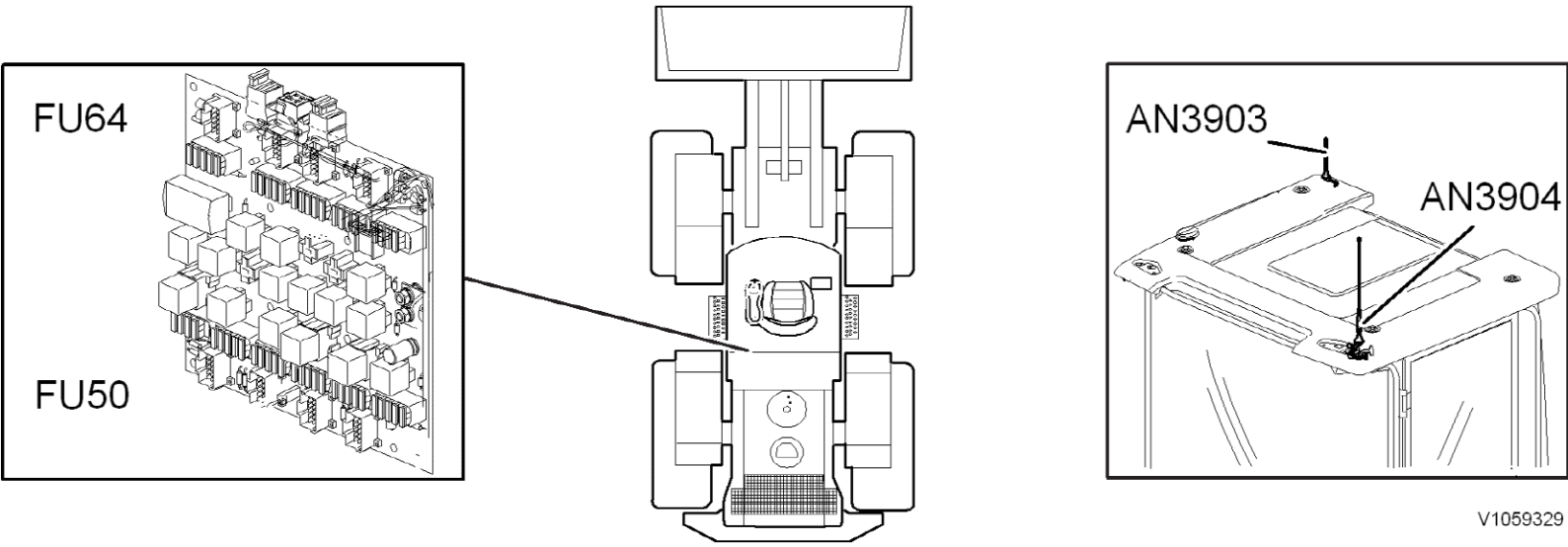
FU64
FU50
AN3903
AN3904
V1059329

VOLVO
Construction Equipment

Service Information

Document Title:	Function Group:	Information Type: **Service Information**	Date: **12/10/2011**
Profile: **WLO, L90F (Volvo) [GB]**			

Wiring diagram 317

Fuse test, unoccupied connections

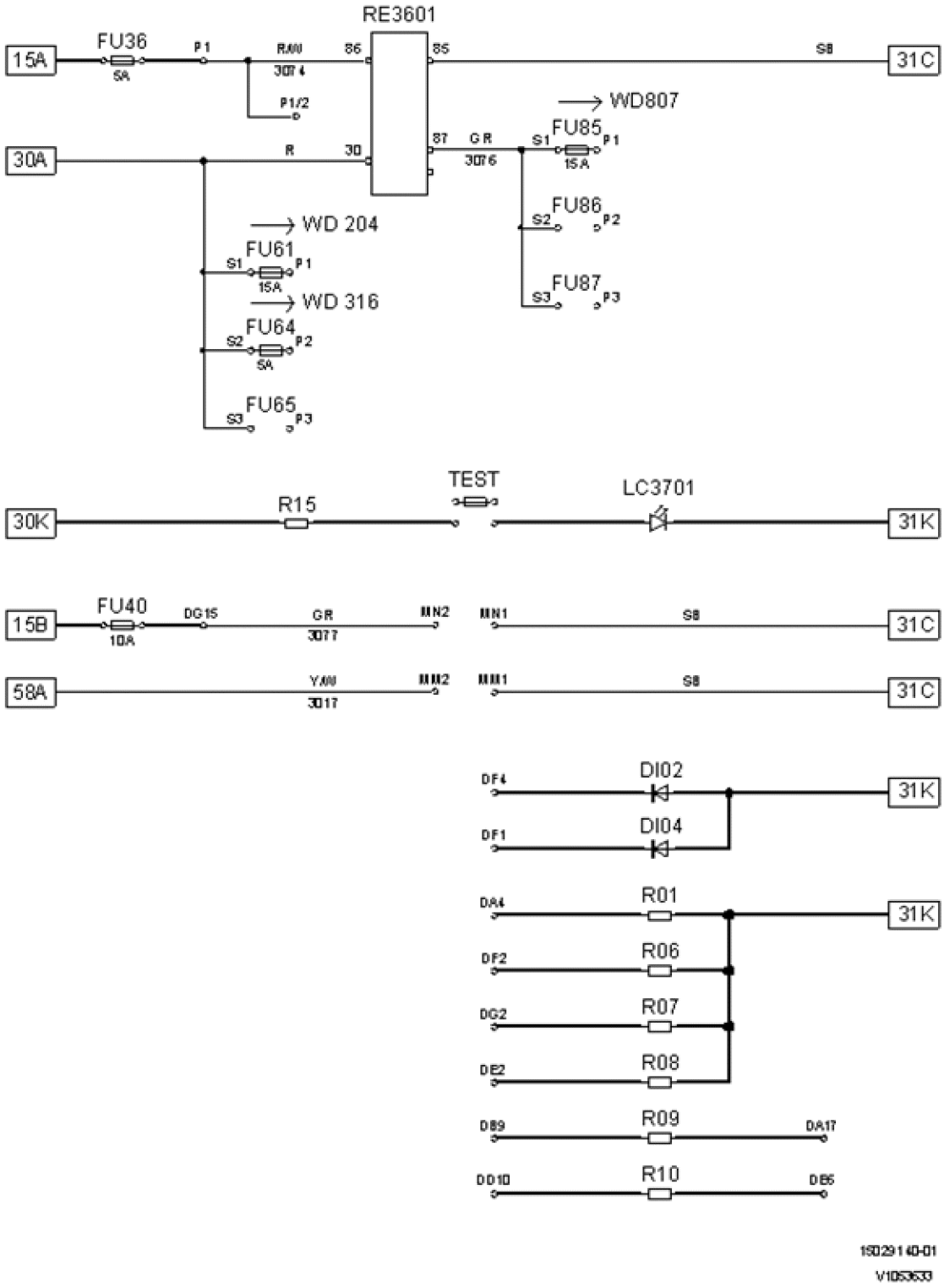

Figure 1

Designation	Function
DI102	—
DI104	—
FU36	Magnetization alternator, hour recorder, fan cyclone filter
FU40	—
FU61	Electrically heated fuel filter
FU64	Voltage feed W-ECU
FU65	—

FU85	Fan cyclone filter
FU86	—
FU87	—
LC3701	Light-emitting diode fuse test
R01[a]	—
R06–R10	—
R15	Fuse test
RE3601	Fan cyclone filter

— = Component is not connected

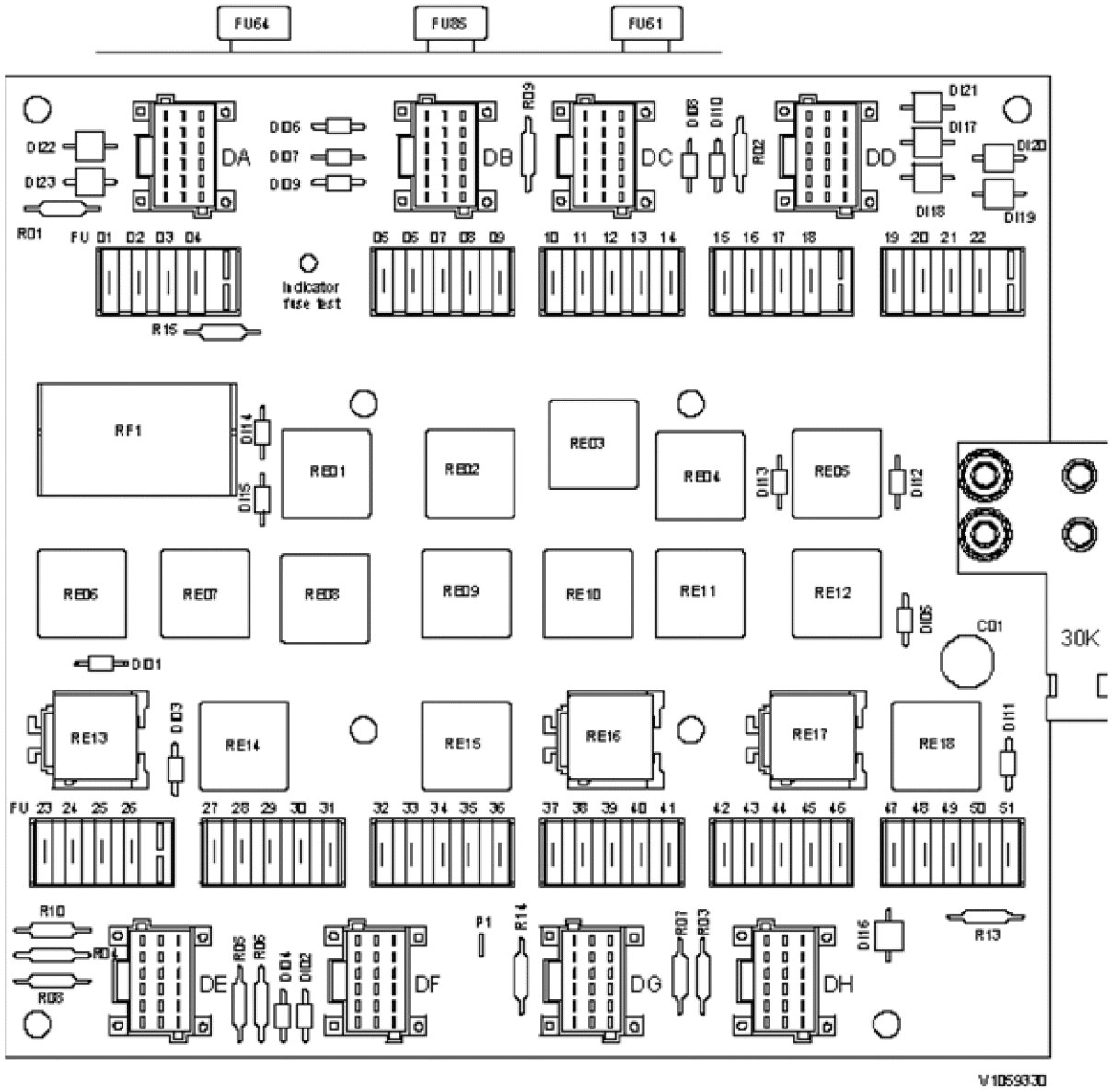

Figure 2
Component position

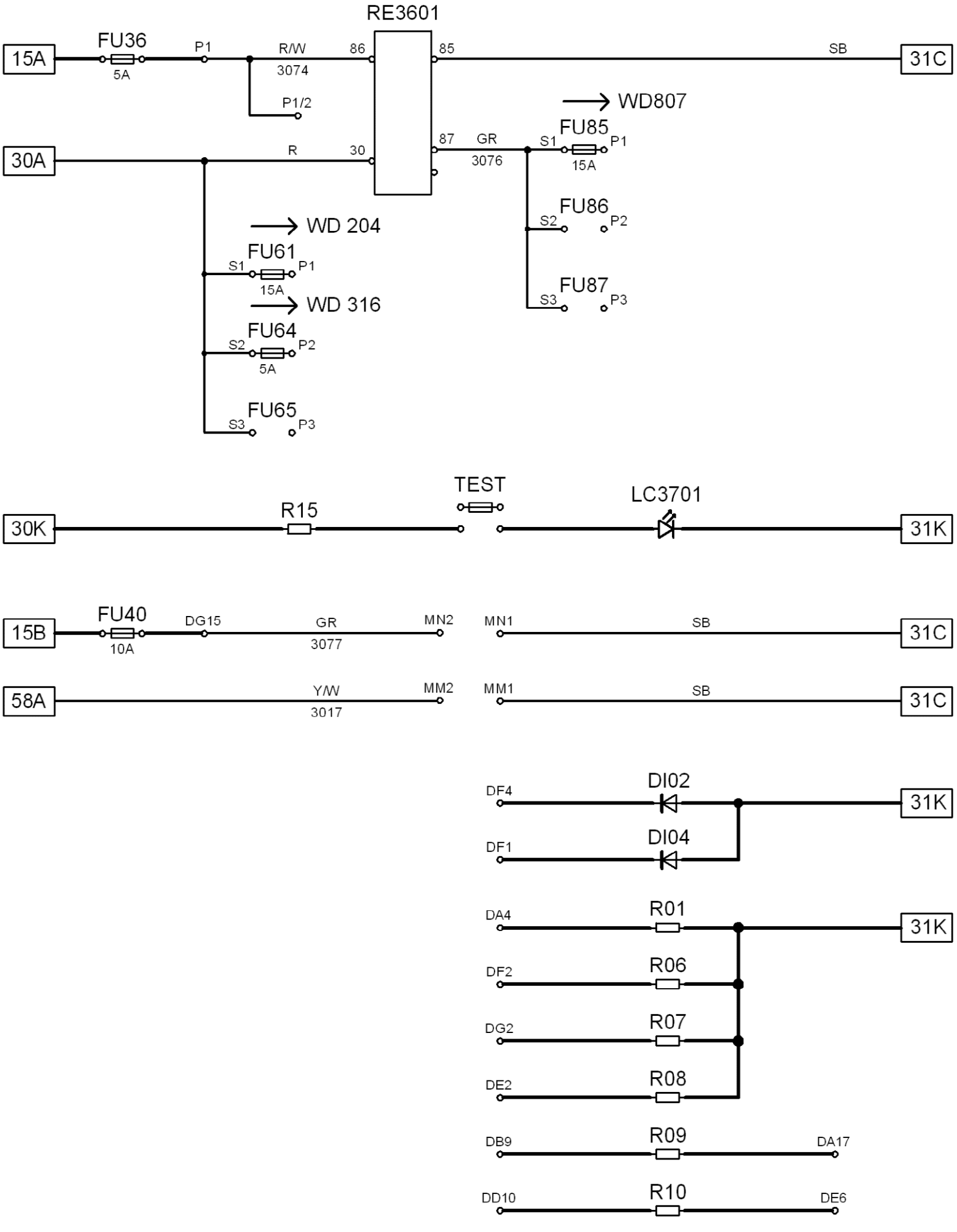

15029140-01

V1053633

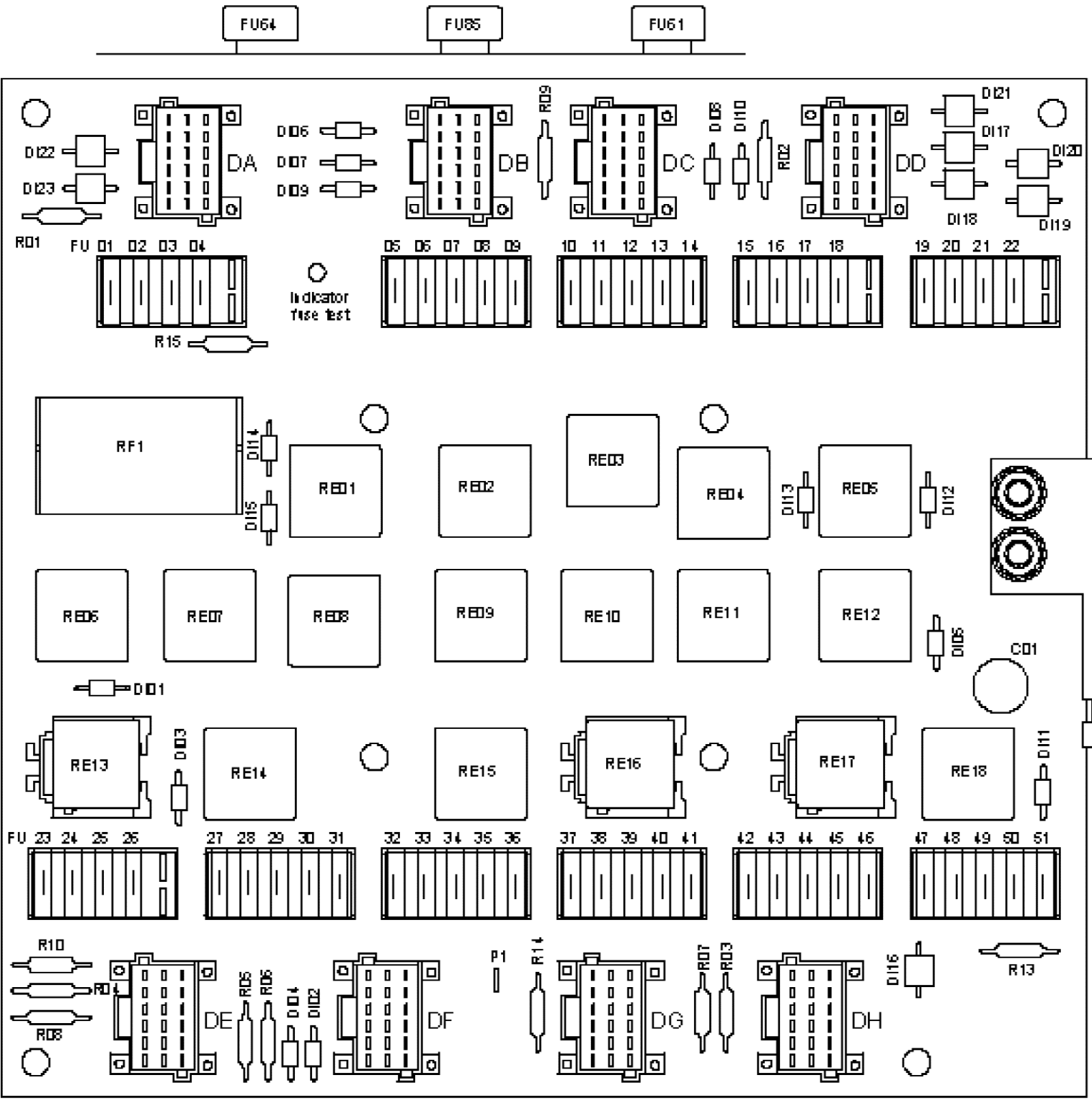
FU64
FU85
FU61
DA
DB
DC
DD
DI22
DI23
DI06
DI07
DI09
RD9
DI08
DI10
RD2
DI21
DI17
DI20
DI18
DI19
RD1
FU 01 02 03 04
05 06 07 08 09
10 11 12 13 14
15 16 17 18
19 20 21 22
Indicator fuse test
R15
RF1
DI14
DI15
RE01
RE02
RE03
RE04
DI13
RE05
DI12
RE06
RE07
RE08
RE09
RE10
RE11
RE12
DI05
CD1
30K
DI01
RE13
DI03
RE14
RE15
RE16
RE17
RE18
DI11
FU 23 24 25 26
27 28 29 30 31
32 33 34 35 36
37 38 39 40 41
42 43 44 45 46
47 48 49 50 51
R10
RD4
RD8
DE
RD5
RD6
DI04
DI02
DF
P1
R14
DG
RD7
RD3
DH
DI16
R13

V1059330

VOLVO
Construction Equipment

Service Information

Document Title:	Function Group:	Information Type: **Service Information**	Date: **12/10/2011**
Profile: **WLO, L90F (Volvo) [GB]**			

Wiring diagram 407

Single lever control

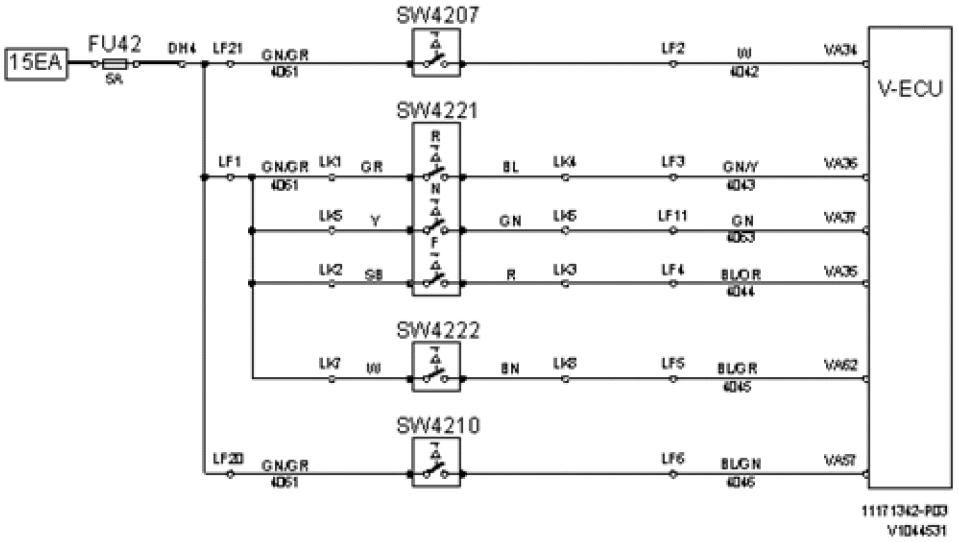

Figure 1

Designation	Function
FU42	Single lever control
SW4207	Activation single lever control
SW4210	Engine brake
SW4221	Forward-neutral-reverse
SW4222	Kick-down

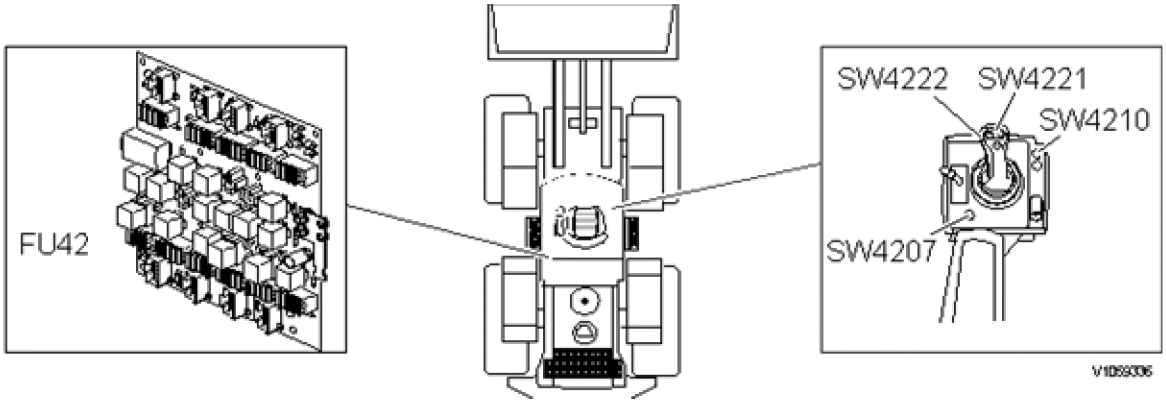

Figure 2
Component position

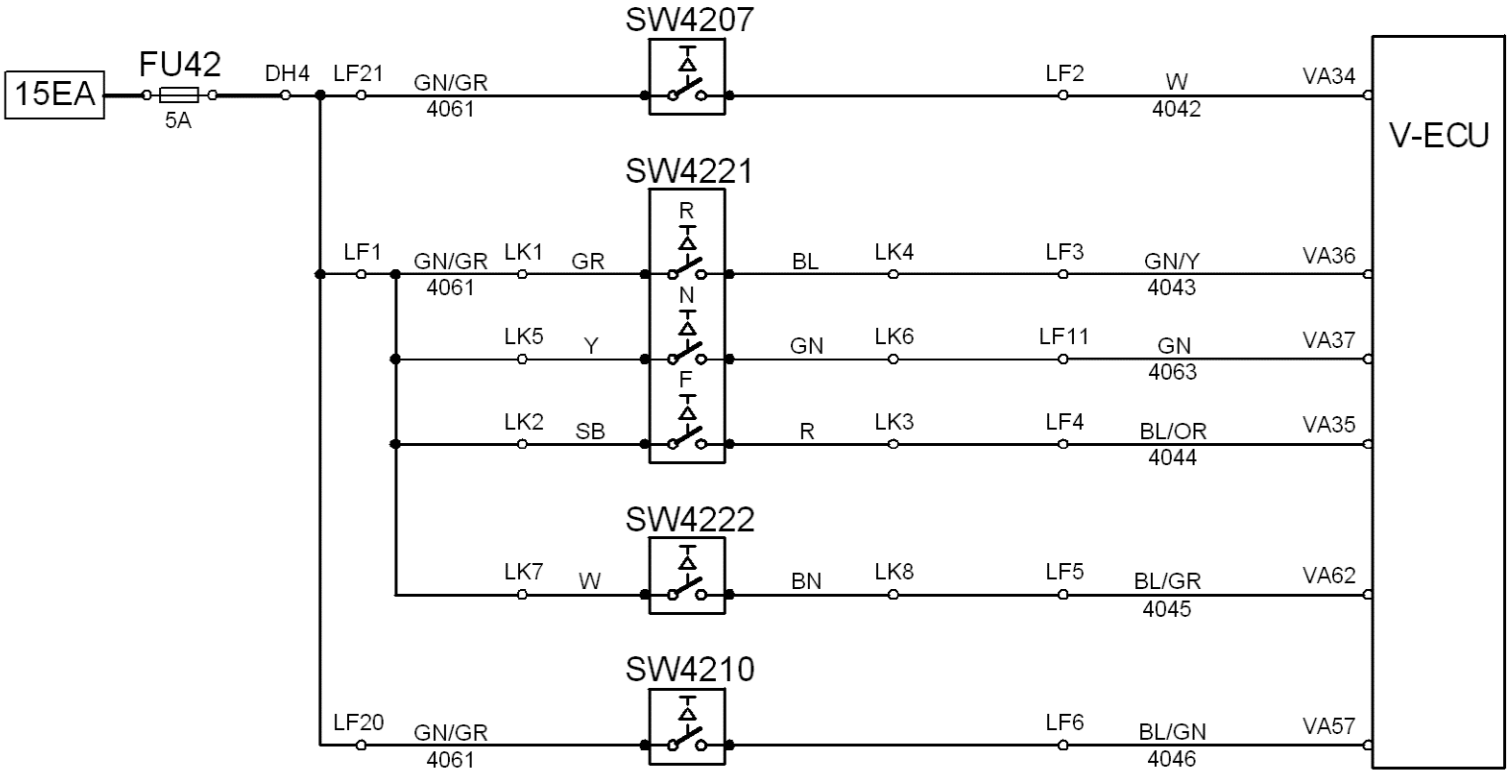

11171342-P03
V1044531

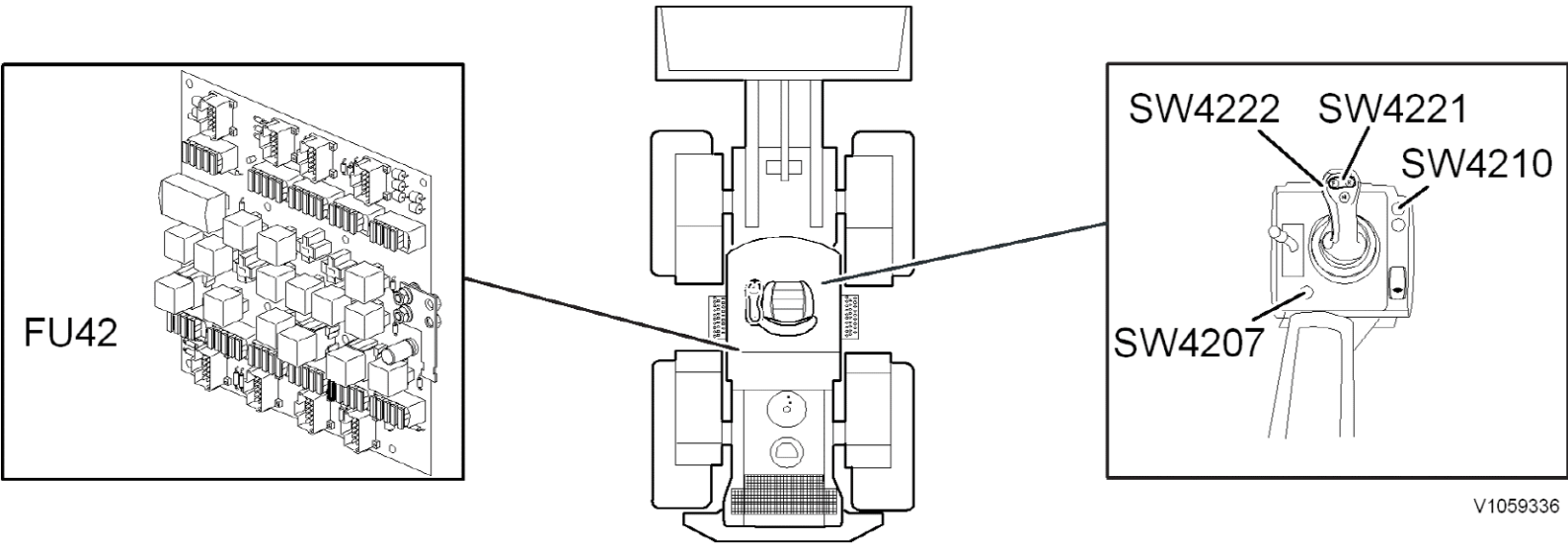
FU42
SW4222
SW4221
SW4210
SW4207
V1059336

More than one document matches the current profile:

Wiring diagram 408
Product Line: WLO
Model Variant: L90F
Site: Arvika, Asheville
Serial Number Start: 25001, 68101
Serial Number End: 26953, 68916

Wiring diagram 408
Product Line: WLO
Model Variant: L90F
Site: Arvika, Asheville
Serial Number Start: 26954, 68917
Serial Number End: 49999, 69999

VOLVO
Construction Equipment

Service Information

Document Title:	Function Group:	Information Type: **Service Information**	Date: **12/10/2011**
Profile: **WLO, L90F (Volvo) [GB]**			

Wiring diagram 408

Gear selector

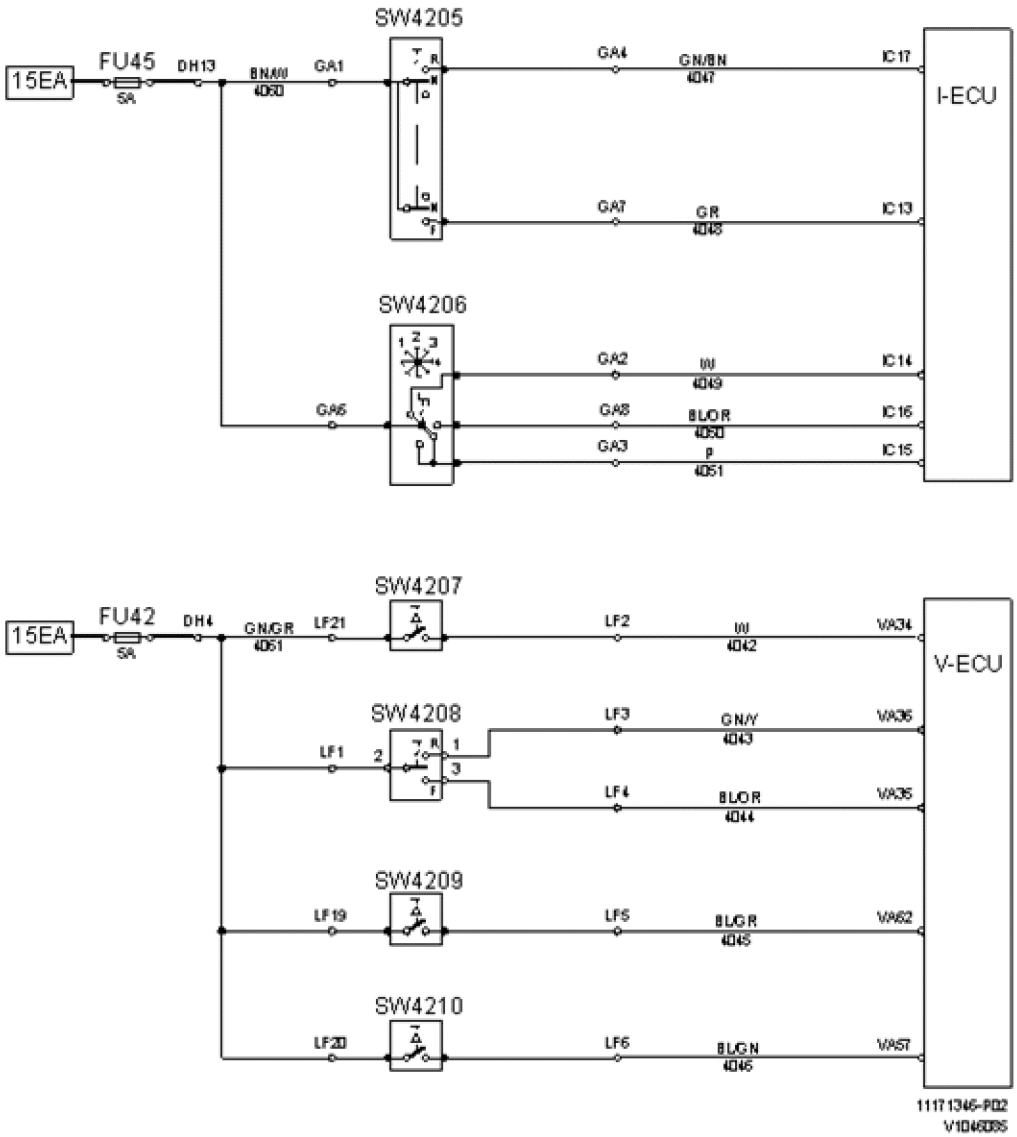

Figure 1

Designation	Function
FU42	Gear selector lever carrier
FU45	Gear lever steering column
SW4205	Directional gear forward/reverse steering column
SW4206	Gear lever steering column

SW4207	Activation forward/reverse lever carrier
SW4208	Directional gear Forward/Reverse lever carrier
SW4209	Kick-down lever carrier
SW4210	Engine brake lever carrier

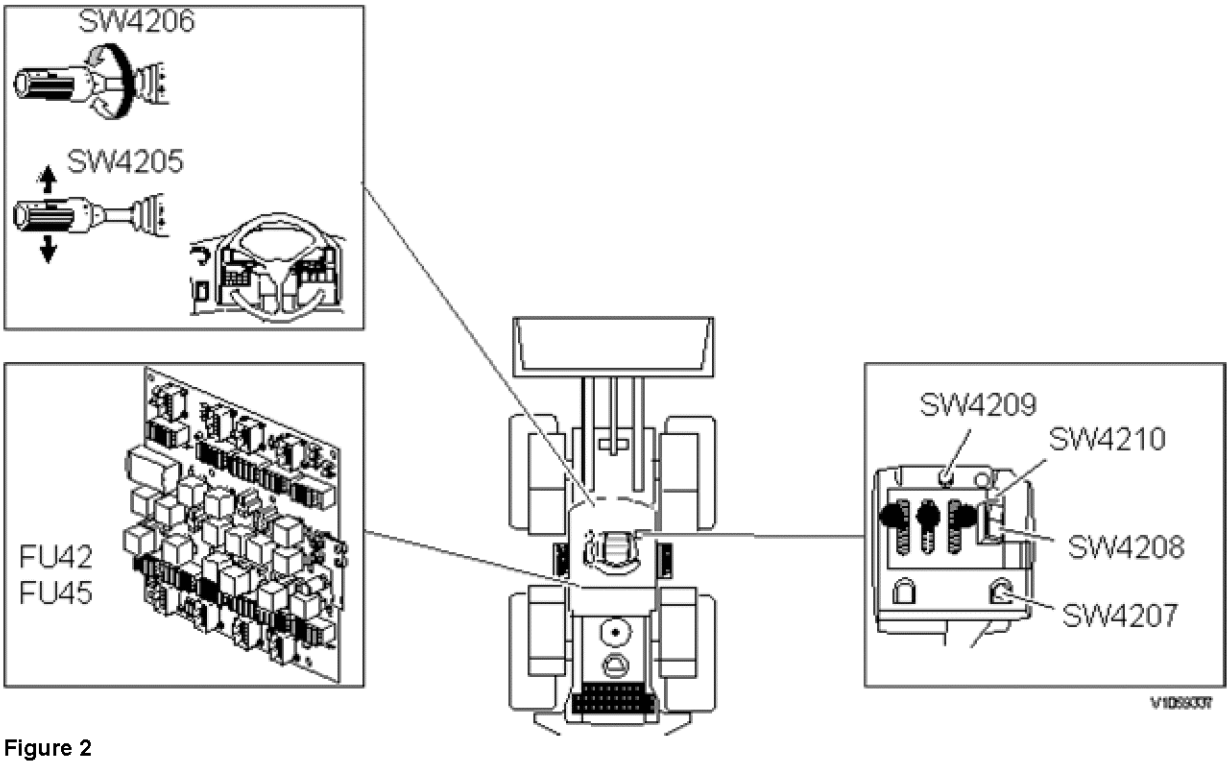

Figure 2
Component position

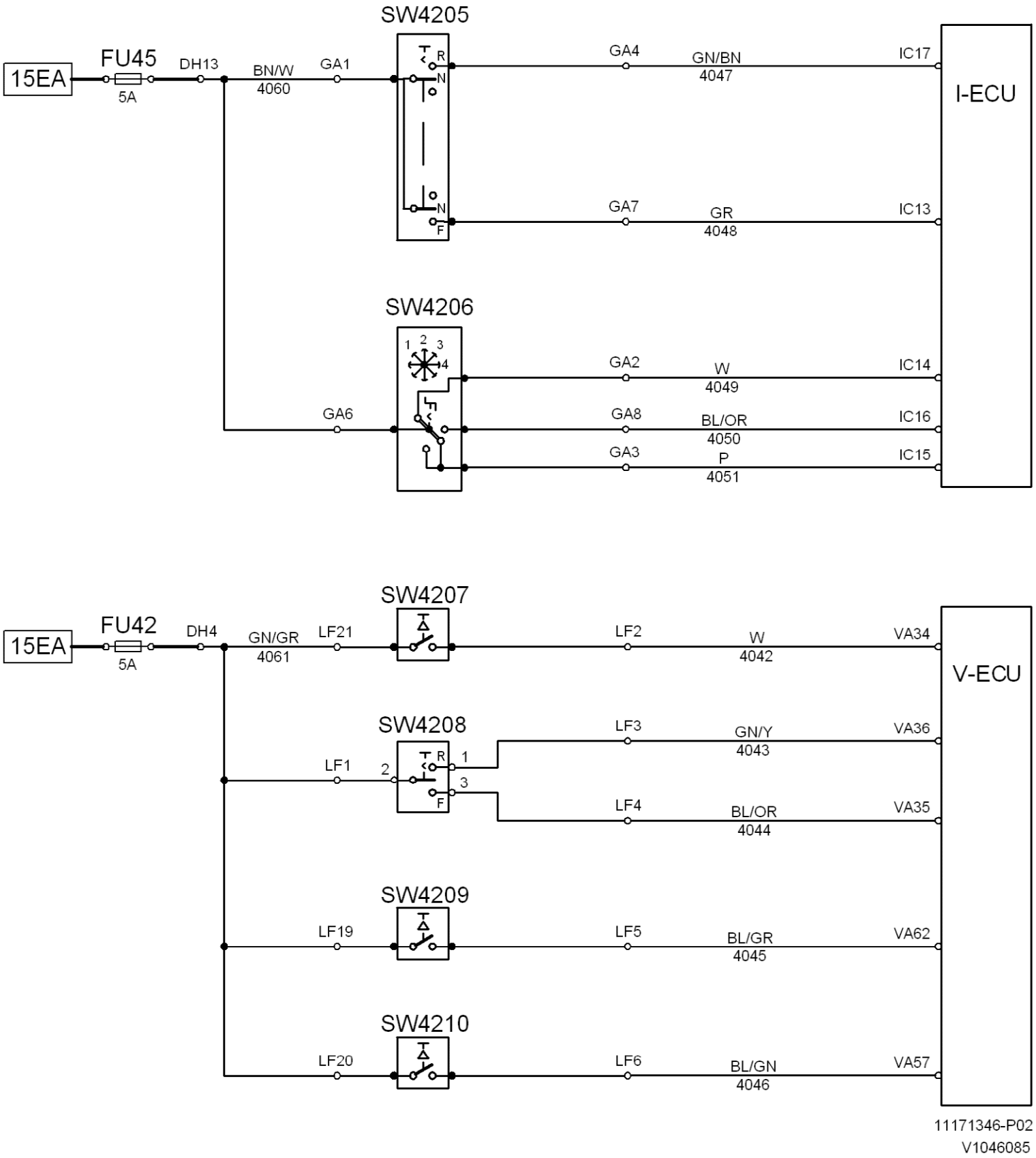

11171346-P02
V1046085

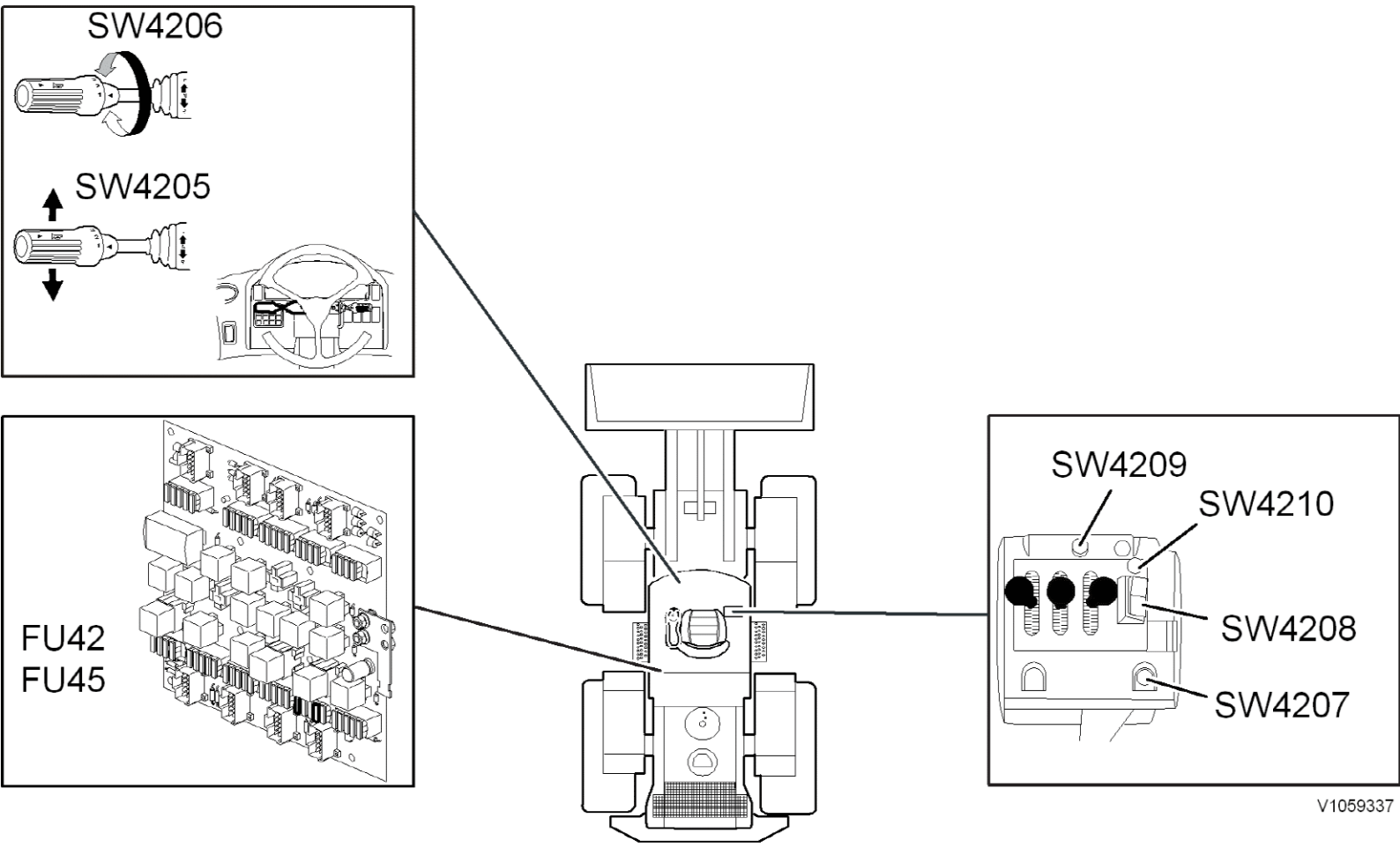
SW4206
SW4205
FU42
FU45
SW4209
SW4210
SW4208
SW4207
V1059337

VOLVO
Construction Equipment

Service Information

Document Title:	Function Group:	Information Type: **Service Information**	Date: **12/10/2011**
Profile: **WLO, L90F (Volvo) [GB]**			

Wiring diagram 408

Gear selector

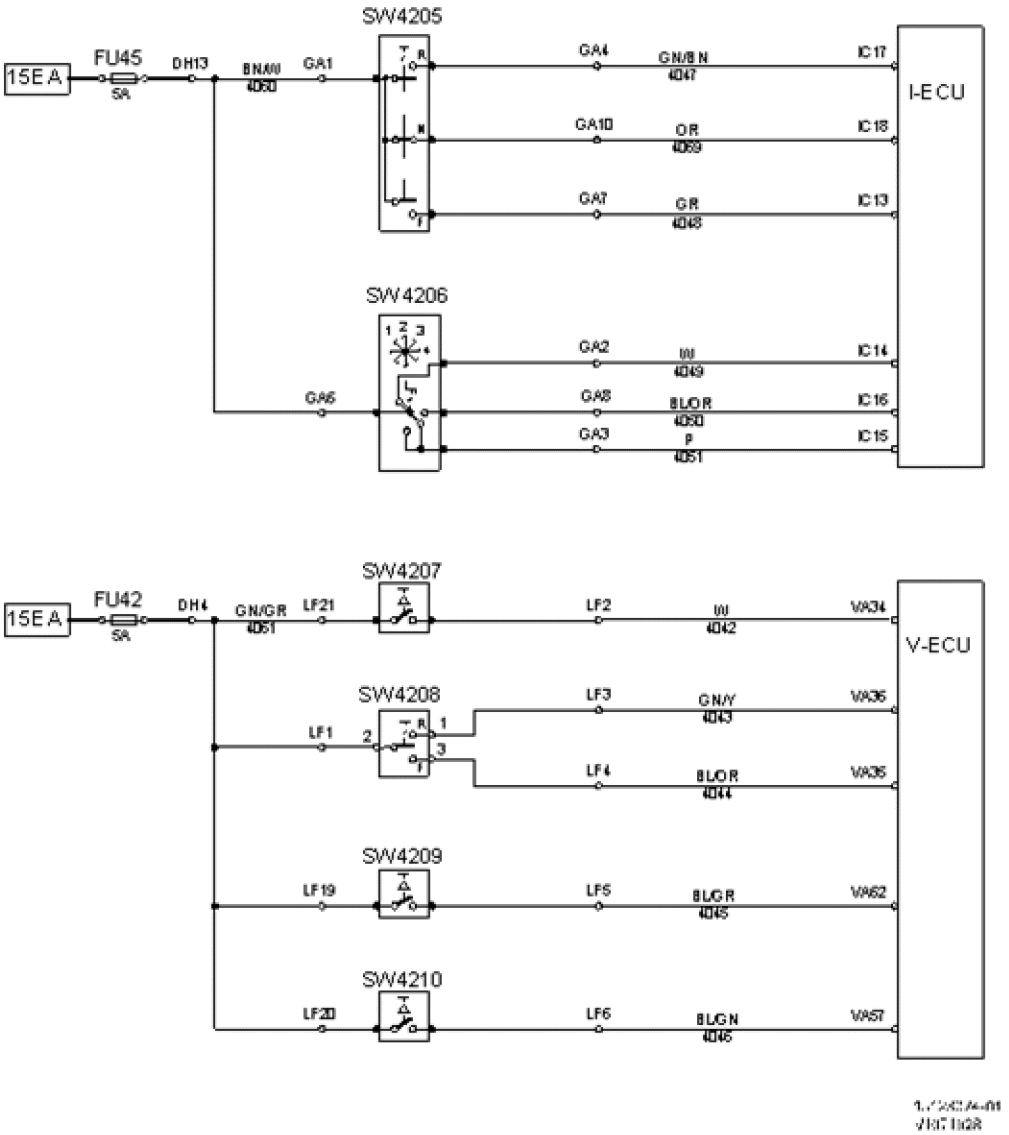

Figure 1

Designation	Function
FU42	Gear selector lever carrier
FU45	Gear lever steering column
SW4205	Directional gear forward/reverse steering column
SW4206	Gear lever steering column
SW4207	Activation forward/reverse lever carrier
SW4208	Directional gear Forward/Reverse lever carrier
SW4209	Kick-down lever carrier
SW4210	Engine brake lever carrier

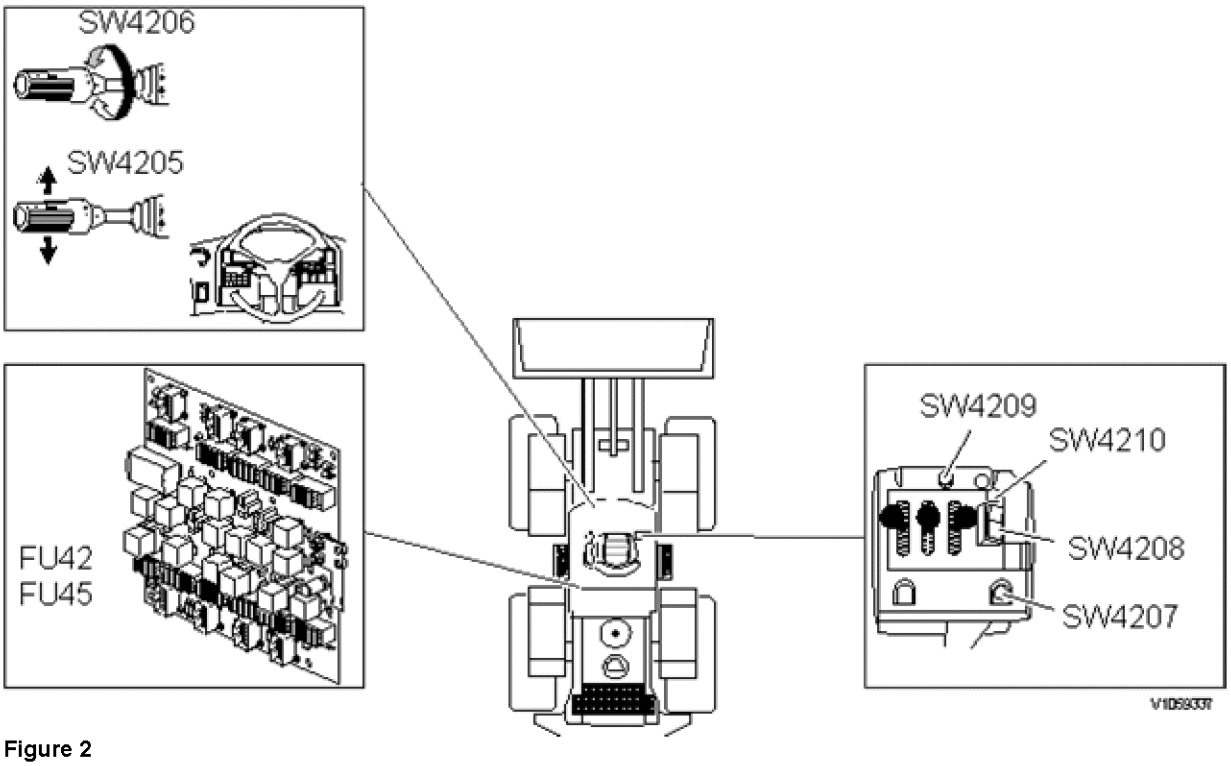

Figure 2
Component position

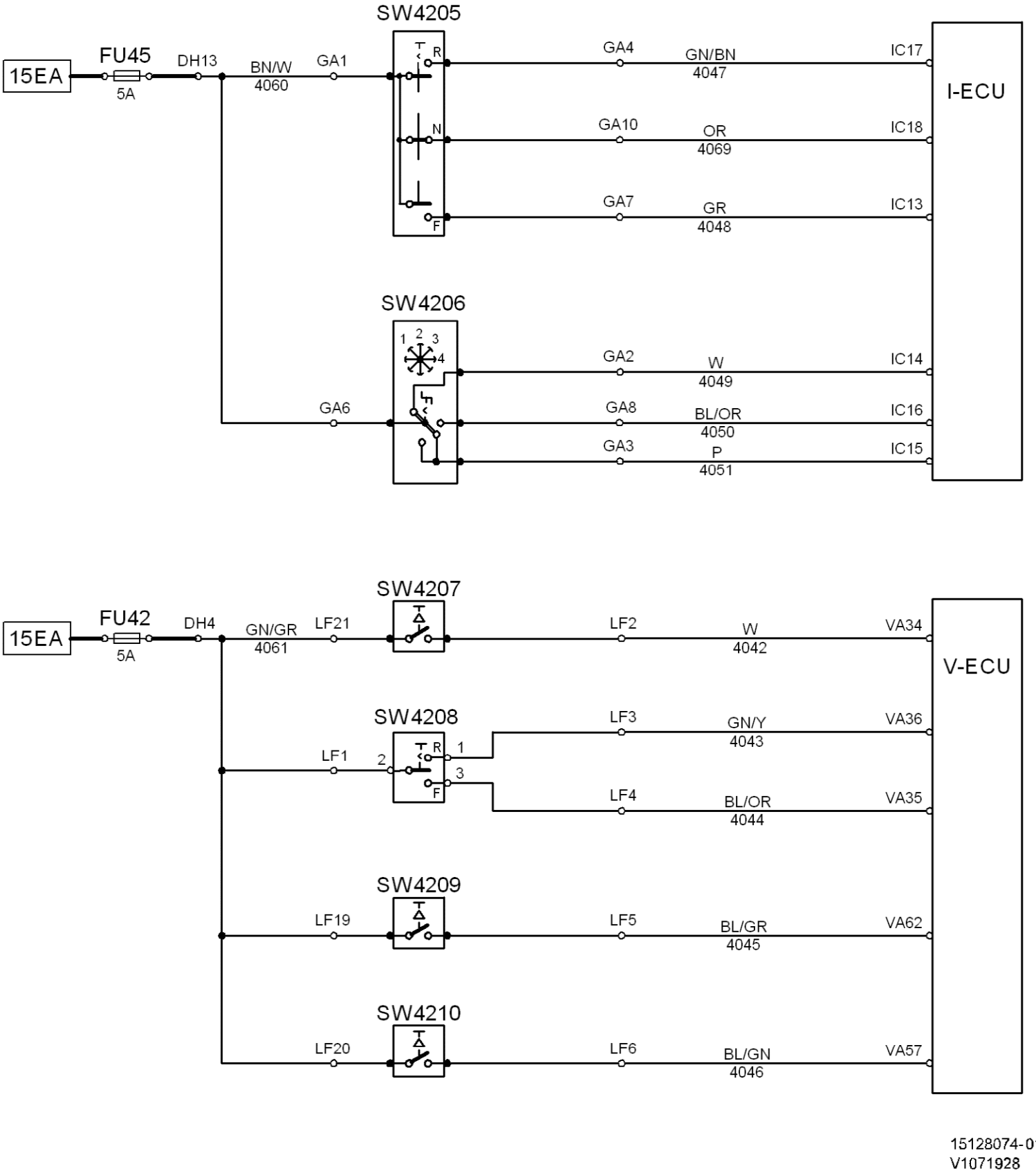

15128074-01
V1071928

More than one document matches the current profile:

Wiring diagram 501
Product Line: WLO
Model Variant: L90F
Site: Arvika
Serial Number Start: 25001
Serial Number End: 26953

Wiring diagram 501
Product Line: WLO
Model Variant: L90F
Site: Arvika
Serial Number Start: 26954
Serial Number End: 49999

VOLVO
Construction Equipment

Service Information

Document Title:	Function Group:	Information Type: **Service Information**	Date: **12/10/2011**
Profile: **WLO, L90F (Volvo) [GB]**			

Wiring diagram 501

Brakes

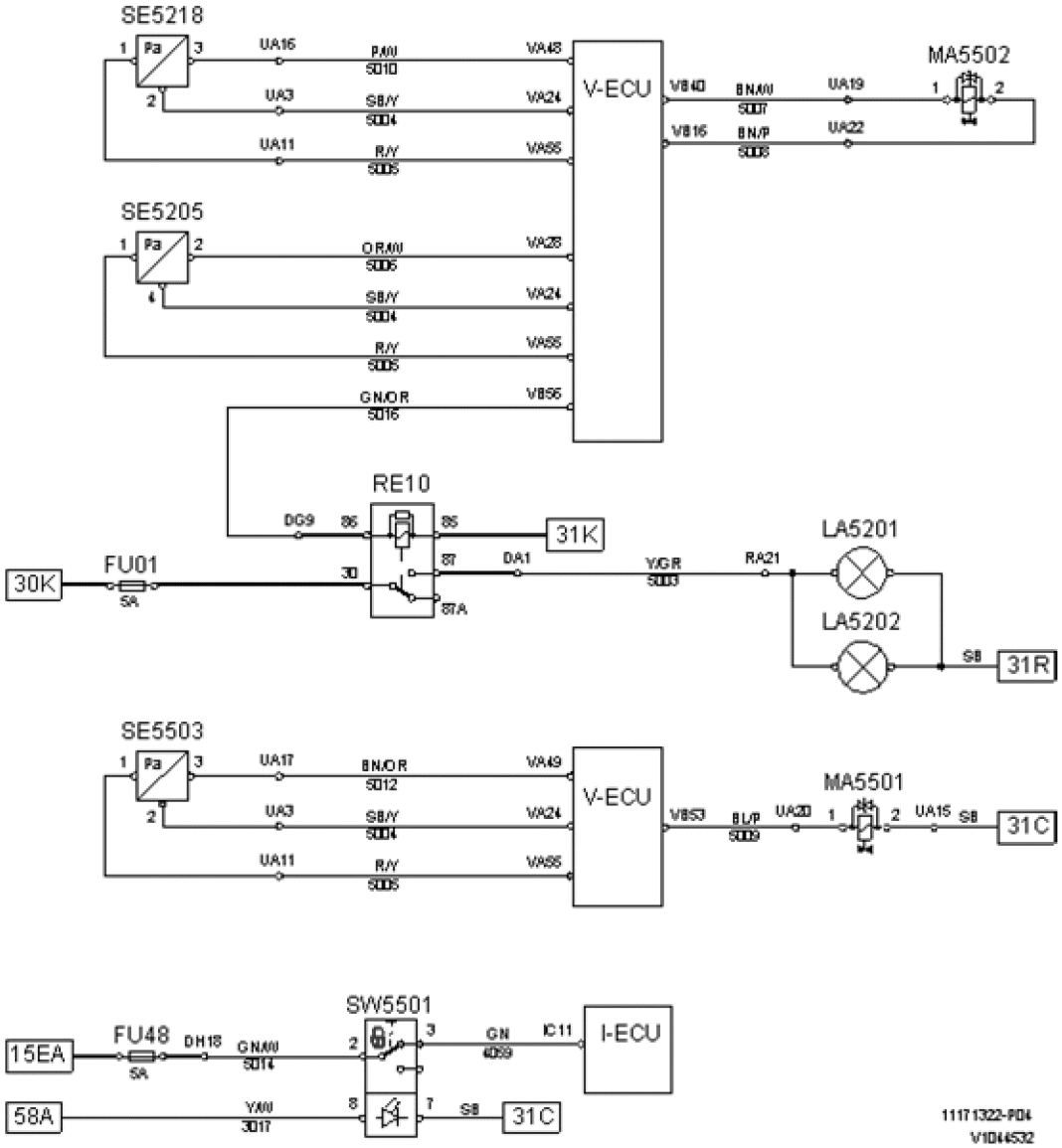

Figure 1

Designation	Function
FU01	Brake lights

FU48	Parking brake
LA5201	Brake light, left
LA5202	Brake light, right
MA5501	Parking brake
MA5502	Brake pressure charging
RE10	Brake lights
SE5205	Output brake pressure
SE5218	Low brake pressure
SE5503	Pressure sensor applied parking brake
SW5501	Parking brake

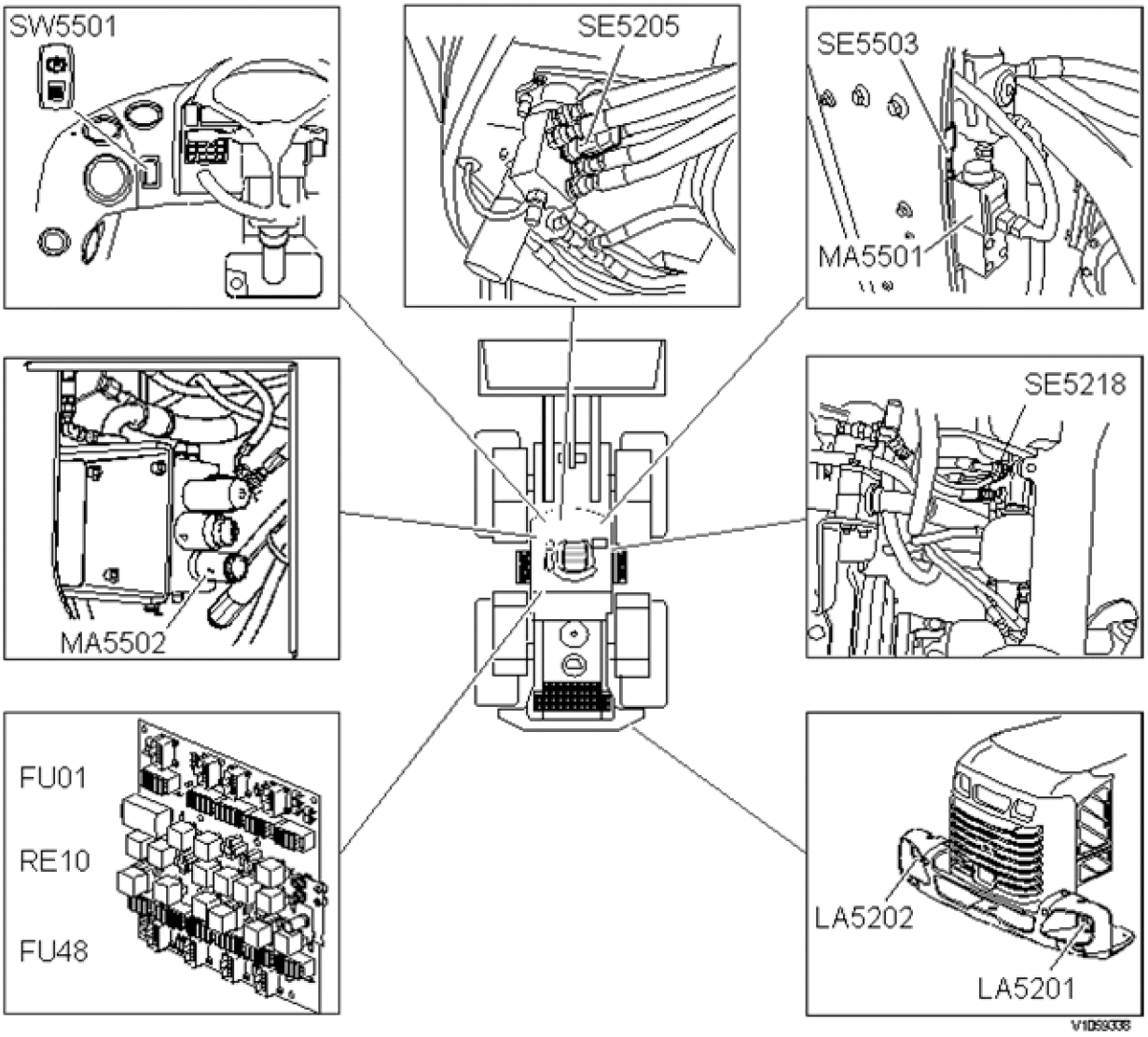

Figure 2
Component position

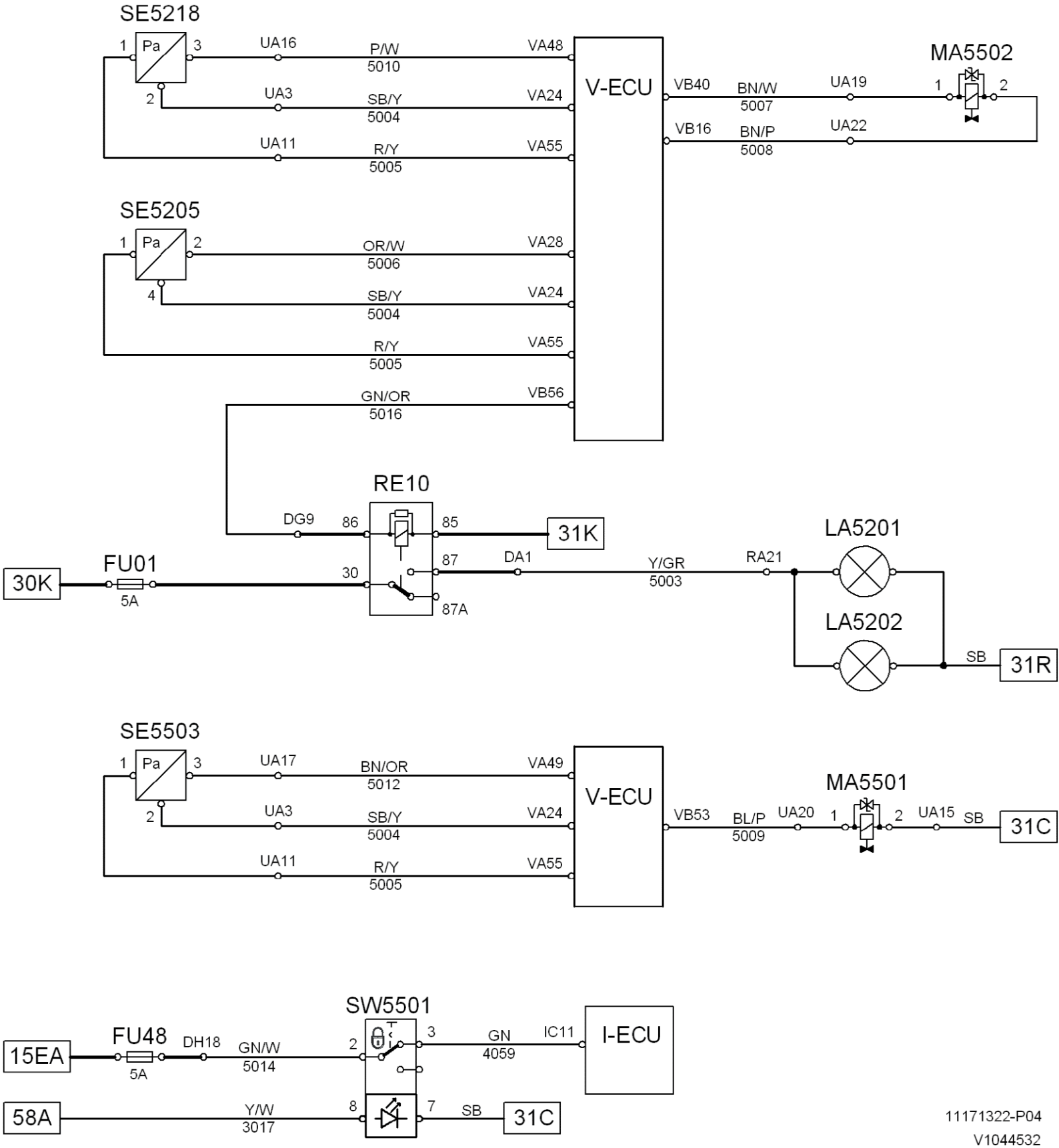

11171322-P04
V1044532

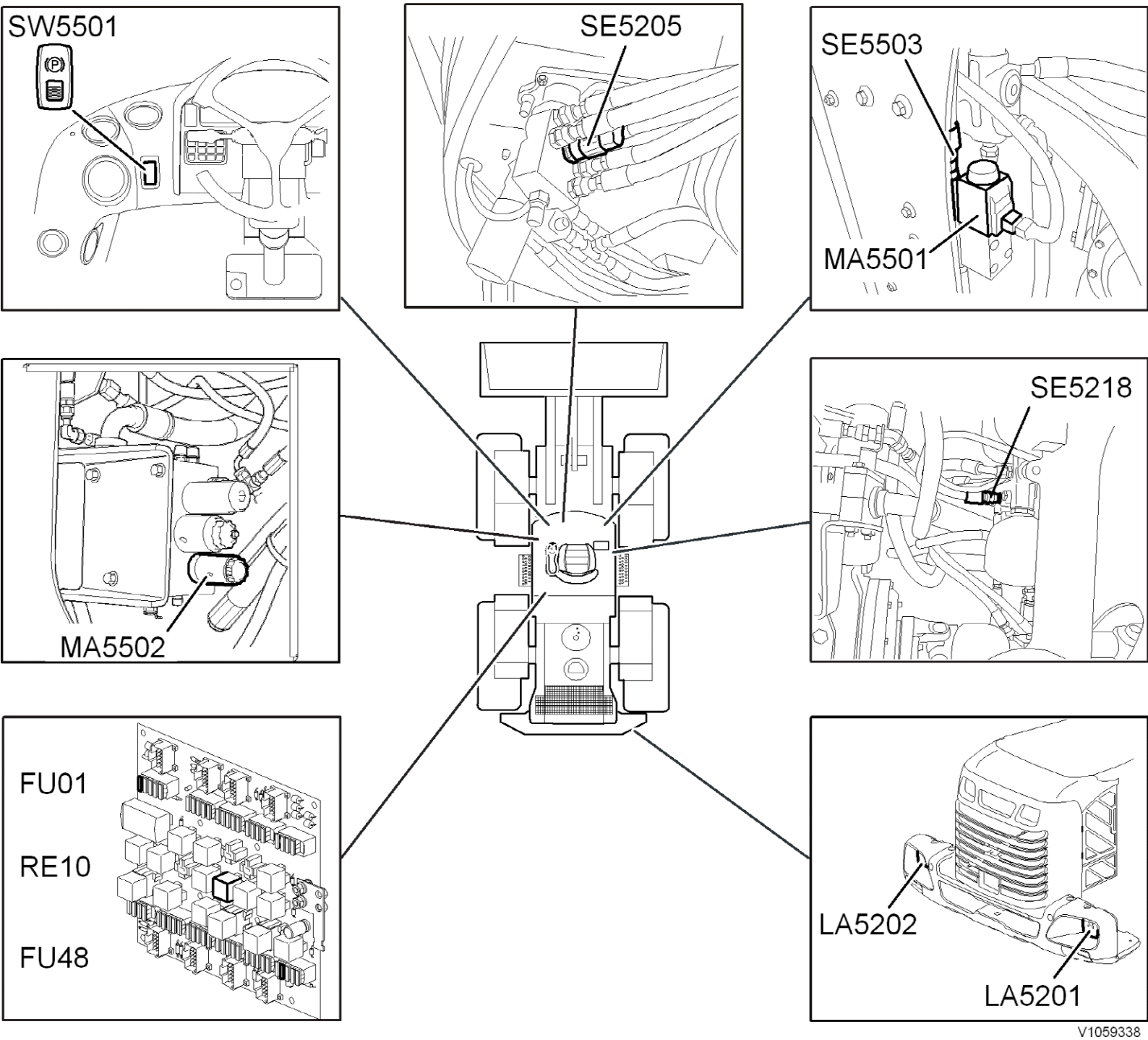
SW5501
SE5205
SE5503
MA5501
MA5502
SE5218
FU01
RE10
FU48
LA5202
LA5201
V1059338

VOLVO
Construction Equipment

Service Information

Document Title:	Function Group:	Information Type: **Service Information**	Date: **12/10/2011**
Profile: **WLO, L90F (Volvo) [GB]**			

Wiring diagram 501

Brakes

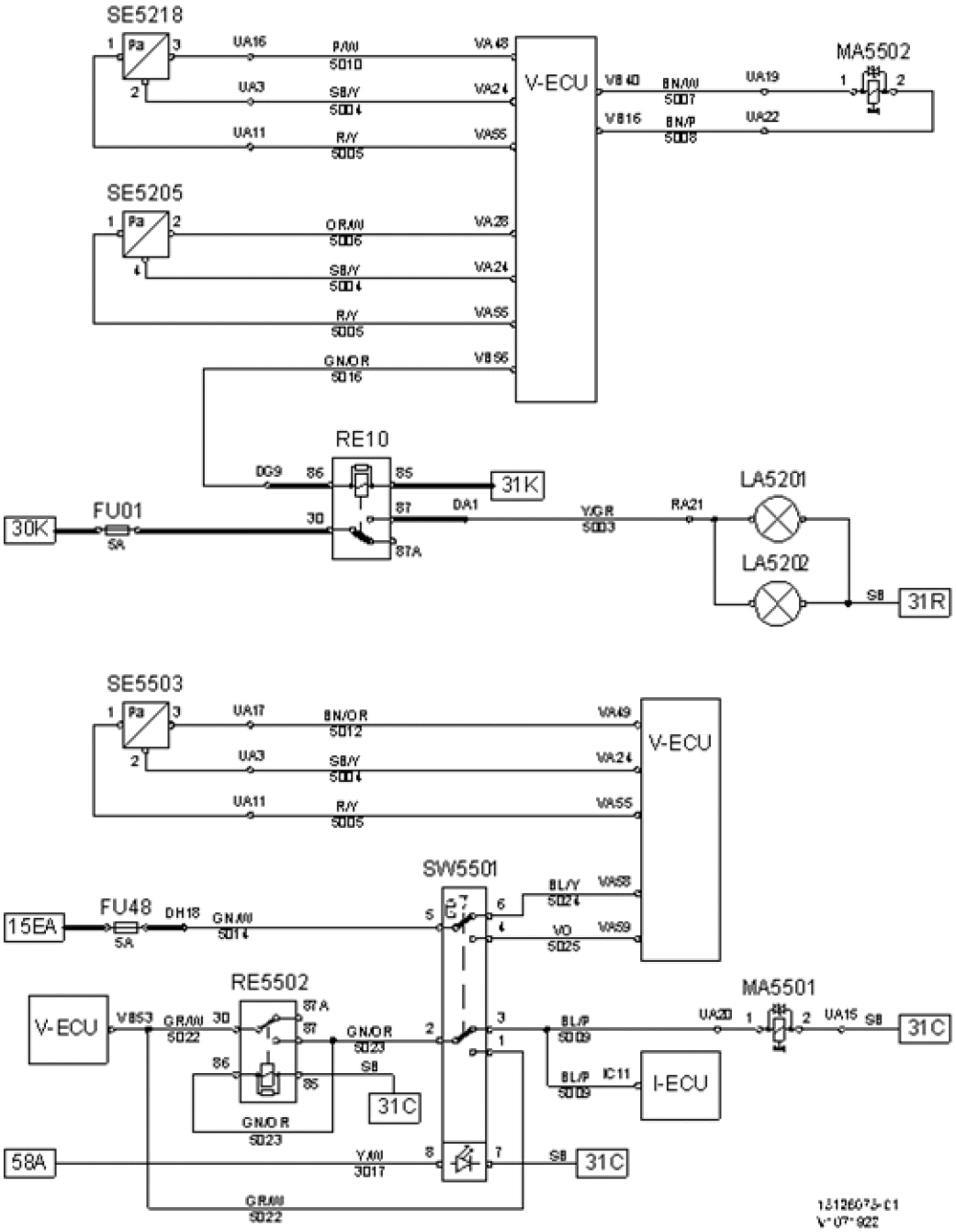

Figure 1

Designation	Function
FU01	Brake lights
FU48	Parking brake
LA5201	Brake light, left
LA5202	Brake light, right
MA5501	Parking brake
MA5502	Brake pressure charging
RE10	Brake lights
RE5502	Parking brake
SE5205	Output brake pressure
SE5218	Low brake pressure
SE5503	Pressure sensor applied parking brake
SW5501	Parking brake

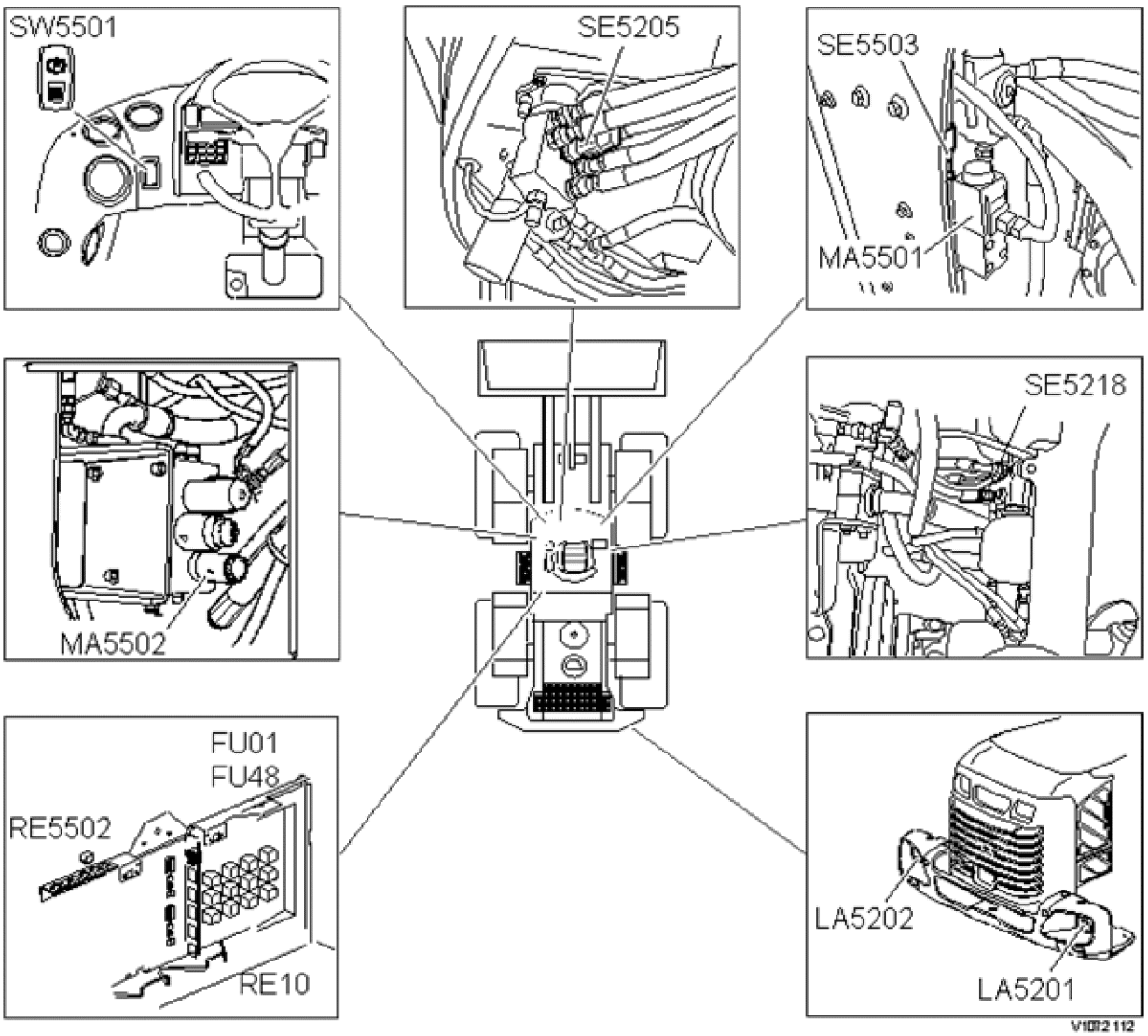

Figure 2
Component position

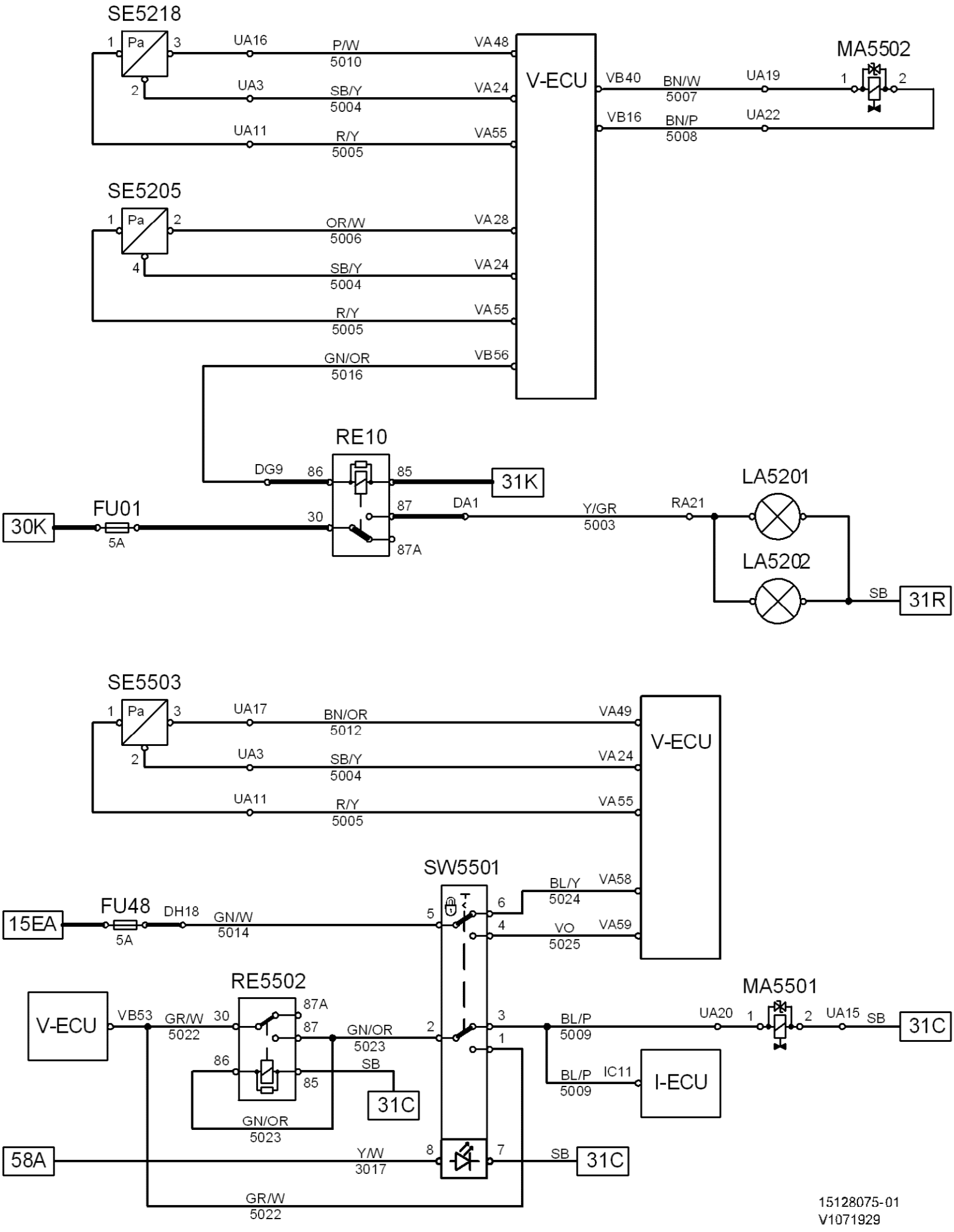
SE5218
Pa
1
3
2
UA16
P/W
5010
VA48
UA3
SB/Y
5004
VA24
UA11
R/Y
5005
VA55
V-ECU
VB40
BN/W
5007
UA19
VB16
BN/P
5008
UA22
MA5502
1
2
SE5205
Pa
1
2
4
OR/W
5006
VA28
SB/Y
5004
VA24
R/Y
5005
VA55
GN/OR
5016
VB56
RE10
DG9
86
85
31K
87
DA1
30
87A
FU01
30K
5A
Y/GR
5003
RA21
LA5201
LA5202
SB
31R
SE5503
Pa
1
3
2
UA17
BN/OR
5012
VA49
UA3
SB/Y
5004
VA24
UA11
R/Y
5005
VA55
V-ECU
SW5501
BL/Y
5024
VA58
VO
5025
VA59
6
5
4
FU48
15EA
5A
DH18
GN/W
5014
RE5502
V-ECU
VB53
GR/W
5022
30
87A
87
86
85
GN/OR
5023
SB
31C
GN/OR
5023
3
2
1
BL/P
5009
BL/P
5009
IC11
I-ECU
MA5501
UA20
1
2
UA15
SB
31C
58A
Y/W
3017
8
7
SB
31C
GR/W
5022
15128075-01
V1071929

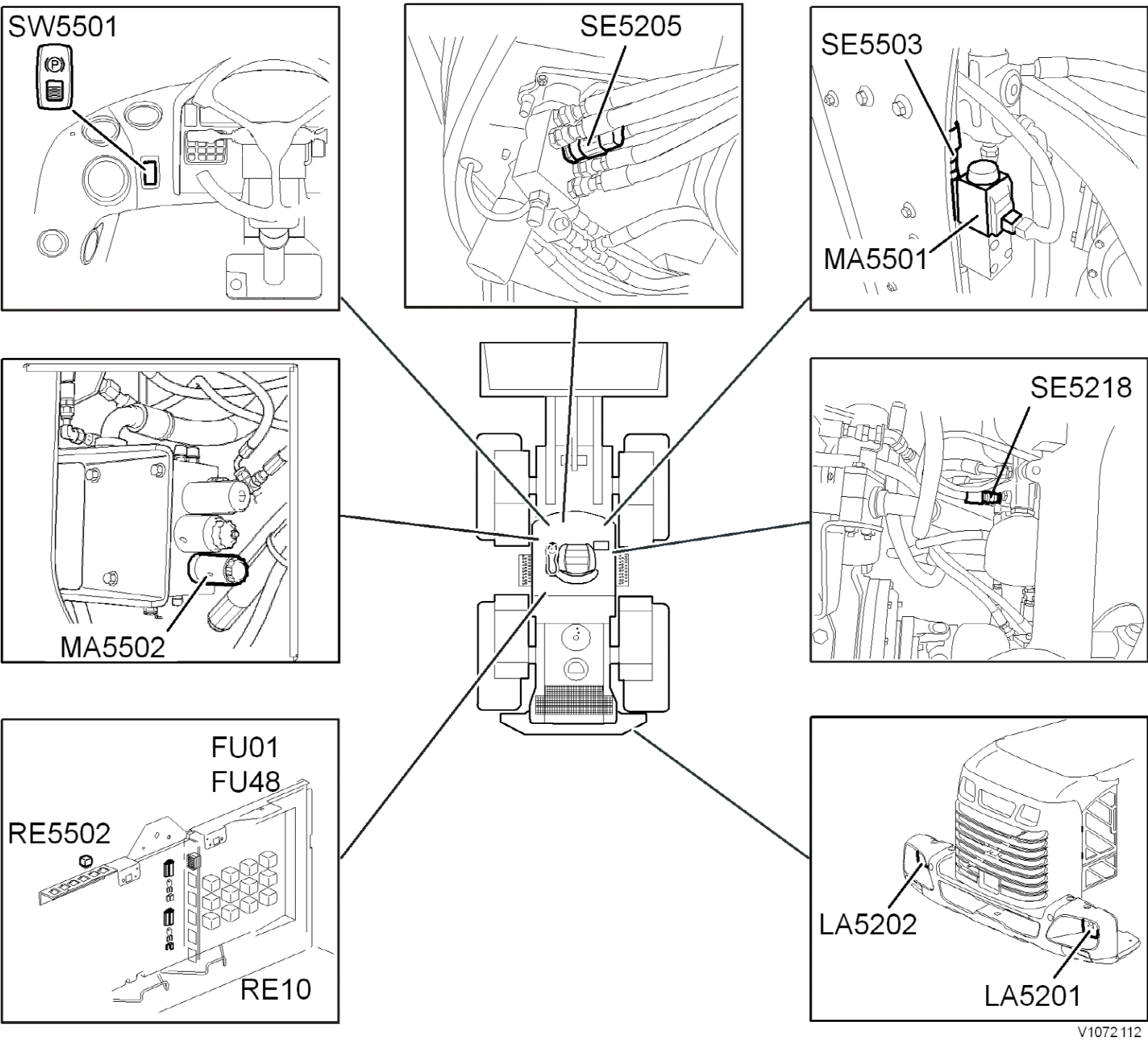
SW5501
SE5205
SE5503
MA5501
MA5502
SE5218
FU01
FU48
RE5502
RE10
LA5202
LA5201
V1072112

VOLVO
Construction Equipment

Service Information

Document Title:	Function Group:	Information Type: **Service Information**	Date: **12/10/2011**
Profile: **WLO, L90F (Volvo) [GB]**			

Wiring diagram 601

Lever steering (CDC)

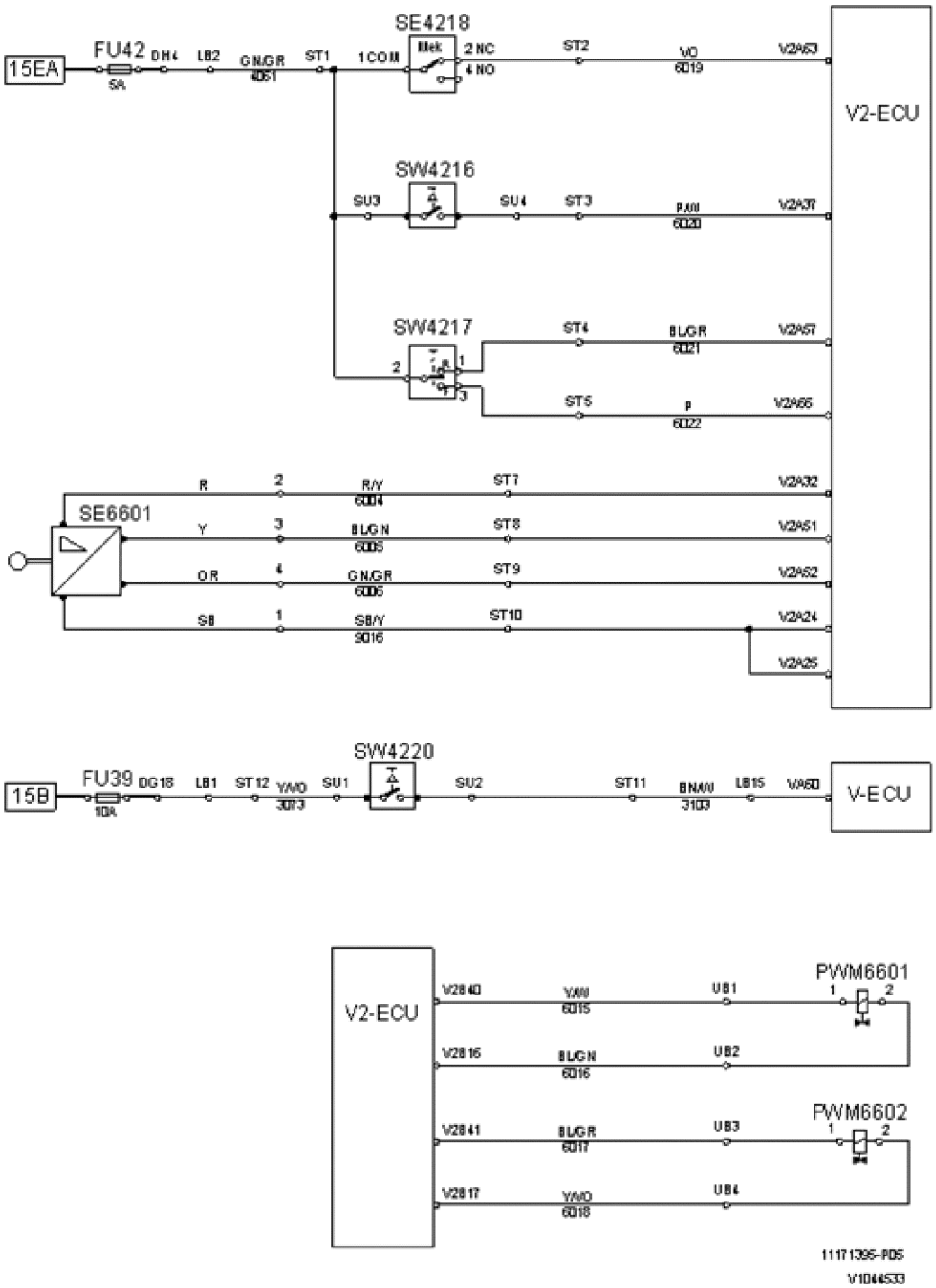

Figure 1

Designation	Function
FU39	Kick-down
FU42	Lever steering
PWM6601	Steering left
PWM6602	Steering right
SE4218	Position monitor armrest
SE6601	Steering lever
SW4216	Activating CDC
SW4217	Forward/reverse
SW4220	Kick-down

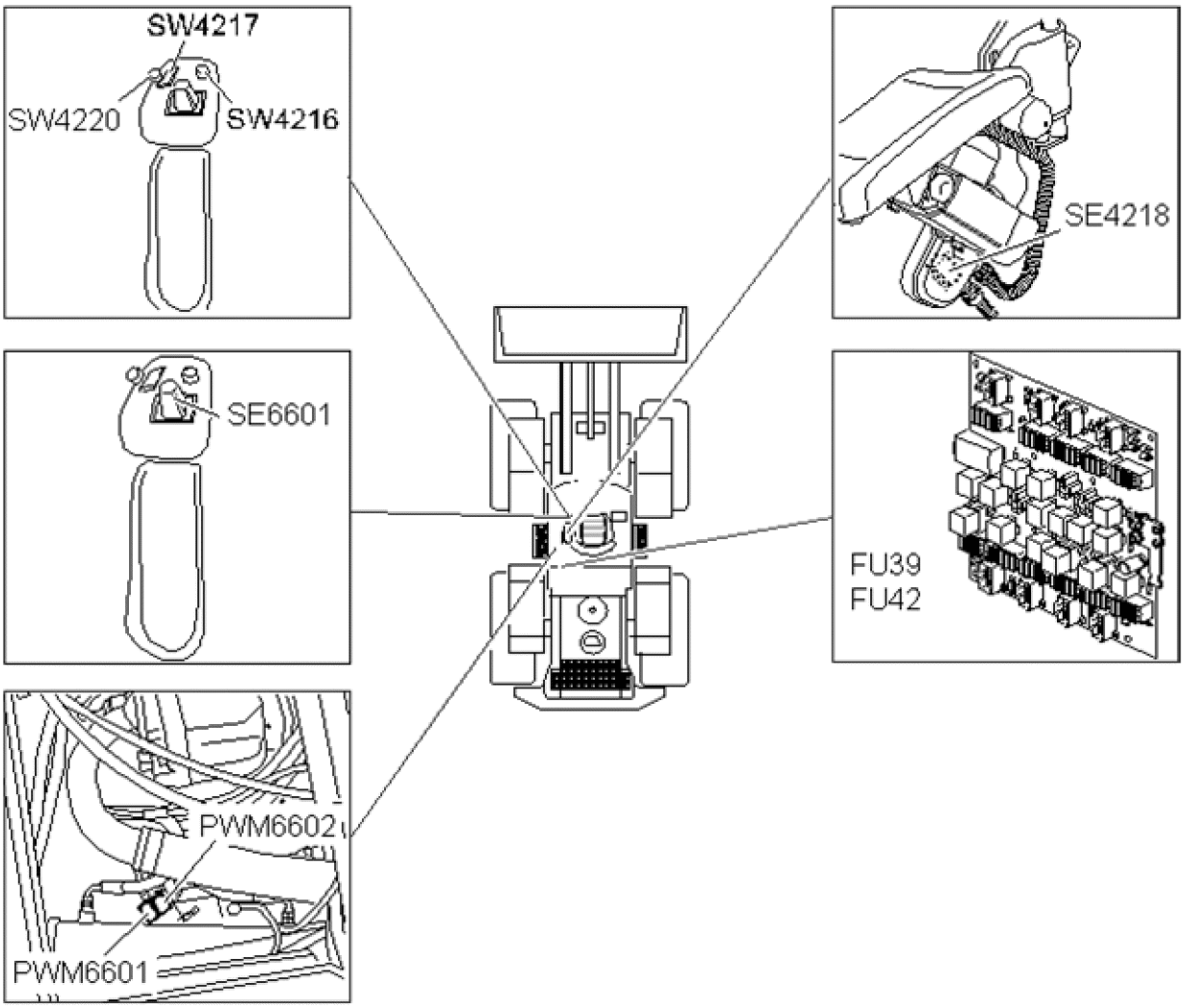

Figure 2
Component position

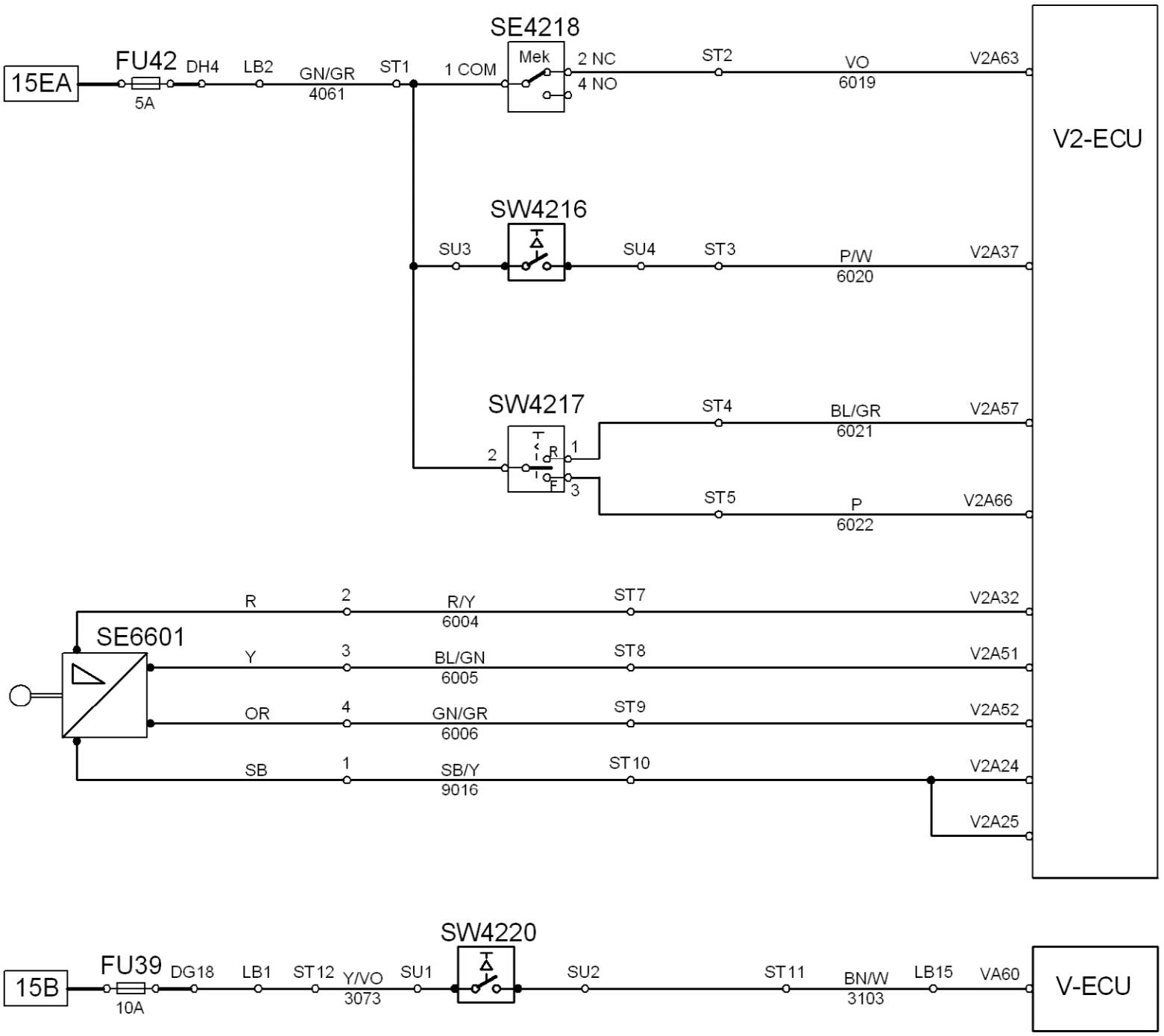

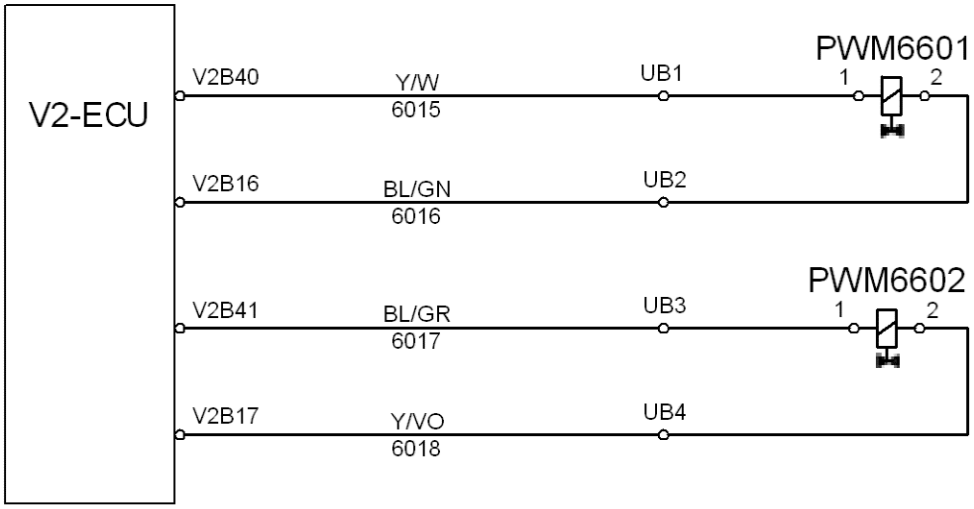

11171395-P05

V1044533

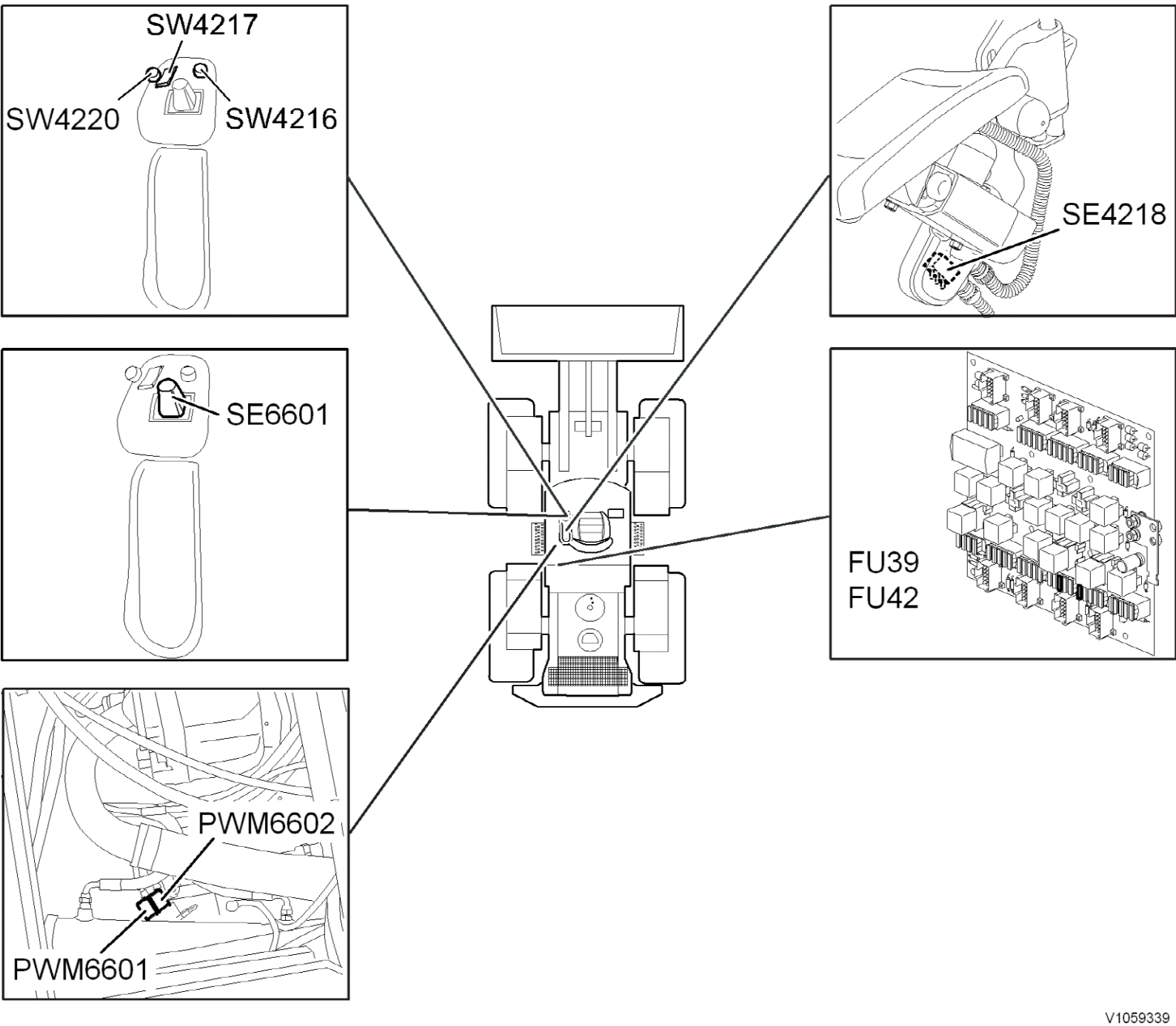
SW4217
SW4220
SW4216
SE4218
SE6601
FU39
FU42
PWM6602
PWM6601
V1059339

VOLVO
Construction Equipment

Service Information

Document Title:	Function Group:	Information Type: **Service Information**	Date: **12/10/2011**
Profile: **WLO, L90F (Volvo) [GB]**			

Wiring diagram 602

Lever steering (CDC) Angle sensor

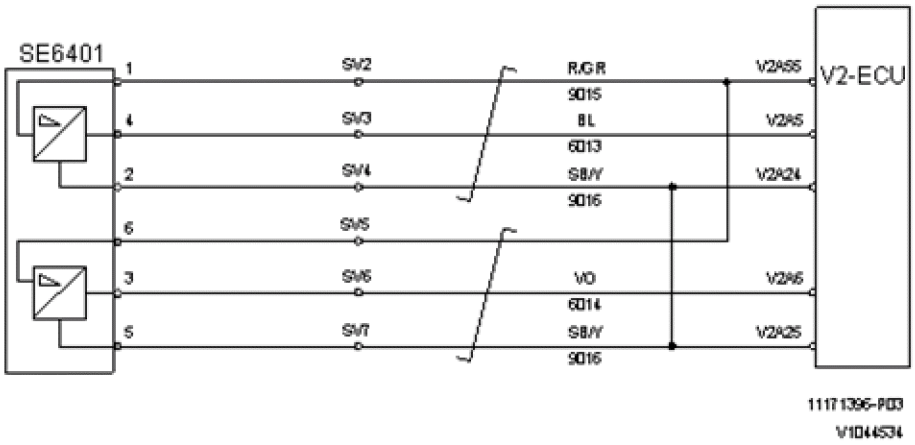

Figure 1

Designation	Function
SE6401	Angle sensor frame joint

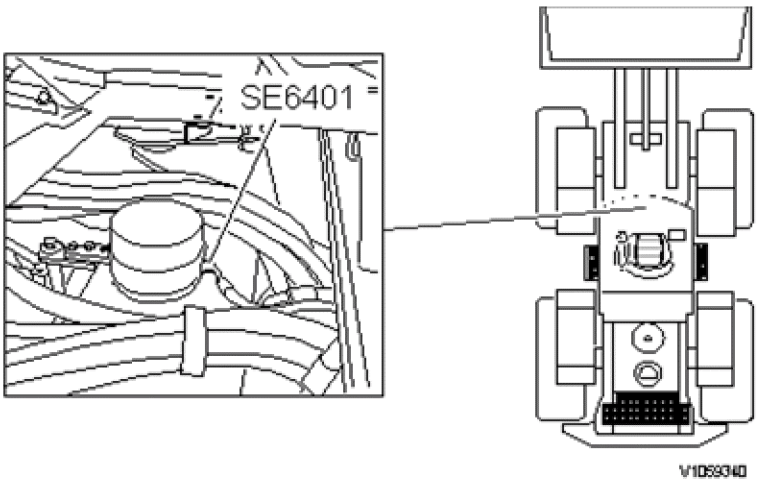

Figure 2
Component position

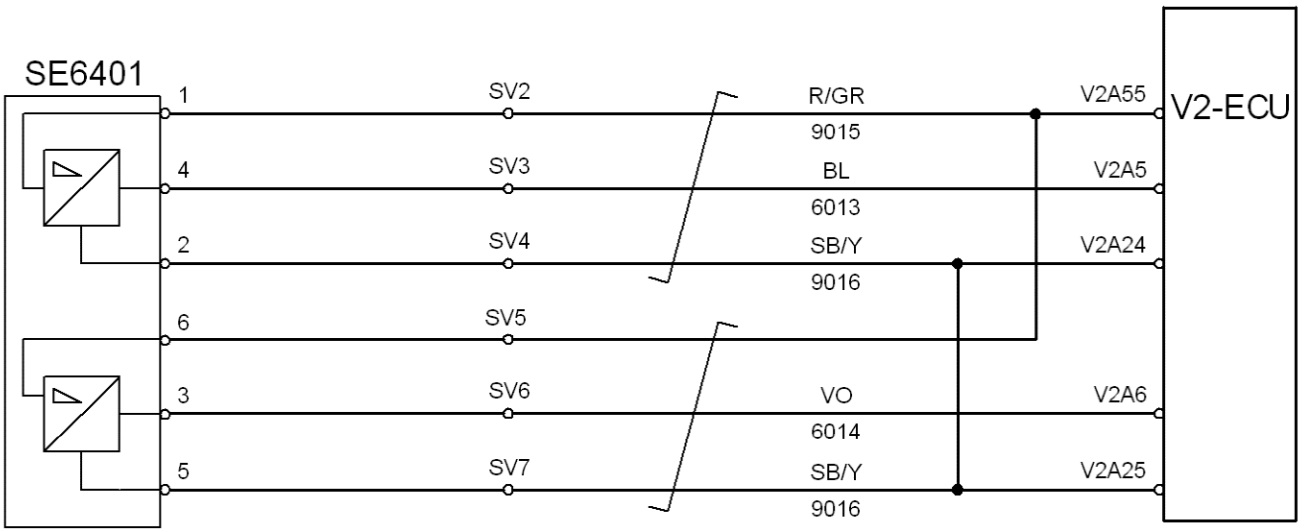

11171396-P03

V1044534

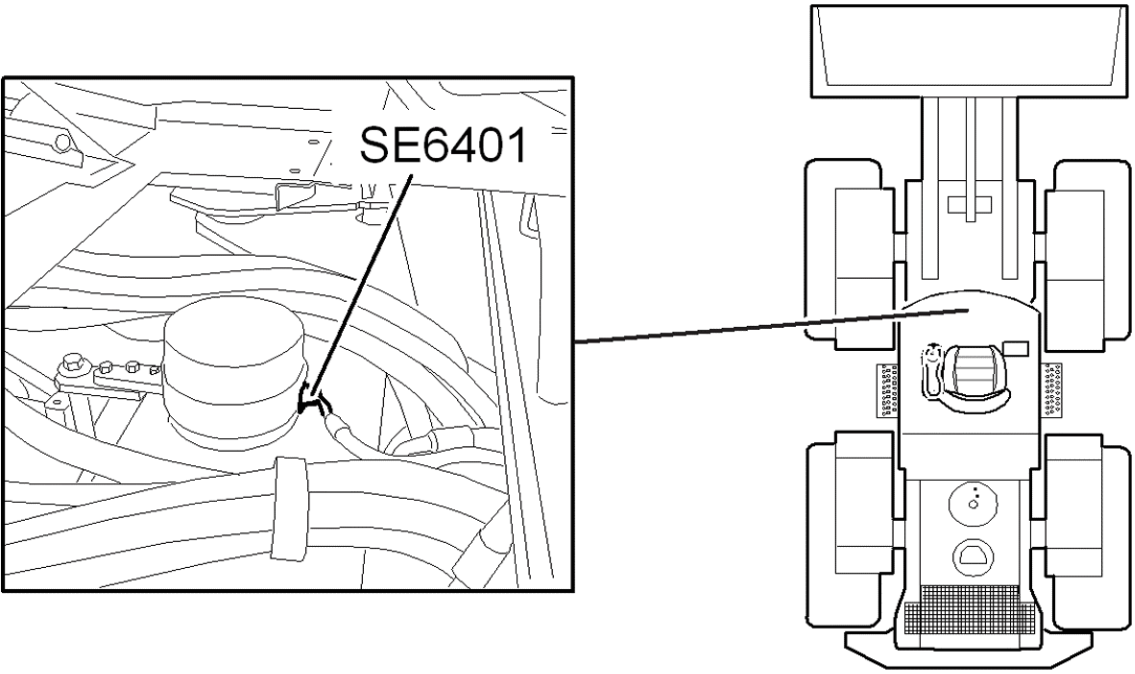

V1059340

VOLVO
Construction Equipment

Service Information

Document Title:	Function Group:	Information Type: **Service Information**	Date: **12/10/2011**
Profile: **WLO, L90F (Volvo) [GB]**			

Wiring diagram 604

Secondary steering

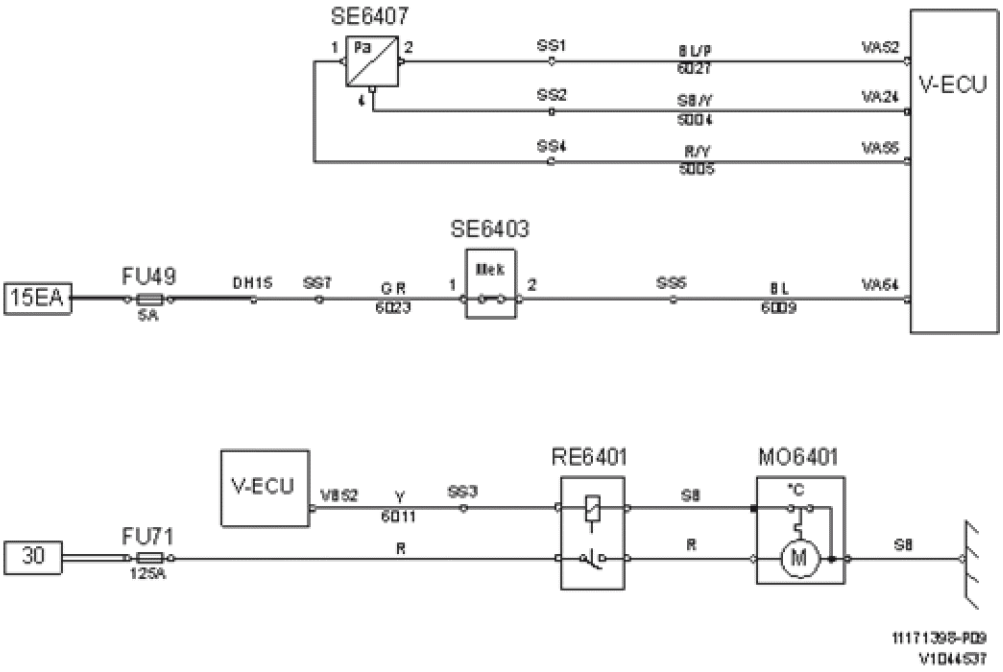

Figure 1

Designation	Function
FU49	Secondary steering
FU71	Secondary steering pump
MO6401	Secondary steering pump
RE6401	Secondary steering
SE6403	Secondary steering, differential pressure
SE6407	Secondary steering test

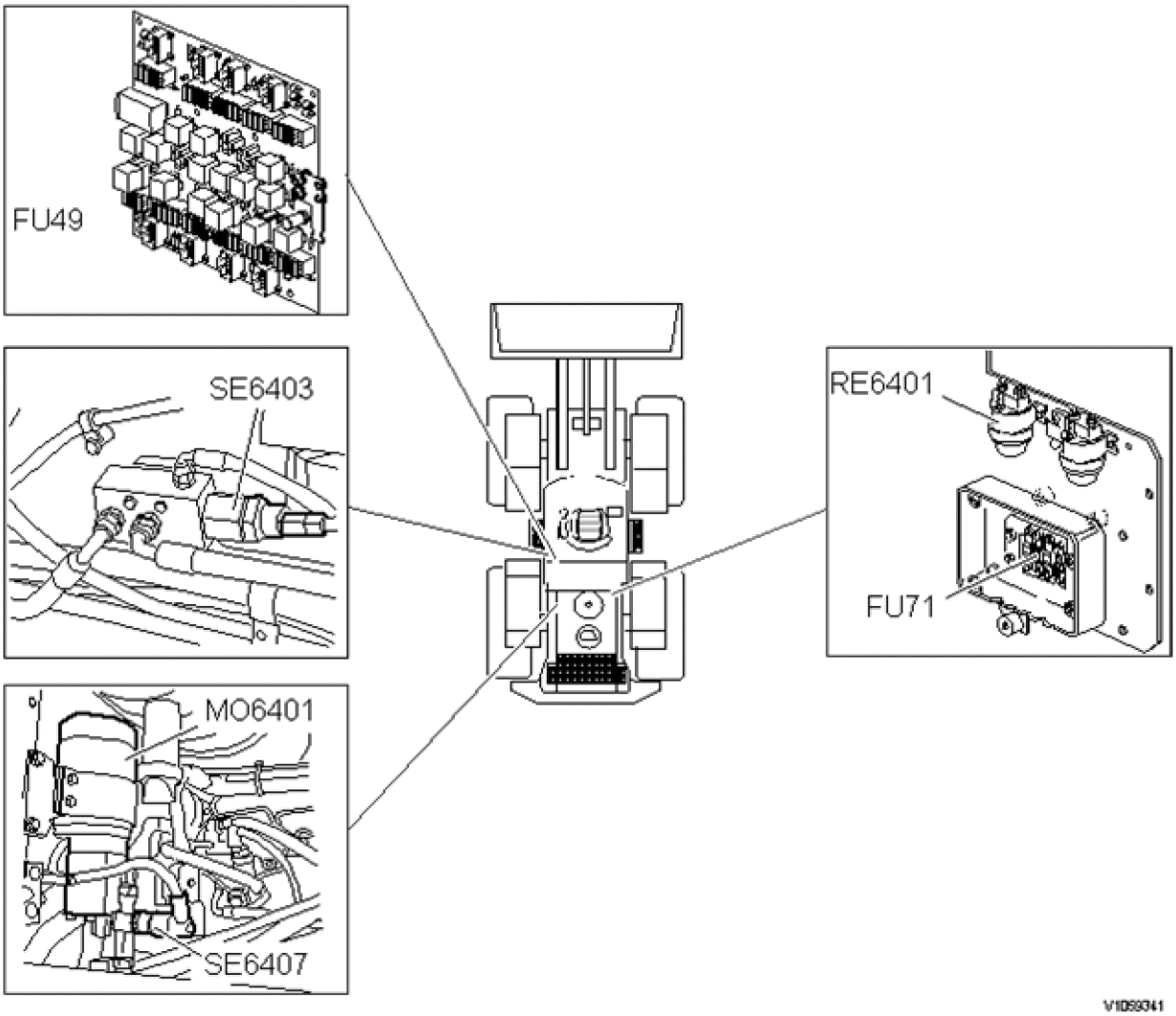

Figure 2
Component position

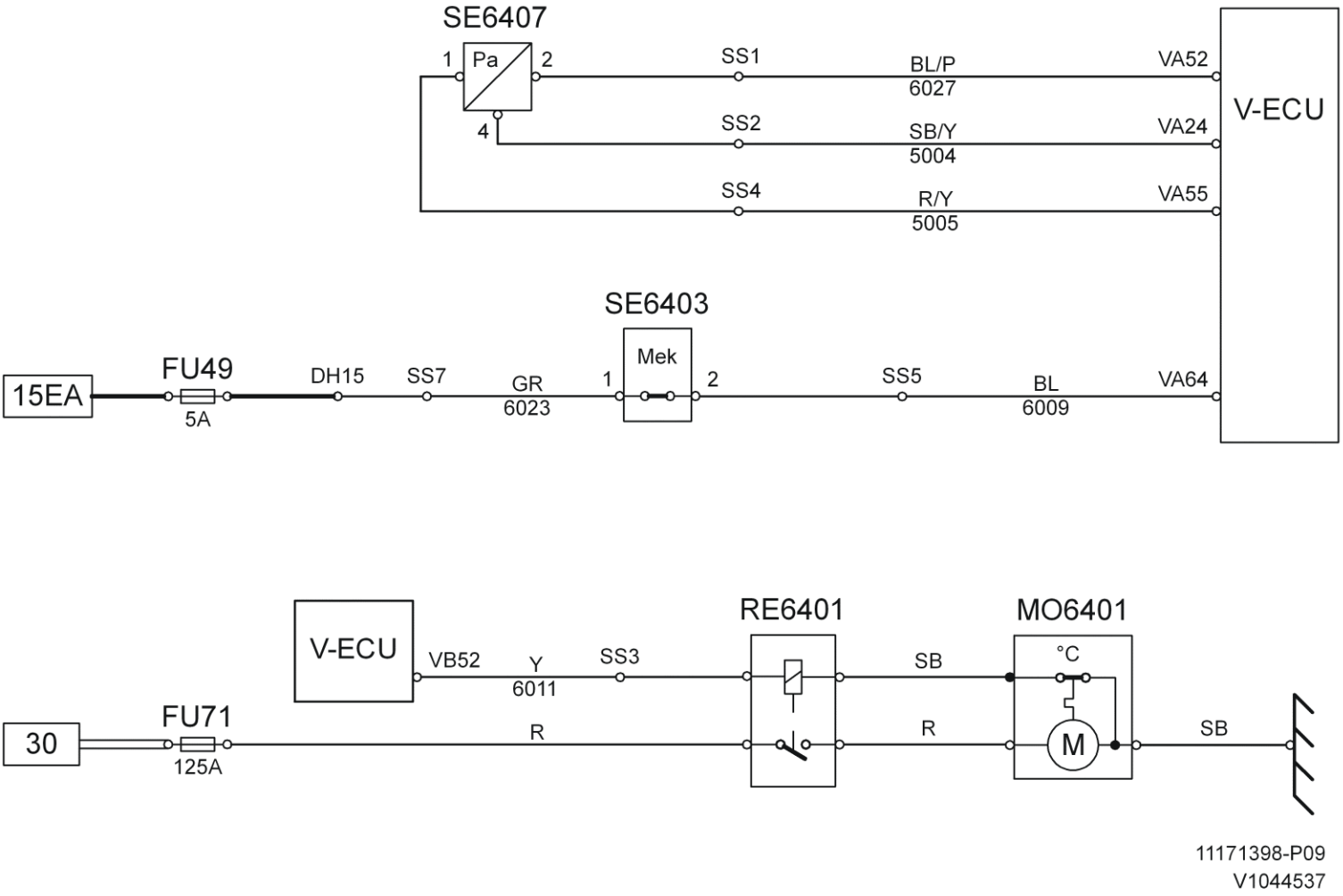

11171398-P09
V1044537

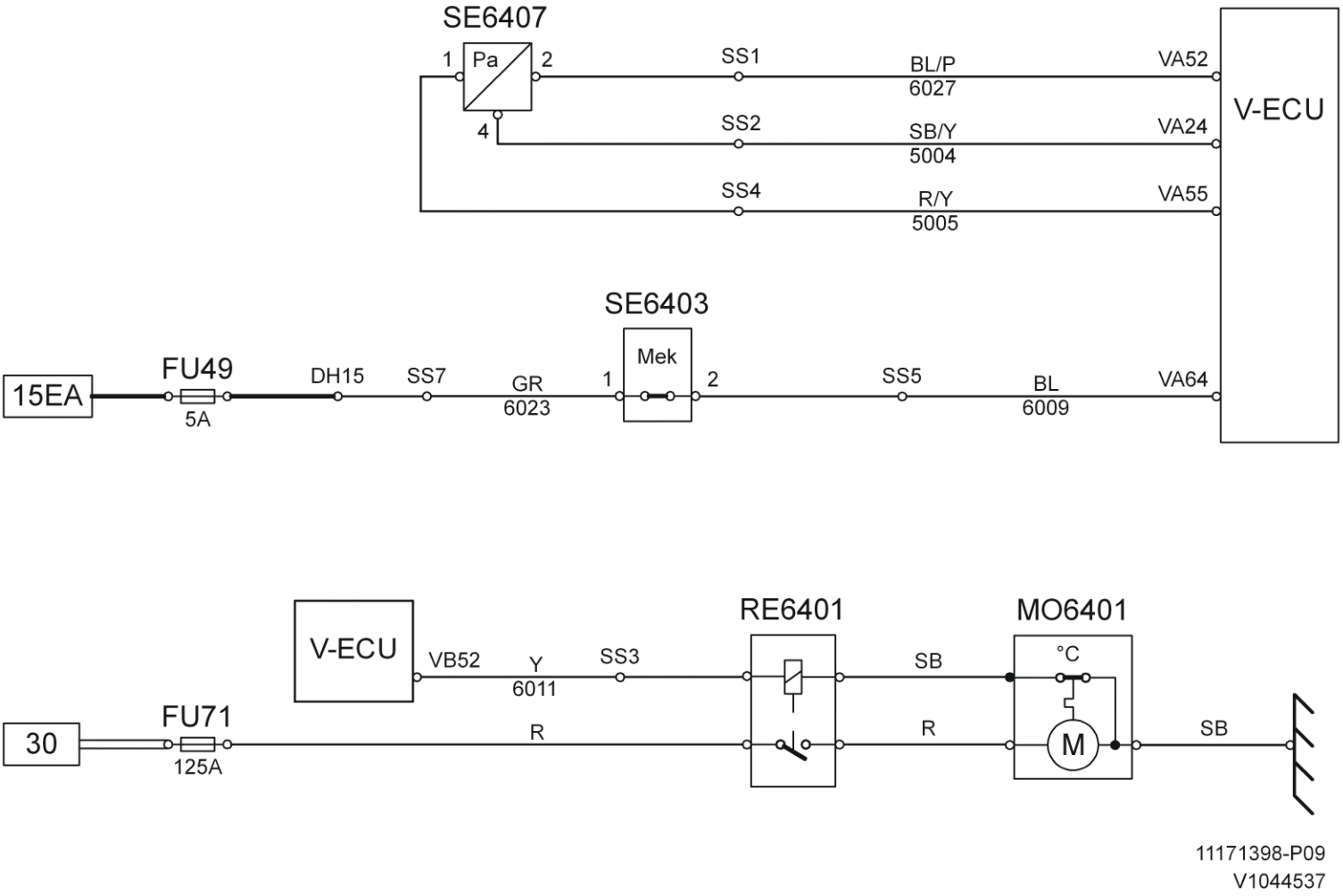

11171398-P09
V1044537

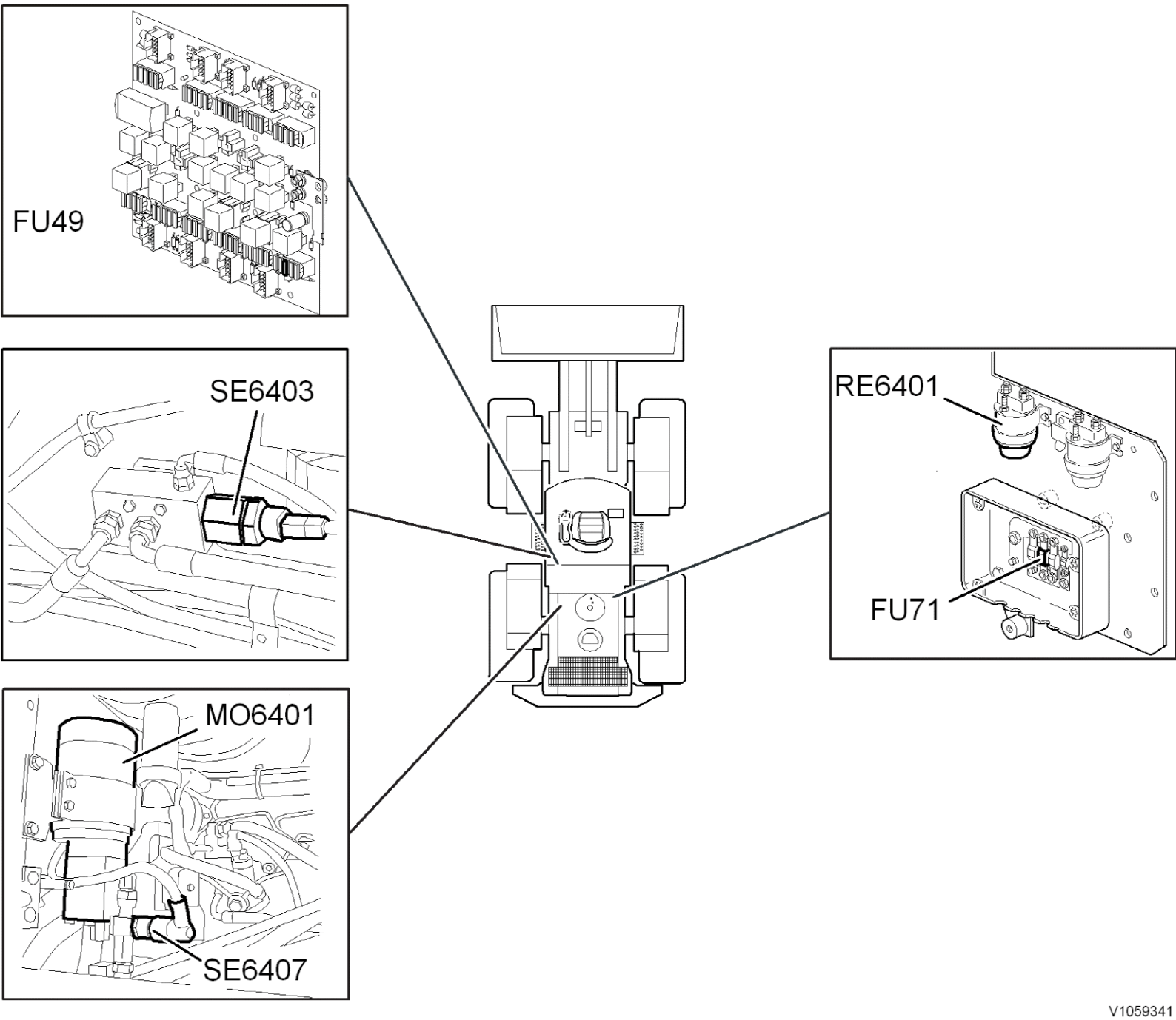

V1059341

VOLVO
Construction Equipment

Service Information

Document Title:	Function Group:	Information Type: **Service Information**	Date: **12/10/2011**
Profile: **WLO, L90F (Volvo) [GB]**			

Wiring diagram 801

Windshield wiper and windshield washer

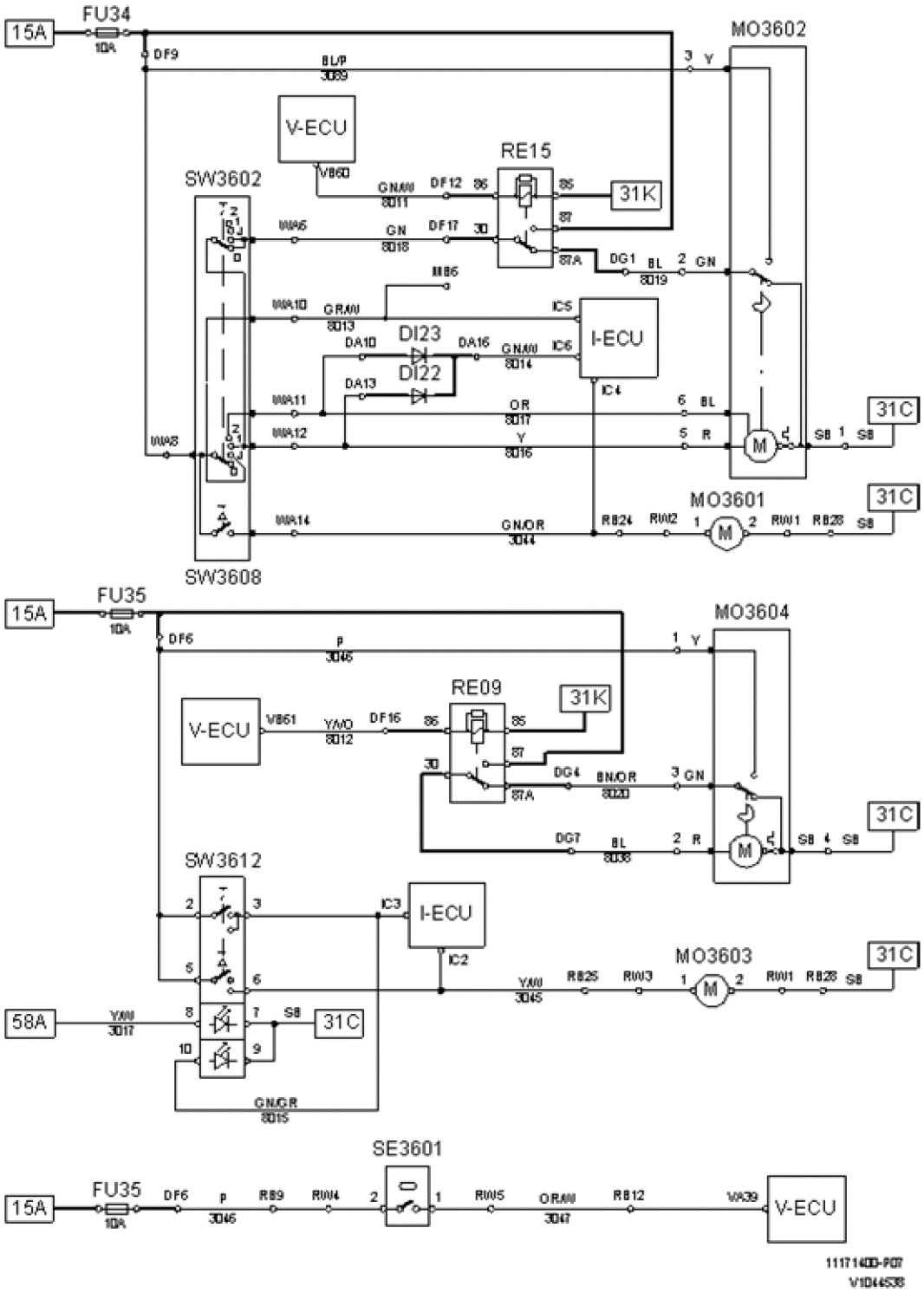

Figure 1

Designation	Function	Designation	Function
DI22	Lock-out diode	RE09	Windshield wiper rear
DI23	Lock-out diode	RE15	Windshield wiper front
FU34	Windshield wiper and windshield washer front	SE3601	Washer fluid level
FU35	Windscreen wiper and washer rear Level monitor washer fluid	SW3602	Windshield wiper front
MO3601	Windshield washer front	SW3608	Windshield washer front
MO3602	Windshield wiper front	SW3612	Windshield wiper rear Windshield washer rear
MO3603	Windshield washer rear		
MO3604	Windshield wiper rear		

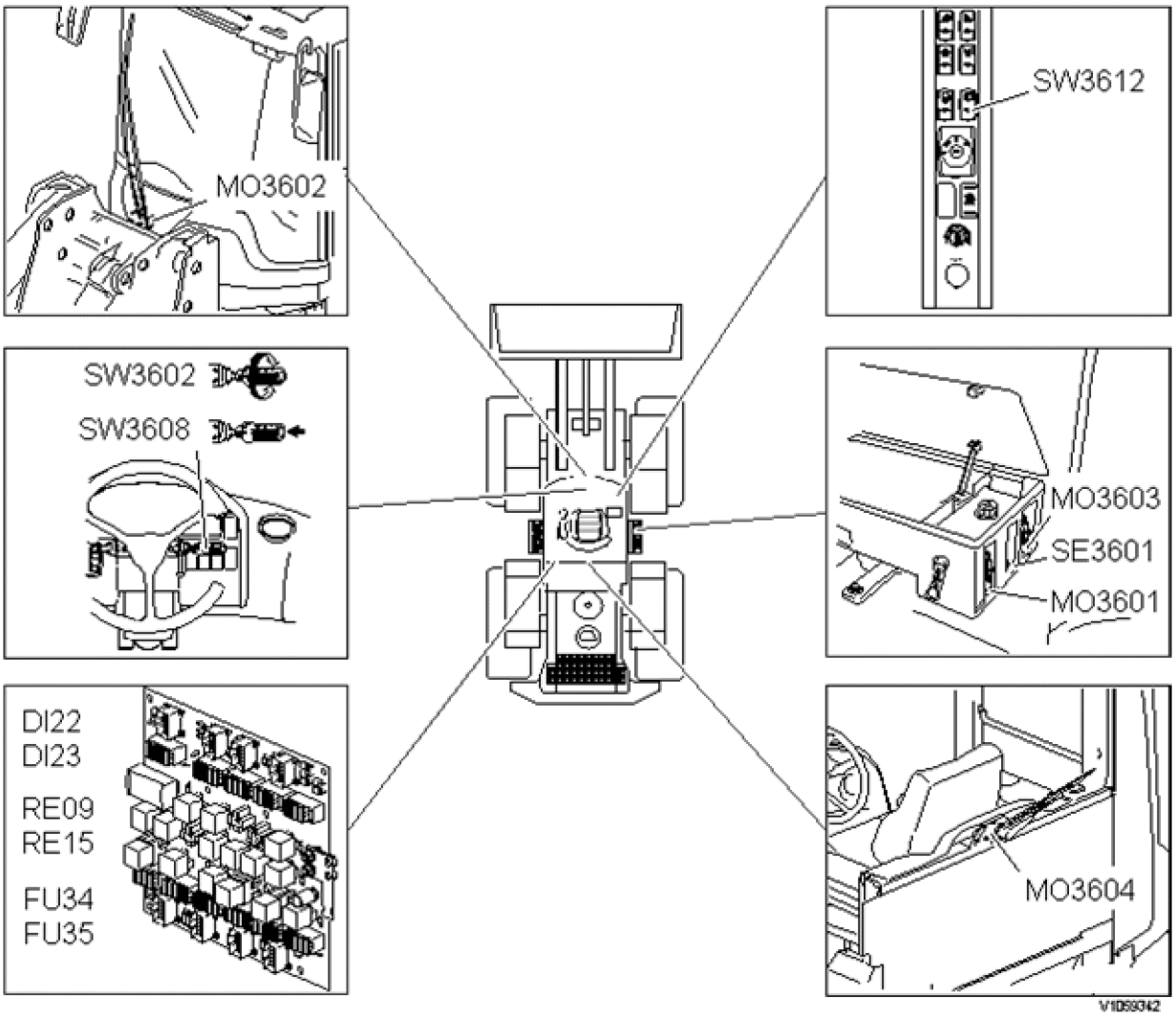

Figure 2
Component position

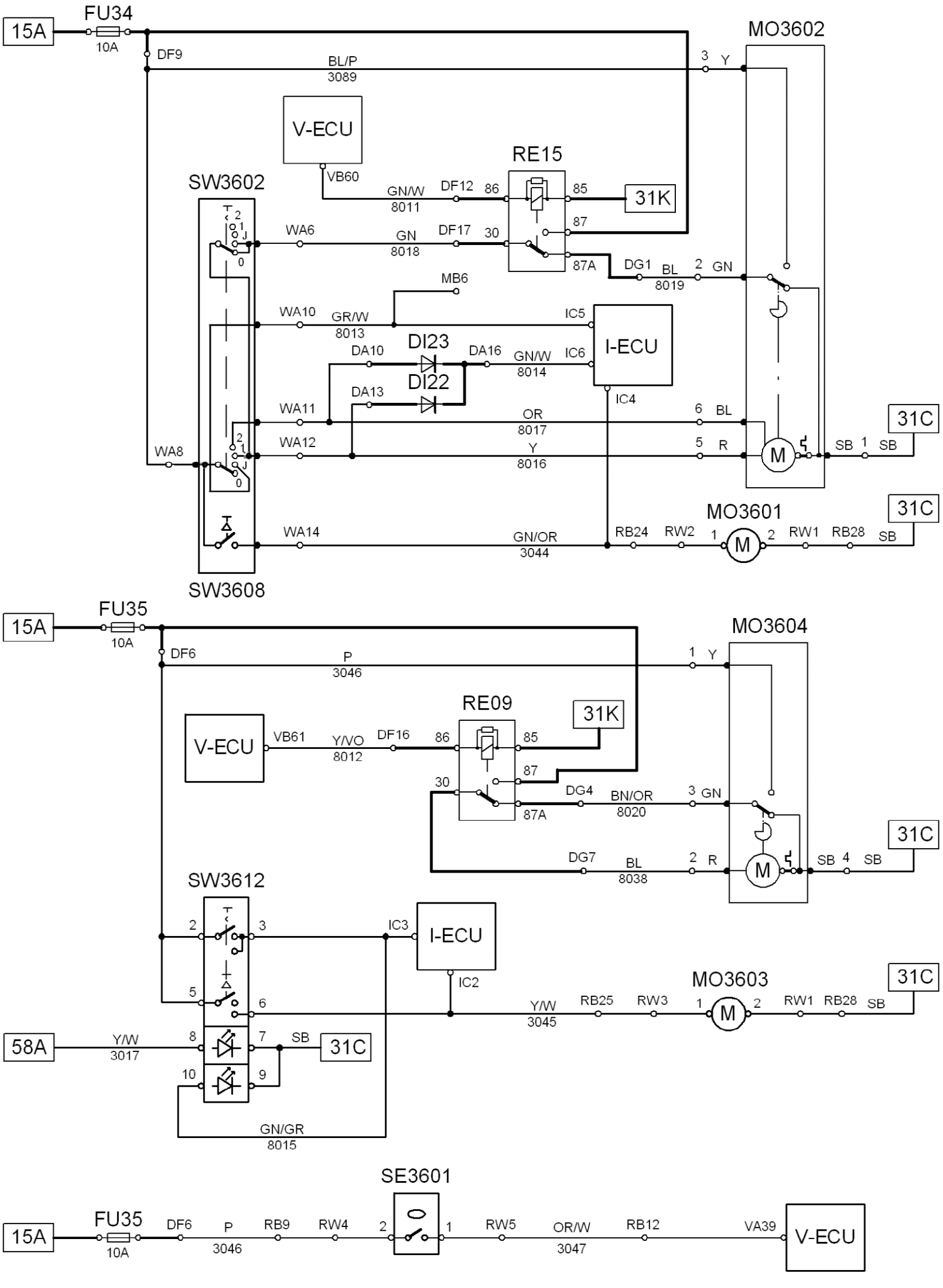

11171400-P07

V1044538

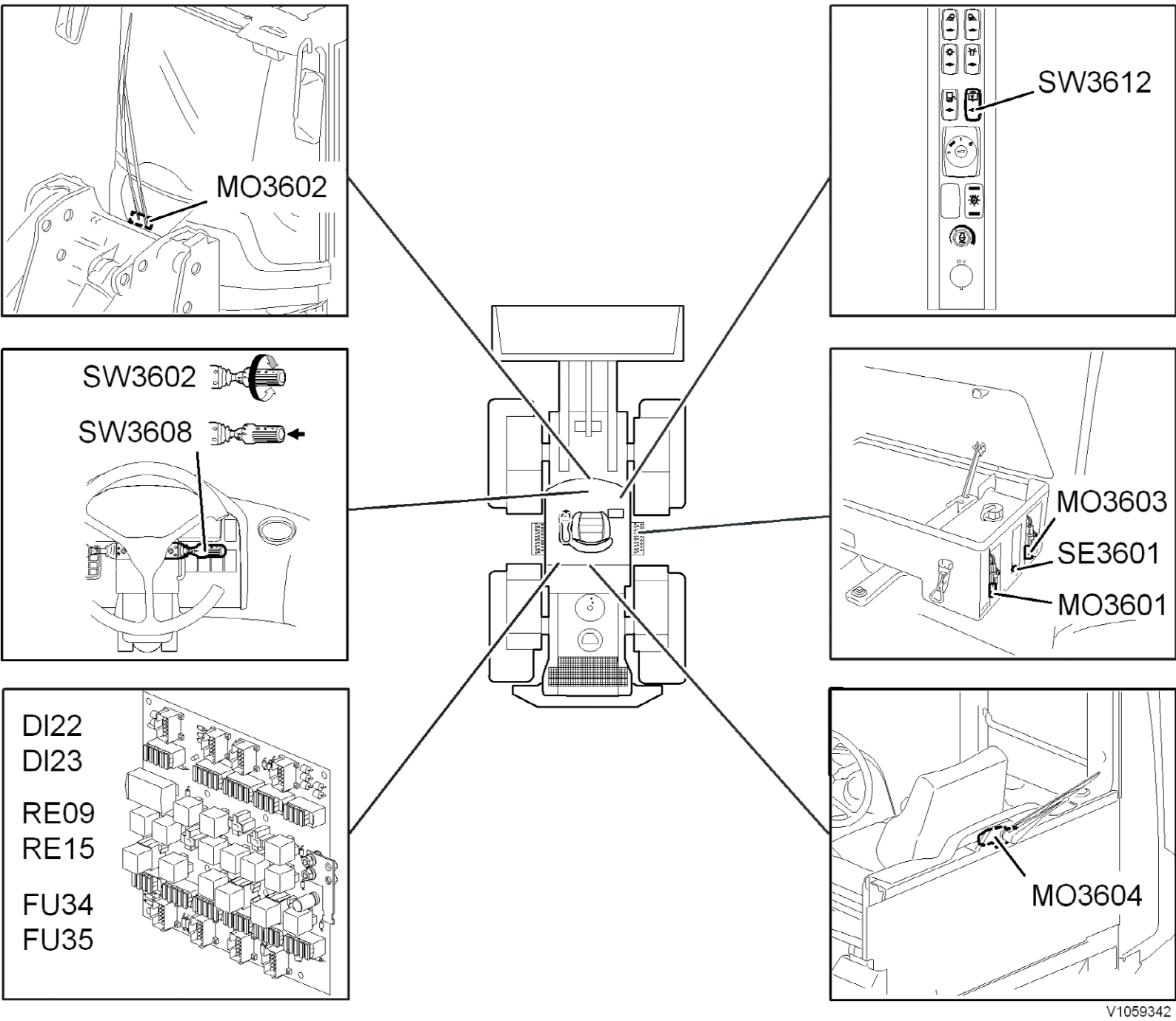
MO3602
SW3612
SW3602
SW3608
MO3603
SE3601
MO3601
DI22
DI23
RE09
RE15
FU34
FU35
MO3604
V1059342

VOLVO
Construction Equipment

Service Information

Document Title:	Function Group:	Information Type: **Service Information**	Date: **12/10/2011**
Profile: **WLO, L90F (Volvo) [GB]**			

Wiring diagram 802

Operator's seat, ambient temperature

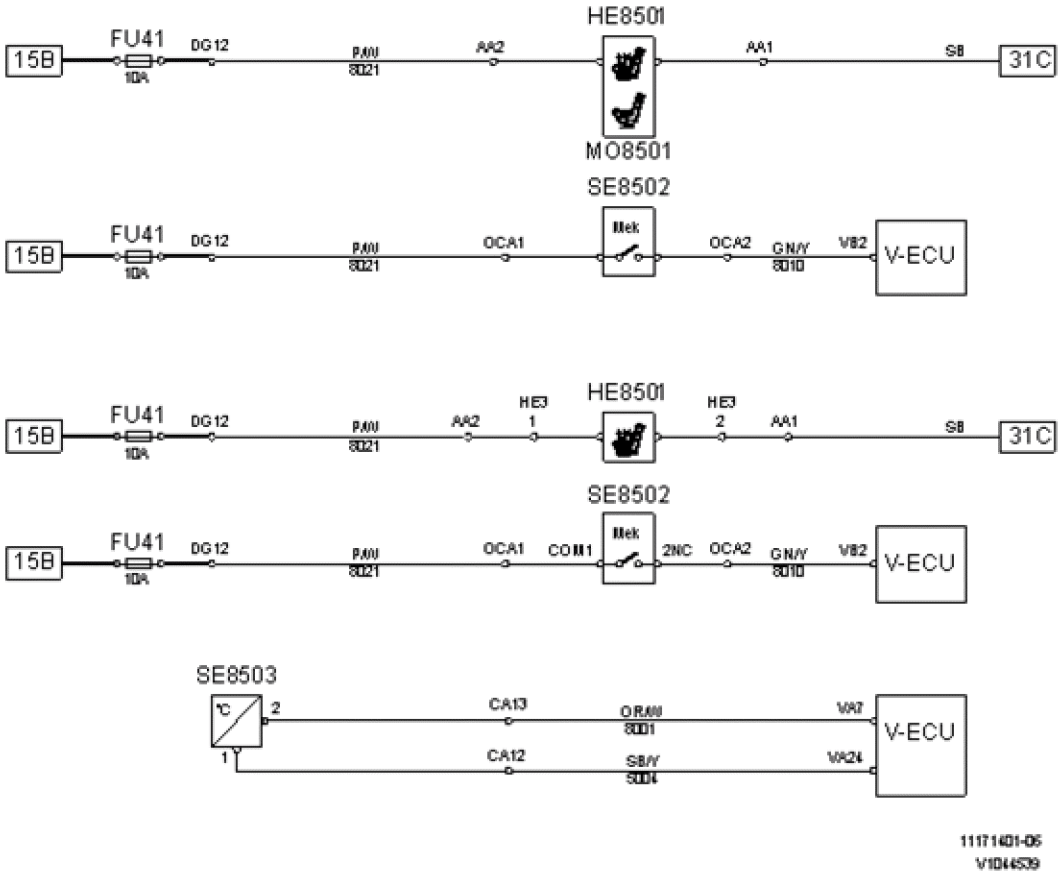

Figure 1

Designation	Function
FU41	Air-suspension operator's seat with seat heating Position sensor air-suspension operator's seat Seat heating mechanically suspended operator's seat Position sensor mechanically suspended operator's seat
HE8501	Seat heating
MO8501	Air compressor
SE8502	Position monitor loading operator's seat
SE8503	Ambient temperature

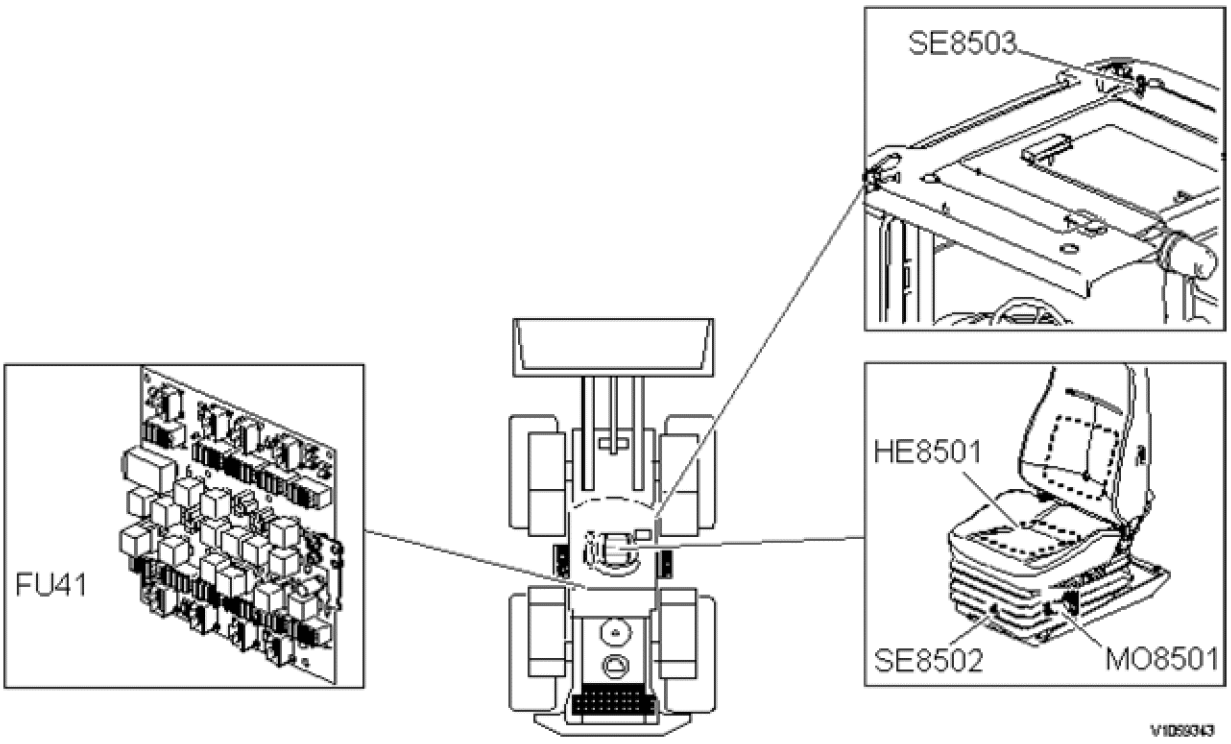

Figure 2
Component position

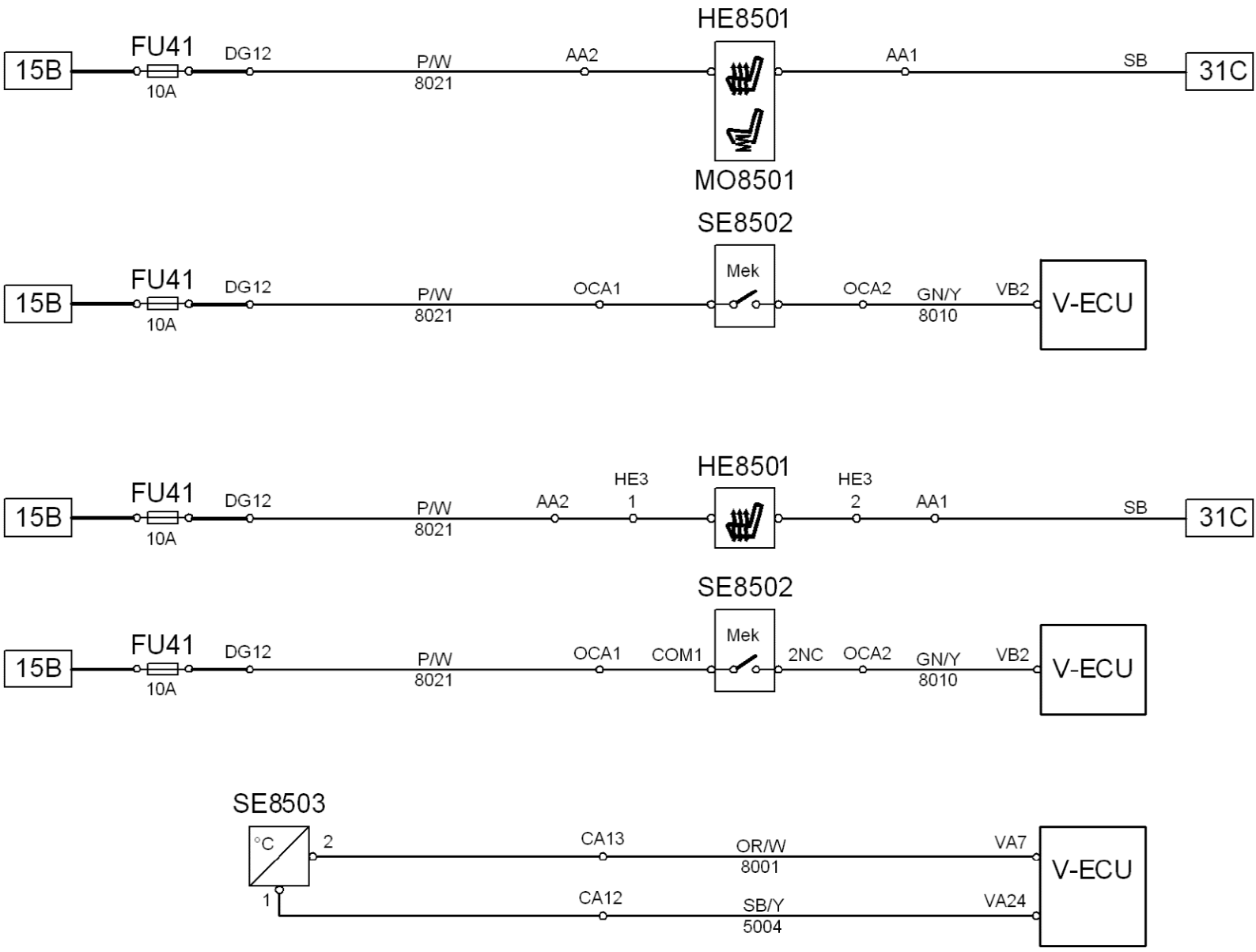

11171401-06
V1044539

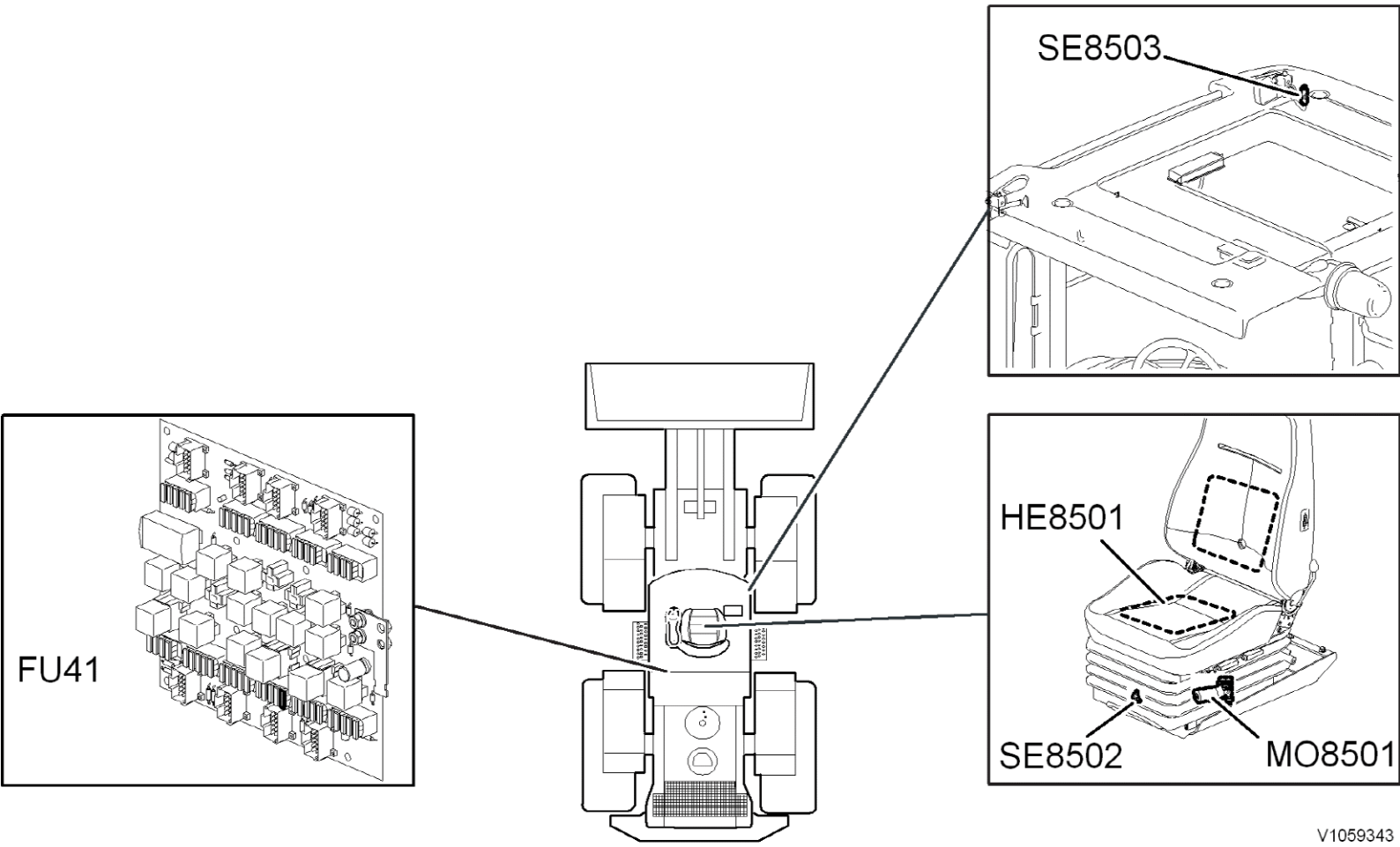
SE8503
FU41
HE8501
SE8502
MO8501
V1059343

More than one document matches the current profile:

Wiring diagram 804
Product Line: WLO
Model Variant: L90F
Site: Arvika, Asheville
Serial Number Start: 25001, 68101
Serial Number End: 26953, 68916

Wiring diagram 804
Product Line: WLO
Model Variant: L90F
Site: Arvika, Asheville
Serial Number Start: 26954, 68917
Serial Number End: 49999, 69999

VOLVO
Construction Equipment

Service Information

Document Title:	Function Group:	Information Type: **Service Information**	Date: **12/10/2011**
Profile: **WLO, L90F (Volvo) [GB]**			

Wiring diagram 804

Back-up camera, rear-view mirrors

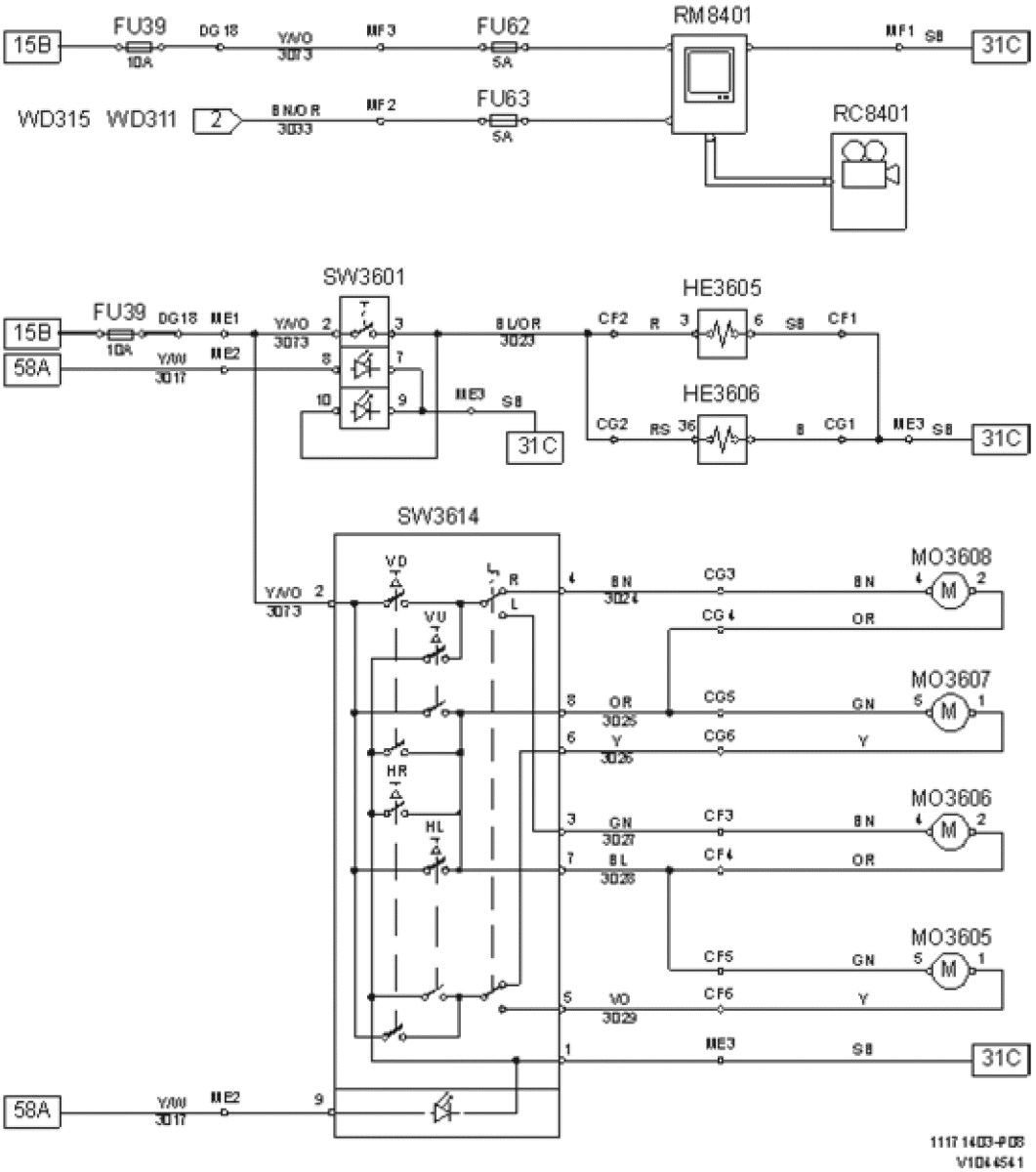

Figure 1

Designation	Function
FU39	Monitor, reversing camera Electric heat rear-view mirrors

	Operation rear-view mirrors
FU62	Monitor, reversing camera
FU63	Activation of back-up camera when reversing
HE3605	Electric heat rear-view mirror left
HE3606	Electric heat rear-view mirror right
MO3605	Electrically controlled rear-view mirror left horizontal
MO3606	Electrically controlled rear-view mirror left vertical
MO3607	Electrically controlled rear-view mirror right horizontal
MO3608	Electrically controlled rear-view mirror right vertical
RC8401	Back-up camera
RM8401	Display window
SW3601	Electrically heated rear-view mirrors
SW3614	Electrically controlled rear-view mirrors

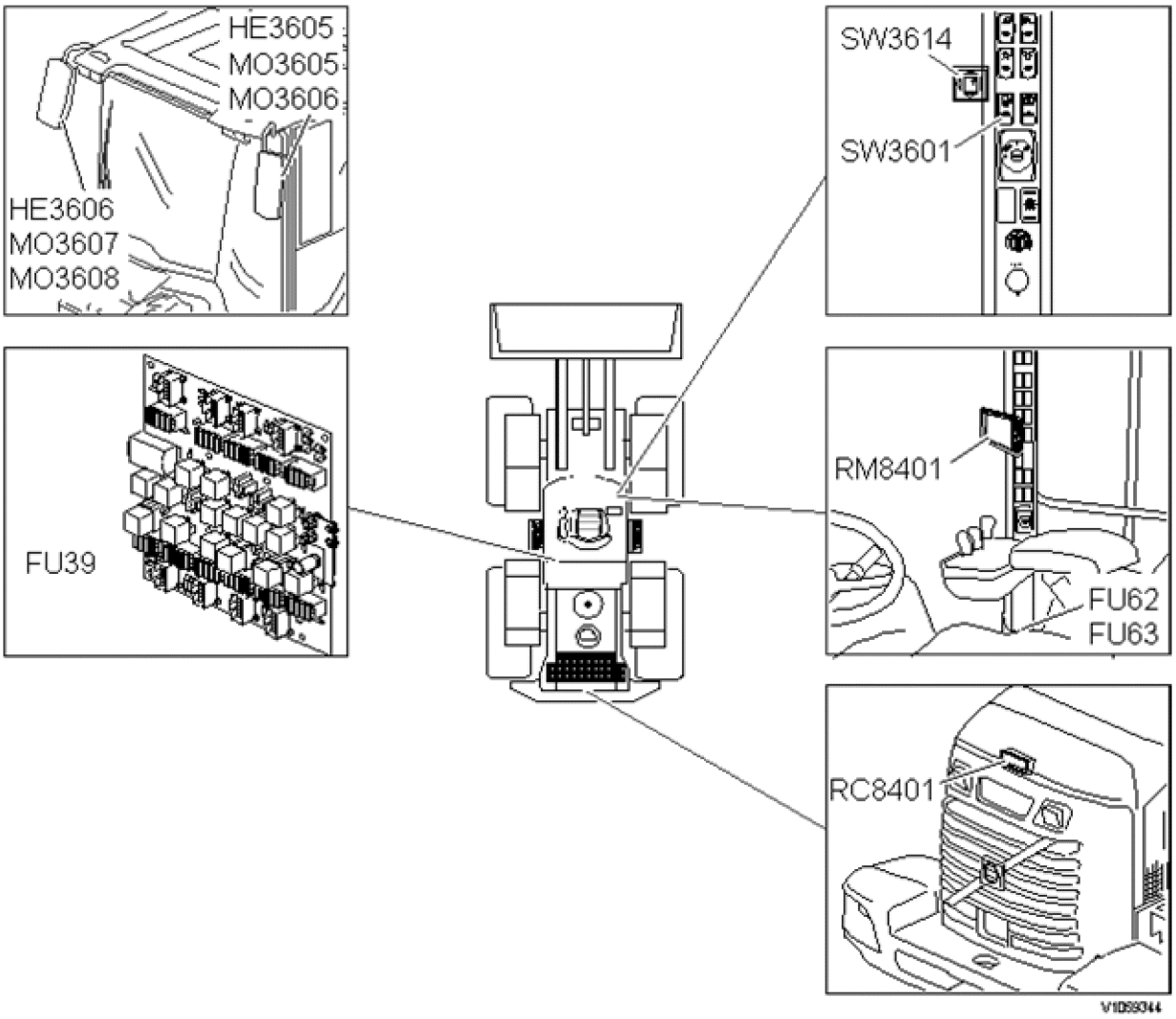

Figure 2
Component position

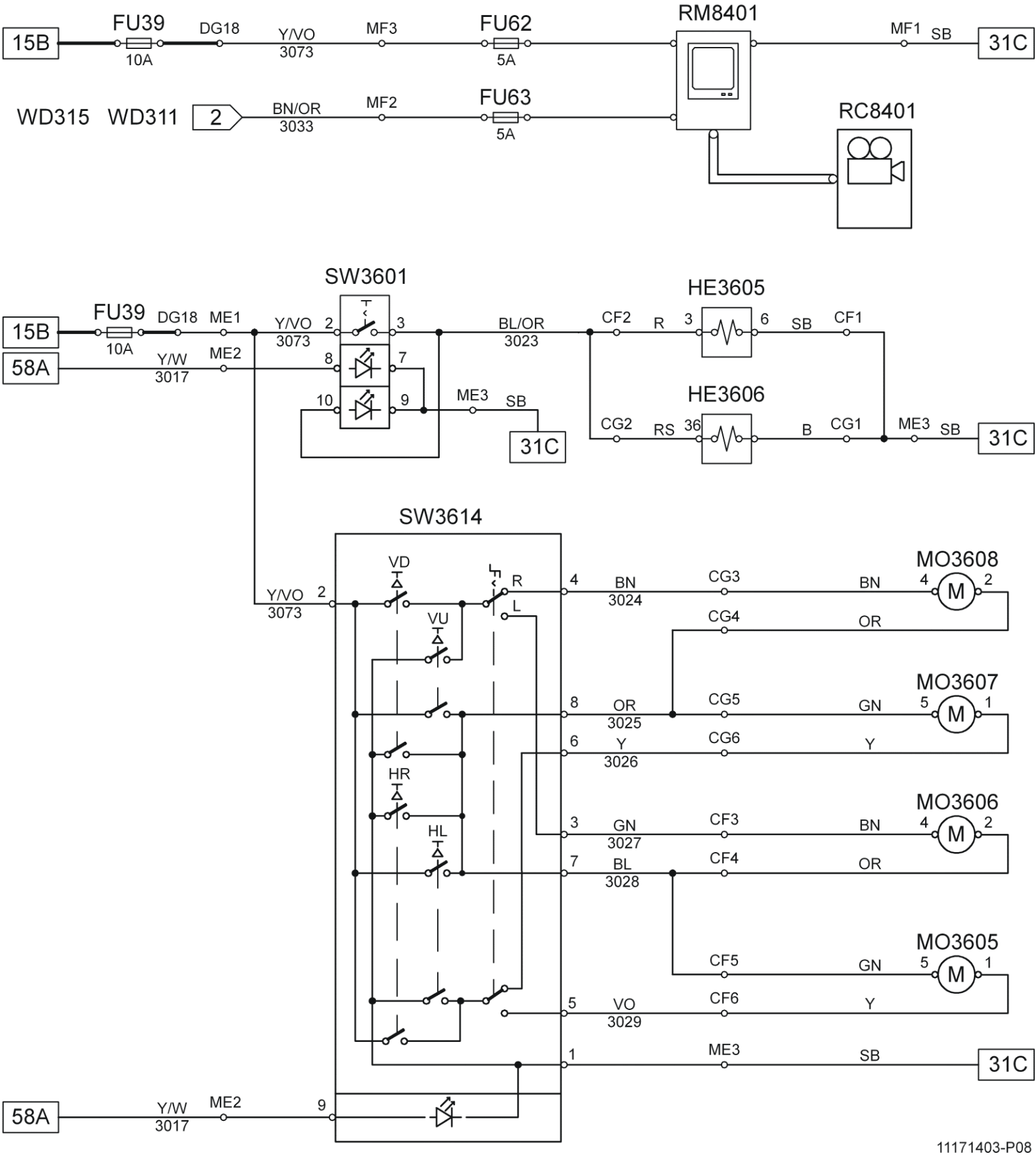
15B
FU39
10A
DG18
Y/VO
3073
MF3
FU62
5A
RM8401
MF1
SB
31C
WD315
WD311
2
BN/OR
3033
MF2
FU63
5A
RC8401
SW3601
HE3605
HE3606
ME1
ME2
Y/W
3017
BL/OR
3023
CF2
R
CF1
CG2
RS
B
CG1
ME3
SW3614
VD
VU
HR
HL
L
BN
3024
OR
3025
Y
3026
GN
3027
BL
3028
VO
3029
CG3
CG4
CG5
CG6
CF3
CF4
CF5
CF6
MO3608
MO3607
MO3606
MO3605
M
58A
11171403-P08
V1044541

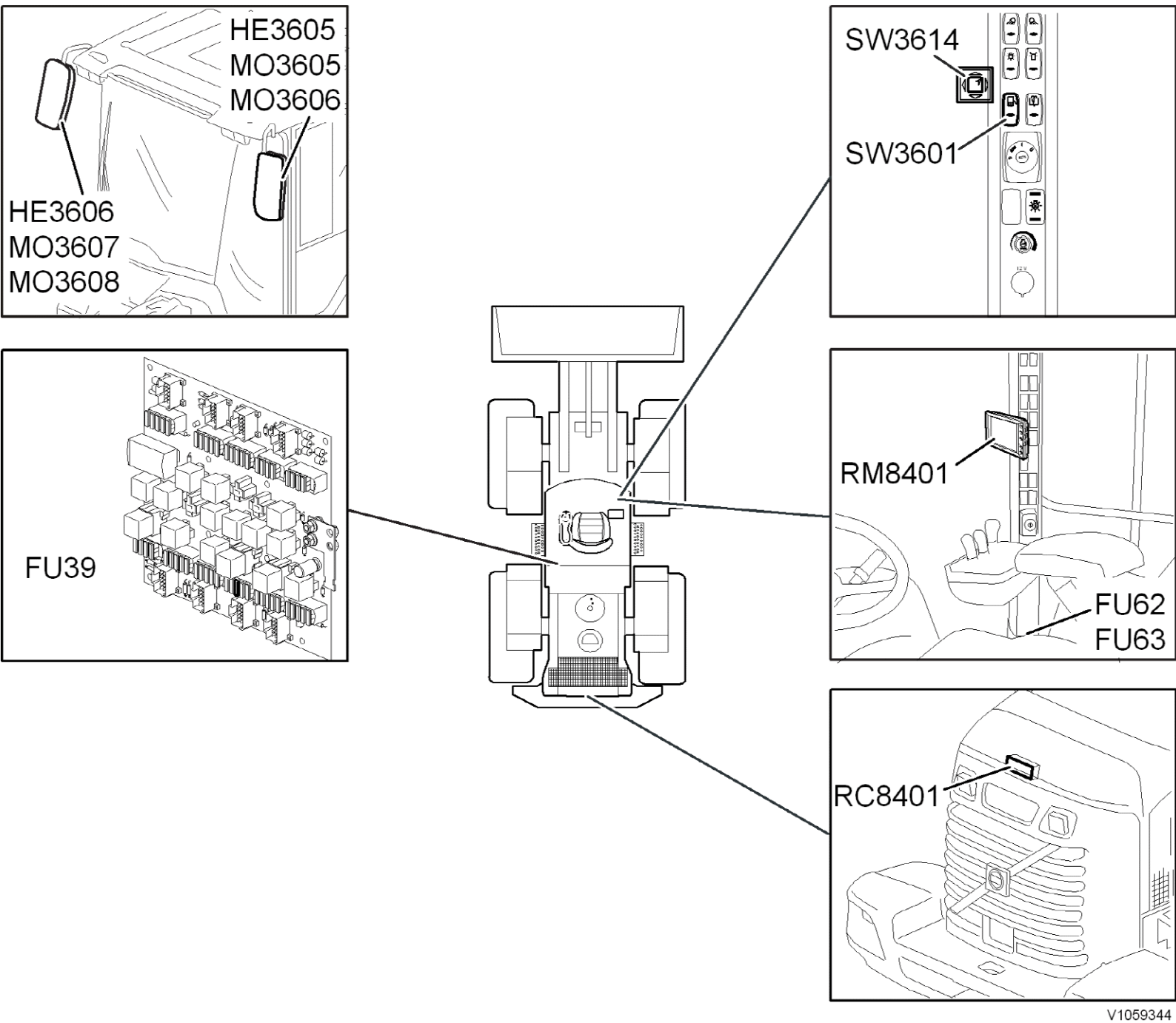
HE3605
MO3605
MO3606
HE3606
MO3607
MO3608
SW3614
SW3601
FU39
RM8401
FU62
FU63
RC8401
V1059344

VOLVO
Construction Equipment

Service Information

Document Title:	Function Group:	Information Type: **Service Information**	Date: **12/10/2011**
Profile: **WLO, L90F (Volvo) [GB]**			

Wiring diagram 804

Back-up camera, rear-view mirrors

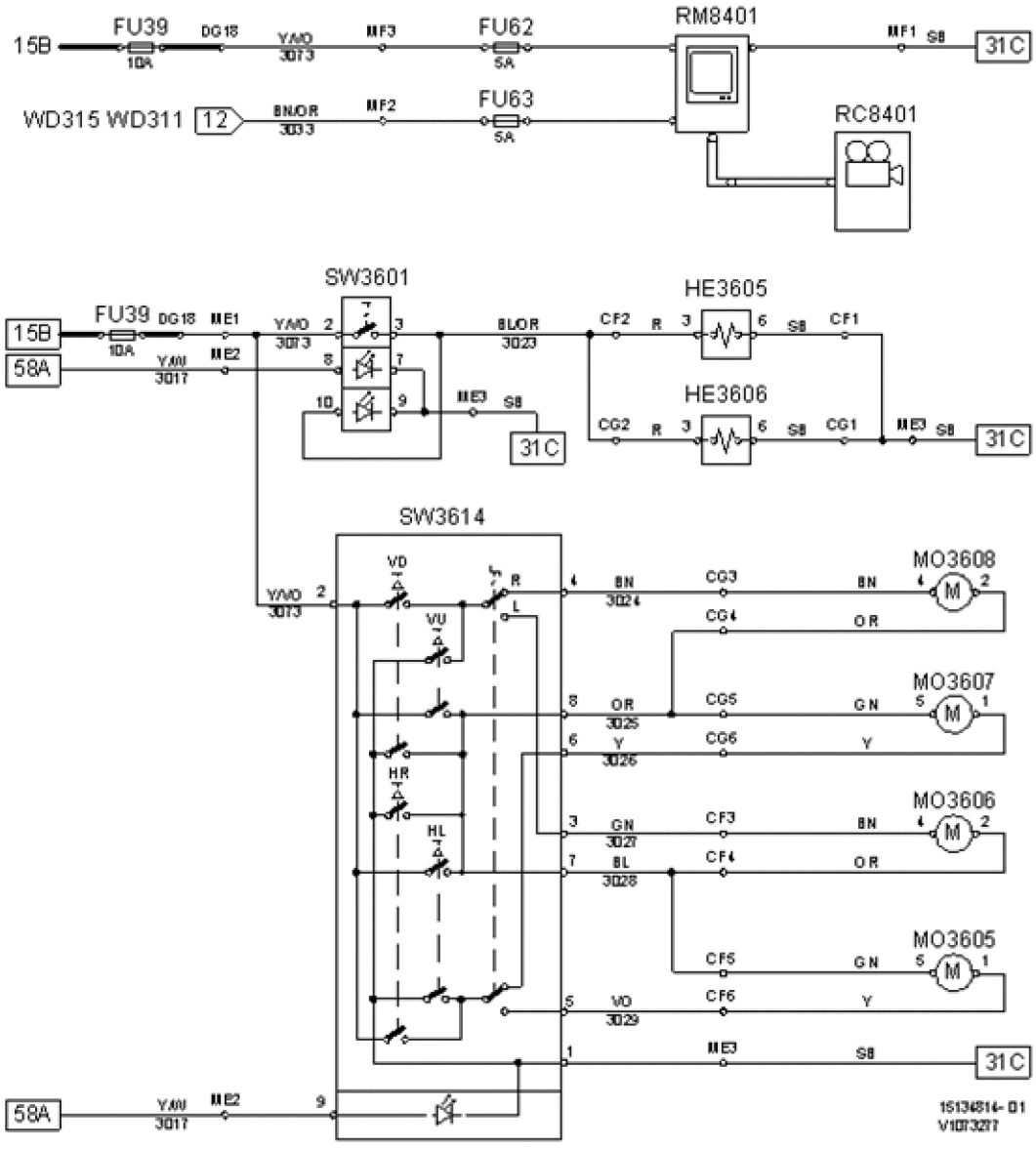

Figure 1

Designation	Function
FU39	Monitor, reversing camera

	Electric heat rear-view mirrors Operation rear-view mirrors
FU62	Monitor, reversing camera
FU63	Activation of back-up camera when reversing
HE3605	Electric heat rear-view mirror left
HE3606	Electric heat rear-view mirror right
MO3605	Electrically controlled rear-view mirror left horizontal
MO3606	Electrically controlled rear-view mirror left vertical
MO3607	Electrically controlled rear-view mirror right horizontal
MO3608	Electrically controlled rear-view mirror right vertical
RC8401	Back-up camera
RM8401	Display window
SW3601	Electrically heated rear-view mirrors
SW3614	Electrically controlled rear-view mirrors

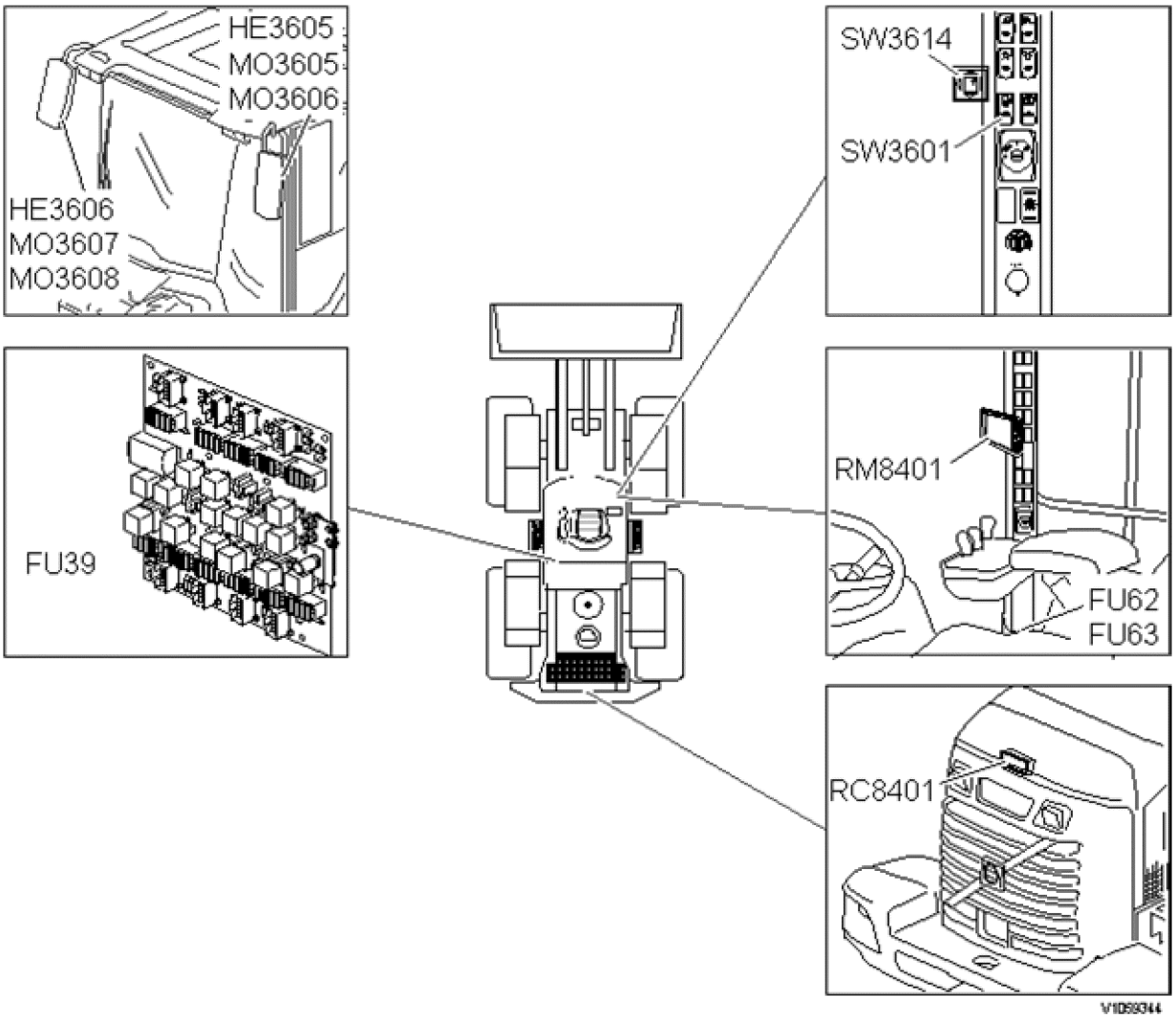

Figure 2
Component position

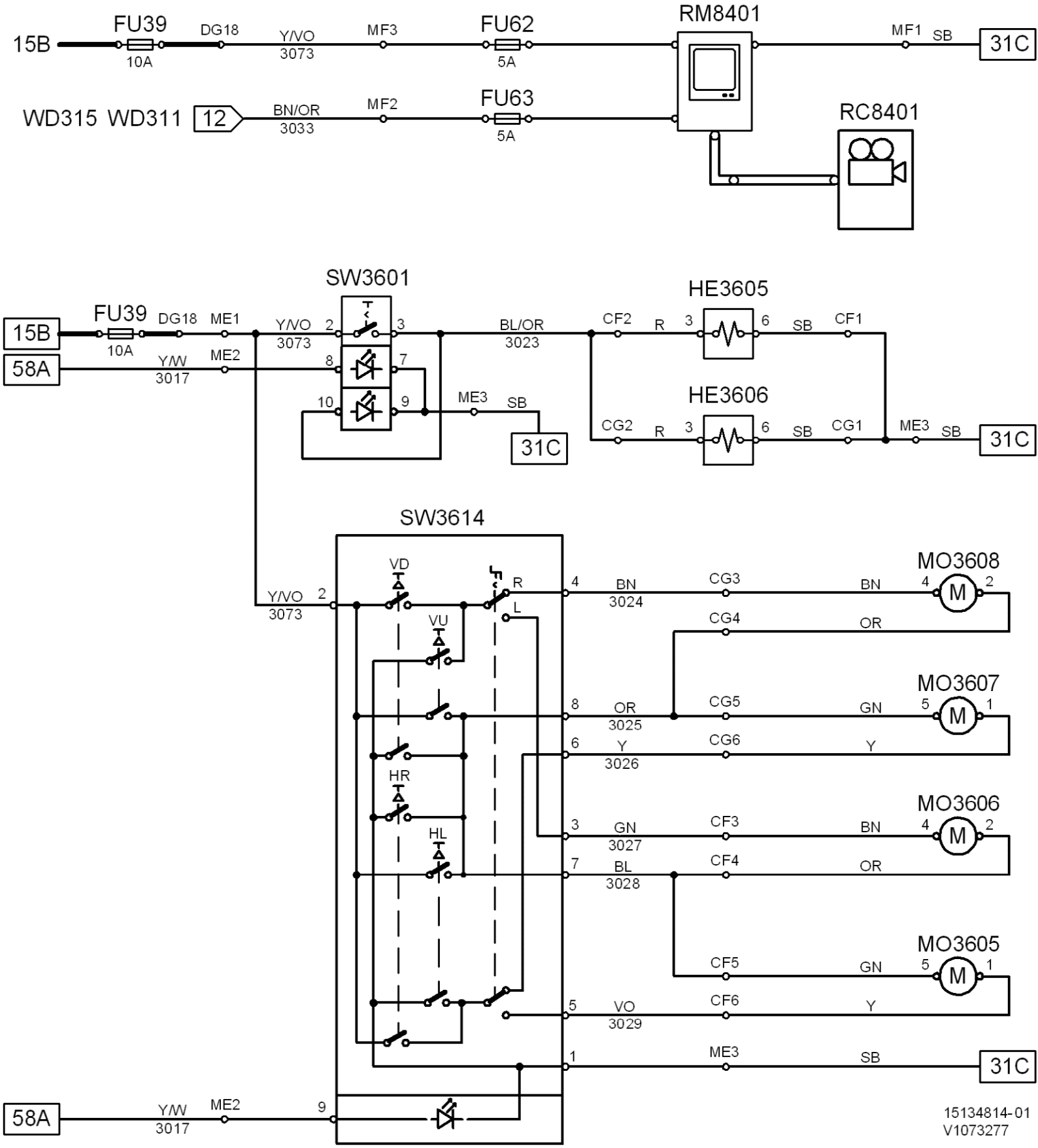
15B
FU39
10A
DG18
Y/VO
3073
MF3
FU62
5A
RM8401
MF1
SB
31C
WD315 WD311
12
BN/OR
3033
MF2
FU63
5A
RC8401
SW3601
HE3605
HE3606
15B
58A
FU39
10A
DG18
ME1
ME2
Y/VO
3073
Y/W
3017
BL/OR
3023
CF2
R
CF1
CG2
CG1
ME3
SB
31C
SW3614
VD
VU
HR
HL
R
L
Y/VO
3073
BN
3024
OR
3025
Y
3026
GN
3027
BL
3028
VO
3029
CG3
CG4
CG5
CG6
CF3
CF4
CF5
CF6
MO3608
MO3607
MO3606
MO3605
M
58A
Y/W
3017
ME2
ME3
SB
31C
15134814-01
V1073277

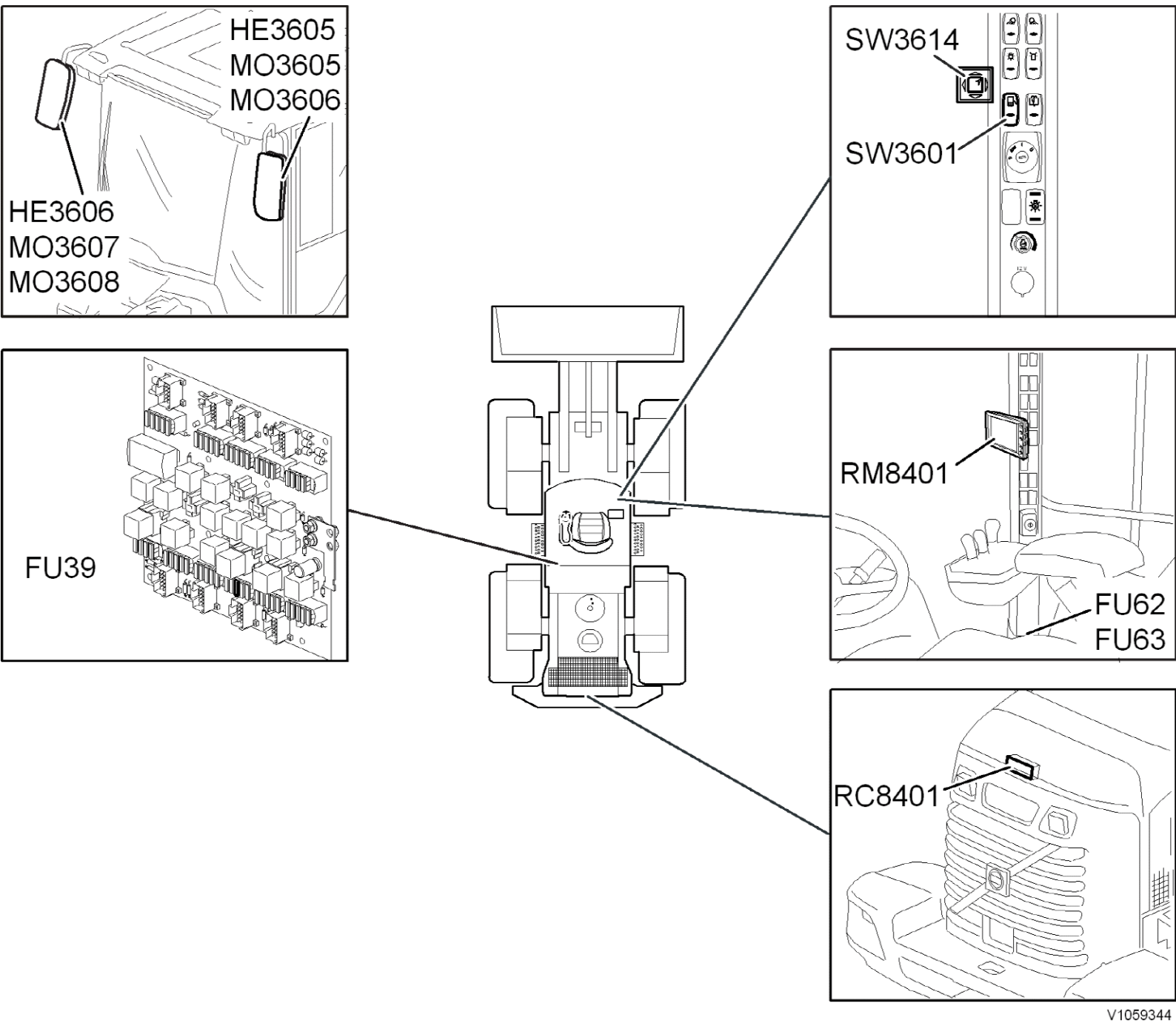
HE3605
MO3605
MO3606
HE3606
MO3607
MO3608
SW3614
SW3601
FU39
RM8401
FU62
FU63
RC8401
V1059344

More than one document matches the current profile:

Wiring diagram 805
Product Line: WLO
Model Variant: L90F
Site: Arvika, Asheville, Pederneiras
Serial Number Start: 25001, 68101, 71501
Serial Number End: 26640, 68769, 71666

Wiring diagram 805
Product Line: WLO
Model Variant: L90F
Site: Arvika, Asheville, Pederneiras
Serial Number Start: 26640, 68770, 71667
Serial Number End: 49999, 69999, 79999

VOLVO
Construction Equipment

Service Information

Document Title:	Function Group:	Information Type: **Service Information**	Date: **12/10/2011**
Profile: **WLO, L90F (Volvo) [GB]**			

Wiring diagram 805

Air conditioning

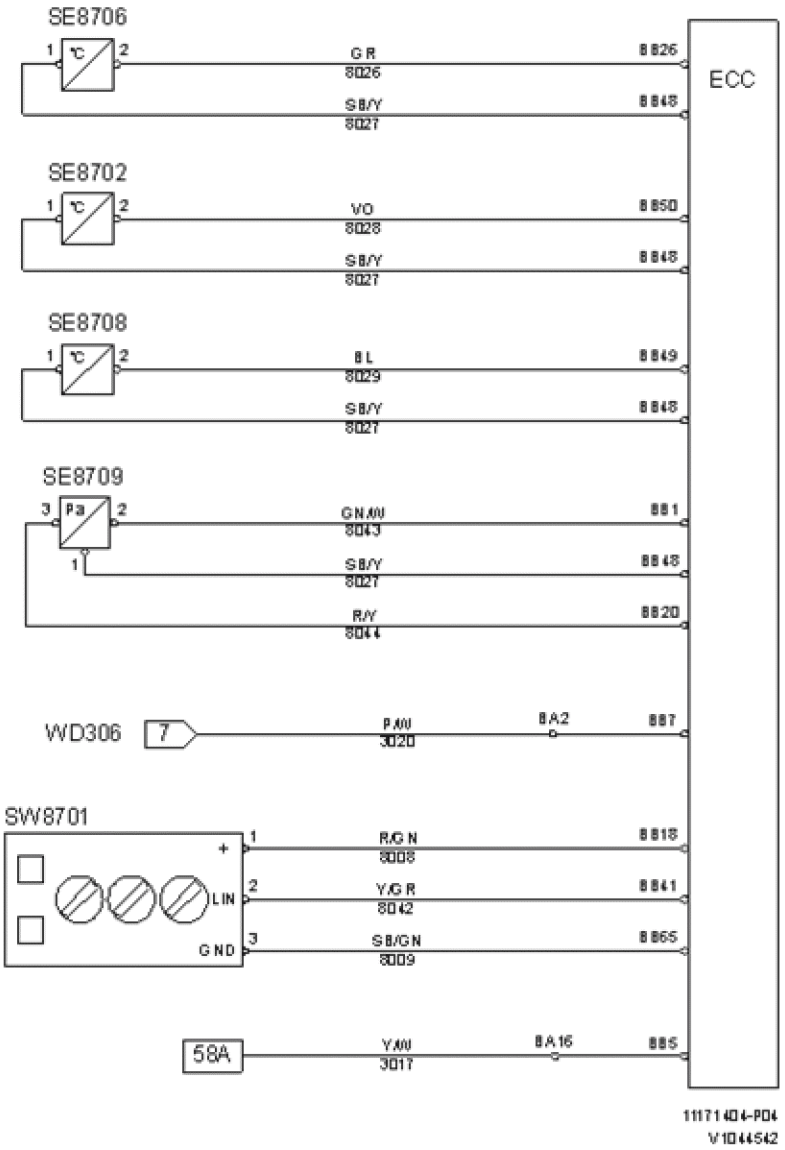

Figure 1

Designation	Function
SE8702	Temperature evaporator
SE8706	Temperature, cab

SE8708	Temperature air channel
SE8709	Pressure refrigerant
SE8701	Controls climate control system

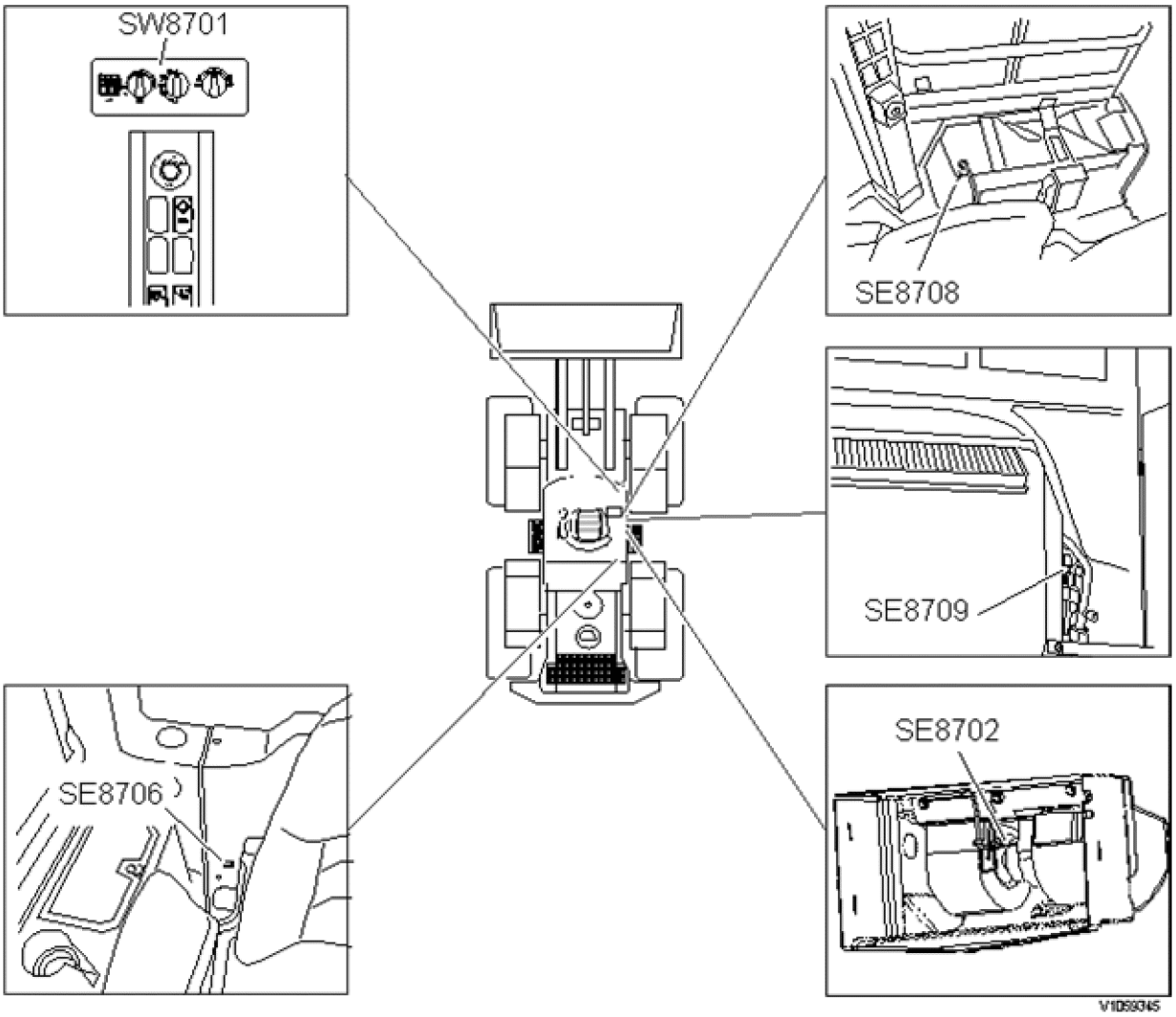

Figure 2
Component position

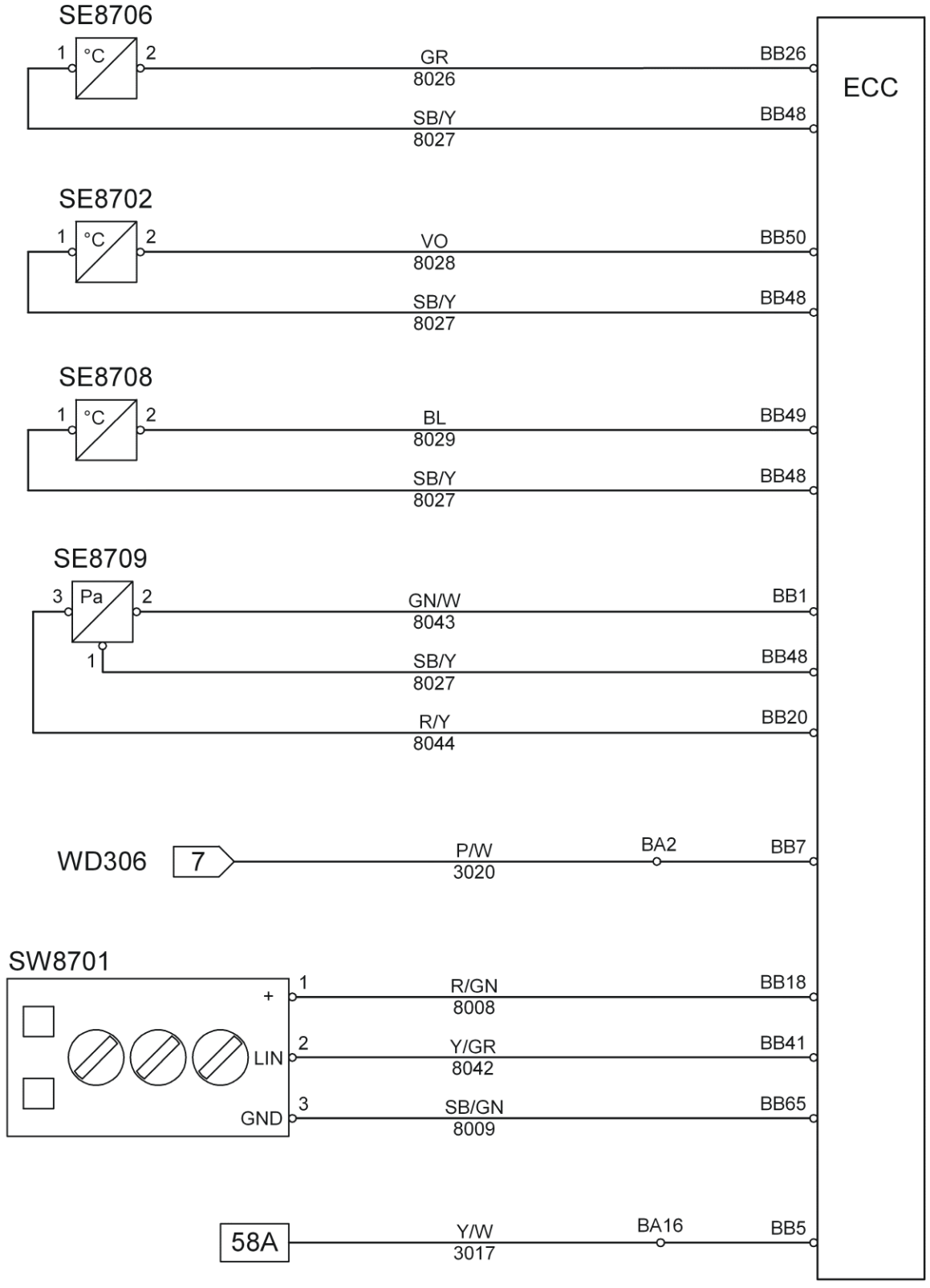

11171404-P04
V1044542

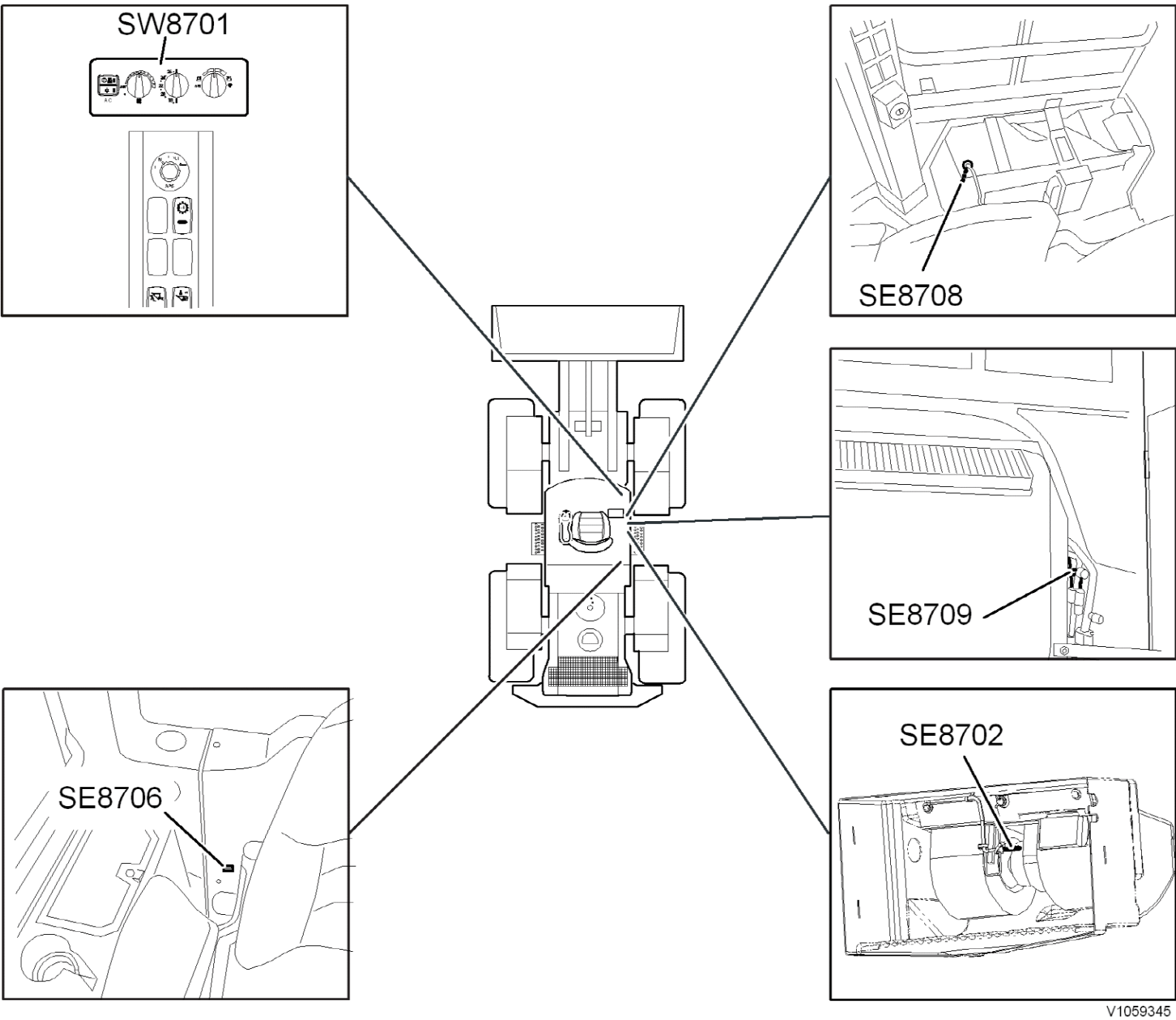
SW8701
SE8708
SE8709
SE8706
SE8702
V1059345

VOLVO
Construction Equipment

Service Information

Document Title:	Function Group:	Information Type: **Service Information**	Date: **12/10/2011**
Profile: **WLO, L90F (Volvo) [GB]**			

Wiring diagram 805

Air conditioning

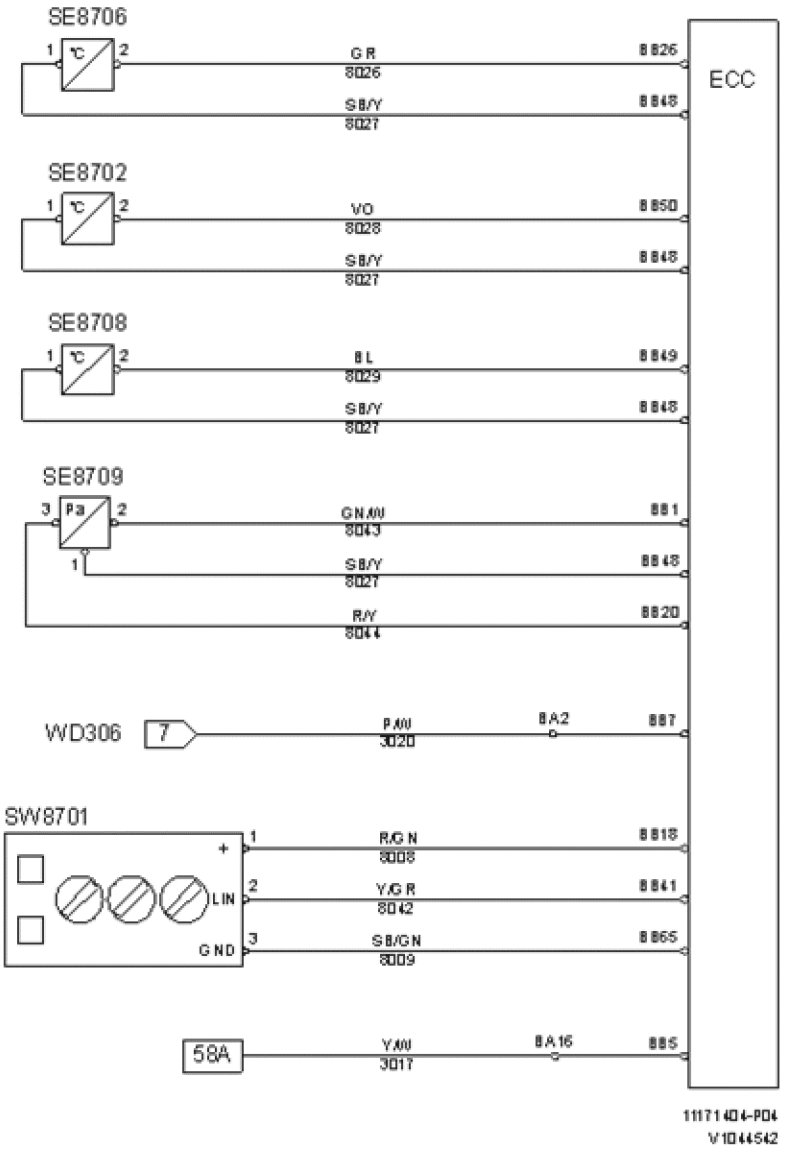

Figure 1

Designation	Function
SE8702	Temperature evaporator
SE8706	Temperature, cab

SE8708	Temperature air channel
SE8709	Pressure refrigerant
SE8701	Controls climate control system

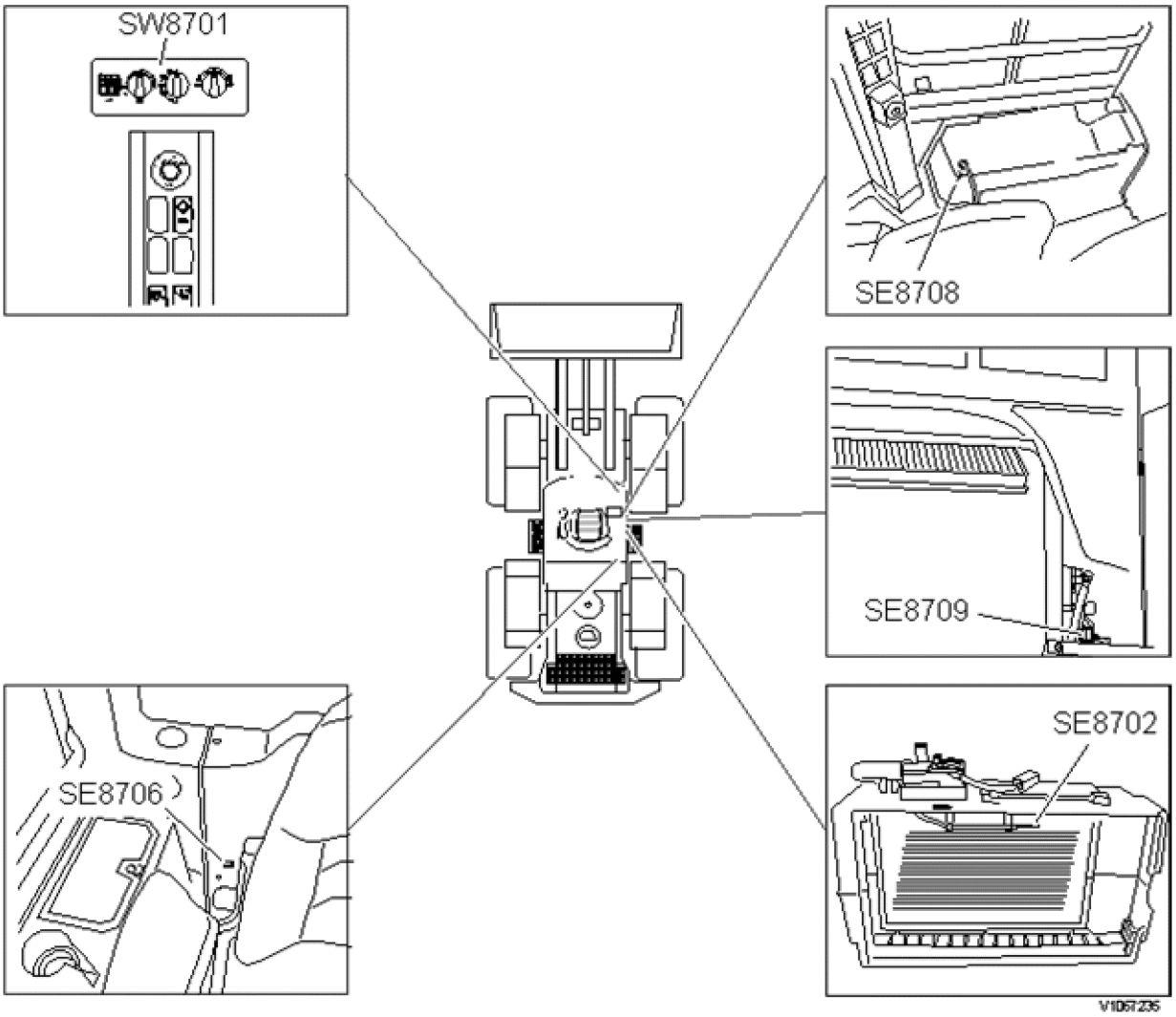

Figure 2
Component position

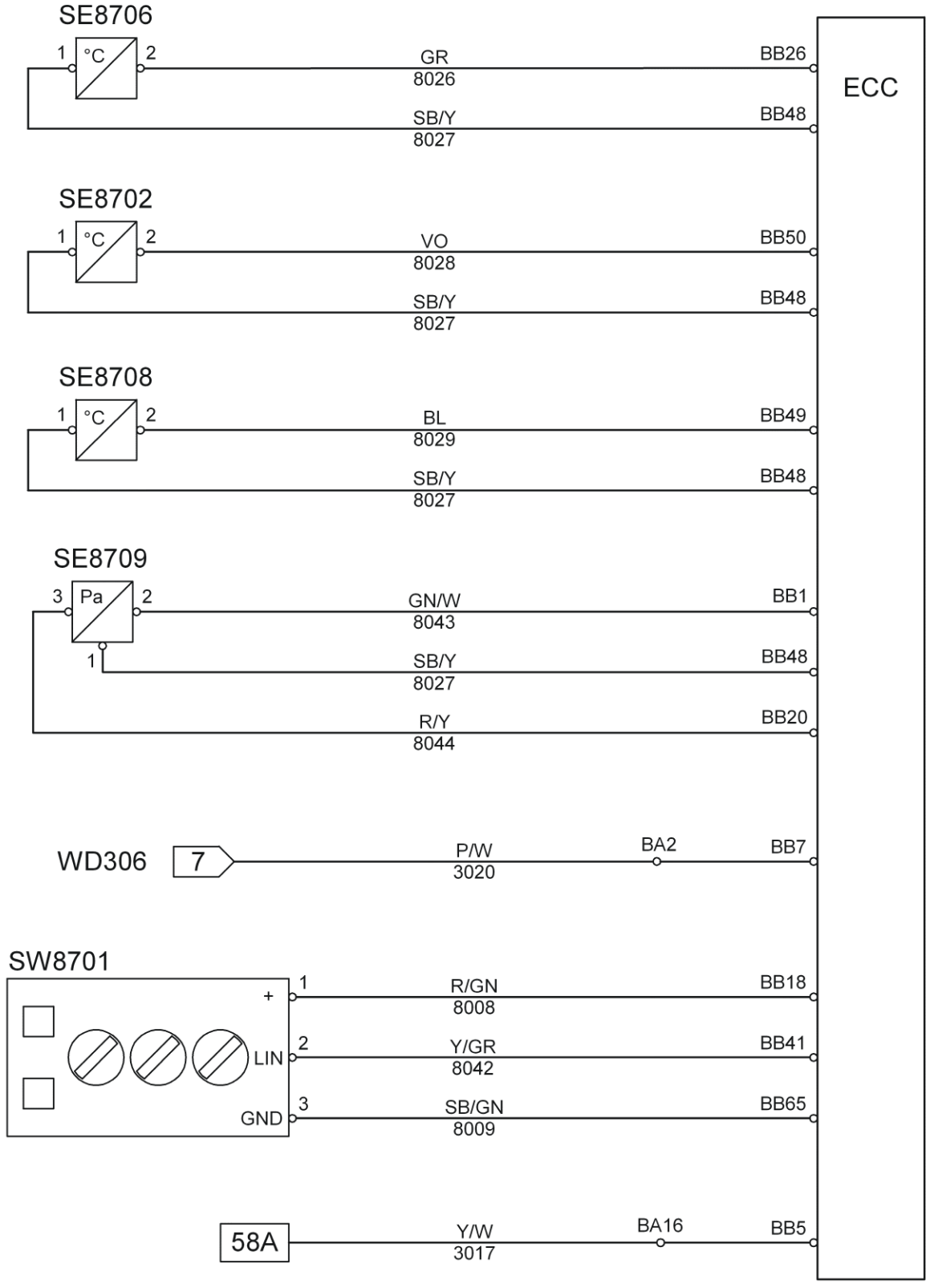

11171404-P04
V1044542

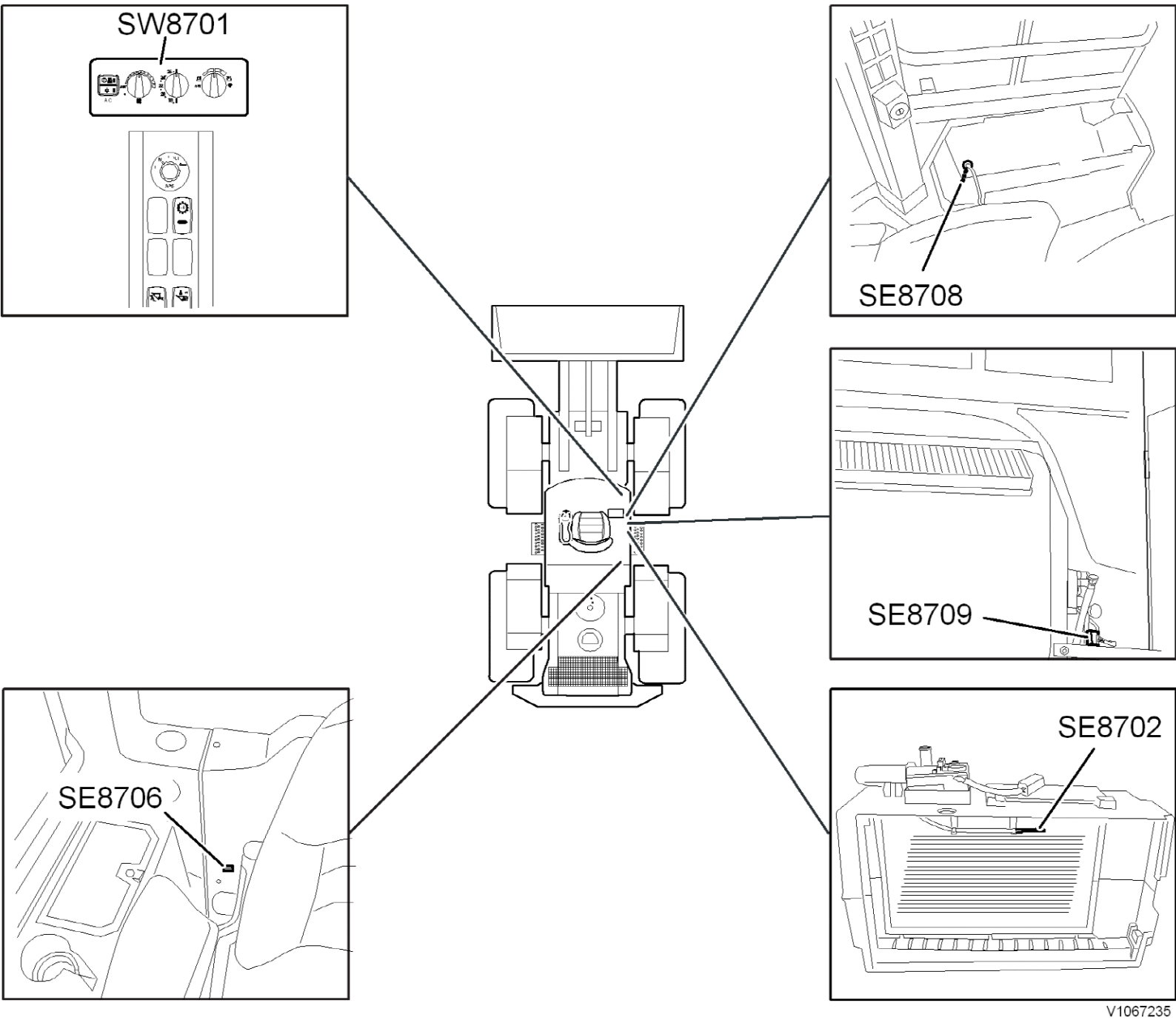
SW8701
SE8708
SE8709
SE8706
SE8702
V1067235

More than one document matches the current profile:

Wiring diagram 806
Product Line: WLO
Model Variant: L90F
Site: Arvika, Asheville, Pederneiras
Serial Number Start: 25001, 68101, 71501
Serial Number End: 26640, 68769, 71666

Wiring diagram 806
Product Line: WLO
Model Variant: L90F
Site: Arvika, Asheville, Pederneiras
Serial Number Start: 26640, 68770, 71667
Serial Number End: 49999, 69999, 79999

VOLVO
Construction Equipment

Service Information

Document Title:	Function Group:	Information Type: **Service Information**	Date: **12/10/2011**
Profile: **WLO, L90F (Volvo) [GB]**			

Wiring diagram 806

Air conditioning

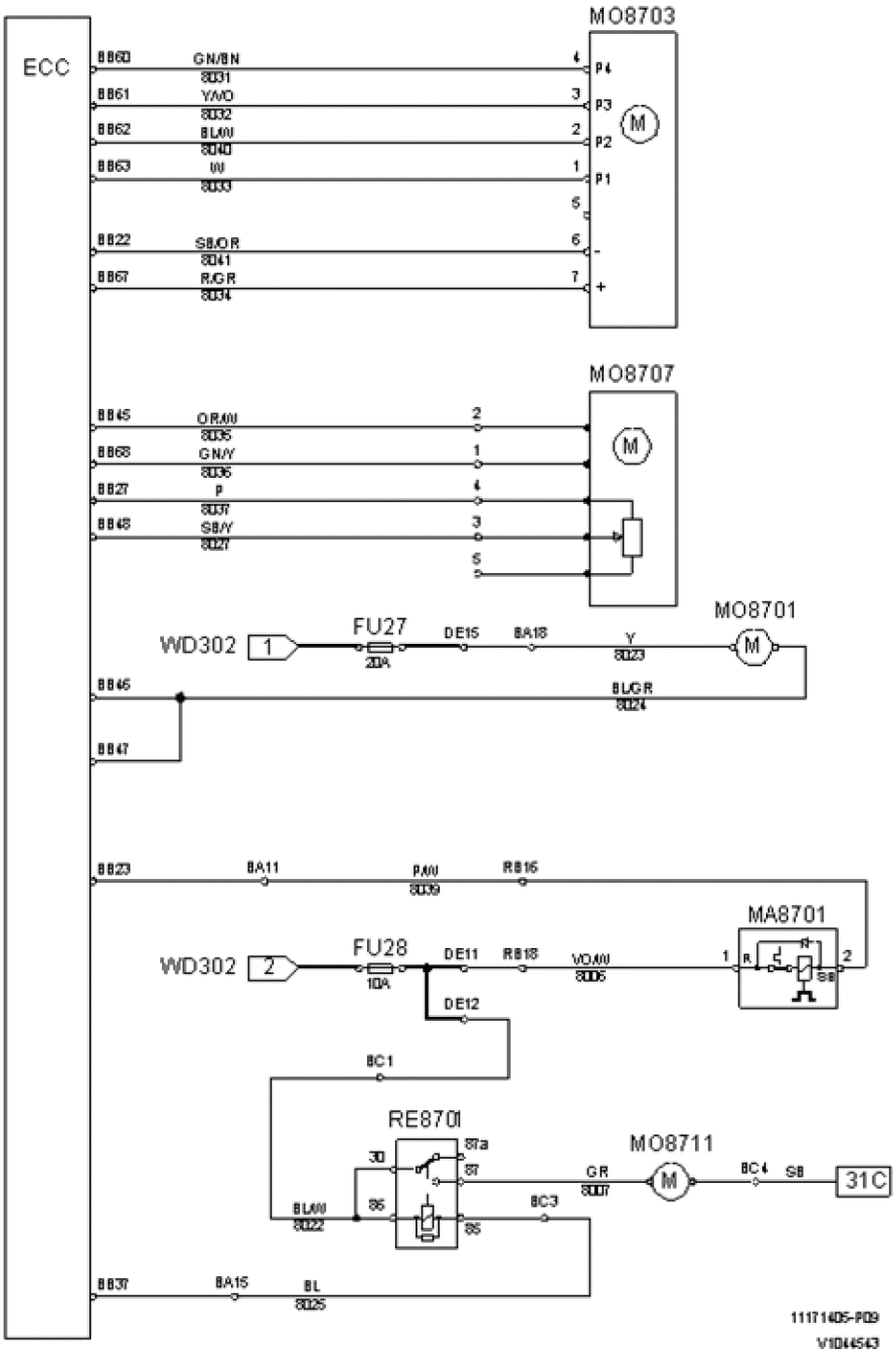

Figure 1

Designation	Function
FU27	Cab fan
FU28	Magnet clutch AC compressor, pause coolant pump
MA8701	Magnet clutch AC compressor
MO8701	Cab fan
MO8703	Actuator inlet
MO8707	Actuator water mixture
MO8711	Pause coolant pump
RE8701	Pause coolant pump

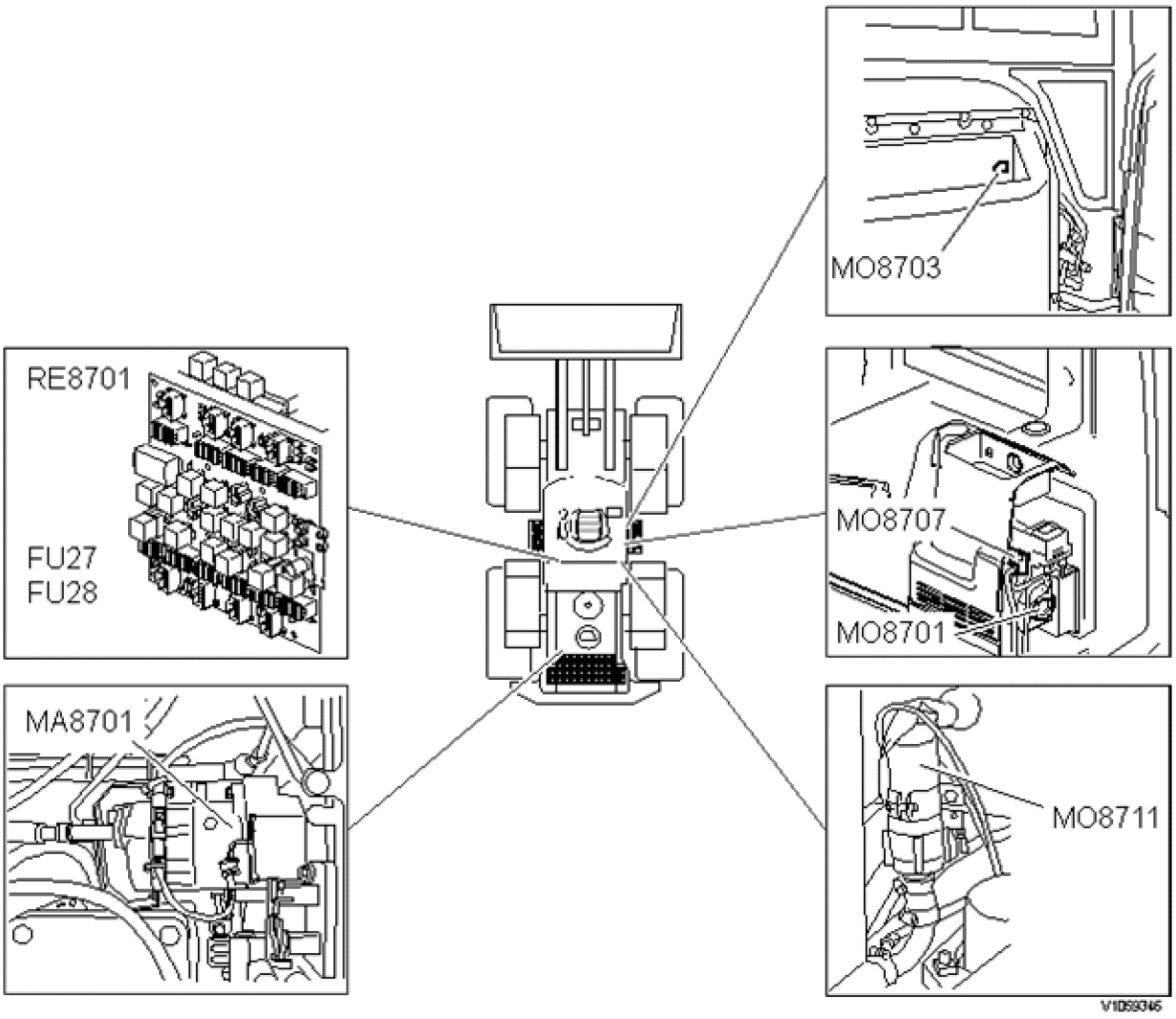

Figure 2
Component position

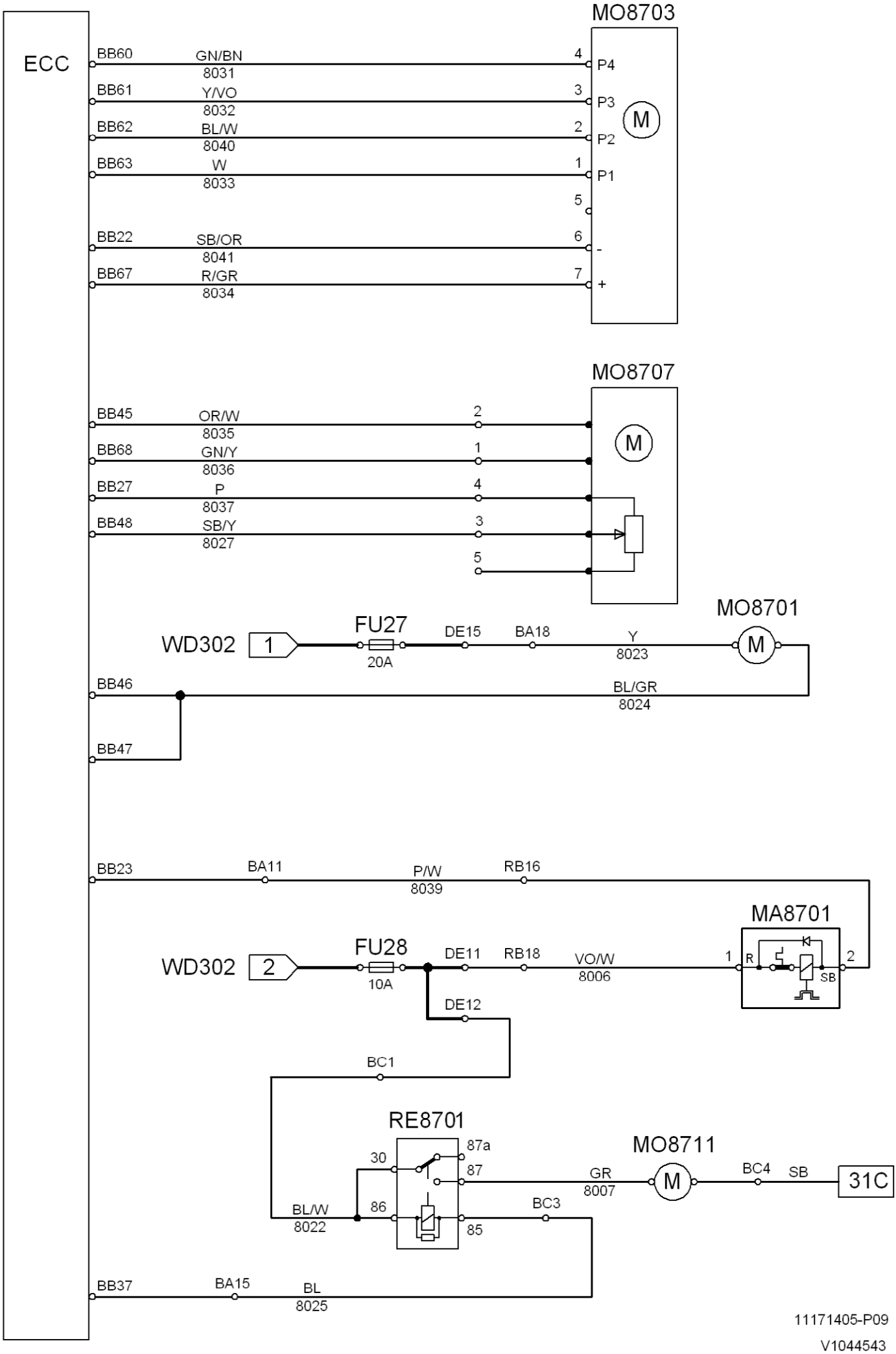
ECC
MO8703
BB60
GN/BN
8031
4
P4
BB61
Y/VO
8032
3
P3
BB62
BL/W
8040
2
P2
BB63
W
8033
1
P1
5
BB22
SB/OR
8041
6
-
BB67
R/GR
8034
7
+
M
MO8707
BB45
OR/W
8035
2
BB68
GN/Y
8036
1
BB27
P
8037
4
BB48
SB/Y
8027
3
5
M
MO8701
WD302
1
FU27
20A
DE15
BA18
Y
8023
M
BB46
BL/GR
8024
BB47
BB23
BA11
P/W
8039
RB16
MA8701
WD302
2
FU28
10A
DE11
RB18
VO/W
8006
1
R
SB
2
DE12
BC1
RE8701
30
87a
87
86
85
BL/W
8022
MO8711
GR
8007
M
BC4
SB
31C
BC3
BB37
BA15
BL
8025
11171405-P09
V1044543

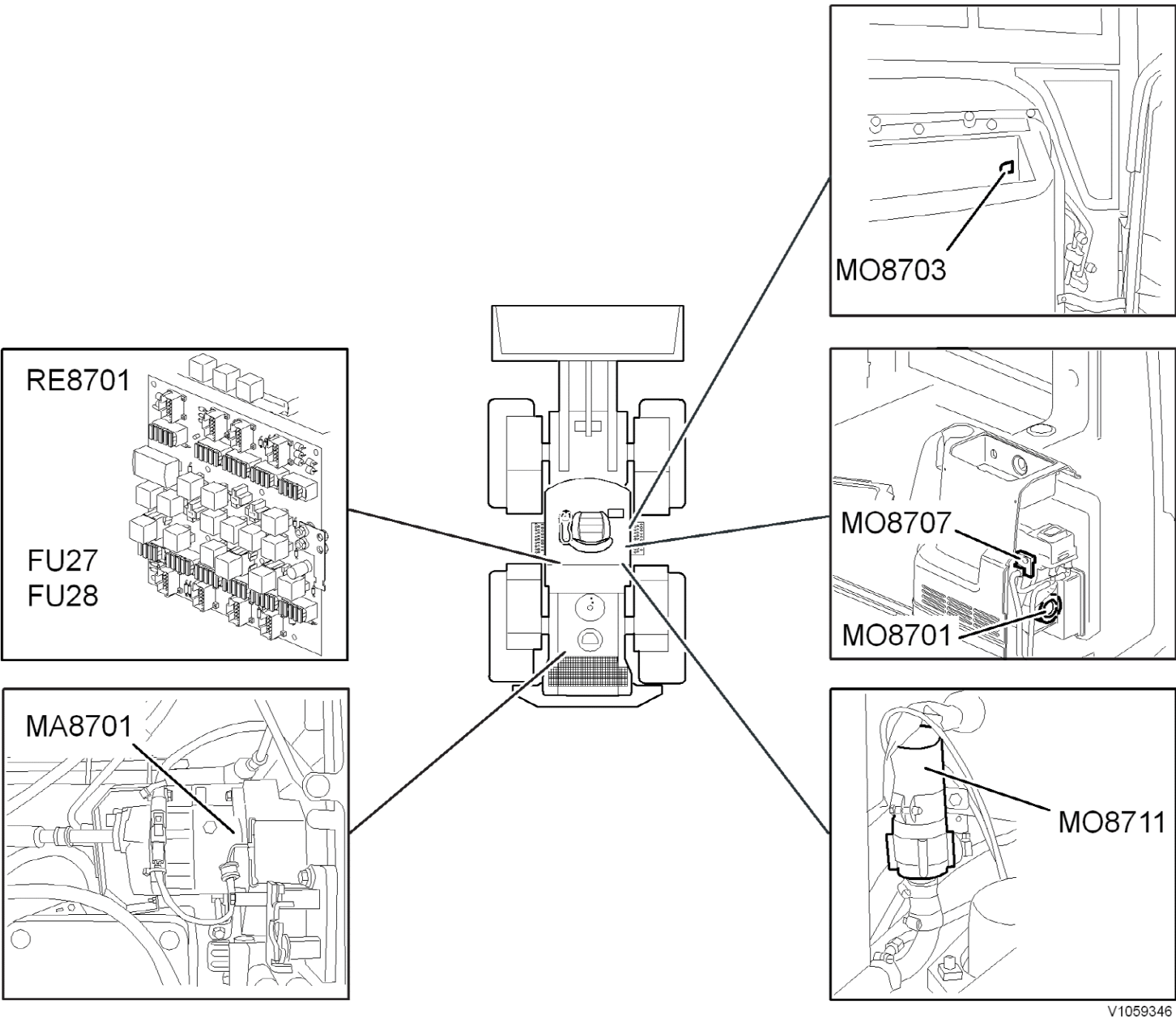
MO8703
RE8701
FU27
FU28
MO8707
MO8701
MA8701
MO8711
V1059346

VOLVO
Construction Equipment

Service Information

Document Title:	Function Group:	Information Type: **Service Information**	Date: **12/10/2011**
Profile: **WLO, L90F (Volvo) [GB]**			

Wiring diagram 806

Air conditioning

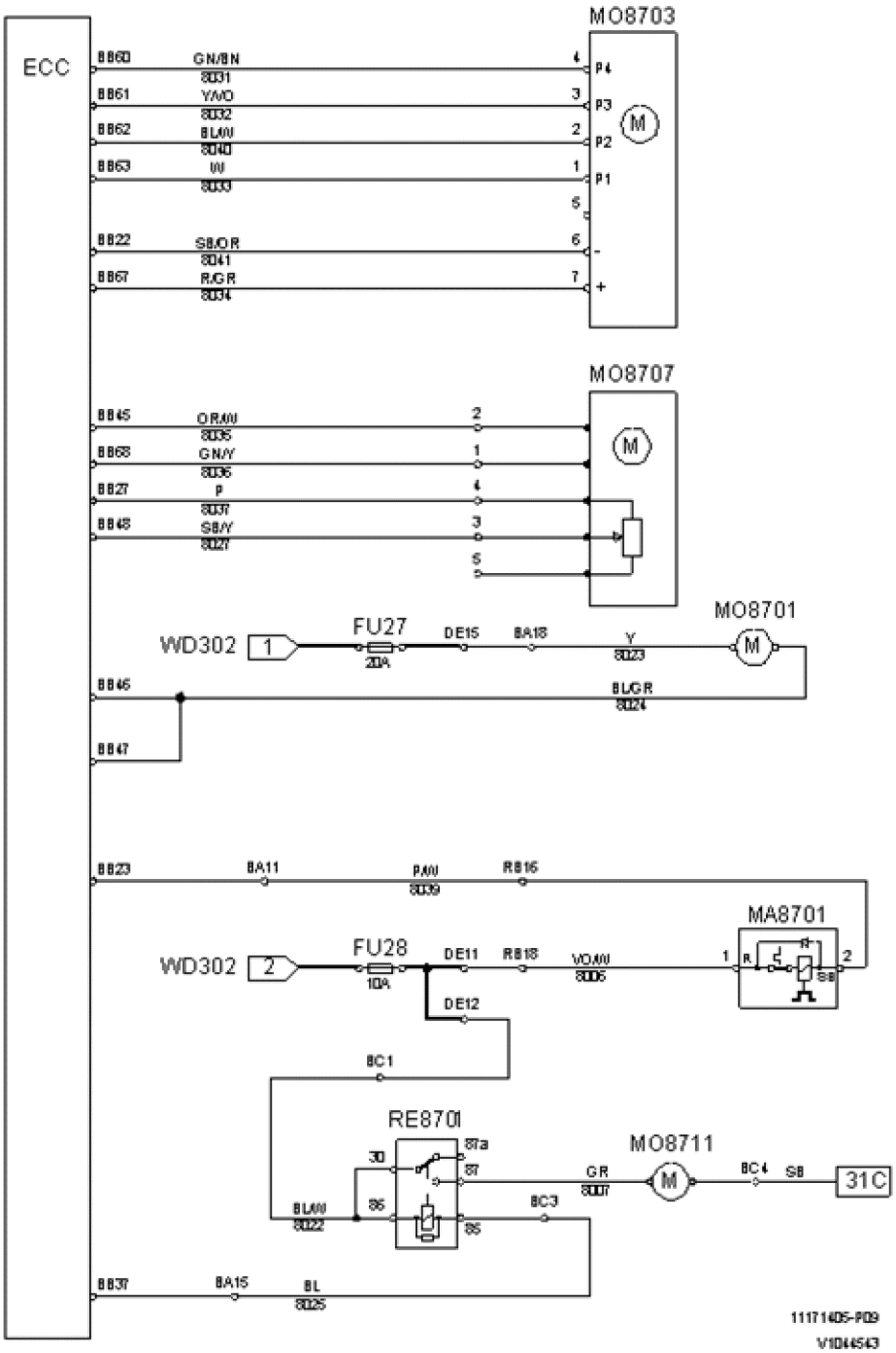

Figure 1

Designation	Function
FU27	Cab fan
FU28	Magnet clutch AC compressor, pause coolant pump
MA8701	Magnet clutch AC compressor
MO8701	Cab fan
MO8703	Actuator inlet
MO8707	Actuator water mixture
MO8711	Pause coolant pump
RE8701	Pause coolant pump

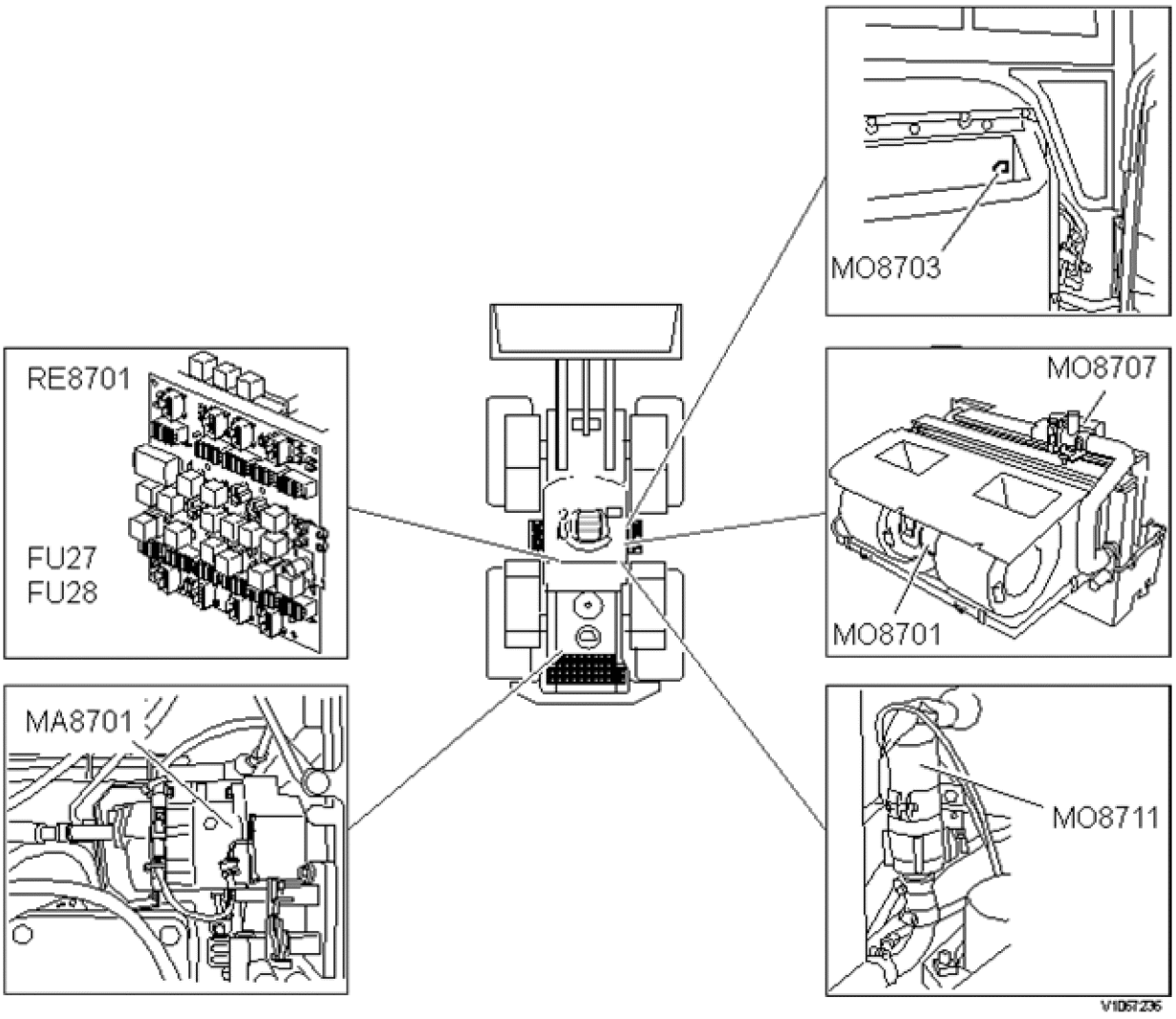

Figure 2
Component position

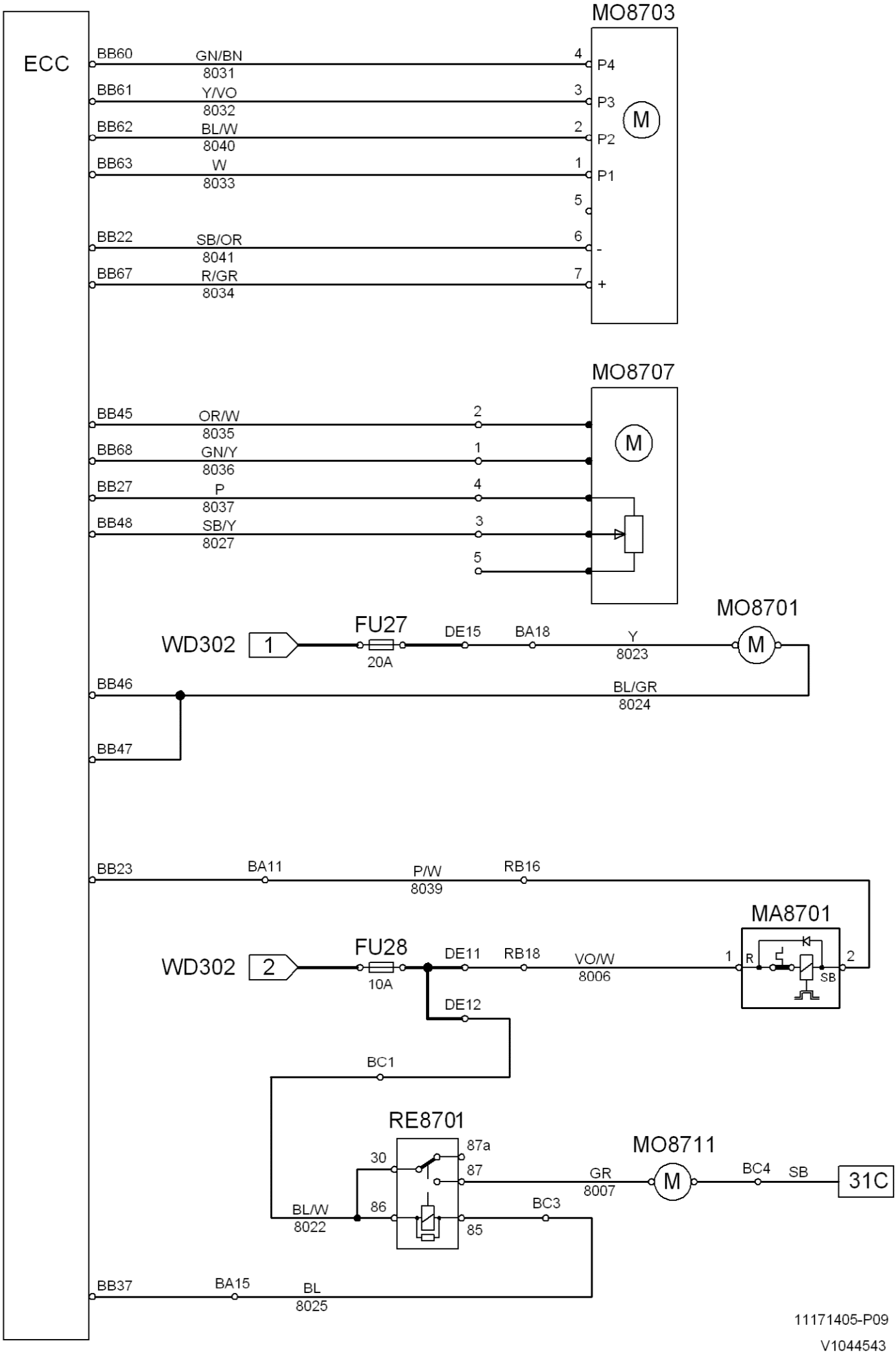
ECC
MO8703
BB60
GN/BN
8031
4
P4
BB61
Y/VO
8032
3
P3
BB62
BL/W
8040
2
P2
BB63
W
8033
1
P1
5
BB22
SB/OR
8041
6
-
BB67
R/GR
8034
7
+
M
MO8707
BB45
OR/W
8035
2
BB68
GN/Y
8036
1
BB27
P
8037
4
BB48
SB/Y
8027
3
5
M
MO8701
WD302
1
FU27
20A
DE15
BA18
Y
8023
M
BB46
BL/GR
8024
BB47
BB23
BA11
P/W
8039
RB16
MA8701
WD302
2
FU28
10A
DE11
RB18
VO/W
8006
1
R
SB
2
DE12
BC1
RE8701
30
87a
87
86
85
BL/W
8022
MO8711
GR
8007
M
BC4
SB
31C
BC3
BB37
BA15
BL
8025
11171405-P09
V1044543

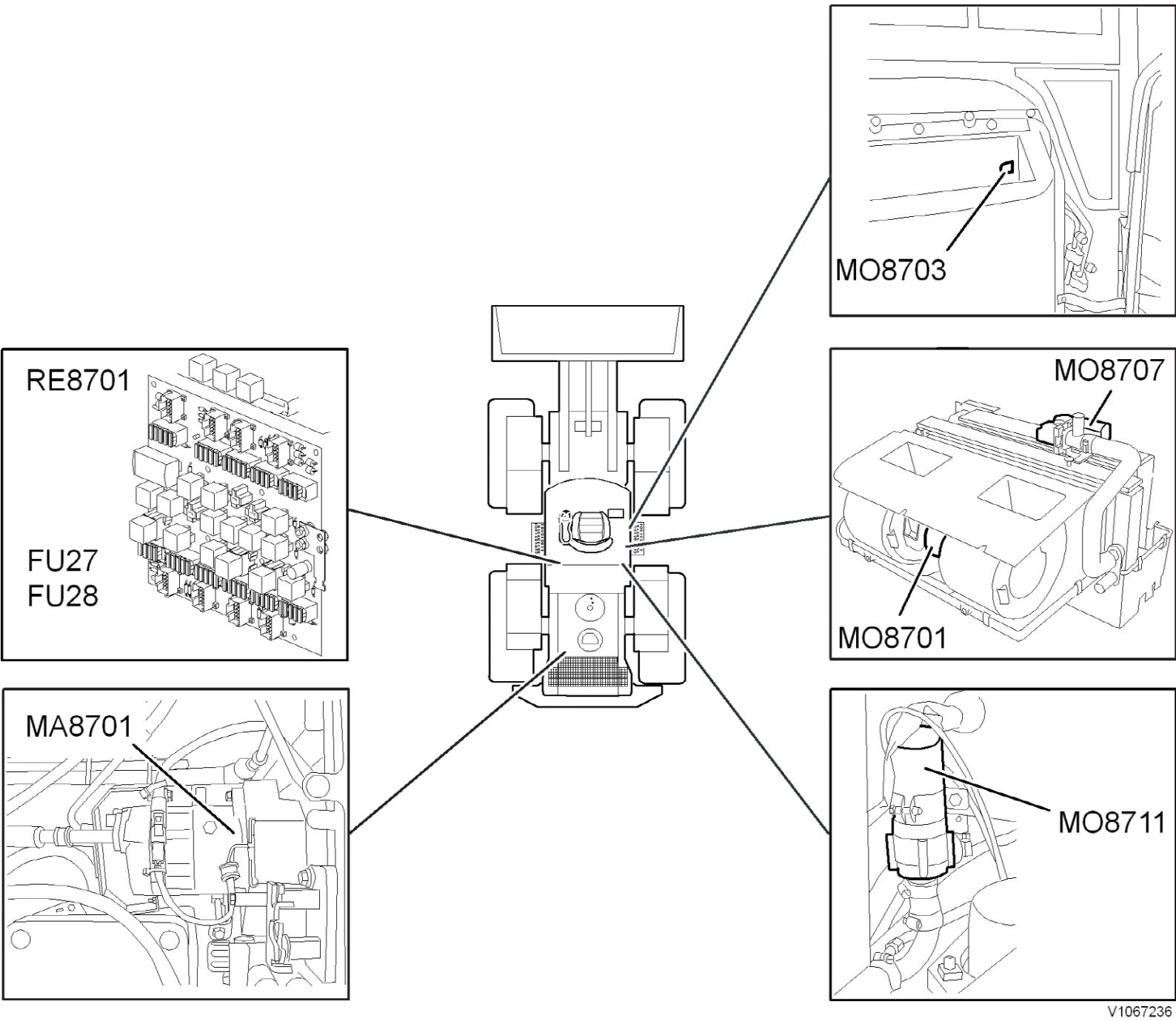
MO8703
RE8701
FU27
FU28
MO8707
MO8701
MA8701
MO8711
V1067236

VOLVO
Construction Equipment

Service Information

Document Title:	Function Group:	Information Type: **Service Information**	Date: **12/10/2011**
Profile: **WLO, L90F (Volvo) [GB]**			

Wiring diagram 807

Fan cyclone filter

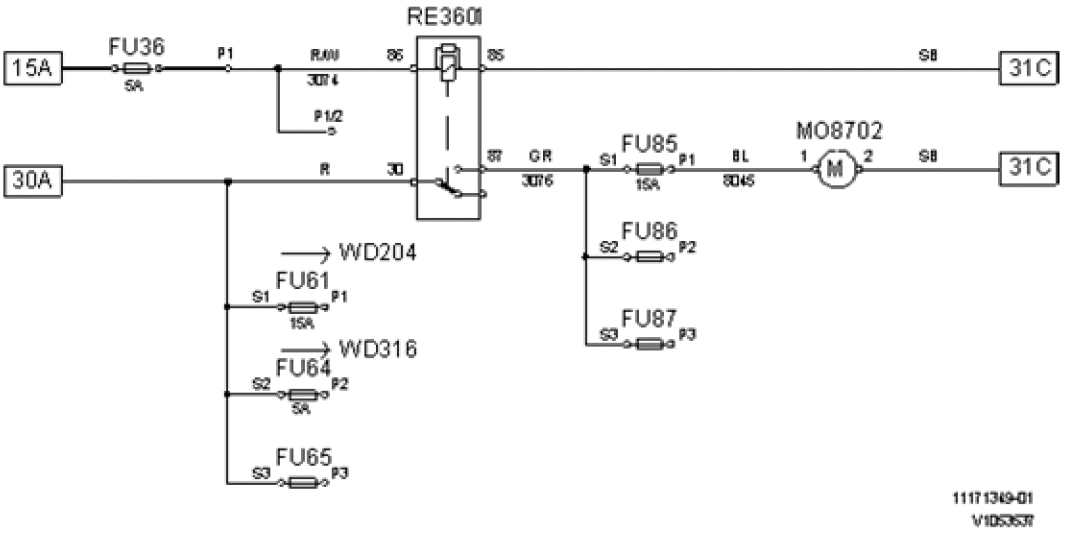

Figure 1

Designation	Function
FU36	Fan cyclone filter
FU61	Electrically heated fuel filter
FU64	Voltage feed W-ECU
FU65	—
FU85	Fan cyclone filter
FU86	—
FU87	—
MO8702	Fan cyclone filter
RE3601	Fan cyclone filter

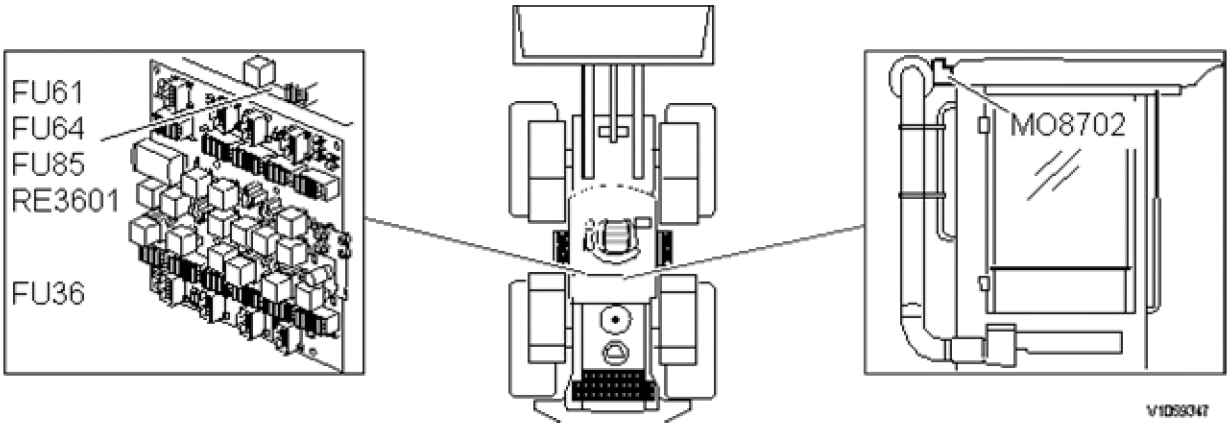

Figure 2
Component position

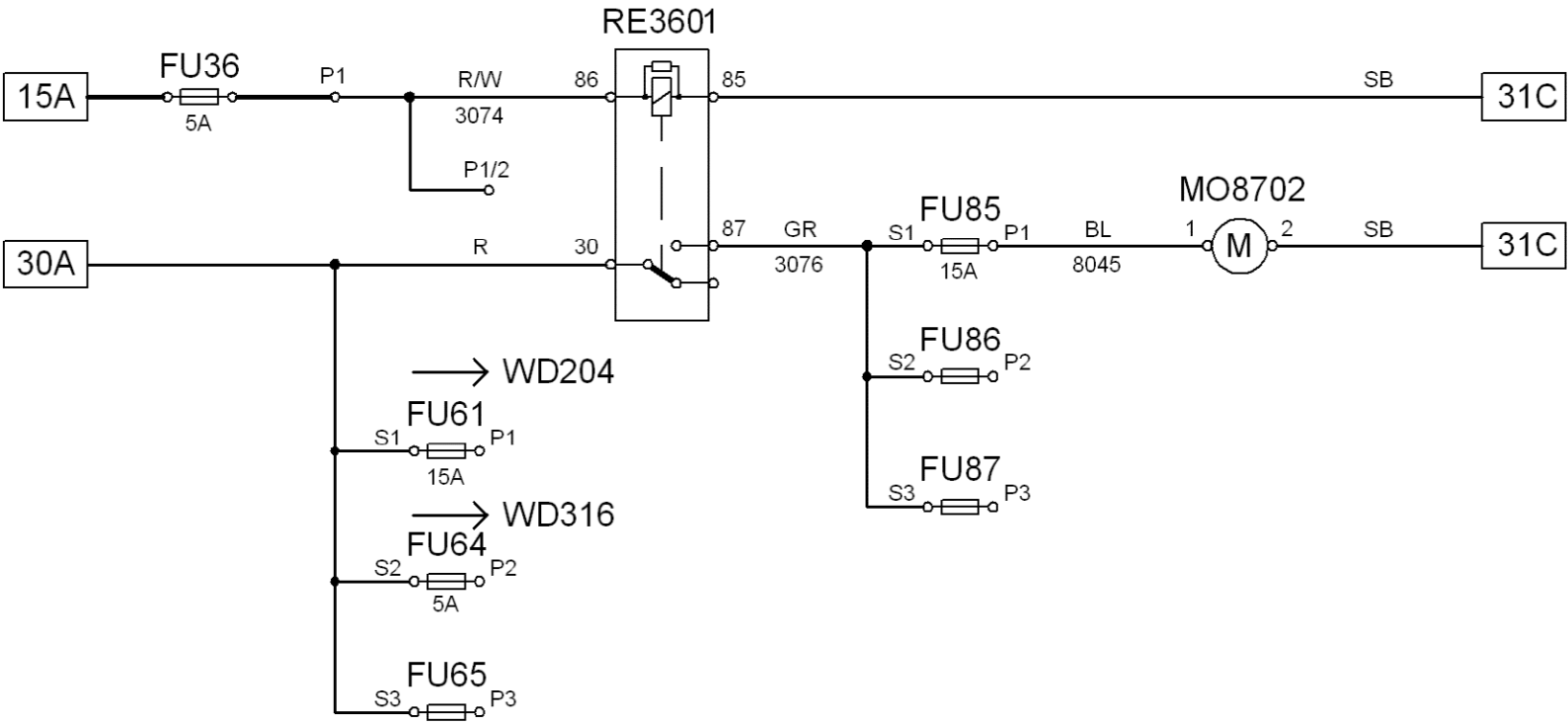

11171349-01
V1053537

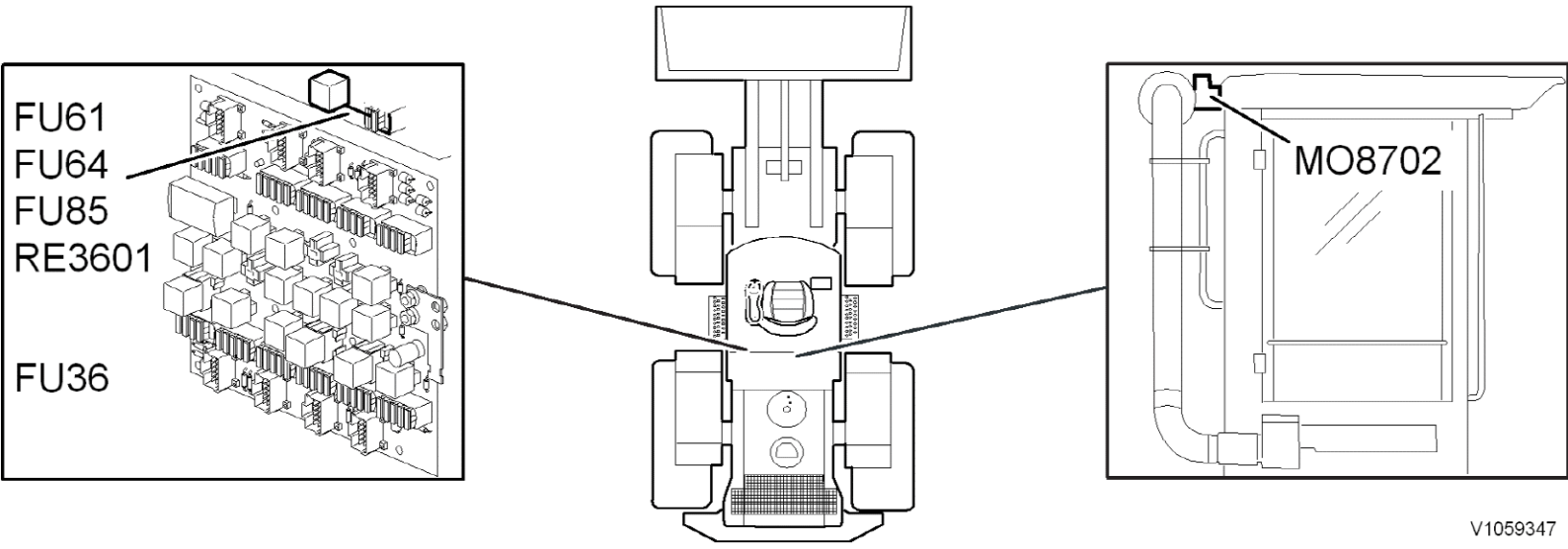
FU61
FU64
FU85
RE3601
FU36
MO8702
V1059347

More than one document matches the current profile:

Wiring diagram 901
Product Line: WLO
Model Variant: L90F
Site: Arvika
Serial Number Start: 25001
Serial Number End: 25774

Wiring diagram 901
Product Line: WLO
Model Variant: L90F
Site: Arvika, Pederneiras, Asheville
Serial Number Start: 25775, 71501, 68101
Serial Number End: 49999, 79999, 69999

VOLVO
Construction Equipment

Service Information

Document Title:	Function Group:	Information Type: **Service Information**	Date: **12/10/2011**
Profile: **WLO, L90F (Volvo) [GB]**			

Wiring diagram 901

Working hydraulics

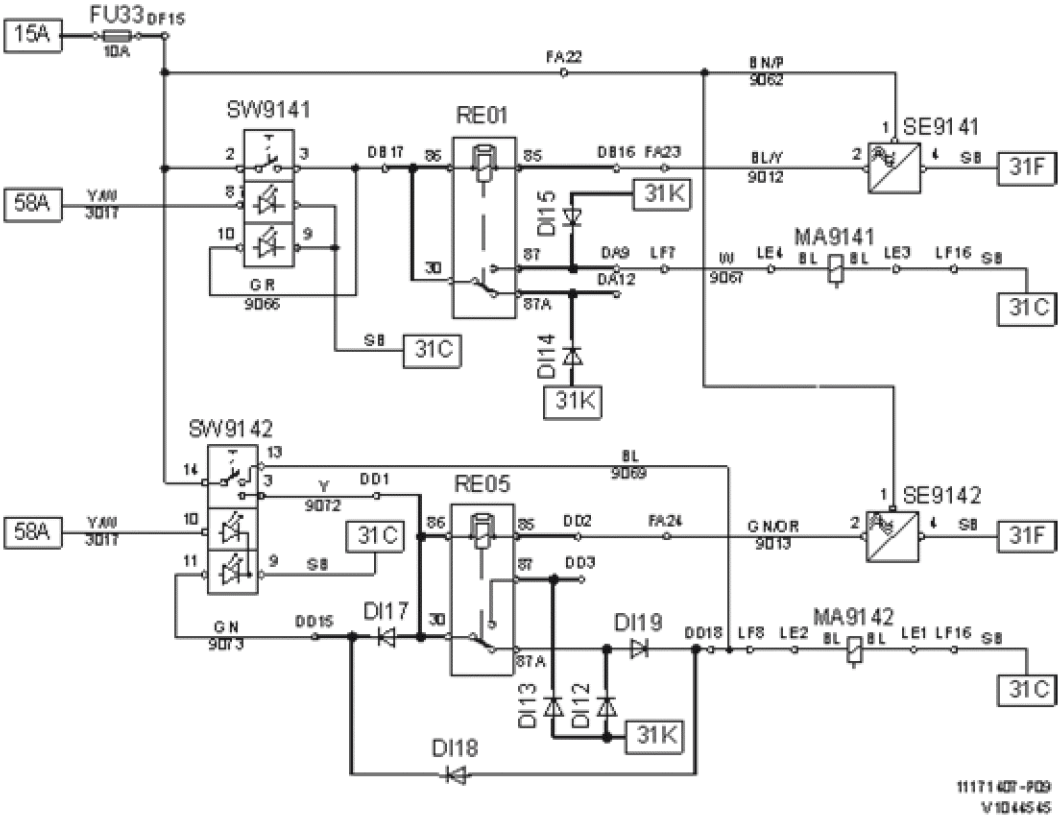

Figure 1

Designation	Function	Designation	Function
DI12	Quench diode	MA9141	Hold solenoid bucket positioner (automatic tilt)
DI13	Quench diode	MA9142	Hold solenoid boom kick-out (automatic lift)
DI14	Quench diode	RE01	Bucket positioner
DI15	Quench diode	RE05	Boom kick-out
DI17	Lock-out diode	SE9141	Position sensor bucket positioner (automatic tilt)
DI18	Lock-out diode	SE9142	Position sensor boom kick-out (automatic lift)
DI19	Lock-out diode	SW9141	Bucket positioner
FU33	Working hydraulics	SW9142	Boom kick-out

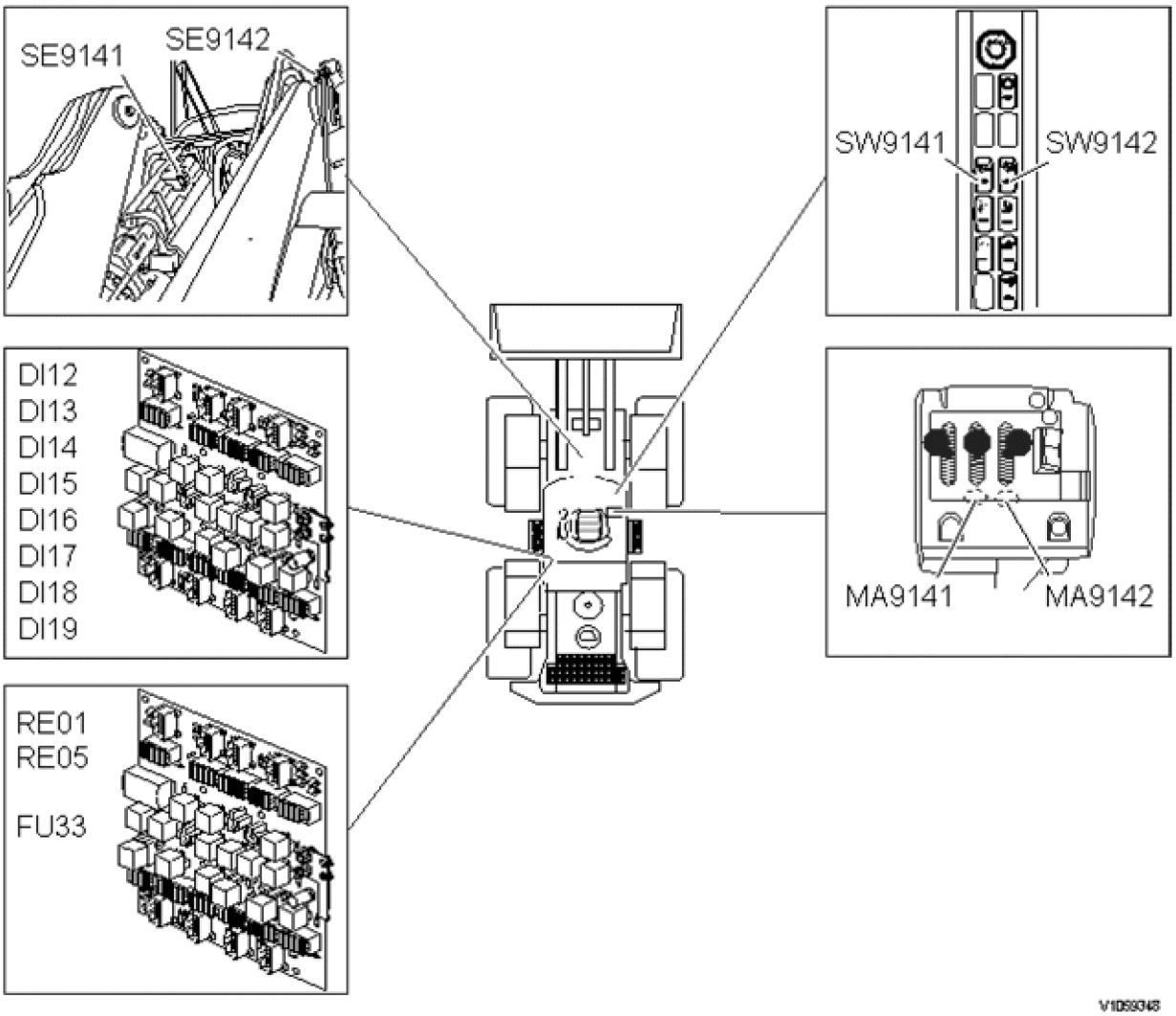

Figure 2
Component position

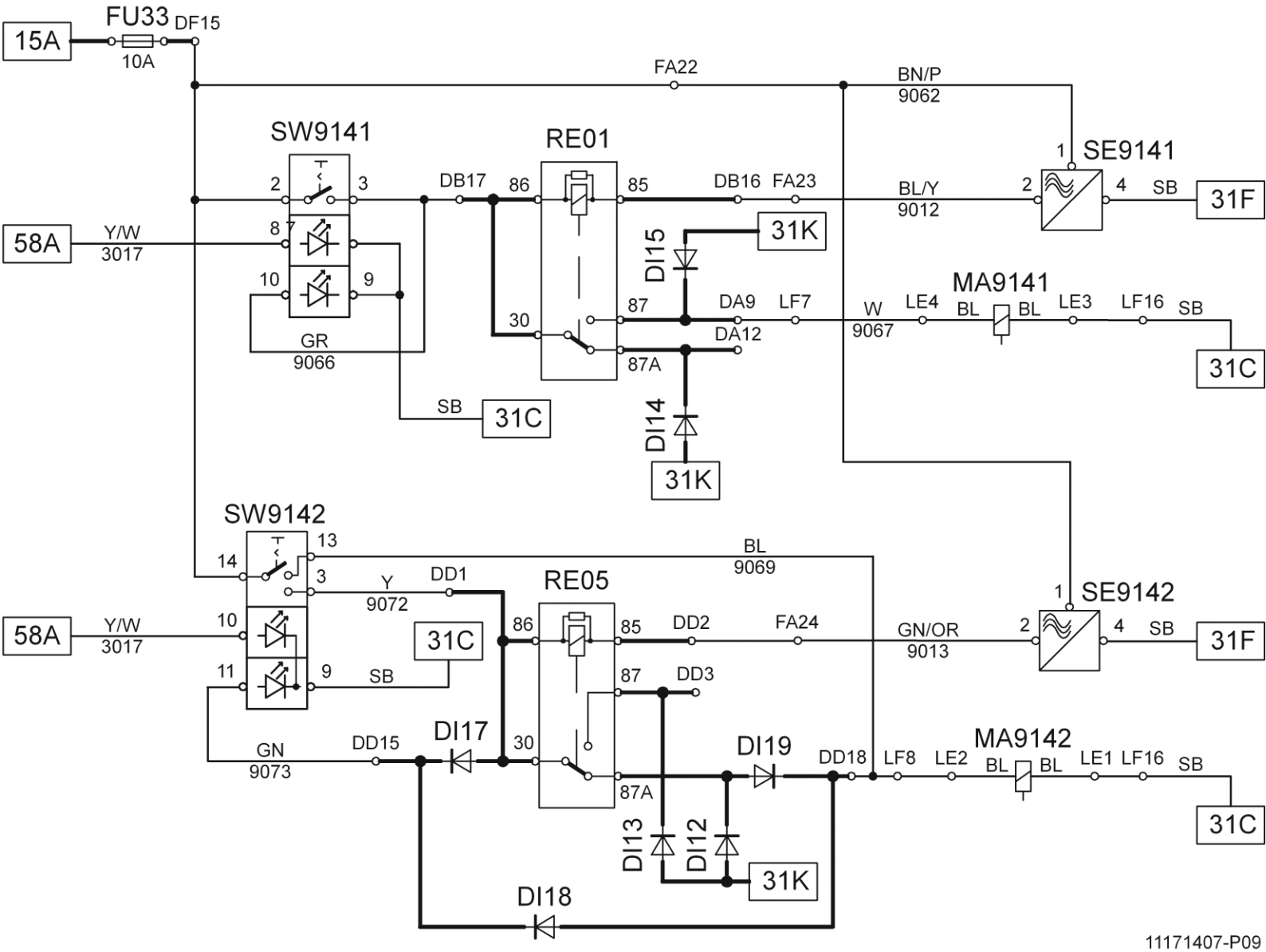
15A
FU33
DF15
10A
FA22
BN/P
9062
SW9141
RE01
SE9141
1
2
3
4
SB
31F
DB17
86
85
DB16
FA23
BL/Y
9012
58A
Y/W
3017
8
7
10
9
GR
9066
31K
DI15
87
DA9
LF7
W
9067
LE4
BL
BL
LE3
LF16
SB
MA9141
30
DA12
87A
31C
SB
DI14
31K
SW9142
13
14
3
Y
9072
DD1
BL
9069
RE05
SE9142
58A
Y/W
3017
10
11
9
SB
31C
86
85
DD2
FA24
GN/OR
9013
87
DD3
GN
9073
DD15
DI17
30
DI19
DD18
LF8
LE2
BL
BL
LE1
LF16
SB
MA9142
87A
DI13
DI12
31K
DI18
11171407-P09
V1044545

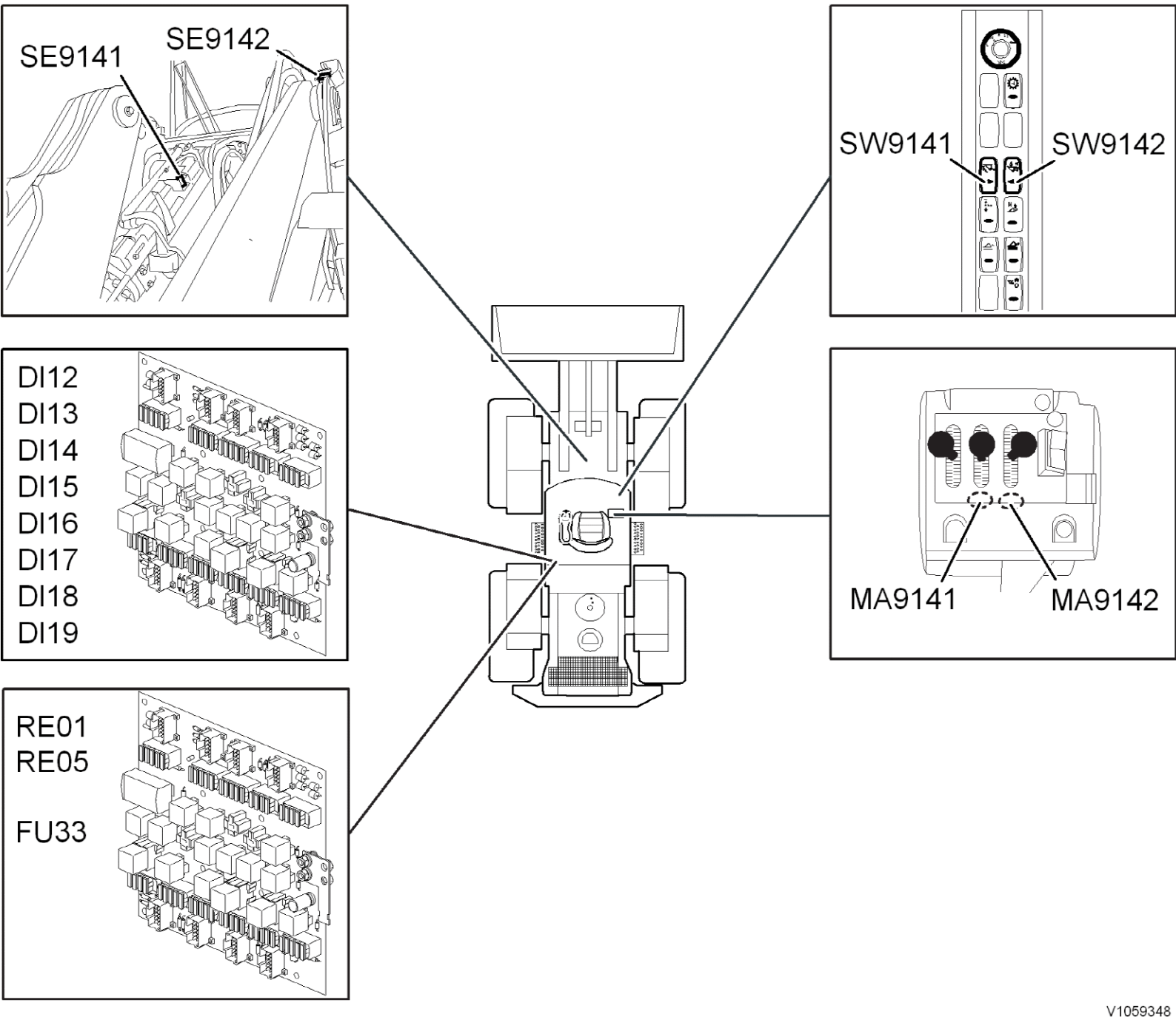
SE9141
SE9142
SW9141
SW9142
DI12
DI13
DI14
DI15
DI16
DI17
DI18
DI19
MA9141
MA9142
RE01
RE05
FU33
V1059348

VOLVO
Construction Equipment

Service Information

Document Title:	Function Group:	Information Type: **Service Information**	Date: **12/10/2011**
Profile: **WLO, L90F (Volvo) [GB]**			

Wiring diagram 901

Working hydraulics

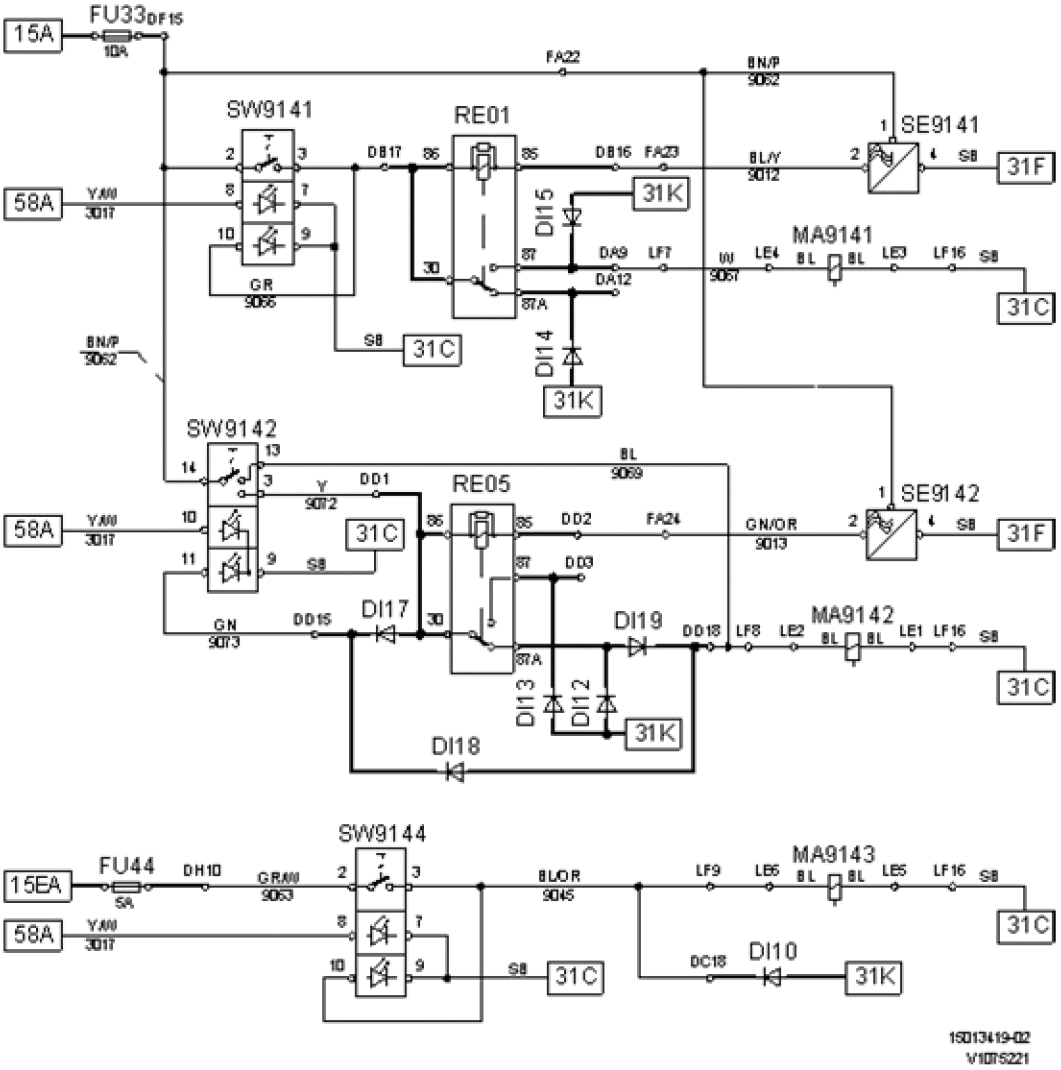

Figure 1

Designation	Function	Designation	Function
DI10	Quench diode	MA9141	Hold solenoid bucket positioner (automatic tilt)
DI12	Quench diode	MA9142	Hold solenoid boom kick-out (automatic lift)
DI13	Quench diode	MA9143	Detent solenoid floating position
DI14	Quench diode	RE01	Bucket positioner
DI15	Quench diode	RE05	Boom kick-out

DI17	Lock-out diode	SE9141	Position sensor bucket positioner (automatic tilt)
DI18	Lock-out diode	SE9142	Position sensor boom kick-out (automatic lift)
DI19	Lock-out diode	SW9141	Bucket positioner
FU33	Working hydraulics	SW9142	Boom kick-out
FU44	Floating position	SW9144	Floating position

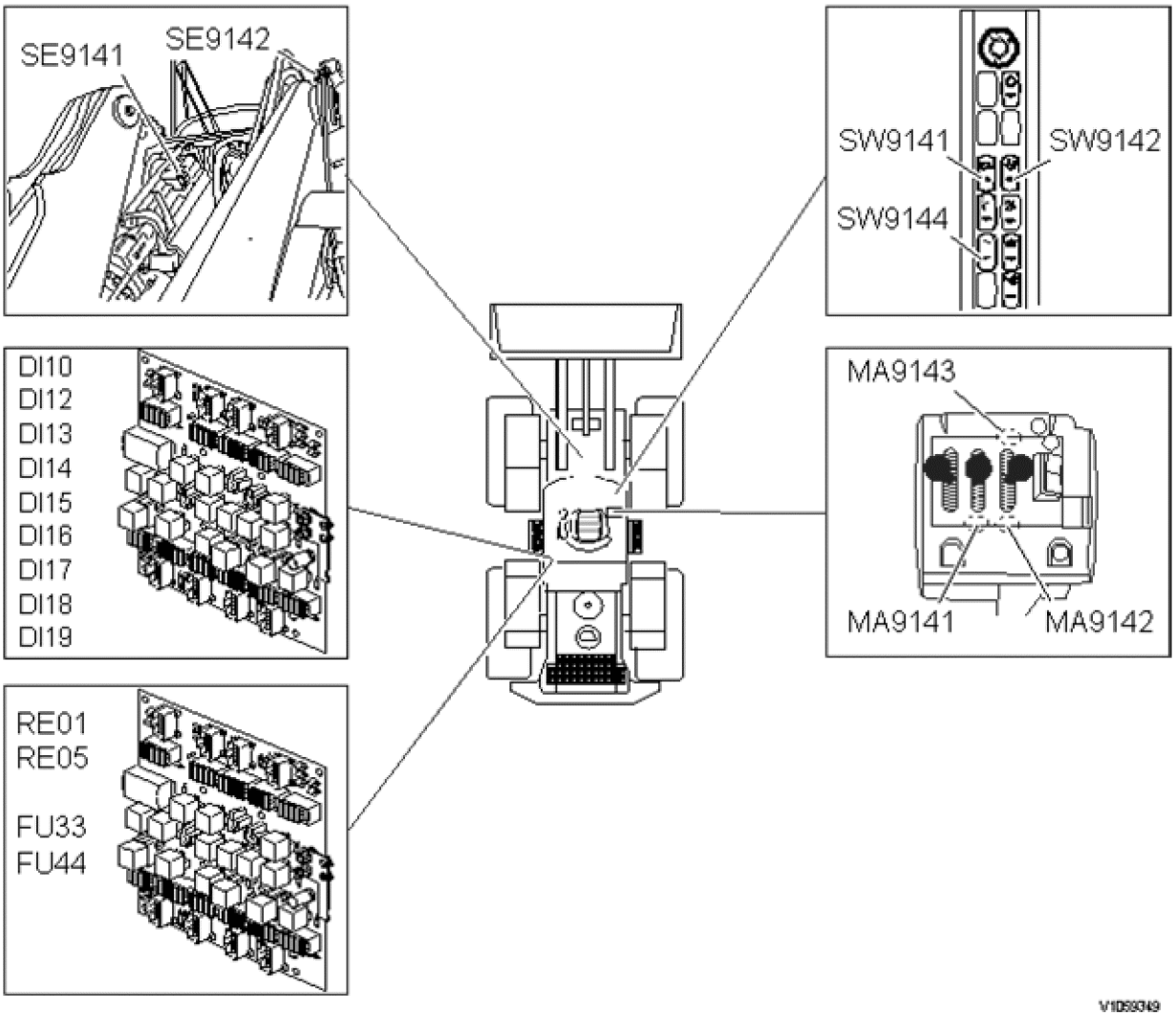

Figure 2
Component position

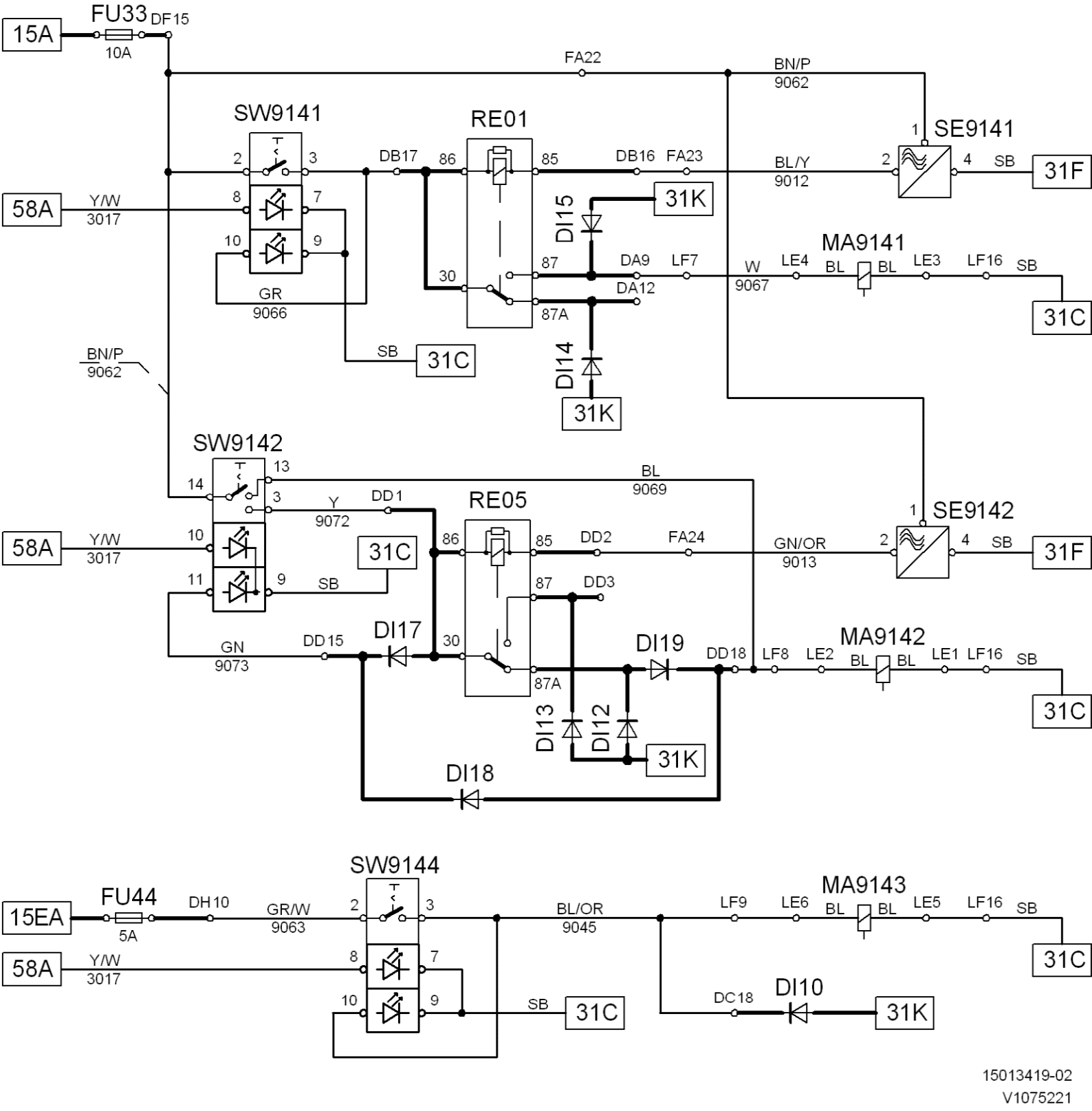
15A
FU33
DF15
10A
FA22
BN/P
9062
SW9141
RE01
SE9141
2
3
DB17
86
85
DB16
FA23
BL/Y
9012
4
SB
31F
58A
Y/W
3017
8
7
10
9
GR
9066
30
87
87A
DA9
LF7
DA12
DI15
31K
MA9141
W
9067
LE4
BL
LE3
LF16
31C
BN/P
9062
SB
31C
DI14
31K
SW9142
RE05
SE9142
14
13
3
Y
9072
DD1
BL
9069
58A
Y/W
3017
10
11
9
SB
31C
86
85
DD2
FA24
GN/OR
9013
87
DD3
GN
9073
DD15
DI17
30
87A
DI19
DD18
LF8
LE2
MA9142
LE1
LF16
31C
DI13
DI12
31K
DI18
SW9144
15EA
FU44
DH10
5A
GR/W
9063
BL/OR
9045
LF9
LE6
MA9143
LE5
LF16
31C
58A
Y/W
3017
DC18
DI10
31K
15013419-02
V1075221

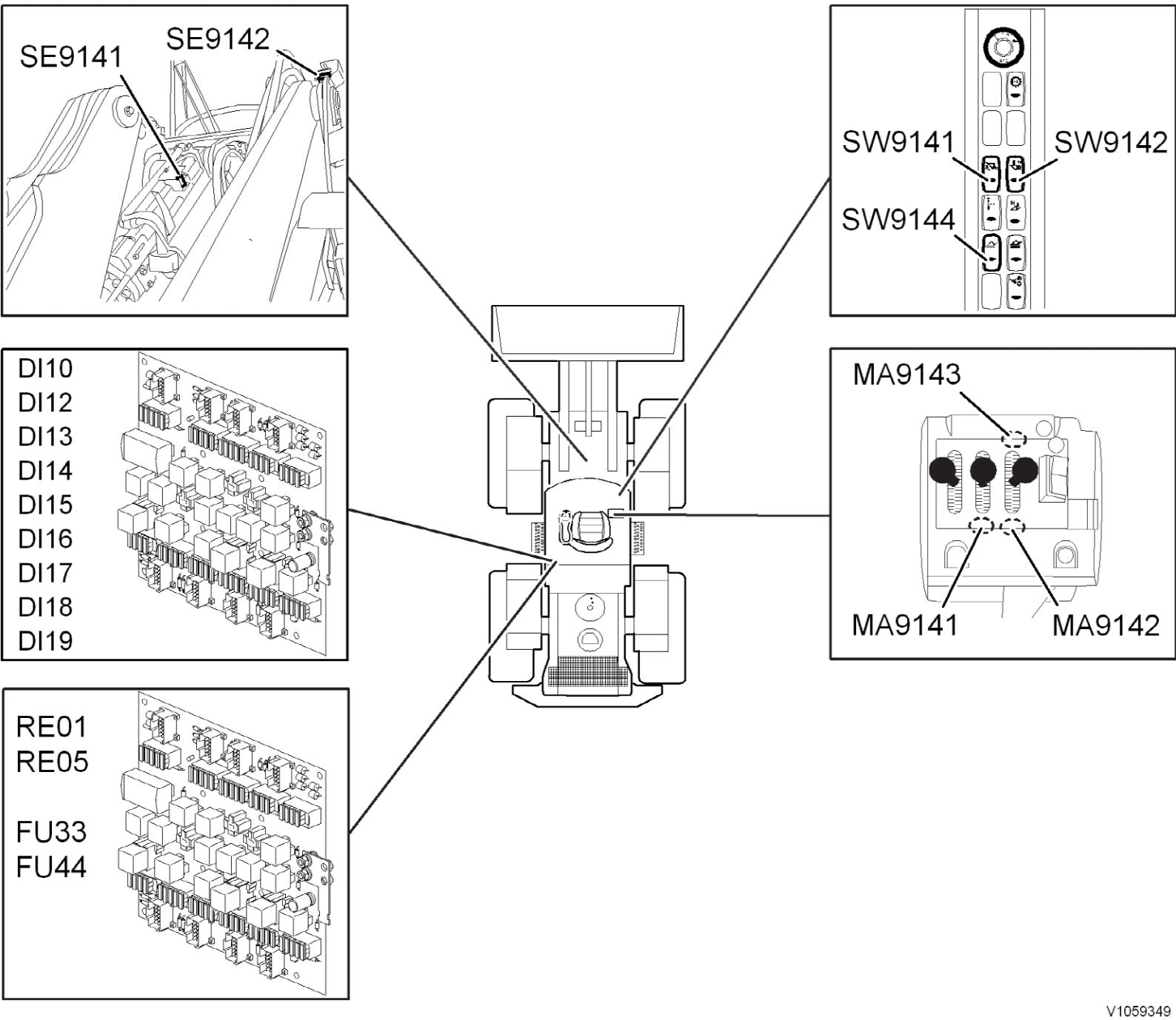
SE9141
SE9142
SW9141
SW9142
SW9144
DI10
DI12
DI13
DI14
DI15
DI16
DI17
DI18
DI19
MA9143
MA9141
MA9142
RE01
RE05
FU33
FU44
V1059349

More than one document matches the current profile:

Wiring diagram 902
Product Line: WLO
Model Variant: L90F
Site: Arvika
Serial Number Start: 25001
Serial Number End: 25774

Wiring diagram 902
Product Line: WLO
Model Variant: L90F
Site: Arvika, Pederneiras, Asheville
Serial Number Start: 25775, 71501, 68101
Serial Number End: 49999, 79999, 69999

VOLVO
Construction Equipment

Service Information

Document Title:	Function Group:	Information Type: **Service Information**	Date: **12/10/2011**
Profile: **WLO, L90F (Volvo) [GB]**			

Wiring diagram 902

Working hydraulics with 4th hydraulic function

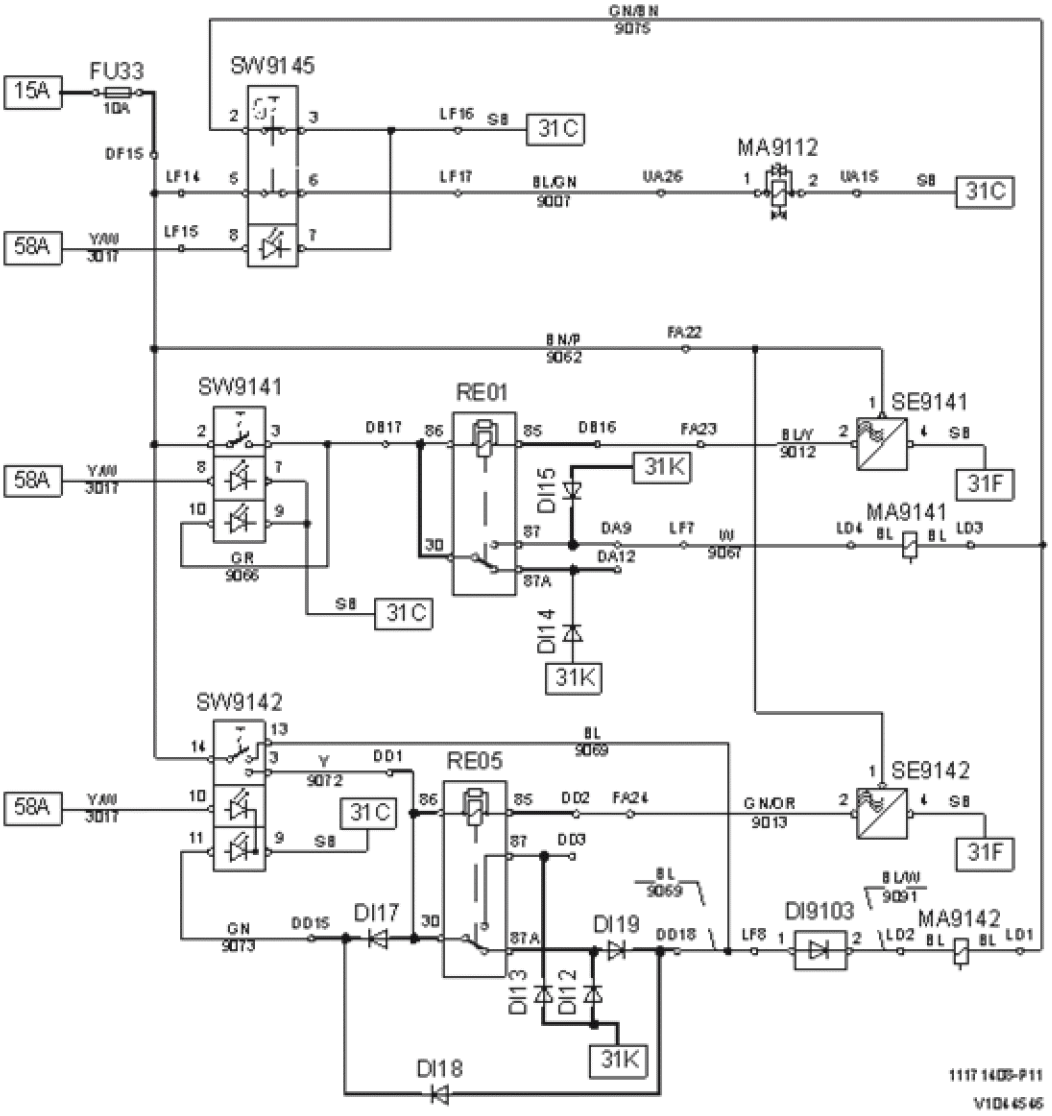

Figure 1

Designation	Function	Designation	Function
DI12	Quench diode	MA9112	Electric lever lock
DI13	Quench diode	MA9141	Hold solenoid bucket positioner (automatic tilt)
DI14	Quench diode	MA9142	Hold solenoid boom kick-out (automatic lift)

DI15	Quench diode	RE01	Bucket positioner
DI17	Lock-out diode	RE05	Boom kick-out
DI18	Lock-out diode	SE9141	Inductive position sensor bucket positioner (automatic tilt)
DI19	Lock-out diode	SE9142	Inductive position sensor boom kick-out (automatic lift)
DI9103	Lock-out diode	SW9141	Bucket positioner
FU33	Working hydraulics	SW9142	Boom kick-out
		SW9145	Electric lever lock

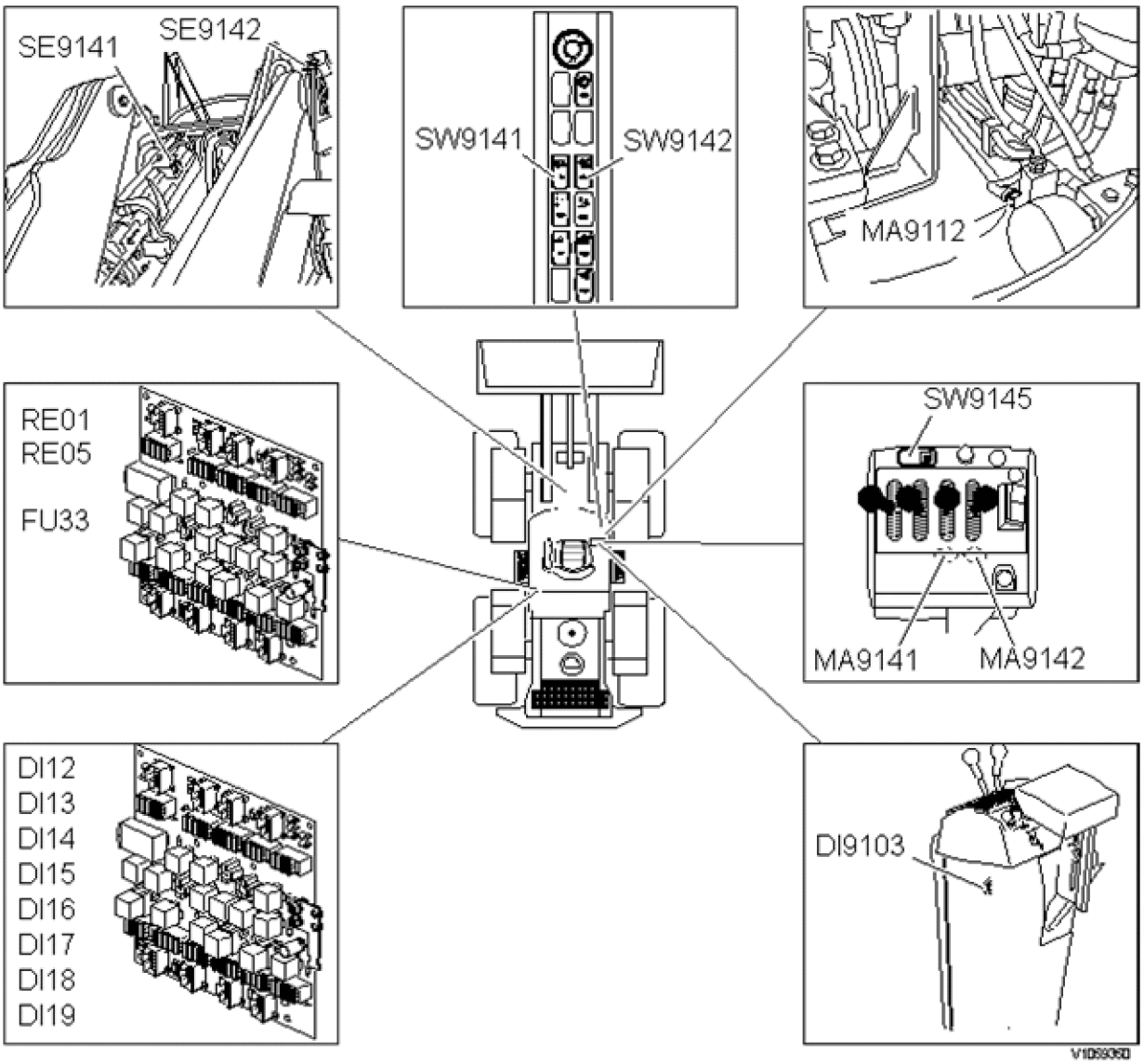

Figure 2
Component position

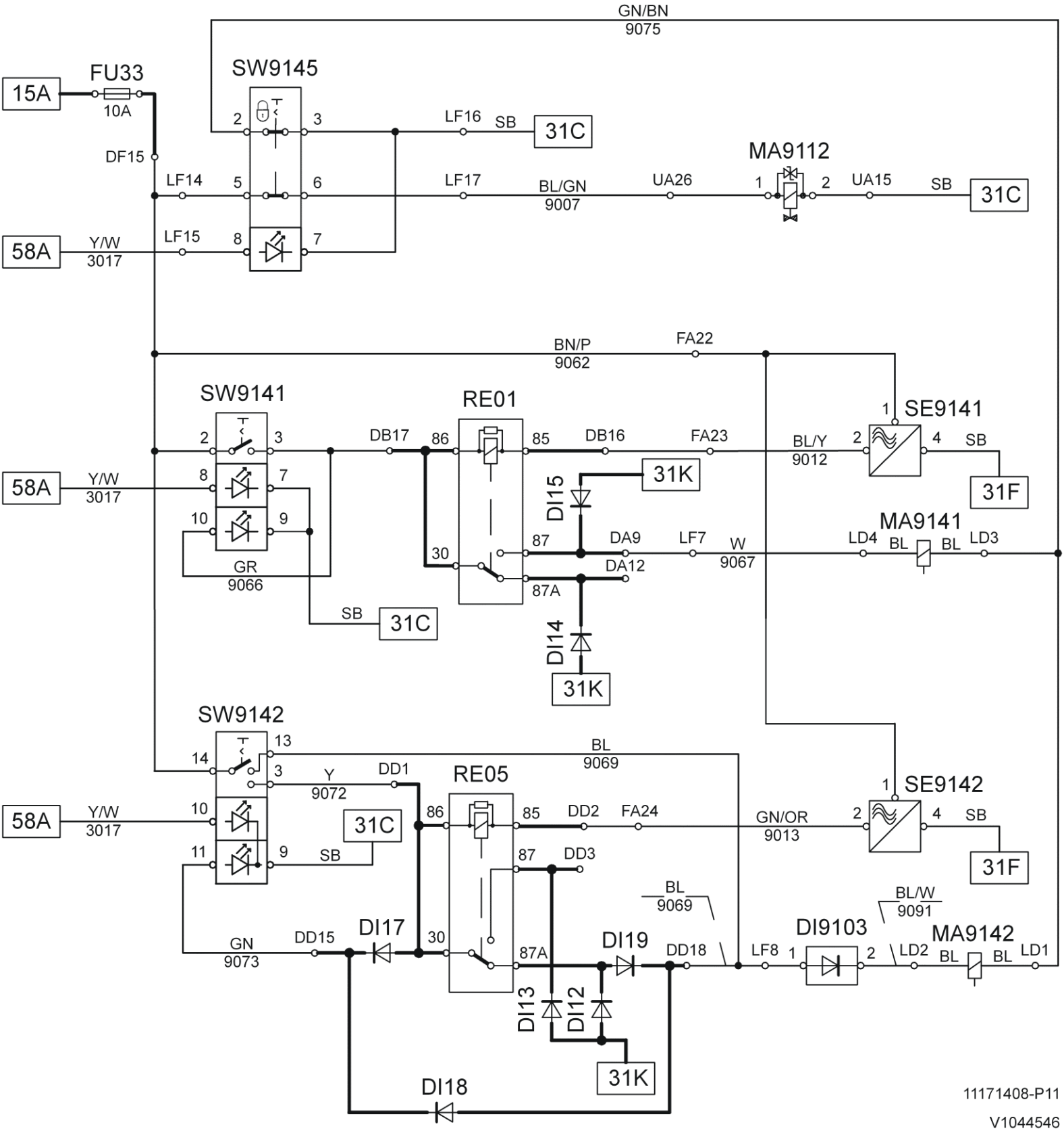
GN/BN
9075
FU33
15A
10A
SW9145
2
3
LF16
SB
31C
DF15
LF14
5
6
LF17
BL/GN
9007
UA26
MA9112
1
2
UA15
SB
31C
58A
Y/W
3017
LF15
8
7
BN/P
9062
FA22
SW9141
RE01
SE9141
2
3
DB17
86
85
DB16
FA23
BL/Y
9012
4
SB
31F
58A
Y/W
3017
8
7
10
9
GR
9066
SB
31C
DI15
31K
87
DA9
LF7
W
9067
MA9141
LD4
BL
BL
LD3
30
DA12
87A
DI14
31K
SW9142
RE05
SE9142
13
14
3
Y
9072
DD1
BL
9069
58A
Y/W
3017
10
11
9
SB
31C
86
85
DD2
FA24
GN/OR
9013
4
SB
31F
87
DD3
BL
9069
BL/W
9091
DI9103
MA9142
GN
9073
DD15
DI17
30
87A
DI19
DD18
LF8
1
2
LD2
BL
BL
LD1
DI13
DI12
31K
DI18
11171408-P11
V1044546

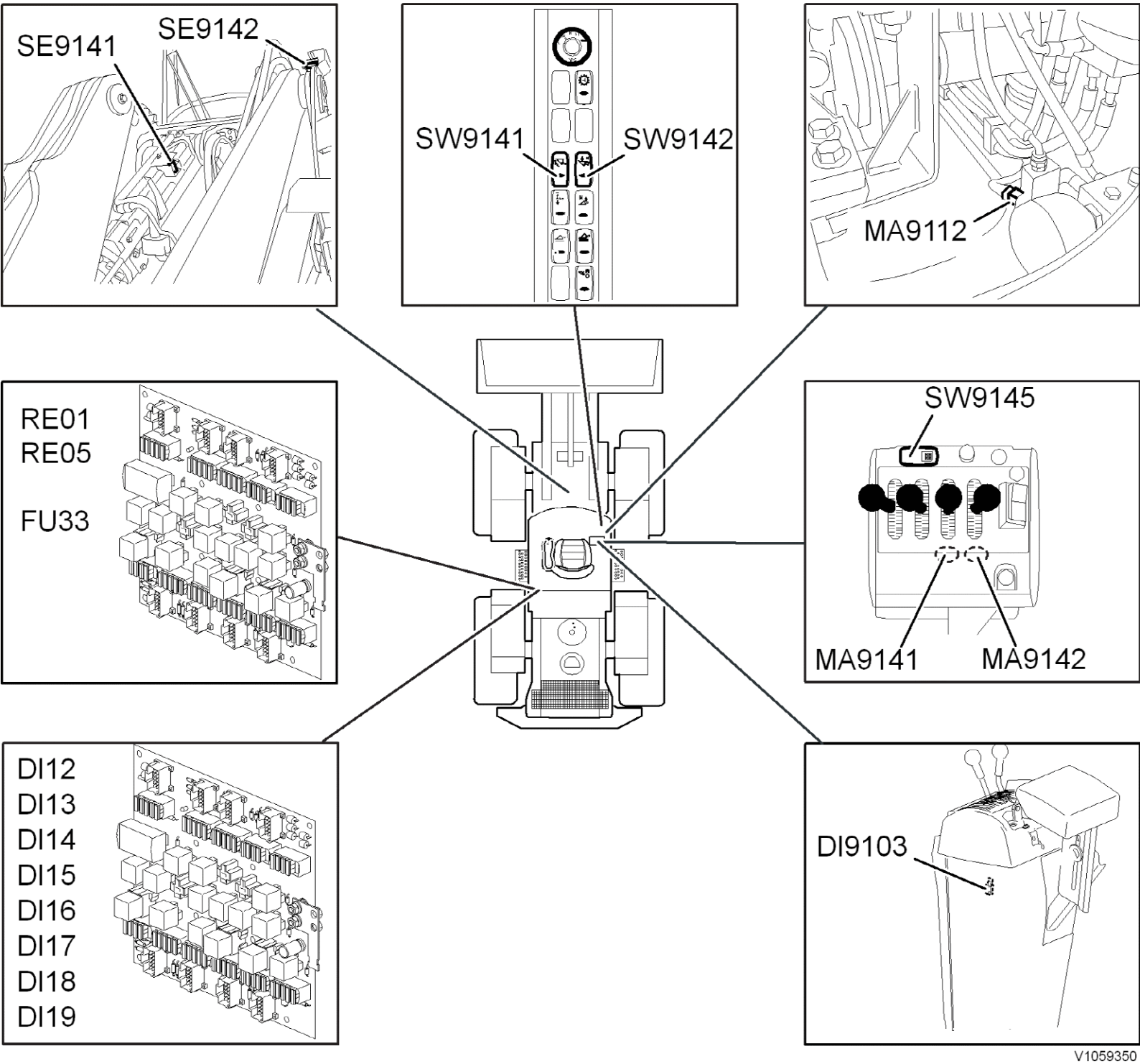
SE9141
SE9142
SW9141
SW9142
MA9112
RE01
RE05
FU33
SW9145
MA9141
MA9142
DI12
DI13
DI14
DI15
DI16
DI17
DI18
DI19
DI9103

V1059350

VOLVO
Construction Equipment

Service Information

Document Title:	Function Group:	Information Type: **Service Information**	Date: **12/10/2011**
Profile: **WLO, L90F (Volvo) [GB]**			

Wiring diagram 902

Working hydraulics with 4th hydraulic function

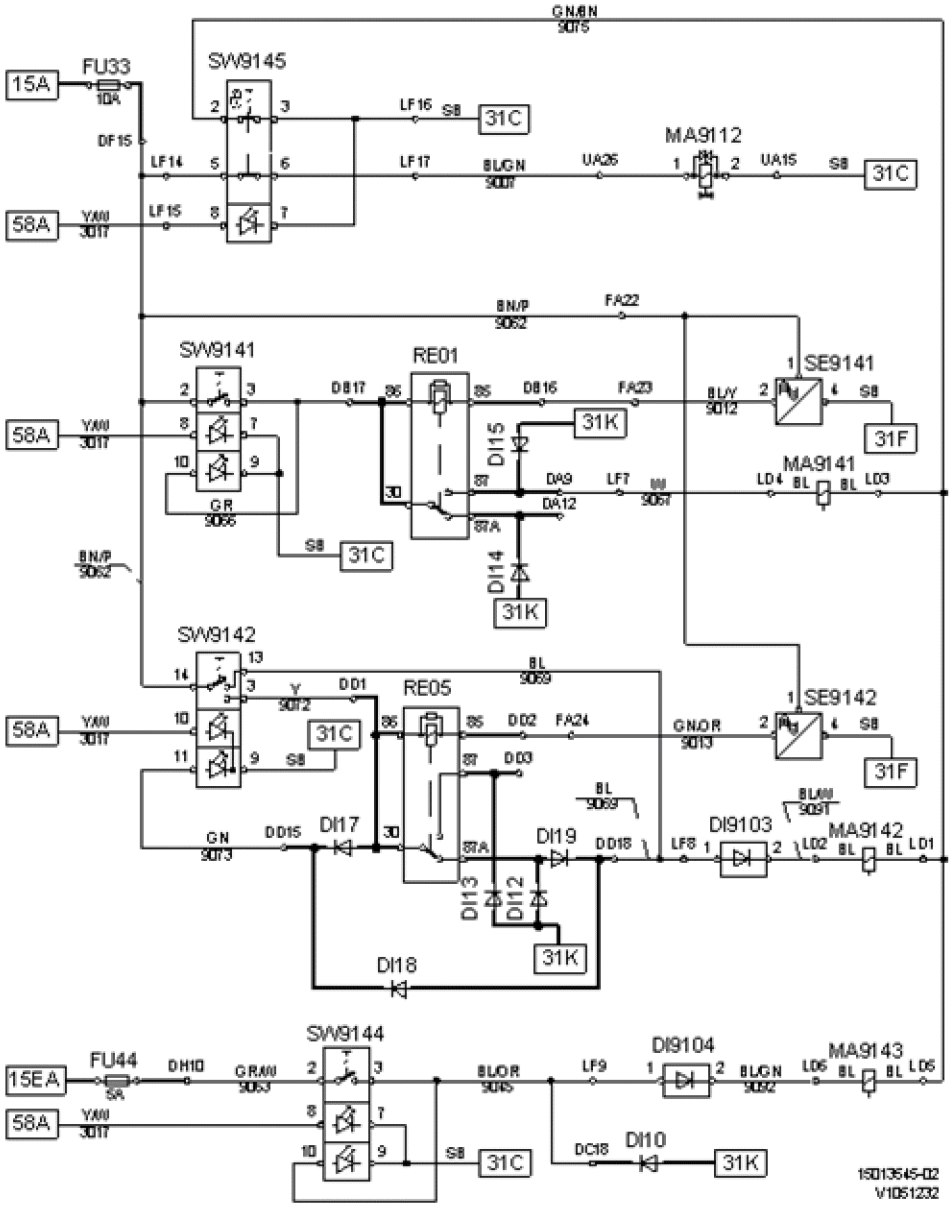

Figure 1

Designation	Function	Designation	Function
DI10	Quench diode	MA9112	Electric lever lock
DI12	Quench diode	MA9141	Hold solenoid bucket positioner (automatic tilt)

DI13	Quench diode	MA9142	Hold solenoid boom kick-out (automatic lift)
DI14	Quench diode	MA9143	Detent solenoid floating position
DI15	Quench diode	RE01	Bucket positioner
DI17	Lock-out diode	RE05	Boom kick-out
DI18	Lock-out diode	SE9141	Inductive position sensor bucket positioner (automatic tilt)
DI19	Lock-out diode	SE9142	Inductive position sensor boom kick-out (automatic lift)
DI9103	Lock-out diode	SW9141	Bucket positioner
FU33	Working hydraulics	SW9142	Boom kick-out
FU44	Floating position	SW9144	Floating position
		SW9145	Electric lever lock

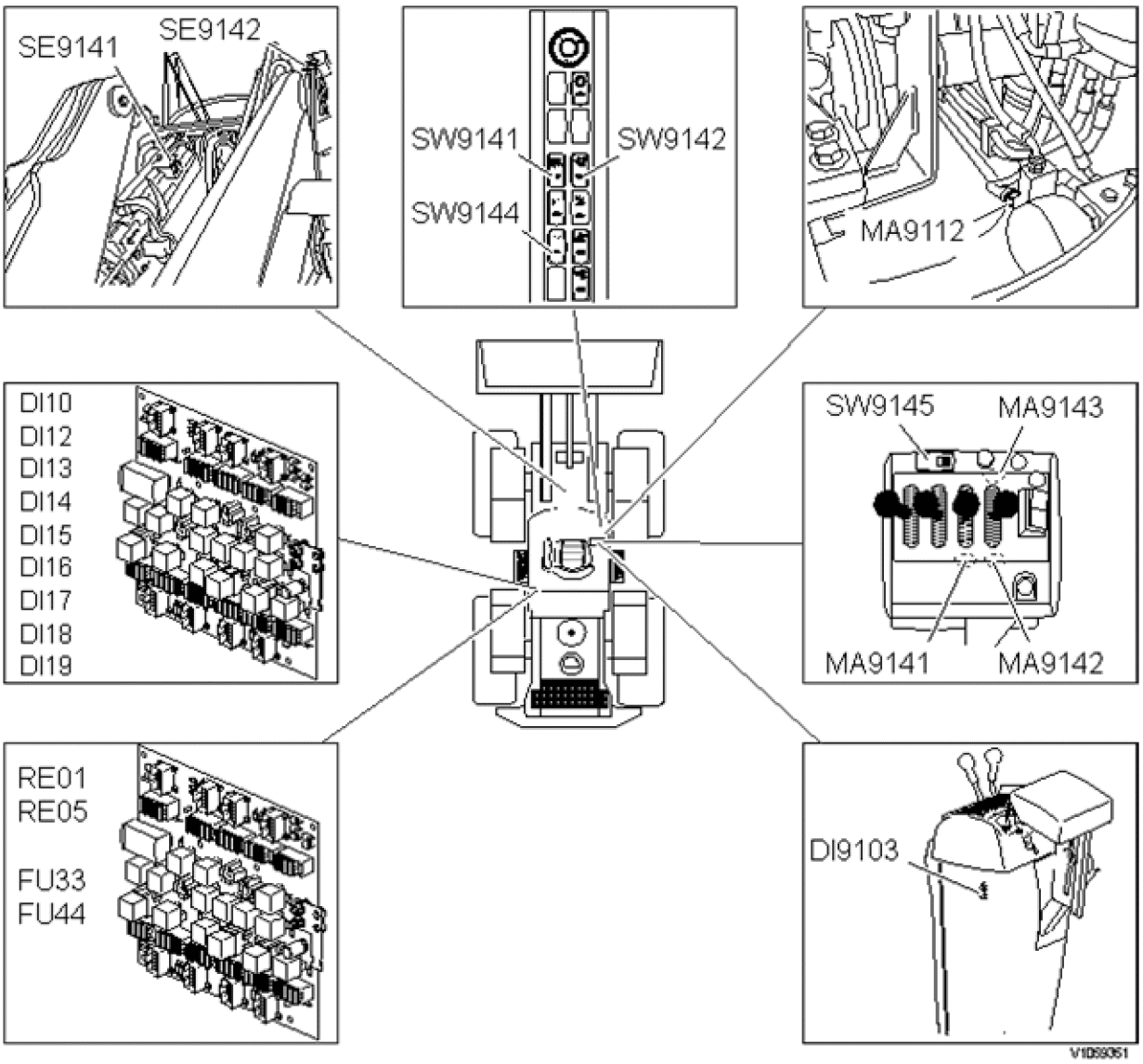

Figure 2
Component position

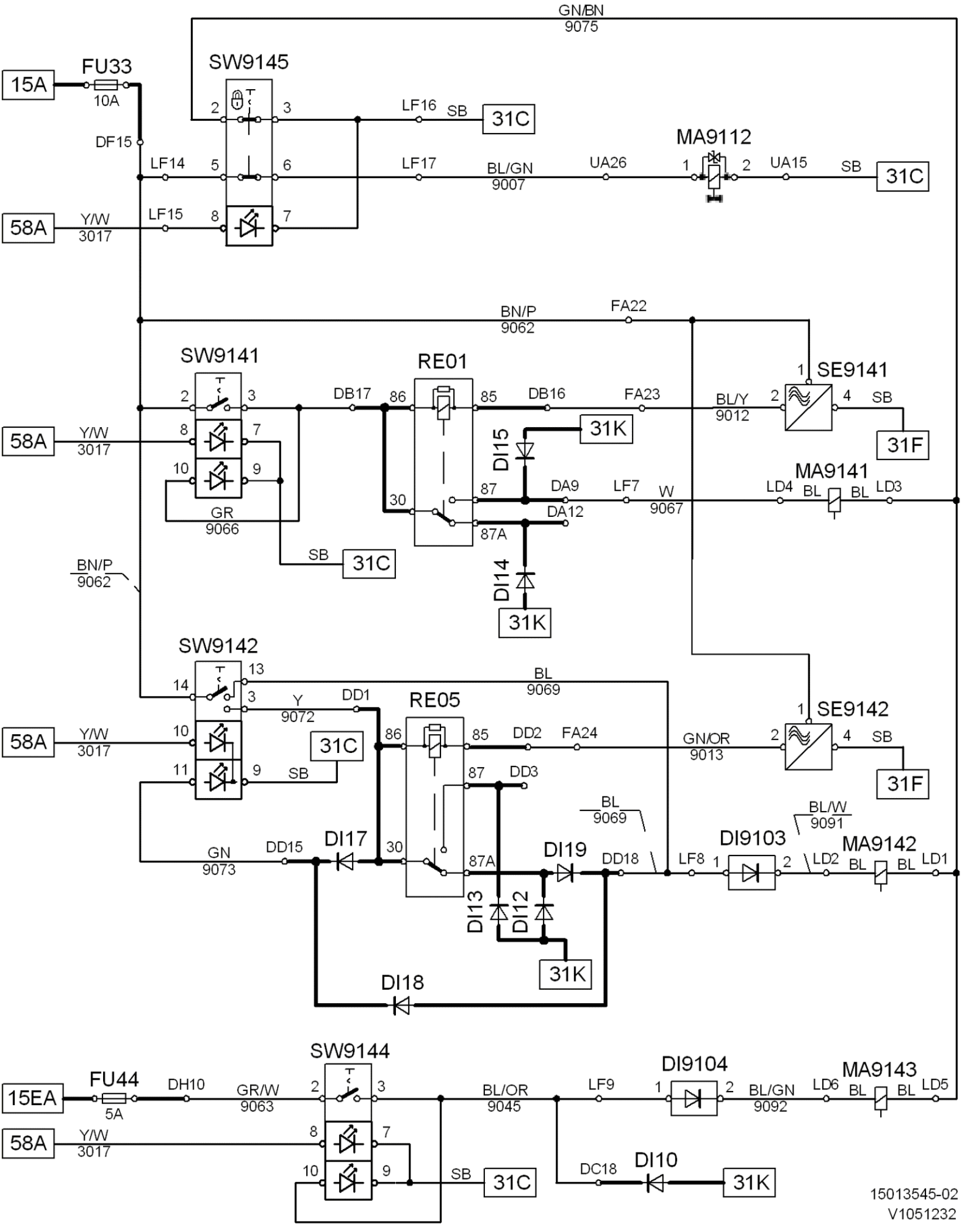
GN/BN
9075
15A
FU33
10A
SW9145
DF15
LF14
LF16
SB
31C
LF17
BL/GN
9007
UA26
MA9112
UA15
SB
31C
58A
Y/W
3017
LF15
BN/P
9062
FA22
SW9141
RE01
SE9141
DB17
DB16
FA23
BL/Y
9012
SB
31F
31K
DI15
DA9
LF7
W
9067
MA9141
LD4
BL
BL
LD3
GR
9066
DA12
SB
31C
BN/P
9062
DI14
31K
SW9142
RE05
SE9142
BL
9069
Y
9072
DD1
DD2
FA24
GN/OR
9013
SB
31F
31C
DD3
BL
9069
BL/W
9091
GN
9073
DD15
DI17
DI19
DD18
LF8
DI9103
MA9142
LD2
BL
BL
LD1
DI13
DI12
31K
DI18
SW9144
FU44
5A
DH10
GR/W
9063
BL/OR
9045
LF9
DI9104
BL/GN
9092
LD6
MA9143
BL
BL
LD5
15EA
58A
Y/W
3017
SB
31C
DC18
DI10
31K
15013545-02
V1051232

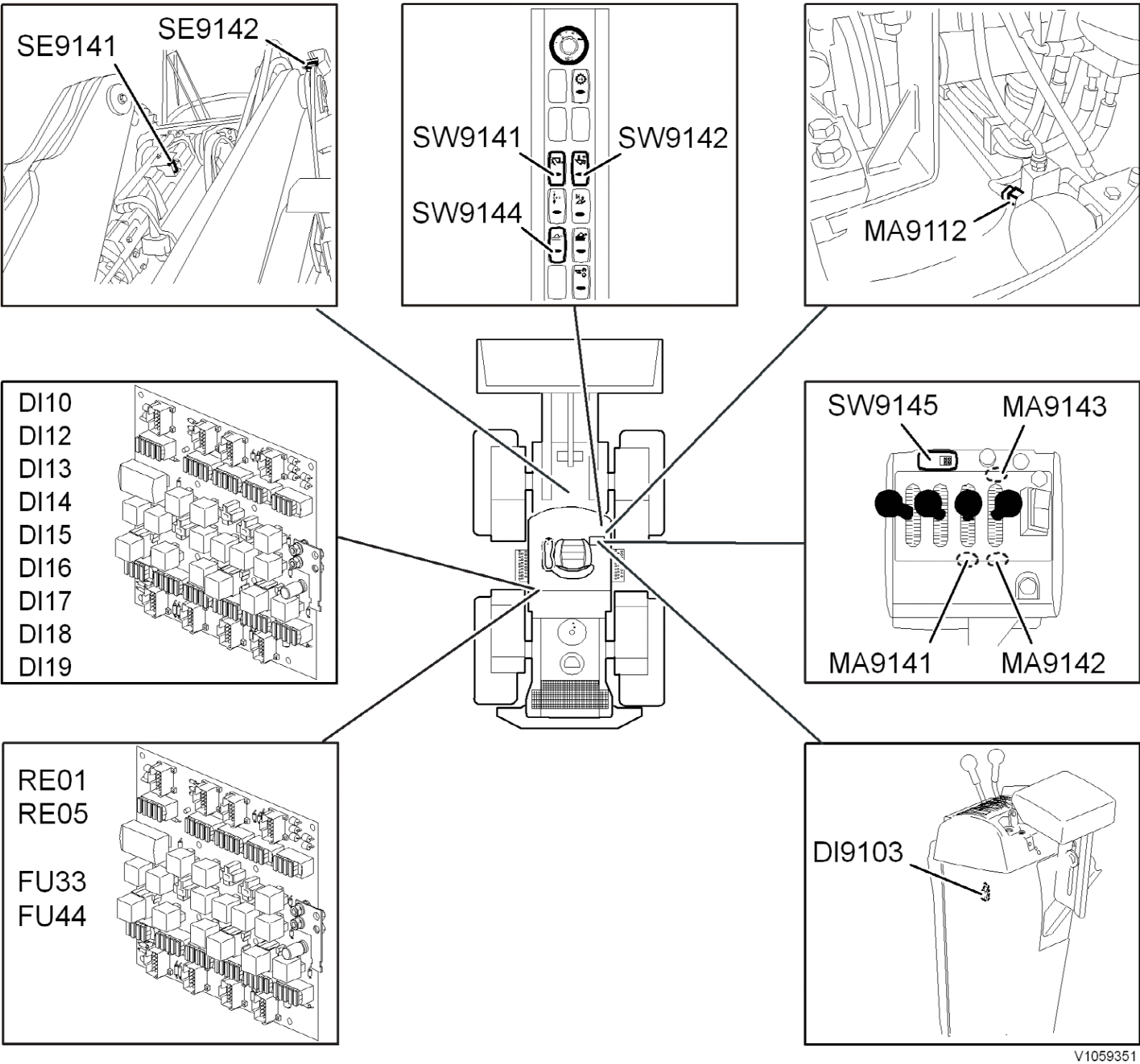
SE9141
SE9142
SW9141
SW9142
SW9144
MA9112
DI10
DI12
DI13
DI14
DI15
DI16
DI17
DI18
DI19
SW9145
MA9143
MA9141
MA9142
RE01
RE05
FU33
FU44
DI9103

V1059351

VOLVO
Construction Equipment

Service Information

Document Title:	Function Group:	Information Type: **Service Information**	Date: **12/10/2011**
Profile: **WLO, L90F (Volvo) [GB]**			

Wiring diagram 903

Boom Suspension System, hydraulic oil temperature / level

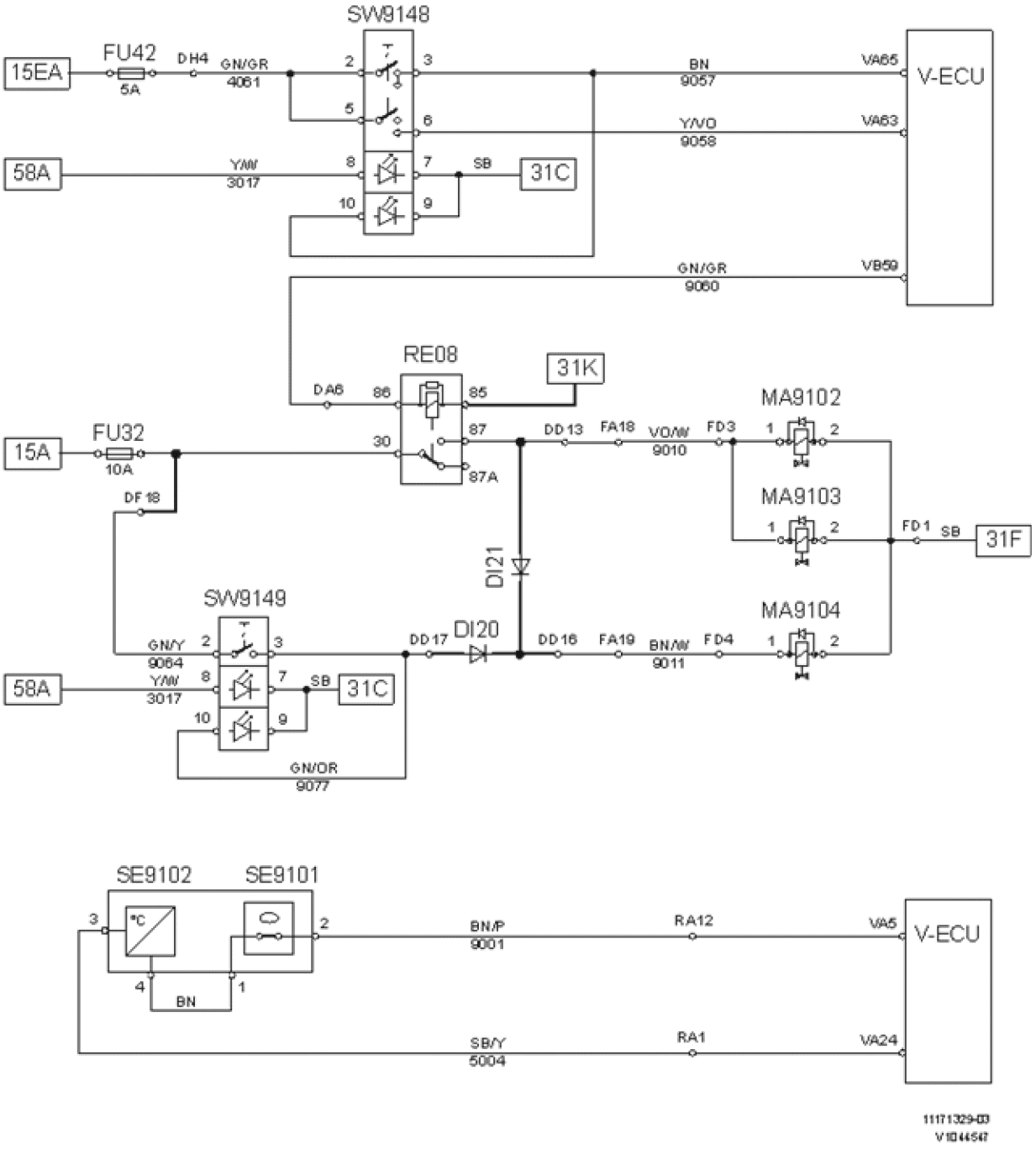

Figure 1

Designation	Function	Designation	Function
DI20	Lock-out diode	RE08	Boom suspension system activation
DI21	Quench diode	SE9101	Hydraulic oil level
FU32	Boom Suspension System	SE9102	Hydraulic oil temperature
FU42	Boom Suspension System, activation / function selection	SW9148	Boom Suspension System, activation / function selection
MA9102	Boom Suspension System	SW9149	Single-acting lift function
MA9103	Boom Suspension System		
MA9104	Single-acting lift function		

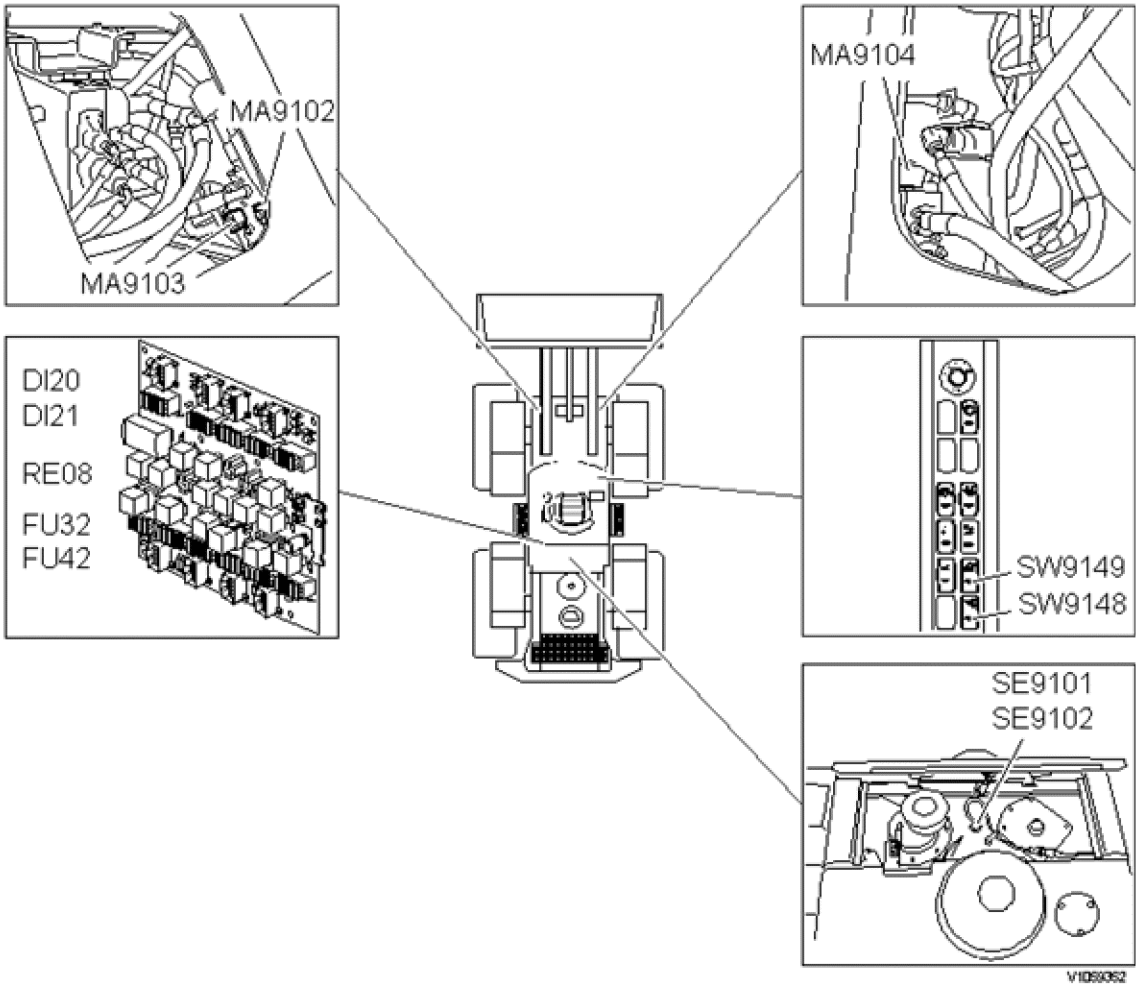

Figure 2
Component position

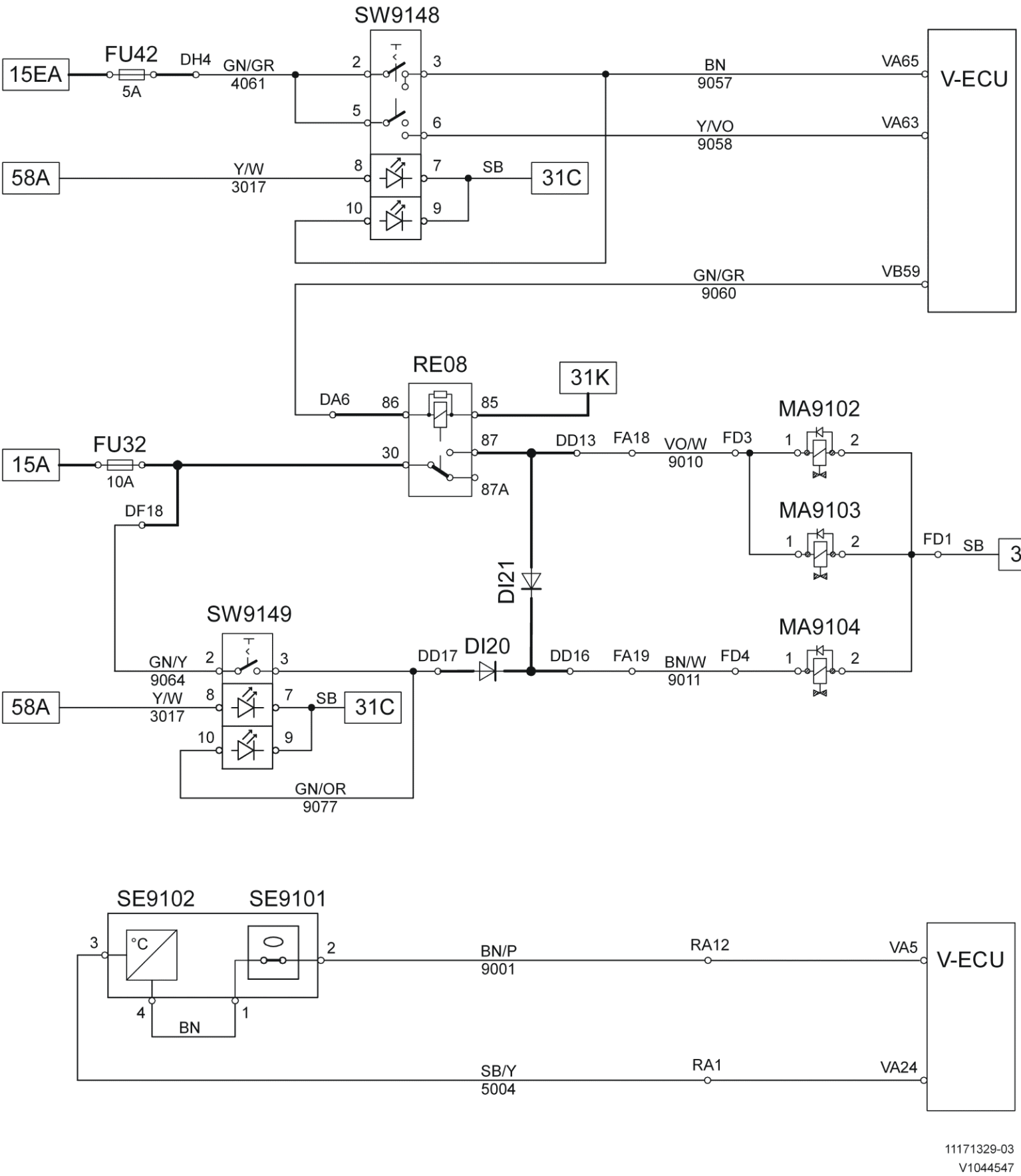

11171329-03
V1044547

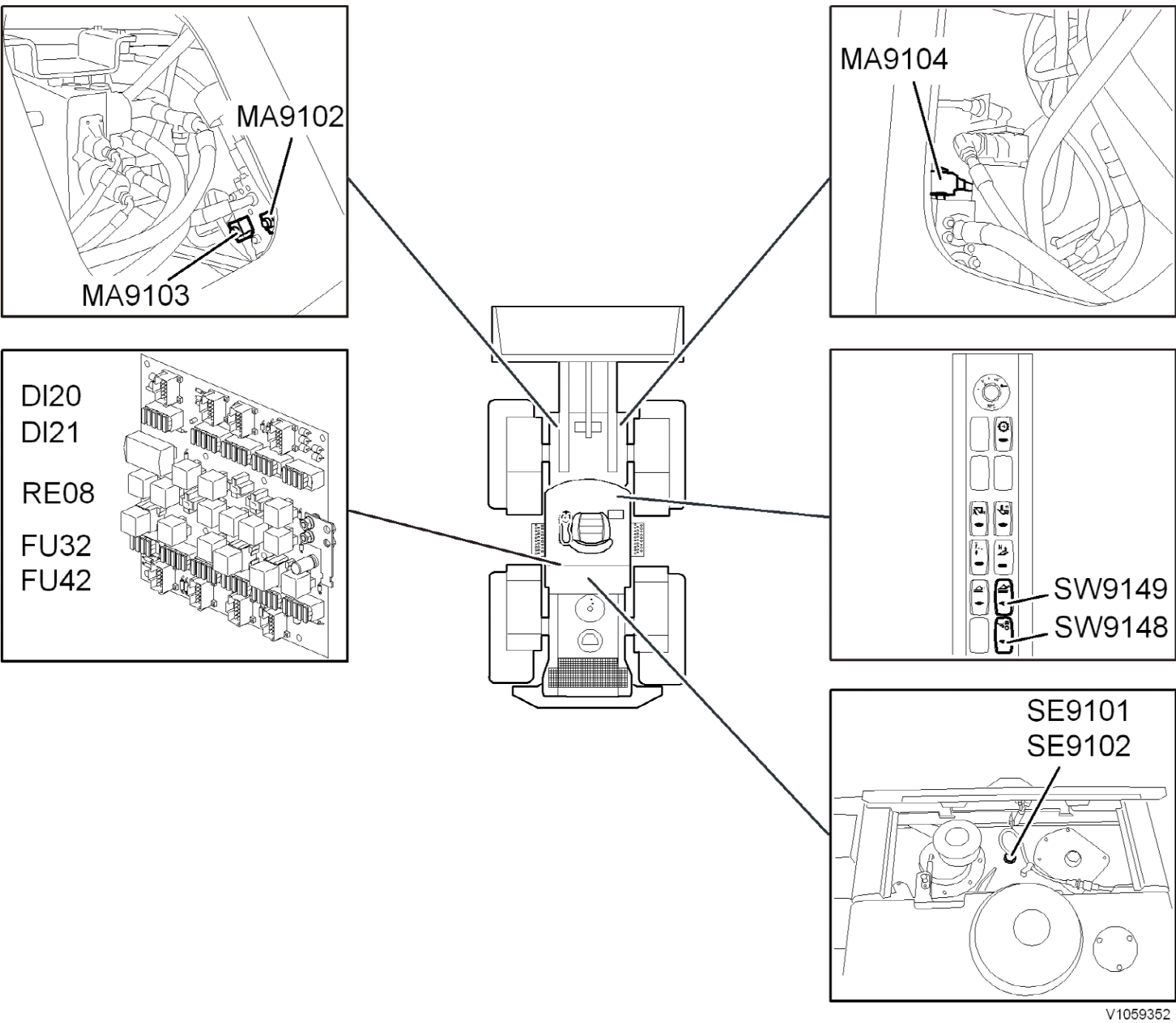
MA9102
MA9103
MA9104
DI20
DI21
RE08
FU32
FU42
SW9149
SW9148
SE9101
SE9102
V1059352

More than one document matches the current profile:

Wiring diagram 904
Product Line: WLO
Model Variant: L90F
Site: Arvika, Asheville
Serial Number Start: 25001, 68101
Serial Number End: 25583, 68417

Wiring diagram 904
Product Line: WLO
Model Variant: L90F
Site: Arvika, Asheville
Serial Number Start: 25583, 68418
Serial Number End: 49999, 69999

VOLVO
Construction Equipment

Service Information

Document Title:	Function Group:	Information Type: **Service Information**	Date: **12/10/2011**
Profile: **WLO, L90F (Volvo) [GB]**			

Wiring diagram 904

Working hydraulics, attachment locking, 3rd hydraulic function, 3rd hydraulic function together with 4th hydraulic function

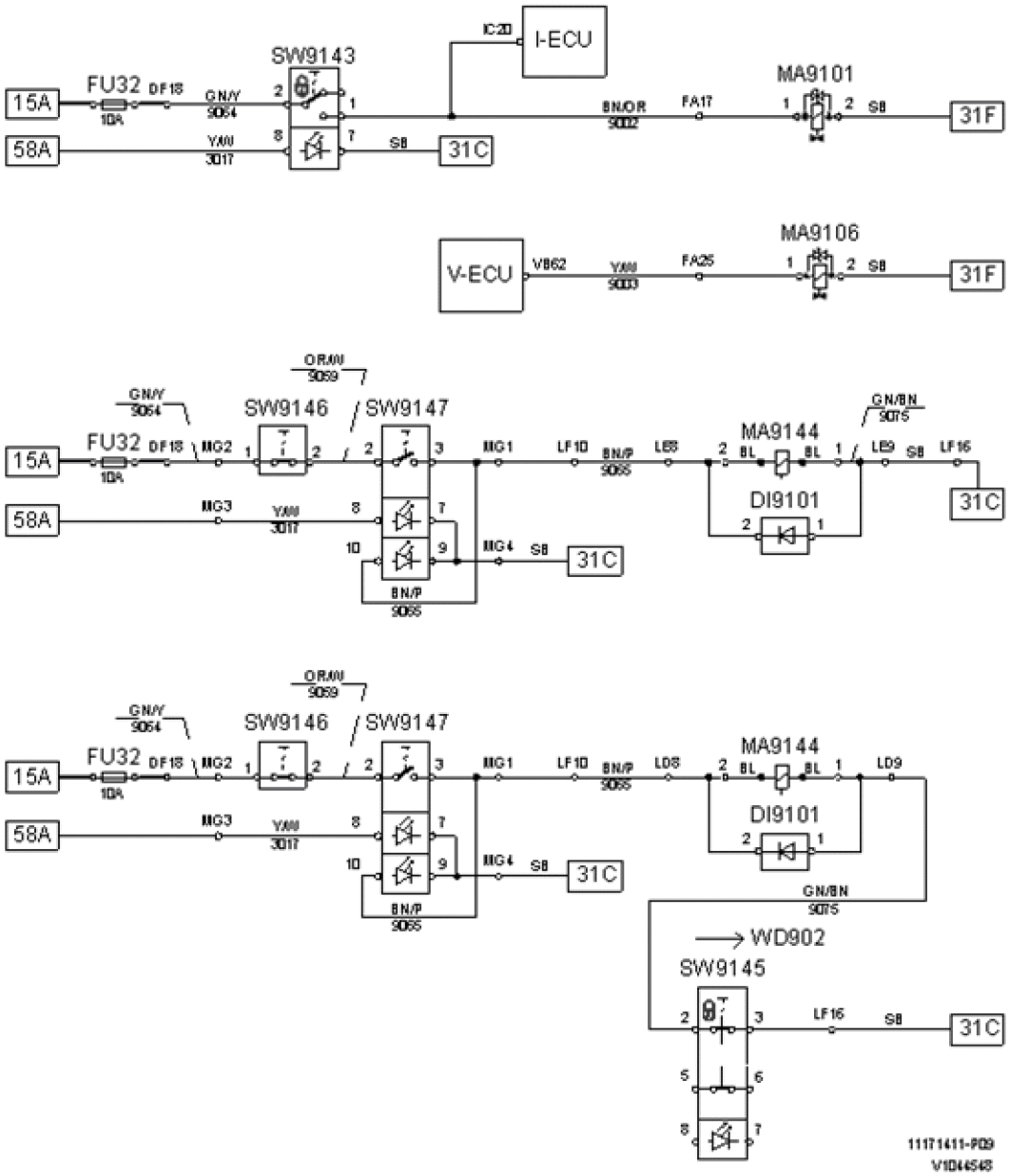

Figure 1

Designation	Function
DI9101	Quench diode
FU32	Attachment locking 3rd hydraulic function 3rd hydraulic function together with 4th hydraulic function
MA9101	Attachment lock, open
MA9106	Attachment lock, close
MA9144	Hold solenoid 3rd hydraulic function
SW9143	Attachment locking
SW9145	Electric lever lock
SW9146	Emergency stop 3rd hydraulic function
SW9147	Hold function, 3rd hydraulic function

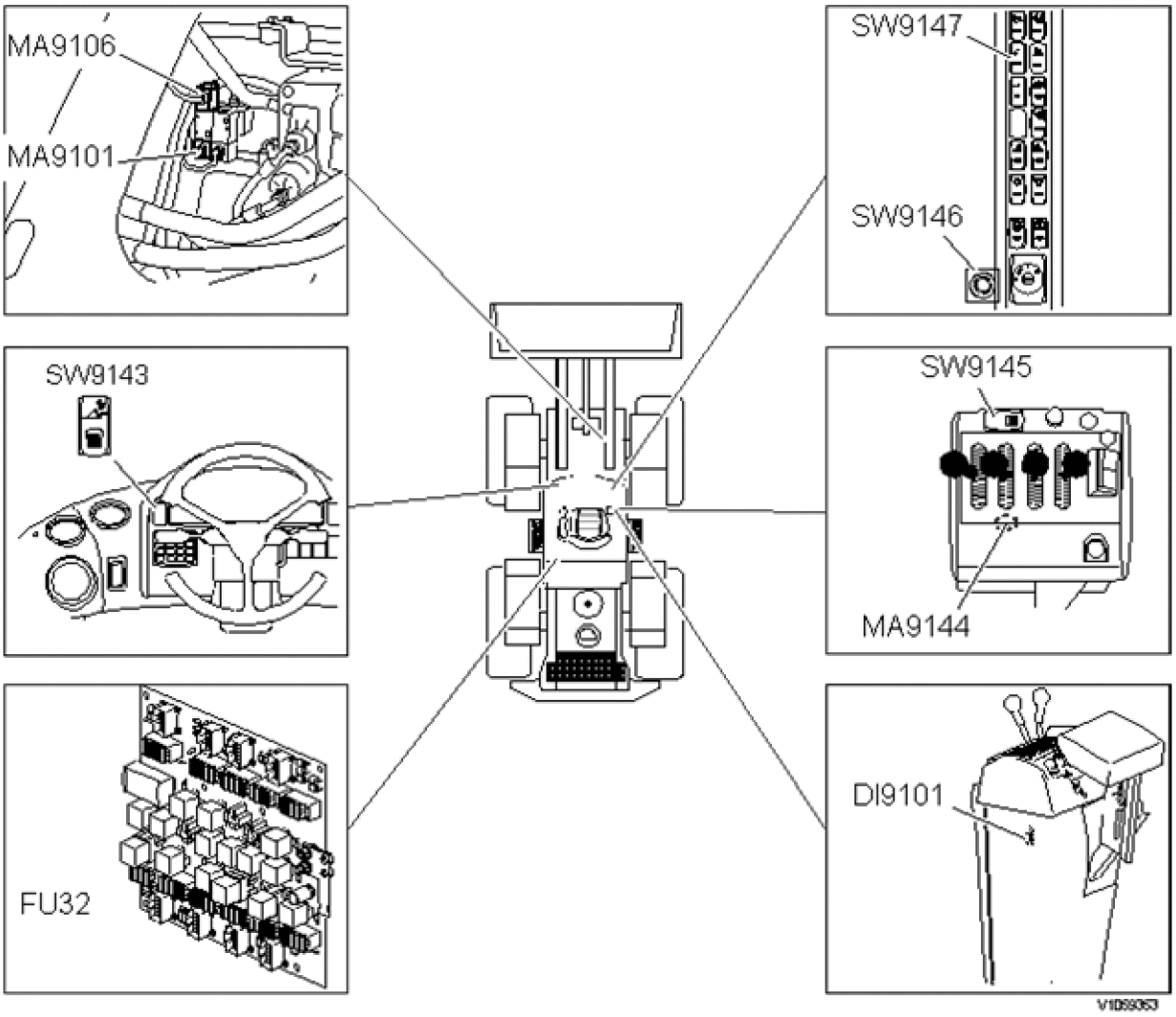

Figure 2
Component position

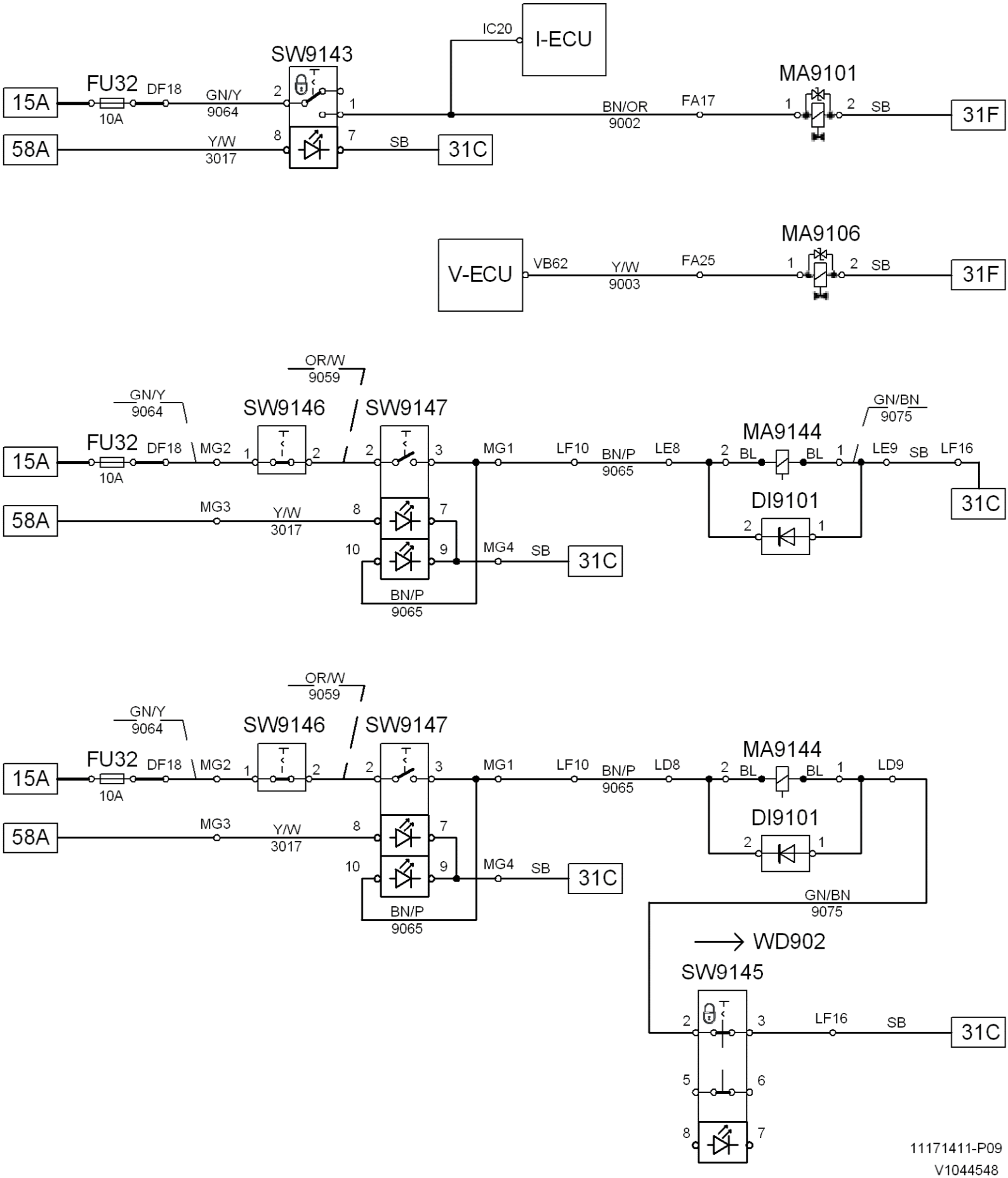
15A
FU32
DF18
10A
GN/Y
9064
SW9143
2
1
IC20
I-ECU
MA9101
BN/OR
9002
FA17
1
2
SB
31F
58A
Y/W
3017
8
7
SB
31C
V-ECU
VB62
Y/W
9003
FA25
MA9106
OR/W
9059
SW9146
SW9147
MG2
MG1
LF10
BN/P
9065
LE8
MA9144
BL
LE9
LF16
GN/BN
9075
DI9101
MG3
MG4
10
9
LD8
LD9
WD902
SW9145
3
5
6
11171411-P09
V1044548

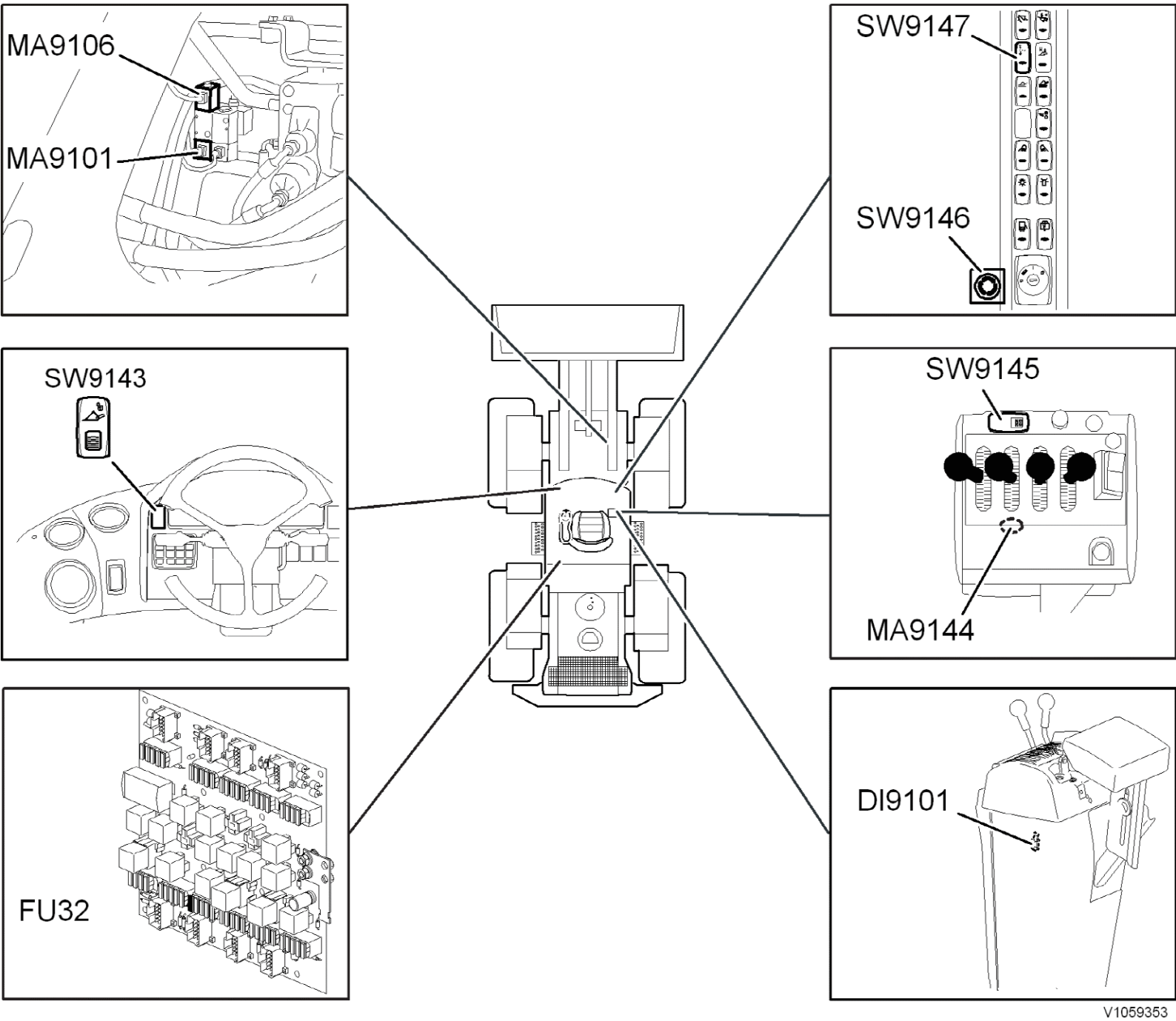
MA9106
MA9101
SW9147
SW9146
SW9143
SW9145
MA9144
FU32
DI9101
V1059353

VOLVO
Construction Equipment

Service Information

Document Title:	Function Group:	Information Type: **Service Information**	Date: **12/10/2011**
Profile: **WLO, L90F (Volvo) [GB]**			

Wiring diagram 904

Working hydraulics, attachment locking, 3rd hydraulic function, 3rd hydraulic function together with 4th hydraulic function

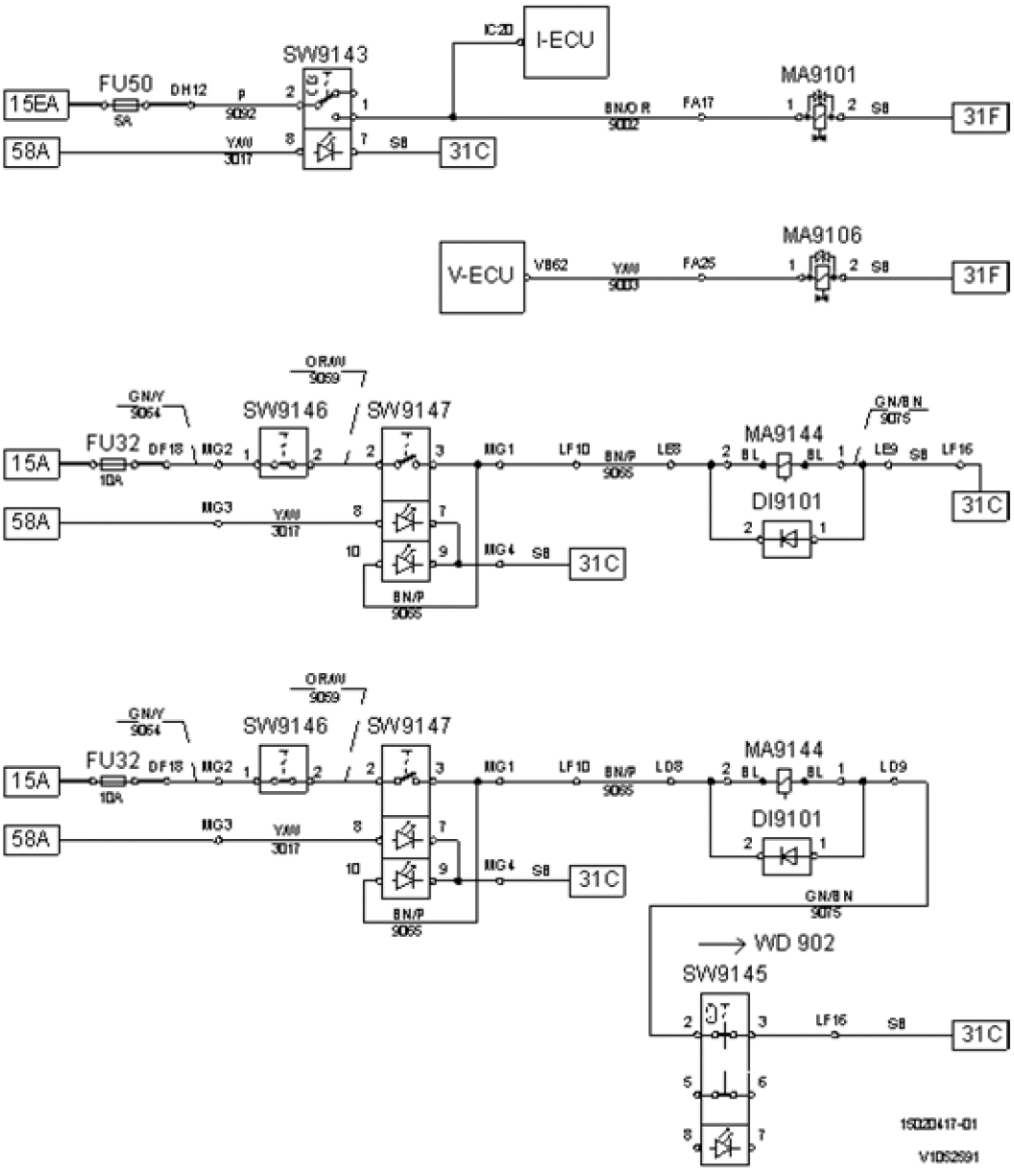

Figure 1

Designation	Function

DI9101	Quench diode
FU32	3rd hydraulic function 3rd hydraulic function together with 4th hydraulic function
FU50	Attachment locking
MA9101	Attachment lock, open
MA9106	Attachment lock, close
MA9144	Hold solenoid 3rd hydraulic function
SW9143	Attachment locking
SW9145	Electric lever lock
SW9146	Emergency stop 3rd hydraulic function
SW9147	Hold function, 3rd hydraulic function

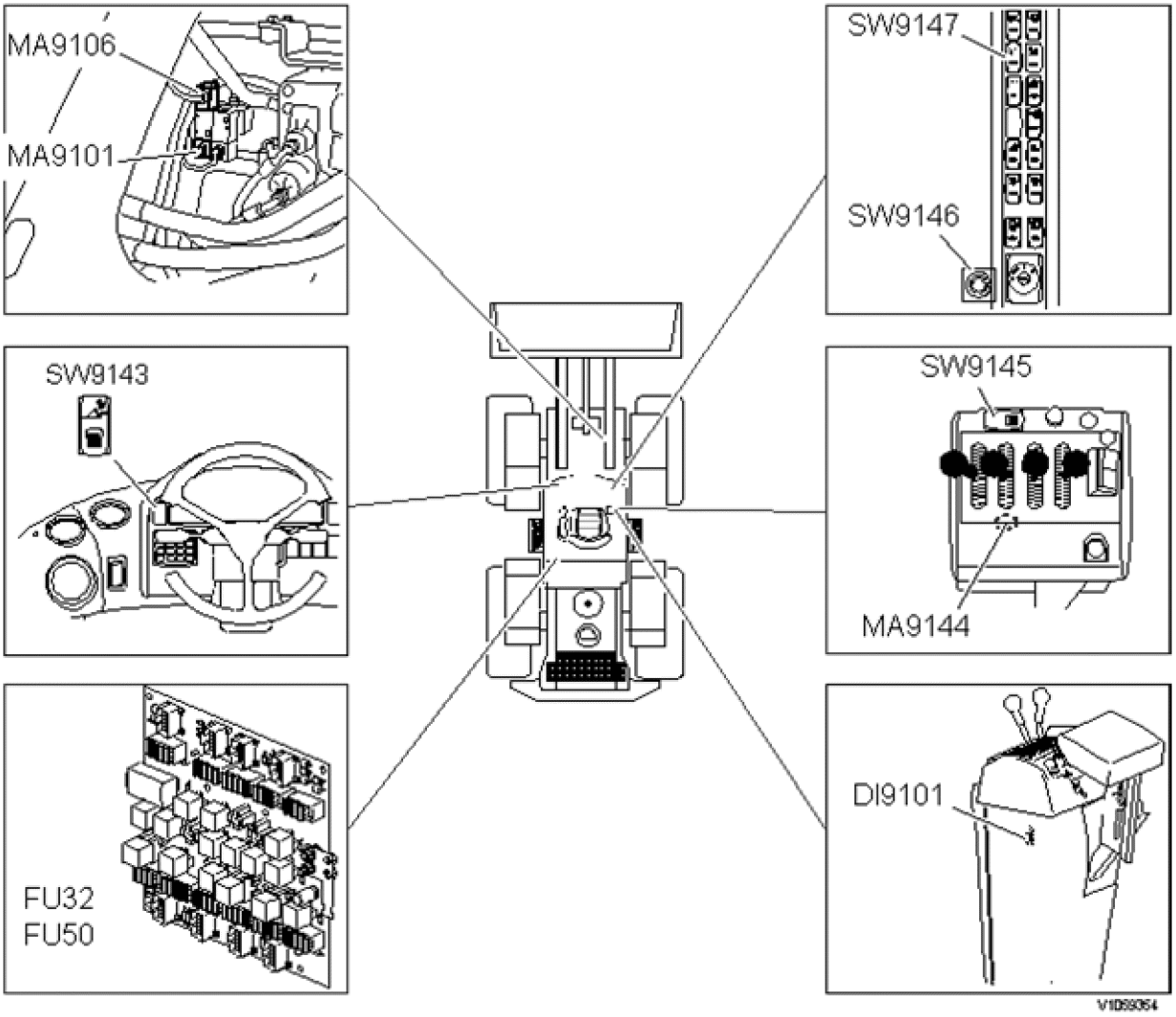

Figure 2
Component position

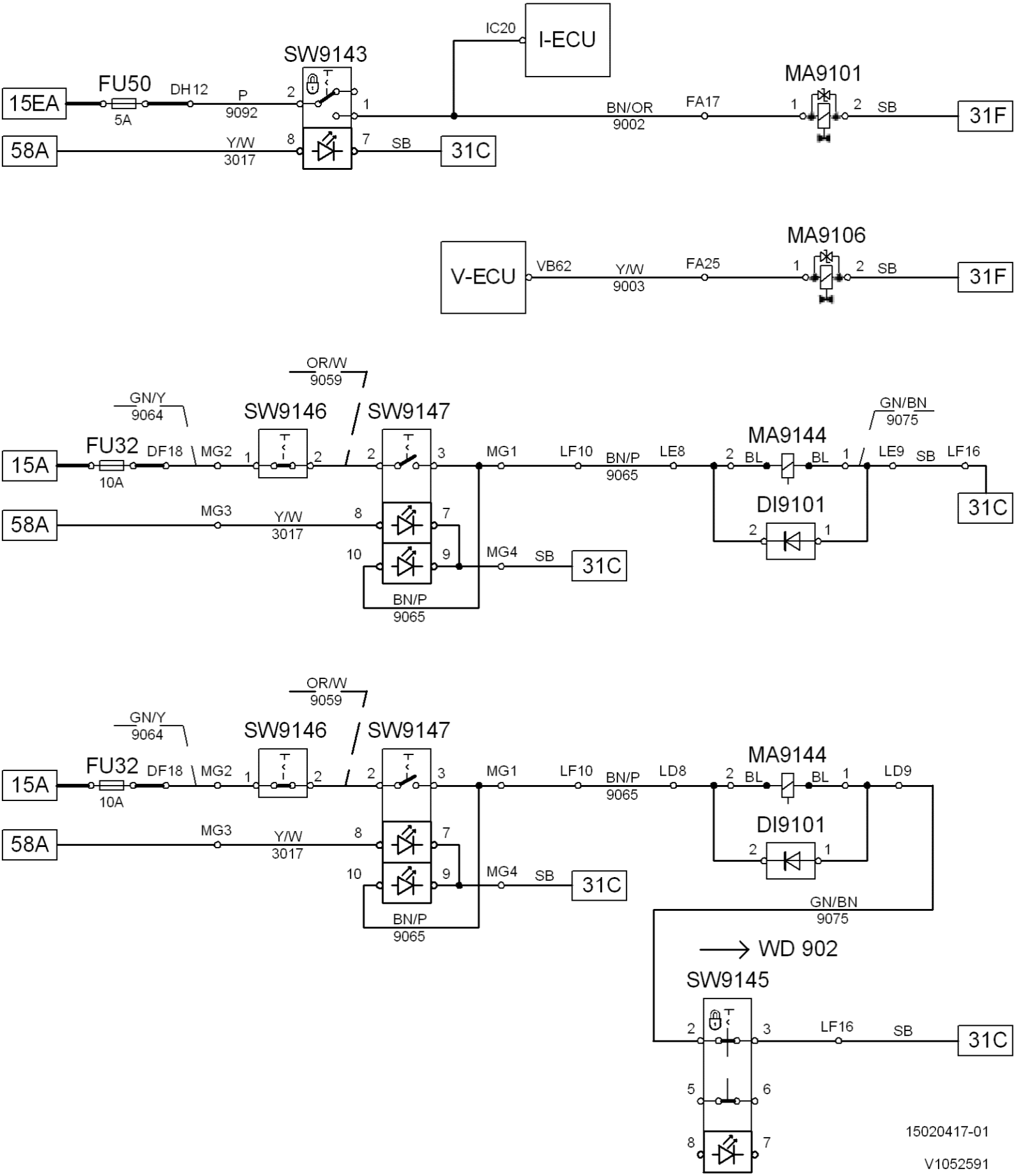
15EA
FU50
5A
DH12
P
9092
SW9143
2
1
IC20
I-ECU
BN/OR
9002
FA17
MA9101
1
2
SB
31F
58A
Y/W
3017
8
7
SB
31C
V-ECU
VB62
Y/W
9003
FA25
MA9106
1
2
SB
31F
OR/W
9059
GN/Y
9064
SW9146
SW9147
15A
FU32
10A
DF18
MG2
1
2
2
3
MG1
LF10
BN/P
9065
LE8
2
BL
MA9144
BL
1
GN/BN
9075
LE9
SB
LF16
31C
58A
MG3
Y/W
3017
8
7
10
9
MG4
SB
31C
BN/P
9065
DI9101
2
1
OR/W
9059
GN/Y
9064
SW9146
SW9147
15A
FU32
10A
DF18
MG2
1
2
2
3
MG1
LF10
BN/P
9065
LD8
2
BL
MA9144
BL
1
LD9
58A
MG3
Y/W
3017
8
7
10
9
MG4
SB
31C
BN/P
9065
DI9101
2
1
GN/BN
9075
WD 902
SW9145
2
3
LF16
SB
31C
5
6
8
7
15020417-01
V1052591

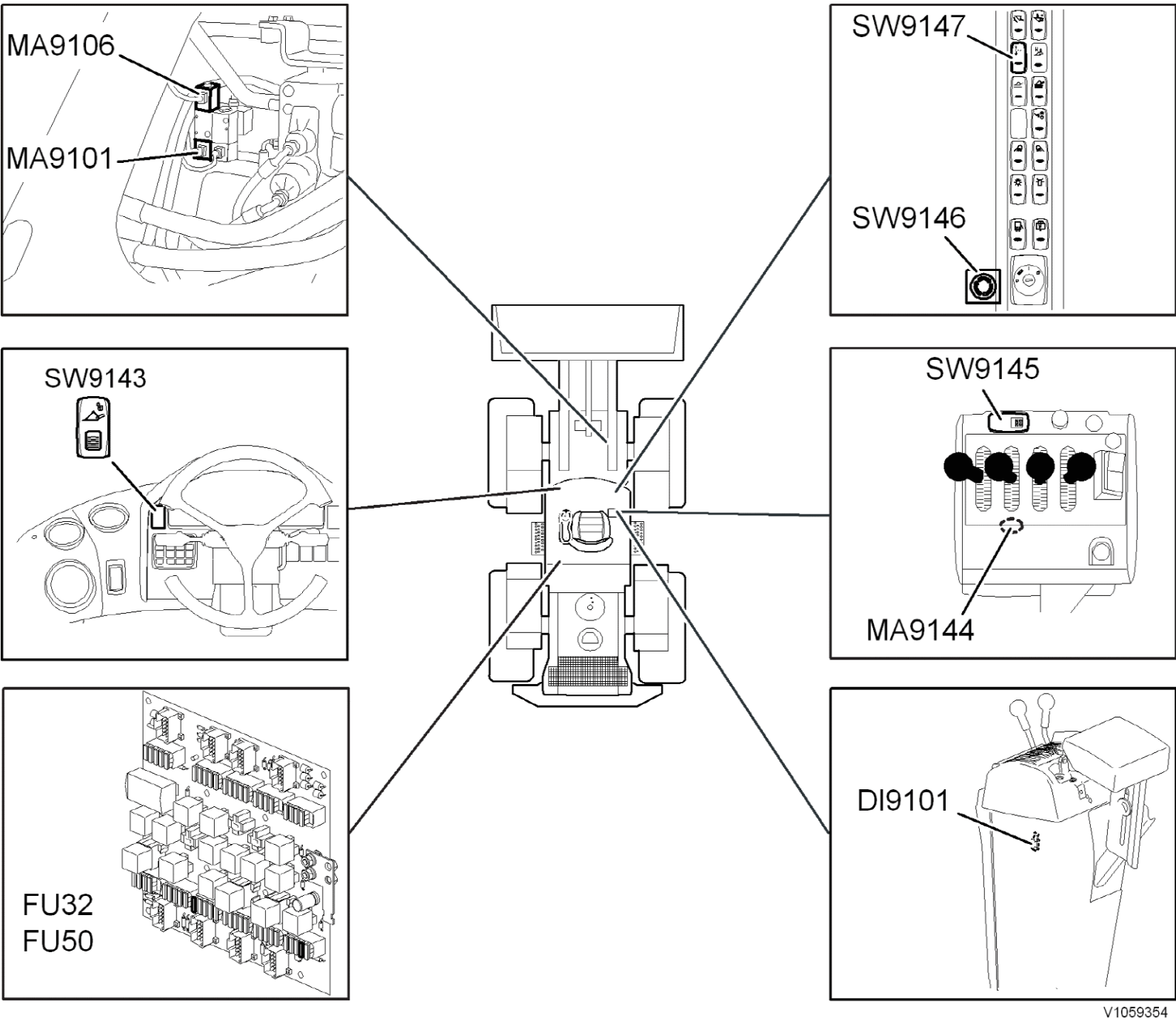
MA9106
MA9101
SW9147
SW9146
SW9143
SW9145
MA9144
FU32
FU50
DI9101
V1059354

VOLVO
Construction Equipment

Service Information

Document Title:	Function Group:	Information Type: **Service Information**	Date: **12/10/2011**
Profile: **WLO, L90F (Volvo) [GB]**			

Wiring diagram 908

Output control pump 2 (P2)

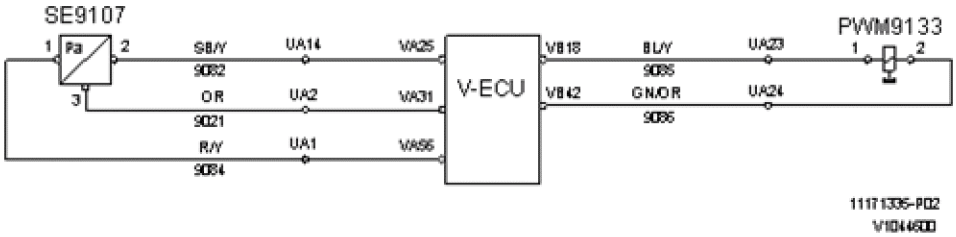

Figure 1

Designation	Function
PWM9133	Output control pump 2 (P2)
SE9107	LS pressure sensor

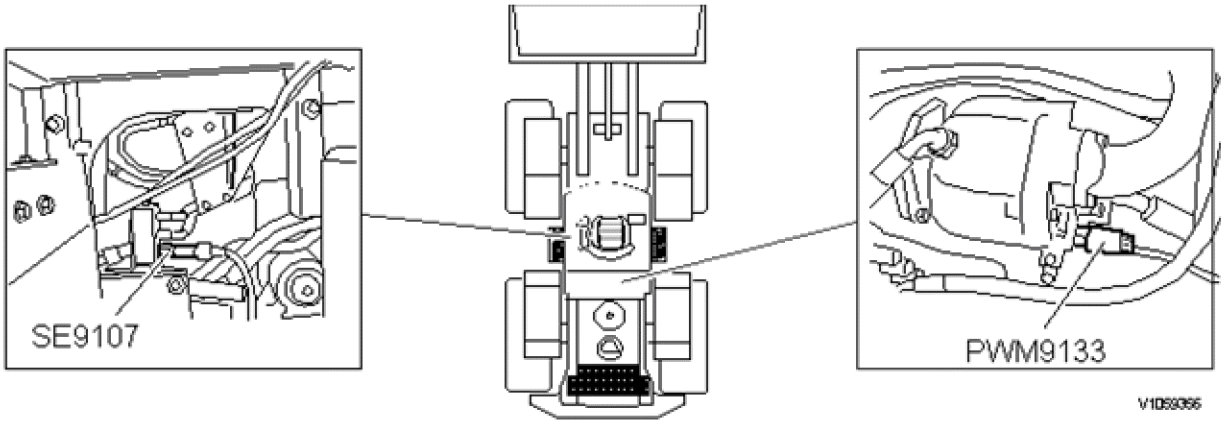

Figure 2
Component position

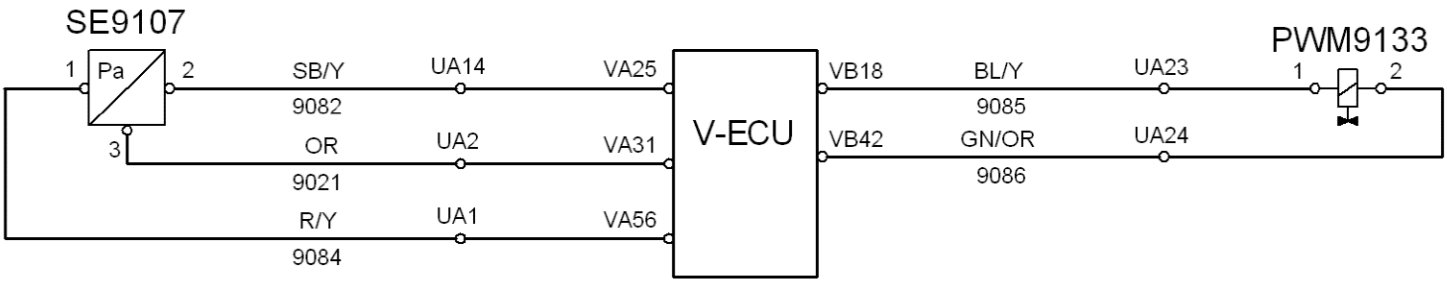

11171335-P02
V1044600

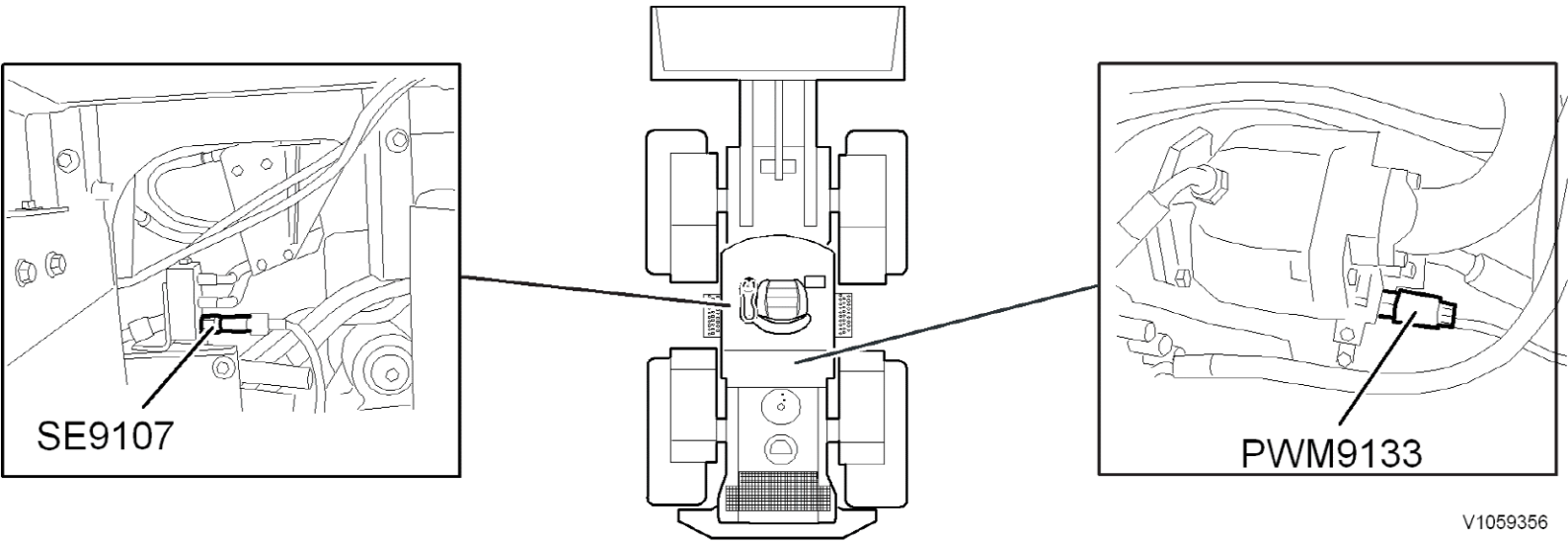
SE9107
PWM9133
V1059356

More than one document matches the current profile:

Wiring diagram 912
Product Line: WLO
Model Variant: L90F
Site: Arvika
Serial Number Start: 25001
Serial Number End: 25774

Wiring diagram 912
Product Line: WLO
Model Variant: L90F
Site: Arvika, Pederneiras, Asheville
Serial Number Start: 25775, 71501, 68101
Serial Number End: 49999, 79999, 69999

VOLVO
Construction Equipment

Service Information

Document Title:	Function Group:	Information Type: **Service Information**	Date: **12/10/2011**
Profile: **WLO, L90F (Volvo) [GB]**			

Wiring diagram 912

Working hydraulics with joystick

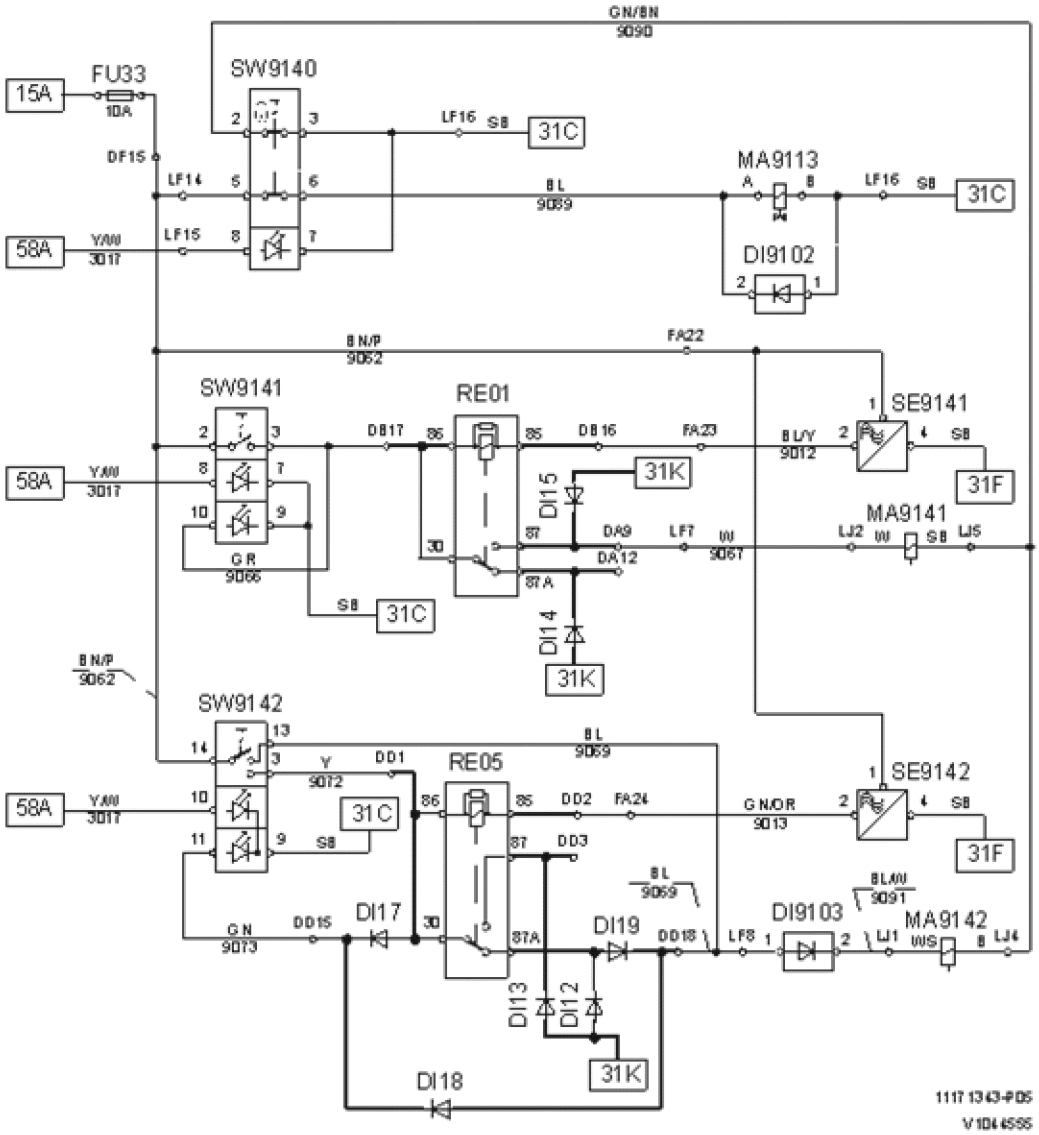

Figure 1

Designation	Function	Designation	Function
DI12	Quench diode	MA9113	Single lever lever lock
DI13	Quench diode	MA9141	Hold solenoid bucket positioner (automatic tilt)
DI14	Quench diode	MA9142	Hold solenoid boom kick-out

			(automatic lift)
DI15	Quench diode	RE01	Bucket positioner
DI17	Lock-out diode	RE05	Boom kick-out
DI18	Lock-out diode	SE9141	Position sensor bucket positioner (automatic tilt)
DI19	Lock-out diode	SE9142	Position sensor boom kick-out (automatic lift)
DI9102	Quench diode	SW9140	Single lever electric lever lock
DI9103	Quench diode	SW9141	Bucket positioner
FU33	Single lever function	SW9142	Boom kick-out

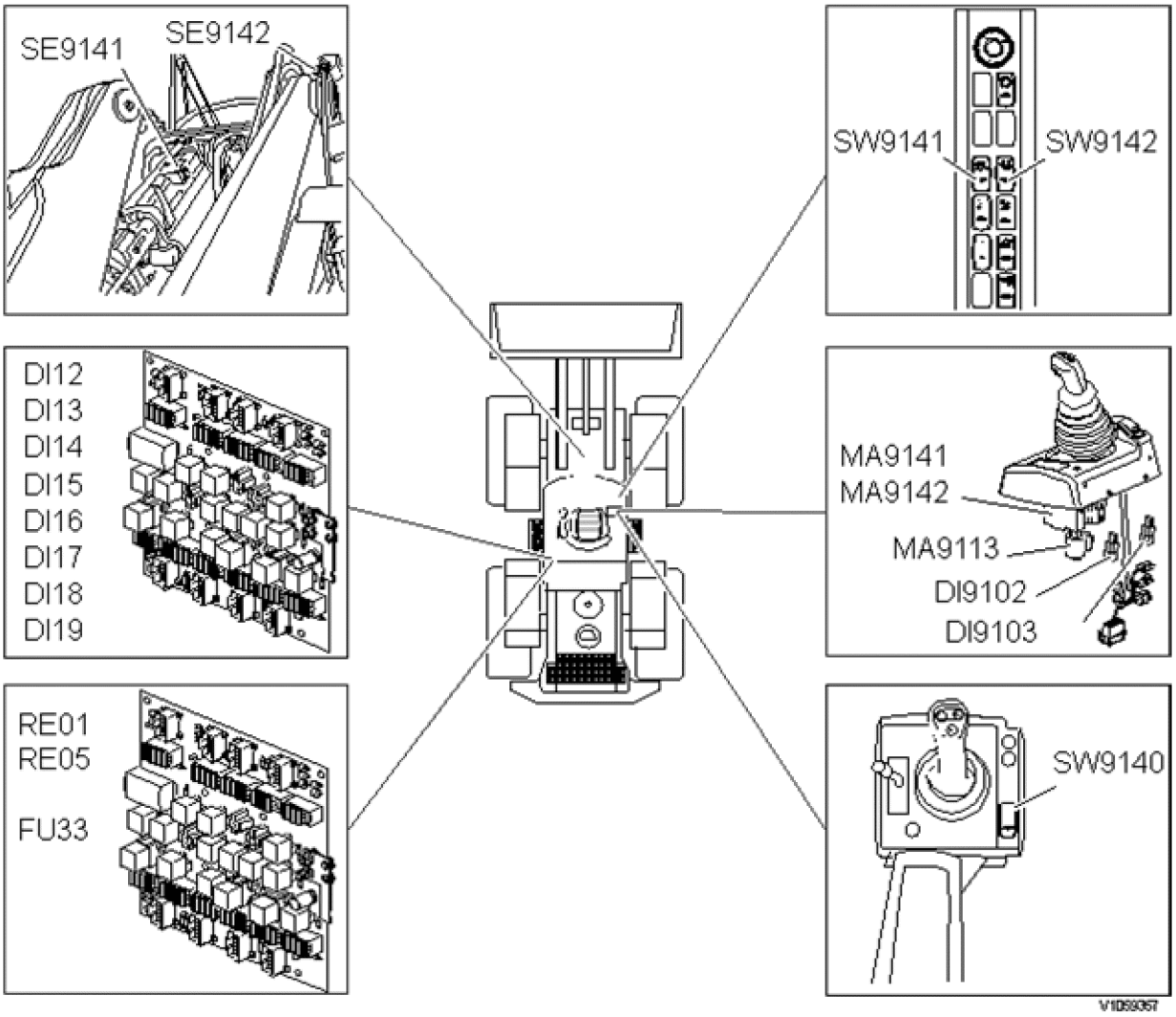

Figure 2
Component position

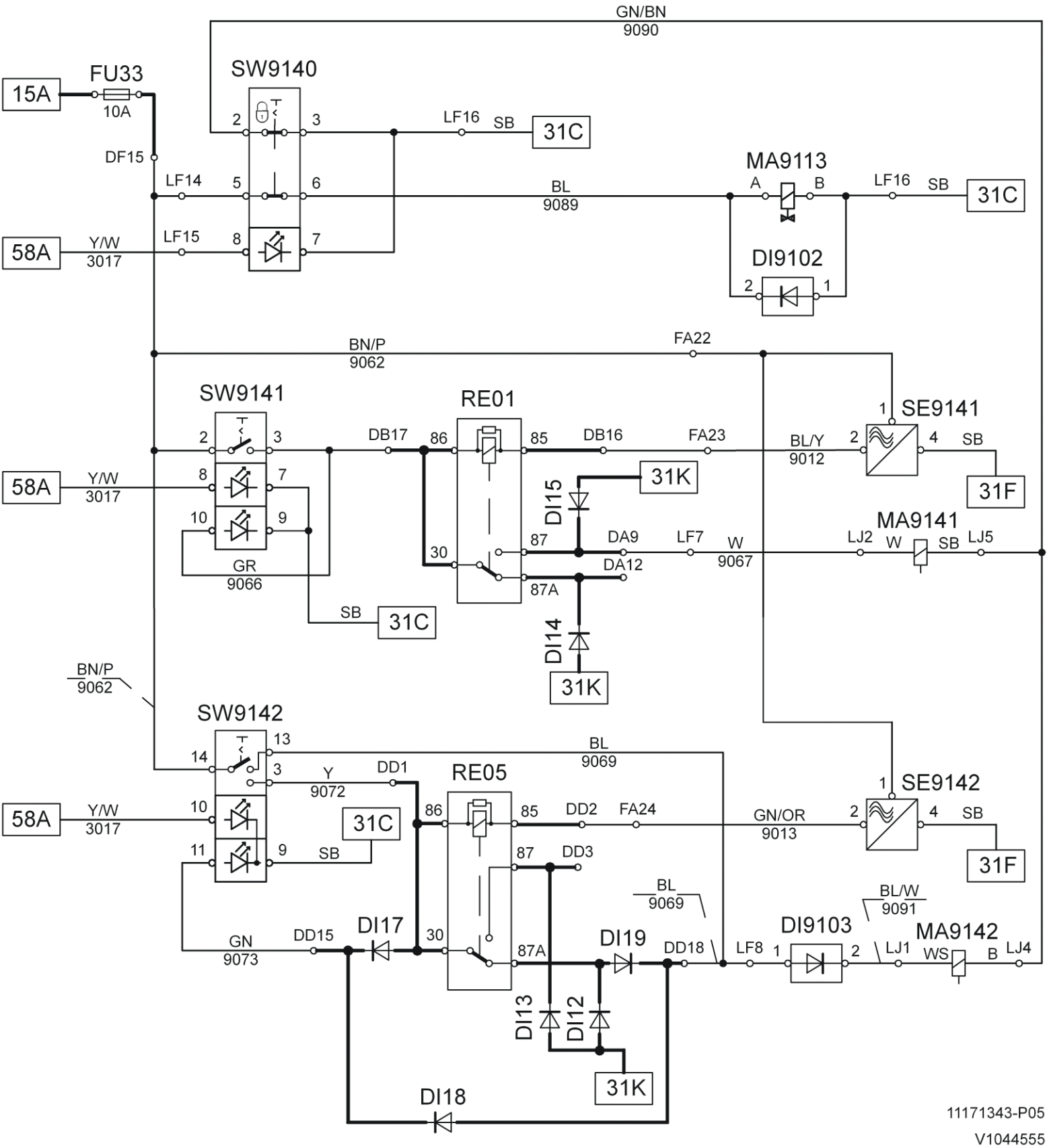
GN/BN
9090
15A
FU33
10A
SW9140
2
3
LF16
SB
31C
DF15
LF14
5
6
BL
9089
MA9113
A
B
LF16
SB
31C
58A
Y/W
3017
LF15
8
7
DI9102
2
1
BN/P
9062
FA22
SW9141
RE01
1
SE9141
2
3
DB17
86
85
DB16
FA23
BL/Y
9012
2
4
SB
31F
58A
Y/W
3017
8
7
10
9
31K
DI15
87
DA9
LF7
W
9067
MA9141
LJ2
W
SB
LJ5
30
DA12
GR
9066
87A
SB
31C
DI14
31K
BN/P
9062
SW9142
13
14
BL
9069
3
Y
9072
DD1
RE05
1
SE9142
58A
Y/W
3017
10
86
85
DD2
FA24
GN/OR
9013
2
4
SB
31F
31C
11
9
SB
87
DD3
BL
9069
BL/W
9091
DI9103
MA9142
GN
9073
DD15
DI17
30
87A
DI19
DD18
LF8
1
2
LJ1
WS
B
LJ4
DI13
DI12
31K
DI18
11171343-P05
V1044555

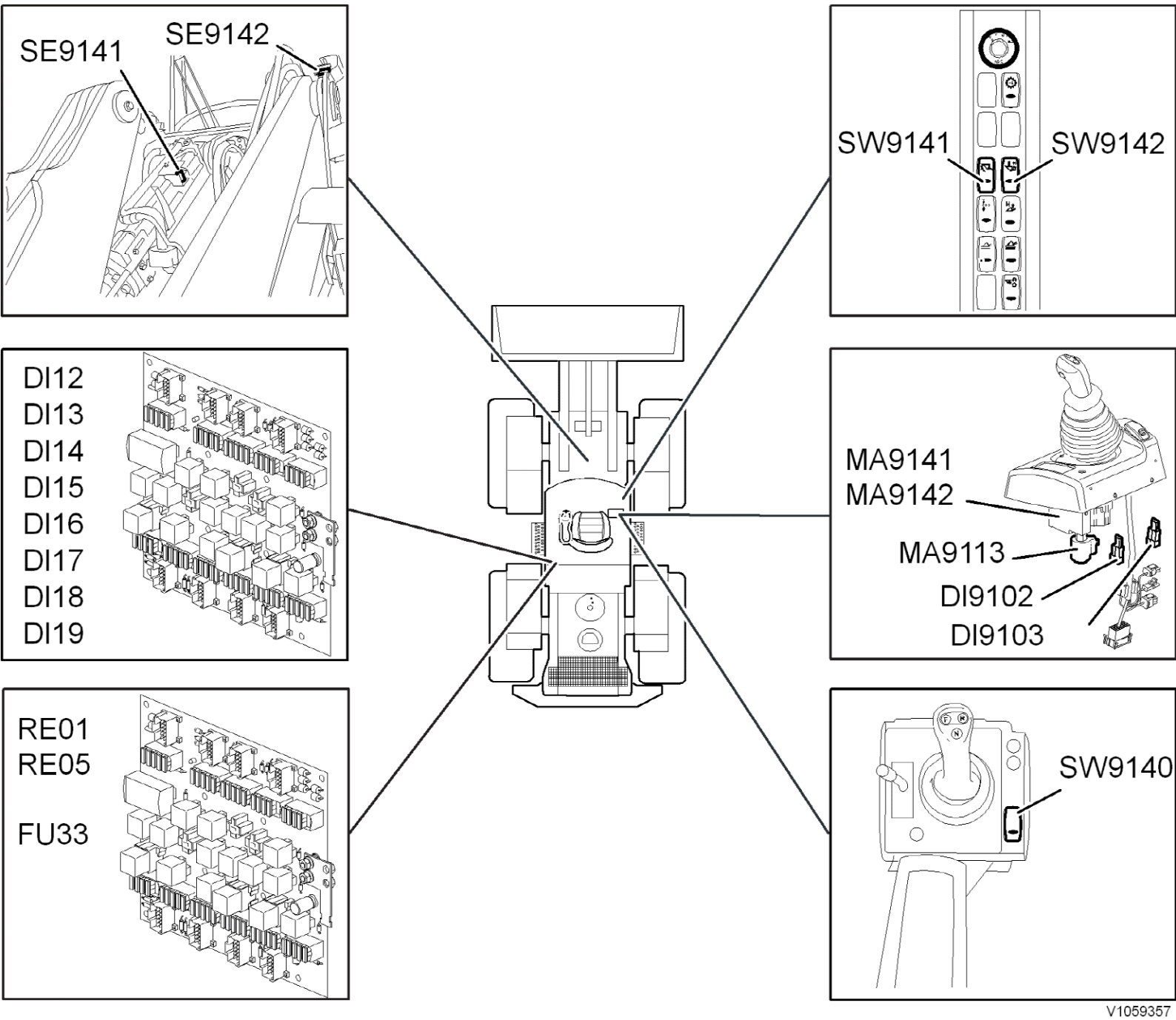
SE9141
SE9142
SW9141
SW9142
DI12
DI13
DI14
DI15
DI16
DI17
DI18
DI19
MA9141
MA9142
MA9113
DI9102
DI9103
RE01
RE05
FU33
SW9140
V1059357

VOLVO
Construction Equipment

Service Information

Document Title:	Function Group:	Information Type: **Service Information**	Date: **12/10/2011**
Profile: **WLO, L90F (Volvo) [GB]**			

Wiring diagram 912

Working hydraulics with joystick

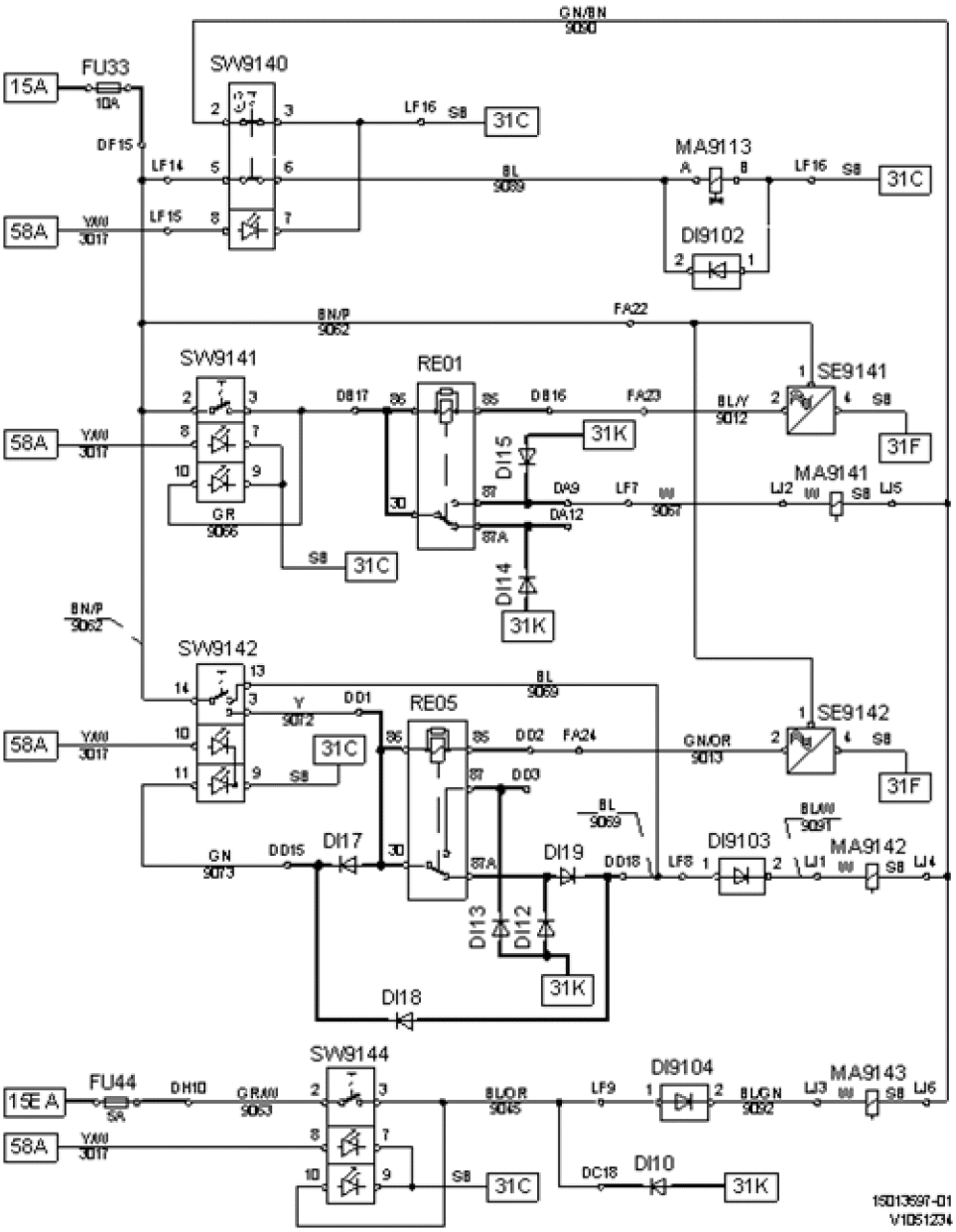

Figure 1

Designation	Function	Designation	Function
DI10	Quench diode	MA9113	Single lever lever lock
DI12	Quench diode	MA9141	Hold solenoid bucket positioner

			(automatic tilt)
DI13	Quench diode	MA9142	Hold solenoid boom kick-out (automatic lift)
DI14	Quench diode	MA9143	Detent solenoid floating position
DI15	Quench diode	RE01	Bucket positioner
DI17	Lock-out diode	RE05	Boom kick-out
DI18	Lock-out diode	SE9141	Position sensor bucket positioner (automatic tilt)
DI19	Lock-out diode	SE9142	Position sensor boom kick-out (automatic lift)
DI9102	Quench diode	SW9140	Single lever electric lever lock
DI9103	Lock-out diode	SW9141	Bucket positioner
DI9104	Lock-out diode	SW9142	Boom kick-out
FU33	Single lever function	SW9144	Floating position
FU44	Floating position		

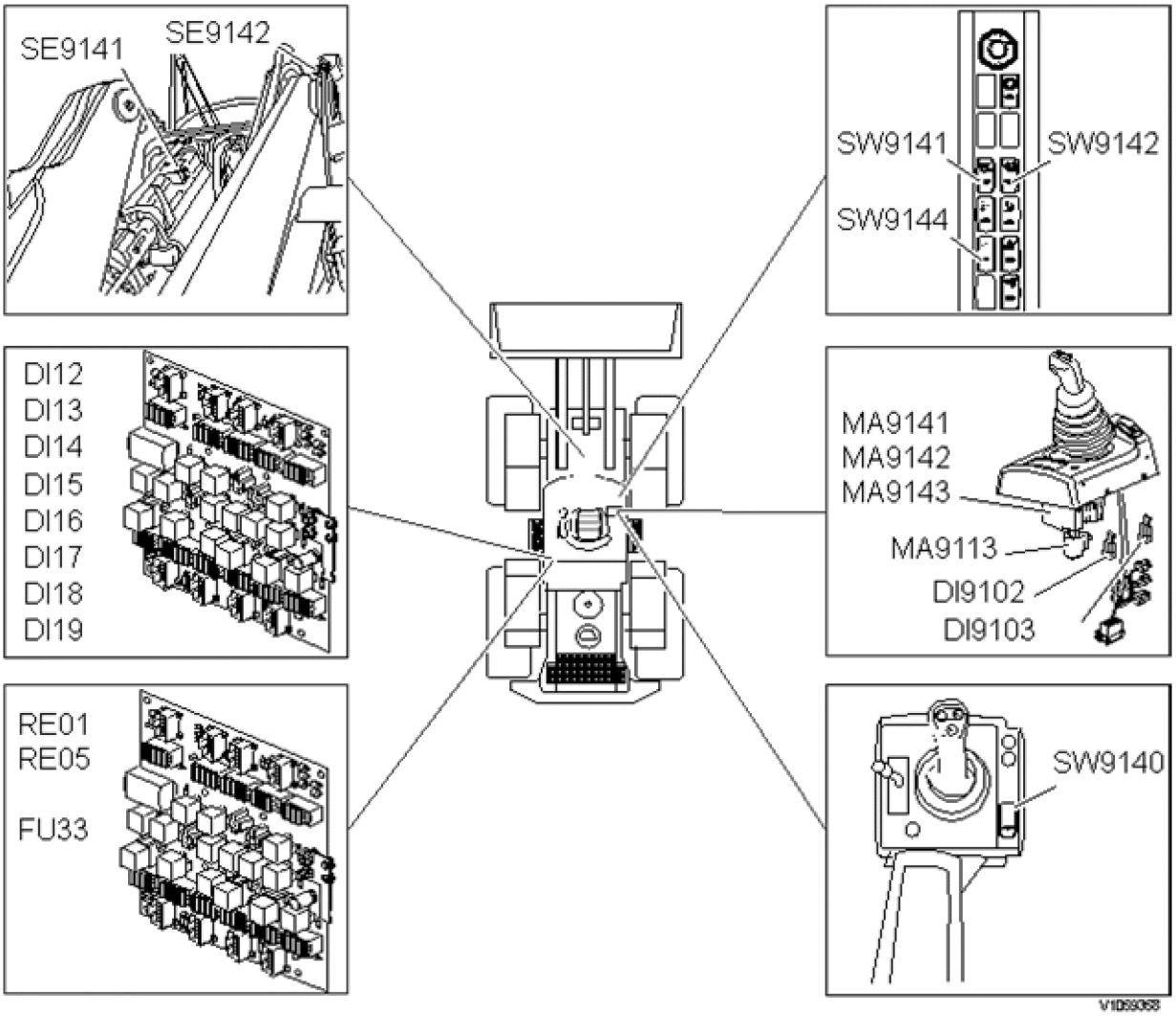

Figure 2
Component position

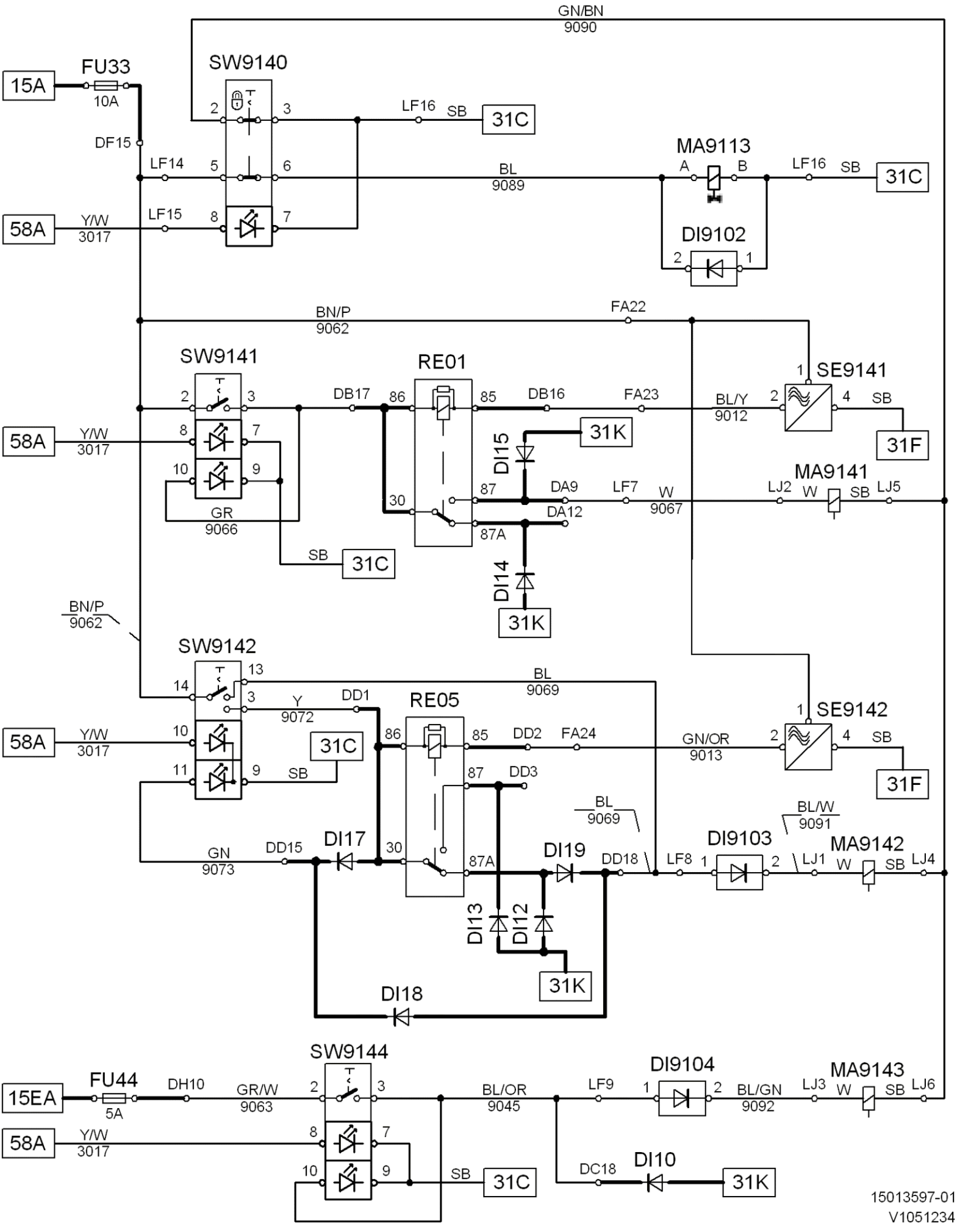
GN/BN
9090
15A
FU33
10A
SW9140
DF15
LF14
LF15
Y/W
3017
58A
LF16
SB
31C
MA9113
BL
9089
DI9102
BN/P
9062
FA22
SW9141
RE01
SE9141
DB17
DB16
FA23
BL/Y
9012
31F
31K
DI15
GR
9066
DA9
LF7
W
9067
DA12
MA9141
LJ2
LJ5
DI14
BN/P
9062
SW9142
BL
9069
Y
9072
DD1
RE05
SE9142
DD2
FA24
GN/OR
9013
DD3
BL
9069
BL/W
9091
GN
9073
DD15
DI17
DI19
DD18
LF8
DI9103
MA9142
LJ1
LJ4
DI13
DI12
DI18
15EA
FU44
5A
DH10
GR/W
9063
BL/OR
9045
LF9
DI9104
MA9143
BL/GN
9092
LJ3
LJ6
DC18
DI10
15013597-01
V1051234

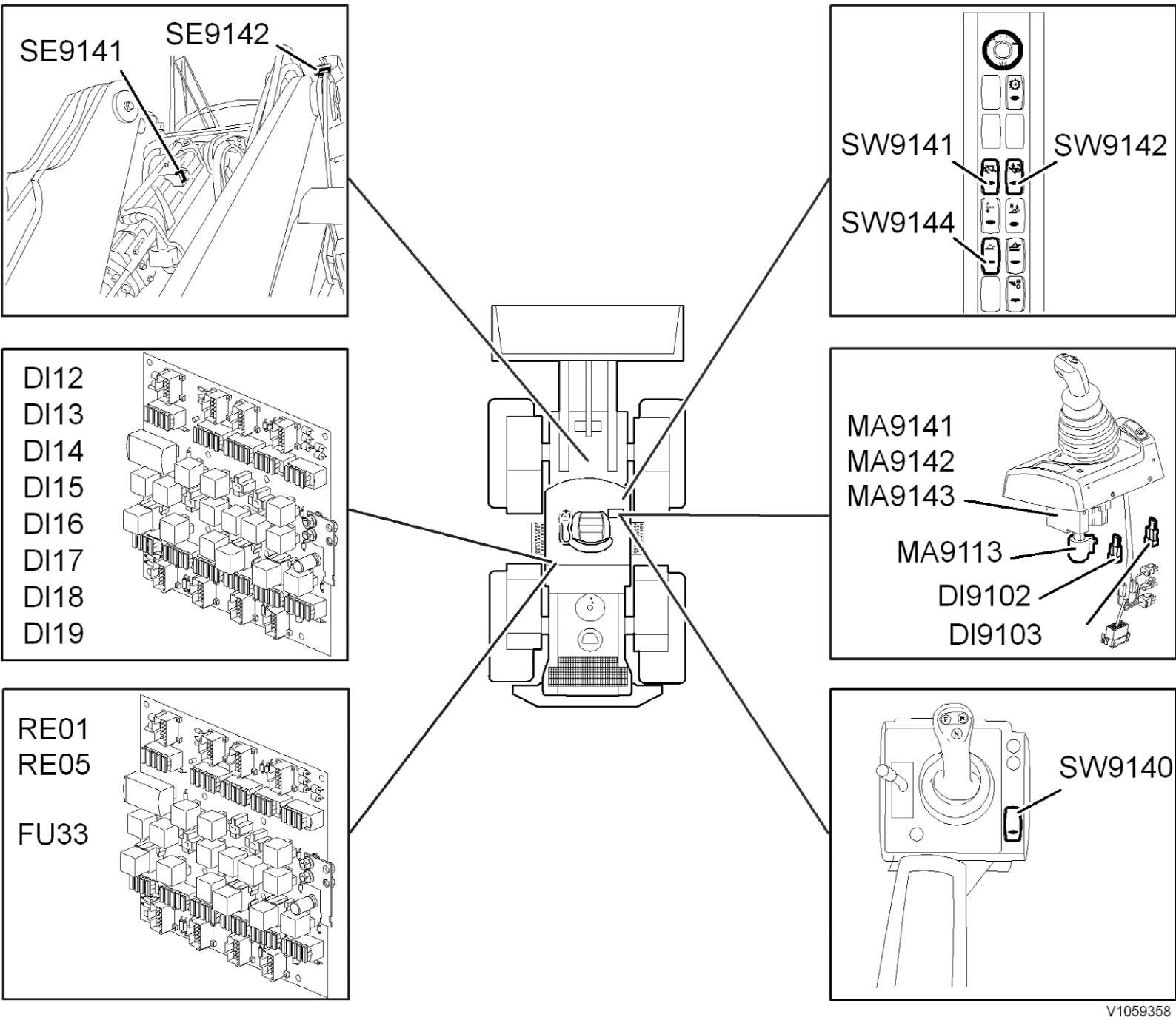
SE9141
SE9142
SW9141
SW9142
SW9144
DI12
DI13
DI14
DI15
DI16
DI17
DI18
DI19
MA9141
MA9142
MA9143
MA9113
DI9102
DI9103
RE01
RE05
FU33
SW9140
V1059358

VOLVO
Construction Equipment

Service Information

Document Title:	Function Group:	Information Type: **Service Information**	Date: **12/10/2011**
Profile: **WLO, L90F (Volvo) [GB]**			

Wiring diagram 913

Central lubrication

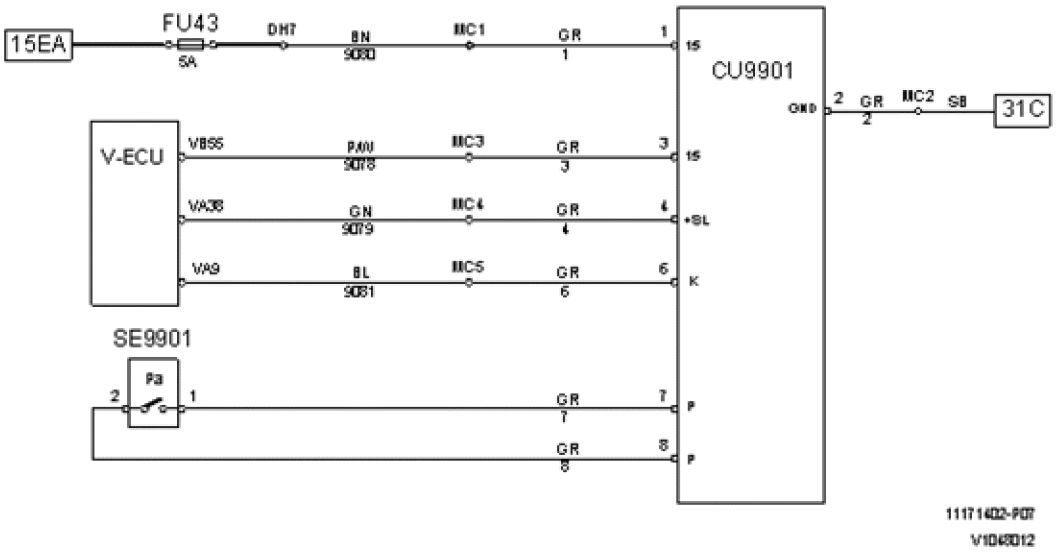

Figure 1

Designation	Function
CU9901	Central lubrication unit
FU43	Central lubrication
SE9901	Pressure monitor

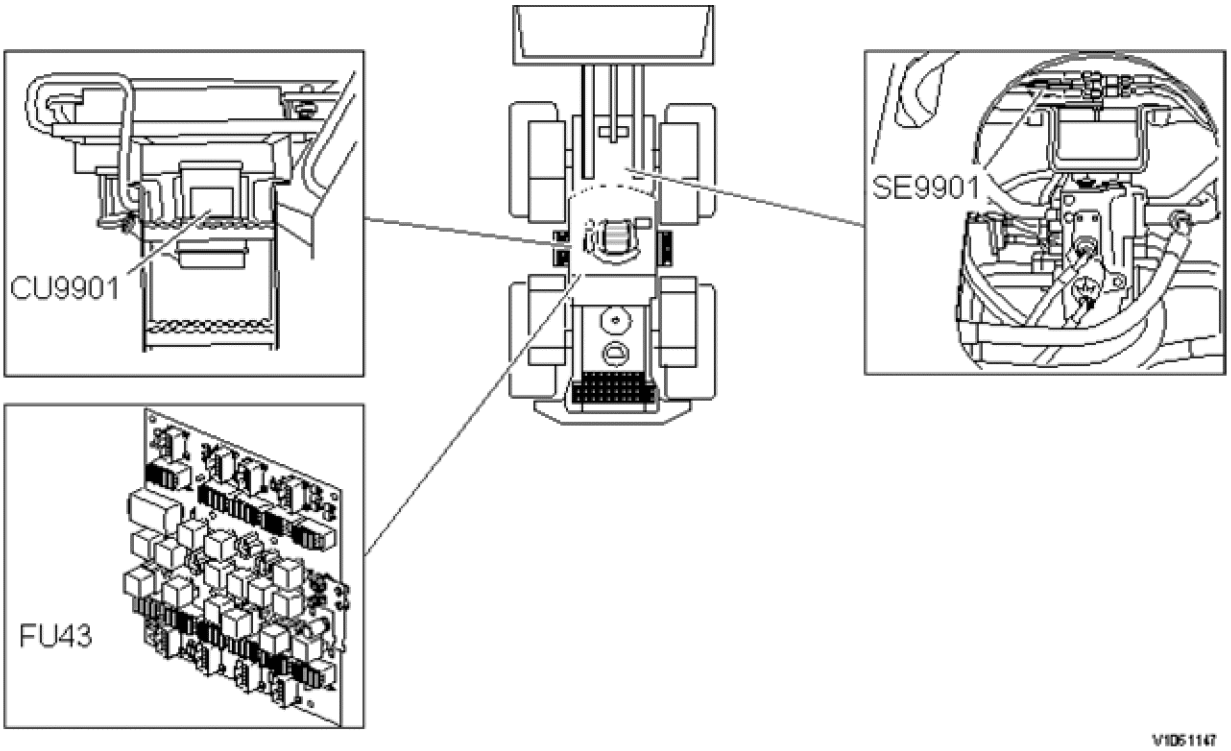

Figure 2
Component position

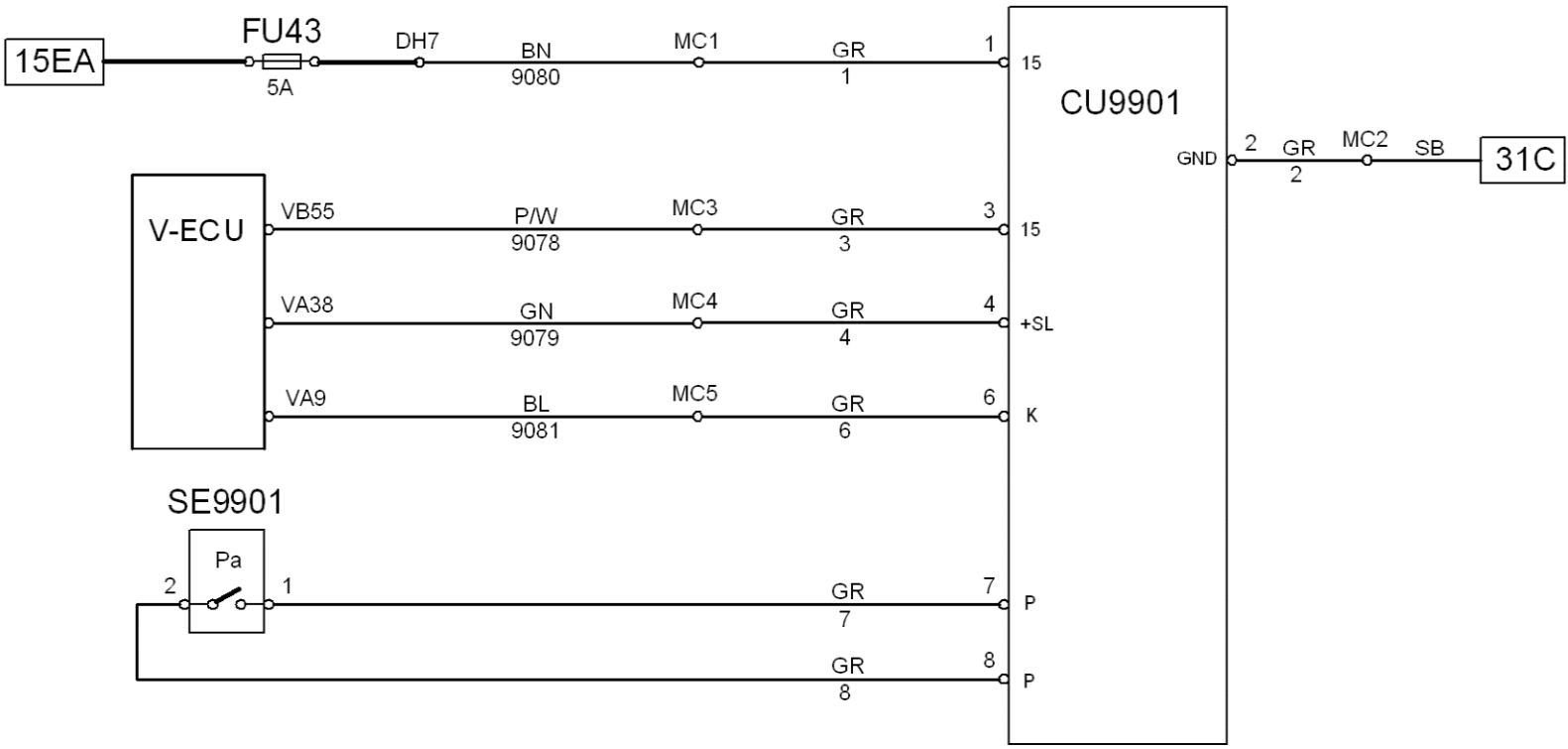

11171402-P07

V1048012

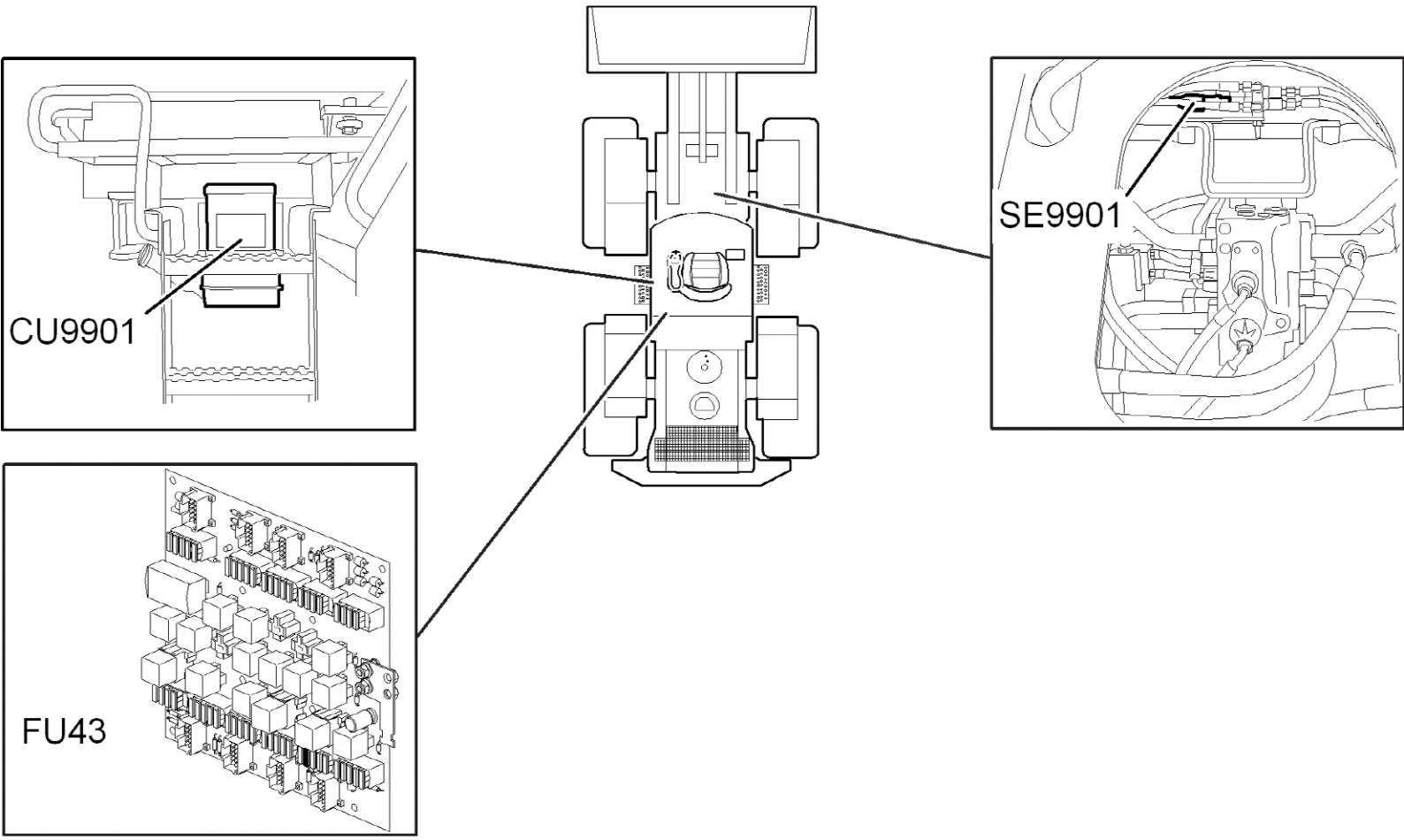

V1061147

VOLVO
Construction Equipment

Service Information

Document Title:	Function Group:	Information Type: **Service Information**	Date: **12/10/2011**
Profile: **WLO, L90F (Volvo) [GB]**			

Battery disconnector switch, description

Battery disconnect switch

The function of the battery disconnector is to disconnect the the machine's electrical system from the battery voltage when the machine is not used.

The battery disconnector is located inside of the radiator casing and is connected to the positive side of the batteries (24 V).

NOTE	**The battery disconnector does not disconnect the voltage feed to voltage converter for radio and voltage socket 12 V.**

See Elschema 301
.

Electrically controlled battery disconnector (optional equipment)

When starting the machine using the ignition, voltage feed is connected by the electrically controlled battery disconnector RE3101 (ordinary battery disconnector SW3101 is on).

The hold function for the electrically controlled battery disconnector is obtained via relay RE3102.

When stopping the machine using the ignition, the hold function cuts out for the electrically controlled battery disconnector and the voltage feed is disconnected.

Emergency stop
Emergency stop SW3102 is located by the left A-pillar.

The emergency stop cuts the hold function for the electrically controlled battery disconnector and the voltage feed is disconnected.

If the emergency stop is used, it must be reset before the machine is started again

See Elschema 308
.

VOLVO
Construction Equipment

Service Information

Document Title:	Function Group:	Information Type: **Service Information**	Date: **12/10/2011**
Profile: **WLO, L90F (Volvo) [GB]**			

Instrument panels

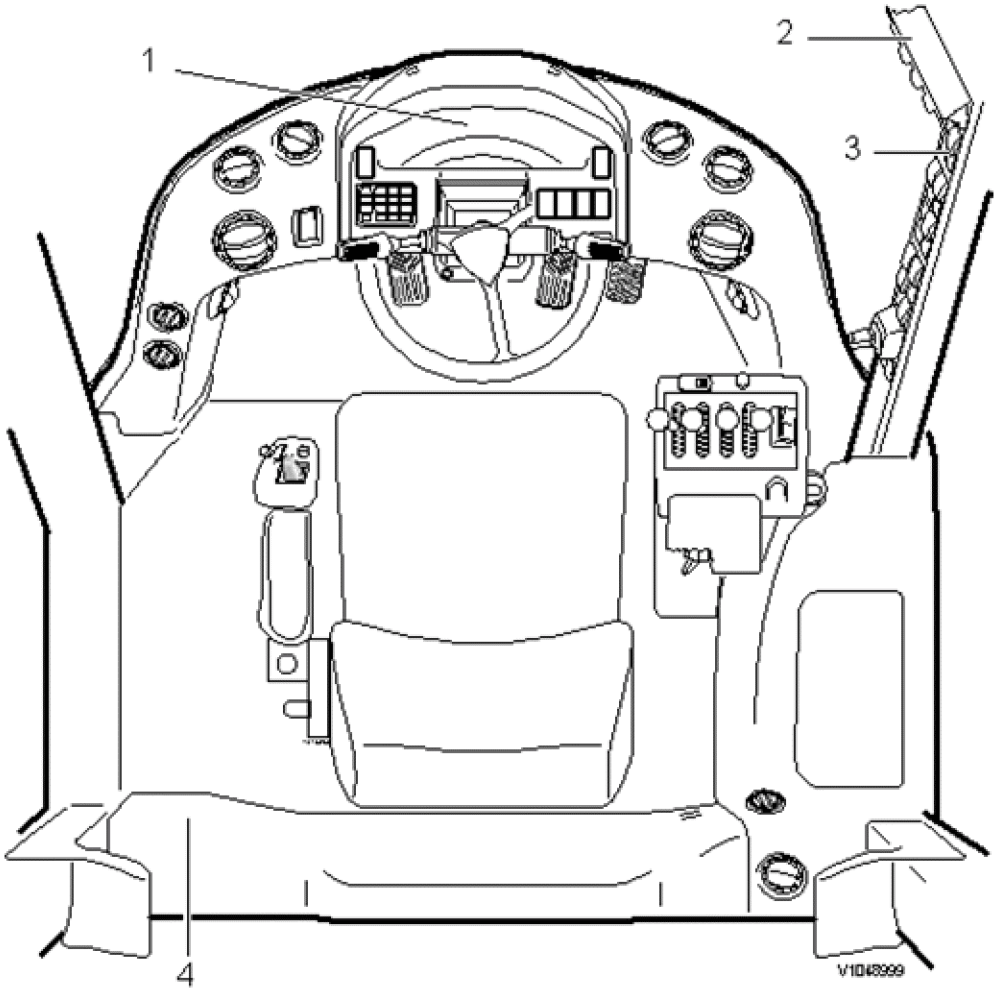

Figure 1
Instrument panels

1. Front instrument panel (central instrument, switches, keypad for information display unit)
2. Roof panel (climate control system)
3. Pillar panel (mode selector, switches, ignition, hand throttle control, and electric power socket 12 V.)
4. Rear cab wall with electric power socket 24 V, hour meter, electrical distribution box with fuses and relays. Socket for service tool.

VOLVO
Construction Equipment

Service Information

Document Title:	Function Group:	Information Type: **Service Information**	Date: **12/10/2011**
Profile: **WLO, L90F (Volvo) [GB]**			

Middle instrument panel with warning lights

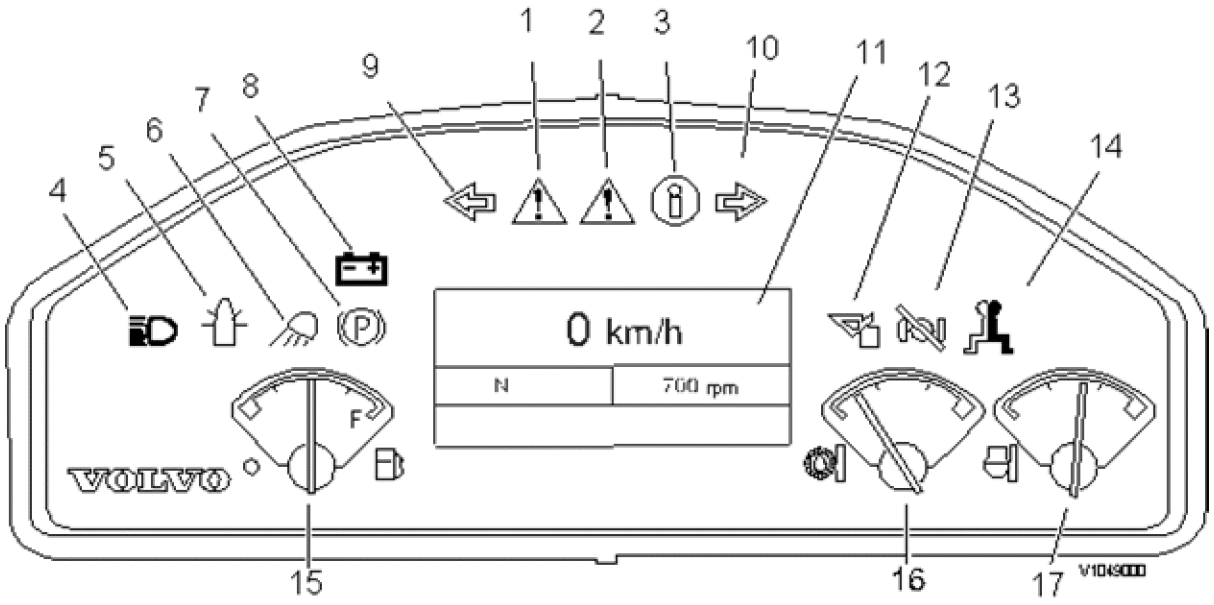

Figure 1

1 Amber central warning
2 Red central warning
3 Information symbol (green)
4 High beams (blue)
5 Rotating beacon (amber)
6 Working lights (amber)
7 Parking brake applied (red)
8 Charging, battery (red)
9 Direction indicator left (green)
10 Direction indicator right (green)
11 Display unit
12 Boom Suspension System activated (green)
13 Differential lock engaged (green)
14 Lever steering activated (green)
15 Fuel level
16 Transmission oil temperature
17 Coolant temperature

VOLVO
Construction Equipment

Service Information

Document Title:	Function Group:	Information Type: **Service Information**	Date: **12/10/2011**
Profile: **WLO, L90F (Volvo) [GB]**			

Washer fluid level

The function monitors the washer fluid level and triggers an alarm when the level is low.

Input signals	Conditions for output functions	Output functions
o Window washer fluid level, SE3601	o Low level > 20 seconds	o Information Low washer fluid level

The following applies in case of faulty input signals:

Input signal	Assumed value in case of a fault
Window washer fluid level	Normal

VOLVO
Construction Equipment

Service Information

Document Title:	Function Group:	Information Type: **Service Information**	Date: **12/10/2011**
Profile: **WLO, L90F (Volvo) [GB]**			

Fuel consumption

The function calculates the machine's fuel consumption and displays it on the information panel.

Calculations of consumption are displayed according to the following:

- Instantaneous consumption in litres per hour.
- Average consumption in litres per hour.
- Total consumption in litres since last reset; up to 99999 litres.
- Residual time for fuel.

Display of consumption and reset of the same takes place in information figure Vehicle info, Operational Data, see also Informationspanel, körbild
.

Fuel consumption, total		
Input signals	**Conditions for output functions**	**Output functions**
o VCADS Pro parameter GZC o Reset o Instantaneous consumption	**Overall conditions for the function:** o VCADS Pro parameter GZC "ON"	o Vehicle info Operational Data Total:[T1] ⓘ
	o Reset Yes or o Total fuel consumption > 99999	o Total fuel consumption = 0

[T1] Shows total fuel consumption since last reset.

The following applies in case of incorrect input signals:

Input	**Assumed value in case of error**
VCADS Pro parameter GZC	"OFF"
Reset	No

Fuel consumption, average		
Input signals	**Conditions for output functions**	**Output functions**
o VCADS Pro parameter GZD o Reset o Total fuel consumption o Machine time	**Overall conditions for the function:** o VCADS Pro parameter GZD "ON"	
	o Total fuel consumption / Machine hours	o Vehicle info Operational Data Avg.:[T1] ⓘ
	o Reset Yes	o Average fuel consumption = 0

[T1] Shows average fuel consumption since last reset.

The following applies in case of incorrect input signals:

Input	**Assumed value in case of error**
VCADS Pro parameter GZD	"OFF"
Reset	No

In case any of the input signals Total fuel consumption or Machine hours is incorrect, the output signal is incorrect until Reset = Yes

Fuel consumption, residual time		
Input signals	**Conditions for output functions**	**Output functions**
○ VCADS Pro parameter HLF ○ VCADS Pro parameter HLI	**Overall conditions for the function:** ○ VCADS Pro parameter HLF "ON"	
○ Fuel level, SE2303 ○ Calculated fuel level [T1] ⓘ ○ Engine On/Off ○ Total fuel consumption	○ Calculated fuel level / Average consumption	○ Vehicle info Operational Data Resid. time fuel:[T2] ⓘ

[T1] Calculated value > fuel level

[T2] Shows calculated time remaining before fuel runs out.

The following applies in case of incorrect input signals:

Input	Assumed value in case of error
VCADS Pro parameter HLF	"OFF"

In case any other input signal is incorrect, the output signal becomes incorrect.

VOLVO
Construction Equipment

Service Information

Document Title:	Function Group:	Information Type: **Service Information**	Date: **12/10/2011**
Profile: **WLO, L90F (Volvo) [GB]**			

Travelling speed

The function calculates and informs the operator about the speed.

The speed is used as input signal to several functions.

Input signals	Conditions for output functions	Output functions
o VCADS Pro parameter QM o Output speed transmission, SE4307	o (Output speed transmission/axle ratio) x VCADS Pro parameter QM	o Distance per second
	o Distance per second x (3.6 / 1000)	o Speed

In case of any input signals being faulty, the output signals are considered to be faulty.

VOLVO
Construction Equipment

Service Information

Document Title:	Function Group:	Information Type: **Service Information**	Date: **12/10/2011**
Profile: **WLO, L90F (Volvo) [GB]**			

Machine hours

The function calculates and shows on the display unit the time the engine of the machine has been On since previous Reset / Setting to zero.

Input signals	Conditions for output functions	Output functions
o VCADS Pro parameter BMH o Engine On/Off	o Engine On	o Vehicle info Operational Data Machine hours

VOLVO
Construction Equipment

Service Information

Document Title:	Function Group:	Information Type: **Service Information**	Date: **12/10/2011**
Profile: **WLO, L90F (Volvo) [GB]**			

Information display, general

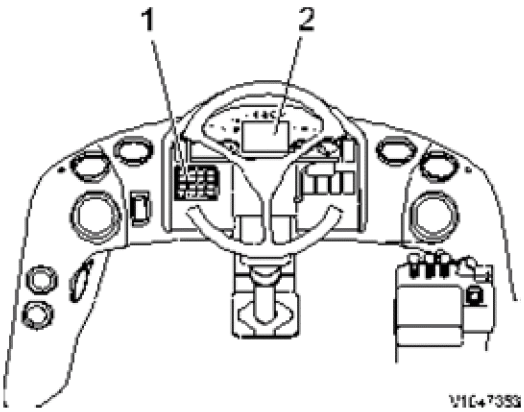

Figure 1
Instrument panel

1 Keypad
2 Display unit

The information panel provides the operator with information, messages, warnings, and alarms. With the keypad, the operator can select group/function from which to read information. The keypad is also used to make settings and enter number values.

The information panel and keypad are located on the instrument panel. The information panel is connected to the instrument control unit (I-ECU).

When the machine is started, the latest figure is shown from the time that the machine was turned off. The information can be adapted to the operator by selecting language and display format for units, time, and date.

Information organization

The information in the information panel is built up in a number of groups/functions:

- Initial display
- Operating information
- Engine
- Transmission
- Hydraulics
- Axles/Brakes
- Electrical system
- Vehicle information
- Vehicle messages
- Service
- Setup

For detailed information, see description of each group.

Changing display screen

Move between groups/functions with the function keys on the keypad. When changing group/function, you always arrive at the top figure in each function group. Return to the figure for “operating information” takes place with the ESC-key or automatically when machine speed is over 20 km/h (12 mph).

Keypad

The following can be performed with the keypad:

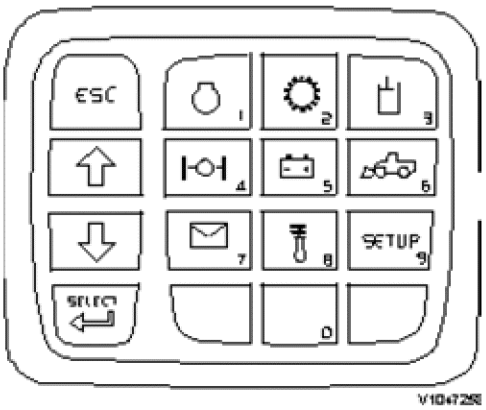

Figure 2
Keypad

- Select group
- Scroll within group
- Activate/deactivate functions
- Reset and acknowledge
- Setup (settings)

The keys' function are also described in the following table.

Certain keys also correspond to a digit which is shown on the key's lower right corner. The number values are used, e.g., when setting date and entering PIN-code for theft protection.

The key SELECT is used to, e.g., make selections, acknowledge, and to get detailed information about any malfunctions.

The key ESC is used to return or cancel.

ESC Return		Engine	1	Transmission	2	Hydraulic system	3
Scroll up		Axles	4	Electrical system	5	Vehicle information	6
Scroll down		Vehicle messages	7	Service	8	**SETUP** Setup (settings)	9
SELECT Confirm					0		

Service mode

The information panel has a function called Service mode. With active Service mode it is possible to access additional or alternative information, e.g., numerical values instead of bars and part numbers for software. Service mode also has additional functions, e.g., simultaneous acknowledgement of all alarms.

The following conditions must be fulfilled to activate Service mode:

- engine off
- Parking brake applied
- Service key pressed in for more than 3 seconds
- Approved message “Enter Service mode” with SELECT-key within 10 seconds.

When Service mode is active the symbol is shown in the lower field in the operating display. To leave Service mode, press in the Service-key for at least 3 seconds.

The functions for Service mode are described further under each group.

Warnings and alarms

Warnings and alarms from the machine are obtained through a combination of central warning, buzzer, and messages in the information panel. For further information about central warning, see Centralvarning
.

Messages about alarms in the information panel are either instructional or informative. In case of serious malfunction, both instructional and informative messages are obtained as follows:

- First the instructional message is obtained, e.g. Stop vehicle or Turn Off Engine.
- After the instruction has been performed, the informative message is obtained, e.g. Low oil level engine.

WARNING! **Do not ignore the alarm and continue to operate the machine! Safely shut down the machine. Inspect and repair the fault. Failure to comply could result in injury!**

For further information about alarms, see Larm, beskrivning
.

VOLVO
Construction Equipment

Service Information

Document Title:	Function Group:	Information Type: **Service Information**	Date: **12/10/2011**
Profile: **WLO, L90F (Volvo) [GB]**			

Information display, start lockout

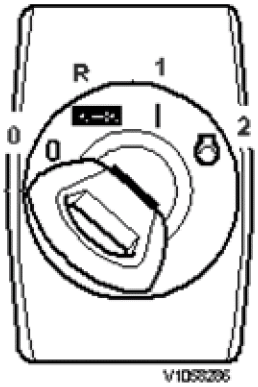

Figure 1
Ignition switch

Theft protection prevents theft of the machine since the following functions do not work when theft protection is activated:

- engine start
- gear selection
- release of parking brake

Start lockout
Enter code * * * *

If the machine is equipped with theft protection, the following display is shown on the information panel when the ignition is turned to position 1. Enter the four-digit code using the keypad.
When the code is entered correctly the theft protection is deactivated and the display on the information panel changes to the operating display, and the engine can be started.

VOLVO
Construction Equipment

Service Information

Document Title:	Function Group:	Information Type: **Service Information**	Date: **12/10/2011**
Profile: **WLO, L90F (Volvo) [GB]**			

Information display, operating display

10 km/h		
F2	CDC	800 rpm
11:15	18 °C (64 °F)	10 l/h
		

Operating display 1

Operating display 1 is shown on the information panel after machine start. If another display has been set when the machine was turned off, it is shown instead and change to operating display takes place by pressing ESC on the keypad.

The following is shown in the operating display:

- Speed (km/h / mph)
- Selected gear (e.g. F2 = Forward 2) and active gear selector (F/R / CDC)
- Engine speed (rpm)
- Clock (24 h / am pm)
- Outside temperature (°C / °F)
- Current fuel consumption (l/h) or time remaining for fuel (h).

The lower field may display symbols for various information according to the following example.


Service mode
Vehicle messages found
Preheating active
Electric lever lock-out 4th function

At speeds above 20 km/h (12 mph) an operating display is shown regardless if another display figure is selected. If another display than the operating display is selected, the system will return to the figure when the speed is below 20 km/h (12 mph).

Change of display is possible only if travel speed is below 20 km/h (12 mph).

10 km/h	
11:15	800 rpm
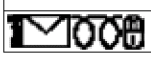	

Operating display 2

Operating display 2 is an alternative operating display with less information. Change to operating display 2 takes place by pressing arrow down.

VOLVO
Construction Equipment

Service Information

Document Title:	Function Group:	Information Type: **Service Information**	Date: **12/10/2011**
Profile: **WLO, L90F (Volvo) [GB]**			

Information display, engine

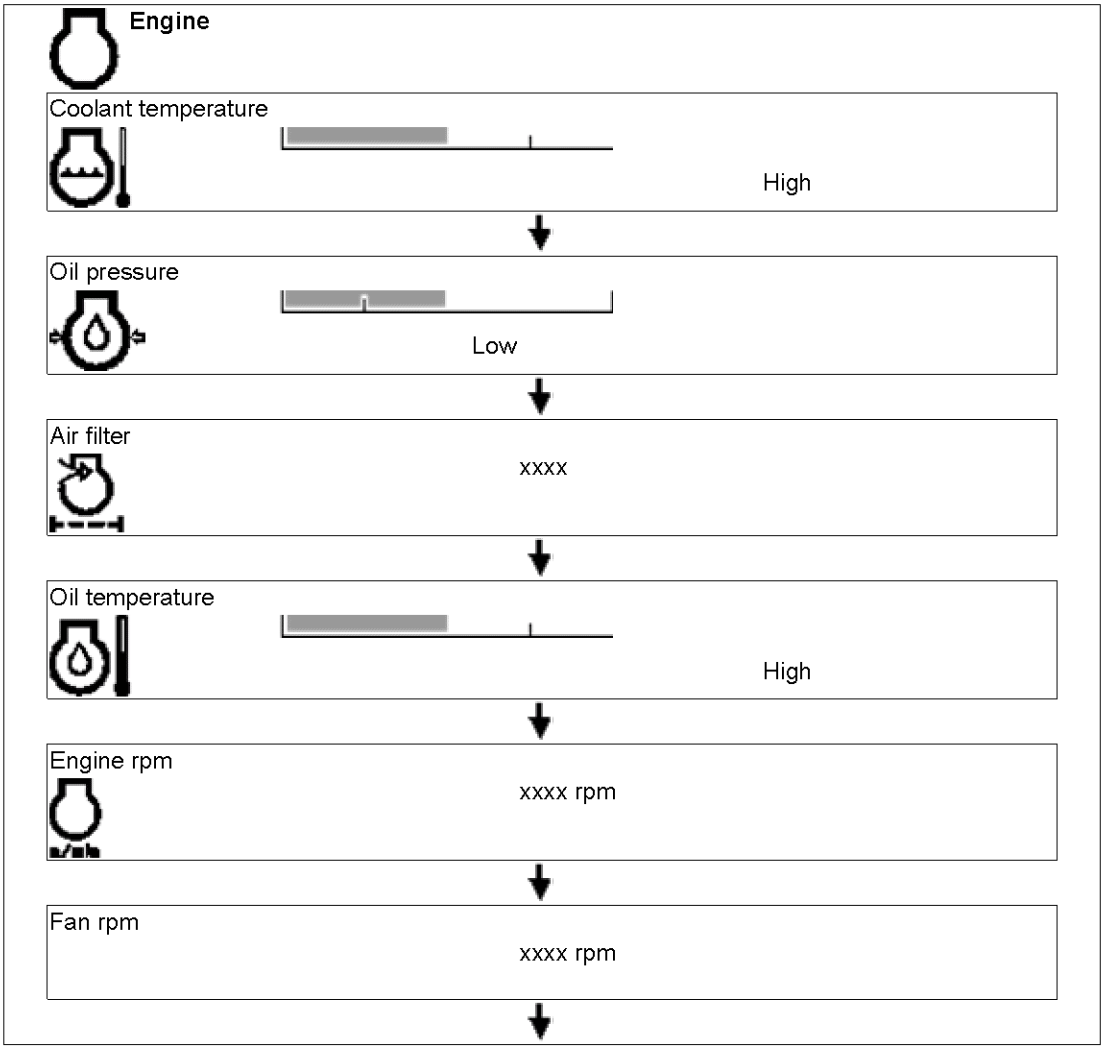

Under menu Engine in the information display unit, it is possible to read status according to the following menu figures.

Temperature and pressure are shown as bars. The functions have either display of normal-low or normal-high.

- Half bar is shown for normal value.
- In case of low value, bar with marking Low is shown.
- In case of high value, bar with marking High is shown.

By selecting Service mode, number values can be shown instead of bars. Conditions for activation of Service mode, see Informationspanel, allmänt
.

To return to previous figure, press [ESC].

Air filter

xxxx = Normal / Clogged

In case of clogged air filter, alarm " CheckClogged air filter engine" is also generated.

Shows any of the following figures for selected fan mode.

Rev. cooling fan 	Interval	Short 15 min.
Rev. cooling fan 	Interval	Long 30 min.
Rev. cooling fan 		Manual Off
Rev. cooling fan 		OFF

Setting reversible cooling fan

To change fan mode, press SELECT to enter figure Rev. cooling fan mode. Select fan mode with arrow keys and press SELECT.
To return to previous figure, press [ESC].

For fan mode Manual, select Off with the arrow keys and press SELECT to reverse the fan.

During on-going reversal, the text in the field changes from 15 min / 30 min / Off to Reversing.

NOTE **The hydraulic oil temperature must be above 0 °C (32 °F) to enable reversal of the cooling fan.**

Rev. cooling fan mode

- ○ Short
- ○ Long
- ○ Manual
- ○ OFF

VOLVO
Construction Equipment

Service Information

Document Title:	Function Group:	Information Type: **Service Information**	Date: **12/10/2011**
Profile: **WLO, L90F (Volvo) [GB]**			

Information display, transmission

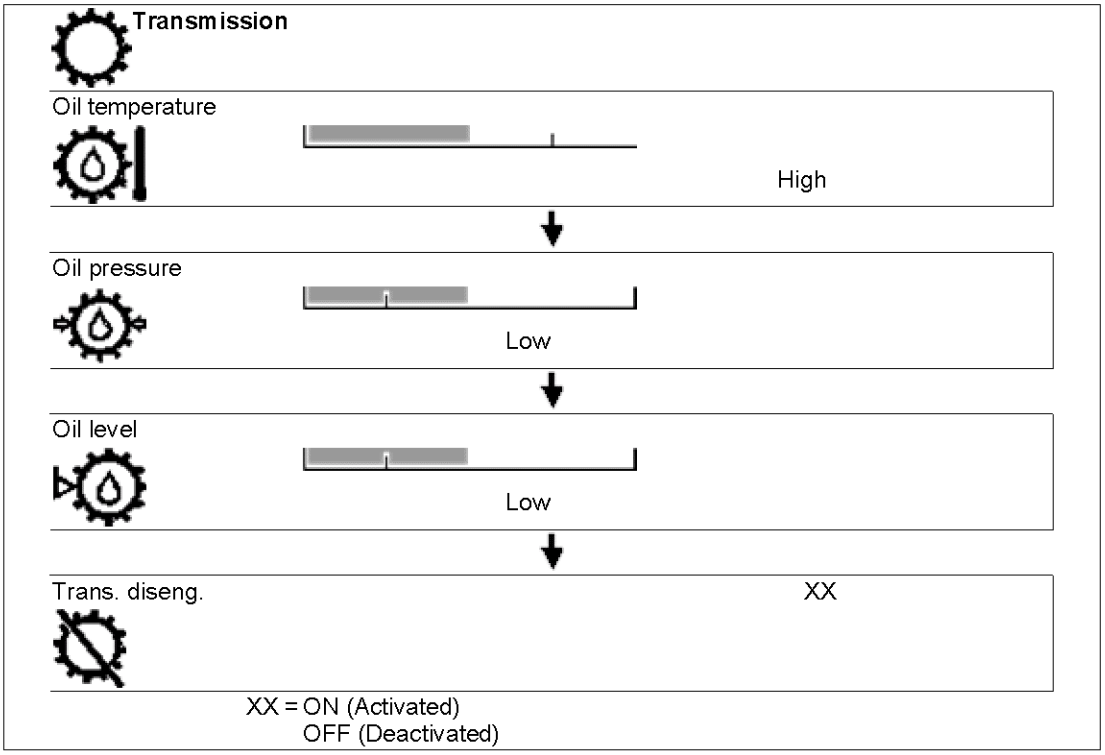

Under menu Transmission in the information display unit, it is possible to read status according to the following menu figures.

Temperature, pressure, and level are shown as bars. The functions have either display of normal-low or normal-high.

- Half bar is shown for normal value.
- In case of low value, bar with marking Low is shown.
- In case of high value, bar with marking High is shown.

By selecting Service mode, number values can be obtained for temperature, pressure, and level. Conditions for activation of Service mode, see Informationspanel, allmänt
.

To return to previous figure, press [ESC].

Transmission disengagement

Make selection for desired function with arrow keys and press SELECT.

VOLVO
Construction Equipment

Service Information

Document Title:	Function Group:	Information Type: **Service Information**	Date: **12/10/2011**
Profile: **WLO, L90F (Volvo) [GB]**			

Information display, hydraulics

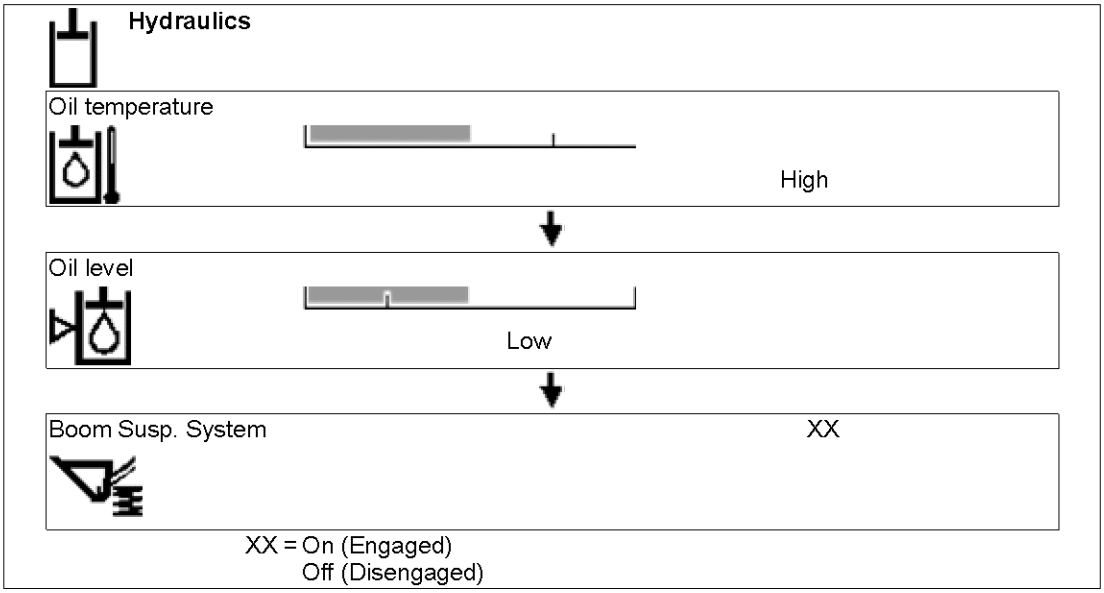

Under menu Hydraulics in the information display unit, it is possible to read status according to the following menu figures

Temperature and level are shown as bars. The functions have either display of normal-low or normal-high.

- Half bar is shown for normal value.
- In case of low value, bar with marking Low is shown.
- In case of high value, bar with marking High is shown

By selecting Service mode, number values can be obtained for temperature and level. Conditions for activation of Service mode, see Informationspanel, allmänt
.

To return to previous figure, press [ESC].

Boom Susp. System

The figure shows if the boom suspension system is engaged or disengaged.
Activation and selection of speed-dependent or gear-dependent boom suspension system takes place with switch SW9148.
In case of activated boom suspension system, the control light on the instrument panel is lit.

VOLVO
Construction Equipment

Service Information

Document Title:	Function Group:	Information Type: **Service Information**	Date: **12/10/2011**
Profile: **WLO, L90F (Volvo) [GB]**			

Information display, axles / brakes

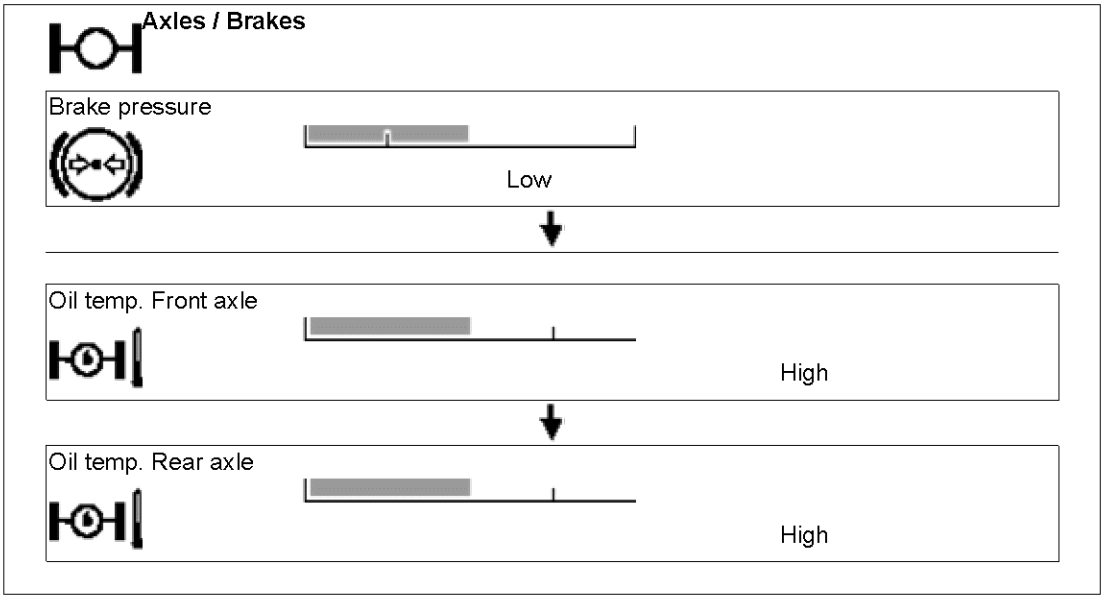

Under the menu Axles / Brakes in the information display, it is possible to read status according to the following menu figures.

Pressure and temperature are shown as bars. The functions have either display of normal-low or normal-high.

- Half bar is shown for normal value.
- For low value, bar is shown to the marking Low.
- For high value, bar is shown to the marking High.

To return to previous figure, press ESC.

Service mode

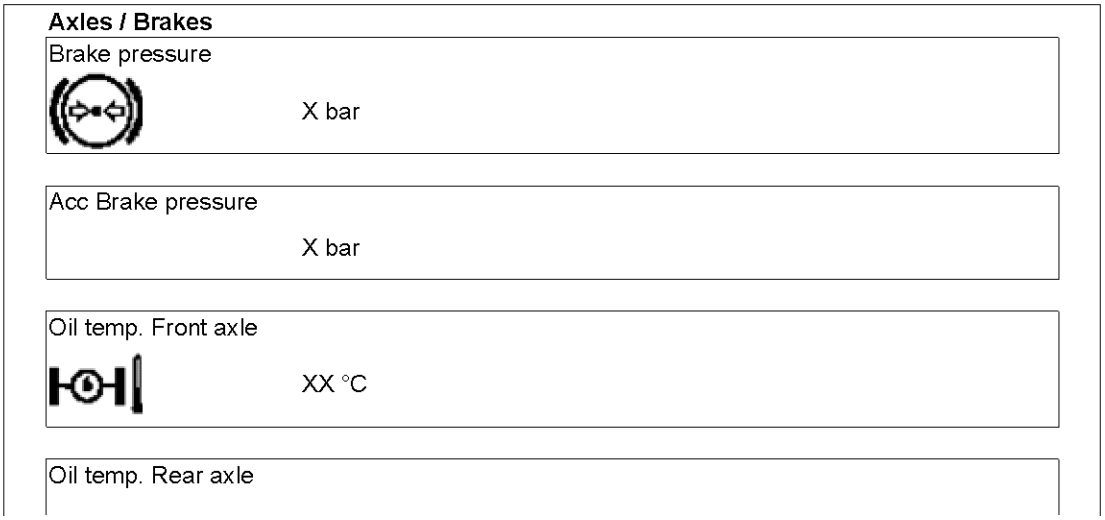



XX °C

By selecting Service mode, number values can be obtained for temperature and pressure. Conditions for activation of Service mode, see Information display unit, general

.

To return to previous figure, press ESC.

More than one document matches the current profile:

Information display, electrical system
Product Line: WLO
Model Variant: L90F
Software Release Start: V2006.6.0
Software Release End: V2008.2.0

Information display, electrical system
Product Line: WLO
Model Variant: L90F
Software Release Start: V2008.3.0

VOLVO
Construction Equipment

Service Information

Document Title:	Function Group:	Information Type: **Service Information**	Date: **12/10/2011**
Profile: **WLO, L90F (Volvo) [GB]**			

Information display, electrical system

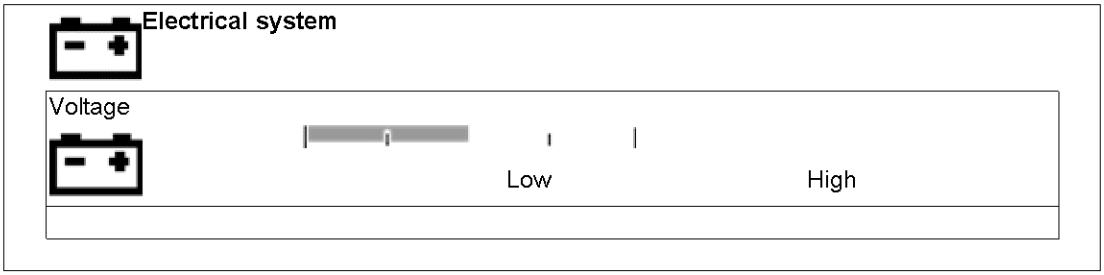

Under the menu Electrical system in the information display, it is possible to read status according to the following menu figure.

Voltage level is shown as a bar.

- Half bar is shown for normal value.
- For low value, bar is shown to the marking Low.

By selecting Service mode, number values can be obtained for battery voltage. Conditions for activation of Service mode, see Information display unit, general
.

To return to previous figure, press ESC.

VOLVO
Construction Equipment

Service Information

Document Title:	Function Group:	Information Type: **Service Information**	Date: **12/10/2011**
Profile: **WLO, L90F (Volvo) [GB]**			

Information display, electrical system

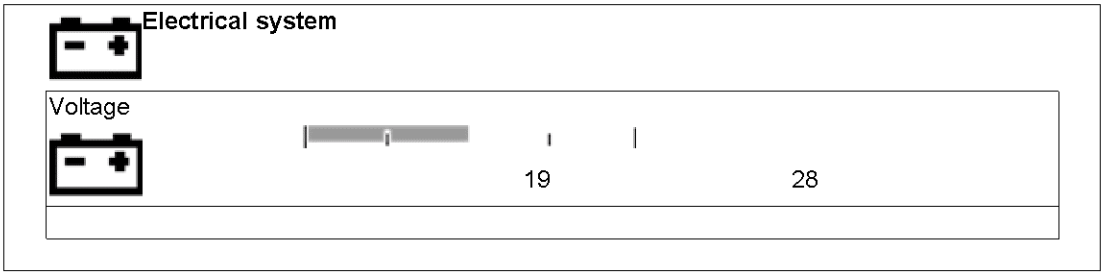

Under the menu Electrical system in the information display, it is possible to read status according to the following menu figure.

Voltage level is shown as a bar.

By selecting Service mode, number values can be obtained for battery voltage. Conditions for activation of Service mode, see Information display unit, general

.

To return to previous figure, press ESC.

Service mode

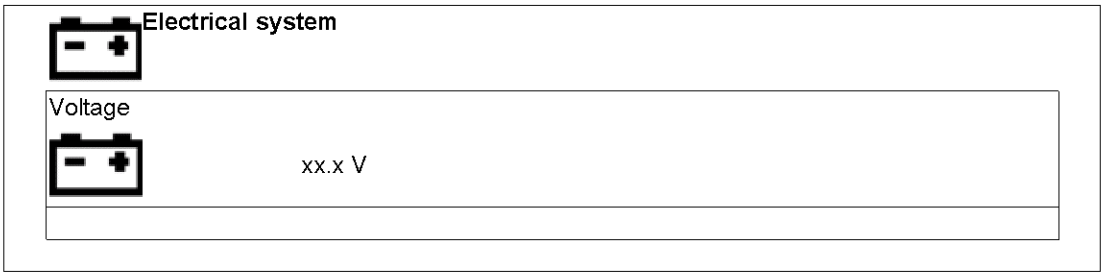

VOLVO
Construction Equipment

Service Information

Document Title:	Function Group:	Information Type: **Service Information**	Date: **12/10/2011**
Profile: **WLO, L90F (Volvo) [GB]**			

Information display, vehicle info

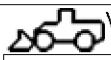
Vehicle info

Operational Data	
Model	LXXXX
Serial no.	XXXXX
Tires	XXXX mm
Machine hours	XXXX h
Time	XX:XX
Date	XXXXXXXX
HW/SW	

Under the menu Vehicle information in the information panel, it is possible to read the following menu figures.

Model: Machine's model designation

Serial no.: Machine's serial number

Tires: Tire dimension mm

Machine hours: Machine's total operating hours

Time: Real time

Date: Current date

HW/SW: Only shown in Service mode.

Operational data


Vehicle info

Operational Data

Reset	Off
Time:	1 h
Distance:	3.2 km
Cycles:	10
Avg.:	5.3 l/h
Total:	237 l
Resid. time fuel:	20.6 h
Instantaneous	8.8 l/h

Reset : Press SELECT to reset operational data.

Time: Operating time in hours

Distance: Distance in km alt. miles

Cycles: Number of cycles

Avg.: Average consumption in litres/h alt. US gal/h

Total: Total consumption in litres alt. US gal

Resid. time fuel: Residual operating time left for remaining fuel

Instantaneous Current consumption in litres/h alt. US gal/h

Avg.: Average consumption in litres/h alt. US gal/h

Total: Total consumption in litres alt. US gal

Service mode, HW/SW

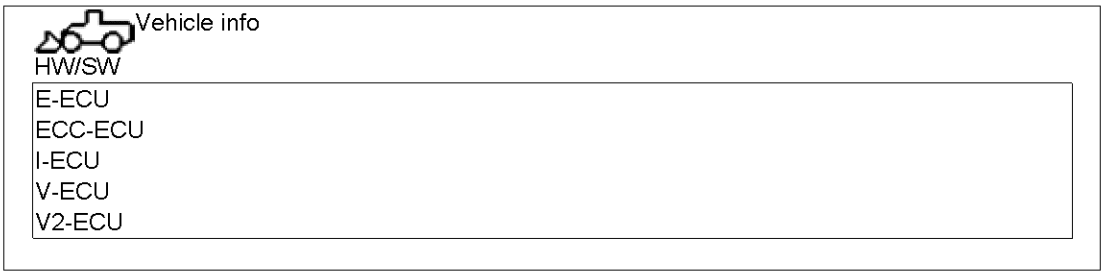

E-ECU: Engine control unit

ECC-ECU: Electronic climate control unit

I-ECU: Instrument control unit

V-ECU: Vehicle control unit

V2-ECU: Vehicle control unit 2

Select control unit with the arrow keys and press SELECT to get to the next figure.

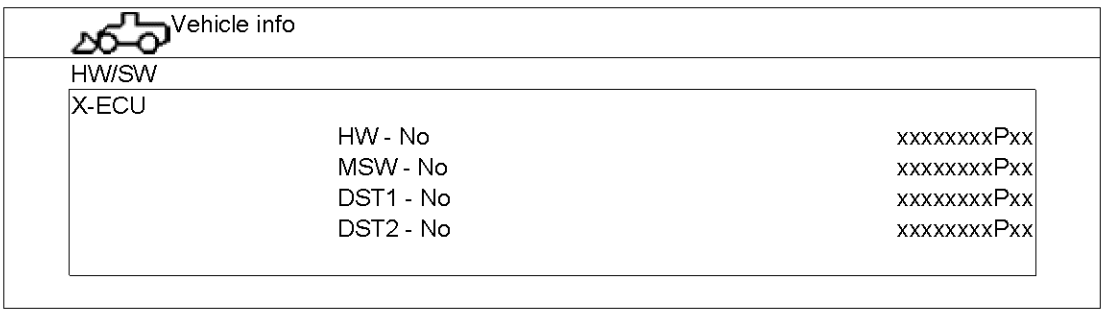

X-ECU Shows selected control unit

HW - No Hardware

MSW - No Software

DST1 - No Data set 1

DST2 - No Data set 2

VOLVO
Construction Equipment

Service Information

Document Title:	Function Group:	Information Type: **Service Information**	Date: **12/10/2011**
Profile: **WLO, L90F (Volvo) [GB]**			

Information display, vehicle messages

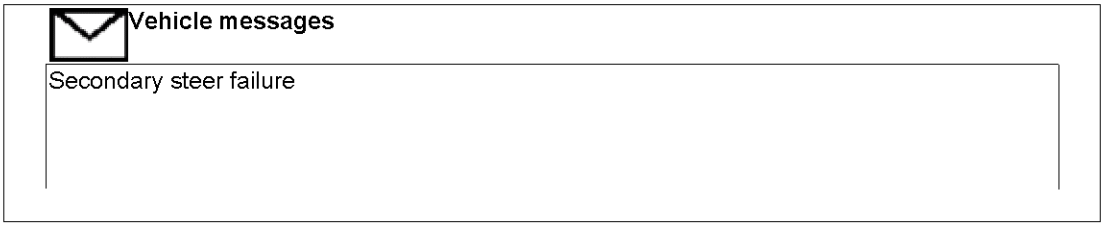

Under the menu vehicle messages in the information panel it is possible to read messages about malfunctions/errors and warnings. Latest message is shown at the top of the window. The information depends on display mode, normal or Service mode as follows.

Normal mode

If there are active messages, the symbol is shown in the lower field in the operating figure. The 20 latest active messages are saved.

Press the key to show messages. To return, press ESC.

Service mode

In Service mode all messages are shown, both inactive and active. The 30 latest active messages are saved.

Conditions for activation of Service Mode, see Informationspanel, allmänt
. Press the key to show messages. To return, press ESC.

For error messages, more detailed information can be shown by selecting message with the arrow keys and pressing SELECT. See also Informationspanel, kontrollera
.

More than one document matches the current profile:

Information display, service
Product Line: WLO
Model Variant: L90F
Software Release Start: V2006.6.0
Software Release End: V2008.2.0

Information display, service
Product Line: WLO
Model Variant: L90F
Software Release Start: V2008.3.0

VOLVO
Construction Equipment

Service Information

Document Title:	Function Group:	Information Type: **Service Information**	Date: **12/10/2011**
Profile: **WLO, L90F (Volvo) [GB]**			

Information display, service

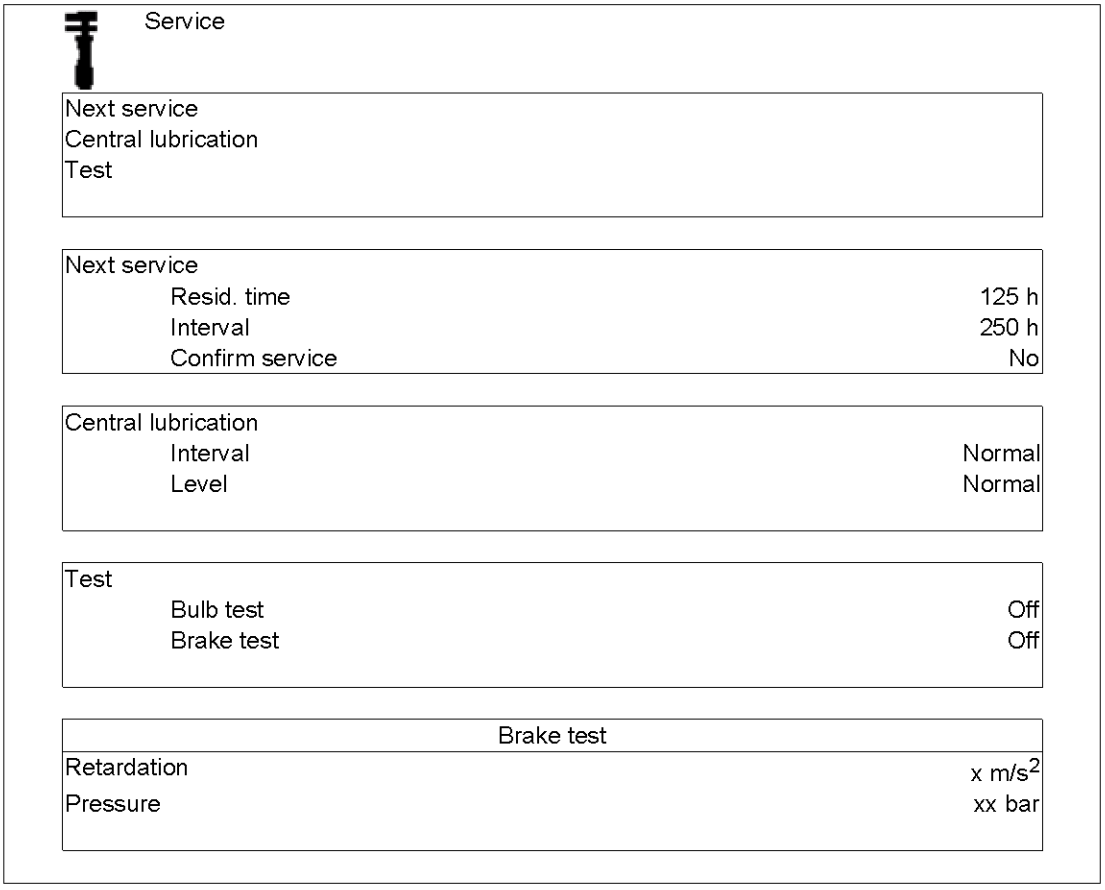

Under the menu Service in the information panel, there are the following information and tests.
Select menu with arrow key, press SELECT

By selecting Service mode, more information may be obtained, see Informationspanel, service mode
.

Conditions for activating Service mode, see Informationspanel, allmänt
.

To return to previous figure, press [ESC].

Next service

Resid. time: Time to next service.

Interval: Shows selected service interval.

Confirm: Press SELECT to confirm performed service.

Central lubrication

Interval: Shows selected interval (Light / Normal / Heavy).
To change setting, press SELECT. Make selection with the arrow keys and press SELECT to confirm the selection.

Level: Shows lubricant level in the reservoir. (Normal / Low).

Test

Make test selection with the arrow keys.

Bulb test: Press SELECT and all control lights on the instrument panel should be lit.

Brake test: Press SELECT.

1. Accelerate over 20 km/h
2. Brake to standstill
3. Read off the test result: Retardation and Pressure.

VOLVO
Construction Equipment

Service Information

Document Title:	Function Group:	Information Type: **Service Information**	Date: **12/10/2011**
Profile: **WLO, L90F (Volvo) [GB]**			

Information display, service

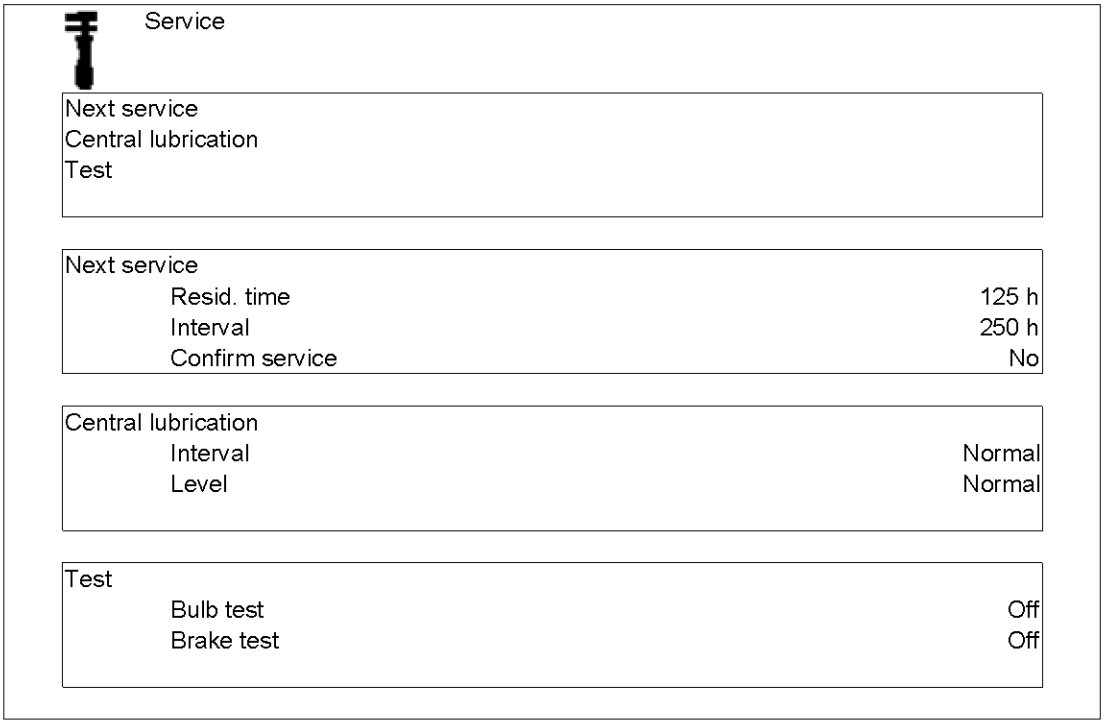

The following information and tests are found under the menu Service in the information display unit.
Select menu with arrow key, press SELECT

By selecting Service mode it is possible to obtain additional information, see Information display unit, service mode
.

Conditions for activation of Service mode, see Information display unit, general
.

To return to previous figure, press ESC.

Next service

Resid. time: Shows time remaining to next service.

Interval: Shows selected service interval.

Confirm: Press SELECT to confirm performed service.

Central lubrication

Interval: Shows selected interval (Light / Normal / Heavy).
To change setting, press SELECT. Make selections with the arrow keys and press SELECT to confirm selection.

Level: Shows lubricant level in the reservoir. (Normal / Low).

Test

Choose test with the arrow keys.

Bulb test: Press SELECT and all control lights on the instrument panel shall light up.

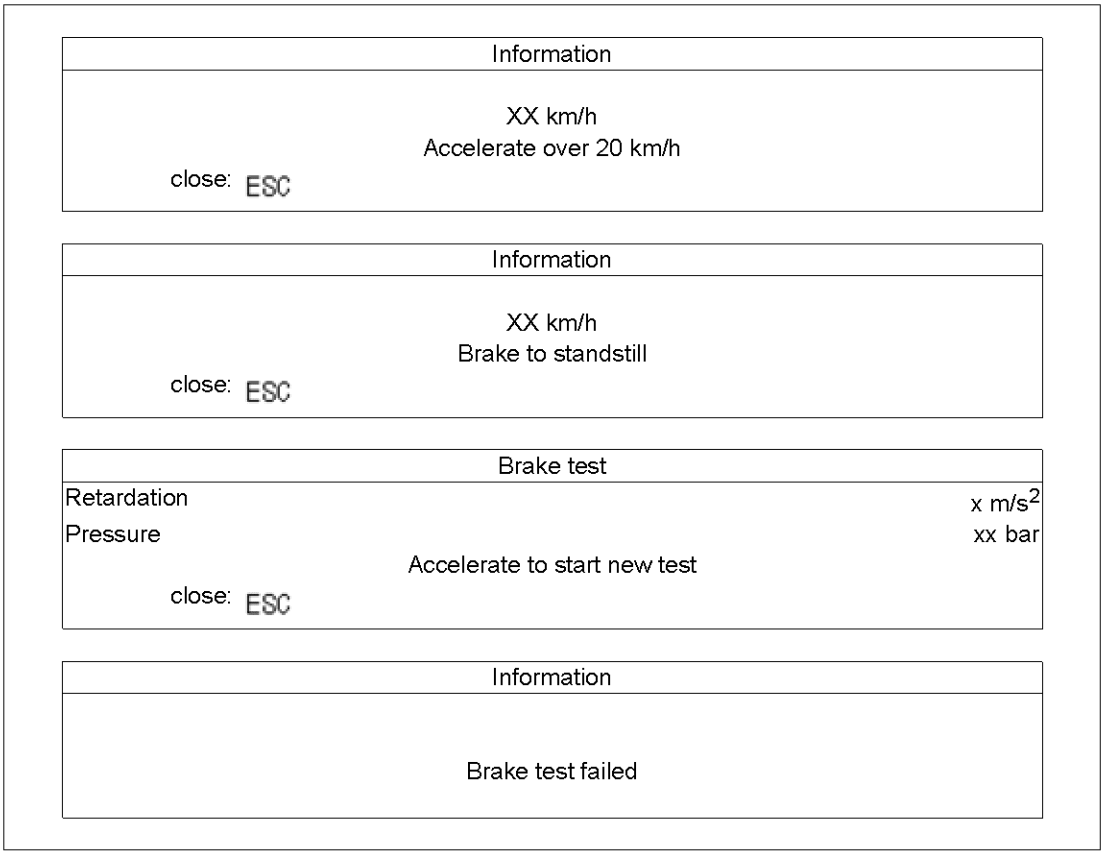

Brake test: Press SELECT.

1. Accelerate over 20 km/h
2. Brake to standstill
3. Read off test results: Retardation and Pressure.

If the brake test fails, “Brake test failed” is shown for 3 seconds. (Retardation > 8 $m/s^{2)}$
To perform new test: Accelerate to start new test

To return to the previous figure, press ESC.

More than one document matches the current profile:

Information display, service mode
Product Line: WLO
Model Variant: L90F
Software Release Start: V2006.6.0
Software Release End: V2008.2.0

Information display, service mode
Product Line: WLO
Model Variant: L90F
Software Release Start: V2008.3.0

VOLVO
Construction Equipment

Service Information

Document Title:	Function Group:	Information Type: **Service Information**	Date: **12/10/2011**
Profile: **WLO, L90F (Volvo) [GB]**			

Information display, service mode



Service (Service mode)

Next service
Central lubrication
Test
I/O-List

Next service	
Resid. time	125 h
Interval	250 h
Confirm service	No

Central lubrication	
Interval	Normal
Level	Normal

Test	
Bulb test	Off
Brake test	Off
Brake test log	Off
Sound test	Off
Pressure test fan pump	Off

The following information and tests are found under the menu Service (Service mode) in the information display unit.
Select menu with arrow key, press SELECT.

Conditions for activation of Service mode, see Information display unit, general
.

To return to previous figure, press ESC.

Next service

Resid. time: Shows time remaining to next service.

Interval: Shows selected service interval.

Confirm: Press SELECT to confirm performed service.

Central lubrication

Interval: Shows selected interval (Light / Normal / Heavy).
To change setting, press SELECT. Make selections with the arrow keys and press SELECT to confirm selection.

Level: Shows lubricant level in the reservoir. (Normal / Low).

Test

Choose test with the arrow keys.

Bulb test: Press SELECT and all control lights on the instrument panel shall light up.

Brake test	
Retardation	x m/s^2
Pressure	xx bar
close: ESC	

Brake test log	
1:	xx bar xx m/s^2
2:	xx bar xx m/s^2
3:	xx bar xx m/s^2
close: ESC	

Brake test: Press SELECT.

1. Accelerate over 20 km/h
2. Brake to standstill
3. Read off test results: Retardation and Pressure.

To return to the previous figure, press ESC.

Brake test log: Press SELECT
Memory of retardation for the latest 3 brake applications.
Memory of output brake pressure for the latest 3 brake applications.
To return to the previous figure, press ESC.

Sound test: Press SELECT. Off switches to On and obtains an rpm for the cooling fan, which is 70% of max. rpm.
To cancel the test, press SELECT.

Pressure test fan pump	
Engine rpm	rpm
Fan rpm	rpm
close: ESC	

I/O-List
I-ECU
V-ECU
V2-ECU

I/O-List											
V-ECU (1/2)											
01	02	03	04	05	06	07	08	09	10	11	12
13	14	15	16	17	18	19	20	21	22	23	24
25	26	27	28	29	30	31	32	33	34	35	36
37	38	39	40	41	42	43	44	45	46	47	48
49	50	51	52	53	54	55	56	57	58	59	60
61	62	63	64	65	66	67	68	69	70	71	72

Pressure test fan pump: Press SELECT and the figure changes to the figure with rpm.
To return to the previous figure, press ESC.

To perform the pressure test, see Pump 3 (P3) Cooling fan pump/Brake pump Stand-by pressure, checking and adjusting
.

I/O-List

Choose control unit and press SELECT.

- I-ECU: Instrument control unit
- V-ECU: Vehicle control unit
- V2-ECU: Vehicle control unit 2

Status for digital inputs and outputs on ECUs is shown in the information display in the form of a matrix acc. to example for V-ECU. The connector's pin number matches the same number in the figure, e.g., VA1 is shown in the figure as 01.

- High signal on digital input (DI) and digital output (DO) is shown with yellow solid rectangle and pin number.
- Low signal on digital input (DI) and digital output (DO) is shown with pin number only.
- Analogue, frequency, and PWM-signals are not shown as high but only with pin number.
- In case of electric failure, “o” is shown for open circuit and “s” for short-circuiting.
- If input or output is not used, “–” is shown.

VOLVO
Construction Equipment

Service Information

Document Title:	Function Group:	Information Type: **Service Information**	Date: **12/10/2011**
Profile: **WLO, L90F (Volvo) [GB]**			

Information display, service mode



Service (Service mode)

Next service
Central lubrication
Test
I/O-List

Next service	
Resid. time	125 h
Interval	250 h
Confirm service	No

Central lubrication	
Interval	Normal
Level	Normal

Test	
Bulb test	Off
Brake test	Off
Brake test log	Off
Sound test	Off
Pressure test fan pump	Off

The following information and tests are found under the menu Service (Service mode) in the information display unit.
Select menu with arrow key, press SELECT.

Conditions for activation of Service mode, see Information display unit, general
.

To return to previous figure, press ESC.

Next service

Resid. time: Shows time remaining to next service.

Interval: Shows selected service interval.

Confirm: Press SELECT to confirm performed service.

Central lubrication

Interval: Shows selected interval (Light / Normal / Heavy).
To change setting, press SELECT. Make selections with the arrow keys and press SELECT to confirm selection.

Level: Shows lubricant level in the reservoir. (Normal / Low).

Test

Choose test with the arrow keys.

Bulb test: Press SELECT and all control lights on the instrument panel shall light up.

Information
XX km/h Accelerate over 20 km/h close: ESC

Information
XX km/h Brake to standstill close: ESC

Brake test	
Retardation	x m/s^2
Pressure	xx bar
Accelerate to start new test	
close: ESC	

Information
Brake test failed

Brake test log	
1:	xx bar xx m/s^2
2:	xx bar xx m/s^2
3:	xx bar xx m/s^2
close: ESC	

Brake test: Press SELECT.

1. Accelerate over 20 km/h
2. Brake to standstill
3. Read off test results: Retardation and Pressure.

If the brake test fails, “Brake test failed” is shown for 3 seconds. (Retardation > 8 m/s^2)
To perform new test: Accelerate to start new test

To return to the previous figure, press ESC.

Brake test log: Press SELECT
Memory of retardation for the latest 3 brake applications.
Memory of output brake pressure for the latest 3 brake applications.
To return to the previous figure, press ESC.

Sound test: Press SELECT. Off switches to On and obtains an rpm for the cooling fan, which is 70% of max. rpm.
To cancel the test, press SELECT.

Pressure test fan pump	
Engine rpm	rpm
Fan rpm	rpm

close: ESC

I/O-List
I-ECU V-ECU V2-ECU

I/O-List
V-ECU (1/2)

01	02	03	04	05	06	07	08	09	10	11	12
13	14	15	16	17	18	19	20	21	22	23	24
25	26	27	28	29	30	31	32	33	34	35	36
37	38	39	40	41	42	43	44	45	46	47	48
49	50	51	52	53	54	55	56	57	58	59	60
61	62	63	64	65	66	67	68	69	70	71	72

Pressure test fan pump: Press SELECT and the figure changes to the figure with rpm.
To return to the previous figure, press ESC.

To perform the pressure test, see Pump 3 (P3) Cooling fan pump/Brake pump Stand-by pressure, checking and adjusting
.

I/O-List

Choose control unit and press SELECT.

- I-ECU: Instrument control unit
- V-ECU: Vehicle control unit
- V2-ECU: Vehicle control unit 2

Status for digital inputs and outputs on ECUs is shown in the information display in the form of a matrix acc. to example for V-ECU. The connector's pin number matches the same number in the figure, e.g., VA1 is shown in the figure as 01.

- High signal on digital input (DI) and digital output (DO) is shown with yellow solid rectangle and pin number.
- Low signal on digital input (DI) and digital output (DO) is shown with pin number only.
- Analogue, frequency, and PWM-signals are not shown as high but only with pin number.
- In case of electric failure, “o” is shown for open circuit and “s” for short-circuiting.
- If input or output is not used, “–” is shown.

VOLVO
Construction Equipment

Service Information

Document Title:	Function Group:	Information Type: **Service Information**	Date: **12/10/2011**
Profile: **WLO, L90F (Volvo) [GB]**			

Information display, settings

☒ Settings

Date	20061224
Time	12:24
Language	xxxxxxx
Units	Metric
Clock options	24 hour
Date format	yyyymmdd
Display	Normal
Intensity	100%

Under the menu Settings in the information panel, it is possible to change the following:

- Date: Setting of current date
- Time: Setting of current time
- Language: Language selection
- Units: Selection of units (Metric / US)
- Clock options: Selection of time format (24 hour / am pm)
- Date format: Selection of date format (yyyymmdd / mmddyyyy)
- Display: Selection of display mode (Normal / Inverted)
- Intensity: Setting of display's light intensity (40% / 60% / 80% / 100%)

To change settings for Date, Time:
Select function with the arrow keys and press SELECT. Make selection with the arrow keys and press SELECT for each field.

To change settings for Language, Intensity:
Select function with the arrow keys and press SELECT. Make selection with the arrow keys and press SELECT.

To change settings for Units, Clock options, Date format, Display:
Select function with the arrow keys and press SELECT. Make selection by pressing SELECT.

VOLVO
Construction Equipment

Service Information

Document Title:	Function Group:	Information Type: **Service Information**	Date: **12/10/2011**
Profile: **WLO, L90F (Volvo) [GB]**			

Information display, check

Read-out of information from the figure "Check"

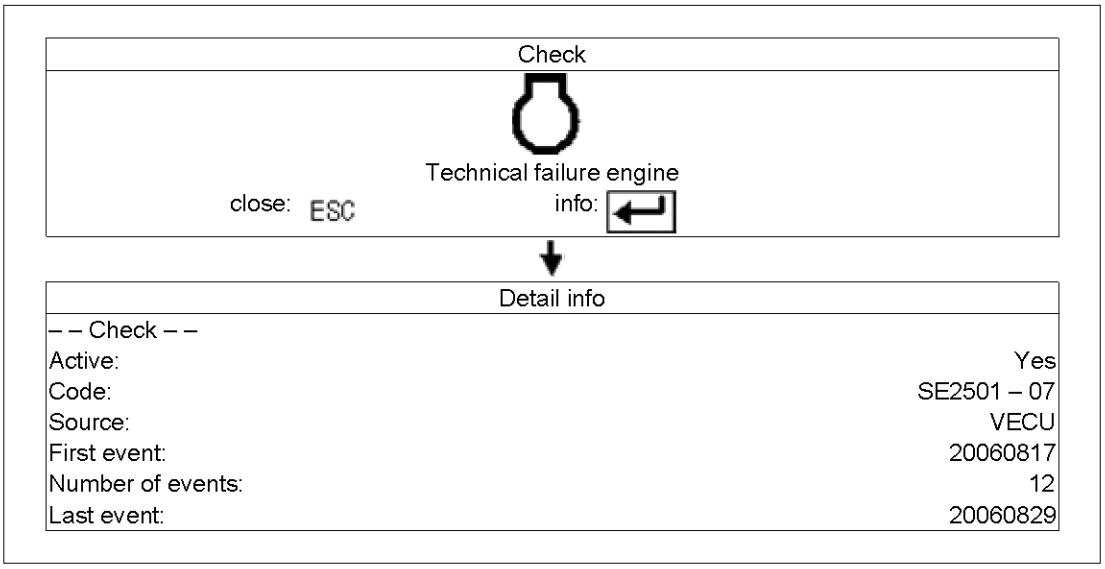

Example – Check Technical failure engine

Check

In the figure "Check", information is shown about which systems or functions to check/troubleshoot. The information is presented with symbol and explaining text.
To return to previous figure, press [ESC].
For more information, press SELECT, which gives a new figure "Detail info".

Detail info

The following information is shown under Detail info:

- Active: indicates if the malfunction/error is active or inactive
- Code: shows any error code in the form of component designation followed by FMI (failure/error cause). If the problem cannot be associated to a component designation, the error code is shown instead according to SAE-standard (e.g., MID128 PID123 FMI12).
- Source: shows which control unit detected the error/failure
- First event: logged date for first time that the failure/error occurred
- Number of events: number of times that the failure/error has been detected
- Last event: last date for failure/error detection

VOLVO
Construction Equipment

Service Information

Document Title:	Function Group:	Information Type: **Service Information**	Date: **12/10/2011**
Profile: **WLO, L90F (Volvo) [GB]**			

Alarm, description

In case of abnormal operating values or malfunction, an alarm is generated in the form of messages in the information display, control lights, buzzer, and central warning.

Messages in the information display unit are divided into priority order according to the following. In case of several messages, the one with highest priority is shown in the information display, other messages are sorted according to priority ranking and when they were generated.

Alarm prio 1 Warning

Warnings may be shown in different ways depending on its priority. A warning consists of a combination of some of the following:

- Instruction figure is shown, e.g., Gear sel. failureCheck at next stop
- Warning figure, e.g., Reduce speed
- Buzzer sounds in varying equal intervals on/off in case of gear position F/R.
- Buzzer sounds with four short signals for gear position N.
- Amber or red central warning.

Warning figure and buzzer remain until corrective action has been taken, then return to previous figure.

Alarm prio 2 Check

- Buzzer sounds with four short signals
- Figure is shown, e.g., CheckTransm. oil pressure sensor, until it's acknowledged, then return to previous figure.
- Amber central warning.

Alarm prio 3 Information

- Buzzer sounds with four short signals .
- Information figure is shown 3 seconds after start or when the message is generated, e.g., InformationLow washer fluid level. Then automatic return to previous figure.
- Information symbol.

VOLVO
Construction Equipment

Service Information

Document Title:	Function Group:	Information Type: **Service Information**	Date: **12/10/2011**
Profile: **WLO, L90F (Volvo) [GB]**			

Central warning

Amber central warning

Light for amber central warning is active to indicate to the operator that something has to be taken care of. The reason for the central warning is shown in the information panel.

Red central warning

Light for red central warning flashes to informer the operator about serious failure/error. The reason for the central warning is shown in the information panel.

Reinforced central warning – buzzer

If red central warning is active at the same time as directional gear is active (Forward or Reverse) the buzzer sounds to reinforce the operator's attention.

VOLVO
Construction Equipment

Service Information

Document Title:	Function Group:	Information Type: **Service Information**	Date: **12/10/2011**
Profile: **WLO, L90F (Volvo) [GB]**			

Transmission, removing (upwards)

Op nbr 421-068

9998547 Lifting tool

Part No. 939651 Nipple
Sling 2 m (6.6 ft)
Sling 4 m (13 ft), 2 pcs
Lifting eye M16, 4 pcs
Shackle, 4 pcs
Shackle T-8, 2 pcs

This operation also includes required tools and times for applicable parts of the following operations:

- Service position 1, see Servicepositioner
- Tvångslossning av parkeringsbroms
- Hytt, borttagning

NOTE **Mark the hose connections before dismantling to facilitate assembling. Plug all connections as they are opened.**

1. Place the machine in service position 1, see Servicepositioner
.
2. Release the pressure in the brake system by depressing the foot brake pedal 30–40 times.
3. Remove the front part of the rear mudguards and the plates on the side of the hydraulic oil tank.
Weight of front part of rear mudguard: **25 kg (55 lb)**
Remove the side plates under the steps on the left and right sides.
4. Drain the hydraulic oil. Capacity, see Hydraulsystem, volym
.

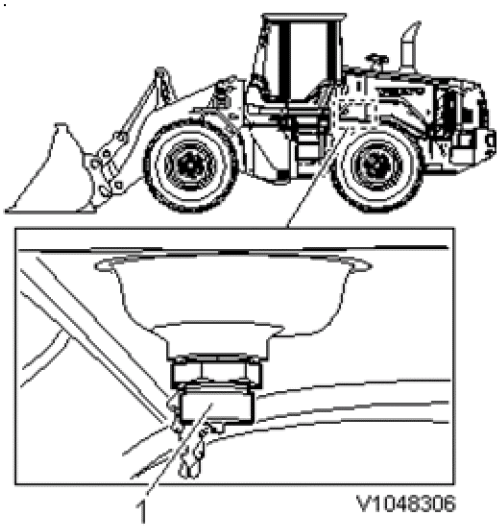

Figure 1

1. Draining

5. Drain the transmission oil. Capacity, see Hydraultransmission, volym

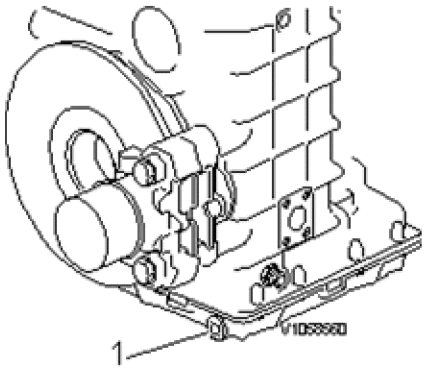

Figure 2

1. Draining

6. Remove the rear propeller shaft.
Weight: **17 kg (37.5 lb)**
Detach the front propeller shaft from the transmission. Move the propeller shaft to one side.

7. Detach the oil filler pipe (connection) (3) from the transmission.

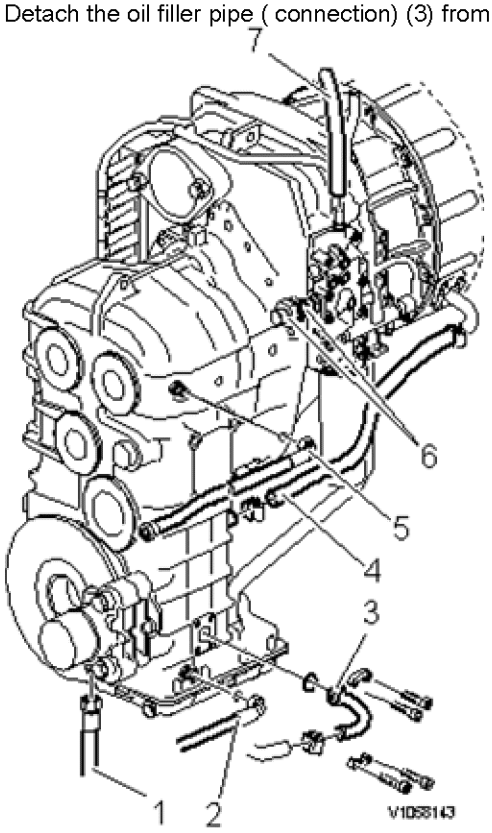

Figure 3

1. Hose, parking brake
2. Connection, level sight glass
3. Connection, filling point
4. Leak-off oil hose
5. Connection, level sight glass
6. Connections, transmission oil cooler
7. Breather hose

8. Disconnect the hoses (2, 5) for the level sight glass from the transmission.

9. Release the parking brake mechanically, seeTvångslossning av parkeringsbroms
10. Remove the hose from the parking brake caliper and plug the connection with nipple 939651.
11. Remove the parking brake caliper.
12. Remove the flywheel housing leak-off oil hose (4) from the transmission.
13. Remove the cab, see Hytt, borttagning
.
14. Disconnect the electrical leads from the transmission. Part the connector for the sensor and disconnect the cable harness from the hydraulic oil tank.
15. Place the evaporator and the receiver drier on the left foot step (without opening the system).
16. Remove the suction hose, pipe, pressure hose, leak-off oil hose and LS-hose from P2.
Disconnect connector (if applicable) (PWM9133) from P2.

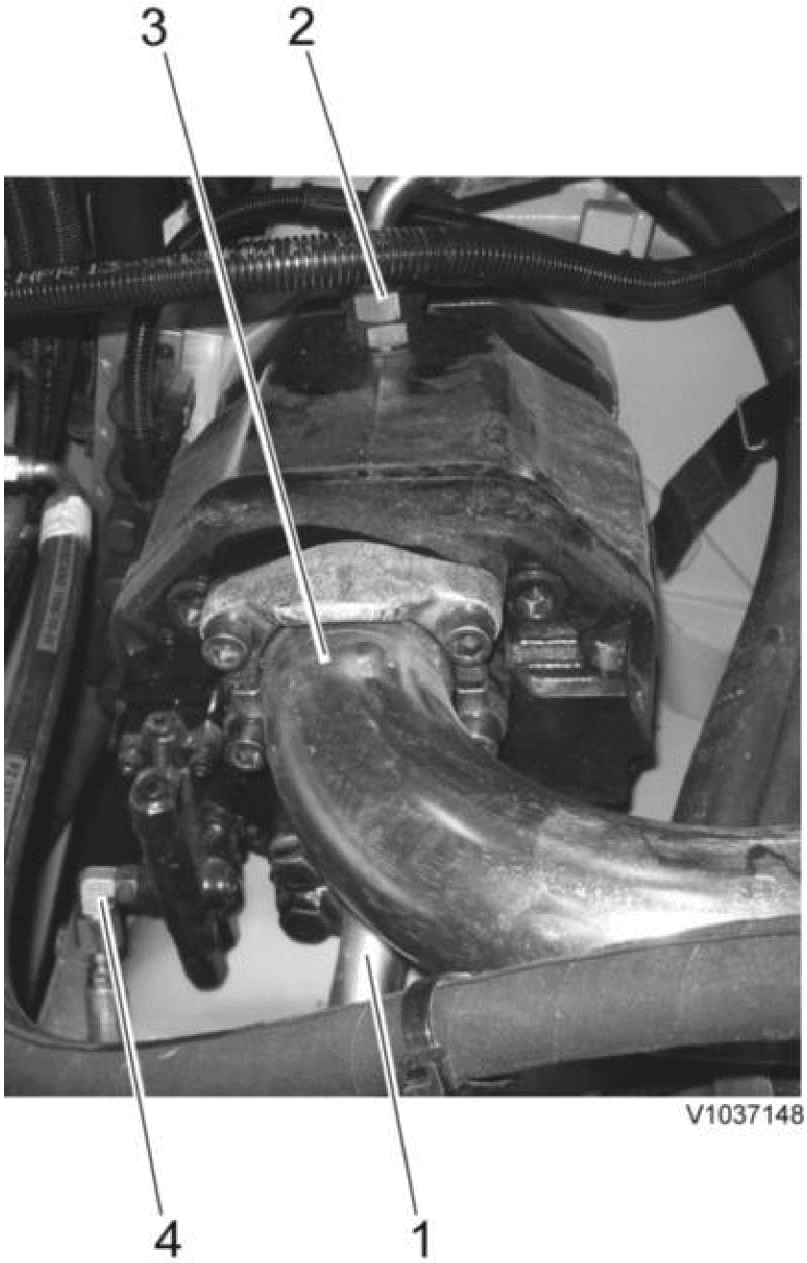

Figure 4
P2

1. Pressure hose
2. Leak-off oil hose
3. Suction hose / pipe
4. LS-hose

VOLVO
Construction Equipment

Service Information

Document Title:	Function Group:	Information Type: **Service Information**	Date: **12/10/2011**
Profile: **WLO, L90F (Volvo) [GB]**			

Transmission, installing

Op nbr 421-072

9998547 Lifting tool
VCADS Pro VCADS Pro Service Tool
9998547 Lifting tool

Part No. 939651 Nipple
Sling 2 m (6.6 ft)
Sling 4 m (13 ft), 2 pcs.
Lifting eye M16, 4 pcs.
Shackle, 4 pcs.
Shackle T-8, 2 pcs.

This operation also includes required tools and times for applicable parts of the following operations:

- Cab, installing
- Hydraulic system, bleeding
- Parking brake, checking wear

1. Lower the transmission's rear end as much as possible and turn down the transmission.

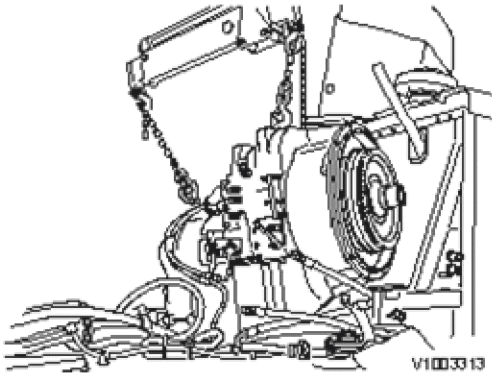

Figure 1

2. Align the transmission with the flywheel housing.
   Keep the lifting device tensioned.
   Install and tighten down the bolted joint between the engine and the transmission.
   Tightening torque: see Engine, tightening torques

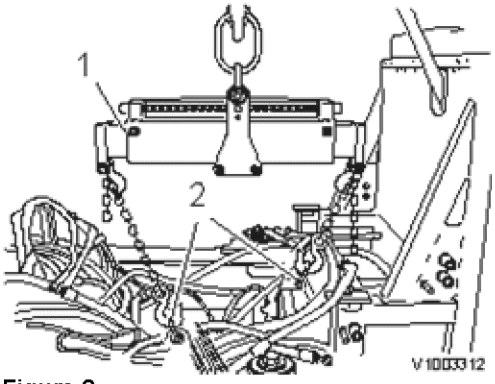

Figure 2

1. 9998547Lifting tool
2. Shackle, 2 pcs.

3. Install the transmission mountings on the transmission.
   Tightening torque: **220 Nm (162 lbf ft)**

4. Lift the transmission and remove the support under the flywheel housing.

5. Lower the transmission and tighten down the transmission mountings against the frame.
   Tightening torque: **220 Nm (162 lbf ft)**

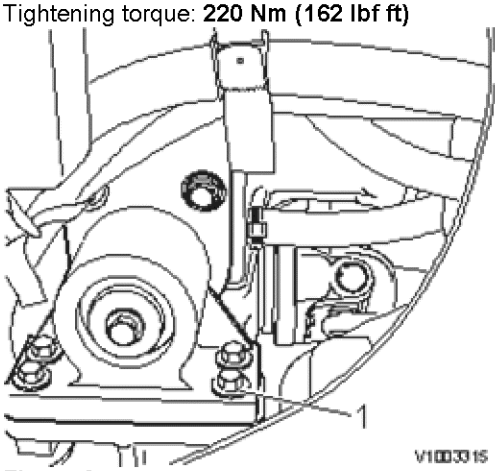

Figure 3

1. Bolts, 4 pcs.

6. Install the parking brake caliper. Weight approx.: **14 kg (30 lbs)** .
   Connect the hose to the parking brake caliper.

   NOTE **Adjustment of the parking brake will take place later.**

7. Install leak-oil hose (4).

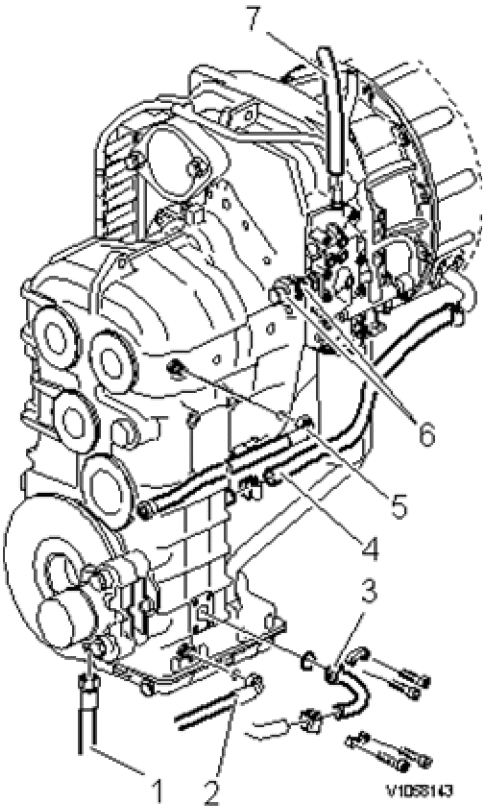

Figure 4

1. Hose, parking brake
2. Connection, level sight glass
3. Connection, filling point
4. Leak-oil hose
5. Connection, level sight glass
6. Connections, transmission oil cooler
7. Breather hose

8. Install the oil filler pipe and the breather hose.

9. Install the propeller shafts.
Rear propeller shaft, weight: **17 kg (37.5 lbs)**
Propeller shaft, tightening torques: see Propeller shaft, tightening torque (flange joint)

10. Install the valve block for the lever steering.

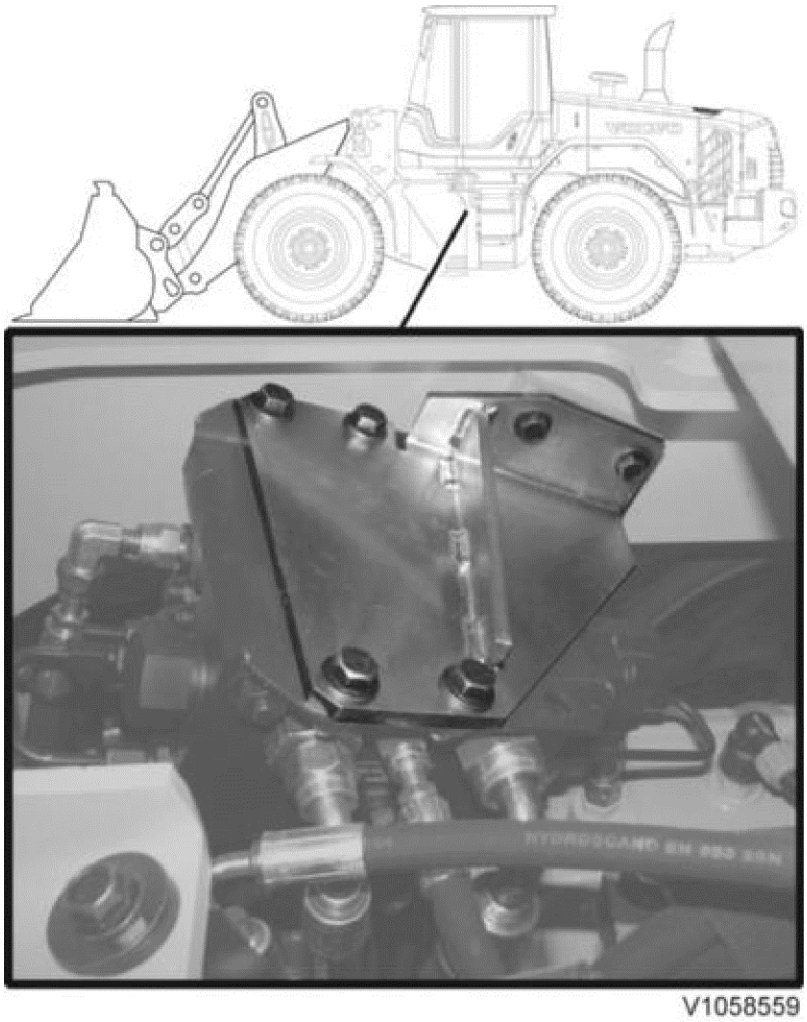

Figure 5
Bracket, valve block

11. Install P2.
Weight: **55 kg (120 lbs)**

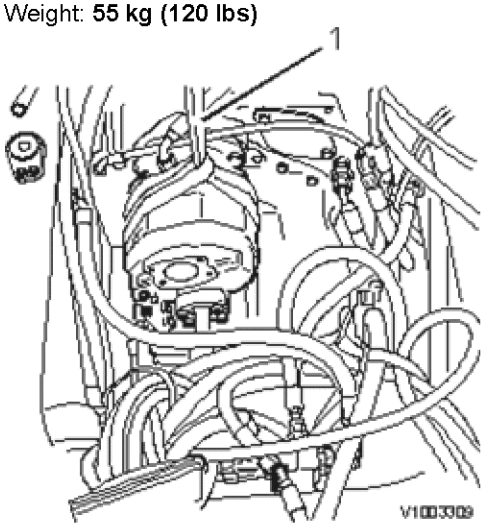

Figure 6
P2

12. Install the suction hose and pipe, oil pressure hose, leak-oil hose and LS-hose.
Connect connector (if applicable) (PWM9133) to P2.

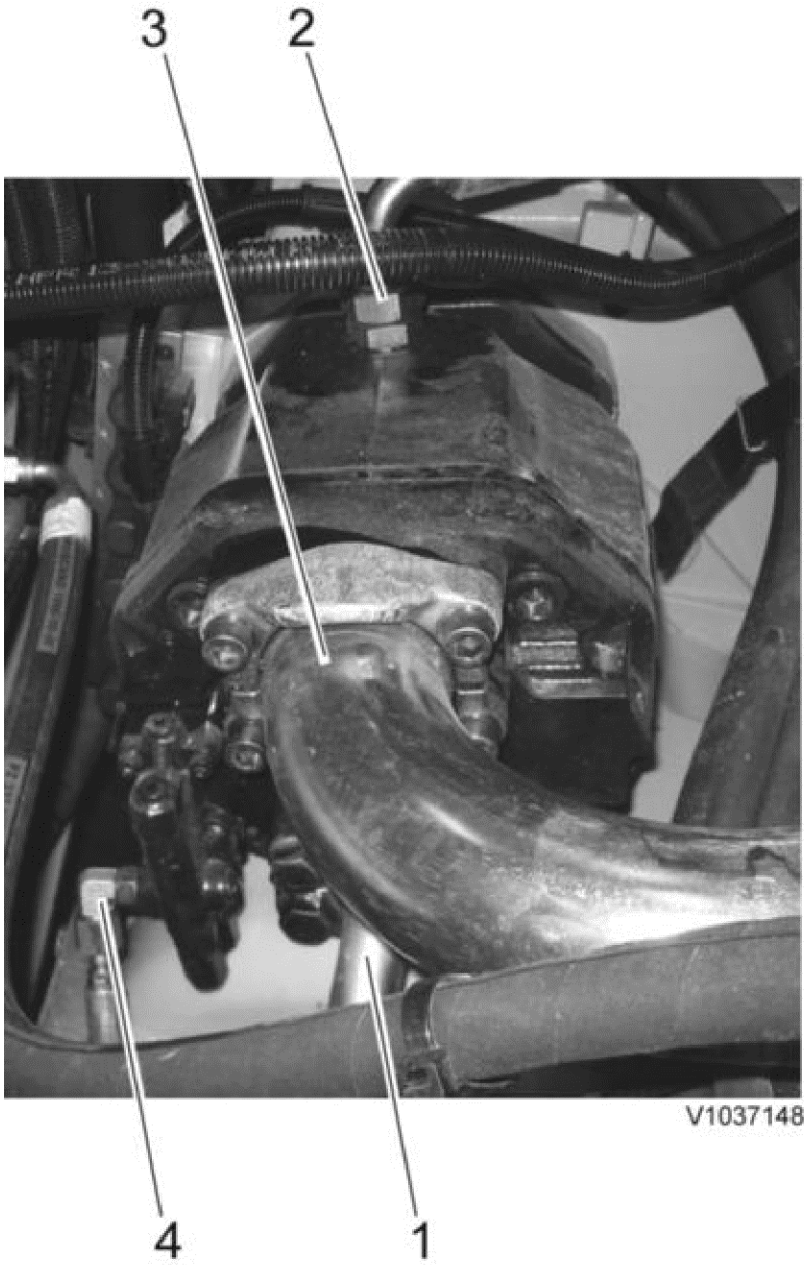

Figure 7

1. Pressure hose
2. Leak-oil hose
3. Suction hose / pipe
4. LS-hose

13. Connect the hoses to the steering cylinders and the hoses from the transmission oil cooler.

14. Install the hydraulic oil tank and connect remaining hoses and the sensors.
Hydraulic tank, weight: **approx. 97 kg (214 lbs)**
Tips! Keep the tank lifted approx. 40 mm (1.57 in) to make it easier to gain access for installing the hydraulic hoses.

15. Install the cable harness on the hydraulic oil tank.

16. Install the cab, see Cab, installing
.

17. Fill with transmission oil and hydraulic oil. Volume, see Transmission, volume
, Hydraulic system, volume
.

18. Part the connectors for MA5502 and PWM2601 on the central valve. Start the engine and let it idle for approx. 5 minutes. Bleed the hydraulic system by operating all hydraulic functions against end-position,

without building up any pressure. Check that there are no leaks. Plug in connectors MA5502 and PWM2601.

19. Adjust the parking brake according to Parking brake, checking wear
20. Check that there are no leaks.
21. Calibrate the transmission with VCADS Pro, operation number 42101–3.
22. Install the plates on the sides of and above the hydraulic oil tank and the front part of the rear mudguards. Weight, front part of rear mudguard: **25 kg (55 lbs)**
23. Check function according to Transmission, function check

VOLVO
Construction Equipment

Service Information

Document Title:	Function Group:	Information Type: **Service Information**	Date: **12/10/2011**
Profile: **WLO, L90F (Volvo) [GB]**			

Transmission, functional check

Op nbr 421-049

After completed repairs, carry out a function check as described below.

1. Start the machine and check all gear selector controls to ensure the function.
2. Check that there are no error messages.

VOLVO
Construction Equipment

Service Information

Document Title:	Function Group:	Information Type: **Service Information**	Date: **12/10/2011**
Profile: **WLO, L90F (Volvo) [GB]**			

Hydraulic transmission, description

General

Hydraulic transmissions HTE110 (L60F), HTE120 (L70F) and HTE125 (L90F) are hydromechanical transmissions. They have torque converter, reduction gears, and hydraulically controlled disc clutches. They have four gears forward and four gears in reverse. The clutch hubs for the different gears rotate freely on the clutch shafts. When a gear is engaged, then the clutch hub that is transmitting power mechanically connected with respective clutch shaft of the hydraulically affected disc clutches. The mechanical power transmission in the hydraulic transmissions takes place via gears in constant mesh. Gearshifting take place without any rim pull loss (Power Shift).
The clutch events, controlled by the V-ECU, control oil flow and fill times for the clutches.

Component position

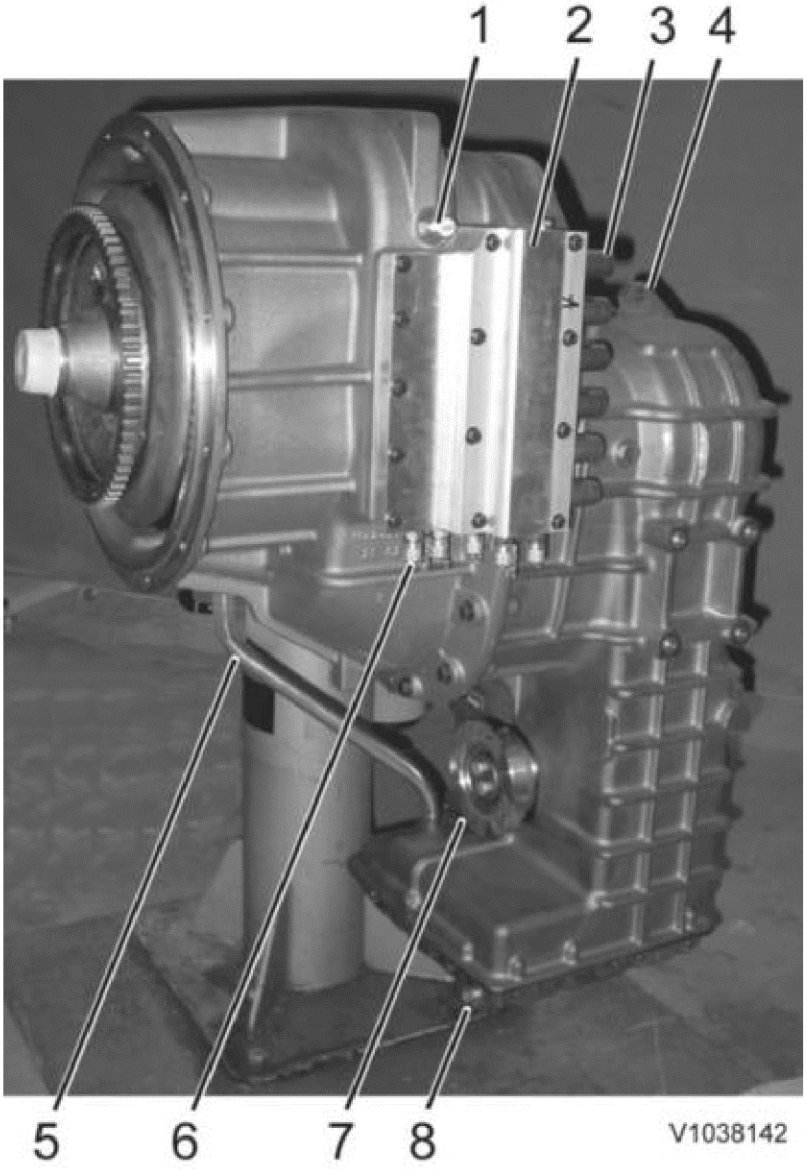

Figure 1

1. SE2704, engine speed
2. Gear selector unit
3. PWM valves
4. Lifting eye
5. Oil suction pipe
6. Pressure check connection
7. Shaft F, output power rear
8. Magnetic plug

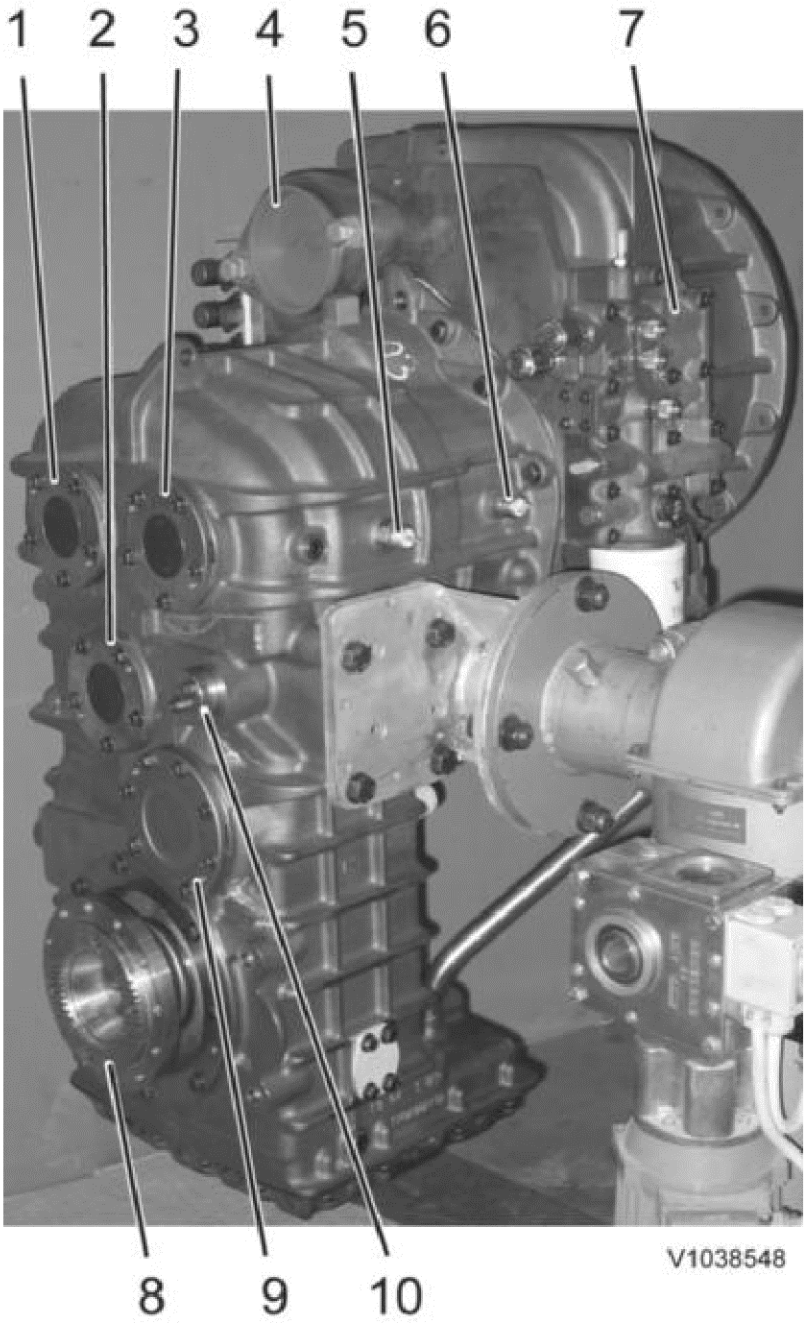

Figure 2

1. Axis B
2. Shaft D
3. Shaft C
4. Shaft H, power take-off hydraulics
5. SE4307 output speed
6. SE4213, turbine speed
7. Valve housing
8. Shaft F, output power forward
9. Shaft E
10. Shaft G

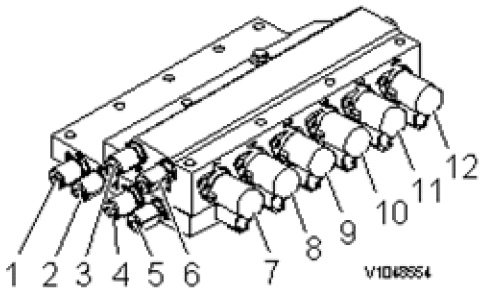

Figure 3

1. Pressure check connection, reverse (R)
2. Pressure check connection, 4th gear (4)
3. Pressure check connection, forward (F)
4. Pressure check connection, 2nd gear (2)
5. Pressure check connection, 1st gear (1)
6. Pressure check connection, 3rd gear (3)
7. PWM-valve, 1st gear (SB)
8. PWM-valve, 3rd gear (SF)
9. PWM-valve, 2nd gear (SC)
10. PWM-valve, forward (SA)
11. PWM-valve, reverse (SD)
12. PWM-valve, 4th gear (SE)

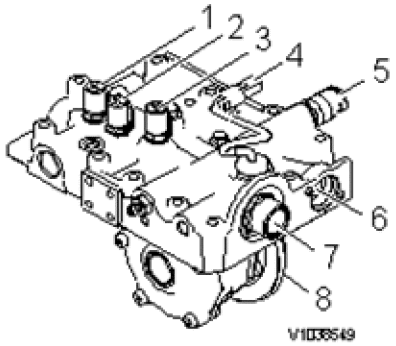

Figure 4

1. Lube oil pressure
2. Torque converter pressure
3. Main pressure
4. SE4903, temperature
5. SE4901, pressure
6. Connection, suction pipe
7. Filter connection
8. Pump

APS

The function controls gearshifting based on the current operating situation[1] ⓘ which gear is to be used and when shifting is to take place to protect the transmission.
With the mode selector, the operator can select different shifting programs depending on the operating conditions.

L	The machine shifts automatically at low engine rpms and low speed.
M	The machine shifts automatically at higher engine rpms than at L.
H	The machine shifts automatically at higher engine rpms and speed than at M.
AUTO	The machine shifts automatically and selects shifting program for optimal comfort and economy.
SERVICE	The gears are shifted manually.

Input signals	Conditions for output functions	Output functions
– Gear selector travel direction, SW4205 – Gear selector, SW4206 – Mode selector, SW4212 – Kick-down	**Manual shifting** – Mode selector in mode SERVICE – Selected directional gear – Selected speed gear	– Directional gear F–N–R – Speed gear 1–4

– Transmission disengagement – Engine brake, SW4210 – Engine speed, SE2701 – Travel speed, SE4307 – Brake pressure, SE5205	**Automatic shifting** – Mode selector in position L–M–H or AUTO – Selected directional gear – Engine speed – Speed	– Directional gear F–N–R – Speed gear 2–4
	Manual kick-down – Kick-down activated – Speed – Time	– Kick-down (downshifting to first gear)
	Transmission disengagement – Transmission disengagement requested – Applied brake	– Transmission disengagement (neutral gear)
	Engine brake – Engine brake in position On	– Engine brake when throttle pedal is released (downshifting to next gear) – Prevents upshifting when increasing throttle

Protective functions
Overspeed protection of transmission in active gear by upshifting to the next gear in case rpm for the protective function is exceeded. Shifting points vary depending on if the engine is pulling or braking.
Warning for overspeed of transmission in active gear.

Automatic shifting with manual kick-down
Shifting is handled automatically. Conditions for shifting is a combination of the mode selector's setting, engine rpm, and machine speed. In AUTO-mode, consideration is also given to operating cycle. Automatic shifting takes place between gears 2–4.
Downshifting to 1st takes place after kick-down has been activated with any of the kick-down controls and if output rpm is within 1st gear's rpm range within 8 s.
Upshifting to 2nd takes place if:
Directional gear is changed.
Any of the kick-down controls are pressed down after 3 s and if speed exceeds 1st gear.
If speed exceeds 1st gear after 5 s.

Automatic shifting with Fully automatic
Same conditions as for APS plus automatic kick-down if the button Fully automatic, SW4211, is activated. Manual kick–down is not changed when automatic kick-down, AKD, is activated. AKD is only used when directional gear is in position F. If the button for kick-down (kick-up) is pressed after AKD-shifting to 1st has taken place, upshifting is prevented for 3 s. Time count for lock-out time starts immediately after AKD has downshifted to 1st gear.

Transmission slipping

The function monitors and informs the operator if clutches slip during normal operation. The signal comes from the APS-function. If slipping continues for more than 0.5 s, then “Engine Shut Down will be activated.

Transmission disengagement

Selection of the function transmission disengagement is moved to the information display unit from and incl. introduction of fully automatic (APS).

Input signals	Conditions for output functions	Output functions
– Output brake pressure, SE5205 – Transmission disengagement, via information display unit	– Transmission disengagement in position On – Output brake pressure > 1.8 MPa (18 bar) (261 psi)	– Transmission disengagement
	– Transmission disengagement in position Off – Output brake pressure < 1.8 MPa (18 bar) (261 psi) or	– No transmission disengagement

Speed limitation

The function limits the vehicle speed to governing legal max. speeds. Setting of speed for speed limitation is done

with VCADS Pro.

Input signals	Conditions for output functions	Output functions
– VCADS Pro parameter HLA – Speed	– VCADS Pro parameter HLA "OFF" – Speed	– No speed limitation
	– VCADS Pro parameter HLA – Speed	– Speed limitation to selected speed (20, 30, or 40 km/h)

Back-up alarm

The function informs bystanders and surroundings that the machine is reversing.

Input signals	Conditions for output functions	Output functions
– Directional gear	– Directional gear in position Reverse	– Back-up alarm SA3603

Transmission oil pressure

The function monitors the main oil pressure in the transmission and informs the operator in case of low transmission oil pressure or if there is a system failure. Monitoring gives consideration to limited pump capacity at low engine speeds and when filling clutches at gearshifting.
See also: Elschema 403

Input signals	Conditions for output functions	Output functions
– Transmission oil pressure, SE4901 – Engine speed, SE2701 – Directional gear	– Upon starting, no alarm is given for 5 seconds after the engine has started Alarm limits for transmission oil pressure: 1. < 0.3 MPa (43.5 psi) at 600 rpm 2. < 1.3 MPa (188.5 psi) at 1200 rpm 3. < 1.5 MPa (217.6 psi) at 2400 rpm – When engine speed is below alarm limit 2, transmission pressure is not monitored for 3 seconds – When engine speed is above alarm limit 2, transmission pressure is not monitored for 2 seconds	– Warning light – Red central warning Warning – Low transmission oil pressure
	According to above as well as: Directional gear in position Forward or Reverse	– Buzzer
– Monitoring, SE4901	– See guided diagnostics.	

Transmission oil temperature

The function monitors transmission oil temperature and informs the operator in case of too high temperature or if there is a system failure. If transmission oil temperature increases even higher, the function “Engine Shut Down is activated to limit engine speed.
See also: Elschema 403

Input signals	Conditions for output functions	Output functions
– Transmission oil temperature, SE4903	– Transmission oil temperature above 110 °C (230 °F) > 2 seconds – High transmission oil temp. is active until the temperature drops > 2 °C (1.8 °F) below the temperature condition for > 2 seconds	Warning – High transmission oil temp.
	– Transmission oil temperature above 120 °C (248 °F) > 2 seconds – Engine Shut Down is active until the temperature drops > 2 °C (1.8 °F) below the temperature condition for > 2 seconds	Warning – High transmission oil temp. – Engine Shutdown
– Monitoring, SE4903	– See guided diagnostics.	

Gear selector

This function co-ordinates the three gear selectors for travel direction and informs the operator about which control is active and if there is a system failure.

This function means that Forward/Reverse shifting can be performed using the gear control located in the steering column, lever carrier, or armrest depending on which control is active. Kick-down can be activated with one of the three Kick-down controls regardless of active gear control. For Kick-down on the armrest to work, the armrest must be lowered.
Priority of the gear selectors means that if a gear selector with higher priority than the active gear selector is activated, the gear selector with lower priority is deactivated.
1. Gear selector, steering column
2. Gear selector, CDC
3. Gear selector, lever carrier (hydraulic and electric version) or gear selector, single lever
See also: Elschema 407

Elschema 408

Elschema 912

Input signals	Conditions for output functions	Output functions
– Gear selector steering column, SW4205 – Gear selector steering column, SW4206 – Gear selector lever steering, SW4217 – Gear selector lever carrier, SW4208 – Single lever (joystick), SW4221 Activation lever carrier, SW4207 – Activation lever steering, SW4216 – Kick-down lever carrier, SW4209 – Kick-down lever steering, SW4220 – Armrest position sensor, SE4218 – Engine On/Off – Speed	**Activation Comfort Drive Control (CDC)** – Engine On – Speed < 5 km/h (3 mph) – Gear selector steering column in position N – Armrest, active (lowered) – Gear selector lever steering in position N – Control activation lever steering in position On	– Activation gear selector lever steering (CDC) – Control light lever steering (CDC)
	Deactivation of lever steering (CDC) takes place if any of the functions below are activated. – Gear selector steering column in position F or R – Armrest inactive (raised) – Engine Off and speed < 5 km/h (3 mph)	– Deactivation gear selector (CDC) – Activation gear selector lever carrier (F/R)
	Activation of lever carrier (F/R) – Engine On – Speed < 5 km/h (3 mph) – Gear selector steering column in position N – Armrest inactive (raised) – Gear selector F/R gear carrier in position N – Control activation F/R lever carrier in position On	– Activation gear selector lever carrier (F/R)
	Deactivation of lever carrier (F/R) takes place if any of the following functions are activated. – Gear selector steering column in position F or R – Engine Off and speed < 5 km/h (3 mph) – Armrest, active (lowered) and control activation Lever steering in position On	– Deactivation of gear selector lever carrier (Lever carrier deactivated) – Activation gear selector lever steering (CDC) – Control light lever steering (CDC)
	Activation of single lever (joystick) – Engine On – Speed < 5 km/h (3 mph) – Gear selector steering column in position N – Armrest, inactive (raised) – Single lever in position N – Control activation F/R lever carrier in position On	– Activation single lever (F/N/R)
	Activation of kick-down takes place if any of the following functions are activated. – Control Kick-down steering column – Control kick-down lever carrier – Control Kick-down lever steering (if lever steering is installed)	– Request for kick-down

– Monitoring, SW4206, SW4208, SW4217, and SW4218	– See diagnostics		

[1] Current operating situation means current engine rpm, output speed, selection of directional gear, speed gear, kick-down, and engine braking.

VOLVO
Construction Equipment

Service Information

Document Title:	Function Group:	Information Type: **Service Information**	Date: **12/10/2011**
Profile: **WLO, L90F (Volvo) [GB]**			

Transmission, check oil pressure

Op nbr 421-002

11666052 Pressure gauge
14290266 Hose

1. Set the APS–control in service position. Set the start key in position 1, press in the button for service 
   and select service mode.
   Turn the start key to position 2 and press in the button for power transmission. 
   Warm up the machine until the transmission oil temperature is **65 °C (149 °F)**

Main pressure, checking

The main pressure is checked at the pressure check on the machine's left side.

2. Connect the pressure gauge to MAIN P, start the engine, and run at high idle with gear in neutral position.
   Read off the main pressure.
   Pressure, see: Hydraultransmission, specifikation

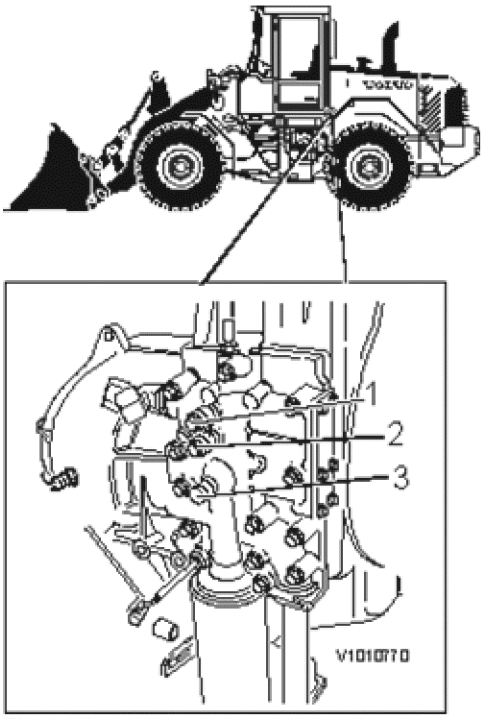

Figure 1

1. Lube oil pressure, LUB P
2. Torque converter pressure, CONV

3. Main pressure, MAIN P

Torque converter pressure, checking

3. Connect the pressure gauge to CONV. Start the engine, and run at high idle with gear in neutral position. Read off the torque converter pressure.
Pressure, see: Hydraultransmission, specifikation

Lube oil pressure, checking

4. Connect the pressure gauge to LUB P. Start the engine, and run at high idle with gear in neutral position. Read off the lubrication oil pressure.
Pressure, see: Hydraultransmission, specifikation

Clutch pressure, checking

5. Apply the parking brake and apply the footbrake maximally.
Connect the pressure gauge on each pressure check connection on the gear selector unit, machine's right side. Start the engine and run at high idle and the gear in respective position.
Pressure, see: Hydraultransmission, specifikation

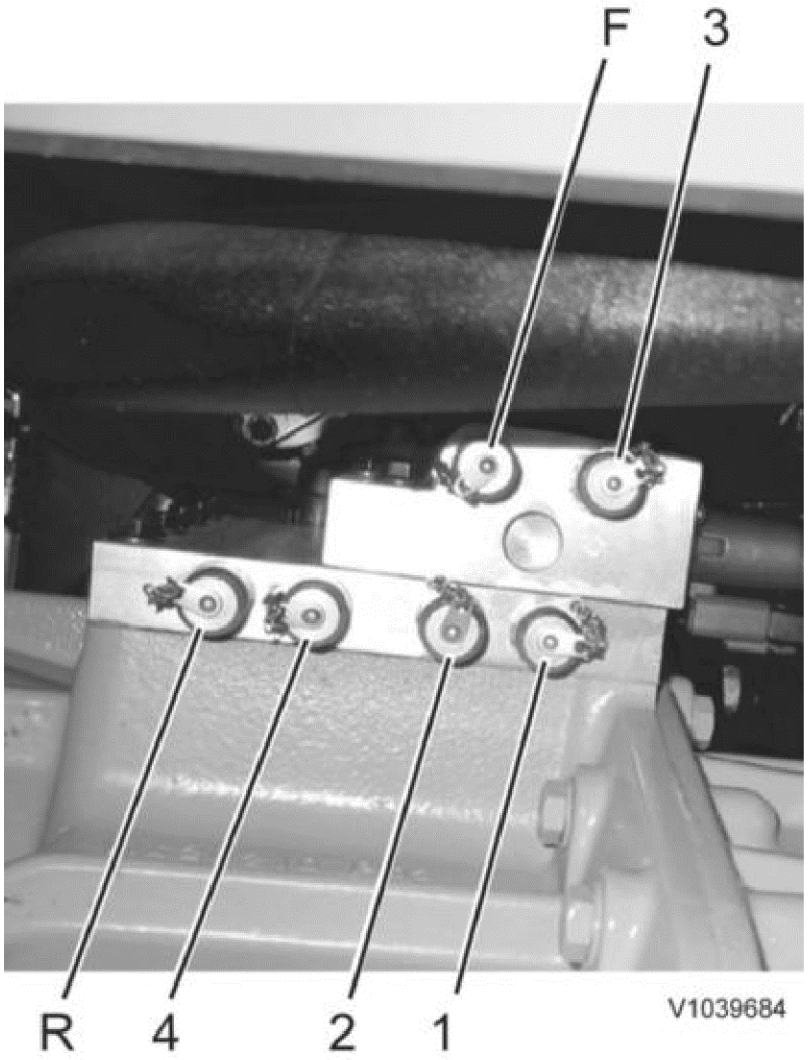

Figure 2

VOLVO
Construction Equipment

Service Information

Document Title:	Function Group:	Information Type: **Service Information**	Date: **12/10/2011**
Profile: **WLO, L90F (Volvo) [GB]**			

Gear selector valve, replacing

Op nbr 421-008

Removing

1. Place the machine in service position 1, see: Service positions
2. Remove the side plate on the right side of the machine.

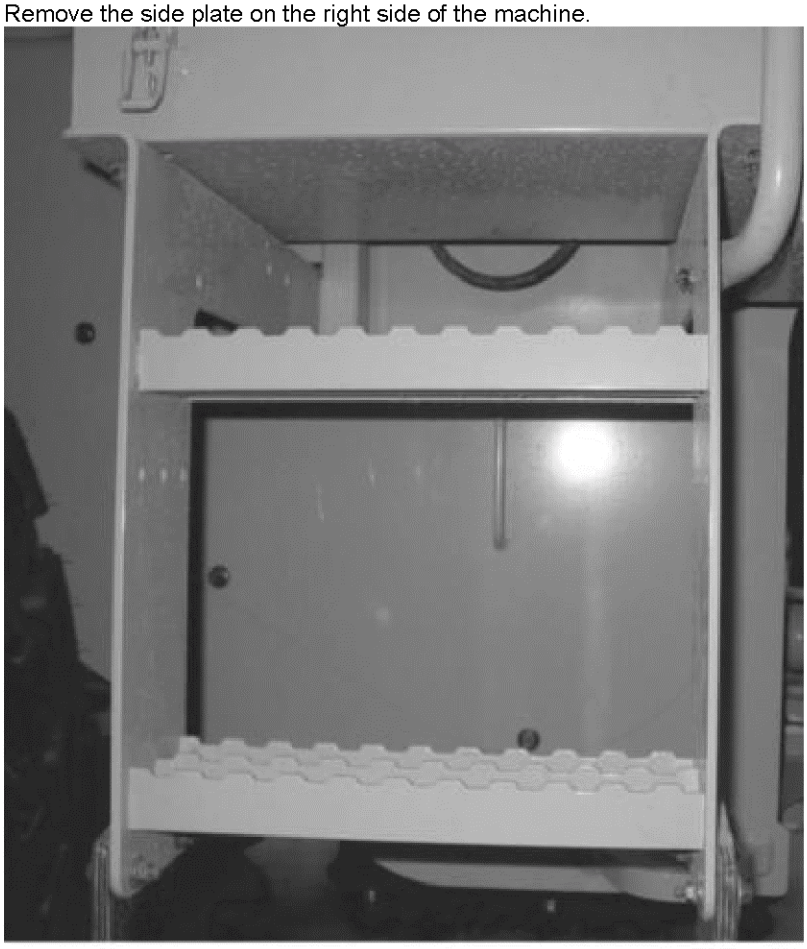

V1047259

Figure 1

3. Loosen the clamps in the frame for the cable harness. Carefully loosen the cable harness for the solenoids. Remove the bolts, 3 different lengths, and remove the gear selector valve.

NOTE **Maintain best possible cleanliness when handling the gear selector valve and its components.**

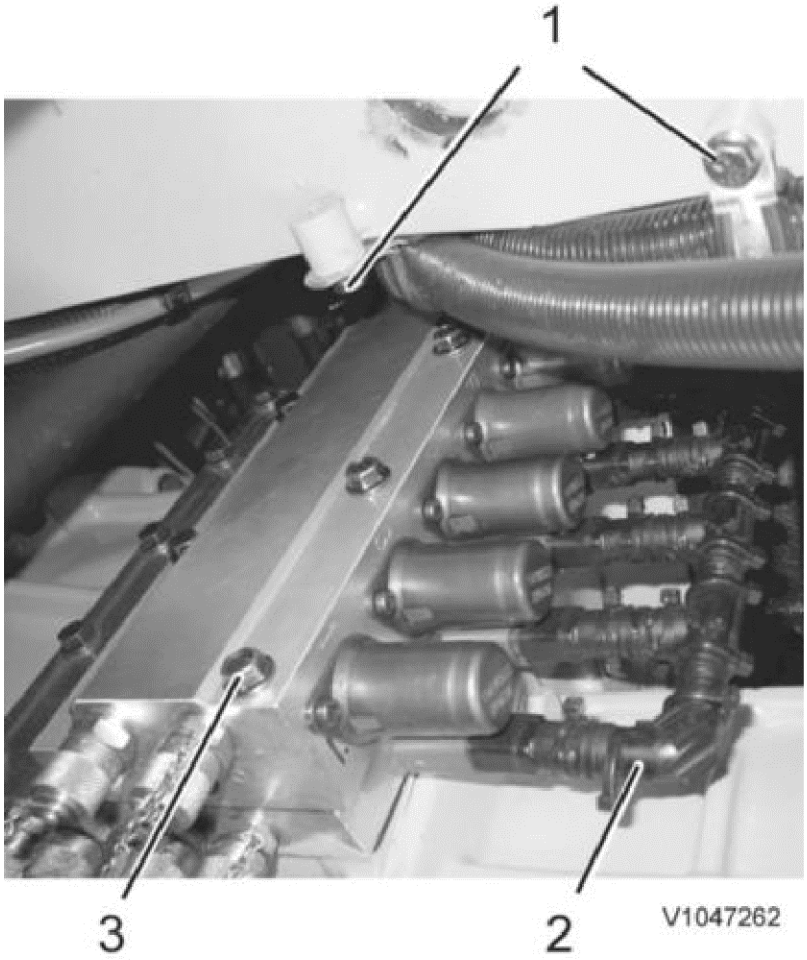

Figure 2

1. Clamps
2. Cable harness for solenoids
3. Bolt M8, 8 pcs.

Installing

4. Install the gear selector valve. Install the bolt at the top in the gear selector valve before it is lifted into place.
   Install the cable harness for the solenoids. Clamp the cable harness in the frame.

VOLVO
Construction Equipment

Service Information

Document Title:	Function Group:	Information Type: **Service Information**	Date: **12/10/2011**
Profile: **WLO, L90F (Volvo) [GB]**			

Hydraulic diagram transmission

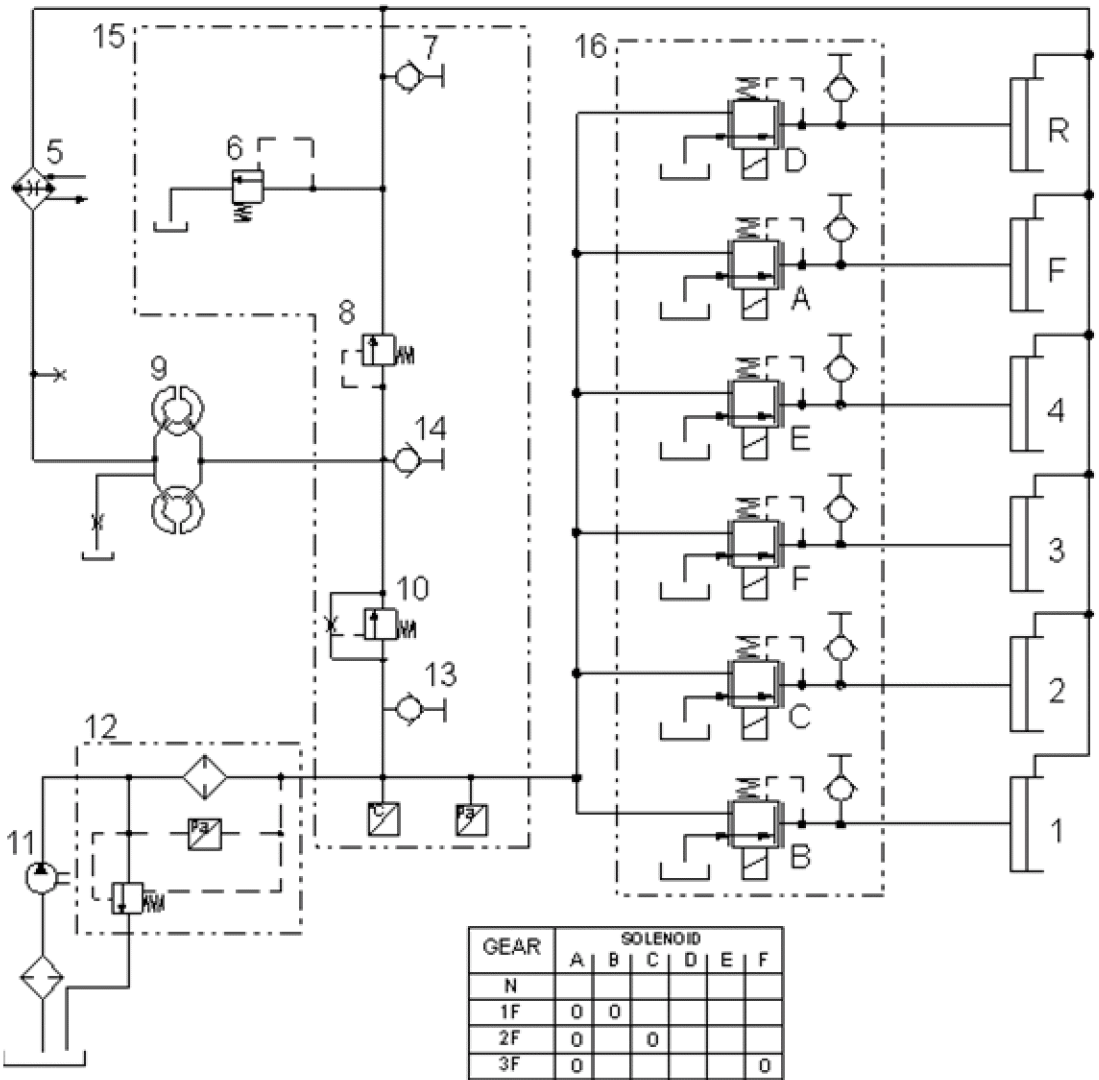

GEAR	SOLENOID A	B	C	D	E	F
N						
1F	0	0				
2F	0		0			
3F	0					0
4F	0				0	
1R		0		0		
2R			0	0		
3R				0		0
4R				0	0	

Figure 1

1	Clutch, 1st gear	9	Torque converter
2	Clutch, 2nd gear	10	Main pressure valve
3	Clutch, 3rd gear	11	Transmission pump
4	Clutch, 4th gear	12	Transmission filter
5	Transmission oil cooler	13	Checking point, main pressure
6	Lubricating oil valve	14	Checking point, torque converter pressure

7	Checking point, lubricating oil pressure	15	Pressure control valve
8	Torque converter pressure valve	16	Gear changing unit
F	Clutch, forward	R	Clutch, reverse

A	Gear-shifting solenoid and checking point, forward	B	Gear-shifting solenoid and checking point, 1st gear
C	Gear-shifting solenoid and checking point, 2nd gear	D	Gear-shifting solenoid and checking point, reverse
E	Gear-shifting solenoid and checking point, 4th gear	F	Gear-shifting solenoid and checking point, 3rd gear

VOLVO
Construction Equipment

Service Information

Document Title:	Function Group:	Information Type: **Service Information**	Date: **12/10/2011**
Profile: **WLO, L90F (Volvo) [GB]**			

Drive axles, description

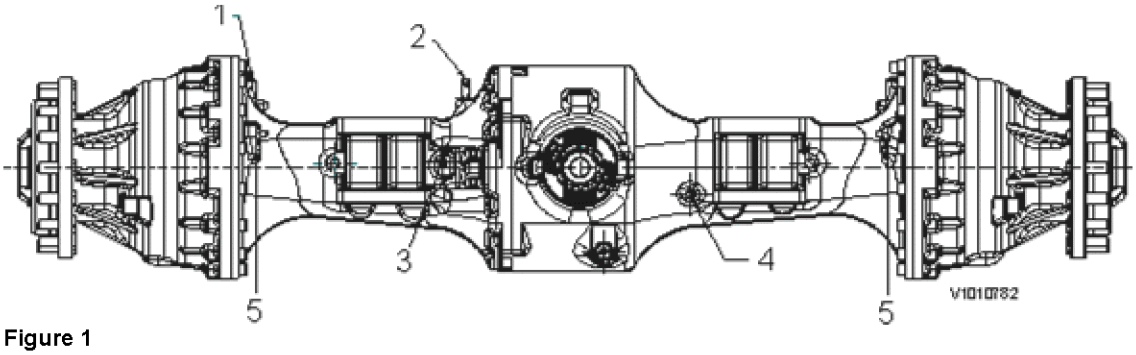

Figure 1
Front axle, AWB25

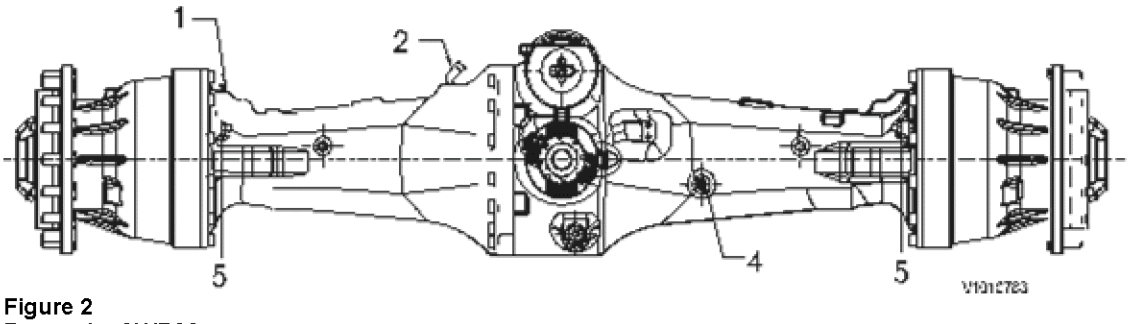

Figure 2
Rear axle, AWB20

1. Brake bleeding
2. Axle bleeding
3. Differential lock control
4. Temperature sensor; SE5201 front, SE5202 rear
5. Brake stroke, adjuster

AWB20 and AWB25 have floating half shafts and planetary gear hub reductions with built-in oil-cooled disc brakes.

The brakes are hydraulically controlled and are joined to the hub reductions so that the brakes, through the use of planetary gears, utilise the reduction ratio of the planetary gears. See also Brake system, description

Mounted on either side of the brake discs are impellers that push the shaft oil alongside the brake discs to provide oil circulation in the shaft and brake cooling. The shafts have a common oil space for the hub reductions and differential carrier assembly.

The front axle version of the axle has a hydraulically controlled differential lock with dog clutch. See differential lock, description Differential lock, description

.

The rear axle version may be provided with a "Limited Slip" type differential, see Limited Slip differential, description

.

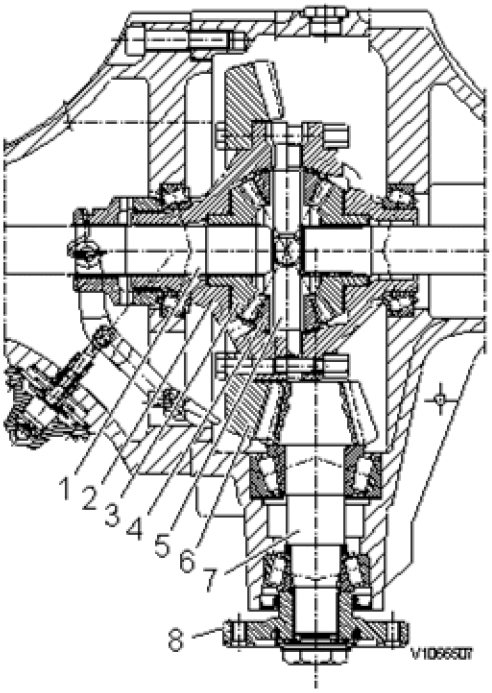

Figure 3
Differential carrier assembly, AWB25

1.	Half shaft	5.	Differential spider
2.	Differential casing	6.	Crown wheel
3.	Half shaft differential side gear	7.	Pinion shaft
4.	Differential pinion	8.	Drive flange

Differential carrier assembly
The differential carrier assembly contains the differential, which allows the two wheels on the axle to rotate at different speeds. The power on the input drive flange (8) turns pinion shaft (7), which in its turn causes crown wheel (6), located on the differential casing (2), to rotate. Because the pinion shaft has fewer gear teeth than the crown wheel a reduction of the rotational speed is obtained.
When the differential casing rotates, differential spider (5) is also made to turn. A differential pinion (4) is located on each of the four arms on the spider. These four pinions are in mesh between the two differential side gears (3) on the half shafts. When the differential spider with its pinions turns, also the half shafts (1) turn and transfer the power to the hub reduction gears and on out to the driving road wheels. Due to the fact that differential pinions (4) are located between the differential side gears (3) on the half shafts (1) the half shafts can rotate at different speeds.

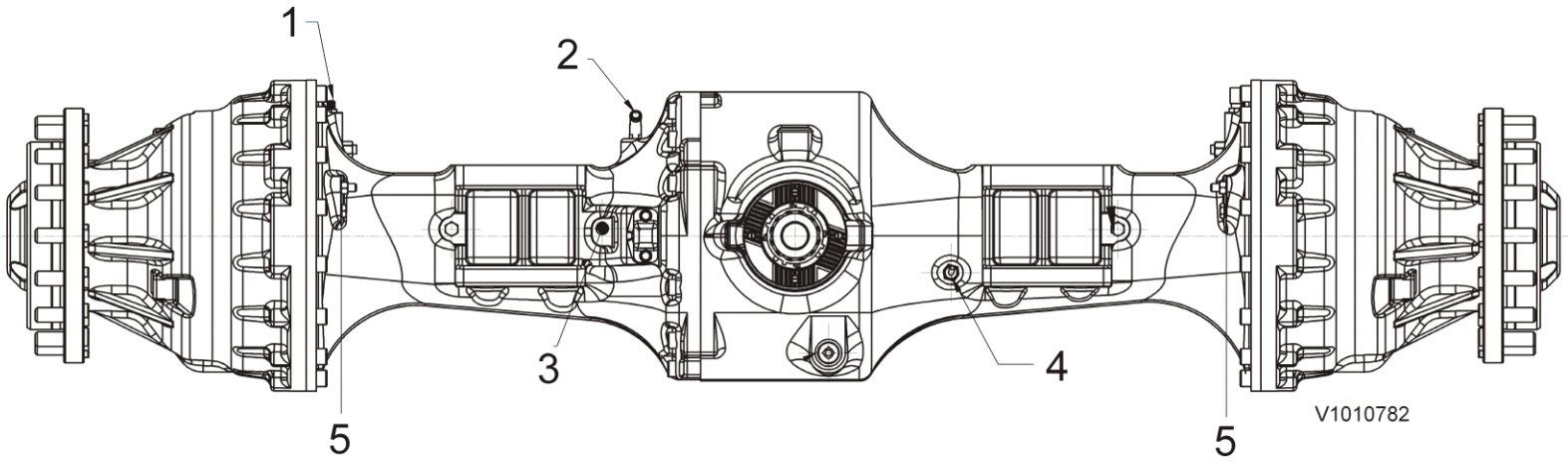
1
2
3
4
5
5
V1010782

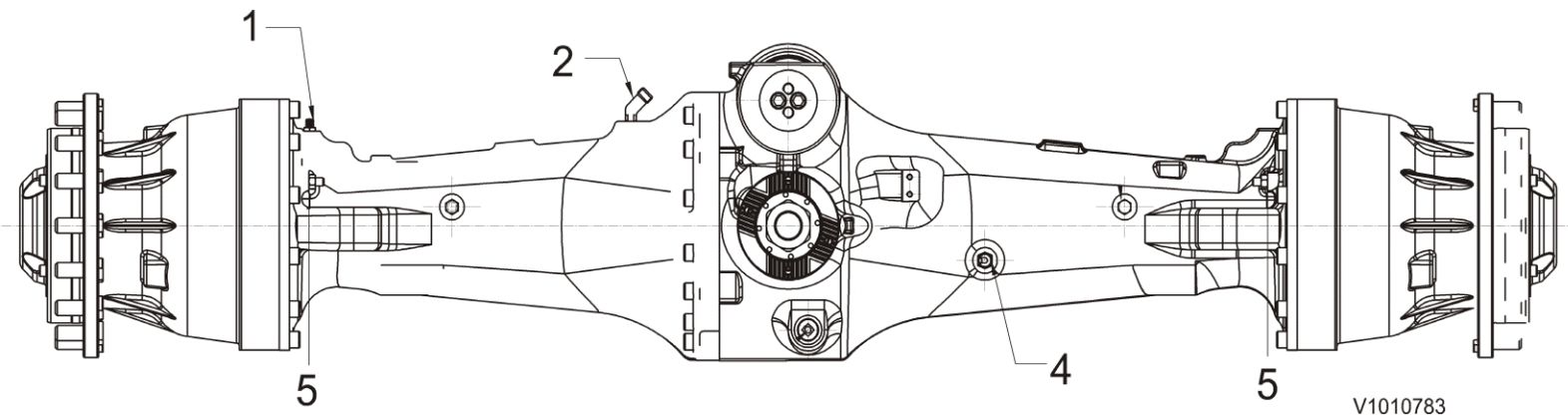
1
2
5
4
5
V1010783

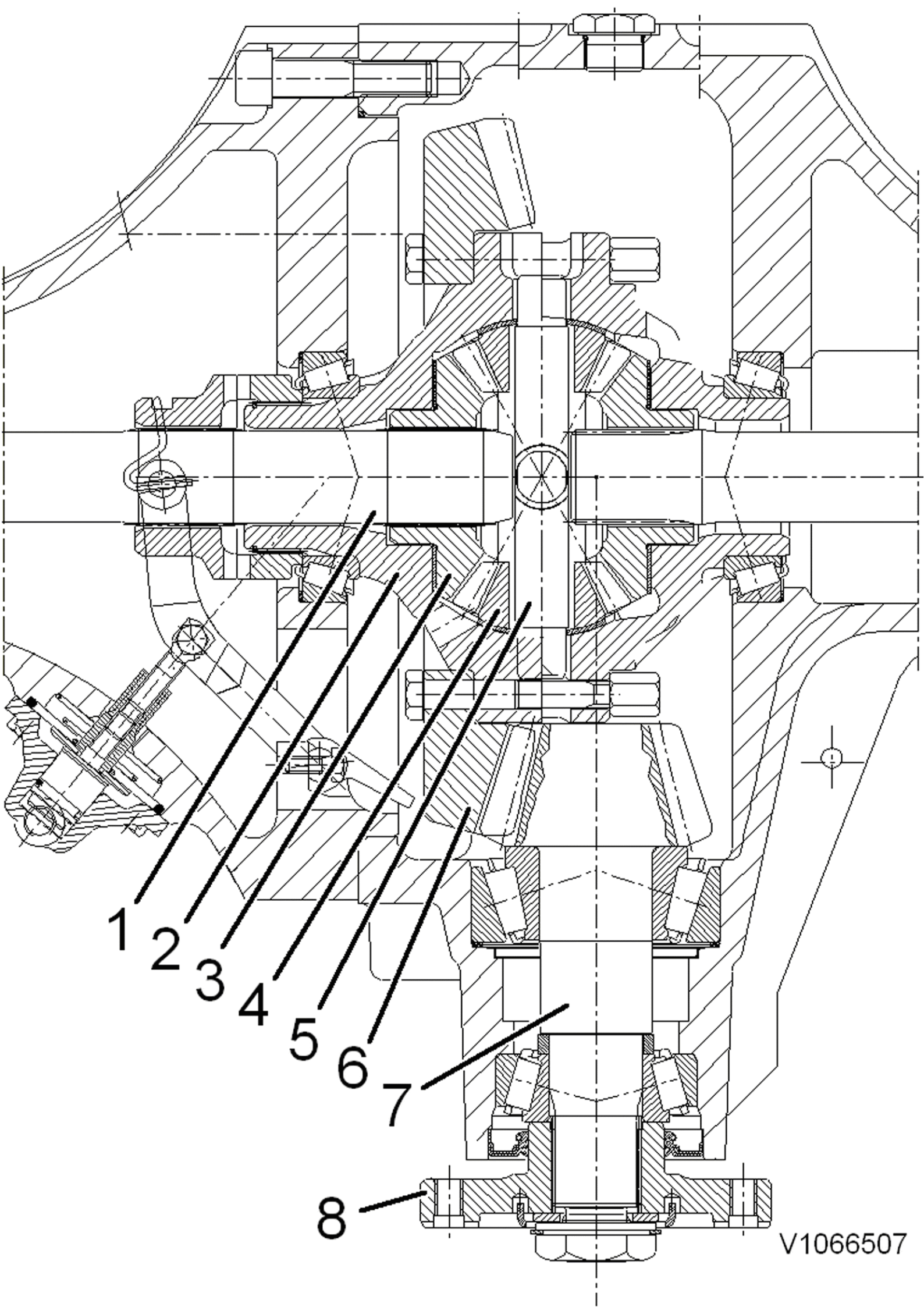
1
2
3
4
5
6
7
8
V1066507

VOLVO
Construction Equipment

Service Information

Document Title:	Function Group:	Information Type: **Service Information**	Date: **12/10/2011**
Profile: **WLO, L90F (Volvo) [GB]**			

Hub, replacing seal

Op nbr 461-043

11666041 Pump
11666043 Jack
11666046 Swivel nipple
11666054 Jack
11667001 Handle
11667010 Plug
11667135 Drift plate
11667400 Drift plate
11668007 Standard Jack Single
11668010 Wheel forklift
9809747 Puller
9993590 Gear wheel
9993713 Puller bolt
9993717 Quick nut
9993722 Support
9993757 Intermediate piece
9993770 Press tool
9993785 Gear segment
9993802 Lifting tool
9993867 Spanner
9996239 Lifting chain

Kukko 20–3
Lifting eye M16, 2 pcs.
Bolt, M10x60, 4 pcs.
Bolt, M10x45, 3 pcs.
Nut M10, 6 pcs.
Nut M16, 6 pcs.
Sling, 2 m
Shackle

Removing

1. Remove the hub reduction according to Navreduktion, borttagning
.

2. Place the hub reduction on, e.g., a wooden block, at least **150 mm (5.9 in)** high, on a bench.
Weight hub reduction.: approx. **190 kg (420 lbs)**.
Remove the centre cap.

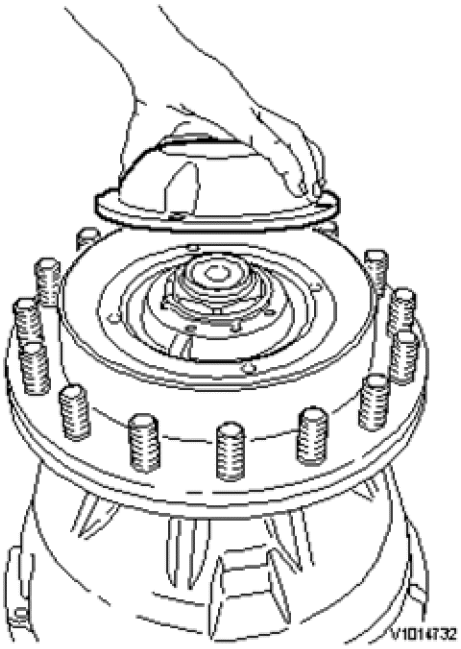

Figure 1

3. Remove the lock ring and the washer.

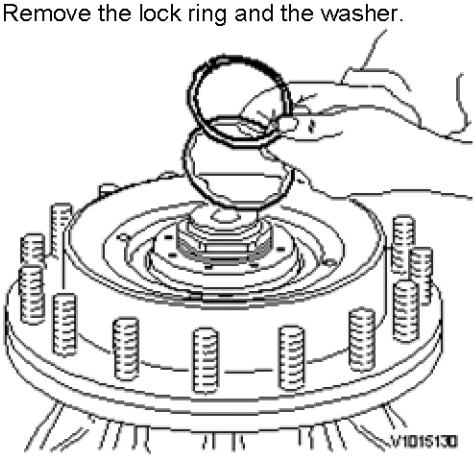

Figure 2

4. Loosen the hub nut. Counterhold with a pry bar.

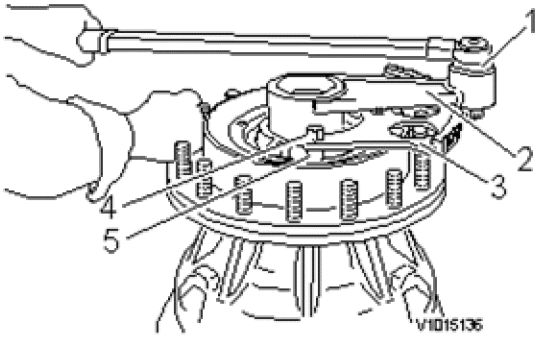

Figure 3

1. 9993590Gear wheel
2. 9993867Spanner
3. 9993785Gear segment
4. Bolt, M10x45, 3 pcs.
5. Nut M16, 6 pcs.

5. Remove the hub nut, washer, measuring washer, and the adjusting shims.

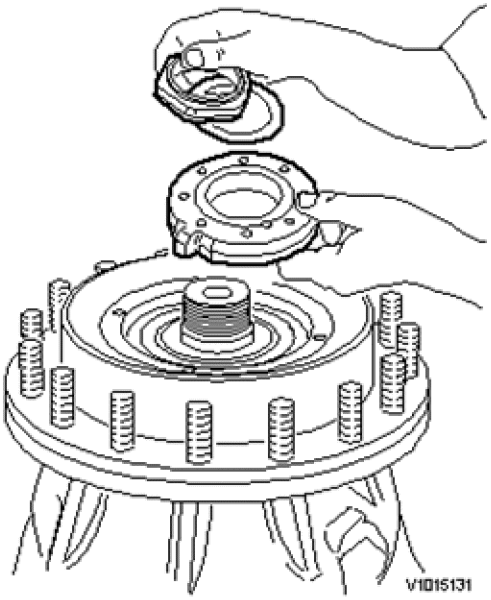

Figure 4

6. Remove the hub carrier from the planet carrier.
   Weight hub carrier approx.: **130 kg (290 lbs)**.

7. Pullers have to be used in some cases.

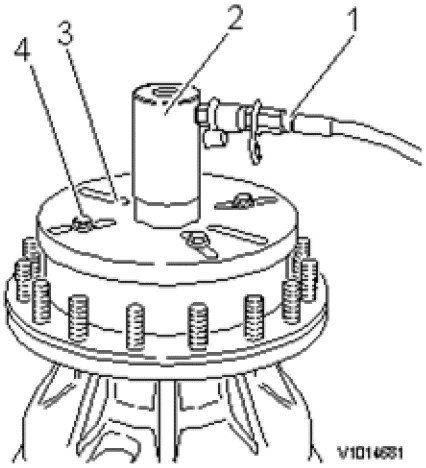

Figure 5

1. 11666041Pump
2. 11666054Jack
3. 9993770Press tool
4. Bolt, M10x60, 4 pcs.

8. Turn the hub carrier.
   Weight hub carrier: approx **130 kg (290 lbs)**.

9. Press off the hub from the hub carrier.

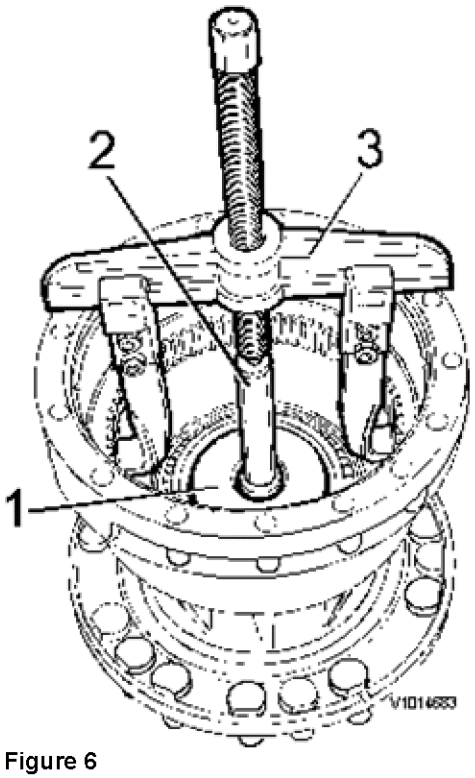

Figure 6

1. 11667135Drift plate
2. 11667001Handle
3. Kukko 20–3

10. Lift away the hub carrier from the hub.
Hub carrier's weight approx.: **70 kg (154 lbs)**.

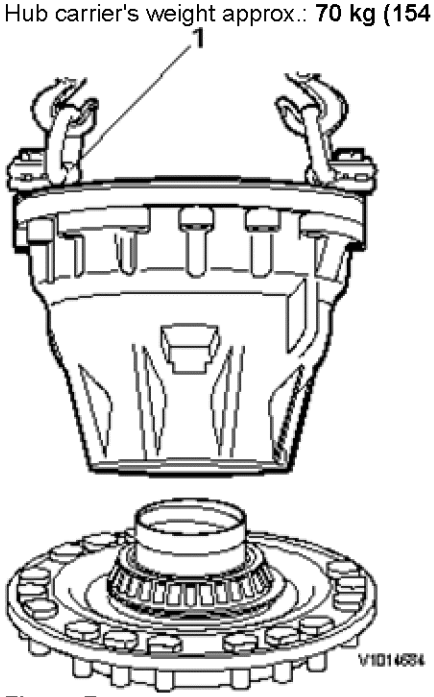

Figure 7

1. Lifting eye M16, 2 pcs.

11. Shock-heat the roller cage and pry it off.

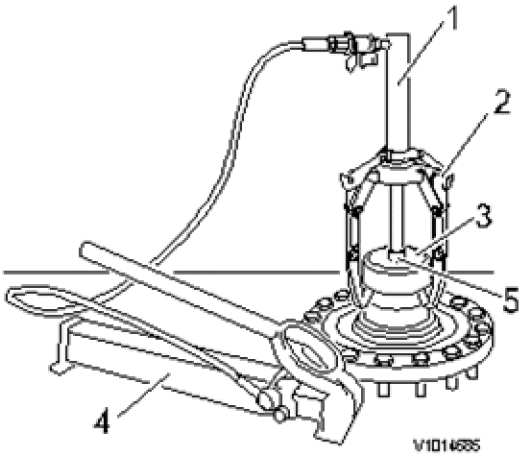

Figure 8

1. 11666043Jack
2. 9809747Puller
3. 11667135Drift plate
4. 11666041Pump
5. 11667010Plug

Shock-heat the bearing race and pry it off.
Remove the hub seal.

Installing

Caution!
Work carefully so that the seal is not damaged.

12. Install new return bearing races.
Install new bearings.
Install the new seal in the hub carrier.

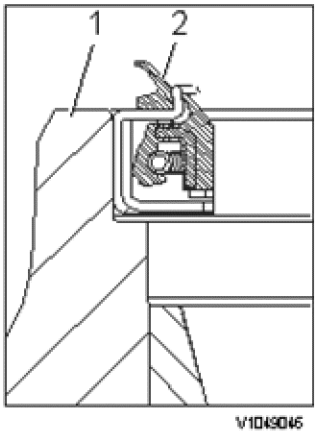

Figure 9

1. Hub carrier
2. Dust lip

NOTE **It is important that the right tools are used to safeguard the seal's function and position.**

Smear grease on the dust lip.

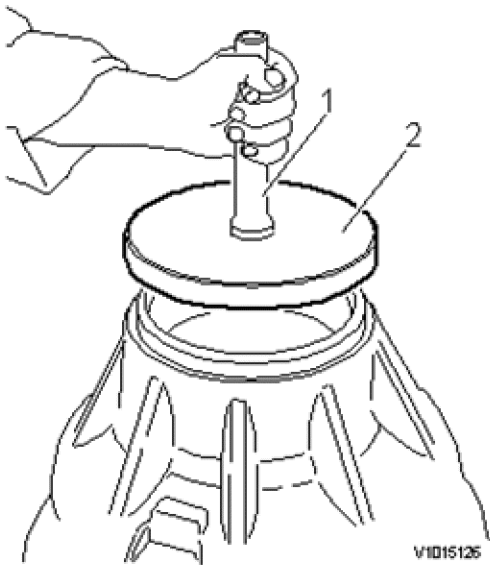

Figure 10

1. 11667001Handle
2. 11667400Drift plate

13. Install the drift plate, puller bolt, and the nut in the wheel hub.

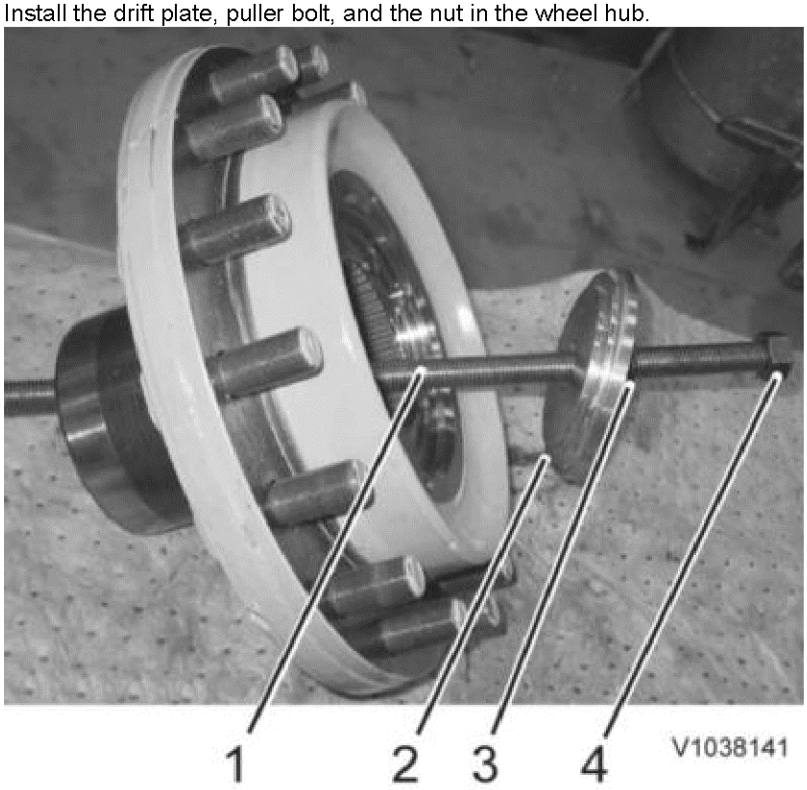

Figure 11

1. 9993713Puller bolt
2. 11667135Drift plate
3. Washer
4. Nut alt. 9993717Quick nut

14. Turn the wheel hub and install the hub carrier on the wheel hub together with the bearing.

15. Install the rest of the tools on the hub carrier as shown in the figure.

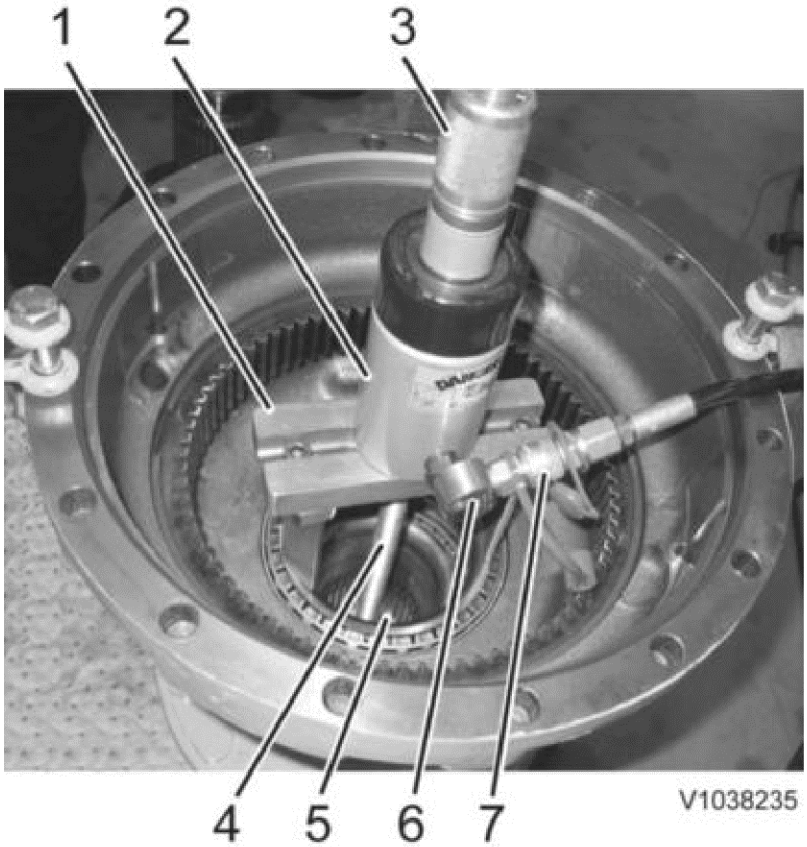

Figure 12

1. 9993722Support (short legs)
2. 11666054Jack
3. 9993717Quick nut
4. 9993713Puller bolt
5. 11667135Drift plate (hidden)
6. 11666046Swivel nipple
7. 11666041Pump

16. Press the hub on the hub carrier. Leave a gap of approx. **10 mm (0.4 in)** between the bearing race and the wheel hub.

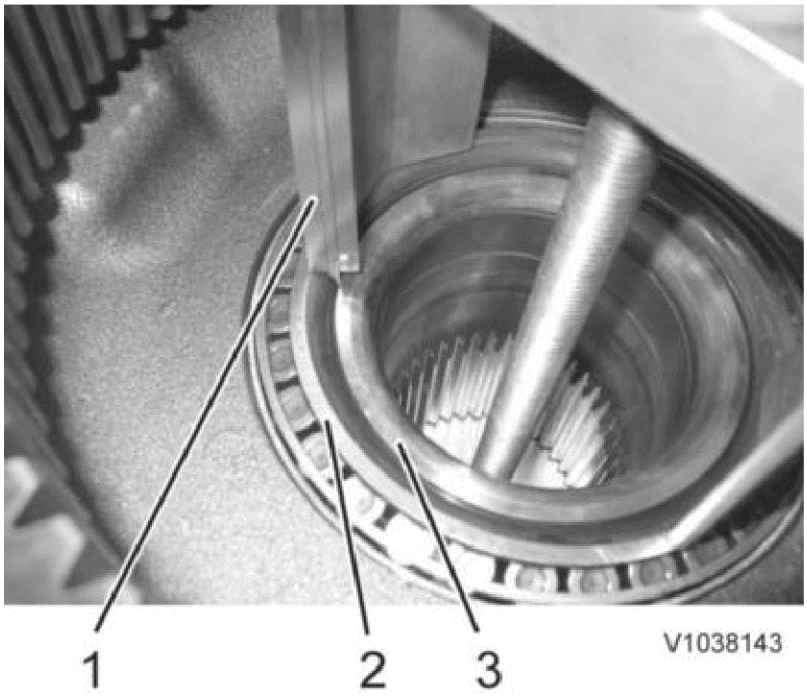

Figure 13

1. Sliding calipers
2. Bearing race
3. Hub

NOTE **If the wheel hub is pressed too far, the bearings are subjected to pressure and the measuring value for rolling resistance becomes wrong.**

17. Place the planet carrier on, e.g., a wooden block, at least **150 mm (5.9 in)** high.
Grease the planet carrier's splines.
Lift the hub carrier so that it hangs horizontally and install it on the planet carrier.
Fit the splines.
Check that all gears end up in position.
Weight planet carrier approx.: **40 kg (90 lbs)**.
Weight hub carrier approx.: **130 kg (270 lbs)**.

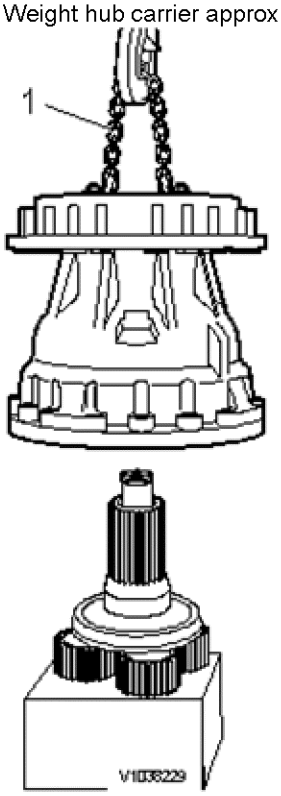

Figure 14

1. 9996239Lifting chain

18. Sometimes the parts have to be pressed together.
Install the tools as shown in the figure.

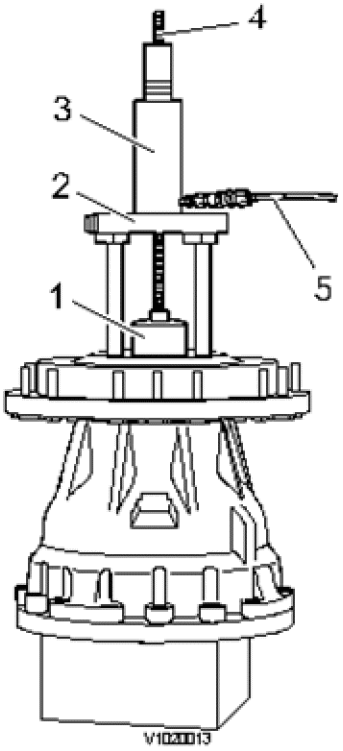

Figure 15

1. 9993757Intermediate piece
2. 9993722Support
3. 11666054Jack
4. 9993713Puller bolt
5. 11666041Pump

19. Stop pressing when an approx. **5 mm (0.2 in)** gap (A) remains between the wheel hub and planet carrier.

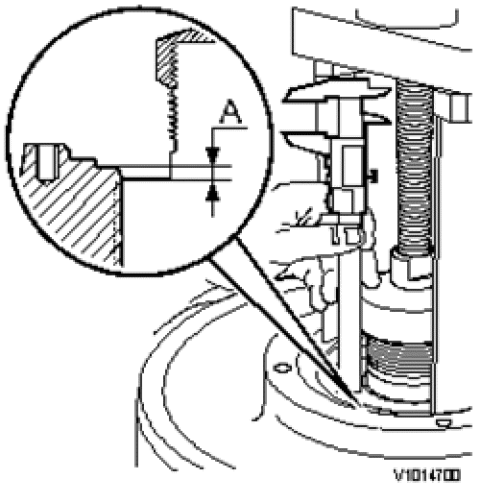

Figure 16

NOTE	**If the wheel hub is pressed too far, the bearings are subjected to pressure and the measuring value for rolling resistance becomes wrong.**

20. Install the measuring ring, washer, and the hub nut. Tighten the hub nut loosely.

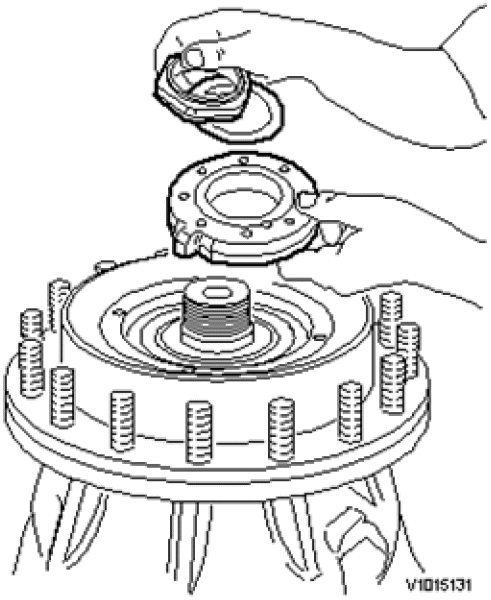

Figure 17

21. Lift up the hub reduction and remove the wooden block.
Hub reduction's weight approx.: **190 kg (420 lbs)**.

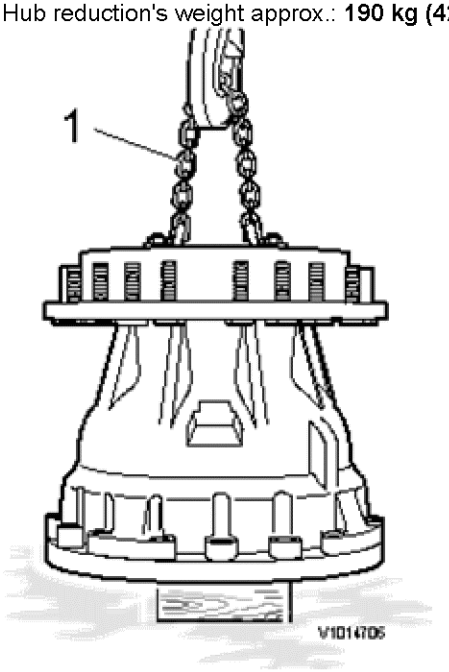

Figure 18

1. 9996239Lifting chain

22. Tighten the hub nut and rotate the wheel hub at the same time, at least 5 revolutions, so that the bearings roll in. Tighten and measure alternately. Stop tightening the hub nut when there is bearing contact. This takes place just when the rolling resistance increases sharply, for example, at approx. **30 Nm (22 lbf ft)**.

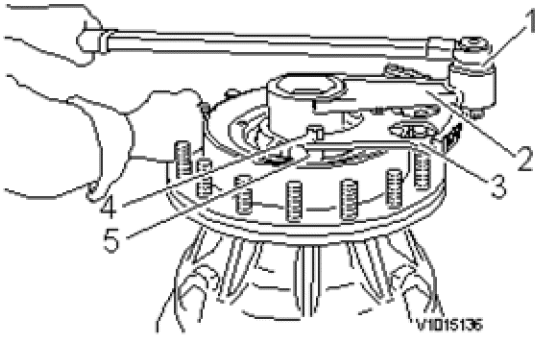

Figure 19
Tightening

1. 9993590Gear wheel
2. 9993867Spanner
3. 9993785Gear segment
4. Bolt, M10x45, 3 pcs.
5. Nut M10, 6 pcs.

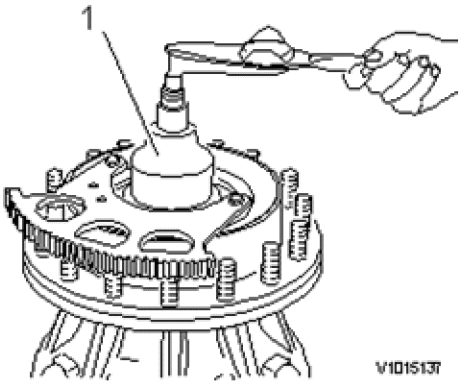

Figure 20
Testing

1. Socket 75 mm

Rolling resistance for new bearings, see: Axlar, specifikationer

The specified value + the measured value becomes the final rolling resistance
Example of specification: 24 Nm
Measured value: 30 Nm
Final value: 24 Nm (17.7 lbf ft) + 30 Nm (22 lbf ft) = 54 Nm (39.8 lbf ft)

23. Tighten the hub nut and rotate the wheel hub at the same time, at least 5 revolutions, so that the bearings roll in. Tighten and measure alternately until the final rolling resistance is obtained (in the example, 54 Nm (39.8 lbf ft)).

24. To determine thickness of the adjusting shims, measure the distance from the upper edge on the measuring washer to the planet carrier's end face, note the value, e.g., **21.7 mm (0.85 in)**.

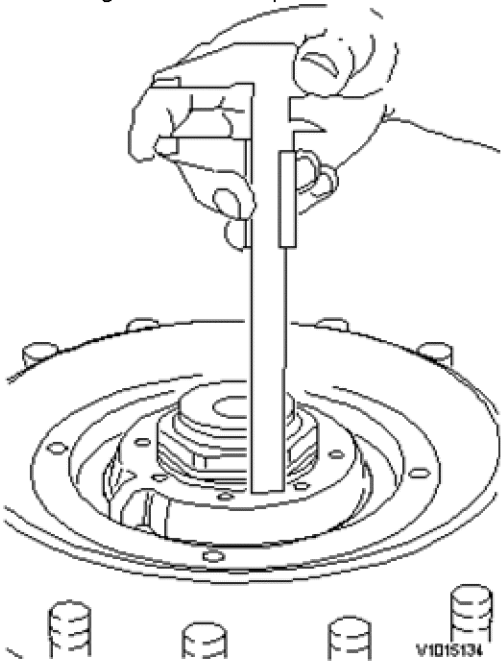

Figure 21

25. Lift up the hub reduction and place the wooden block between the bench and the planet carrier.
Hub reduction's weight approx.: **190 kg (419 lbs)**.

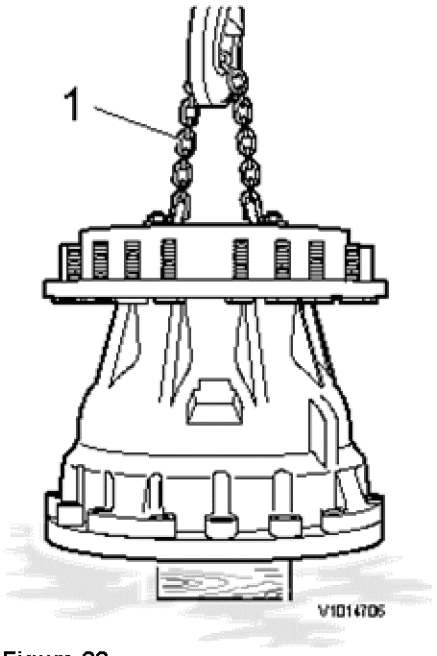

Figure 22

1. 9996239Lifting chain

26. Remove the hub nut, washer, and measuring washer.

27. Combine adjusting shims according to the example so that these, together with the washer's thickness, have the same value as the measured value in step 25.
Example:
Measured value according to step 25 minus the measuring washer's thickness gives the thickness for the adjusting shims, e.g.: 21.7 – 20.0 =1.7 mm (0.85 – 0.78 = 0.07 in).

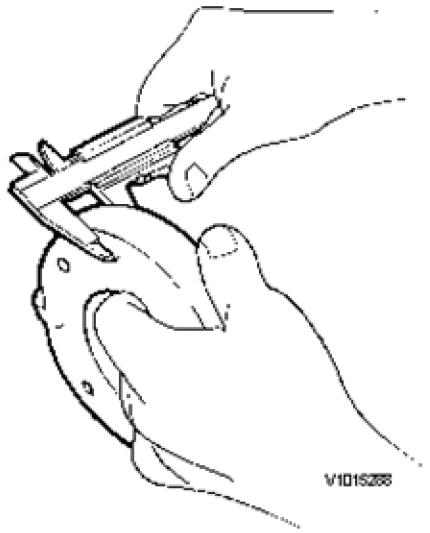

Figure 23

28. Install adjusting shims, measuring washer, washer, and hub nut, tighten the hub nut loosely.

29. Lift the hub reduction and remove the wooden block.

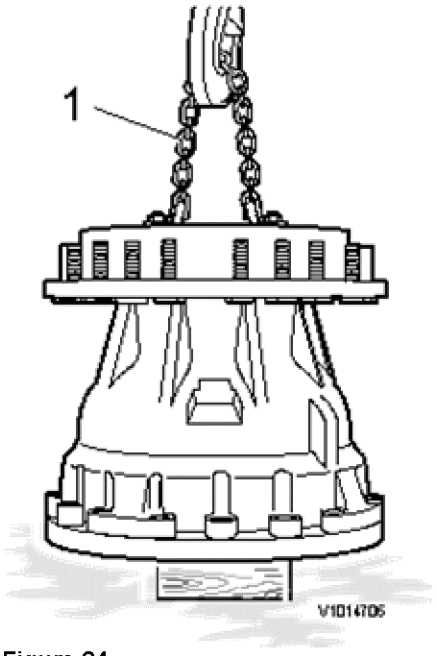

Figure 24

1. 9996239Lifting chain

30. Tighten the hub nut and rotate the wheel hub alternately until the correct torque is reached.
Tightening torque, hub nut, see: Fram- och bakaxel, åtdragningsmoment

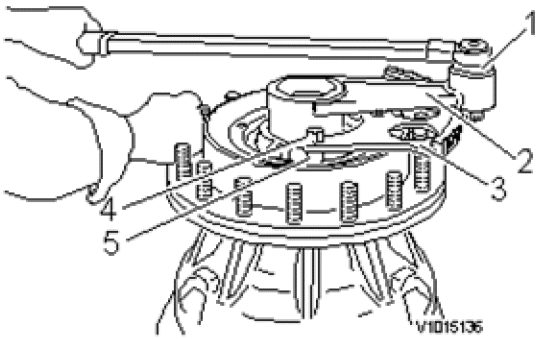

Figure 25

1. 9993590Gear wheel
2. 9993867Spanner
3. 9993785Gear segment
4. Bolt, M10x45, 3 pcs.
5. Nut M10, 6 pcs.

31. Rotate the wheel hub approx. 5 revolutions and check that the rolling resistance is correct, that is, corresponds to the value that was calculated before. According to the example: 54 Nm (39.8 lbf ft).
Check the tightening torque on the hub nut once again.
If the value of the rolling resistance is not correct, adjust with adjusting shims. Value too high, add adjusting shims. Loosen the hub nut and press apart approx. 1 mm. Value too low, remove adjusting shims.

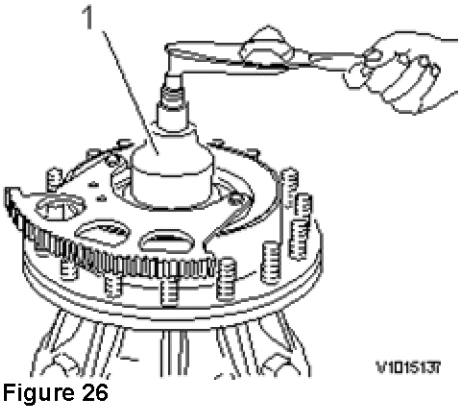

Figure 26

1. Socket 75 mm

32. Install the lock washer and the lock ring.

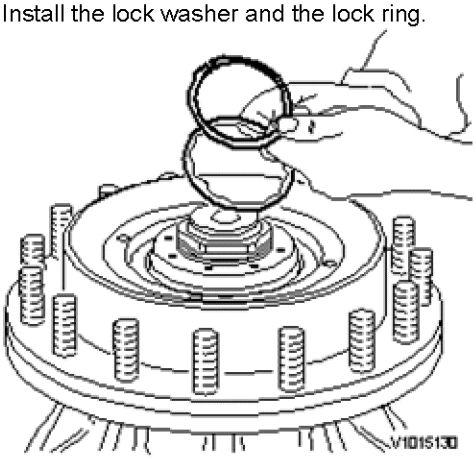

Figure 27

NOTE **The lock washer is available with two different spacings.**

33. Install the O-ring on the cover.
Install the cover. Check the position.
Tightening torque cover, see: Fram- och bakaxel, åtdragningsmoment

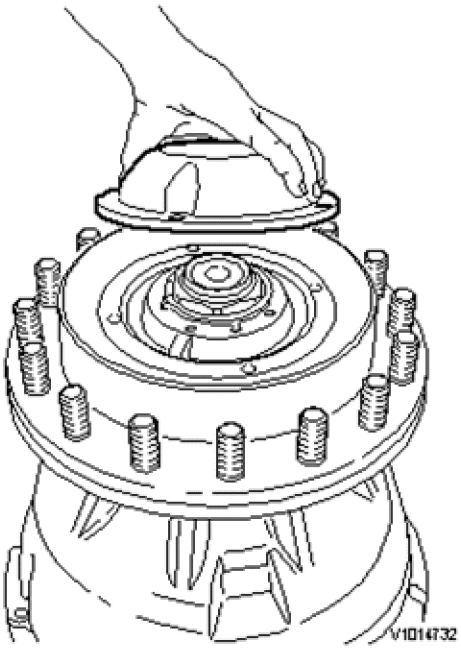

Figure 28

34. Install the hub reduction according to Navreduktion, ditsättning
.

VOLVO
Construction Equipment

Service Information

Document Title:	Function Group:	Information Type: **Service Information**	Date: **12/10/2011**
Profile: **WLO, L90F (Volvo) [GB]**			

Axle, removing

Op nbr 461-002

9993831 Support
9998547 Lifting tool
11668007 Standard Jack Single
11668007 Standard Jack Single
11668010 Wheel forklift

Sling, 6 m (20 ft), 2 pcs

1. Lock the frame joint with the frame joint lock.
2. Position two 11668007Standard Jack Single under the lifting points in the front frame and lift the front wheels.

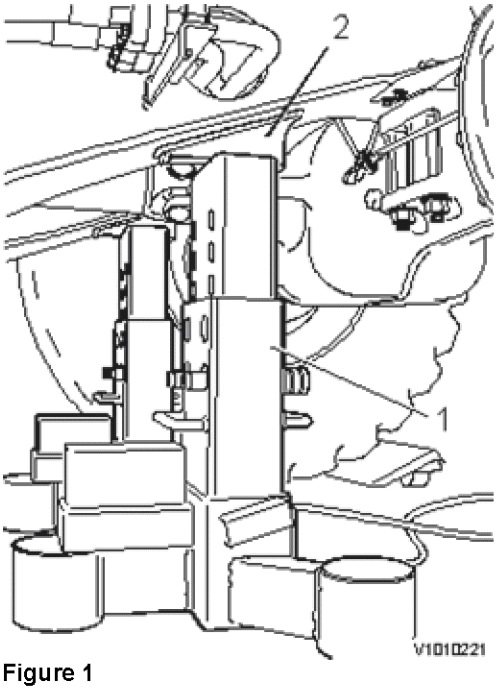

Figure 1

1. 11668007Standard Jack Single
2. Support point

3. Raise the lifting frame and secure with 9993831Support. Tilt out the bucket and release the pressure in the hydraulic system.

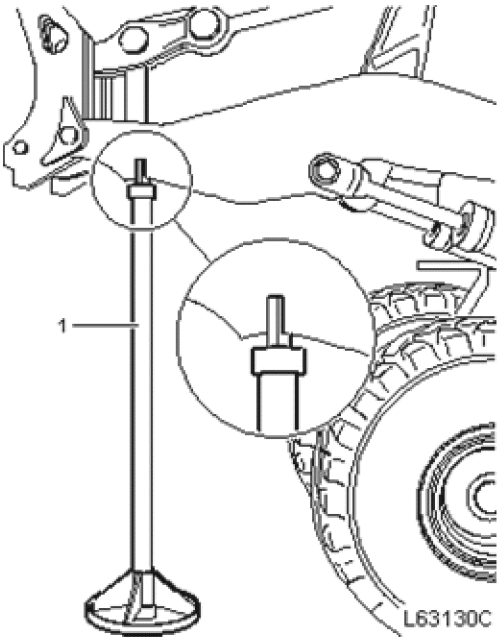

Figure 2

1. 9993831Support

4. Release the pressure in the brake system by depressing the brake pedal several times (30–40 times). Fully depress the brake pedal and hold it in position with a suitable tool.
   When the brake pedal is blocked, the oil in the hydraulic tank is prevented from running out to the respective brake pistons.

   NOTE **The brake pedal must remain blocked until the front axle has been installed again.**

5. Remove the front wheels.
   Weight: **approx. 360 kg (795 lb)**

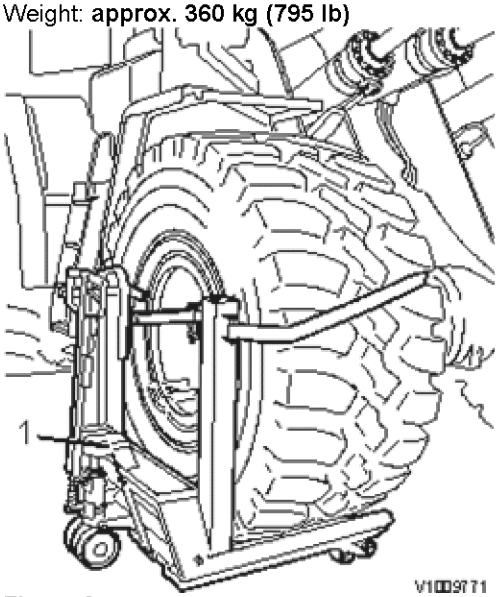

Figure 3

1. 11668010Wheel forklift

6. Remove the front mudguards.

7. Loosen the bolts for the support bearing. Tie up the propeller shaft and remove the propeller shaft flange bolted joint against the front axle.

8. Remove the electrical leads and hoses for the differential lock and the brake and the breather hose for the axle. Use protective plugs for plugging all hoses.
   Remove the cables for the temperature sensor.

9. Connect 9998547Lifting tool to the front axle and remove the attaching bolts.

Lower and lift out the axle. Secure the axle (e.g. with a jack) so that it will not tip.
Front axle weight AWB15 (L60F): **approx. 600 kg (1320 lb)**
AWB25 (L70F, L90F): **approx. 900 kg (1985 lb)**

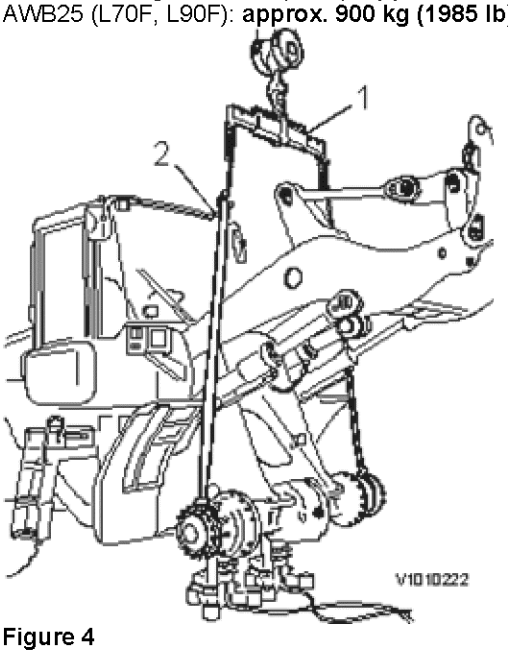

Figure 4

1. 9998547Lifting tool
2. Sling, 6 m (20 ft)

VOLVO
Construction Equipment

Service Information

Document Title:	Function Group:	Information Type: **Service Information**	Date: **12/10/2011**
Profile: **WLO, L90F (Volvo) [GB]**			

Axle, installing

Op nbr 461-003

9993831 Support
9998547 Lifting tool
11668007 Standard Jack Single
11668007 Standard Jack Single
11668010 Wheel forklift

Sling 6 m (20 ft), 2 pcs

1. Position the axle under the machine. Connect 9998547Lifting tool and two slings to the axle.
   Front axle weight AWB15 (L60F): **approx. 600 kg (1320 lb)**
   AWB25 (L70F, L90F): **approx. 900 kg (1985 lb)**

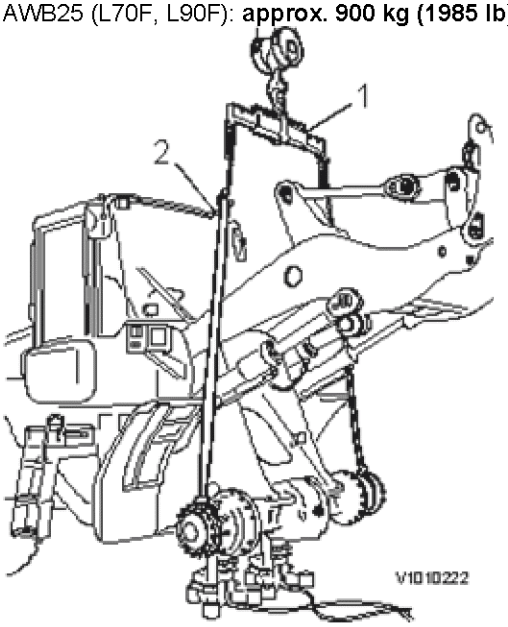

Figure 1

1. 9998547Lifting tool
2. Sling, 6 m (20 ft)

2. Lift the axle up into position and install the attaching bolts. If required make use of a jack to prevent the axle from turning.
   Tightening torque: see Fram- och bakaxel, åtdragningsmoment

3. Connect the propeller shaft to the front axle. Install the attaching bolts.
   Tightening torque: see Kardanaxel, åtdragningsmoment

4. Tighten down the bolts for the support bearing.

5. Install the electrical leads and hoses for the differential lock and the brake and the breather hose for the axle. Connect the cables for the temperature sensor.

6. Install the front mudguards.

7. Install the front wheels.
   Weight: **approx. 360 kg (795 lb)**
   Tightening torque: see Hjul, åtdragningsmoment

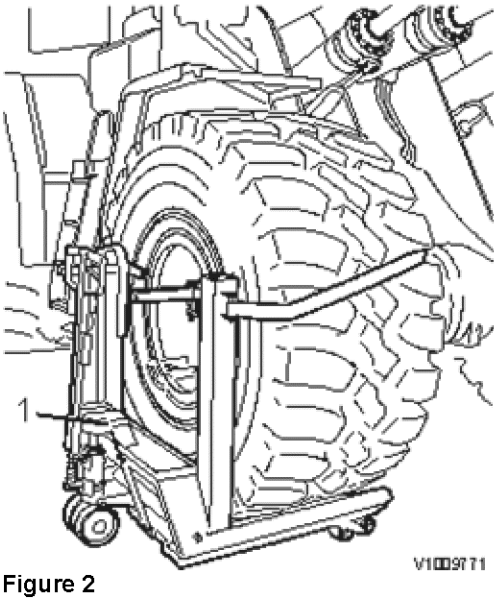

Figure 2

1. 11668010Wheel forklift

8. Lower the machine and remove the jacks.

NOTE	**Raise the lifting frame and remove the support before the front wheels are lowered, so that the support or the lifting frame are not damaged.**

9. Bleed the front brake circuit according to Bromssystem, luftning
   .

VOLVO
Construction Equipment

Service Information

Document Title:	Function Group:	Information Type: **Service Information**	Date: **12/10/2011**
Profile: **WLO, L90F (Volvo) [GB]**			

Hub reduction gear, reconditioning one side

Op nbr 461-042

11666041 Pump
11666043 Jack
11666046 Swivel nipple
11666054 Jack
11667001 Handle
11667010 Plug
11667135 Drift plate
11667195 Drift plate
11667400 Drift plate
11668007 Standard Jack Single
11668010 Wheel forklift
9809747 Puller
9993590 Gear wheel
9993713 Puller bolt
9993717 Quick nut
9993722 Support
9993757 Intermediate piece
9993770 Press tool
9993785 Gear segment
9993802 Lifting tool
9993867 Spanner
9996239 Lifting chain

Sling, 2 m
Shackle
Kukko 20-3
Kukko 22–2 Puller
Kukko 21–4 Expander
Kukko 20–20 Puller
Kukko 2-150 Puller arms
Lifting eye M10, 2 pcs.
Lifting eye M16, 2 pcs.
Gas welding torch
Bolt, M10x45, 3 pcs.
Bolt, M10x60, 4 pcs.
Nut M16, 6 pcs.
Nut M10, 6 pcs.

1. Remove the hub reduction according to Navreduktion
   .
2. Overhaul the hub reduction according to Navreduktion
   .
3. Install the hub reduction according to Navreduktion, renovering
   .

VOLVO
Construction Equipment

Service Information

Document Title:	Function Group:	Information Type: **Service Information**	Date: **12/10/2011**
Profile: **WLO, L90F (Volvo) [GB]**			

Hub reduction, removing

Op nbr 461-037

11668007 Standard Jack Single
11668010 Wheel forklift
9993802 Lifting tool

Sling, 2 m
Shackle

1. Remove the wheel according to Framhjul, borttagning
   .
2. Drain the axle oil.
   Volume, see: Axlar, specifikationer
   .
3. Mark the hub reduction's position in relation to the axle housing.
   Connect the lifting tool to the hub reduction. Remove the attaching bolts and remove the hub reduction.
   Hub reduction's weight approx.: **190 kg (419 lbs)**

   NOTE **In certain cases, the half shaft and brake disc can remain in the hub reduction.**

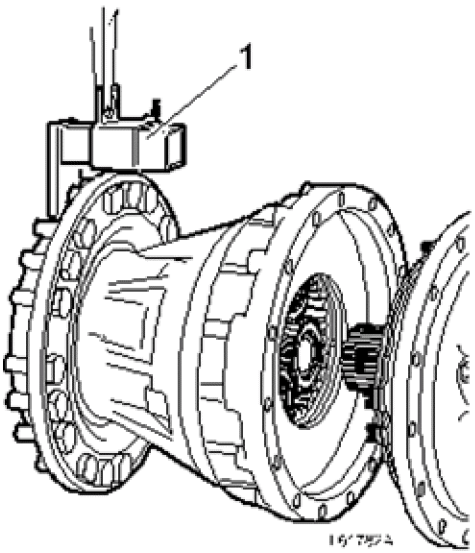

Figure 1

1. 9993802Lifting tool

VOLVO
Construction Equipment

Service Information

Document Title:	Function Group:	Information Type: **Service Information**	Date: **12/10/2011**
Profile: **WLO, L90F (Volvo) [GB]**			

Hub reduction, installing

Op nbr 461-038

11668007 Standard Jack Single
11668010 Wheel forklift
9993802 Lifting tool

Sling, 2 m
Shackle

1. Install the O-ring on the axle casing.
   Fit the brake disc.
   Check the springs.

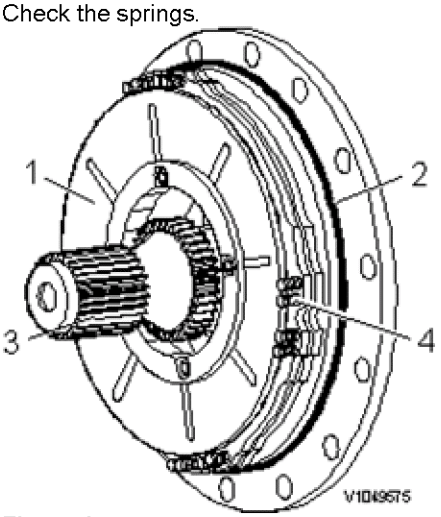

Figure 1

1. Brake disc
2. O-ring
3. Sun gear
4. Spring

2. Fit the brake plate and guide pins.

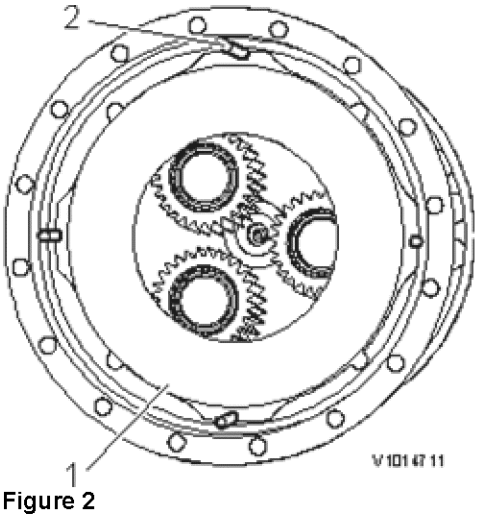

Figure 2

1. Brake plate
2. Guide pins

3. Connect the lifting tool and install the hub reduction.
   Hub reduction's weight approx.: **190 kg (419 lbs)**

NOTE	**Install according to marking and check that the guide pins in the hub reduction fit in the brake piston's slots.**

NOTE	**Sun gear, half shaft, and brake disc can also be installed in the hub reduction before installation on the axle.**

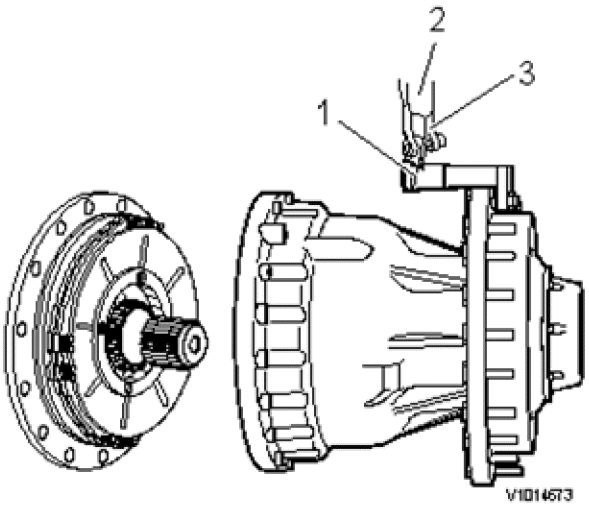

Figure 3

1. 9993802Lifting tool
2. Sling
3. Shackle

4. Fit and tighten down the bolts.
   Tightening torque, see: Fram- och bakaxel, åtdragningsmoment

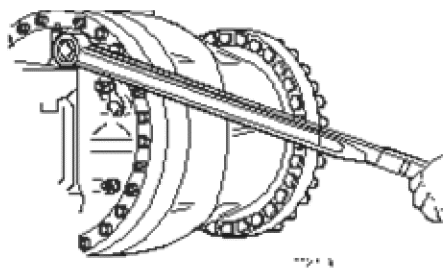

Figure 4

5. Remove the lifting tool from the hub reduction.
6. Bleed the brakes, see: Bromssystem, luftning
7. Start the engine and charge up the brake pressure. Turn off the engine, apply the service brake, and lock the brake pedal with a suitable spacer.
8. Set the adjusting screws against the applied brake piston. Then turn them out 1/2 revolution. Lock the adjusting screws with the lock nuts. Let up the brake pedal.

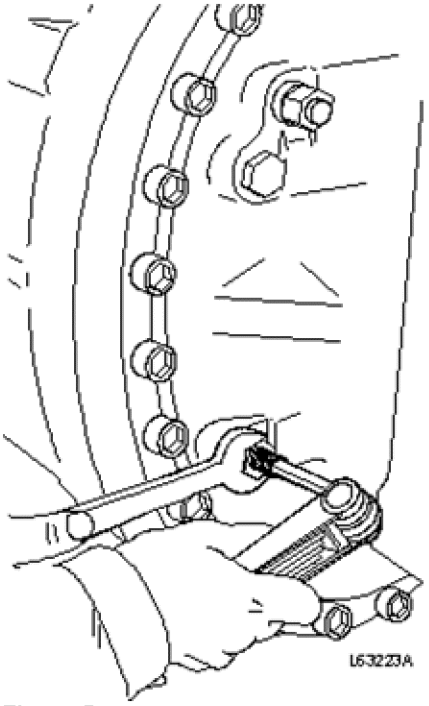

Figure 5

9. Fill oil in the axle.
   Volume, see: Axlar, specifikationer
10. Install the wheel according to Framhjul, ditsättning
    .

VOLVO
Construction Equipment

Service Information

Document Title:	Function Group:	Information Type: **Service Information**	Date: **12/10/2011**
Profile: **WLO, L90F (Volvo) [GB]**			

Axle, removing

Op nbr 463-002

9993722 Support
9993725 Puller bolt
9993741 Socket
9993757 Intermediate piece
9993843 Adapter
9998547 Lifting tool
11668010 Wheel forklift
11668007 Standard Jack Single
11668007 Standard Jack Single

Sling 3 m (10 ft), 2 pcs
Sling 1 m (40 in), 2 pcs
Part no. 935100 Plug
Part no. 935651 Plug

This operation also includes required tools and times for applicable parts of the following operations: .

- Service position 1, see Servicepositioner
- Bakhjul, borttagning

1. Release the pressure in the brake system by depressing the brake pedal several times (30–40 times).
2. Remove the rear wheels according to Bakhjul, borttagning
   .
3. Remove the rear part of the rear mudguards from the engine cover.
   Weight, rear mudguard: **approx. 28 kg (62 lb)**
4. Disconnect the brake hose from the axle and plug the connections with 935651 and 935100. Collect the waste oil in a suitable vessel. Disconnect the breather hose from the axle.

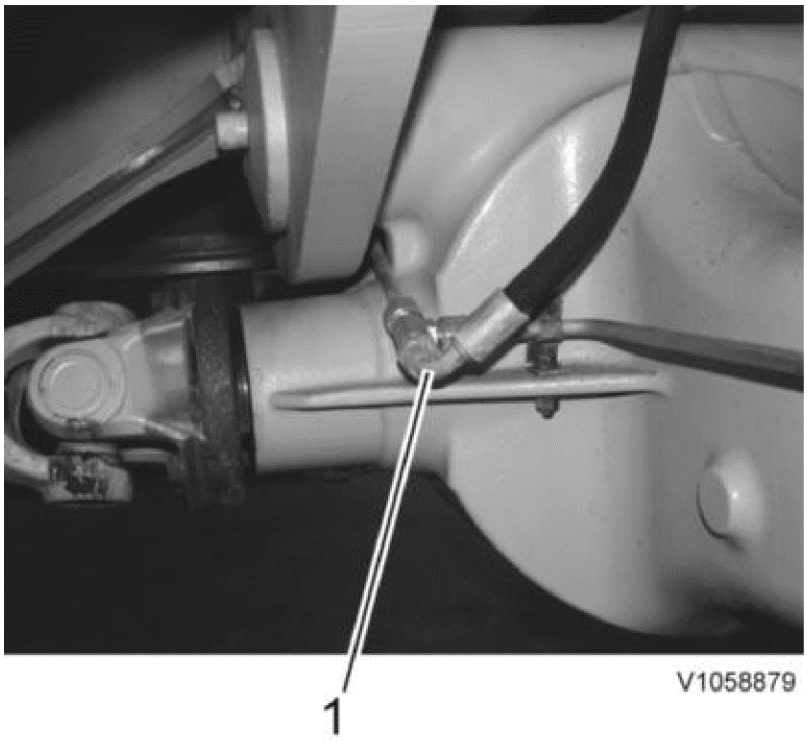

Figure 1

1. Brake hose

5. Disconnect the rear propeller shaft from the drive flange.

6. Connect a lifting device to the axle.
Position a jack under the axle to take the load off the pivot bearing pin.
Rear axle, **Weight: approx 700 kg (1543 lb)**



Figure 2

1. 9998547Lifting tool
2. Sling 3 m (10 ft), 2 pcs
3. Sling 1 m (40 in), 2 pcs

7. Press out the bearing covers using the attaching bolts as puller bolts. If this is not possible because the pin moves, use tools according to figure and pull out the bearing cover. Then tap out the pin forward in the machine. Weight of pin: **approx. 15 kg (33 lb)**

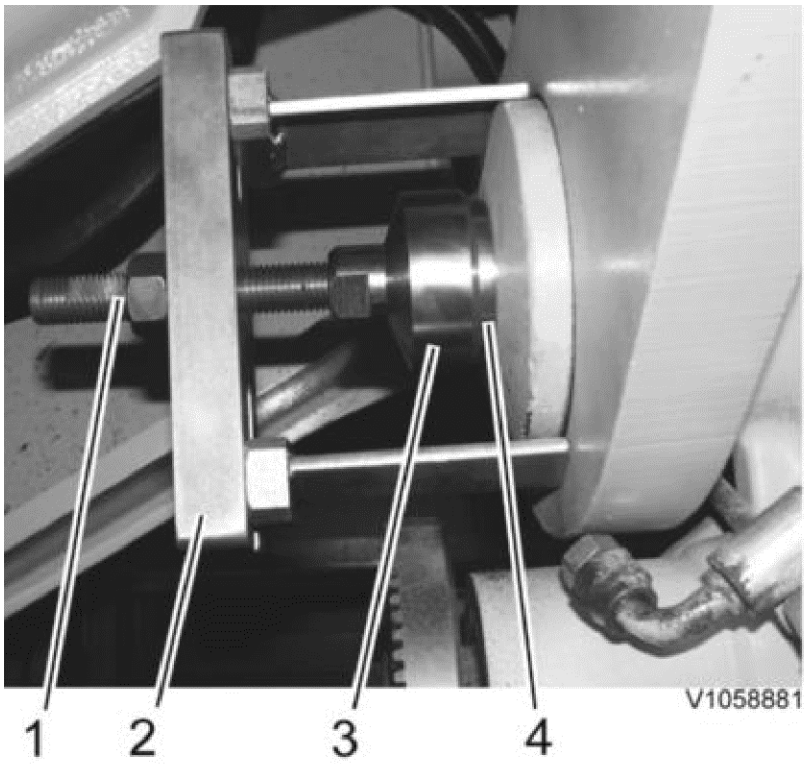

Figure 3

1. 9993725Puller bolt
2. 9993722Support
3. 9993757Intermediate piece
4. 9993843Adapter

8. Lower the axle.

VOLVO
Construction Equipment

Service Information

Document Title:	Function Group:	Information Type: **Service Information**	Date: **12/10/2011**
Profile: **WLO, L90F (Volvo) [GB]**			

Axle, installing

Op nbr 463-003

9998547 Lifting tool
11668010 Wheel forklift
11668007 Standard Jack Single
11668007 Standard Jack Single

Sling 3 m (10 ft), 2 pcs
Sling 1 m (40 in), 2 pcs
Dial test indicator with magnetic base
Bolt M16x120, washers
Plastic hose, inside diameter approx. 6 mm (0.236 in), length approx. 1 m (3 ft)

This operation also includes required tools and times for applicable parts of the following operations:

- Bakhjul, ditsättning
- Bromssystem, luftning

1. Place the rear axle in correct position under the machine.
   Connect a lifting device and lift the axle.

   NOTE **Leave the lifting device connected until the axial clearance has been adjusted.**

   Axle weight: **approx. 600 kg (1325 lb)**



Figure 1

1. 9998547Lifting tool
2. Sling 3 m (10 ft), 2 pcs
3. Sling 1 m (40 in), 2 pcs

2. Install the pin from the front.
Weight of pin: **approx. 15 kg (33 lb)**
Install the front bearing cover. Install the rear bearing cover together with shims corresponding to the thickness they had before, but with additional shims with a thickness of **1 mm (0.0394 in)**. Use M16X120 bolts with washers for pulling in the bearing covers.
Torque-tighten the bolts
Tightening torque: **275 N m (203 lbf ft)**



Figure 2

3. Measure the axial clearance of the pin with a dial test indicator.
   Permissible clearance: 0–1 mm (0–0.039 in)

VOLVO
Construction Equipment

Service Information

Document Title:	Function Group:	Information Type: **Service Information**	Date: **12/10/2011**
Profile: **WLO, L90F (Volvo) [GB]**			

Automatic differential brake, "Limited Slip", description

The difference between a conventional differential and a limited slip differential lies in the distribution of the available torque.
A conventional differential can only transfer as much torque as the slipping wheel succeeds in transferring to the wheel with the best grip. A limited slip differential can transfer up to **4** times as much torque.

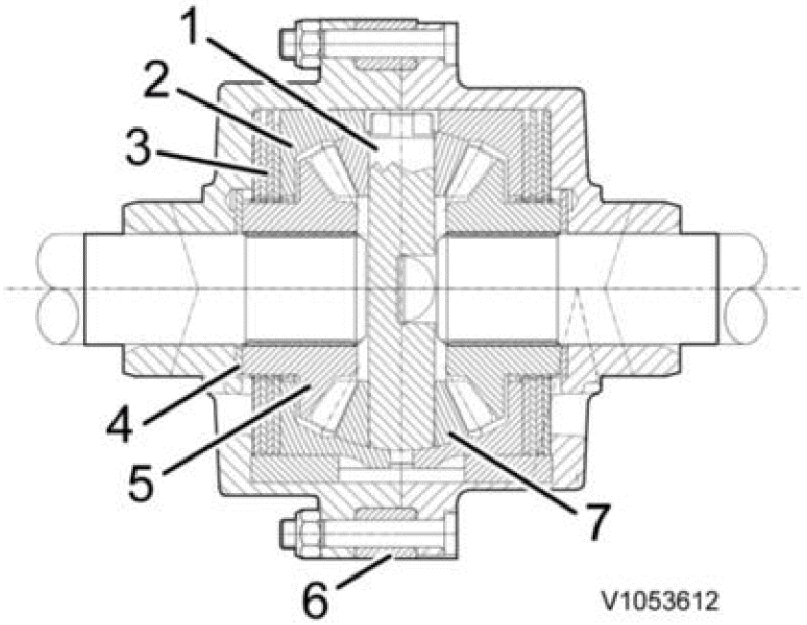

Figure 1
Limited slip differential, principle diagram

1. Axle joint
2. Thrust plate
3. Clutch pack
4. Thrust washer
5. Differential pinion
6. Crown wheel
7. Differential pinion

A Normal operation – No slipping
When driving forward or in reverse in a straight line the limited slip differential works in the same way as a conventional differential. 50% of the torque is transferred to each wheel.

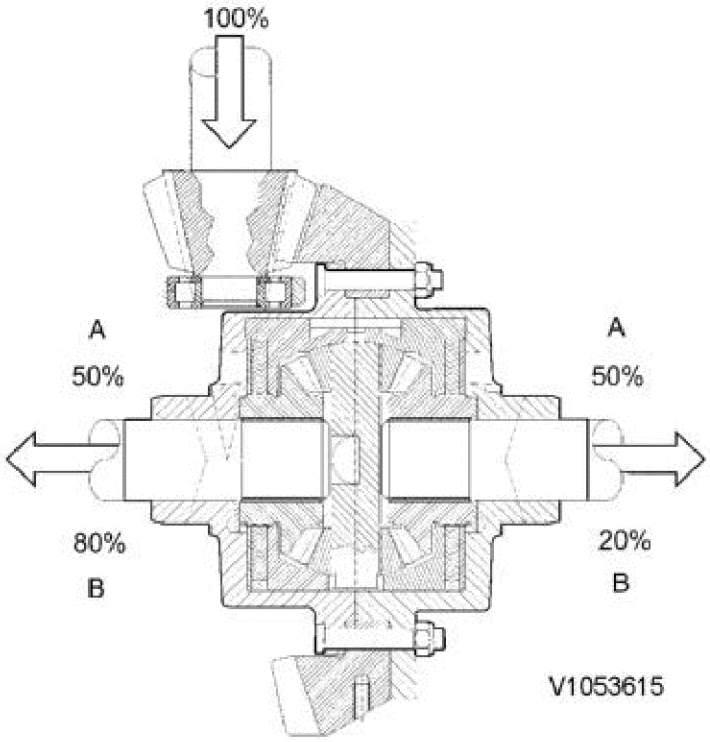

Figure 2
Limited slip differential, principle diagram

B Function of differential when slip is limited
When one of the wheels begins to rotate faster than the other, slippage occurs in the corresponding disc pack. The limited slip differential aims to make both wheels rotate at the same speed. The greater the torque applied on the limited slip differential, the more the spider is pressed against the thrust plates. The thrust plates are pressed against the disc pack, which then locks the differential pinions. In this way a great part of the torque is transferred from the fastest rotating wheel to the other wheel.

More than one document matches the current profile:

Differential lock, description
Product Line: WLO
Model Variant: L90F
Site: Arvika, Asheville
Serial Number Start: 26954, 68917
Serial Number End: 49999, 69999

Differential lock, description
Product Line: WLO
Model Variant: L90F
Site: Pederneiras
Serial Number Start: 71501
Serial Number End: 71501

VOLVO
Construction Equipment

Service Information

Document Title:	Function Group:	Information Type: **Service Information**	Date: **12/10/2011**
Profile: **WLO, L90F (Volvo) [GB]**			

Differential lock, description

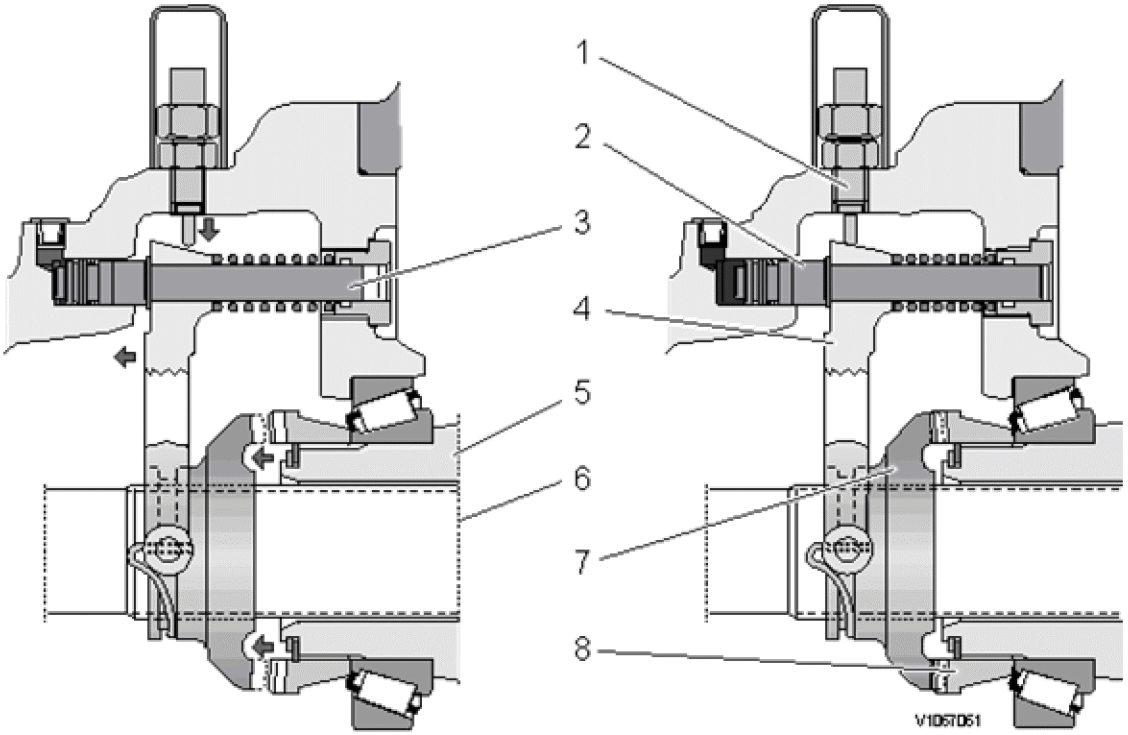

Figure 1

1. Sensor, SE4608
2. Piston
3. Push rod
4. Shift fork
5. Differential housing
6. Half shaft
7. Drive flange
8. Drive flange

The differential lock dog-clutch consists of two dog-clutch halves (7) and (8), which, when in mesh, prevent the drive axle's wheels from rotating at different speeds. Dog-clutch half (7) is mounted on splines on the half shaft (6) so that it rotates at the speed of the half shaft. The opposing dog-clutch half (8) is mounted on splines on the differential casing (5).

When engaging the differential lock, the piston (2) is pressurized by servo oil pressure with solenoid valve MA4603. The piston (2) pushes on the shift fork (4) which makes sure that the two drive flanges (7) and (8) engage. Thereby the half shaft (6) is prevented from having a different rotational speed compared to the differential casing (5). At the same time sensor SE4608 (1) is actuated and provides the operator with an indication that the differential lock is engaged and that drive is the same on both wheels in order to improve manoeuvrability.

Push rod (3) is spring-loaded and will return to its original position as soon as the servo oil pressure has been drained and when drive power is the same on both wheels. Then the two dog-clutch halves are separated again and the differential lock is disengaged. The control light follows the switch.
See also Wiring diagram 403:

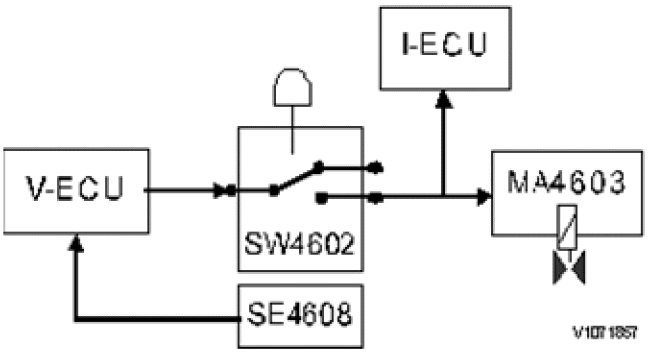

Figure 2

Software

Engaging differential lock with foot switch, SW4602. When the switch is pressed, the solenoid valve MA4603 is activated and the control light on the instrument panel lights up. When the differential lock is engaged, the sensor SE4608 sends a signal to the V-ECU to acknowledge that the differential lock is engaged.

Input signals	Conditions for output functions	Output functions
– Foot switch, SW4602 – Acknowledgement of engaged differential lock, SE4608	– Foot switch in position On	– Differential lock MA4603
	– Engaged differential lock	– Amber control light, differential lock engaged
– Monitoring, MA4603	– See diagnostics	

VOLVO
Construction Equipment

Service Information

Document Title:	Function Group:	Information Type: **Service Information**	Date: **12/10/2011**
Profile: **WLO, L90F (Volvo) [GB]**			

Differential lock, description

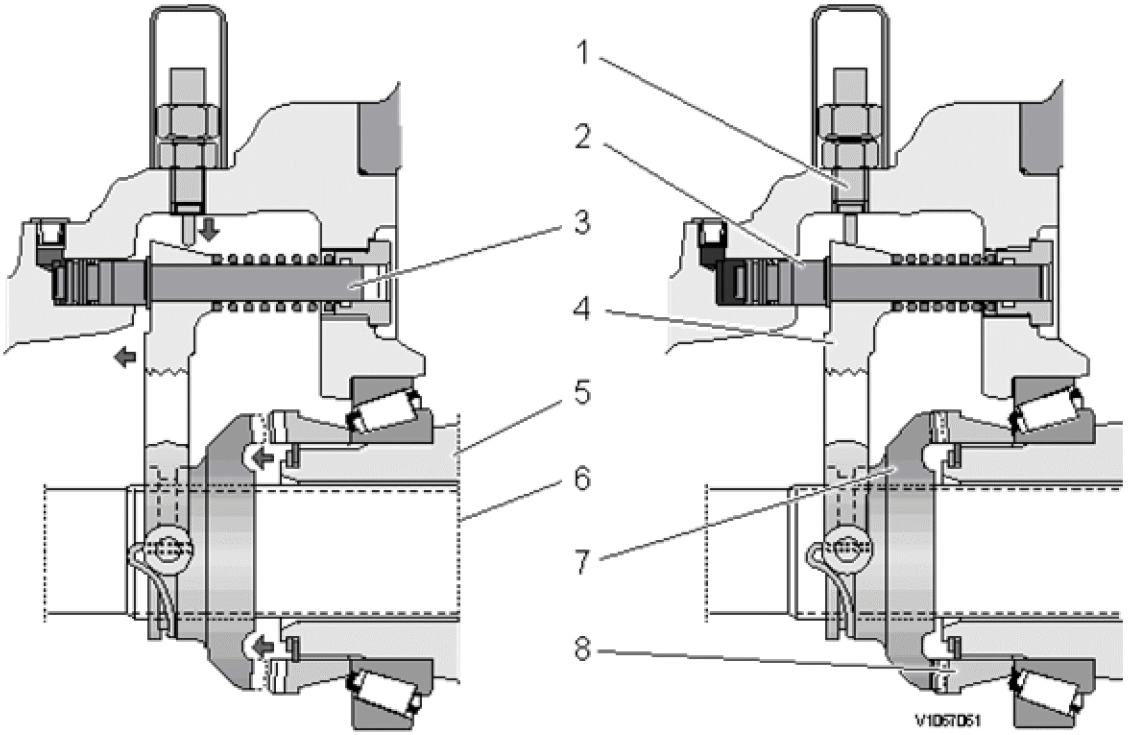

Figure 1

1. Sensor, SE4608
2. Piston
3. Push rod
4. Shift fork
5. Differential casing
6. Half shaft
7. Drive flange
8. Drive flange

The differential lock dog clutch consists of two dog clutch halves (7) and (8), which, when in mesh, prevent the drive axle wheels from rotating at different speeds. Dog clutch half (7) is mounted on splines on the half shaft (6) so that it rotates at the speed of the half shaft. The opposing dog clutch half (8) is mounted on splines on the differential casing (5).

When engaging the differential lock, the space above piston (2) is pressurised by servo oil pressure with the aid of solenoid valve MA4603. Pushrod (3) is pressed downward and transfers the force created by the servo oil pressure. The shift fork (4) causes the two dog clutch halves (7) and (8) to mesh. Half shaft (2) is thereby prevented from having a different rotational speed compared with differential casing (5). At the same time sensor SE4608 (1) is actuated and provides the operator with an indication that the differential lock is engaged and that the traction power is equally distributed between the two wheels in order to improve traversability.

Pushrod (3) is spring loaded and will return to its original position as soon as the servo oil pressure has been drained and when traction power is the same on both wheels. Then the two dog clutch halves are separated again and the differential lock is disengaged. The control lamp follows the differential lock and not the switch.

Software

The function controls engagement of the differential lock and informs the operator about whether the differential lock is engaged or whether there is a system fault. Engagement of the differential lock is done with the foot switch, which via I-ECU and V-ECU energises the solenoid valve. When the differential lock is engaged, the control lamp on the instrument panel lights up. When the differential lock is engaged, the mechanical monitor sends a signal to V-ECU to acknowledge that the differential lock is engaged and the control lamp on the instrument panel lights up.

Input signals	Conditions for output functions	Output functions
– Foot switch, SW4602 – Acknowledgement of engaged differential lock, SE4608	– Foot switch in position On	– Differential lock MA4603
	– Engaged differential lock	– Amber control lamp, differential lock engaged
– Monitoring, MA4603	– See diagnostics	

VOLVO
Construction Equipment

Service Information

Document Title:	Function Group:	Information Type: **Service Information**	Date: **12/10/2011**
Profile: **WLO, L90F (Volvo) [GB]**			

Differential lock, adjustment, front axle engagement

Op nbr 468-051

9990008 Measuring equipment
9993831 Support
11666013 Pump
11668007 Standard Jack Single
11668007 Standard Jack Single

Multimeter

The differential lock is located on the front axle's left side.

1. Place the machine in service position 2, see Service positions
.

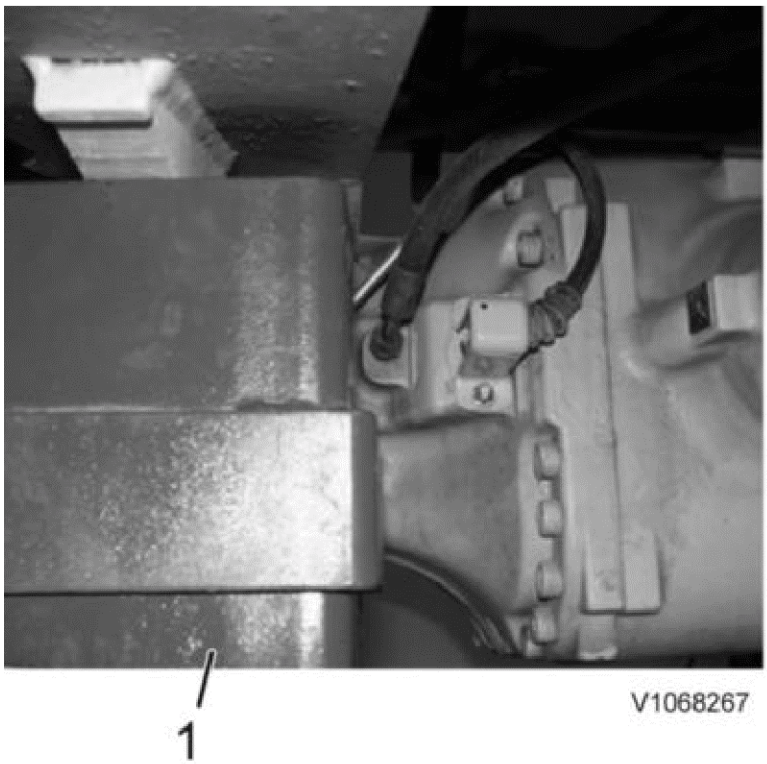

2.

Figure 1

1. 11668007Standard Jack Single, 2 pcs.

Place two jacks under the jacking points in the front frame and raise the front axle so that both front wheels are off the ground and can rotate freely. The wheels should rotate in opposite directions.

3.

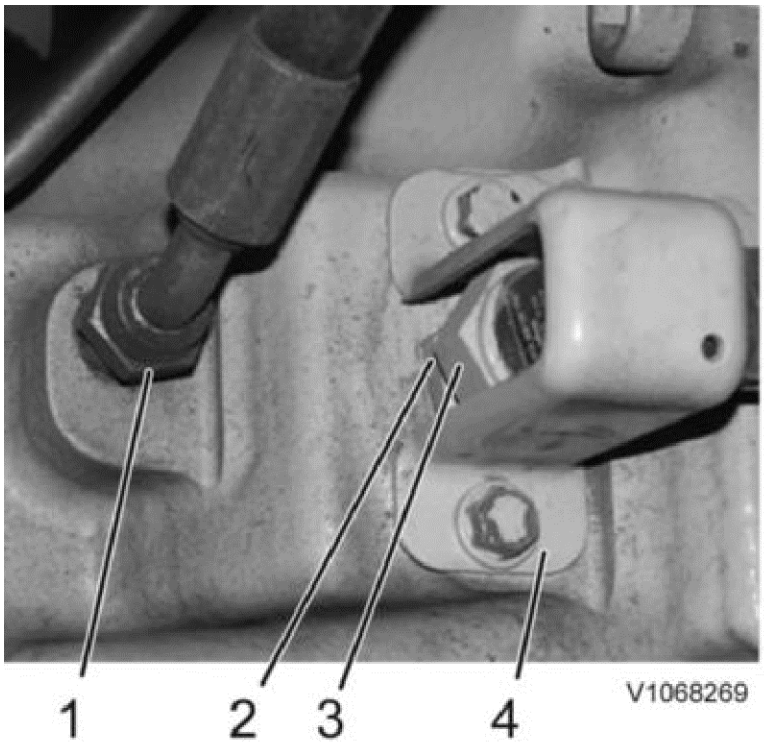

Figure 2

1. Differential lock
2. Lock nut for sensor
3. Sensor SE4608
4. Brace

Remove the brace. Unplug the connector for the sensor. Loosen the sensor's lock nut.

4.

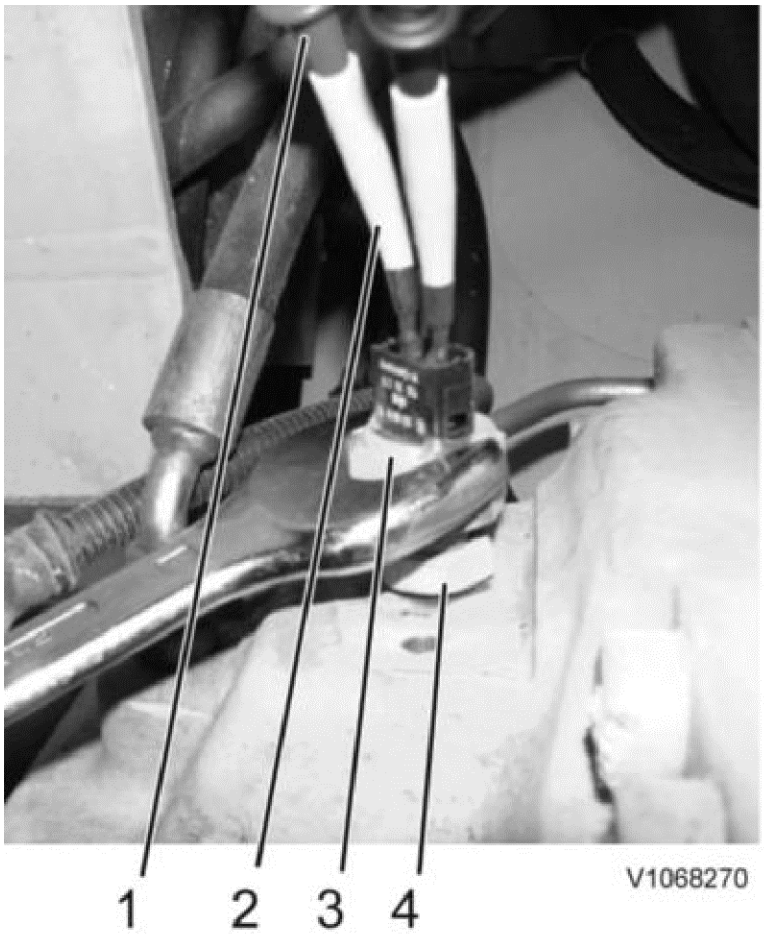

Figure 3

1. Multimeter
2. 9990008Measuring equipment
3. Sensor
4. Lock nut

- Connect 9990008Measuring equipment, the multimeter, and set it to ohm and sound.
- Turn in the sensor until it closes the power circuit, the multimeter generates a sound.
- Turn out the sensor 1/2 — 3/4 turn.
- Seal with sealant, e.g., Loctite 510 or silicone rubber RTV 5242.
- Tighten the lock nut without changing the setting. Tightening torque for differential lock switch, see: Front and rear axle, tightening torques

5. Plug in the connector and install the protection.
6. Install the brace.
7. 

Figure 4

Check the function.

- Check that there are no error codes.
- Turn on the main electric power with the battery disconnector.
- Start the machine.
- Activate the foot switch. The symbol for differential lock is shown on the instrument panel.

8. Lower the machine and remove the jacks.

VOLVO
Construction Equipment

Service Information

Document Title:	Function Group:	Information Type: **Service Information**	Date: **12/10/2011**
Profile: **WLO, L90F (Volvo) [GB]**			

Brake system, component location

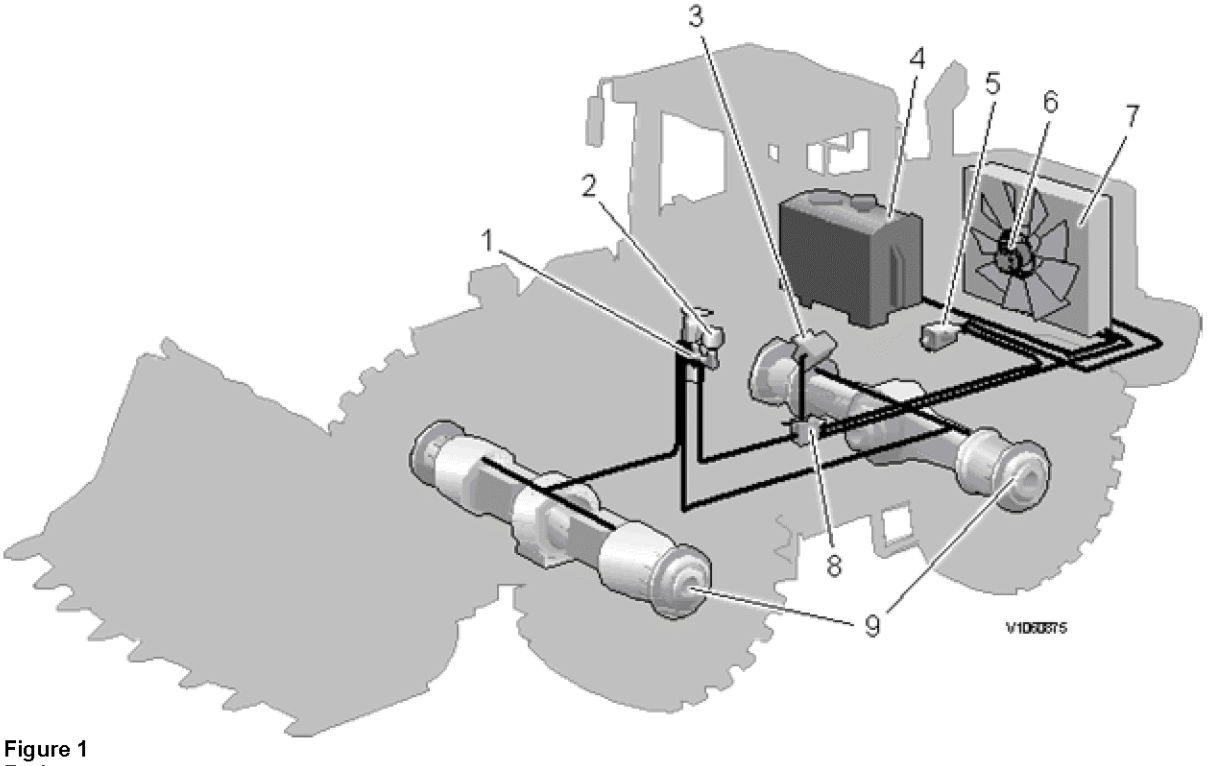

Figure 1
Brake system

1. Foot brake valve
2. Accumulator block, brakes
3. Hydraulic pump, P2
4. Hydraulic oil tank
5. Hydraulic pump, P3
6. Fan motor
7. Hydraulic oil cooler
8. Central valve
9. Axle with wet disc brakes

For description of components, see

- Bromsventil, beskrivning
- Bromsackumulator, beskrivning
- Hydraulpumpar, beskrivning
- Kylfläktmotor, beskrivning
- Hydrauloljetank, beskrivning
- Centralblock, beskrivning
- Drivaxlar, beskrivning

VOLVO
Construction Equipment

Service Information

Document Title:	Function Group:	Information Type: **Service Information**	Date: **12/10/2011**
Profile: **WLO, L90F (Volvo) [GB]**			

Braking system, description

The machine has a hydraulic brake system, divided into two output circuits, one for the front axle and one for the rear axle.

The hydraulic brake system consists of a foot brake valve and an accumulator block with three accumulators. One accumulator is for the front circuit, one accumulator is for the rear circuit and one accumulator is in common.

The accumulators are precharged with nitrogen gas and their purpose is to store pressure and to make sure that the braking capacity is safeguarded.

The brake system is pressurised via the central valve with hydraulic oil from Pump 3 (P3) or Pump 2 (P2). P3 is located on the engine power take-off on the left side of the machine. P2 is located on the transmission power take-off on the right side of the machine.

P3 supplies the radiator fan and ensures that the brakes are charged during transport operation. P2 pressurises the brake system passively when the working hydraulics is used.

The front and rear axles are equipped with wet disc brakes.
Brake cooling is achieved in that each brake disc is equipped with pump impeller, which works as a circulation pump for the axle oil.

The axles have built-in brake disc wear indicators.

See also Cooling fan, description
, Elschema 501
and Hydraulschema, komplett
.

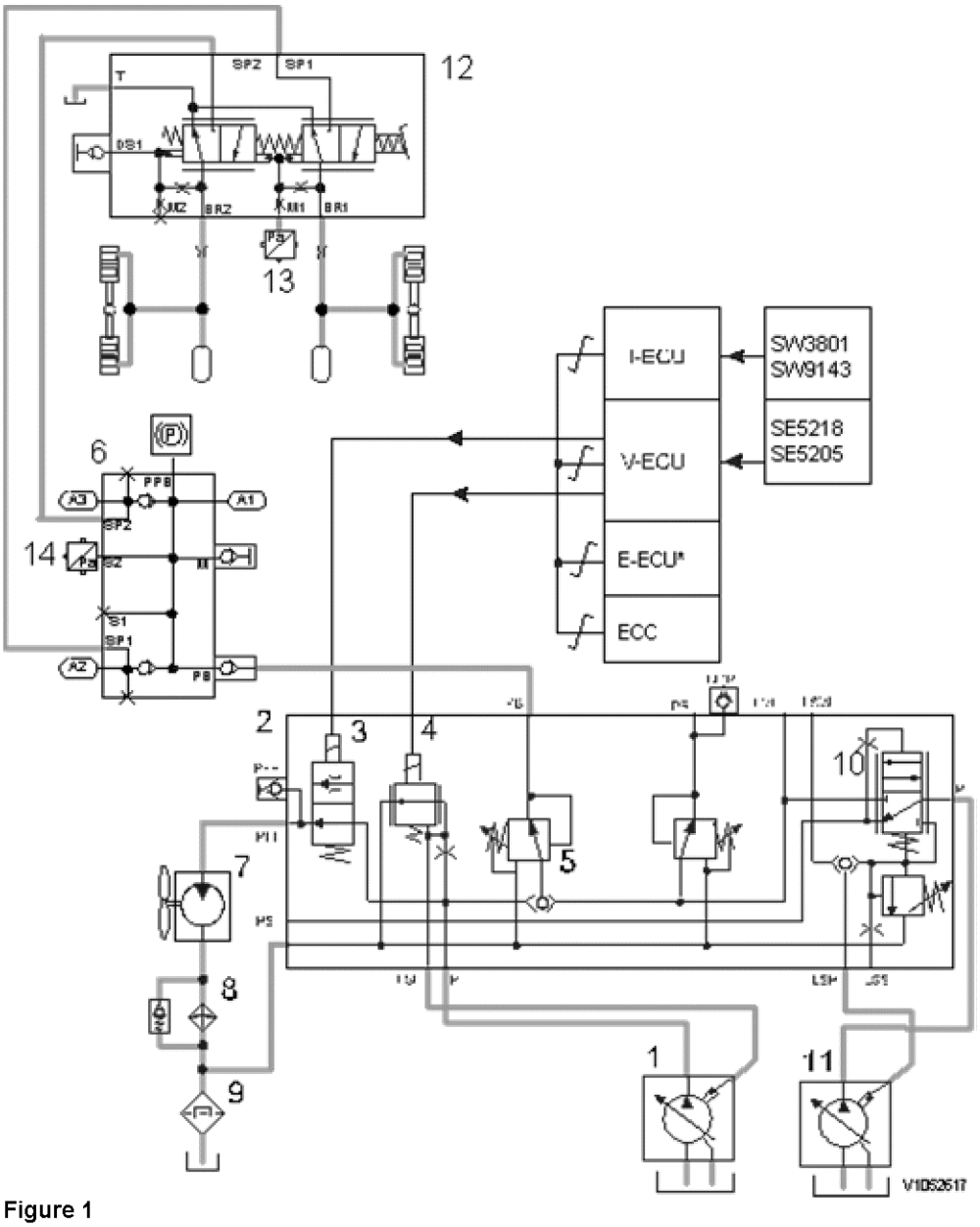

Figure 1

1 Pump 3	10 Priority spool
2 Central valve	11 Pump 2
3 MA5502 Brake pressure charging	12 Foot brake valve
4 PWM2601 Control, cooling fan	13 SE5205
5 Pressure reducing valve, brake	14 SE5218
6 Brake accumulator block	SW3801 Keyboard
7 Cooling fan motor	SW9143 Attachment locking
8 Hydraulic oil cooler	* Atmospheric pressure sensor
9 Filter	

Pump 2, hydraulic (passive) brake pressure charging

Pump 2 (P2) pressurises the central block and from there primarily supplies the steering with oil. The pressure-limiting valve for max. steering pressure limits the maximum working pressure of the steering. When the steering is "saturated" with oil, the priority spool in the central valve shifts to supplying brake pressure charging, servo system and working hydraulics. When the working hydraulics is used and the pressure exceeds existing system pressure in the brake circuit, the brake accumulators will be passively charged via the pressure-reducing valve for brake pressure.

Pump 3, electrically controlled brake pressure charging

VOLVO
Construction Equipment

Service Information

Document Title:	Function Group:	Information Type: **Service Information**	Date: **12/10/2011**
Profile: **WLO, L90F (Volvo) [GB]**			

Brake discs, measuring wear

Op nbr 510-003

9993831 Support

1. Place the machine in service position 2, see: Servicepositioner

   NOTE **Leave the battery disconnect switch turned on.**

2. When required, check the output brake pressure according to Bromssystem, kontroll och justering av tryck i krets
   .

3. Start the engine and charge the accumulators. Apply the service brake maximally and block the brake pedal in applied position with a suitable spacer.

   NOTE **The brake has to be applied during the entire wear check.**

4. Remove the wear indicator cap.

5. Press in the wear indicator pin until it stops. Check if the brake disc has to be replaced, see Hjulbroms, specifikation
   .

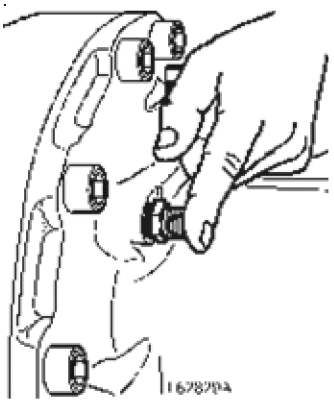

Figure 1
Principle illustration

The brake disc's wear is indicated by the position of the wear indicator pin's flat surface B in relation to the nipple's flat surface A.

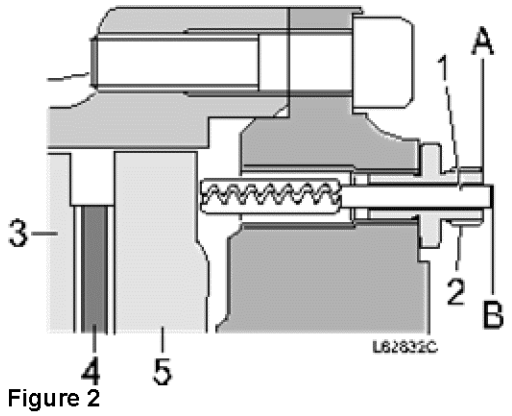

Figure 2

A. Nipple, flat surface
B. Indicator pin, flat surface
1. Wear indicator pin
2. Nipple
3. Brake plate
4. Brake disc
5. Brake piston

6. If the brake disc is worn, change brake disc Bromslameller, byte
.

7. Reinstall the wear indicator cap.
Release the brake pedal.

8. Check the remaining brake discs.

9. Restore the machine.

VOLVO
Construction Equipment

Service Information

Document Title:	Function Group:	Information Type: **Service Information**	Date: **12/10/2011**
Profile: **WLO, L90F (Volvo) [GB]**			

Wheel brakes, functional check

Op nbr 510-004

After completed repairs, carry out a function check as described below.

1. Start the machine and perform a brake test via the information display unit to ensure the function. See Brake system, description
2. Check that there are no error messages.

VOLVO
Construction Equipment

Service Information

Document Title:	Function Group:	Information Type: **Service Information**	Date: **12/10/2011**
Profile: **WLO, L90F (Volvo) [GB]**			

Brake disc, replacing

Op nbr 516-005

9993802 Lifting tool
11668010 Wheel forklift
9993875 Gauge
11668007 Standard Jack Single

Brake disc, removing

1. Remove the hub reduction according to Navreduktion, borttagning
.
2. Remove the brake disc.
3. Loosen the lock nuts. Unscrew the adjusting screws for the brake piston approx. 1 turn.
Clean and check the parts for any wear or damage.

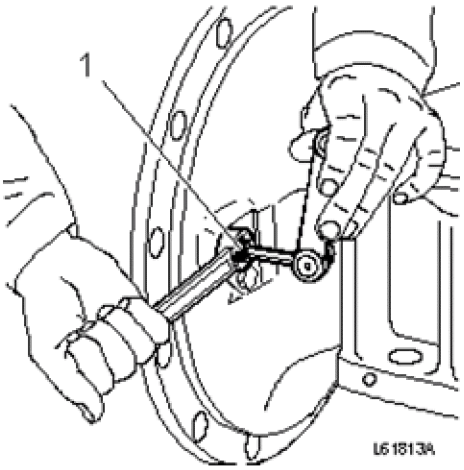

Figure 1

1. Adjusting screws with lock nuts

Brake disc, installing

4. Remove the impeller from the old brake disc.
5. Centre the impeller on the new brake disc as follows:
Position the new brake disc on a level surface with the two impeller halves on either side. Install two new bolts loosely without tightening them. Centre the impeller halves on the brake disc by knocking spring pins 6.35 x 24 mm (0.25 x 0.945 in) into two opposing bolt holes.
Tighten the bolts in the two other holes.
Tightening torque, see Framhjulsbroms, åtdragningsmoment
.
Tap out the spring pins and install the two remaining bolts.

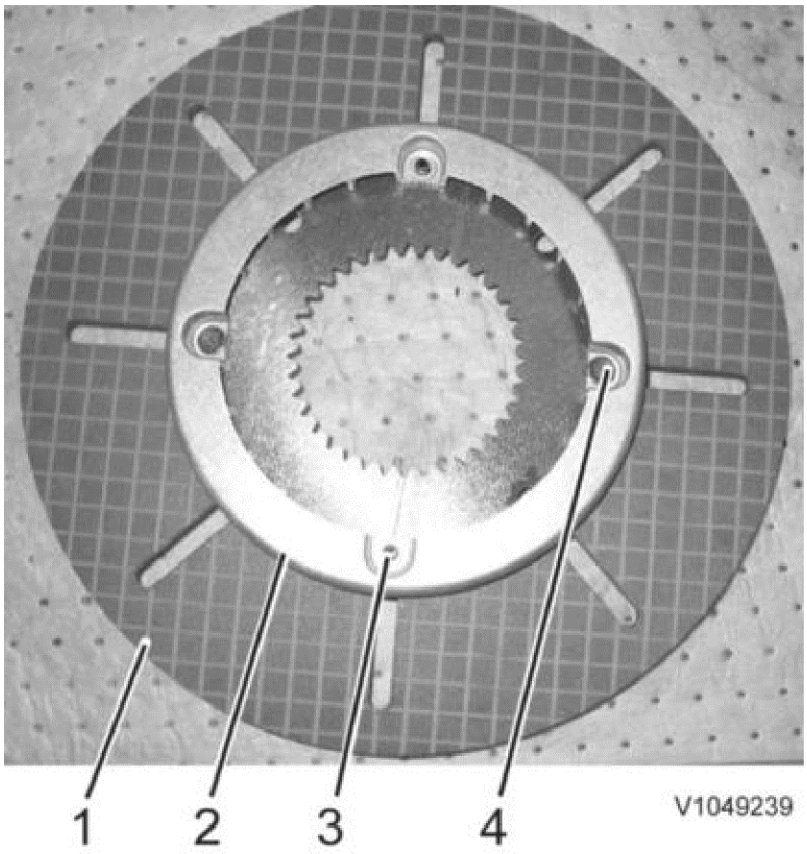

Figure 2

1. Brake disc
2. Impeller half
3. Spring pin
4. Bolt

6. Install the hub reduction according to Navreduktion, ditsättning
.

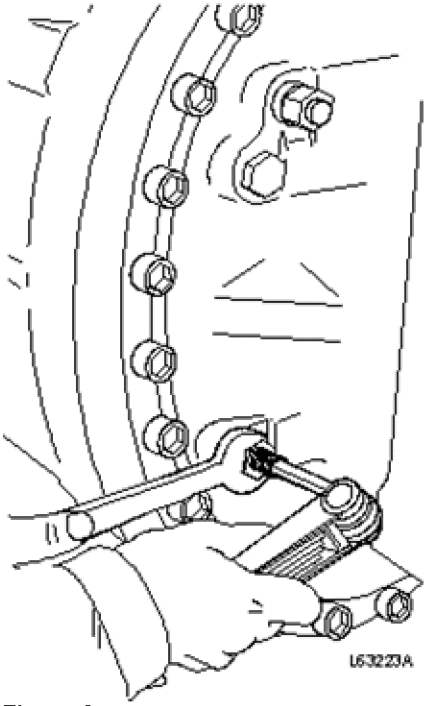

Figure 3

VOLVO
Construction Equipment

Service Information

Document Title:	Function Group:	Information Type: **Service Information**	Date: **12/10/2011**
Profile: **WLO, L90F (Volvo) [GB]**			

Brake piston, replacing seals

Op nbr 516-050

9993802 Lifting tool
11668010 Wheel forklift
9993875 Gauge
11668007 Standard Jack Single

Brake piston, removing

1. Remove the brake disc according to Bromslameller, byte
.
2. Connect the vacuum pump according to Hydrauloljetank, vakuumsättning, inkoppling och urkoppling av pump
.
3. Remove the air bleeder screw.
Remove the brake piston with a pry bar.
Brake piston's weight: **15 kg (33 lbs)**.
Clean and check the parts for wear and damage.

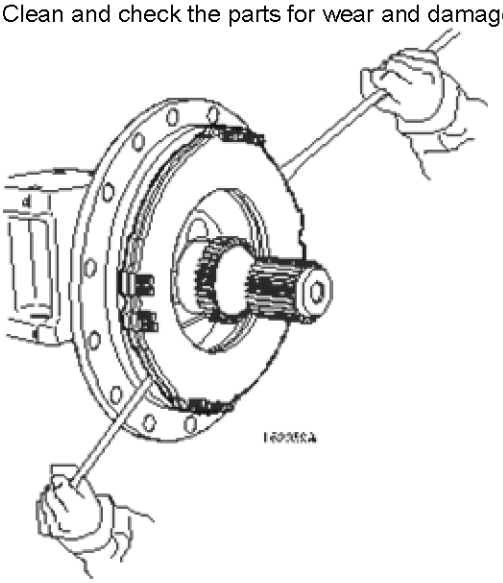

Figure 1

4. Change seals. Grease the brake piston and the seals. Install the seals with the flat surface facing the bottom of the groove on the brake piston.

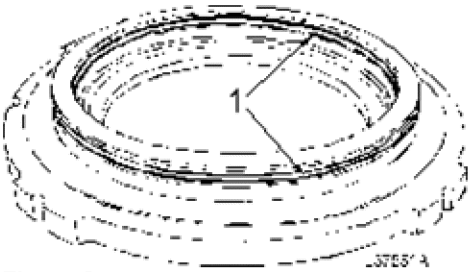

Figure 2

1. Seals

Brake piston, installing

5. Install the brake piston with slots for guide pins as a plus character (+) using c-clamps and spacers as shown in figure.
   Install the air bleeder screw.

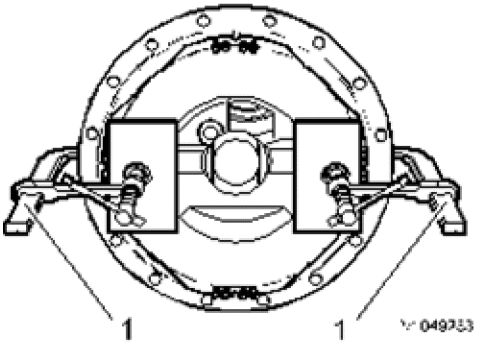

Figure 3

1. C-clamps

6. Remove the vacuum pump according to Hydrauloljetank, vakuumsättning, inkoppling och urkoppling av pump
   .

7. Install the brake disc according to Bromslameller, byte
   .

8. Restore the machine.

VOLVO
Construction Equipment

Service Information

Document Title:	Function Group:	Information Type: **Service Information**	Date: **12/10/2011**
Profile: **WLO, L90F (Volvo) [GB]**			

Brake system, checking function, hydraulic

Op nbr 520-001

11666051 Pressure gauge
14290266 Hose

1. When required, bleed the brake system, see Brake system, bleeding
2. Check the function of the fan hydraulics, see Fan hydraulics, checking function
   .
3. Warm up the machine until the brake system reaches working temperature.
4. Lock the frame joint with the frame joint lock. Place blocks in front of and behind the wheels.

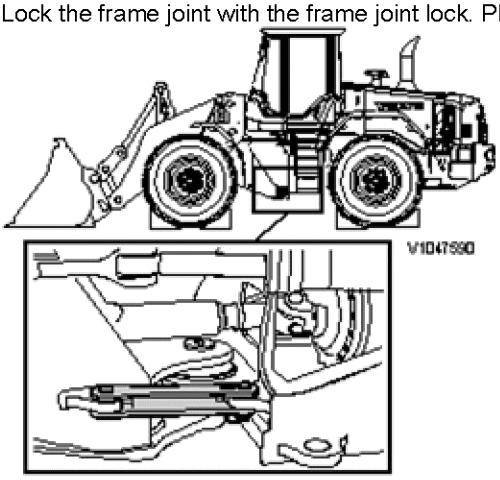

Figure 1

5. Release the brake system pressure by depressing the brake pedal repeatedly (30–40 times). Connect the pressure gauge to the checking point on the accumulator block.

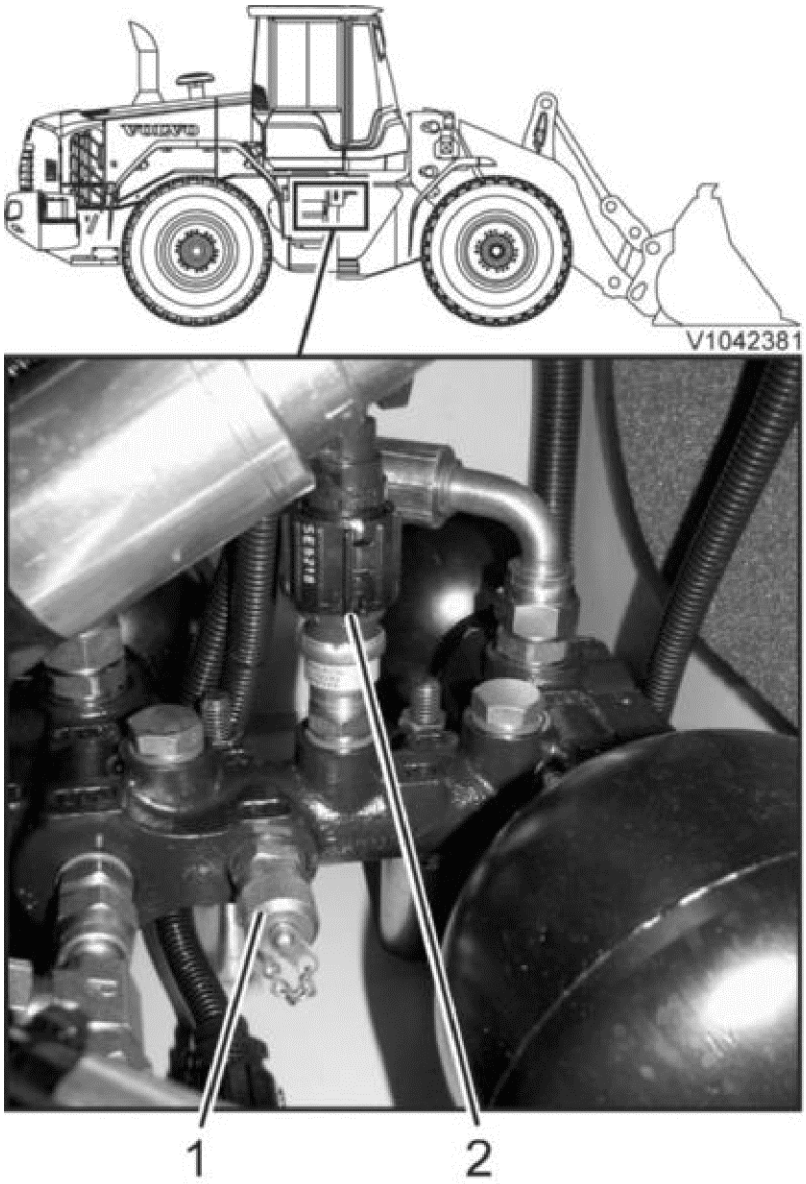

Figure 2
Accumulator block, seen from underneath

1. Checking point, brake pressure
2. SE5218

Passive brake charging function, checking

6. Start the engine and wait until the brake system has been charged.
7. Check max. passive brake charging pressure by tilting in towards end position and read off the max. brake charging pressure, see Brake system, specifications
   .
   Stop the engine.
   Any adjustment is carried out on the pressure-reducing valve (1) on the central valve.

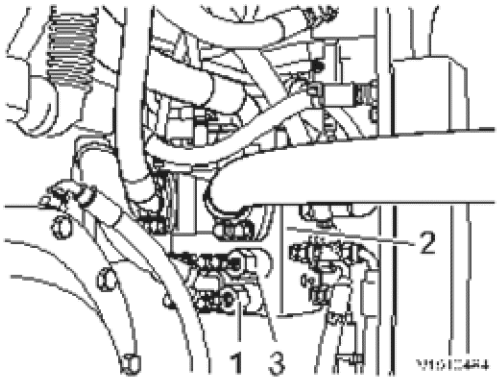

Figure 3

1. Adjusting brake pressure, pressure-reducing valve
2. Central valve
3. Adjusting servo pressure, pressure-reducing valve

Electrically controlled brake charging function, checking

8. Carefully lower the pressure by braking until it begins to rise again. Read off the cut-in pressure, see Brake system, specifications
.
Read off the unloading (cut-out) pressure, see Brake system, specifications
.
The cut-in pressure and the unloading pressure are not adjustable. They are determined by the V-ECU, which in its turn receives signal from SE5218. If the unloading pressure or the cut-in pressure are not achieved, it may among other things be because the max. brake charging pressure is too low or that SE5218 is faulty.

Braking capacity, checking

9. Stop the engine.
Brake carefully to lower the pressure down to **13 MPa (1885 psi)**.
Read off the pressure gauge.
Then check the level of the pressure drop after four full brake applications. The pedal should be trodden right down and released fully four times. The pressure must not drop below **9 MPa (1305 psi)** before the full brake applications have been completed.
If the number of full brake applications is not achieved, the precharging pressure of the accumulators must be checked.

Common accumulator, checking

10. Depress the brake pedal several times to release the brake pressure. At the same time check the pressure on the pressure gauge.
The pressure in the common accumulator then drops slowly down to the accumulator precharging pressure and then it drops rapidly.

NOTE	**If the precharging pressure in the accumulator is less than what is given in the specifications, it must be replaced, see Brake accumulator, specifications**

.

Remove the hose and the pressure gauge from the accumulator block.

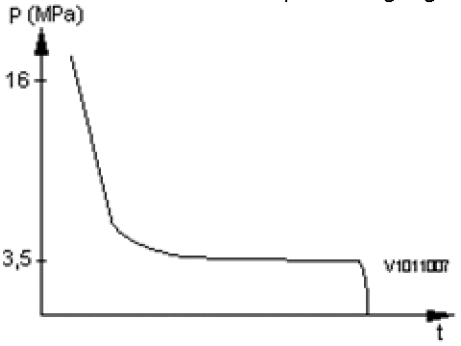

Figure 4

Pressure drop curve

Accumulator for front and rear circuit respectively, checking

WARNING! **Risk of high-pressure oil.**

Release the brake system pressure by depressing the brake pedal repeatedly (30–40 times).

11. Remove the accumulator for the front and rear circuit respectively.
Check the accumulator, removed, see Accumulator, checking (removed)

12. Start the engine and wait until the brake system has been charged. Check that the vehicle message for low brake pressure has been extinguished. Check that there are no error codes.

VOLVO
Construction Equipment

Service Information

Document Title:	Function Group:	Information Type: **Service Information**	Date: **12/10/2011**
Profile: **WLO, L90F (Volvo) [GB]**			

Brake system, check and adjusting pressure in circuit

Op nbr 520-005

14290266 Hose
11666051 Pressure gauge

1. When required, bleed the brake system, see Bromssystem, luftning
   .
2. Warm up the machine until the brake system reaches working temperature, ca 60–80 °C (140–176 °F).
3. Lock the frame joint with the frame joint lock. Place blocks in front of and behind the wheels.

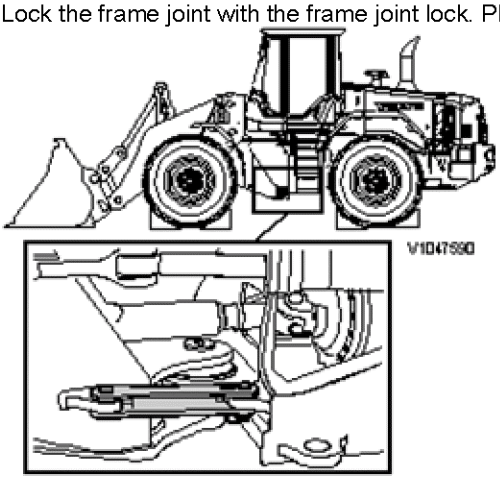

Figure 1

Checking

4. Connect the pressure gauge to the checking point on the foot brake valve (front brake circuit).
   Start the engine. Check that warning of low brake pressure is not shown.
   Depress the brake pedal so that it fits up against the adjusting screw. Read off the pressure on the pressure gauge.
   Max. output brake pressure, see Bromsventil, specifikation
   .

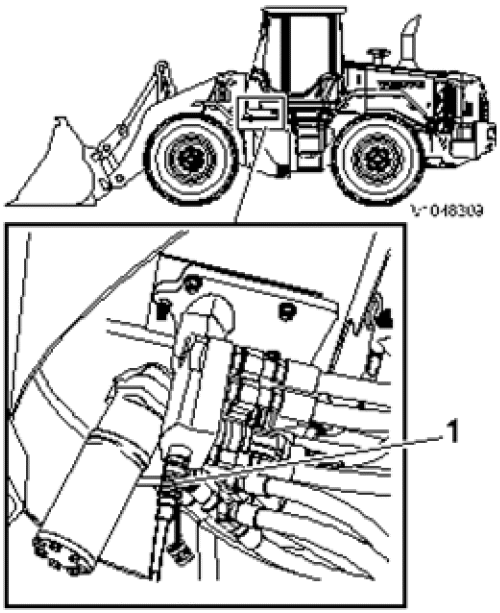

Figure 2

1. Checking point, brake pressure

5. Stop the engine. When required, adjust the output brake pressure, otherwise remove the pressure gauge.

Adjusting

6. Remove the security seal from the adjusting screw.

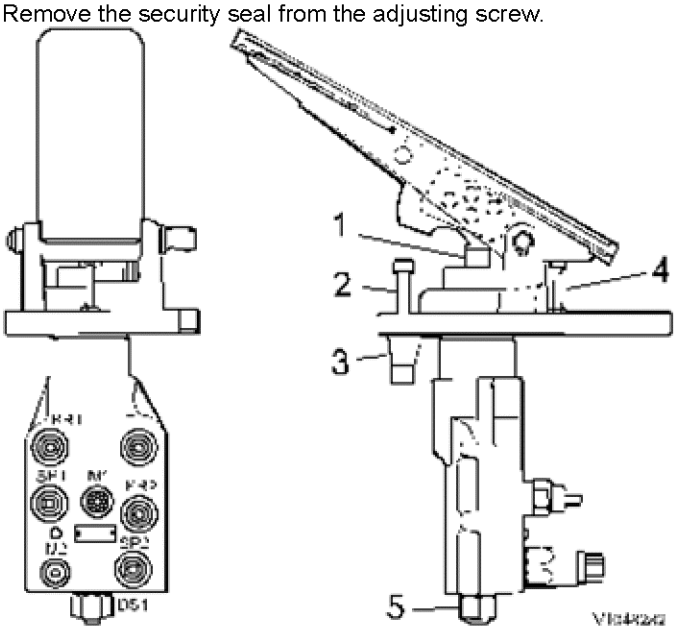

Figure 3

1. Piston
2. Adjusting screw for pressure in circuit
3. Security seal
4. Adjusting screw for pedal free travel
5. Checking point

7. The pressure is adjusted with adjusting screw 2. The adjusting screw limits the brake pedal movement and when adjusting the piston stroke is thereby adjusted.

8. Install a new security seal to the adjusting screw.

9. Check that the clearance between brake pedal and piston are according to specifications, see Fotbromspedal, justering av vinkel och pedalspel
.

VOLVO
Construction Equipment

Service Information

Document Title:	Function Group:	Information Type: **Service Information**	Date: **12/10/2011**
Profile: **WLO, L90F (Volvo) [GB]**			

Brake system, bleeding

Op nbr 520-037

Plastic hose, inside diameter approx. 6 mm (0.236 in), length approx. 1 m (3 ft)

The brake system is divided into two circuits. This means that if only one circuit has been opened (a line has been disconnected, etc.), only that circuit requires bleeding.

1. Check and adjust the oil level in the hydraulic oil tank.
2. Fully depress the brake pedal and block it in that position with a suitable spacer.
3. Start the engine and run it at idling speed.
4. **WARNING!** **Oil under high pressure!**

   Connect the plastic hose to the bleeder nipple and carefully open the bleeder screw. Close the bleeder screw when oil free from air flows out.

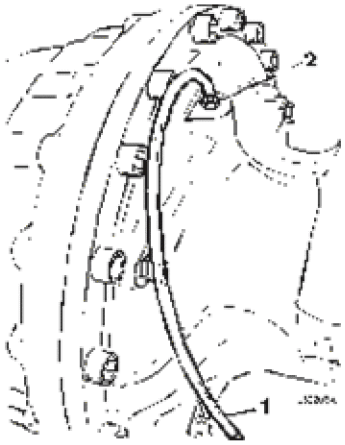

Figure 1

1. Plastic hose
2. Bleeder screw

5. Stop the engine. Adjust the oil level in the hydraulic oil tank.
6. Test the function.

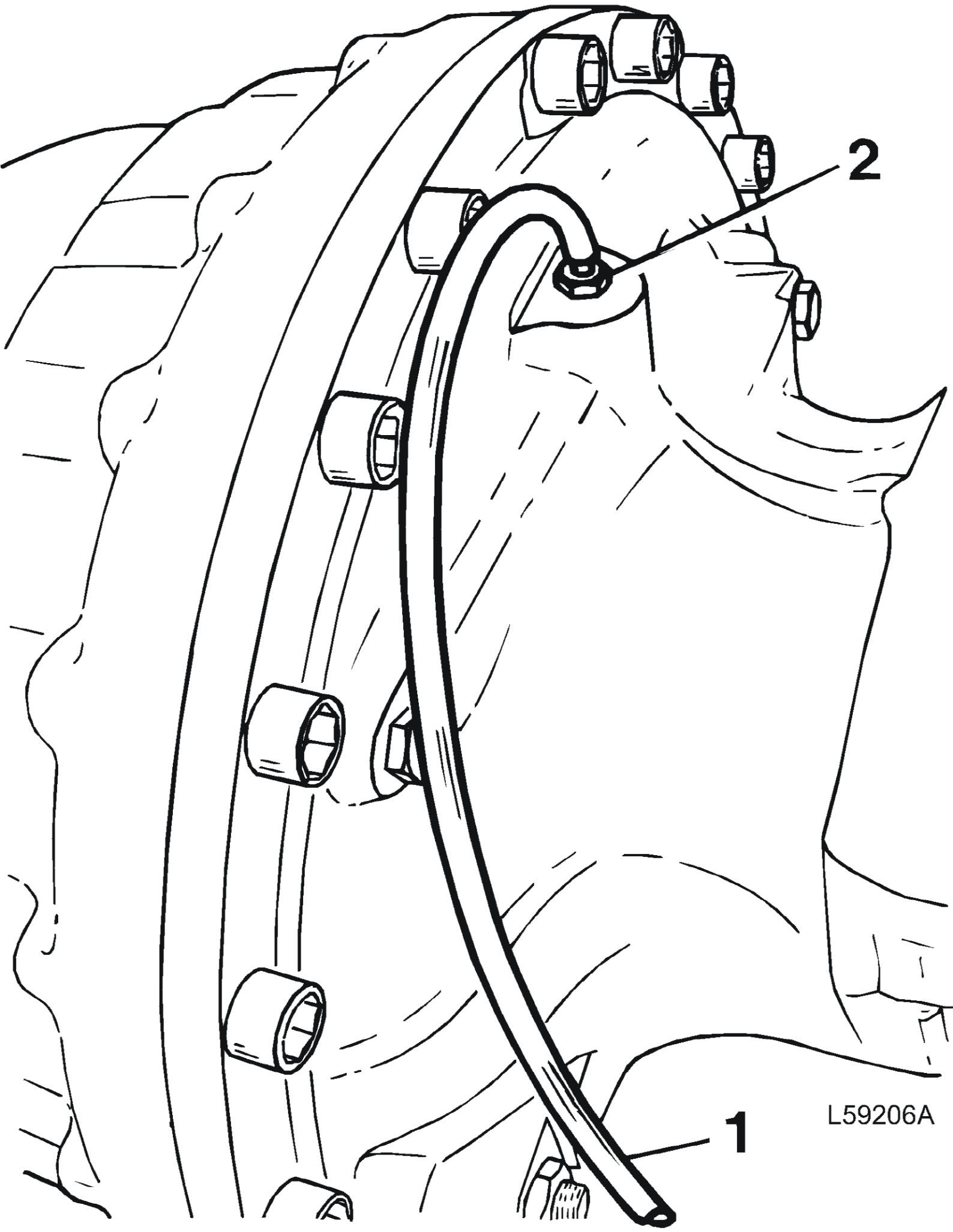
2
1
L59206A

VOLVO
Construction Equipment

Service Information

Document Title:	Function Group:	Information Type: **Service Information**	Date: **12/10/2011**
Profile: **WLO, L90F (Volvo) [GB]**			

Foot brake valve, description

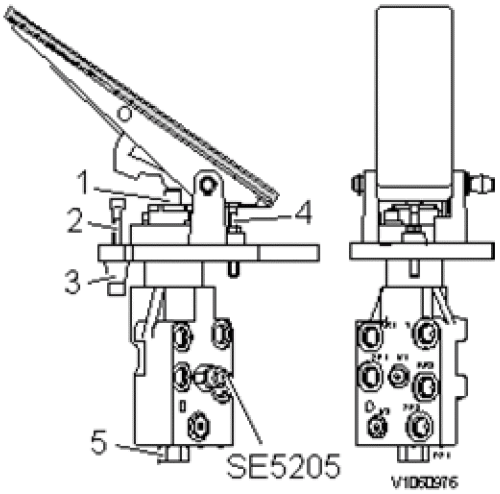

Figure 1
Brake valve

1. Piston
2. Adjusting screw for system pressure
3. Security seal
4. Adjusting screw for pedal free travel
5. Checking point(s)

SE5205 Sensor, stop lights, output brake pressure

The foot brake valve is of the proportional type, which means that the output brake pressure is proportionate to the angle of the brake pedal. The valve has two circuits, one for the front axle brakes and one for the rear axle brakes. The maximum output brake pressure is limited. This reduced brake pressure can be adjusted on the underside of the valve by increasing or reducing the stroke of the brake pedal.

VOLVO
Construction Equipment

Service Information

Document Title:	Function Group:	Information Type: **Service Information**	Date: **12/10/2011**
Profile: **WLO, L90F (Volvo) [GB]**			

Foot brake valve, removal

Op nbr 525-005

14360000 Vacuum pump / 24V

Plug 935100, 3 pcs
Plug 935651, 3 pcs
Plug 935574, 2 pcs
Plug 935486, 2 pcs

1. Lock the frame joint with the frame joint lock.
   Place blocks in front of and behind the wheels.
2. Release the pressure in the brake system by depressing the brake pedal right down repeatedly, until the resistance in the pedal ceases.
3. Remove the cover plate located at the lower edge of the cab on the left side of the machine. [1]
4. Connect the vacuum pump according to Hydrauloljetank, vakuumsättning, inkoppling och urkoppling av pump
   .
5. Disconnect all hoses from the brake valve. Plug the hoses and the connections on the brake valve.

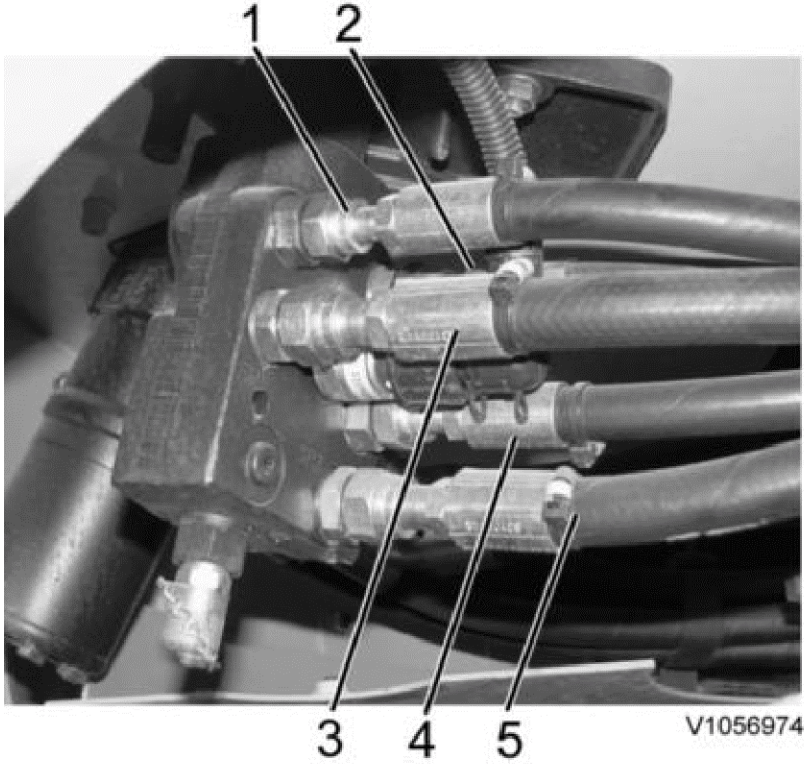

Figure 1

	Colour marking	Connection
1	Pink, green	BR1
2	Unmarked	T
3	Pink, yellow	SP1
4	White, pink	BR2
5	Blue, pink	SP2

Part the connector for stop light.

6. Remove the attaching bolts from the accelerator pedal. Part the connector for the accelerator pedal. Remove the accelerator pedal. Take care of the spacers.

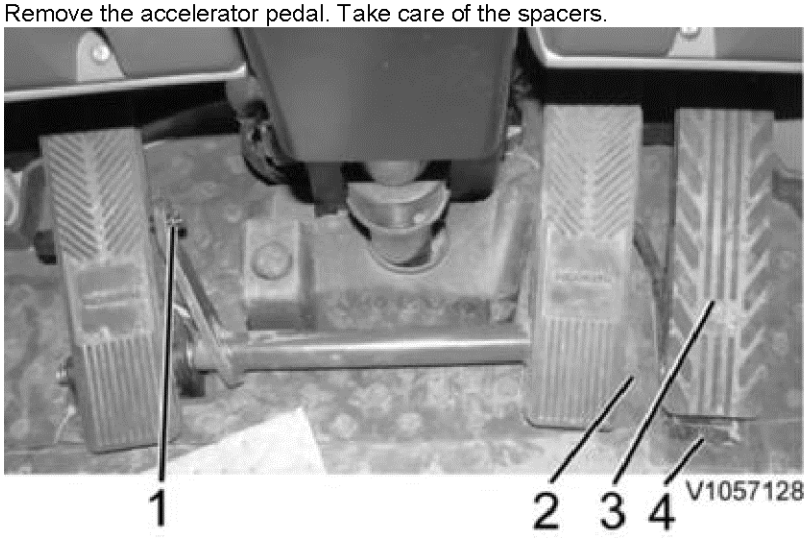

Figure 2

1. Attaching bolt connecting stay
2. Attaching bolts, brake pedal (under the mat)
3. Attaching bolt accelerator pedal (behind the pedal)
4. Attaching bolt, accelerator pedal

Remove the front floor mat.
Remove the attaching bolts from the right brake pedal. Remove the right brake pedal.
Remove the attaching bolt from the connecting stay.
Remove the pedal rubber from the left brake pedal.

7. Remove the nuts from the brake valve attaching bolts.

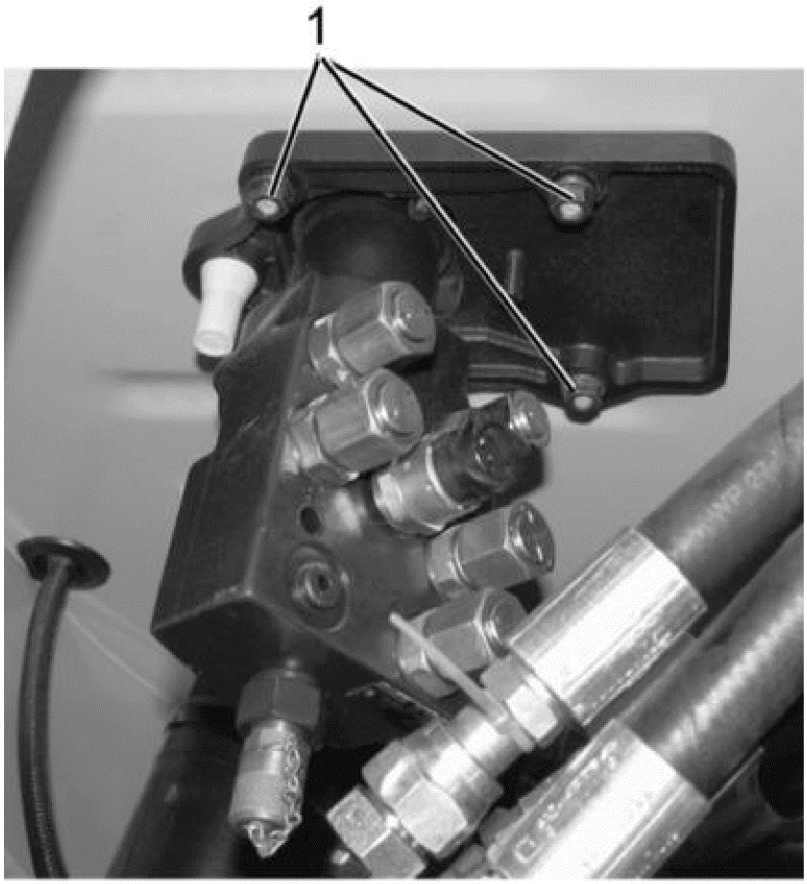

Figure 3

1. Nuts for attaching bolts

Remove the brake valve together with the brake pedal.
Take care of the rubber plug in the floor.

---

[1] Optional equipment

VOLVO
Construction Equipment

Service Information

Document Title:	Function Group:	Information Type: **Service Information**	Date: **12/10/2011**
Profile: **WLO, L90F (Volvo) [GB]**			

Foot brake valve removed, reconditioning

Op nbr 525-009

Dismantling

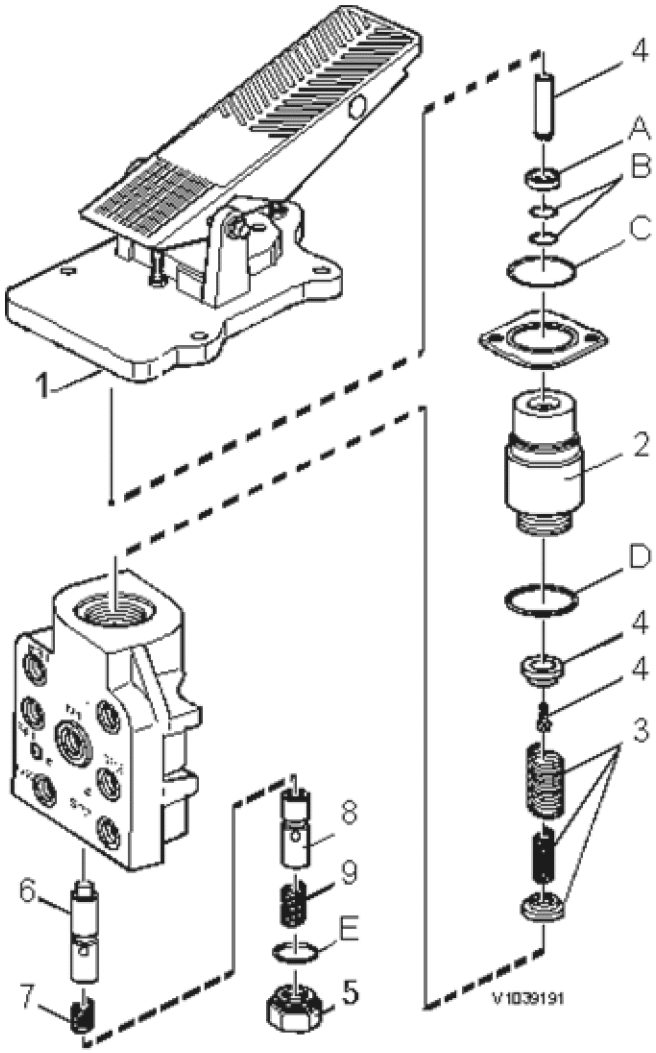

Figure 1

1. Remove the pedal rubber and remove the pedal together with the attaching plate as one unit (1).
2. Secure the valve housing in a vice. Remove sleeve (2).

NOTE **Clamp the valve housing across the narrow sides.**

3. Remove the springs and spring guide (3). Remove the valve housing from the vice.
4. Remove pushrod (4).
5. Remove plug (5) together with the testing nipple.
   Remove spring (9), piston (8), spring (7) and piston (6).
6. Remove seal ring (A) and bushes (B) from sleeve (2).
   Use a Ø 2 mm (0.08 in) pointed steel wire as a tool when removing the bushes.
   Remove O-rings (D) and (E).
7. Clean and inspect with regard to damage or wear. Replace damaged or worn parts.

Assembling

8. Secure sleeve (2) in a vice, with the threaded part upward.
9. Install a new bush (B). Coat the bush with grease.
10. Turn the sleeve in the vice. Install a new bush (B) and a new seal ring (A). Coat the seal ring and the bush with grease.
    Install pushrod (4).

    NOTE **If the pushrod has been dismantled, coat the threads on the bolt with locking fluid medium before assembling.**

11. Install a new O-ring on plug (5). Lubricate the O-ring with clean hydraulic oil.
12. Secure the valve housing in the vice, with the hole for the sleeve facing upward. Install piston (6), the shorter spring (7), the piston (8), the longer spring (9) and plug (5), from underneath.
    Tightening torque, plug: Fotbromsventil
    .
13. Install the spring guide and springs (3).
14. Lubricate with oil and install a new O-ring on the sleeve. Coat the threads on the sleeve with locking fluid medium and install it in the valve housing.
    Tightening torque: see Fotbromsventil
    .
15. Check that it is possible to press down the pushrod a bit by hand, and that it springs back.
16. Install the pedal on the valve.
    Tightening torque, attaching bolts: Fotbromsventil
    .
17. When the foot brake valve has been installed in the machine, carry out Bromssystem, luftning
    , Bromssystem, kontroll och justering av tryck i krets
    and possibly Fotbromspedal, justering av vinkel och pedalspel

VOLVO
Construction Equipment

Service Information

Document Title:	Function Group:	Information Type: **Service Information**	Date: **12/10/2011**
Profile: **WLO, L90F (Volvo) [GB]**			

Foot brake valve, installation

Op nbr 525-006

14360000 Vacuum pump / 24V

Plug 935100, 3 pcs
Plug 935651, 3 pcs
Plug 935574, 2 pcs
Plug 935486, 2 pcs

1. Install the foot brake valve together with the nuts for the attaching bolts.

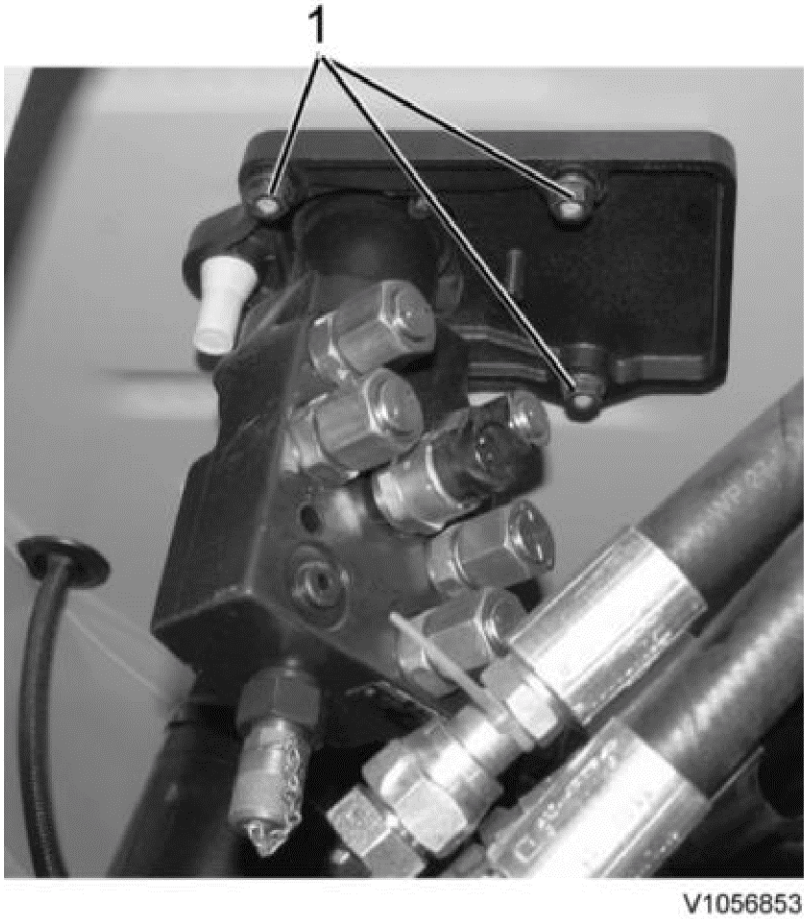

Figure 1

1. Nuts for attaching bolts, 4 pcs

2. Install the rubber plug.

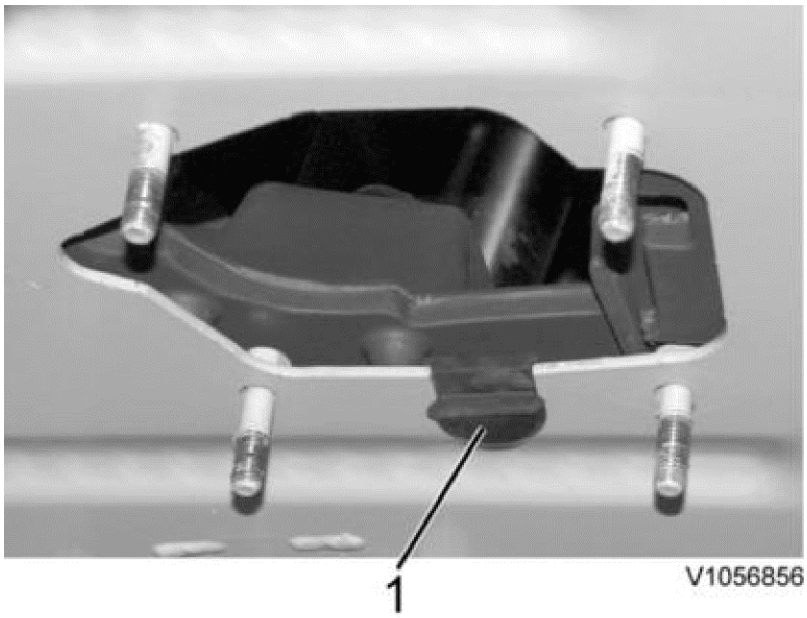

Figure 2

1. Rubber plug

3. Replace the O-rings on the hoses. Install the hoses and connect the connector for the stop lights.

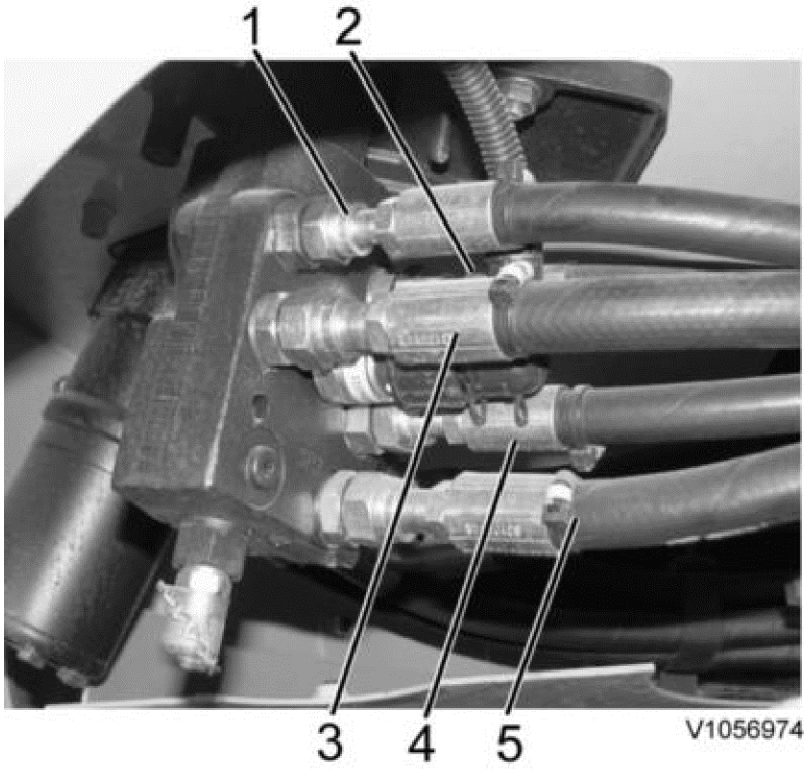

Figure 3

	Colour marking	Connection
1	Pink, green	BR1
2	Unmarked	T
3	Pink, yellow	SP1
4	White, pink	BR2
5	Blue, pink	SP2

4. Remove the vacuum pump according to Hydrauloljetank, vakuumsättning, inkoppling och urkoppling av pump
.

5. Install the pedal rubber.
   Put the map on the floor.
   Install the right brake pedal and its attaching bolts.
   Install the accelerator pedal and its spacers and attaching bolts.
   Install the attaching bolt for the connecting stay.

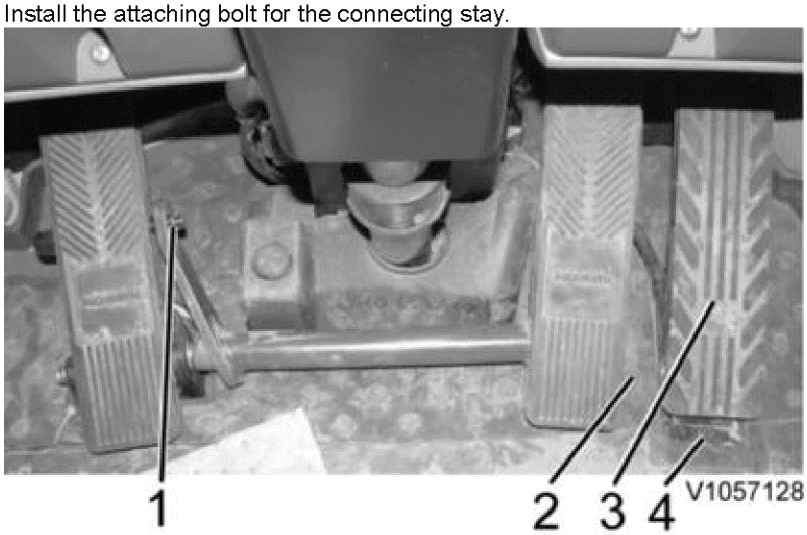

Figure 4

1. Attaching bolt for connecting stay
2. Attaching bolts brake pedal (under the mat)
3. Attaching bolt accelerator pedal (behind the pedal)
4. Attaching bolt accelerator pedal

6. Install the plate on the left side of the machine at the lower edge of the cab.

7. Restore the machine.
   Test-run the machine with regard to leaks.

VOLVO
Construction Equipment

Service Information

Document Title:	Function Group:	Information Type: **Service Information**	Date: **12/10/2011**
Profile: **WLO, L90F (Volvo) [GB]**			

Brake pedal, adjusting angle

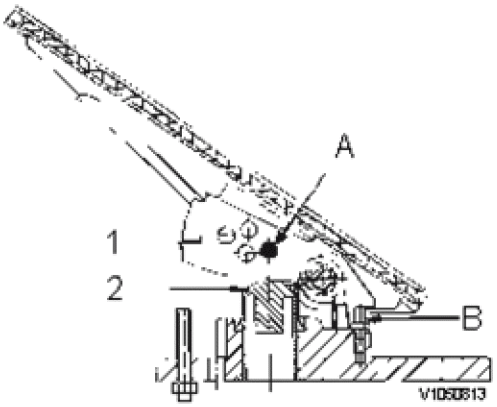

Figure 1
Adjusting brake pedal

Adjusting pedal angle

The pedal can be adjusted to an angle of 40°, 45°, 50° and 55°.

1. Adjustment of the pedal angle is effected by repositioning the screw under the pedal. Pos. A corresponds to a pedal angle of 50° .

   NOTE **The pedal must be removed in order to adjust the angle.**

Adjusting pedal play

1. Screw down adjusting screw B until there is zero clearance between the brake pedal 1 and the piston (2). Then screw down the screw about half a turn.

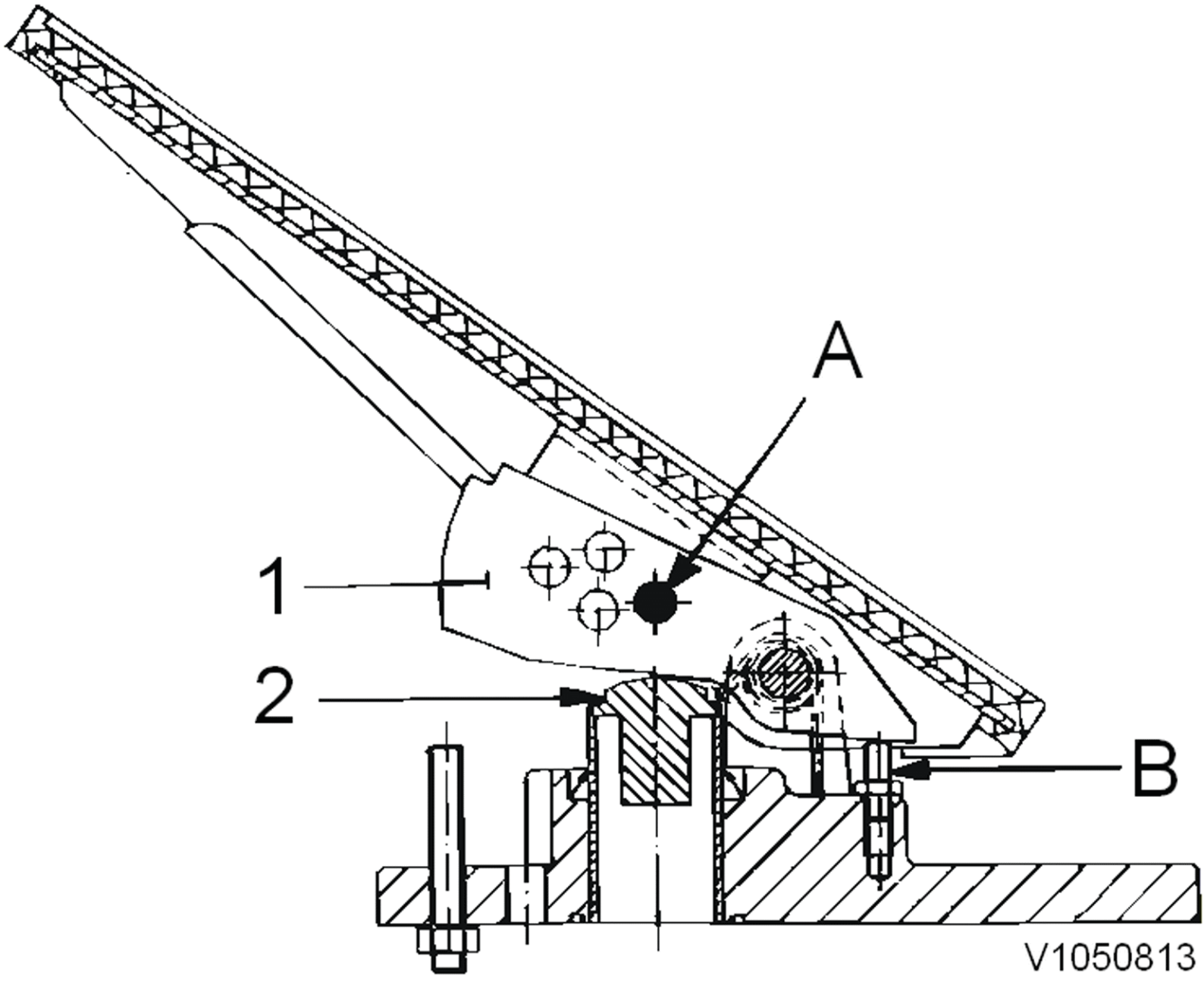
A
1
2
B
V1050813

VOLVO
Construction Equipment

Service Information

Document Title:	Function Group:	Information Type: **Service Information**	Date: **12/10/2011**
Profile: **WLO, L90F (Volvo) [GB]**			

Brake accumulator, description

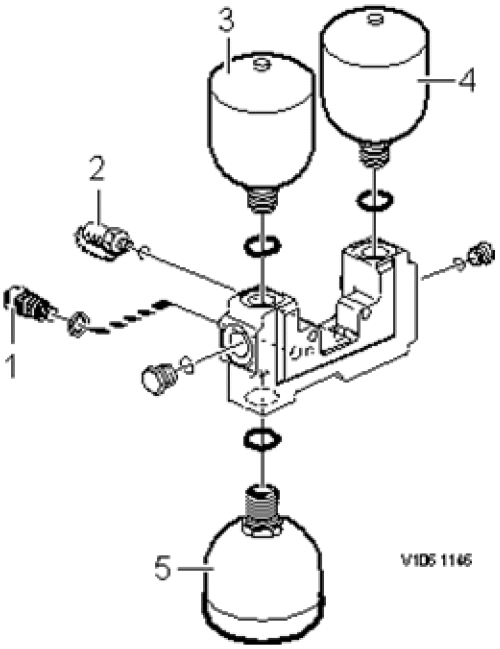

Figure 1
Accumulator block, brake

1. SE5218, sensor, brake pressure charging
2. Testing nipple, checking point
3. Accumulator, rear circuit
4. Accumulator, front circuit
5. Accumulator, in common

The accumulators, which are precharged with nitrogen, store pressure and provide safe braking within sufficiently safe limits. One accumulator is for the front circuit, one accumulator is for the rear circuit and one accumulator is in common.

VOLVO
Construction Equipment

Service Information

Document Title:	Function Group:	Information Type: **Service Information**	Date: **12/10/2011**
Profile: **WLO, L90F (Volvo) [GB]**			

Accumulator, check

Op nbr 527-009

Removing

1. Turn the ignition key to position 1.
2. Release the pressure in the brake system by depressing the brake pedal right down several times until the resistance in the pedal ceases.
3. Remove the right side cover under the ladder.
4. Loosen the bolts retaining the accumulator block.
5. Remove the accumulators.

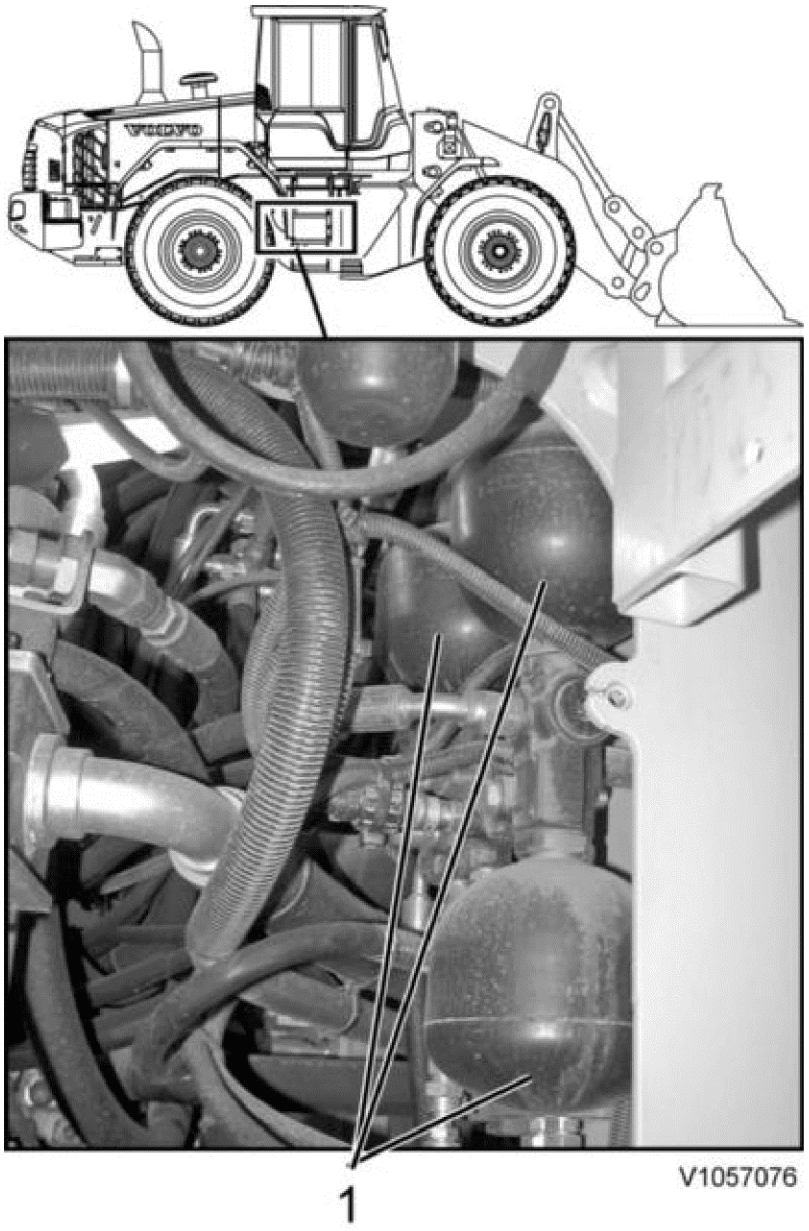

Figure 1

1. Brake accumulators

Checking

6. Presure-test the accumulators according to Ackumulator, losstagen, kontroll
.

Installation

7. Install the accumulators.
8. Tighten down the bolts retaining the accumulator block.
9. Install the right side cover under the ladder on the right side of the machine.
10. Bleed the brake system according to Bromssystem, luftning

VOLVO
Construction Equipment

Service Information

Document Title:	Function Group:	Information Type: **Service Information**	Date: **12/10/2011**
Profile: **WLO, L90F (Volvo) [GB]**			

Accumulator removed, checking charging pressure

Op nbr 527-001

11666041 Pump
11666051 Pressure gauge
14290266 Hose

E-2000

1. Connect E-2000 to the accumulator. Connect the other tools according to the figure.

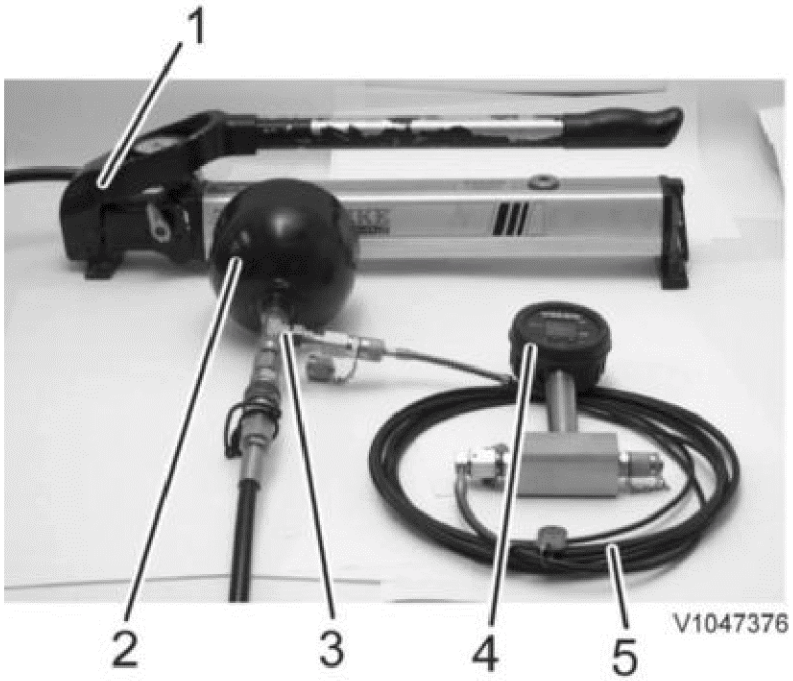

Figure 1
Checking removed accumulator

1. 11666041Pump
2. Accumulator
3. E-2000
4. 11666051Pressure gauge
5. 14290266Hose

2. Pump oil into the accumulator.
After a few pump strokes the pressure will rise quickly up to the precharging pressure and then rise slowly.
Precharging pressure, see Servosystem, specifikation
.
If the precharging pressure is less than what is specified, it must be discarded, see Kasserade ackumulatorer
.

VOLVO
Construction Equipment

Service Information

Document Title:	Function Group:	Information Type: **Service Information**	Date: **12/10/2011**
Profile: **WLO, L90F (Volvo) [GB]**			

Accumulator, discarding

Op nbr 900-050

⇒

WARNING! **A discarded accumulator which is not punctured may still contain high pressure and must always be handled with great care.**

1. **WARNING!** **Use safety glasses.**

Accumulators that are to be discarded must not constitute a hazard.
This is done by carefully puncturing the accumulator with a Ø3 mm (0.118 in) drill.

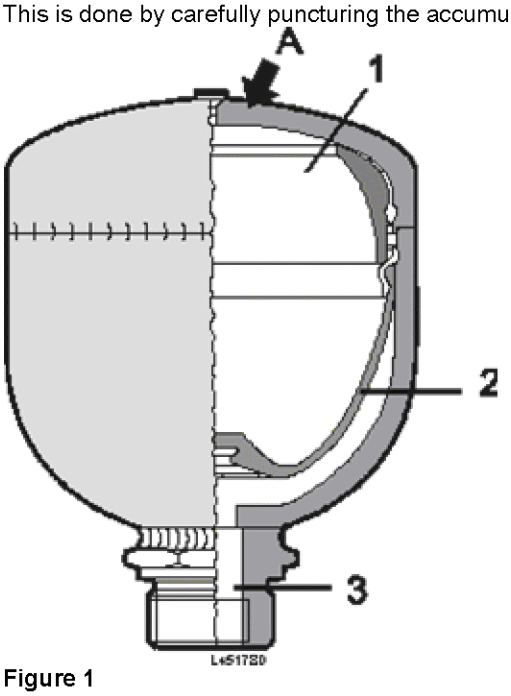

Figure 1
Accumulator

A. Drill here with a Ø3 mm (0.118 in) drill
1. Nitrogen gas space
2. Rubber diaphragm
3. Connection for oil

VOLVO
Construction Equipment

Service Information

Document Title:	Function Group:	Information Type: **Service Information**	Date: **12/10/2011**
Profile: **WLO, L90F (Volvo) [GB]**			

Parking brake, component location

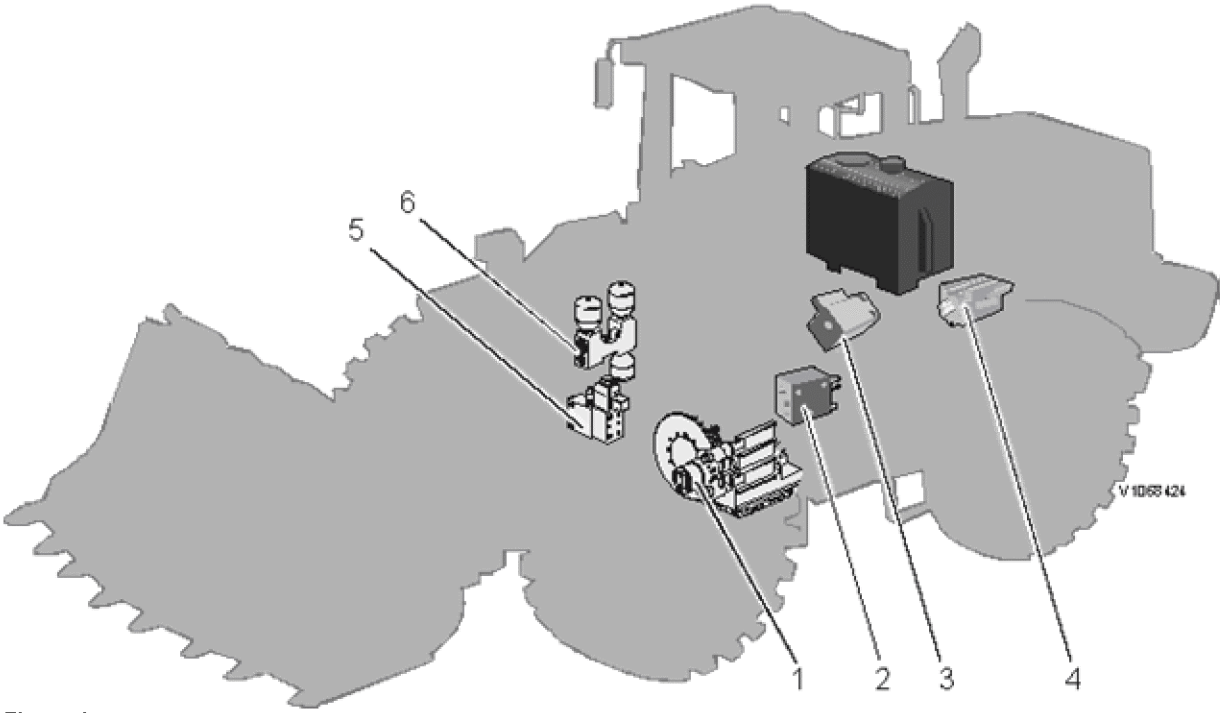

Figure 1

1. Parking brake
2. Central block
3. Pump 2
4. Pump 3
5. Valve block, MA5501, SE5503
6. Accumulator block, service brakes

For description of components, see:

- Central valve, description
- Hydraulic pumps, description

VOLVO
Construction Equipment

Service Information

Document Title:	Function Group:	Information Type: **Service Information**	Date: **12/10/2011**
Profile: **WLO, L90F (Volvo) [GB]**			

Parking brake, description

The parking brake is a disc brake positioned externally on the transmission front output shaft.



Figure 1
SW5501

The parking brake is applied and released with switch SW5501. When the upper end of SW5501 is pressed in, the parking brake is applied. To release the parking brake, the catch on SW5501 must be released.

Regardless of the position of switch SW5501, the parking brake is applied when the engine is turned off. When the engine is started and the lower end of SW5501 is not pressed in, the switch must first be pressed in and then released, if the parking brake is to be released.

NOTE	**If the engine is started and the upper end of SW5501 is not pressed in, the parking brake will be released automatically, when either of the directional gears is selected and the engine speed exceeds 1600 rpm.**

See also Elschema 501
and Hydraulschema, komplett
.

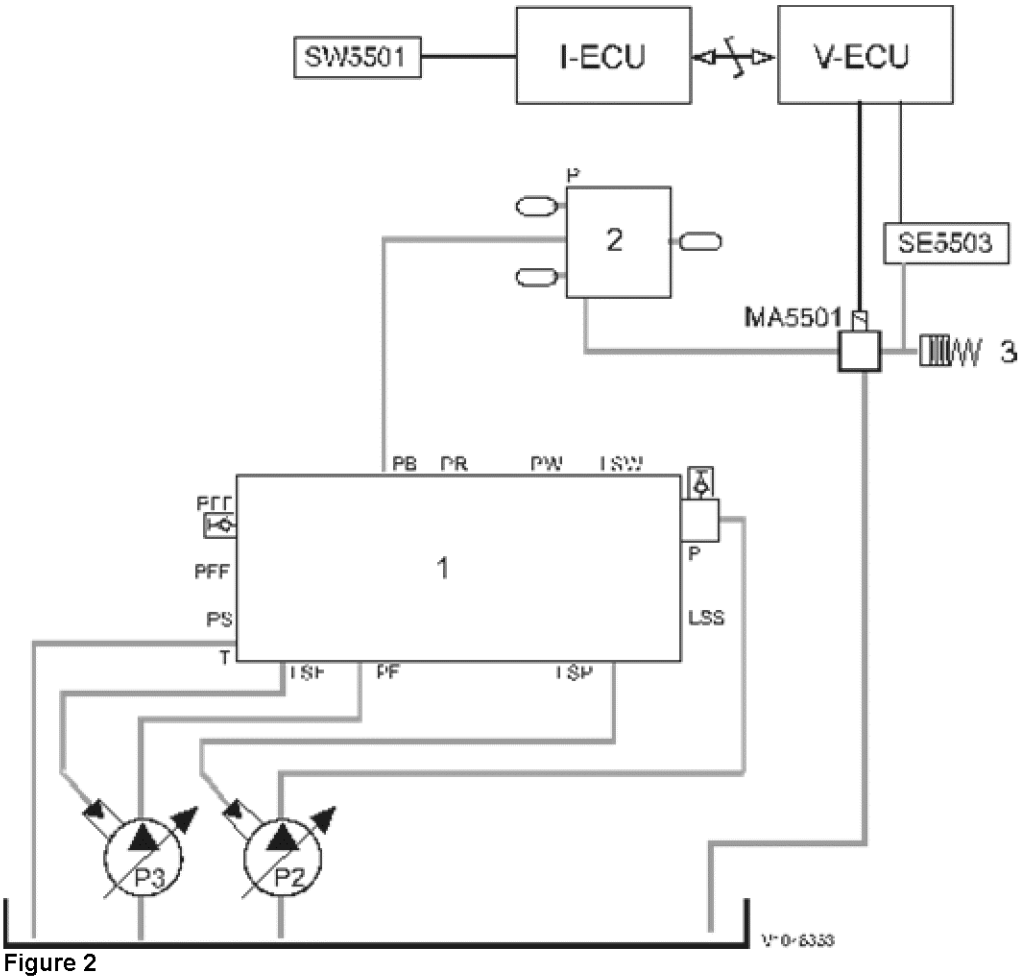

Figure 2

1. Central valve
2. Accumulator block, service brakes
3. Parking brake

Application of parking brake

When the upper end of SW5501 is pressed in or if the engine is turned off, MA5501 becomes de-energised. The oil from the hydraulic pumps (via the central valve and brake accumulator block) cannot pass through the parking-brake valve to the parking brake, which means that the parking brake becomes applied because of the spring force. SE5503 senses no pressure and sends signal to the V-ECU about this, which will cause the control lamp for the parking brake to light up (if the ignition is on).

Release of parking brake

When SW5501 is released, MA5501 becomes energised. The oil from the hydraulic pumps (via the central valve and brake accumulator block) can pass through the parking-brake valve and the parking brake is pressurised. The hydraulic oil pressure then overcomes the spring force and the parking brake is released. Also SE5503 registers pressure and sends signal about this to the V-ECU whereby the control lamp for the parking brake is extinguished.

If the operator selects directional gear forward or reverse, even though the parking brake is applied, a warning will be shown on the operator display unit. If the warning is ignored, the parking brake will be released automatically, when the engine speed exceeds 1600 rpm.

Software

Electric parking brake		
Input signals	**Conditions for output functions**	**Output functions**
o Ignition switch, SW3301 o Speed, SE4307	Machine stationary o Engine Off o Speed < 5 km/h (3 mph)	o Parking brake applied "ON". MA5501 de-energised and SE5503 without pressure.

○ Parking brake applied ○ Engine speed, SE2701 ○ Engine On/Off ○ Directional gear ○ Switch, parking brake, SW5501	○ Ignition switch in position 0	
	Machine in starting position ○ Engine Off ○ Speed < 5 km/h (3 mph) ○ Directional gear in position Neutral ○ Ignition switch in position 1	○ Parking brake applied “ON”. MA5501 de-energised and SE5503 without pressure. ○ Warning lamp, parking brake
	Machine in operation with directional gear in position Neutral ○ Engine On ○ Switch, parking brake in position Applied ○ Directional gear in position Neutral	○ Parking brake applied “ON”. MA5501 de-energised and SE5503 without pressure. ○ Warning lamp, parking brake
	Machine in operation with directional gear in position Forward or Reverse ○ Engine On ○ Switch, parking brake in position Applied ○ Directional gear in position Forward or Reverse	○ Parking brake applied “ON”. MA5501 de-energised and SE5503 without pressure. ○ Warning lamp, parking brake ○ Red central warning ○ Warning Applied parking brake
	Release of parking brake, when the machine is in operation and the parking brake is applied with the parking brake switch ○ Engine On ○ Switch, parking brake in position Released ○ Directional gear in position Neutral	○ Parking brake applied “OFF”. MA5501 energised and SE5503 pressurised.
	Safety function “Release of parking brake” when the machine is in operation and the parking brake is applied because the engine has been turned off. ○ Engine On ○ Switch, parking brake in position Applied ○ Directional gear in position Forward or Reverse ○ Engine revolutions <1600 rpm	○ Parking brake applied “OFF”. MA5501 energised and SE5503 pressurised.
○ Logic diagnostics	Application of parking brake ○ When MA5501 becomes de-energised, SE5503 should be without pressure within 3 seconds Release of parking brake ○ When MA5501 becomes energised, SE5503 should become pressurised within 10 seconds	○ Check Parking brake failure Check at next stop

The following applies in case of incorrect input signals:

Input signal	Assumed value in case of a fault
Engine	“On”
Ignition switch, SW3301	“ON”
Engine speed, SE2701	<1600 rpm
Directional gear	"Neutral"
Speed, SE4307	0 km/h (3.7 mph)

Parking brake alarm		
Input signals	**Conditions for output functions**	**Output functions**
○ VCADS Pro parameter HWU “ ○ Parking brake applied ○ Engine On/Off ○ Load operator seat, SE8502	General conditions for the function ○ VCADS Pro parameter HWU “ON”	○ Red central warning ○ Warning Park brake NOT applied
	○ Engine On ○ Parking brake applied “OFF” ○ Load operator seat On >3 seconds	

The following applies in case of incorrect input signals:

Input signal	Assumed value in case of a fault
Engine	"On"
Parking brake applied	"ON"
Load operator seat	Function turned off
VCADS Pro parameter HWU	"OFF"

Parking brake applied		
Input signals	**Conditions for output functions**	**Output functions**
o Parking brake pressure, SE5503	o SE5503 without pressure	o Parking brake applied "ON"
	o SE5503 pressurised	o Parking brake applied "OFF"

VOLVO
Construction Equipment

Service Information

Document Title:	Function Group:	Information Type: **Service Information**	Date: **12/10/2011**
Profile: **WLO, L90F (Volvo) [GB]**			

Parking brake, adjusting

Op nbr 550-002

NOTE **Adjustment is always carried out after any part of the parking brake has been replaced.**

1. Start the engine and let it idle. Release the parking brake.
   Screw the adjusting screw so that the total clearance between the brake disc and the pads is acc. to specification, see Parkeringsbroms, specifikationer
   .
   Tighten the lock nut and again check the clearance.

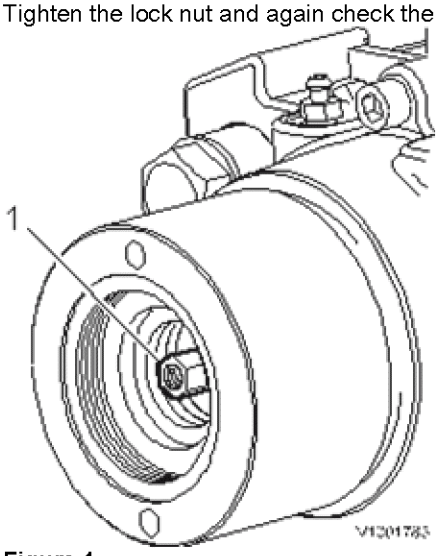

Figure 1

1. Lock nut and adjusting screw

2. Adjust the retainer bolt so that the specified clearance is obtained on both sides of the brake disc, see Parkeringsbroms, specifikationer
   . Tighten the lock nut.
   Stop the engine.

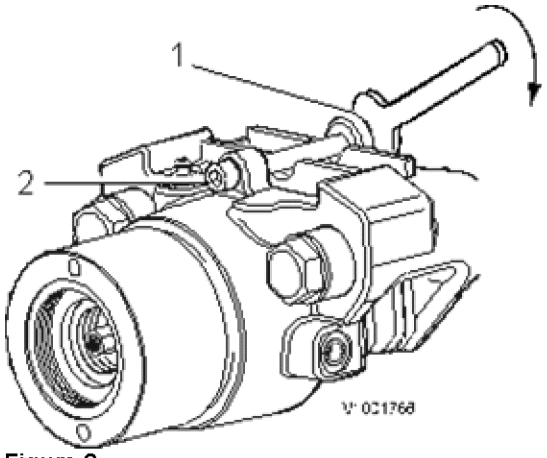

Figure 2

1. Lock nut
2. Retainer bolt

VOLVO
Construction Equipment

Service Information

Document Title:	Function Group:	Information Type: **Service Information**	Date: **12/10/2011**
Profile: **WLO, L90F (Volvo) [GB]**			

Parking brake, replacing brake pads

Op nbr 550-014

1. Place the machine in service position 1, see Service positions
.

   NOTE **Leave the battery disconnect switch turned on.**

2. Remove the cover under the ladder on the machine's left side.
3. Remove the cover located on the left side of the transmission.

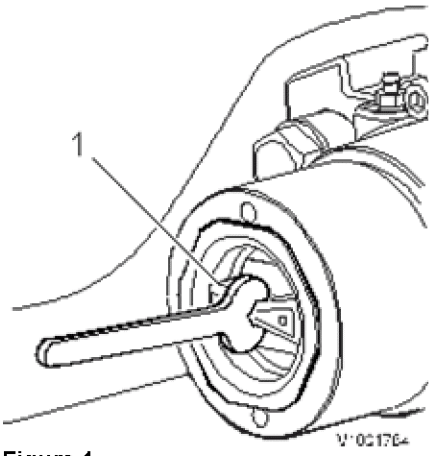

Figure 1

1. Cover

4. Start the engine and let it idle. Release the parking brake.
   Loosen the lock nut and the adjusting screw.
   Turn off the engine.

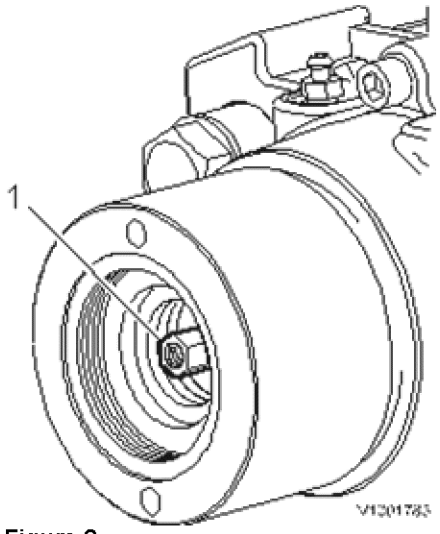

Figure 2

1. Lock nut and adjusting screw

5. Remove the retainer bolt, nut, and the lock nut. Remove the pads.

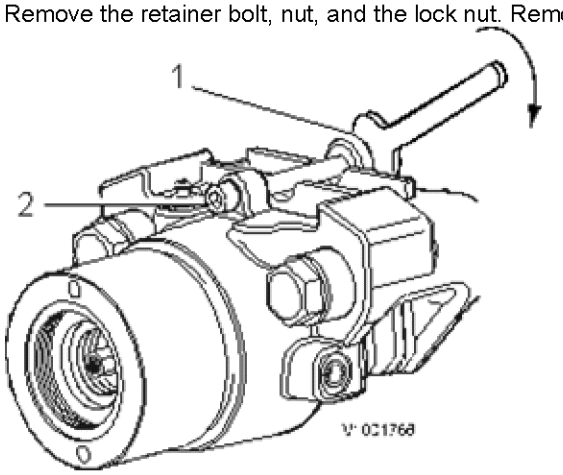

Figure 3

1. Lock nut
2. Retainer bolt

6. Install the new linings.
   Install the retainer bolt, nut, and the lock nut without locking them.

Adjusting

7. See Parking brake, checking wear
   .

8. Install the cover.

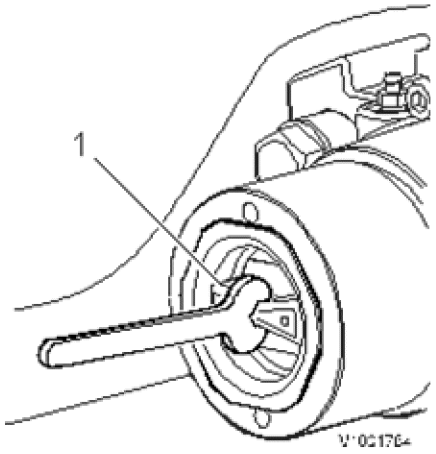

Figure 4

1. Cover

9. Install the cover.
10. Remove the blocks by the wheels. Restore the machine and check that there are no error codes.
11. Check function according to Parking brake, checking function

VOLVO
Construction Equipment

Service Information

Document Title:	Function Group:	Information Type: **Service Information**	Date: **12/10/2011**
Profile: **WLO, L90F (Volvo) [GB]**			

Parking brake, function check

Op nbr 550-023

After completed repairs, carry out a function check as described below.

1. Turn the mode selector, APS, to position service and apply the parking brake.
2. Turn on the ignition and enter the service display unit so that the rpm can be seen. Start the machine and select gear F3. Press ECS on the service display unit to see the rpm.
3. IMPORTANT!
   Do not exceed the stated rpm.
   Rev up to 1000 rpm and check that the machine is stationary.
4. Turn off the machine and select neutral gear. Deactivate the parking brake.
5. Turn on the ignition and enter the service display unit so that the rpm can be seen. Start the machine and select gear F3. Press ECS on the service display unit to see the rpm. Be prepared with the footbrake as the engine rpm increases. At 1600 ±20 rpm, the parking brake releases and the machine will drive in engaged gear direction.
6. Check that there are no error messages.

VOLVO
Construction Equipment

Service Information

Document Title:	Function Group:	Information Type: **Service Information**	Date: **12/10/2011**
Profile: **WLO, L90F (Volvo) [GB]**			

Steering system, component location

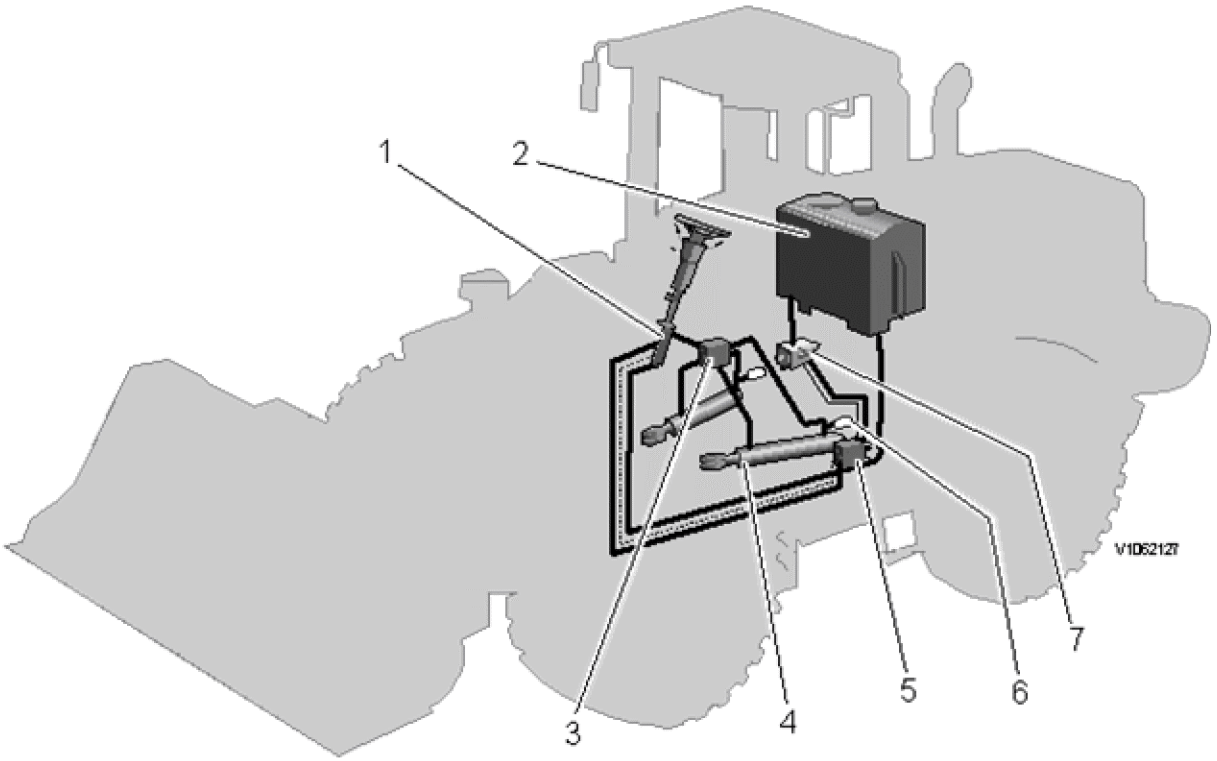

Figure 1
Steering system

1. Steering valve
2. Hydraulic oil tank
3. Valve block
4. Steering cylinder (2 pcs)
5. Central valve
6. Accumulator (2 pcs)
7. Hydraulic pump (P2)

For description of components, see:

- Styrventil, beskrivning
- Hydrauloljetank, beskrivning
- Ventilblock, beskrivning
- Centralblock, beskrivning
- Hydraulpumpar, beskrivning

VOLVO
Construction Equipment

Service Information

Document Title:	Function Group:	Information Type: **Service Information**	Date: **12/10/2011**
Profile: **WLO, L90F (Volvo) [GB]**			

Steering system, description

Neutral position

The pump is in the angled-down position and only supplies a stand-by pressure.

The steering valve is in neutral position. The LS-line is then connected to tank via steering valve and pressure back-up valve. Pressure is built up in the outlet line and the pressure line. When the steering is not used, the spring force of the priority spool is overcome and the spool directs the oil to the brake and servo systems and the working hydraulics respectively.

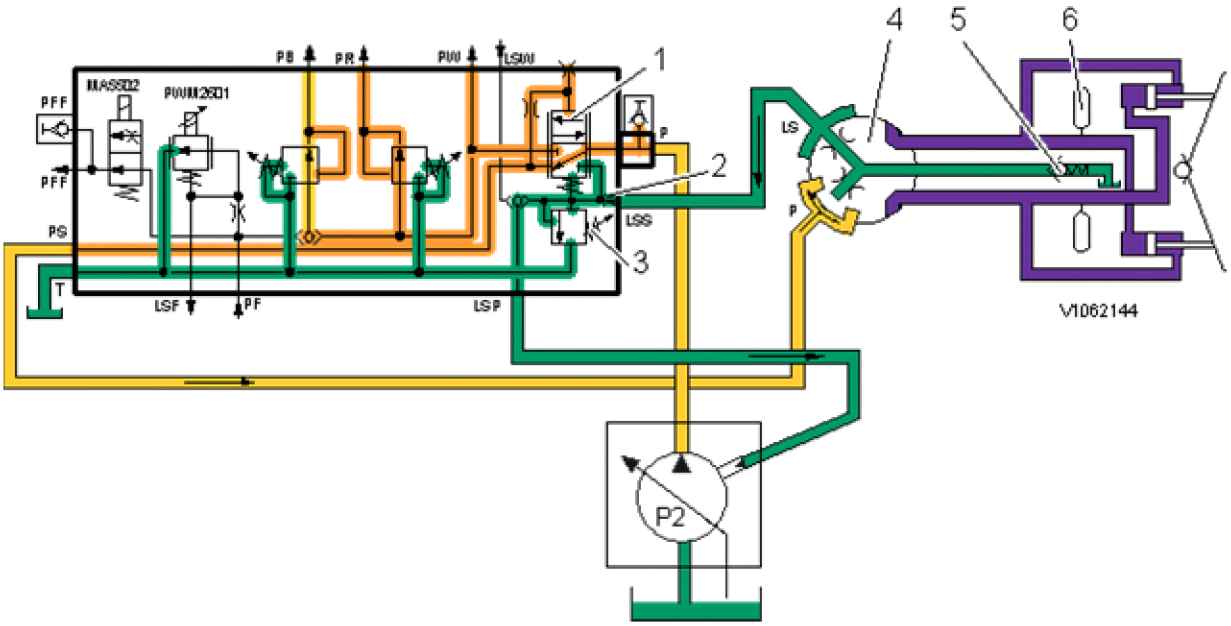

Figure 1
Neutral position

1. Priority valve
2. Restriction
3. Pressure-limiting valve for max. steering pressure
4. Steering valve
5. Pressure back-up valve
6. Accumulator

Green = Return, without pressure
Orange = Stand-by pressure
Violet = Oil closed in

Steering, activation

The steering valve is turned and steering pressure is conducted to the plus side of one of the steering cylinders and to the minus side of the other cylinder. The accumulators provide a smooth pressure build-up. The LS-line becomes connected to the outlet port on the steering valve.

The LS-pressure enters on the underside of the priority valve and forces, together with the spring force, the spool up and ensures connection to the steering valve, thereby prioritising the steering above the working hydraulics.

The flow from the pump is now permitted to increase so that the pump supplies an amount of oil that is proportional to steering lock and steering speed.

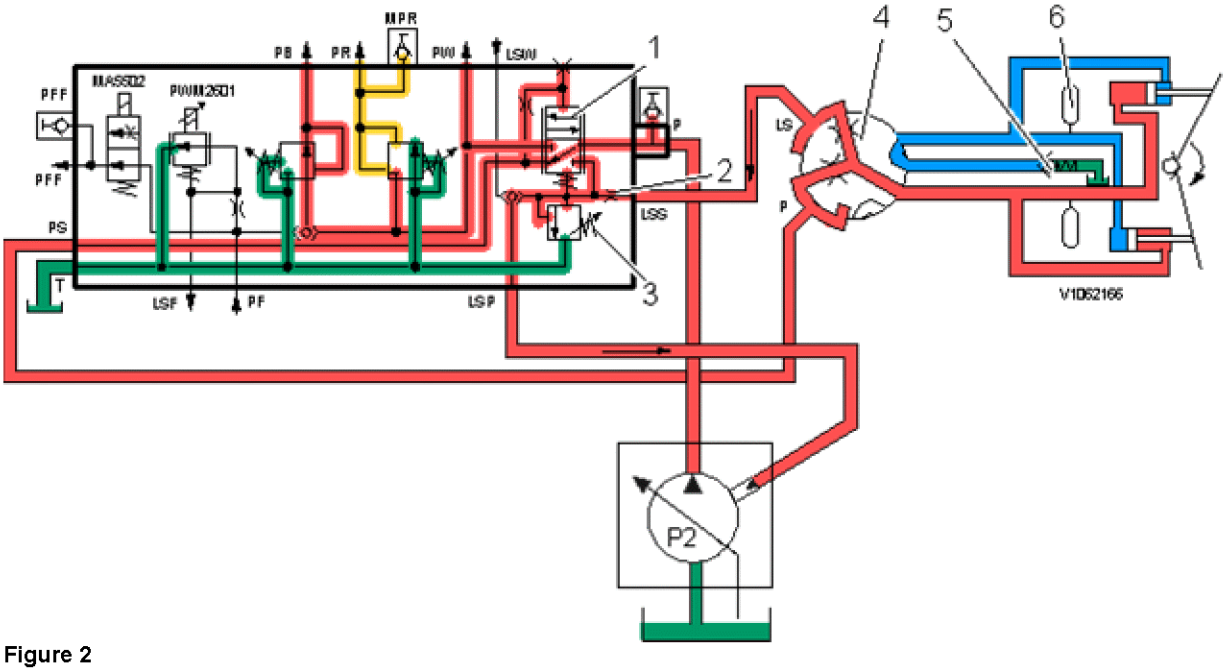

Figure 2
Steering, normal

1. Priority valve
2. Restriction
3. Pressure-limiting valve for max. steering pressure
4. Steering valve
5. Pressure back-up valve
6. Accumulator

Green	= Return, without pressure	Violet	= Oil closed in
Red	= Working pressure	Orange	= Stand-by pressure
Blue	= Raised return pressure		

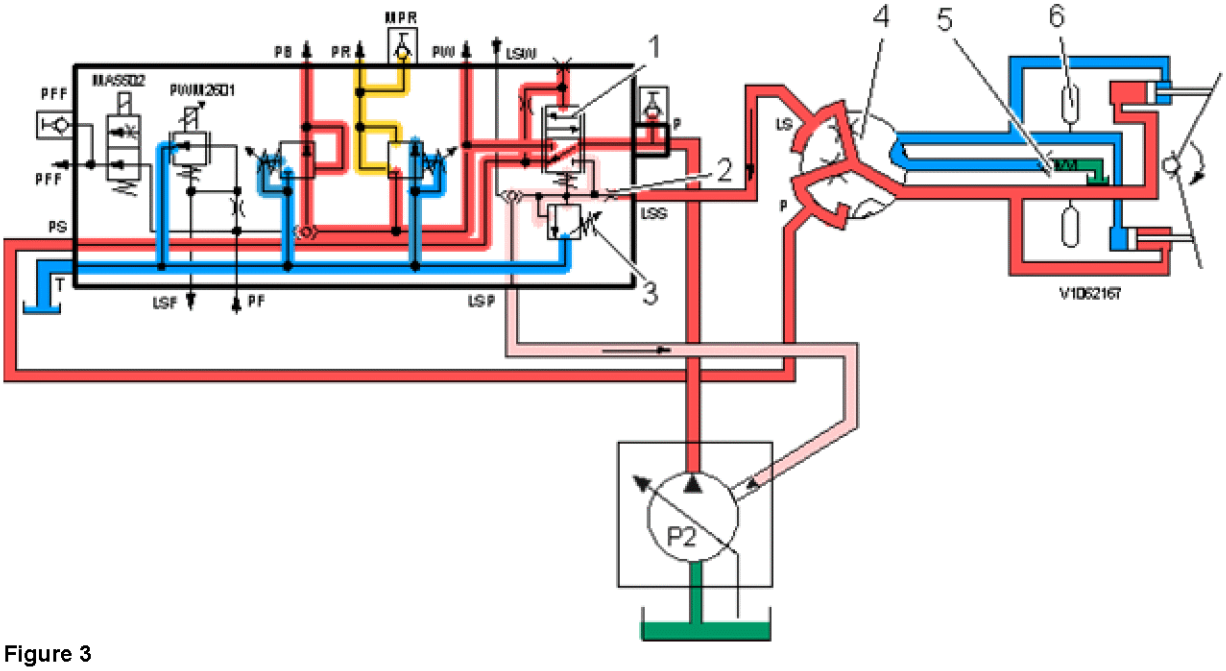

Figure 3
Steering against end position

1. Priority valve
2. Restriction
3. Pressure-limiting valve for max. steering pressure
4. Steering valve

5. Pressure back-up valve
6. Accumulator

Green	= Return, without pressure	Violet	= Oil closed in
Red	= Working pressure	Orange	= Stand-by pressure
Blue	= Raised return pressure	Pink	LS-pressure

See also Hydraulschema, komplett

.

VOLVO
Construction Equipment

Service Information

Document Title:	Function Group:	Information Type: **Service Information**	Date: **12/10/2011**
Profile: **WLO, L90F (Volvo) [GB]**			

V2-ECU, MID 249, changing non-programmed ECU

Op nbr 900-031

VCADS Pro VCADS Pro Service Tool
88890020 Interface
88890027 Cable

1. Place the machine in service position 1, see Service positions
.
2. Fold the back-rest forward and remove the rear cab panel.
3. Connect VCADS Pro and carry out the operation 90001-3 MID 249 ECU, programming.
4. Disconnect the connectors from the V2 ECU.

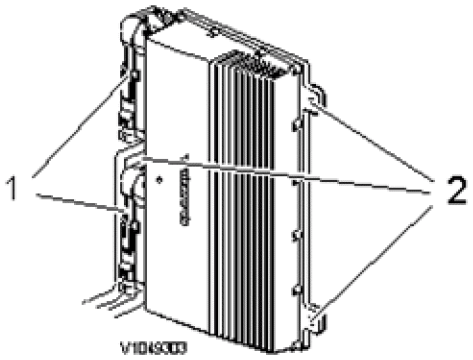

Figure 1

1. Connectors
2. Bolts

5. Replace the V2 ECU.
6. Connect the connectors to the V2 ECU.
7. Turn on the battery disconnect switch.
8. Finish the VCADS Pro operation 90001-3 MID 249 ECU, programming.
9. Carry out functional checks according to Comfort Drive Control (lever steering), checking function
, Lifting, checking function
, Tilting, checking function
, 3rd/4th hydraulics, checking function
10. Restore the machine.

VOLVO
Construction Equipment

Service Information

Document Title:	Function Group:	Information Type: **Service Information**	Date: **12/10/2011**
Profile: **WLO, L90F (Volvo) [GB]**			

V2-ECU, MID 249, changing pre-programmed ECU

Op nbr 900-032

VCADS Pro VCADS Pro Service Tool
88890020 Interface
88890027 Cable

1. Place the machine in service position 1, see Service positions
.
2. Fold the back-rest forward and remove the rear cab panel.
3. The new control unit has basically adjusted parameters for the machine. If it is possible to read-out customer parameters, connect VCADS Pro and carry out the operation 17030-3 Parameter, programming. Save all read parameters to job card.
The operation is used for reading out customer parameters from the old control unit in order to be able to compare with parameters in the new control unit.
4. Disconnect the connectors from the V2 ECU.

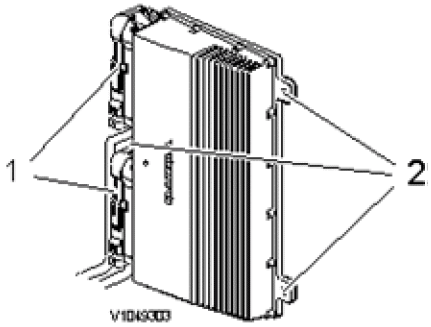

Figure 1

1. Connectors
2. Bolts

5. Replace the V2 ECU.
6. Connect the connectors to the V2 ECU.
7. Turn on the battery disconnect switch.
8. If customer parameters have been read-out from the old control unit, they should be compared with the parameters in the new control unit.
   - Connect VCADS Pro and carry out the operation 17030-3 Parameter, programming. Save all read parameters to job card.
   - Compare the parameter settings on the job cards.
   - Carry out the operation 17030-3 Parameter, programming and change the customer parameters according to the job card for the old control unit.
9. Carry out functional checks according to Comfort Drive Control (lever steering), checking function
, Lifting, checking function
, Tilting, checking function
, 3rd/4th hydraulics, checking function
10. Restore the machine.

VOLVO
Construction Equipment

Service Information

Document Title:	Function Group:	Information Type: **Service Information**	Date: **12/10/2011**
Profile: **WLO, L90F (Volvo) [GB]**			

Valve block, description

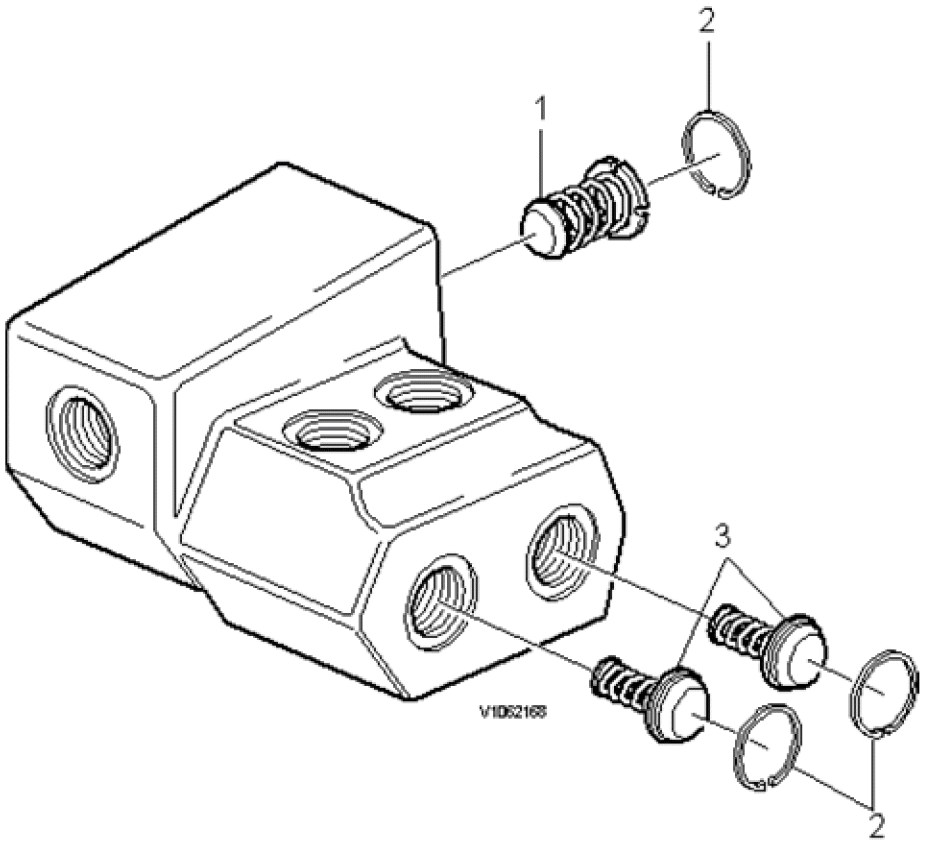

Figure 1
Valve block

1. Pressure back-up valve
2. Circlip
3. Non-return valve

The valve block contains two non-return valves for topping up the suction sides of the cylinders and a pressure back-up valve.

VOLVO
Construction Equipment

Service Information

Document Title:	Function Group:	Information Type: **Service Information**	Date: **12/10/2011**
Profile: **WLO, L90F (Volvo) [GB]**			

Steering valve, description

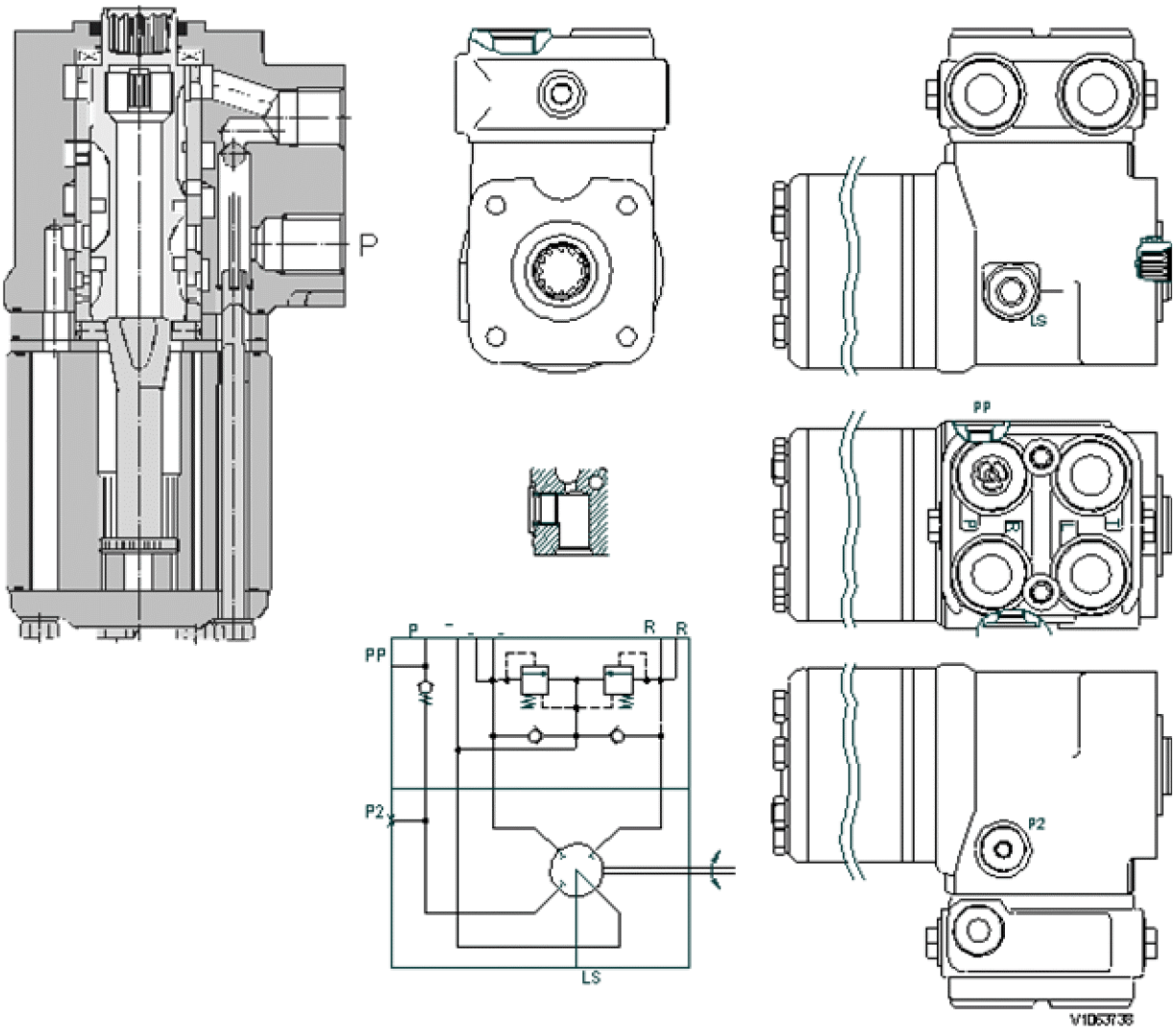

Figure 1

VOLVO
Construction Equipment

Service Information

Document Title:	Function Group:	Information Type: **Service Information**	Date: **12/10/2011**
Profile: **WLO, L90F (Volvo) [GB]**			

Steering system, checking and adjusting working pressure

Op nbr 645-028

14290266 Hose
11666051 Pressure gauge

1. Warm up the machine until the hydraulic system is at operating temperature, 60–80 °C (140–176 °F).
2. Secure the frame joint with the frame joint lock. Place blocks in front of and behind the wheels.

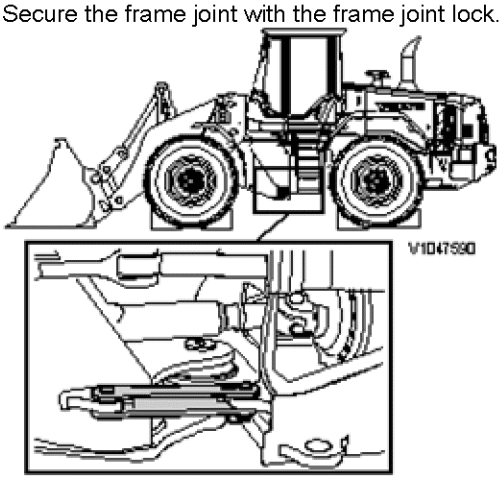

Figure 1

3. Connect the pressure gauge to the checking point on the steering valve.

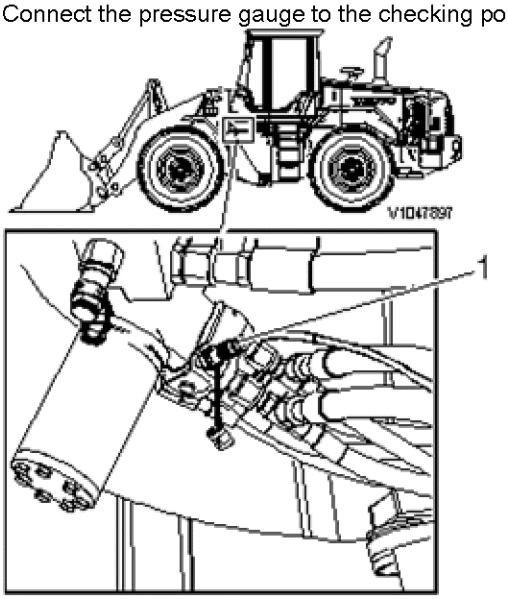

Figure 2

1. Checking point

Checking stand-by pressure

4. Start the engine and run at low idling speed. Read off the stand-by pressure.
Stand-by pressure, see Steering, hydraulic equipment, specifications
.

NOTE **The steering system stand-by pressure is determined by the stand-by pressure of the pump and by the opening pressure of the priority spool. The stand-by pressure for steering cannot be adjusted separately, instead the pressure is adjusted on the flow compensator on pump P2, see Hydraulic pump, checking and adjusting stand-by pressure
. If the stand-by pressure is correct at the pump, but not for the steering, this may be because of a fault in the priority spool of the central valve.**

Checking steering pressure

5. Steer against the frame joint lock in both directions and check the steering pressure at the respective end position.
Steering pressure, see Steering, hydraulic equipment, specifications
.

6. Stop the engine.

Adjusting steering pressure

7. Part the connector for MA5502.

NOTE **The engine must be turned off when the steering pressure is adjusted.**

Adjust the steering pressure on the pressure-limiting valve on the central valve.
Steering pressure, see Steering, hydraulic equipment, specifications
.

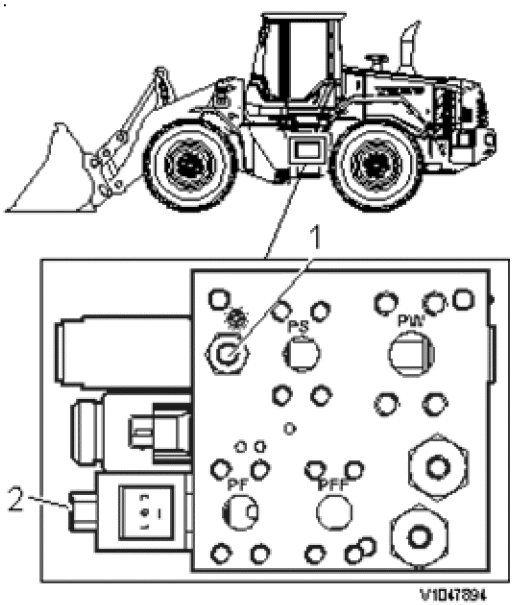

Figure 3
Central valve

1. Pressure-limiting valve, steering pressure
2. MA5502

8. Turn off the engine and remove the pressure gauge. Connect the connector for MA5502

9. Restore the machine.

10. Test the function of the steering system according to Steering system, function check
.

VOLVO
Construction Equipment

Service Information

Document Title:	Function Group:	Information Type: **Service Information**	Date: **12/10/2011**
Profile: **WLO, L90F (Volvo) [GB]**			

Steering cylinder removed, reconditioning excl replacing bearings

Op nbr 645-052

89130 Wrench
9993579 Installation tool
11667001 Handle
11667065 Drift plate

1. Remove the piston rod from the cylinder tube. Use 89130Wrench to loosen the cap.
   Collect the waste oil in a suitable vessel.
   Check the cylinder tube and the piston rod for damage.

2. Secure the fork end of the piston rod in a vice.
   Knock out the spring pin locking the nut.

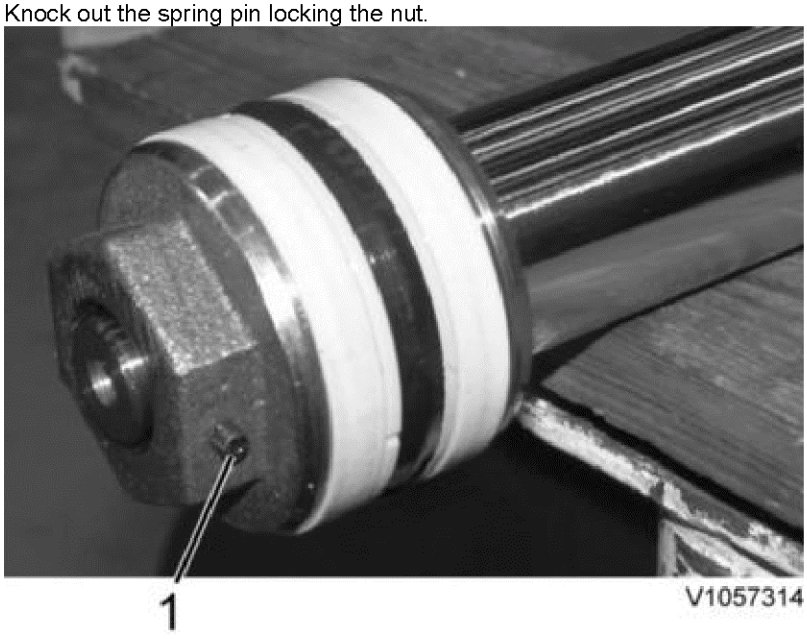

Figure 1

1. Spring pin

   Remove the nut, the piston and the cap from the piston rod.

3. Replace the seals on the cap. Use 11667001Handle together with 11667065Drift plate to install the scraper ring on the cap.
   Use 9993579Installation tool to install the seal ring.

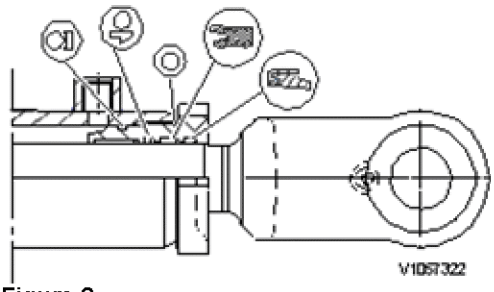

Figure 2

4. Replace the seals on the piston.

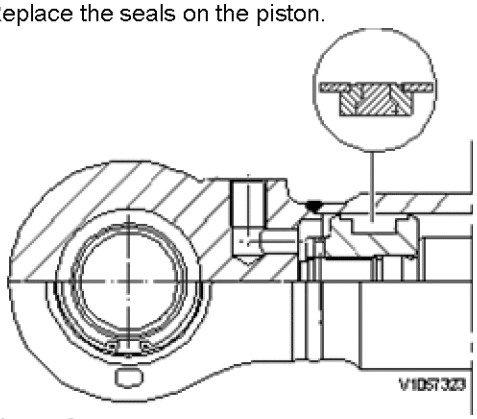

Figure 3

5. Coat the gaskets with hydraulic oil.
Apply a thin layer of copper grease to the threads on the cap. Install the cap on the piston rod.
Install the piston on the piston rod. Secure the piston by tightening the nut and lock with the spring pin.
Tightening torque, nut: see Styrcylinder, åtdragningsmoment
.

NOTE **If the holes for the spring pin do not align, drill a new hole Ø 6 mm (0.236 in) through the nut and the piston rod. In all, there must not be more than three holes.**

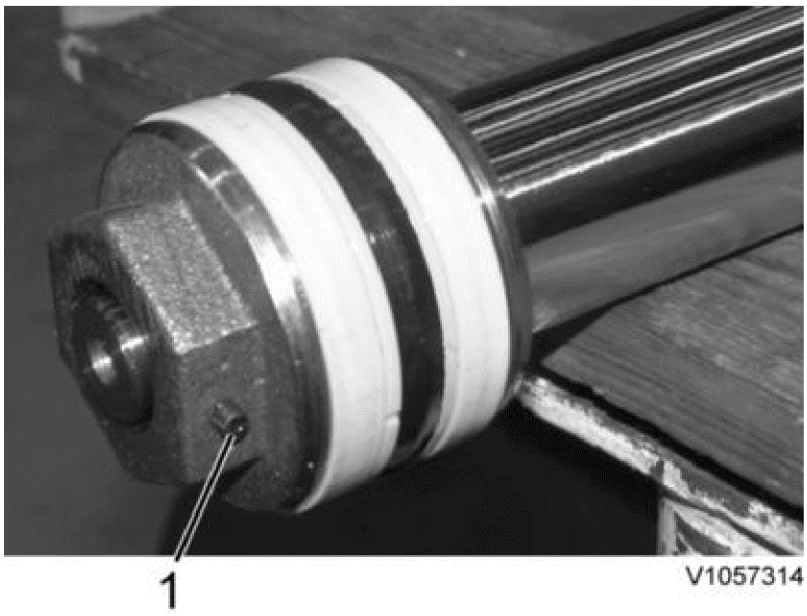

Figure 4

1. Spring pin

6. Install the piston rod in the cylinder tube.
Screw the cylinder cap onto the cylinder tube using wrench 89130. Lock the cylinder cap to the cylinder tube by upsetting the lock washer.

VOLVO
Construction Equipment

Service Information

Document Title:	Function Group:	Information Type: **Service Information**	Date: **12/10/2011**
Profile: **WLO, L90F (Volvo) [GB]**			

Steering valve, replacing

Op nbr 645-082

14360000 Vacuum pump / 24V

Plug 935756
Plug 935650
Plug 935575
Plug 935644
Plug 935574, 5 pcs
Plug 935486, 5 pcs

Removing

1. Place the machine on level ground.
2. Remove the cover plates located at the lower edge of the cab on the right and left sides of the machine. [1]
3. Start the engine and steer fully to the left. Stop the engine.
   Place blocks in front of and behind the wheels.
4. Connect the vacuum pump according to Hydraulic oil tank, creating vacuum, connecting and disconnecting pump
   .
5. Mark and disconnect the hoses from the steering valve.
   Plug the hoses.

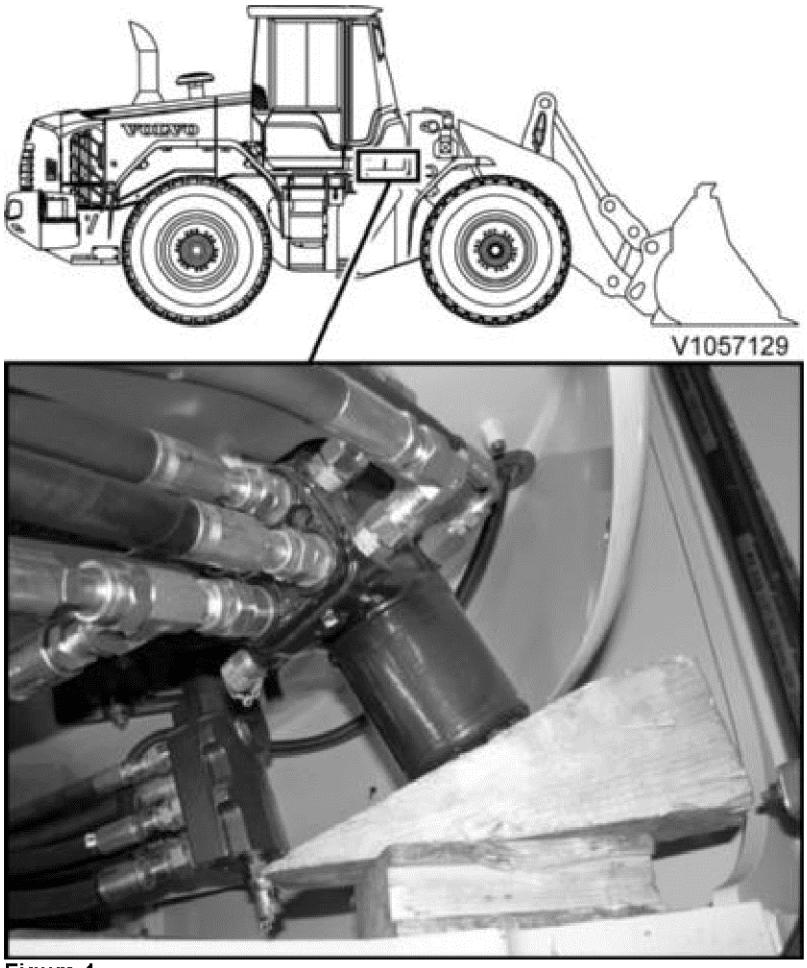

Figure 1

Turn off the vacuum pump.

6. Place a wedge under the steering valve so that it does not fall down when the attaching bolts are removed.
7. Remove the four bolts retaining the steering valve. Remove the wedge and remove the steering valve.
   Weight of steering valve: **approx. 12 kg (26 lb)**

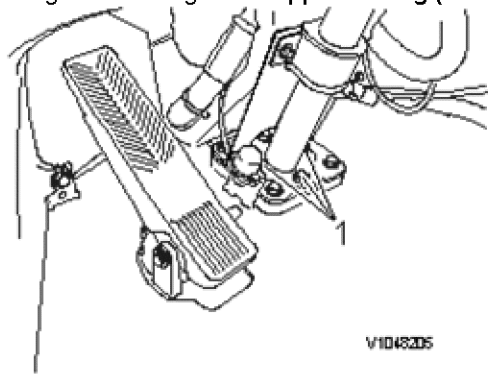

Figure 2

1. Bolts, 4 pcs

Installation

8. Place the steering valve in a vice.
   Remove the connections and the testing nipple from the old steering valve.
   Check the O-rings on the connections and replace when required.
   Place the new steering valve in a vice.
   Install the connections and he testing nipple on the steering valve.
   Coat the splines with copper grease.
9. Place the steering valve in correct position and with a key underneath so that the steering valve is retained

in position.
Weight of steering valve: **approx. 12 kg (26 lb)**
Install the bolts retaining the steering valve.

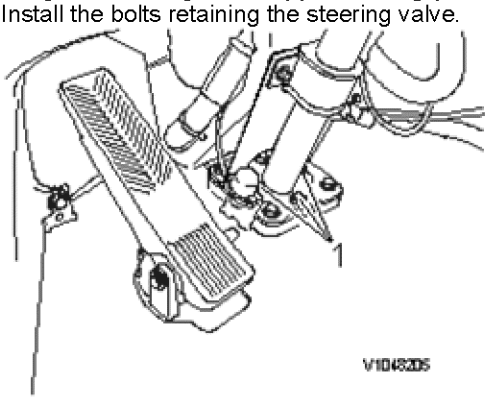

Figure 3

1. Bolts, 4 pcs

10. Turn on the vacuum pump.
Remove the plugs and connect the hoses to the steering valve.

11. Remove the vacuum pump according to Hydraulic oil tank, creating vacuum, connecting and disconnecting pump
.

12. Test-run the machine. Check that there are no leaks. Test the function of the steering system according to Steering system, function check
.

13. Install the plates at the lower edge of the cab on the right and left sides of the machine.

---

[1] Optional equipment

VOLVO
Construction Equipment

Service Information

Document Title:	Function Group:	Information Type: **Service Information**	Date: **12/10/2011**
Profile: **WLO, L90F (Volvo) [GB]**			

Secondary steering, component location

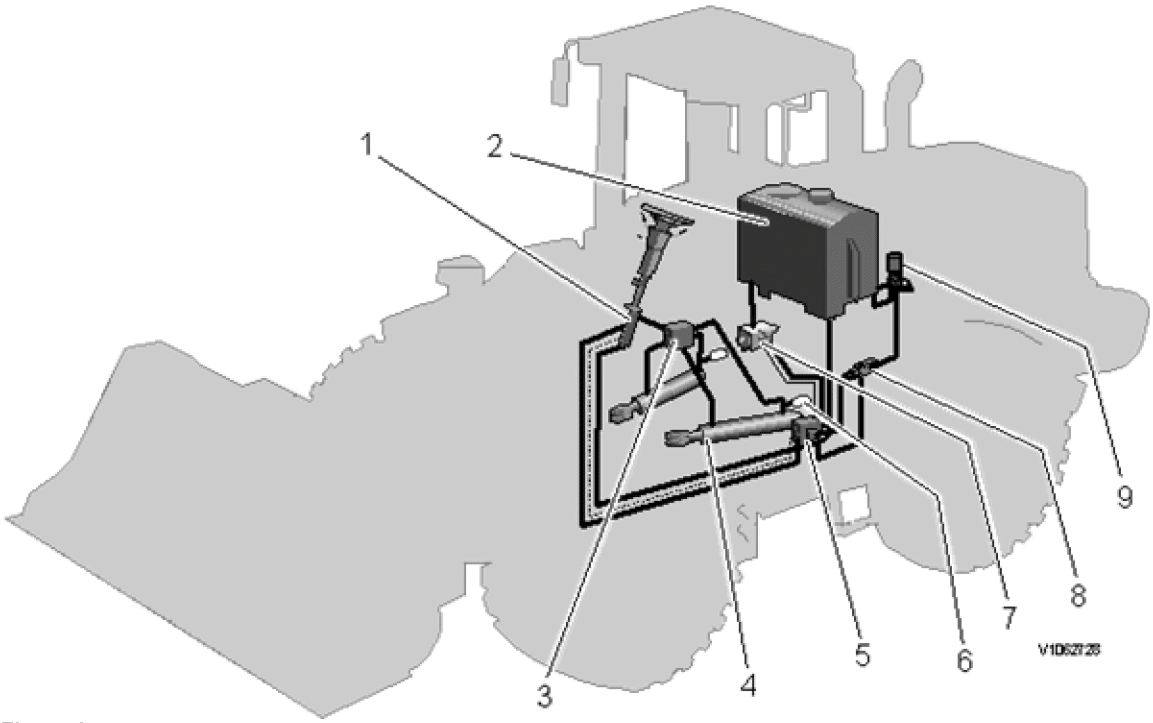

Figure 1
Secondary steering

1. Steering valve
2. Hydraulic oil tank
3. Valve block
4. Steering cylinder (2 pcs)
5. Central valve
6. Accumulator (2 pcs)
7. Hydraulic pump P2
8. Pressure monitor
9. Secondary steering pump

For description of components, see:

- Styrventil, beskrivning
- Hydrauloljetank, beskrivning
- Ventilblock, beskrivning
- Centralblock, beskrivning
- Hydraulpumpar, beskrivning
- Tryckvakt, beskrivning
- Reservstyrningspump

VOLVO
Construction Equipment

Service Information

Document Title:	Function Group:	Information Type: **Service Information**	Date: **12/10/2011**
Profile: **WLO, L90F (Volvo) [GB]**			

Secondary steering pump, description

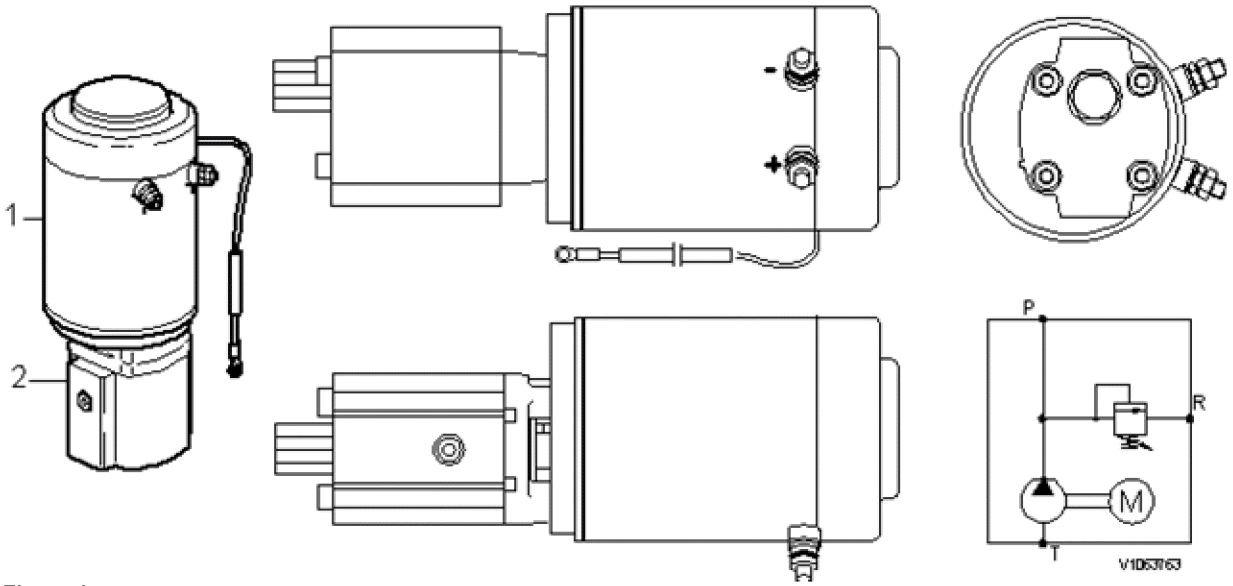

Figure 1

1. Electric motor
2. Pump

The electrically powered secondary steering pump provides the steering system with oil when the ordinary (primary) hydraulic pump (P2) does not supply oil.

VOLVO
Construction Equipment

Service Information

Document Title:	Function Group:	Information Type: **Service Information**	Date: **12/10/2011**
Profile: **WLO, L90F (Volvo) [GB]**			

Pressure monitor, description

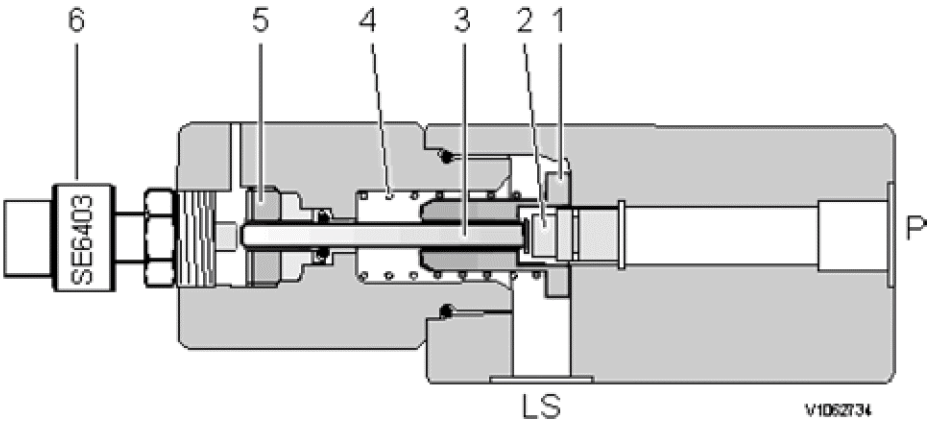

Figure 1
Differential-pressure monitor

1. Steering
2. Poppet
3. Piston
4. Spring
5. Nut
6. Sensor SE6403

The pressure monitor senses the differential pressure between the LS-pressure and the steering pressure.

VOLVO
Construction Equipment

Service Information

Document Title:	Function Group:	Information Type: **Service Information**	Date: **12/10/2011**
Profile: **WLO, L90F (Volvo) [GB]**			

Secondary steering pump, checking and adjusting working pressure

Op nbr 647-091

11666051 Pressure gauge
14290266 Hose
VCADS Pro VCADS Pro Service Tool

E-2001 T-coupling

1. Block the wheels. Lock the frame joint with the frame joint lock.
2. Open the left engine cover. Remove the lower the engine cover.
3. Disconnect the pressure hose from the pressure sensor.
4. Connect the T-coupling, E-2001
, between the pressure hose and the pressure sensor.

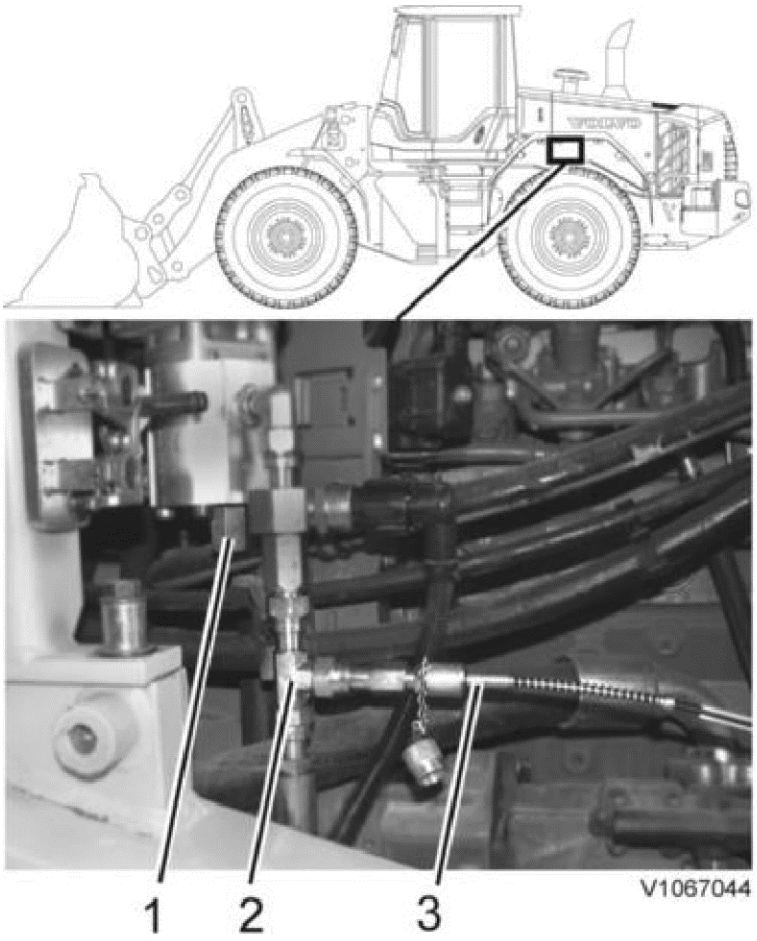

Figure 1

1. Adjusting pressure
2. E-2001 T-coupling
3. 14290266Hose and 11666051Pressure gauge

5. Connect 11666051Pressure gauge and 14290266Hose
6. Connect VCADS ProVCADS Pro Service Tool and carry out the following operation: 64721-3 Secondary steering, test
7. Check that the pressure gauge and VCADS Pro show the same reading and that the pressure is correct according to Secondary steering pump, specifications
.
8. If required, adjust the pressure in the appropriate place.
9. Remove the testing equipment and re-install the hose to the pressure sensor.
10. Restore the machine.
11. Start the machine and check that there are no error codes.

VOLVO
Construction Equipment

Service Information

Document Title:	Function Group:	Information Type: **Service Information**	Date: **12/10/2011**
Profile: **WLO, L90F (Volvo) [GB]**			

Comfort Drive Control (CDC), component location

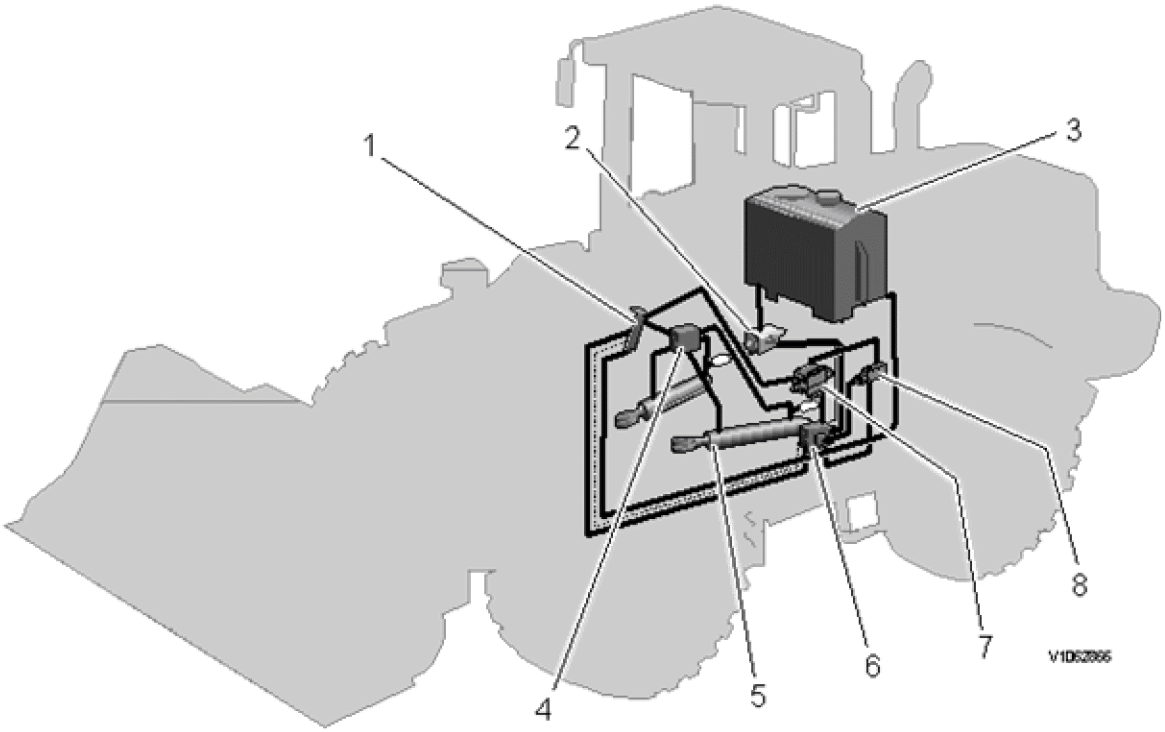

Figure 1
Comfort Drive Control (lever steering)

1. Steering valve
2. Hydraulic pump, P2
3. Hydraulic oil tank
4. Valve block
5. Steering cylinder (2 pcs)
6. Central valve
7. Control valve, Comfort Drive Control (lever steering)
8. Pressure monitor

For description of components, see:

- Steering valve, description
- Hydraulic pumps, description
- Hydraulic oil tank, description
- Valve block, description
- Central valve, description
- Control valve, Comfort Drive Control (lever steering), description
- Pressure monitor, description

VOLVO
Construction Equipment

Service Information

Document Title:	Function Group:	Information Type: **Service Information**	Date: **12/10/2011**
Profile: **WLO, L90F (Volvo) [GB]**			

Lever steering (CDC), functional check

Op nbr 660-011

1. Start the machine and check that there are no error messages.
2. Check that Comfort Drive Control (lever steering) cannot be activated if any of the following criteria is fulfilled:
   - armrest is raised
   - gear selector on steering column, armrest, or lever carrier is in forward or reverse position
3. Activate Comfort Drive Control (lever steering) and steer repeatedly against right and left full lock to make sure that the function works as it should.
4. Let the engine run at 1500 rpm. Steer as fast as possible from full lock on one side to full lock on the other side. Steering time according to Comfort Drive Control (lever steering), specifications shall be reached between one side's end-position until the other side's end.position damping starts. The difference may not be greater than 0.3 seconds when steering to the left and right.
5. Check that operation of the gear selector on the lever carrier does not result in a change of travel direction, that is, that the gear selector on the armrest has priority.
6. Check that Comfort Drive Control (lever steering) disengages if you:
   - raise the armrest
   - operate the gear selector on the steering column
7. Check that steering with the steering wheel has higher priority than Comfort Drive Control (lever steering) by, with activated lever steering, steering to the left with the joystick and at the same time turning the steering wheel to the right. The machine should turn to the right. When the steering wheel is released, the machine should steer to the left.

More than one document matches the current profile:

Comfort Drive Control, servo pressure, checking
Product Line: WLO
Model Variant: L90F

Comfort Drive Control, servo pressure, checking
Product Line: WLO
Model Variant: L90F

VOLVO
Construction Equipment

Service Information

Document Title:	Function Group:	Information Type: **Service Information**	Date: **12/10/2011**
Profile: **WLO, L90F (Volvo) [GB]**			

Comfort Drive Control, servo pressure, checking

Op nbr 660-012

11666052 Pressure gauge
14290266 Hose
936446 Testing nipple

1. Block the wheels. Lock the frame joint with the frame joint lock.
2. Remove the plate on the left side of the machine under the cab.
3. Remove the plug from the PS port and install 936446Testing nipple.

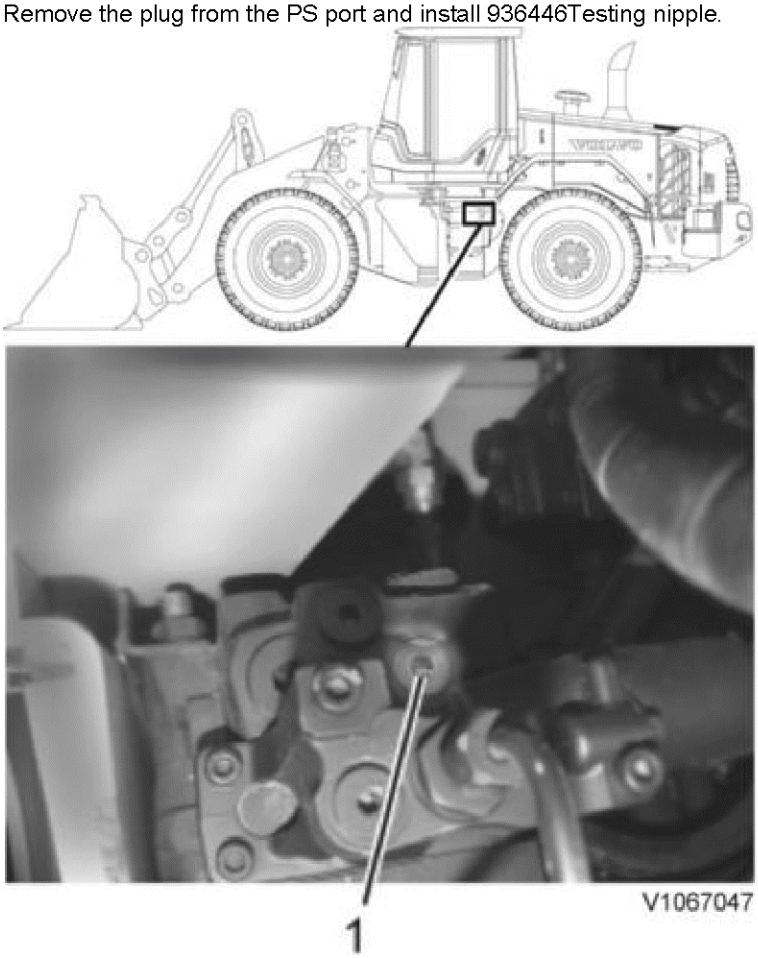

Figure 1

1. PS port

4. Connect 11666052Pressure gauge and 14290266Hose.
5.

Start the engine and activate the Comfort Drive Control (lever steering).
Steer against end position and check that the pressure is correct according to Control valve, Comfort Drive Control (lever steering), specifications
.

Note that the pressure is not adjustable.

6. Remove the measuring equipment. Re-install the plug in the PS port.
7. Install the plate under the cab.
8. Restore the machine.

VOLVO
Construction Equipment

Service Information

Document Title:	Function Group:	Information Type: **Service Information**	Date: **12/10/2011**
Profile: **WLO, L90F (Volvo) [GB]**			

Comfort Drive Control, servo pressure, checking

Op nbr 660-012

11666052 Pressure gauge
14290266 Hose
936446 Testing nipple

1. Block the wheels. Lock the frame joint with the frame joint lock.
2. Remove the plate on the left side of the machine under the cab.
3. Remove the plug from the PS-port on the control valve for lever steering, and install 936446Testing nipple.

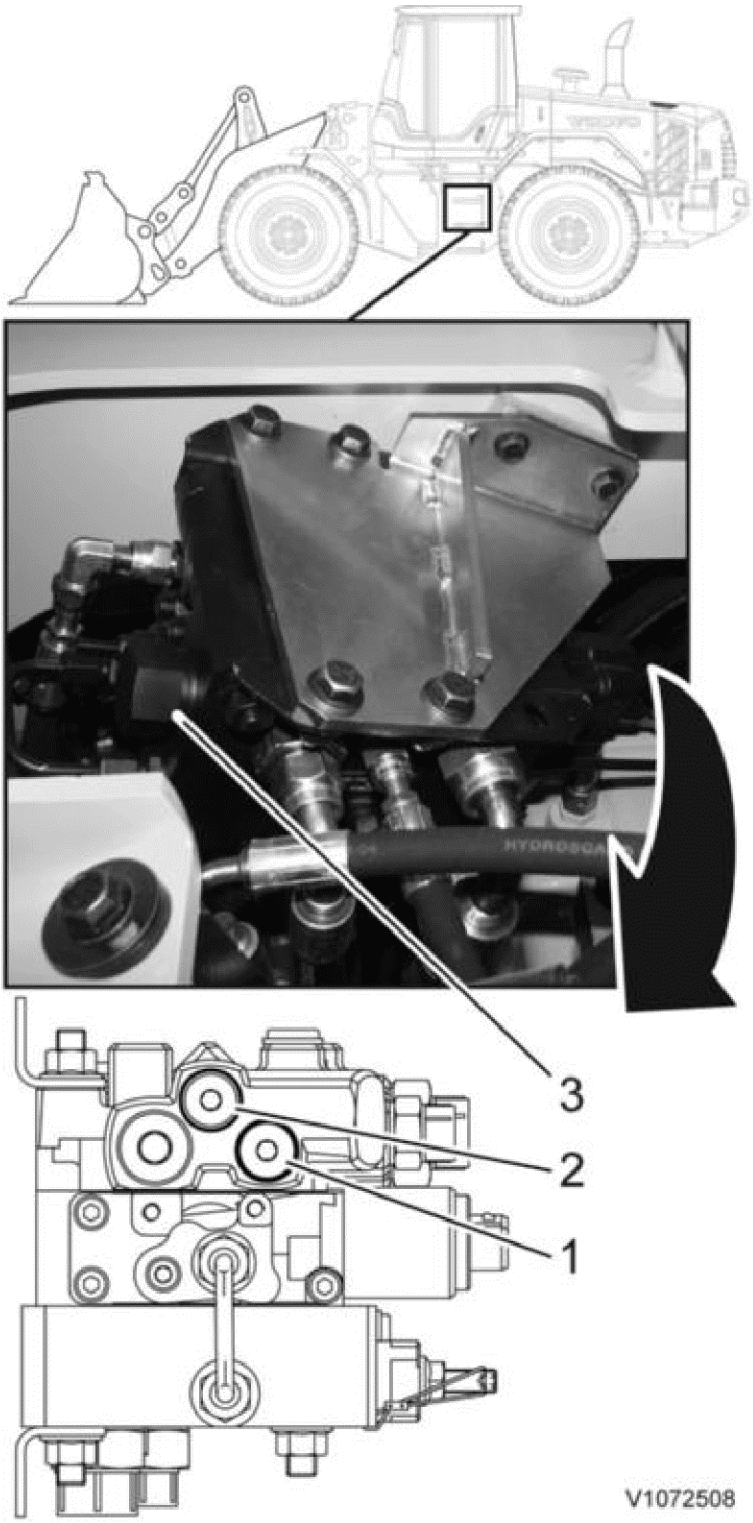

Figure 1

1. PS-port
2. Strainer
3. Pressure limiter, internal servo pressure

NOTE **Cannot be adjusted.**

4. Connect 11666052Pressure gauge and 14290266Hose.

5. Start the engine and activate Comfort Drive Control (lever steering).
Steer against end-position and check that the pressure is correct according to Control valve, Comfort Drive Control (lever steering), specifications
.

Note that the pressure is not adjustable.
If the pressure is too low, check that the pressure limiter and strainer are not clogged or defective.

6. Remove the measuring equipment. Reinstall the plug in the PS-port.
7. Install the plate under the cab.
8. Restore the machine.

VOLVO
Construction Equipment

Service Information

Document Title:	Function Group:	Information Type: **Service Information**	Date: **12/10/2011**
Profile: **WLO, L90F (Volvo) [GB]**			

Comfort Drive Control (CDC), description

Comfort Drive Control (CDC) means that steering, shifting forward/reverse and engagement of kick-down can be operated via controls positioned on the left arm rest.
The travelling speed can be limited, when the Comfort Drive Control is engaged. This means that as long as the Comfort Drive Control is engaged it is not possible to drive faster than what the VCADS Pro parameter HKX states.

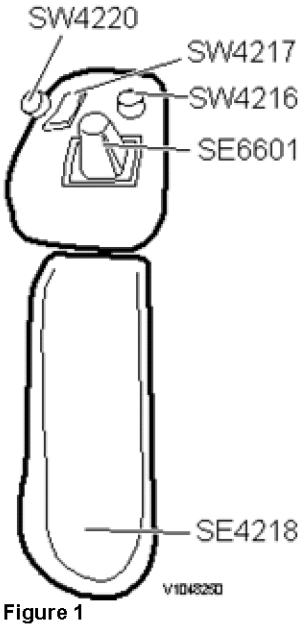

Figure 1
Arm rest, Comfort Drive Control (CDC)

SW4220	Switch, kick-down, Comfort Drive Control (CDC)
SW4217	Switch, forward/reverse, Comfort Drive Control (CDC)
SW4216	Switch, activation of Comfort Drive Control (CDC)
SE6601	Steering lever (joystick), Comfort Drive Control (CDC)
SE4218	Position sensor for arm rest, Comfort Drive Control (CDC)

By moving the steering lever (joystick) to the right and left respectively the operator steers the machine. The steering speed (i.e. the flow to the steering cylinders) increases the closer to the end position the lever is moved.
When the machine is near to full steering lock the flow to the steering cylinders reduces which will cause the steering movement to slow down before the front frame stops against the rear frame, so called end-of-stroke damping.

The steering speed reduces as the travelling speed of the machine increases at the same time as the sensitivity increases.

The sensitivity of the steering lever, the end-of-stroke damping and similar values are determined by the software for the machine and chosen to suit the machine model in question.

See also Elschema 601
, Elschema 602
and Hydraulschema, komplett
.

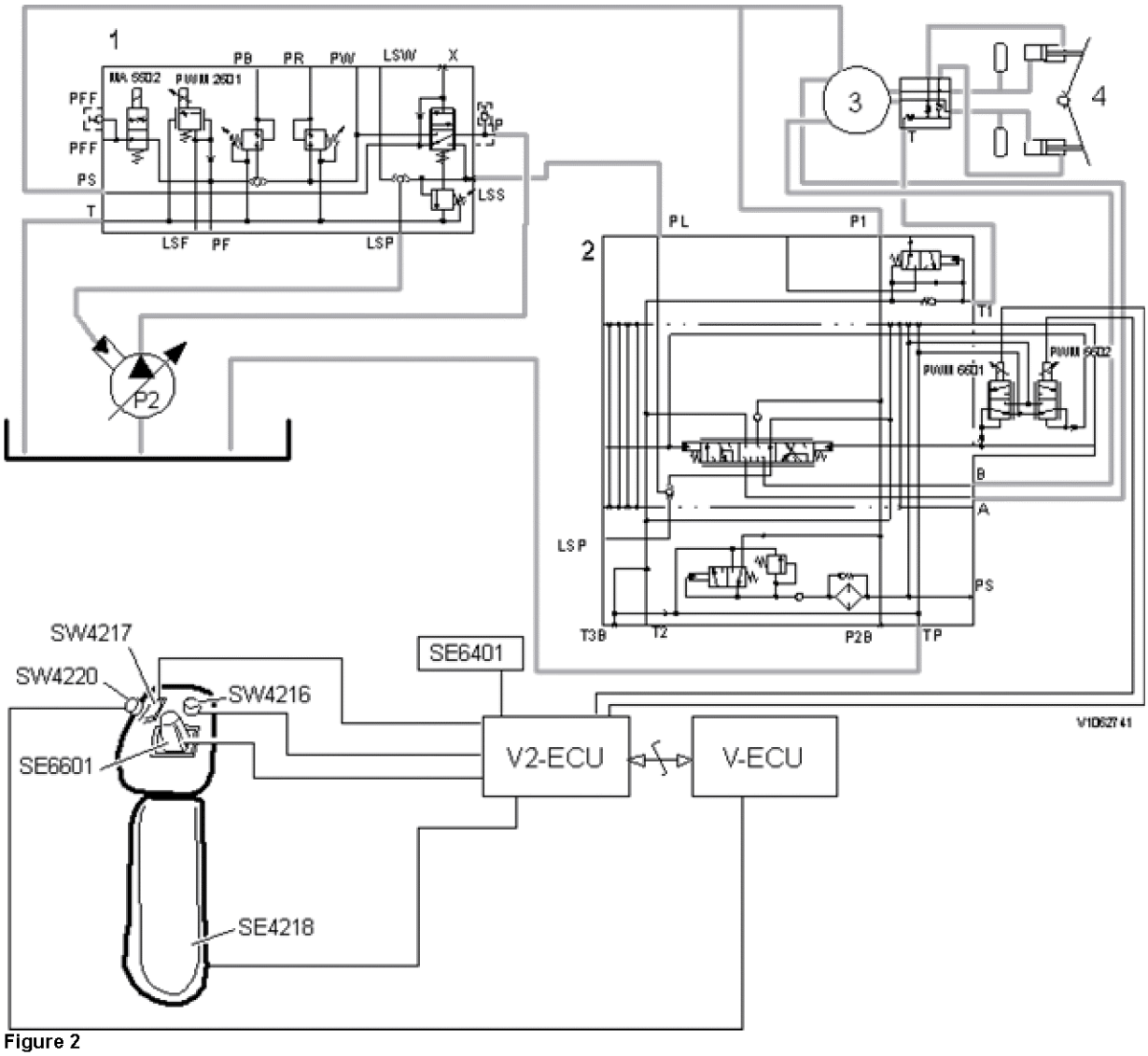

Figure 2
Comfort Drive Control, CDC

1. Central valve
2. CDC-valve
3. Steering valve
4. Steering cylinders

SW4220	Switch, kick-down, Comfort Drive Control (CDC)
SW4217	Switch, forward/reverse, Comfort Drive Control (CDC)
SW4216	Switch, activation of Comfort Drive Control (CDC)
SE6601	Steering lever (joystick), Comfort Drive Control (CDC)
SE4218	Position sensor for arm rest, Comfort Drive Control (CDC)
PWM6601	Proportional valve, Comfort Drive Control, steering left
PWM6602	Proportional valve, Comfort Drive Control, steering right

Engagement of Comfort Drive Control (CDC)

The Comfort Drive Control is engaged with switch SW4216 provided the arm rest is lowered so that sensor SE4218 is closed. When the Comfort Drive Control is engaged, the control lamp for the Comfort Drive Control is alight and the message CDC activated is shown on the operator display unit.

NOTE **It is only possible to activate the Comfort Drive Control when all gear selector controls are in neutral position. If this is not the case the message "InformationGear sel. not in neutral" will be shown on the display unit.**

Steering to the right/left

When steering lever SE6601 is actuated, a signal is received by either of proportional valves PWM6601 or PWM6602 (via V2-

ECU) and a connection is opened so that hydraulic oil flows from pump 2 (via the central valve priority spool) to the steering cylinders (via the CDC-valve and the steering valve). The machine is steered as long as the lever is actuated. Angle sensor SE6401 senses the angle of the steering joint. The V2-ECU sends a signal to the proportional valve, which restricts the flow to the steering cylinders, when the steering is nearing the end-of-stroke position.

Software

<table>
<tr><th colspan="3">Comfort Drive Control (CDC)</th></tr>
<tr><th>Input signals</th><th>Conditions for output functions</th><th>Output functions</th></tr>
<tr><td rowspan="2">o VCADS Pro parameter EDD
o VCADS Pro parameter HKX
o Engine On/Off
o Position sensor, arm rest, SE4218
o Switch, activation of Comfort Drive Control, SW4216
o Angle sensor, Comfort Drive Control, SE6401
o Lever, Comfort Drive Control, SE6601</td><td>General conditions for the function
o VCADS Pro parameter EDD "On"</td><td rowspan="2">o PWM6601 (the machine steers to the left) 0–100% flow with end-of-stroke damping
o PWM6602 (the machine steers to the right) 0–100% flow with end-of-stroke damping</td></tr>
<tr><td>o Engine On
o Position sensor, arm rest On
o Switch, activation of Comfort Drive Control On
o Steering lever 0– ±100%
o Angle sensor, Comfort Drive Control 0– ±100%</td></tr>
<tr><td>o Monitoring PWM6601</td><td rowspan="5">o System error, open circuit or short circuit
See Diagnostics</td><td rowspan="4">o Amber central warning
o CheckCDC failure</td></tr>
<tr><td>o Monitoring PWM6602</td></tr>
<tr><td>o Monitoring SE6401</td></tr>
<tr><td>o Monitoring SE6601</td></tr>
<tr><td>o Monitoring SW4217</td><td>o Amber central warning
o CheckGear sel. CDC failure</td></tr>
</table>

VOLVO
Construction Equipment

Service Information

Document Title:	Function Group:	Information Type: **Service Information**	Date: **12/10/2011**
Profile: **WLO, L90F (Volvo) [GB]**			

Comfort drive control (CDC), angle sensor, changing

Op nbr 660-006

VCADS Pro VCADS Pro Service Tool

NOTE **If the angle sensor has been removed, loosened or in any way been disturbed from its position, the function must be calibrated even if the angle sensor is not replaced.**

Removing

1. Lock the frame joint with the frame joint lock. Place blocks in front of and behind the wheels.

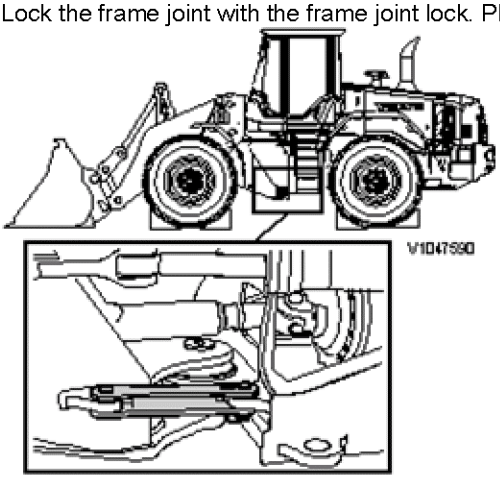

Figure 1

2. Remove the floor mat and the front floor plate.
3. Remove the guard over the angle sensor.

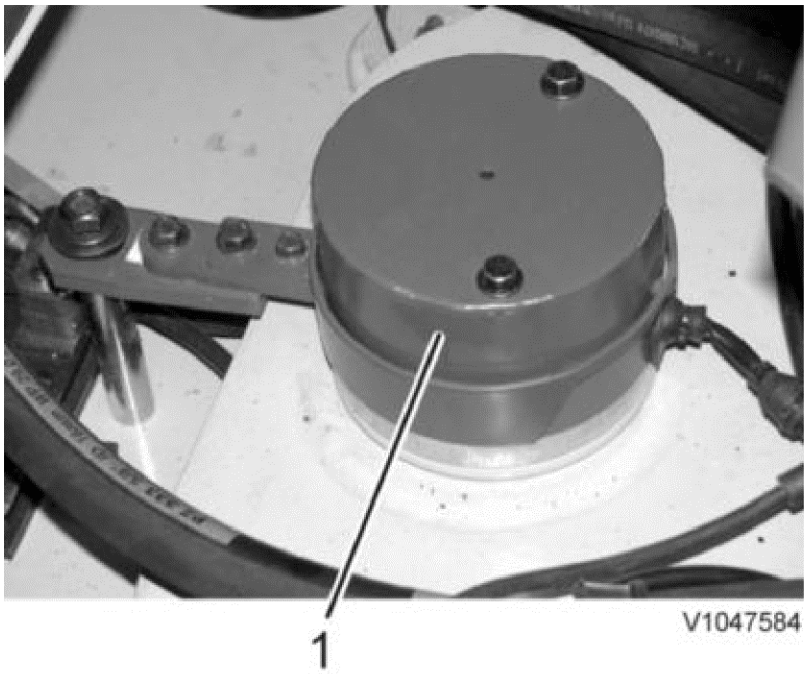

Figure 2
Angle transmitter Comfort Drive Control (lever steering)

1. Guard

4. Part the connector by the angle sensor.

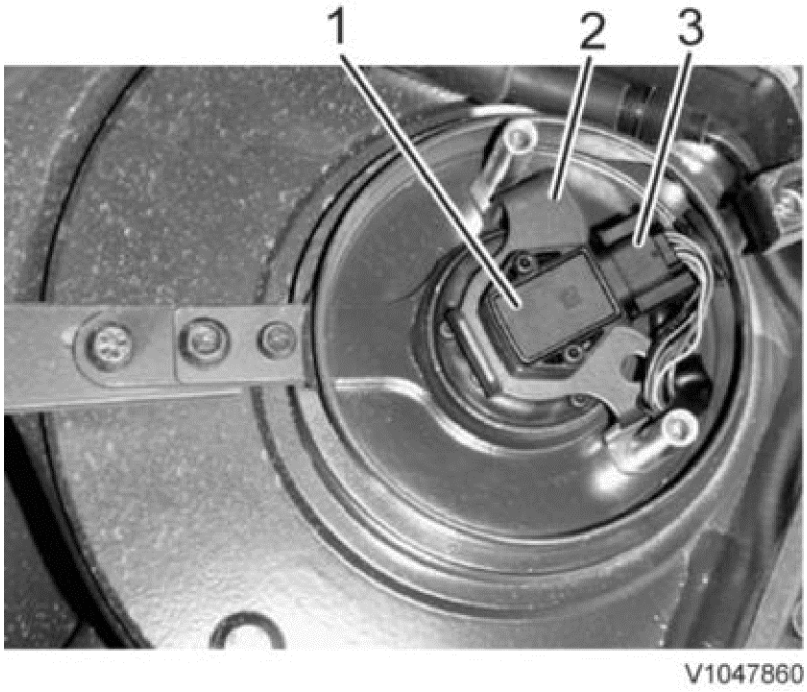

Figure 3

1. Angle sensor
2. Angle sensor bracket
3. Connector

5. Remove the bolts retaining the angle sensor.
6. Remove the bolts retaining angle sensor bracket. Pull away the bracket.
7. Remove the bolts retaining the driver and remove the angle transmitter together with the driver.
8. Remove the cotter pin and the angle sensor.

Installation

NOTE	**Check that the driver is intact and that the angle sensor stud cannot move in the driver.**

9. Install the new angle transmitter on the driver and secure it with the cotter pin.
10. Install the driver together with the angle transmitter and install the bolts retaining the driver.
11. Install the bolts retaining the angle sensor bracket.
12. Install the angle sensor in its bracket.
13. Assemble the connector.
14. Install the guard over the angle sensor.
15. Install the front floor plate.
16. Put the mat back.
17. Restore the machine.
18. Calibrate the Comfort Drive Control (lever steering) using VCADS Pro according to Op. No. 64187-3.
19. Test-run the machine. Check that there are no error codes. Test the function of the Comfort Drive Control according to Comfort Drive Control (lever steering), checking function
.

VOLVO
Construction Equipment

Service Information

Document Title:	Function Group:	Information Type: **Service Information**	Date: **12/10/2011**
Profile: **WLO, L90F (Volvo) [GB]**			

Comfort drive control (CDC), solenoid valve, changing

Op nbr 660-007

14360000 Vacuum pump / 24V
VCADS Pro VCADS Pro Service Tool

There are two solenoid valves for the Comfort Drive Control (lever steering), PWM6601A and PWM6602B. The method for replacing solenoid valve is the same regardless of which solenoid valve that is to be replaced.

Removing

1. Lock the frame joint with the frame joint lock. Place blocks in front of and behind the wheels.

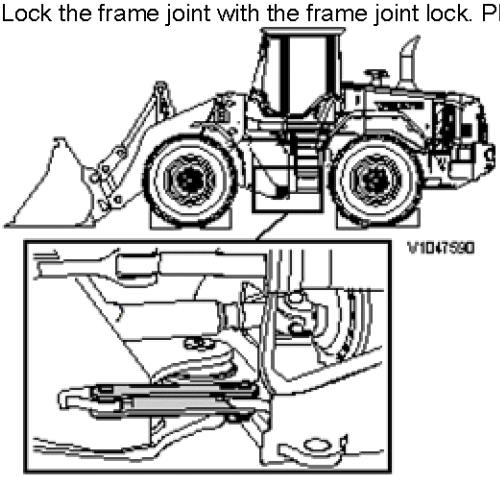

Figure 1
Locking frame joint

2. Remove the floor mat.
3. Fold the operator seat forward, see Operator seat, securing
.
4. Remove the rear floor plate.
5. Connect the vacuum pump, see Hydraulic oil tank, creating vacuum, connecting and disconnecting pump
.

WARNING! **Oil under high pressure!**

6. Part the connector by the solenoid valve.
Remove the bolts retaining the solenoid valve and remove the solenoid valve.

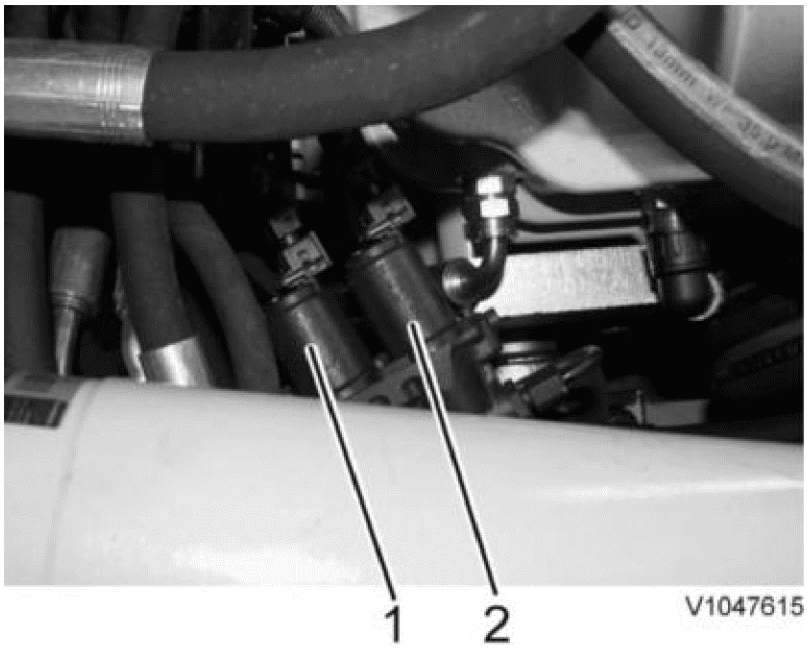

Figure 2

1. PWM6601A
2. PWM6602B

Installation

7. Lubricate the O-rings on the solenoid valve with oil. Install the solenoid valve together with the attaching bolts.
   Assemble the connector.
8. Remove the vacuum pump, see Hydraulic oil tank, creating vacuum, connecting and disconnecting pump
   .
9. Install the rear floor plate.
10. Fold the operator seat back, see Operator seat, securing
    .
11. Lay the floor mat back in position.
12. Restore the machine.
13. Calibrate the Comfort Drive Control (lever steering) using VCADS Pro Op. No. 64186-3.

    NOTE **Take care when the Comfort Drive Control (lever steering) is not calibrated. A small control lever deflection may result in max. steering speed.**

14. Test-run the machine. Check that there are no error codes. Test the function of the Comfort Drive Control (lever steering) according to Comfort Drive Control (lever steering), checking function
    .

VOLVO
Construction Equipment

Service Information

Document Title:	Function Group:	Information Type: **Service Information**	Date: **12/10/2011**
Profile: **WLO, L90F (Volvo) [GB]**			

Comfort Drive Control (CDC), control valve, removal

Op nbr 660-009

14360000 Vacuum pump / 24V

Crowfoot spanner, 24 mm

1. Place the machine in service position 1, see Servicepositioner
.

   NOTE **Leave the battery disconnect switch turned on.**

2. Mark and disconnect the hoses from the automatic greasing pump [1] ⓘ .
   Split the connector for the automatic greasing pump.
   Remove the automatic greasing pump. Weight approx. **10 kg (25 lb)**.
3. Cut the tie retaining the hoses for the automatic greasing pump and lay the hoses to one side.
4. Remove the plate on the left side of the machine below the cab.
5. Connect the vacuum pump, see Hydrauloljetank, vakuumsättning, inkoppling och urkoppling av pump
.
6. Remove the bolts for the bracket for the LS-pressure connecting block. Move the block to one side.

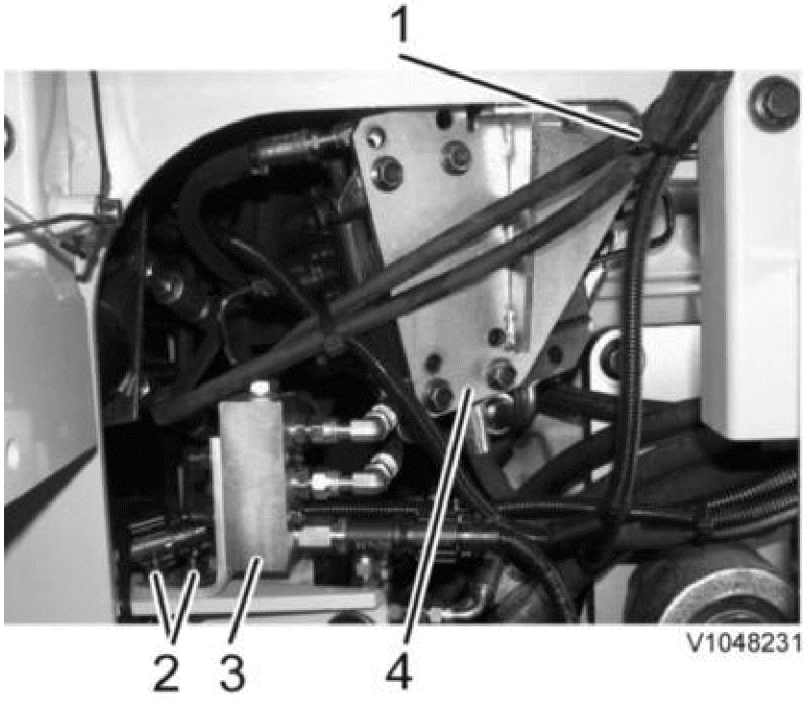

Figure 1

1. Ties

2. Attaching bolt, 2 pcs
3. Connecting block LS-pressure
4. Bracket for CDC-valve

7. Mark and disconnect the hydraulic hoses from the CDC-valve. Use the crowfoot spanner. Collect the waste oil in a suitable vessel.
   Plug the hoses.
   Split the connectors for PWM6601A and PWM6602B.

8. Remove the bolts retaining the bracket for the CDC-valve and remove the bracket together with the valve. Weight approx. **15 kg (35 lb)**.

---

[1] Optional equipment

VOLVO
Construction Equipment

Service Information

Document Title:	Function Group:	Information Type: **Service Information**	Date: **12/10/2011**
Profile: **WLO, L90F (Volvo) [GB]**			

Comfort drive control (CDC), control valve, installation

Op nbr 660-010

14360000 Vacuum pump / 24V
VCADS Pro VCADS Pro Service Tool

Crowfoot spanner, 24 mm

1. When replacing the Comfort Drive Control (lever steering) valve, transfer the required parts from the old valve to the new one.
2. Install the bracket together with the Comfort Drive Control (lever steering) valve. Weight approx. **15 kg (35 lb)**.
   Connect the connectors to PWM6601A and PWM6602B.

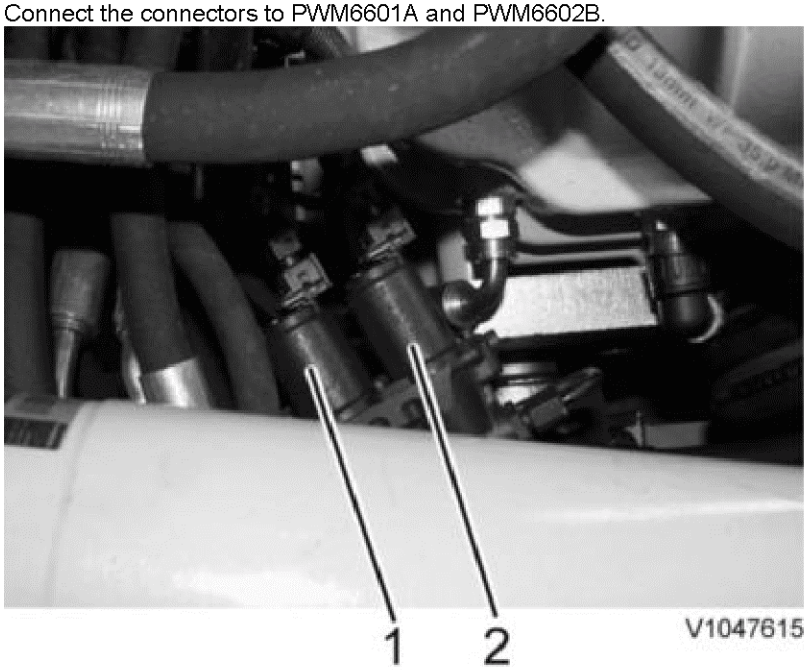

Figure 1
Solenoid valves seen from above (through the opening in the cab floor)

1. PWM6601A (front in the machine)
2. PWM6602B (rear in the machine)

3. Remove the plugs, check the O-rings and connect the hoses to the Comfort Drive Control (lever steering) valve. Use the crowfoot spanner.

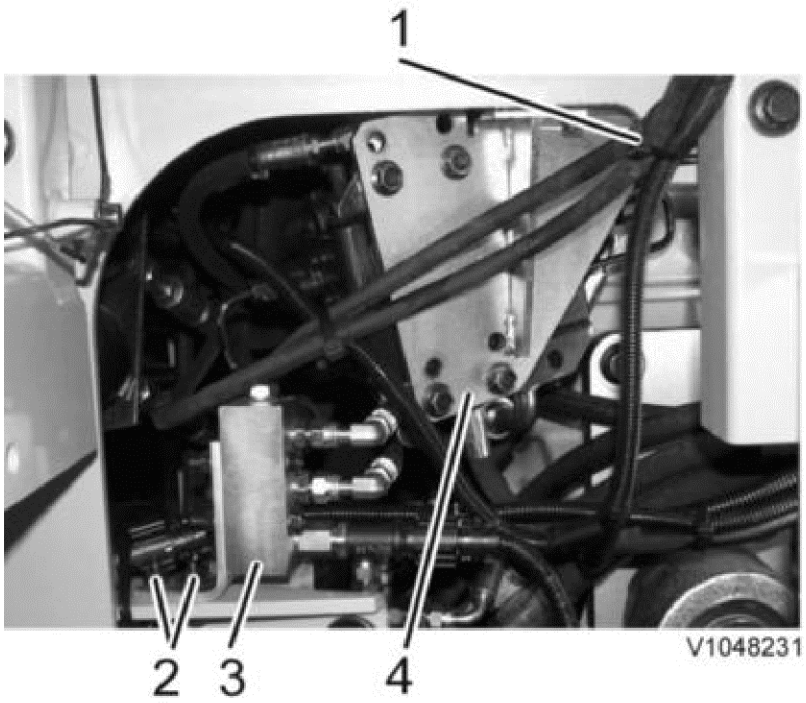

Figure 2

1. Tie(s) for automatic greasing
2. Attaching bolt, 2 pcs
3. Connecting block LS-pressure
4. Bracket for Comfort Drive Control (lever steering) valve

4. Remove the vacuum pump, see Hydraulic oil tank, creating vacuum, connecting and disconnecting pump .
5. Install the connecting block for LS-pressure.
6. Tie up the hoses and the cable harness for the automatic greasing pump using tie(s).
7. Install the plate behind the ladder on the right side of the machine.
8. Install the automatic greasing pump [1] ⓘ and connect the hoses and the connector. Weight approx. **10 kg (25 lb)**.
9. Restore the machine.
10. Start the engine and bleed the steering system by steering with the Comfort Drive Control (lever steering) to full lock to the right and to the left several times.

    NOTE **Take care when the Comfort Drive Control (lever steering) is not calibrated. A small control lever deflection may result in max. steering speed.**

11. Calibrate the Comfort Drive Control (lever steering) using VCADS Pro Op. No. 64186–3.
12. Test-run the machine. Check that there are no error codes. Test the function of the Comfort Drive Control (lever steering) according to Comfort Drive Control (lever steering), checking function .

---

[1] Optional equipment

VOLVO
Construction Equipment

Service Information

Document Title:	Function Group:	Information Type: **Service Information**	Date: **12/10/2011**
Profile: **WLO, L90F (Volvo) [GB]**			

Error codes when calibrating

During calibration with the VCADS Pro service tool, the error codes listed below may occur.

Error code	Possible cause	Check/Action
Cal 002	The action is performed incorrectly.	
Cal 003	The action is performed incorrectly.	
Cal 004	The action is performed incorrectly.	
Cal 005	Faulty lever.	Check the lever and the cable harness, see Section 302, Troubleshooting.
Cal 006	The lever does not return to centre position because it is binding or blocked.	
Cal 007	Internal error in ECU. Wrong parameter value.	Check value of parameter for the function.
Cal 012	Faulty angle sensor.	Check the angle sensor, see Section 302, Troubleshooting.
Cal 014	Defective solenoid valve. Defective control valve for lever steering.	Check the solenoid valve, see section, 302, Troubleshooting.
Cal 015	The action is performed incorrectly. Angle sensor is loose.	Check the angle sensor, see Section 302, Troubleshooting.
Cal 016	Defective solenoid valve. Angle sensor is loose. Max. pump pressure is too low. Defective shock valve. Stop in LS-line. Servo pressure too low. Angle change not reached within valid current range. Control valve for lever steering needs too high pilot pressure to open. LS-hoses are installed incorrectly.	Check the solenoid valves and the angle sensor, see Section 302, Troubleshooting. Check the pump pressure and servo pressure. Check the shock valve.
Cal 510	Hydraulic oil temperature too low. Defective springs in the solenoid valves.	Warm up the machine. Replace solenoid valves.
Cal 511	Hydraulic oil temperature too low. Defective spring in solenoid valve.	Warm up the machine. Replace solenoid valve for the function.
Cal 512	Hydraulic oil temperature too low. Defective spring in solenoid valve.	Warm up the machine. Replace solenoid valve for the function.
Cal 513		Repeat the calibration step up to 10 times.
Cal 514		Repeat the calibration step up to 10 times.

VOLVO
Construction Equipment

Service Information

Document Title:	Function Group:	Information Type: **Service Information**	Date: **12/10/2011**
Profile: **WLO, L90F (Volvo) [GB]**			

Frame, description

The front frame is constructed as an open box section.
It carries the loader linkage and is the attachment point for the front axle. There are also special axle stand points on the front frame.

The rear axle is composed of two frame members. Each frame member consists of an open box section.
The rear frame carries the cab, engine and transmission.
The counterweight and the rear axle are attached to the rear frame.

The engine and transmission are rubber-mounted in the frame.

Important attaching surfaces between the frame and components are machined for exact positioning of components and strong joints.

The frame joint is dimensioned to handle high stress loads.
The upper bearing arrangement consists of a spherical link bearing and the lower bearing arrangement consists of two tapered roller bearings.

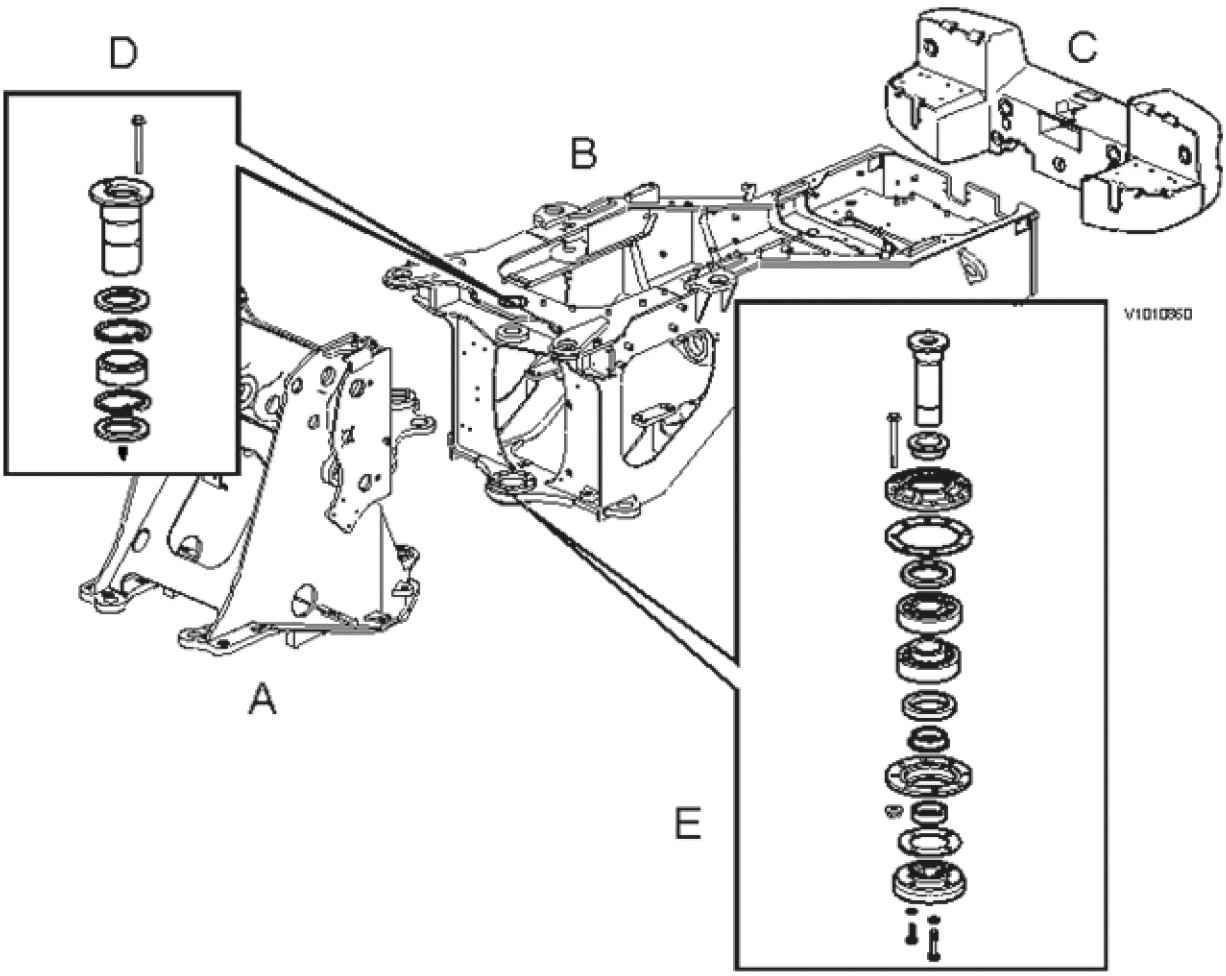

Figure 1
Frame parts

A. Front frame

B. Rear frame
C. Counterweight
D. Upper frame joint bearing
E. Lower frame joint bearing

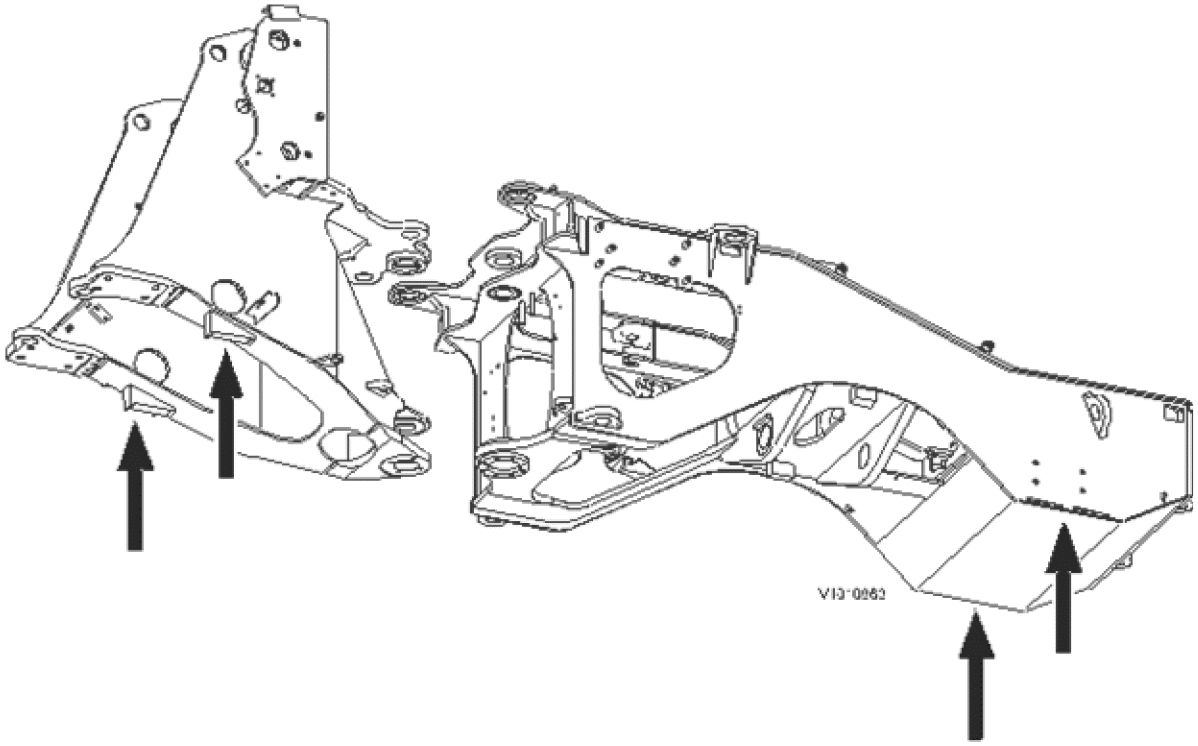

Figure 2
Frame's support points

VOLVO
Construction Equipment

Service Information

Document Title:	Function Group:	Information Type: **Service Information**	Date: **12/10/2011**
Profile: **WLO, L90F (Volvo) [GB]**			

Frame joint, description

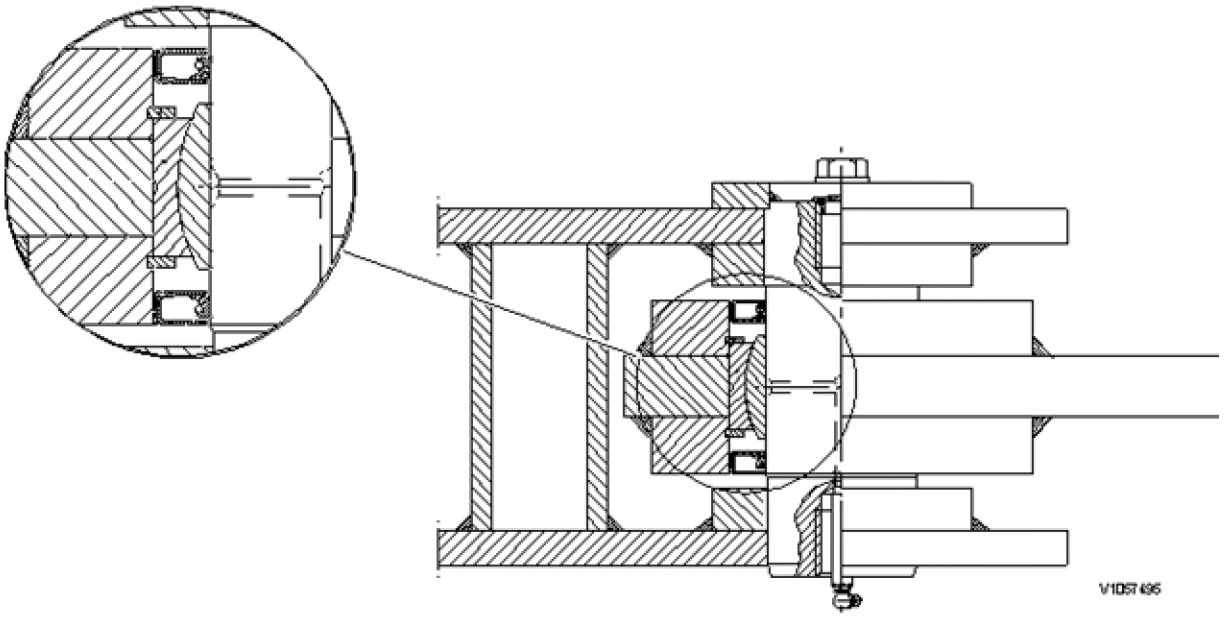

Figure 1
Upper frame joint bearing

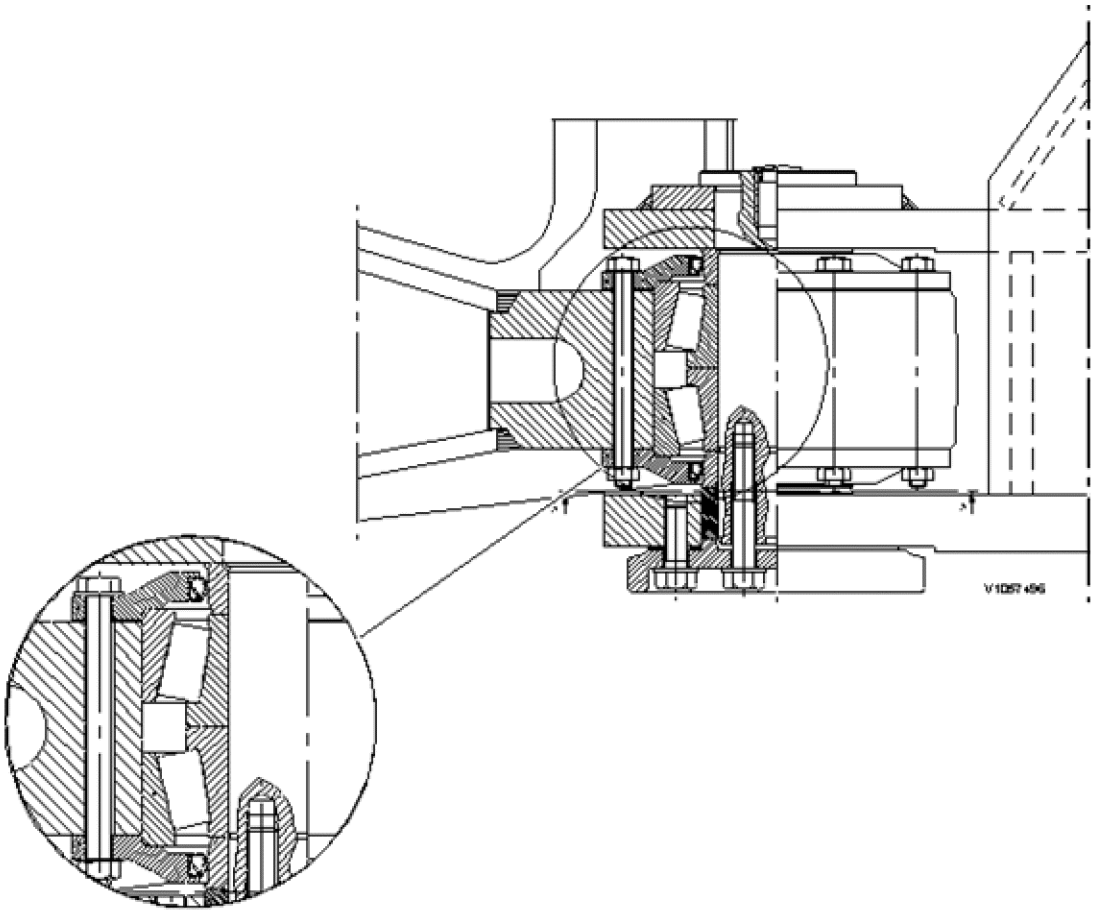

Figure 2
Lower frame joint bearing

VOLVO
Construction Equipment

Service Information

Document Title:	Function Group:	Information Type: **Service Information**	Date: **12/10/2011**
Profile: **WLO, L90F (Volvo) [GB]**			

Frame joint, replacing bearings

Op nbr 741-036

9993651 Puller bolt
9993713 Puller bolt
9993717 Quick nut
9993717 Quick nut
9993739 Support
9993857 Intermediate piece
11666013 Pump
11666054 Jack
11666055 Jack
11667001 Handle
11667110 Drift plate
11667120 Drift plate
11667140 Drift plate

Garage jack 10 tonnes, 2 pcs
Ratchet block
Threaded rod M16
Guide pins M12 x 200 mm
VCADS Pro

NOTE **Place all pins in a freezer for approx. 8 hours prior to installation.**

Dismantling

1. Position the machine on level ground, possibly with attachment installed and flat against the ground or support the attachment bracket.
   Release the pressure in the hydraulics and the brake system.
   Drain the hydraulic oil. Hydraulsystem, volym
   .
2. Turn off the current with the battery disconnect switch and position blocks by the front wheels.
3. Block the rear axle pivoting by positioning wooden wedges between the rear axle and the frame.

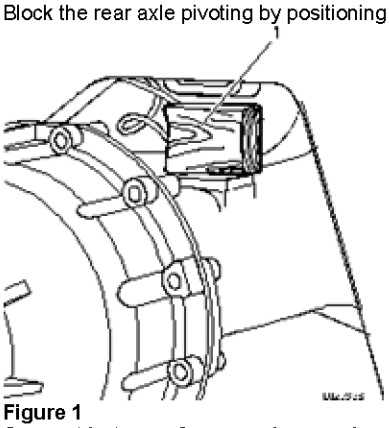

Figure 1
Support between frame and rear axle

1. Wooden wedges on both sides

4. Disconnect the lubrication hoses from the support bearing.
   Remove the complete propeller shaft together with support bearing.**Weight approx.: 25 kg (55 lb)**
5. Release the parking brake, see Tvångslossning av parkeringsbroms

6. Remove the mat in the cab and remove the front cover.

7. Remove the cover over the angle sensor.
Remove the two screw studs. Remove the three Torx screws retaining the sensor.
Remove the sensor.
Remove the centre bolt and the nut for the arm.
Lift away the sensor together with intermediate plate.

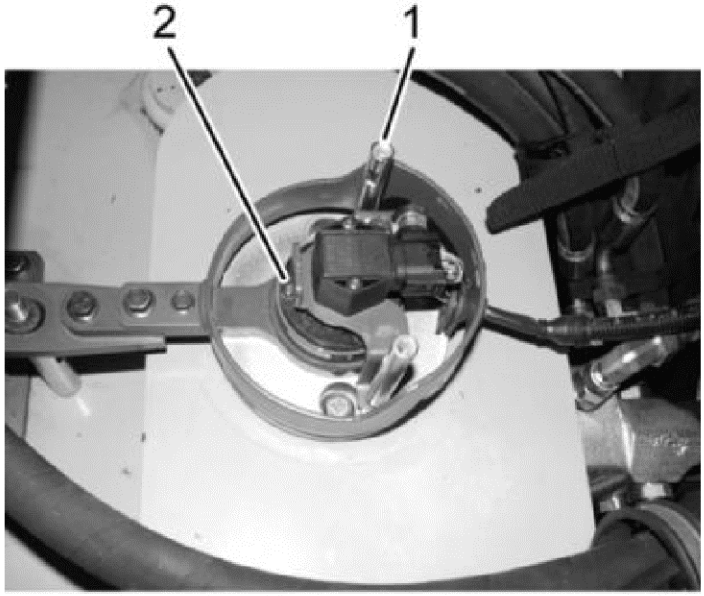

V1057488

Figure 2
Angle sensor

1. Screw stud
2. Torx screw

8. Remove the front steering cylinder brackets.
Remove the lock ring. Tap out the pin. Take care of the two plastic washers

9. Loosen the bracket for the servo hoses. Cut the ties for the cable harness along the return hose. Disconnect the pressure and the return hoses.

10. Secure the rear frame by attaching the hoist to the towing eye on the counterweight. Position a jack under the front frame by the frame joint.

11. Remove the cover for the lower pin and take care of the shims.

12. Press out the lower pin with a drift and a jack.



V1057489

Figure 3

13. Position the jack under the rear frame.

14. Remove the lock screws for the upper pin.

15. Pull out the upper pin.

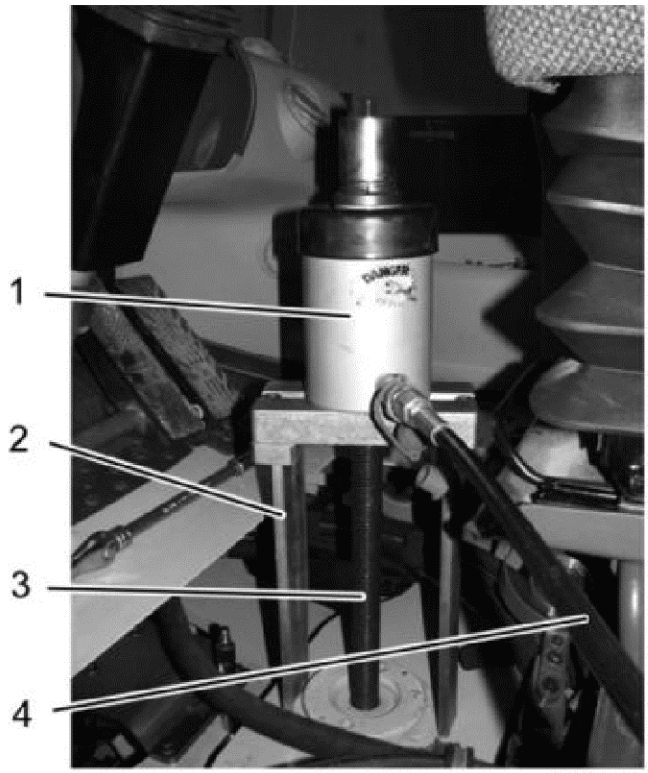

Figure 4
Removing upper pin

1. 11666055Jack
2. 9993739Support
3. 9993651Puller bolt
4. 11666013Pump

Part the machine.

16. Prize the frame joint apart with a suitable tool and aid the procedure by moving the machine sideways with a ratchet block.

NOTE **The lower spacer ring may possibly have to be knocked down with a drift.**

Dismantling bearing.

17. Remove the bolts for the bearing covers on the lower bearing. Take care of the shims.
Knock out the bearings.

18. Remove the seals in the covers.

19. Remove the seal rings and the lock rings on the upper bearing.
Knock out the bearing.

Assembling upper bearing

20. Install the upper link bearing together with lock rings. Turn the slot in the bearing 90° to the load direction (the direction of travel).

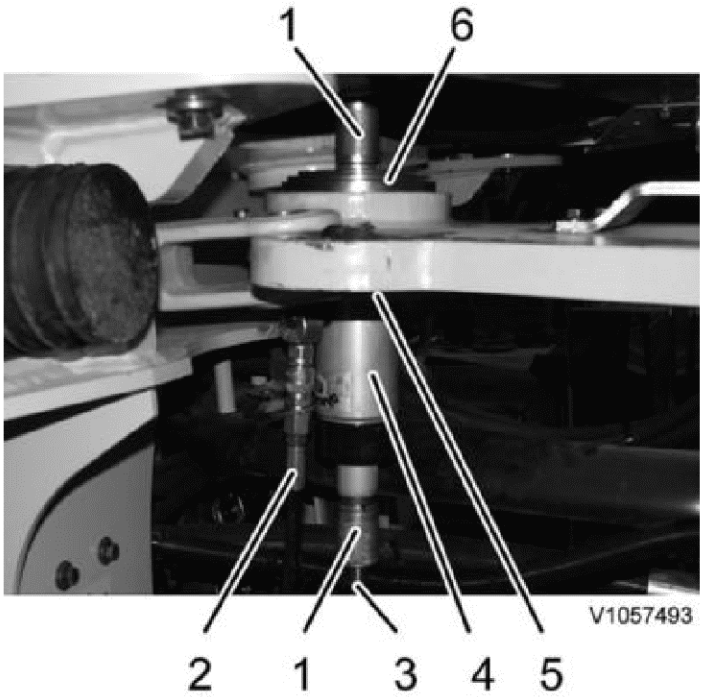

Figure 5
Installing upper bearing

1. 9993717Quick nut
2. 11666013Pump
3. 9993713Puller bolt
4. 11666054Jack
5. 11667110Drift plate
6. 11667140Drift plate

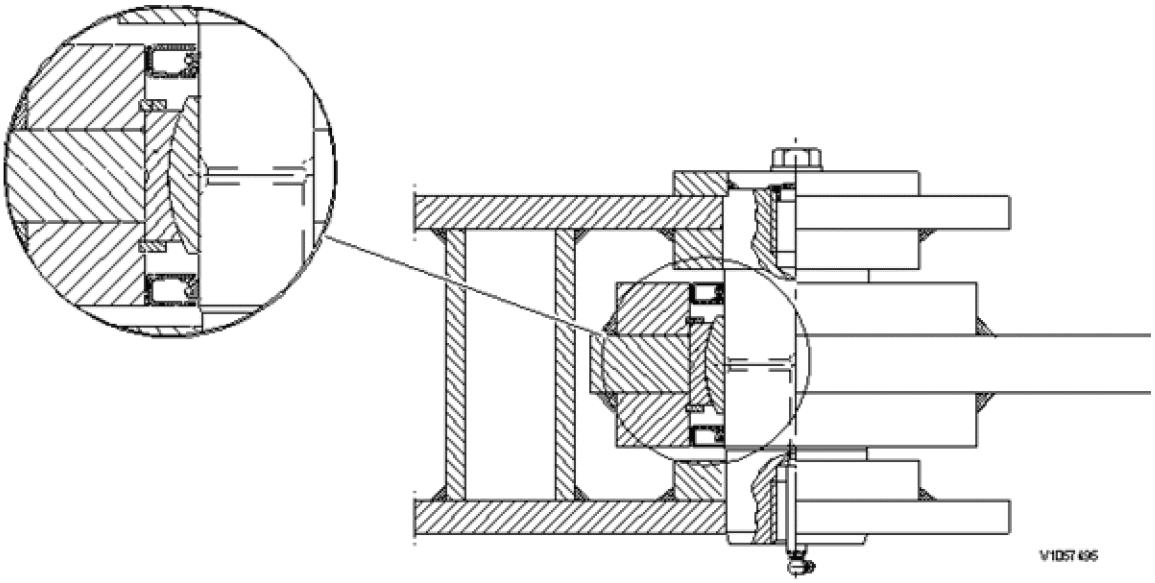

Figure 6
Upper bearing

21. Install the seal rings. Use 11667120Drift plate and 11667001Handle.

    NOTE **The lip of the seal should be facing outwards.**

22. Lubricate bearing and seals with plenty of grease.

Assembling lower bearing

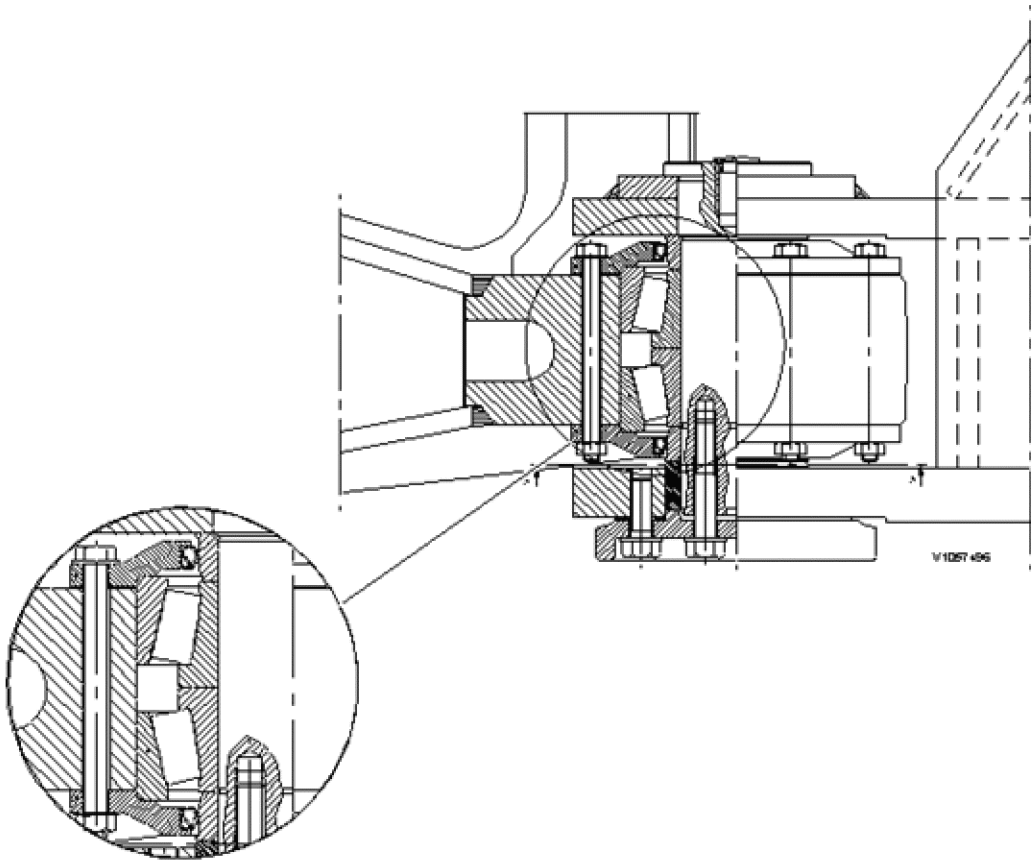

Figure 7
Lower bearing

23. Install seal rings in the covers. Use 11667001Handle and 11667110Drift plate.

NOTE **The lip of the seal in the upper cover should be facing upwards. The lip of the seal in the lower cover should be facing upwards.**

24. Install the lower bearing race.
Install the lower cover. Tighten down the cap with the bolts with installed shims. Secure the cover with suitable shims and jack and to keep the bearing cover against the frame when adjusting with shims.
Lubricate the bearings and install them.
Install the upper bearing race.

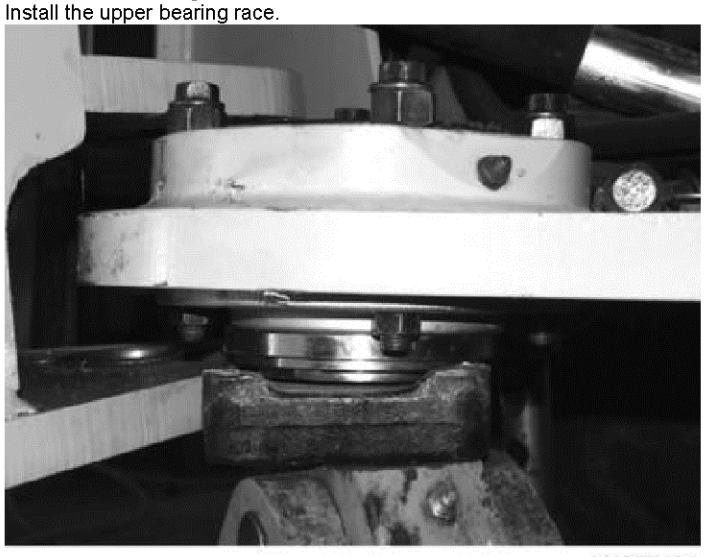

V1057494

Figure 8

25. Remove the bolts from the lower cap. Install the upper bearing cover and re-install the bolts. Carefully tighten the bolts for the bearing cover alternately, rotate the bearing pack with the pin and 9993857Intermediate piece, tighten the bolts alternately

until **the turning torque becomes 7–10 N m (5–7 lbf ft).**
Measure the slot at each bolt with a feeler gauge and make a note of the measurements.

26. Remove the upper bearing cover and install shims corresponding to the smallest measurement.

27. Lubricate the seals with plenty of grease. Install the bearing cover and tighten the bolts alternately, **Tightening torque:** Ramled, åtdragningsmoment

    Check the rolling resistance of the bearing pack.
    Adjust when necessary:
    In case of too great rolling resistance, install more shims.
    In case of too little rolling resistance, reduce the number of shims.

28. Lubricate the bearings with grease at the same time as they are rotated.

NOTE **Install the spacer rings.**

Docking of frame parts

29. Align and pull the frame parts together. Cool the pins to facilitate installation.
    Install the frame joint upper pin. Use guide pins.
    Install the lower cover. Install a threaded rod M12 x 200 mm in the pin.
    Guide the frame joint pin into the cover with the aid of the threaded rod. Pull down the pin with the threaded rod. Remove the threaded rod.

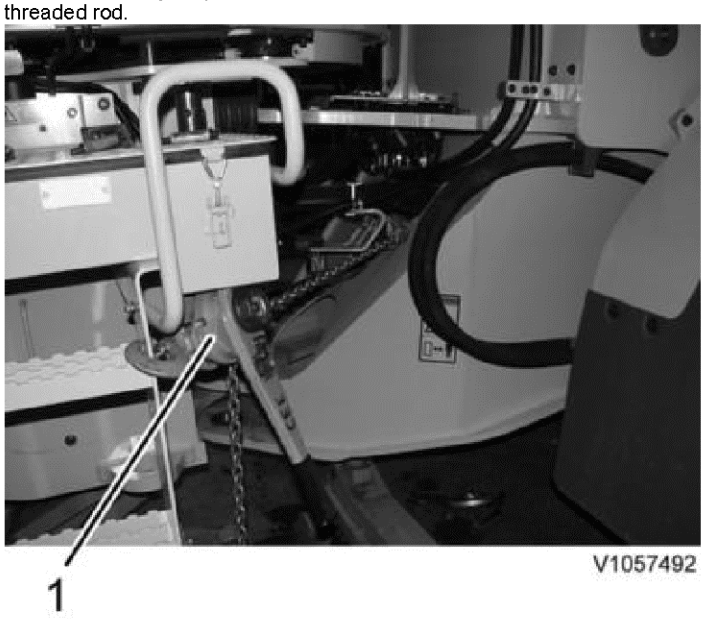

Figure 9
Docking

1. Ratchet block

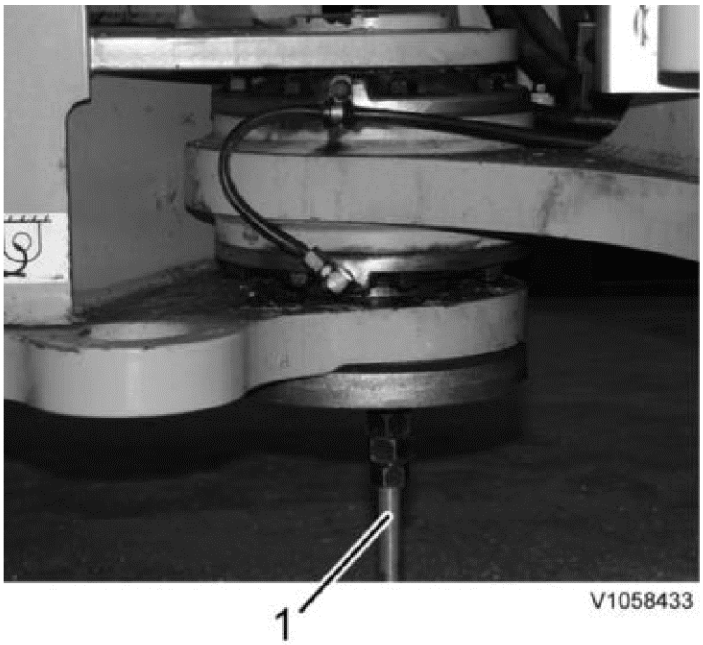

Figure 10

1. Threaded rod

30. Tighten down the cover with the bolts for the pin. Measure the slot between the cover and the frame in several places and make a note of the measurements in order to determine the thickness of the shims.

31. Remove the cover and install shims corresponding to the determined measurement.
Install the cover and tighten the bolts.
Tightening torque Ramled, åtdragningsmoment

32. Install the pressure and return hoses. Install the bracket for the servo hoses. Clamp the cable harness to the return hose.

33. Install the whole propeller shaft together with support bearing. **Weight approx.: 25 kg (55 lb)**Kardanaxel, åtdragningsmoment
.

34. Install the front steering cylinder brackets.
Position the two plastic washers on either side of the lug. Tap in the pin. Install the lock ring.

35. Install the lock screws for the frame joint upper pin. See Ramled, åtdragningsmoment
.

36. Install the intermediate plate with the holes for the screw studs rearwards. Install the plastic washer and the angled arm and tighten it down with the centre bolt and the nut for the arm. Install the sensor with the small hole rearwards and screw in the three Torx screws. Screw in the two screw studs. Install the cover over the angle sensor.

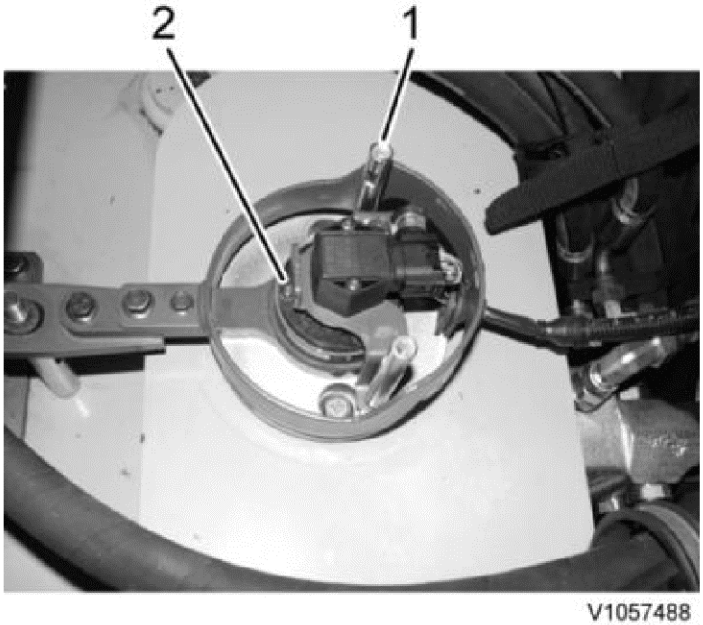

Figure 11
Angle sensor

1. Screw stud
2. Torx screw

37. Put back floor and floor mat.
38. Fill with hydraulic oil.
39. Restore and adjust the parking brake. See Parkeringsbroms, slitagekontroll
.
40. Lubricate the upper and lower bearings for the frame joint and the support bearing for the propeller shaft.
41. Carry out VCADS Pro calibration 64187–3 for the lever steering end positions.

VOLVO
Construction Equipment

Service Information

Document Title:	Function Group:	Information Type: **Service Information**	Date: **12/10/2011**
Profile: **WLO, L90F (Volvo) [GB]**			

Axle suspension, replacing bushes and seals

Op nbr 755-003

9993843 Adapter
9993757 Intermediate piece
9993722 Support
9993725 Puller bolt
11667001 Handle
9993717 Quick nut
9993717 Quick nut
9993713 Puller bolt
11667080 Drift plate
11667085 Drift plate
11667125 Drift plate
11666013 Pump
11666054 Jack
11668007 Standard Jack Single
11668007 Standard Jack Single
11668010 Wheel forklift

Sling 3 m (10 ft), 2 pcs
Sling 1 m (40 in), 2 pcs
Part no. 935100 Plug
Part no. 935651 Plug
Kukko 21–8
Kukko 22–2

This operation also includes required tools and times for applicable parts of the following operations:

- Servicepositioner
- Bakaxel, borttagning
- Bakaxel, ditsättning

1. Remove the rear axle according to Bakaxel, borttagning
.
2. Position the axle on a stable support, work bench or similar.
3. Remove the seal ring. On the pinion side, install the tools and pull out the washer. Heat the bush with a welding torch. Allow the bush to cool. Install the tools and pull out the bush.
Repeat the procedure on the opposite side.
The rear bush is provided with a flange.

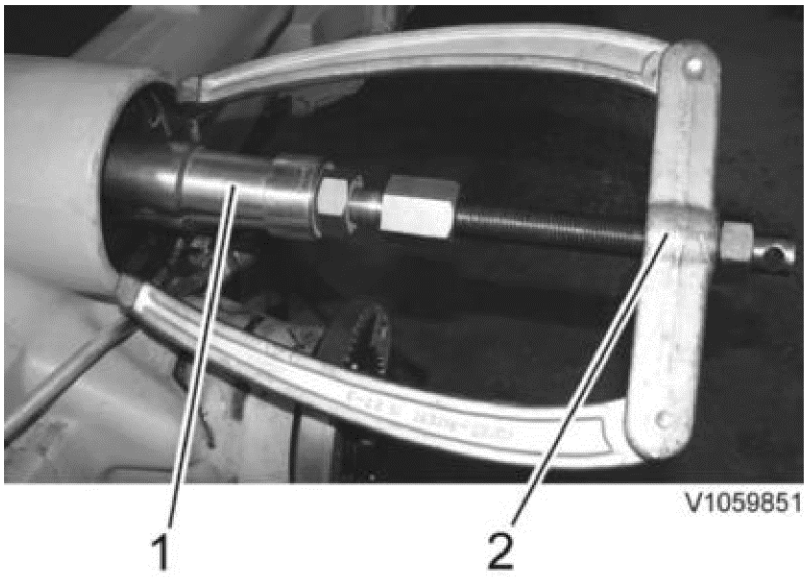

Figure 1

1. Kukko 21–8
2. Kukko 22–2

4. Lubricate and press in the bushes.

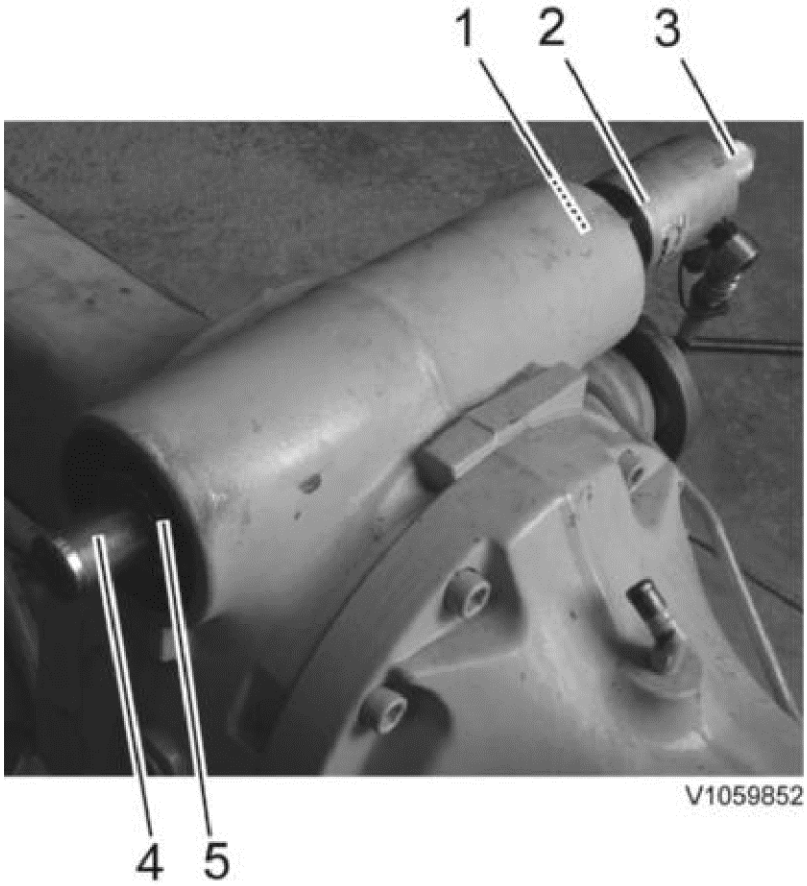

Figure 2

1. 11667085Drift plate
2. 11666054Jack
3. 9993713Puller bolt
   9993717Quick nut
4. 9993717Quick nut
5. 11667080Drift plate

5. Install the washer. If the washer is provided with a chamfer, this should be turned inwards.

6. Install the seal rings.

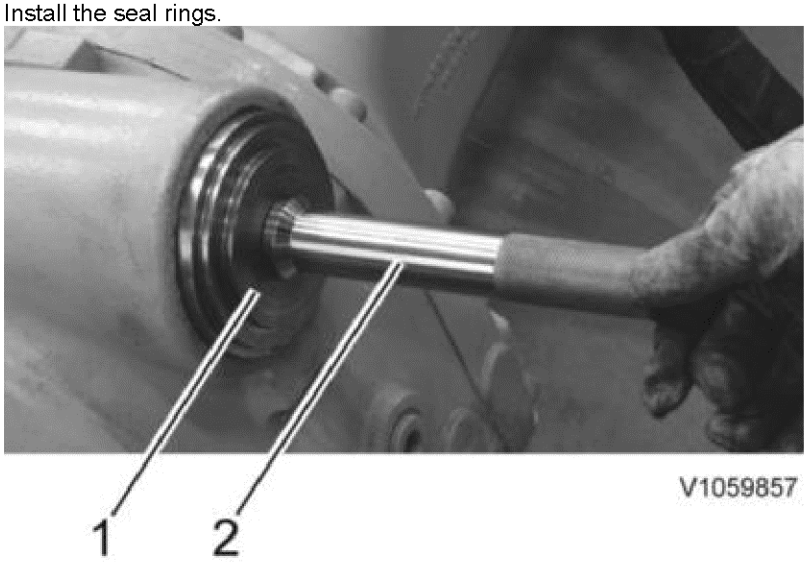

Figure 3

1. 11667125Drift plate
2. 11667001Handle

7. Install the axle according to Bakaxel, ditsättning

VOLVO
Construction Equipment

Service Information

Document Title:	Function Group:	Information Type: **Service Information**	Date: **12/10/2011**
Profile: **WLO, L90F (Volvo) [GB]**			

Rear wheel, removal

Op nbr 771-004

11668010 Wheel forklift
11668007 Standard Jack Single
11668007 Standard Jack Single

1. Place the machine in service position 1, see Servicepositioner
.
2. Remove the wheel nut protective caps.
3. Loosen the wheel nuts.
Caution!
Do not remove the wheel nuts before the axle is raised and the wheel has been secured with a wheel forklift or similar equipment.
4. Place two 11668007Standard Jack Singles under the frame. Raise the machine and secure the stand jacks using their pins.

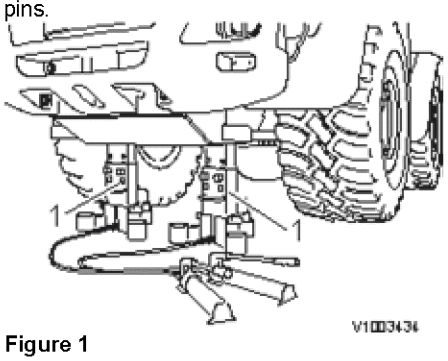

Figure 1

1. 11668007Standard Jack Single

5. Install 11668010Wheel forklift and secure the wheel.

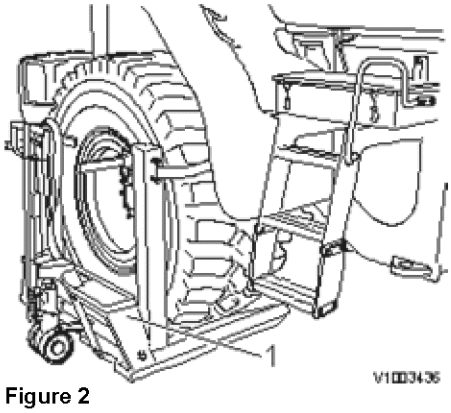

Figure 2

1. 11668010Wheel forklift

6. Remove the wheel nuts and remove the wheel.
Weight of wheel: **approx. 360 kg (794 lb)**.

VOLVO
Construction Equipment

Service Information

Document Title:	Function Group:	Information Type: **Service Information**	Date: **12/10/2011**
Profile: **WLO, L90F (Volvo) [GB]**			

Rear wheel, installation

Op nbr 771-005

11668007 Standard Jack Single
11668007 Standard Jack Single
11668010 Wheel forklift
VCADS Pro VCADS Pro Service Tool

1. Clean the contact faces in the rim and on the hub. Make sure that the threads in the hub are clean and free from any damage.
2. Fit the wheel.
   Weight wheel: **approx. 360 kg (794 lbs)**.

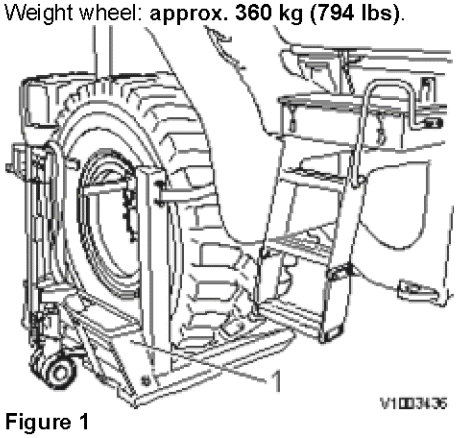

Figure 1

1. 11668010Wheel forklift

Install the wheel nuts.

NOTE **Tighten the nuts crosswise, a little at a time, so that the wheel isn't tilted.**

Remove the wheel forklift.
Tightening torque, see Wheels, tightening torques
.

3. Install the wheel nuts' caps.
4. Lower the machine and remove the jacks.

WARNING! **Tires installed on a split rim may explode and cause very severe injuries.**

NOTE **When changing dimension of the wheels, the parameter shall be changed according to operation number 17030–3 with VCADS Pro.**

5. Restore the machine and check that there are no error messages.
6. Check function according to Brake system, function check, retardation

VOLVO
Construction Equipment

Service Information

Document Title:	Function Group:	Information Type: **Service Information**	Date: **12/10/2011**
Profile: **WLO, L90F (Volvo) [GB]**			

Front wheel, removal

Op nbr 771-002

11668007 Standard Jack Single
11668010 Wheel forklift

1. Place the machine in service position 1, see Servicepositioner
.
2. Support the axle so that the wheels can rotate.

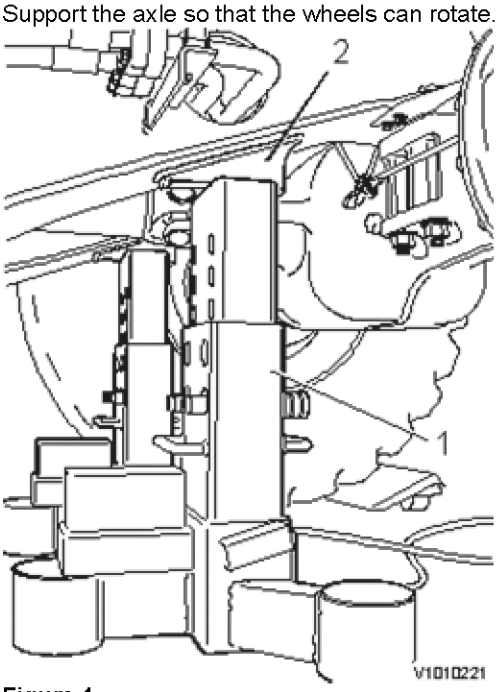

Figure 1

1. 11668007Standard Jack Single
2. Support point

3. Remove the wheel.
Wheel's weight: approx. **360 kg (795 lbs)**.

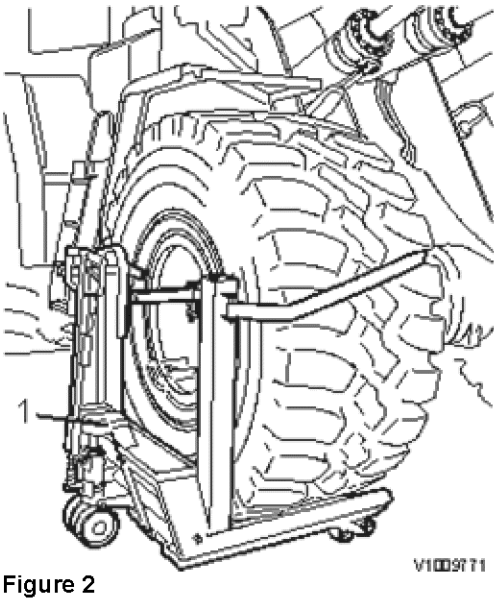

Figure 2

1. 11668010Wheel forklift

VOLVO
Construction Equipment

Service Information

Document Title:	Function Group:	Information Type: **Service Information**	Date: **12/10/2011**
Profile: **WLO, L90F (Volvo) [GB]**			

Front wheel, installation

Op nbr 771-003

11668010 Wheel forklift
11668007 Standard Jack Single
VCADS Pro VCADS Pro Service Tool

1. Fit the wheel.
   Wheel's weight: approx. **360 kg (795 lbs)**.
   Tightening torque wheel studs, see Wheels, tightening torques
   .

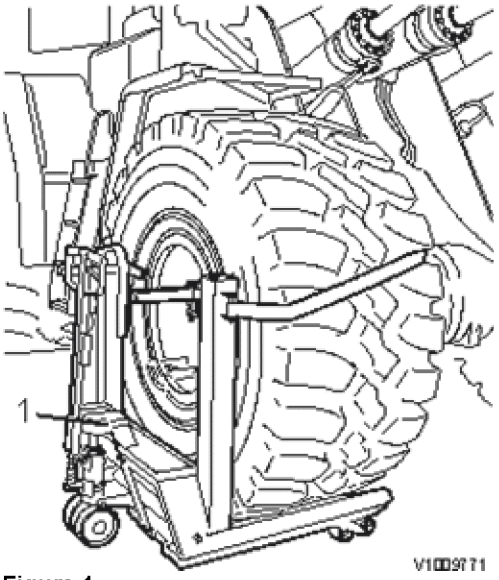

Figure 1

1. 11668010Wheel forklift

2. Let down the machine and remove the jack.

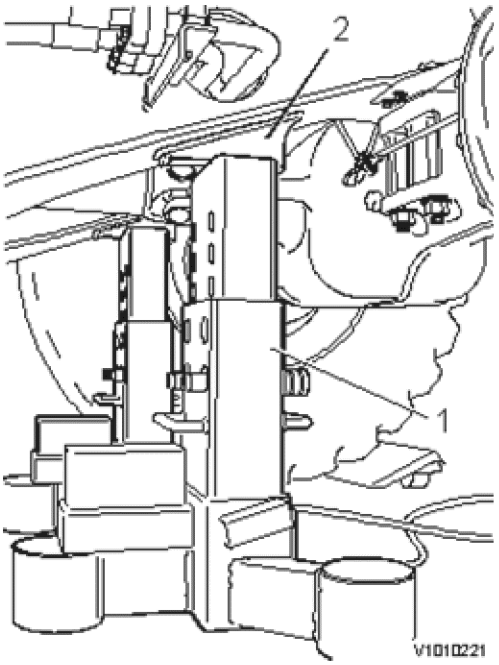

Figure 2

1. 11668007Standard Jack Single
2. Support point

3. Restore the machine to operating condition.

NOTE	**When changing dimension of the wheels, the parameter shall be changed according to operation number 17030–3 with VCADS Pro.**

4. Restore the machine and check that there are no error messages.
5. Check function according to Brake system, function check, retardation

VOLVO
Construction Equipment

Service Information

Document Title:	Function Group:	Information Type: **Service Information**	Date: **12/10/2011**
Profile: **WLO, L90F (Volvo) [GB]**			

Cab, removing

Op nbr 810-001

88830070 Plug
88830070 Plug
88830070 Plug
88830070 Plug
88830070 Plug
88830070 Plug
88830070 Plug
88830070 Plug
88830070 Plug
88830070 Plug

Sling 4 m (13 ft), 2 pcs
Lifting eye M16, 4 pcs
Shackle, 4 pcs

NOTE **When working on a machine with air conditioning.**
Do not loosen any hoses or connections for the air conditioning and thereby inadvertently releasing refrigerant.

1. Place the machine in service position 1, see Servicepositioner
   .

2. Remove the plastic casing together with the air filters.
   Remove the plate and detach the connector for the recirculation damper.

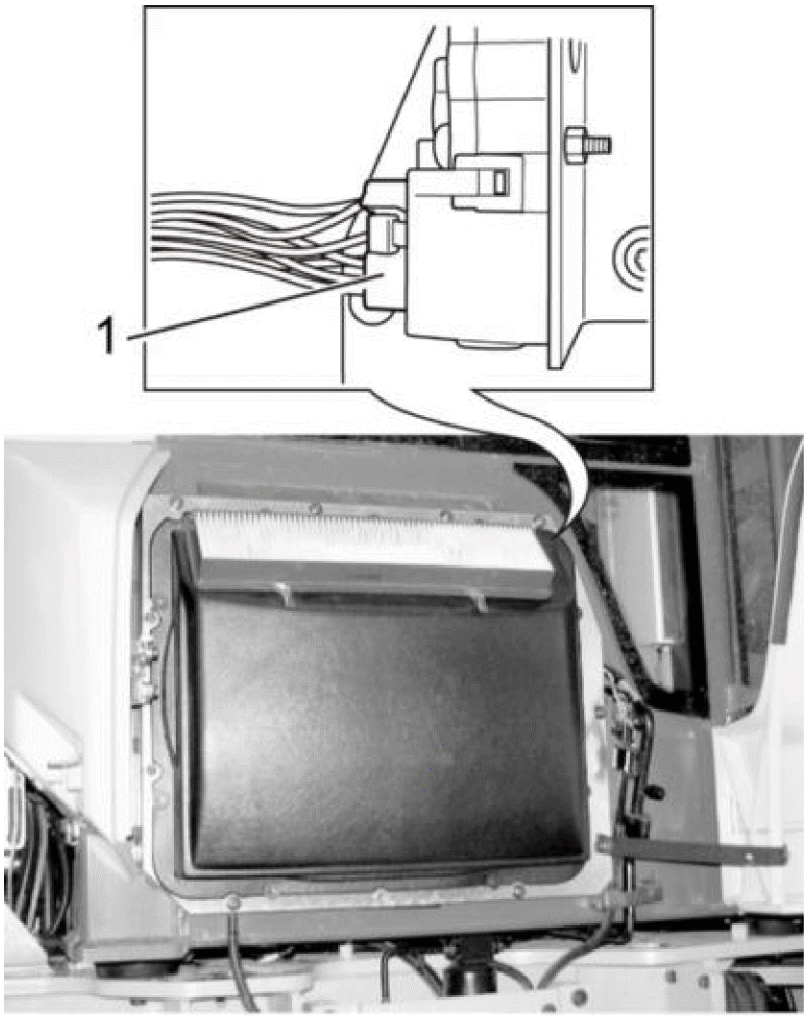

Figure 1

1. Connector

3. Remove the attaching plate retaining the evaporator.

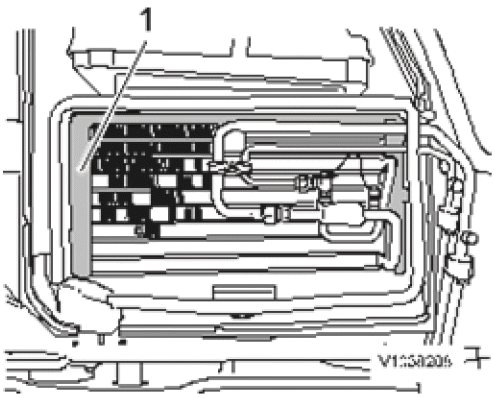

Figure 2

1. Attaching plate

4. Carefully move the evaporator out to one side and suspend it without kinking any hoses.
5. Drain the coolant, see Hytt, specifikationer
.
6. Remove the front part of the rear mudguard on the right side and the cover behind the mudguard. Weight: approx. **25 kg (55 lb)**

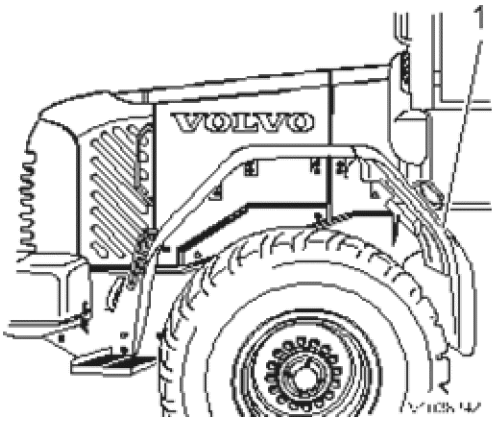

Figure 3

1. Front part of rear mudguard

7. Detach the coolant hoses from the cab.

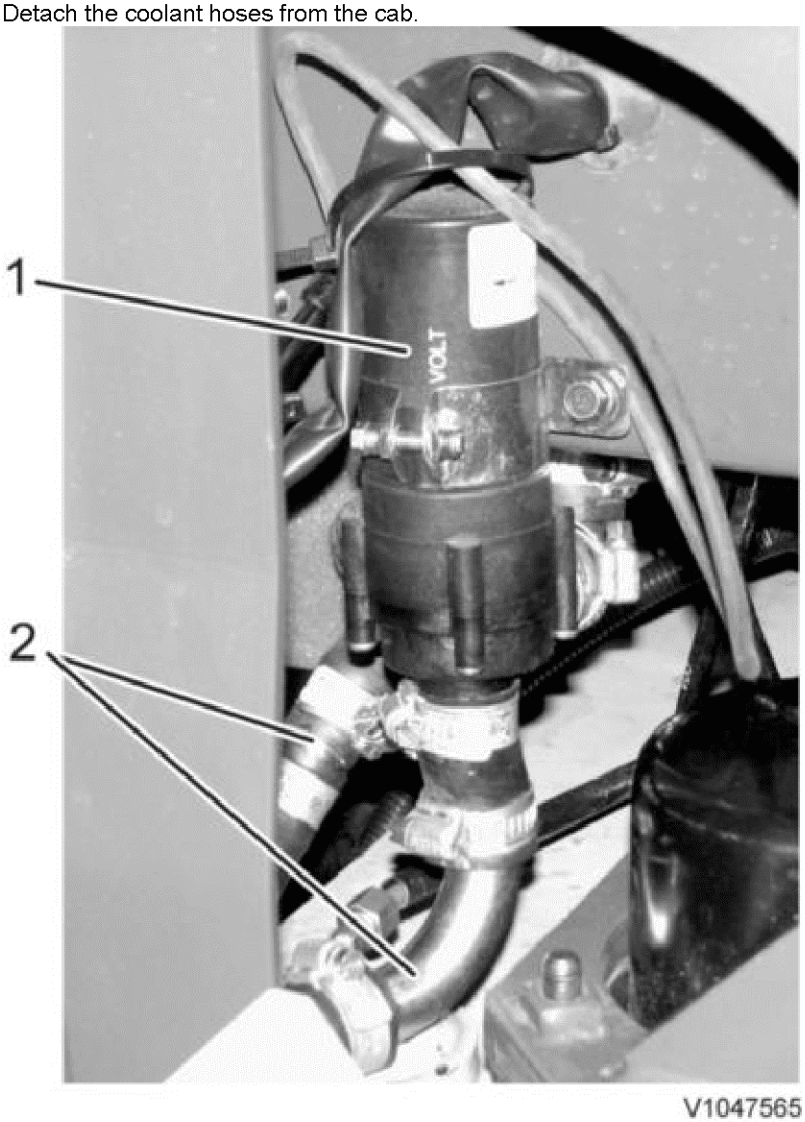

Figure 4

1. Timer cab heating pump [1] ⓘ
2. Coolant hoses

8. Part the washer fluid hoses at the non-return valves.

VOLVO
Construction Equipment

Service Information

Document Title:	Function Group:	Information Type: **Service Information**	Date: **12/10/2011**
Profile: **WLO, L90F (Volvo) [GB]**			

Cab, installing

Op nbr 810-002

88830070 Plug
88830070 Plug
88830070 Plug
88830070 Plug
88830070 Plug
88830070 Plug
88830070 Plug
88830070 Plug
88830070 Plug
88830070 Plug

Sling 4 m (13 ft), 2 pcs
Lifting eyes, M16, 4 pcs
Shackle, 4 pcs

1. Attach the lifting device.

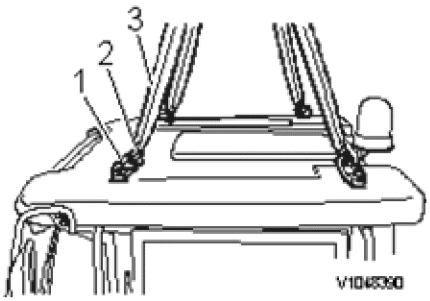

Figure 1

1. Lifting eye, M16
2. Shackle, 4 pcs
3. Sling, 2 pcs

2. Lift the cab into place. Weight of cab: **approx. 800 kg (1764 lb).**
3. Secure the cab with the attaching bolts, see Hytt, åtdragningsmoment
.

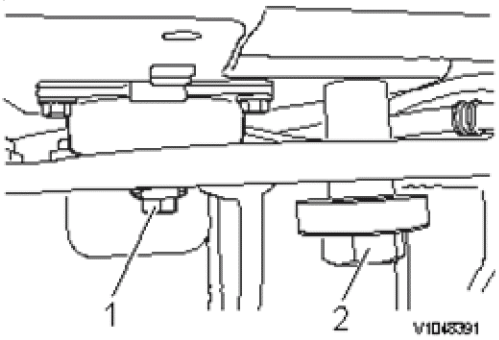

Figure 2

1. Attaching bolt
2. Safety bolt

4. Apply locking fluid (Loctite 243) to the safety bolts.
   Install the safety bolts on the cab, see Hytt, åtdragningsmoment
   .

5. Remove the lifting device and install the rubber bushes, spacers and bolts retaining the roof.

6. Push up the steering valve and wedge it in position. Install the bolts retaining the steering valve.

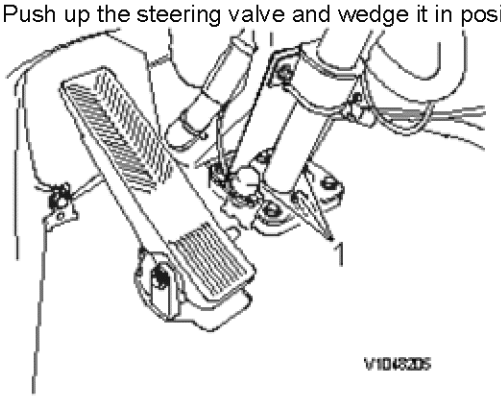

Figure 3

1. Bolt

7. Install the foot brake valve in the cab floor. Connect connector SE5205 to the foot brake valve.

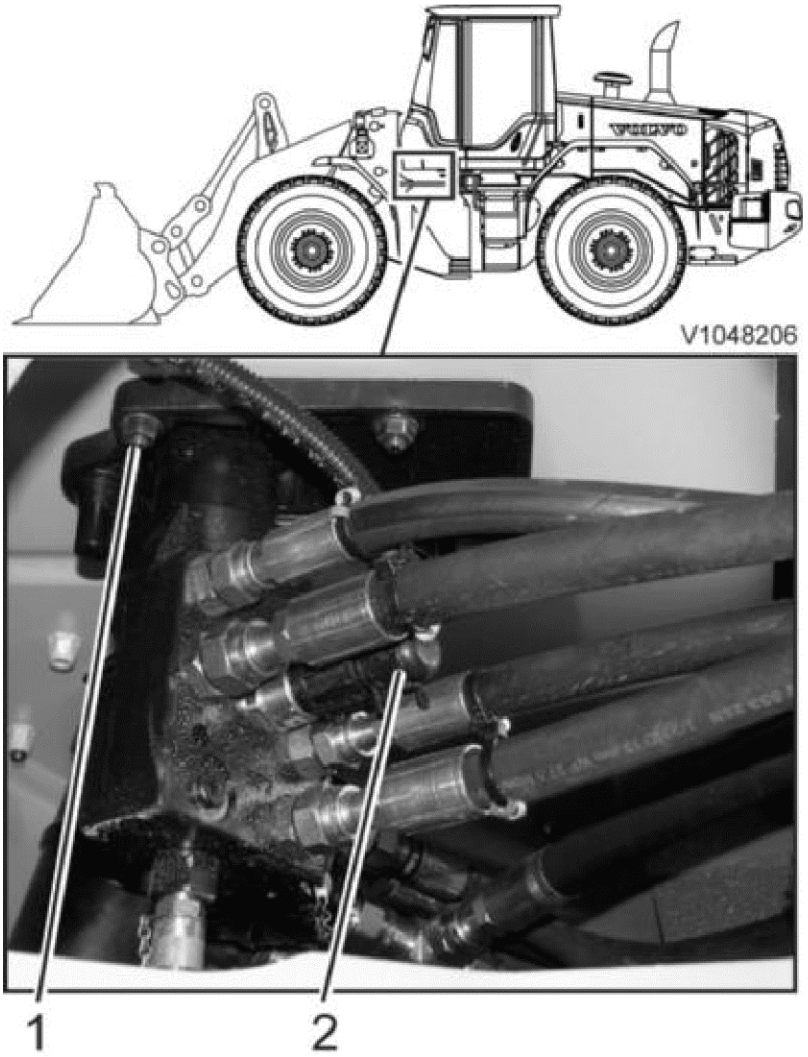

Figure 4

1. Attaching bolt, 4 pcs

2. Sensor SE5205

8. Switch on the battery disconnect switch.
Connect the vacuum pump according to Hydrauloljetank, vakuumsättning, inkoppling och urkoppling av pump
.

9. Check the O-rings. Install the safety catch and connect all quick-action couplings to the control lever carrier.
Tighten the tensioning strap.

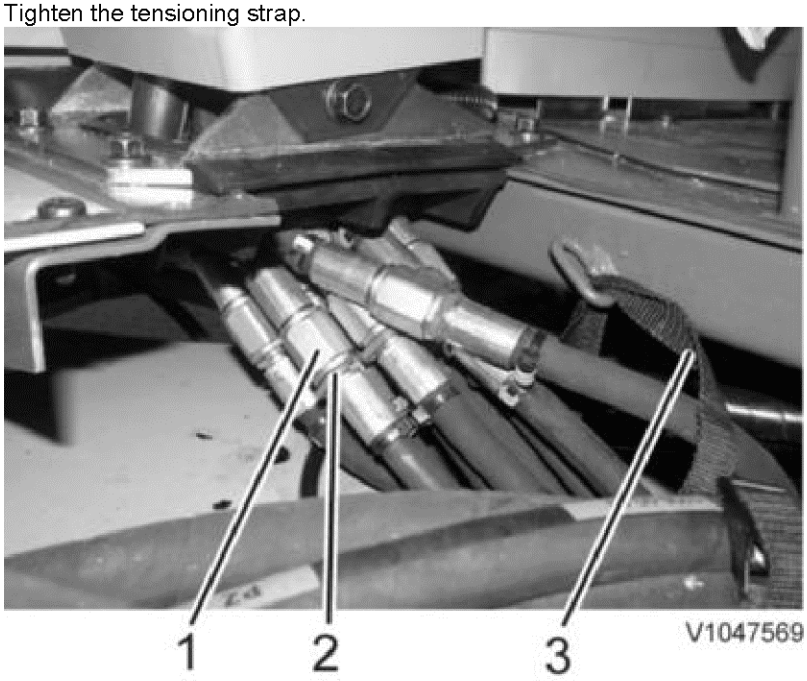

Figure 5

1. Quick-action couplings, control lever carrier
2. Safety catch
3. Tensioning strap

10. Remove the vacuum pump according to Hydrauloljetank, vakuumsättning, inkoppling och urkoppling av pump
.
Turn off the battery disconnect switch.

11. Install the front floor plate

12. Install foot brake pedal on the valve. Install the right foot brake pedal.

13. Put back the front floor mat and tighten down the accelerator pedal.

14. Connect the electrical cables to the back wall on the cab (left side).
Tighten the belt that keeps the cable harness together.
Install the protective casing over the electrical terminals.

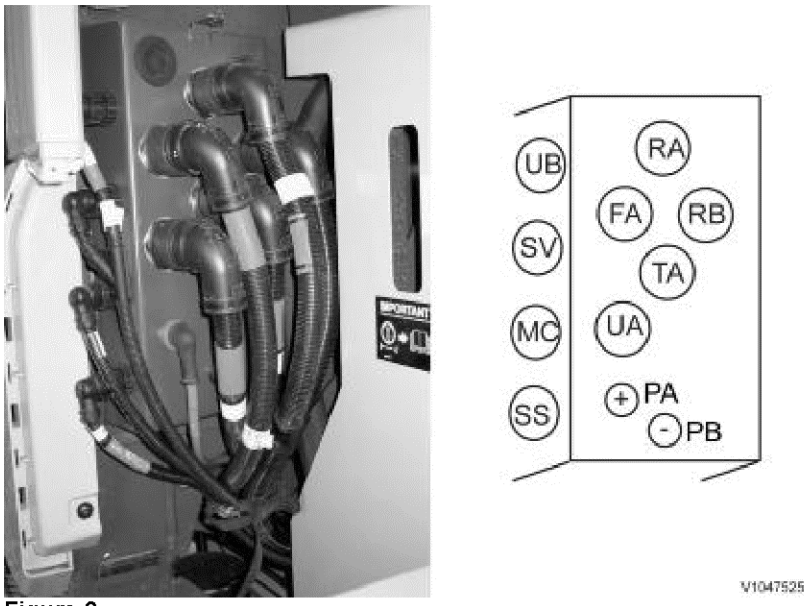

Figure 6
Cable harness marking

15. Bolt on the front part of the rear mudguard on the left side. Weight approx. **25 kg (55 lb)**.



Figure 7

1. Front part of rear mudguard

16. Install the top step.
17. Connect the coolant hoses to the cab.

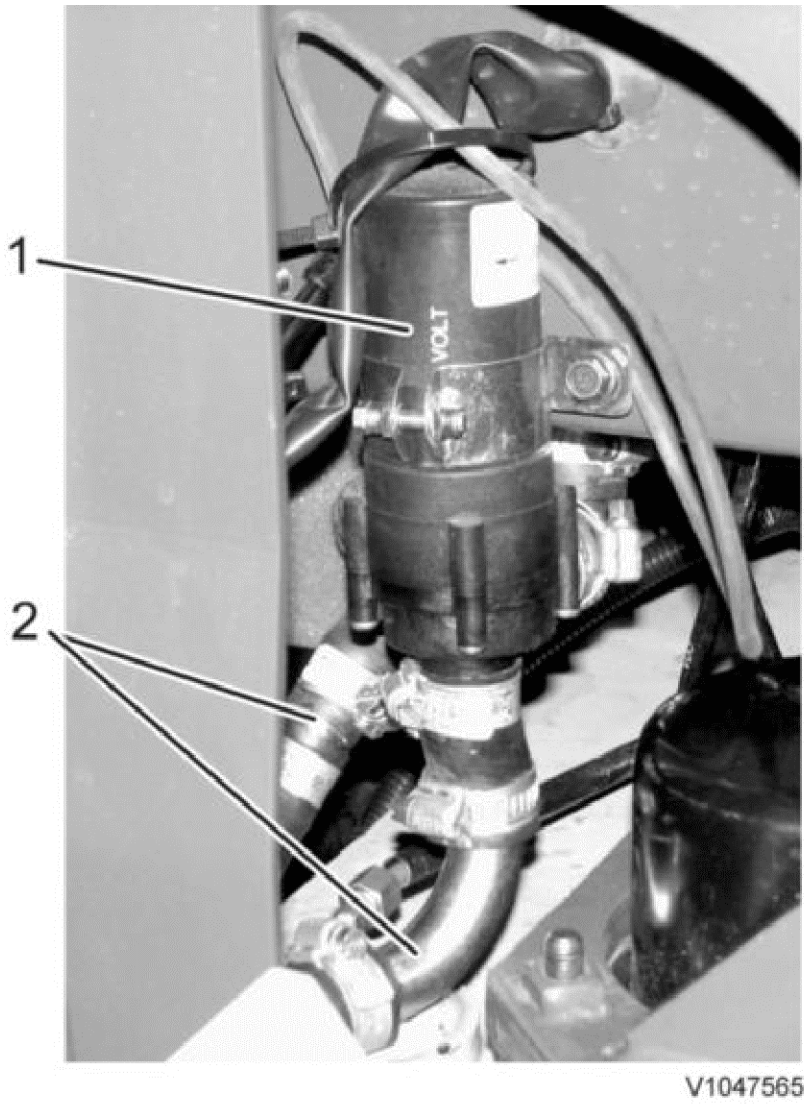

Figure 8

1. Timer cab heating pump [1]
2. Coolant hoses

18. Install the front part of the rear mudguard on the right side and the cover behind the mudguard.

19. Install the evaporator. Install the sealing strip.

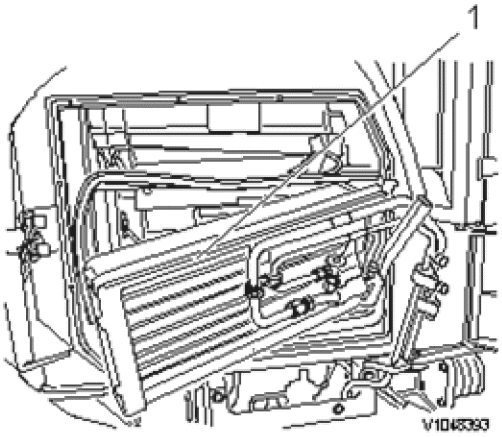

Figure 9

1. Evaporator

20. Connect the connector for the recirculation damper.
Install the plate together with the plastic casing and the air filters.
Connect the condensation water hose.

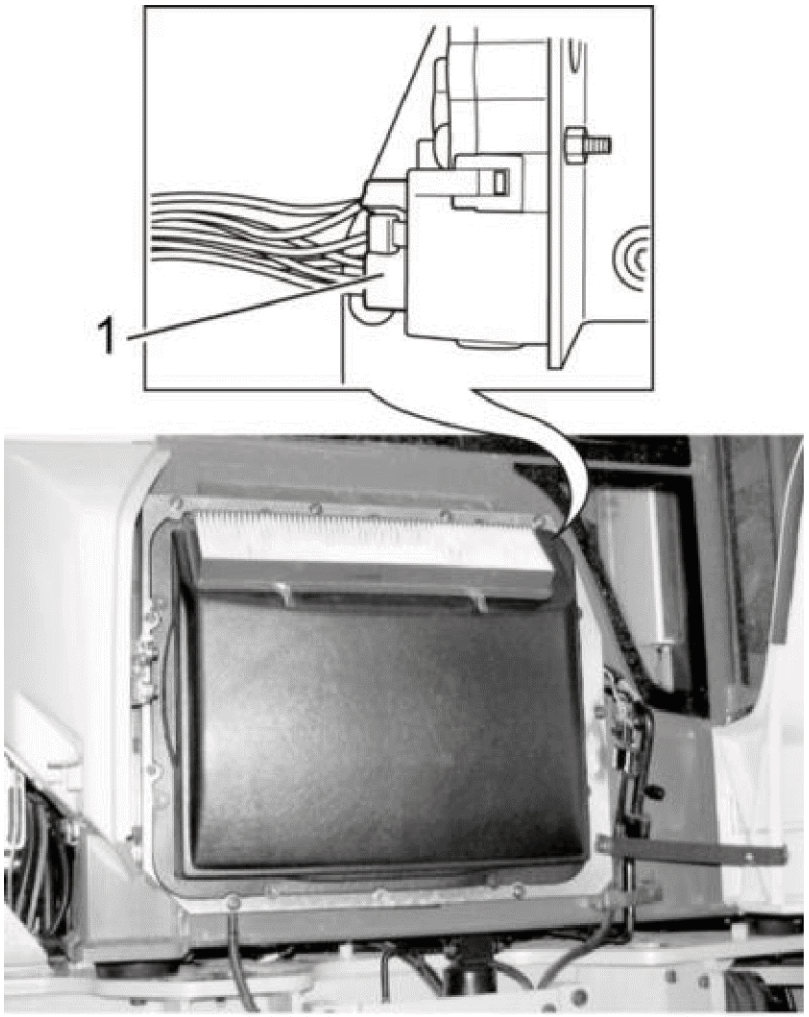

Figure 10

1. Connector

21. Join the washer fluid hoses by the non-return valves.

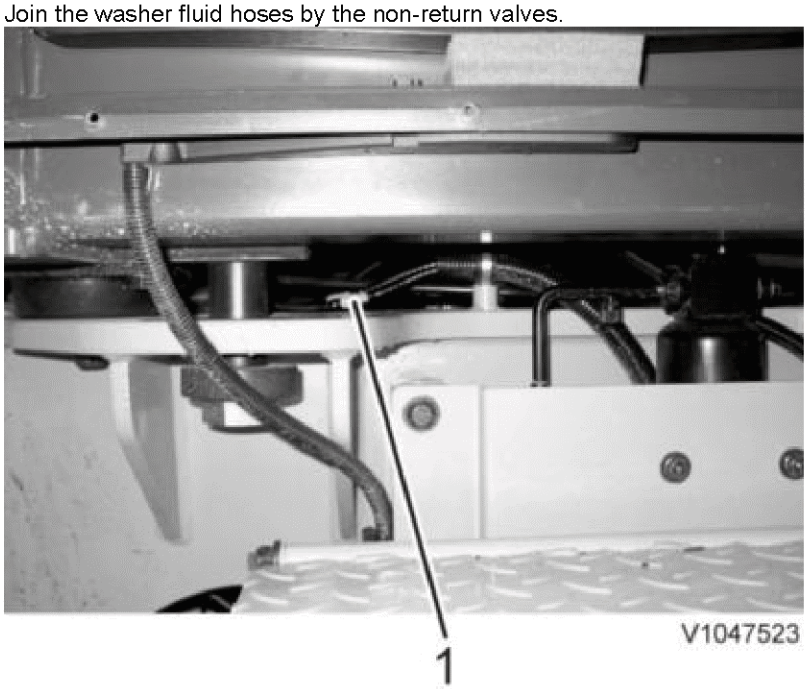

Figure 11

1. Non-return valves

22. Install the cover behind the rear mudguard on the right side.
23. Bolt on the front part of the rear mudguard on the right side. Weight approx. **25 kg (55 lb)**.

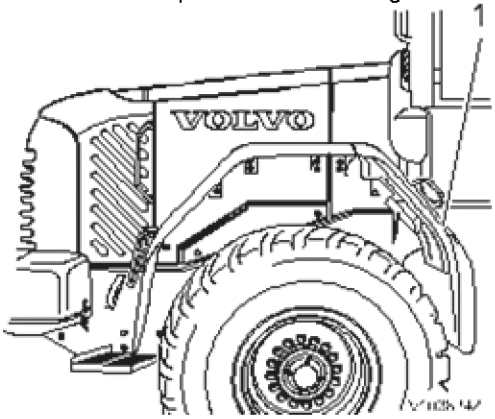

Figure 12

1. Front part of rear mudguard

24. Fill coolant, see Kylsystem, volym
.
25. Restore the machine.
26. Test-run the machine. Check that there are no leaks.

---

[1] Optional equipment

VOLVO
Construction Equipment

Service Information

Document Title:	Function Group:	Information Type: **Service Information**	Date: **12/10/2011**
Profile: **WLO, L90F (Volvo) [GB]**			

Viscous cab suspension, description

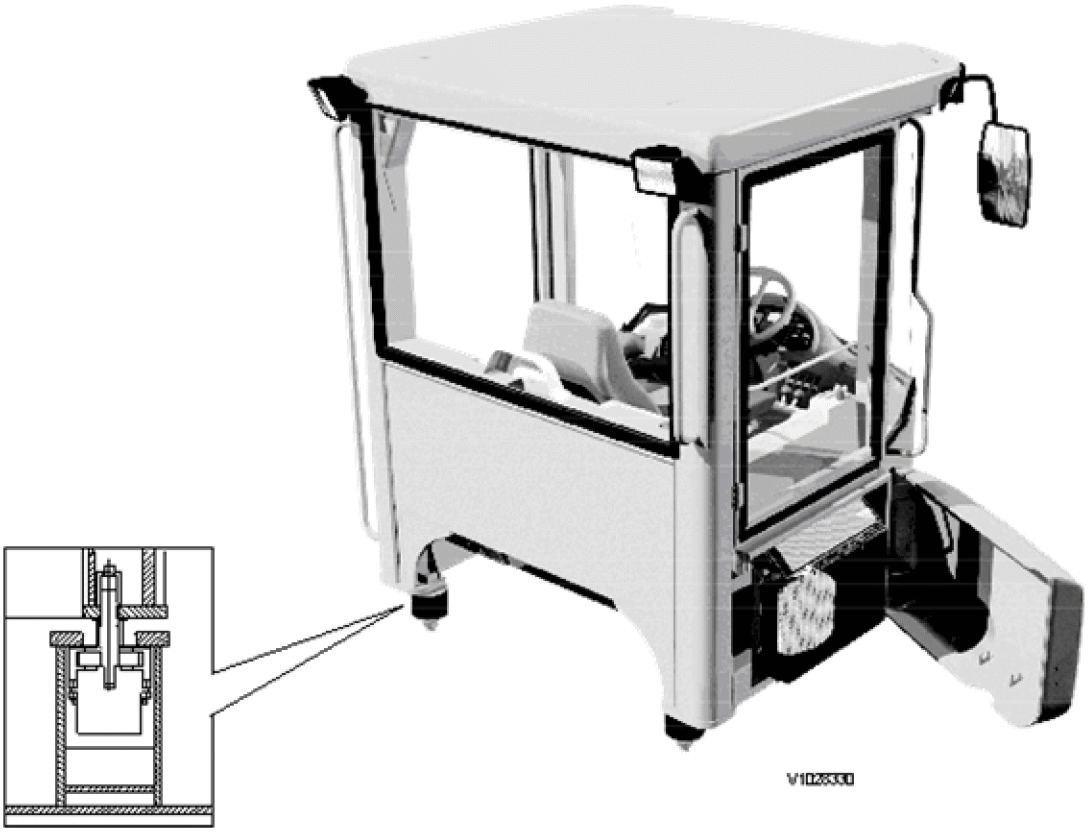

Figure 1
Cab suspension

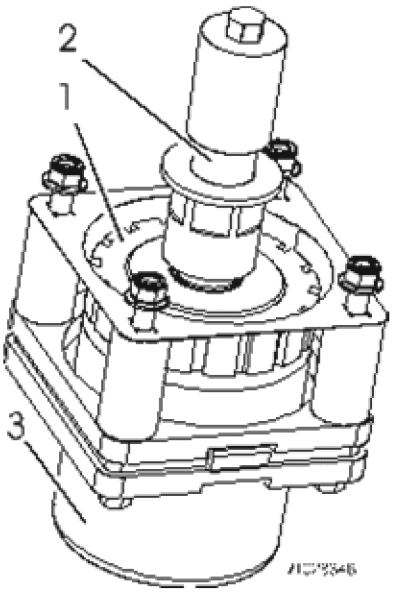

Figure 2
Cab suspension unit

1. ROPS-washer
2. ROPS-bolt
3. Vibration insulator / shock absorber

The cab suspension consists of four vibration shock absorbers, that are integrated with the necessary equipment for ROPS-protection. (ROPS= Roll Over Protection System)
The function of the insulators is to isolate the cab from the frame noise and the vibrations in the machine, as well as dampen the shocks that are generated during work with the machine.
The insulators are, like in a traditional design cab suspension, made up of a rubber body that absorb the cab's own weight as well as insulate from frame noise and vibrations. In addition, there is a vertical-action shock absorber unit consisting of a damping piston, that works in a chamber filled with high-viscosity fluid. This unit provides improved damping of shocks.
The ROPS-parts consist of a heavy-duty bolt (ROPS-bolt) with permanently installed washer, (ROPS-washer). These are mounted between the insulator and the cab, and act against the cab towers' upper plate. In case of an accident where the machine rolls over, the ROPS-parts prevent the cab from coming loose from the machine.

The viscous cab suspension is a comfort detail (similar to shock absorbers) and may have to be replaced during the machine's life.
The service life of the cab suspension depends on the application.

VOLVO
Construction Equipment

Service Information

Document Title:	Function Group:	Information Type: **Service Information**	Date: **12/10/2011**
Profile: **WLO, L90F (Volvo) [GB]**			

Viscous cab suspension, changing one unit

Op nbr 818-020

Removing

1. Remove the side panels under the cab.
2. 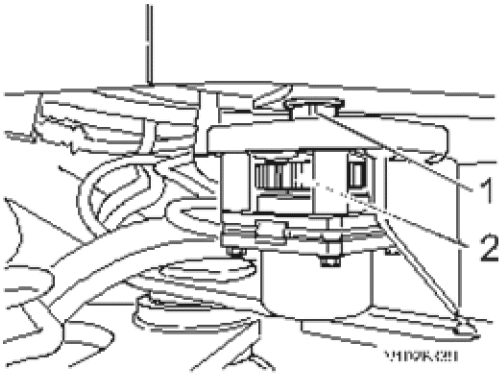

Figure 1
Viscous cab suspension

1. Nut
2. ROPS-washer

Loosen the nut under all four cab mounts.

Caution!
Hold back the ROPS-washer with a pry bar to avoid damaging the damper unit.

3. 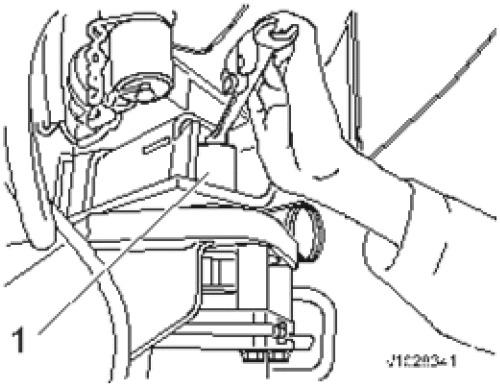

Figure 2
Loosening cap nuts

1. Cap nut

Remove the cap nuts from the bolts on all four cab mounts.

4. 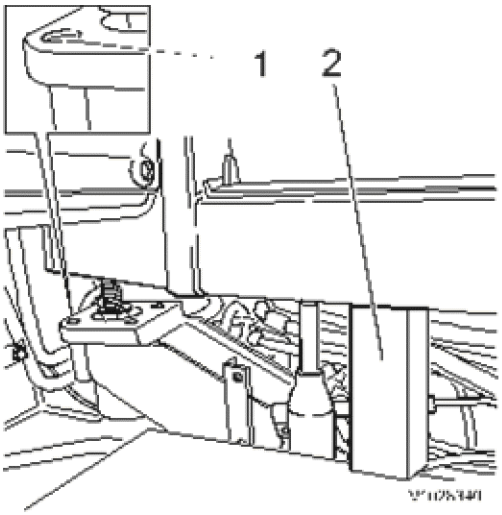

Figure 3

1. Nuts
2. Shim

Lift the cab on one side with a jack so that the nuts can be accessed.

WARNING! **Risk of injuries caused by crushing**

5. Secure the lift with a spacer.
6. Remove the cab suspension unit

NOTE **When changing the rear cab suspension unit, the rear fender shall be loosened at the leading edge and forced backwards.**

Installing

7. 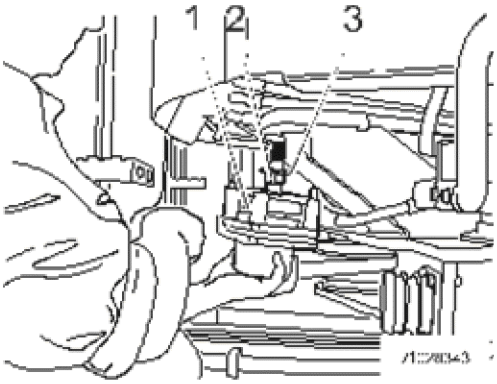

Figure 4

1. Cab suspension
2. Nut
3. washer

Install the cab suspension unit with nut and washer mounted on the ROPS-bolt before installing.

8. Torque the attaching bolts and the nuts.

Tightening torque: **48 Nm (35.4 lbf ft)**

9. 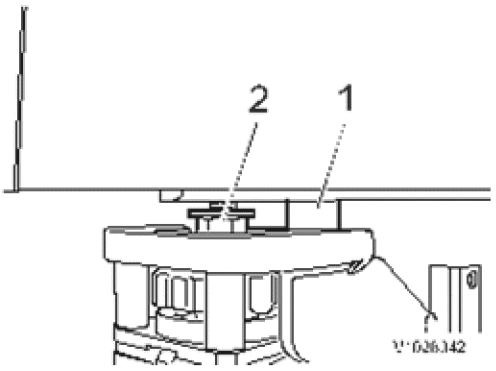

Figure 5

1. Spacer
2. Nut

Place a 25 mm spacer between cab mount and bracket on the frame.

10. Remove the shim, lower the cab on the spacer, make sure that the bolt enters the cab mount.
11. Screw on the nut together with the washer against the cab mount.
12. 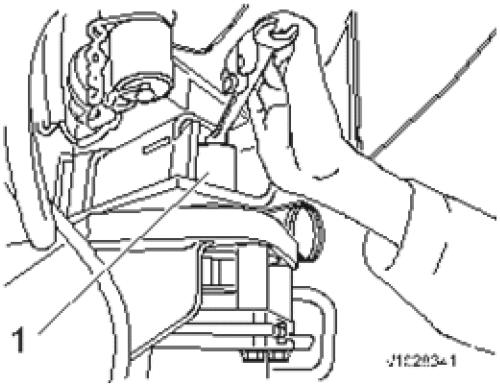

Figure 6

1. Cap nut

Install the cap nuts on the ROPS-bolts on all cab suspension units and tighten as much as possible with hand tools.

13. Torque the nut under the cab mount. For access, use an open-ended wrench.

Tightening torque: **600 Nm (443 lbf ft)**

NOTE **Counterhold against the ROPS-washer with a pry bar so that the insulator / shock absorber does not turn during torquing.**

14. 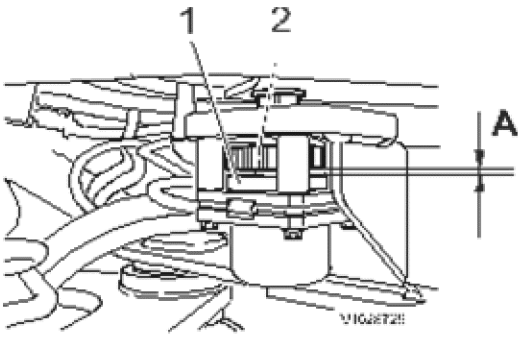

Figure 7

- 1. Rubber
- 2. ROPS-washer

- A. Distance between ROPS-washer and rubber

Check that the distance is the same between the ROPS-washer and the rubber on all four cab mounts. The distance shall be approx. 7 mm (0.28 in).

15. Lift the cab enough to enable removal of the spacers.
The distance between the ROPS-washer and the rubber shall be 2-3 mm (0.079-0.118 in) rear, and 4-5 mm (0.158-0.20 in) front. The values apply to standard-equipped cab.

16. Install the side panels under the cab.

VOLVO
Construction Equipment

Service Information

Document Title:	Function Group:	Information Type: **Service Information**	Date: **12/10/2011**
Profile: **WLO, L90F (Volvo) [GB]**			

Engine hood, removal

Op nbr 821-001

Sling 4 m (13 ft), 2 pcs.
Sling 2 m (6.6 ft), 2 pcs.
Ratchet block
Lift ring
Lifting eyes M12, 4 pcs.

1. Place the machine in service position, see Säkerhetsregler vid service
.

2. Raise the radiator grill and hood hatches. Remove the side gratings and the casing.

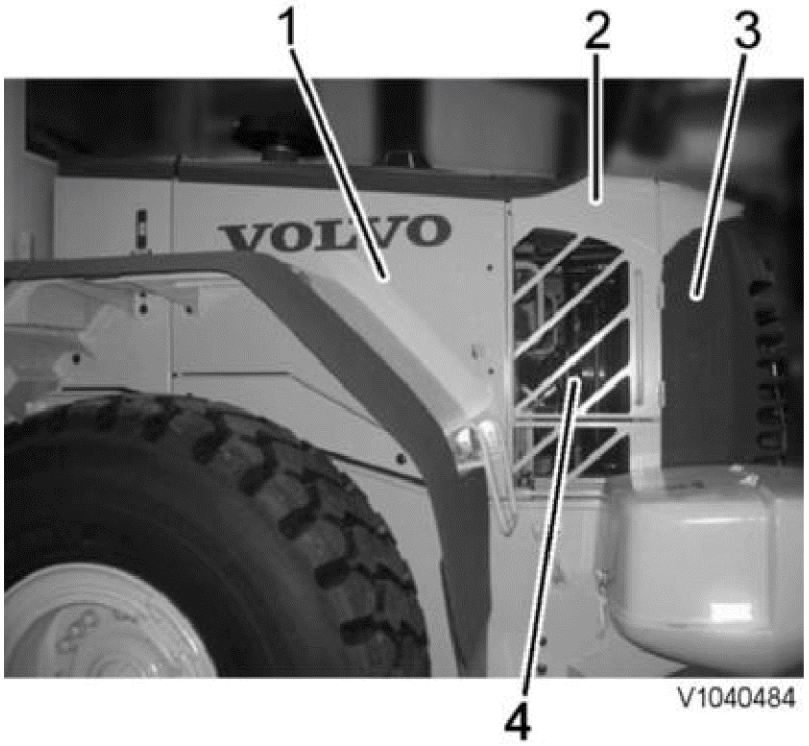

Figure 1

1. Hood cover
2. Casing
3. Radiator grill
4. Side grating

3. Turn off the electric power with the battery disconnect switch and remove fuse FU18.

WARNING! **Open the expansion tank cap slowly and carefully. The cooling system operates at high pressure and hot coolant may rush out and cause severe burns.**

Open the cap for the expansion tank and drain the coolant at the drain point.
Volume: **30 dm^3 (8 US gal)**

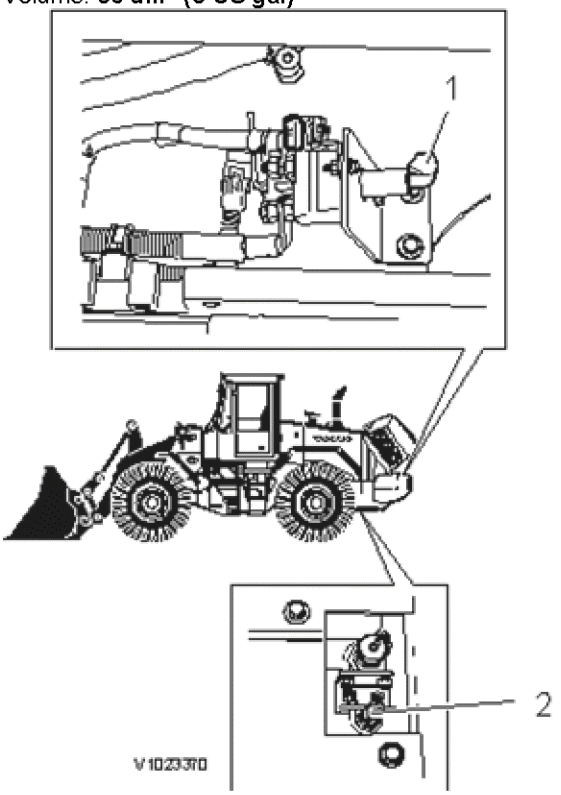

Figure 2

1. Battery disconnect switch
2. Drain point for coolant

Machine's right side

4.

- Disconnect the rubber hose on the turbocharger (2).
- Remove the clamp and disconnect the pipe on the muffler (1).
- Remove the hoses (3) from the expansion tank, unplug the connector SE2603 for the coolant level sensor (5), connector SE2502 for the air mass sensor (6) and the vacuum hose (7) for the air filter indicator. Remove the drain hose for the expansion tank (4).

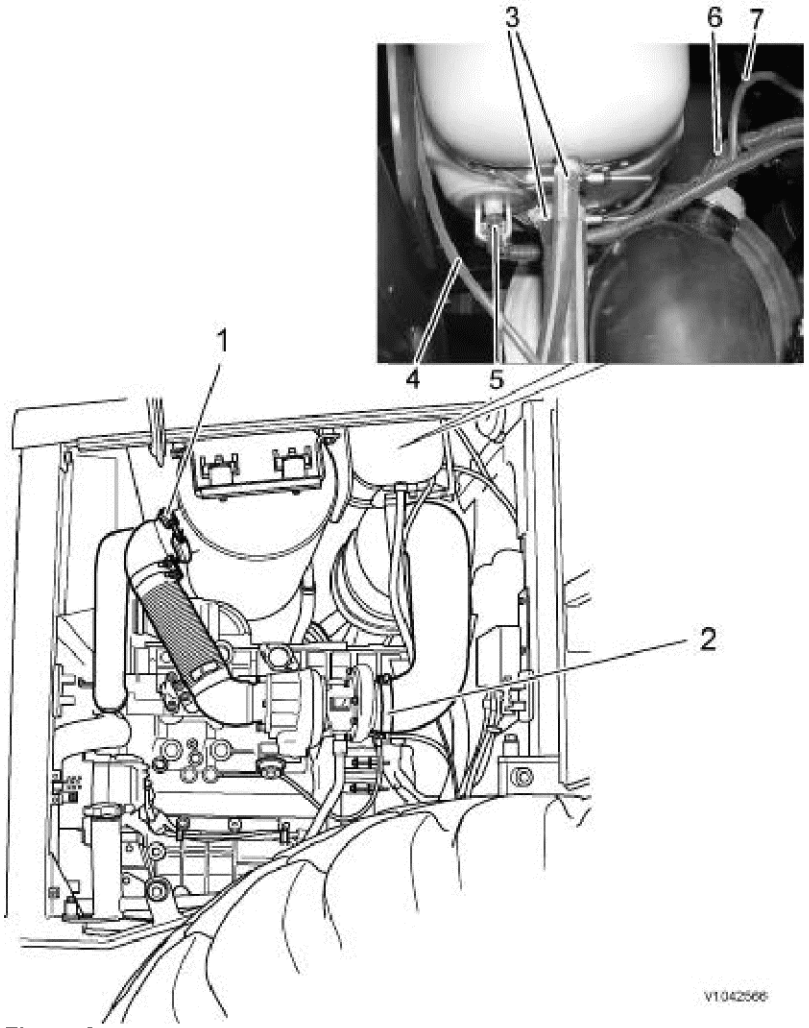

Figure 3

Behind machine, under hood

5. Unplug connector RZ and disconnect the clamping on the framework.

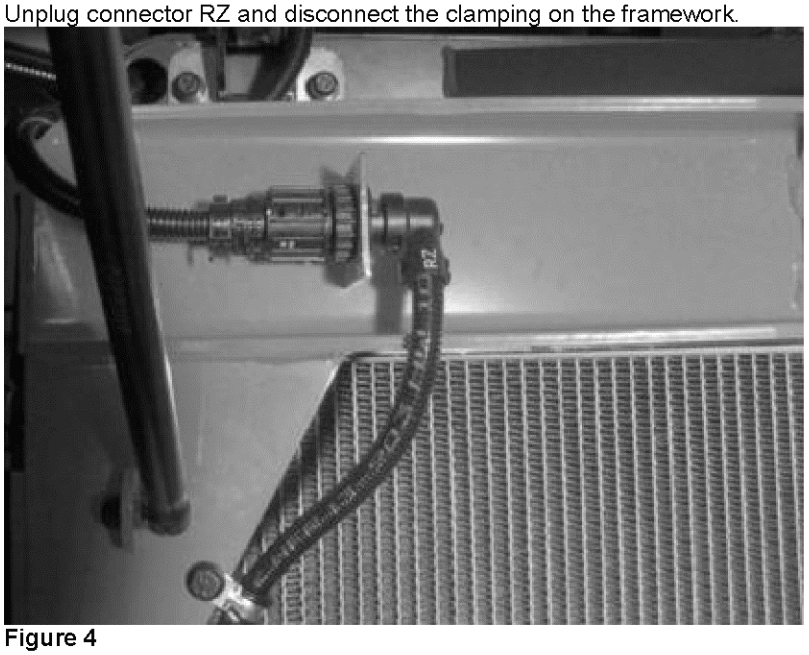

Figure 4
V1037000

6. Loosen the bolts for the condenser and lay it down carefully on the radiator. Secure the condenser so that there is no risk of the hoses being pulled off.

NOTE **Retain the fibre washers that are mounted between the condenser and the hood.**

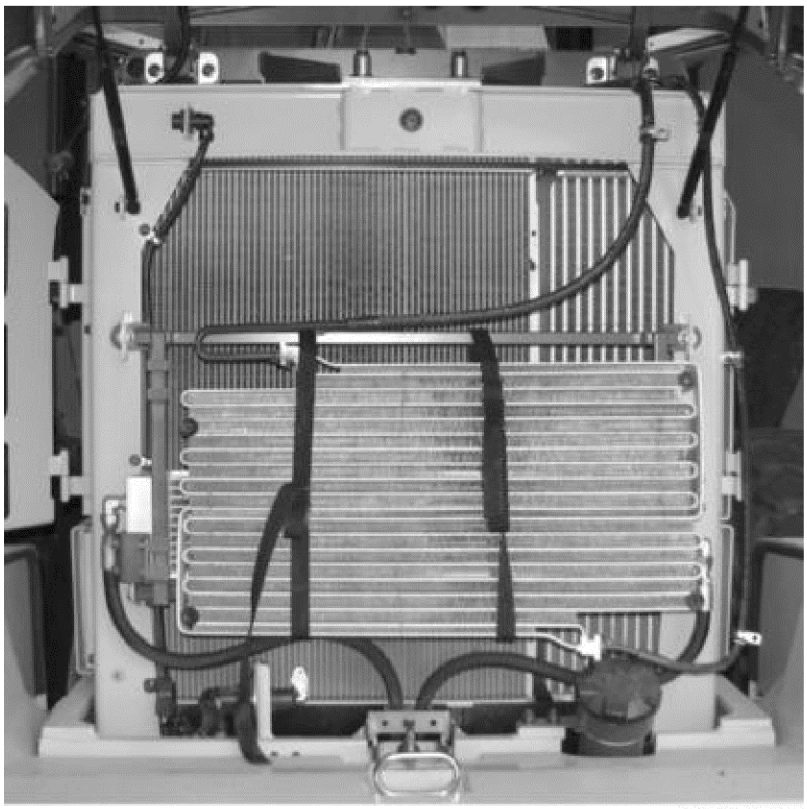

V1036997

Figure 5
V1036997

7. Clean the threads for the lifting eyes on the hood and install the lifting eyes. Connect sling and ratchet block as shown in figure.

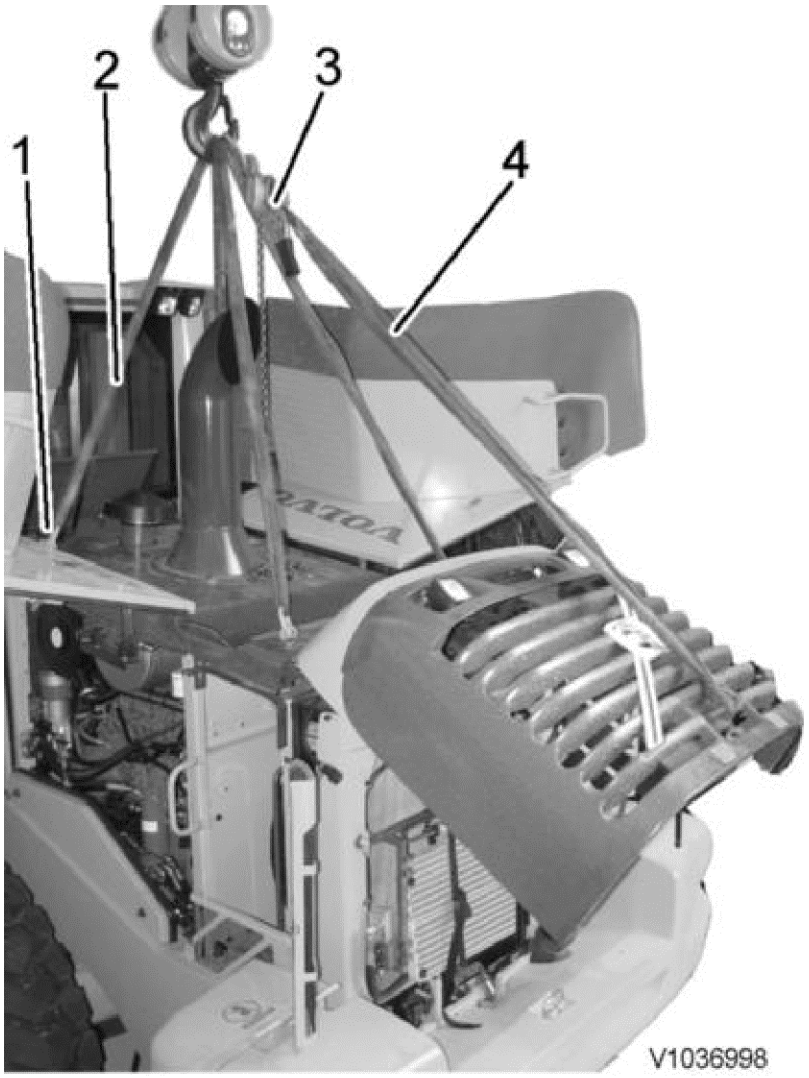

Figure 6
V1036998

1. Lifting eye M12 (4 pcs.)
2. Sling 4 m (2 pcs.)
3. Ratchet block, lift ring
4. Sling, 2 m

8. Remove the bolts from the intermediate wall (1) and the plate (2). Disconnect the coolant hose (3) from the radiator.

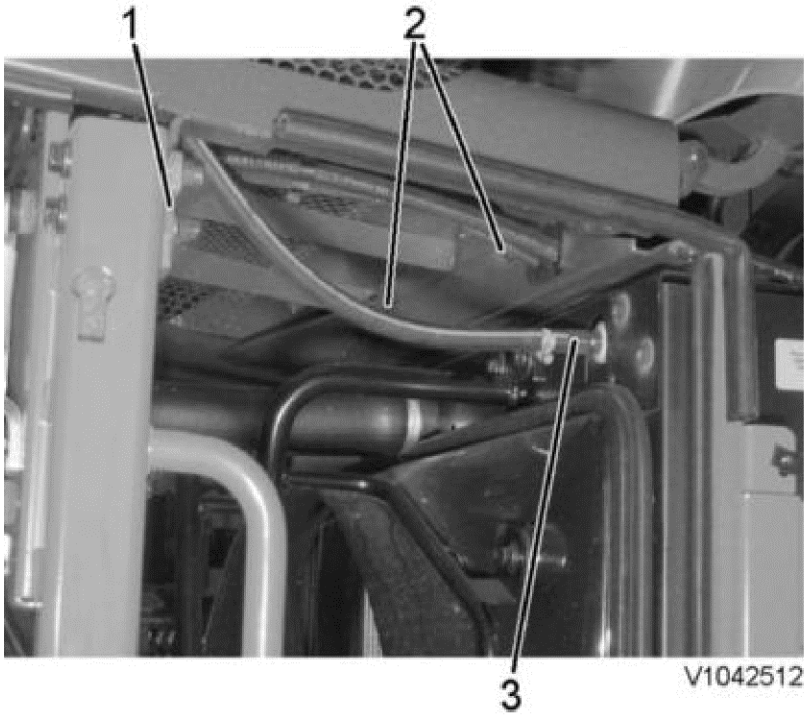

Figure 7

9. Remove the rear bolts for the hood (1).

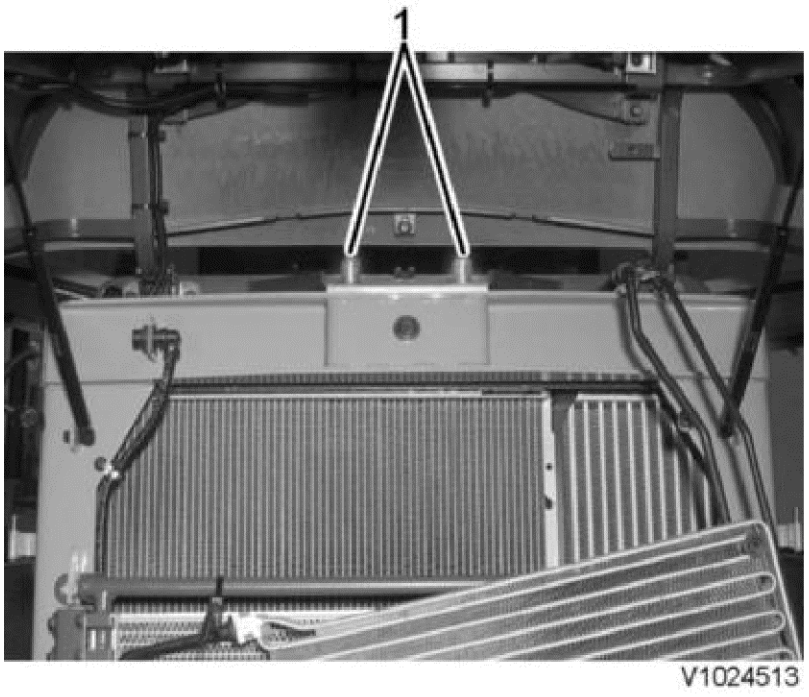

Figure 8

10. Disconnect the gas springs from their brackets in the framework.

11. Remove the front bolts for the hood. Bolts are accessed by opening the cover for the hydraulic oil tank. (Two bolts on each side.)



Figure 9
V1037082

12. Lift away the hood. Weight: **300 kg (660 lbs)**.

VOLVO
Construction Equipment

Service Information

Document Title:	Function Group:	Information Type: **Service Information**	Date: **12/10/2011**
Profile: **WLO, L90F (Volvo) [GB]**			

Engine hood, installation

Op nbr 821-002

Sling 4 m (13 ft), 4 pcs
Sling 2 m (6.6 ft), 2 pcs.
Sling 1 m (3.3 ft)
Ratchet block
Lifting eyes M12, 4 pcs.

1. Lift the hood into place. Weight: **300 kg (660 lbs)**.

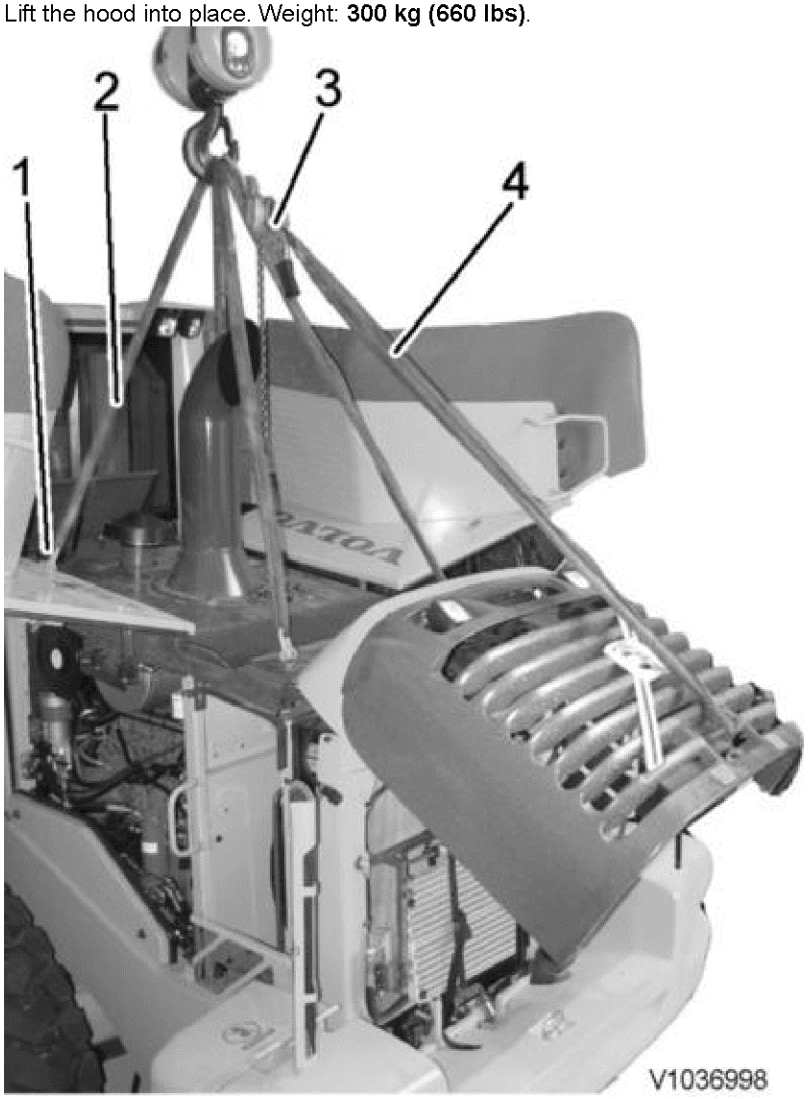

Figure 1
V1036998

1. Lifting eye M12 (4 pcs.)
2. Sling 4 m (2 pcs.)
3. Ratchet block, lift ring
4. Sling, 2 m

2. Screw in the front bolts for the hood.



Figure 2
V1037082

3. Install the bolts in the intermediate wall (1) and the plate (2). Connect the coolant hose (3) to the radiator.

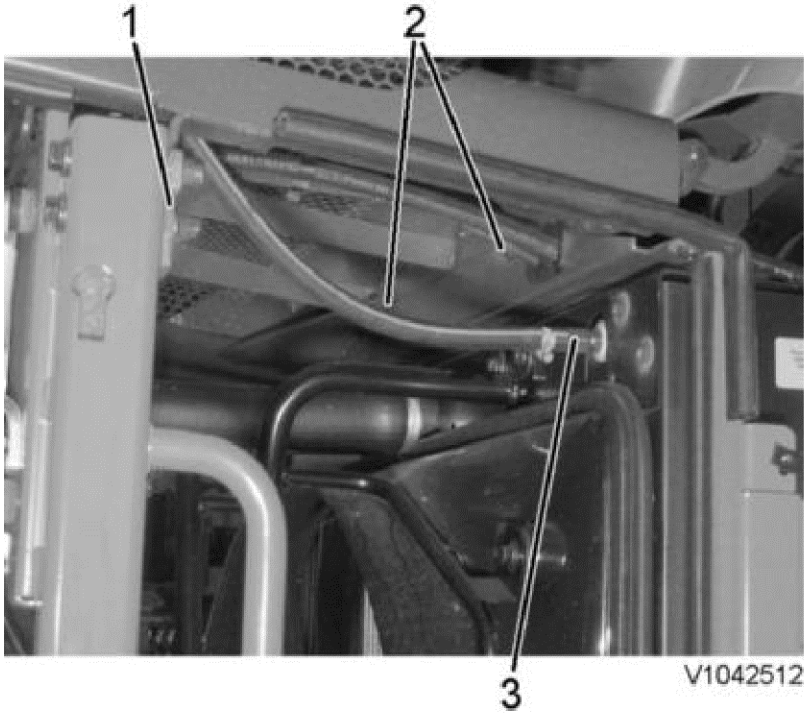

Figure 3

4. Install the gas struts in the mounting in the framework.
5. Screw in the rear bolts (1) for the hood.

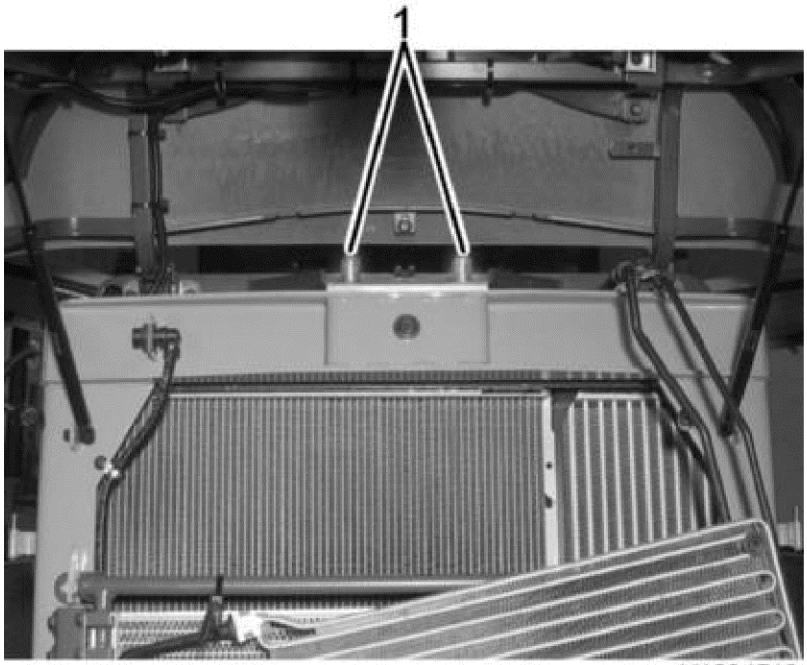

Figure 4
V1042513

6. Bolt down the condenser with the fibre washers against the hood side.

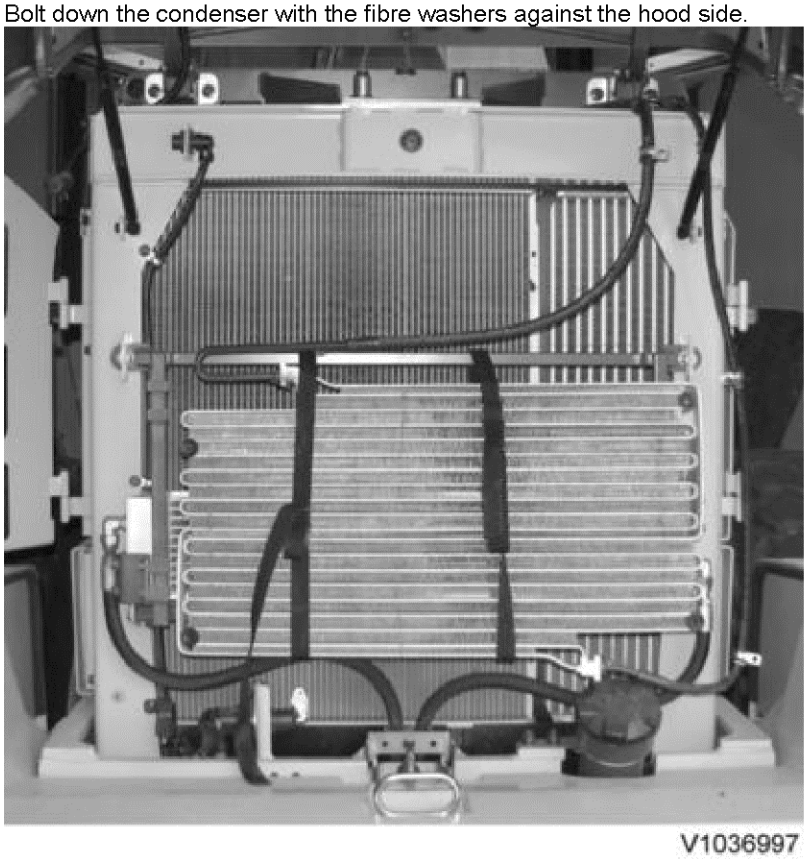

Figure 5
V1036997

7. Plug in connector RZ.

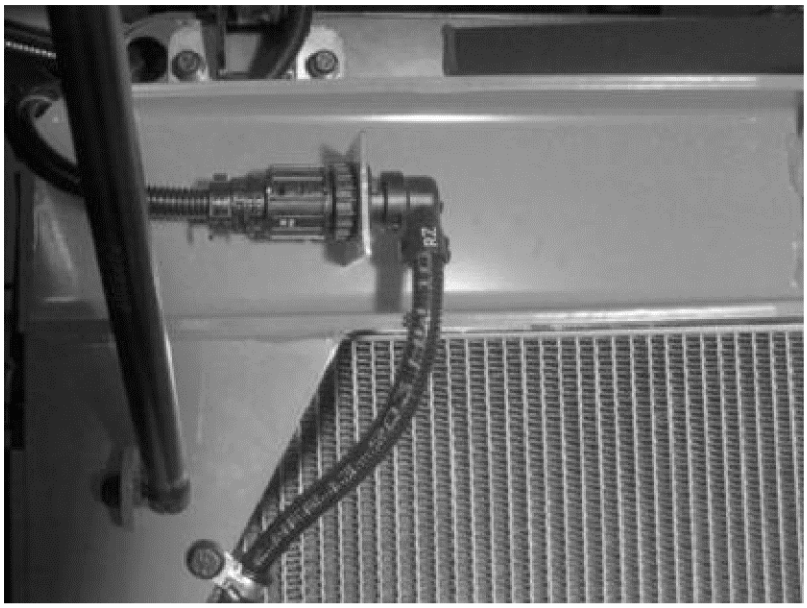

Figure 6
V1037000

Machine's right side

8. Connect:
   - the rubber hose to the turbocharger (2).

     NOTE

   - the pipe on the muffler (1) and install the clamp.

     NOTE **To prevent the pipe from working loose from the turbo, make sure that the clamp ends up as far in as possible on the turbo sleeve.**

   - the hoses (3) for the expansion tank, connector SE2603 for the coolant level sensor (5), connector SE2502 for the air mass sensor (6) and the vacuum hose (7) for the air filter indicator. Connect the drain hose to the expansion tank (4).

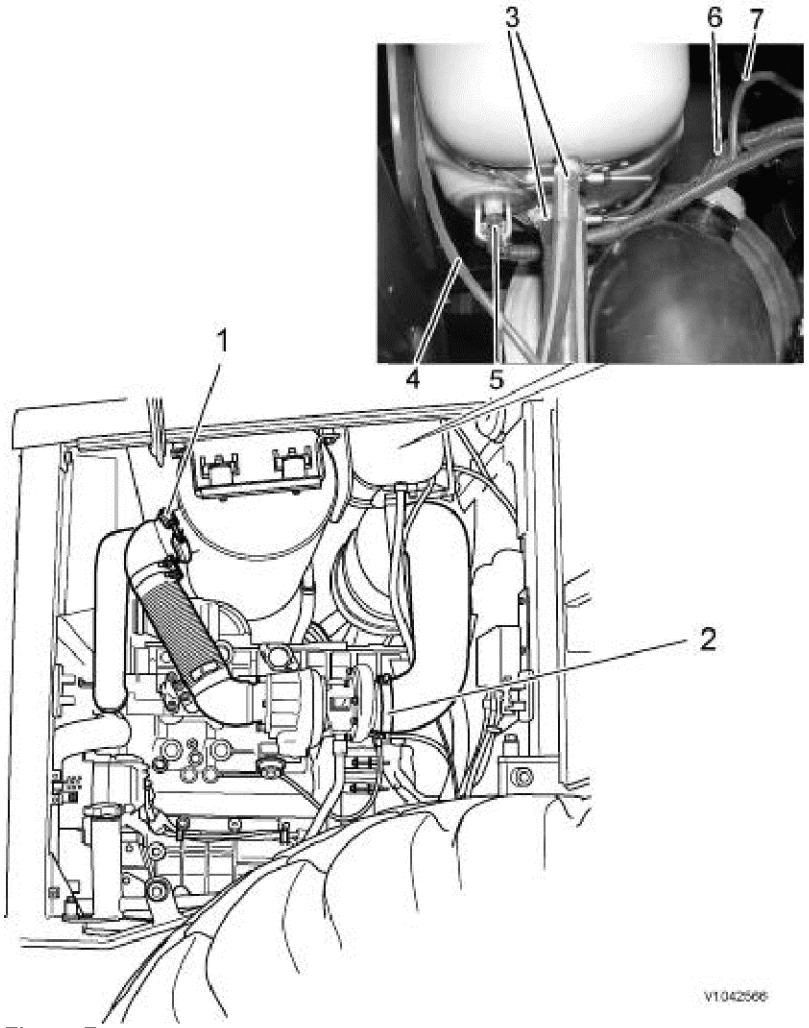

Figure 7

9. Install the side gratings (4) and the casing (2). Lower the radiator grill (3) and the hood hatches (1).

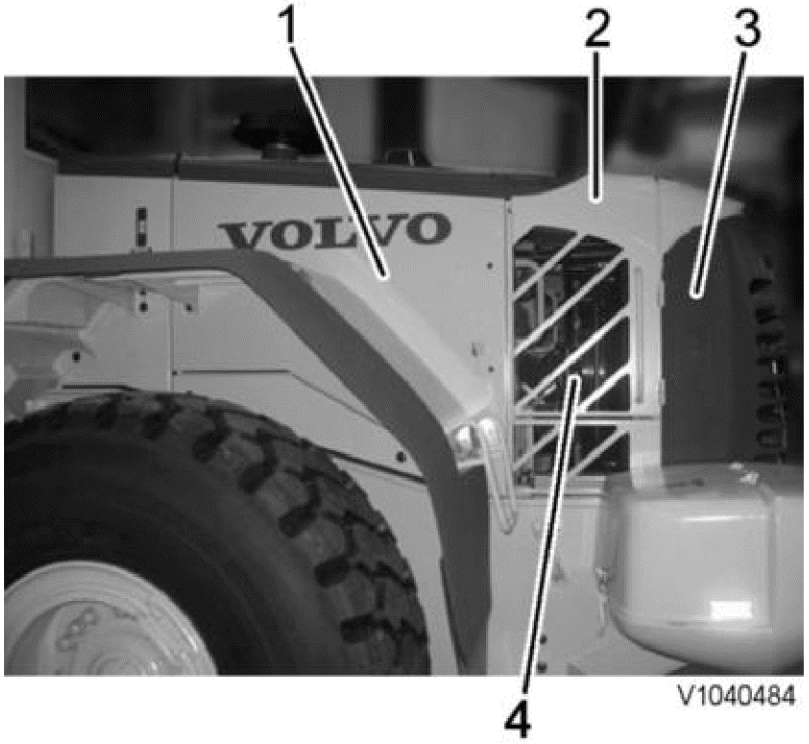

Figure 8

10. Fill coolant.
    Volume: **30 dm^3 (8 US gal)**

11. Turn on the electric power with the battery disconnector.

VOLVO
Construction Equipment

Service Information

Document Title:	Function Group:	Information Type: **Service Information**	Date: **12/10/2011**
Profile: **WLO, L90F (Volvo) [GB]**			

Door lock, changing

Op nbr 834-011

Removing

1. Remove the panel on the door's inside.
2. Unhook the wire and remove the screw and the door lock.

Installing

3. Install a new door lock. Install the screw and the wire.
4. Install the panel on the door's inside.

More than one document matches the current profile:

Windscreen, replacing
Product Line: WLO
Model Variant: L70F, L90F, L60F, L220F, L180F HL, L180F, L150F, L350F, L120F, L110F

Side window, replacing
Product Line: WLO
Model Variant: L70F, L90F, L60F, L220F, L180F HL, L180F, L150F, L350F, L120F, L110F

VOLVO
Construction Equipment

Service Information

Document Title:	Function Group:	Information Type: **Service Information**	Date: **12/10/2011**
Profile: **WLO, L90F (Volvo) [GB]**			

Windscreen, replacing

Op nbr 843-002

88830060 Disassembly tool
88830062 Wire unvinding device
88890051 Dispensing gun
9812521 Two cup suction lifter
9812521 Two cup suction lifter

Working platforms, 2 pcs
Adhesive
Sealant
Scraper with cut-out
Spacer



Figure 1
88830060Disassembly tool

1. Ratchet handle	7. Blade for seam scraper
2. Parabolic chisel	8. Winch
3. Winch special	9. Mounting tool
4. Wire inserter	10. Safety glasses

5. Extension	11. Plastic cover
6. Seam scraper	12. Guide pins

Conditions

See General information about panes
and play the instruction DVD supplied in the case before commencing work.

1. Park the machine in service position 1, see Service positions
2. Place the two working platforms next to the cab.
3. Remove the windscreen wiper.
4. Remove any work lights.
5. Remove the screws for the roof and raise the roof at the front edge approximately 100 mm and secure it so that the front window can be accessed.

Removal

6. Cut off the sealant, with a snap-blade for example, along the pane joint as a V-joint and especially in the corners of the panes.

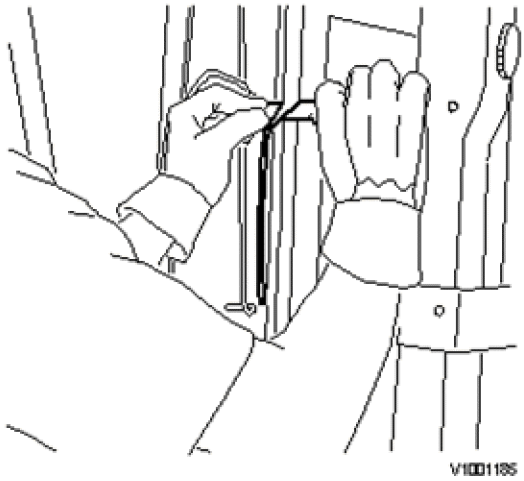

Figure 2
Scraping

7. Roll out about 6 metres of wire from the wire holder and cut.

WARNING! **Risk of cuts! Wear safety glasses and use protective gloves.**

8. Push the wire inserter between the pane and frame at the left-hand upper corner from the inside. Hold the tip near to the panel otherwise there is a risk of the pane cracking.

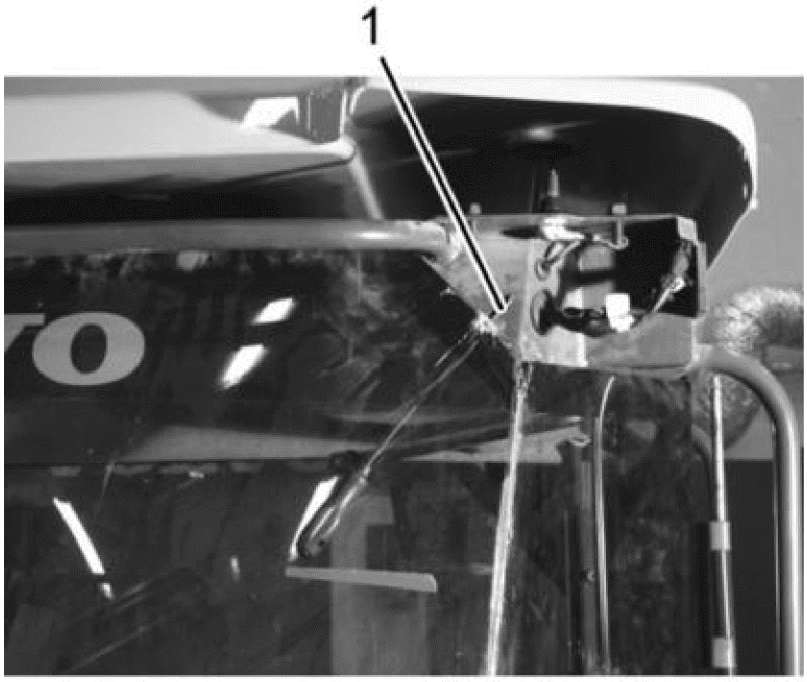

Figure 3

1. Wire inserter

9. Insert both the wire ends in the wire inserter's hole and bend the wire tips backwards.

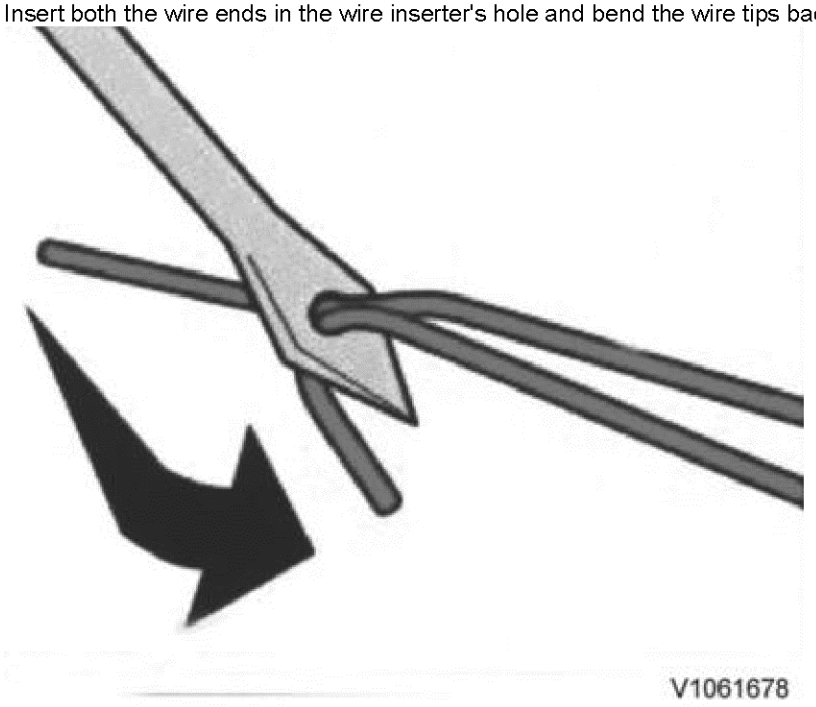

Figure 4
Wire inserter

10. Pull in the wires and then straighten the wire ends.

11. Place the wire along the join around the pane. Keep the wire in place with pins, which are positioned so that the wire runs past the pins.
Apply a piece of tape at the lower edge of the pane to keep the pane in place when detached.

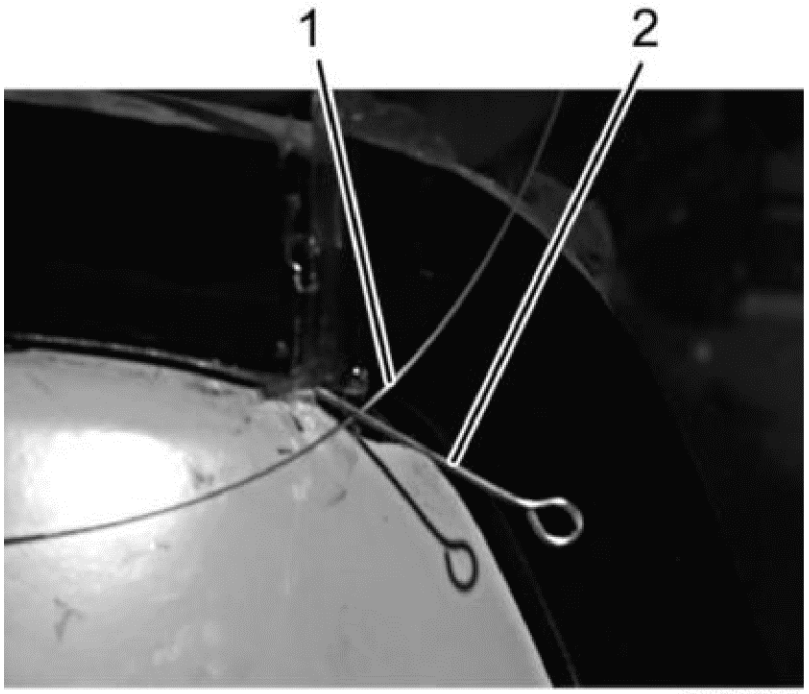

Figure 5

1. Cutting wire
2. Guide pin

12. Position the winch on the inside at the upper right-hand corner.

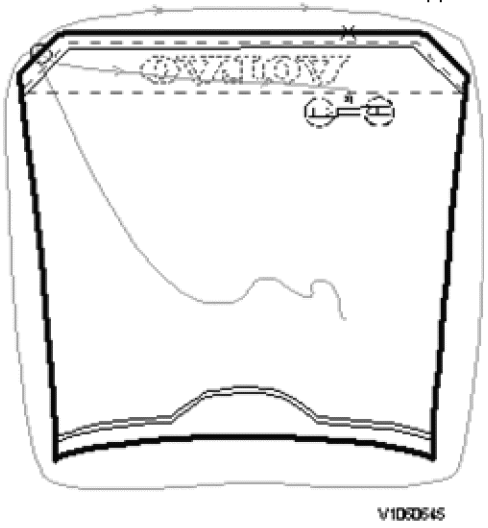

Figure 6
Winch position

13. Bend the wire ends and hook the wire in the winch drum and tension the wire.

14. Using the wire, cut along the join until the wire is directly above the winch.

NOTE	**When transferring the winch, the line reel must be braked by hand to prevent the wire from rolling up. Release the interlock with the other hand.**

15. Transfer the winch to a new position at the lower right-hand corner.

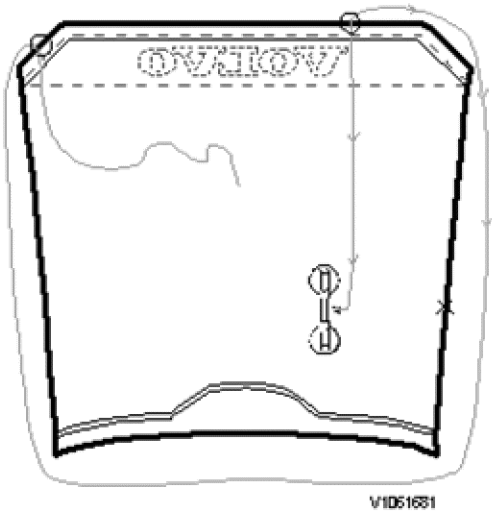

Figure 7
Winch position



Figure 8

16. Using the wire, cut along the joint until the wire is directly above the winch. Guide the wire by hand when at the join between the panes.

17. Place the other winch at the lower left-hand corner.

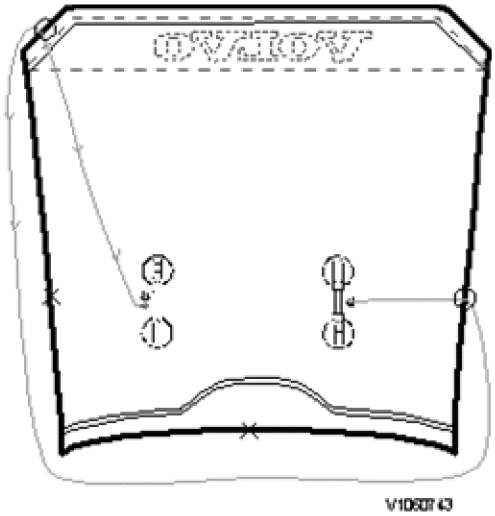

Figure 9
Twin winches

18. Using the wire, cut along the joint until the wire is directly above the winch. Guide the wire by hand when at the join between the panes.

19. Place both winches at the bottom, on the pane.

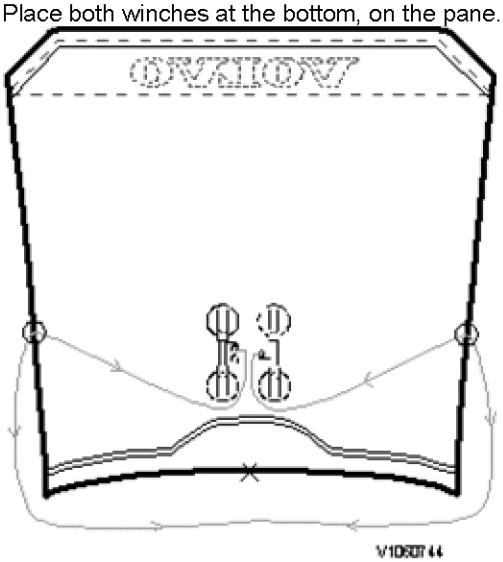

Figure 10
Twin winches

1. Cutting wires

20. Place the plastic protection at the bottom, on the pane to prevent damaging the instrument panel.

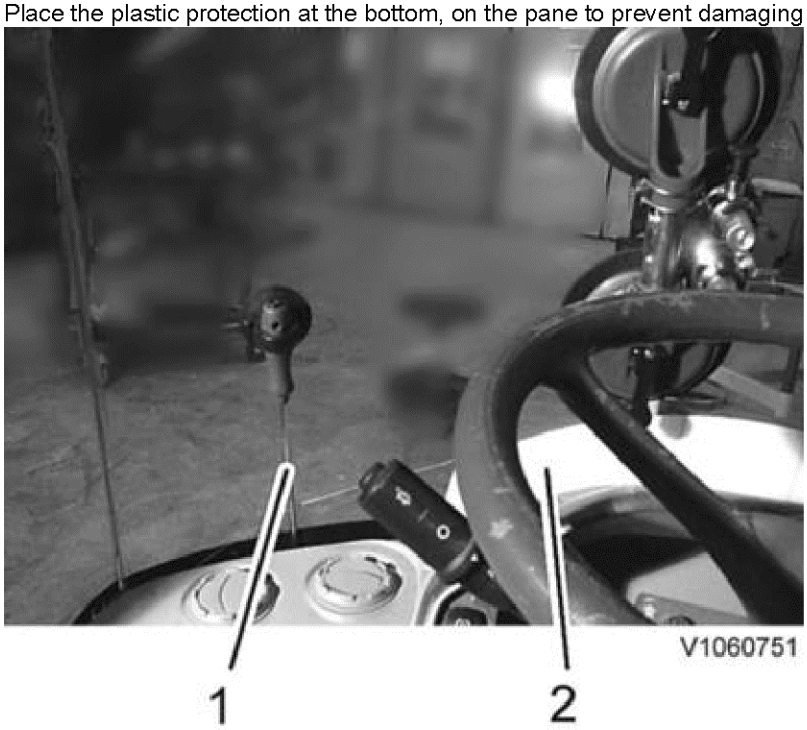

Figure 11

1. Parabolic chisel
2. Plastic cover

21. Using the wire, cut along the join with one winch until the wire reaches the pane. Use the parabolic chisel. Carry out the same on the other side.
Use two glass lifters and lift the pane out. **Weight approx.: 20 kg (40 lbs)**.

Installing

22. Cut the adhesive bead cleanly using the steel blade knife. Save about 3 mm (0.12 in) thickness of the old adhesive bead. Turn the smoothing edge towards the adhesive bead for best results.

23. Place spacers, approx. 3 pcs on the panel under the pane.

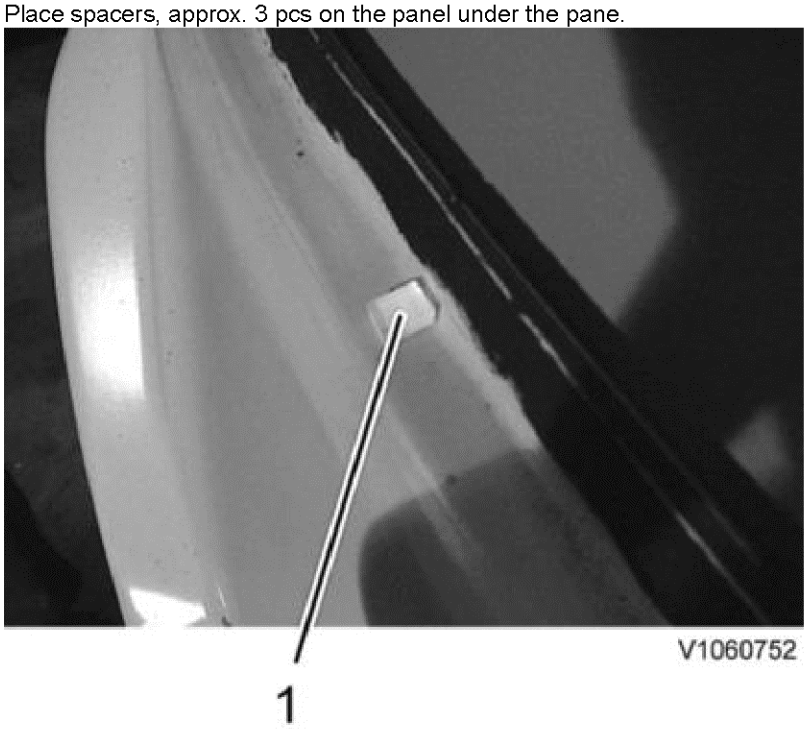

Figure 12

1. Spacer

24. Mark the centre with a dash on the upper edge of the cab and the pane.

25. Heat the adhesive to a maximum of 70 °C (160 °F). Apply the adhesive using a glue gun and supplied nozzle to the upper and lower edges of the cab.
Apply a thicker bead to the cab's upper angled corner.

26. Position the pane with the glass lifter. **Weight approx.: 20 kg (40 lbs)** Insert the upper edge first and then press the entire pane into place. Adjust the pane according to the dash.

27. Apply a 50 mm (2 in) wide piece of masking tape 2 mm (0.08 in) from the glass edge on the outside and 0.5 mm (0.02) on the inside of the pane.

28. Seal the joints between the panes from the outside with a generous amount of sealant. Ensure that the joints are properly filled. The sealant must flow out onto the inside of the pane.

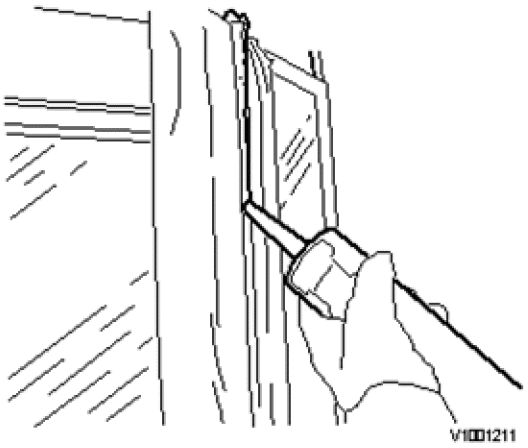

Figure 13

29. Smooth out the sealant on the outside using the cut-out of the plastic scraper. Ensure that there is enough extra sealant so that the join takes the same shape as the cut-out on the scraper.
The corner of the scraper is used on the inside to remove any excess sealant.

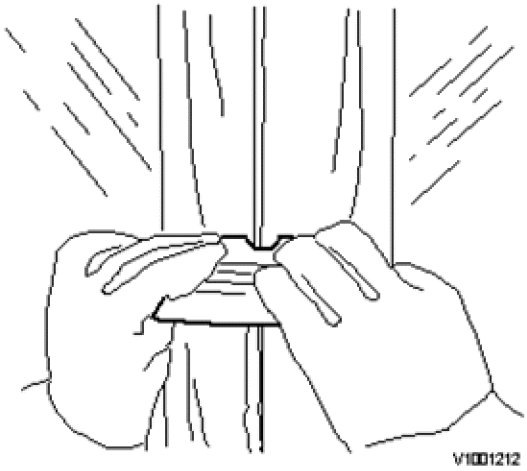

Figure 14

30. Remove the masking tape by pulling it at right angles from the join.
31. Allow the adhesive and sealant to dry for: 1 day at 20 °C (70 °F).
32. Reinstall and screw the roof back into place.
33. Reinstall any work lights.
34. Install the windscreen wiper.
35. Clean the pane.
36. Restore the machine to operating condition.

VOLVO
Construction Equipment

Service Information

Document Title:	Function Group:	Information Type: **Service Information**	Date: **12/10/2011**
Profile: **WLO, L90F (Volvo) [GB]**			

Side window, replacing

Op nbr 843-013

88830060 Disassembly tool
88830062 Wire unvinding device
88890051 Dispensing gun
9812521 Two cup suction lifter

Adhesive
Sealant
Scraper with cut-out
Spacer



Figure 1
88830060Disassembly tool

1. Ratchet handle	7. Blade for seam scraper
2. Parabolic chisel	8. Winch
3. Winch special	9. Mounting tool
4. Wire inserter	10. Safety glasses
5. Extension	11. Plastic cover
6. Seam scraper	12. Guide pins

Conditions

See General information about panes
and play the instruction DVD supplied in the case before commencing work.

1. Park the machine in service position 1. See Service positions
2. Remove any work lights.

Removing

3. Cut off the sealant, with a snap-blade for example, along the pane joint as a V-joint and especially in the corners of the panes.

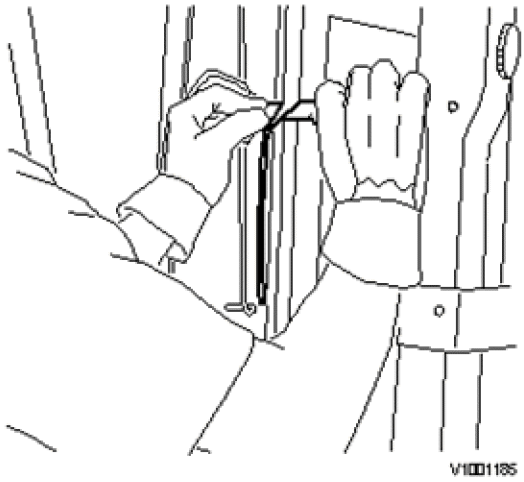

Figure 2
Scraping

To determine the necessary wire length, measure the circumference of the pane plus two diagonals.

4. Roll out the necessary length of cutting wire from the wire holder (about 1 m/revolution) and cut off.

WARNING! **Risk of cuts! Wear safety glasses and use protective gloves.**

5. Insert the wire puller between the pane and frame at the left-hand lower corner from the inside.
Hold the tip near to the panel otherwise there is a risk of the pane cracking.
6. Insert both the wire ends and bend the wire tips backwards.

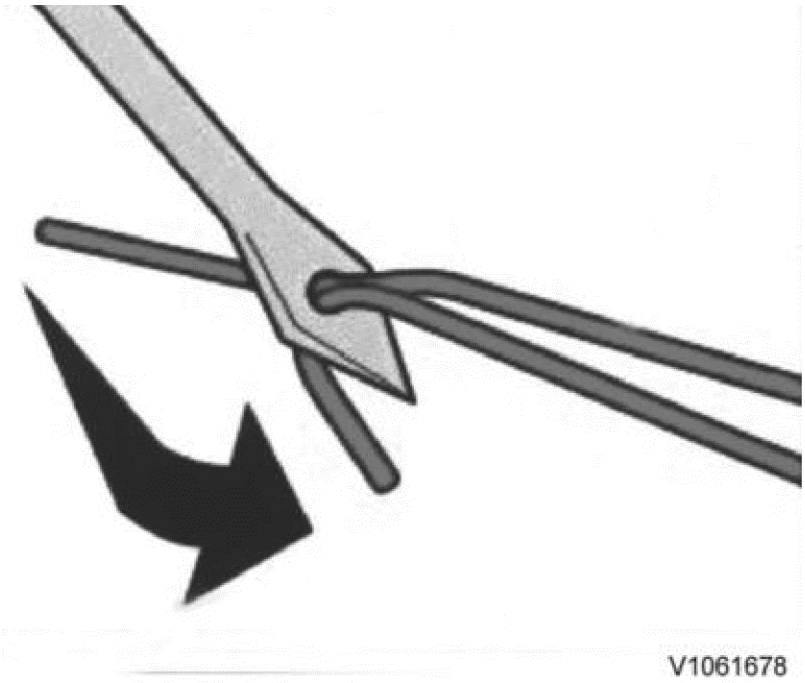

Figure 3
Wire inserter

7. Pull in the wires and then straighten the wire ends.

8. Place the wire along the join around the pane. Keep the wire in place with pins, which are positioned so that the wire runs past the pins.
Apply a piece of tape at the lower edge of the pane to keep the pane in place when detached.

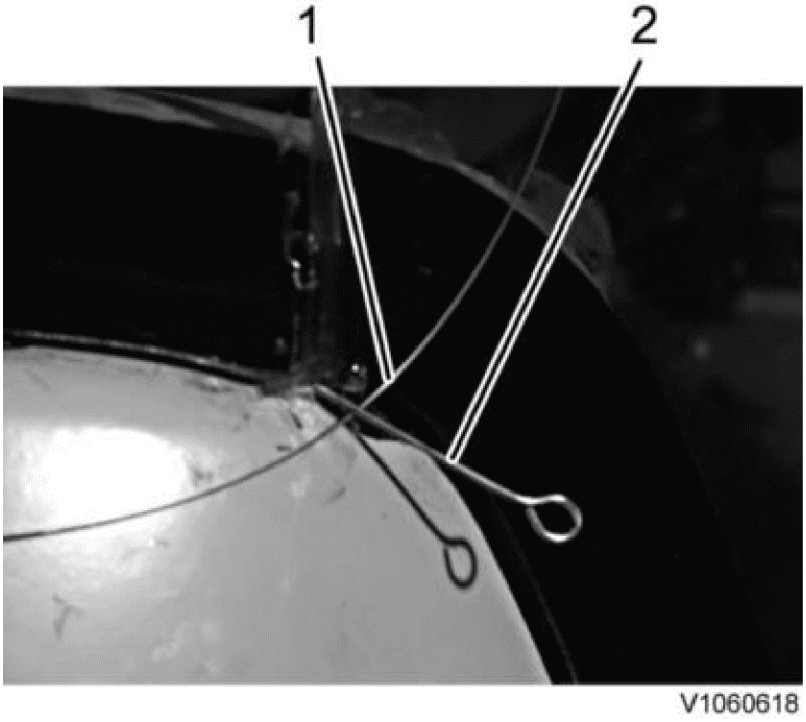

Figure 4

1. Cutting wire
2. Guide pin

9. Place the winch with twin rollers on the inside at the upper edge of the pane.

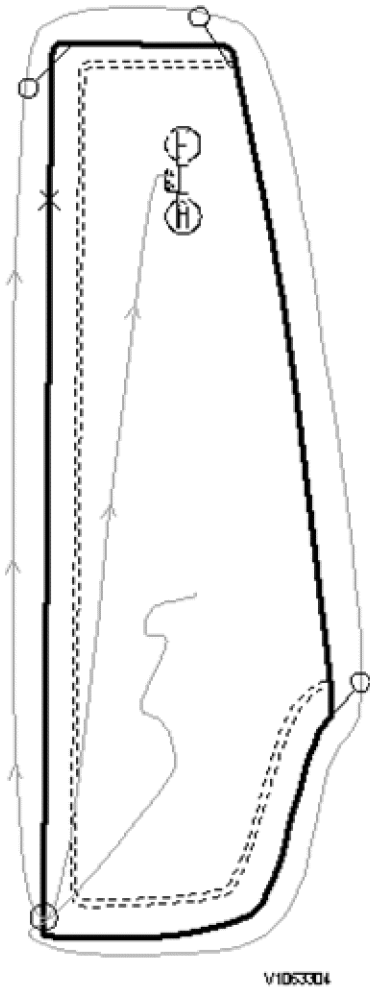

Figure 5
Winch position 1

10. Bend the wire ends and hook the wire in the winch drum and tension the wire.
11. Using the wire, cut along the join until the wire is directly above the winch.



Figure 6

NOTE **When transferring the winch, the line reel must be braked by hand to prevent the wire from rolling up. Release the interlock with the other hand.**

12. Turn the winch with the rollers the other direction. Continue pulling the wire around the upper edge of the pane.

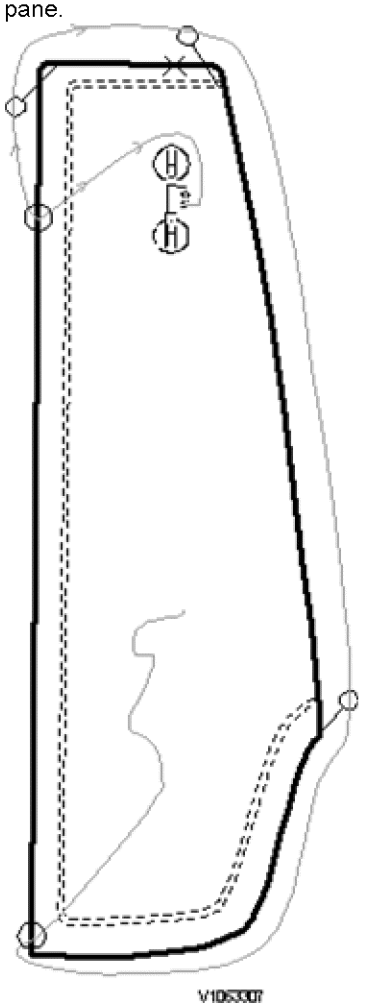

Figure 7
Winch position 2

13. Transfer the winch to a new position at the lower angle at the instrument panel.

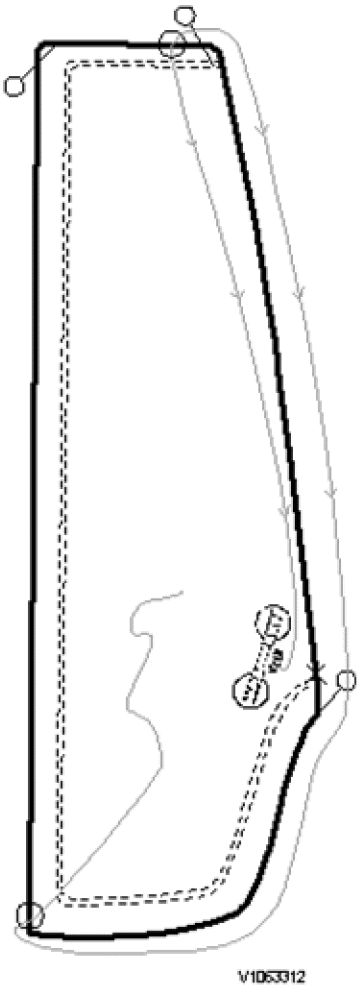

Figure 8
Winch position 3

14. Using the wire, cut along the pane until the wire is opposite the winch. Use your hand to guide the wire.
15. Insert the loose wire into the winch's other roller.

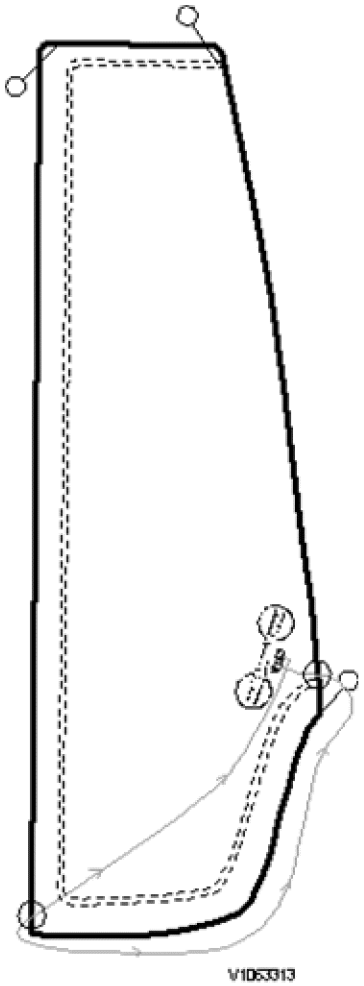

Figure 9
Winch position 4

16. Use the wire to cut along the pane until it detaches. Hold the pane with the glass lift.
Lift out the window pane.

Installing

17. Cut the adhesive bead clean using the steel blade knife. Save about 1-2 mm (0.04-0.08 in) thickness of the old adhesive bead. Turn the smoothing edge towards the adhesive bead for best results.

18. Place spacers, approx. 3 pcs on the panel under the pane.

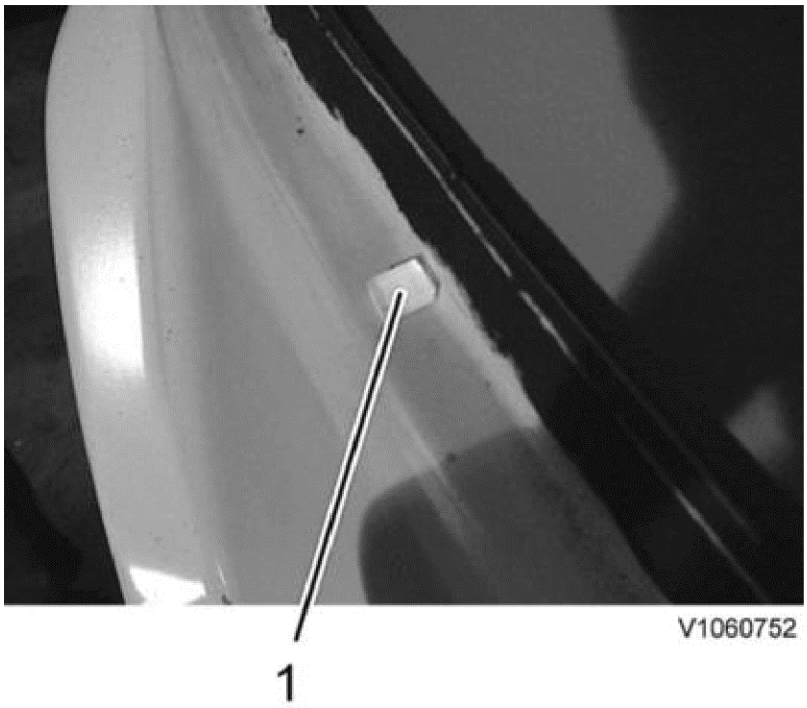

Figure 10

1. Spacer

19. Heat the adhesive to a maximum of 70 °C (160 °F). Apply the adhesive using a glue gun and supplied nozzle to the cab edge.

NOTE **The pane must be positioned within 15 minutes.**

20. Lift the pane into position using the glass lifter. Adjust the pane leaving a 1-2 mm (0.04–0.08 in) gap between the front pane and the side pane.

21. Apply a 50 mm (2 in) wide piece of masking tape 2 mm (0.08 in) from the glass edge on the outside and 0.5 mm (0.02) on the inside of the pane.

22. Seal the joint between the panes from the outside with a generous amount of sealant. Ensure that the joints are properly filled. The sealant must flow out onto the inside of the pane.

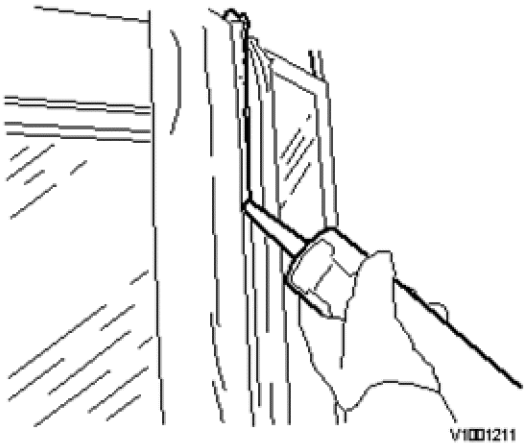

Figure 11

23. Smooth out the sealant on the outside using the cut-out of the plastic scraper. Ensure that there is enough extra sealant so that the join takes the same shape as the cut-out on the scraper.
The corner of the scraper is used on the inside to remove any excess sealant.

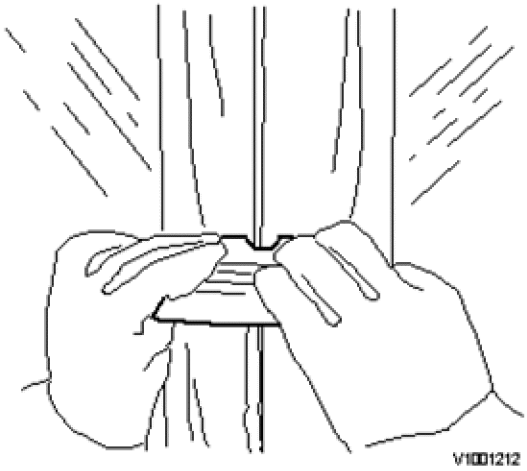

Figure 12

24. Remove the masking tape by pulling it at right angles from the join.
25. Allow the adhesive and sealant to dry for: 1 day at 20 °C (70 °F).
26. Reinstall any work lights.
27. Clean the pane.
28. Restore the machine to operating condition.

VOLVO
Construction Equipment

Service Information

Document Title:	Function Group:	Information Type: **Service Information**	Date: **12/10/2011**
Profile: **WLO, L90F (Volvo) [GB]**			

Operator's seat, securing

Preparations to ensure that the seat does not fall down.

WARNING! **The work involves handling heavy components - failure to stay alert may result in severe crushing injuries.**

Op nbr 852-010

1. Remove the panel behind the seat.
   Unplug connectors OCA and A (seat heating).
   Unplug connector SR-ST (CDC).
   Remove the bolts for the seat and lean the seat against the steering wheel.
   Secure the seat with the lap-type seatbelt around the steering column.



V1042563

Figure 1
Raised seat



Figure 2
Securing seat

1. Lap-type seatbelt

Reset

2. Loosen the lap-type seatbelt and lower the seat.
Bolt down the seat.
Plug in connector SR-ST (CDC).
Plug in connectors OCA and A (seat heating).
Reinstall the panel behind the seat.

VOLVO
Construction Equipment

Service Information

Document Title:	Function Group:	Information Type: **Service Information**	Date: **12/10/2011**
Profile: **WLO, L90F (Volvo) [GB]**			

Air conditioning, description

Temperature control consists of a control panel, SW8701, and a control unit, ECC (Electronic Climate Control).

Using an electrically controlled coolant flow valve, MO8707, and temperature sensors SE8706, SE8708, SE8702, and SE8503, the ECC controls the temperature in the cab. SE8503 sends the signals via the V-ECU. The AC-unit, if installed, also contributes to controlling the cab temperature.

If the fan control is in the AUT-position, the system strives to reach selected temperature as soon as possible in coordination with the coolant flow valve and lowest possible fan speed.
If the recirculation control is in the AUT-position, the damper is controlled according to ambient temperature and selected temperature.

The temperature sensors sense:

- SE8702 – Evaporator temperature (only with installed AC)
- SE8708 – Air temperature in air channel
- SE8706 – Air temperature in cab behind operator's seat
- SE8503 – Ambient temperature via V-ECU

The primary sensor for controlling cab temperature is SE8706. SE8708 is a reference sensor in order to achieve as even temperature as possible in the air channel. The ECC receives information about ambient temperature via SE8503.

The electrically controlled coolant flow valve remains in its latest position when the engine is switched off. If the pause heater function[1] ⓘ is engaged, the coolant flow valve and sensors are active in the ECC.

Timer

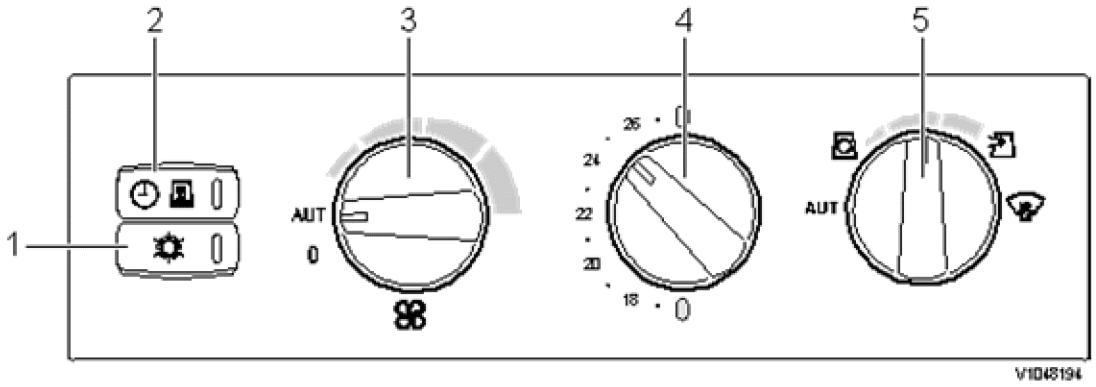

Figure 1

1. Switch AC[2] ⓘ
   The switch is also found on machines without AC-unit. The control light in the switch shows that the function is active. If the control light starts to flash, the AC has been shut off due to too low or too high pressure, and must be reactivated.
2. Cab ventilation/pause heat.
3. Fan control.
   If the fan control is in the AUT-position, fan speed is controlled automatically. If the fan speed is high when the cab door is opened, fan speed is reduced automatically.
4. Temperature control.

5. Recirculation control and defroster.
   In defroster position, max. fan speed and AC are activated. For more detailed information, see Operator's manual.

Climate control system with components

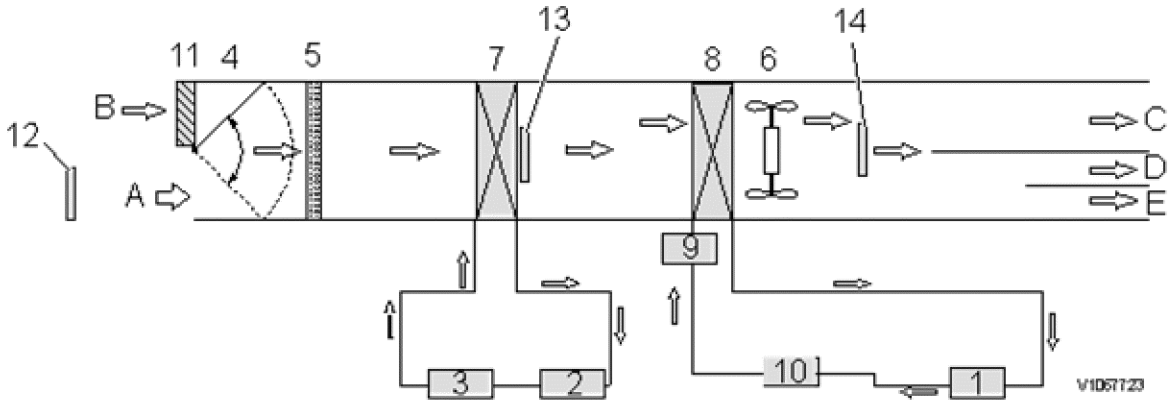

Figure 2

1. Engine
2. AC-compressor (with installed AC)
3. Condenser (with installed AC)
4. Recirculation damper
5. Filters
6. Fan motor
7. Evaporator with expansion valve (with installed AC)
8. Heater core
9. Coolant flow valve
10. Coolant pump, pause heat
11. Pre-filter
12. SE8706
13. SE8702
14. SE8708

A. Indoor air
B. Ambient air
C. Face
D. Floor
E. Windshield

Air conditioning

When the AC switch on the panel is pressed in, the AC-compressor starts and controls the evaporator's temperature if the pressure and temperature are within the limit values, see software description.
The evaporator's temperature is controlled by the ECC and the compressor's cycles. If AC-unit is installed and activated, the cooling fan's base speed is increased upon request from the ECC.
When the AC-compressor works, the evaporator becomes cold. Temperature sensor SE8702 sends signal to the ECC. If the evaporator gets colder than 3 °C (37.4 °F), the ECC cuts off the ground connection to the compressor. When the AC-compressor stops, the temperature increases and, at approx. 7 °C (45 °F), the ECC engages the AC-compressor again.

For the AC-compressor to start, that is, for the magnet clutch to be active, the following must take place:

- The AC switch on the panel must be pressed in or soft start AC must be activated, see next paragraph.
- The pressure in the system must be within the limit values, see software description.
- Engine must be running
- Evaporator temperature must be above approx. 3 °C (37.4 °F)
- Reversing[3] ⓘ of the cooling fan must not be requested.

Soft start AC

When the engine starts, the ECC grounds RE14 which closes the circuit. MA8701 receives voltage from FU28 and

ground via the ECC, which enables the AC-compressor to start. The AC-compressor rotates when the starter motor rotates to achieve slow pressure build-up. Thus, fluid shocks are avoided in the compressor at the same time as the compressor's shaft seal is lubricated.

Soft start is not activated if:

- Less than four hours have passed since the engine was turned off.
- The system has the wrong pressure, see software description
- The temperature in the evaporator is low, see software description.

Monitoring AC

If the pressure sensor SE8709, high-pressure side on the AC-unit, indicates <0.1 MPa (1 Bar) (14.5 psi) at engine start and the ambient temperature is above +10 °C (50 °F), “ERROR AC-system” is shown on the operator's information panel and the light on the AC switch flashes. The problem may be that there is no refrigerant in the AC-system or that the pressure sensor is defective.

Increased cooling fan speed due to AC

The machine is equipped with hydraulic cooling fan, which also cools the condenser. When high cooling performance is desired in the cab, pressure sensor SE8709, at pressure > 1.8 MPa (18 bar) (261 psi), sends a request for increased cooling fan rpm to the V-ECU, via the ECC, and the cooling fan rpm is increased, despite no other cooling requests from the machine.

RE14 feeds the cab fan, AC-compressor, and the pause heat pump (if installed).
See also Wiring diagram 310
,
Wiring diagram 302
,
Wiring diagram 805
as well as
Wiring diagram 806

Software

Air conditioning		
Input signals	**Conditions for output functions**	**Output functions**
○ VCADS Pro parameter GYC ○ VCADS Pro parameter HGO ○ VCADS Pro parameter HSZ ○ VCADS Pro parameter FVJ ○ Pressure refrigerant, SE8709 ○ Control climate control system SW8701 ○ Engine speed, SE2701 ○ Engine On/Off ○ Reversing cooling fan ○ Switch attachment lock, SW9143 ○ Ambient temperature, SE8503 ○ Key feed On/Off ○ Temperature	Soft start at engine start ○ Key feed Off>4 hours ○ Engine speed > 100 rpm ○ Pressure refrigerant within normal value range	○ Engagement of AC-compressor (via ECC) for 10 seconds
	Monitoring at engine start ○ Pressure refrigerant < 155 MPa (1.55 bar) (22.5 psi) or Pressure refrigerant >2.24 MPa (22.4 bar) (325 psi) ○ Key feed On ○ Ambient temperature > 10 °C (50 °F)	○ Amber central warning ○ Check ECCfailure
	Operation ○ VCADS Pro parameter GYC=1 ○ Control air conditioning AC On ○ Engine On ○ Pressure refrigerant within normal value range	○ Engagement of AC-compressor (via ECC)
	Reversing of cooling fan during operation ○ Requested reversal of cooling fan ○ AC-compressor engaged	○ Disengagement of AC-compressor (via ECC) until reversing sequence is finished
	Safety during operation ○ Control air conditioning AC On ○ Engine On	○ Disengagement of AC-compressor (via ECC)

evaporator, SE8702 o Temperature cab, SE8706 o Temperature air channel, SE8708	o Pressure refrigerant < 0.1 MPa (1 bar) (15 psi) or > 2.1 MPa (21 bar) (305 psi) Restart to operation: After a problem has been taken care of, the AC-unit must be deactivated and then activated again	
	Return to operation after operating attachment lock with SW9143 o Pressure refrigerant < 0.1 MPa (1 bar) (15 psi) or > 2.1 MPa (21 bar) (305 psi) o < 10 seconds since SW9143 changed status o Pressure refrigerant within normal value range < 60 seconds	o Engagement of AC-compressor (via ECC) 10 seconds after pressure for refrigerant has reached normal value
	Alarm conditions increased pressure without attachment lock installed o VCADS Pro parameter GYC =1 o VCADS Pro parameter FVJ =OFF o Engine On o Ambient temperature <25 °C (77 °F) o Pressure refrigerant > 1.86 MPa (18.6 bar) (270 psi) Or: o Ambient temperature <0 °C (32 °F) o Pressure refrigerant >2.24 MPa (22.4 bar) (325 psi)	o Amber central warning o Check ECCfailure
	Alarm conditions increased pressure with attachment lock installed o VCADS Pro parameter GYC =1 o VCADS Pro parameter FVJ =ON o Engine On o More than 120 seconds since SW9143 attachment lock was actuated o Ambient temperature <25 °C (77 °F) o Pressure refrigerant > 1.86 MPa (18.6 bar) (261 psi) Or: o Ambient temperature <0 °C (32 °F) o Pressure refrigerant >2.24 MPa (22.4 bar) (325 psi)	o Amber central warning o Check ECCfailure

In case of any defective VCADS Pro parameter, it is considered to be “OFF” or “0”
In case of defective pressure sensor SE8709, it is considered to be outside the working values.
In case of defective control air conditioning SW8701, the AC is considered to be Off
In case of defective input signal Engine On/Off, it is considered to be On.
In case of defective switch attachment lock, SW9143 it is considered to be Locked.
In case of defective ambient temperature, SE8503 is considered to be >25 °C (77 °F)
In case defective input signal Key feed, no soft start shall be performed.

---

[1] Optional equipment

[2] Optional equipment

[3] Optional equipment

VOLVO
Construction Equipment

Service Information

Document Title:	Function Group:	Information Type: **Service Information**	Date: **12/10/2011**
Profile: **WLO, L90F (Volvo) [GB]**			

ECC, MID 146, changing non-programmed ECU

Op nbr 870-011

VCADS Pro VCADS Pro Service Tool
88890020 Interface
88890027 Cable

1. Place the machine in service position 1, see Servicepositioner
.
2. Connect VCADS Pro and perform the operation 87371-3 MID 146 ECU, programming
3. Fold the backrest forward and remove the rear cab panel.
4. Remove the right cab panel.
5. Unplug the connector from the ECC.

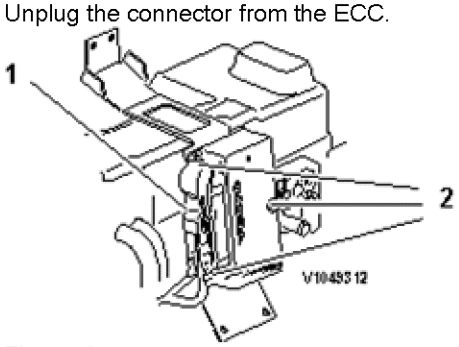

Figure 1

1. Connector
2. Bolts

6. Change ECC.
7. Plug in the connector for the ECC.
8. Turn on the voltage with the battery disconnector.
9. Finish VCADS Pro operation 87371-3 MID 146 ECU, programming.
10. Start the machine and check that no error messages appear.
11. Restore the machine to operating condition.

VOLVO
Construction Equipment

Service Information

Document Title:	Function Group:	Information Type: **Service Information**	Date: **12/10/2011**
Profile: **WLO, L90F (Volvo) [GB]**			

ECC, MID 146, changing pre-programmed ECU

Op nbr 870-010

1. Place the machine in service position 1, see Service positions
.
2. The new control unit has basic settings for parameters for the machine.
3. Fold the backrest forward and remove the rear cab panel.
4. Remove the right cab panel.
5. Unplug the connector from the ECC.

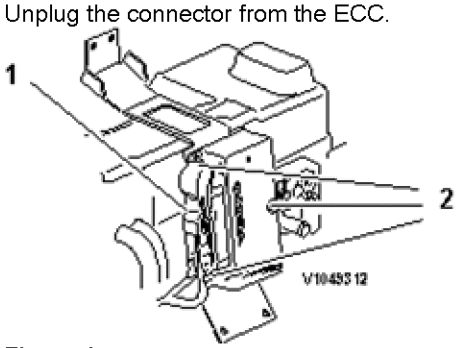

Figure 1

1. Connector
2. Bolts

6. Change ECC.
7. Plug in the connector for the ECC.
8. Turn on the voltage with the battery disconnector.
9. Start the machine and check that no error messages appear.
10. Restore the machine to operating condition.

VOLVO
Construction Equipment

Service Information

Document Title:	Function Group:	Information Type: **Service Information**	Date: **12/10/2011**
Profile: **WLO, L90F (Volvo) [GB]**			

Climate unit, removing

Op nbr 870-012

Removing

1. Place the machine in service position 1 in accordance with Service positions
2. Open the plastic cover for the air conditioning

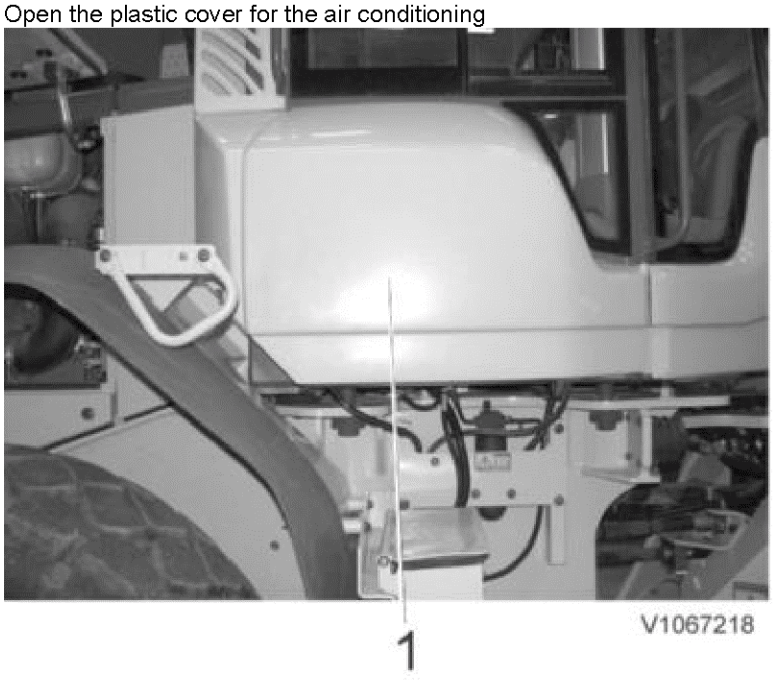

Figure 1

1. Plastic cover

3. Remove the filter cover and the filters.

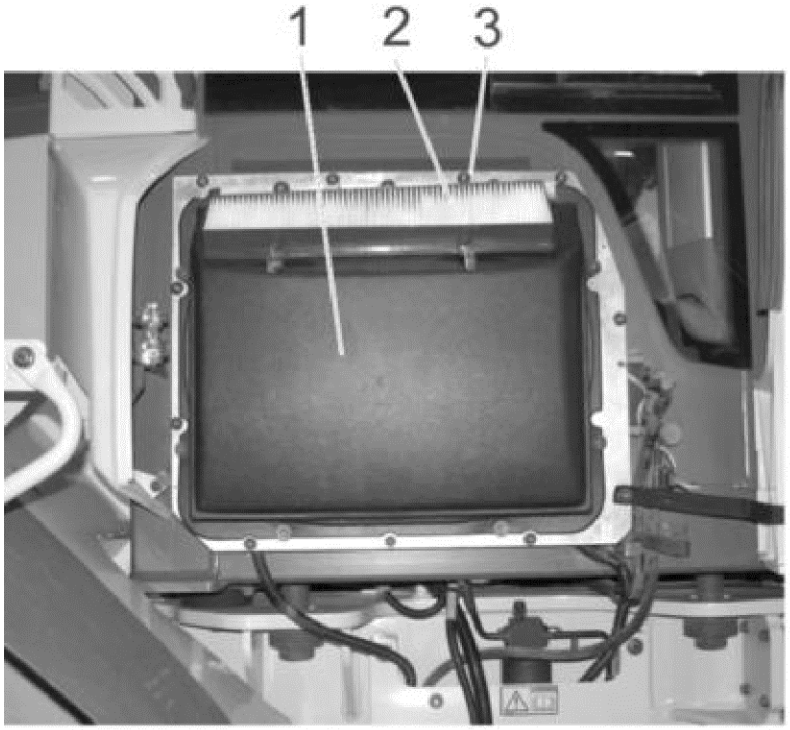

Figure 2

1. Filter cover
2. Filters

4. Remove the cover plate and unplug connector MO8703 for the motor for the air mixing damper.

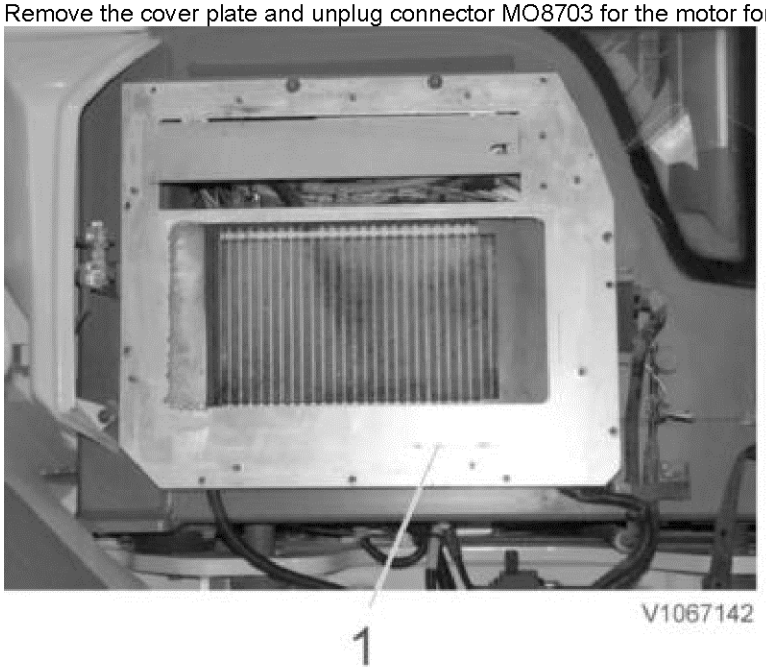

Figure 3

1. Cover plate

5. Remove the rear panel behind the seat in the cab.

VOLVO
Construction Equipment

Service Information

Document Title:	Function Group:	Information Type: **Service Information**	Date: **12/10/2011**
Profile: **WLO, L90F (Volvo) [GB]**			

Climate unit, installing

Op nbr 870-013

Installing

1. Lift the climate control unit (air conditioning) into place. Connect the hoses and bolt down the heater valve. Remove the clamping pliers and check for any leaks.
2. Bolt down the climate control unit (air conditioning).

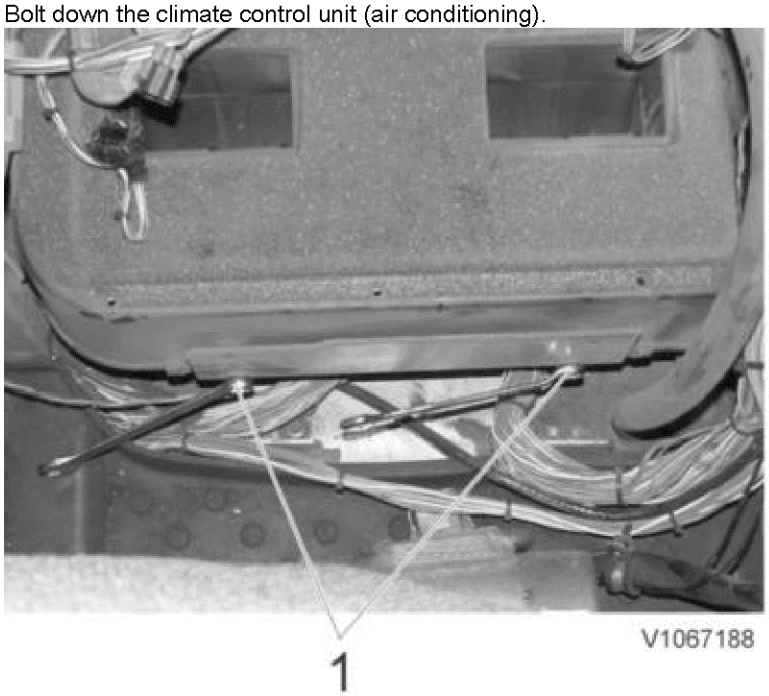

Figure 1

1. Bolts for climate unit

3. Plug in connectors MO8701 and SE8702
4. Reinstall the ECC-unit, bolt down the heater valve, and plug in connector BB.

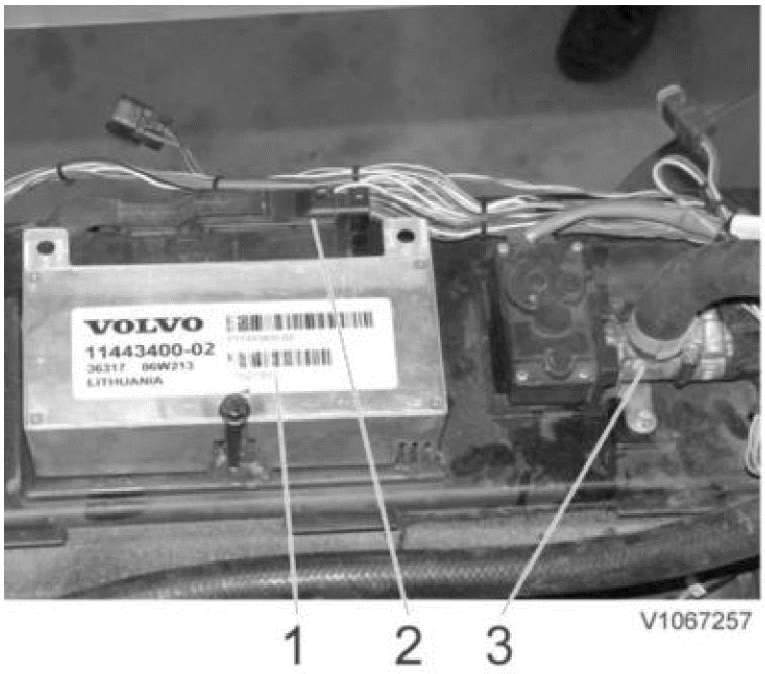

Figure 2

1. ECC unit
2. Connector BB
3. Water valve

5. Install the evaporator, the AC hoses' rubber bushing, and the drain hoses for the condensation water.

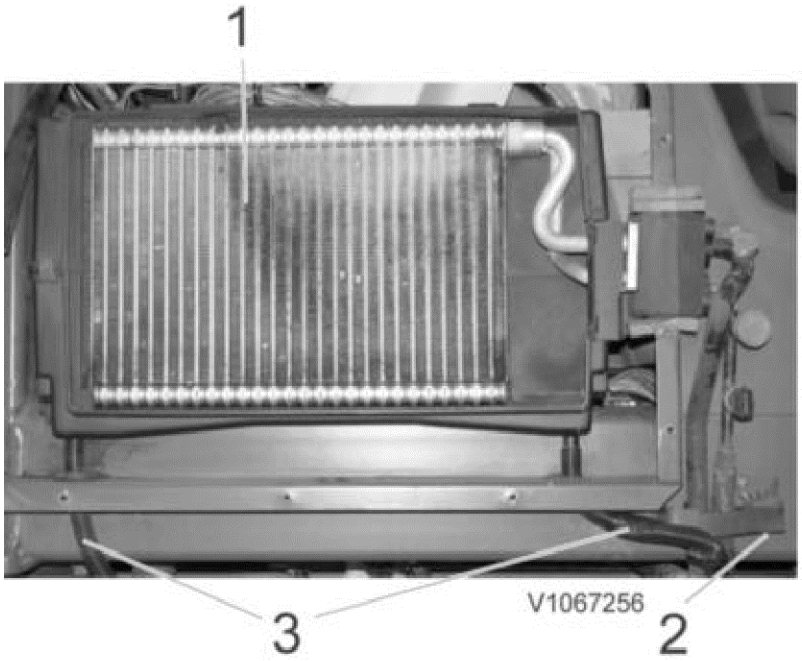

Figure 3

1. Evaporator
2. Bolt
3. Drain hoses

6. Install the plate to the right of the evaporator.

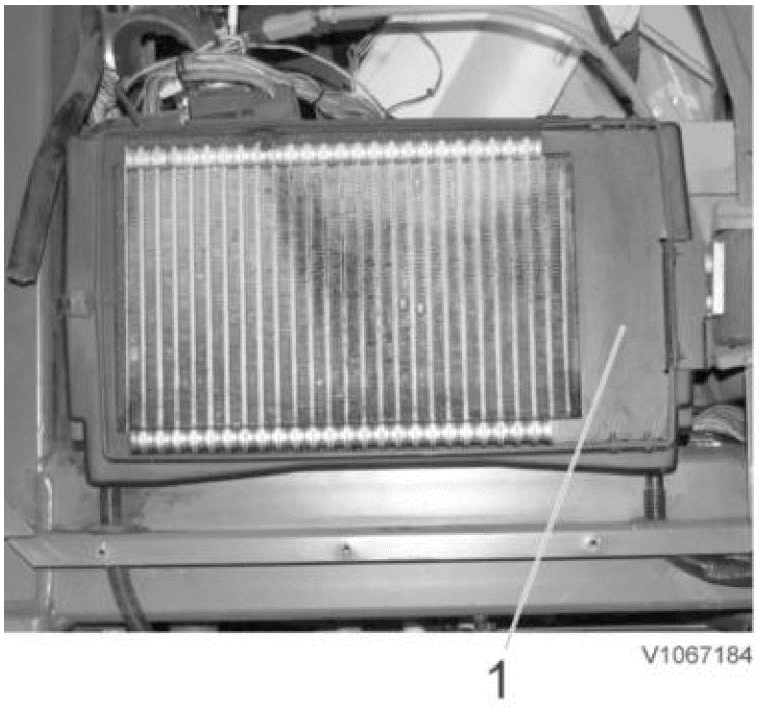

Figure 4

1. Plate

7. Plug in connector MO8703 for the air mixing damper's motor on the cover plate. Install the cover plate.

NOTE **Install the stop belt for the plastic cover using one of the bolts for the cover plate.**

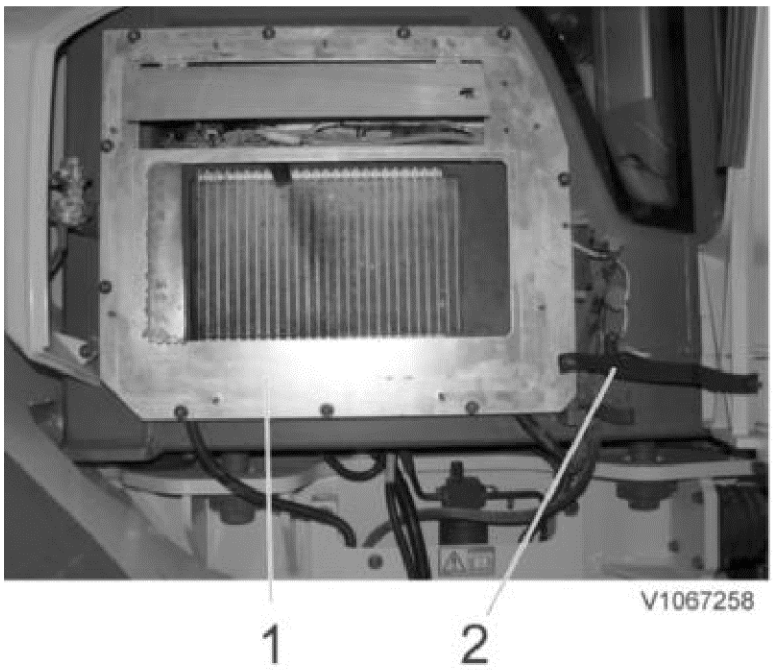

Figure 5

1. Cover plate
2. Resistance belt

8. Install the air duct and plug in the connector SE8708 for the air duct's temperature sensor.

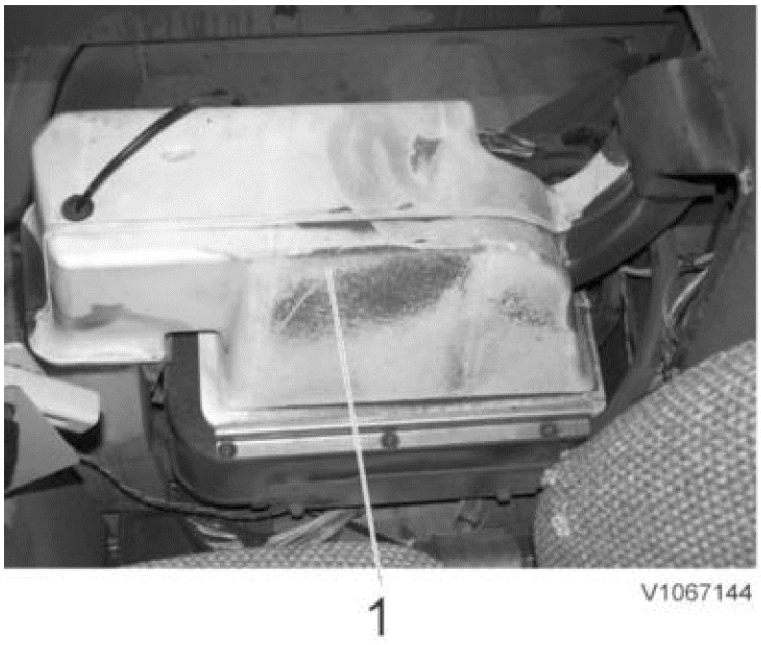

Figure 6

1. Ventilation duct

9. Reinstall the rear panel behind the seat in the cab.



Figure 7

1. Panel

10. Refit the right side panel

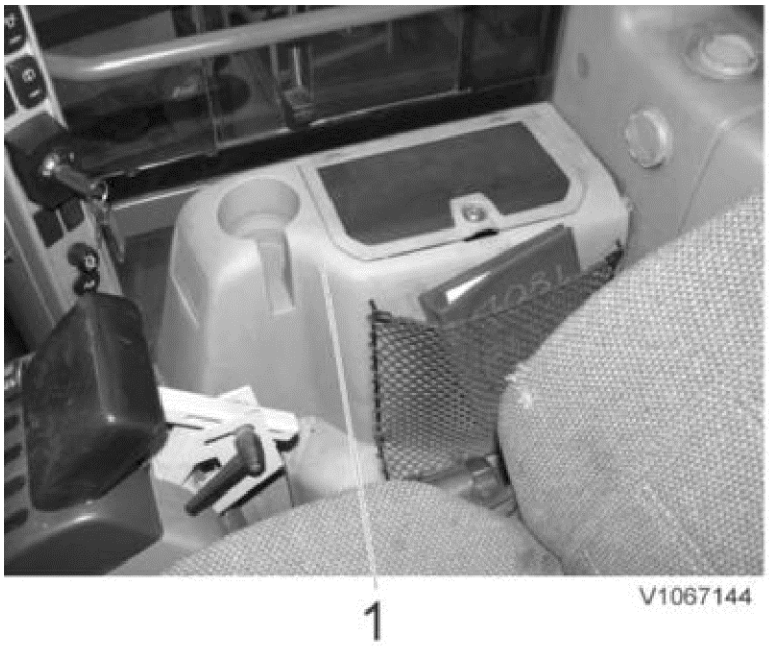

Figure 8

1. Right side panel

11. Test-run and check the cover for the damper motor's function and if there are any leaks.



Figure 9

1. Cover

12. Install the main filter, metal strip, and pre-filter.

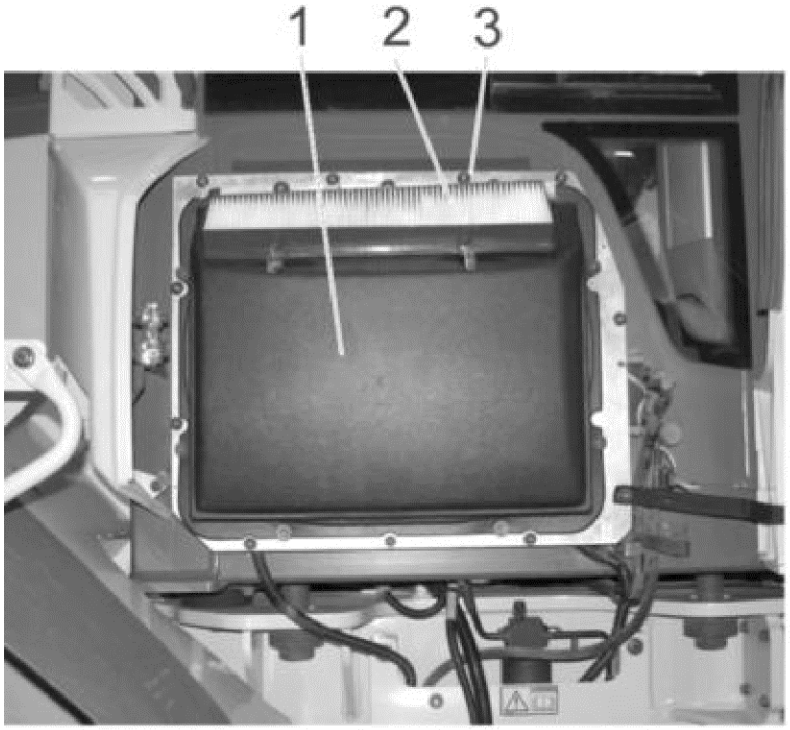

Figure 10

1. Primary filter
2. Pre-filter
3. Metal strip

13. Close the plastic cover and check that the drain hoses are not trapped

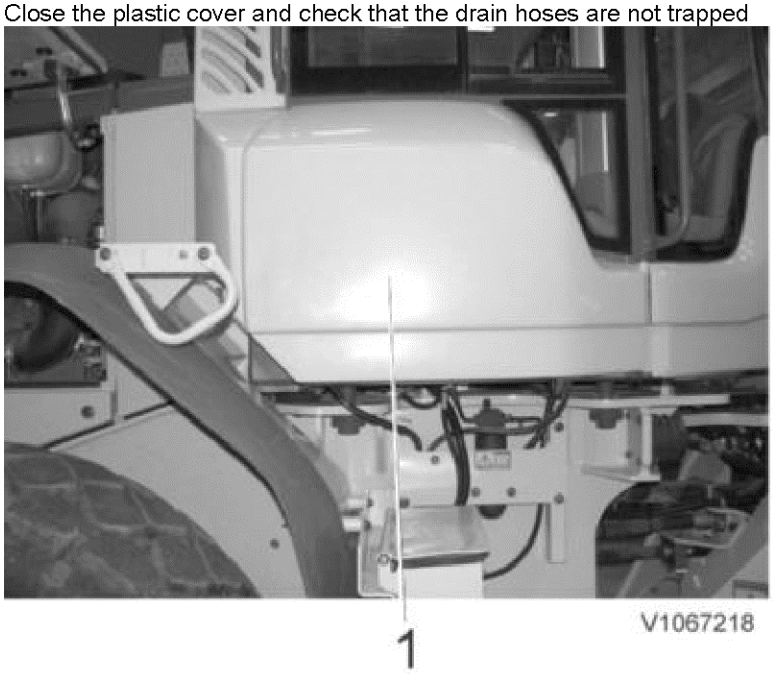

Figure 11

1. plastic cover

14. Restore the machine and test-run

VOLVO
Construction Equipment

Service Information

Document Title:	Function Group:	Information Type: **Service Information**	Date: **12/10/2011**
Profile: **WLO, L90F (Volvo) [GB]**			

Fan motor, replacing

Op nbr 873-006

1. Remove the air conditioning from the machine in accordance with Air conditioning and place it on a table.
2. Remove the hose between the heater unit and heater valve.
3. Dismantle the housing by removing all clips



Figure 1

1. Clips

4. Remove the bolt holding the cables to the fan motor



Figure 2

1. Bolt for fan motor cables

5. Lift out the fan motor and replace it.

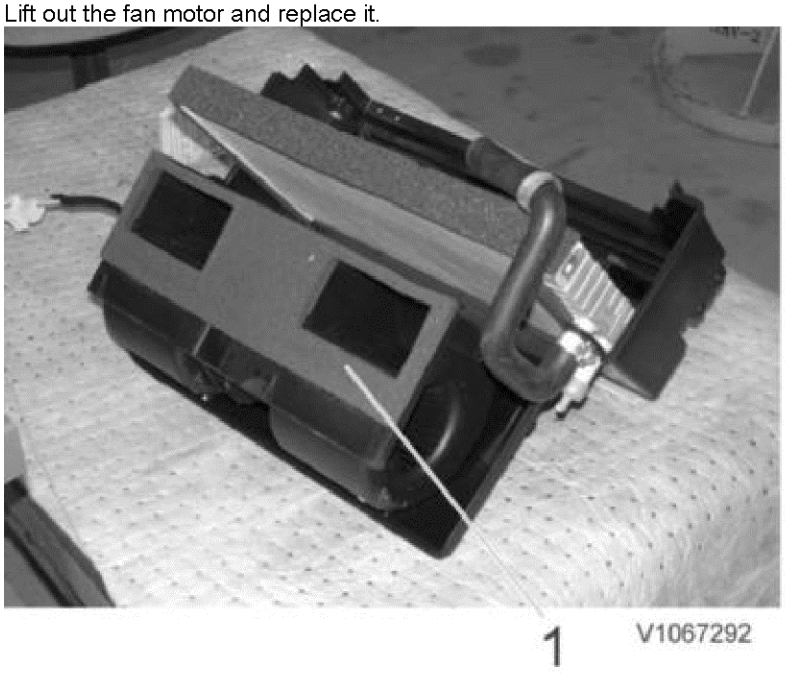

Figure 3

1. Fan motor

6. Affix the cables to the fan motor
7. Close the main switch.
8. Switch on the ignition and test-run the fan motor.
9. Refit the cover and affix all clips. Fit the hose for the heater valve.

NOTE **Check that the fan is fitted in the correct position.**

10. Refit the climate unit in accordance with: Air conditioning

VOLVO
Construction Equipment

Service Information

Document Title:	Function Group:	Information Type: **Service Information**	Date: **12/10/2011**
Profile: **WLO, L90F (Volvo) [GB]**			

Air mix door actuator, replacing

Op nbr 873-011

1. Place the machine in service position 1 in accordance with Service positions
2. Open the plastic cover for the AC unit

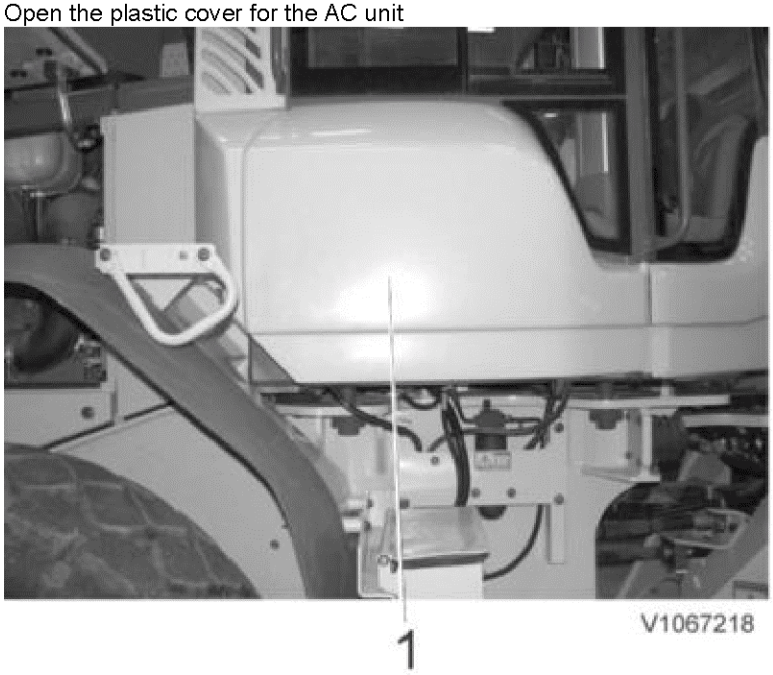

Figure 1

1. Plastic cover

3. Remove the pre-filter, metal strip and main filter.

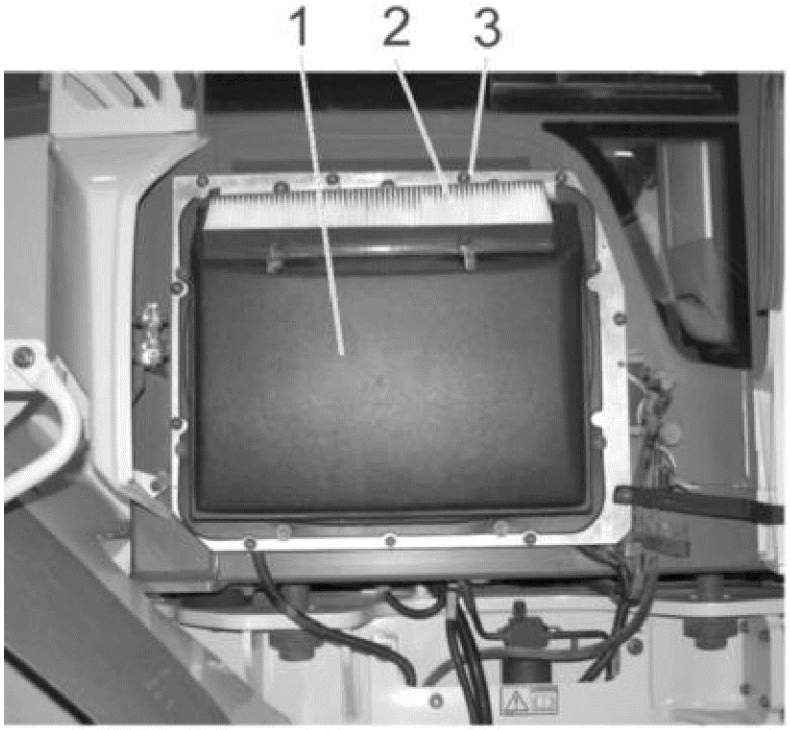

Figure 2

1. Filter cover
2. Filters

4. Remove the cover plate and unplug connector MO8703 for the motor for the air mixing damper

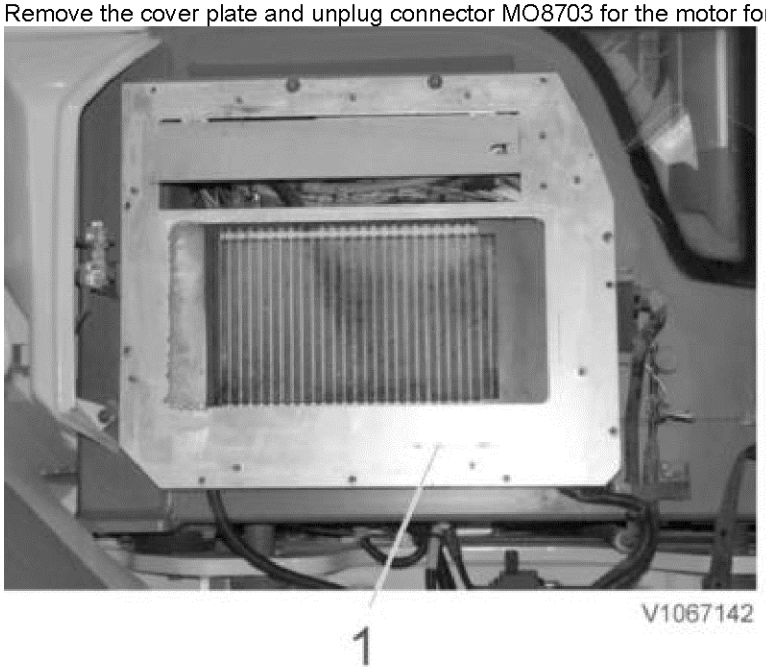

Figure 3

1. Cover plate

5. Place the cover plate on a soft surface to avoid damaging the air mixing damper.
6. Loosen the motor for the air mixing damper

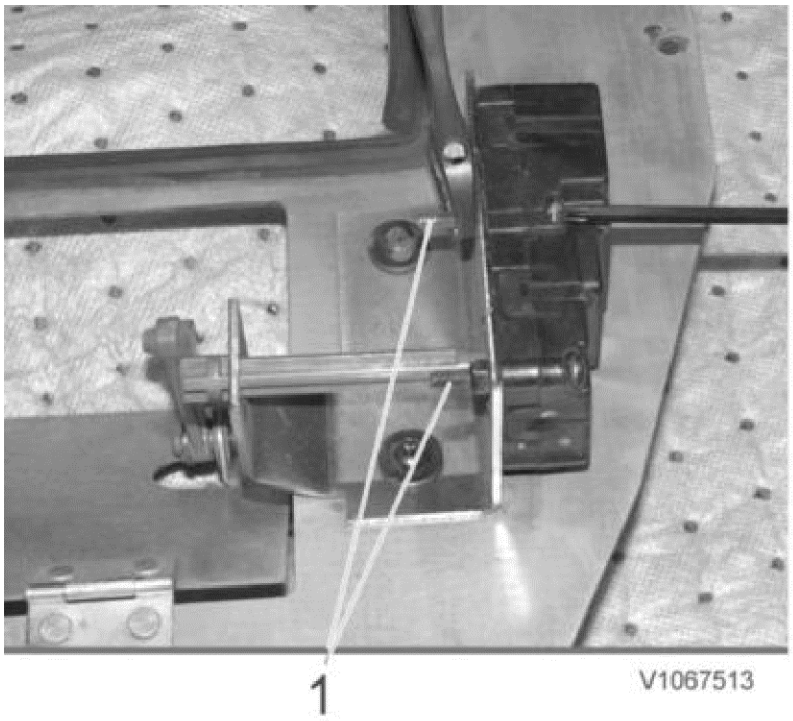

Figure 4

1. Bolts for the air mixing damper

7. Pull the motor out from the damper shaft

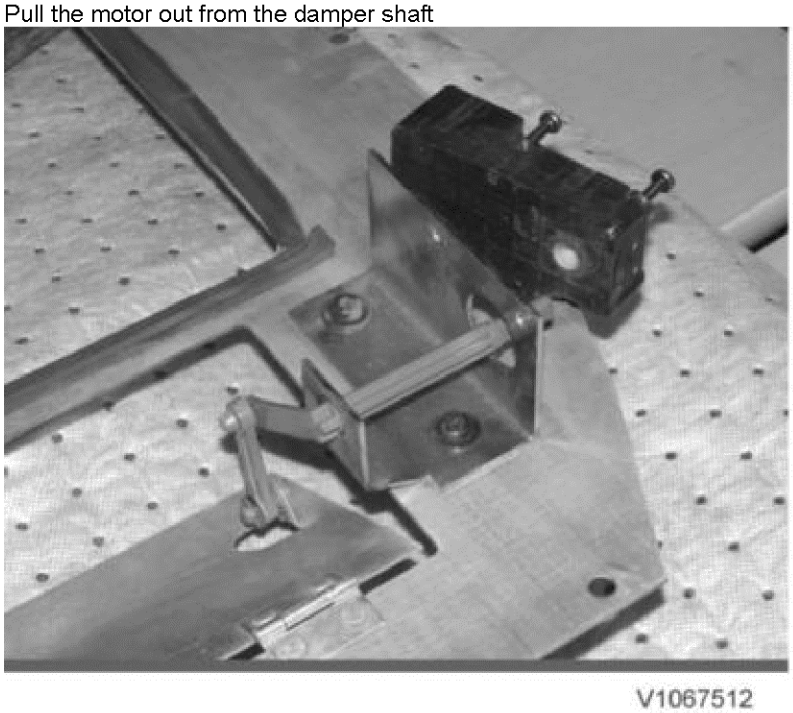

Figure 5

8. Refit a new motor for the air mixing damper
9. Plug in connector MO8703 for the motor for the air mixing damper and fit the cover plate

NOTE	**Fit the resistance belt for the plastic cover using one of the bolts for the cover plate**

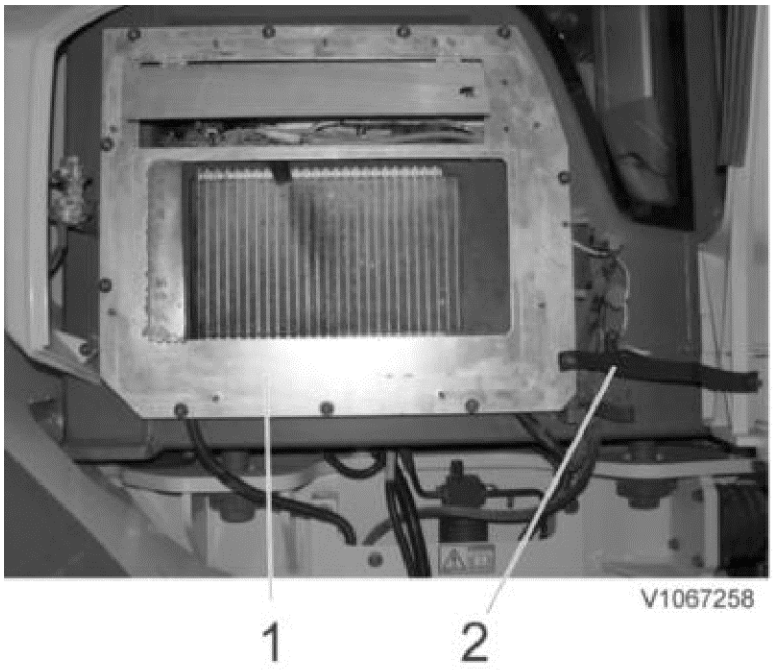

Figure 6

1. Cover plate
2. Resistance belt

10. Close the main switch
11. Test-run and check the function of the cover for the damper motor.



Figure 7

1. Cover

12. Fit the main filter, metal strip and pre-filter

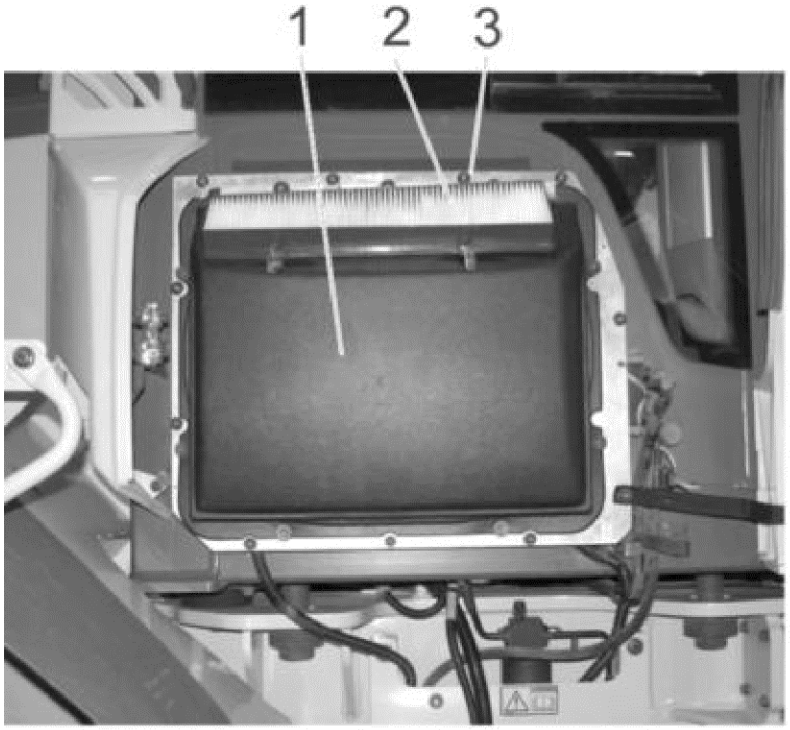

Figure 8

1. Primary filter
2. Pre-filter
3. Metal strip

13. Close the plastic cover

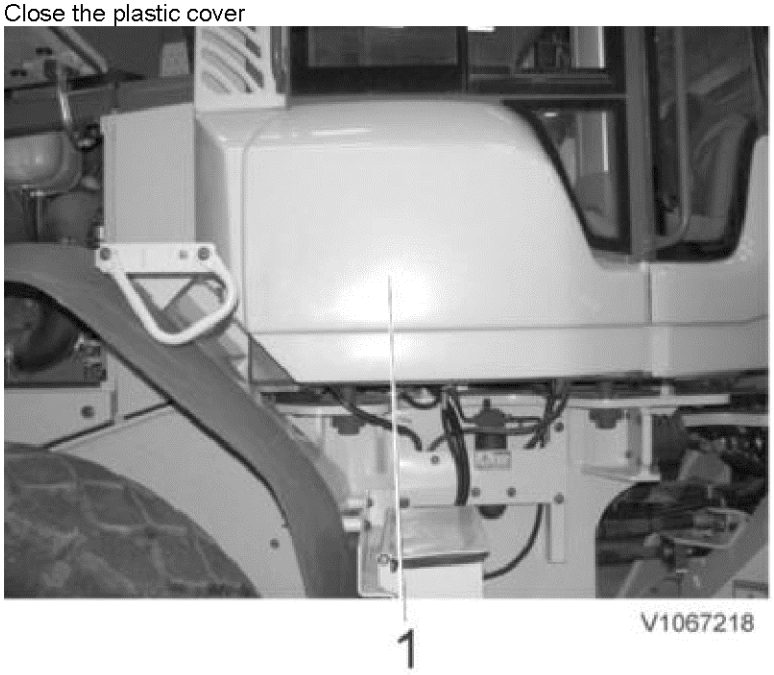

Figure 9

1. Plastic cover

14. Restore the machine and test-run.

VOLVO
Construction Equipment

Service Information

Document Title:	Function Group:	Information Type: **Service Information**	Date: **12/10/2011**
Profile: **WLO, L90F (Volvo) [GB]**			

Heater core, replacing

Op nbr 873-004

1. Remove the air conditioning from the machine and place it on a table. See: Air conditioning
2. Remove the hose between the heater unit and heater valve. Dismantle the housing by removing all clips.

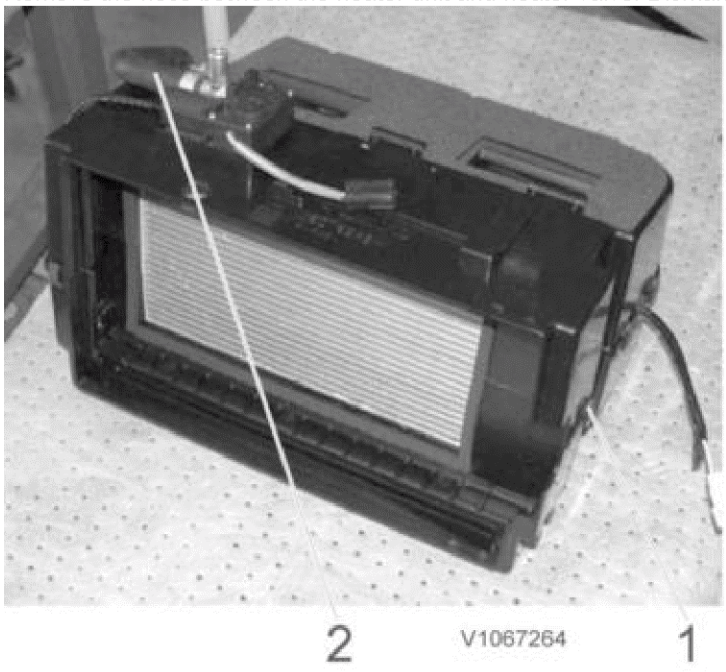

Figure 1

1. Clips
2. Slang

3. Remove the heater unit and replace it.

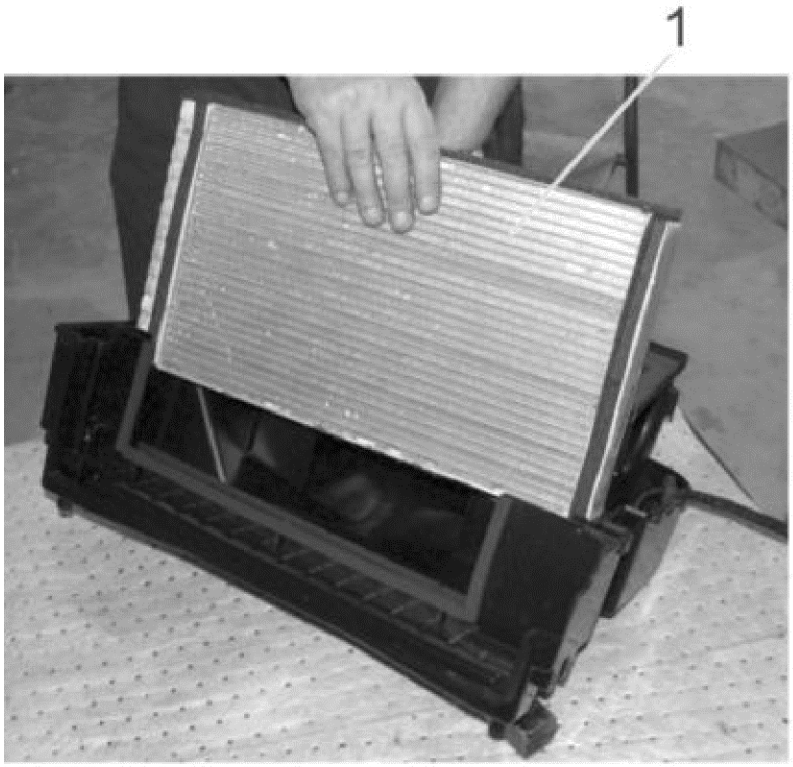

Figure 2

1. Heater unit

4. Refit the cover and affix all clips. Fit the hose for the heater valve.

NOTE **Check that the fan is fitted in the correct position.**

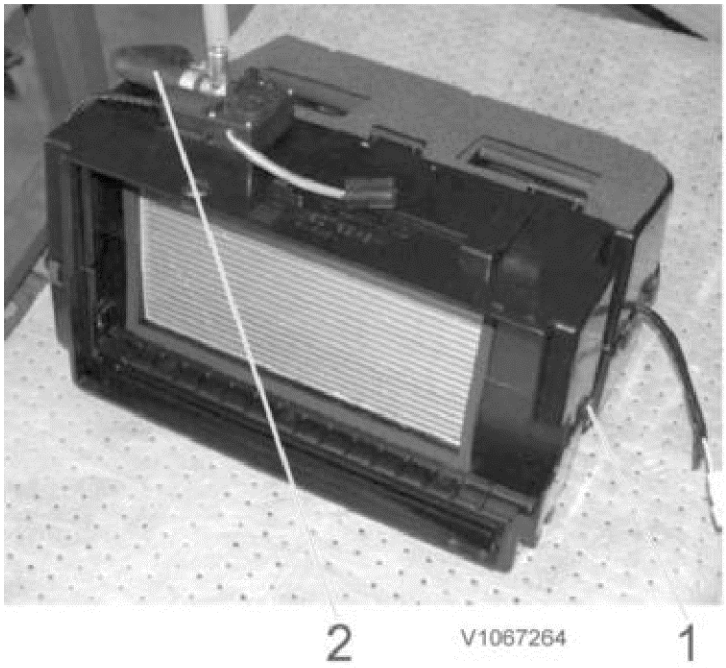

Figure 3

1. Clips
2. Slang

5. Refit the climate unit in accordance with: Air conditioning

VOLVO
Construction Equipment

Service Information

Document Title:	Function Group:	Information Type: **Service Information**	Date: **12/10/2011**
Profile: **WLO, L90F (Volvo) [GB]**			

Fan motor, replacing

Op nbr 873-006

Caution!
Refrigerant under pressure. Do not disconnect any hoses or connections on the air conditioning, thereby involuntary releasing refrigerant.

See also Säkerhet vid arbete med köldmedium för kylanläggning

1. Turn off the voltage with the battery disconnect switch.
2. Open the hatch to the air conditioning.
   Remove the plate with the air filters.
   Unplug the connector for the control unit.

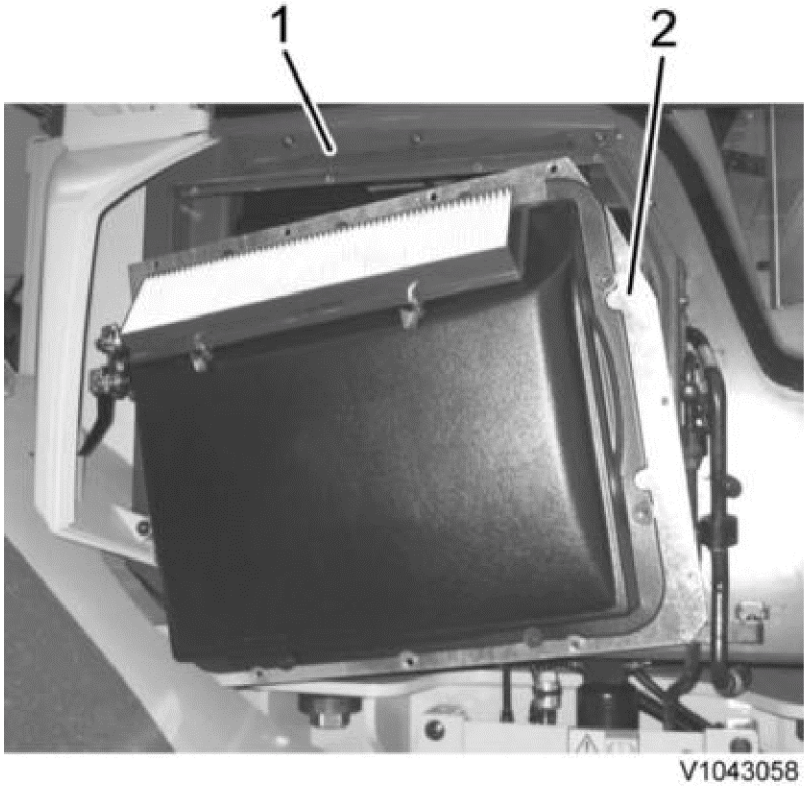

Figure 1
Cab filter

1. Holder plate for filters
2. Cab filter plate

3. Remove the plate that holds the cab filters.
4. Unplug the connector for low-pressure monitor SE8709.

Disconnect the pipes for evaporator.
Loosen the sealing strip by the evaporator's pipes.
Remove the temperature sensor from the evaporator, and carefully swing out the evaporator and lay it on the steps.

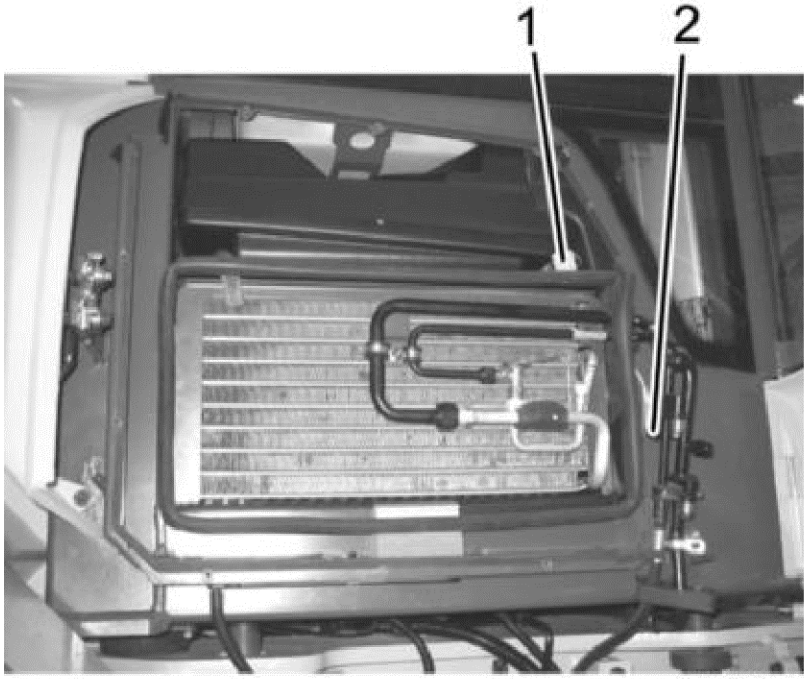

Figure 2
Evaporator

1. Connector for air-mixing damper
2. Connector for low-pressure monitor

5. Disconnect the electric connections for the fan motor. Yellow cable is +.
Remove the outer bolts for the fan motor's retainer plate and remove the plate.
Lift away the fan assembly.

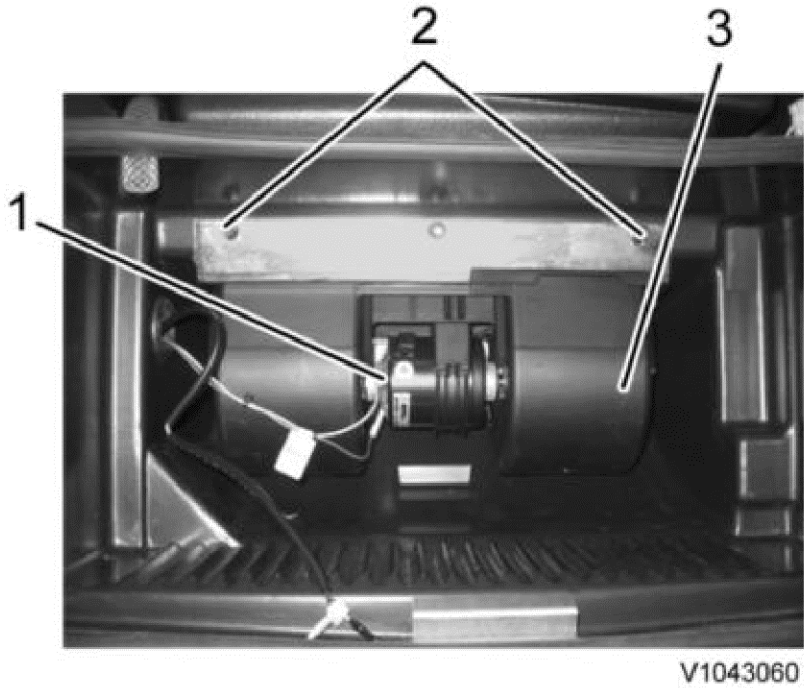

Figure 3
Cab fan

1. Electrical connection

2. Retaining bolts
3. Fan unit

Installing

6. Install the fan assembly.
   Fit the fan motor's retainer plate and the two bolts.
   Install the fan motor's electric connections. Yellow cable is connected to +.

7. Test-run the fan at fan speeds (rpm).

8. Reinstall the temperature sensor in the evaporator.
   Reinstall the evaporator and reinstall the clamps for the pipes.
   Reinstall the sealing strip.
   Plug in the connector for low-pressure monitor SE8709.

9. Install the plate that holds the cab filters.

10. Plug in the connector for the air-mixing damper's control unit.
    Install the plate with the cab filters.
    Close the hatch for the air conditioning.

VOLVO
Construction Equipment

Service Information

Document Title:	Function Group:	Information Type: **Service Information**	Date: **12/10/2011**
Profile: **WLO, L90F (Volvo) [GB]**			

Air mix door actuator, replacing

Op nbr 873-011

1. Turn off the voltage with the battery disconnect switch.
2. Open the hatch to the air conditioning.
   Remove the plate that holds the cab filters.

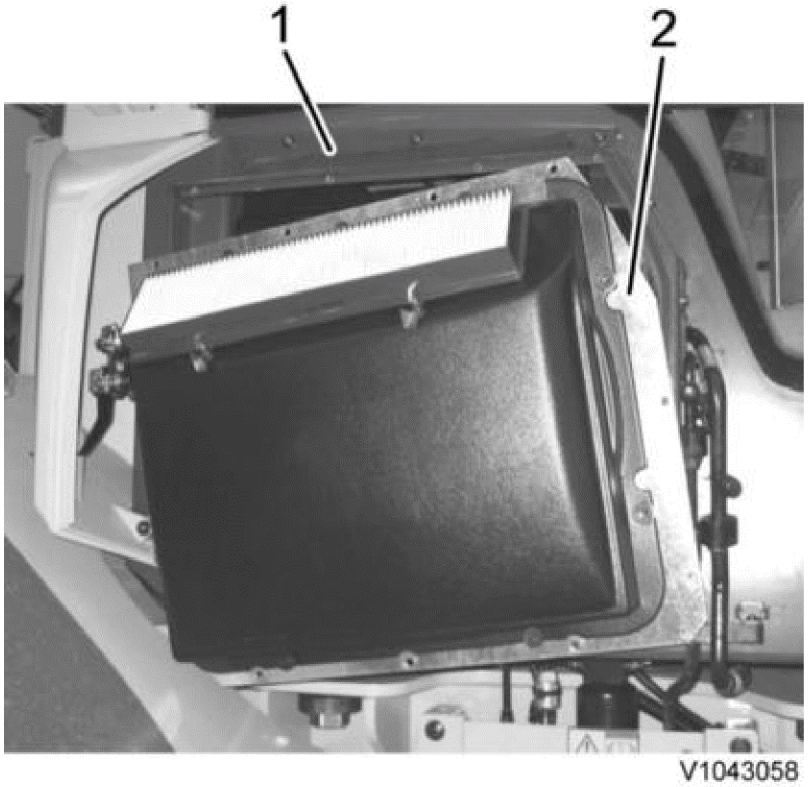

Figure 1
Cab filter

1. Holder plate for filters
2. Cab filter plate

Unplug the connector for the control unit.

3. Remove the control unit from the plate.

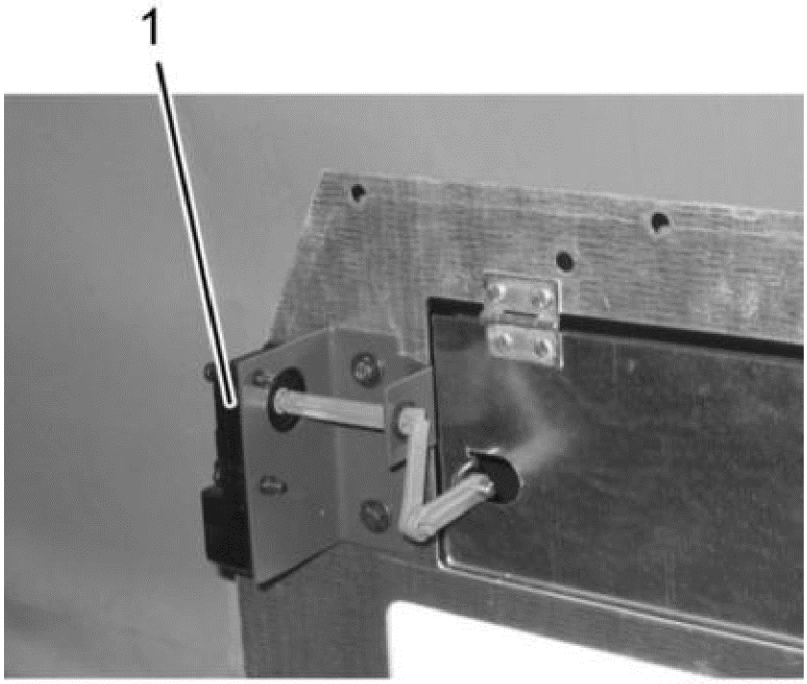

Figure 2
Air-mixing damper

1. Control unit

Installing

4. Install the control unit.

   NOTE **The damper shall be closed.**

5. Install the plate that holds the cab filters.
   Plug in the connector for the control unit.

6. Control the air-mixing damper's function by removing the pre-filter and operate the damper with the control.

VOLVO
Construction Equipment

Service Information

Document Title:	Function Group:	Information Type: **Service Information**	Date: **12/10/2011**
Profile: **WLO, L90F (Volvo) [GB]**			

ECC control unit, replacing

Op nbr 873-019

1. Place the machine in service position 1 in accordance with Service positions

Removing

2. Remove the rear panel behind the seat in the cab



Figure 1

1. Panel

3. Remove the right side panel

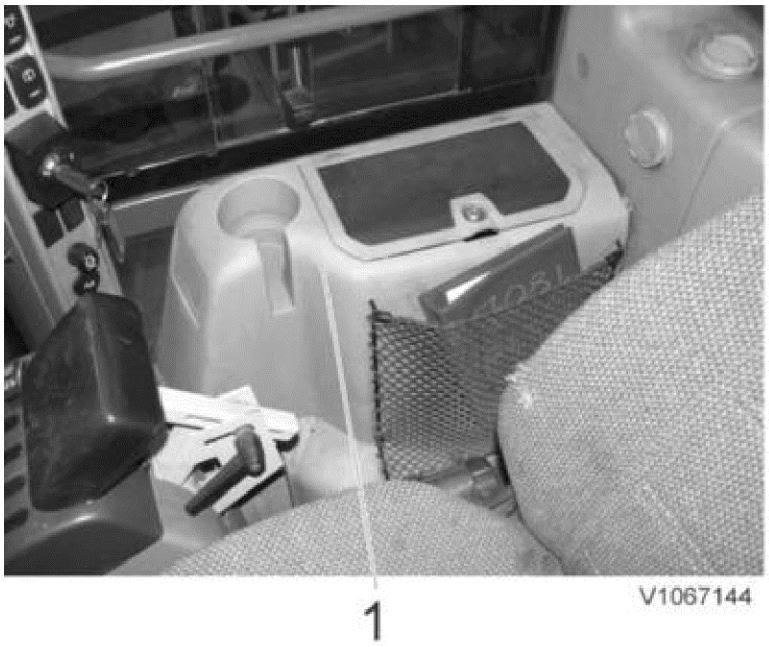

Figure 2

1. Right side panel

4. Remove the ventilation duct and unplug connector SE8708 for the air duct's temperature sensor.



Figure 3

1. Ventilation duct

5. Unplug the connector BB. Remove the ECC

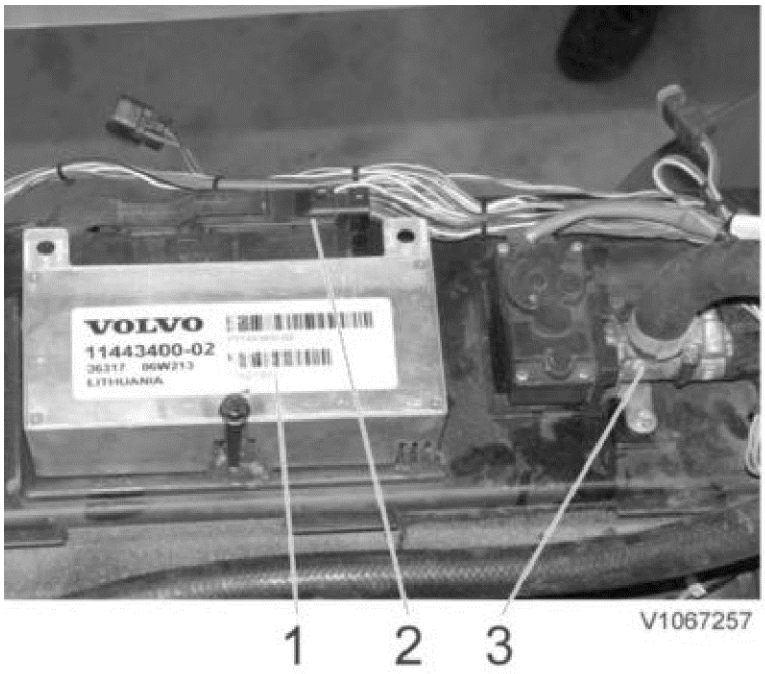

Figure 4

1. ECC unit
2. Connector BB
3. Water valve

Installing

6. Fit the new ECC. Plug in connector BB.

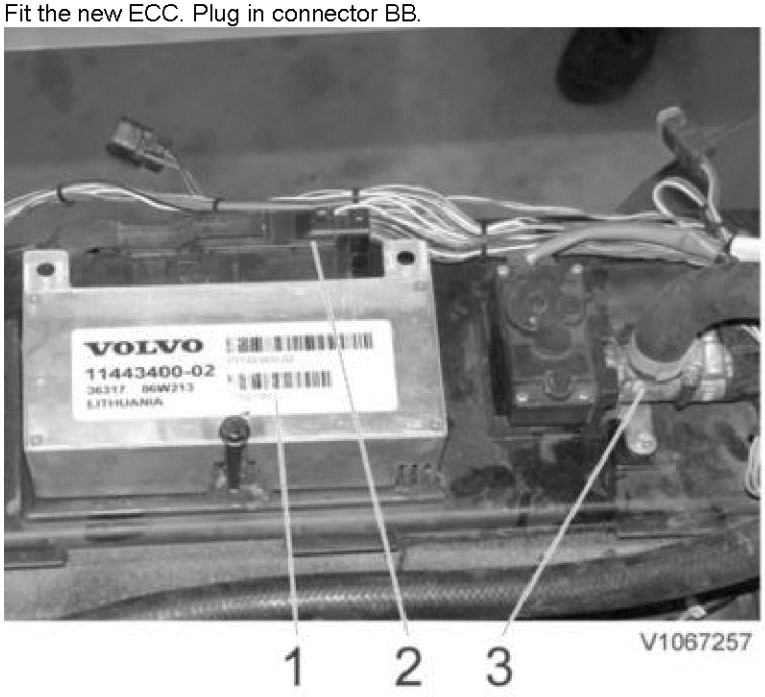

Figure 5

1. ECC unit
2. Connector BB
3. Water valve

7. Close the main switch
8. Fit the air duct and plug in connector SE8708 for the air duct's temperature sensor.



Figure 6

1. Ventilation duct

9. Refit the right side panel



Figure 7

1. Right side panel

10. Refit the rear panel behind the seat in the cab.

VOLVO
Construction Equipment

Service Information

Document Title:	Function Group:	Information Type: **Service Information**	Date: **12/10/2011**
Profile: **WLO, L90F (Volvo) [GB]**			

Heater core, replacing

Op nbr 873-004

1. Turn off the voltage with the battery disconnect switch.
2. Remove the side panel on the right side in the cab.
3. Remove the panel over the right rear cab pillar.



Figure 1

1. Cab pillar

4. Remove the control unit with the bracket and plastic cover over the heater core.

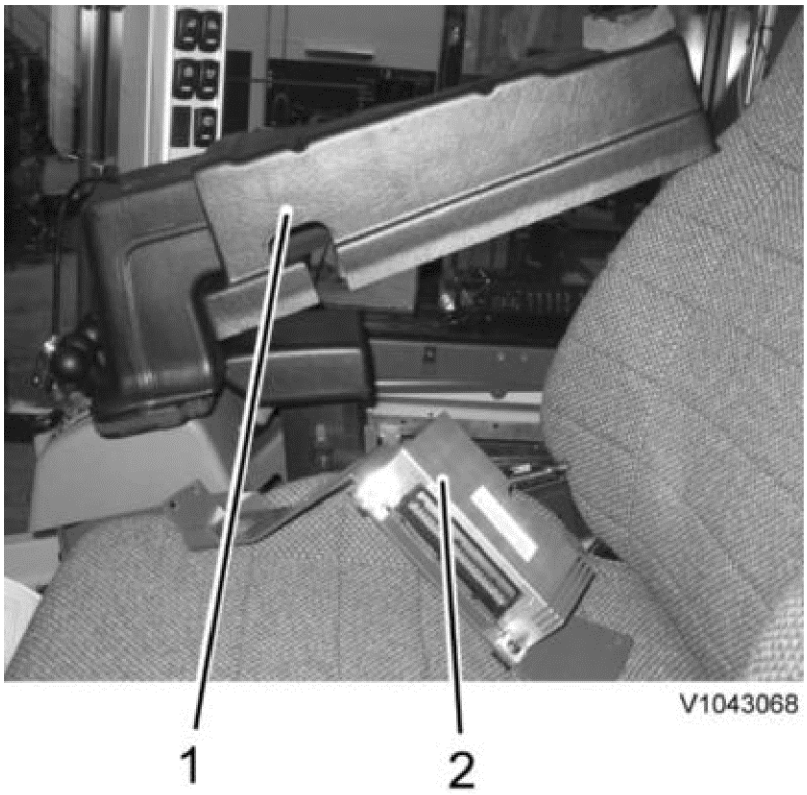

Figure 2

1. Plastic cover
2. ECC control unit

5. Clamp shut the hoses to the heater core with two clamping pliers.

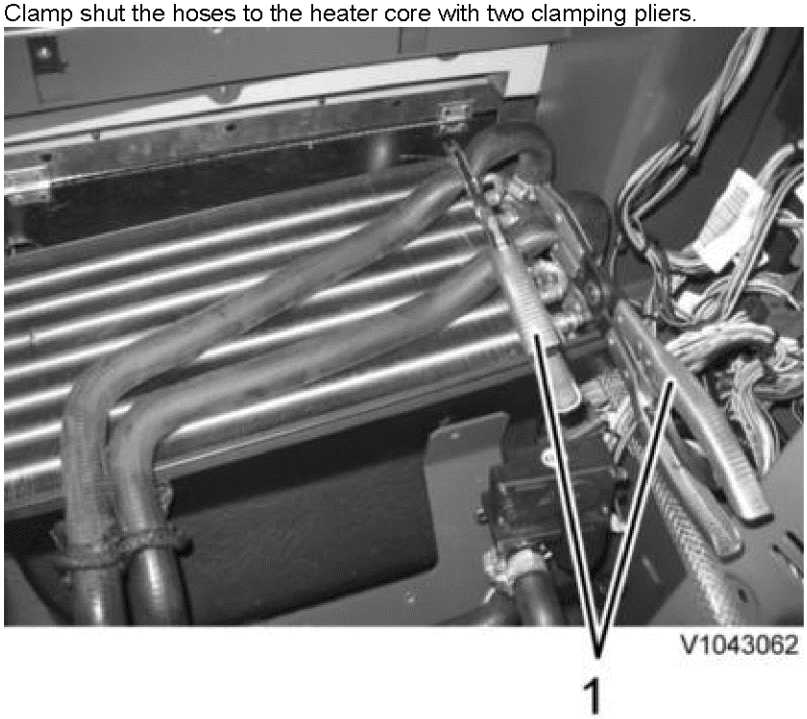

Figure 3
Heater core

1. Clamping pliers

6. Disconnect and lift up the heater core.
Remove the hoses.

Installing

7. Install the heater core and connect the hoses.
   Remove the clamping pliers over the hoses.

8. Install the plastic cover over the heater core.
   Install the control unit with bracket.

9. Install the panel over the right rear cab pillar.

10. Reinstall the side panel.

11. Check the coolant level.
    Check function of the system.

VOLVO
Construction Equipment

Service Information

Document Title:	Function Group:	Information Type: **Service Information**	Date: **12/10/2011**
Profile: **WLO, L90F (Volvo) [GB]**			

Heat control valve, replacing

Op nbr 873-008

1. Turn off the voltage with the battery disconnect switch.
2. Remove the side panel on the right side in the cab.
3. Remove the bolt that holds the heat control valve.

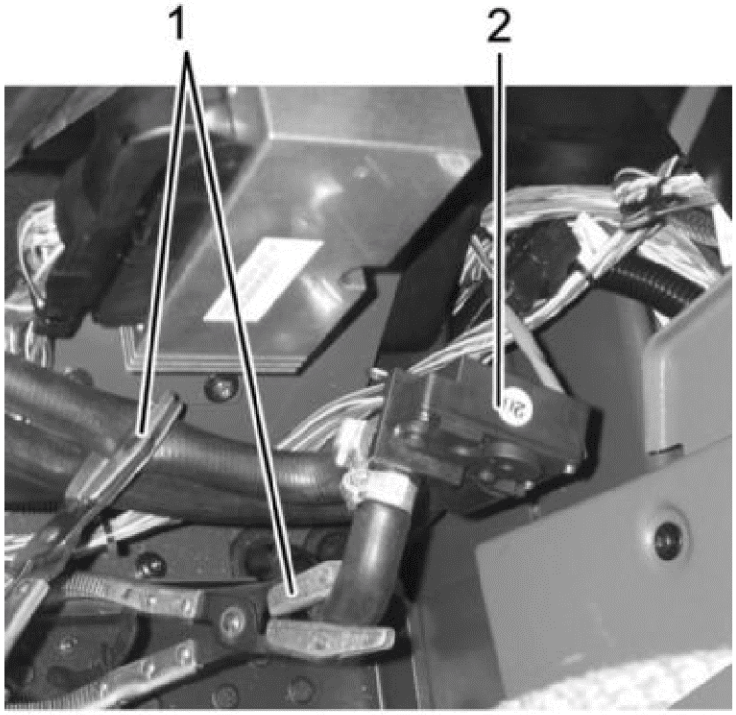

Figure 1

1. Clamping pliers
2. Heat control valve

4. Clamp shut the hoses to the heater core with two clamping pliers.
5. Remove the heat control valve.

Installing

6. Install the heat control valve.
   Remove the clamping pliers.
7. Reinstall the side panel.
8. Check the coolant level.
   Check function of the system.

VOLVO
Construction Equipment

Service Information

Document Title:	Function Group:	Information Type: **Service Information**	Date: **12/10/2011**
Profile: **WLO, L90F (Volvo) [GB]**			

ECC control unit, replacing

Op nbr 873-019

1. Turn off the voltage with the battery disconnect switch.
2. Loosen the screws for the side panel on the right side in the cab.
3. Lean the operator's seat forward, see Förarsäte, fastsättning
   .
4. Remove the side panel.
5. Unplug the connector for the control unit.

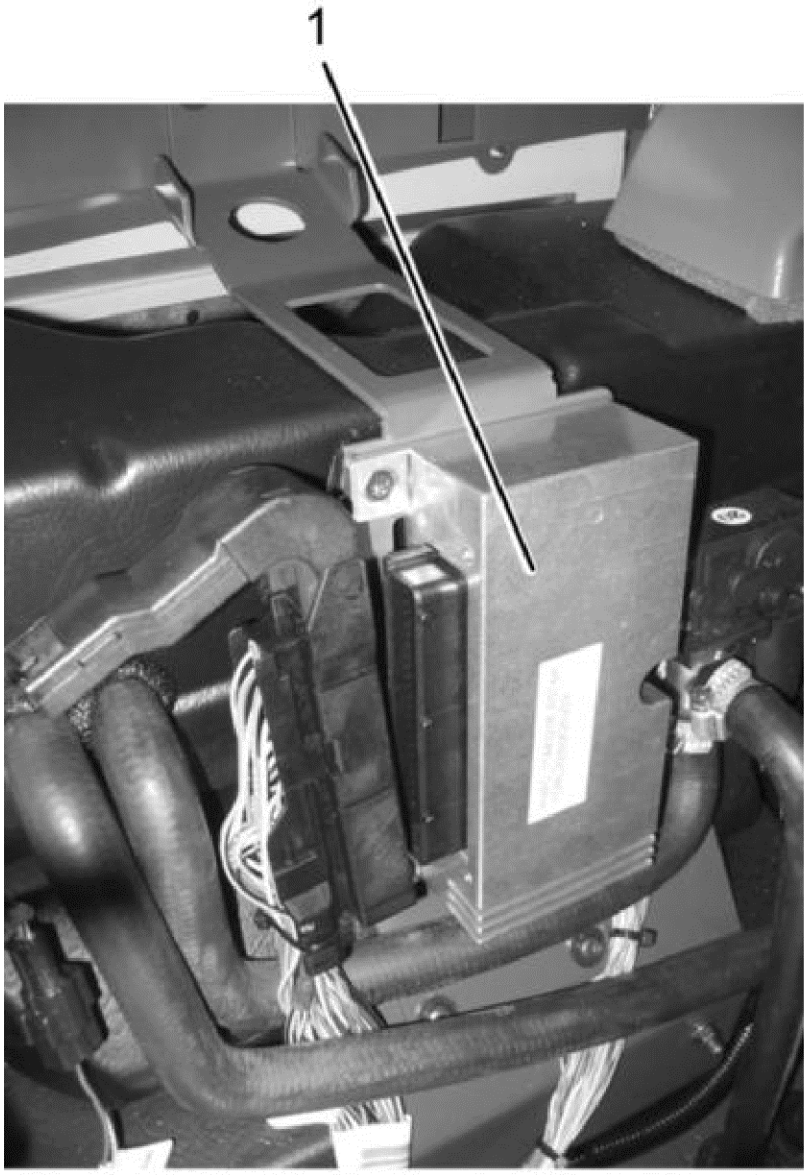

Figure 1

1. ECC control unit

6. Remove the control unit.

Installing

7. Install the control unit.
8. Plug in the connector.
9. Install the side panel.
10. Lean back the operator's seat, see Förarsäte, fastsättning
.

VOLVO
Construction Equipment

Service Information

Document Title:	Function Group:	Information Type: **Service Information**	Date: **12/10/2011**
Profile: **WLO, L90F (Volvo) [GB]**			

Expansion valve, replacing incl draining and filling

Op nbr 874-013

1. Place the machine in service position in accordance with Service positions
2. Open the plastic cover for the AC unit

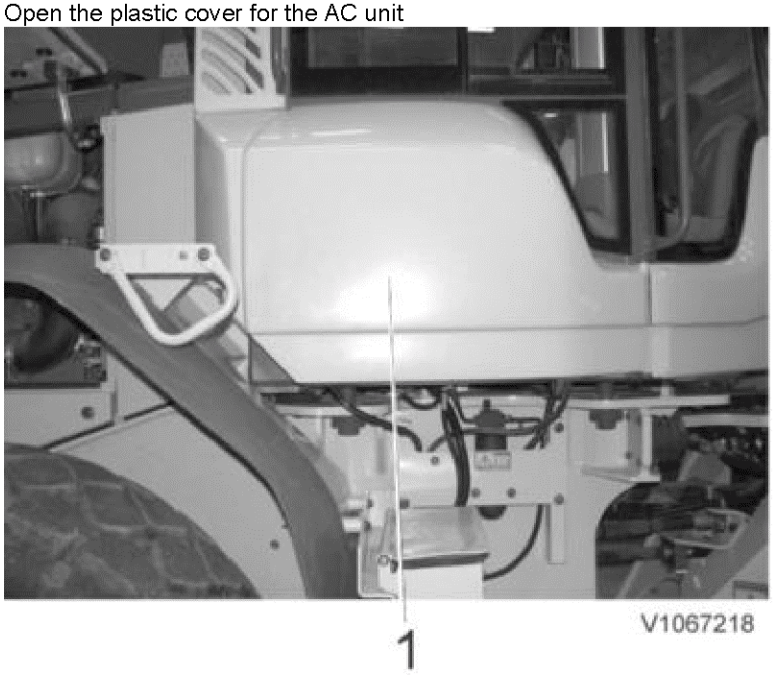

Figure 1

1. Plastic cover

3. Remove the pre-filter, metal strip and main filter.

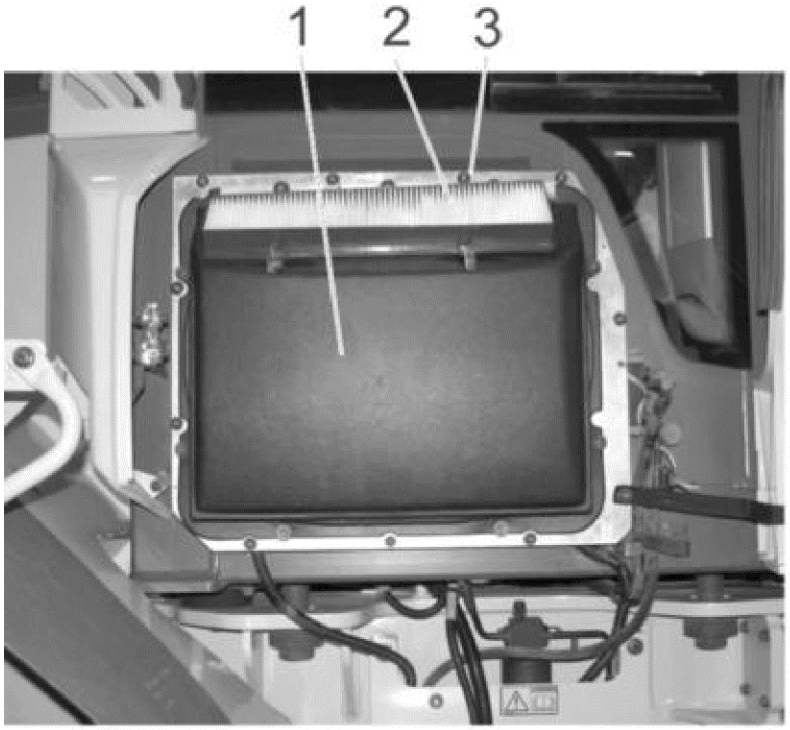

Figure 2

1. Filter cover
2. Filters

4. Drain the system of refrigerant, see Service Manual, Air conditioning R134a and Draining the refrigerant

5. Remove the cover plate and unplug connector MO8703 for the motor for the air mixing damper.

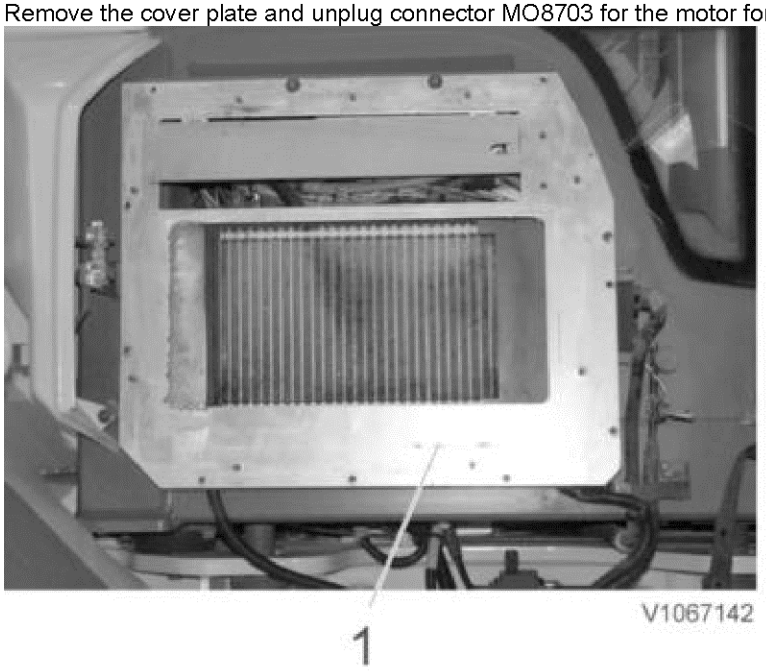

Figure 3

1. Cover plate

6. Remove the plate fitted to the right over the evaporator.

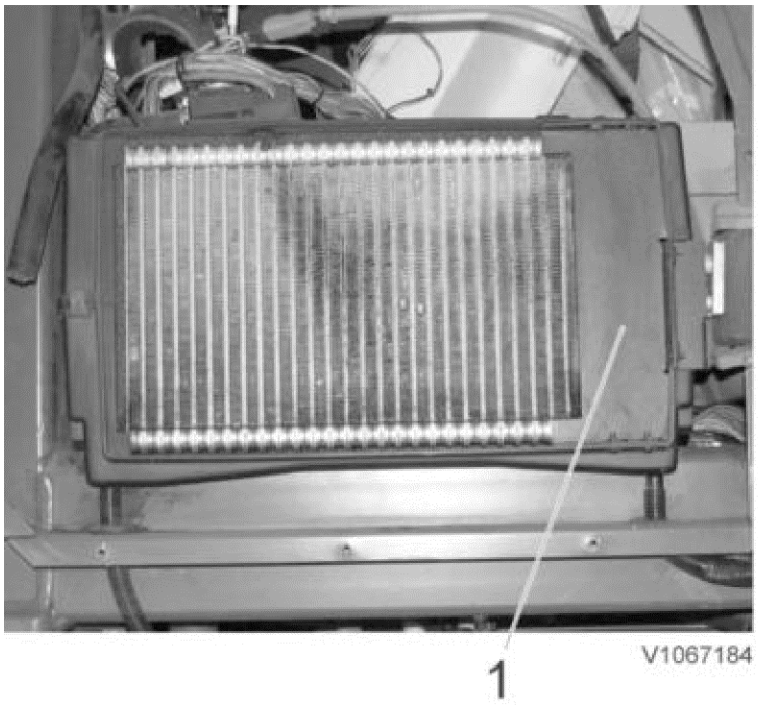

Figure 4

1. Plate

7. Remove the bolt for the AC hoses' rubber leadthrough.

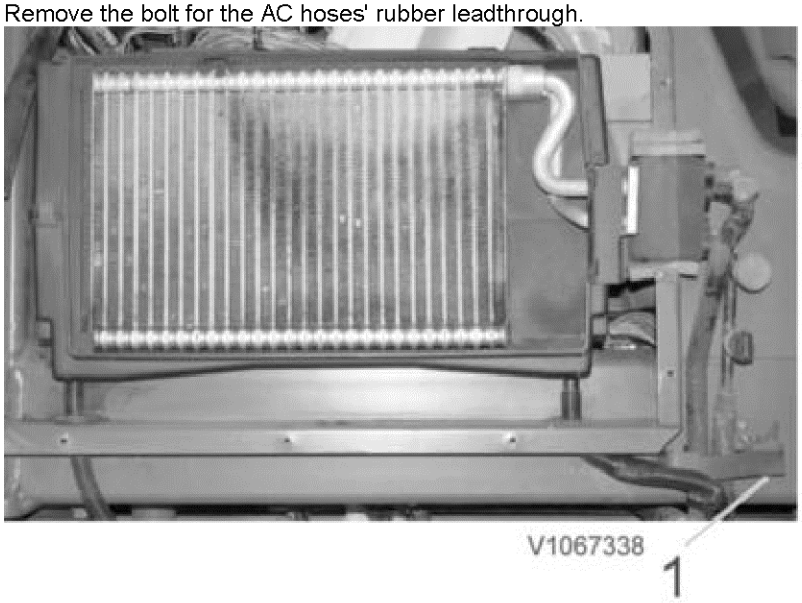

Figure 5

1. Bolt

8. Fold out the evaporator and place it down carefully.
9. Remove the hoses from the expansion valve



Figure 6

1. Hoses

10. Remove the evaporator and place it on a soft surface.

11. Remove the foam rubber around the expansion valve so that the bolts for the plate can be removed. Remove the plate.

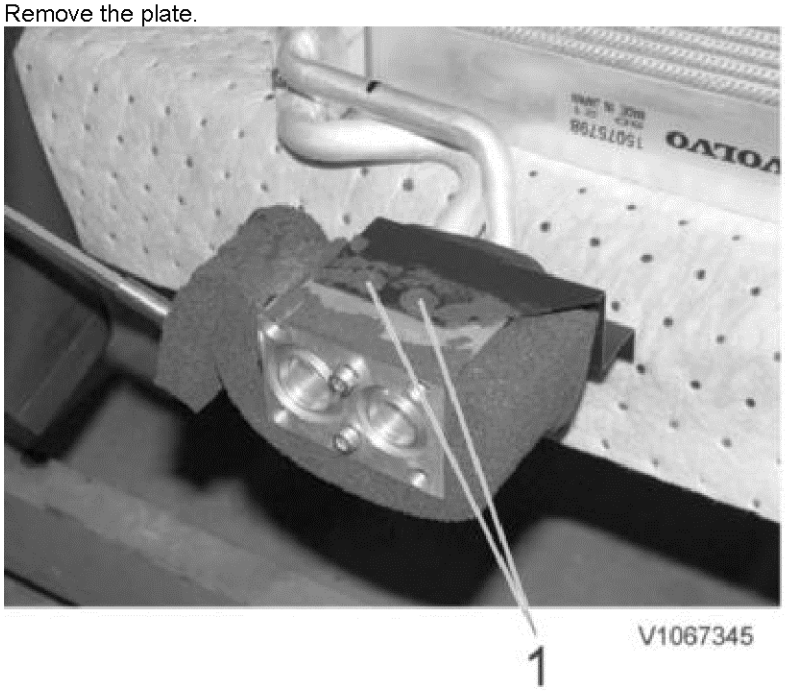

Figure 7

1. Bolts for the plate

12. Pick away the black rubber.

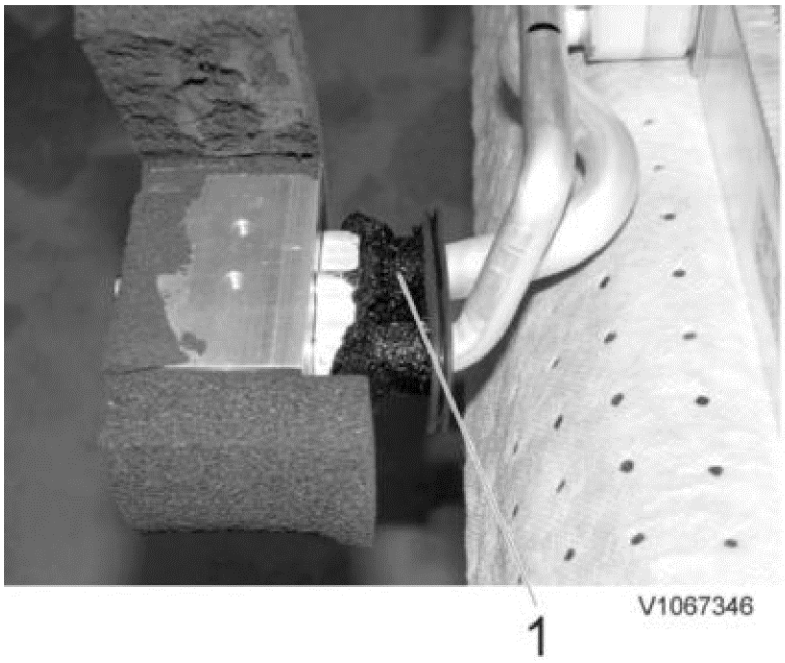

Figure 8

1. Rubber

13. Remove the expansion valve from the pipes

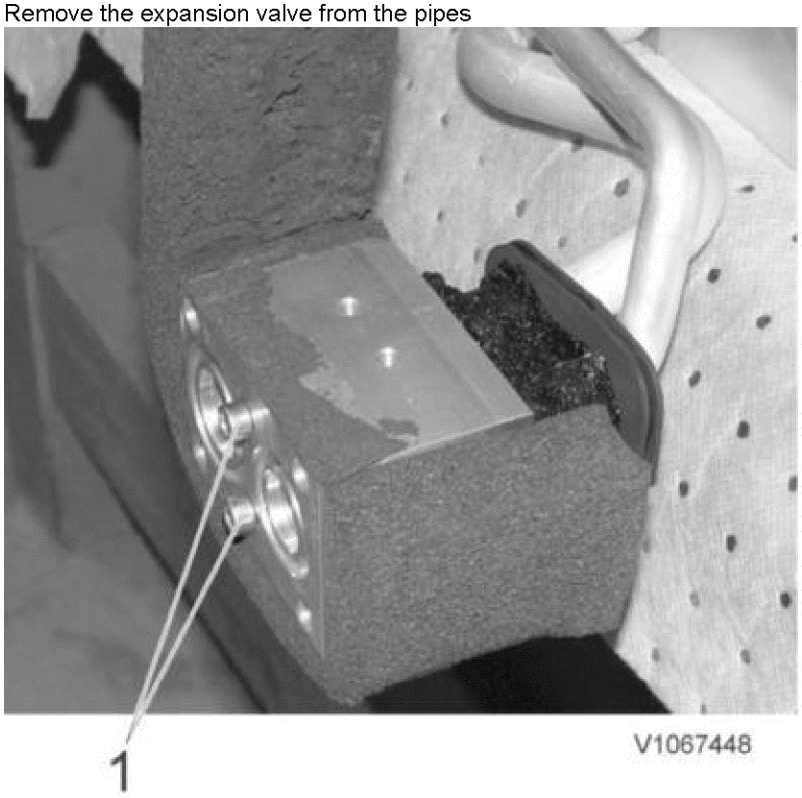

Figure 9

1. Bolts

14. Fit new O-rings on the connecting pipes and lubricate them with compressor oil for the AC-unit

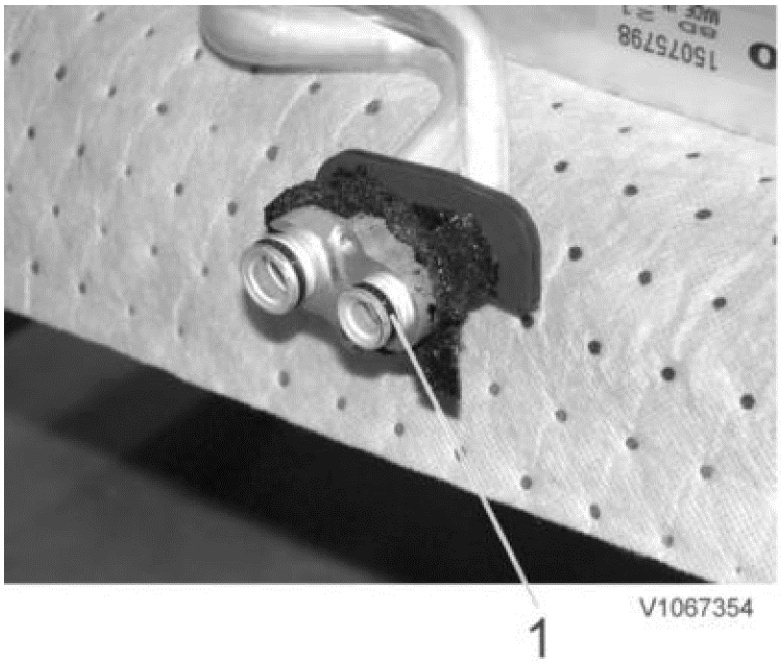

Figure 10

1. O-rings, x 2

15. Screw in the new expansion valve

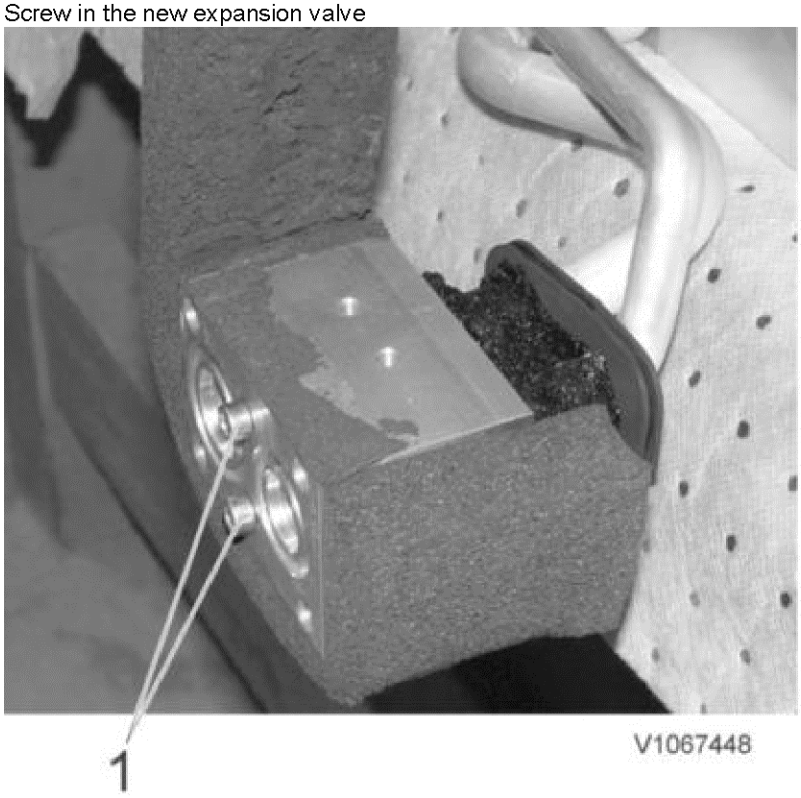

Figure 11

1. Bolts

16. Refit the rubber

VOLVO
Construction Equipment

Service Information

Document Title:	Function Group:	Information Type: **Service Information**	Date: **12/10/2011**
Profile: **WLO, L90F (Volvo) [GB]**			

Compressor, replacing incl draining and filling

Op nbr 874-006

9812512 Refrigerant unit
9812513 Scale
9812514 Adapter
9812446 Nipple
9812445 Vacuum pump
9812452 Hose
9812453 Nipple
9511207 Leak detector AC

WARNING! **Aggressive oil. Avoid contact to bare skin. Use protective gloves.**

Removing

1. Drain the system of refrigerant, see Service Manual Air Conditioning R134a, Tömning av köldmedium .

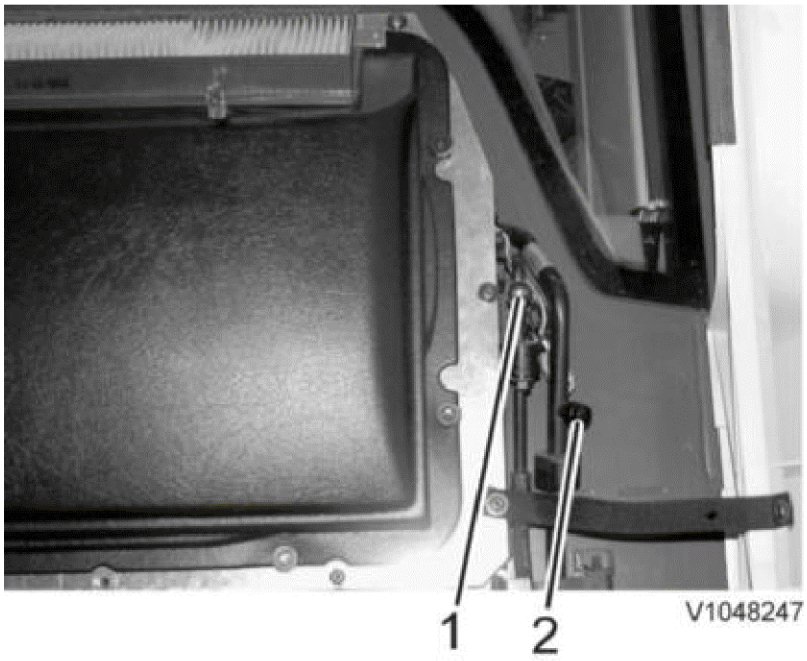

Figure 1

1. High-pressure connection
2. Low-pressure connection

2. Open left engine cover.

3. Remove the fuel filter's (6) attaching bolts and move it aside to reach the compressor.

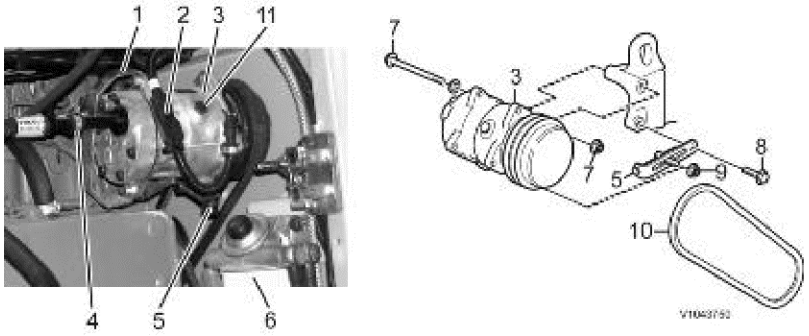

Figure 2

1. Holder bracket for hose clamps
2. Connector
3. Compressor
4. Hose clamp, 2 pcs.
5. Adjusting screw for belt tension
6. Fuel filter
7. Upper attaching bolt for compressor
8. Bolt for belt tensioner bracket
9. Belt tensioner's nut
10. Drive belt
11. Plug

4. Unplug the connector (2) for the electric connection on the compressor.
Remove the hose clamps (4) for the refrigerant hoses.
Remove the holder bracket (1) for the hose clamps.
Disconnect the refrigerant hoses from the compressor. Plug the hoses to prevent impurities from entering the system.

5. Loosen the belt tensioner's nut (9).
Loosen the tension at the top end on the compressor (7).
Loosen the tension on the adjusting screw and remove the belt (5).
Loosen the belt tensioner bracket (8).

6. Remove the compressor by removing the upper attaching bolt and its nut (7) as well as the bolt for the belt tensioner bracket.

7. Remove the plug (11) and drain the oil in a graduated measuring glass. Note the oil volume.

8. Fill the corresponding oil volume in the new compressor.

NOTE	**When installing a factory-new compressor, the oil volume in the compressor must be reduced by approx. 100 ml to avoid overfilling.**

Lube the O-ring with PAG-oil and install the plug.

NOTE	**In case of compressor failure where burrs, filings, etc. have been generated, change the condenser, receiver drier, and expansion valve, as well as the hoses between them.**

Installing

9. Transfer the required parts to the new compressor.

10. Install the compressor with the bolt for tensioning the compressor (7) and the bolt for the belt tensioner bracket (8).

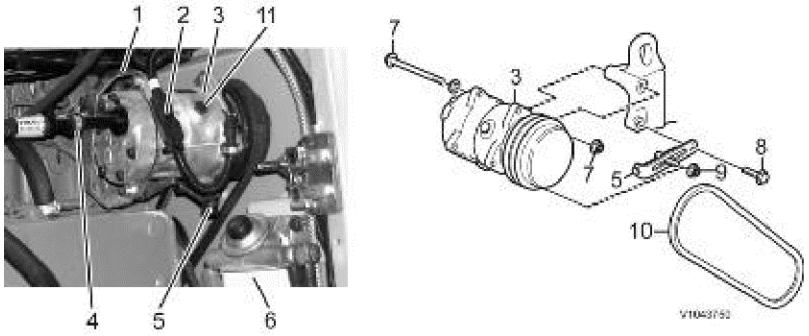

Figure 3

1. Holder bracket for hose clamps
2. Connector
3. Compressor
4. Hose clip
5. Adjusting screw for belt tension
6. Fuel filter
7. Bolt for tensioning compressor
8. Bolt for belt tensioner bracket
9. Belt tensioner's nut
10. Drive belt
11. Plug

11. Install the drive belt (10) and tension the belt with the adjusting screw (5), see Kylanläggning, specifikation
.

12. Remove the plugs on the connections.
Change and lubricate the O-rings on the compressor's connections with 1161629 PAG-oil.

13. Change and lubricate the O-rings on the refrigerant hoses with 1161629 PAG-oil.
Remove the plugs and connect the refrigerant hoses to the compressor.

14. Reinstall the hose clamps' holder bracket (1).
Install the hose clamps (4).
Plug in the connector (2).

15. Reinstall the fuel filter (6).

16. If the system has been punctured, change receiver drier. See Torkfilter, byte inkl tömning och fyllning
.

17. Vacuum-pump and fill the system with refrigerant, see Service Manual Air Conditioning R134a,
Vakuumpumpning samt återfyllning av AC-olja
as well as Återfyllning av köldmedium i AC-anläggningen, med våg 981 2513
.

18. Check for leaks in the area around the compressor, see Service Manual R134a, Läcksökare 951 1207, ny modell
.

VOLVO
Construction Equipment

Service Information

Document Title:	Function Group:	Information Type: **Service Information**	Date: **12/10/2011**
Profile: **WLO, L90F (Volvo) [GB]**			

Receiver, replacing incl draining and filling

Op nbr 874-011

9812512 Refrigerant unit
9812513 Scale
9812514 Adapter
9812446 Nipple
9812445 Vacuum pump
9812452 Hose
9812453 Nipple
9511207 Leak detector AC

WARNING! **Aggressive oil. Avoid contact to bare skin. Use protective gloves.**

Removing

1. Drain the system of refrigerant, see Service Manual Air Conditioning R134a, Tömning av köldmedium .
2. Disconnect the refrigerant pipes from the receiver drier.
3. Loosen the two bolts for the clamp that holds down the receiver drier.
4. Remove the receiver drier.

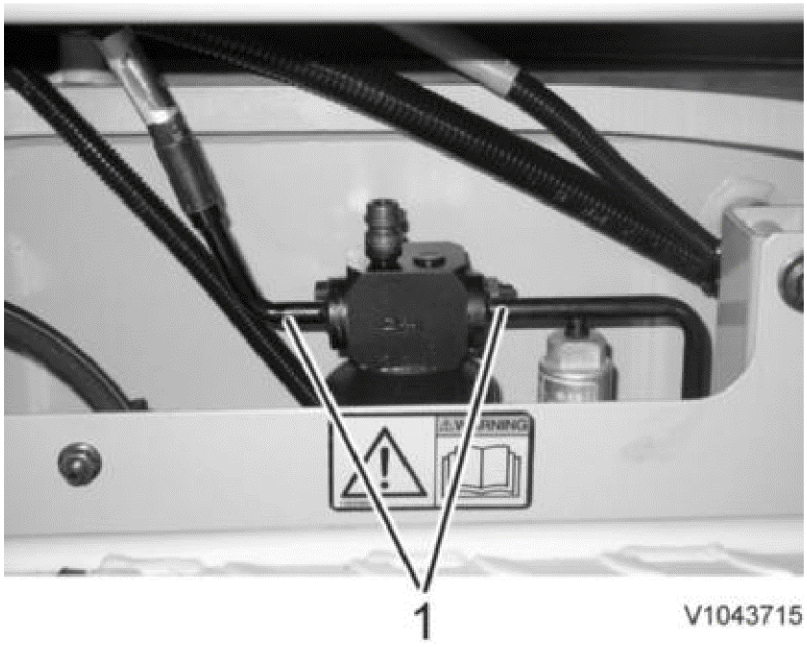

Figure 1

1. Refrigerant pipes

NOTE **If the receiver drier is not installed immediately, plug the connections.**

Installing

5. Install the hose clamp.
6. Remove the seal from the receiver drier. Change and lubricate the O-rings with 1161629 PAG-oil on the refrigerant pipes and the receiver drier. Connect the refrigerant pipes to the receiver drier. Tighten the connections according to specifications, see Kylanläggning, åtdragningsmoment
.
7. Install the receiver drier and tighten the bolts for the clamp.
8. Vacuum-pump and fill the system with refrigerant, see Service Manual Air Conditioning R134a, Vakuumpumpning samt återfyllning av AC-olja
as well as Återfyllning av köldmedium i AC-anläggningen, med våg 981 2513
.
9. Check for leaks in the area around the receiver drier, see Service Manual Air Conditioning R134a, Läcksökare 951 1207, ny modell

More than one document matches the current profile:

Evaporator, replacing incl draining and filling
Product Line: WLO
Model Variant: L90F
Site: Arvika, Pederneiras, Asheville
Serial Number Start: 26641, 71667, 68770
Serial Number End: 49999, 79999, 69999
Optional Equipments: ECC

Evaporator, replacing incl draining and filling
Product Line: WLO
Model Variant: L90F
Optional Equipments: AC

VOLVO
Construction Equipment

Service Information

Document Title:	Function Group:	Information Type: **Service Information**	Date: **12/10/2011**
Profile: **WLO, L90F (Volvo) [GB]**			

Evaporator, replacing incl draining and filling

Op nbr 874-012

9812512 Refrigerant unit
9812513 Scale
9812514 Adapter
9812446 Nipple
9812445 Vacuum pump
9812452 Hose
9812453 Nipple
9511207 Leak detector AC

WARNING! **Aggressive oil. Avoid contact to bare skin. Use protective gloves.**

Removing

1. Place the machine in service position 1 in accordance with Service positions
2. Drain the system of refrigerant, see Service Manual Air conditioning R134a, Draining the refrigerant .
3. Open the plastic cover for the air conditioning

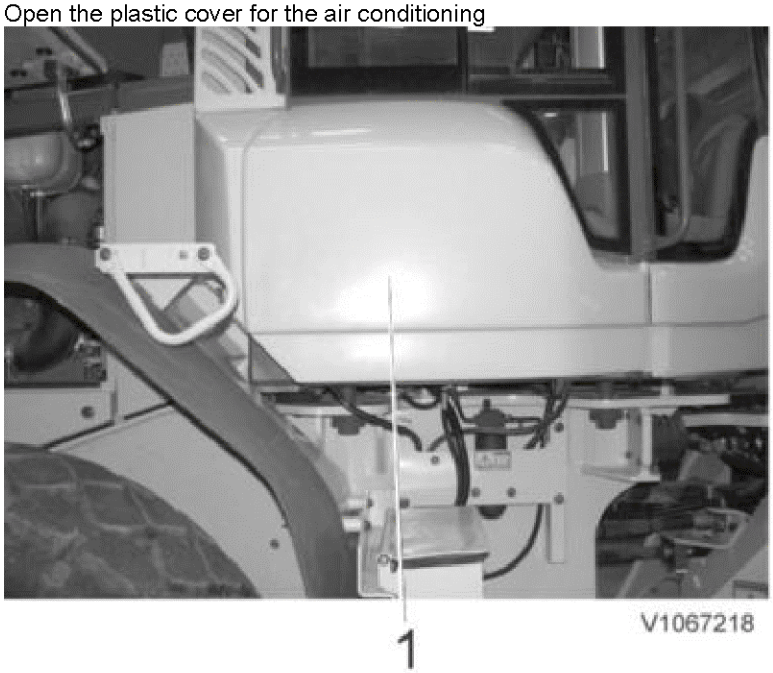

Figure 1

1. Plastic cover

4. Remove the filter cover and the filters.

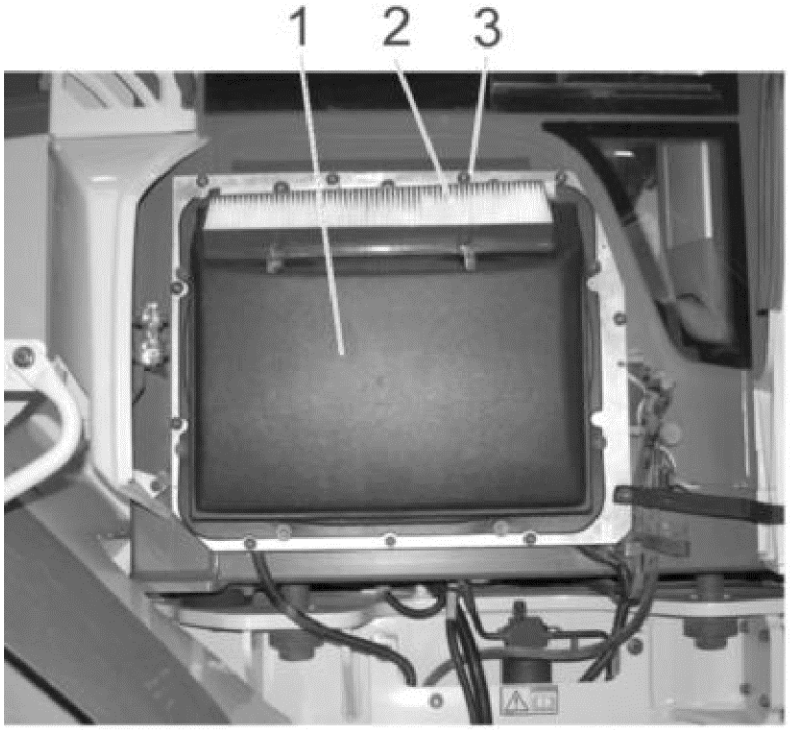

Figure 2

1. Filter cover
2. Filters
3. Bolt

5. Remove the cover plate and unplug connector MO8703 for the motor for the air mixing damper.

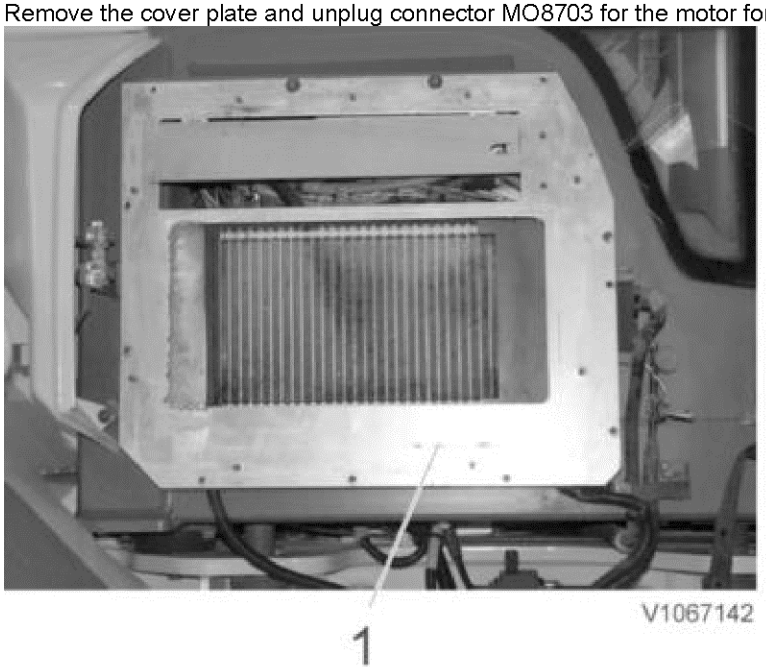

Figure 3

1. Cover plate

6. Remove the plate fitted to the right over the evaporator.

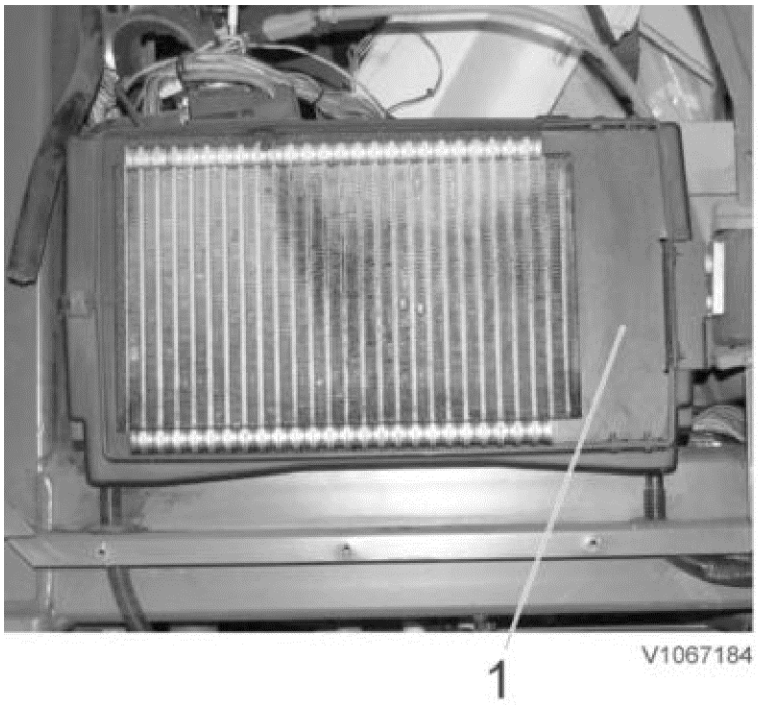

Figure 4

1. Plate

7. Remove the bolt for the AC hoses' rubber leadthrough. Remove the drain hoses for condensation water.

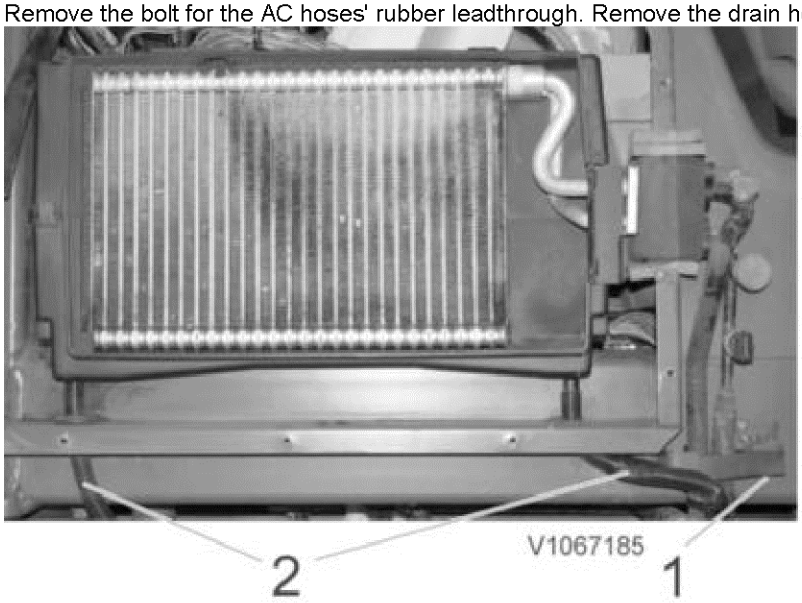

Figure 5

1. Bolt
2. Drain hoses

8. Fold out the evaporator and place it to one side.

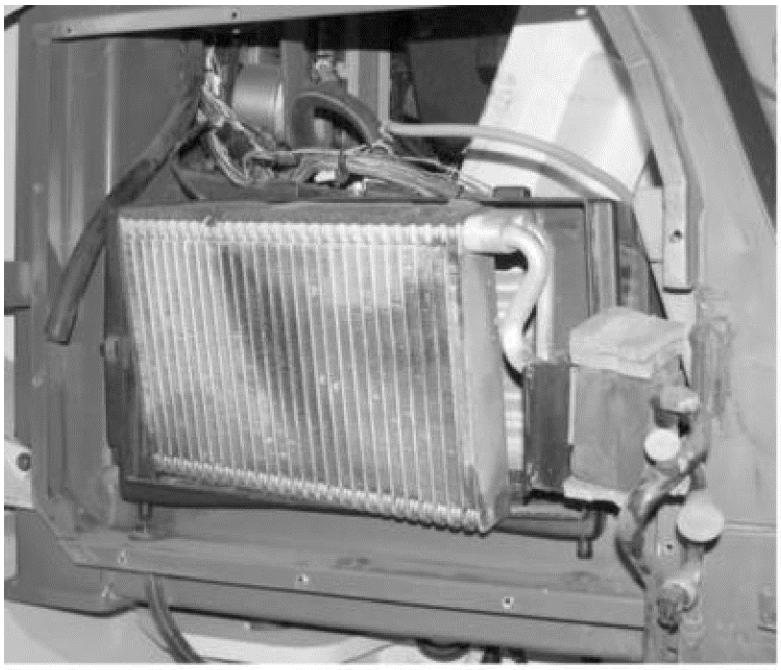

V1067187

Figure 6

9. Loosen the bolts so that the evaporator is disconnected and replace it.

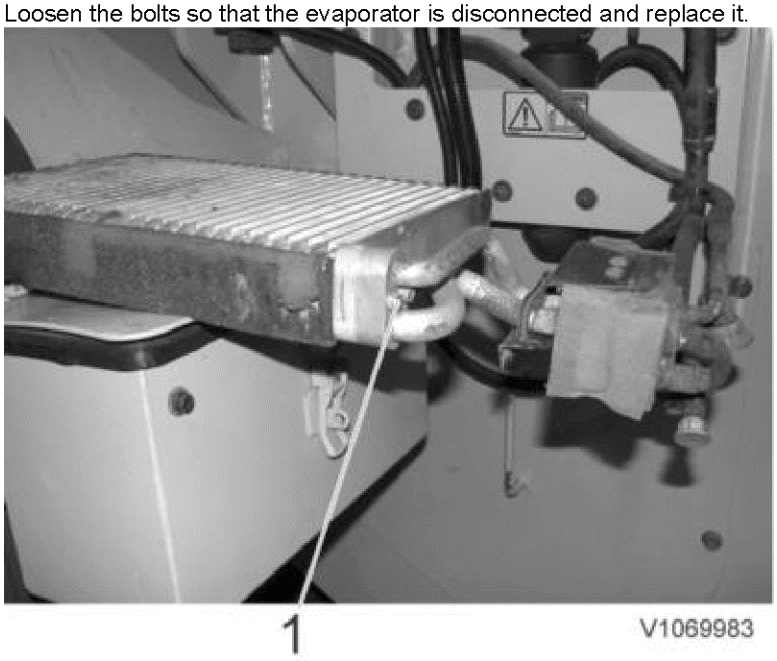

V1069983

Figure 7

1. Bolt

10. Install the evaporator, the AC hoses' rubber bushing, and the drain hoses for the condensation water.

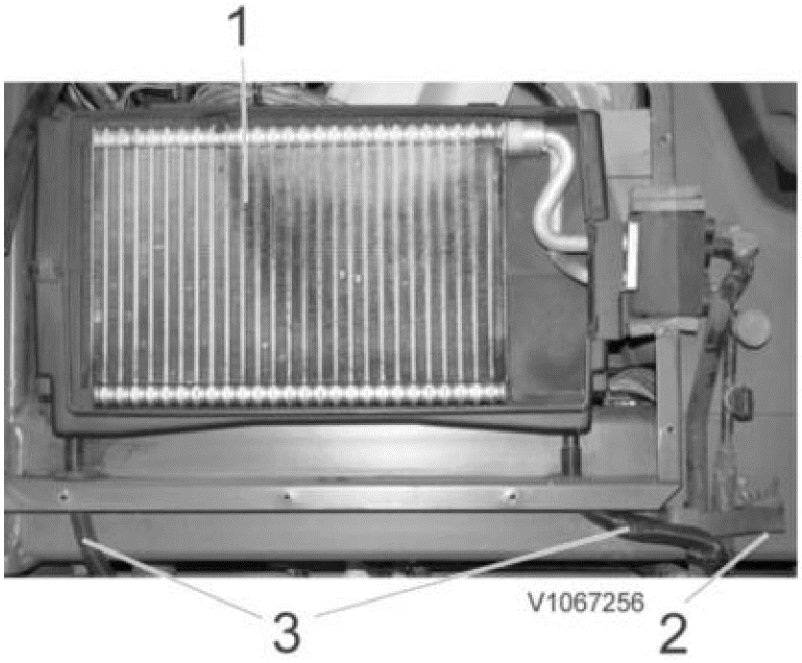

Figure 8

1. Evaporator
2. Bolt
3. Drain hoses

11. Install the plate to the right of the evaporator.

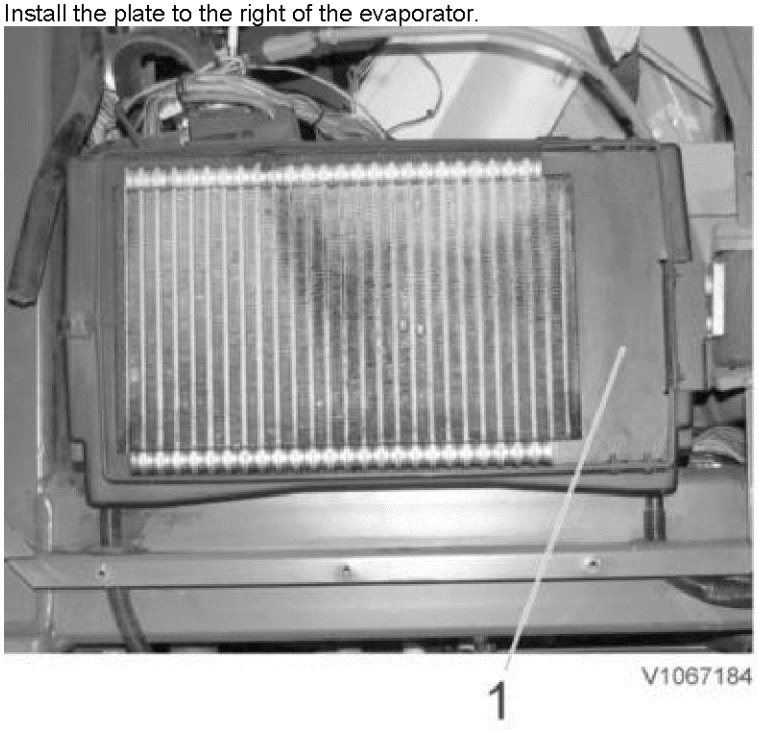

Figure 9

1. Plate

12. Plug in connector MO8703 for the air mixing damper's motor on the cover plate. Install the cover plate.

NOTE **Install the stop belt for the plastic cover using one of the bolts for the cover plate.**

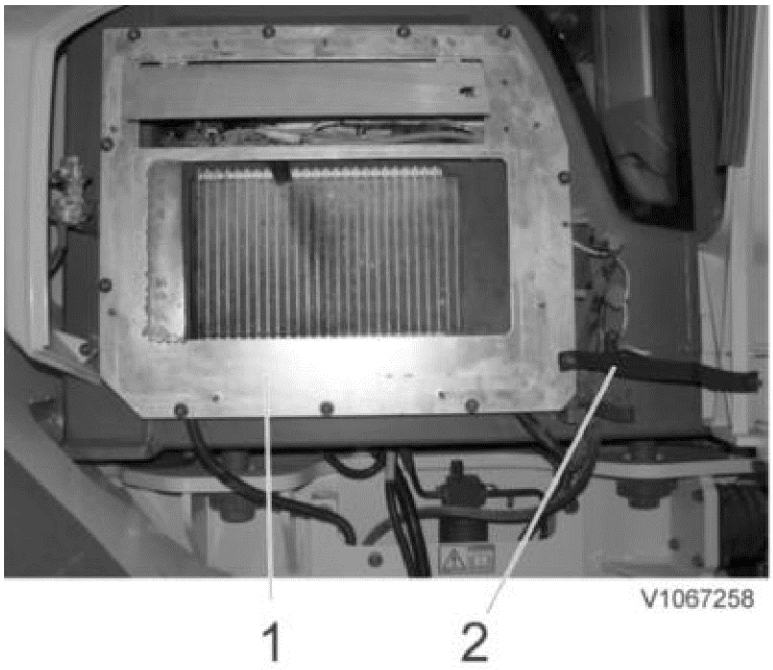

Figure 10

1. Cover plate
2. Resistance belt

13. Install the main filter, metal strip, and pre-filter.

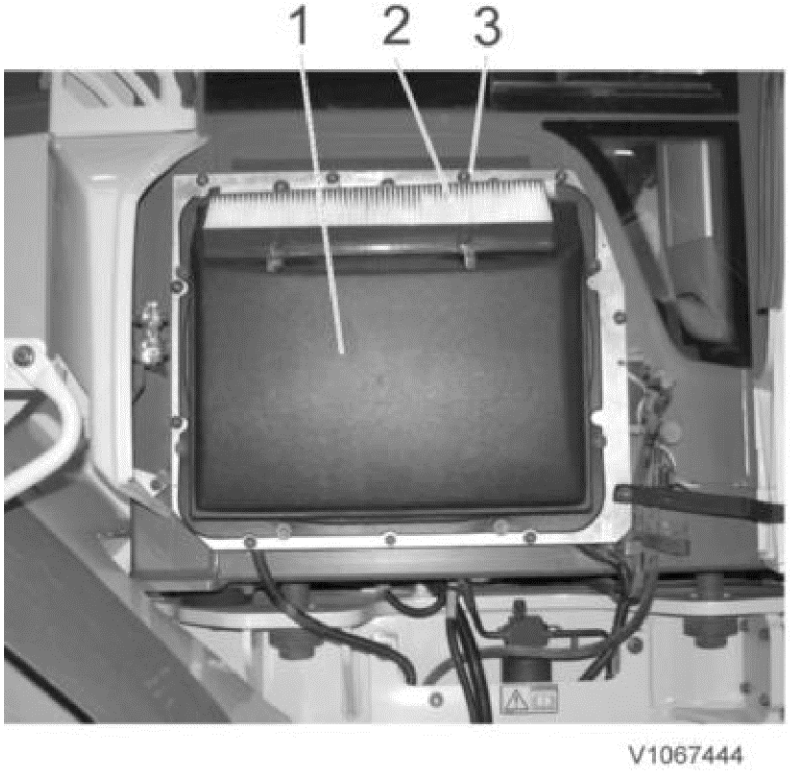

Figure 11

1. Filter cover
2. Filters
3. Bolt

14. Close the plastic cover and check that the drain hoses are not trapped

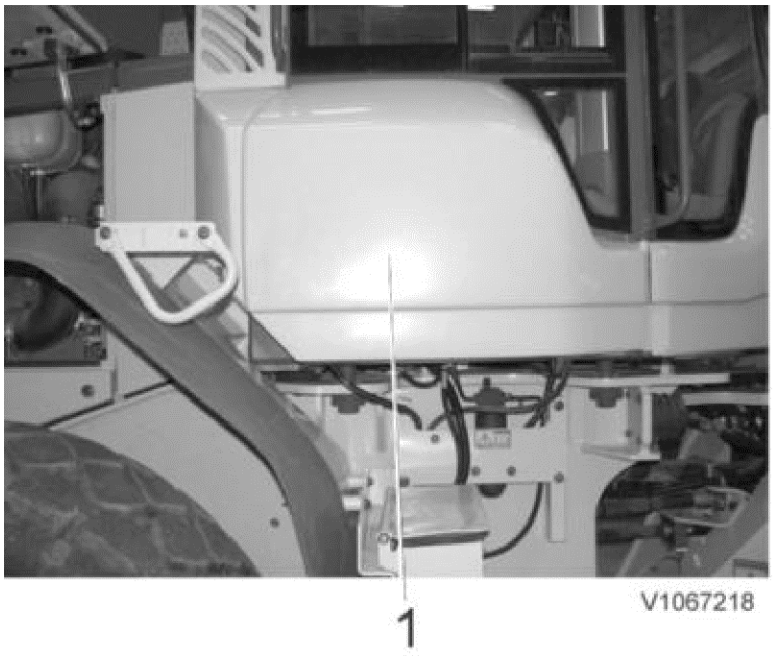

Figure 12

1. Plastic cover

15. If the system has been punctured, change receiver dryer. See Receiver drier, changing, incl. draining and filling
.

16. Vacuum-pump and fill the system with refrigerant, see Service Manual Air conditioning R134a, Vacuum-pumping and refilling with AC–oil
as well as Refilling refrigerant in the AC unit, with scales 981 2513
.

17. Check for leaks in the area around the evaporator, see Service Manual R134a, Leakage detector 951 1207, new model
.

18. Check the air conditioning unit according to Performance test, air conditioning unit

VOLVO
Construction Equipment

Service Information

Document Title:	Function Group:	Information Type: **Service Information**	Date: **12/10/2011**
Profile: **WLO, L90F (Volvo) [GB]**			

Evaporator, replacing incl draining and filling

Op nbr 874-012

9812512 Refrigerant unit
9812513 Scale
9812514 Adapter
9812446 Nipple
9812445 Vacuum pump
9812452 Hose
9812453 Nipple
9511207 Leak detector AC

WARNING! **Aggressive oil. Avoid contact to bare skin. Use protective gloves.**

Removing

1. Drain the system of refrigerant, see Service Manual Air Conditioning R134a, Tömning av köldmedium .
2. Remove the plate with the air filters.
   Unplug the connector for the recirculation damper.

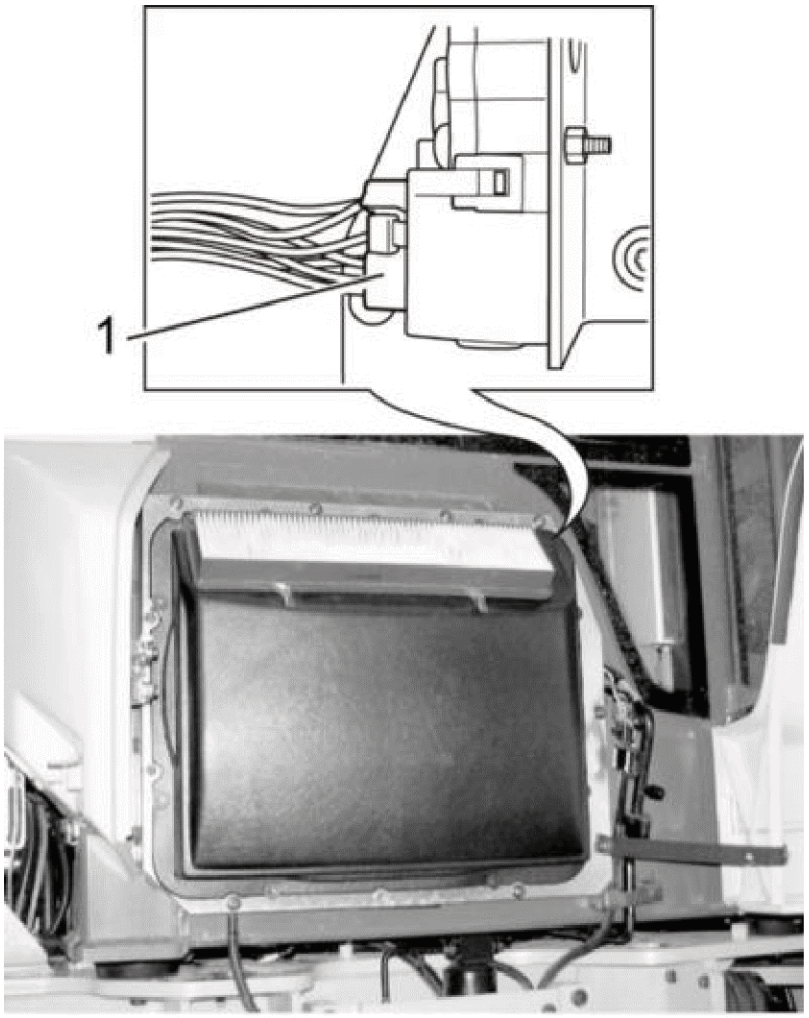

Figure 1

1. Connector

3. Pull up the hose from the cab's temperature sensor.

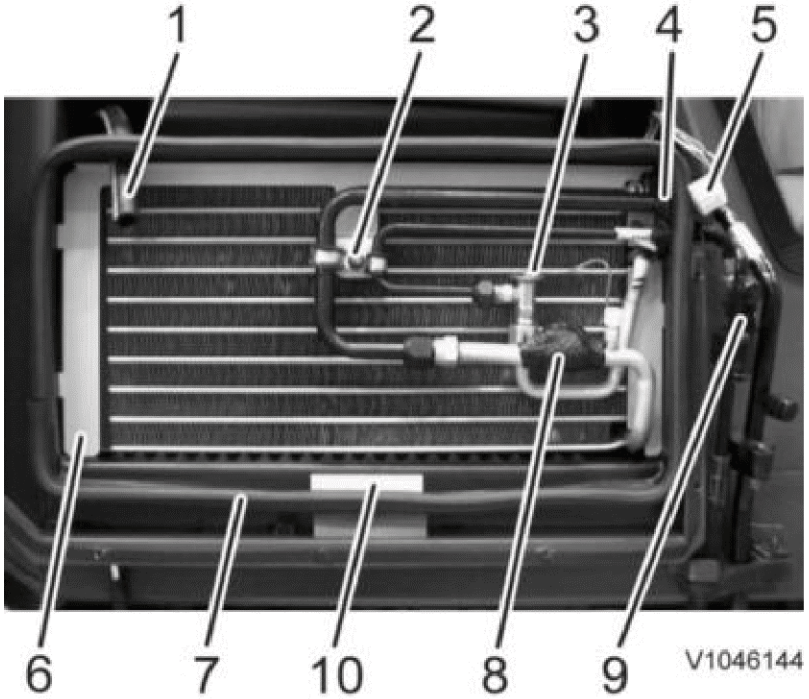

Figure 2

1. Hose from cab's temperature sensor
2. Pipe clamp, 2 pcs.
3. Expansion valve
4. Pipe with temperature-insulating tape
5. Switch for pressure monitor SE8709
6. Attaching plate
7. Sealing strip
8. Capillary tube with temperature-insulating tape
9. Connector for low-pressure monitor
10. Shield

4. Unplug the connector for the pressure monitor, SE8709, and cut the cable ties that attach the cables to the pipes.
Remove seal strip.
Remove the pipe clamps.
Disconnect the connections from the expansion valve. Plug the connections.
Disconnect the connections from the evaporator. Plug the connections. Lay the pipes on the steps.
Press out the plastic on the right side of the evaporator so that the lug on the evaporator's attaching plate releases. Remove the evaporator.

5. Remove the expansion valve and its capillary tube from the evaporator.
Remove the attaching plate.

Installing

6. Install the attaching plate on the evaporator.
Check and lubricate the O-rings with 1161629 PAG-oil and install the expansion valve with its capillary tube on the evaporator.
Insulate the capillary tube with temperature-insulating tape.

NOTE **Clean the contact face for the capillary tube coil before installing. The temperature-insulating tape must not be stretched.**

7. Install the evaporator. Begin with the rear side.
Insert the hose from the cab's temperature sensor, approx. 55 mm down.
Install the evaporator's connecting pipes.
Connect pressure monitor SE8709 and secure the cabling with cable ties.
Check and lubricate the O-rings with 1161629 PAG-oil and connect the pipes for the expansion valve.
Seal around the pipes with temperature-insulating tape.
Install the protective plate and install the sealing strip.

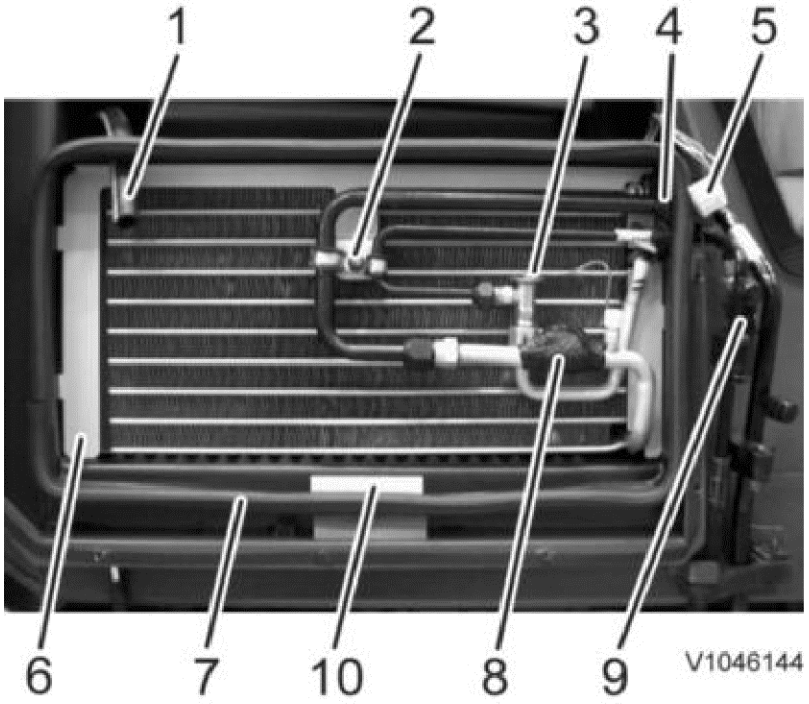

Figure 3

1. Hose from cab's temperature sensor

2. Pipe clamp
3. Expansion valve
4. Pipe with temperature-insulating tape
5. Switch for pressure monitor SE8709
6. Attaching plate
7. Sealing strip
8. Capillary tube with temperature-insulating tape
9. Connector for low-pressure monitor
10. Shield

8. If the system has been punctured, change receiver drier. See Torkfilter, byte inkl tömning och fyllning
.

9. Vacuum-pump and fill the system with refrigerant, see Service Manual Air Conditioning R134a, Vakuumpumpning samt återfyllning av AC-olja
as well as Återfyllning av köldmedium i AC-anläggningen, med våg 981 2513
.

10. Check for leaks in the area around the evaporator, see Service Manual R134a, Läcksökare 951 1207, ny modell
.

11. Check the sealing strip on the plate that seals against the cab filter plate. Install the cab filter plate.

VOLVO
Construction Equipment

Service Information

Document Title:	Function Group:	Information Type: **Service Information**	Date: **12/10/2011**
Profile: **WLO, L90F (Volvo) [GB]**			

Expansion valve, replacing incl draining and filling

Op nbr 874-013

9812512 Refrigerant unit
9812513 Scale
9812514 Adapter
9812446 Nipple
9812445 Vacuum pump
9812452 Hose
9812453 Nipple
9511207 Leak detector AC

WARNING! **Aggressive oil. Avoid contact to bare skin. Use protective gloves.**

Removing

1. Drain the system of refrigerant, see Service Manual Air Conditioning R134a, Tömning av köldmedium .
2. Remove the plate with the air filters.
   Unplug the connector for the control unit for the recirculation hatch.

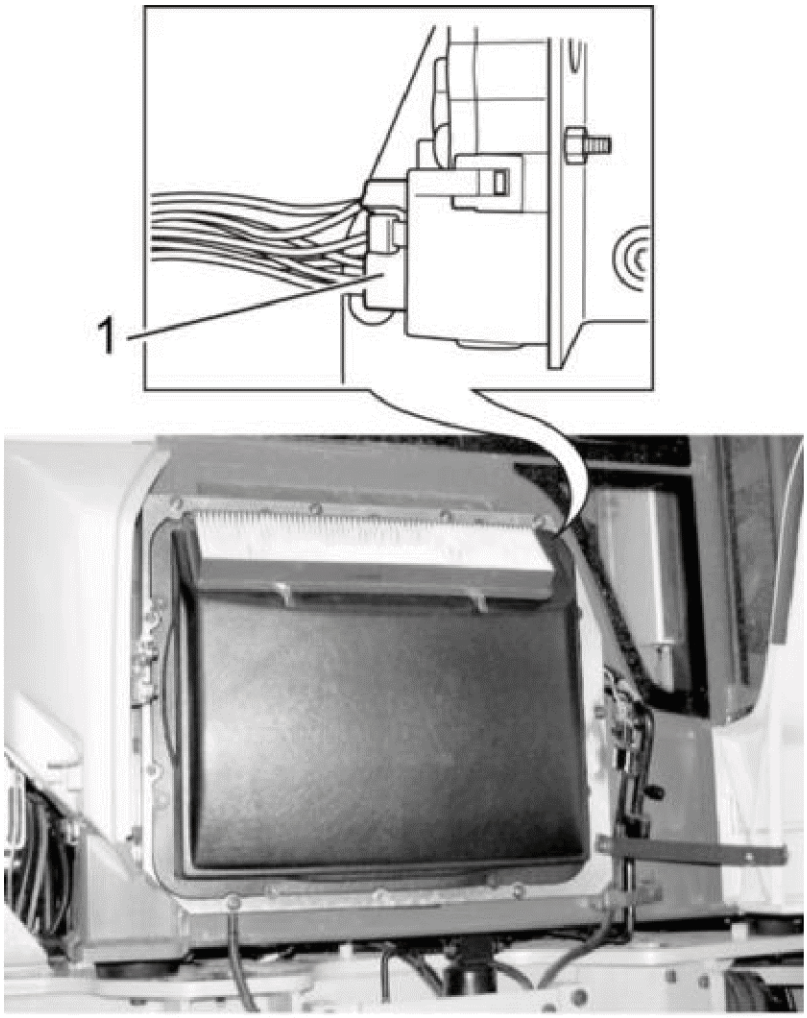

Figure 1

1. Connector

3. Remove the temperature-insulating tape from the capillary tube coil. Loosen the bracket that holds the capillary tube.

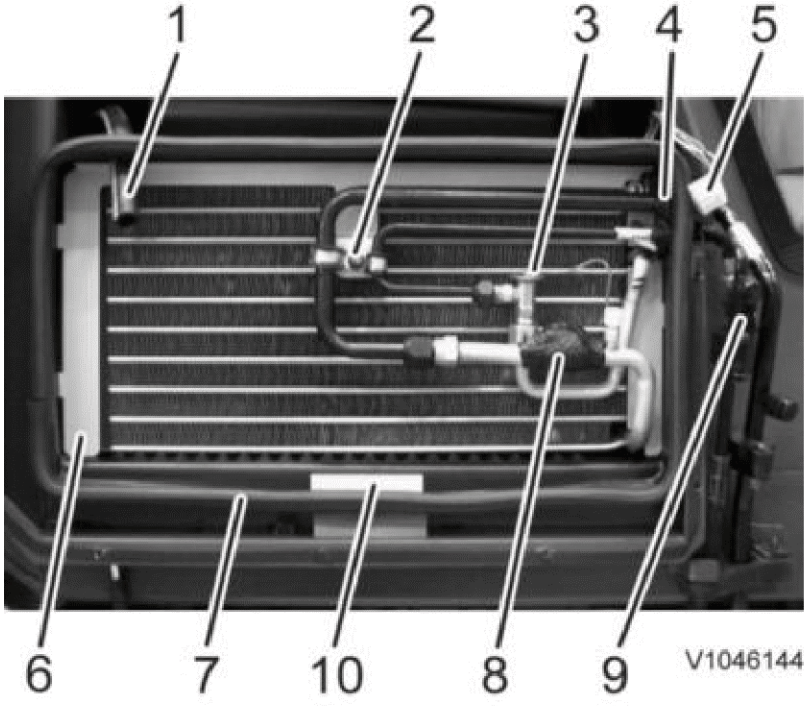

More than one document matches the current profile:

Temperature sensor cooling system, replacing
Product Line: WLO
Model Variant: L90F
Optional Equipments: AC

Temperature sensor cooling system, replacing
Product Line: WLO
Model Variant: L90F
Site: Arvika, Asheville, Pederneiras
Serial Number Start: 26641, 68770, 71667
Serial Number End: 49999, 69999, 79999
Optional Equipments: ECC

VOLVO
Construction Equipment

Service Information

Document Title:	Function Group:	Information Type: **Service Information**	Date: **12/10/2011**
Profile: **WLO, L90F (Volvo) [GB]**			

Temperature sensor cooling system, replacing

Op nbr 386-016

Removing SE8702

1. Open the hatch on the machine's right side on the cab.
   Remove the plate with the air filters.
   Unplug the connector for the motor for the recirculation damper.

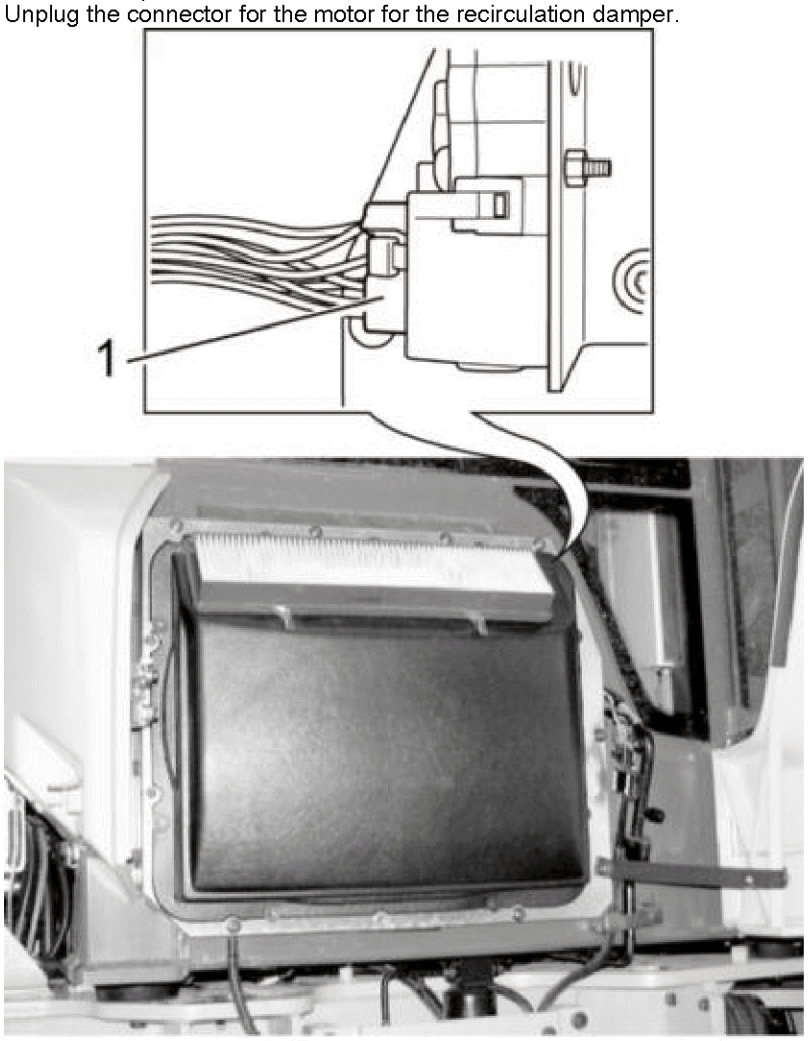

V1047568

Figure 1

1. Connector

2. Unplug the connector for SE8709 and cut the cable ties.

Pull out the hose from the cab's temperature sensor.
Remove the sealing strip and the protective plate.
Loosen the bolt for the clamp.
Press out the plastic on the right side of the evaporator so that the lug on the evaporator releases. Swing out the attaching plate together with the evaporator and lay it on the steps.

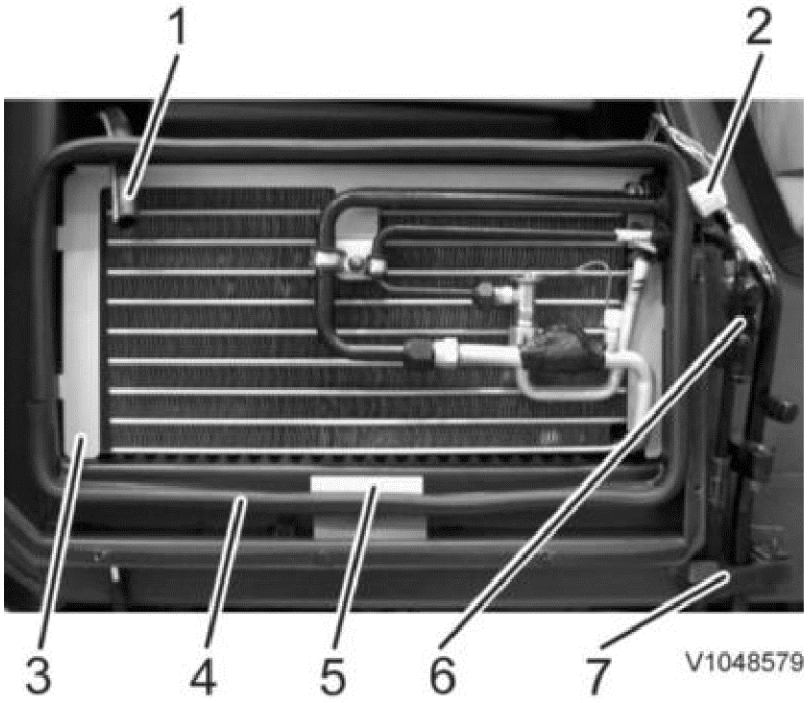

Figure 2

1. Hose from cab's temperature sensor
2. Connector recirculation damper
3. Attaching plate
4. Sealing strip
5. Shield
6. Connector for pressure monitor SE8709
7. Clamp

3. Cut the sensor's cable tie and disconnect it from its bracket.
4. Remove the side panel on the right side in the cab.
5. Unplug the connector for SE8702. Remove the sensor.

Installing SE8702

6. Insert SE8702 through the rubber bushing in the slide of the climate casing and plug in its connector.
7. Install the side panel on the right side in the cab.
8. Secure SE8702 with cable ties on the bracket as shown.

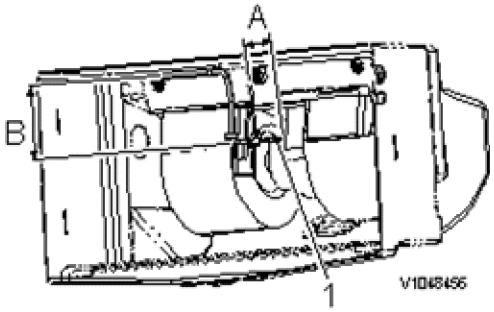

Figure 3

A. 41 ±2 mm (1.61 ± 0.08 in)
B. 82 ±2 mm (3.19 ± 0.08 in)

1. SE8702

9. Install the attaching plate with the evaporator.

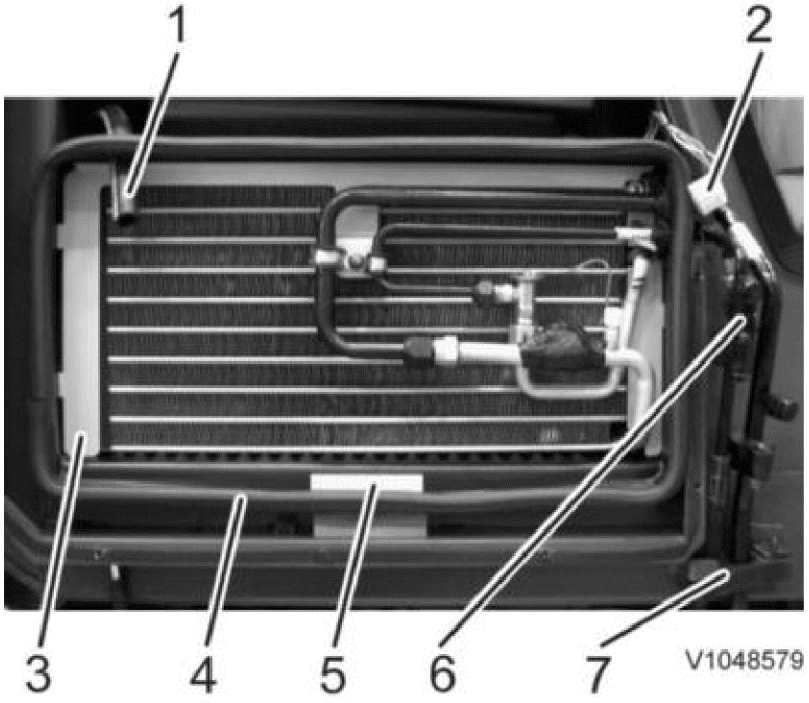

Figure 4

1. Hose from cab's temperature sensor
2. Connector recirculation damper
3. Attaching plate
4. Sealing strip
5. Shield
6. Connector for pressure monitor SE8709
7. Clamp

Install the hose from the cab's temperature sensor, approx. 55 mm down.
Install the protective plate and the sealing strip.
Plug in connector for SE8709. Secure the cable harness with cable ties.

10. Check the sealing strip on the plate against the cab filter plate.
Plug in the connector for the control unit.

11. Install the plate with the cab filters.
Close the hatch on the machine's right side on the cab.

VOLVO
Construction Equipment

Service Information

Document Title:	Function Group:	Information Type: **Service Information**	Date: **12/10/2011**
Profile: **WLO, L90F (Volvo) [GB]**			

Temperature sensor cooling system, replacing

Op nbr 386-016

Removing

1. Place the machine in service position 1 in accordance with Service positions
2. Open the plastic cover for the air conditioning

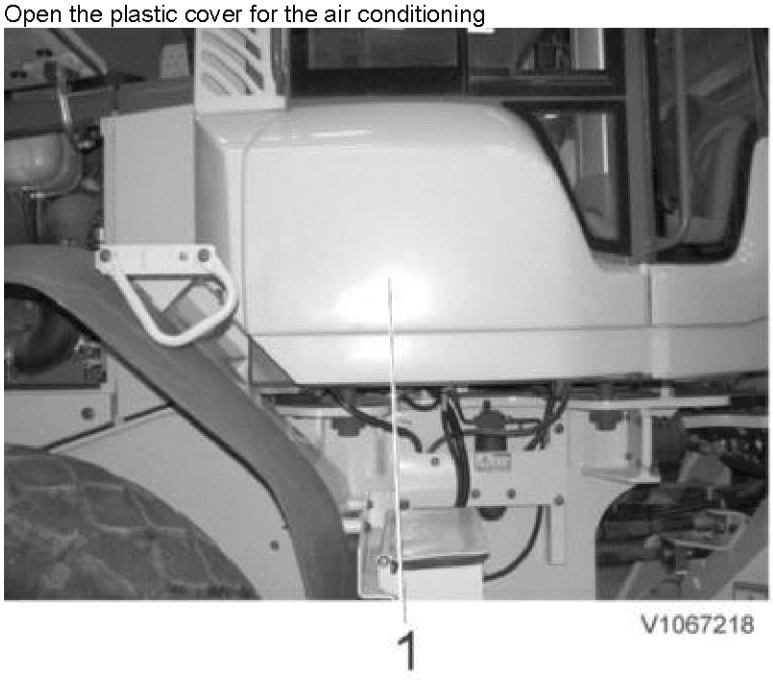

Figure 1

1. Plastic cover

3. Remove the filter cover and the filters.

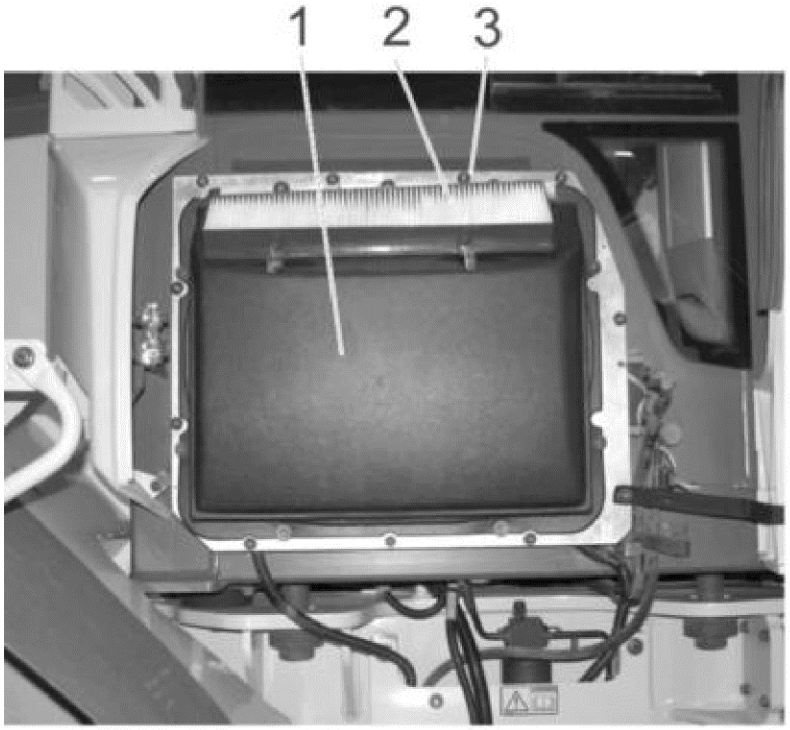

Figure 2

1. Filter cover
2. Filters
3. Bolt

4. Remove the cover plate and unplug connector MO8703 for the motor for the air mixing damper.

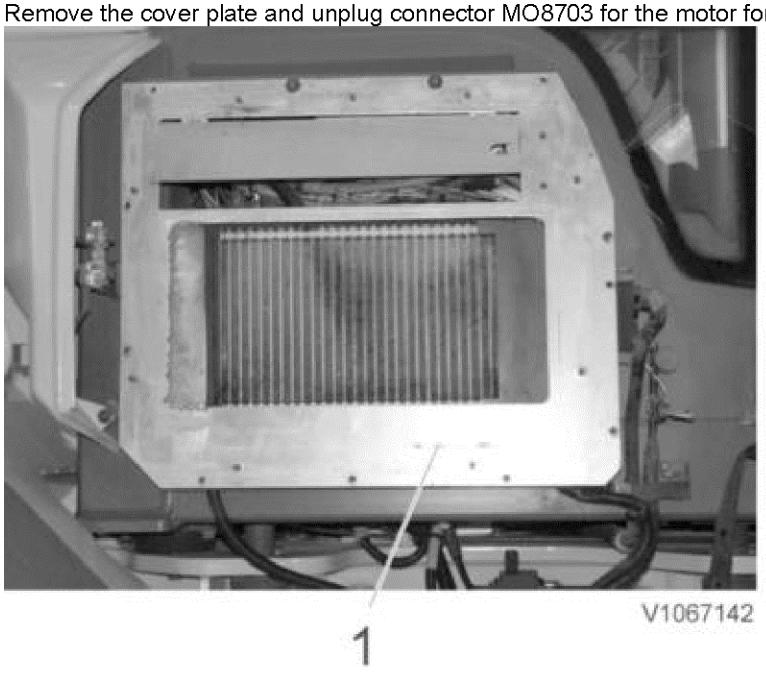

Figure 3

1. Cover plate

5. Remove the plate fitted to the right over the evaporator.

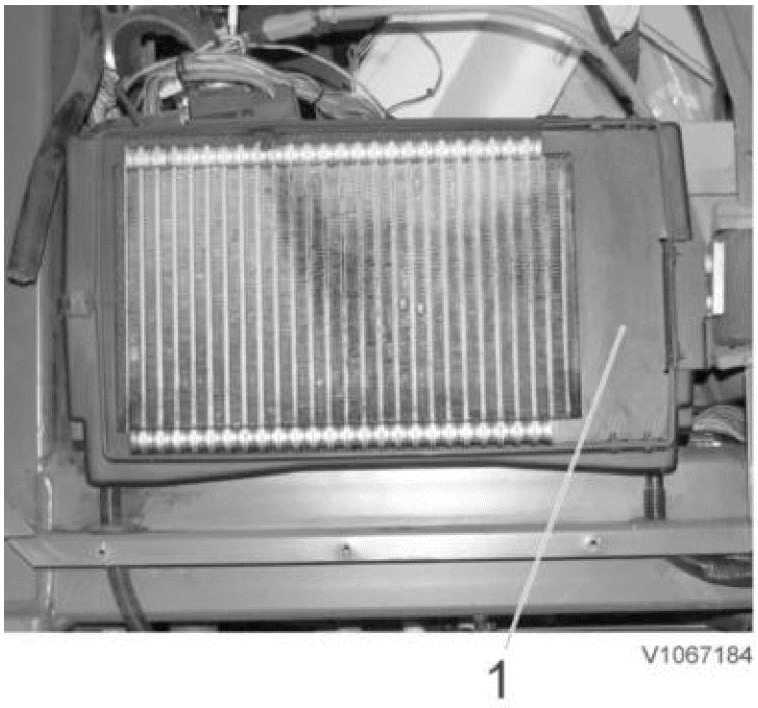

Figure 4

1. Plate

6. Remove the bolt for the AC hoses' rubber leadthrough. Remove the drain hoses for condensation water.

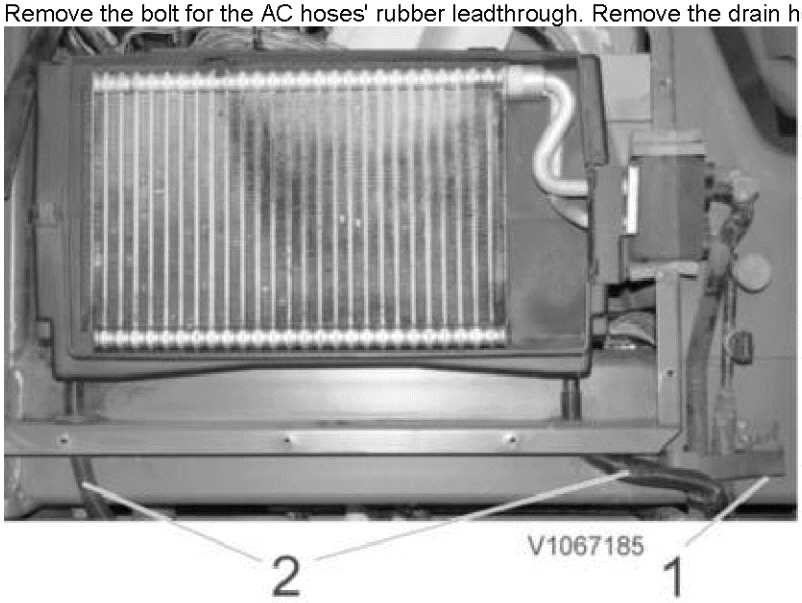

Figure 5

1. Bolt
2. Drain hoses

7. Fold out the evaporator and place it to one side.

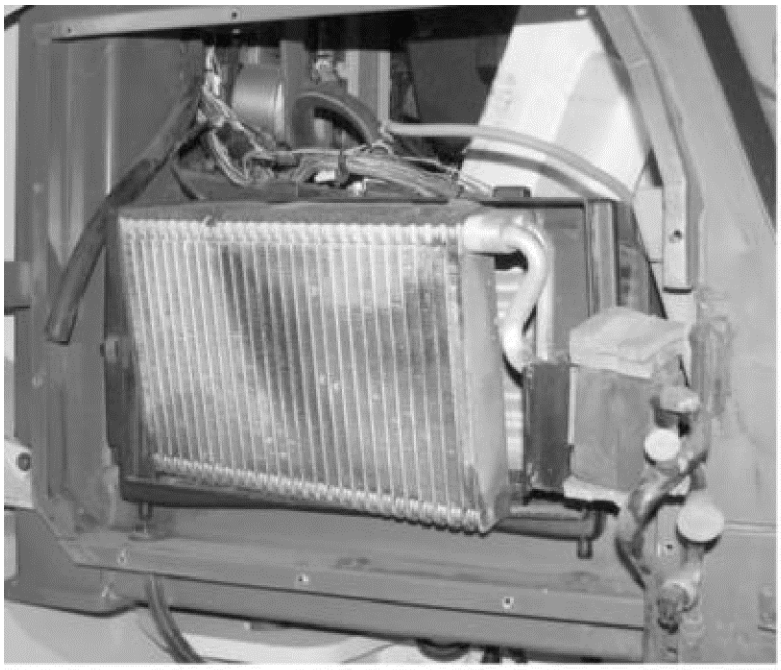

V1067187

Figure 6

8. Unplug the connector for the temperature sensor and replace it.

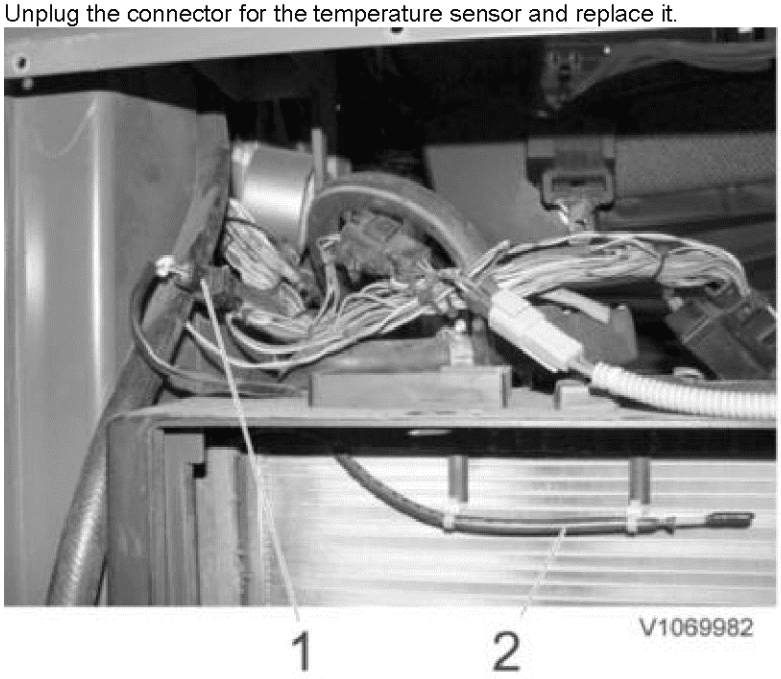

V1069982

Figure 7

1. Connector
2. Temperature sensor

9. Install the evaporator, rubber hoses, and the rubber bushing

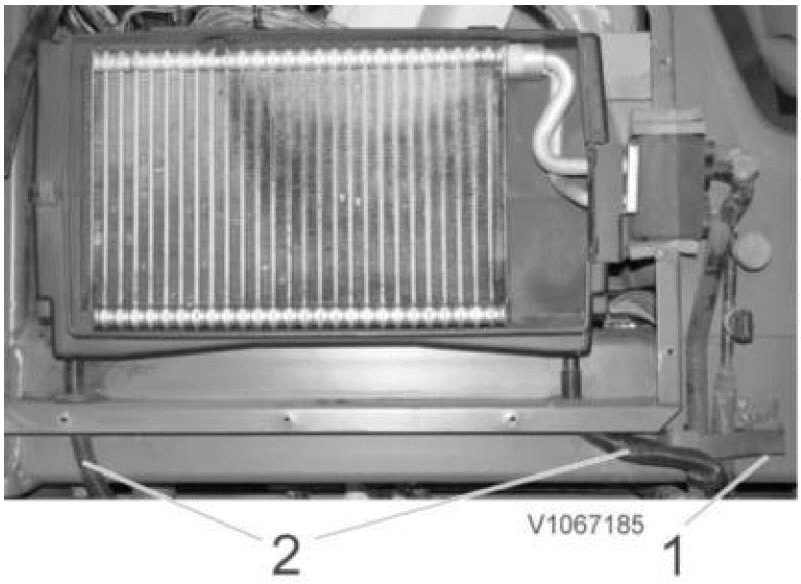

Figure 8

1. Bolt
2. Drain hoses

10. Reinstall the plate located to the right over the evaporator.



Figure 9

1. Plate

11. Reinstall the cover plate and plug in connector MO8703 for the motor for the air mixing damper.

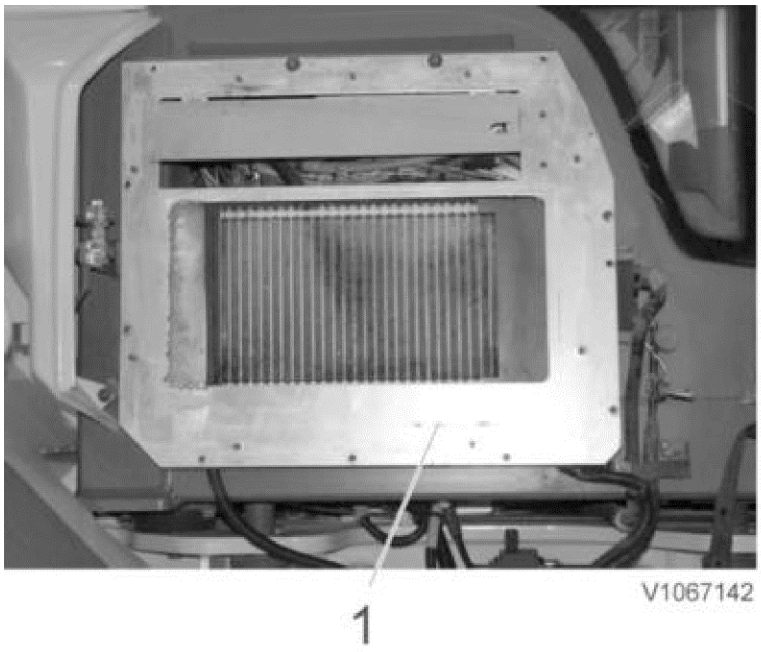

Figure 10

1. Cover plate

12. Reinstall the filter cover and the filters.

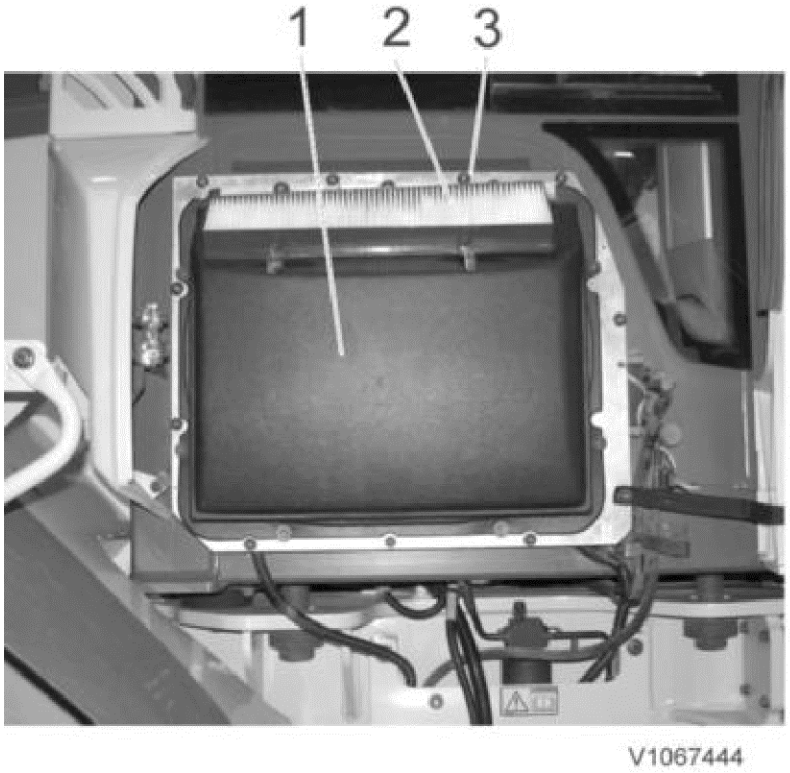

Figure 11

1. Filter cover
2. Filters
3. Bolt

13. Close the plastic cover for the air conditioning unit

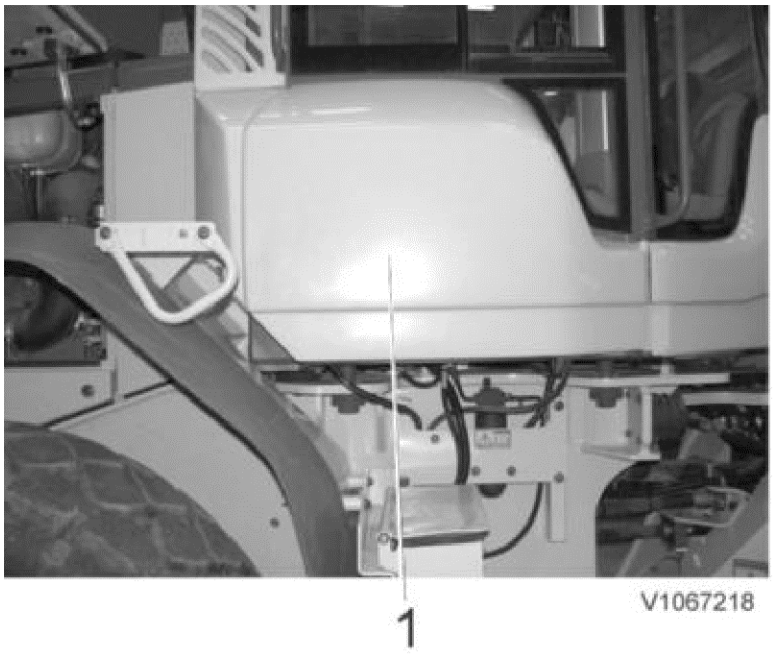

Figure 12

1. Plastic cover

14. Restore the machine from service position 1
15. Perform check of the air conditioning unit according to Performance test, air conditioning unit

VOLVO
Construction Equipment

Service Information

Document Title:	Function Group:	Information Type: **Service Information**	Date: **12/10/2011**
Profile: **WLO, L90F (Volvo) [GB]**			

Condenser, replacing incl draining and filling

Op nbr 874-010

9812512 Refrigerant unit
9812513 Scale
9812514 Adapter
9812446 Nipple
9812445 Vacuum pump
9812452 Hose
9812453 Nipple
9511207 Leak detector AC

WARNING! **Aggressive oil. Avoid contact to bare skin. Use protective gloves.**

Removing

1. Drain the system of refrigerant, see Service Manual Air Conditioning R134a, Tömning av köldmedium .
2. Open the radiator casing.

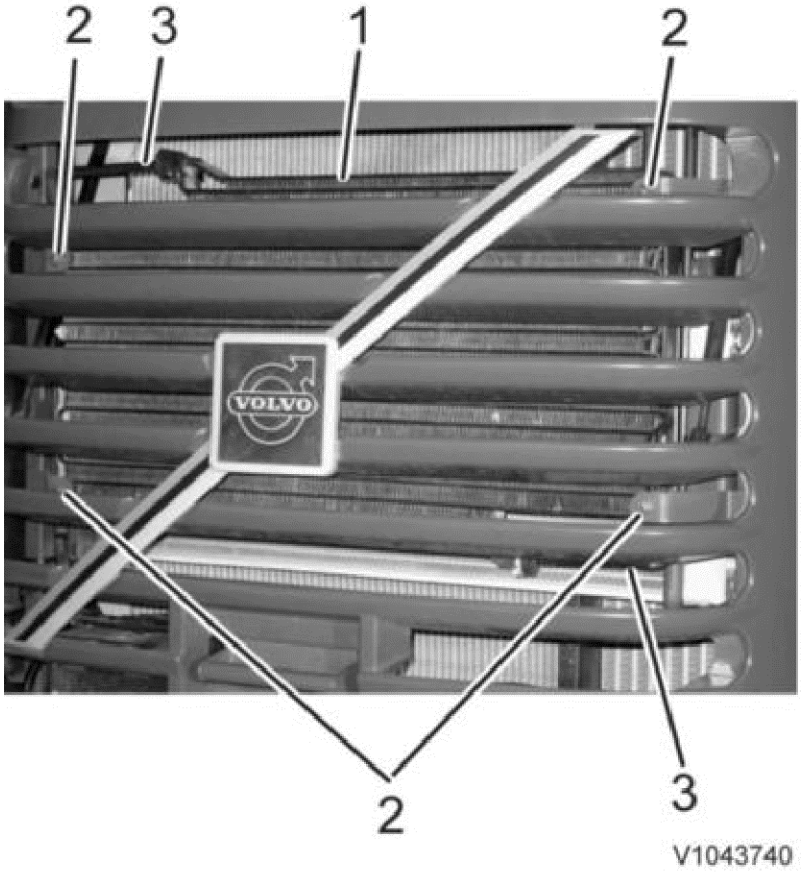

Figure 1

1. Condenser
2. Attaching points
3. Refrigerant pipes

3. Disconnect the refrigerant pipes from the condenser.
4. Plug the refrigerant pipes immediately to prevent impurities from entering the system.

   NOTE **Hold the condenser so that it does not fall down when the bolts are removed.**

5. Lift aside the condenser.

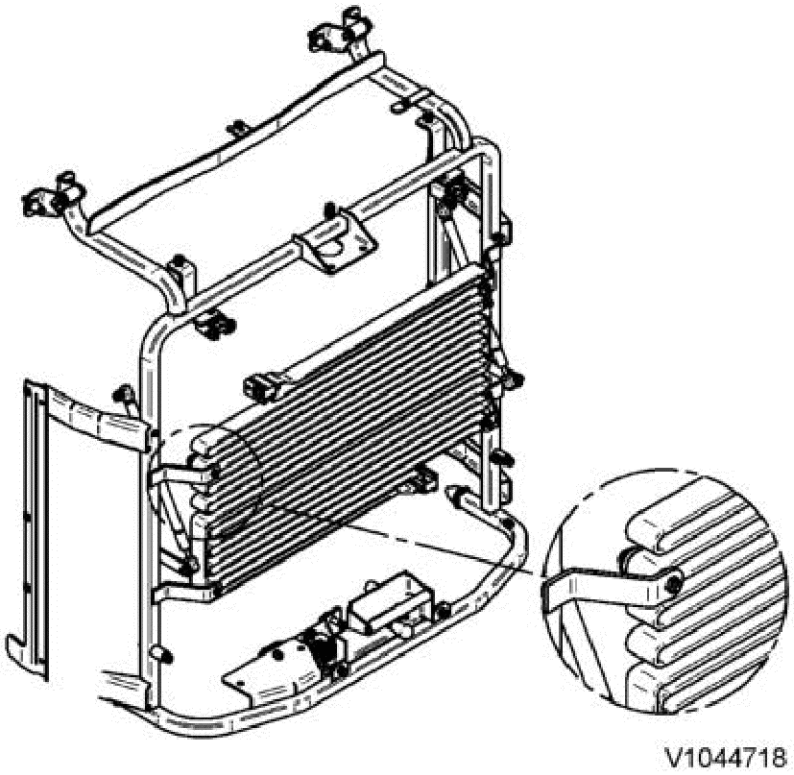

Figure 2
Condenser - attaching points

6. Remove the rubber pads from the condenser (8 pcs.).

Installing

7. Install the rubber pads (8 pcs.) in the condenser.
8. Install the new condenser.

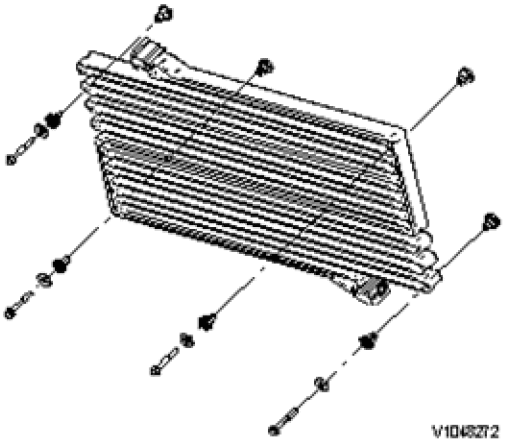

Figure 3
Condenser, installing

9. Remove the plugs the from the connecting pipes.
10. Change and lubricate the O-rings with 1161629 PAG-oil.
Connect the refrigerant pipes and bolt down the pipe clamp.
11. Close the radiator casing.
12. If the system has been punctured, change receiver drier. See Torkfilter, byte inkl tömning och fyllning .
13. Vacuum-pump and fill the system with refrigerant, see Service Manual Air Conditioning R134a, Vakuumpumpning samt återfyllning av AC-olja
as well as Återfyllning av köldmedium i AC-anläggningen, med våg 981 2513

.

14. Check for leaks in the area around the condenser, see Service Manual Air Conditioning R134a, Läcksökare 951 1207, ny modell

VOLVO
Construction Equipment

Service Information

Document Title:	Function Group:	Information Type: **Service Information**	Date: **12/10/2011**
Profile: **WLO, L90F (Volvo) [GB]**			

Hydraulic system, component location

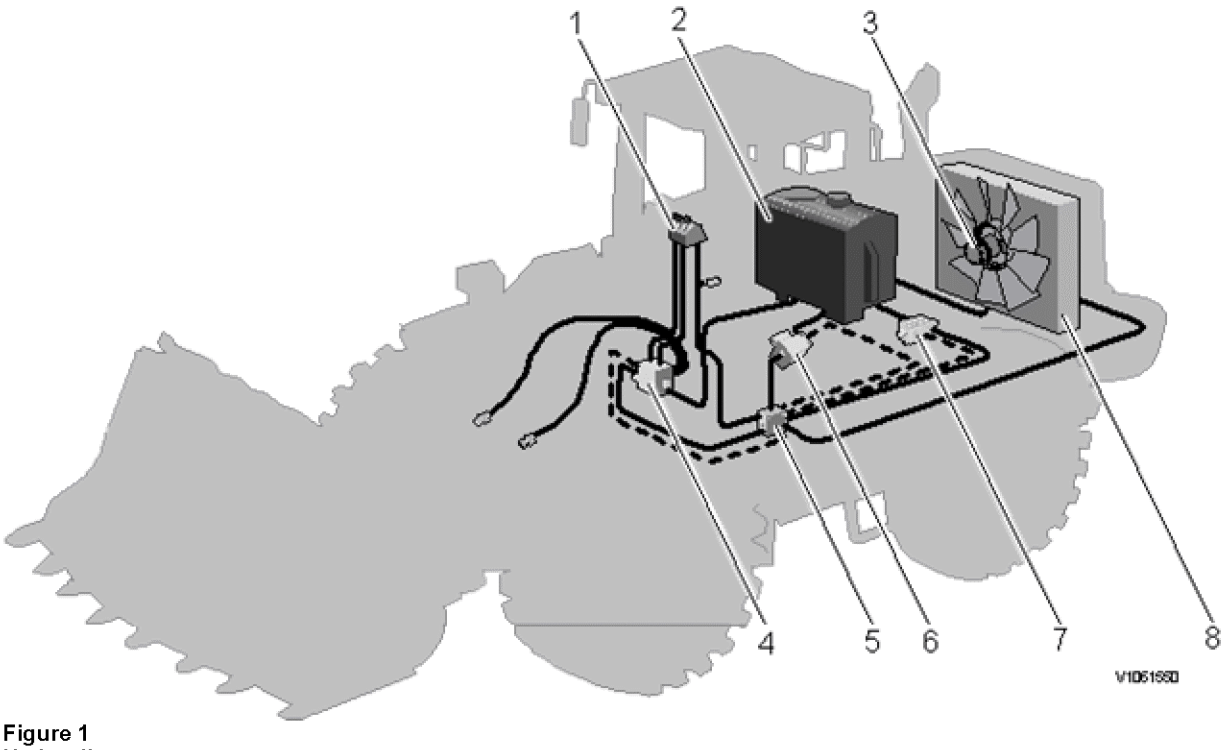

Figure 1
Hydraulic system

1. Servo valve
2. Hydraulic oil tank
3. Fan motor
4. Control valve
5. Central valve
6. Pump 2
7. Pump 3
8. Hydraulic oil cooler

For description of components, see:

- Servoventil, beskrivning
- Hydrauloljetank, beskrivning
- Kylfläktmotor, beskrivning
- Manöverventil, beskrivning
- Centralblock, beskrivning
- Hydraulpumpar, beskrivning

More than one document matches the current profile:

Hydraulic system, description
Product Line: WLO
Model Variant: L90F
Site: Arvika
Serial Number Start: 25001
Serial Number End: 25774

Hydraulic system, description
Product Line: WLO
Model Variant: L90F
Site: Arvika, Asheville, Pederneiras
Serial Number Start: 25775, 68101, 71501
Serial Number End: 49999, 69999, 79999

VOLVO
Construction Equipment

Service Information

Document Title:	Function Group:	Information Type: **Service Information**	Date: **12/10/2011**
Profile: **WLO, L90F (Volvo) [GB]**			

Hydraulic system, description

The hydraulic system consists of several different components and systems, which together form a complete hydraulic system. The hydraulic system is described by the various functions being divided it into, e.g. brake system, steering system and working hydraulics. The sub-systems have the hydraulic oil tank, the central valve and the hydraulic pumps in common.

In order to distinguish between the different pumps and their functions in a simple way (regardless of the machine model), e.g. the pump for the cooling fan is called pump 3. As this machine only has two pumps, they are called pump 2 (P2) and pump 3 (P3) in order to, as far as possible, maintain the similarities between de different machine models. Thus, there is no pump 1 (P1) on this machine.

See also:

- Arbetshydraulsystem, funktionsbeskrivning
- Spakstyrning (CDC), beskrivning
- Reservstyrning, beskrivning
- Styrning, funktionsbeskrivning
- Parkeringsbroms, beskrivning
- Bromssystem, beskrivning
- Cooling fan, description

The machine has two hydraulic pumps (P2 and P3) which supply the whole hydraulic system with oil. The two hydraulic pumps supply the oil to the central valve where it is distributed out to the various functions. P2 primarily provides the steering system, working hydraulics and the servo-hydraulic system with oil. P3 primarily provides the hydraulic cooling fan with oil. The brakes may be charged via both pumps.

If the hydraulic system is to function in a correct way the hydraulic system must, among other things, be free from air and the hydraulic oil must be at the correct working temperature. There are two sensors in the hydraulic oil tank that monitor the hydraulic oil level (SE9101) and the hydraulic oil temperature (SE9102). If the level is too low or the temperature too high, information about this will be shown on the operator display unit. When the ambient temperature for the machine is low, the software of the machine sees to that the warming up of the hydraulic oil takes place by requesting brake pressure charging even though the brake pressure is not low. This causes the hydraulic oil to the fan motor to be forced through a restriction in the central valve MA5502 and this leads to a rise in temperature.

See also Elschema 903
, Elschema 908
and Hydraulschema, komplett
.

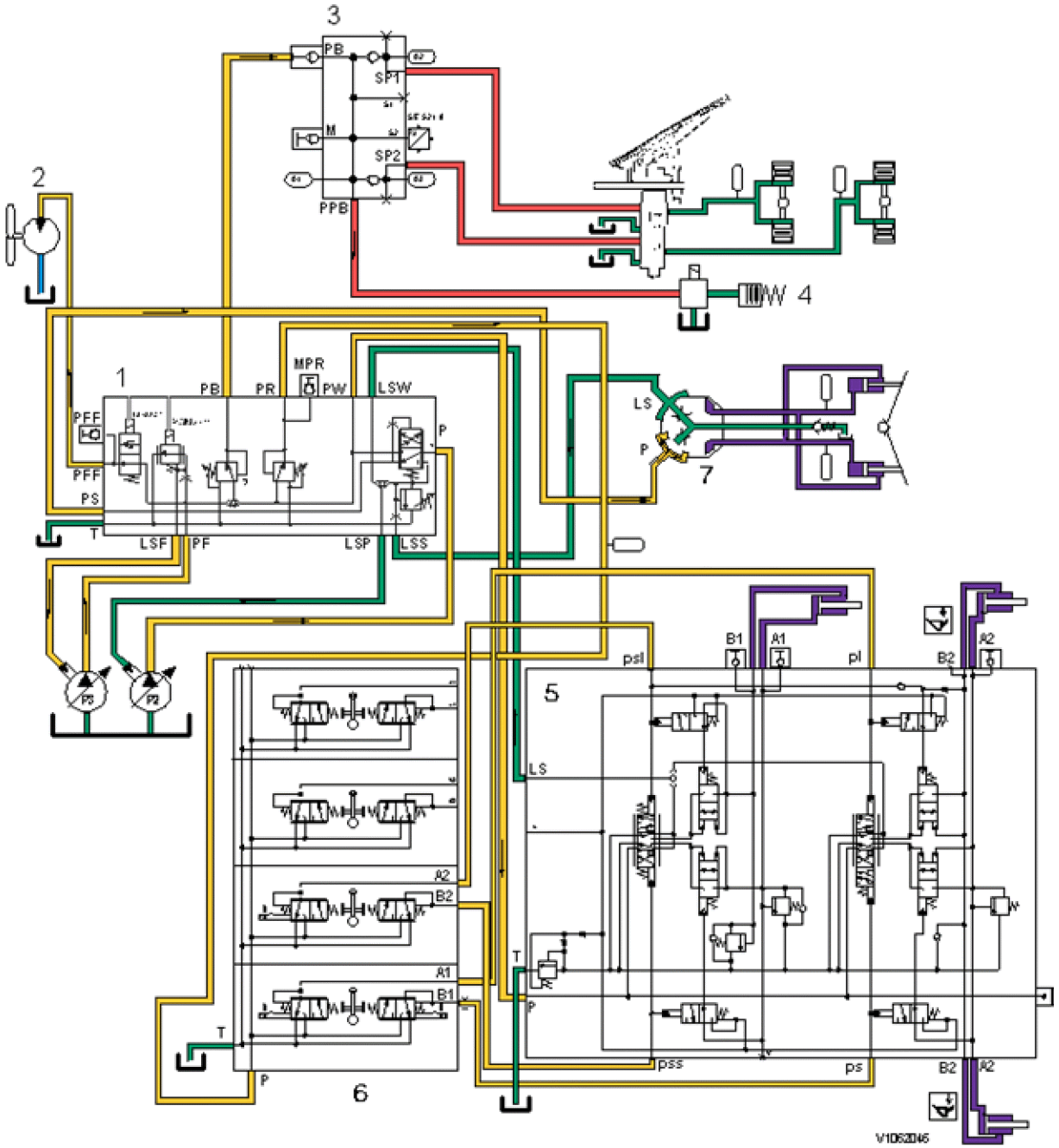

Figure 1
Hydraulic system

1. Central valve
2. Fan motor
3. Accumulator block
4. Parking brake
5. Control valve
6. Servo valve
7. Steering valve
8. Steering cylinders

Software

NOTE **The level monitor is connected in series with the temperature sensor, which means that the hydraulic oil temperature cannot be read off, if the hydraulic oil level is below warning level.**

Hydraulic oil level		
Input signals	**Conditions for output functions**	**Output functions**
o Monitoring, SE9101	o Hydraulic oil level below warning level for more than two seconds.	o Amber central warning o Warning

		"Low Hydraulic Oil Level"

Hydraulic oil temperature		
Input signals	**Conditions for output functions**	**Output functions**
o Hydraulic oil temperature, SE9102	o Hydraulic oil temperature above 110 °C (230 °F)	o Red central warning o Warning "High hydraulic oil temp."
o Monitoring, SE9102	o System error, signal outside limit values See Diagnostics	o Amber central warning o Check Temp. sensor hydraulics [T1]

[T1] System errors for hydraulic oil level and hydraulic oil temperature have the information screen in common.

Warming up hydraulic oil		
Input signals	**Conditions for output functions**	**Output functions**
o VCADS Pro parameter HKT "0, 1" [T1] o Hydraulic oil temperature, SE9102 o Coolant temperature, engine, SE2606, o Charge air temperature, SE2507 o Induction air temperature, SE2501 o Engine On/Off	**General conditions for the function** o VCADS Pro parameter HKT "1"	
	General conditions for warming o Engine On o Coolant temperature 90 °C (194 °F) or higher or o Induction air temperature below 25 °C (77 °F) o Charge air temperature 45 °C (113 °F) or higher If the above conditions are met, no warming of the hydraulic oil takes place according to the conditions given below.	o No warming
	Warming up 1 o Hydraulic oil temperature 0–15 °C (32–59 °F) o Engine On When the hydraulic oil temperature reaches above 15 °C (59 °F) the warming of the hydraulic oil ceases.	o Brake pressure charging o Fab control valve PWM2601, 15 MPa (2176 psi)
	Warming up 2 o Hydraulic oil temperature below 0 °C (32 °F) o Engine On When the hydraulic oil temperature reaches above 0 °C (32 °F) the control pressure for PWM2601 changes according to Warming 1.	o Brake pressure charging o Fab control valve PWM2601, 21 MPa (3046 psi)

[T1] Parameter HKT activates the function Warming Hydraulic Oil. 0=Not activated, 1=Activated

VOLVO
Construction Equipment

Service Information

Document Title:	Function Group:	Information Type: **Service Information**	Date: **12/10/2011**
Profile: **WLO, L90F (Volvo) [GB]**			

Hydraulic system, description

The hydraulic system consists of several different components and systems, which together form a complete hydraulic system. The hydraulic system is described by the various functions being divided it into, e.g. brake system, steering system and working hydraulics. The sub-systems have the hydraulic oil tank, the central valve and the hydraulic pumps in common.

In order to distinguish between the different pumps and their functions in a simple way (regardless of the machine model), e.g. the pump for the cooling fan is called pump 3. As this machine only has two pumps, they are called pump 2 (P2) and pump 3 (P3) in order to, as far as possible, maintain the similarities between de different machine models. Thus, there is no pump 1 (P1) on this machine.

See also:

- Arbetshydraulsystem, funktionsbeskrivning
- Spakstyrning (CDC), beskrivning
- Reservstyrning, beskrivning
- Styrning, funktionsbeskrivning
- Parkeringsbroms, beskrivning
- Bromssystem, beskrivning
- Cooling fan, description

The machine has two hydraulic pumps (P2 and P3) which supply the whole hydraulic system with oil. The two hydraulic pumps supply the oil to the central valve where it is distributed out to the various functions. P2 primarily provides the steering system, working hydraulics and the servo-hydraulic system with oil. P3 primarily provides the hydraulic cooling fan with oil. The brakes may be charged via both pumps.

If the hydraulic system is to function in a correct way the hydraulic system must, among other things, be free from air and the hydraulic oil must be at the correct working temperature. There are two sensors in the hydraulic oil tank that monitor the hydraulic oil level (SE9101) and the hydraulic oil temperature (SE9102). If the level is too low or the temperature too high, information about this will be shown on the operator display unit. When the ambient temperature for the machine is low, the software of the machine sees to that the warming up of the hydraulic oil takes place by requesting brake pressure charging even though the brake pressure is not low. This causes the hydraulic oil to the fan motor to be forced through a restriction in the central valve MA5502 and this leads to a rise in temperature.

See also Elschema 903
, Elschema 908
and Hydraulschema, komplett
.

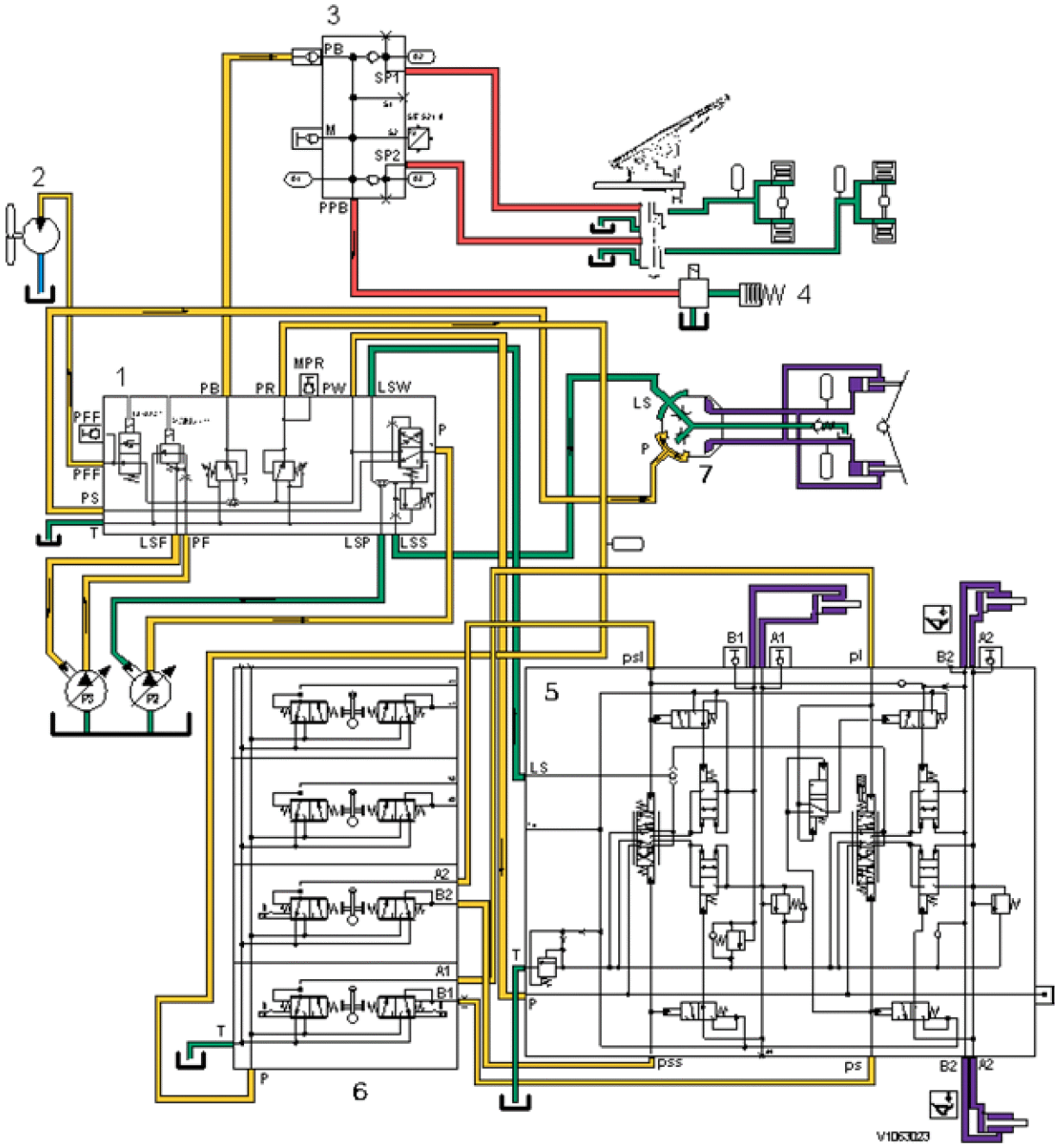

Figure 1
Hydraulic system

1. Central valve
2. Fan motor
3. Accumulator block
4. Parking brake
5. Control valve
6. Servo valve
7. Steering valve
8. Steering cylinders

Software

NOTE **The level monitor is connected in series with the temperature sensor, which means that the hydraulic oil temperature cannot be read off, if the hydraulic oil level is below warning level.**

Hydraulic oil level		
Input signals	**Conditions for output functions**	**Output functions**
o Monitoring, SE9101	o Hydraulic oil level below warning level for more than two seconds.	o Amber central warning o Warning

VOLVO
Construction Equipment

Service Information

Document Title:	Function Group:	Information Type: **Service Information**	Date: **12/10/2011**
Profile: **WLO, L90F (Volvo) [GB]**			

Hydraulic system, bleeding

Op nbr 900-002

To be considered after replacing hydraulic components:

1. The hydraulic oil tank must be inspected and cleaned from any contaminants.
2. Clean the return oil filter magnetic rod (if applicable).
3. The return oil filter should be inspected and changed if the filter has visible impurities. If the operating time of the machine is over 50% of the normal filter change interval, replace the filter.
4. All hydraulic oil, new and recycled, must be filled via the hydraulic oil tank return filter. In order to be able to re-use the oil, it must be entirely free from debris and contaminants.

WARNING! **Hot hydraulic oil and hydraulic oil under pressure may result in severe personal injuries**

1. To prevent the brake charging and the cooling fan from starting, disconnect the connectors from PWM2601 and MA5502.

NOTE **Risk of overheating!**

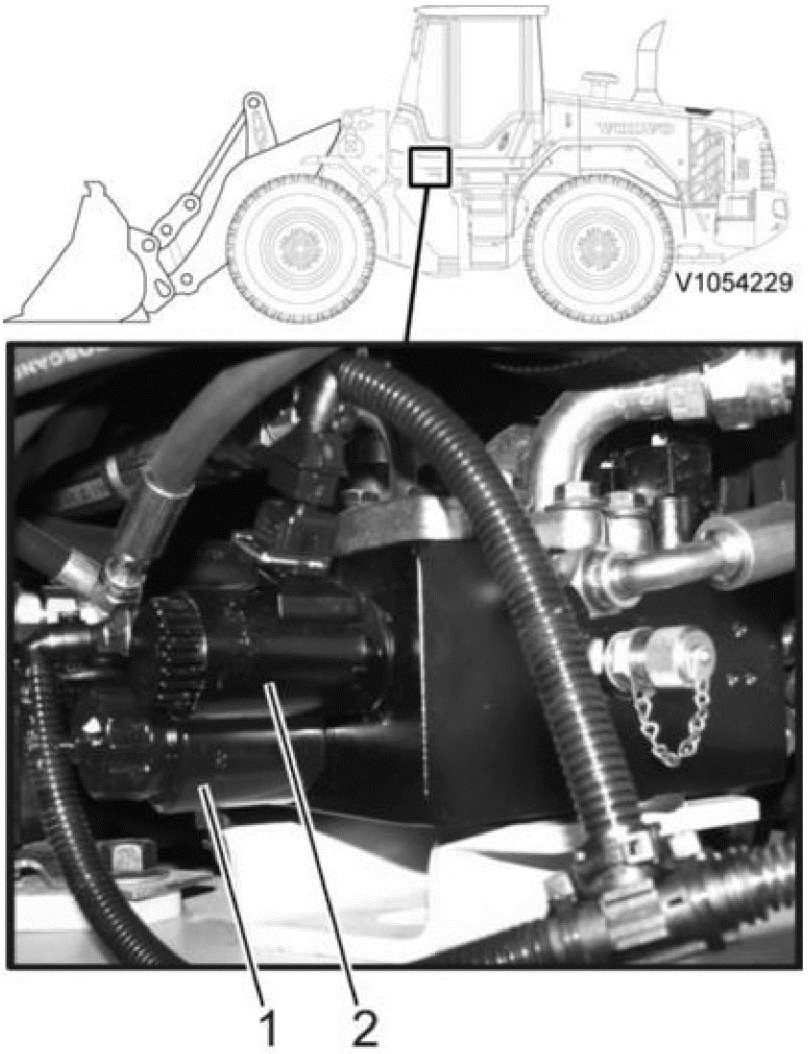

Figure 1

1. PWM2601
2. MA5502

2. Start the engine and run it at **low idling speed** for approximately 15 minutes without activating hydraulic functions.
3. Connect the connectors to PWM2601 and MA5502.
4. Carefully actuate all working-hydraulics functions a few times using small lever movements with the engine running at low idling speed.

   NOTE **The hydraulic cylinders should not be operated against their end-of-stroke positions.**

5. Raise the lifting frame to its upper end position, without building up pressure.

   NOTE **It is very important that pressure is not built up even though the function is operated to its end position.**

6. Lower the lifting frame.
7. Raise the lifting frame until the tilting cylinder is horizontal to the ground.
8. Carefully tilt fully inward without building up a pressure.
9. Stop the engine.
   Fill hydraulic oil in the hydraulic oil tank, if required.
   If air bubbles are visible in the reservoir, leave the engine turned off for approx. ten minutes.
10. Bleed the brakes, see Bromssystem, luftning

.

11. Raise the lifting frame fully and tilt fully outward.

NOTE	**If all oil has been emptied from the lifting cylinders or several components in the hydraulic system, the lifting cylinders must be bled, depending on machine type, with the aid of air bleeder nipples on the cylinders (1 nipple per cylinder).**

12. Lower the lifting frame and stop the engine.
Leave the engine turned off for approx. ten minutes and fill oil in the hydraulic oil tank, if required.

13. Start the engine.
Bleed the steering valve by turning the steering wheel until the machine steers properly.

14. Turn the steering wheel fully to the right respectively the left several times.

15. Stop the engine and leave it turned off for at least 15 minutes.

Test-running

16. Start the engine and run it at **low idling speed**.
Tilt inward and outward until air bubbles are no longer visible in the hydraulic oil tank sight glass.

17. Raise and lower the lifting frame until air bubbles are no longer visible in the hydraulic oil tank sight glass.

18. Increase the engine speed to **high idling speed**.
Carefully test all hydraulic functions (lifting, tilting, steering and brakes) in order to slowly building up pressure in the hydraulic system.

19. When required, check and if required adjust stand-by pressure and working pressure for the hydraulic oil pumps, see Hålltryck (P2),kontroll och justering
, Arbetstryck (P2), kontroll och justering
, Pump 3 (P3) Kylfläktpump/Bromspump. Hålltryck, kontroll och justering
and Pump 3 (P3) Kylfläktpump/Bromspump. Kylfläkt, kontroll maxtryck

VOLVO
Construction Equipment

Service Information

Document Title:	Function Group:	Information Type: **Service Information**	Date: **12/10/2011**
Profile: **WLO, L90F (Volvo) [GB]**			

Working hydraulic system, component position

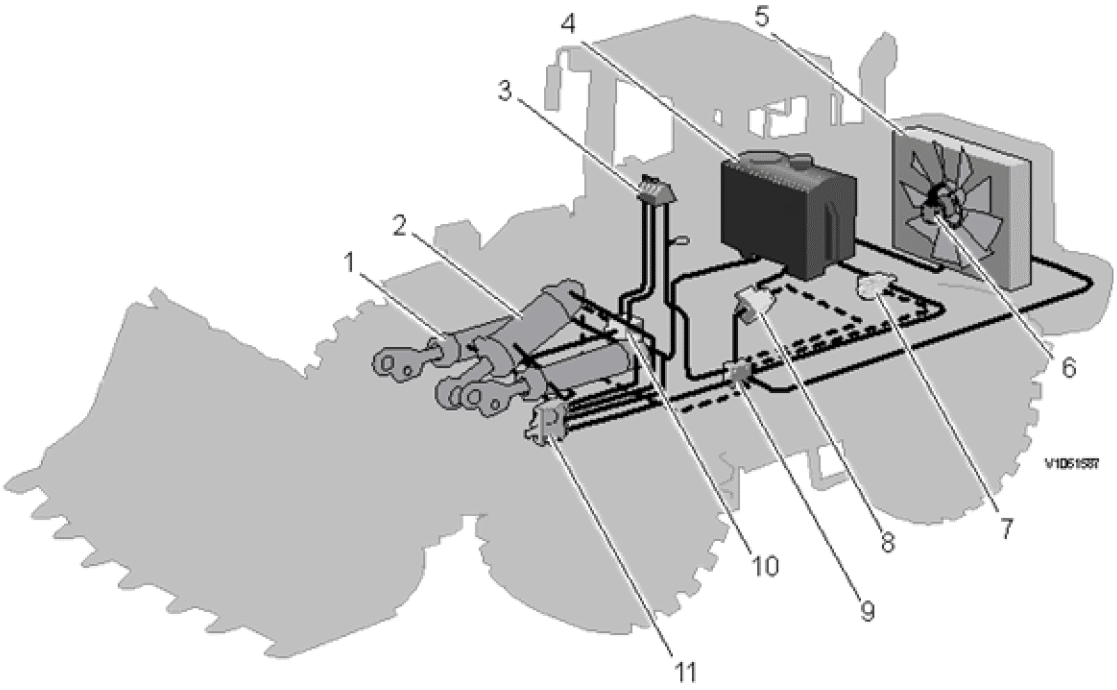

Figure 1
Working hydraulics

1. Lifting cylinder (2 pcs)
2. Tilting cylinder
3. Servo valve
4. Hydraulic oil tank
5. Hydraulic oil cooler
6. Fan motor
7. Pump 3
8. Pump 2
9. Central valve
10. Control valve, 3rd/4th hydraulic function [1]
11. Control valve

For description of components, see:

- Servoventil, beskrivning
- Hydrauloljetank, beskrivning
- Kylfläktmotor, beskrivning
- Hydraulpumpar, beskrivning
- Centralblock, beskrivning
- 3:e/4:e hydraulfunktion, ventil, beskrivning
- Manöverventil, beskrivning

[1] Optional equipment

More than one document matches the current profile:

Working hydraulic system, description
Product Line: WLO
Model Variant: L90F
Site: Arvika, Asheville, Pederneiras
Serial Number Start: 25775, 68101, 71501
Serial Number End: 49999, 69999, 79999

Working hydraulic system, description
Product Line: WLO
Model Variant: L90F
Site: Arvika
Serial Number Start: 25001
Serial Number End: 25774

VOLVO
Construction Equipment

Service Information

Document Title:	Function Group:	Information Type: **Service Information**	Date: **12/10/2011**
Profile: **WLO, L90F (Volvo) [GB]**			

Working hydraulic system, description

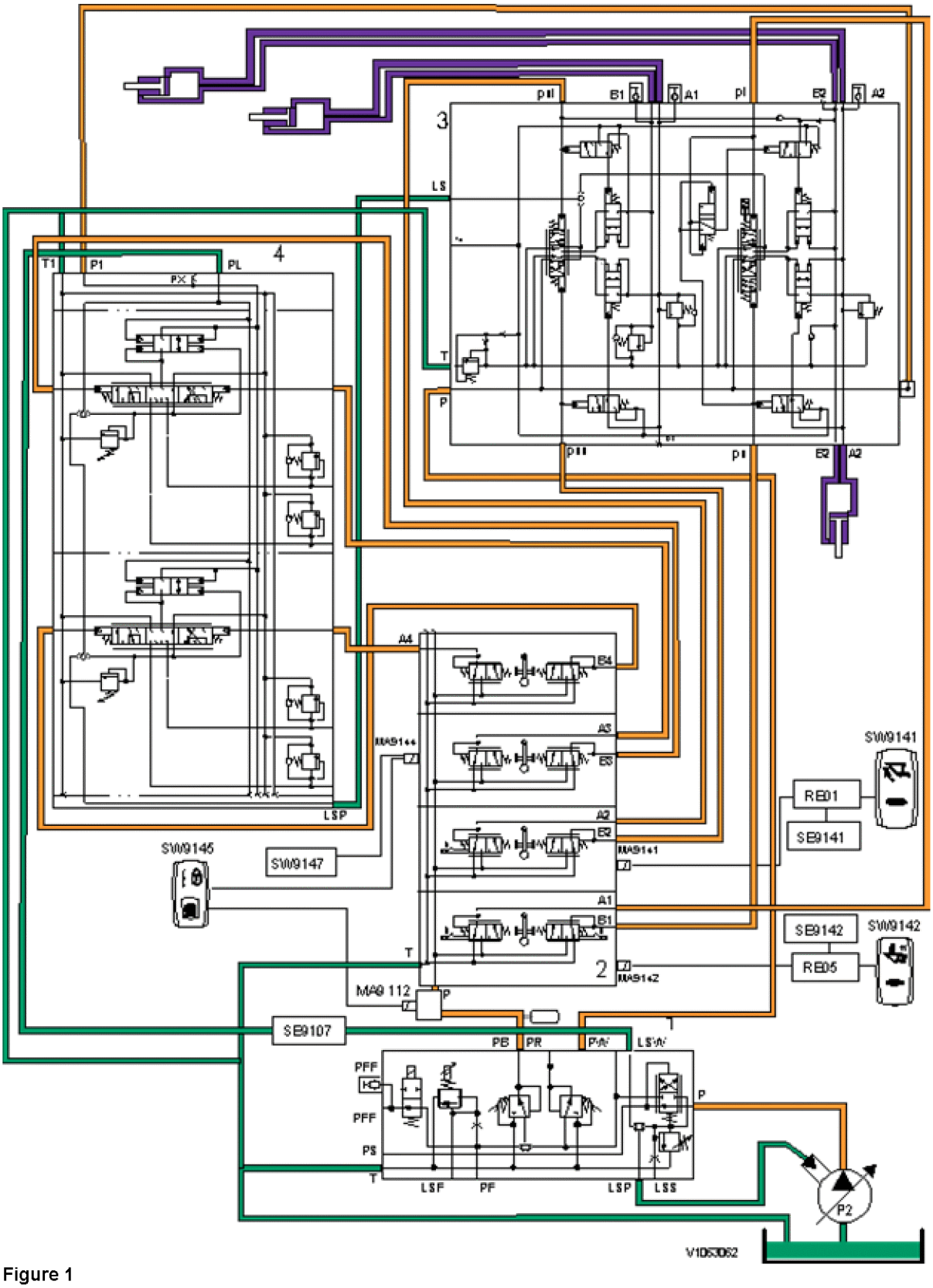

Figure 1

1. Central valve
2. Servo valve
3. Control valve
4. Control valve, 3rd/4th function

MA9112	Control lever lockout	SE9142	Position sensor, boom kick-out
MA9141	Detent solenoid, bucket positioner	SW9141	Switch, bucket positioner
MA9142	Detent solenoid, boom kick-out	SW9142	Switch, boom kick-out

MA9144	Detent solenoid, 3rd function	SW9145	Control lever lock-out, switch
RE01	Relay bucket positioner	SW9147	Hold function, 3rd hydraulic function, switch
RE05	Relay boom kick-out	P2	Pump 2
SE9141	Position sensor, bucket positioner	SE9107	Pressure sensor electrically controlled hydraulic pump (only L90F)

The oil from hydraulic pump P2 is supplied via the central valve to the servo valve and the control valves. As the valves are of the closed centre type, i.e. no oil passes through the valves as long as no function is used, the LS-pressure remains low and hydraulic pump P2 only supplies oil at a low pressure.

When one of the functions is used (the lever on the servo valve is actuated) the oil passes through the servo valve and further on out to one of the control valves, where it actuates the spool in the control valve. This is called servo pressure. The actuated spool is displaced and the oil from the pump can then pass through the control valve and further on out to, for example, the lifting cylinders. The heavier the work that is to be done, the higher the LS-pressure will be, and thus the pressure from P2 increases.

NOTE **Hydraulic pump P2 is electrically controlled on L90F, see Hydraulpump flödesreglering, beskrivning**
.

See also:

- Lyftfunktion, beskrivning
- Tiltfunktion, beskrivning
- Flytläge, beskrivning
- 3:e, alt 3:e / 4:e hydraulfunktion, beskrivning
- Lastarmsfjädring, funktionsbeskrivning
- Hydraulschema, komplett
- Elschema 902
- Elschema 904
- Elschema 905
- Elschema 908

To prevent the working hydraulics from being used inadvertently, e.g. when travelling on public roads, the control levers can be locked with SW9145. SW9145 then actuates MA9112, which closes a valve so that no oil can pass from the central valve to the servo valve. In this way no servo pressure is obtained and the control valves cannot be actuated and are kept in closed position.

Boom kick-out and bucket positioner

The boom kick-out and bucket positioner function make it easy to move the lifting frame to a preset position. If the upper end of SW9141 is pressed in, the detent solenoid MA9141 for tilting is activated. The servo lever for tilting will then be kept in position by the detent solenoid, which will not release the lever until sensor SE9141 (positioned on the lifting frame) sends a signal indicating that the required positon for tilting has been reached.

The boom kick-out function works in a corresponding way if the upper end of SW9142 is pressed in. When SW9142 is in its middle position, the lifting arms will rise to the maximum lifting height.
See also Elschema 901
.

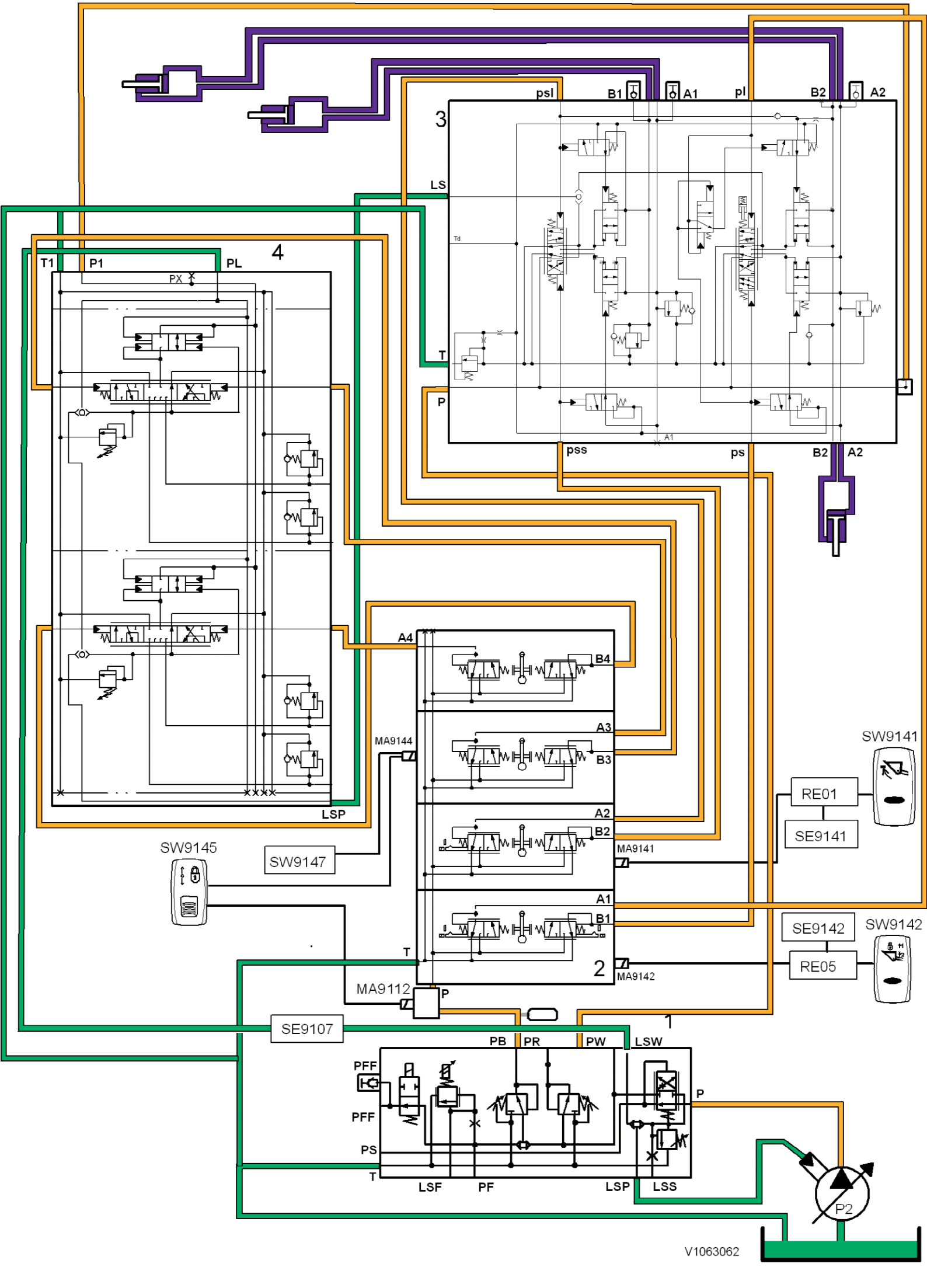
psl
B1
A1
pl
B2
A2
3
LS
T
P
pss
ps
B2
A2
4
T1
P1
PL
PX
LSP
A4
B4
A3
B3
A2
B2
A1
B1
2
MA9144
MA9141
MA9142
MA9112
SW9145
SW9147
SW9141
RE01
SE9141
SE9142
SW9142
RE05
SE9107
1
PB
PR
PW
LSW
PFF
PFF
PS
T
LSF
PF
LSP
LSS
P
P2
V1063062

VOLVO
Construction Equipment

Service Information

Document Title:	Function Group:	Information Type: **Service Information**	Date: **12/10/2011**
Profile: **WLO, L90F (Volvo) [GB]**			

Working hydraulic system, description

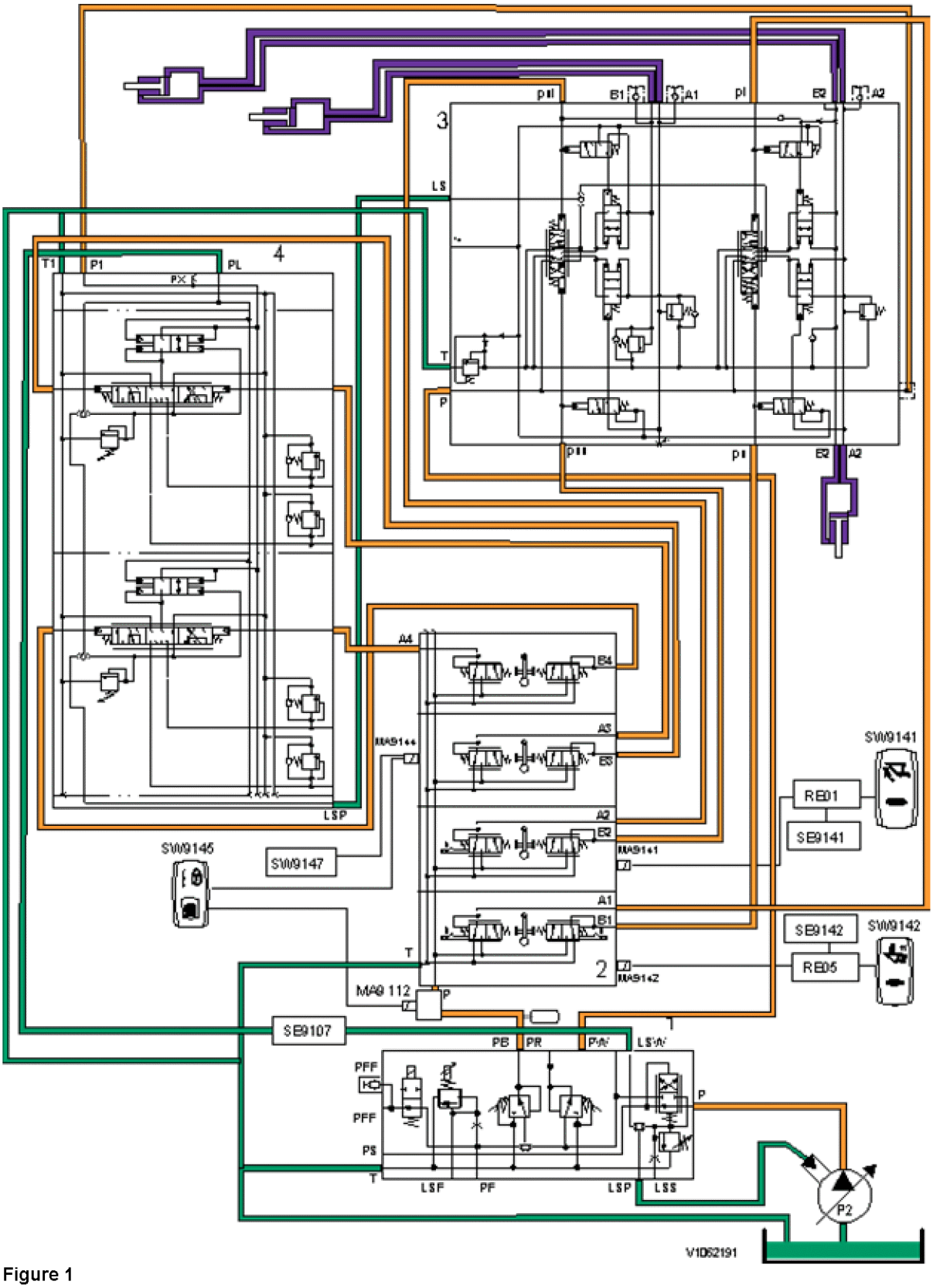

Figure 1

1. Central valve
2. Servo valve
3. Control valve
4. Control valve, 3rd/4th function

MA9112	Control lever lockout	SE9142	Position sensor, boom kick-out
MA9141	Detent solenoid, bucket positioner	SW9141	Switch, bucket positioner
MA9142	Detent solenoid, boom kick-out	SW9142	Switch, boom kick-out

MA9144	Detent solenoid, 3rd function	SW9145	Control lever lock-out, switch
RE01	Relay bucket positioner	SW9147	Hold function, 3rd hydraulic function, switch
RE05	Relay boom kick-out	P2	Pump 2
SE9141	Position sensor, bucket positioner	SE9107	Pressure sensor electrically controlled hydraulic pump (only L90F)

The oil from hydraulic pump P2 is supplied via the central valve to the servo valve and the control valves. As the valves are of the closed centre type, i.e. no oil passes through the valves as long as no function is used, the LS-pressure remains low and hydraulic pump P2 only supplies oil at a low pressure.

When one of the functions is used (the lever on the servo valve is actuated) the oil passes through the servo valve and further on out to one of the control valves, where it actuates the spool in the control valve. This is called servo pressure. The actuated spool is displaced and the oil from the pump can then pass through the control valve and further on out to, for example, the lifting cylinders. The heavier the work that is to be done, the higher the LS-pressure will be, and thus the pressure from P2 increases.

NOTE **Hydraulic pump P2 is electrically controlled on L90F, see Hydraulpump flödesreglering, beskrivning**
.

See also:

- Lyftfunktion, beskrivning
- Tiltfunktion, beskrivning
- Flytläge, beskrivning
- 3:e, alt 3:e / 4:e hydraulfunktion, beskrivning
- Lastarmsfjädring, funktionsbeskrivning
- Hydraulschema, komplett
- Elschema 902
- Elschema 904
- Elschema 905
- Elschema 908

To prevent the working hydraulics from being used inadvertently, e.g. when travelling on public roads, the control levers can be locked with SW9145. SW9145 then actuates MA9112, which closes a valve so that no oil can pass from the central valve to the servo valve. In this way no servo pressure is obtained and the control valves cannot be actuated and are kept in closed position.

Boom kick-out and bucket positioner

The boom kick-out and bucket positioner function make it easy to move the lifting frame to a preset position. If the upper end of SW9141 is pressed in, the detent solenoid MA9141 for tilting is activated. The servo lever for tilting will then be kept in position by the detent solenoid, which will not release the lever until sensor SE9141 (positioned on the lifting frame) sends a signal indicating that the required positon for tilting has been reached.

The boom kick-out function works in a corresponding way if the upper end of SW9142 is pressed in. When SW9142 is in its middle position, the lifting arms will rise to the maximum lifting height.
See also Elschema 901
.

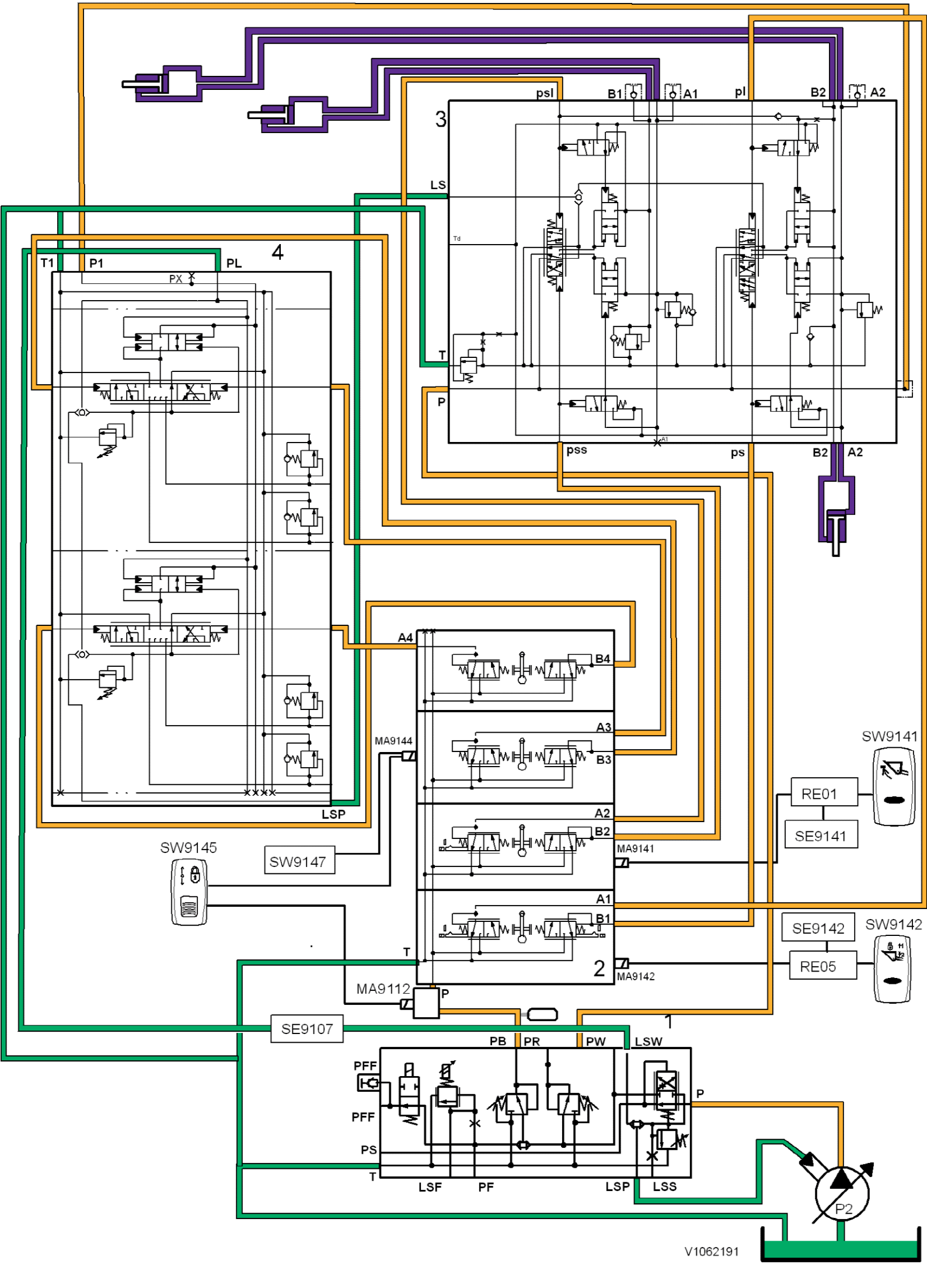
psl
B1
A1
pl
B2
A2
3
LS
Td
T
P
pss
ps
B2
A2
4
T1
P1
PL
PX
LSP
A4
B4
A3
B3
A2
B2
A1
B1
2
T
P
MA9144
MA9141
MA9142
MA9112
SW9145
SW9147
SW9141
RE01
SE9141
SE9142
SW9142
RE05
SE9107
1
PB
PR
PW
LSW
PFF
PFF
PS
T
LSF
PF
LSP
LSS
P
P2
V1062191

VOLVO
Construction Equipment

Service Information

Document Title:	Function Group:	Information Type: **Service Information**	Date: **12/10/2011**
Profile: **WLO, L90F (Volvo) [GB]**			

Working hydraulic system, description

Working hydraulics

The working hydraulics is of the load-sensing (LS) type and its main parts are: hydraulic oil tank, hydraulic pumps with variable flow, central valve, control valve, servo valve, solenoid valves, hydraulic cylinders and hydraulic oil cooler.
The purpose of the central valve is to distribute hydraulic oil and pressure to the cooling fan, the brake system, the steering system, the servo system and working hydraulics.

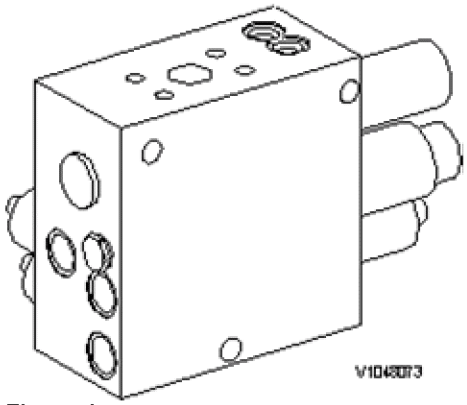

Figure 1
Central valve

The control valve has a closed centre. This means that no oil passes through the control valve when none of the functions are used. There is one spool for the lifting/lowering function and one spool for the tilting function in the control valve.

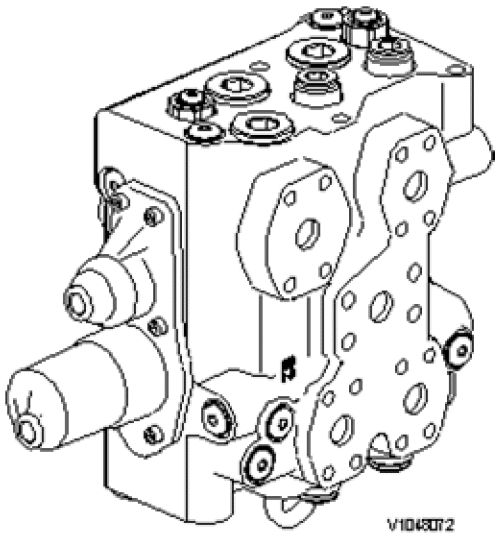

Figure 2
Control valve

A 3rd function and 3rd/4th function can be achieved with a separate control valve. It is located on the front frame under the front edge of the cab.

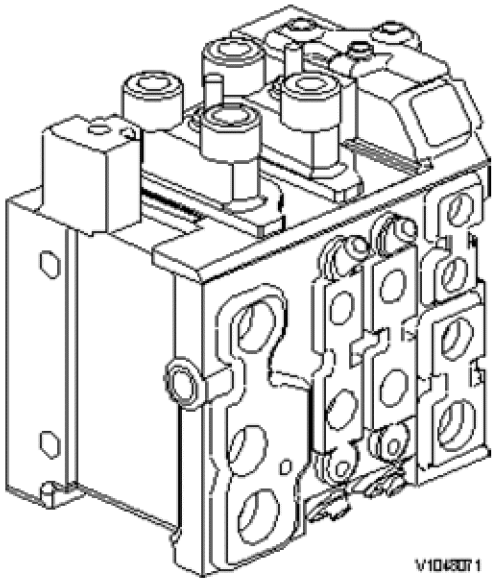

Figure 3
Control valve 3rd/4th hydraulic function

The servo valve has a closed centre. It has one section for each function: one each for lifting and tilting, and one each for 3rd and 4th functions, if the machine has these.
The servo valve is equipped with detent solenoids (electro magnets) for bucket positioner and boom kick-out.

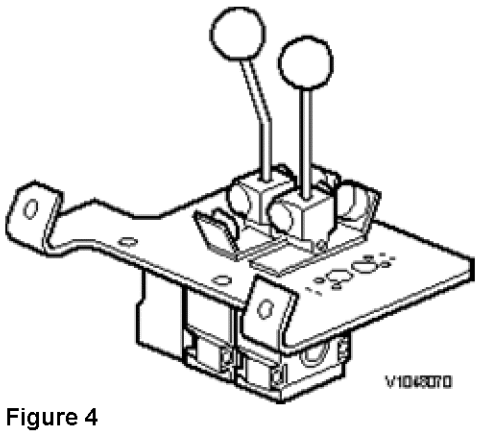

Figure 4
Servo valve

The machine can be equipped with single lever control, which then replaces the ordinary servo valve. To make the single lever control function the VCADS Pro parameter HKY must be set to 2. See also Elschema 912
.

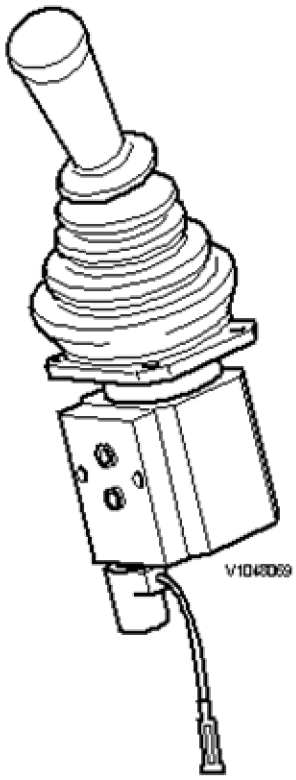

Figure 5
Single lever control

The machine has two lifting cylinders, one tilting cylinder and one cylinder for the hydraulic locking of the attachment bracket [1] ⓘ . See also Hydrauliskt redskapsfäste, beskrivning
.

The lifting frame consists of two arms attached to the upper part of the front frame. The arms are connected to each other with a stiffening construction that also supports a linkage system that transfers the tilting movement. Tilting is provided by a cylinder located between the lifting arms. The bucket can be attached via a special attachment bracket or directly to the lifting frame.

The machine can be equipped with a suspension system, which is called Boom Suspension System. For further description, see Lastarmsfjädring, beskrivning
.

---

[1] Optional equipment

VOLVO
Construction Equipment

Service Information

Document Title:	Function Group:	Information Type: **Service Information**	Date: **12/10/2011**
Profile: **WLO, L90F (Volvo) [GB]**			

Hydraulic oil tank, description

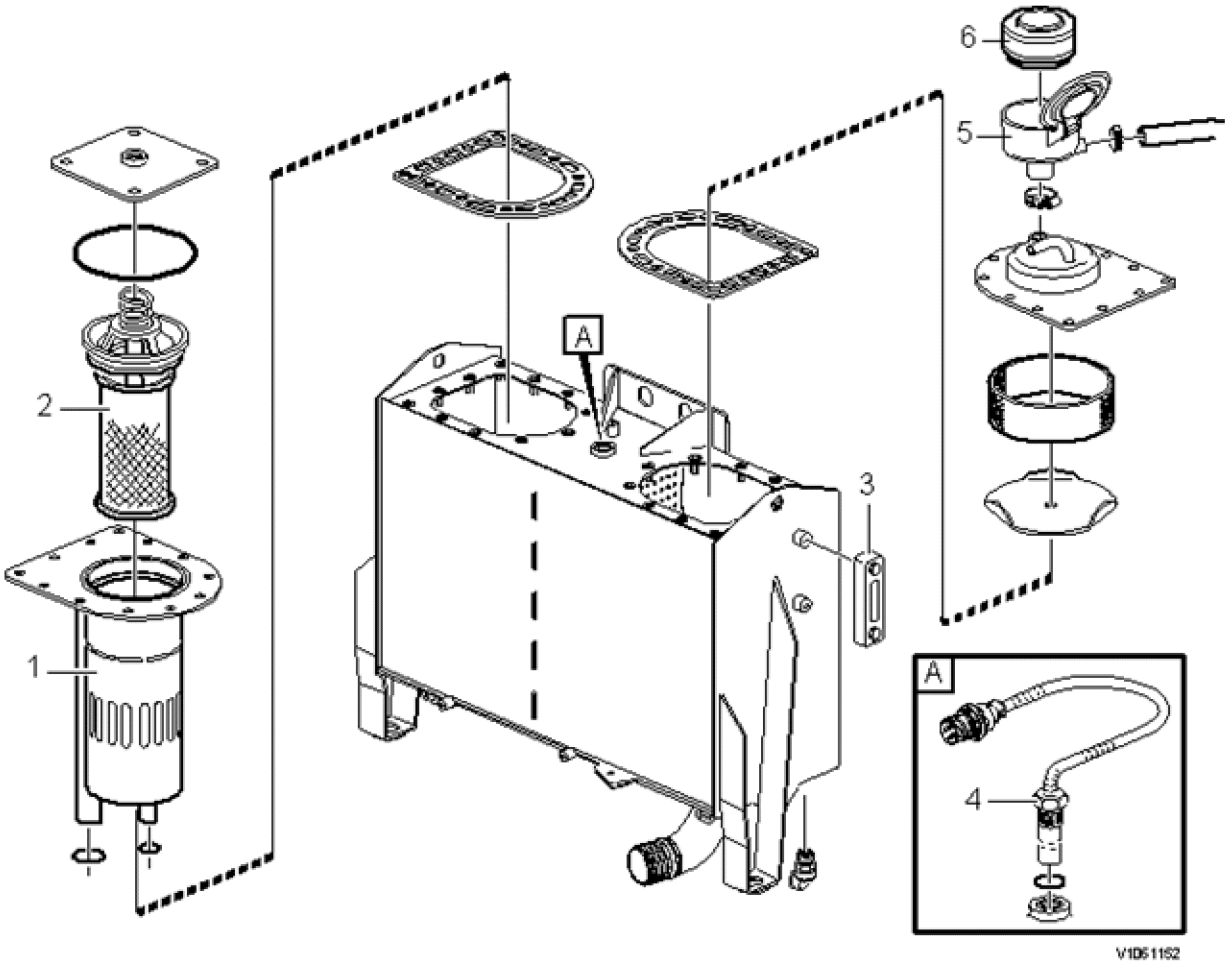

Figure 1
Hydraulic oil tank

1. Filter housing
2. Filter insert
3. Level sight glass
4. SE9101, sensor, hydraulic oil level
   SE9102, sensor, hydraulic oil temperature
5. Breather filter
6. Filter insert

The hydraulic oil tank is common to the whole hydraulic system. The tank is provided with a return oil filter with magnetic rod. Ventilation takes place through a breather filter. In the hydraulic oil tank there is a sensor which monitors the hydraulic oil level (SE9101) and a sensor which monitors the hydraulic oil temperature (SE9102).

VOLVO
Construction Equipment

Service Information

Document Title:	Function Group:	Information Type: **Service Information**	Date: **12/10/2011**
Profile: **WLO, L90F (Volvo) [GB]**			

Hydraulic oil tank, vacuum-pumping, connecting and disconnecting pump

Op nbr 911-040

14360000 Vacuum pump / 24V
9809685 Cable

Metal plugs

Connecting

1. Switch on the current with the battery disconnect switch on the machine.

   NOTE **If, for some reason, it is not suitable to switch on the current with the battery disconnect switch, us cable 9809685.**

2. Remove the breather filter from the air vent pipe on the hydraulic oil tank. Install the vacuum pump connection.

3. Certain machines: Disconnect the breather hose from the transmission. Plug the hose and the pipe.

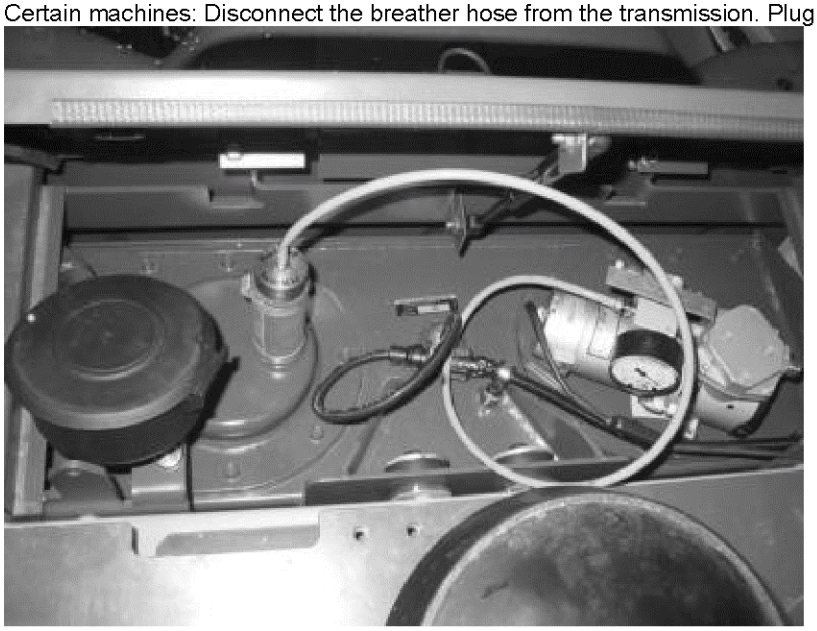

Figure 1
Connecting vacuum pump

4. Start the vacuum pump.
   There is now a partial vacuum in the hydraulic oil tank and some work can now be carried out on the hydraulic system without having to drain off the hydraulic oil.

Never leave the vacuum pump unattended. A power failure may cause operating

NOTE **problems.**

NOTE **Plug all connections using metal plugs as soon as the connections have been exposed.**

Disconnecting

5. Turn off the vacuum pump and remove it.
6. Install the breather hose on the transmission.
7. Install the breather filter on the hydraulic oil tank.
8. Test the function of the machine.

VOLVO
Construction Equipment

Service Information

Document Title:	Function Group:	Information Type: **Service Information**	Date: **12/10/2011**
Profile: **WLO, L90F (Volvo) [GB]**			

Lift function, description

Control valve, lowering function

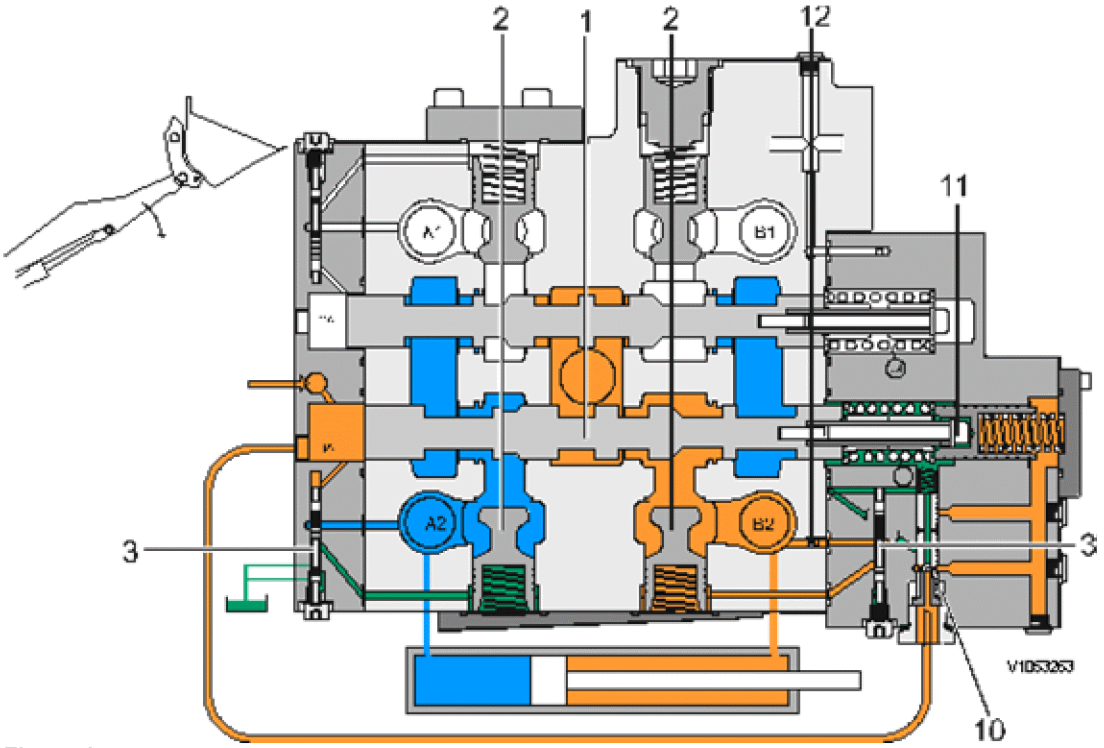

Figure 1

1	Spool, lifting/lowering function	Green	Return oil without pressure
2	Load-holding valve	Orange	Stand-by pressure
3	Pilot spool	Red	Working pressure
10	Floating position spool	Blue	Raised return pressure
11	Floating position piston		
12	Restriction, lowering/tilting function		

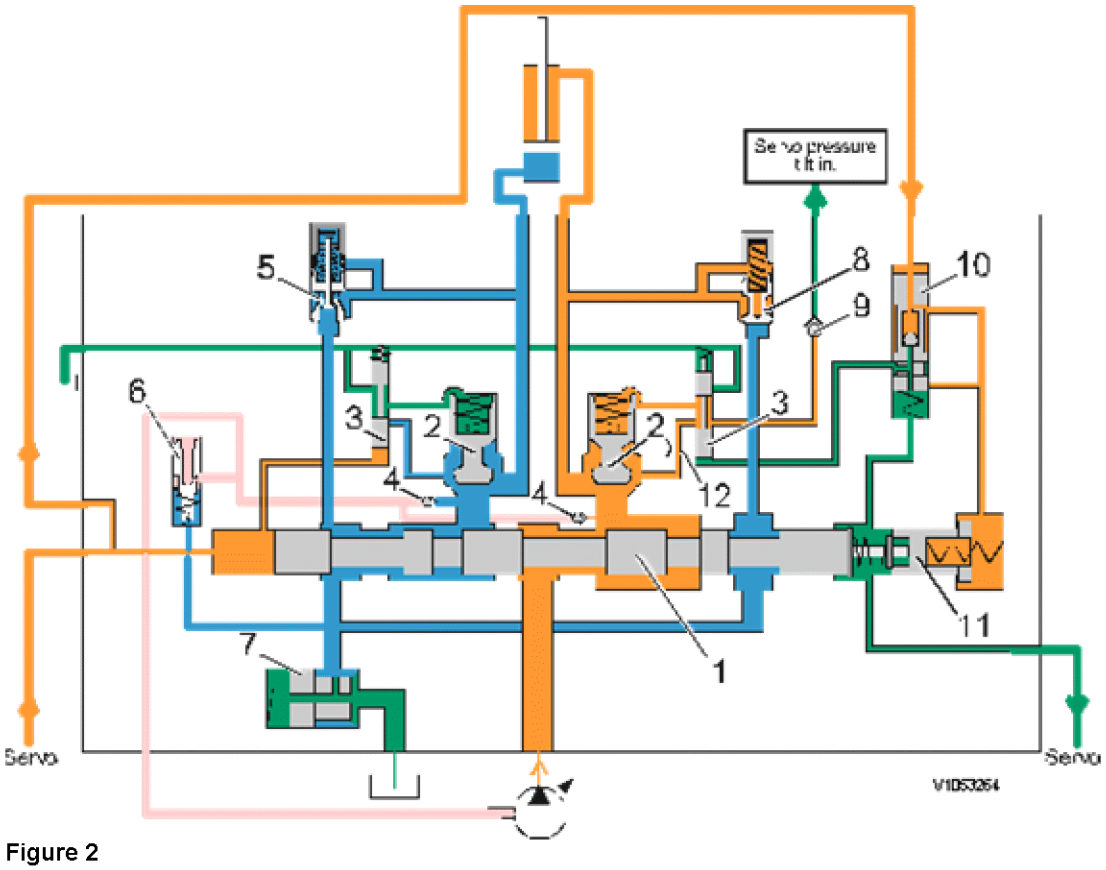

Figure 2
Lifting section, lowering

Green	Return oil without pressure
Orange	Stand-by pressure
Pink	LS-pressure
Blue	Raised return pressure

The servo pressure acts on the left side of spool (1) and the left pilot spool (3) as well as the floating position spool (10). (Floating position spool (10) is not moved until the sensing position of the lowering lever has been passed.) The servo pressure passes floating position spool (10) and pressurises floating position piston (11), which limits the movement of the spool to the right, i.e. prevents floating position engagement.

The oil from the hydraulic pumps opens the right load-holding valve (2) and continues to the minus side of the lifting cylinder. The right non-return valve (4) opens and conducts the LS-pressure (load-sensing pressure) back to the flow compensators of the pumps (normally very low LS-pressure during lowering as gravity assists with the lowering). The oil from the plus side of the lifting cylinders opens the left load-holding valve (2) and is conducted via spool (1) to back-up valve (7) and on to the tank.

Control valve lowering/tilting function (tilting in)

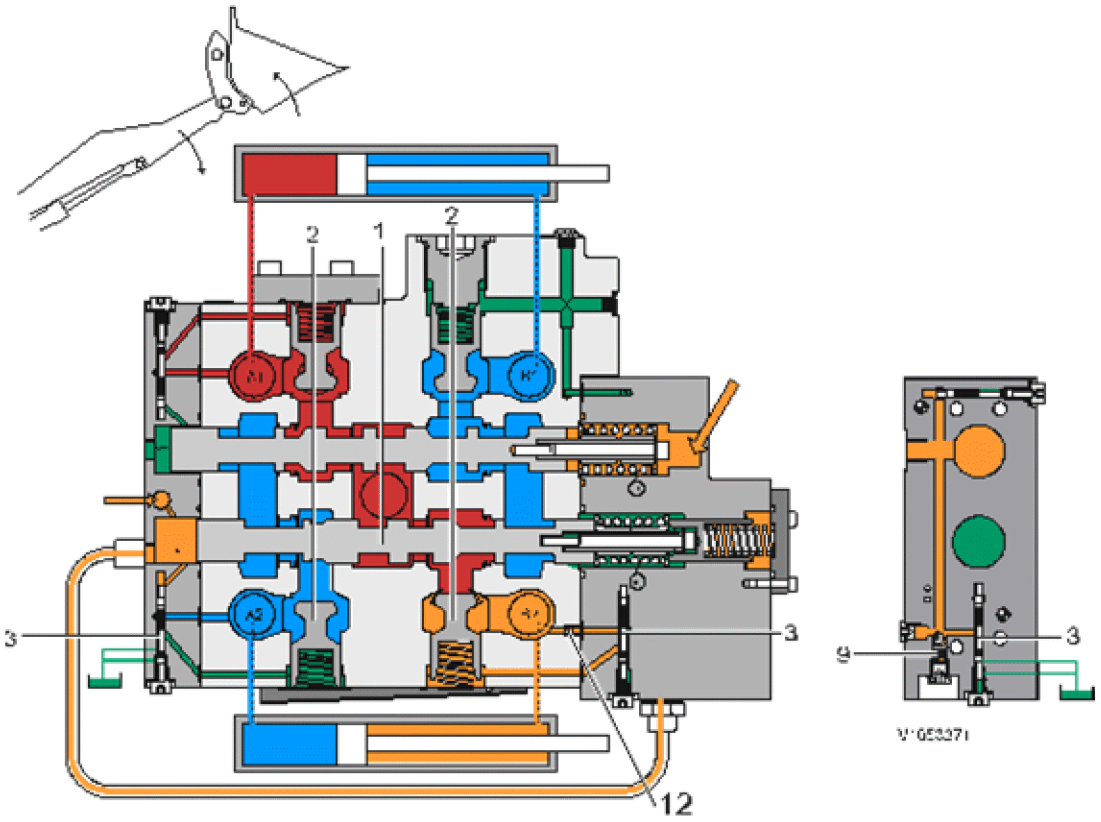

Figure 3

1	Spool	Green	Return oil without pressure
2	Load-holding valve	Orange	Stand-by pressure
3	Pilot spool	Red	Working pressure
9	Non-return valve	Blue	Raised return pressure
12	Restriction, lowering/tilting function		

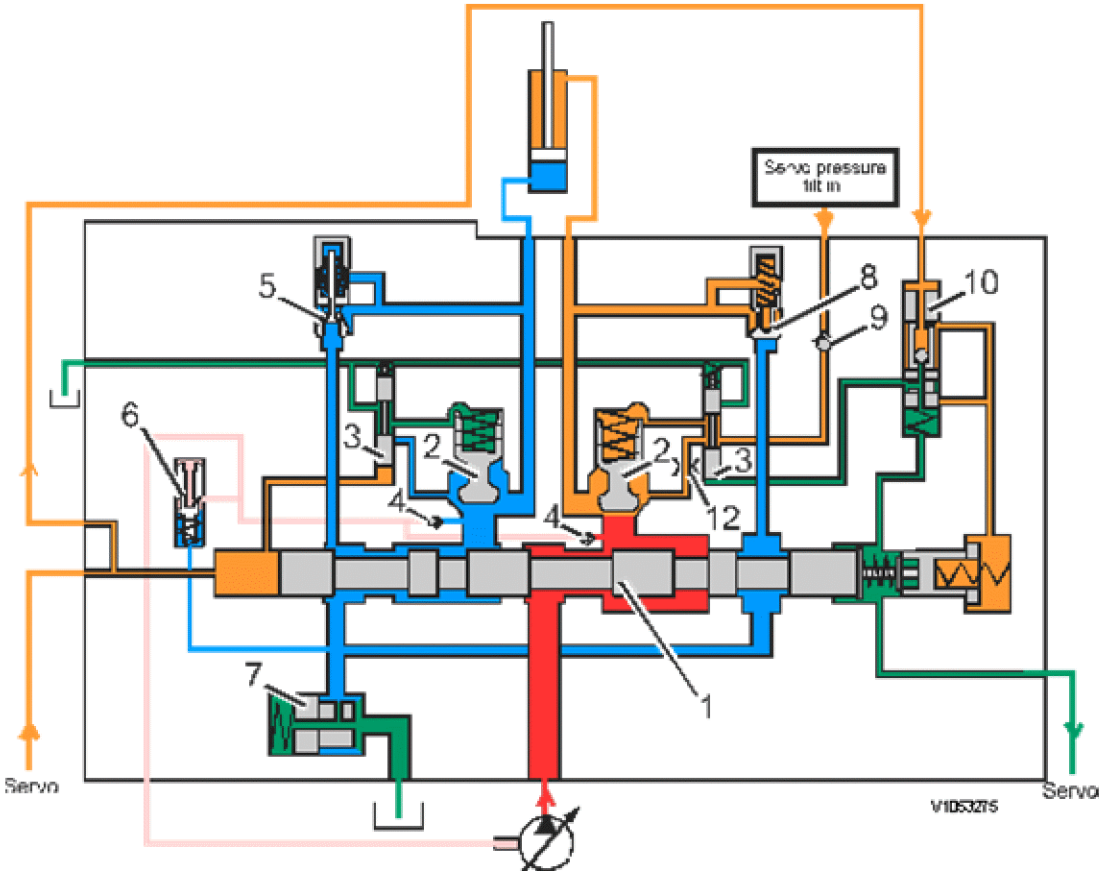

Figure 4
Lifting section, lowering / tilting in

Green	Return oil without pressure
Orange	Stand-by pressure
Pink	LS-pressure
Blue	Raised return pressure
Red	Working pressure

In order to be able to tilt in at the same time as the lifting arms are lowered, the servo pressure is conducted from the tilting in section past the non-return valve (9). The servo pressure from tilting in passes the right pilot spool (3) and restriction (12), thus ensuring the pressure. This because when lowering and tilting in are used at the same time, the LS-pressure will be higher from the tilting function and the pump supplies more flow. If the load-holding valve is not pressed down and creates a resistance, the oil will pass directly to the lowering function.

The servo pressure is then conducted to the spring side on the right load-holding valve (2). Load-holding valve (2) begins to close and thereby increasing the LS-pressure which is conducted via the right non-return valve (4) to the flow compensators on the hydraulic pumps. The pressure level increase in this way allows simultaneous tilting in of the bucket while lowering it.

VOLVO
Construction Equipment

Service Information

Document Title:	Function Group:	Information Type: **Service Information**	Date: **12/10/2011**
Profile: **WLO, L90F (Volvo) [GB]**			

Tilt function, description

Tilting section, neutral position

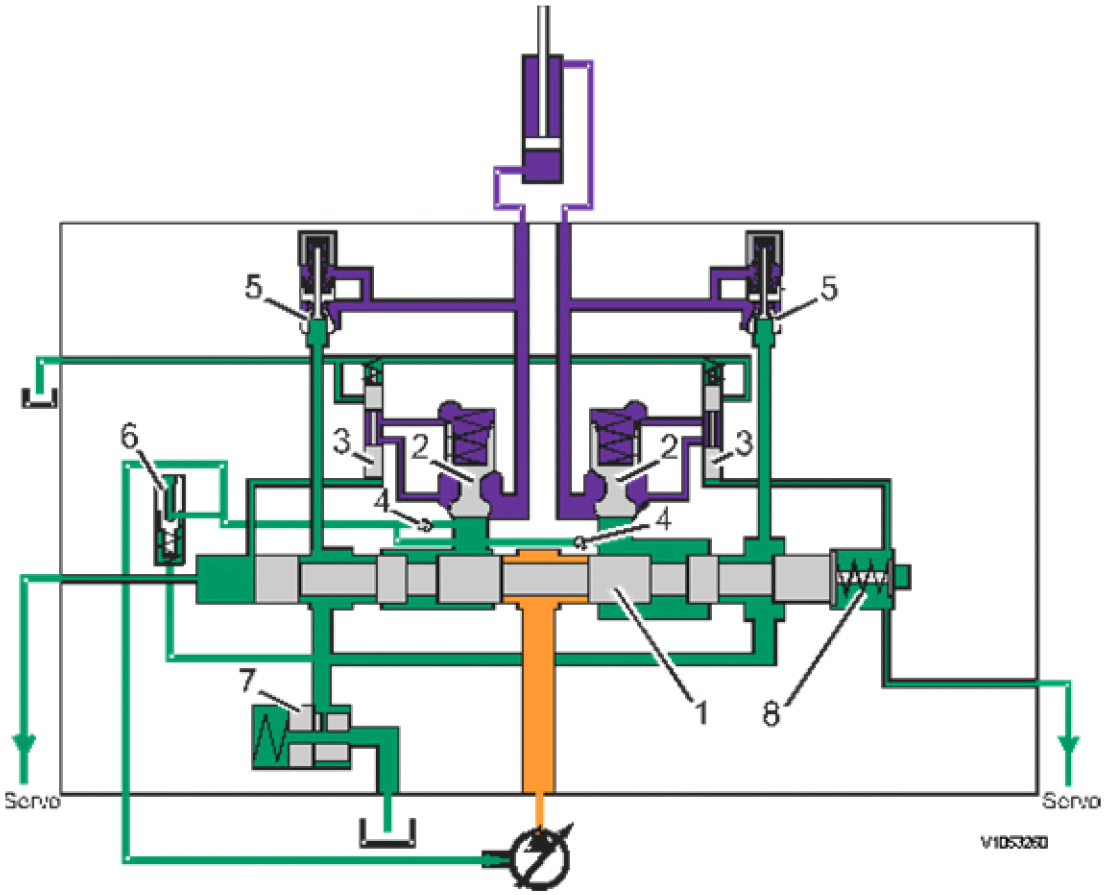

Figure 1
Control valve, tilting section, neutral

Green	Return oil without pressure
Violet	Oil closed in
Orange	Stand-by pressure

1. Spool actuated by servo pressure and centred in neutral position by a dual-action spring (8).
2. Load-holding valves prevent the load from sinking during lifting. On the side from which oil returns to the tank the load-holding valve is controlled by pilot spool (3) which is actuated by the servo pressure that controls spool (1).
3. Pilot spools which drain the spring side of load-holding valve (2) to the tank when the load-holding valve is to open for return oil.
4. Non-return valves for LS-pressure (load-sensing pressure), which is conducted via flow regulator (6) to the flow compensator on pump 1 and the flow compensator on pump 2 in order to attain the required pressure and flow.
5. Shock valves with anti-cavitation valve, not adjustable.

6. Flow regulator that ensures the flow of LS-pressure (load-sensing pressure) to tank regardless of the level of pressure. (Draining of LS-pressure, bleed off). This is to ensure fixed flow compensation for pump 1 and pump 2.
7. Back-up valve for return oil, ensures good afterfilling.
8. Double-acting spring centres spool 1 in neutral position.

Tilting section, tilting in

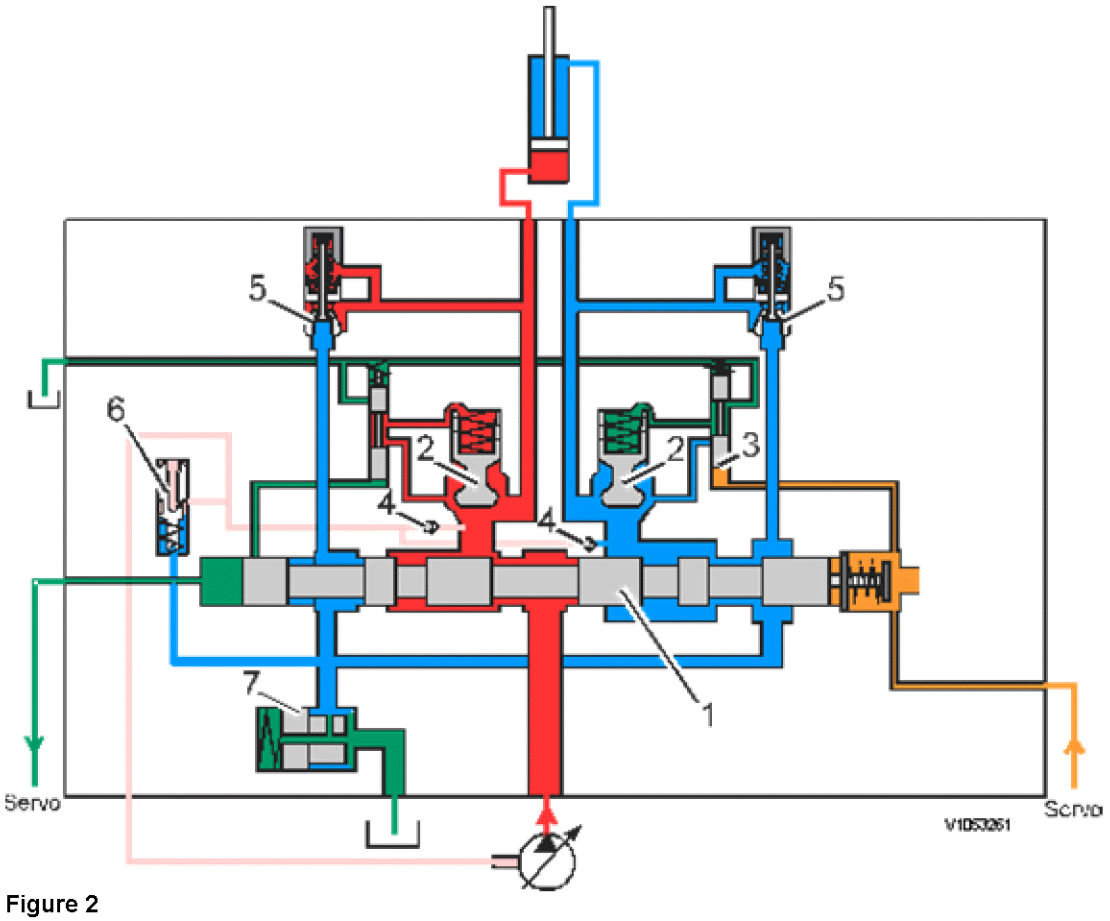

Figure 2

Green	Return oil without pressure
Red	Working pressure
Orange	Servo pressure
Pink	LS-pressure
Blue	Raised return pressure

The servo pressure acts on the right side of spool (1) and the right pilot spool (3). When pilot spool (3) moves, the oil on the spring side of the right load-holding valve (2) is drained to tank. The oil from the hydraulic pump opens the left load-holding valve (2) and continues to the plus side of the tilting cylinder.

The left non-return valve (4) opens and conducts the LS-pressure (load-sensing pressure) back to the flow compensators of the hydraulic pumps. A controlled draining (bleed off) of LS-pressure via flow regulator (6) to the tank occurs. The oil from the minus side of the tilting cylinder opens the right load-holding valve and is conducted to the back-up valve (7) via spool (1). When back-up valve (7) is opened, the oil is conducted to the tank.

Tilting section, shock

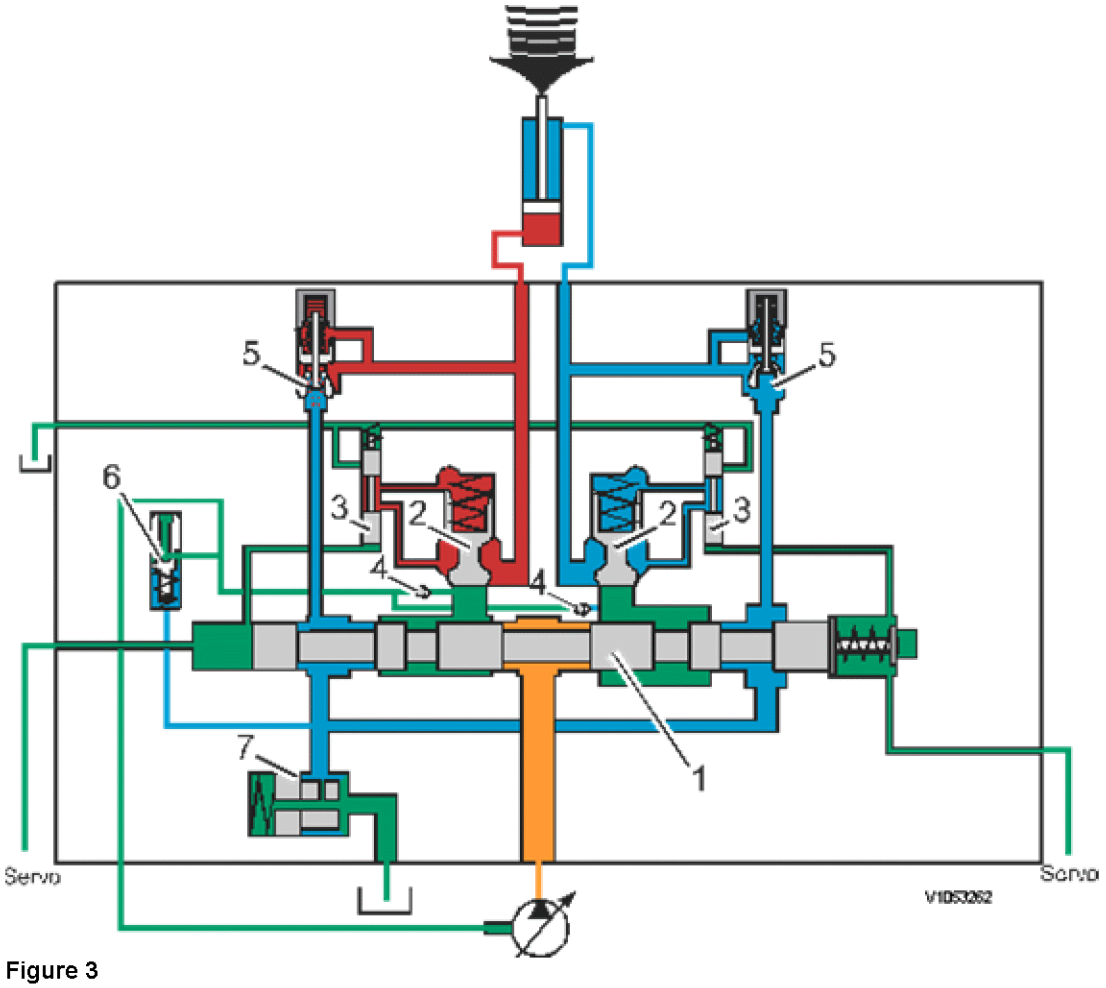

Figure 3

Green	Return oil without pressure
Red	Working pressure
Orange	Servo pressure
Blue	Raised return pressure

In this example the shock pressure is reached on the plus side of the tilting cylinder if, for example, a large rock falls on the leading edge of the bucket. The shock pressure opens the left shock valve (5). The oil is conducted to back-up valve (7), which ensures that cavitation is avoided by raising the pressure up to anti-cavitation valve (5).

The anti-cavitation function in the right shock valve (5) opens and conducts the oil to the minus side of the tilting cylinder. The surplus oil from the plus side of the tilting cylinder is conducted to the tank.

VOLVO
Construction Equipment

Service Information

Document Title:	Function Group:	Information Type: **Service Information**	Date: **12/10/2011**
Profile: **WLO, L90F (Volvo) [GB]**			

Floating position, description

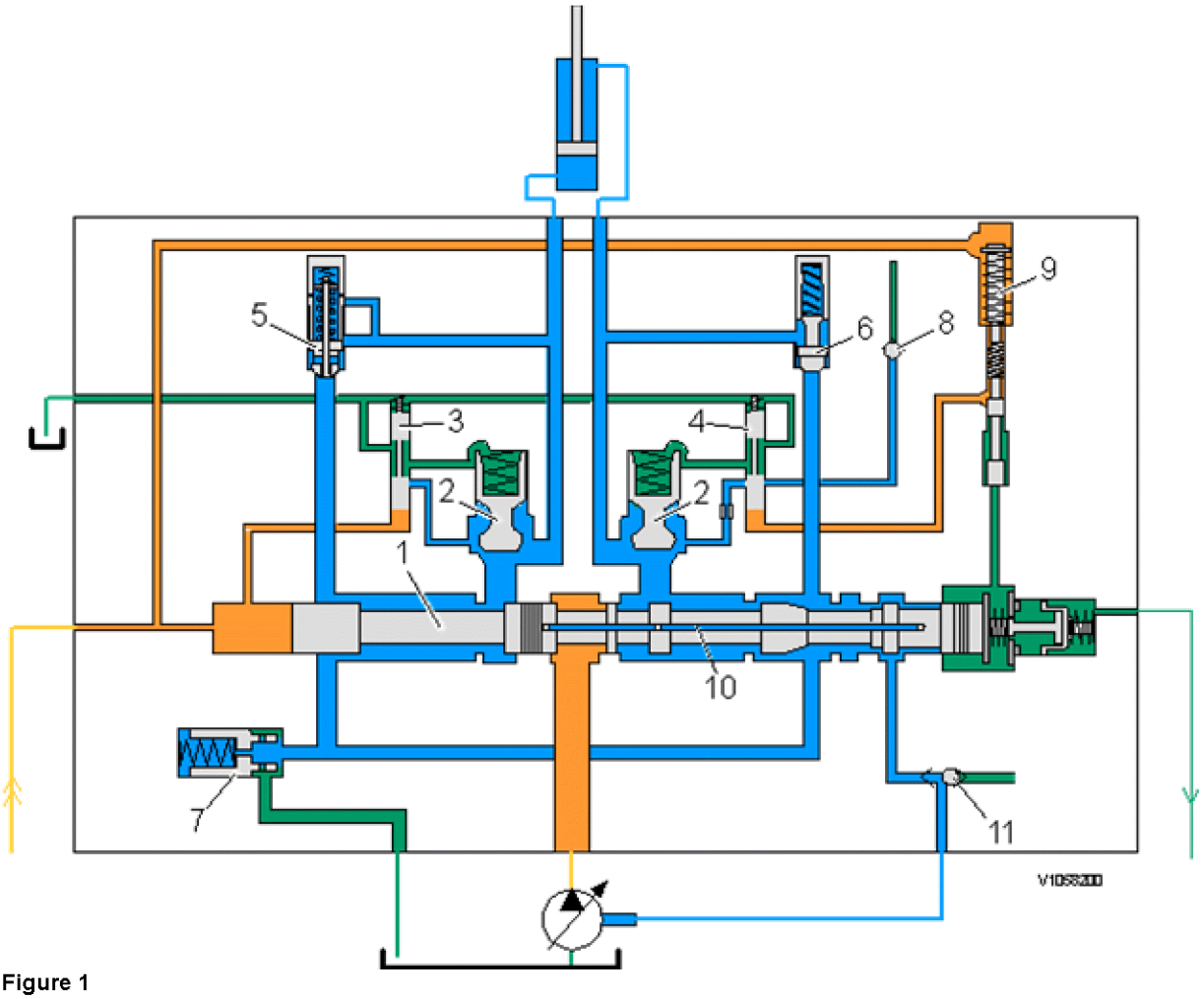

Figure 1
Lifting section, floating position

Green	Return oil without pressure
Orange	Stand-by pressure, servo pressure
Blue	Raised return pressure

1. Spool
2. Load-holding valve
3. Pilot spool, lifting
4. Pilot spool, lowering
5. Anti-cavitation valve
6. Shock valve, minus side
7. Pressure back-up valve
8. Non-return valve
9. Floating position spool
10. LS-duct
11. Shuttle valve

Lifting section, floating position

Servo pressure acts on the left side of spool (1), pilot spool (3) and floating position spool (9).

As the lowering lever passes the sensing position, the servo pressure rises above approx. 2 MPa (290 psi) and presses down floating position spool (9). The servo pressure can now be conducted to pilot spool (4). The servo pressure overcomes the spring force in the floating position spool and presses it downward. The servo pressure can now, via floating position spool (9), move on to the underside of the pilot spool for the minus side of the lifting cylinder and press it upward.

The spring side of load-holding valve (2) is drained to tank. When the spring sides of both load-holding valves are drained to tank, they can open for oil flow in either direction. Spool (1), which is now in floating position, allows the oil to flow freely between both sides of the cylinder.

The high servo pressure also overcomes the floating position catch for the spool, that is to say the spring on the right side of the spool. When this takes place, the pump connection to the cylinder is closed.

VOLVO
Construction Equipment

Service Information

Document Title:	Function Group:	Information Type: **Service Information**	Date: **12/10/2011**
Profile: **WLO, L90F (Volvo) [GB]**			

Control valve, description



Figure 1
Control valve

The control valve is a spool valve with closed centre. This means that no oil passes through the valve in neutral position. The control valve contains one spool for the lifting/lowering function and one spool for the tilting in/out function.

The valve consists of a section where the spools for the lifting/lowering and tilting functions are built-in.

The load-holding valve pilot spools for each function are located in the control valve end plates.

The lifting/lowering function and the tilting function are connected in parallel, which means that these functions can be operated simultaneously.

The valve is provided with shock and anti-cavitation valves for the lifting/tilting function. These valves are not adjustable and are replaced as whole units. The valve is also equipped with a back-up valve for return oil which ensures proper anti-cavitation function.

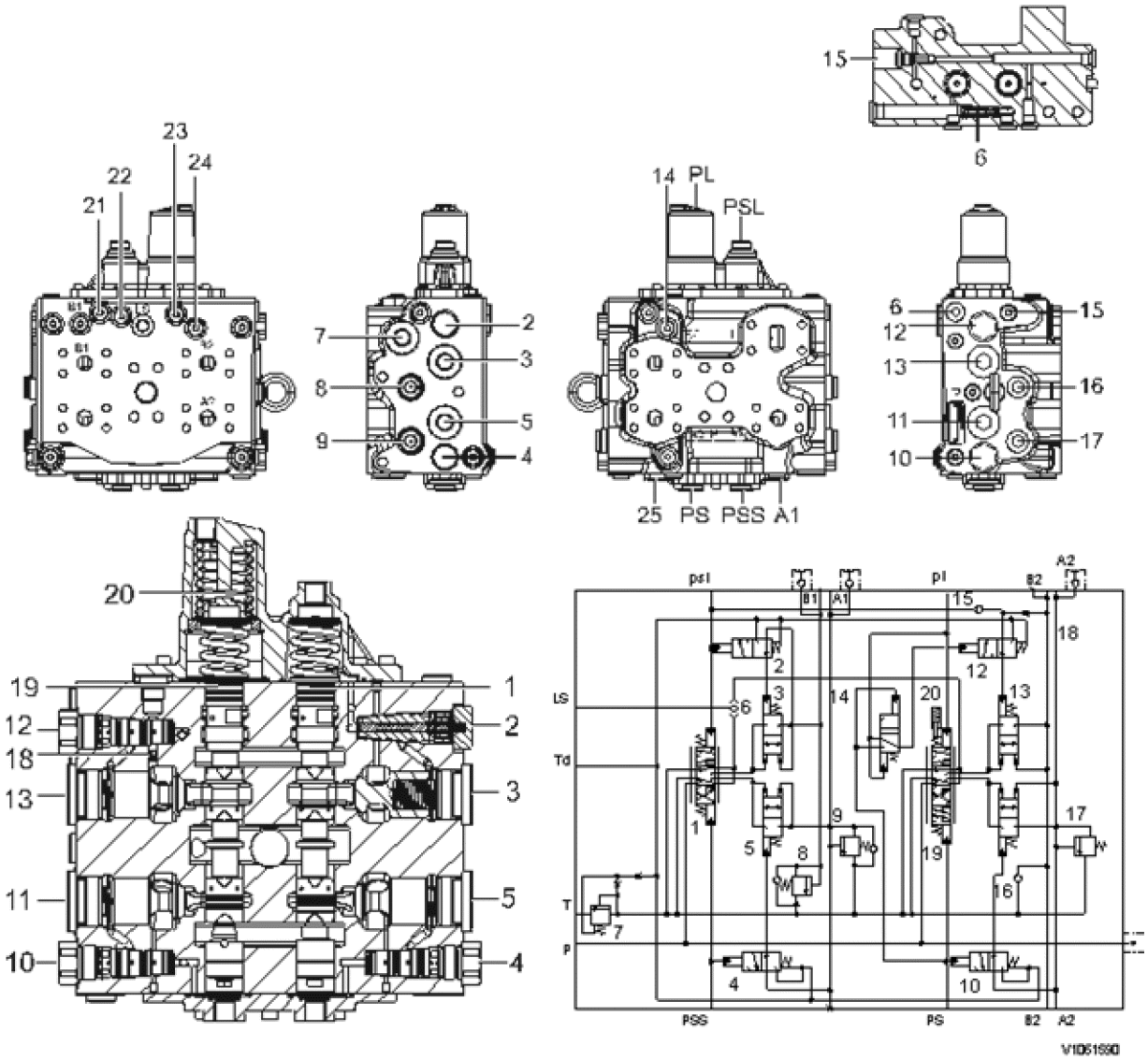

Figure 2
Control valve

1. Tilting spool	14. Floating position spool
2. Pilot spool for (3)	15. Non-return valve (tilting in / lowering)
3. Tilting out (-), load-holding valve / return tilting in	16. Anti-cavitation valve, lowering
4. Pilot spool for (5)	17. Shock valve, lifting
5. Tilting in (+), load-holding valve / return tilting out	18. Restriction
6. Shuttle valve, LS tilting/lifting	19. Lifting spool
7. Pressure back-up valve	20. Floating position piston
8. Tilting out (-), shock / anti-cavitation valve	21. Checking point, servo pressure, tilting in (plugged)
9. Tilting in (+), shock / anti-cavitation valve	22. Checking point, LS-pressure, tilting (plugged)
10. Pilot spool for (11)	23. Checking point, LS-pressure, lifting (plugged)
11. Lifting (+), load-holding valve / return lowering	24. Checking point, servo pressure, lifting (plugged)
12. Pilot spool for (13)	25. Checking point, servo pressure, lowering (plugged)
13. Lowering (-), load-holding valve / return lifting	

Shock valves, principle diagram

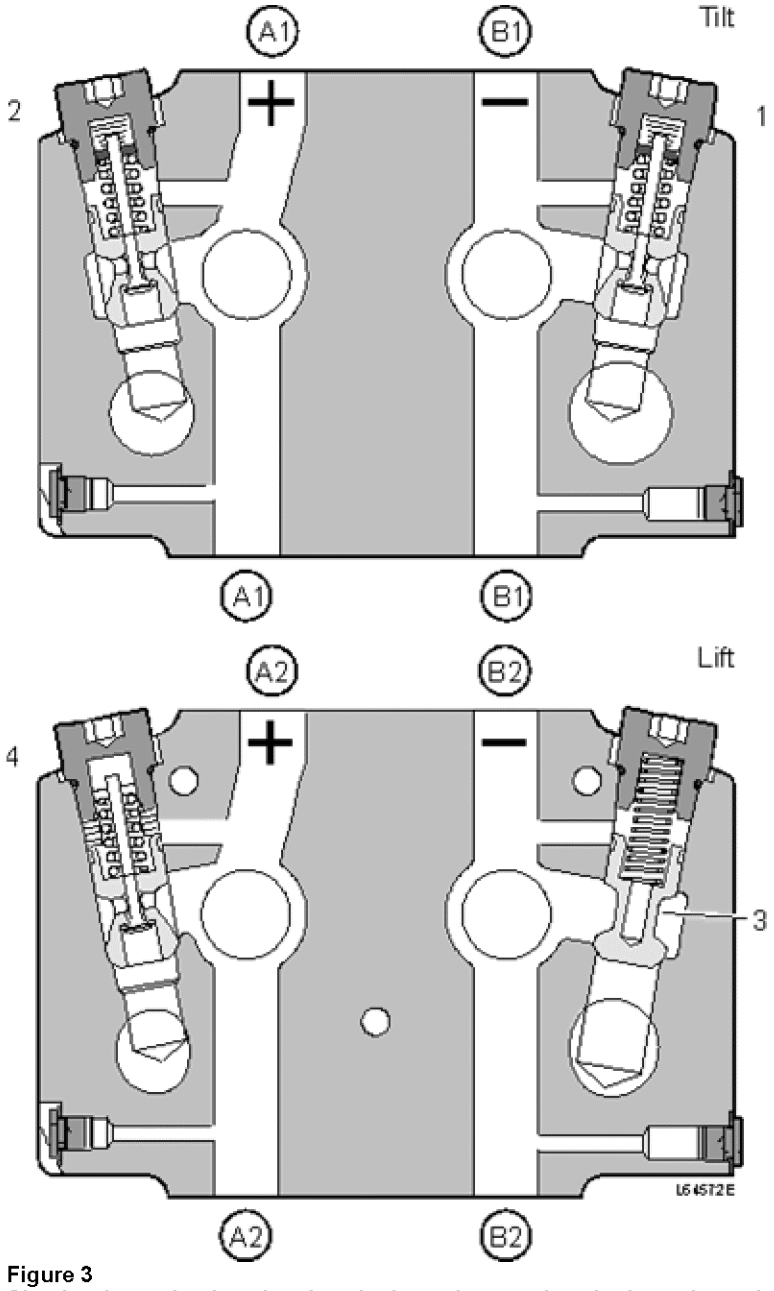

Figure 3
Shock valves, shock and anti-cavitation valves, anti-cavitation valve, principle diagram

1. Shock and anti-cavitation valve, tilting function (tilting out)
2. Shock and anti-cavitation valve, tilting function (tilting in)
3. Anti-cavitation valve, lowering function
4. Shock valve, lifting function

VOLVO
Construction Equipment

Service Information

Document Title:	Function Group:	Information Type: **Service Information**	Date: **12/10/2011**
Profile: **WLO, L90F (Volvo) [GB]**			

Central valve, description

The purpose of the central valve is to distribute oil and pressure to the cooling fan, brakes, steering, servo system and working hydraulics. Pressure and flow from P2 and P3 is distributed by the central valve to the different sub-systems.

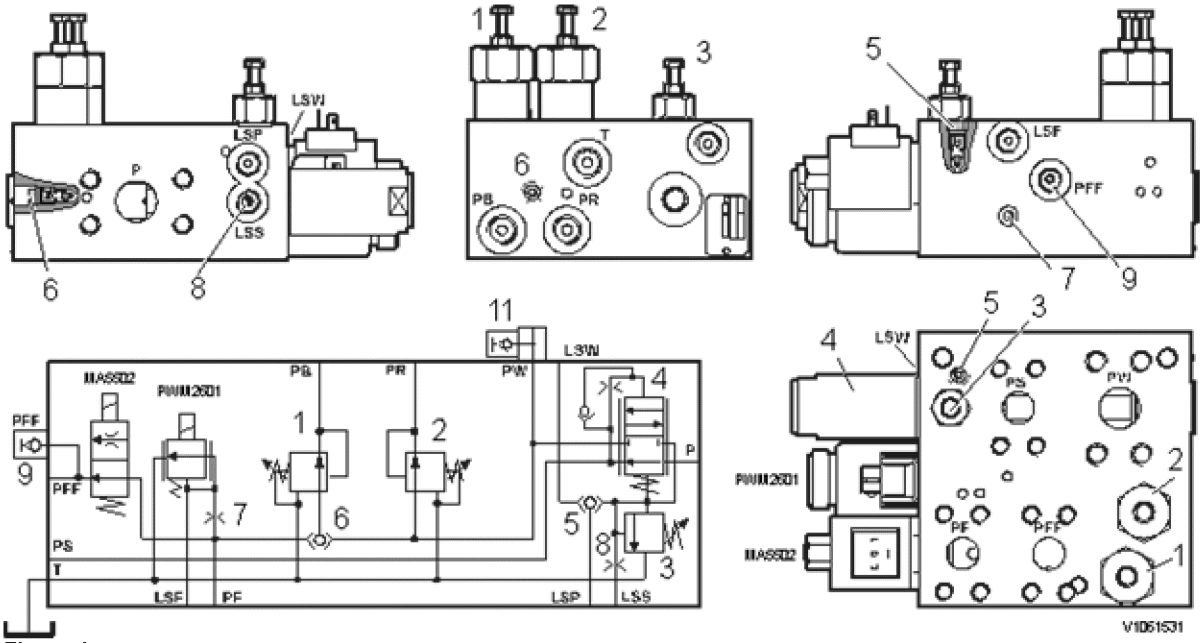

Figure 1
Central valve

1. Pressure-reducing spool, max. brake pressure
2. Pressure-reducing spool, max. servo pressure
3. Pressure-limiting valve, max. steering pressure
4. Priority valve
5. Shuttle valve
6. Shuttle valve
7. Restriction
8. Restriction
9. Checking point, P3
10. Checking point, P2

PWM2601 – Proportional valve for cooling fan speed and brake charging
MA5502 – Brake charging valve

Designations on the central valve

PFF	Output pressure, hydraulic fan	PF	Input pressure, P3
PB	Output brake pressure	LSF	LS-pressure to P3
PR	Output servo pressure	LSS	LS-pressure from steering
PS	Output steering pressure	LSW	LS-pressure from working hydraulics
PW	Working pressure, working hydraulics, output or input pressure P1	LSP	LS-pressure, to P1 and P2
P	Input pressure, P2		

VOLVO
Construction Equipment

Service Information

Document Title:	Function Group:	Information Type: **Service Information**	Date: **12/10/2011**
Profile: **WLO, L90F (Volvo) [GB]**			

Shock valve lift function, checking

Op nbr 912-023

9993831 Support
14360000 Vacuum pump / 24V
11666051 Pressure gauge
14290266 Hose
11666041 Pump
9993825 Check valve

1. Place the machine in service position 1, see Servicepositioner
   .

   NOTE **Leave the battery disconnect switch turned on.**

2. Release the pressure in the system by moving the servo control levers back and forth 10–15 times.

   NOTE **If the machine is equipped with 3rd/4th function, the ignition key must be in position 1.**

3. Connect the vacuum pump, see Hydrauloljetank, vakuumsättning
   .

4. Remove the shock valve for the lifting function and plug the hole with the plug from 9993825Check valve.

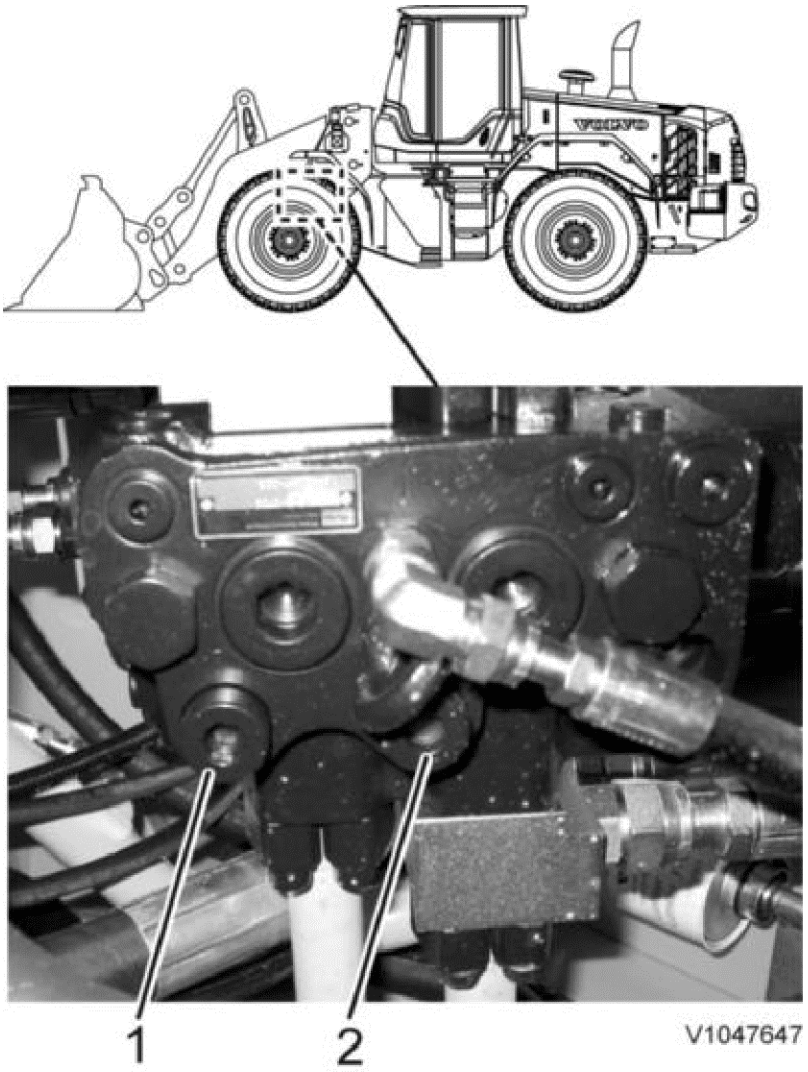

Figure 1
Control valve as seen from underneath

1. Shock valve, lifting
2. Anti-cavitation valve, lowering (not affected)

5. Screw down the shock valve into 9993825Check valve and connect the remaining tools according to the figure.
   Check the opening pressure of the shock valve, by pumping until the pressure no longer rises. The shock valve has then opened and the opening pressure can be read off.
   Collect the oil, which runs out of the draining hole in a suitable vessel.
   Opening pressure, see Manöverventil, specifikation
   .
   The shock valve is not adjustable.

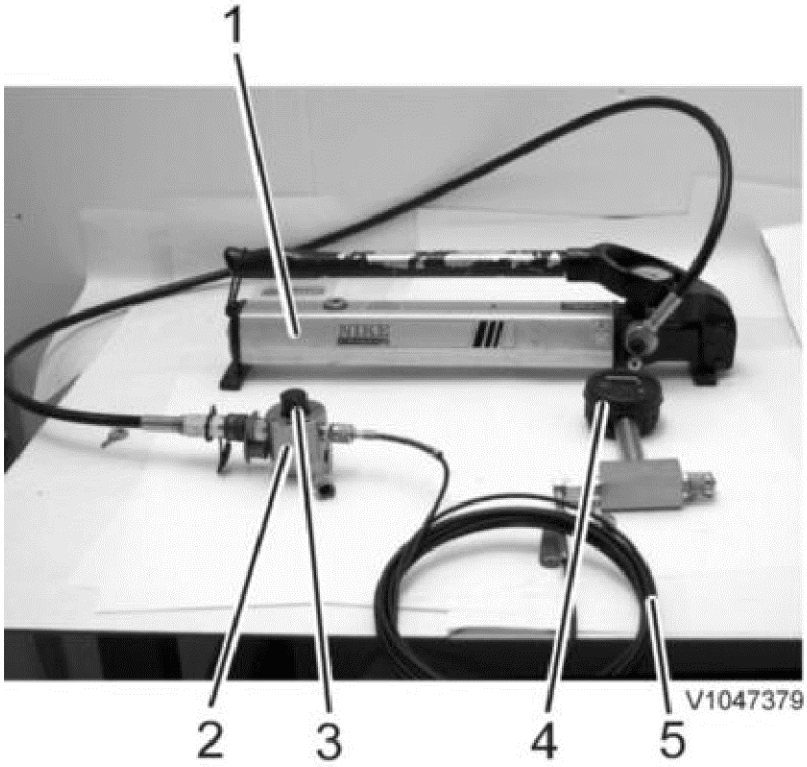

Figure 2

1. 11666041Pump
2. 9993825Check valve
3. Shock valve
4. 11666051Pressure gauge
5. 14290266Hose

6. Install the shock valve on the control valve.
7. Remove the vacuum pump, see Hydrauloljetank, vakuumsättning, inkoppling och urkoppling av pump .
8. Restore the machine.

VOLVO
Construction Equipment

Service Information

Document Title:	Function Group:	Information Type: **Service Information**	Date: **12/10/2011**
Profile: **WLO, L90F (Volvo) [GB]**			

Back-up valve, checking and adjusting

Op nbr 912-018

9993831 Support
11666052 Pressure gauge
14290266 Hose

1. Warm up the machine until the hydraulic system has reached operating temperature.
2. Raise the lifting frame and secure with 9993831Support.

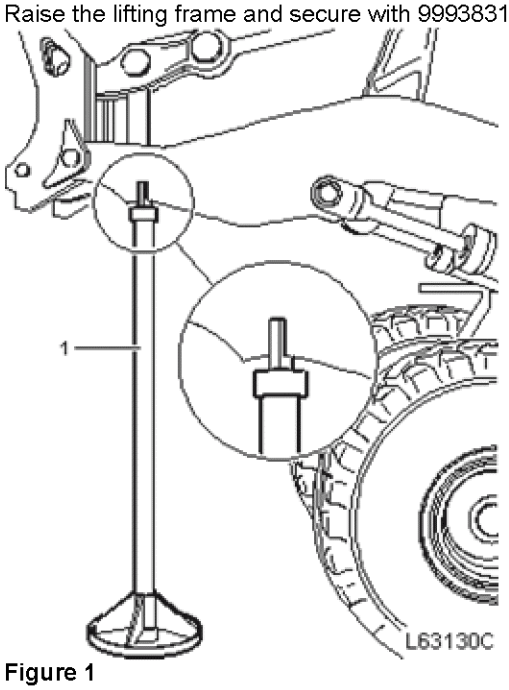

Figure 1
Securing lifting frame

1. 9993831Support

3. Remove the cover plate on the front frame.
4. Connect the measuring equipment to the checking point, marked A1, at the back of the control valve.

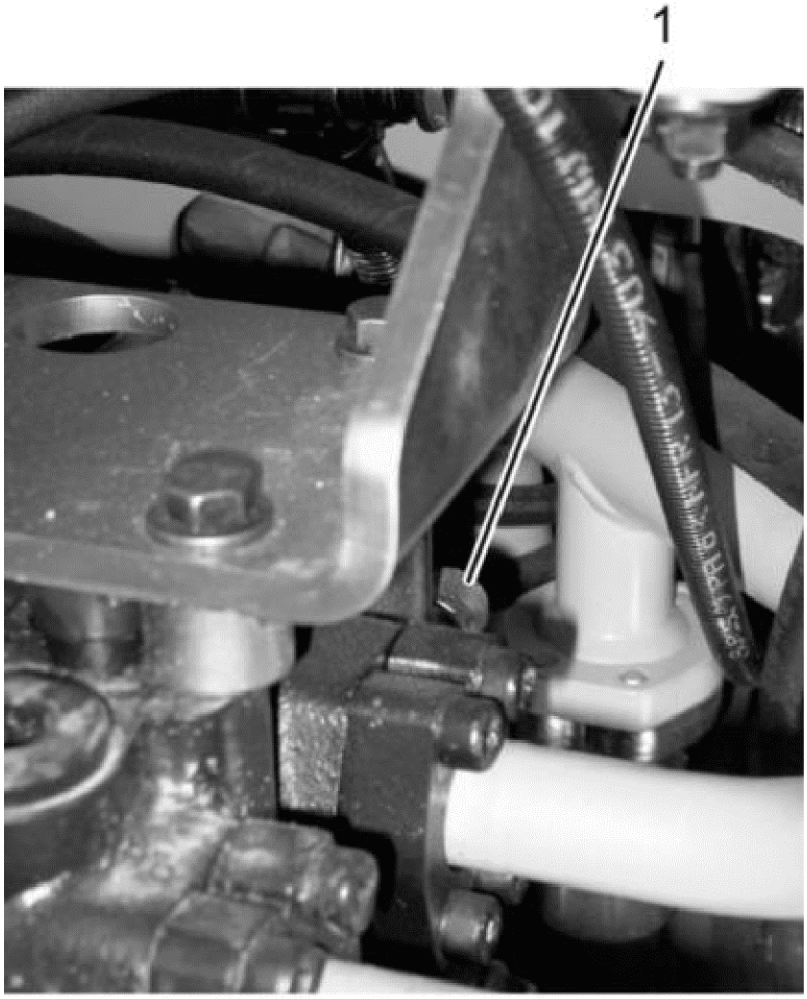

Figure 2

1. Checking point

5. Start the engine. Remove the stand and lower the lifting frame until the bucket lies flat against the ground. If no bucket is installed, use pieces of wood under the bucket attachment in order to be able to lift the machine off the ground.
6. Slowly tilt forward (so that the machine is lifted off the ground)
   Read off the pressure. Correct return pressure, see Ventiler, arbetshydraulsystem, specifikation
   .
7. Raise the lifting frame and secure with 9993831Support.
8. Remove the pressure gauge and install the cover plate on the front frame.
9. Restore the machine.

VOLVO
Construction Equipment

Service Information

Document Title:	Function Group:	Information Type: **Service Information**	Date: **12/10/2011**
Profile: **WLO, L90F (Volvo) [GB]**			

Shock valve, tilt function, checking

Op nbr 912-021

9993831 Support
14360000 Vacuum pump / 24V
11666051 Pressure gauge
14290266 Hose
11666041 Pump
9993825 Check valve

1. Place the machine in service position 2, see Servicepositioner
   .

   NOTE **Leave the battery disconnect switch switched on.**

2. Release the pressure in the system by moving the servo control levers back and forth 10–15 times.

   NOTE **If the machine is equipped with 3rd/4th function, the ignition key must be in position 1.**

3. Remove the cover plate on the front frame.
4. Remove the bracket retaining the control valve.

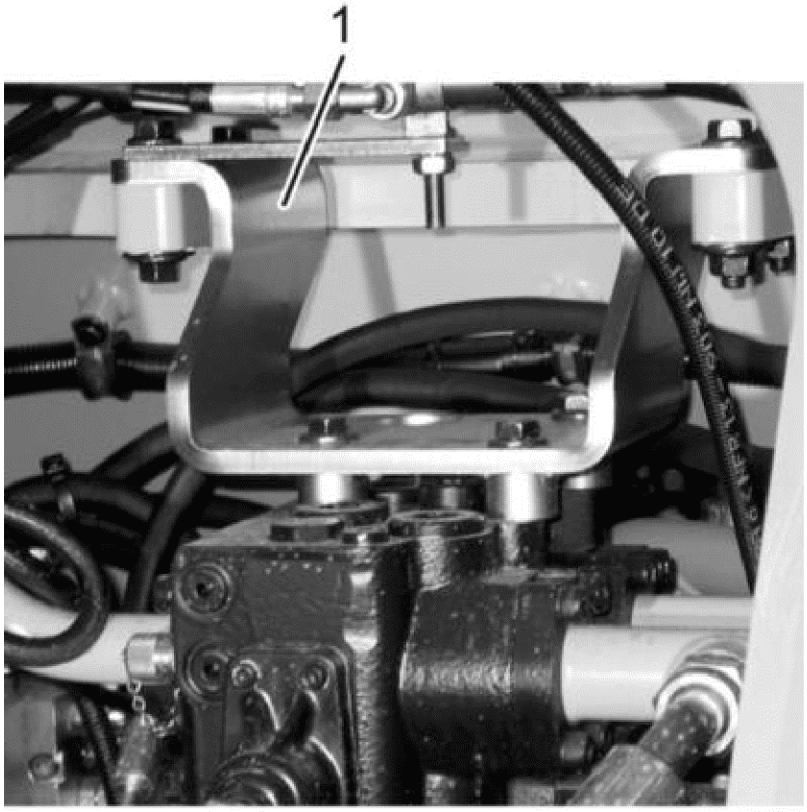

Figure 1

1. Bracket

5. Connect the vacuum pump, see Hydrauloljetank, vakuumsättning
.

6. Remove the shock valve for the function in question and plug the hole with the plug from 9993825Check valve.

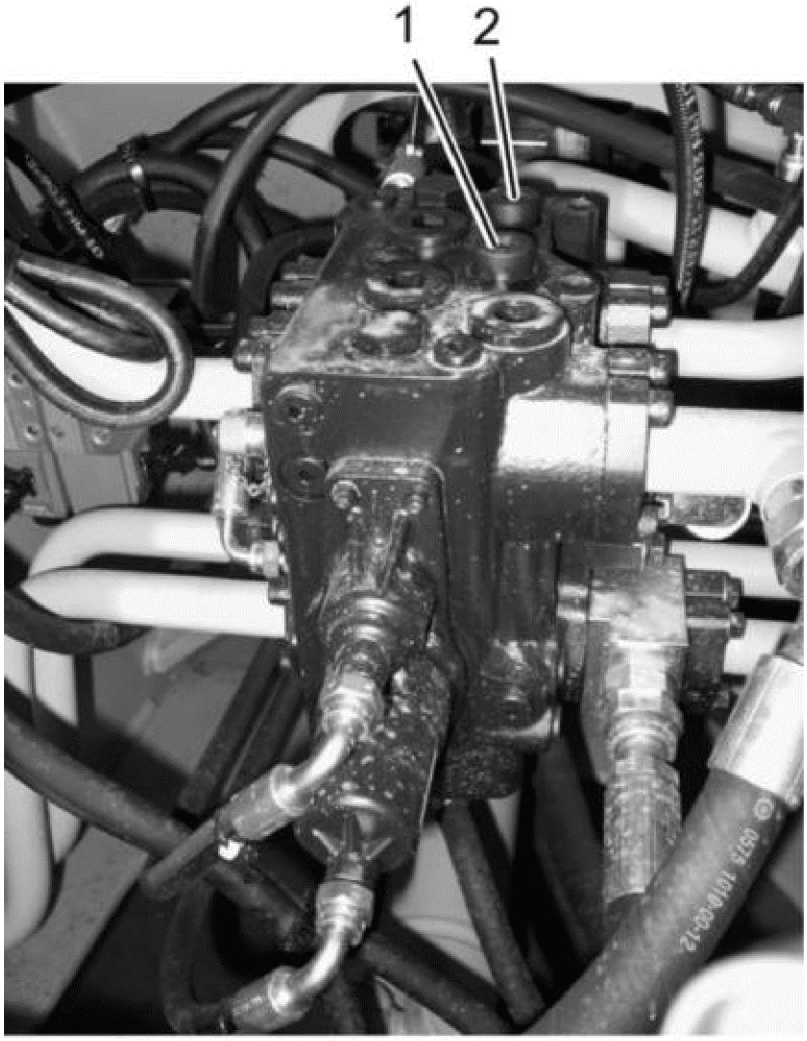

Figure 2
Control valve

1. Shock valve tilting out (-)
2. Shock valve tilting in (+)

7. Screw down the shock valve into 9993825Check valve and connect the remaining tools according to the figure.
   Check the opening pressure of the shock valve, by pumping until the pressure no longer rises. The shock valve has then opened and the opening pressure can be read off.
   Collect the oil, which runs out of the draining hole in a suitable vessel.
   Opening pressure, see Manöverventil, specifikation
   .
   The shock valve is not adjustable.

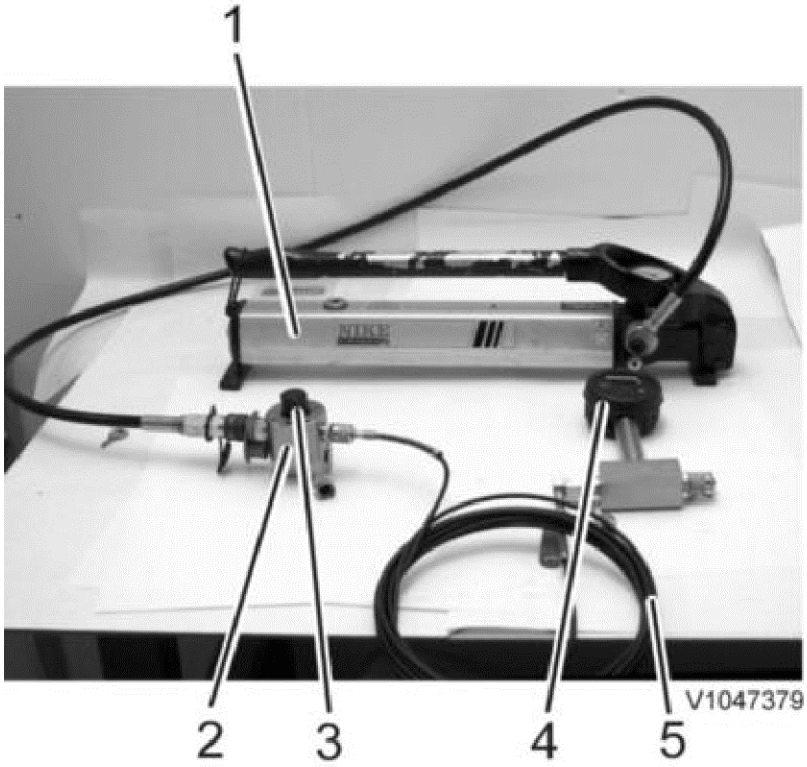

Figure 3
Principle illustration

1. 11666041Pump
2. 9993825Check valve
3. Shock valve
4. 11666051Pressure gauge
5. 14290266Hose

8. Re-install the shock valve on the control valve.
9. Remove the vacuum pump, see Hydrauloljetank, vakuumsättning, inkoppling och urkoppling av pump .
10. Install the bracket retaining the control valve.
11. Install the cover plate on the front frame.
12. Restore the machine.

VOLVO
Construction Equipment

Service Information

Document Title:	Function Group:	Information Type: **Service Information**	Date: **12/10/2011**
Profile: **WLO, L90F (Volvo) [GB]**			

Lift, functional check

Op nbr 912-120

1. Start the engine and check that there are no error codes.
2. Operate the lifting and lowering functions and check that the system operates smoothly and that the lifting/lowering speed corresponds to the lever deflection.
3. Check that the boom slows down when it is getting close to the upper and lower end positions (end-of-stroke damping).
4. Adjust to the required lifting height (boom kick-out). Lower the boom to ground level. Raise the boom (detent function) and then check that the lifting movement stops at the preset position.
5. .Check the Return To Dig function: Release the lever and check that the system enters floating position by again moving the lever to the detent position.
    1. Adjust to the required position where the boom should stop when lowering.
    2. Raise the boom to the upper end position. Lower the boom (detent function) and check that the lowering movement stops at the preset position.
6. Disengage the Return To Dig function.
   Lower the boom until the bucket lies flat against the ground. Activate the floating position and tilt out so that the point of the bucket is pressed against the ground. The boom should then move upward without lifting the machine.
7. Check lifting and lowering time according to Lifting time, checking
   .

VOLVO
Construction Equipment

Service Information

Document Title:	Function Group:	Information Type: **Service Information**	Date: **12/10/2011**
Profile: **WLO, L90F (Volvo) [GB]**			

Tilt, functional check

Op nbr 912-127

1. Start the engine and check that there are no error codes.
2. Operate the tilting function and check that the system works smoothly and that the tilting speed corresponds to the lever deflection
3. Activate the bucket positioner. Set the required tilting position. Tilt outwards fully. Then pull the lever to the detent position and check that the tilting movement stops at the preset position.

VOLVO
Construction Equipment

Service Information

Document Title:	Function Group:	Information Type: **Service Information**	Date: **12/10/2011**
Profile: **WLO, L90F (Volvo) [GB]**			

Control valve, removal

Op nbr 912-154

9993831 Support
11666051 Pressure gauge
14290266 Hose
14360000 Vacuum pump / 24V

Ratchet block 150 kg (331 lb), 2 pcs
Sling, 1 m (3.3 ft)
Sling, 2 m (6.6 ft)
Shackle
Lifting eye M12, 2 pcs

1. Place the machine in service position 2, see Servicepositioner
   .

   NOTE **Leave the battery disconnect switch turned on.**

2. Release the hydraulic oil pressure for the Boom Suspension System [1] ⓘ , see Lastarmsfjädring, hydrauloljetryck i ackumulatorer, avlastning
   .
3. Connect the vacuum pump, see Hydrauloljetank, vakuumsättning, inkoppling och urkoppling av pump
   .
4. Release the pressure in the servo system by moving the servo control levers back and forth 10–15 times.

   NOTE **If the machine is equipped with 3rd/4th function, the ignition key must be in position 1.**

Removing

5. Remove the cover plate on the front frame.
6. Mark all hoses and pipes to facilitate later reconnection of the control valve.
7. Disconnect the hoses from the control valve.
   Collect the waste oil in a suitable vessel.
   Install protective plugs in the hoses and their connections on the control valve.
8. Remove the bracket for the control valve.

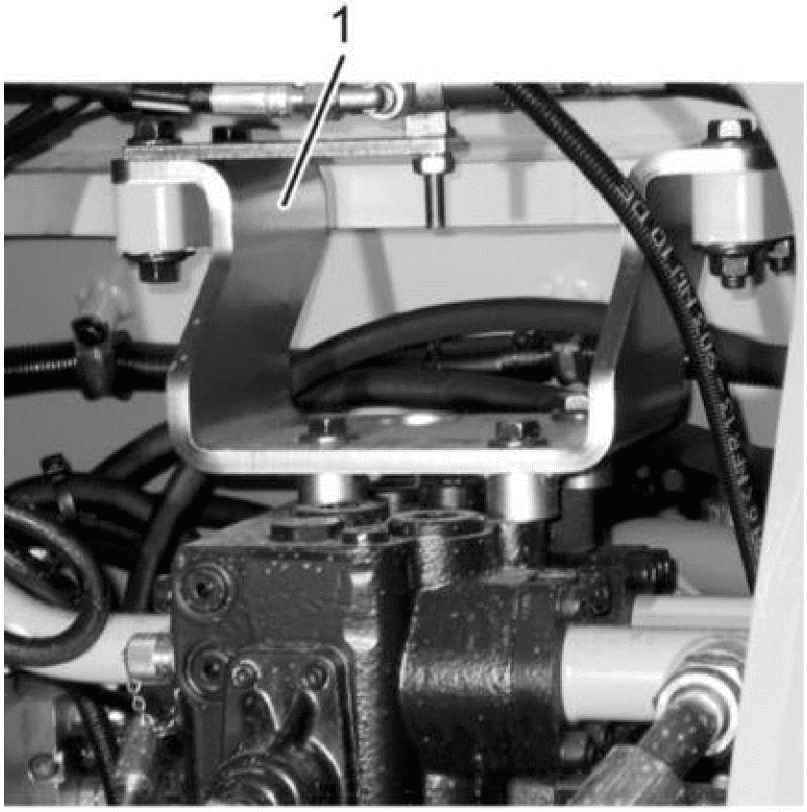

Figure 1

1. Bracket

9. Install the lifting eyes (2 pcs) in two of the bolt holes on the bracket.
Attach a sling around the tilting cylinder.
Lay a pinch-bar on the step on the control valve bracket. Secure with two bolts.
Attach a ratchet block to one of the lifting eyes and pull the chain behind the pinch-bar and up to the sling around the tilting cylinder.
Install a shackle in the other lifting eye.
Attach a sling around the loader unit.
Attach a ratchet block to the shackle and to the sling around the loader unit.

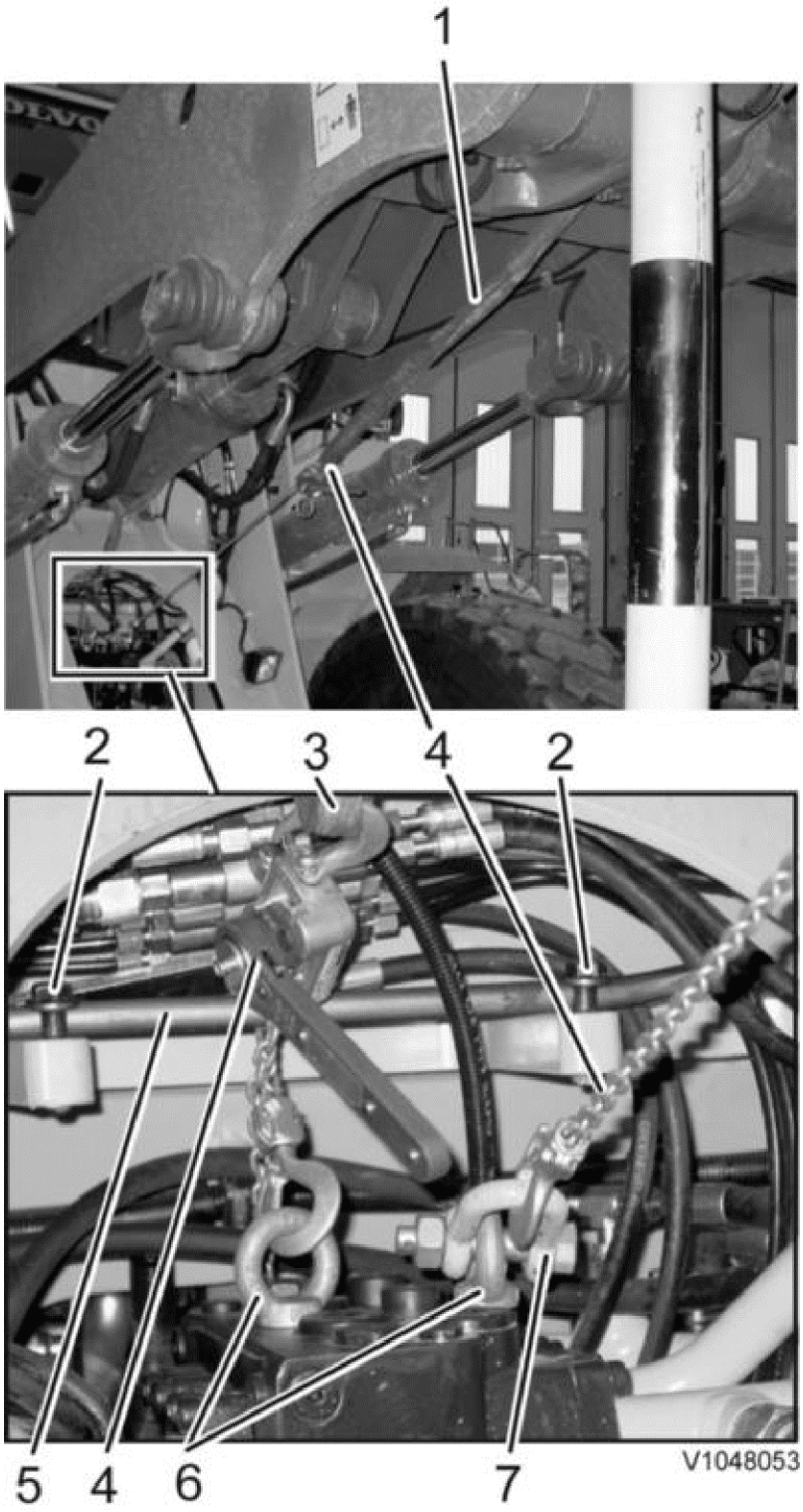

Figure 2

1. Sling, 2 m (6.6 ft)
2. Bolt
3. Sling, 1 m (3.3 ft)
4. Ratchet block
5. Pinch-bar
6. Lifting eyes
7. Shackle

10. Remove the clamps for the hydraulic pipes by the tilting cylinder and the lifting cylinders.

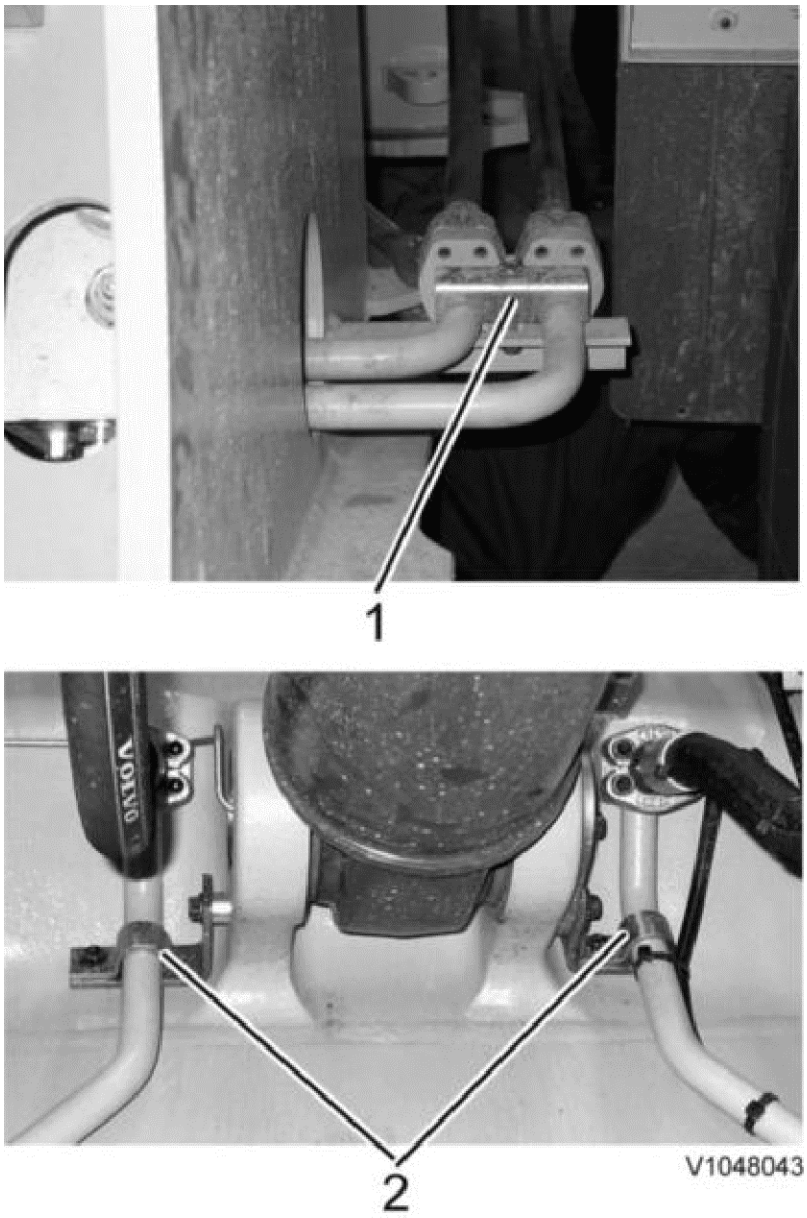

Figure 3

1. Clamps by lifting cylinders
2. Clamps by tilting cylinder

11. Disconnect the pipes from the control valve.
    Install protective plugs to the pipes and their connections on the valve.

12. Remove the control valve.
    Control valve weight: **approx. 45 kg (100 lb)**

---

[1] Optional equipment

VOLVO
Construction Equipment

Service Information

Document Title:	Function Group:	Information Type: **Service Information**	Date: **12/10/2011**
Profile: **WLO, L90F (Volvo) [GB]**			

Control valve, installation

Op nbr 912-155

9993831 Support
11666051 Pressure gauge
14290266 Hose
14360000 Vacuum pump / 24V

Ratchet block 150 kg (331 lb), 2 pcs
Sling, 1 m (3.3 ft)
Sling, 2 m (6.6 ft)
Shackle
Lifting eye M12, 2 pcs

1. Connect the lifting devices to the control valve and lift it into position.
   Control valve weight: **approx. 45 kg (100 lb)**
   Check the O-rings and secure the control valve with the aid of the pipes. Do not tighten the pipes.

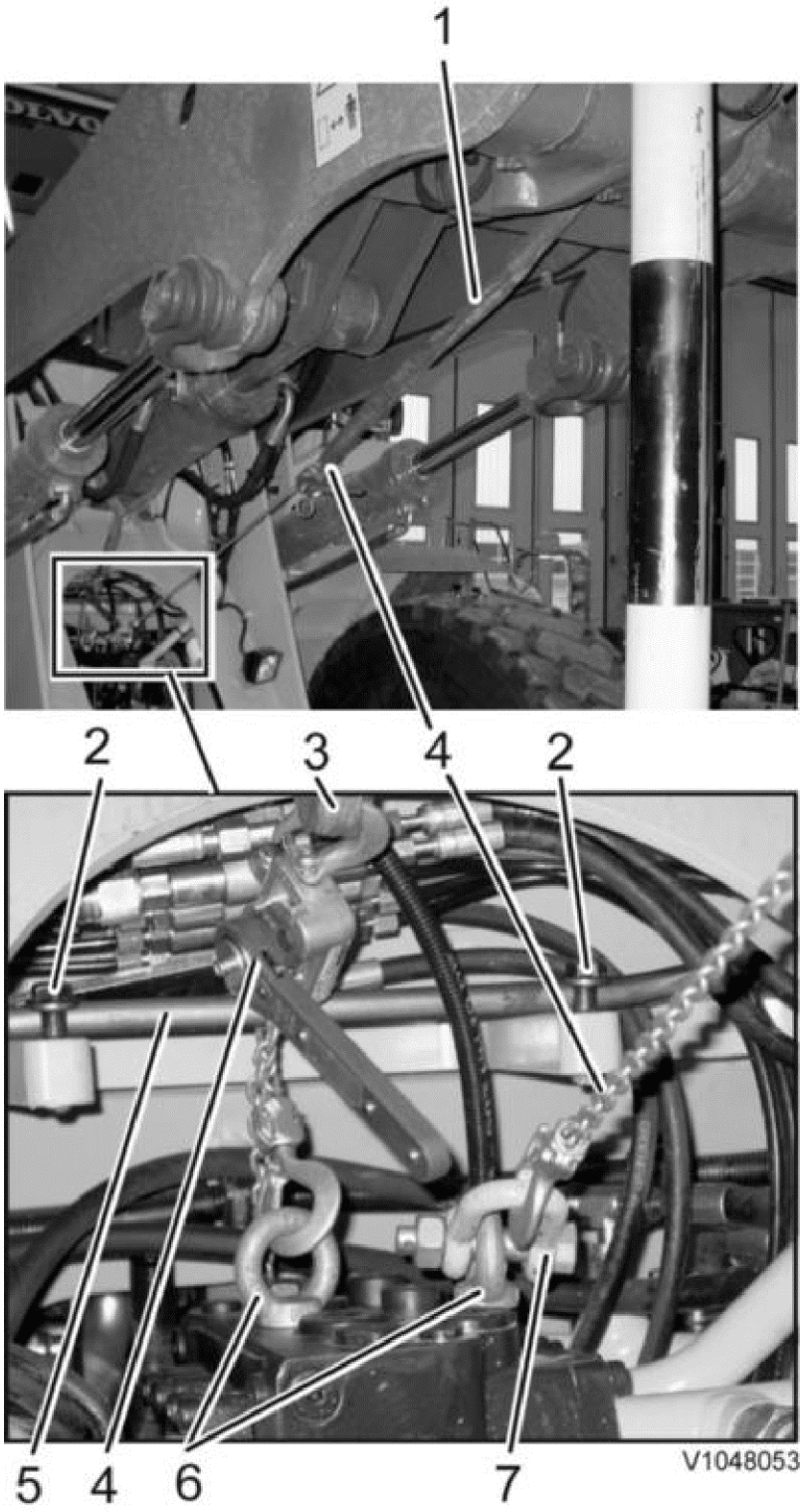

Figure 1

1. Sling, 2 m (6.6 ft)
2. Bolt
3. Sling, 1 m (3.3 ft)
4. Ratchet block
5. Pinch-bar
6. Lifting eyes
7. Shackle

2. Remove the lifting device and install the control valve bracket.

3. Adjust the pipes so that they do not chafe against any parts and so that there will not be any tension in the pipes. Install the clamps for the hydraulic pipes by the tilting cylinder and the lifting cylinders. Tighten the pipe connections.

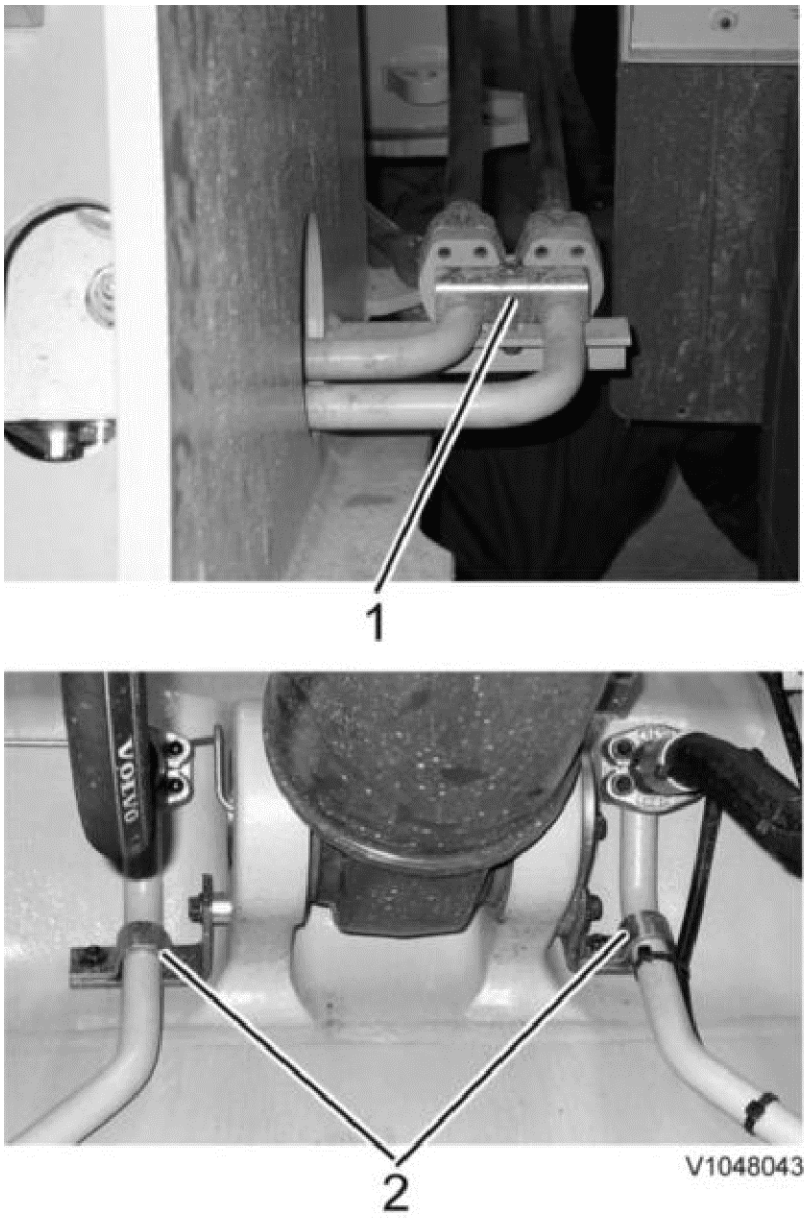

Figure 2

1. Clamps by tilting cylinder
2. Clamps by lifting cylinders

4. Check the O-rings and connect the hoses to the control valve.
5. Remove the vacuum pump, see Hydrauloljetank, vakuumsättning, inkoppling och urkoppling av pump .
6. Install the cover plate on the front frame.
7. Bleed the hydraulic system, see Hydraulsystem, luftning
   points:
   - 1–7
   - 9–10
   - 14–17
8. Test-run the machine. Check for leaks and test-run all functions.

VOLVO
Construction Equipment

Service Information

Document Title:	Function Group:	Information Type: **Service Information**	Date: **12/10/2011**
Profile: **WLO, L90F (Volvo) [GB]**			

Central valve, removal

Op nbr 912-152

14360000 Vacuum pump / 24V

Removing

1. Place the machine in service position 1, see Servicepositioner
.

   NOTE **Leave the battery disconnect switch turned on.**

2. Connect the vacuum pump, see Hydrauloljetank, vakuumsättning, inkoppling och urkoppling av pump
.

3. Split the connector for the engine heater [1] ⓘ and disconnect the cable leading to the engine heater grounding point. Mark and disconnect the hoses from the automatic greasing pump and split its connector. [2] ⓘ

4. Detach the transmission filler pipe from the ladder. Remove the ladder on the left side of the machine together with the automatic greasing pump with the aid of a lifting device.
   Weight: **approx. 45 kg (approx. 100 lb)**

5. Remove the cover on the left side of the machine below the cab.

6. Split the connectors for the central valve and cut the tie retaining the connector for SE6404.

7. Mark the hoses, which are connected to the central valve, in order to facilitate assembling.
   Disconnect the hoses from the central valve.
   Plug the hose ends and their connections on the central valve.
   Collect the waste oil in a suitable vessel.

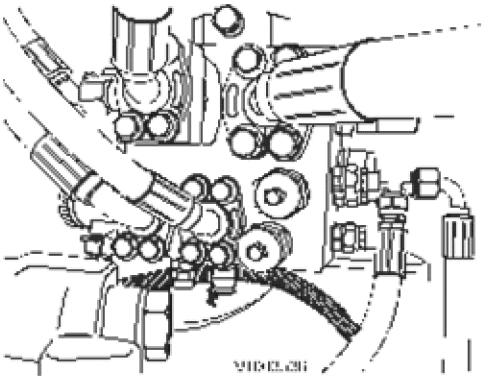

Figure 1
Central valve seen from the right side

8. Detach the bracket for the clamp for the transmission filling pipe from the central valve bracket.

9. Place a board or similar under the central valve.

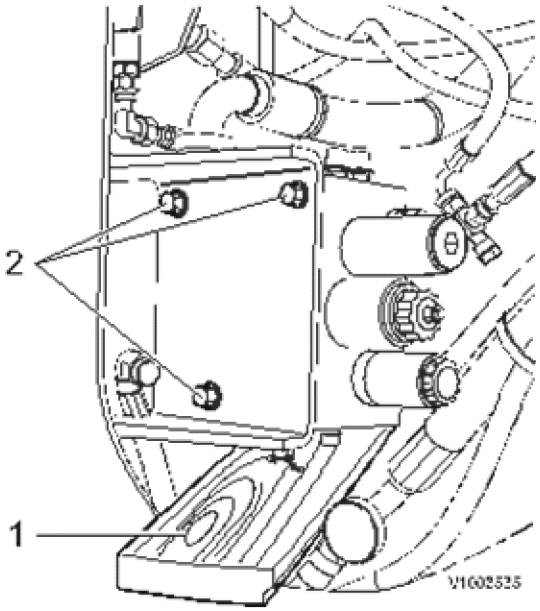

Figure 2
Central valve seen from the left side

1. Board (or similar)
2. Attaching bolts

10. Remove the attaching bolts (3 pcs) and lower the central valve onto the board.

11. Lift away the central valve.
Weight: **approx. 20 kg (approx. 45 lb)**

---

[1] Optional equipment

[2] Optional equipment

VOLVO
Construction Equipment

Service Information

Document Title:	Function Group:	Information Type: **Service Information**	Date: **12/10/2011**
Profile: **WLO, L90F (Volvo) [GB]**			

Central valve, installation

Op nbr 912-153

14360000 Vacuum pump / 24V

1. When replacing central valve, transfer the required parts from the removed central valve to the new one.
2. Install the central valve (three bolts and their rubber bushings) with the aid of a board (or similar).

NOTE **Make sure that the rubber bushings between the central valve and the bracket are correctly positioned.**

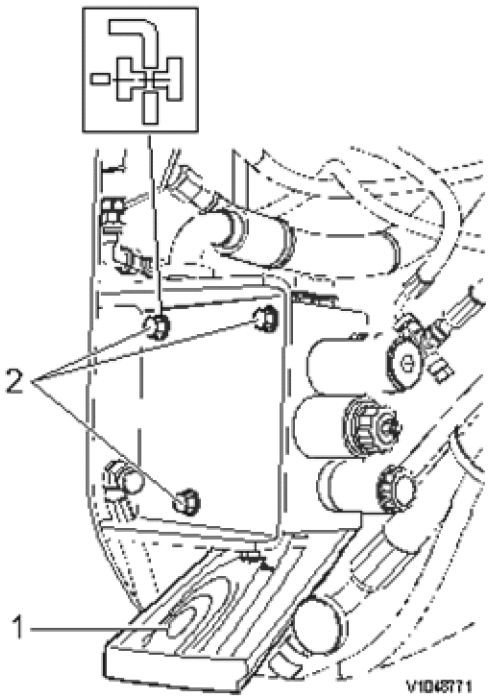

Figure 1

1. Board (or similar)
2. Attaching bolts

Weight: **approx. 20 kg (approx. 45 lb)**

3. Remove the plugs from the hoses. Check the O-rings and connect the hoses to the central valve.

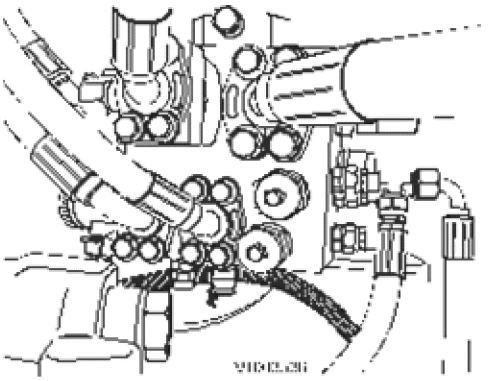

Figure 2

4. Install the bracket for the clamp for the transmission filler pipe on the central valve bracket.
   Assemble the connectors for the central valve.
   Clamp the leads and the hoses.

5. Install the cover on the left side of the machine below the cab.

6. Install the ladder with the automatic greasing pump with the aid of a lifting device.
   Weight: **approx. 45 kg (approx. 100 lb)**
   Install the transmission filler pipe on the ladder.

7. Assemble the connector for the engine heater [1] ⓘ on the ladder.
   Connect the hoses and the connector to the automatic greasing pump [2] ⓘ .

8. Remove the vacuum pump, see Hydrauloljetank, vakuumsättning, inkoppling och urkoppling av pump
   .

9. Start the engine and check that there are no leaks.
   Bleed the hydraulic system, see Hydraulsystem, luftning
   .

10. Check and if required adjust the following:
    - Pump 3 (P3) Kylfläktpump/Bromspump Kylfläkt, kontroll maxtryck
    - Bromssystem, funktionskontroll hydraulik
      points 1–5.
    - Servotryck, kontroll och justering
    - Hydraulpump, kontroll och justering av max. arbetstryck
    - Styrsystem, kontroll och justering av hålltryck
      and Styrsystem, kontroll och justering av arbetstryck
      .

---

[1] Optional equipment

[2] Optional equipment

VOLVO
Construction Equipment

Service Information

Document Title:	Function Group:	Information Type: **Service Information**	Date: **12/10/2011**
Profile: **WLO, L90F (Volvo) [GB]**			

Back-up valve, replacing

Op nbr 912-151

14360000 Vacuum pump / 24V

Removing

1. Place the machine in service position 2, see Servicepositioner
.

   NOTE **Leave the battery disconnect switch turned on.**

2. Connect the vacuum pump, see Hydrauloljetank, vakuumsättning, inkoppling och urkoppling av pump
.
3. Remove the cover plate on the front frame.
4. Remove the back-up valve.

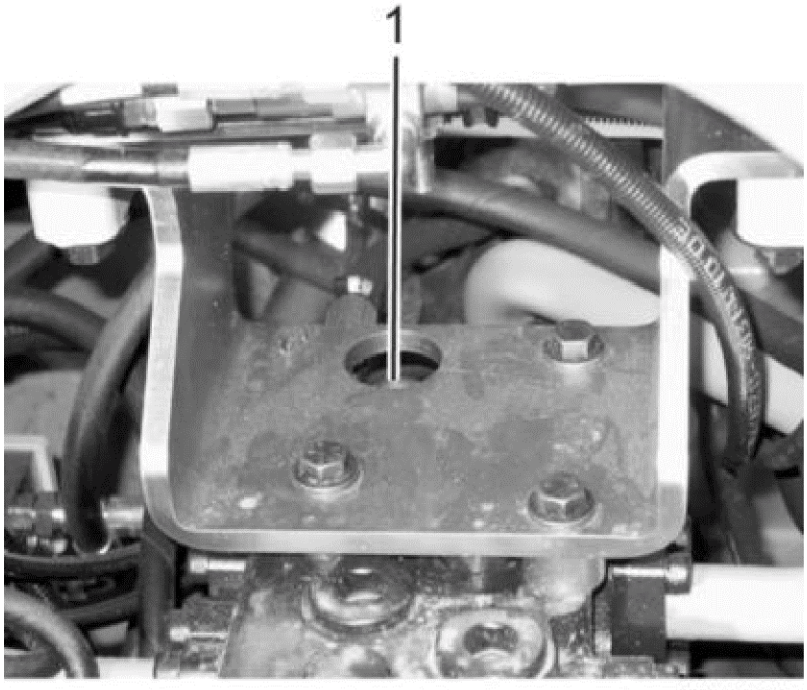

Figure 1

1. Back-up valve

Checking

5. Check that the O-rings and the support rings are not damaged.

6. Check that the spool does not bind.

Installation

7. Install the back-up valve.
8. Remove the vacuum pump, see Hydrauloljetank, vakuumsättning, inkoppling och urkoppling av pump .
9. Install the cover plate.
10. Restore the machine.

VOLVO
Construction Equipment

Service Information

Document Title:	Function Group:	Information Type: **Service Information**	Date: **12/10/2011**
Profile: **WLO, L90F (Volvo) [GB]**			

Hydraulic pumps, description

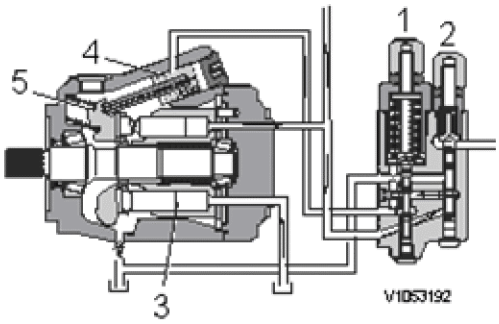

Figure 1
Hydraulic pump, principle diagram P2, P3

1. Pressure compensator
2. Flow compensator
3. Pump unit
4. Control piston
5. Yoke

P2 supplies oil to the steering system, working hydraulics and the servo system. Secondarily P2 also supplies oil to the brake system.

P3 supplies the hydraulic cooling fan and the brake system with oil.

P2 has electrical power limitation and one PWM-valve, which can drain the LS-pressure to tank.

See also Hydraulpump flödesreglering, beskrivning
.

VOLVO
Construction Equipment

Service Information

Document Title:	Function Group:	Information Type: **Service Information**	Date: **12/10/2011**
Profile: **WLO, L90F (Volvo) [GB]**			

Hydraulic pump flow regulation, description

P2, Stand-by pressure

When the engine is started, the angling of the pump will be at "max. flow". As the system is of the closed centre type the pump pressure will build up rapidly and move via the flow compensator down to the control piston for displacement via PWM9133, and angle down the pump. The pump now supplies a minimal flow, in fact, only the flow required to maintain a stand-by pressure, which is a result of the spring force on the flow compensator and its setting.

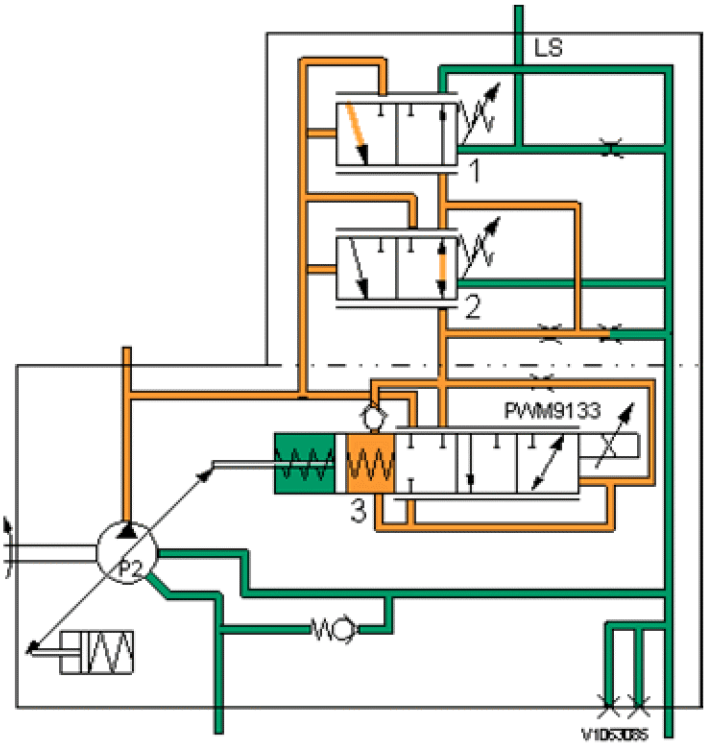

Figure 1
Stand-by pressure

Orange	Stand-by pressure
Green	Without pressure (tank)
1	Flow compensator
2	Pressure compensator
3	Control piston

P2, Working pressure

When any of the hydraulic functions is being used, the LS-pressure acts proportionally on the spring side of the flow compensator and tries to counteract the oil pressure from the pump on the opposite side. Before the correct pressure has been reached, the back of the control piston is drained and the pump displacement increases and the pump supplies a higher flow. When the correct pressure has been reached (the LS-pressure = the pump

pressure), the pressure from the pump will get to the back of the control piston, the pump displacement reduces and the flow reduces at the same time as the pressure is maintained. All the time the flow compensator balances the pressure to the control piston.

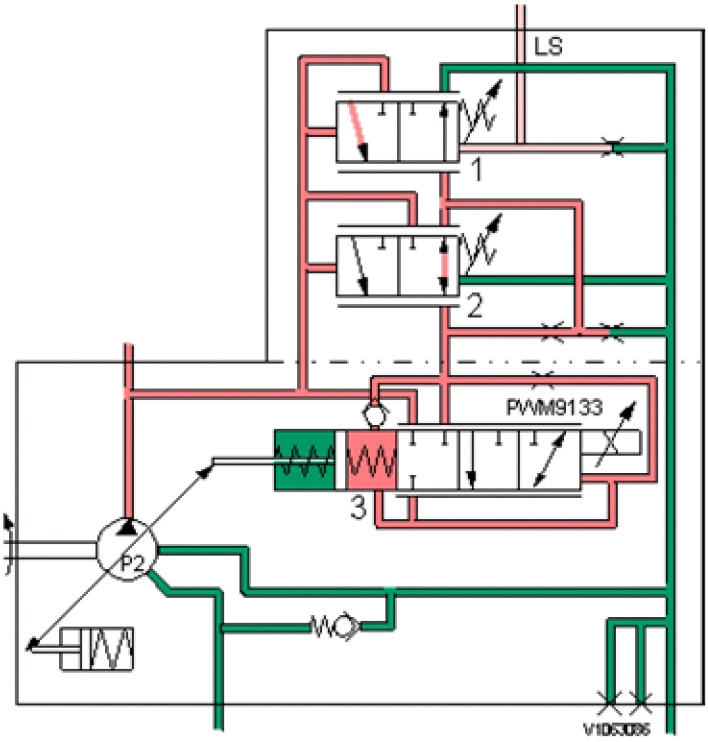

Figure 2
Working pressure

Green	Without pressure (tank)
Pink	Working pressure
Pink	LS-pressure
1	Flow compensator
2	Pressure compensator
3	Control piston

P2, Maximum pressure

When a hydraulic function operates against end position, the oil pressure works against the spring force in the pressure compensator and thus limits the maximum pressure of the pump. When the oil pressure overcomes the spring force, the oil pressure presses, via the compensator, on the piston that controls the displacement. The angle of the pump yoke is reduced and the high pressure is maintained as long as the control lever is kept in the same position.

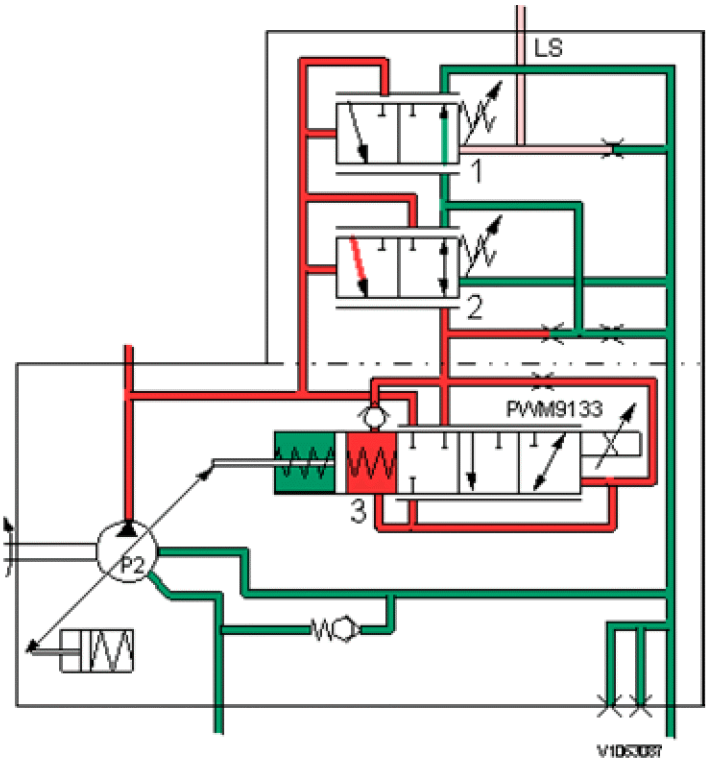

Figure 3
Maximum pressure

Green	Without pressure (tank)
Red	Working pressure
Pink	LS-pressure
1	Flow compensator
2	Pressure compensator
3	Control piston

P2, Power controlled

To guard against inadvertent engine stops, when some hydraulic functions are operated, the V-ECU reduces the load on the engine by regulating downwards the pressure that P2 supplies. If the engine speed is low and the load on the engine is high, the V-ECU supplies current to PWM9133 according to a certain curve. The valve section in PWM9133 opens a duct between the pump pressure and the control piston for the displacement. The control piston adjusts the displacement downwards and thereby lowering the flow.

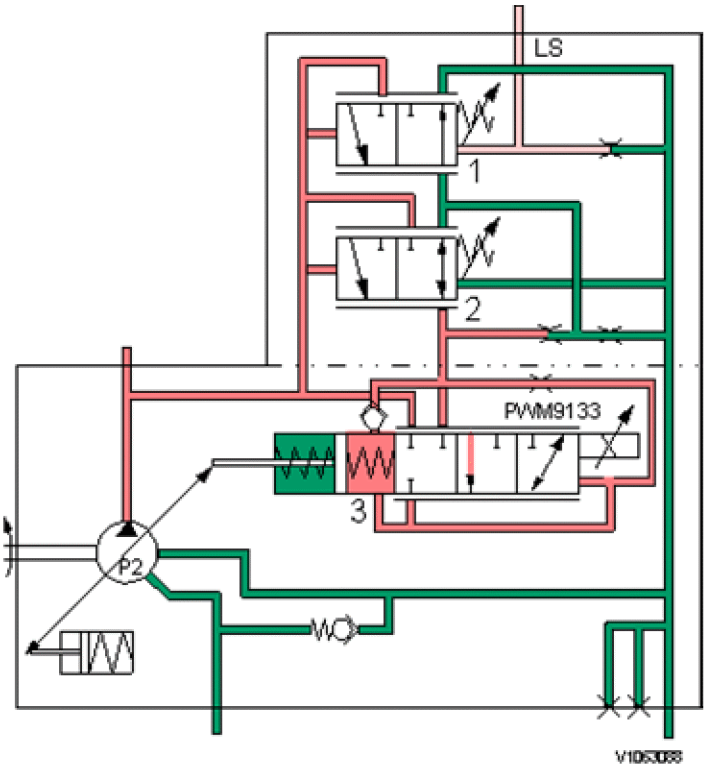

Figure 4

Pink	Working pressure
Green	Without pressure (tank)
Pink	LS-pressure
1	Flow compensator
2	Pressure compensator
3	Control piston

P3, stand-by pressure

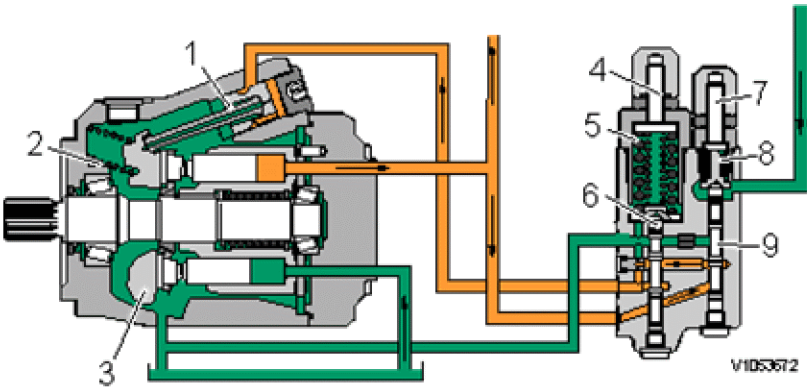

Figure 5
P3 stand-by pressure

Green	Return, without pressure
Orange	Stand-by pressure

1. Control piston
2. Spring
3. Yoke, pump
4. Adjusting screw, maximum pressure working hydraulics
5. Spring
6. Pressure compensator spool
7. Adjusting screw, stand-by pressure
8. Spring
9. Flow compensator spool

VOLVO
Construction Equipment

Service Information

Document Title:	Function Group:	Information Type: **Service Information**	Date: **12/10/2011**
Profile: **WLO, L90F (Volvo) [GB]**			

Hydraulic power control valve, replacing

Op nbr 913-069

14360000 Vacuum pump / 24V

1. Place the machine in service position 1, see Servicepositioner
.
2. Connect vacuum pump, see Hydrauloljetank, vakuumsättning, inkoppling och urkoppling av pump
.
3. Fold back the mat in the cab.
4. Lean the operator seat forward and secure it according to Förarsäte, fastsättning
.
5. Remove the rear cover in the cab floor.
6. Disconnect the connector and remove the solenoid valve.

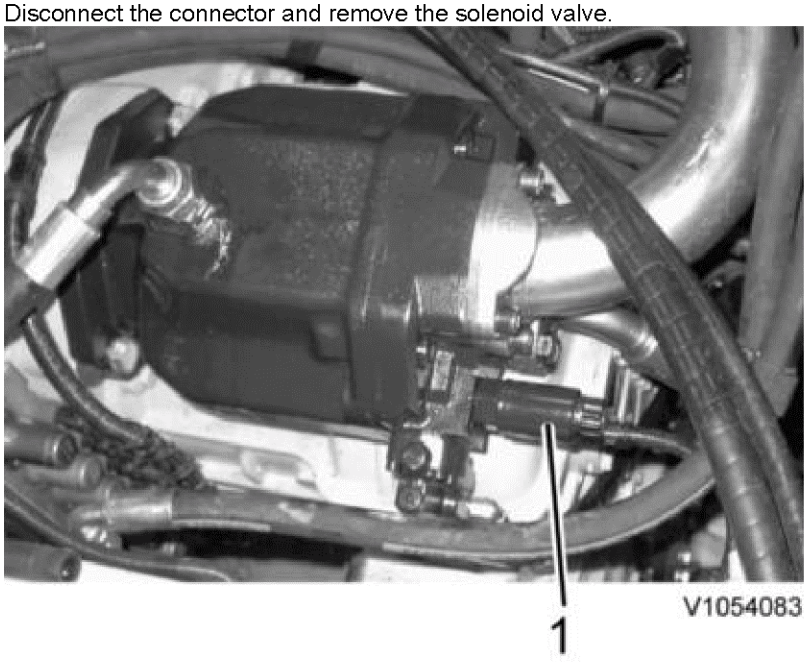

Figure 1

1. PWM9133

7. Install the new solenoid valve.
8. Restore the machine.
9. Test the function of the machine.

VOLVO
Construction Equipment

Service Information

Document Title:	Function Group:	Information Type: **Service Information**	Date: **12/10/2011**
Profile: **WLO, L90F (Volvo) [GB]**			

Hydraulic pump, checking and adjusting standby pressure

Op nbr 913-003

14290266 Hose
11666051 Pressure gauge

Stand-by pressure, checking

1. Warm up the machine until the hydraulic system has reached operating temperature.
2. Secure the frame joint with the frame joint lock. Place blocks in front of and behind the wheels.

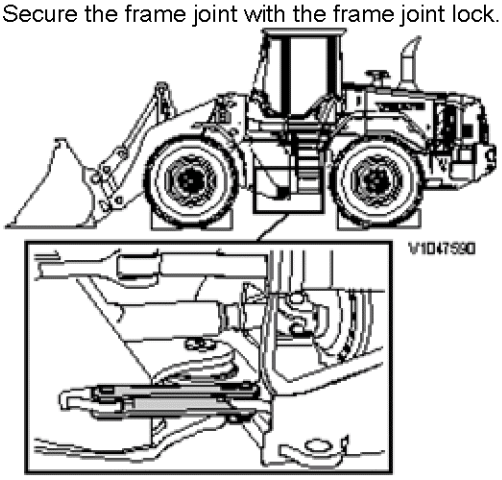

Figure 1
Locking frame joint

3. Connect the pressure gauge to the checking point on the central valve.

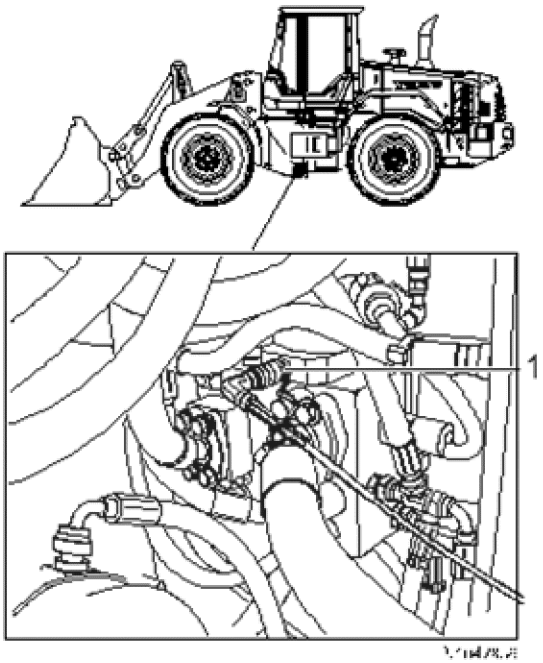

Figure 2

1. Checking point

4. Start the engine and run it at low idling and read off the stand-by pressure.
   Stand-by pressure, see Hydraulpump (P2), specifikation
   .
   Caution!
   None of the hydraulic functions must be actuated.

Stand-by pressure, adjusting

5. Stop the engine.
6. Remove the cover plate behind the ladder on the right side of the machine.
7. Adjust the pump flow compensator until the correct stand-by pressure is obtained.

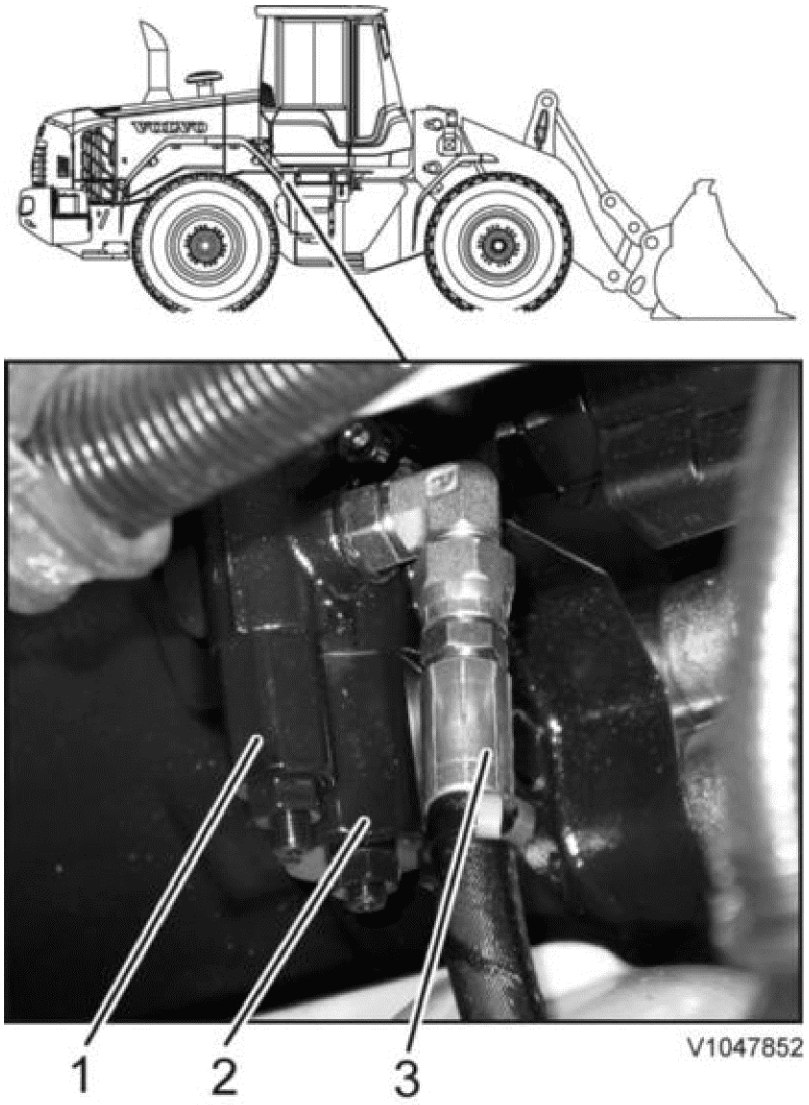

Figure 3

1. Flow compensator
2. Pressure compensator
3. LS hose

If it does not help to adjust the stand-by pressure, check the pressure again with the LS-line removed, and adjust again, see Hydraulpump, kontroll och justering av hålltryck (LS-ledning borttagen)
.

8. Install the cover plate on the right side behind the ladder.
9. Restore the machine.

More than one document matches the current profile:

Hydraulic pump, checking and adjusting stand-by pressure (LS-line removed)
Product Line: WLO
Model Variant: L90F

Hydraulic pump, checking and adjusting stand-by pressure (LS-line removed)
Product Line: WLO
Model Variant: L90F

VOLVO
Construction Equipment

Service Information

Document Title:	Function Group:	Information Type: **Service Information**	Date: **12/10/2011**
Profile: **WLO, L90F (Volvo) [GB]**			

Hydraulic pump, checking and adjusting stand-by pressure (LS-line removed)

Op nbr 913-033

14290266 Hose
11666051 Pressure gauge

935650 Plug

1. Warm up the machine until the hydraulic system has reached operating temperature.
2. Secure the frame joint with the frame joint lock. Place blocks in front of and behind the wheels.

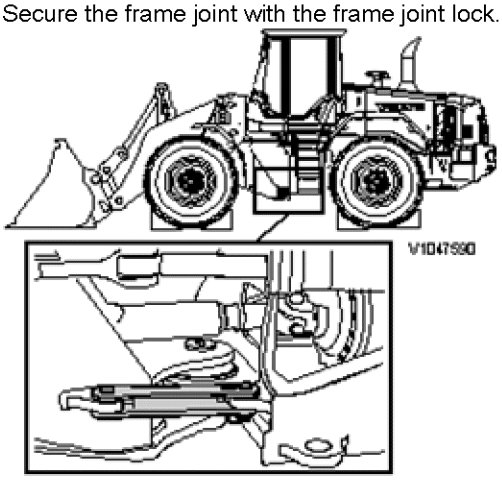

Figure 1
Locking frame joint

3. Connect the pressure gauge to the checking point on the central valve.

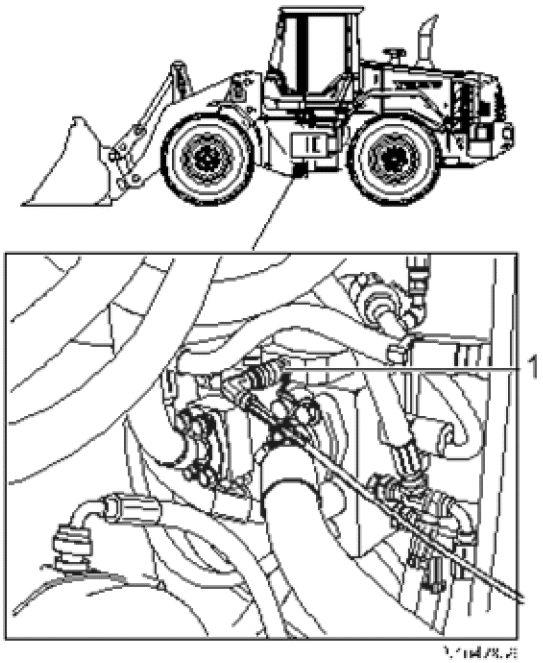

Figure 2

1. Checking point

4. Remove the cover plate behind the ladder on the right side of the machine.

5. Disconnect the LS-line from the pump and plug the line with part No. 935650. (This is done so that the LS-pressure from steering valve and control valve shall not affect the measuring).
   The pump does not need to be plugged.
   Caution!
   Collect draining oil.

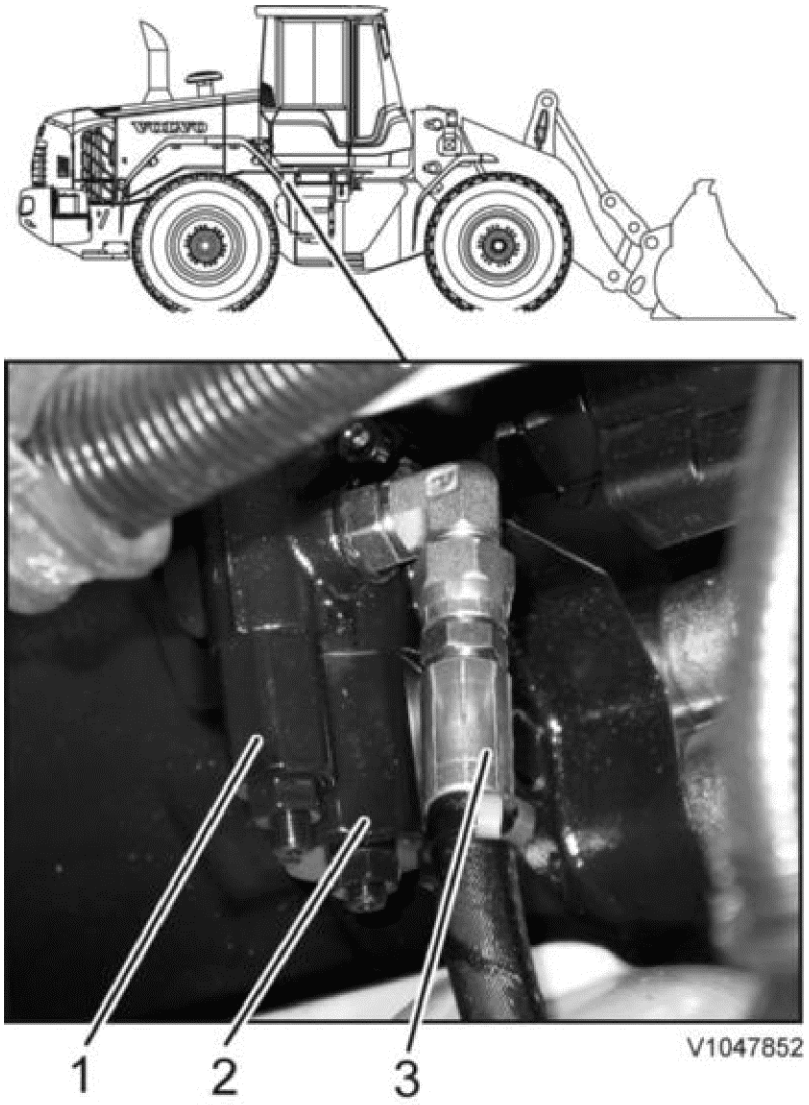

Figure 3

1. Flow compensator
2. Pressure compensator
3. LS hose

6. Start the engine, run it at low idling speed and read off the stand-by pressure.
   Stand-by pressure, see Hydraulpump (P2), specifikation
   .
   Caution!
   None of the hydraulic functions must be actuated.

Stand-by pressure, adjusting

7. Stop the engine.
8. Adjust the pump flow compensator until the correct stand-by pressure is obtained.

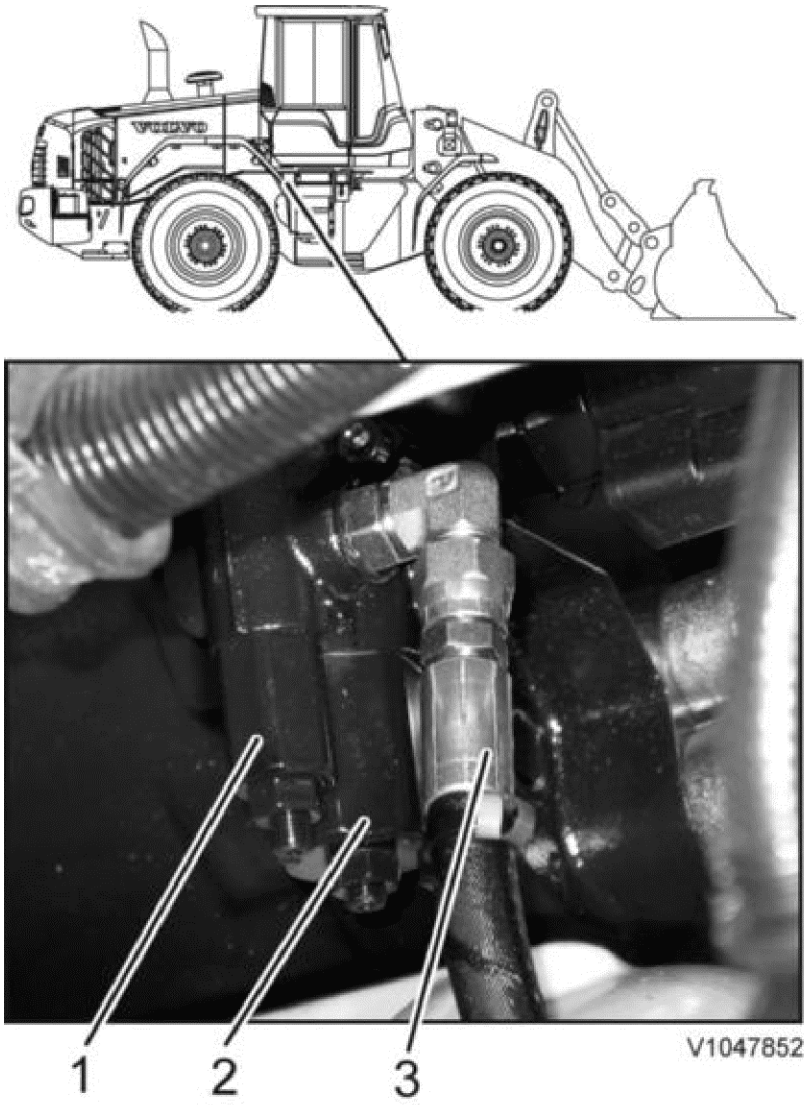

Figure 4

1. Flow compensator
2. Pressure compensator
3. LS hose

9. Remove the plug and connect the LS-line.
10. Install the cover plate behind the ladder on the right side of the machine.
11. Restore the machine.

VOLVO
Construction Equipment

Service Information

Document Title:	Function Group:	Information Type: **Service Information**	Date: **12/10/2011**
Profile: **WLO, L90F (Volvo) [GB]**			

Hydraulic pump, checking and adjusting stand-by pressure (LS-line removed)

Op nbr 913-033

14290266 Hose
11666051 Pressure gauge

935650 Plug

1. Warm up the machine until the hydraulic system has reached operating temperature.
2. Secure the frame joint with the frame joint lock. Place blocks in front of and behind the wheels.

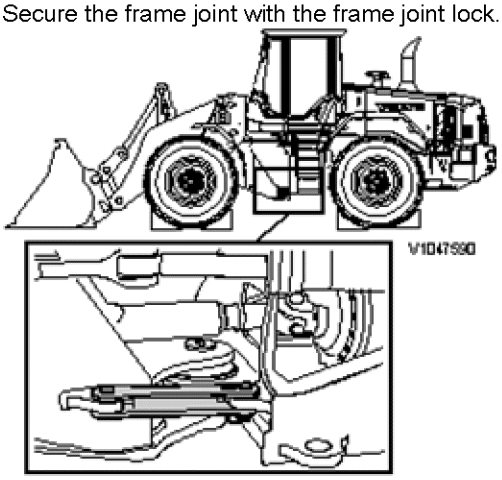

Figure 1
Locking frame joint

3. Connect the pressure gauge to the checking point on the central valve.

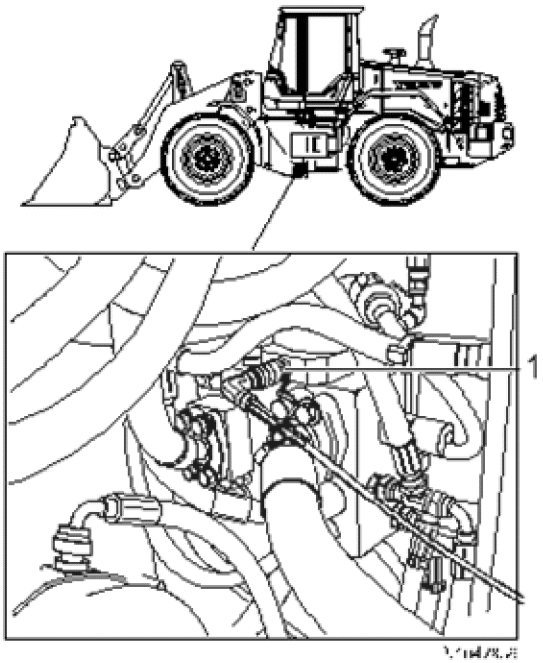

Figure 2

1. Checking point

4. Remove the cover plate on the right side behind the steps.

5. Disconnect the LS-line from the pump and plug the line with part No. 935650. (This is done so that the LS-pressure from steering valve and control valve shall not affect the measuring).
   The pump does not need to be plugged.
   Caution!
   Collect draining oil.

VOLVO
Construction Equipment

Service Information

Document Title:	Function Group:	Information Type: **Service Information**	Date: **12/10/2011**
Profile: **WLO, L90F (Volvo) [GB]**			

Hydraulic pump, checking and adjusting max working pressure

Op nbr 913-004

14290266 Hose
11666051 Pressure gauge

1. Warm up the machine until the hydraulic system has reached working temperature.

Checking

2. Secure the frame joint with the frame joint lock. Place blocks in front of and behind the wheels.

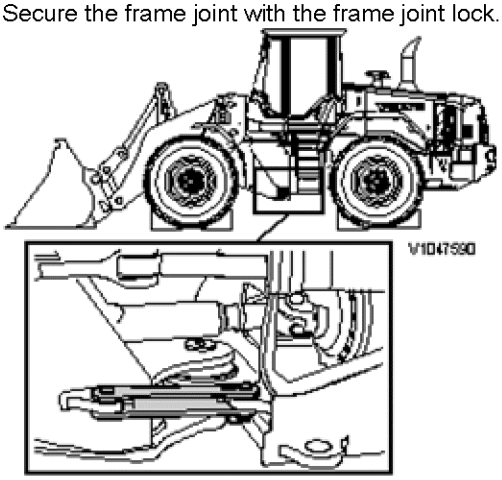

Figure 1
Locking frame joint

3. Connect the pressure gauge to the checking point on the central valve.

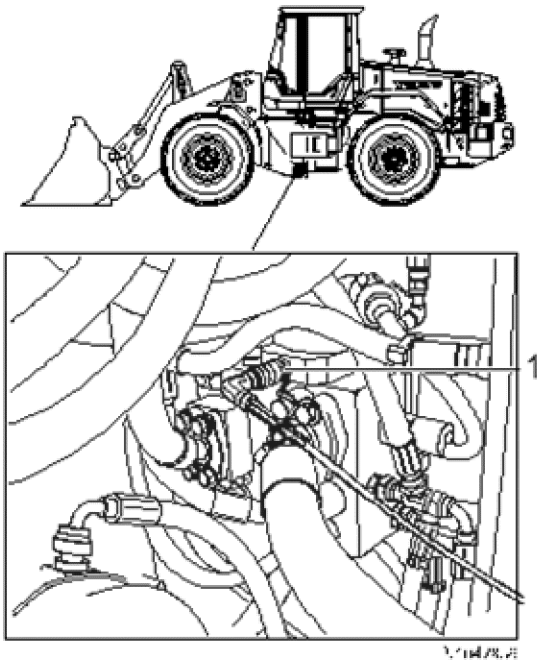

Figure 2

1. Checking point

4. Start the engine and run it at high idling speed. Lower the lifting arms slowly against stop.
   Read off the max. pressure.
   Working pressure, max., see Hydraulpump (P2), specifikation
   .
   Release the lever and shut off the engine.

Adjusting

5. Stop the engine.
6. Remove the cover plate behind the ladder on the right side of the machine.
7. Adjust on the pump pressure compensator until the correct maximum pressure is obtained, see Hydraulpump (P2), specifikation
   .

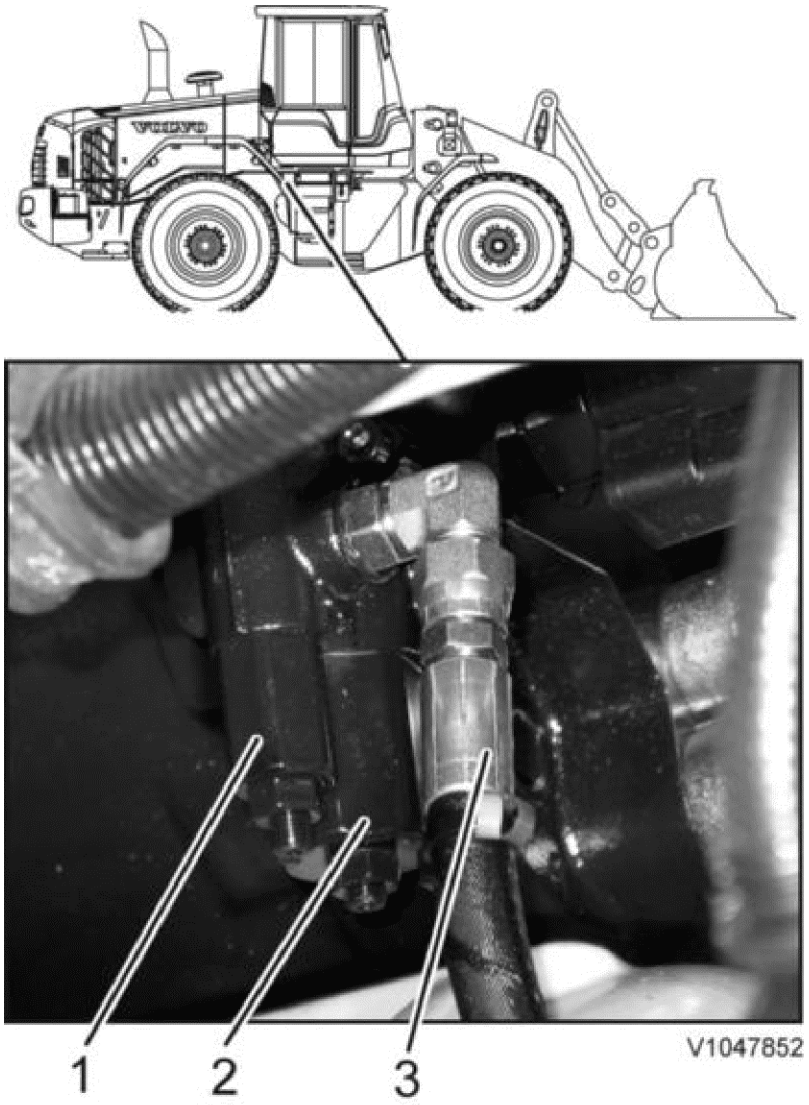

Figure 3

1. Flow compensator
2. Pressure compensator
3. LS hose

8. Install the cover plate behind the ladder on the right side of the machine.
9. Restore the machine.

VOLVO
Construction Equipment

Service Information

Document Title:	Function Group:	Information Type: **Service Information**	Date: **12/10/2011**
Profile: **WLO, L90F (Volvo) [GB]**			

Hydraulic pump P2, removal

Op nbr 913-050

Sling, 1 m (3 ft)
Sling 4 m (13 ft), 2 pcs
Lifting eye M16, 4 pcs
Shackle, 4 pcs

1. Drain the hydraulic oil, approx. **125 l (33 US gall)**.

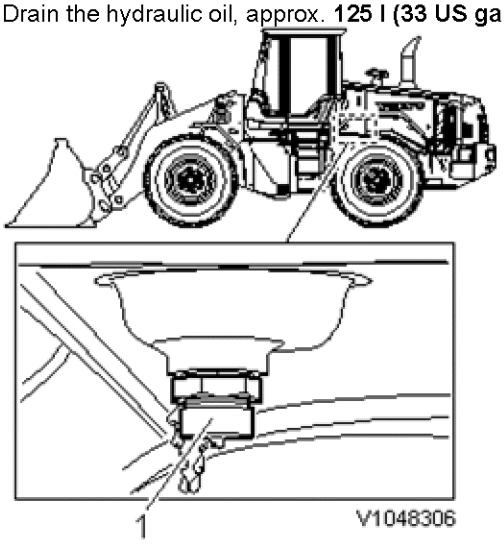

Figure 1

1. Plug

2. Remove the cab, see Hytt, borttagning
.

3. Disconnect the connector for PWM9133 on the pump.

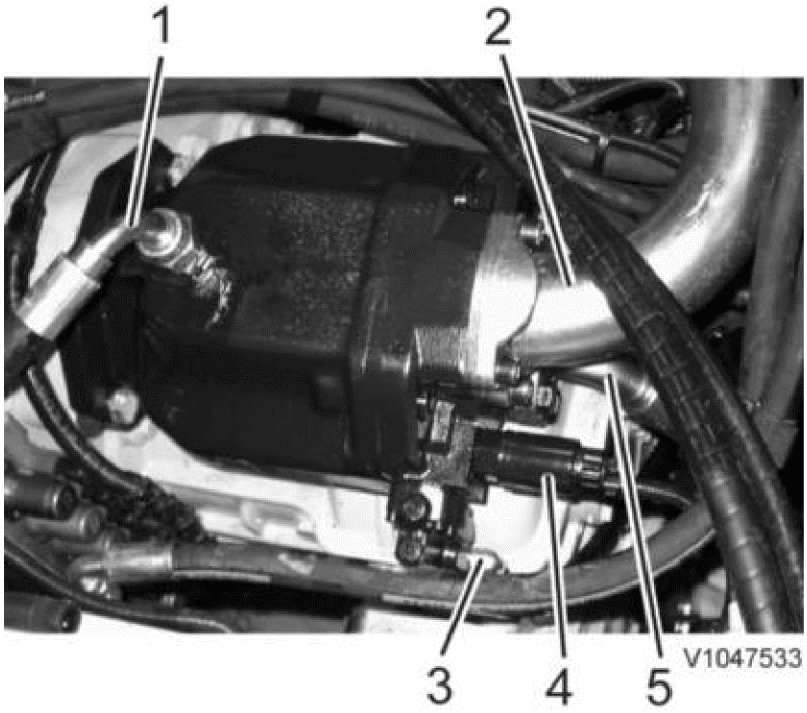

Figure 2
Hydraulic pump P2

1. Leak-off oil line
2. Suction line
3. LS hose
4. PWM9133
5. Pressure hose

4. Disconnect the suction line and plug the connection.
5. Disconnect the leak-off oil line and plug the connection.
6. Disconnect the pressure hose and the LS hose and plug the connections.
7. Connect the sling around the pump. Connect the lifting device.

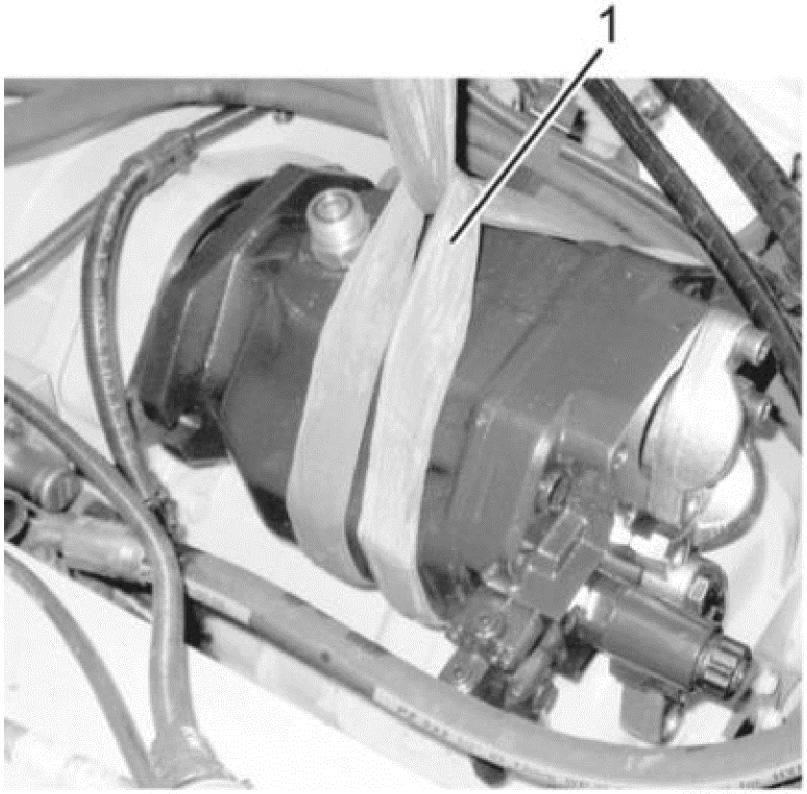

Figure 3

1. Sling

Remove the bolts retaining the pump.
Lift out the pump.
Weight approx. **50 kg (110 lb)**.

VOLVO
Construction Equipment

Service Information

Document Title:	Function Group:	Information Type: **Service Information**	Date: **12/10/2011**
Profile: **WLO, L90F (Volvo) [GB]**			

Hydraulic pump P2, installation

Op nbr 913-051

Sling, 1 m (3.3 ft)
Sling 4 m (13 ft), 2 pcs
Lifting eye M16, 4 pcs
Shackle, 4 pcs

1. When replacing pump, transfer the required parts.
2. Check the O-rings in the spacer and the splines in the sleeve.

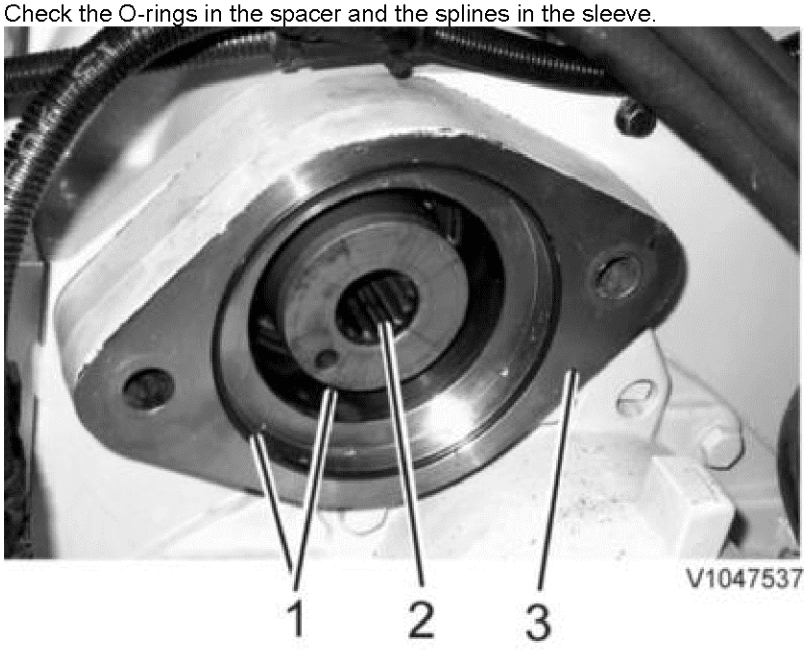

Figure 1

1. O-ring
2. Sleeve
3. Spacer

3. Install the spacer
   Lift in the pump with the aid of the lifting device.
   Weight approx. **50 kg (110 lb)**.

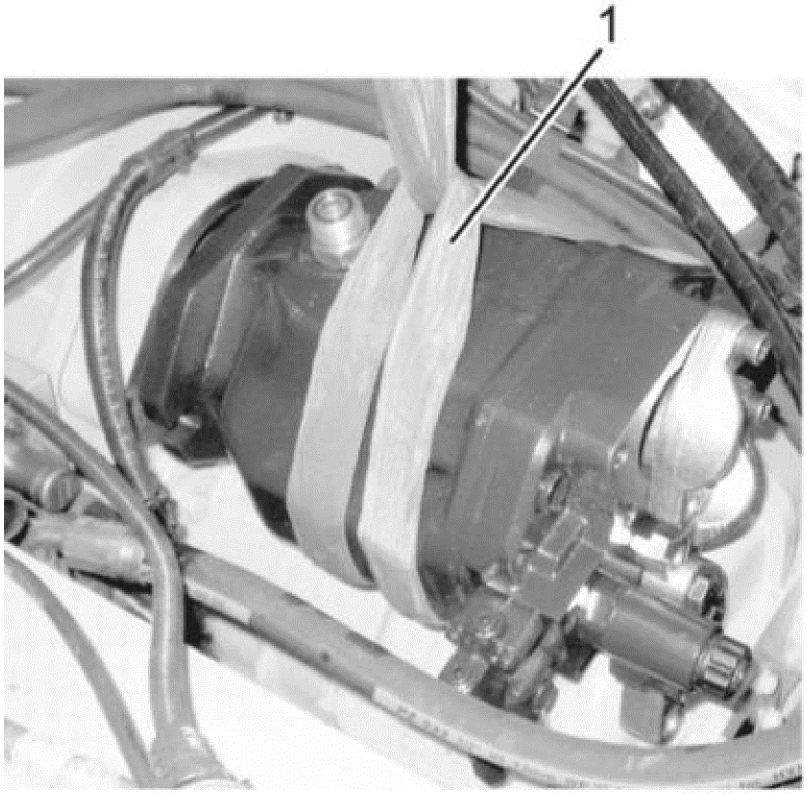

Figure 2

1. Sling

Install the bolts retaining the pump.

NOTE **The engine may have to be rotated to make the splines align.**

4. Check the O-rings and connect the LS-hose, the pressure hose and the suction line.

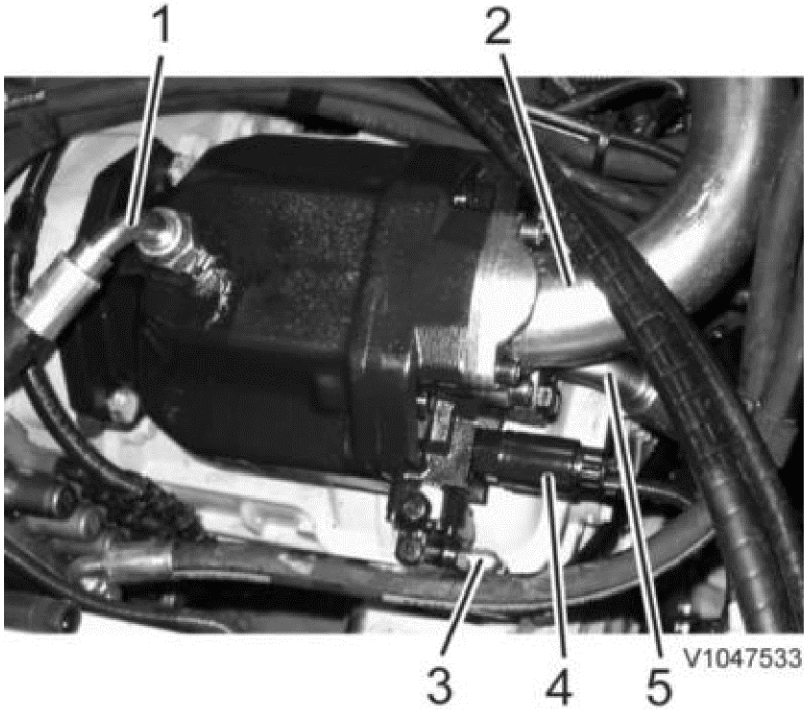

Figure 3

1. Leak-off oil line
2. Suction line

3. LS hose
4. PWM9133
5. Pressure hose

Connect the connector to PWM9133.

5. Prefill the pump with hydraulic oil via leak-off oil connection. Connect the leak-off oil line.

6. Install the cab, see Hytt, ditsättning

7. Test-run the machine. Check that there are no leaks.

VOLVO
Construction Equipment

Service Information

Document Title:	Function Group:	Information Type: **Service Information**	Date: **12/10/2011**
Profile: **WLO, L90F (Volvo) [GB]**			

Hydraulic pump P3, removal

Op nbr 263-081

14360000 Vacuum pump / 24V

Sling, 2 m (6.6 ft)

1. Place the machine in service position 1, see Servicepositioner
.
2. Connect the vacuum pump, see Hydrauloljetank, vakuumsättning, inkoppling och urkoppling av pump
.
3. Open the left engine cover and remove the cover plate.

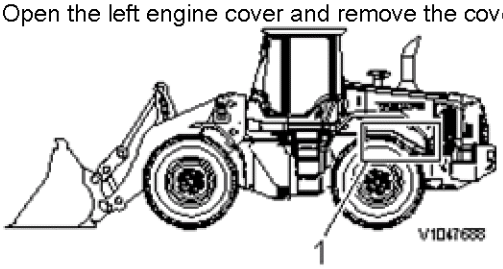

Figure 1

1. Cover plate and engine cover.

4. Remove the fuel filter. Collect the fuel that is spilled in a suitable vessel.

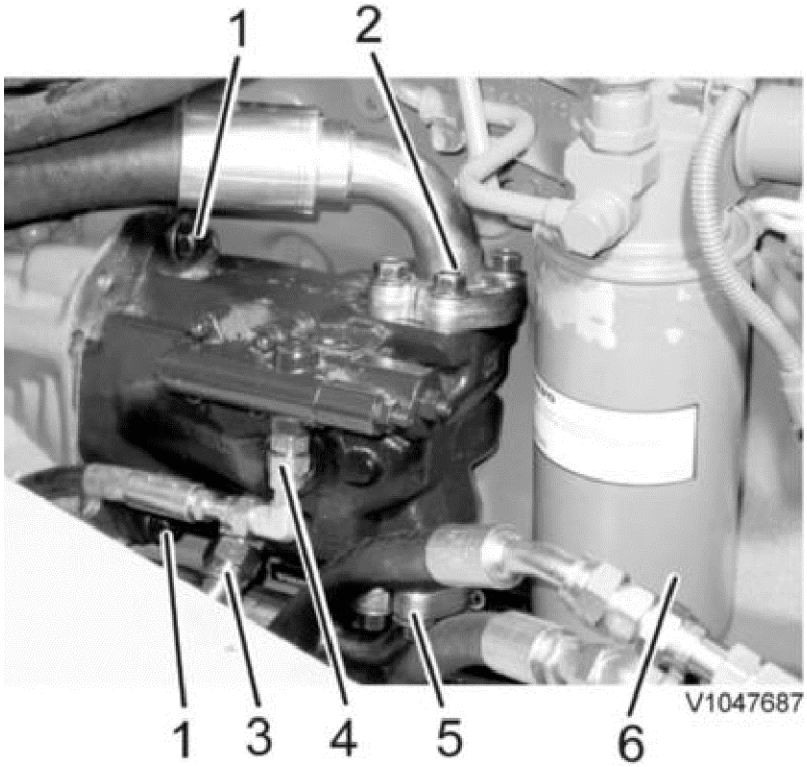

Figure 2

1. Attaching bolt, 2 pcs
2. Suction hose
3. Leak-off oil hose
4. LS hose
5. Pressure hose
6. Fuel filter

5. Plug all connections as they are opened.
   Release the pressure hose from the pump.
6. Disconnect the leak-off oil hose from the pump.
7. Disconnect the LS-hose from the pump.
8. Disconnect the suction hose from the pump.
9. Remove the attaching bolts retaining the pump.
10. Remove the pump with the aid of a sling and an iron bar. Lever with the iron bar against the top of the engine.
    Pump weight approx. **20 kg (40 lb)**

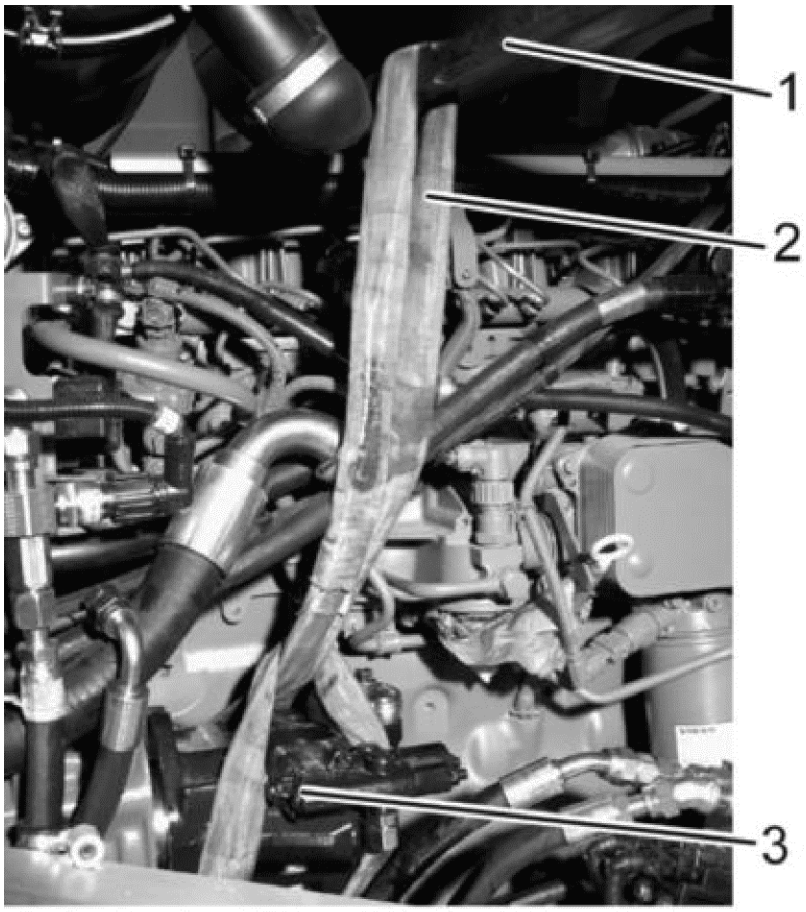

V1047683

Figure 3

1. Iron bar
2. Sling
3. Pump P3

VOLVO
Construction Equipment

Service Information

Document Title:	Function Group:	Information Type: **Service Information**	Date: **12/10/2011**
Profile: **WLO, L90F (Volvo) [GB]**			

Hydraulic pump P3, installation

Op nbr 263-082

1. Check the splines on the drive sleeve.
2. Check the O-ring between the pump and the engine. Apply grease to the O-ring location and install the O-ring on the engine.
3. Install the pump with the aid of a sling and an iron bar. Lever with the iron bar against the top of the engine.

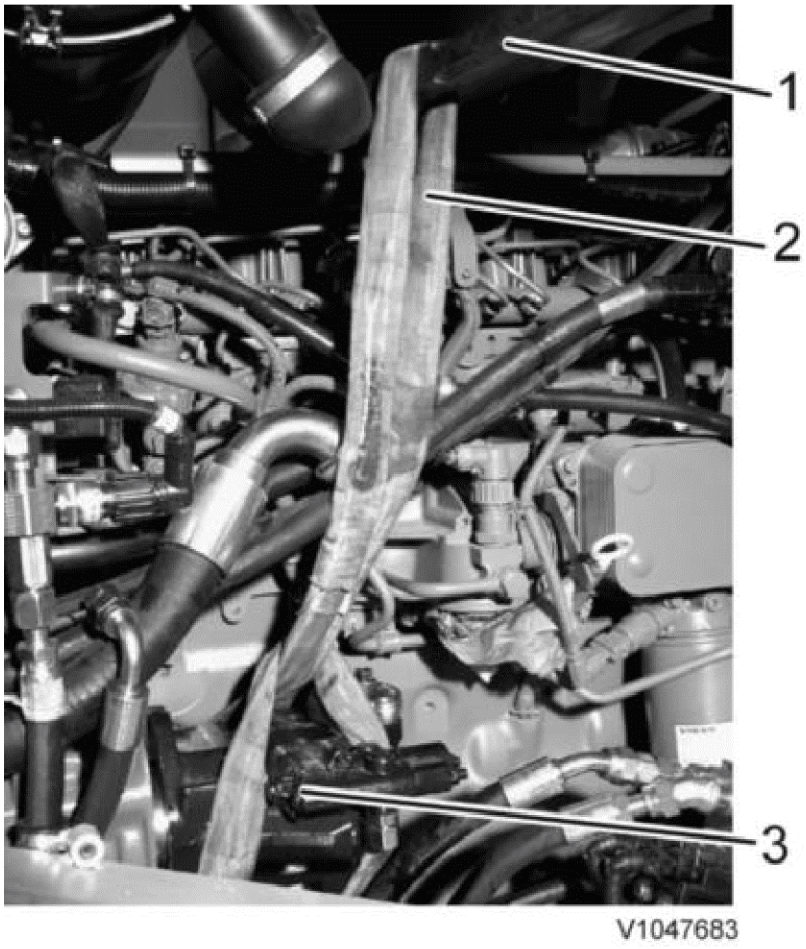

Figure 1

1. Iron bar
2. Sling
3. Pump P3

4. Install the attaching bolts retaining the pump.
Remove the plugs and check that the O-rings are not damaged. Connect the pressure hose.

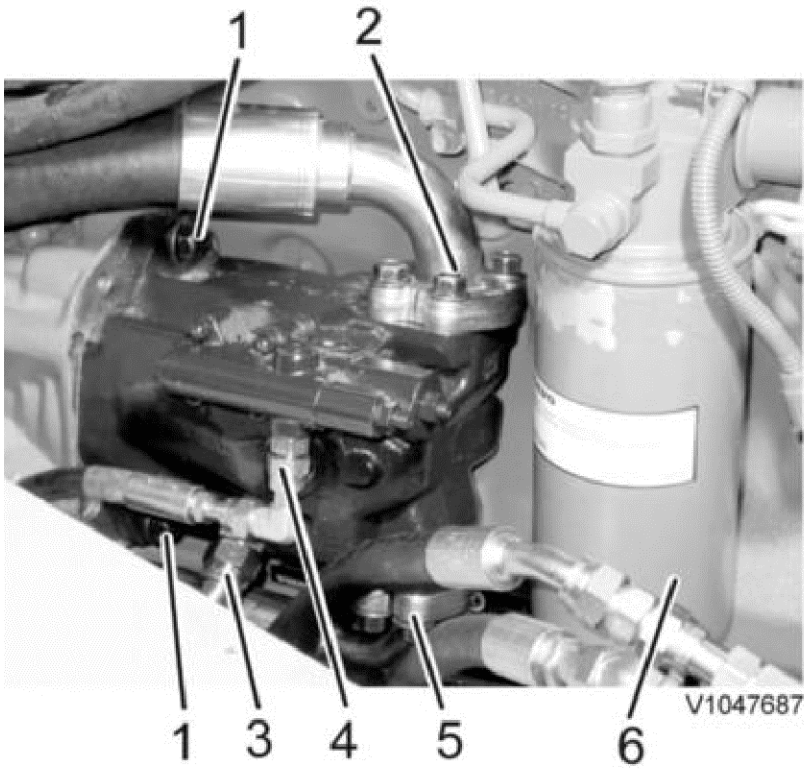

Figure 2

1. Attaching bolt, 2 pcs
2. Suction hose
3. Leak-off oil hose
4. LS-hose
5. Pressure hose
6. Fuel filter

5. Remove the plugs and check that the O-rings are not damaged. Connect the leak-off oil hose.
6. Remove the plugs and check that the O-rings are not damaged. Connect the LS-hose.
7. Remove the plugs and check that the O-rings are not damaged. Connect the suction hose.
8. Remove the vacuum pump, see Hydrauloljetank, vakuumsättning, inkoppling och urkoppling av pump .
9. Install the fuel filter.
10. Bleed the fuel system, see Bränslesystem, luftning .
11. Install the cover plate and close the left engine cover.

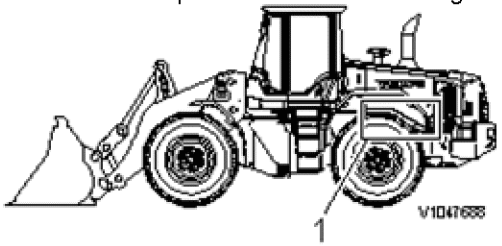

Figure 3

1. Cover plate and engine cover.

12. Restore the machine.
13. Test-run the machine.

VOLVO
Construction Equipment

Service Information

Document Title:	Function Group:	Information Type: **Service Information**	Date: **12/10/2011**
Profile: **WLO, L90F (Volvo) [GB]**			

Servo system, description

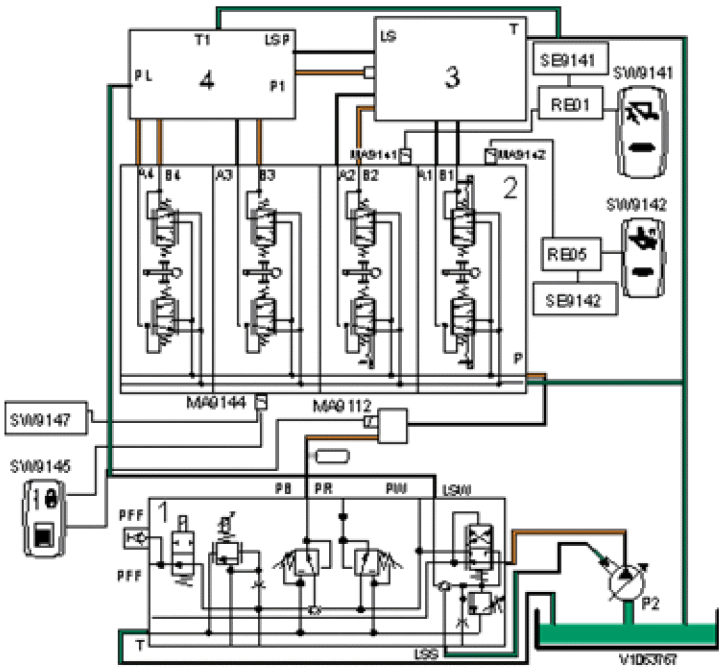

Figure 1
Servo system

1	Central valve	MA9112 [1] ⓘ	Control lever lockout
2	Servo valve	MA9144	Detent solenoid, 3rd function
3	Control valve	MA9141	Detent solenoid, bucket positioner
4	Control valve 3rd/4th hydraulic function	MA9142	Detent solenoid, boom kick-out
SW9141	Switch, bucket positioner	SE9141	Position sensor, bucket positioner
SW9142	Switch, boom kick-out	SE9142	Position sensor, boom kick-out
SW9145	Switch, control lever lock-out	Green	Return without pressure
SW9147	Switch, detent function 3rd function	Orange	Stand-by pressure

The maximum pressure in the servo circuit is adjusted on the pressure-reducing valve in the central valve.

The accumulator stores oil which may be used for lowering the loader unit, if the ordinary working hydraulics for some reason cannot be used.

MA9112, the control lever lock-out is a safety function that blocks oil supply to the servo valve, in order to prevent movement of the loader unit in case one should inadvertently actuate a servo control lever.

The same oil which is used in the servo system is also used for operating the differential lock.

See also:

- Hydraulschema, komplett
- Elschema 901
- Elschema 902
- Elschema 904

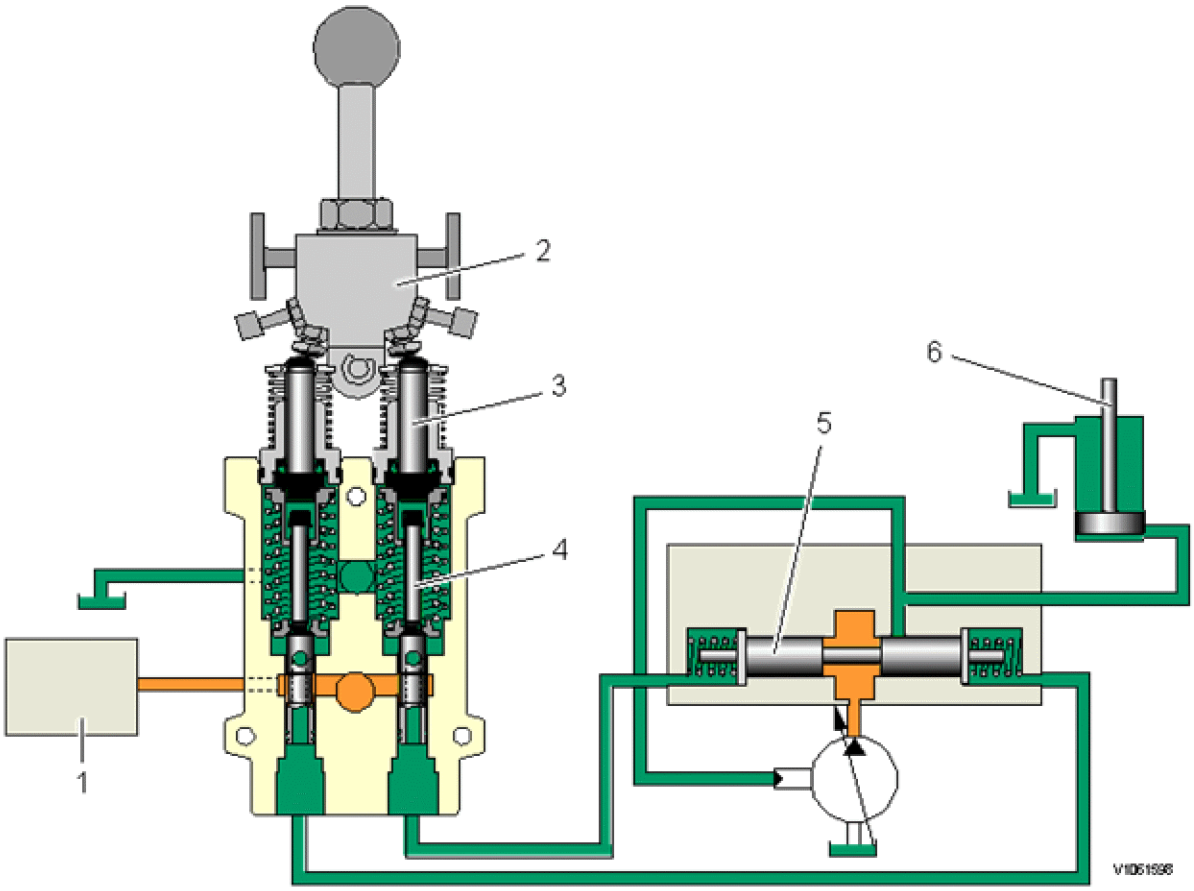

Figure 2
Servo system, principle diagram

Green	Return, without pressure	3	Thrust pin
Orange	Stand-by pressure	4	Servo spool
1	Central valve	5	Directional spool
2	Servo lever	6	Hydraulic cylinder

The basic servo valve function resembles that of a pressure limiting valve. In neutral position the valve spool closes shuts the servo pressure out, while the connections in the control valve have connection to tank.

When the thrust pin is actuated via the lever (function is activated) the valve spool will be pressed down by the spring and at first close the connection to tank. When the movement is continued, the valve spool will open and admit servo pressure out to the control valve.

The output servo pressure also affects the valve spool, which is pressed up against the spring. When the output pressure reaches a value corresponding to the lever deflection and thereby the spring force, the valve closes. This results in a controlled oil pressure, which actuates the control valve spool.

When the valve spool in the servo valve opens, a so called starting pressure is obtained immediately, and this is the pressure that manages to move the valve spool to starting position. The starting pressure causes each control valve spool to move to a certain position before the connection to the hydraulic cylinder is opened.

Between starting position and sensing position in the servo valve the output pressure is controlled proportionally to the lever deflection. The servo valve is in sensing position when an additional resistance is felt in the lever. The output servo pressure in sensing position is the pressure that is required to press the spool in the control valve to its end position.

When the sensing position is being passed, a so called forced opening is obtained and the output servo pressure rises to the same level as the input servo pressure. Sensing position is available on functions with detent solenoid, i.e. lowering (floating position), lifting and tilting in.

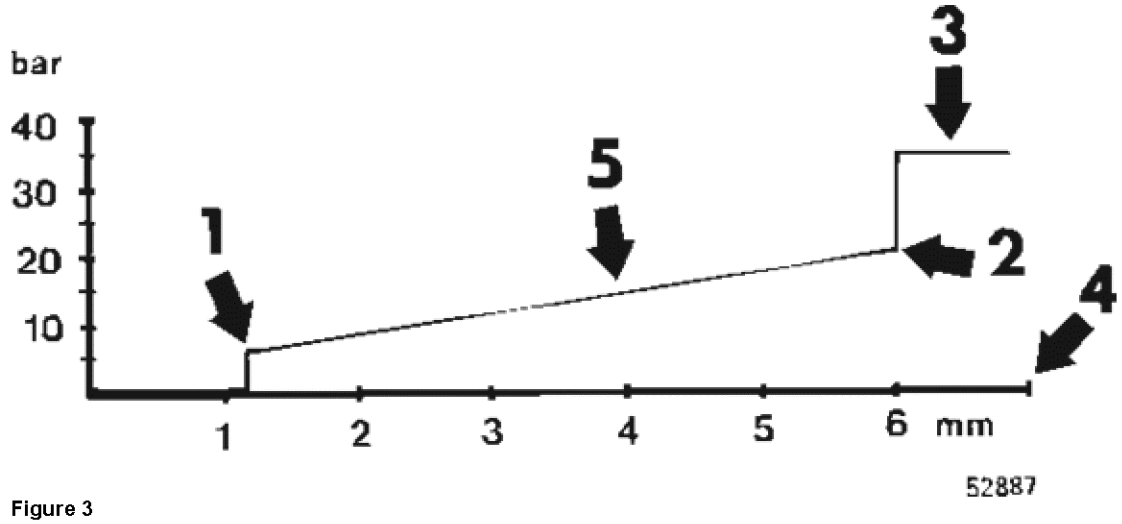

Figure 3
Pressure diagram, output servo pressure as a function of lever travel.

1. Starting pressure
2. Forced opening
3. Max. servo pressure
4. Stroke, thrust pin
5. Controlled pressure from servo valve

---

[1] Only on machines equipped with 4th hydraulic function. On machines without 4th function the control levers can be locked manually on the control lever carrier.

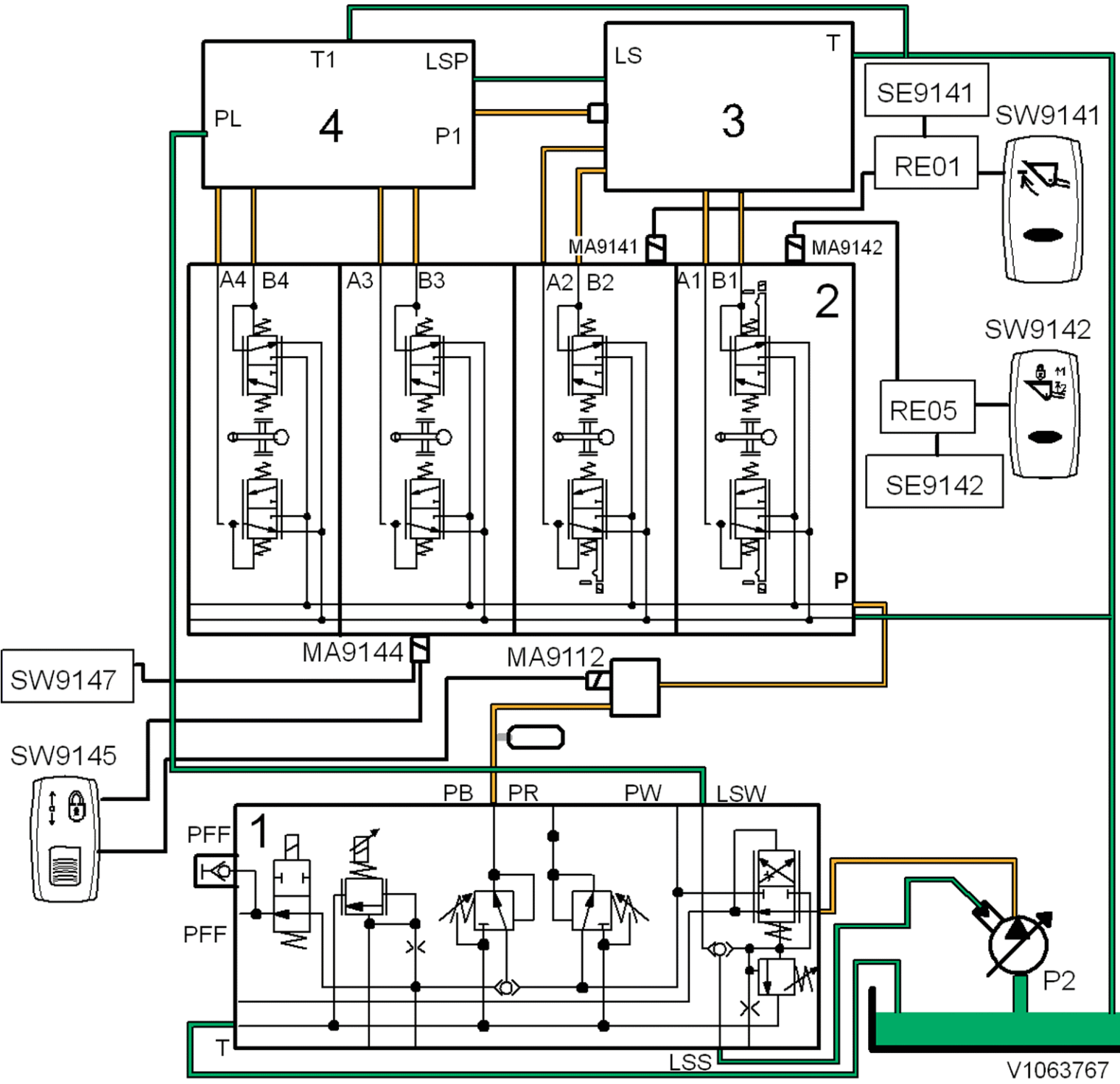
T1
LSP
PL
4
P1
LS
T
3
SE9141
SW9141
RE01
MA9141
MA9142
A4
B4
A3
B3
A2
B2
A1
B1
2
SW9142
RE05
SE9142
P
MA9144
MA9112
SW9147
SW9145
PB
PR
PW
LSW
PFF
1
PFF
T
LSS
P2
V1063767

VOLVO
Construction Equipment

Service Information

Document Title:	Function Group:	Information Type: **Service Information**	Date: **12/10/2011**
Profile: **WLO, L90F (Volvo) [GB]**			

Servo system, component position

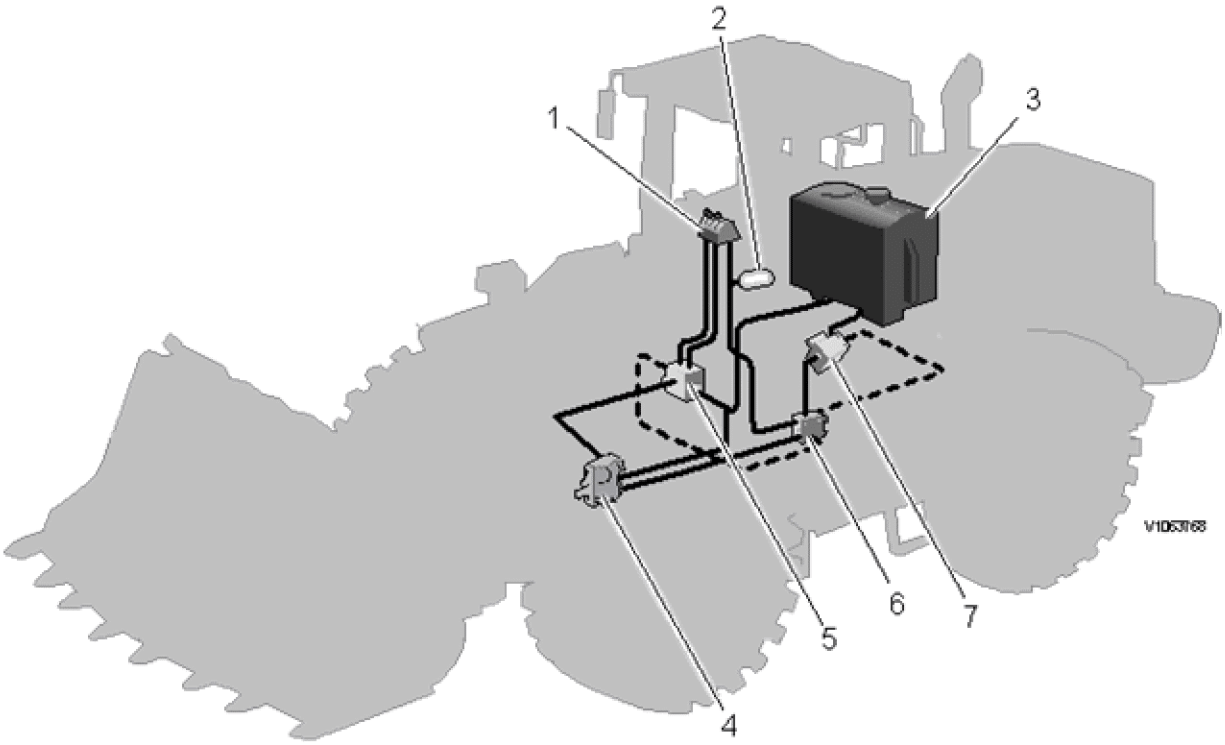

Figure 1
Servo system

1. Servo valve
2. Accumulator
3. Hydraulic oil tank
4. Control valve
5. Control valve, 3rd/4th hydraulic function [1]
6. Central valve
7. Pump 2

For description of components, see:

- Servoventil, beskrivning
- Hydrauloljetank, beskrivning
- Hydraulpumpar, beskrivning
- Centralblock, beskrivning
- 3:e/4:e hydraulfunktion, ventil, beskrivning
- Manöverventil, beskrivning

[1] Optional equipment

VOLVO
Construction Equipment

Service Information

Document Title:	Function Group:	Information Type: **Service Information**	Date: **12/10/2011**
Profile: **WLO, L90F (Volvo) [GB]**			

Servo valve, description

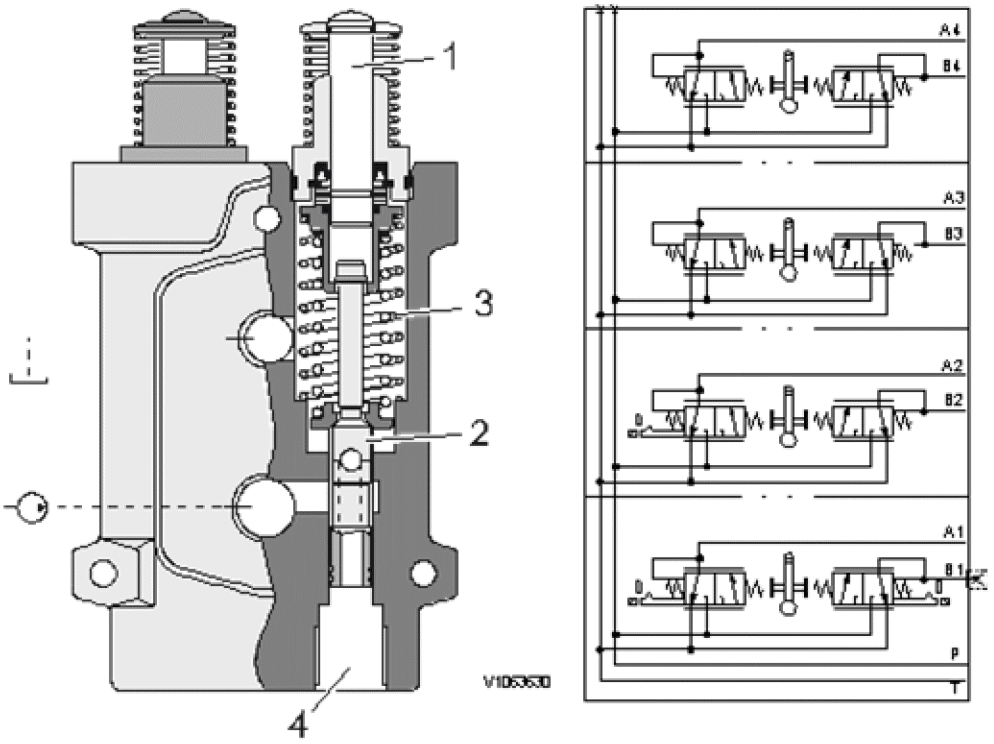

Figure 1
Servo valve

1. Thrust pin
2. Valve spool
3. Spring
4. Connection to control valve

The servo valve has a closed centre and has one section for each hydraulic function. One function for lifting and tilting respectively. The servo valve is equipped with detent solenoids (electro magnets) for the floating position, bucket positioner and boom kick-out.

If the machine is equipped with 3rd or 3rd/4th functions, the servo valve will consist of three or four sections.

VOLVO
Construction Equipment

Service Information

Document Title:	Function Group:	Information Type: **Service Information**	Date: **12/10/2011**
Profile: **WLO, L90F (Volvo) [GB]**			

Servo pressure, checking at the spool in control valve

Op nbr 914-063

9993831 Support
14290266 Hose
11666052 Pressure gauge

E–1706

NOTE **Before checking the servo pressure at the spool, the servo pressure must be checked and adjusted, see Servotryck, kontroll och justering**
.

1. Warm up the machine until the hydraulic system has reached operating temperature.
2. Raise the lifting frame and secure with 9993831Support.

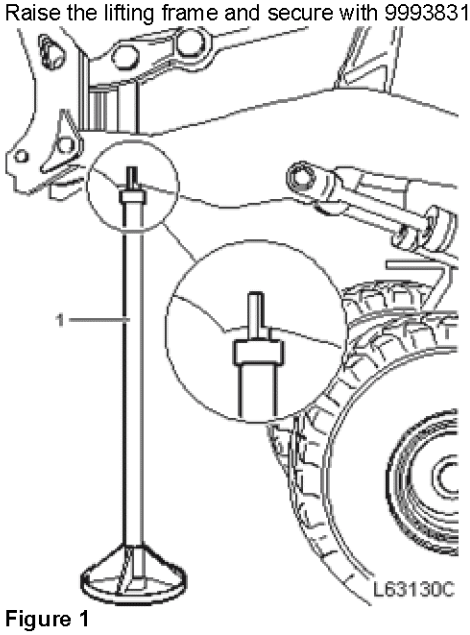

Figure 1

3. Release the pressure in the system by moving the servo control levers back and forth 10–15 times.

   NOTE **If the machine is equipped with 3rd/4th function, the ignition key must be in position 1.**

4. Remove the cover plate on the front frame.
5. Disconnect the servo line from the control valve at the function in question and install tool E-1706, 14290266Hose and 11666052Pressure gauge.
   Collect the oil that runs out in a suitable vessel.

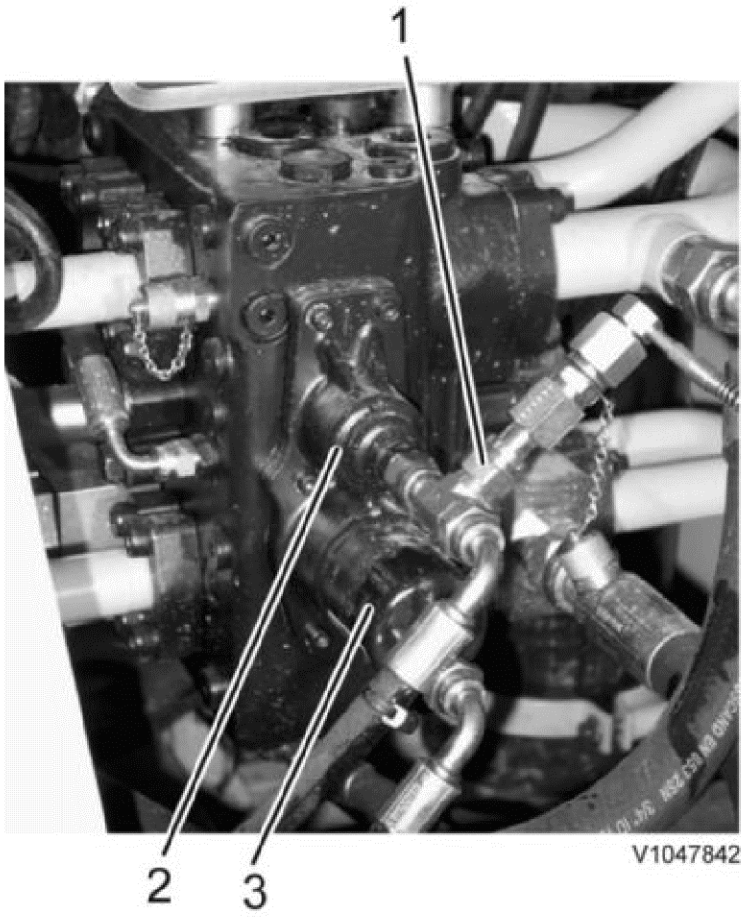

Figure 2
Checking servo pressure at spool

1. E-1706
2. Tilting in (plus side)
3. Lifting (plus side)

6. Start the engine and remove the support.
Operate the function in question and read off the servo pressure.

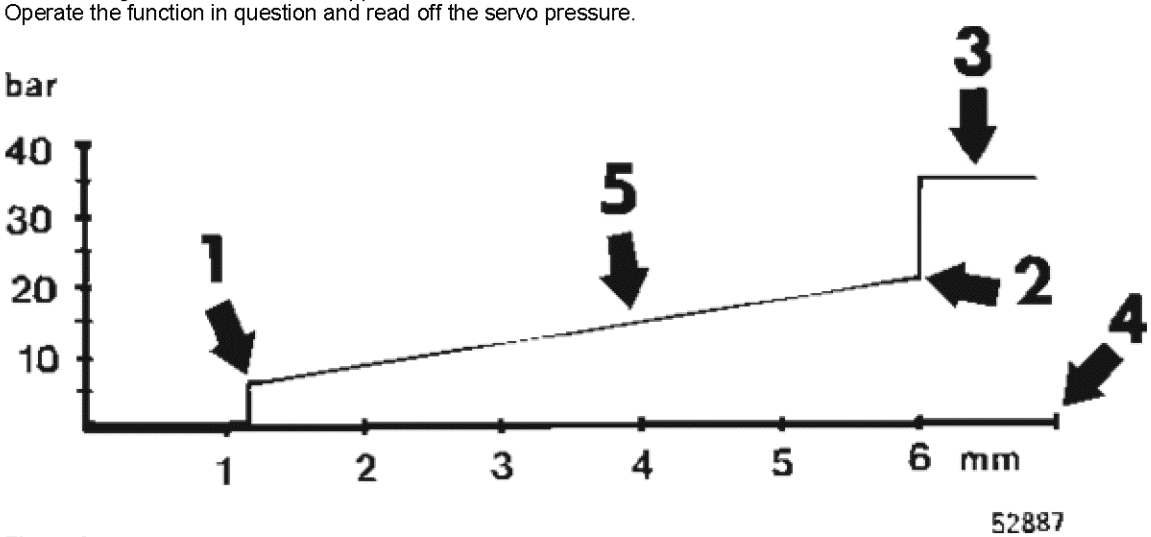

Figure 3
Pressure diagram, output servo pressure as a function of lever deflection.

1. Starting pressure, 0.6—0.7 MPa (6.0—7.0 bar) (87—101 psi)
Starting pressure 3rd/4th function, 0.5—0.6 MPa (5.0—6.0 bar) (72—87 psi)
2. Forced opening
3. Max. servo pressure
4. Stroke, thrust pin
5. Controlled pressure from servo valve

If the pressures are not according to the pressure diagram:

Begin by checking the servo valve spool for the function in question.

If the measured pressure is too low:
Check the servo pressure (main servo pressure), see Servotryck, kontroll och justering
, at the same time as checking the servo pressure at the spool. If the main servo pressure drops when the function is used, this is caused by an internal leakage in the control valve.

7. Remove the tools.
8. Connect the servo line to the control valve.
9. Restore the machine.

VOLVO
Construction Equipment

Service Information

Document Title:	Function Group:	Information Type: **Service Information**	Date: **12/10/2011**
Profile: **WLO, L90F (Volvo) [GB]**			

Servo pressure, checking and adjusting

Op nbr 914-055

14290266 Hose
11666052 Pressure gauge

Checking

1. Warm up the machine until the hydraulic system has reached operating temperature.
2. Secure the frame joint with the frame joint lock. Place blocks in front of and behind the wheels.

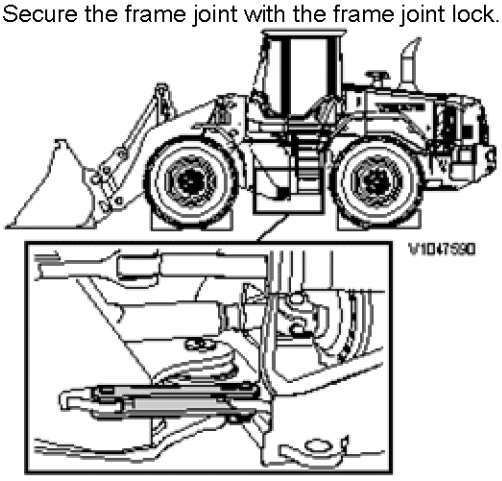

Figure 1

3. Release the pressure in the system by moving the servo control levers back and forth 10–15 times.

NOTE **If the machine is equipped with 3rd/4th function, the ignition key must be in position 1.**

4. Remove the cover plate behind the ladder on the right side of the machine.
5. Connect the pressure gauge to the checking point on the load-lowering block.

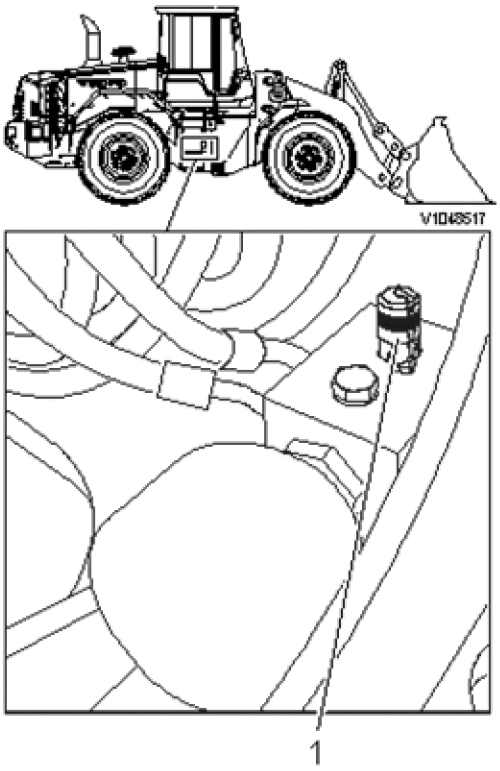

Figure 2

1. Checking point

6. Start the engine. Run it at low idling speed.
   Tilt in against end position.
   Servo pressure, see Servosystem, specifikation

Adjusting

7. Adjust the servo pressure on the pressure-reducing valve (3) on the central valve.

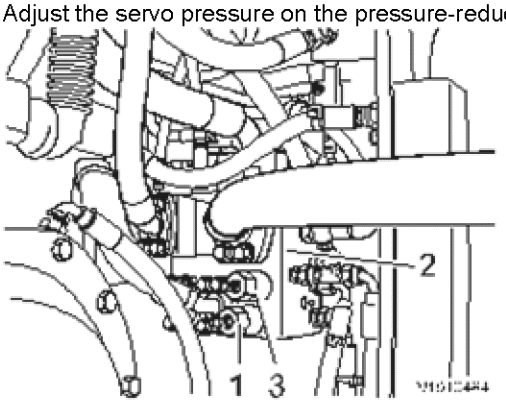

Figure 3
Central valve

1. Adjusting brake pressure, pressure-reducing valve
2. Central valve
3. Adjusting servo pressure, pressure-reducing valve

8. Install the cover plate behind the ladder on the right side of the machine.

9. Restore the machine.

VOLVO
Construction Equipment

Service Information

Document Title:	Function Group:	Information Type: **Service Information**	Date: **12/10/2011**
Profile: **WLO, L90F (Volvo) [GB]**			

Servo valve, adjusting control

Op nbr 914-054

1. Remove the cover over the servo valve.



V1047899

Figure 1

2. Adjust the distance between the adjusting screw for the lever and the thrust pin, so that the screw fits up against the pin but without actuating it.

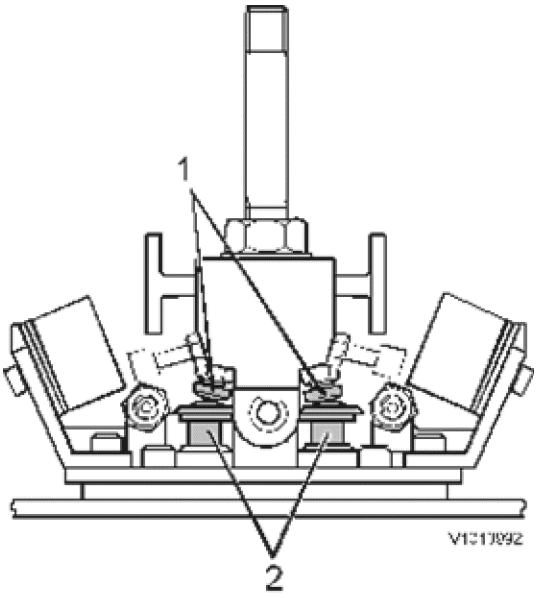

Figure 2

1. Adjusting screw
2. Thrust pin

Detent solenoid, bucket positioner and boom kick-out

3. Adjust the solenoid so that the stop washer fits up against the solenoid at full lever deflection on the side in question.

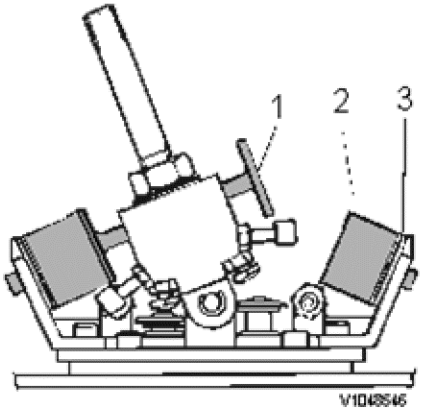

Figure 3

1. Stop washer
2. Detent solenoid
3. Spacer washers

Adjusting sensing position

4. The sensing position is the position, which the lever has to pass before the detent solenoid pulls (detent position).
Move the lever to the sensing position. Adjust the clearance between detent solenoid and stop washer to 2–3 mm with adjusting screws (2) on the side in question, see item A.

NOTE **The adjusting screw may only be rotated complete revolutions.**

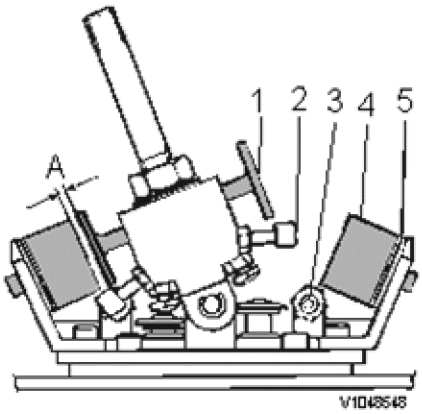

Figure 4

A. 2–3 mm (0.079–0.118 in)
1. Stop washer
2. Adjusting screw
3. Thrust pin
4. Detent solenoid
5. Spacer washers

5. Adjust thrust pin (2) to determine the force that is required in order to move the lever to the detent position. Use a 2 mm hexagon key.

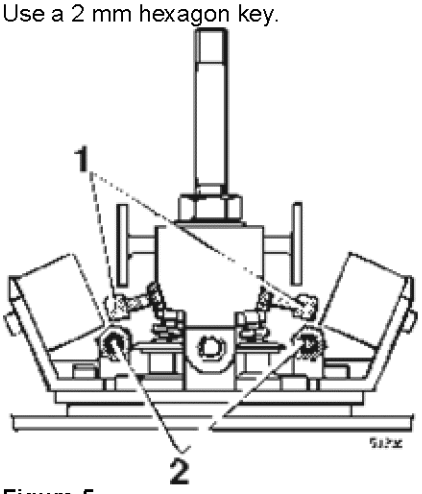

Figure 5
Sensing position

1. Adjusting screw
2. Thrust pin

6. Install the cover over the servo valve.

VOLVO
Construction Equipment

Service Information

Document Title:	Function Group:	Information Type: **Service Information**	Date: **12/10/2011**
Profile: **WLO, L90F (Volvo) [GB]**			

Servo valve, removal

Op nbr 914-064

14360000 Vacuum pump / 24V

1. Place the machine on level ground. Place blocks in front of and behind the wheels.
2. If the machine is equipped with 3rd/4th hydraulic function, turn the ignition key to position 1.
3. Release the pressure in the servo system by moving the servo control levers back and forth approx. 20 times.
4. Remove the knobs from the control levers.

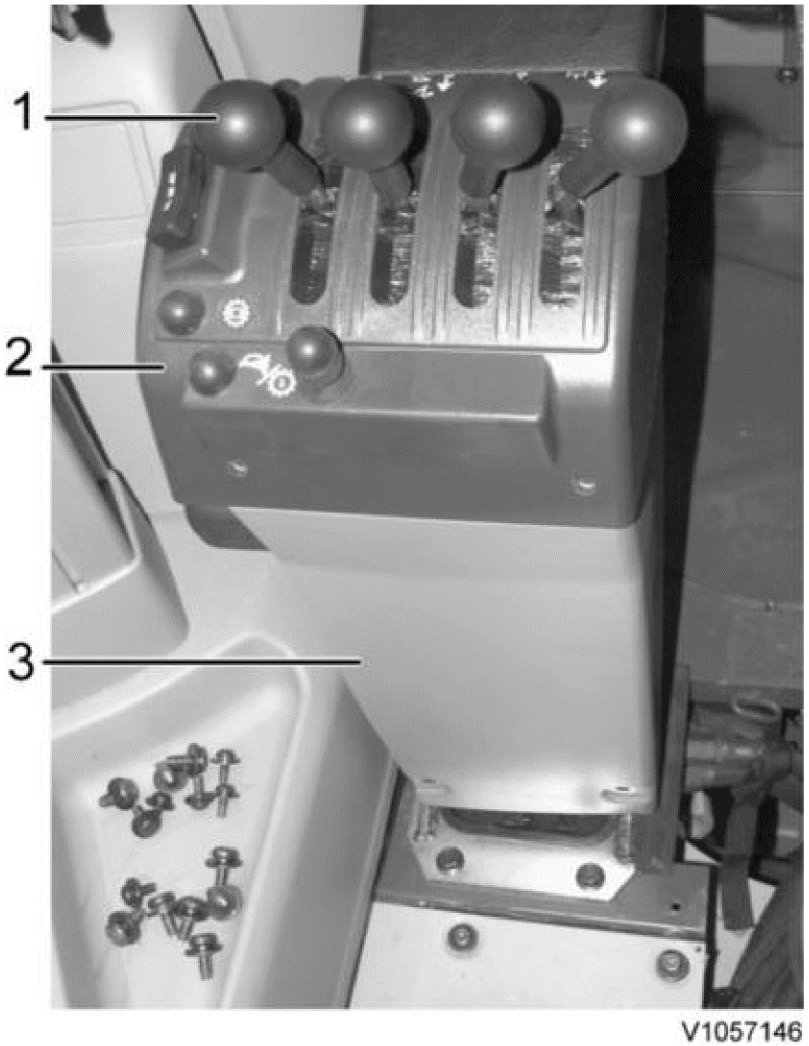

Figure 1

1. Knob
2. Upper plastic casing
3. Lower plastic casing
   Front cover plate (behind the plastic casing)

Remove the attaching bolts for the upper plastic casing. Move the upper plastic casing to one side.
Remove the lower plastic casing.
Remove the front cover plate.

5. Remove the rear floor mat.
   Remove the front floor plate.

6. Connect the vacuum pump according to Hydrauloljetank, vakuumsättning, inkoppling och urkoppling av pump
   .

7. Disconnect the quick-action couplings from the control lever carrier. Plug the hoses.

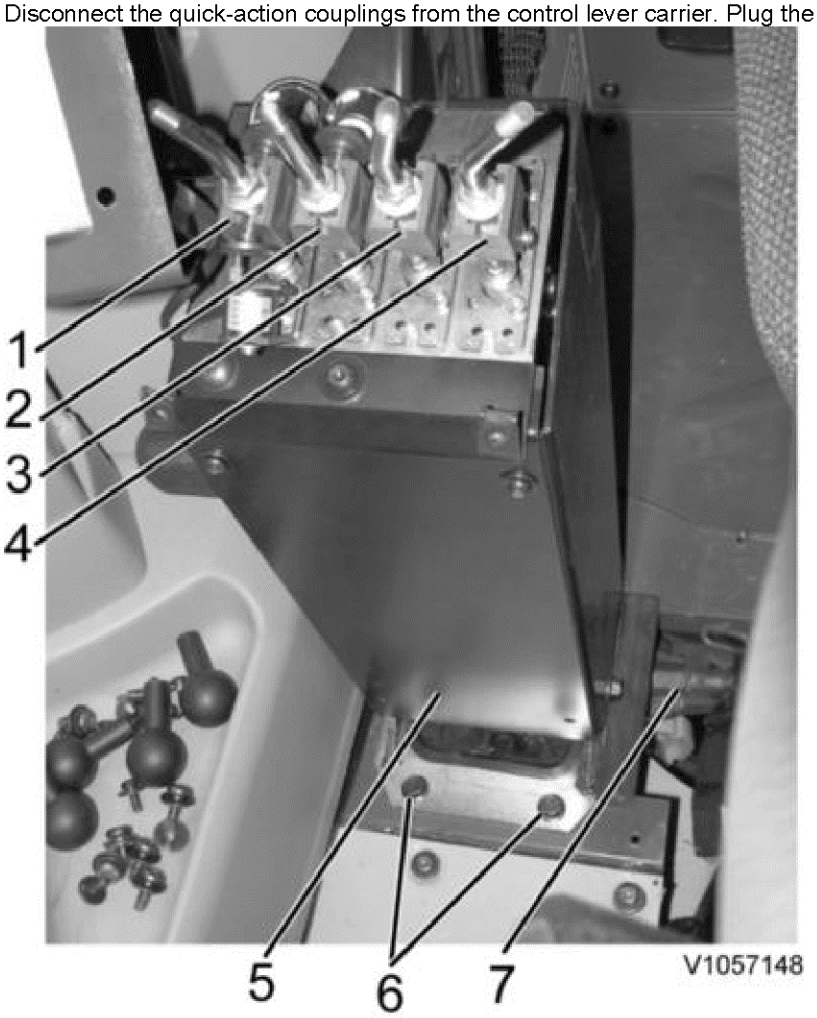

Figure 2

1. 4th hydraulic function
2. 3rd hydraulic function
3. tilting function
4. lifting function
5. Front cover plate
6. Attaching bolts, floor
7. Quick-action couplings

8. Part connector LF (positioned behind the front cover plate).
   Remove the attaching bolts for the control lever carrier at the floor.
   Remove the control lever carrier.
   Weight of control lever carrier **approx. 23 kg (50 lb)**.

9. Remove the attaching bolts from the servo valve.
   Remove the rubber plate from the underside of the control lever carrier.
   Part connector LE.

VOLVO
Construction Equipment

Service Information

Document Title:	Function Group:	Information Type: **Service Information**	Date: **12/10/2011**
Profile: **WLO, L90F (Volvo) [GB]**			

Servo valve, installation

Op nbr 914-065

14360000 Vacuum pump / 24V

1. Install the connections and the hoses on the new section.
2. Check the O-rings and install the bolts that keep the sections together. Install the valve plate. Apply locking fluid to the attaching bolts.

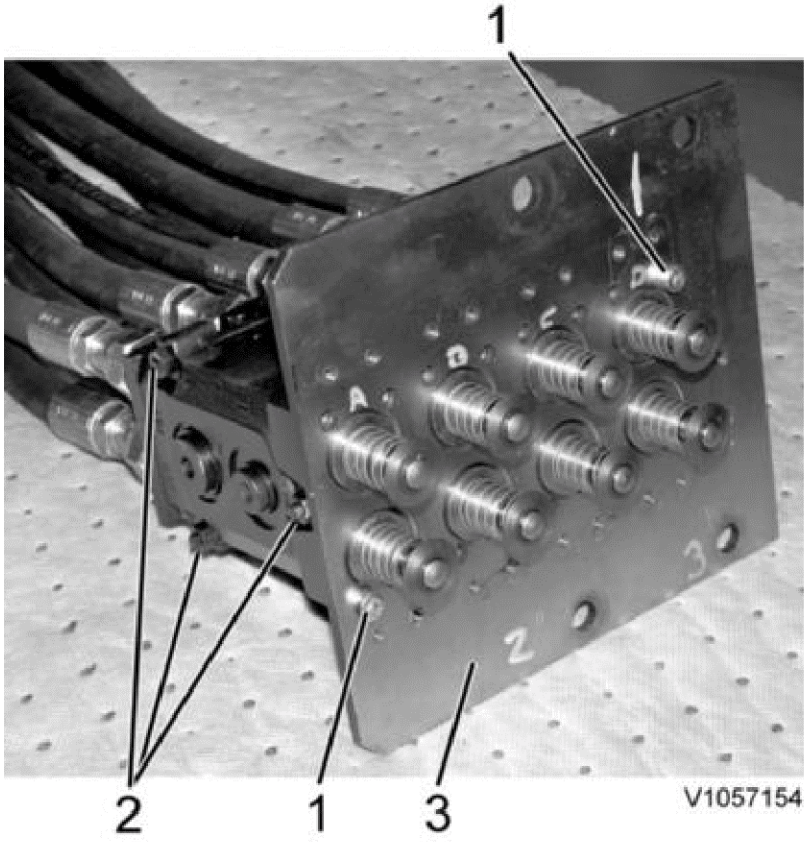

Figure 1

1. Attaching bolts for valve plate
2. Bolts keeping the sections together
3. Valve plate

3. Install the control levers together with their attaching bolts. Install the solenoids together with their attaching bolts.

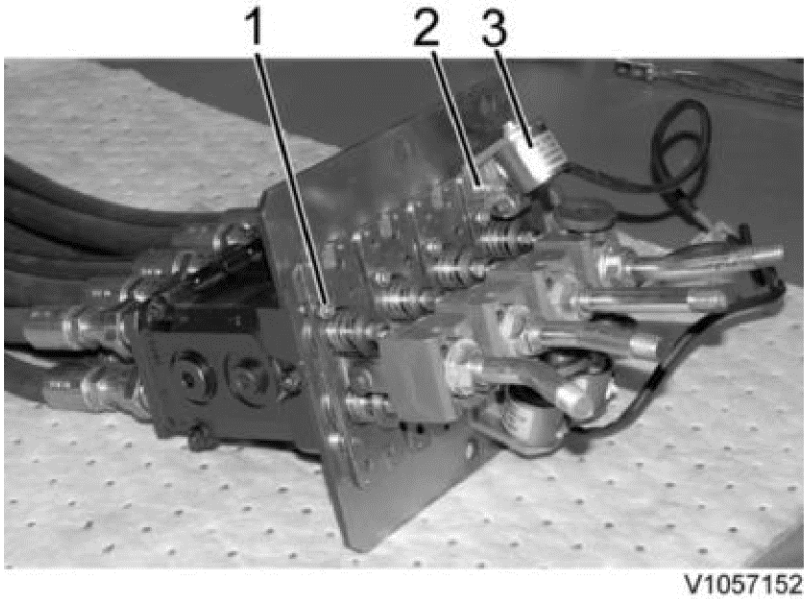

Figure 2

1. Attaching bolt for lever
2. Attaching bolt for solenoid
3. Solenoid

4. Install the servo valve on the control lever carrier together with its attaching bolts.
   Connect connector LE.
   Install the rubber plate on the underside of the control lever carrier.

5. Position the control lever carrier in the cab and secure to the floor with the attaching bolts.
   Connect connector LF.
   Install the front cover plate.
   Weight of control lever carrier **approx. 23 kg (50 lb)**.

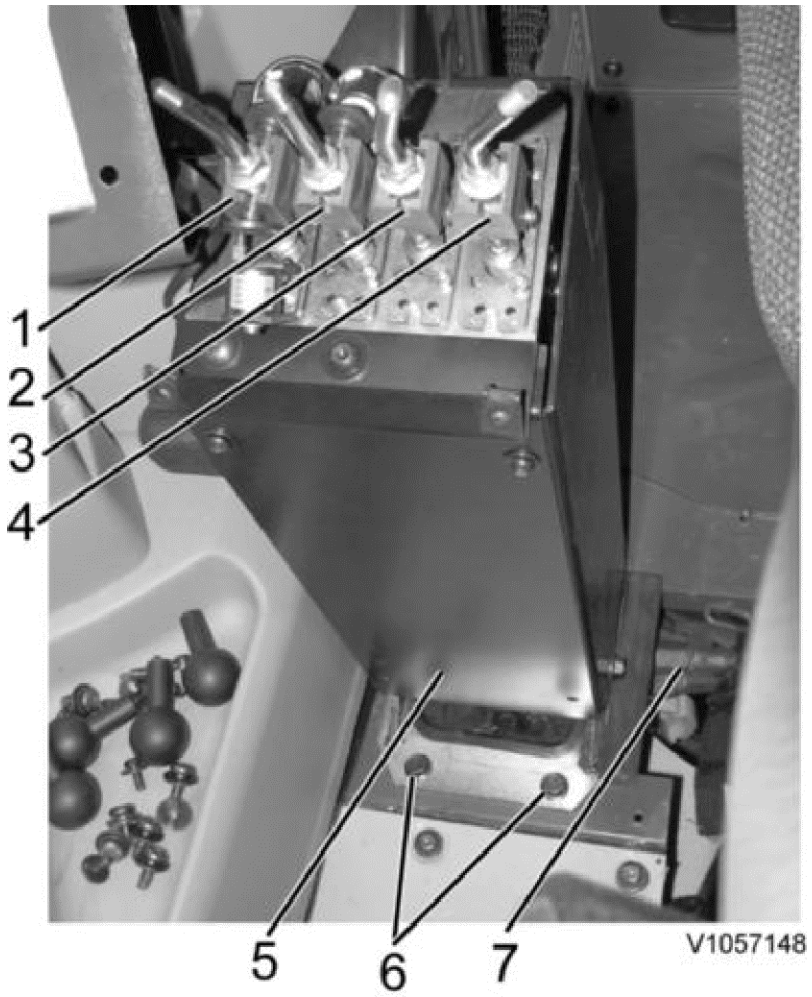

Figure 3

1. 4th hydraulic function
2. 3rd hydraulic function
3. Tilting function
4. Lifting function
5. Front cover plate
6. Attaching bolts, floor
7. Quick-action couplings

6. Remove the plugs and connect the quick-action couplings.
7. Remove the vacuum pump according to Hydrauloljetank, vakuumsättning, inkoppling och urkoppling av pump
.
8. Install the lower plastic casing.

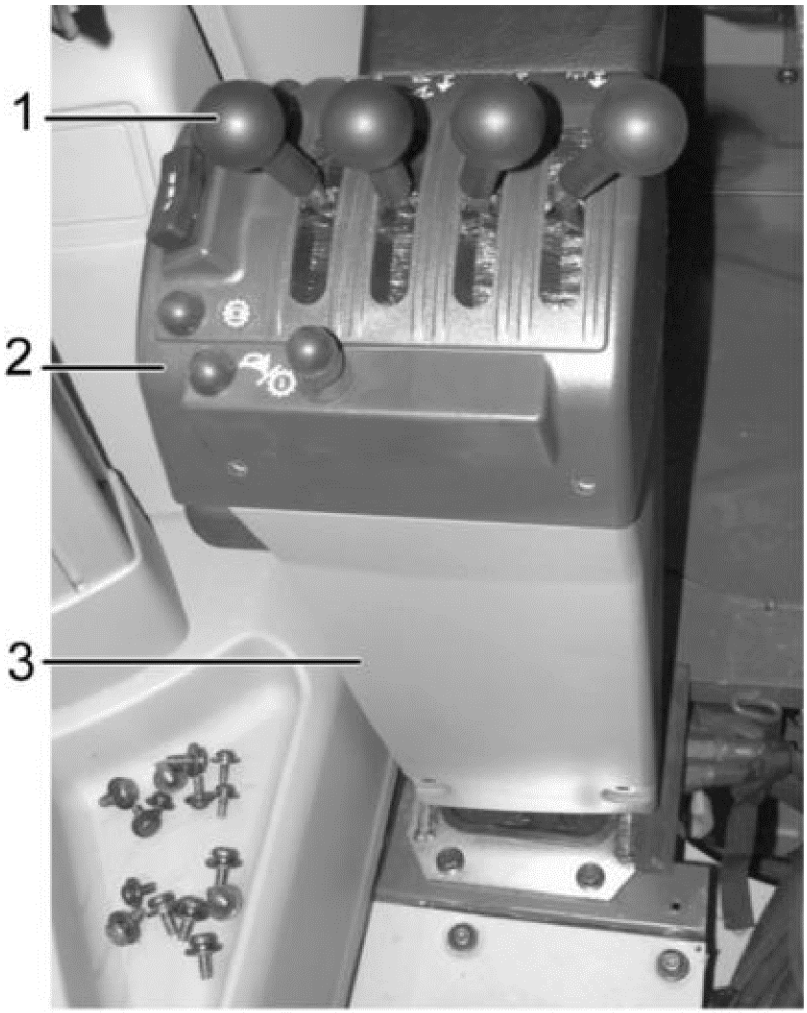

V1057146

Figure 4

1. Knob
2. Upper plastic casing
3. Lower plastic casing

Install the upper plastic casing.
Install the knobs on the control levers.

9. Test-run the machine. Check that there are no leaks.

10. Install the front floor plate.
Put back the rear floor mat.

VOLVO
Construction Equipment

Service Information

Document Title:	Function Group:	Information Type: **Service Information**	Date: **12/10/2011**
Profile: **WLO, L90F (Volvo) [GB]**			

Accumulator, checking (pressure back-up for servo circuit)

Op nbr 914-052

11666041 Pump
11666051 Pressure gauge
14290266 Hose

E-2000

1. Remove the accumulator according to Servoackumulator, borttagning
.
2. Connect E-2000 to the accumulator. Connect the other tools according to the figure.

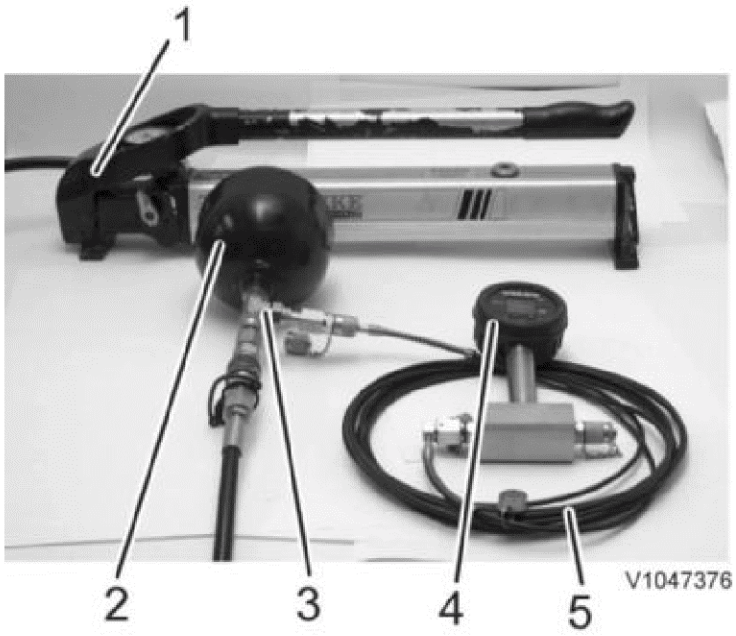

Figure 1

1. 11666041Pump
2. Accumulator
3. E-2000
4. 11666051Pressure gauge
5. 14290266Hose

3. Pump oil into the accumulator.
After a few pump strokes the pressure will rise quickly up to the precharging pressure and then rise slowly.
Precharging pressure, see Servosystem, specifikation
.
If the precharging pressure is less than what is specified, it must be discarded, see Ackumulator, kassering
.
4. Install the checked or new accumulator according to Servoackumulator, ditsättning

VOLVO
Construction Equipment

Service Information

Document Title:	Function Group:	Information Type: **Service Information**	Date: **12/10/2011**
Profile: **WLO, L90F (Volvo) [GB]**			

Servo accumulator, removal

Op nbr 914-047

1. Turn the key to position 1.
2. Release the pressure in the servo system by moving the servo control levers back and forth approx. 20–30 times.
3. Remove the right side cover, under the ladder.
4. Remove the accumulator. Collect the waste oil in a vessel.

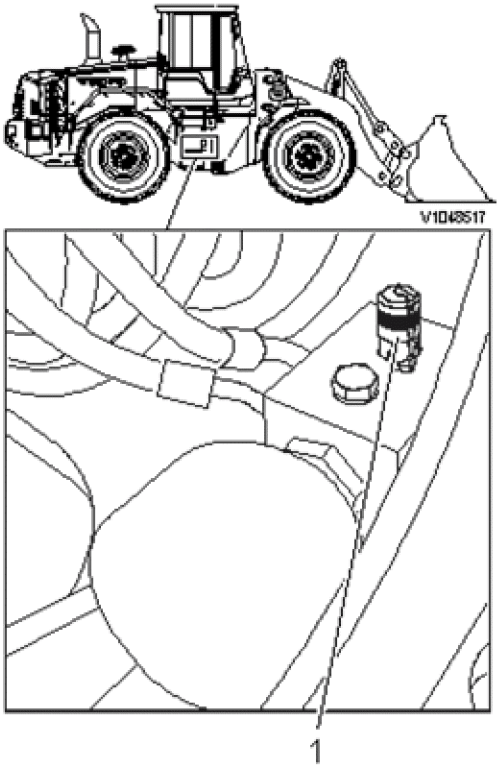

Figure 1
Servo accumulator, checking point (1)

VOLVO
Construction Equipment

Service Information

Document Title:	Function Group:	Information Type: **Service Information**	Date: **12/10/2011**
Profile: **WLO, L90F (Volvo) [GB]**			

Accumulator removed, checking

Op nbr 914-049

11666041 Pump
11666051 Pressure gauge
14290266 Hose

E-2000

1. Connect E-2000 to the accumulator. Connect the other tools according to the figure.

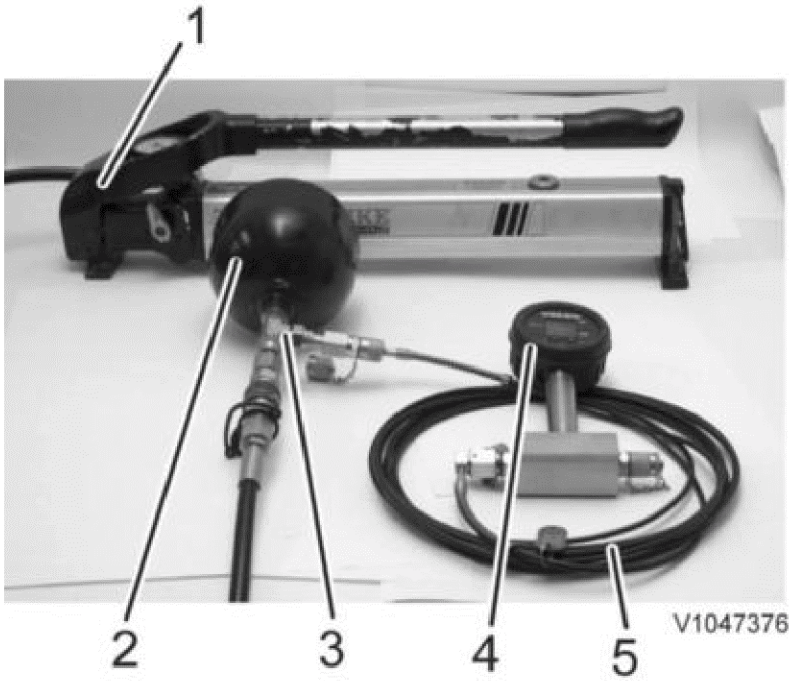

Figure 1
Checking removed accumulator

1. 11666041Pump
2. Accumulator
3. E-2000
4. 11666051Pressure gauge
5. 14290266Hose

2. Pump oil into the accumulator.
After a few pump strokes the pressure will rise quickly up to the precharging pressure and then rise slowly.
Precharging pressure, see Servosystem, specifikation
.
If the precharging pressure is less than what is specified, it must be discarded, see Kasserade ackumulatorer
.

VOLVO
Construction Equipment

Service Information

Document Title:	Function Group:	Information Type: **Service Information**	Date: **12/10/2011**
Profile: **WLO, L90F (Volvo) [GB]**			

Servo accumulator, installation

Op nbr 914-048

1. Lubricate the O-ring with oil and install the accumulator.

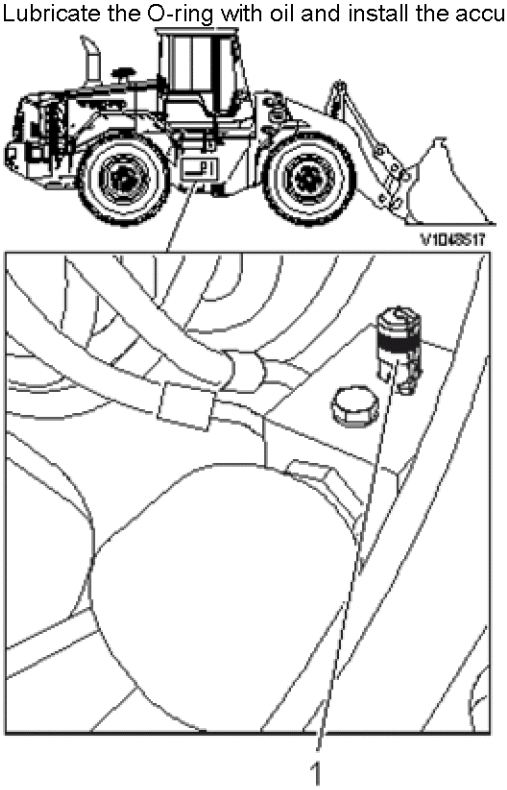

Figure 1

2. Test the function of the machine. Check that there are no leaks.
3. Install the side cover.

VOLVO
Construction Equipment

Service Information

Document Title:	Function Group:	Information Type: **Service Information**	Date: **12/10/2011**
Profile: **WLO, L90F (Volvo) [GB]**			

Boom Suspension System, component description

Piston type accumulator

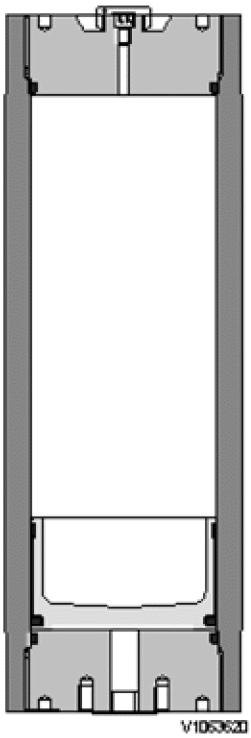

Figure 1
Piston type accumulator

Valve block

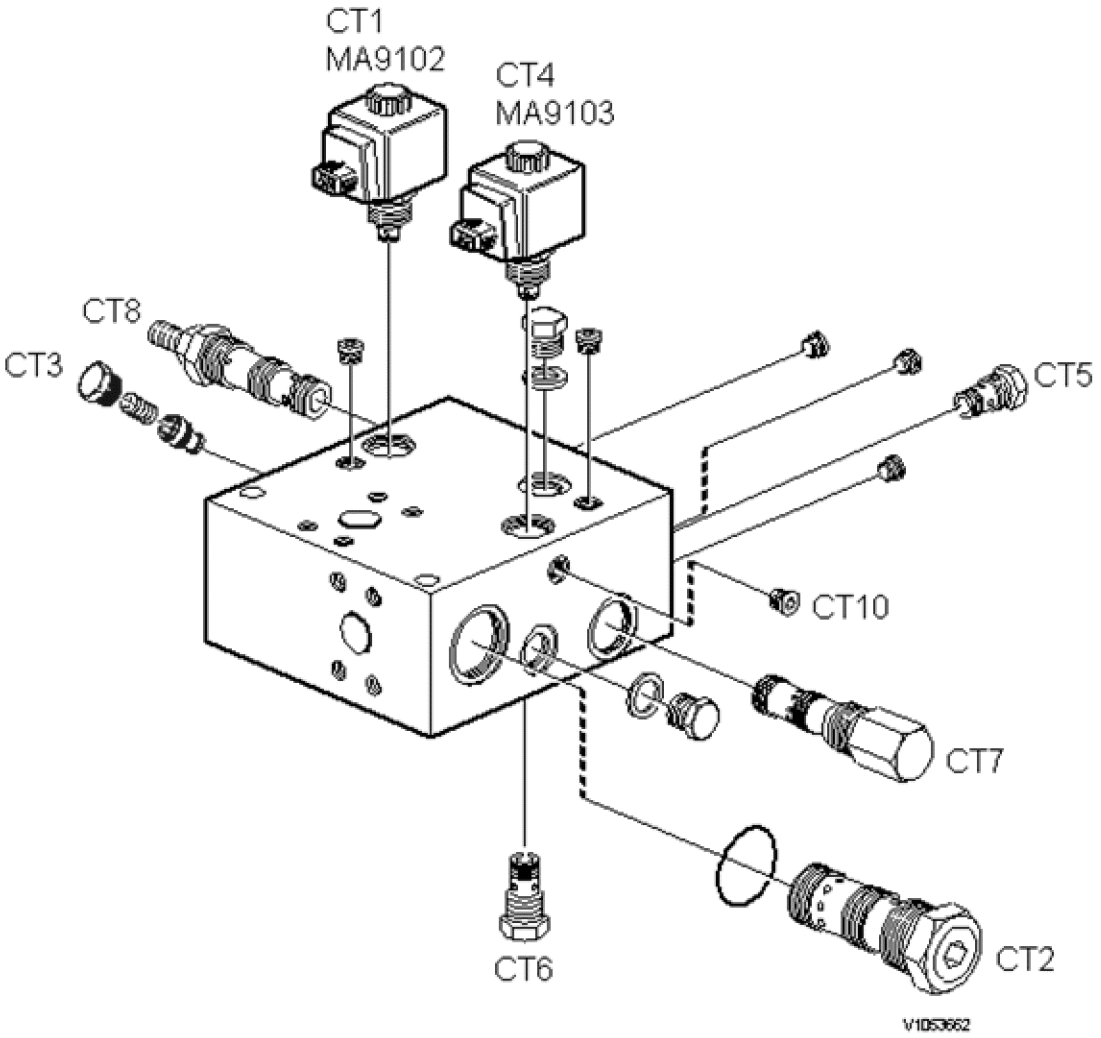

Figure 2
Valve block 1 (V1)

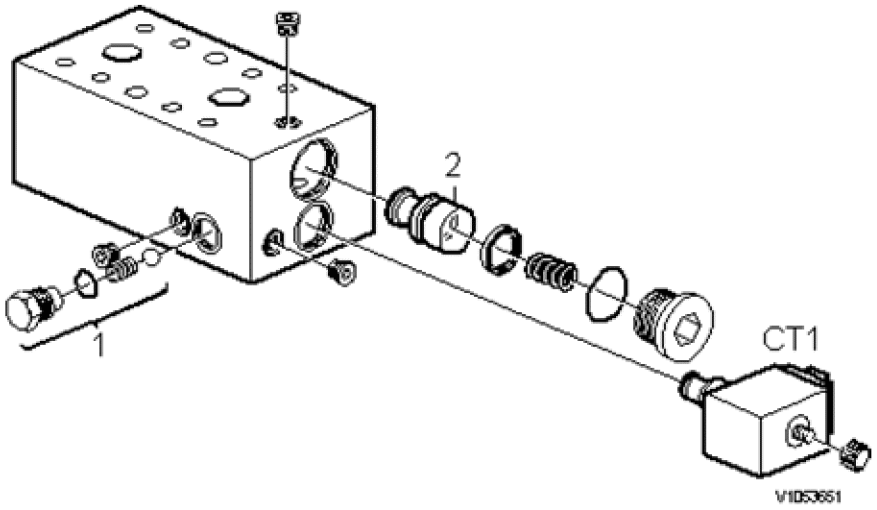

Figure 3
Valve block 2 (V2)

1. CT 2, non-return valve
2. Logic element 3

VOLVO
Construction Equipment

Service Information

Document Title:	Function Group:	Information Type: **Service Information**	Date: **12/10/2011**
Profile: **WLO, L90F (Volvo) [GB]**			

Boom Suspension System, description

The system consists of one or two piston accumulators, depending on machine type and two valve blocks (V1 and V2). The accumulators are precharged with nitrogen gas. The accumulator(s) is connected to the lifting cylinders of the machine via a valve. In cases where there are two accumulators, precharging pressure is different in the accumulators in order to provide good suspension at varying weights of the load. The pressures correspond approximately to the pressure build-up caused by an empty and a full bucket respectively, but may have to be modified depending operating conditions.

Accumulators, charging

Accumulators can only be charged when the Boom Suspension System is disengaged.

In this way, unwanted movements are avoided when another hydraulic function is used (i.e. tilt or 3rd/4th function) while the system is activated and engaged.

The springing action is achieved by connecting the plus side of the lifting cylinders so that the cylinder pressure "rests" against the accumulators while at the same time the minus side of the lifting cylinders is connected to the hydraulic oil tank. When operating across uneven ground and the lifting arms are actuated by a "bouncing load", the lifting arms move vertically but the pressure variations are taken up (absorbed) by the accumulators.

Engagement of Boom Suspension System

The engagement of the Boom Suspension System, i.e. when MA9104, MA9102 and MA9103 become energised, is controlled by the V-ECU, which receives signals from SW9148, whether gear-dependent or speed-dependent function is selected.

Engagement of gear-dependent function

When Boom Suspension System is activated and gear-dependent mode is selected (SW9148 in centre position) the Boom Suspension System is engaged apart from in gears F1 and R1 and kick-down.

Engagement of speed-dependent function

Limit values for engagement and disengagement of speed-dependent Boom Suspension System (SW9148 lower end pressed) is set with VCADS Pro parameters GZI, GZJ, GZK and GZL for directional gears forward and reverse. See the software description for limit values.

Fully automatic not activated
With forward drive engaged, the Boom Suspension System will be engaged when the speed exceeds VCADS Pro parameter GZI + 1 km/h (1 mph). With reverse drive engaged or in neutral, the Boom Suspension System will be engaged when the speed exceeds VCADS Pro parameter GZJ.

With forward drive engaged, the Boom Suspension System will be disengaged when the speed is below VCADS Pro parameter GZI. With reverse drive engaged or in neutral, the Boom Suspension System will be disengaged when the speed is below 2 km/h (1 mph).

Full Automatic Power Shift activated
With forward drive engaged or in neutral, the Boom Suspension System will be engaged when the speed exceeds VCADS Pro parameter GZK + 1 km/h (1 mph). When either of gears R2, R3 and R4 are engaged, the Boom Suspension System will be engaged when the speed exceeds VCADS Pro parameter GZL + 1 km/h (1 mph) or when GZL = 0 km/h (0 mph).

With forward drive engaged or in neutral, the Boom Suspension System will be disengaged when the speed is below VCADS Pro parameter GZK. When either of gears R2, R3 and R4 are engaged, the Boom Suspension System will be disengaged when the speed is below VCADS Pro parameter GZL. The Boom Suspension System will also be disengaged, when gear R1 is engaged.

Engagement of Boom Suspension System

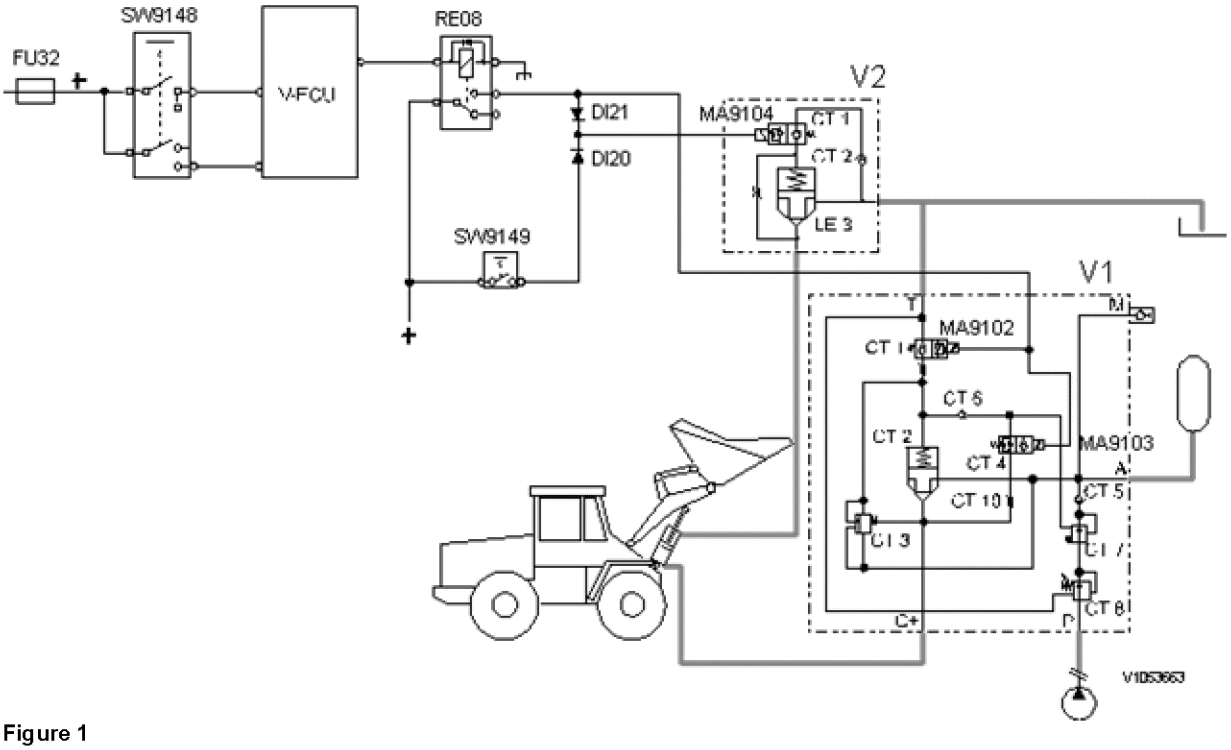

Figure 1

When the system is not activated, the pressure in the lifting cylinders and accumulators is different (not the same). Charging of the accumulator(s) takes place via pressure-reducing valve CT8, which controls the maximum charging pressure, which approximately corresponds to a pressure with a fully loaded bucket. Copying valve CT7, which, via CT4, is connected to the plus side of the lifting cylinders, is open as long as the pressure at the plus side of the lifting cylinders does not exceed the pressure in the accumulator(s). Consequently, the pressure is copied to the accumulators, when any of the hydraulic functions is operated, i.e. the accumulators can only be charged by using one of the hydraulic functions. When the pressure in the accumulator(s) becomes the same as the pressure at the plus side of the lifting cylinders, CT7 will close.

When the Boom Suspension System becomes engaged, CT1 (MA9102) opens the connection to tank and drains the space at the top of CT2. CT4 (MA9103) closes the connection between the plus side of the lifting cylinders and copying valve CT7. CT2 opens the connection between the plus side of the lifting cylinders and the accumulator(s).

If the pressure in the accumulator(s) is higher than the pressure in the lifting cylinders, when the Boom Suspension System is engaged, CT3 will be connected to the top of CT2 by the higher pressure from the accumulator(s). The connection is closed at CT6. The surplus pressure in the accumulator(s) is drained via the restriction and CT1, which at the same time keeps CT2 closed. When the pressure in the accumulator(s) and the lifting cylinders has been equalised, CT3 closes and CT2 opens the connection between the lifting cylinders and the accumulator(s).

Without pressure balancing, the oil from the accumulators would flow into the lifting cylinders and cause an inadvertent raising of the lifting unit.

CT1 (MA9104) opens the top of LE3 to tank. When the top of LE3 has been drained, a connection is opened between the minus side of the lifting cylinders and tank. The restrictions in LE3 and CT1 (MA9104) slow down the flow from the minus side of the lifting cylinders and dampen oscillations in the lifting arms.

If single-acting lifting is required, without topping up the plus side of the lifting cylinders, it is possible only to energise MA9104 with switch SW9149.

See also

- Elschema 903
- Hydraulschema, komplett

Software

Gear-dependent Boom Suspension System		
Input signals	**Conditions for output functions**	**Output functions**
○ Boom Suspension System, SW9148 ○ Engine On/Off	**General conditions** ○ SW9148 in position gear-dependent Boom Suspension System (control lamp for Boom	○ Engagement of Boom Suspension System via relay RE08

o Kick-down On/Off o Directional gear o Engaged gear o Speed, SE4307 o Activation Full Automatic Power Shift, SW4211 o VCADS Pro parameter FVK "0, 1" [T1] ⓘ	Suspension System is alight) [T2] ⓘ o Engine On o Kick-down Off o FVK = 1 **Directional gear Neutral** o Directional gear in position Neutral **Directional gear Forward** o Engaged gear F2, F3, F4 **Directional gear Reverse** o Engaged gear R2, R3, R4 **Disengagement of Boom Suspension System takes place if any of the following conditions are fulfilled**: o Engaged gear F1 o Engaged gear R1 o Kick-down On	o Disengagement of Boom Suspension System via relay RE08 Under the menu "Hydraulics" on the display unit the status disengaged/engaged is shown.
o Monitoring, RE08	o System error, open circuit or short circuit See Diagnostics	o Amber central warning o Check BSS Failure

[T1] The parameter FVK activates the Boom Suspension System. "0"=Not installed, "1"=Installed

[T2] The control lamp is continuously alight as long as the function is activated.

Speed-dependent Boom Suspension System without activated Full Automatic Power Shift		
Input signals	**Conditions for output functions**	**Output functions**
o Boom Suspension System, SW9148 o Activation Full Automatic Power Shift, SW4211 o Engine On/Off o Kick-down On/Off o Directional gear o Engaged gear o Speed, SE4307 o VCADS Pro parameter GZI o VCADS Pro parameter GZJ o VCADS Pro parameter FVK "0, 1" [T1] ⓘ	**General conditions** o SW9148 in position speed-dependent Boom Suspension System (control lamp for Boom Suspension System is alight) [T2] ⓘ o SW4211 Full Automatic Power Shift Off o Engine On o Kick-down Off o FVK = 1 **Directional gear Forward** o Engaged gear F2, F3, F4 o Speed higher than GZI + 1 km/h (1 mph) GZI = 5–20 km/h (3–12 mph) Preselected value 5 km/h (3 mph) **Directional gear Reverse R or Neutral N** o Directional gear in position Neutral o Engaged gear R2, R3, R4 o Speed higher than GZJ GZJ = 2–20 km/h (1–12 mph) Preselected value 6 km/h (4 mph) **Disengagement of Boom Suspension System takes place if any of the following conditions are fulfilled:** o Directional gear in position Forward and speed lower than GZI o Directional gear in position Reverse and speed lower than 2 km/h (1 mph) o Directional gear in position Neutral and speed lower than 2 km/h (1 mph)	o Engagement of Boom Suspension System via relay RE08 o Disengagement of Boom Suspension System via relay RE08 Under the menu "Hydraulics" on the display unit the status disengaged/engaged is shown.
o Monitoring, RE08	o System error, open circuit or short circuit See Diagnostics	o Amber central warning o Check BSS Failure

[T1] The parameter FVK activates the Boom Suspension System. "0"=Not installed, "1"=Installed

[T2] The control lamp is continuously alight as long as the function is activated.

Speed-dependent Boom Suspension System with activated Full Automatic Power Shift		
Input signals	**Conditions for output functions**	**Output functions**
o Boom Suspension	**General conditions**	o Engagement of Boom

System, SW9148 o Activation Full Automatic Power Shift, SW4211 o Engine On/Off o Kick-down On/Off o Directional gear o Engaged gear o Speed, SE4307 o VCADS Pro parameter GZK o VCADS Pro parameter GZL o VCADS Pro parameter FKV “0, 1”[T1] ⓘ	o SW9148 in position speed-dependent Boom Suspension System (control lamp for Boom Suspension System is alight) [T2] ⓘ o SW4211 Full Automatic Power Shift On o Engine On o Kick-down Off o FVK = 1 **Directional gear Forward or Neutral** o Directional gear in position Neutral or Forward o Speed higher than GZK + 1 km/h (1 mph) GZK = 8–20 km/h (5–12 mph) Preselected value 8 km/h (5 mph) **Directional gear Reverse** o Engaged gear R2, R3, R4 o GZL = 0 km/h (0 mph) GZL = 0–20 km/h (0–12 mph) Preselected value 0 km/h (0 mph) o Speed higher than GZL + 1 km/h (1 mph) GZL = 0–20 km/h (0–12 mph) Preselected value 0 km/h (0 mph) or o GZL not 0 o Engaged gear R2, R3, R4 o Speed higher than GZL + 1 km/h (1 mph) **Disengagement of Boom Suspension System takes place if any of the following conditions are fulfilled:** o Directional gear in position Forward and speed lower than GZK o Directional gear in position Neutral and speed lower than GZK o Engaged gear R1 or o GZL not 0 o Engaged gear R2, R3 or R4 and speed lower than GZL	Suspension System via relay RE08 o Disengagement of Boom Suspension System via relay RE08 Under the menu “Hydraulics” on the display unit the status disengaged/engaged is shown.
o Monitoring, RE08	o System error, open circuit or short circuit See Diagnostics	o Amber central warning o Check BSS Failure

[T1] The parameter FVK activates the Boom Suspension System. “0”=Not installed, “1”=Installed

[T2] The control lamp is continuously alight as long as the function is activated.

Incorrect input signals

In case of a fault with any of the input signals, Boom Suspension System will not be engaged.

VOLVO
Construction Equipment

Service Information

Document Title:	Function Group:	Information Type: **Service Information**	Date: **12/10/2011**
Profile: **WLO, L90F (Volvo) [GB]**			

3rd/4th hydraulic function, valve, description

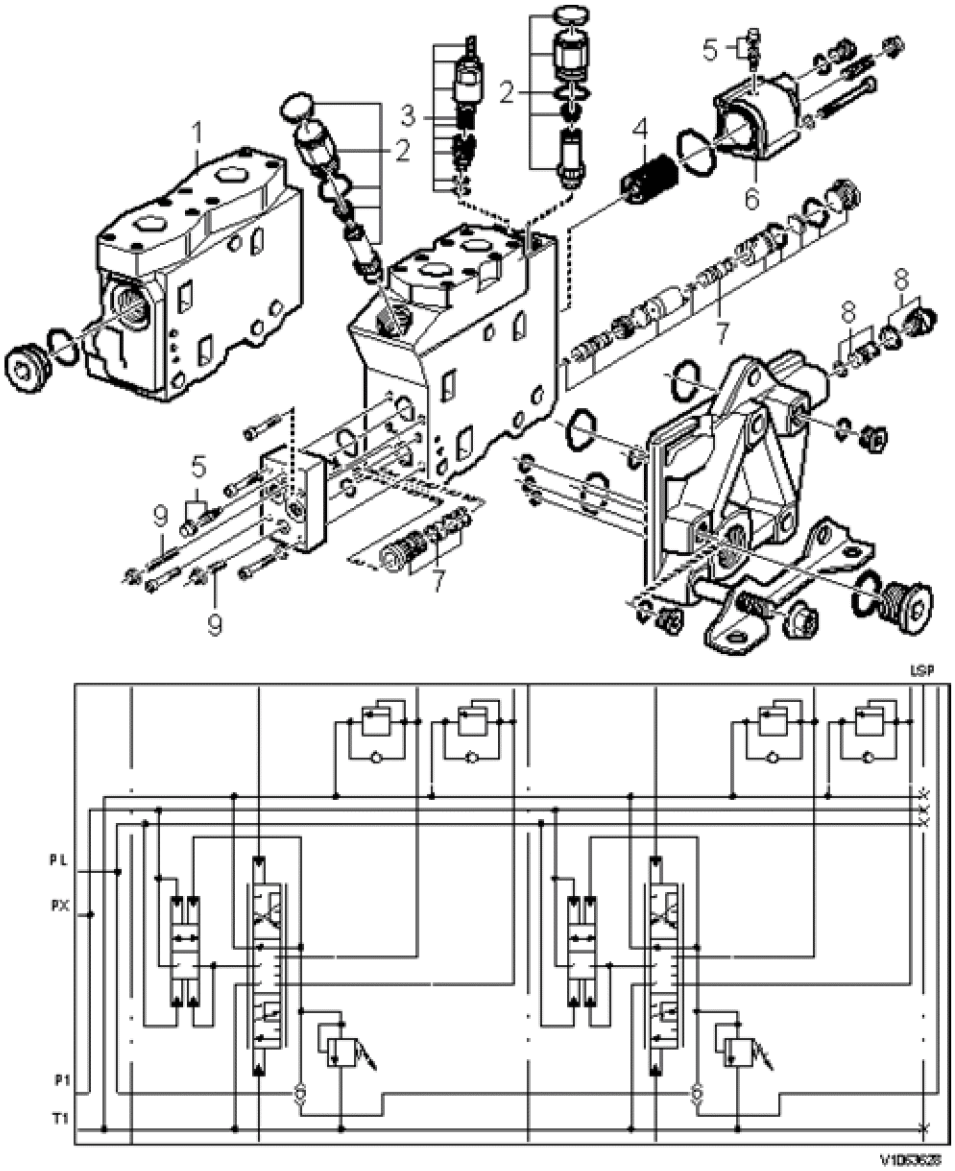

Figure 1

1. Connecting block
2. Anti-cavitation valve
3. Pressure-reducing valve
4. Spring + spool
5. Air nipple
6. Housing
7. Compensator
8. Bush and nipple
9. Stroke limiter (is not used)

VOLVO
Construction Equipment

Service Information

Document Title:	Function Group:	Information Type: **Service Information**	Date: **12/10/2011**
Profile: **WLO, L90F (Volvo) [GB]**			

Boom suspension accumulator, check and adjusting

Op nbr 916-002

11666135 Gas filling kit

Checking precharging pressure

1. Lock the frame joint with the frame joint lock. Place blocks in front of and behind the wheels. Lower the lifting frame (boom) until the bucket lies flat against the ground.

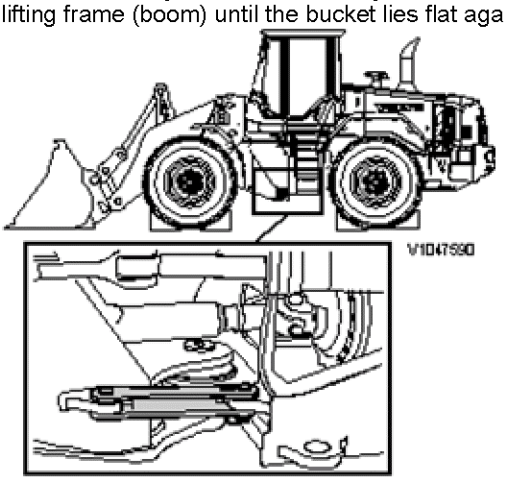

Figure 1

2. Release the pressure in the Boom Suspension System, see Boom Suspension System, hydraulic oil pressure in accumulators, releasing.

NOTE **When checking or reducing the accumulator precharging pressure, there is no need to have the gas cylinder connected.**

3. Remove the nut from the accumulator valve.

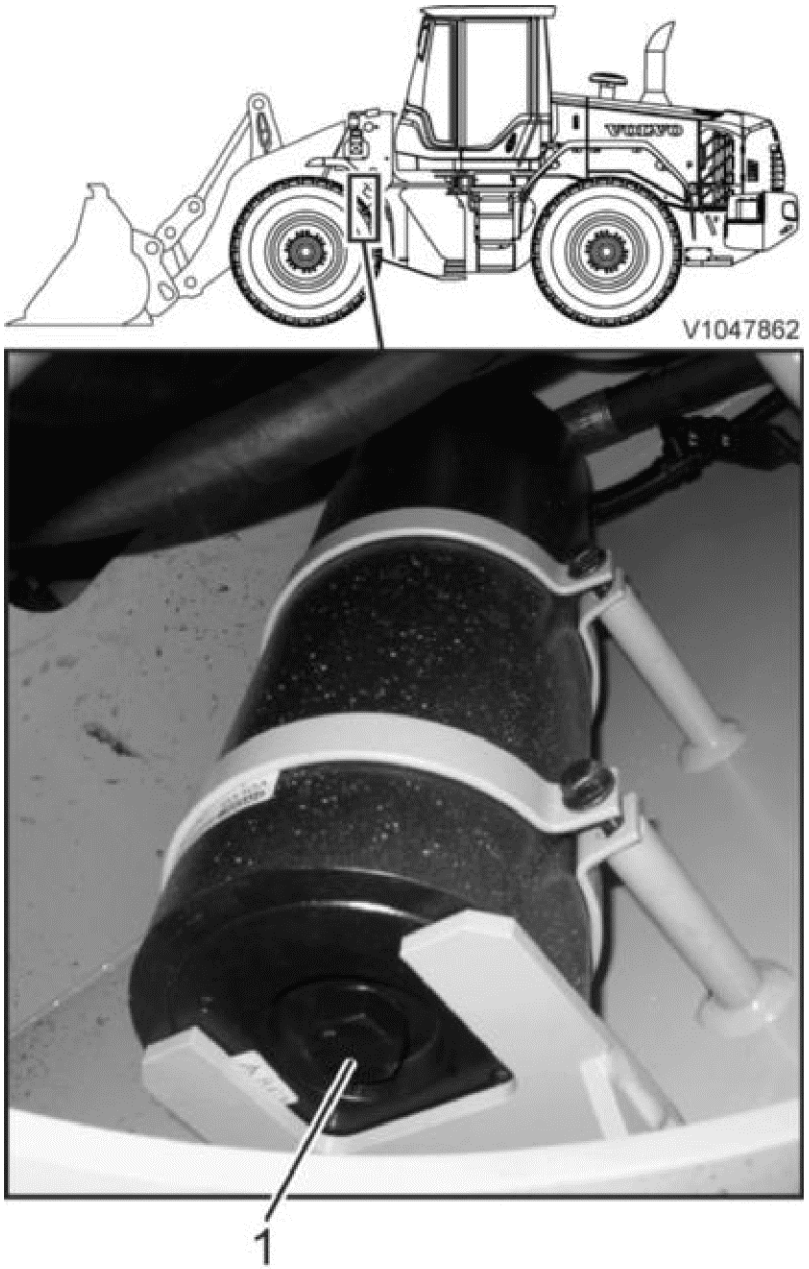

Figure 2
Accumulator as seen from underneath

1. Nut

4. Loosen the hexagon socket head bolt in the accumulator valve approx. 1/4 of a turn counter-clockwise. Use a 6 mm hexagon key.

5. Screw 11666135Gas filling kit on to the accumulator by hand. Make sure that there is an O-ring in position in the tool.

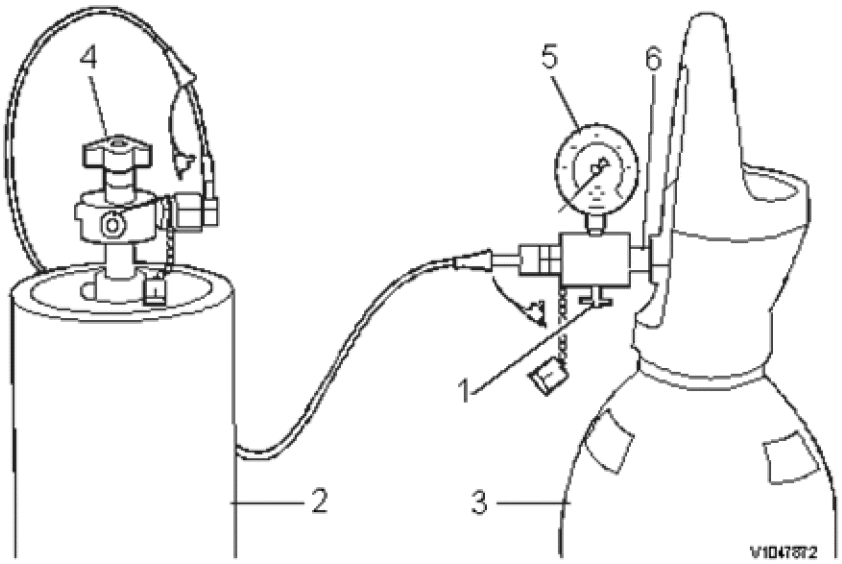

Figure 3
11666135Gas filling kit, Principle diagram

1. Unloading valve
2. Accumulator
3. Nitrogen gas cylinder (N_2)
4. Gas valve
5. Pressure gauge
6. Non-return valve

6. Close the unloading valve.

7. Open the gas valve. When the pressure gauge begins to indicate, the gas valve should be opened one further turn. The pressure gauge shows the precharging pressure in the accumulator, see Boom Suspension System, specifications
.

Reducing precharging pressure

8. Carefully open the unloading valve. Gas will flow out from the tool. Reduce until the pressure is according to the specifications, see Boom Suspension System, specifications
.

Raising precharging pressure

9. Connect the tool to nitrogen gas cylinder.

10. Carefully open the gas valve on the nitrogen gas cylinder.

11. Carefully open the gas valve on the accumulator. Gas flows into the accumulator.

NOTE **Adjust the pressure slowly, so as not to overload gas valve.**

12. Close the valve on the nitrogen gas cylinder, and read off achieved pressure on the pressure gauge.

13. Repeat this procedure until the correct precharging pressure has been reached, see Boom Suspension System, specifications
. Wait for approx. 5 minutes, while equalisation of temperature takes place. Again check the pressure.

Conclusion

14. When the required pressure has been reached, the accumulator gas valve should be closed, clockwise.

15. Remove the tool from the accumulator. Check-tighten the hexagon socket head bolt in the gas valve on the accumulator, see Boom Suspension System, tightening torque
.

16. Check that the gas valve does not leak. Use a soap and water solution.
17. Check the O-ring in the nut and install the nut.
18. Restore the machine.
19. Test the function of the Boom Suspension System according to Boom Suspension System, test-running with a load
.

VOLVO
Construction Equipment

Service Information

Document Title:	Function Group:	Information Type: **Service Information**	Date: **12/10/2011**
Profile: **WLO, L90F (Volvo) [GB]**			

Boom suspension system, left accumulator, removal

Op nbr 916-010

11666051 Pressure gauge
14290266 Hose

Lifting eye M8
Lifting eye M12
Ratchet block, 150 kg (331 lb)
Sling, 1 m (3.3 ft)
Sling, 2 m (6.6 ft)
Shackle, 2 pcs

1. Place the machine in service position 2, see Servicepositioner
.

   NOTE **Leave the battery disconnect switch turned on.**

2. Release the pressure in the accumulator, see Lastarmsfjädring, hydrauloljetryck i ackumulatorer, avlastning
.
3. Remove the cover plate on the front frame.
4. Disconnect the hose connection (2) from the top of the accumulator.

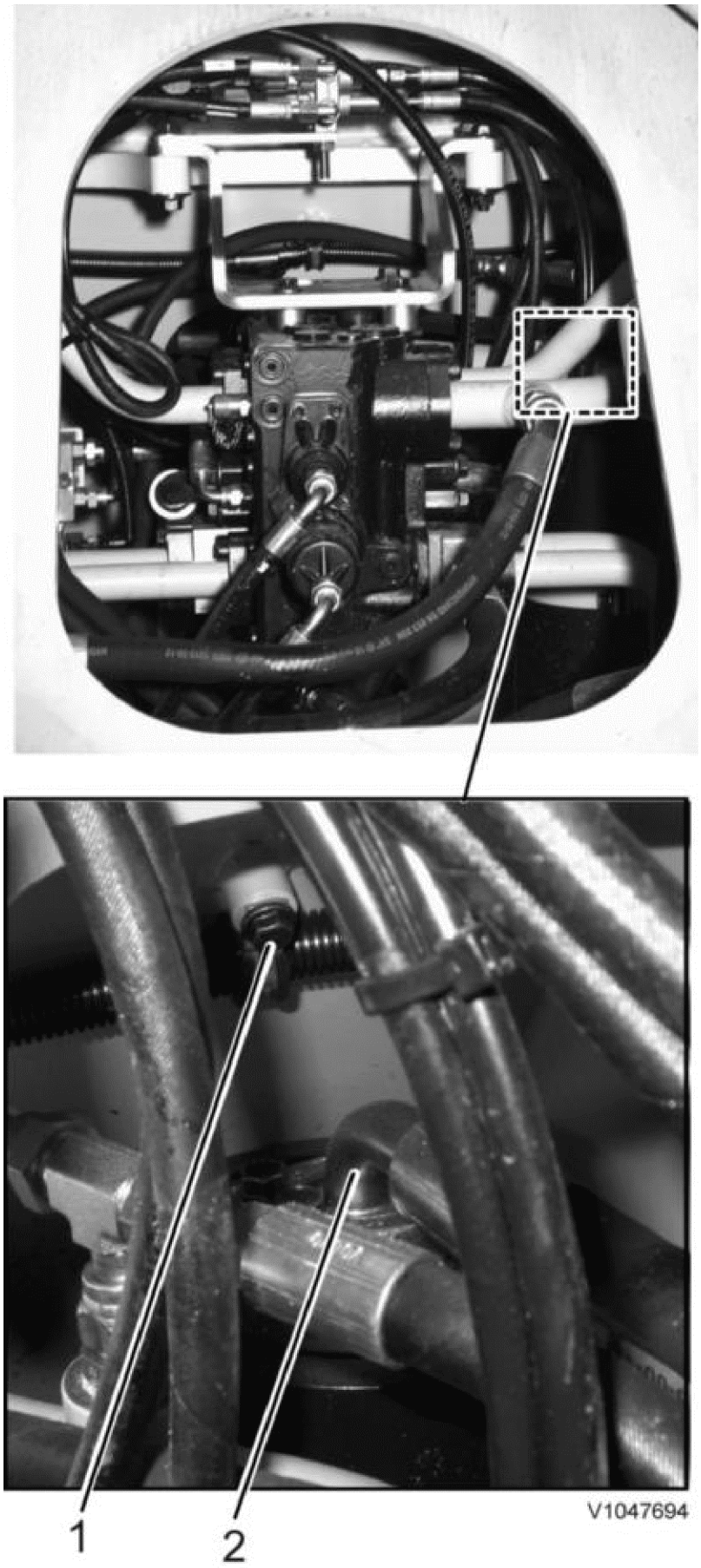

Figure 1

1. Bolt retaining the cable harness
2. Hose connection

5. Install a lifting eye M12 on the accumulator
6. Remove bolt (1) retaining the cable harness. Screw in a lifting eye M8 in the bolt hole.
7. Connect the sling, the ratchet block and the shackle according to the figure.

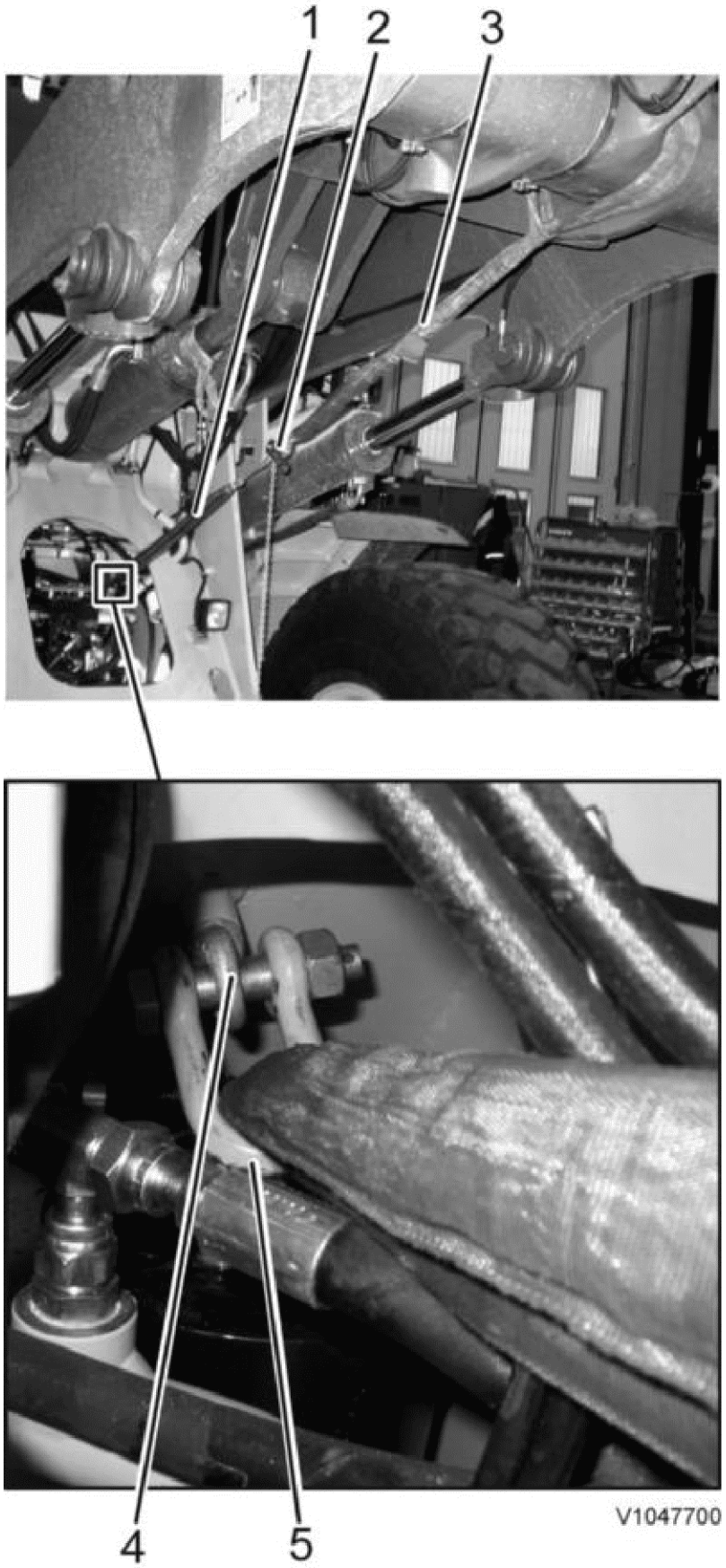

Figure 2

1. Sling
2. Ratchet block
3. Sling
4. Lifting eye M8
5. Shackle

8. Remove bracket (1) on which the accumulator stands.

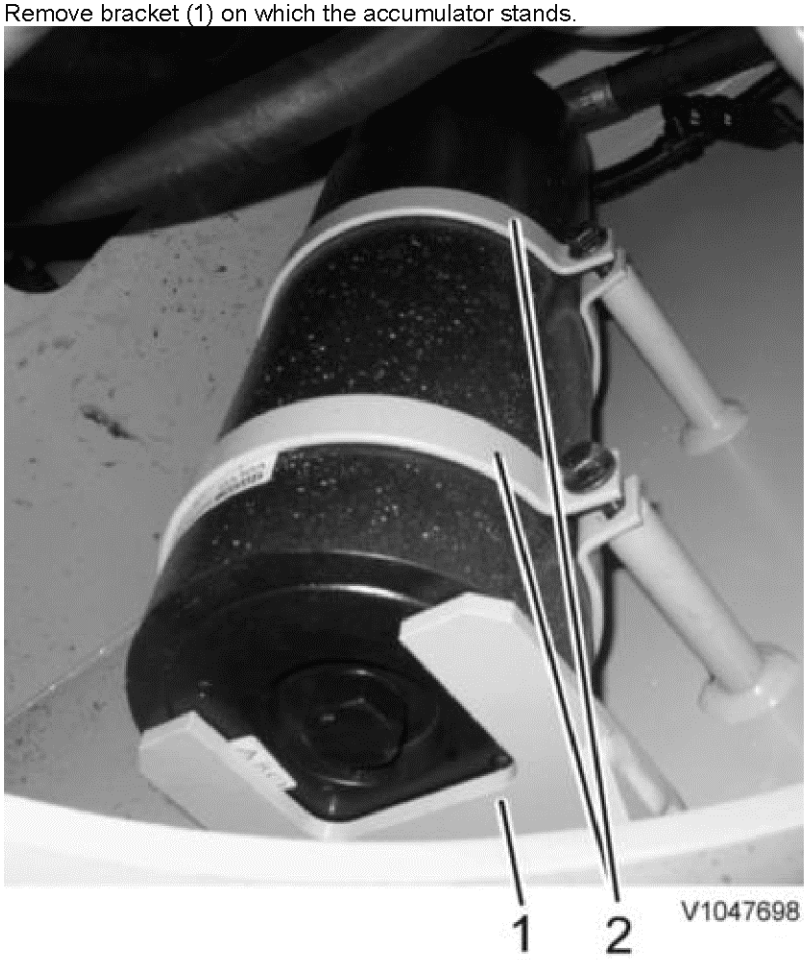

Figure 3
Accumulator as seen from underneath

1. Bracket
2. Braces

9. Loosen braces (2) retaining the accumulator and lower the accumulator down through the hole. Weight approx. **45 kg (100 lb)**

VOLVO
Construction Equipment

Service Information

Document Title:	Function Group:	Information Type: **Service Information**	Date: **12/10/2011**
Profile: **WLO, L90F (Volvo) [GB]**			

Boom suspension system, left accumulator, installation

Op nbr 916-011

Ratchet block, 150 kg (331 lb)
Lifting eye M8
Lifting eye M12
Sling, 2 m (6.6 ft)
Sling, 1 m (3.3 ft)
Shackle, 2 pcs

Installation

1. Install the lifting eye and the shackle on the accumulator. Connect the sling and the shackle. Insert the sling through the upper shackle and connect it to the ratchet block and the sling.

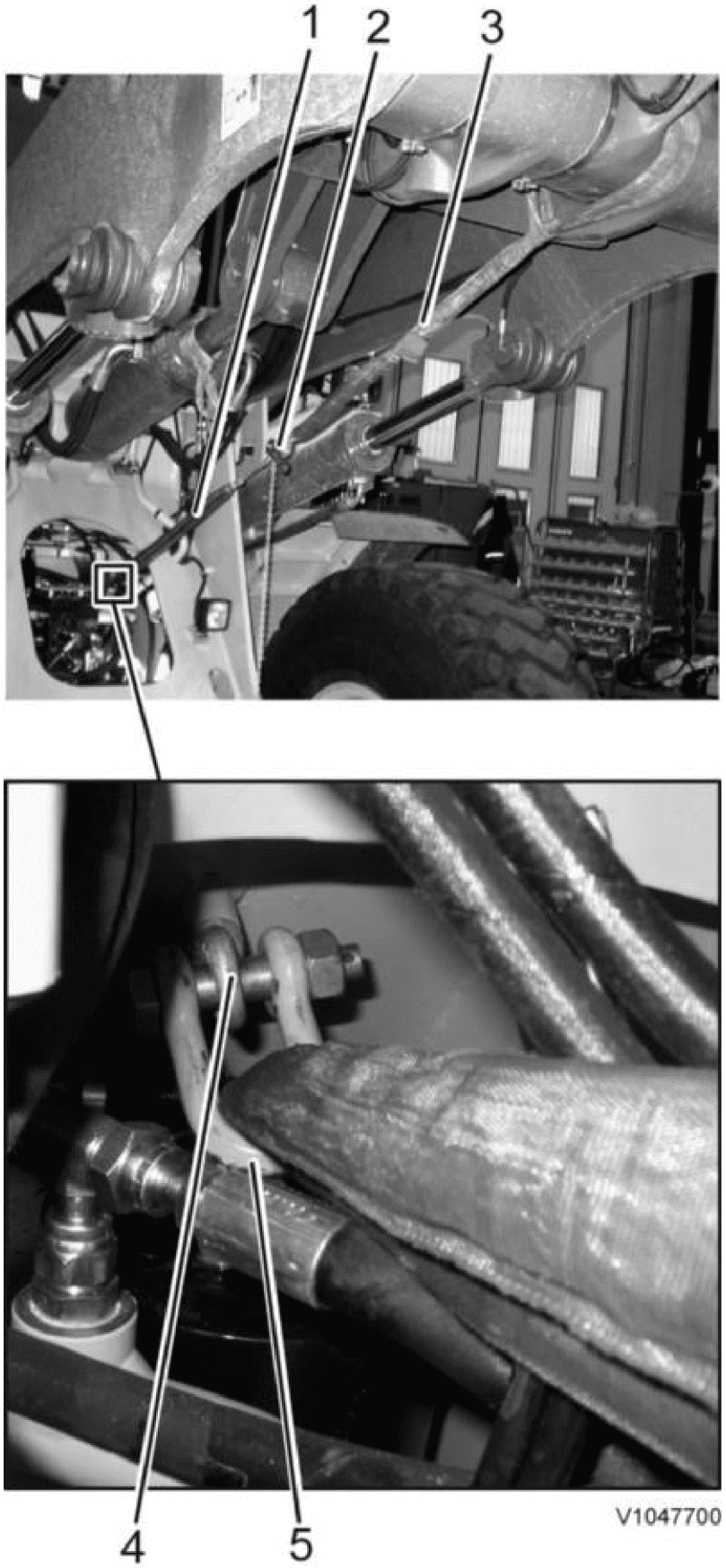

Figure 1

1. Sling
2. Ratchet block
3. Sling
4. Lifting eye M8

5. Shackle

2. Install bracket (1) on which the accumulator is to stand.
Secure the accumulator with braces (2).

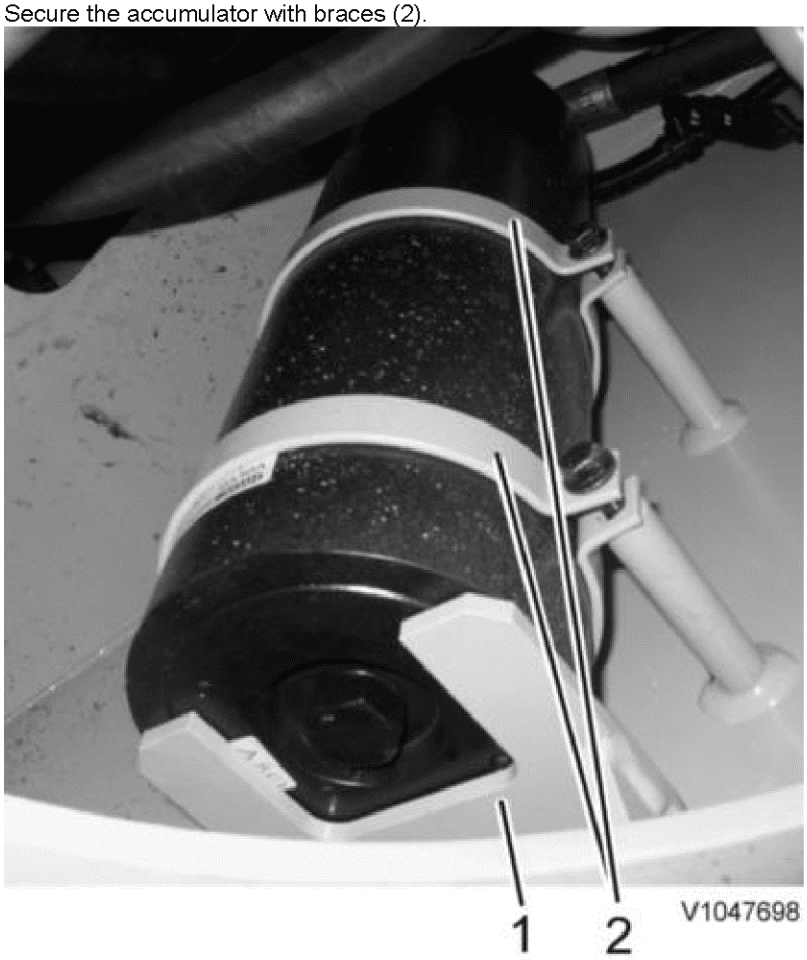

Figure 2

1. Bracket
2. Braces

3. Lower the accumulator.
4. Bolt down braces (2) retaining the accumulator.
5. Remove the slings, the ratchet block and the shackle.
Remove the lifting eyes from the accumulator and the bolt hole.
6. Install the bolt retaining the cable harness.
7. Check the O-ring and connect the hose to the top of the accumulator.
8. Restore the machine.
9. Test-run the machine and check that there are no leaks.
10. Test the function of the Boom Suspension System according to Boom Suspension System, test-running with a load
.

VOLVO
Construction Equipment

Service Information

Document Title:	Function Group:	Information Type: **Service Information**	Date: **12/10/2011**
Profile: **WLO, L90F (Volvo) [GB]**			

Boom suspension system, hydraulic oil pressure in accumulators, depressurizing

Op nbr 916-070

14290266 Hose
11666051 Pressure gauge
9993831 Support

1. Raise the lifting frame and secure against 9993831Support. Stop the engine.
2. Remove the cover over the electrical distribution box.
3. Remove RE08.
4. Connect terminals 30 and 87 to each other with the aid of a cable.

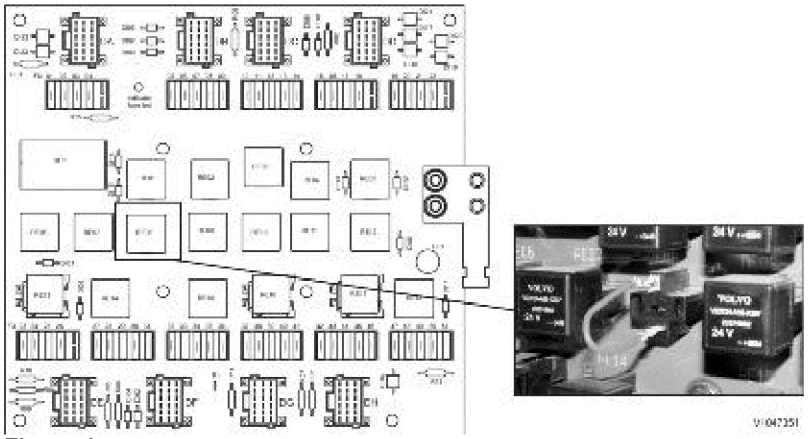

Figure 1
Electrical distribution box

5. Turn the ignition key to position 1 and leave it there for approx. 60 s. The accumulators are being drained. Move the lifting lever forward and rearward several times.
6. Turn the ignition key to position 0.
   The accumulators should now be drained and the Boom Suspension System without pressure. Only a residual pressure of approx. 0.3 MPa (44 psi) should exist in the system.
7. Check that the pressure has been released by connecting the pressure hose with the pressure gauge to port M on the valve block.

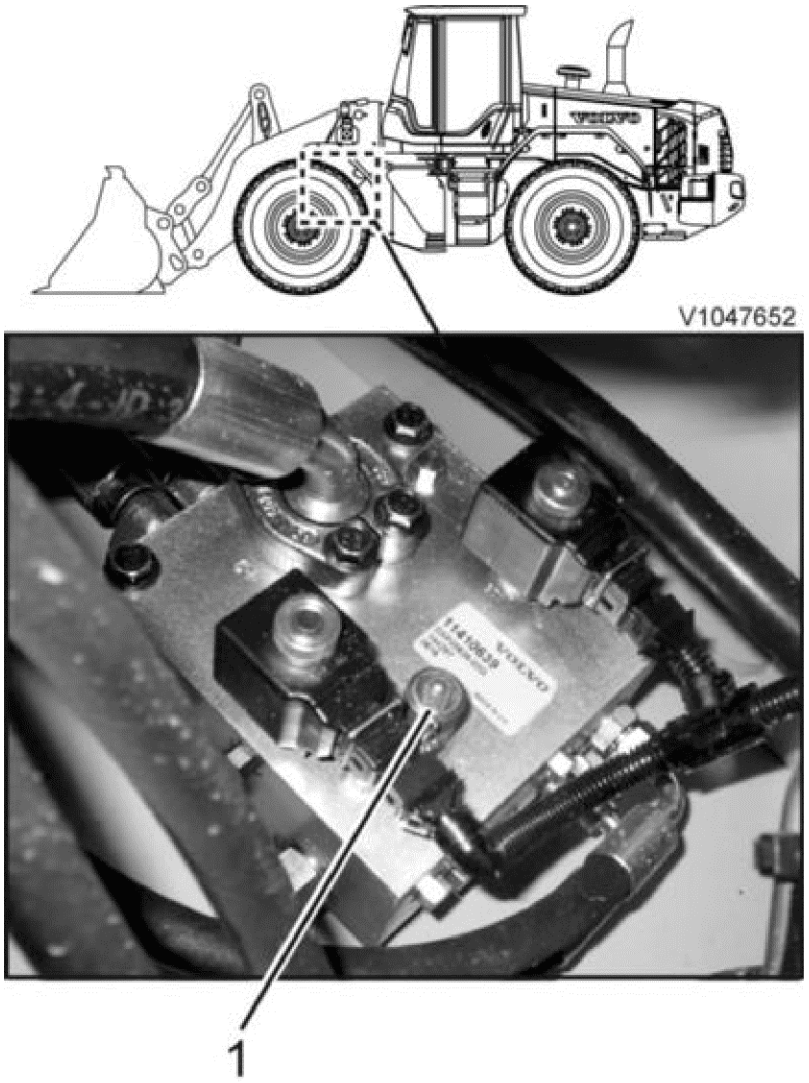

Figure 2

1. Checking point, Port M

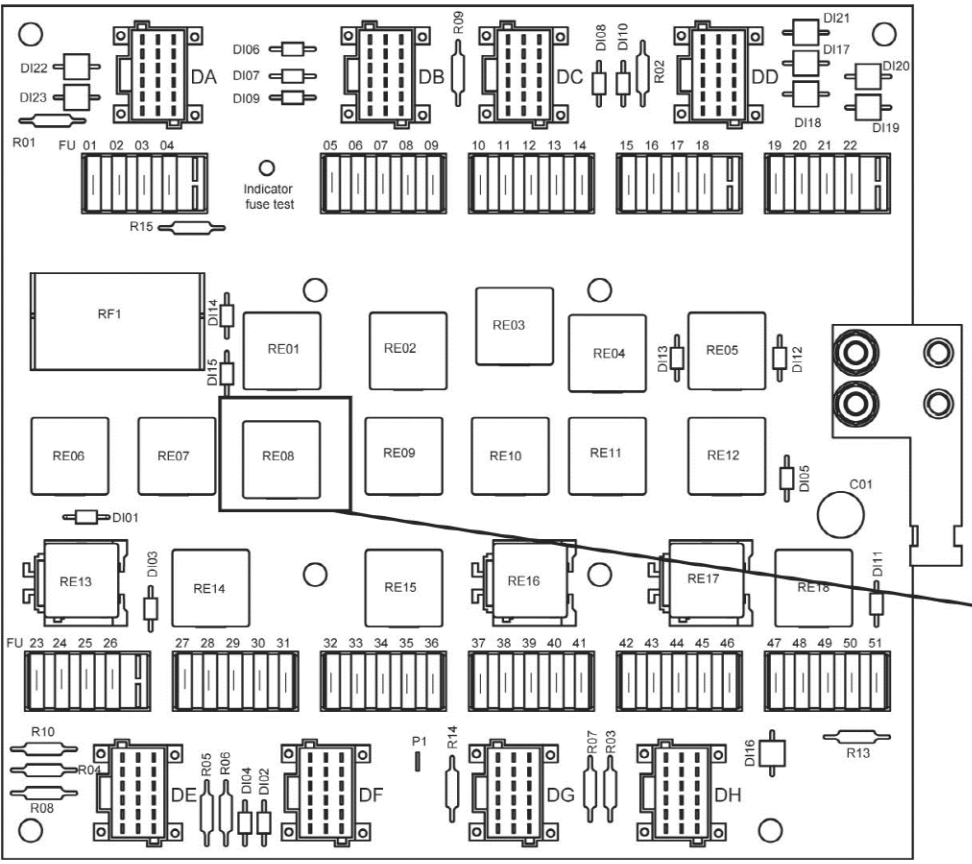
DA
DB
DC
DD
DE
DF
DG
DH
DI01
DI02
DI03
DI04
DI05
DI06
DI07
DI08
DI09
DI10
DI11
DI12
DI13
DI14
DI15
DI16
DI17
DI18
DI19
DI20
DI21
DI22
DI23
R01
R02
R03
R04
R05
R06
R07
R08
R09
R10
R13
R14
R15
P1
C01
FU 01 02 03 04
05 06 07 08 09
10 11 12 13 14
15 16 17 18
19 20 21 22
FU 23 24 25 26
27 28 29 30 31
32 33 34 35 36
37 38 39 40 41
42 43 44 45 46
47 48 49 50 51
Indicator fuse test
RF1
RE01
RE02
RE03
RE04
RE05
RE06
RE07
RE08
RE09
RE10
RE11
RE12
RE13
RE14
RE15
RE16
RE17
RE18

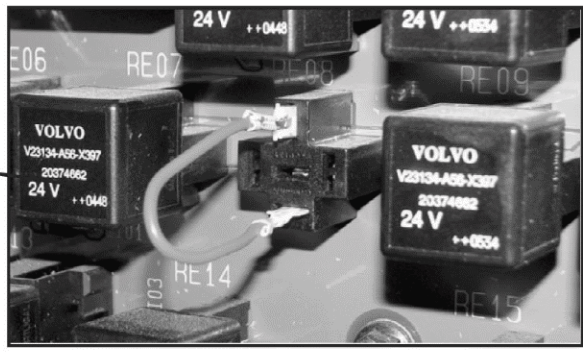
VOLVO
V23134-A55-X397
20374682
24 V
RE07
RE09
RE14
RE15

V1047351

VOLVO
Construction Equipment

Service Information

Document Title:	Function Group:	Information Type: **Service Information**	Date: **12/10/2011**
Profile: **WLO, L90F (Volvo) [GB]**			

Accumulator, boom suspension system, discarding

Op nbr 916-072

1. Remove the protective plate and the valve cap.

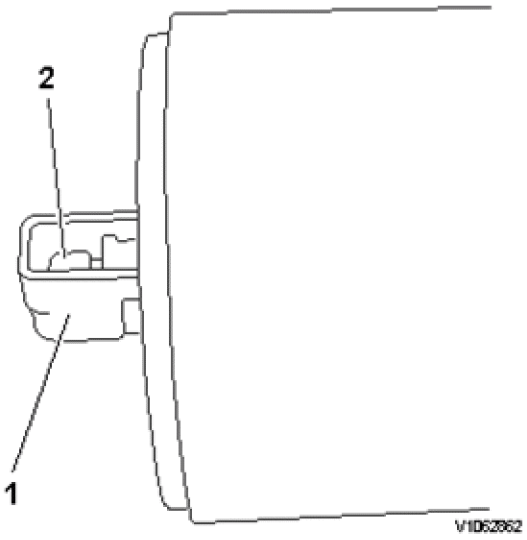

Figure 1

1. Protective plate
2. Valve cap

2. Open the valve by carefully turning the lock nut counter-clockwise.

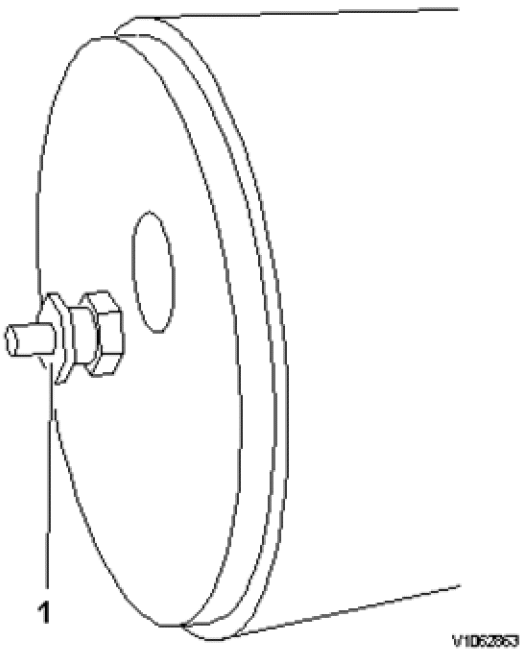

Figure 2

1. Lock nut

3. When gas has stopped flowing out, remove the valve.

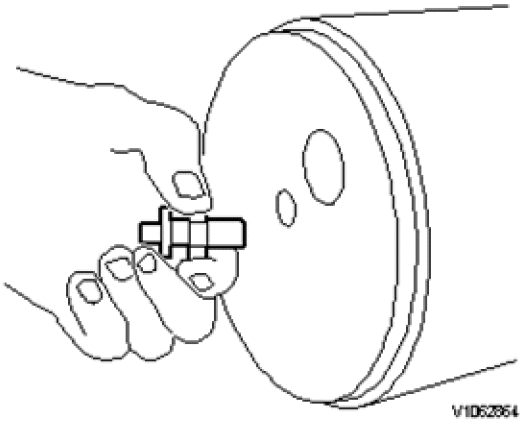

Figure 3

VOLVO
Construction Equipment

Service Information

Document Title:	Function Group:	Information Type: **Service Information**	Date: **12/10/2011**
Profile: **WLO, L90F (Volvo) [GB]**			

Boom suspension system, pressure reduction, safety valve, checking and adjusting

Op nbr 916-006

11666051 Pressure gauge
14290266 Hose
9993831 Support

1. Warm up the machine until it has reached operating temperature.
2. Place the machine in service position 2, see Service positions
   .

   NOTE **Leave the battery disconnect switch turned on.**

3. Release the pressure in the Boom Suspension System, see Boom Suspension System, hydraulic oil pressure in accumulators, releasing
   .
4. Remove the cover plate on the front frame.
   Connect the pressure gauge to the checking point on the Boom Suspension System valve block V1.

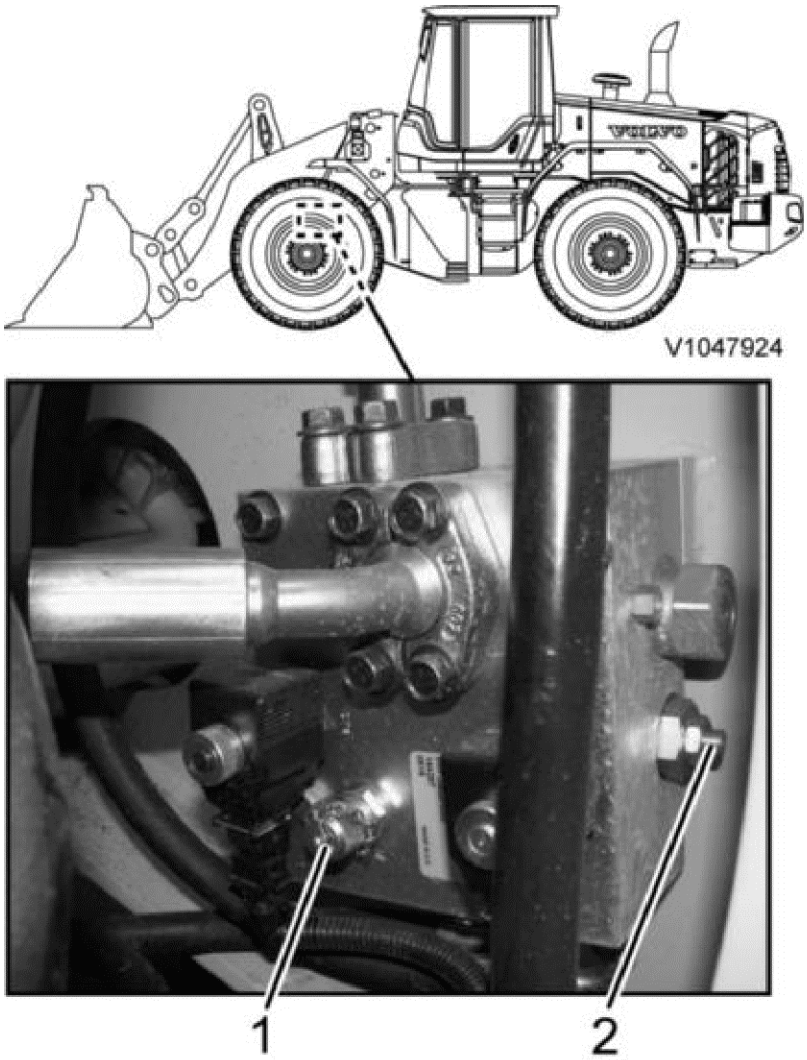

Figure 1
Valve block

1. Checking point
2. Pressure-reducing valve, CT8

5. Start the engine and raise the lboom to end position.
   Keep the lifting function working against its end position and at the same time read off the pressure gauge. The pressure should rise to the setting pressure for the pressure-reducing valve, see Boom Suspension System, specifications
   . If the correct pressure is not reached, secure the boom 9993831Supportand adjust on the pressure-reducing valve CT8 with the engine turned off. Carry out a new check after adjusting.

6. Stop the engine and release the pressure in the accumulators, see Boom Suspension System, hydraulic oil pressure in accumulators, releasing
   , remove the pressure gauge and restore the machine.

7. Test the function of the Boom Suspension System according to Boom Suspension System, test-running with a load

VOLVO
Construction Equipment

Service Information

Document Title:	Function Group:	Information Type: **Service Information**	Date: **12/10/2011**
Profile: **WLO, L90F (Volvo) [GB]**			

Boom suspension system, test drive with load

Op nbr 916-074

1. Set the mode selector for gear shifting to position AUT.

Gear-dependent function

2. Start the engine.
3. Fill the bucket with a full load. Tilt the bucket backwards towards stop. Raise the bucket approximately 1 metre (3 ft) above the ground.
4. Engage 2nd gear and drive the machine at a speed between 0–10 km/h (0–6.2 mph).
   The boom should not move.
5. Activate Boom Susp. System in gear-dependent position.
6. Green control lamp should light up.
   Menu “Hydraulics“ on the display unit shows Boom Susp. System On when either of gears 2–4, forward/reverse and neutral position are selected.
   The boom should be springy.
7. Engage 1st gear or use kick-down.
   The “Hydraulics“ menu on the display unit shows Boom Susp. System Off.
   The boom should not be springy.

Speed-dependent function

8. Activate Boom Susp. System in speed-dependent position.
   Green control lamp should light up.
9. Engage gear F4 and drive the machine at a speed between 0–10 km/h (0–6.2 mph).
   Check the following:
   Speed below 5 km/h (3.1 mph) The boom should not be springy.
   The “Hydraulics“ menu on the display unit shows Boom Susp. System Off.
   Speed above 6 km/h (3.7 mph). The boom should be springy.
   The “Hydraulics“ menu on the display unit shows Boom Susp. System On.
10. Select reverse gear. The boom should be springy.
    The “Hydraulics“ menu on the display unit shows Boom Susp. System On.

VOLVO
Construction Equipment

Service Information

Document Title:	Function Group:	Information Type: **Service Information**	Date: **12/10/2011**
Profile: **WLO, L90F (Volvo) [GB]**			

Boom suspension accumulator, reconditioning

Op nbr 916-003

11666135 Gas filling kit

Dismantling

WARNING! **Gas under high pressure!**

If the accumulator precharge pressure (gas pressure) has not been released, there is gas under high pressure in the accumulator.

1. Secure the accumulator in a vice.
2. Reduce the precharging pressure in the accumulator, see Ackumulator, kontroll och justering
.
3. Unscrew the covers on both sides of the accumulator. Use two bolts (Ø 8 mm) in the cover holes and one pinch-bar.

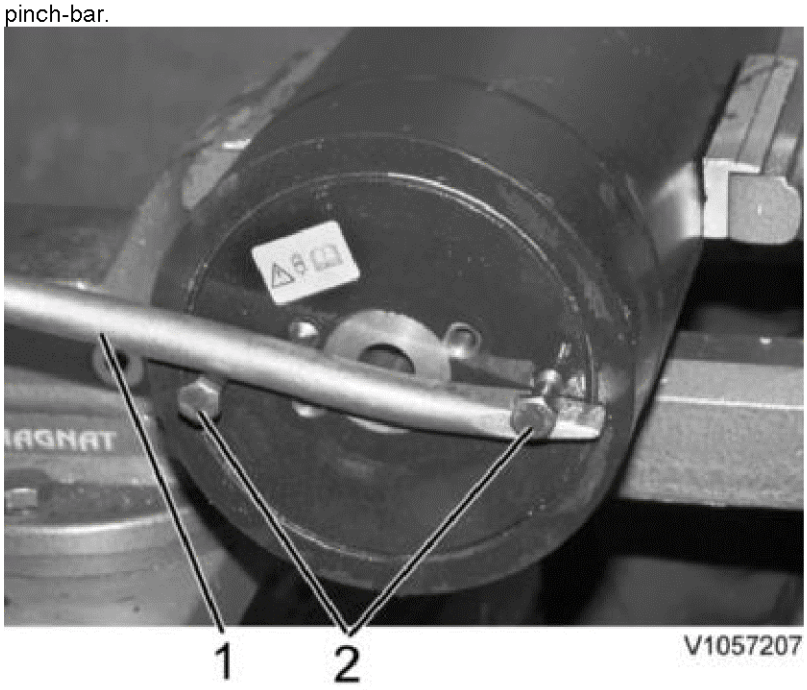

Figure 1

1. Pinch-bar
2. Bolt or pin Ø 8 mm

4. Press the piston out of the accumulator. Press from the gas side of the accumulator, so that the piston is pushed out on the oil side.

Checking and cleaning

5. Clean and check the cylinder tube and the piston as regards damage.
   Make sure that no cleaning agent or lint from rags remain on any parts.
6. Install new O-rings on both covers.
7. Install a new O-ring (2) on the piston. Install a new seal ring on top of the O-ring on the piston.
   Install a new support ring on the piston.

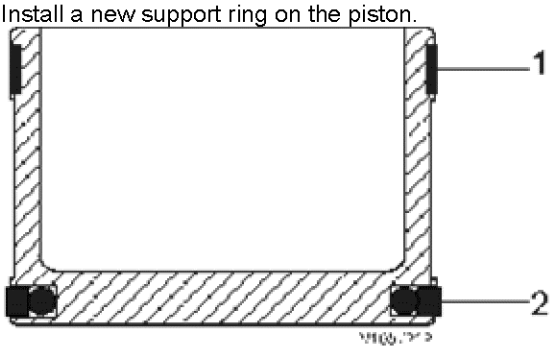

Figure 2

1. Support ring
2. O-ring and seal ring

Assembling

8. Lubricate the piston and the accumulator oil side with hydraulic oil.
9. Press in the piston into the accumulator.

   NOTE **The plane side of the piston should face the accumulator oil side.**

10. Coat the threads on the covers and O-rings with hydraulic oil and install the covers.
11. Fill the accumulator with gas, see Ackumulator, kontroll och justering
    .

VOLVO
Construction Equipment

Service Information

Document Title:	Function Group:	Information Type: **Service Information**	Date: **12/10/2011**
Profile: **WLO, L90F (Volvo) [GB]**			

3rd/4th hydraulic function, checking and adjusting pressure

Op nbr 916-020

14290266 Hose
11666051 Pressure gauge

NOTE **Pressure is adjusted on the control valve for 3rd/4th hydraulic function positioned in the front frame of the machine under the front edge of the cab. The engine should be turned off while adjusting.**

Maximum pressure, checking

1. Warm up the machine until the hydraulic system has reached operating temperature.
2. Lock the frame joint with the frame joint lock. Place blocks in front of and behind the wheels.

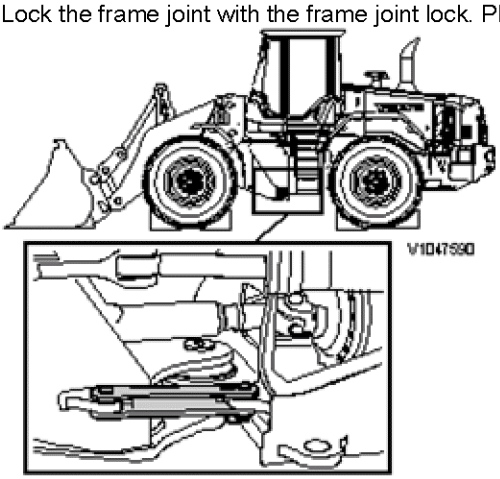

Figure 1

3. Connect the pressure gauge to the checking point on the central valve.

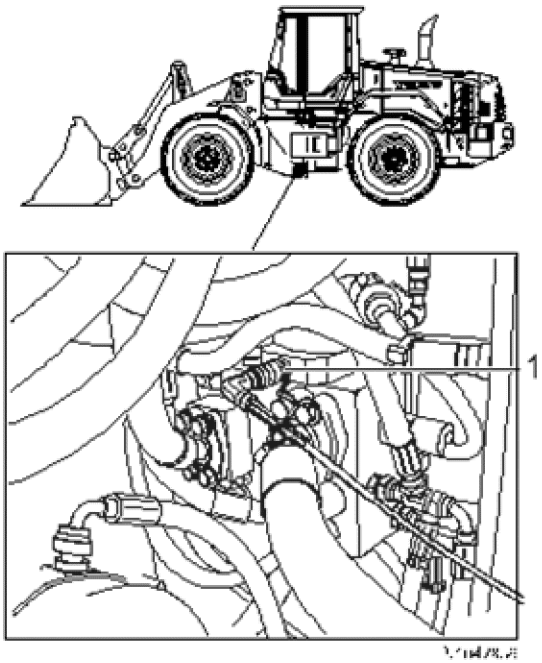

Figure 2

1. Checking point

4. Start the engine, stall the respective function against end position and read off the pressure gauge. Maximum pressure, see 3:e/4:e hydraulfunktion, specifikation
.

Maximum pressure, adjusting

5. Adjust on the pressure-limiting valve on the respective function.

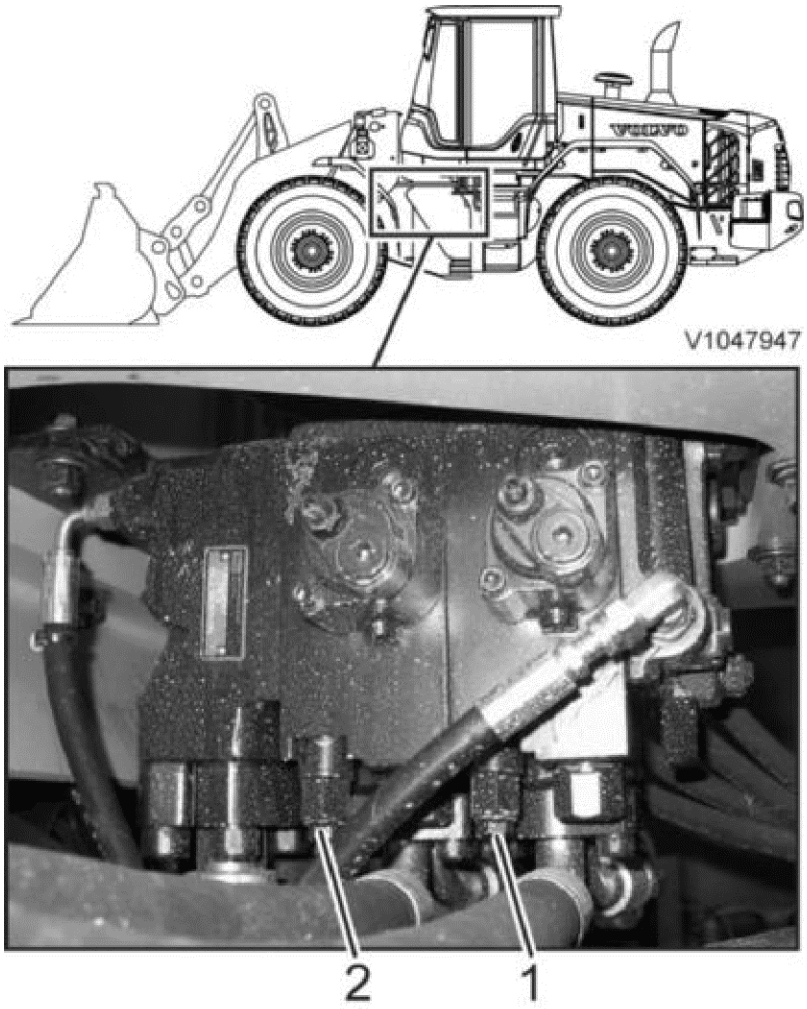

Figure 3

1. Pressure-limiting valve, 4th function
2. Pressure-limiting valve, 3rd function

6. Remove the pressure gauge.
7. Restore the machine.

VOLVO
Construction Equipment

Service Information

Document Title:	Function Group:	Information Type: **Service Information**	Date: **12/10/2011**
Profile: **WLO, L90F (Volvo) [GB]**			

3rd/4th hydraulic function, shock valve, checking

Op nbr 916-017

14360000 Vacuum pump / 24V
11666051 Pressure gauge
14290266 Hose
11666041 Pump
9993825 Check valve

1. Secure the frame joint with the frame joint lock. Place blocks in front of and behind the wheels.

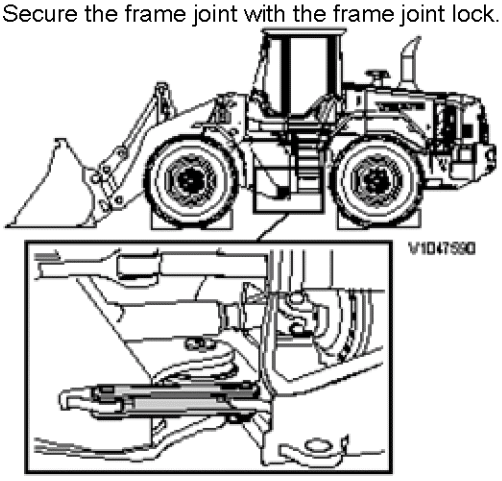

Figure 1

2. Release the pressure in the system by moving the servo control levers to and fro 10–15 times with the ignition in position 1.
3. Connect vacuum pump, see Hydrauloljetank, vakuumsättning
.

Shock valves on the right side

4. Remove the shock valve.

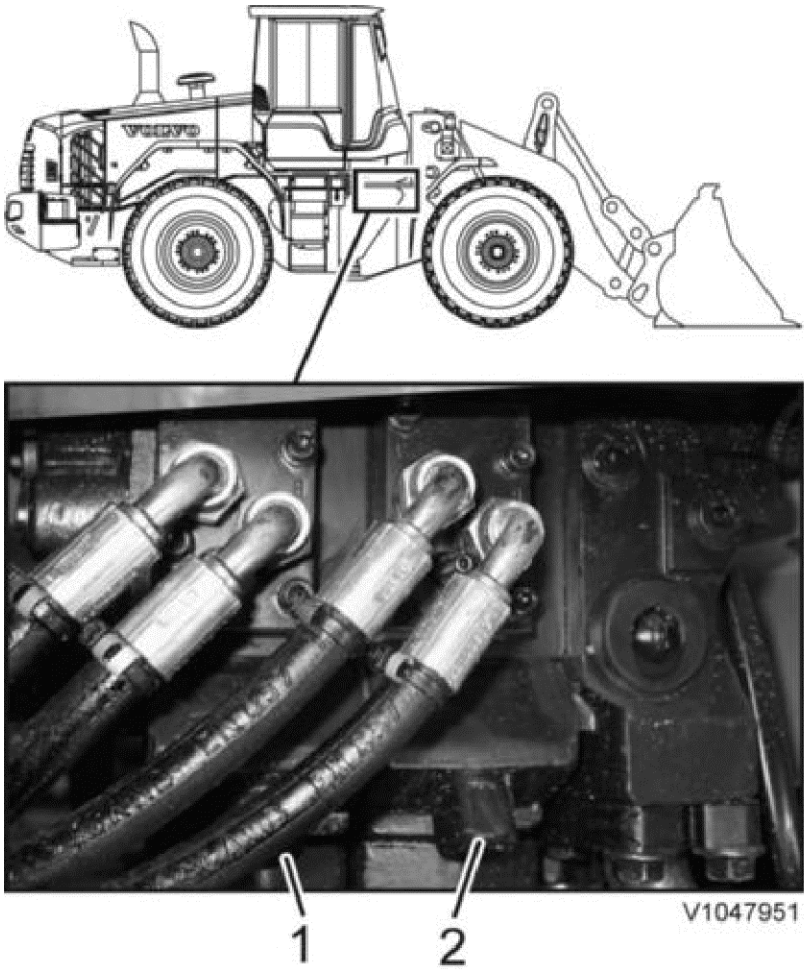

Figure 2
Control valve 3rd/4th function, as seen from the right side of the machine

1. Shock valve, 4th function
2. Shock valve, 3rd function

5. Plug the hole with the plug from 9993825Check valve

6. Screw down the shock valve into 9993825Check valve and connect the remaining tools according to the figure.

NOTE **Only the lower part of 9993825Check valve is to be used. Therefore screw off the upper part before the shock valve is screwed down into the tool.**

Check the shock valve working pressure by pumping until the pressure no longer rises. The shock valve has then opened and the opening pressure can be read off.
Collect the oil, which runs out of the draining hole in a suitable vessel.
Opening pressure, see 3:e/4:e hydraulfunktion, specifikation
.
The shock valve is not adjustable.

NOTE **Collect the oil, which runs out of the draining hole, in a suitable vessel.**

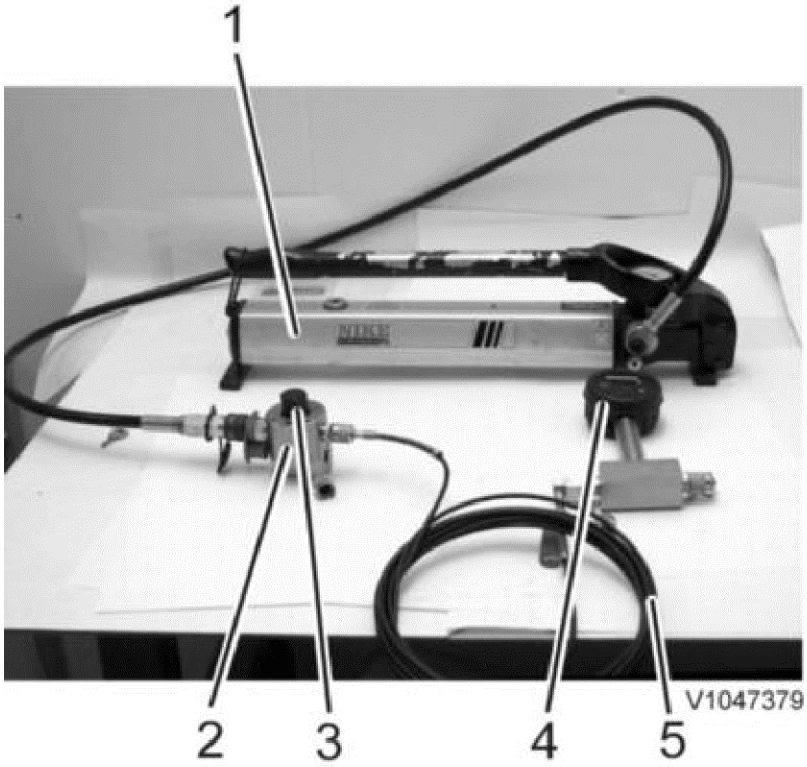

Figure 3

1. 11666041Pump
2. 9993825Check valve
3. Shock valve
4. 11666051Pressure gauge
5. 14290266Hose

Shock valves on the left side

7. Remove one of the SAE coupling halves for the pressure hose and remove the shock valve for the 3rd function.

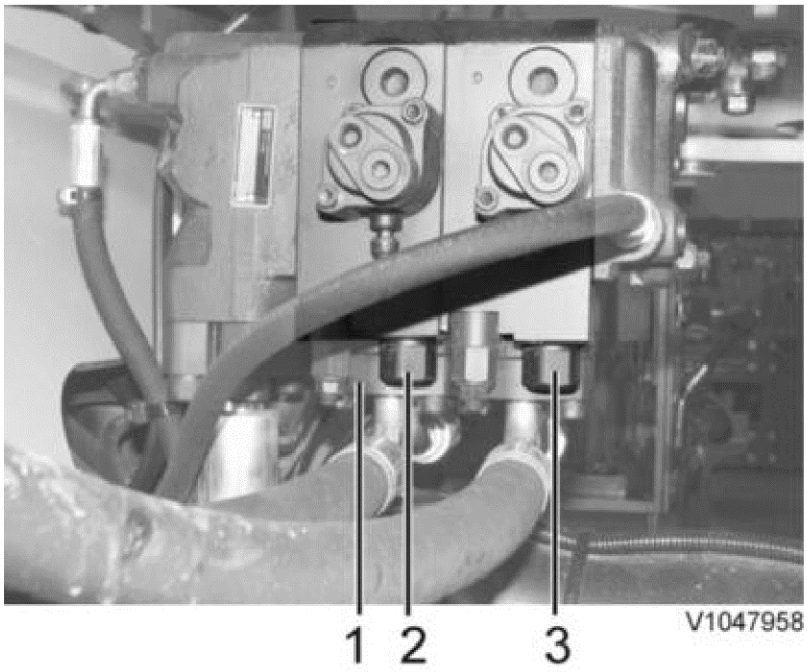

Figure 4
Control valve 3rd/4th function, as seen from the left side of the machine

1. SAE coupling half for pressure hose
2. Shock valve, 3rd function

3. Shock valve, 4th function

8. See points 5 and 6.
9. Install the shock valve for the 3rd function.
10. Re-install the SAE coupling half.
11. Remove the shock valve for the 4th function.
12. See points 5 and 6.
13. Re-install the shock valve on the control valve for the 3rd/4th function.
14. Remove the vacuum pump.
15. Restore the machine.

VOLVO
Construction Equipment

Service Information

Document Title:	Function Group:	Information Type: **Service Information**	Date: **12/10/2011**
Profile: **WLO, L90F (Volvo) [GB]**			

Hydraulic attachment bracket, description

The machine can be equipped with hydraulic attachment bracket, where the attachments are locked with the aid of a hydraulic cylinder (attachment lock). If the machine is equipped with hydraulic attachment bracket, the VCADS Pro parameter FVJ must be “On”, if the function is to work.
The attachment lock is opened and closed by actuating switch SW9143 for the attachment locking. The display unit provides information about whether the attachment lock is open or if there is a fault in the circuit.



Figure 1
SW9143

When the engine is started and the switch SW9143 for the attachment lock is in the "close" position, MA9106 will be activated (energised) for 120 seconds. During this period it is not possible to open the attachment lock with SW9143.

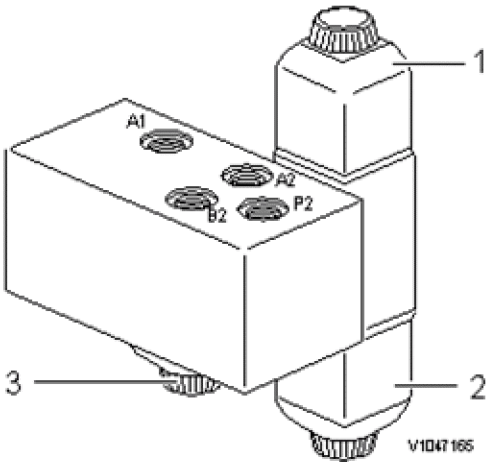

Figure 2
Valve, hydraulic attachment bracket and differential lock

1. MA9106
2. MA9101
3. MA4603 (differential lock)

MA9106 and MA9101 respectively cause the attachment lock to close and open with the aid of oil from the brake circuit.

See also Hydraulschema, komplett
and Elschema 904
.

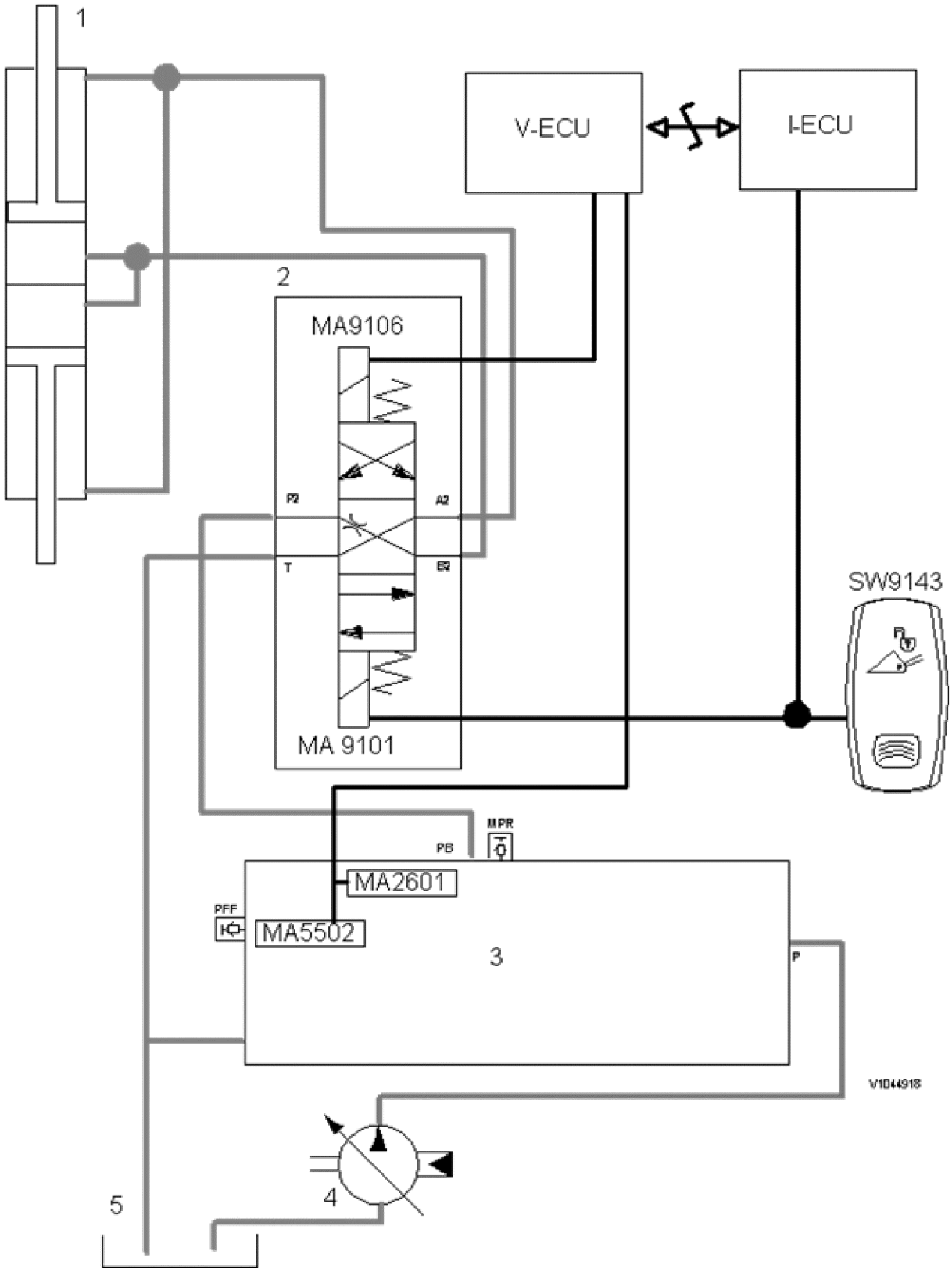

Figure 3
Hydraulically attachment lock

1. Hydraulic cylinder, attachment lock
2. Valve for attachment lock
3. Central valve (with MA2601 and MA5502)
4. Hydraulic pump
5. Hydraulic oil tank

Opening the attachment lock

When the catch on switch SW9143 is released and switch SW9143 is actuated, MA9101 is energised and a signal is sent to the I-ECU. The I-ECU sends a signal to the V-ECU which requests brake charging, thus providing raised hydraulic pressure for ten seconds. If charge air temperature is higher than 90°C (194°F), no brake pressure charging takes place until the temperature has dropped to below 90°C (194°F). [1] ⓘ The valve spool is moved and opens the connection between port P2 and port B2, so that hydraulic oil is conducted out to the cylinder minus ends (piston rod ends). The oil from the cylinder plus ends (piston ends) is drained via port A2 and port T to the hydraulic oil tank.

When the voltage to MA9101 is interrupted, the valve spool is moved to the neutral position and no hydraulic oil can pass through the valve.

When the attachment lock is open, red central warning is shown together with information "WARNING Attachment Lock Open"

Closing attachment lock

When switch SW9143 is moved to the "close" positon, a signal is sent to the V-ECU (via the I-ECU). The V-ECU sends a signal to MA9106, which is energised. At the same time the V-ECU requests brake charging, which provides raised hydraulic pressure for ten seconds. If the charge air temperature is higher than 90 °C (194 °F), no brake pressure charging takes place until the temperature has dropped to below 90 °C (194 °F). The valve spool is moved and the hydraulic oil is conducted to the cylinder plus ends (piston ends). The oil from the cylinder minus ends (piston rod ends) is drained to the hydraulic oil tank.

When request for closing the attachment lock reaches the I-ECU, amber central warning is shown together with information "Check attachment lockand confirm " When the locking has been checked, it must be acknowledged with the ESC button on the keyboard.

When the voltage to MA9106 is interrupted, the valve spool is displaced to the neutral position and no hydraulic oil can pass through the valve.

Software

Input signals	Conditions for output functions	Output functions
o VCADS Pro parameter FVJ o Engine On/Off o Switch attachment locking, SW9143 o Acknowledgement, ESC[T1] ⓘ o Charge air temperature, SE2507 o Key Feed On/Off	**General conditions for the function** o VCADS Pro parameter FVJ "On"	
	Opening o Key Feed On o Engine On o SW9143 in position Open (MA9101 to position open attachment lock) o Charge air temperature < 90°C (194°F)	o Brake pressure charging for 10 seconds o Red central warning o WARNING Attachment Lock Open
	Closing o Key Feed On o Engine On o SW9143 in position Locked o Charge air temperature < 90°C (194°F)	o Brake pressure charging for 10 seconds o MA9106 to position closing the attachment lock for 30 seconds o Red central warning o Check Check attachment lockand confirm
Monitoring MA9106	System error, open circuit or short circuit See Diagnostics	o Amber central warning o Check Attachment lock

[T1] On keyboard

---

[1] If the sensor for the charge air temperature is faulty, the function assumes that the temperature is < 90°C (194°F).

VOLVO
Construction Equipment

Service Information

Document Title:	Function Group:	Information Type: **Service Information**	Date: **12/10/2011**
Profile: **WLO, L90F (Volvo) [GB]**			

Attachment locking hydraulic cylinder (vision-optimised bracket), replacing

Op nbr 924-035

Axle stand, 1000 kg (2205 lb)

Applies only to machines with vision-optimised attachment bracket.

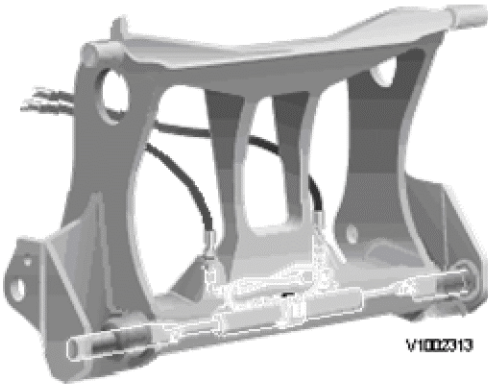

Figure 1
Vision-optimised attachment bracket

1. Start the engine and secure the boom with the axle stand. Tilt the attachment bracket outwards.



V1047961

Figure 2

2. Unlock the attachment lock (pull the studs into the attachment bracket) using the locking button. Turn off the engine **and take out the ignition key.**
3. Remove the cover plate.
4. Disconnect the hydraulic hoses from lead-through connections on the attachment bracket. Plug the lead-through connections.

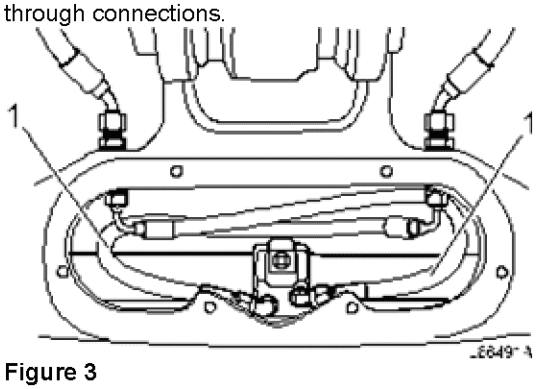

Figure 3

1. Hydraulic hoses

5. Remove the bolt retaining the hydraulic cylinder.
6. Press in the pins and push the cylinder over to one side.
7. Remove the lock ring from the pin and tap out the pin.
   Remove the hydraulic cylinder together with the hoses.

8. Transfer required parts to the new cylinder.
9. Install the new cylinder and install the lock pin and the lock ring.
   Install the bolt retaining the cylinder.
10. Connect the hoses to the lead-through couplings.
11. Start the engine and test the function of the attachment locking and check that there are no leaks of hydraulic oil.
12. Test the function of the attachment locking. Check that there are no error messages.
13. Re-install the cover.

VOLVO
Construction Equipment

Service Information

Document Title:	Function Group:	Information Type: **Service Information**	Date: **12/10/2011**
Profile: **WLO, L90F (Volvo) [GB]**			

Attachment locking, functional check

Op nbr 924-036

After completed repairs, carry out a function check as described below.

1. Starta maskinen och manövrera redskapslåset upprepade gånger för att säkerställa funktionen.
2. Check that there are no error messages.

VOLVO
Construction Equipment

Service Information

Document Title:	Function Group:	Information Type: **Service Information**	Date: **12/10/2011**
Profile: **WLO, L90F (Volvo) [GB]**			

Central lubrication system, description

The automatic greasing system consists of pump unit, two main lines (duct A and duct B), distribution blocks with metering valves, secondary lines and lubrication pressure sensor SE9901.
A control unit, CU9901, which is integrated with the pump, actuates the pump according to a preselected lubrication cycle. The control unit in the pump senses whether a gear is engaged, this is in order for lubrication to take place only when required. The signal from V-ECU is +24 V with the gear selector in neutral position and 0 V when a gear is engaged, see Elschema 803
.
To ensure lubrication, even when there is a loss of signal, e.g. in case of a broken cable, the signal is inverted, i.e. no signal to CU9901 will result in engagement of the automatic greasing.
The lubricant is pumped out via the main lines (duct A and duct B), which lead to the distribution blocks.
The supplied amount of lubricant is determined by the size of the metering valves, and is not affected by back pressure, temperature or the distance between the pump unit and the lubrication point.
In order to obtain the correct lubrication relative to existing working and loading conditions three preprogrammed greasing cycles may be selected via the operator display unit.

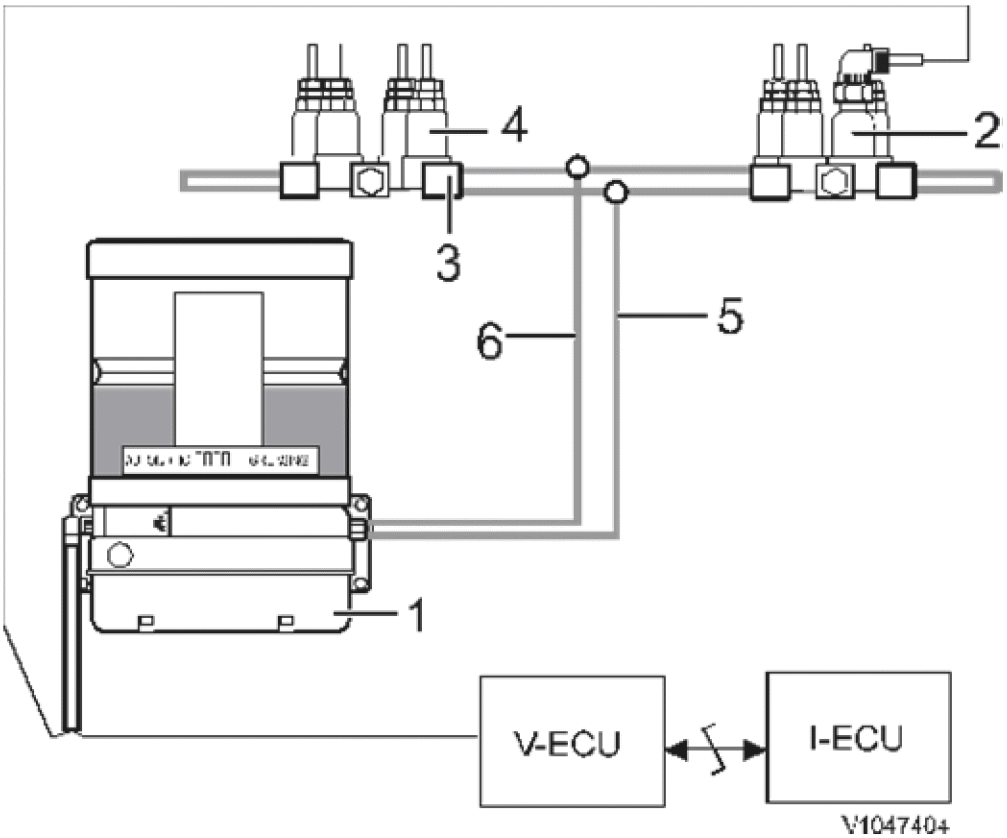

Figure 1

1. Pump unit with CU9901
2. Lubrication pressure sensor, SE9901
3. Distribution block
4. Metering valve
5. Main line duct A
6. Main line duct B

Software

Input signals	Conditions for output functions	Output functions
o VCADS Pro parameter BGR	General conditions for the function o VCADS Pro parameter BGR "On"	
o Directional gear o Engine On/Off	o Directional gear in position Forward or Reverse o Engine To	o Engagement of automatic greasing
o Automatic greasing interval	o Interval for automatic greasing selected via display unit	o Lubrication according to selected lubrication interval Light Normal Heavy
o Automatic greasing indication	o Interval for automatic greasing selected via display unit	o Information about selected interval for automatic greasing is shown on display unit
	o Signal from CU9901 about low lubricant level	o Amber central warning o Check Lubricating grease level low Check at next stop
	o SE9901 is indicating no pressure o Electrical fault in the circuit o Combination of electrical fault and no pressure	o Amber central warning o Check Central lubrication failure

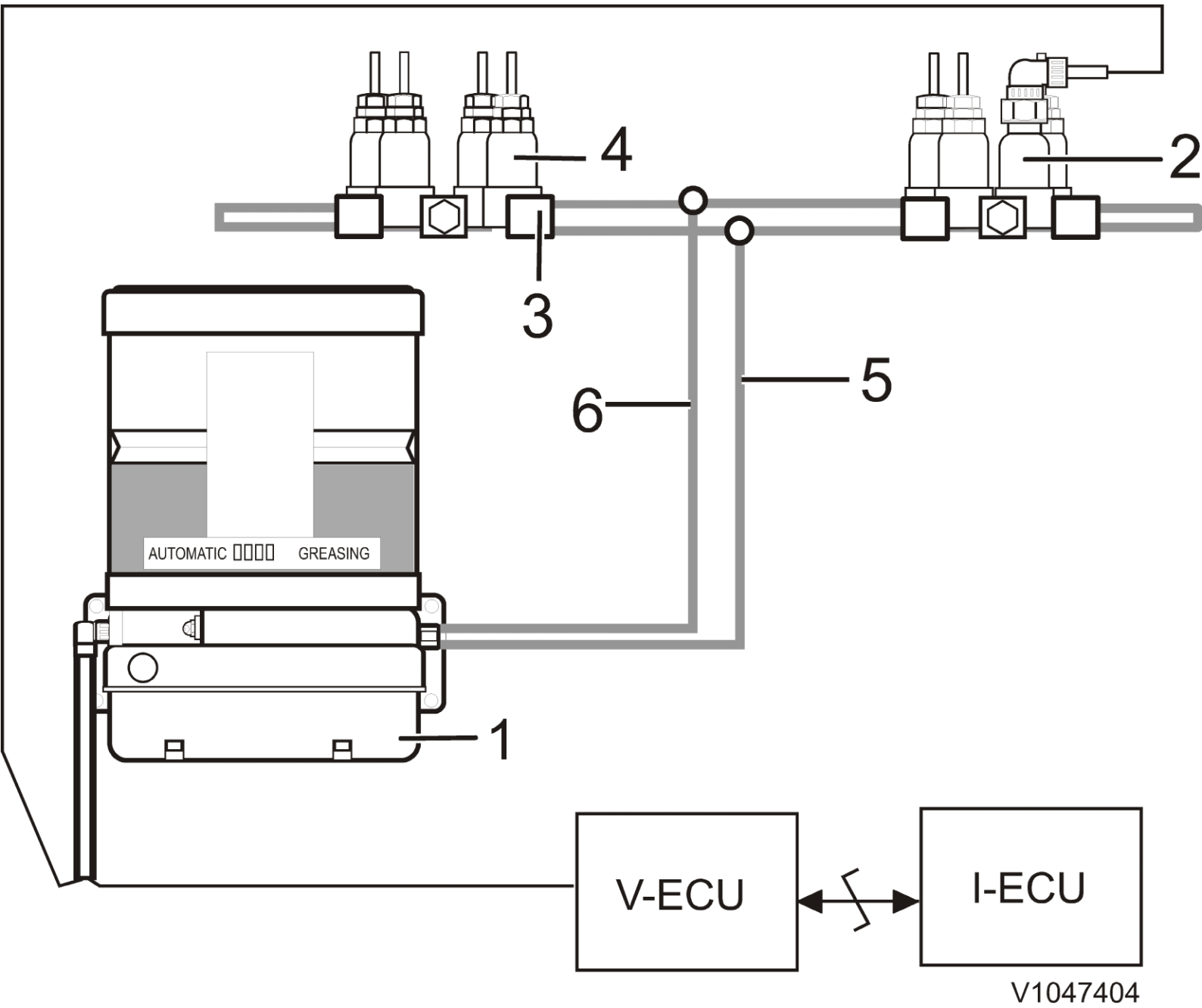
4
2
3
6
5
AUTOMATIC GREASING
1
V-ECU
I-ECU
V1047404

VOLVO
Construction Equipment

Service Information

Document Title:	Function Group:	Information Type: **Service Information**	Date: **12/10/2011**
Profile: **WLO, L90F (Volvo) [GB]**			

Explanations to hydraulic diagram

Symbols

Symbol	Explanation
 V1031824	Line
 V1031925	Servo line / Pilot line
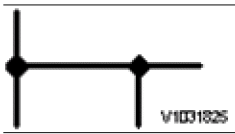 V1031825	Line junction
 V1031826	Crossing lines not connecting
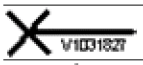 V1031827	Outlet, plugged
 V1031828	Quick-action coupling (e.g. checking point)
 V1031855	Restriction
 V1031856	Restriction, insignificantly viscosity-dependent
 V1031857	Adjustable restriction
Reservoirs and accumulators	
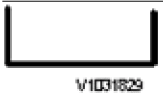 V1031829	Atmospheric (open) reservoir
 V1031830	Accumulator
Filter	
 V1031831	Filter, strainer
 V1031832	Filter with magnetic element

Heat exchanger	
	Cooler without representation of lines for the coolant
Control devices	
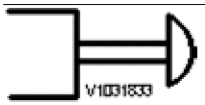	Manual control by push button
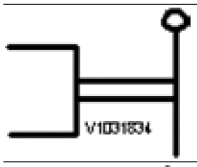	Manual control by lever
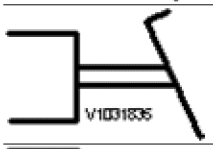	Manual control by pedal
	Mechanical control by spring, neutral position spring, return spring
	Electromagnetic control (one winding)
	Hydraulic pressure control
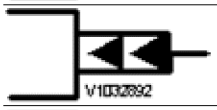	Hydraulic pressure control, two pressure levels
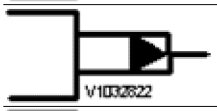	Control via hydraulic pressure drop
	Pneumatic control
	Control via pneumatic pressure drop
Sources of energy	
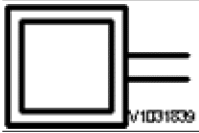	Combustion engine
	Electric motor
Pumps	
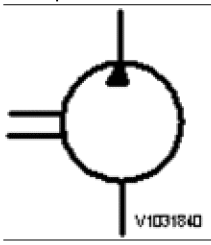	Hydraulic pump with fixed displacement and one direction of flow

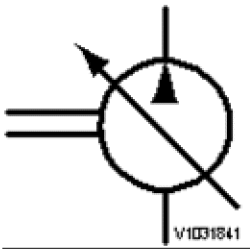 V1031841	Hydraulic pump with variable displacement and one direction of flow
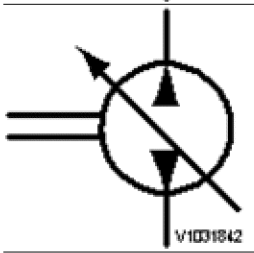 V1031842	Hydraulic pump with variable displacement and two directions of flow
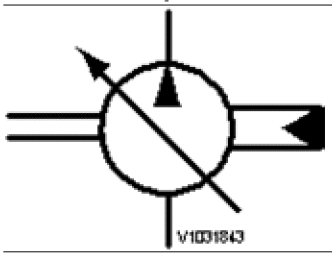 V1031843	Hydraulic pump with variable displacement, pressure controlled
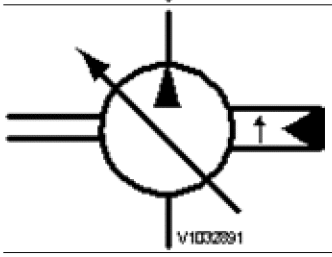 V1032891	Hydraulic pump with variable displacement, pressure controlled with pressure-compensated control
Motors	
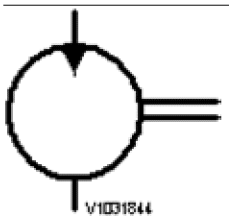 V1031844	Hydraulic motor with fixed displacement and one direction of flow
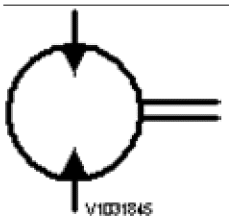 V1031845	Hydraulic motor with fixed displacement and two directions of flow
Cylinders	
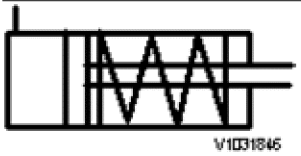 V1031846	Single-acting cylinder with return stroke by spring
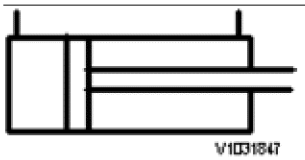 V1031847	Double-acting cylinder with single piston rod (The piston end is called plus side and the piston rod end is called minus side)
Valves	
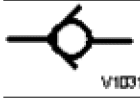 V1031849	Non-return valve which requires very low opening pressure

	Non-return valve which requires a certain opening pressure
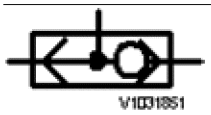	Shuttle valve
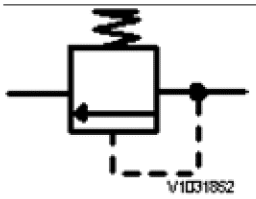	Pressure-limiting valve
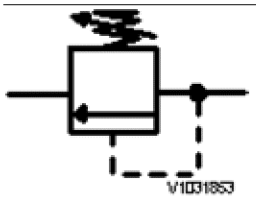	Pressure-limiting valve with adjustable opening pressure
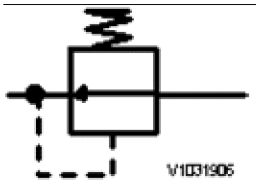	Pressure-reducing valve
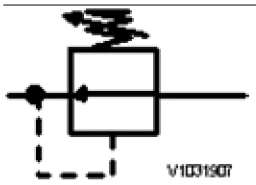	Pressure-reducing valve with adjustable closing pressure
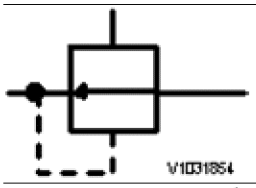	Pressure-reducing valve, pressure controlled
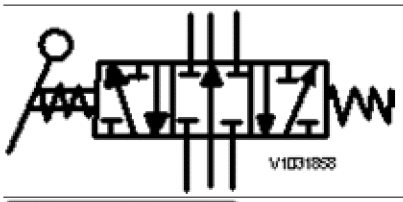	Three-position valve, lever-controlled and spring-centred
	Lines parallel with the long sides of the valve symbol show that the valve can take up any position between its end positions (stepless movement)
	Shut-off valve / Breather valve

Application

The symbols in a diagram show connections, flow paths and function of the components in the system, but does not show the design of the components.

NOTE **In a hydraulic diagram the valve symbols are always drawn in neutral position.**

Valve symbols

The basic element of a valve symbol is a square box. One box is shown for each position that the moving part of a valve (spool or similar) can take up.

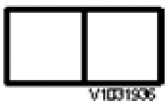

Figure 1
Valve symbol

If the valve does not have fixed positions, but can be operated steplessly, this is shown with parallel lines along the valve symbol.

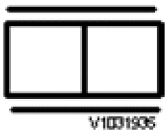

Figure 2
Valve symbol, steplessly controlled valve

Internal flow paths and flow directions are drawn in the boxes. Line connections to the valve are drawn to the box that shows the valve position when other components are actuated according to the diagram.

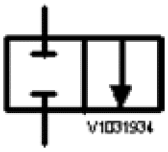

Figure 3
Closed valve

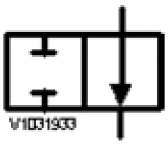

Figure 4
Open valve

Interpretation of valve symbols

In a three-position valve the spool can be placed in three positions, which in the symbol are represented by one box for each position. The box that represents the intended position is drawn between the line connections, which means that the appropriate connecting paths in the valve are shown in the diagram.

The position in the diagram

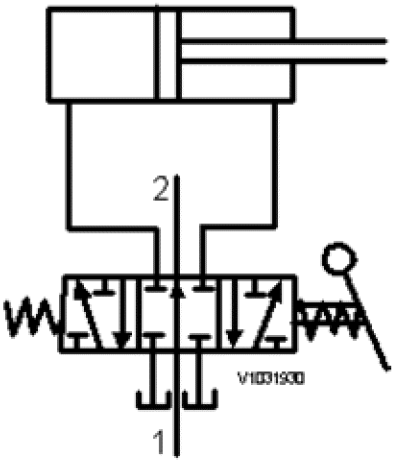

Figure 5
Neutral position

1. Inlet
2. Outlet

The spool is centred in neutral position by the springs. The inlet is connected to the outlet through the spool.

Imagined position for piston movement outwards

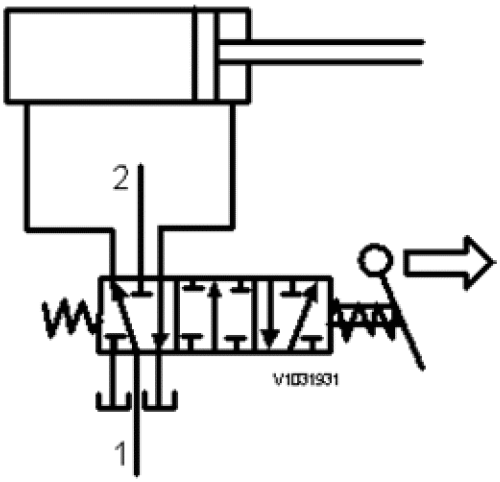

Figure 6
The piston rod is pressed out

1. Inlet
2. Outlet

The spool is actuated with the lever so that the plus side of the cylinder is connected to the inlet at the same time as the minus side is connected to the tank.

Imagined position for piston movement inwards

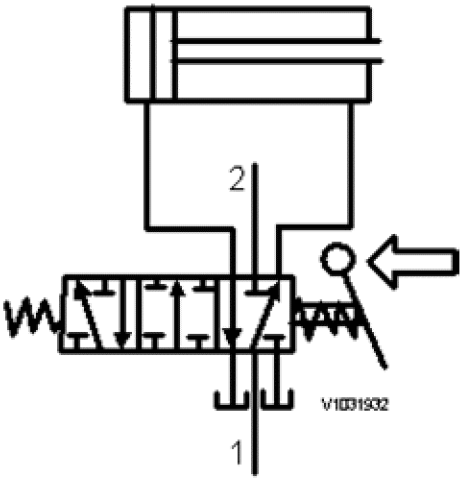

Figure 7
The piston rod is pressed in

1. Inlet
2. Outlet

The spool is actuated with the lever so that the minus side of the cylinder is connected to the inlet at the same time as the plus side is connected to the tank.

More than one document matches the current profile:

Hydraulic diagram, complete
Product Line: WLO
Model Variant: L90F
Site: Arvika
Serial Number Start: 25001
Serial Number End: 25774

Hydraulic diagram, complete
Product Line: WLO
Model Variant: L90F
Site: Asheville, Pederneiras, Arvika
Serial Number Start: 68101, 71501, 25775
Serial Number End: 69999, 79999, 26246

Hydraulic diagram, complete
Product Line: WLO
Model Variant: L90F
Site: Arvika
Serial Number Start: 26247
Serial Number End: 49999

VOLVO
Construction Equipment

Service Information

Document Title:	Function Group:	Information Type: **Service Information**	Date: **23/10/2011**
Profile: **WLO, L90F (Volvo) [GB]**			

Hydraulic diagram, complete

2	Hydraulic oil cooler
3	Pump, secondary steering
4	Sensor block, secondary steering
5	Valve, lever steering (CDC)
6	Central valve
7	Foot brake valve
8	Solenoid valves, differential lock, attachment locking
9	Valve block, Boom Suspension System (BSS)
10	Fan motor
11	Hydraulic oil filter
12	Hydraulic oil pumps, P2 and P3
13	Load-lowering block
14	Servo valve
15	Accumulator block, brakes
16	Connecting block
17	Parking brake
18	Steering valve
19	3rd/4th hydraulic function
20	Control valve
21	Reversible fan
26	Solenoid valve for servo pressure

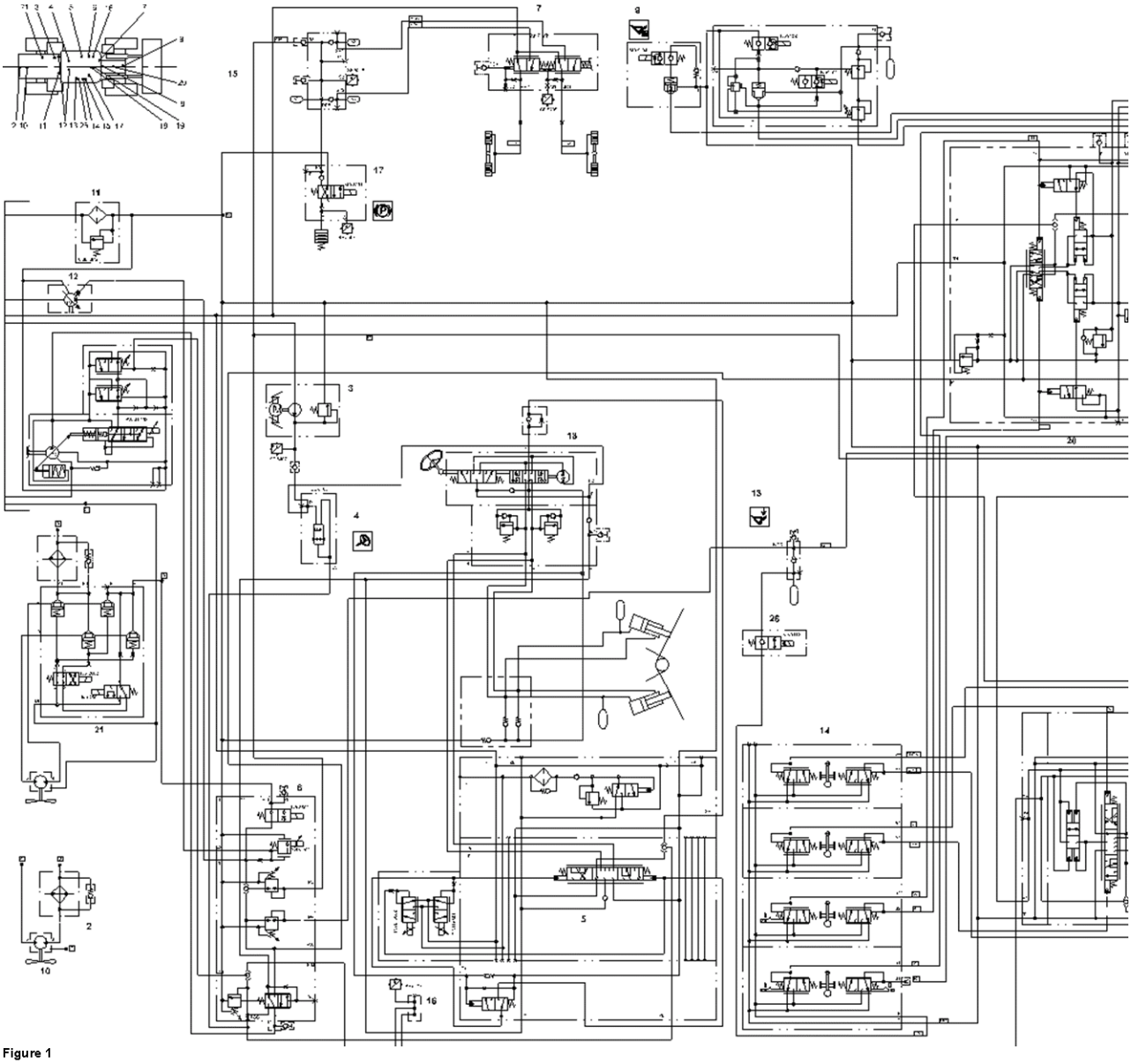

Figure 1

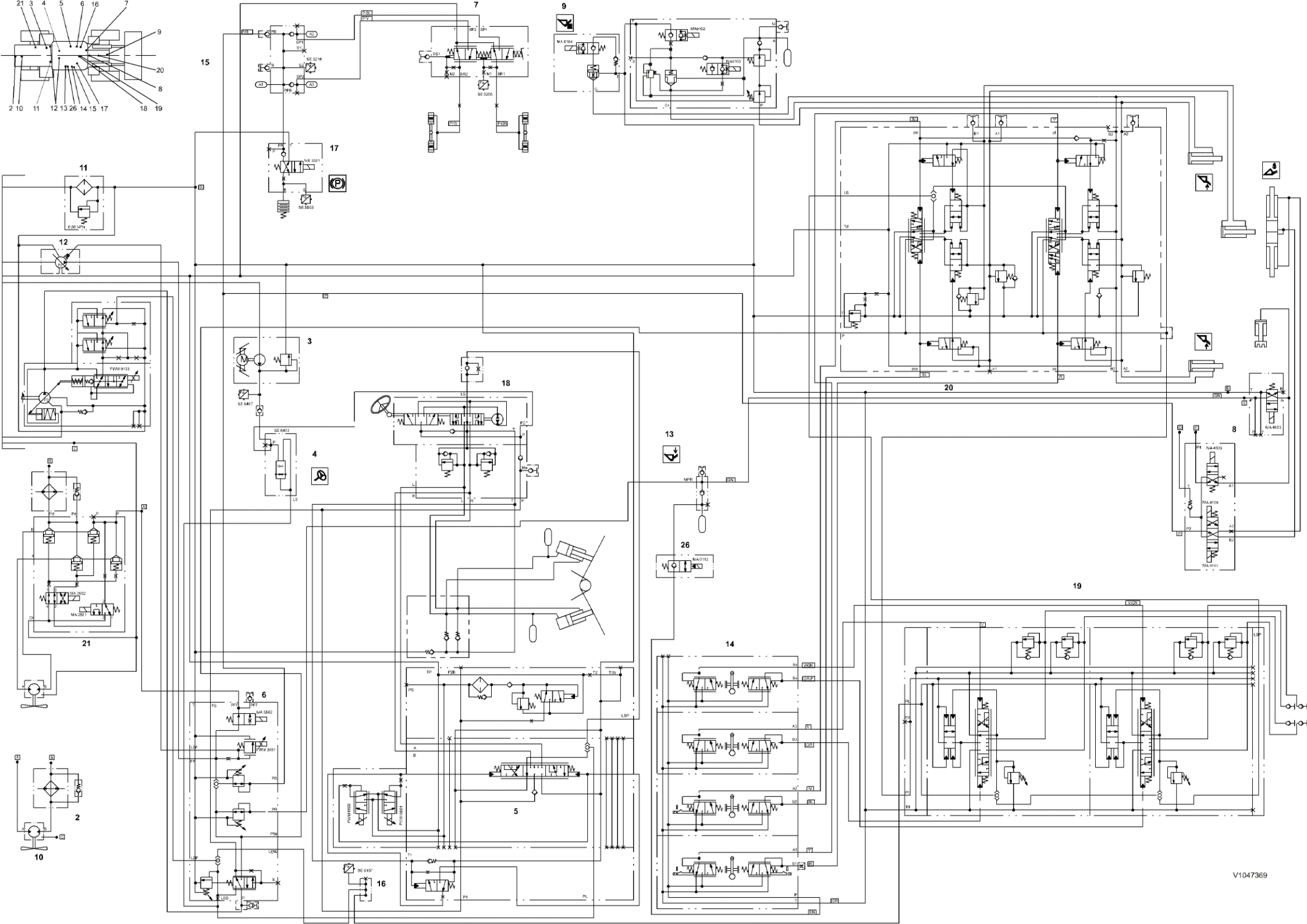
21 3 4 5 6 16 7
9
20
8
2 10 11 12 13 26 14 15 17 18 19
15
7
9
17
11
12
3
18
13
4
26
14
20
8
19
21
6
5
2
10
16
V1047369

VOLVO
Construction Equipment

Service Information

Document Title:	Function Group:	Information Type: **Service Information**	Date: **23/10/2011**
Profile: **WLO, L90F (Volvo) [GB]**			

Hydraulic diagram, complete

2	Hydraulic oil cooler
3	Pump, secondary steering
4	Sensor block, secondary steering
5	Valve, lever steering (CDC)
6	Central valve
7	Foot brake valve
8	Solenoid valves, differential lock, attachment locking
9	Valve block, Boom Suspension System (BSS)
10	Fan motor
11	Hydraulic oil filter
12	Hydraulic oil pumps, P2 and P3
13	Load-lowering block
14	Servo valve
15	Accumulator block, brakes
16	Connecting block
17	Parking brake
18	Steering valve
19	3rd/4th hydraulic function
20	Control valve
21	Reversible fan
26	Solenoid valve for servo pressure

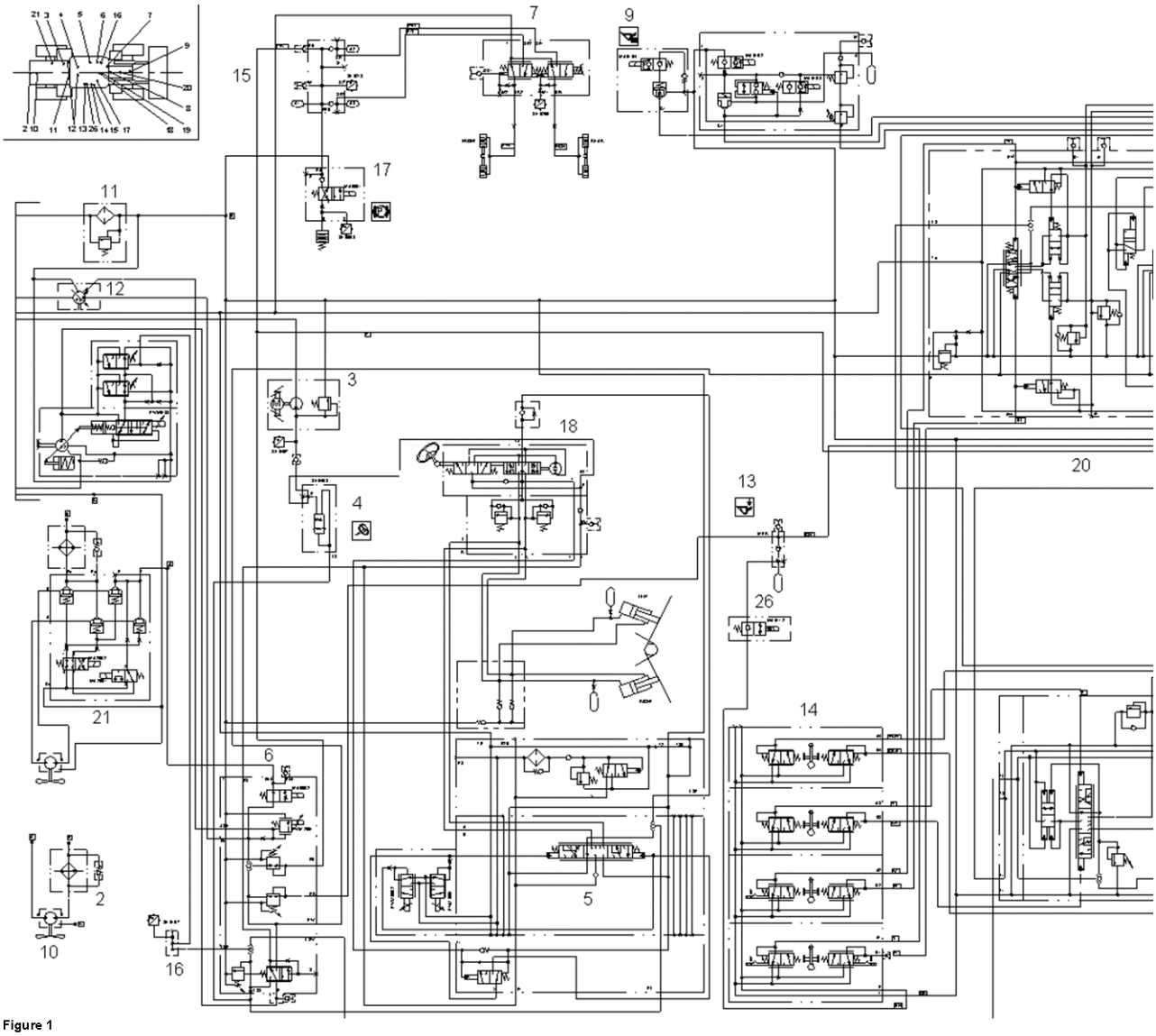

Figure 1

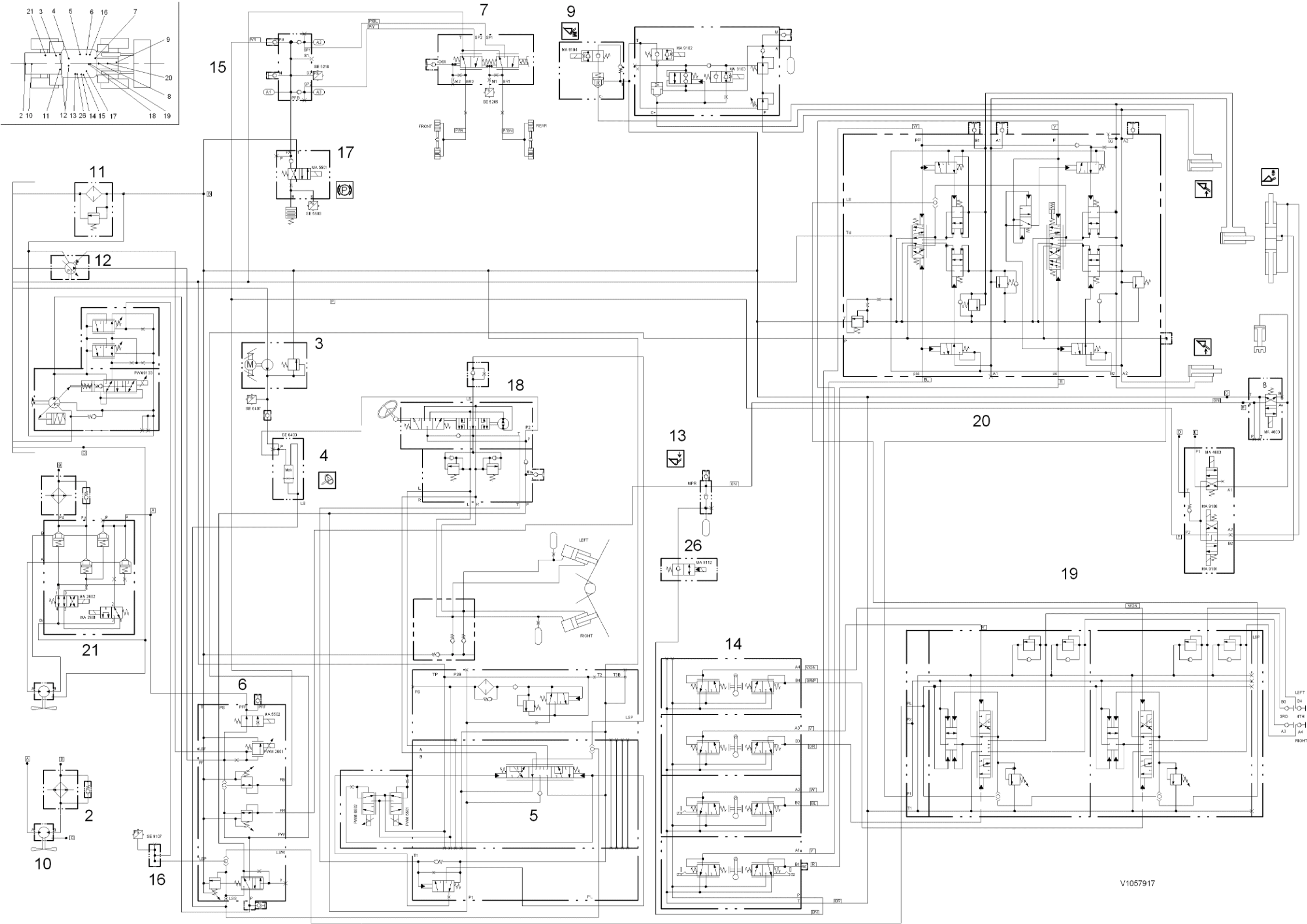
1
2
3
4
5
6
7
8
9
10
11
12
13
14
15
16
17
18
19
20
21
26
V1057917

VOLVO
Construction Equipment

Service Information

Document Title:	Function Group:	Information Type: **Service Information**	Date: **23/10/2011**
Profile: **WLO, L90F (Volvo) [GB]**			

Hydraulic diagram, complete

2	Hydraulic oil cooler
3	Pump, secondary steering
4	Sensor block, secondary steering
5	Valve, lever steering (CDC)
6	Central valve
7	Foot brake valve
8	Solenoid valves, differential lock, attachment locking
9	Valve block, Boom Suspension System (BSS)
10	Fan motor
11	Hydraulic oil filter
12	Hydraulic oil pumps, P2 and P3
13	Load-lowering block
14	Servo valve
15	Accumulator block, brakes
16	Connecting block
17	Parking brake
18	Steering valve
19	3rd/4th hydraulic function
20	Control valve
21	Reversible fan
26	Solenoid valve for servo pressure

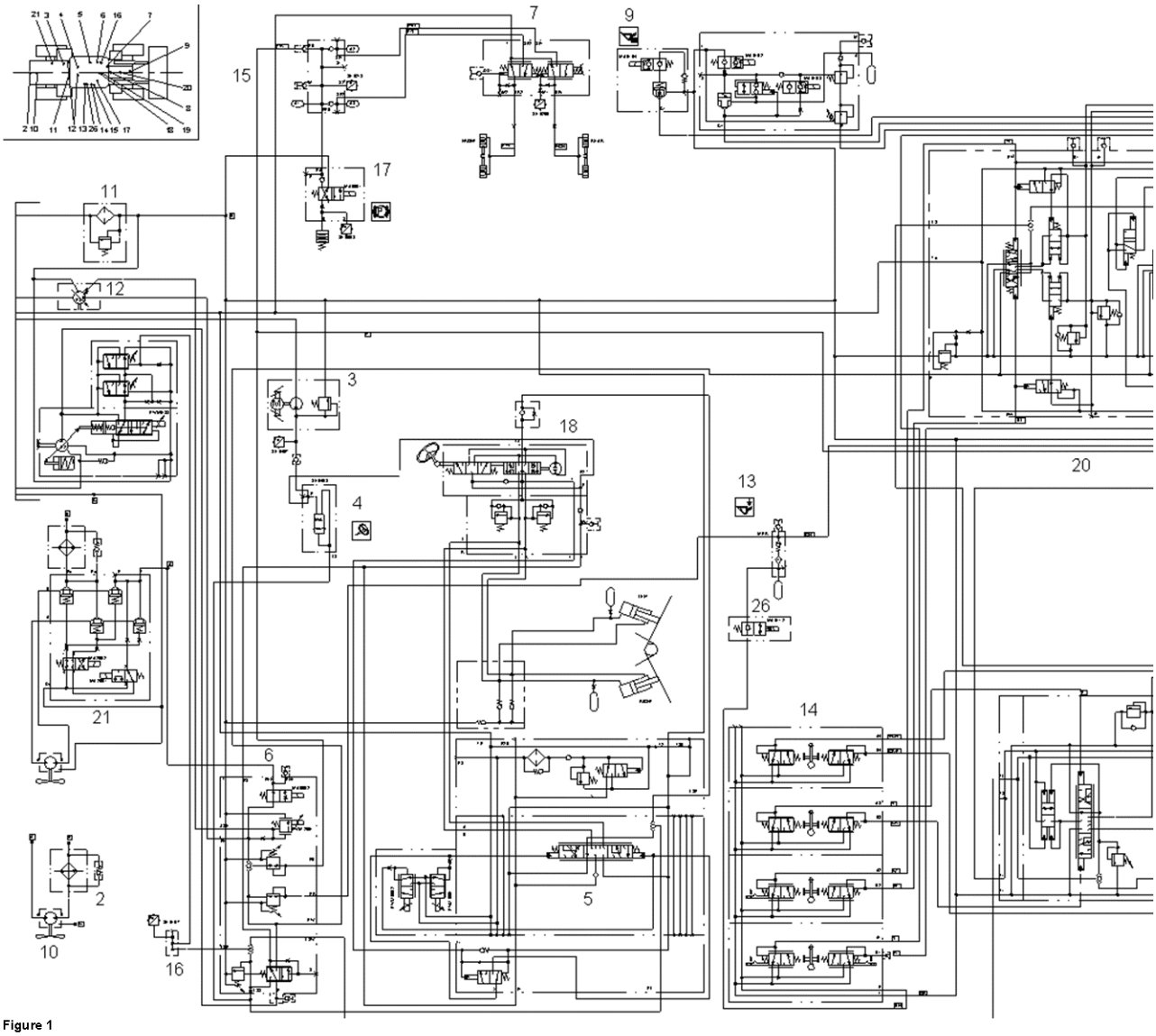

Figure 1

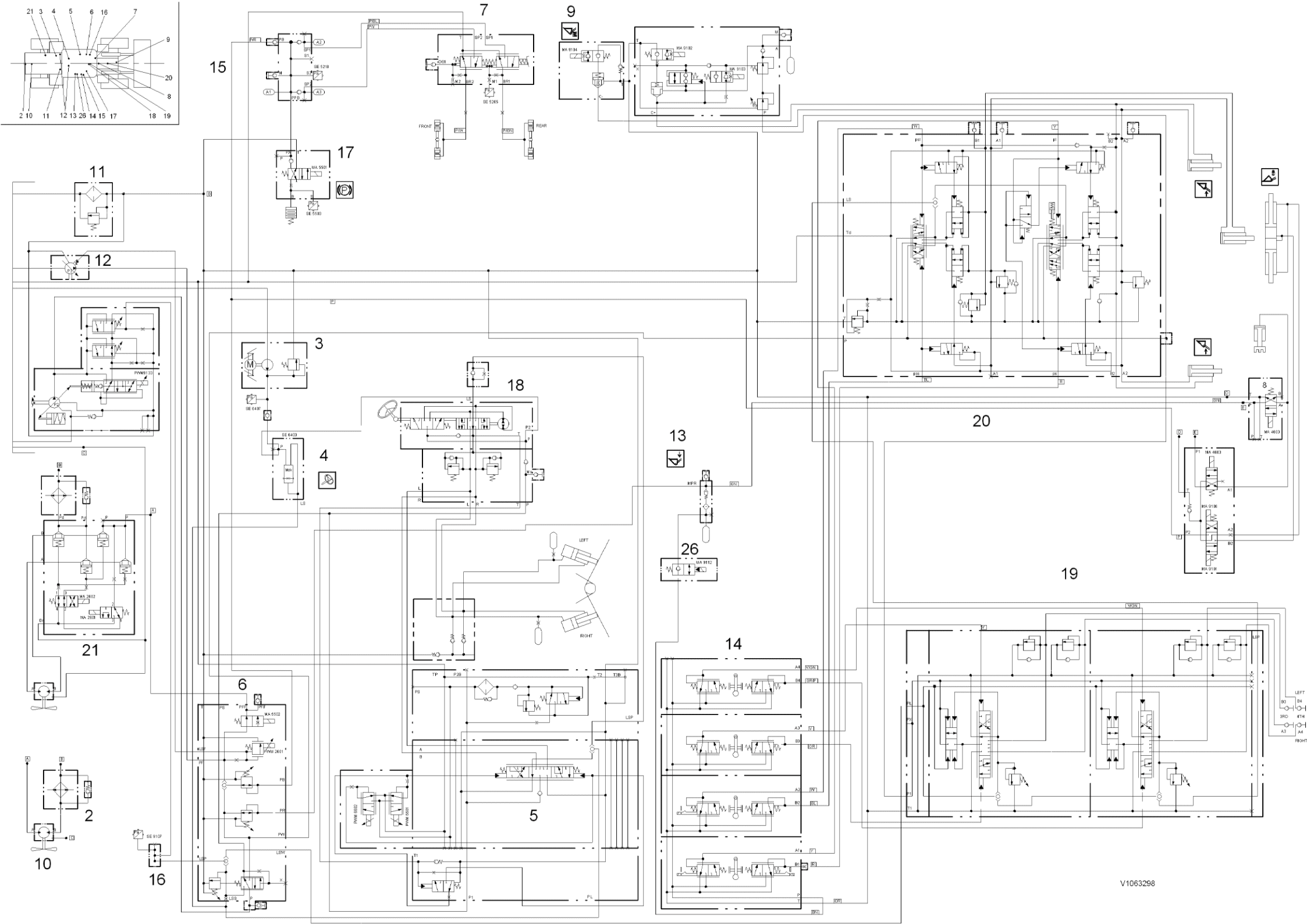
21 3 4 5 6 16 7
9
20
8
2 10 11 12 13 26 14 15 17 18 19
15
7
9
17
11
12
3
18
4
13
26
8
20
19
21
6
5
14
2
10
16
V1063298