RUTHZIL TRATOR COMERCIAL DE PEÇAS LTDA 11 97083-6812 ROLANDO CITRANGULO

LB115B NEW HOLLAND

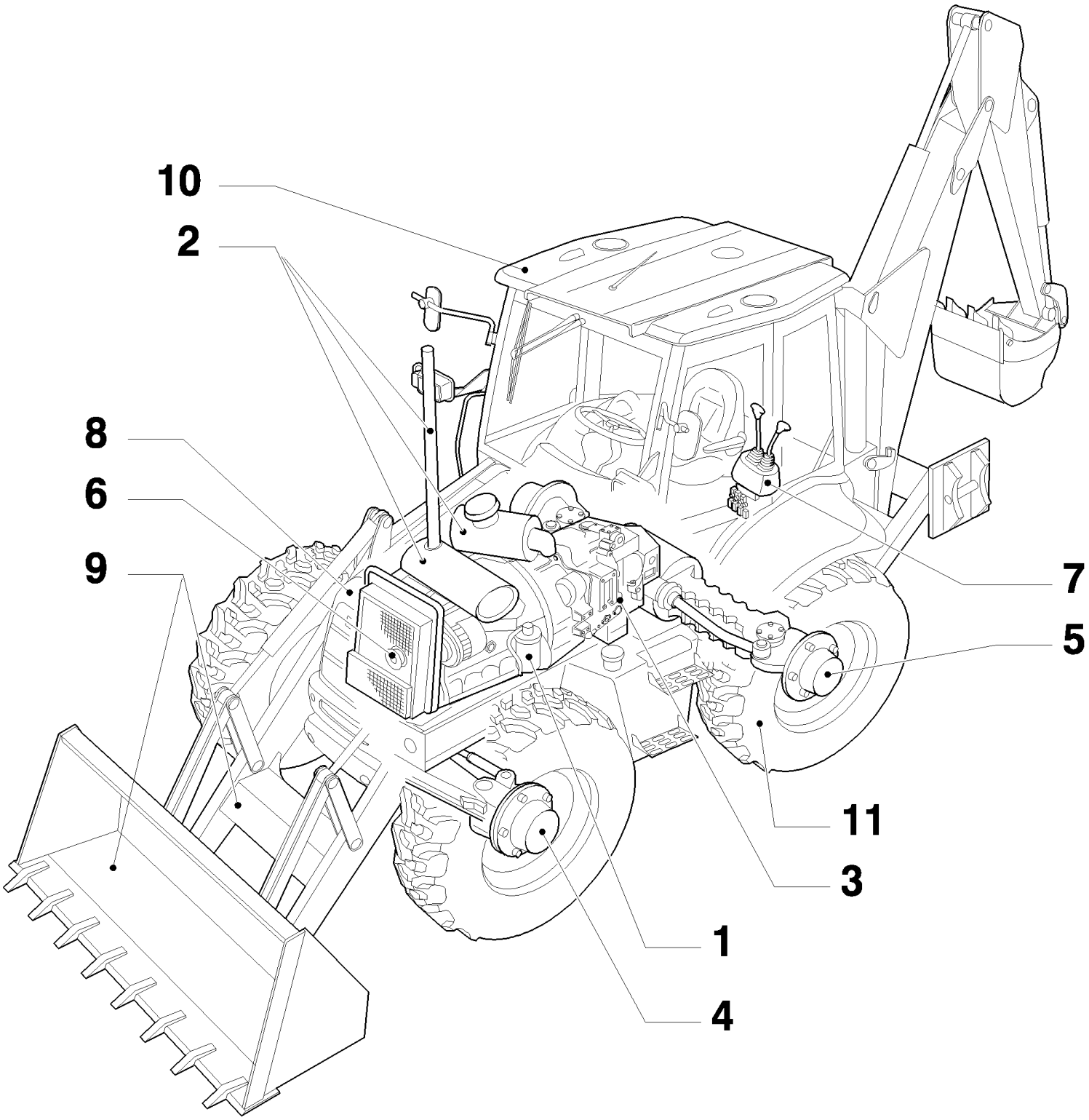

LB115.B EUR BACKHOE LOADER (1/05-)

MAIN(00) SECTIONS

Ref	Part Number	Qty	Description

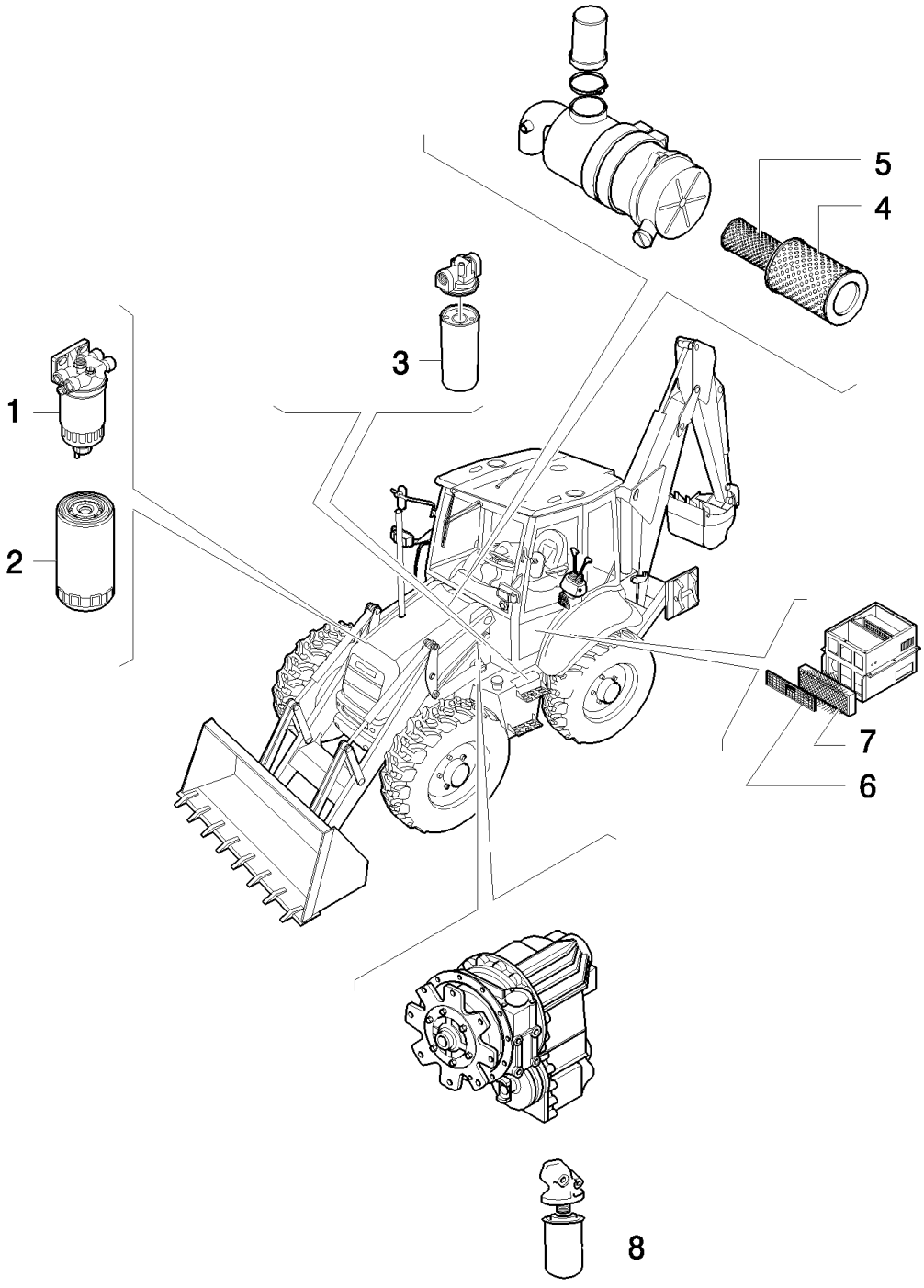
1
2
3
4
5
6
7
8

LB115.B EUR BACKHOE LOADER (1/05-)

MPARTS(00) MAINTENANCE PARTS

Ref	Part Number	Qty	Description
1	1930010	1	FILTER, FUEL, , See Page 0.200 Ref : 6
2	87803260	1	FILTER, ENGINE OIL, Single pkg qty. For multi pkg [qty.12] order 87803260MP, , See Page 0.302 Ref : 1
3	86989733	1	FILTER, HYDRAULIC OIL, , See Page 1.821.6 Ref : 6
4	87438249	1	FILTER, ELEMENT, , See Page 1.19.1 Ref : 4
5	87438246	1	FILTER, ELEMENT, , See Page 1.19.1 Ref : 3
6	85826026	1	FILTER, CAB, , See Page 1.94.2 Ref : 4
7	85826032	1	FILTER, CAB, , See Page 1.94.2 Ref : 2
8	85817004	1	FILTER, , Power Shuttle 2 WD See Page 1.28.0/ A Ref : 14 And 4 WD See Page 1.28.0/ B Ref : 14
8	9968988	1	FILTER, HYDRAULIC OIL, , Power Shift See Page 1.28.0/ C Ref : 14

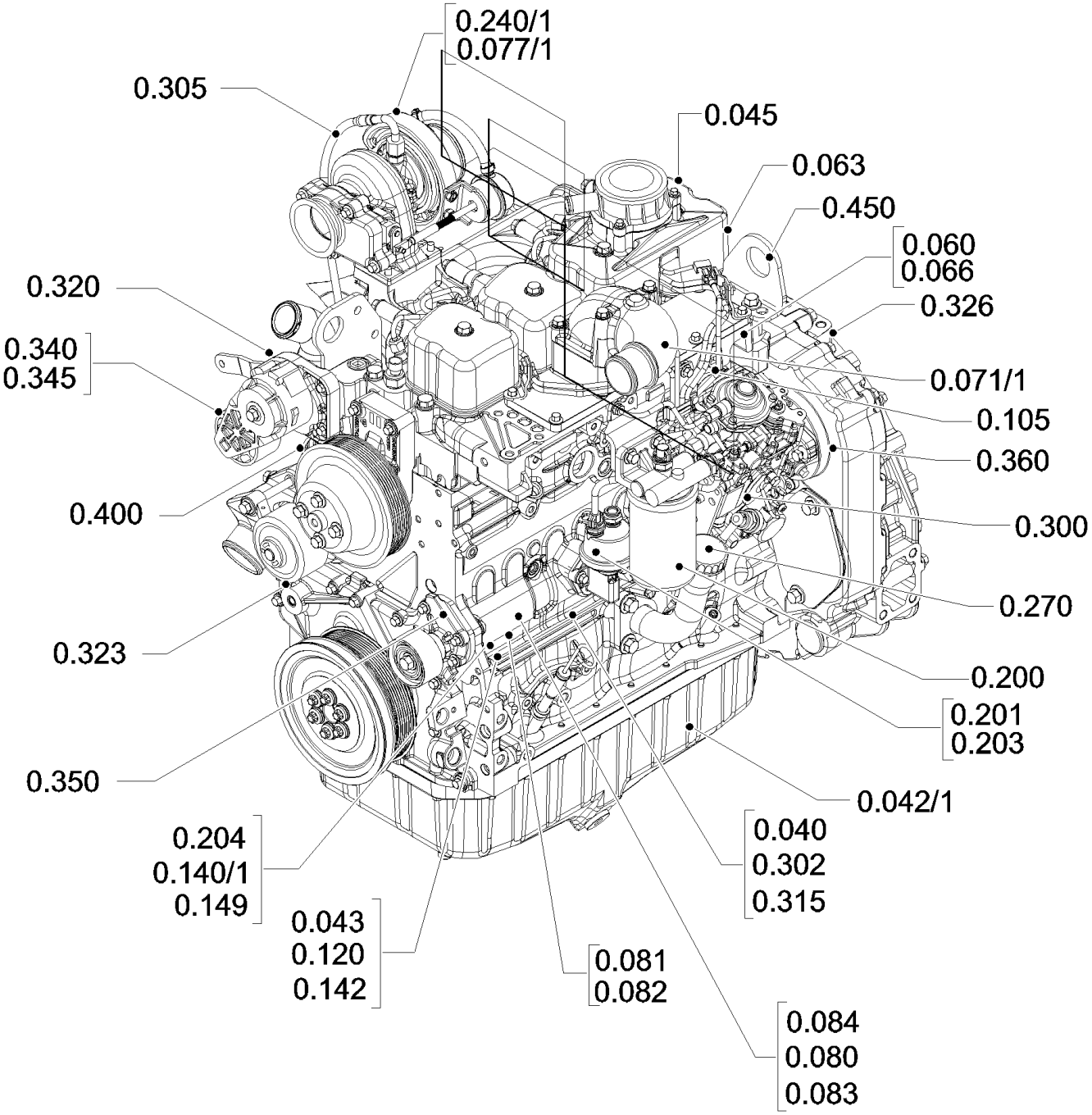
0.240/1
0.077/1
0.305
0.045
0.063
0.450
0.060
0.066
0.320
0.326
0.340
0.345
0.071/1
0.105
0.360
0.400
0.300
0.270
0.323
0.200
0.201
0.203
0.350
0.042/1
0.204
0.140/1
0.149
0.040
0.302
0.315
0.043
0.120
0.142
0.081
0.082
0.084
0.080
0.083

SEC. 01(00) ENGINE 1/2

Ref	Part Number	Qty	Description

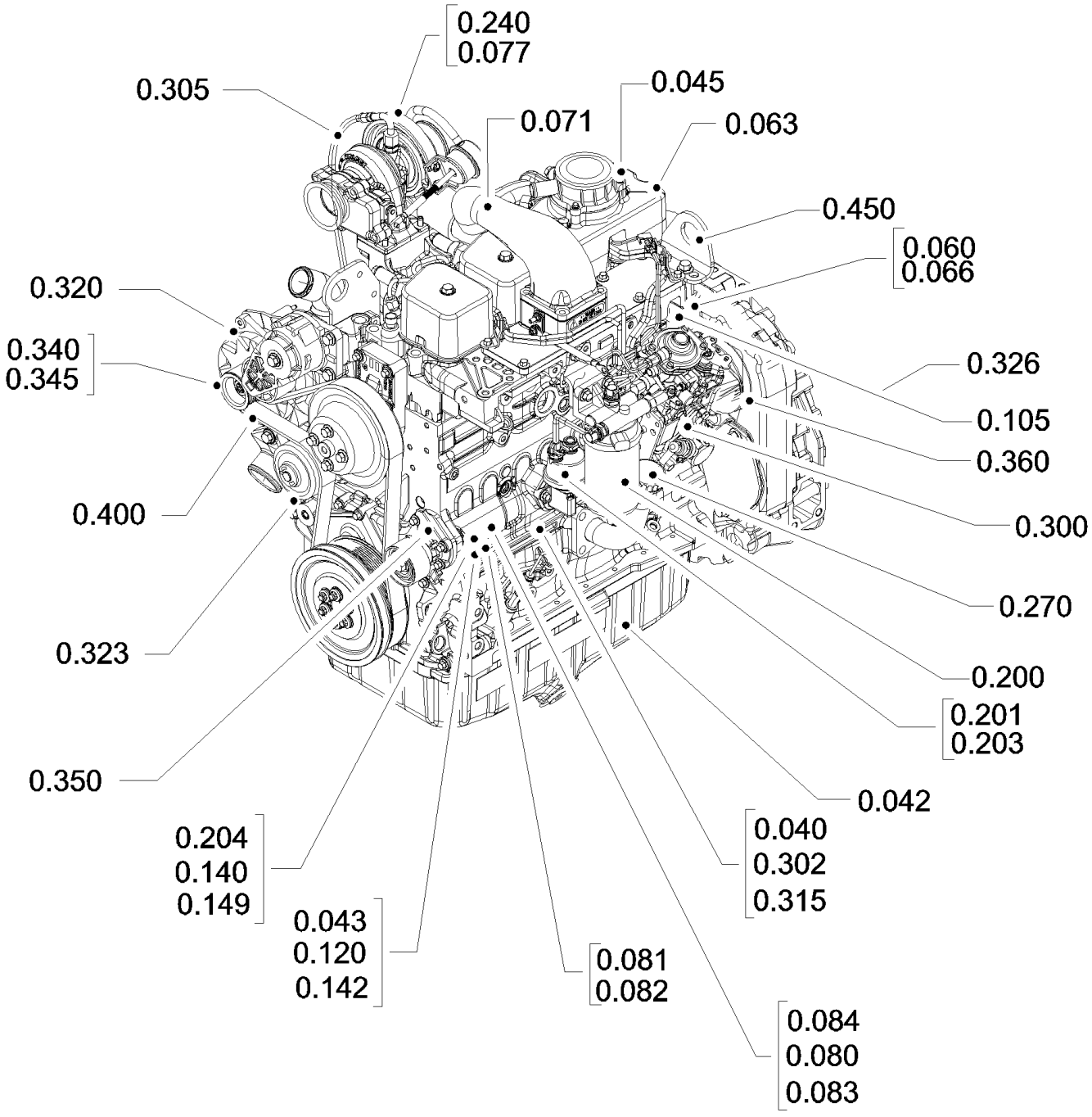
0.240
0.077
0.305
0.045
0.071
0.063
0.450
0.060
0.066
0.320
0.340
0.345
0.326
0.105
0.360
0.400
0.300
0.270
0.323
0.200
0.201
0.203
0.350
0.042
0.204
0.140
0.149
0.040
0.302
0.315
0.043
0.120
0.142
0.081
0.082
0.084
0.080
0.083

Ref	Part Number	Qty	Description

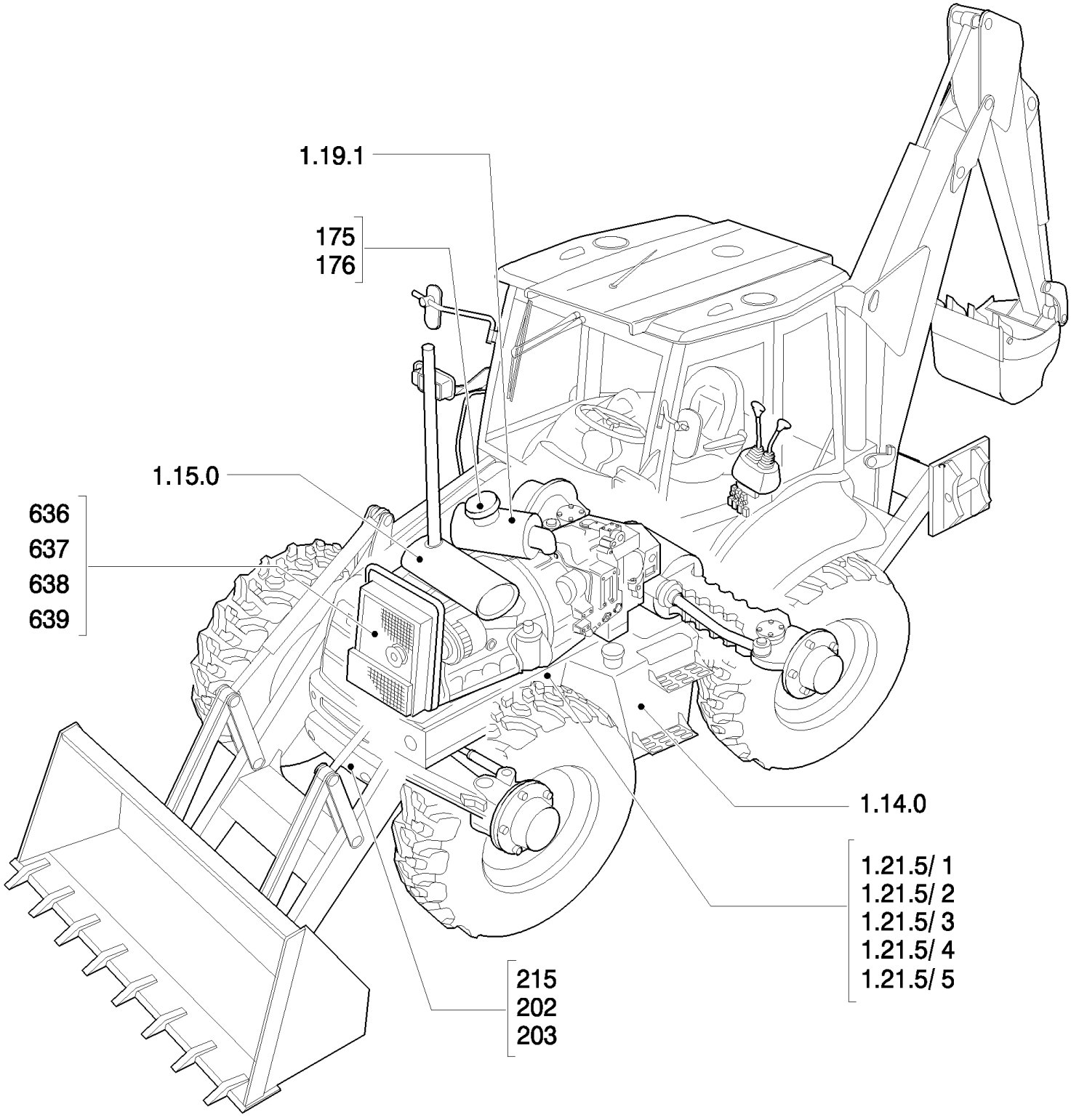
1.19.1
175
176
1.15.0
636
637
638
639
1.14.0
1.21.5/ 1
1.21.5/ 2
1.21.5/ 3
1.21.5/ 4
1.21.5/ 5
215
202
203

SEC. 02(00) FUEL TANK - MUFFLER - RADIATOR - AIR CLEANER - CHASSIS

Ref	Part Number	Qty	Description

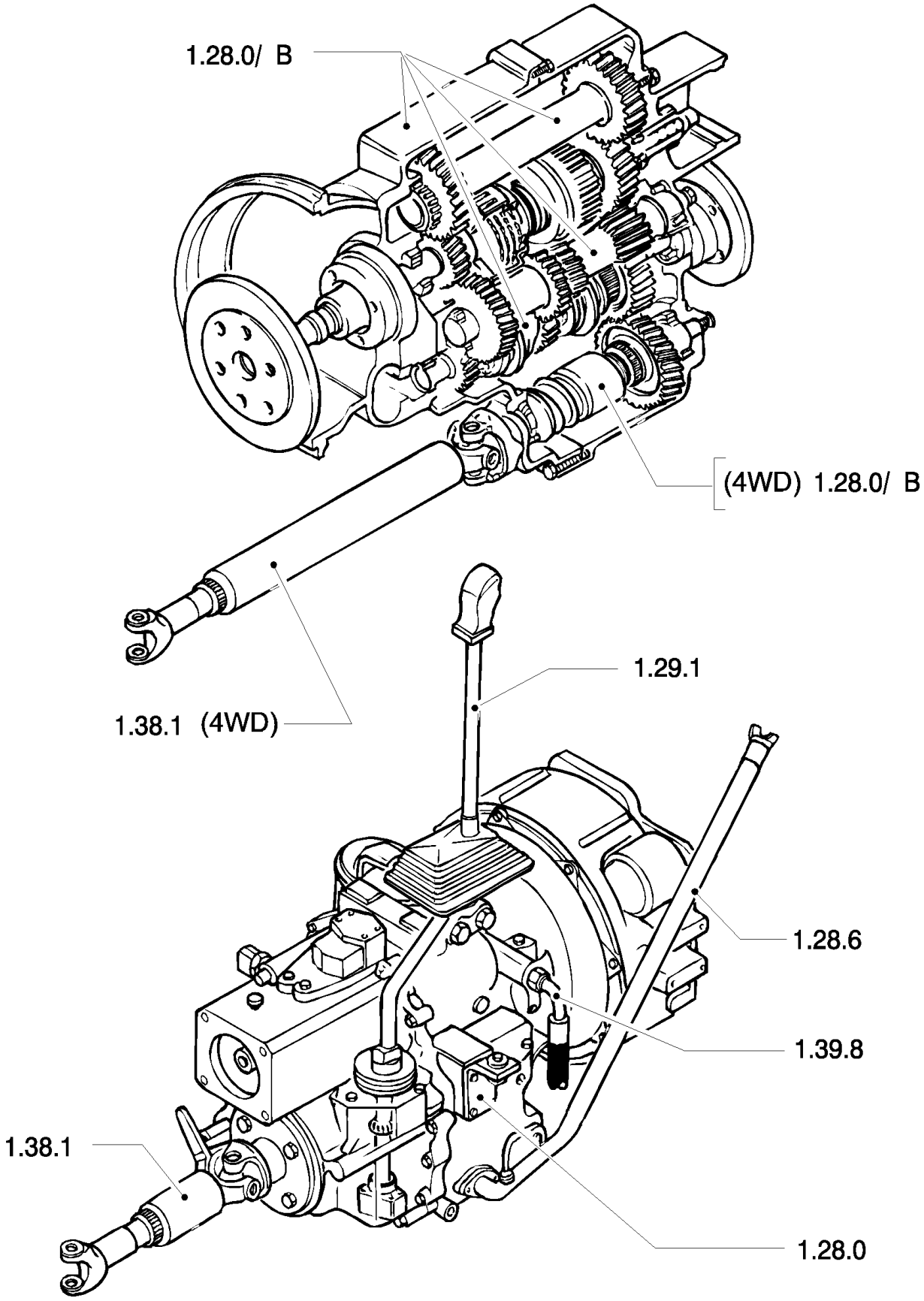
1.28.0/ B
(4WD) 1.28.0/ B
1.29.1
1.38.1 (4WD)
1.28.6
1.39.8
1.38.1
1.28.0

Ref	Part Number	Qty	Description

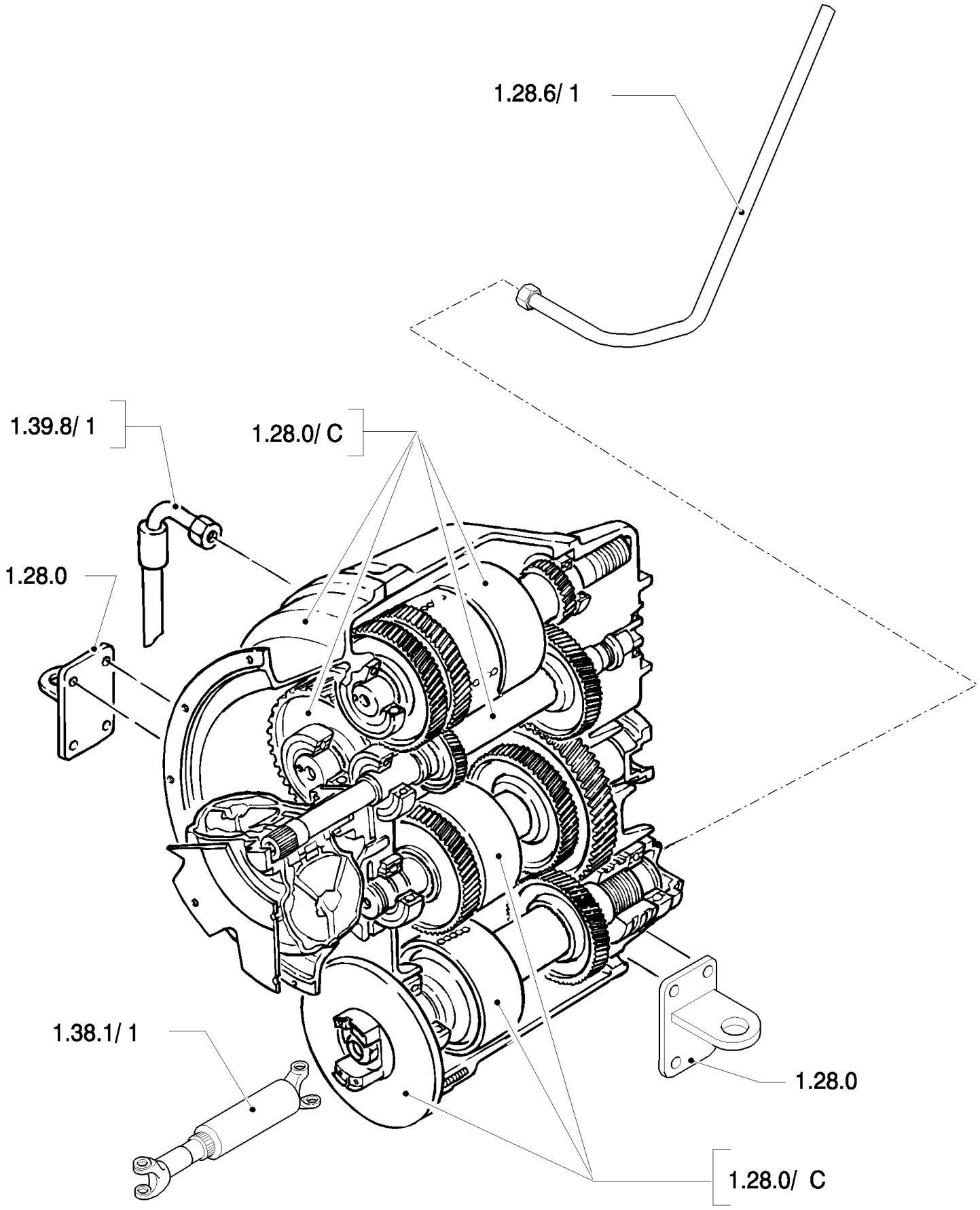
1.28.6/ 1
1.39.8/ 1
1.28.0/ C
1.28.0
1.38.1/ 1
1.28.0
1.28.0/ C

Ref	Part Number	Qty	Description

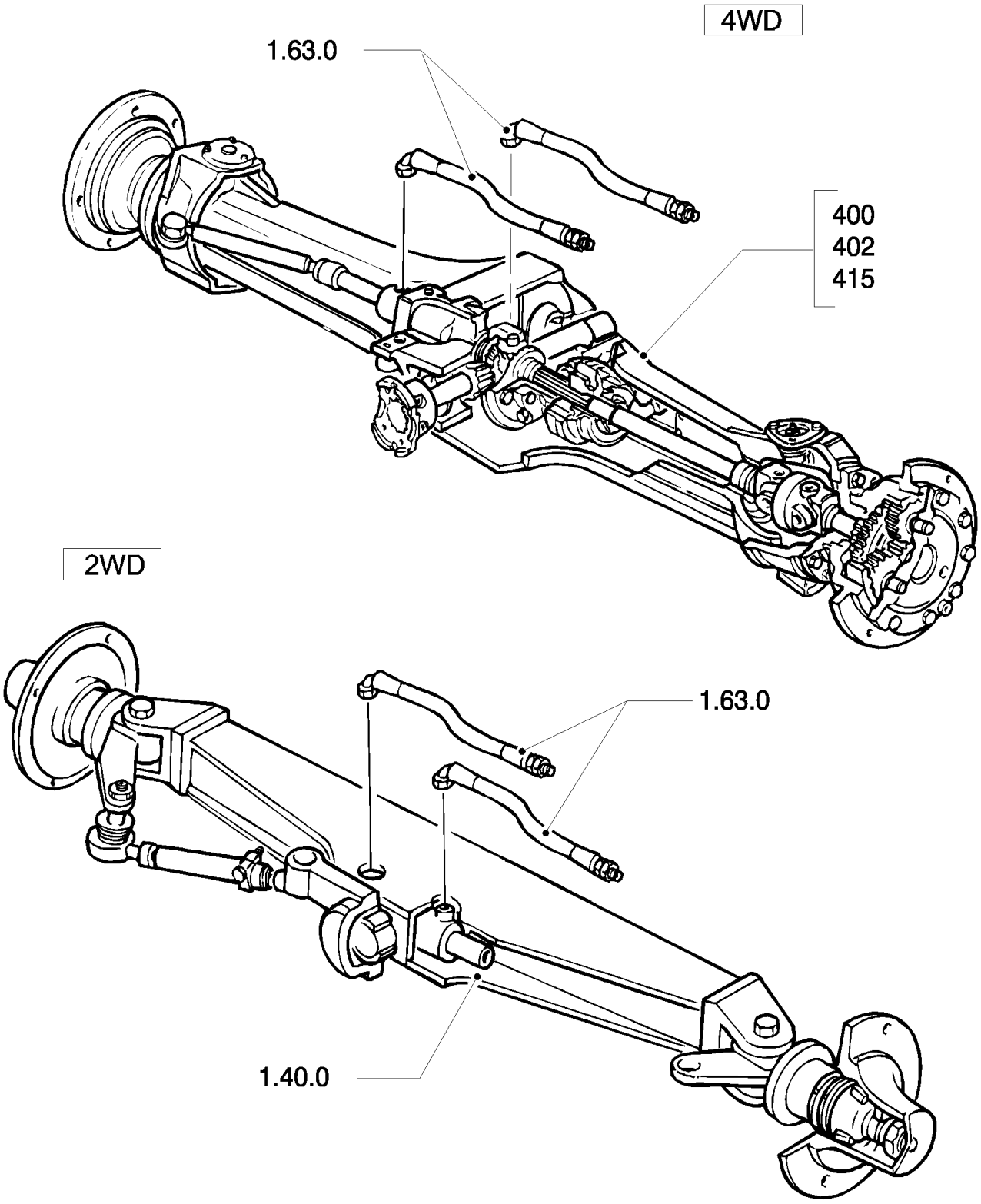
4WD
1.63.0
400
402
415
2WD
1.63.0
1.40.0

SEC. 04(00) FRONT AXLE

Ref	Part Number	Qty	Description

4WS

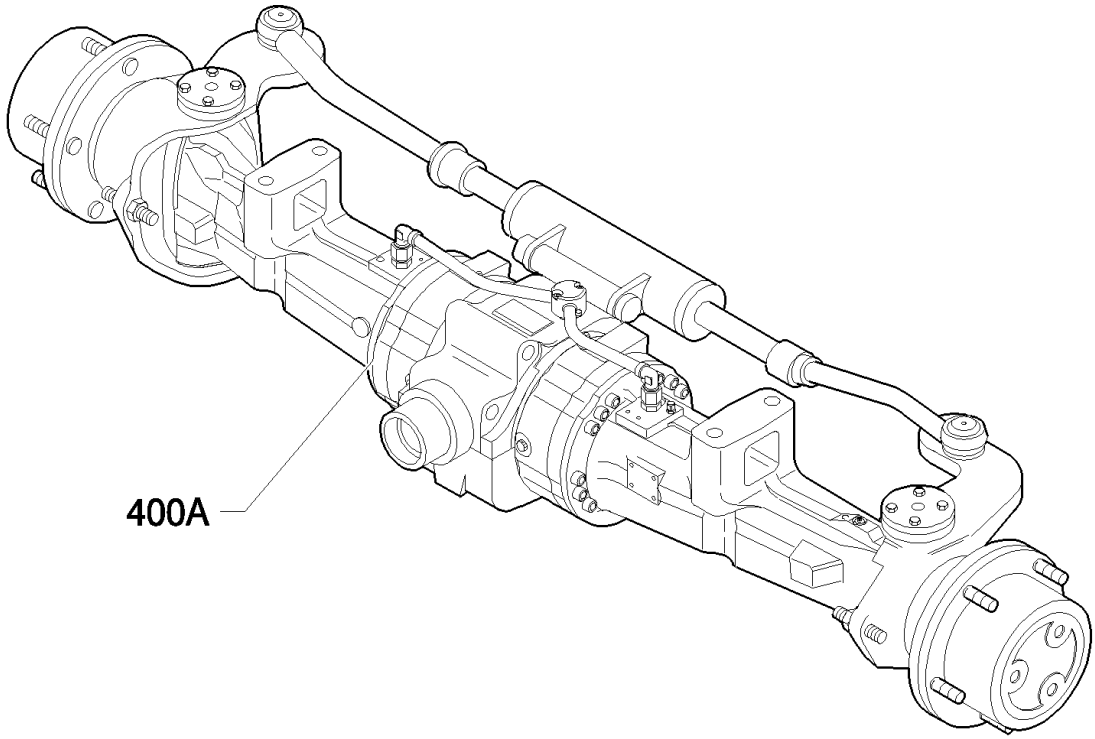

2WS

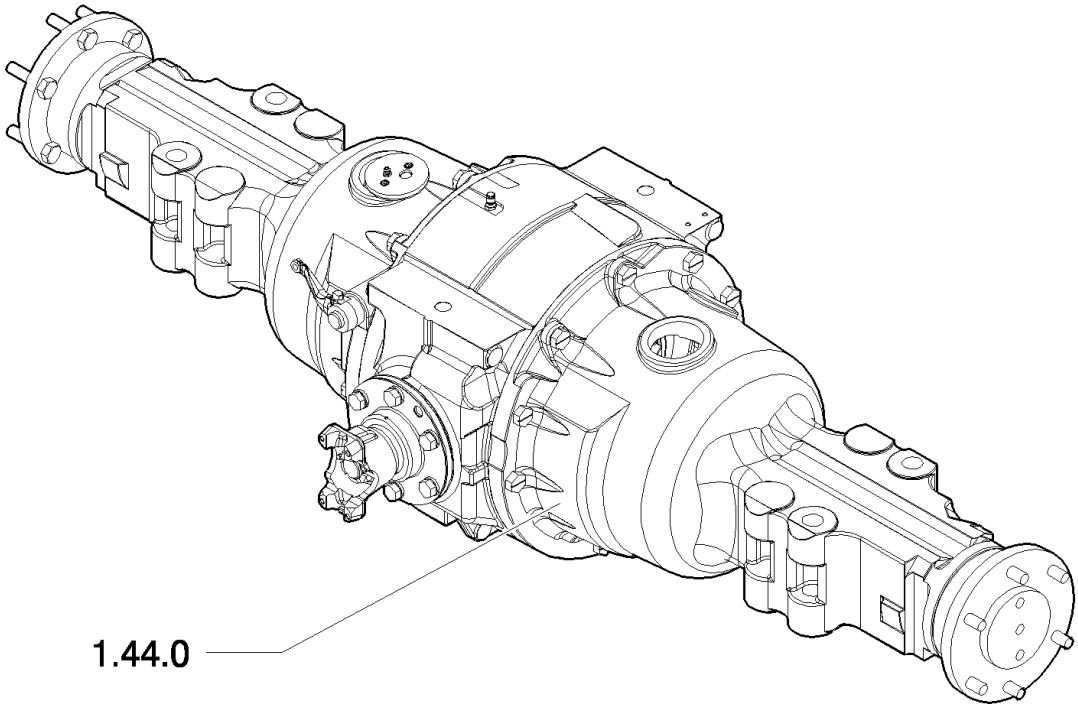

SEC. 05(00) REAR AXLE

Ref	Part Number	Qty	Description

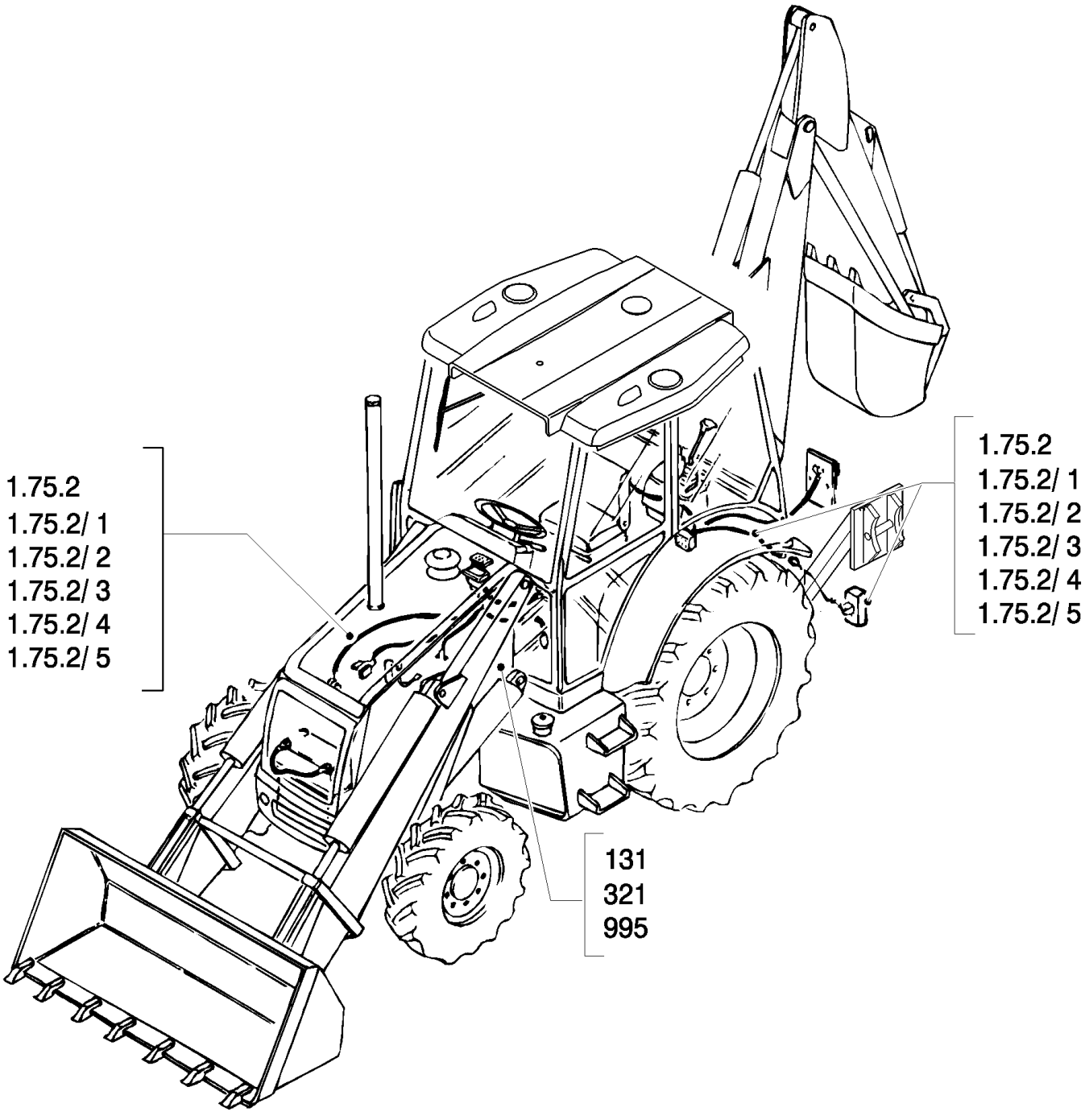
1.75.2
1.75.2/ 1
1.75.2/ 2
1.75.2/ 3
1.75.2/ 4
1.75.2/ 5
1.75.2
1.75.2/ 1
1.75.2/ 2
1.75.2/ 3
1.75.2/ 4
1.75.2/ 5
131
321
995

Ref	Part Number	Qty	Description

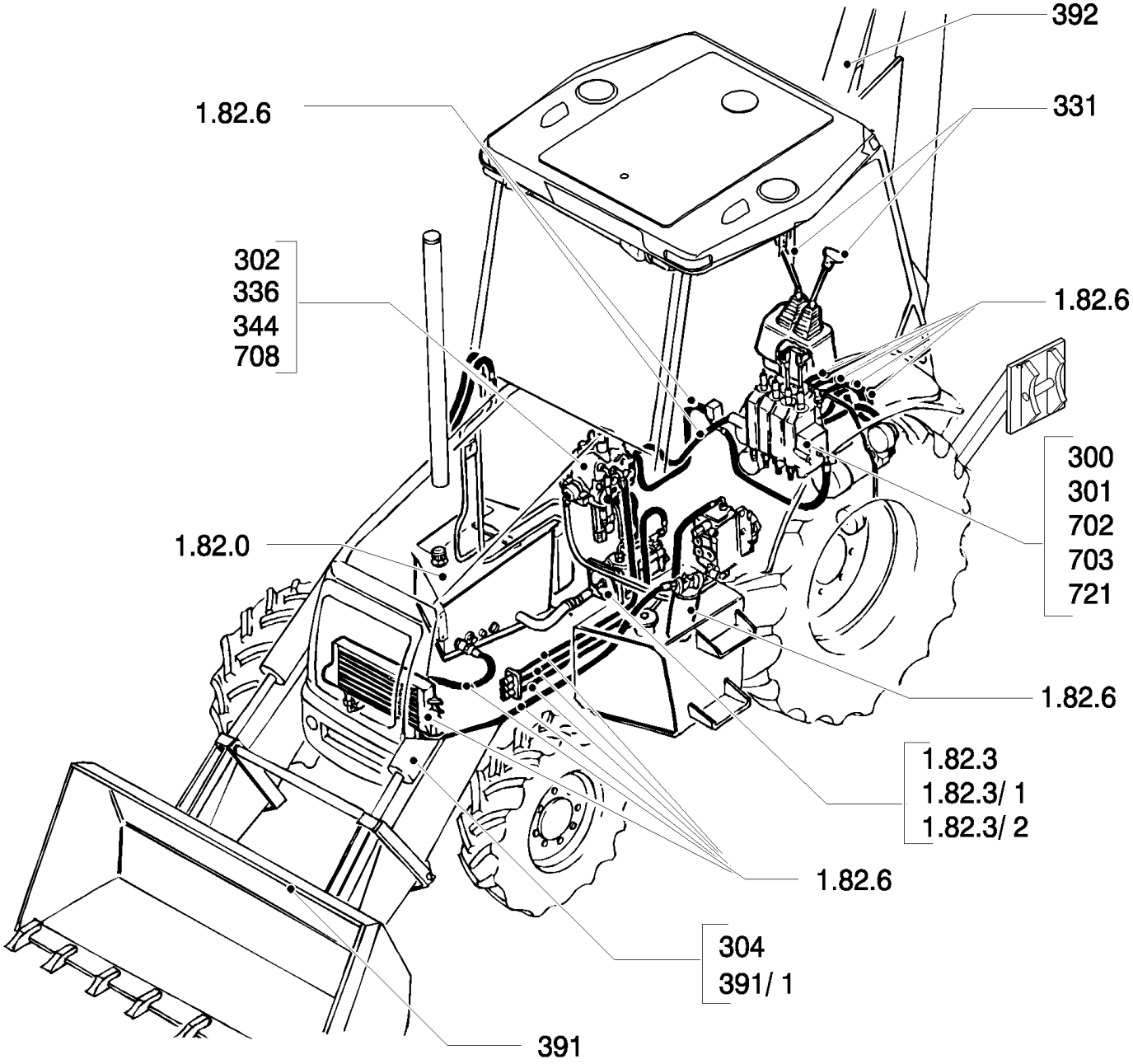
392
1.82.6
331
302
336
344
708
1.82.6
300
301
702
703
721
1.82.0
1.82.6
1.82.3
1.82.3/ 1
1.82.3/ 2
1.82.6
304
391/ 1
391

SEC. 07(00) SLIDES VALVES

Ref	Part Number	Qty	Description

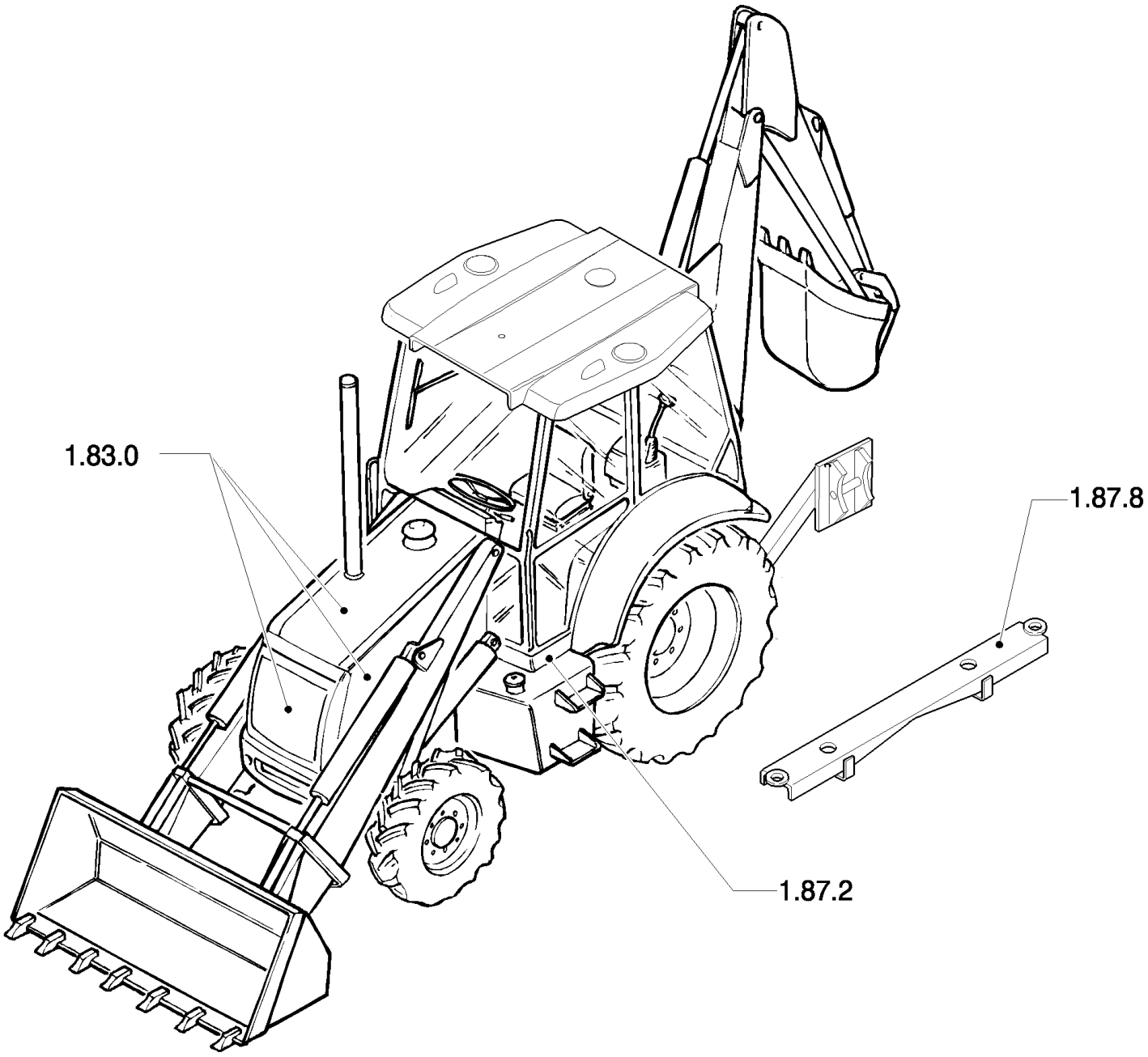
1.83.0
1.87.8
1.87.2

SEC. 08(00) BODY & HOOD

Ref	Part Number	Qty	Description

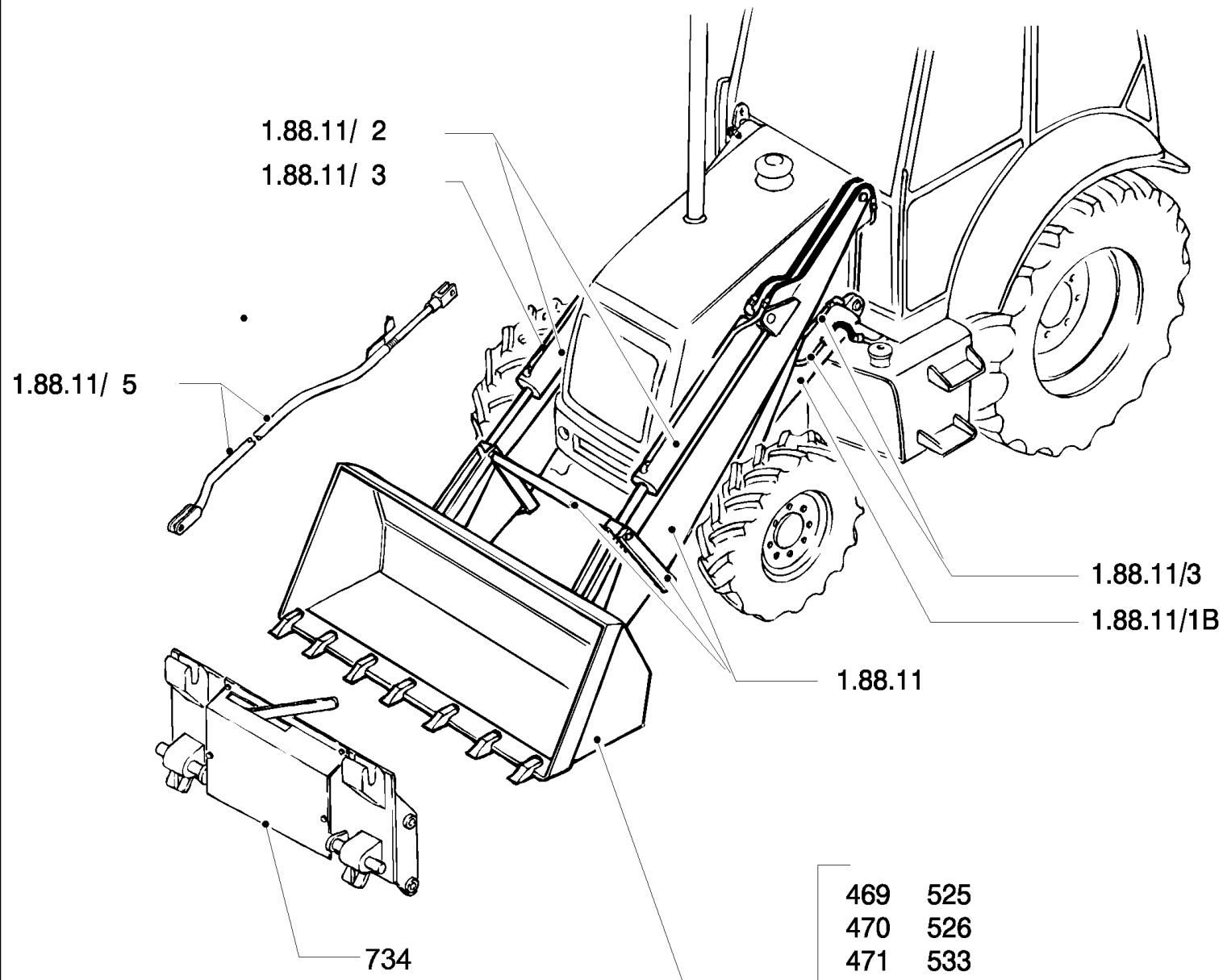

469	525
470	526
471	533
472	534
473	535/ 2
474	536/ 1
475	537/ 1
476	548
500	555
501	556
502	

SEC. 09(00) LOADER 1/1

Ref	Part Number	Qty	Description

SIDE SHIFT

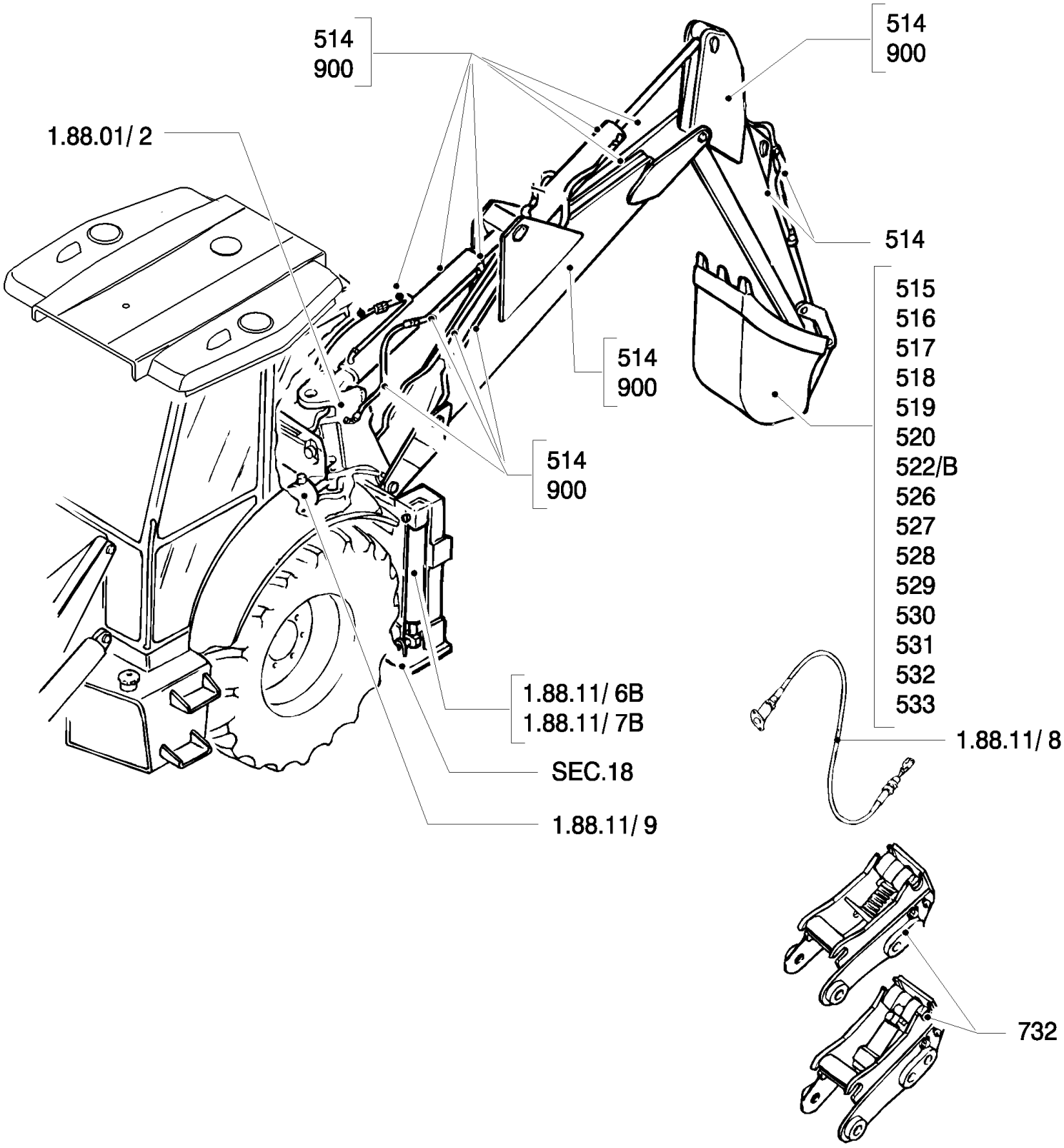
514
900
514
900
1.88.01/ 2
514
515
516
517
518
519
520
522/B
526
527
528
529
530
531
532
533
514
900
514
900
1.88.11/ 6B
1.88.11/ 7B
SEC.18
1.88.11/ 9
1.88.11/ 8
732

SEC. 09(01) BACKHOE 1/2

Ref	Part Number	Qty	Description

CENTER PIVOT

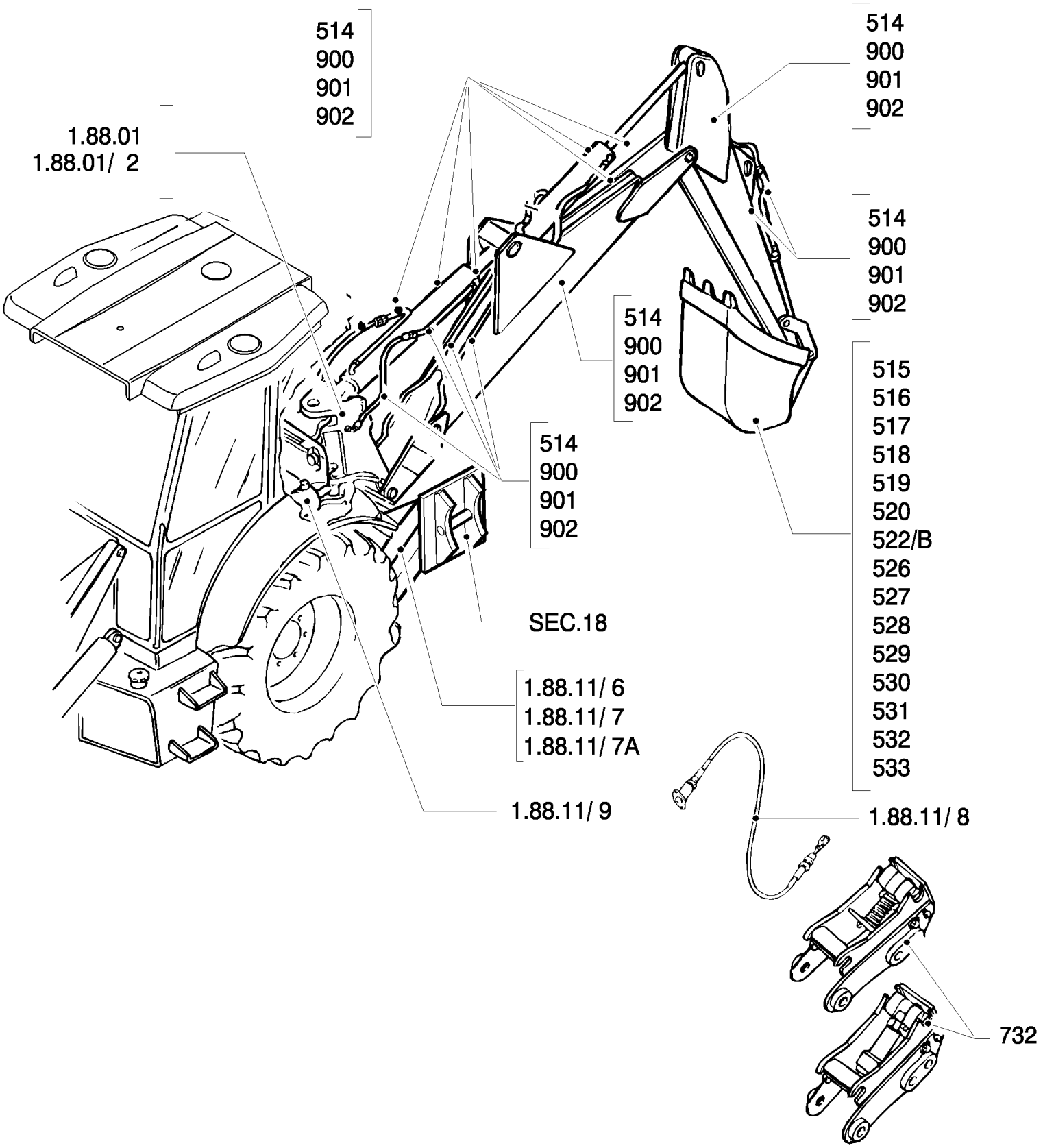

Ref	Part Number	Qty	Description

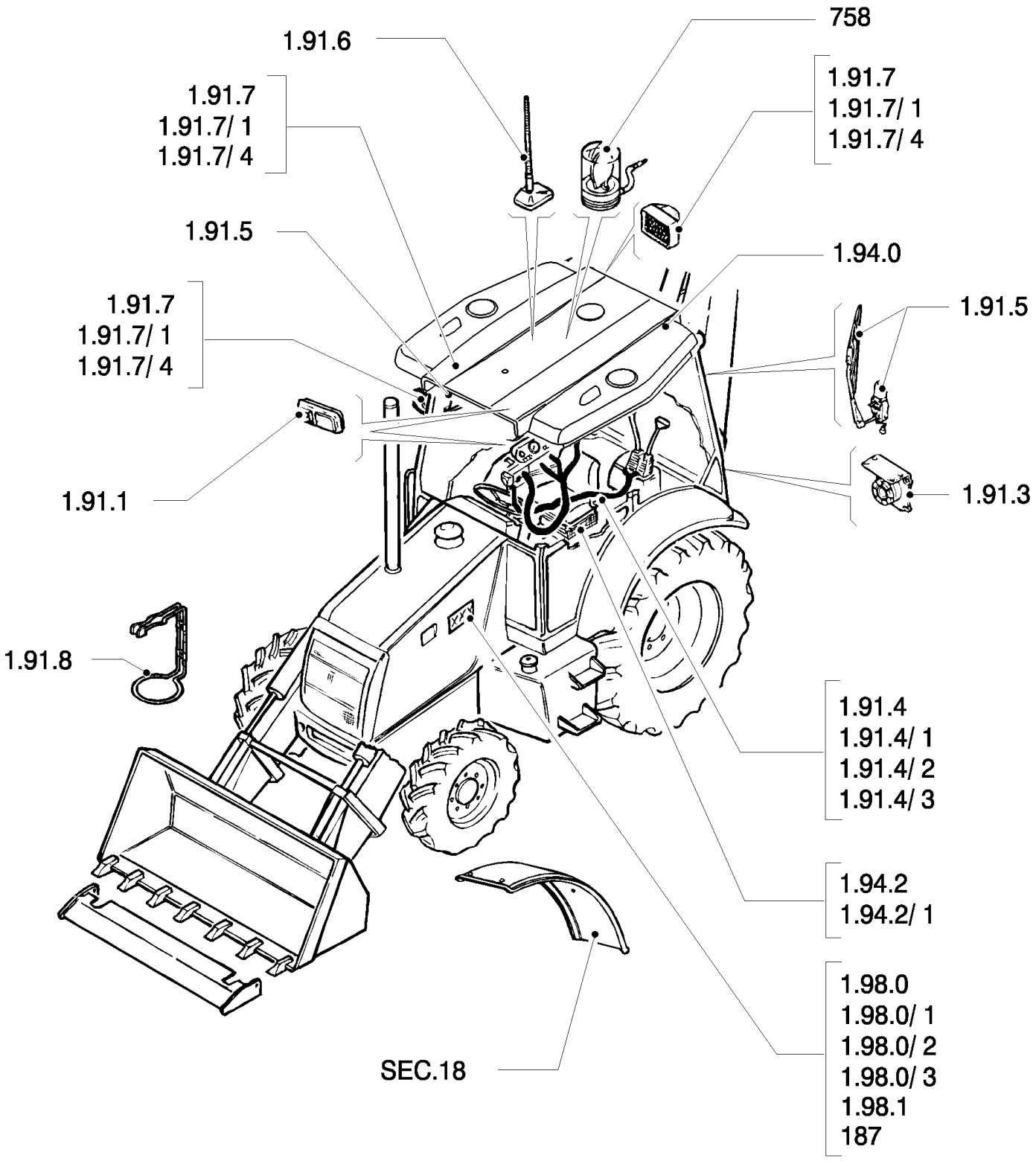
1.91.6
758
1.91.7
1.91.7/ 1
1.91.7/ 4
1.91.7
1.91.7/ 1
1.91.7/ 4
1.91.5
1.94.0
1.91.7
1.91.7/ 1
1.91.7/ 4
1.91.5
1.91.1
1.91.3
1.91.8
1.91.4
1.91.4/ 1
1.91.4/ 2
1.91.4/ 3
1.94.2
1.94.2/ 1
1.98.0
1.98.0/ 1
1.98.0/ 2
1.98.0/ 3
1.98.1
187
SEC.18

SEC. 10(00) BODY, HOOD & DRIVER'S POST 1/3

Ref	Part Number	Qty	Description

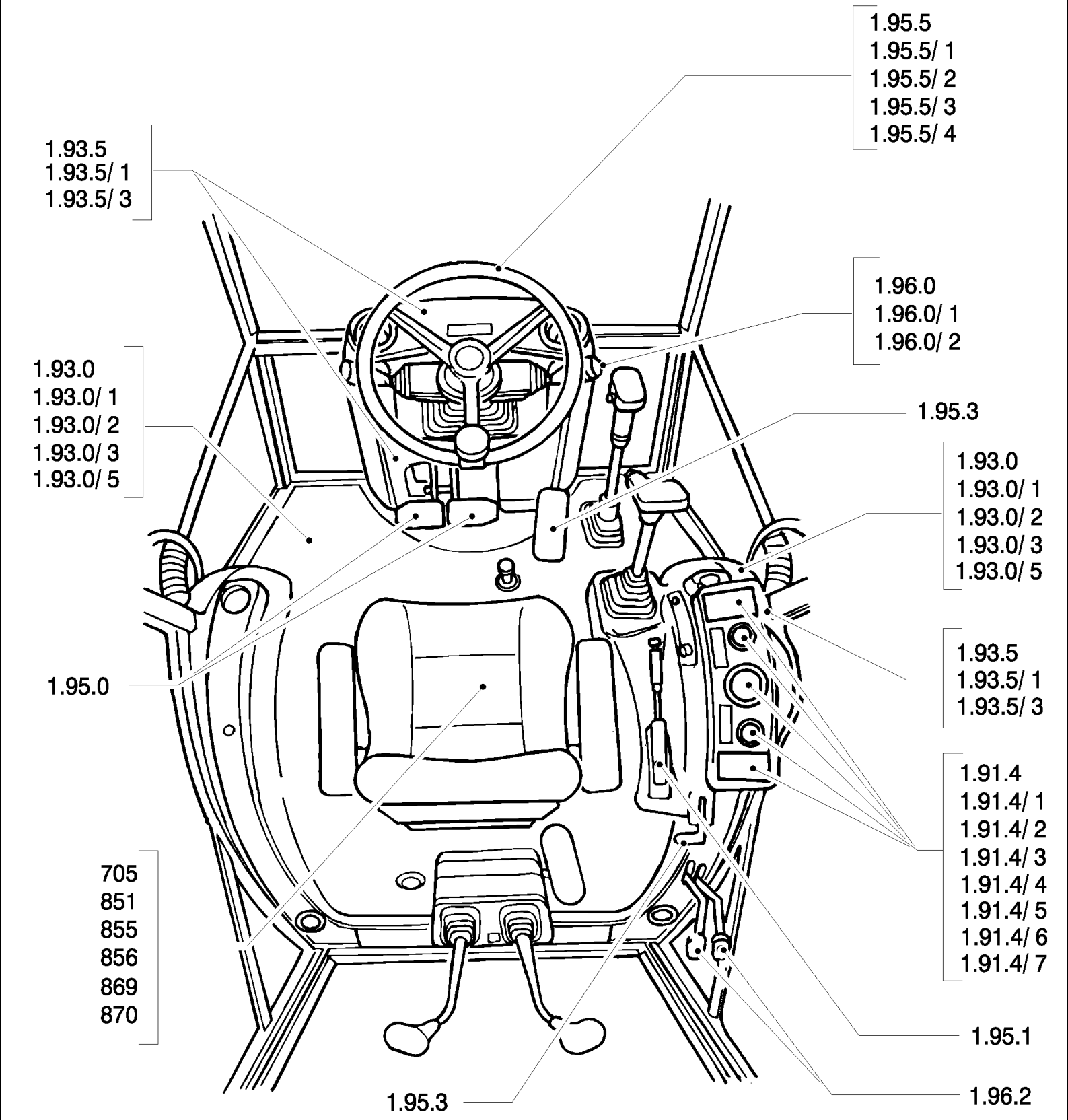
1.95.5
1.95.5/ 1
1.95.5/ 2
1.95.5/ 3
1.95.5/ 4
1.93.5
1.93.5/ 1
1.93.5/ 3
1.96.0
1.96.0/ 1
1.96.0/ 2
1.93.0
1.93.0/ 1
1.93.0/ 2
1.93.0/ 3
1.93.0/ 5
1.95.3
1.93.0
1.93.0/ 1
1.93.0/ 2
1.93.0/ 3
1.93.0/ 5
1.95.0
1.93.5
1.93.5/ 1
1.93.5/ 3
1.91.4
1.91.4/ 1
1.91.4/ 2
1.91.4/ 3
1.91.4/ 4
1.91.4/ 5
1.91.4/ 6
1.91.4/ 7
705
851
855
856
869
870
1.95.1
1.96.2
1.95.3

SEC. 10(01) BODY, HOOD & DRIVER'S POST 2/3

Ref	Part Number	Qty	Description

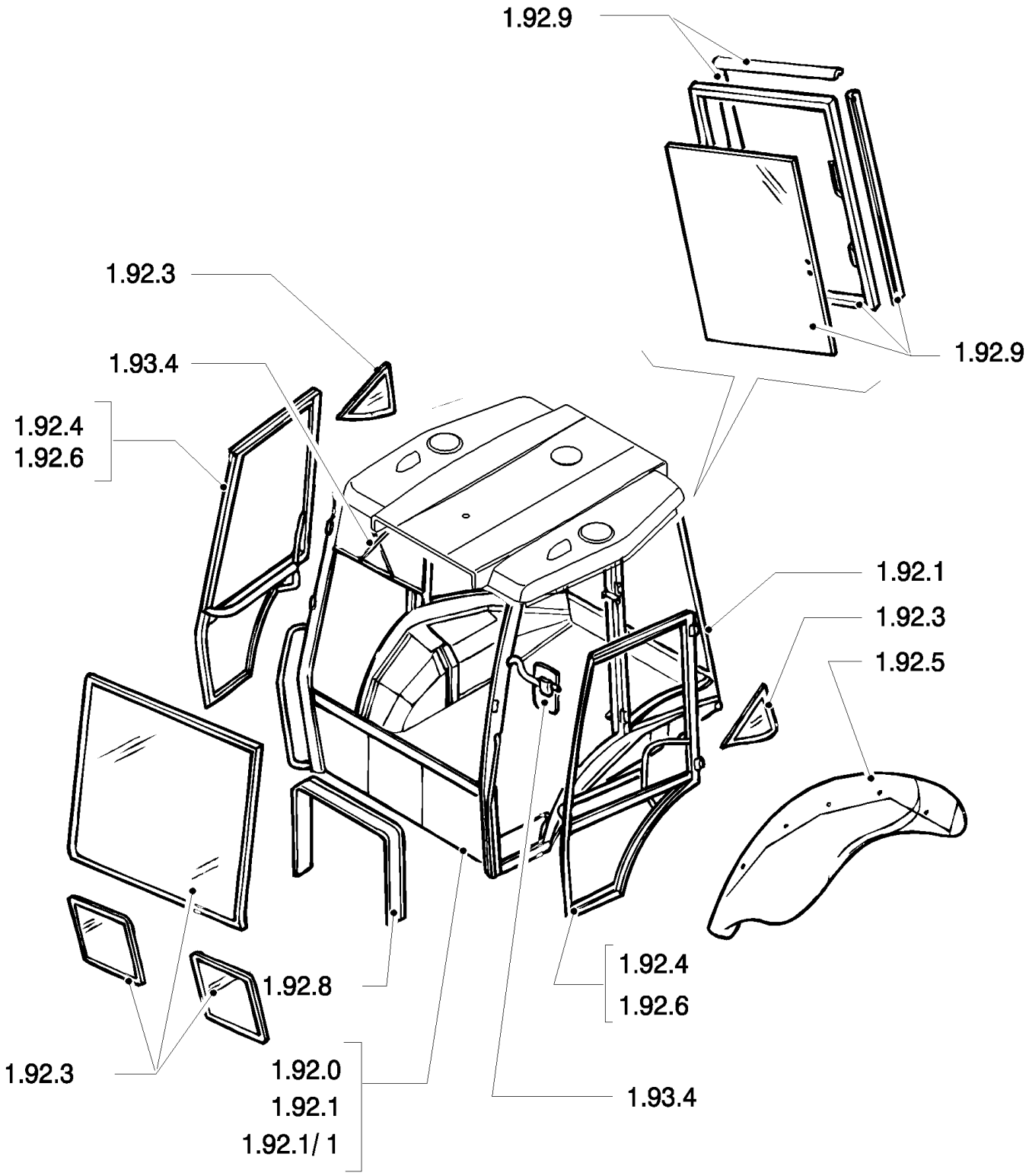
1.92.9
1.92.3
1.93.4
1.92.4
1.92.6
1.92.9
1.92.1
1.92.3
1.92.5
1.92.4
1.92.6
1.92.8
1.92.3
1.92.0
1.92.1
1.92.1/ 1
1.93.4

SEC. 10(02) BODY, HOOD & DRIVER'S POST 3/3

Ref	Part Number	Qty	Description

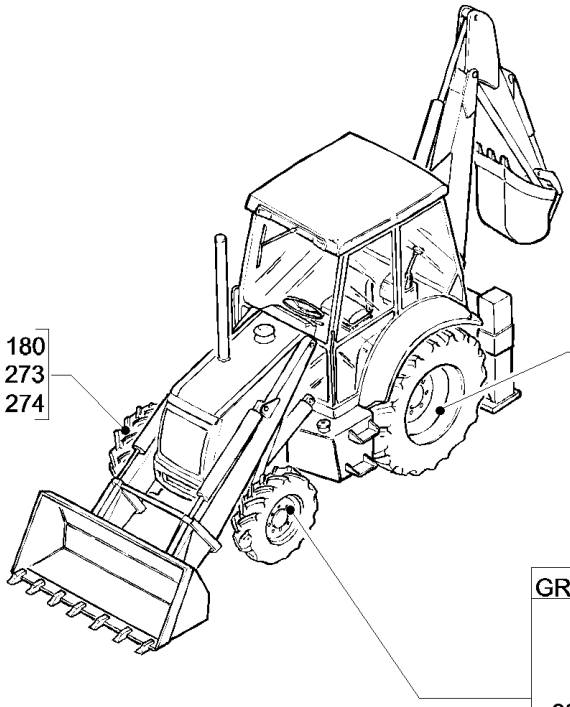

GROUP	EQUIP	TIRE SIZE	RIM
83.00	83.52	16.9 - 28 R4-10PLY TITAN	W15LX28Z
	83.62	16.9 - 28 R4 - 12PR	W14LX 28
	83.64	16.9 - 24 R4 - 10PR	W15LX 24
	83.65	17.5 - L24 R4 - 10PR	W15LX 24
	83.91	19.5 - 24 R4 - 10PR	W16LX 24
	83.92	18.4 - 26 R4 - 12PR	DW16L X26
	83.92	21L24 R4 - 10PR	W18L X24
	83.93	18.4 - 26 R1 - 12PR	DW16L X26
	83.93	19.5 x 24 "JUMBO NJLK"	W16L X24
	83.96	480/80 R26 IT520	DW16LX26
	83.97	16.9 - 28	W14L X28Z
	83.98	18.4 - 26	DW16L X26

GROUP	EQUIP	TIRE SIZE	RIM
82.00	82.75	14 -17.5NHS - 8PR	10.5 X 17.5
	82.76	12 -16.5NHS -8PR	9,75 X 16,5
	82.78	10.5/80 -18I3 - 10PR	9 X 18
	82.79	12.5/80 -18I3 - 10PR	9 X 18
	82.80	12.5/80 -18I3 - 10PR	9 X 18
	82.86	340/80-R18-136A8	9 X 18
	82.87	320/80-R18-IT520	9 X 18
	82.89	16.5 - 18	9 X 18

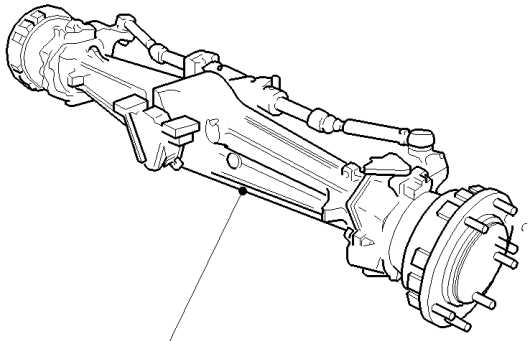

GROUP	EQUIP	TIRE SIZE	RIM
81.00	81.35	11L - 16F3 - 10PR	W8LX 16
	81.38	11L - 16SLF3 - 10PR	W8LX 16

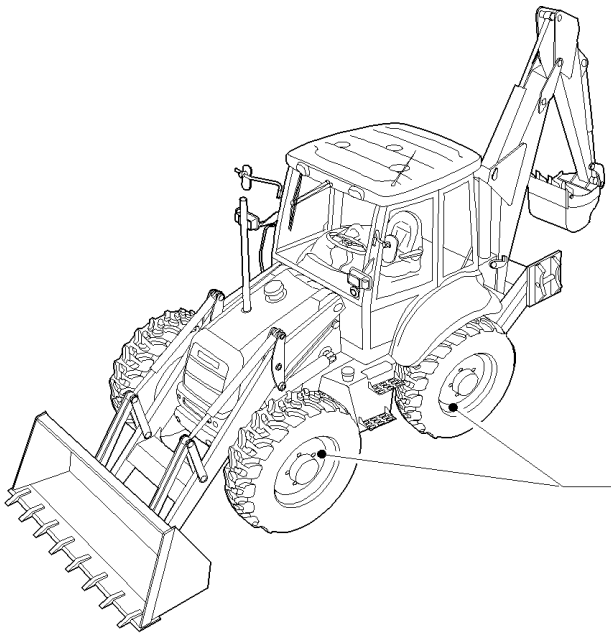

GROUP	EQUIP	TIRE SIZE	RIM
85.00	85.64	16.9 - 24 R4 - 12PR	W14LX 24
	85.64	16.9 - 24 R4 - 12PR (I.S.G.)	W15LX 24
	85.65	16.9 - 28 R4 - 12PR	W15LX 28
	85.65	16.9 - 28 R4 12PLY GY (I.S.G.T.)	W15LX 28
	85.66	440/80 R28 156A8 IT530	W14LX 28
	85.67	440/80 R28 156A8 IT520	W14LX 28

SEC. 11(00) WHEELS

Ref	Part Number	Qty	Description

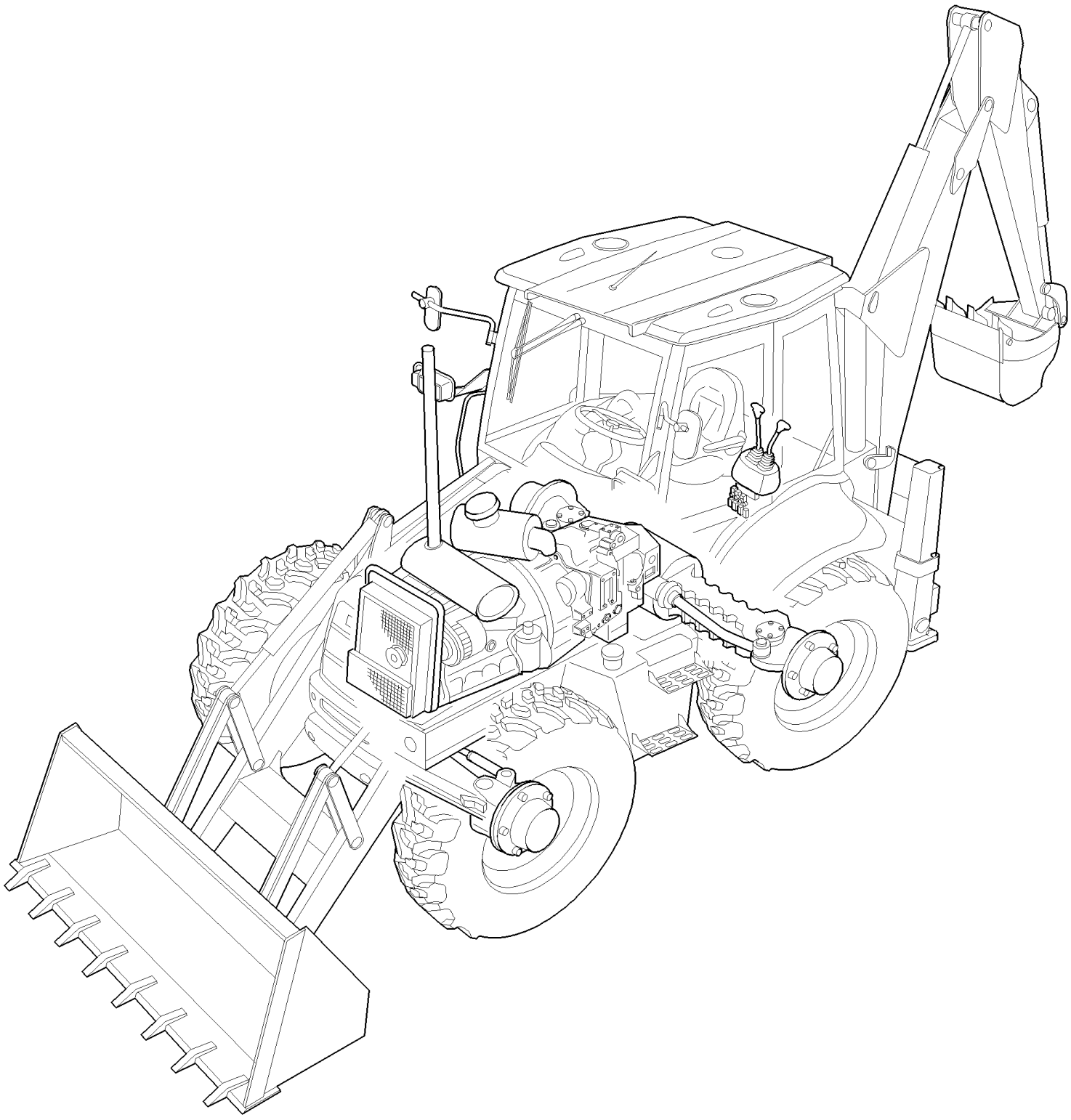

SEC. 18(00) VARIATION

Ref	Part Number	Qty	Description

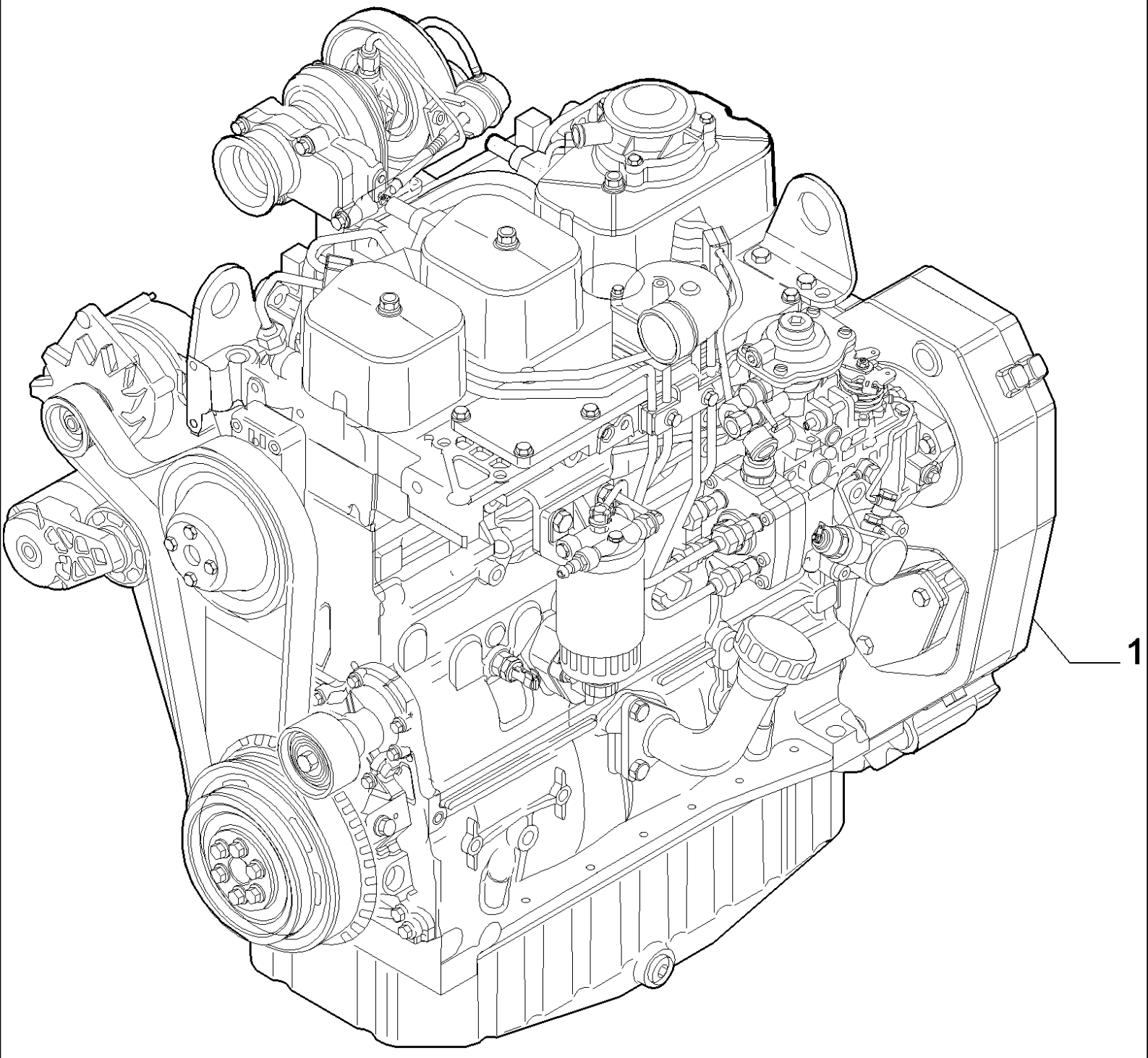
1

LB115.B EUR BACKHOE LOADER (1/05-)

0.021/ 2(01) ENGINE

Ref	Part Number	Qty	Description
1	86982635	1	ENGINE, - ASSY, 86982635=87342414, UP TO S/N 031056893
1	87342414	1	ENGINE, , FROM TO S/N 031056894 (12/12/2005)

0.040(01) CYLINDER BLOCK

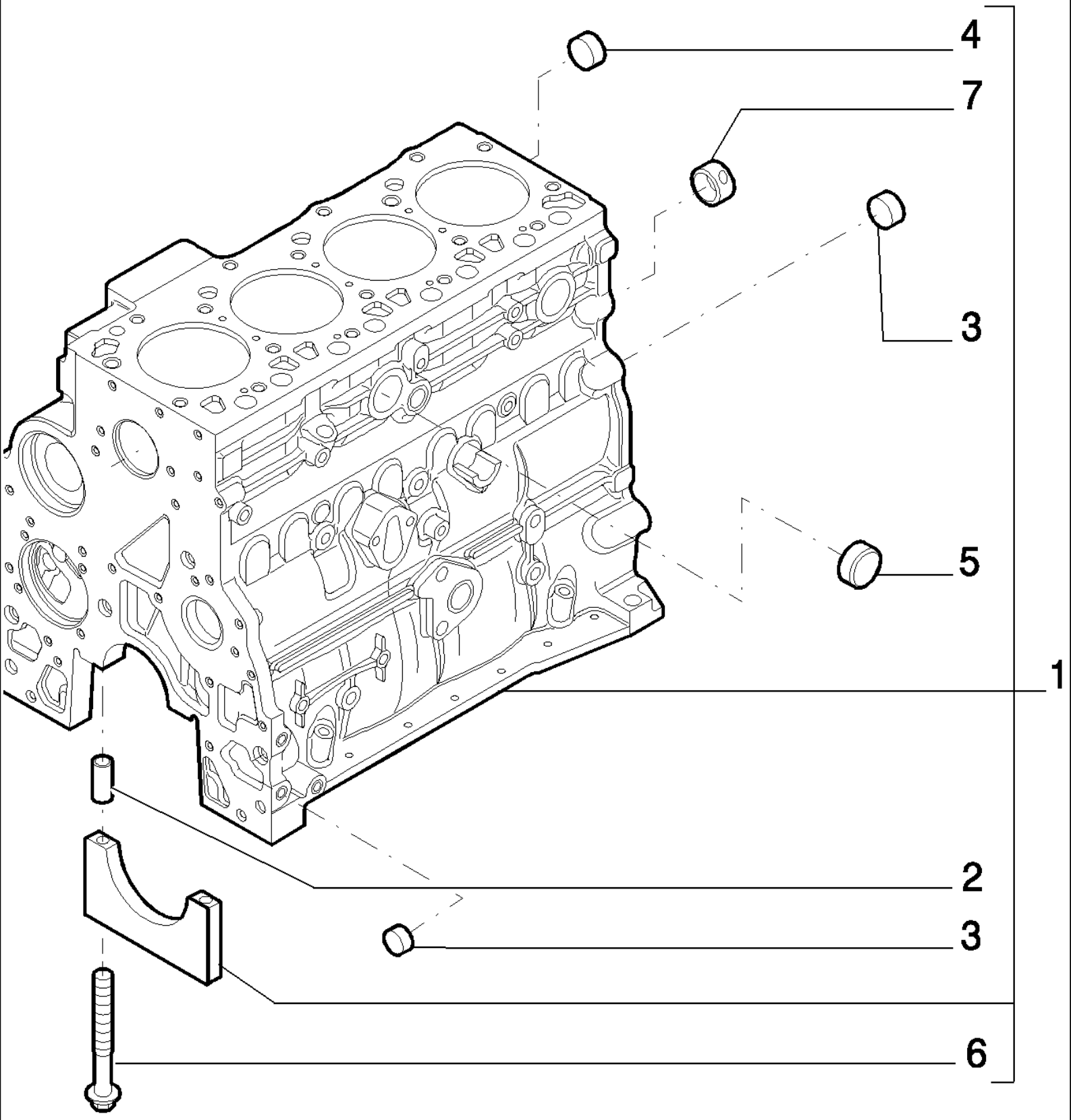

LB115.B EUR BACKHOE LOADER (1/05-)

0.040(01) CYLINDER BLOCK

Ref	Part Number	Qty	Description
1	2830082	1	CYLINDER BLOCK, - ASSY
2	4899026	10	DOWEL,
3	4895039	3	PLUG, 17.73 mm OD
4	4895038	4	PLUG, 58.06 mm OD
5	4895228	2	PLUG, 35.23 mm OD
6	4891353	10	SCREW, Flg Hd, M12 x 1.5 x 120,
7	4895040	1	BUSHING,

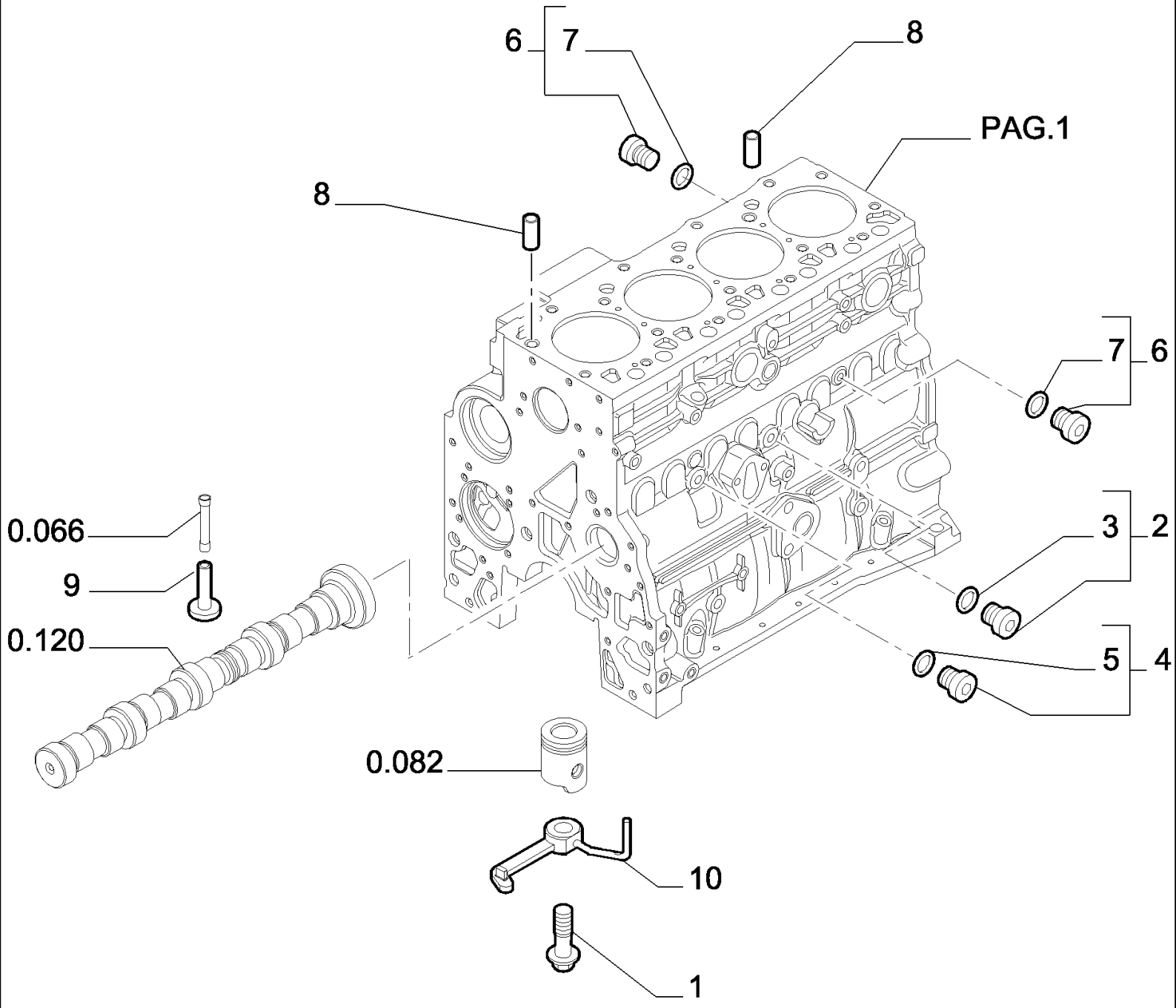
6
7
8
PAG.1
8
7
6
0.066
9
3
2
0.120
5
4
0.082
10
1

LB115.B EUR BACKHOE LOADER (1/05-)

0.040(02) CYLINDER BLOCK

Ref	Part Number	Qty	Description
1	4894218	4	SCREW,
2	4895605	1	PLUG, 14x1.5 - ASSY
3	4899115	1	O-RING,
4	4899009	1	PLUG, 10x1.5 - ASSY
5	4899072	1	O-RING,
6	4895392	2	PLUG, 18x1.5 - ASSY
7	4895393	1	O-RING,
8	4895049	2	DOWEL,
9	4895180	8	TAPPET,
10	504047260	4	NOZZLE, LUB. OIL JET,

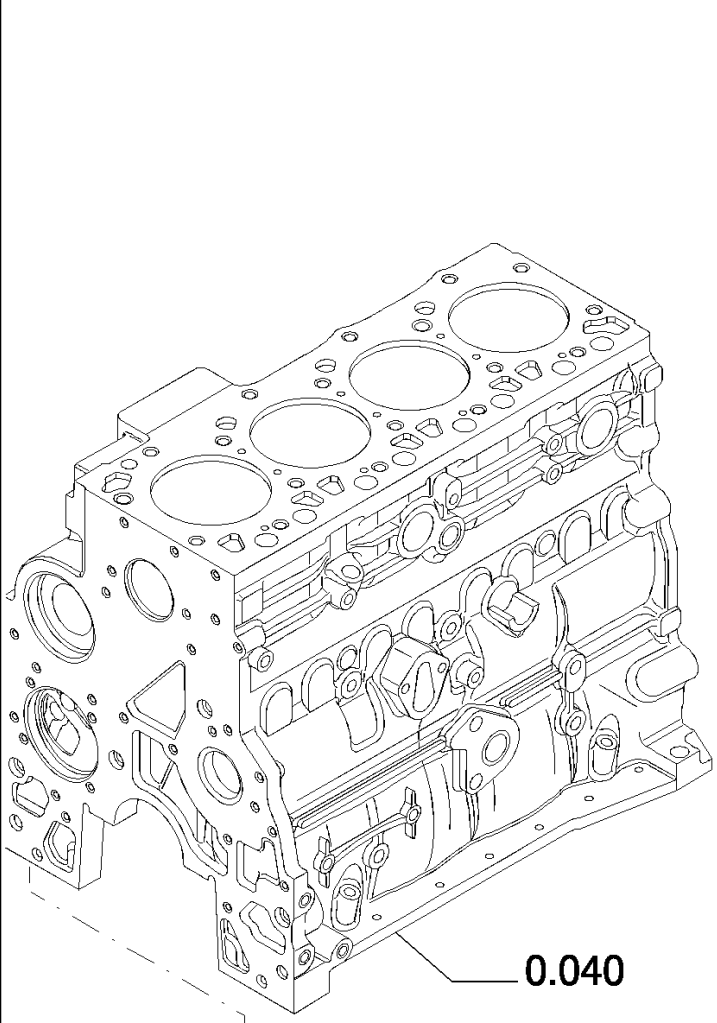
0.040

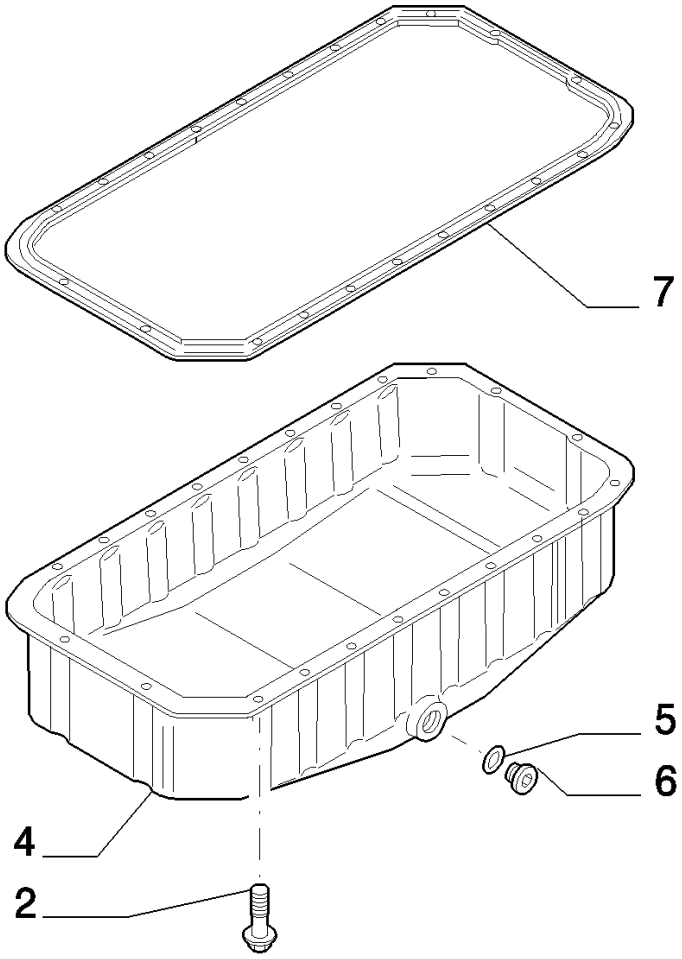
7
5
6
4
2

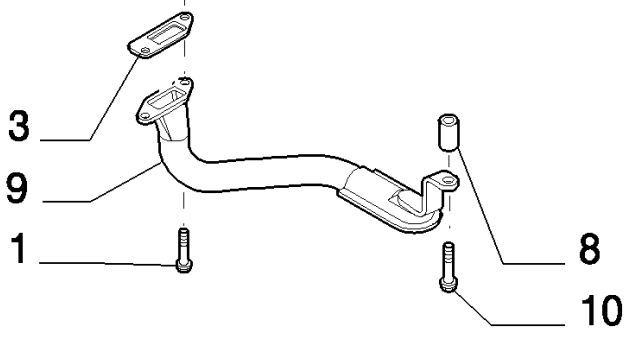
3
9
1
8
10

LB115.B EUR BACKHOE LOADER (1/05-)

0.042/ 1(01) OIL PUMP, PAN

Ref	Part Number	Qty	Description
1	4899020	2	SCREW, M8X1.25X20
2	4899091	22	SCREW, Hex Flg, M8 x 1.25 x 40, M8X1.25X40
2	4895489	2	SCREW, M8X1.25X110
3	4898301	1	GASKET,
4	504051886	1	PAN, ENGINE OIL,
5	17282280	1	GASKET, 23,4X2,6
6	4894139	1	PLUG, 22X1.5
7	504069777	1	GASKET,
8	504062812	1	SPACER,
9	504051893	1	STRAINER, ELEMENT,
10	4895538	1	SCREW, M10X1.5X120

0.043(01) CYLINDER BLOCK - COVERS

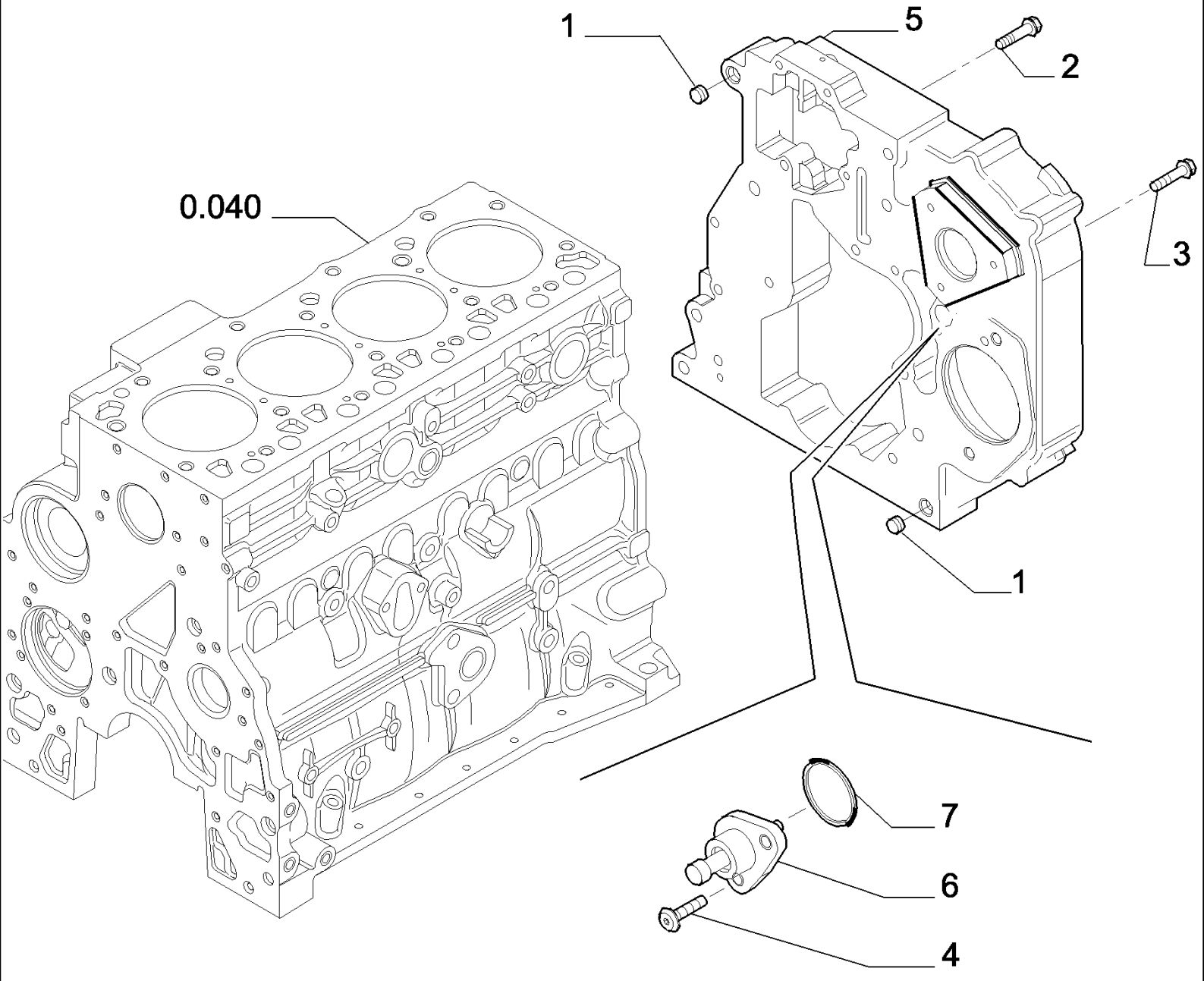

LB115.B EUR BACKHOE LOADER (1/05-)

0.043(01) CYLINDER BLOCK - COVERS

Ref	Part Number	Qty	Description
1	4899026	2	DOWEL,
2	4899091	4	SCREW, Hex Flg, M8 x 1.25 x 40, M8X1.25X40
3	4899093	5	SCREW, Hex Flg, M10 x 1.5 x 30,
3	4899073	2	SCREW, Hex Flg, M12 x 1.75 x 30, M12X1.75X30
4	4895355	2	SCREW, Torx Rd Hd, M5 x .8 x 17,
5	504097164	1	
6	504074001	1	COVER,
7	17278780	1	O-RING,

0.043(02) CYLINDER BLOCK - COVERS

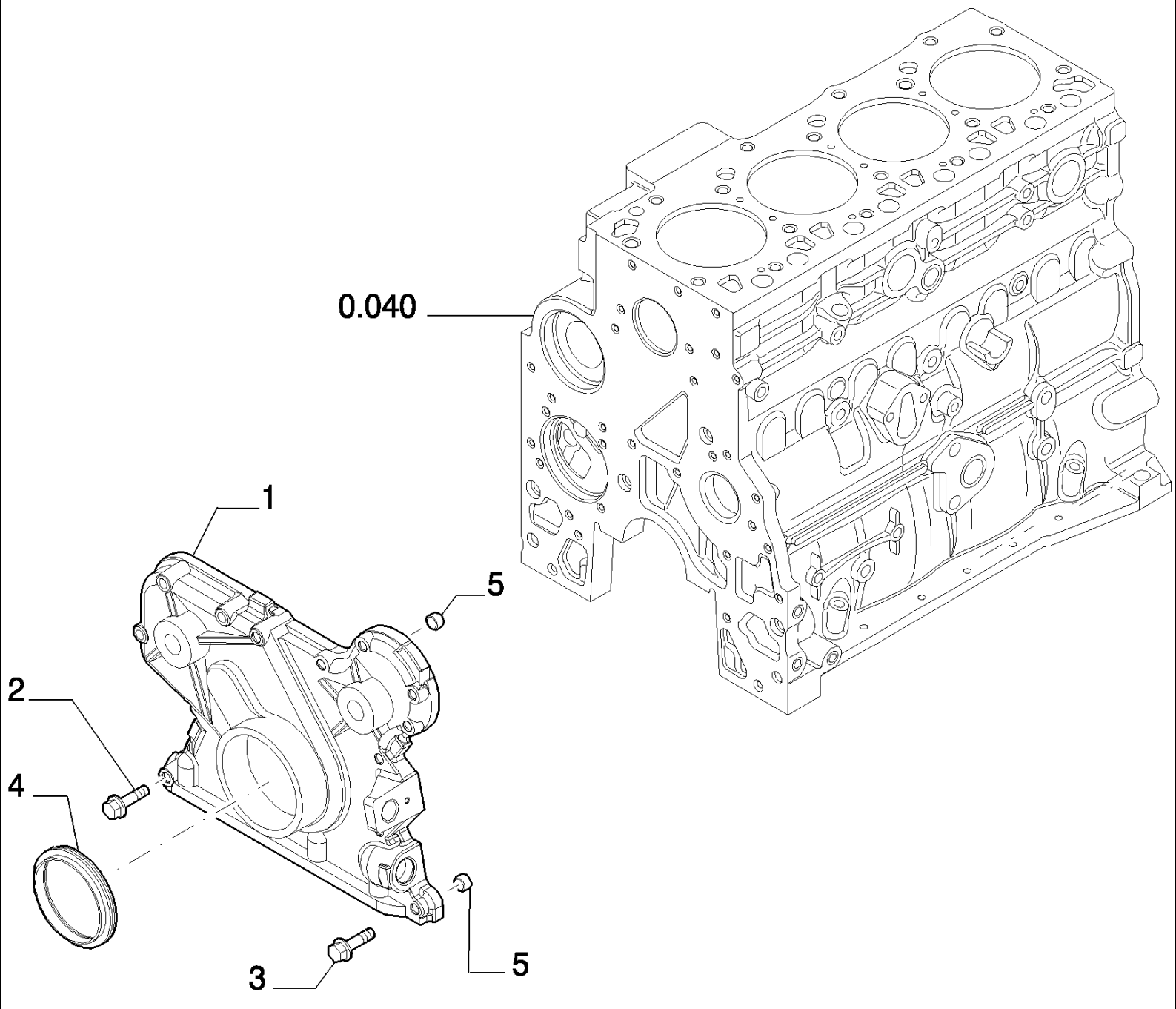

LB115.B EUR BACKHOE LOADER (1/05-)

0.043(02) CYLINDER BLOCK - COVERS

Ref	Part Number	Qty	Description
1	4897024	1	COVER,
2	4899078	5	SCREW, Hex Flg, M8 x 1.25 x 45, M8X1.25X45
3	4899063	8	SCREW, Hex Flg, M8 x 1.25 x 30,
4	4890832	1	SEAL,
5	4891209	2	DOWEL,

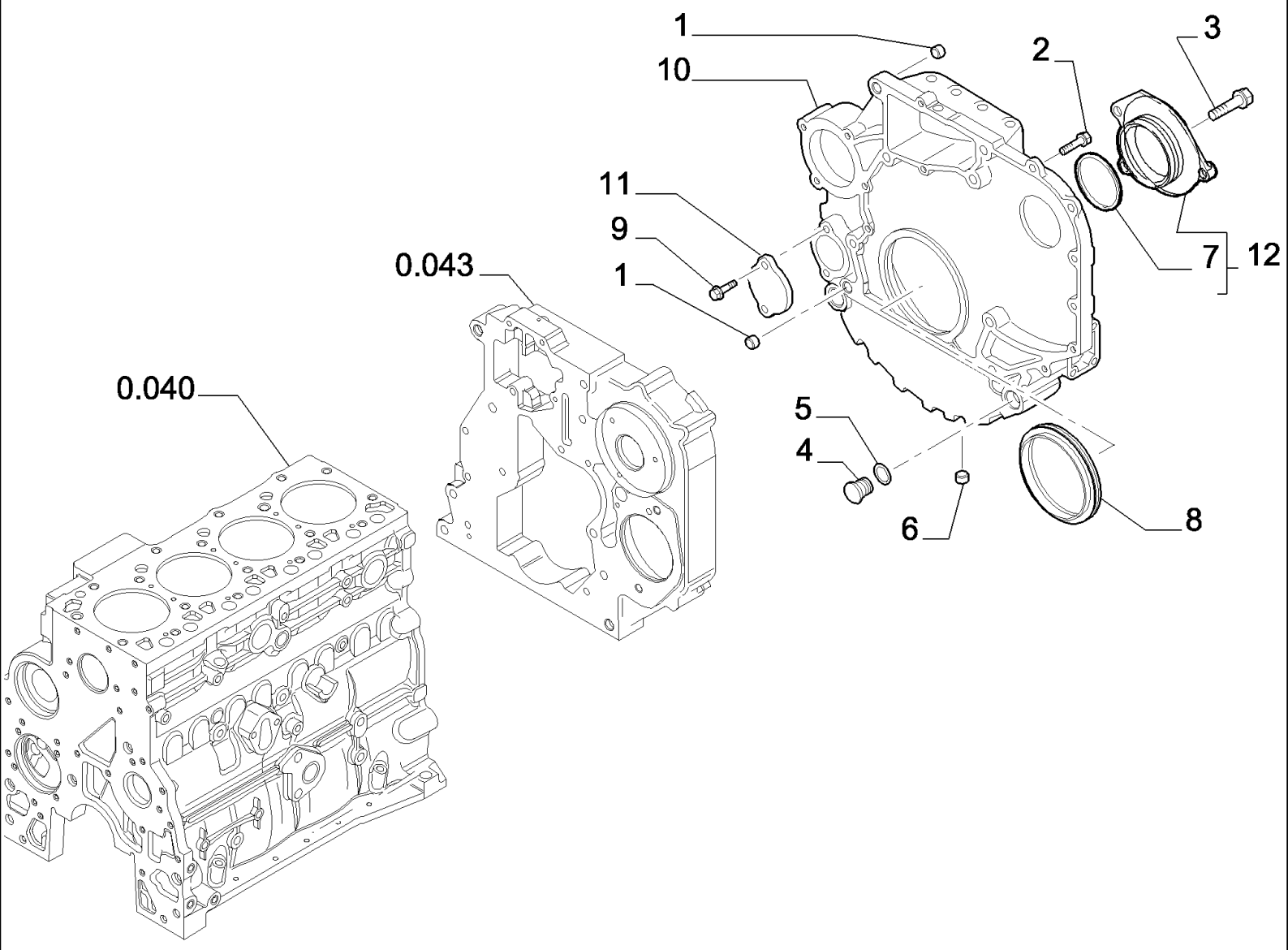
1
10
2
3
11
9
1
0.043
7
12
0.040
5
4
6
8

LB115.B EUR BACKHOE LOADER (1/05-)

0.043(03) CYLINDER BLOCK - COVERS

Ref	Part Number	Qty	Description
1	4899026	2	DOWEL,
2	4899109	3	SCREW, Hex, M10 x 1.5 x 80, M10X1.5X80
2	4892915	8	SCREW, M10X1.5X40
2	4899076	5	SCREW, Hex Flg, M12 x 1.75 x 80, M12X80
2	4899074	2	SCREW, Hex Flg, M12 x 1.75 x 120, M12X1,75X120
2	2852865	2	SCREW, M10X35
2	4899143	1	SCREW, Hex Flg, M10 x 1.5 x 140, M10X1,5X140
3	4899020	3	SCREW, M8X20
4	4895378	2	PLUG,
5	4895379	2	O-RING, M21.82 ID x 3.53 Thk
6	4899079	1	SCREW, Hex Flg, M8 x 1.25 x 25,
7	17285481	1	GASKET, 75X87X2,62
8	4890833	1	SEAL,
9	4899068	2	SCREW, Hex Flg , M8 x 1.25 x 16,
10	504069775	1	COVER,
11	4895155	1	COVER,
12	2854073	1	COVER, - ASSY

0.045(01) BREATHER - ENGINE

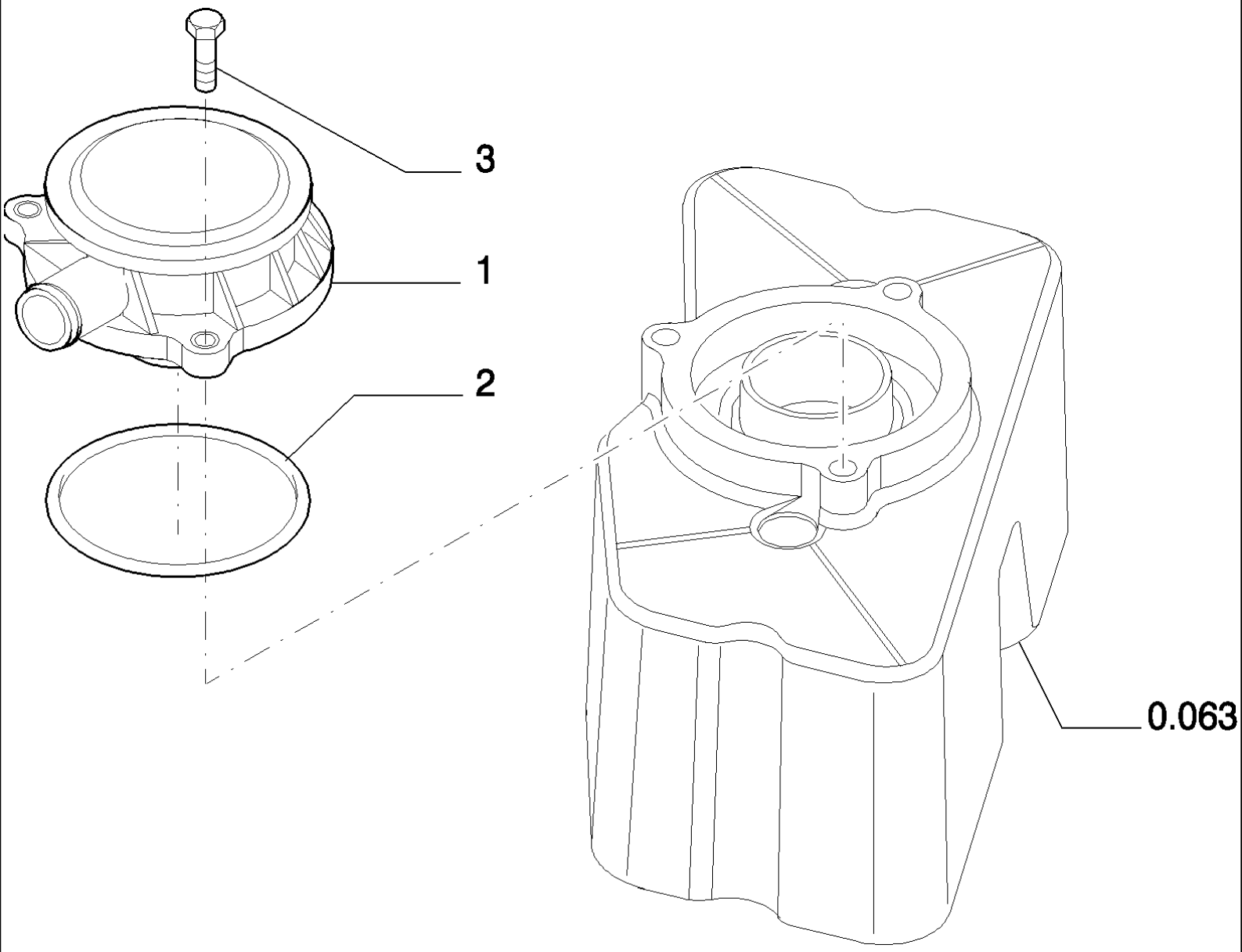

LB115.B EUR BACKHOE LOADER (1/05-)

0.045(01) BREATHER - ENGINE

Ref	Part Number	Qty	Description
1	500315794	1	BREATHER,
2	500315795	1	GASKET,
3	4899110	3	SCREW, Hex Flg, M6 x 1 x 20,

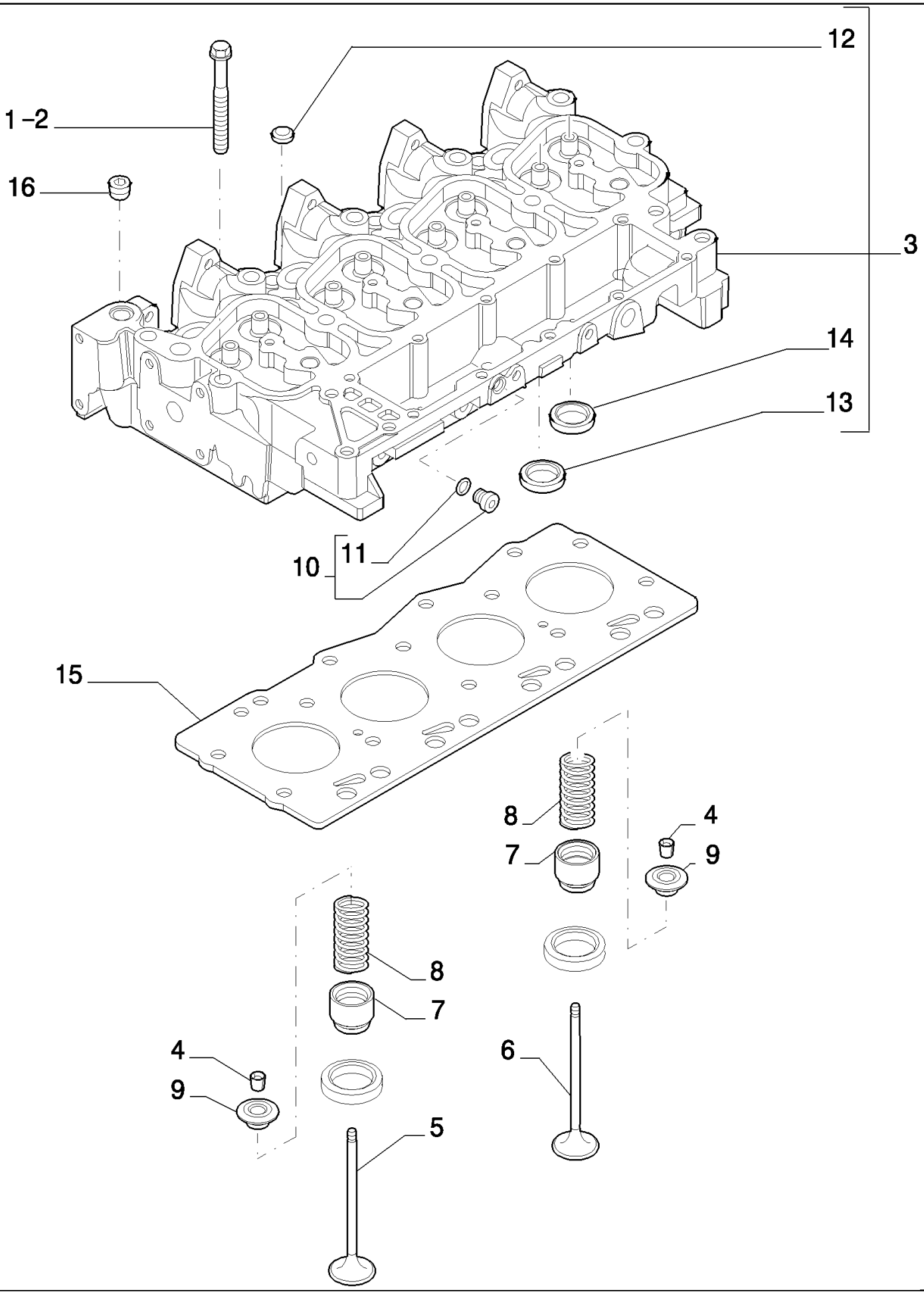
12
1 –2
16
3
14
13
10
11
15
8
4
7
9
8
7
4
9
6
5

LB115.B EUR BACKHOE LOADER (1/05-)

0.060(01) CYLINDER HEAD

Ref	Part Number	Qty	Description
1	4892861	4	SCREW, Wash Hd, M12 x 1.25 x 73, M12X1.75X73
2	4892859	10	SCREW, Wash Hd, M12 x 1.25 x 143,
3	4895790	1	CYLINDER HEAD, - ASSY
4	4895183	16	COLLET,
5	4895188	4	VALVE, ENG EXHAUST, STD,
6	4895187	4	VALVE, ENGINE, INLET, STD,
7	4895347	8	SEAL,
8	4895215	8	SPRING, VALVE,
9	4895184	8	RETAINER,
10	4899009	1	PLUG, - ASSY 10X1.5
11	4899072	1	O-RING,
12	4895179	3	PLUG,
13	4897178	4	VALVE SEAT,
14	4897179	4	VALVE SEAT,
15	2830919	1	GASKET, CYLINDER HEAD, SP= 1.25
16	4895078	5	PLUG,

0.063(01) CYLINDER HEAD - COVERS

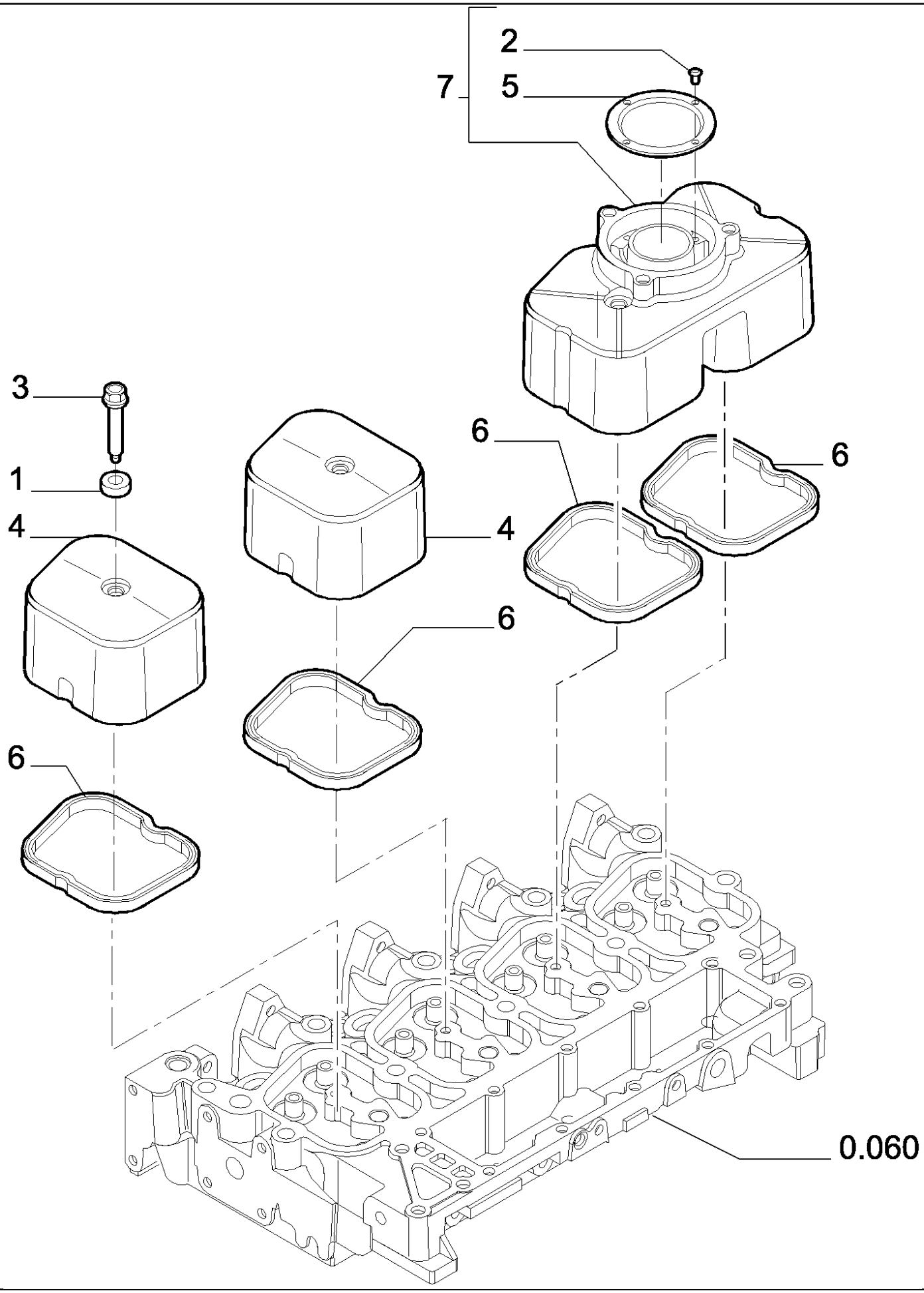

LB115.B EUR BACKHOE LOADER (1/05-)

0.063(01) CYLINDER HEAD - COVERS

Ref	Part Number	Qty	Description
1	4895360	4	ISOLATOR,
2	16784504	4	SCREW,
3	4895214	4	SCREW, M8X1.25X33
4	504065040	2	COVER,
5	2830775	1	BAFFLE,
6	504053522	4	GASKET,
7	2830784	1	COVER, VALVE, - ASSY

0.066(01) CYLINDER HEAD - VALVE MECHANISM

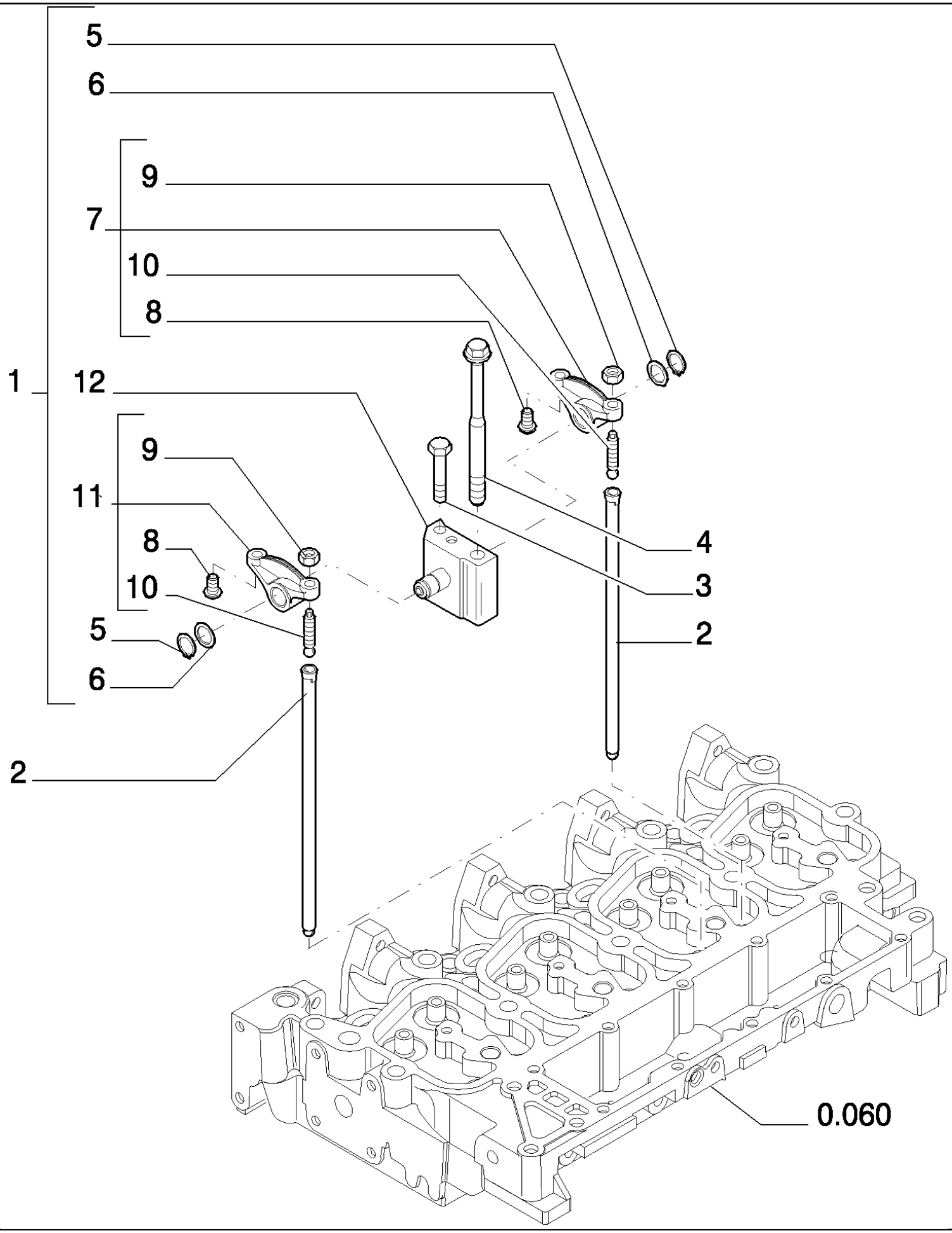

LB115.B EUR BACKHOE LOADER (1/05-)

0.066(01) CYLINDER HEAD - VALVE MECHANISM

Ref	Part Number	Qty	Description
1	4895195	4	ROCKER ARM, - ASSY
2	4895361	8	ROD, PUSH,
3	504067723	4	SCREW,
4	4892860	4	SCREW, Wash Hd, M12 x 1.25 x 183, M12X1.75X183
5	4895363	2	RING, SNAP,
6	4895364	2	WASHER,
7	4895196	1	ROCKER ARM, - ASSY
8	4895365	2	INSERT,
9	4895198	2	NUT,
10	4895199	2	SCREW,
11	4895200	1	ROCKER ARM, - ASSY
12	4895204	1	SUPPORT,

0.071/ 1(01) MANIFOLD - INTAKE

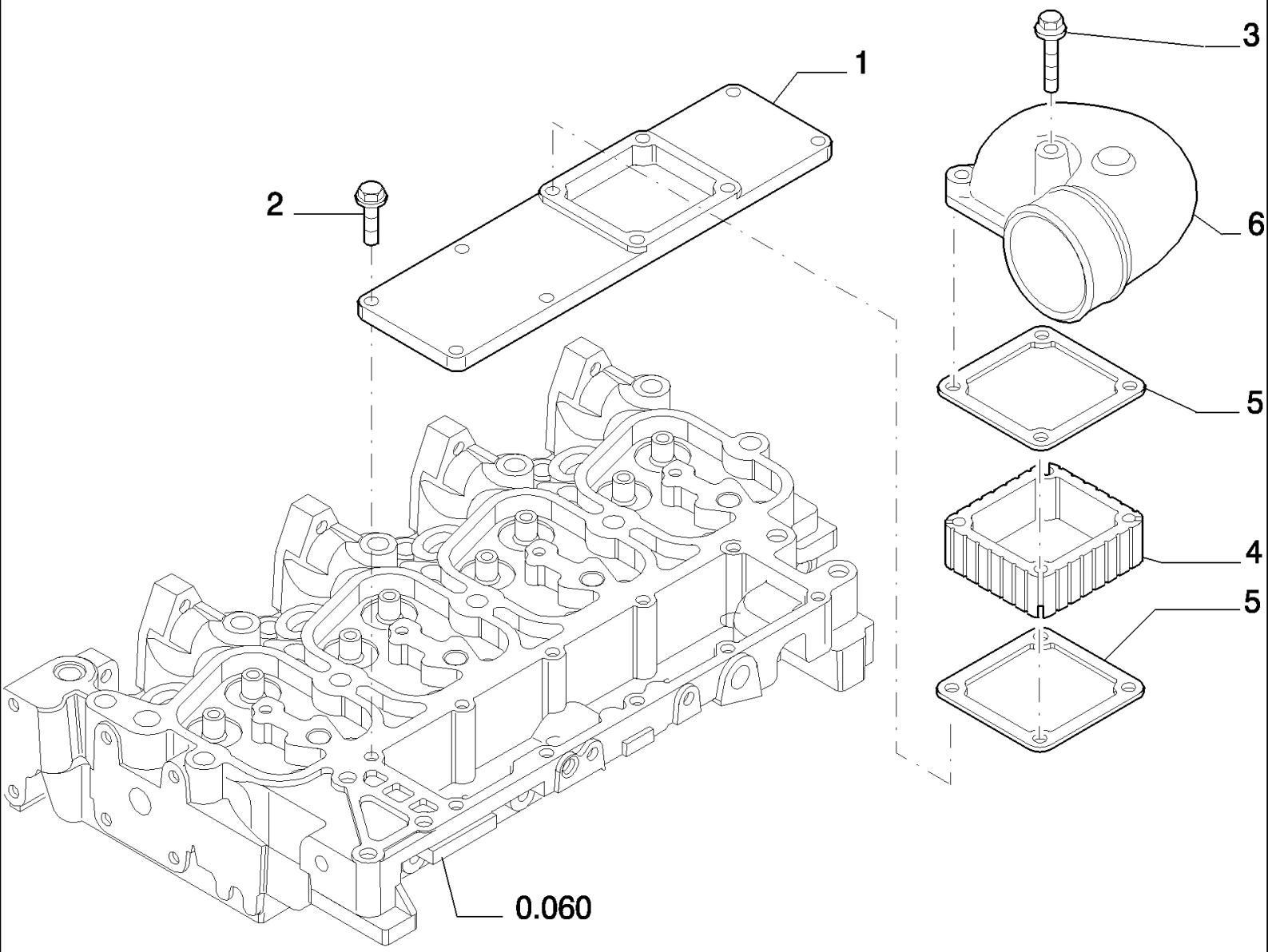

LB115.B EUR BACKHOE LOADER (1/05-)

0.071/ 1(01) MANIFOLD - INTAKE

Ref	Part Number	Qty	Description
1	504064865	1	COVER,
2	4899039	6	SCREW, Hex Flg, M8 x 1.25 x 25,
3	16598624	2	SCREW, Hex Flg, M8 x 1.25 x 140,
3	16598224	2	SCREW, M8X90
4	4895648	1	SPACER,
5	4899921	2	GASKET,
6	504062464	1	MANIFOLD, INLET,

0.077/ 1(01) MANIFOLD - EXHAUST

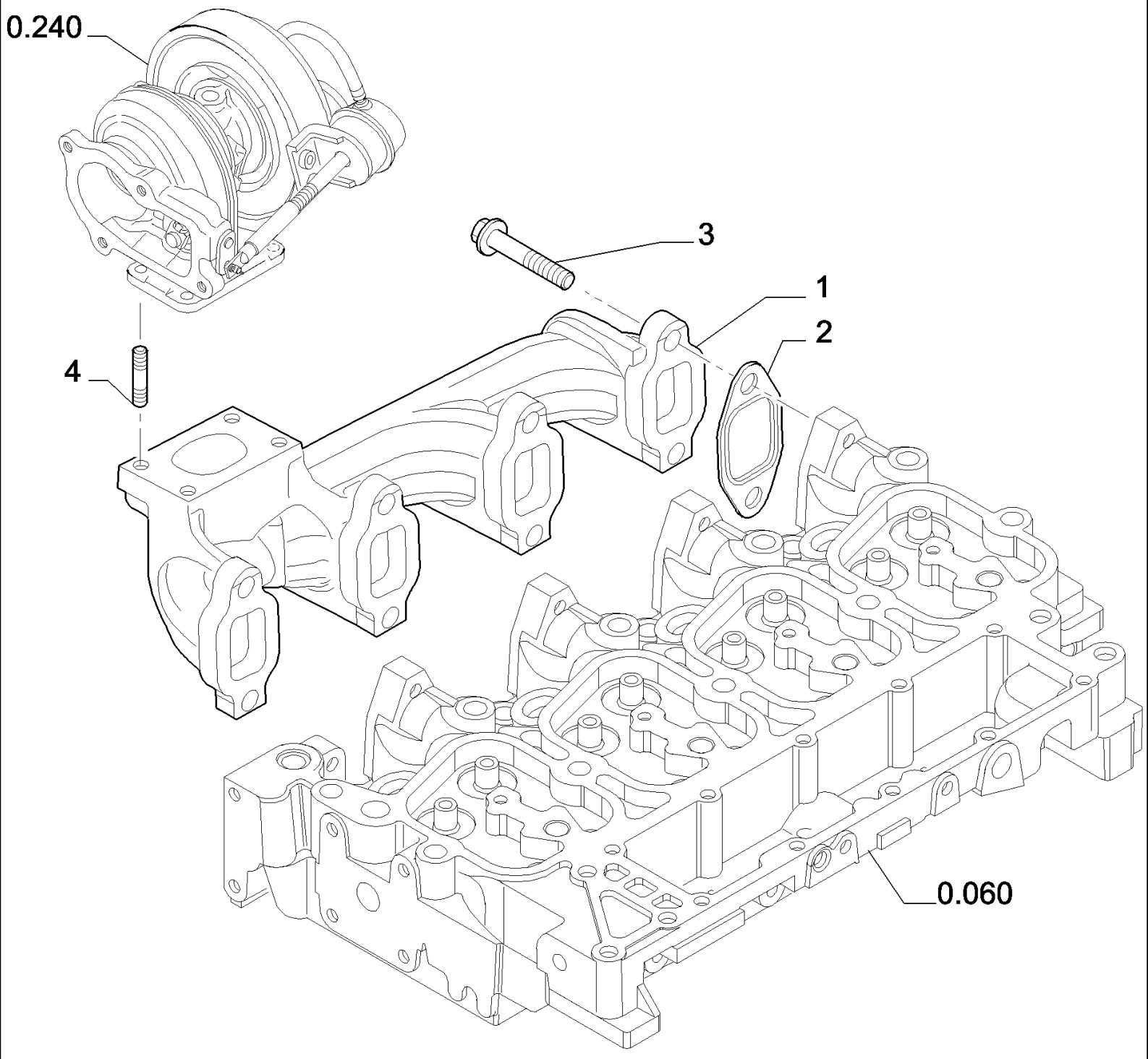

LB115.B EUR BACKHOE LOADER (1/05-)

0.077/ 1(01) MANIFOLD - EXHAUST

Ref	Part Number	Qty	Description
1	504066618	1	MANIFOLD, EXHAUST,
2	504081248	4	GASKET,
3	504085705	8	SCREW, M10X1,5X65
4	4899119	4	STUD,

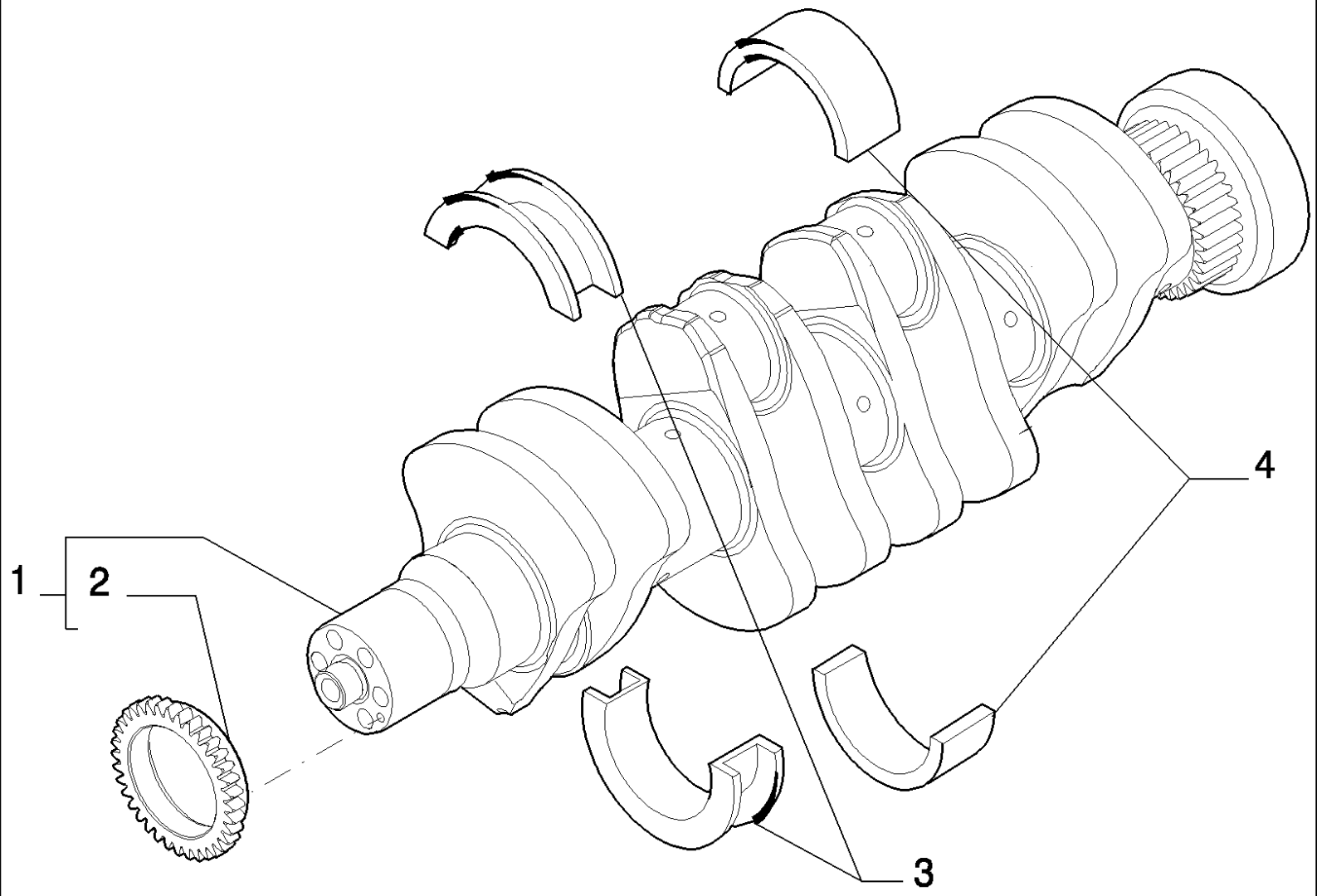
1
2
3
4

LB115.B EUR BACKHOE LOADER (1/05-)

0.080(01) CRANKSHAFT

Ref	Part Number	Qty	Description
1	504095659	1	- ASSY
2	4893386	1	GEAR,
3	2992153	1	SET, THRUST WASHERS (STD), (+ 0.000) (+ 0.000)
3	2992154	1	SET,THRUST WASHERS +0.508, (+ 0.254) (+ 0.250)
3	2992155	1	SET, THRUST WASHERS +0.25, (+ 0.508) (+ 0.500)
4	2992147	4	SET OF MAIN BRGS.STD,
4	2992148	4	SET OF MAIN BRGS -0.254,
4	2992149	4	SET OF MAIN BRGS -0.508mm,

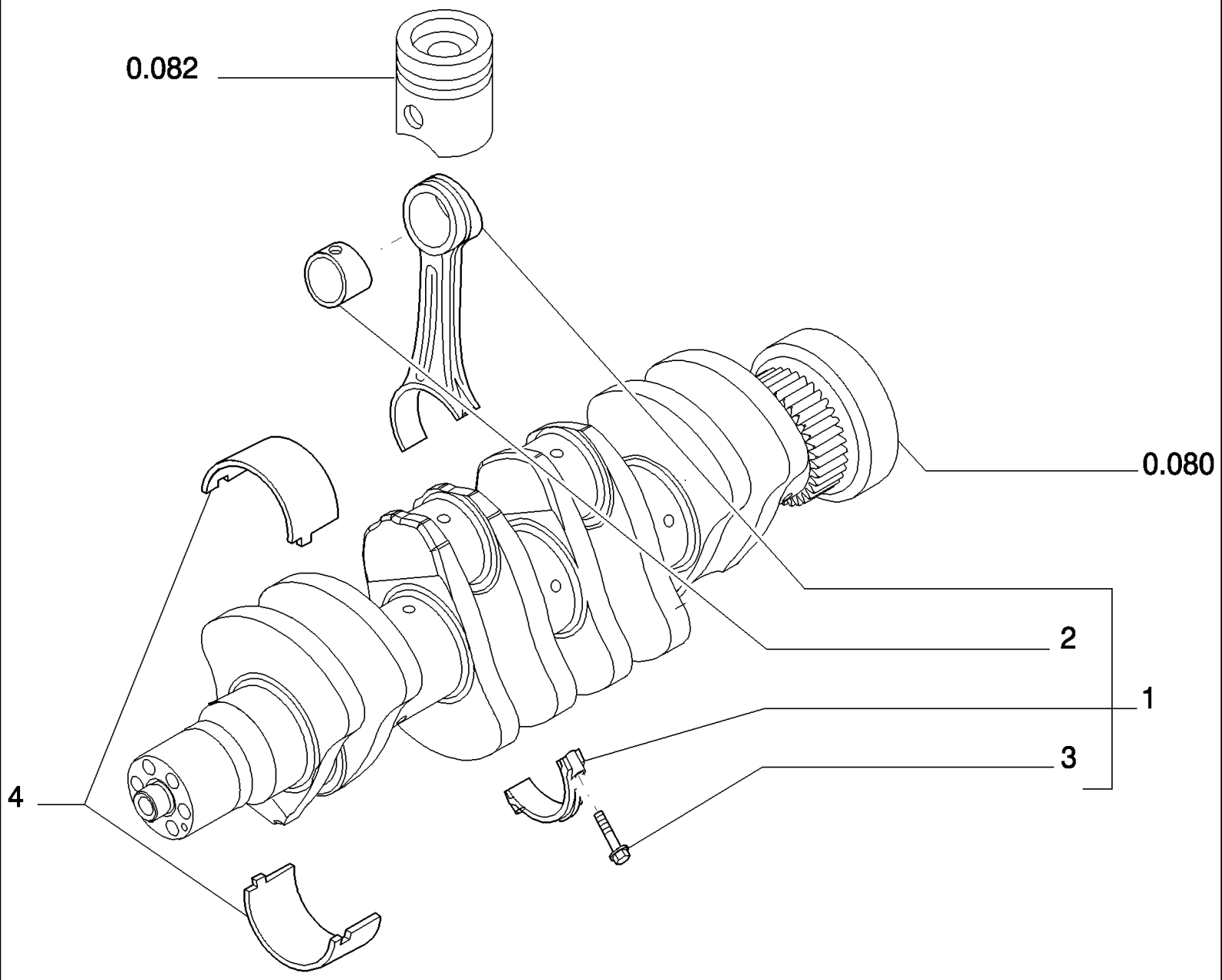
0.082
0.080
2
1
3
4

LB115.B EUR BACKHOE LOADER (1/05-)

0.081(01) PISTONS - CONNECTING ROD

Ref	Part Number	Qty	Description
1	2831298	4	ROD, CONNECTING, - ASSY
2	4892708	1	BUSHING,
3	2831297	2	SCREW,
4	8093882	4	SET, CONN ROD BRGS (STD),

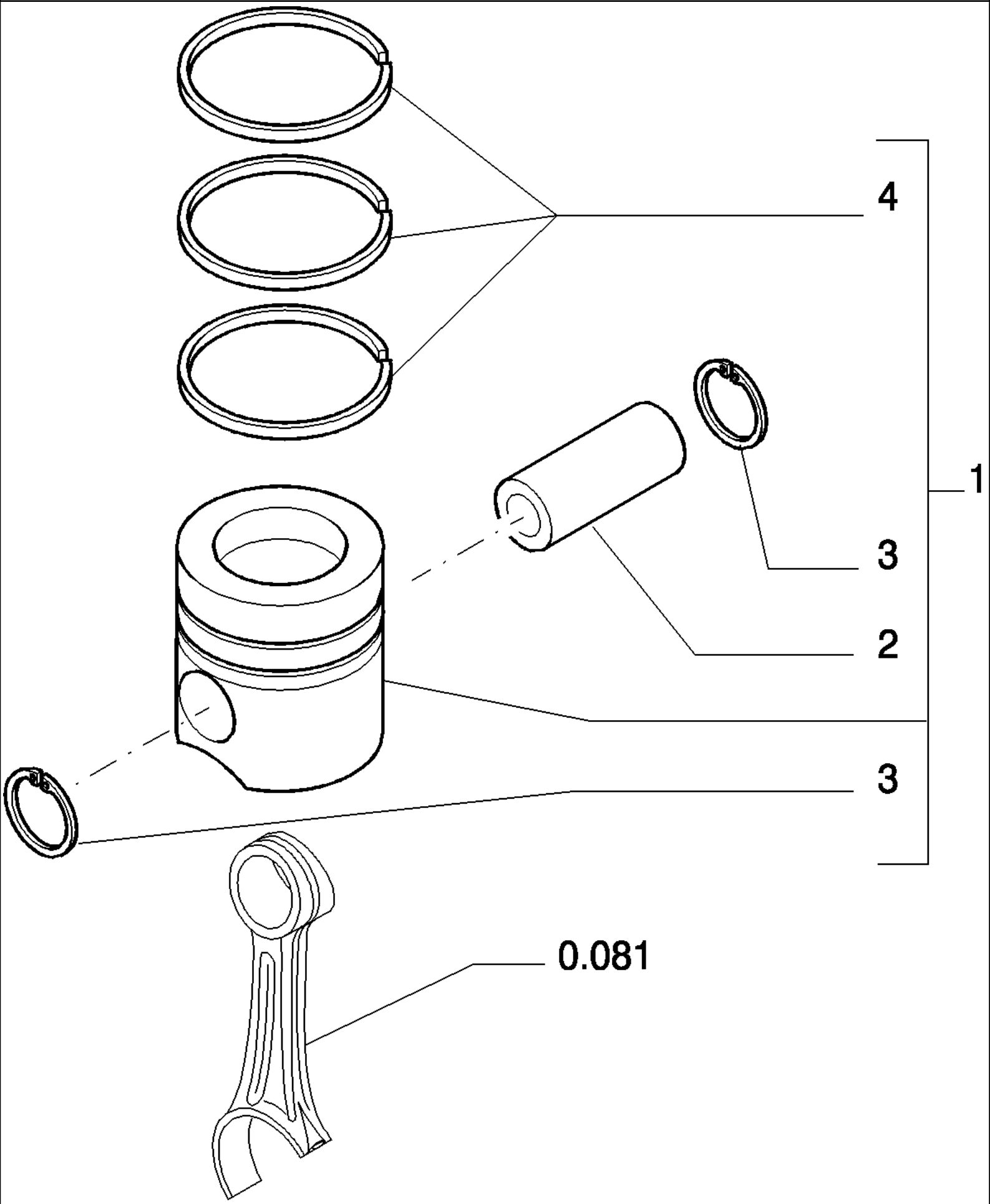
4
1
3
2
3
0.081

LB115.B EUR BACKHOE LOADER (1/05-)

0.082(01) PISTONS - CONNECTING ROD

Ref	Part Number	Qty	Description
1	8094740	4	KIT, PISTON & RINGS, STD
1	8094753	4	KIT, PISTON & RINGS, + 0.4
2	4892712	1	PIN, PISTON,
3	4892713	2	RING, LOCKING,
4	8094739	1	KIT, PISTON RINGS, STD
4	8094752	1	SET, PISTON RINGS + 0.4, + 0.4

0.083(01) FLYWHEEL - ENGINE

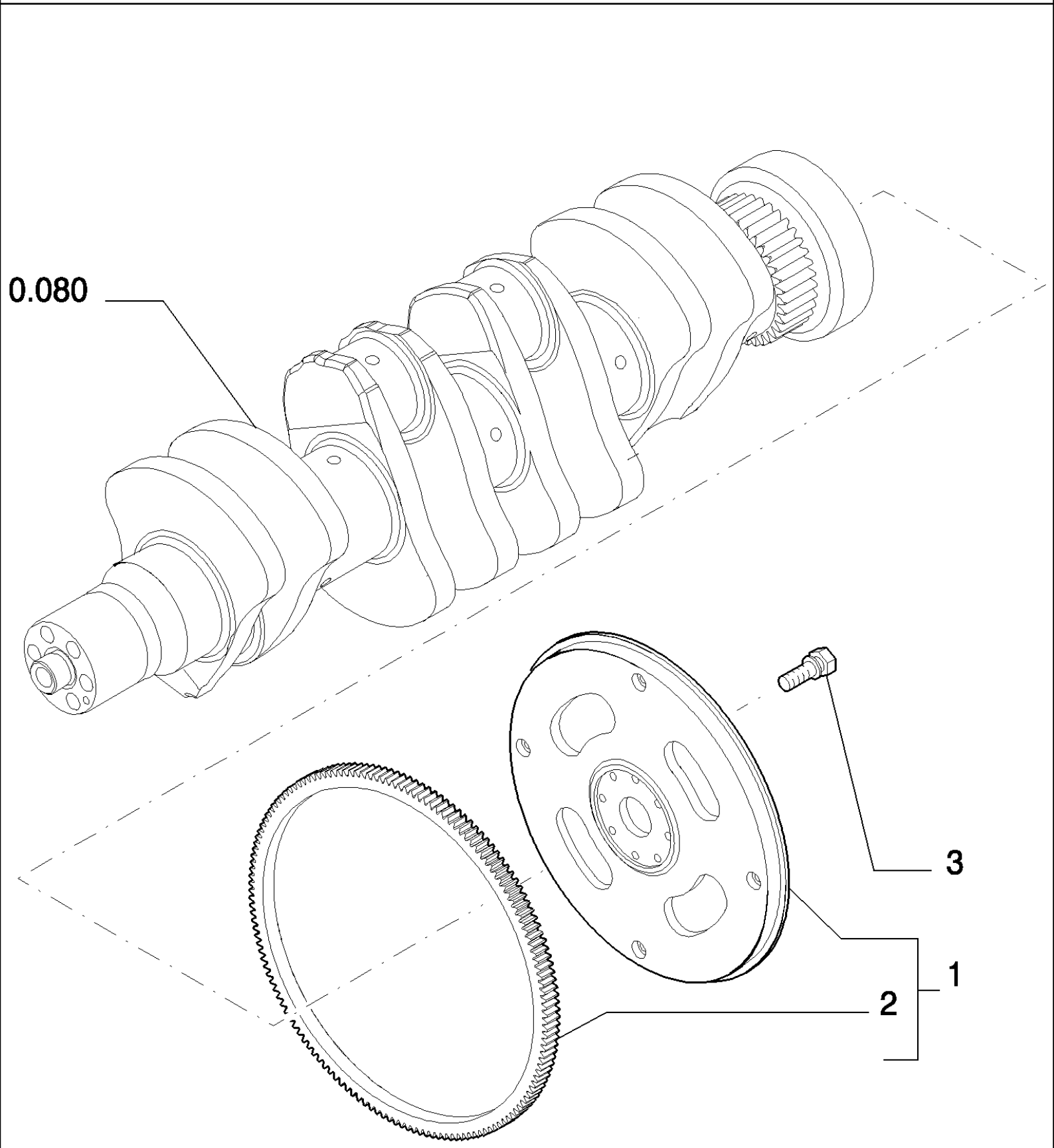

LB115.B EUR BACKHOE LOADER (1/05-)

0.083(01) FLYWHEEL - ENGINE

Ref	Part Number	Qty	Description
1	504057736	1	FLYWHEEL, ENGINE, - ASSY
2	504062460	1	GEAR, RING,
3	4894641	8	SCREW, Wash Hd, M12 x 1.25 x 31,

0.084(01) PULLEY - CRANKSHAFT

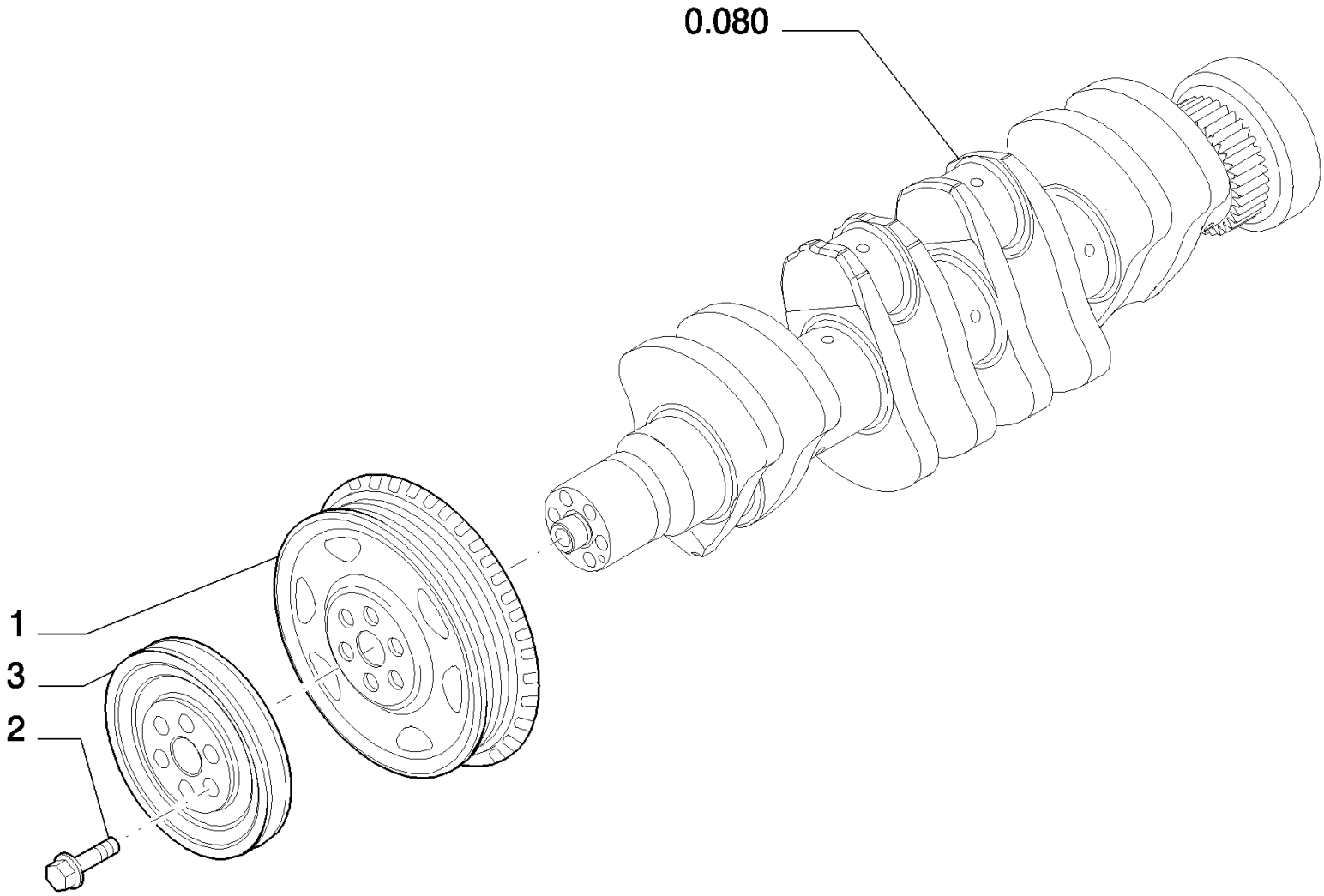

LB115.B EUR BACKHOE LOADER (1/05-)

0.084(01) PULLEY - CRANKSHAFT

Ref	Part Number	Qty	Description
1	4896773	1	PULLEY,
2	4892867	6	SCREW, Torx Wash Hd, M12 x 1.25 x 78.5,
3	504061622	1	PULLEY,

0.105(01) DYNAMIC BALANCER, GEARS & SHAFTS

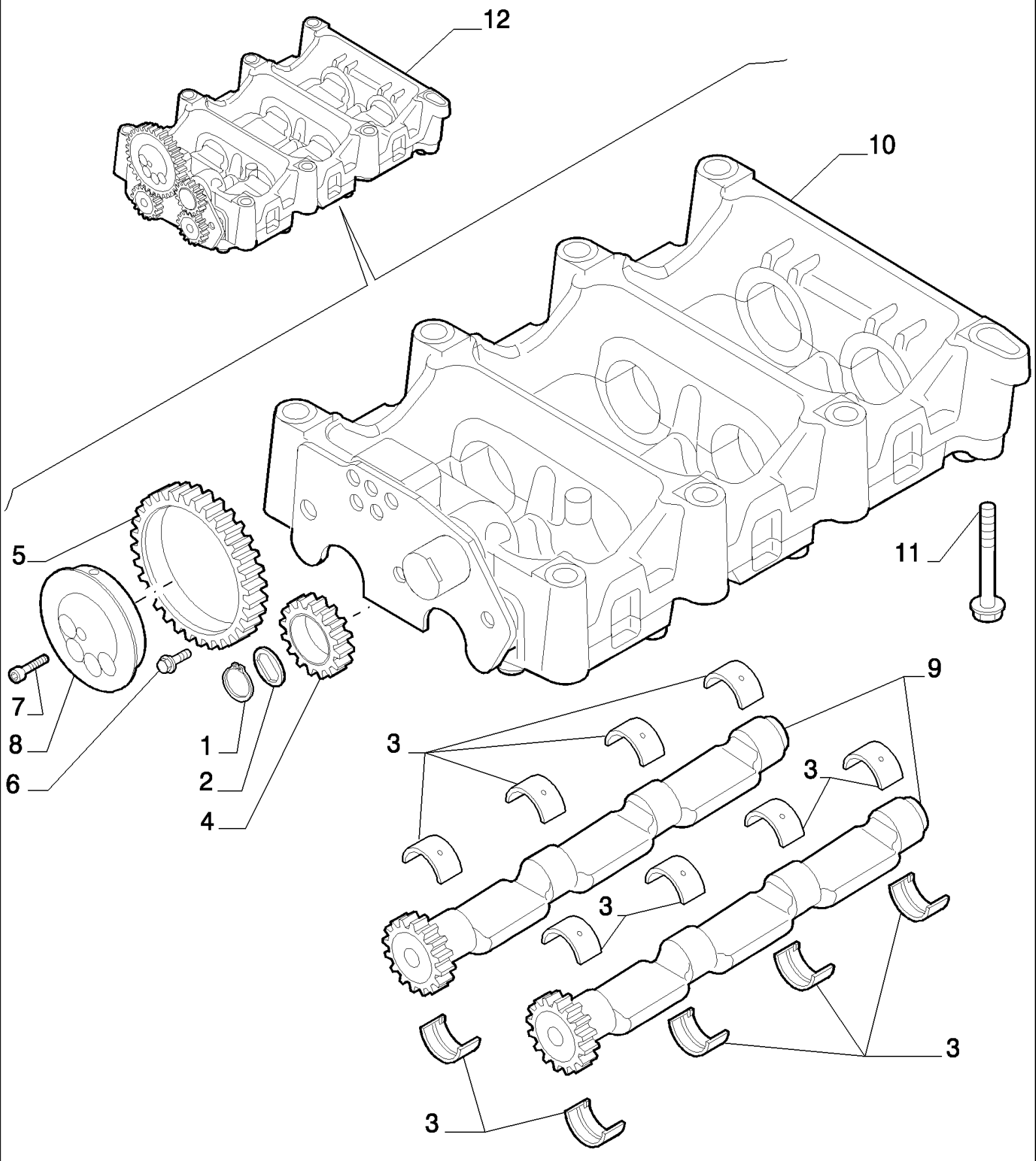

LB115.B EUR BACKHOE LOADER (1/05-)

0.105(01) DYNAMIC BALANCER, GEARS & SHAFTS

Ref	Part Number	Qty	Description
1	16866473	1	RING, SNAP,
2	4897123	1	WASHER, THRUST,
3	4897071	16	BUSHING,
4	4897048	1	GEAR, IDLER,
5	4896947	1	GEAR, IDLER,
6	4895586	3	SCREW,
7	2830433	4	SCREW,
8	2831031	1	SHAFT, IDLE,
9	504088119	2	SHAFT ASSY.,
10	2831300	1	HOUSING, - ASSY, Assy See Page 2
11	4899109	7	SCREW, Hex, M10 x 1.5 x 80,
11	4897934	1	SCREW,
12	504088120	1	BALANCER, - ASSY

0.105(02) DYNAMIC BALANCER, GEARS & SHAFTS (2831300)

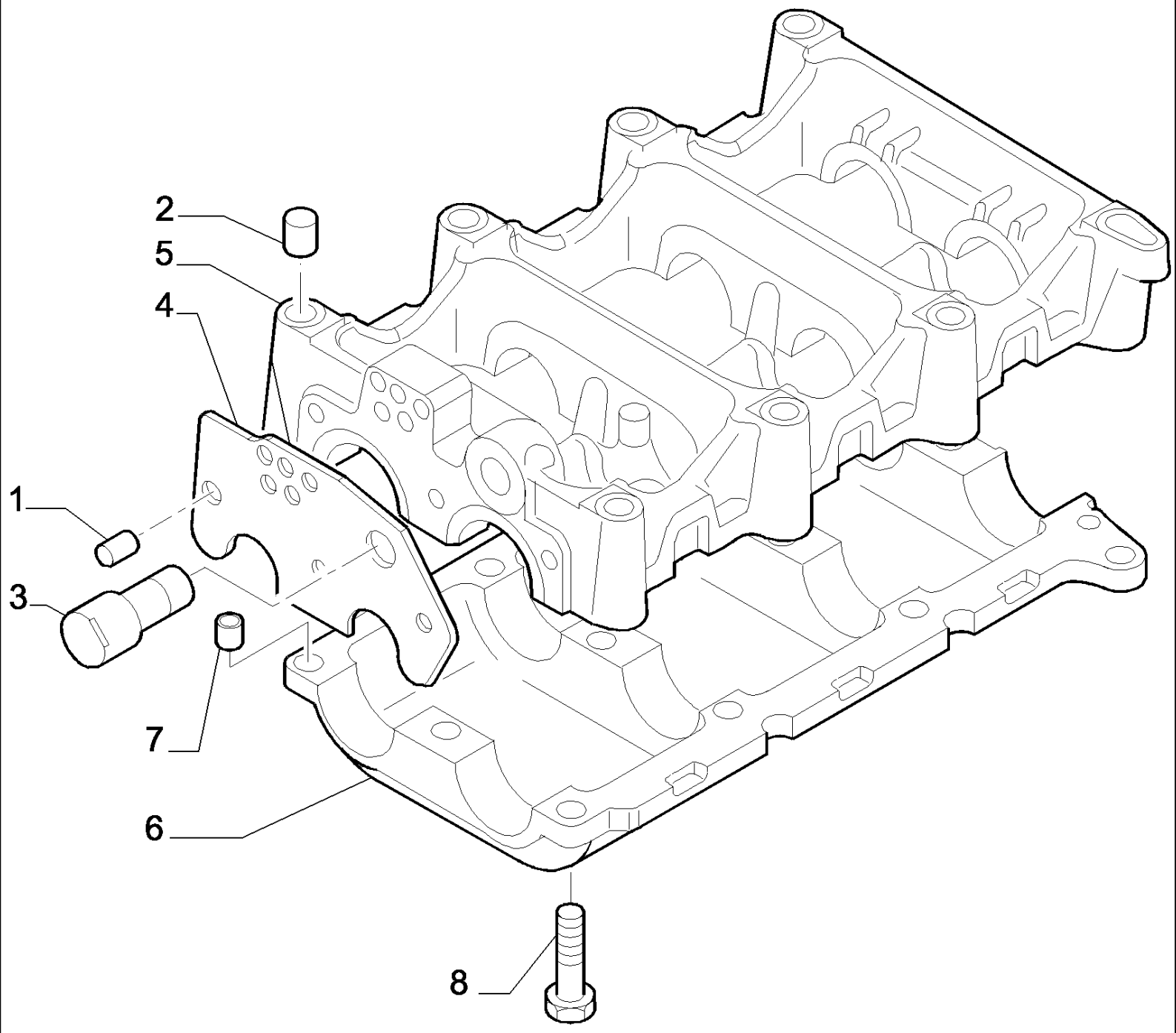

LB115.B EUR BACKHOE LOADER (1/05-)

0.105(02) DYNAMIC BALANCER, GEARS & SHAFTS (2831300)

Ref	Part Number	Qty	Description
1	2831305	1	DOWEL,
2	4899027	2	DOWEL,
3	2830948	1	SHAFT, IDLE,
4	2830905	1	PLATE, THRUST,
5	2831303	1	FRAME,
6	2831304	1	
7	4891209	2	DOWEL,
8	4895323	12	SCREW,

0.120(01) CAMSHAFT

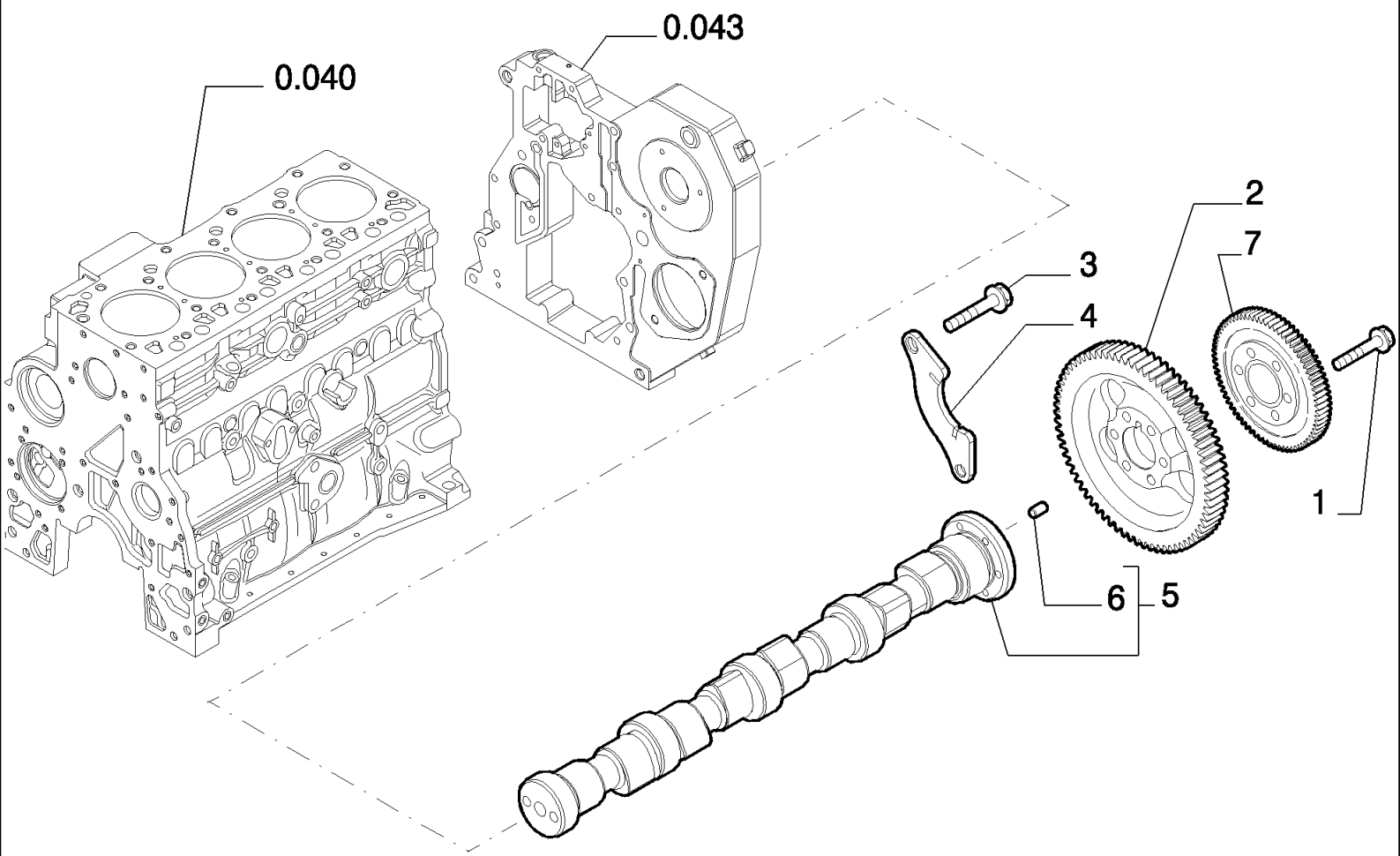

LB115.B EUR BACKHOE LOADER (1/05-)

0.120(01) CAMSHAFT

Ref	Part Number	Qty	Description
1	4895323	6	SCREW,
2	504062752	1	GEAR,
3	4899068	2	SCREW, Hex Flg , M8 x 1.25 x 16,
4	4897457	1	FLANGE,
5	4899610	1	CAMSHAFT, - ASSY
6	4899080	1	DOWEL,
7	504034954	1	GEAR, DRIVEN,

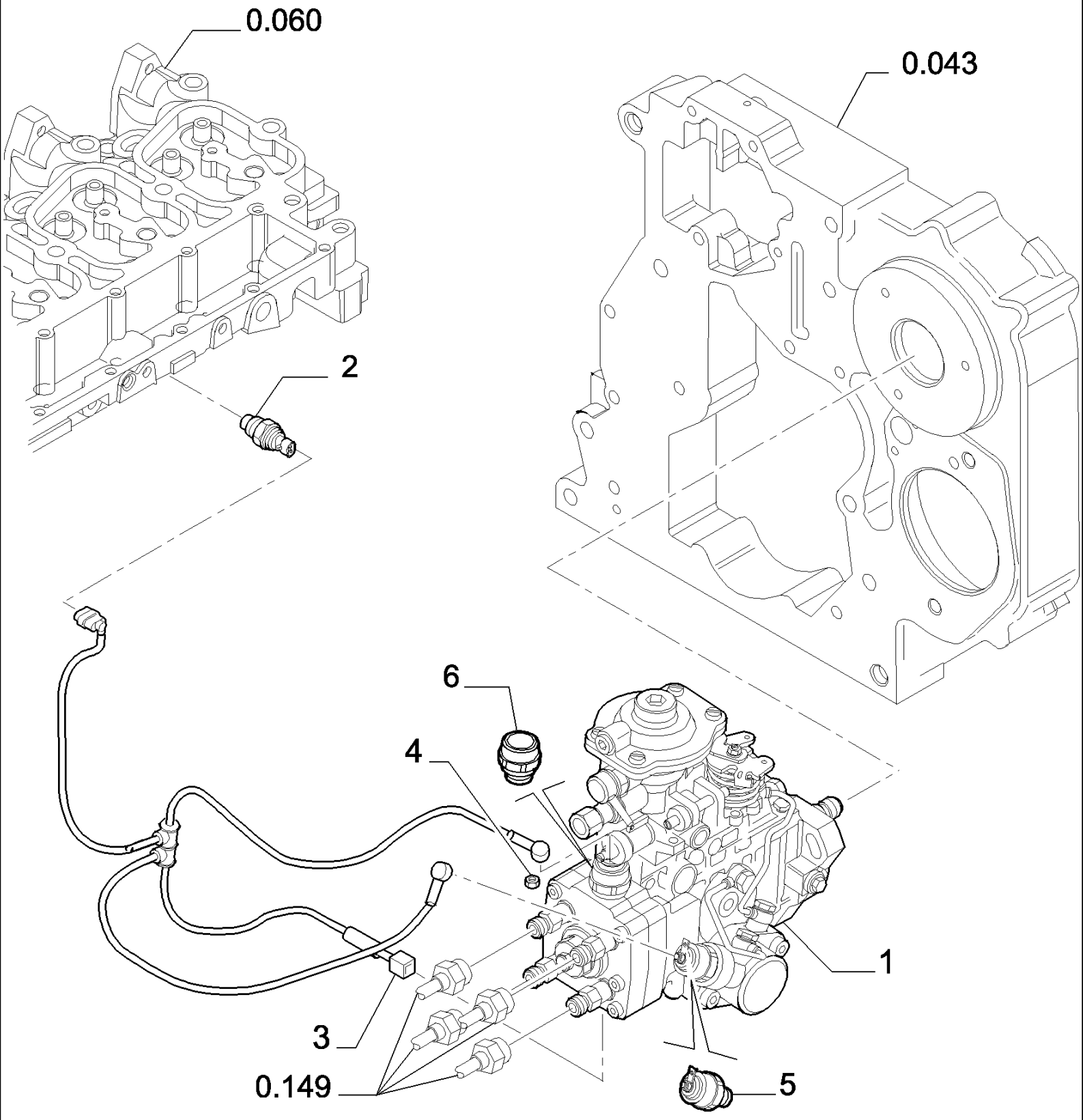
0.060
0.043
2
6
4
1
3
0.149
5

LB115.B EUR BACKHOE LOADER (1/05-)

0.140/ 1(01) FUEL INJECTION PUMP

Ref	Part Number	Qty	Description
1	504054020	1	PUMP, FUEL, - ASSY
2	504032877	1	SENDER, TEMPERATURE, Water Temperature
3	504060728	1	HARNESS, WIRE,
4	16979231	2	NUT,
5	72219391	1	VALVE, SHUT-OFF,
6	2852741	1	SOLENOID,

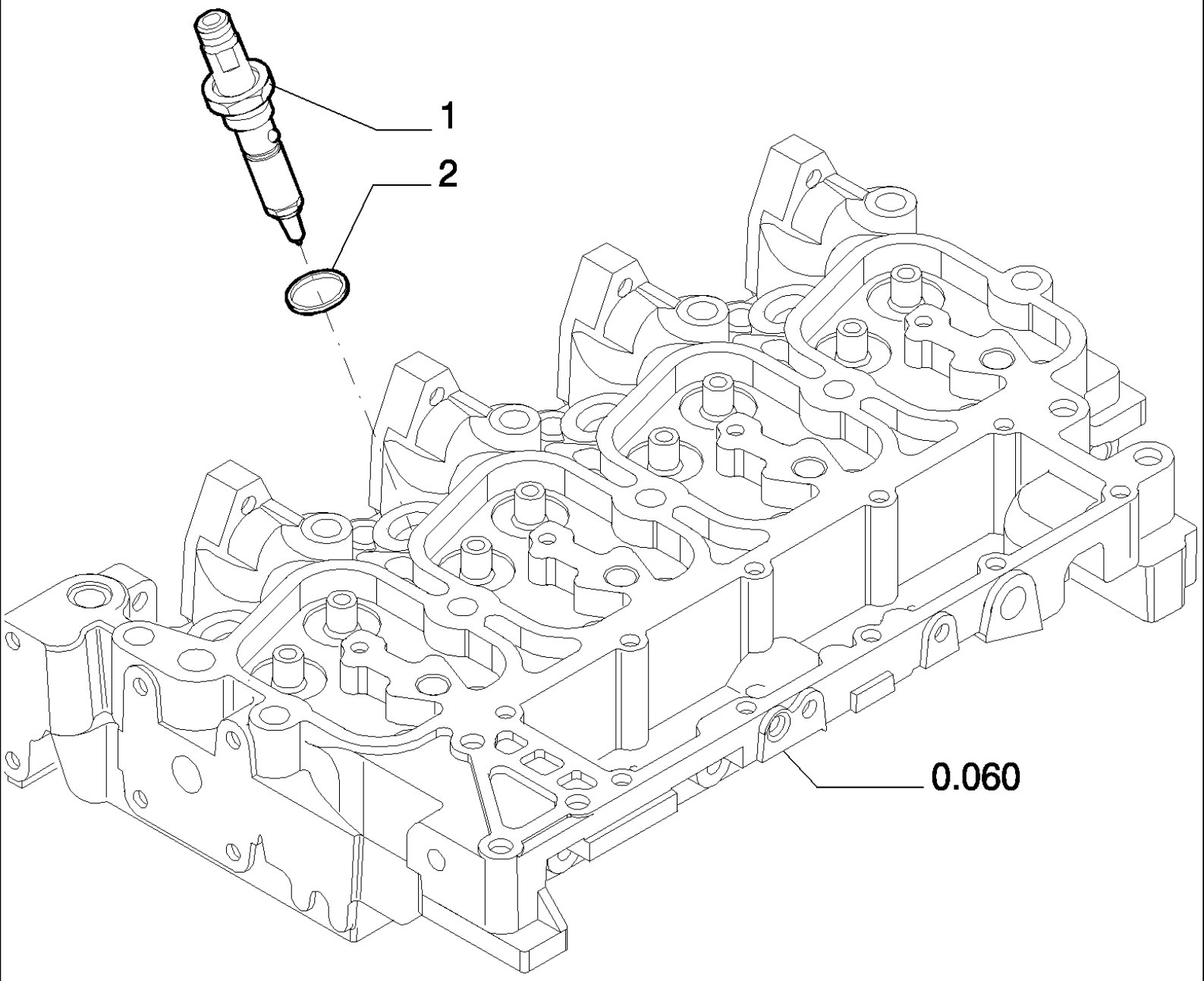
1
2
0.060

LB115.B EUR BACKHOE LOADER (1/05-)

0.140/ 1(02) FUEL INJECTION SYSTEM

Ref	Part Number	Qty	Description
1	504063465	4	INJECTOR, FUEL SYSTEM,
2	4895297	4	SEALRING,

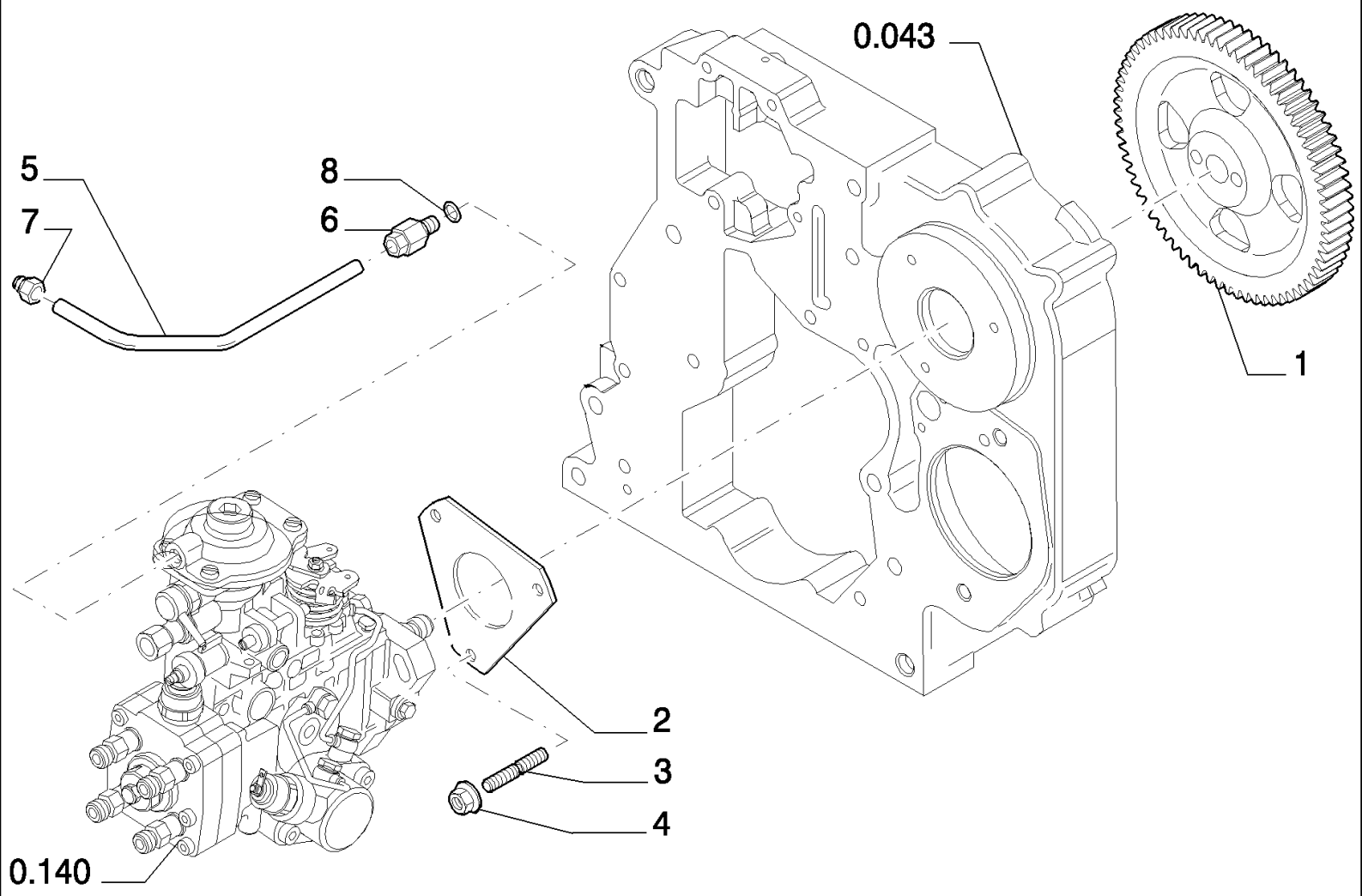
0.043
5
7
8
6
1
2
3
4
0.140

LB115.B EUR BACKHOE LOADER (1/05-)

0.142(01) FUEL INJECTION SYSTEM

Ref	Part Number	Qty	Description
1	504093385	1	GEAR,
2	504083433	1	GASKET,
3	16746824	3	STUD,
4	4899003	3	NUT, 8X1.25
5	504057292	1	TUBE,
6	4893518	1	FITTING, 8X1
7	4896770	1	FITTING, 10X1
8	4858605	1	SEAL,

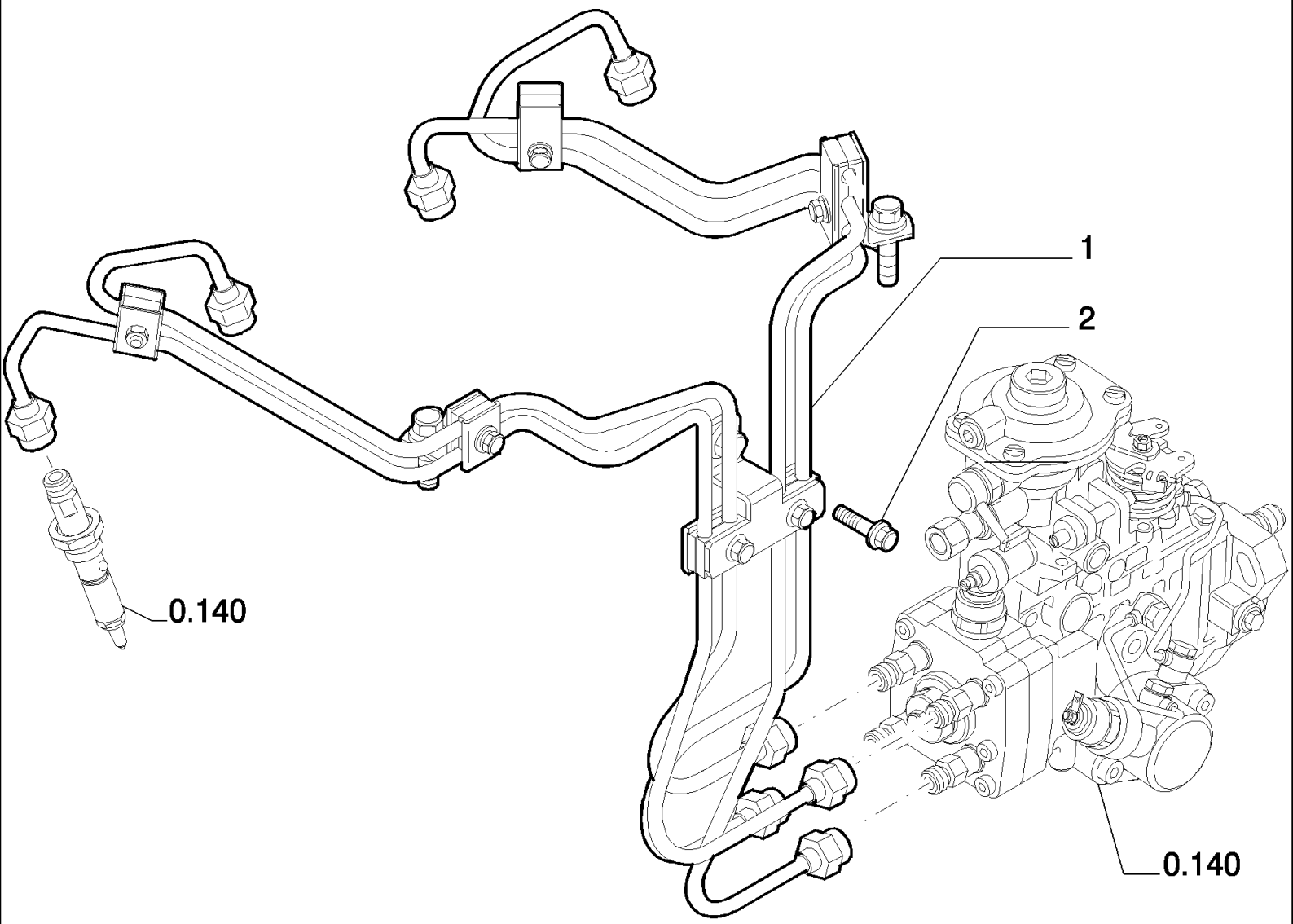
1
2
0.140
0.140

LB115.B EUR BACKHOE LOADER (1/05-)

0.149(01) FUEL INJECTION SYSTEM

Ref	Part Number	Qty	Description
1	504042116	1	KIT, Fuel Injection Supply Tubes
2	4899068	1	SCREW, Hex Flg , M8 x 1.25 x 16,

0.200(01) FUEL FILTER

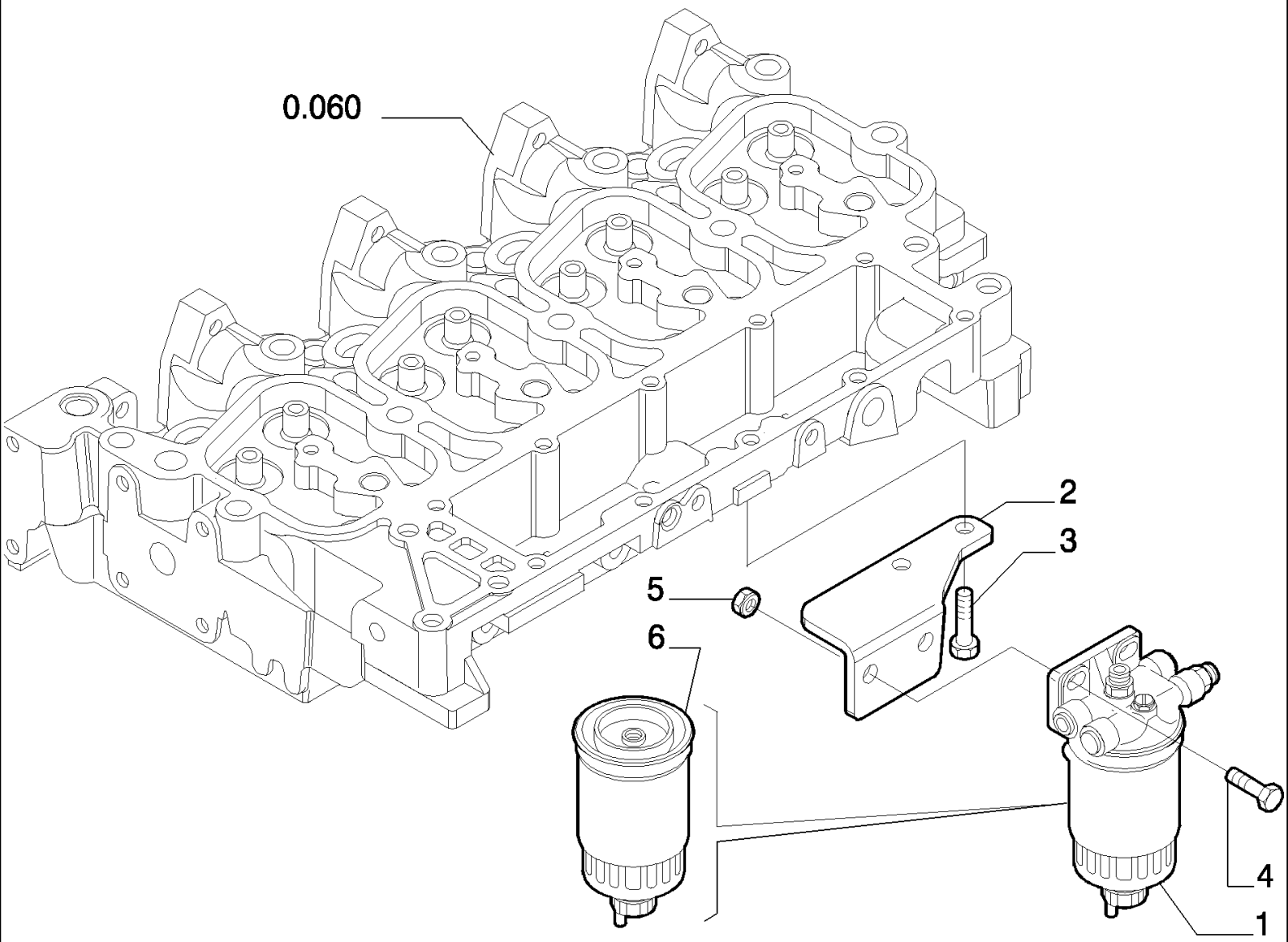

LB115.B EUR BACKHOE LOADER (1/05-)

0.200(01) FUEL FILTER

Ref	Part Number	Qty	Description
1	2852098	1	FILTER ASSY, - ASSY
2	504001088	1	SUPPORT,
3	4899020	2	SCREW, M8X1,25X20
4	4899093	2	SCREW, Hex Flg, M10 x 1.5 x 30,
5	4895166	2	NUT, 10X1.5
6	1930010	1	FILTER, FUEL,

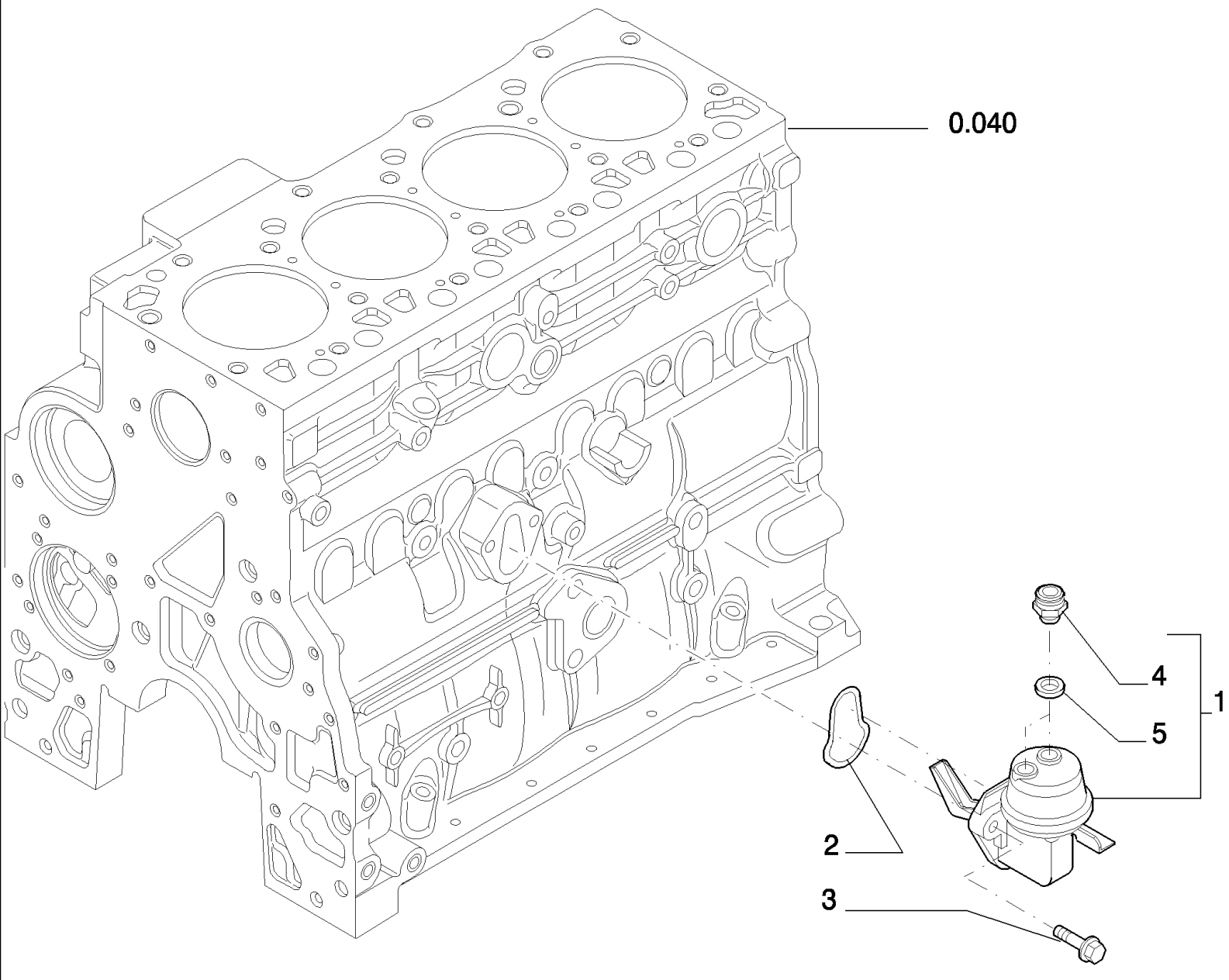
0.040
4
5
1
2
3

LB115.B EUR BACKHOE LOADER (1/05-)

0.201(01) FUEL PUMP

Ref	Part Number	Qty	Description
1	2830266	1	PUMP, FUEL, - ASSY
2	2830156	1	GASKET,
3	4899031	2	SCREW, Hex Flg, M8 x 1.25 x 25,
4	4890964	2	FITTING,
5	4894721	2	WASHER, SEALING,

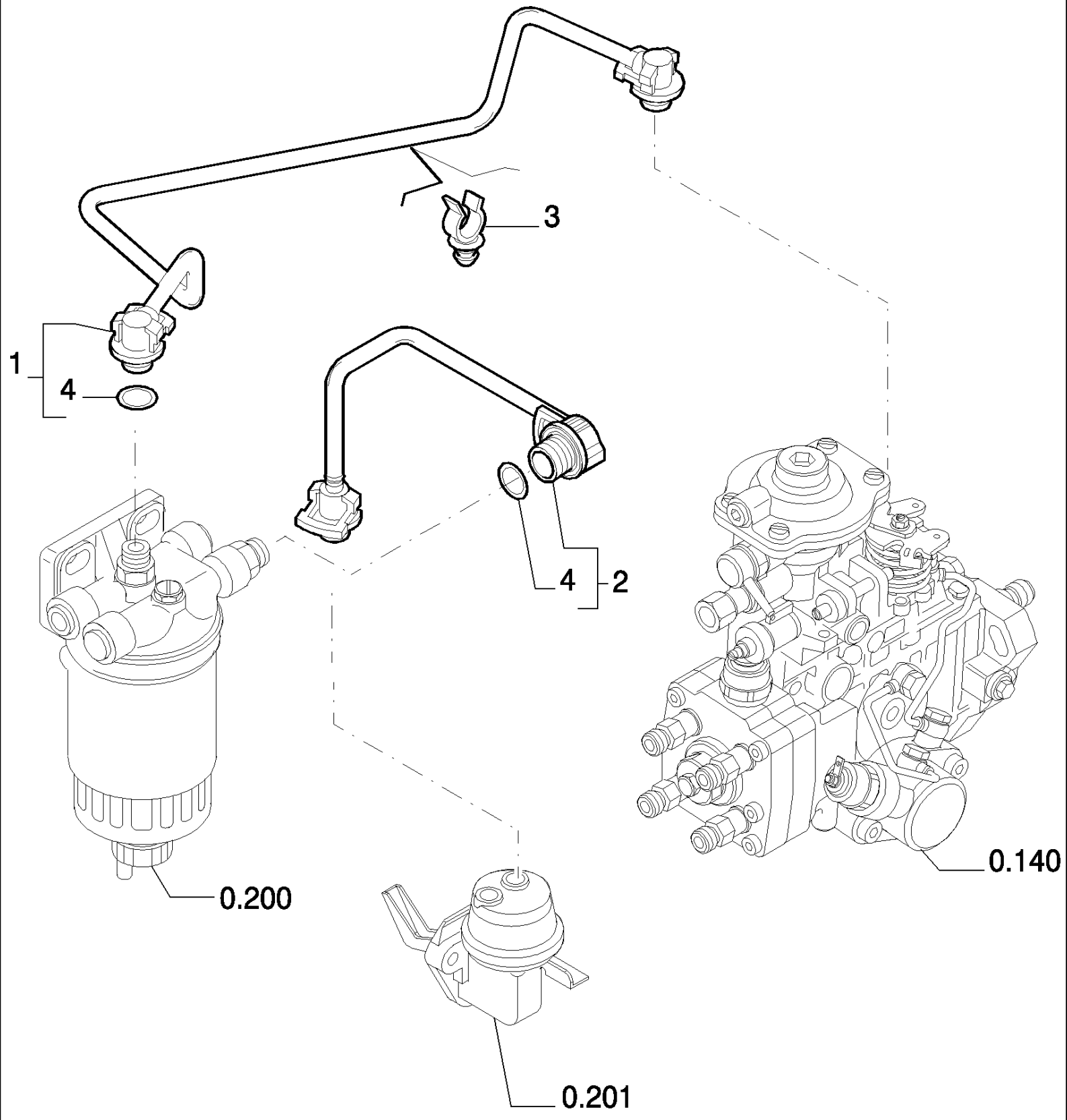
3
1
4
4
2
0.200
0.140
0.201

LB115.B EUR BACKHOE LOADER (1/05-)

0.203(01) FUEL INJECTION SYSTEM

Ref	Part Number	Qty	Description
1	2852105	1	TUBE, - ASSY
2	2852594	1	TUBE, - ASSY
3	2852111	1	CLAMP,
4	4894095	2	O-RING,

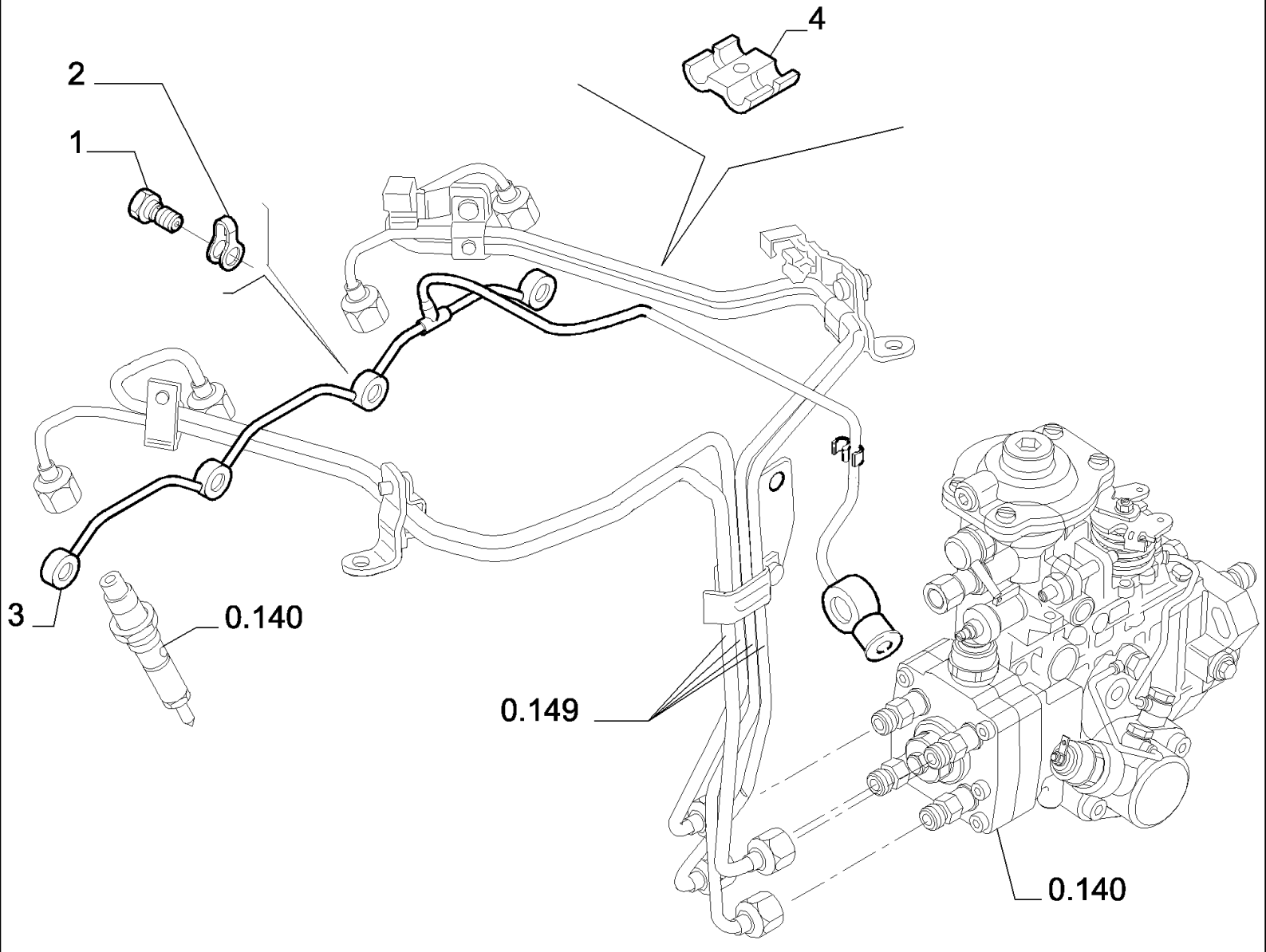
4
2
1
3
0.140
0.149
0.140

LB115.B EUR BACKHOE LOADER (1/05-)

0.204(01) FUEL INJECTION SYSTEM

Ref	Part Number	Qty	Description
1	4895244	4	BOLT, BANJO,
2	4895305	4	SEAL,
3	504051276	1	TUBE,
4	98429625	1	CLAMP,

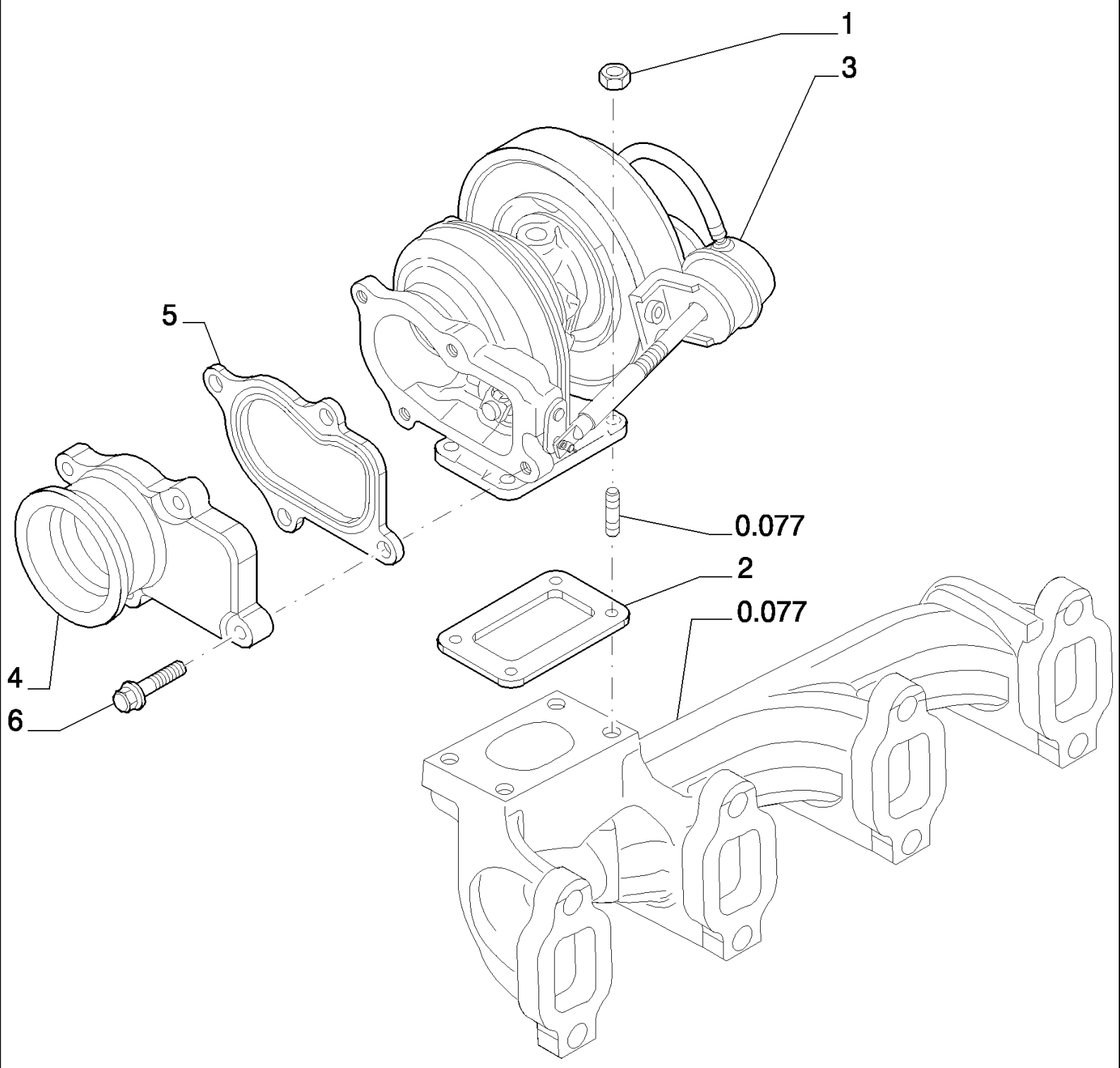
1
3
5
0.077
2
0.077
4
6

LB115.B EUR BACKHOE LOADER (1/05-)

0.240/ 1(01) TURBOCHARGER

Ref	Part Number	Qty	Description
1	4899118	4	NUT,
2	4895133	1	GASKET,
3	504057286	1	TURBOCHARGER,
4	504010786	1	MANIFOLD, EXHAUST,
5	504035094	1	GASKET,
6	4898482	4	SCREW, Flg Hd, M8 x 1.25 x 30,

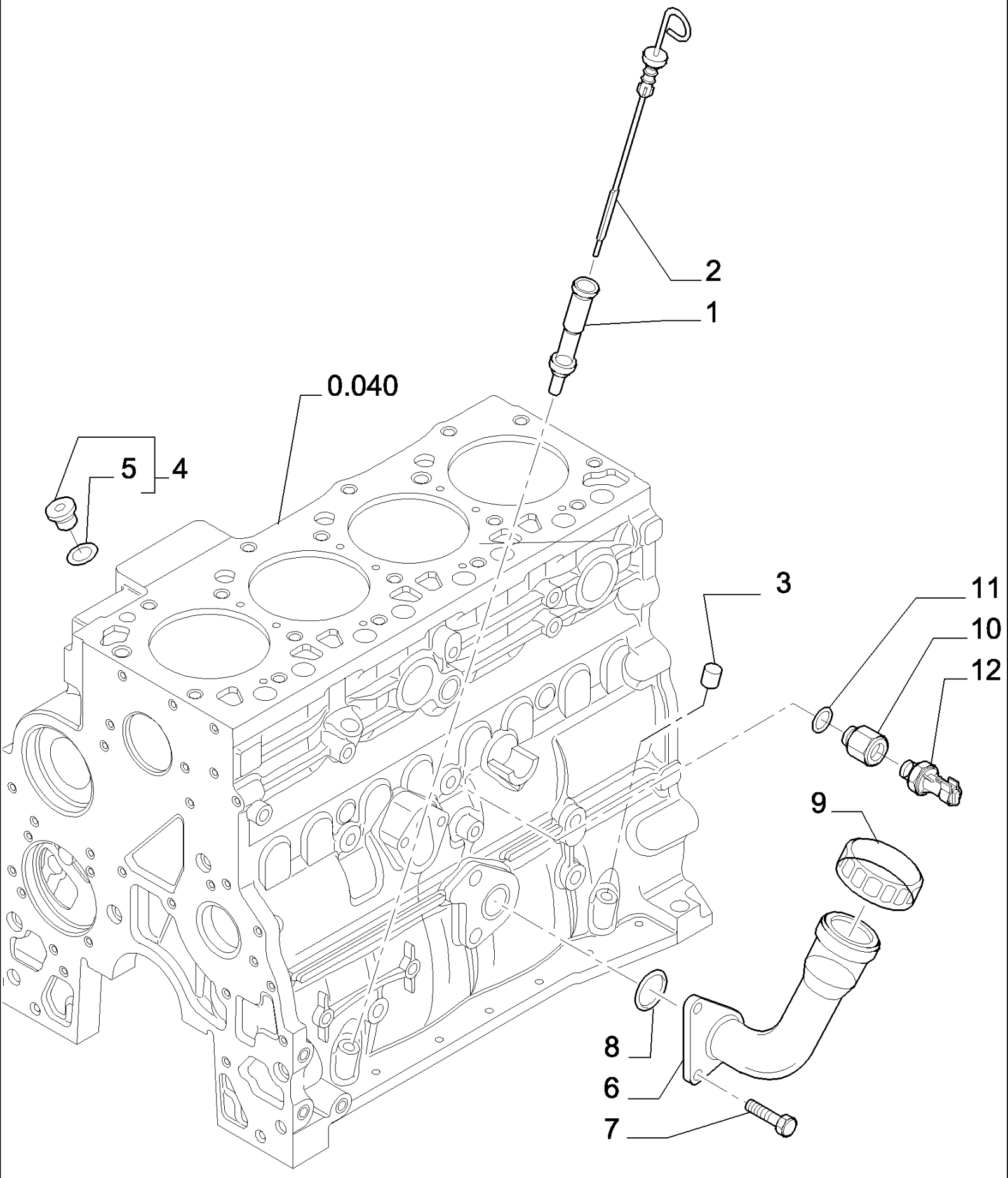
2
1
0.040
5
4
3
11
10
12
9
8
6
7

LB115.B EUR BACKHOE LOADER (1/05-)

0.270(01) ENGINE, OIL

Ref	Part Number	Qty	Description
1	504011329	1	TUBE,
2	504062795	1	DIPSTICK,
3	4899036	1	PLUG,
4	4897330	2	PLUG, - ASSY
5	4895610	1	O-RING,
6	504011338	1	TUBE, , UP TO S/N ENGINE 148474
7	16587924	2	SCREW,
8	17283181	1	O-RING,
9	2852136	1	CAP, INTRODUCTION, , UP TO S/N ENGINE 148474
10	504036358	1	ADAPTER,
11	4899115	1	O-RING,
12	87803147	1	SENDER UNIT, 87803147 or 87803148 Switch Are Interchangeable, Use Either Switch In Stock, Version : SIPEA
12	87803148	1	SENDER UNIT, 87803147 or 87803148 Switch Are Interchangeable, Use Either Switch In Stock, Version : BORLETTI

UP TO S/N ENGINE 148474

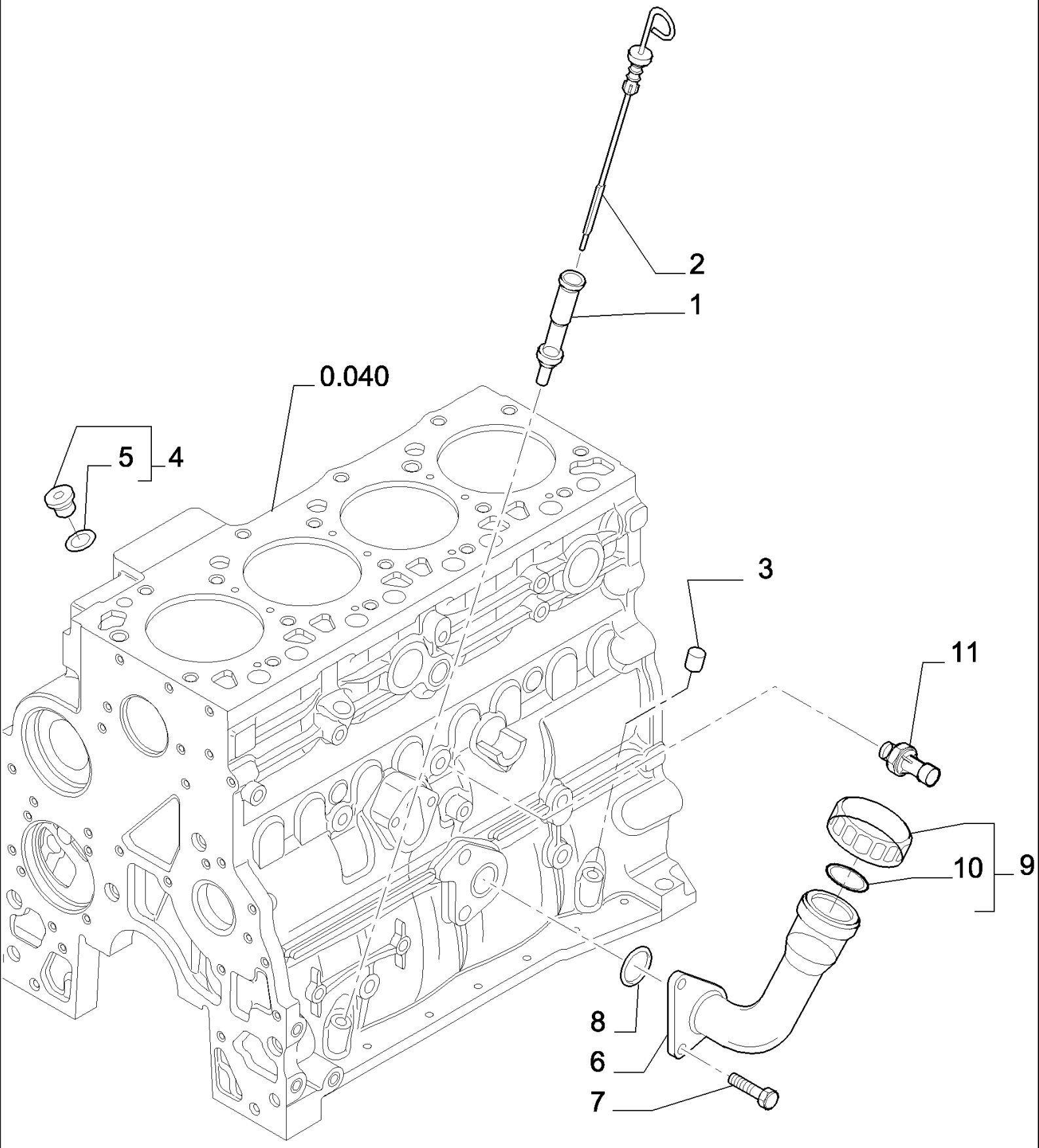
2
1
0.040
5
4
3
11
10
9
8
6
7

LB115.B EUR BACKHOE LOADER (1/05-)

0.270/A(01) ENGINE, OIL

Ref	Part Number	Qty	Description
1	504011329	1	TUBE,
2	504062795	1	DIPSTICK,
3	4899036	1	PLUG,
4	4897330	2	PLUG, - ASSY
5	4895610	1	O-RING,
6	2853407	1	NECK FILLER, , FROM TO S/N ENGINE 148475
7	16587924	2	SCREW,
8	17283181	1	O-RING,
9	2853410	1	CAP, INTRODUCTION, - ASSY, FROM TO S/N ENGINE 148475
10	2853412	1	O-RING, , FROM TO S/N ENGINE 148475
11	504084983	1	SWITCH, PRESSURE,

FROM S/N ENGINE 148475

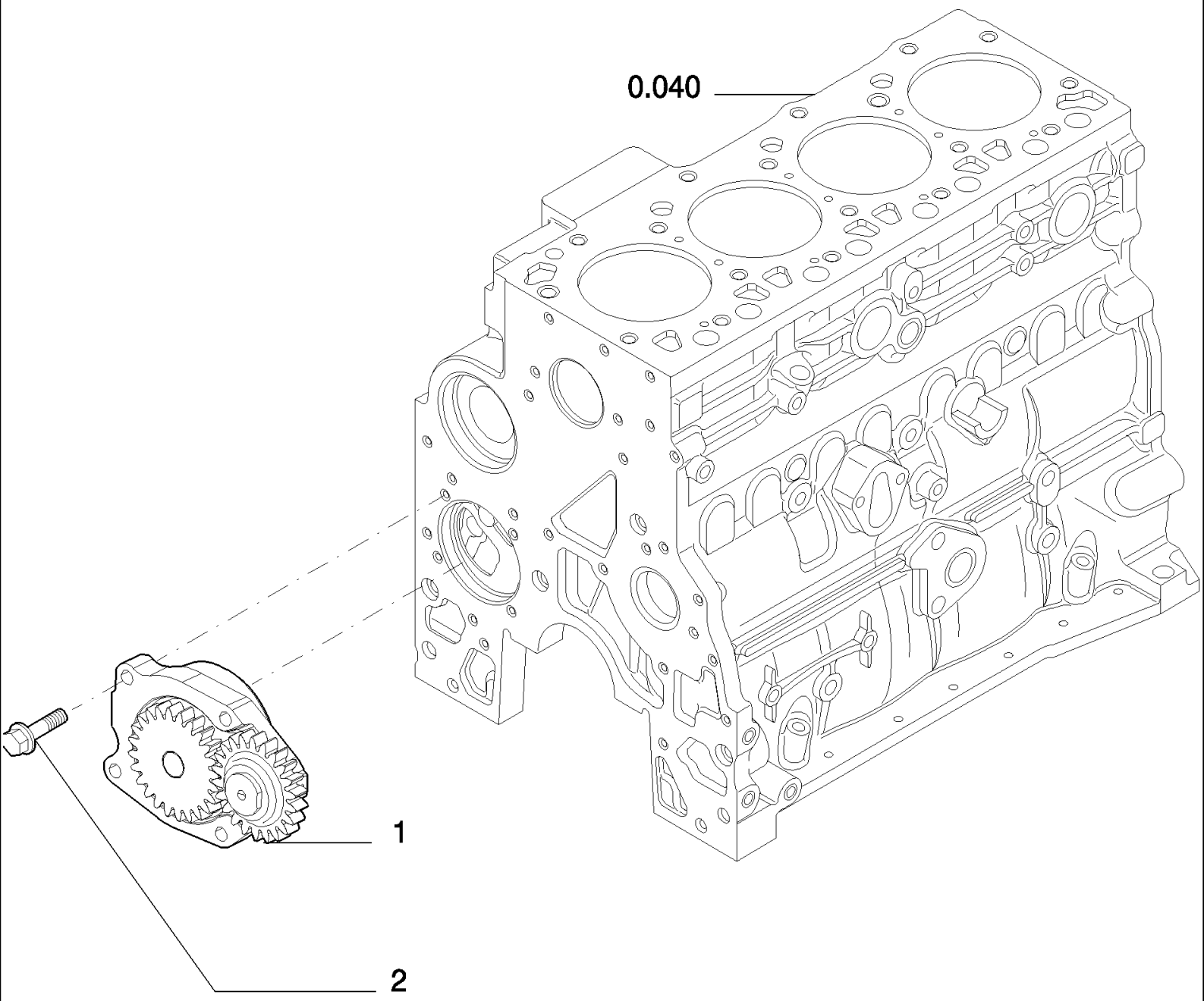
0.040
1
2

LB115.B EUR BACKHOE LOADER (1/05-)

0.300(01) OIL PUMP - ENGINE

Ref	Part Number	Qty	Description
1	4897480	1	PUMP, ENGINE OIL,
2	4899090	4	SCREW, Hex Flg, M8 x 1.25 x 30,

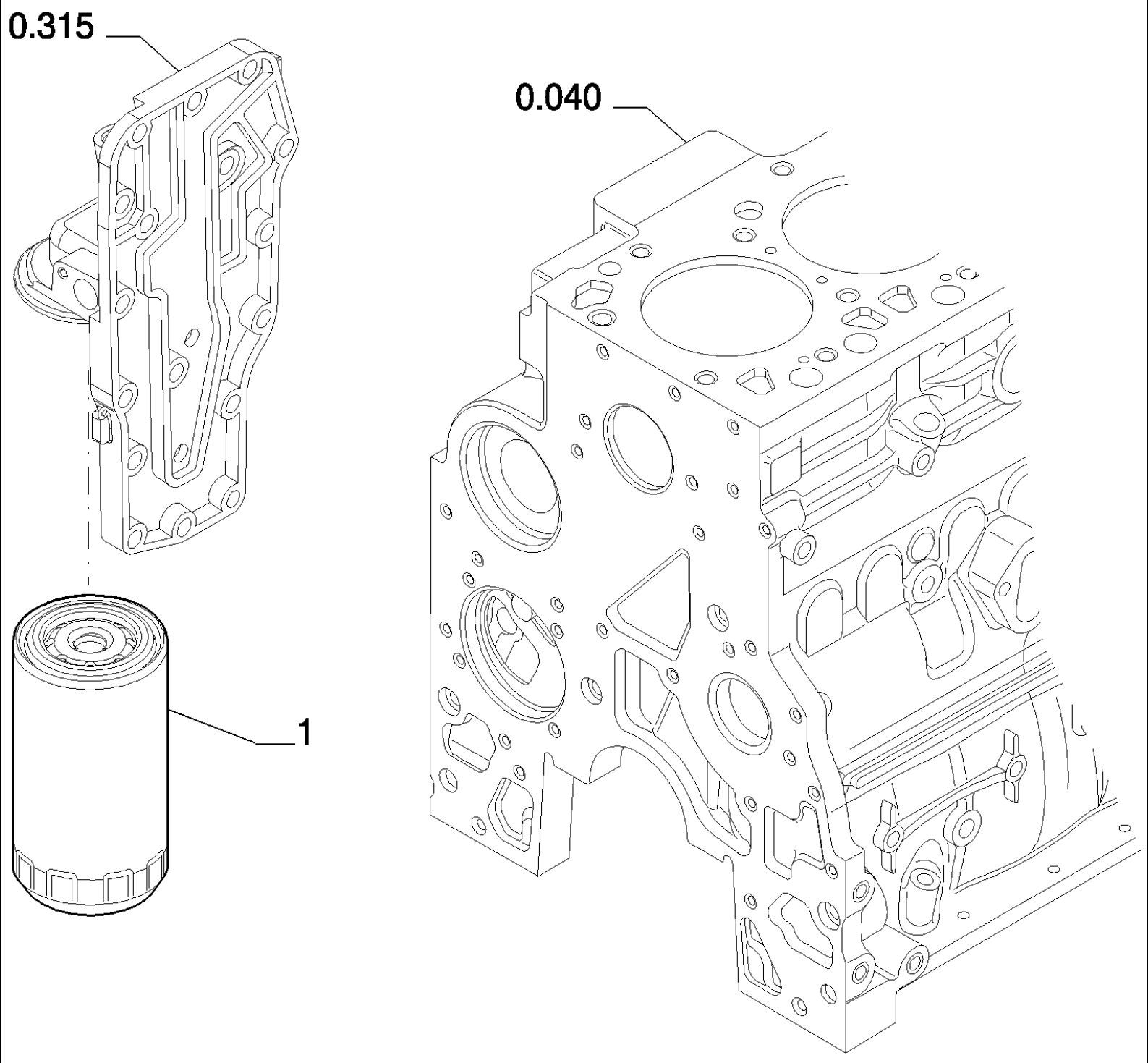
0.315
0.040
1

LB115.B EUR BACKHOE LOADER (1/05-)

0.302(01) OIL FILTERS - ENGINE

Ref	Part Number	Qty	Description
1	87803260	1	FILTER, ENGINE OIL, Single pkg qty. For multi pkg [qty.12] order 87803260MP,

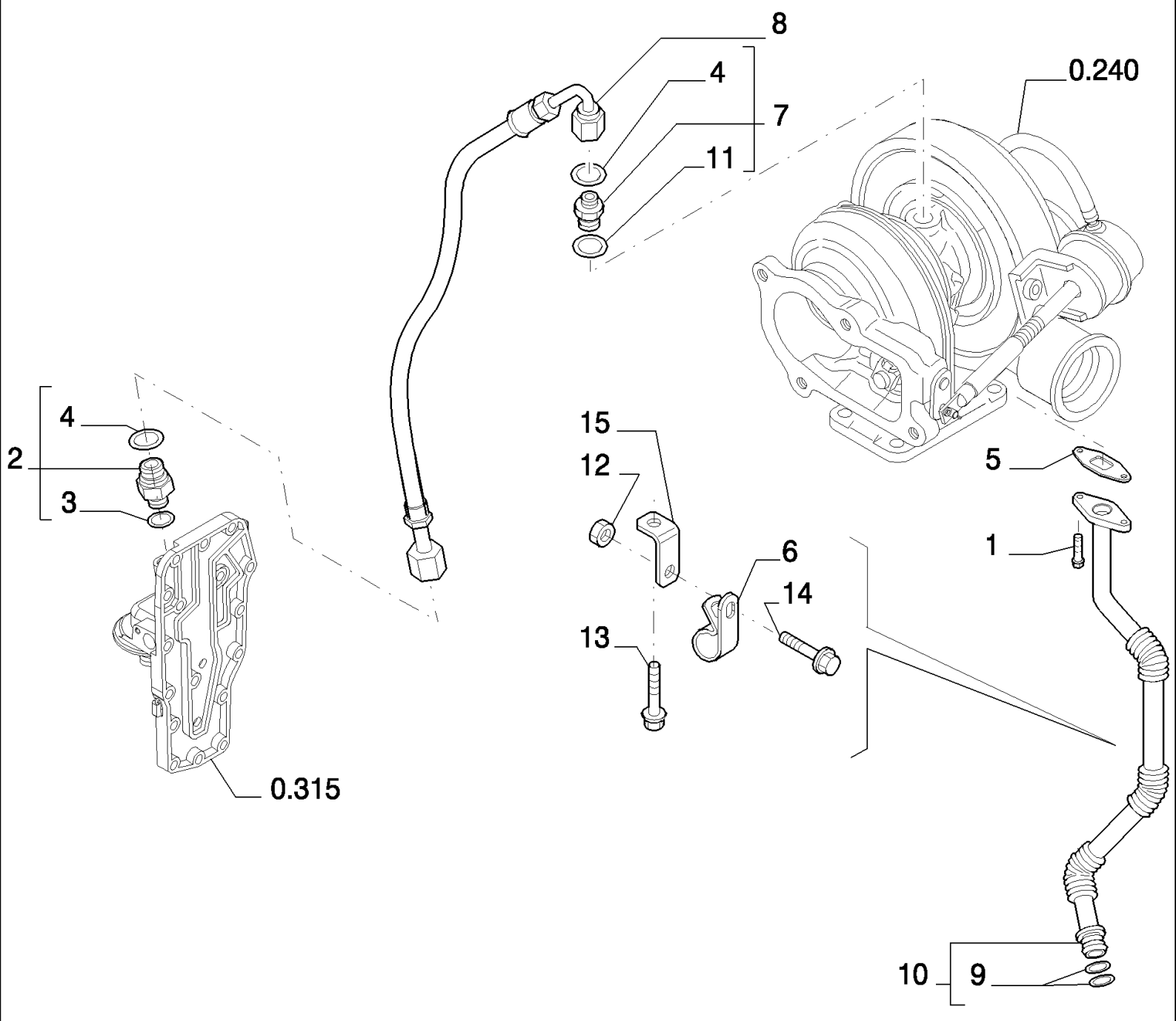
8
4
7
11
0.240
4
2
3
0.315
15
12
13
6
14
5
1
10
9

LB115.B EUR BACKHOE LOADER (1/05-)

0.305(01) PIPING - ENGINE OIL

Ref	Part Number	Qty	Description
1	4895164	2	SCREW, M6X1X16
2	4895107	1	CONNECTOR, HYD., - ASSY
3	4899107	1	O-RING,
4	4899108	2	O-RING,
5	4899467	1	GASKET,
6	4899519	1	CLAMP,
7	4899106	1	CONNECTOR, HYD.,
8	504053173	1	HOSE,
9	4899058	2	O-RING, M17.12 ID x 2.62 Thk
10	504053166	1	PIPE, - ASSY
11	4899121	1	WASHER, SEALING,
12	17044625	1	NUT, M6
13	18138324	1	SCREW, M8X1.25X16
14	18137824	1	SCREW, M8X16
15	504053894	1	BRACKET,

0.315(01) OIL FILTER AND COOLER

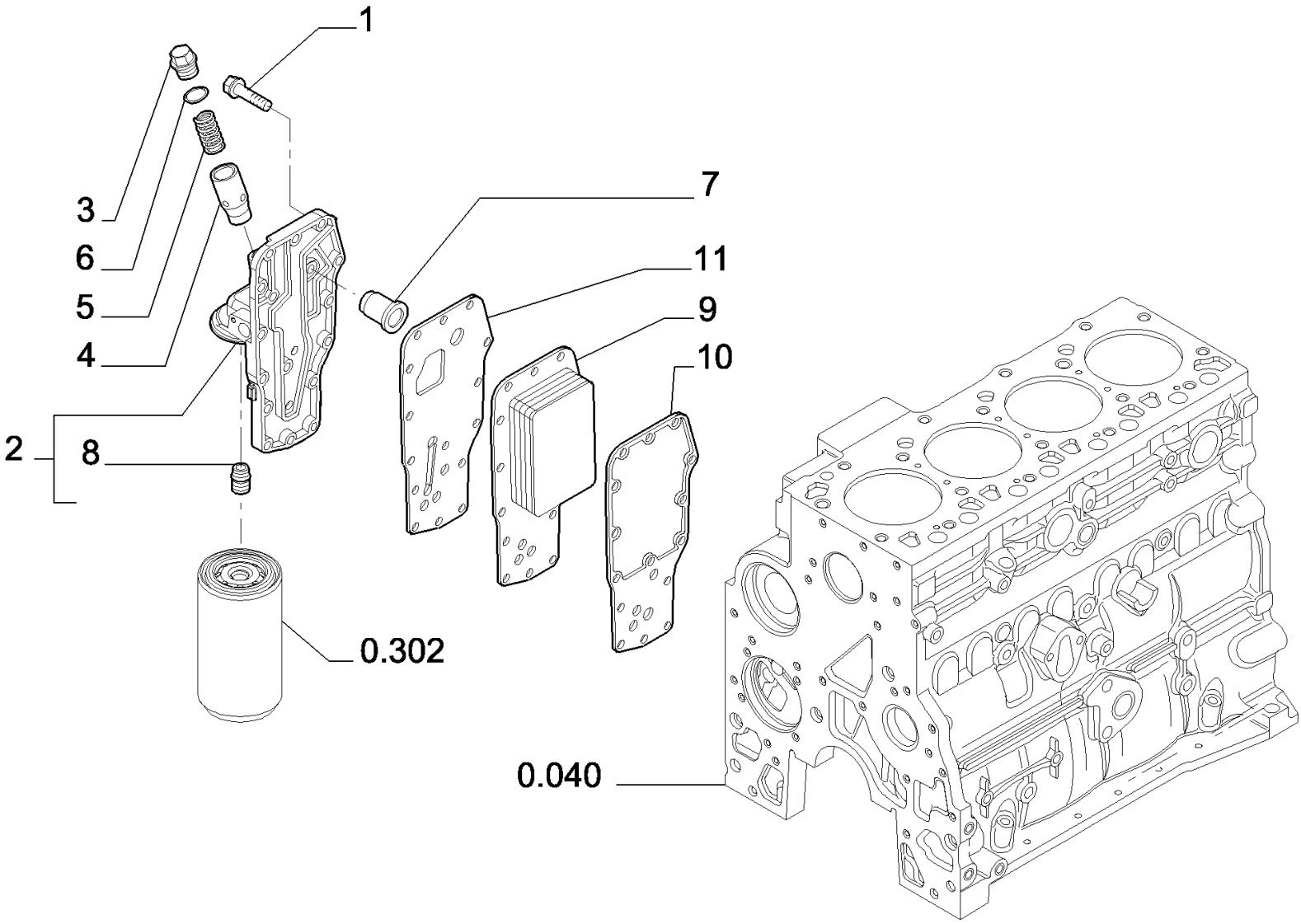

LB115.B EUR BACKHOE LOADER (1/05-)

0.315(01) OIL FILTER AND COOLER

Ref	Part Number	Qty	Description
1	4899019	15	SCREW, Hex Flg, M8 x 1.25 x 35,
2	4899643	1	Head, Filter, - ASSY
3	4895043	1	PLUG,
4	4896404	1	PLUNGER,
5	4895045	1	SPRING,
6	4899035	1	O-RING, M18.39 ID x 2.69 Thk
7	4896410	1	VALVE, PRESSURE RELIEF,
8	4893391	1	ADAPTER,
9	4896406	1	COOLER, OIL,
10	2830559	1	GASKET,
11	4896409	1	GASKET,

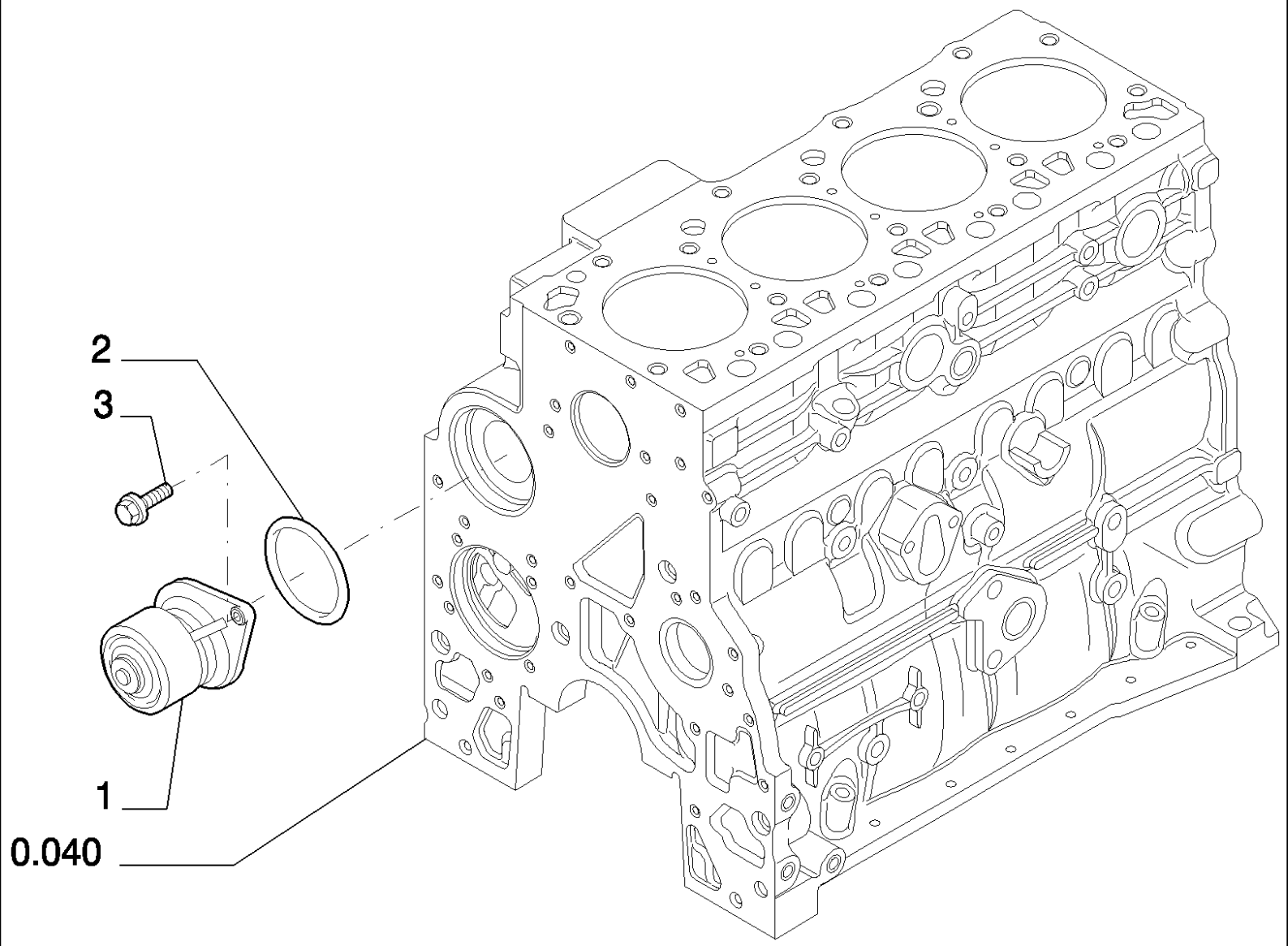
2
3
1
0.040

LB115.B EUR BACKHOE LOADER (1/05-)

0.320(01) WATER PUMP

Ref	Part Number	Qty	Description
1	4891252	1	PUMP, WATER,
2	504062856	1	GASKET,
3	4899079	2	SCREW, Hex Flg, M8 x 1.25 x 25,

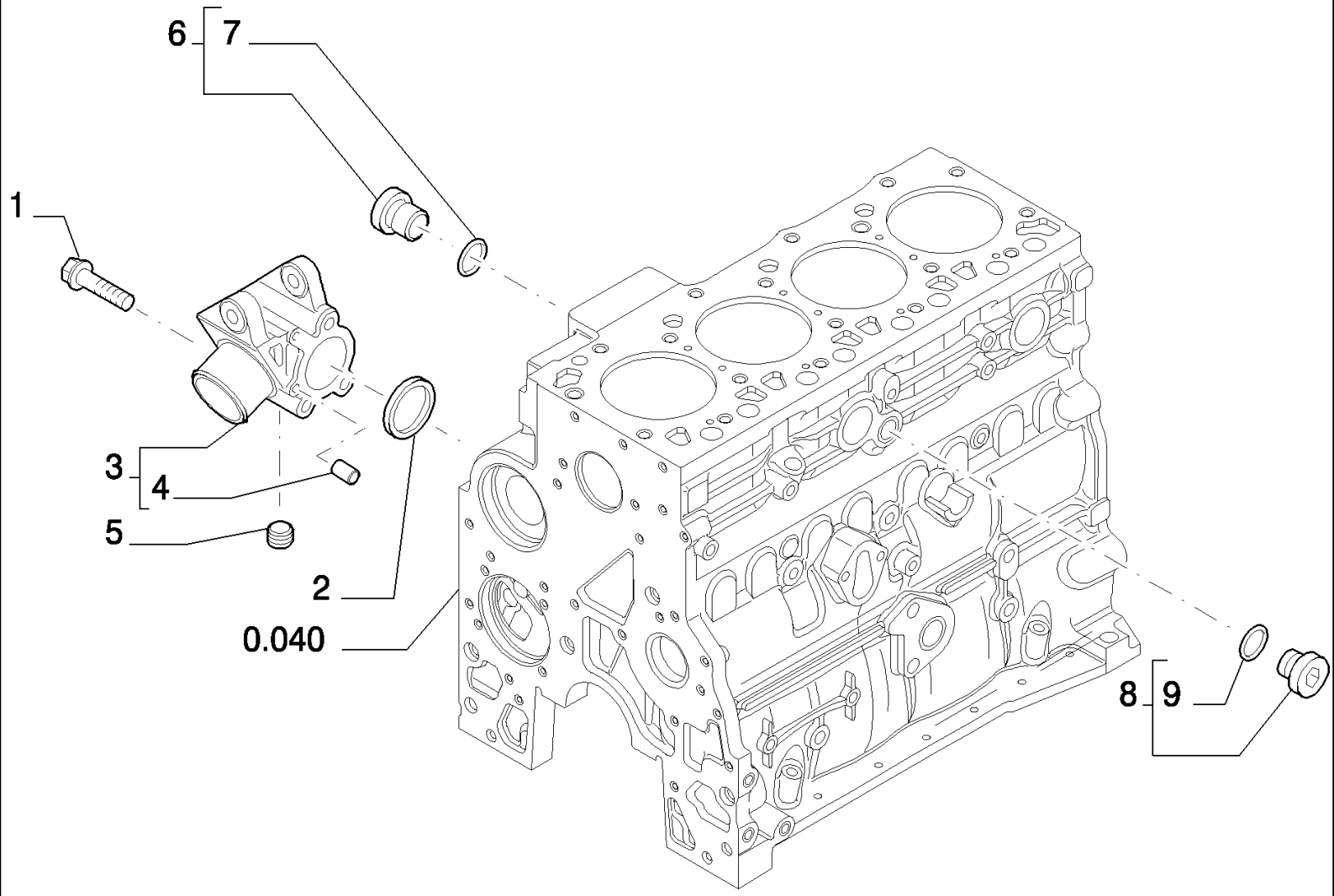
6
7
1
3
4
5
2
0.040
8
9

LB115.B EUR BACKHOE LOADER (1/05-)

0.323(01) COOLING SYSTEM - ENGINE

Ref	Part Number	Qty	Description
1	4899109	3	SCREW, Hex, M10 x 1.5 x 80, M10X1.5X80
2	504062710	1	O-RING,
3	504064336	1	SUPPORT, - ASSY
4	4895576	2	DOWEL,
5	504074178	1	PLUG,
6	4895392	1	PLUG, - ASSY M18X1.5
7	4895393	1	O-RING,
8	4895623	1	PLUG, - ASSY
9	4895625	1	O-RING,

0.326(01) THERMOSTAT - ENGINE COOLING SYSTEM

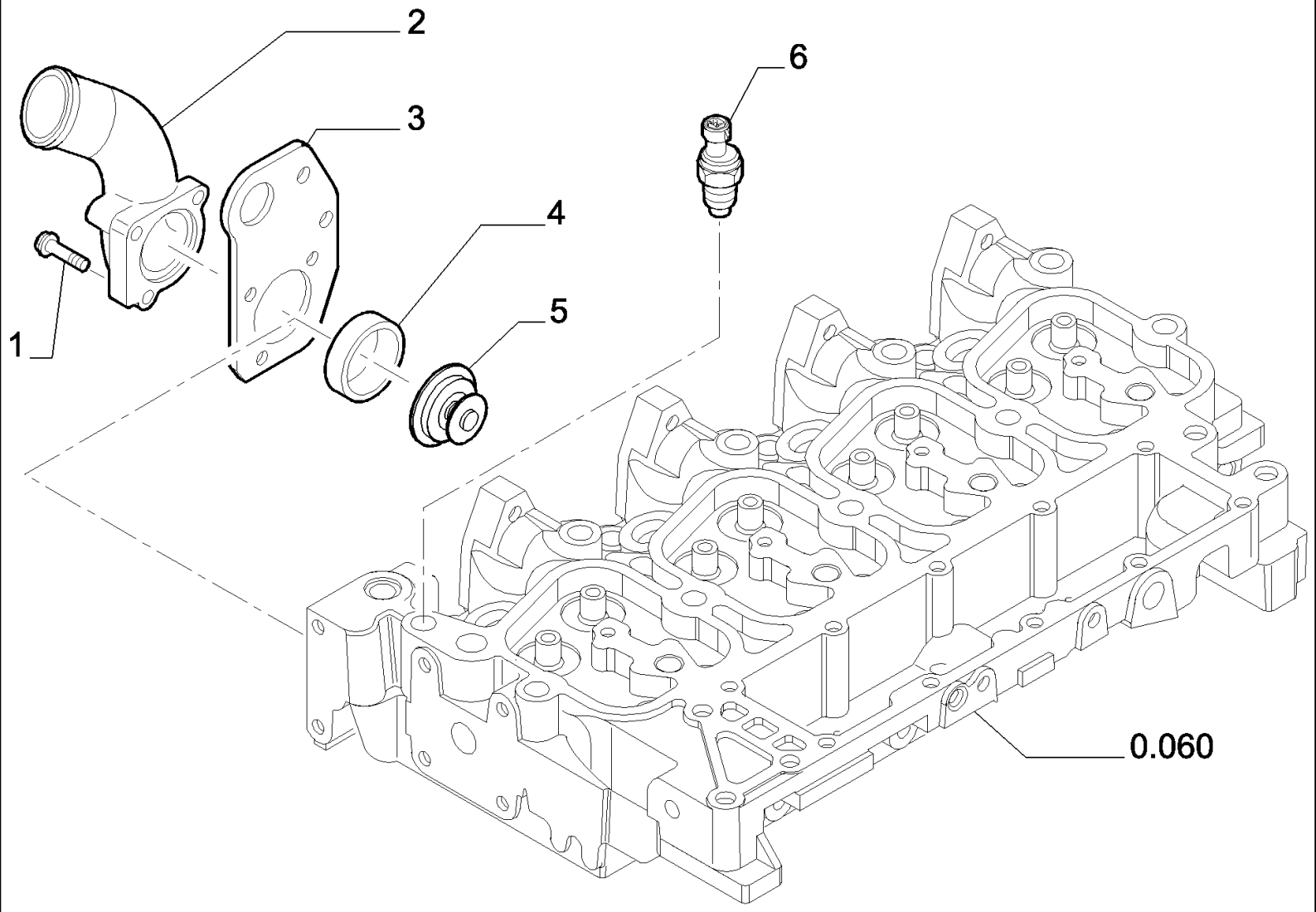

LB115.B EUR BACKHOE LOADER (1/05-)

0.326(01) THERMOSTAT - ENGINE COOLING SYSTEM

Ref	Part Number	Qty	Description
1	16586624	1	SCREW, 8X35
1	16592624	2	SCREW, 8X80
2	504051210	1	ELBOW,
3	504052013	1	RING, LIFTING,
4	504053512	1	GASKET,
5	504038890	1	THERMOSTAT,
6	504025599	1	SENDER, TEMPERATURE,

0.340(01) WATER PUMP - CONTROL

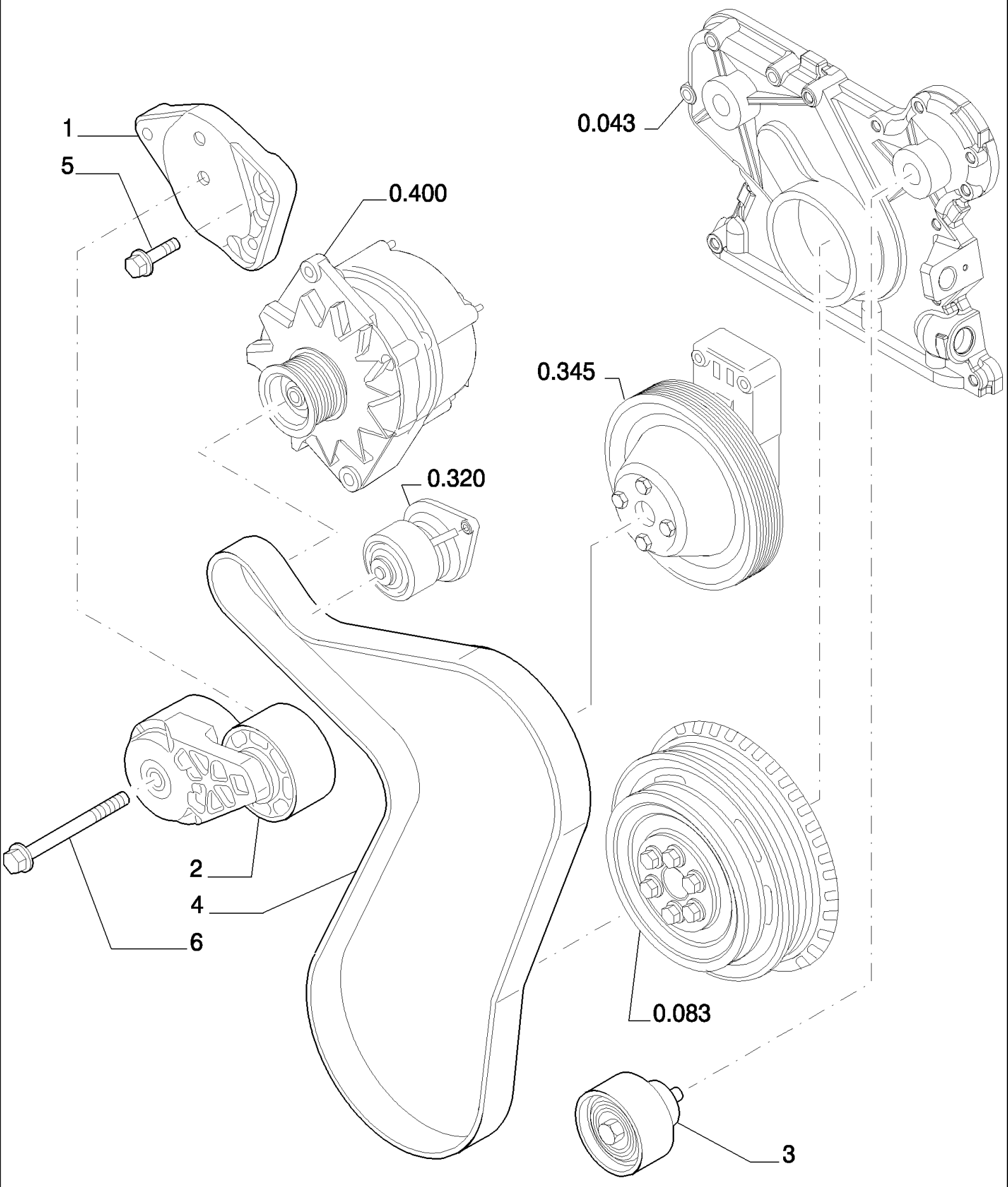

LB115.B EUR BACKHOE LOADER (1/05-)

0.340(01) WATER PUMP - CONTROL

Ref	Part Number	Qty	Description
1	504064340	1	BRACKET, , UP TO S/N 031056821
2	504028028	1	TENSIONER, BELT,
3	504065880	1	PULLEY,
4	REF	1	INSTRUCTION, , See Page 636A 02, UP TO S/N 031056821
5	4899079	2	SCREW, Hex Flg, M8 x 1.25 x 25, , UP TO S/N 031056821
6	4899109	1	SCREW, Hex, M10 x 1.5 x 80, M10X1.5X80 , UP TO S/N 031056821

UP TO S/N 031056821

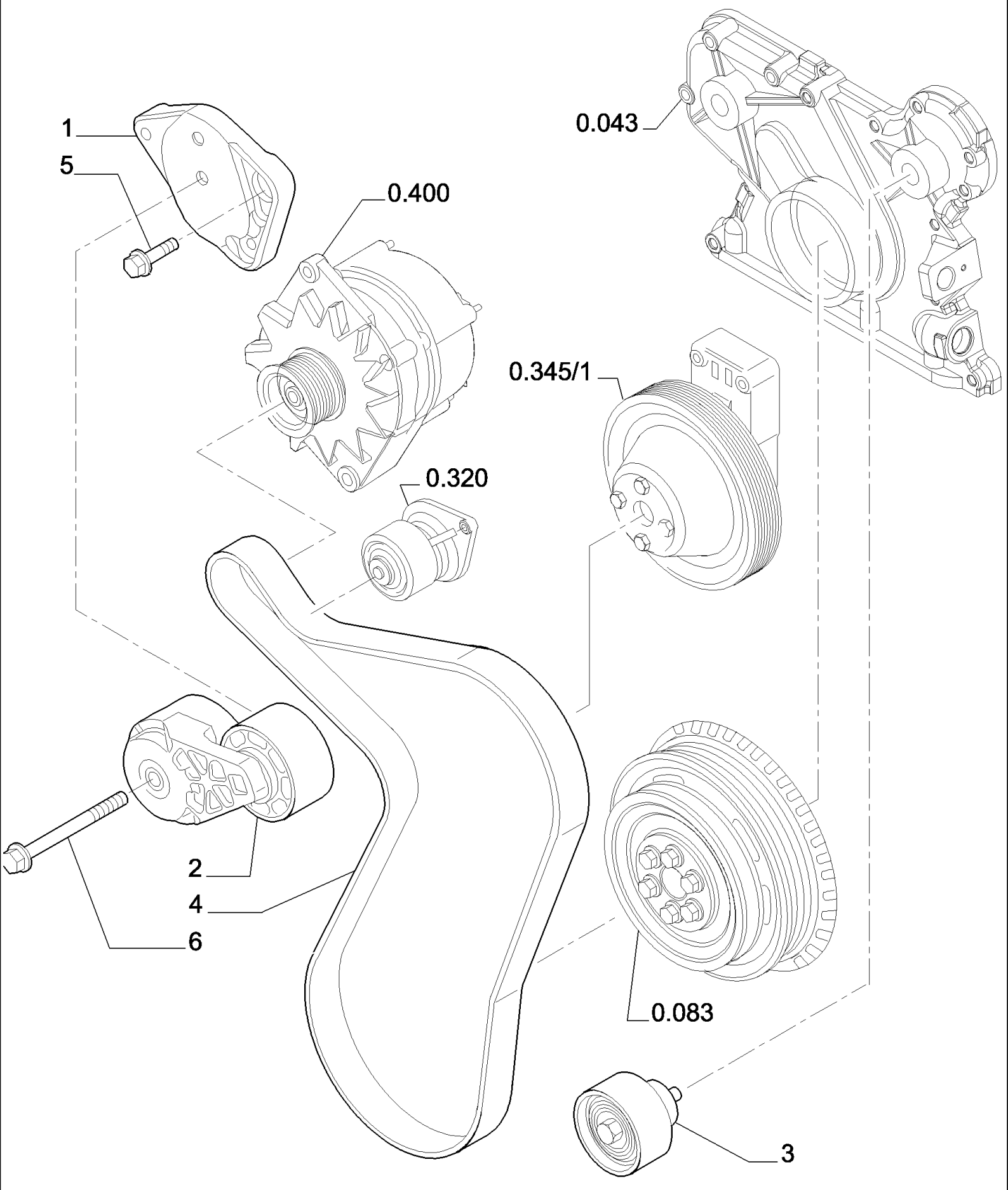
1
5
0.400
0.043
0.345/1
0.320
2
4
6
0.083
3

LB115.B EUR BACKHOE LOADER (1/05-)

0.340/A(01) WATER PUMP - CONTROL

Ref	Part Number	Qty	Description
1	504069572	1	BRACKET, , FROM TO S/N 031056822
2	504028028	1	TENSIONER, BELT,
3	504065880	1	PULLEY,
4	504076395	1	BELT, TRANSMISSION, , FROM TO S/N 031056822
5	16586524	2	SCREW, M8X1,25X30, FROM TO S/N 031056822
6	4895292	1	SCREW, M10X1.5X70 , FROM TO S/N 031056822

FROM S/N 031056822 (12/01/2005)

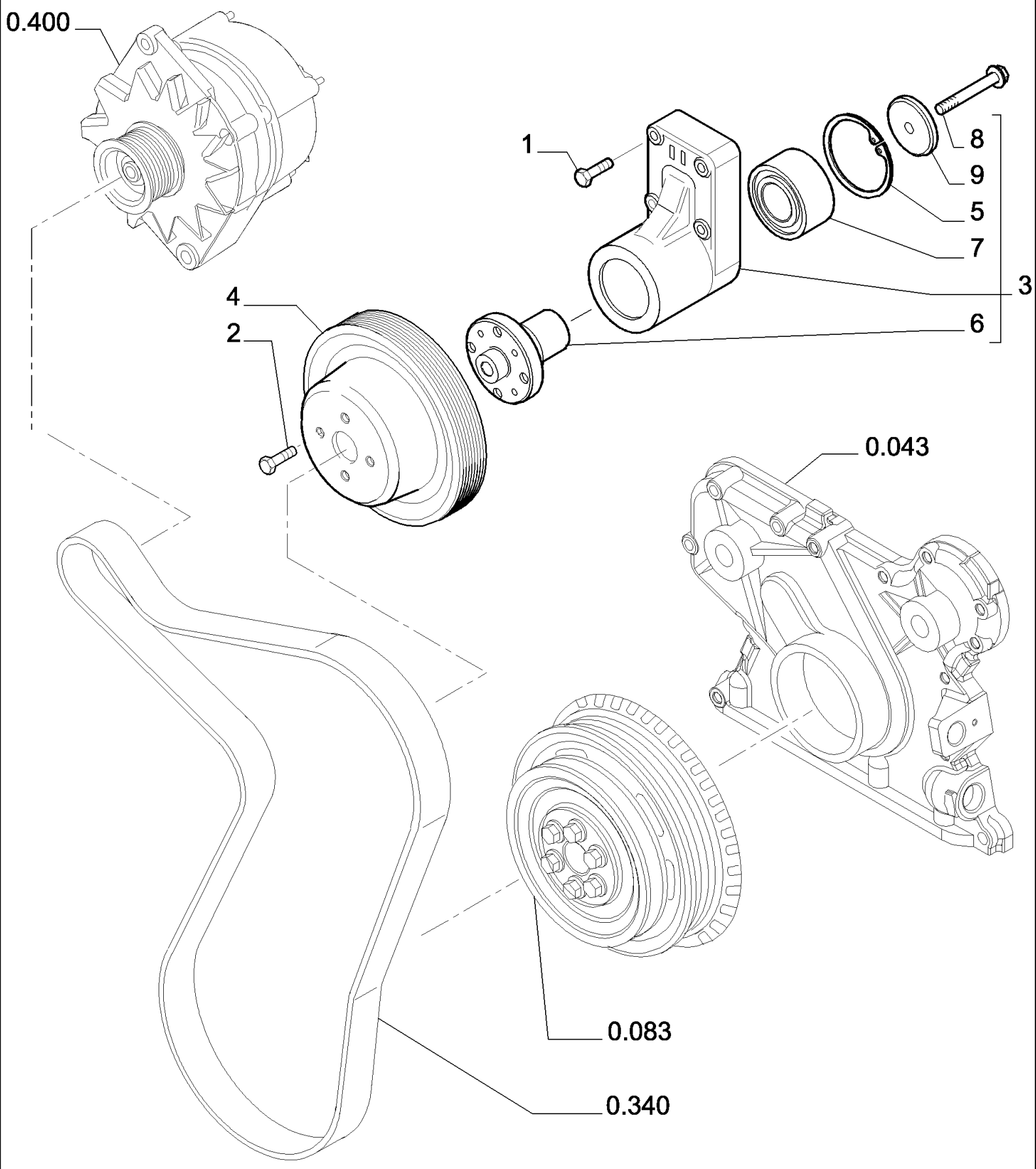
0.400
1
8
9
5
7
3
6
4
2
0.043
0.083
0.340

LB115.B EUR BACKHOE LOADER (1/05-)

0.345(01) FAN DRIVE

Ref	Part Number	Qty	Description
1	4899053	4	SCREW, Hex Flg, M8 x 45, M8X1.25X45
2	4895291	4	SCREW, Hex Flg, M10 x 1.5 x 20, M10X1.5X20
3	504035148	1	SUPPORT, - ASSY
4	4895301	1	PULLEY, , UP TO S/N 031056821
5	500395697	1	RING, SNAP,
6	4892426	1	HUB,
7	4892732	1	BEARING, BALL,
8	16676834	1	SCREW, M10X70
9	4890732	1	RETAINER,

UP TO S/N 031056821

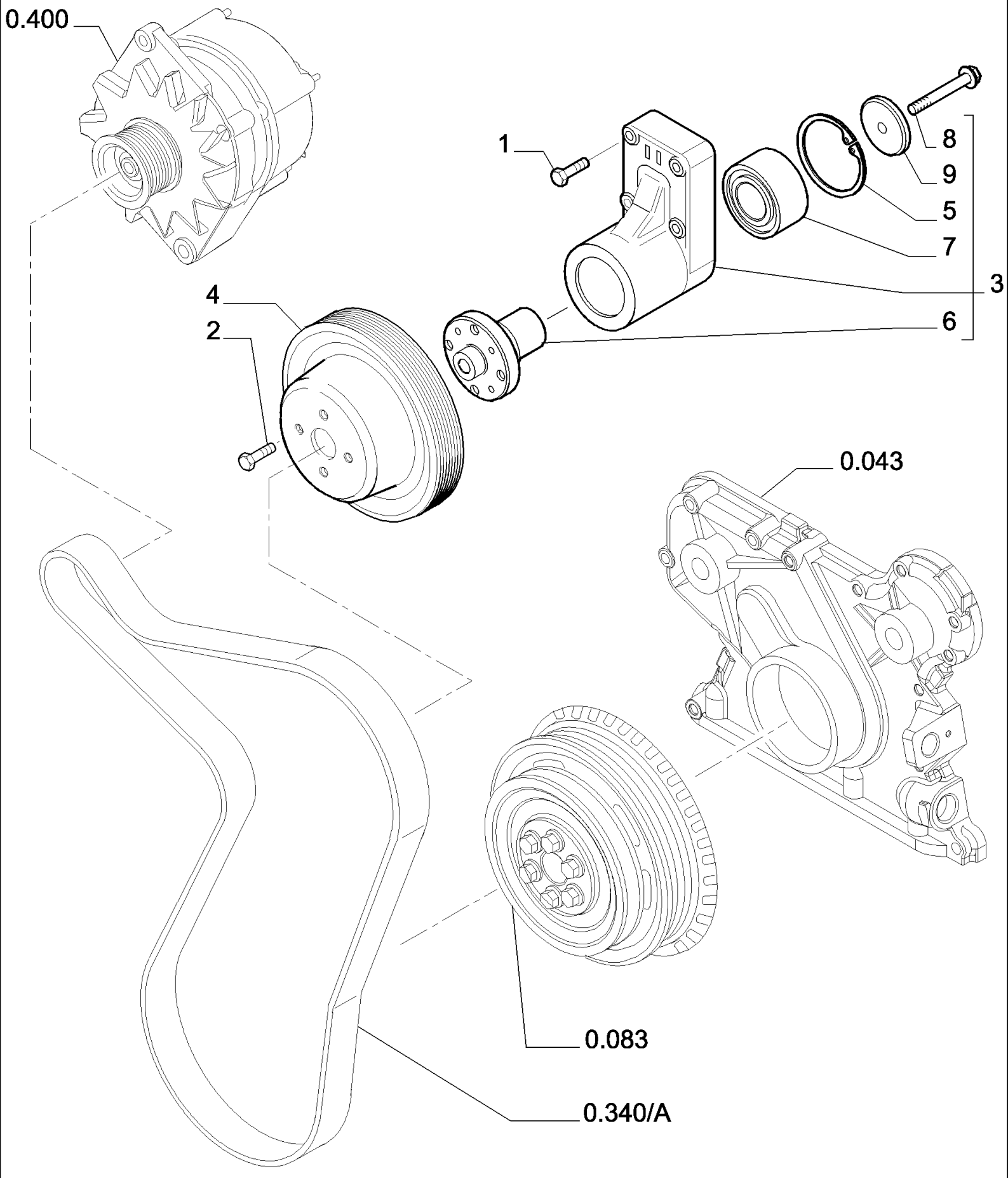
0.400
1
8
9
5
7
3
6
4
2
0.043
0.083
0.340/A

LB115.B EUR BACKHOE LOADER (1/05-)

0.345/A(01) FAN DRIVE

Ref	Part Number	Qty	Description
1	4899053	4	SCREW, Hex Flg, M8 x 45, M8X1.25X45
2	4895291	4	SCREW, Hex Flg, M10 x 1.5 x 20, M10X1.5X20
3	504035148	1	SUPPORT, - ASSY
4	4890343	1	PULLEY, , FROM TO S/N 031056822
5	500395697	1	RING, SNAP,
6	4892426	1	HUB,
7	4892732	1	BEARING, BALL,
8	16676834	1	SCREW, M10X70
9	4890732	1	RETAINER,

FROM S/N 031056822 (12/01/2005)

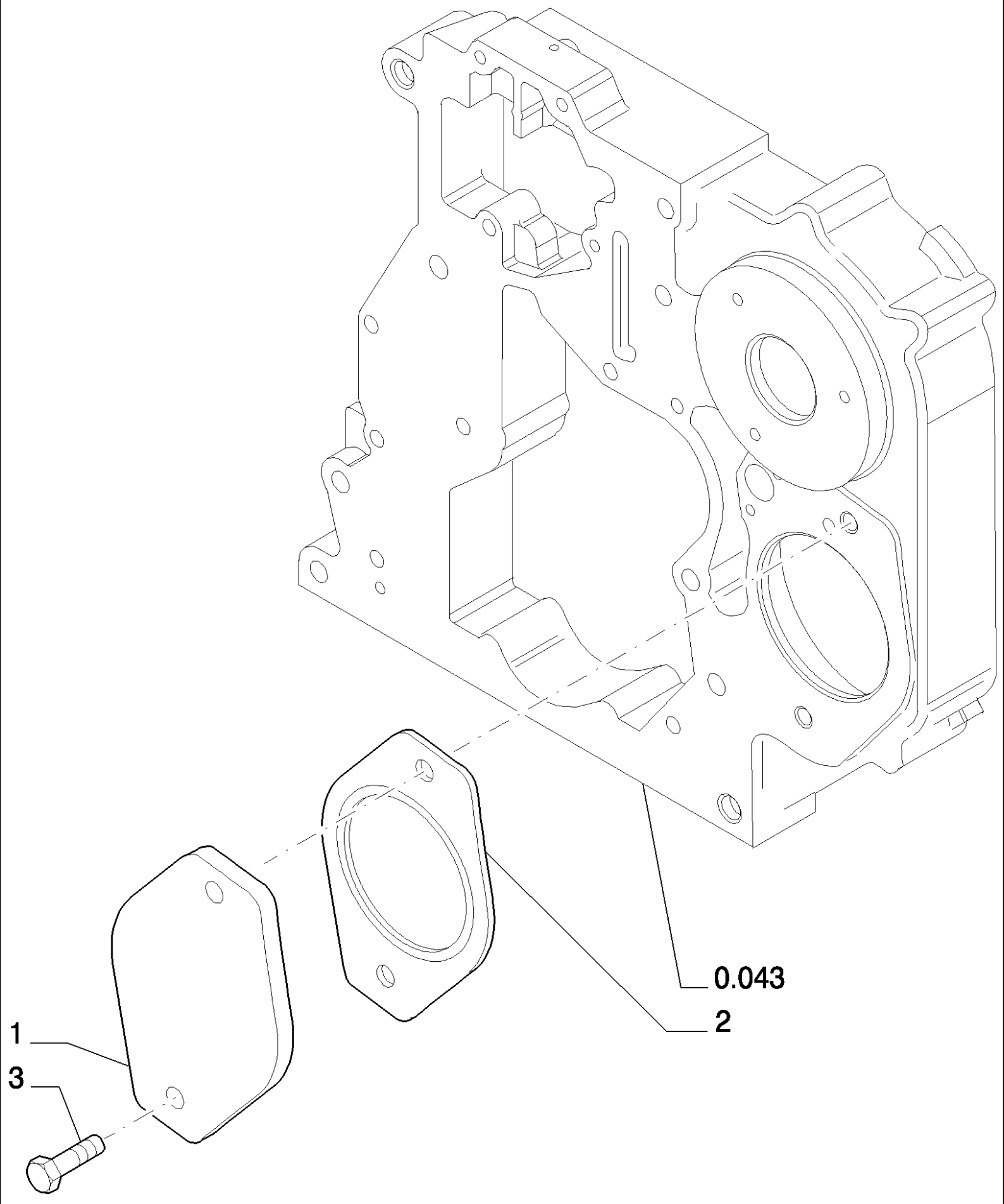
0.043
2
1
3

LB115.B EUR BACKHOE LOADER (1/05-)

0.350(01) POWER TAKE-OFF

Ref	Part Number	Qty	Description
1	504049033	1	COVER,
2	4896897	1	GASKET,
3	4895327	2	SCREW,

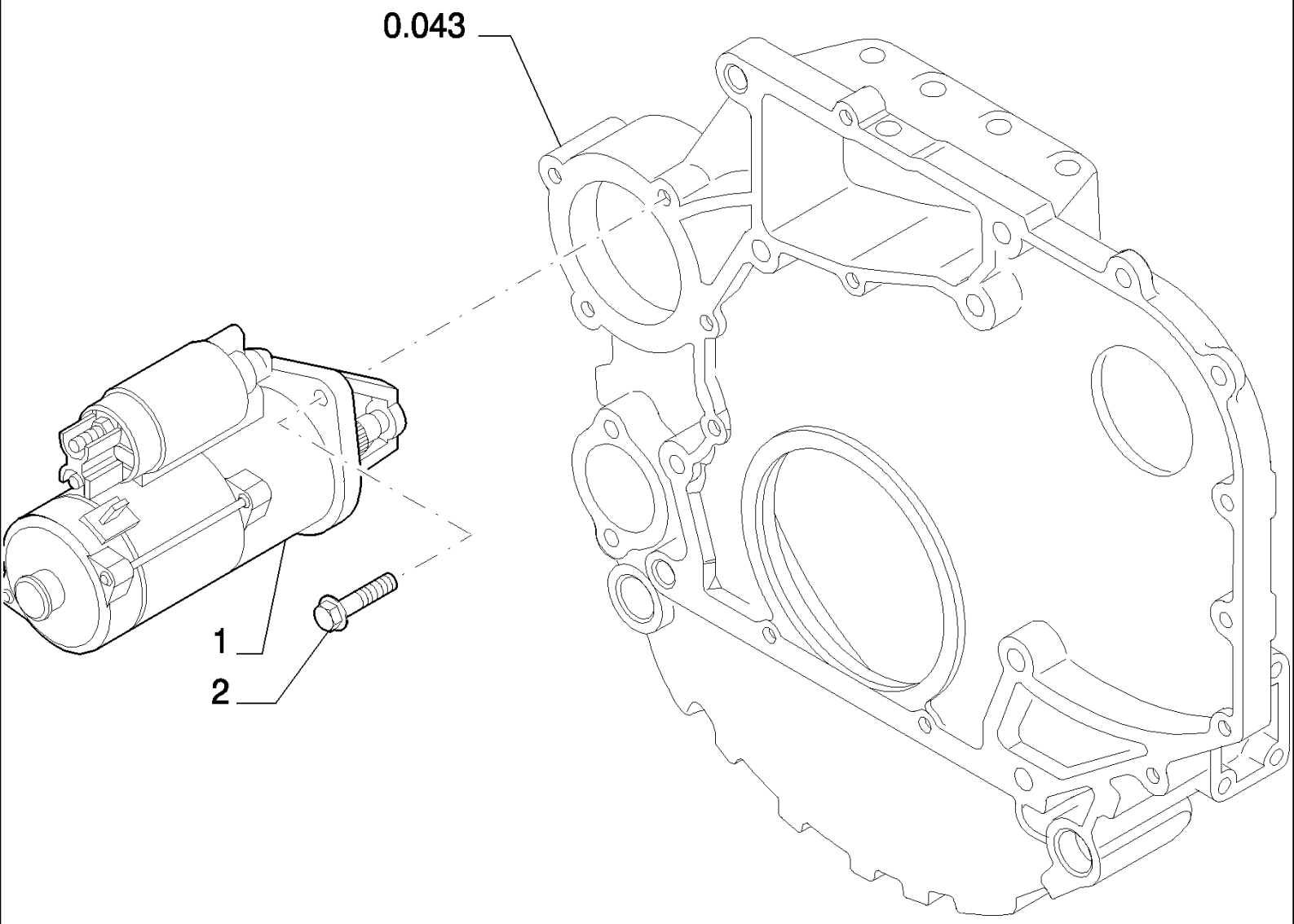
0.043
1
2

LB115.B EUR BACKHOE LOADER (1/05-)

0.360(01) STARTER MOTOR

Ref	Part Number	Qty	Description
1	504031929	1	MOTOR, STARTER,
2	18139524	3	SCREW, M10X1.5X30

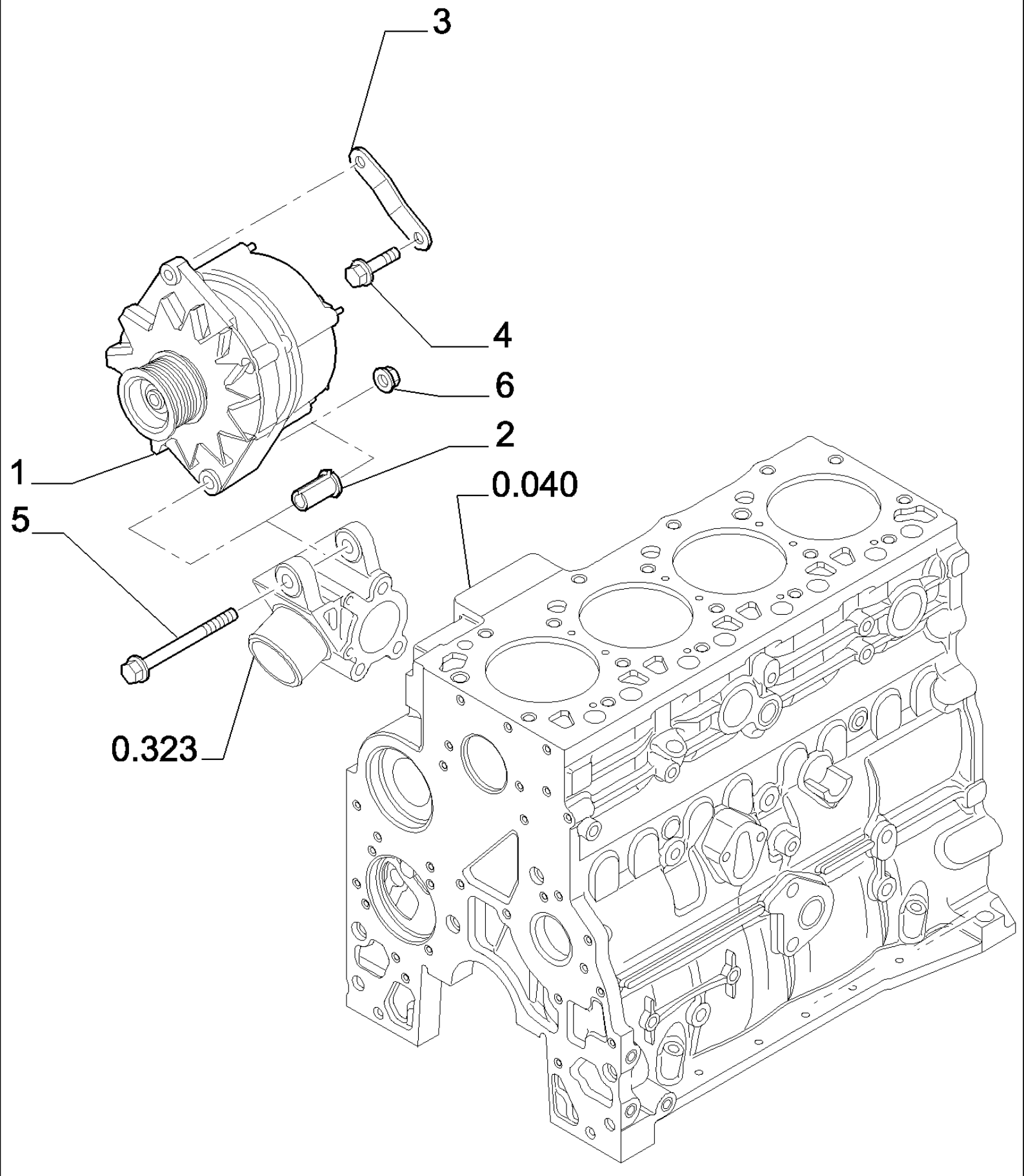
3
4
6
2
1
0.040
5
0.323

LB115.B EUR BACKHOE LOADER (1/05-)

0.400(01) ALTERNATOR

Ref	Part Number	Qty	Description
1	87422777	1	ALTERNATOR, - ASSY, See Page 636A 04
2	504060839	1	SPACER,
3	504061464	1	BRACKET,
4	4895291	1	SCREW, Hex Flg, M10 x 1.5 x 20, M10X1.5X20
5	4895538	1	SCREW, M10X1.5X120
6	4895166	1	NUT, M10X1.5

0.450(01) ENGINE - LIFT HOOK

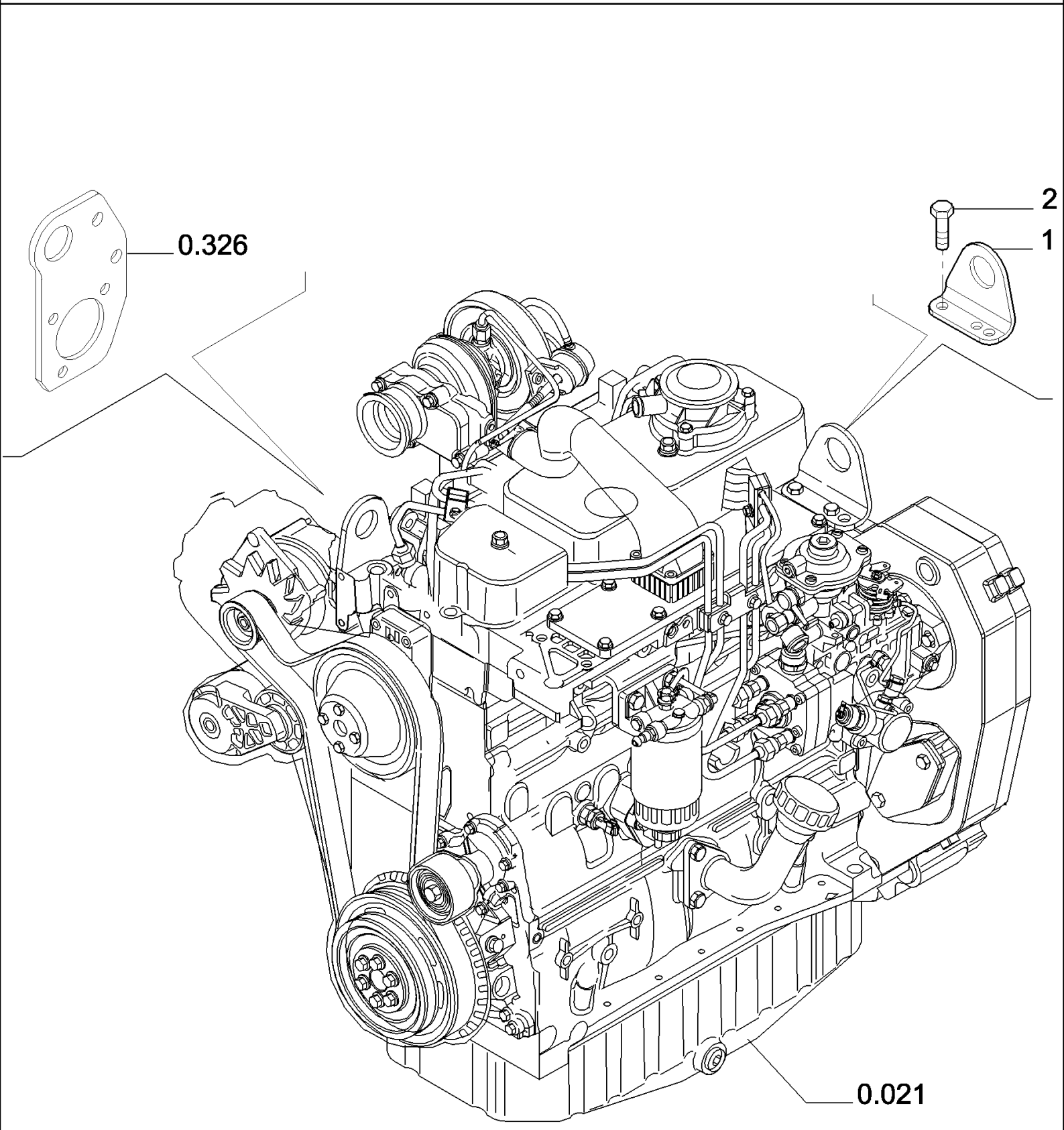

LB115.B EUR BACKHOE LOADER (1/05-)

0.450(01) ENGINE - LIFT HOOK

Ref	Part Number	Qty	Description
1	504026078	1	RING, LIFTING,
2	4899073	2	SCREW, Hex Flg, M12 x 1.75 x 30, M12X1.75X30

095(01) STABILIZER CONTROL WITHOUT AUTO-UP (CENTER PIVOT)

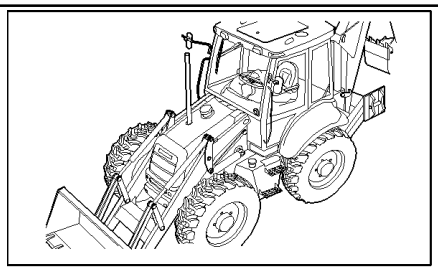

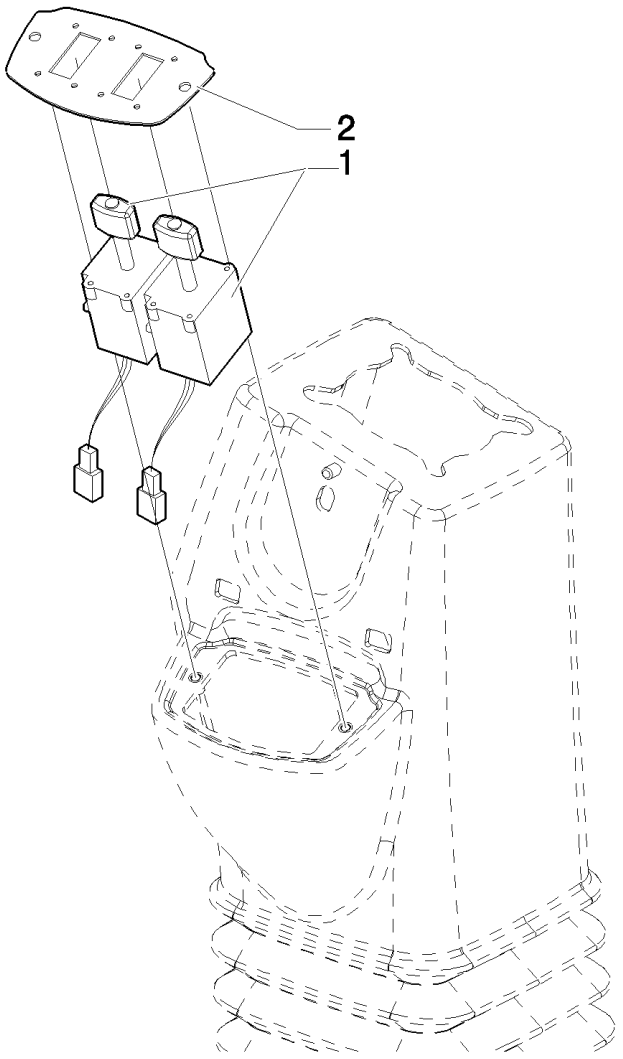

Pilot Control Version

LB115.B EUR BACKHOE LOADER (1/05-)

095(01) STABILIZER CONTROL WITHOUT AUTO-UP (CENTER PIVOT)

Ref	Part Number	Qty	Description
1	86988086	2	JOYSTICK,
2	87435381	1	PLATE, MOUNTING,

Pilot Control Version

096(01) STABILIZER CONTROL WITH AUTO-UP (CENTER PIVOT)

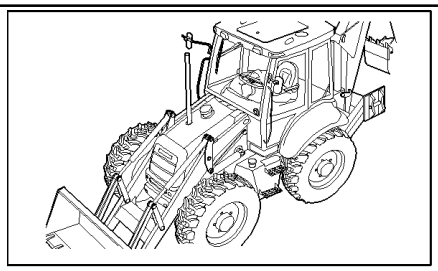

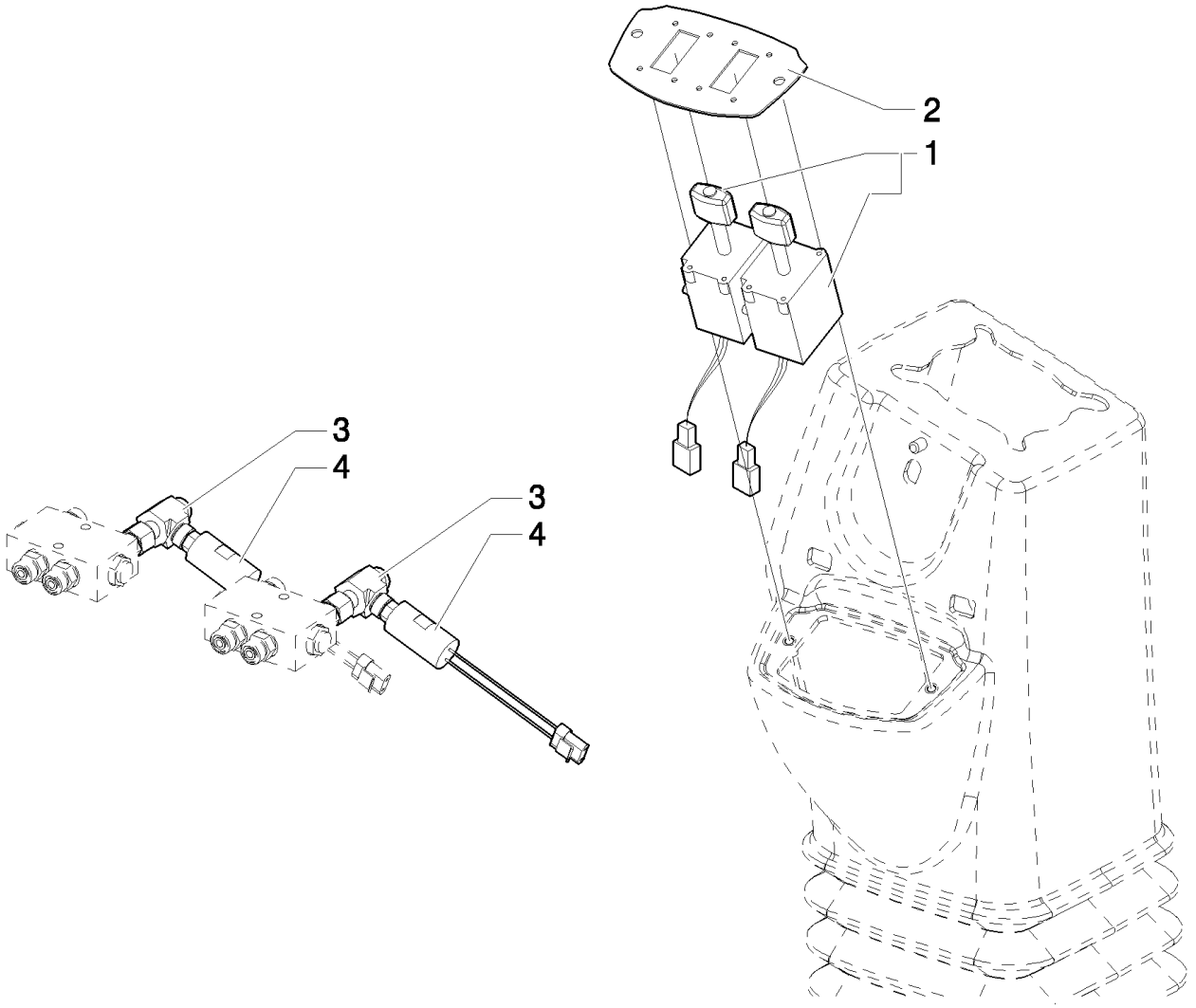

Pilot Control Version

LB115.B EUR BACKHOE LOADER (1/05-)

096(01) STABILIZER CONTROL WITH AUTO-UP (CENTER PIVOT)

Ref	Part Number	Qty	Description
1	86988086	2	JOYSTICK,
2	87435381	1	PLATE, MOUNTING,
3	87401111	2	CONNECTOR, HYD.,
4	87589234	2	SWITCH, PRESSURE,

Pilot Control Version

1.14.0(01) FUEL TANK & RELATED PARTS

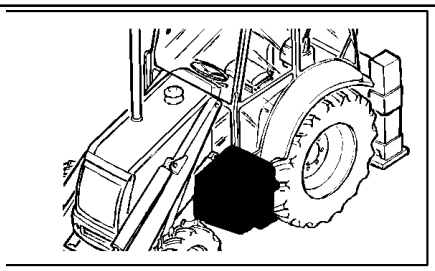

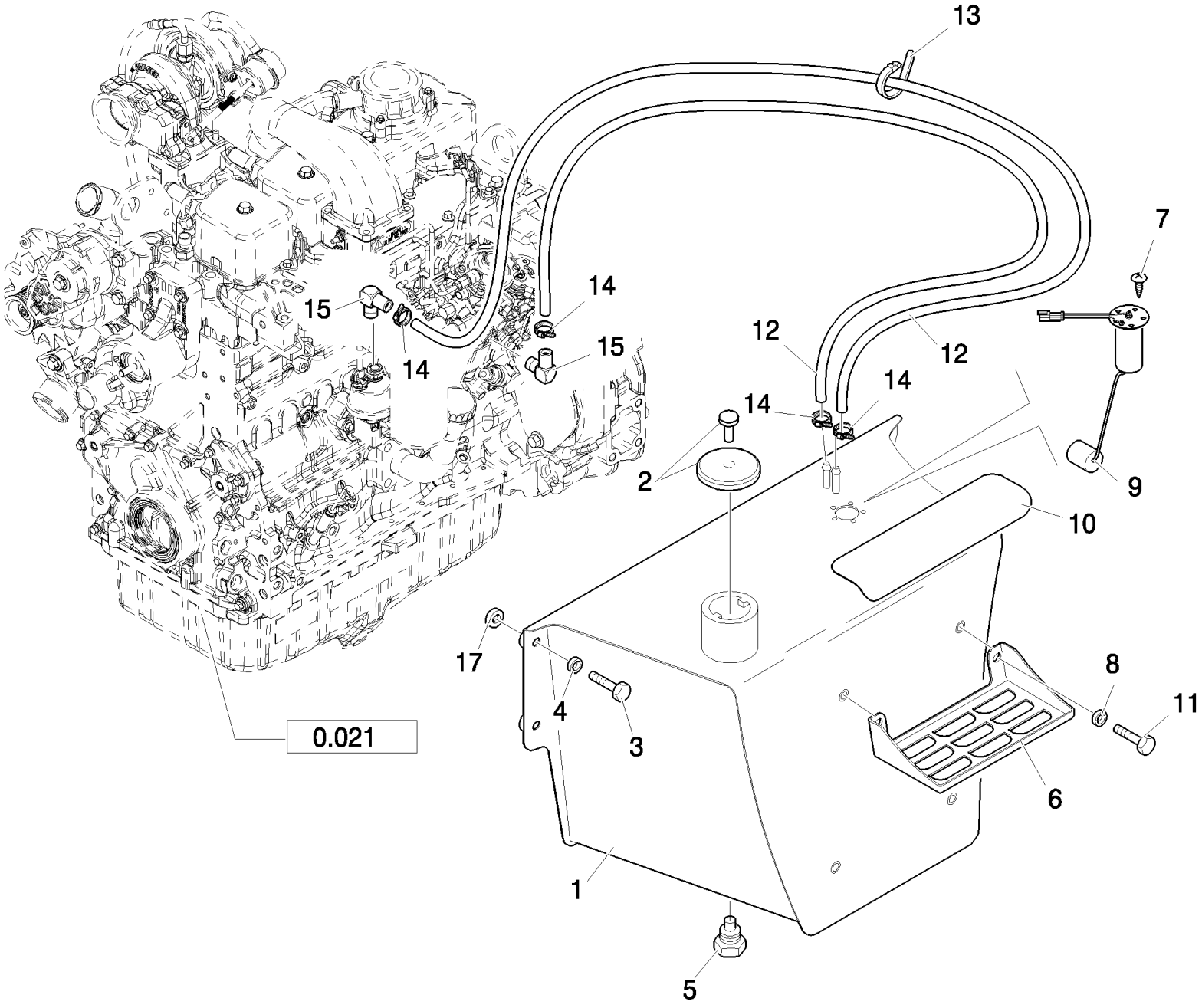

LB115.B EUR BACKHOE LOADER (1/05-)

1.14.0(01) FUEL TANK & RELATED PARTS

Ref	Part Number	Qty	Description
1	87355226	1	FUEL TANK,
2	85825392	1	CAP FUEL, LOCKABLE,
3	15540721	4	SCREW, Hex, M12 x 1.25 x 45, 8.8, Full Thd,
4	47048973	4	WASHER,
5	47050671	1	PLUG,
6	85801218	2	PILLAR,
7	85825158	5	SCREW, M5x12
8	47048976	4	WASHER, M12
9	86985587	1	SENDER UNIT,
10	87404910	1	STRIP, ANTI-SKID,
11	15540721	4	SCREW, Hex, M12 x 1.25 x 45, 8.8, Full Thd,
12	87403672	2	HOSE, FLEXIBLE,
13	14560187	4	STRAP, CABLE, L=203.2 mm
14	85824381	4	CLAMP, HOSE,
15	87414560	2	FITTING,
17	87353741	4	SPACER,

1.15.0(01) MUFFLER & EXTENSIONS

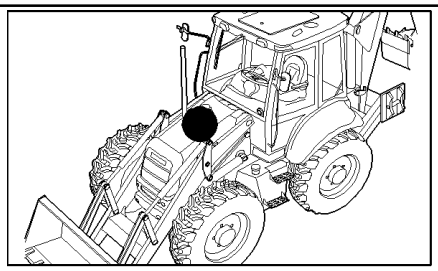

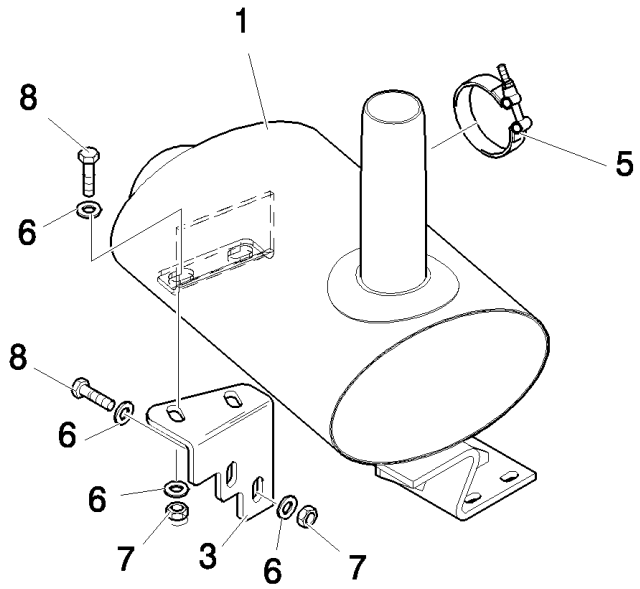

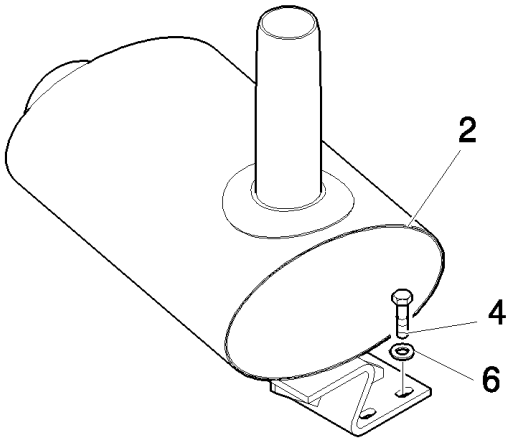

LB115.B EUR BACKHOE LOADER (1/05-)

1.15.0(01) MUFFLER & EXTENSIONS

Ref	Part Number	Qty	Description
1	87347670	1	MUFFLER,
2	87347671	1	MUFFLER, , With Spark Arrester
3	87412988	1	BRACKET,
4	47049098	3	SCREW, M10x60
5	47048898	1	CLAMP,
6	47048972	11	WASHER, M10
7	47049041	4	NUT, M10
8	47049186	4	BOLT, Hex, M10 x 30, 8.8,

1.15.0(02) MUFFLER & EXTENSIONS

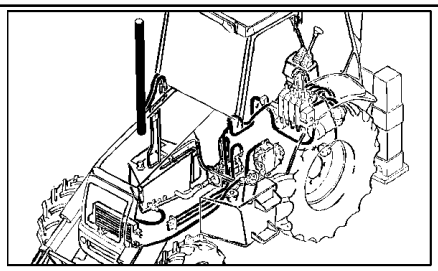

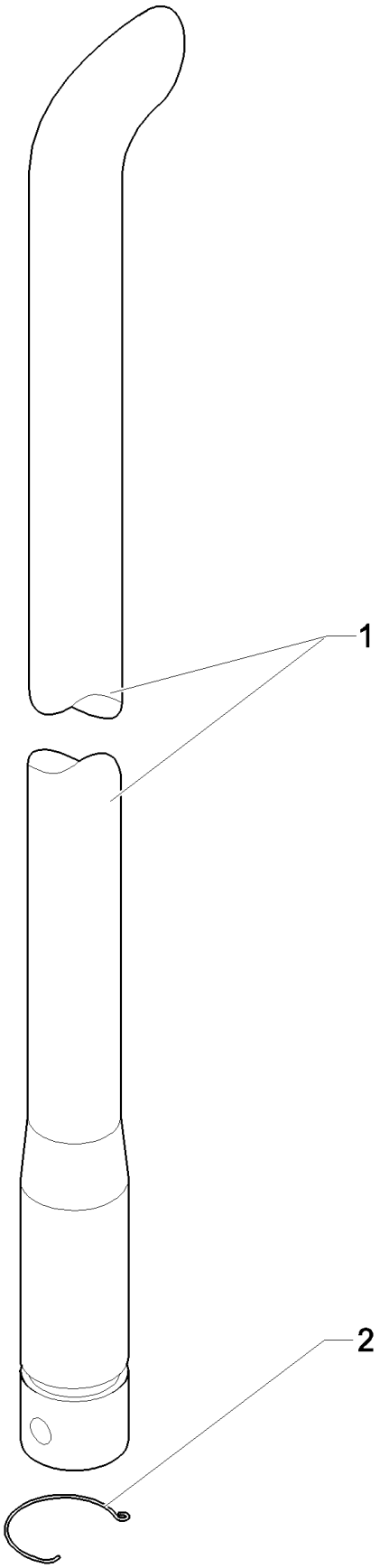

LB115.B EUR BACKHOE LOADER (1/05-)

1.15.0(02) MUFFLER & EXTENSIONS

Ref	Part Number	Qty	Description
1	47055750	1	TUBE, RIGID,
2	87416643	1	SPRING,

1.17.2(01) EXPANSION TANK

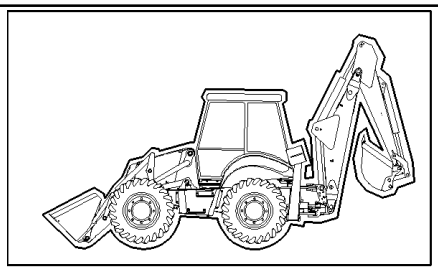

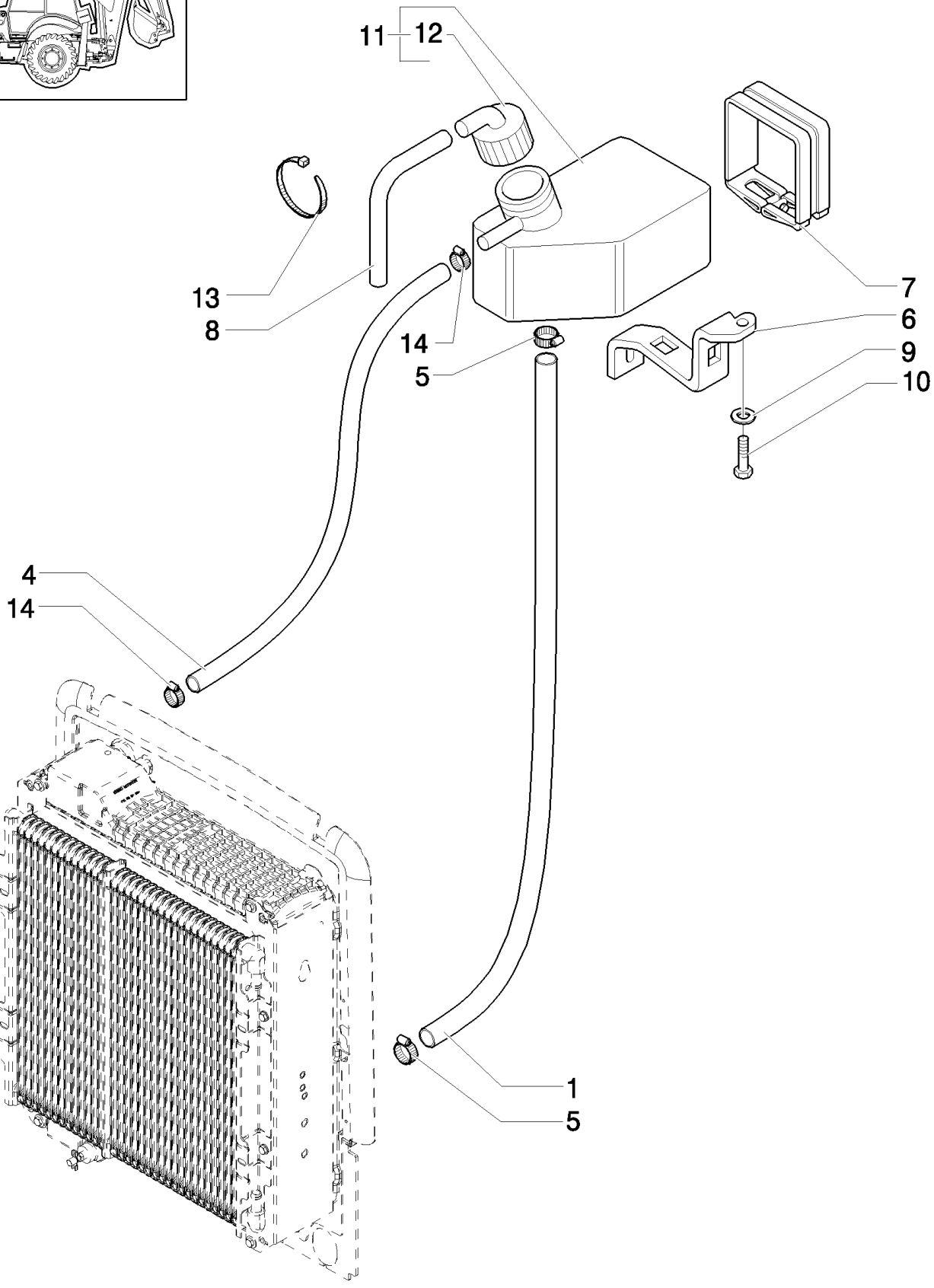

LB115.B EUR BACKHOE LOADER (1/05-)

1.17.2(01) EXPANSION TANK

Ref	Part Number	Qty	Description
1	87410546	1	TUBE,
4	87410547	1	TUBE,
5	85803013	2	CLAMP, HOSE,
6	85805256	1	BRACKET,
7	85804302	1	CLAMP,
8	85803226	1	HOSE, FLEXIBLE,
9	11193979	2	WASHER, SPRING, Belleville, M8.4,
10	16043821	2	SCREW, Hex, M8 x 30, 8.8,
11	85802804	1	RESERVOIR,COOLANT EXPNSN,
12	85803019	1	CAP, FILLER,
13	14560187	4	STRAP, CABLE, L=203.2 mm
14	85824381	2	CLAMP, HOSE,

1.19.1(01) AIR CLEANER & HOSES

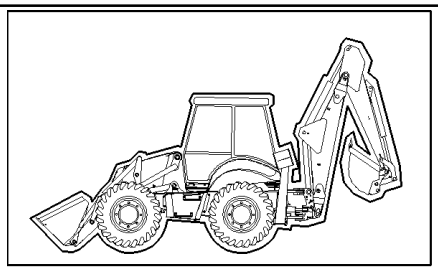

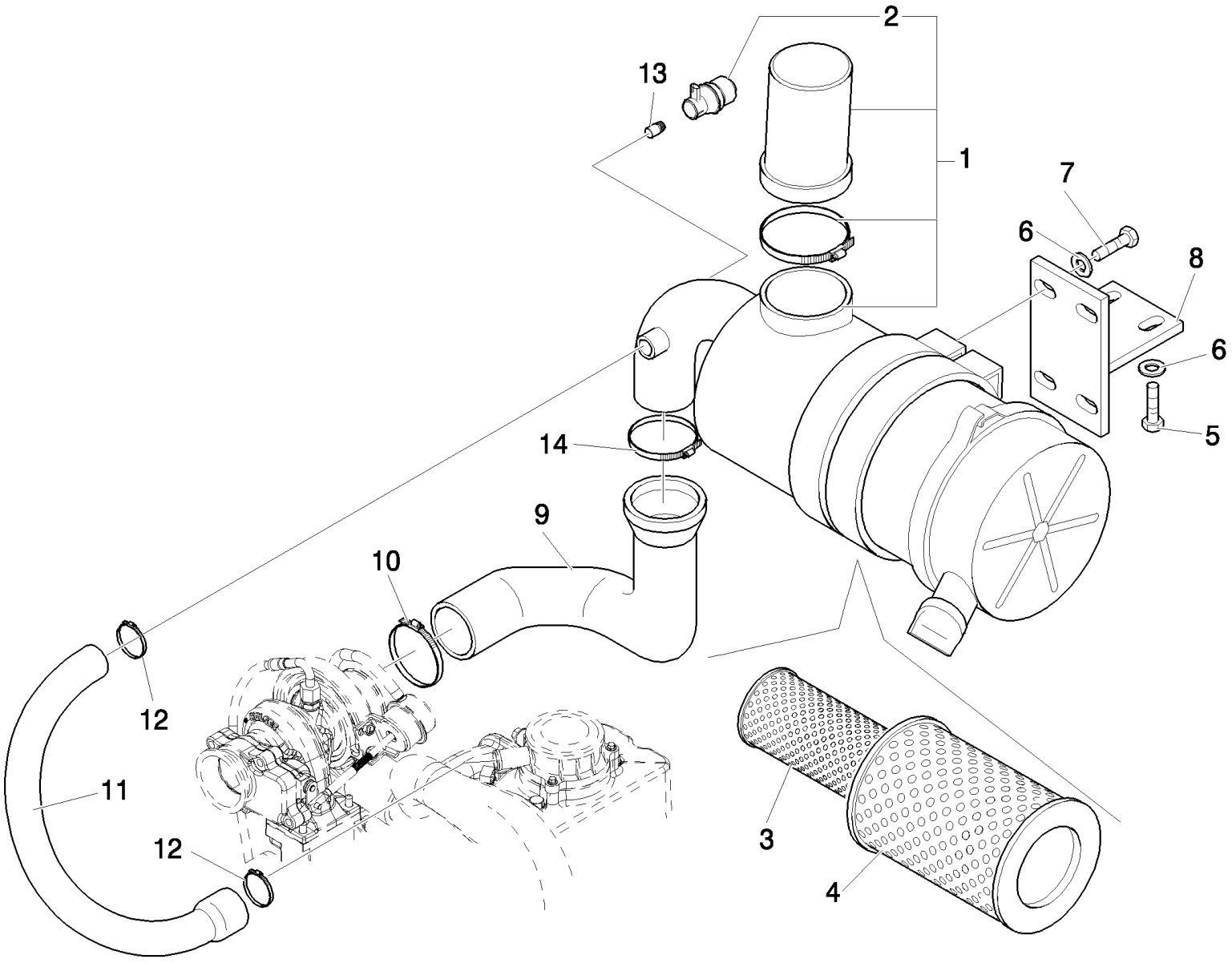

LB115.B EUR BACKHOE LOADER (1/05-)

1.19.1(01) AIR CLEANER & HOSES

Ref	Part Number	Qty	Description
1	87442705	1	AIR CLEANER, ASSY
2	87442601	1	SWITCH,
3	87418364	1	FILTER, AIR, , Primary
4	87418365	1	FILTER, AIR, , Secondary
5	16043821	2	SCREW, Hex, M8 x 30, 8.8,
6	47048962	6	WASHER, 9x16x1.6
7	47049160	4	SCREW, Hex, M8 x 20, 8.8,
8	87412754	1	BRACKET,
9	87442309	1	HOSE, , UP TO S/N 031055222
9	87335345	1	HOSE, , FROM TO S/N 031055223
10	85803010	1	CLAMP, HOSE,
11	87442310	1	HOSE,
12	85803013	2	CLAMP, HOSE,
13	47048450	1	FITTING,
14	85802743	1	CLAMP, HOSE,

1.21.4(01) REAR SUPPORT (SIDE SHIFT)

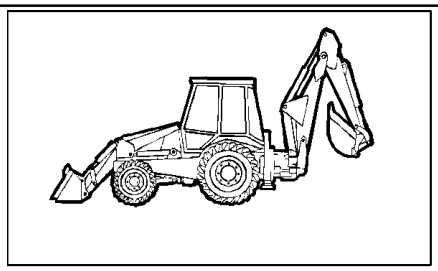

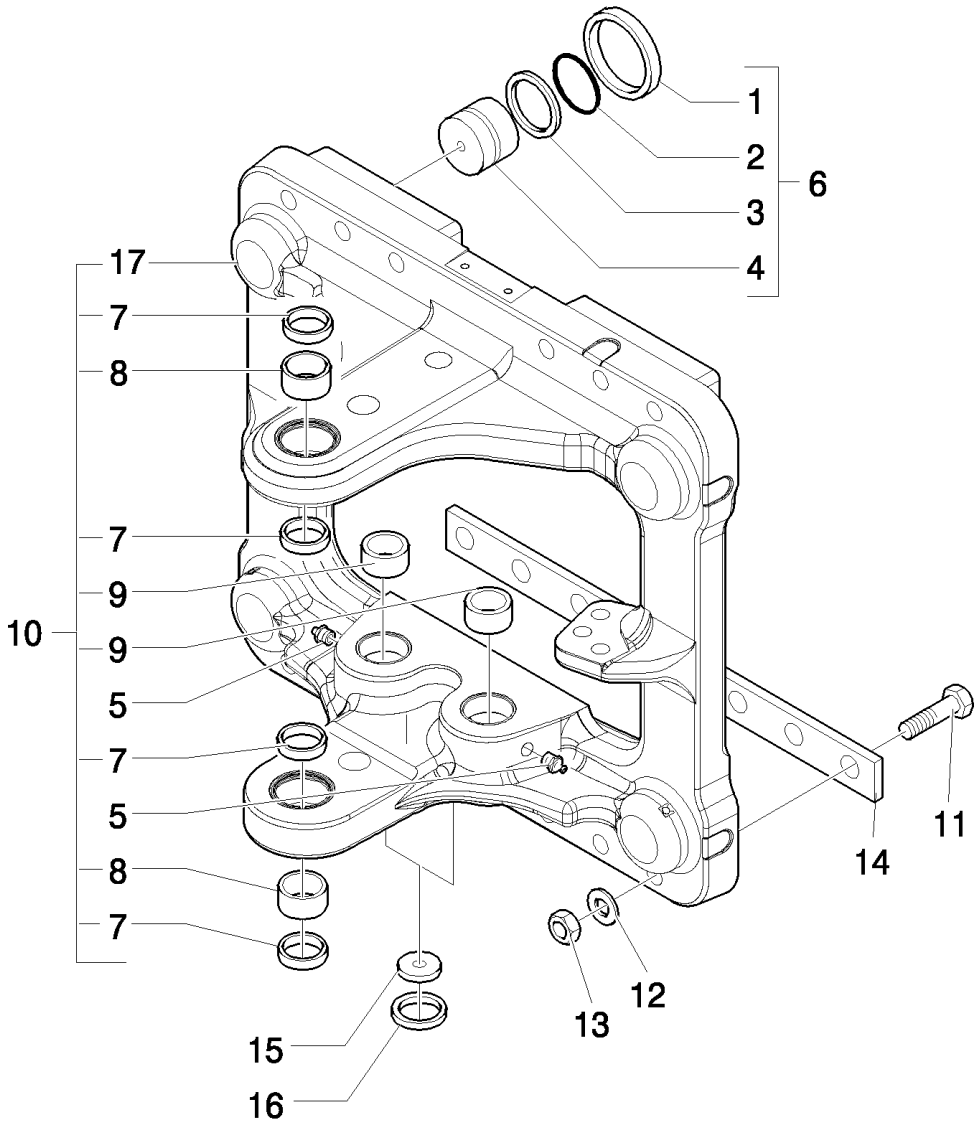

LB115.B EUR BACKHOE LOADER (1/05-)

1.21.4(01) REAR SUPPORT (SIDE SHIFT)

Ref	Part Number	Qty	Description
1	85801395	4	CAP, WASHER,
2	14471780	4	GASKET, -334, 70 Duro, 2.6" ID x .210" Thk,
3	85828100	4	RING,
4	85801396	4	PISTON,
5	87901S8	2	NIPPLE, LUBE, 1/8"-27 X .66" lg,
6	85828099	4	SHOCK ABSORBER, , Includes 1 To 4
7	81875248	4	SEAL,
8	85700728	2	BUSHING,
9	83910645	2	BUSHING,
10	87356803	1	PLATE, RETAINING, , Includes 7, 8, 9, 17
11	15871934	12	SCREW, Hex, M24 x 140, 10.9,
12	11200679	12	WASHER, LOCK,
13	12164521	12	NUT, M24 x 2, Cl 10, M24x2
14	85801373	2	PLATE,
15	85825426	2	COVER,
16	11061874	2	RING,
17	87356799	1	PLATE, RETAINING,

1.21.5/ 2(01) FRAME (CENTER PIVOT)

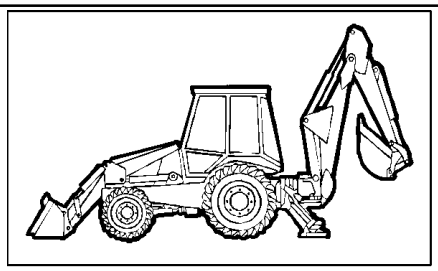

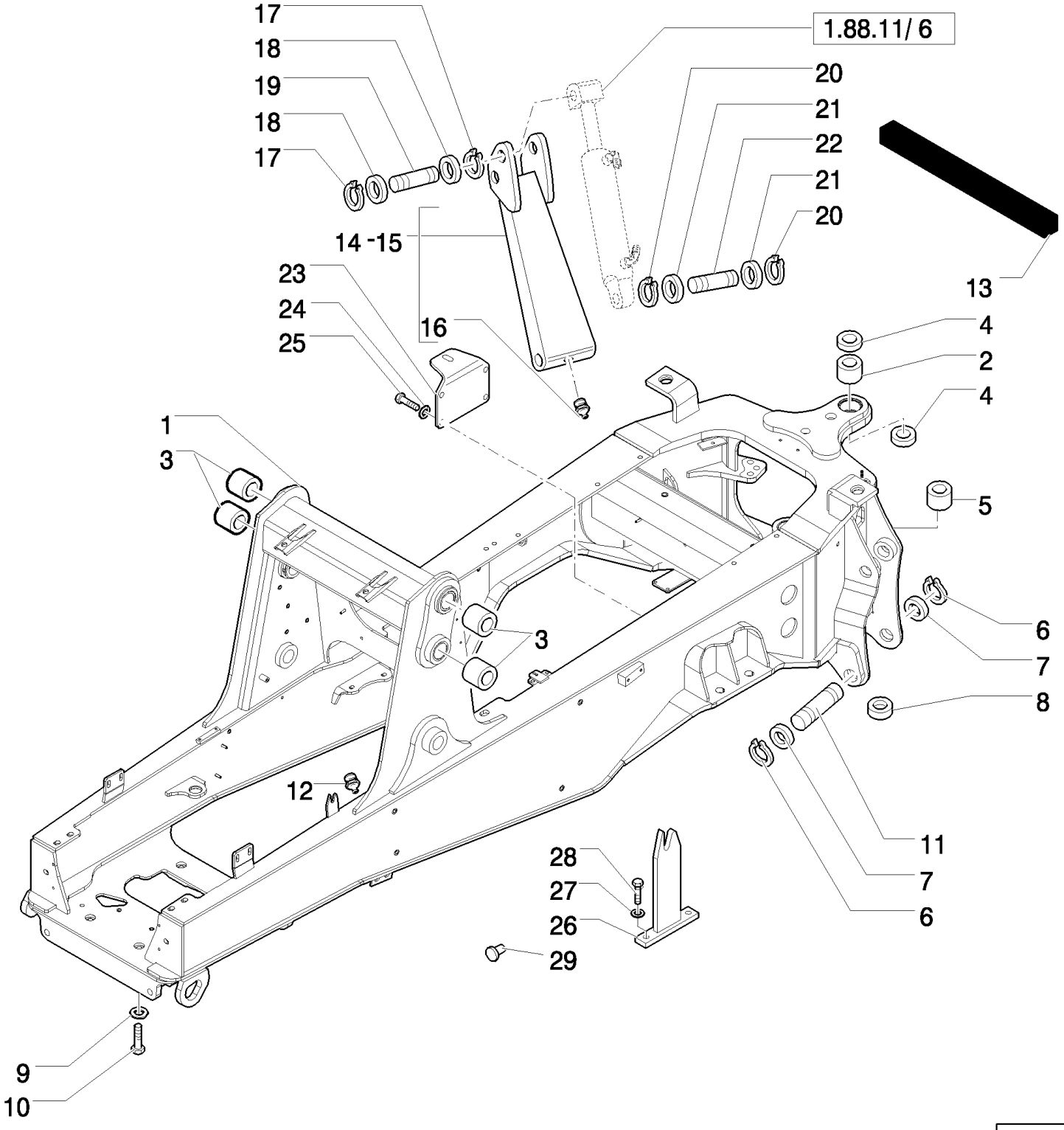

LB115.B EUR BACKHOE LOADER (1/05-)

1.21.5/ 2(01) FRAME (CENTER PIVOT)

Ref	Part Number	Qty	Description
1	87303100	1	FRAME, , Includes 2, 3, 5, FROM TO S/N XXX
1	87573094	1	FRAME, , UP TO S/N XXX, Includes 2, 3, 5
2	85700728	2	BUSHING,
3	85804468	2	BUSHING,
4	F2NNC513AA	4	SEAL,
5	83910645	2	BUSHING,
6	N800272S36M	4	RING, SNAP,
7	290885	4	WASHER,
8	85803517	1	BUSHING, RUBBER,
9	10520431	6	WASHER, 20x35
10	15989134	6	SCREW, Hex, M20 x 100, 10.9,
11	D7NNC669A	2	PIN,
13	85802338	1	SEAL, RUBBER,
14	85803960	1	STABILIZER, RH, Includes 16
15	85803959	1	STABILIZER, LH, Includes 16
16	87916S8	1	NIPPLE, LUBE,
17	N800270S36M	4	RING, SNAP,
18	D7NNC622A	4	SPACER,
19	E8NNC667AA	2	PIN,
20	N800271S36M	4	RING, SNAP,
21	D7NNC622C	4	SPACER,
22	85801262	1	PIN,
23	85804171	1	SUPPORT,
24	11198679	4	WASHER, SPRING, Belleville, M13,
25	15540534	4	SCREW, Hex, M12 x 1.25 x 35, 10.9, Full Thd,
26	87302151	1	SUPPORT, RH
27	11193874	2	WASHER, SPRING, Belleville, M8.4,
28	16043421	2	SCREW, Hex, M8 x 20, 8.8,
29	85808422	2	PLUG,

1.21.5/ 4(01) FRAME (SIDE SHIFT)

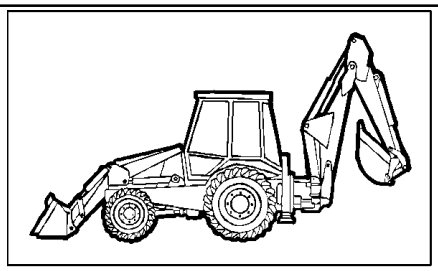

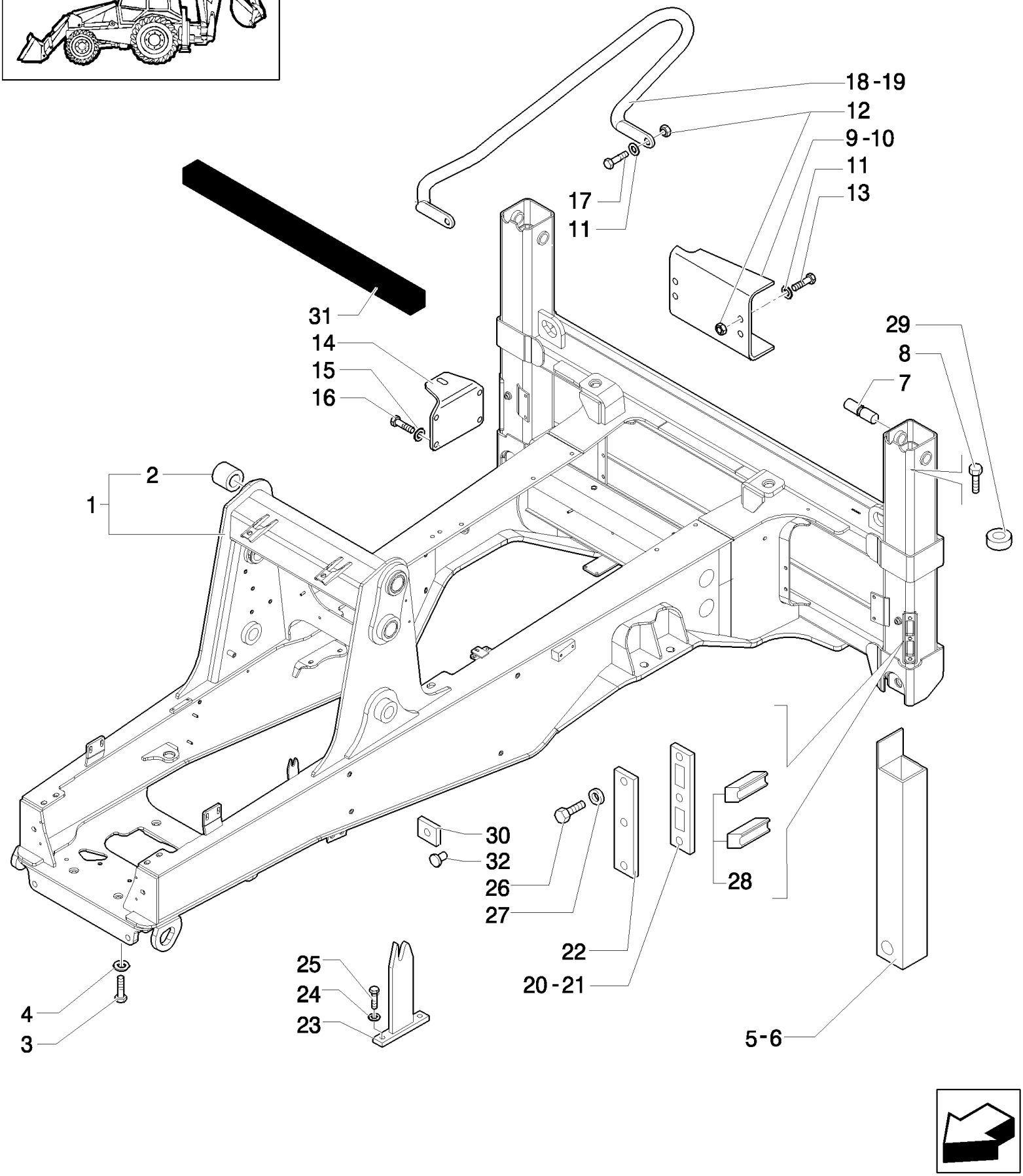

LB115.B EUR BACKHOE LOADER (1/05-)

1.21.5/ 4(01) FRAME (SIDE SHIFT)

Ref	Part Number	Qty	Description
1	87573100	1	FRAME, , Includes 2, 5, 6, FROM TO S/N XXX
1	87318519	1	FRAME, , UP TO S/N XXX, Includes 2, 5, 6
2	85804468	2	BUSHING,
3	15989134	4	SCREW, Hex, M20 x 100, 10.9,
4	10520431	4	WASHER, 20x35
5	85818846	1	STABILIZER, LH, FROM TO S/N XXX
5	87376353	1	STABILIZER, LH, UP TO S/N XXX
6	85818845	1	STABILIZER, RH, FROM TO S/N XXX
6	87376352	1	STABILIZER, RH, UP TO S/N XXX
7	E1NNF486AA	2	PIN,
8	85813470	2	SCREW, 1/2"-13
9	85819234	1	PANEL, RH
10	85819236	1	PANEL, LH
11	11190679	10	WASHER, SPRING, Belleville, M10.5,
12	12164711	10	NUT, M10 x 1.25, Cl 8,
13	15970621	6	SCREW, Hex, M10 x 1.25 x 22, 8.8, Full Thd,
14	85804171	1	SUPPORT,
15	11198679	4	WASHER, SPRING, Belleville, M13,
16	15540534	4	SCREW, Hex, M12 x 1.25 x 35, 10.9, Full Thd,
17	11306921	4	SCREW, Hex, M10 x 1.25 x 30, 8.8, Full Thd,
18	87376888	1	SUPPORT, RH
19	87376890	1	SUPPORT, LH
20	85818854	8	SHIM,
21	85818853	8	SHIM,
22	85818855	2	SHIM,
23	87302151	1	SUPPORT,
24	11193874	2	WASHER, SPRING, Belleville, M8.4,
25	16043421	2	SCREW, Hex, M8 x 20, 8.8,
26	11255921	6	SCREW, Hex, M14 x 1.5 x 40, 8.8, Full Thd, M14x40
27	11194179	6	WASHER, SPRING, Belleville, M15,
28	85818852	4	PAD,
29	85803517	1	BUSHING, RUBBER,
30	85805195	2	PLATE,
31	85802338	1	SEAL, RUBBER,
32	85804422	2	SPACER,

1.28.0(01) GEARING SPEED GEAR

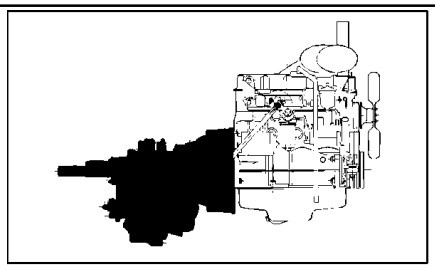

KIT = 16

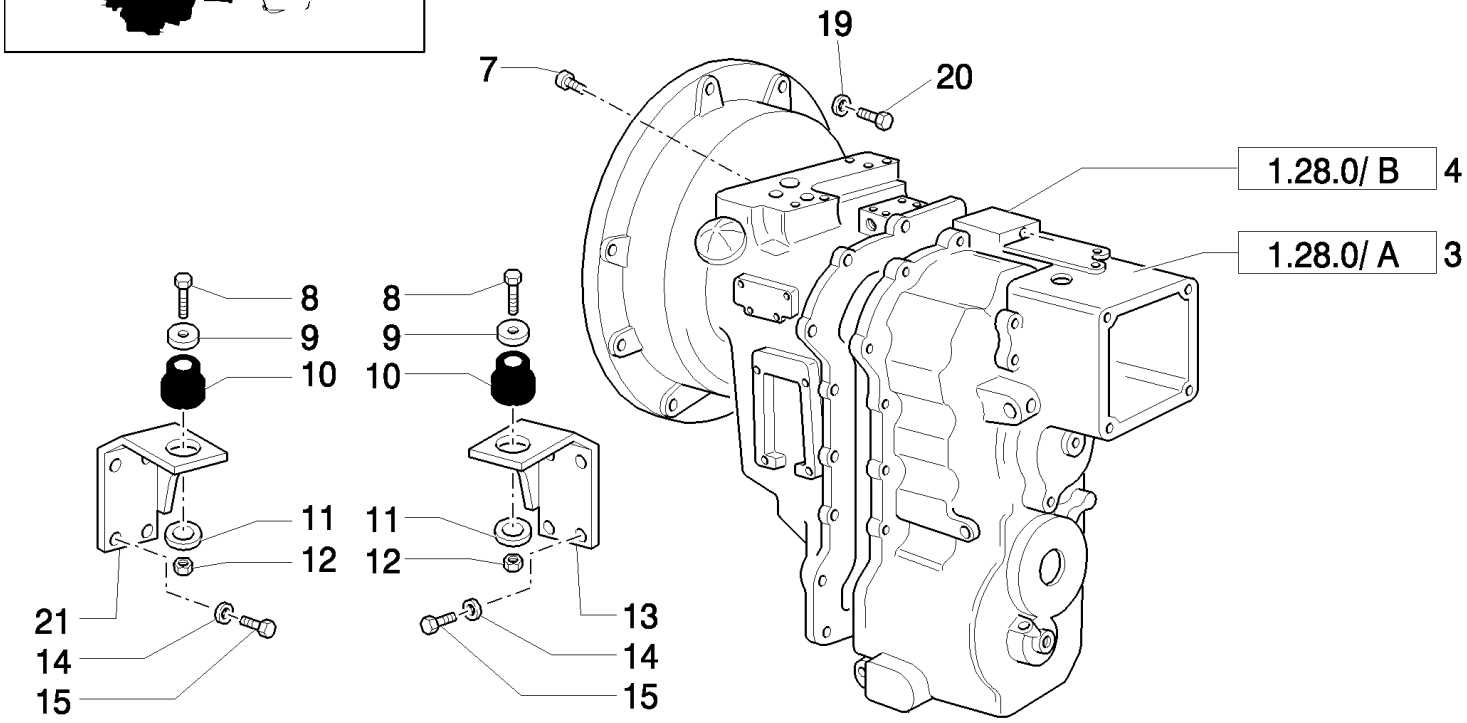

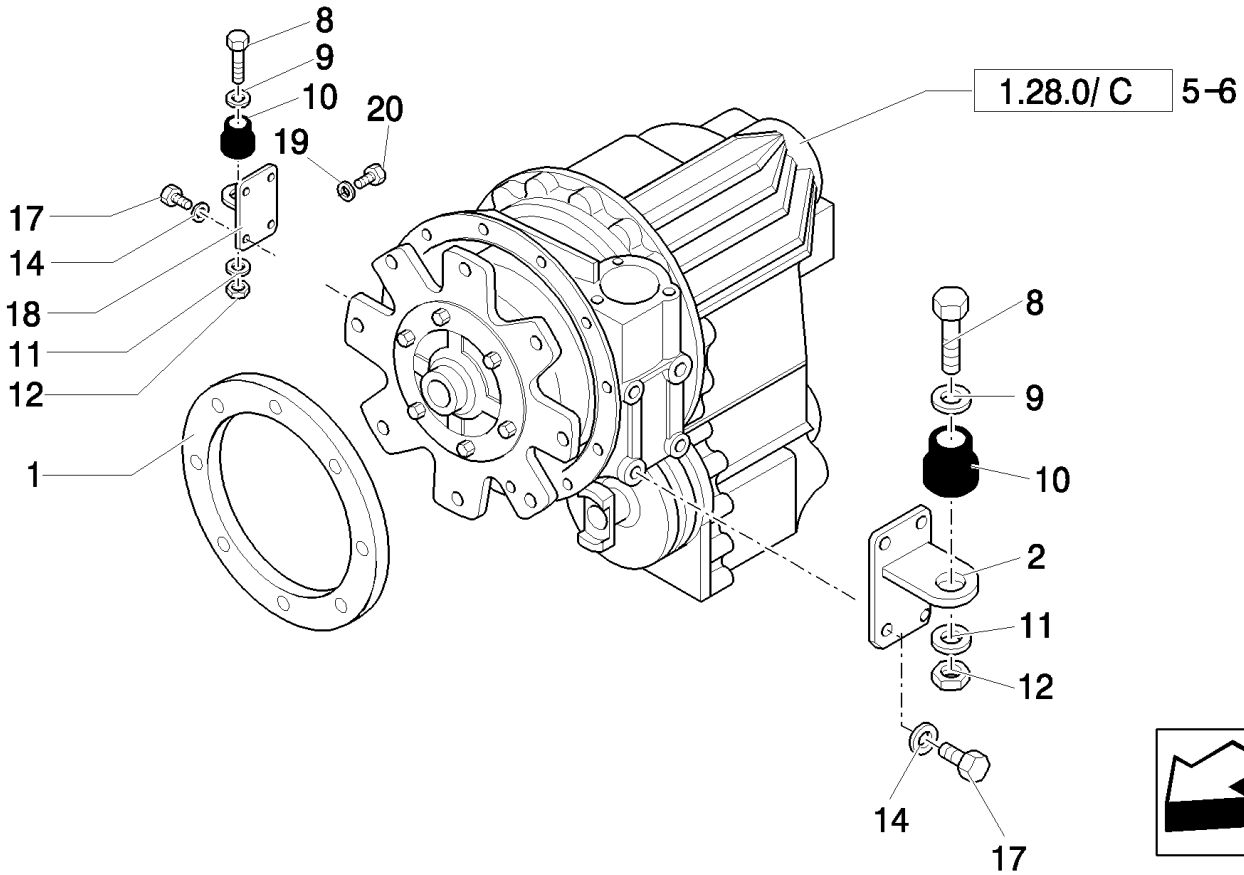

LB115.B EUR BACKHOE LOADER (1/05-)

1.28.0(01) GEARING SPEED GEAR

Ref	Part Number	Qty	Description
1	87407758	1	RING,
2	85804276	1	SUPPORT, LH
3	86990712	1	TRANSMISSION, , Only for 2WD, Power Shuttle Up To S/N xxx
4	86990713	1	TRANSMISSION, , Only for 4WD, Power Shuttle Up To S/N xxx
5	86990714	1	TRANSMISSION, 2 WS, Only for LB110.B, B110 4WD, Power Shift
5	87571324	1	TRANSMISSION, , From To S/N xxx
6	86990715	1	TRANSMISSION, 4 WS, Only for LB115.B, B115 4WD, Power Shift
6	87571330	1	TRANSMISSION, , From To S/N xxx
7	88352	8	SCREW, Hex, 3/8"-16 x 2 1/2", G5,
8	87410647	2	SCREW, M12x1.25x90
9	85801585	2	WASHER, SEALING, 65mm OD
10	87416967	2	SUPPORT,
11	85802618	2	WASHER, SEALING,
12	16105011	2	NUT, LOCK, M12x1.75x1.25
13	87405629	1	SUPPORT, LH
13	87405628	1	SUPPORT, RH
14	11198679	8	WASHER, SPRING, Belleville, M13,
15	11112634	8	SCREW, M12x35
16	85806019	AR	KIT, O-Ring, for under Directional Control Valve, Kit o-ring for directional control valve
17	11112434	8	SCREW, Hex, M12 x 30, 10.9, Full Thd,
18	85804275	1	SUPPORT, RH
19	47049372	12	WASHER,
20	11106434	12	SCREW, Hex, M10 x 30, 10.9, Full Thd,
21	87405628	1	SUPPORT, RH

1.28.0/ C(01) TRANSMISSIONGEARING SPEED GEAR (4WD POWER-SHIFT)

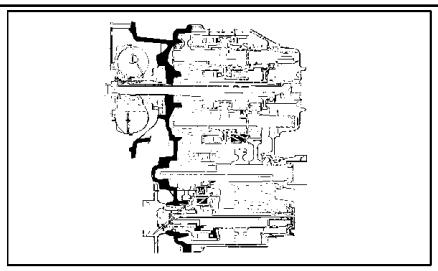

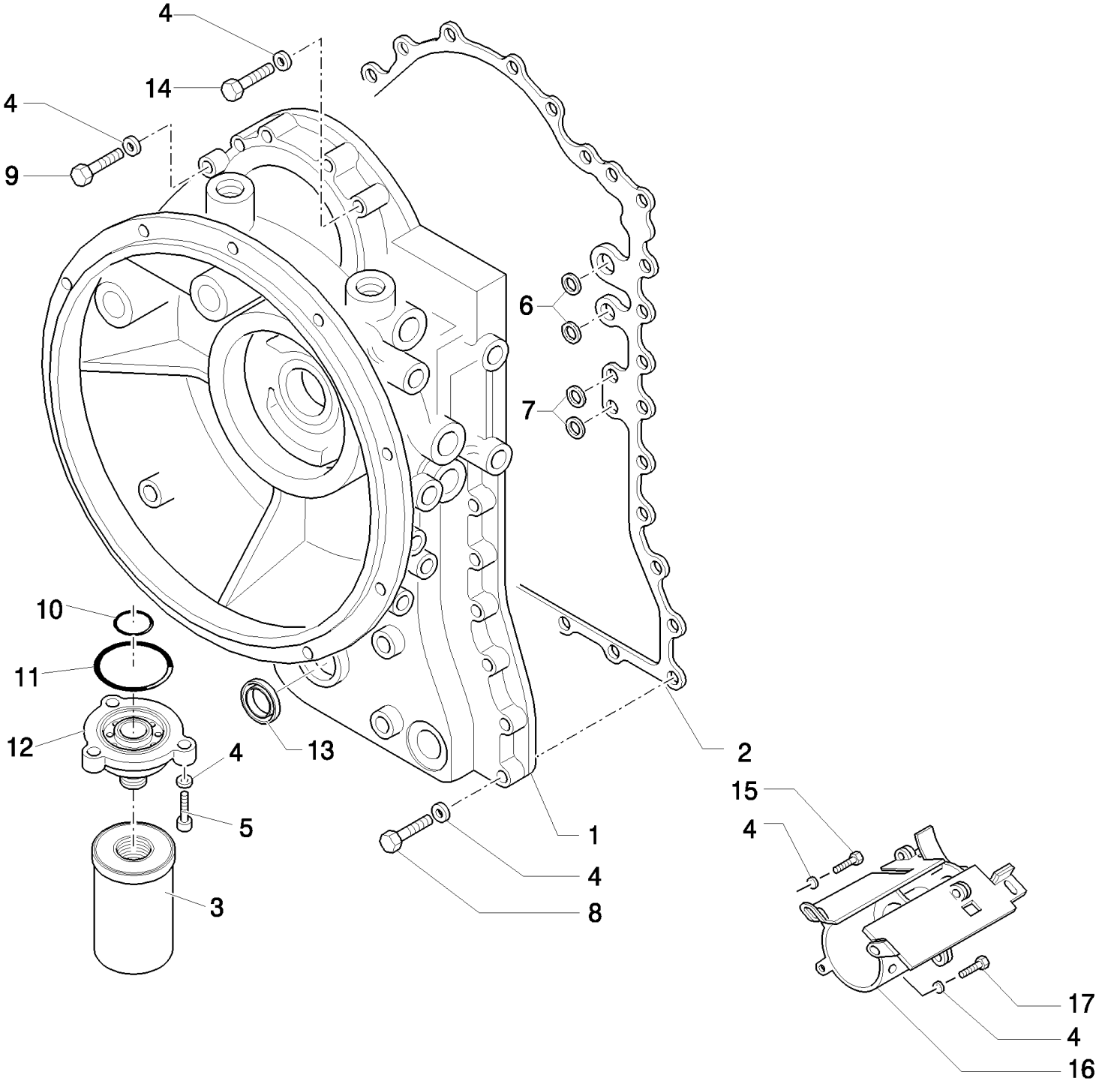

LB115.B EUR BACKHOE LOADER (1/05-)

1.28.0/ C(01) TRANSMISSIONGEARING SPEED GEAR (4WD POWER-SHIFT)

Ref	Part Number	Qty	Description
1	9968979	1	TRANSMISSION HOUSING,
2	9969002	1	GASKET,
3	9968988	1	FILTER, HYDRAULIC OIL,
4	9968996	37	WASHER, LOCK,
5	9968997	3	SCREW,
6	9969420	2	O-RING,
7	9969421	2	O-RING,
8	9969007	14	SCREW,
9	9969424	10	SCREW,
10	85808324	1	GASKET,
11	85808325	1	GASKET,
12	85812020	1	Head, Filter,
13	9969001	1	GASKET,
14	9969008	5	SCREW,
15	9969016	1	SCREW,
16	85808326	1	BAFFLE,
17	9969000	2	SCREW,

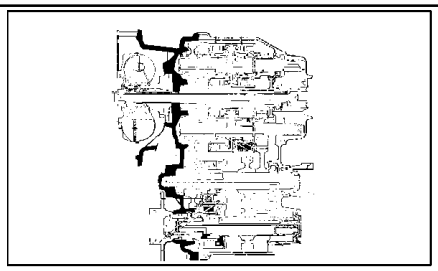

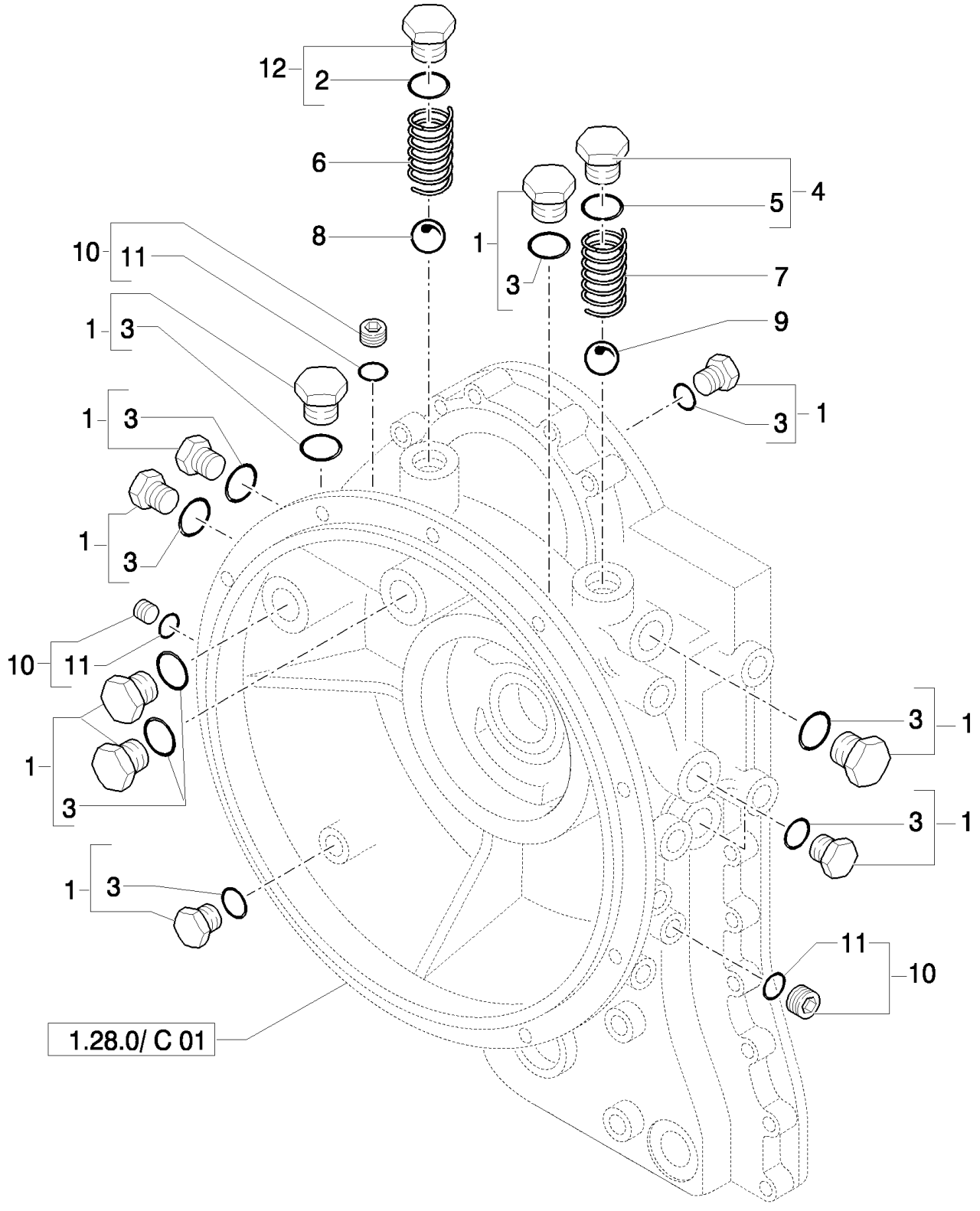
12
2
6
8
1
3
5
4
7
9
10
11
1
3
1
3
1
3
1
3
10
11
1
3
1
3
1
3
1
3
11
10
1.28.0/ C 01

LB115.B EUR BACKHOE LOADER (1/05-)

1.28.0/ C(02) TRANSMISSIONGEARING SPEED GEAR (4WD POWER-SHIFT)

Ref	Part Number	Qty	Description
1	9970283	10	PLUG, , Includes 3
2	85808321	1	O-RING,
3	85808323	10	O-RING,
4	9968987	1	PLUG, , Includes 5
5	9968986	1	O-RING,
6	85808320	1	SPRING,
7	9968985	1	SPRING,
8	85808319	1	BALL,
9	9968984	1	BALL,
10	9970284	3	PLUG, , Includes 11
11	9968989	3	O-RING,
12	85808322	1	PLUG, , Includes 2

1.28.0/ C(03) TRANSMISSIONGEARING SPEED GEAR (4WD POWER-SHIFT)

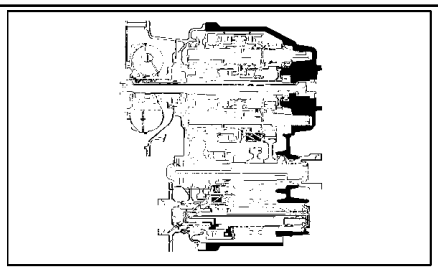

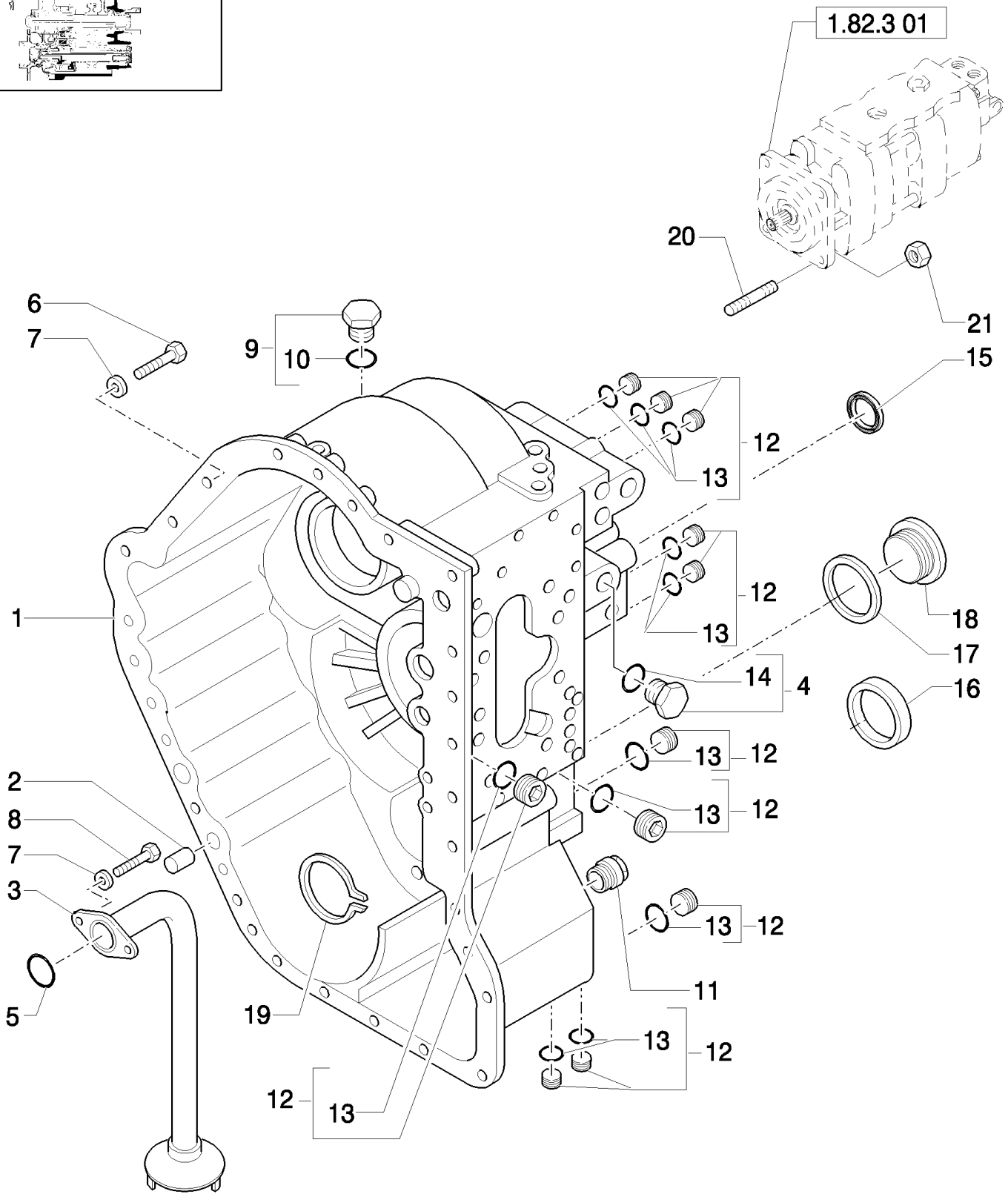

LB115.B EUR BACKHOE LOADER (1/05-)

1.28.0/ C(03) TRANSMISSIONGEARING SPEED GEAR (4WD POWER-SHIFT)

Ref	Part Number	Qty	Description
1	85812225	1	TRANSMISSION HOUSING,
2	9969017	2	PIN,
3	85808328	1	TUBE,
4	85808330	1	PLUG, , Includes 14
5	85808327	1	O-RING,
6	9969424	9	SCREW,
7	9968996	9	WASHER, LOCK,
8	9969000	2	SCREW,
9	9970283	1	PLUG, , Includes 10
10	85808323	1	O-RING,
11	9970002	1	PLUG,
12	9970284	11	PLUG, , Includes 13
13	9968989	11	O-RING,
14	9969429	1	O-RING,
15	9969001	1	GASKET,
16	9970285	1	PLUG,
17	9970004	1	GASKET,
18	85808331	1	PLUG,
19	9970003	1	RING, LOCKING,
20	85803991	4	STUD, M12x1.75
21	85802684	4	NUT,

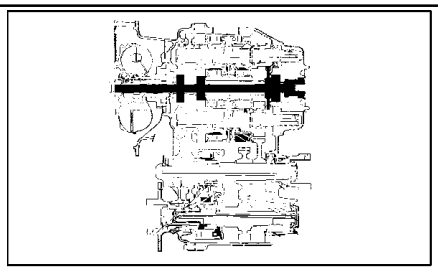

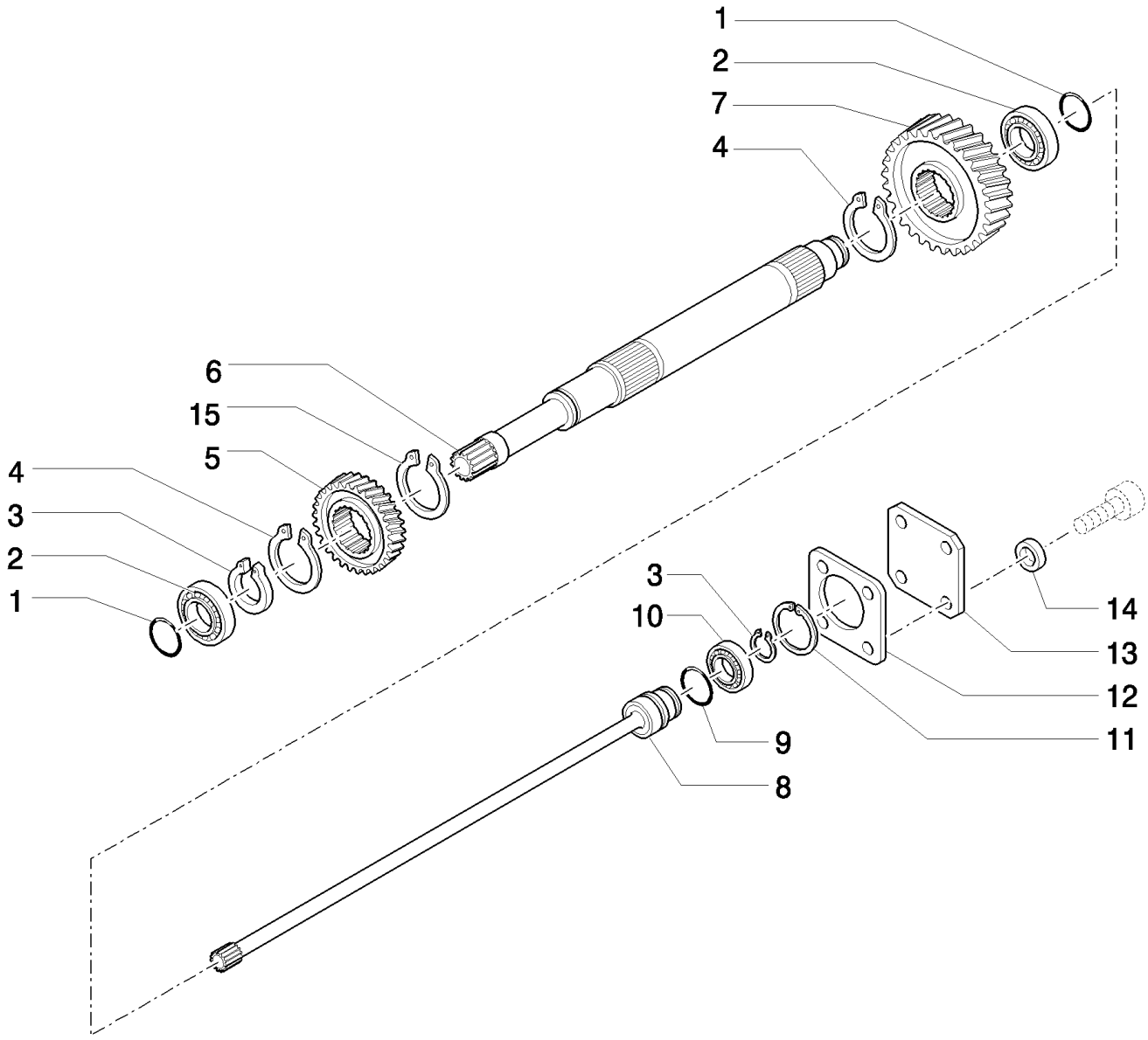
1
2
7
4
6
15
5
4
3
2
1
3
10
9
8
14
13
12
11

LB115.B EUR BACKHOE LOADER (1/05-)

1.28.0/ C(04) TRANSMISSIONGEARING SPEED GEAR (4WD POWER-SHIFT)

Ref	Part Number	Qty	Description
1	9969070	2	RING,
2	9970010	2	BEARING, ROLLER, TAPERED,
3	9969023	2	RING, SNAP,
4	9969059	2	RING, SNAP,
5	85808356	1	GEAR,
6	85808354	1	SHAFT,
7	85808357	1	GEAR,
8	85808333	1	ROD,
9	9969021	1	RING,
10	9969022	1	BEARING, ROLLER, TAPERED,
11	9969024	1	RING, SNAP,
12	9970015	1	GASKET,
13	9969027	1	COVER,
14	9970016	4	WASHER, LOCK,
15	85808355	1	RING, SNAP,

PUMP DRIVE AND INPUT SHAFT GROUP

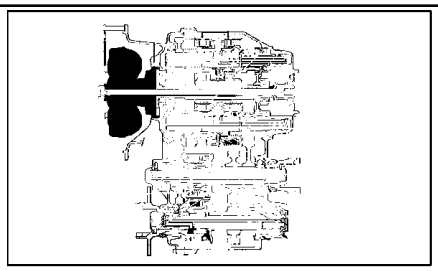

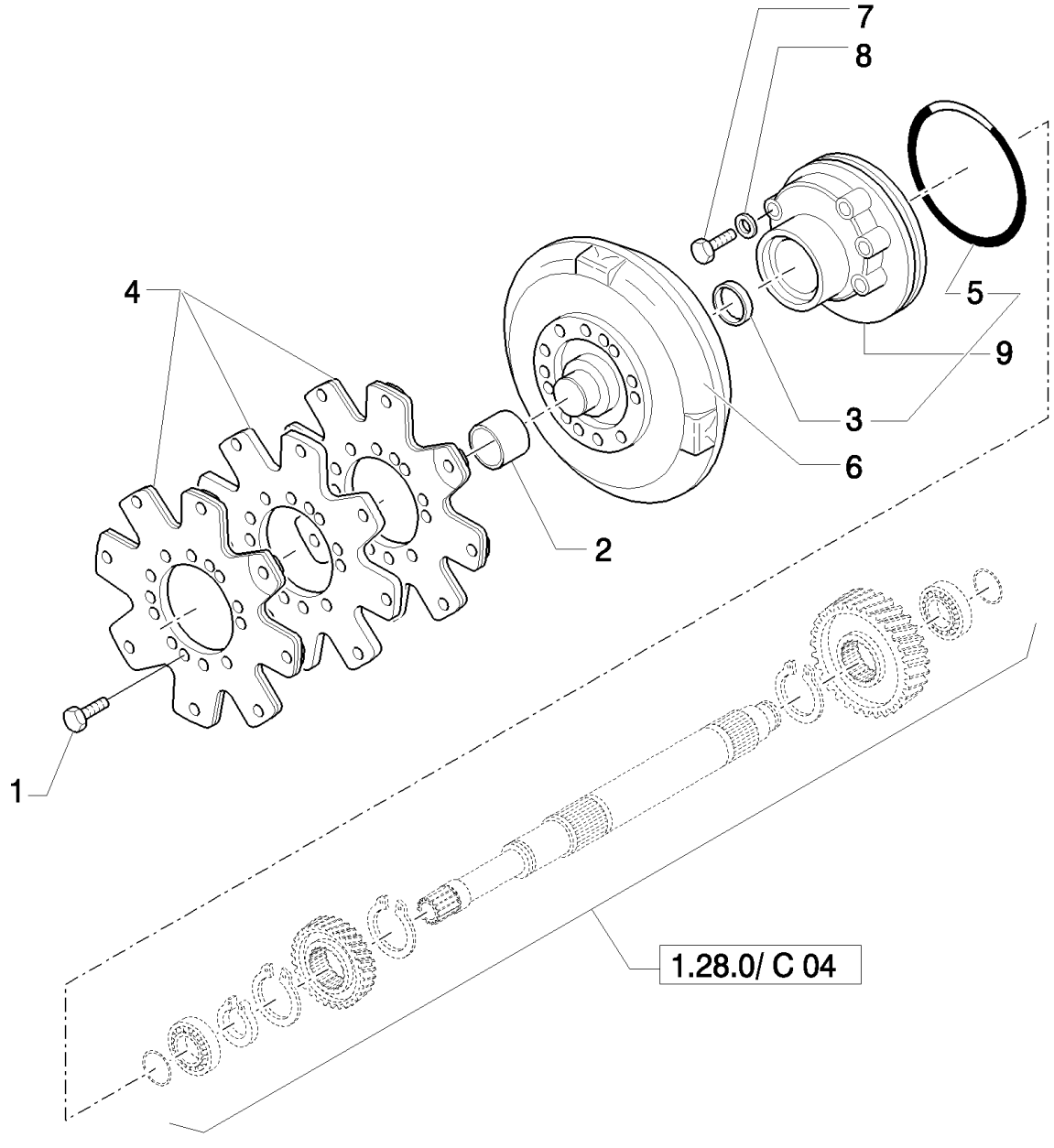
7
8
4
5
9
3
6
2
1
1.28.0/ C 04

LB115.B EUR BACKHOE LOADER (1/05-)

1.28.0/ C(05) TRANSMISSIONGEARING SPEED GEAR (4WD POWER-SHIFT)

Ref	Part Number	Qty	Description
1	9970017	6	SCREW,
2	9969039	1	BUSHING,
3	85808336	1	SEAL,
4	87410613	1	PLATE,
5	9969041	1	O-RING,
6	87410612	1	TORQUE CONVERTER,
7	9969042	6	SCREW,
8	9969043	6	WASHER, SEALING,
9	9969040	1	PUMP, , Includes 3, 5

TORQUE CONVERTER, CHARGING PUMP AND DRIVE PLATE GROUP

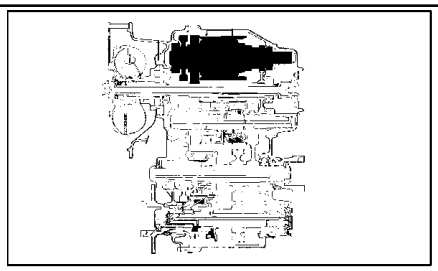

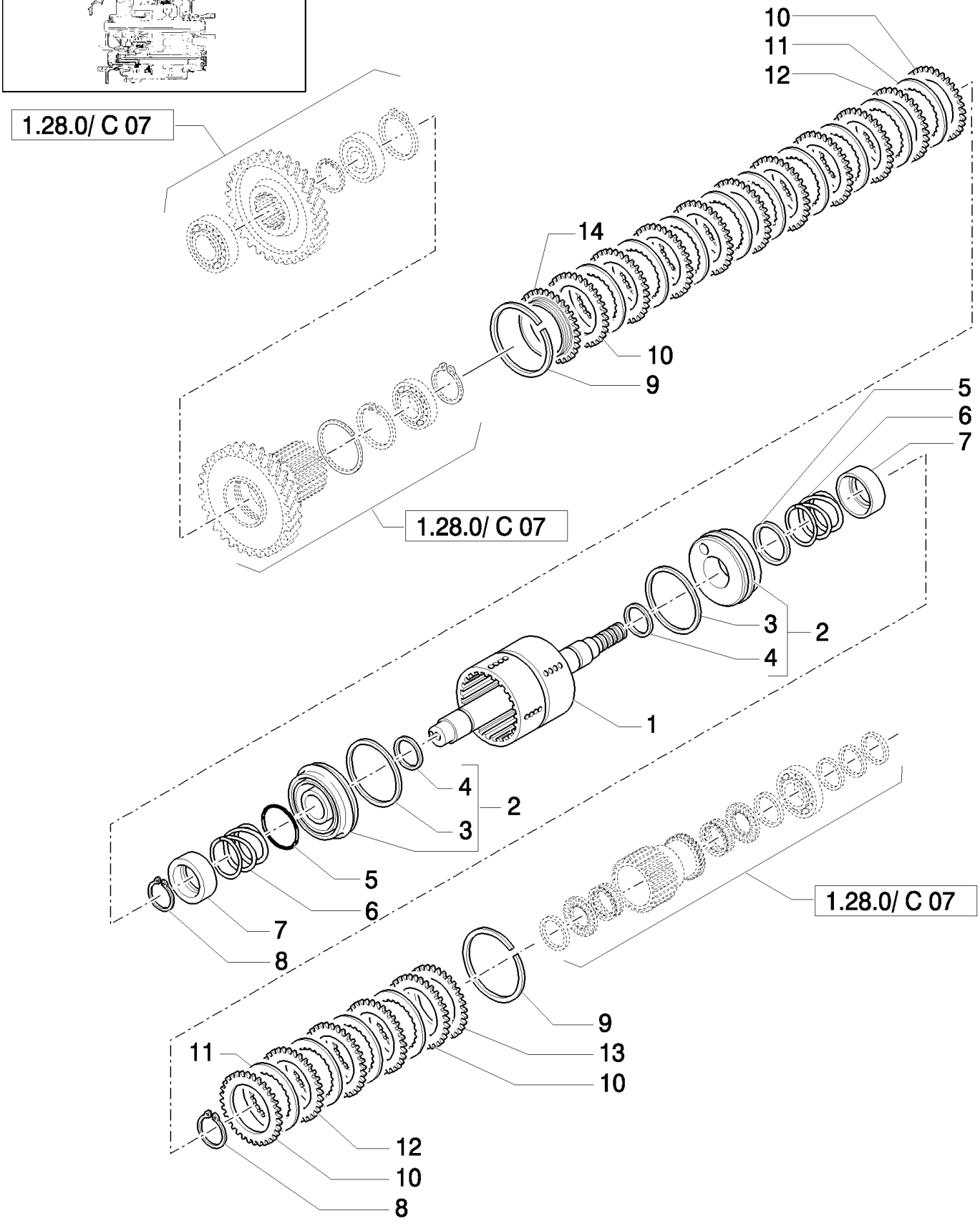

FWD LOW/FWD HIGH SHAFT AND GEARS GROUP

LB115.B EUR BACKHOE LOADER (1/05-)

1.28.0/ C(06) TRANSMISSIONGEARING SPEED GEAR (4WD POWER-SHIFT)

Ref	Part Number	Qty	Description
1	85823862	1	SHAFT,
2	9969045	2	PISTON, , Includes 3, 4
3	9969046	2	O-RING,
4	9969047	2	O-RING,
5	9969048	2	RING,
6	9969049	2	SPRING,
7	9969050	2	STOP,
8	9969051	2	RING, SNAP,
9	9969057	2	RING,
10	85808338	4	HALF-DISC,
11	85808339	12	DISC,
12	85808340	10	CLUTCH, PLATE,
13	85808343	1	PLATE, END,
14	85823863	1	PLATE, BACK,

FWD LOW/FWD HIGH SHAFT AND GEARS GROUP

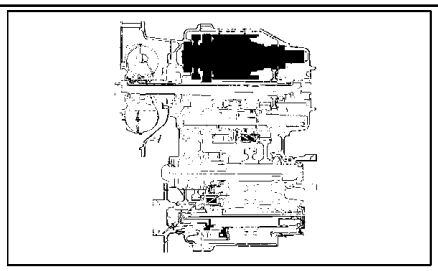

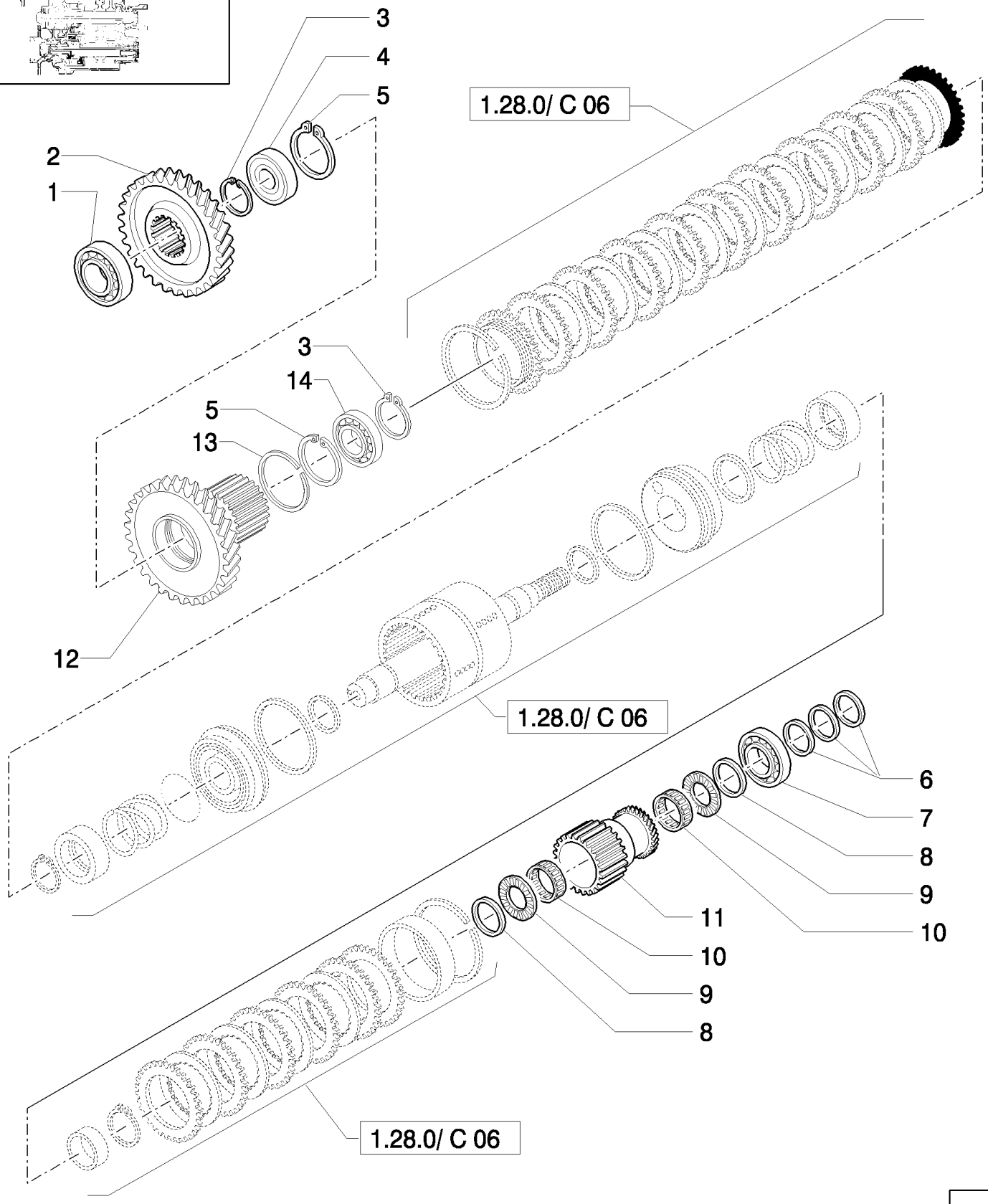
3
4
5
2
1
1.28.0/ C 06
3
14
5
13
12
1.28.0/ C 06
6
7
8
9
11
10
10
9
8
1.28.0/ C 06

LB115.B EUR BACKHOE LOADER (1/05-)

1.28.0/ C(07) TRANSMISSIONGEARING SPEED GEAR (4WD POWER-SHIFT)

Ref	Part Number	Qty	Description
1	85808348	1	BEARING, ROLLER, TAPERED,
2	85808347	1	GEAR,
3	9969059	2	RING, SNAP,
4	85808346	1	BEARING, ROLLER, TAPERED,
5	9969061	2	RING, SNAP,
6	9969070	3	RING,
7	9970044	1	BEARING, ROLLER, TAPERED,
8	9969066	2	SPACER,
9	9969065	2	BEARING, THRUST,
10	9969067	2	BEARING, NEEDLE,
11	85808349	1	GEAR,
12	85823864	1	GEAR,
13	85823865	1	RING, LOCKING,
14	9969062	1	BEARING, ROLLER, TAPERED,

FWD LOW/FWD HIGH SHAFT AND GEARS GROUP

1.28.0/ C(08) TRANSMISSIONGEARING SPEED GEAR (4WD POWER-SHIFT)

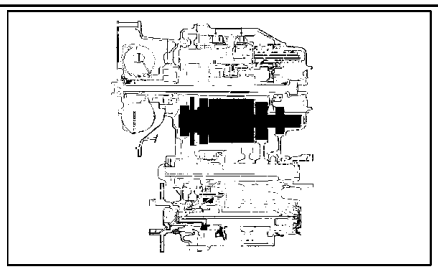

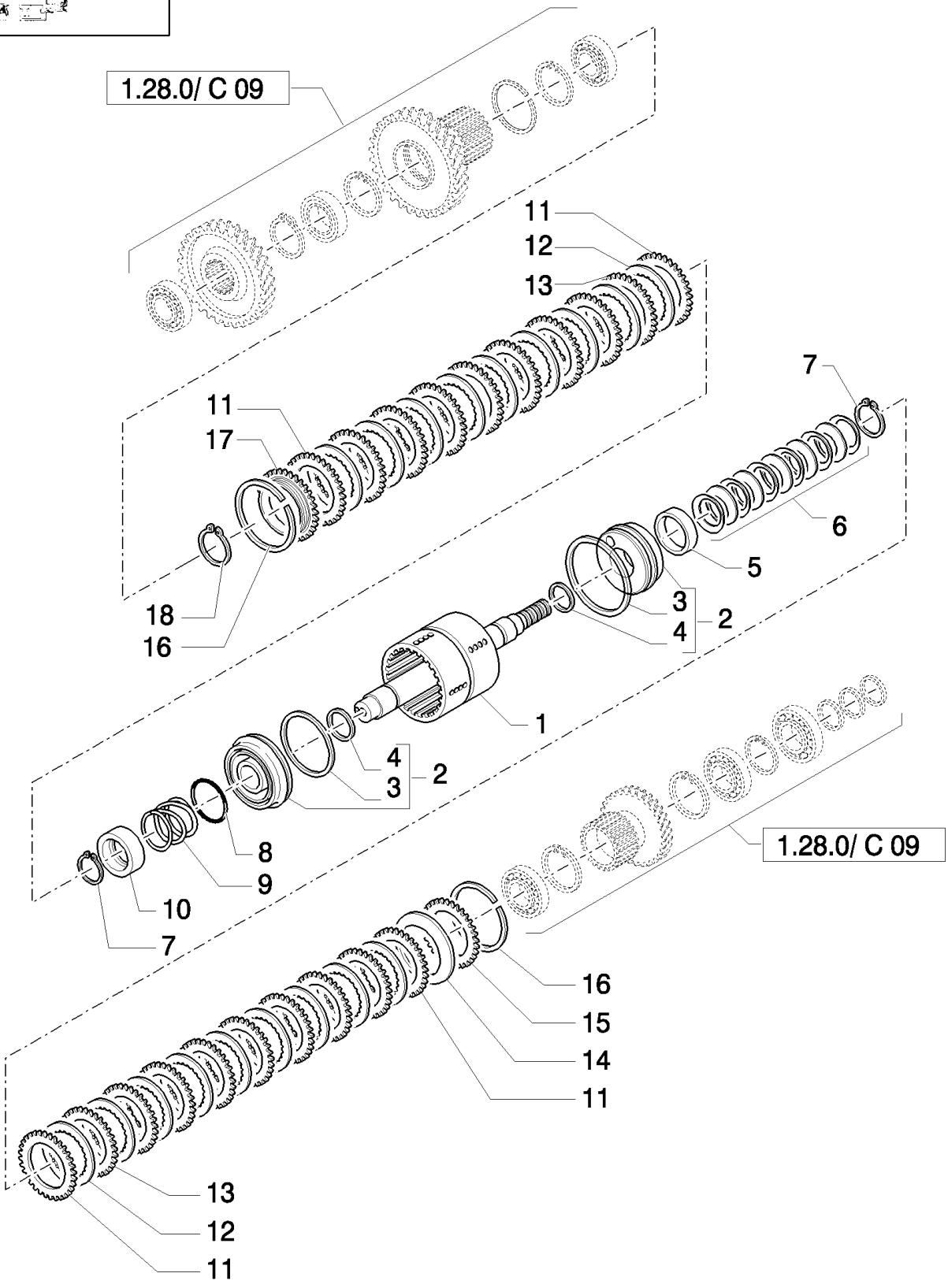

LB115.B EUR BACKHOE LOADER (1/05-)

1.28.0/ C(08) TRANSMISSIONGEARING SPEED GEAR (4WD POWER-SHIFT)

Ref	Part Number	Qty	Description
1	85823872	1	SHAFT,
2	9969045	2	PISTON, , Includes 3, 4
3	9969046	2	O-RING,
4	9969047	2	O-RING,
5	85808351	1	RING,
6	9969072	1	KIT,
7	9969051	2	RING, SNAP,
8	9969048	1	RING,
9	9969049	1	SPRING,
10	9969050	1	STOP,
11	85808338	4	HALF-DISC,
12	85808339	16	DISC, MM.2.5
13	85808340	14	CLUTCH, PLATE, MM.2.5
14	9969073	1	SPRING,
15	85808343	1	PLATE, END,
16	9969057	2	RING,
17	85823863	1	PLATE, BACK,
18	9969059	1	RING, SNAP,

REVERSE/1ST SHAFT AND GEARS GROUP

1.28.0/ C(09) TRANSMISSIONGEARING SPEED GEAR (4WD POWER-SHIFT)

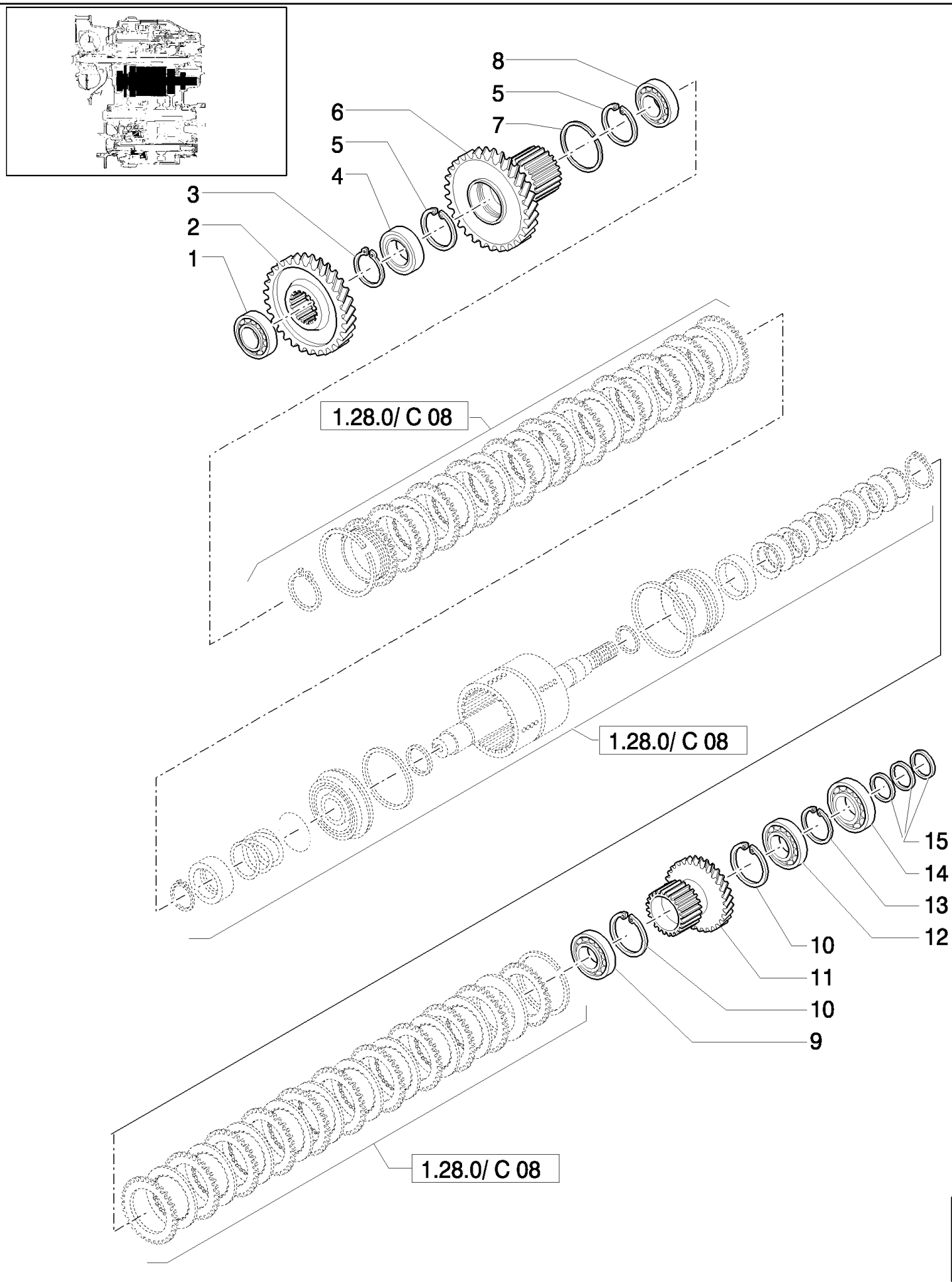

REVERSE/1ST SHAFT AND GEARS GROUP

Ref	Part Number	Qty	Description
1	85808348	1	BEARING, ROLLER, TAPERED,
2	85808352	1	GEAR,
3	9969059	1	RING, SNAP,
4	85808346	1	BEARING, ROLLER, TAPERED,
5	9969061	2	RING, SNAP,
6	85823864	1	GEAR,
7	85823865	1	RING, LOCKING,
8	9969062	1	BEARING, ROLLER, TAPERED,
9	9969077	1	BEARING, ROLLER, TAPERED,
10	9969076	2	RING, SNAP,
11	85808353	1	GEAR,
12	9969078	1	BEARING, ROLLER, TAPERED,
13	9969079	1	RING, SNAP,
14	9970010	1	BEARING, ROLLER, TAPERED,
15	9969070	3	RING,

1.28.0/ C(10) TRANSMISSIONGEARING SPEED GEAR (4WD POWER-SHIFT)

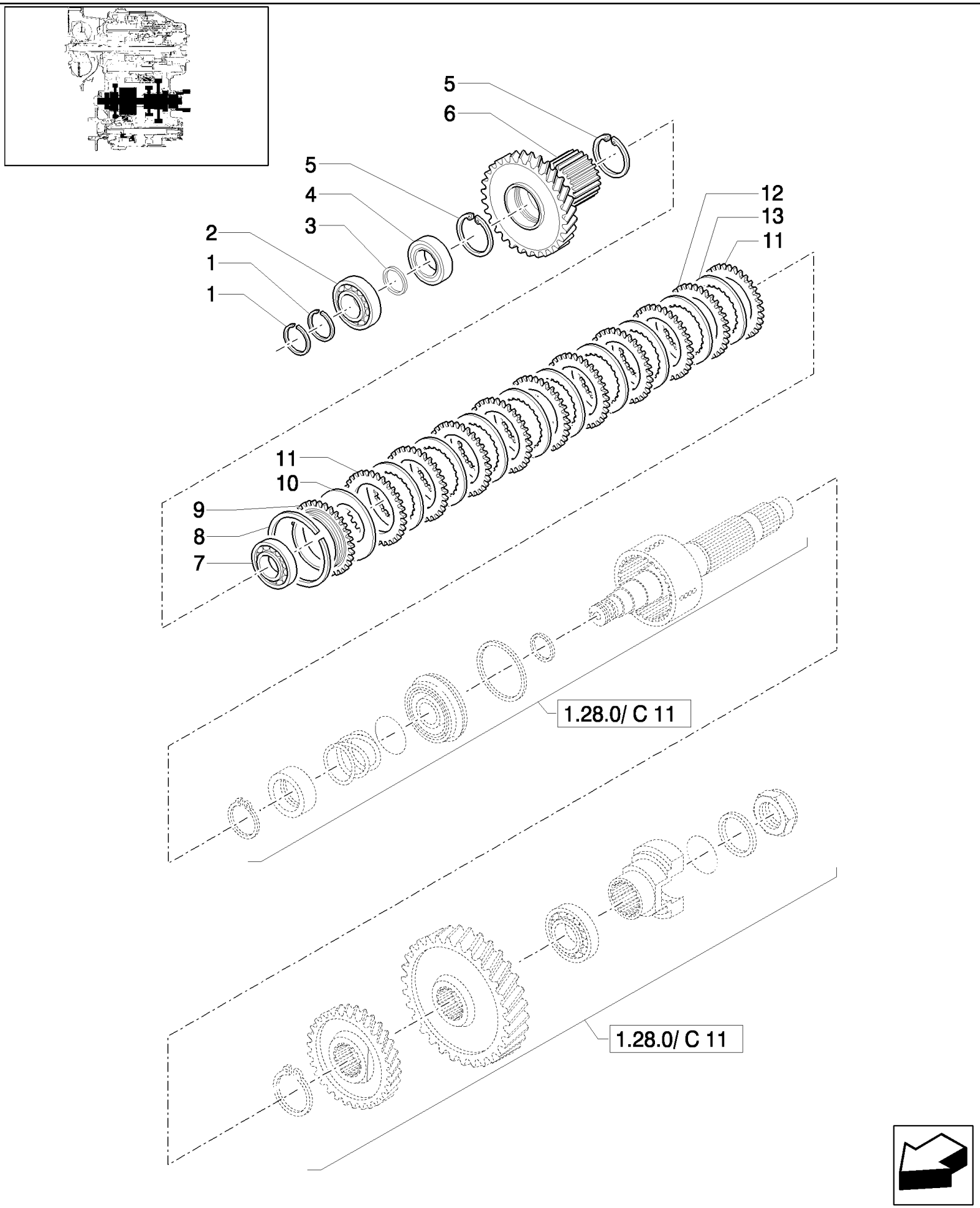

LB115.B EUR BACKHOE LOADER (1/05-)

1.28.0/ C(10) TRANSMISSIONGEARING SPEED GEAR (4WD POWER-SHIFT)

Ref	Part Number	Qty	Description
1	9969070	2	RING,
2	9970010	1	BEARING, ROLLER, TAPERED,
3	9969085	1	RING,
4	9969078	1	BEARING, ROLLER, TAPERED,
5	9969076	2	RING, SNAP,
6	85808359	1	GEAR,
7	9969077	1	BEARING, ROLLER, TAPERED,
8	9969057	1	RING,
9	85808343	1	PLATE, END,
10	9969073	1	SPRING,
11	85808338	2	HALF-DISC,
12	85808340	7	CLUTCH, PLATE,
13	85808339	8	DISC,

2ND SHAFT GROUP

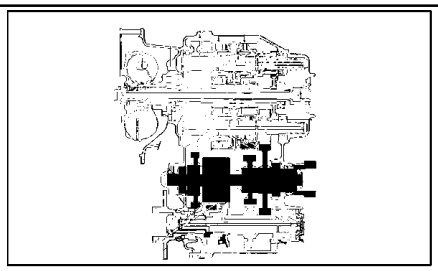

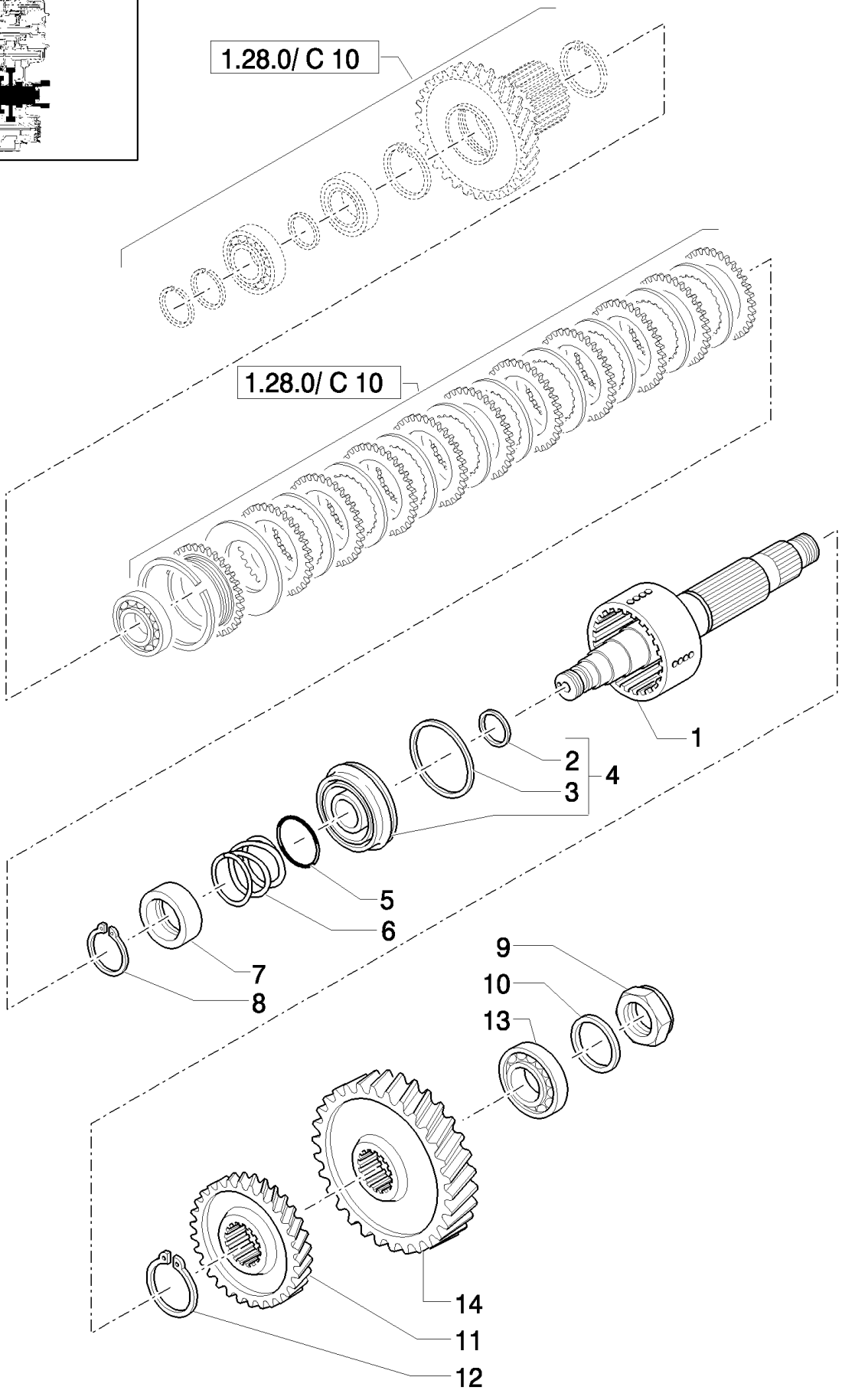
1.28.0/ C 10
1.28.0/ C 10
1
2
3
4
5
6
7
8
9
10
13
14
11
12

LB115.B EUR BACKHOE LOADER (1/05-)

1.28.0/ C(11A) TRANSMISSION (4WD, 4WS, POWER-SHIFT)

Ref	Part Number	Qty	Description
1	85808358	1	SHAFT,
2	9969047	1	O-RING,
3	9969046	1	O-RING,
4	9969045	1	PISTON, , Includes 2, 3
5	9969048	1	RING,
6	9969049	1	SPRING,
7	9969050	1	STOP,
8	9969051	1	RING, SNAP,
9	9969093	1	NUT,
10	9969092	1	WASHER,
11	85808360	1	GEAR,
12	9970054	1	RING, SNAP,
13	85808362	1	BEARING, ROLLER, TAPERED,
14	85808361	1	GEAR,

2ND SHAFT GROUP

1.28.0/ C(12) TRANSMISSIONGEARING SPEED GEAR (4WD POWER-SHIFT)

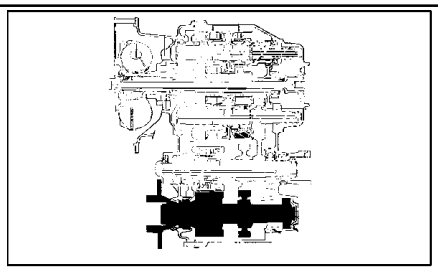

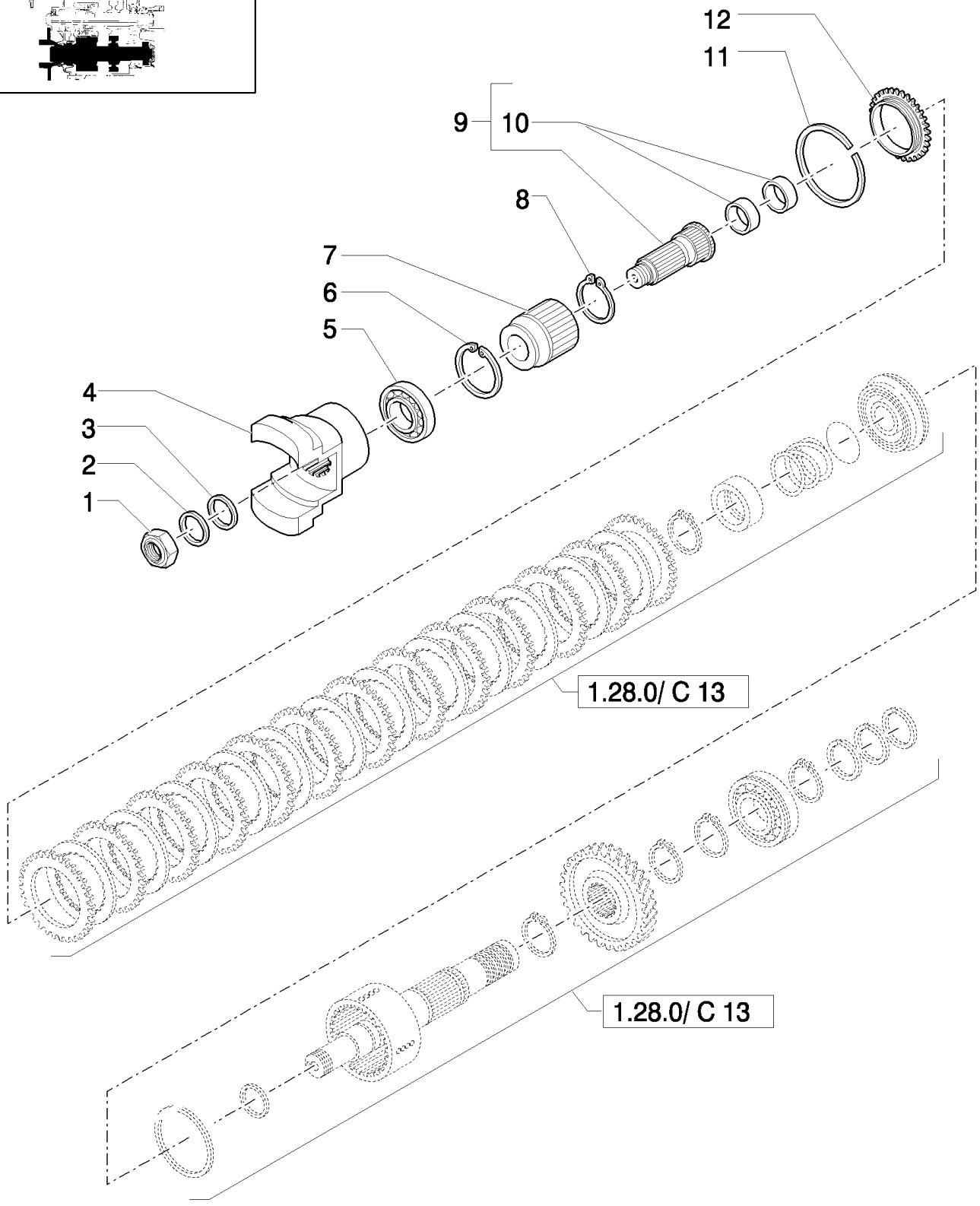

OUTPUT SHAFT W/INTERNAL DISCONNECT GROUP

LB115.B EUR BACKHOE LOADER (1/05-)

1.28.0/ C(12) TRANSMISSIONGEARING SPEED GEAR (4WD POWER-SHIFT)

Ref	Part Number	Qty	Description
1	9969093	1	NUT,
2	9969092	1	WASHER,
3	9970059	1	O-RING,
4	9969090	1	HUB,
5	9970068	1	BEARING, ROLLER, TAPERED,
6	9969100	1	RING,
7	85808335	1	HUB,
8	9970054	1	RING, SNAP,
9	85808478	1	SHAFT, , Includes 10
10	85813307	2	BUSHING,
11	9969057	1	RING,
12	85808343	1	PLATE, END,

OUTPUT SHAFT W/INTERNAL DISCONNECT GROUP

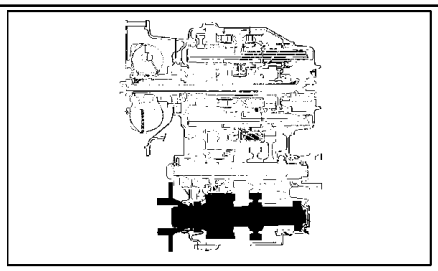

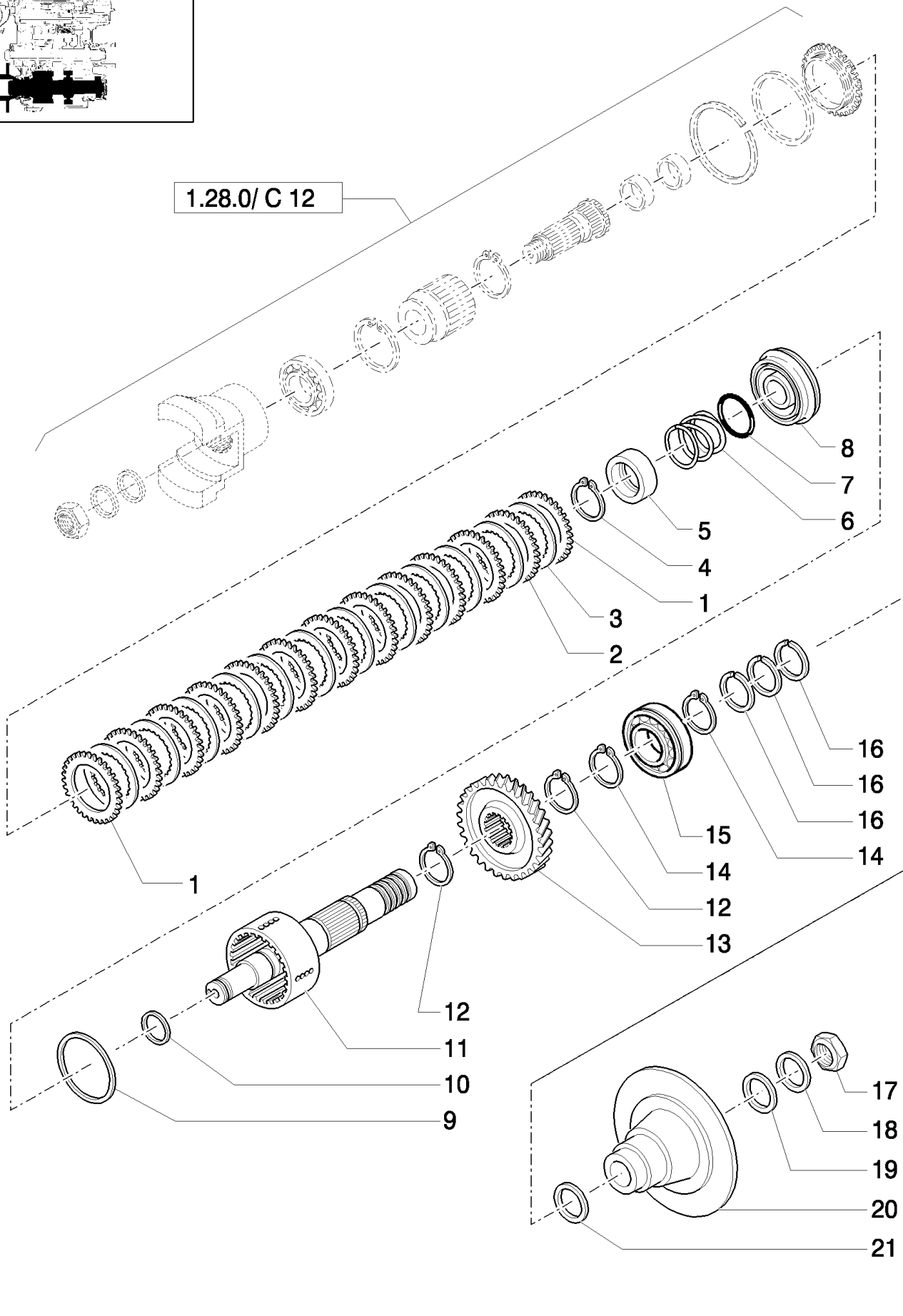

OUPUT SHAFT W/INTERNAL DISCONNECT GROUP

LB115.B EUR BACKHOE LOADER (1/05-)

1.28.0/ C(13A) TRANSMISSION (4WD, 4WS POWER-SHIFT)

Ref	Part Number	Qty	Description
1	85808338	2	HALF-DISC,
2	85808340	11	CLUTCH, PLATE, MM.2.5
3	85808339	12	DISC, MM.2.5
4	9969051	1	RING, SNAP,
5	9969050	1	STOP,
6	9969049	1	SPRING,
7	9969048	1	RING,
8	9969045	1	PISTON,
9	9969046	1	O-RING,
10	9969047	1	O-RING,
11	85823852	1	SHAFT,
12	9969095	2	RING, SNAP,
13	85808334	1	GEAR,
14	9969086	2	RING, SNAP,
15	85808365	1	BEARING, ROLLER, TAPERED,
16	9969097	3	RING, PISTON,
17	9969093	1	NUT,
18	9969092	1	WASHER,
19	9970059	1	O-RING,
20	9969101	1	BRAKE DISC,
21	85808366	1	SPACER,

OUPUT SHAFT W/INTERNAL DISCONNECT GROUP

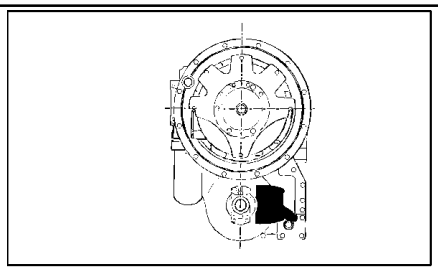

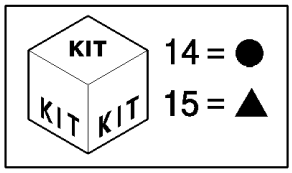
KIT
KIT KIT
14 = ●
15 = ▲

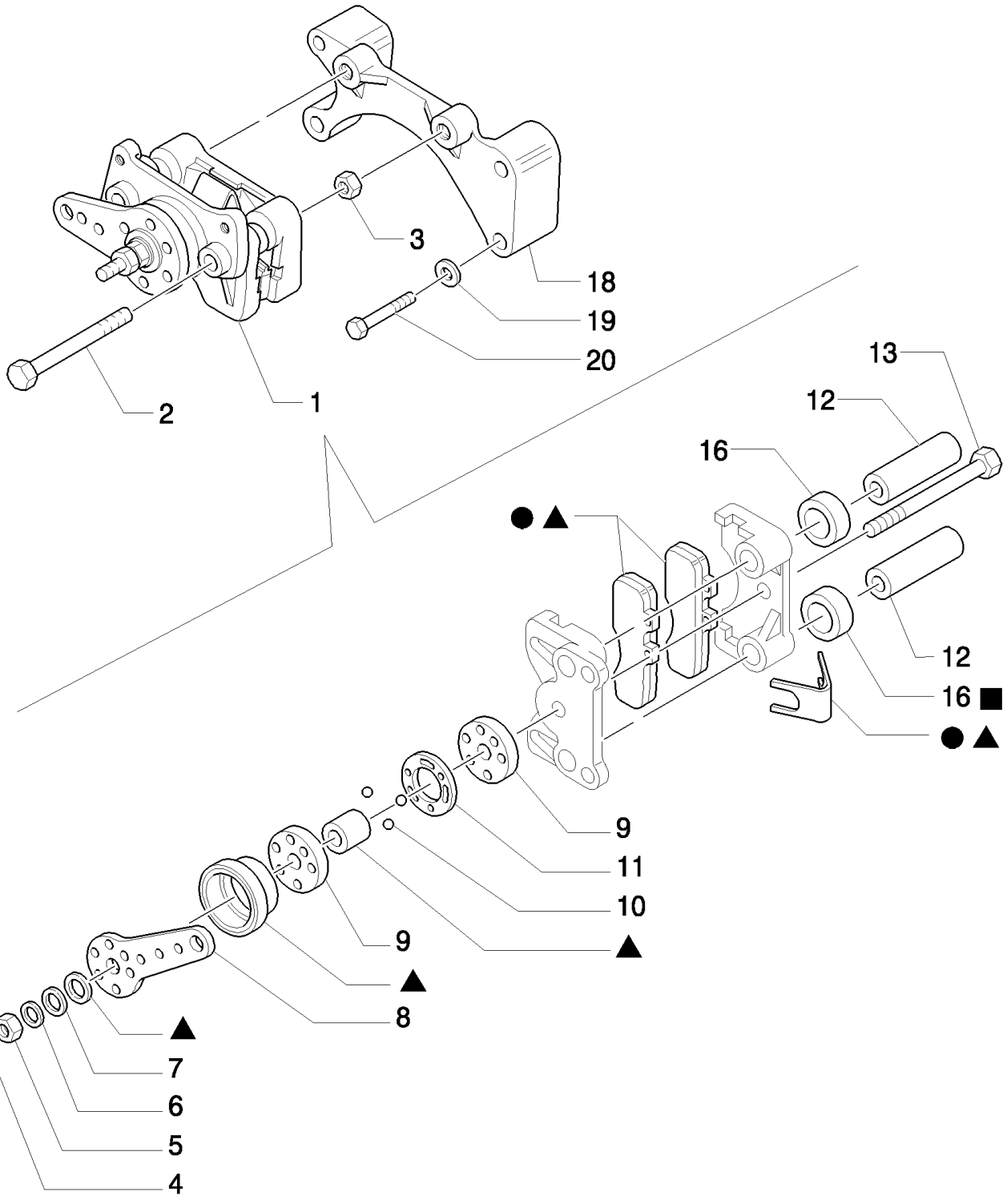
3
18
19
20
2
1
13
12
16
● ▲
12
16 ■
● ▲
9
11
10
▲
9
▲
8
▲
7
6
5
4

LB115.B EUR BACKHOE LOADER (1/05-)

1.28.0/ C(14A) TRANSMISSION (4WD, 4WS POWER-SHIFT)

Ref	Part Number	Qty	Description
1	85813303	1	BRAKE ASSY.,
2	9969103	2	SCREW,
3	9969104	2	NUT,
4	9969105	1	NUT,
5	9969106	1	NUT,
6	9969107	1	WASHER,
7	9969108	1	WASHER,
8	9969109	1	LEVER,
9	9969110	2	CAM,
10	9969111	3	BALL,
11	9969112	1	STOP,
12	9969113	2	SLEEVE,
13	9969114	1	SCREW,
14	9969115	1	KIT,
15	9969116	1	KIT,
16	85813302	2	BUSHING, RUBBER,
18	85808377	1	PLATE, RETAINING,
19	85808379	4	WASHER, LOCK,
20	85808378	4	SCREW,

PARKING BRAKE GROUP

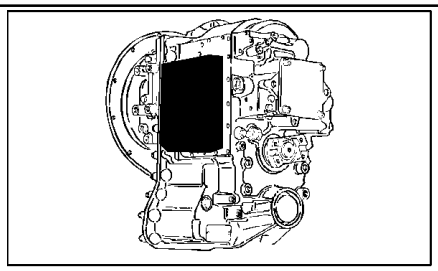

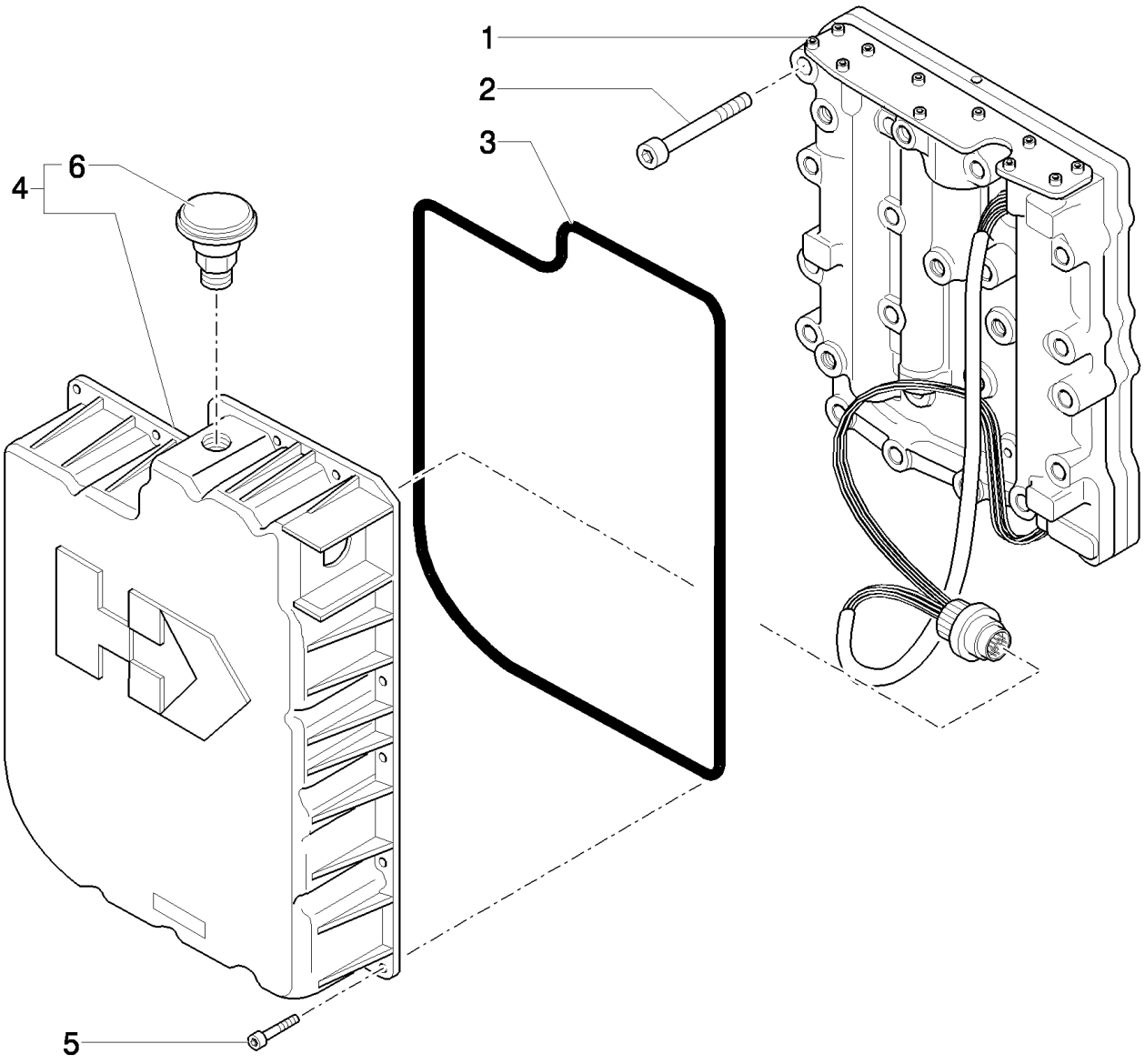

CONTROL VALVE MOUNTING GROUP

LB115.B EUR BACKHOE LOADER (1/05-)

1.28.0/ C(15) TRANSMISSIONGEARING SPEED GEAR (4WD POWER-SHIFT)

Ref	Part Number	Qty	Description
1	85817030	1	VALVE, CONTROL,
2	9970071	17	SCREW,
3	85808368	1	GASKET,
4	85808369	1	COVER, , Includes 6
5	9970074	20	SCREW,
6	9970075	1	BREATHER,

CONTROL VALVE MOUNTING GROUP

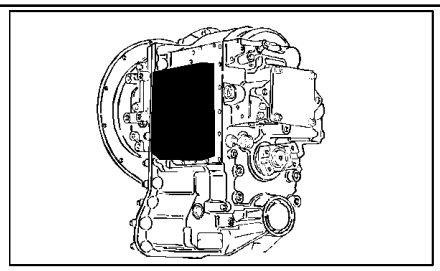

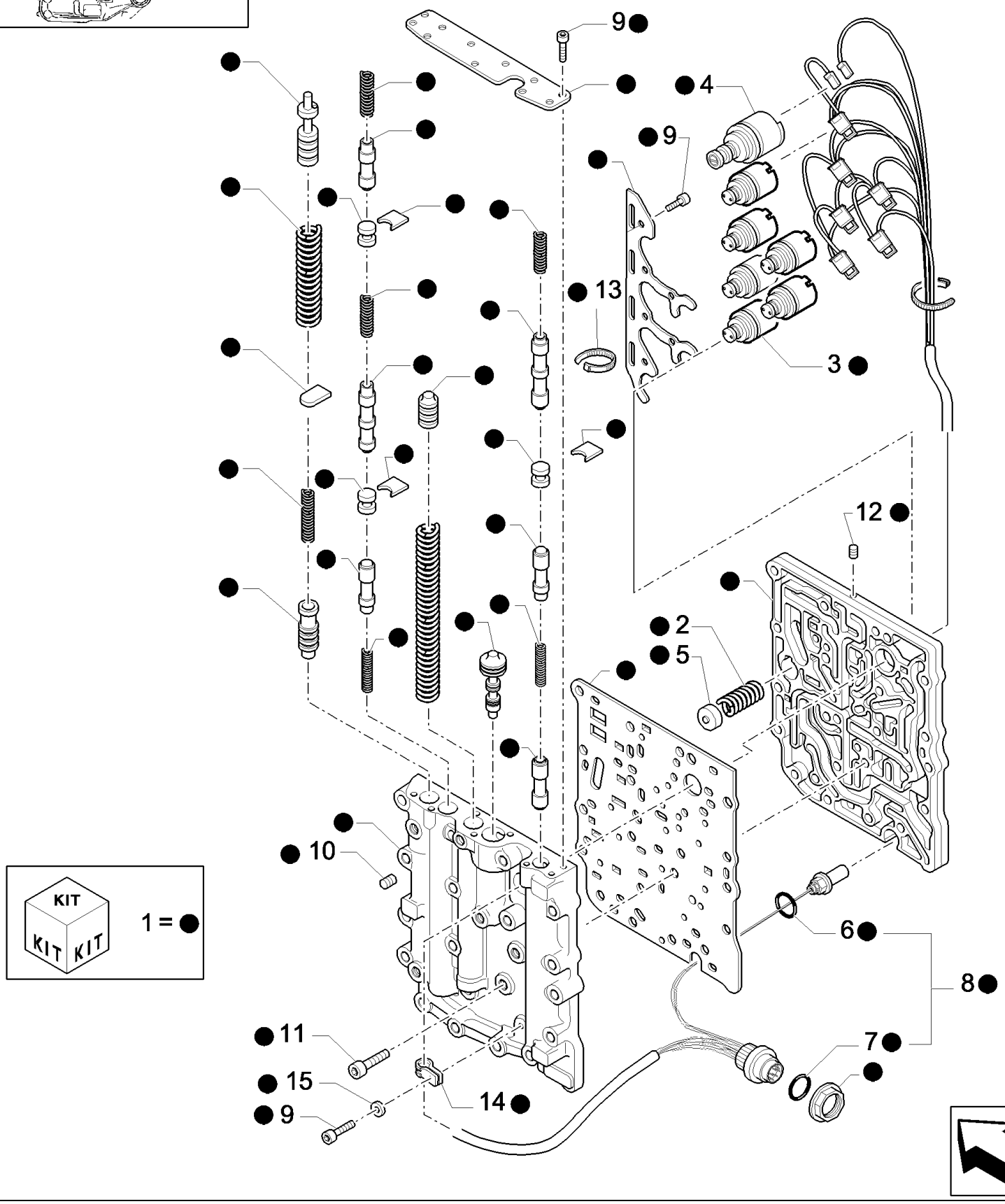

CONTROL VALVE ASSEMBLY

LB115.B EUR BACKHOE LOADER (1/05-)

1.28.0/ C(16) TRANSMISSIONGEARING SPEED GEAR (4WD POWER-SHIFT)

Ref	Part Number	Qty	Description
1	85817030	1	VALVE, CONTROL,
2	9970286	1	SPRING,
3	9970078	6	SOLENOID,
4	9970079	1	VALVE, HYDRAULIC,
5	85808373	1	SPOOL,
6	85813308	1	O-RING,
7	9970082	1	O-RING,
8	85817029	1	SENSOR, , Includes 6, 7
9	85808370	18	SCREW,
10	85808371	2	PLUG,
11	85808372	3	SCREW,
12	85808374	6	PLUG,
13	9969363	6	STRAP, CABLE,
14	85808375	1	CLIP,
15	85808376	1	WASHER, LOCK,

CONTROL VALVE ASSEMBLY

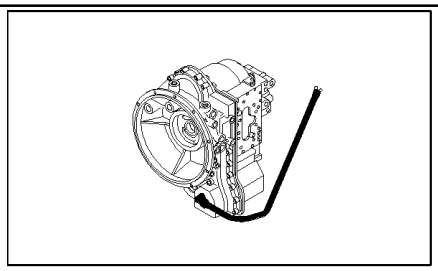

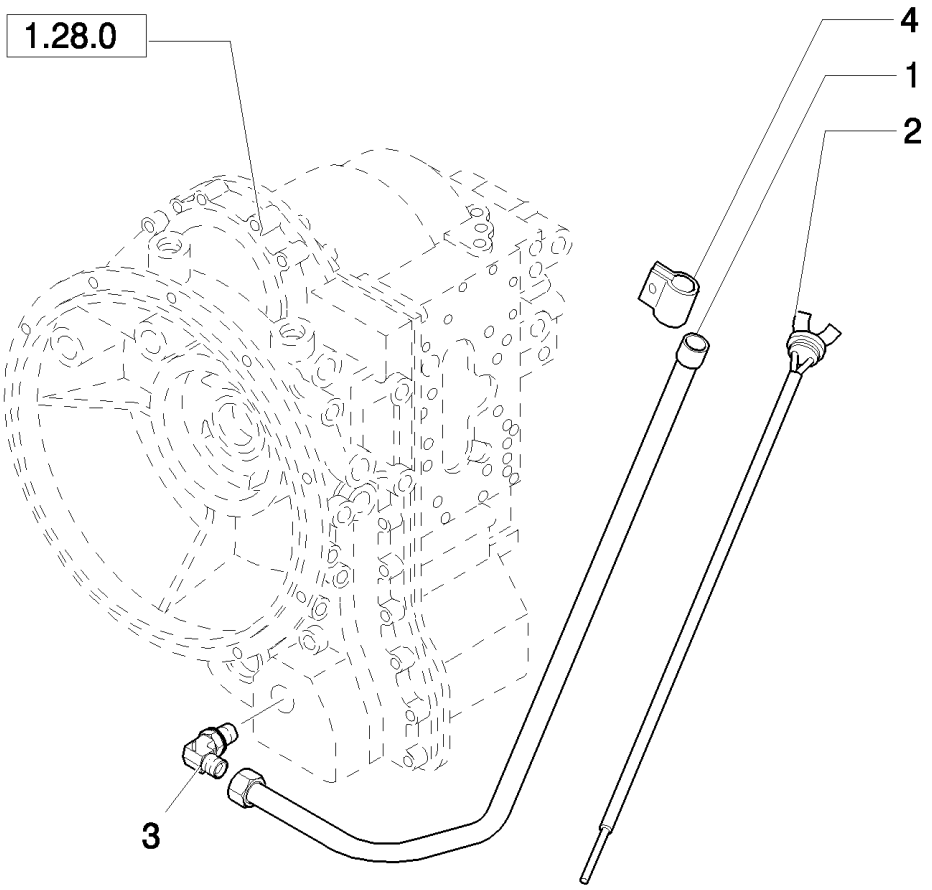
1.28.0
4
1
2
3

LB115.B EUR BACKHOE LOADER (1/05-)

1.28.6/ 1(01) GEAR FILTER PIPES (POWER-SHIFT)

Ref	Part Number	Qty	Description
1	87400239	1	TUBE,
2	87400371	1	DIPSTICK,
3	47050658	1	ELBOW,
4	47049176	1	CLAMP,

1.38.1(01) FRONT & REAR DRIVESHAFT (POWER-SHUTTLE)

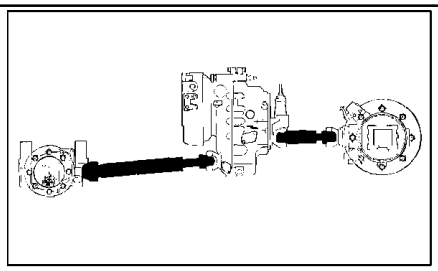

KIT KIT KIT
6 = ■
7 = ●

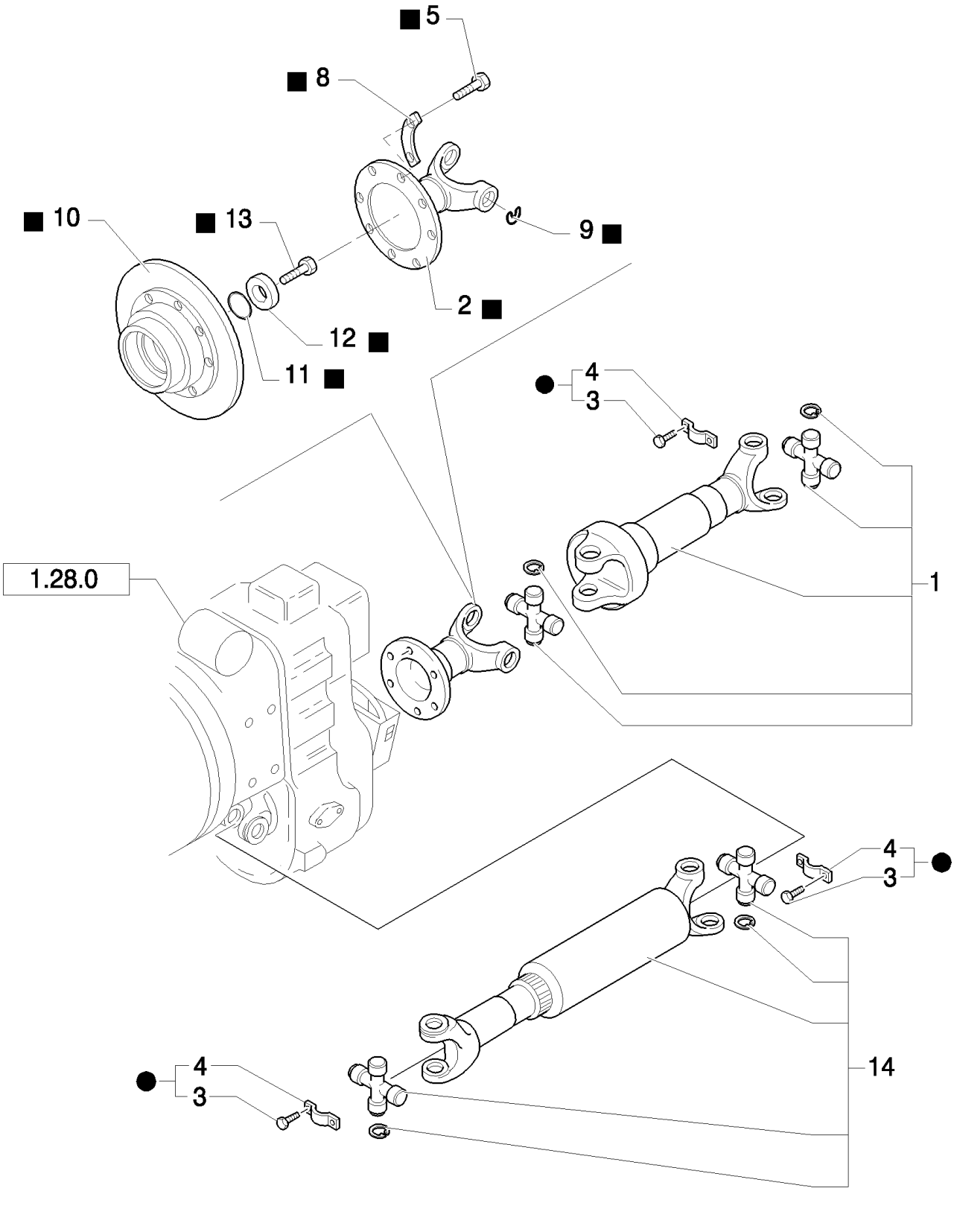

LB115.B EUR BACKHOE LOADER (1/05-)

1.38.1(01) FRONT & REAR DRIVESHAFT (POWER-SHUTTLE)

Ref	Part Number	Qty	Description
1	87552418	1	PROPELLER SHAFT,
2	85820157	1	FLANGE,
3	87311153	4	Bolt; Not Serviced Seperately; Order Kit 87311154
4	87311152	AR	Bearing Strap; Not Serviced Seperately; Order Kit 87311154
5	85820154	8	SCREW, M10 x 1.5
6	85820908	1	KIT, SERVICE, Incl. 2, 5, 6, 8 - 13, Trasformation Kit from DIN100 ti DIN120
7	87311154	4	BRACKET, Kit, Incl. 3, 4; Kit Incl. (1) Strap And (2) Bolts
8	85819186	4	COVER,
9	85820914	2	CIRCLIP,
10	85820909	1	FLANGE,
11	9968309	1	O-RING, 1.29"IDx.139"Thk
12	9968306	1	WASHER,
13	9968308	1	SCREW,
14	87552416	1	PROPELLER SHAFT,

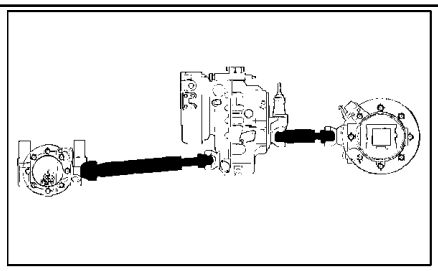

KIT KIT KIT 3 = ●

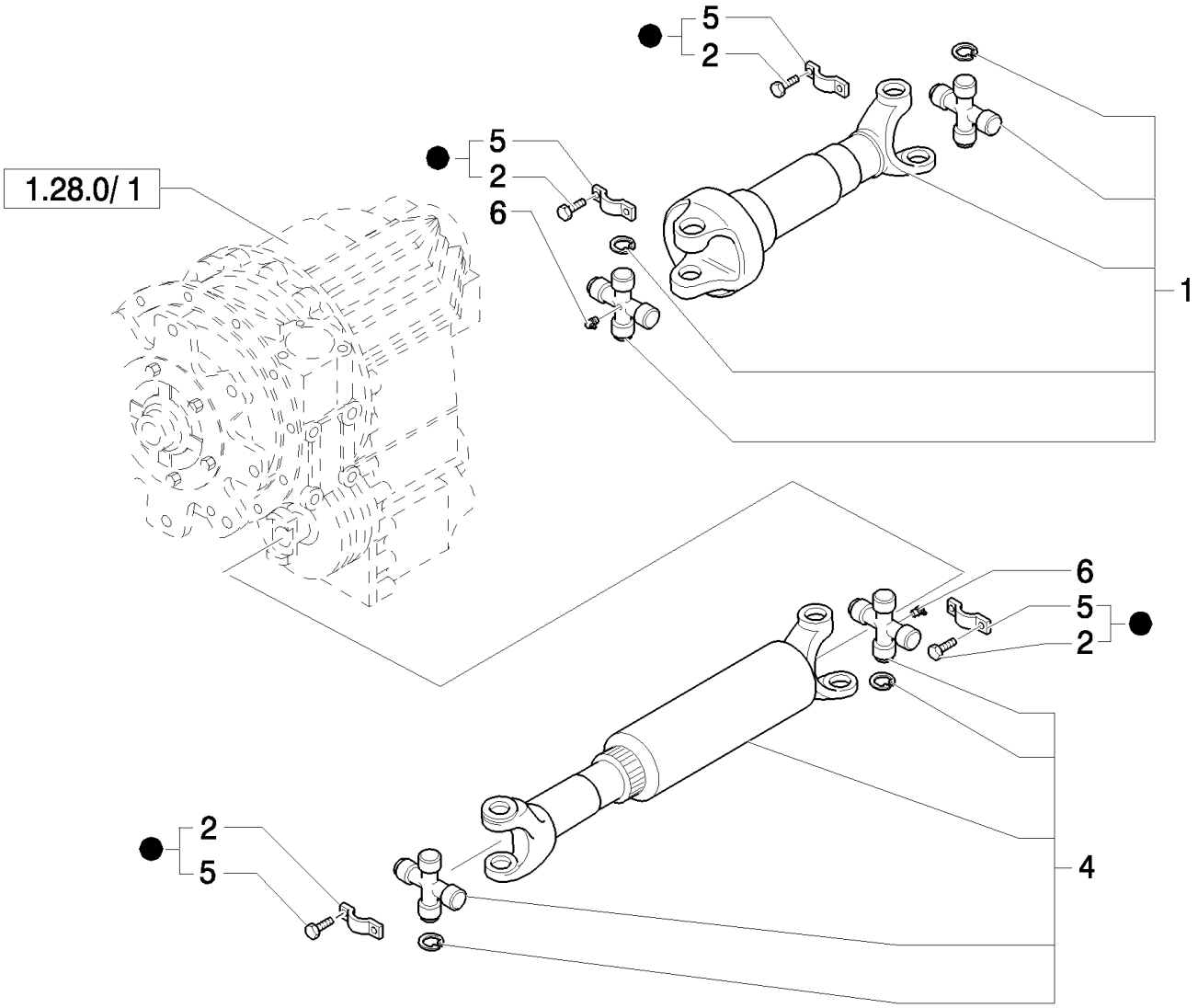

LB115.B EUR BACKHOE LOADER (1/05-)

1.38.1/ 1(01) FRONT & REAR DRIVESHAFT (POWER-SHIFT)

Ref	Part Number	Qty	Description
1	87552422	1	PROPELLER SHAFT, ASSY,REAR
2	87311153	4	
3	87311154	4	BRACKET,
4	87552420	1	PROPELLER SHAFT, ASSY,FRONT
5	87311152	4	

1.39.8(01) TRANSMISSION OIL COOLING PIPES (POWER-SHUTTLE)

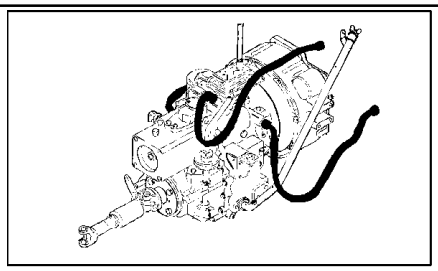

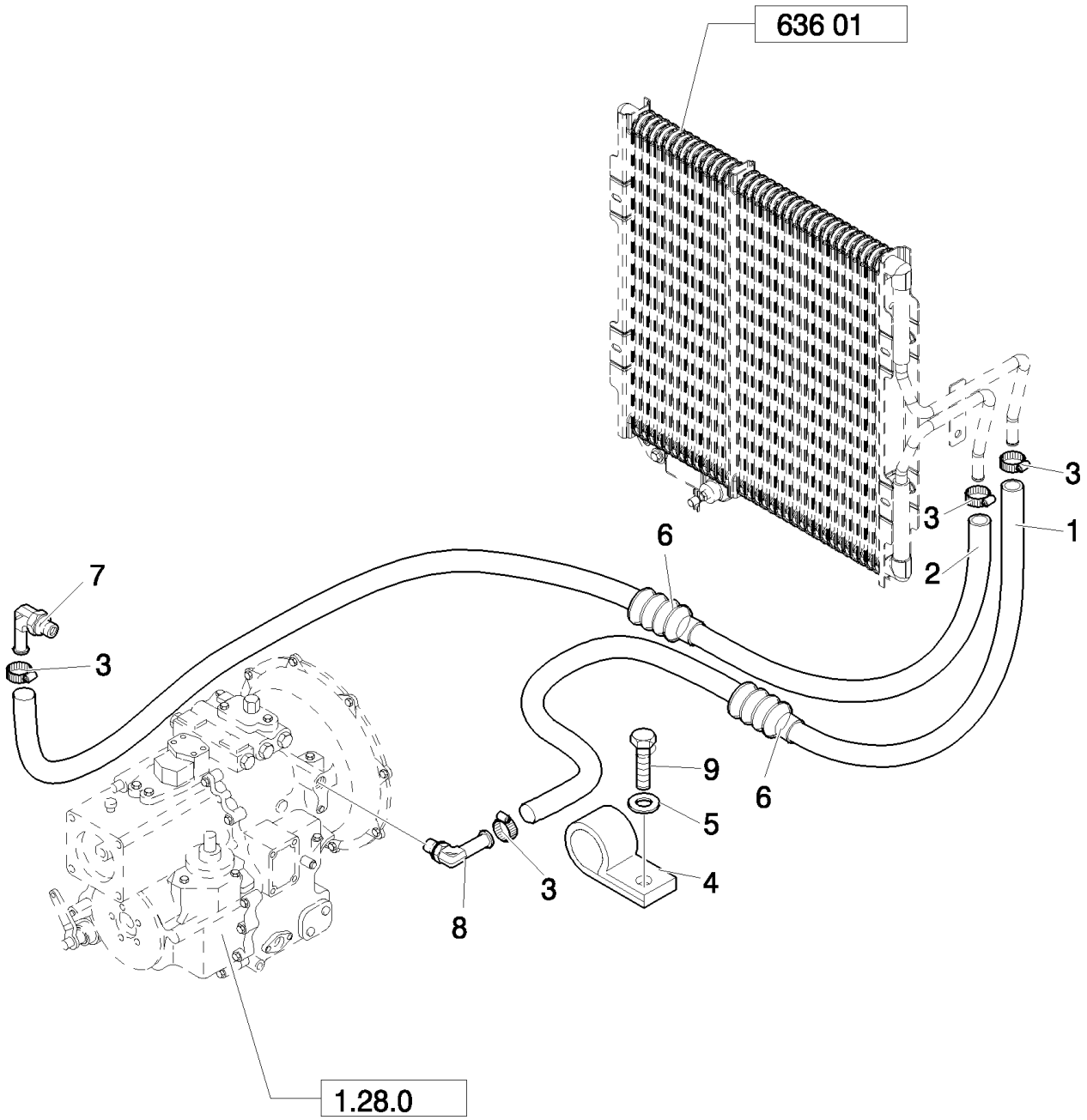

LB115.B EUR BACKHOE LOADER (1/05-)

1.39.8(01) TRANSMISSION OIL COOLING PIPES (POWER-SHUTTLE)

Ref	Part Number	Qty	Description
1	87302506	1	HOSE, FLEXIBLE,
2	87302507	1	HOSE, FLEXIBLE,
3	87314076	4	COLLAR,
4	47048664	1	CLAMP,
5	47048964	1	WASHER,
6	87345955	2	SHIELD,
7	87017744	1	FITTING, 90ş, 5/8" Hose x 1 5/16"-12 ORB Beaded,
8	87017743	1	FITTING, 45ş, 5/8" Hose x 1 5/16"-12 ORB Beaded,
9	47042364	1	BOLT,

1.39.8/ 1(01) TRANSMISSION OIL COOLING PIPES (POWER-SHIFT)

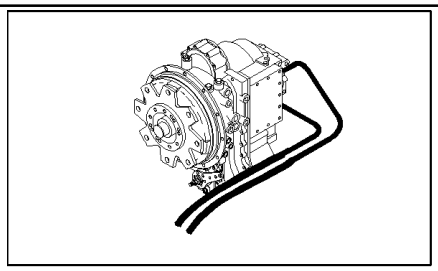

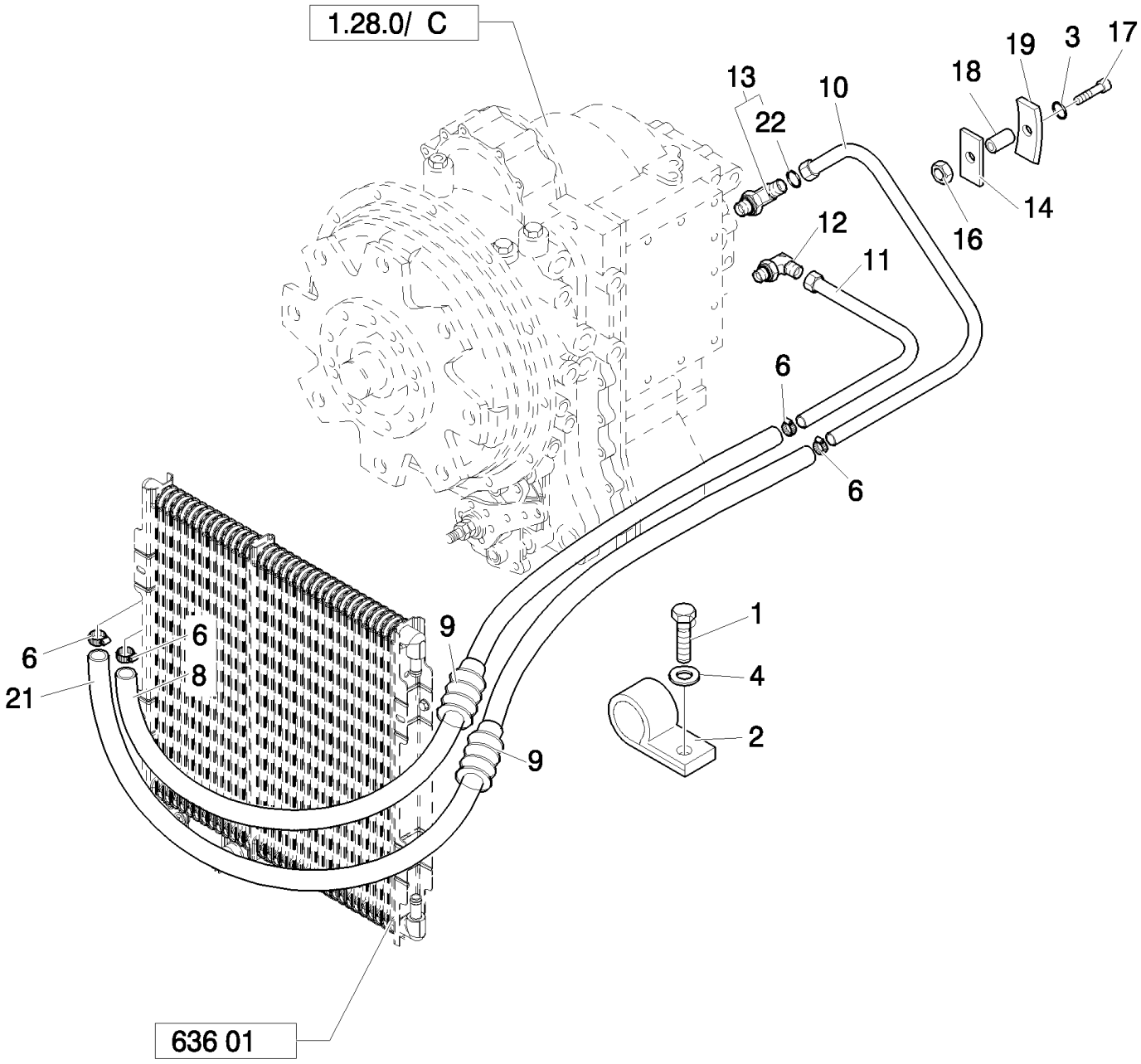

LB115.B EUR BACKHOE LOADER (1/05-)

1.39.8/ 1(01) TRANSMISSION OIL COOLING PIPES (POWER-SHIFT)

Ref	Part Number	Qty	Description
1	47042364	1	BOLT,
2	47048664	1	CLAMP,
3	47048962	1	WASHER, 9x16x16
4	47048964	1	WASHER,
6	87314076	4	COLLAR,
8	87302504	1	HOSE, FLEXIBLE,
9	87345955	2	SHIELD,
10	87403231	1	TUBE, RIGID,
11	87403229	1	TUBE,
12	47050660	1	ELBOW,
13	100197	1	ELBOW, 45ş, 7/8"-14 x 1 1/16"-12, O-Ring,
14	87400407	1	BRACKET,
16	47049030	1	NUT, M8x10
17	47049082	1	SCREW, M8x35
18	47048328	1	SPACER,
19	47048735	1	COLLAR,
21	87302505	1	HOSE, FLEXIBLE,
22	167266	1	O-RING, 12-1, 90 Duro, .924 ID x .116" Thk,

1.63.0(01) POWER STEERING HYDRAULIC SYSTEM

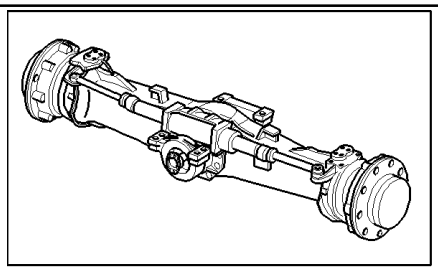

LB115.B EUR BACKHOE LOADER (1/05-)

1.63.0(01) POWER STEERING HYDRAULIC SYSTEM

Ref	Part Number	Qty	Description
1	85805232	1	VALVE, HYDRAULIC, , Only for LB115.B - B115, See Page 1.63.0/A
2	11193879	2	WASHER, SPRING, Belleville, M8.4, , Only for LB115.B - B115
3	16043421	2	SCREW, Hex, M8 x 20, 8.8, , Only for LB115.B - B115
4	390951S36	4	CONNECTOR, HYD., {PP:83963371} , Only for LB115.B - B115
5	85805318	2	ELBOW, 90ş, 9/16"-18, 37ş x 9/16"-18, O-Ring, , Only for LB115.B - B115
6	85815615	2	HOSE, FLEXIBLE, , Only for LB115.B - B115
7	85813377	2	HOSE, FLEXIBLE, , Only for LB115.B - B115
8	85812202	1	HOSE, FLEXIBLE, , Only for LB115.B - B115
9	85815614	2	CONNECTOR, HYD., 11/16"-16 ORS x 9/16"-18, O-Ring, , Only for LB115.B - B115
10	85803332	1	STRAP, CABLE, , Not for LB115.B - B115
11	85812212	2	HOSE, FLEXIBLE, , Not for LB115.B - B115
12	83985067	1	CONNECTOR, HYD., , Not for LB115.B - B115
13	83983763	1	CONNECTOR, HYD., , Not for LB115.B - B115
14	85826080	1	HOSE, FLEXIBLE, L=MM.1200, Only for LB115.B - B115
15	85805231	1	HOSE, FLEXIBLE, L=2100 mm, Only for LB115.B - B115
16	9993141	1	O-RING, -012, 90 Duro, .364" ID x .070" Thk, , Only for LB115.B - B115
17	9617873	1	O-RING, {PP:89617873} 6-1, 90 Duro, .468" ID x .078" Thk, , Only for LB115.B - B115

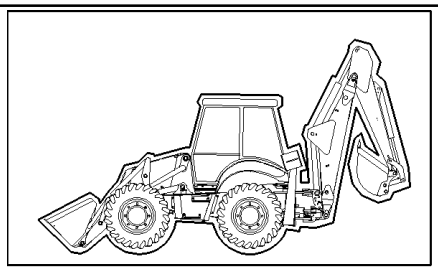

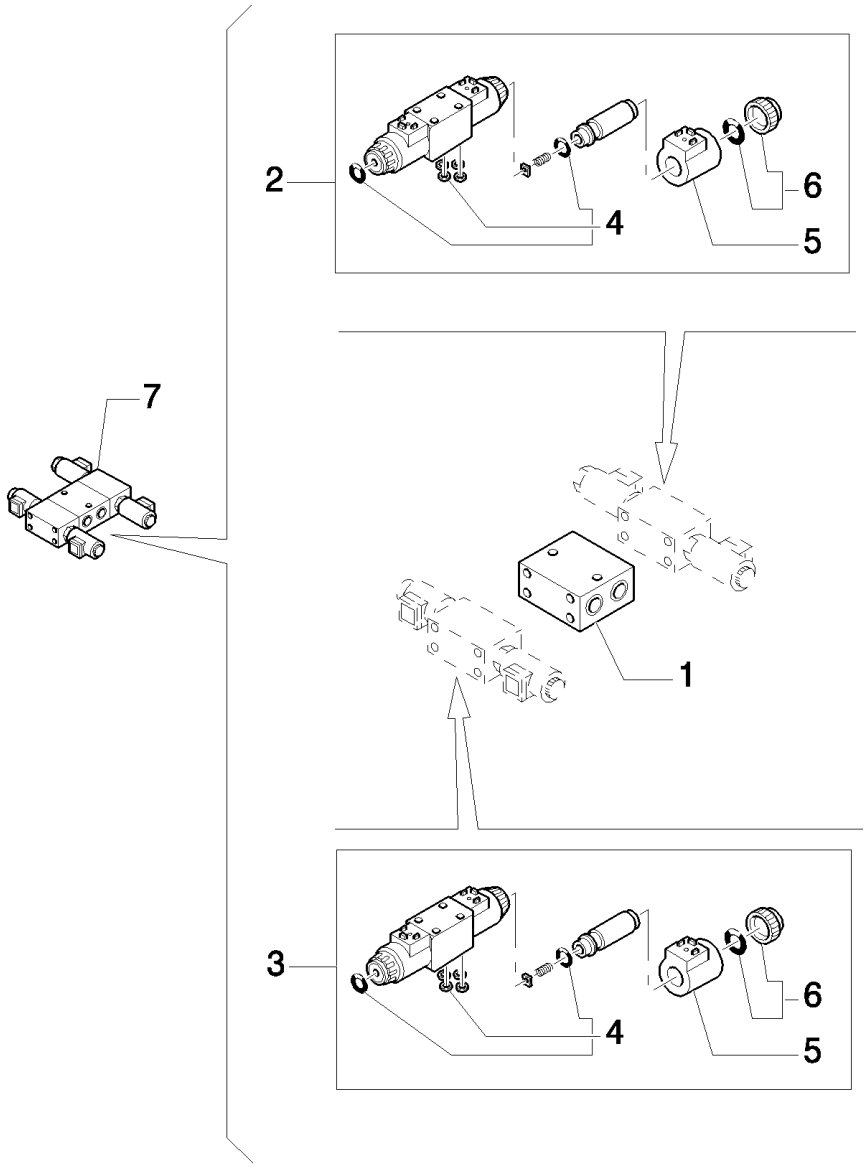
2
4
6
5
7
1
3
4
6
5

LB115.B EUR BACKHOE LOADER (1/05-)

1.63.0/ A(01) POWER STEERING HYDRAULIC SYSTEM (4WS)

Ref	Part Number	Qty	Description
1	85812014	1	PLATE,
2	85812017	1	VALVE, SOLENOID, Front, Includes 4, 5, 6
3	85812019	1	VALVE, SOLENOID, Rear, Includes 4, 5, 6
4	85812018	2	KIT, SEALS,
5	85812015	4	COIL,
6	85812016	4	KIT, SEALS,
7	85805232	1	VALVE, HYDRAULIC, Assy

1.75.2(01) CHASSIS HARNESS & GROUND WIRE (POWER SHUTTLE)

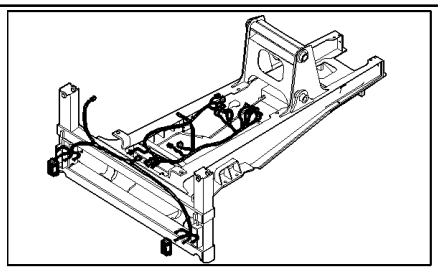

KIT KIT KIT = 14

LB115.B EUR BACKHOE LOADER (1/05-)

1.75.2(01) CHASSIS HARNESS & GROUND WIRE (POWER SHUTTLE)

Ref	Part Number	Qty	Description
1	87406399	1	HARNESS, WIRE,
2	85805686	4	CLIP, HOSE,
3	85805685	2	CLIP, HOSE,
4	14560187	55	STRAP, CABLE, L=203.2 mm
5	85803884	1	Strap, Ground,
6	16043021	1	SCREW, Hex, M8 x 12, 8.8, Full Thd,
7	11193879	1	WASHER, SPRING, Belleville, M8.4,
8	14048211	1	NUT, M8 x 1.25, Cl 8,
9	12647121	1	WASHER, M8 x 20 x 3,
10	87303310	2	HARNESS, WIRE,
11	85803854	2	LAMP, TAIL,
12	12647601	4	WASHER, M6 x 16 x 2,
13	14305321	4	SCREW, Hex Soc Hd, M6 x 20, 8.8,
14	87406389	1	HARNESS, WIRE,

Up To S/N XXX

1.75.2(02) CHASSIS HARNESS & GROUND WIRE (POWER SHUTTLE)

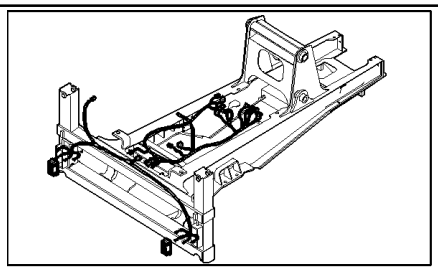

KIT
KIT KIT
17= ●
19= ▲

LB115.B EUR BACKHOE LOADER (1/05-)

1.75.2(02) CHASSIS HARNESS & GROUND WIRE (POWER SHUTTLE)

Ref	Part Number	Qty	Description
1	87544169	1	HARNESS,
2	85805686	4	CLIP, HOSE,
3	85805685	2	CLIP, HOSE,
4	14560187	55	STRAP, CABLE, L=203.2 mm
5	85803884	1	Strap, Ground,
6	16043021	1	SCREW, Hex, M8 x 12, 8.8, Full Thd,
7	11193879	1	WASHER, SPRING, Belleville, M8.4,
8	14048211	1	NUT, M8 x 1.25, Cl 8,
9	12647121	1	WASHER, M8 x 20 x 3,
10	87303310	2	HARNESS, WIRE,
11	85803854	2	LAMP, TAIL,
12	10902321	4	SCREW, Hex, M6 x 18, 8.8, Full Thd,
13	87302820	2	BRACKET,
14	10441190	2	CLAMP,
15	12574211	4	NUT, M6 x 1, Cl 8,
16	87303306	2	CLIP,
17	87303309	1	LAMP, TAIL,
18	15980321	2	SCREW, Hex, M16 x 1.5 x 22, 8.8, Full Thd, M16x1.5x25
19	87318551	1	LAMP, TAIL,
20	87302756	2	SUPPORT,
21	11191579	2	WASHER, SPRING, Belleville, M17,

From To S/N XXX

1.75.2(03) BATTERY LOCK-OUT SWITCH & GROUND WIRE (POWER SHUTTLE)

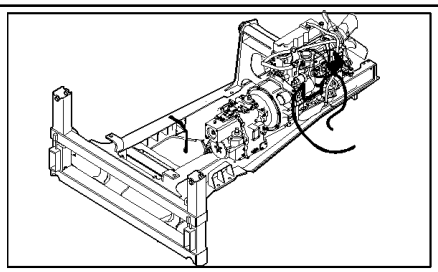

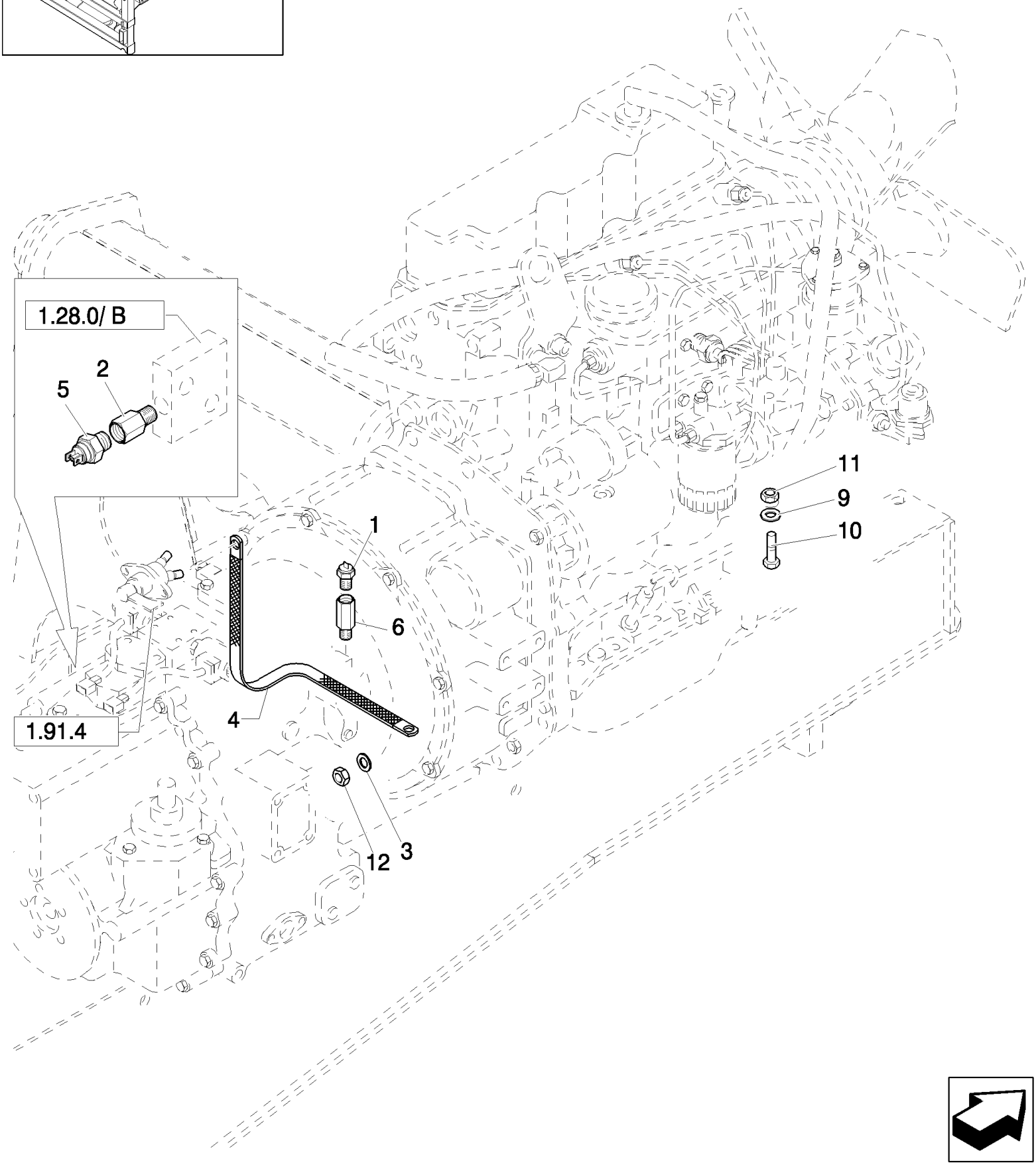

LB115.B EUR BACKHOE LOADER (1/05-)

1.75.2(03) BATTERY LOCK-OUT SWITCH & GROUND WIRE (POWER SHUTTLE)

Ref	Part Number	Qty	Description
1	85803879	1	SENDER UNIT,
2	85820156	1	ADAPTER, POSITIVE
3	12647121	1	WASHER, M8 x 20 x 3,
4	87405018	1	Strap, Ground,
5	85817672	1	SWITCH, PRESSURE,
6	85803524	1	ADAPTER,
9	47048993	1	WASHER,
10	47049010	1	SCREW, M10x20
11	47049031	1	NUT, M10
12	16104111	1	NUT, M8 x 1.25, Cl 8,

1.75.2(04) ENGINE HARNESS (POWER SHUTTLE)

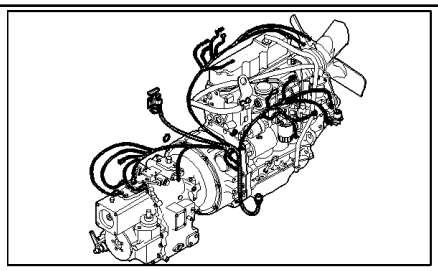

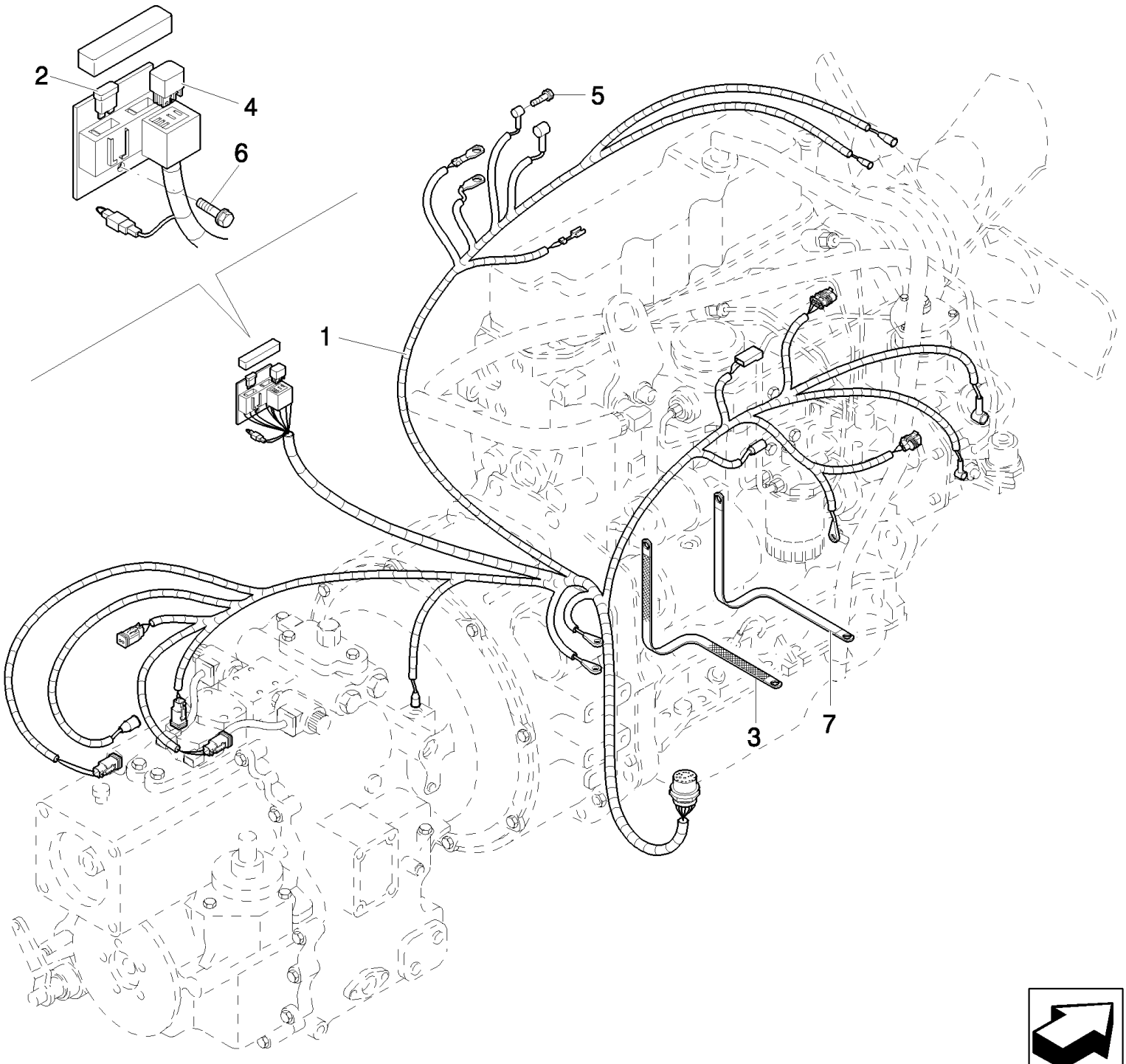

LB115.B EUR BACKHOE LOADER (1/05-)

1.75.2(04) ENGINE HARNESS (POWER SHUTTLE)

Ref	Part Number	Qty	Description
1	87406398	1	HARNESS, WIRE, Includes 87431470 3 amp diode, Includes 2, 4
2	11055890	1	FUSE, 80A
3	87407206	1	Strap, Ground,
4	85805162	1	RELAY, 12V-70A
5	47049186	2	BOLT, Hex, M10 x 30, 8.8,
6	16043824	1	SCREW, Hex, M8 x 30, 8.8, Full Thd,
7	87410268	1	Strap, Ground,

1.75.2/ 2(01) CHASSIS HARNESS & GROUND WIRE (POWER SHIFT)

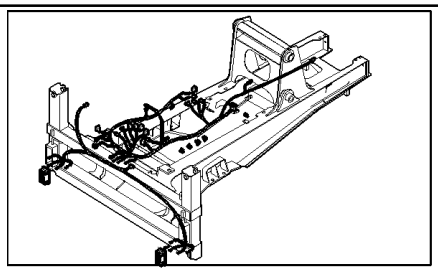

KIT KIT KIT = 14

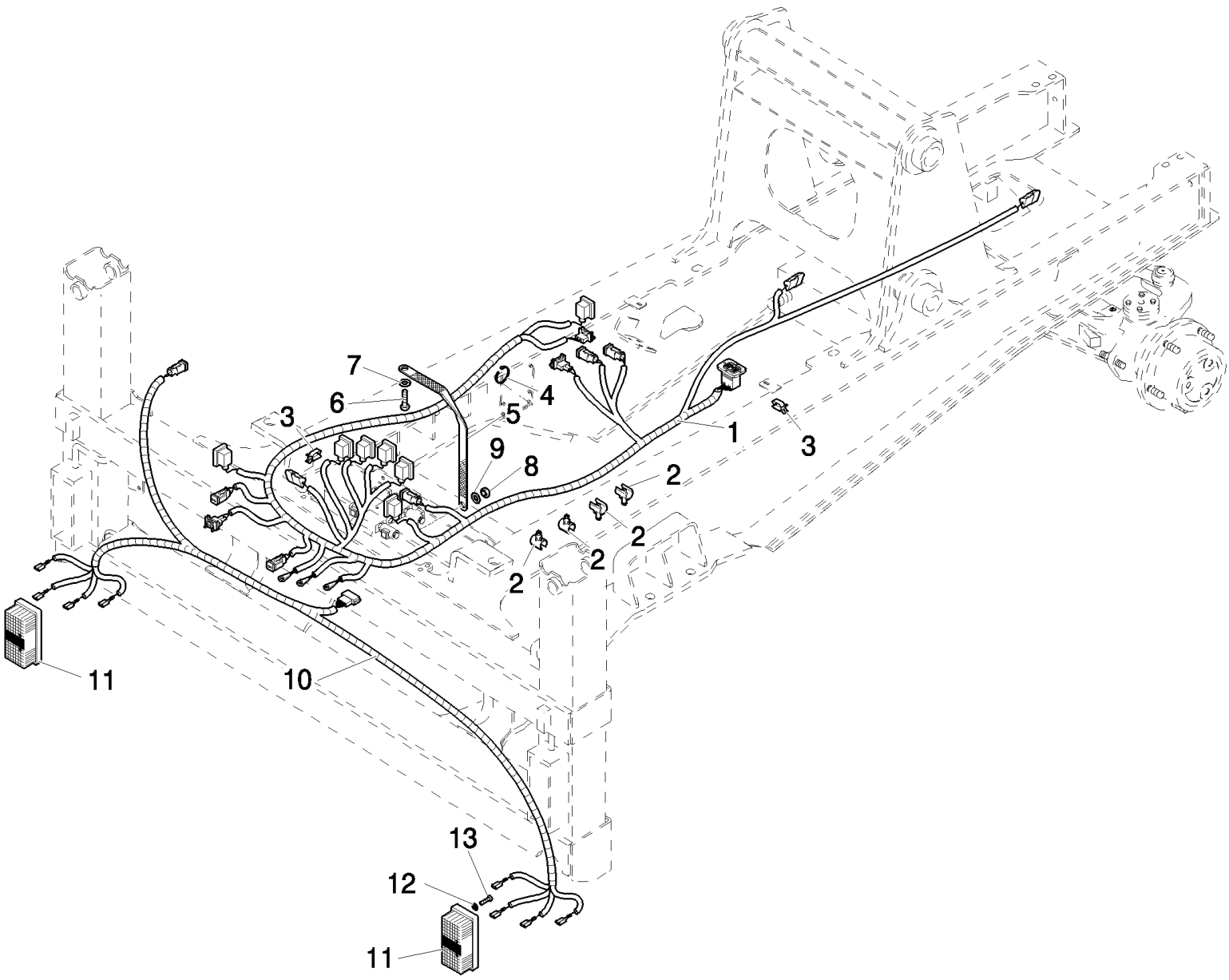

LB115.B EUR BACKHOE LOADER (1/05-)

1.75.2/ 2(01) CHASSIS HARNESS & GROUND WIRE (POWER SHIFT)

Ref	Part Number	Qty	Description
1	87406407	1	HARNESS, WIRE,
2	85805686	4	CLIP, HOSE,
3	85805685	3	CLIP, HOSE,
4	14560187	55	STRAP, CABLE, L=203.2 mm
5	85803884	1	Strap, Ground,
6	16043021	1	SCREW, Hex, M8 x 12, 8.8, Full Thd,
7	11193879	1	WASHER, SPRING, Belleville, M8.4,
8	14048221	1	NUT, M8 x 1.25, Cl 10,
9	12647121	1	WASHER, M8 x 20 x 3,
10	85802374	1	HARNESS, WIRE,
11	85803854	2	LAMP, TAIL,
12	12647601	4	WASHER, M6 x 16 x 2,
13	14305321	4	SCREW, Hex Soc Hd, M6 x 20, 8.8,
14	87406396	1	HARNESS, WIRE,

Up To S/N XXX

1.75.2/ 2(02) CHASSIS HARNESS & GROUND WIRE (POWER SHIFT)

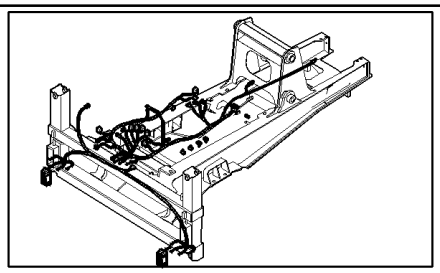

KIT
KIT KIT
17= ●
19= ▲

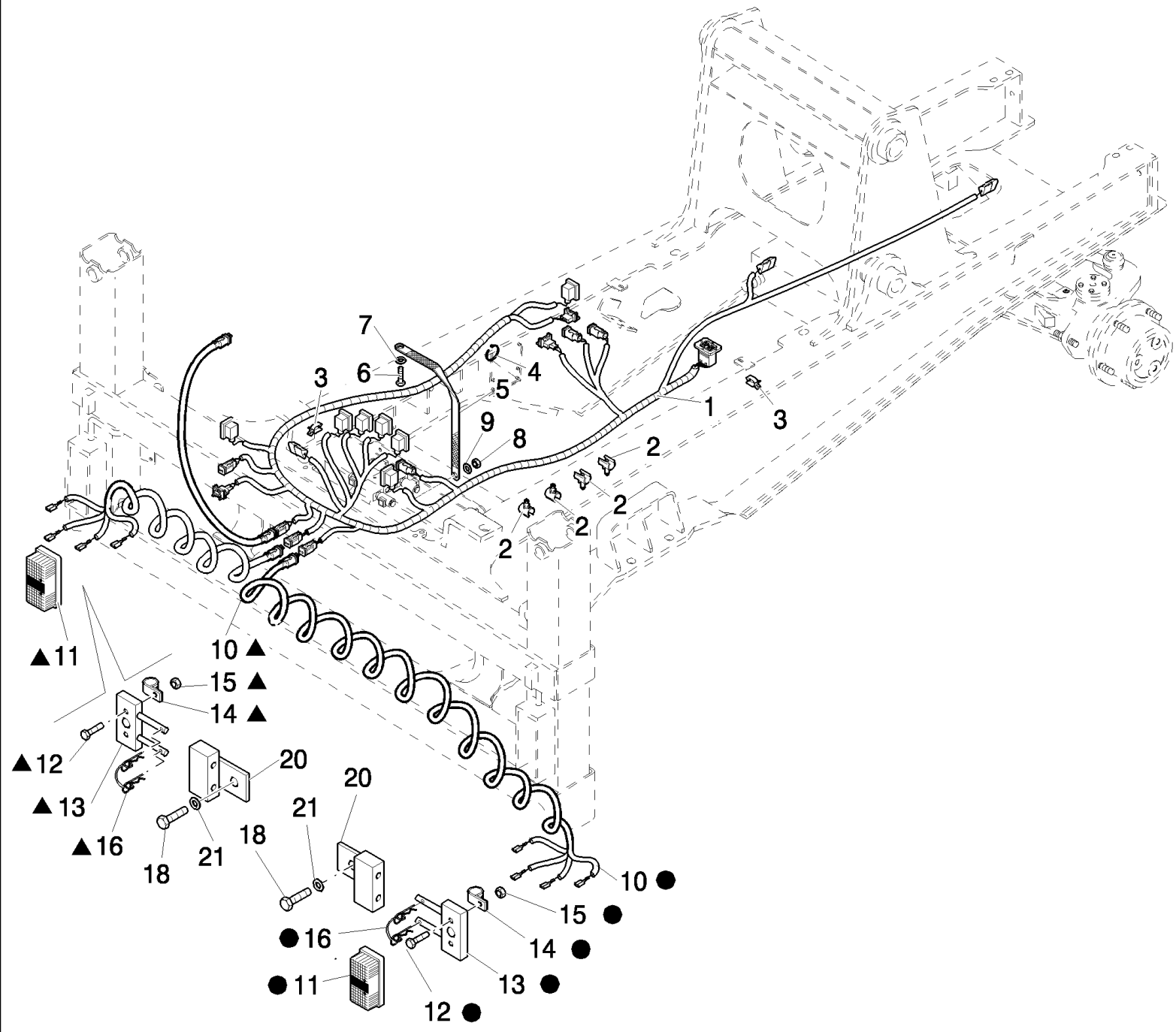

LB115.B EUR BACKHOE LOADER (1/05-)

1.75.2/ 2(02) CHASSIS HARNESS & GROUND WIRE (POWER SHIFT)

Ref	Part Number	Qty	Description
1	87406407	1	HARNESS, WIRE,
2	85805686	4	CLIP, HOSE,
3	85805685	3	CLIP, HOSE,
4	14560187	55	STRAP, CABLE, L=203.2 mm
5	85803884	1	Strap, Ground,
6	16043021	1	SCREW, Hex, M8 x 12, 8.8, Full Thd,
7	11193879	1	WASHER, SPRING, Belleville, M8.4,
8	14048221	1	NUT, M8 x 1.25, Cl 10,
9	12647121	1	WASHER, M8 x 20 x 3,
10	87303310	2	HARNESS, WIRE,
11	85803854	2	LAMP, TAIL,
12	10902321	4	SCREW, Hex, M6 x 18, 8.8, Full Thd,
13	87302820	2	BRACKET,
14	10441190	2	CLAMP,
15	12574211	4	NUT, M6 x 1, Cl 8,
16	87303306	2	CLIP,
17	87303309	1	LAMP, TAIL,
18	15980321	1	SCREW, Hex, M16 x 1.5 x 22, 8.8, Full Thd, M16x1.25x25
19	87318551	1	LAMP, TAIL,
20	87302756	2	SUPPORT,
21	11191579	2	WASHER, SPRING, Belleville, M17,

From To S/N XXX

1.75.2/ 2(03) BATTERY LOCK-OUT SWITCH & GROUND WIRE (POWER SHIFT)

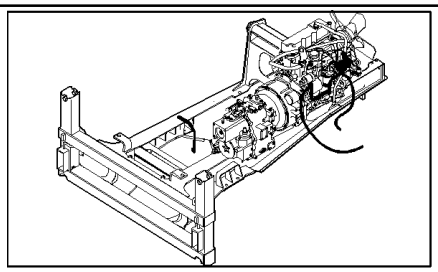

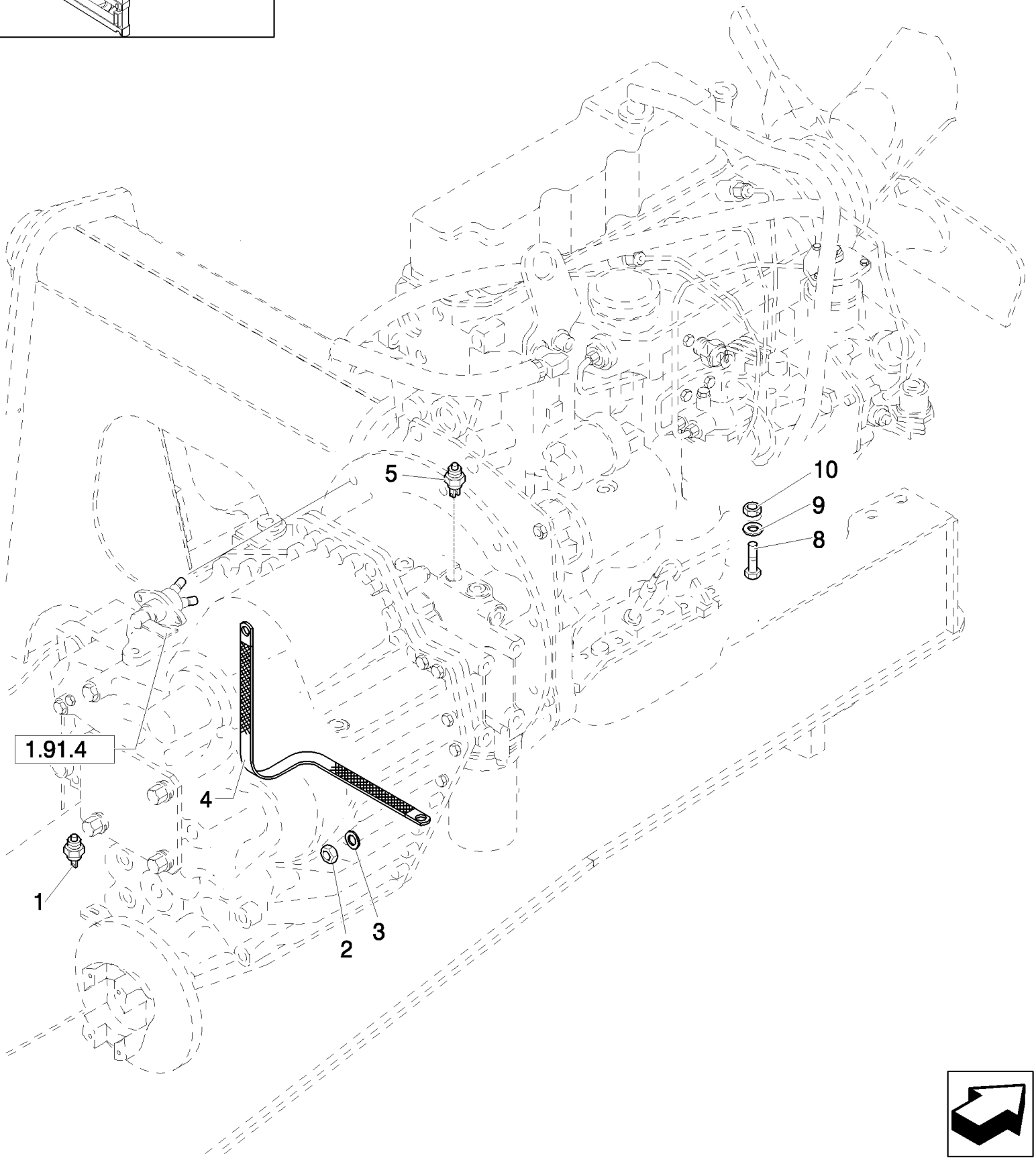

LB115.B EUR BACKHOE LOADER (1/05-)

1.75.2/ 2(03) BATTERY LOCK-OUT SWITCH & GROUND WIRE (POWER SHIFT)

Ref	Part Number	Qty	Description
1	85802381	1	SENDER UNIT,
2	16104111	1	NUT, M8 x 1.25, Cl 8,
3	12647121	1	WASHER, M8 x 20 x 3,
4	87405018	1	Strap, Ground,
5	85818894	1	SWITCH, PRESSURE,
8	47049010	1	SCREW, M10x20
9	47048993	1	WASHER,
10	47049031	1	NUT, M10

1.75.2/ 2(04) ENGINE HARNESS (POWER SHIFT)

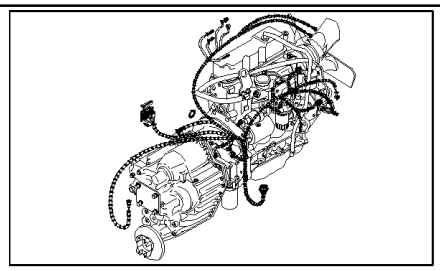

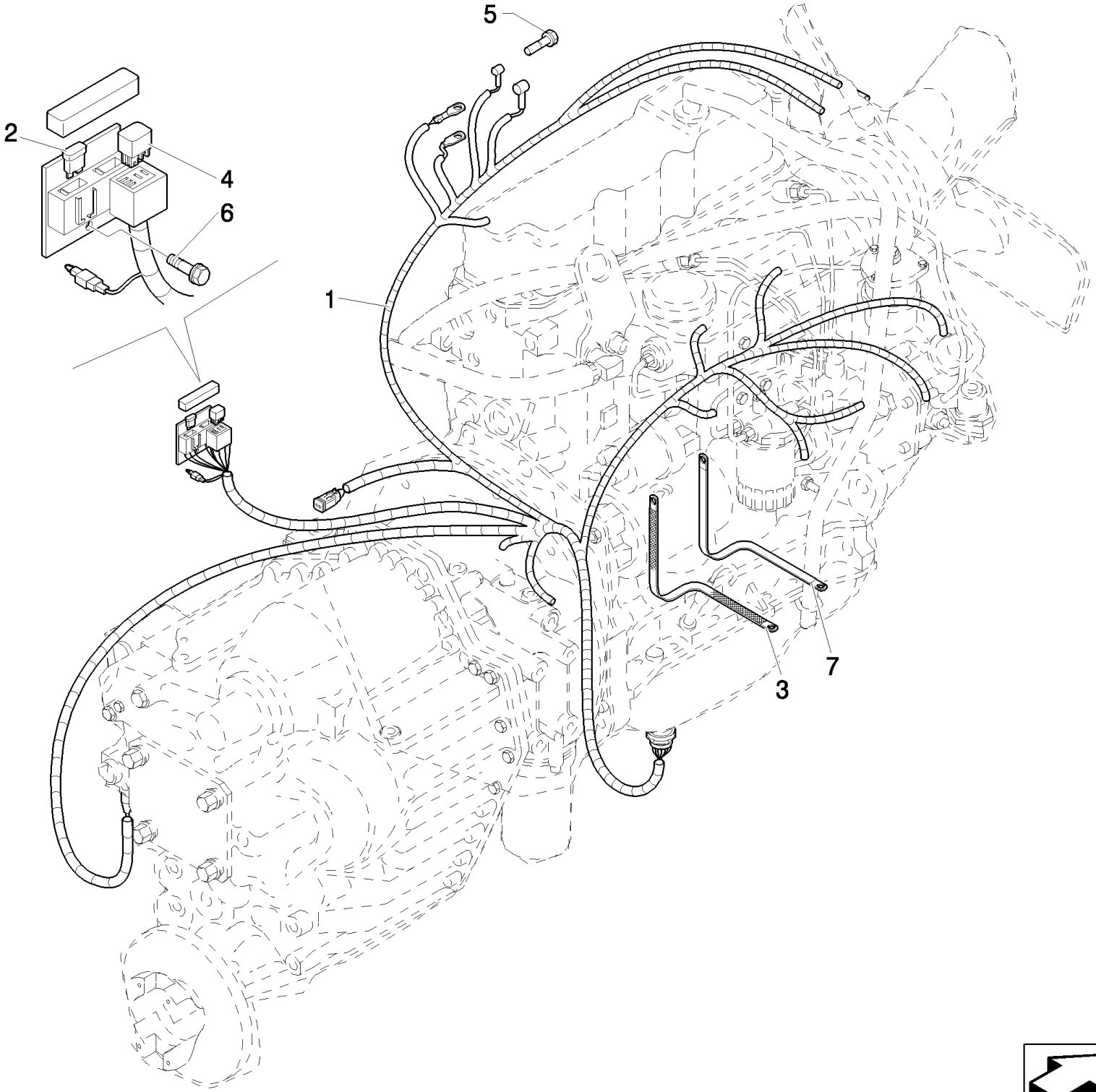

LB115.B EUR BACKHOE LOADER (1/05-)

1.75.2/ 2(04) ENGINE HARNESS (POWER SHIFT)

Ref	Part Number	Qty	Description
1	87406403	1	HARNESS, WIRE, , Includes 2, 3, 4
2	11055890	1	FUSE, 80A
3	87407206	1	Strap, Ground,
4	85805162	1	RELAY, 12V-70A
5	47049186	1	BOLT, Hex, M10 x 30, 8.8,
6	16043824	1	SCREW, Hex, M8 x 30, 8.8, Full Thd,
7	87410268	1	Strap, Ground,

1.75.2/ 5(01) CHASSIS HARNESS & GROUND WIRE (POWER SHIFT)

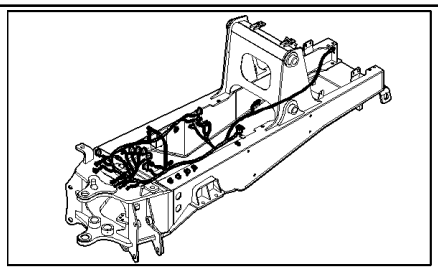

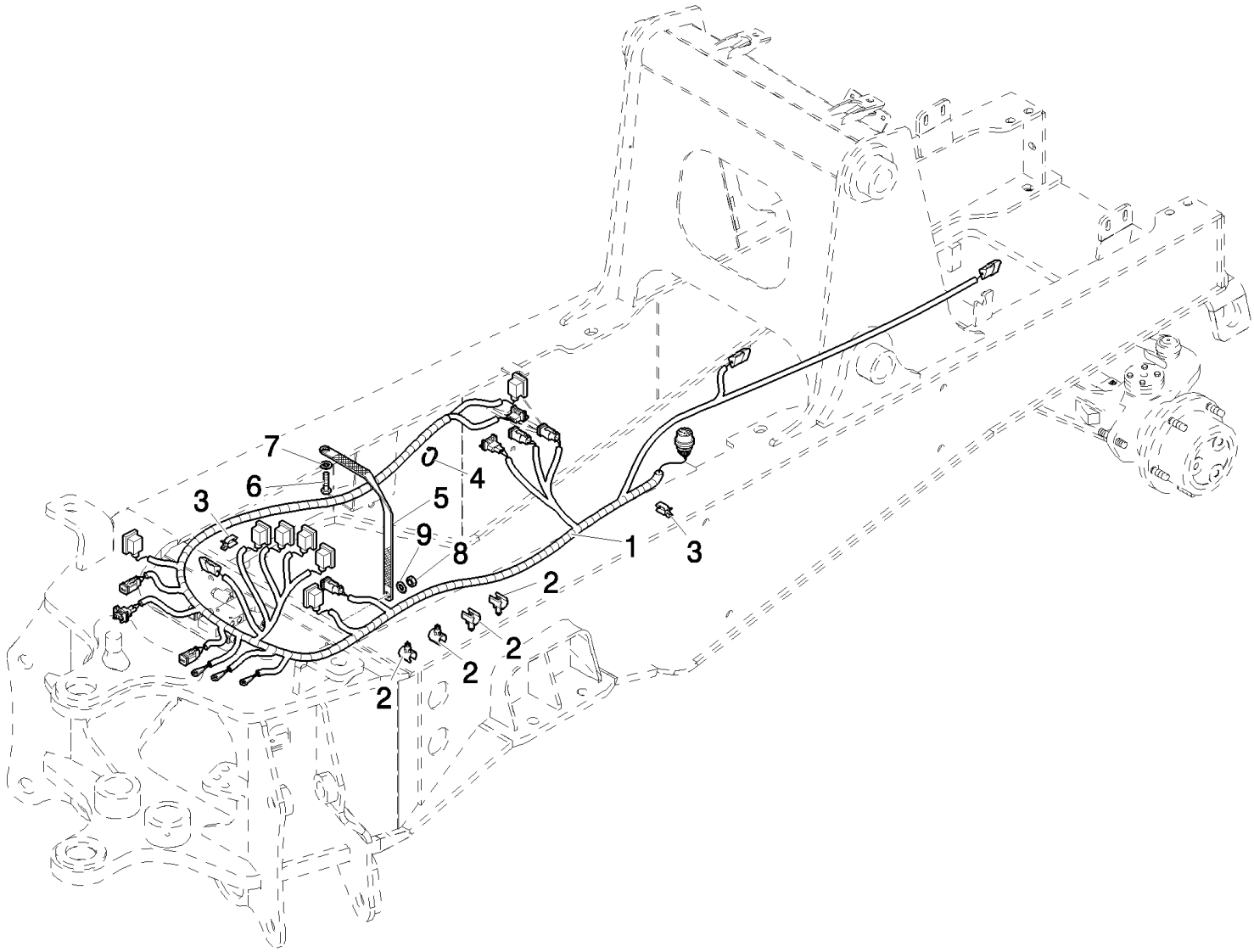

LB115.B EUR BACKHOE LOADER (1/05-)

1.75.2/ 5(01) CHASSIS HARNESS & GROUND WIRE (POWER SHIFT)

Ref	Part Number	Qty	Description
1	87406407	1	HARNESS, WIRE,
2	85805686	4	CLIP, HOSE,
3	85805685	3	CLIP, HOSE,
4	14560187	55	STRAP, CABLE, L=203.2 mm
5	85803884	1	Strap, Ground,
6	16043021	1	SCREW, Hex, M8 x 12, 8.8, Full Thd,
7	11193879	1	WASHER, SPRING, Belleville, M8.4,
8	14048211	1	NUT, M8 x 1.25, Cl 8,
9	12647121	1	WASHER, M8 x 20 x 3,

1.75.2/ 5(02) BATTERY LOCK-OUT SWITCH & GROUND WIRE (POWER SHIFT)

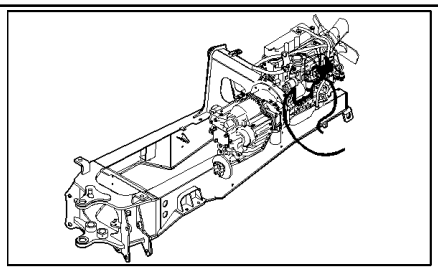

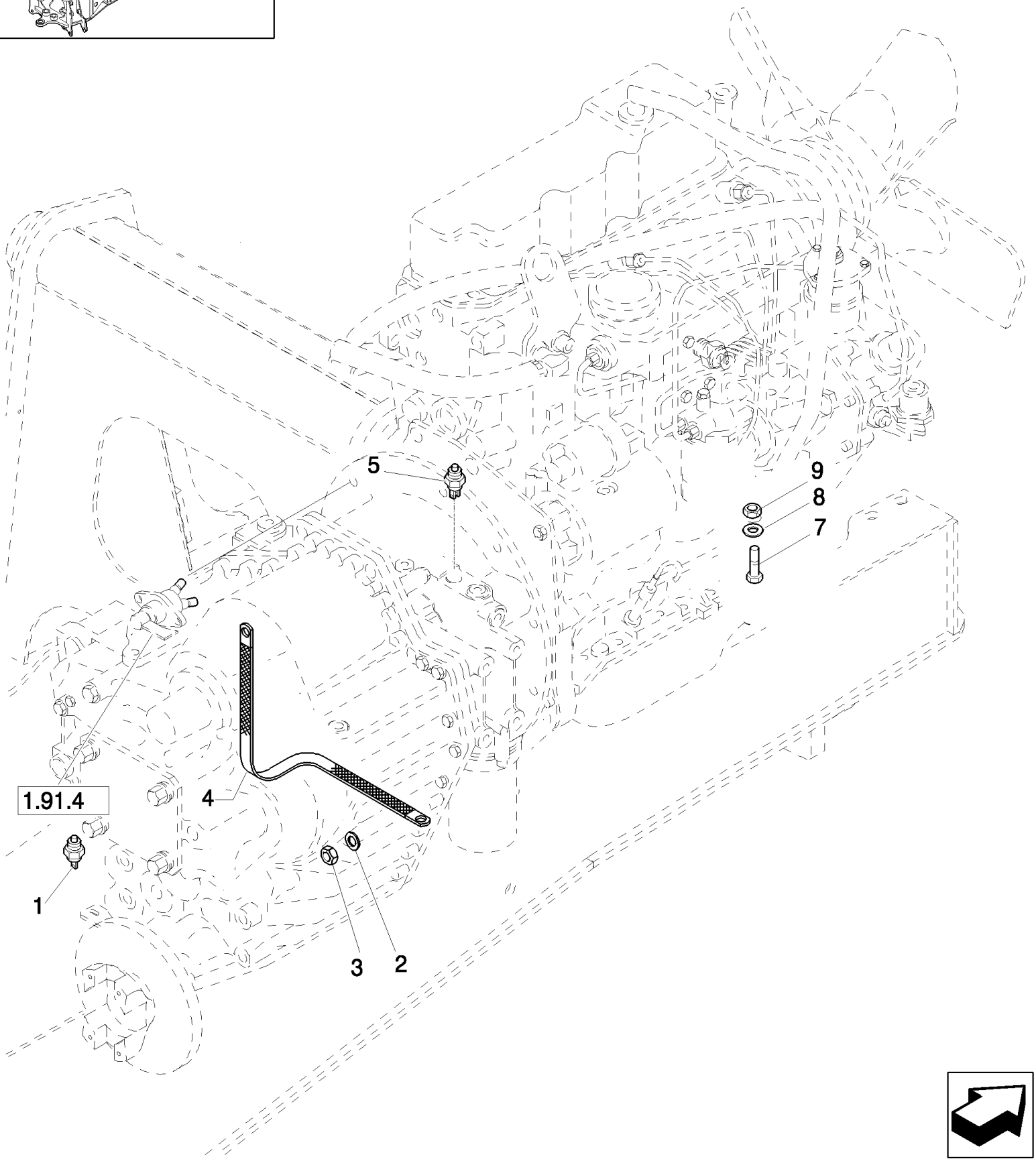

LB115.B EUR BACKHOE LOADER (1/05-)

1.75.2/ 5(02) BATTERY LOCK-OUT SWITCH & GROUND WIRE (POWER SHIFT)

Ref	Part Number	Qty	Description
1	85802381	1	SENDER UNIT,
2	12647121	1	WASHER, M8 x 20 x 3,
3	16104111	1	NUT, M8 x 1.25, Cl 8,
4	87405018	1	Strap, Ground,
5	85818894	1	SWITCH, PRESSURE,
7	47049010	1	SCREW, M10x20
8	47048993	1	WASHER,
9	47049031	1	NUT, M10

1.75.2/ 5(03) ENGINE HARNESS (POWER SHIFT)

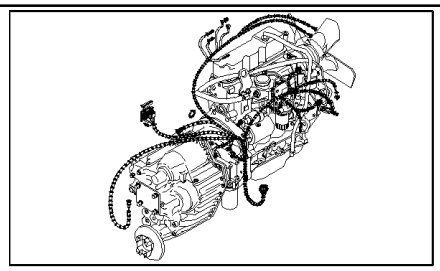

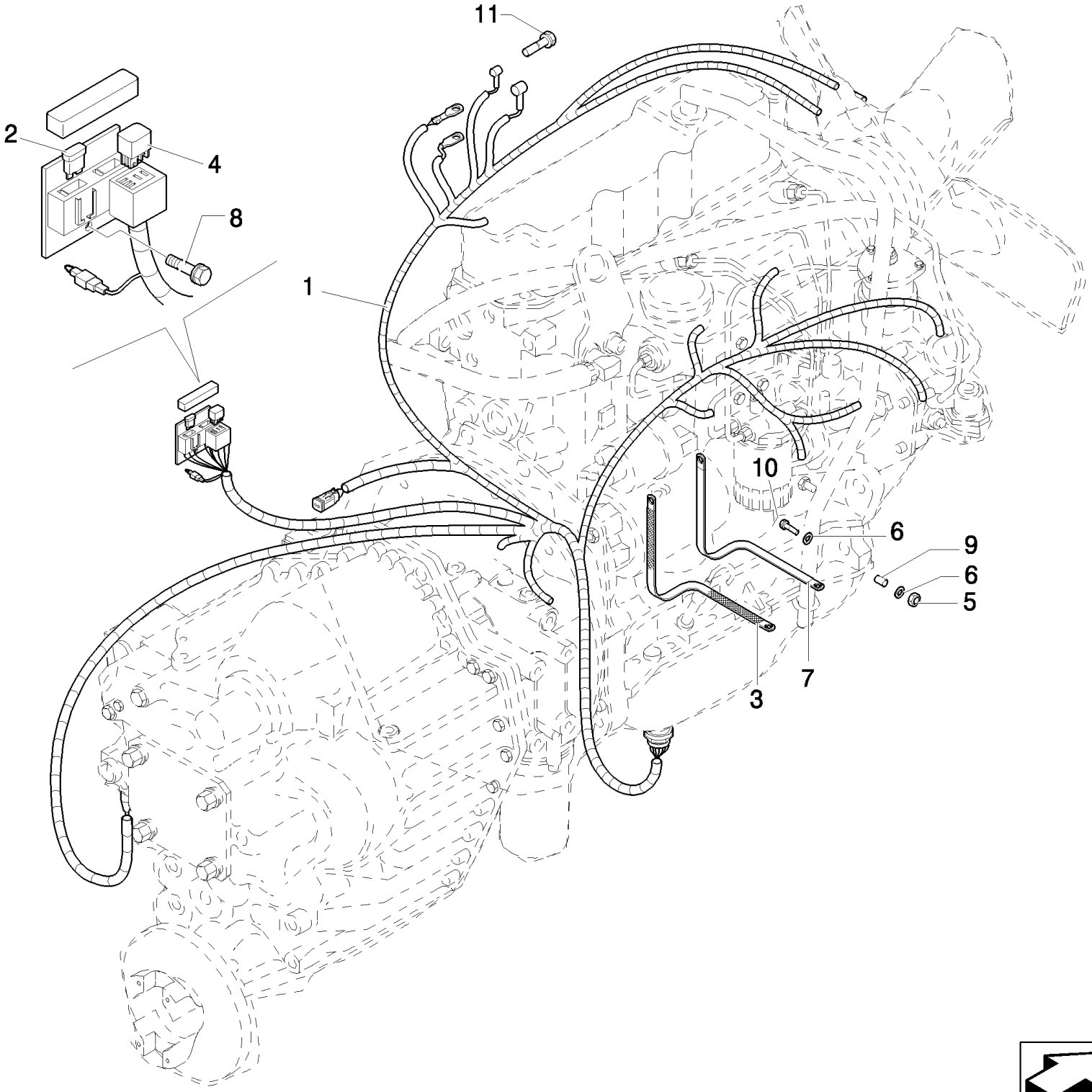

LB115.B EUR BACKHOE LOADER (1/05-)

1.75.2/ 5(03) ENGINE HARNESS (POWER SHIFT)

Ref	Part Number	Qty	Description
1	87406403	1	HARNESS, WIRE, , Includes 2, 3, 4
2	11055890	1	FUSE, 80A
3	87407206	1	Strap, Ground,
4	85805162	1	RELAY, 12V-70A
5	14048211	1	NUT, M8 x 1.25, Cl 8,
6	12638511	2	WASHER, M8 x 15 x 1.5, 8x15
7	87410268	1	Strap, Ground,
8	16043824	1	SCREW, Hex, M8 x 30, 8.8, Full Thd,
9	87415208	1	SPACER,
10	16044221	2	SCREW, Hex, M8 x 50, 8.8,
11	47049186	1	BOLT, Hex, M10 x 30, 8.8,

1.80.99(01) SWING POST ASSEMBLY, BUSHINGS & PINS

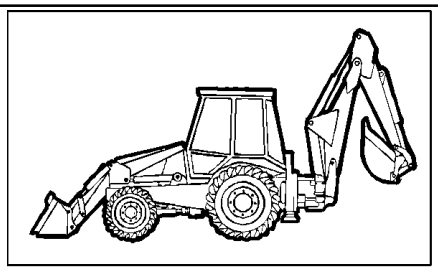

KIT
KIT KIT
18 = ●

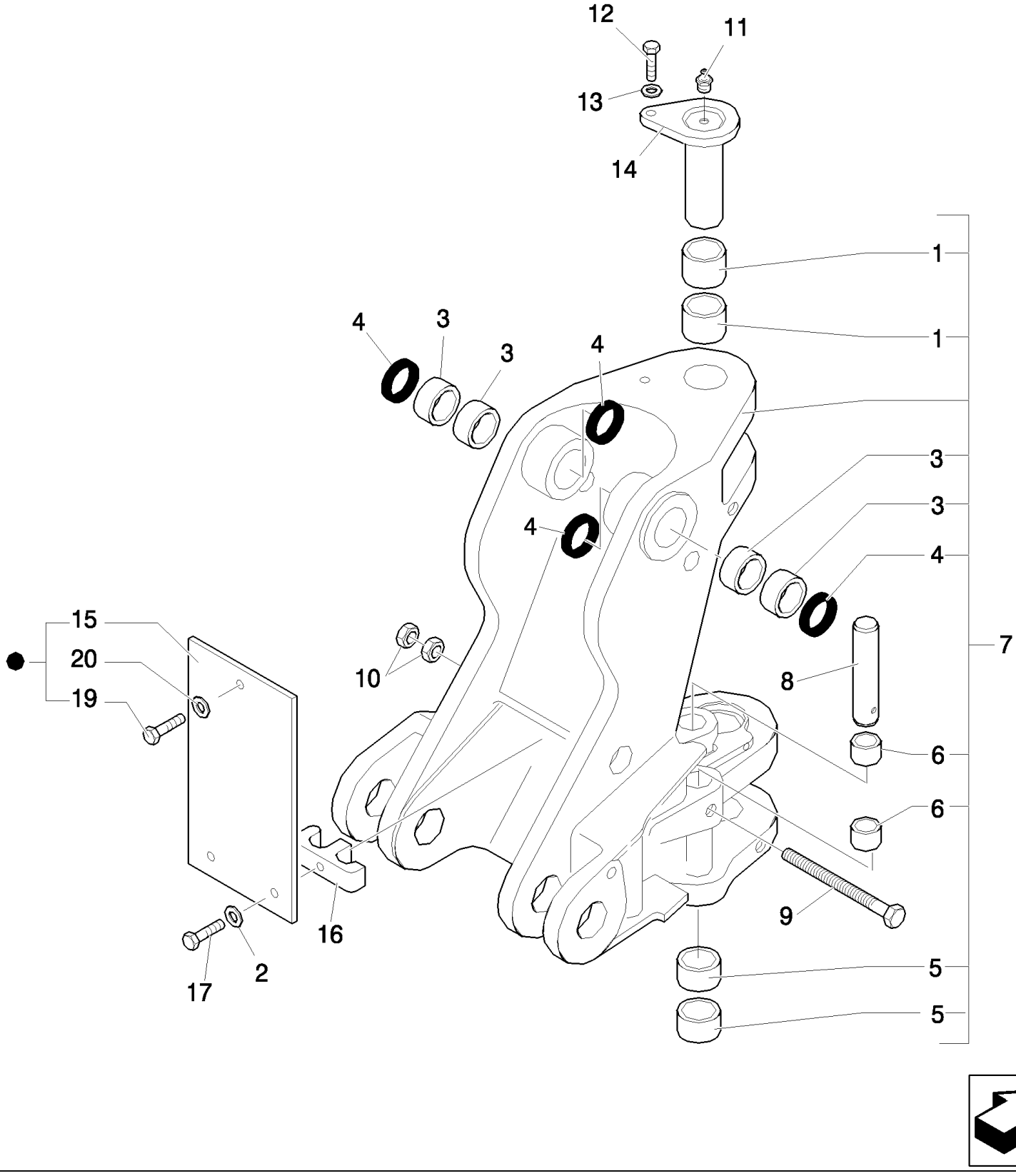

LB115.B EUR BACKHOE LOADER (1/05-)

1.80.99(01) SWING POST ASSEMBLY, BUSHINGS & PINS

Ref	Part Number	Qty	Description
1	85803196	2	BUSHING,
2	11190579	2	WASHER, SPRING, Belleville, M10.5,
3	85801029	4	BUSHING,
4	85801025	4	SEAL,
5	85803197	2	BUSHING,
6	85803193	4	BUSHING,
7	85803623	1	SUPPORT, P/N 85801028 in Primer colour, Includes 1, 3 To 6
8	85803192	2	PIN,
9	87363478	2	SCREW, M10x270
10	10717421	2	NUT, Thin, M14 x 2, Cl 05, M14
11	83416242	AR	NIPPLE, LUBE, 1/8"-27
12	85802397	1	SCREW, M16X40
13	85802396	1	WASHER,
14	85801076	1	PIN,
15	85805137	1	PLATE,
16	87310285	1	CLAMP,
17	11107321	2	SCREW, Hex, M10 x 55, 8.8,
18	85805648	1	KIT,
19	16043621	1	BOLT, Hex, M8 x 25, 8.8,
20	11193979	1	WASHER, SPRING, Belleville, M8.4,

1.80.99(02) SWING POST PINS & TRANSPORT LOCK HOOK

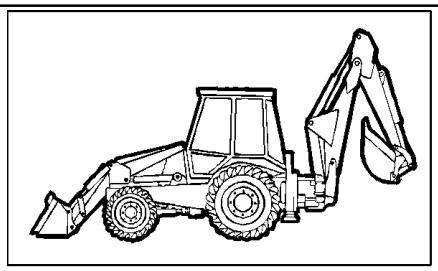

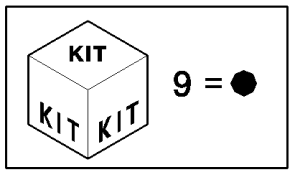

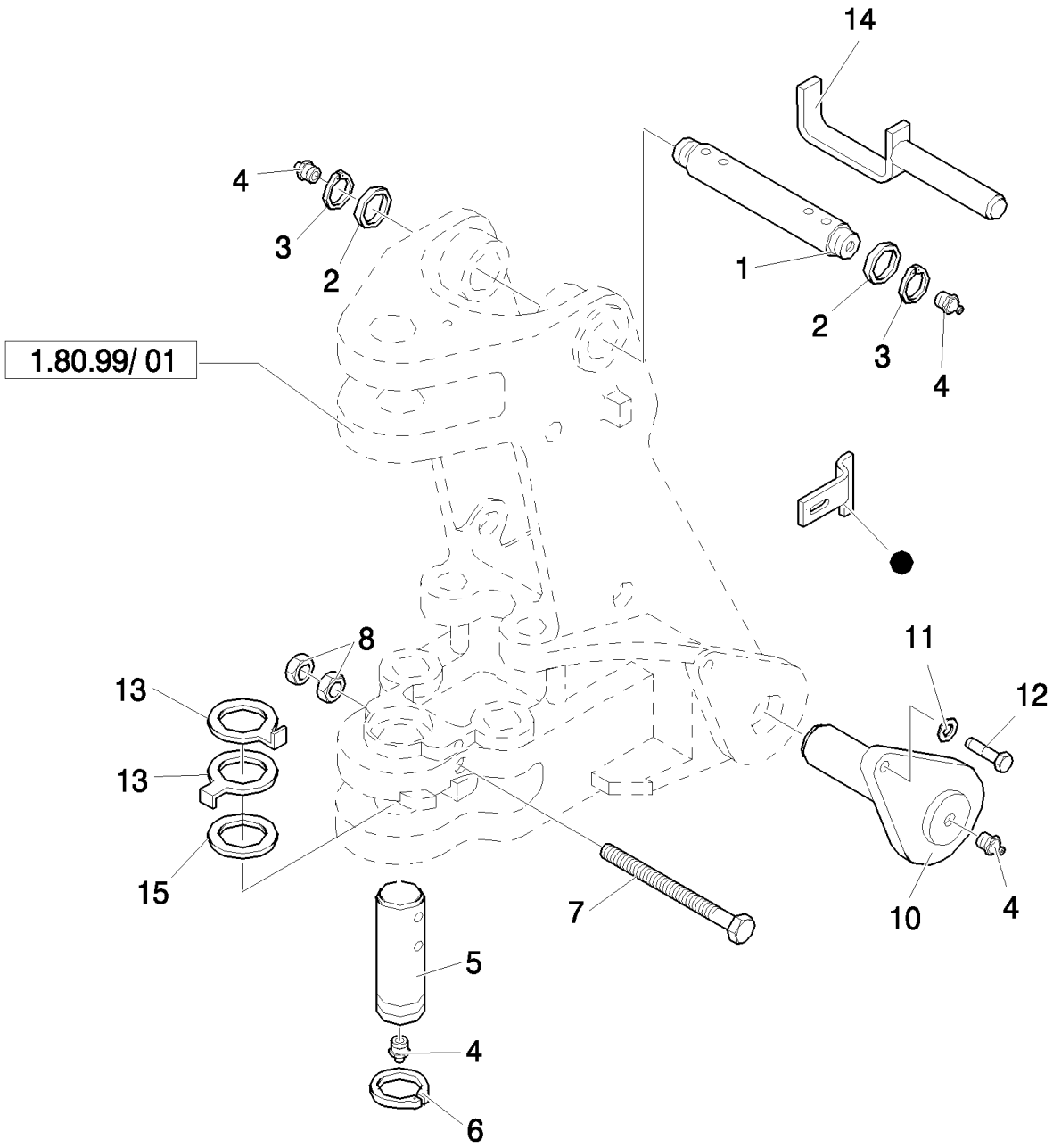

LB115.B EUR BACKHOE LOADER (1/05-)

1.80.99(02) SWING POST PINS & TRANSPORT LOCK HOOK

Ref	Part Number	Qty	Description
1	85801026	1	PIN,
2	83910977	2	SPACER, M45X66X3
3	83911019	2	RING, SNAP,
4	83416242	AR	NIPPLE, LUBE, 1/8"-27
5	85801079	1	PIN,
6	85803198	1	RING, SNAP,
7	15201934	2	BOLT, Hex, M14 x 170, 10.9, M14x170
8	10717421	2	NUT, Thin, M14 x 2, Cl 05, M14
9	85816776	1	KIT,
10	85802872	2	PIN,
11	85802396	2	WASHER,
12	85802397	2	SCREW, M16X40
13	85801191	2	SPACER,
14	85819613	1	PIN, , Only for LB 90.B - LB95.B - LB110.B
15	8274447	1	SHIM,

1.82.0(01) HYDRAULIC OIL RESERVOIR

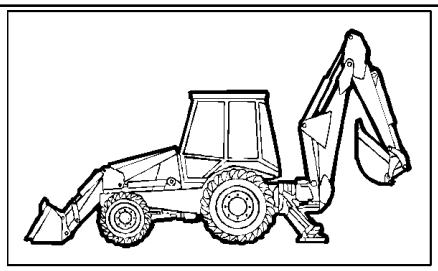

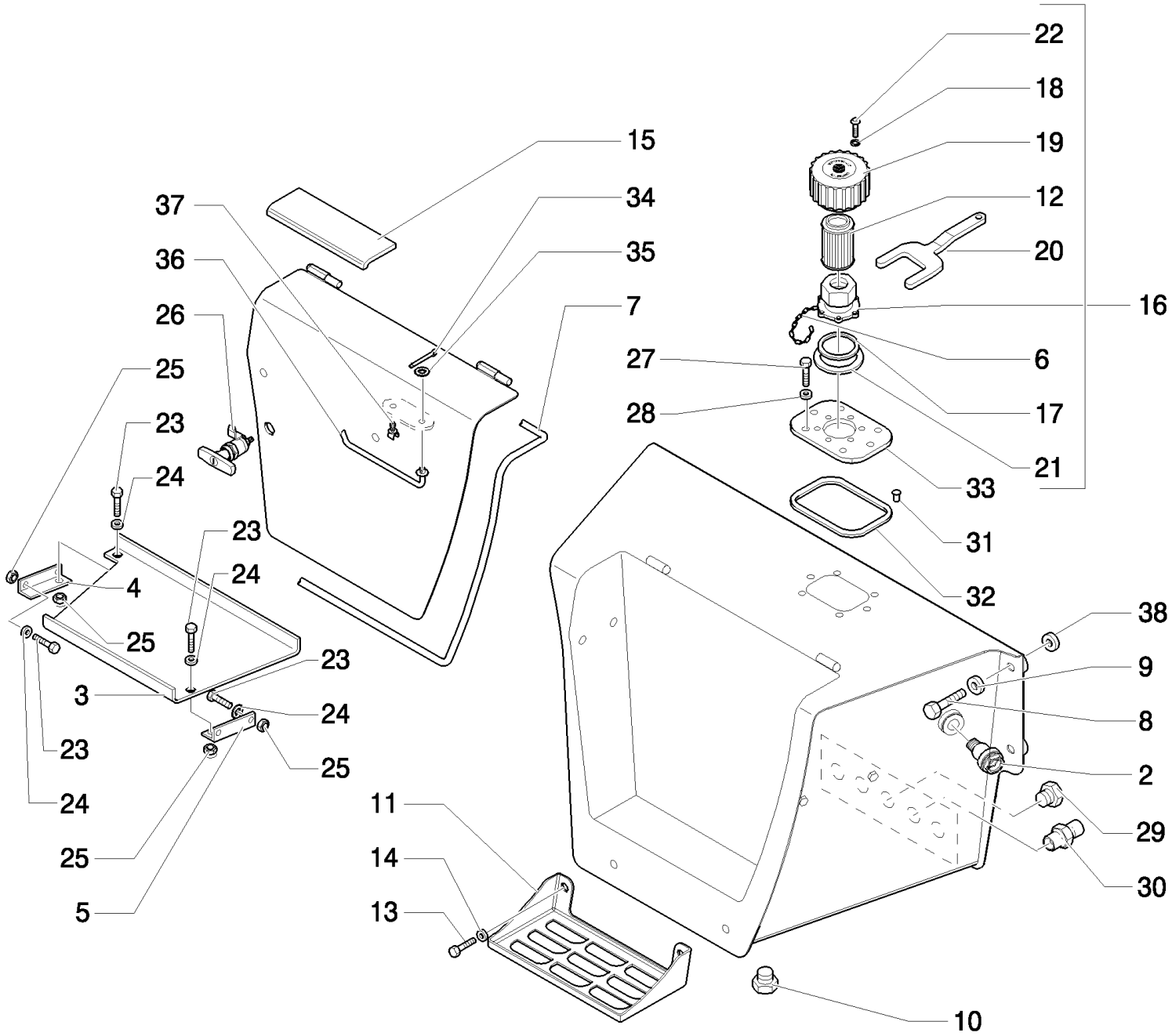

LB115.B EUR BACKHOE LOADER (1/05-)

1.82.0(01) HYDRAULIC OIL RESERVOIR

Ref	Part Number	Qty	Description
	87577246	1	TANK, , Includes 2 To 38
2	85801249	1	GAUGE, LEVEL,
3	87407463	1	TRAY,
4	87407464	1	BRACKET,
5	87407465	1	BRACKET, M6x22
6	85813352	1	FLANGE,
7	87417207	1	SEAL, RUBBER,
8	15540721	4	SCREW, Hex, M12 x 1.25 x 45, 8.8, Full Thd,
9	47048976	4	WASHER,
10	47050671	2	PLUG, M33x2
11	85801218	2	PILLAR,
12	87407928	1	FILTER,
13	11112421	4	SCREW, Hex, M12 x 30, 8.8,
14	47048973	4	WASHER,
15	87404910	1	STRIP, ANTI-SKID,
16	87403241	1	CAP, FILLER, ASSY
17	85813351	1	O-RING, 39.35 x 2.62
18	85813354	6	O-RING, 6 x 1.5
19	85813350	1	PLUG,
20	85802580	1	WRENCH, SPECIAL,
21	9969380	1	GASKET,
22	85813353	6	SCREW, M5 x 16
23	47049185	4	SCREW, M10x25
24	47048972	4	WASHER,
25	47049041	4	NUT, M10
26	87574189	1	HANDLE,
27	16043421	6	SCREW, Hex, M8 x 20, 8.8,
28	47048962	6	WASHER, 9x16x1.6
29	85825154	3	PLUG,
30	85825155	1	CONNECTOR, HYD.,
31	85826382	7	NUT, M8
32	85826383	1	GASKET,
33	85828107	1	PLATE,
34	47042074	1	PIN,
35	47044758	1	WASHER,
36	85828017	1	LEVER,
37	47043563	1	CLIP,
38	87353741	4	SPACER,

1.82.3/ 1(01) HYDRAULIC PUMP (40+35-165L/MM)

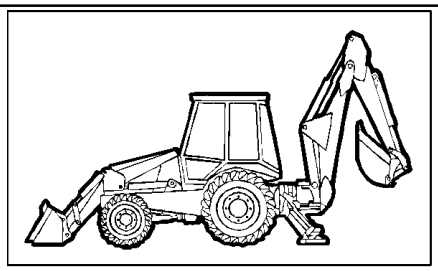

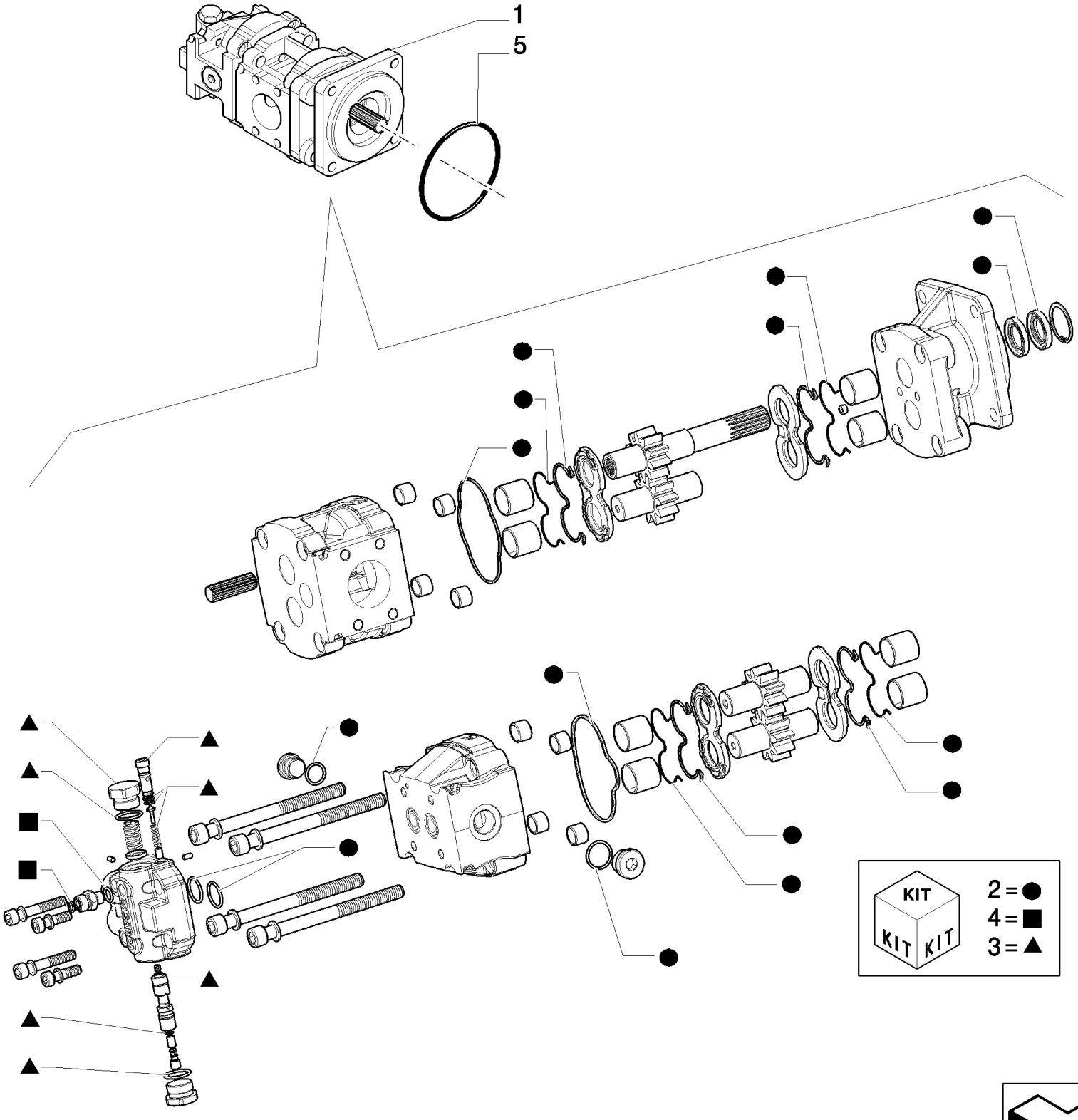

LB115.B EUR BACKHOE LOADER (1/05-)

1.82.3/ 1(01) HYDRAULIC PUMP (40+35-165L/MM)

Ref	Part Number	Qty	Description
1	85826148	1	PUMP, HYDRAULIC, , Includes 2, 3, 4, UP TO S/N 031056941
1	87362337	1	PUMP, HYDRAULIC, , Includes 2, 3, 4, FROM TO S/N 031056942
2	85813244	1	KIT, SEALS, Seal
3	85819027	1	VALVE, Kit, UP TO S/N XXX
3	87530241	1	COVER, , FROM S/N XXX
4	85824196	1	CONNECTOR, HYD.,
5	14466880	1	O-RING, -250, 70 Duro, 4.984" ID x .139" Thk,

1.82.3/ 2(01) HYDRAULIC PUMP (40+35-165L/MM)

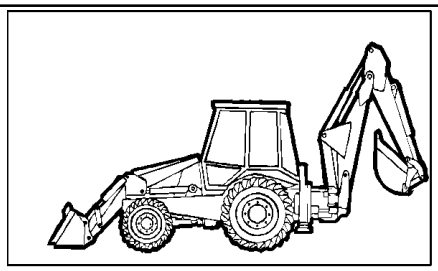

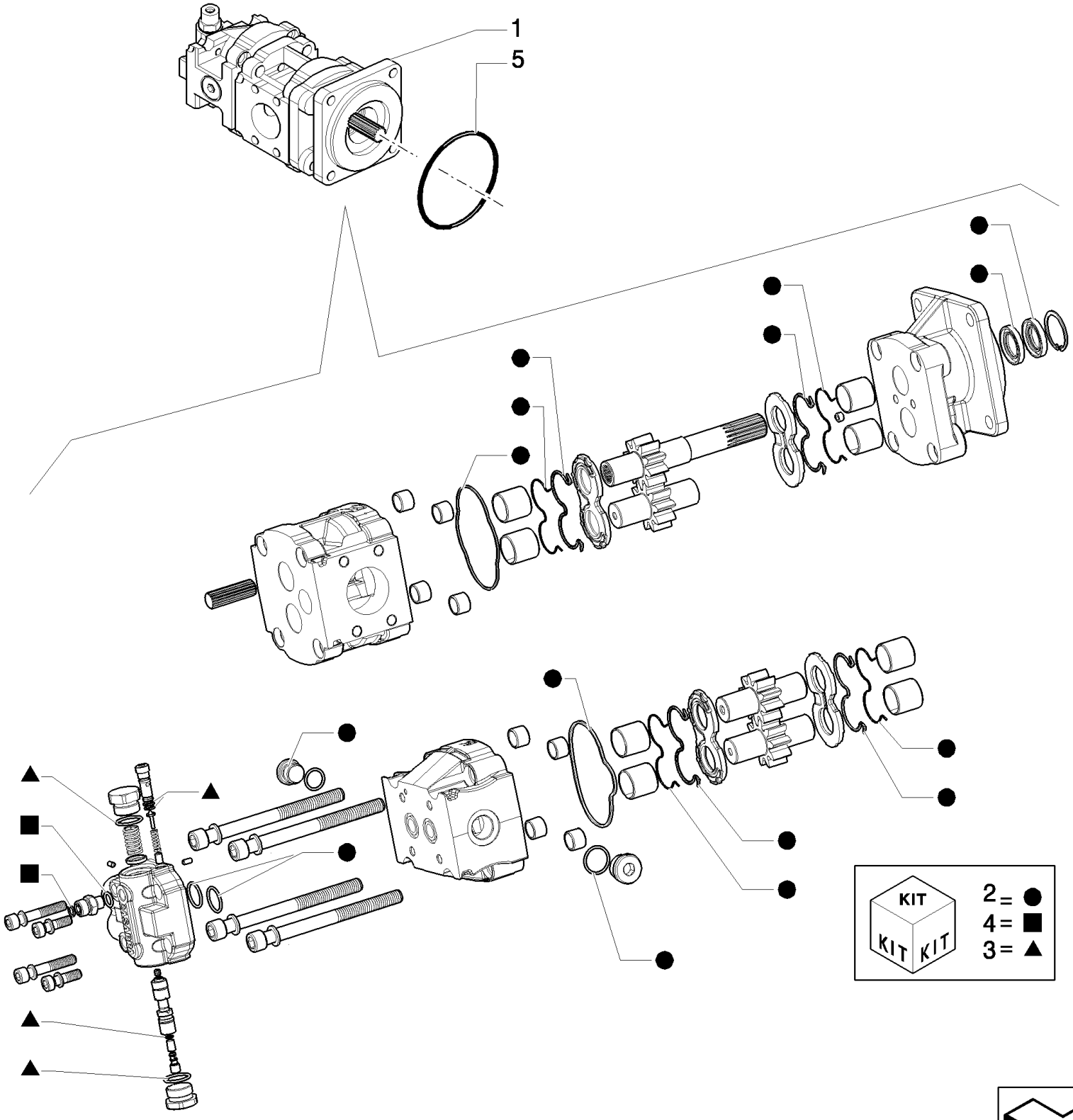

Up To S/N XXX

LB115.B EUR BACKHOE LOADER (1/05-)

1.82.3/ 2(01) HYDRAULIC PUMP (40+35-165L/MM)

Ref	Part Number	Qty	Description
1	85826149	1	PUMP, HYDRAULIC, Powershift Models, Includes 2, 3, 4
2	85813244	1	KIT, SEALS, Seal
3	85819027	1	VALVE, Kit
4	85824196	1	CONNECTOR, HYD.,
5	14466880	1	O-RING, -250, 70 Duro, 4.984" ID x .139" Thk,

Up To S/N XXX

1.82.6(01) HYDRAULIC SYSTEM PIPING

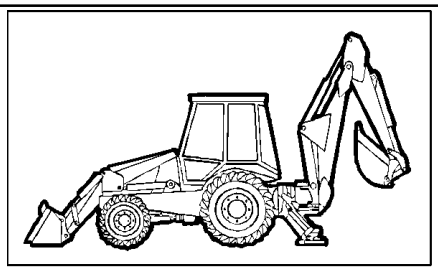

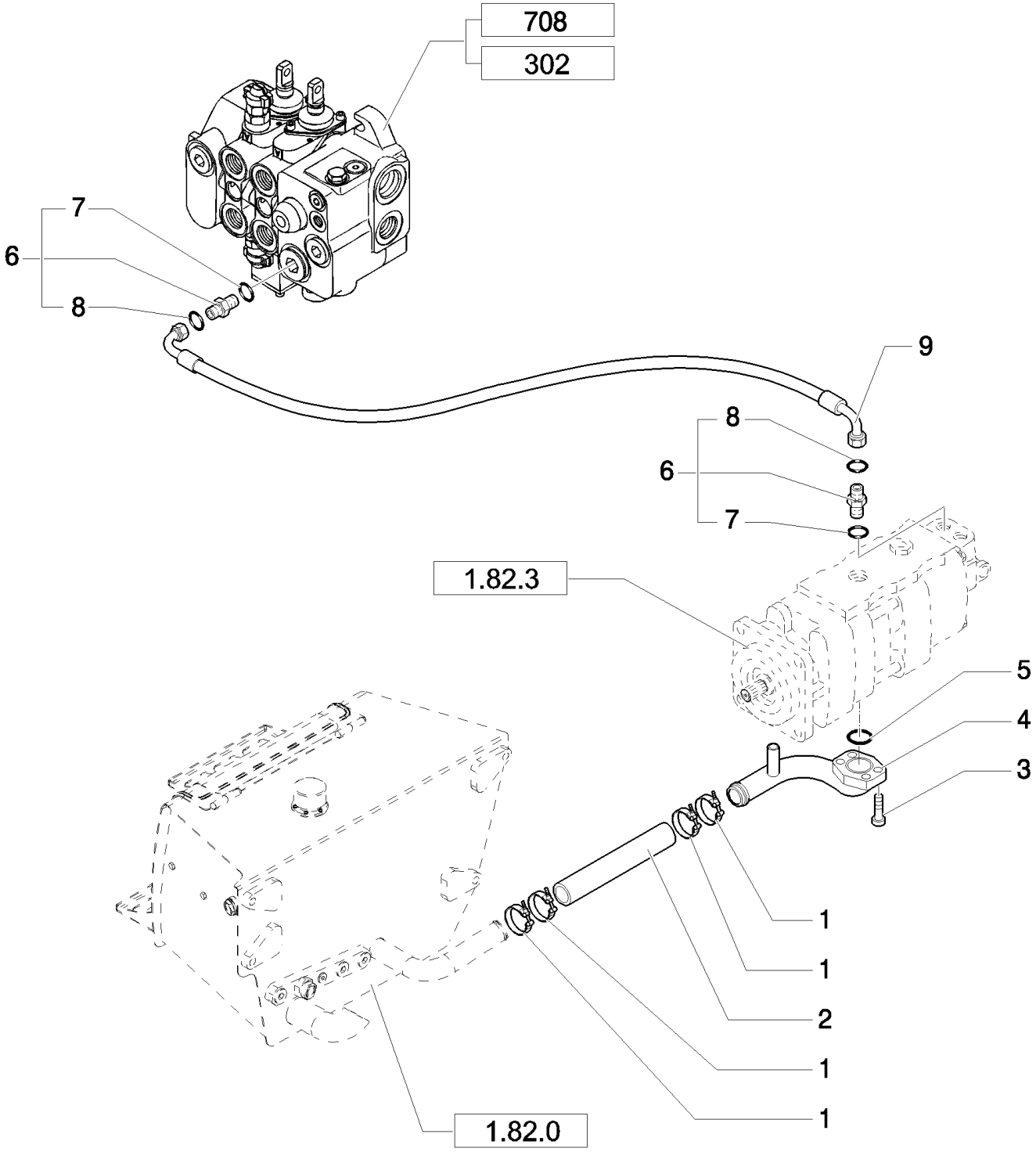

All version except: LB110.B (Center Pivot, Mechanical) and Nord America Mechanical Version

LB115.B EUR BACKHOE LOADER (1/05-)

1.82.6(01) HYDRAULIC SYSTEM PIPING

Ref	Part Number	Qty	Description
1	85803012	4	CLAMP, HOSE,
2	85811870	1	HOSE,
3	14422021	3	SCREW, Hex Soc Hd, M12 x 30, 8.8,
4	85827041	1	TUBE,
5	14464680	1	O-RING, -228, 70 Duro, 2.234" ID x .139" Thk,
6	390937S36	2	CONNECTOR, HYD., {PP:83962538} 1-3/16"-12 ORS x 1-1/16"-12 SAE O-Ring, , Includes 7, 8
7	167266	2	O-RING, 12-1, 90 Duro, .924 ID x .116" Thk,
8	9991976	2	O-RING, -018, 90 Duro, .739" ID x .070" Thk,
9	87360332	1	HOSE, FLEXIBLE,

All version except: LB110.B (Center Pivot, Mechanical) and Nord America Mechanical Version

1.82.6(02) HYDRAULIC SYSTEM PIPING

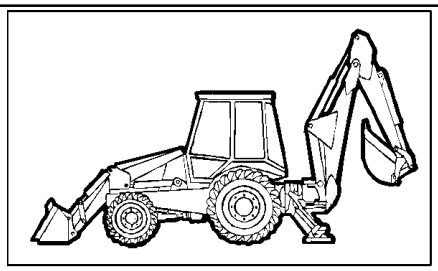

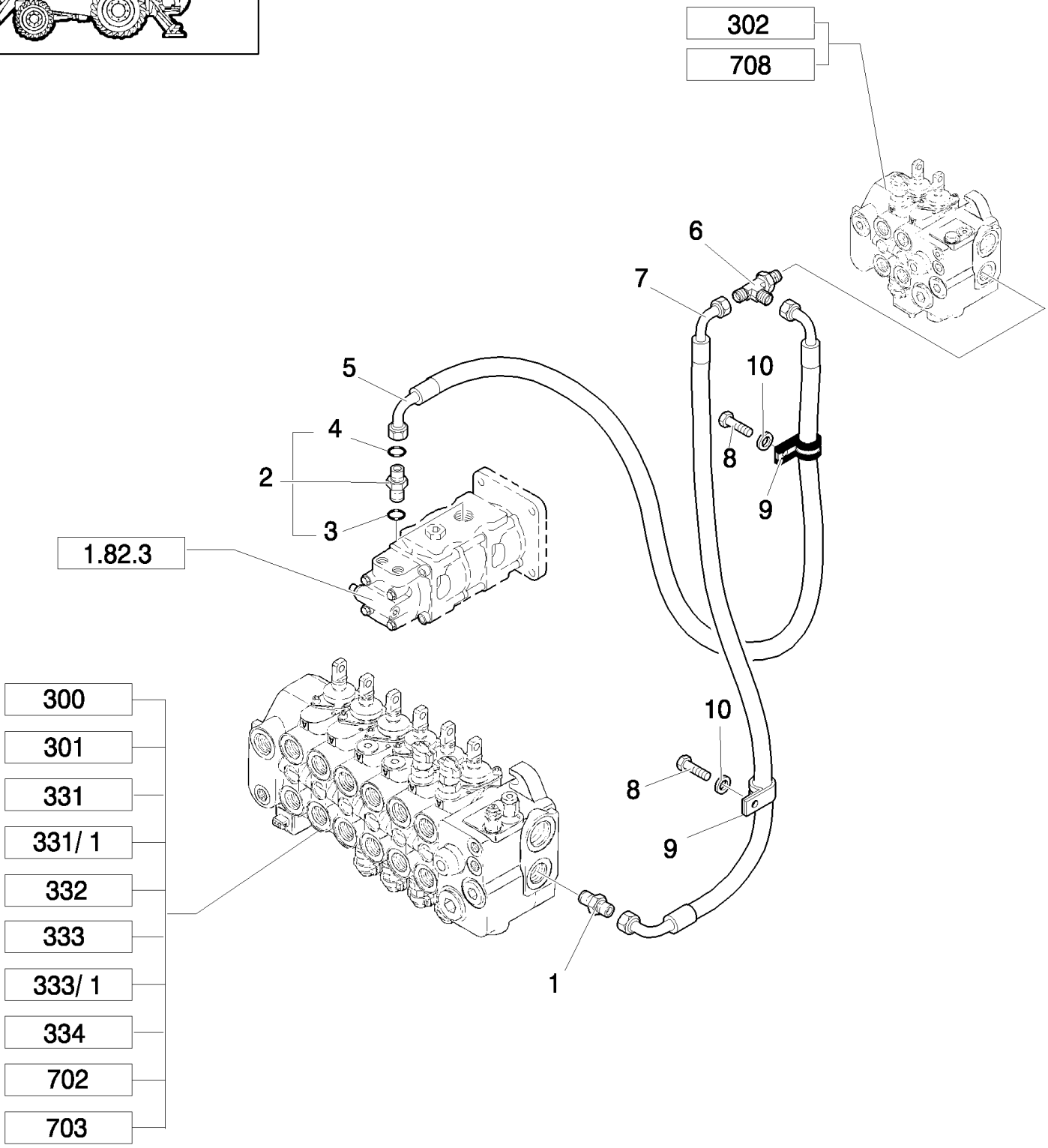

All version except: LB110.B (Center Pivot, Mechanical) and Nord America Mechanical Version

LB115.B EUR BACKHOE LOADER (1/05-)

1.82.6(02) HYDRAULIC SYSTEM PIPING

Ref	Part Number	Qty	Description
1	85803486	1	CONNECTOR, HYD.,
2	83963000	1	CONNECTOR, HYD., , Includes 3, 4
3	167269	1	O-RING, 10-1, 90 Duro, .755" ID x .097" Thk,
4	83901443	1	O-RING,
5	87360331	1	HOSE, FLEXIBLE,
6	85826093	1	TEE,
7	87516888	1	HOSE, FLEXIBLE, L=MM.1080
8	15541621	2	SCREW, Hex, M12 x 1.25 x 100, 8.8,
9	85802890	2	CLAMP,
10	11190779	2	WASHER, SPRING, Belleville, M13,

All version except: LB110.B (Center Pivot, Mechanical) and Nord America Mechanical Version

1.82.6(03) HYDRAULIC SYSTEM PIPING

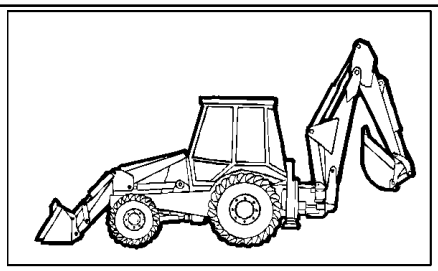

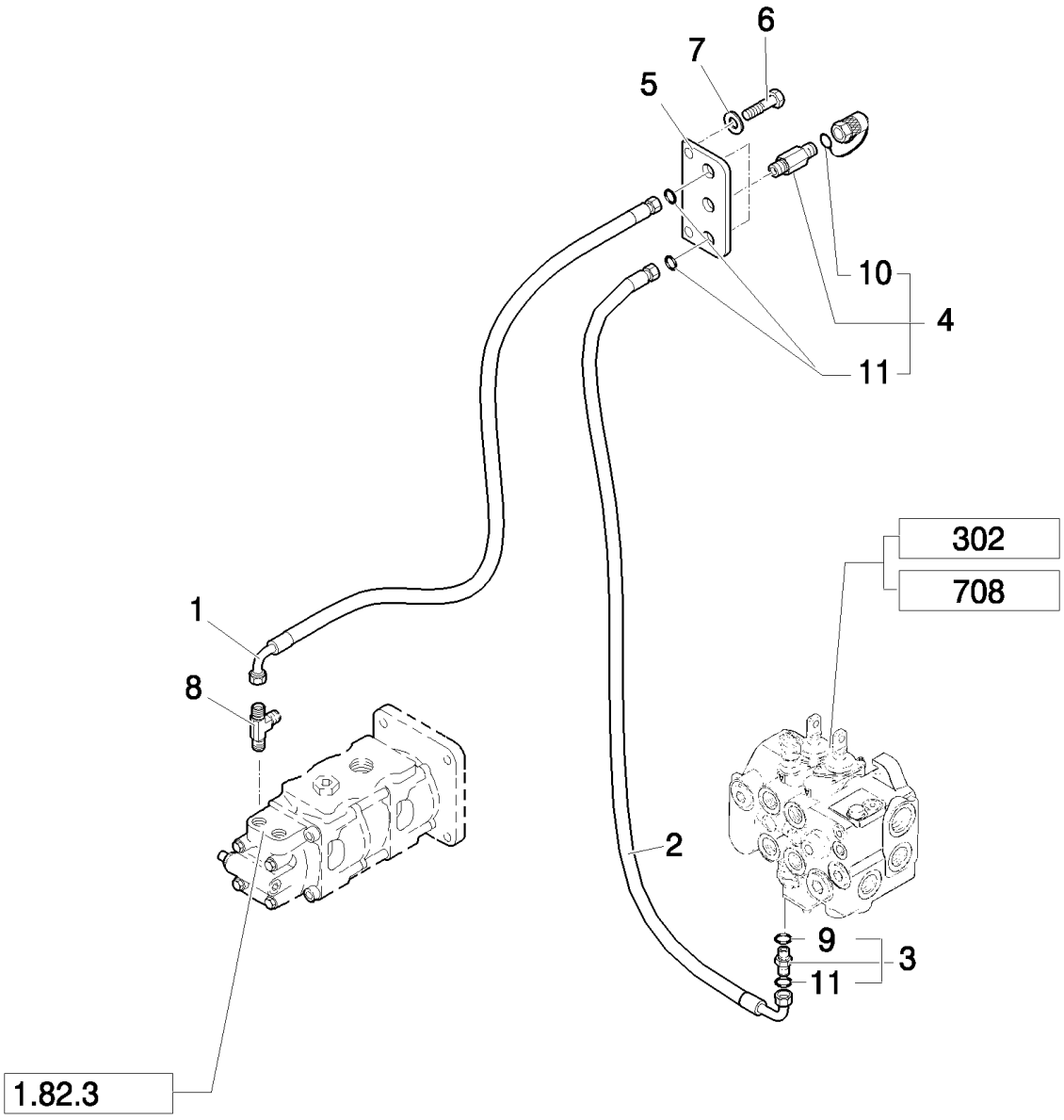

All version except: LB110.B (Center Pivot, Mechanical) and Nord America Mechanical Version

LB115.B EUR BACKHOE LOADER (1/05-)

1.82.6(03) HYDRAULIC SYSTEM PIPING

Ref	Part Number	Qty	Description
1	85812171	1	HOSE, FLEXIBLE,
2	85812173	1	HOSE, FLEXIBLE,
3	83963371	1	CONNECTOR, HYD., , Includes 9, 11
4	85817226	2	COUPLING, QUICK, MALE, , Includes 10, 11
5	85802846	1	PLATE,
6	16043221	2	SCREW, Hex, M8 x 16, 8.8,
7	12647121	2	WASHER, M8 x 20 x 3,
8	85805502	1	TEE,
9	81845037	1	O-RING,
10	9968791	2	PLUG,
11	81844851	3	O-RING, 90 Duro, .375" ID x .070" Thk

All version except: LB110.B (Center Pivot, Mechanical) and Nord America Mechanical Version

1.82.6(04) HYDRAULIC SYSTEM PIPING

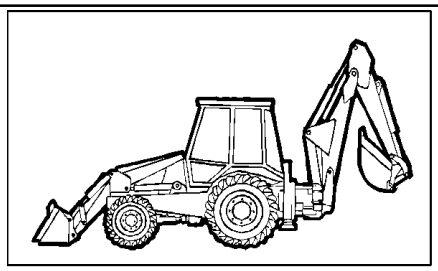

All version except: LB110.B (Center Pivot, Mechanical) and Nord America Mechanical Version

LB115.B EUR BACKHOE LOADER (1/05-)

1.82.6(04) HYDRAULIC SYSTEM PIPING

Ref	Part Number	Qty	Description
1	390954S36	3	CONNECTOR, HYD., {PP:83963375} 1 7/16"-12 ORFS x 1 5/16"-12 ORB, , Includes 2, 3
2	167268	3	O-RING, 16-1, 90 Duro, 1.171" ID x .116" Thk,
3	9824050	3	O-RING, -021, 90 Duro, .926" ID x .070" Thk,
4	85818909	1	HOSE, FLEXIBLE,
5	85805167	1	HOSE, FLEXIBLE, , Mechanical Control Version Europe
5	85827823	1	HOSE, FLEXIBLE, , Only for Pilot Control Version Europe an NA version
6	85802955	1	PLUG,
7	85805168	1	CONNECTOR, HYD.,
8	85805166	1	BLOCK,
9	11190779	2	WASHER, SPRING, Belleville, M13, 12x24x2.8
10	15541621	2	SCREW, Hex, M12 x 1.25 x 100, 8.8,
11	390951S36	2	CONNECTOR, HYD., {PP:83963371} , Includes 14, 15
12	85812174	1	HOSE, FLEXIBLE,
13	79072960	1	STRAP, CABLE,
14	81844851	2	O-RING, 90 Duro, .375" ID x .070" Thk
15	81845037	2	O-RING, 90 Duro, .468" ID x .078" Thk
16	83962179	1	ELBOW, 90°, Only for NA Pilot Control Version

All version except: LB110.B (Center Pivot, Mechanical) and Nord America Mechanical Version

1.82.6(05) HYDRAULIC SYSTEM PIPING

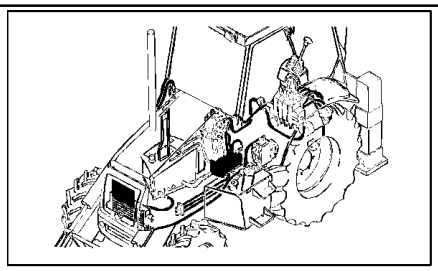

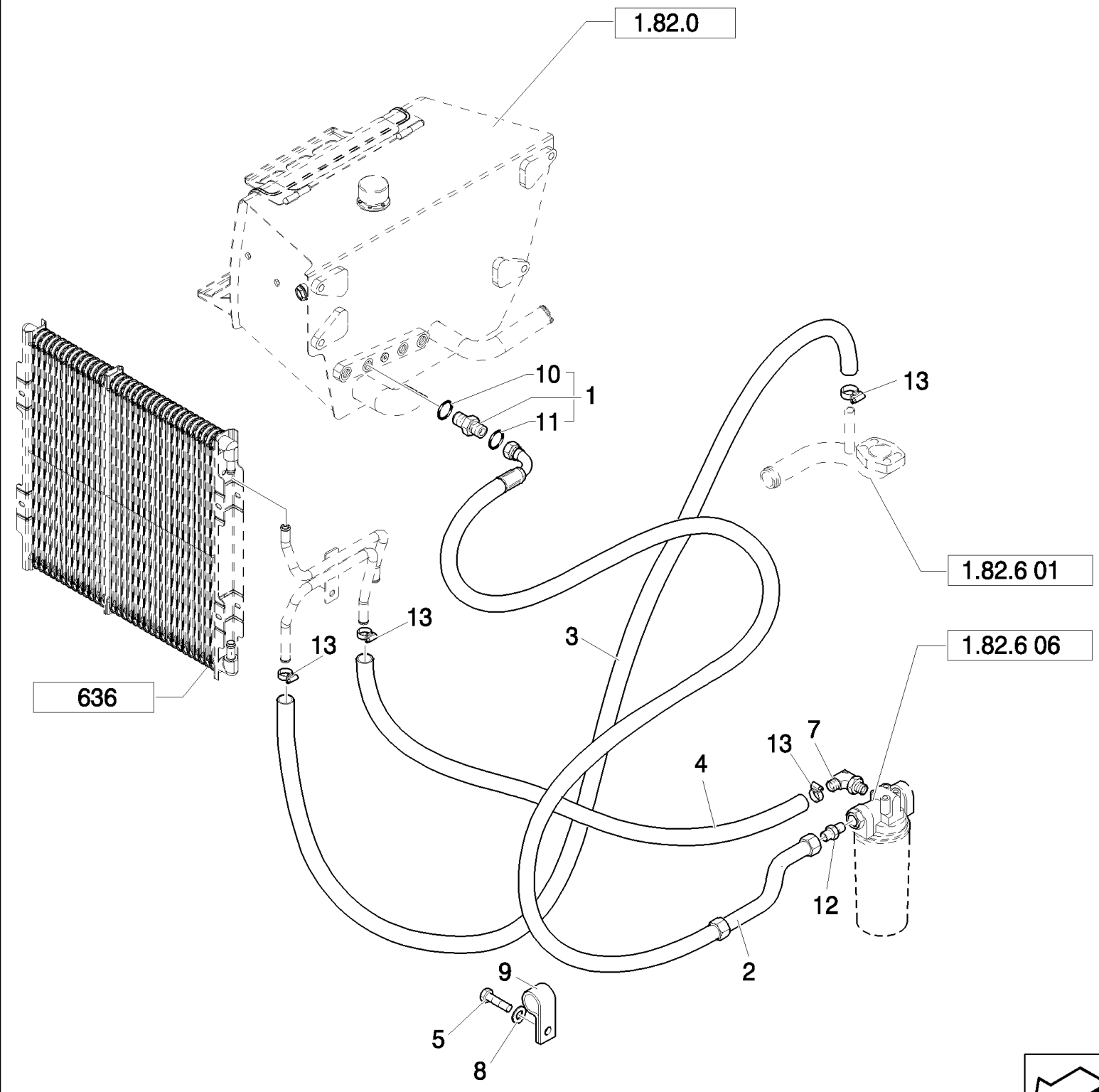

LB115.B EUR BACKHOE LOADER (1/05-)

1.82.6(05) HYDRAULIC SYSTEM PIPING

Ref	Part Number	Qty	Description
1	85802801	1	CONNECTOR, HYD., 1-11/16"-12 ORS x 1-5/16"-12 SAE O-ring, Includes 10, 11
2	85827824	1	HOSE, FLEXIBLE,
3	87326810	1	HOSE, FLEXIBLE, , Only for POWER SHIFT
3	87326809	1	HOSE, FLEXIBLE, , Only for POWER SHUTTLE
4	87326808	1	HOSE, FLEXIBLE,
5	47042364	1	BOLT, M12x25
7	85824060	1	ELBOW,
8	47048964	1	WASHER,
9	47048664	1	CLAMP,
10	80167268	1	O-RING,
11	89824051	1	O-RING,
12	85802960	1	CONNECTOR, HYD.,
13	87314076	4	COLLAR,

1.82.6(06) HYDRAULIC SYSTEM PIPING

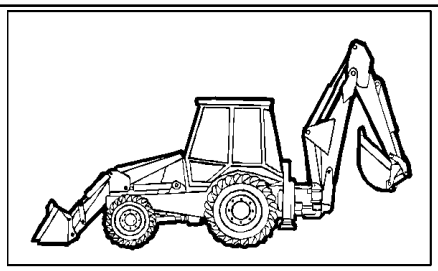

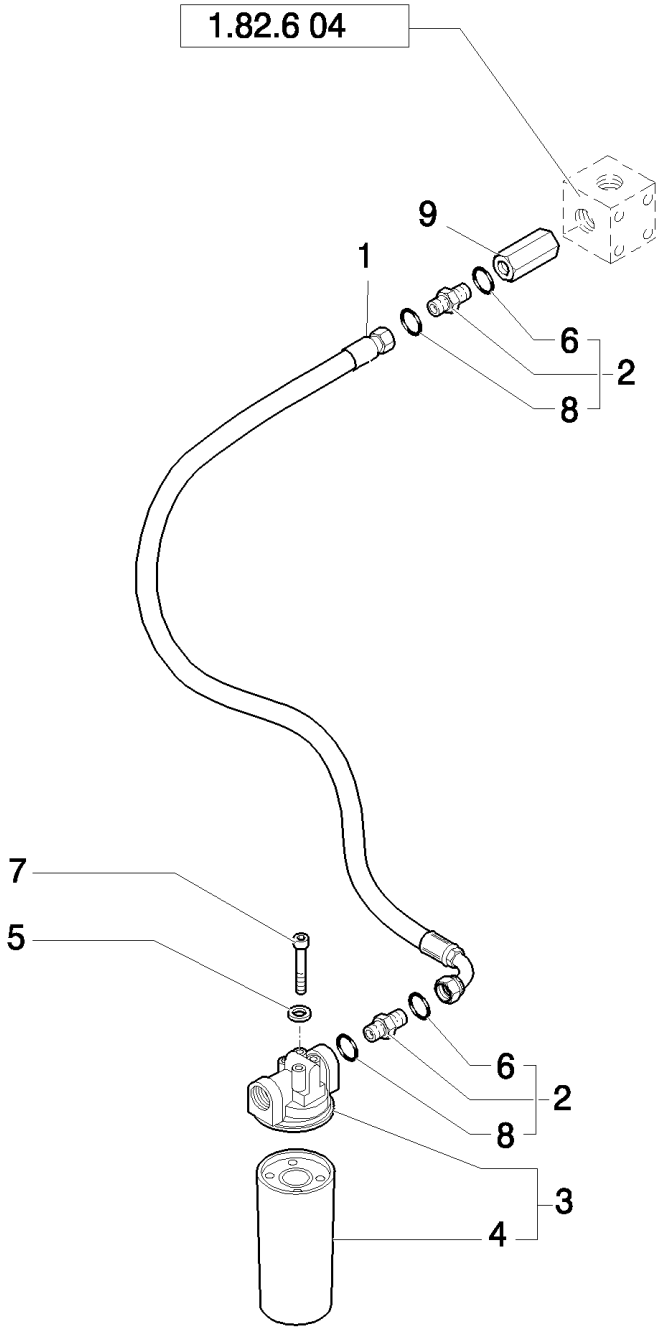

All version except: LB110.B (Center Pivot, Mechanical)

LB115.B EUR BACKHOE LOADER (1/05-)

1.82.6(06) HYDRAULIC SYSTEM PIPING

Ref	Part Number	Qty	Description
1	85805840	1	HOSE, FLEXIBLE,
2	85802801	2	CONNECTOR, HYD., 1-11/16"-12 ORS x 1-5/16"-12 SAE O-ring, Includes 6, 8
3	87315438	1	FILTER ASSY, , Includes 4
4	86989733	1	FILTER, HYDRAULIC OIL,
5	11190579	4	WASHER, SPRING, Belleville, M10.5,
6	80167268	2	O-RING,
7	11106221	4	SCREW, Hex, M10 x 25, 8.8, Full Thd,
8	89824051	2	O-RING,
9	85805824	1	VALVE, CHECK,

All version except: LB110.B (Center Pivot, Mechanical)

1.82.6(07A) HYDRAULIC SYSTEM PIPING

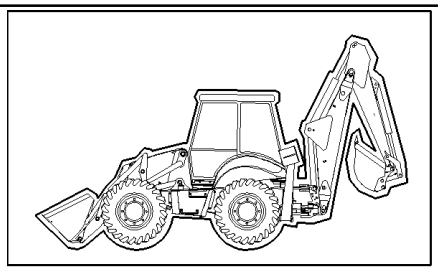

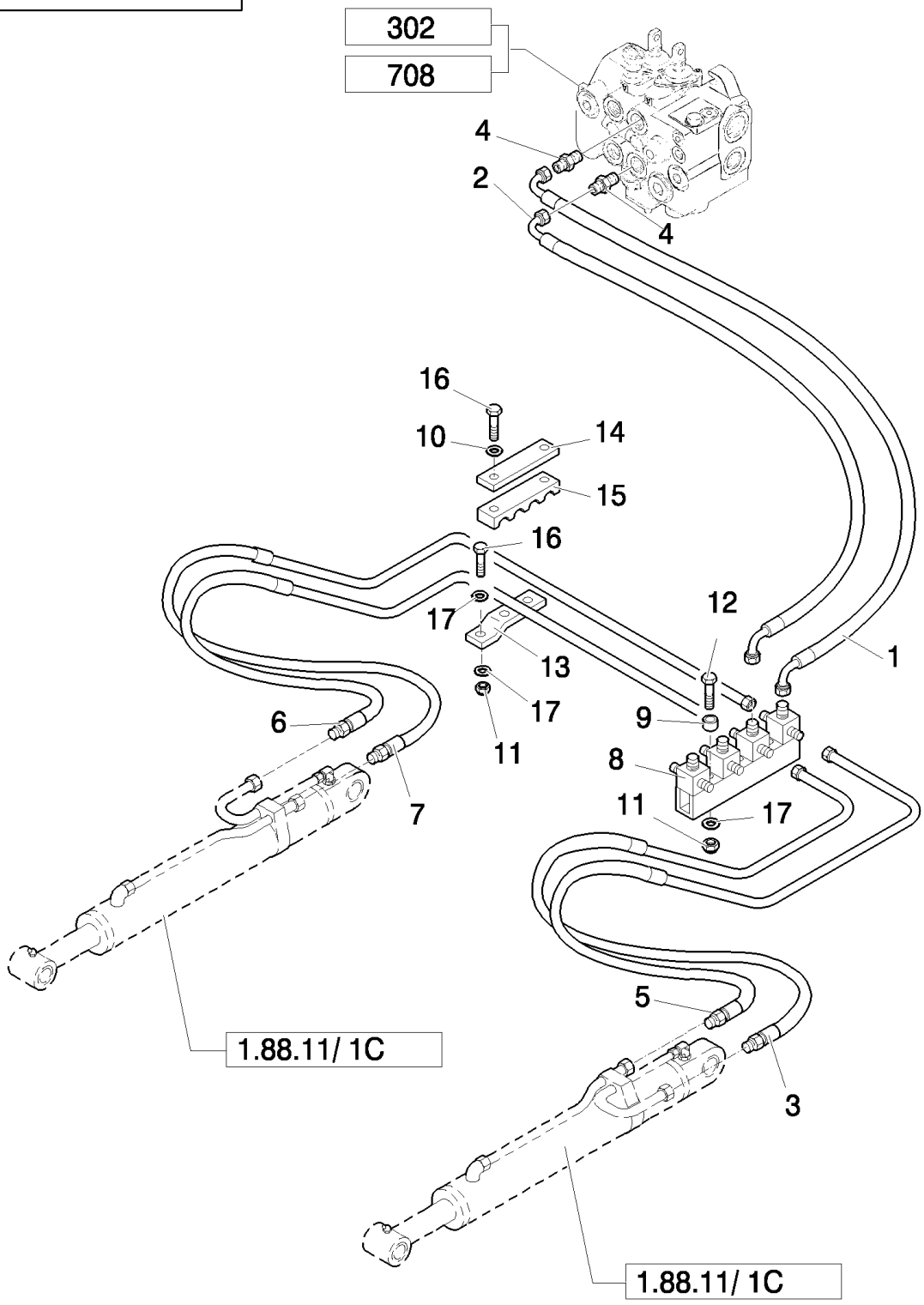

LB115.B EUR BACKHOE LOADER (1/05-)

1.82.6(07A) HYDRAULIC SYSTEM PIPING

Ref	Part Number	Qty	Description
1	85826089	1	HOSE, FLEXIBLE,
2	85826087	1	HOSE, FLEXIBLE,
3	85805181	1	HOSE, FLEXIBLE,
4	83962539	2	CONNECTOR, HYD.,
5	85805182	1	HOSE, FLEXIBLE,
6	85805183	1	HOSE, FLEXIBLE,
7	85805184	1	HOSE, FLEXIBLE,
8	85805203	1	MANIFOLD,
9	85802891	1	SPACER,
10	11193879	2	WASHER, SPRING, Belleville, M8.4,
11	14048221	2	NUT, M8 x 1.25, Cl 10,
12	16044021	1	SCREW, Hex, M8 x 40, 8.8,
13	85805206	1	PLATE,
14	85805207	1	PLATE,
15	85805208	1	CLAMP,
16	16043821	3	SCREW, Hex, M8 x 30, 8.8,
17	12647121	2	WASHER, M8 x 20 x 3,

1.82.6(08B) HYDRAULIC SYSTEM PIPING

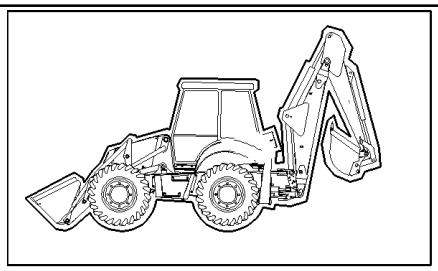

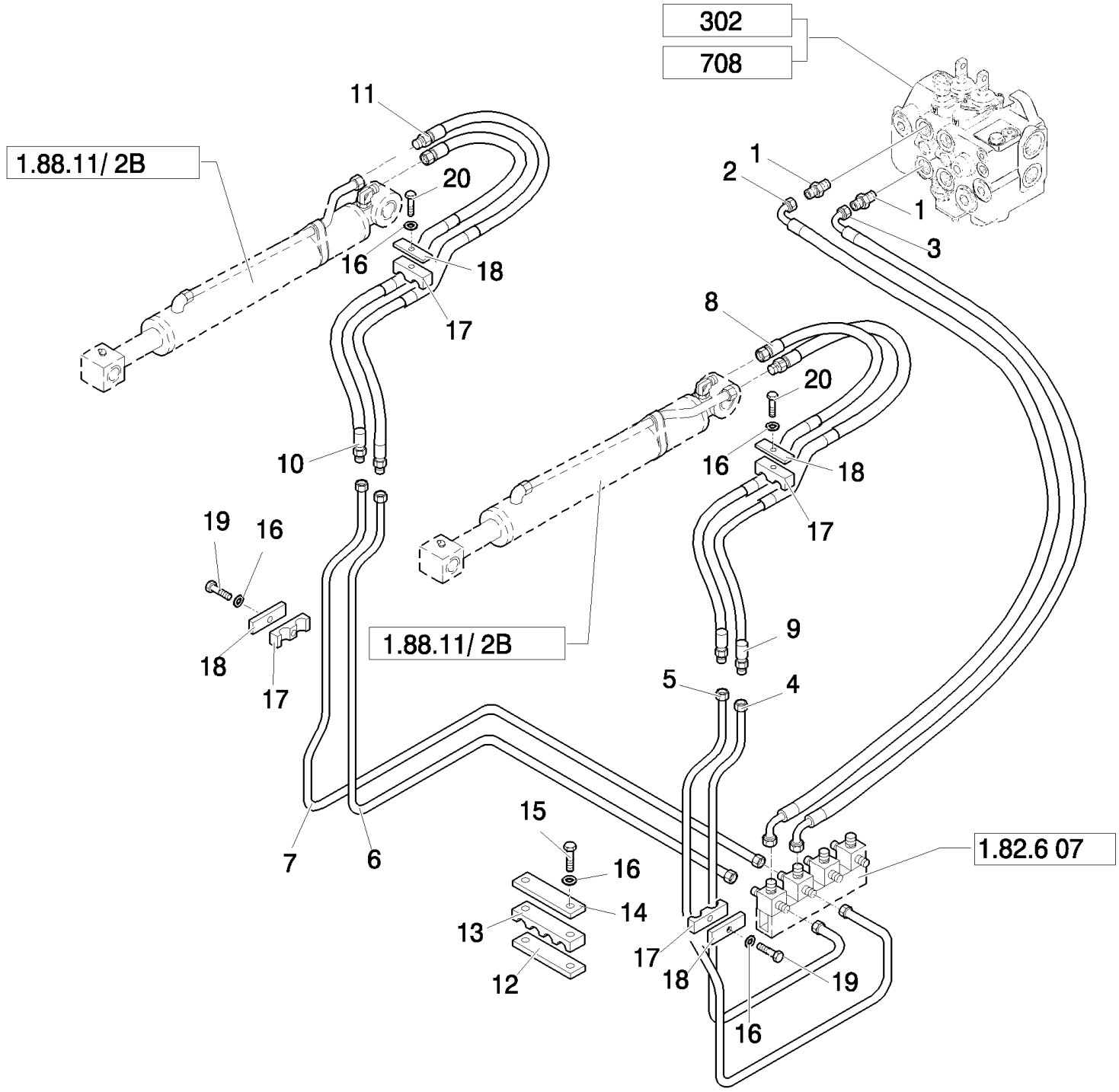

LB115.B EUR BACKHOE LOADER (1/05-)

1.82.6(08B) HYDRAULIC SYSTEM PIPING

Ref	Part Number	Qty	Description
1	390938S36	2	CONNECTOR, HYD., 1-1/16-12 ORB x 1-14 ORFS; Incl. 167266, 9992069 O-Rings
2	85826088	1	HOSE, FLEXIBLE,
3	85826086	1	HOSE, FLEXIBLE,
4	85805189	1	TUBE, HYD,
5	85805191	1	TUBE, HYD,
6	85805185	1	TUBE, HYD,
7	85805187	1	TUBE, HYD,
8	85813373	1	TUBE, HYD,
8	87535338	1	PIPE, , Only for B95TC
9	85813374	1	TUBE, HYD,
9	87535340	1	PIPE, , Only for B95TC
10	85813375	1	TUBE, HYD,
10	87535342	1	PIPE, , Only for B95TC
11	85813376	1	TUBE, HYD,
11	87535343	1	PIPE, , Only for B95TC
12	85805210	2	PLATE,
13	85805211	2	CLAMP,
14	85805209	2	PLATE,
15	16043821	4	SCREW, Hex, M8 x 30, 8.8,
16	11193979	8	WASHER, SPRING, Belleville, M8.4,
17	85805193	4	CLAMP,
18	85805195	4	PLATE,
19	16044021	2	SCREW, Hex, M8 x 40, 8.8,
20	16044221	2	SCREW, Hex, M8 x 50, 8.8, M8x1.25x40

1.82.6(09C) HYDRAULIC SYSTEM PIPING

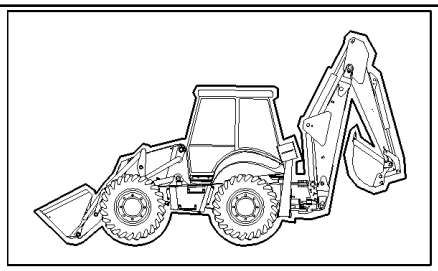

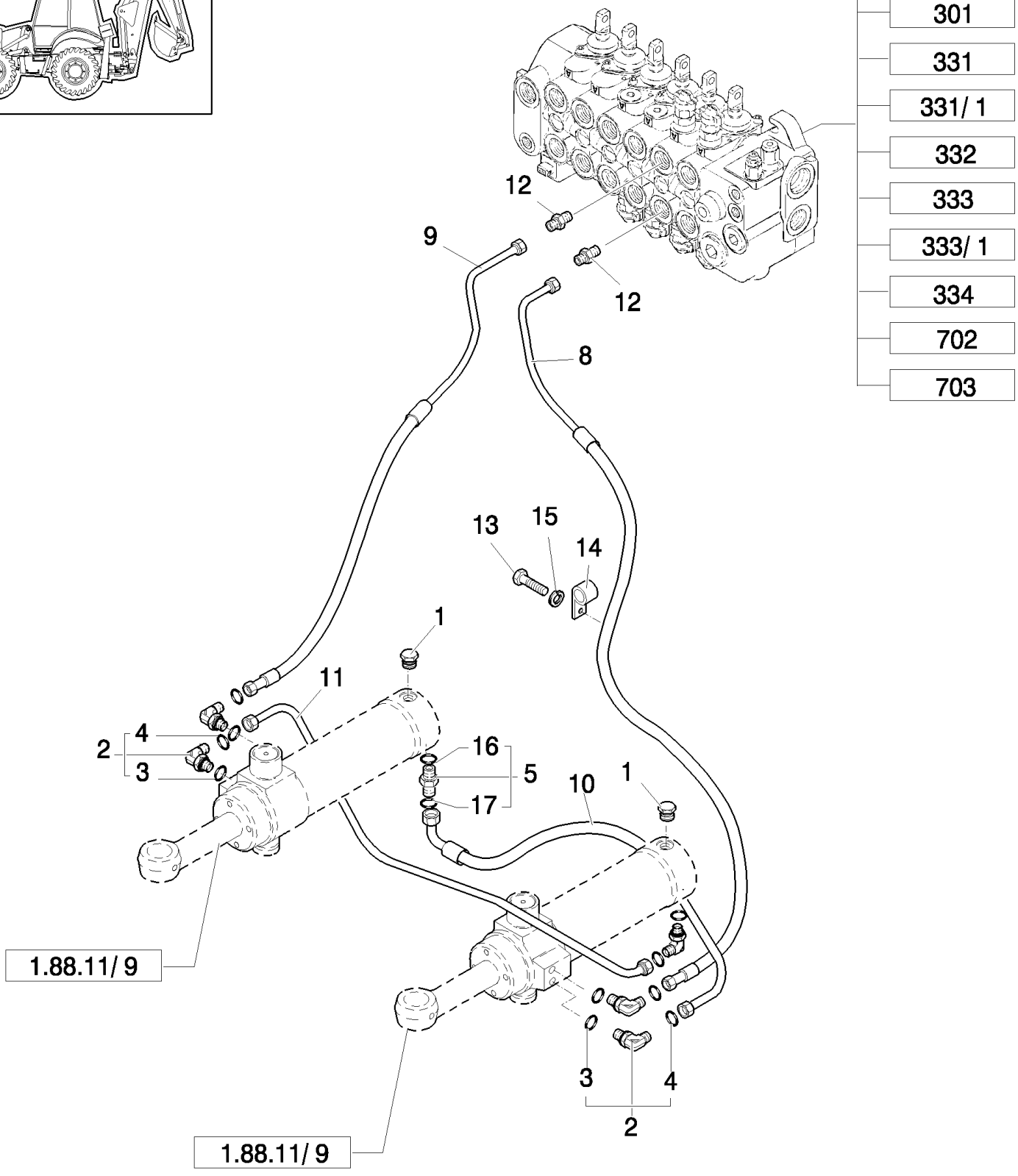

All version except: LB110.B (Center Pivot, Mechanical)

LB115.B EUR BACKHOE LOADER (1/05-)

1.82.6(09C) HYDRAULIC SYSTEM PIPING

Ref	Part Number	Qty	Description
1	85802955	2	PLUG,
2	83971549	5	ELBOW, , Includes 3, 4
3	80128825	5	O-RING,
4	89992298	6	O-RING,
5	83963374	1	CONNECTOR, HYD., , Includes 16, 17
8	85819730	1	HOSE, FLEXIBLE, , Only for LB110.B - LB115.B
8	85819060	1	TUBE, HYD,
9	85819728	1	HOSE, FLEXIBLE, , Only for LB110.B - LB115.B
9	85819061	1	HOSE, FLEXIBLE,
10	85819727	1	HOSE, FLEXIBLE, , Only for LB110.B - LB115.B
10	85820109	1	TUBE, HYD,
11	85819729	1	HOSE, FLEXIBLE,
12	85805258	2	CONNECTOR, HYD., 9/16"-16 ORS x 1 1/16"-12, O-Ring,
13	16044221	2	SCREW, Hex, M8 x 50, 8.8,
14	14560187	2	STRAP, CABLE, L=203.2 mm
15	11193879	2	WASHER, SPRING, Belleville, M8.4,
16	81332258	1	
17	81845038	1	O-RING, -014, 90 Duro, .489" ID x .070" Thk,

All version except: LB110.B (Center Pivot, Mechanical)

1.82.6(09D) HYDRAULIC SYSTEM PIPING

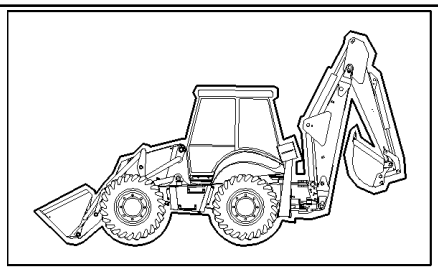

LB115.B EUR BACKHOE LOADER (1/05-)

1.82.6(09D) HYDRAULIC SYSTEM PIPING

Ref	Part Number	Qty	Description
1	85802955	2	PLUG,
2	390967S36	5	ELBOW, , Includes 3, 4
3	128825	5	O-RING, 8-1, 90 Duro, .644" ID x .087" Thk,
4	9992298	6	O-RING, -014, 90 Duro, .489" ID x .070" Thk,
5	390953S36	1	CONNECTOR, HYD., , Includes 4, 6
8	85819060	1	TUBE, HYD,
9	85819061	1	HOSE, FLEXIBLE,
10	85820109	1	TUBE, HYD,
11	85819729	1	HOSE, FLEXIBLE,
12	85805258	2	CONNECTOR, HYD., 9/16"-16 ORS x 1 1/16"-12, O-Ring,

Mechanical Version

1.82.6(11) HYDRAULIC SYSTEM PIPING(SIDE SHIFT)

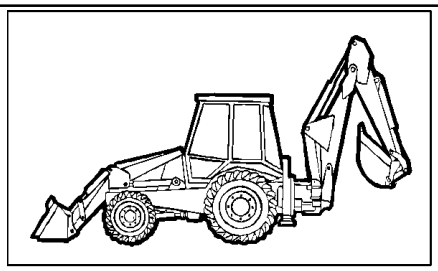

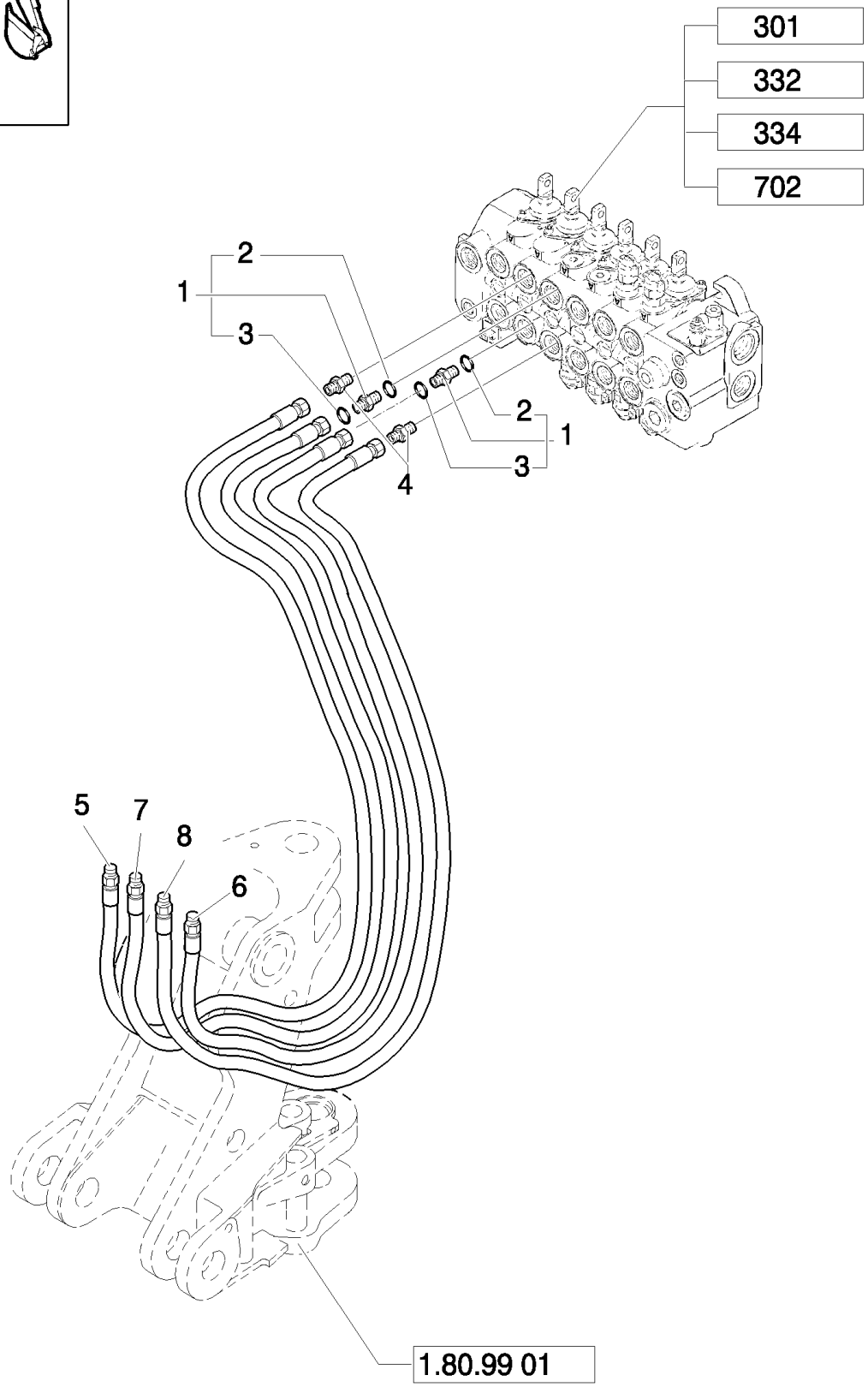

All version except: LB110.B (Center Pivot, Mechanical) and Nord America Mechanical Version

LB115.B EUR BACKHOE LOADER (1/05-)

1.82.6(11) HYDRAULIC SYSTEM PIPING(SIDE SHIFT)

Ref	Part Number	Qty	Description
1	390937S36	2	CONNECTOR, HYD., 1-3/16"-12 ORS x 1-1/16"-12 SAE O-Ring, , Includes 2, 3
2	167266	2	O-RING, 12-1, 90 Duro, .924 ID x .116" Thk,
3	9991976	2	O-RING, -018, 90 Duro, .739" ID x .070" Thk,
4	390938S36	2	CONNECTOR, HYD., 1-1/16-12 ORB x 1-14 ORFS; Incl. 167266, 9992069 O-Rings
5	85819064	1	HOSE, FLEXIBLE,
6	85819062	1	HOSE, FLEXIBLE,
7	85819063	1	HOSE, FLEXIBLE,
8	85819065	1	HOSE, FLEXIBLE,

All version except: LB110.B (Center Pivot, Mechanical) and Nord America Mechanical Version

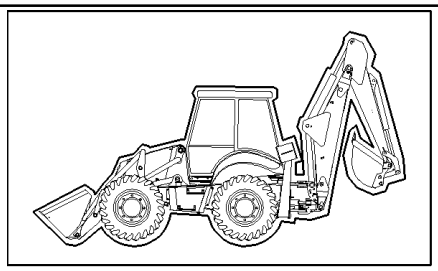

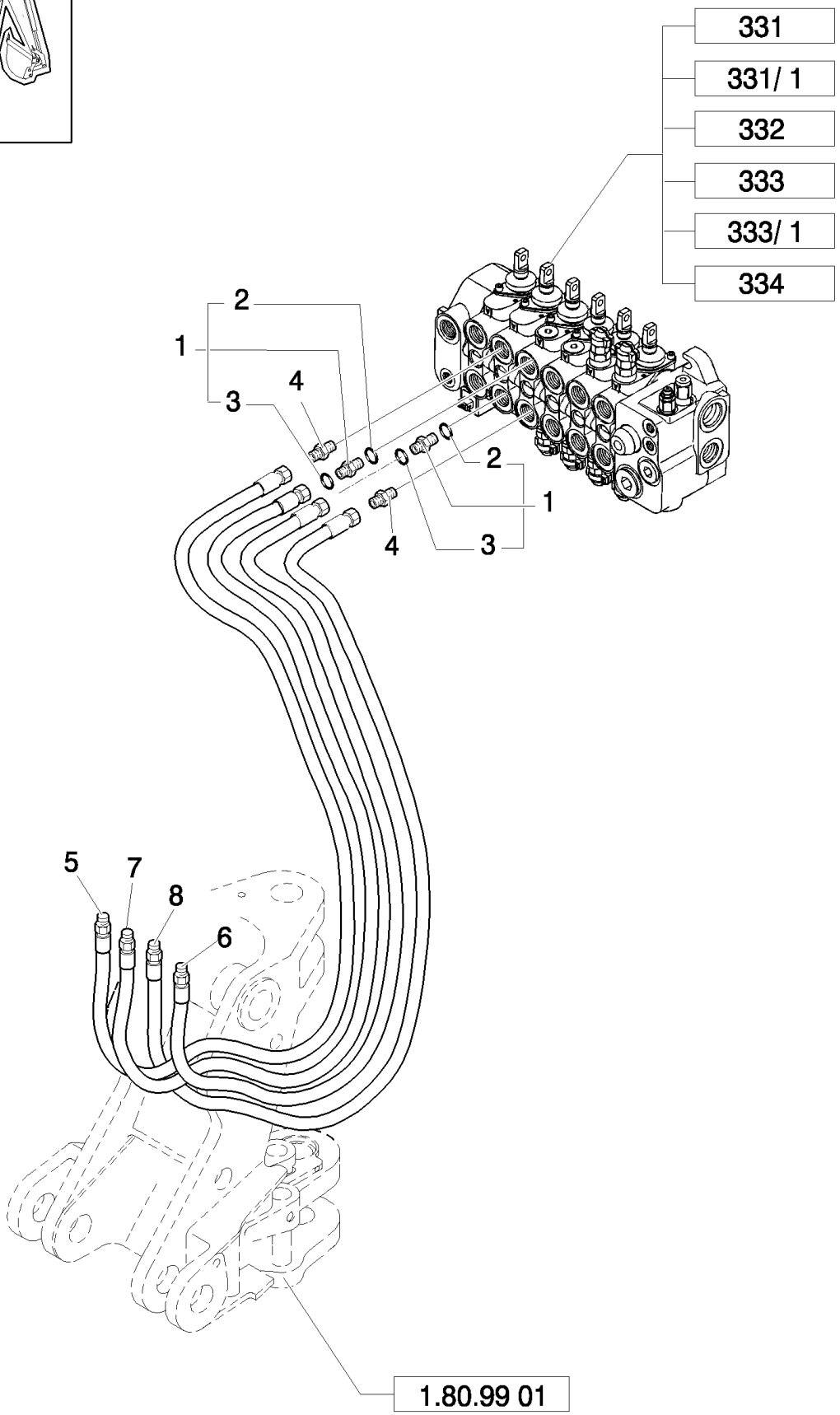
331
331/ 1
332
333
333/ 1
334
2
1
3
4
2
1
4
3
5
7
8
6
1.80.99 01

LB115.B EUR BACKHOE LOADER (1/05-)

1.82.6(11B) HYDRAULIC SYSTEM PIPING

Ref	Part Number	Qty	Description
1	390937S36	2	CONNECTOR, HYD., 1-3/16"-12 ORS x 1-1/16"-12 SAE O-Ring, , Includes 2, 3
2	167266	2	O-RING, 12-1, 90 Duro, .924 ID x .116" Thk,
3	9991976	2	O-RING, -018, 90 Duro, .739" ID x .070" Thk,
4	390938S36	2	CONNECTOR, HYD., 1-1/16-12 ORB x 1-14 ORFS; Incl. 167266, 9992069 O-Rings
5	85812176	1	HOSE, FLEXIBLE,
6	85812152	1	HOSE, FLEXIBLE,
7	85812177	1	HOSE, FLEXIBLE,
8	87621920	1	

Pilot Control Version

1.82.6(12) HYDRAULIC SYSTEM PIPING

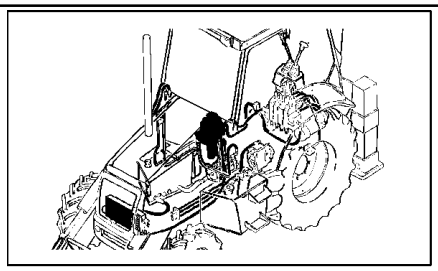

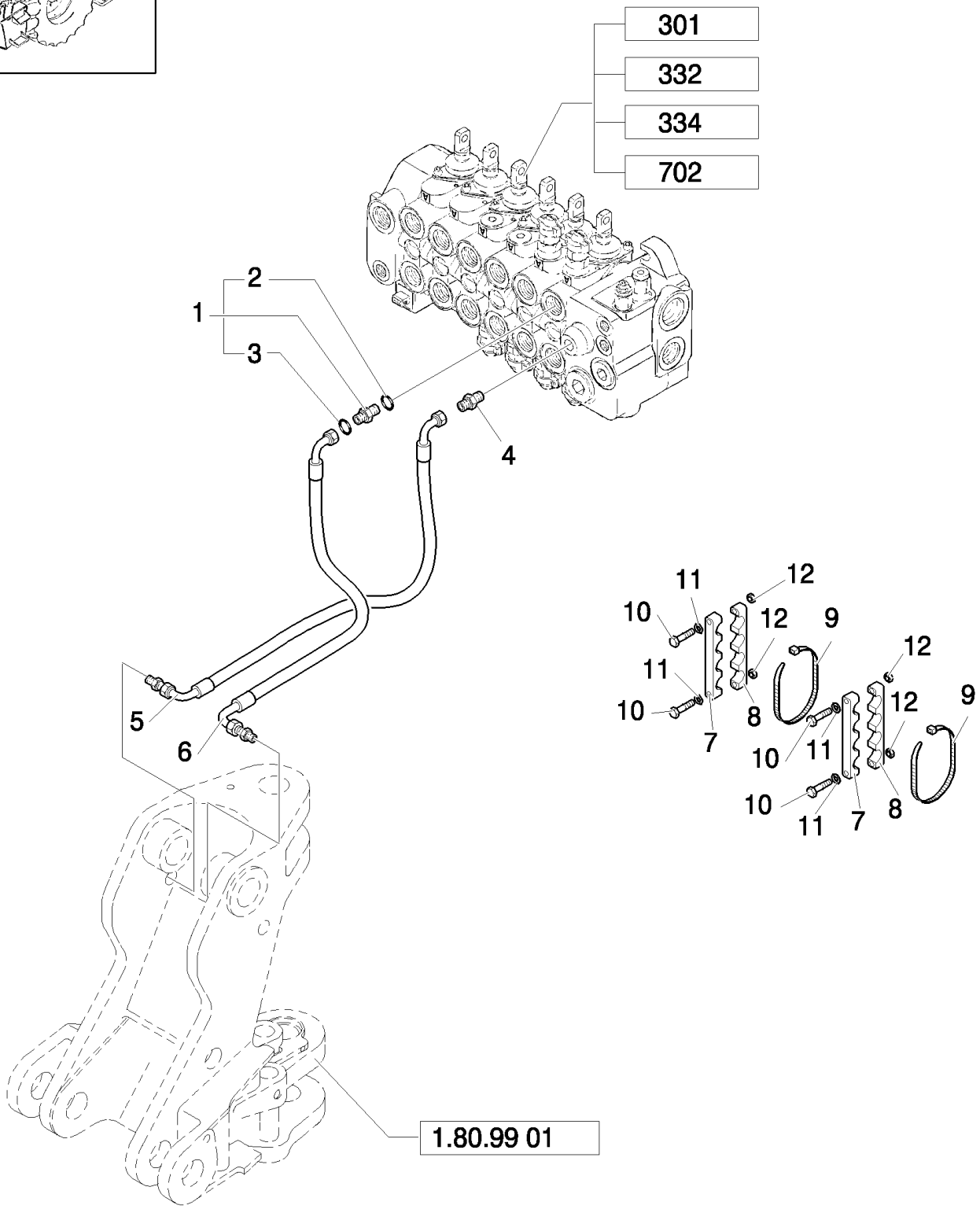

LB115.B EUR BACKHOE LOADER (1/05-)

1.82.6(12) HYDRAULIC SYSTEM PIPING

Ref	Part Number	Qty	Description
1	390937S36	1	CONNECTOR, HYD., 1-3/16"-12 ORS x 1-1/16"-12 SAE O-Ring, , Includes 2, 3
2	167266	1	O-RING, 12-1, 90 Duro, .924 ID x .116" Thk,
3	9991976	1	O-RING, -018, 90 Duro, .739" ID x .070" Thk,
4	390938S36	1	CONNECTOR, HYD., 1-1/16-12 ORB x 1-14 ORFS; Incl. 167266, 9992069 O-Rings
5	85819058	1	TUBE, HYD,
6	85819059	1	TUBE, HYD,
7	85817230	2	CLAMP,
8	85817231	2	CLAMP,
9	85817474	2	STRAP, CABLE,
10	15213621	4	SCREW, Hex, M8 x 55, 8.8, Full Thd,
11	11193879	4	WASHER, SPRING, Belleville, M8.4,
12	14048211	4	NUT, M8 x 1.25, Cl 8,

All version except: LB110.B (Center Pivot, Mechanical) and Nord America Mechanical Version

1.82.6(13) HYDRAULIC SYSTEM PIPING(SIDE SHIFT)

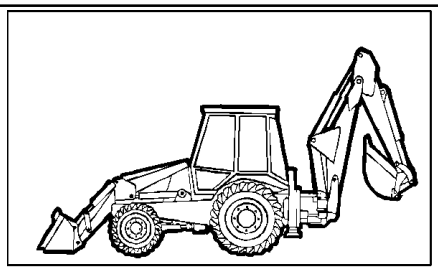

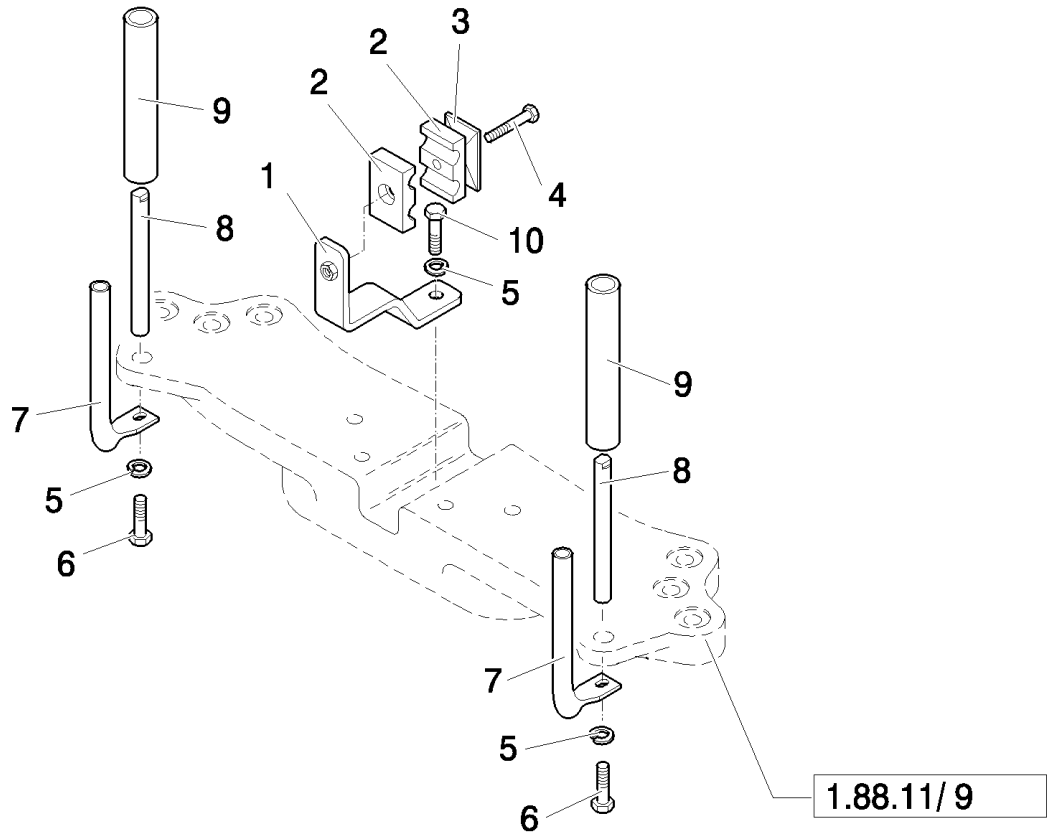

LB115.B EUR BACKHOE LOADER (1/05-)

1.82.6(13) HYDRAULIC SYSTEM PIPING(SIDE SHIFT)

Ref	Part Number	Qty	Description
1	85817316	1	SUPPORT,
2	87390511	2	CLAMP,
3	87390514	1	PLATE,
4	16044221	1	SCREW, Hex, M8 x 50, 8.8,
5	11190579	3	WASHER, SPRING, Belleville, M10.5,
6	11307021	2	SCREW, Hex, M10 x 1.25 x 40, 10.9, Full Thd,
7	85819584	2	PIN,
8	85825231	2	PIN,
9	85825230	2	HOSE, FLEXIBLE,
10	11106221	1	SCREW, Hex, M10 x 25, 8.8, Full Thd,

1.82.6(13A) ROTATION PLATE HOSE CLAMPS

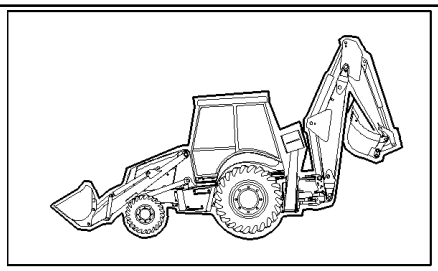

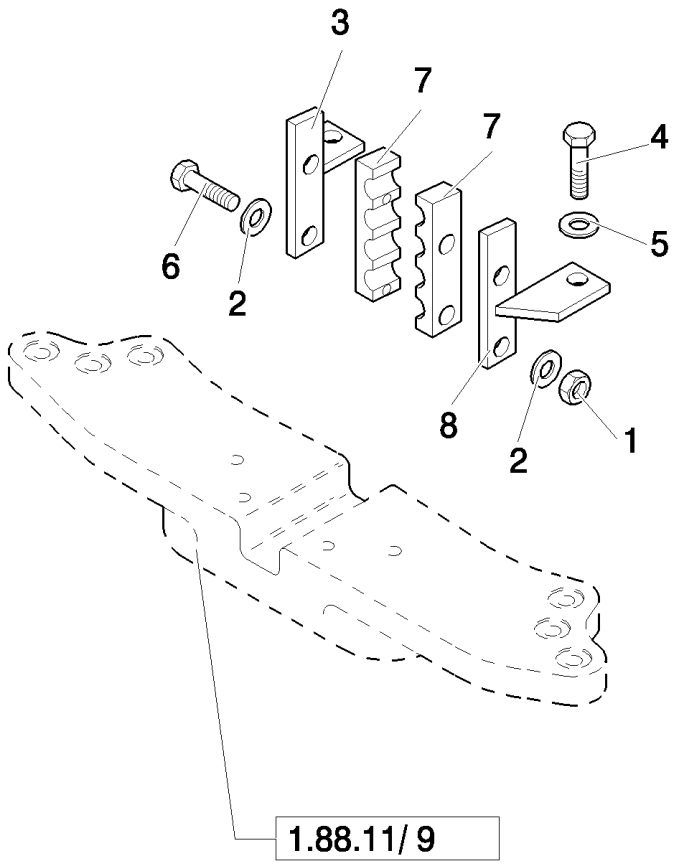

LB115.B EUR BACKHOE LOADER (1/05-)

1.82.6(13A) ROTATION PLATE HOSE CLAMPS

Ref	Part Number	Qty	Description
1	14048221	1	NUT, M8 x 1.25, Cl 10,
2	12647121	3	WASHER, M8 x 20 x 3,
3	85804573	1	SUPPORT,
4	11106221	2	SCREW, Hex, M10 x 25, 8.8, Full Thd,
5	11190579	2	WASHER, SPRING, Belleville, M10.5,
6	16044421	2	SCREW, Hex, M8 x 60, 8.8,
7	85802731	2	CLAMP,
8	85804574	1	SUPPORT,

1.82.6(14) HYDRAULIC SYSTEM PIPING

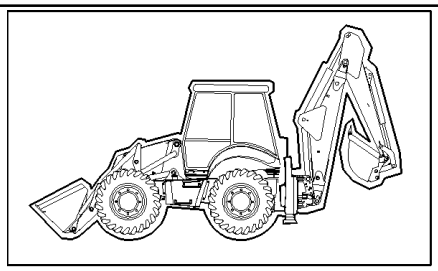

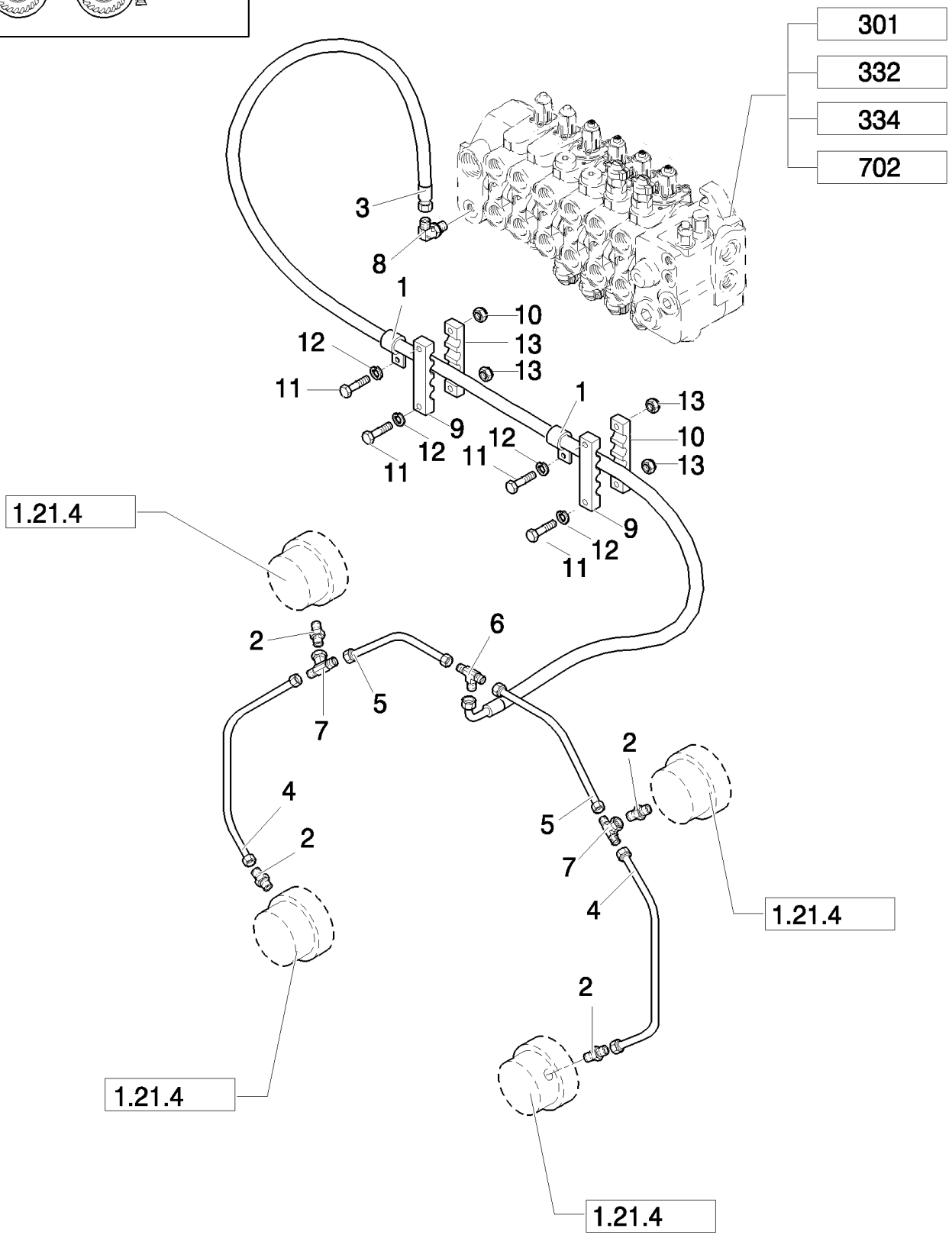

LB115.B EUR BACKHOE LOADER (1/05-)

1.82.6(14) HYDRAULIC SYSTEM PIPING

Ref	Part Number	Qty	Description
1	85803346	1	BRACKET,
2	85803333	4	CONNECTOR, HYD.,
3	85819554	1	HOSE, FLEXIBLE,
4	85826238	2	TUBE, RIGID,
5	85826240	2	TUBE, HYD,
6	85803334	1	TEE,
7	85803335	2	TEE,
8	85802234	1	ELBOW,
9	85817277	2	CLAMP, RH
10	85817279	2	CLAMP, LH
11	15213621	4	SCREW, Hex, M8 x 55, 8.8, Full Thd,
12	11193879	4	WASHER, SPRING, Belleville, M8.4,
13	14048211	4	NUT, M8 x 1.25, Cl 8,

Mechanical Version

1.82.6(15) HYDRAULIC SYSTEM PIPING

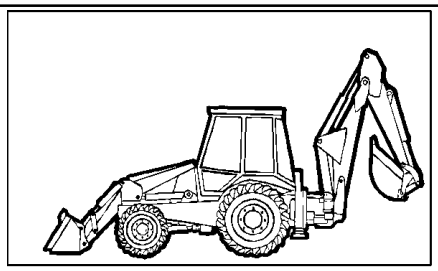

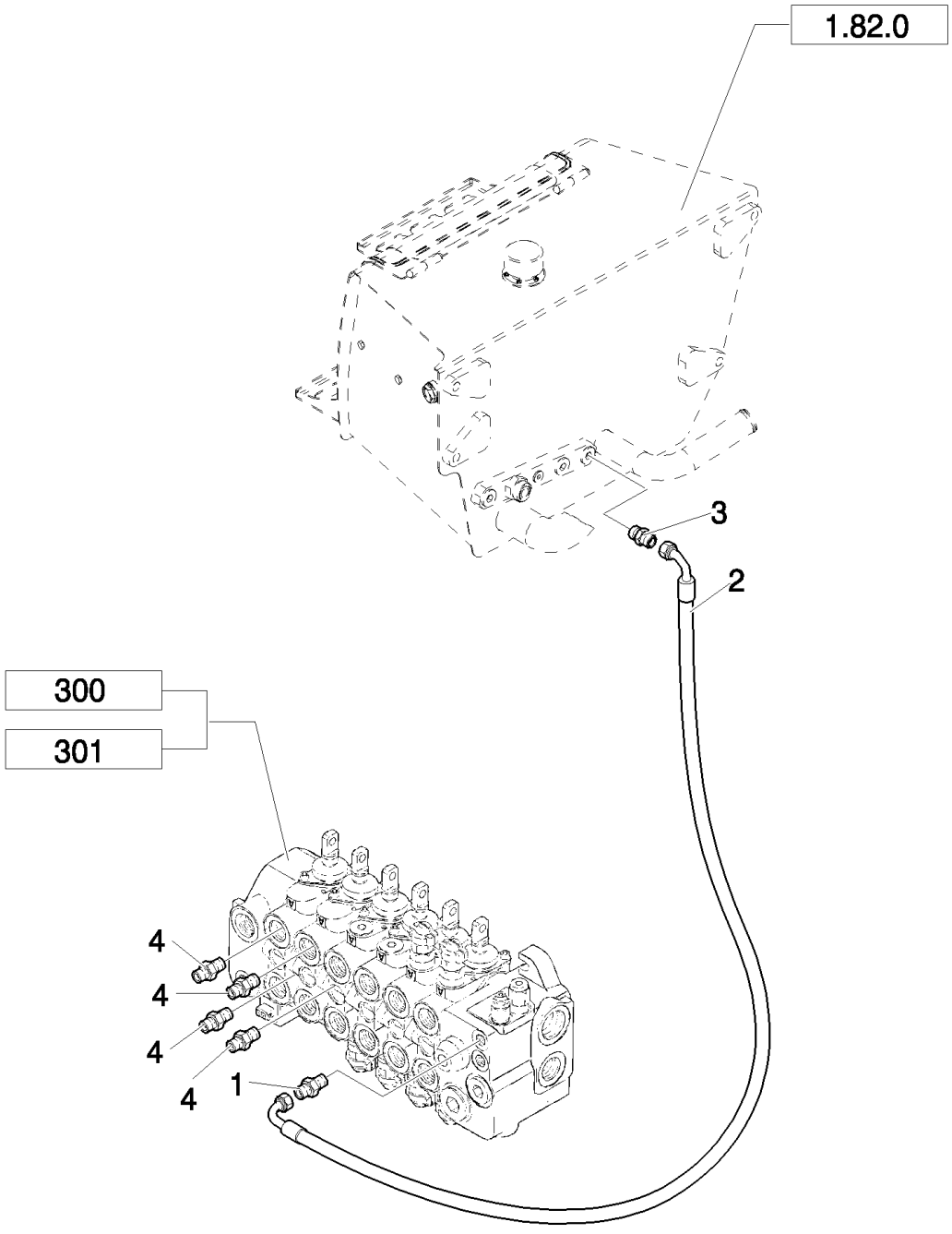

LB115.B EUR BACKHOE LOADER (1/05-)

1.82.6(15) HYDRAULIC SYSTEM PIPING

Ref	Part Number	Qty	Description
1	85802803	1	CONNECTOR, HYD.,
2	85805259	1	HOSE, FLEXIBLE,
3	85802960	1	CONNECTOR, HYD.,
4	85805258	4	CONNECTOR, HYD., 9/16"-16 ORS x 1 1/16"-12, O-Ring,

Mechanical Version

1.83.0(01) HOOD, GRILLE & RELATED PARTS

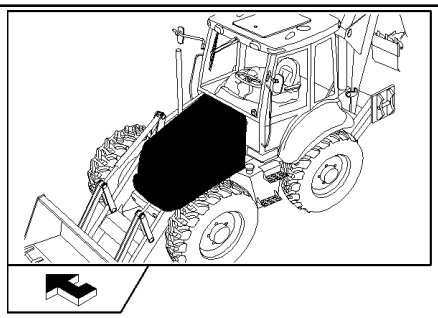

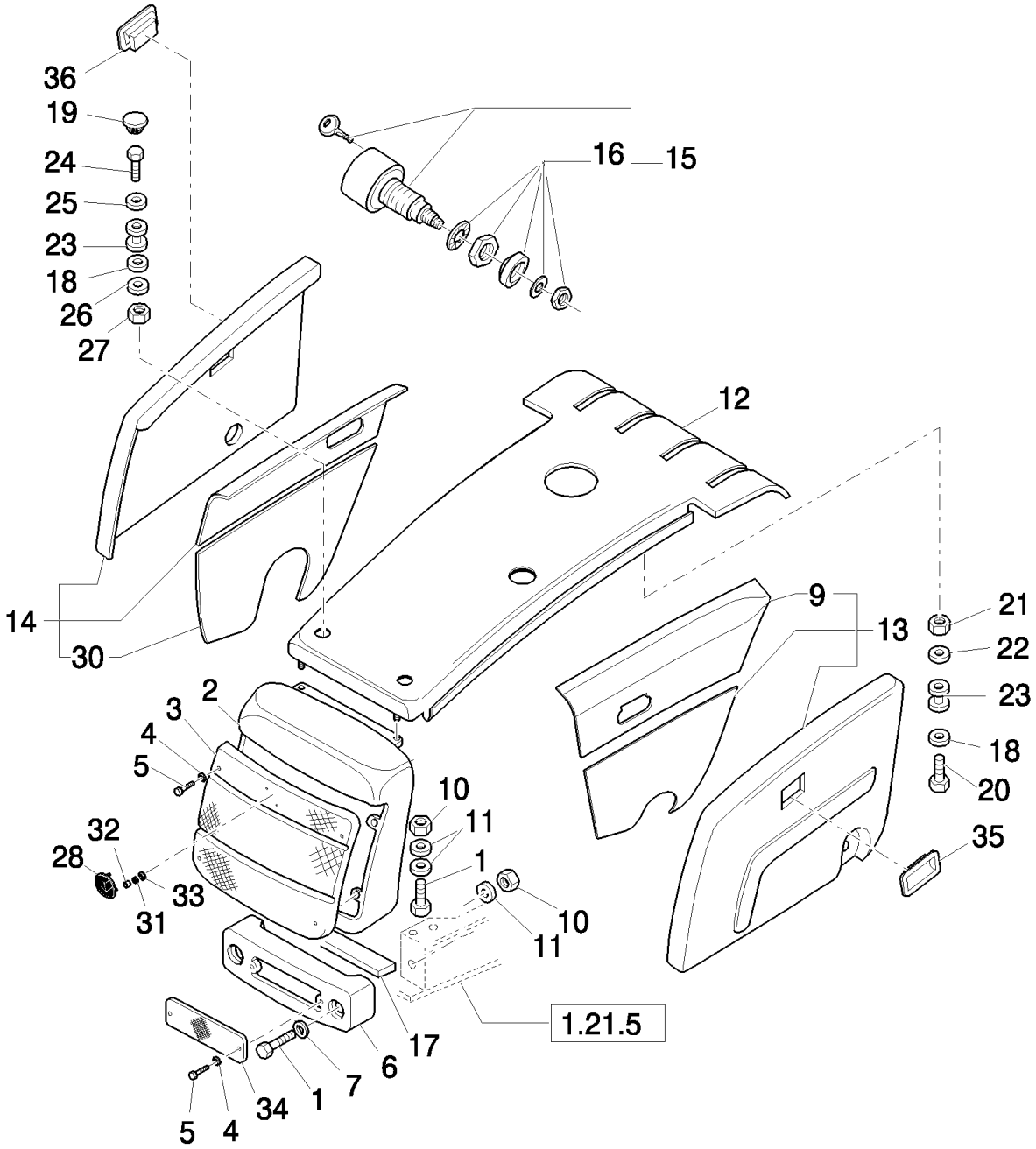

LB115.B EUR BACKHOE LOADER (1/05-)

1.83.0(01) HOOD, GRILLE & RELATED PARTS

Ref	Part Number	Qty	Description
1	15981221	6	SCREW, Hex, M16 x 65, 8.8,
2	87325160	1	HOOD,
2	85825070	1	HOOD, Replaces 87325160
3	87571893	1	GRILLE,
4	11193979	4	WASHER, SPRING, Belleville, M8.4,
5	16043421	4	SCREW, Hex, M8 x 20, 8.8,
6	85803625	1	PANEL,
7	13580001	3	WASHER,
8	11190879	2	WASHER, SPRING, Belleville, M13,
9	86981462	2	NUT, M10 x 1.5, Flg, Cl 10, M12x1.25
10	12164111	6	NUT, M16x1.5
11	11191579	10	WASHER, SPRING, Belleville, M17,
12	85826084	1	PANEL, ENGINE HOOD,
13	87341210	1	PANEL, ENGINE HOOD, LH
14	87341206	1	PANEL, Acoustic, RH
15	87302234	2	KNOB, L = 101 mm, UP TO S/N 031053231
15	87303089	2	KNOB, L = 104,5 mm, FROM TO S/N 031053232
16	85806128	AR	KIT,
17	85817795	1	STRIP, SEALING,
18	86592700	4	WASHER, M10 x 28 x 4, HT, 10.5x28x4
19	85827683	2	PLUG,
20	11107021	2	SCREW, Hex, M10 x 45, 8.8,
21	86625071	2	NUT, M10, U,
22	13578621	2	WASHER, 10x30x2
23	47048668	4	GASKET,
24	85826361	2	SCREW,
25	47054521	2	WASHER,
26	47048972	2	WASHER, M10
27	12577211	2	NUT, M10 x 1.5, Cl 8,
28	85820107	1	EMBLEM,
29	87341208	1	PANEL, ENGINE HOOD, Acoustic, LH
30	87341215	1	PANEL, ENGINE HOOD, RH
31	47352075	1	
32	5138360	2	RING,
33	5135069	2	CLIP,
34	12643721	2	WASHER, M6 x 18 x 1.5,

1.87.2(01) CAB SCREEN

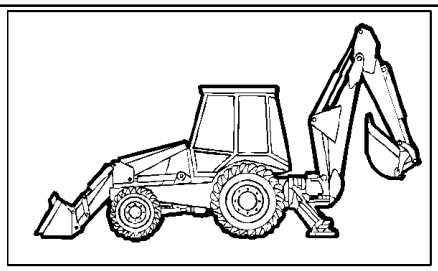

KIT 13=●

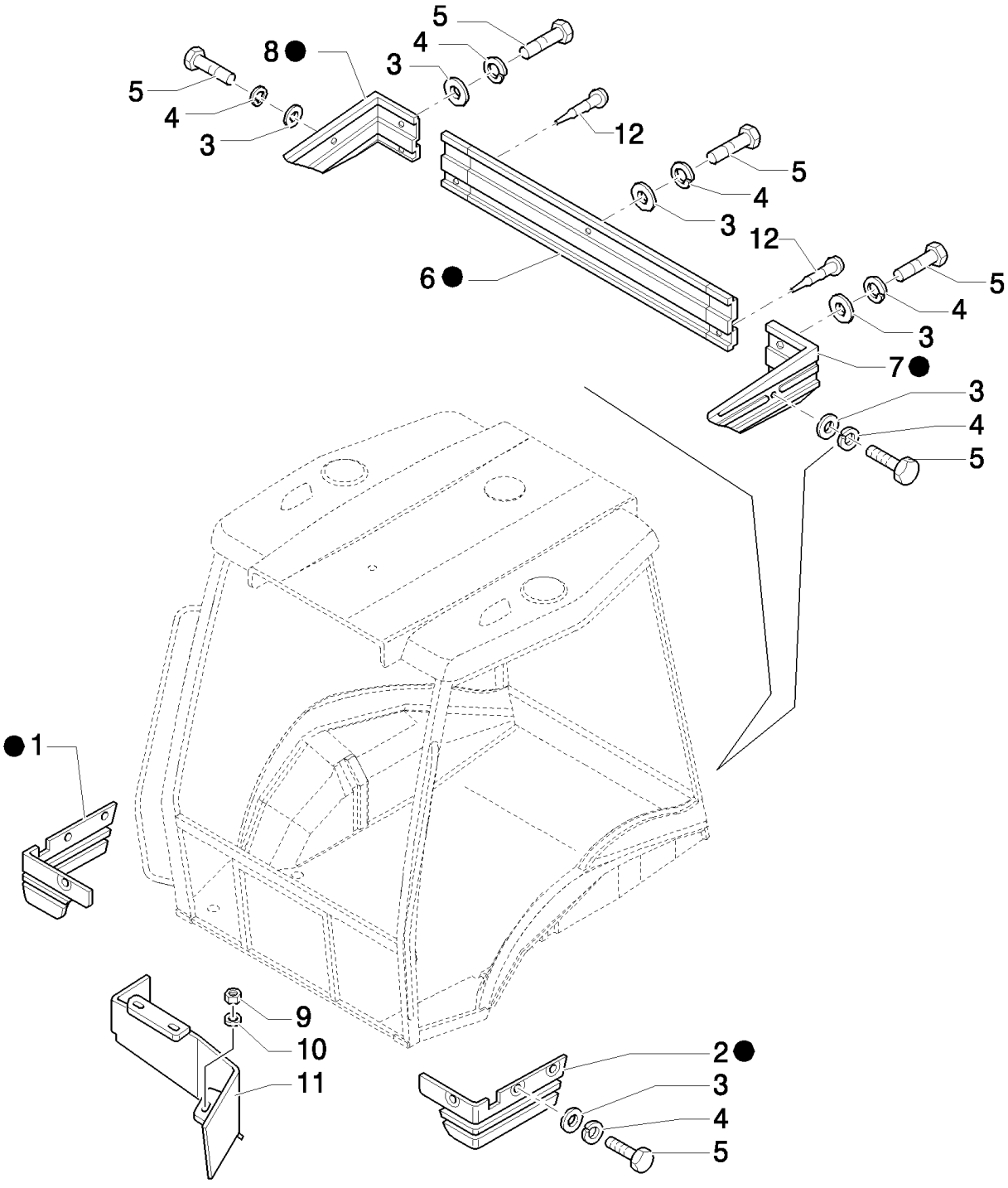

LB115.B EUR BACKHOE LOADER (1/05-)

1.87.2(01) CAB SCREEN

Ref	Part Number	Qty	Description
1	87315641	1	COVER, RH
2	87315643	1	COVER, LH
3	12643721	11	WASHER, M6 x 18 x 1.5,
4	11194679	11	WASHER, SPRING, Belleville, M6.4,
5	10902421	11	SCREW, Hex, M6 x 20, 8.8,
6	85805303	1	COVER,
7	85805304	1	COVER, LH
8	85805305	1	COVER, RH
9	16104111	3	NUT, M8 x 1.25, Cl 8,
10	11193979	3	WASHER, SPRING, Belleville, M8.4,
11	85805142	1	GUARD,
12	85808422	2	PLUG,
13	87315628	1	KIT,

1.87.8(01) CAB FASTENERS

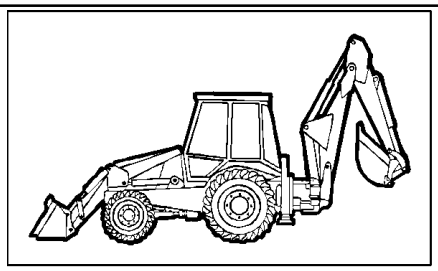

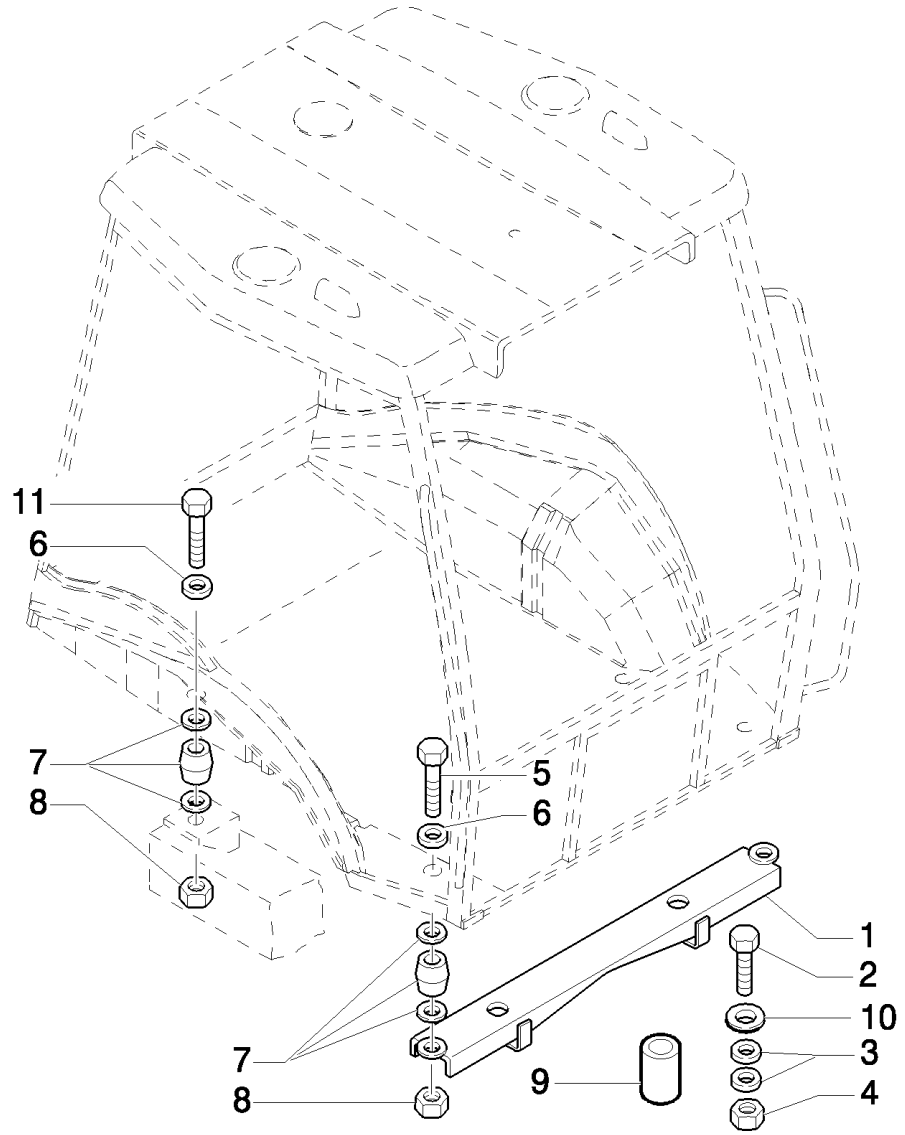

LB115.B EUR BACKHOE LOADER (1/05-)

1.87.8(01) CAB FASTENERS

Ref	Part Number	Qty	Description
1	85801319	1	SUPPORT, , Only For LB110.B - B110
1	87303780	1	SUPPORT, , Only for LB115.B - B115
2	15989334	2	SCREW, Hex, M20 x 1.5 x 110, 10.9,
3	10520431	4	WASHER,
4	12575121	2	NUT, M20 x 1.5, Cl 10,
5	15982134	2	SCREW, Hex, M16 x 140, 10.9,
6	14496931	4	WASHER, M16 x 30 x 3,
7	87569589	4	SILENTBLOC,
8	12574921	4	NUT, M16 x 1.5, Cl 10,
9	85801324	2	TUBE,
10	85804493	2	WASHER, 21 x 40 x 6
11	15981834	2	SCREW, Hex, M16 x 1.5 x 120, 10.9,

1.88.01(01) TRANSPORT LOCK" REAR LOCKING" (CENTER PIVOT)

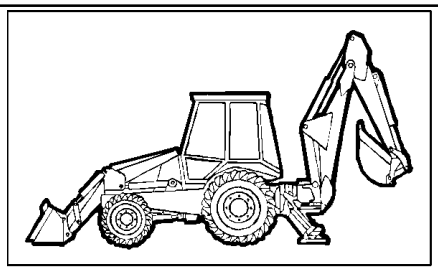

LB115.B EUR BACKHOE LOADER (1/05-)

1.88.01(01) TRANSPORT LOCK" REAR LOCKING" (CENTER PIVOT)

Ref	Part Number	Qty	Description
1	85821268	1	SHOCK ABSORBER, , Only for LB90.B - LB95.B - LB115.B
2	11193879	1	WASHER, SPRING, Belleville, M8.4,
3	16043621	1	BOLT, Hex, M8 x 25, 8.8,
4	85812278	1	DECAL, , Only for LB90.B - LB95.B - LB115.B
5	85819482	1	BUSHING,
6	11106221	2	SCREW, Hex, M10 x 25, 8.8, Full Thd,
7	11190579	2	WASHER, SPRING, Belleville, M10.5,
8	85819485	1	BASE, , Only for EUROPE Version
9	85813407	2	RING,
10	85819468	1	CLEVIS,
11	87302958	1	PIN, CLEVIS,
12	85819477	2	BALL JOINT,
13	85819478	1	NUT, M10
14	85819479	2	BELLOWS,
15	85819481	1	ROD,
17	85819480	1	TUBE,
18	85821270	1	WASHER,
19	85821271	1	NUT, M16
20	85824227	2	CLAMP,
21	87302956	1	TIE-ROD, , Only for LB90.B - LB95.B - LB115.B

1.88.01(02) TRANSPORT LOCK" REAR LOCKING" (CENTER PIVOT)

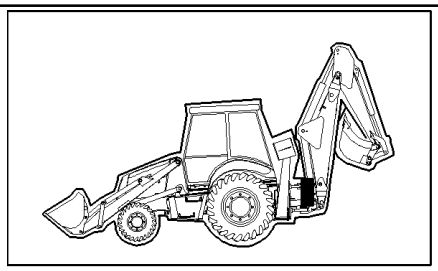

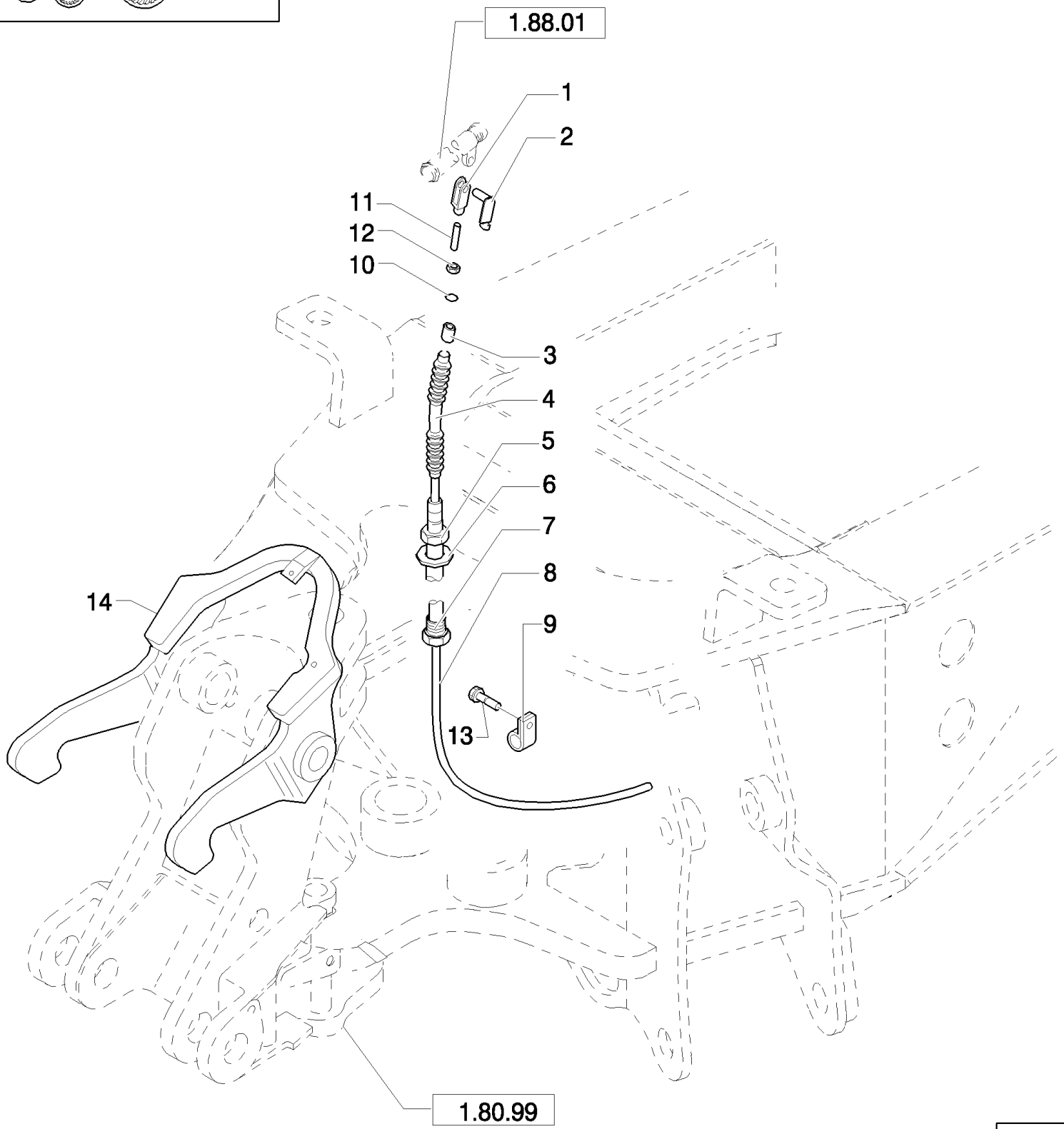

LB115.B EUR BACKHOE LOADER (1/05-)

1.88.01(02) TRANSPORT LOCK" REAR LOCKING" (CENTER PIVOT)

Ref	Part Number	Qty	Description
1	85819467	1	CLEVIS,
2	85819469	1	CLIP,
3	85819471	1	RING,
4	85821278	1	BELLOWS,
5	87302960	2	NUT,
6	87302959	1	WASHER,
7	85819486	1	NUT,
8	87302967	1	CABLE,
9	10450190	1	CLAMP,
10	85821277	1	RING, RUBBER,
11	85821279	1	ROD,
12	85821273	1	NUT, M8 x 1.25
13	16043021	1	SCREW, Hex, M8 x 12, 8.8, Full Thd,
14	85819493	1	HOOK,

1.88.01/ 2(01) "TRANSPORT LOCK" ON/OFF SWITCH, VALVE & HOSES (POWER SHIFT, SIDE SHIFT, CENTER PIVOT)

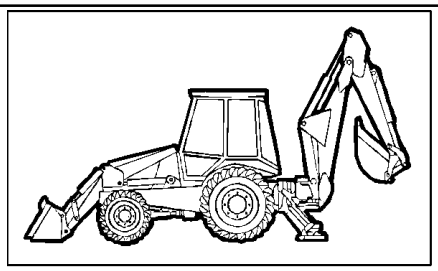

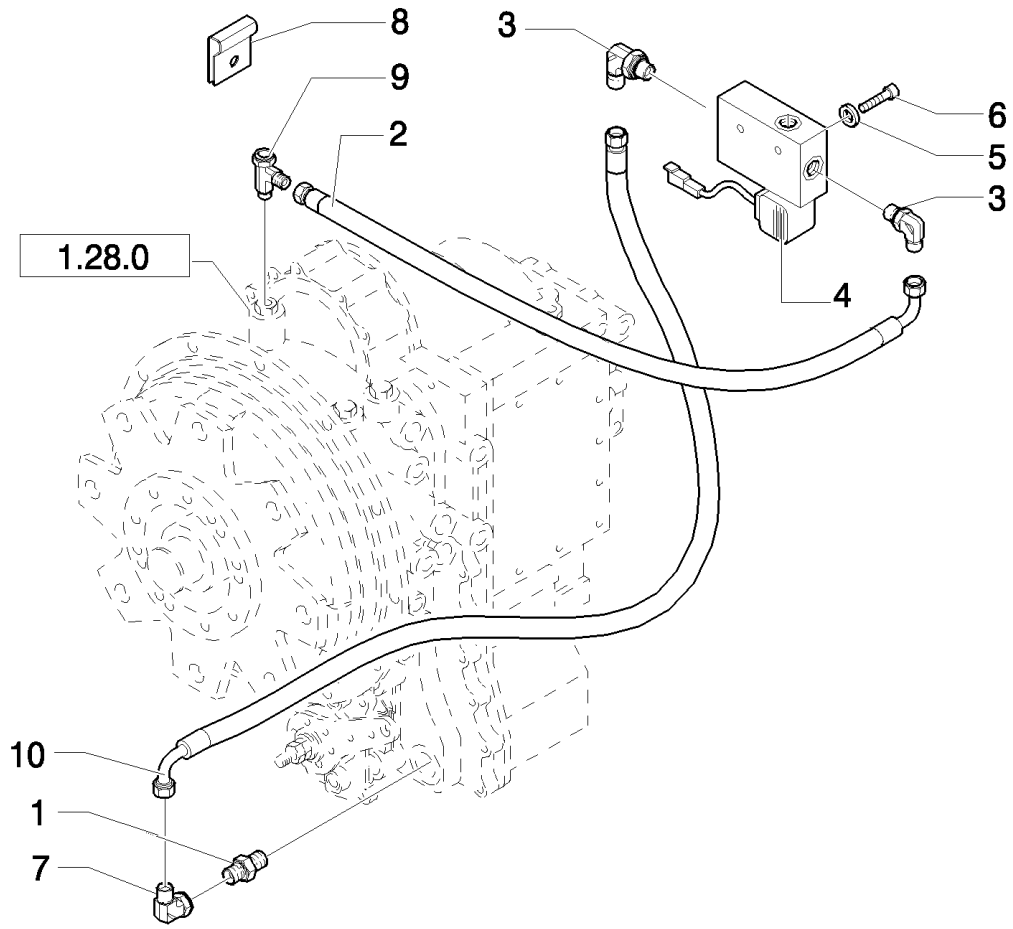

LB115.B EUR BACKHOE LOADER (1/05-)

1.88.01/ 2(01) "TRANSPORT LOCK" ON/OFF SWITCH, VALVE & HOSES (POWER SHIFT, SIDE SHIFT, CENTER PIVOT)

Ref	Part Number	Qty	Description
1	87403805	1	CONNECTOR, HYD.,
2	85805260	1	HOSE, FLEXIBLE,
3	85802234	2	ELBOW,
4	85817265	1	VALVE, SOLENOID,
5	11197779	2	WASHER, SPRING, Belleville, M6.4,
6	10903221	2	SCREW, Hex, M6 x 40, 8.8, M6x1x85
7	47050634	1	ELBOW,
8	14560187	2	STRAP, CABLE, L=203.2 mm
9	85826962	1	CONNECTOR, HYD.,
10	85819068	1	HOSE, FLEXIBLE,

1.88.01/ 2(02) TRANSPORT LOCK HOOK, CYLINDER & HOSE (SIDE SHIFT,CENTER PIVOT, POWER SHIFT)

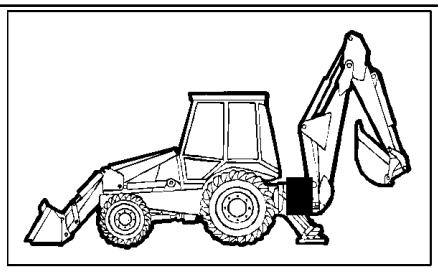

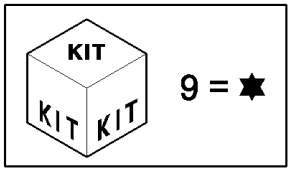

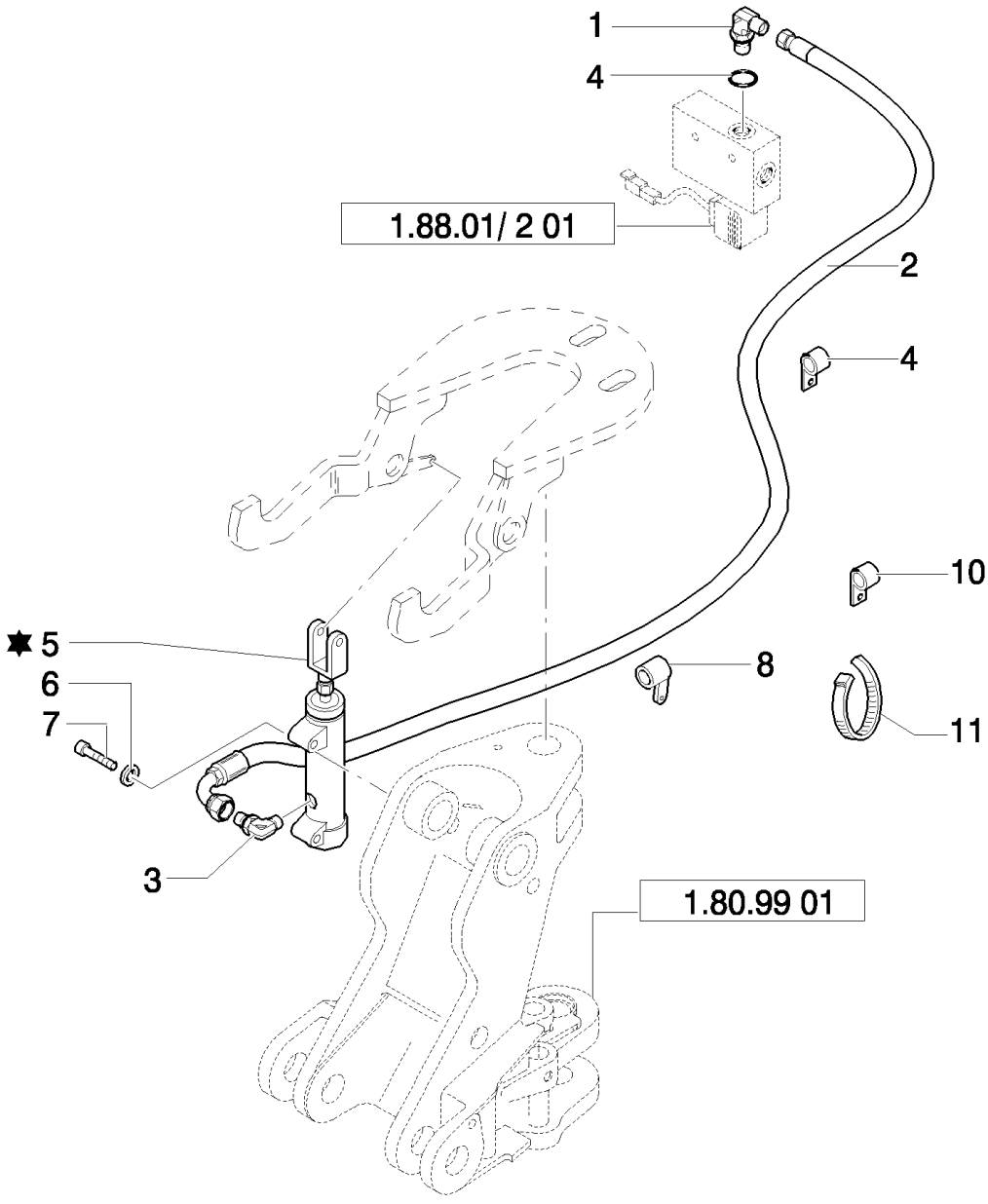

LB115.B EUR BACKHOE LOADER (1/05-)

1.88.01/ 2(02) TRANSPORT LOCK HOOK, CYLINDER & HOSE (SIDE SHIFT,CENTER PIVOT, POWER SHIFT)

Ref	Part Number	Qty	Description
1	85802234	1	ELBOW,
2	85819068	1	HOSE, FLEXIBLE, , Only for Side Shift
2	85827681	1	HOSE, FLEXIBLE, , Only for Center Pivot
3	85824089	1	ELBOW,
4	79072960	1	STRAP, CABLE,
5	87362349	1	CYLINDER,
6	11193879	2	WASHER, SPRING, Belleville, M8.4,
7	16044221	2	SCREW, Hex, M8 x 50, 8.8,
9	87337354	2	KIT,
8	85802890	1	CLAMP,
10	85802336	1	CLAMP,
11	85803332	4	STRAP, CABLE,

1.88.09/ 1(01) DISTRIBUTOR VALVE SUPPORT (SIDE SHIFT)

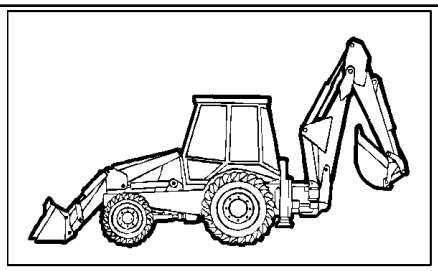

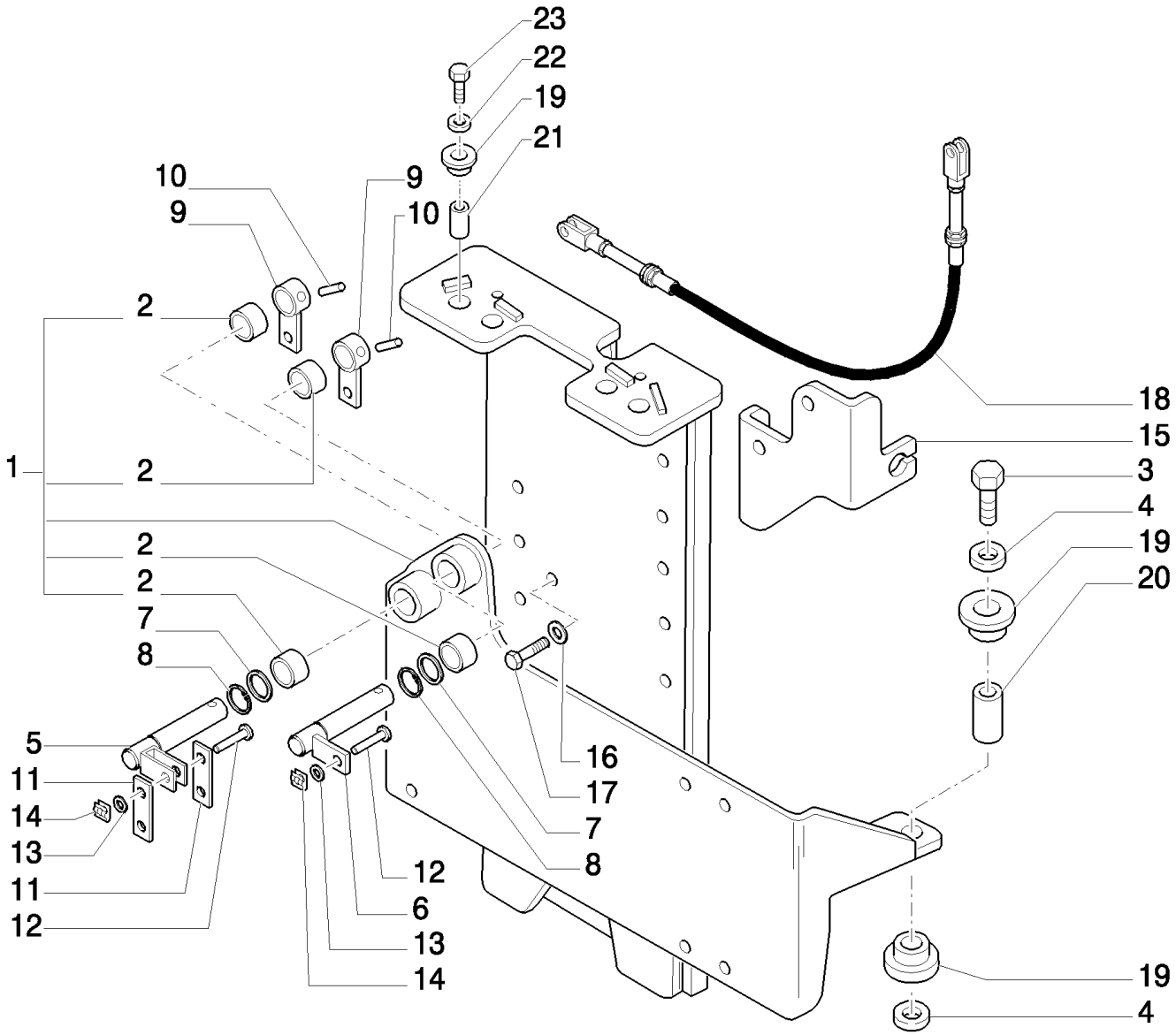

LB115.B EUR BACKHOE LOADER (1/05-)

1.88.09/ 1(01) DISTRIBUTOR VALVE SUPPORT (SIDE SHIFT)

Ref	Part Number	Qty	Description
1	85820168	1	SUPPORT,
2	85802494	4	BUSHING,
3	15215821	2	SCREW, Hex, M12 x 60, 8.8, Full Thd,
4	85802618	5	WASHER, SEALING, 13X41X3
5	85805328	1	LEVER,
6	85805331	1	LEVER, IDLER,
7	14496901	2	WASHER, M16 x 30 x 3,
8	N663114S36	2	RING, SNAP, {PP:83911366}
9	85805335	2	LEVER,
10	85805616	2	PIN,
11	85805338	2	LINK,
12	85805408	3	PIN, ROLL,
13	14499401	3	WASHER, M8 x 14 x 1.6,
14	11064071	3	CLIP,
15	85805097	1	SUPPORT,
16	11193879	2	WASHER, SPRING, Belleville, M8.4,
17	16043121	2	SCREW, Hex, M8 x 14, 8.8, Full Thd,
18	85805409	2	CABLE,
19	87348165	6	ISOLATOR,
20	85817252	2	BUSHING, 12.5 x 16.5 x 24
21	85820172	1	BUSHING,
22	85820170	1	SPACER,
23	15216421	1	SCREW, Hex, M12 x 90, 8.8, Full Thd,

Mechanical Version

1.88.11/ A(01) ARMS AND JOINTS

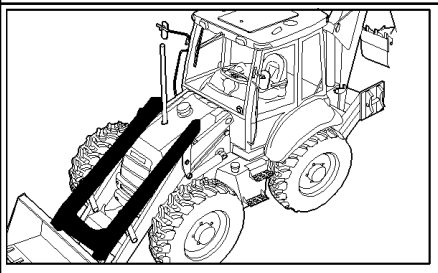

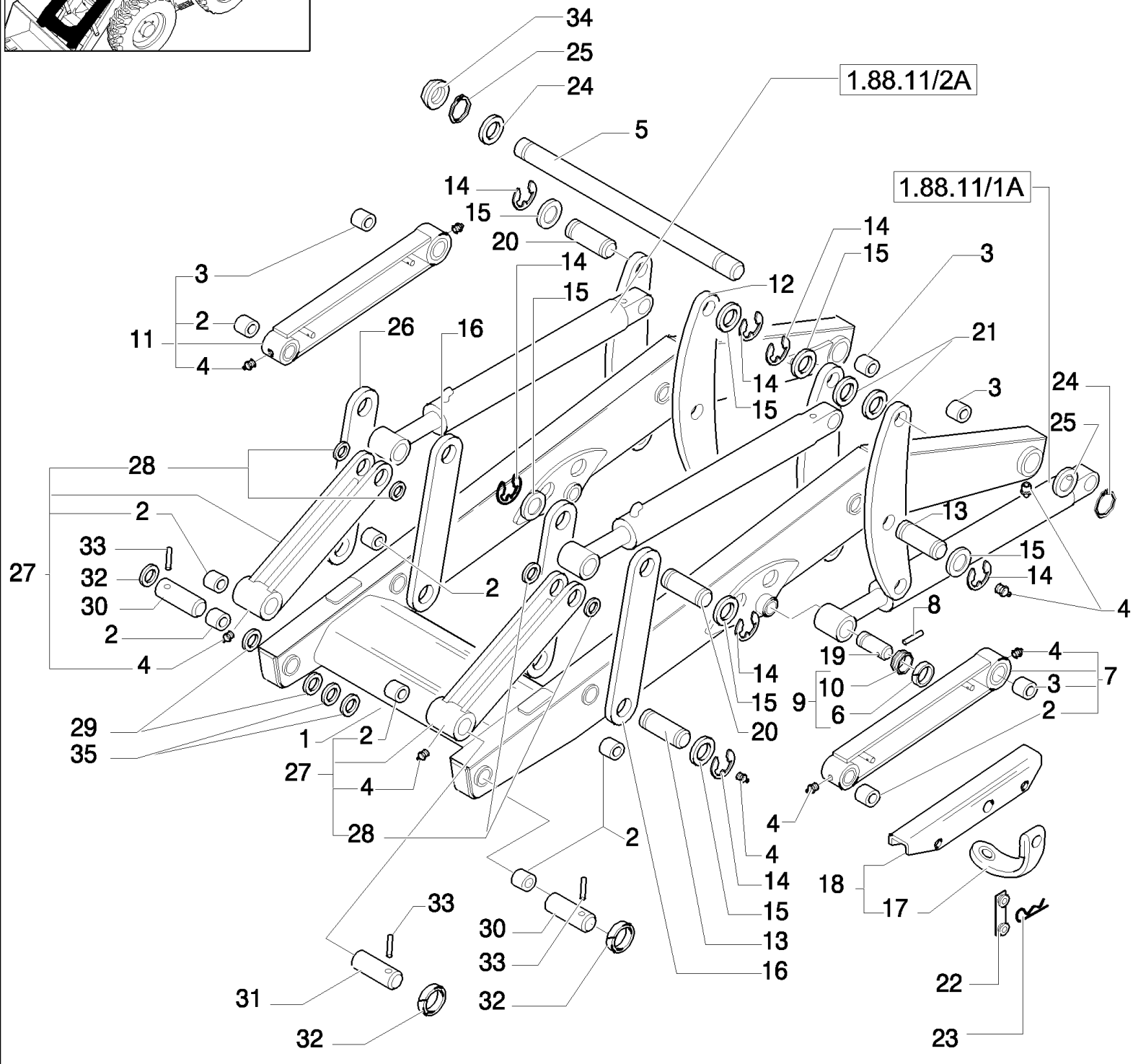

LB115.B EUR BACKHOE LOADER (1/05-)

1.88.11/ A(01) ARMS AND JOINTS

Ref	Part Number	Qty	Description
1	85825446	1	ARM, LIFT, , Includes 2, 3, 4
2	85804475	10	BUSHING,
3	85804468	4	BUSHING,
4	87901S8	12	NIPPLE, LUBE, 1/8"-27 X .66" lg,
5	87400102	1	PIN,
6	85802991	2	O-RING,
7	85804578	1	LINK, , Includes 2, 3, 4
8	85802994	2	PIN,
9	85804504	2	SUPPORT,
10	85804465	2	RING,
11	85804497	1	LINK, , Includes 2, 3, 4
12	85804505	4	LINK,
13	85804469	4	PIN, ROLL,
14	85805654	20	CIRCLIP,
15	D7NNC622C	20	SPACER, {PP:83910977}
16	85804509	3	LINK,
17	85811977	1	BELT,
18	85811995	1	KIT,
19	87400400	2	PIN,
20	85804508	6	PIN, ROLL,
21	85804495	4	SPACER,
22	85804587	2	INSULATOR BLOCK,
23	85804588	2	PIN, SPLIT (COTTER),
24	87401079	2	WASHER,
25	11069876	2	RING, LOCKING, M60, Ext,
26	87305181	1	PANEL, SIDE,
27	85804513	2	LINK, , Includes 2, 4, 28
28	85804515	4	BUSHING,
29	85818916	8	SHIM,
30	85804533	2	PIN,
31	85805306	2	PIN,
32	85802974	4	RING,
33	85804534	4	PIN, ROLL,
34	85804504	2	SUPPORT,
35	85828253	2	SHIM,

1.88.11/ 1C(01) LIFT CYLINDER

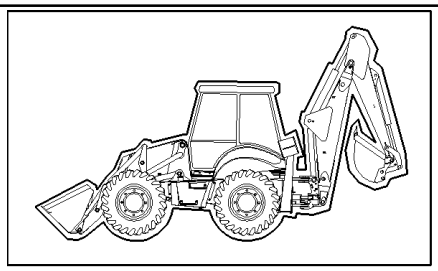

KIT
KIT KIT
18=●
25=■

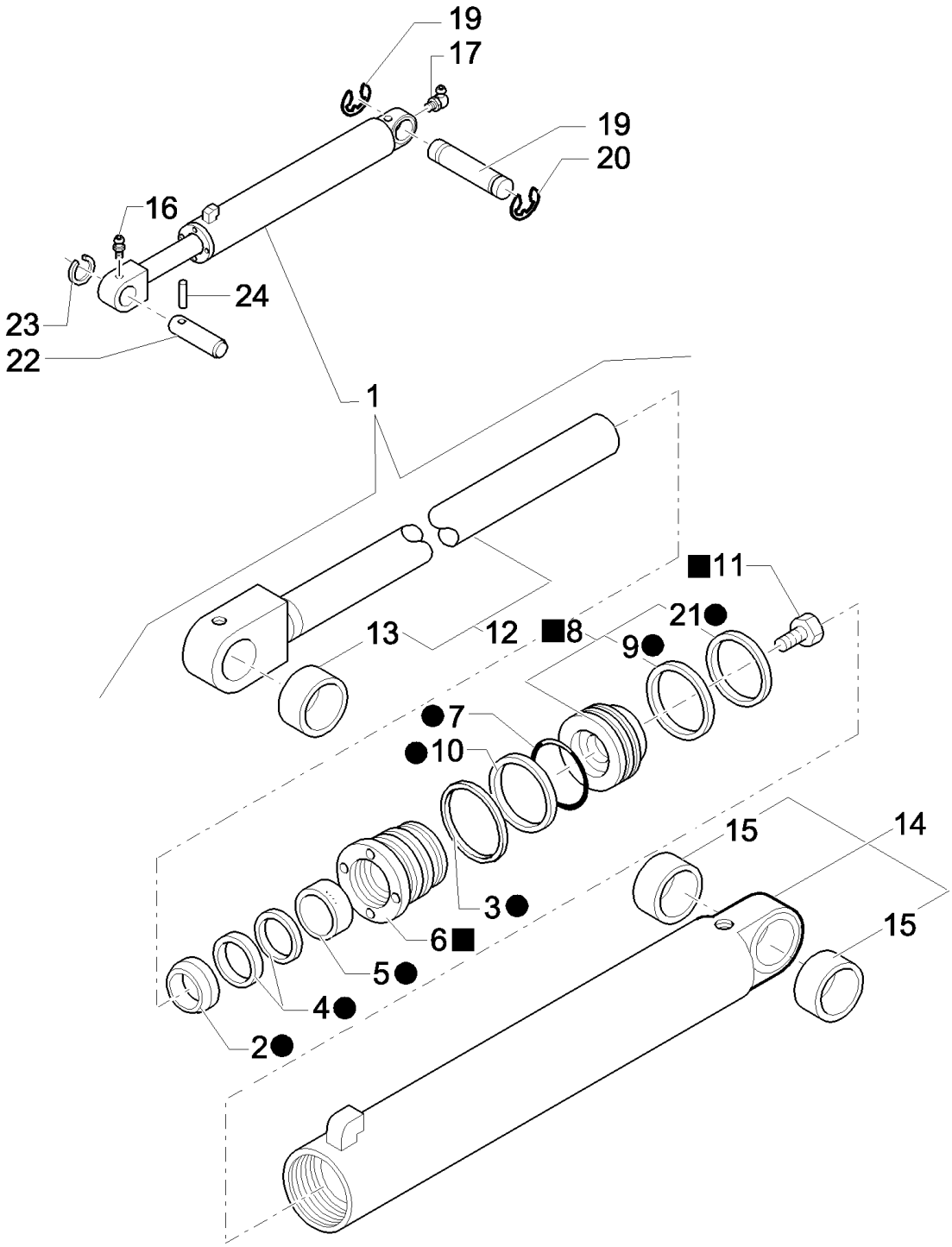

LB115.B EUR BACKHOE LOADER (1/05-)

1.88.11/ 1C(01) LIFT CYLINDER

Ref	Part Number	Qty	Description
1	87315524	2	HYDRAULIC CYLINDER, ASSY
2	87414969	2	SEAL,
3	87440401	2	BACK-UP RING,
4	87414970	2	KIT, SEALS,
5	87414966	2	BEARING, NYLON,
6	87415116	2	GLAND,
7	87414341	2	RING,
8	87405859	2	PISTON, , Includes 9, 21
9	87414333	2	SEAL,
10	87421144	2	O-RING,
11	87428020	2	SCREW,
12	85800013	2	ROD, , Includes 13
13	85800016	2	BUSHING,
13	87450315	2	BUSHING,
14	85800011	2	TUBE, HYD, , Includes 15
15	291550	2	BUSHING, {PP:81901897}
16	87901S8	2	NIPPLE, LUBE, 1/8"-27 X .66" lg,
17	87916S8	2	NIPPLE, LUBE, {PP:81818824} 1/827-90GR
18	87428628	1	KIT, SEALS, D=50
19	87553363	2	PIN,
20	47049094	4	CIRCLIP,
21	87408634	2	Ring, Wear,
22	85804538	2	PIN, ROLL,
23	85802974	2	RING,
24	85804534	2	PIN, ROLL,
25	87424196	2	KIT, REPAIR,

1.88.11/ 2B(01) LOADER BUCKET CONTROL CYLINDER

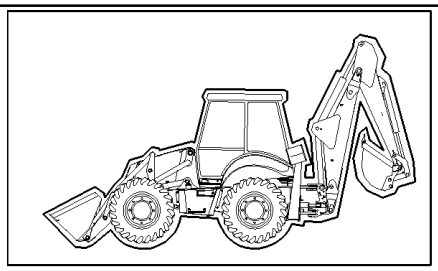

KIT
KIT KIT
19 = ●
20 = ■

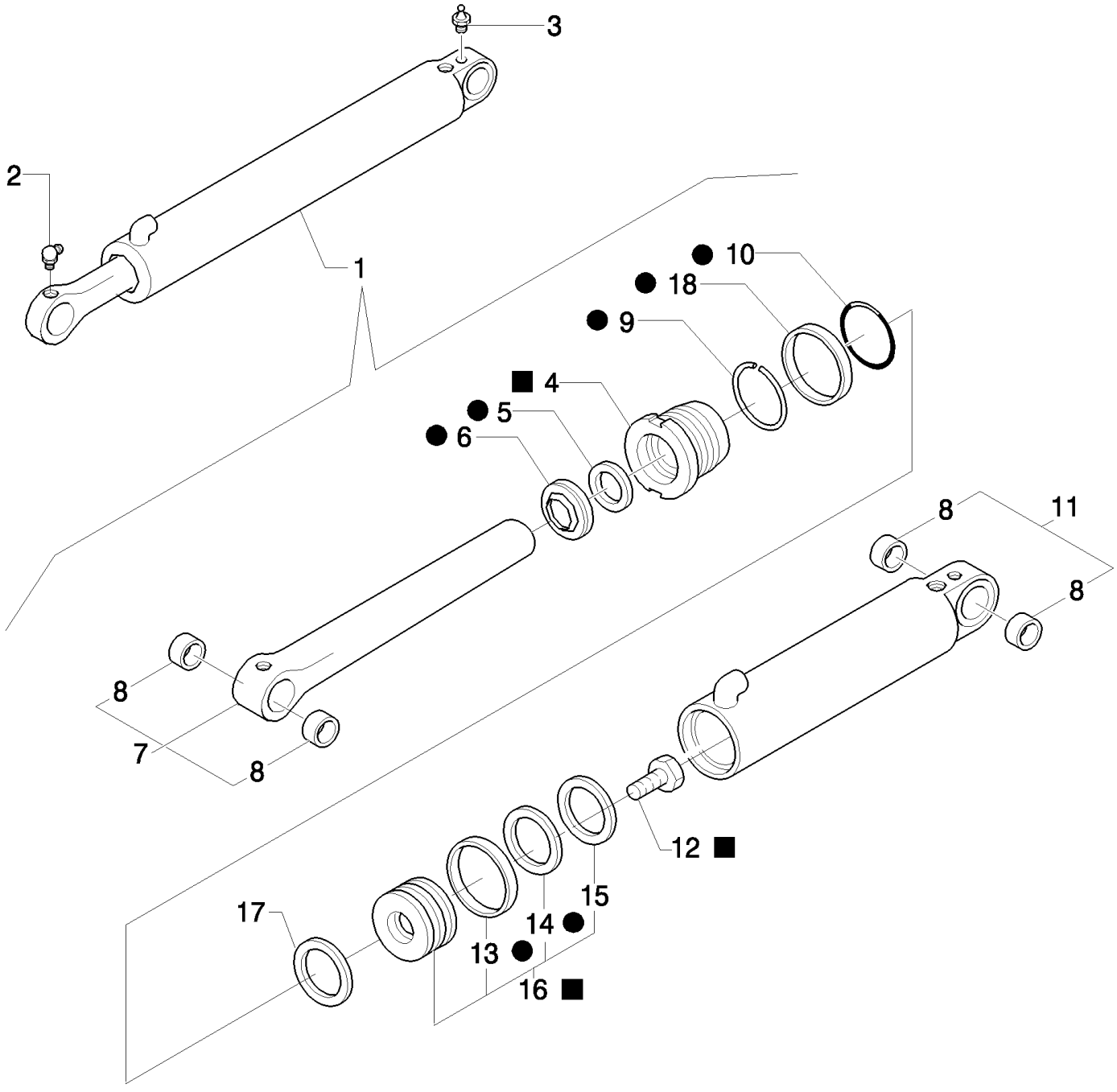

LB115.B EUR BACKHOE LOADER (1/05-)

1.88.11/ 2B(01) LOADER BUCKET CONTROL CYLINDER

Ref	Part Number	Qty	Description
1	87315523	1	HYDRAULIC CYLINDER, ASSY,LOADER BUCKET
2	87916S8	2	NIPPLE, LUBE, {PP:81818824} 1/8-27-90GR
3	87901S8	4	NIPPLE, LUBE, 1/8"-27 X .66" lg,
4	87432511	2	GLAND,
5	87414970	2	KIT, SEALS,
6	87414969	4	SEAL,
7	85800053	2	ROD, , Includes 8
8	85800016	4	BUSHING,
8	87450315	2	BUSHING,
9	87440396	2	BACK-UP RING,
10	87421143	2	O-RING,
11	85800051	2	BARREL, , Includes 8
12	87428020	2	SCREW,
13	87414340	1	RING,
14	87414332	2	SEAL,
15	87408633	2	Ring, Wear,
16	87445497	2	PISTON, , Includes 13 To 15
17	85800090	2	SEAL,
18	87408633	2	Ring, Wear,
19	87432515	1	KIT, SEALS,
20	87445498	1	KIT,

Up to S/N 031054679

1.88.11/ 2B(02) LOADER BUCKET CONTROL CYLINDER

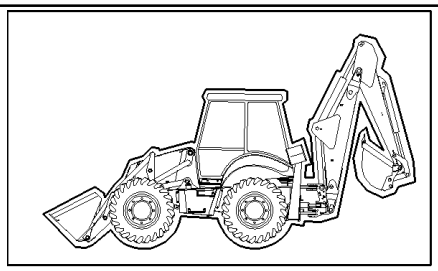

KIT
KIT KIT
19 = ●
20 = ■

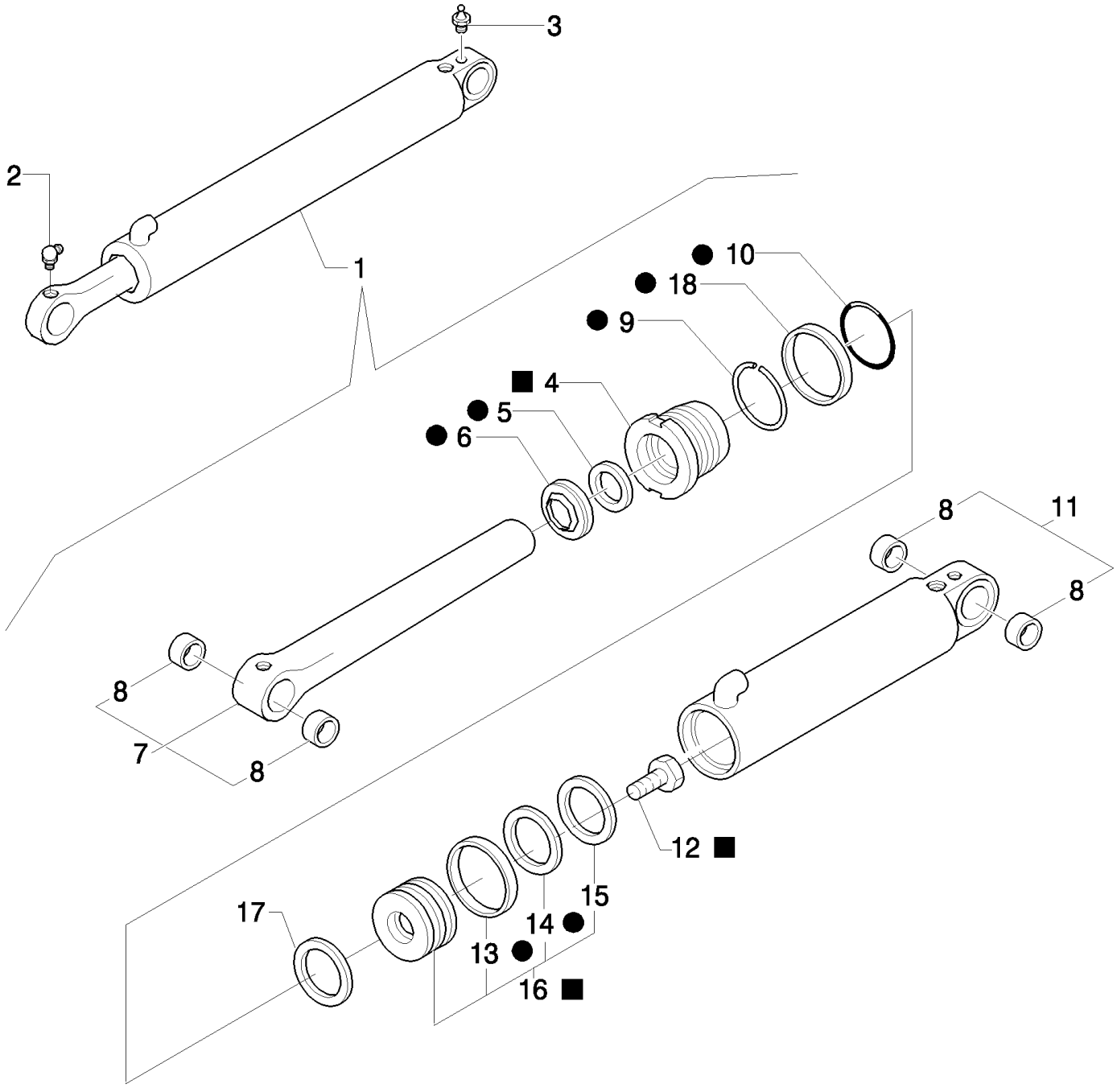

From to S/N 031054680

LB115.B EUR BACKHOE LOADER (1/05-)

1.88.11/ 2B(02) LOADER BUCKET CONTROL CYLINDER

Ref	Part Number	Qty	Description
1	87432502	2	HYDRAULIC CYLINDER, Assy, Loader Bucket
2	87916S8	2	NIPPLE, LUBE, {PP:81818824} 1/8-27-90GR
3	87901S8	2	NIPPLE, LUBE, 1/8"-27 X .66" lg,
4	87432511	2	GLAND,
5	87414970	2	KIT, SEALS,
6	87414969	2	SEAL,
7	85800053	2	ROD, , Includes 8
8	85800016	4	BUSHING,
8	87450315	2	BUSHING,
9	87440396	2	BACK-UP RING,
10	87421143	2	O-RING,
11	85800051	2	BARREL, , Includes 8
12	87428020	2	SCREW,
13	87414340	4	RING,
14	87414332	4	SEAL,
15	87408633	4	Ring, Wear,
16	87445497	2	PISTON, , Includes 13 To 15
17	85800090	2	SEAL,
18	87408633	2	Ring, Wear,
19	87432515	1	KIT, SEALS,
20	87445498	1	KIT,

From to S/N 031054680

1.88.11/ 3A(01) LIFT CYLINDER AND BUCKET PIPES

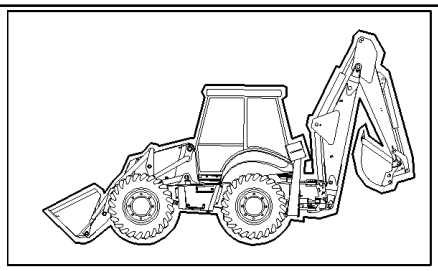

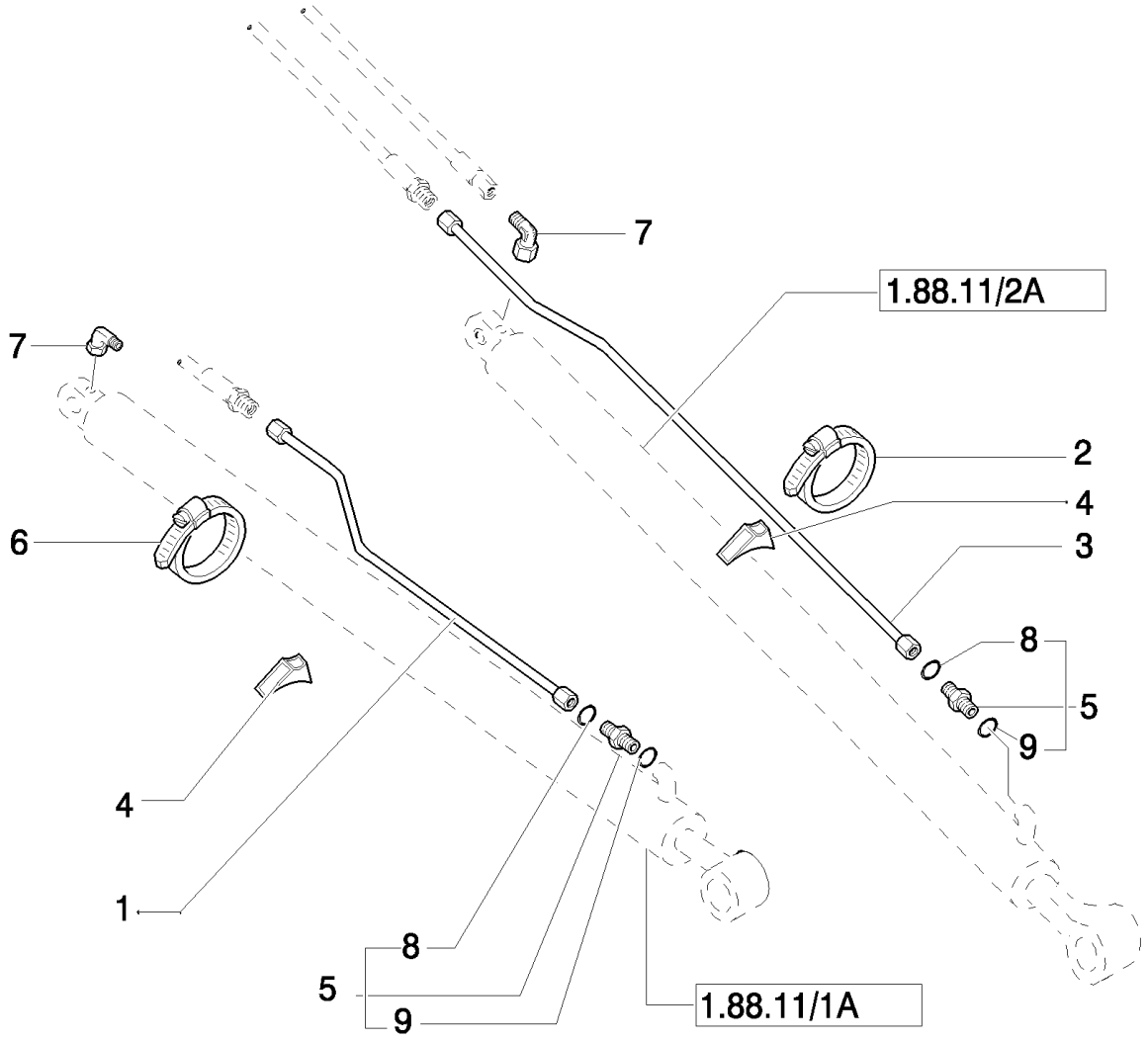

LB115.B EUR BACKHOE LOADER (1/05-)

1.88.11/ 3A(01) LIFT CYLINDER AND BUCKET PIPES

Ref	Part Number	Qty	Description
1	85805171	1	TUBE, HYD, RH
1	85805311	1	TUBE, HYD, LH
2	85802743	2	CLAMP, HOSE,
3	85805170	2	TUBE, HYD,
4	87303910	4	SPACER,
5	390955S36	4	CONNECTOR, HYD., {PP:83963376} , Includes 8, 9
6	85803008	2	CLAMP, HOSE,
7	85802961	4	ELBOW,
8	9992298	8	O-RING, -014, 90 Duro, .489" ID x .070" Thk,
9	167269	8	O-RING, 10-1, 90 Duro, .755" ID x .097" Thk,

1.88.11/ 6(02) STABILIZER CYLINDERS (CENTER PIVOT)

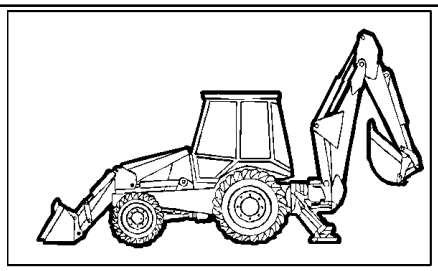

KIT
KIT KIT
15 = ●
17 = ■

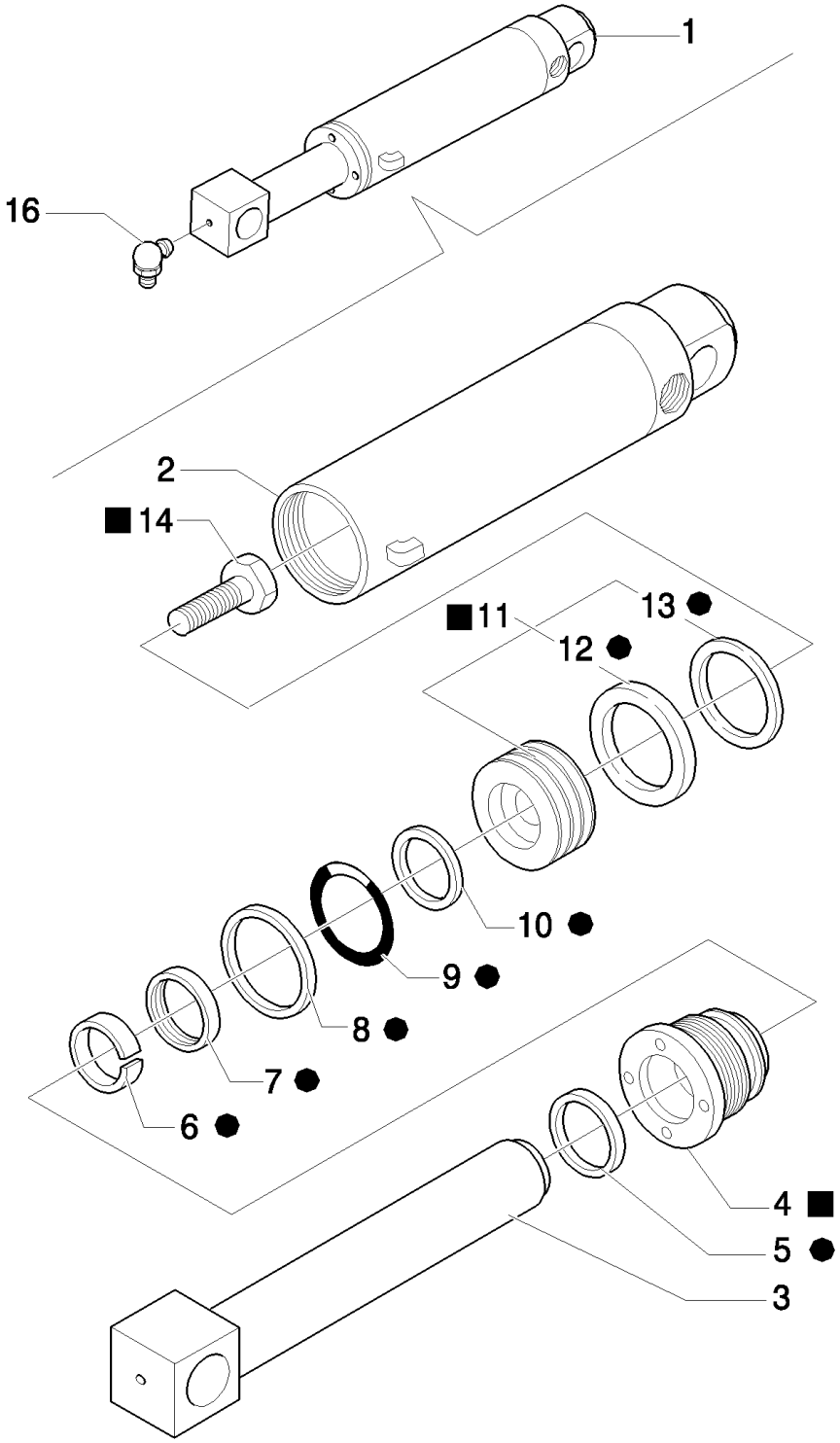

LB115.B EUR BACKHOE LOADER (1/05-)

1.88.11/ 6(02) STABILIZER CYLINDERS (CENTER PIVOT)

Ref	Part Number	Qty	Description
1	87315528	2	HYDRAULIC CYLINDER,
2	85800604	2	FLEXIBLE CONTROL,
3	85800603	2	ROD,
4	87412400	2	CYLINDER HEAD,
5	87414974	2	WIPER,
6	87414971	2	O-RING,
7	87414975	2	KIT, SEALS,
8	87440410	2	BACK-UP RING,
9	87421145	2	O-RING,
10	87414342	2	RING,
11	87406921	2	CONNECTOR, ELEC, , Includes 12, 13
12	87414334	2	SEAL,
13	87408635	2	Ring, Wear,
14	87428011	2	BOLT,
15	87428630	1	KIT, SEALS,
16	87916S8	2	NIPPLE, LUBE, {PP:81818824}
17	87424198	2	KIT, 1/8"-27

1.88.11/ 6B(01) STABILIZER CYLINDERS (SIDE SHIFT)

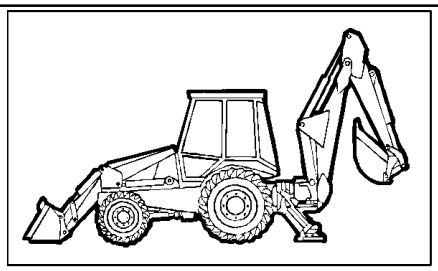

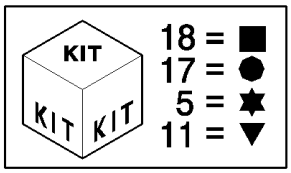

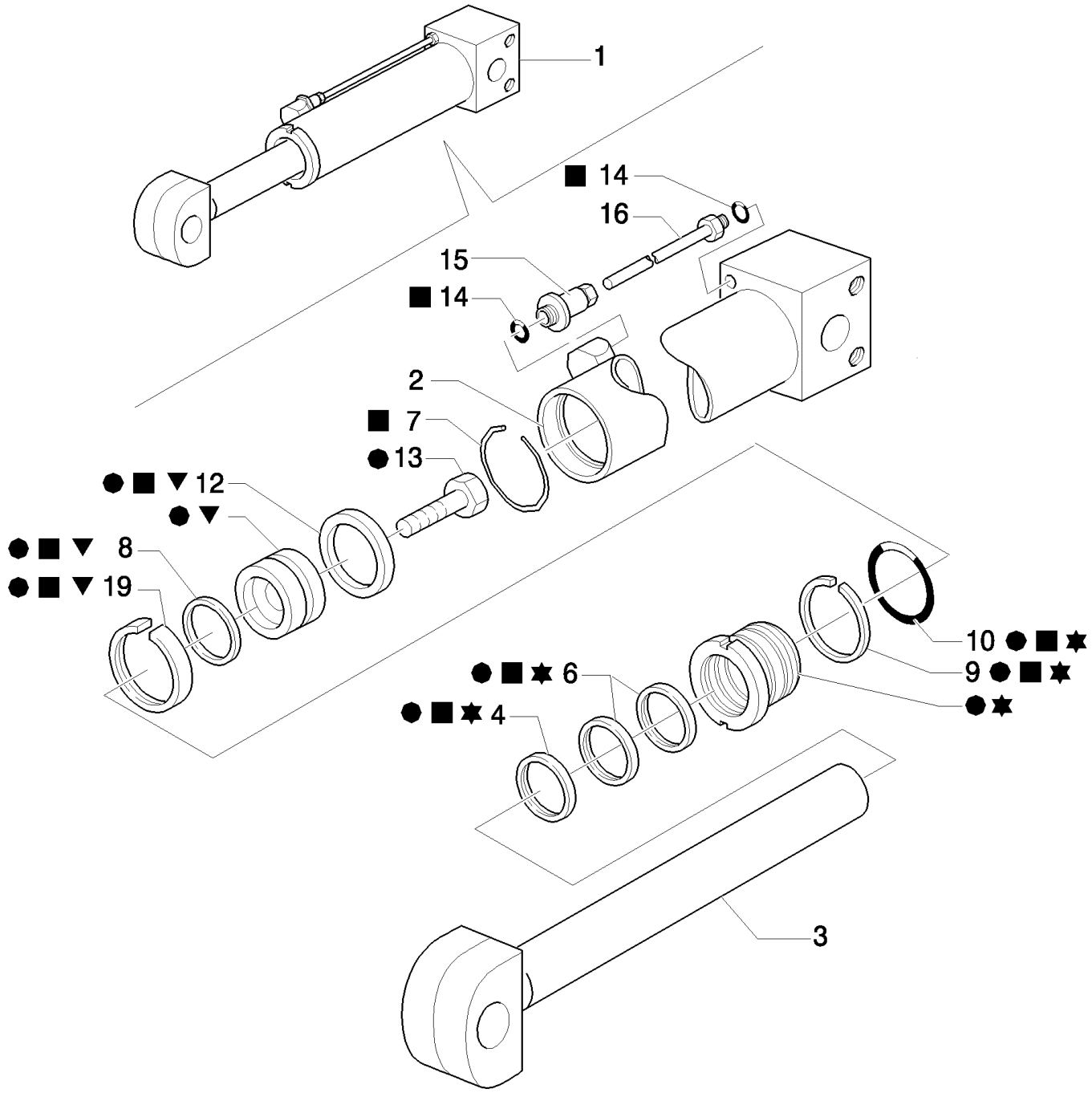

LB115.B EUR BACKHOE LOADER (1/05-)

1.88.11/ 6B(01) STABILIZER CYLINDERS (SIDE SHIFT)

Ref	Part Number	Qty	Description
1	87315514	2	HYDRAULIC CYLINDER, ASSY
2	83961907	2	CAP CYLINDER END,
3	83961908	2	ROD,
4	87414969	2	SEAL,
5	87415113	2	GLAND,
6	87414970	2	KIT, SEALS,
7	83913375	2	WIRE, RETAINING,
8	87414339	2	RING,
9	87440399	2	BACK-UP RING,
10	87421142	2	O-RING,
11	87405560	2	PISTON,
12	87414331	2	SEAL,
13	87428020	2	SCREW,
14	81845037	4	O-RING, 90 Duro, .468" ID x .078" Thk
15	83936645	2	CONNECTOR, HYD.,
16	83936644	2	TUBE, RIGID,
17	87424184	AR	KIT,
18	87428620	1	KIT, SEALS,
19	87408632	1	Ring, Wear,

UP TO S/N XXX

1.88.11/ 6C(01) STABILIZER CYLINDERS (SIDE SHIFT)

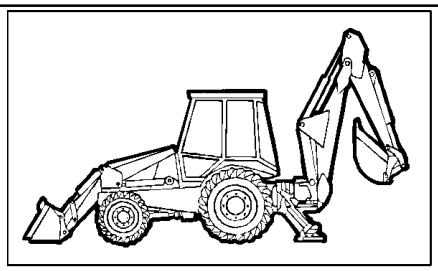

KIT 18 = ●
KIT KIT 17 = ■

LB115.B EUR BACKHOE LOADER (1/05-)

1.88.11/ 6C(01) STABILIZER CYLINDERS (SIDE SHIFT)

Ref	Part Number	Qty	Description
1	87574186	2	CYLINDER,
2	87547464	2	TUBE, RIGID,
3	87520398	2	ROD,
4	87414969	2	SEAL,
5	87415113	2	GLAND,
6	87414970	2	KIT, SEALS,
7	83913375	2	WIRE, RETAINING,
8	87414339	2	RING,
9	87440399	2	BACK-UP RING,
10	87421142	2	O-RING,
11	87405560	2	PISTON,
12	87414331	2	SEAL,
13	87428020	2	SCREW,
14	87573091	2	TUBE, RIGID,
15	87573090	2	TUBE, RIGID,
16	12577211	2	NUT, M10 x 1.5, Cl 8,
17	87424184	AR	KIT,
18	87428620	1	KIT, SEALS,
19	87408632	1	Ring, Wear,
20	11108221	2	SCREW, Hex, M10 x 100, 8.8,
21	87376510	2	PIN,
22	85813328	2	COLLAR,
23	87573095	2	ANCHOR,
24	83961741	2	ELBOW,
25	83963371	2	CONNECTOR, HYD.,
26	87376505	4	SPACER,
27	87376504	2	PIN,
28	11069074	2	BACK-UP RING,

FROM S/N XXX

1.88.11/ 7B(01) PIPES FOR STABILIZER CYLINDERS (SIDE SHIFT)

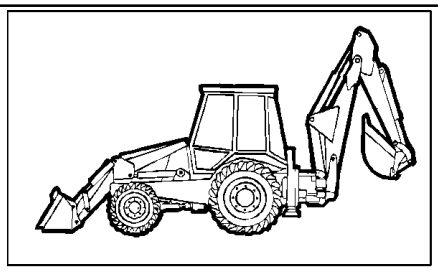

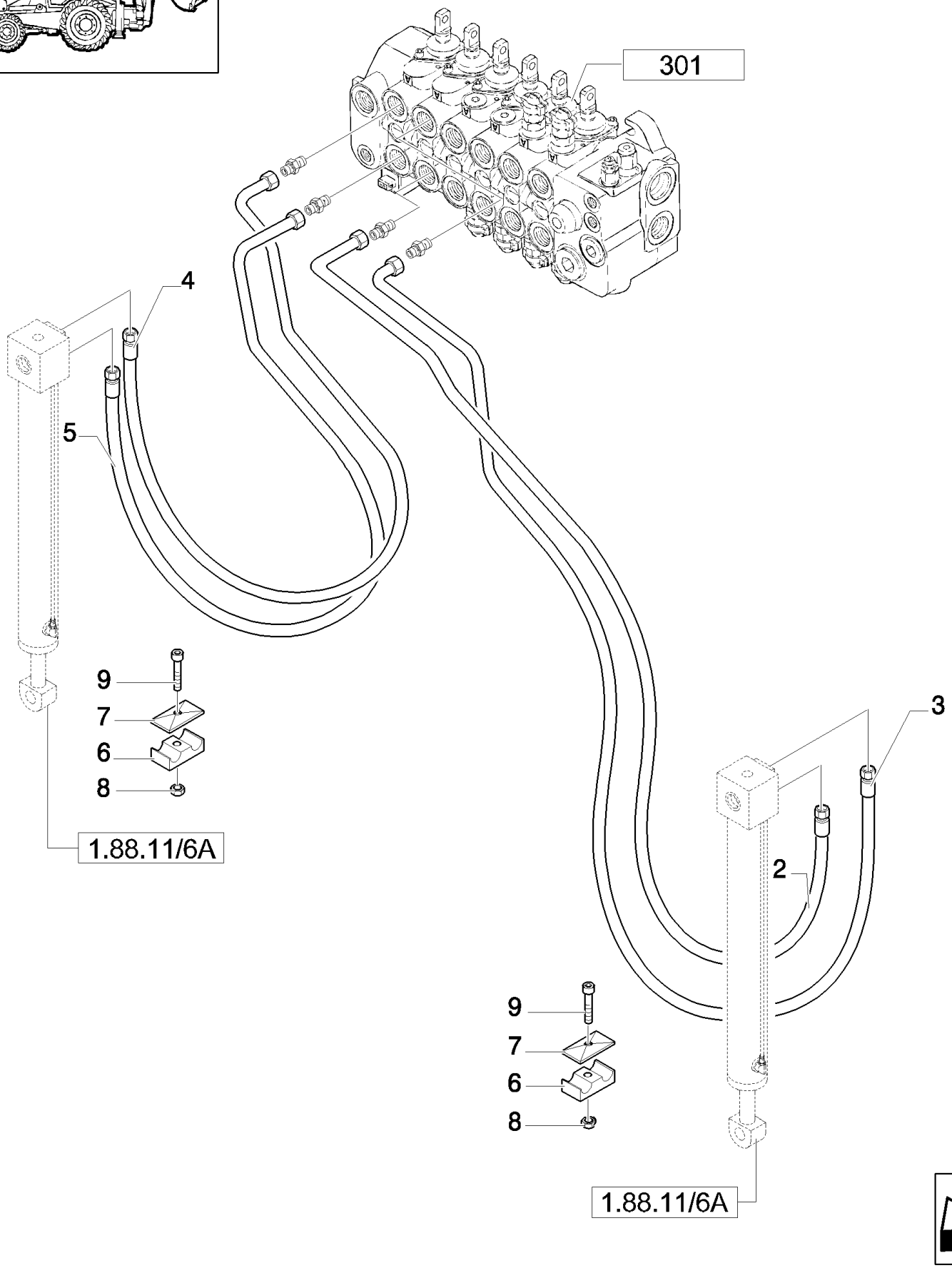

UP TO S/N XXX

LB115.B EUR BACKHOE LOADER (1/05-)

1.88.11/ 7B(01) PIPES FOR STABILIZER CYLINDERS (SIDE SHIFT)

Ref	Part Number	Qty	Description
2	87357861	1	HOSE, FLEXIBLE, RH
3	87357866	1	HOSE, FLEXIBLE, RH
4	87357871	1	HOSE, FLEXIBLE, LH
5	87357872	1	HOSE, FLEXIBLE, LH
6	87357881	2	SPACER,
7	85802900	2	CLAMP,
8	14048211	2	NUT, M8 x 1.25, Cl 8,
9	16044121	2	SCREW, Hex, M8 x 45, 8.8,

UP TO S/N XXX

1.88.11/ 7E(01) PIPES FOR STABILIZER CYLINDERS (CENTER PIVOT)

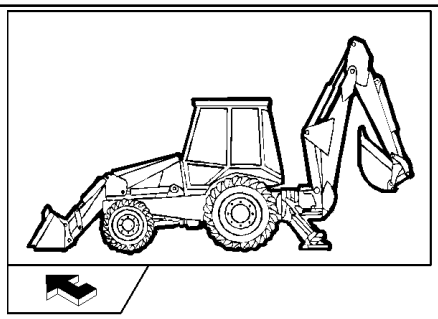

KIT 20 = ●

LB115.B EUR BACKHOE LOADER (1/05-)

1.88.11/ 7E(01) PIPES FOR STABILIZER CYLINDERS (CENTER PIVOT)

Ref	Part Number	Qty	Description
1	83963374	2	CONNECTOR, HYD., , Includes 16, 18
2	87390511	4	CLAMP,
3	85802620	2	TUBE, HYD,
4	83985067	8	CONNECTOR, HYD.,
5	85802820	2	VALVE, CHECK, , Includes 22 to 24
6	85807877	4	HOSE, FLEXIBLE, L=1232 mm
7	85802965	2	CONNECTOR, HYD.,
8	85803008	2	CLAMP, HOSE,
9	87303912	2	BLOCK,
10	87390514	2	PLATE,
11	15213621	2	SCREW, Hex, M8 x 55, 8.8, Full Thd,
12	14048211	2	NUT, M8 x 1.25, Cl 8,
13	11193879	6	WASHER, SPRING, Belleville, M8.4,
14	87390534	2	PLATE,
15	85807878	2	HOSE, FLEXIBLE, L=1416 mm, RH, Includes 16
16	9992298	6	O-RING, -014, 90 Duro, .489" ID x .070" Thk,
17	85807879	2	HOSE, FLEXIBLE, L=1829 mm, LH, Includes 16
18	80128825	2	O-RING,
19	16044421	2	SCREW, Hex, M8 x 60, 8.8, LH
19	16044821	2	SCREW, Hex, M8 x 80, 8.8, RH
20	85803517	2	BUSHING, RUBBER,
21	85802891	2	SPACER, RH
22	85821126	1	KIT,
23	85820160	2	VALVE, HYDRAULIC,
24	85820159	6	PLUNGER,

1.88.11/ 8(01) RETURN TO DIG SENSOR

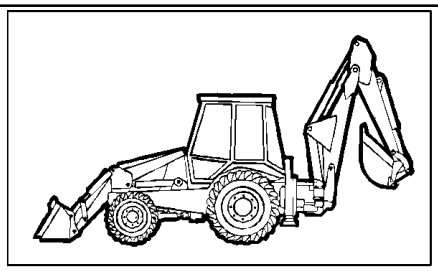

LB90.B-LB95.B-LB110.B

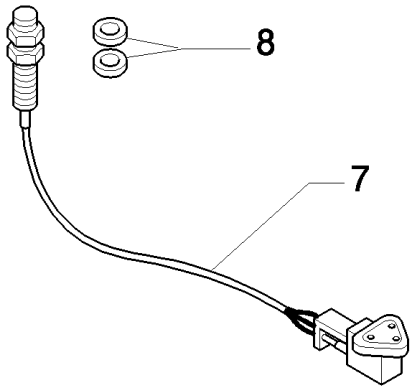

LB115.B

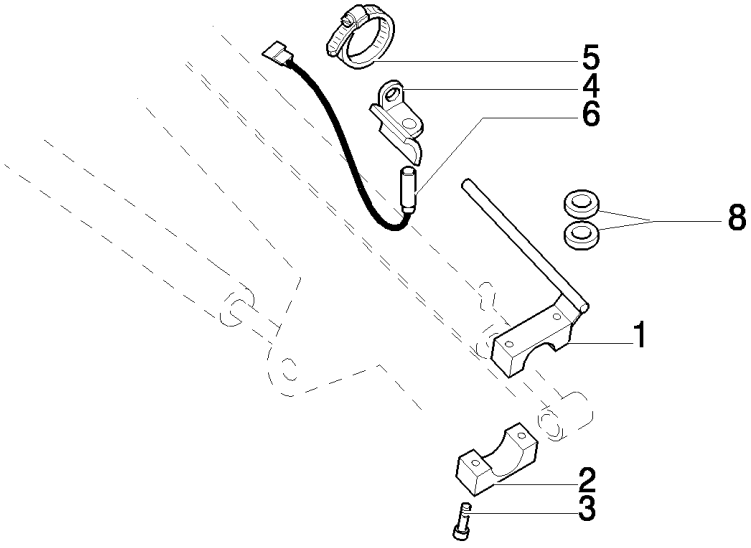

LB115.B EUR BACKHOE LOADER (1/05-)

1.88.11/ 8(01) RETURN TO DIG SENSOR

Ref	Part Number	Qty	Description
1	85805108	1	ROD,
2	85805111	1	BLOCK,
3	14305621	2	SCREW, Hex Soc Hd, M6 x 35, 8.8,
4	85805113	1	SUPPORT,
5	85803010	2	CLAMP, HOSE,
6	85805619	1	SENSOR,
7	85802950	1	SENSOR,
8	14497001	4	WASHER, LOCK, 19X34X3

1.88.11/ 9(01) CYLINDERS AND ROTATION PLATE (SIDE SHIFT)

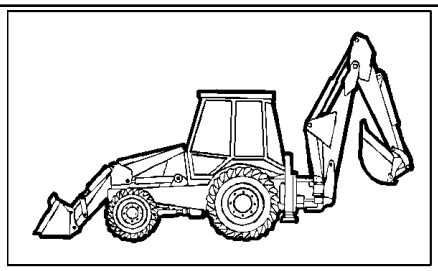

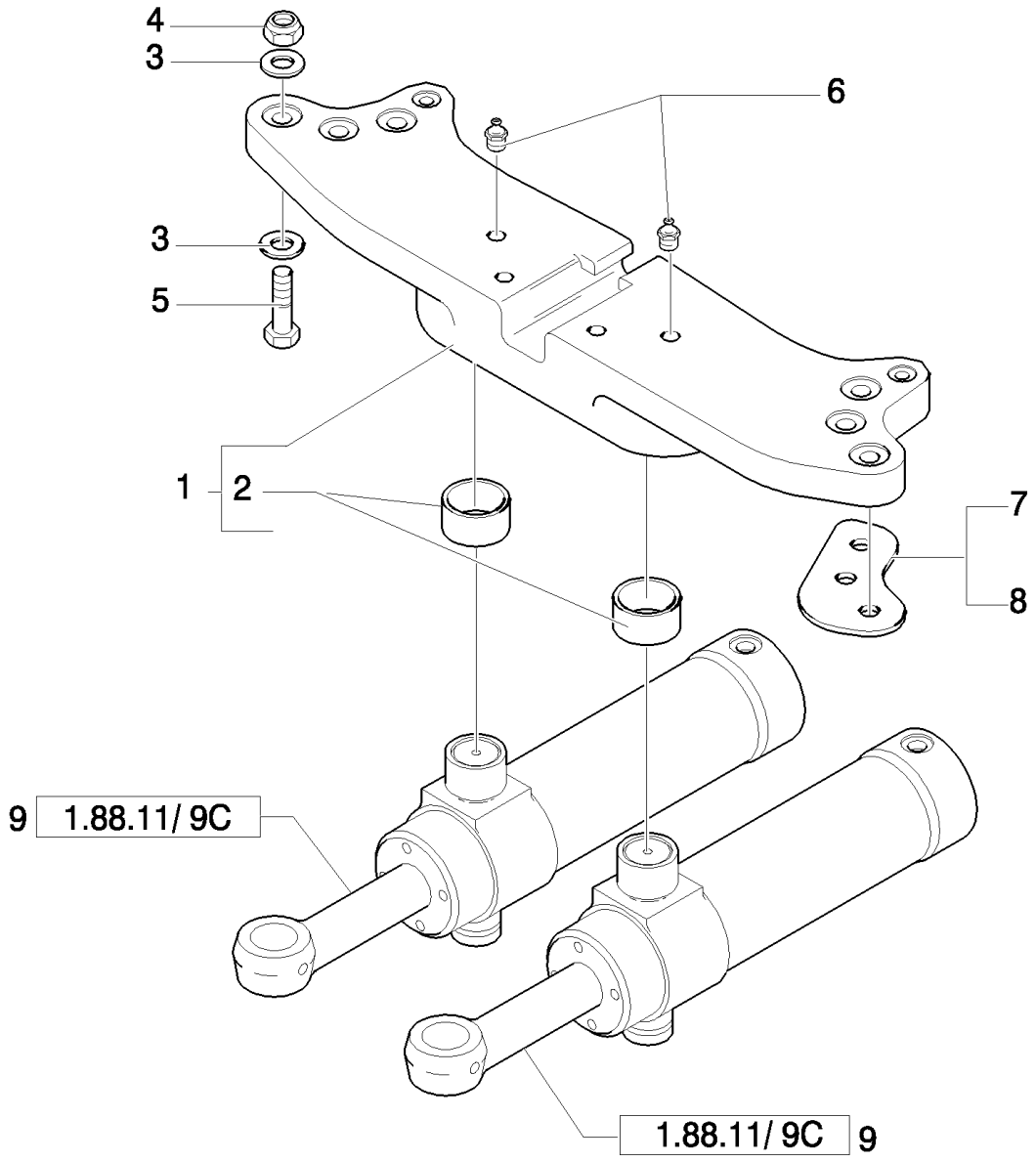

LB115.B EUR BACKHOE LOADER (1/05-)

1.88.11/ 9(01) CYLINDERS AND ROTATION PLATE (SIDE SHIFT)

Ref	Part Number	Qty	Description
1	85818903	1	PLATE, RETAINING,
2	83910645	2	BUSHING,
3	10520431	12	WASHER, 20X35
4	12575121	6	NUT, M20 x 1.5, Cl 10,
5	15988934	6	SCREW, Hex, M20 x 90, 10.9,
6	87901S8	4	NIPPLE, LUBE, 1/8"-27 X .66" lg,
7	85801153	4	SHIM,
8	85803039	2	SHIM,
9	87450926	2	HYDRAULIC CYLINDER, , UP TO S/N XXX
9	87315529	2	HYDRAULIC CYLINDER, , FROM S/N XXX

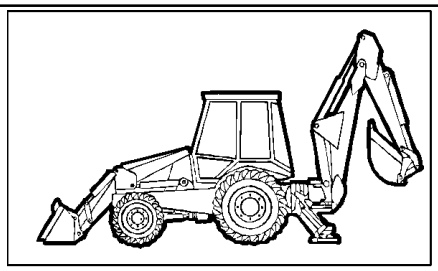

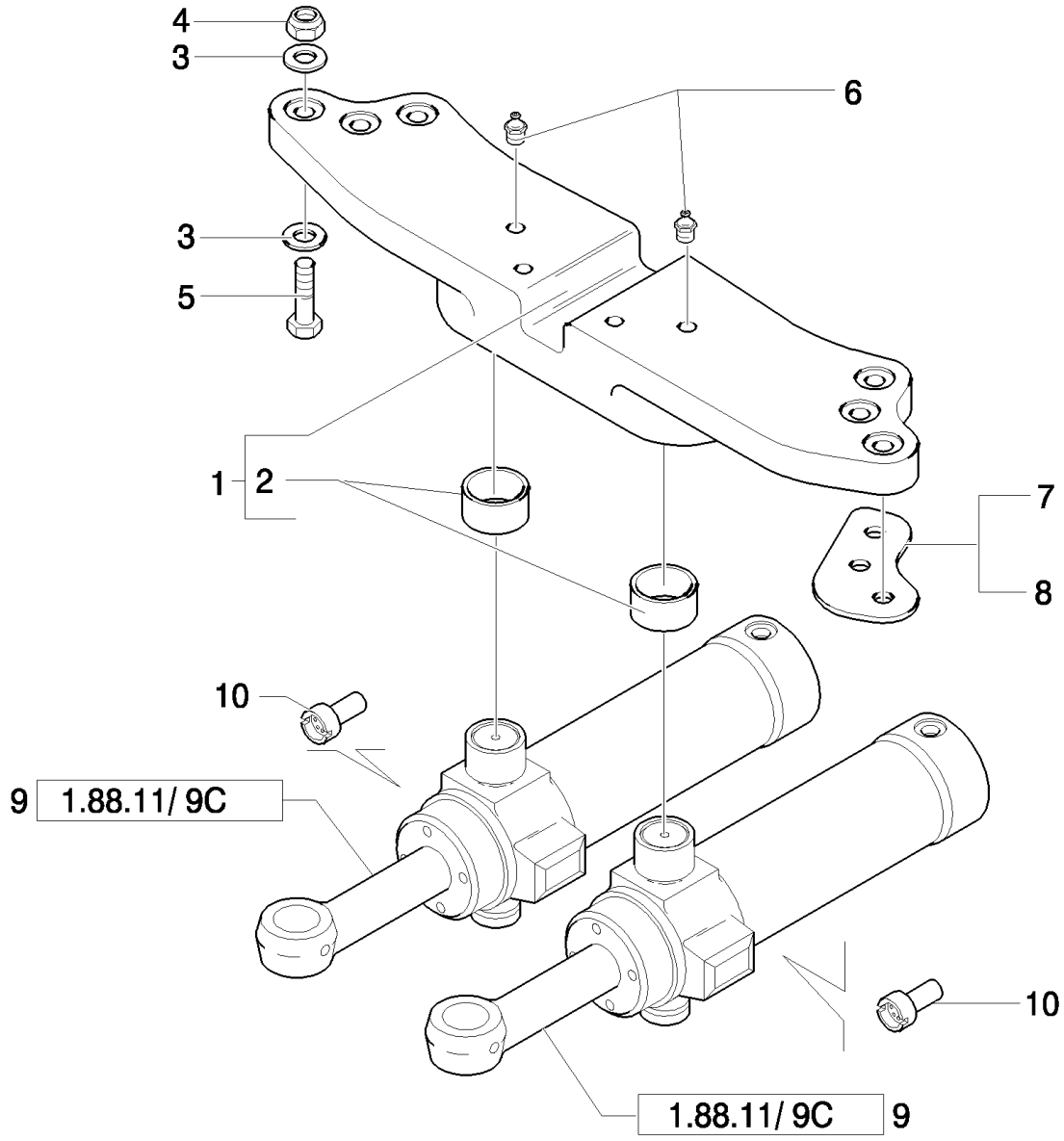
4
3
6
3
5
1
2
7
8
10
9
1.88.11/ 9C
10
1.88.11/ 9C
9

LB115.B EUR BACKHOE LOADER (1/05-)

1.88.11/ 9A(01) CYLINDERS AND ROTATION PLATE

Ref	Part Number	Qty	Description
1	85803617	1	PLATE, RETAINING,
2	83910645	2	BUSHING,
3	10520431	12	WASHER,
4	12575121	6	NUT, M20 x 1.5, Cl 10,
5	15988934	6	SCREW, Hex, M20 x 90, 10.9,
6	87901S8	4	NIPPLE, LUBE, 1/8"-27 X .66" lg,
7	85801153	4	SHIM,
8	85803039	2	SHIM,
9	87450926	2	HYDRAULIC CYLINDER, , UP TO S/N XXX
9	87315529	2	HYDRAULIC CYLINDER, , FROM S/N XXX
10	85800965	2	REDUCER,

1.88.11/ 9C(01) SWING CYLINDERS BACKHOE

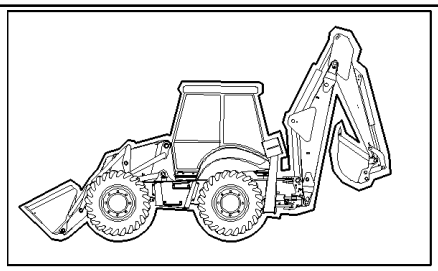

KIT KIT KIT 11 = ●

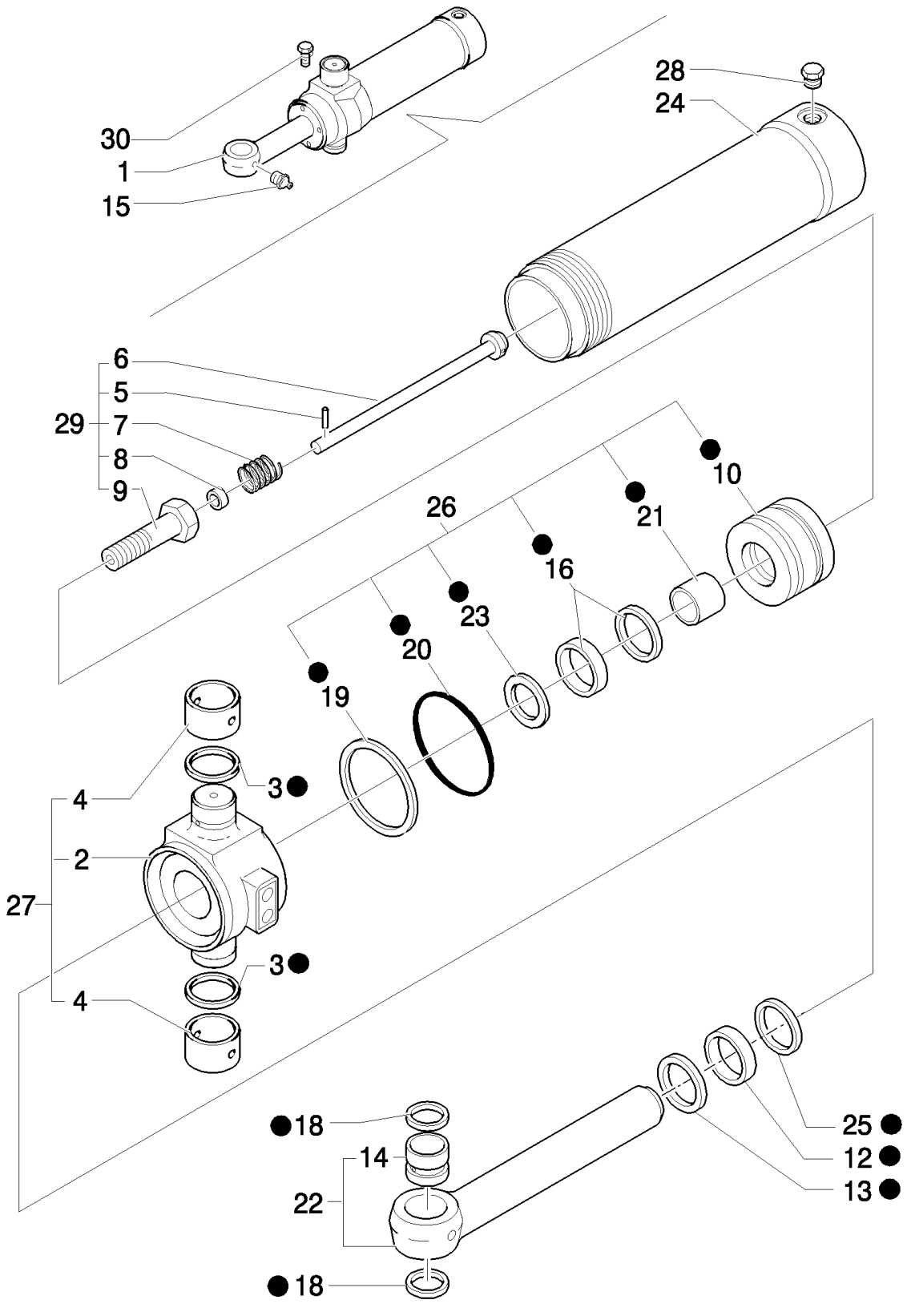

LB115.B EUR BACKHOE LOADER (1/05-)

1.88.11/ 9C(01) SWING CYLINDERS BACKHOE

Ref	Part Number	Qty	Description
1	87315529	1	HYDRAULIC CYLINDER,
2	87422783	1	TRUNNION,
3	D7NNC513E	2	SEAL, {PP:83910601} Seal
4	83912378	2	BUSHING,
5	D7NNC511A	1	PIN, {PP:83910599}
6	85800990	1	ROD,
7	E0NNB543AA	1	SPRING, {PP:83931313}
8	E9NNE602AA	1	RING, {PP:83998909}
9	87428014	1	SCREW, M30x2x100
10	87424838	1	PISTON,
11	87428631	1	KIT, SEALS,
12	87408636	1	RING,
13	87414335	1	SEAL, HYD-CYLINDER,
14	85800303	1	BUSHING,
15	87901S8	2	NIPPLE, LUBE, 1/8"-27 X .66" lg,
16	87414970	1	KIT, SEALS, 50 mm Rod
18	D9NNC513BA	2	SEAL, {PP:83931289}
19	85800007	1	BACK-UP RING, Back-up
20	87421149	1	O-RING, 4.734" ID x .139" Thk
21	87414966	1	BEARING, NYLON, 50 mm Rod
22	87433032	1	ROD,
23	87414969	1	SEAL, 50 mm Rod
24	87455335	1	CYLINDER HEAD,
25	87414343	1	RING,
26	87445307	1	KIT, SEALS,
27	87445758	1	TRUNNION,
28	353-779	1	3/4-16
29	87424935	1	BOLT,
30	276-2456	1	SCREW, SELF TAPPING, 10-24x3/8

1.88.12/ 3(01) FRONT CONTROL VALVE SUPPORT AND TRANSMISSIONS (CENTER PIVOT)

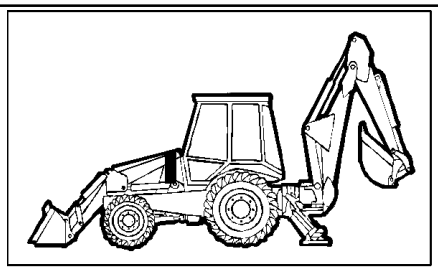

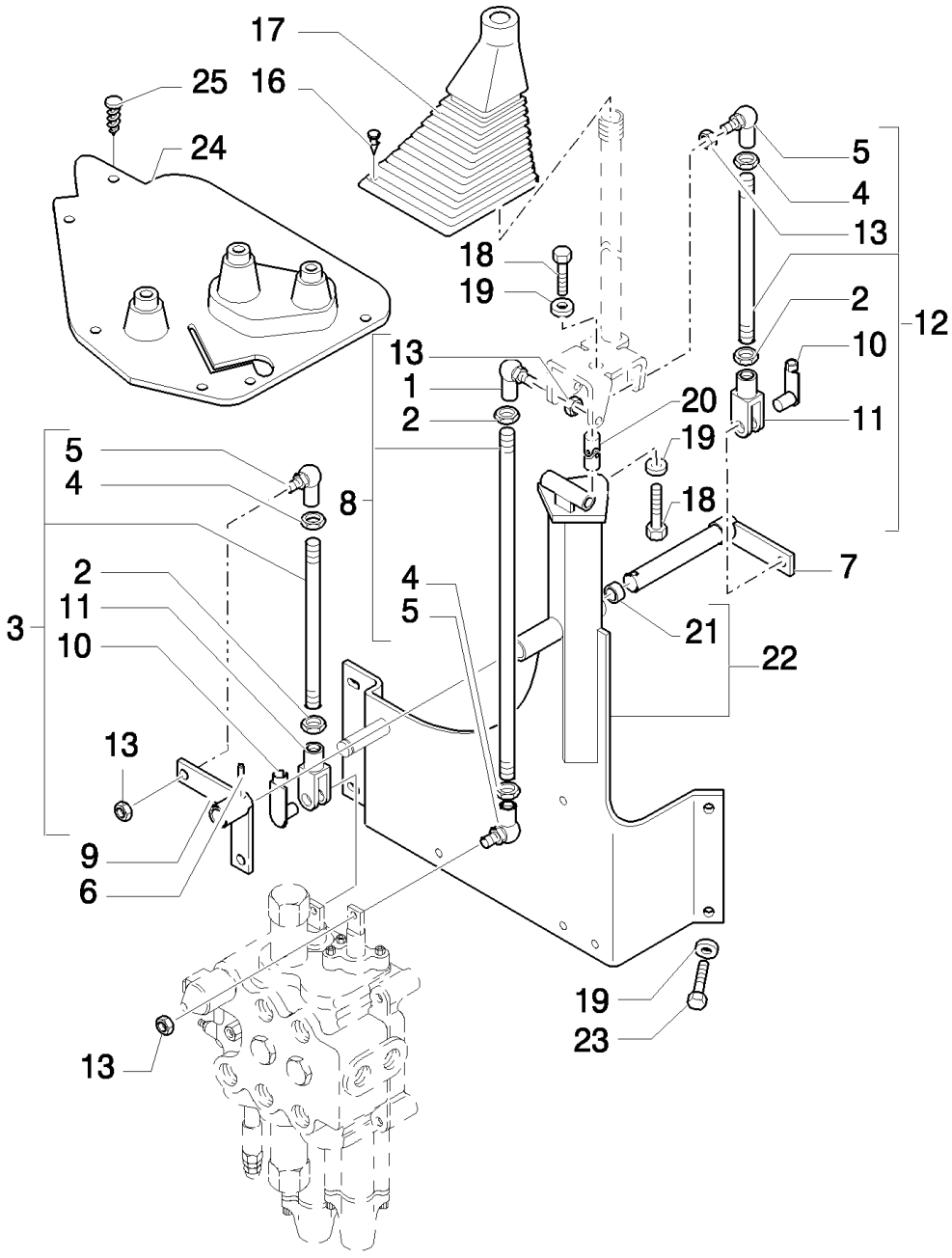

LB115.B EUR BACKHOE LOADER (1/05-)

1.88.12/ 3(01) FRONT CONTROL VALVE SUPPORT AND TRANSMISSIONS (CENTER PIVOT)

Ref	Part Number	Qty	Description
1	85804376	1	BALL JOINT,
2	16102311	3	NUT, Thin, M8 x 1.25, Cl 04,
3	85801564	1	TIE-ROD,
4	16102911	3	NUT, Thin, M8 x 1.25, Cl 04, LH,
5	85804375	3	BALL JOINT,
6	85805616	1	PIN,
7	85805692	1	PIN,
8	85801566	1	TIE-ROD,
9	85805690	1	LEVER,
10	85802738	2	PIN,
11	11991971	2	CLEVIS,
12	85801562	1	TIE-ROD,
13	14048211	4	NUT, M8 x 1.25, Cl 8,
16	14568887	AR	BUTTON,
17	85802842	1	BOOT,
18	15540321	2	SCREW, Hex, M12 x 1.25 x 25, 8.8, Full Thd,
19	11190779	6	WASHER, SPRING, Belleville, M13,
20	85801518	1	JOINT, UNIVERSAL,
21	85802494	2	BUSHING,
22	85817789	1	SUPPORT, , UP TO S/N 031056905
22	87312027	1	SUPPORT, , FROM TO S/N 031056906
23	11112821	4	BOLT, Hex, M12 x 40, 8.8, Full Thd,
24	85804539	1	COVER, w/Cab
25	85808422	6	PLUG, w/Cab

1.88.12/ 4(01) FRONT CONTROL VALVE SUPPORT AND TRANSMISSIONS (SIDE SHIFT)

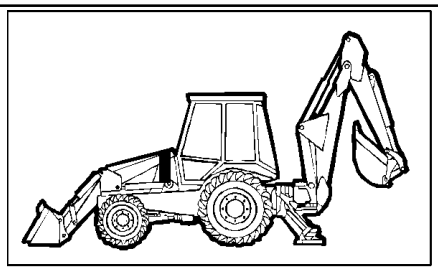

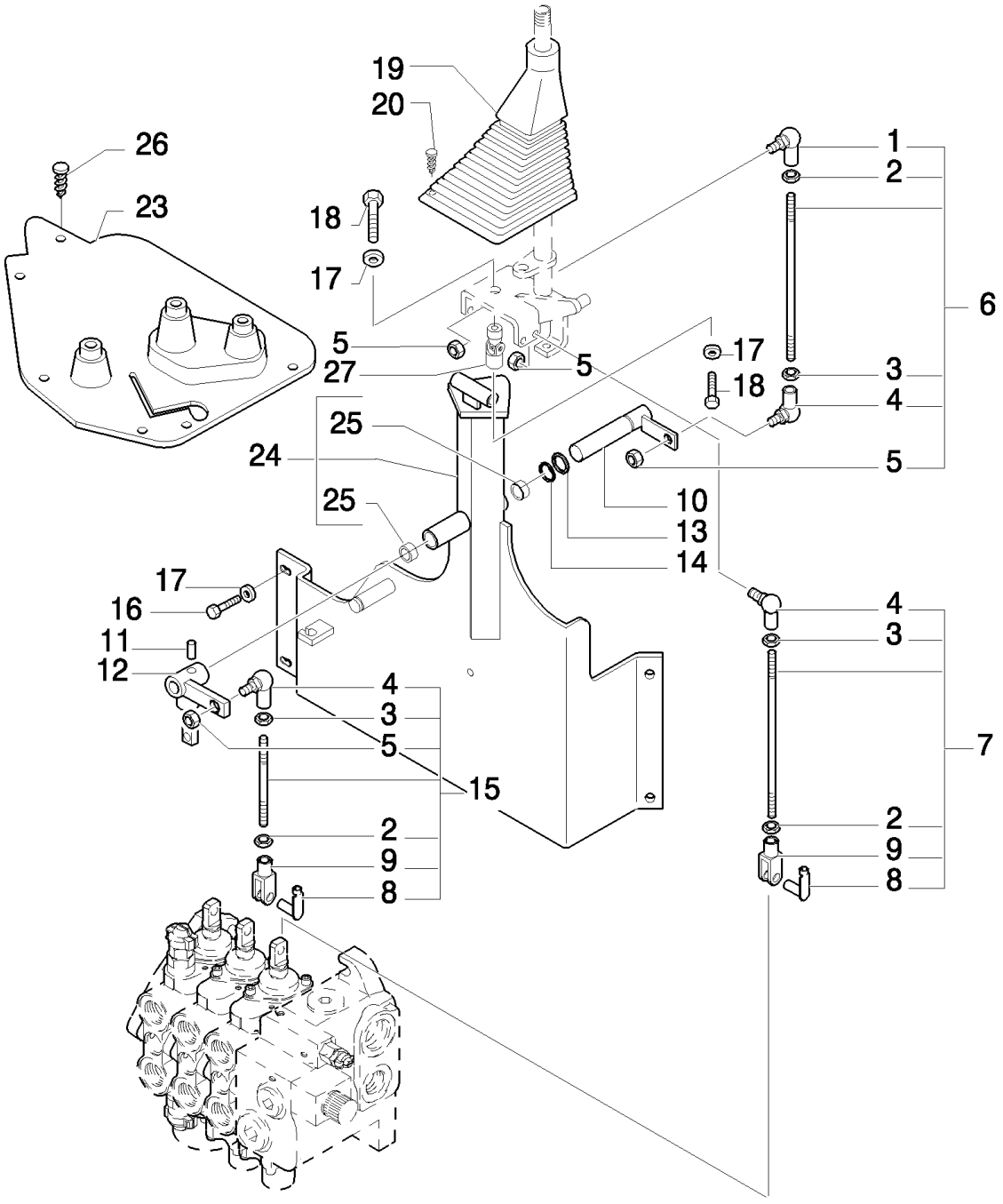

LB115.B EUR BACKHOE LOADER (1/05-)

1.88.12/ 4(01) FRONT CONTROL VALVE SUPPORT AND TRANSMISSIONS (SIDE SHIFT)

Ref	Part Number	Qty	Description
1	85804376	1	BALL JOINT,
2	16102911	3	NUT, Thin, M8 x 1.25, Cl 04, LH,
3	16102311	3	NUT, Thin, M8 x 1.25, Cl 04,
4	85804375	3	BALL JOINT,
5	14048221	5	NUT, M8 x 1.25, Cl 10,
6	85803477	1	TIE-ROD,
7	85805498	1	TIE-ROD,
8	85802738	2	PIN,
9	11991971	2	CLEVIS,
10	85824463	1	LEVER,
11	85805616	1	PIN,
12	85825465	1	IDLER,
13	14496901	1	WASHER, M16 x 30 x 3,
14	N663114S36	1	RING, SNAP, {PP:83911366}
15	85805806	1	TIE-ROD,
16	11112821	4	BOLT, Hex, M12 x 40, 8.8, Full Thd,
17	11190779	5	WASHER, SPRING, Belleville, M13,
18	15540321	AR	SCREW, Hex, M12 x 1.25 x 25, 8.8, Full Thd,
19	85802842	1	BOOT,
20	14568887	4	BUTTON, 8x20
23	85806245	1	BOOT,
24	85825459	1	SUPPORT,
24	87304841	1	SUPPORT, , For all Model
25	85802494	2	BUSHING,
26	85808422	6	PLUG,
27	85801518	1	JOINT, UNIVERSAL,

1.91.1(01) CAB / CEILING LIGHT

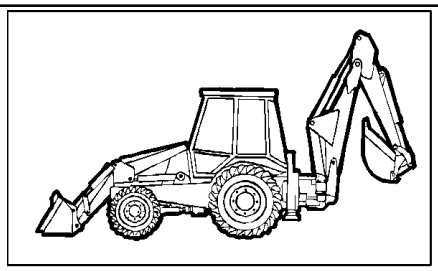

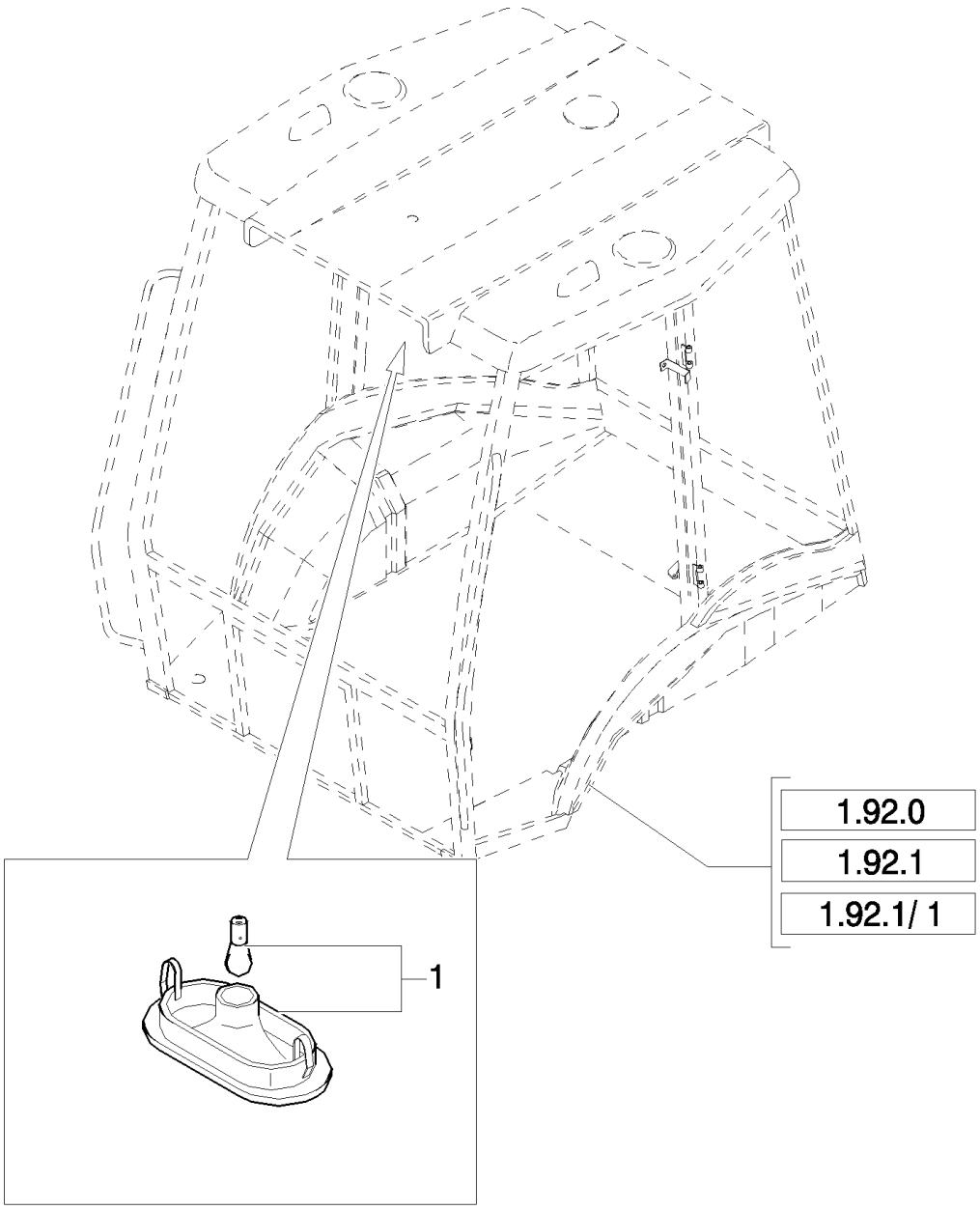

LB115.B EUR BACKHOE LOADER (1/05-)

1.91.1(01) CAB / CEILING LIGHT

Ref	Part Number	Qty	Description
1	82022833	1	LAMP, CEILING,

1.91.3(01) BACK-UP ALARM

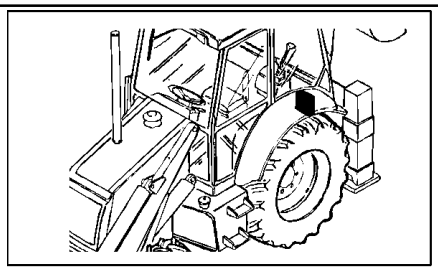

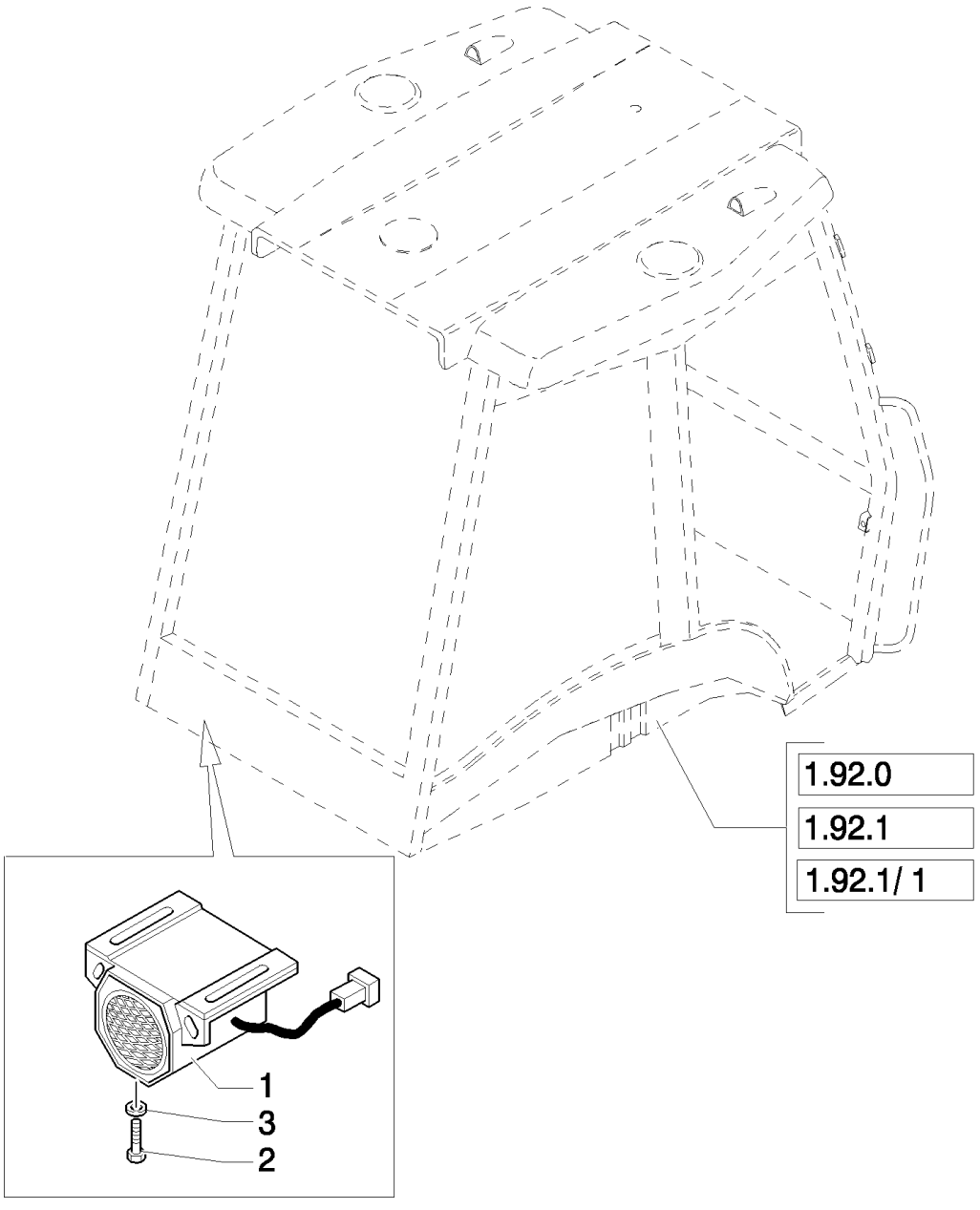

LB115.B EUR BACKHOE LOADER (1/05-)

1.91.3(01) BACK-UP ALARM

Ref	Part Number	Qty	Description
1	87303261	1	ALARM,
2	13276424	2	SCREW, Pan Hd, M6 x 20, 8.8,
3	11197774	2	WASHER, SPRING, Belleville, M6.4,

1.91.4/ 6(01) IGNITON SWITCH, POWER POINT, FUSE PANEL & SIDE CONSOLE HARNESS (CAB CP POWER SHIFT)

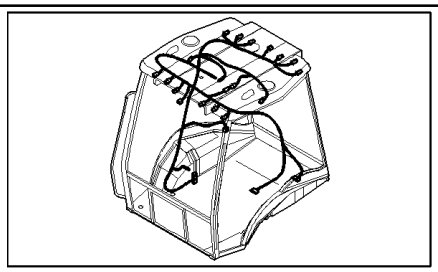

KIT KIT KIT

1 = ● see also Tav. 1.91.4/6 02
1.91.4/6 03
1.91.4/6 04
1.91.4/6 05

LB115.B EUR BACKHOE LOADER (1/05-)

1.91.4/ 6(01) IGNITON SWITCH, POWER POINT, FUSE PANEL & SIDE CONSOLE HARNESS (CAB CP POWER SHIFT)

Ref	Part Number	Qty	Description
1	87406392	1	HARNESS, WIRE, , UP TO S/N XXX
1	87325293	1	, FROM S/N XXX
2	85825330	1	HARNESS, WIRE,
3	85819568	1	HARNESS, WIRE, Rotary Beacon
4	85825331	1	HARNESS, WIRE,

1.91.4/ 6(02) IGNITON SWITCH, POWER POINT, FUSE PANEL & SIDE CONSOLE HARNESS (CAB CP POWER SHIFT)

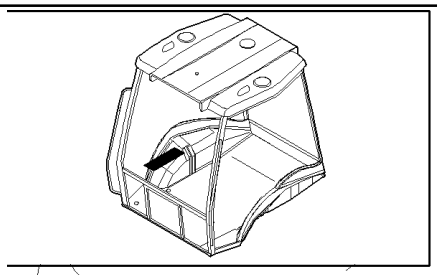

KIT
KIT KIT

1 = ● see also Tav.

1.91.4/6 01
1.91.4/6 03
1.91.4/6 04
1.91.4/6 05
1.91.4/6 07

LB115.B EUR BACKHOE LOADER (1/05-)

1.91.4/ 6(02) IGNITON SWITCH, POWER POINT, FUSE PANEL & SIDE CONSOLE HARNESS (CAB CP POWER SHIFT)

Ref	Part Number	Qty	Description
1	87406392	1	HARNESS, WIRE, , UP TO S/N XXX
1	87325293	1	, FROM S/N XXX
2	87431454	1	PANEL,
3	85806134	1	FUSE,
4	10519204	1	WASHER, M4 x 9 x .8,
5	11054590	2	FUSE,
6	85806135	1	ISOLATOR,
7	11054890	5	FUSE,
8	11054990	7	FUSE,
9	11055090	8	FUSE,
10	11055190	1	FUSE,
11	12574011	1	NUT, M4 x .7, Cl 8,
12	85803986	1	RELAY, Flasher
13	85825504	1	PANEL,
14	85825198	9	RELAY,
15	85826012	1	KIT, , Includes 16 To 18
16	NSS	1	NOT SERVICED SEPARATELY,
17	85826014	1	HARNESS, WIRE,
18	NSS	1	NOT SERVICED SEPARATELY,
19	85826071	1	DECAL,

1.91.4/ 6(03) IGNITON SWITCH, POWER POINT, FUSE PANEL & SIDE CONSOLE HARNESS (CAB CP POWER SHIFT)

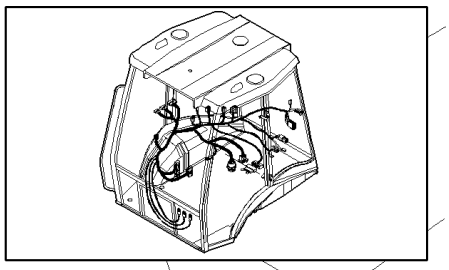

KIT

1 = ● see also Tav. 1.91.4/6 01, 1.91.4/6 02, 1.91.4/6 04, 1.91.4/6 05, 1.91.4/6 07

LB115.B EUR BACKHOE LOADER (1/05-)

1.91.4/ 6(03) IGNITON SWITCH, POWER POINT, FUSE PANEL & SIDE CONSOLE HARNESS (CAB CP POWER SHIFT)

Ref	Part Number	Qty	Description
1	87406392	1	HARNESS, WIRE, , UP TO S/N XXX
1	87325293	1	, FROM S/N XXX
2	87431456	1	HARNESS, WIRE, , UP TO S/N XXX
2	87325298	1	CABLE, ELECTRIC, , FROM S/N XXX
3	85802160	1	LIGHT, WARNING,
4	85819450	2	RELAY, M4
5	87431469	1	SWITCH, IGNITION, 3A
6	85804675	2	KEY, DOOR LOCK,
7	85821410	1	BLOCK, 7,5A

1.91.4/ 6(04) IGNITON SWITCH, POWER POINT, FUSE PANEL & SIDE CONSOLE HARNESS (CAB CP POWER SHIFT)

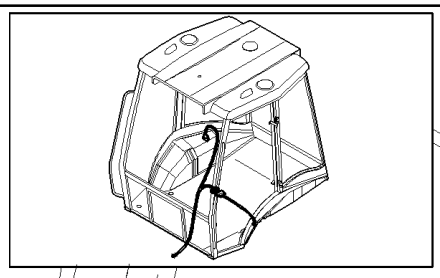

KIT

1 = ● see also Tav.

1.91.4/6 01
1.91.4/6 02
1.91.4/6 03
1.91.4/6 05
1.91.4/6 07

LB115.B EUR BACKHOE LOADER (1/05-)

1.91.4/ 6(04) IGNITON SWITCH, POWER POINT, FUSE PANEL & SIDE CONSOLE HARNESS (CAB CP POWER SHIFT)

Ref	Part Number	Qty	Description
1	87406392	1	HARNESS, WIRE, , UP TO S/N XXX
1	87325293	1	, FROM S/N XXX
2	85802426	1	HARNESS, WIRE, Trans.
3	85802427	1	HARNESS, WIRE, Electronic Gear Selector (EGS)

1.91.4/ 6(05) IGNITON SWITCH, POWER POINT, FUSE PANEL & SIDE CONSOLE HARNESS (CAB CP POWER SHIFT)

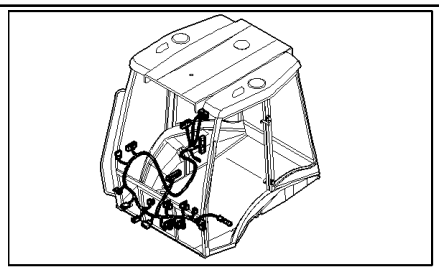

KIT KIT KIT

1 = ● see also Tav.

1.91.4/6 01
1.91.4/6 02
1.91.4/6 03
1.91.4/6 04
1.91.4/6 07

LB115.B EUR BACKHOE LOADER (1/05-)

1.91.4/ 6(05) IGNITON SWITCH, POWER POINT, FUSE PANEL & SIDE CONSOLE HARNESS (CAB CP POWER SHIFT)

Ref	Part Number	Qty	Description
1	87406392	1	HARNESS, WIRE, , UP TO S/N XXX
1	87325293	1	, FROM S/N XXX
2	85817575	1	HARNESS, WIRE,
3	85806133	1	SWITCH, FLASHER, Hazard
4	85805833	1	CLIP,
5	85805834	1	SWITCH,
6	85805832	1	BRACKET,
7	85812118	1	KNOB,
8	87326065	1	SCREW,

1.91.4/ 6(06) FRONT DASH (CAB CP POWER SHIFT)

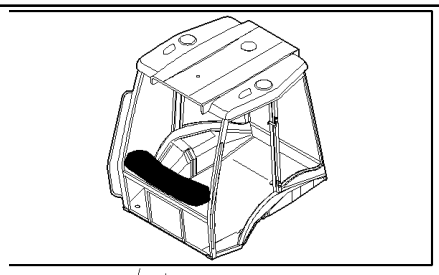

LB115.B EUR BACKHOE LOADER (1/05-)

1.91.4/ 6(06) FRONT DASH (CAB CP POWER SHIFT)

Ref	Part Number	Qty	Description
1	85818826	1	DASHBOARD,
2	85818828	1	SWITCH, LIGHTS,
3	85818827	1	SWITCH,
4	85825254	2	PLUG,
5	85819134	1	SWITCH,
6	85817589	1	INSTRUMENT CLUSTER,
7	85819145	1	SWITCH,
8	14143790	4	BULB,
9	85807944	1	DECAL,

1.91.4/ 6(07) IGNITON SWITCH, POWER POINT, FUSE PANEL & SIDE CONSOLE HARNESS (CAB CP POWER SHIFT)

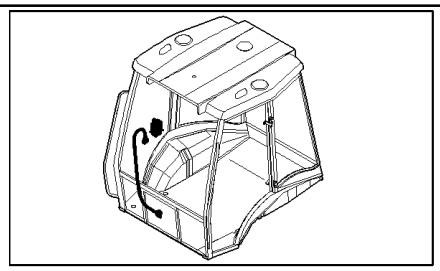

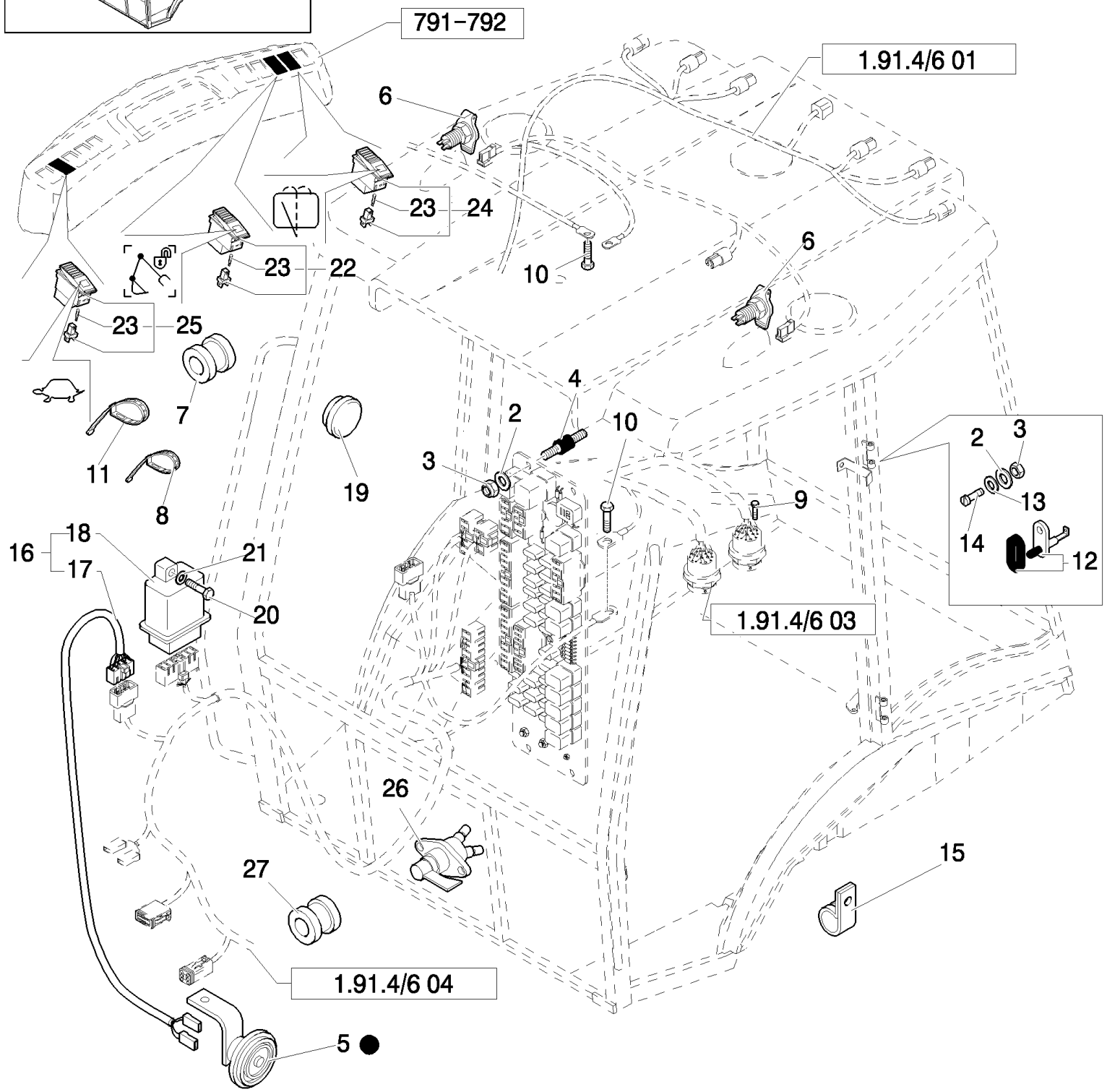

KIT KIT KIT

1 = ● see also Tav.

1.91.4/6 01
1.91.4/6 02
1.91.4/6 03
1.91.4/6 04
1.91.4/6 05

LB115.B EUR BACKHOE LOADER (1/05-)

1.91.4/ 6(07) IGNITON SWITCH, POWER POINT, FUSE PANEL & SIDE CONSOLE HARNESS (CAB CP POWER SHIFT)

Ref	Part Number	Qty	Description
1	87406392	1	HARNESS, WIRE, , UP TO S/N XXX
1	87325293	1	, FROM S/N XXX
2	10615274	6	WASHER, LOCK, Ext Tooth, M4,
3	12574011	6	NUT, M4 x .7, Cl 8,
4	85802478	4	SILENTBLOC,
5	5169413	1	HORN,
6	87546419	2	SOCKET,
7	10398980	1	GROMMET,
8	5112712	5	STRAP, CABLE,
9	13272214	2	SCREW, Cross Pan Hd, M4 x 16,
10	16042924	2	SCREW, Hex, M8 x 10, 8.8, Full Thd,
11	85805383	30	STRAP, CABLE,
12	E7NN14A103EA	2	HARNESS, WIRE, {PP:83961524}
13	10519204	2	WASHER, M4 x 9 x .8,
14	13309417	2	SCREW, Cross Oval Hd, M4 x 20,
15	10450090	1	CLAMP,
16	NSS	1	NOT SERVICED SEPARATELY, , Includes 17, 18
17	87410259	1	HARNESS, WIRE,
18	85806132	1	FLASHER UNIT, Circuit Board
19	85808460	1	PLUG,
20	10902624	1	SCREW, Hex, M6 x 25, 8.8, Full Thd,
21	11193274	1	WASHER, SPRING, Belleville, M6.4,
22	85819141	1	SWITCH,
23	14143790	2	BULB,
24	85818823	1	SWITCH, WINDSHIELD WIPER,
25	85819142	1	SWITCH,
26	87409316	1	SWITCH, Master Disconnect
27	10398680	2	GROMMET,

1.91.4/ 7(01) IGNITON SWITCH, POWER POINT, FUSE PANEL & SIDE CONSOLE HARNESS (POWER SHIFT EUR)

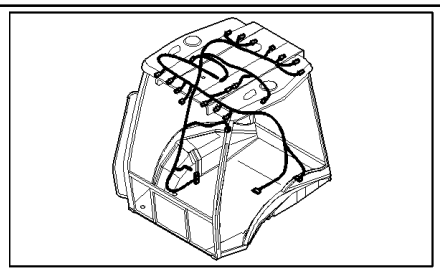

KIT KIT KIT

1 = ● see also Tav.

1.91.4/7 02
1.91.4/7 03
1.91.4/7 04
1.91.4/7 05

LB115.B EUR BACKHOE LOADER (1/05-)

1.91.4/ 7(01) IGNITON SWITCH, POWER POINT, FUSE PANEL & SIDE CONSOLE HARNESS (POWER SHIFT EUR)

Ref	Part Number	Qty	Description
1	87406392	1	HARNESS, WIRE, , UP TO S/N XXX
1	87325293	1	, FROM S/N XXX
2	85825330	1	HARNESS, WIRE,
3	85819568	1	HARNESS, WIRE, Rotary Beacon
4	85825331	1	HARNESS, WIRE,

1.91.4/ 7(02) IGNITON SWITCH, POWER POINT, FUSE PANEL & SIDE CONSOLE HARNESS (POWER SHIFT EUR)

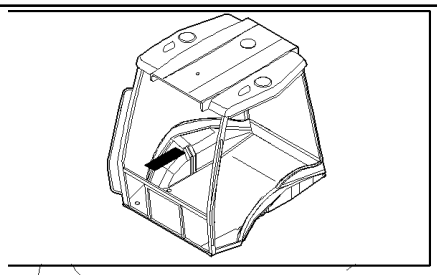

KIT
KIT KIT

1 = ● see also Tav. 1.91.4/7 01
1.91.4/7 03
1.91.4/7 04
1.91.4/7 05
1.91.4/7 07

LB115.B EUR BACKHOE LOADER (1/05-)

1.91.4/ 7(02) IGNITON SWITCH, POWER POINT, FUSE PANEL & SIDE CONSOLE HARNESS (POWER SHIFT EUR)

Ref	Part Number	Qty	Description
1	87406392	1	HARNESS, WIRE, , UP TO S/N XXX
1	87325293	1	, FROM S/N XXX
2	87431454	1	PANEL,
3	85806134	1	FUSE,
4	10519204	1	WASHER, M4 x 9 x .8,
5	11054590	2	FUSE, 3A
6	85806135	1	ISOLATOR,
7	11054890	5	FUSE, 7,5A
8	11054990	7	FUSE, 10A
9	11055090	8	FUSE, 15A
10	11055190	1	FUSE, 20A
11	12574011	1	NUT, M4 x .7, Cl 8,
12	85803986	1	RELAY, Flasher
13	85825504	1	PANEL,
14	85825198	9	RELAY,
15	85826071	1	DECAL,
16	85826012	1	KIT, , Includes 17 To 19
17	NSS	1	NOT SERVICED SEPARATELY,
18	85826014	1	HARNESS, WIRE,
19	NSS	1	NOT SERVICED SEPARATELY,

1.91.4/ 7(03) IGNITON SWITCH, POWER POINT, FUSE PANEL & SIDE CONSOLE HARNESS (POWER SHIFT EUR)

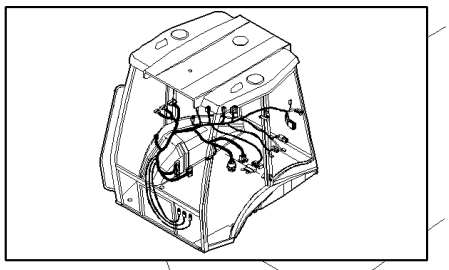

KIT KIT KIT

1 = ● see also Tav.

1.91.4/7 01
1.91.4/7 02
1.91.4/7 04
1.91.4/7 05
1.91.4/7 07

LB115.B EUR BACKHOE LOADER (1/05-)

1.91.4/ 7(03) IGNITON SWITCH, POWER POINT, FUSE PANEL & SIDE CONSOLE HARNESS (POWER SHIFT EUR)

Ref	Part Number	Qty	Description
1	87406392	1	HARNESS, WIRE, , UP TO S/N XXX
1	87325293	1	, FROM S/N XXX
2	87431456	1	HARNESS, WIRE, , UP TO S/N XXX
2	87325298	1	CABLE, ELECTRIC, , FROM S/N XXX
3	85802160	1	LIGHT, WARNING,
4	85819450	1	RELAY,
5	87431469	1	SWITCH, IGNITION,
6	85804675	2	KEY, DOOR LOCK,
7	85821410	1	BLOCK,

1.91.4/ 7(04) IGNITON SWITCH, POWER POINT, FUSE PANEL & SIDE CONSOLE HARNESS (POWER SHIFT EUR)

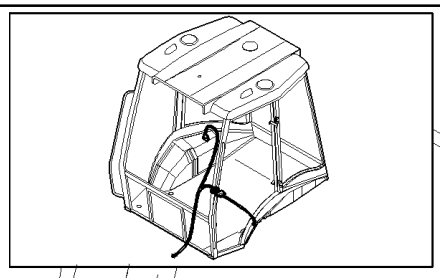

KIT KIT KIT

1 = ● see also Tav. 1.91.4/7 01, 1.91.4/7 02, 1.91.4/7 03, 1.91.4/7 05, 1.91.4/7 07

LB115.B EUR BACKHOE LOADER (1/05-)

1.91.4/ 7(04) IGNITON SWITCH, POWER POINT, FUSE PANEL & SIDE CONSOLE HARNESS (POWER SHIFT EUR)

Ref	Part Number	Qty	Description
1	87406392	1	HARNESS, WIRE, , UP TO S/N XXX
1	87325293	1	, FROM S/N XXX
2	85802426	1	HARNESS, WIRE, Trans.
3	85802427	1	HARNESS, WIRE, Electronic Gear Selector (EGS)

1.91.4/ 7(05) IGNITON SWITCH, POWER POINT, FUSE PANEL & SIDE CONSOLE HARNESS (POWER SHIFT EUR)

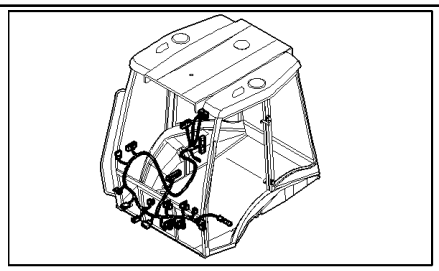

KIT KIT KIT

1 = ● see also Tav. 1.91.4/7 01
1.91.4/7 02
1.91.4/7 03
1.91.4/7 04
1.91.4/7 07

LB115.B EUR BACKHOE LOADER (1/05-)

1.91.4/ 7(05) IGNITON SWITCH, POWER POINT, FUSE PANEL & SIDE CONSOLE HARNESS (POWER SHIFT EUR)

Ref	Part Number	Qty	Description
1	87406392	1	HARNESS, WIRE, , UP TO S/N XXX
1	87325293	1	, FROM S/N XXX
2	85817575	1	HARNESS, WIRE,
3	85806133	1	SWITCH, FLASHER, Hazard
4	85805833	1	CLIP,
5	85805834	1	SWITCH,
6	85805832	1	BRACKET,
7	85812118	1	KNOB,

1.91.4/ 7(06) FRONT DASH (POWER SHIFT EUR)

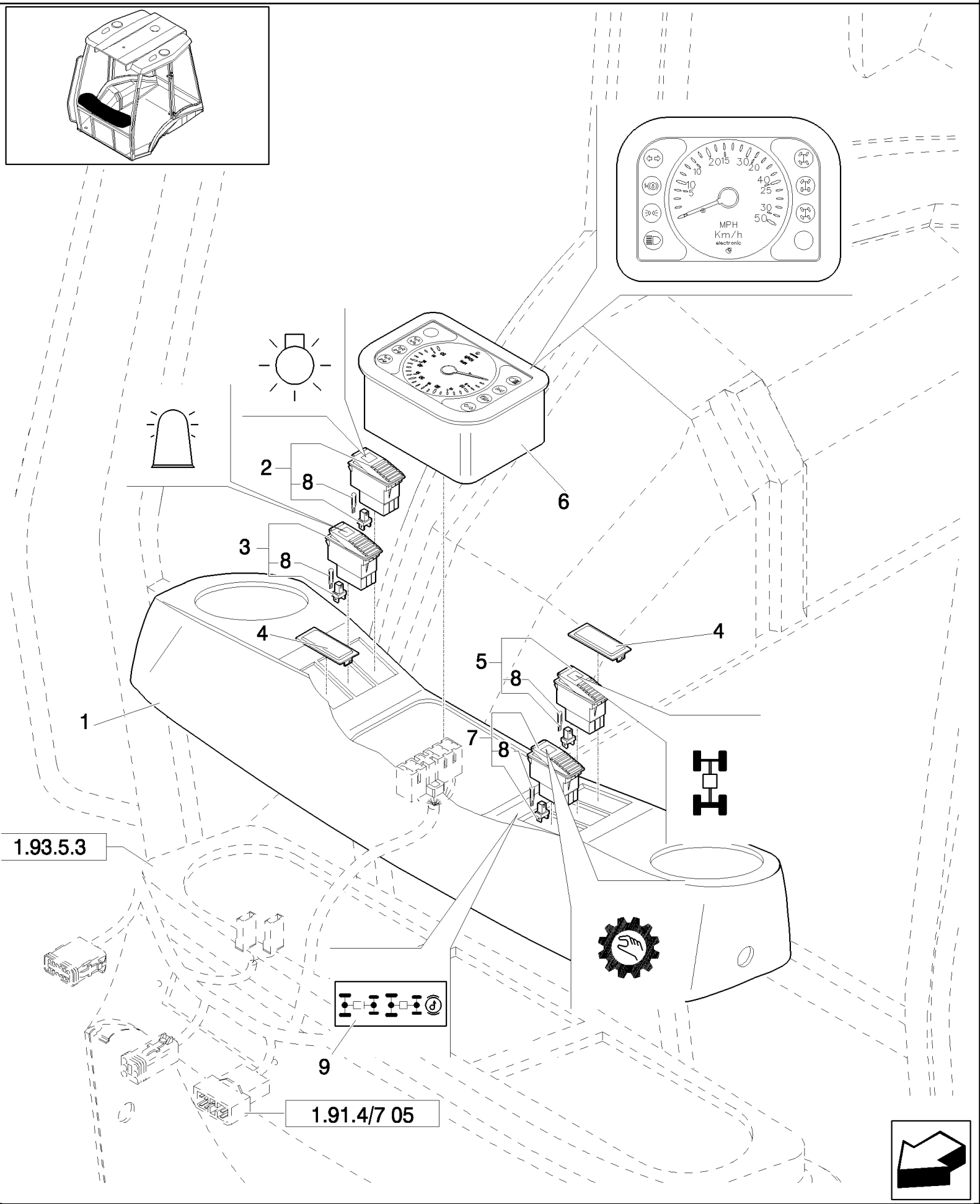

LB115.B EUR BACKHOE LOADER (1/05-)

1.91.4/ 7(06) FRONT DASH (POWER SHIFT EUR)

Ref	Part Number	Qty	Description
1	85818826	1	DASHBOARD,
2	85818828	1	SWITCH, LIGHTS,
3	85818827	1	SWITCH,
4	85825254	1	PLUG,
5	85819134	1	SWITCH,
6	85817589	1	INSTRUMENT CLUSTER,
7	85819145	1	SWITCH,
8	14143790	5	BULB,
9	85807944	1	DECAL,

1.91.4/ 7(07) IGNITON SWITCH, POWER POINT, FUSE PANEL & SIDE CONSOLE HARNESS (POWER SHIFT EUR)

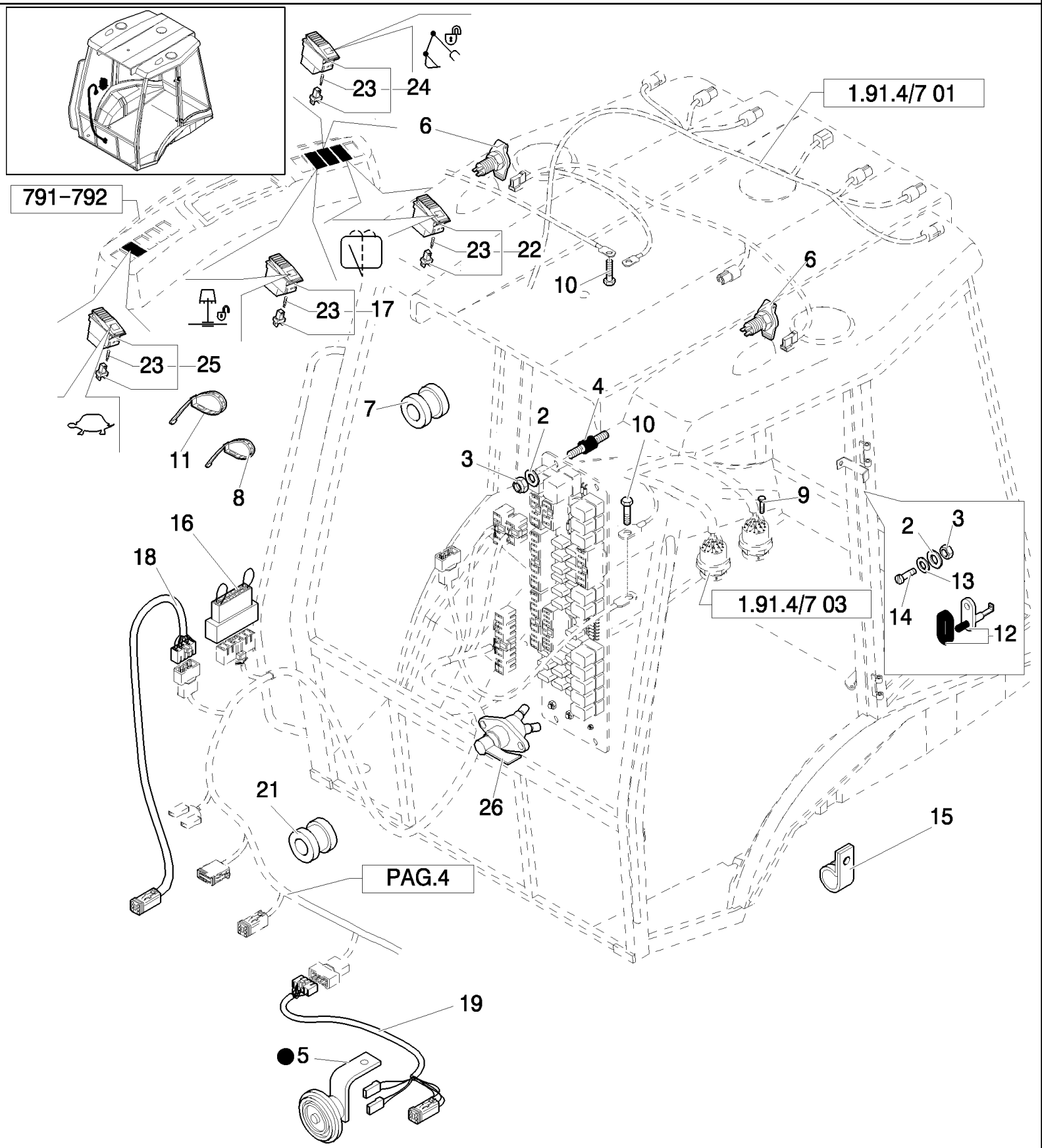

KIT	1 = ● see also Tav. 1.91.4/7 01 1.91.4/7 02 1.91.4/7 03 1.91.4/7 04

LB115.B EUR BACKHOE LOADER (1/05-)

1.91.4/ 7(07) IGNITON SWITCH, POWER POINT, FUSE PANEL & SIDE CONSOLE HARNESS (POWER SHIFT EUR)

Ref	Part Number	Qty	Description
1	87406392	1	HARNESS, WIRE, , UP TO S/N XXX
1	87325293	1	, FROM S/N XXX
2	10615274	6	WASHER, LOCK, Ext Tooth, M4,
3	12574011	6	NUT, M4 x .7, Cl 8,
4	85802478	4	SILENTBLOC,
5	5169413	1	HORN,
6	87546419	2	SOCKET,
7	10398980	1	GROMMET,
8	5112712	5	STRAP, CABLE,
9	13272214	2	SCREW, Cross Pan Hd, M4 x 16,
10	16042924	2	SCREW, Hex, M8 x 10, 8.8, Full Thd,
11	85805383	30	STRAP, CABLE,
12	83961521	2	SWITCH, ASSY, Interior Lamp
13	10519204	2	WASHER, M4 x 9 x .8,
14	13309417	2	SCREW, Cross Oval Hd, M4 x 20,
15	10450090	1	CLAMP,
16	85806136	1	CONNECTOR, ELEC,
17	85818895	1	SWITCH,
18	85819193	1	HARNESS, WIRE, RH
19	85819195	1	HARNESS, WIRE, LH
21	10398680	2	GROMMET,
22	85818823	1	SWITCH, WINDSHIELD WIPER,
23	14143790	3	BULB,
24	85819141	1	SWITCH,
25	85819142	1	SWITCH,
26	87409316	1	SWITCH, Master Disconnect

1.91.5(01) FRONT AND REAR WINDSCREEN WIPERS

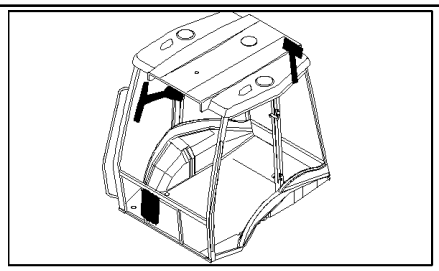

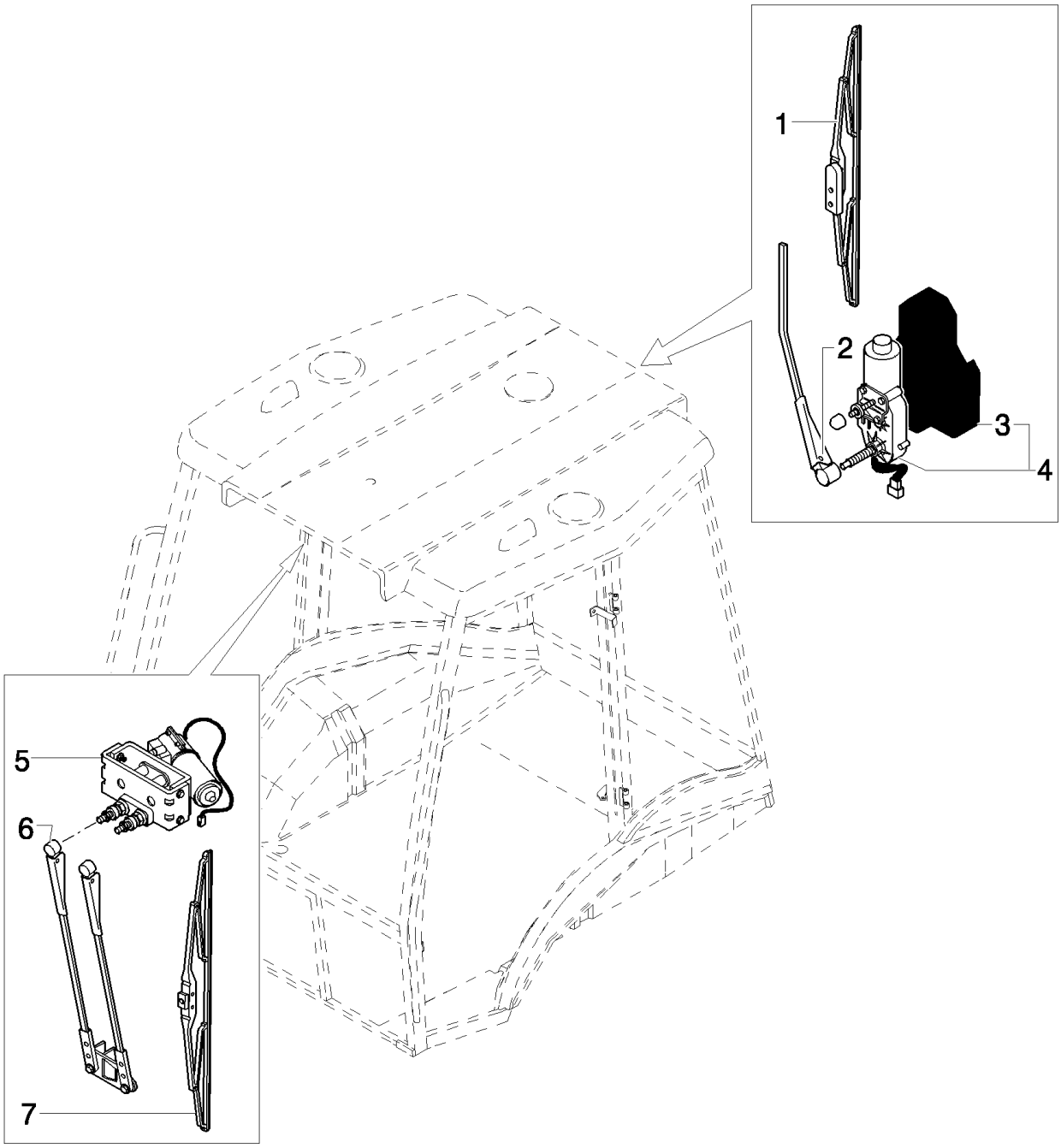

LB115.B EUR BACKHOE LOADER (1/05-)

1.91.5(01) FRONT AND REAR WINDSCREEN WIPERS

Ref	Part Number	Qty	Description
1	85819827	1	WIPER BLADE, Rear
2	85806098	1	WIPER ARM, Rear
3	85806095	1	COVER, Rear
4	85806097	1	WIPER MOTOR, Rear, Includes 3
5	85806184	1	WIPER MOTOR, Front
6	85806185	1	WIPER ARM, Front
7	85819826	1	WIPER BLADE, Front

1.91.5(02) WINDSCREEN WIPERS RESERVOIR & NOZZLES

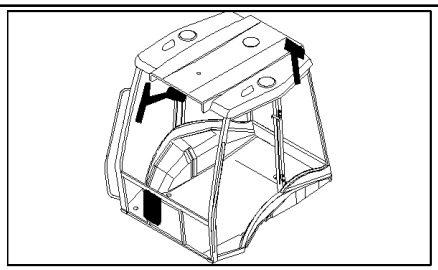

KIT
KIT KIT
1 = ●

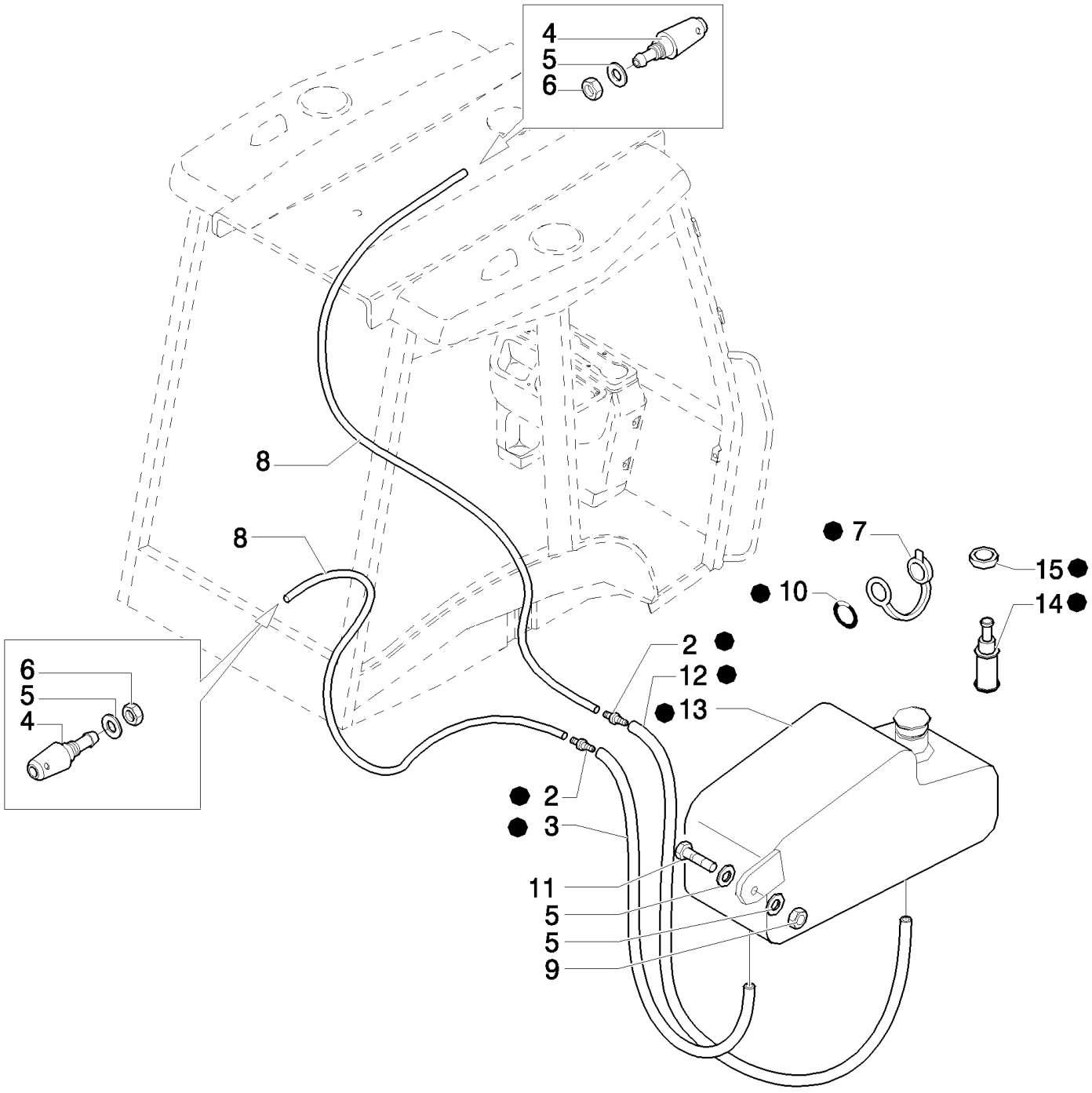

LB115.B EUR BACKHOE LOADER (1/05-)

1.91.5(02) WINDSCREEN WIPERS RESERVOIR & NOZZLES

Ref	Part Number	Qty	Description
1	85821153	1	PAN,
2	85821337	2	VALVE, CHECK,
3	85821335	2	HOSE, FLEXIBLE,
4	85802398	2	NOZZLE,
5	12646704	4	WASHER, M8 x 20 x 2,
6	16102411	2	NUT, Thin, M8 x 1, Cl 04,
7	5175736	1	CAP,
8	85821338	2	HOSE, FLEXIBLE,
9	12574211	1	NUT, M6 x 1, Cl 8,
10	85820237	1	O-RING,
11	13313417	1	SCREW, Cross Oval Hd, M6 x 25,
12	85824450	1	HOSE, FLEXIBLE,
13	85821334	1	RESERVOIR, WINDSH. WASH,
14	85821333	2	PUMP,
15	85821336	2	SEAL,

1.91.6(01) RADIO ANTENNA & SPEAKER COVER

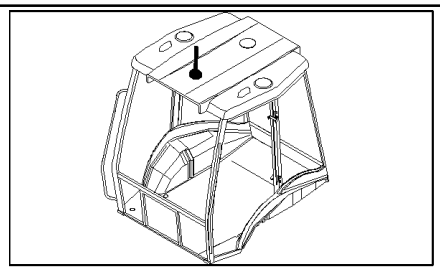

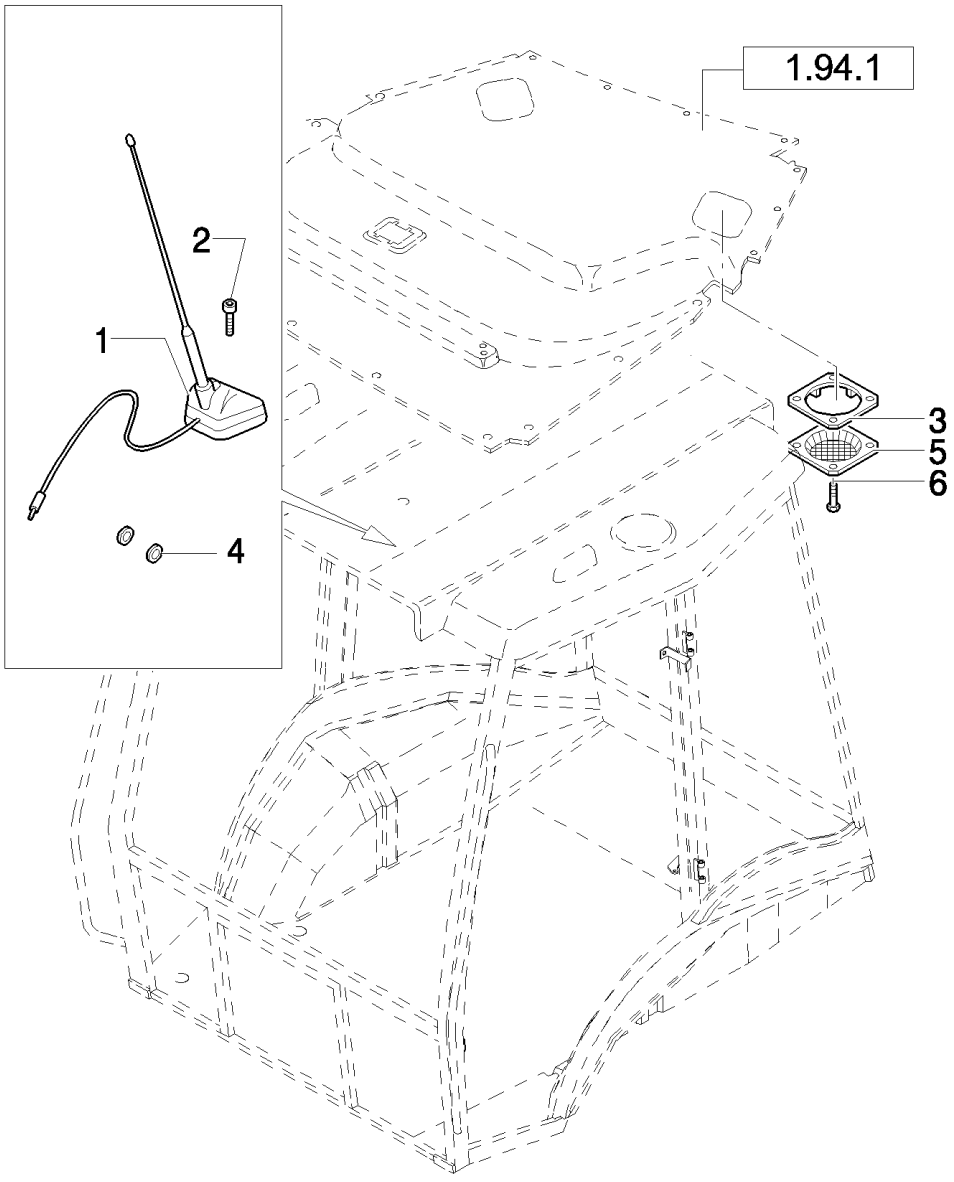

LB115.B EUR BACKHOE LOADER (1/05-)

1.91.6(01) RADIO ANTENNA & SPEAKER COVER

Ref	Part Number	Qty	Description
1	85819569	1	ANTENNA,
2	13311817	1	SCREW, Cross Oval Hd, M5 x 40,
3	85802107	2	PLATE, MOUNTING,
4	10399580	1	GROMMET,
5	85804362	2	GRILLE,
6	13297842	8	SCREW,

1.91.7(01) LAMPS & LIGHTS - CAB (EUROPE)

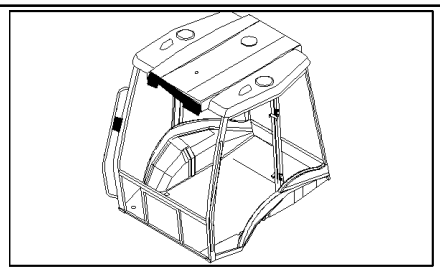

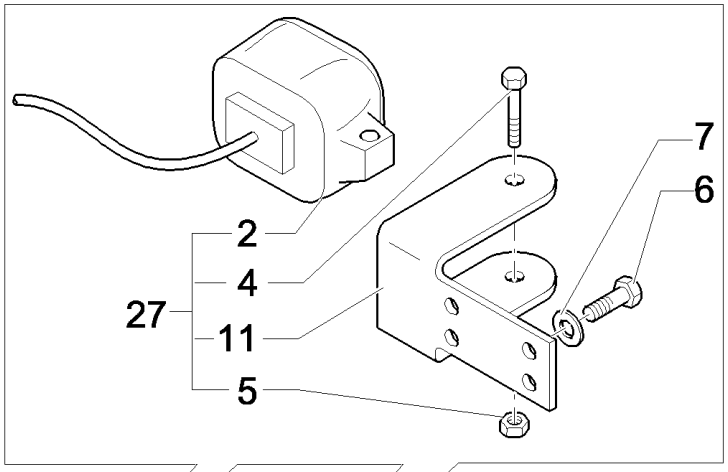

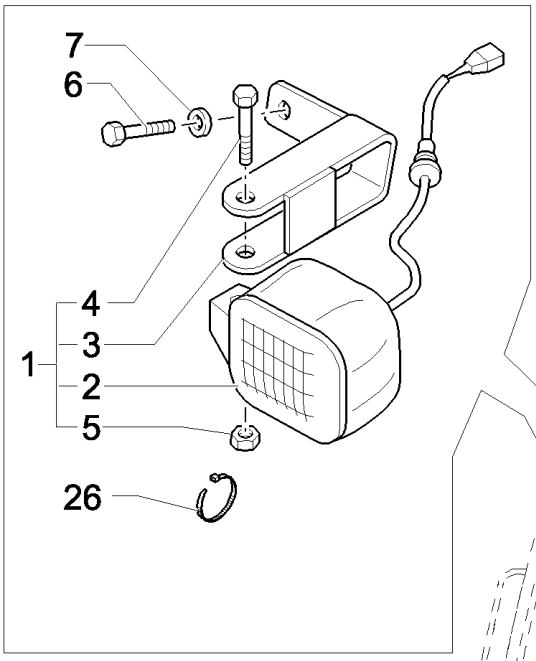

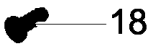

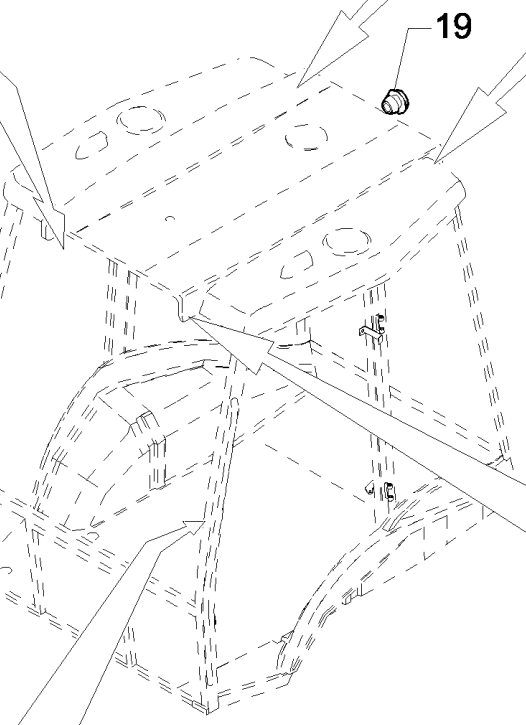

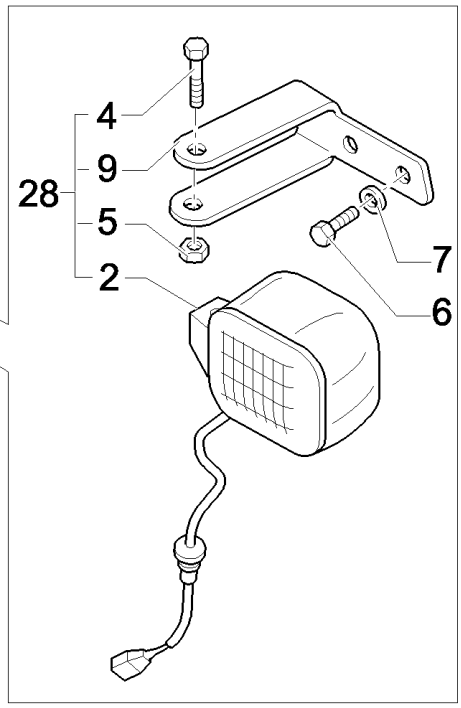

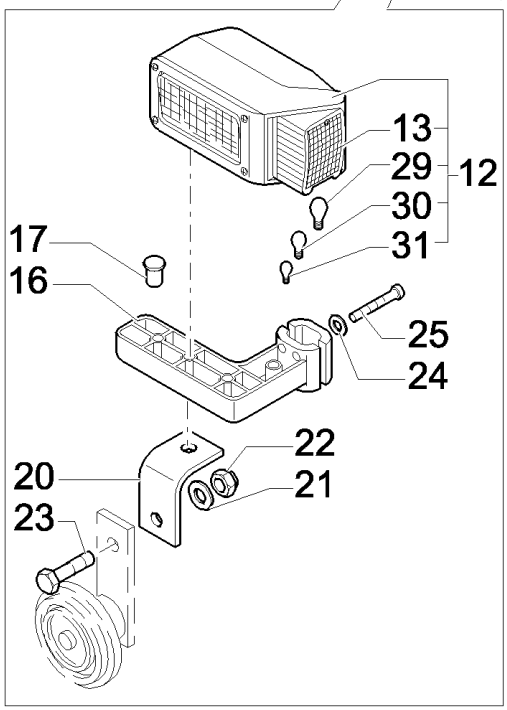

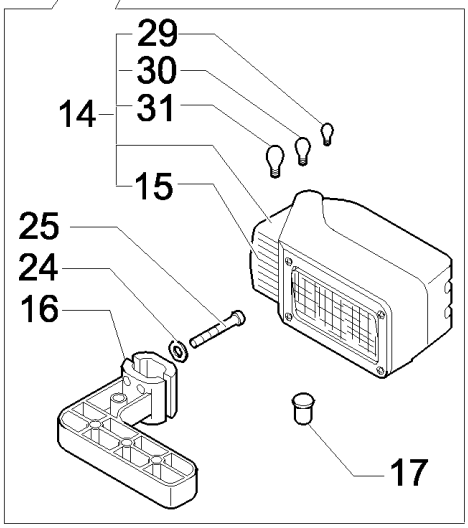



LB115.B EUR BACKHOE LOADER (1/05-)

1.91.7(01) LAMPS & LIGHTS - CAB (EUROPE)

Ref	Part Number	Qty	Description
1	85819695	1	LIGHT,
2	85819200	4	HEADLAMP, Includes H3 12V 55W Bulb, Order 9703399 For Bulb
3	85819190	1	BRACKET, RH
4	16044324	4	SCREW, Hex, M8 x 55, 8.8,
5	16104111	4	NUT, M8 x 1.25, Cl 8,
6	10902124	12	SCREW, Hex, M6 x 14, 8.8, Full Thd,
7	11197774	12	WASHER, SPRING, Belleville, M6.4,
9	85819191	1	BRACKET, LH
11	85819194	2	BRACKET,
12	85821384	1	HEADLAMP, RH, , Includes 13, 29, 30, 31
13	9969431	1	LENS, RH
14	85821385	1	HEADLAMP, LH, , Includes 15, 29, 30, 31
15	9969430	1	LENS, LH
16	85819828	2	SUPPORT,
17	5132136	4	COVER,
18	83994150	8	PLUG,
19	5118658	8	PLUG,
20	87358963	1	COLLAR, RETAINER,
21	10519611	1	WASHER, Ř 8
22	14048211	1	NUT, M8 x 1.25, Cl 8,
23	16043421	1	SCREW, Hex, M8 x 20, 8.8,
24	10569274	8	WASHER, LOCK, Ř 6
25	14305324	8	SCREW, Hex Soc Hd, M6 x 20, 8.8,
26	5112712	2	STRAP, CABLE,
27	85819699	2	KIT, ENGINE OVERHAUL,
28	85819696	1	LIGHT,
29	14142390	1	BULB,
30	14152090	1	BULB,
31	14148190	1	BULB,

1.91.8(01) CAB-SAFETY FRAME / EXTINGUISHER

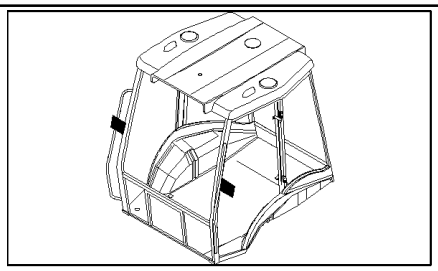

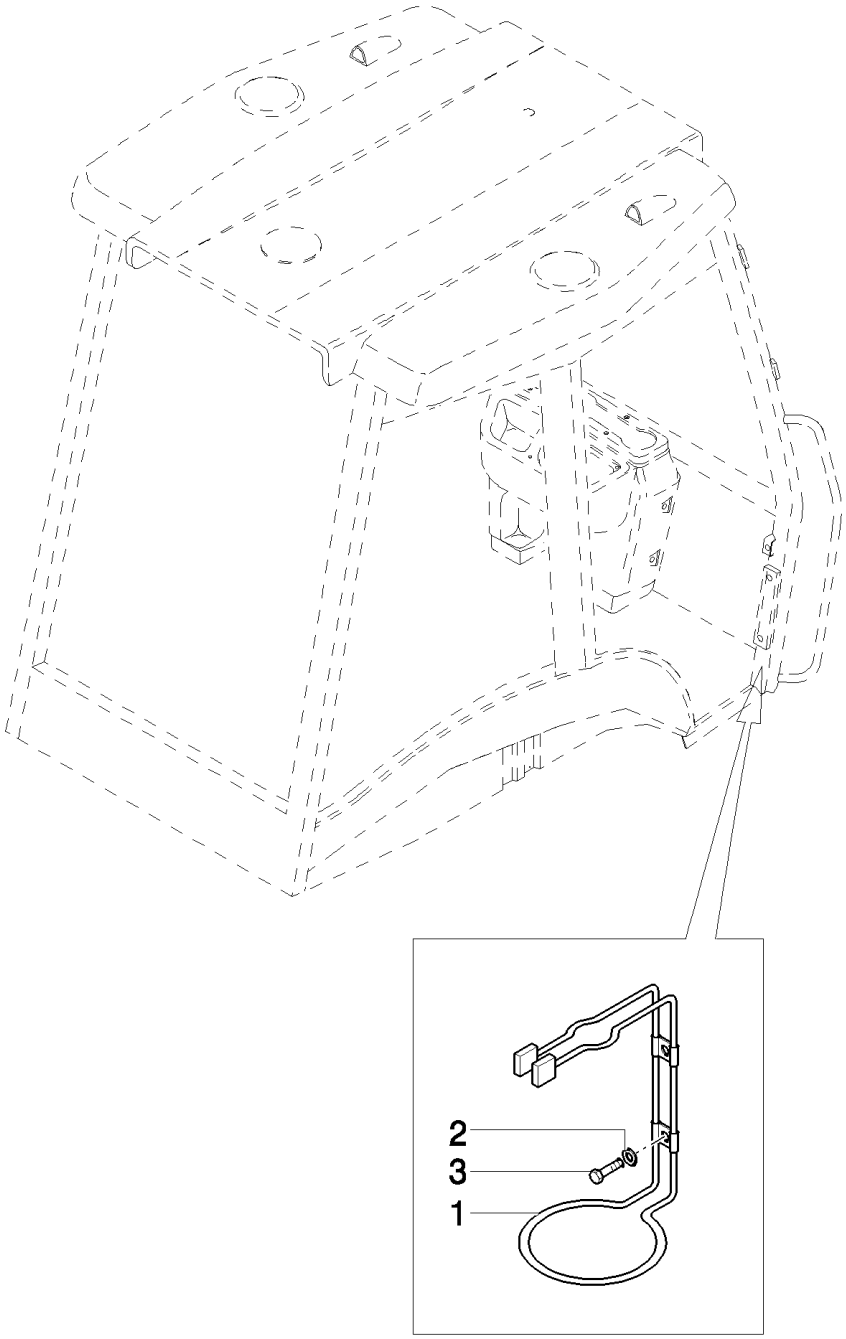

LB115.B EUR BACKHOE LOADER (1/05-)

1.91.8(01) CAB-SAFETY FRAME / EXTINGUISHER

Ref	Part Number	Qty	Description
1	85802276	1	SUPPORT,
2	11193274	2	WASHER, SPRING, Belleville, M6.4,
3	13275914	2	SCREW, Pan Hd, M6 x 10, 5.8,

1.92.1(01) CAB - FRAME-DOOR

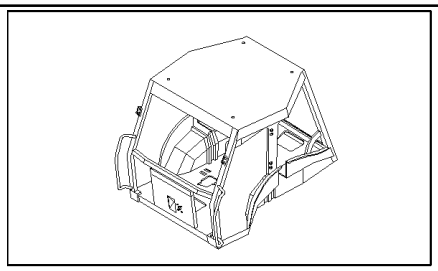

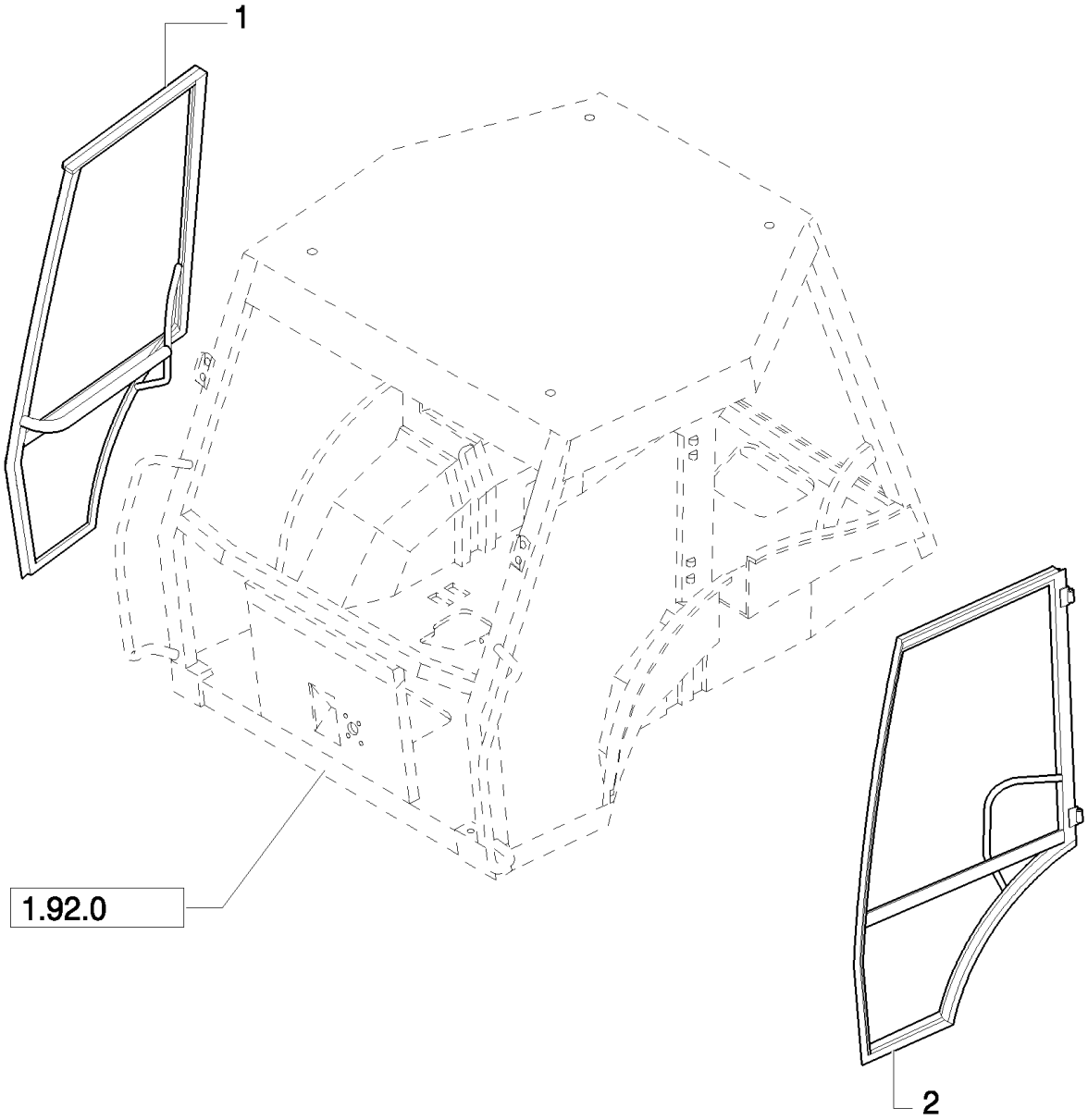

LB115.B EUR BACKHOE LOADER (1/05-)

1.92.1(01) CAB - FRAME-DOOR

Ref	Part Number	Qty	Description
1	85801654	1	DOOR, RH
1	87354650	1	FRAME, RH, From S/N 031056894 LB 115 Mechanical Version, From S/N 031056893 LB 110 - LB 90 - LB 95 Mechanical Version, From S/N 031056917 LB 110 Mechanical Version, From S/N 031056892 LB 110 - LB 90 - LB 95 Pilot Version, Power shuttle, From S/N 031056896 LB 110 Pilot Version, Power shift, From S/N 031056900 LB 115 Pilot Version
2	85801655	1	DOOR, LH
2	87354652	1	FRAME, LH, From S/N 031056894 LB 115 Mechanical Version, From S/N 031056893 LB 110 - LB 90 - LB 95 Mechanical Version, From S/N 031056917 LB 110 Mechanical Version, From S/N 031056892 LB 110 - LB 90 - LB 95 Pilot Version, Power shuttle, From S/N 031056896 LB 110 Pilot Version, Power shift, From S/N 031056900 LB 115 Pilot Version

Mechanical Version

1.92.1/ 2(01) CAB - FRAME-DOOR

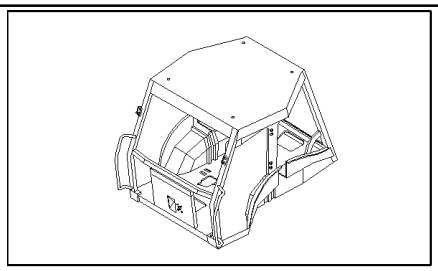

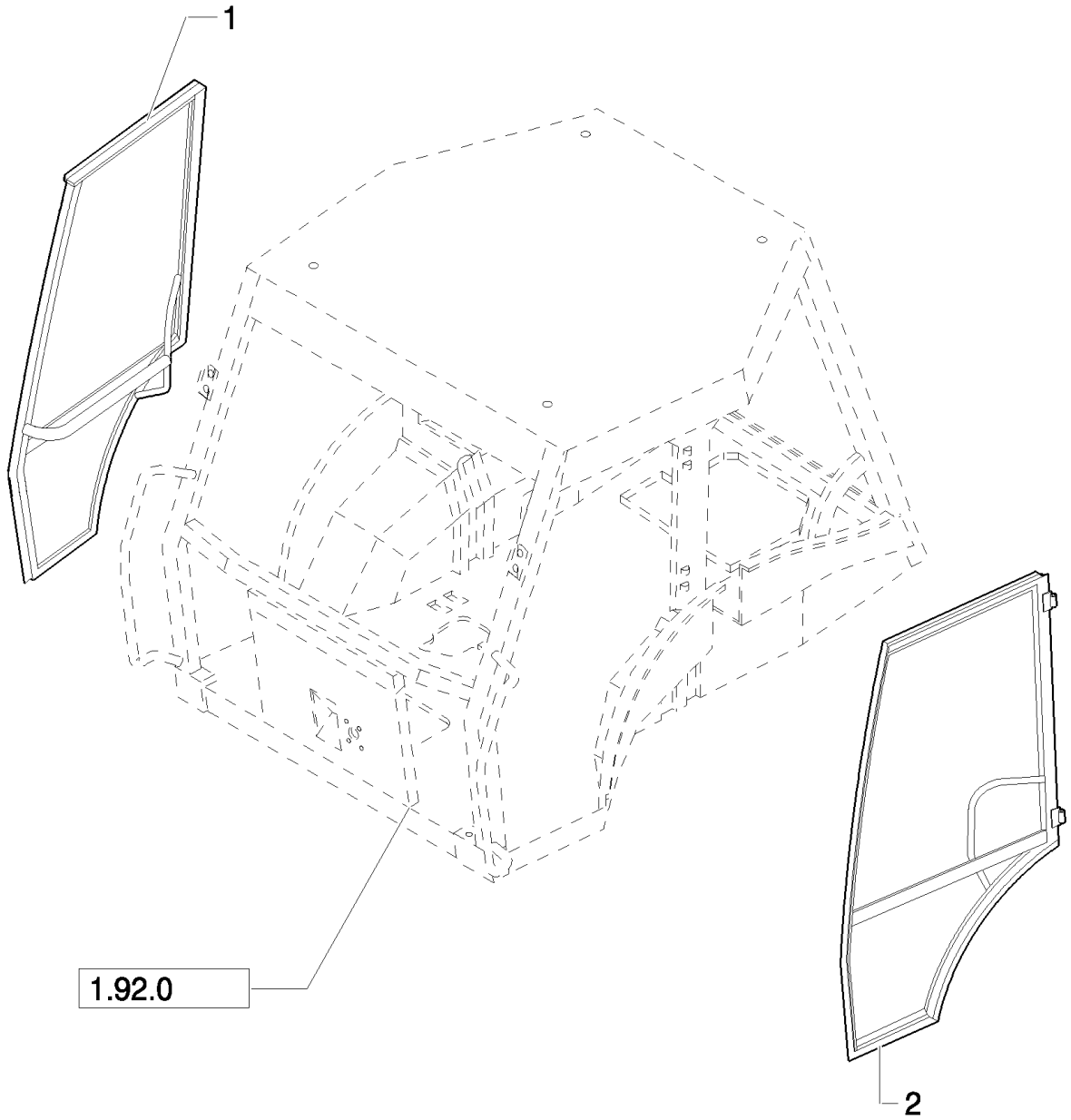

LB115.B EUR BACKHOE LOADER (1/05-)

1.92.1/ 2(01) CAB - FRAME-DOOR

Ref	Part Number	Qty	Description
1	85801654	1	DOOR, RH, UP TO S/N XXX
1	87354650	1	FRAME, RH, FROM S/N XXX
2	85801655	1	DOOR, LH, UP TO S/N XXX
2	87354652	1	FRAME, LH, FROM S/N XXX

Pilot Control Version

1.92.3(01) WINDOWS

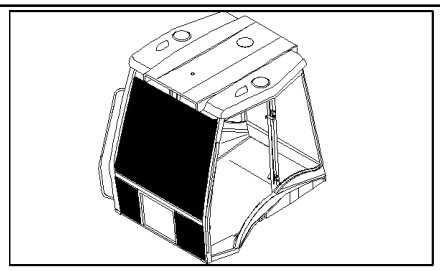

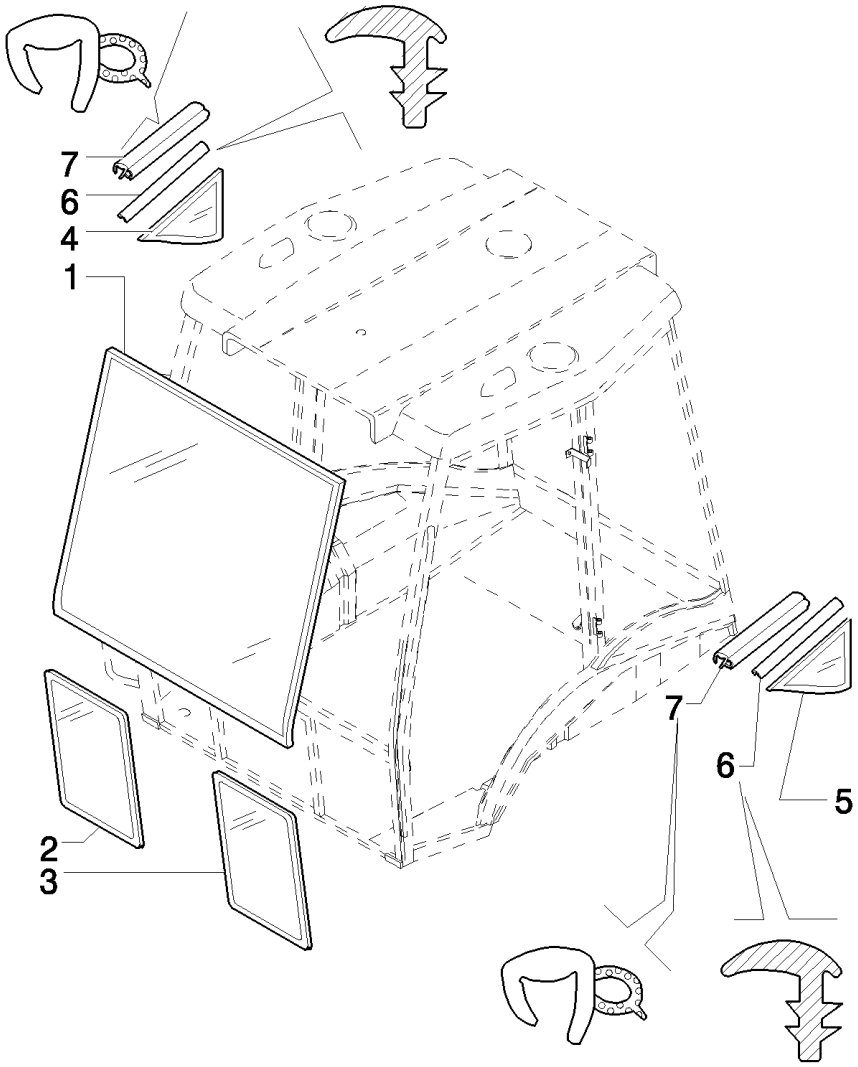

LB115.B EUR BACKHOE LOADER (1/05-)

1.92.3(01) WINDOWS

Ref	Part Number	Qty	Description
1	85801621	1	GLASS,
2	85801622	1	GLASS ASSY, CAB, RH
3	85801623	1	GLASS ASSY, CAB, LH
4	85801630	1	GLASS ASSY, CAB, RH
5	85801631	1	GLASS ASSY, CAB, LH
6	85802334	M	GASKET,
7	85805065	2	GASKET,

1.92.4(01) WINDOWS

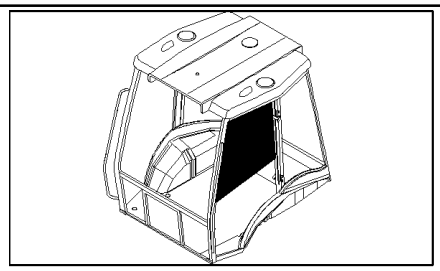

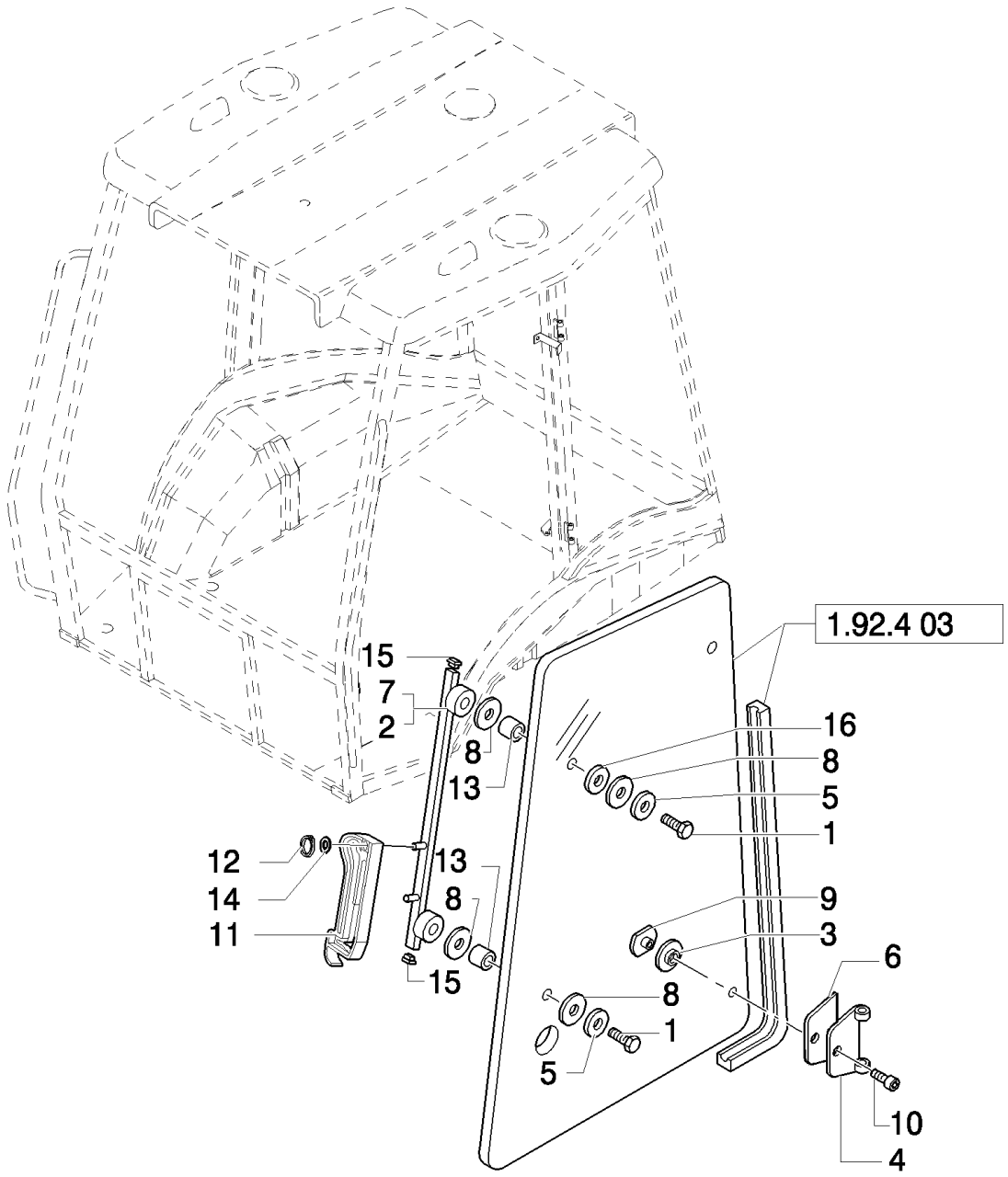

LB115.B EUR BACKHOE LOADER (1/05-)

1.92.4(01) WINDOWS

Ref	Part Number	Qty	Description
1	82859922	4	SCREW,
2	87396515	1	SUPPORT, RH
3	83961985	4	SPACER,
4	85804869	4	HINGE,
5	83963153	4	SPACER,
6	81872036	4	GASKET,
7	87396492	1	SUPPORT, LH
8	83962050	12	RING,
9	85805448	4	NUT, RING,
10	81871864	4	SCREW, Socket Drive, M8x1.25x16
11	87353724	4	HANDLE,
12	11087776	4	CIRCLIP, M6,
13	83961987	4	SPACER,
14	10519404	2	WASHER, M6 x 11.95 x 1.6,
15	81871439	8	PLUG,
16	12638504	4	WASHER, M8 x 15 x 1.5,

1.92.4(02) WINDOWS

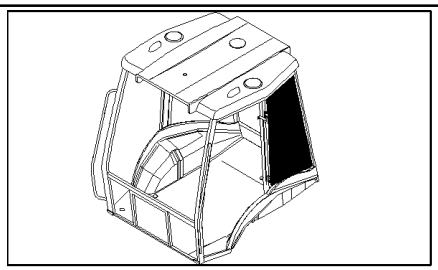

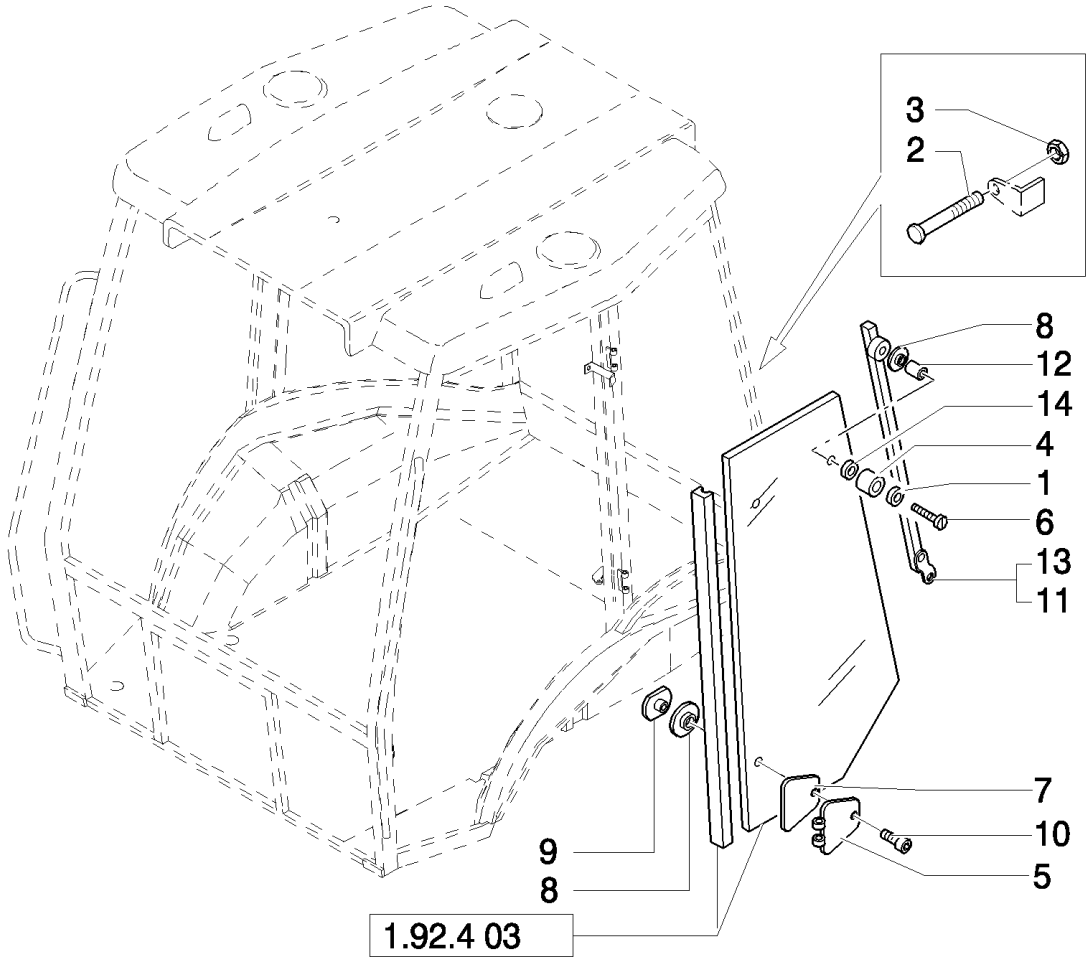

LB115.B EUR BACKHOE LOADER (1/05-)

1.92.4(02) WINDOWS

Ref	Part Number	Qty	Description
1	10519404	2	WASHER, M6 x 11.95 x 1.6,
2	87313813	4	PIN,
3	10702711	8	NUT,
4	83976357	2	BUMPER,
5	85804870	4	HINGE,
6	10903224	2	VALVE, HYDRAULIC, Hex, M6 x 40, 8.8,
7	81872028	4	SPACER,
8	83961985	4	SPACER,
9	85805448	4	NUT, RING,
10	81871864	4	SCREW, Socket Drive, M8 x 1.25 x 16
11	87396525	1	SUPPORT, RH
12	83961987	2	SPACER,
13	87396528	1	SUPPORT, LH
14	11193979	2	WASHER, SPRING, Belleville, M8.4,

1.92.4(03) WINDOWS

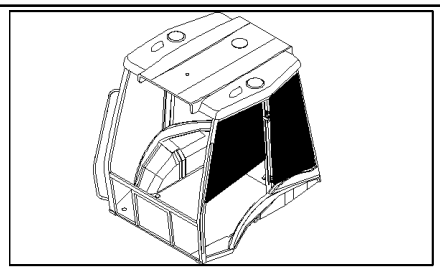

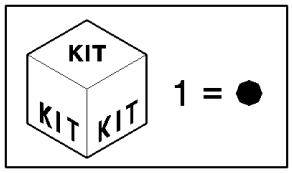

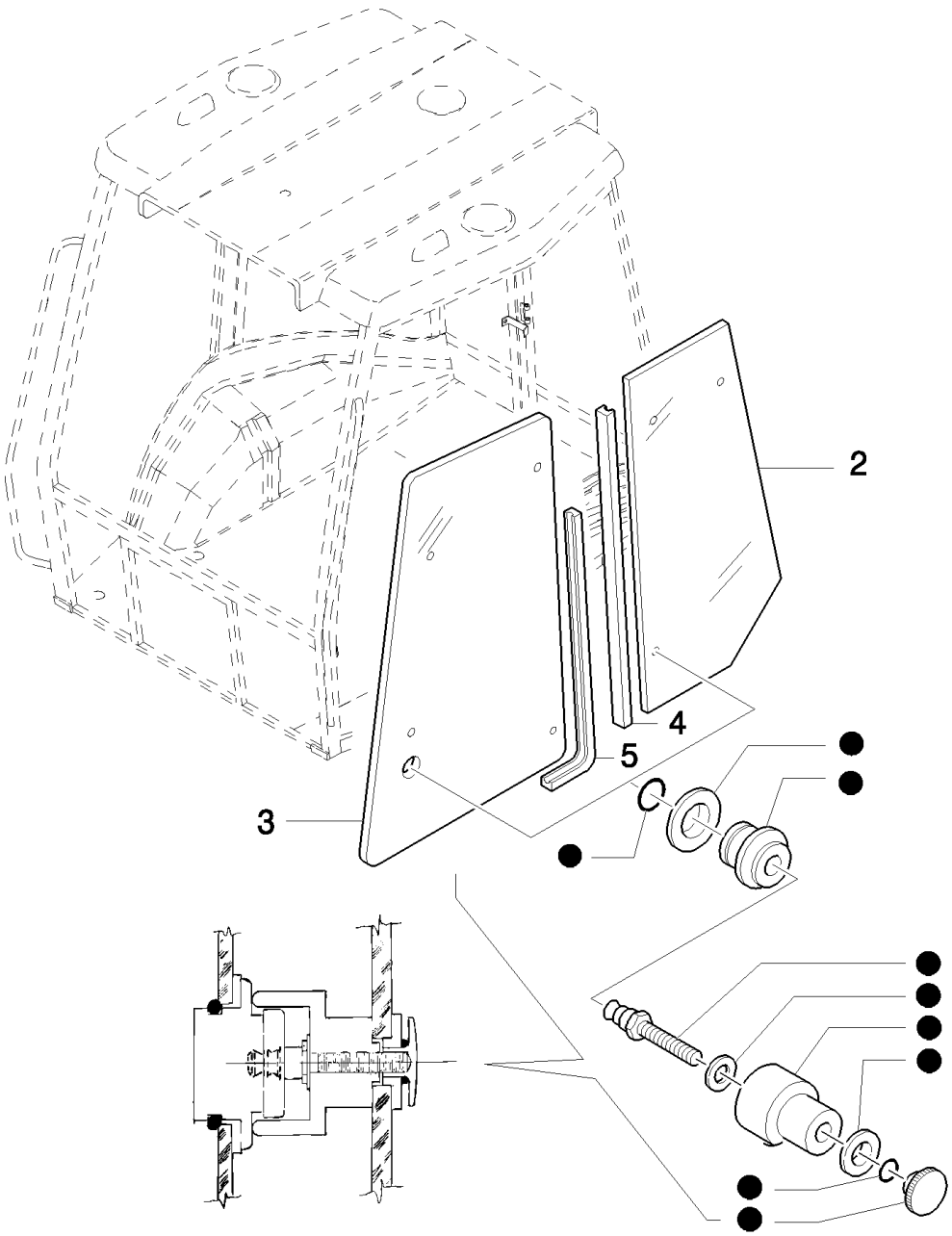

LB115.B EUR BACKHOE LOADER (1/05-)

1.92.4(03) WINDOWS

Ref	Part Number	Qty	Description
1	85804617	2	KIT,
2	85801628	2	GLASS ASSY, CAB,
3	85801626	2	GLASS ASSY, CAB,
4	85812254	2	SEAL, RUBBER, L=3150
5	85812255	2	SEAL, RUBBER, L=3315

1.92.5(01) FENDERS, REAR

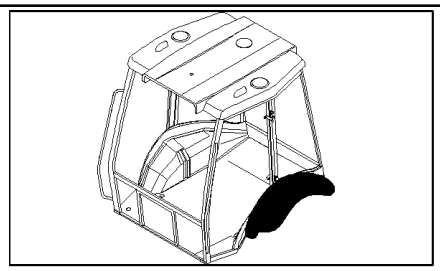

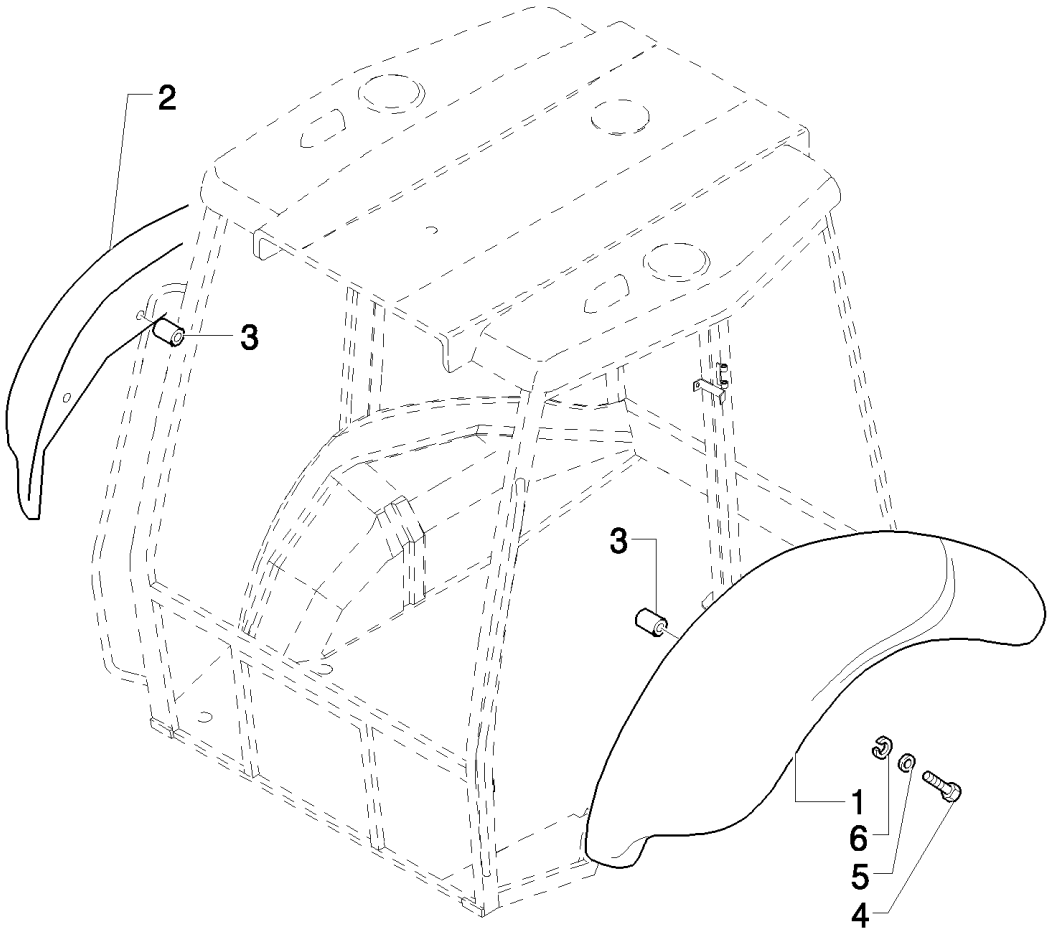

LB115.B EUR BACKHOE LOADER (1/05-)

1.92.5(01) FENDERS, REAR

Ref	Part Number	Qty	Description
1	85817211	1	FENDER, REAR, LH, Only for LB90.B - LB95.B - LB110.B
1	85817213	1	FENDER, REAR, LH, Only for LB115.B 4WS
2	85817210	1	FENDER, REAR, RH, Only for LB90.B - LB95.B - LB110.B
2	85817212	1	FENDER, REAR, RH, Only for LB115.B 4WS
3	85812338	12	INSERT, THREADED,
4	16044124	10	SCREW, Hex, M8 x 45, 8.8,
5	12646204	10	WASHER, M8 x 35 x 3,
6	11193874	10	WASHER, SPRING, Belleville, M8.4,

1.92.6(01) DOOR COMPONENTS

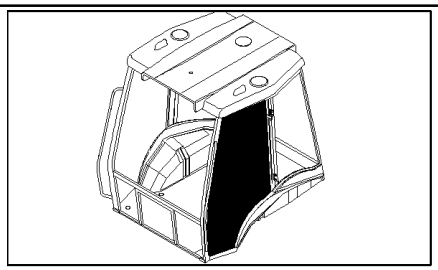

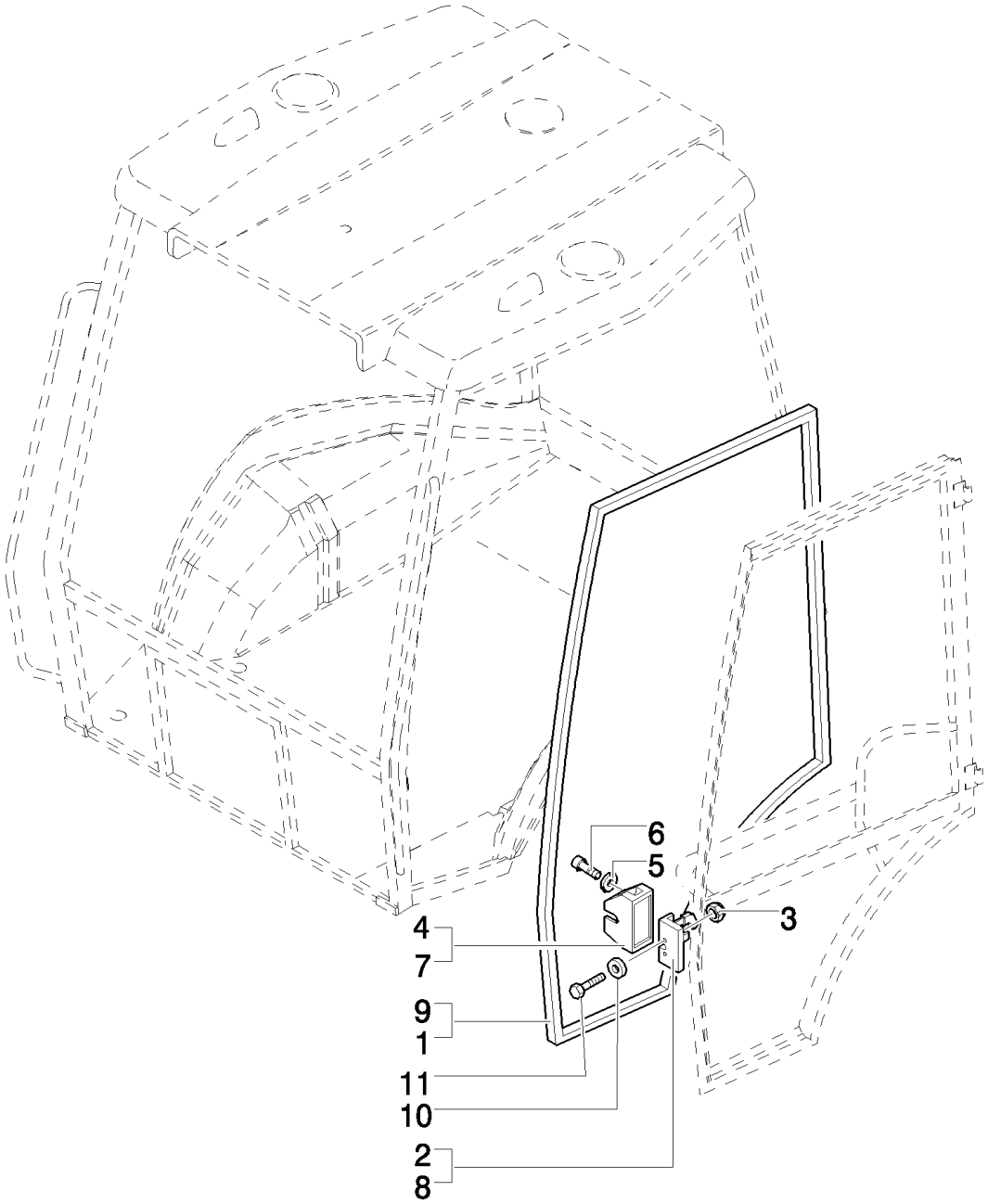

LB115.B EUR BACKHOE LOADER (1/05-)

1.92.6(01) DOOR COMPONENTS

Ref	Part Number	Qty	Description
1	85812252	1	SEAL, RUBBER, RH
2	44910052	1	LOCK, LH
3	14048214	4	NUT, M8 x 1.25,
4	85805771	1	COVER, LH
5	12643701	4	WASHER, M6 x 18 x 1.5,
6	13273911	4	SCREW, Cross Pan Hd, M5 x 10,
7	85805770	1	COVER, RH
8	44910053	1	LOCK, CYLINDER, RH
9	85812253	1	SEAL, RUBBER, LH
10	10519604	2	WASHER, M8 x 17 x 2,
11	14442421	2	SCREW, Hex Soc Flat Hd, M8 x 40, 8.8,

1.92.6(02) DOOR COMPONENTS

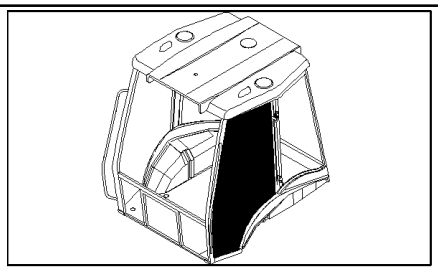

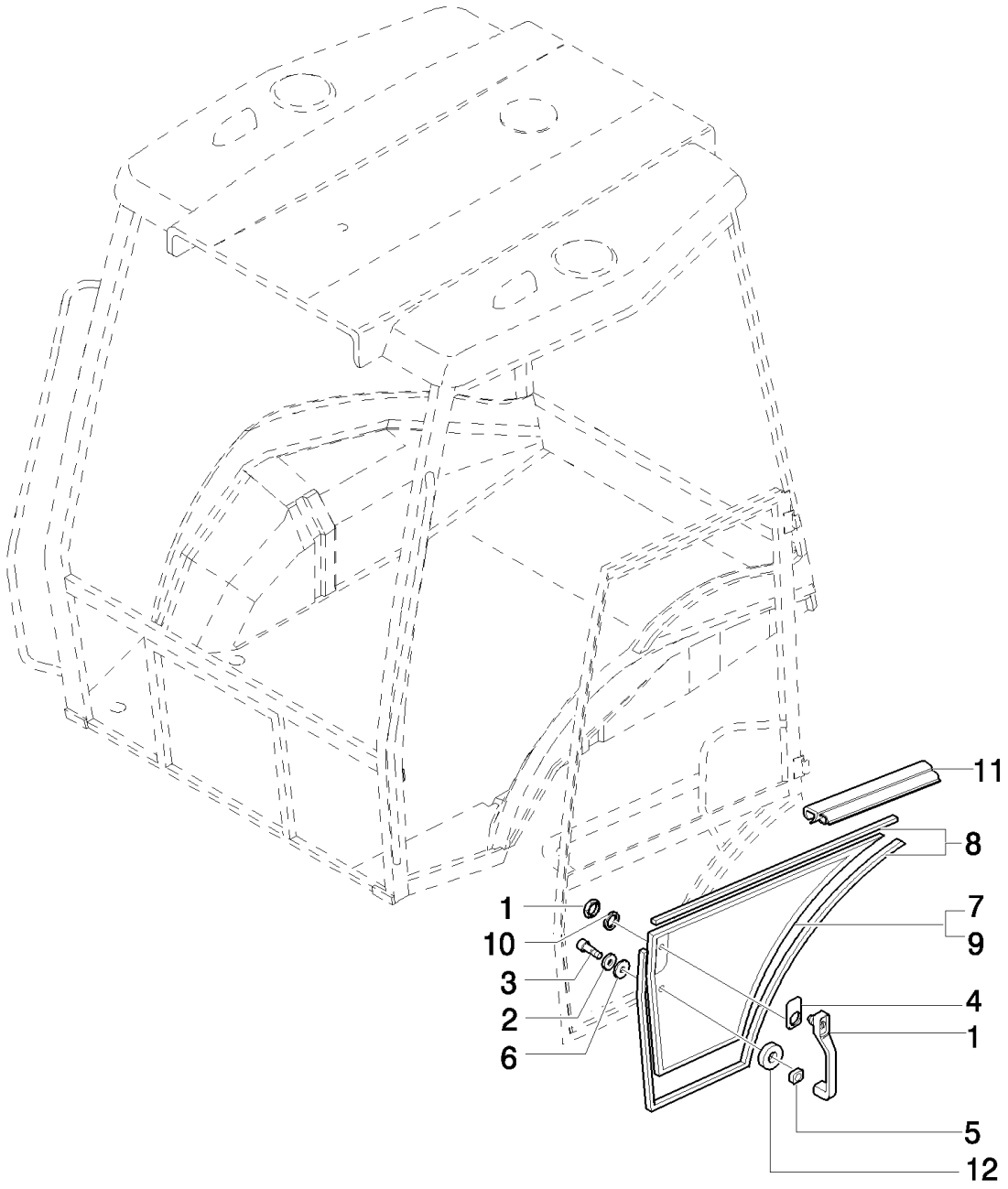

LB115.B EUR BACKHOE LOADER (1/05-)

1.92.6(02) DOOR COMPONENTS

Ref	Part Number	Qty	Description
1	85805659	2	HANDLE,
2	12640601	2	WASHER, M6 x 25 x 2,
3	13276621	2	SCREW, Cross Pan Hd, M6 x 25, 8.8,
4	85801799	2	GASKET,
5	85801800	2	GASKET,
6	83961987	4	SPACER,
7	85801624	1	GLASS ASSY, CAB, RH
8	85802334	MT	GASKET,
9	85801625	1	GLASS ASSY, CAB, LH
10	85802307	2	GASKET,
11	85805065	2	GASKET,
12	85801801	2	GASKET, 24X6X2

1.92.6(03) DOOR COMPONENTS

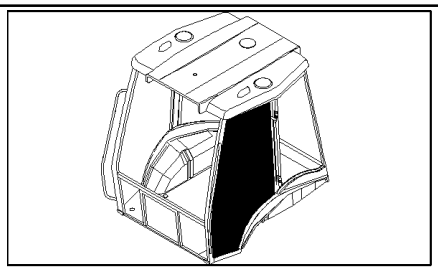

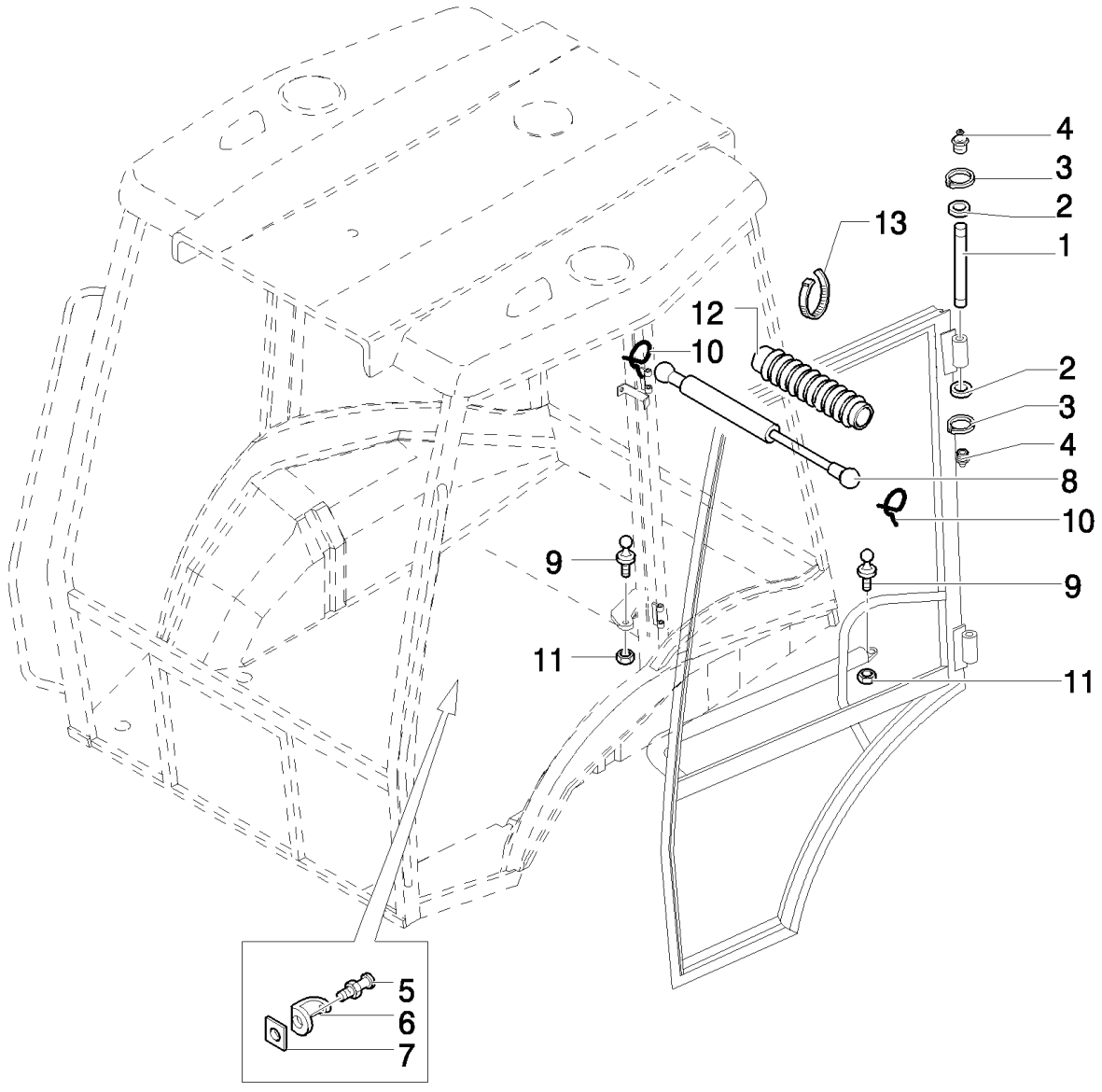

LB115.B EUR BACKHOE LOADER (1/05-)

1.92.6(03) DOOR COMPONENTS

Ref	Part Number	Qty	Description
1	87304810	4	PIN,
2	E8NN16N647AA	8	WASHER, {PP:83964146}
3	11088076	8	CIRCLIP, M10, D.9
4	13406911	4	NIPPLE, LUBE, 1/4"-28,
5	E9NN9422196AA	2	PLATE, STRIKER, {PP:83994395}
6	E9NN94218N45AA	2	COVER, {PP:83994372}
7	83994378	2	NUT, M12 x 1
8	5183854	2	SHOCK ABSORBER,
9	82000409	4	PIN, BALL,
10	81869714	4	CLIP,
11	16104511	4	NUT, M8 x 1.25, Cl 8.8,
12	E9NN94231N12AB	2	SUPPORT, {PP:81867742}
13	5112712	4	STRAP, CABLE,

1.92.9(01) REAR WINDOWS

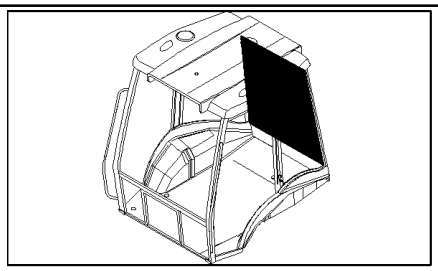

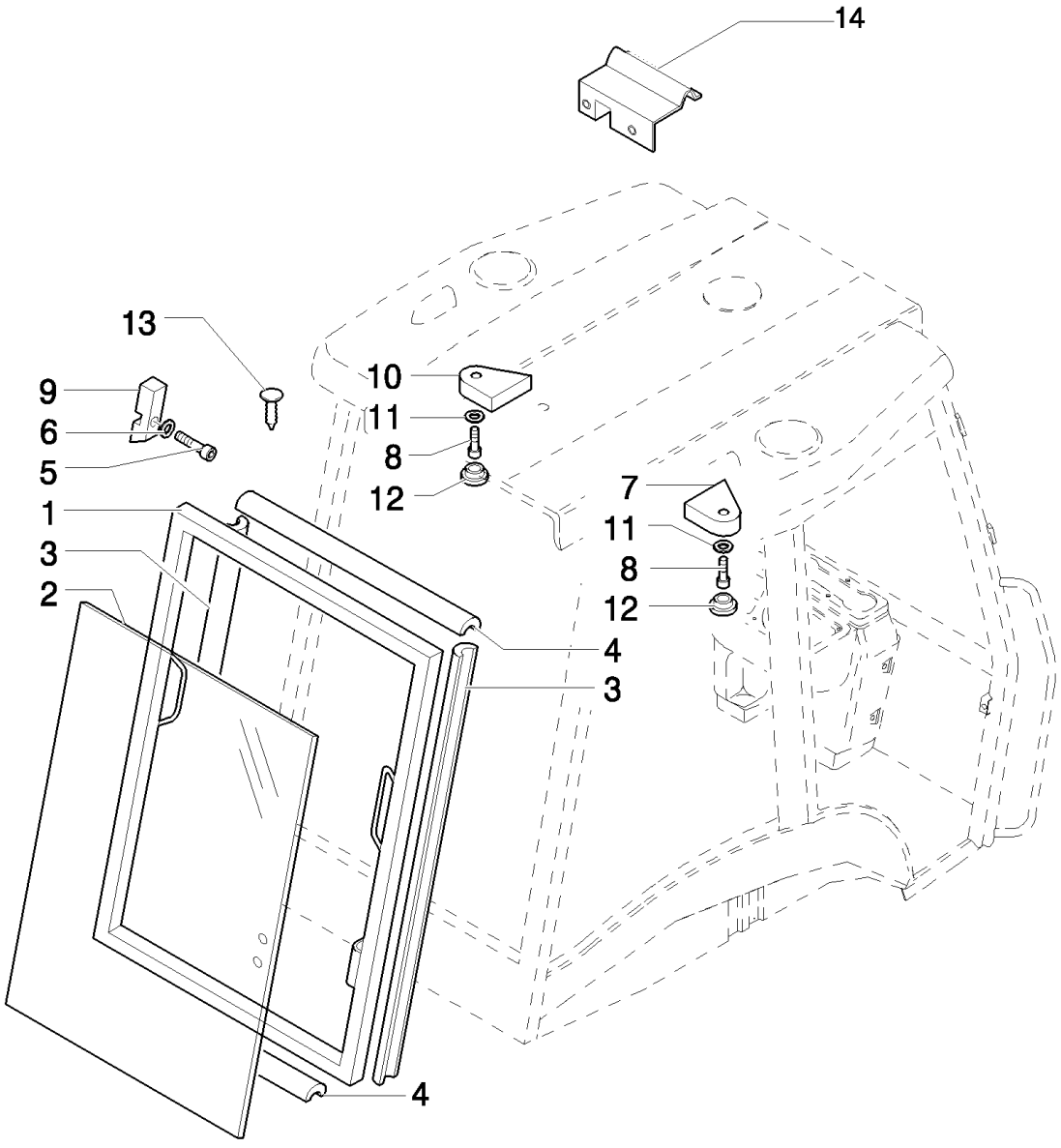

LB115.B EUR BACKHOE LOADER (1/05-)

1.92.9(01) REAR WINDOWS

Ref	Part Number	Qty	Description
1	85801739	1	LID,
2	85801632	1	GLASS ASSY, CAB,
3	85801811	2	EXTRUSION,
4	85819017	1	GASKET, L=1010
4	85819018	1	GASKET, L=965
6	12646704	6	WASHER, M8 x 20 x 2,
7	85801828	1	PAD, RH
8	13313417	2	SCREW, Cross Oval Hd, M6 x 25,
9	85801826	2	STOP,
10	85801829	1	PAD, LH
11	85801991	2	WASHER,
12	79111978	2	PLUG,
13	83994150	2	PLUG,
14	85812365	1	COLLAR, RETAINER,
5	16043324	6	SCREW, Hex, M8 x 18, 8.8, Full Thd,

1.92.9(02) REAR WINDOWS

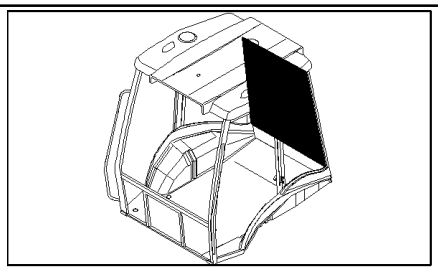

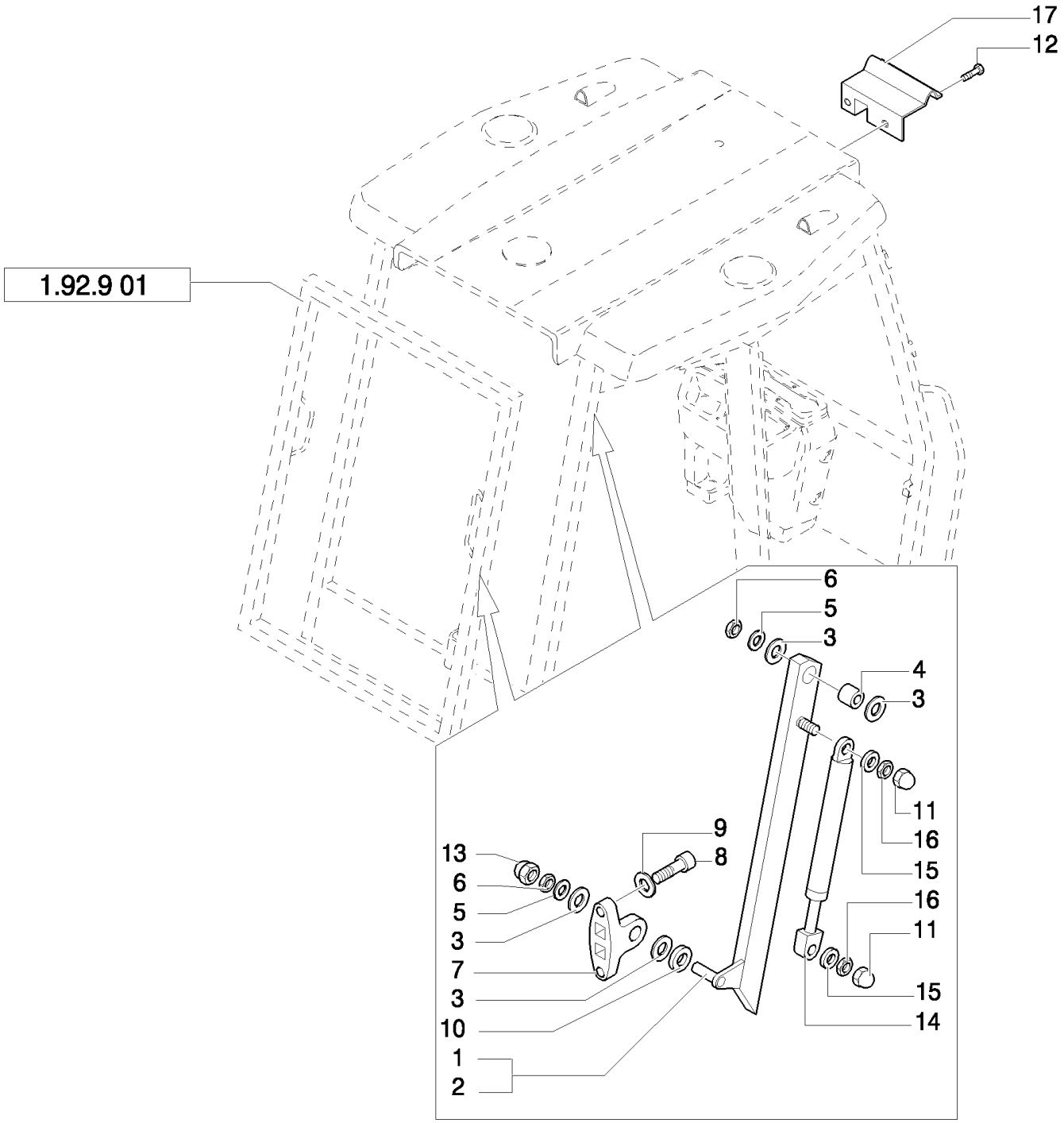

LB115.B EUR BACKHOE LOADER (1/05-)

1.92.9(02) REAR WINDOWS

Ref	Part Number	Qty	Description
1	85801812	1	TIE-ROD, RH
2	85801813	1	TIE-ROD, LH
3	85801814	12	SPACER,
4	85801815	2	BUSHING,
5	12646904	4	WASHER, M12 x 28 x 3,
6	16104111	4	NUT, M8 x 1.25, Cl 8,
7	85801816	2	SUPPORT,
8	12638501	4	WASHER, M8 x 15 x 1.5,
9	14306424	4	SCREW, Hex Soc Hd, M8 x 25, 8.8,
10	12647004	2	WASHER, M8 x 25 x 2.5,
11	15811387	4	PROTECTION CAP,
12	13276217	2	SCREW, Cross Pan Hd, M6 x 16,
13	5132136	2	COVER,
14	85801827	2	SHOCK ABSORBER,
15	14496407	4	WASHER,
16	12574215	4	NUT, M6 x 1, Cl 8,
17	85812364	1	RETAINER,

1.92.9(03) REAR WINDOWS

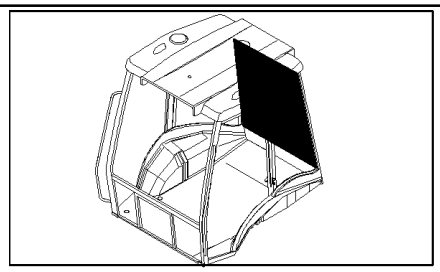

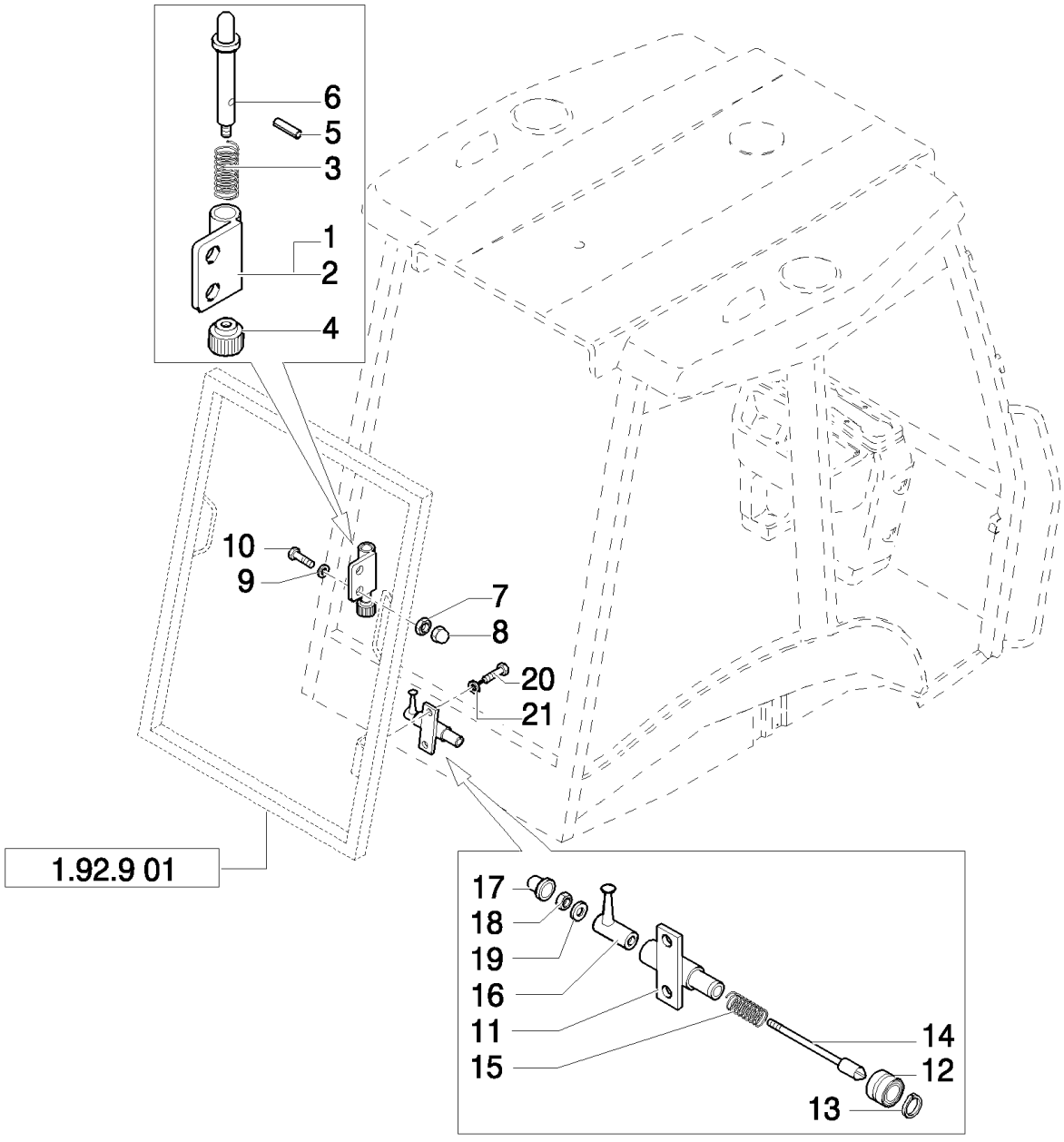

LB115.B EUR BACKHOE LOADER (1/05-)

1.92.9(03) REAR WINDOWS

Ref	Part Number	Qty	Description
1	85801831	1	CLIP, LH
2	85801830	1	BLOCK, RH
3	85801832	2	SPRING,
4	85801833	2	KNOB,
5	14161771	2	PIN, LOCK, M3 x 16, Slotted,
6	85801834	2	PIN,
7	16104111	4	NUT, M8 x 1.25, Cl 8,
8	5132136	4	COVER,
9	11198074	4	WASHER, SPRING, Belleville, M8.4,
10	85827836	4	SCREW, Cap, HH, CL 8.8, M8 x 1.25 x 25
11	85801820	1	PIN, RH
11	85801821	2	PIN, LH
12	85802018	2	BEARING, NEEDLE,
13	85802351	2	RING, LOCKING,
14	85801823	2	PIN,
15	85801824	2	SPRING,
16	85801825	2	LATCH,
17	15811387	2	PROTECTION CAP,
19	12637821	4	WASHER, M5 x 11 x 1,
20	14306424	4	SCREW, Hex Soc Hd, M8 x 25, 8.8,
21	11198074	4	WASHER, SPRING, Belleville, M8.4,
18	12574111	4	NUT, M5 x .8, Cl 8,

1.93.0(01) CAB / SOFT TRIM

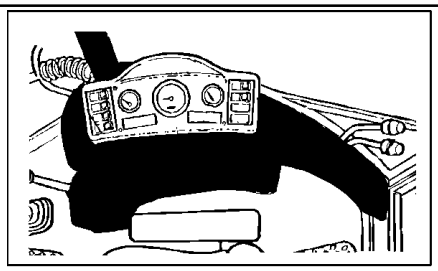

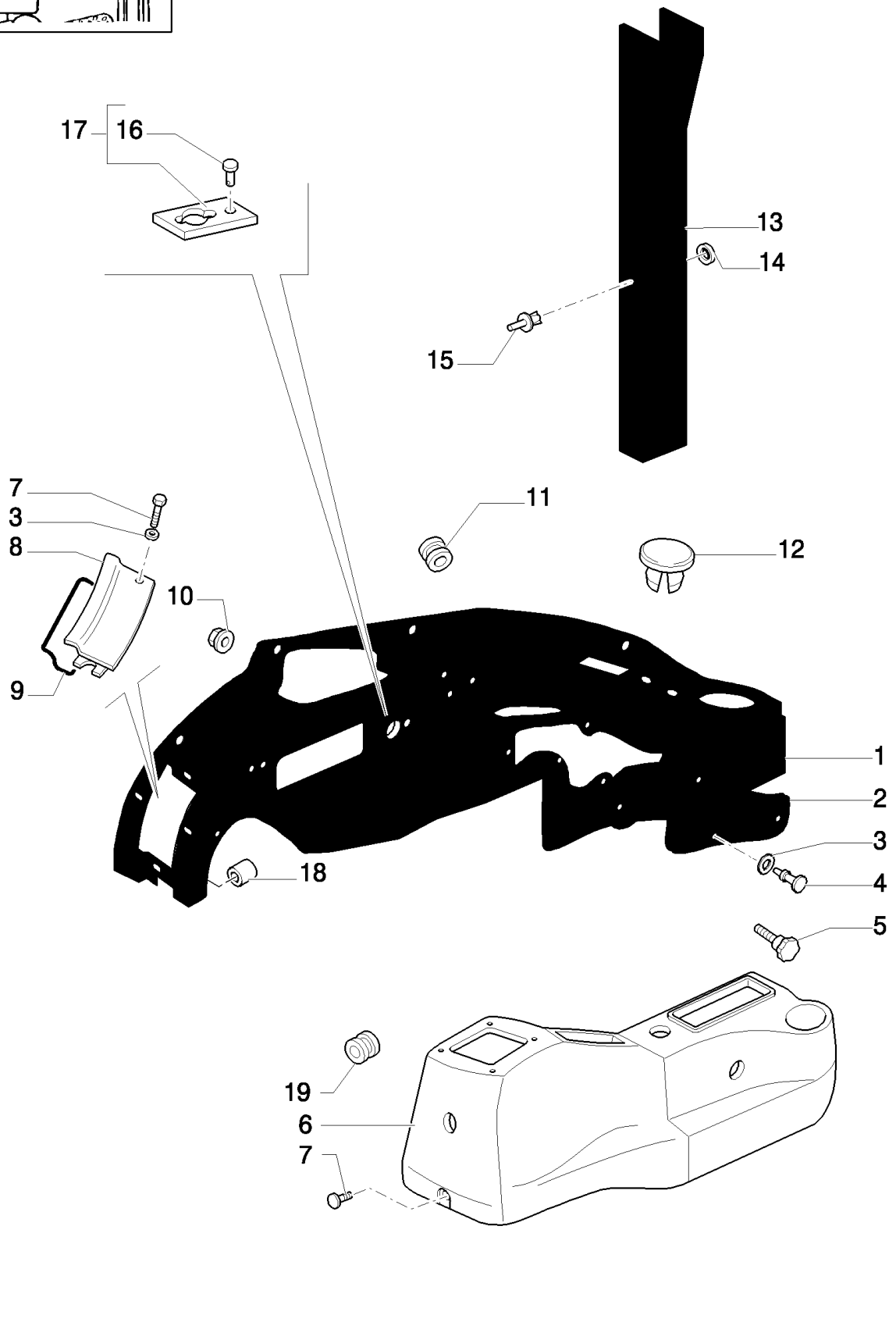

LB115.B EUR BACKHOE LOADER (1/05-)

1.93.0(01) CAB / SOFT TRIM

Ref	Part Number	Qty	Description
1	85821318	1	SOFT TRIM, RH, UP TO S/N XXX, Includes 2, 8, 9, 18
1	87362096	1	SOFT TRIM, , FROM S/N XXX, Includes 2, 8, 9, 18
2	85801649	1	SOFT TRIM,
3	85801991	AR	WASHER,
4	13311217	5	SCREW, Cross Oval Hd, M5 x 20,
5	85805323	1	KNOB,
6	87319785	1	SOFT TRIM,
7	13311017	AR	SCREW, Cross Oval Hd, M5 x 16,
8	85825191	1	COVER,
9	85806023	1	STRIP, SEALING,
10	14084814	5	NUT, M8 x 1.25, Flg,
11	10398980	1	GROMMET, 46X5
12	79111815	1	PLUG,
13	85819285	1	SOFT TRIM, RH
14	85801991	4	WASHER,
15	F1NN94000Z36AA	6	STUD, {PP:81870039}
16	10427200	1	RIVET, Flat Hd, M4 x 5,
17	85827548	1	PLATE,
18	85805819	6	BUSHING, THREADED,
19	87517471	1	RING, INSULATING,

1.93.0(02) CAB / SOFT TRIM (POWER SHUTTLE)

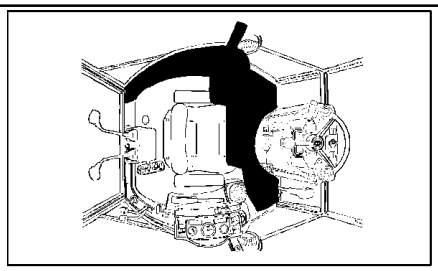

LB115.B EUR BACKHOE LOADER (1/05-)

1.93.0(02) CAB / SOFT TRIM (POWER SHUTTLE)

Ref	Part Number	Qty	Description
1	85819277	1	SOFT TRIM, LH, UP TO S/N XXX
1	87362098	1	SOFT TRIM, , FROM S/N XXX
2	79089592	6	WASHER, D=24
3	13313417	6	SCREW, Cross Oval Hd, M6 x 25,
4	85819287	1	SOFT TRIM, LH
5	5178468	1	GRAB STRAP,
6	14084011	1	NUT, M4 x .7, Flg,
7	14084814	4	NUT, M8 x 1.25, Flg,
8	85801991	4	WASHER,
9	15627011	12	RIVET,
10	E7NN94290N06AA	1	STRAP, {PP:83961823}
11	12638107	1	SPACER, 5X14
12	85806154	1	RIVET,
13	79111978	1	PLUG,
14	5148132	1	SOCKET, LAMP,
15	14143790	1	BULB, 1,2W
16	F1NN94000Z36AA	6	STUD, {PP:81870039}
17	5148131	1	SOCKET, POWER,
18	79111978	1	PLUG, D=23
19	85808460	1	PLUG,

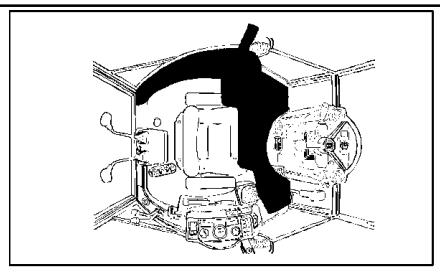

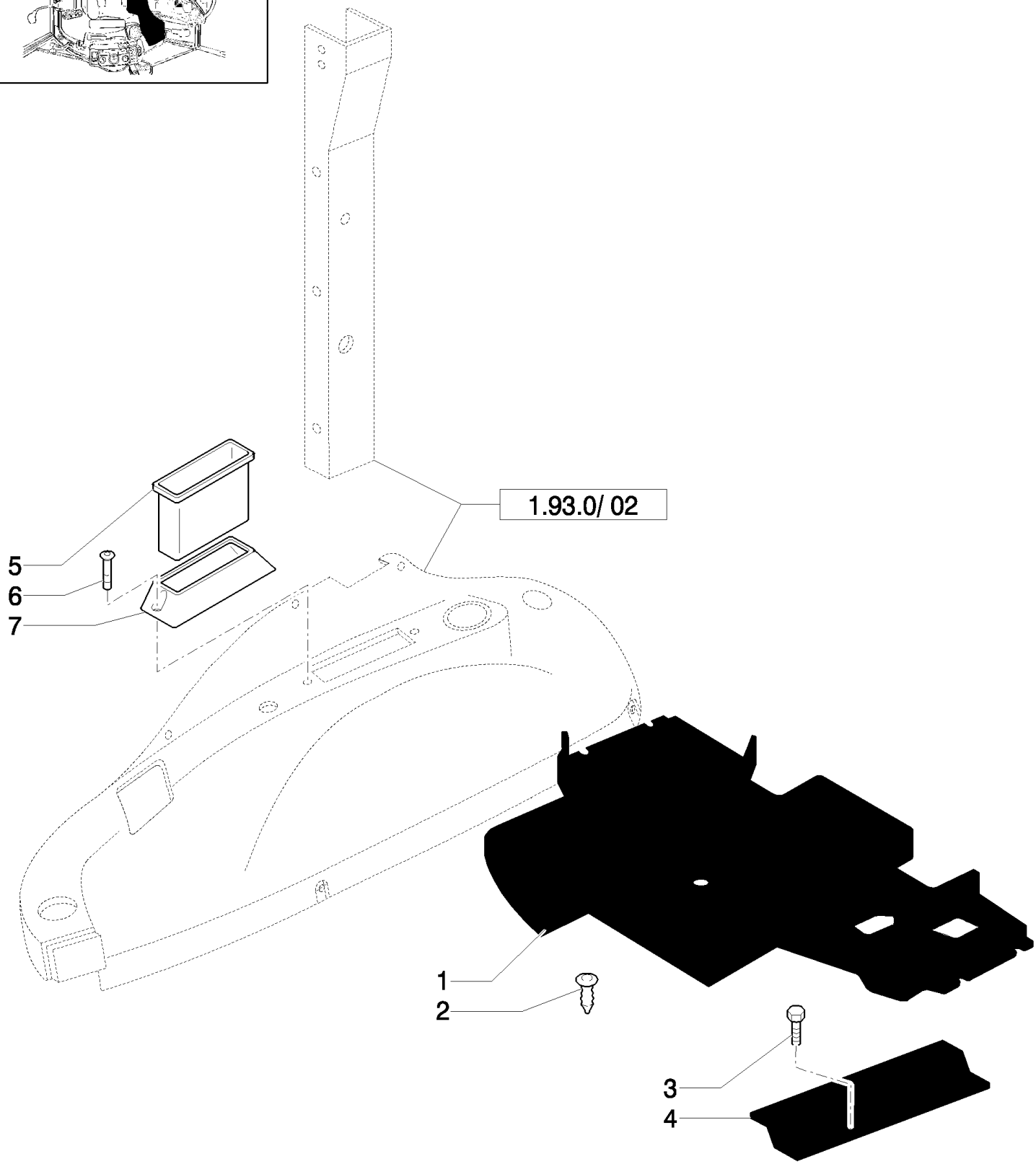
1.93.0/ 02
5
6
7
1
2
3
4

LB115.B EUR BACKHOE LOADER (1/05-)

1.93.0(03) CAB / SOFT TRIM

Ref	Part Number	Qty	Description
1	85804865	1	MAT,
2	14568887	2	BUTTON,
3	14441521	5	SCREW, Hex Soc Flat Hd, M6 x 25, 8.8,
4	85805591	2	MOULDING, DOOR SILL,
5	85801979	1	CONTAINER,
6	13276617	2	SCREW, Cross Pan Hd, M6 x 25,
7	85801651	1	HOUSING,

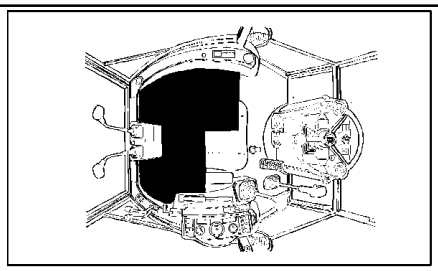

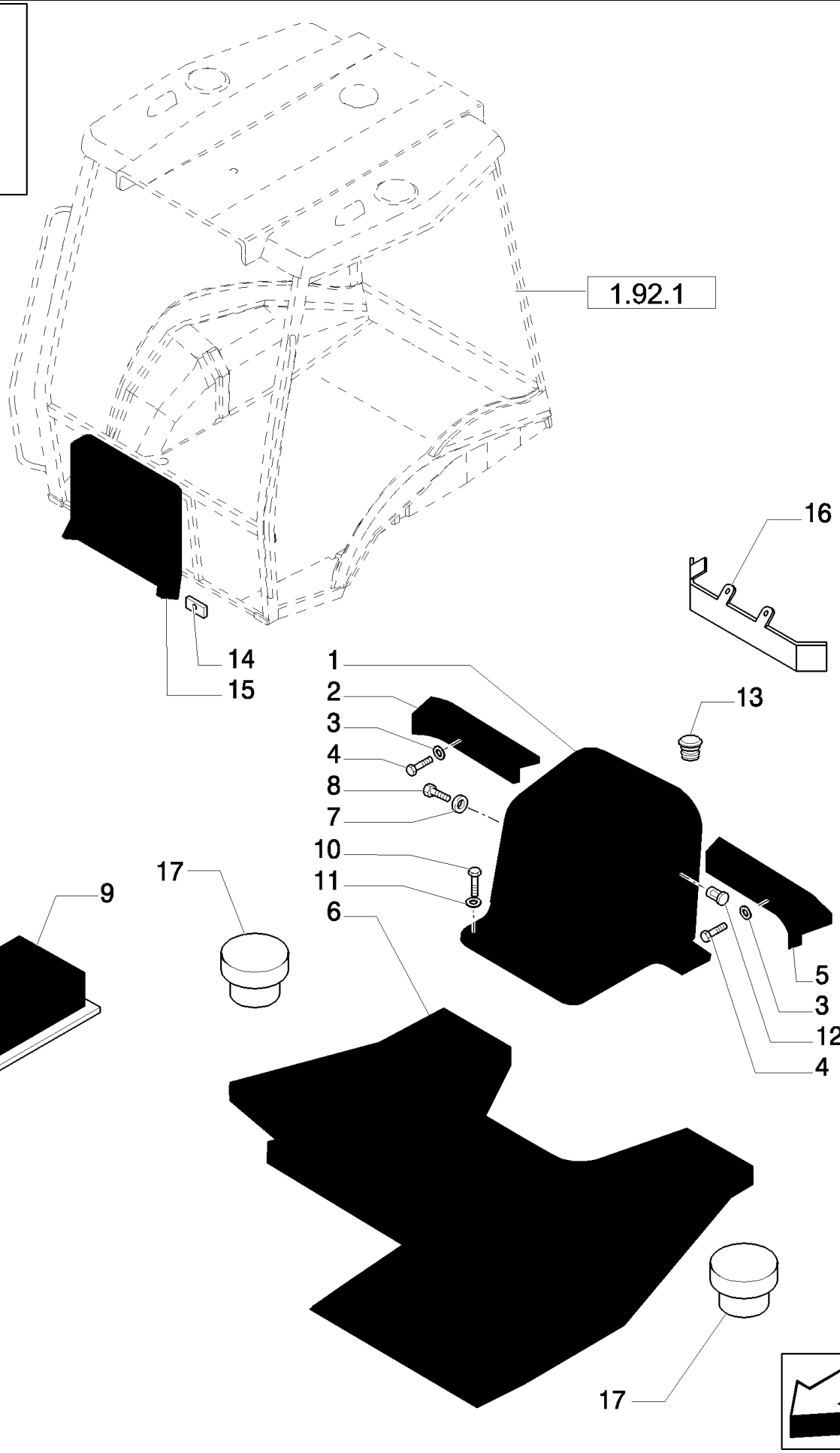
1.92.1
16
14
15
1
2
3
4
8
7
10
11
6
13
17
9
5
3
12
4
17

LB115.B EUR BACKHOE LOADER (1/05-)

1.93.0(04) CAB / SOFT TRIM

Ref	Part Number	Qty	Description
1	87319801	1	CONSOLE,
2	85804863	1	FOOT REST,
3	10519604	4	WASHER, M8 x 17 x 2,
4	16043824	4	SCREW, Hex, M8 x 30, 8.8, Full Thd,
5	85804864	1	FOOT REST,
6	85804866	1	MAT,
7	79089592	1	WASHER,
8	79105220	1	SCREW, LOCK, Cross Oval Csk Hd, M6 x 20,
9	4999021	1	GASKET,
11	12640621	4	WASHER, M6 x 25 x 2,
12	85802259	2	BUSHING, THREADED,
13	82001909	1	PLUG,
14	85812080	4	NUT,
15	87408893	1	PANEL,
16	87323749	1	BRACKET,
17	87319803	2	PLUG,
10	10902624	4	SCREW, Hex, M6 x 25, 8.8, Full Thd,

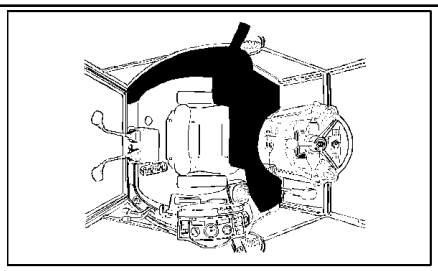

5
6
8
4
16
10
11
12
13
17
14
15
1.93.0/1 03
18
1
7
9
2
3
1.93.0/1 03

LB115.B EUR BACKHOE LOADER (1/05-)

1.93.0/ 1(02) CAB / SOFT TRIM (POWER SHIFT)

Ref	Part Number	Qty	Description
1	85819279	1	SOFT TRIM, , UP TO S/N XXX, Only for IDRAULIC TRANSPORT LOCK
1	85819277	1	SOFT TRIM, LH, UP TO S/N XXX
1	87362094	1	SOFT TRIM, , FROM S/N XXX, Only for IDRAULIC TRANSPORT LOCK
1	87362098	1	SOFT TRIM, , FROM S/N XXX
2	79089592	6	WASHER, D=24
3	13313417	6	SCREW, Cross Oval Hd, M6 x 25,
4	85819287	1	SOFT TRIM, LH
5	5178468	1	GRAB STRAP,
6	14084011	1	NUT, M4 x .7, Flg,
7	14059314	4	NUT, M8
8	85801991	4	WASHER,
9	15627011	6	RIVET,
10	E7NN94290N06AA	1	STRAP, {PP:83961823}
11	12638107	1	SPACER, 5X14
12	85806154	1	RIVET,
13	79111978	1	PLUG,
14	5148132	1	SOCKET, LAMP,
15	14143790	1	BULB, 1,2W
16	F1NN94000Z36AA	6	STUD, {PP:81870039}
17	5148131	1	SOCKET, POWER,
18	85808460	1	PLUG,

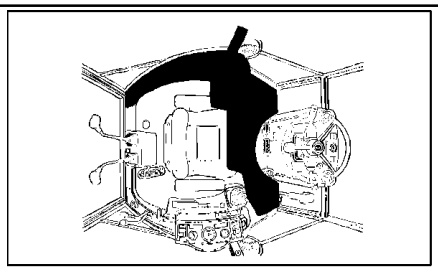

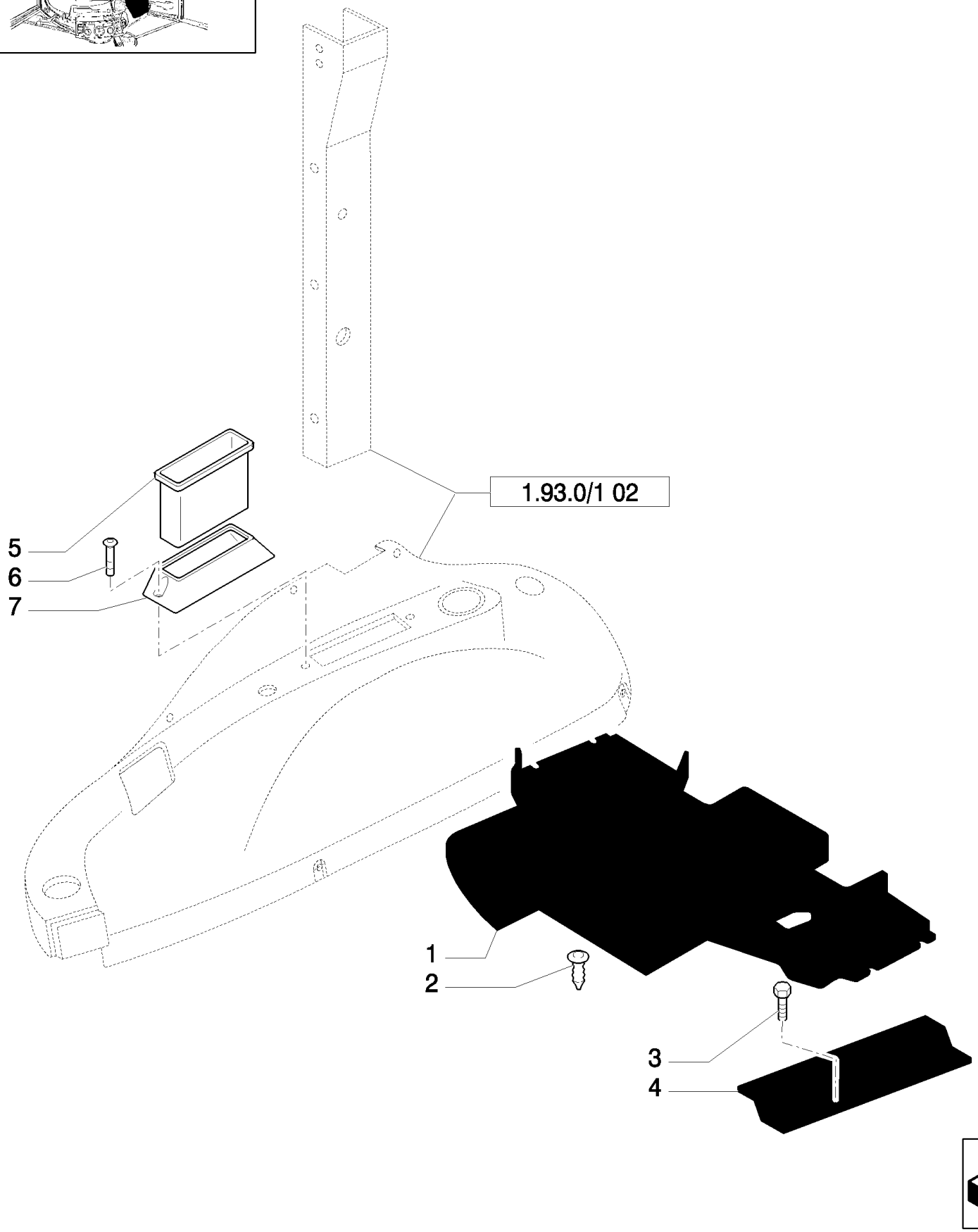
1.93.0/1 02
5
6
7
1
2
3
4

LB115.B EUR BACKHOE LOADER (1/05-)

1.93.0/ 1(03) CAB / SOFT TRIM (POWER SHIFT)

Ref	Part Number	Qty	Description
1	85804867	1	MAT,
2	14568887	2	BUTTON,
3	14441521	5	SCREW, Hex Soc Flat Hd, M6 x 25, 8.8,
4	85805591	2	MOULDING, DOOR SILL,
5	85801979	1	CONTAINER,
6	13276617	2	SCREW, Cross Pan Hd, M6 x 25,
7	85801651	1	HOUSING,

Mechanical Version

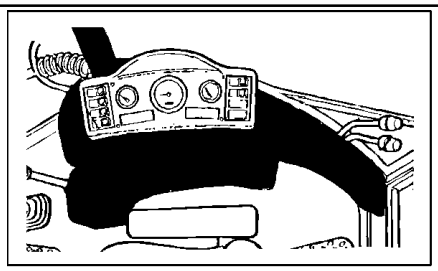

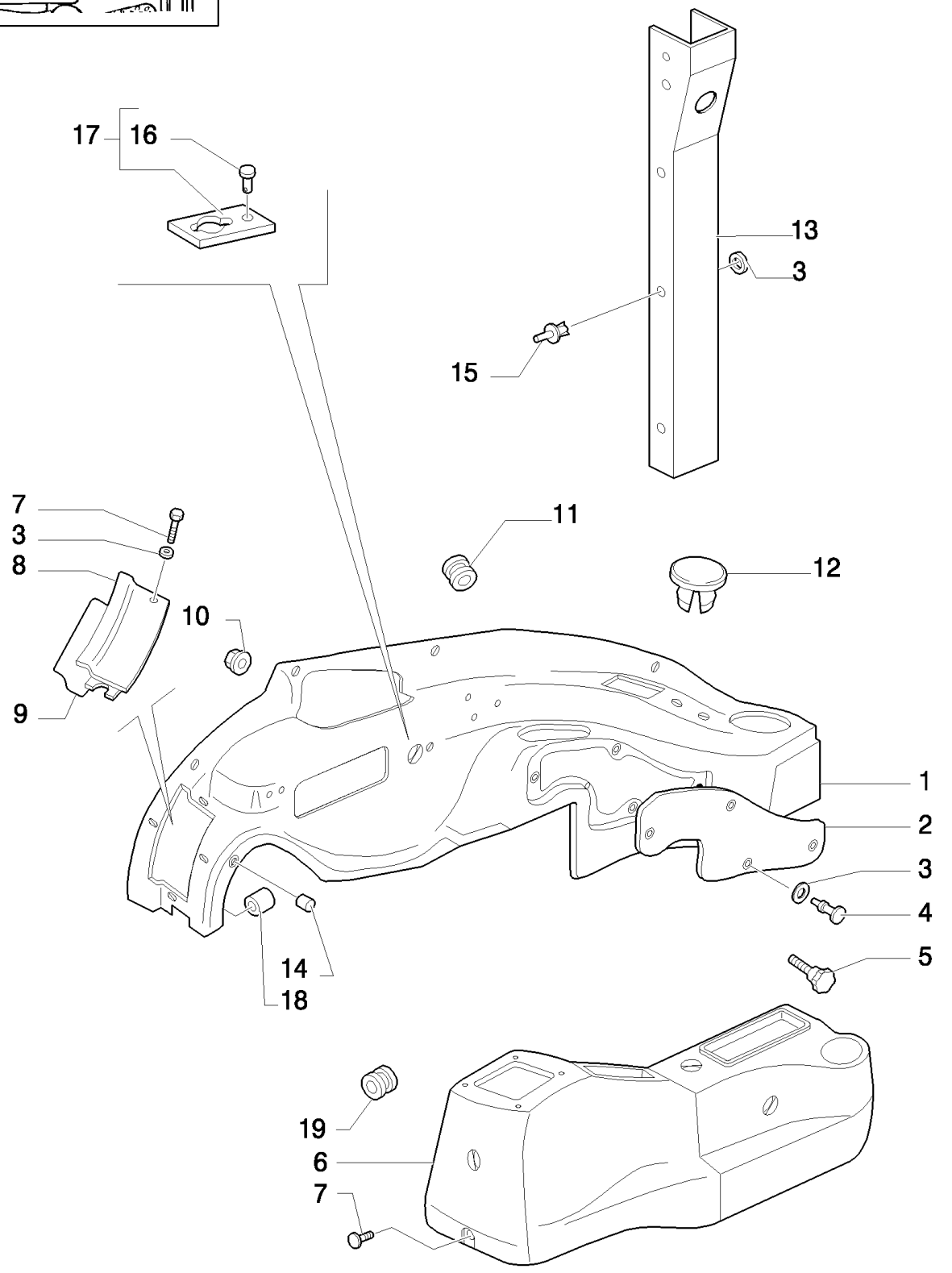
17
16
13
3
15
7
3
8
11
12
10
9
1
2
3
4
5
14
18
19
6
7

LB115.B EUR BACKHOE LOADER (1/05-)

1.93.0/ 3(01) CAB / SOFT TRIM

Ref	Part Number	Qty	Description
1	85825277	1	SOFT TRIM, RH, UP TO S/N XXX, Includes 2, 8, 9, 14, 18
1	87362092	1	SOFT TRIM, , FROM S/N XXX, Includes 2, 8, 9, 14, 18
2	85801649	1	SOFT TRIM,
3	85801991	AR	WASHER,
4	13311217	5	SCREW, Cross Oval Hd, M5 x 20,
5	85805323	1	KNOB,
6	87319785	1	SOFT TRIM,
7	13311017	AR	SCREW, Cross Oval Hd, M5 x 16,
8	85825191	1	COVER,
9	85806023	1	STRIP, SEALING,
10	14084814	5	NUT, M8 x 1.25, Flg,
11	10398980	1	GROMMET, 46X5
12	79111815	1	PLUG,
13	85819285	1	SOFT TRIM, RH
14	85805819	4	BUSHING, THREADED,
15	F1NN94000Z36AA	6	STUD, {PP:81870039}
16	10427200	1	RIVET, Flat Hd, M4 x 5,
17	85827548	1	PLATE,
18	85804750	6	BUSHING, THREADED,
19	87517471	1	RING, INSULATING,

Pilot Control Version

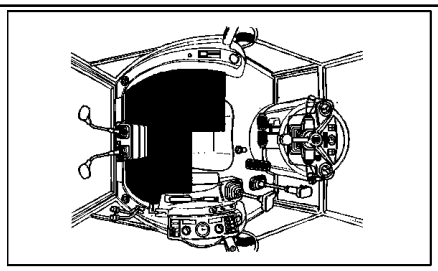

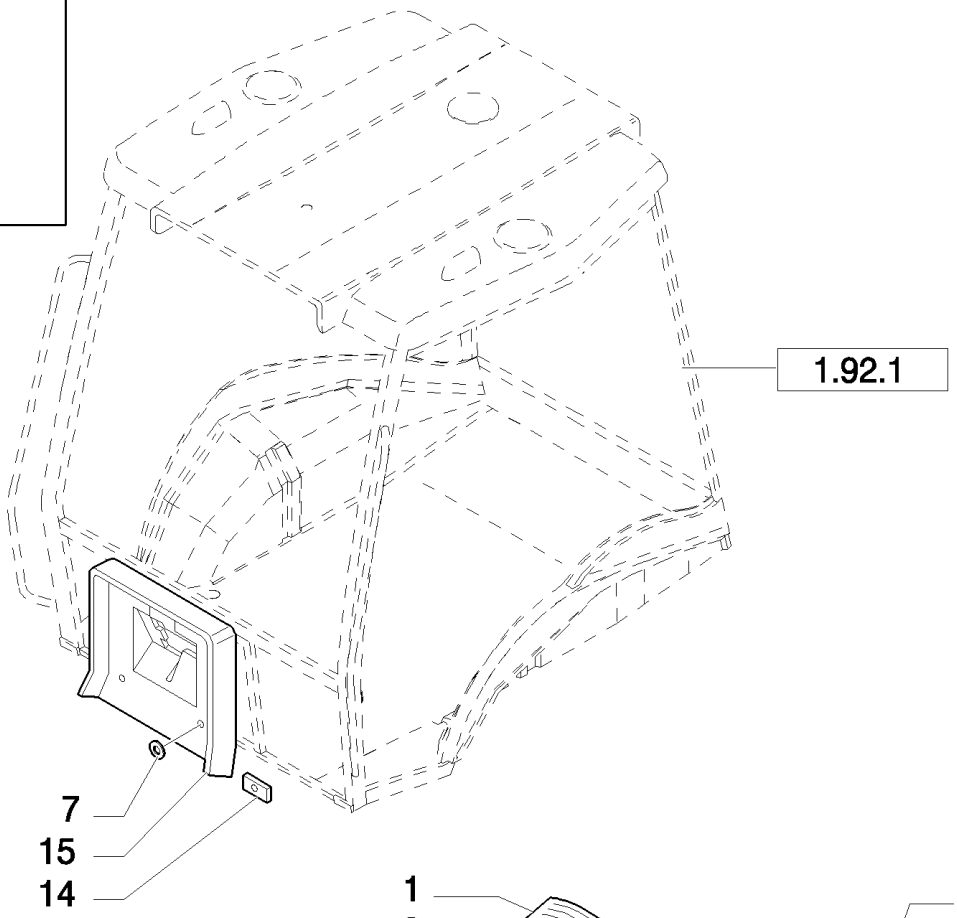
1.92.1
7
15
14
1
3
4
13
11
10
6
9
12
8
3
4
2
5

LB115.B EUR BACKHOE LOADER (1/05-)

1.93.0/ 3(04) CAB / SOFT TRIM

Ref	Part Number	Qty	Description
1	87410385	1	PANEL,
2	87426550	1	COVER, TOP,
3	10519604	4	WASHER, M8 x 17 x 2,
4	16043824	4	SCREW, Hex, M8 x 30, 8.8, Full Thd,
5	87426546	1	COVER, TOP,
6	87410108	1	MAT,
7	79089592	1	WASHER,
8	11193274	10	WASHER, SPRING, Belleville, M6.4,
9	4999021	1	GASKET,
11	12640621	4	WASHER, M6 x 25 x 2,
12	10902524	10	SCREW, Hex, M6 x 22, 8.8, Full Thd,
13	82001909	1	PLUG,
14	85812080	4	NUT,
15	87408893	1	PANEL,
10	10902624	4	SCREW, Hex, M6 x 25, 8.8, Full Thd,

1.93.4(01) REAR MIRROR- SUN SCREEN

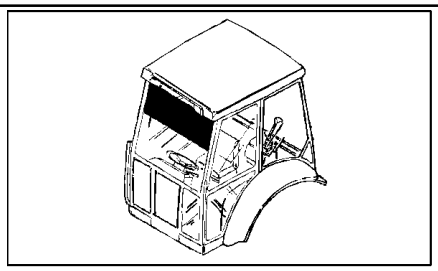

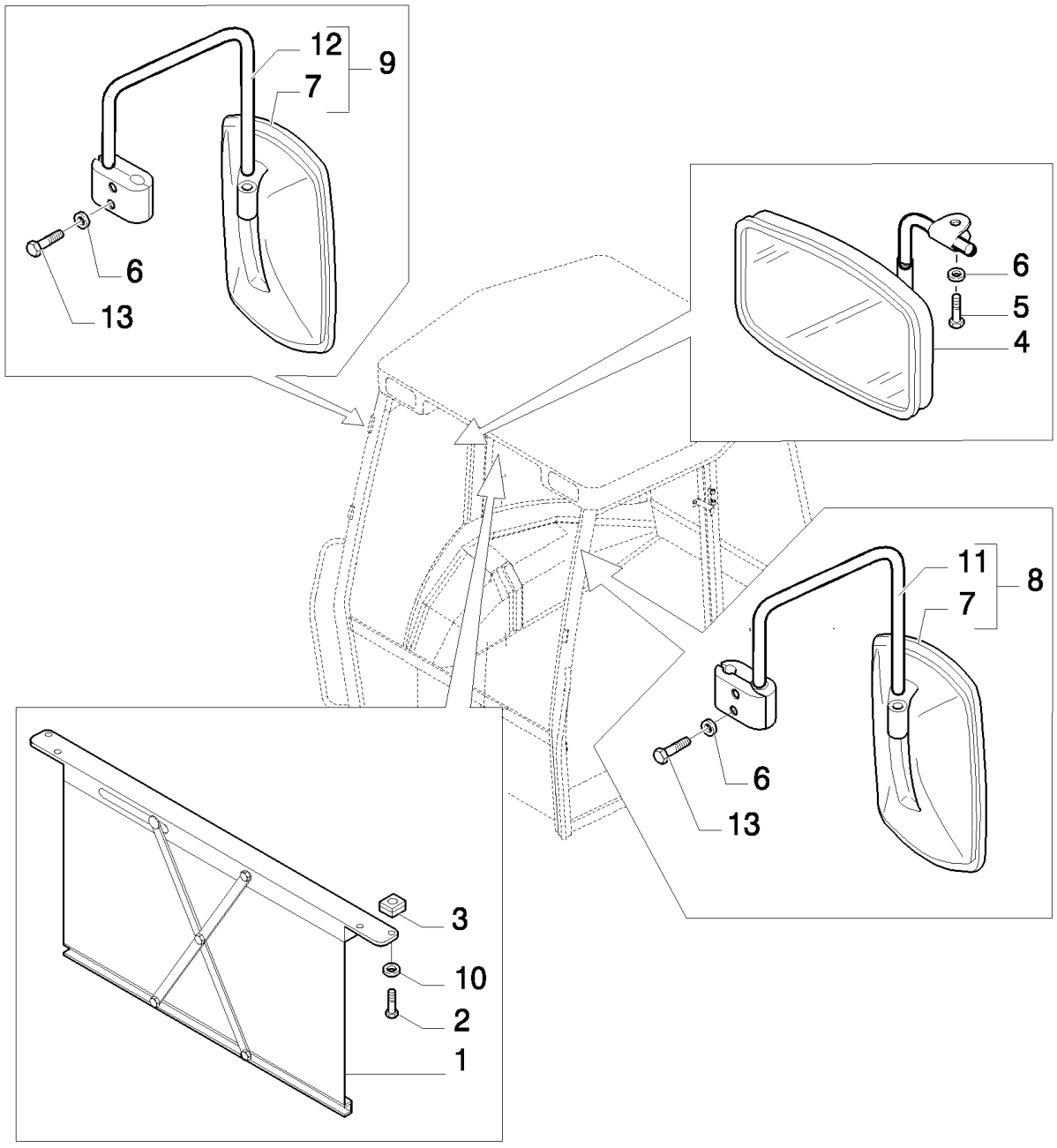

LB115.B EUR BACKHOE LOADER (1/05-)

1.93.4(01) REAR MIRROR- SUN SCREEN

Ref	Part Number	Qty	Description
1	5176441	1	SUN CURTAIN,
2	14303324	4	SCREW, Hex Soc Hd, M4 x 20, 8.8, Full Thd,
3	14197790	4	NUT, M4 x .7, Cage,
4	83995298	1	MIRROR, LH, SX (CAB)
5	13313417	1	SCREW, Cross Oval Hd, M6 x 25, (CAB)
6	11193274	4	WASHER, SPRING, Belleville, M6.4, (ROPS)
7	85820138	2	MIRROR, REAR-VIEW,
8	85820139	1	MIRROR, LH, SX
9	85820136	1	MIRROR, RH, DX
10	12642821	4	WASHER, M4 x 12 x 1,
11	NSS	1	NOT SERVICED SEPARATELY, SX
12	NSS	1	NOT SERVICED SEPARATELY, DH
13	10902127	4	SCREW,

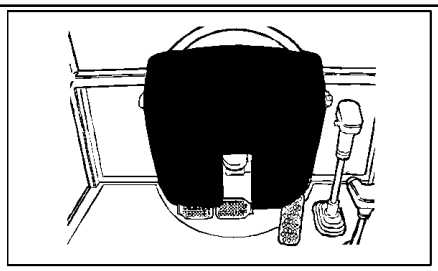

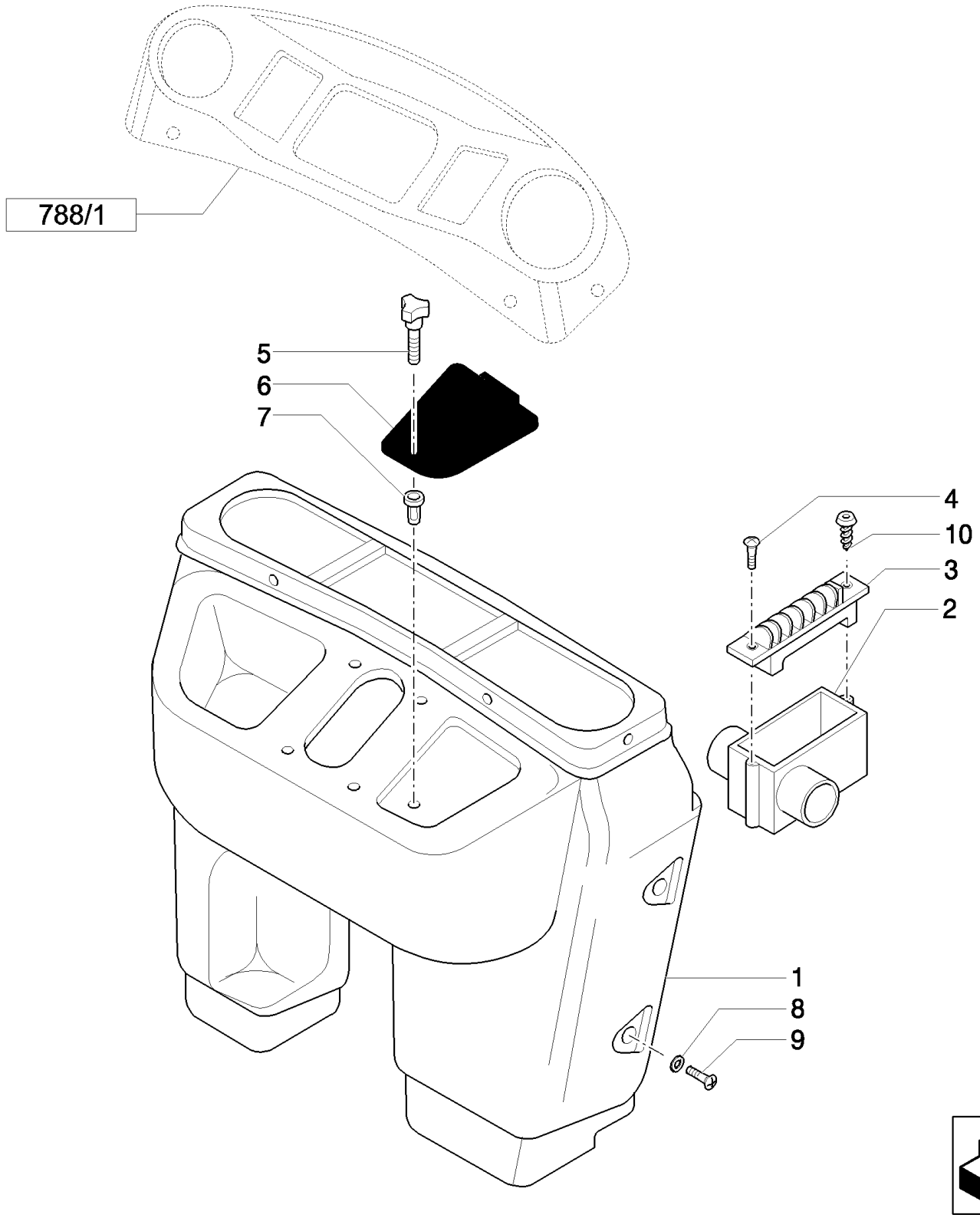
788/1
5
6
7
4
10
3
2
1
8
9

LB115.B EUR BACKHOE LOADER (1/05-)

1.93.5/ 1(01) CAB / PANEL DASH

Ref	Part Number	Qty	Description
1	85819289	1	PANEL, DASH, Assy, Cab, Includes 2 To 6
2	85819567	2	DUCT, AIR, Cab
3	85819454	2	DIFFUSER, Cab
4	14440327	4	SCREW, Hex Soc Flat Hd, M4 x 20, 8.8, Cab
5	85805323	1	KNOB, M5
6	85806089	1	COVER,
7	85804750	5	BUSHING, THREADED, M5
8	79089592	AR	WASHER, D=24
9	79105220	AR	SCREW, LOCK, Cross Oval Csk Hd, M6 x 20, M6X20
10	14568887	4	BUTTON, CAB 8X20

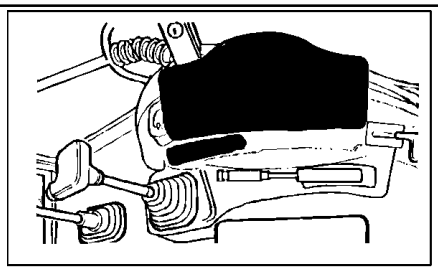

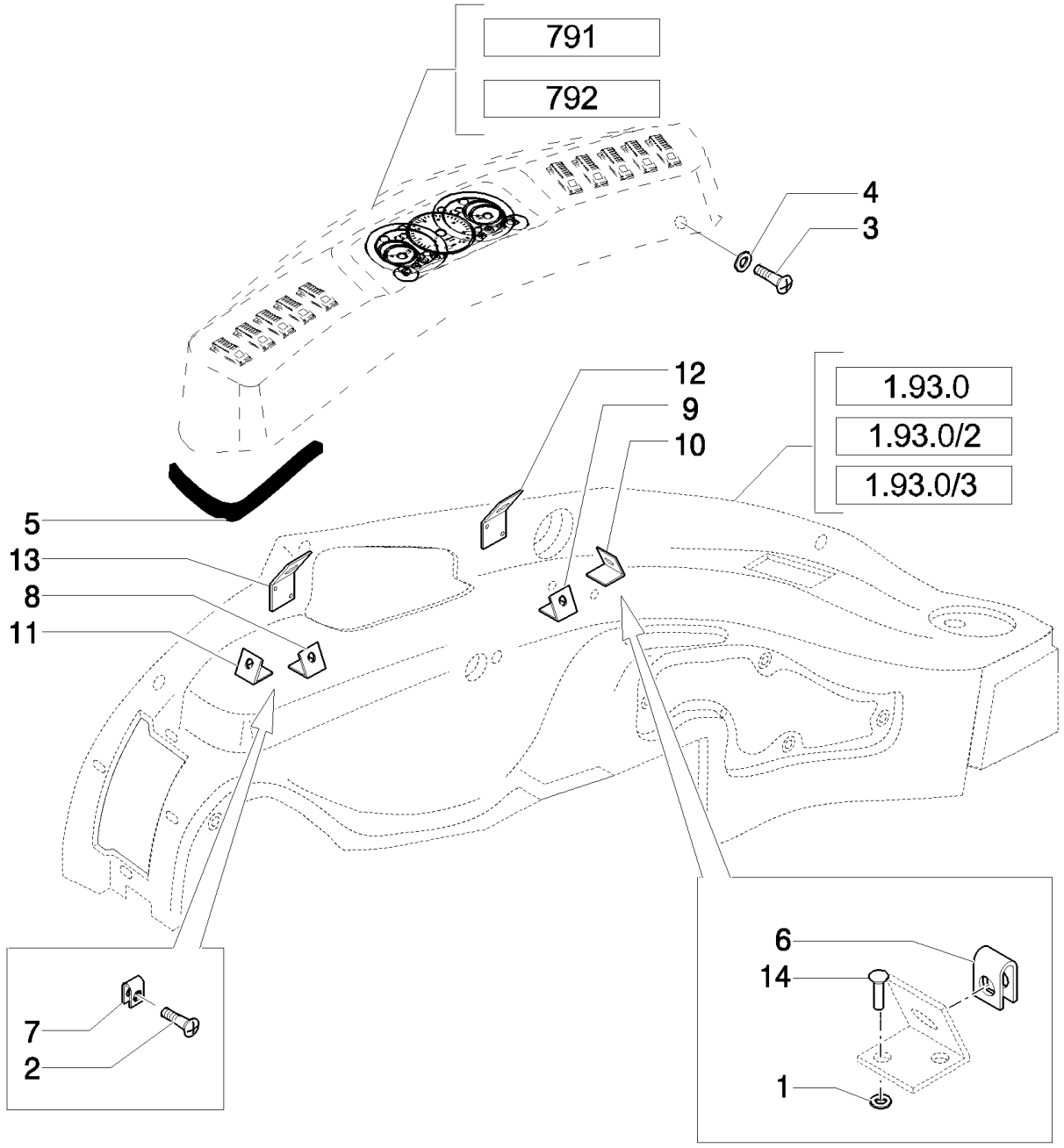
791
792
4
3
12
9
10
1.93.0
1.93.0/2
1.93.0/3
5
13
8
11
7
2
6
14
1

LB115.B EUR BACKHOE LOADER (1/05-)

1.93.5/ 1(02) CAB / PANEL DASH

Ref	Part Number	Qty	Description
1	12642804	1	WASHER, M4 x 12 x 1,
2	15693301	2	SCREW, Cross Oval Hd, M4.8 x 19, Cab
3	15693507	AR	SCREW, Cross Oval Hd, M4.8 x 22,
4	85801991	AR	WASHER,
5	85824393	1	SEAL, RUBBER,
6	14189176	6	NUT, J, #10,
7	14372671	2	NUT, M4.2, U, 12.4mm long, CAB
8	85802141	1	BRACKET,
9	85802142	1	BRACKET,
10	85802143	1	BRACKET,
11	85802144	1	BRACKET,
12	85802145	1	BRACKET,
13	85802146	1	BRACKET,
14	14642192	12	RIVET,

1.93.5/ 3(01) CAB / PANEL DASH

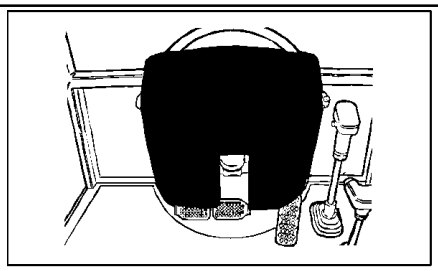

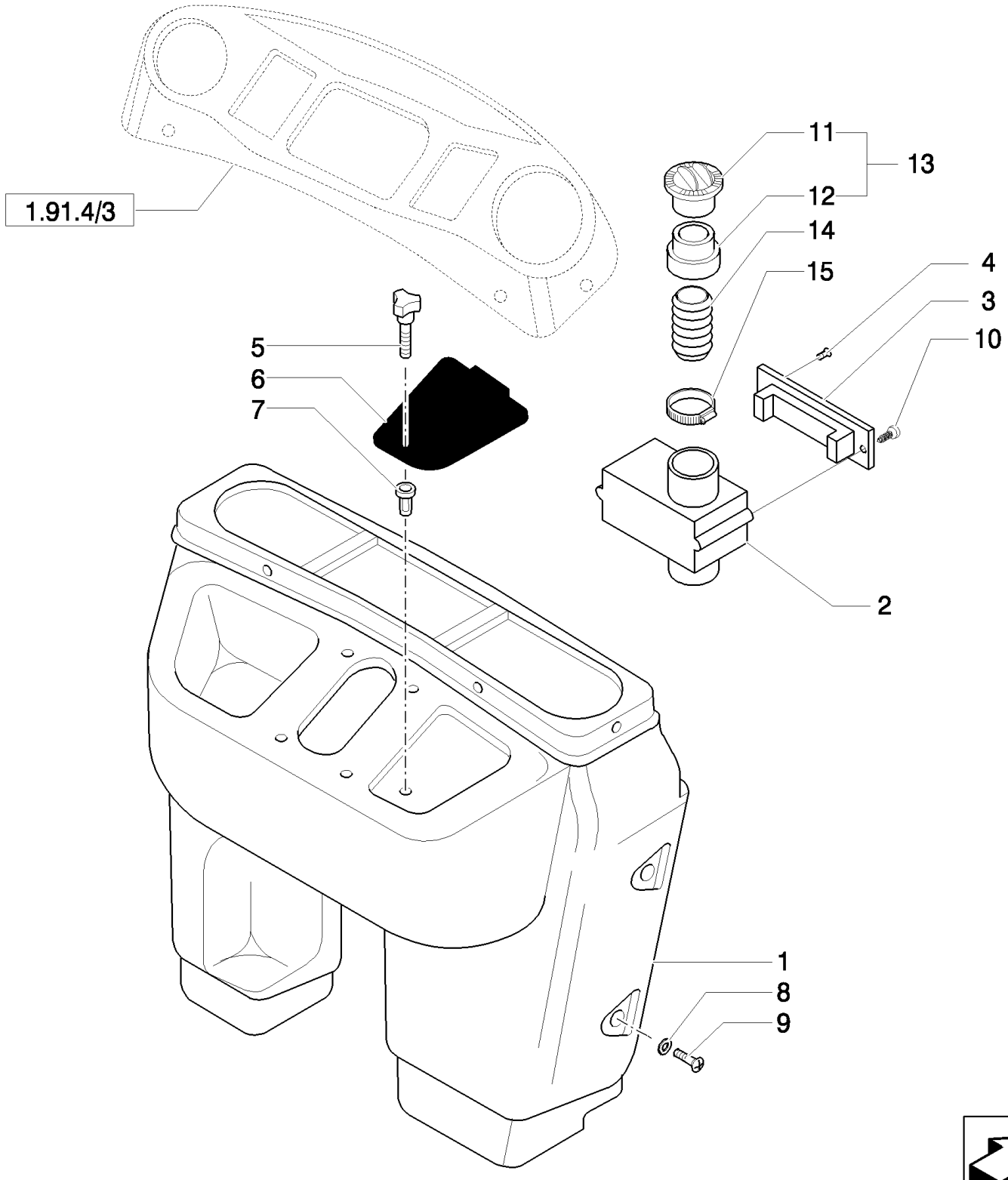

LB115.B EUR BACKHOE LOADER (1/05-)

1.93.5/ 3(01) CAB / PANEL DASH

Ref	Part Number	Qty	Description
1	85819291	1	PANEL, DASH, Assy, Includes 2 To 7
2	85819567	2	DUCT, AIR,
3	85819454	2	DIFFUSER,
4	14440327	4	SCREW, Hex Soc Flat Hd, M4 x 20, 8.8,
5	85805323	1	KNOB, M5
6	85806089	1	COVER,
7	85804750	5	BUSHING, THREADED, M5
8	79089592	AR	WASHER, D=24
9	79105220	AR	SCREW, LOCK, Cross Oval Csk Hd, M6 x 20, M6X20
10	14568887	4	BUTTON, 8X20
11	85819544	2	DIFFUSER,
12	85819545	2	REDUCER, , UP TO S/N XXX
12	87358811	2	REDUCER, , UP TO S/N XXX
13	85819543	2	DIFFUSER, , FROM S/N XXX
13	87358807	2	DIFFUSER, , FROM S/N XXX
14	85819592	2	SLEEVE,
15	13000990	2	CLAMP, HOSE,

1.93.7(01) INTERIOR REAR-VIEW MIRROR (POWER SHUTTLE) - ROPS

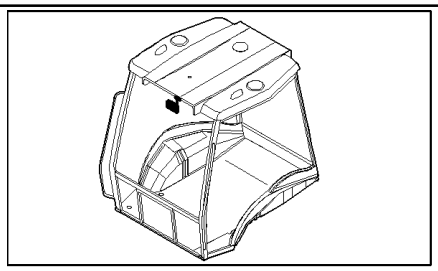

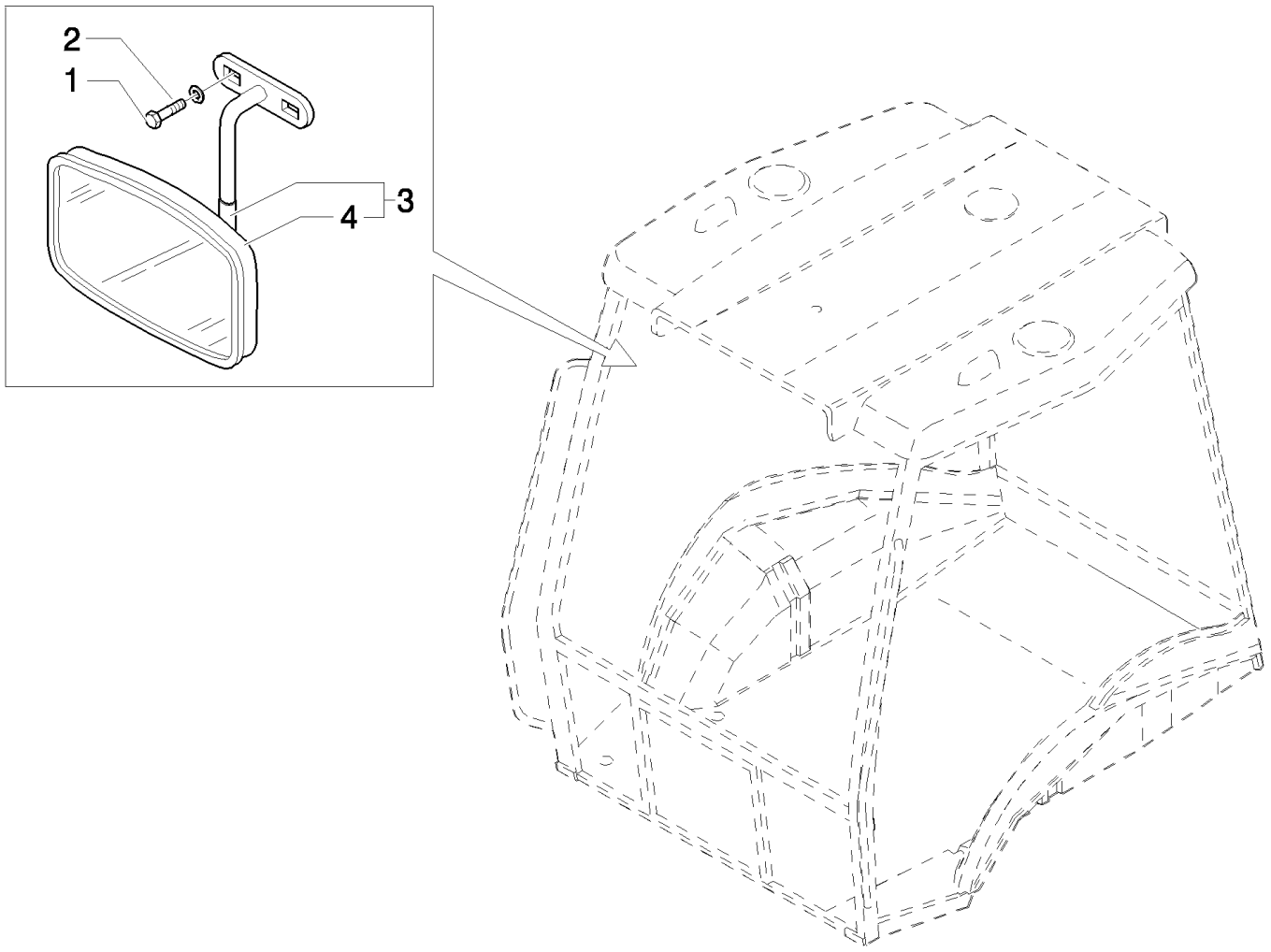

LB115.B EUR BACKHOE LOADER (1/05-)

1.93.7(01) INTERIOR REAR-VIEW MIRROR (POWER SHUTTLE) - ROPS

Ref	Part Number	Qty	Description
1	11193274	2	WASHER, SPRING, Belleville, M6.4,
2	10902424	2	SCREW, Hex, M6 x 20, 8.8, Full Thd,
3	85817685	1	MIRROR, REAR-VIEW,
4	85817686	1	MIRROR, REAR-VIEW, w/Cab

1.94.0(01) CAB/ CANOPY

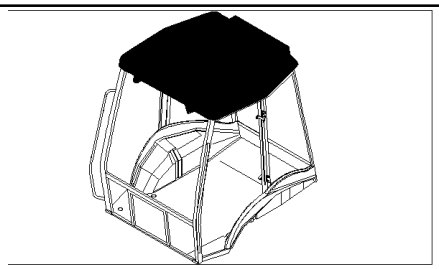

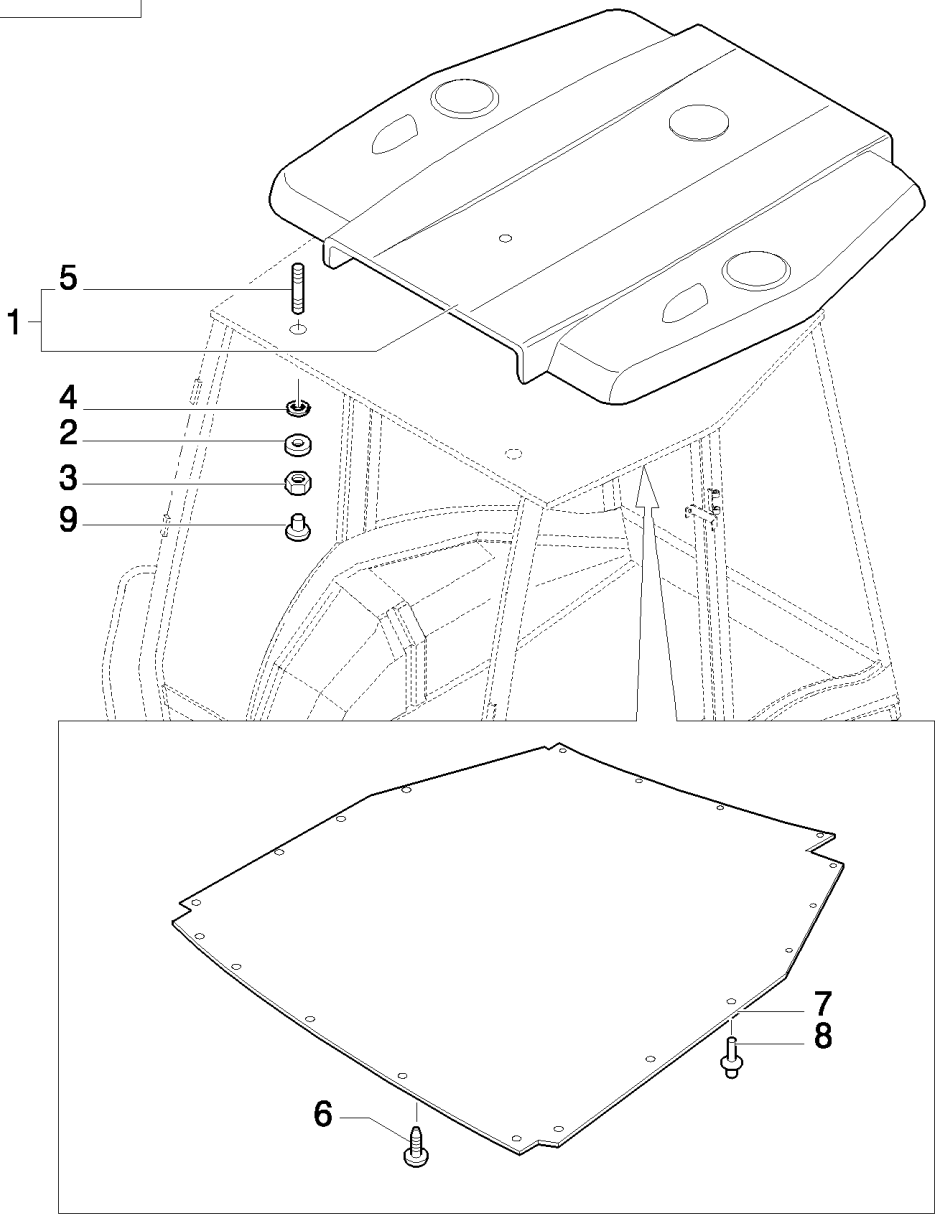

LB115.B EUR BACKHOE LOADER (1/05-)

1.94.0(01) CAB/ CANOPY

Ref	Part Number	Qty	Description
1	87315646	1	ROOF,
1	87349055	1	ROOF, , Only for NA Version
2	12647004	8	WASHER, M8 x 25 x 2.5,
3	16104111	8	NUT, M8 x 1.25, Cl 8,
4	85801801	8	GASKET,
5	13517021	8	STUD,
6	85805777	1	PLUG,
7	87319727	1	SOFT TRIM,
8	5162852	21	BUTTON,
9	87350247	8	PLUG, , Only for EUROPE Version

1.94.2(01) HEATER HOUSING, COIL, BLOWER & VALVE

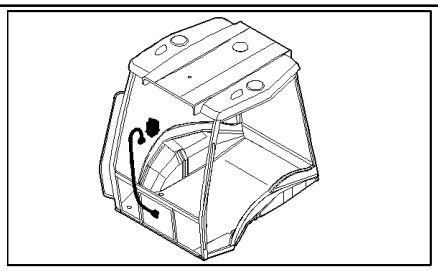

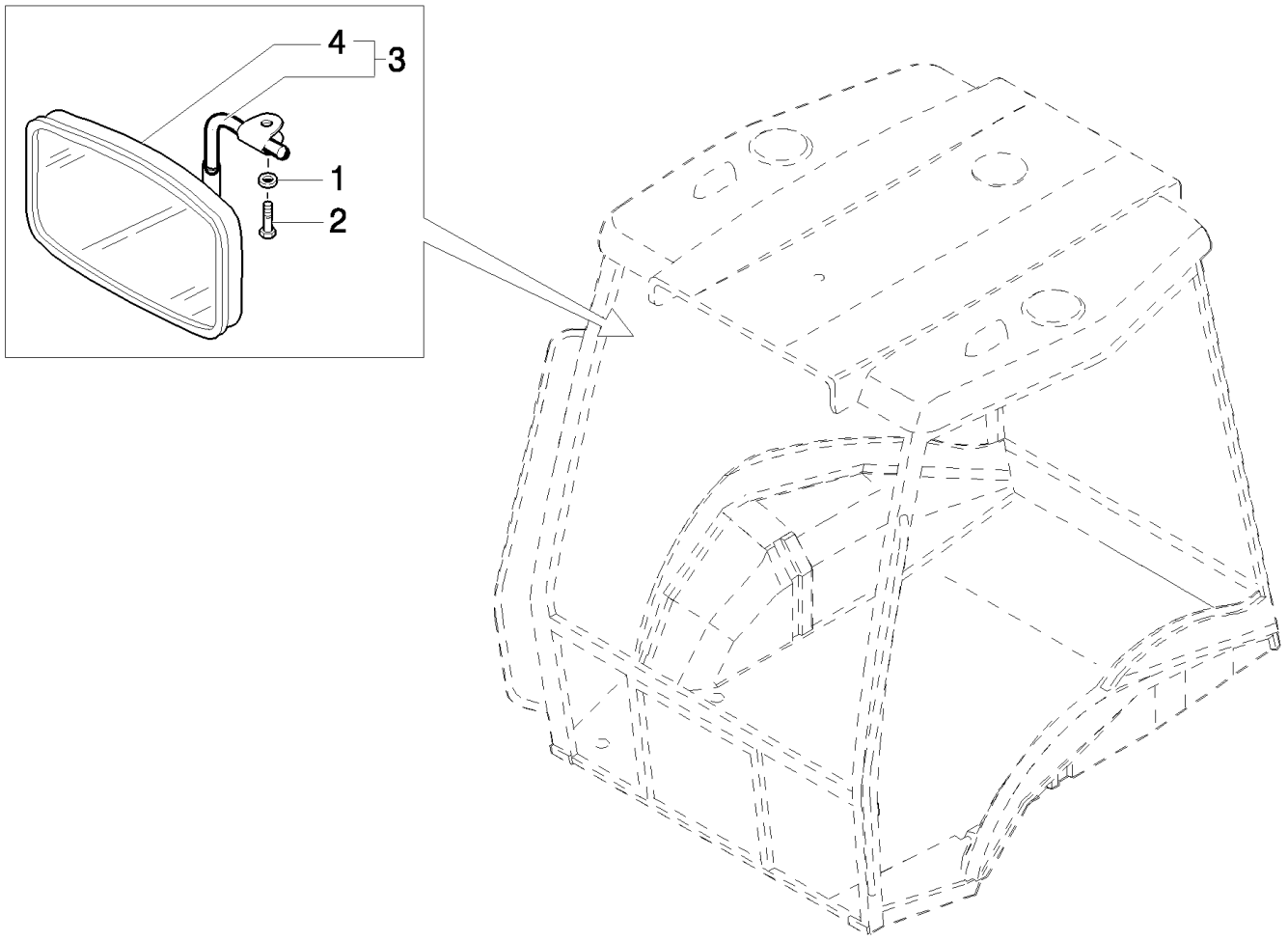

LB115.B EUR BACKHOE LOADER (1/05-)

1.94.2(01) HEATER HOUSING, COIL, BLOWER & VALVE

Ref	Part Number	Qty	Description
1	85826283	1	HEATER, , Includes 2 To 19 And Figure 1.94.2 02 Ref. 1 To 4, 6
2	85821348	1	HEAT EXCHANGER,
3	85804412	2	GROMMET,
4	85820883	1	BLOWER, ELECTRIC,
5	85804044	2	DIFFUSER,
6	85820885	1	GASKET,
7	85820884	1	DRAINCOCK/TAP, SUPPLY,
8	85820887	2	SCREW,
9	85820886	2	NUT,
10	85820889	1	SPRING,
11	85820890	1	CABLE,
12	85820893	4	SCREW,
13	85820894	4	WASHER,
14	85820895	1	CABLE, ELECTRIC,
15	85821347	1	HEATER,
16	85820899	8	SCREW,
17	85820900	1	CLAMP, HOSE,
18	85821345	1	SEAL, RUBBER,
19	85821346	1	SEAL, RUBBER,

Mechanical Version, Up To S/N XXX

1.94.2(02) HEATER ASSEMBLY & FILTERS

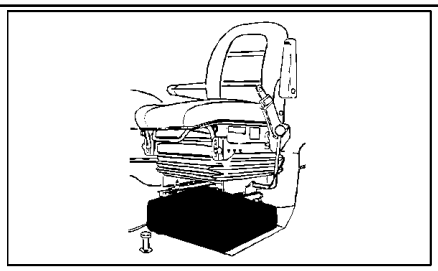

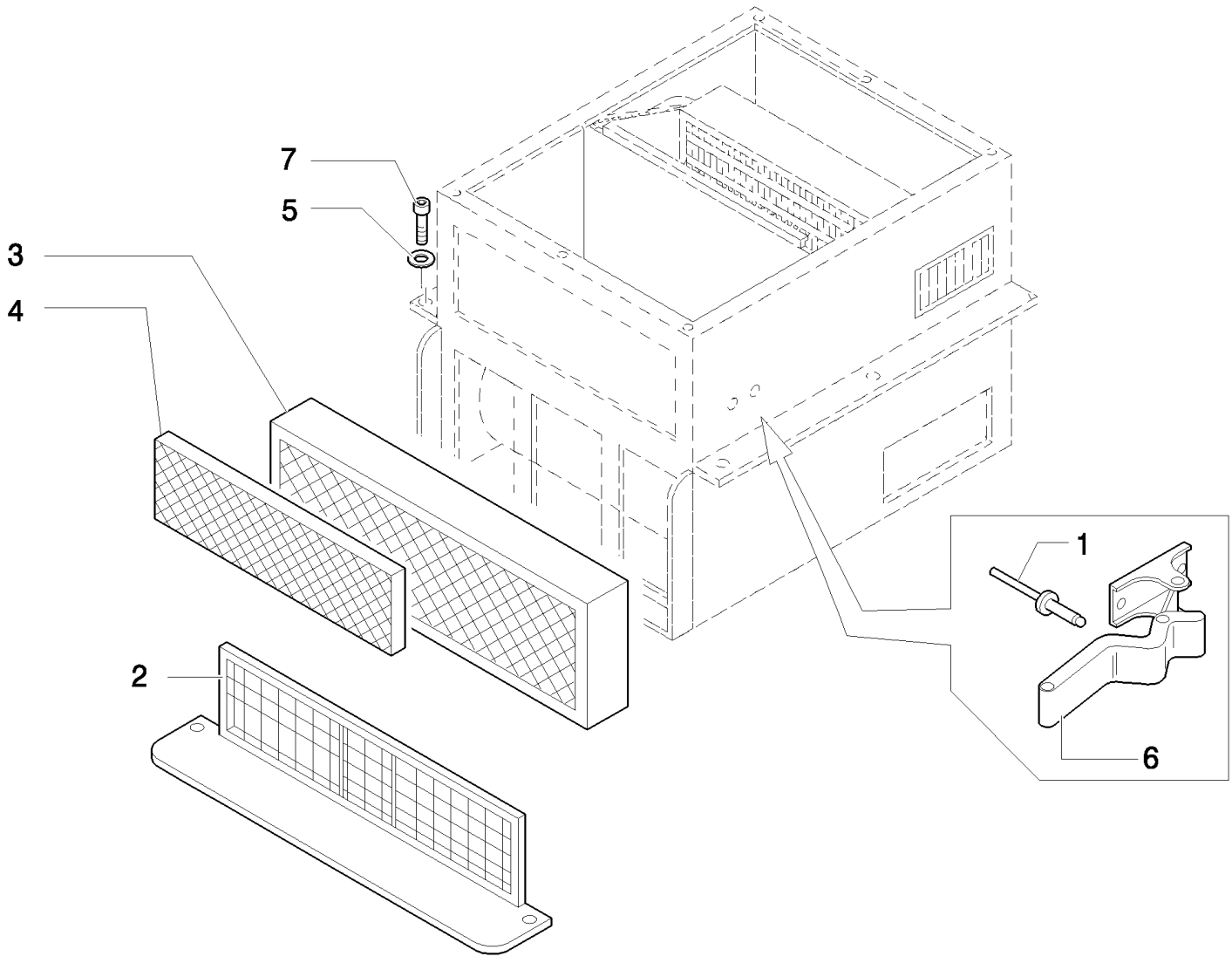

LB115.B EUR BACKHOE LOADER (1/05-)

1.94.2(02) HEATER ASSEMBLY & FILTERS

Ref	Part Number	Qty	Description
1	85820896	4	RIVET,
2	85820897	1	CONTAINER,
3	85826032	1	FILTER, CAB, VARANI
3	85826026	1	FILTER, CAB, PANCLEAN
4	85820898	1	FILTER, CAB,
5	11193874	6	WASHER, SPRING, Belleville, M8.4,
6	85812043	2	LATCH,
7	16043424	6	SCREW, Hex, M8 x 20, 8.8, Full Thd,

Up To S/N XXX

1.94.2(03) HEATER WATER HOSES

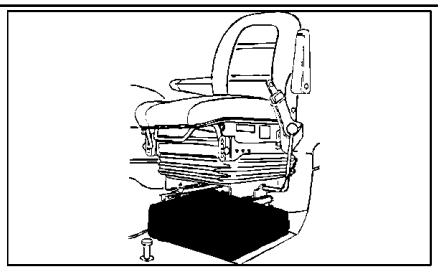

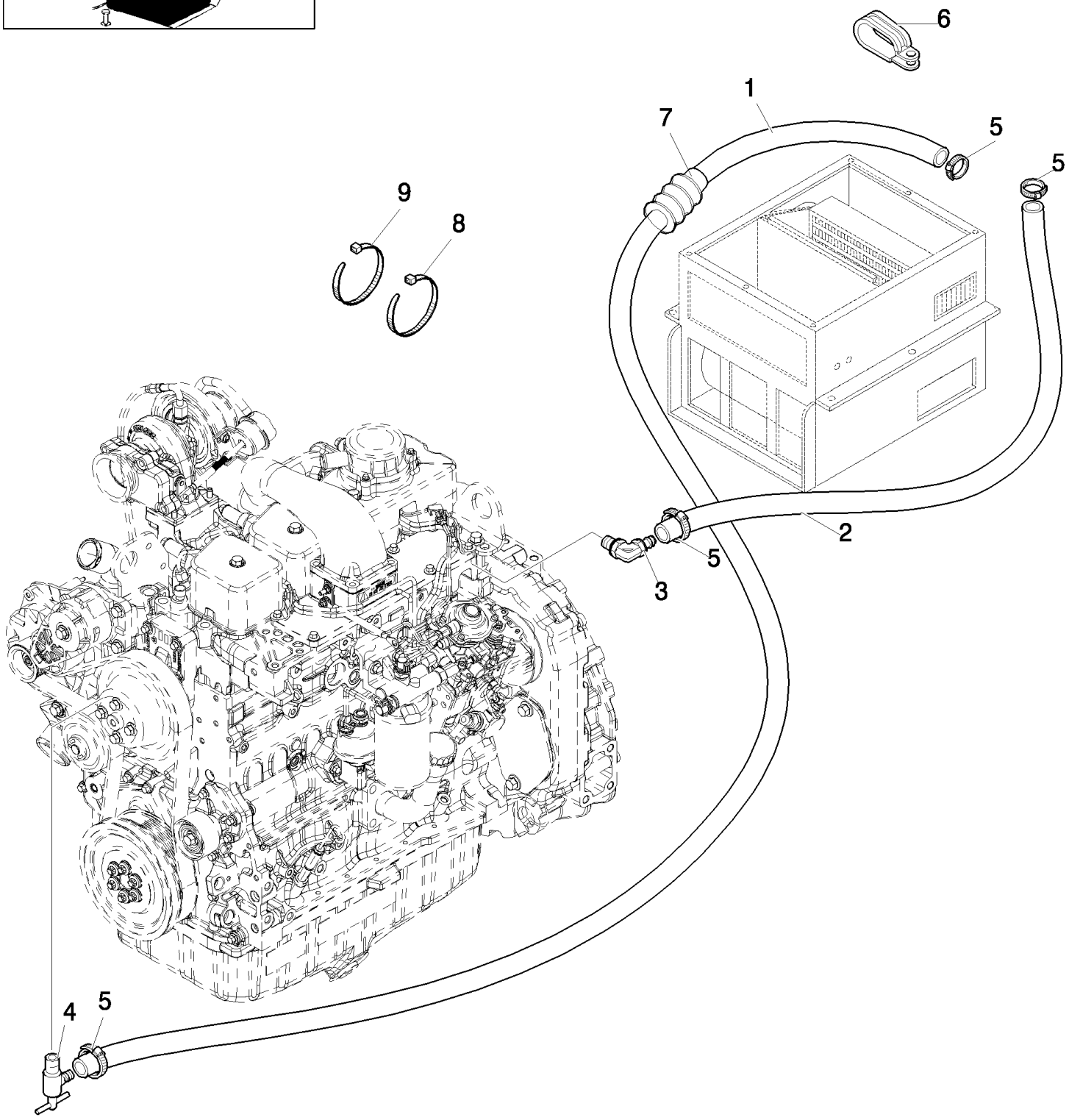

LB115.B EUR BACKHOE LOADER (1/05-)

1.94.2(03) HEATER WATER HOSES

Ref	Part Number	Qty	Description
1	87403646	1	HOSE, FLEXIBLE,
2	87403647	1	HOSE, FLEXIBLE,
3	87550745	1	CONNECTOR, HYD.,
4	47048896	1	VALVE, HYDRAULIC,
5	85803079	4	CLAMP, HOSE,
6	47048653	2	COLLAR,
7	87345955	3	SHIELD,
8	47048448	1	COLLAR,
9	47048451	3	STRAP, CABLE,

Up To S/N XXX

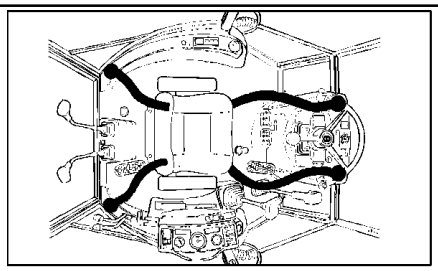

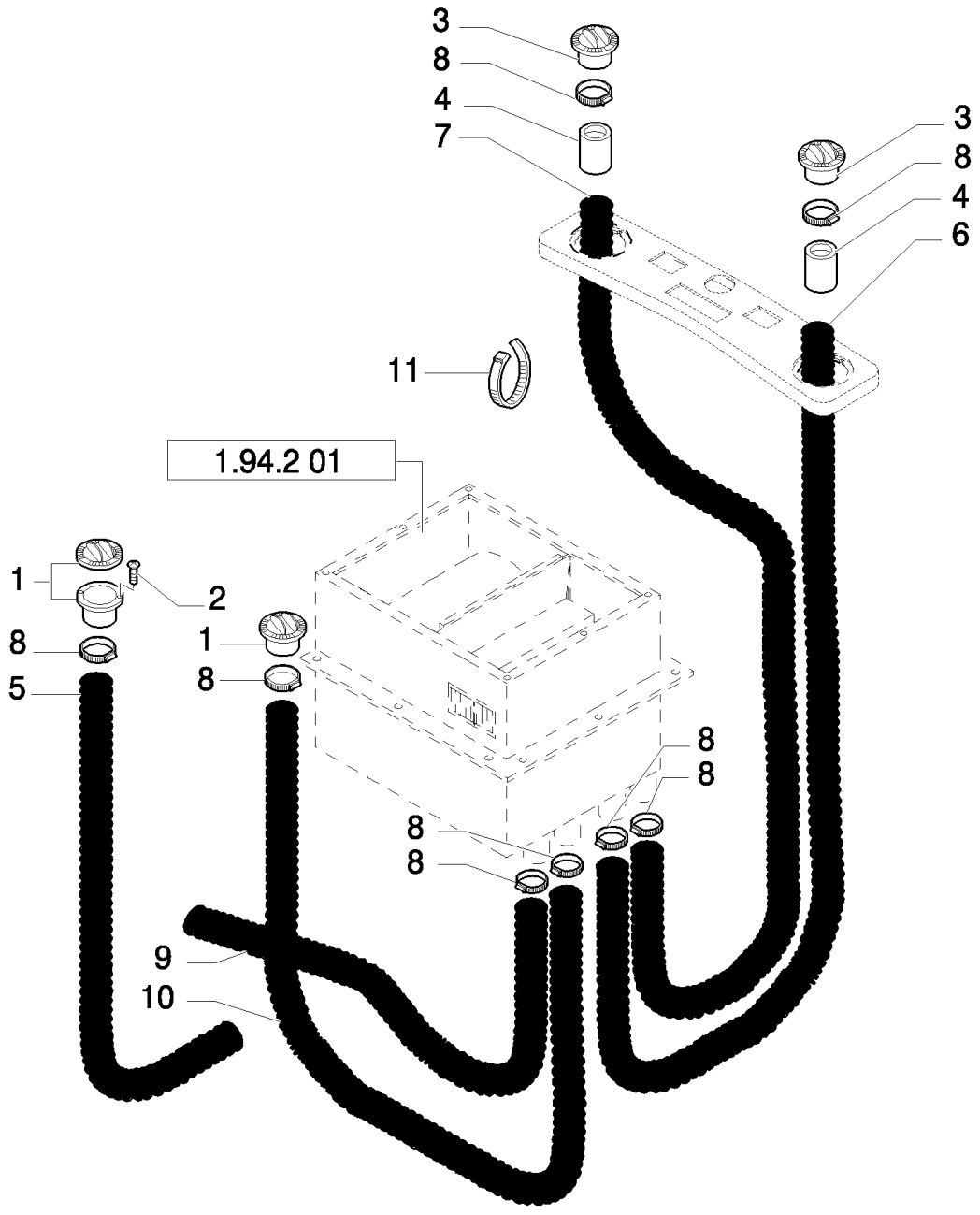
3
8
4
7
3
8
4
6
11
1.94.2 01
1
2
8
5
1
8
8
8
8
8
9
10

LB115.B EUR BACKHOE LOADER (1/05-)

1.94.2(04) AIR DUCTS & VENTS

Ref	Part Number	Qty	Description
1	70741298	2	DIFFUSER,
2	15915901	4	6x16
3	85819543	2	DIFFUSER,
4	85819592	2	SLEEVE,
5	85820905	1	DUCT, AIR,
6	85820901	1	DUCT, AIR, Front, LH
7	85820902	1	DUCT, AIR, Front, RH
8	13000990	10	CLAMP, HOSE,
9	85820904	1	DUCT, AIR, Rear, RH
10	85820903	1	DUCT, AIR, Rear, LH
11	5112712	11	STRAP, CABLE,

Mechanical Version, Up To S/N XXX

1.94.2(05) HEATER CONTROL PANEL

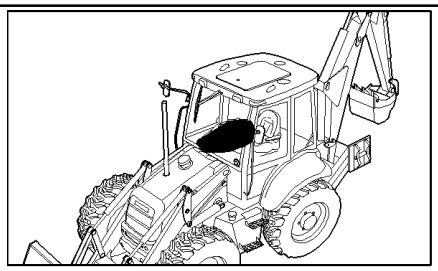

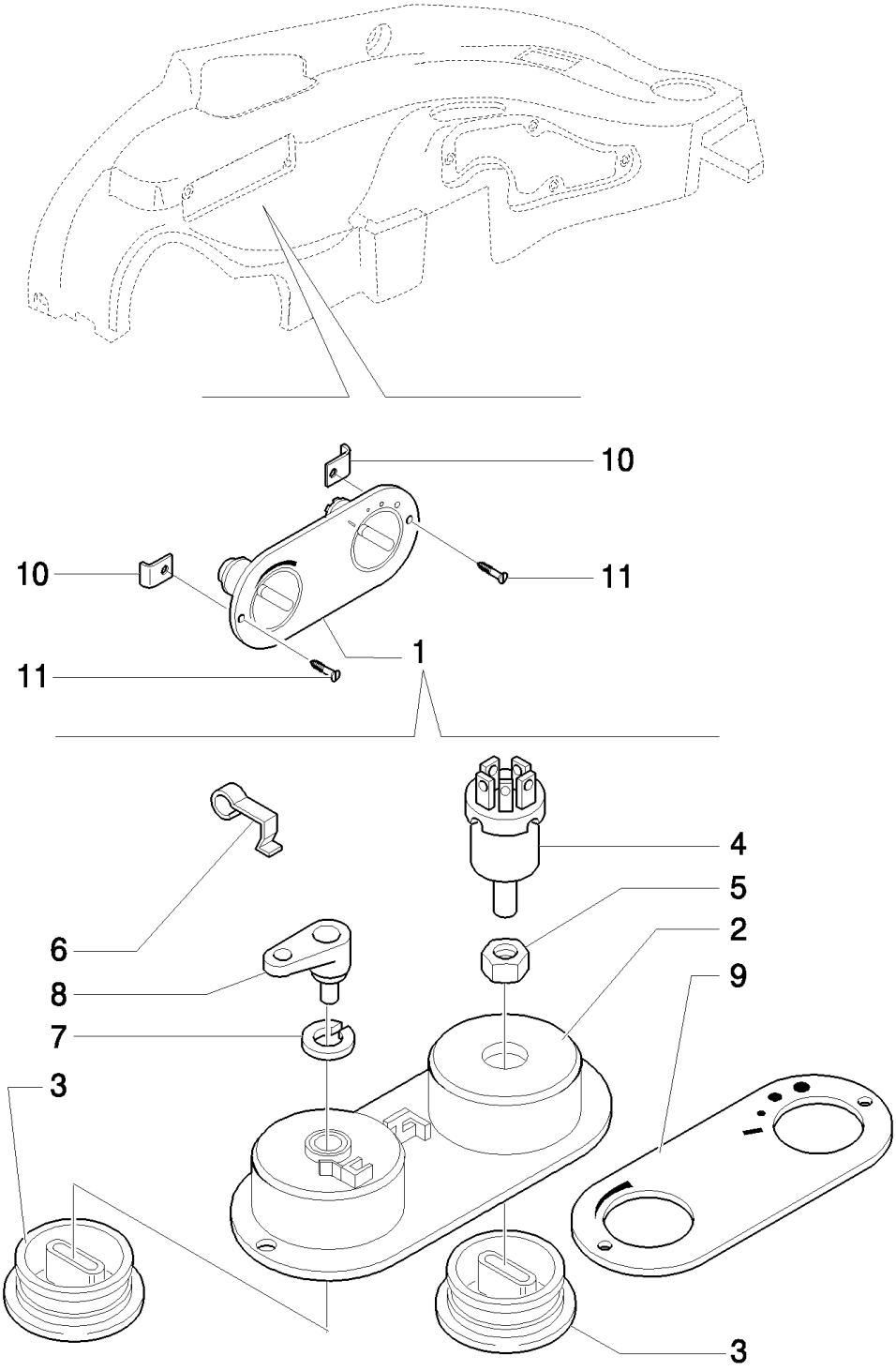

LB115.B EUR BACKHOE LOADER (1/05-)

1.94.2(05) HEATER CONTROL PANEL

Ref	Part Number	Qty	Description
1	85817567	1	DASHBOARD,
2	85817569	1	BEZEL,
3	85817568	1	KNOB,
4	9966238	1	SWITCH, FAN,
5	9966239	1	NUT,
6	9971567	2	SPRING,
7	9966241	1	WASHER, LOCK,
8	82002777	1	LEVER,
9	9970494	1	DECAL,
10	14372671	2	NUT, M4.2, U, 12.4mm long,
11	15693507	2	SCREW, Cross Oval Hd, M4.8 x 22,

Up To S/N XXX

1.94.2/ 1(01) HEATER HOUSING, COIL, BLOWER & VALVE

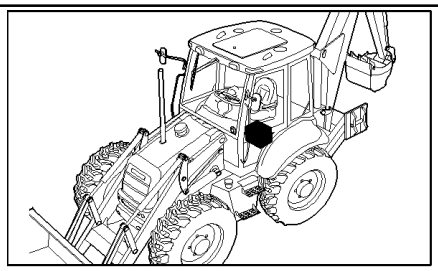

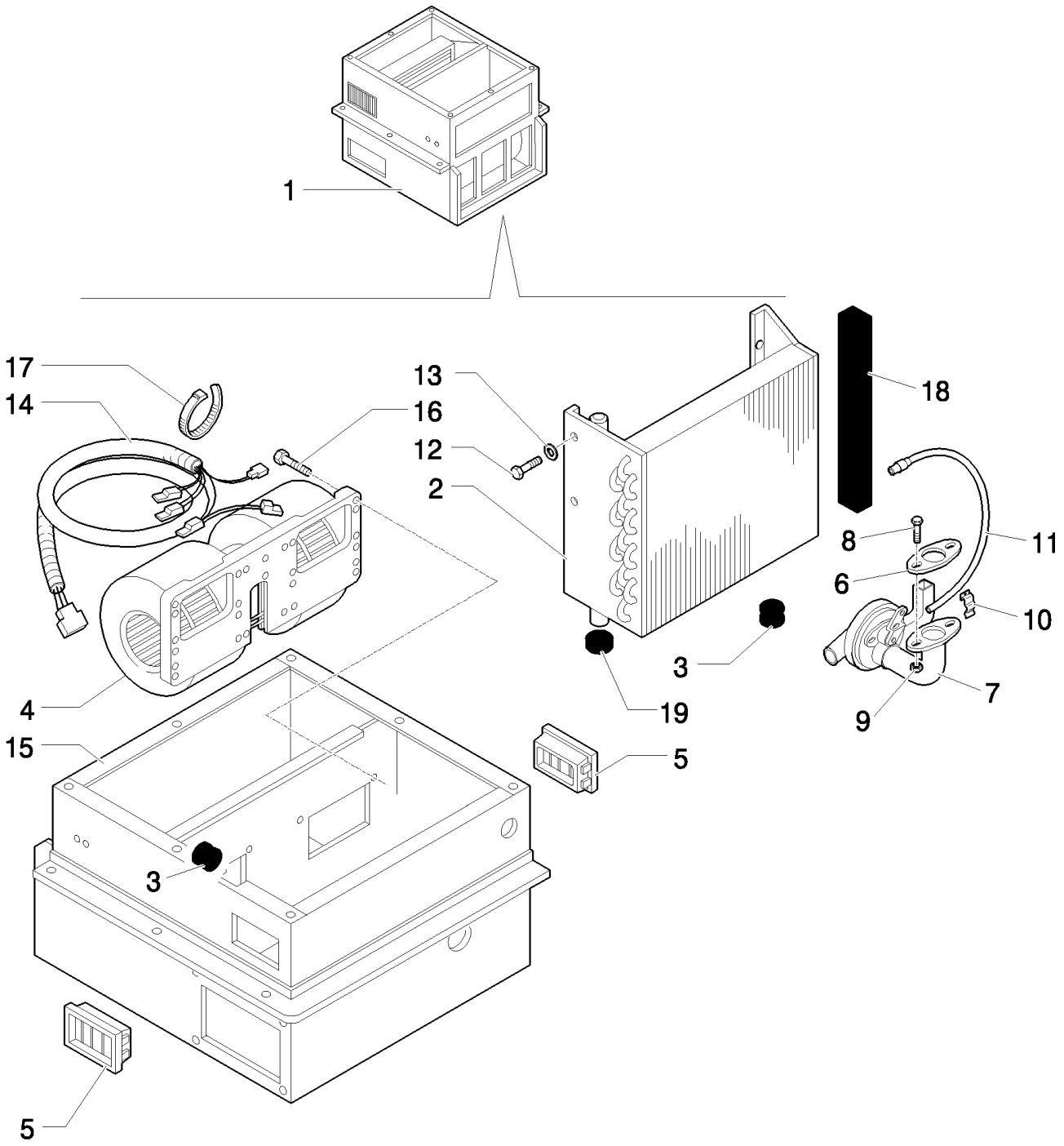

Pilot Control Version, Up To S/N XXX

LB115.B EUR BACKHOE LOADER (1/05-)

1.94.2/ 1(01) HEATER HOUSING, COIL, BLOWER & VALVE

Ref	Part Number	Qty	Description
1	NSS	1	NOT SERVICED SEPARATELY, , Includes 2 To 19 And Figure 1.94.2 02 Ref. 1 To 4, 6
2	85821348	1	HEAT EXCHANGER,
3	85804412	2	GROMMET,
4	85820883	1	BLOWER, ELECTRIC,
5	85804044	2	DIFFUSER,
6	85820885	1	GASKET,
7	85820884	1	DRAINCOCK/TAP, SUPPLY,
8	85820887	2	SCREW,
9	85820886	2	NUT,
10	85820889	1	SPRING,
11	85820890	1	CABLE,
12	85820893	4	SCREW,
13	85820894	4	WASHER,
14	85820895	1	CABLE, ELECTRIC,
15	85826284	1	BOX,
16	85820899	8	SCREW,
17	85820900	1	CLAMP, HOSE,
18	85821345	1	SEAL, RUBBER,
19	85821346	1	SEAL, RUBBER,

Pilot Control Version, Up To S/N XXX

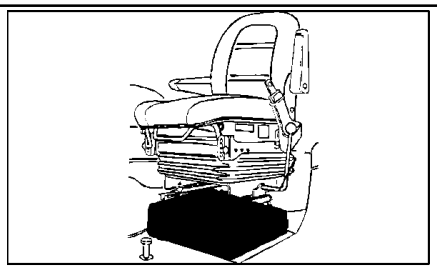

Pilot Control Version, From S/N XXX

LB115.B EUR BACKHOE LOADER (1/05-)

1.94.2/ 1(03) HEATER WATER HOSES

Ref	Part Number	Qty	Description
1	87324991	1	HOSE, FLEXIBLE,
2	87324999	1	HOSE, FLEXIBLE,
3	87550745	1	CONNECTOR, HYD.,
4	47048896	1	VALVE, HYDRAULIC,
5	85803079	4	CLAMP, HOSE,
6	85802336	2	CLAMP,
7	87345955	3	SHIELD,
8	47044673	2	WASHER,
9	47048451	3	STRAP, CABLE,
10	11112221	2	SCREW, Hex, M12 x 25, 8.8, Full Thd,

Pilot Control Version, From S/N XXX

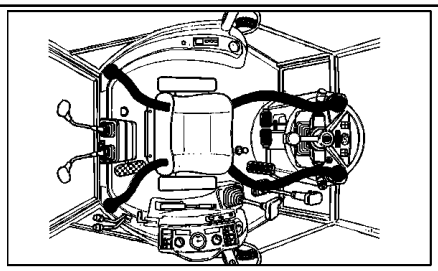

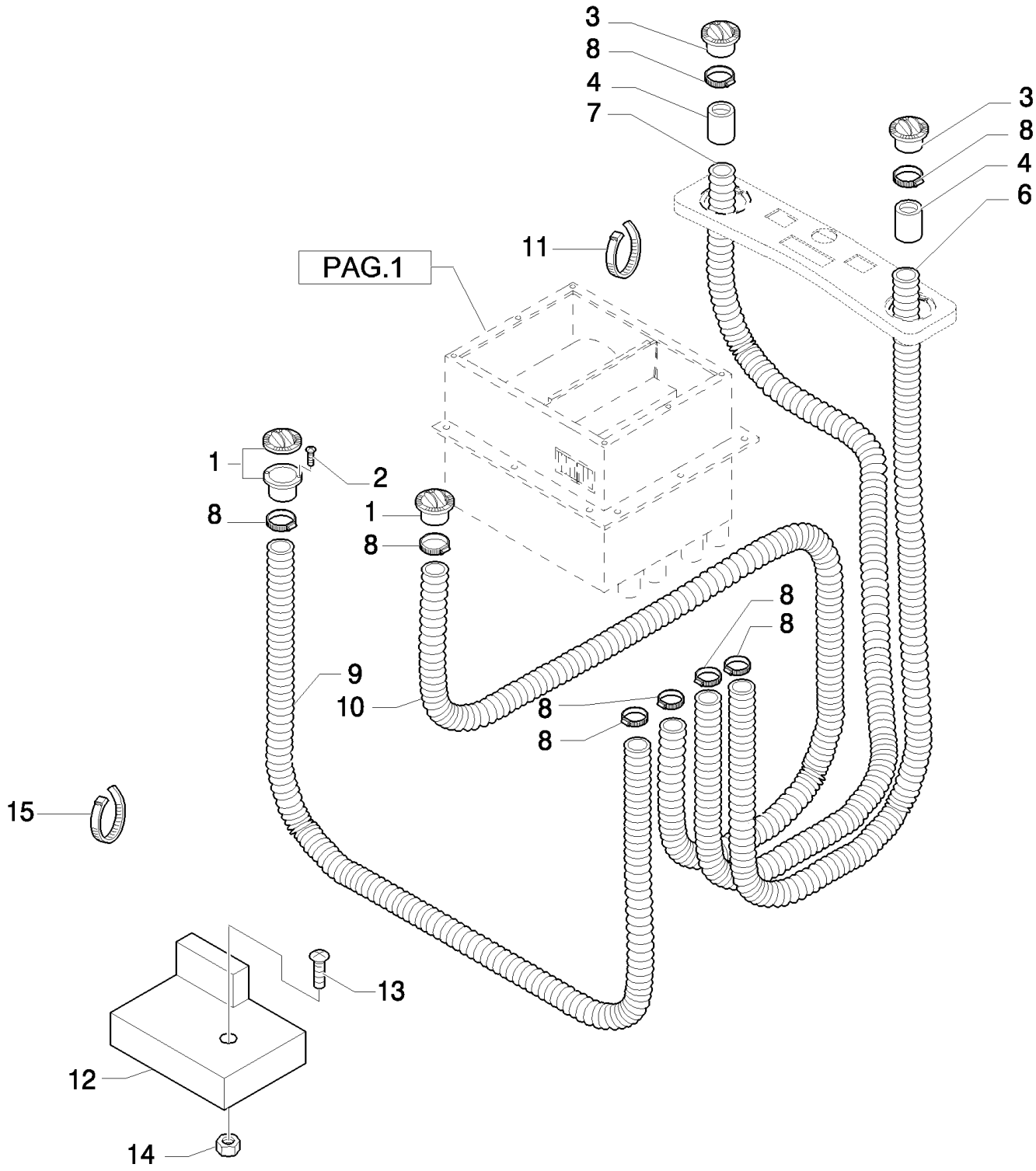

Pilot Control Version, Up To S/N XXX

LB115.B EUR BACKHOE LOADER (1/05-)

1.94.2/ 1(04) AIR DUCTS & VENTS

Ref	Part Number	Qty	Description
1	70741298	2	DIFFUSER,
2	15915901	4	6x16
3	85819543	2	DIFFUSER,
4	85819592	2	SLEEVE,
6	85820902	1	DUCT, AIR, Front, LH
7	85820901	1	DUCT, AIR, Front, RH
8	13000990	10	CLAMP, HOSE,
9	85820904	1	DUCT, AIR, Rear, RH
10	85825476	1	HOSE, FLEXIBLE, REAR, LH
11	5112712	11	STRAP, CABLE,
12	85826934	1	PLATE,
13	10902221	1	SCREW, Hex, M6 x 16, 8.8,
14	12574211	1	NUT, M6 x 1, Cl 8,
15	386170C1	1	STRAP, CABLE, {PP:85821535}

Pilot Control Version, Up To S/N XXX

1.95.0(01) CAB-SAFETY FRAME / BRAKE PEDAL

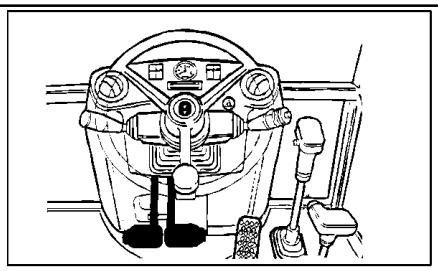

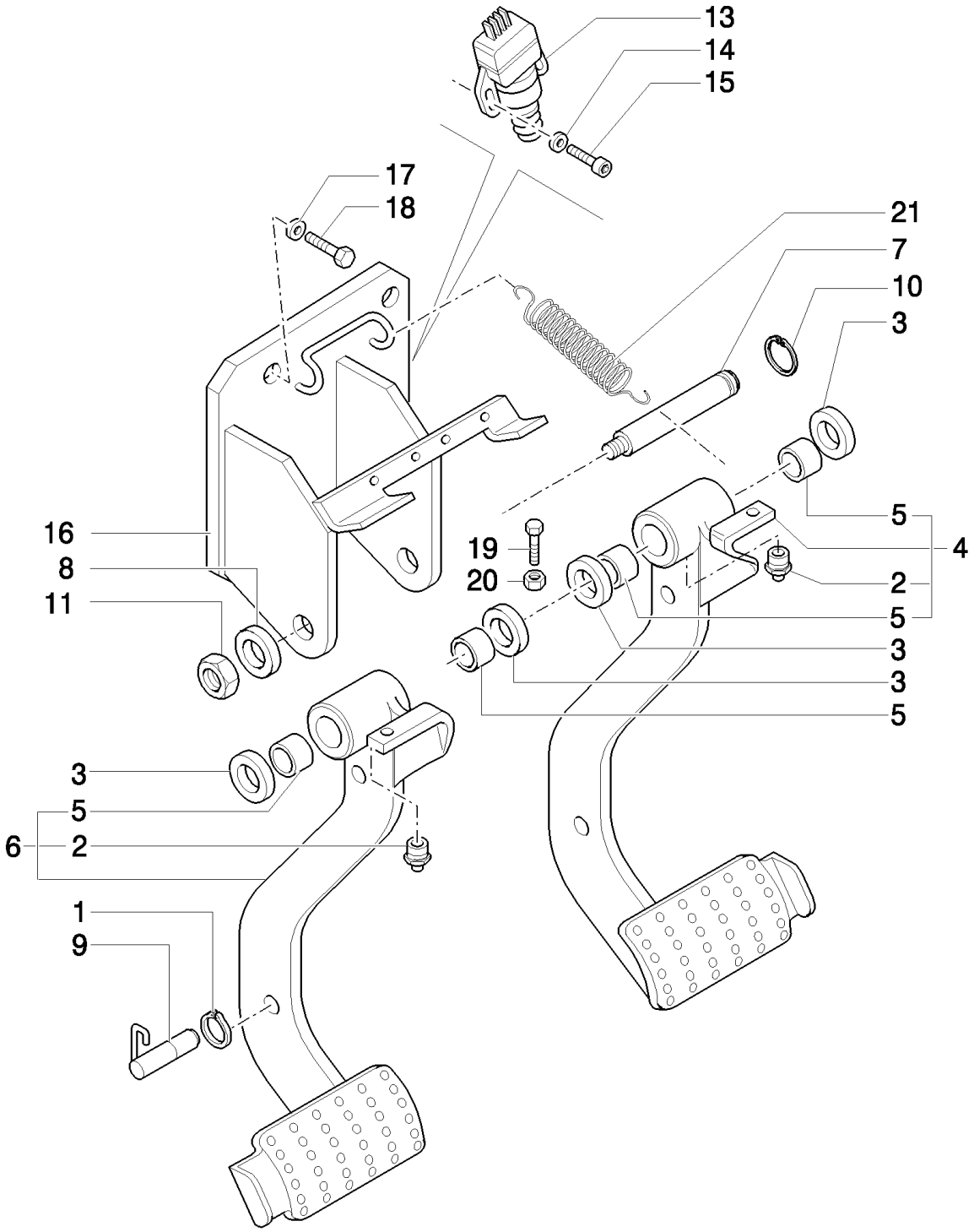

LB115.B EUR BACKHOE LOADER (1/05-)

1.95.0(01) CAB-SAFETY FRAME / BRAKE PEDAL

Ref	Part Number	Qty	Description
1	11088176	1	CIRCLIP, M11,
2	13407214	2	NIPPLE, LUBE,
3	5148062	4	WASHER,
4	85805285	1	PEDAL, RH
5	4983992	4	BEARING, NEEDLE,
6	85805283	1	PEDAL, LH
7	85801860	1	PIN,
8	10517274	1	WASHER, LOCK,
9	87517988	1	BLOCK,
10	11067376	1	RING, SNAP, M25, Ext,
11	12164114	1	NUT, M16 x 1.5
13	82026949	2	SWITCH, Brake
14	12642821	4	WASHER, M4 x 12 x 1, W/Cab
15	14303324	4	SCREW, Hex Soc Hd, M4 x 20, 8.8, Full Thd, W/Cab
16	85805277	1	SUPPORT,
17	11190574	4	WASHER, SPRING, Belleville, M10.5,
18	15970524	4	SCREW, Hex, M10 x 1.25 x 20, 8.8, Full Thd,
19	16043921	2	SCREW, M8 x 1,25 x 35
20	11701621	2	NUT, M8, Cl 10,
21	5153180	1	SPRING,

1.95.0(02) CAB-SAFETY FRAME / BRAKE PEDAL

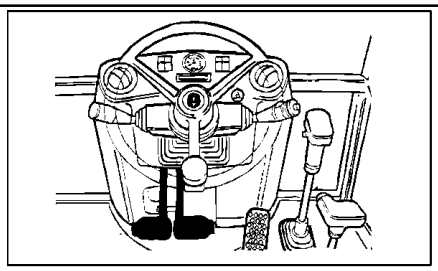

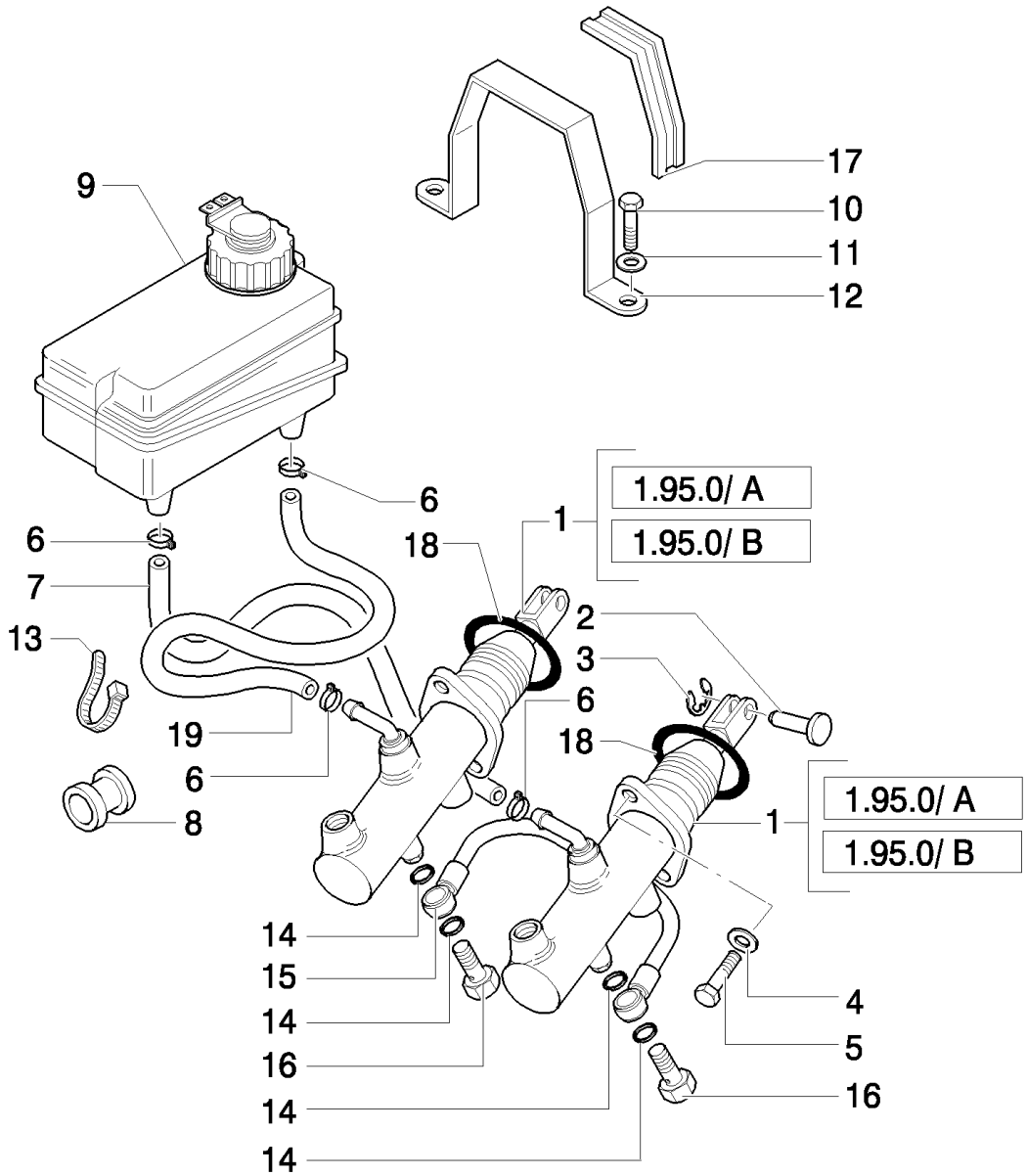

LB115.B EUR BACKHOE LOADER (1/05-)

1.95.0(02) CAB-SAFETY FRAME / BRAKE PEDAL

Ref	Part Number	Qty	Description
1	85805257	2	MASTER CYLINDER, , UP TO S/N XXX, Only for LB90.B - LB95.B - LB110.B
1	87398198	2	BRAKE CYLINDER, , FROM S/N XXX
1	85824114	2	PUMP, HYDRAULIC, , Only for LB115.B - B115
2	5155381	2	PIN,
3	11064176	2	CLIP,
4	11193874	4	WASHER, SPRING, Belleville, M8.4,
5	14306324	4	SCREW, Hex Soc Hd, M8 x 20, 8.8,
6	13423271	4	CLIP, HOSE,
7	85819914	1	TUBE,
8	85801941	2	RING, RUBBER,
9	82003369	1	TANK, , Brake Fluid, Cap is P/N 85806176
10	10902624	2	SCREW, Hex, M6 x 25, 8.8, Full Thd,
11	11193274	2	WASHER, SPRING, Belleville, M6.4,
12	85801092	1	BRACKET,
13	14560187	1	STRAP, CABLE, L=203.2 mm
14	4858607	8	SEAL,
15	5155701	1	TUBE,
16	5155703	2	BOLT, BANJO, M12x1.25x22
17	85801093	1	STRIP-GASKET,
18	13399076	2	RING, , Only for CAB
19	85819915	1	TUBE,

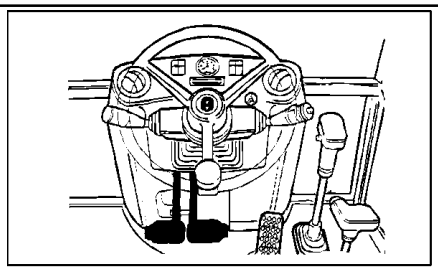

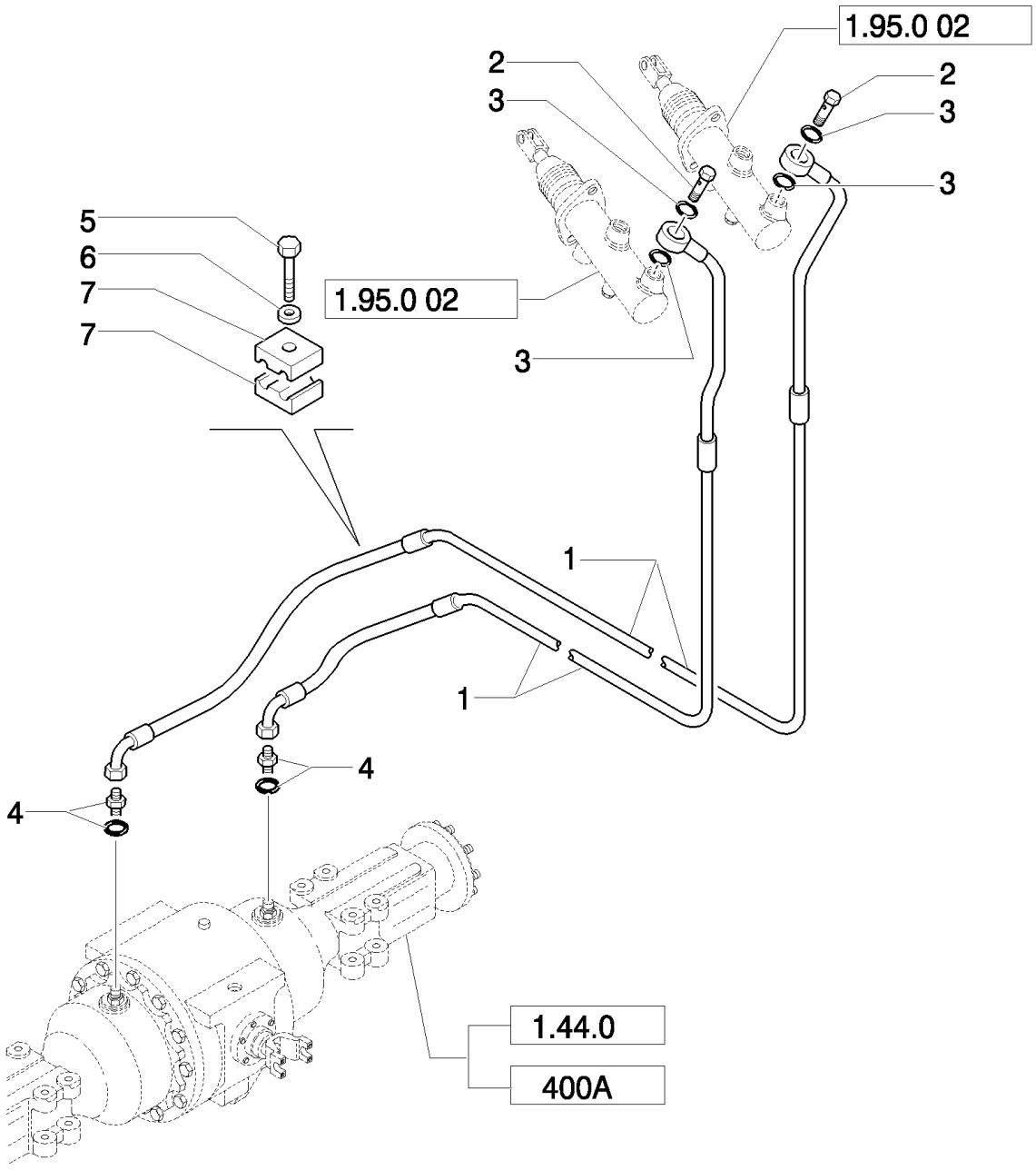
1.95.0 02
2
3
2
3
3
5
6
7
7
1.95.0 02
3
1
1
4
4
1.44.0
400A

LB115.B EUR BACKHOE LOADER (1/05-)

1.95.0(03) CAB-SAFETY FRAME / BRAKE PEDAL

Ref	Part Number	Qty	Description
1	85819177	2	TUBE, HYD,
2	5155703	2	BOLT, BANJO,
3	4858607	4	SEAL,
4	85803312	2	CONNECTOR, HYD.,
4	85805655	2	ELBOW, , Only for LB115.B - B115
5	15212721	2	SCREW, Hex, M6 x 40, 8.8, Full Thd,
6	14447021	2	WASHER, M5 x 15 x 1,
7	85805548	4	CLIP,

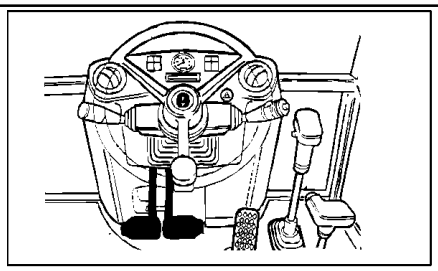

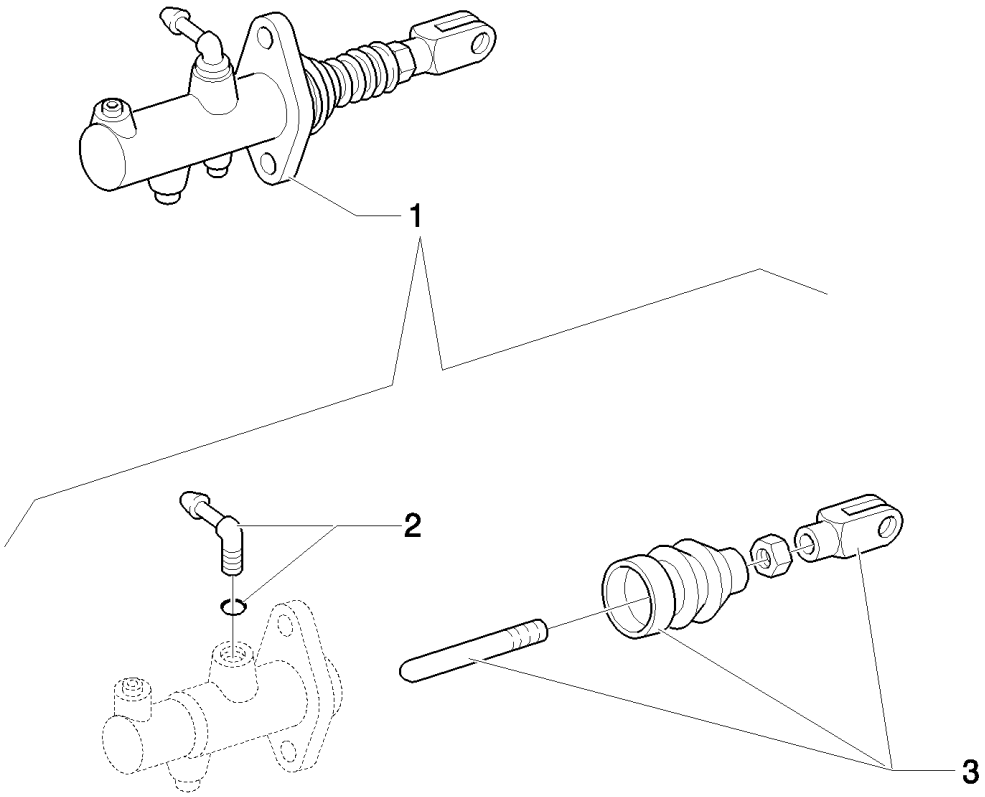
1
2
3

LB115.B EUR BACKHOE LOADER (1/05-)

1.95.0/ B(01) CAB- BRAKE PEDAL

Ref	Part Number	Qty	Description
1	85824114	1	PUMP, HYDRAULIC, ASSY
2	85824160	1	KIT,
3	85824161	1	KIT,

1.95.1/1(01) CAB-SAFETY FRAME / HAND BRAKE (EUR)

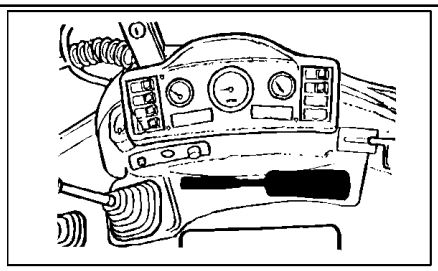

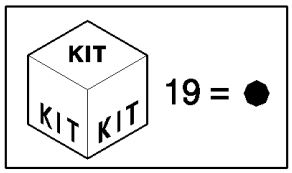

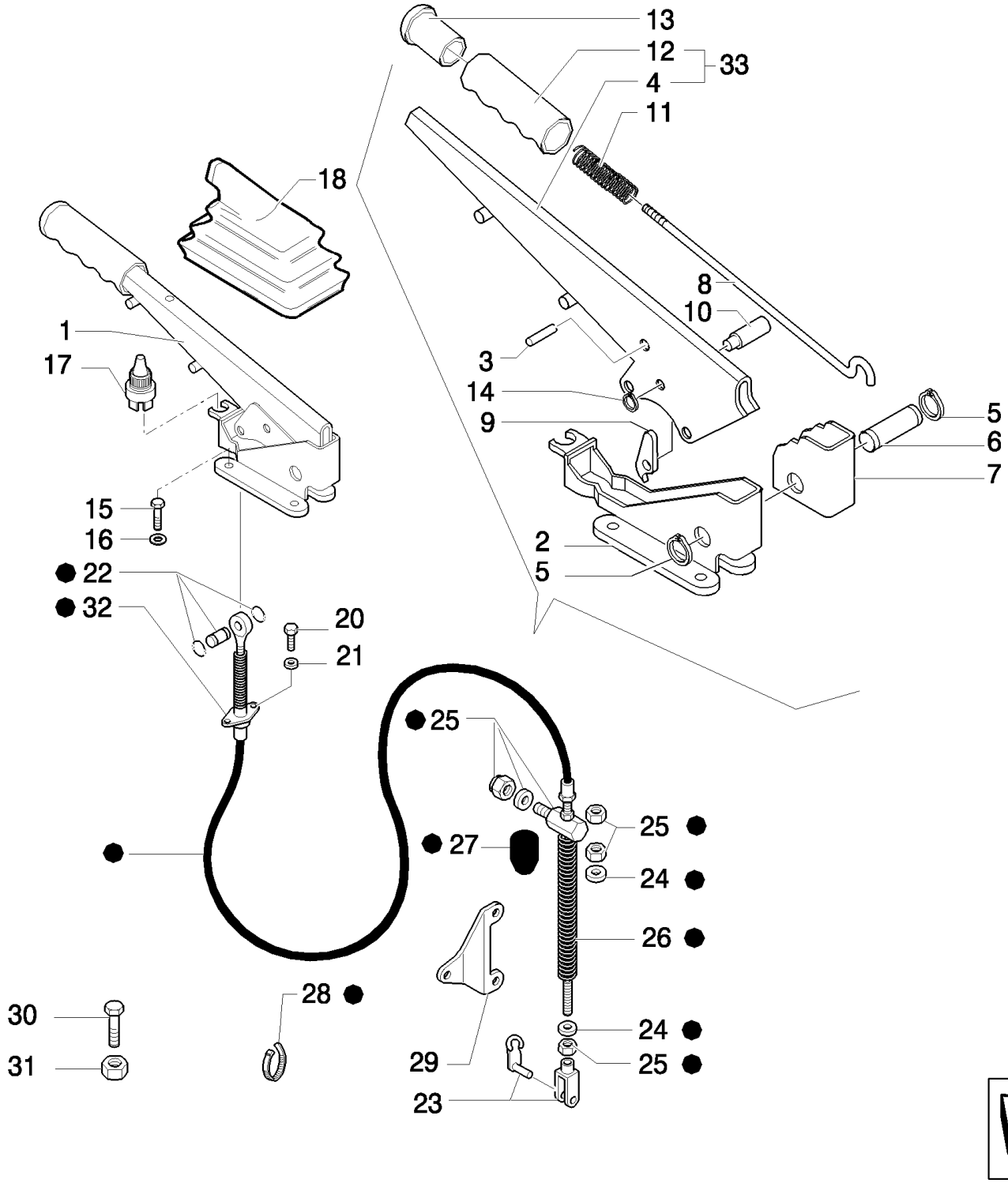

LB115.B EUR BACKHOE LOADER (1/05-)

1.95.1/1(01) CAB-SAFETY FRAME / HAND BRAKE (EUR)

Ref	Part Number	Qty	Description
1	85827832	1	LEVER, , Includes 2 To 14, 30, 31, 33
2	85805441	1	SUPPORT,
3	4985127	1	RIVET,
4	85805440	1	LEVER,
5	13400776	2	RING, LOCKING,
6	4988275	1	PIN,
7	5110153	1	TOOTHED SECTOR,
8	85827833	1	DIPSTICK,
9	5110155	1	PAWL,
10	5131437	1	PIN,
11	5105729	1	SPRING,
12	86021837	1	HANDLE GRIP,
13	4985122	1	BUTTON,
14	11065476	1	RING, SNAP, M6, Ext,
15	14306424	4	SCREW, Hex Soc Hd, M8 x 25, 8.8,
16	11197874	4	WASHER, SPRING, Belleville, M8.4,
17	85816770	1	SWITCH, ASSY,
18	5106733	1	BOOT,
19	85815537	1	CABLE, , Includes 22 To 28, 32
20	10978024	2	SCREW, Hex, M5 x 20, 8.8, Full Thd,
21	10615371	2	WASHER, LOCK, Ext Tooth, M5,
22	85815550	1	CONNECTOR, ELEC,
23	85815556	1	CONNECTOR, ELEC,
24	85815555	2	WASHER, 22 x 10.2 x 2
25	85815552	1	JOINT, UNIVERSAL,
26	85821173	1	SPRING,
27	85821172	1	GASKET,
28	85815549	1	CLAMP,
29	85805251	1	SUPPORT,
30	13272319	1	SCREW,
31	10794011	1	NUT, M4, Cl 8,
32	85815551	1	
33	85827834	1	LEVER, , Includes 4, 12

1.95.3(01) HAND-OPERATED AND PEDAL-OPERATED ACCELERATOR CONTROL

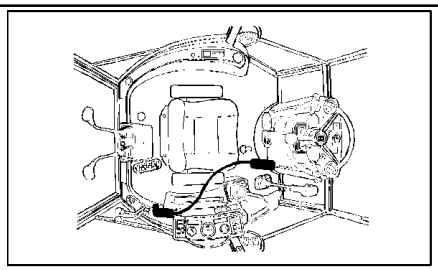

KIT KIT KIT 23 = ●

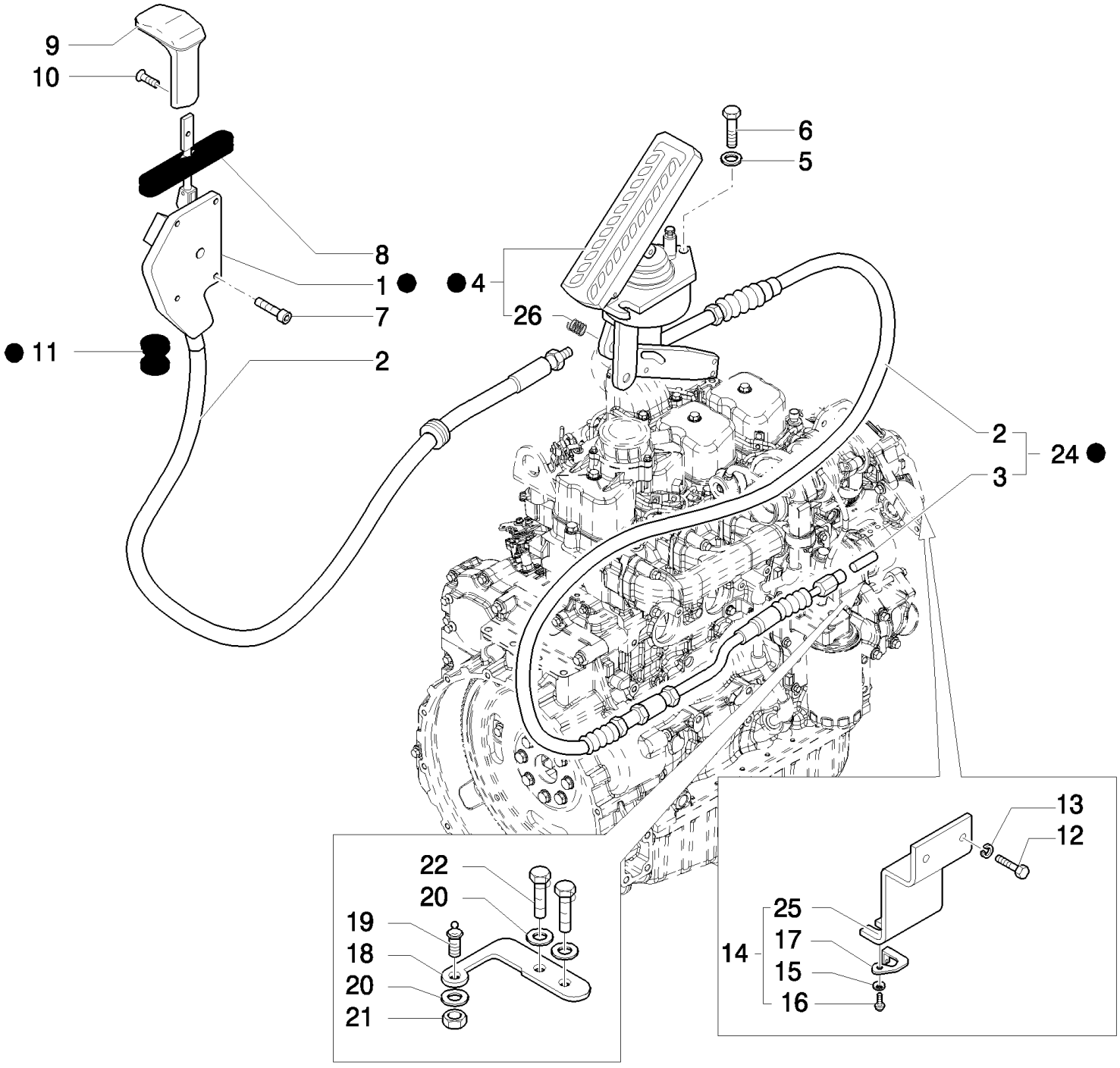

LB115.B EUR BACKHOE LOADER (1/05-)

1.95.3(01) HAND-OPERATED AND PEDAL-OPERATED ACCELERATOR CONTROL

Ref	Part Number	Qty	Description
1	85821328	1	LEVER, ASSY
2	NS	1	NOT SERVICED, ASSY,
3	85813140	1	BALL JOINT, HEAD,
4	85813096	1	PEDAL, Includes 87348419 Spring, 16100811 M8 Nut, 16044321 M8 x 55 Screw, Includes 26
5	11193274	3	WASHER, SPRING, Belleville, M6.4,
6	10902424	3	SCREW, Hex, M6 x 20, 8.8, Full Thd,
7	13311217	4	SCREW, Cross Oval Hd, M5 x 20,
8	85803380	1	BOOT, w/Cab
9	13312721	1	SCREW, Cross Oval Hd, M6 x 10,
10	82002692	1	KNOB,
11	10398280	1	RING,
12	47049149	2	SCREW, M12X25
13	47048994	2	WASHER,
14	87387014	1	BRACKET, CPL, Only For LB90.B - LB95.B - B95 - B95TC - B95LR
14	86988396	1	BRACKET, , Only For LB110.B - LB115.B - B110 - B115
15	12604179	1	WASHER,
16	13769401	1	RIVET,
17	85803040	1	KEY,
18	87420814	1	LEVER,
19	85813311	1	PIN,
20	47048991	3	WASHER,
21	47049029	1	NUT,
22	86977726	2	SCREW, Hex, M6 x 12, 8.8,
23	87571708	1	ACCELERATOR, , Only For LB90.B - LB95.B - B95 - B95TC - B95LR
23	85827825	1	, Only For LB110.B - LB115.B - B110 - B115
24	85827699	1	CABLE, , Includes 2, 3
25	86988395	1	
26	87348419	1	SPRING,

1.95.5(02) POWER STEERING MOTOR HOSES

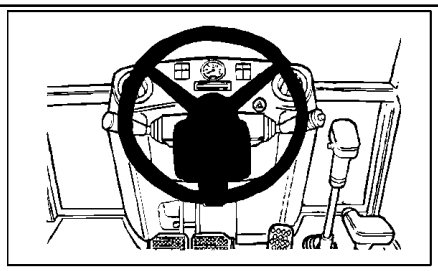

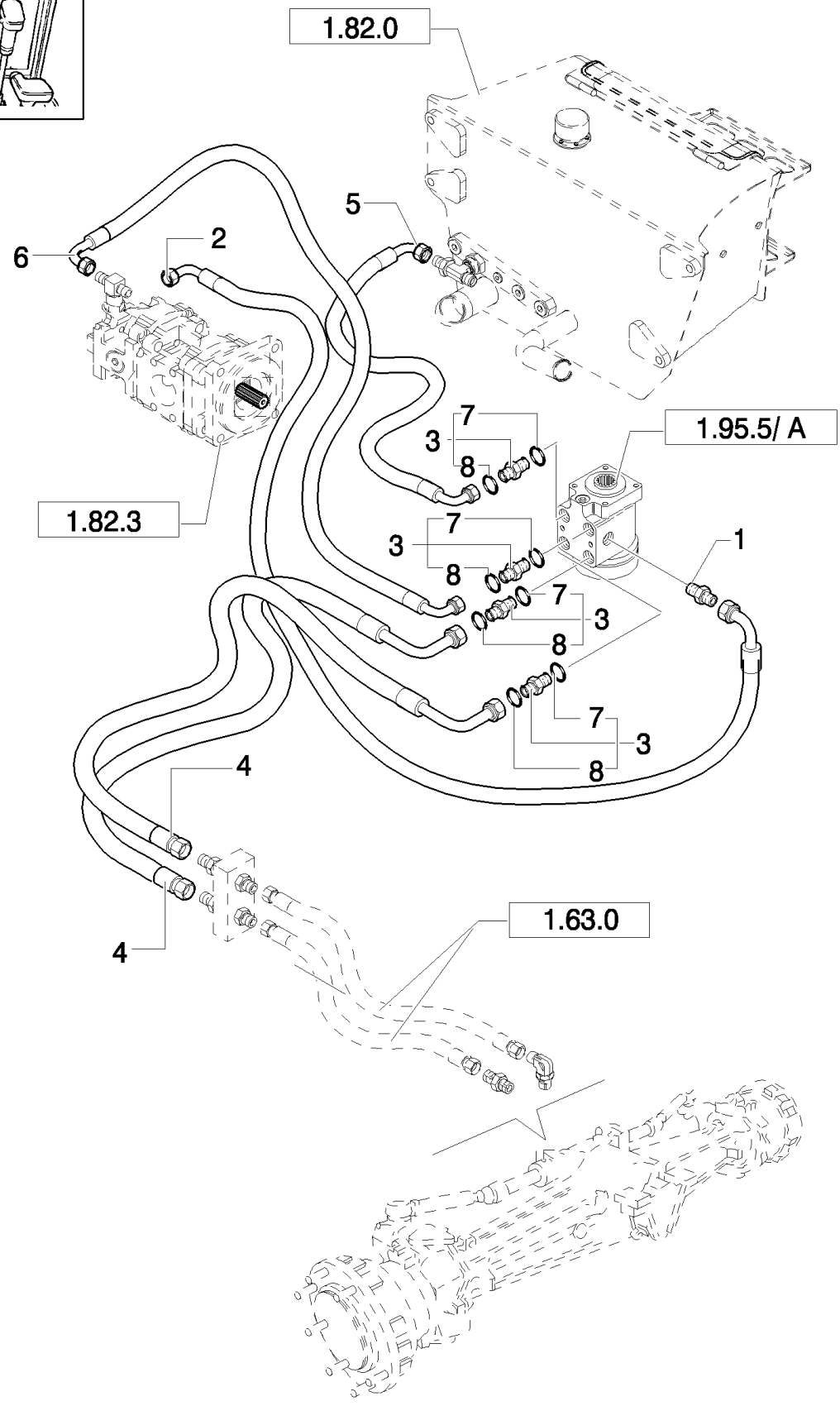

LB115.B EUR BACKHOE LOADER (1/05-)

1.95.5(02) POWER STEERING MOTOR HOSES

Ref	Part Number	Qty	Description
1	85802640	1	CONNECTOR, HYD.,
2	85819041	1	HOSE, FLEXIBLE,
3	390953S36	4	CONNECTOR, HYD., , Includes 7, 8
4	85826080	2	HOSE, FLEXIBLE, RH CYLINDER
5	85802761	1	HOSE, FLEXIBLE,
6	85820282	1	HOSE, FLEXIBLE,
7	128825	4	O-RING, 8-1, 90 Duro, .644" ID x .087" Thk,
8	9992298	4	O-RING, -014, 90 Duro, .489" ID x .070" Thk,

1.95.5/ C(01) POWER STEERING MOTOR

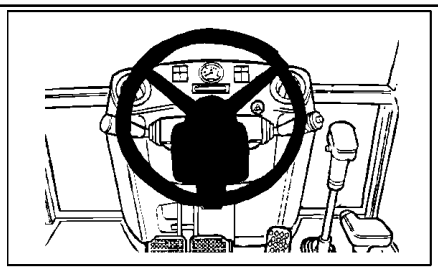

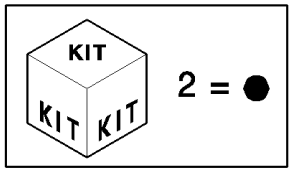

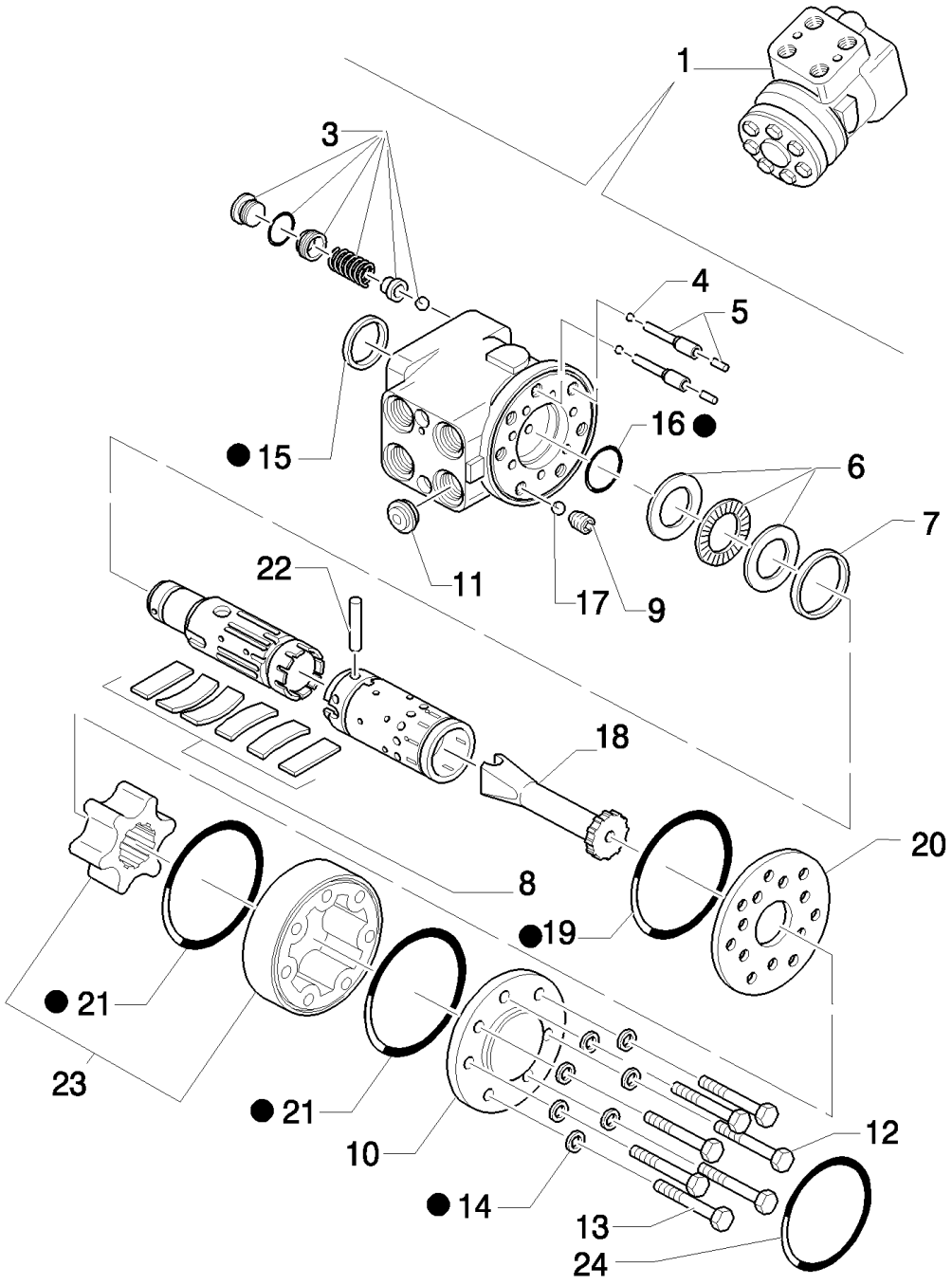

LB115.B EUR BACKHOE LOADER (1/05-)

1.95.5/ C(01) POWER STEERING MOTOR

Ref	Part Number	Qty	Description
1	85804837	1	STEERING HYDRAULIC, Assy
2	85808390	1	KIT, SEALS,
3	9970370	2	VALVE, HYDRAULIC,
4	85808385	2	BALL,
5	9961829	2	PIN,
6	9961810	1	BEARING ASSY,
7	85812133	1	RING,
8	9960181	1	SET OF PARTS,
9	85812132	1	BUSHING, THREADED,
10	85812134	1	COVER,
11	85808386	1	VALVE, CHECK,
12	85808389	6	SCREW,
13	85808388	1	SCREW, w/Pin
14	85812112	7	WASHER,
15	85812109	1	O-RING,
16	85808380	1	O-RING,
17	85812131	1	BALL,
18	85808381	1	SHAFT,
19	85812110	1	O-RING,
20	85808382	1	PLATE,
21	85812111	2	O-RING,
22	9932887	1	PIN,
23	85808387	1	KIT,
24	85808384	1	PLAQUE, DATA,

Up To S/N XXX

1.95.5/ C(02) POWER STEERING MOTOR

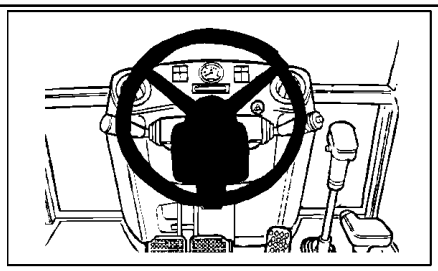

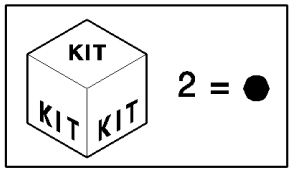

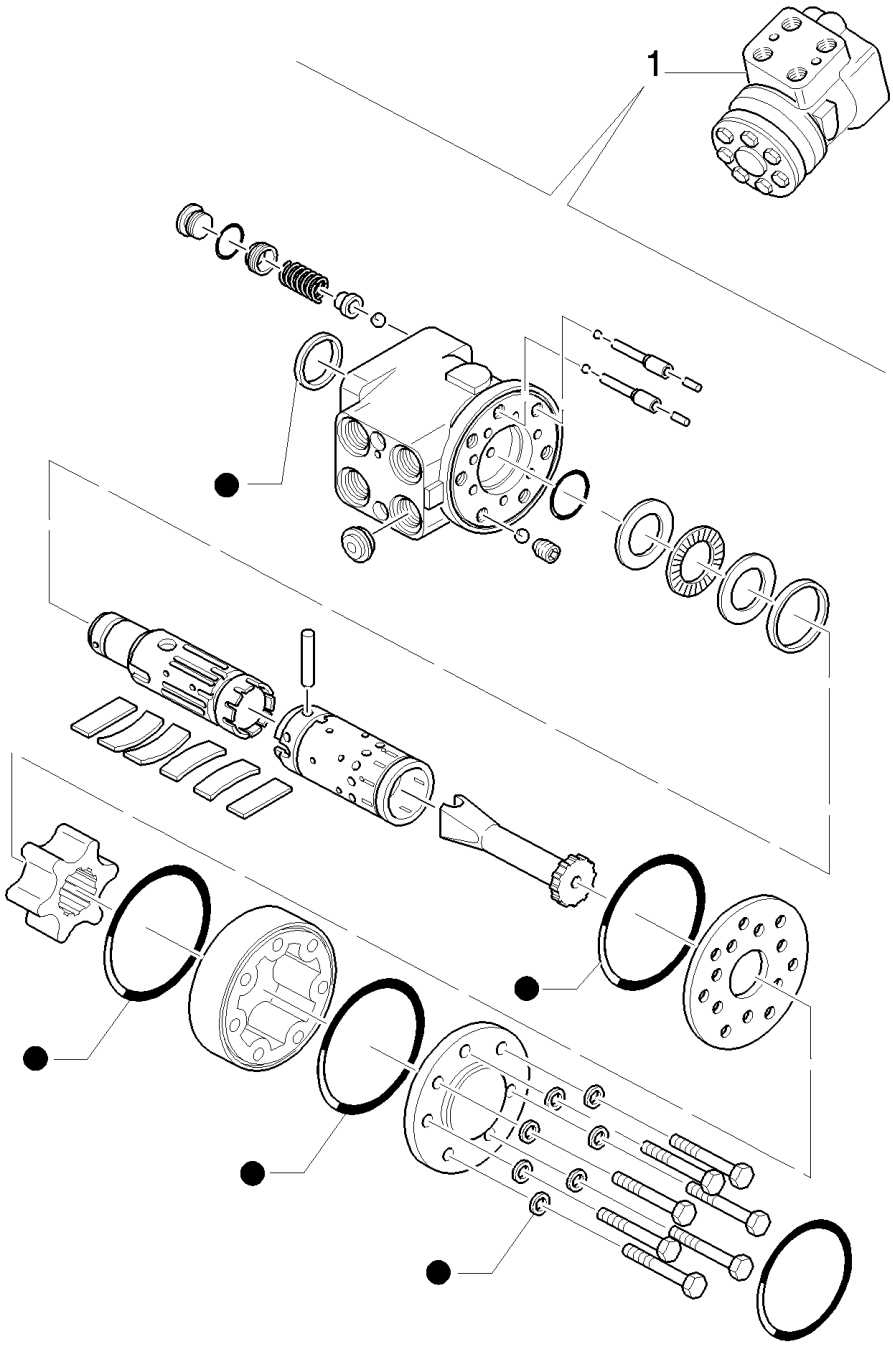

From To S/N XXX

LB115.B EUR BACKHOE LOADER (1/05-)

1.95.5/ C(02) POWER STEERING MOTOR

Ref	Part Number	Qty	Description
1	87360432	1	STEERING HYDRAULIC, ASSY
2	85808390	1	KIT, SEALS,

From To S/N XXX

1.95.5/ 4(01) POWER STEERING MOTOR, WHEEL & COLUMN (4WS)

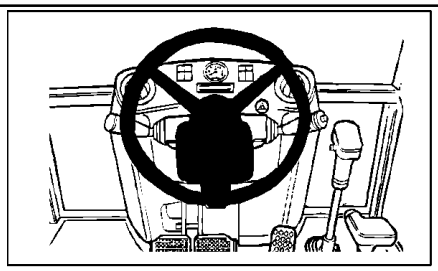

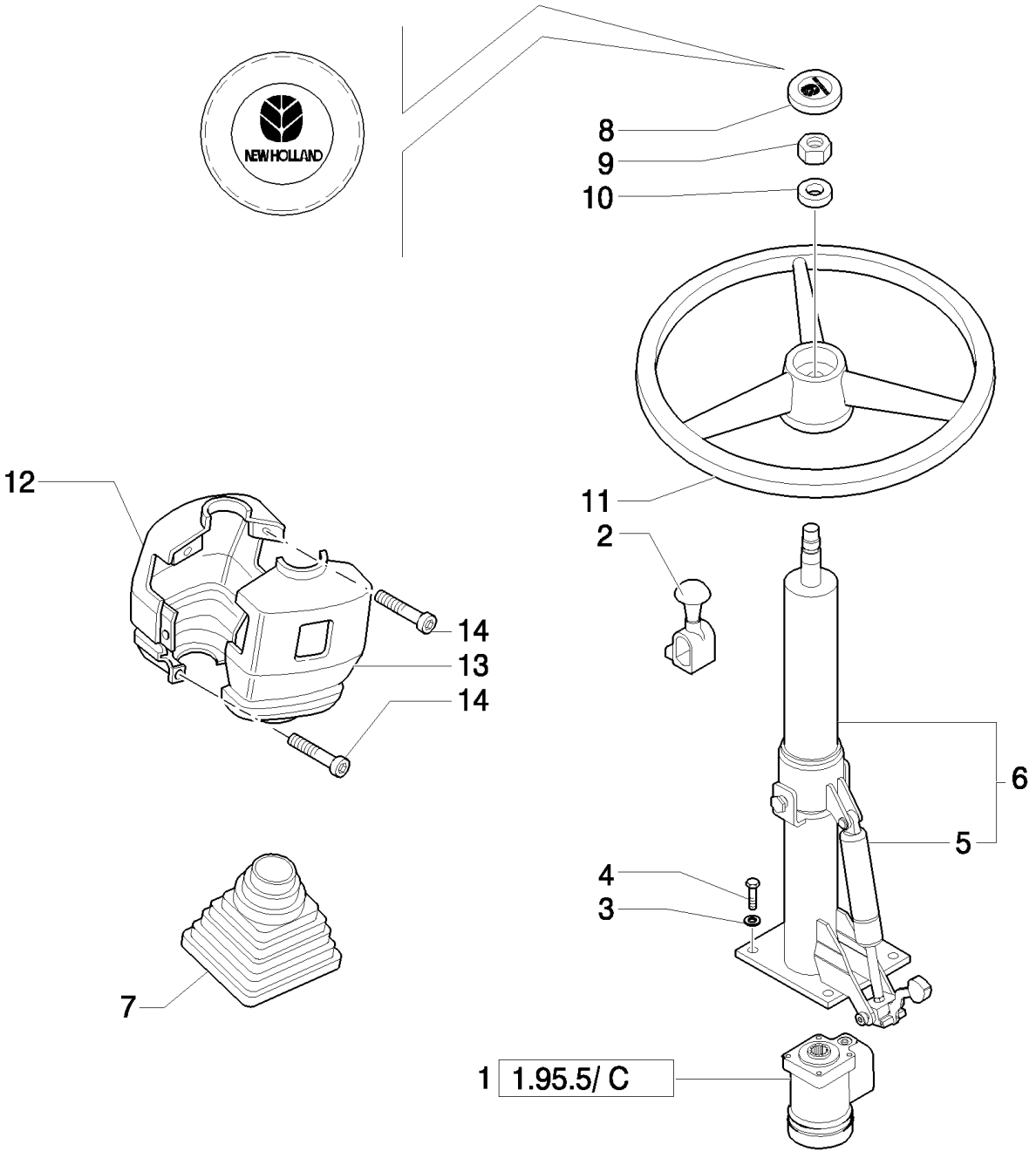

LB115.B EUR BACKHOE LOADER (1/05-)

1.95.5/ 4(01) POWER STEERING MOTOR, WHEEL & COLUMN (4WS)

Ref	Part Number	Qty	Description
1	85804837	1	STEERING HYDRAULIC, , UP TO S/N XXX
1	87360432	1	STEERING HYDRAULIC, , FROM S/N XXX
2	85801879	1	KNOB,
3	10615774	4	WASHER, LOCK, 10x18x2
4	85804705	4	SCREW, 3/8"-16x7/8", UP TO S/N XXX
4	14432334	4	SCREW, Hex Soc Hd, M10 x 22, 10.9, , FROM S/N XXX
5	85824197	1	GAS STRUT, , UP TO S/N XXX, Only for 85805545
5	87328134	1	BLOCK, , FROM S/N XXX
6	85805545	1	STEERING COLUMN, , UP TO S/N XXX
6	87560586	1	STEERING COLUMN, , FROM S/N XXX
7	85801976	1	BOOT,
8	85820105	1	CAP,
9	10791414	1	NUT, M16x1.5
10	4998760	1	WASHER, M16x1.5
11	5148946	1	STEERING WHEEL,
12	85805774	1	SOFT TRIM,
13	85805773	1	SOFT TRIM,
14	14303324	4	SCREW, Hex Soc Hd, M4 x 20, 8.8, Full Thd,
15	11190574	4	WASHER, SPRING, Belleville, M10.5,
16	85824197	1	GAS STRUT, , Only for 85805545

1.96.0/ 2(01) FOWARD/REVERSE & MULTI-PURPOSE LEVER, CAB (POWER-SHIFT)

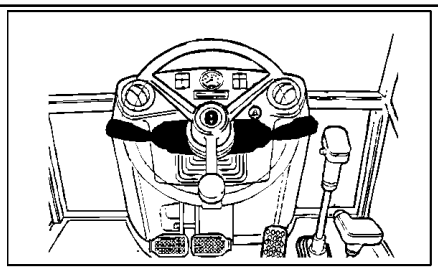

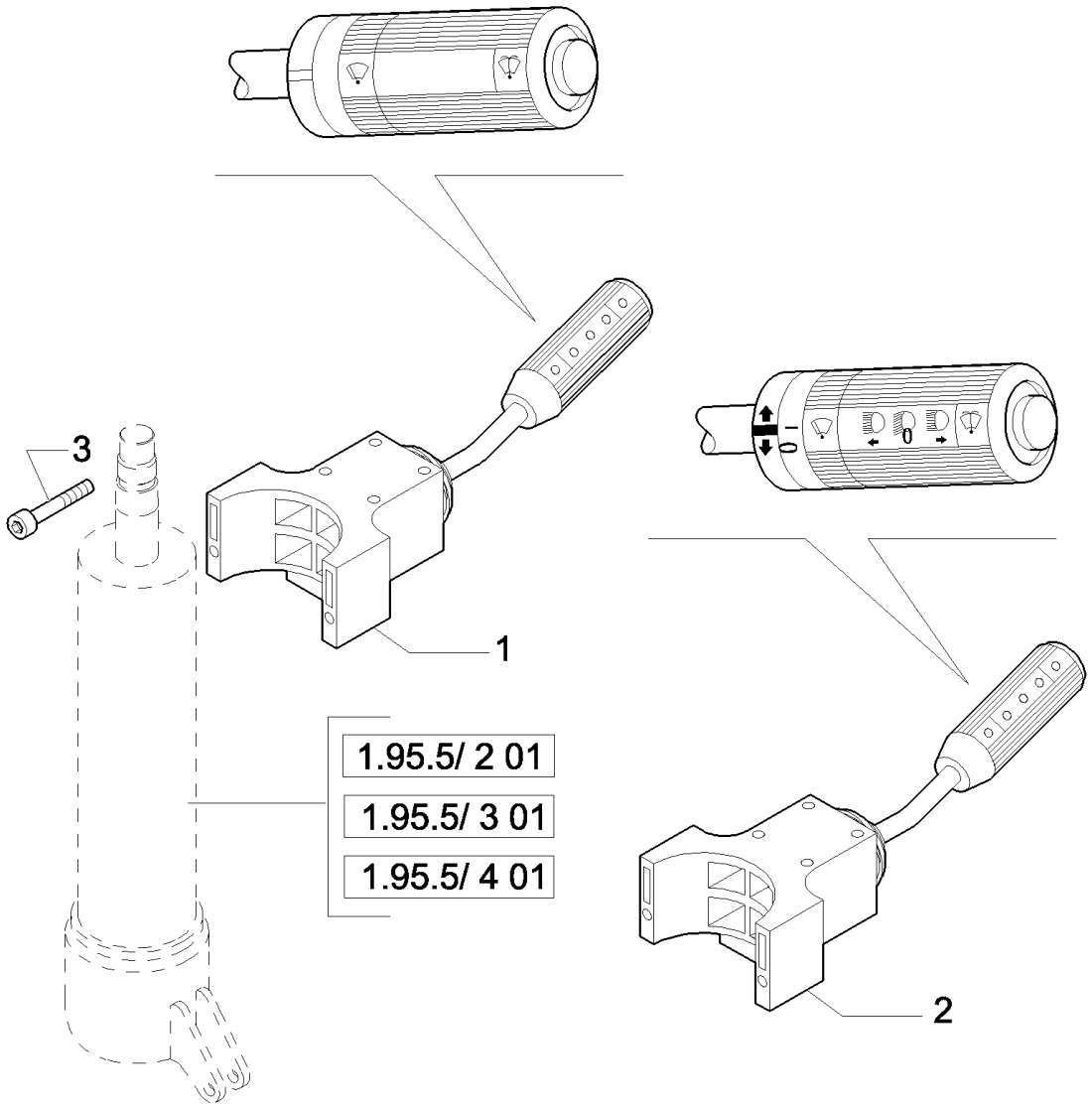

LB115.B EUR BACKHOE LOADER (1/05-)

1.96.0/ 2(01) FOWARD/REVERSE & MULTI-PURPOSE LEVER, CAB (POWER-SHIFT)

Ref	Part Number	Qty	Description
1	85801939	1	SWITCH,
2	85828252	1	SWITCH, ASSY,
3	14304724	2	SCREW, Hex Soc Hd, M5 x 50, 8.8, Full Thd,

1.96.2(01) STABILIZER CONTROL

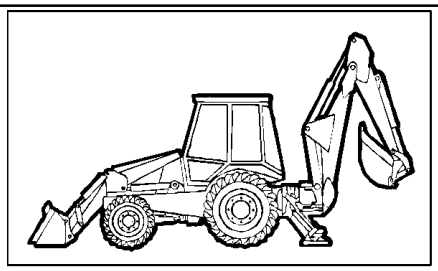

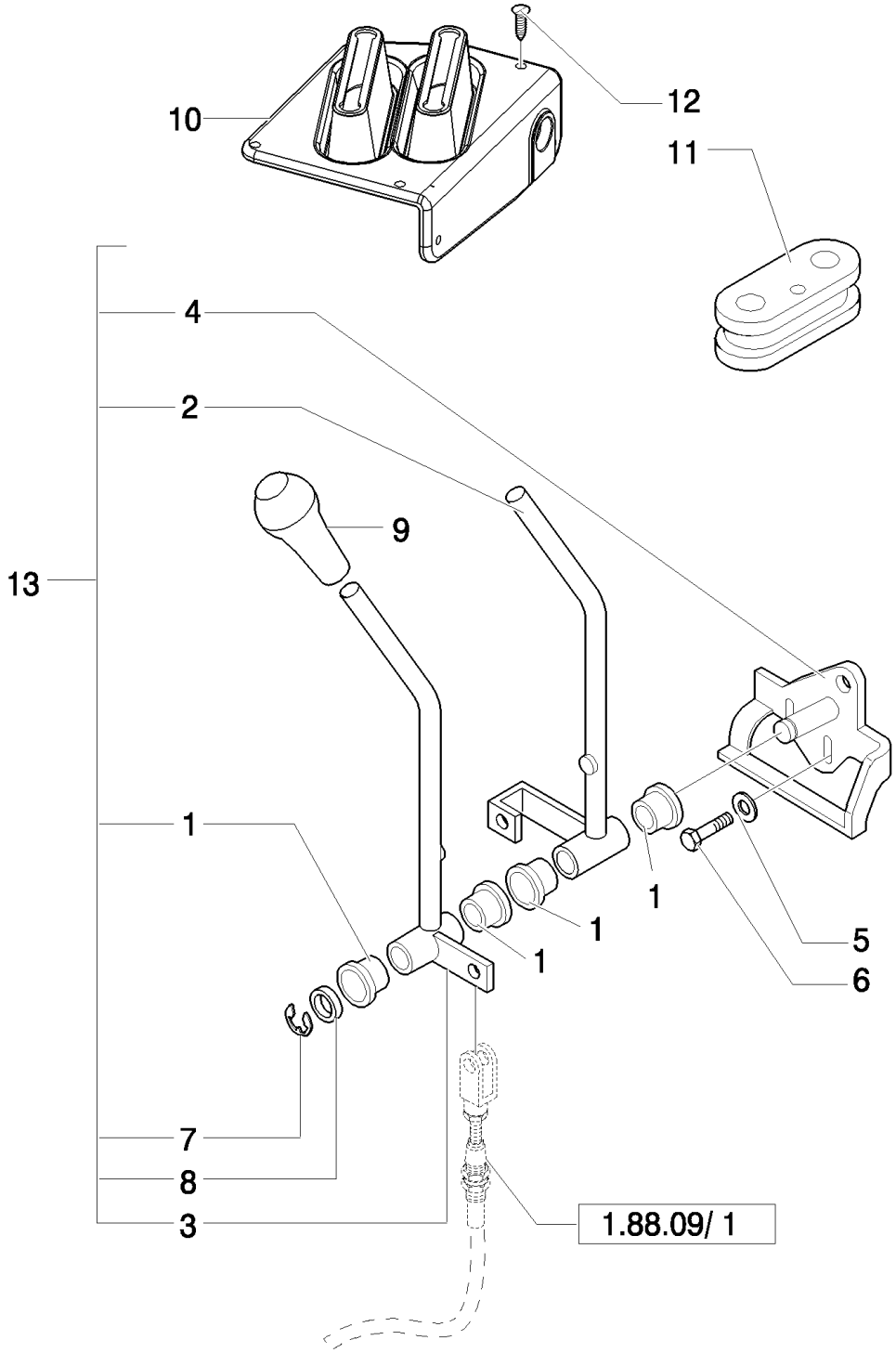

LB115.B EUR BACKHOE LOADER (1/05-)

1.96.2(01) STABILIZER CONTROL

Ref	Part Number	Qty	Description
1	85813136	4	BUSHING,
2	85813134	1	LEVER, RH
3	85813135	1	LEVER, LH
4	85813133	1	SUPPORT,
5	11193874	2	WASHER, SPRING, Belleville, M8.4,
6	16043624	2	SCREW, Hex, M8 x 25, 8.8, Full Thd,
7	85813138	1	CIRCLIP,
8	85813137	1	WASHER,
9	85802763	2	KNOB,
10	85821316	1	BOOT,
11	87407927	1	INSULATOR BLOCK,
12	85827850	6	PLUG,
13	85813100	1	ARM, TRIP, , Includes 1 To 4, 7, 8

Mechanical Version

1.96.2(02) STABILIZER CONTROL

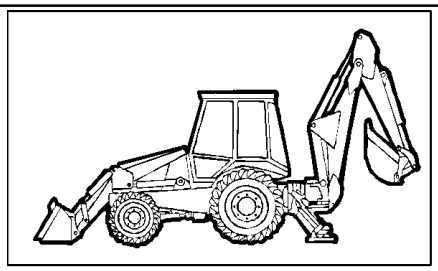

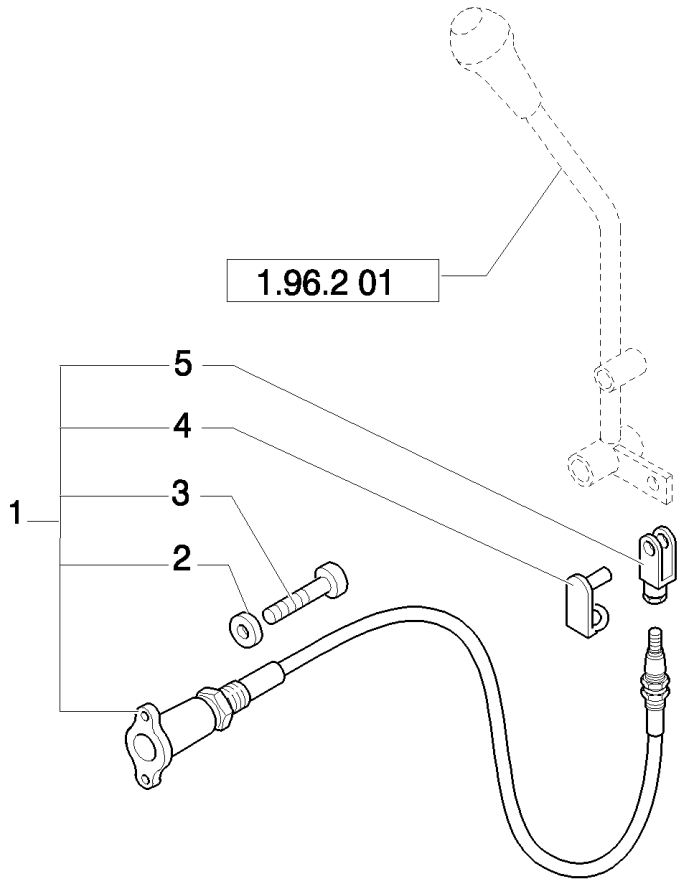

LB115.B EUR BACKHOE LOADER (1/05-)

1.96.2(02) STABILIZER CONTROL

Ref	Part Number	Qty	Description
1	85813104	2	CABLE,
2	85813201	4	WASHER,
3	85813200	4	SCREW, M6 x 15
4	85813186	2	CLIP,
5	85813187	2	CLEVIS,

Mechanical Version

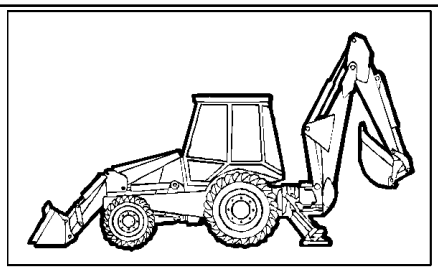

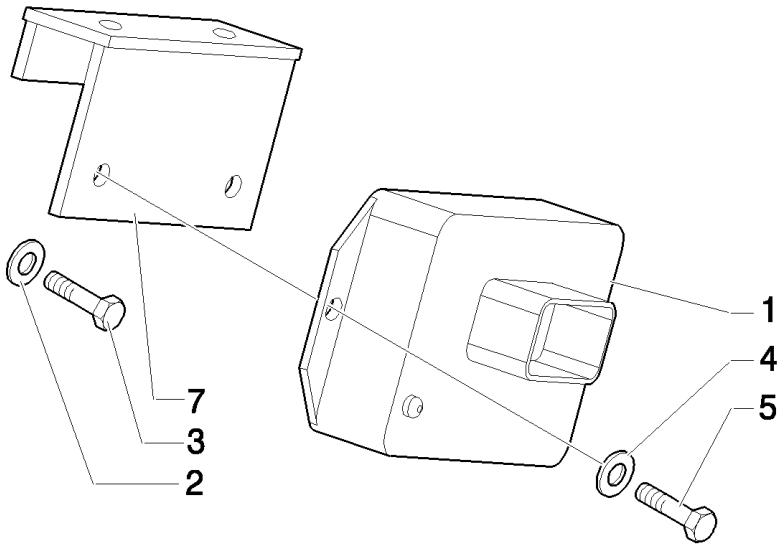

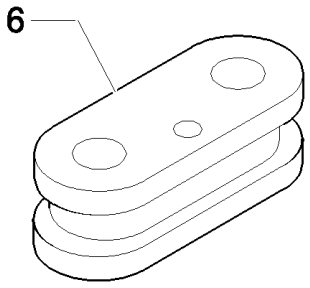

Pilot Control Version 87419454 Black Box Controller for Machines W/O Bi-Directional Auxiliary Hydraulics; 87419455 White Box Controller for Machines W/Bi-Directional Auxiliary Hydraulics. 87419455 Can Service All Machines Equipped With or Without Bi-Directional Auxiliary Hydraulics.

LB115.B EUR BACKHOE LOADER (1/05-)

1.96.2/ 1(01) PILOT CONTROL DIAGNOSTICS

Ref	Part Number	Qty	Description
1	87419454	1	BOX, , 6 function black color
1	87419455	1	CONTROL UNIT, , 8 function white color
2	11193874	2	WASHER, SPRING, Belleville, M8.4,
3	16043624	2	SCREW, Hex, M8 x 25, 8.8, Full Thd,
4	47048959	2	WASHER,
5	85824079	2	SCREW, M4x20
6	87407927	1	INSULATOR BLOCK,
7	85828213	1	SUPPORT,

Pilot Control Version 87419454 Black Box Controller for Machines W/O Bi-Directional Auxiliary Hydraulics; 87419455 White Box Controller for Machines W/Bi-Directional Auxiliary Hydraulics. 87419455 Can Service All Machines Equipped With or Without Bi-Directional Auxiliary Hydraulics.

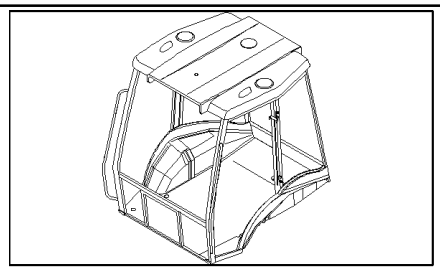

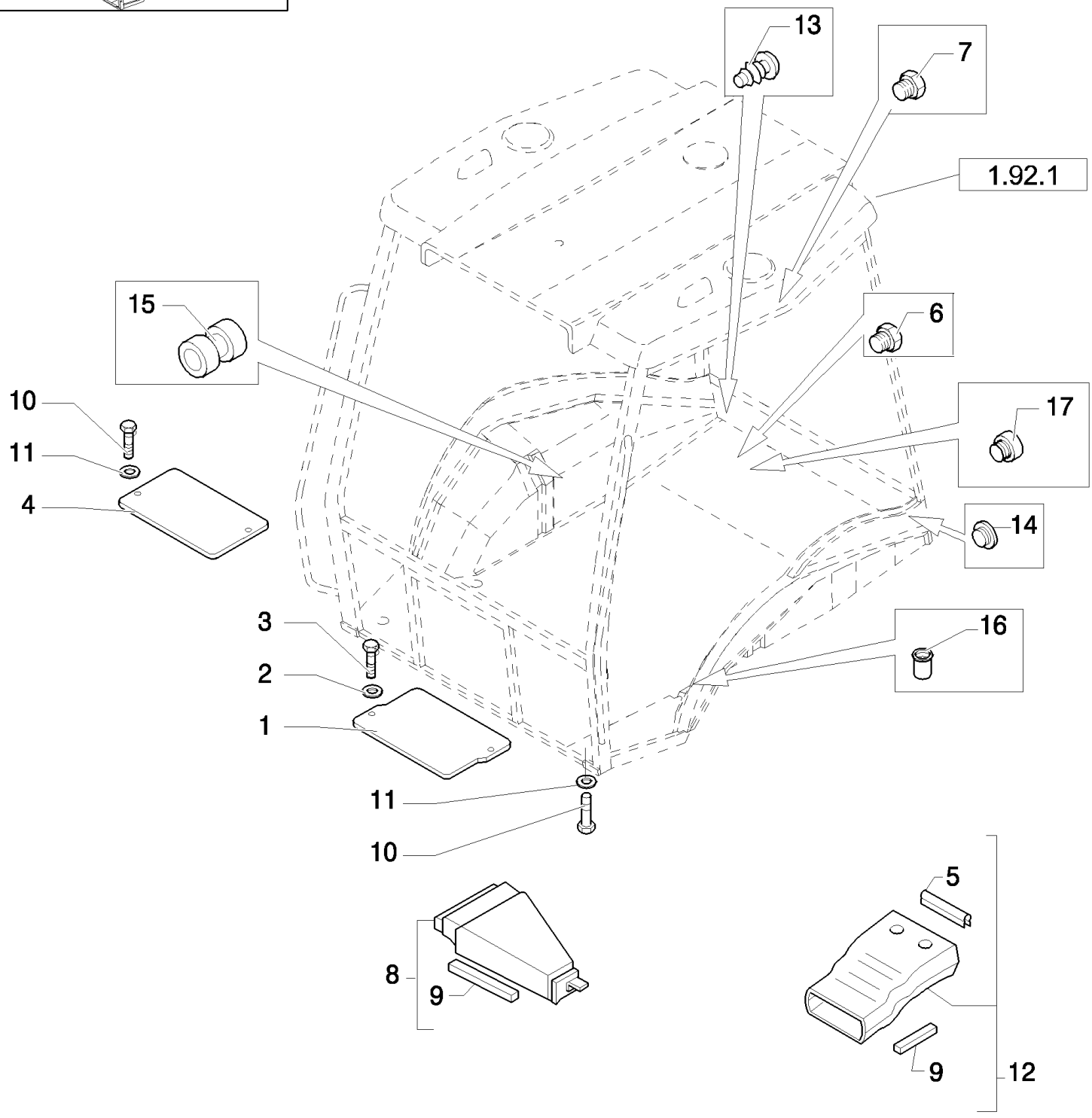
13
7
1.92.1
15
6
10
17
11
4
14
3
16
2
1
11
10
5
8
9
9
12

LB115.B EUR BACKHOE LOADER (1/05-)

1.96.7/ 2(01) CAB / MISCELLANEOUS CAPS (CENTER PIVOT) USA

Ref	Part Number	Qty	Description
1	85801968	1	PLATE,
2	11198074	2	WASHER, SPRING, Belleville, M8.4,
3	16043424	2	SCREW, Hex, M8 x 20, 8.8, Full Thd,
4	85802225	1	COVER,
5	85812021	1	STRIP, SEALING,
6	79111978	5	PLUG,
7	83994150	2	PLUG,
8	85805200	1	DUCT, AIR, FRONT
9	85806023	1	STRIP, SEALING,
10	10902224	5	SCREW, Hex, M6 x 16, 8.8, Full Thd,
11	11193274	5	WASHER, SPRING, Belleville, M6.4,
12	85820141	1	DUCT, AIR,
13	85802310	4	PLUG,
14	85802227	1	PLUG,
15	10398580	2	RING, INSULATING,
16	85801953	2	RIVET,
17	85802309	2	PLUG,

Mechanical Version

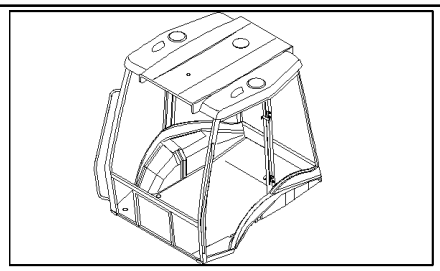

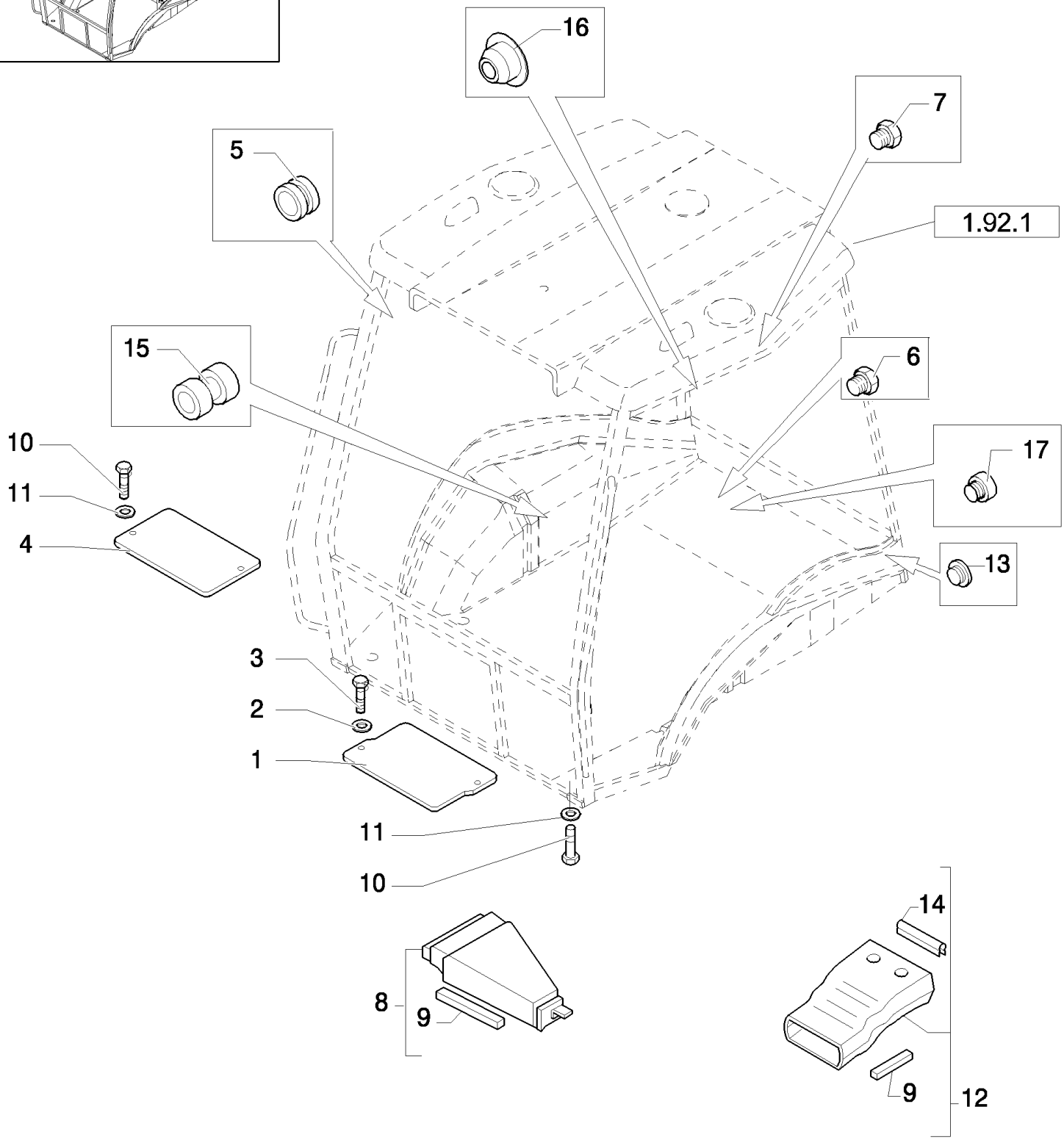
16
7
5
1.92.1
15
6
10
17
11
4
13
3
2
1
11
10
14
8
9
9
12

LB115.B EUR BACKHOE LOADER (1/05-)

1.96.7/ 3(01) CAB / MISCELLANEOUS CAPS (POWER SHIFT) EUR

Ref	Part Number	Qty	Description
1	85801968	1	PLATE,
2	11198074	2	WASHER, SPRING, Belleville, M8.4,
3	120104	2	SCREW, Hex, M8 x 20, 8.8,
4	85802225	1	COVER,
5	85801941	3	RING, RUBBER,
6	79111978	5	PLUG,
7	83994150	2	PLUG,
8	85805200	1	DUCT, AIR, FRONT.
9	85806023	1	STRIP, SEALING,
10	86508568	5	SCREW, Hex, M6 x 16, 8.8,
11	11193274	5	WASHER, SPRING, Belleville, M6.4,
12	85820141	1	DUCT, AIR,
13	85802227	1	PLUG,
14	85812021	1	STRIP, SEALING,
15	10398580	2	RING, INSULATING,
16	82003283	2	PLUG,
17	85802309	2	PLUG,

Mechanical Version

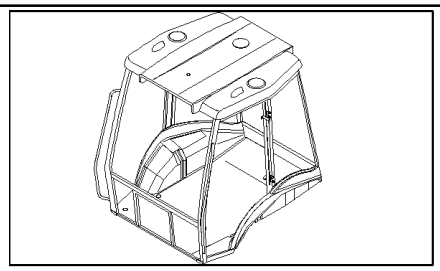

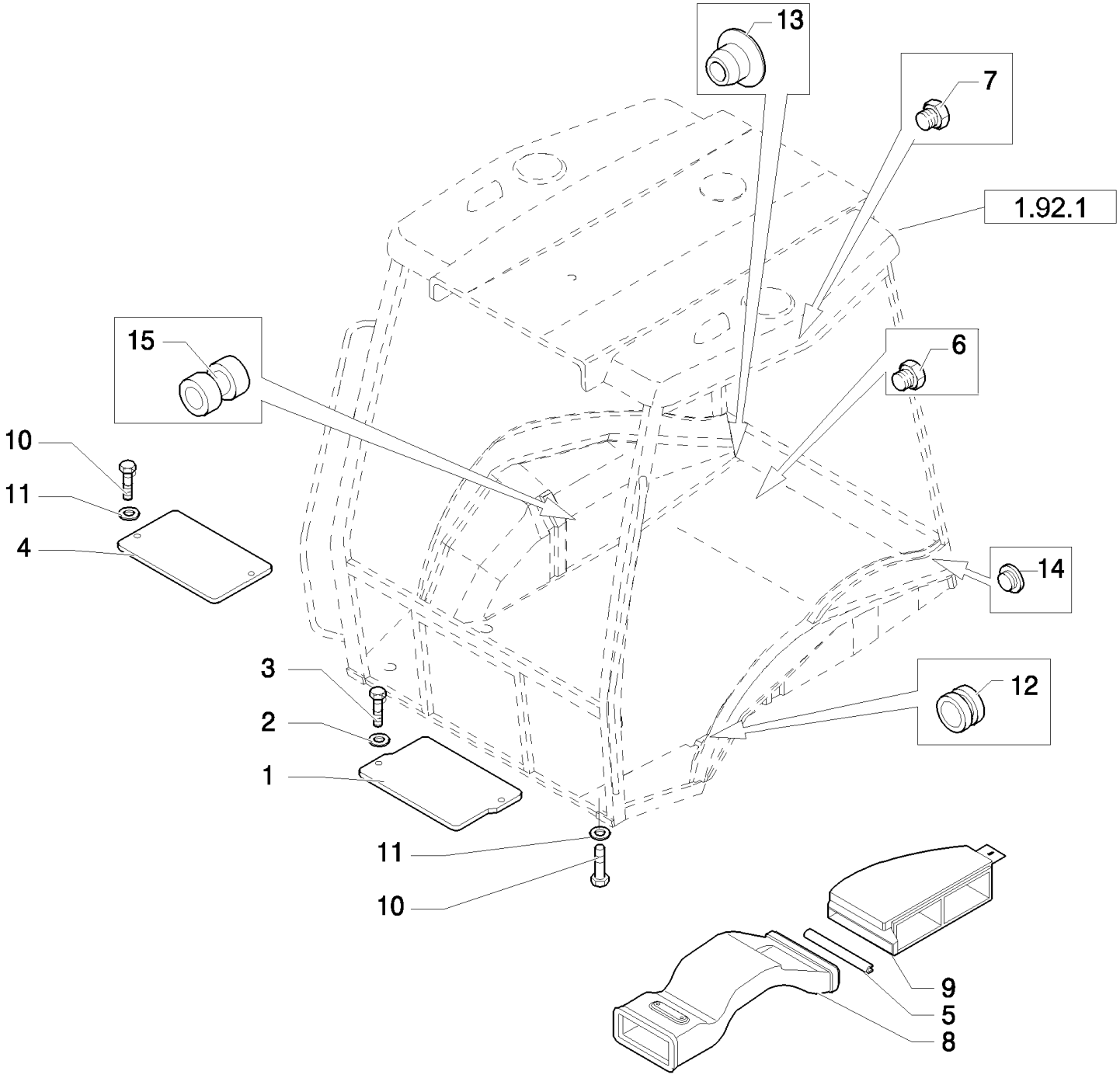

Pilot Control Version

LB115.B EUR BACKHOE LOADER (1/05-)

1.96.7/ 8(01) CAB / MISCELLANEOUS CAPS (CENTER PIVOT) USA

Ref	Part Number	Qty	Description
1	85801968	1	PLATE,
2	11198074	2	WASHER, SPRING, Belleville, M8.4,
3	16043424	2	SCREW, Hex, M8 x 20, 8.8, Full Thd,
4	85802225	1	COVER,
5	85812021	1	STRIP, SEALING,
6	79111978	5	PLUG,
7	83994150	2	PLUG,
8	87408277	1	DUCT, AIR, FRONT
9	87319754	1	DUCT, AIR,
10	10902224	5	SCREW, Hex, M6 x 16, 8.8, Full Thd,
11	11193274	5	WASHER, SPRING, Belleville, M6.4,
12	85801941	1	RING, RUBBER,
13	82003283	4	PLUG,
14	85802227	1	PLUG,
15	10398580	2	RING, INSULATING,

Pilot Control Version

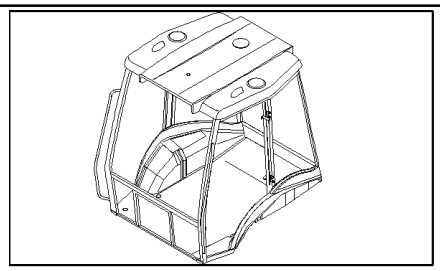

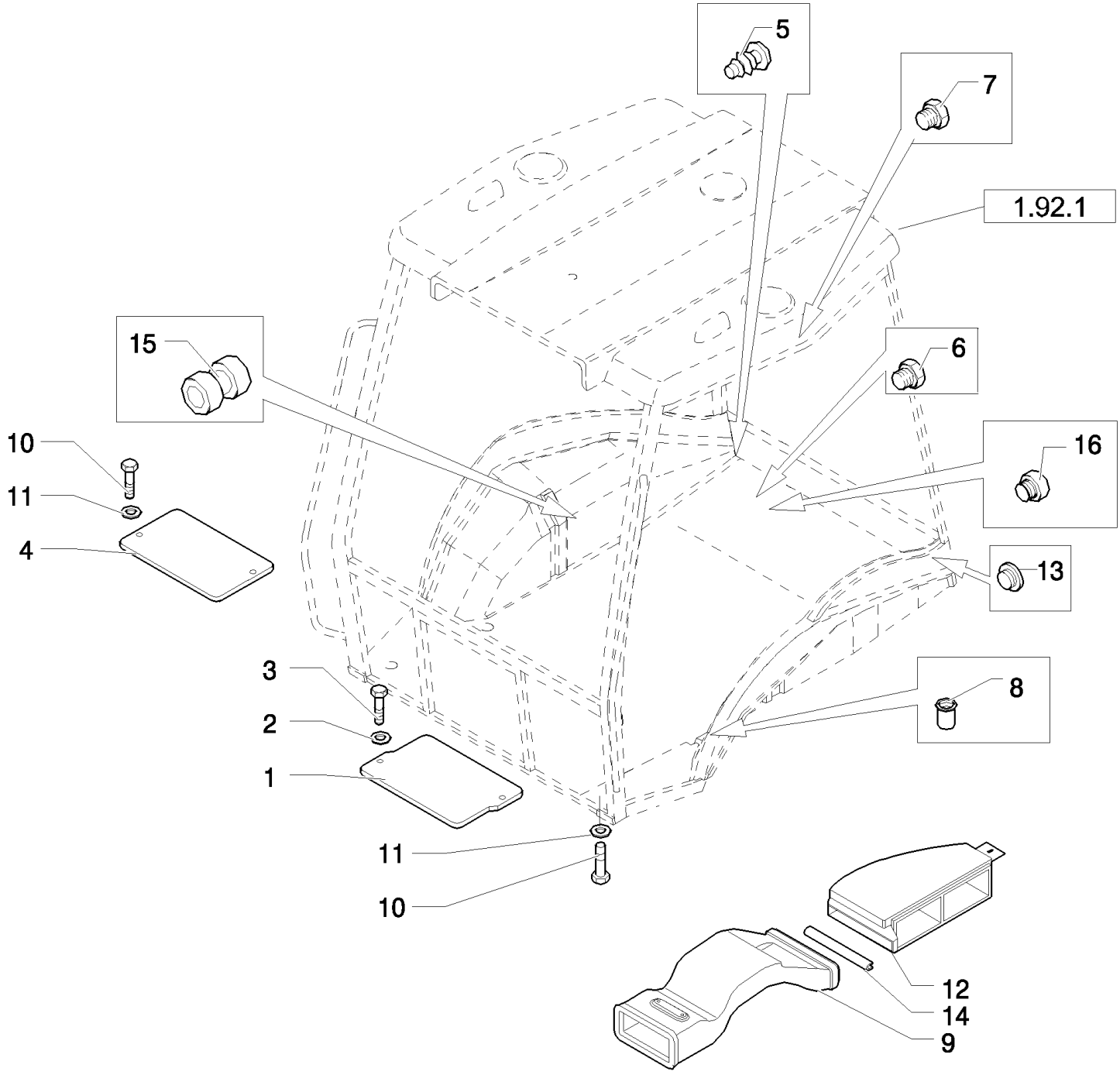
5
7
1.92.1
15
6
10
16
11
4
13
3
8
2
1
11
10
12
14
9

LB115.B EUR BACKHOE LOADER (1/05-)

1.96.7/ 9(01) CAB / MISCELLANEOUS CAPS (POWER SHIFT) EUR

Ref	Part Number	Qty	Description
1	85801968	1	PLATE,
2	11198074	2	WASHER, SPRING, Belleville, M8.4,
3	16043424	2	SCREW, Hex, M8 x 20, 8.8, Full Thd,
4	85802225	1	COVER,
5	85802310	4	PLUG,
6	79111978	5	PLUG,
7	83994150	2	PLUG,
8	85801953	2	RIVET,
9	87408277	1	DUCT, AIR,
10	10902224	5	SCREW, Hex, M6 x 16, 8.8, Full Thd,
11	11193274	5	WASHER, SPRING, Belleville, M6.4,
12	87408358	1	PANEL,
13	85802227	1	PLUG,
14	85812021	1	STRIP, SEALING,
15	10398580	2	RING, INSULATING,
16	85802309	2	PLUG,

Pilot Control Version

1.98.0(01) INFORMATION SYMBOL DECALS - EUROPA

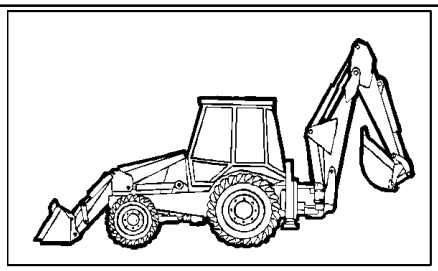

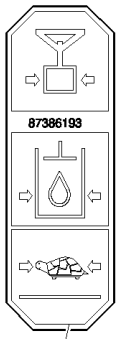

1

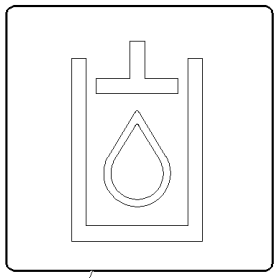

2

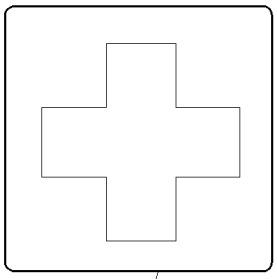

3

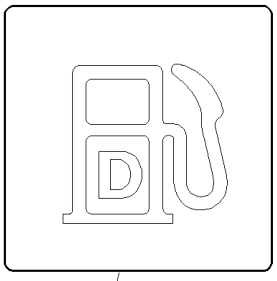

4

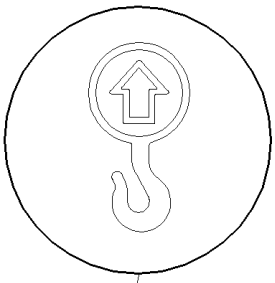

5

6

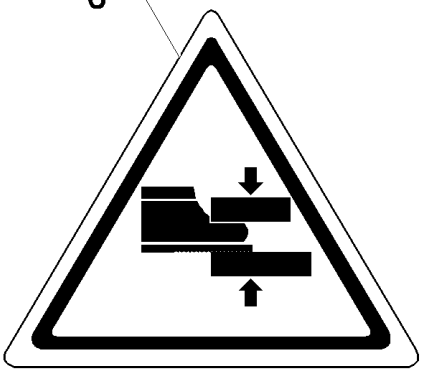

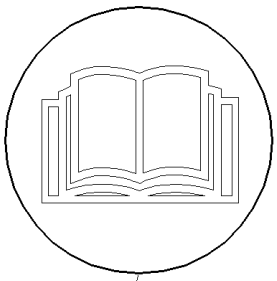

7

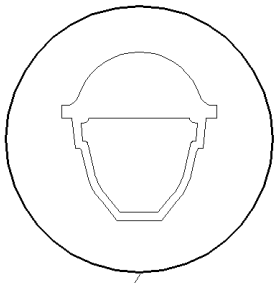

8

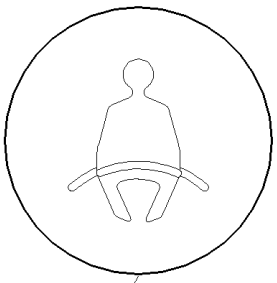

9

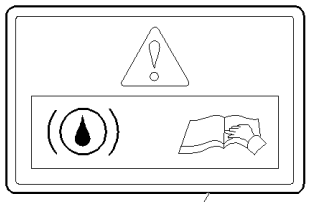

12

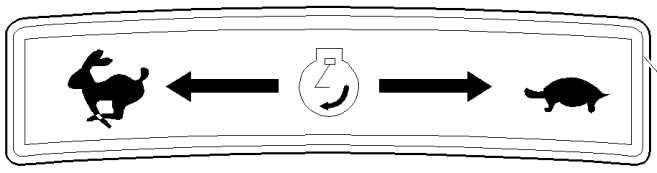

10

11

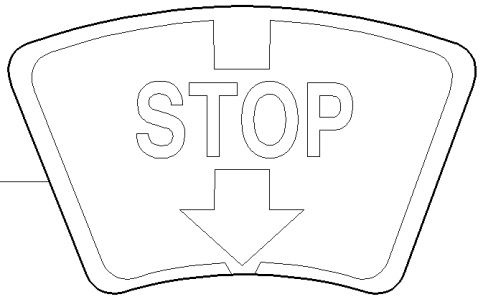

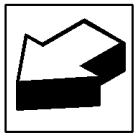

LB115.B EUR BACKHOE LOADER (1/05-)

1.98.0(01) INFORMATION SYMBOL DECALS - EUROPA

Ref	Part Number	Qty	Description
1	87386193	1	DECAL,
2	85804341	1	DECAL,
3	85804339	1	DECAL,
4	85804338	1	DECAL,
5	85804336	4	DECAL,
6	85804332	1	DECAL,
7	85804333	3	DECAL,
8	85804334	2	DECAL,
9	85804335	1	DECAL,
10	85803789	1	DECAL,
11	85802441	1	DECAL,
12	85807870	1	DECAL,

1.98.0(02) WARNING SYMBOL DECALS - EUROPA

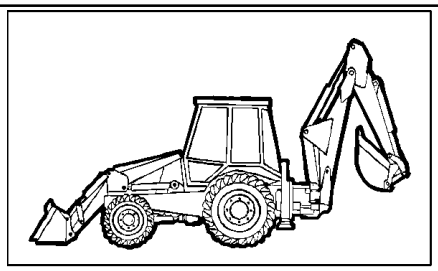

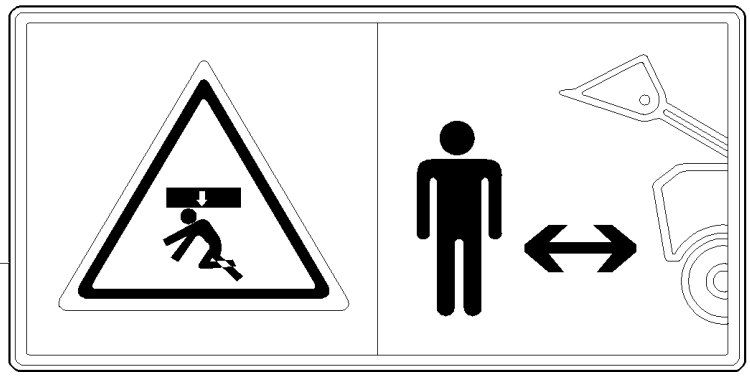

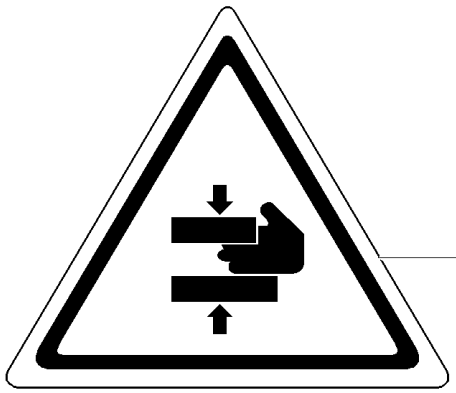



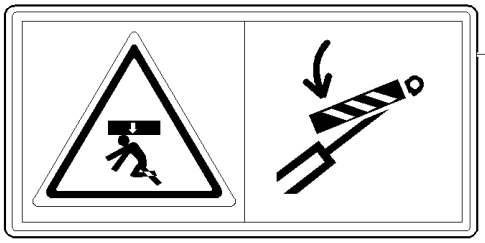



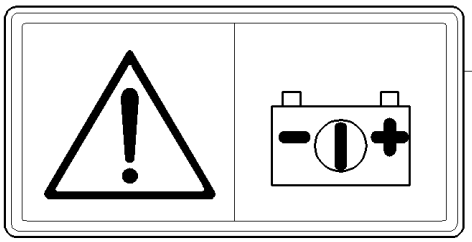

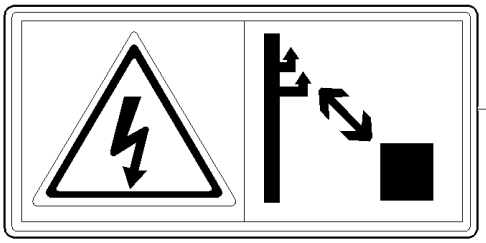

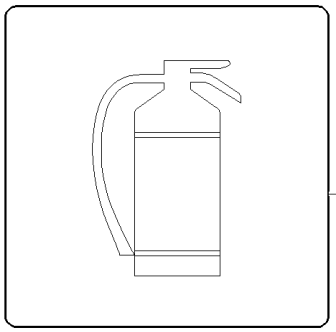

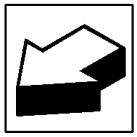

LB115.B EUR BACKHOE LOADER (1/05-)

1.98.0(02) WARNING SYMBOL DECALS - EUROPA

Ref	Part Number	Qty	Description
1	85804324	2	DECAL,
2	85804330	1	DECAL,
3	85804331	4	DECAL,
4	85804329	6	DECAL,
5	85804325	1	DECAL,
6	85804326	1	DECAL,
7	85804327	1	DECAL,
8	85804337	1	DECAL,

1.98.0(03) CAB WARNING & INFORMATION DECALS - EUROPA

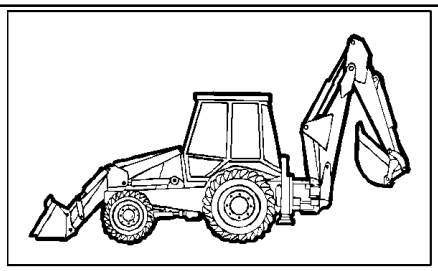

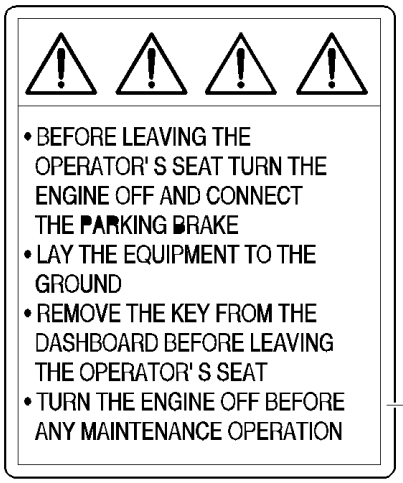

4



3

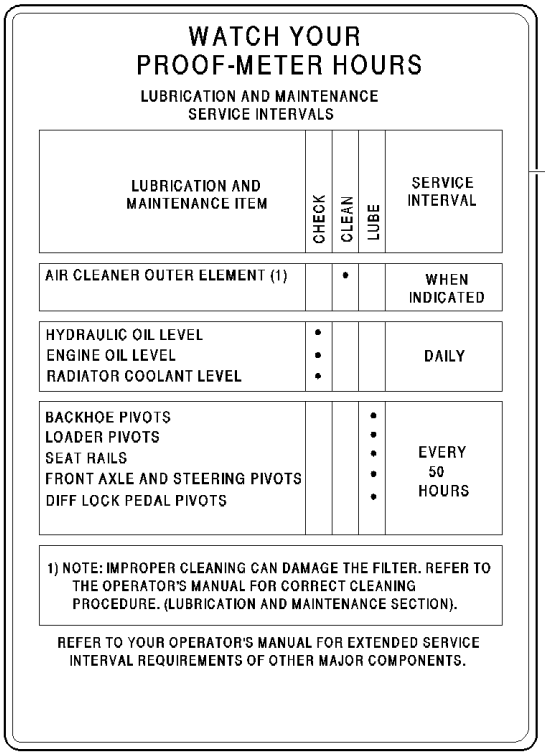

WATCH YOUR
PROOF-METER HOURS

LUBRICATION AND MAINTENANCE
SERVICE INTERVALS

LUBRICATION AND MAINTENANCE ITEM	CHECK	CLEAN	LUBE	SERVICE INTERVAL
AIR CLEANER OUTER ELEMENT (1)		•		WHEN INDICATED
HYDRAULIC OIL LEVEL ENGINE OIL LEVEL RADIATOR COOLANT LEVEL	• • •			DAILY
BACKHOE PIVOTS LOADER PIVOTS SEAT RAILS FRONT AXLE AND STEERING PIVOTS DIFF LOCK PEDAL PIVOTS			• • • • •	EVERY 50 HOURS

1) NOTE: IMPROPER CLEANING CAN DAMAGE THE FILTER. REFER TO THE OPERATOR'S MANUAL FOR CORRECT CLEANING PROCEDURE. (LUBRICATION AND MAINTENANCE SECTION).

REFER TO YOUR OPERATOR'S MANUAL FOR EXTENDED SERVICE INTERVAL REQUIREMENTS OF OTHER MAJOR COMPONENTS.

1

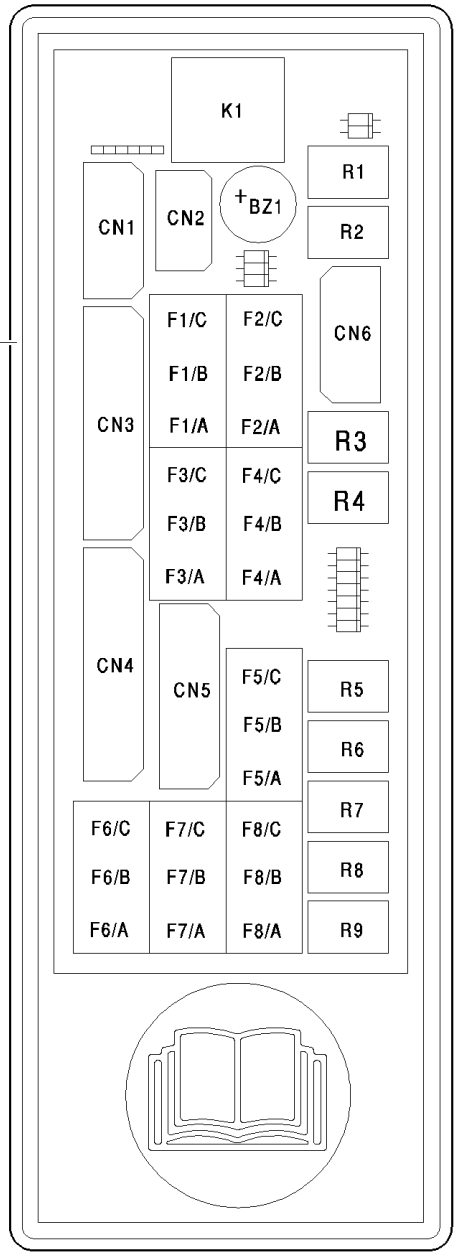

2



5

LB115.B EUR BACKHOE LOADER (1/05-)

1.98.0(03) CAB WARNING & INFORMATION DECALS - EUROPA

Ref	Part Number	Qty	Description
1	85828075	1	DECAL, FINNISH
1	85828076	1	DECAL, SWEDISH
1	85828072	1	DECAL, NORWEGIAN
1	85828073	1	DECAL, DANISH
1	85821915	1	DECAL, ENGLISH
1	85828050	1	DECAL, FRENCH
1	85828062	1	DECAL, SPANISH
1	85828077	1	DECAL, DUTCH
1	85828078	1	DECAL, POTUGUESE
1	85828079	1	DECAL, GREEK
1	85828071	1	DECAL, ITALIAN
1	85828074	1	DECAL, GERMAN
1	87324353	1	DECAL,
1	87319999	1	DECAL,
1	87323058	1	DECAL,
1	87319995	1	DECAL,
1	87323062	1	DECAL,
1	87323054	1	DECAL,
1	87319991	1	DECAL,
1	87323066	1	DECAL,
1	87324357	1	DECAL,
2	85802250	1	DECAL,
3	85804357	3	DECAL, FRENCH
4	85802242	2	DECAL, Finnish
4	85802245	2	DECAL, Swedish
4	85802248	2	DECAL, Norwegian
4	85802251	2	DECAL, Dutch
4	85802254	2	DECAL, Portuguese
4	85802257	2	DECAL, Greek
4	85802260	2	DECAL, Danish
4	85804328	2	DECAL, Italian
4	85804400	2	DECAL, English
4	85804401	2	DECAL, French
4	85804402	2	DECAL, German
4	85804403	2	DECAL, Spanish
4	87323051	1	DECAL,
4	87323059	1	DECAL,
4	87319996	1	DECAL,
4	87323063	1	DECAL,
4	87323055	1	DECAL,
4	87319992	1	DECAL,
4	87323067	1	DECAL,
4	87324358	1	DECAL,

LB115.B EUR BACKHOE LOADER (1/05-)

1.98.0(03) CAB WARNING & INFORMATION DECALS - EUROPA

Ref	Part Number	Qty	Description
4	87324354	1	DECAL,
5	85804358	3	DECAL, , Only for FRANCE Version

1.98.0(04) BACKHOE, LOADER & ENGINE WARNING DECALS - EUROPA

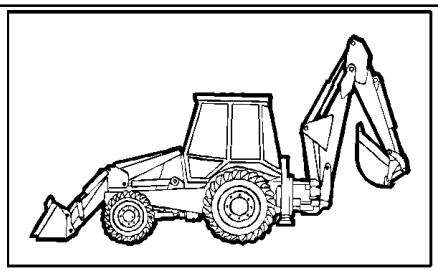

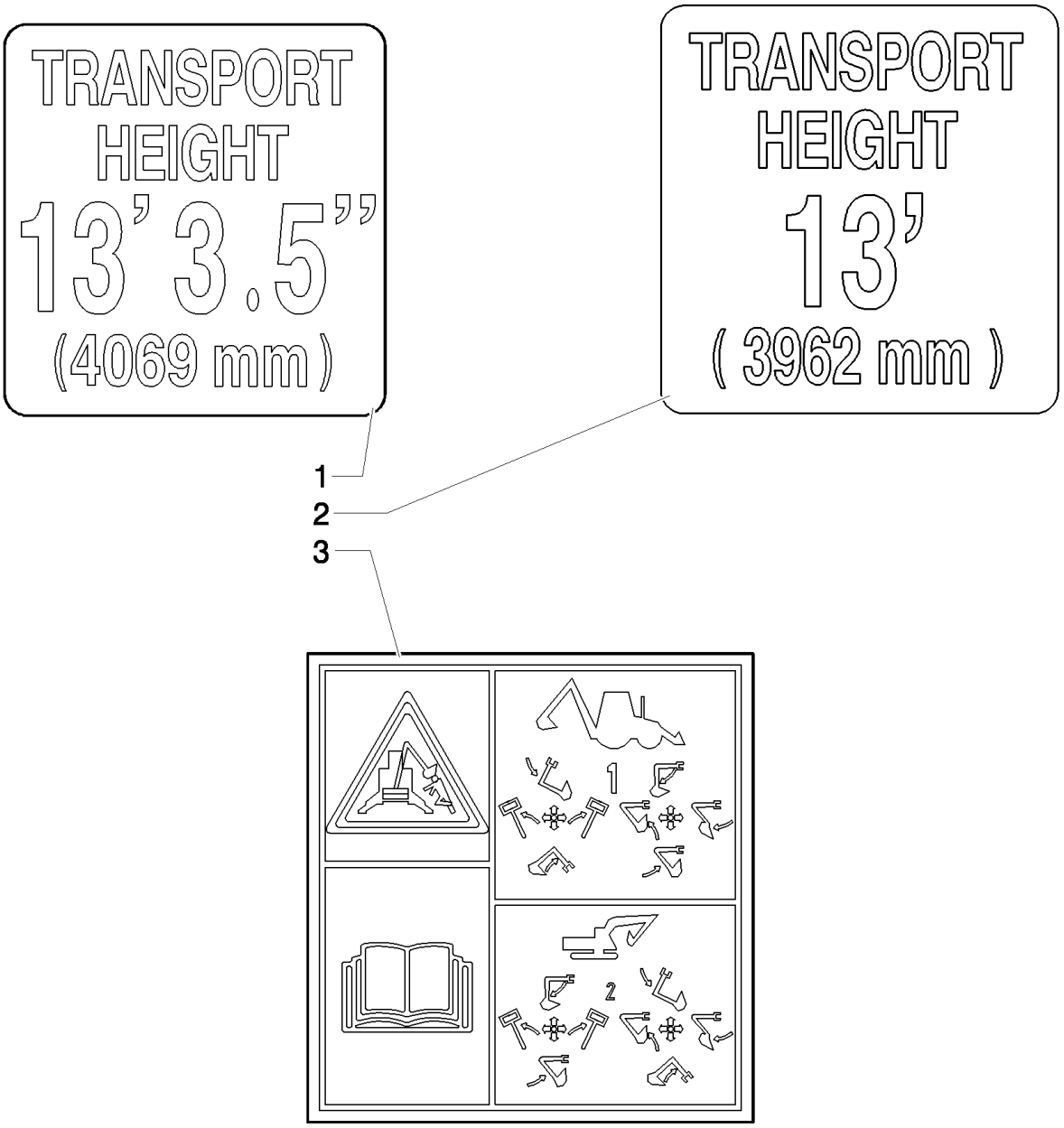

LB115.B EUR BACKHOE LOADER (1/05-)

1.98.0(04) BACKHOE, LOADER & ENGINE WARNING DECALS - EUROPA

Ref	Part Number	Qty	Description
1	85812279	1	DECAL, , Only for LB115.B UK VERSION
2	85805829	1	DECAL, , Only for NA Pilot Control Version
3	87305953	1	DECAL,

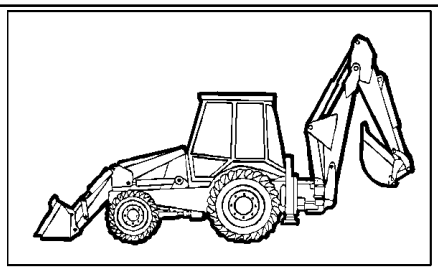

1

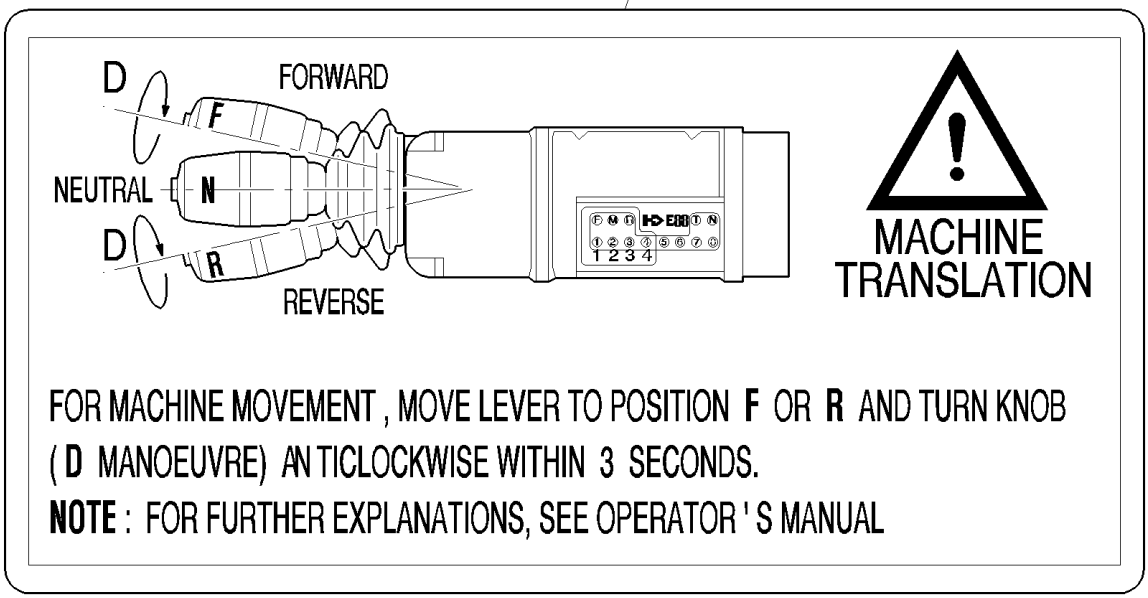
D
FORWARD
F
NEUTRAL
N
D
R
REVERSE
1 2 3 4
MACHINE
TRANSLATION
FOR MACHINE MOVEMENT , MOVE LEVER TO POSITION F OR R AND TURN KNOB
(D MANOEUVRE) AN TICLOCKWISE WITHIN 3 SECONDS.
NOTE : FOR FURTHER EXPLANATIONS, SEE OPERATOR ' S MANUAL

LB115.B EUR BACKHOE LOADER (1/05-)

1.98.0/ 2(01) FOWARD/REVERSE & STEERING DECALS - POWER SHIFT

Ref	Part Number	Qty	Description
1	85804959	1	DECAL, English
1	85805671	1	DECAL, Danish , Only for LB110.B - LB115.B
1	85805672	1	DECAL, Finnish, Only for LB110.B - LB115.B
1	85805673	1	DECAL, Dutch, Only for LB110.B - LB115.B
1	85805674	1	DECAL, Swedish, Only for LB110.B - LB115.B
1	85805675	1	DECAL, Portuguese, Only for LB110.B - LB115.B
1	85805676	1	DECAL, Norwegian, Only for LB110.B - LB115.B
1	85805677	1	DECAL, Greek, Only for LB110.B - LB115.B
1	85805678	1	DECAL, Italian, Only for LB110.B - LB115.B
1	85805679	1	DECAL, French, Only for LB110.B - LB115.B - B115
1	85805680	1	DECAL, German, Only for LB110.B - LB115.B
1	85805681	1	DECAL, Spanish
1	87323052	1	DECAL, , Only for LB110.B - LB115.B
1	87323060	1	DECAL, , Only for LB110.B - LB115.B
1	87319997	1	DECAL, , Only for LB110.B - LB115.B
1	87323064	1	DECAL, , Only for LB110.B - LB115.B
1	87323056	1	DECAL, , Only for LB110.B - LB115.B
1	87319993	1	DECAL, , Only for LB110.B - LB115.B
1	87323068	1	DECAL, , Only for LB110.B - LB115.B
1	87324359	1	DECAL, , Only for LB110.B - LB115.B
1	87324355	1	DECAL, , Only for LB110.B - LB115.B

1.98.0/ 2(02) FOWARD/REVERSE & STEERING DECALS - POWER SHIFT

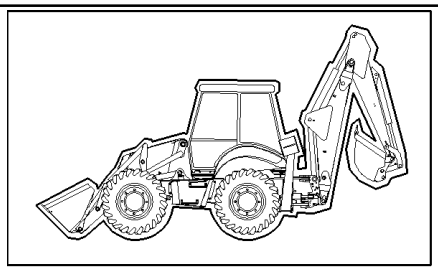

1



LB115.B EUR BACKHOE LOADER (1/05-)

1.98.0/ 2(02) FOWARD/REVERSE & STEERING DECALS - POWER SHIFT

Ref	Part Number	Qty	Description
1	85813493	1	DECAL, Italian, Only for LB115.B
1	85813494	1	DECAL, English, Only for 4WS
1	85813495	1	DECAL, French , Only for 4WS
1	85813496	1	DECAL, German, Only for LB115.B
1	85813497	1	DECAL, Spanish, Only for 4WS
1	85813498	1	DECAL, Finnish, Only for LB115.B
1	85813499	1	DECAL, Swedish, Only for LB115.B
1	85815500	1	DECAL, Norwegian, Only for LB115.B
1	85815501	1	DECAL, Dutch, Only for LB115.B
1	85815502	1	DECAL, Portuguese, Only for LB115.B
1	85815503	1	DECAL, Greek, Only for LB115.B
1	85815504	1	DECAL, Danish, Only for LB115.B
1	87324356	1	DECAL, , Only for LB115.B
1	87323053	1	DECAL, , Only for LB115.B
1	87323061	1	DECAL, , Only for LB115.B
1	87319998	1	DECAL, , Only for LB115.B
1	87323065	1	DECAL, , Only for LB115.B
1	87323057	1	DECAL, , Only for LB115.B
1	87319994	1	DECAL, , Only for LB115.B
1	87323069	1	DECAL, , Only for LB115.B
1	87324360	1	DECAL, , Only for LB115.B

1.98.1(05) LB115.B MODEL IDENTIFICATIO (POWER SHIFT)

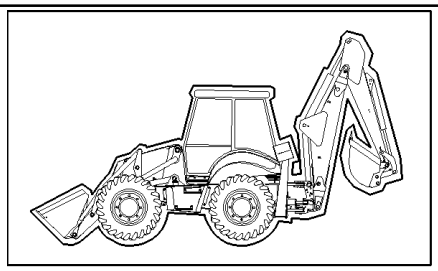

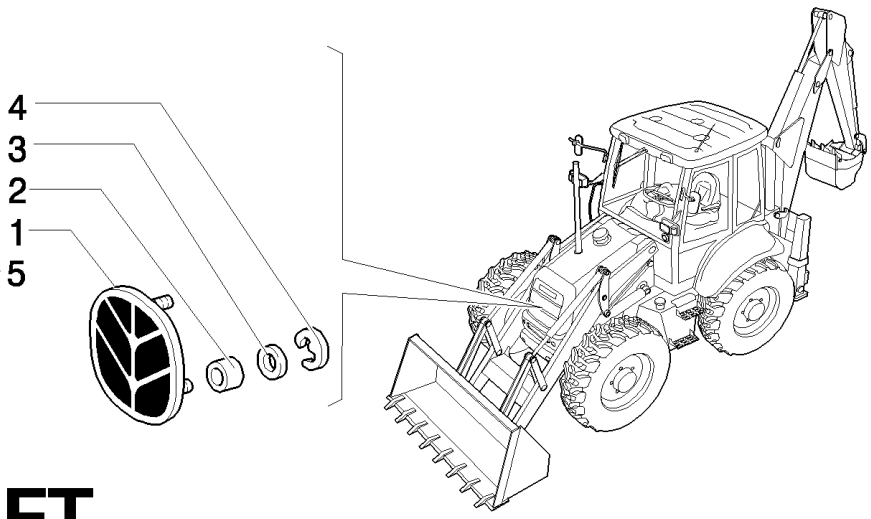

POWERSHIFT

NEW HOLLAND

6

10



NEW HOLLAND

7

11

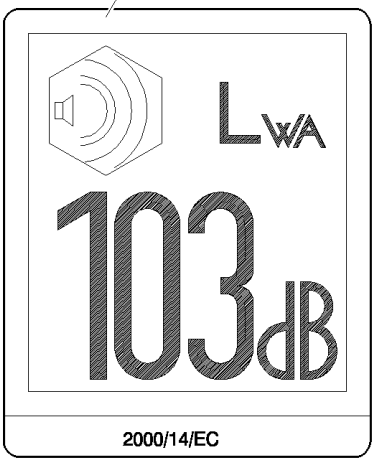

LB115.B

8

LB115.B

9

LB115.B EUR BACKHOE LOADER (1/05-)

1.98.1(05) LB115.B MODEL IDENTIFICATIO (POWER SHIFT)

Ref	Part Number	Qty	Description
1	85820107	1	EMBLEM,
2	12643711	2	WASHER,
3	5138360	2	RING,
4	5135069	2	CLIP,
5	85811898	2	DECAL,
6	87319147	2	DECAL, L=MM.1100
7	87319148	2	DECAL, L=MM.570
8	87319149	2	DECAL, L=MM.700
9	87319161	2	DECAL, L=MM.790
10	85806162	1	DECAL,
11	85824398	1	DECAL, , UP TO S/N XXX
11	87303176	1	DECAL, , Only for ROPS
11	87346214	1	DECAL, , FROM S/N XXX

120(01) SILENT HAMMER CB65S

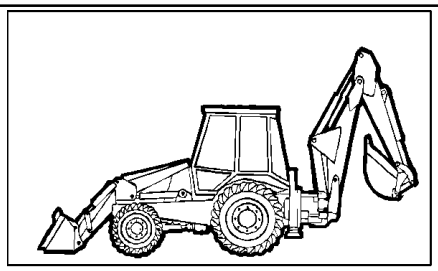

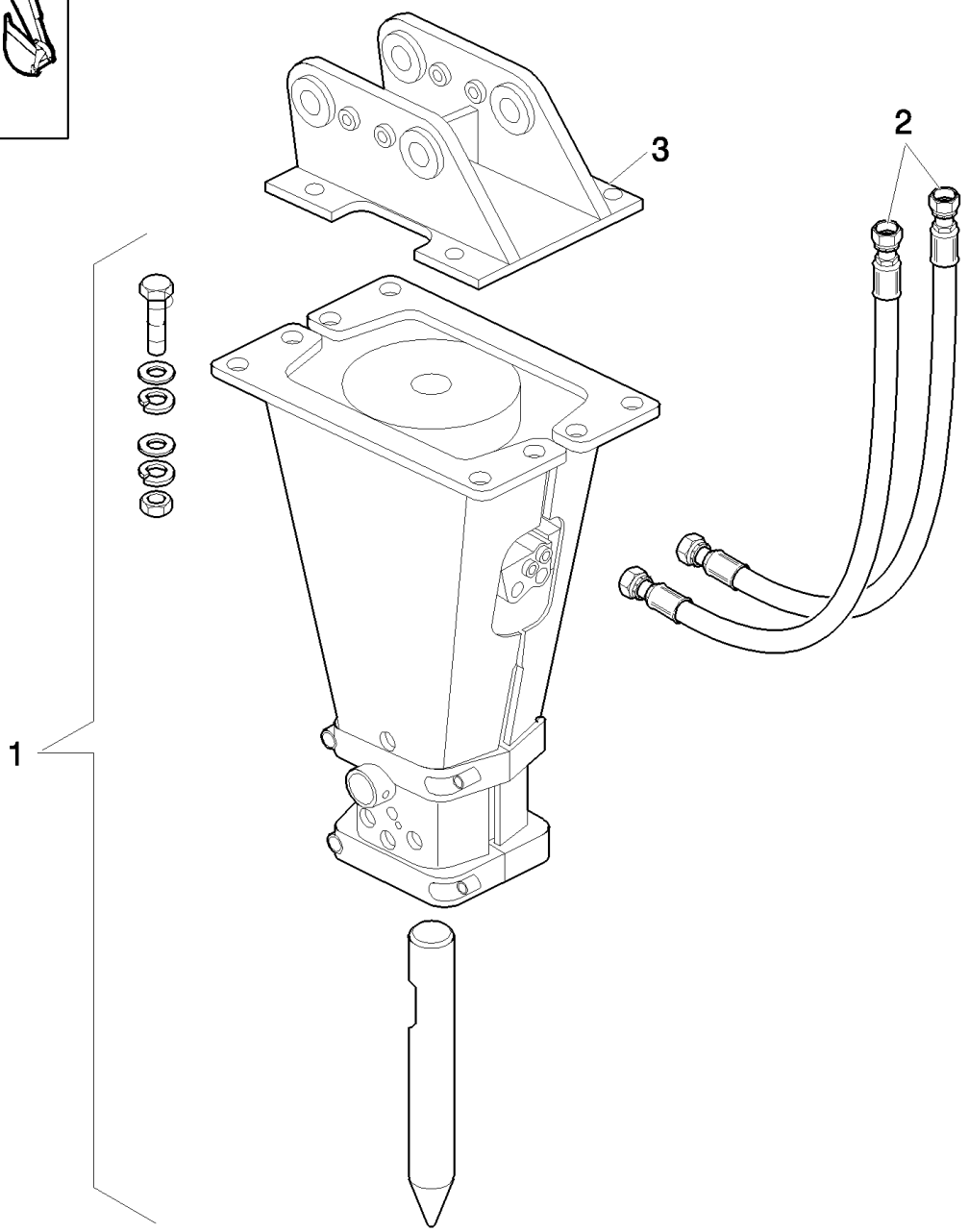

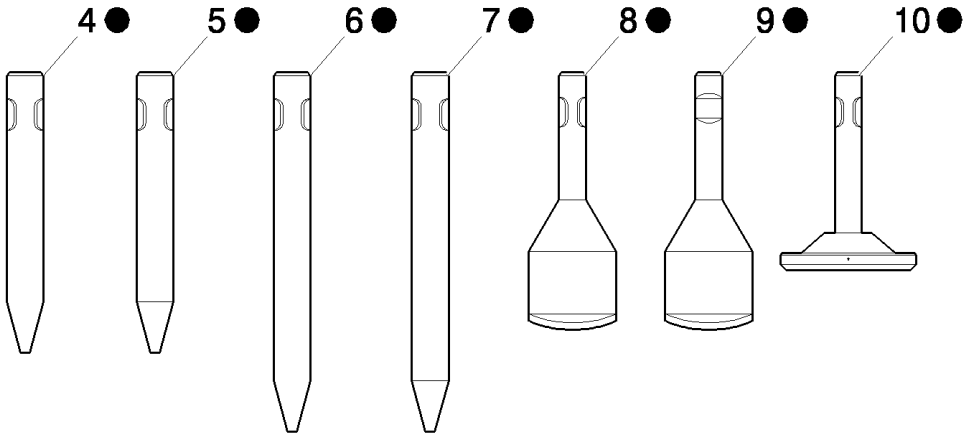

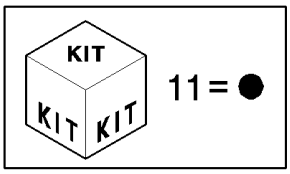

LB115.B EUR BACKHOE LOADER (1/05-)

120(01) SILENT HAMMER CB65S

Ref	Part Number	Qty	Description
1	82848120	1	HAMMER, -ASSY
2	82848343	1	HOSE KIT, L=2380
3	87335337	1	BRACKET, LB
4	87779459	1	POINT,
5	87779461	1	POINT,
6	87779460	1	POINT,
7	85848133	1	
8	87779462	1	TOOL,
9	87779444	1	TOOL, GENERAL,
10	87779474	1	TOOL,
11	87335146	1	

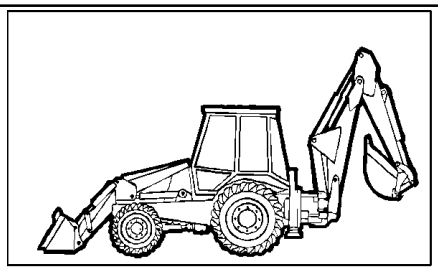

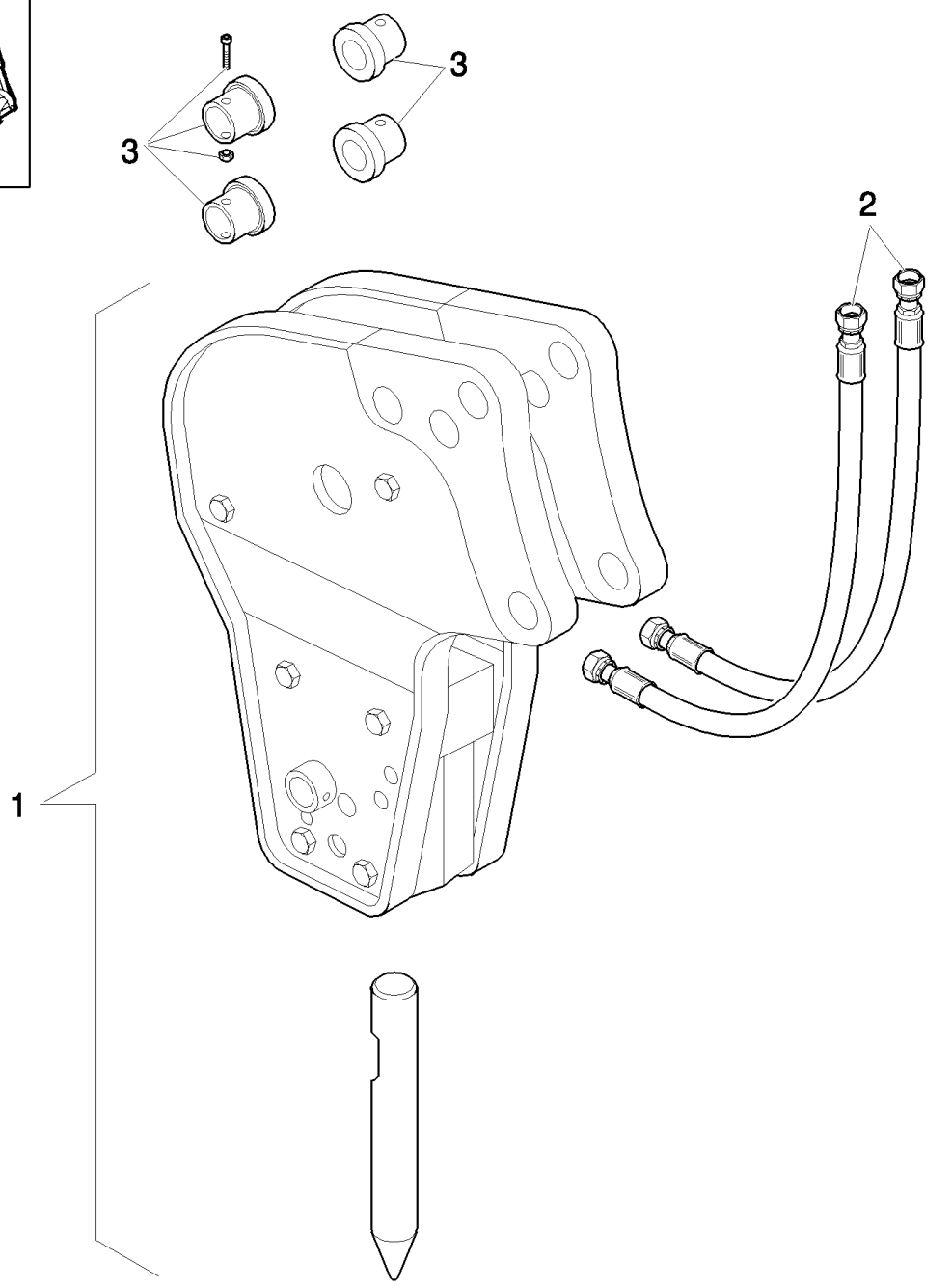
3
3
2
1

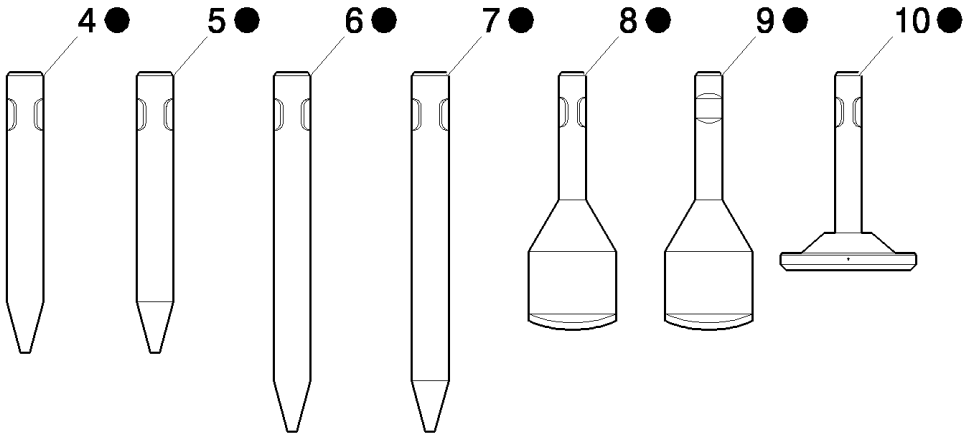
4 ●
5 ●
6 ●
7 ●
8 ●
9 ●
10 ●

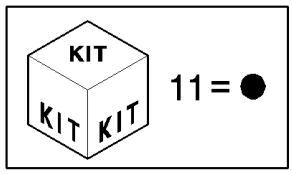
KIT
KIT KIT
11 = ●

LB115.B EUR BACKHOE LOADER (1/05-)

120/ 1(01) HAMMER CB65B

Ref	Part Number	Qty	Description
1	82848118	1	HAMMER, -ASSY
2	82848343	1	HOSE KIT, L=2380
3	82848344	1	SET, BRUSHES, LB
4	87779459	1	POINT,
5	87779461	1	POINT,
6	87779460	1	POINT,
7	85848133	1	
8	87779462	1	TOOL,
9	87779444	1	TOOL, GENERAL,
10	87779474	1	TOOL,
11	87335146	1	

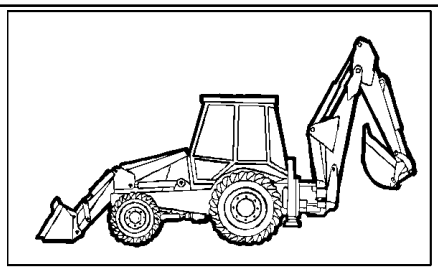

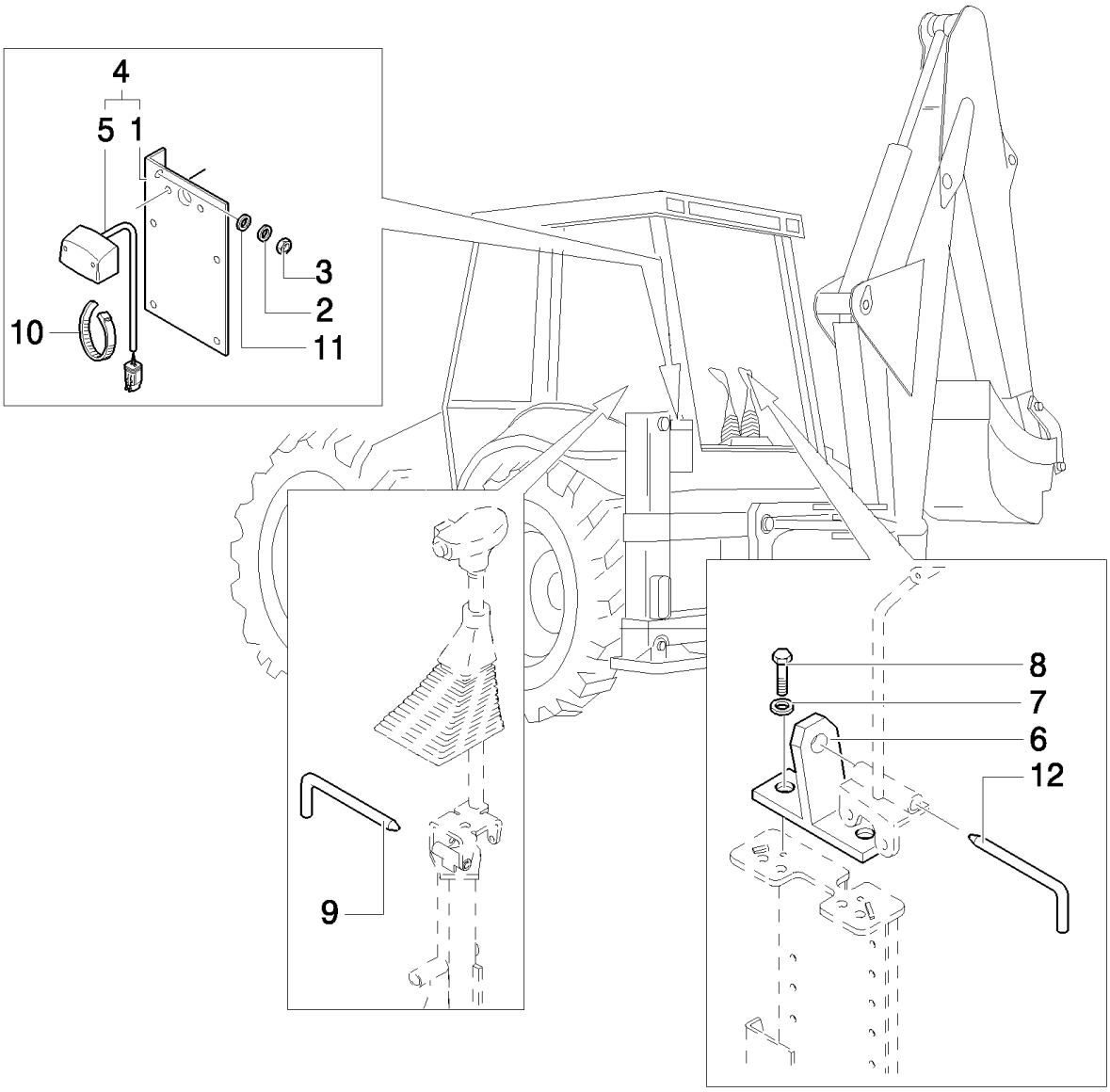
4
5
1
3
2
11
10
9
8
7
6
12

LB115.B EUR BACKHOE LOADER (1/05-)

128(01) APPROVAL FOR ITALY

Ref	Part Number	Qty	Description
1	85803296	1	SUPPORT,
2	11193879	2	WASHER, SPRING, Belleville, M8.4,
3	16100811	2	NUT, M8, Cl 8,
4	87387257	1	LAMP, NUMBER PLATE, , Includes 1, 5
5	87387258	1	LAMP, NUMBER PLATE,
6	85803125	1	STOP, (MECH.)
7	11193979	1	WASHER, SPRING, Belleville, M8.4,
8	16043621	1	BOLT, Hex, M8 x 25, 8.8,
9	85803543	1	PIN,
10	85803332	2	STRAP, CABLE,
11	12647121	2	WASHER, M8 x 20 x 3,
12	85803550	1	PIN, (MECH.)

Mechanical Version

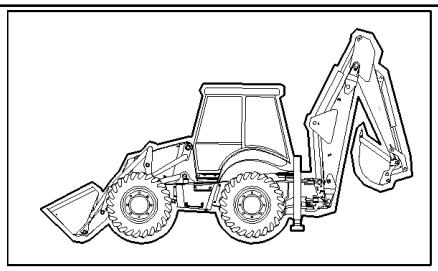

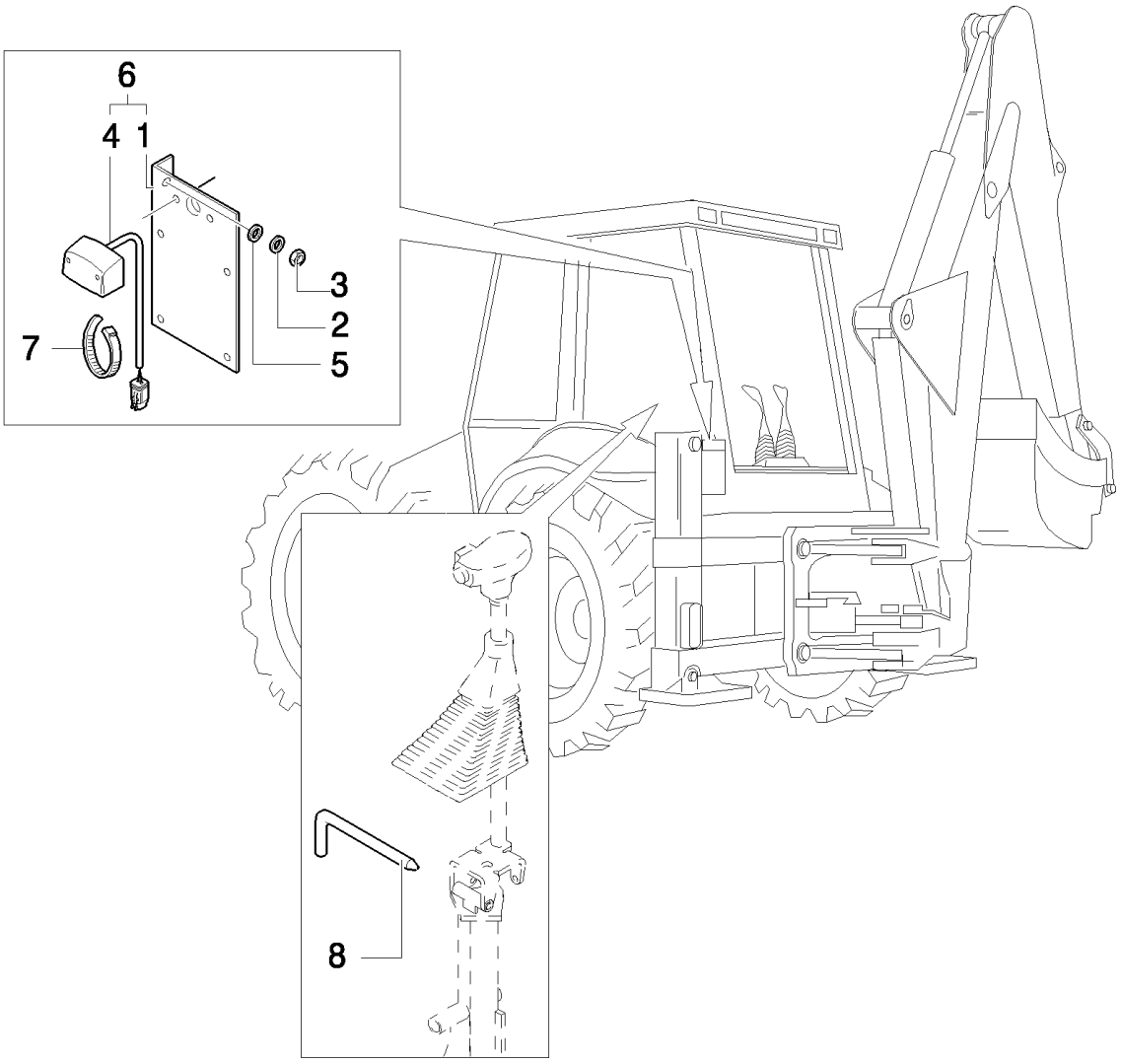
6
4
1
3
2
5
7
8

LB115.B EUR BACKHOE LOADER (1/05-)

128(02) APPROVAL FOR ITALY

Ref	Part Number	Qty	Description
1	85803296	1	SUPPORT,
2	11193879	2	WASHER, SPRING, Belleville, M8.4,
3	16100811	2	NUT, M8, Cl 8,
4	87387258	1	LAMP, NUMBER PLATE,
5	12647121	2	WASHER, M8 x 20 x 3,
6	87387257	1	LAMP, NUMBER PLATE, , Includes 1, 4
7	85803332	2	STRAP, CABLE,
8	85803543	1	PIN,

Pilot Control Version

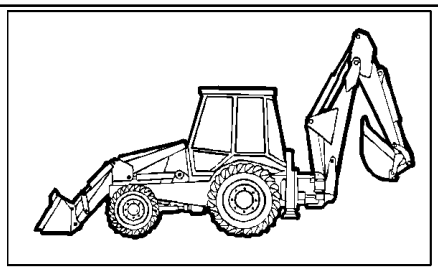

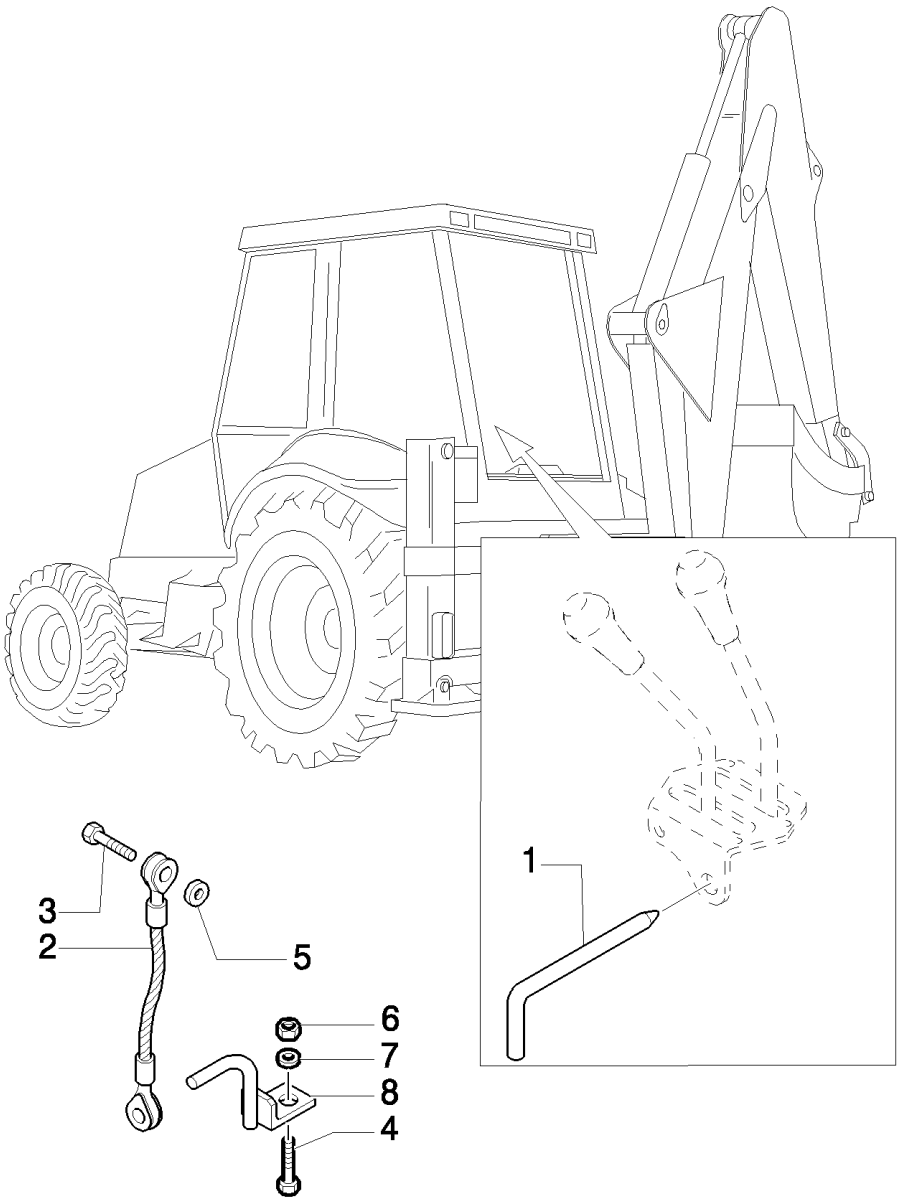
1
3
2
5
6
7
8
4

LB115.B EUR BACKHOE LOADER (1/05-)

128(03) APPROVAL FOR ITALY

Ref	Part Number	Qty	Description
1	85803549	1	PIN,
2	87521932	2	TIE-ROD,
3	15540321	2	SCREW, Hex, M12 x 1.25 x 25, 8.8, Full Thd,
4	11390521	2	SCREW, Hex, M16 x 1.5 x 40, 8.8, Full Thd,
5	11190879	2	WASHER, SPRING, Belleville, M13,
6	12574911	2	NUT, M16 x 1.5, Cl 8,
7	14496921	2	WASHER, M16 x 30 x 3,
8	85803999	2	HOOK,

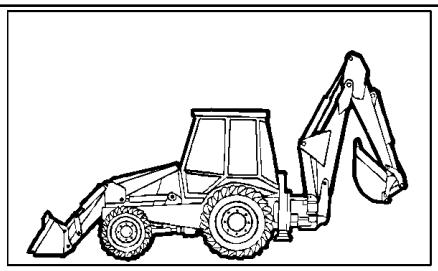

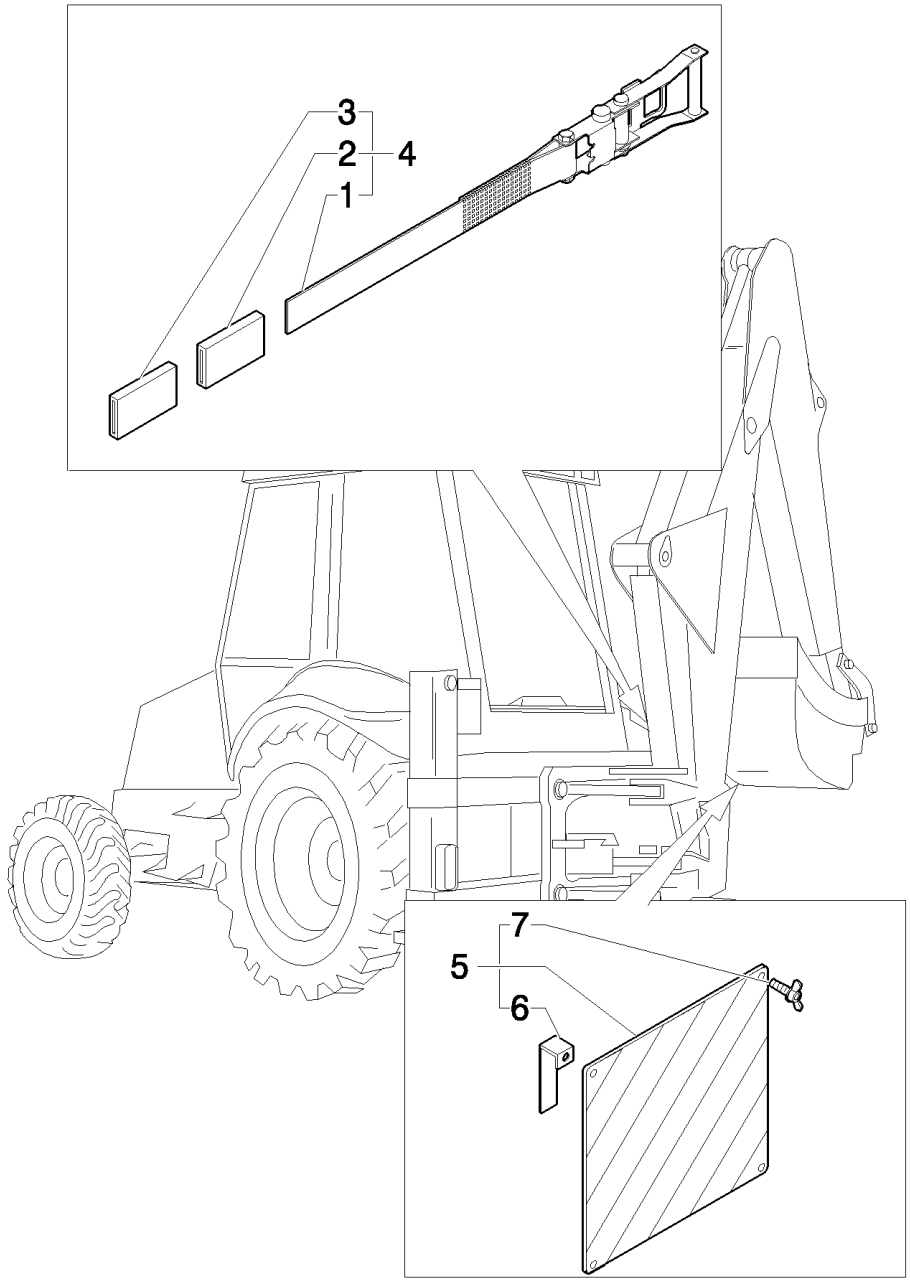
3
2
4
1
7
5
6

LB115.B EUR BACKHOE LOADER (1/05-)

128(04) APPROVAL FOR ITALY

Ref	Part Number	Qty	Description
1	87362482	1	
2	87362481	1	
3	87361091	1	
4	87361089	1	BLOCK, , Includes 1 To 3
5	87394180	1	PANEL, , Includes 6, 7
6	87394182	2	
7	87394186	2	

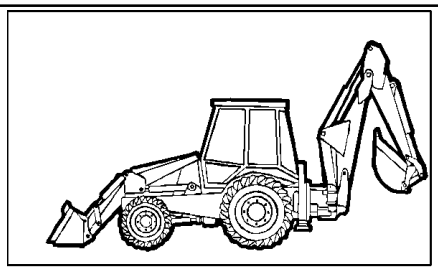

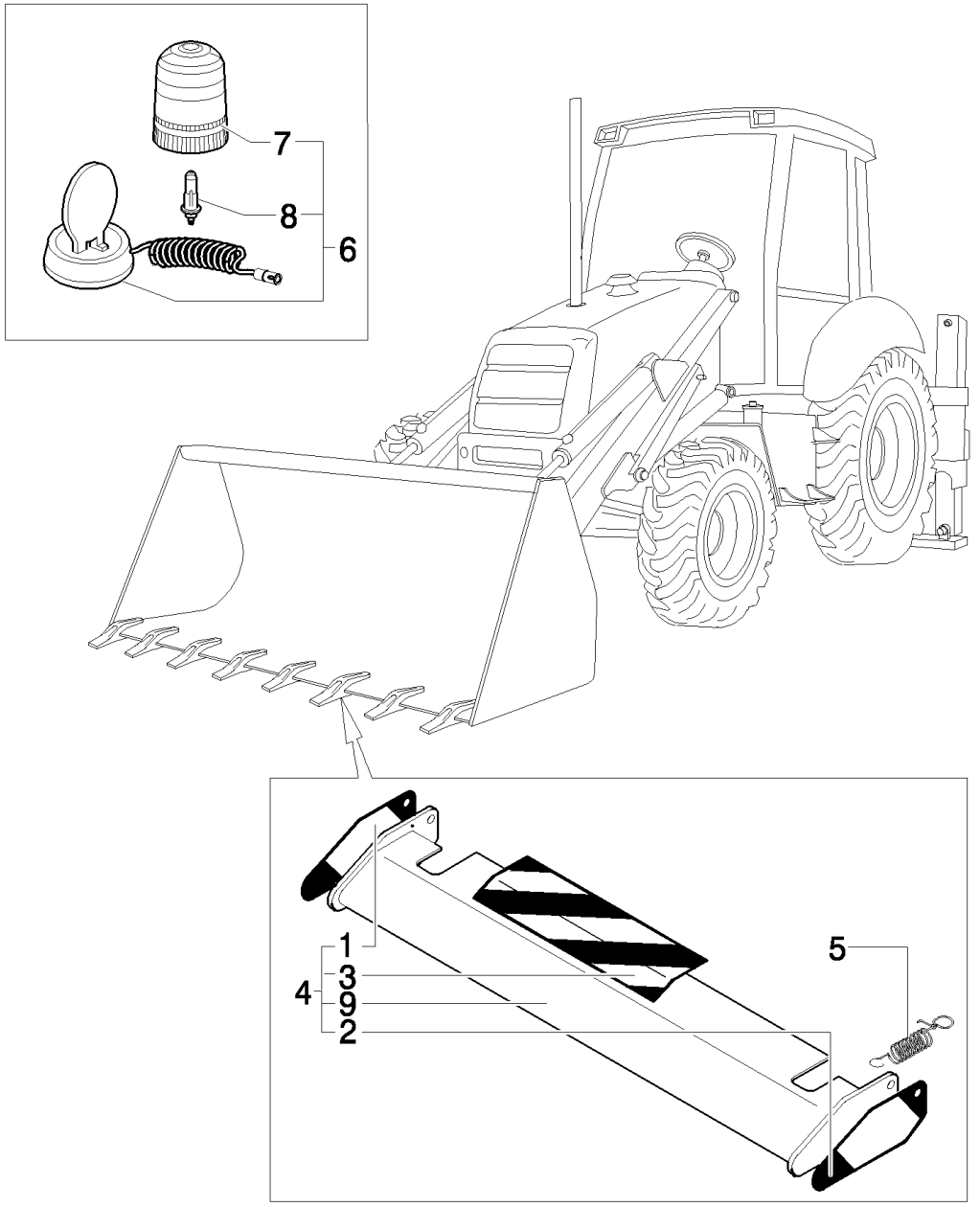
7
8
6
1
3
4
9
2
5

LB115.B EUR BACKHOE LOADER (1/05-)

128(05) APPROVAL FOR ITALY

Ref	Part Number	Qty	Description
1	85803538	1	STRIP-GASKET,
2	85803539	1	DECAL,
3	85803537	1	STRIP-GASKET, , Only for LB 90.B - LB95.B - LB110.B
3	85805614	1	DECAL, , Only for LB115.B
4	85803537	1	STRIP-GASKET, , Only for LB 90.B - LB95.B - LB110.B, Includes 1 To 3, 9
4	85805611	1	SHIELD, , Only for LB115.B, Includes 1 To 3, 9
5	85803541	2	SPRING,
6	85817129	1	BEACON, , Includes 7, 8
7	85817131	1	LENS,
8	85817130	1	BULB,
9	85803518	1	GUARD, , Only for LB 90.B - LB95.B - LB110.B
9	85805612	1	PROTECTION, , Only for LB115.B

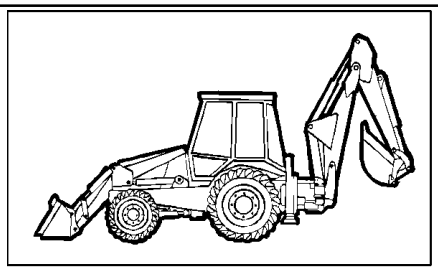

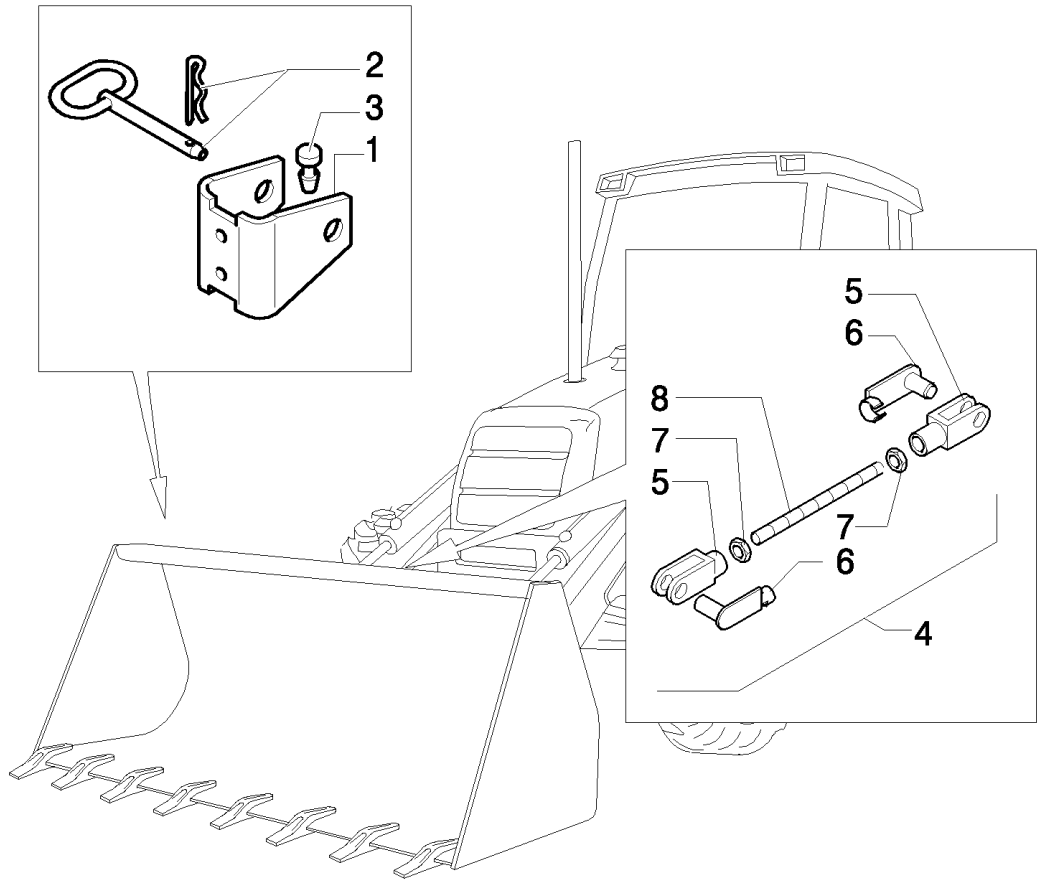
2
3
1
5
6
8
7
5
7
6
4

LB115.B EUR BACKHOE LOADER (1/05-)

128(06) APPROVAL FOR ITALY

Ref	Part Number	Qty	Description
1	85805610	1	STOP,
2	86507337	1	PIN, HITCH,
3	14565080	2	BUTTON,
4	87370045	1	TIE-ROD, , Includes 5 To 8
5	10008271	2	YOKE,
6	85805608	2	YOKE,
7	12163311	2	NUT, M16, Cl 8,
8	87370072	1	TIE-ROD,

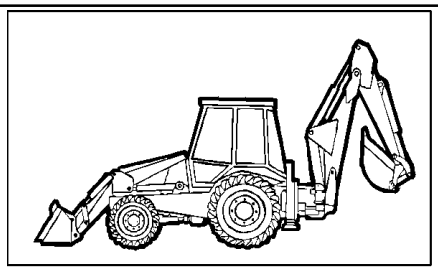

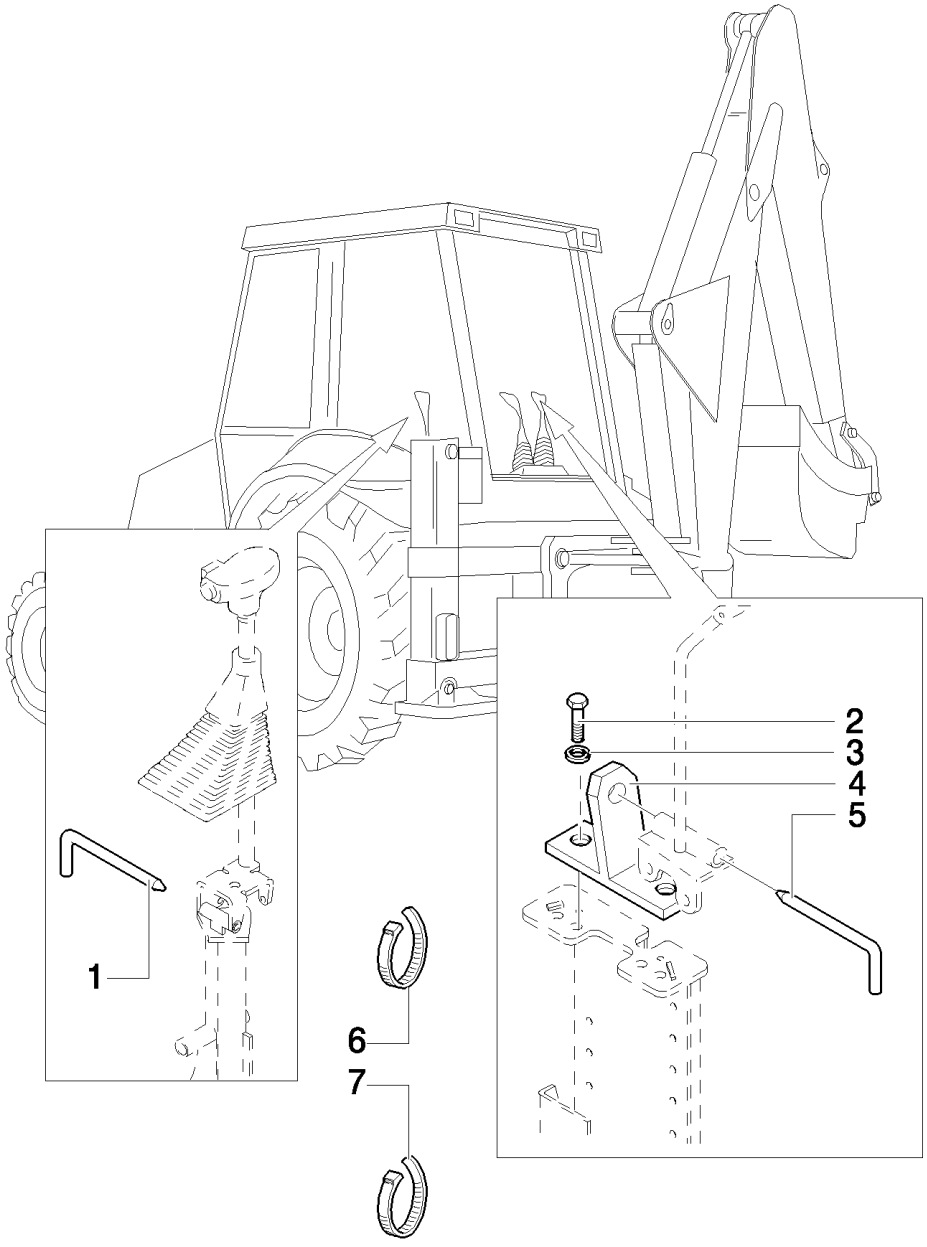
1
2
3
4
5
6
7

LB115.B EUR BACKHOE LOADER (1/05-)

129(01) APPROVAL FOR GERMANY

Ref	Part Number	Qty	Description
1	85803543	1	PIN,
2	16043621	2	BOLT, Hex, M8 x 25, 8.8,
3	11193979	2	WASHER, SPRING, Belleville, M8.4,
4	85803125	1	STOP,
5	85803550	1	PIN,
6	79072960	1	STRAP, CABLE,
7	85803332	2	STRAP, CABLE,

Mechanical Version

129(02) APPROVAL FOR GERMANY

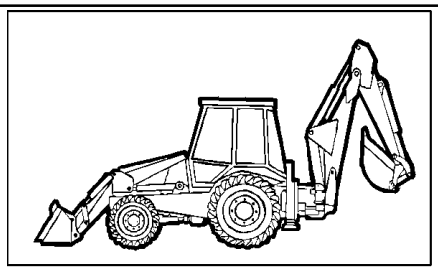

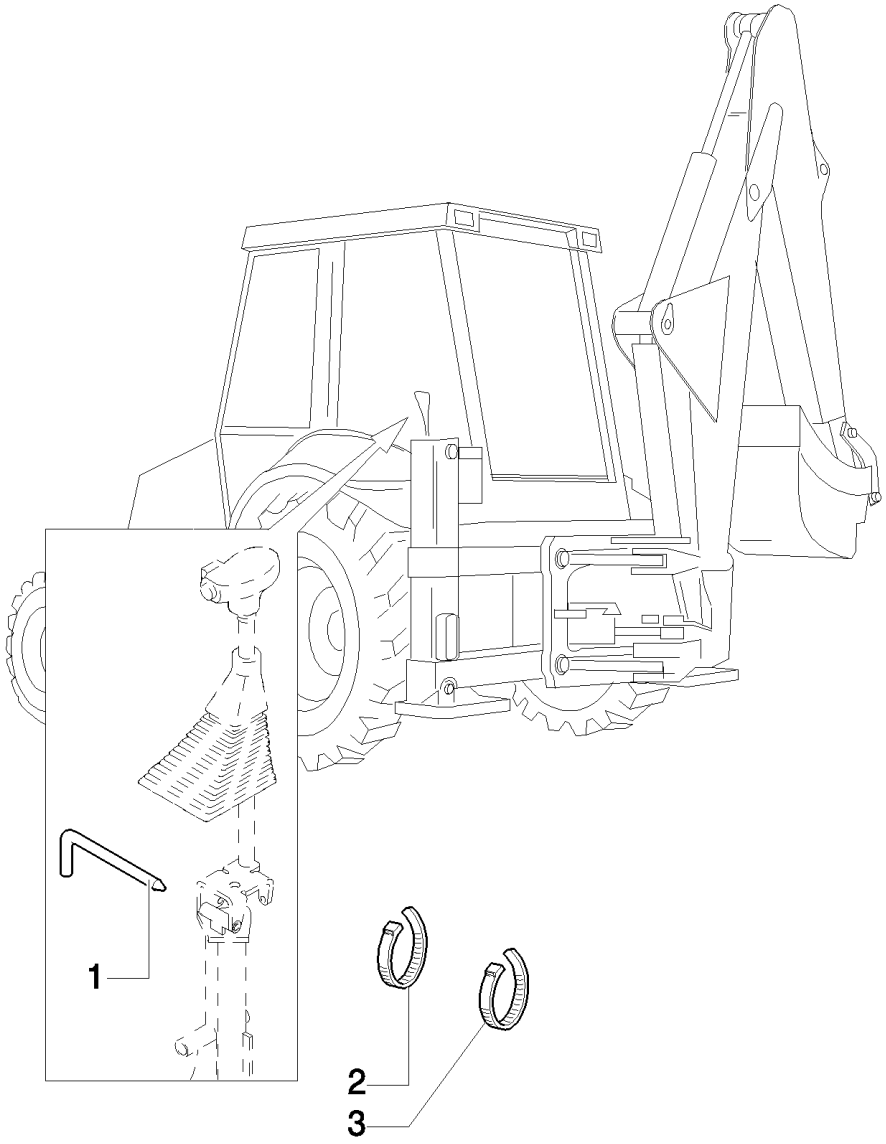

LB115.B EUR BACKHOE LOADER (1/05-)

129(02) APPROVAL FOR GERMANY

Ref	Part Number	Qty	Description
1	85803543	1	PIN,
2	79072960	2	STRAP, CABLE,
3	85803332	2	STRAP, CABLE,

Pilot Control Version

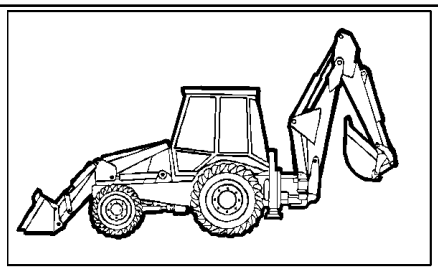

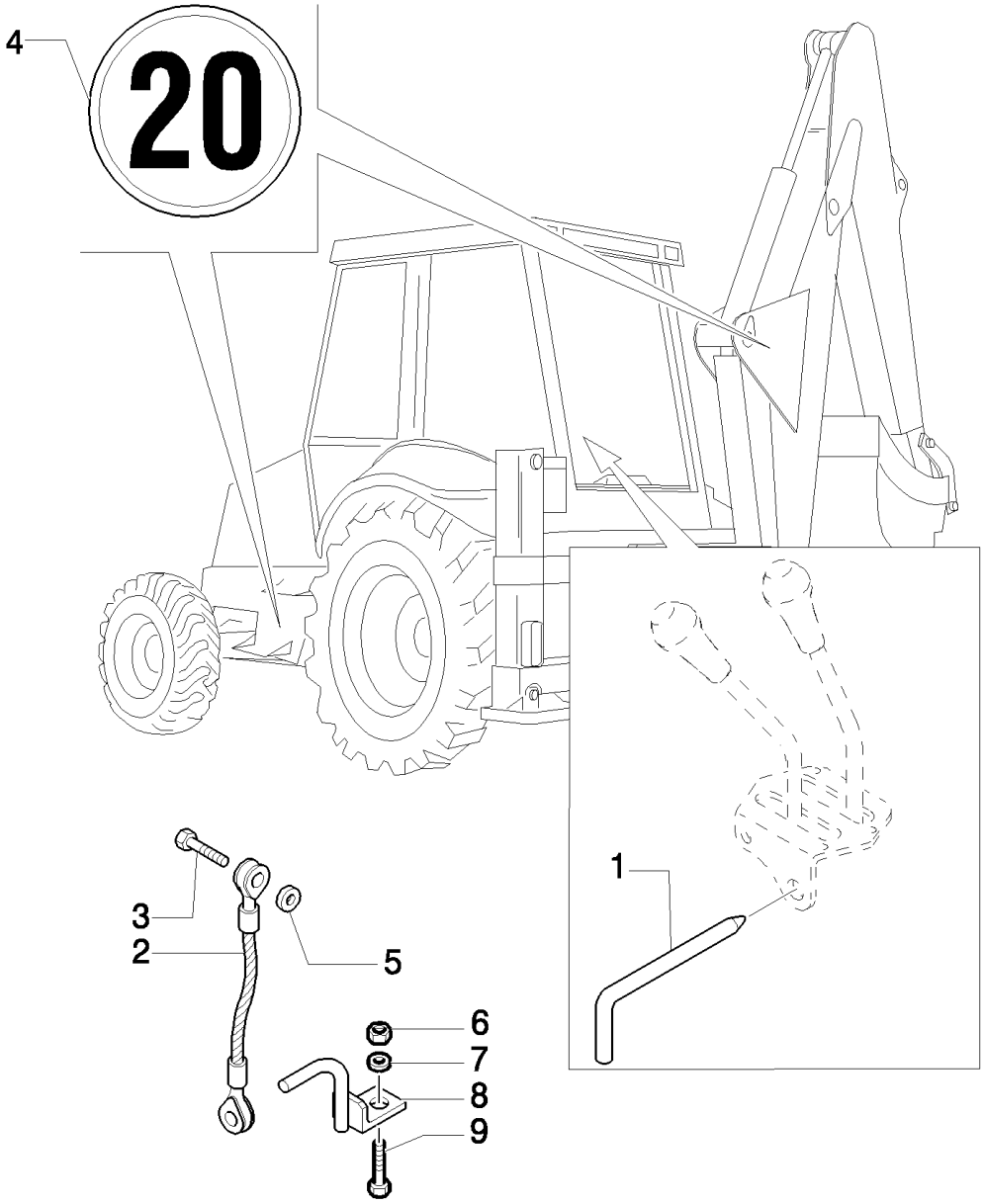
4
20
1
3
2
5
6
7
8
9

LB115.B EUR BACKHOE LOADER (1/05-)

129(03) APPROVAL FOR GERMANY

Ref	Part Number	Qty	Description
1	85803549	1	PIN,
2	87521932	2	TIE-ROD,
3	15540321	2	SCREW, Hex, M12 x 1.25 x 25, 8.8, Full Thd,
4	85804357	3	DECAL,
5	11190879	2	WASHER, SPRING, Belleville, M13,
6	12574911	2	NUT, M16 x 1.5, Cl 8,
7	14496921	2	WASHER, M16 x 30 x 3,
8	85803999	2	HOOK,
9	11390521	2	SCREW, Hex, M16 x 1.5 x 40, 8.8, Full Thd,

129(04) APPROVAL FOR GERMANY

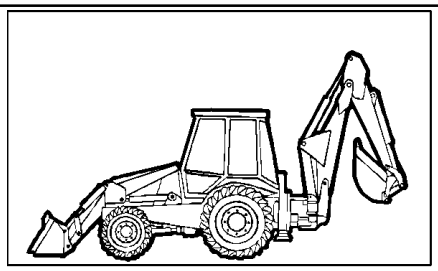

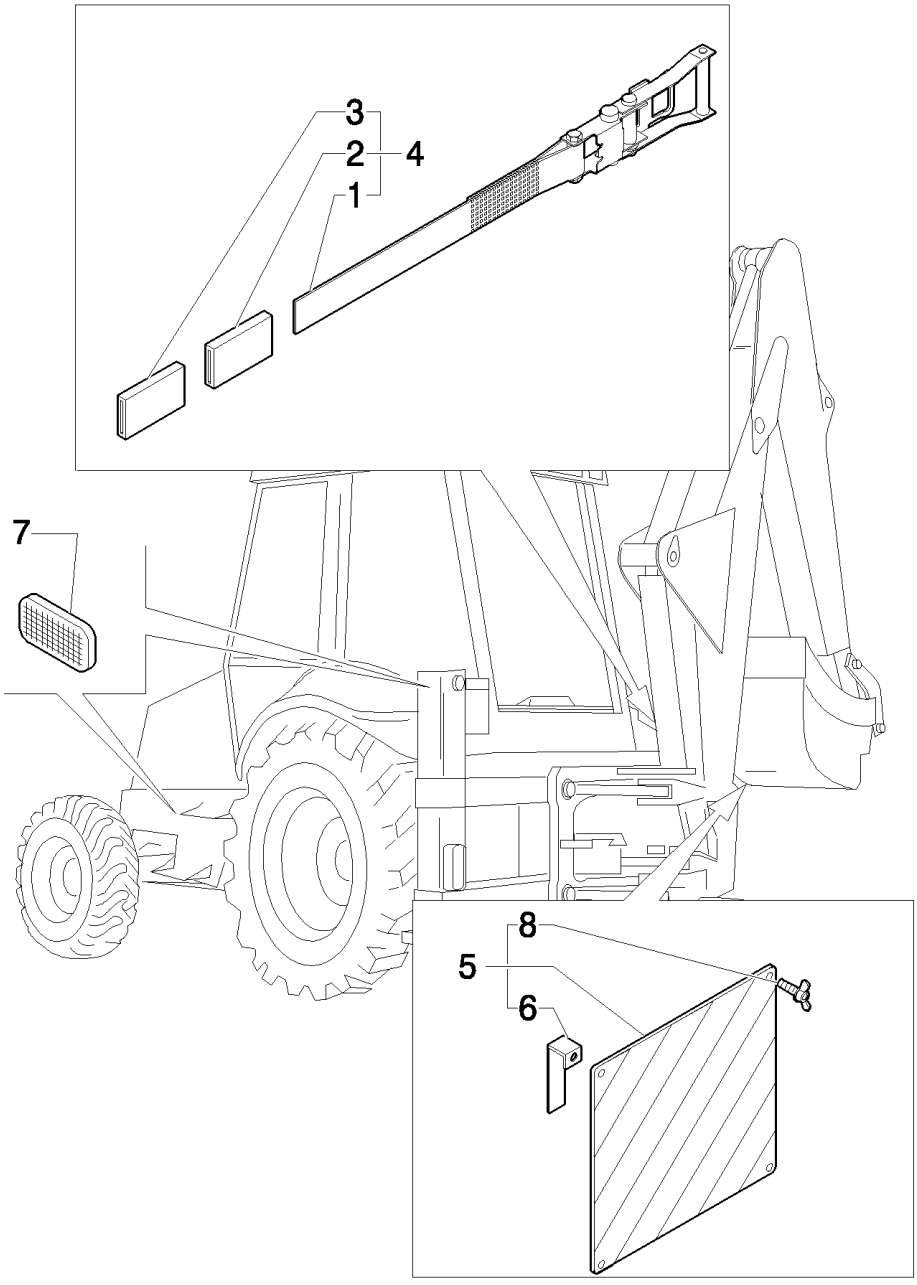

LB115.B EUR BACKHOE LOADER (1/05-)

129(04) APPROVAL FOR GERMANY

Ref	Part Number	Qty	Description
1	87362482	1	
2	87362481	1	
3	87361091	1	
4	87361089	1	BLOCK, , Includes 1, 2, 3
5	87394180	1	PANEL, , Includes 6, 8
6	87394185	4	RED
7	85804011	4	REFLECTOR, Orange
8	87394186	2	

129(06) APPROVAL FOR GERMANY

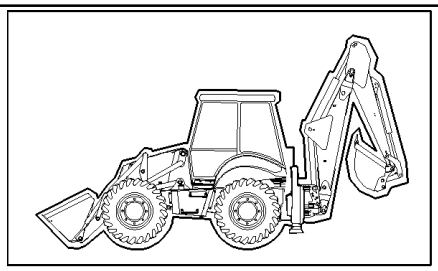

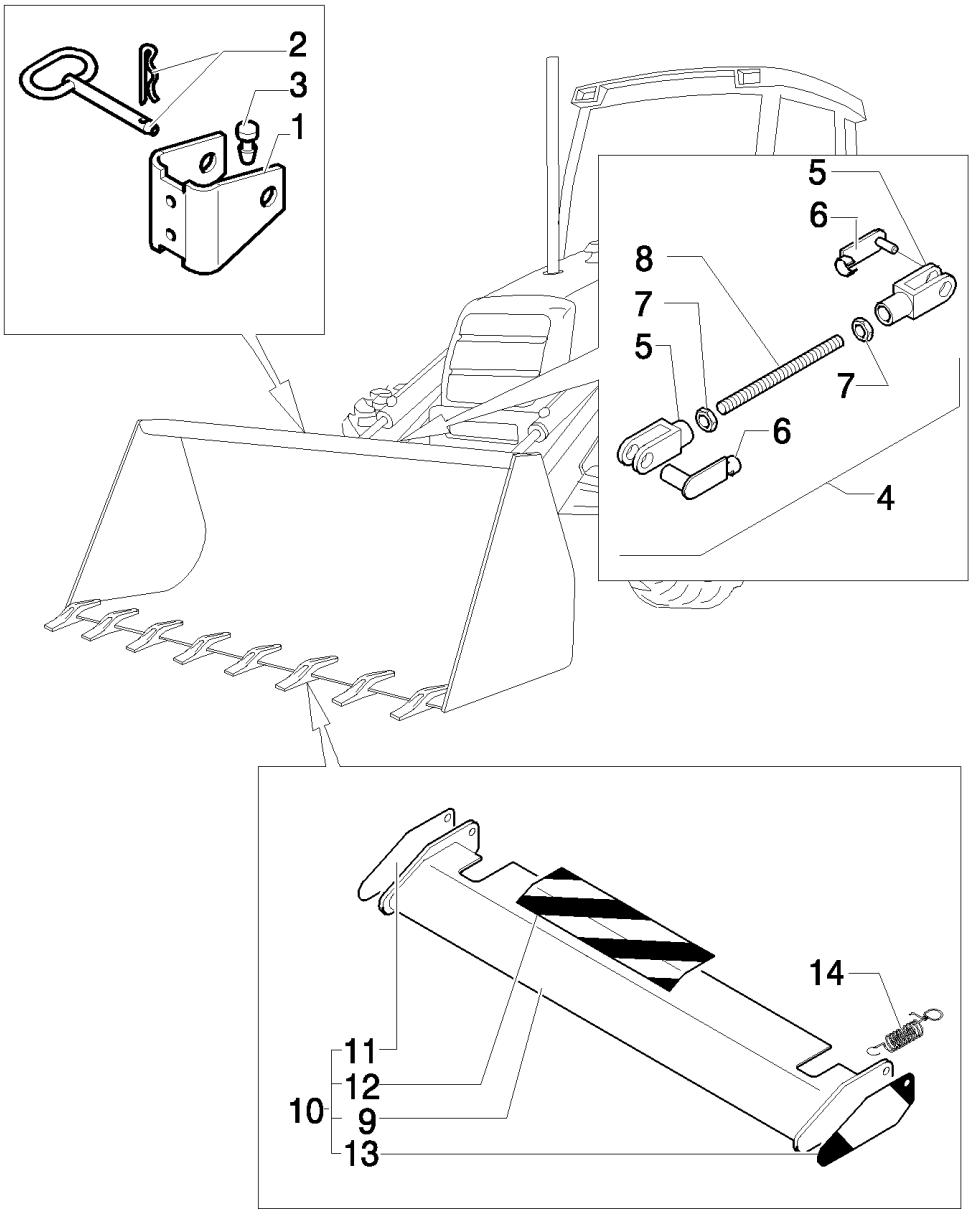

LB115.B EUR BACKHOE LOADER (1/05-)

129(06) APPROVAL FOR GERMANY

Ref	Part Number	Qty	Description
1	85805610	1	STOP,
2	86507337	1	PIN, HITCH,
3	14565080	1	BUTTON,
4	87370045	1	TIE-ROD, , Includes 5 To 8
5	10008271	2	YOKE,
6	85805608	2	YOKE,
7	12163311	2	NUT, M16, Cl 8,
8	87370072	1	TIE-ROD,
9	85805612	1	PROTECTION,
10	85805611	1	SHIELD, , Includes 9 to 14
11	85803538	1	STRIP-GASKET,
12	85805614	1	DECAL,
13	85803539	1	DECAL,
14	85803541	2	SPRING,

129(07) APPROVAL FOR GERMANY

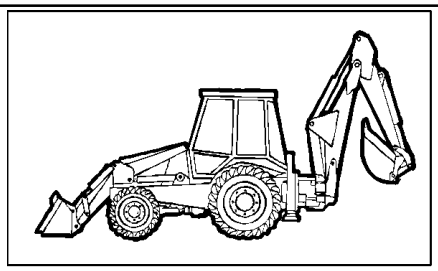

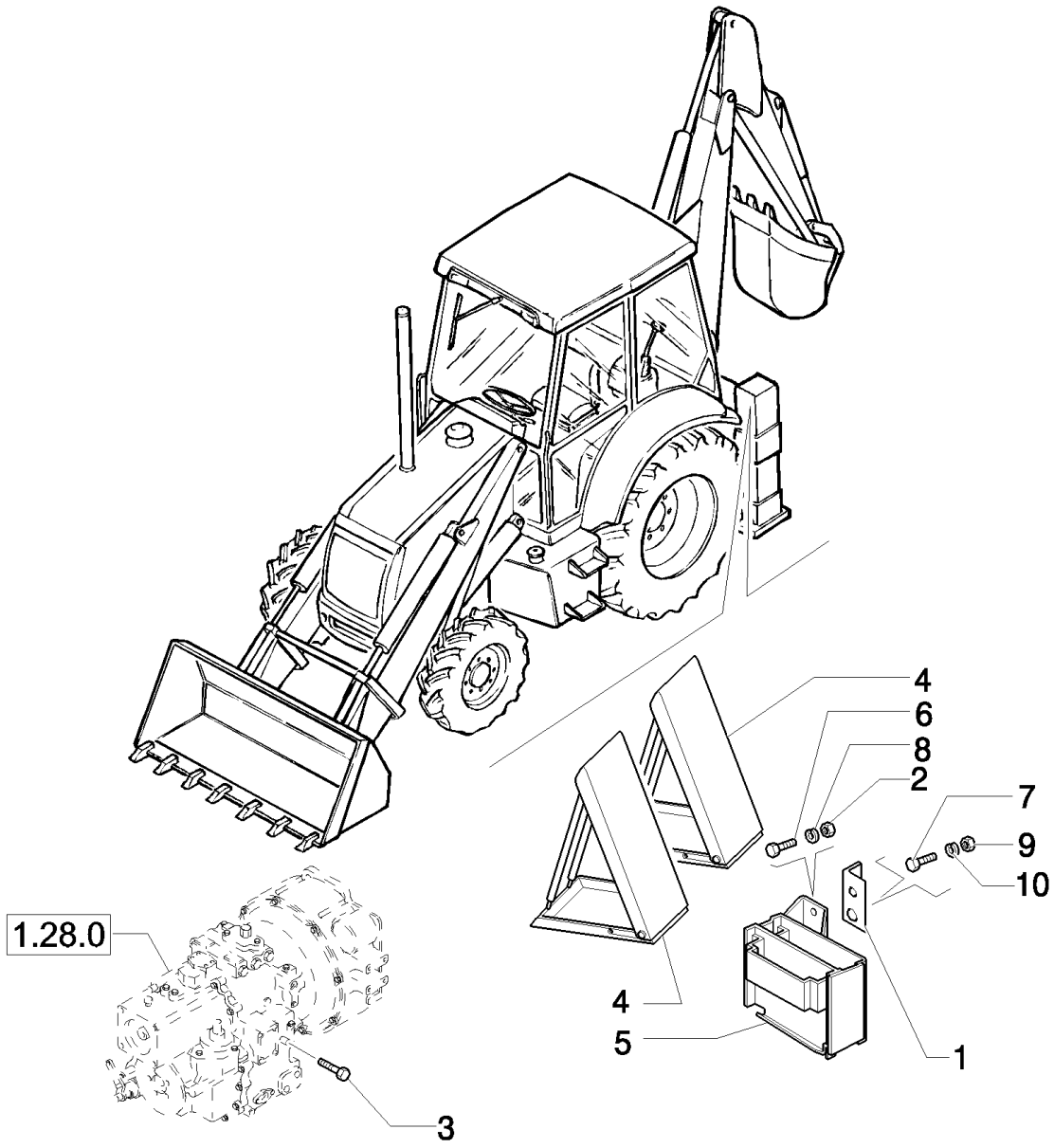

LB115.B EUR BACKHOE LOADER (1/05-)

129(07) APPROVAL FOR GERMANY

Ref	Part Number	Qty	Description
1	85802389	1	ANGLE BAR,
2	16101521	1	NUT, M12 x 1.25, Cl 10,
3	85803398	1	SCREW, , 4TH Geéar Lock, Only for LB 90.B - LB95.B - LB110.B
4	5112736	2	WHEEL CHOCK,
5	5155895	1	SUPPORT, -ASSY
6	15540534	1	SCREW, Hex, M12 x 1.25 x 35, 10.9, Full Thd,
7	16043621	1	BOLT, Hex, M8 x 25, 8.8,
8	11198679	1	WASHER, SPRING, Belleville, M13,
9	16102211	1	NUT, M8, Cl 10,
10	11193979	1	WASHER, SPRING, Belleville, M8.4,

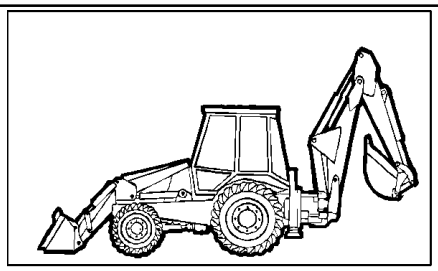

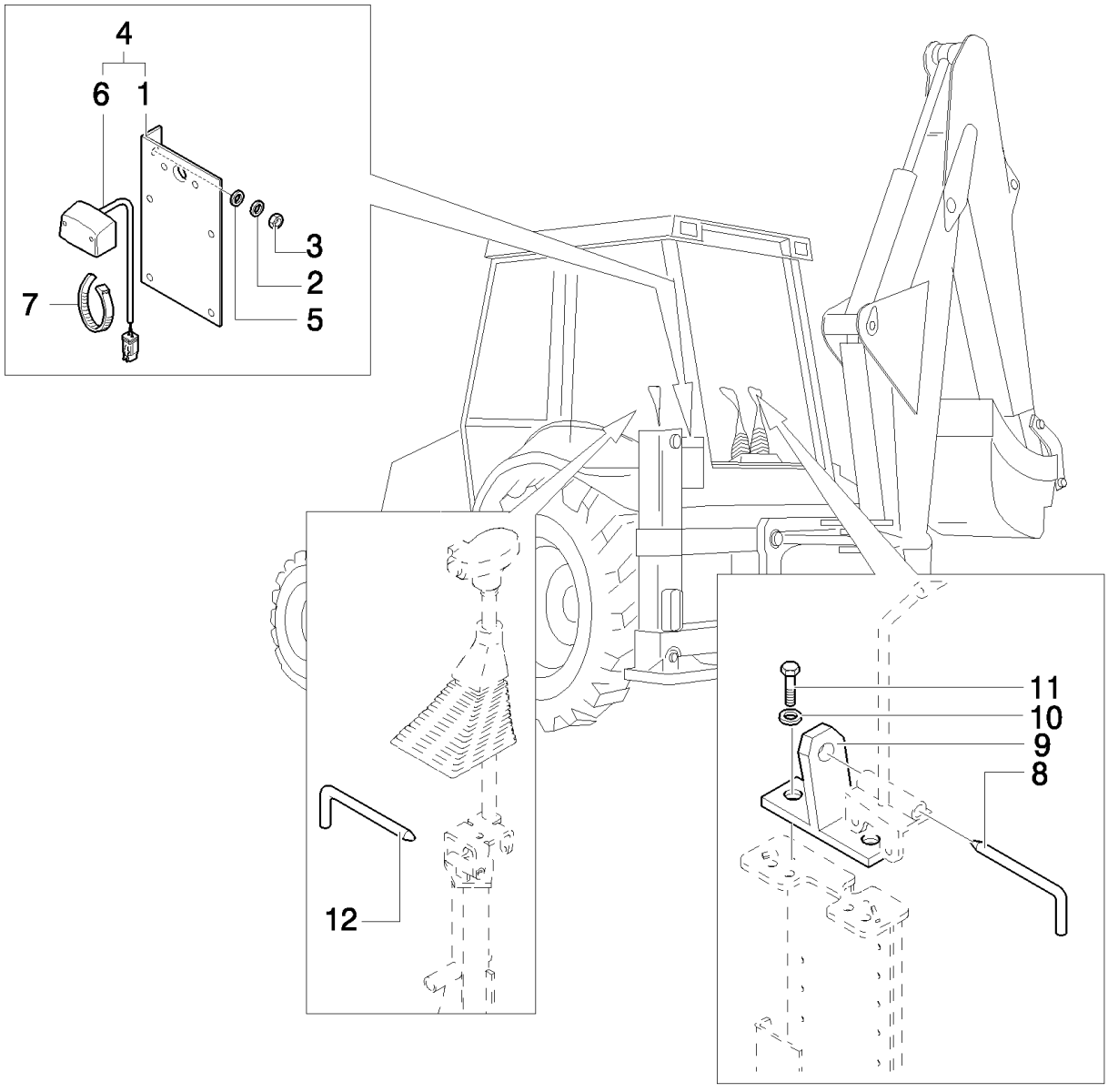
4
6
1
3
2
5
7
12
11
10
9
8

LB115.B EUR BACKHOE LOADER (1/05-)

130(01) APPROVAL FOR EUROPE

Ref	Part Number	Qty	Description
1	85803296	1	SUPPORT,
2	11193879	2	WASHER, SPRING, Belleville, M8.4,
3	16100811	2	NUT, M8, Cl 8,
4	87387257	1	LAMP, NUMBER PLATE, , Includes 1, 6
5	12647121	2	WASHER, M8 x 20 x 3,
6	87387258	1	LAMP, NUMBER PLATE,
7	85803332	2	STRAP, CABLE,
8	85803550	1	PIN,
9	85803125	1	STOP,
10	11193979	2	WASHER, SPRING, Belleville, M8.4,
11	16043621	2	BOLT, Hex, M8 x 25, 8.8,
12	85803543	1	PIN,

Mechanical Version

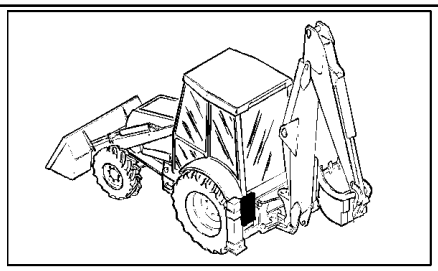

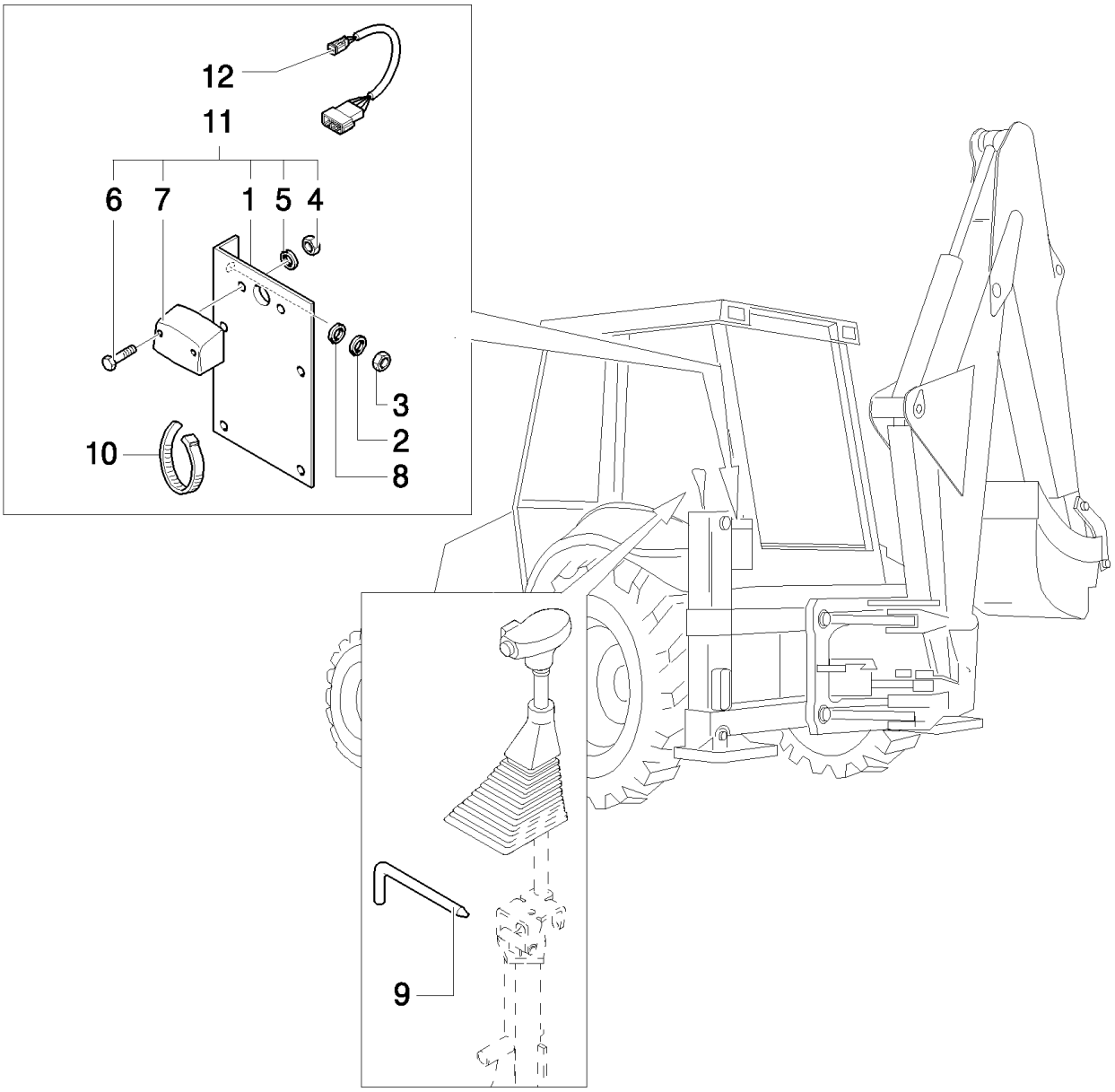
12
11
6
7
1
5
4
3
2
10
8
9

LB115.B EUR BACKHOE LOADER (1/05-)

130(02) APPROVAL FOR EUROPE

Ref	Part Number	Qty	Description
1	85803296	1	SUPPORT,
2	11193879	2	WASHER, SPRING, Belleville, M8.4,
3	16100811	2	NUT, M8, Cl 8,
4	12574111	2	NUT, M5 x .8, Cl 8,
5	12637811	2	WASHER,
6	10977821	2	SCREW, Hex, M5 x 16, 8.8, Full Thd,
7	85803533	1	LAMP, NUMBER PLATE,
8	12647121	1	WASHER, M8 x 20 x 3,
9	85803543	1	PIN,
10	85803332	2	STRAP, CABLE,
11	85803522	1	, Includes 1, 4 To 7
12	87318560	1	HARNESS, WIRE,

Pilot Control Version

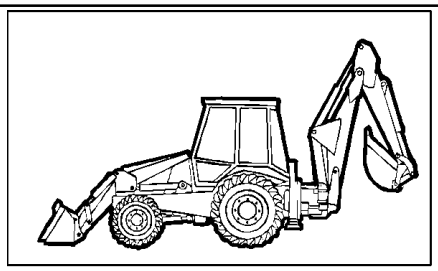

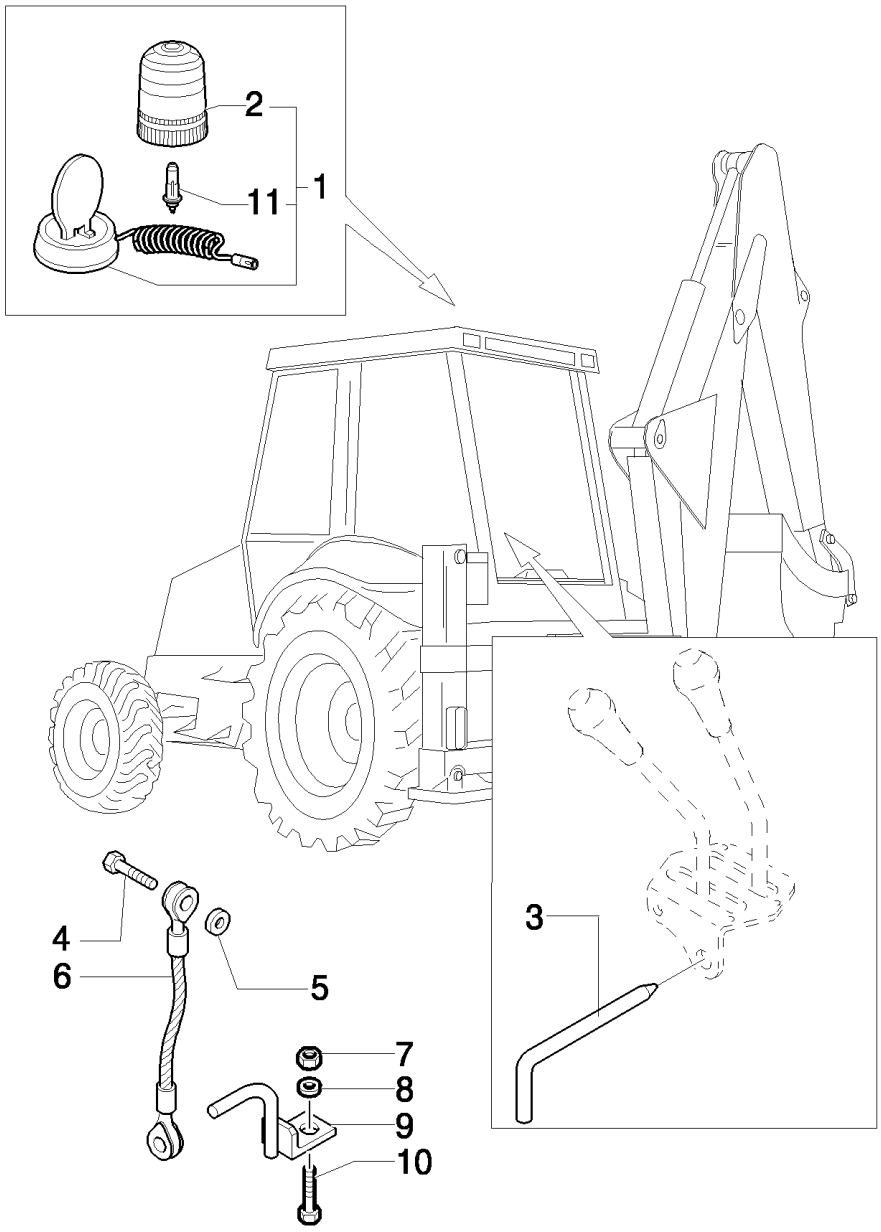
2
11
1
3
4
6
5
7
8
9
10

LB115.B EUR BACKHOE LOADER (1/05-)

130(03) APPROVAL FOR EUROPE

Ref	Part Number	Qty	Description
1	85817129	2	BEACON, , Includes 2, 11
2	85817131	2	LENS,
3	85803549	1	PIN,
4	15540321	2	SCREW, Hex, M12 x 1.25 x 25, 8.8, Full Thd,
5	11190879	2	WASHER, SPRING, Belleville, M13,
6	87521932	2	TIE-ROD,
7	12574911	2	NUT, M16 x 1.5, Cl 8,
8	14496921	2	WASHER, M16 x 30 x 3,
9	85803999	2	HOOK,
10	11390521	2	SCREW, Hex, M16 x 1.5 x 40, 8.8, Full Thd,
11	85817130	2	BULB, 12V-55W

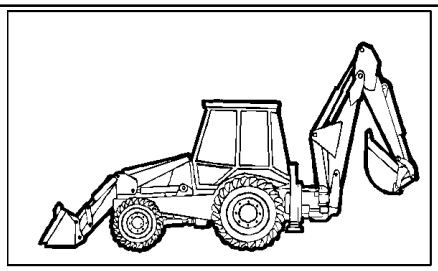

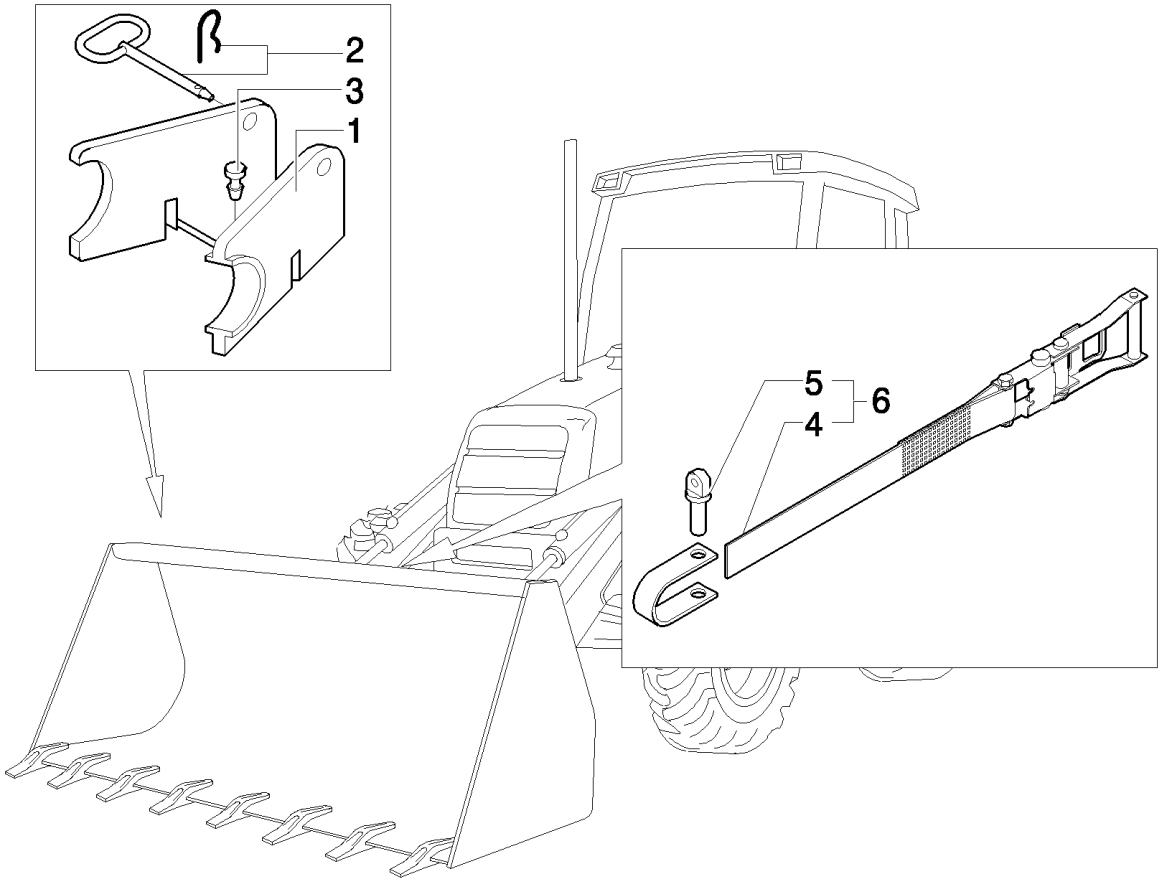
2
3
1
5
6
4

LB115.B EUR BACKHOE LOADER (1/05-)

130(04) APPROVAL FOR EUROPE

Ref	Part Number	Qty	Description
1	85803519	1	BLOCK,
2	86507337	1	PIN, HITCH,
3	14566887	2	PLUG,
4	87361054	1	
5	87361088	1	
6	87361052	1	BELT, CONVEYOR, , Includes 4, 5

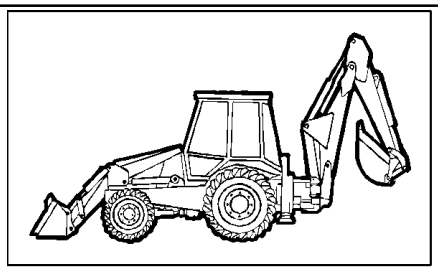

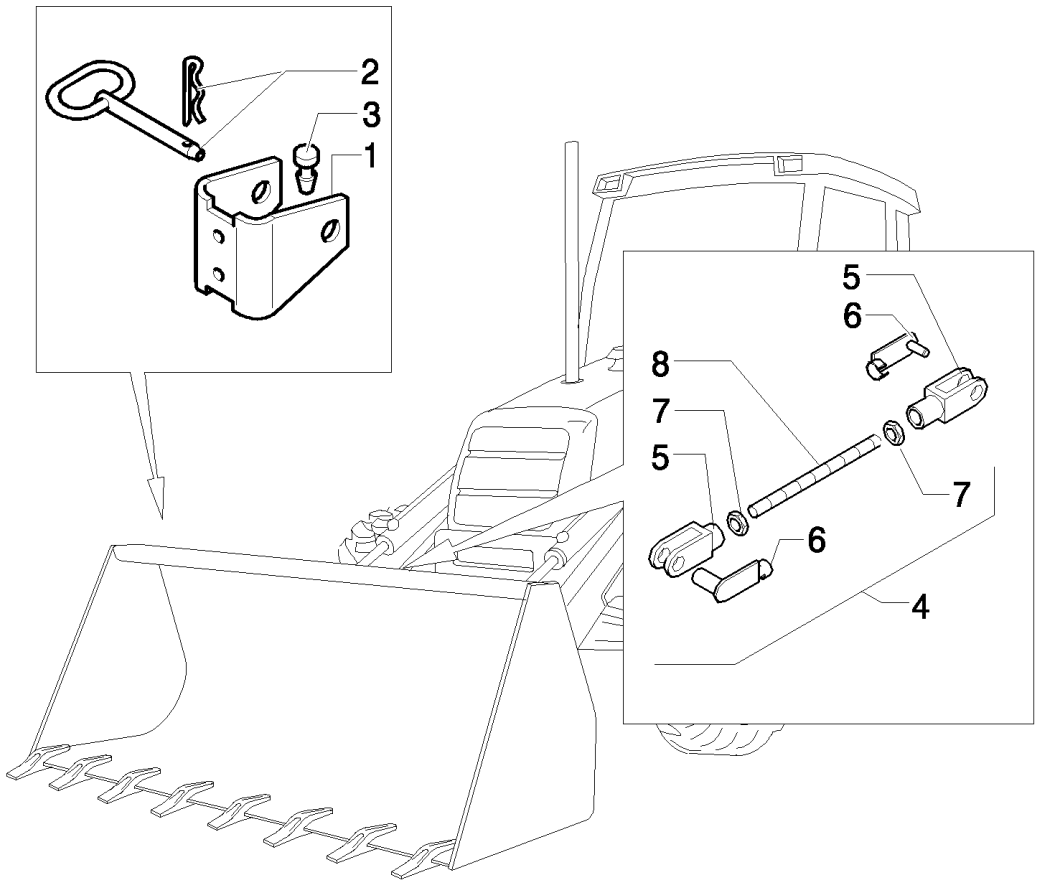
2
3
1
5
6
8
7
5
7
6
4

LB115.B EUR BACKHOE LOADER (1/05-)

130(05) APPROVAL FOR EUROPE

Ref	Part Number	Qty	Description
1	85805610	1	STOP,
2	86507337	2	PIN, HITCH,
3	14565080	2	BUTTON,
4	87370045	1	TIE-ROD, , Includes 5 to 8
5	10008271	2	YOKE,
6	85805608	2	YOKE,
7	12163311	2	NUT, M16, Cl 8,
8	87370072	1	TIE-ROD,

131(01) SINGLE BATTERY

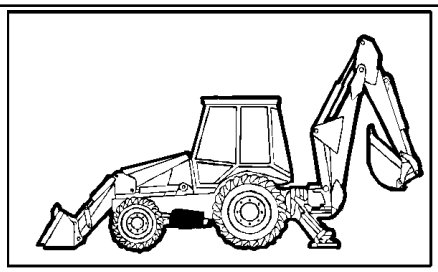

LB115.B EUR BACKHOE LOADER (1/05-)

131(01) SINGLE BATTERY

Ref	Part Number	Qty	Description
1	85825440	1	BATTERY, WET, U.S.
1	85826206	1	BATTERY, WET, CANADIAN.
1	9673604DS	1	BATTERY, DRY, Canadian
2	87416929	1	BRACKET,
3	412005	2	BOLT, Hex, M10 x 220, 8.8, M10x220
4	47048963	2	WASHER,
5	47049041	2	NUT, M10
6	47048788	2	ANGLE,
7	87404248	1	CABLE, GROUND,
8	87404127	1	DECAL,
9	87567414	1	

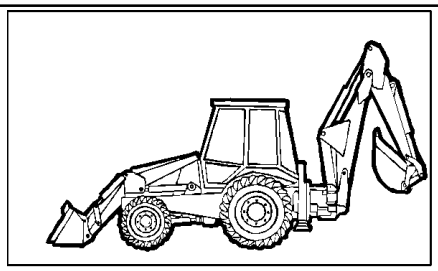

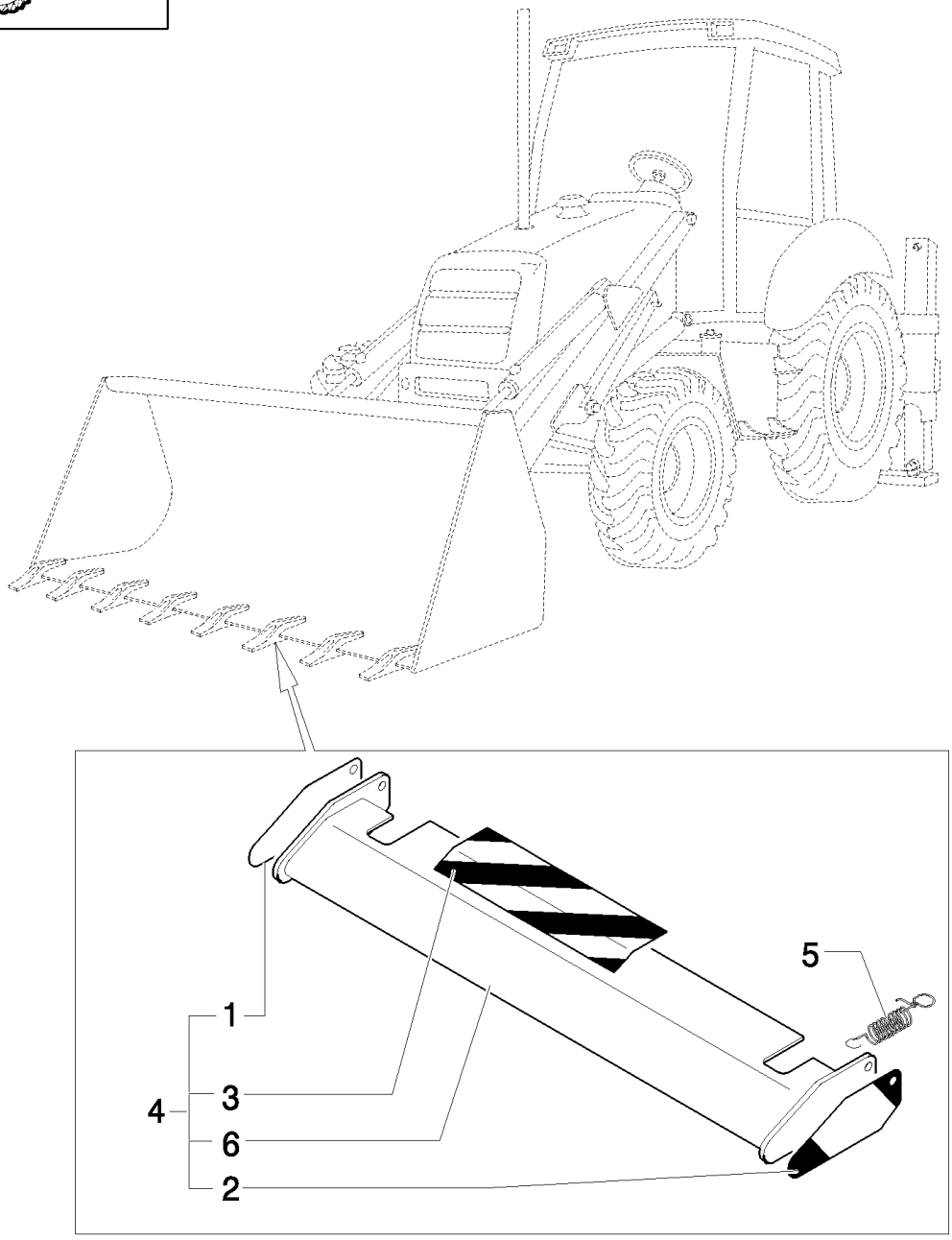
5
1
4
3
6
2

LB115.B EUR BACKHOE LOADER (1/05-)

140(01) UK VERSION

Ref	Part Number	Qty	Description
1	85803538	1	STRIP-GASKET,
2	85803539	1	DECAL,
3	85803537	1	STRIP-GASKET, , Only for LB90.B - LB95.B - LB110.B
3	85805614	1	DECAL, , Only for LB115.B 4WS
4	85803534	1	GUARD, , Only for LB90.B - LB95.B - LB110.B, Includes 1, 2, 3, 6
4	85805611	1	SHIELD, , Only for LB115.B 4WS, Includes 1, 2, 3, 6
5	85803541	2	SPRING,
6	85803518	1	GUARD, , Only for LB 90.B - LB95.B - LB110.B
6	85805612	1	PROTECTION, , Only for LB115.B

140(02) APPROVAL FOR UK-EUROPE

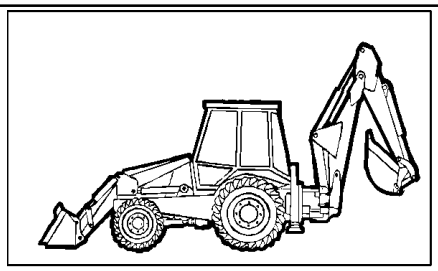

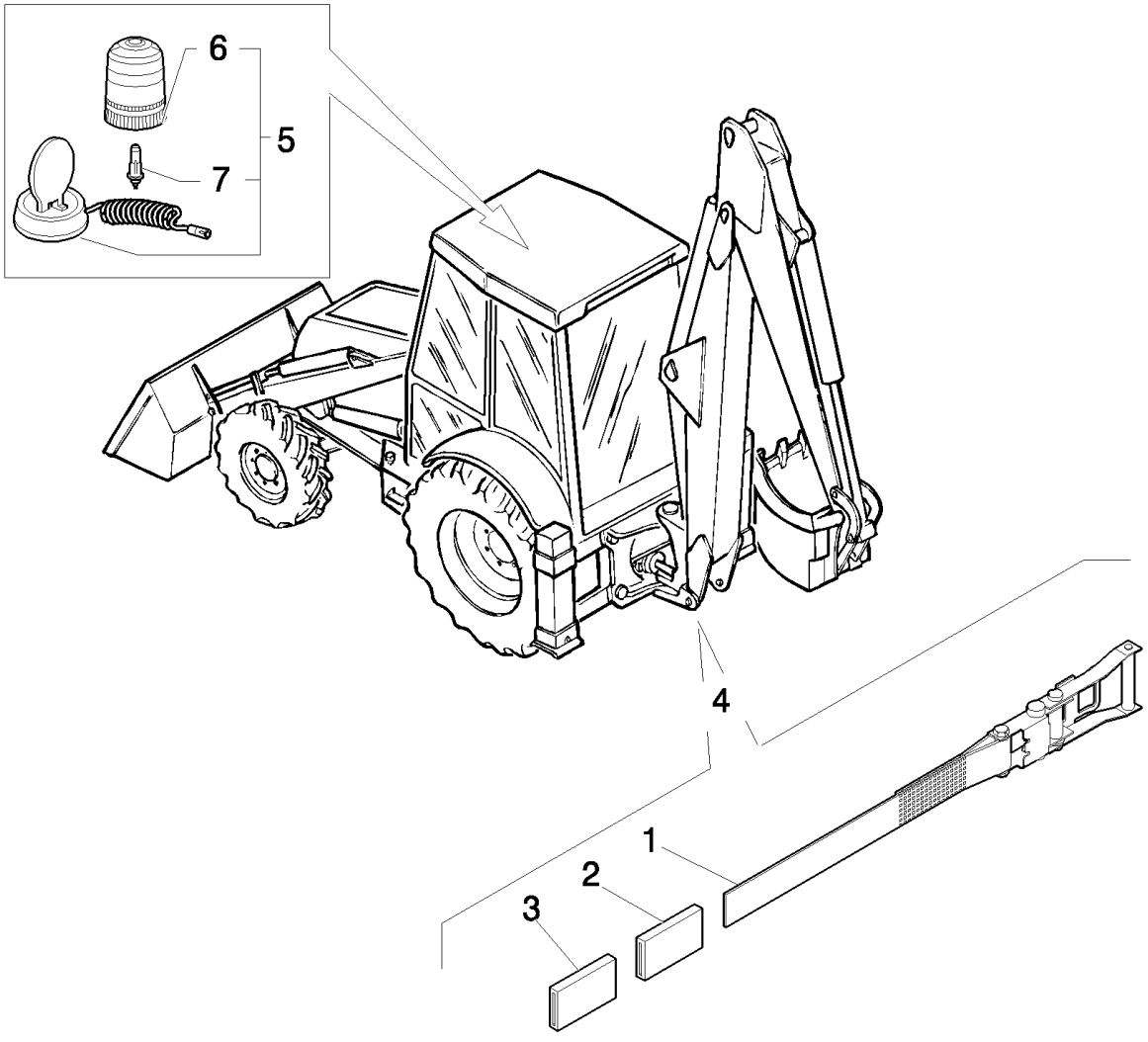

LB115.B EUR BACKHOE LOADER (1/05-)

140(02) APPROVAL FOR UK-EUROPE

Ref	Part Number	Qty	Description
1	87361091	1	
2	87362481	1	
3	87362482	1	M10x70
4	87361089	1	BLOCK, , Includes 1, 2, 3
5	85817129	1	BEACON,
6	85817131	1	LENS,
7	85817130	1	BULB,

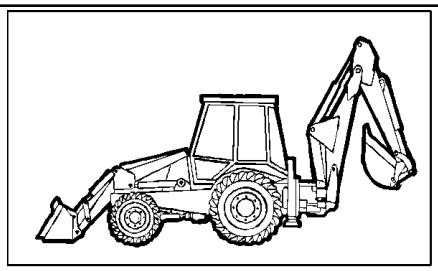

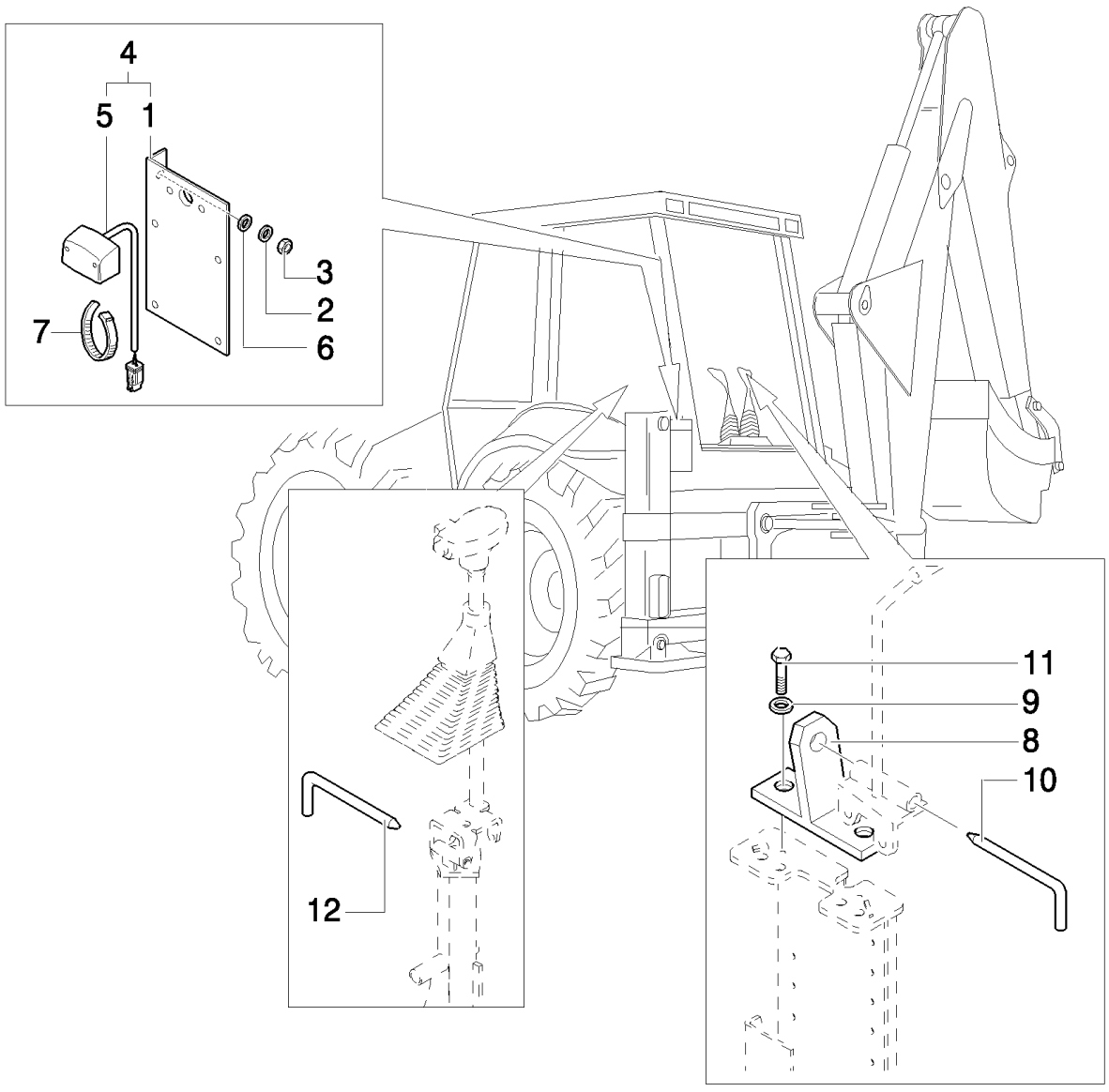
4
5
1
3
2
6
7
12
11
9
8
10

LB115.B EUR BACKHOE LOADER (1/05-)

140(04) APPROVAL FOR UK-EUROPE

Ref	Part Number	Qty	Description
1	85803296	1	SUPPORT,
2	11193879	2	WASHER, SPRING, Belleville, M8.4,
3	16100811	2	NUT, M8, Cl 8,
4	87387257	1	LAMP, NUMBER PLATE, M10, Includes 1, 5
5	87387258	1	LAMP, NUMBER PLATE,
6	12647121	2	WASHER, M8 x 20 x 3,
7	85803332	2	STRAP, CABLE,
8	85803125	1	STOP,
9	11193979	2	WASHER, SPRING, Belleville, M8.4,
10	85803550	1	PIN,
11	16043621	2	BOLT, Hex, M8 x 25, 8.8,
12	85803543	1	PIN,

Mechanical Version

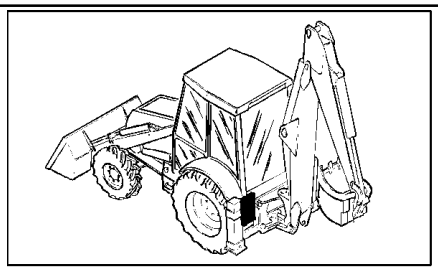

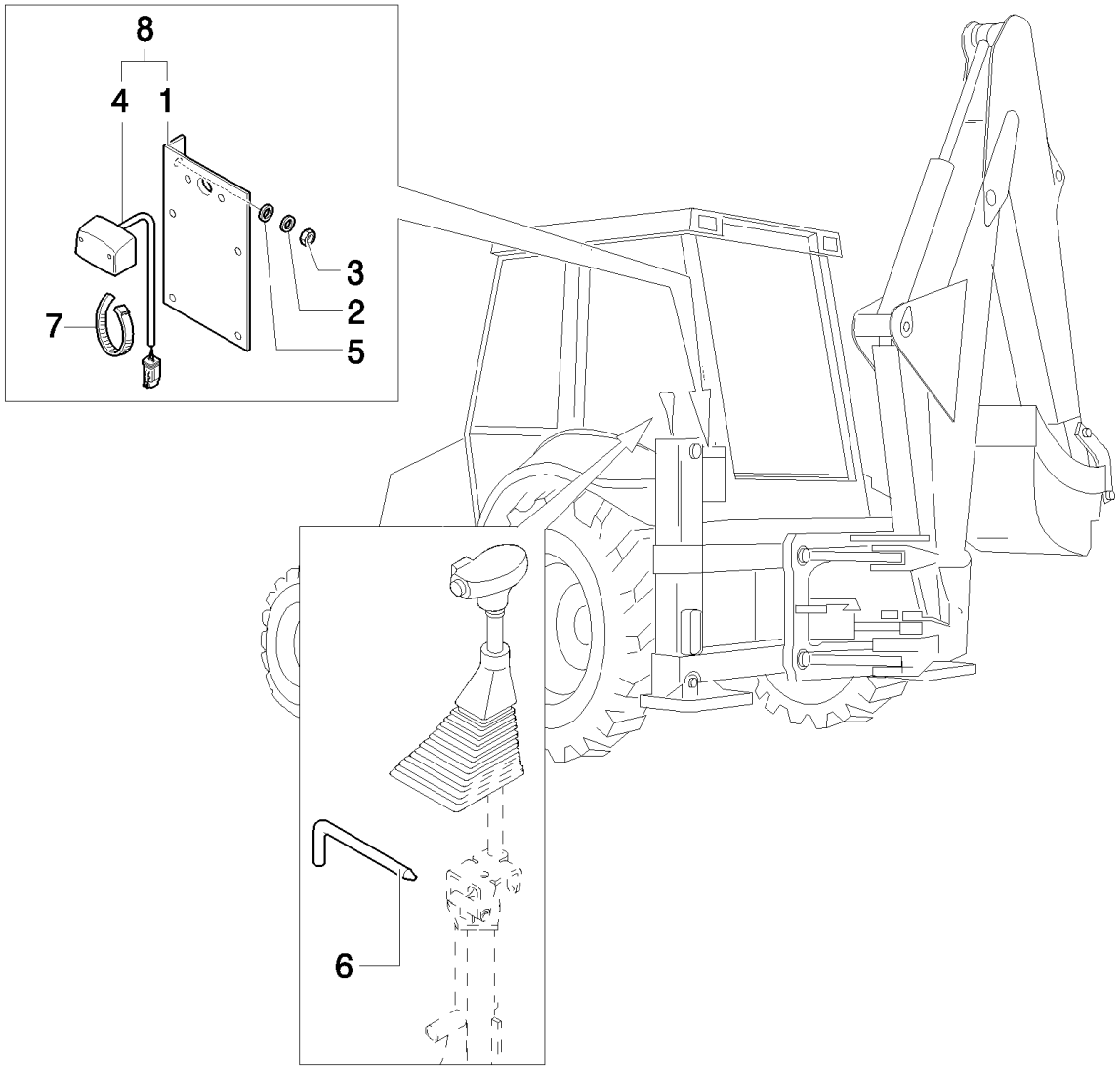
8
4
1
3
2
5
7
6

LB115.B EUR BACKHOE LOADER (1/05-)

140(05) UK VERSION

Ref	Part Number	Qty	Description
1	85803296	1	SUPPORT,
2	11193879	2	WASHER, SPRING, Belleville, M8.4,
3	16100811	2	NUT, M8, Cl 8,
4	87387258	1	LAMP, NUMBER PLATE,
5	12647121	2	WASHER, M8 x 20 x 3,
6	85803543	1	PIN,
7	85803332	2	STRAP, CABLE,
8	87387257	1	LAMP, NUMBER PLATE, , Includes 1,4

Pilot Control Version

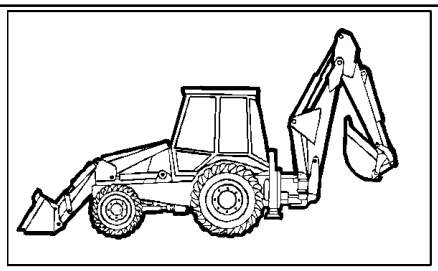

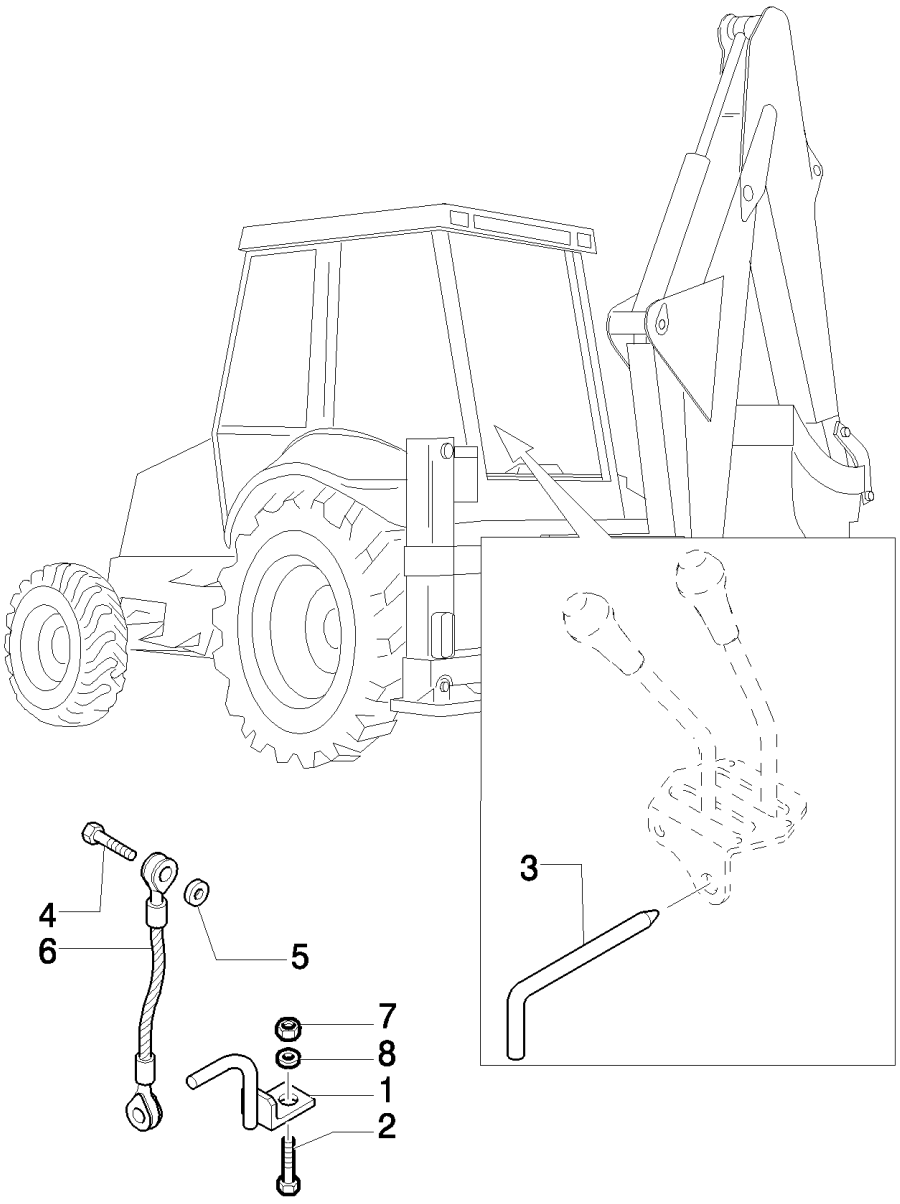
3
4
6
5
7
8
1
2

LB115.B EUR BACKHOE LOADER (1/05-)

140(06) APPROVAL FOR UK-EUROPE

Ref	Part Number	Qty	Description
1	85803999	2	HOOK,
2	11390521	2	SCREW, Hex, M16 x 1.5 x 40, 8.8, Full Thd,
3	85803549	1	PIN,
4	15540321	2	SCREW, Hex, M12 x 1.25 x 25, 8.8, Full Thd,
5	11190879	2	WASHER, SPRING, Belleville, M13,
6	87521932	2	TIE-ROD,
7	12574911	2	NUT, M16 x 1.5, Cl 8,
8	14496921	2	WASHER, M16 x 30 x 3,

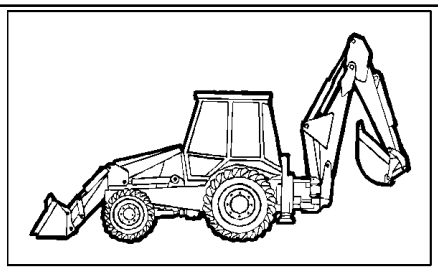

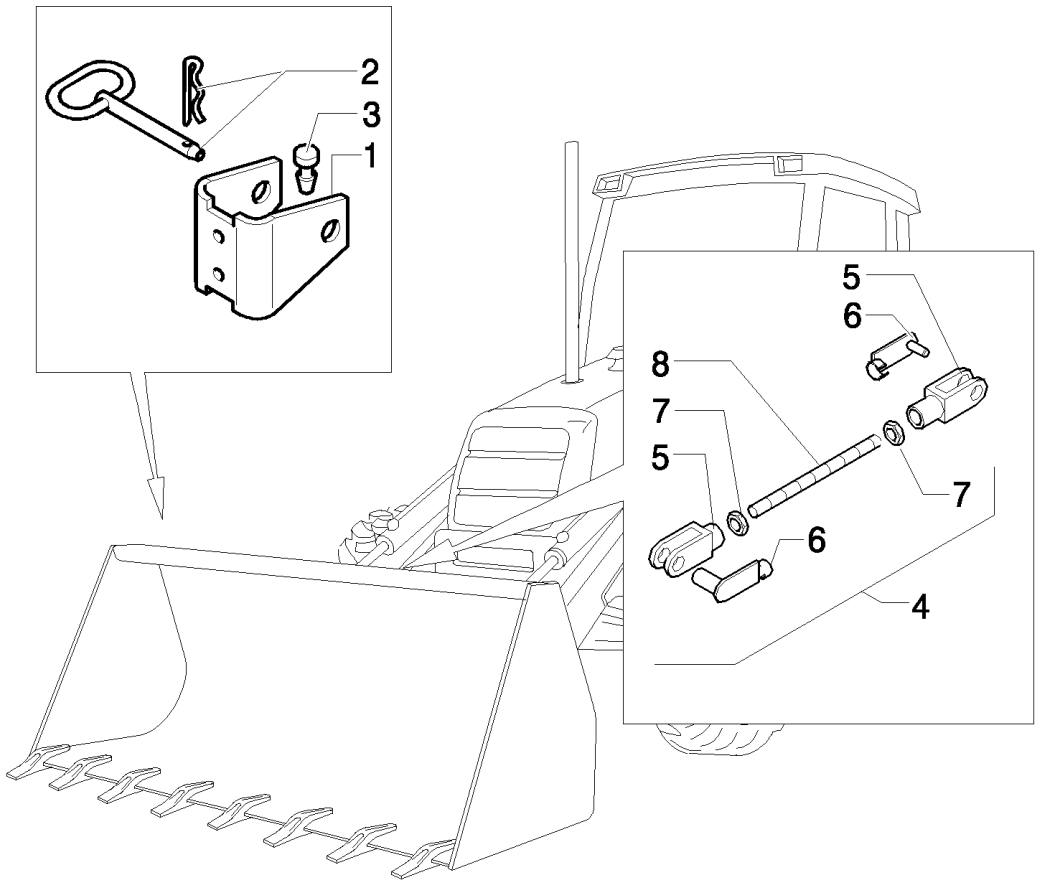
2
3
1
5
6
8
7
5
7
6
4

LB115.B EUR BACKHOE LOADER (1/05-)

140(07) APPROVAL FOR UK-EUROPE

Ref	Part Number	Qty	Description
1	85805610	1	STOP,
2	86507337	2	PIN, HITCH,
3	14565080	2	BUTTON,
4	87370045	1	TIE-ROD, , Includes 5 to 8
5	10008571	2	YOKE,
6	85805608	2	YOKE,
7	12163311	2	NUT, M16, Cl 8,
8	87370072	1	TIE-ROD,

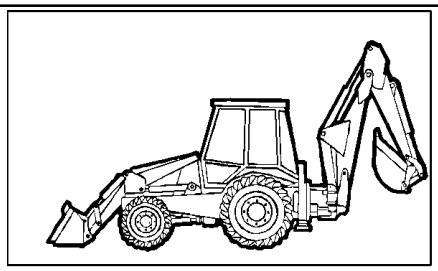

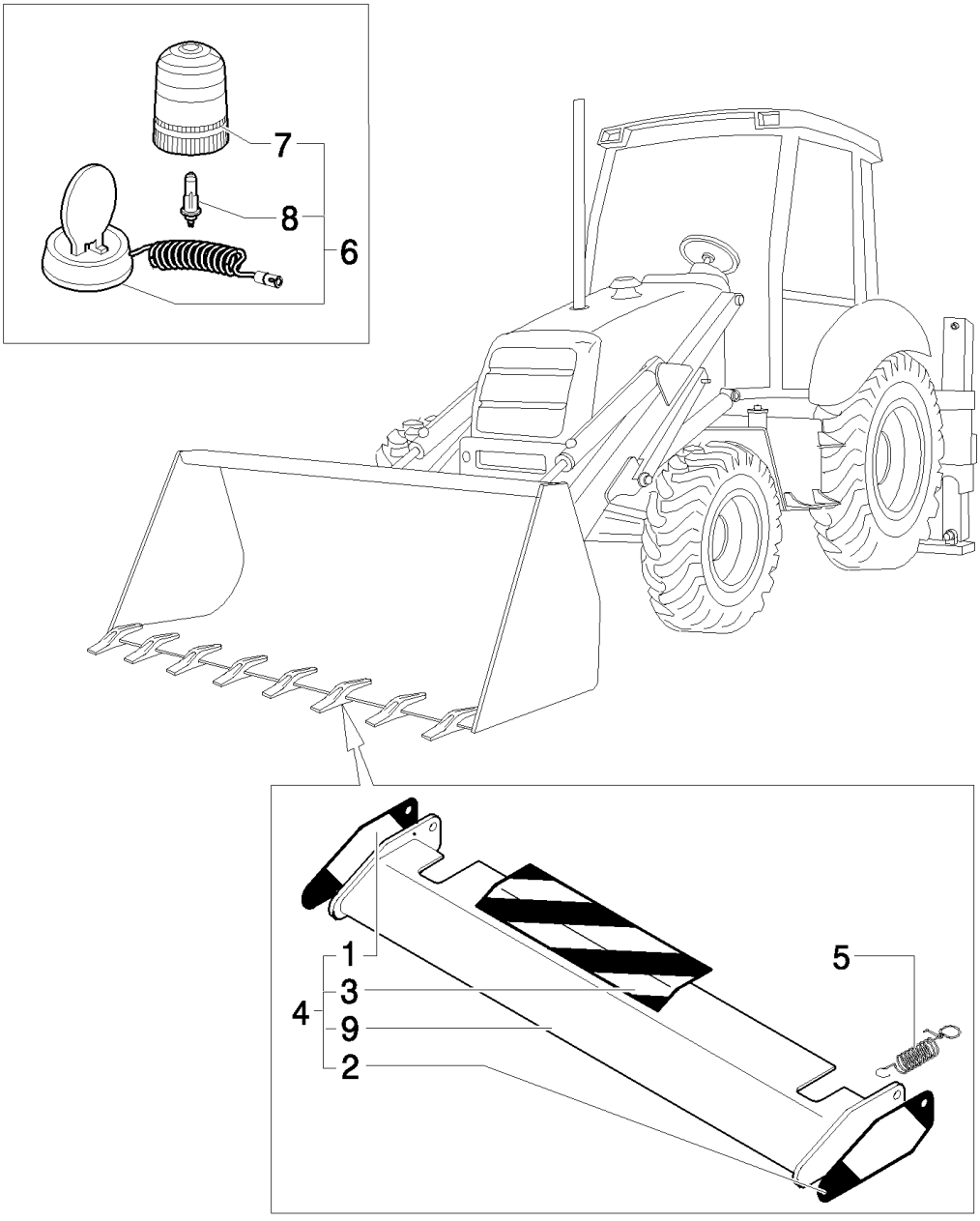
7
8
6
1
3
4
9
2
5

LB115.B EUR BACKHOE LOADER (1/05-)

141(01) APPROVAL FOR FRANCE-EUROPE

Ref	Part Number	Qty	Description
1	85803538	1	STRIP-GASKET,
2	85803539	1	DECAL,
3	85803537	1	STRIP-GASKET, , Only for LB 90.B - LB95.B - LB110.B
3	85805614	1	DECAL, , Only for LB 90.B - LB95.B - LB110.B
4	85803534	1	GUARD, , Only for LB 90.B - LB95.B - LB110.B, Includes 1, 2, 3, 9
4	85805611	1	SHIELD, , Only for LB 90.B - LB95.B - LB110.B
5	85803541	2	SPRING,
6	85817129	1	BEACON, , Includes 7, 8
7	85817131	1	LENS,
8	85817130	1	BULB,
9	85803518	1	GUARD, , Only for LB 90.B - LB95.B - LB110.B
9	85805612	1	PROTECTION, , Only for LB115.B

141(02) APPROVAL FOR FRANCE-EUROPE

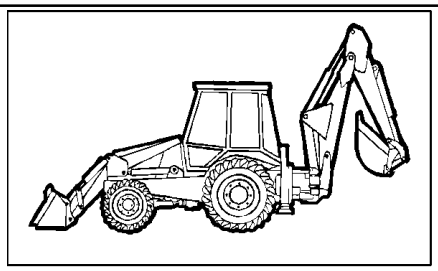

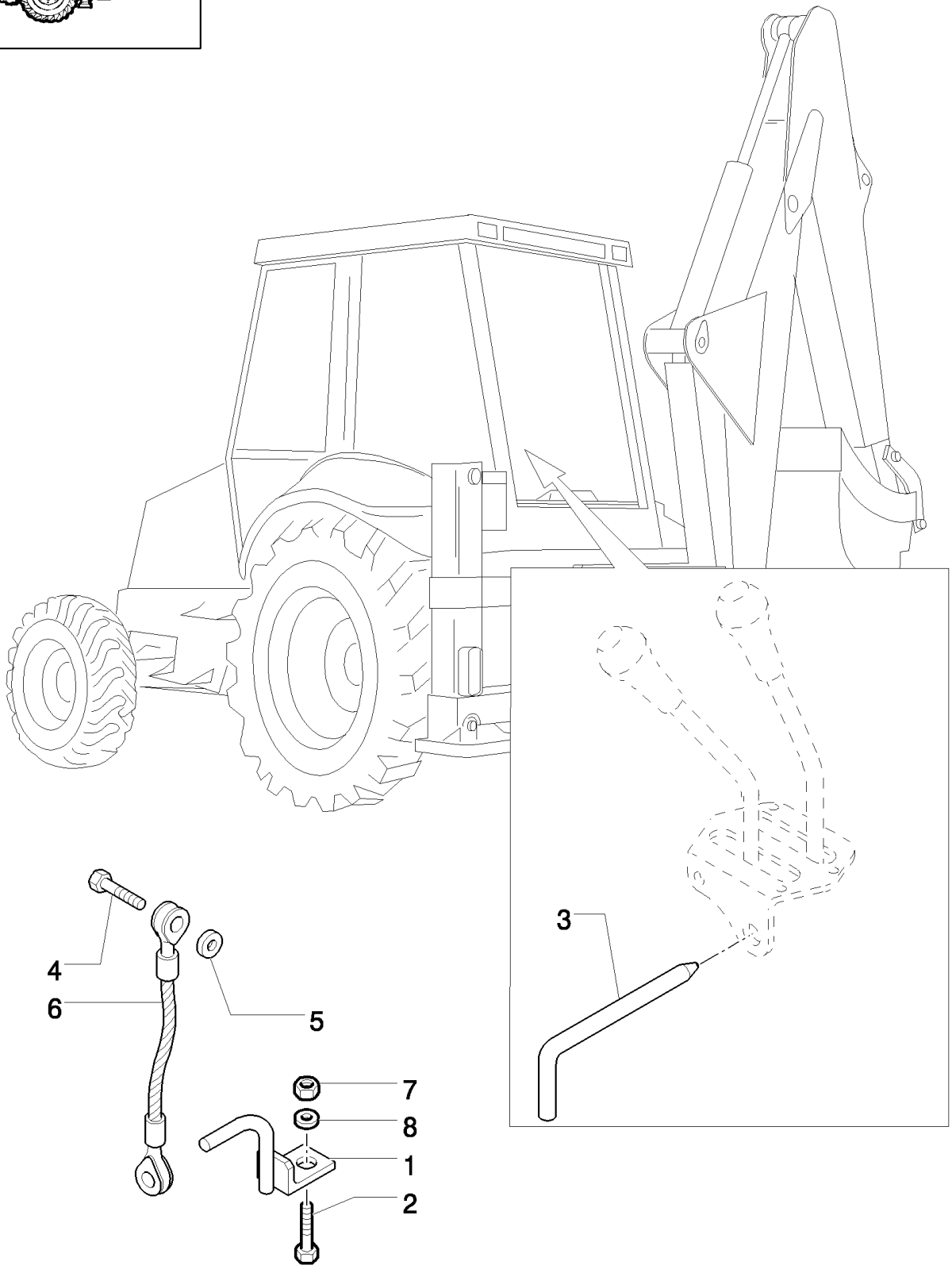

LB115.B EUR BACKHOE LOADER (1/05-)

141(02) APPROVAL FOR FRANCE-EUROPE

Ref	Part Number	Qty	Description
1	85803999	2	HOOK,
2	11390521	2	SCREW, Hex, M16 x 1.5 x 40, 8.8, Full Thd,
3	85803549	1	PIN,
4	15540321	2	SCREW, Hex, M12 x 1.25 x 25, 8.8, Full Thd,
5	11190879	2	WASHER, SPRING, Belleville, M13,
6	87521932	2	TIE-ROD,
7	12574911	2	NUT, M16 x 1.5, Cl 8,
8	14496921	2	WASHER, M16 x 30 x 3,

141(04) APPROVAL FOR FRANCE-EUROPE

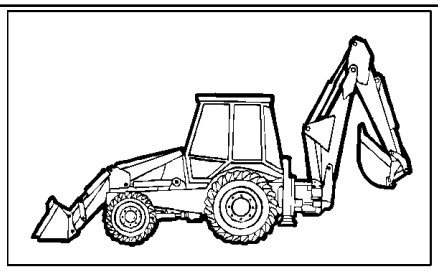

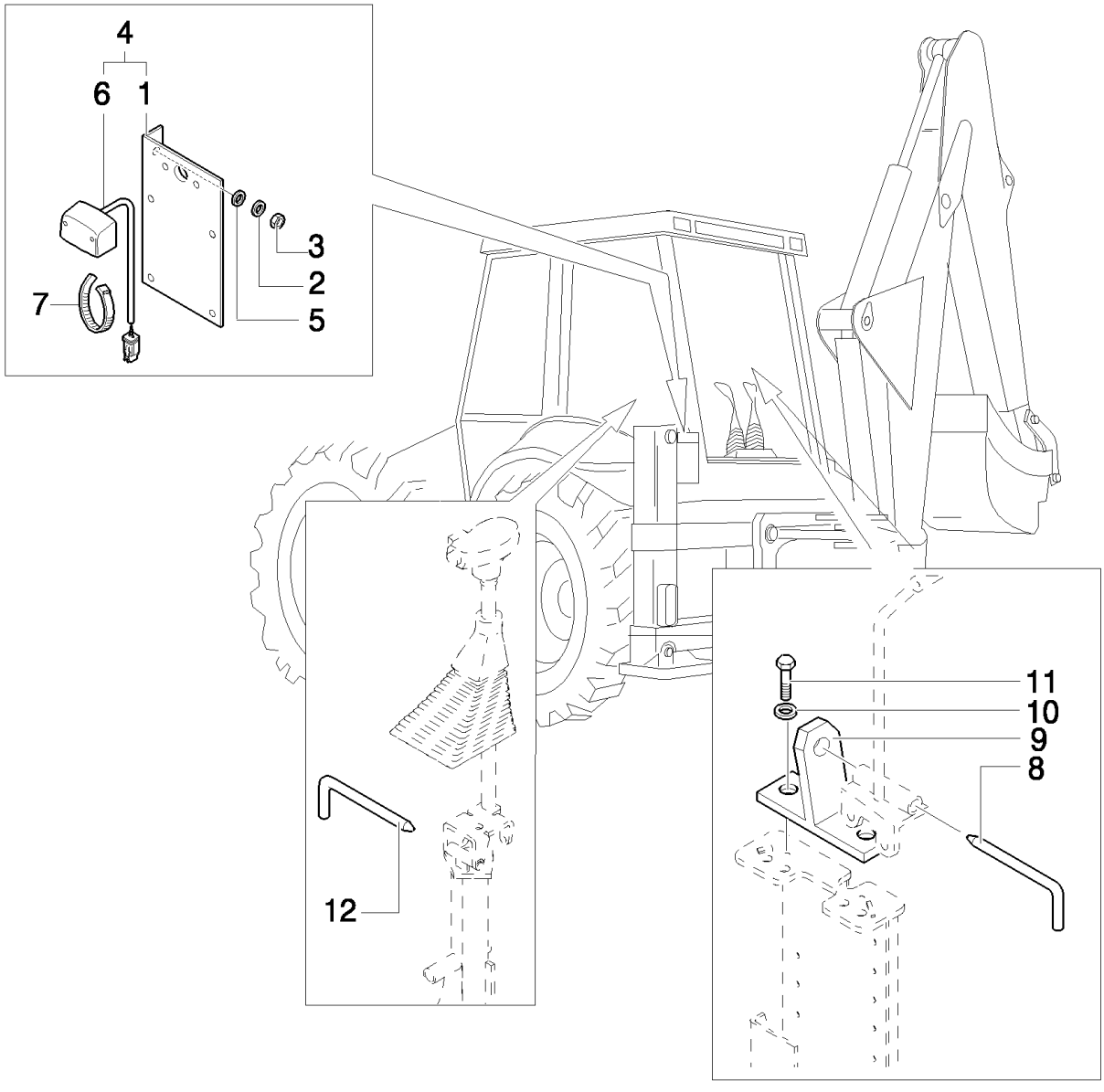

LB115.B EUR BACKHOE LOADER (1/05-)

141(04) APPROVAL FOR FRANCE-EUROPE

Ref	Part Number	Qty	Description
1	85803296	1	SUPPORT,
2	11193879	2	WASHER, SPRING, Belleville, M8.4,
3	16100811	2	NUT, M8, Cl 8,
4	87387257	1	LAMP, NUMBER PLATE, , Includes 1, 6
5	12647121	2	WASHER, M8 x 20 x 3,
6	87387258	1	LAMP, NUMBER PLATE,
7	85803332	2	STRAP, CABLE,
8	85803550	1	PIN,
9	85803125	1	STOP,
10	11193979	2	WASHER, SPRING, Belleville, M8.4,
11	16043621	2	BOLT, Hex, M8 x 25, 8.8,
12	85803543	1	PIN,

Mechanical Version

141(05) APPROVAL FOR FRANCE

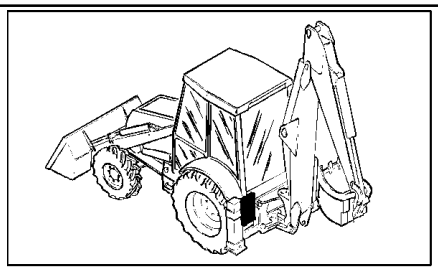

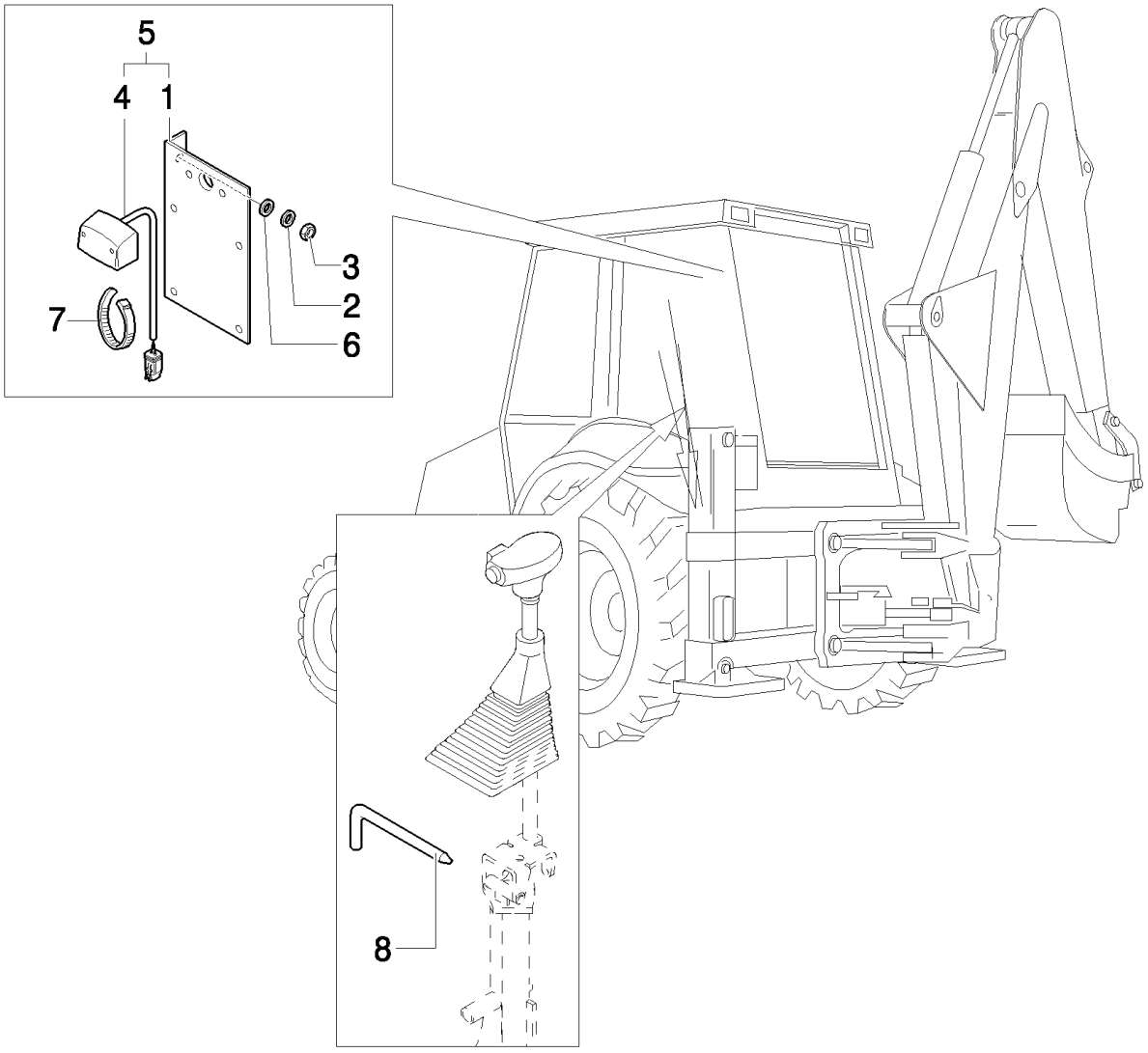

LB115.B EUR BACKHOE LOADER (1/05-)

141(05) APPROVAL FOR FRANCE

Ref	Part Number	Qty	Description
1	85803296	1	SUPPORT,
2	11193879	2	WASHER, SPRING, Belleville, M8.4,
3	16100811	2	NUT, M8, Cl 8,
4	87387258	1	LAMP, NUMBER PLATE,
5	87387257	1	LAMP, NUMBER PLATE,
6	12647121	2	WASHER, M8 x 20 x 3,
7	85803332	2	STRAP, CABLE,
8	85803543	1	PIN,

Pilot Control Version

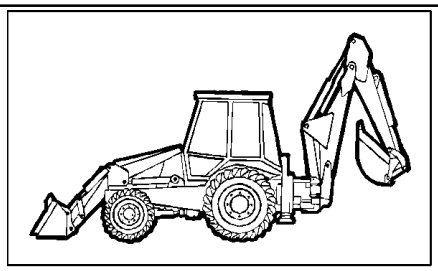

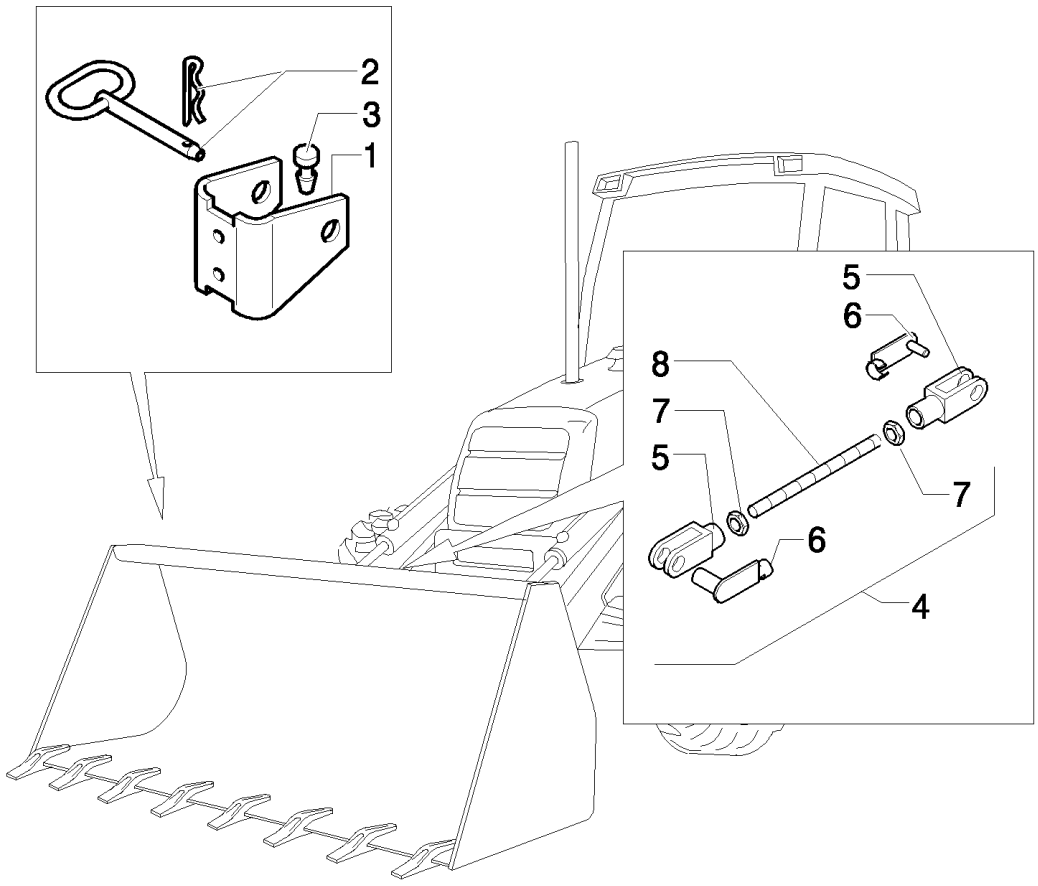
2
3
1
5
6
8
7
5
7
6
4

LB115.B EUR BACKHOE LOADER (1/05-)

141(06) APPROVAL FOR FRANCE-EUROPE

Ref	Part Number	Qty	Description
1	85805610	1	STOP,
2	86507337	2	PIN, HITCH,
3	14565080	2	BUTTON,
4	87370045	1	TIE-ROD, , Includes 5 to 8
5	10008271	2	YOKE,
6	85805608	2	YOKE,
7	12163311	2	NUT, M16, Cl 8,
8	87370072	1	TIE-ROD,

175(01) AIR INTAKE CAP & PRE-CLEANER

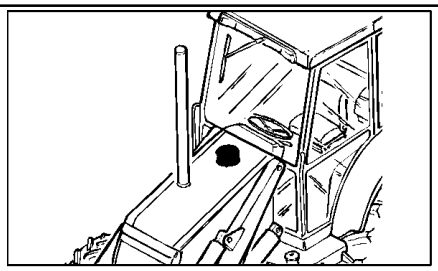

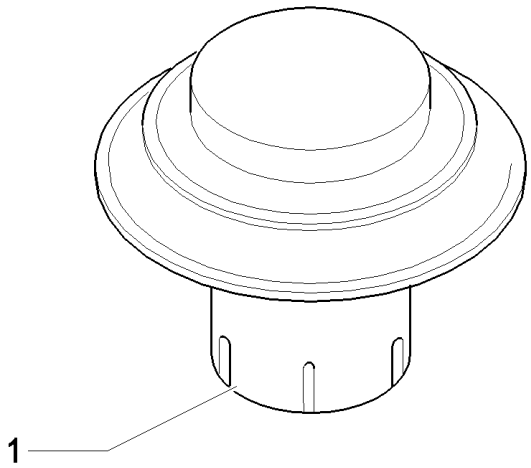

Standard

LB115.B EUR BACKHOE LOADER (1/05-)

175(01) AIR INTAKE CAP & PRE-CLEANER

Ref	Part Number	Qty	Description
1	85804602	1	INTAKE, AIR,

Standard

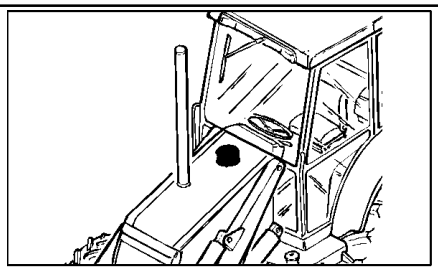

EQUIP. 176

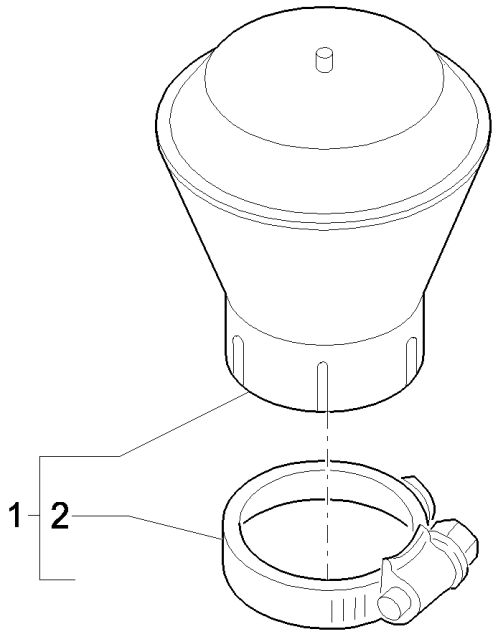

EQUIP. 197

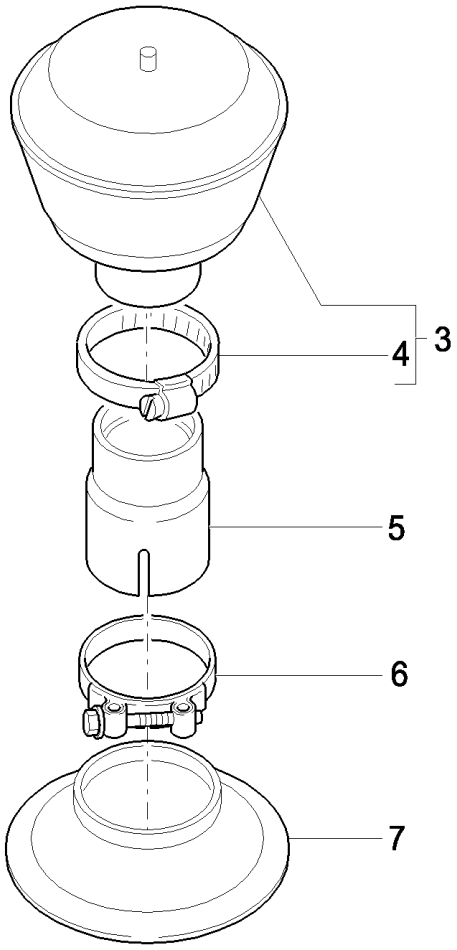

Centrifugal Pre-cleaner

LB115.B EUR BACKHOE LOADER (1/05-)

176(01) AIR INTAKE CAP & PRE-CLEANER

Ref	Part Number	Qty	Description
1	85804347	1	PRESCREENER,
2	85802743	1	CLAMP, HOSE,
3	85804347	1	PRESCREENER,
4	85802743	1	CLAMP, HOSE,
5	85804349	1	EXTENSION,
6	85811975	1	CLAMP,
7	85802829	1	GUARD,

Centrifugal Pre-cleaner

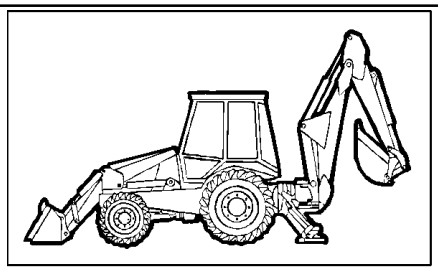

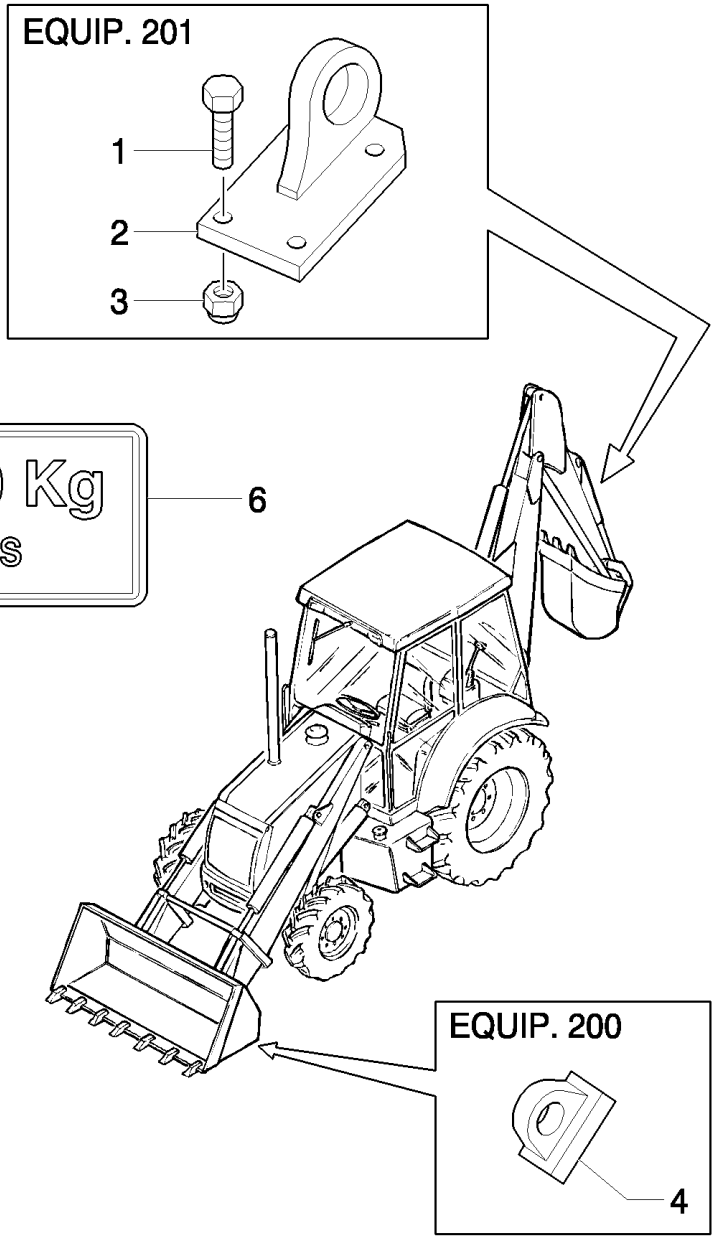
EQUIP. 201
1
2
3
SWL=1000 Kg
AT 3.4m RADIUS
6
EQUIP. 200
4
SWL=1000 Kg
5

LB115.B EUR BACKHOE LOADER (1/05-)

200(01) SHOVEL AND REAR LIFTING HOOKS

Ref	Part Number	Qty	Description
1	11394334	4	SCREW, Hex, M14 x 1.5 x 45, 8.8, Full Thd, (Equip.201)
2	85802599	1	HOOK, (EQUIP.201)
3	12574825	4	NUT, M14 x 1.5, Cl 10, (EQUIP.201)
4	85805807	1	HOOK, (Equip.200)
5	85805663	1	DECAL, (EQUIP.200)
6	85805664	1	DECAL, (EQUIP.201)

Mechanical Version

202(01) FRONT WEIGHTS

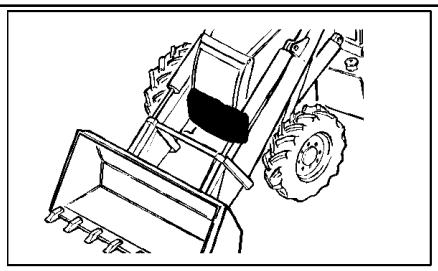

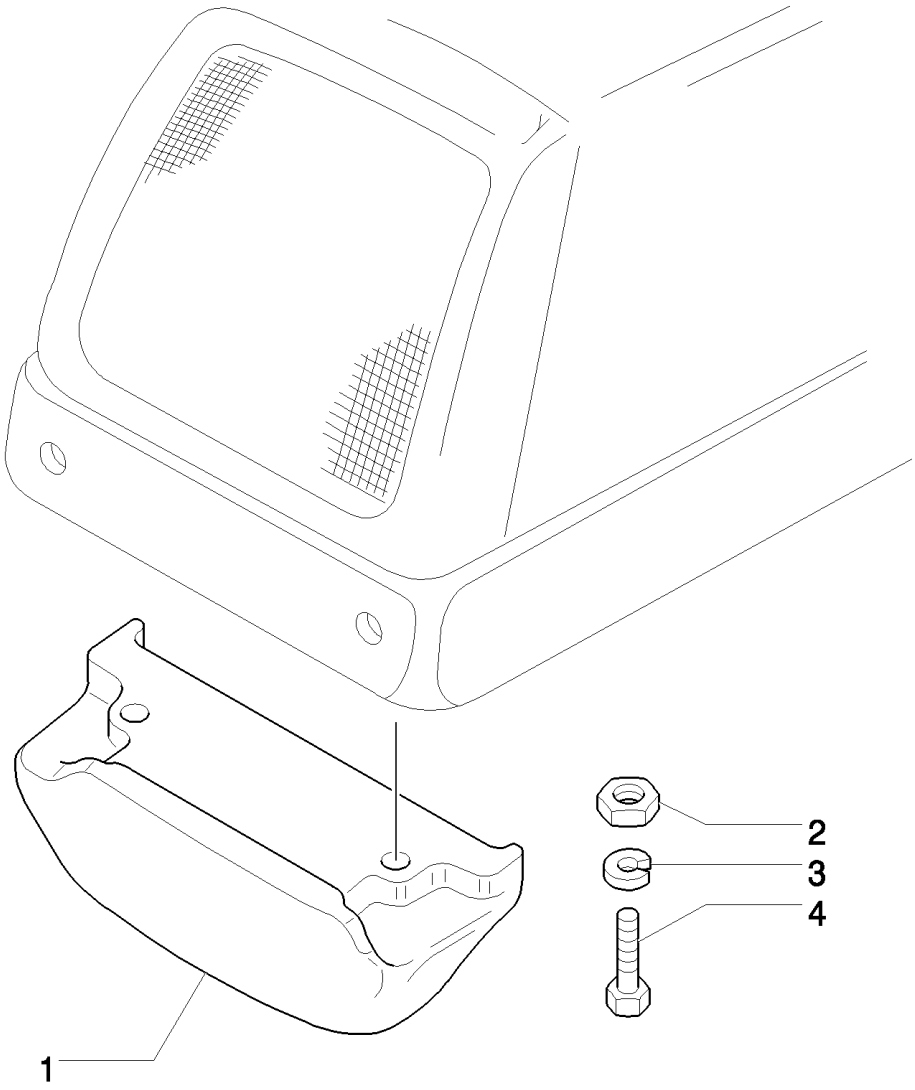

LB115.B EUR BACKHOE LOADER (1/05-)

202(01) FRONT WEIGHTS

Ref	Part Number	Qty	Description
1	85804725	1	WEIGHT,
2	12575121	2	NUT, M20 x 1.5, Cl 10,
3	10520431	4	WASHER,
4	15989334	2	SCREW, Hex, M20 x 1.5 x 110, 10.9,

207(01) REAR WEIGHT (CENTER PIVOT)

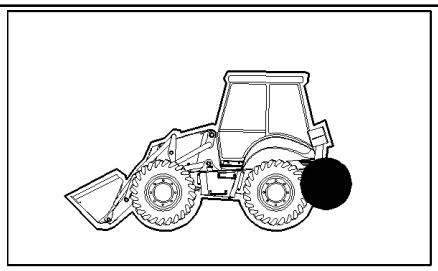

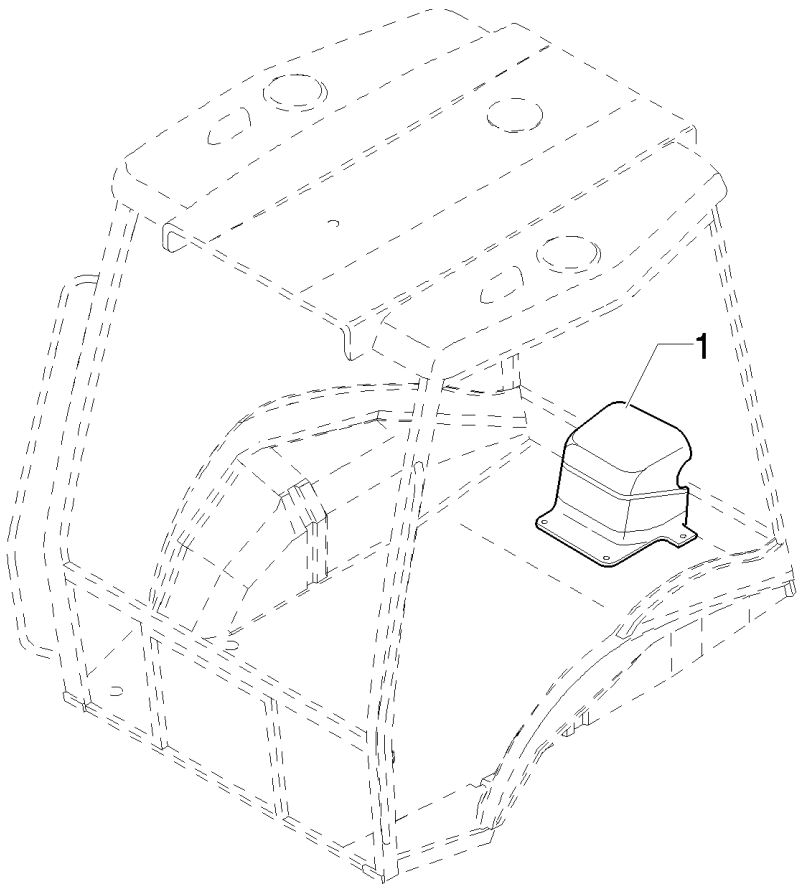

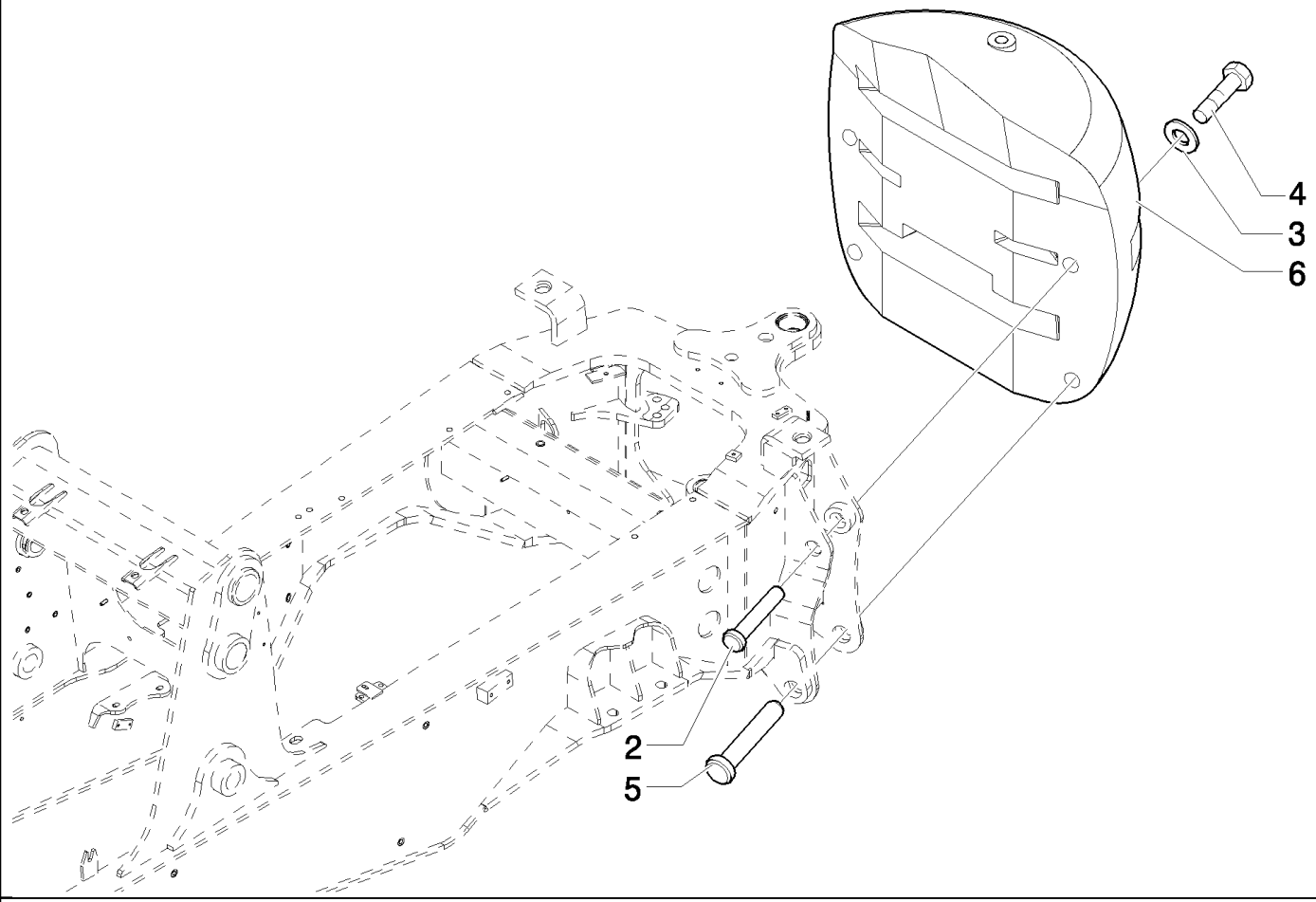

LB115.B EUR BACKHOE LOADER (1/05-)

207(01) REAR WEIGHT (CENTER PIVOT)

Ref	Part Number	Qty	Description
1	87387648	1	SOFT TRIM,
2	85807935	2	PIN,
3	85807951	4	WASHER, LOCK,
4	15998731	4	SCREW, Hex, M24 x 2 x 180, 10.9, M24x180
5	85807934	2	PIN,
6	87388774	1	WEIGHT, COUNTER,

273(01) (4WS) FRONT SPARE WHEEL

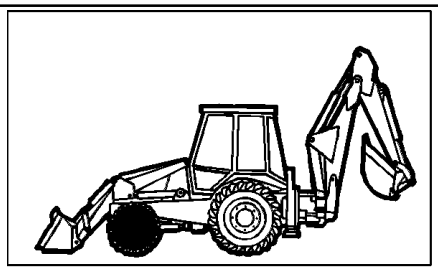

TIRE SIZE	RIM
440/80R28 156A8 IT530	W14Lx28

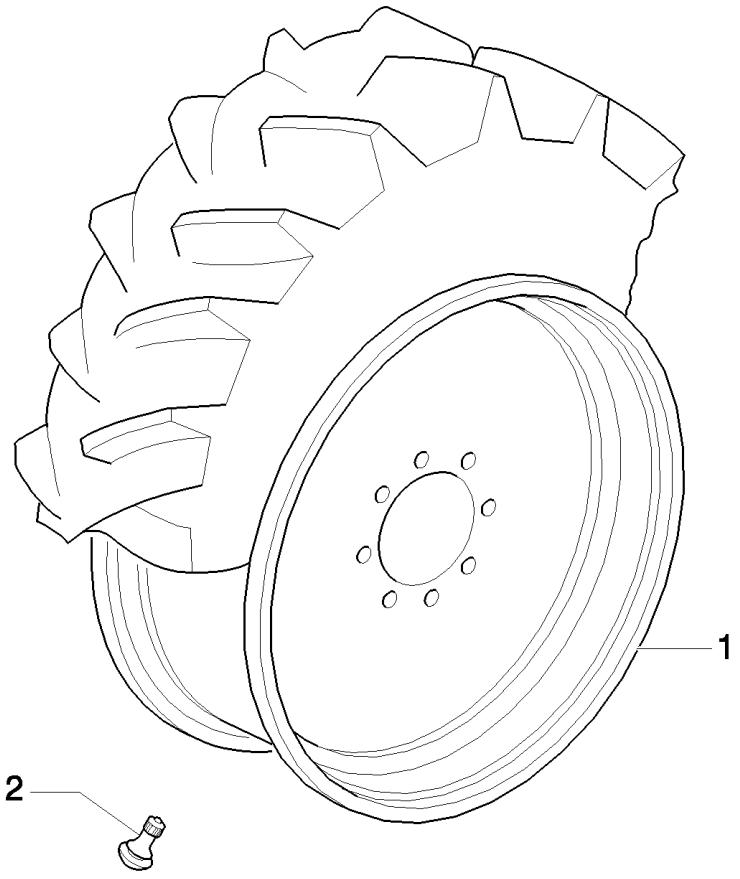

LB115.B EUR BACKHOE LOADER (1/05-)

273(01) (4WS) FRONT SPARE WHEEL

Ref	Part Number	Qty	Description
1	87305221	1	WHEEL, W14LX28
2	85700224	1	VALVE STEM,

300(01) BACKHOE CONTROL VALVE, 6 SECTIONS (CENTER PIVOT)

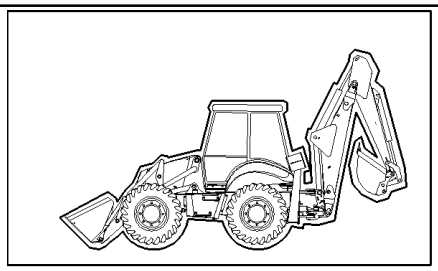

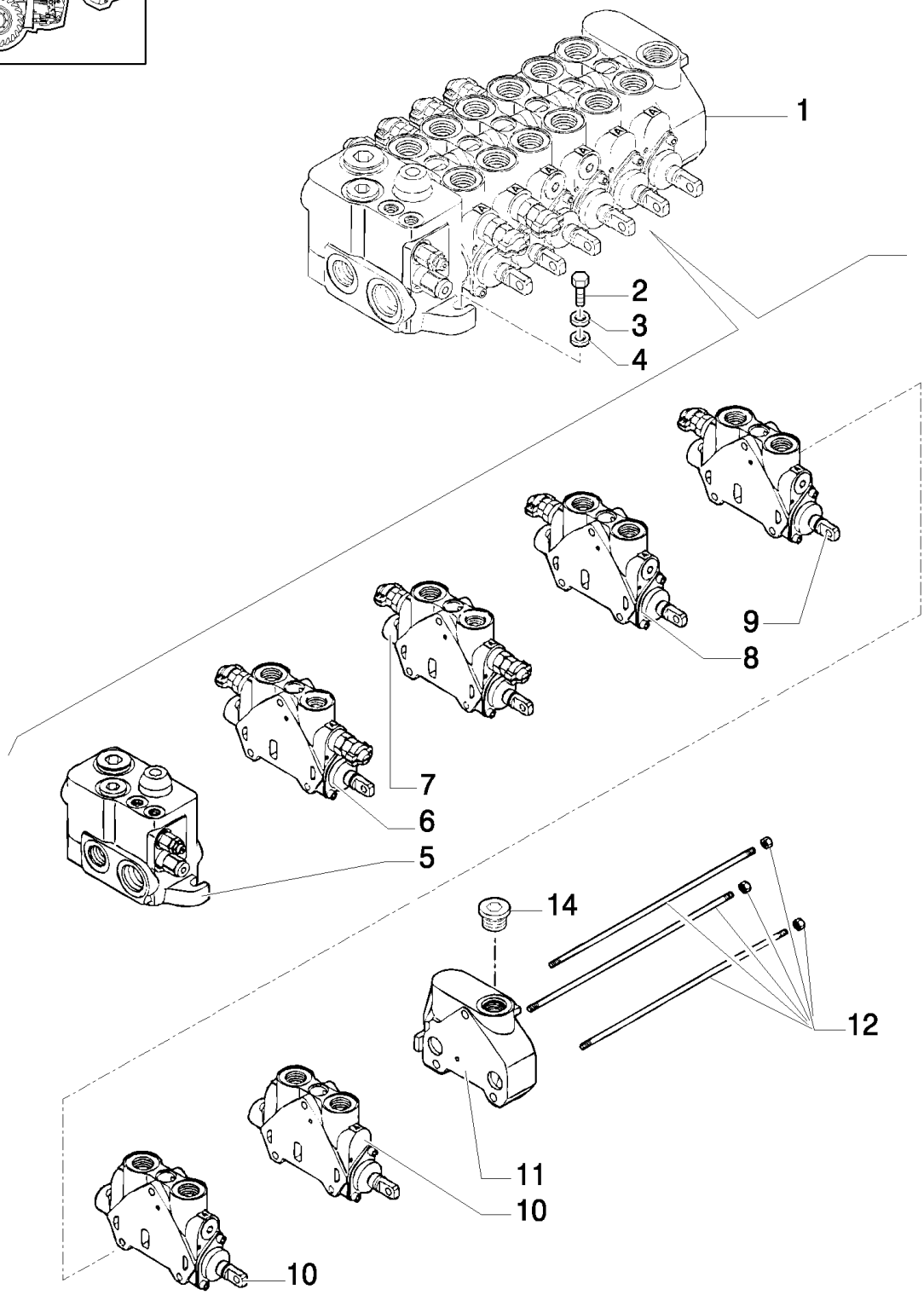

LB115.B EUR BACKHOE LOADER (1/05-)

300(01) BACKHOE CONTROL VALVE, 6 SECTIONS (CENTER PIVOT)

Ref	Part Number	Qty	Description
1	85824220	1	VALVE, CONTROL, ASSY
2	15888724	3	SCREW, Hex, M10 x 1.25 x 55, 8.8,
3	11190679	3	WASHER, SPRING, Belleville, M10.5,
4	85818943	3	SPACER,
5	85826255	1	SECTOR, TOOTHED, , See Page 300 02
6	85826245	1	SECTOR, TOOTHED, , Boom Cylinder, See Page 300 03
7	85826253	1	SECTOR, TOOTHED, , Swing Cylinder, See Page 300 04
8	85826246	1	SECTOR, TOOTHED, , Bucket Cylinder, See Page 300 05
9	85826248	1	SECTOR, TOOTHED, , Arm Cylinder, See Page 300 06
10	85826251	2	SECTOR, TOOTHED, , Stabilizer Cylinder, See Page 300 07
11	85826250	1	VALVE SECTION, HYD, , Clamps Cylinder
12	85811958	1	KIT,
14	85811921	1	PLUG, 1-1/16"-12 UNF 2A

Mechanical Version

300(02) BACKHOE CONTROL VALVE, INLET SECTION

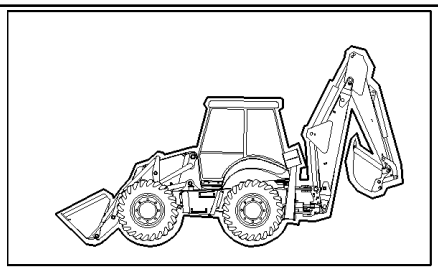

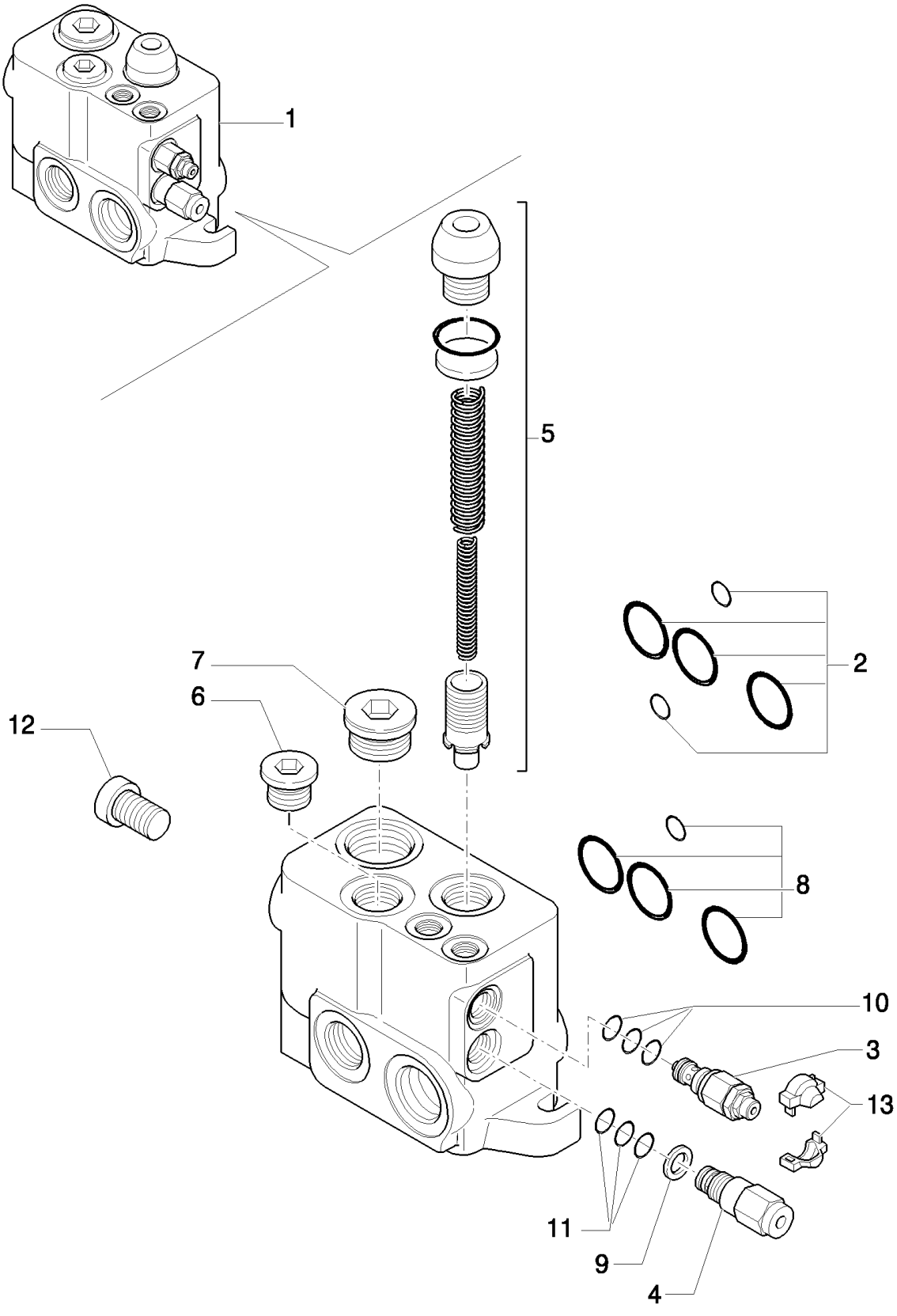

LB115.B EUR BACKHOE LOADER (1/05-)

300(02) BACKHOE CONTROL VALVE, INLET SECTION

Ref	Part Number	Qty	Description
1	85826255	1	SECTOR, TOOTHED, ASSY
2	85825477	1	KIT, SEALS,
3	85811946	1	VALVE, PRESSURE RELIEF,
4	85820128	1	REGULATOR,
5	85820129	1	KIT, Regulation
6	85811921	1	PLUG, 1-1/16"-12 UNF 2A
7	85811922	1	PLUG, 1-5/16"-12 UNF 2A
8	85825473	1	KIT, SEALS, SEALS
9	85817669	1	GASKET,
10	85821236	1	KIT, SEALS, Seal, LS Pressure Relief
11	85821235	1	KIT, SEALS, Seal, Flow Regulator
12	85811923	1	PLUG,
13	85811934	1	KIT,

Mechanical Version

300(03) BACKHOE CONTROL VALVE, BOOM SECTION

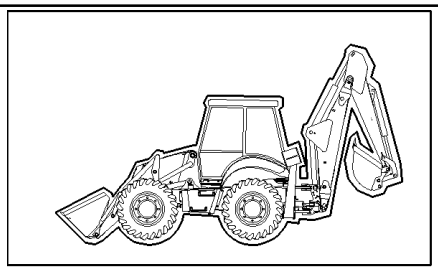

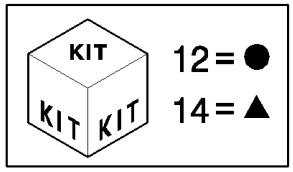

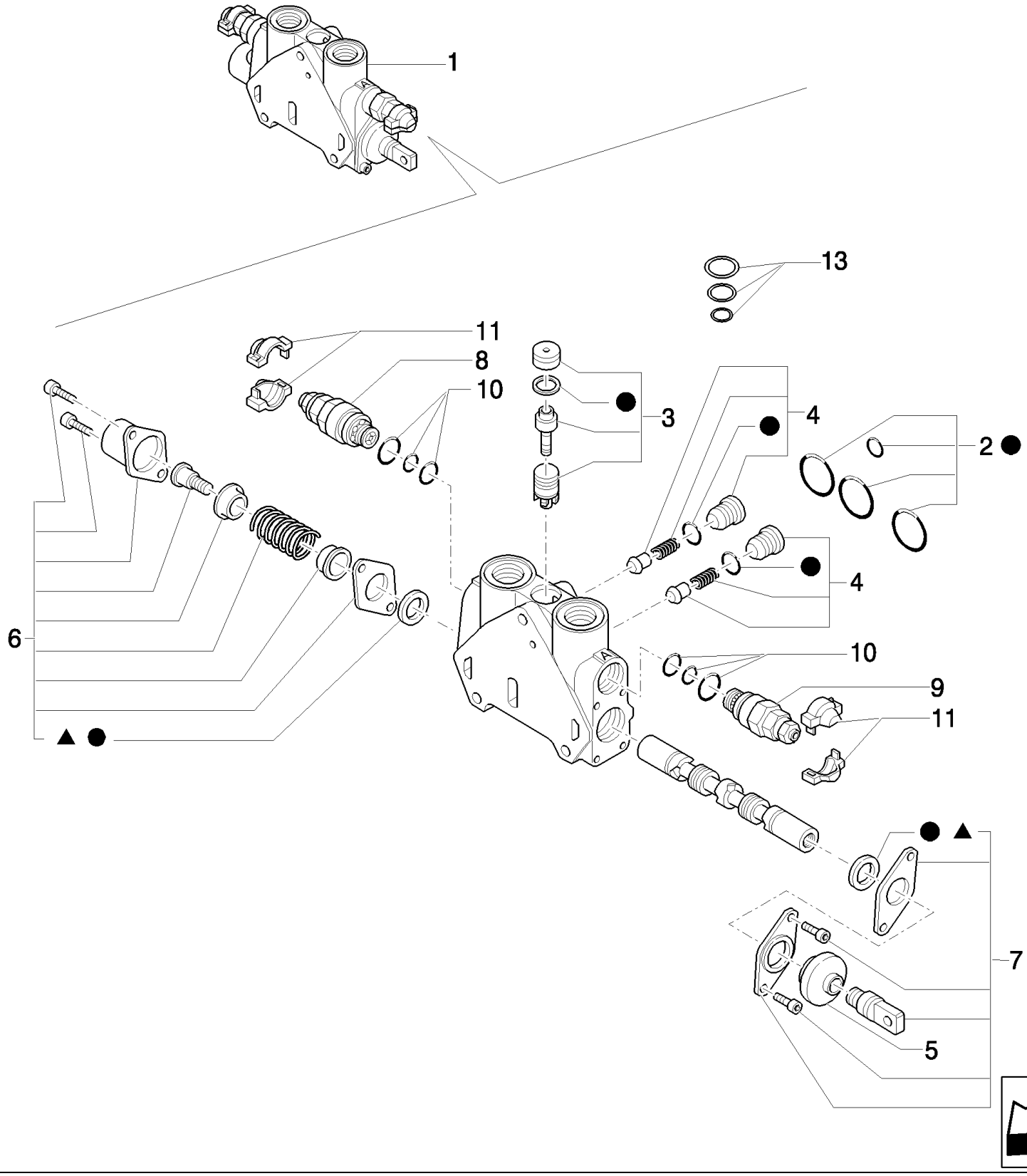

LB115.B EUR BACKHOE LOADER (1/05-)

300(03) BACKHOE CONTROL VALVE, BOOM SECTION

Ref	Part Number	Qty	Description
1	85826245	1	SECTOR, TOOTHED, ASSY
2	85819148	1	KIT, SEALS, Seals
3	85819378	1	KIT, SEALS, Seals
4	85811938	2	VALVE, CHECK, Valve
5	85820130	1	BOOT,
6	85824279	1	KIT, Seals
7	85824278	1	KIT, Working Section
8	85812117	1	VALVE, HYDRAULIC, , Includes 10, 11, 315 BAR
9	85812116	1	VALVE, PRESSURE RELIEF, , Includes 10, 11, 240 BAR
10	85811933	2	KIT, SEALS, Seals
11	85811934	2	KIT, Cover
12	85824281	1	KIT, SEALS, Seals
13	85819040	1	KIT, SEALS, Compensator Seals
14	85824283	1	KIT, SEALS, Spool Seal

Mechanical Version

300(04) BACKHOE CONTROL VALVE, SWING SECTION

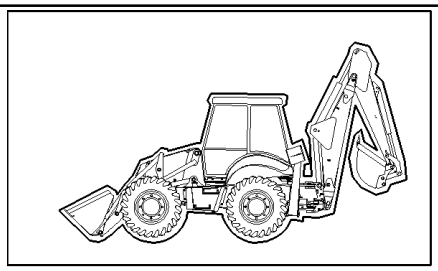

KIT
KIT KIT
9 = ●
13 = ▲

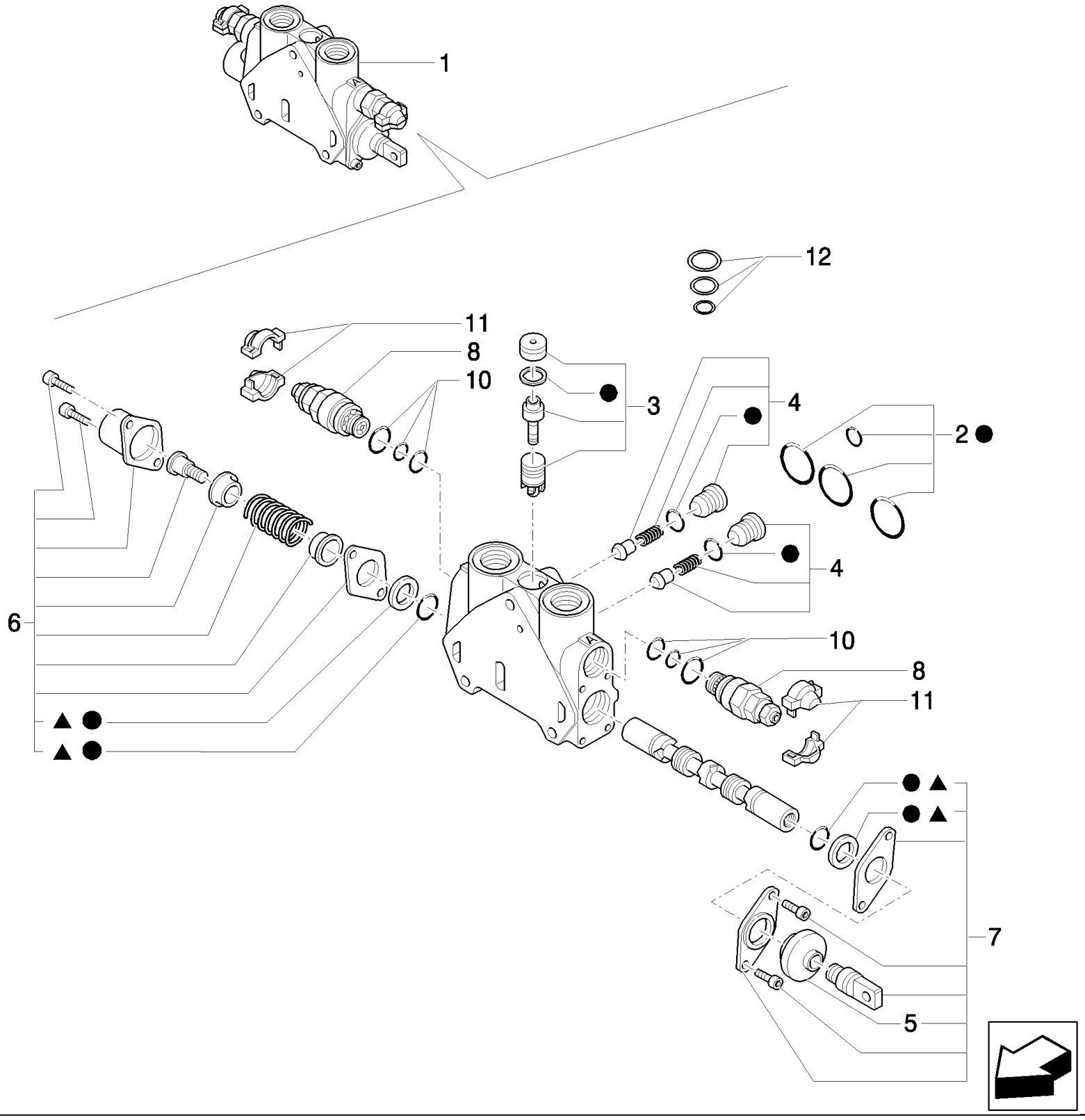

LB115.B EUR BACKHOE LOADER (1/05-)

300(04) BACKHOE CONTROL VALVE, SWING SECTION

Ref	Part Number	Qty	Description
1	85826253	1	SECTOR, TOOTHED, ASSY
2	85819148	1	KIT, SEALS, Seals
3	85819378	1	KIT, SEALS, Seals
4	85811938	2	VALVE, CHECK, Valve
5	85820130	1	BOOT,
6	85824279	1	KIT, Cover Assy
7	85824278	1	KIT, Working Section
8	85812114	2	VALVE, HYDRAULIC, , Includes 10, 11, 205 BAR
9	85824282	1	KIT, Seals
10	85811933	2	KIT, SEALS, Seals
11	85811934	2	KIT, Cover
12	85819040	1	KIT, SEALS, Compensator Seal
13	85825248	1	KIT, Spool Seal

Mechanical Version

300(05) BACKHOE CONTROL VALVE, BUCKET SECTION

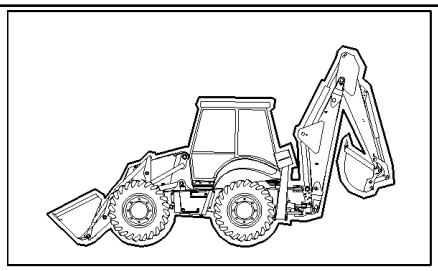

KIT
KIT KIT
12 = ●
14 = ▲

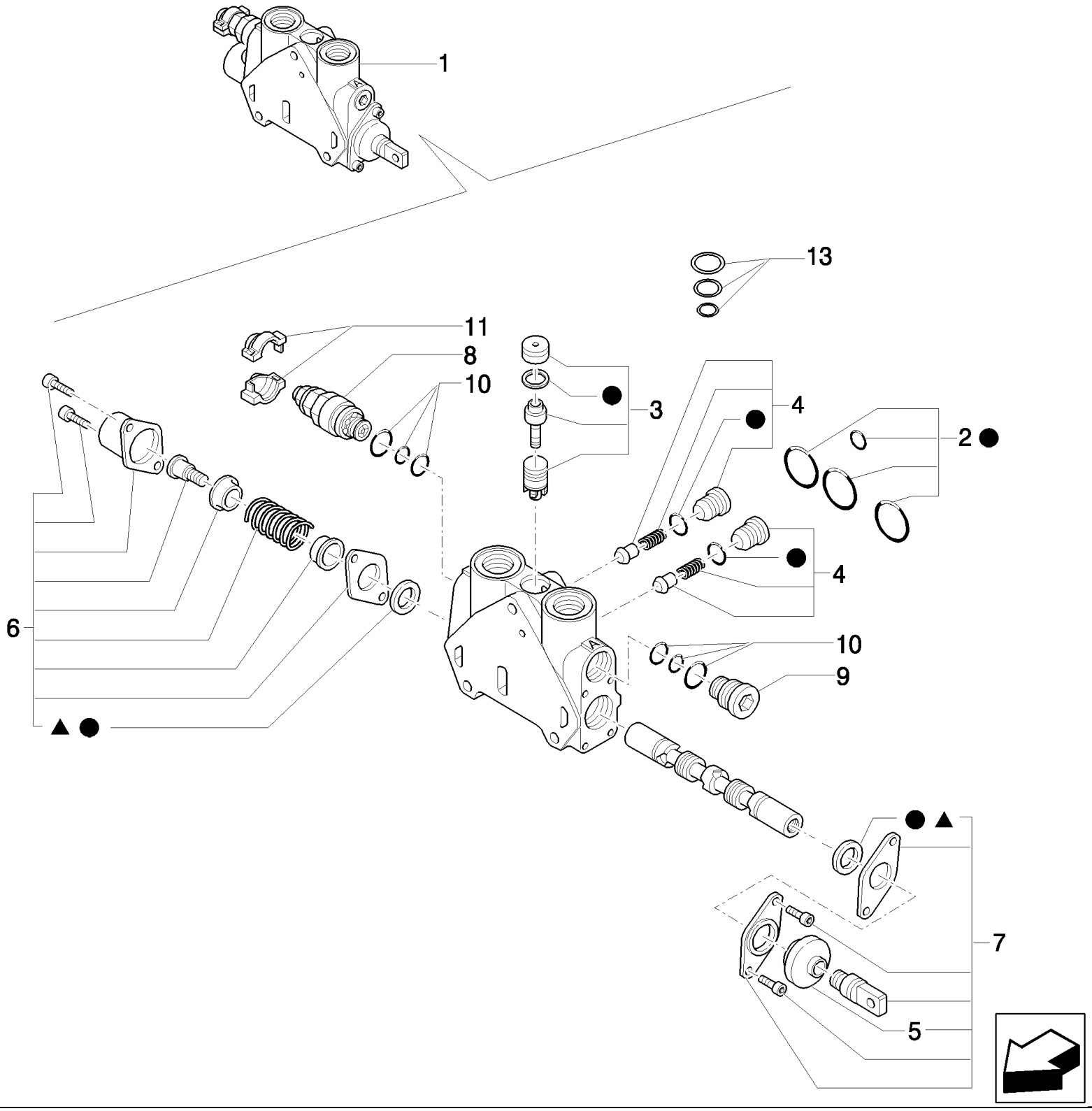

LB115.B EUR BACKHOE LOADER (1/05-)

300(05) BACKHOE CONTROL VALVE, BUCKET SECTION

Ref	Part Number	Qty	Description
1	85826246	1	SECTOR, TOOTHED, ASSY
2	85819148	1	KIT, SEALS, Seals
3	85819378	1	KIT, SEALS, Seals
4	85811938	2	VALVE, CHECK, VALVE
5	85820130	1	BOOT,
6	85824279	1	KIT, Cover Assy
7	85824278	1	KIT, Working section
8	85812115	1	VALVE, HYDRAULIC, , Includes 10, 11, 220 BAR
9	85811937	1	PLUG, , Includes 10
10	85811933	2	KIT, SEALS, Seals
11	85811934	1	KIT, Cover
12	85824281	1	KIT, SEALS, Seals
13	85819040	1	KIT, SEALS, Compensator Seal
14	85824283	1	KIT, SEALS, Spool Seal

Mechanical Version

300(06) BACKHOE CONTROL VALVE, DIPPERSTICK SECTION

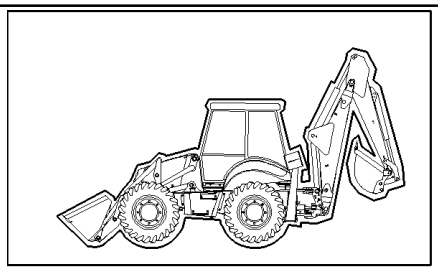

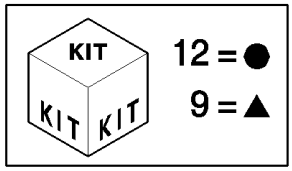

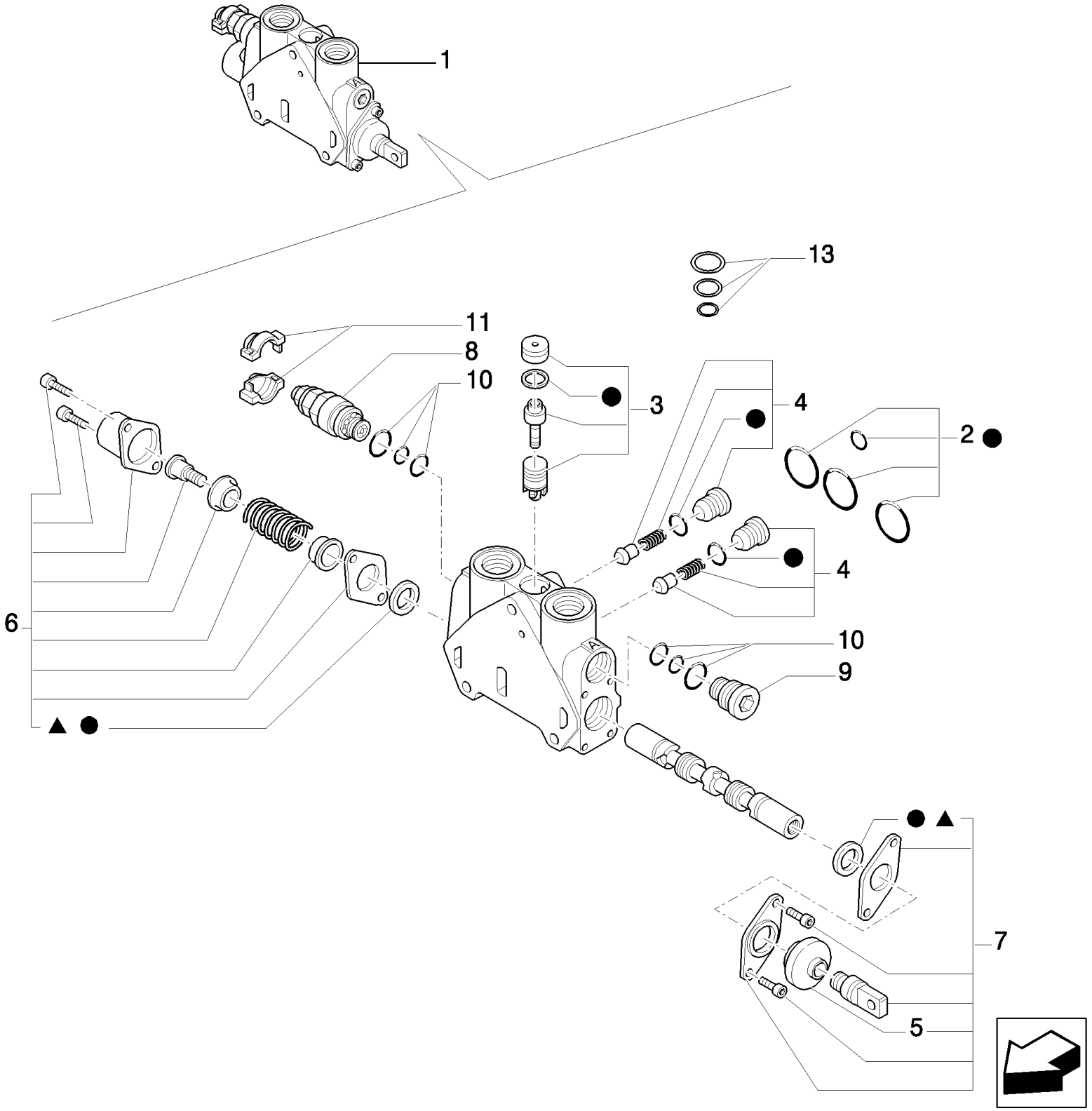

LB115.B EUR BACKHOE LOADER (1/05-)

300(06) BACKHOE CONTROL VALVE, DIPPERSTICK SECTION

Ref	Part Number	Qty	Description
1	85826248	1	SECTOR, TOOTHED, ASSY
2	85819148	1	KIT, SEALS, Seals
3	85819378	1	KIT, SEALS, Seals
4	85811938	2	VALVE, CHECK, Valve
5	85820130	1	BOOT,
6	85824279	1	KIT, Cover Assy
7	85824278	1	KIT, Working Section
8	85812116	1	VALVE, PRESSURE RELIEF, , Includes 10, 11, 240 BAR
9	85824283	1	KIT, SEALS, Spool Seals, Includes 10
10	85811933	1	KIT, SEALS, Valve Seals
11	85811934	1	KIT, Cover
12	85824281	1	KIT, SEALS, Seals
13	85819040	1	KIT, SEALS, Compensator Seal

Mechanical Version

300(07) BACKHOE CONTROL VALVE, STABILIZER SECTION (CENTER PIVOT)

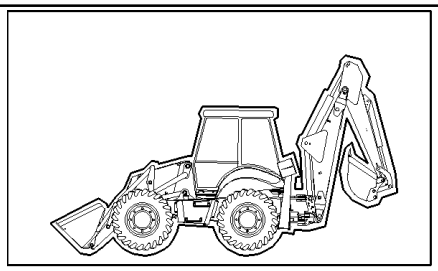

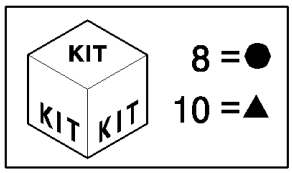

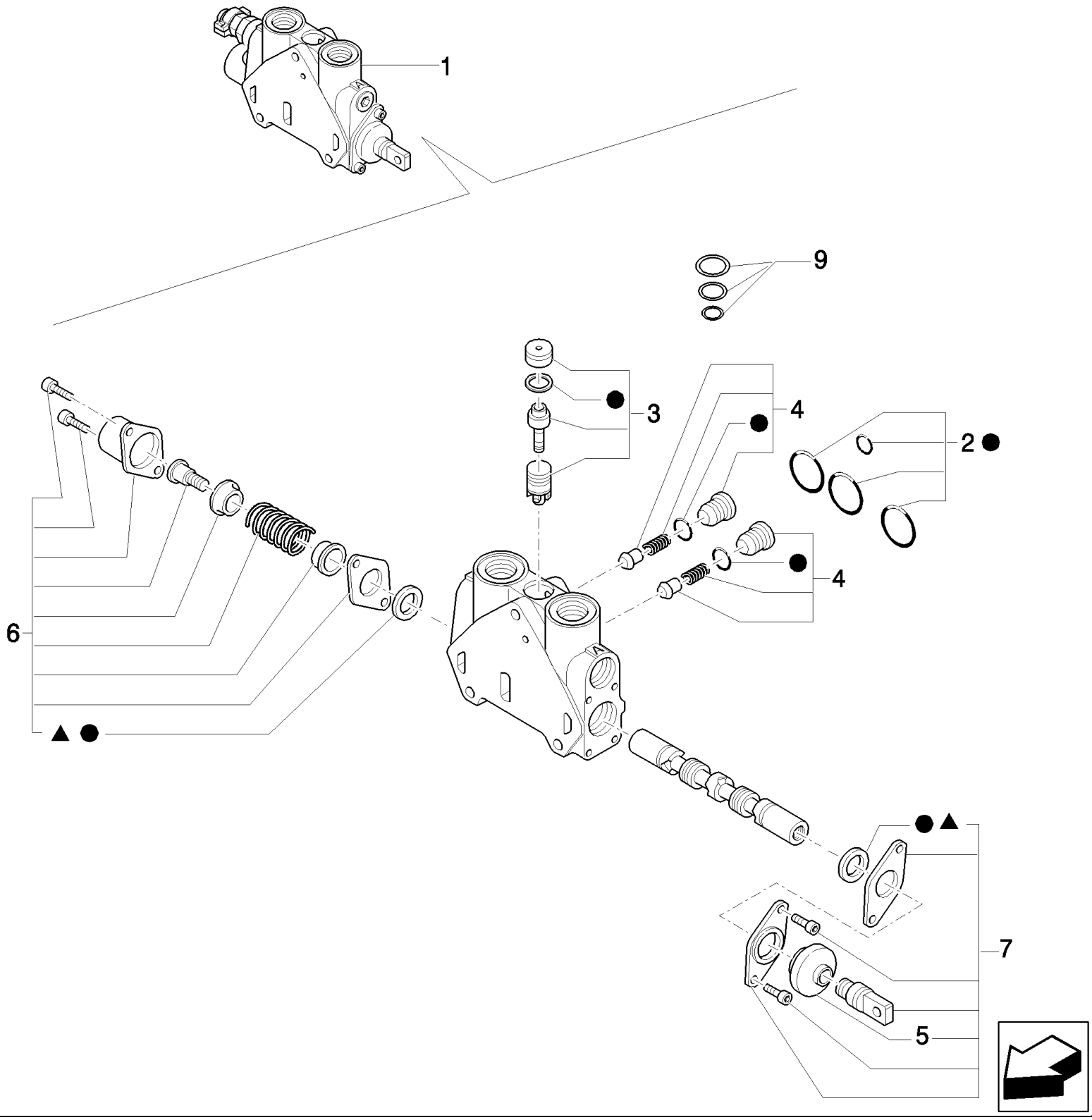

LB115.B EUR BACKHOE LOADER (1/05-)

300(07) BACKHOE CONTROL VALVE, STABILIZER SECTION (CENTER PIVOT)

Ref	Part Number	Qty	Description
1	85826251	1	SECTOR, TOOTHED, ASSY
2	85819148	1	KIT, SEALS, Seals
3	85819378	1	KIT, SEALS, Seals
4	85811938	2	VALVE, CHECK, Valve
5	85820130	1	BOOT,
6	85824279	1	KIT, Cover Assy
7	85824278	1	KIT, Working Assy
8	85824281	1	KIT, SEALS, Seals
9	85819040	1	KIT, SEALS, Compensator Seal
10	85824283	1	KIT, SEALS, Spool Seal

Mechanical Version

301(01) BACKHOE CONTROL VALVE, 6 SECTIONS (SIDE SHIFT)

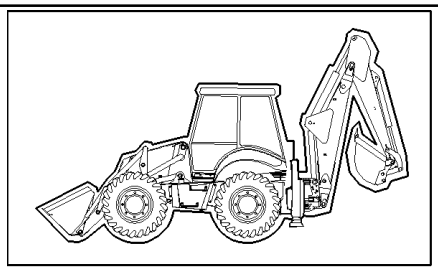

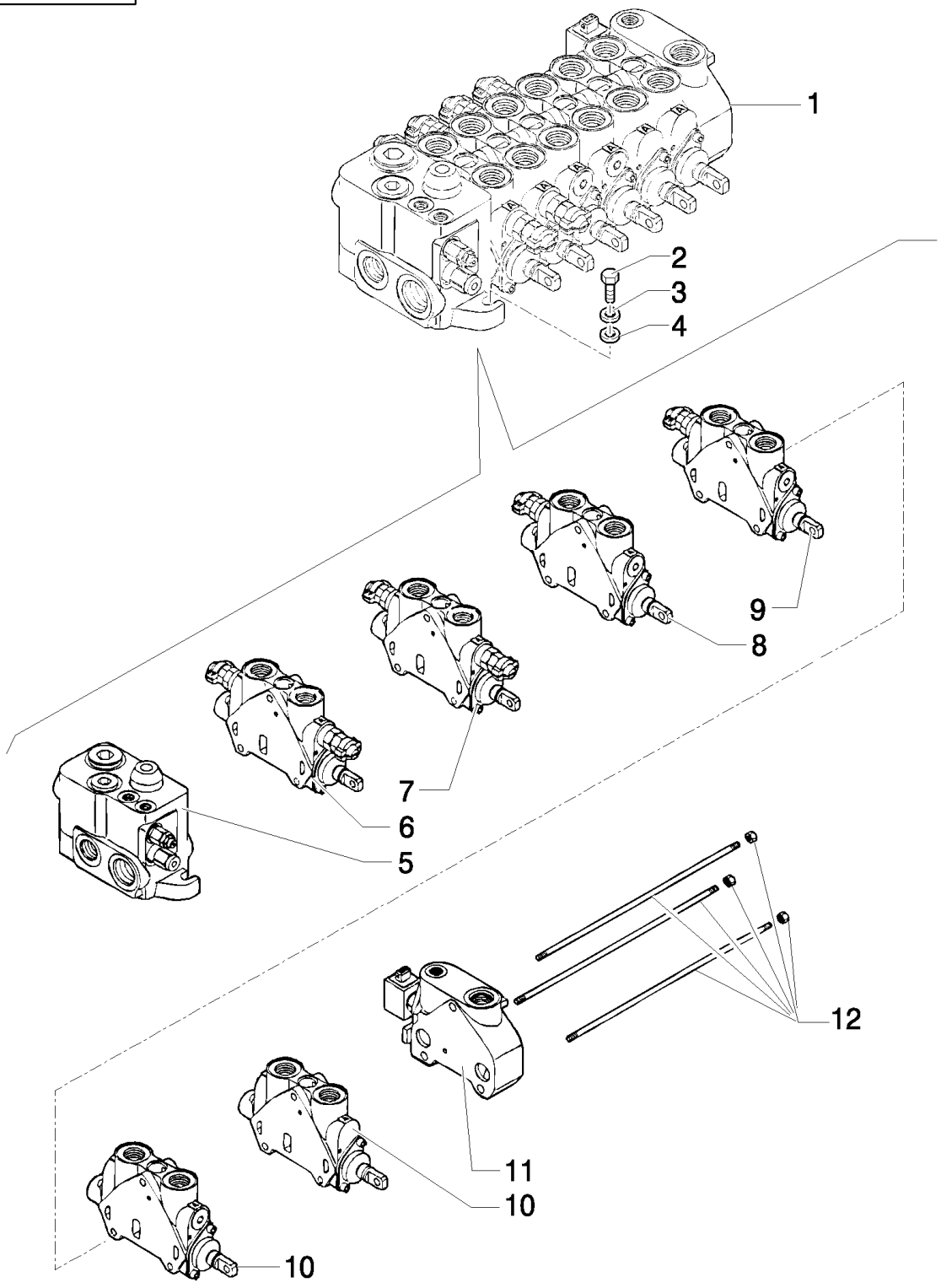

LB115.B EUR BACKHOE LOADER (1/05-)

301(01) BACKHOE CONTROL VALVE, 6 SECTIONS (SIDE SHIFT)

Ref	Part Number	Qty	Description
1	85824221	1	VALVE, CONTROL, Assy, UP TO S/N 031058525
1	87376074	1	VALVE, HYDRAULIC, , FROM TO S/N 031058526
2	15888724	3	SCREW, Hex, M10 x 1.25 x 55, 8.8,
3	11190679	3	WASHER, SPRING, Belleville, M10.5,
4	85818943	3	SPACER, 10X30X2
5	85826255	1	SECTOR, TOOTHED, , See Page 300 02
6	85826245	1	SECTOR, TOOTHED, , Boom Cylinder, See Page 300 03
7	85826253	1	SECTOR, TOOTHED, , Swing Cylinder, See Page 300 04
8	85826246	1	SECTOR, TOOTHED, , Bucket Cylinder, See Page 300 05
9	85826248	1	SECTOR, TOOTHED, , Arm Cylinder, See Page 300 06
10	87542780	2	SECTOR, , Stabilizer Cylinder, See Page 301 02
11	85826249	1	SECTOR, TOOTHED, , Clamps Cylinder, See Page 301 03
12	85811958	1	KIT,

Mechanical Version

301(02) BACKHOE CONTROL VALVE, STABILIZER SECTION (SIDE SHIFT)

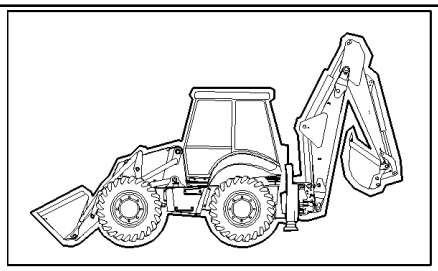

KIT
KIT KIT
8 = ●
10 = ▲

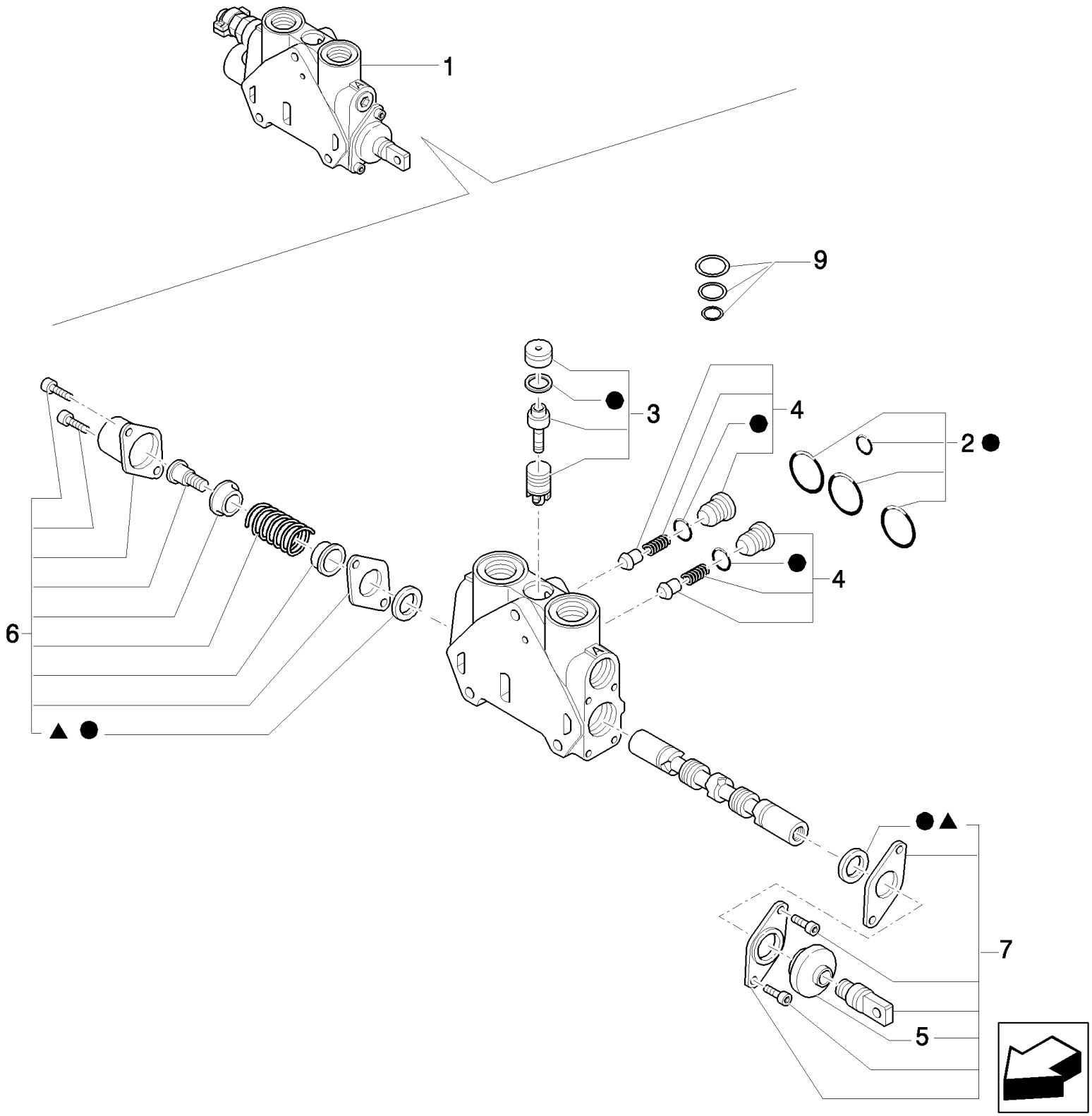

LB115.B EUR BACKHOE LOADER (1/05-)

301(02) BACKHOE CONTROL VALVE, STABILIZER SECTION (SIDE SHIFT)

Ref	Part Number	Qty	Description
1	87542780	1	SECTOR,
2	85819148	1	KIT, SEALS, Seals
3	85819378	1	KIT, SEALS, Valve
4	85811938	2	VALVE, CHECK, Valve
5	85820130	1	BOOT,
6	85824279	1	KIT, Seal
7	85824278	1	KIT, Working Assy
8	85824281	1	KIT, SEALS, Seals
9	85819040	1	KIT, SEALS, Compensator Seal
10	85824283	1	KIT, SEALS, Spool Seal

Mechanical Version

301(03) BACKHOE CONTROL VALVE, OULET SECTION (SIDE SHIFT)

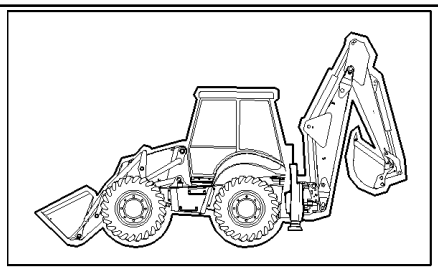

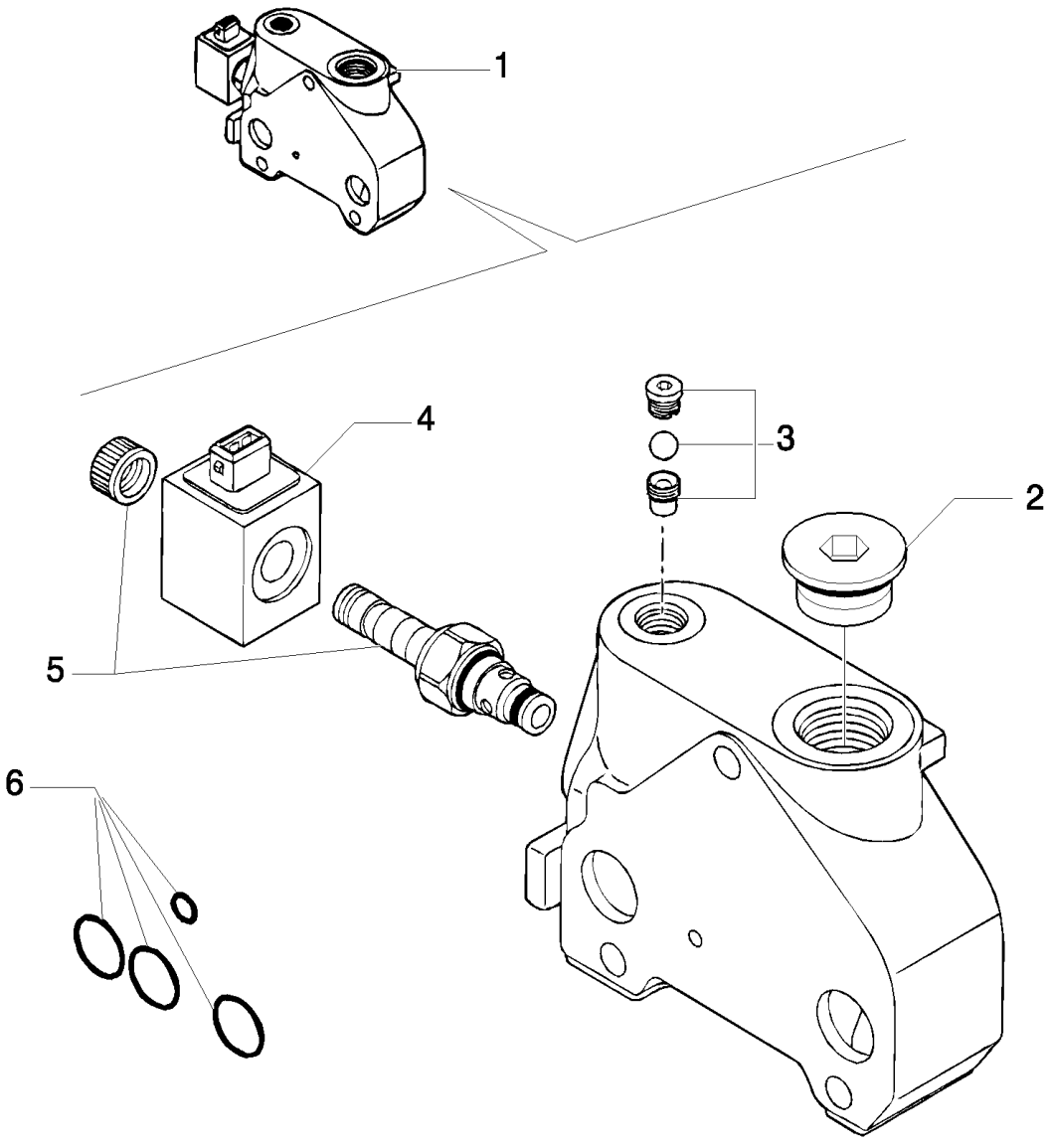

LB115.B EUR BACKHOE LOADER (1/05-)

301(03) BACKHOE CONTROL VALVE, OULET SECTION (SIDE SHIFT)

Ref	Part Number	Qty	Description
1	85826249	1	SECTOR, TOOTHED, ASSY
2	85811921	1	PLUG,
3	85811952	1	KIT, Valve
4	85811953	1	SOLENOID,
5	85811954	1	KIT, Valve
6	85825473	1	KIT, SEALS, Seals

Mechanical Version

302(01) TWO-SECTION CONTROL VALVE FOR LOADER

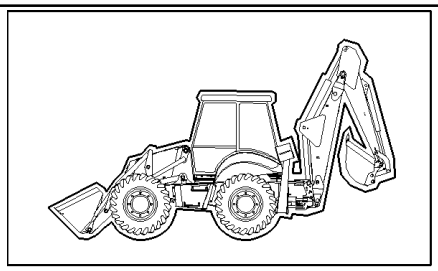

KIT
KIT KIT
17 = ●

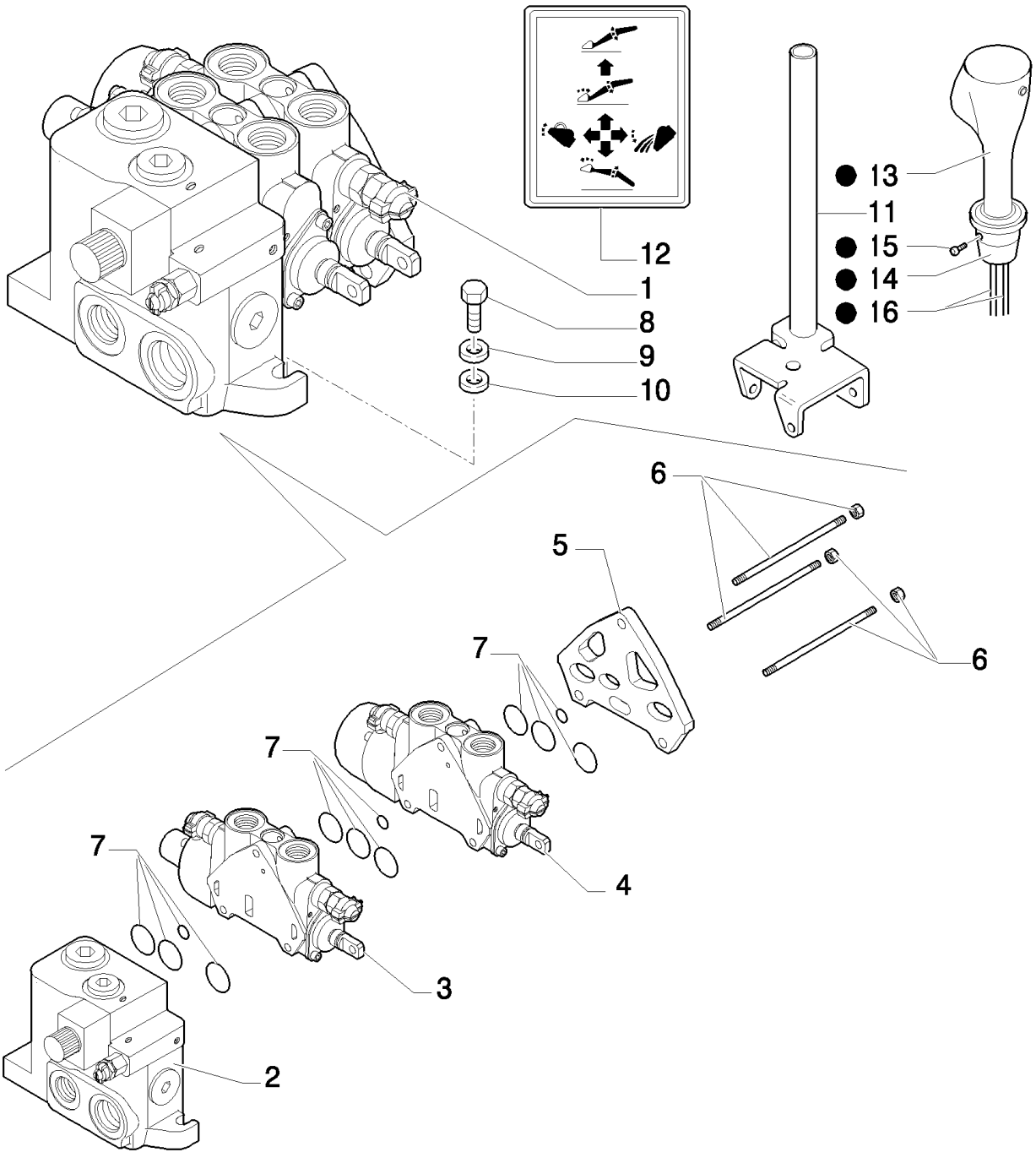

LB115.B EUR BACKHOE LOADER (1/05-)

302(01) TWO-SECTION CONTROL VALVE FOR LOADER

Ref	Part Number	Qty	Description
1	85825188	1	VALVE, CONTROL, ASSY
2	85825468	1	VALVE SECTION, HYD, ASSY, See Page 302 02
3	87558567	1	SECTOR, , LOADER, See Page 302 03
4	85825469	1	VALVE SECTION, HYD, , Bucket, See Page 302 04
5	85826924	1	SECTOR, TOOTHED, ASSY
6	85825475	1	TIE-ROD, THREADED, TIE RODS
7	85825473	3	KIT, SEALS, Seal
8	11234721	3	SCREW, Hex, M10 x 1.25 x 45, 8.8,
9	13578621	3	WASHER, 10x30x2
10	11190679	3	WASHER, SPRING, Belleville, M10.5,
11	85805813	1	LEVER, , Only for LB90.B - LB95.B - LB110.B
11	87304793	1	LEVER, , Only for LB110.B - LB115.B
12	85804346	1	DECAL,
13	87304800	1	JOYSTICK, , Only for LB90.B - LB95.B - LB110.B
13	87304799	1	JOYSTICK, , Only for LB110.B - LB115.B
13	87311302	1	HANDLE GRIP, , Only for POWER SHIFT
13	87311306	1	HANDLE GRIP, , Only for POWER SHUTTLE
14	87311303	1	HUB,
15	13789621	2	SET SCREW, Hex Soc, M8 x 10, Flat Pt,
16	87311836	1	HARNESS, WIRE,
16	87311838	1	HARNESS, WIRE,
17	87304799	1	JOYSTICK,
17	87311102	1	JOYSTICK, , Only for POWER SHIFT
17	87311103	1	JOYSTICK, , Only for POWER SHUTTLE

302(02) TWO-SECTION CONTROL VALVE FOR LOADER

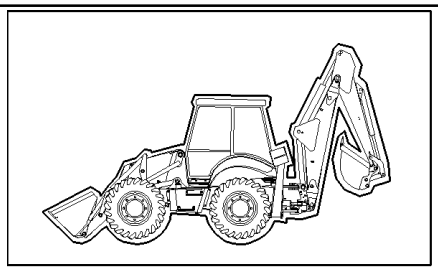

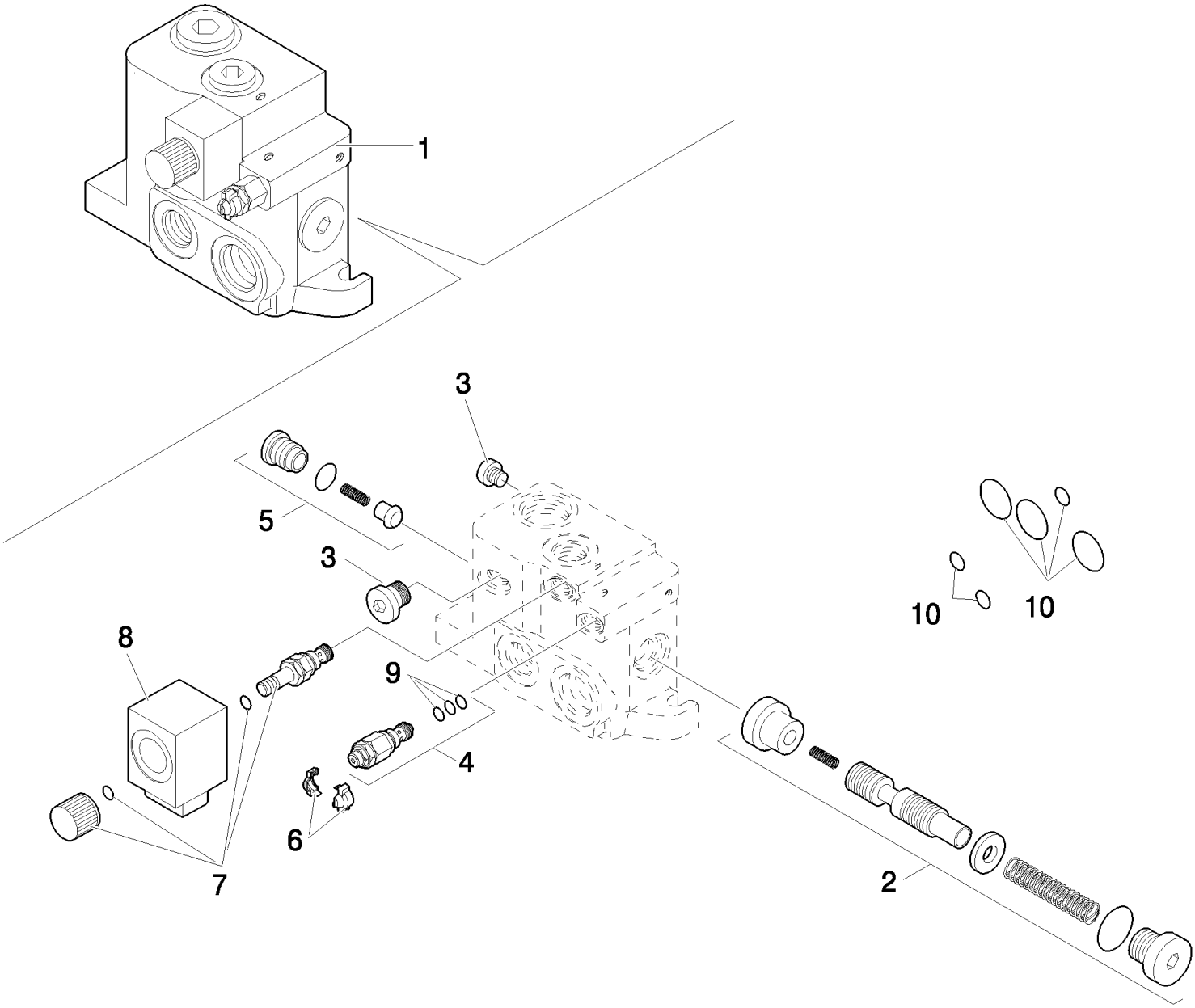

LB115.B EUR BACKHOE LOADER (1/05-)

302(02) TWO-SECTION CONTROL VALVE FOR LOADER

Ref	Part Number	Qty	Description
1	85825468	1	VALVE SECTION, HYD, ASSY
2	85825472	1	KIT, Spool Assy
3	85811923	2	PLUG,
4	85811946	1	VALVE, PRESSURE RELIEF,
5	85811938	1	VALVE, CHECK, Valve
6	85811934	1	KIT, Cover
7	85811954	1	KIT, 1" 1/16-12 UNF 2A
8	85811953	1	SOLENOID, 9/16-18 UNF
9	85821236	1	KIT, SEALS, Seal, LS Pressure Relief
10	85819148	1	KIT, SEALS, Seal

302(03) TWO-SECTION CONTROL VALVE FOR LOADER

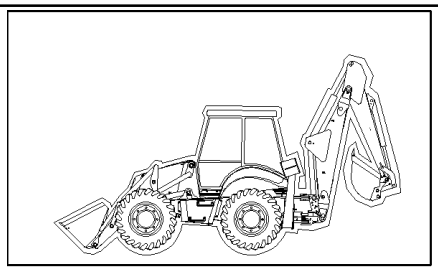

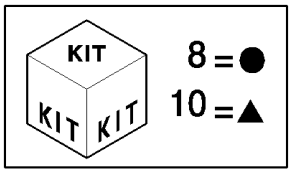

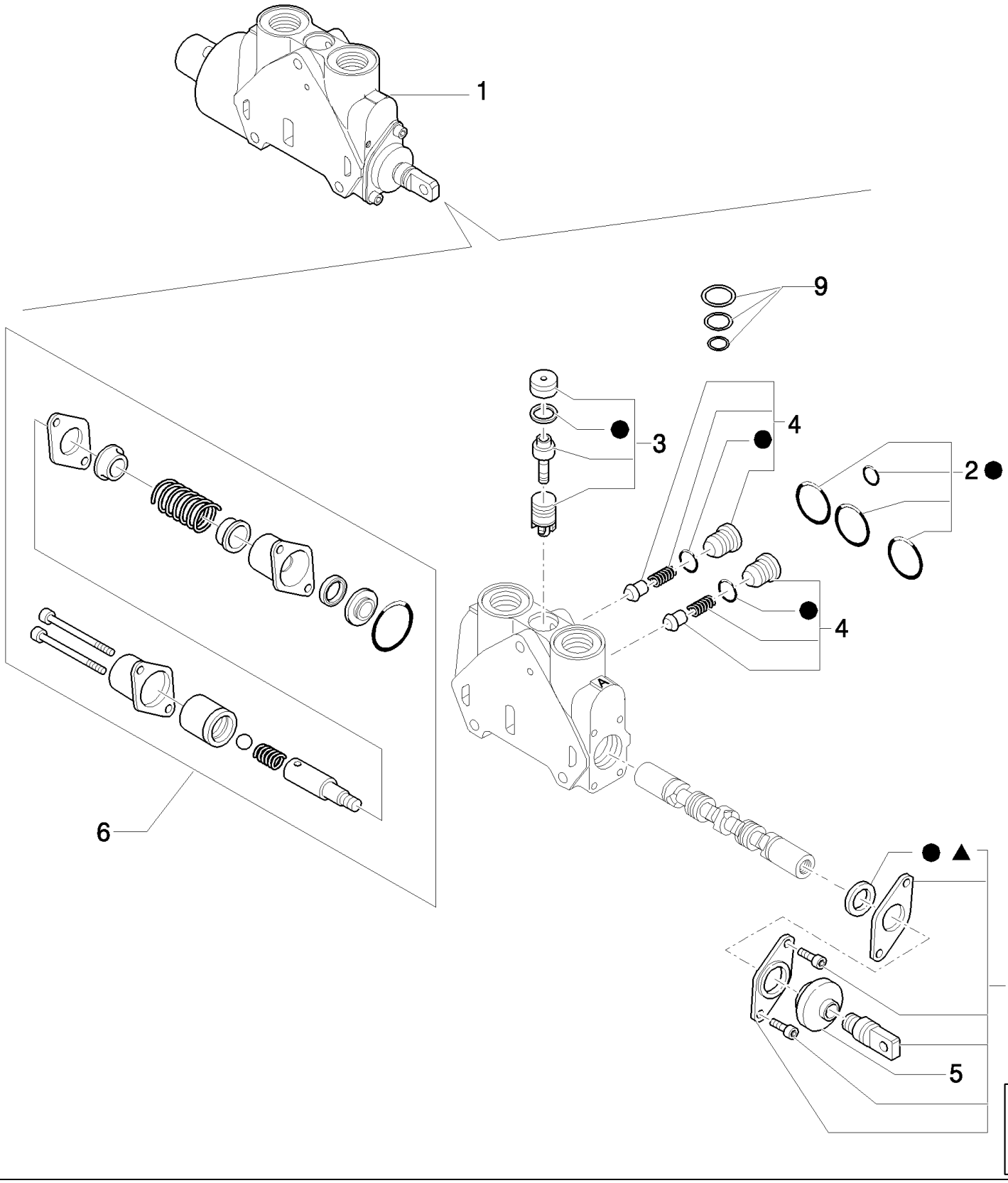

LB115.B EUR BACKHOE LOADER (1/05-)

302(03) TWO-SECTION CONTROL VALVE FOR LOADER

Ref	Part Number	Qty	Description
1	87558567	1	SECTOR, ASSY
2	85819148	1	KIT, SEALS, Seals
3	85819378	1	KIT, SEALS, Valve
4	85811938	2	VALVE, CHECK, Valve
5	85820130	1	BOOT,
6	87558870	1	KIT, Cover Assy
7	85824278	1	KIT, Working Assy
8	85824282	1	KIT, Seals
9	85819040	1	KIT, SEALS, Compensator Seal
10	85824283	1	KIT, SEALS, Spool Seal

302(04) TWO-SECTION CONTROL VALVE FOR LOADER

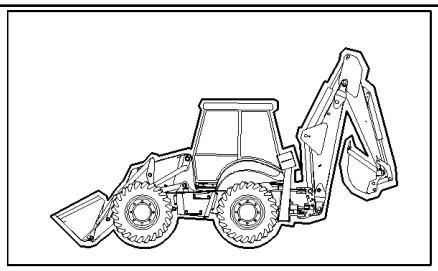

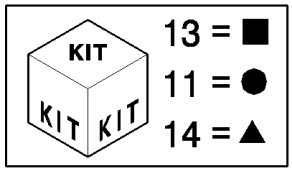

1
2 ●
■ ●
3
4
10
8
9
9
12
10
6
▲ ●
●
●

LB115.B EUR BACKHOE LOADER (1/05-)

302(04) TWO-SECTION CONTROL VALVE FOR LOADER

Ref	Part Number	Qty	Description
1	85825469	1	VALVE SECTION, HYD, ASSY
2	85819148	1	KIT, SEALS, Seals
3	85819378	1	KIT, SEALS, Valve
4	85811938	2	VALVE, CHECK, Valve
5	85820130	1	BOOT,
6	85825471	1	KIT, Cover Assy
7	85824278	1	KIT, Working Assy
8	85812116	1	VALVE, PRESSURE RELIEF, , Includes 9, 10, 230 BAR
9	85811933	2	KIT, SEALS, Valve Seals
10	85811934	2	KIT, Cover
11	85824281	1	KIT, SEALS, Seals
12	85812113	1	VALVE, HYDRAULIC, , Includes 9, 10, 160 BAR
13	85819040	1	KIT, SEALS, Compensator Seal
14	85824283	1	KIT, SEALS, Spool Seal

304(01) LOCK VALVE ON TILTING CYLINDER

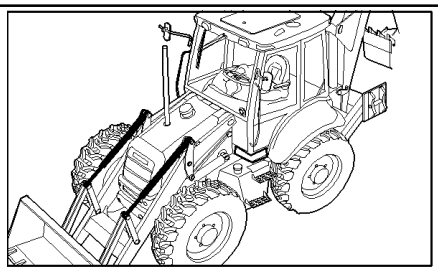

KIT
KIT KIT
18 = ●

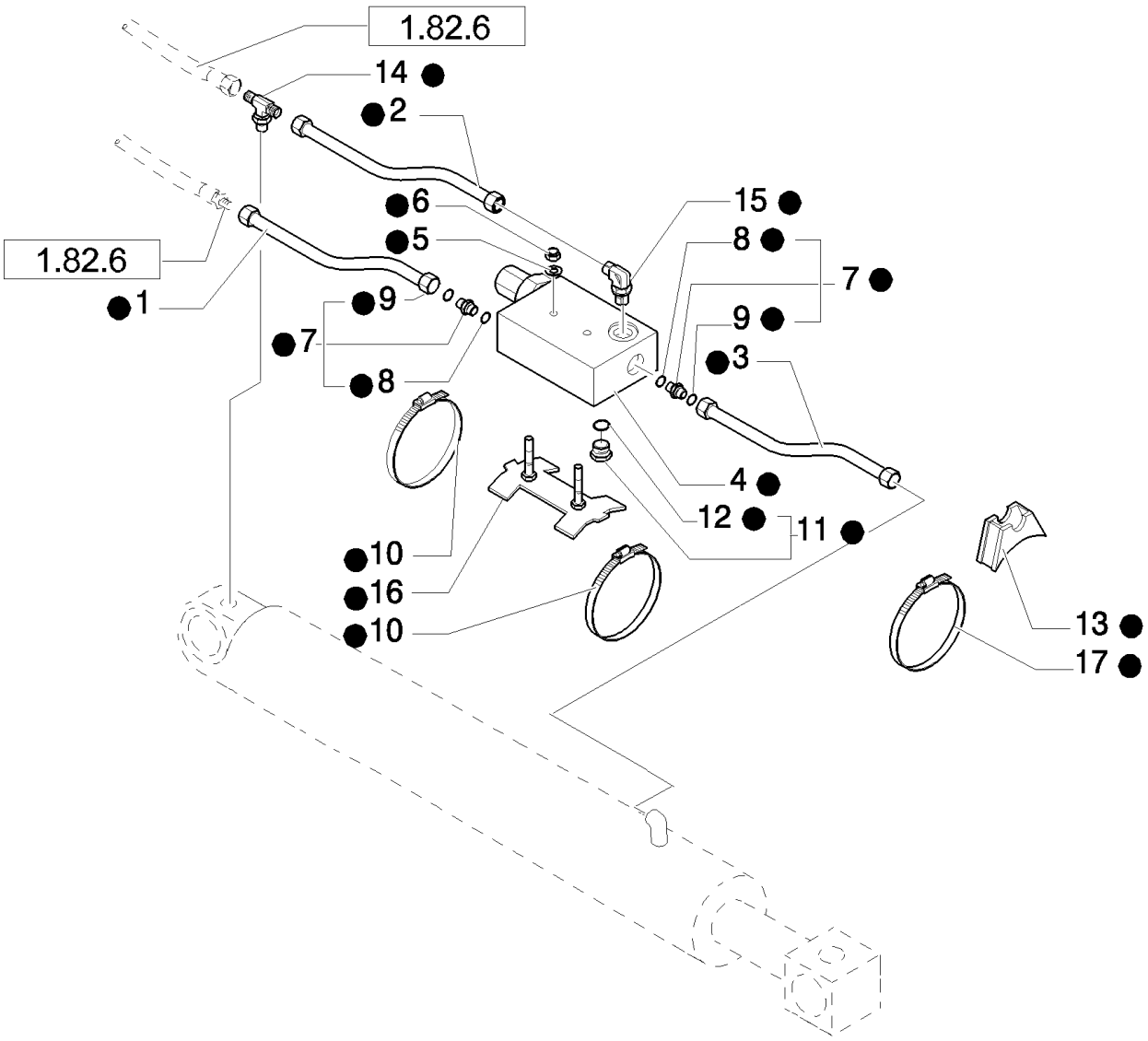

LB115.B EUR BACKHOE LOADER (1/05-)

304(01) LOCK VALVE ON TILTING CYLINDER

Ref	Part Number	Qty	Description
1	85812004	2	TUBE, HYD,
2	85812005	2	TUBE, HYD,
3	85812006	2	TUBE, HYD,
4	85813118	2	VALVE, HYDRAULIC,
5	11193879	4	WASHER, SPRING, Belleville, M8.4,
6	14048211	4	NUT, M8 x 1.25, Cl 8,
7	390953S36	4	CONNECTOR, HYD., {PP:83963374} , Includes 8, 9
8	128825	4	O-RING, 8-1, 90 Duro, .644" ID x .087" Thk,
9	9992298	4	O-RING, -014, 90 Duro, .489" ID x .070" Thk,
10	85803010	2	CLAMP, HOSE,
11	85802805	2	PLUG, M8 x 1.25, Includes 12
12	9825770	2	O-RING, -011, 90 Duro, .301" ID x .070" Thk,
13	87303910	2	SPACER,
14	85805218	2	TEE,
15	85805220	2	ELBOW,
16	85805221	2	SUPPORT,
17	85803008	2	CLAMP, HOSE,
18	NSS	1	NOT SERVICED SEPARATELY, , Includes 1 To 17 Also Page 304 02, 304 03

304(02) LOCK VALVE ON LIFTING CYLINDER

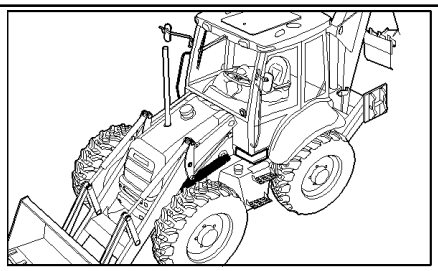

KIT 18 = ●

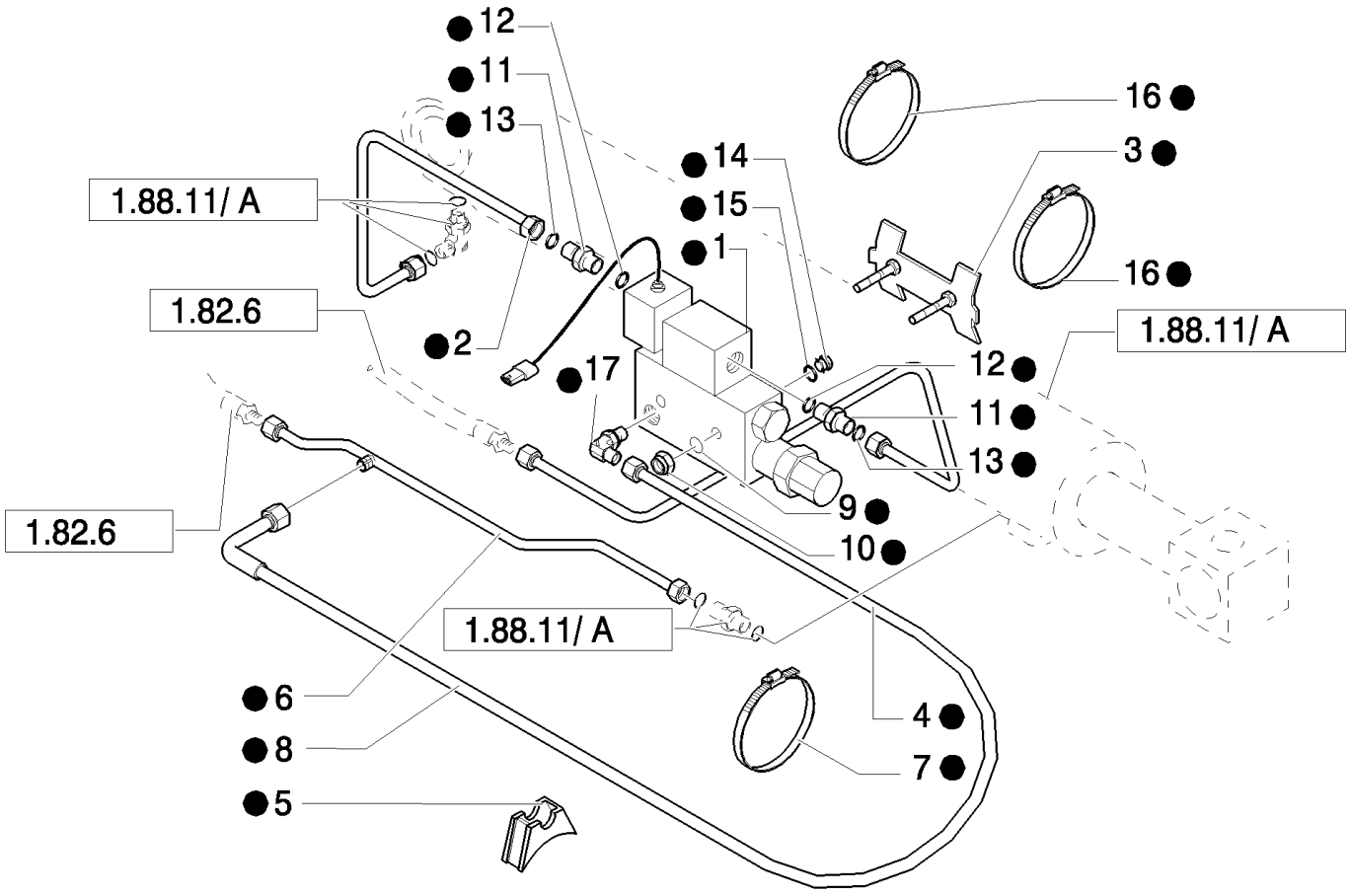

LB115.B EUR BACKHOE LOADER (1/05-)

304(02) LOCK VALVE ON LIFTING CYLINDER

Ref	Part Number	Qty	Description
1	85805223	2	VALVE, HYDRAULIC,
2	85811998	1	TUBE, HYD, RH
2	85812324	1	TUBE, HYD, LH
3	85805221	2	SUPPORT,
4	85812000	1	TUBE, HYD, RH
4	85812323	1	TUBE, HYD, LH
5	7708312	4	SPACER, {PP:83901828}
6	85812002	1	TUBE, HYD, LH
6	85812326	1	TUBE, HYD, RH
7	85803008	2	CLAMP, HOSE,
8	85815506	2	HOSE, FLEXIBLE,
9	11193879	4	WASHER, SPRING, Belleville, M8.4,
10	14048211	4	NUT, M8 x 1.25, Cl 8,
11	390953S36	4	CONNECTOR, HYD., {PP:83963374} , Includes 12, 13
12	128825	4	O-RING, 8-1, 90 Duro, .644" ID x .087" Thk,
13	9992298	4	O-RING, -014, 90 Duro, .489" ID x .070" Thk,
14	85802805	2	PLUG, , Includes 15
15	9825770	2	O-RING, -011, 90 Duro, .301" ID x .070" Thk,
16	85802743	4	CLAMP, HOSE,
17	85805220	2	ELBOW,
18	NSS	1	NOT SERVICED SEPARATELY, SEE PAGE 1,3, Includes 1 To 17 Also Page 304 01, 304 03
13	9992298	4	O-RING, -014, 90 Duro, .489" ID x .070" Thk,

304(03) LOCK VALVE

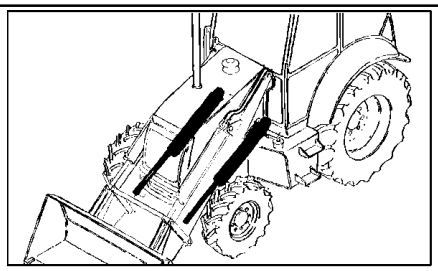

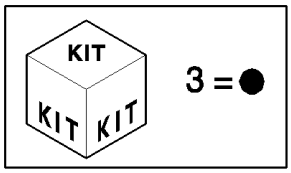

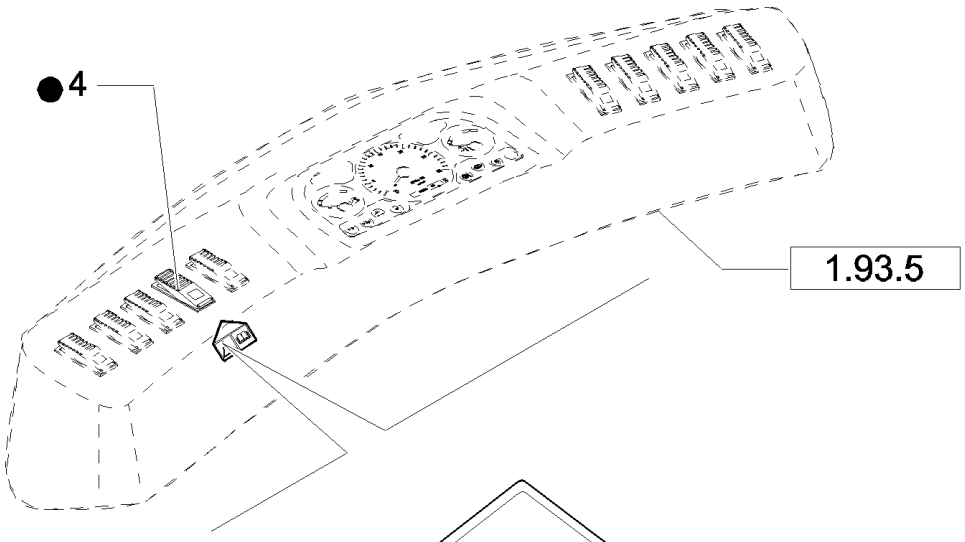

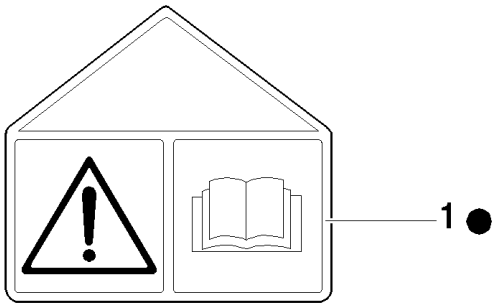

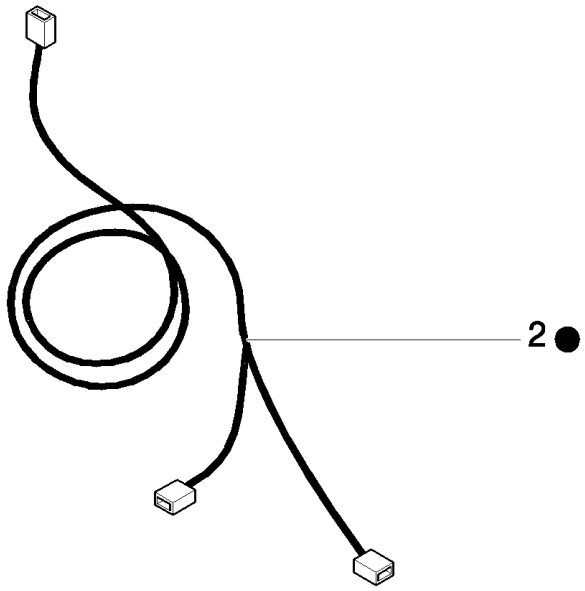

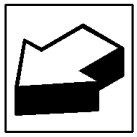

LB115.B EUR BACKHOE LOADER (1/05-)

304(03) LOCK VALVE

Ref	Part Number	Qty	Description
1	85805228	1	DECAL,
2	85826274	1	HARNESS,
3	NSS	1	NOT SERVICED SEPARATELY, , Includes 1, 2, 4 Also page 304 01, 304 02
4	85819074	1	SWITCH,

311(01) STABILIZER CYLINDER - LOCK VALVE (SIDE SHIFT)

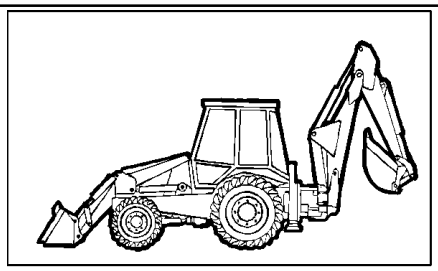

KIT KIT KIT 7 = ●

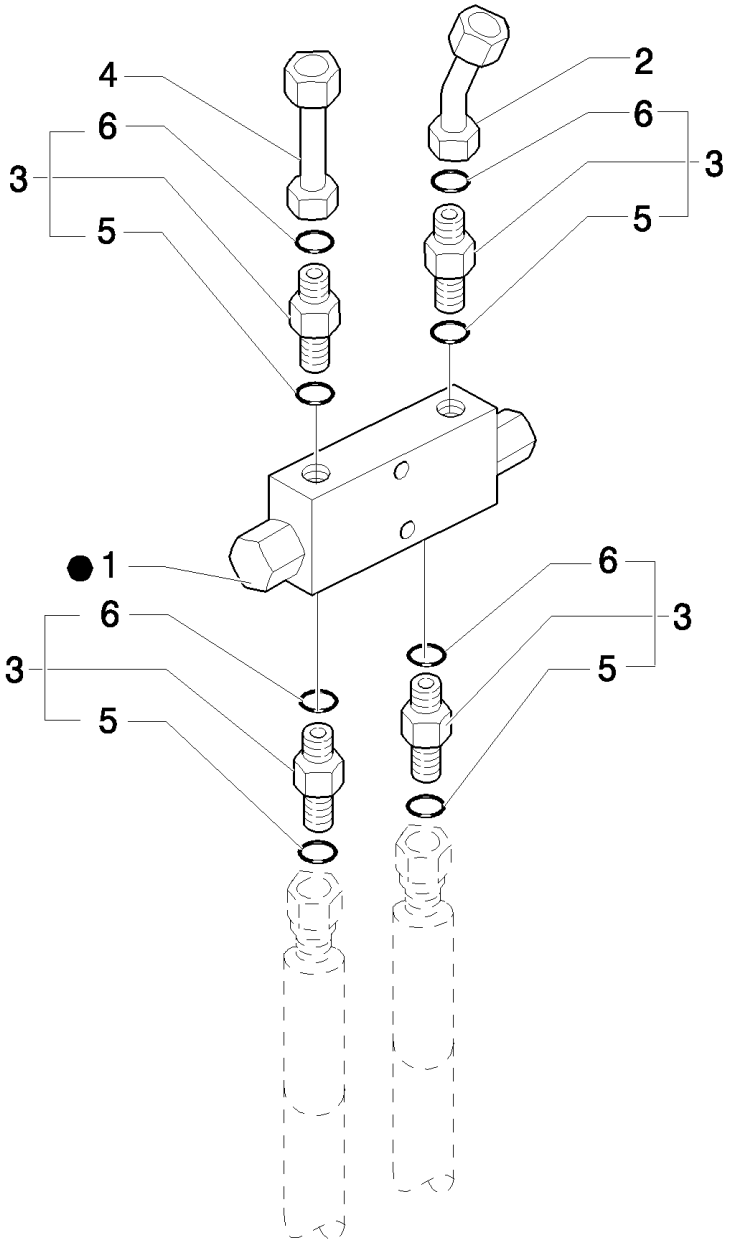

LB115.B EUR BACKHOE LOADER (1/05-)

311(01) STABILIZER CYLINDER - LOCK VALVE (SIDE SHIFT)

Ref	Part Number	Qty	Description
1	85805941	2	VALVE, HYDRAULIC,
2	85812328	2	TUBE, HYD,
3	390953S36	8	CONNECTOR, HYD., {PP:83963374} , Includes 5, 6
4	85812329	2	TUBE, HYD,
5	128825	8	O-RING, 8-1, 90 Duro, .644" ID x .087" Thk,
6	9992298	8	O-RING, -014, 90 Duro, .489" ID x .070" Thk,
7	85820284	1	KIT, SEALS,

Up To S/N XXX

311(02) STABILIZER CYLINDER - LOCK VALVE (SIDE SHIFT)

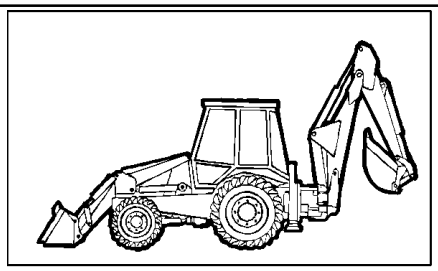

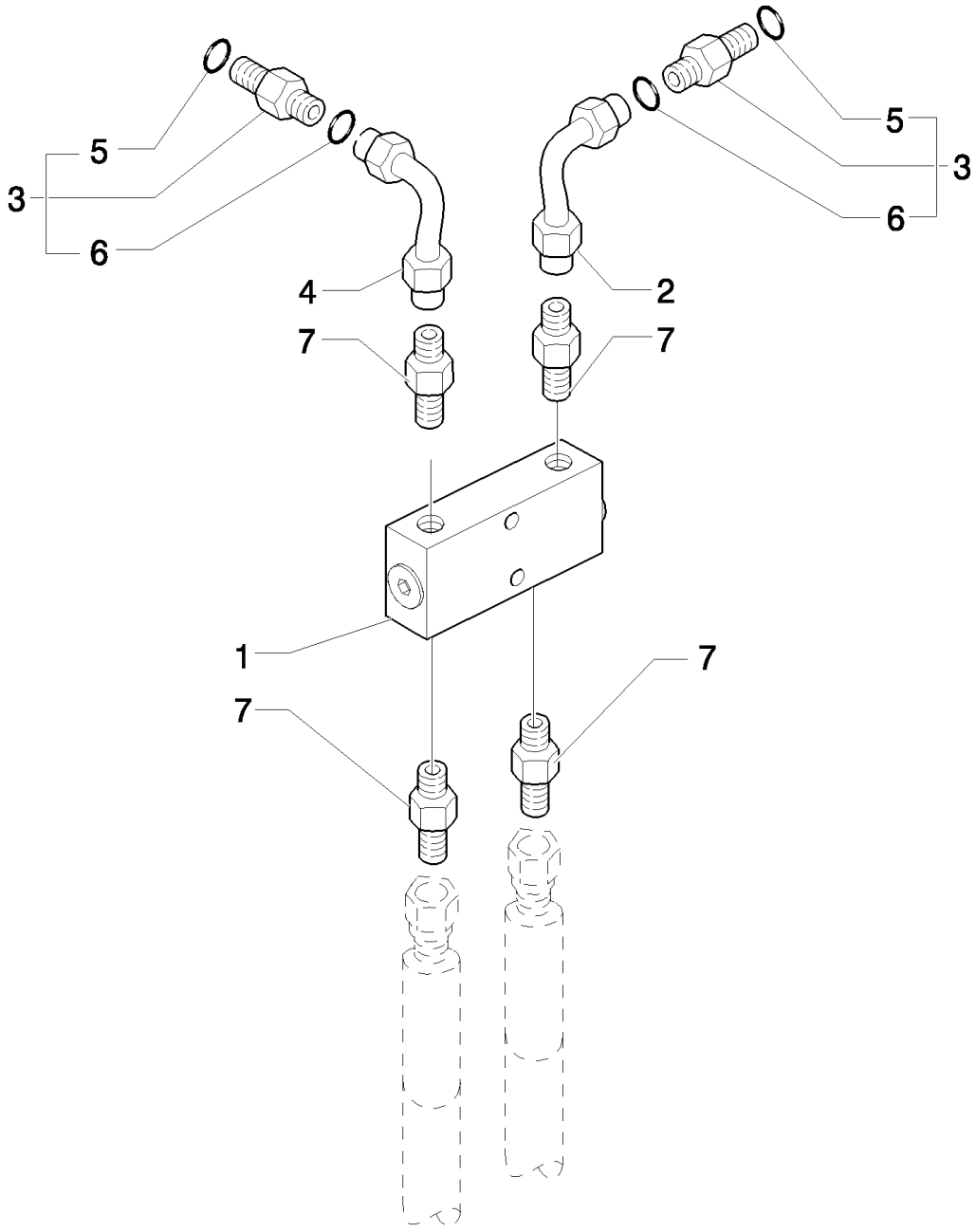

LB115.B EUR BACKHOE LOADER (1/05-)

311(02) STABILIZER CYLINDER - LOCK VALVE (SIDE SHIFT)

Ref	Part Number	Qty	Description
1	87374648	2	VALVE,
2	87372336	2	TUBE, RIGID, RH
3	83963374	4	CONNECTOR, HYD., , Includes 5, 6
4	87374624	2	TUBE, RIGID, LH
5	80128825	4	O-RING, 8-1, 90 Duro, .644" ID x .087" Thk
6	89992298	4	O-RING,
7	83985067	8	CONNECTOR, HYD.,

From To S/N XXX

321(01) DOUBLE BATTERY

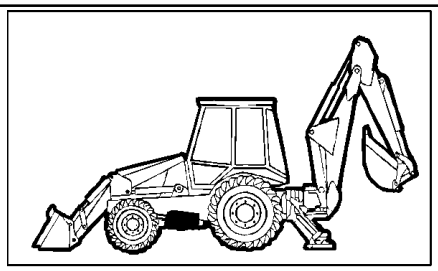

KIT KIT KIT 15 = ●

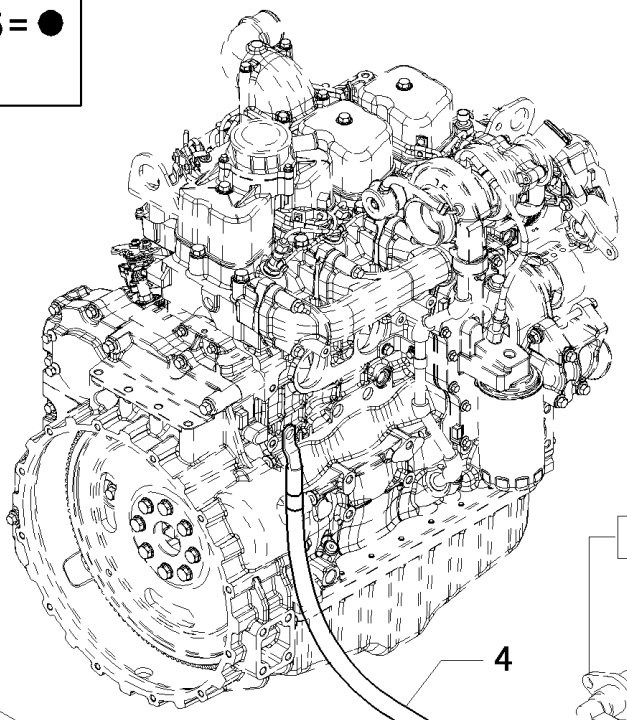

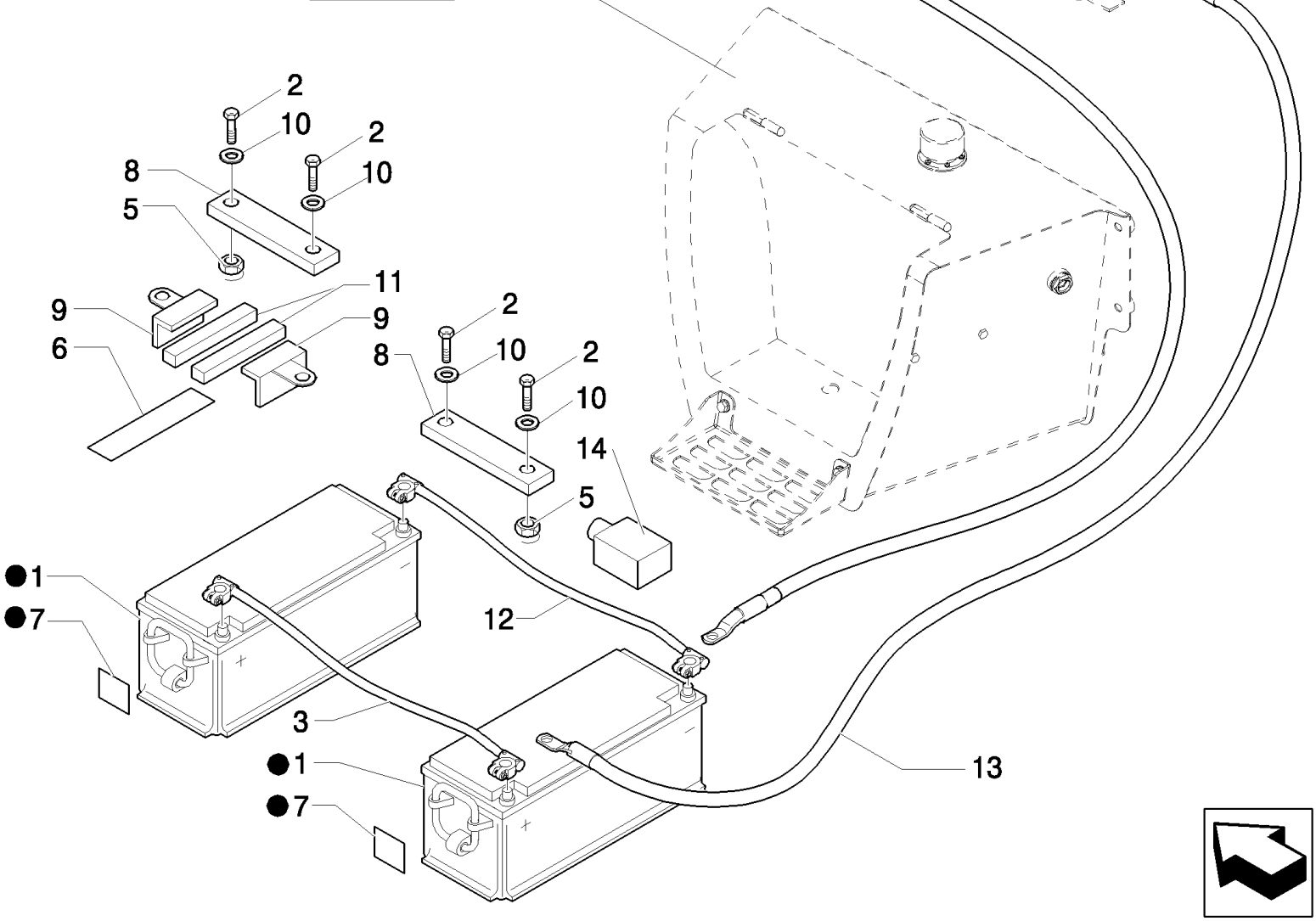

LB115.B EUR BACKHOE LOADER (1/05-)

321(01) DOUBLE BATTERY

Ref	Part Number	Qty	Description
1	87422014	2	BATTERY, WET, U.S.
1	CF960DSW	2	Battery, Dry; Canada
2	412005	4	BOLT, Hex, M10 x 220, 8.8, M10x220
3	85827072	1	CABLE, ELECTRIC,
4	87568472	1	CABLE,
5	47049041	4	NUT, M10
6	47049590	AR	DECAL,
7	87404127	2	DECAL,
8	87415781	2	BRACKET,
9	47048788	4	ANGLE,
10	47048963	4	WASHER,
11	87303506	4	PLATE, RETAINING, , UP TO S/N XXX
11	87529531	4	PLATE, RETAINING, , FROM S/N XXX
12	85827416	1	CABLE, GROUND,
13	87427925	1	CABLE,
14	85826906	2	GUARD,
15	85826208	AR	BATTERY, WET,

328(01) HYDRAULIC SYSTEM PIPING(SIDE SHIFT)

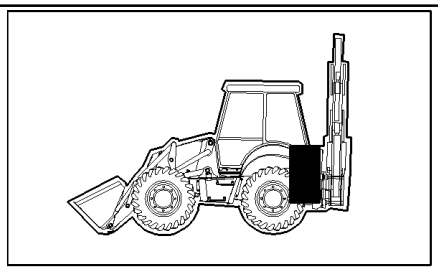

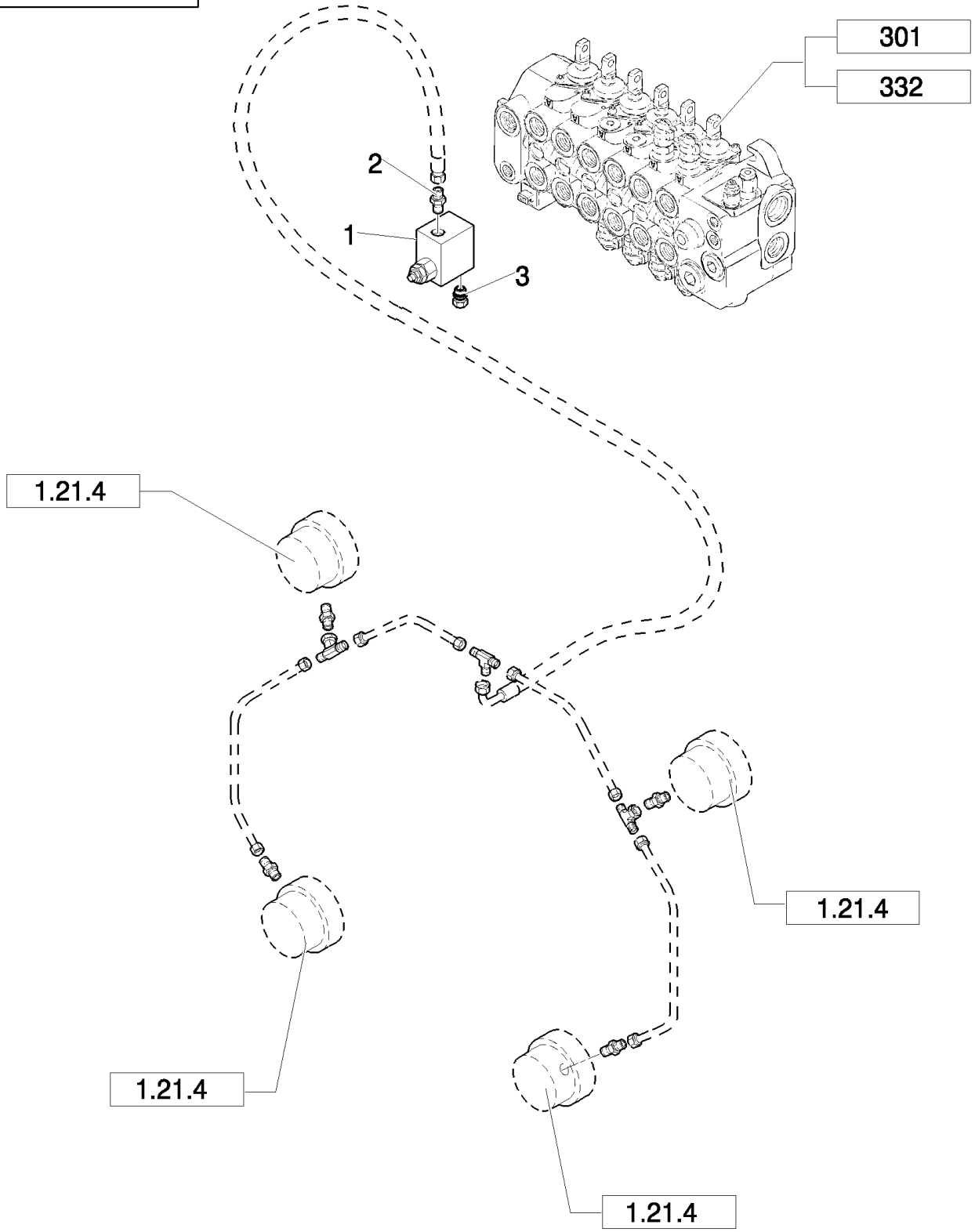

LB115.B EUR BACKHOE LOADER (1/05-)

328(01) HYDRAULIC SYSTEM PIPING(SIDE SHIFT)

Ref	Part Number	Qty	Description
1	85824426	1	VALVE, HYDRAULIC,
2	85824427	1	CONNECTOR, HYD.,
3	85824428	1	CONNECTOR, HYD.,

331/ A(01) 6 SECTION PILOT CONTROL VALVE SUPPORT, COMPLETE

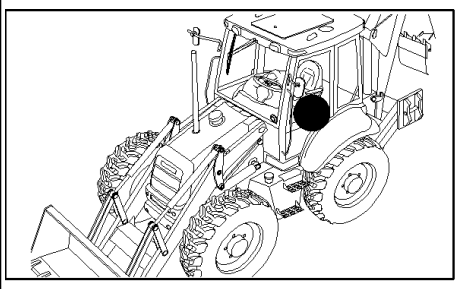

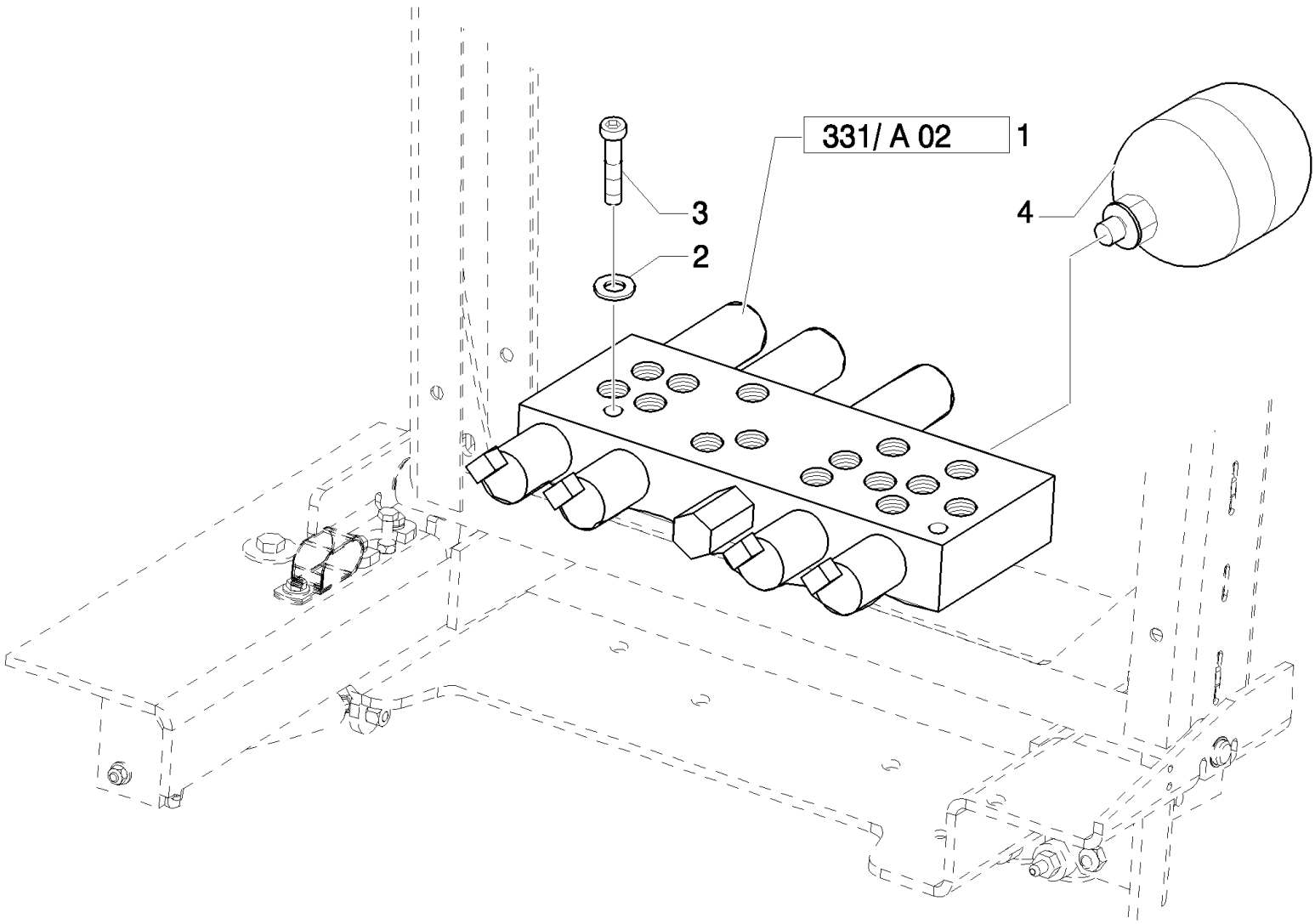

Pilot Control Version

LB115.B EUR BACKHOE LOADER (1/05-)

331/ A(01) 6 SECTION PILOT CONTROL VALVE SUPPORT, COMPLETE

Ref	Part Number	Qty	Description
1	85827472	1	VALVE, HYDRAULIC,
2	47048961	2	WASHER,
3	47049078	2	SCREW, M6x60
4	87425225	1	ACCUMULATOR,

Pilot Control Version

331/ A(02) 2 SECTION PILOT CONTROL VALVE SUPPORT, COMPLETE

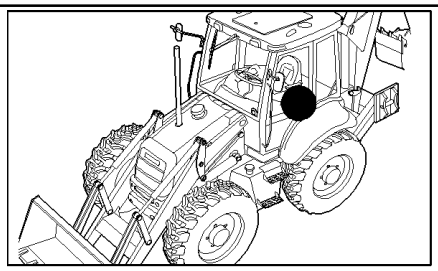

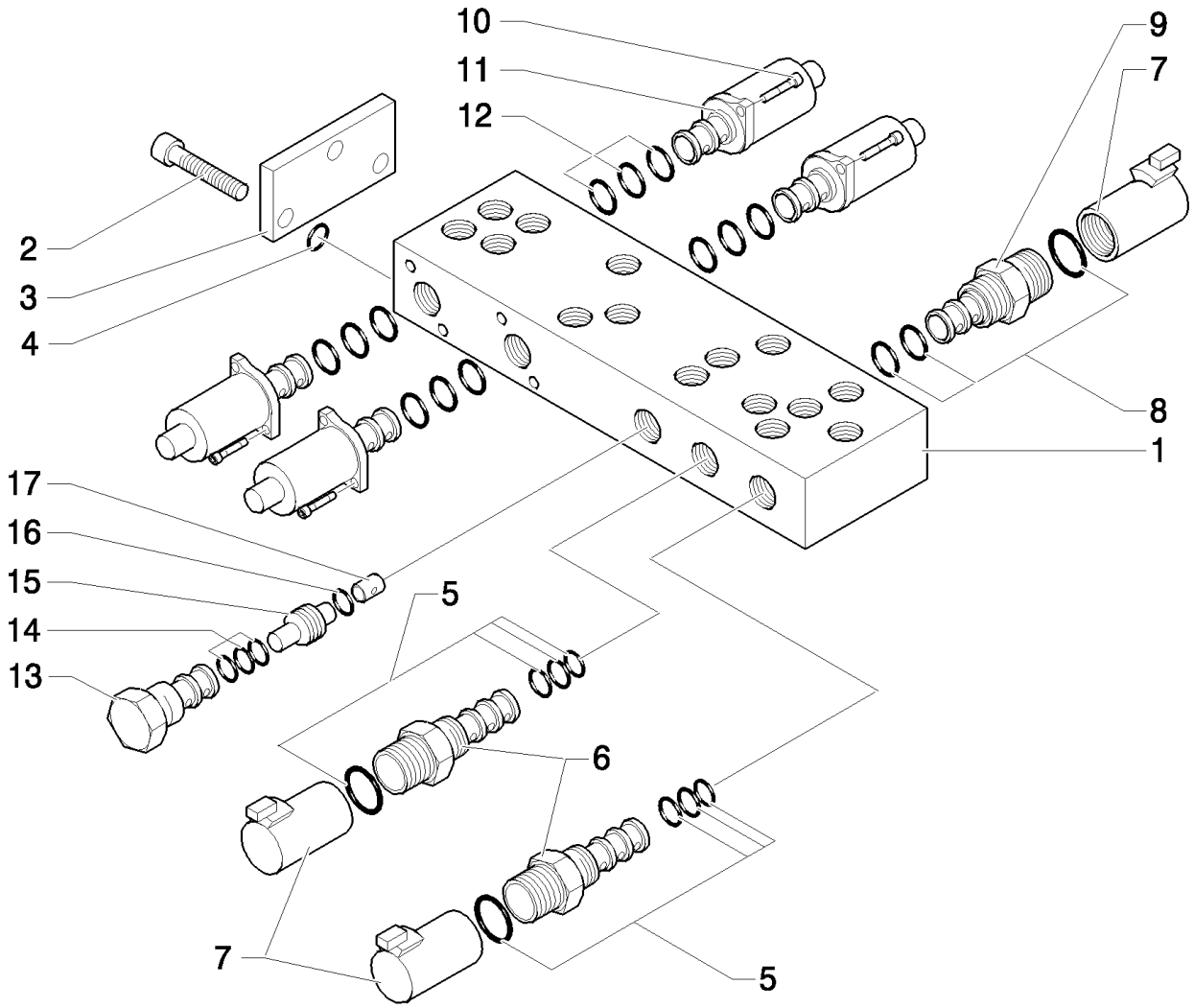

Pilot Control Version

LB115.B EUR BACKHOE LOADER (1/05-)

331/ A(02) 2 SECTION PILOT CONTROL VALVE SUPPORT, COMPLETE

Ref	Part Number	Qty	Description
1	85828013	1	BODY,
2	14304021	3	SCREW, Hex Soc Hd, M5 x 10, 8.8,
3	85827991	1	PLATE,
4	85827999	1	KIT, SEALS,
5	85828002	2	KIT, SEALS,
6	85827996	2	SOLENOID, , Includes 5, 7
7	85827995	3	COIL,
8	85827998	1	KIT, SEALS,
9	85827994	1	SOLENOID, , Includes 7, 8
10	14302921	8	BOLT, Hex, M4 x 10, 8.8, Full Thd,
11	85827993	4	SOLENOID,
12	85828000	4	KIT, SEALS,
13	85827997	1	VALVE, CARTRIDGE, HYDRAULIC PRESSURE REDUCING VALVE
14	85828001	1	KIT, SEALS,
15	85827992	1	VALVE, CHECK,
16	85828003	1	O-RING,
17	85828005	1	ORIFICE,

Pilot Control Version

331/ B(01) PILOT CONTROL VALVE SUPPORT, COMPLETE

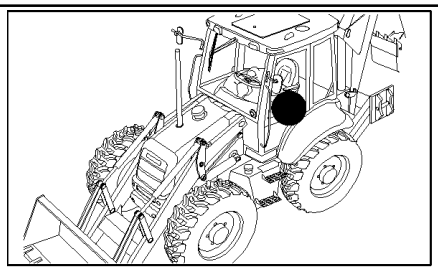

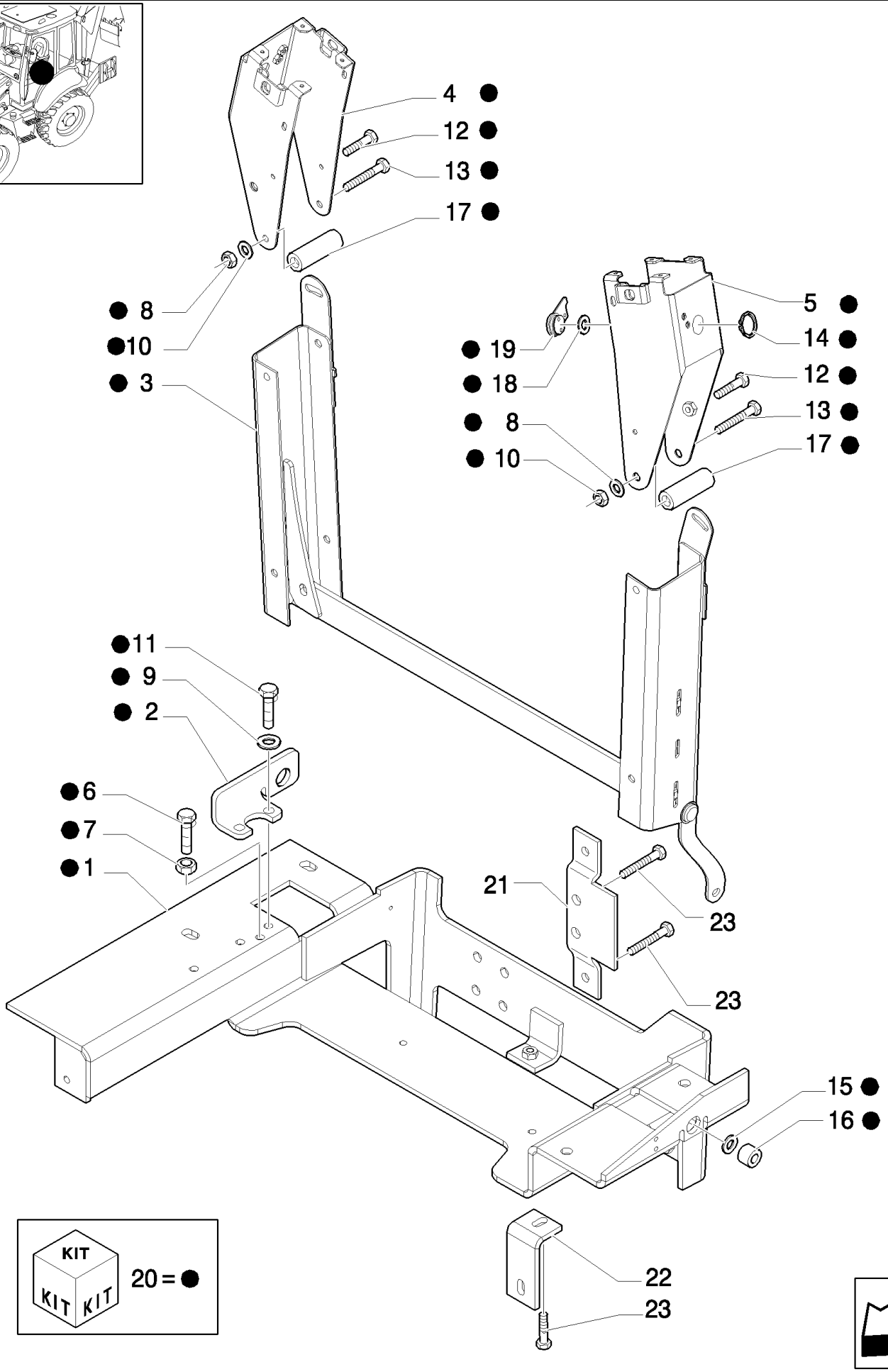

Pilot Control Version

LB115.B EUR BACKHOE LOADER (1/05-)

331/ B(01) PILOT CONTROL VALVE SUPPORT, COMPLETE

Ref	Part Number	Qty	Description
1	87434992	1	SUPPORT,
2	87427004	1	SUPPORT,
3	87453109	1	
4	87453116	1	SUPPORT,
5	87453117	1	SUPPORT,
6	15213721	1	SCREW, Hex, M8 x 60, 8.8, Full Thd,
7	16100811	1	NUT, M8, Cl 8,
8	47048969	6	WASHER, M11 x 24
9	47048992	2	WASHER, M8
10	47049041	2	NUT, M10
11	47049082	2	SCREW, M8 x 35
12	47049184	2	SCREW, M8 x 20
13	84058418	2	SCREW, Hex, M10 x 125, 8.8,
14	85824053	1	O-RING,
15	85824054	4	WASHER,
16	85824059	2	BUSHING,
17	87453110	2	SPACER,
18	87405706	1	WASHER,
19	87453118	1	LEVER,
20	NSS	1	NOT SERVICED SEPARATELY, , Includes 1 To 19
21	86990460	1	PLATE, MOUNTING,
22	87402306	1	BRACKET,
23	16040821	3	BOLT, Hex, M10 x 40, 8.8, Full Thd,

Pilot Control Version

331/ C(01) 6 SECTION PILOT CONTROL VALVE SUPPORT, COMPLETE

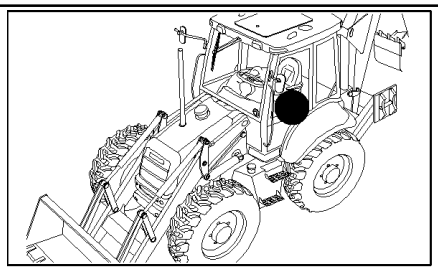

Pilot Control Version

LB115.B EUR BACKHOE LOADER (1/05-)

331/ C(01) 6 SECTION PILOT CONTROL VALVE SUPPORT, COMPLETE

Ref	Part Number	Qty	Description
1	87309923	1	BOOT, , UP TO S/N XXX
1	87449734	1	, FROM S/N XXX
2	87309924	1	BOOT, , UP TO S/N XXX
2	87449735	1	, FROM S/N XXX
3	87437689	2	KNOB,
4	87437688	2	KNOB,
5	87437366	1	ARMREST,
6	87437369	1	ARMREST,
7	87423802	1	SWITCH,
8	87410105	1	SWITCH,
9	87435372	2	PLATE, RETAINING, , UP TO S/N XXX
9	87410723	2	PLATE, RETAINING, , FROM S/N XXX
10	10902834	8	SCREW,
11	87436396	1	GUARD, , UP TO S/N 031057640
11	87307656	1	GUARD, , FROM S/N 031057641
12	87388704	1	JOYSTICK, , See Page 333/C 07
13	47050686	7	CONNECTOR, HYD.,
14	87431301	1	SHIELD, , Only for Center Pivot
14	87427962	1	SHIELD, , Only for Side Shift
15	87016552	8	SCREW, SELF TAPPING, Hex Hd, M6.3 x 19,
16	87022296	8	SCREW, Cross Pan Hd, M3 x 8,
17	87310085	2	SCREW, SELF TAPPING,
18	10902321	3	SCREW, Hex, M6 x 18, 8.8, Full Thd,
19	87388706	1	JOYSTICK, , See Page 331/C 08, FROM TO S/N 031058208
20	87418368	1	ROD,
21	87418369	1	ROD,
22	87310098	4	BOLT, M6 x 20
23	87424301	1	SEAL, RUBBER,
24	87427991	1	SEAL, RUBBER,
25	87427989	1	SEAL, RUBBER,
26	87427993	1	SEAL, RUBBER,
27	87425696	2	SEAL, RUBBER,
28	87414205		DECAL,
29	87431300	1	GUARD, , Only for Center Pivot
29	87427963	1	PLATE, , Only for Side Shift
30	85803312	21	CONNECTOR, HYD.,
31	87306512	2	GASKET,
32	87310186	2	WASHER,
33	87423812	1	DECAL,
34	87310085	2	SCREW, SELF TAPPING,
35	87452511	2	NUT,
36	87423401	1	FITTING,
37	11197779	8	WASHER, SPRING, Belleville, M6.4,

Pilot Control Version

331/ C(02) 6 SECTION PILOT CONTROL VALVE SUPPORT, COMPLETE

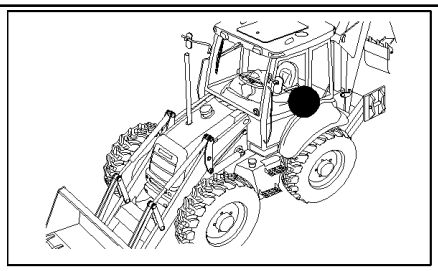

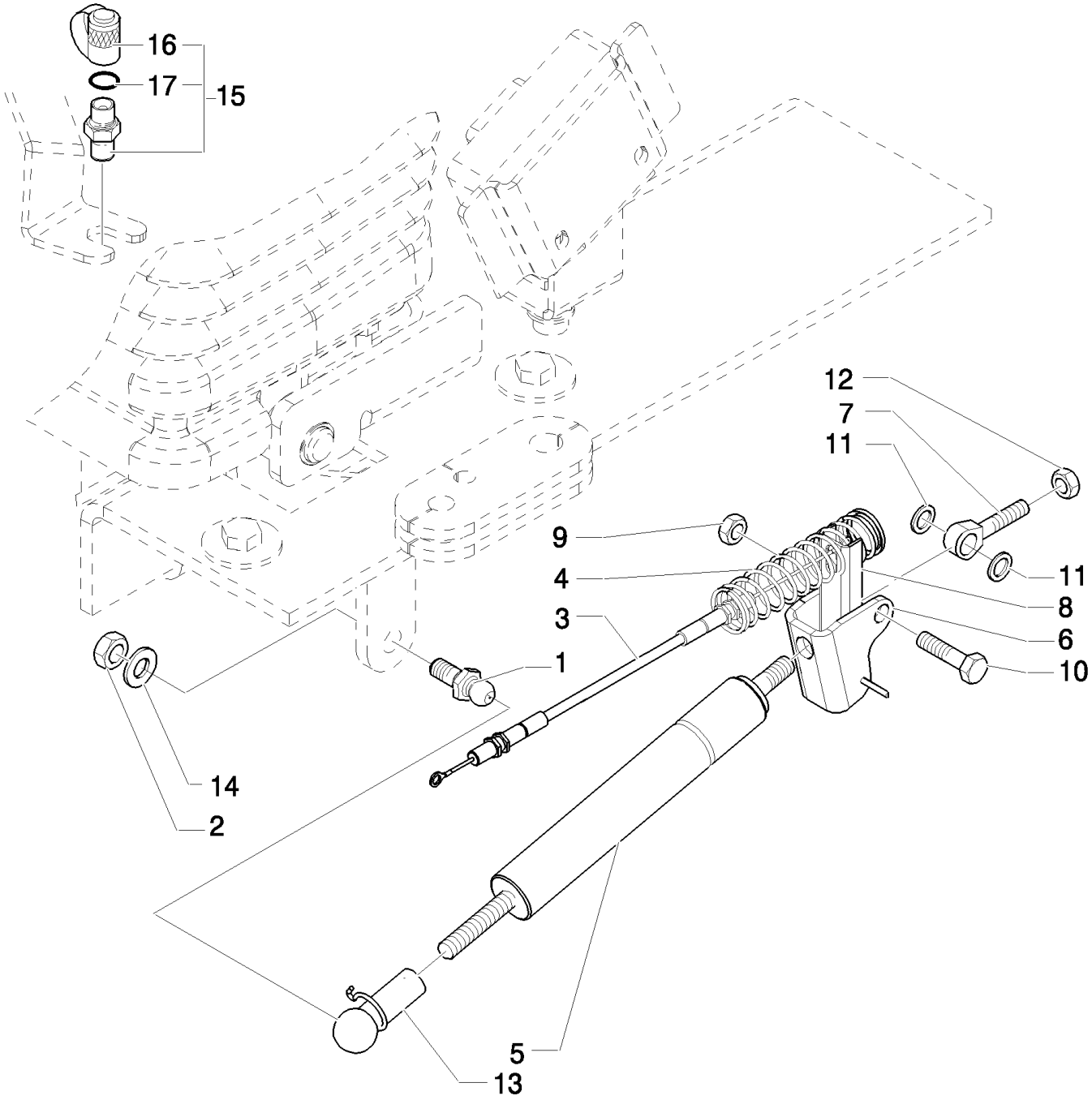

Pilot Control Version

LB115.B EUR BACKHOE LOADER (1/05-)

331/ C(02) 6 SECTION PILOT CONTROL VALVE SUPPORT, COMPLETE

Ref	Part Number	Qty	Description
1	85824067	1	PIN, BALL,
2	47049041	1	NUT, M10
3	87430028	1	CABLE,
4	87443692	1	SPRING,
5	86989616	1	GAS STRUT,
6	85824080	1	BRACKET,
7	85821514	2	PIN,
7	85824081	1	BALL JOINT,
8	86984549	1	CHANNEL,
9	85821516	1	NUT,
10	85821515	1	BOLT,
11	85821520	2	SPACER,
12	47049442	2	NUT,
13	86999310	1	CLIP,
14	47049404	1	WASHER,
15	85817226	1	COUPLING, QUICK, MALE, , Includes 16, 17
16	9968791	1	PLUG,
17	9993141	1	O-RING, -012, 90 Duro, .364" ID x .070" Thk,

Pilot Control Version

331/ C(03) 6 SECTION PILOT CONTROL VALVE SUPPORT, COMPLETE

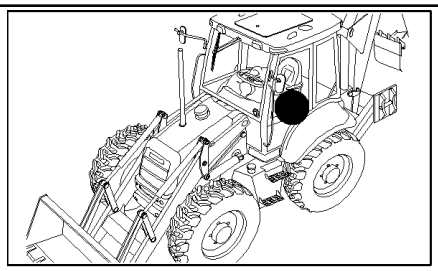

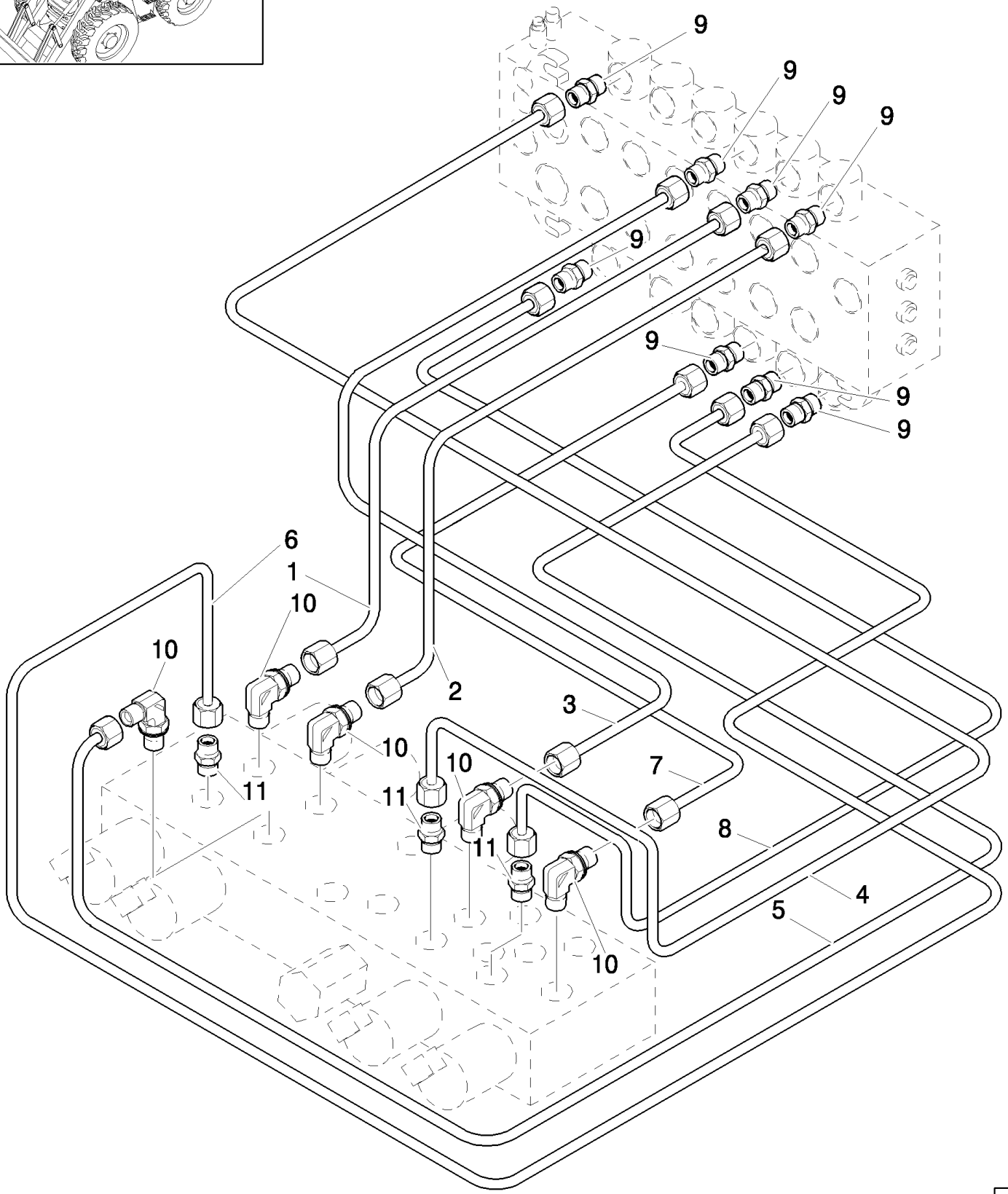

Pilot Control Version

LB115.B EUR BACKHOE LOADER (1/05-)

331/ C(03) 6 SECTION PILOT CONTROL VALVE SUPPORT, COMPLETE

Ref	Part Number	Qty	Description
1	85827093	1	TUBE, HYD,
2	85827094	1	TUBE, HYD,
3	85827091	1	TUBE, HYD,
4	85827089	1	TUBE, HYD,
5	85827092	1	TUBE, HYD,
6	85827095	1	TUBE, HYD,
7	85827090	1	TUBE, HYD,
8	85827088	1	TUBE, HYD,
9	85803312	8	CONNECTOR, HYD.,
10	47050653	5	ELBOW,
11	47050685	3	CONNECTOR, HYD.,

Pilot Control Version

331/ C(04) 6 SECTION PILOT CONTROL VALVE SUPPORT, COMPLETE

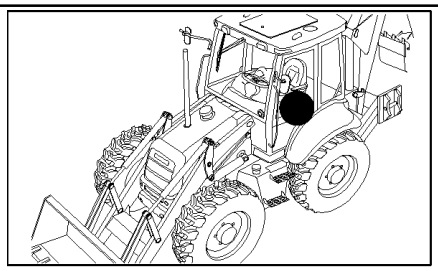

Pilot Control Version

LB115.B EUR BACKHOE LOADER (1/05-)

331/ C(04) 6 SECTION PILOT CONTROL VALVE SUPPORT, COMPLETE

Ref	Part Number	Qty	Description
1	85827084	1	HOSE, FLEXIBLE,
2	85827085	1	HOSE, FLEXIBLE,
3	85827086	1	HOSE, FLEXIBLE,
4	85827077	1	HOSE, FLEXIBLE,
5	85827087	1	HOSE, FLEXIBLE,
6	85827082	2	HOSE, FLEXIBLE,
7	85827467	1	ELBOW,
8	85827466	2	TEE,
9	85827076	2	HOSE, FLEXIBLE,
10	85827080	2	HOSE, FLEXIBLE,
11	85827078	2	HOSE, FLEXIBLE,
12	47120173	2	TEE,
13	47050686	3	CONNECTOR, HYD.,
14	47050653	3	ELBOW,
15	85803312	3	CONNECTOR, HYD.,
16	87423401	1	FITTING,

Pilot Control Version

331/ C(05) 6 SECTION PILOT CONTROL VALVE SUPPORT, COMPLETE

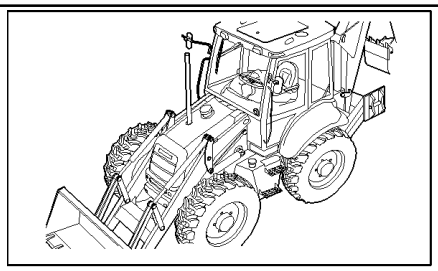

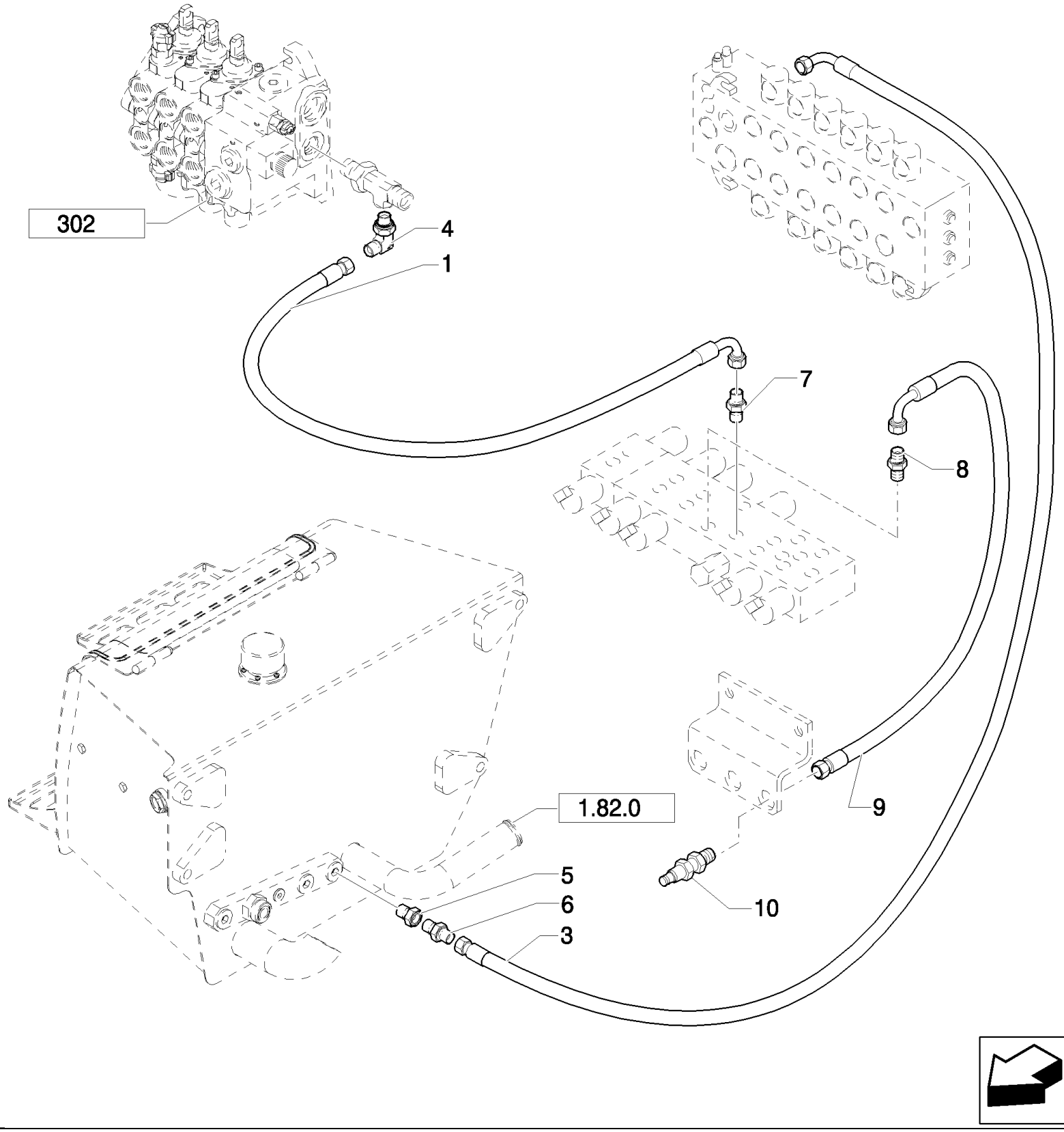

Pilot Control Version

LB115.B EUR BACKHOE LOADER (1/05-)

331/ C(05) 6 SECTION PILOT CONTROL VALVE SUPPORT, COMPLETE

Ref	Part Number	Qty	Description
1	85827476	1	HOSE, FLEXIBLE,
3	85827475	1	HOSE, FLEXIBLE,
4	85805318	1	ELBOW, 90ş, 9/16"-18, 37ş x 9/16"-18, O-Ring,
5	85826100	1	REDUCER,
6	47050686	1	CONNECTOR, HYD.,
7	47050653	1	ELBOW,
8	83963371	1	CONNECTOR, HYD.,
9	85812173	1	HOSE, FLEXIBLE,
10	85817226	1	COUPLING, QUICK, MALE,

Pilot Control Version

331/ C(06) 6 SECTION PILOT CONTROL VALVE SUPPORT, COMPLETE (CENTER PIVOT)

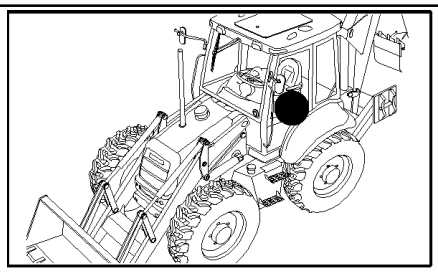

KIT KIT KIT 3 = ●

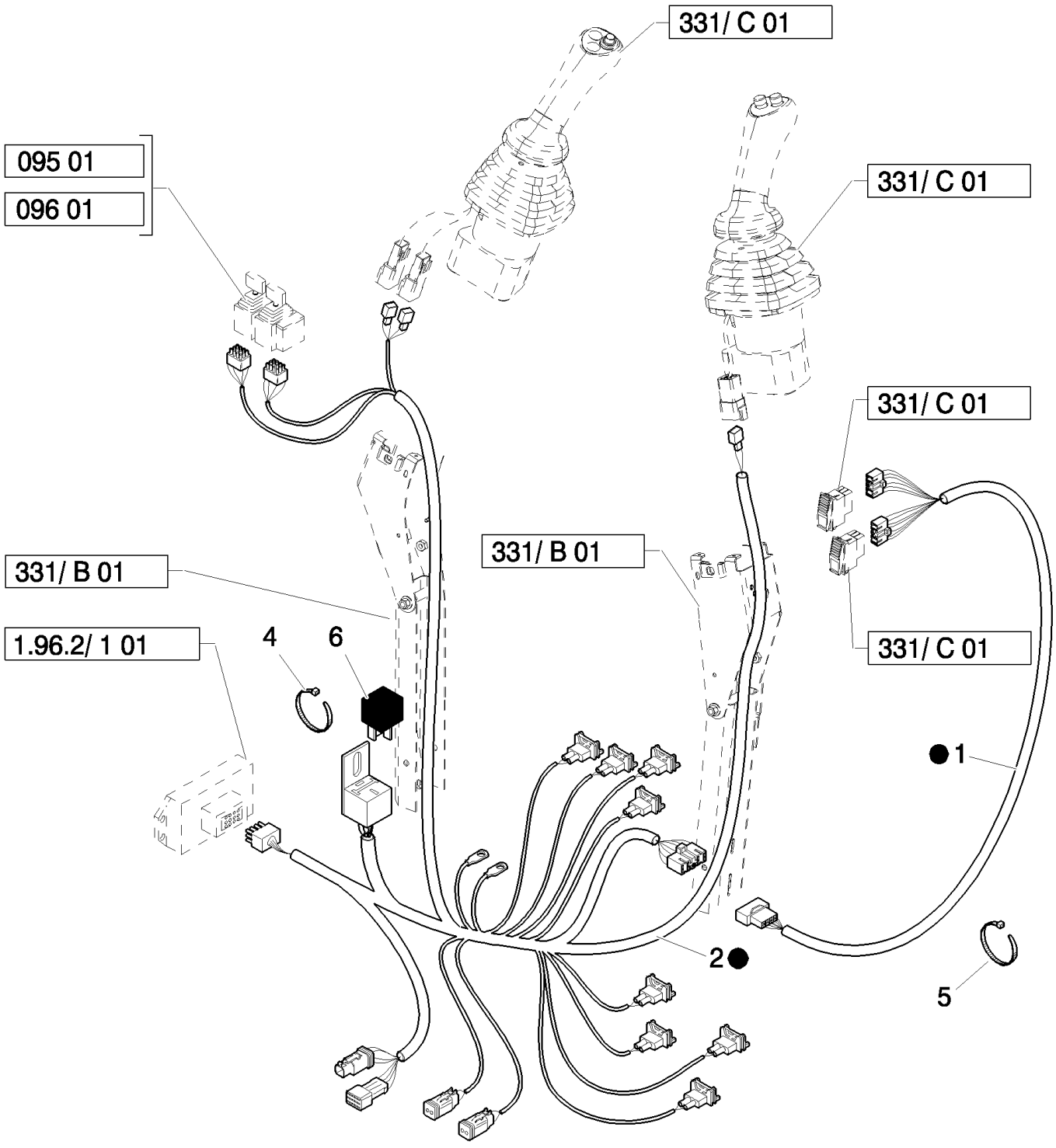

Pilot Control Version

LB115.B EUR BACKHOE LOADER (1/05-)

331/ C(06) 6 SECTION PILOT CONTROL VALVE SUPPORT, COMPLETE (CENTER PIVOT)

Ref	Part Number	Qty	Description
1	85828216	1	HARNESS, WIRE,
2	87305611	1	HARNESS, WIRE,
3	87305604	1	HARNESS, WIRE, , Includes 1, 2, 6
4	14560187	6	STRAP, CABLE, L=203.2 mm
5	386170C1	4	STRAP, CABLE, {PP:85821535}
6	85821537	1	RELAY,

Pilot Control Version

331/ C(07) VALVE, JOYSTICK PILOT CONTROLS (LEFT HAND)

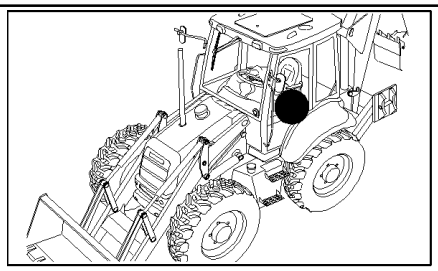

LB115.B EUR BACKHOE LOADER (1/05-)

331/ C(07) VALVE, JOYSTICK PILOT CONTROLS (LEFT HAND)

Ref	Part Number	Qty	Description
	87388704	1	JOYSTICK, , Includes 1 To 23
1	87398960	1	VALVE, PILOT,
2	87436225	1	RETAINER,
3	87428023	1	BOLT,
4	87037944	1	NUT, Thin, M12 x 1.75, Cl 05,
5	87443721	1	BOOT,
6	225315C1	1	CONNECTOR, ELEC,
7	225318C1	1	WEDGE,
8	87308838	1	HANDLE GRIP,
9	15687475	3	SCREW, SELF TAPPING, Pan Hd, M3.5 x 25, Stainless,
10	87308839	1	HANDLE GRIP,
11	87435243	1	BEZEL,
12	87437372	1	SWITCH,
13	86625128	2	PLUG, Dome, .562" hole, Nylon,
14	87424267	1	GROMMET,
15	87435506	2	SEAL,
16	87438046	1	STRAP, CABLE,
17	87000312	1	STRAP, CABLE,
18	87586731	4	KIT,
19	87586758	1	PLATE, RETAINING,
20	87586760	4	PLUNGER,
21	87586764	1	
22	87586772	4	REGULATOR,
23	87586773	1	KIT,

331/ C(08) VALVE, JOYSTICK PILOT CONTROLS (RIGHT HAND) - STANDARD VERSION

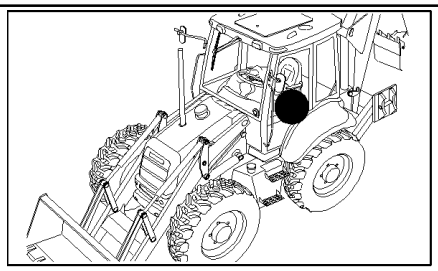

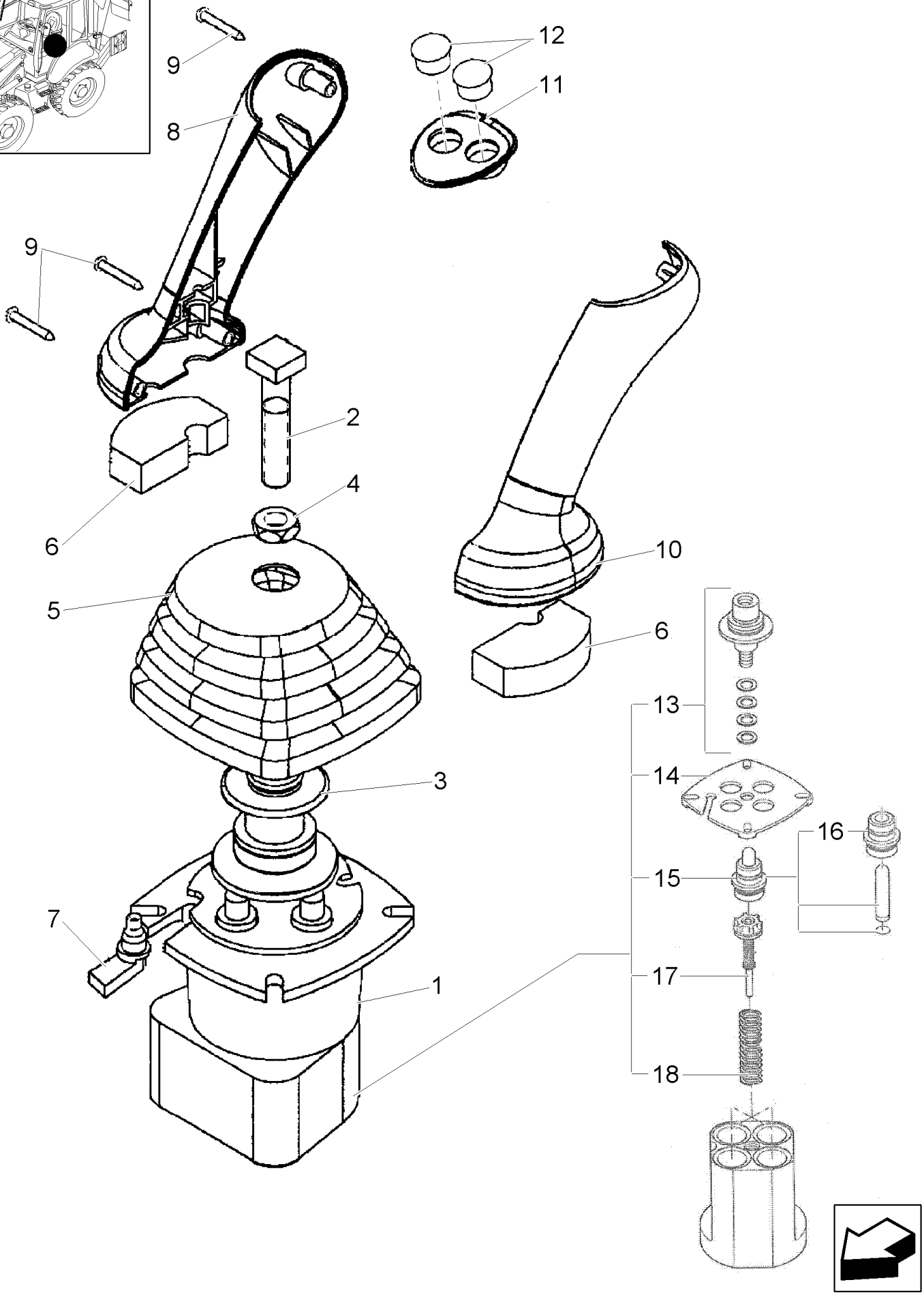

LB115.B EUR BACKHOE LOADER (1/05-)

331/ C(08) VALVE, JOYSTICK PILOT CONTROLS (RIGHT HAND) - STANDARD VERSION

Ref	Part Number	Qty	Description
	87388706	1	JOYSTICK, , Includes 1 To 18
1	87398960	1	VALVE, PILOT,
2	87428023	1	BOLT,
3	87436225	1	RETAINER,
4	87037944	1	NUT, Thin, M12 x 1.75, Cl 05,
5	87443722	1	BOOT,
6	87435506	1	SEAL,
7	87451448	1	GROMMET,
8	87308838	1	HANDLE GRIP,
9	15687475	3	SCREW, SELF TAPPING, Pan Hd, M3.5 x 25, Stainless,
10	87308839	1	HANDLE GRIP,
11	87435242	1	BEZEL,
12	86625128	2	PLUG, Dome, .562" hole, Nylon,
12	87437371	2	SWITCH, ASSY, Retract and Extend
13	87586731	4	KIT,
14	87586758	1	PLATE, RETAINING,
15	87586760	4	PLUNGER,
16	87586764	1	
17	87586772	4	REGULATOR,
18	87586773	1	KIT,

331/ 1(01) BACKHOE CONTROL VALVE, 6 SECTIONS (CENTER PIVOT) EUROPE

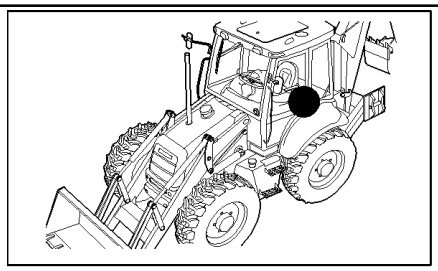

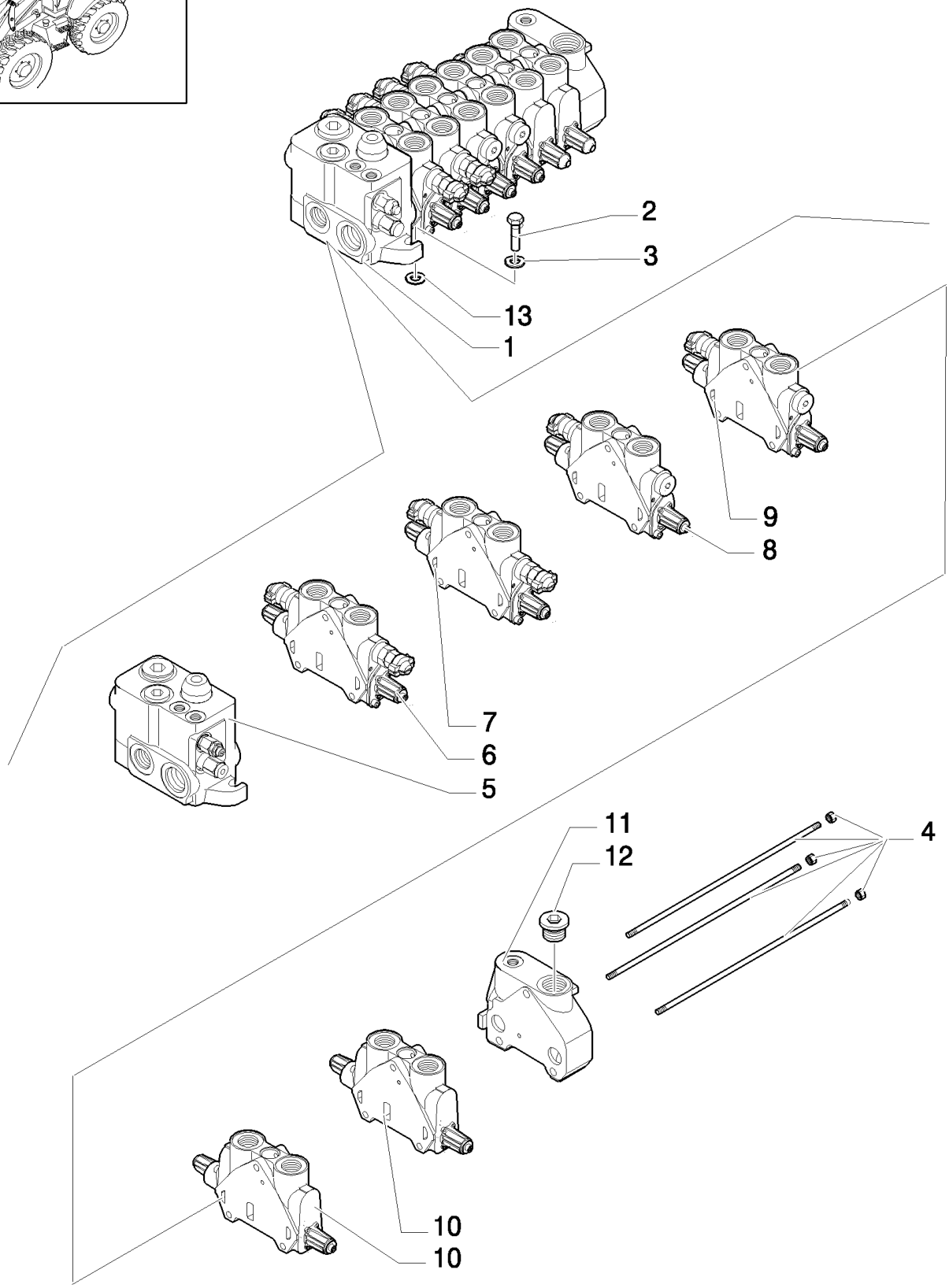

Pilot Control Version

LB115.B EUR BACKHOE LOADER (1/05-)

331/ 1(01) BACKHOE CONTROL VALVE, 6 SECTIONS (CENTER PIVOT) EUROPE

Ref	Part Number	Qty	Description
1	87302742	1	VALVE, CONTROL,
2	16040821	3	BOLT, Hex, M10 x 40, 8.8, Full Thd,
3	11190679	3	WASHER, SPRING, Belleville, M10.5,
4	85811958	1	KIT,
5	87308747	1	VALVE SECTION, HYD, , See Page 331/1 02
6	85826359	1	SECTOR, TOOTHED, , Boom Cylinder, See Page 331/1 03
7	85826357	1	SECTOR, TOOTHED, , Swing Cylinder, See Page 331/1 04
8	85826356	1	SECTOR, TOOTHED, , Bucket Cylinder, See Page 331/1 05
9	85826355	1	SECTOR, TOOTHED, , Arm Cylinder, See Page 331/1 06
10	85826360	2	SECTOR, TOOTHED, , Stabilizer Cylinder, See Page 331/1 07
11	85826250	1	VALVE SECTION, HYD, , Includes 12
12	85811921	1	PLUG, 1-1/16"-12 UNF 2A
13	13578621	3	WASHER,

Pilot Control Version

331/ 1(03) BACKHOE CONTROL VALVE, BOOM SECTION (CENTER PIVOT) EUROPE

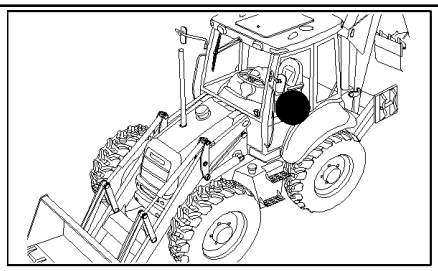

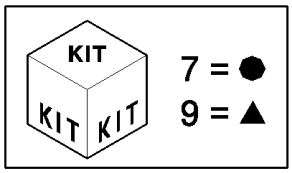

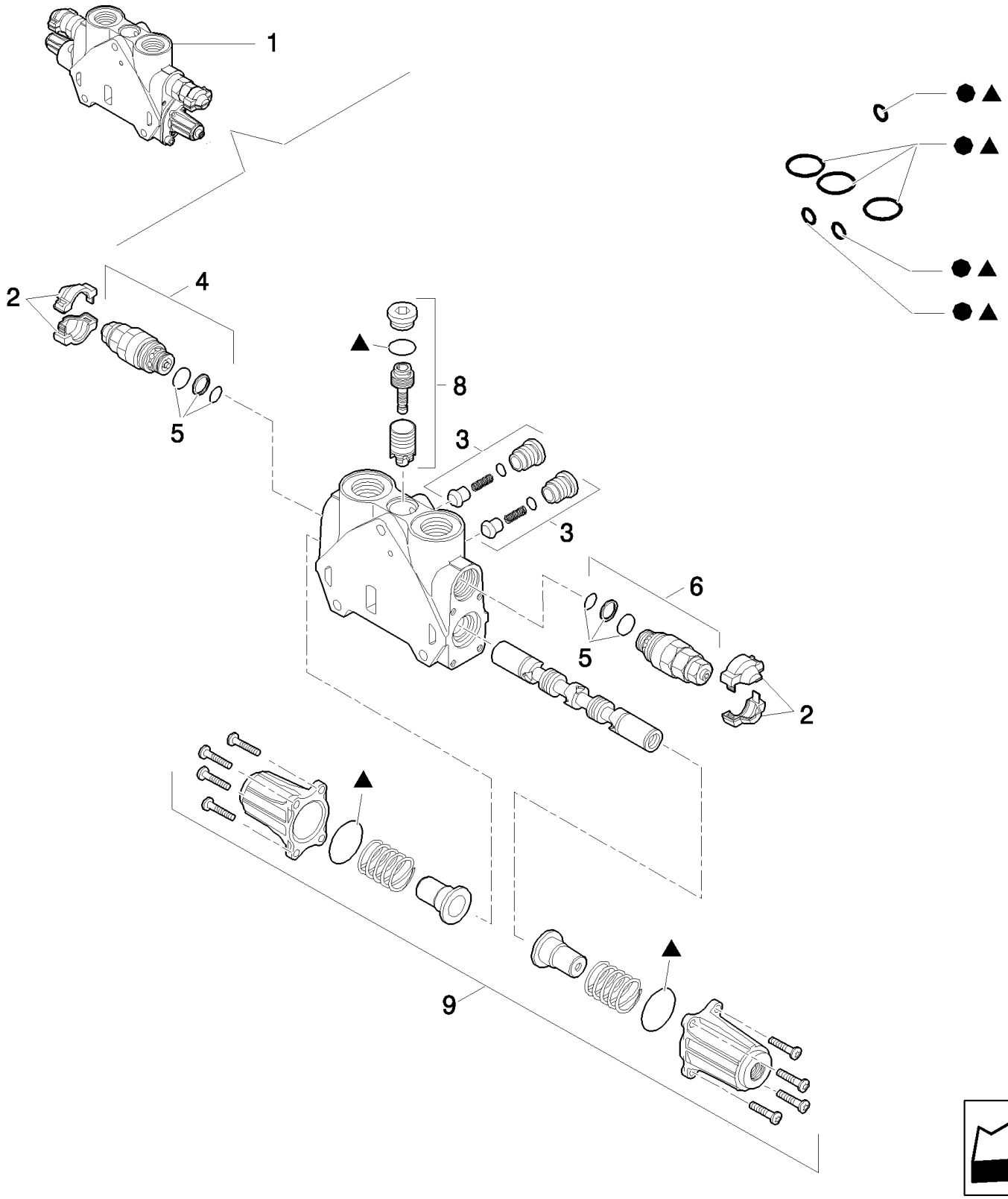

Pilot Control Version

LB115.B EUR BACKHOE LOADER (1/05-)

331/ 1(03) BACKHOE CONTROL VALVE, BOOM SECTION (CENTER PIVOT) EUROPE

Ref	Part Number	Qty	Description
1	85826359	1	SECTOR, TOOTHED,
2	85811934	2	KIT, Cover
3	85811938	2	VALVE, CHECK, Valve
4	85812116	2	VALVE, PRESSURE RELIEF, , Includes 5, 240 BAR
5	85811933	2	KIT, SEALS, Valve Seals
6	85812117	3	VALVE, HYDRAULIC, , Includes 5, 315 BAR
7	85819148	1	KIT, SEALS, Seals
8	85819378	1	KIT, SEALS, Valve
9	85824281	1	KIT, SEALS, Cover Assy

Pilot Control Version

331/ 1(04) BACKHOE CONTROL VALVE, SWING SECTION (CENTER PIVOT) EUROPE

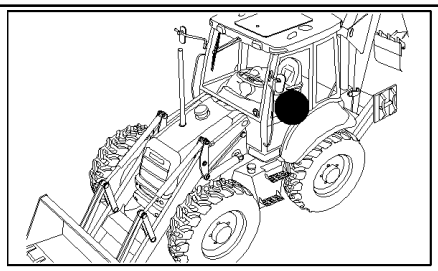

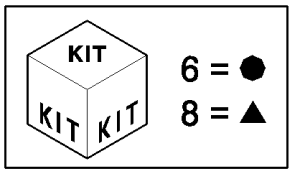

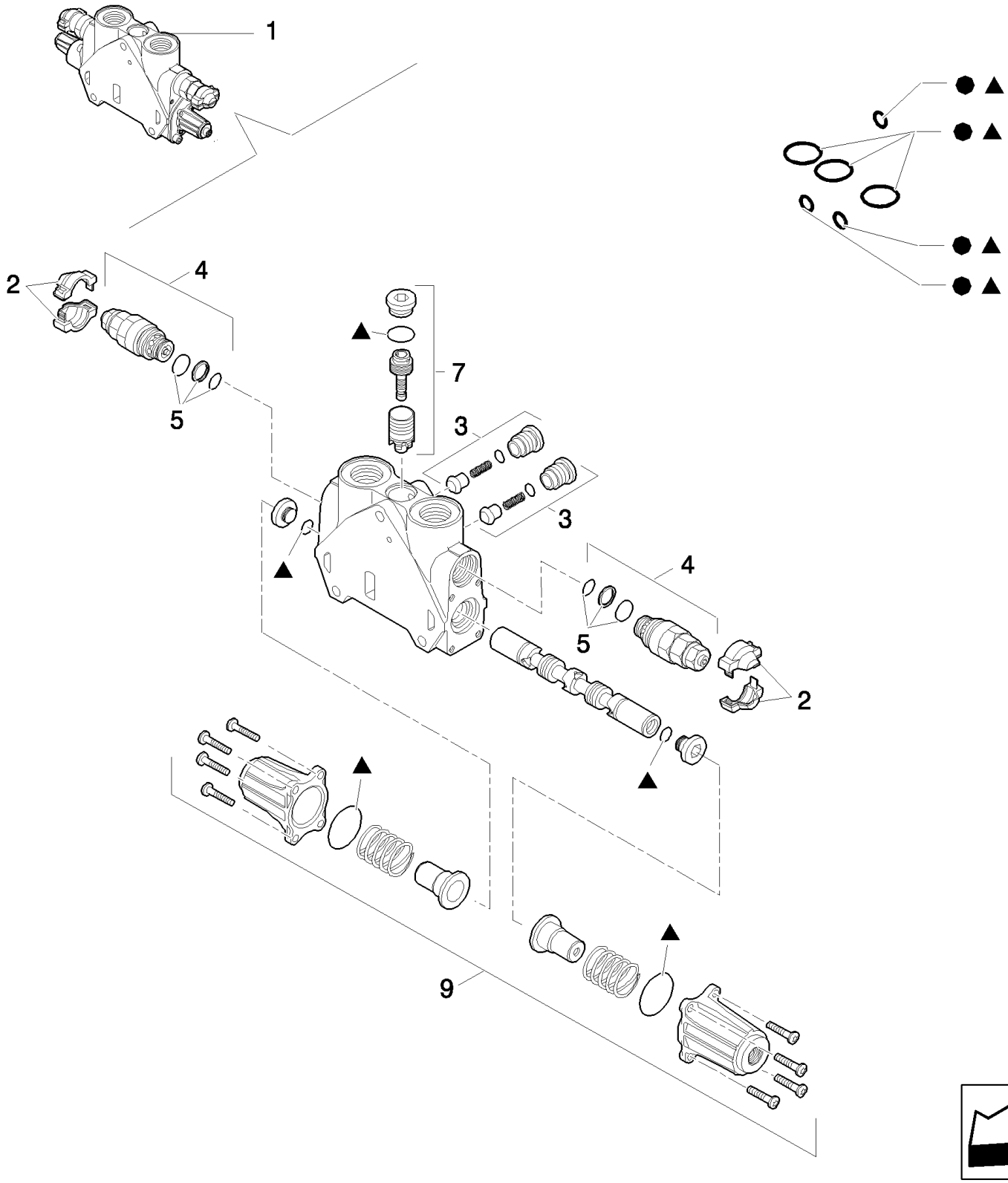

Pilot Control Version

LB115.B EUR BACKHOE LOADER (1/05-)

331/ 1(04) BACKHOE CONTROL VALVE, SWING SECTION (CENTER PIVOT) EUROPE

Ref	Part Number	Qty	Description
1	85826357	1	SECTOR, TOOTHED,
2	85811934	2	KIT, Cover
3	85811938	2	VALVE, CHECK, Valve
4	85812114	2	VALVE, HYDRAULIC, , Includes 5, 205 BAR
5	85811933	2	KIT, SEALS, Secondary Valve
6	85819148	1	KIT, SEALS, Seals
7	85819378	1	KIT, SEALS, Seals
8	85824282	1	KIT,
9	85826344	1	KIT,

Pilot Control Version

331/ 1(05) BACKHOE CONTROL VALVE, BUCKET SECTION (CENTER PIVOT) EUROPE

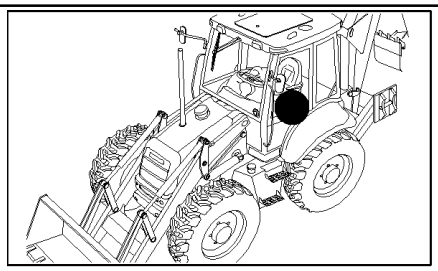

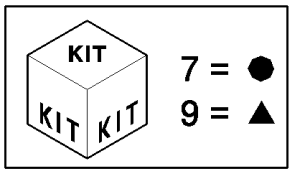

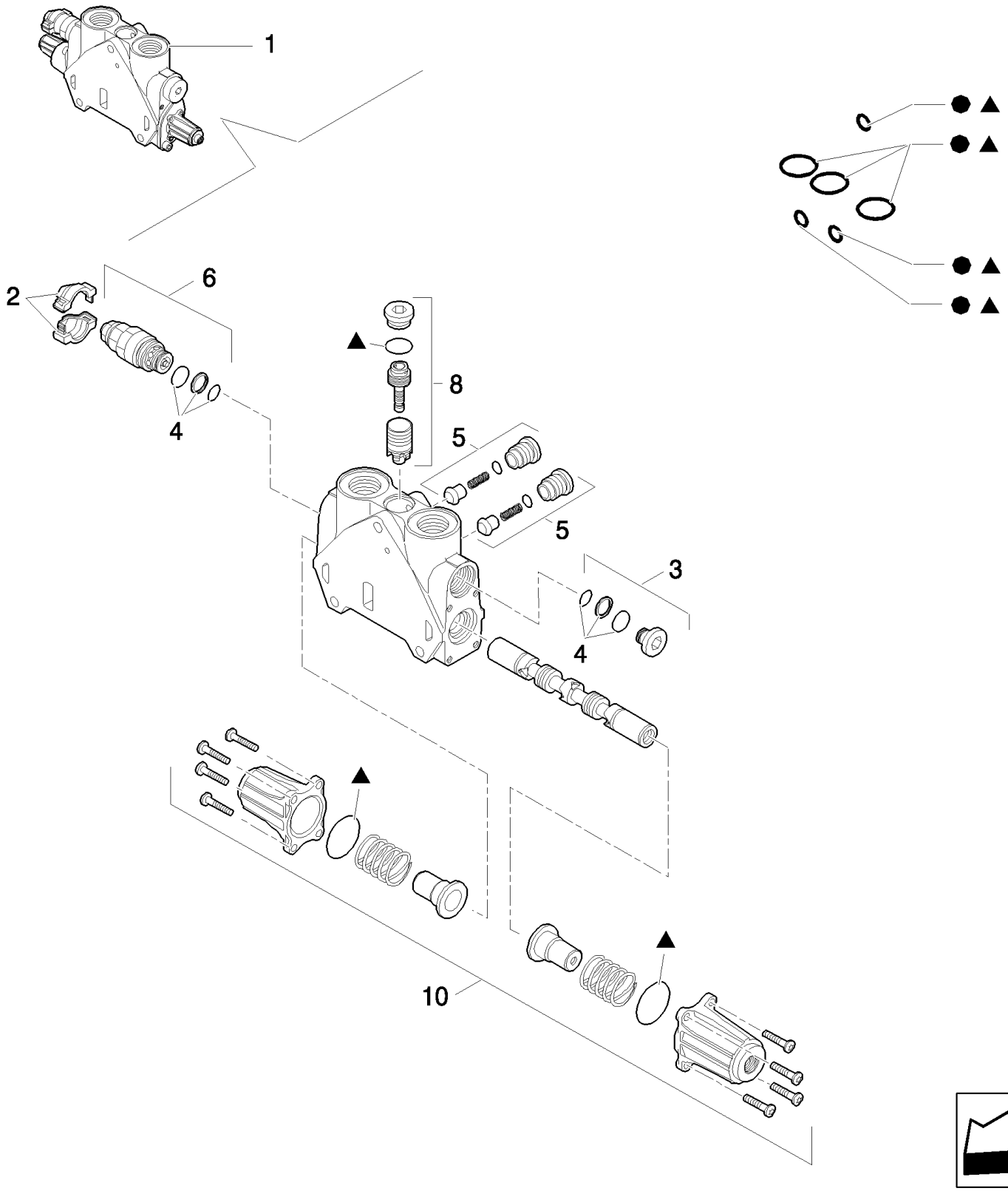

Pilot Control Version

LB115.B EUR BACKHOE LOADER (1/05-)

331/ 1(05) BACKHOE CONTROL VALVE, BUCKET SECTION (CENTER PIVOT) EUROPE

Ref	Part Number	Qty	Description
1	85826356	1	SECTOR, TOOTHED,
2	85811934	1	KIT, Cover
3	85811937	1	PLUG, , Includes 4
4	85811933	1	KIT, SEALS, Valve Seals
5	85811938	1	VALVE, CHECK, Valve
6	85812115	1	VALVE, HYDRAULIC, , 220 BAR, Includes 4
7	85819148	1	KIT, SEALS, Seals
8	85819378	1	KIT, SEALS, Valve
9	85824281	1	KIT, SEALS, Seals
10	85826344	2	KIT, Cover Assy

Pilot Control Version

331/ 1(06) BACKHOE CONTROL VALVE, DIPPERSTICK SECTION (CENTER PIVOT) EUROPE

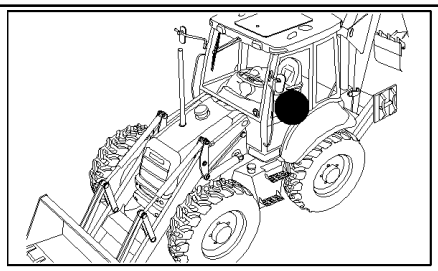

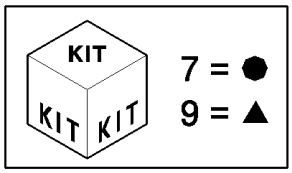

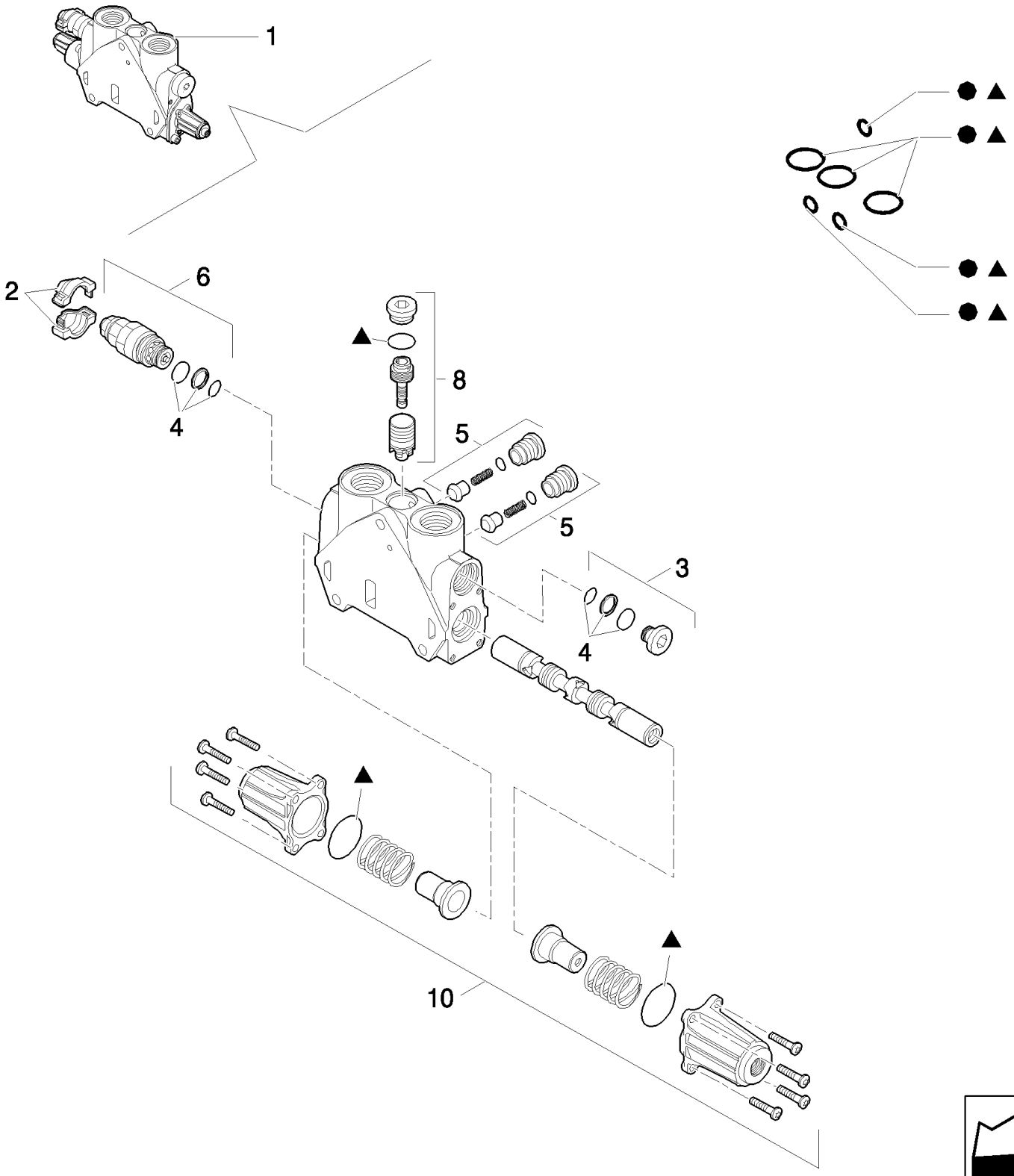

Pilot Control Version

LB115.B EUR BACKHOE LOADER (1/05-)

331/ 1(06) BACKHOE CONTROL VALVE, DIPPERSTICK SECTION (CENTER PIVOT) EUROPE

Ref	Part Number	Qty	Description
1	85826355	1	SECTOR, TOOTHED,
2	85811934	1	KIT, Cover
3	85811937	1	PLUG, , Includes 4
4	85811933	1	KIT, SEALS, Valve Seals
5	85811938	2	VALVE, CHECK, Valve
6	85812116	1	VALVE, PRESSURE RELIEF, , 240 BAR, Includes 4
7	85819148	1	KIT, SEALS, Seals
8	85819378	1	KIT, SEALS, Valve
9	85824281	1	KIT, SEALS, Seals
10	85826344	1	KIT, Cover Assy

Pilot Control Version

331/ 1(07) BACKHOE CONTROL VALVE, STABILIZER SECTION (CENTER PIVOT) EUROPE

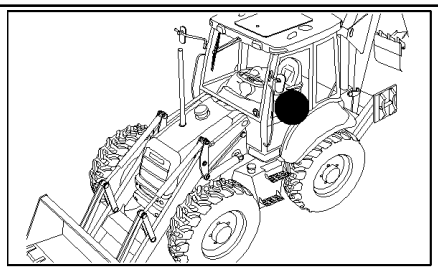

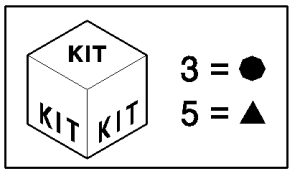

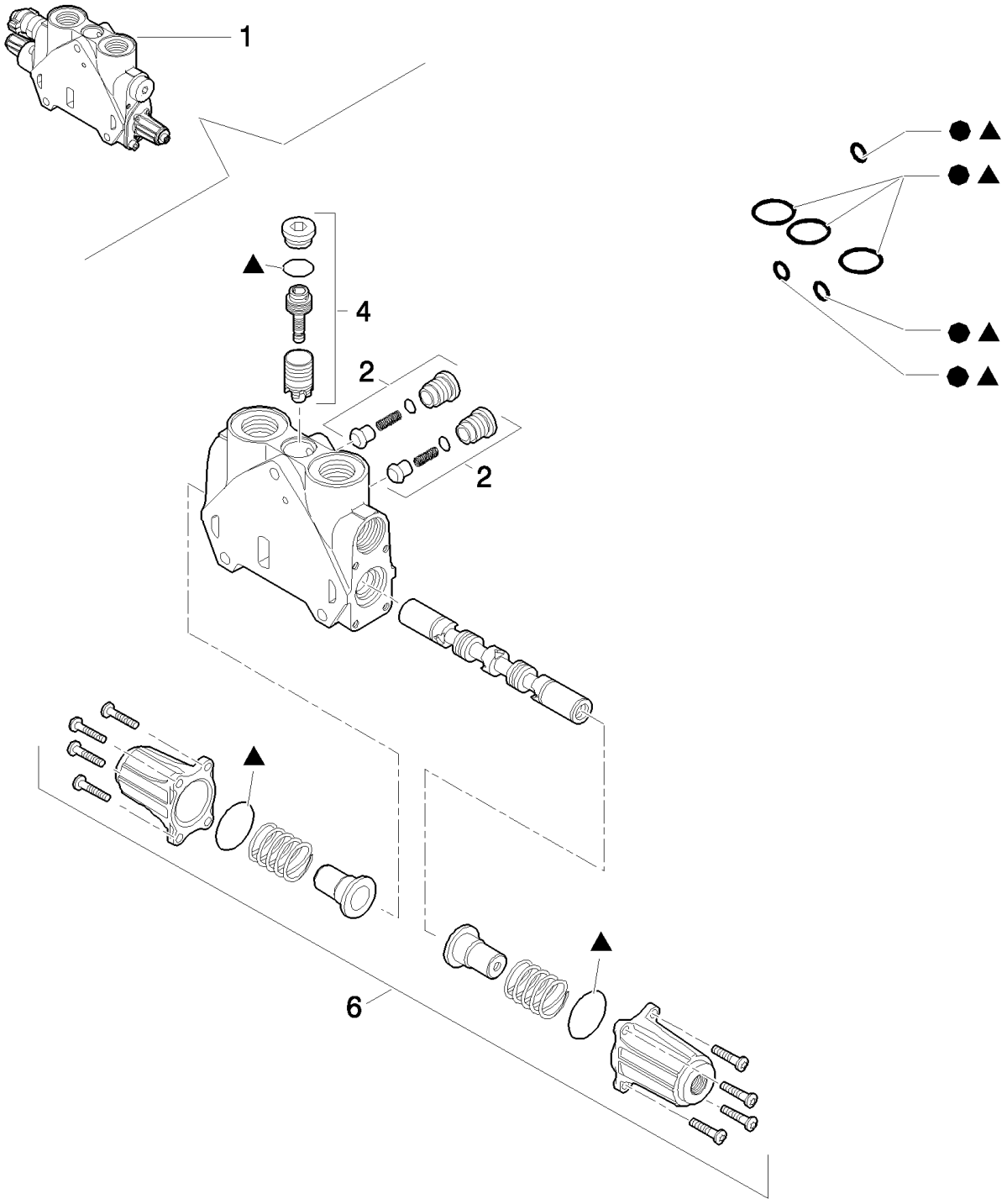

Pilot Control Version

LB115.B EUR BACKHOE LOADER (1/05-)

331/ 1(07) BACKHOE CONTROL VALVE, STABILIZER SECTION (CENTER PIVOT) EUROPE

Ref	Part Number	Qty	Description
1	85826360	2	SECTOR, TOOTHED,
2	85811938	2	VALVE, CHECK, Valve
3	85819148	1	KIT, SEALS, Seals
4	85819378	1	KIT, SEALS, Valve
5	85824281	1	KIT, SEALS, Seals
6	85826344	1	KIT, Cover Assy

Pilot Control Version

332(01) BACKHOE CONTROL VALVE, 6 SECTIONS (SIDE SHIFT) EUROPE

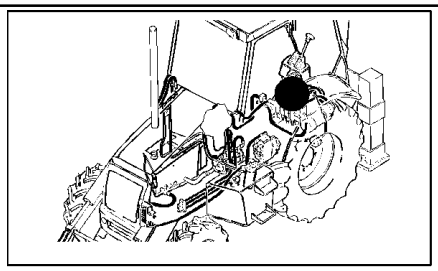

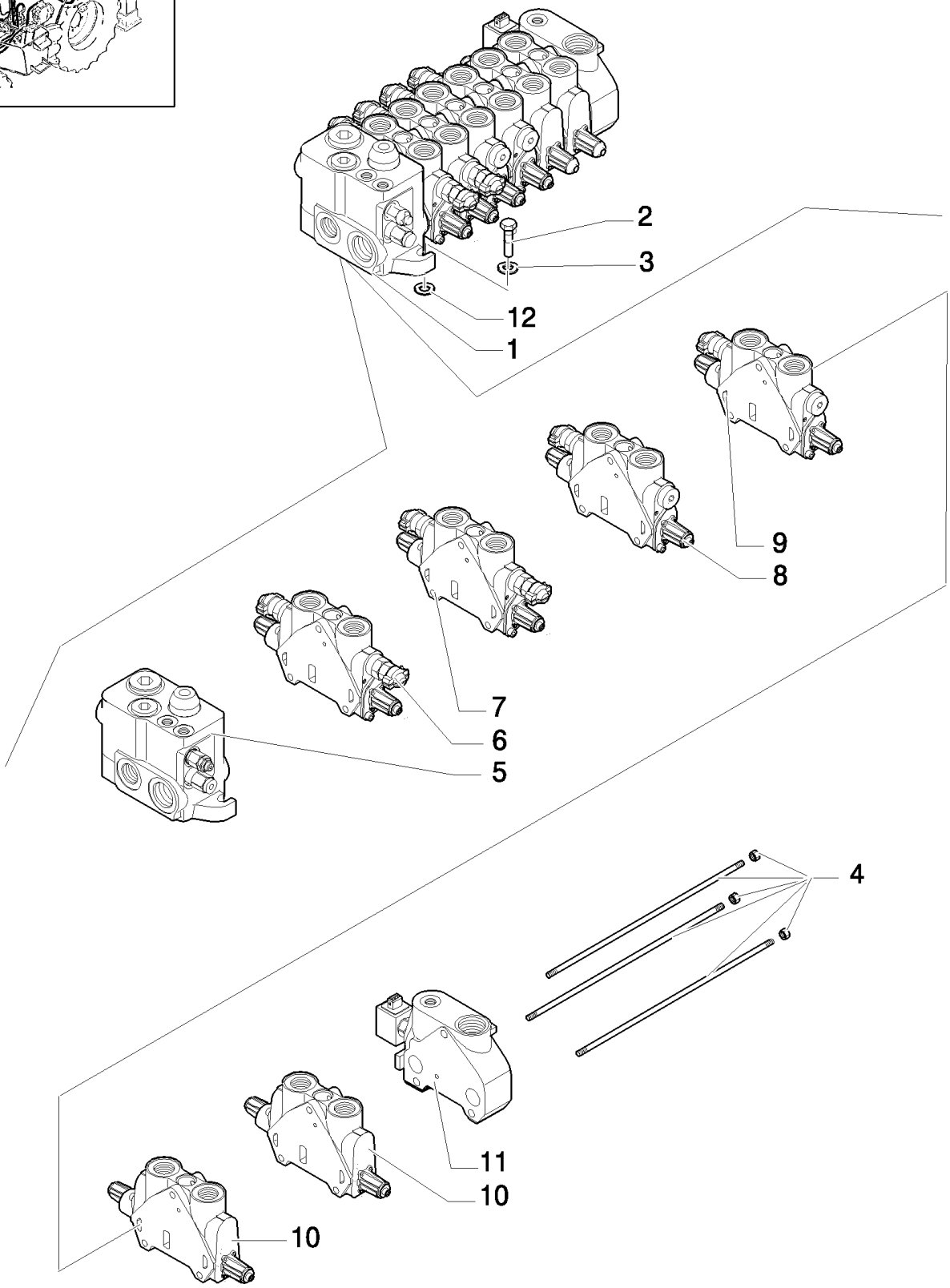

Pilot Control Version

LB115.B EUR BACKHOE LOADER (1/05-)

332(01) BACKHOE CONTROL VALVE, 6 SECTIONS (SIDE SHIFT) EUROPE

Ref	Part Number	Qty	Description
1	87378502	1	VALVE, HYDRAULIC,
2	614-10045	3	SCREW, Hex, M10 x 45, 8.8, Full Thd, M10x45
3	11190679	5	WASHER, SPRING, Belleville, M10.5,
4	85811958	1	KIT,
5	87308747	1	VALVE SECTION, HYD, , See Page 331/1 02
6	85826930	1	SECTOR, TOOTHED, , Boom Cylinder, See Page 332 02
7	85826931	1	SECTOR, TOOTHED, , Swing Cylinder, See Page 332 03
8	85826932	1	SECTOR, TOOTHED, , Bucket Cylinder, See Page 332 04
9	85826933	1	SECTOR, TOOTHED, , Arm Cylinder, See Page 332 05
10	87558568	2	SECTOR, , Stabilizer Cylinder, See Page 332 06
11	85826249	1	SECTOR, TOOTHED, , See Page 332 07
12	13578621	3	WASHER,

Pilot Control Version

332(02) BACKHOE CONTROL VALVE, 6 SECTIONS (SIDE SHIFT) EUROPE

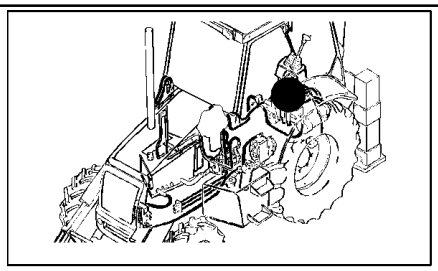

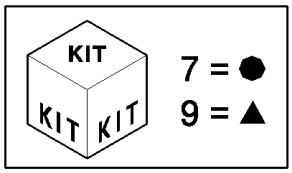

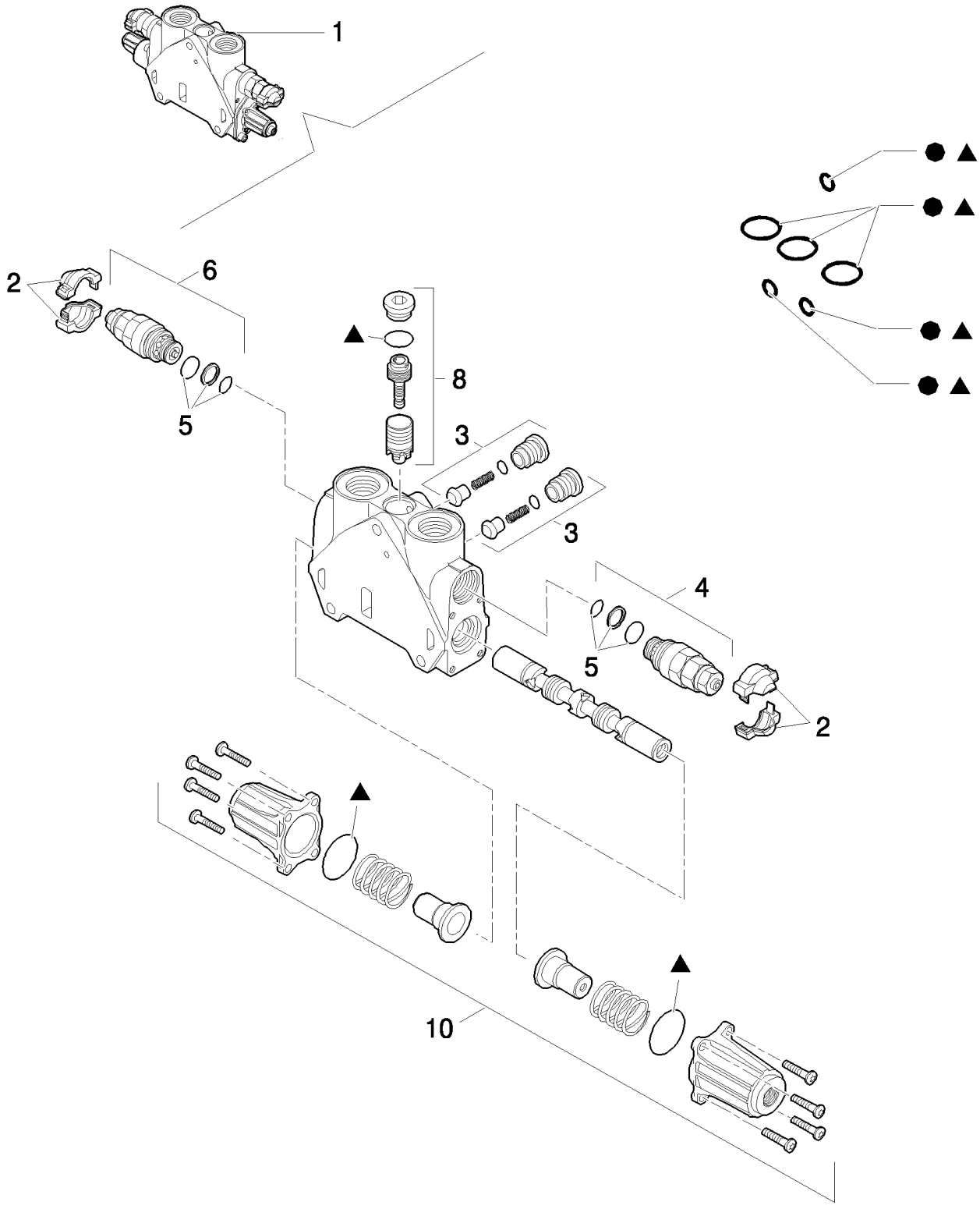

Pilot Control Version, Boom Cylinder

LB115.B EUR BACKHOE LOADER (1/05-)

332(02) BACKHOE CONTROL VALVE, 6 SECTIONS (SIDE SHIFT) EUROPE

Ref	Part Number	Qty	Description
1	85826930	1	SECTOR, TOOTHED,
2	85811934	2	KIT, Cover
3	85811938	2	VALVE, CHECK, Valve
4	85812116	1	VALVE, PRESSURE RELIEF, , Includes 5, 240 BAR
5	85811933	1	KIT, SEALS, Valve seals
6	85812117	1	VALVE, HYDRAULIC, , 315 BAR
7	85819148	1	KIT, SEALS, Seals
8	85819378	1	KIT, SEALS, Valve
9	85824281	1	KIT, SEALS, Seals
10	85826344	1	KIT, Cover Assy

Pilot Control Version, Boom Cylinder

332(03) BACKHOE CONTROL VALVE, 6 SECTIONS (SIDE SHIFT) EUROPE

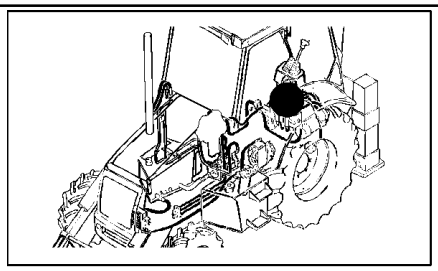

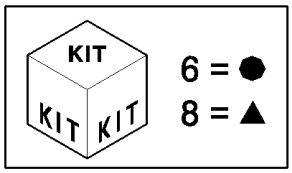

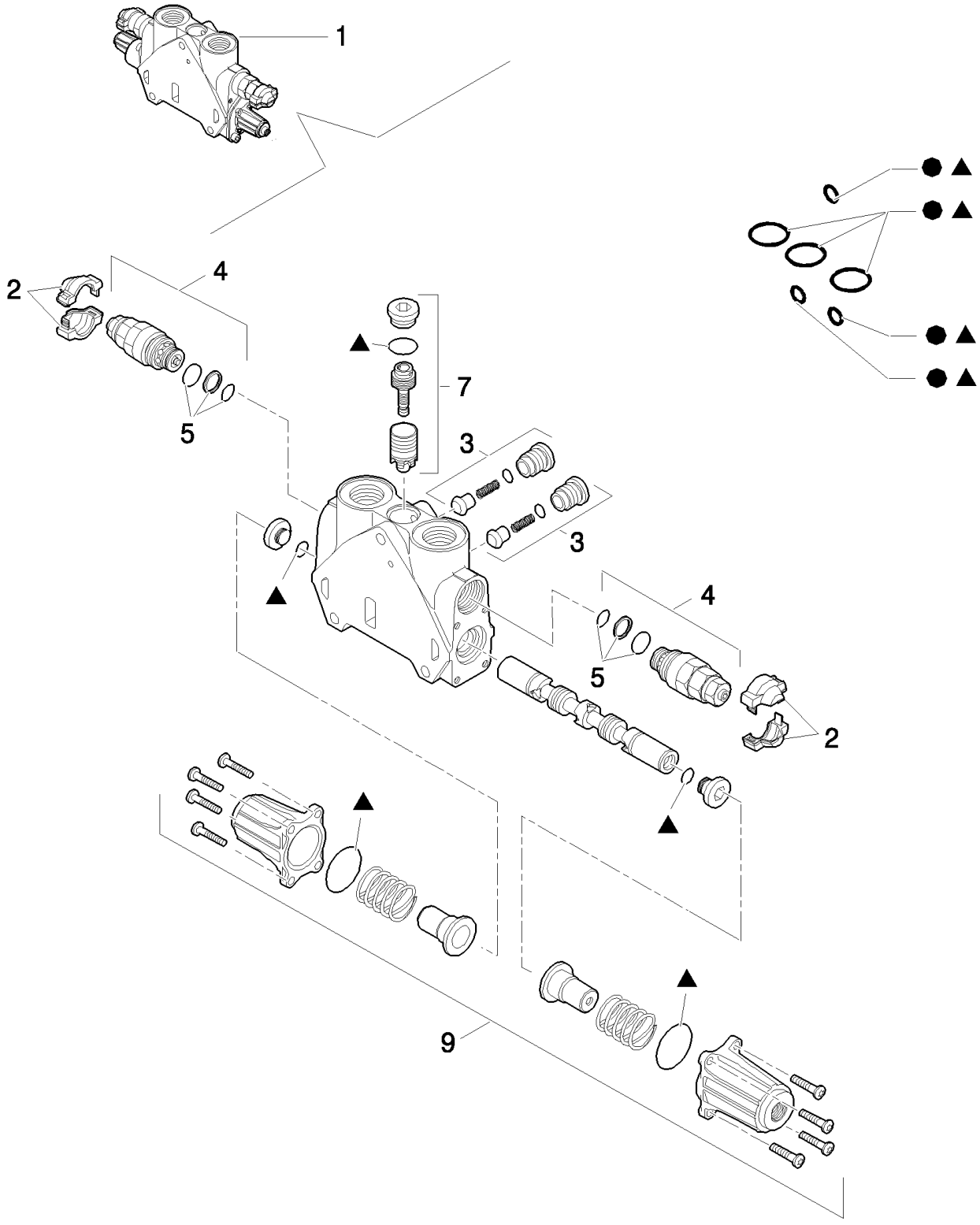

Pilot Control Version, Swing Cylinder

LB115.B EUR BACKHOE LOADER (1/05-)

332(03) BACKHOE CONTROL VALVE, 6 SECTIONS (SIDE SHIFT) EUROPE

Ref	Part Number	Qty	Description
1	85826931	1	SECTOR, TOOTHED,
2	85811934	2	KIT, Cover
3	85811938	2	VALVE, CHECK, Valve
4	85812114	2	VALVE, HYDRAULIC, , Includes 5, 205 BAR
5	85811933	2	KIT, SEALS, Valve
6	85819148	1	KIT, SEALS, Seals
7	85819378	1	KIT, SEALS, Valve
8	85824282	1	KIT, Seals
9	85826344	1	KIT, Cover Assy

Pilot Control Version, Swing Cylinder

332(04) BACKHOE CONTROL VALVE, 6 SECTIONS (SIDE SHIFT) EUROPE

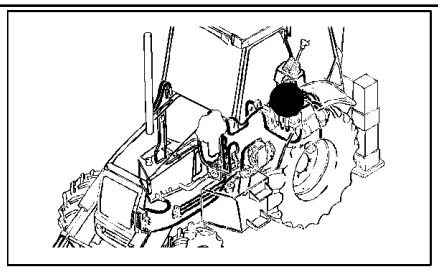

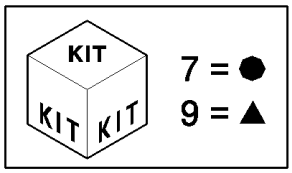

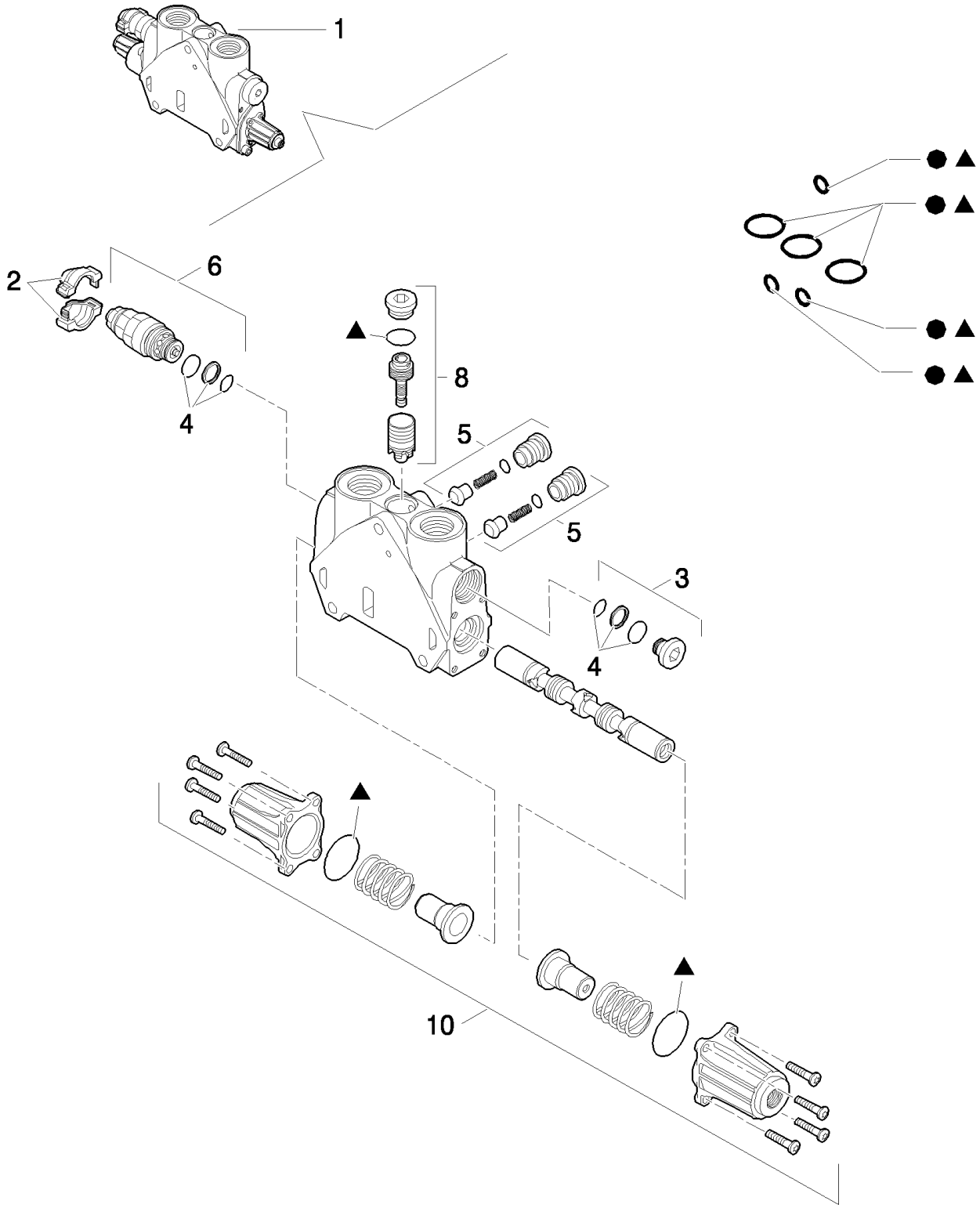

Pilot Control Version, Bucket Cylinder

LB115.B EUR BACKHOE LOADER (1/05-)

332(04) BACKHOE CONTROL VALVE, 6 SECTIONS (SIDE SHIFT) EUROPE

Ref	Part Number	Qty	Description
1	85826932	1	SECTOR, TOOTHED,
2	85811934	1	KIT, Cover
3	85811937	1	PLUG, , Includes 4
4	85811933	1	KIT, SEALS, Valve Seals
5	85811938	2	VALVE, CHECK, Valve
6	85812115	1	VALVE, HYDRAULIC, , 220 BAR, Includes 4
7	85819148	1	KIT, SEALS, Seals
8	85819378	1	KIT, SEALS, Valve
9	85824281	1	KIT, SEALS, Seals
10	85826344	1	KIT, Cover Assy

Pilot Control Version, Bucket Cylinder

332(05) BACKHOE CONTROL VALVE, 6 SECTIONS (SIDE SHIFT) EUROPE

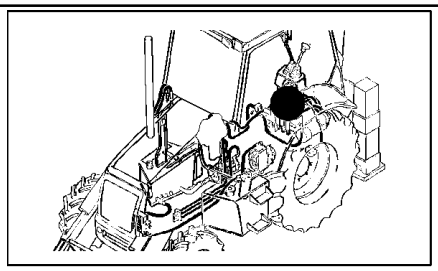

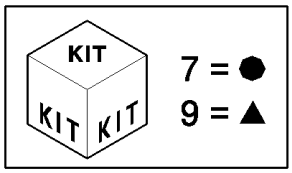

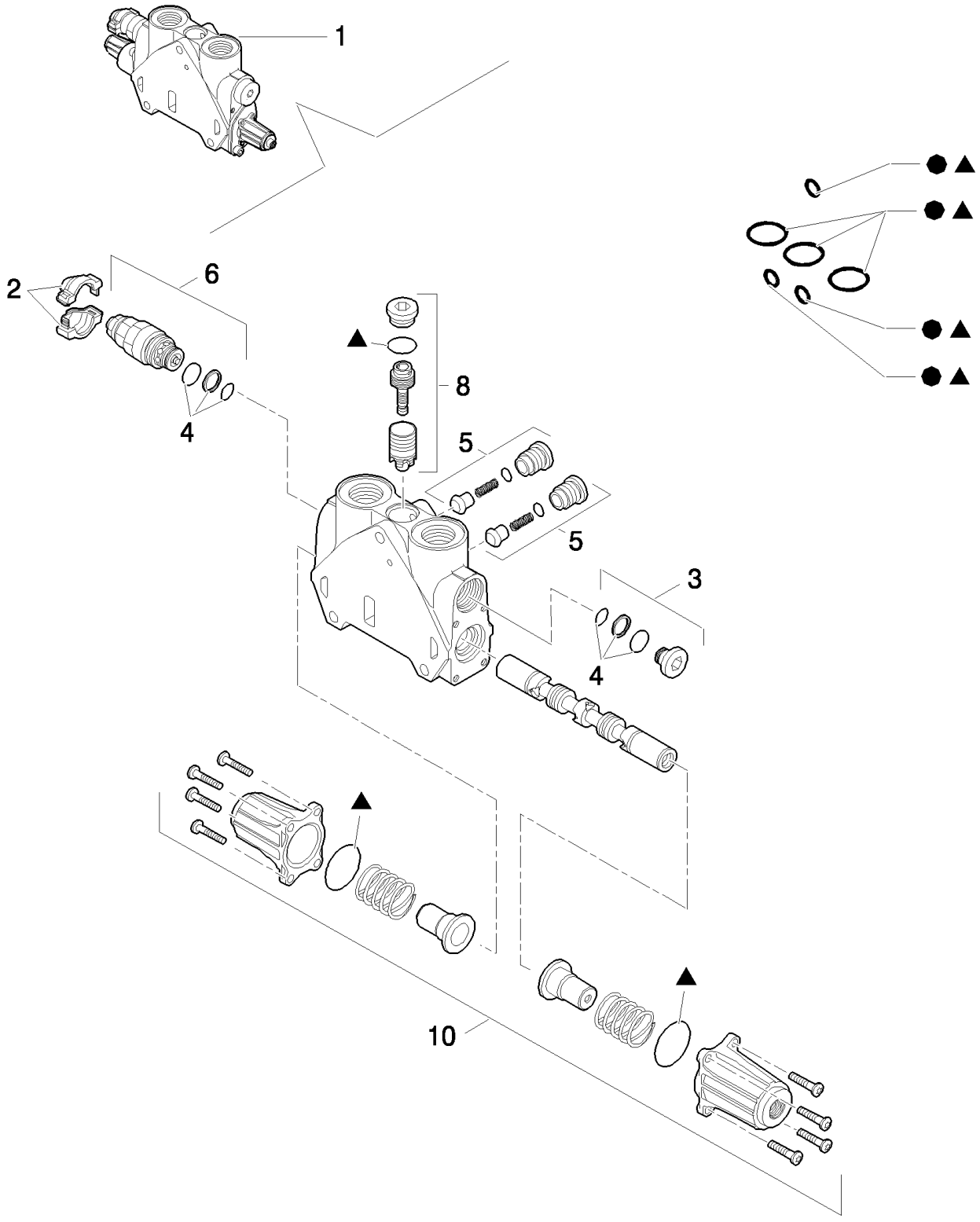

Pilot Control Version, Dipperstick Cylinder

LB115.B EUR BACKHOE LOADER (1/05-)

332(05) BACKHOE CONTROL VALVE, 6 SECTIONS (SIDE SHIFT) EUROPE

Ref	Part Number	Qty	Description
1	85826933	1	SECTOR, TOOTHED,
2	85811934	1	KIT, Cover
3	85811937	1	PLUG, , Includes 4
4	85811933	1	KIT, SEALS, Valve Seals
5	85811938	2	VALVE, CHECK, Valve
6	85812116	1	VALVE, PRESSURE RELIEF, , 240 BAR, Includes 4
7	85819148	1	KIT, SEALS, Seals
8	85819378	1	KIT, SEALS, Valve
9	85824281	1	KIT, SEALS, Seals
10	85826344	1	KIT, Cover Assy

Pilot Control Version, Dipperstick Cylinder

332(06) BACKHOE CONTROL VALVE, 6 SECTIONS (SIDE SHIFT) EUROPE

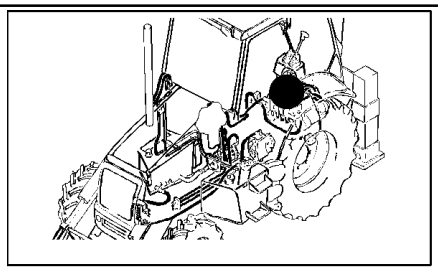

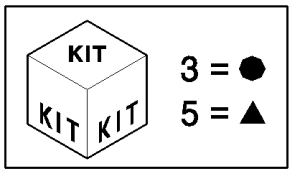

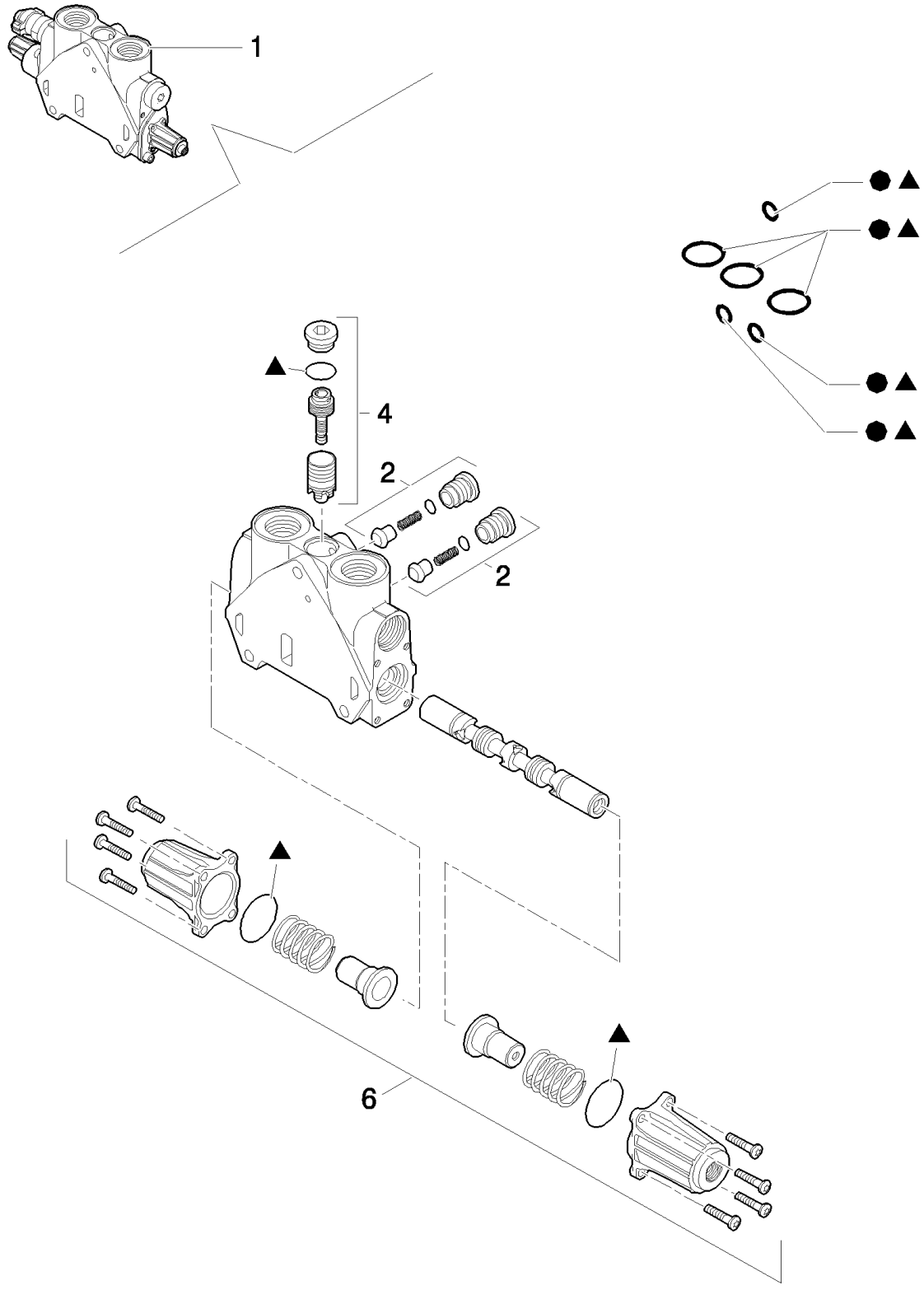

Pilot Control Version, Stabilizer

LB115.B EUR BACKHOE LOADER (1/05-)

332(06) BACKHOE CONTROL VALVE, 6 SECTIONS (SIDE SHIFT) EUROPE

Ref	Part Number	Qty	Description
1	87558568	2	SECTOR,
2	85811938	2	VALVE, CHECK, Valve
3	85819148	1	KIT, SEALS, Seals
4	85819378	1	KIT, SEALS, Valve
5	85824281	1	KIT, SEALS, Seals
6	85826344	1	KIT, Cover Assy

Pilot Control Version, Stabilizer

332(07) BACKHOE CONTROL VALVE, 6 SECTIONS (SIDE SHIFT) EUROPE

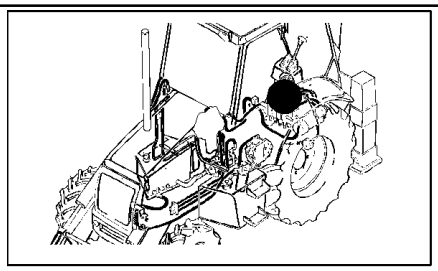

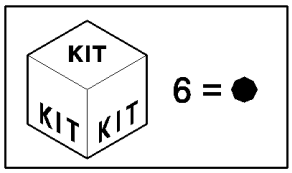

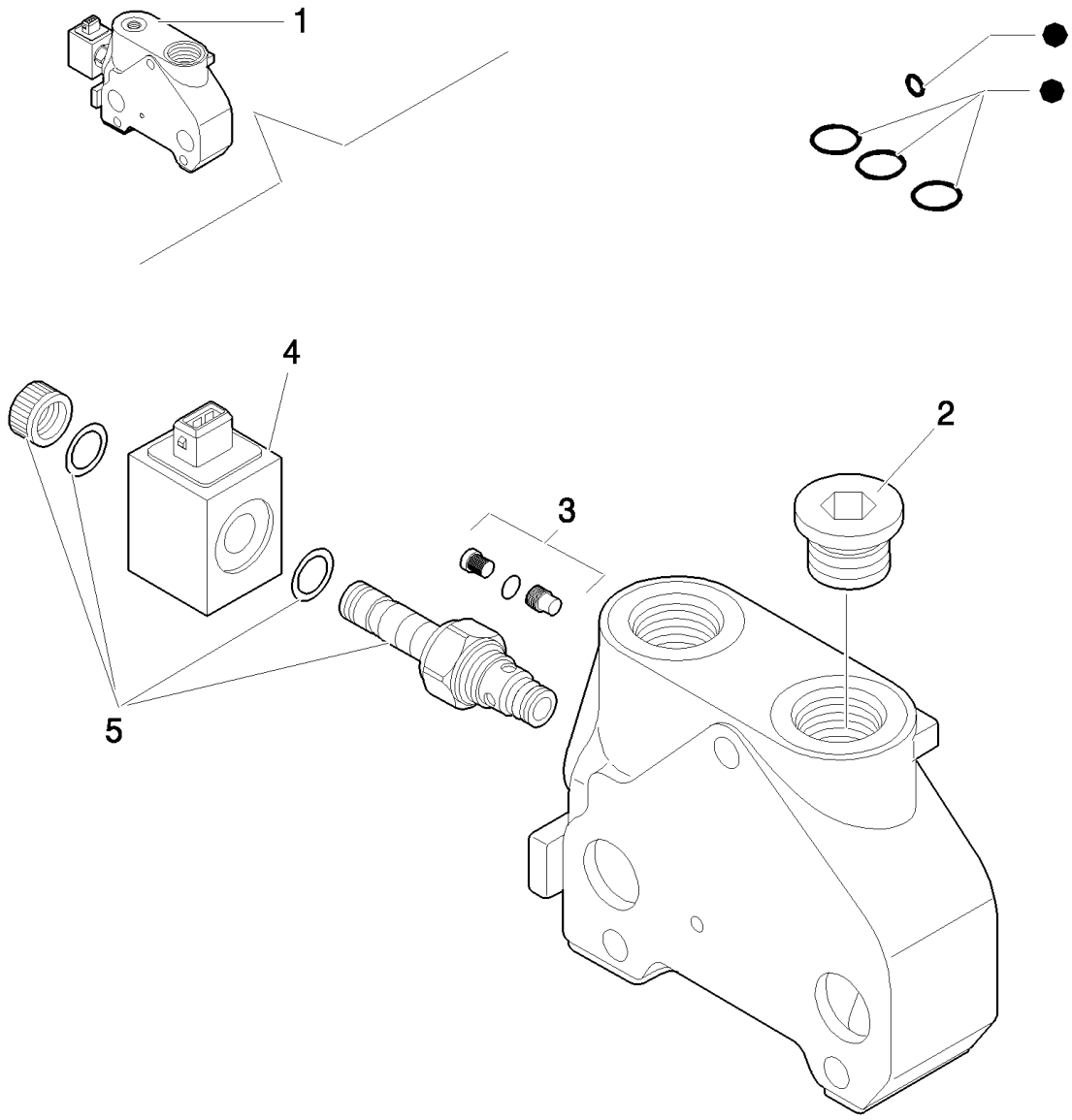

LB115.B EUR BACKHOE LOADER (1/05-)

332(07) BACKHOE CONTROL VALVE, 6 SECTIONS (SIDE SHIFT) EUROPE

Ref	Part Number	Qty	Description
1	85826249	1	SECTOR, TOOTHED,
2	85811921	1	PLUG, 1-1/16"-12 UNF 2A
3	85811952	1	KIT, Valve
4	85811953	1	SOLENOID,
5	85811954	1	KIT, Valve
6	85825473	1	KIT, SEALS, Seal

Pilot Control Version

332(13) 6-SECTION PILOT CONTROL VALVE SUPPORT,COMPLETE (SIDE SHIFT) EUROPE

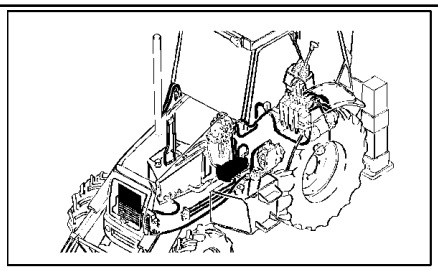

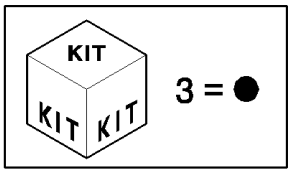

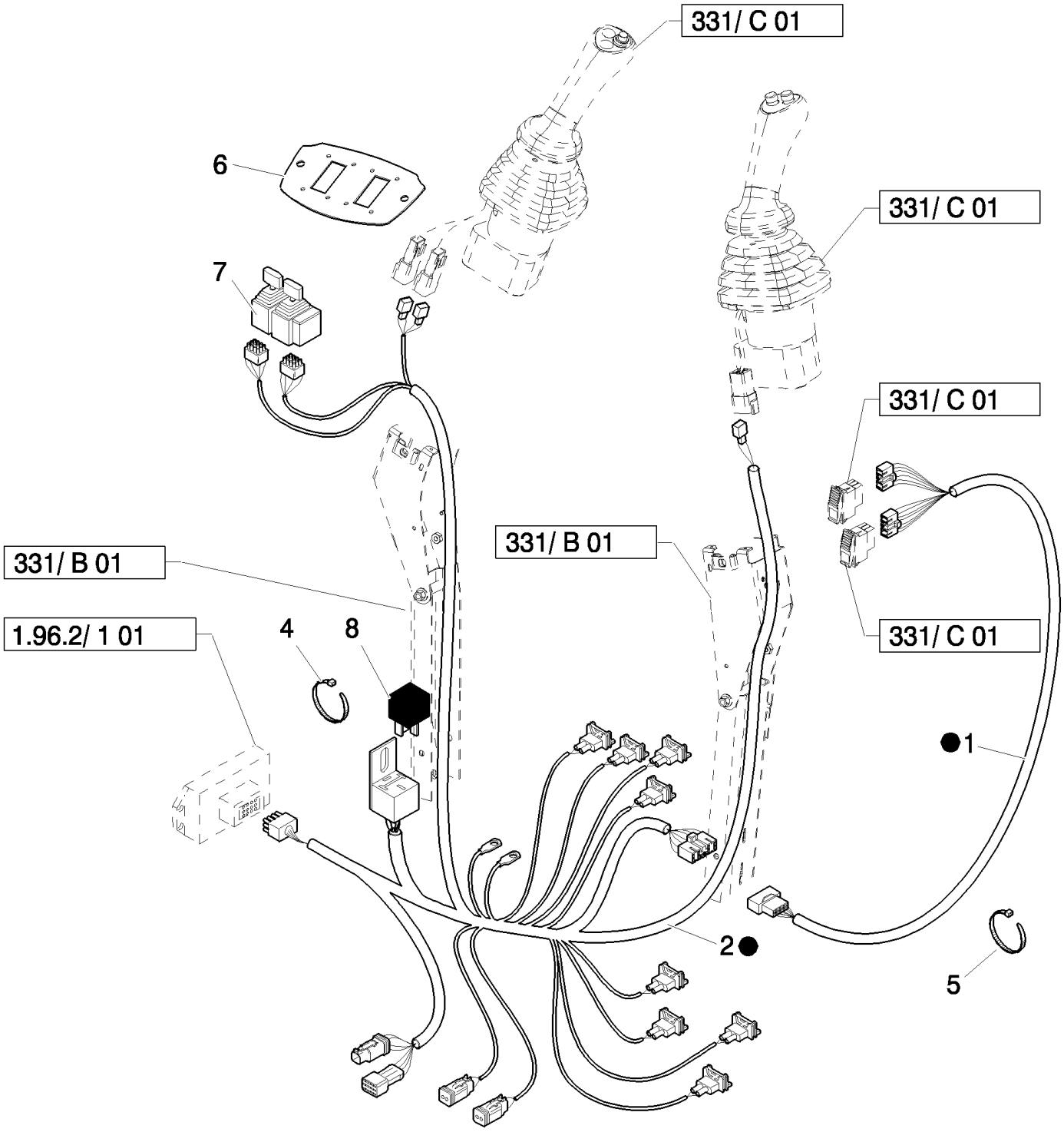

LB115.B EUR BACKHOE LOADER (1/05-)

332(13) 6-SECTION PILOT CONTROL VALVE SUPPORT,COMPLETE (SIDE SHIFT) EUROPE

Ref	Part Number	Qty	Description
1	85828216	1	HARNESS, WIRE,
2	87305611	1	HARNESS, WIRE,
3	87305604	1	HARNESS, WIRE, , Includes 1, 2, 8
4	14560187	6	STRAP, CABLE, L=203.2 mm
5	386170C1	4	STRAP, CABLE, {PP:85821535}
6	87418000	1	PLATE, MOUNTING,
7	86988086	2	JOYSTICK,
8	85821537	1	RELAY,

Pilot Control Version

333(01) 7-SECTIONS EXCAVATOR CONTROL VALVE (CENTER PIVOT) EUROPE

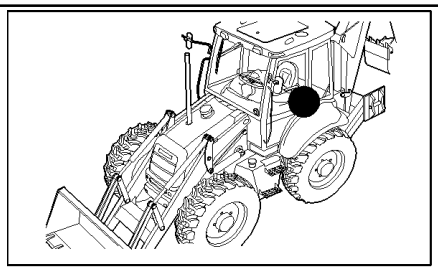

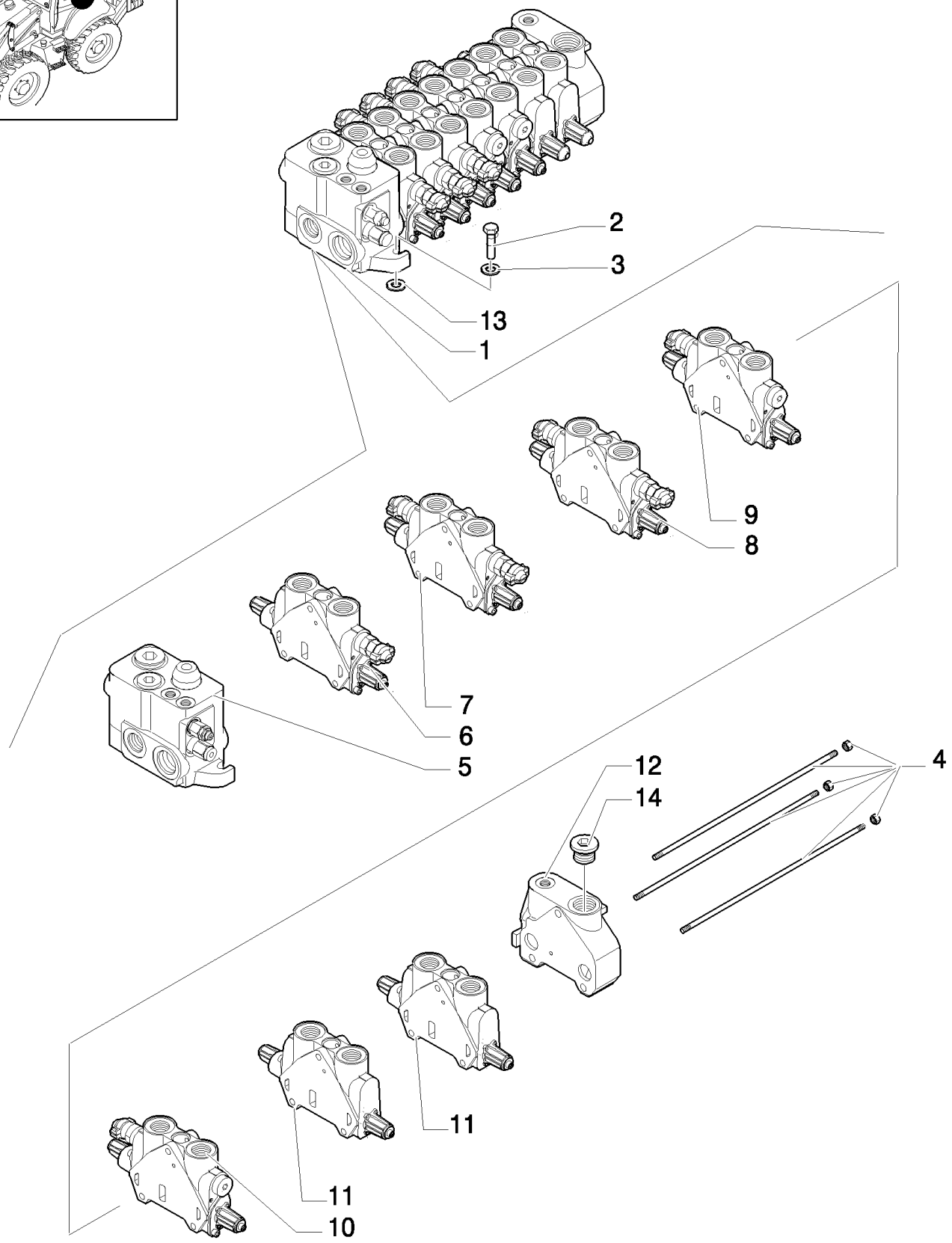

Pilot Control Version

333(01) 7-SECTIONS EXCAVATOR CONTROL VALVE (CENTER PIVOT) EUROPE

Ref	Part Number	Qty	Description
1	87327766	1	
2	16040821	3	BOLT, Hex, M10 x 40, 8.8, Full Thd,
3	11190679	3	WASHER, SPRING, Belleville, M10.5,
4	85811959	1	KIT,
5	87308747	1	VALVE SECTION, HYD, , See Page 331/1 02
6	87341284	1	SECTOR, TOOTHED, , See Page 333 02
7	85826359	1	SECTOR, TOOTHED, , See Page 331/1 03
8	85826357	1	SECTOR, TOOTHED, , See Page 331/1 04
9	85826356	1	SECTOR, TOOTHED, , See Page 331/1 05
10	85826355	1	SECTOR, TOOTHED, , See Page 331/1 06
11	85826360	2	SECTOR, TOOTHED, , See Page 331/1 07
12	85826250	1	VALVE SECTION, HYD,
13	13578621	3	WASHER,
14	85811921	1	PLUG,

Pilot Control Version

333(02) 7-SECTIONS EXCAVATOR CONTROL VALVE (CENTER PIVOT) EUROPE

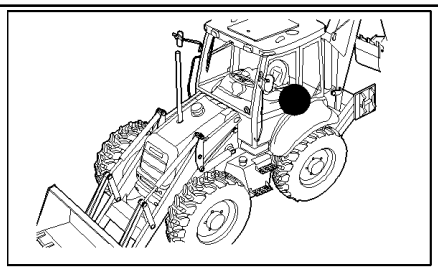

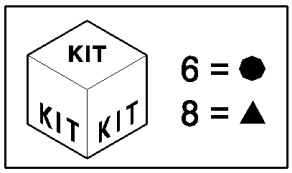

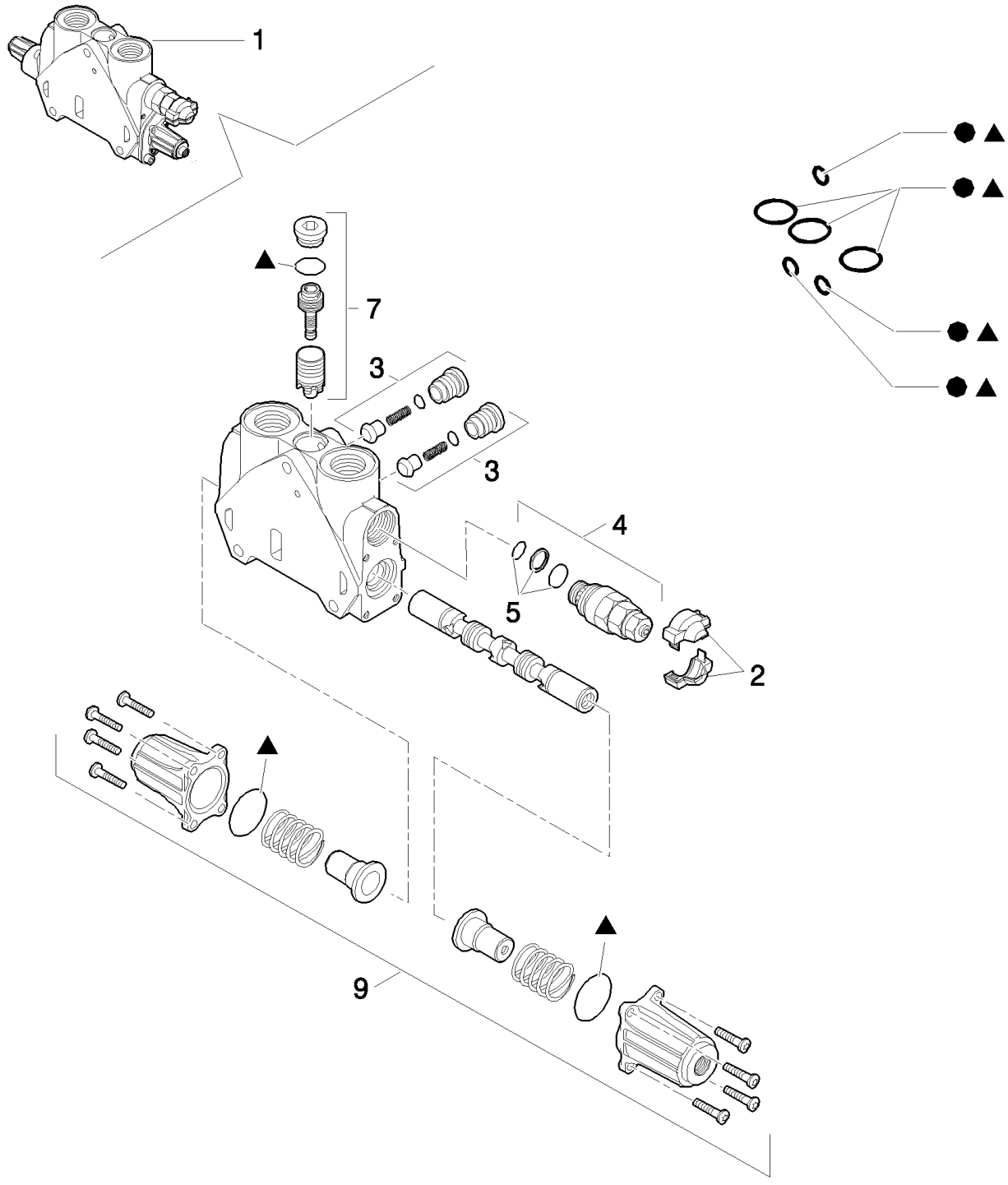

Pilot Control Version

LB115.B EUR BACKHOE LOADER (1/05-)

333(02) 7-SECTIONS EXCAVATOR CONTROL VALVE (CENTER PIVOT) EUROPE

Ref	Part Number	Qty	Description
1	87341284	1	SECTOR, TOOTHED,
2	85811934	1	KIT, Cover
3	85811938	2	VALVE, CHECK, Valve
4	87341088	1	VALVE, HYDRAULIC, , Includes 5, 124 BAR
5	85811933	1	KIT, SEALS, Valve Seals
6	85819148	1	KIT, SEALS, Seals
7	85819378	1	KIT, SEALS, Valve
8	85824281	1	KIT, SEALS, Seals
9	85826344	1	KIT, Cover Assy

Pilot Control Version

333/ A(01) 7 SECTION PILOT CONTROL VALVE SUPPORT, COMPLETE

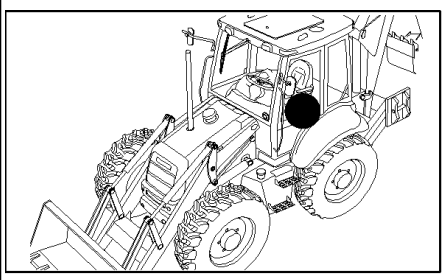

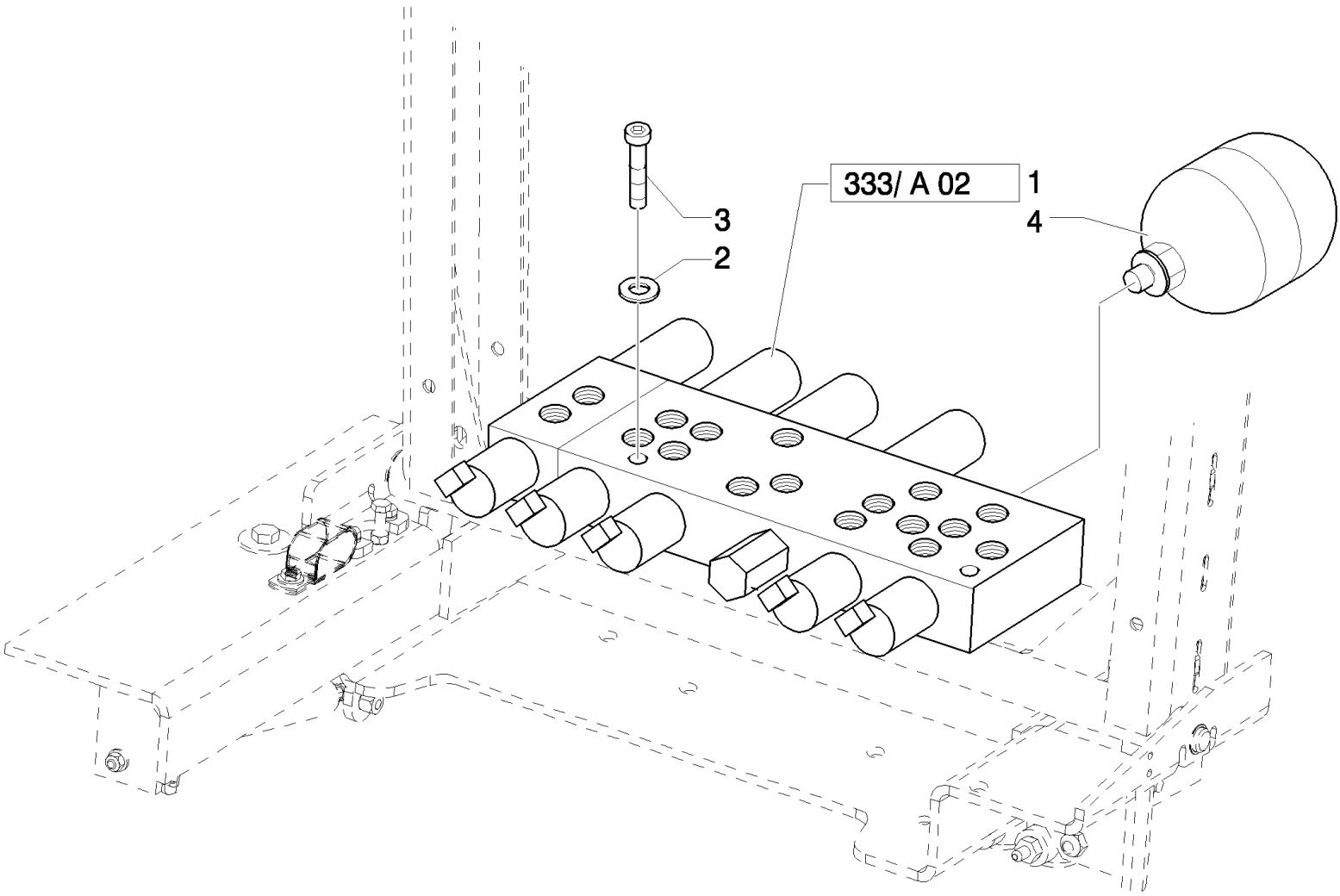

LB115.B EUR BACKHOE LOADER (1/05-)

333/ A(01) 7 SECTION PILOT CONTROL VALVE SUPPORT, COMPLETE

Ref	Part Number	Qty	Description
1	85827471	1	VALVE, HYDRAULIC,
2	47048961	2	WASHER,
3	47049078	2	SCREW, M6x60
4	87425225	1	ACCUMULATOR,

Pilot Control Version

333/ A(02) 7 SECTION PILOT CONTROL VALVE SUPPORT, COMPLETE

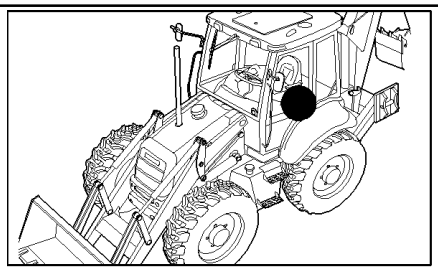

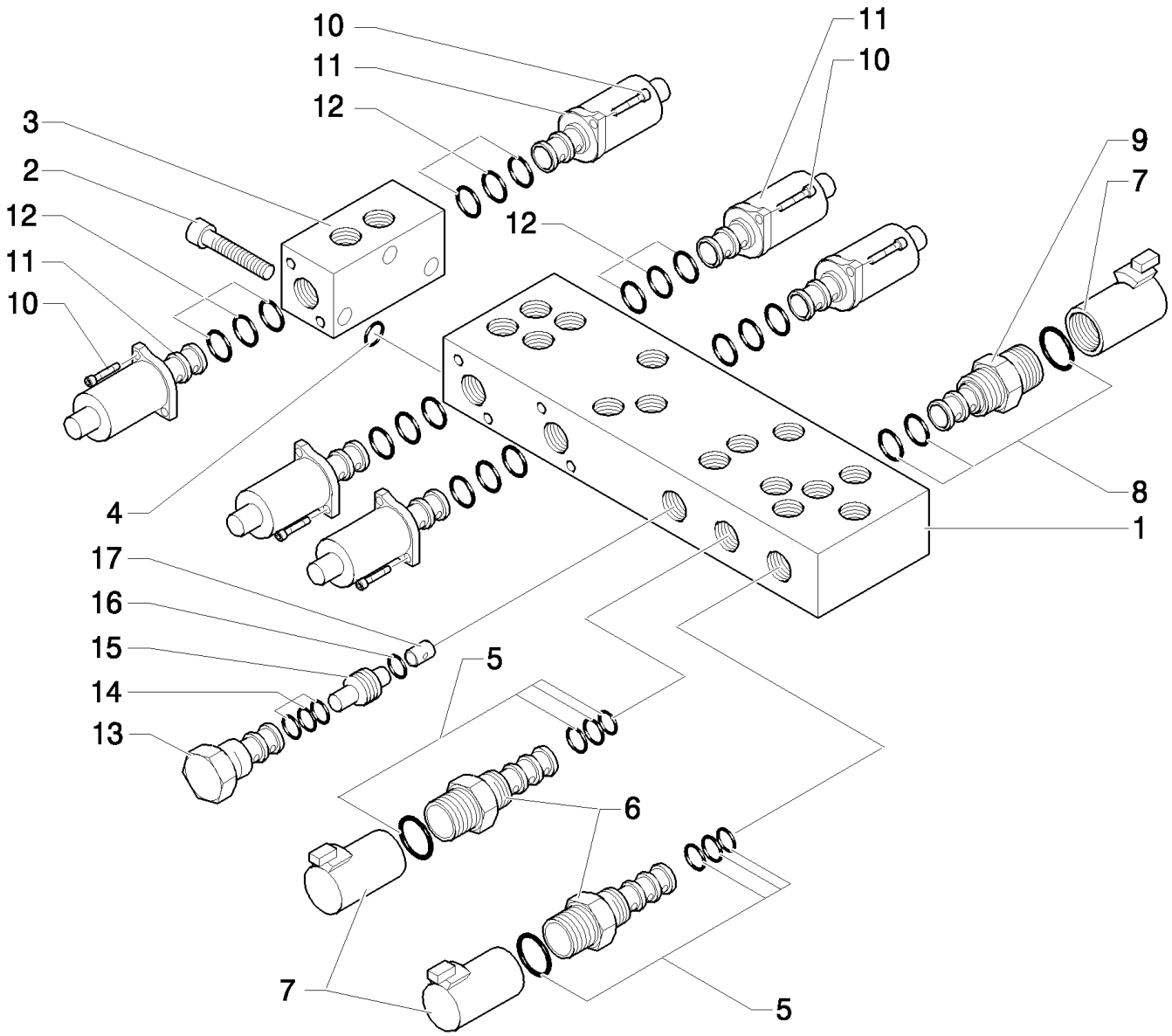

Pilot Control Version

LB115.B EUR BACKHOE LOADER (1/05-)

333/ A(02) 7 SECTION PILOT CONTROL VALVE SUPPORT, COMPLETE

Ref	Part Number	Qty	Description
1	85828015	1	BODY,
2	14358921	3	SCREW, Hex Soc Hd, M5 x 45, 10.9,
3	85828004	1	BODY, M6x60
4	85827999	1	KIT, SEALS,
5	85828002	2	KIT, SEALS,
6	85827996	2	SOLENOID, , Includes 5, 7
7	85827995	3	COIL,
8	85827998	1	KIT, SEALS,
9	85827994	1	SOLENOID, , Includes 7, 8
10	14302921	12	BOLT, Hex, M4 x 10, 8.8, Full Thd,
11	85827993	6	SOLENOID,
12	85828000	6	KIT, SEALS,
13	85827997	1	VALVE, CARTRIDGE, HYDRAULIC PRESSURE REDUCING VALVE
14	85828001	1	KIT, SEALS,
15	85827992	1	VALVE, CHECK,
16	85828003	1	O-RING,
17	85828005	1	ORIFICE,

Pilot Control Version

333/ A(03) 7 SECTION PILOT CONTROL VALVE SUPPORT, COMPLETE

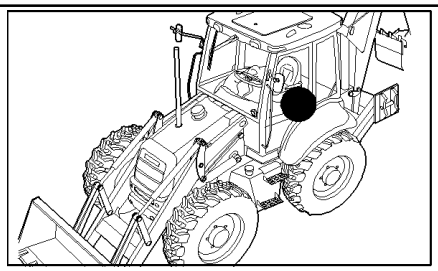

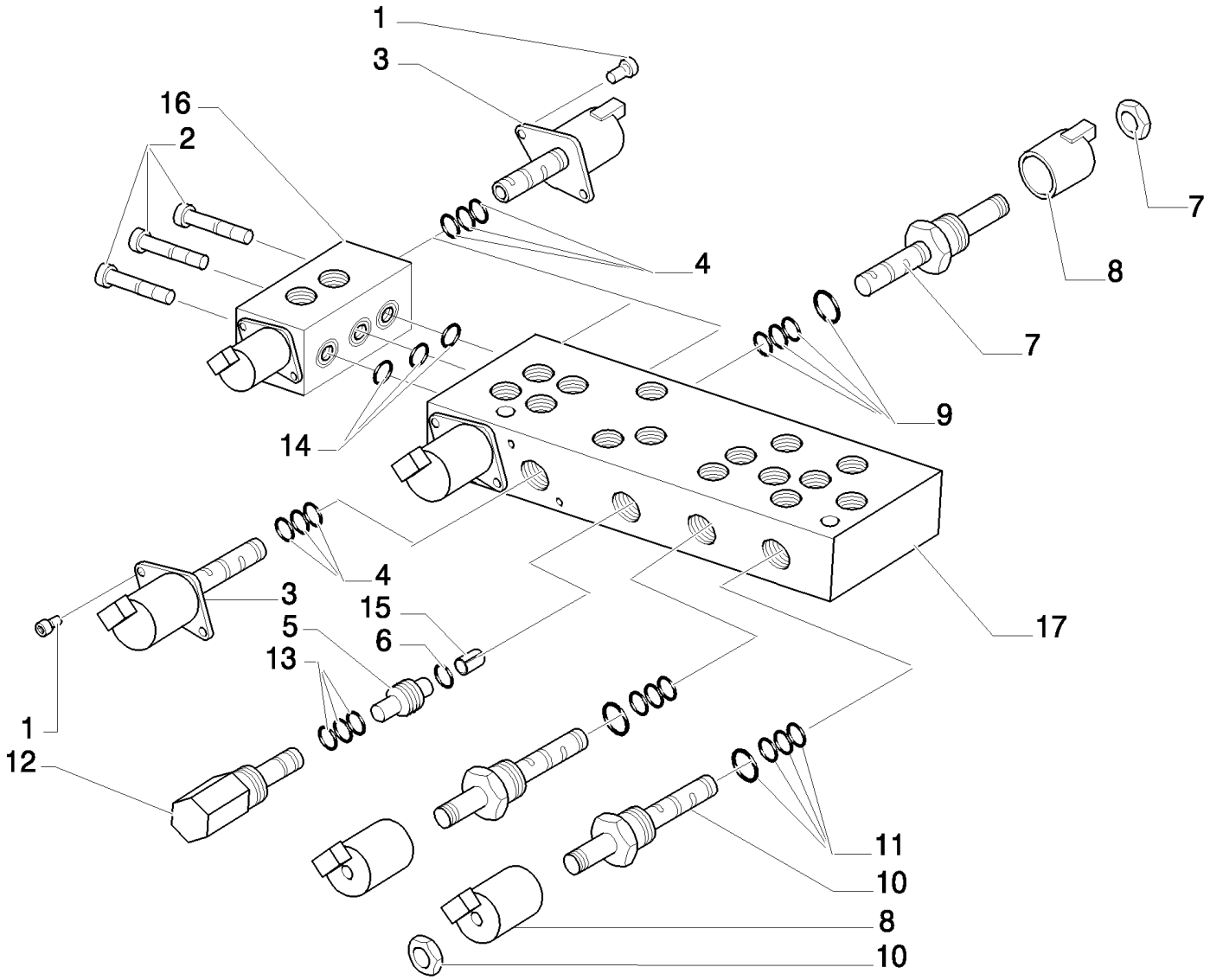

Pilot Control Version

LB115.B EUR BACKHOE LOADER (1/05-)

333/ A(03) 7 SECTION PILOT CONTROL VALVE SUPPORT, COMPLETE

Ref	Part Number	Qty	Description
1	14302921	12	BOLT, Hex, M4 x 10, 8.8, Full Thd,
2	14358921	3	SCREW, Hex Soc Hd, M5 x 45, 10.9,
3	85827993	6	SOLENOID,
4	85828000	1	KIT, SEALS,
5	85827992	1	VALVE, CHECK,
6	85828003	1	O-RING,
7	85827994	1	SOLENOID, , Includes 8, 9
8	85827995	3	COIL,
9	85827998	0	KIT, SEALS,
10	85827996	2	SOLENOID, , Includes 8, 11
11	85828002	0	KIT, SEALS,
12	85827997	1	VALVE, CARTRIDGE, HYDRAULIC PRESSURE REDUCING VALVE
13	85828001	0	KIT, SEALS,
14	85827999	0	KIT, SEALS,
15	85828005	1	ORIFICE,
16	85828014		
17	85828013	1	BODY,

Pilot Control Version

333/ B(01) 7 SECTION PILOT CONTROL VALVE SUPPORT, COMPLETE

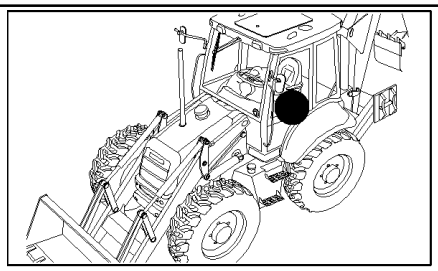

Pilot Control Version

LB115.B EUR BACKHOE LOADER (1/05-)

333/ B(01) 7 SECTION PILOT CONTROL VALVE SUPPORT, COMPLETE

Ref	Part Number	Qty	Description
1	87309923	1	BOOT, , UP TO S/N XXX
1	87449734	1	, FROM S/N XXX
2	87309924	1	BOOT, , UP TO S/N XXX
2	87449735	1	, FROM S/N XXX
3	87437689	2	KNOB,
4	87437688	2	KNOB,
5	87437366	1	ARMREST,
6	87437369	1	ARMREST,
7	87423802	1	SWITCH,
8	87410105	1	SWITCH,
9	87435372	2	PLATE, RETAINING,
10	10902834	8	SCREW,
11	87436396	1	GUARD, , UP TO S/N 031057640
11	87307656	1	GUARD, , FROM S/N 031057641
12	87443740	1	JOYSTICK,
13	47050686	7	CONNECTOR, HYD.,
14	87431301	1	SHIELD,
15	87016552	8	SCREW, SELF TAPPING, Hex Hd, M6.3 x 19, M6x13
16	87022296	8	SCREW, Cross Pan Hd, M3 x 8,
17	87310085	2	SCREW, SELF TAPPING,
18	10902321	3	SCREW, Hex, M6 x 18, 8.8, Full Thd,
19	87443743	1	JOYSTICK, , See Page 331/C 08
20	87418368	1	ROD,
21	87418369	1	ROD,
22	87310098	4	BOLT, M6 x 20
23	87424301	1	SEAL, RUBBER,
24	87427991	1	SEAL, RUBBER,
25	87427989	1	SEAL, RUBBER,
26	87427993	1	SEAL, RUBBER,
27	87425696	2	SEAL, RUBBER,
28	87414205	1	DECAL,
29	87431300	1	GUARD,
30	85803312	21	CONNECTOR, HYD.,
31	87306512	2	GASKET,
32	87310186	2	WASHER,
33	87423812	1	DECAL,
34	87310085	2	SCREW, SELF TAPPING,
35	87452511	2	NUT,
36	87423401	1	FITTING,
37	11197779	8	WASHER, SPRING, Belleville, M6.4,

Pilot Control Version

333/ B(02) 7 SECTION PILOT CONTROL VALVE SUPPORT, COMPLETE (CENTER PIVOT) EUROPE

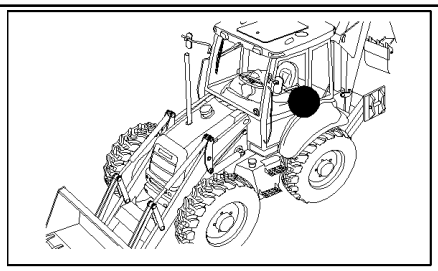

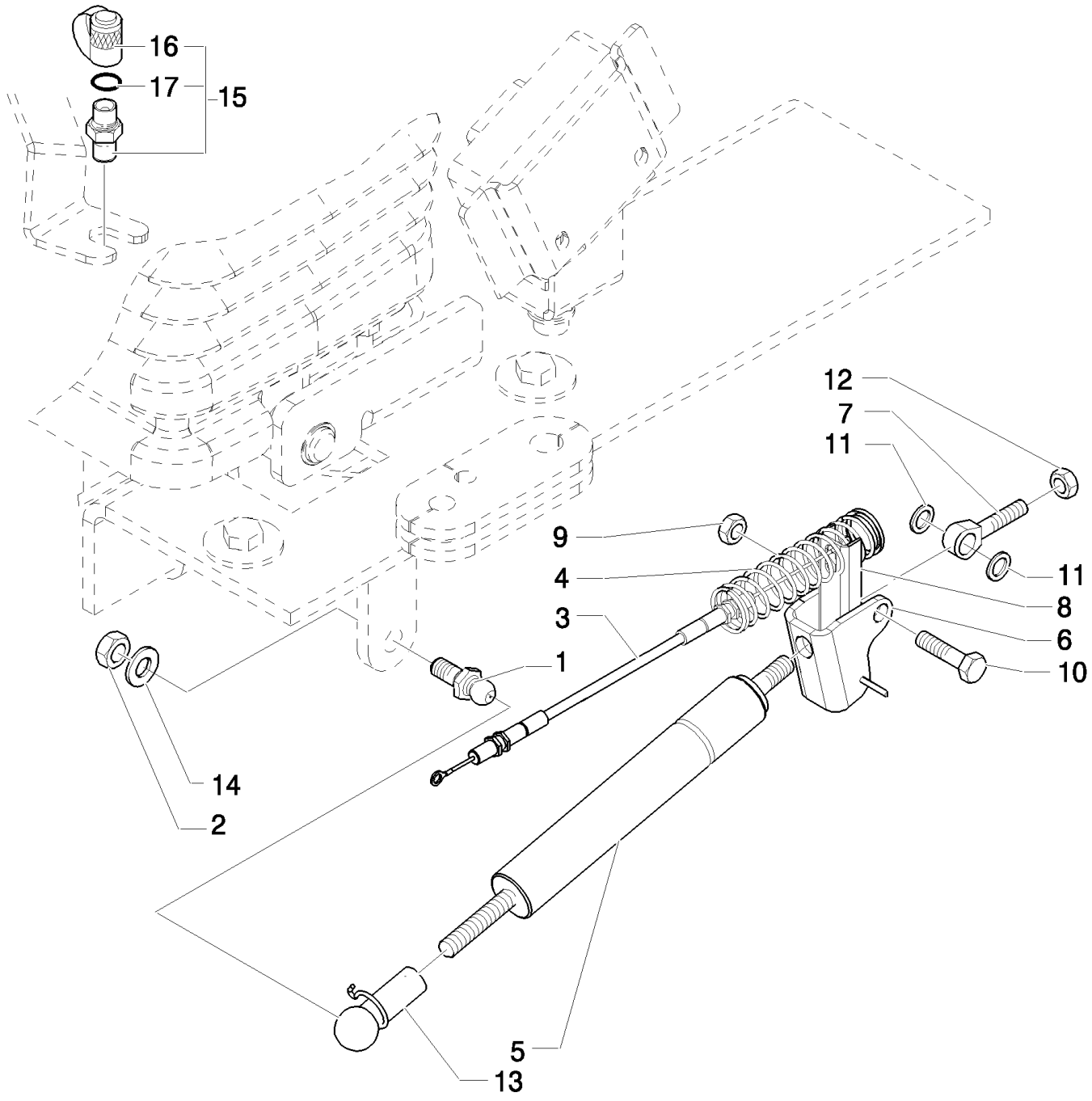

Pilot Control Version

LB115.B EUR BACKHOE LOADER (1/05-)

333/ B(02) 7 SECTION PILOT CONTROL VALVE SUPPORT, COMPLETE (CENTER PIVOT) EUROPE

Ref	Part Number	Qty	Description
1	85824067	1	PIN, BALL,
2	47049041	1	NUT, M10
3	87430028	1	CABLE,
4	87443692	1	SPRING,
5	86989616	1	GAS STRUT,
6	85824080	1	BRACKET,
7	85821514	2	PIN,
7	85824081	1	BALL JOINT,
8	86984549	1	CHANNEL,
9	85821516	1	NUT,
10	85821515	1	BOLT,
11	85821520	2	SPACER,
12	47049442	2	NUT,
13	86999310	1	CLIP,
14	47049404	1	WASHER,
15	85817226	1	COUPLING, QUICK, MALE,
16	9968791	1	PLUG,
17	9993141	1	O-RING, -012, 90 Duro, .364" ID x .070" Thk,

Pilot Control Version

333/ B(03) 7 SECTION PILOT CONTROL VALVE SUPPORT, COMPLETE

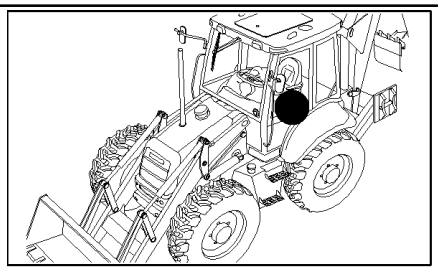

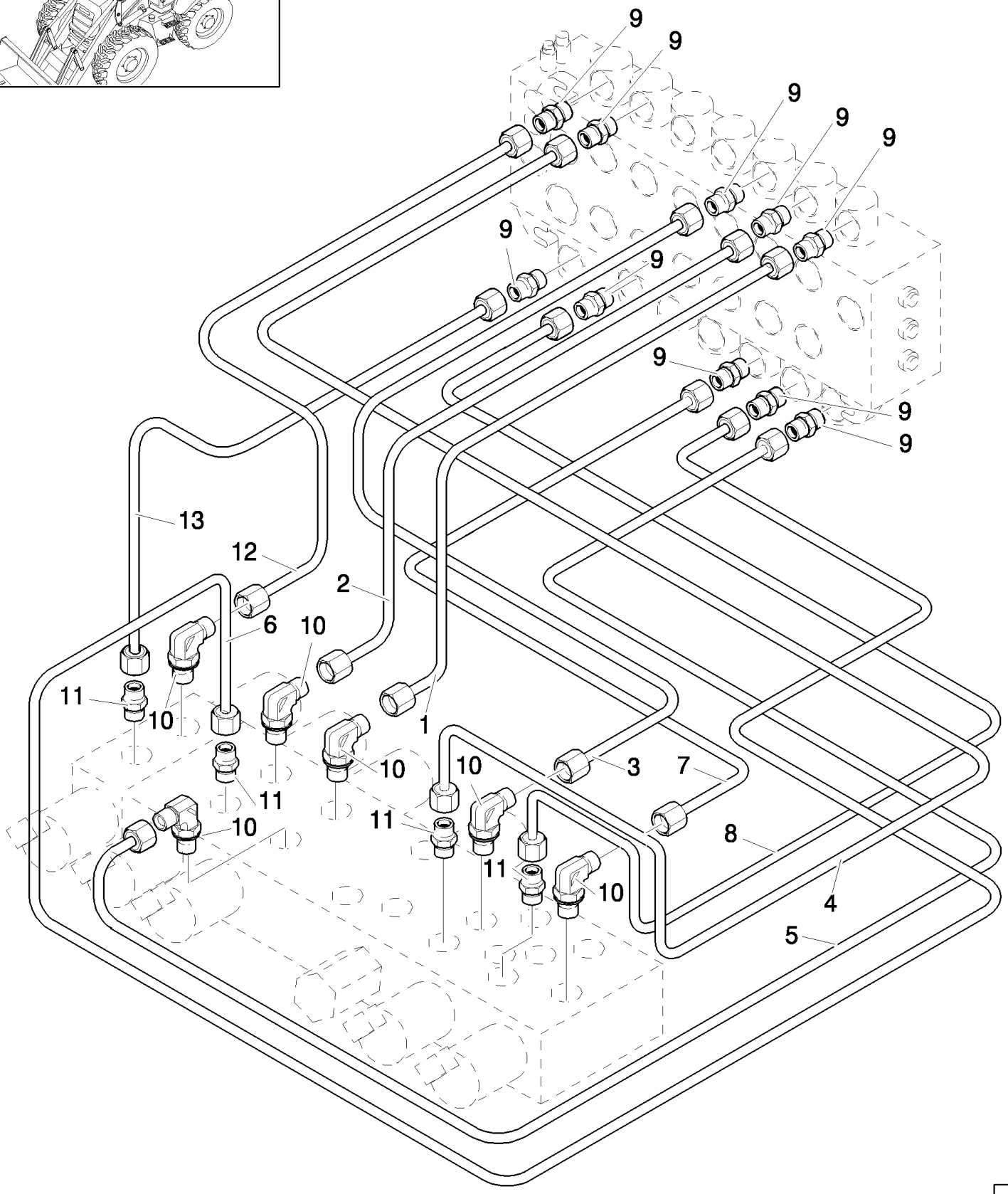

Pilot Control Version

LB115.B EUR BACKHOE LOADER (1/05-)

333/ B(03) 7 SECTION PILOT CONTROL VALVE SUPPORT, COMPLETE

Ref	Part Number	Qty	Description
1	85827093	1	TUBE, HYD,
2	85827094	1	TUBE, HYD,
3	85827091	1	TUBE, HYD,
4	85827089	1	TUBE, HYD,
5	85827092	1	TUBE, HYD,
6	85827095	1	TUBE, HYD,
7	85827090	1	TUBE, HYD,
8	85827088	1	TUBE, HYD,
9	85803312	10	CONNECTOR, HYD.,
10	47050653	6	ELBOW,
11	47050685	4	CONNECTOR, HYD.,
12	85827097	1	TUBE, HYD,
13	87306186	1	TUBE, HYD,

Pilot Control Version

333/ B(04) 7 SECTION PILOT CONTROL VALVE SUPPORT, COMPLETE

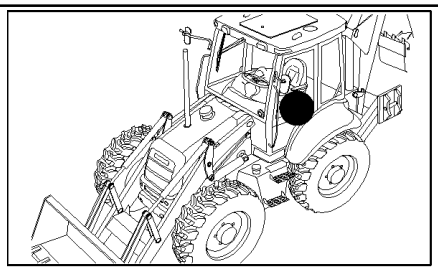

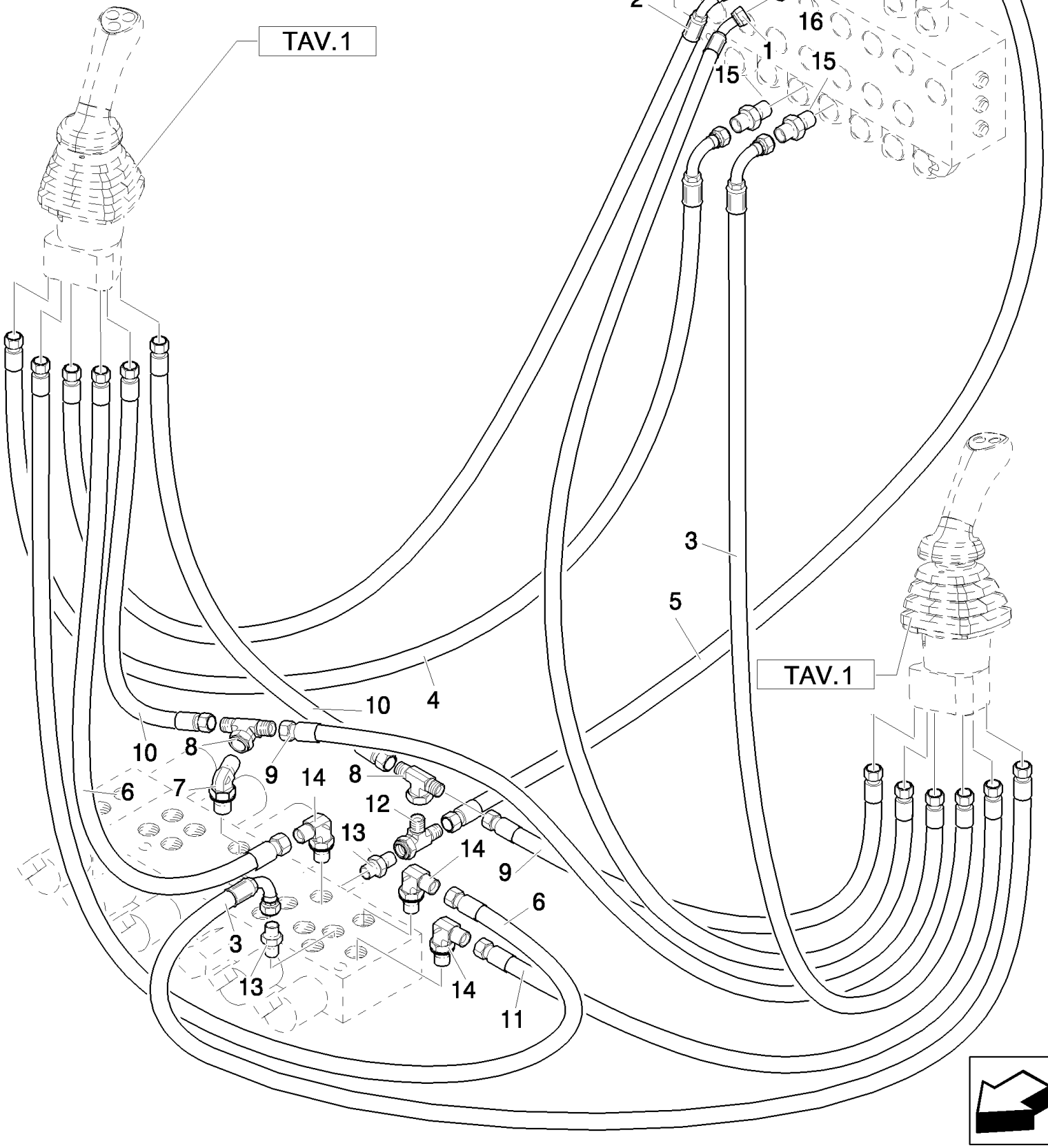

Pilot Control Version

LB115.B EUR BACKHOE LOADER (1/05-)

333/ B(04) 7 SECTION PILOT CONTROL VALVE SUPPORT, COMPLETE

Ref	Part Number	Qty	Description
1	85827084	1	HOSE, FLEXIBLE,
2	85827085	1	HOSE, FLEXIBLE,
3	85827086	2	HOSE, FLEXIBLE,
4	85827077	1	HOSE, FLEXIBLE,
5	85827087	1	HOSE, FLEXIBLE,
6	85827082	2	HOSE, FLEXIBLE,
7	85827467	1	ELBOW,
8	85827466	2	TEE,
9	85827076	2	HOSE, FLEXIBLE,
10	85827080	2	HOSE, FLEXIBLE,
11	85827078	1	HOSE, FLEXIBLE,
12	47120173	2	TEE,
13	47050686	3	CONNECTOR, HYD.,
14	47050653	3	ELBOW,
15	85803312	3	CONNECTOR, HYD.,
16	87423401	1	FITTING,

Pilot Control Version

333/ B(05) 7 SECTION PILOT CONTROL VALVE SUPPORT, COMPLETE

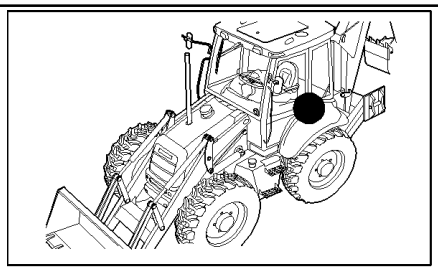

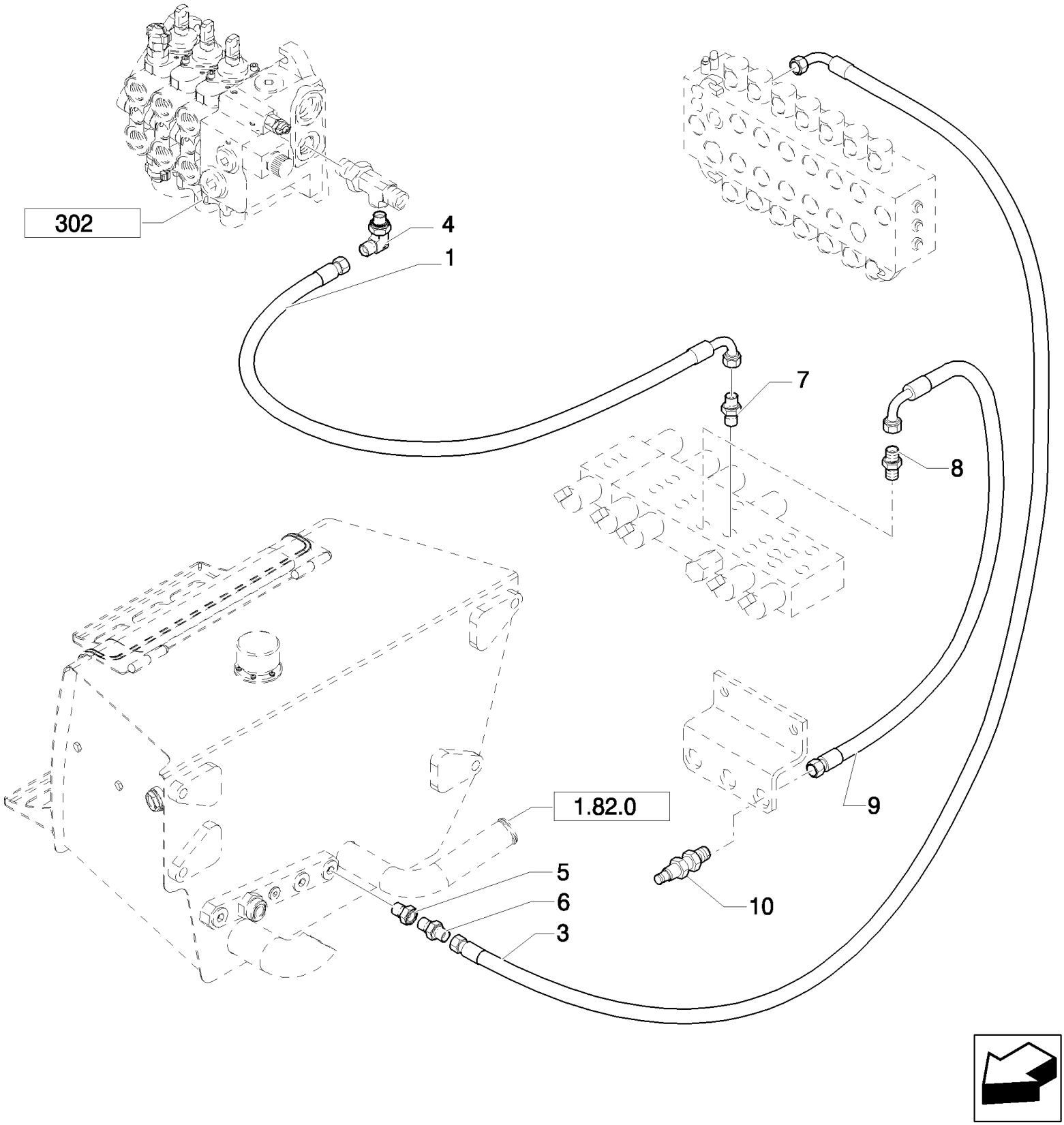

Pilot Control Version

LB115.B EUR BACKHOE LOADER (1/05-)

333/ B(05) 7 SECTION PILOT CONTROL VALVE SUPPORT, COMPLETE

Ref	Part Number	Qty	Description
1	85827476	1	HOSE, FLEXIBLE,
3	85827475	1	HOSE, FLEXIBLE,
4	85805318	1	ELBOW, 90ş, 9/16"-18, 37ş x 9/16"-18, O-Ring,
5	85826100	1	REDUCER,
6	47050686	1	CONNECTOR, HYD.,
7	47050653	1	ELBOW,
8	83963371	1	CONNECTOR, HYD.,
9	85812173	1	HOSE, FLEXIBLE,
10	85817226	1	COUPLING, QUICK, MALE,

Pilot Control Version

333/ B(06) 7 SECTION PILOT CONTROL VALVE SUPPORT, COMPLETE (CENTER PIVOT) EUROPE

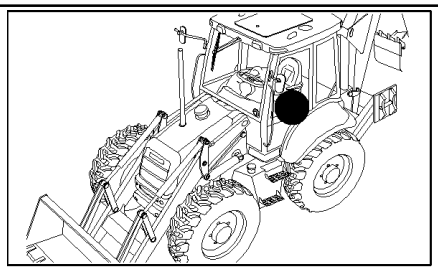

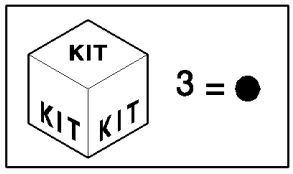

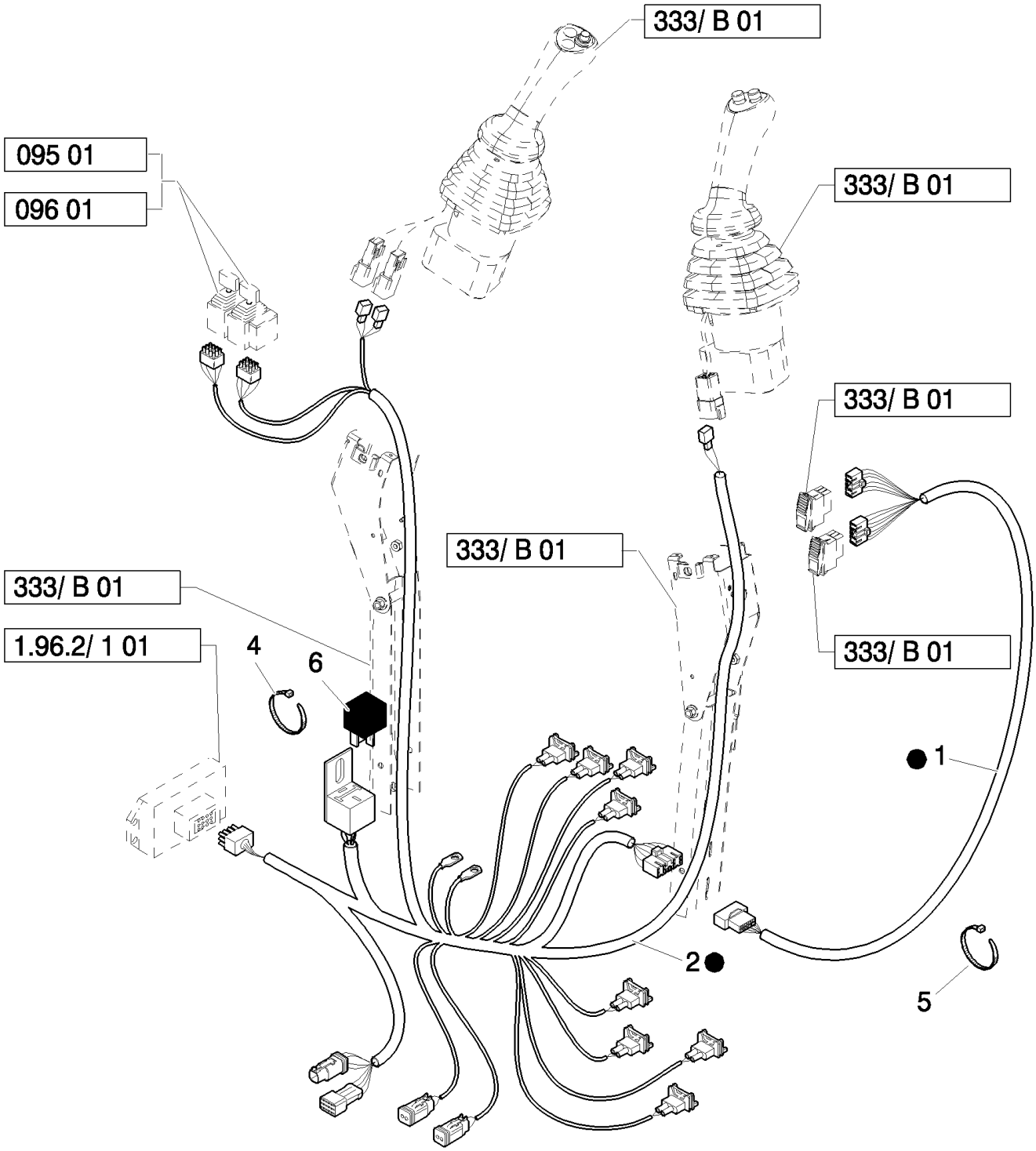

LB115.B EUR BACKHOE LOADER (1/05-)

333/ B(06) 7 SECTION PILOT CONTROL VALVE SUPPORT, COMPLETE (CENTER PIVOT) EUROPE

Ref	Part Number	Qty	Description
1	85828216	1	HARNESS, WIRE,
2	87305611	1	HARNESS, WIRE,
3	87305604	1	HARNESS, WIRE, , Includes 1, 2, 6
4	14560187	6	STRAP, CABLE, L=203.2 mm
5	386170C1	4	STRAP, CABLE, {PP:85821535}
6	85821537	1	RELAY,

Pilot Control Version

333/ B(07) 7 SECTION PILOT CONTROL VALVE SUPPORT, COMPLETE (CENTER PIVOT) EUROPE

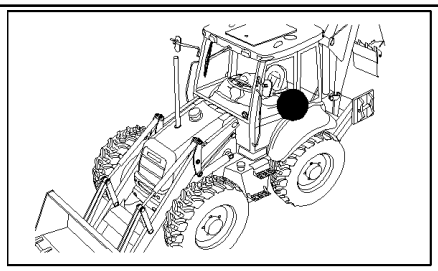

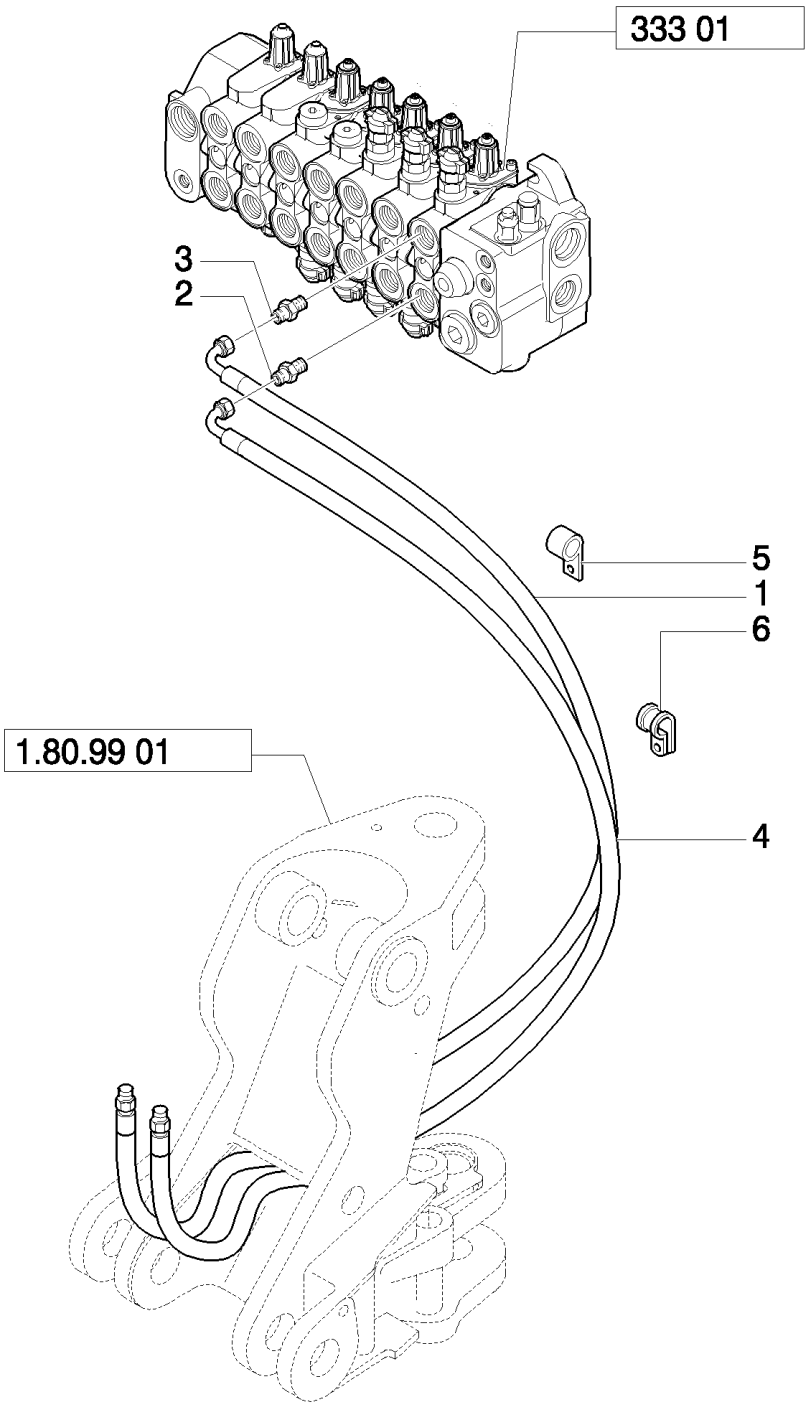

Pilot Control Version

LB115.B EUR BACKHOE LOADER (1/05-)

333/ B(07) 7 SECTION PILOT CONTROL VALVE SUPPORT, COMPLETE (CENTER PIVOT) EUROPE

Ref	Part Number	Qty	Description
1	85812192	1	HOSE, FLEXIBLE,
2	85805258	1	CONNECTOR, HYD., 9/16"-16 ORS x 1 1/16"-12, O-Ring,
3	390938S36	1	CONNECTOR, HYD., 1-1/16-12 ORB x 1-14 ORFS; Incl. 167266, 9992069 O-Rings
4	85812211	1	HOSE, FLEXIBLE,
5	85803393	2	CLAMP,
6	85812029	4	CLAMP,

Pilot Control Version

333/ B(08) 7 SECTION PILOT CONTROL VALVE SUPPORT, COMPLETE

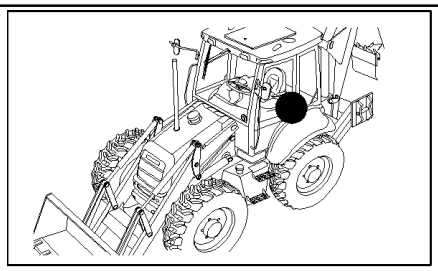

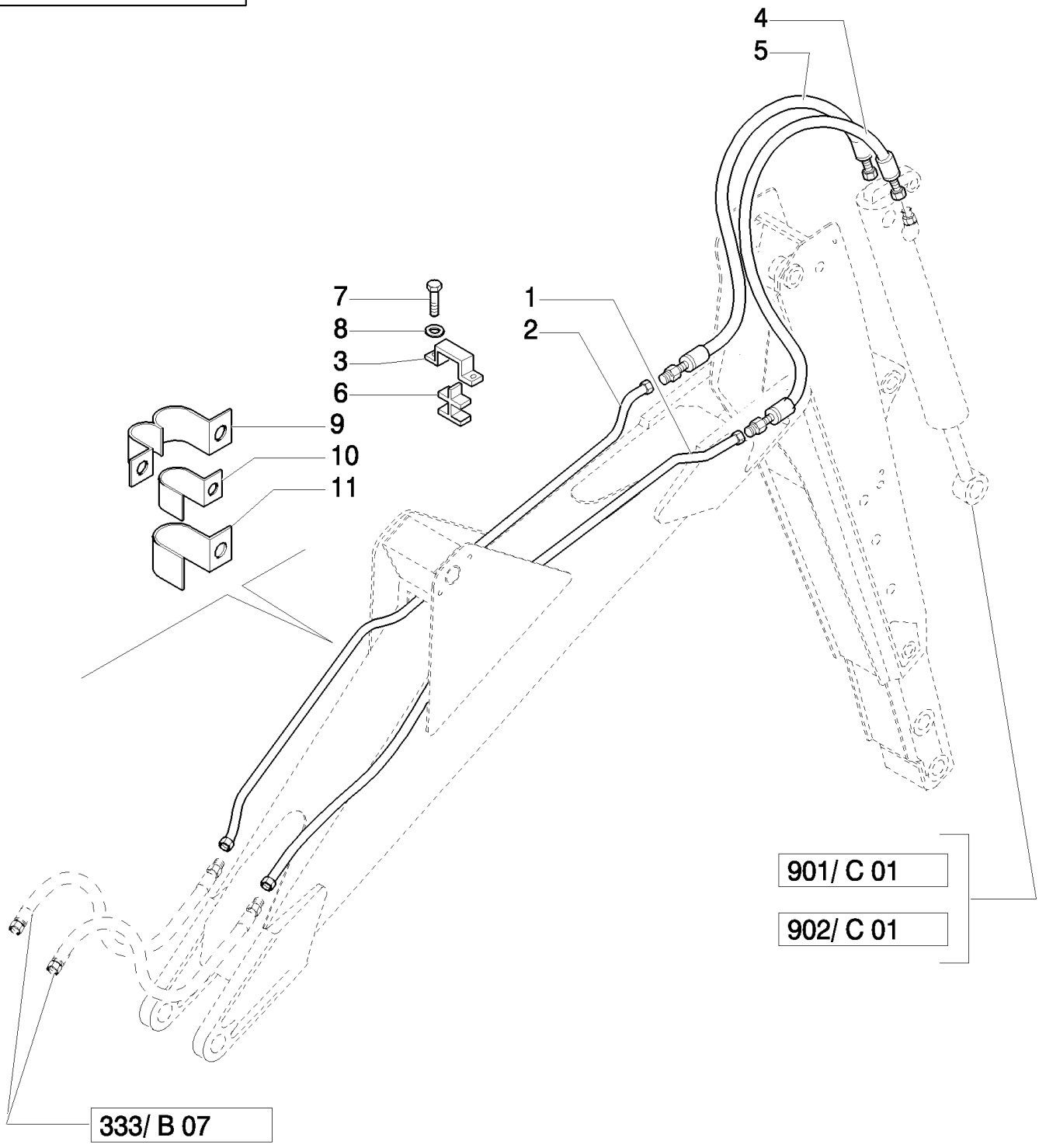

Pilot Control Version

LB115.B EUR BACKHOE LOADER (1/05-)

333/ B(08) 7 SECTION PILOT CONTROL VALVE SUPPORT, COMPLETE

Ref	Part Number	Qty	Description
1	85815642	1	TUBE, HYD, 16 mm OD Tube
2	85815640	1	TUBE, HYD, 12 mm OD Tube
3	85803402	1	PLATE,
4	85817109	1	HOSE, FLEXIBLE,
5	85817108	1	HOSE, FLEXIBLE,
6	85802532	1	CLIP, HOSE,
7	16043621	2	BOLT, Hex, M8 x 25, 8.8,
8	11193879	2	WASHER, SPRING, Belleville, M8.4,
9	85802529	2	CLAMP,
10	85802527	2	CLAMP,
11	85802528	2	CLAMP,

Pilot Control Version

333/ B(09) 7 SECTION PILOT CONTROL VALVE SUPPORT, COMPLETE (CENTER PIVOT) EUROPE

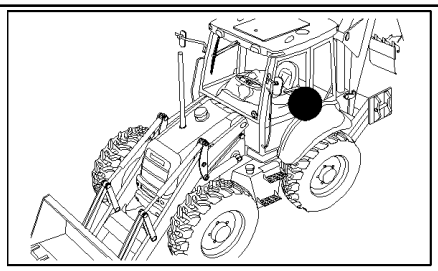

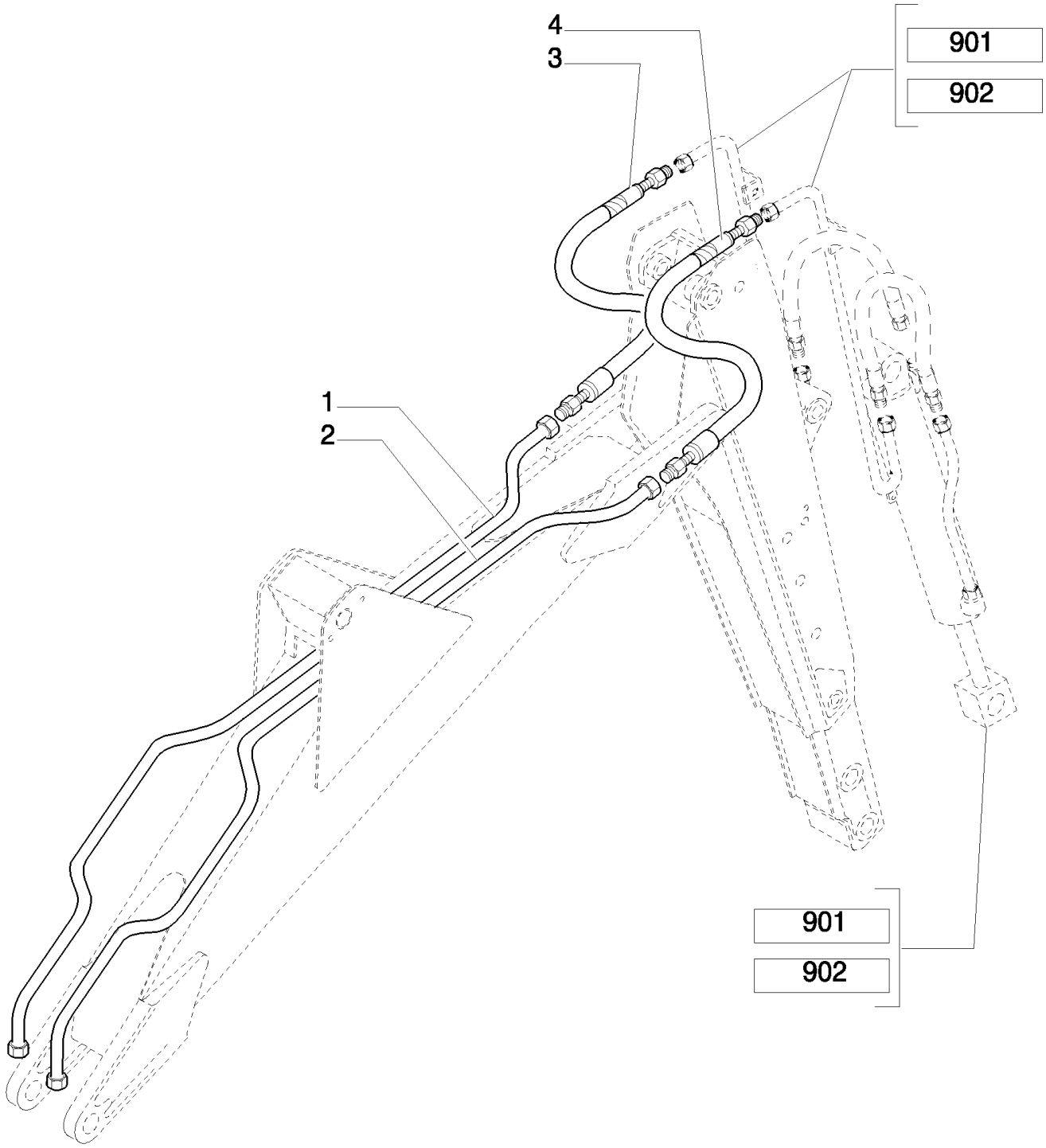

Pilot Control Version

LB115.B EUR BACKHOE LOADER (1/05-)

333/ B(09) 7 SECTION PILOT CONTROL VALVE SUPPORT, COMPLETE (CENTER PIVOT) EUROPE

Ref	Part Number	Qty	Description
1	85815674	1	TUBE, HYD, 20 mm OD Tube
2	85815676	1	TUBE, HYD, 16 mm OD Tube
3	85817106	1	HOSE, FLEXIBLE,
4	85817107	1	HOSE, FLEXIBLE,

Pilot Control Version

333/ 1(08) 7-SECTIONS EXCAVATOR CONTROL VALVE (CENTER PIVOT) NORTH AMERICA

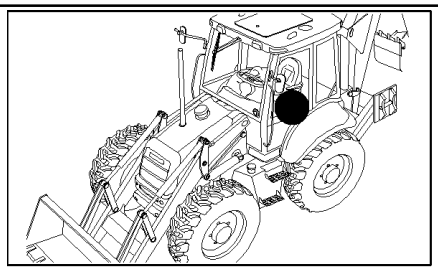

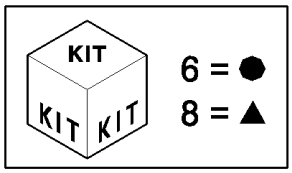

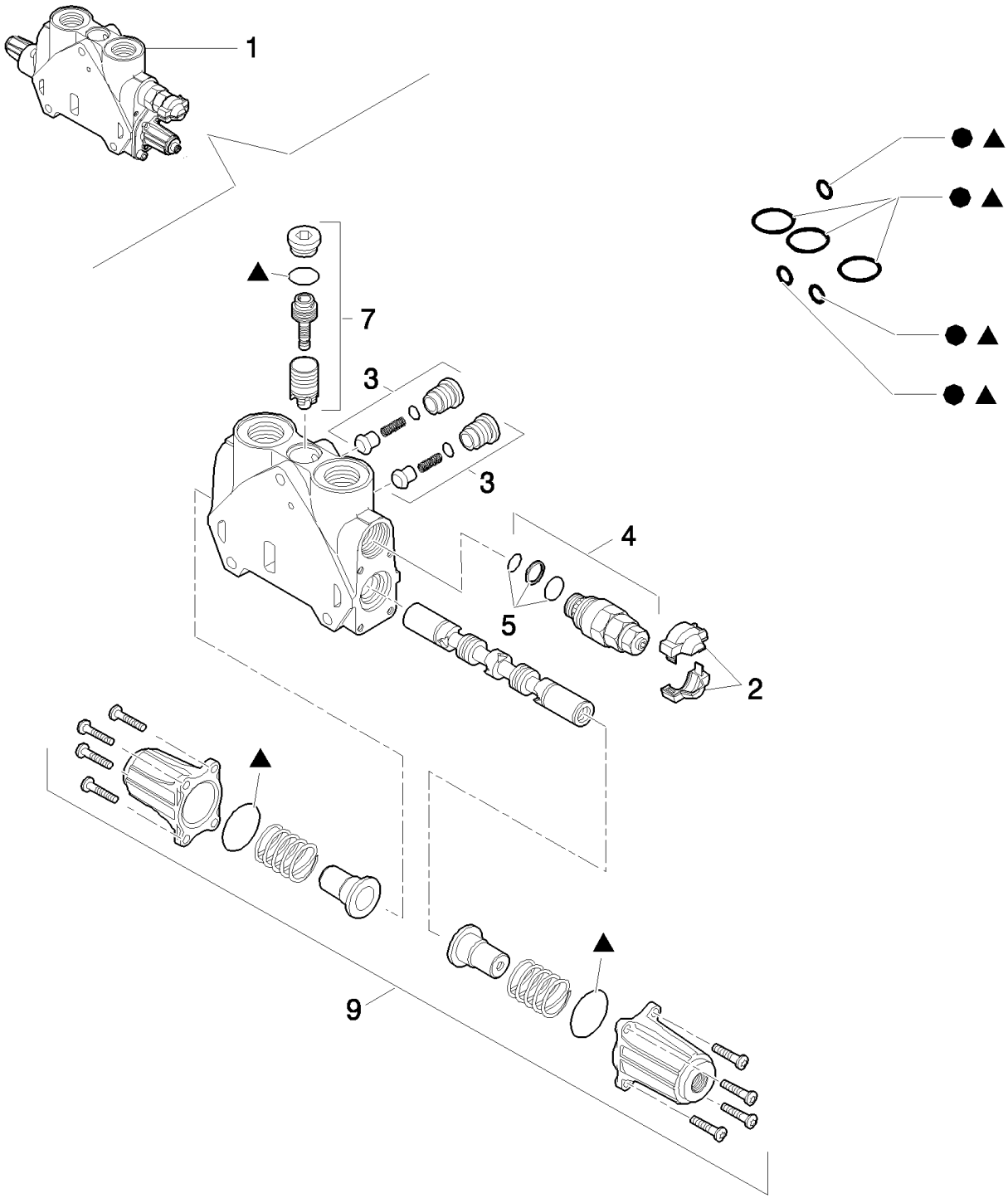

Pilot Control Version

LB115.B EUR BACKHOE LOADER (1/05-)

333/ 1(08) 7-SECTIONS EXCAVATOR CONTROL VALVE (CENTER PIVOT) NORTH AMERICA

Ref	Part Number	Qty	Description
1	87558574	1	SECTOR,
2	85811934	2	KIT, Cover
3	85811938	2	VALVE, CHECK, Valve
4	87341088	2	VALVE, HYDRAULIC, , Includes 4, 124 BAR
5	85811933	1	KIT, SEALS, Valve Seals
6	85819148	1	KIT, SEALS, Seals
7	85819378	1	KIT, SEALS, Valve
8	85824281	1	KIT, SEALS, Seals
9	85826344	1	KIT, Cover Assy

Pilot Control Version

334(01) 7-SECTIONS EXCAVATOR CONTROL VALVE (SIDE SHIFT) EUROPE

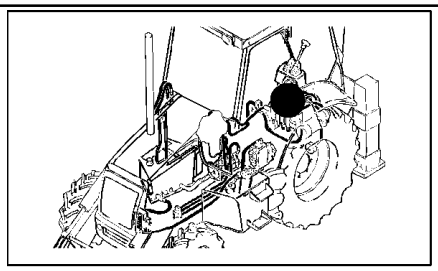

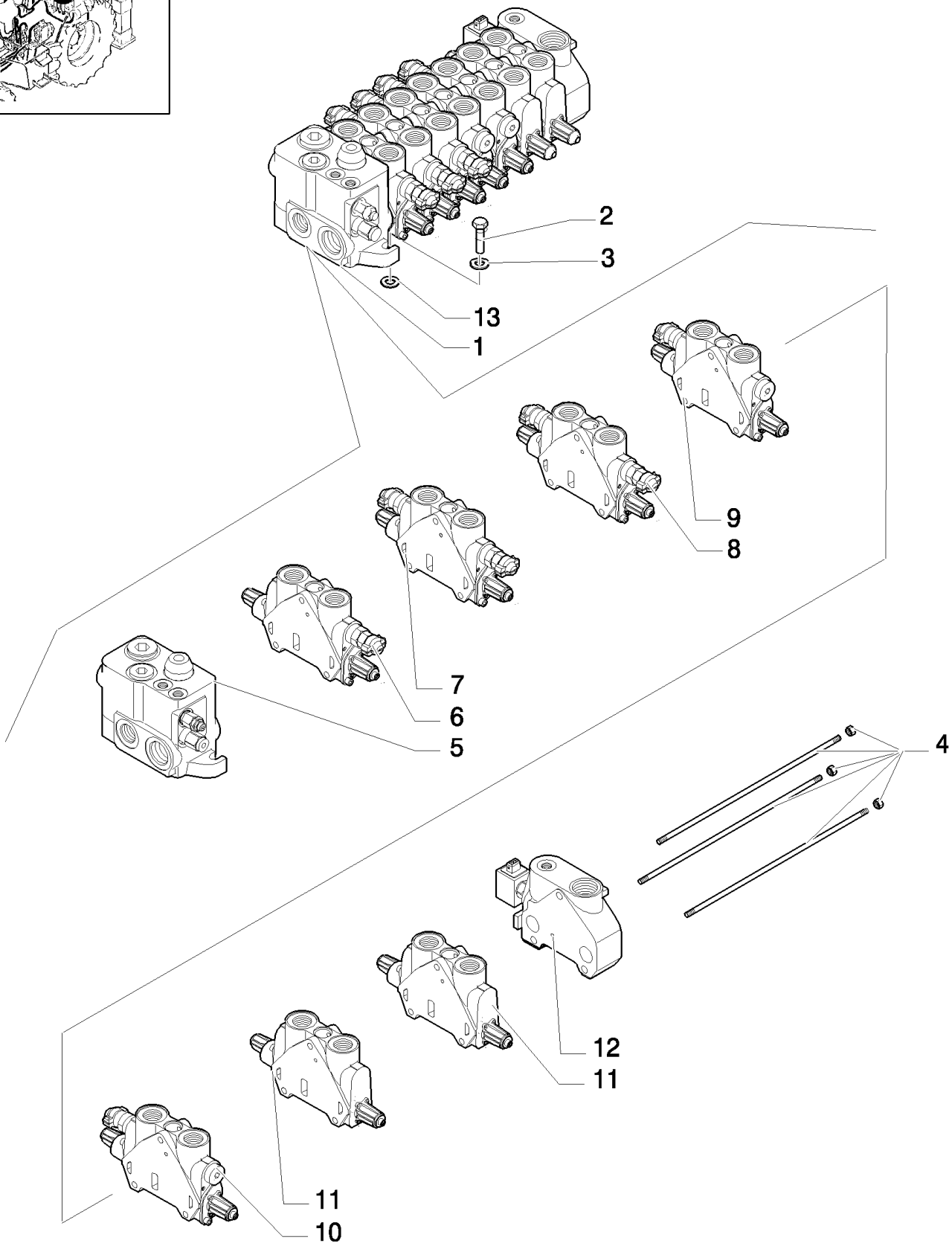

Pilot Control Version

LB115.B EUR BACKHOE LOADER (1/05-)

334(01) 7-SECTIONS EXCAVATOR CONTROL VALVE (SIDE SHIFT) EUROPE

Ref	Part Number	Qty	Description
1	87302741	1	VALVE, CONTROL, , UP TO S/N 031057761
1	87327767	1	VALVE, HYDRAULIC, , FROM TO S/N 031057762, UP TO S/N 031058525
1	87378498	1	VALVE, HYDRAULIC, , FROM TO S/N 031058526
2	614-10045	3	SCREW, Hex, M10 x 45, 8.8, Full Thd, M10x45
3	11190679	5	WASHER, SPRING, Belleville, M10.5,
4	85811959	1	KIT,
5	87308747	1	VALVE SECTION, HYD, , See Page 331/1 02
6	85826935	1	KIT, , UP TO S/N XXX, Telescopic Cylinder, See Page 334 02
6	87558573	1	SECTOR, , FROM S/N XXX, Telescopic Cylinder, See Page 333 03
7	85826930	1	SECTOR, TOOTHED, , Boom Cylinder, See Page 332 02
8	85826931	1	SECTOR, TOOTHED, , Swing Cylinder, See Page 332 03
9	85826932	1	SECTOR, TOOTHED, , Bucket Cylinder, See Page 332 04
10	85826933	1	SECTOR, TOOTHED, , Arm Cylinder, See Page 332 05
11	87558568	2	SECTOR, , Stabilizer Cylinder, See Page 332 06
12	85826249	1	SECTOR, TOOTHED, , See Page 332 07
13	13578621	3	WASHER,

Pilot Control Version

334(02) 7-SECTIONS EXCAVATOR CONTROL VALVE (SIDE SHIFT) EUROPE

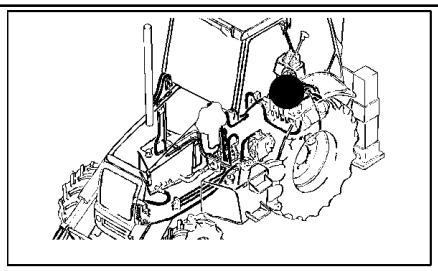

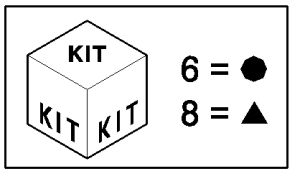

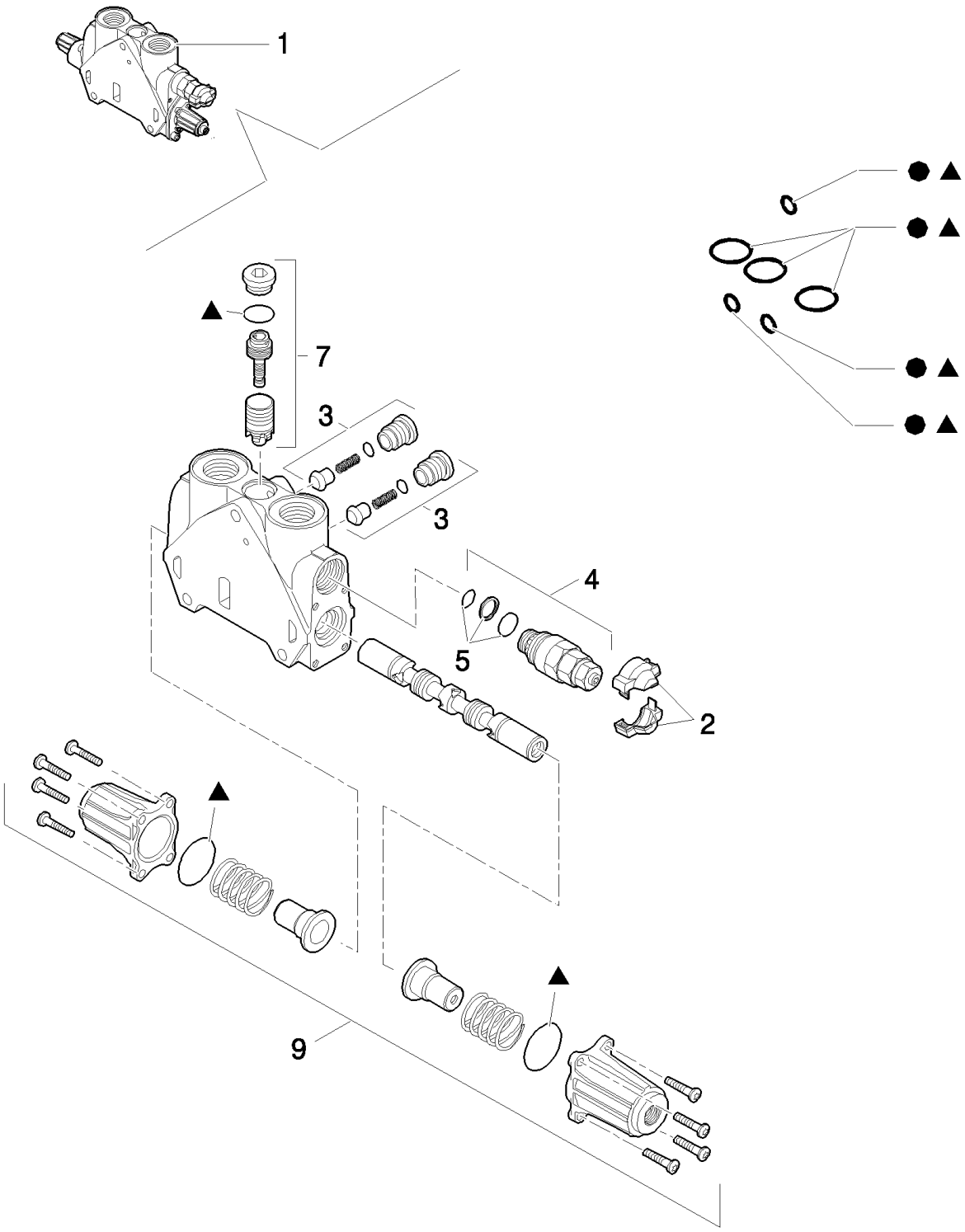

LB115.B EUR BACKHOE LOADER (1/05-)

334(02) 7-SECTIONS EXCAVATOR CONTROL VALVE (SIDE SHIFT) EUROPE

Ref	Part Number	Qty	Description
1	85826935	1	KIT,
2	85811934	1	KIT, Cover
3	85811938	2	VALVE, CHECK, Valve
4	85812113	1	VALVE, HYDRAULIC, , Includes 5, 165 BAR
5	85811933	1	KIT, SEALS, Valve Seals
6	85819148	1	KIT, SEALS, Seals
7	85819378	1	KIT, SEALS, Valve
8	85824281	1	KIT, SEALS, Seals
9	85826344	1	KIT, Cover Assy

Pilot Control Version,Telescopic Cylinder

334(08) 7-SECTIONS EXCAVATOR CONTROL VALVE (SIDE SHIFT) EUROPE

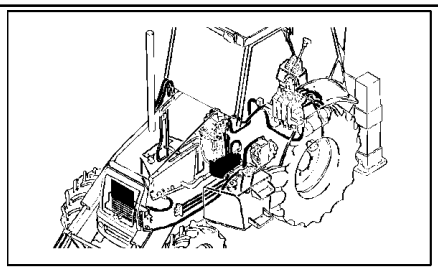

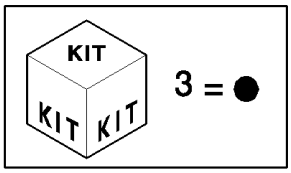

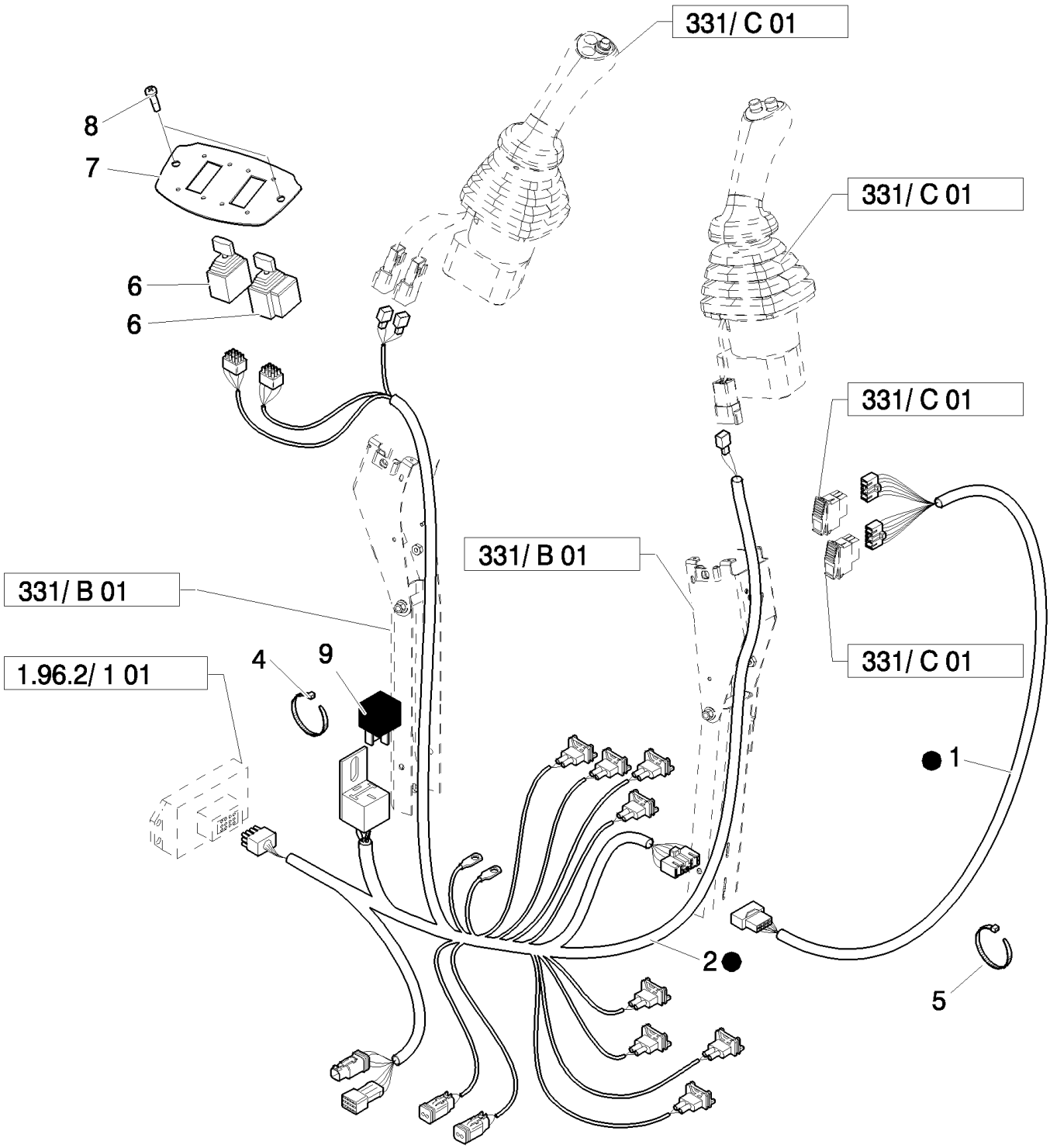

LB115.B EUR BACKHOE LOADER (1/05-)

334(08) 7-SECTIONS EXCAVATOR CONTROL VALVE (SIDE SHIFT) EUROPE

Ref	Part Number	Qty	Description
1	85828216	1	HARNESS, WIRE,
2	87305611	1	HARNESS, WIRE,
3	87305604	1	HARNESS, WIRE,
4	14560187	6	STRAP, CABLE, L=203.2 mm
5	386170C1	4	STRAP, CABLE, {PP:85821535}
6	86988086	2	JOYSTICK,
7	87435381	1	PLATE, MOUNTING,
8	140-106	2	SCREW, {PP:85821534} Cross Pan Hd, #10-24 x 1/2",
9	85821537	1	RELAY,

Pilot Control Version

334(09) 7-SECTIONS EXCAVATOR CONTROL VALVE

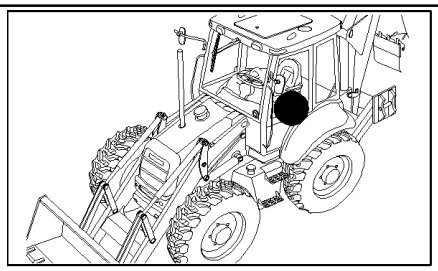

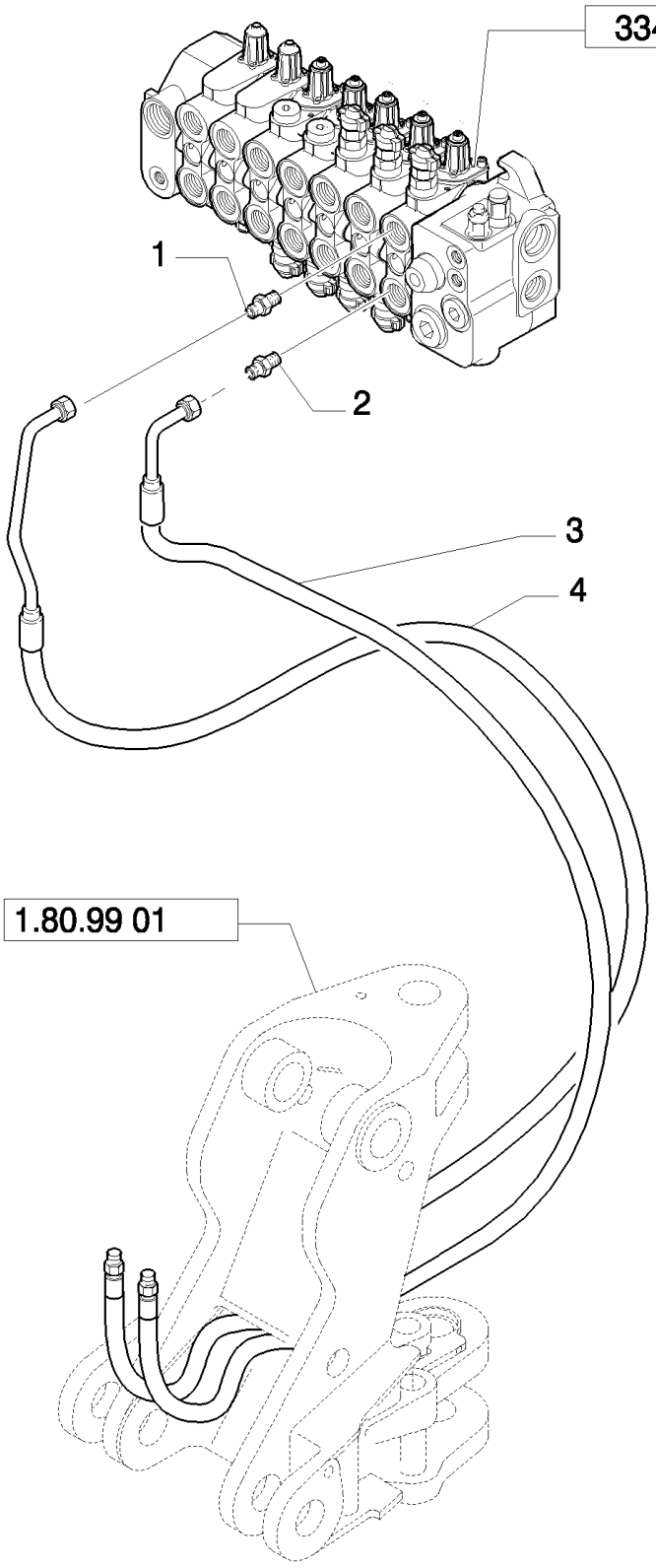

LB115.B EUR BACKHOE LOADER (1/05-)

334(09) 7-SECTIONS EXCAVATOR CONTROL VALVE

Ref	Part Number	Qty	Description
1	390938S36	1	CONNECTOR, HYD., 1-1/16-12 ORB x 1-14 ORFS; Incl. 167266, 9992069 O-Rings
2	85805258	1	CONNECTOR, HYD., 9/16"-16 ORS x 1 1/16"-12, O-Ring,
3	85819067	1	HOSE, FLEXIBLE,
4	85819066	1	HOSE, FLEXIBLE,

334(11) 7-SECTIONS EXCAVATOR CONTROL VALVE

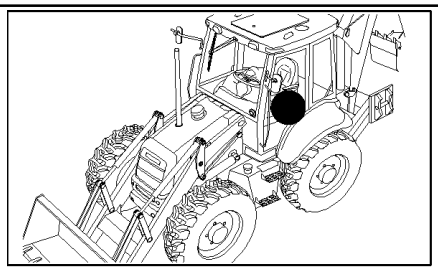

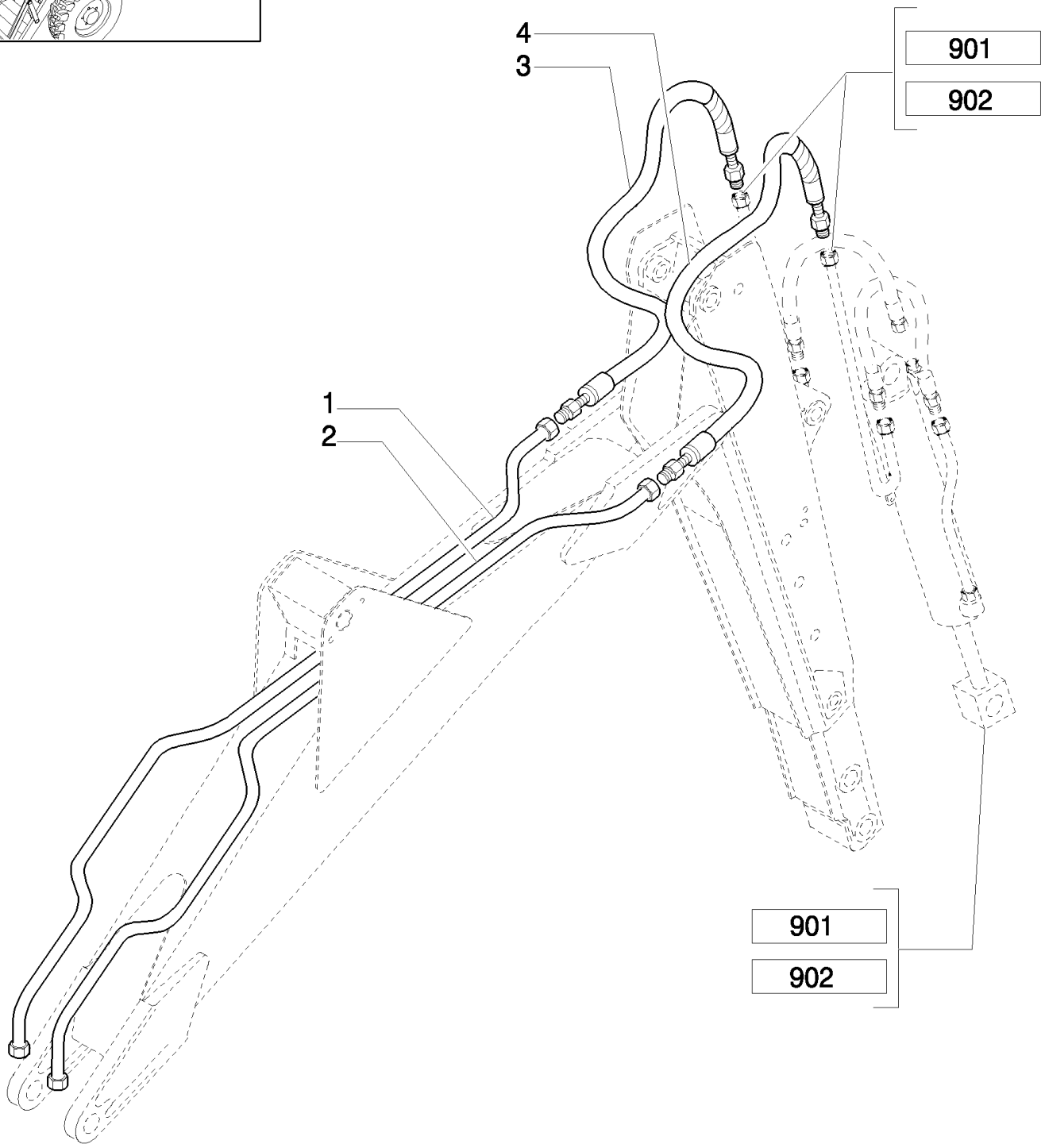

LB115.B EUR BACKHOE LOADER (1/05-)

334(11) 7-SECTIONS EXCAVATOR CONTROL VALVE

Ref	Part Number	Qty	Description
1	85815674	1	TUBE, HYD, 20 mm OD Tube
2	85815676	1	TUBE, HYD, 16 mm OD Tube
3	85817106	1	HOSE, FLEXIBLE, , Includes 3A
3A	9991976	2	O-RING, -018, 90 Duro, .739" ID x .070" Thk,
4	85817107	1	HOSE, FLEXIBLE, , Includes 4A
4A	9992069	2	O-RING, -016, 90 Duro, .614" ID x .070" Thk,

341(01) 8-SECTIONS EXCAVATOR CONTROL VALVE(CENTER PIVOT) EUROPE

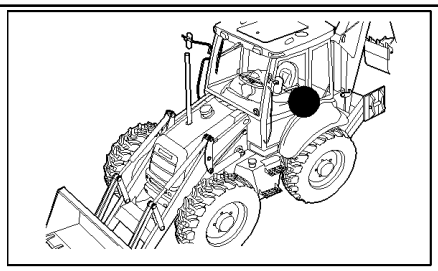

Pilot Control Version

LB115.B EUR BACKHOE LOADER (1/05-)

341(01) 8-SECTIONS EXCAVATOR CONTROL VALVE(CENTER PIVOT) EUROPE

Ref	Part Number	Qty	Description
1	87305216	1	VALVE, CONTROL, , UP TO S/N 031057761
1	87327769	1	VALVE, HYDRAULIC, , FROM TO S/N 031057762, UP TO S/N 031058394
1	87378511	1	VALVE, HYDRAULIC, , FROM TO S/N 031058395
2	614-10045	3	SCREW, Hex, M10 x 45, 8.8, Full Thd, M10x45
3	11190679	5	WASHER, SPRING, Belleville, M10.5,
4	87432207	1	BOLT,
5	87308747	1	VALVE SECTION, HYD, , See Page 331/1 02
6	85826935	1	KIT, , UP TO S/N XXX, See Page 333 02, Telescopic Cylinder
6	87558573	1	SECTOR, , FROM S/N XXX, Telescopic Cylinder, See Page 333 03
7	85826930	1	SECTOR, TOOTHED, , Boom Cylinder, See Page 331/1 03
8	85826931	1	SECTOR, TOOTHED, , Swing Cylinder, See Page 331/1 04
9	85826932	1	SECTOR, TOOTHED, , Bucket Cylinder, See Page 331/1 05
10	85826933	1	SECTOR, TOOTHED, , Arm Cylinder, See Page 331/1 06
11	87558568	2	SECTOR, , Stabilizer Cylinder, See Page 332 06
12	85826249	1	SECTOR, TOOTHED, , Includes 13
13	85811921	1	PLUG, 1-1/16"-12 UNF 2A
14	85826342	1	VALVE SECTION, HYD, , Optional, See Page 341 02
15	13578621	3	WASHER,

Pilot Control Version

341(02) EXCAVATOR CONTROL VALVES GROUP 8 SECTIONS - OPTIONAL SECTION

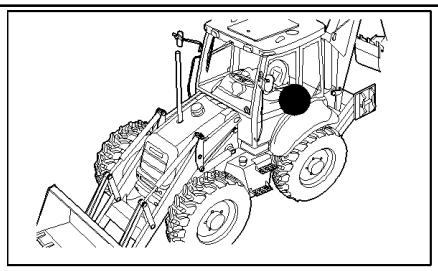

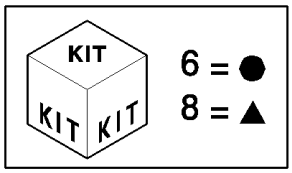

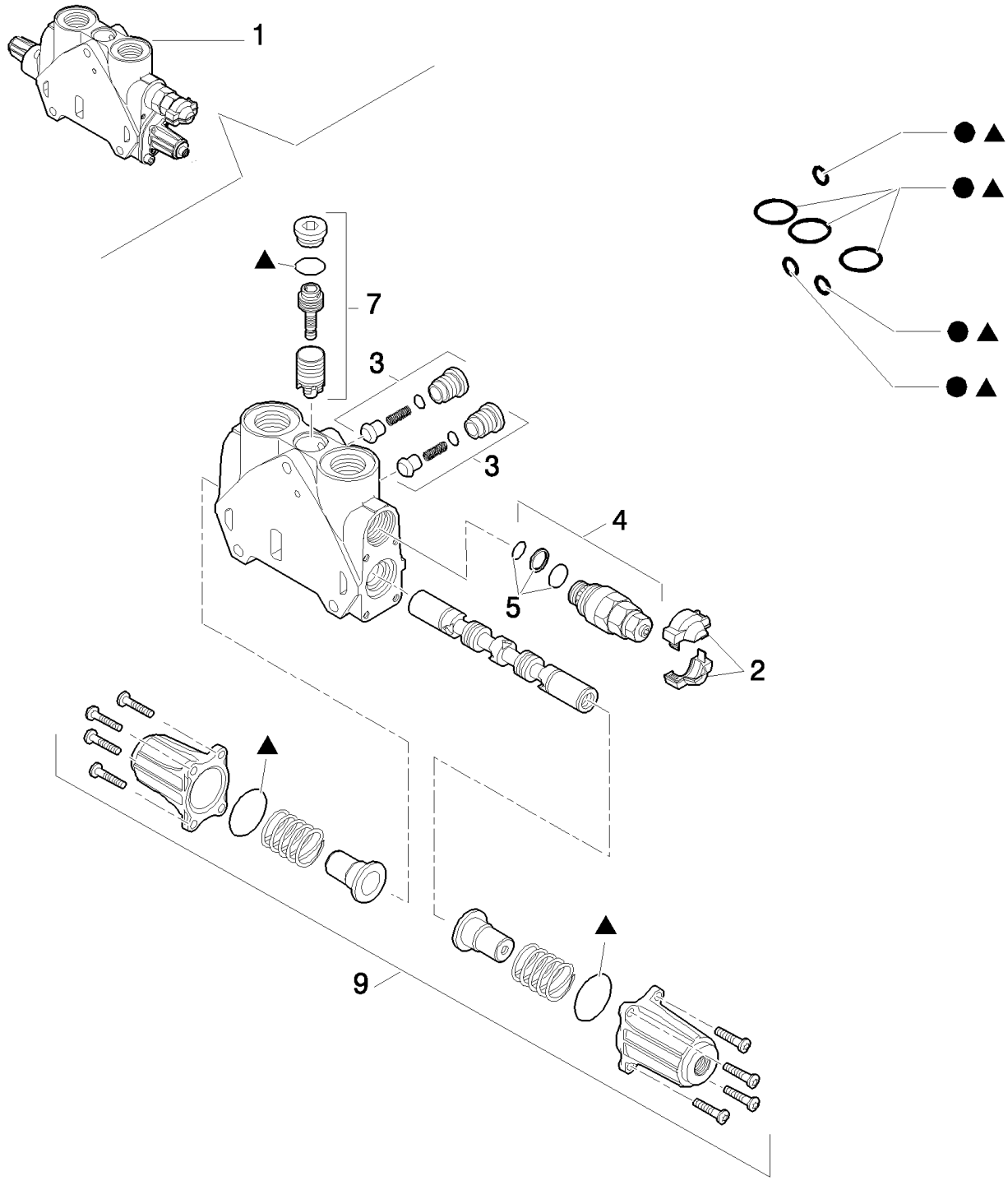

Pilot Control Version

LB115.B EUR BACKHOE LOADER (1/05-)

341(02) EXCAVATOR CONTROL VALVES GROUP 8 SECTIONS - OPTIONAL SECTION

Ref	Part Number	Qty	Description
1	85826342	1	VALVE SECTION, HYD,
2	85811934	1	KIT,
3	85811938	2	VALVE, CHECK,
4	85812115	1	VALVE, HYDRAULIC, , Includes 5, 220 BAR
5	85811933	1	KIT, SEALS,
6	85819148	1	KIT, SEALS, SEALS
7	85819378	1	KIT, SEALS,
8	85824281	1	KIT, SEALS,
9	85826344	1	KIT,

Pilot Control Version

341/ A(01) 8 SECTION PILOT CONTROL VALVE SUPPORT,COMPLETE

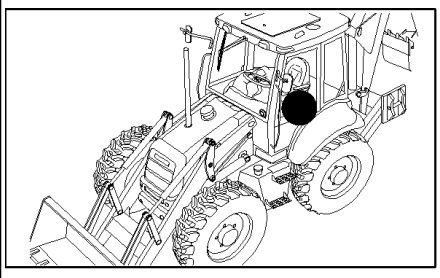

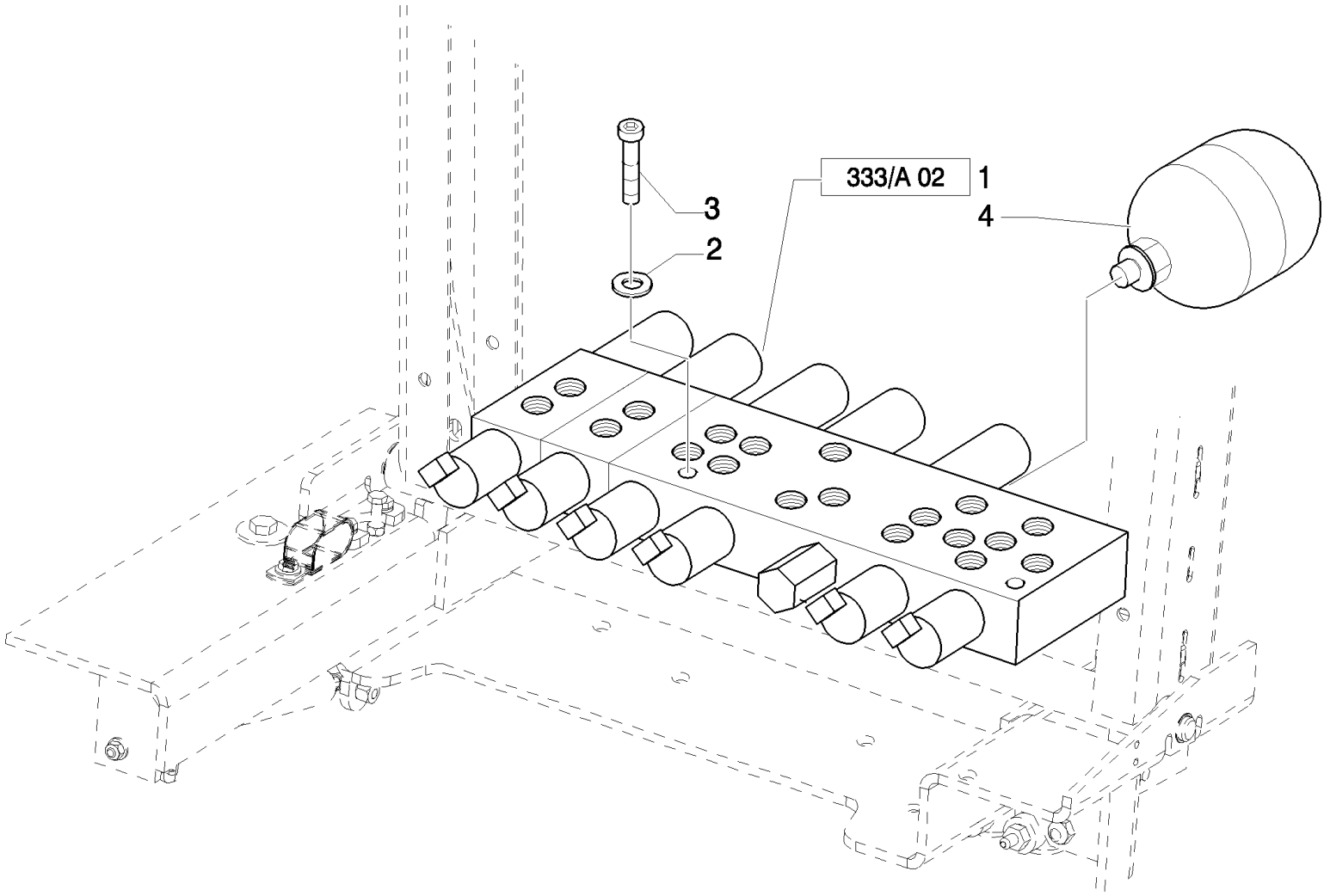

Pilot Control Version

LB115.B EUR BACKHOE LOADER (1/05-)

341/ A(01) 8 SECTION PILOT CONTROL VALVE SUPPORT,COMPLETE

Ref	Part Number	Qty	Description
1	87434621	1	VALVE, CONTROL,
2	47048961	2	WASHER,
3	47049078	2	SCREW,
4	87425225	1	ACCUMULATOR,

Pilot Control Version

341/ A(02) PROPORTIONAL VALVE 4 OPERATIONS

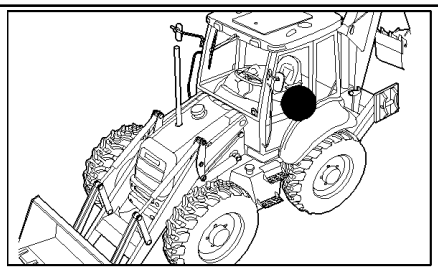

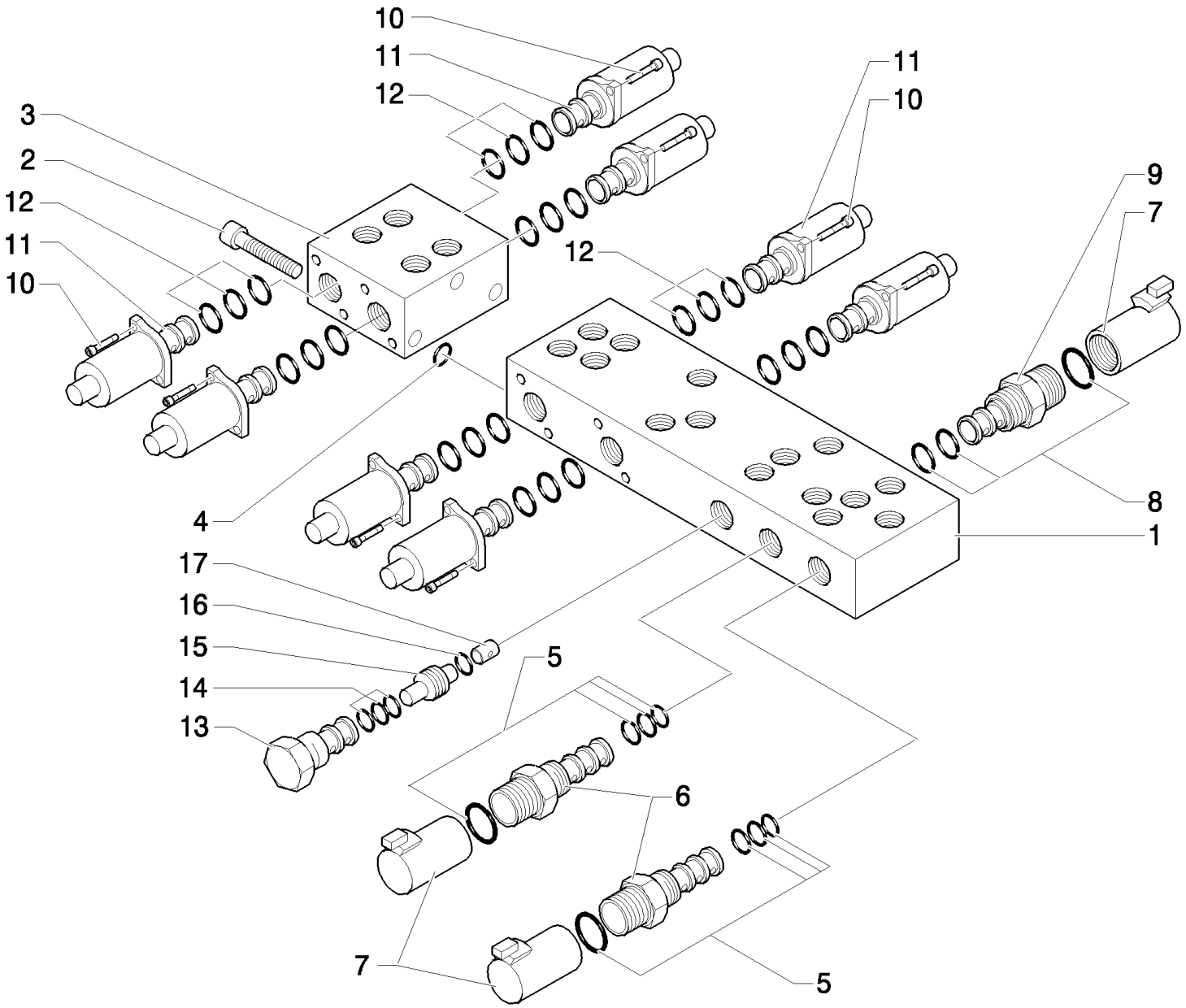

Pilot Control Version

LB115.B EUR BACKHOE LOADER (1/05-)

341/ A(02) PROPORTIONAL VALVE 4 OPERATIONS

Ref	Part Number	Qty	Description
1	85828015	1	BODY,
2	85828061	3	SCREW,
3	85828054	1	VALVE, MANIFOLD, M6x60
4	85827999	1	KIT, SEALS,
5	85828002	2	KIT, SEALS,
6	85827996	2	SOLENOID, , Includes 5, 7
7	85827995	3	COIL,
8	85827998	1	KIT, SEALS,
9	85827994	1	SOLENOID, , Includes 7, 8
10	14302921	16	BOLT, Hex, M4 x 10, 8.8, Full Thd,
11	85827993	8	SOLENOID,
12	85828000	8	KIT, SEALS,
13	85827997	1	VALVE, CARTRIDGE, HYDRAULIC PRESSURE REDUCING VALVE
14	85828001	1	KIT, SEALS,
15	85827992	1	VALVE, CHECK,
16	85828003	1	O-RING,
17	85828005	1	ORIFICE,

Pilot Control Version

341/ B(01) 8 SECTION PILOT CONTROL VALVE SUPPORT,COMPLETE

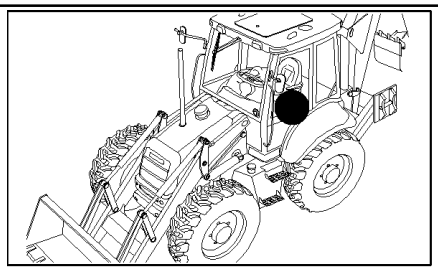

Pilot Control Version

LB115.B EUR BACKHOE LOADER (1/05-)

341/ B(01) 8 SECTION PILOT CONTROL VALVE SUPPORT,COMPLETE

Ref	Part Number	Qty	Description
1	87309923	1	BOOT, , UP TO S/N XXX
1	87449434	1	, FROM S/N XXX
2	87309924	1	BOOT, , UP TO S/N XXX
2	87449735	1	, FROM S/N XXX
3	87437689	2	KNOB,
4	87437688	2	KNOB,
5	87437366	1	ARMREST, LH
6	87437369	1	ARMREST, RH
7	87423802	1	SWITCH,
8	87410105	1	SWITCH,
9	87435372	2	PLATE, RETAINING,
10	10902834	8	SCREW,
11	87436396	1	GUARD, , UP TO S/N 031057640
11	87307656	1	GUARD, , FROM S/N 031057641
12	87443740	1	JOYSTICK,
13	47050686	4	CONNECTOR, HYD.,
14	87431301	1	SHIELD,
15	87016552	8	SCREW, SELF TAPPING, Hex Hd, M6.3 x 19,
16	87022296	8	SCREW, Cross Pan Hd, M3 x 8,
17	87310085	2	SCREW, SELF TAPPING,
18	10902321	3	SCREW, Hex, M6 x 18, 8.8, Full Thd,
19	87388705	1	JOYSTICK, , See Page 341/C 03
20	87418368	1	ROD,
21	87418369	1	ROD,
22	87310098	4	BOLT, M6 x 20
23	87424301	1	SEAL, RUBBER,
24	87427991	1	SEAL, RUBBER,
25	87427989	1	SEAL, RUBBER,
26	87427993	1	SEAL, RUBBER,
27	87425696	2	SEAL, RUBBER,
29	87431300	1	GUARD,
30	85803312	21	CONNECTOR, HYD.,
31	87306512	2	GASKET,
32	87310186	2	WASHER,
33	87310085	2	SCREW, SELF TAPPING,
34	87452511	2	NUT,
35	87423401	1	FITTING,
36	87414205	1	DECAL,
37	87423812	1	DECAL,
38	11197779	8	WASHER, SPRING, Belleville, M6.4,

Pilot Control Version

341/ B(03) 8 SECTION PILOT CONTROL VALVE SUPPORT,COMPLETE

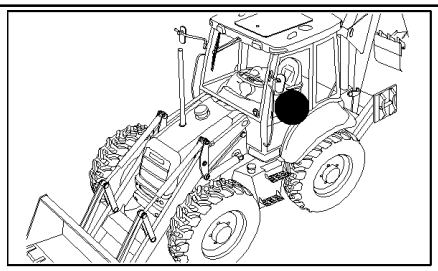

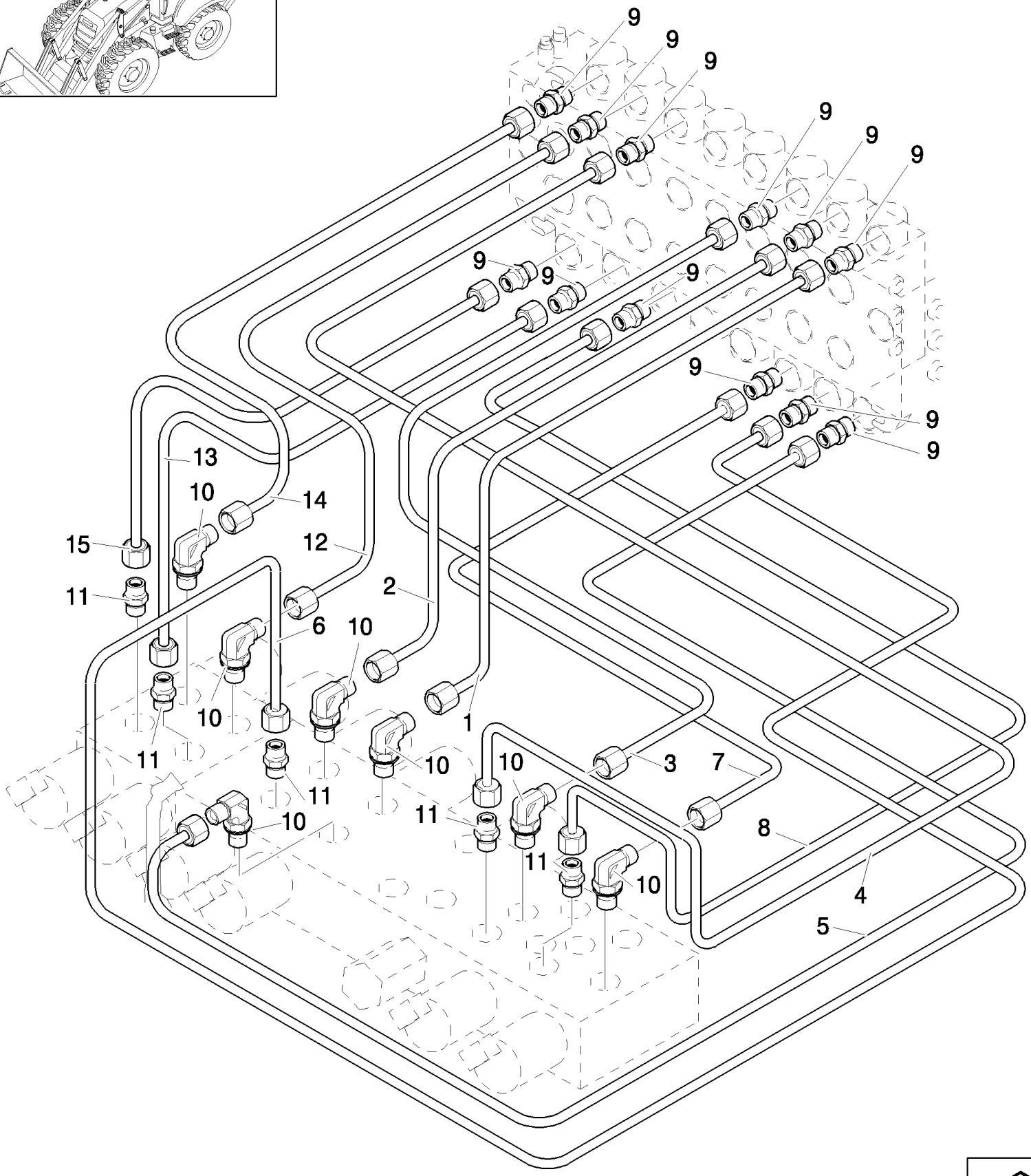

Pilot Control Version

LB115.B EUR BACKHOE LOADER (1/05-)

341/ B(03) 8 SECTION PILOT CONTROL VALVE SUPPORT,COMPLETE

Ref	Part Number	Qty	Description
1	85827093	1	TUBE, HYD,
2	85827094	1	TUBE, HYD,
3	85827091	1	TUBE, HYD,
4	85827089	1	TUBE, HYD,
5	85827092	1	TUBE, HYD,
6	85827095	1	TUBE, HYD,
7	85827090	1	TUBE, HYD,
8	85827088	1	TUBE, HYD,
9	85803312	12	CONNECTOR, HYD.,
10	47050653	1	ELBOW,
10	47050653	6	ELBOW,
11	47050685	5	CONNECTOR, HYD.,
12	85827097	1	TUBE, HYD,
13	87306186	1	TUBE, HYD,
14	87306187	1	TUBE, HYD,
15	87306188	1	TUBE, HYD,

Pilot Control Version

341/ B(07) 8 SECTION PILOT CONTROL VALVE SUPPORT,COMPLETE(CENTER PIVOT)EUROPE

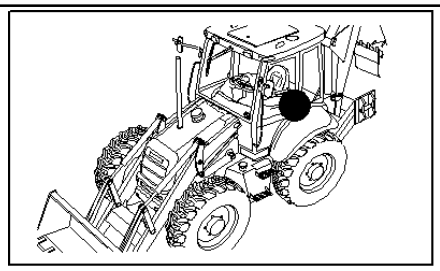

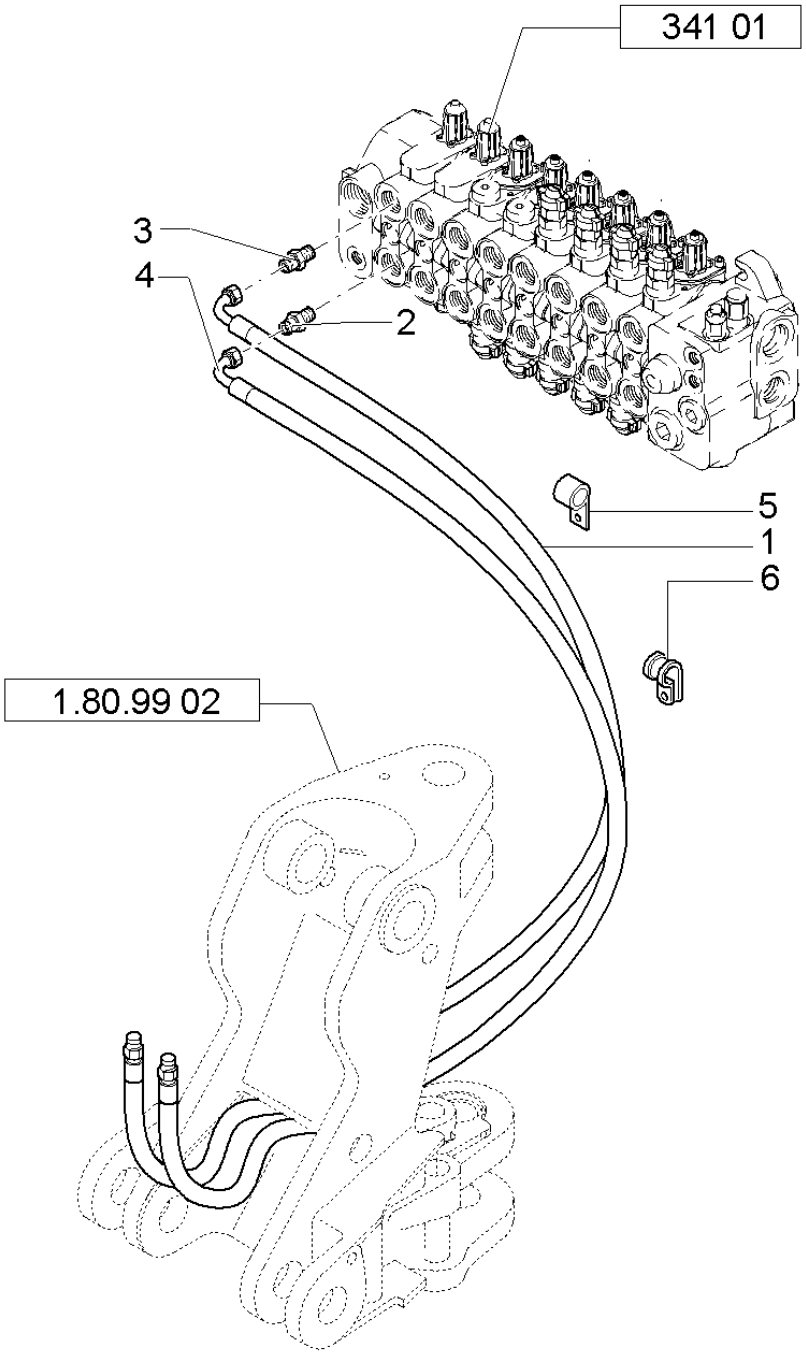

Pilot Control Version

LB115.B EUR BACKHOE LOADER (1/05-)

341/ B(07) 8 SECTION PILOT CONTROL VALVE SUPPORT,COMPLETE(CENTER PIVOT)EUROPE

Ref	Part Number	Qty	Description
1	85812192	1	HOSE, FLEXIBLE,
1	87311441	1	HOSE, FLEXIBLE,
2	85805258	1	CONNECTOR, HYD., 9/16"-16 ORS x 1 1/16"-12, O-Ring,
3	390938S36	1	CONNECTOR, HYD., 1-1/16-12 ORB x 1-14 ORFS; Incl. 167266, 9992069 O-Rings
4	87311440	1	HOSE, FLEXIBLE,
5	85803393	2	CLAMP,
6	85812029	4	CLAMP,

Pilot Control Version

341/ B(08) 8 SECTION PILOT CONTROL VALVE SUPPORT,COMPLETE(

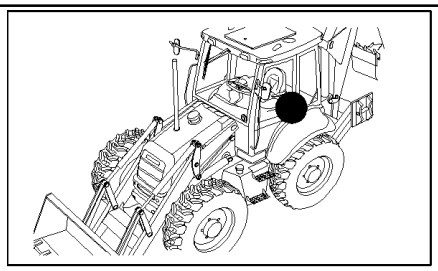

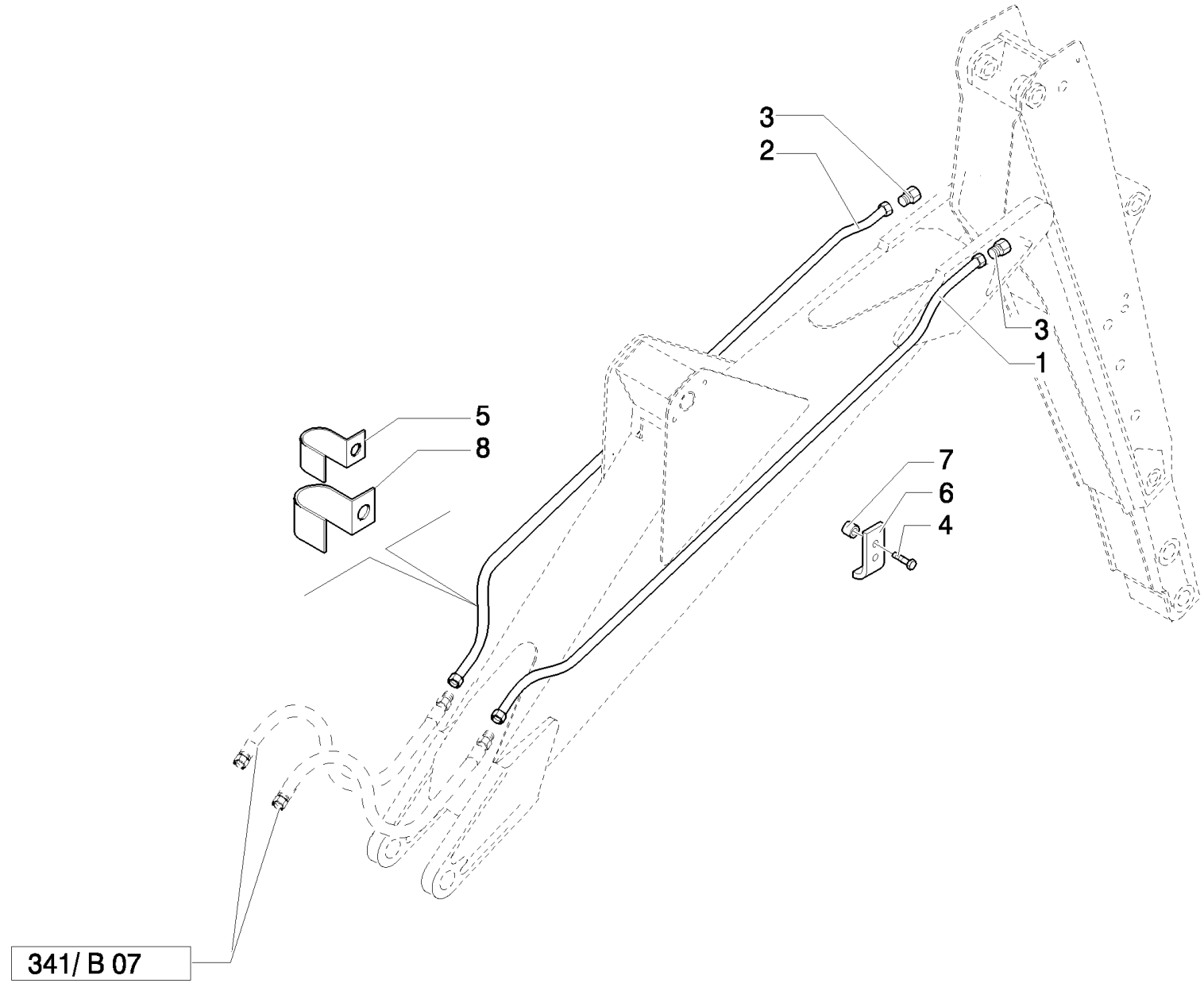

Pilot Control Version

LB115.B EUR BACKHOE LOADER (1/05-)

341/ B(08) 8 SECTION PILOT CONTROL VALVE SUPPORT,COMPLETE(

Ref	Part Number	Qty	Description
1	87309782	1	TUBE, HYD,
2	87309783	1	TUBE, HYD,
3	87311516	2.	PLUG,
4	16043621	2	BOLT, Hex, M8 x 25, 8.8,
5	87316099	1	CLAMP,
6	47044988	1	ARM,
7	87311442	2	SPACER,
8	87316101	1	CLAMP,

Pilot Control Version

341/ C(03) 6 SECTION PILOT CONTROL VALVE SUPPORT,COMPLETE

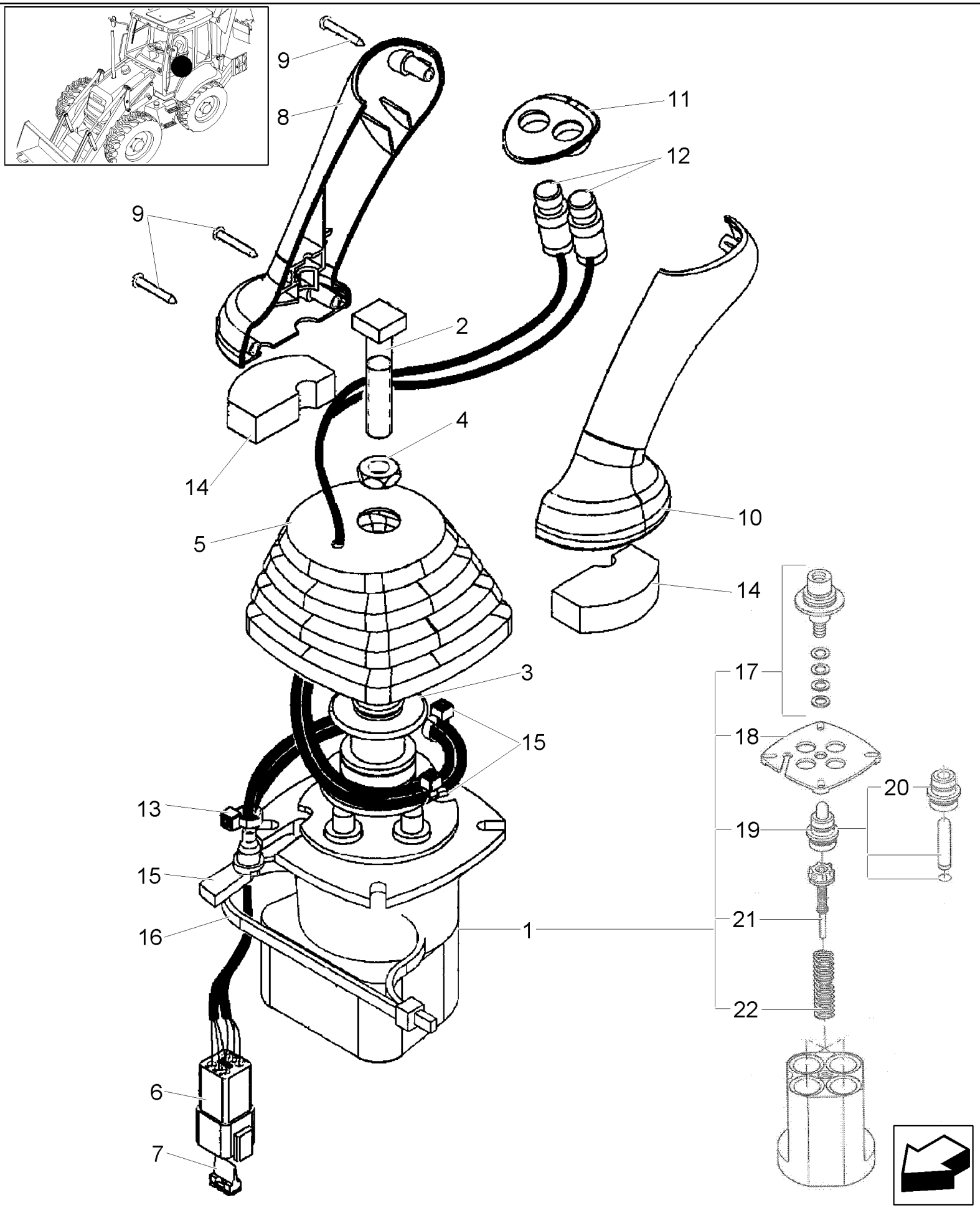

LB115.B EUR BACKHOE LOADER (1/05-)

341/ C(03) 6 SECTION PILOT CONTROL VALVE SUPPORT,COMPLETE

Ref	Part Number	Qty	Description
	87388705	1	JOYSTICK, , Includes 1 To 22
1	87398960	1	VALVE, PILOT,
2	87428023	1	BOLT,
3	87436225	1	RETAINER,
4	87037944	1	NUT, Thin, M12 x 1.75, Cl 05,
5	87443721	1	BOOT,
6	255350C1	1	
7	225353C1	1	WEDGE,
8	87308838	1	HANDLE GRIP,
9	15687475	3	SCREW, SELF TAPPING, Pan Hd, M3.5 x 25, Stainless,
10	87308838	1	HANDLE GRIP,
11	87425242	1	
12	87437371	1	SWITCH, ASSY,
13	87424267	1	GROMMET,
14	87435506	2	SEAL,
15	87000312	1	STRAP, CABLE,
16	87438046	1	STRAP, CABLE,
17	87586731	4	KIT,
18	87586758	1	PLATE, RETAINING,
19	87586760	4	PLUNGER,
20	87586764	1	
21	87586772	4	REGULATOR,
22	87586773	1	KIT,

341/ C(04) VALVE, JOYSTICK (PILOT CONTROLS) (LEFT - HAND)

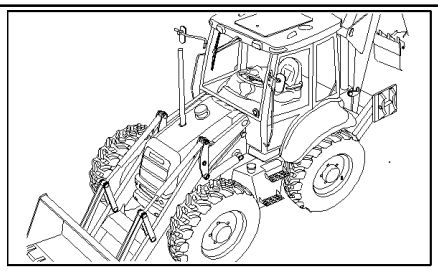

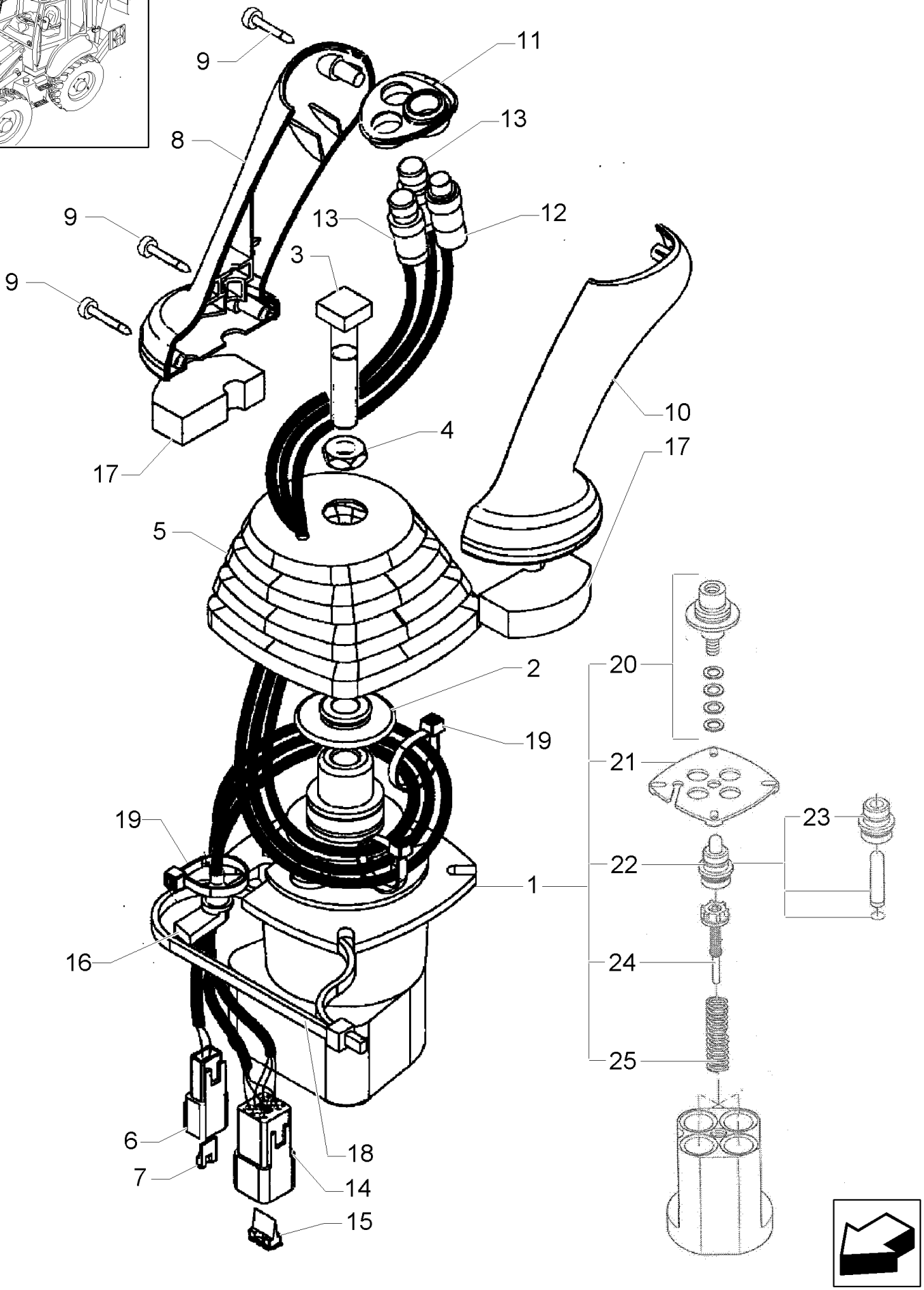

LB115.B EUR BACKHOE LOADER (1/05-)

341/ C(04) VALVE, JOYSTICK (PILOT CONTROLS) (LEFT - HAND)

Ref	Part Number	Qty	Description
	87388708	1	JOYSTICK, , Includes 1 To 25
1	87398960	1	VALVE, PILOT,
2	87436225	1	RETAINER,
3	87428023	1	BOLT,
4	87037944	1	NUT, Thin, M12 x 1.75, Cl 05,
5	87443721	1	BOOT,
6	225315C1	1	CONNECTOR, ELEC,
7	225318C1	1	WEDGE,
8	87308838	1	HANDLE GRIP,
9	15687475	3	SCREW, SELF TAPPING, Pan Hd, M3.5 x 25, Stainless,
10	87308839	1	HANDLE GRIP,
11	87435243	1	BEZEL,
12	87437372	1	SWITCH,
13	87437371	2	SWITCH, ASSY,
14	225350C1	1	CONNECTOR, ELEC,
15	225353C1	1	WEDGE,
16	87424267	1	GROMMET,
17	87435506	2	SEAL,
18	128825	1	O-RING, 8-1, 90 Duro, .644" ID x .087" Thk,
19	87000312	1	STRAP, CABLE,
20	87586731	4	KIT,
21	87586758	1	PLATE, RETAINING,
22	87586760	4	PLUNGER,
23	87586764	1	
24	87586772	4	REGULATOR,
25	87586773	1	KIT,

346(01) A/C HOUSING & FILTERS

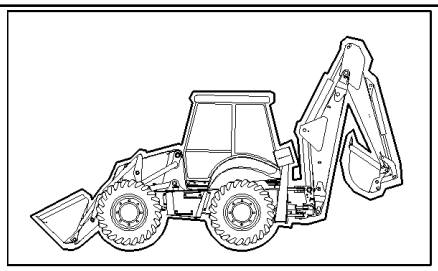

KIT KIT KIT = 16

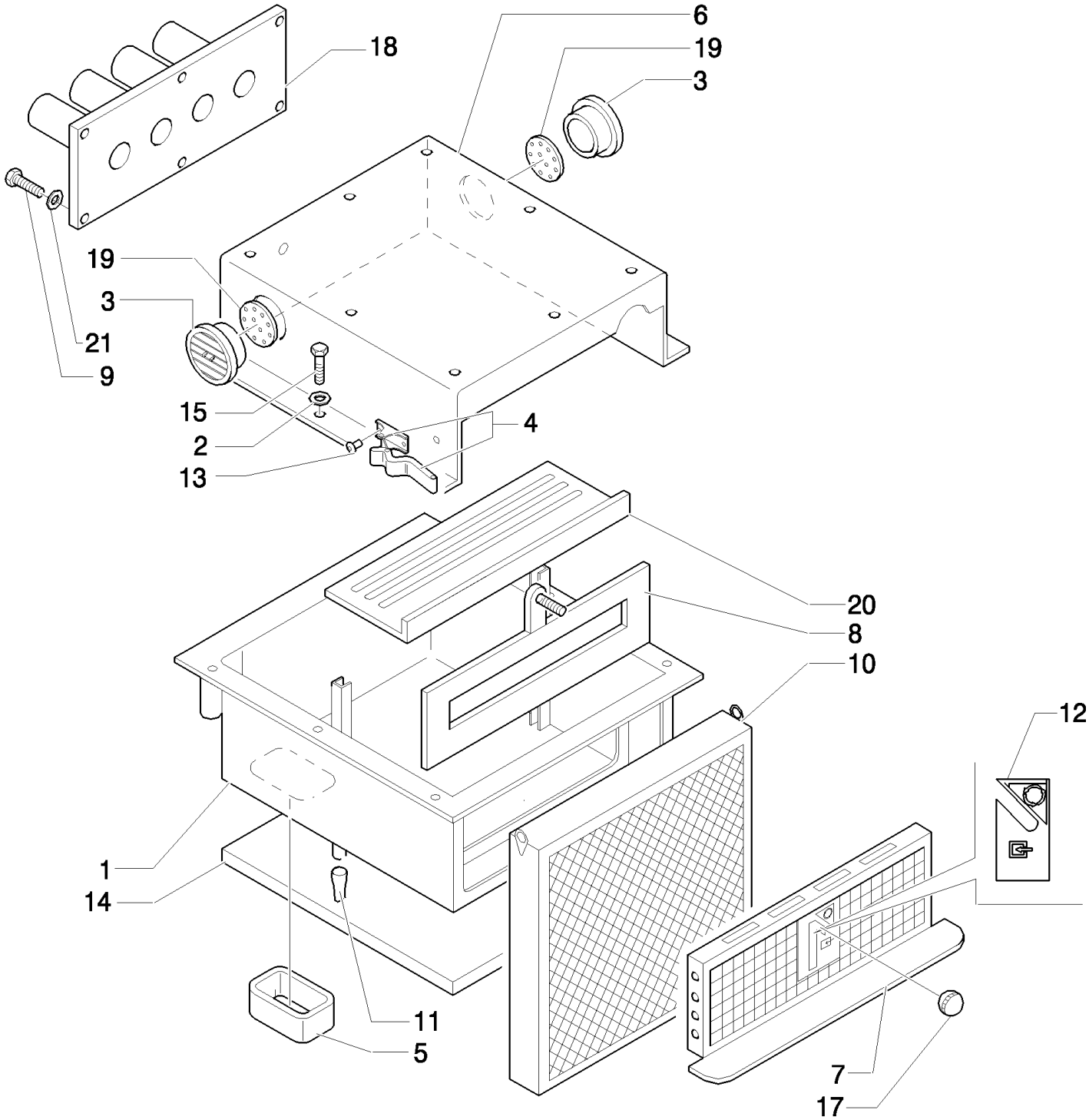

Mechanical Version, From To S/N XXX

LB115.B EUR BACKHOE LOADER (1/05-)

346(01) A/C HOUSING & FILTERS

Ref	Part Number	Qty	Description
1	87314323	1	HOUSING,
2	11193974	6	WASHER, SPRING, Belleville, M8.4,
3	87314728	2	INTAKE, AIR,
4	87358142	2	COLLAR,
5	87314730	1	INSULATION, FOAM,
6	87314328	1	INTAKE, AIR,
7	87314330	1	GRILLE,
8	87314350	1	LID,
9	85819184	6	SCREW,
10	87314367	1	FILTER, CAB,
11	87315029	2	VALVE, DUST,
12	87314351	1	DECAL,
13	87358141	4	RIVET,
14	87314520	1	INSULATION, FOAM,
15	16043624	6	SCREW, Hex, M8 x 25, 8.8, Full Thd,
16	87314518	1	INSULATION, FOAM, - KIT
17	87314353	1	KNOB,
18	87314357	1	DUCT, AIR,
19	87314362	2	BULKHEAD,
20	87314355	1	BOTTOM,
21	11193974	6	WASHER, SPRING, Belleville, M8.4,

Mechanical Version, From To S/N XXX

346(02) A/C BLOWER & COILS

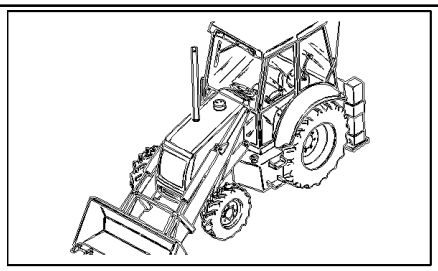

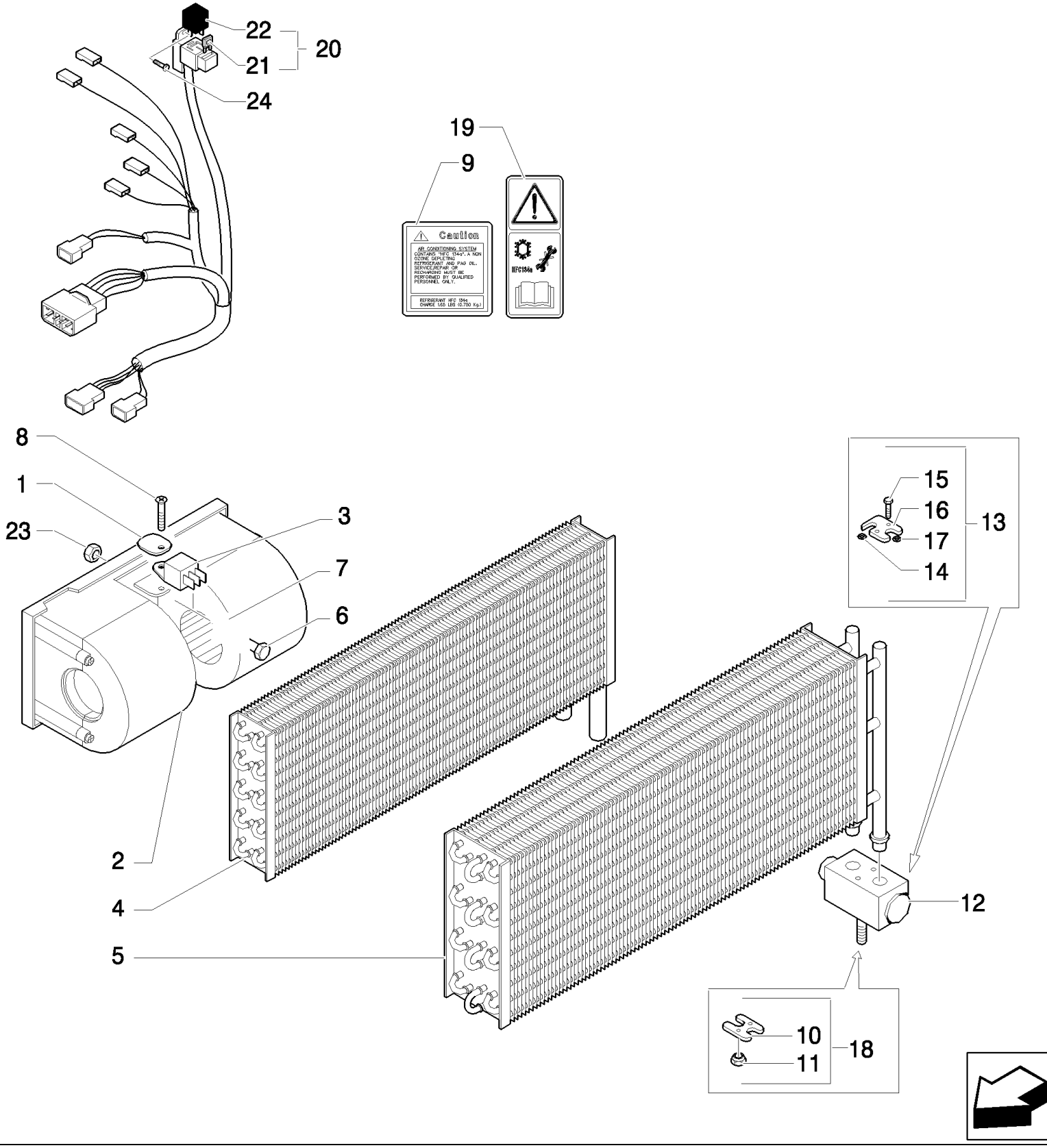

LB115.B EUR BACKHOE LOADER (1/05-)

346(02) A/C BLOWER & COILS

Ref	Part Number	Qty	Description
1	85817289	1	PLATE, RETAINING,
2	85813079	1	MOTOR, ELECTRIC, SMALL,
3	85804041	1	RESISTOR,
4	87314527	1	HEATER,
5	87314369	1	EVAPORATOR,
6	10902424	1	SCREW, Hex, M6 x 20, 8.8, Full Thd,
7	11197774	1	WASHER, SPRING, Belleville, M6.4,
8	85817189	1	SCREW,
9	87324469	1	DECAL,
10	85805008	1	FLANGE,
11	14040611	1	NUT,
12	87314524	1	VALVE, CONTROL,
13	85804038	1	FLANGE,
14	85805003	1	O-RING,
15	85805004	2	SCREW,
16	85805005	1	FLANGE,
17	85805006	1	O-RING,
18	85821131	1	FLANGE,
19	85804441	1	DECAL,
20	87314517	1	HARNESS, WIRE,
21	11055290	1	FUSE,
22	85805144	1	RELAY,
23	12574211	1	NUT, M6 x 1, Cl 8,
24	85819184	1	SCREW,

Mechanical Version, From To S/N XXX

346(03) HEATER COIL HOSES

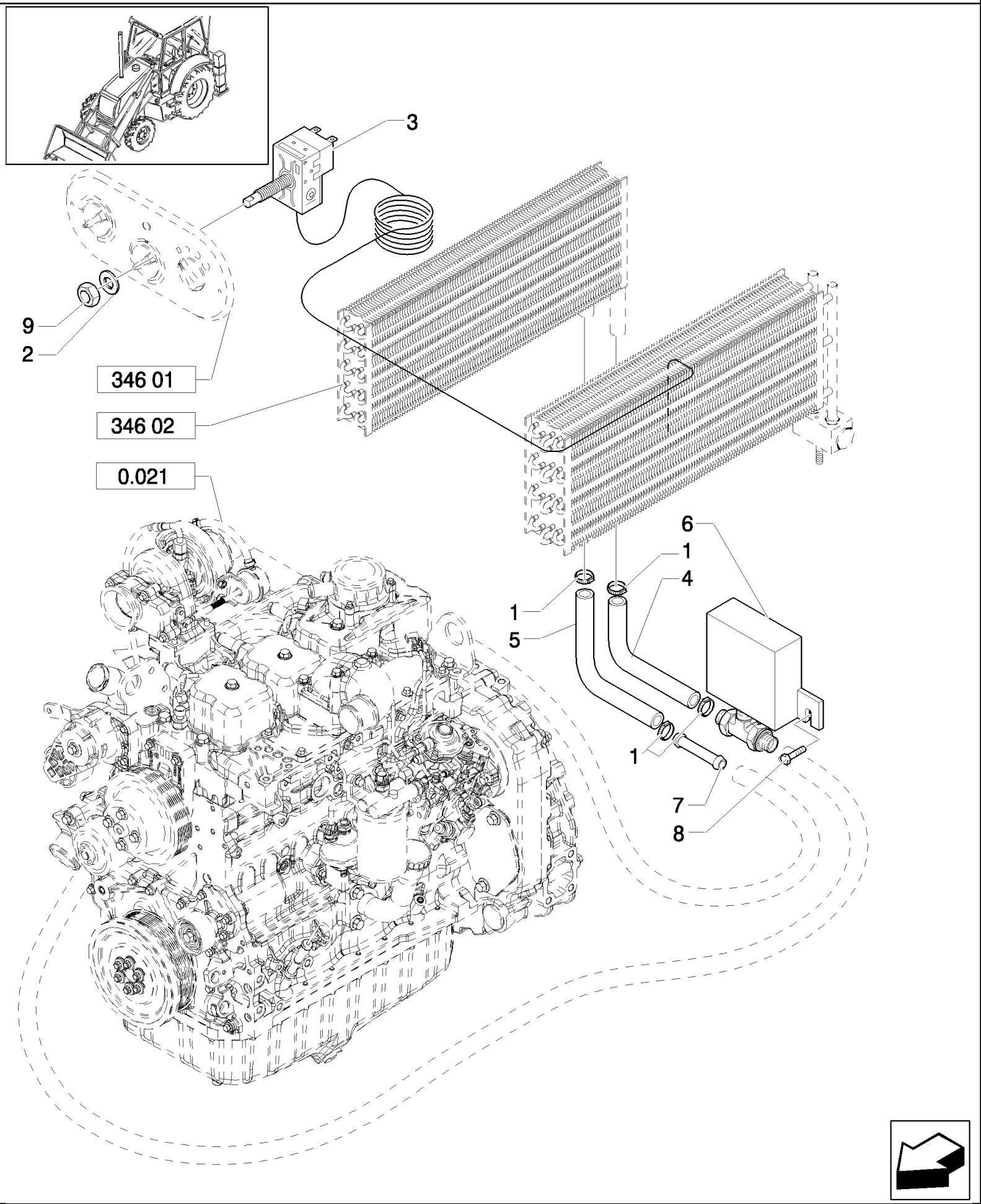

Mechanical Version, From To S/N XXX

LB115.B EUR BACKHOE LOADER (1/05-)

346(03) HEATER COIL HOSES

Ref	Part Number	Qty	Description
1	87314726	4	CLAMP, HOSE,
2	85817295	1	NUT,
3	87314526	1	THERMOSTAT,
4	87318747	1	HOSE, FLEXIBLE,
5	87318750	1	HOSE, FLEXIBLE,
6	87314554	1	DRAINCOCK/TAP, SUPPLY,
7	85804051	1	TUBE,
8	85819184	2	SCREW,
9	87358348	1	WASHER,

Mechanical Version, From To S/N XXX

346(04) A/C & HEATER CONTROL PANEL

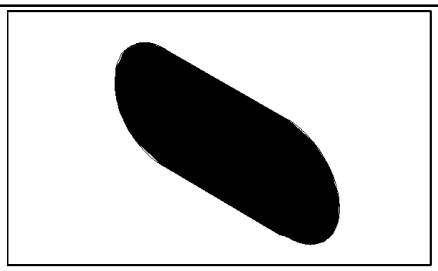

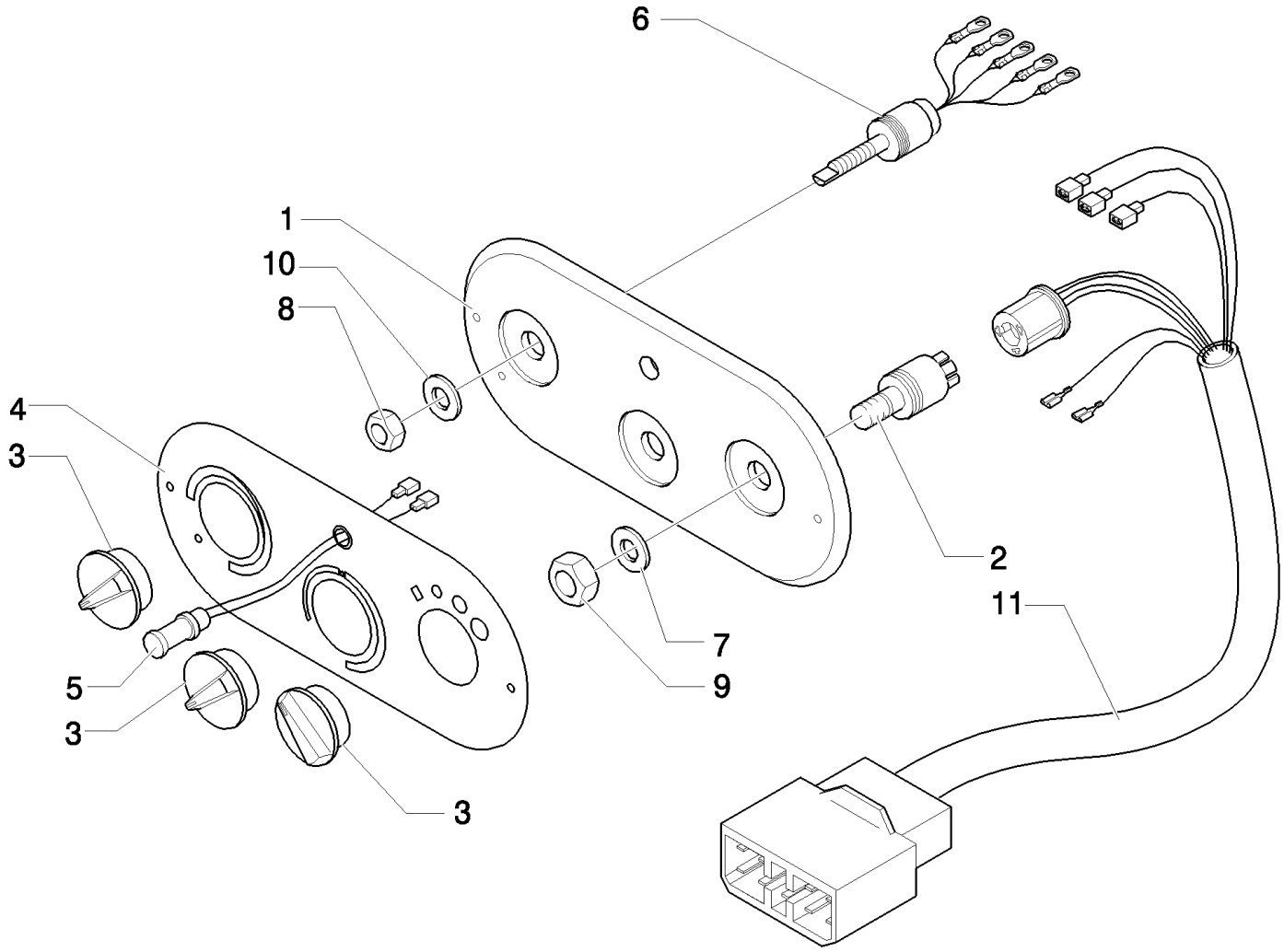

LB115.B EUR BACKHOE LOADER (1/05-)

346(04) A/C & HEATER CONTROL PANEL

Ref	Part Number	Qty	Description
1	87314743	1	DASHBOARD,
2	87314747	1	SWITCH,
3	87314749	3	KNOB,
4	87314750	1	DECAL,
5	87314751	1	BULB,
6	87314753	1	POTENTIOMETER,
7	87358348	1	WASHER, 13X20
8	87334860	1	NUT,
9	87334861	1	NUT, 12,5X18X1,5
10	87358349	1	WASHER, 10,5X16X1,5
11	87314522	1	HARNESS, WIRE,

Mechanical Version, From To S/N XXX

346(05) A/C & HEATER CONSOLE DUCTS

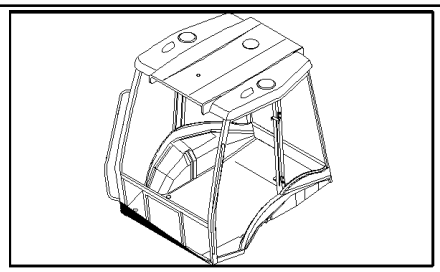

LB115.B EUR BACKHOE LOADER (1/05-)

346(05) A/C & HEATER CONSOLE DUCTS

Ref	Part Number	Qty	Description
1	85819452	5	HOSE,
2	85819451	1	HOSE,
3	87314771	1	DUCT, AIR,
4	87314772	2	DUCT, AIR,
5	87314773	1	DUCT, AIR,
6	87319448	1	DUCT, AIR,
7	85819454	2	DIFFUSER,
8	87314946	1	DISTRIBUTOR,
9	87314947	1	DISTRIBUTOR,
10	87314948	1	ELBOW,
11	85819453	1	ELBOW,
12	85819544	2	DIFFUSER, , UP TO S/N XXX
13	70741298	2	DIFFUSER, , UP TO S/N XXX
13	87362068	4	, FROM S/N XXX
14	15915901	4	
15	87319437	1	DUCT, AIR,
17	87314767	2	DUCT, AIR,
18	87314769	2	DUCT, AIR,
20	13000990	2	CLAMP, HOSE,
21	87319443	1	DUCT, AIR,
22	5112712	12	STRAP, CABLE,
23	87319453	2	ELBOW,
24	85818891	1	ELBOW, , UP TO S/N XXX
25	85813324	6	CLAMP, HOSE,
26	14440327	4	SCREW, Hex Soc Flat Hd, M4 x 20, 8.8,

Mechanical Version, From To S/N XXX

346/1(01) TRANSFORMATION SET FROM HEATING TO AIR CONDITIONING

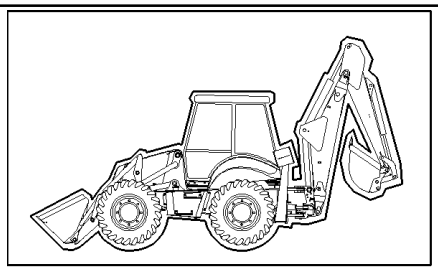

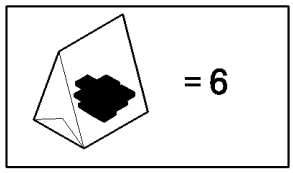

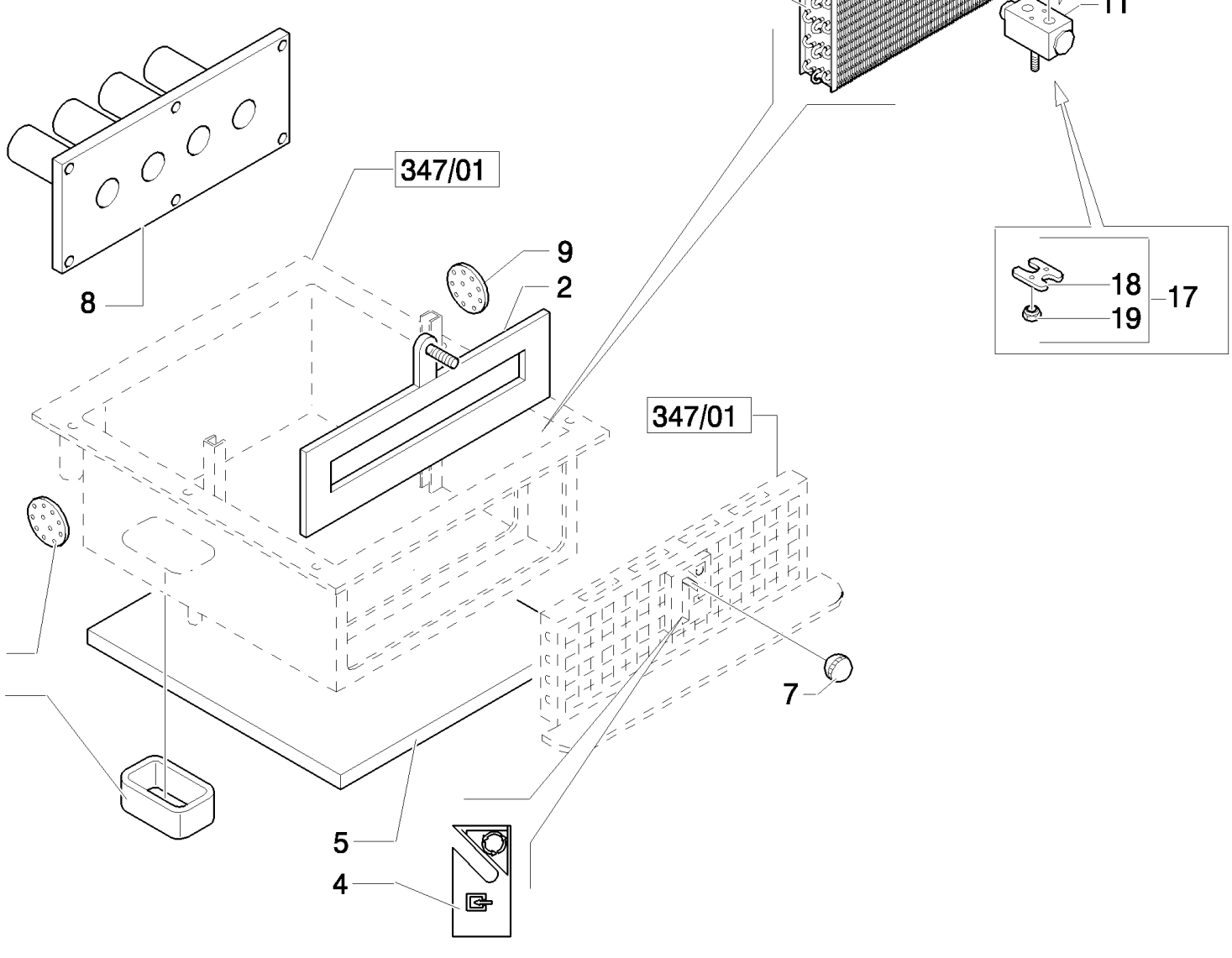

LB115.B EUR BACKHOE LOADER (1/05-)

346/1(01) TRANSFORMATION SET FROM HEATING TO AIR CONDITIONING

Ref	Part Number	Qty	Description
1	87314730	1	INSULATION, FOAM,
2	87314350	1	LID,
4	87314351	1	DECAL,
5	87314520	1	INSULATION, FOAM,
6	87314518	1	INSULATION, FOAM,
7	87314353	1	KNOB,
8	87314357	1	DUCT, AIR,
9	87314362	2	BULKHEAD,
10	87314369	1	EVAPORATOR,
11	87314524	1	VALVE, CONTROL,
12	85804038	1	FLANGE,
13	85805003	1	O-RING,
14	85805004	2	SCREW,
15	85805005	1	FLANGE,
16	85805006	1	O-RING,
17	85821131	1	FLANGE,
18	85805008	1	FLANGE,
19	14040611	1	NUT,
23	85817295	1	NUT,
24	87314526	1	THERMOSTAT,
25	87314749	1	KNOB,
26	87314750	1	DECAL,
27	87314751	1	BULB,
28	87314757	1	WASHER, SEALING,

Mechanical Version, From To S/N XXX

346/1(02) TRANSFORMATION SET FROM HEATING TO AIR CONDITIONING

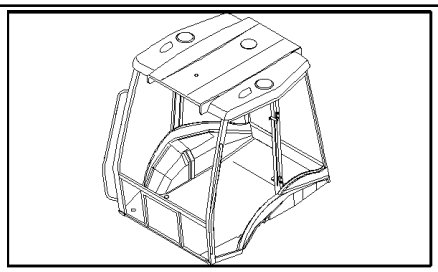

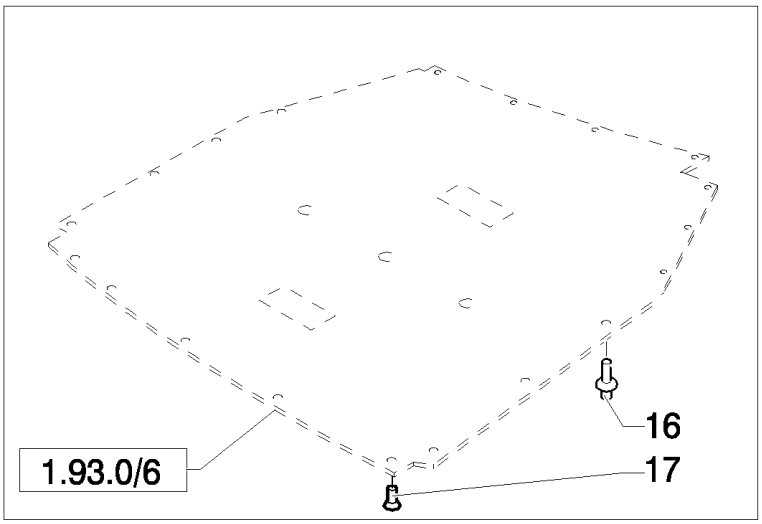

LB115.B EUR BACKHOE LOADER (1/05-)

346/1(02) TRANSFORMATION SET FROM HEATING TO AIR CONDITIONING

Ref	Part Number	Qty	Description
1	85819452	3	HOSE,
2	85819451	1	HOSE,
3	87314771	1	DUCT, AIR,
4	87314772	2	DUCT, AIR,
5	87314773	1	DUCT, AIR,
6	87319448	1	DUCT, AIR,
7	85819454	2	DIFFUSER,
8	87314946	1	DISTRIBUTOR,
9	87314947	1	DISTRIBUTOR,
10	87314948	1	ELBOW,
11	85819453	2	ELBOW,
12	85819544	2	DIFFUSER, , UP TO S/N XXX
12	87362068	4	, FROM S/N XXX
13	5112712	3	STRAP, CABLE,
14	13000690	4	CLAMP, HOSE,
15	14440327	4	SCREW, Hex Soc Flat Hd, M4 x 20, 8.8,
16	5162852	21	BUTTON,
17	85805777	1	PLUG,
18	F1NN94000Z36AA	12	STUD, {PP:81870039}

Mechanical Version, From To S/N XXX

347(01) HOUSING & FILTERS

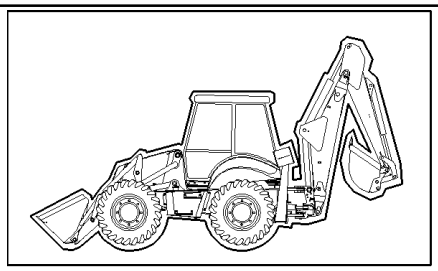

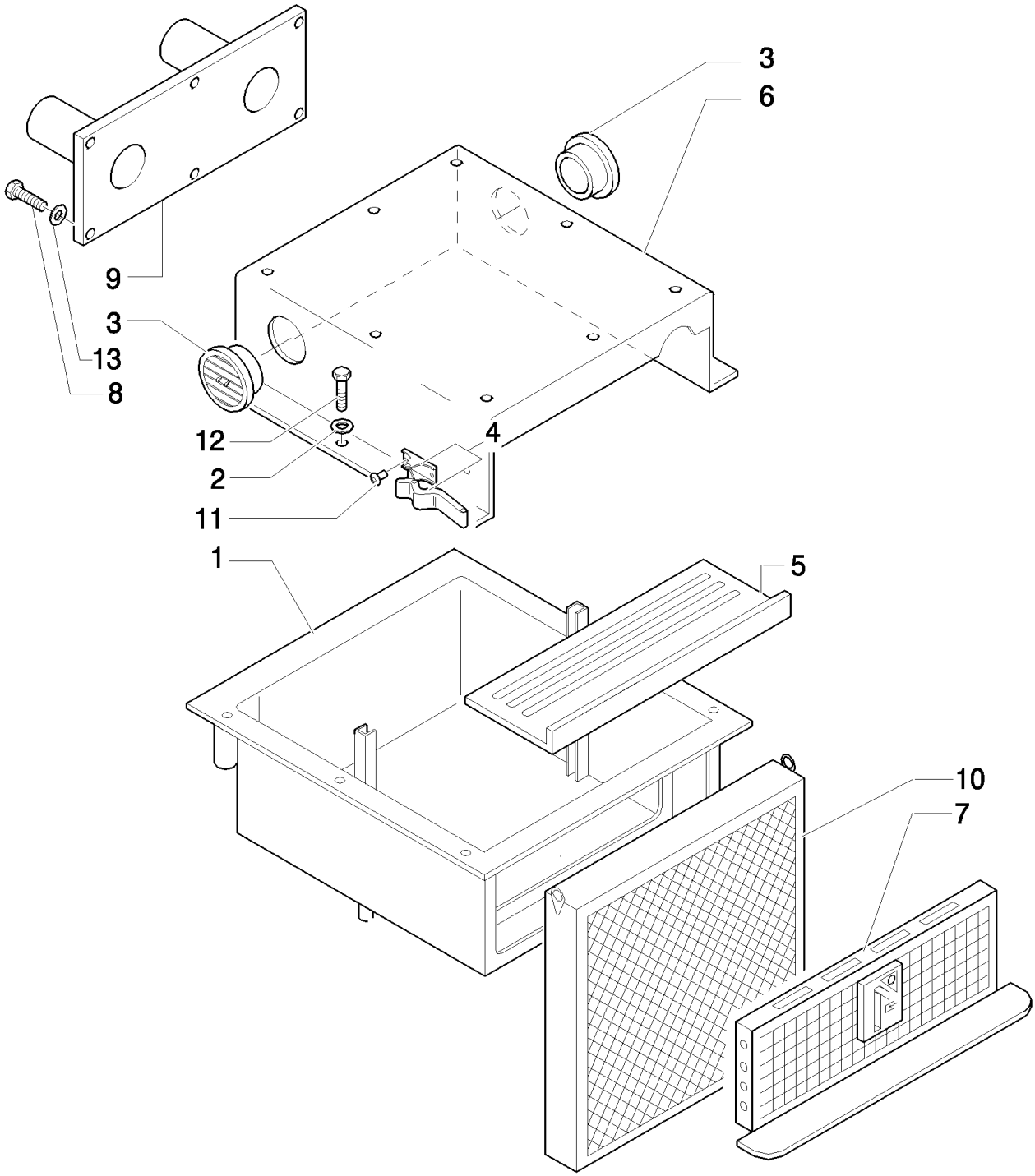

LB115.B EUR BACKHOE LOADER (1/05-)

347(01) HOUSING & FILTERS

Ref	Part Number	Qty	Description
1	87314323	1	HOUSING,
2	11193974	6	WASHER, SPRING, Belleville, M8.4,
3	87314728	2	INTAKE, AIR,
4	87358142	2	COLLAR,
5	87314355	1	BOTTOM,
6	87314328	1	INTAKE, AIR,
7	87314330	1	GRILLE,
8	85819184	6	SCREW,
9	87316439	1	DUCT, AIR,
10	87314367	1	FILTER, CAB,
11	87358141	4	RIVET,
12	16043624	6	SCREW, Hex, M8 x 25, 8.8, Full Thd,
13	11193974	1	WASHER, SPRING, Belleville, M8.4,

Mechanical Version, From To S/N XXX

347(02) HEATER BLOWER & COILS

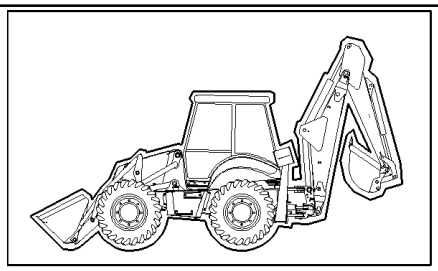

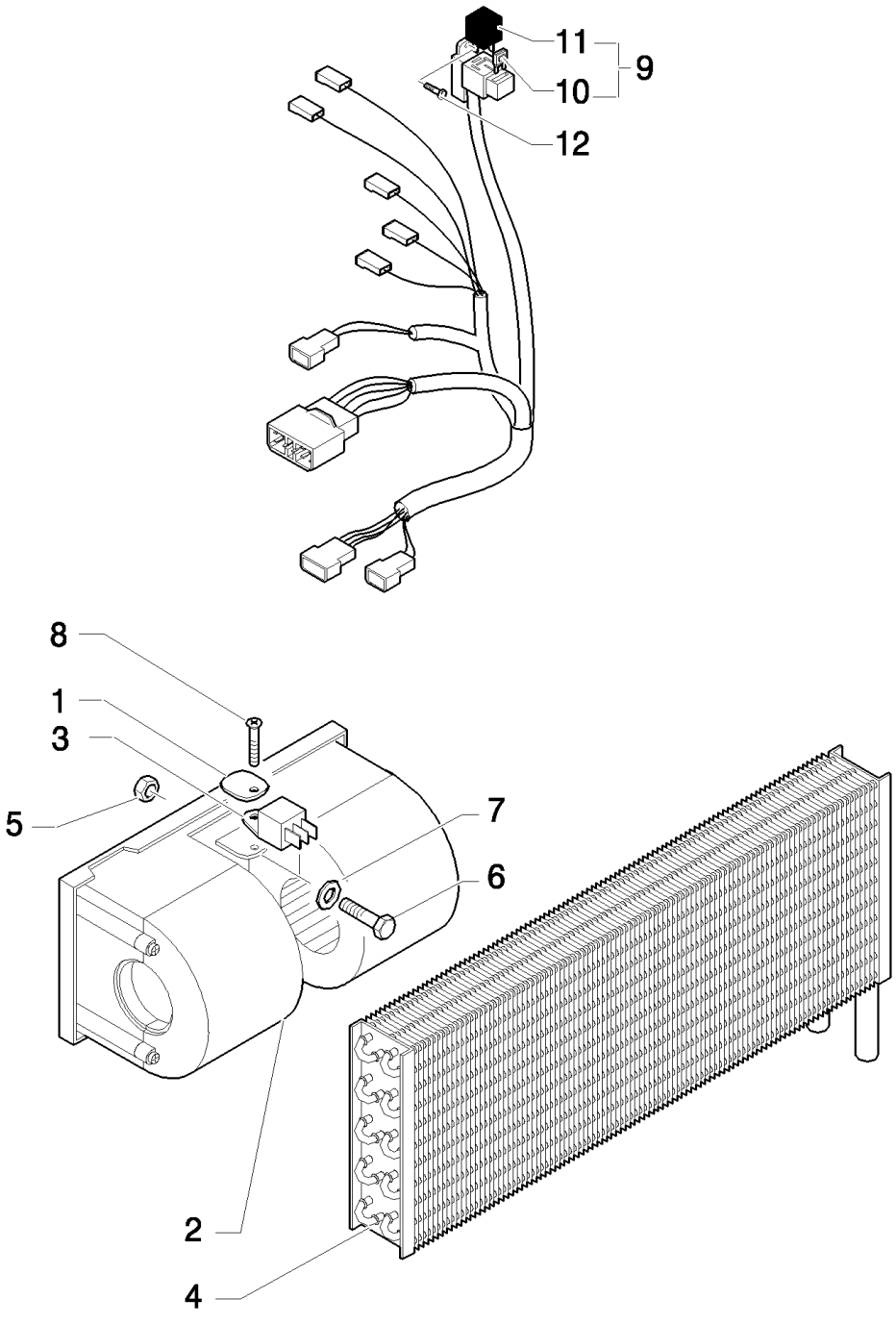

LB115.B EUR BACKHOE LOADER (1/05-)

347(02) HEATER BLOWER & COILS

Ref	Part Number	Qty	Description
1	85817289	1	PLATE, RETAINING,
2	85813079	1	MOTOR, ELECTRIC, SMALL,
3	85804041	1	RESISTOR,
4	87314527	1	HEATER,
5	12574211	1	NUT, M6 x 1, Cl 8,
6	10902424	1	SCREW, Hex, M6 x 20, 8.8, Full Thd,
7	11197774	1	WASHER, SPRING, Belleville, M6.4,
8	85817189	1	SCREW,
9	87314517	1	HARNESS, WIRE,
10	11054990	1	FUSE,
11	85821537	1	RELAY,
12	85819184	1	SCREW,

Mechanical Version, From To S/N XXX

347(03) HEATER COIL HOSES

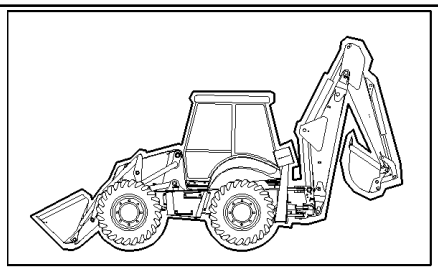

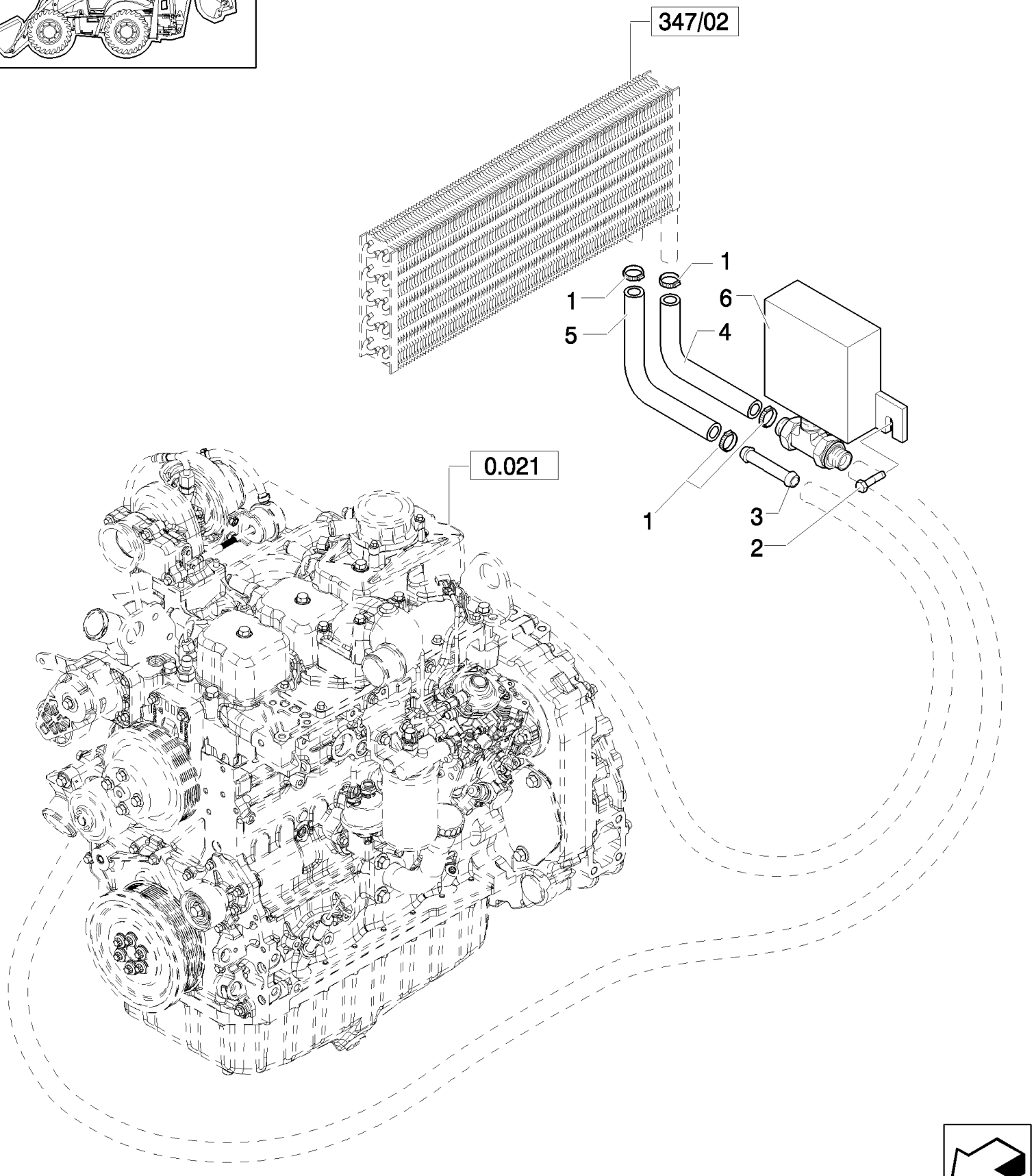

Mechanical Version, From To S/N XXX

LB115.B EUR BACKHOE LOADER (1/05-)

347(03) HEATER COIL HOSES

Ref	Part Number	Qty	Description
1	87314726	4	CLAMP, HOSE,
2	85819184	2	SCREW,
3	85804051	1	TUBE,
4	87318747	1	HOSE, FLEXIBLE,
5	87318750	1	HOSE, FLEXIBLE,
6	87314554	1	DRAINCOCK/TAP, SUPPLY,

Mechanical Version, From To S/N XXX

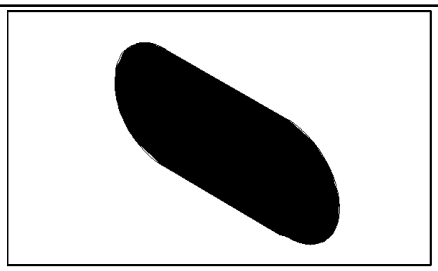

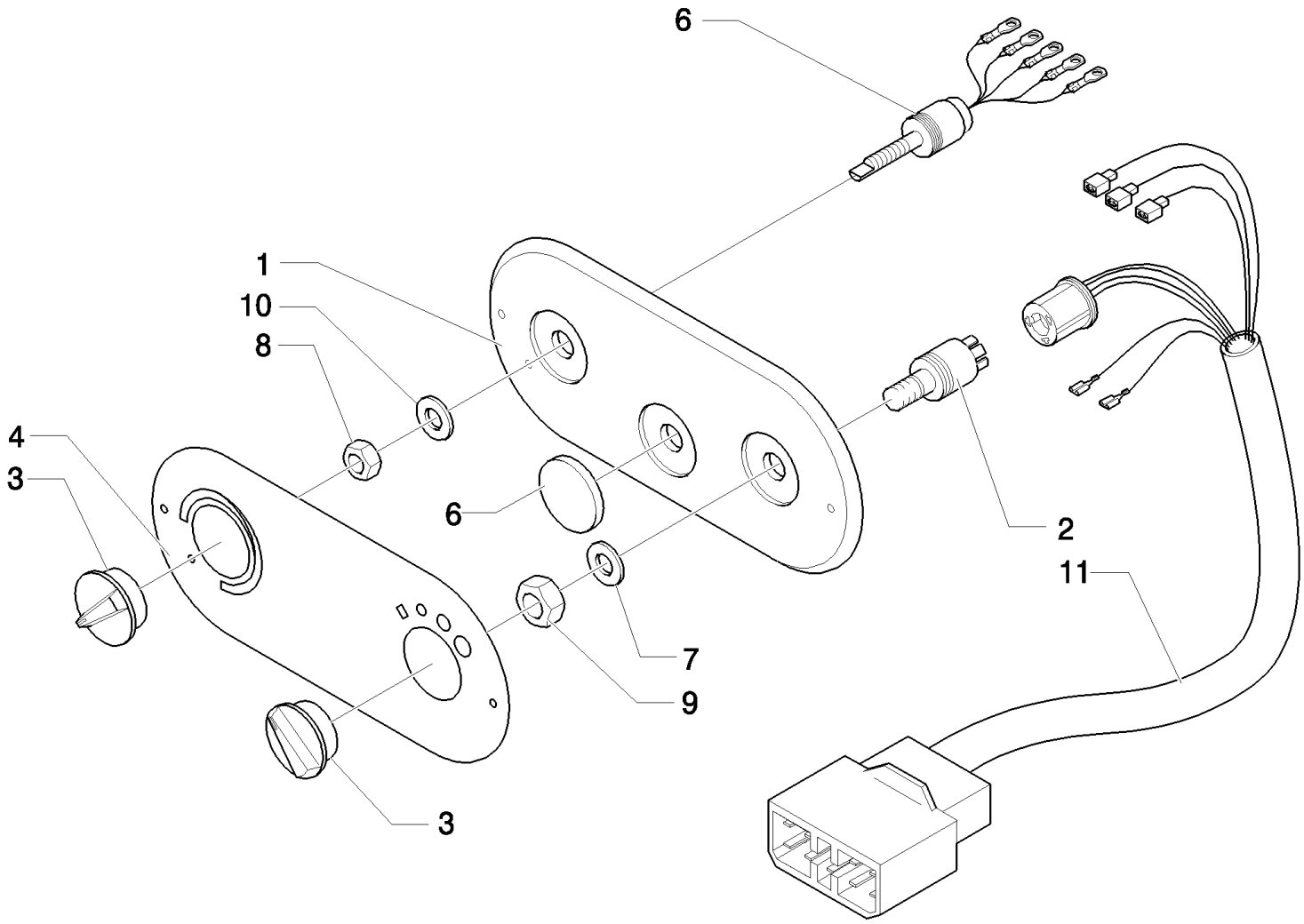

Mechanical Version, From To S/N XXX

LB115.B EUR BACKHOE LOADER (1/05-)

347(04) A/C & HEATER CONTROL PANEL

Ref	Part Number	Qty	Description
1	87314743	1	DASHBOARD,
2	87314747	1	SWITCH,
3	87314749	2	KNOB,
4	87314753	1	POTENTIOMETER,
5	87314757	2	WASHER, SEALING, 13X20
6	87316442	1	PLUG,
7	87358348	1	WASHER, 12,5X18X1,5
8	87334860	1	NUT,
9	87334861	1	NUT,
10	87358349	1	WASHER, 10,5X16X1,5
11	87314522	1	HARNESS, WIRE,

Mechanical Version, From To S/N XXX

347(05) A/C & HEATER CONSOLE DUCTS

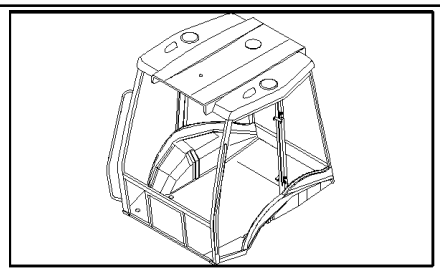

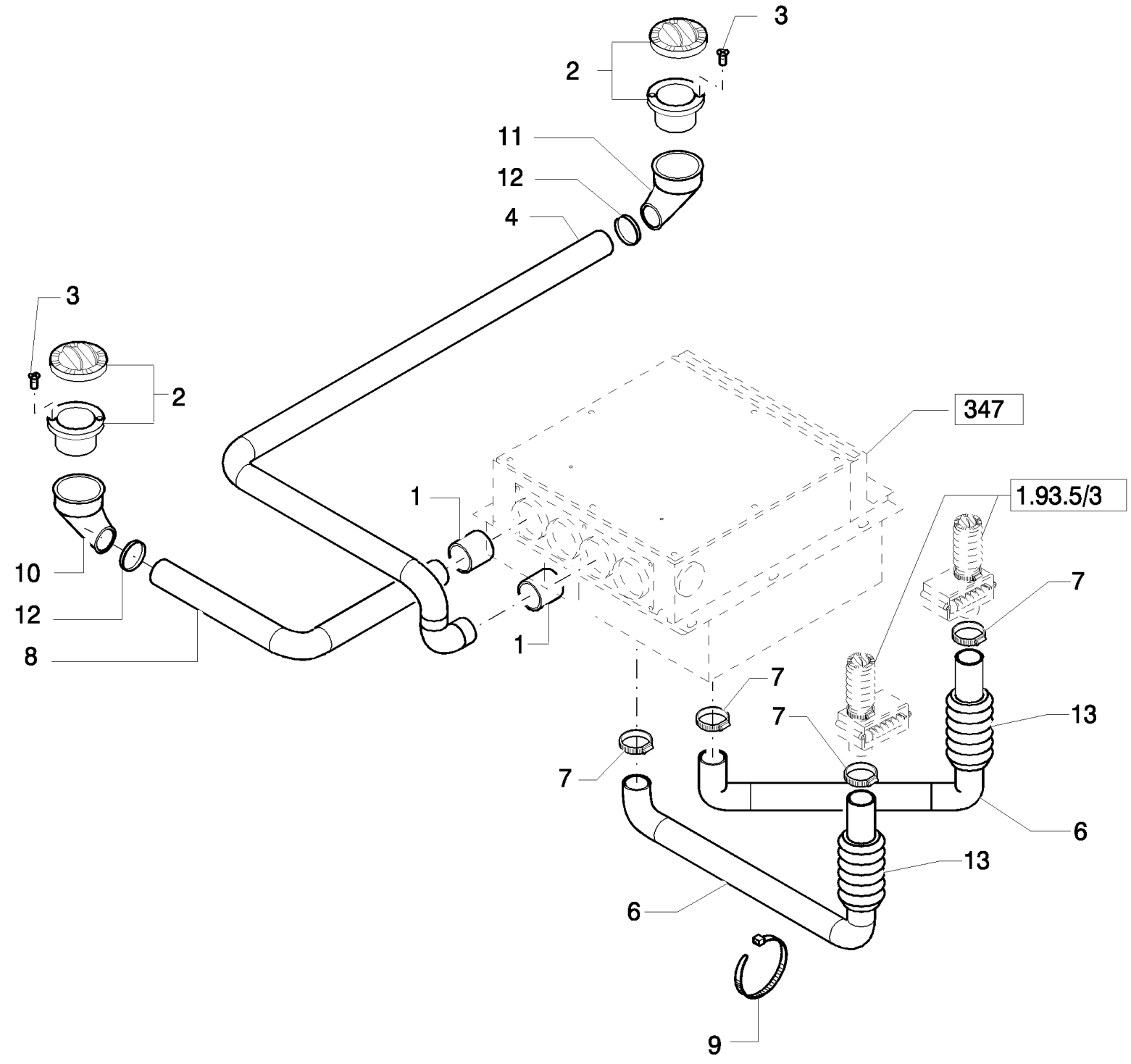

LB115.B EUR BACKHOE LOADER (1/05-)

347(05) A/C & HEATER CONSOLE DUCTS

Ref	Part Number	Qty	Description
1	85819452	2	HOSE,
2	70741298	2	DIFFUSER, , UP TO S/N XXX
2	87362068	2	, FROM S/N XXX
3	15915901	4	
4	87319437	1	DUCT, AIR,
6	87314767	2	DUCT, AIR,
7	13000990	4	CLAMP, HOSE,
8	87319443	1	DUCT, AIR,
9	5112712	12	STRAP, CABLE,
10	87319453	2	ELBOW,
11	85818891	1	ELBOW, , UP TO S/N XXX
12	85813324	2	CLAMP, HOSE,
13	87314769	2	DUCT, AIR,

Mechanical Version, From To S/N XXX

347(06) CAB HEATING COATING PLUG

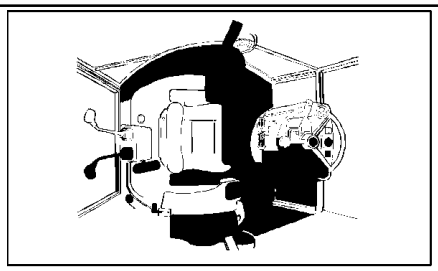

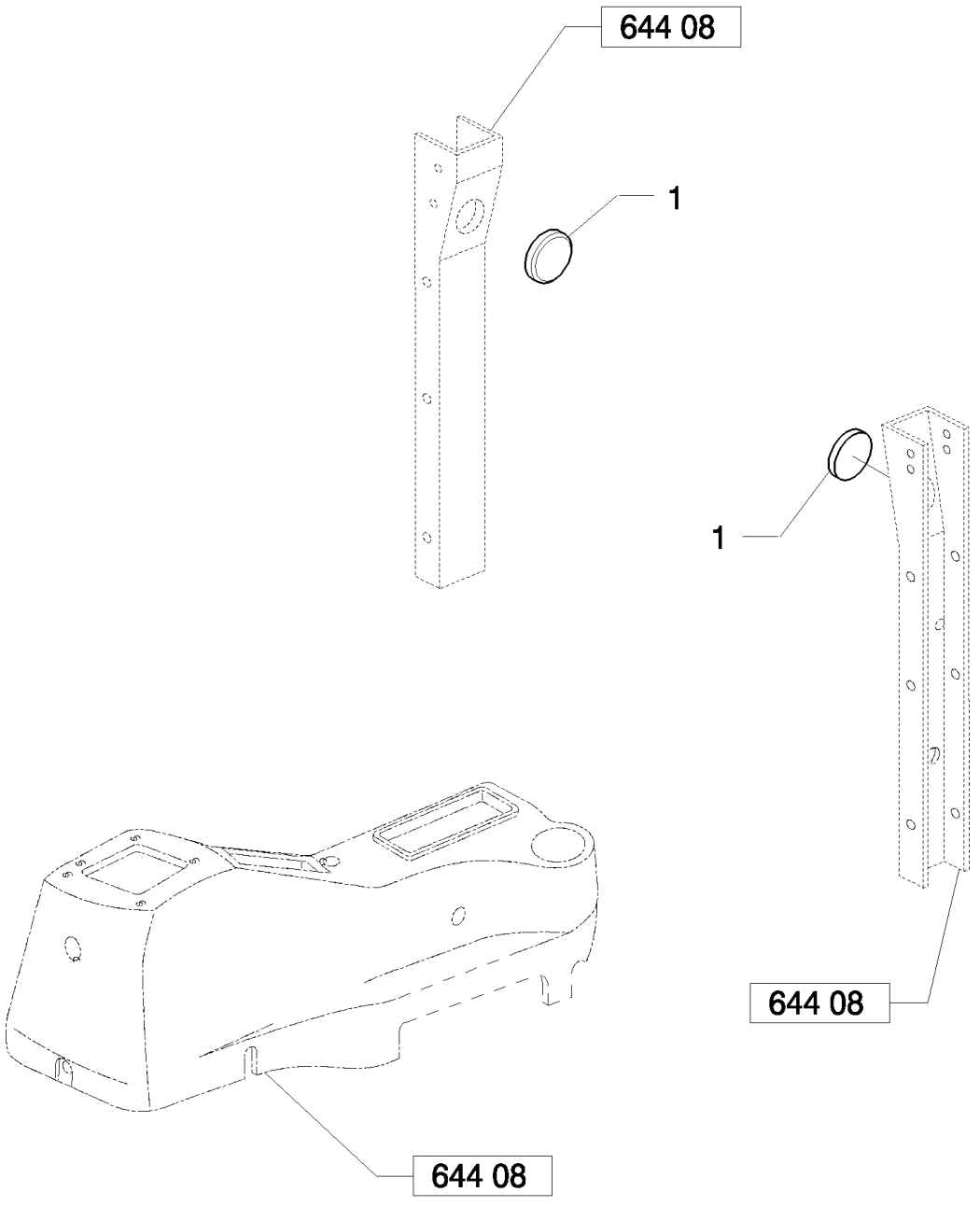

LB115.B EUR BACKHOE LOADER (1/05-)

347(06) CAB HEATING COATING PLUG

Ref	Part Number	Qty	Description
1	87319018	2	PLUG,

Mechanical Version, From To S/N XXX

350(01) 2 LEVER BACKHOE CONTROLS, LEVER, BOOT & DECALS

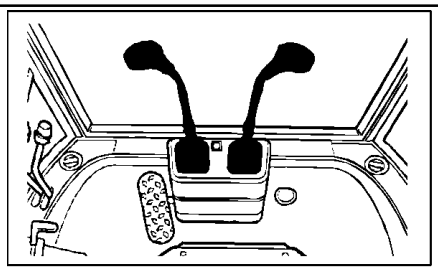

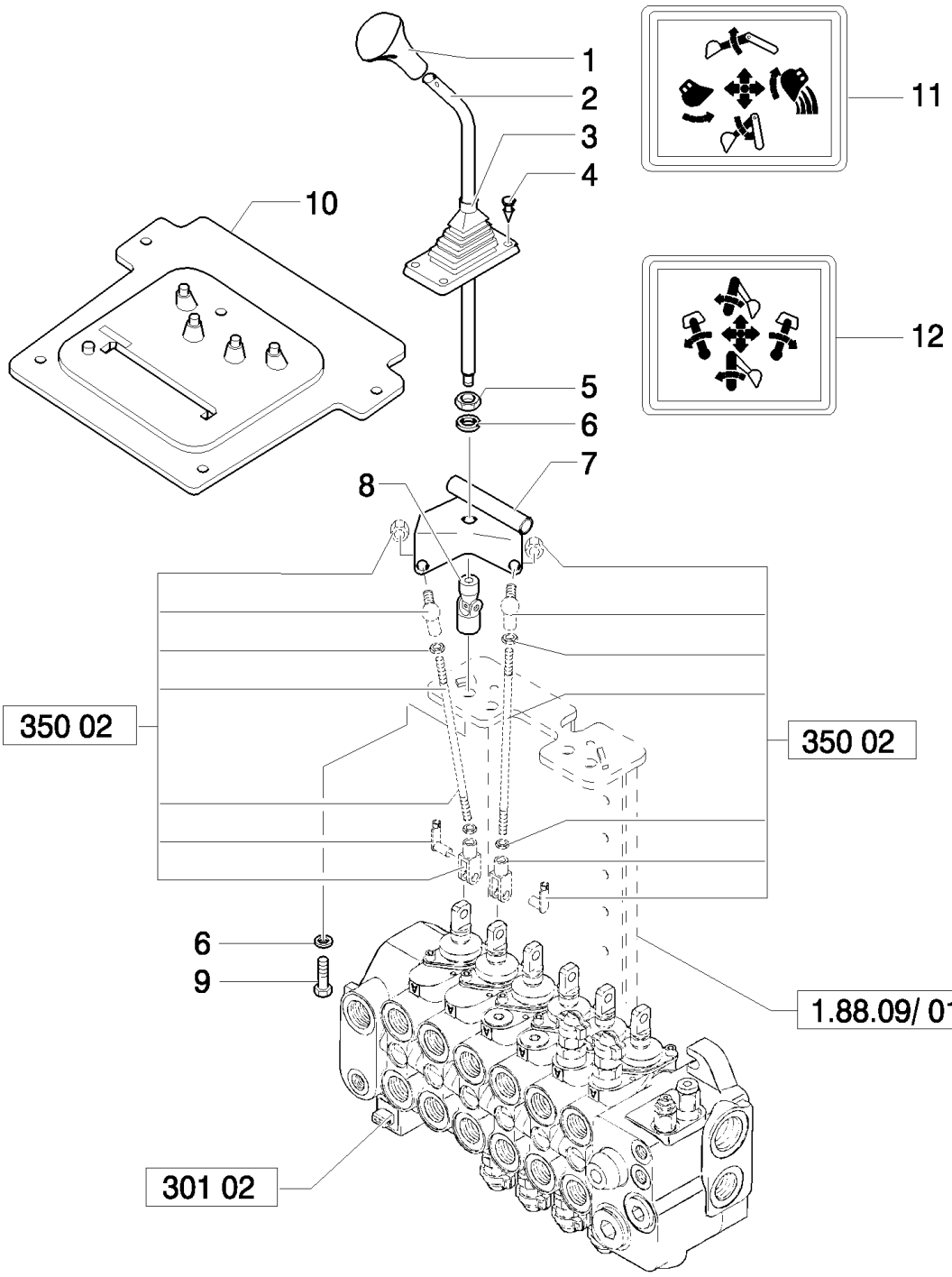

Mechanical Version

LB115.B EUR BACKHOE LOADER (1/05-)

350(01) 2 LEVER BACKHOE CONTROLS, LEVER, BOOT & DECALS

Ref	Part Number	Qty	Description
1	85801502	1	KNOB, REAR CONTROL
1	85802682	1	KNOB, FOR SWITCH - REAR CONTROL
2	85801488	2	LEVER,
3	85802843	2	BOOT,
4	14568887	8	BUTTON,
5	16101511	2	NUT, M12 x 1.25, Cl 8,
6	11190779	4	WASHER, SPRING, Belleville, M13,
7	85803124	1	BRACKET, LH
7	85803107	1	BRACKET, RH
8	85801518	2	JOINT, UNIVERSAL,
9	15540321	2	SCREW, Hex, M12 x 1.25 x 25, 8.8, Full Thd,
10	85804540	1	BOOT,
11	85804344	1	DECAL,
12	85804345	1	DECAL,

Mechanical Version

350(02) 2 LEVER BACKHOE CONTROLS, LEVER TIE-ROD ASSEMBLY

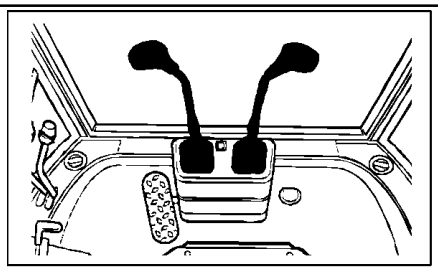

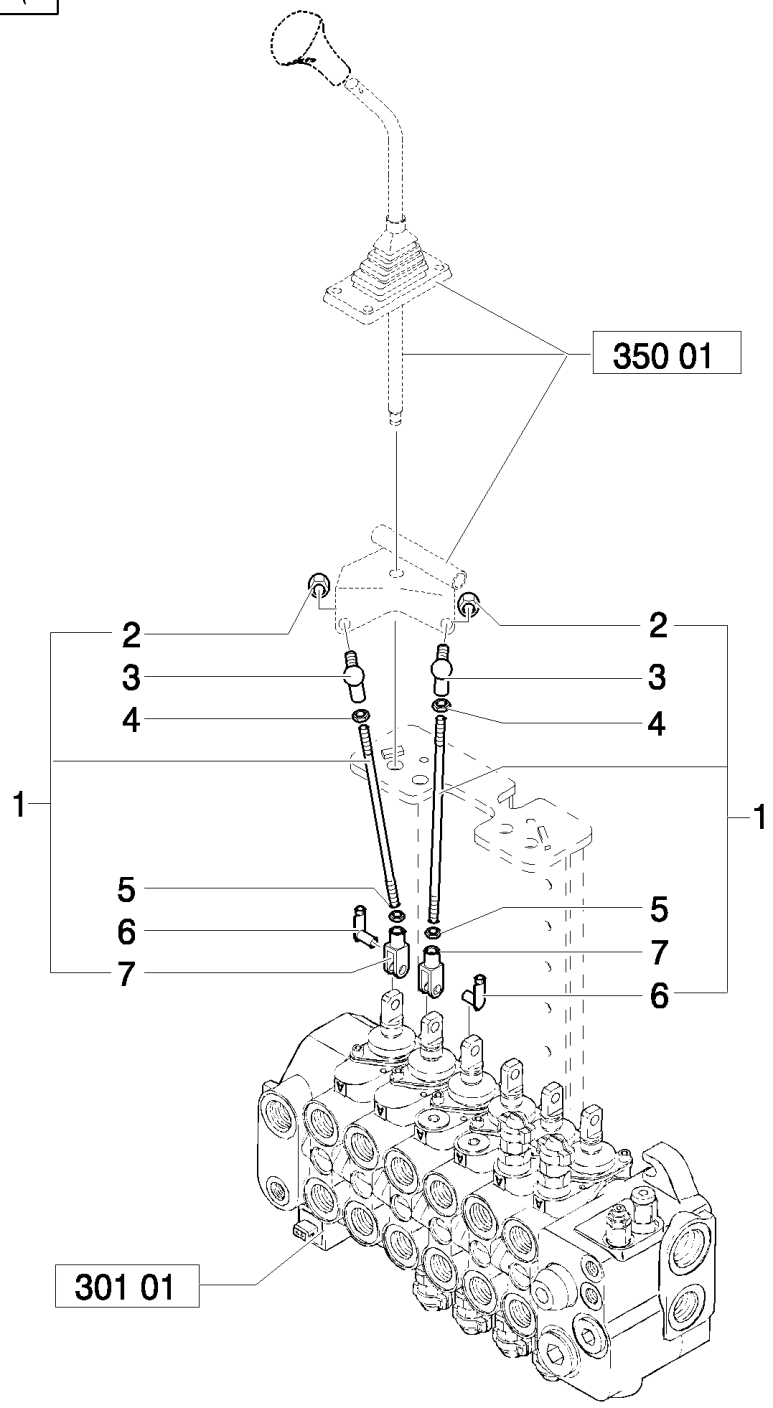

LB115.B EUR BACKHOE LOADER (1/05-)

350(02) 2 LEVER BACKHOE CONTROLS, LEVER TIE-ROD ASSEMBLY

Ref	Part Number	Qty	Description
1	85805237	4	TIE-ROD,
2	14048211	4	NUT, M8 x 1.25, Cl 8,
3	85804375	4	BALL JOINT,
4	16102311	4	NUT, Thin, M8 x 1.25, Cl 04,
5	16102911	4	NUT, Thin, M8 x 1.25, Cl 04, LH,
6	85802738	4	PIN,
7	11991971	4	CLEVIS,

Mechanical Version

351(01) JCB 2 LEVER BACKHOE CONTROLS, LEVERS, BOOT & DECALS

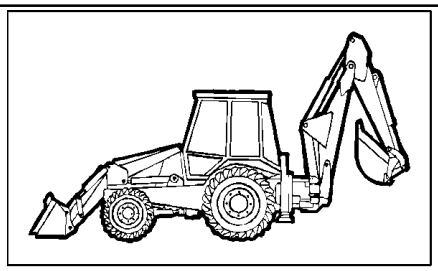

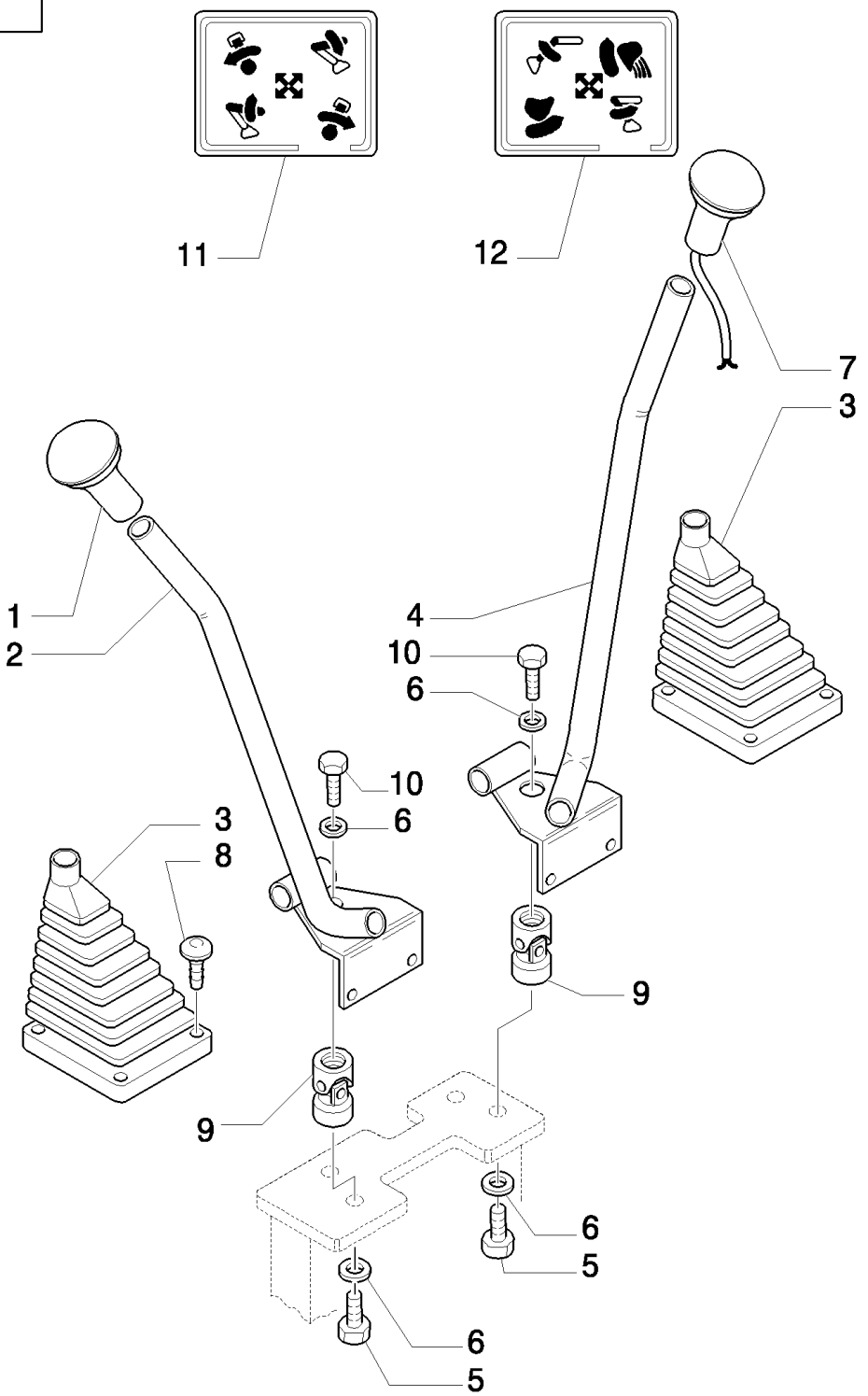

LB115.B EUR BACKHOE LOADER (1/05-)

351(01) JCB 2 LEVER BACKHOE CONTROLS, LEVERS, BOOT & DECALS

Ref	Part Number	Qty	Description
1	85801502	1	KNOB,
2	85803802	1	BRACKET,
3	85802843	2	BOOT,
4	85803784	1	BRACKET,
5	15540321	2	SCREW, Hex, M12 x 1.25 x 25, 8.8, Full Thd,
6	11190779	4	WASHER, SPRING, Belleville, M13,
7	85802682	1	KNOB,
8	14568887	8	BUTTON,
9	85801518	2	JOINT, UNIVERSAL,
10	14331021	2	SCREW, M12X1,25X25
11	85803810	1	DECAL,
12	85803811	1	DECAL,

Mechanical Version

351(02) JCB 2 LEVER BACKHOE CONTROLS, UPPER TIE-ROD ASSEMBLY

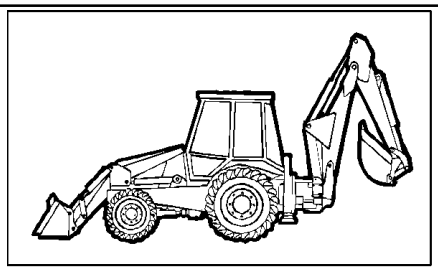

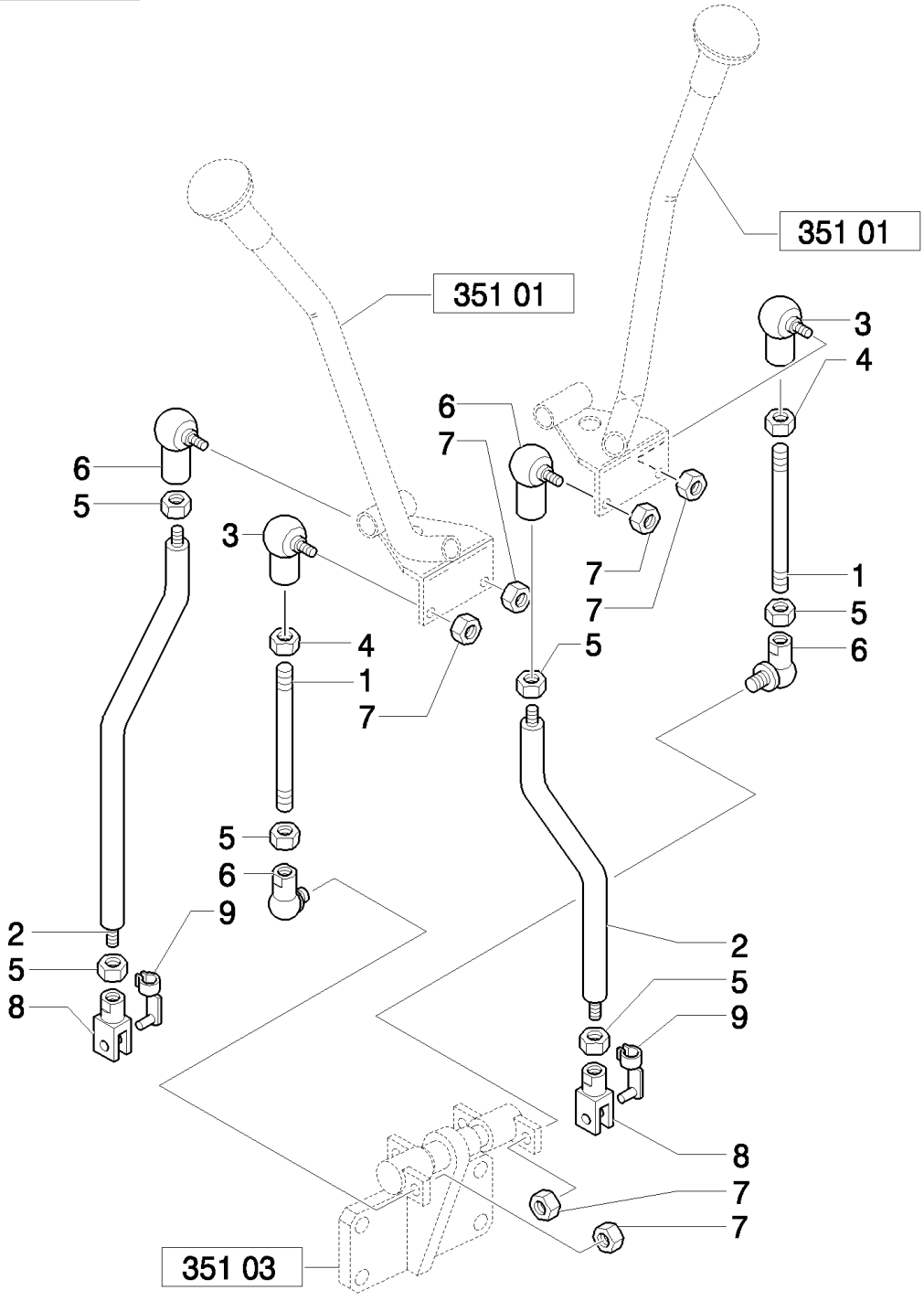

LB115.B EUR BACKHOE LOADER (1/05-)

351(02) JCB 2 LEVER BACKHOE CONTROLS, UPPER TIE-ROD ASSEMBLY

Ref	Part Number	Qty	Description
1	85804915	2	TIE-ROD, Assy, Includes 3 To 7
2	85806167	2	TIE-ROD, Assy, Includes 5 to 9
3	85804376	2	BALL JOINT,
4	16102911	2	NUT, Thin, M8 x 1.25, Cl 04, LH,
5	16102311	6	NUT, Thin, M8 x 1.25, Cl 04,
6	85804375	4	BALL JOINT,
7	14048211	6	NUT, M8 x 1.25, Cl 8,
8	10007871	2	YOKE,
9	85802738	2	PIN,

Mechanical Version

351(03) JCB 2 LEVER BACKHOE CONTROLS, LOWER TIE-ROD ASSEMBLY

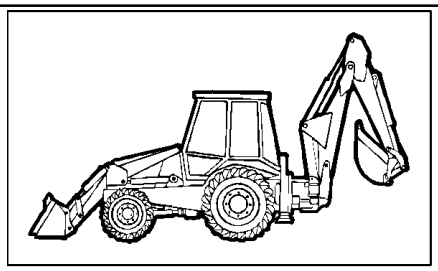

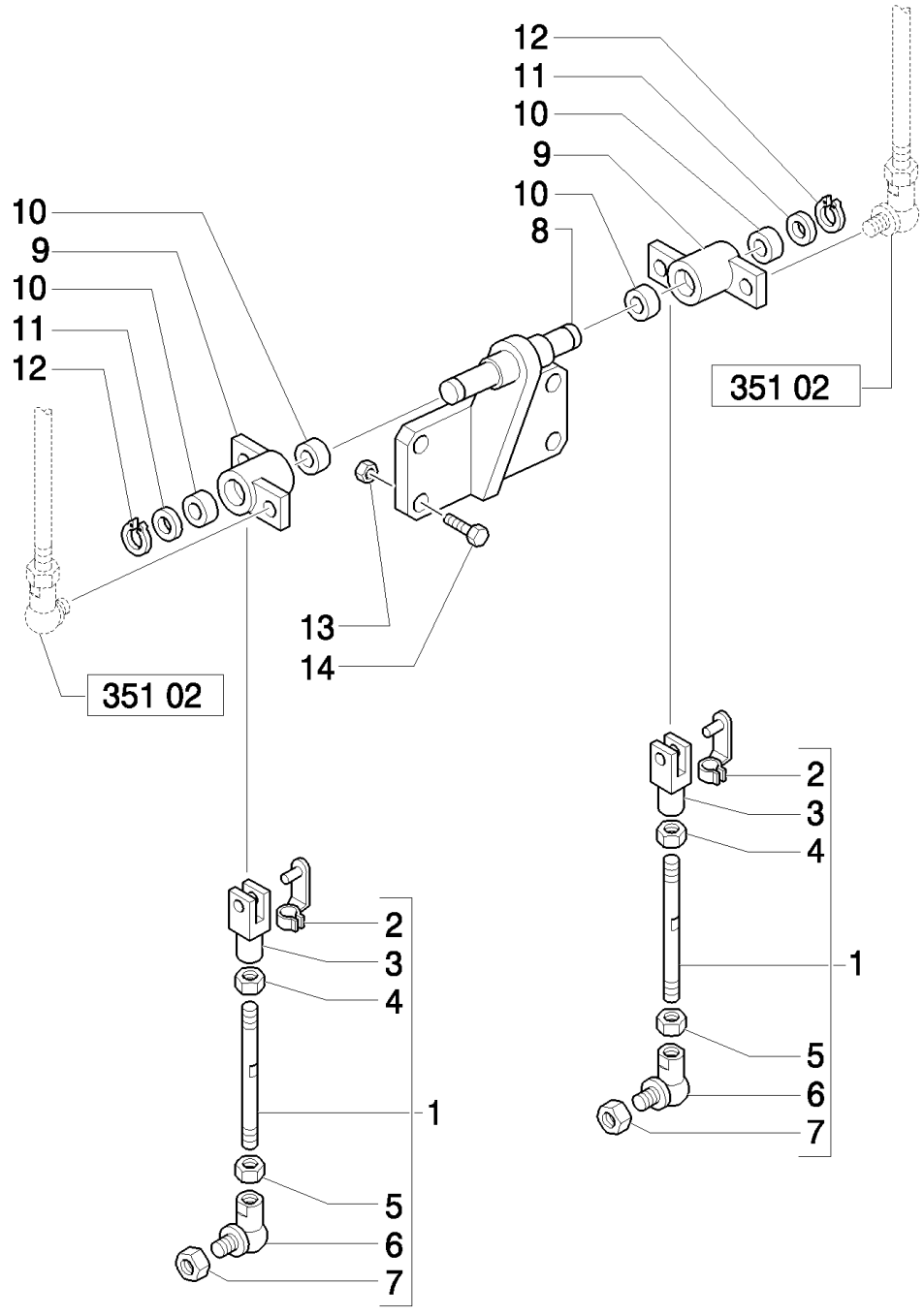

LB115.B EUR BACKHOE LOADER (1/05-)

351(03) JCB 2 LEVER BACKHOE CONTROLS, LOWER TIE-ROD ASSEMBLY

Ref	Part Number	Qty	Description
1	85806165	2	TIE-ROD, Assy
2	85802738	2	PIN,
3	11991971	2	CLEVIS,
4	16102911	2	NUT, Thin, M8 x 1.25, Cl 04, LH,
5	16102311	2	NUT, Thin, M8 x 1.25, Cl 04,
6	85804375	2	BALL JOINT,
7	14048211	2	NUT, M8 x 1.25, Cl 8,
8	85804899	1	SUPPORT,
9	85804895	2	LEVER, , Includes 10
10	85802494	4	BUSHING,
11	13507714	2	WASHER,
12	N663114S36	2	RING, SNAP, {PP:83911366}
13	16104111	4	NUT, M8 x 1.25, Cl 8,
14	16043821	4	SCREW, Hex, M8 x 30, 8.8,

Mechanical Version

353(01) 4 LEVER BACKHOE CONTROLS, CONSOLE, LEVERS & BELLCRANK

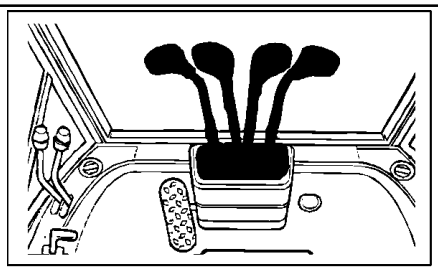

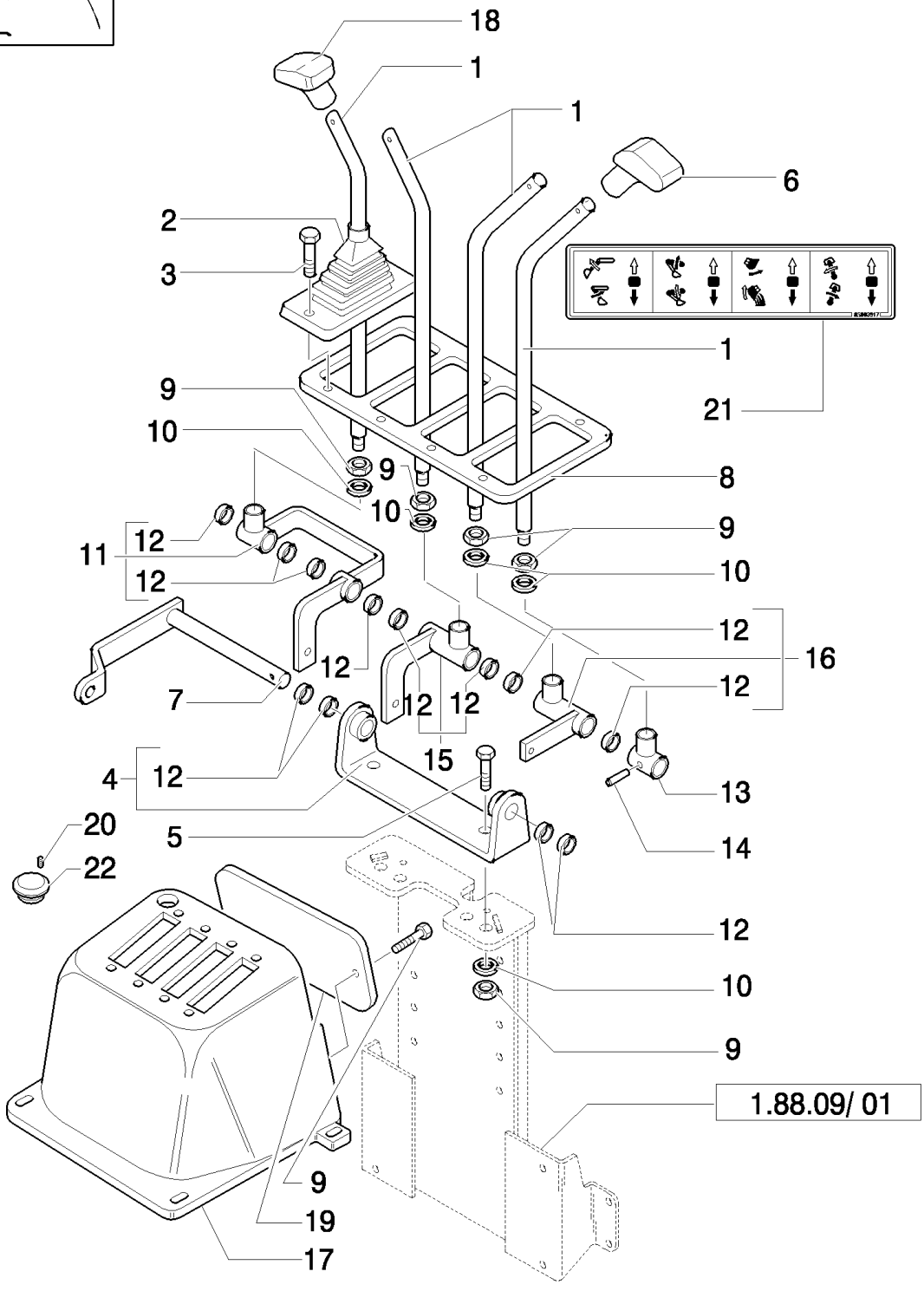

LB115.B EUR BACKHOE LOADER (1/05-)

353(01) 4 LEVER BACKHOE CONTROLS, CONSOLE, LEVERS & BELLCRANK

Ref	Part Number	Qty	Description
1	85804780	4	LEVER,
2	85803382	4	BOOT,
3	13272477	10	SCREW, Cross Pan Hd, M4 x 20, 12.9,
4	85802647	1	SUPPORT,
5	15540421	2	SCREW, Hex, M12 x 1.25 x 30, 8.8, Full Thd,
6	83962919	2	HANDLE, R.H.
7	85804782	1	PIN,
8	85803540	1	PLATE,
9	16101511	6	NUT, M12 x 1.25, Cl 8,
10	11190779	6	WASHER, SPRING, Belleville, M13,
11	85804801	1	BELLCRANK,
12	85802494	12	BUSHING,
13	85804787	1	BELLCRANK,
14	13940370	1	PIN, ROLL, M5 x 26, Coiled,
15	85804794	1	BELLCRANK,
16	85804791	1	BELLCRANK,
17	85805239	1	CONSOLE,
18	83962918	2	HANDLE, L.H.
19	85804781	1	COVER,
20	13812631	1	SET SCREW, Hex Soc, M12 x 12, Flat Pt,
21	85803917	1	DECAL,
22	85802227	1	PLUG,

Mechanical Version

353(02) 4 LEVER BACKHOE CONTROLS, UPPER TIE-ROD ASSEMBLY

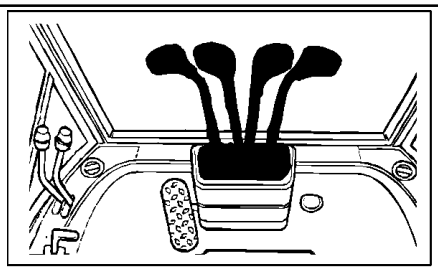

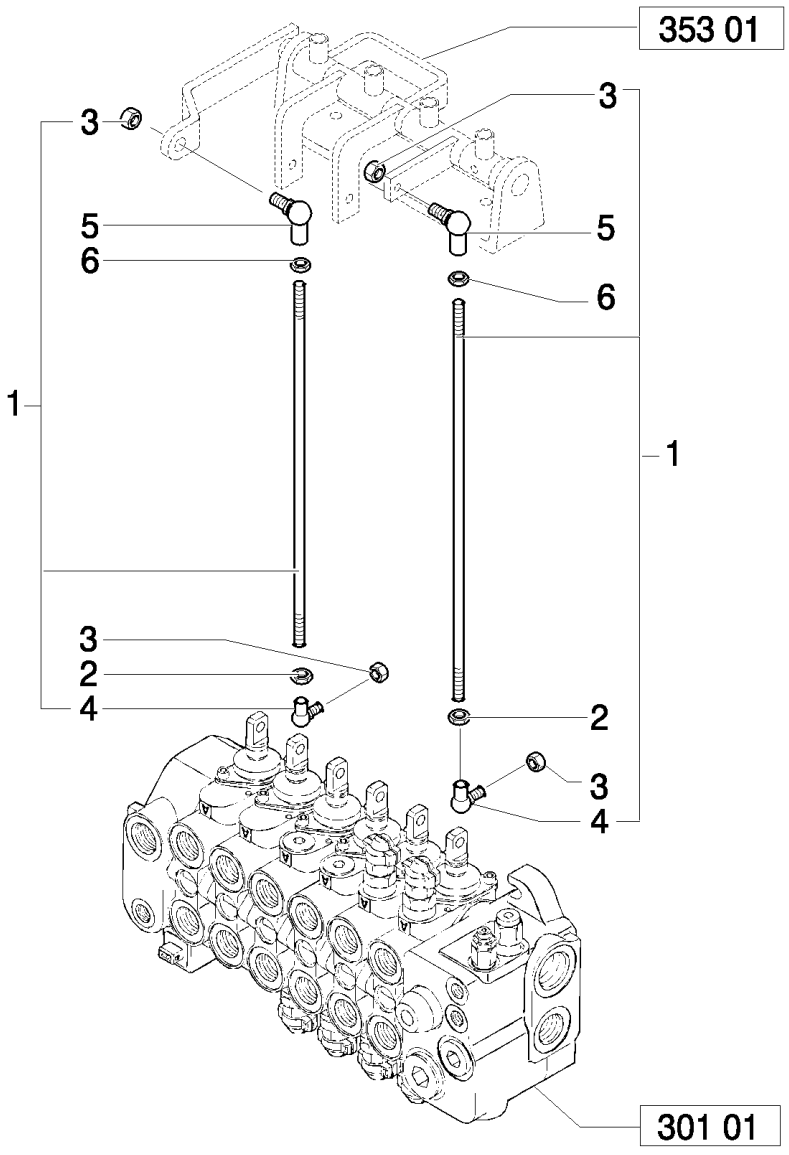

LB115.B EUR BACKHOE LOADER (1/05-)

353(02) 4 LEVER BACKHOE CONTROLS, UPPER TIE-ROD ASSEMBLY

Ref	Part Number	Qty	Description
1	85804736	2	TIE-ROD,
2	16102911	2	NUT, Thin, M8 x 1.25, Cl 04, LH,
3	14048211	4	NUT, M8 x 1.25, Cl 8,
4	85804376	2	BALL JOINT,
5	85804375	2	BALL JOINT,
6	16102311	2	NUT, Thin, M8 x 1.25, Cl 04,

Mechanical Version

353(03) 4 LEVER BACKHOE CONTROLS, LOWER TIE-ROD ASSEMBLY

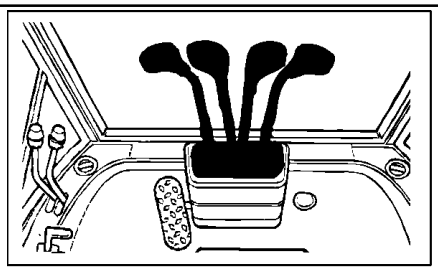

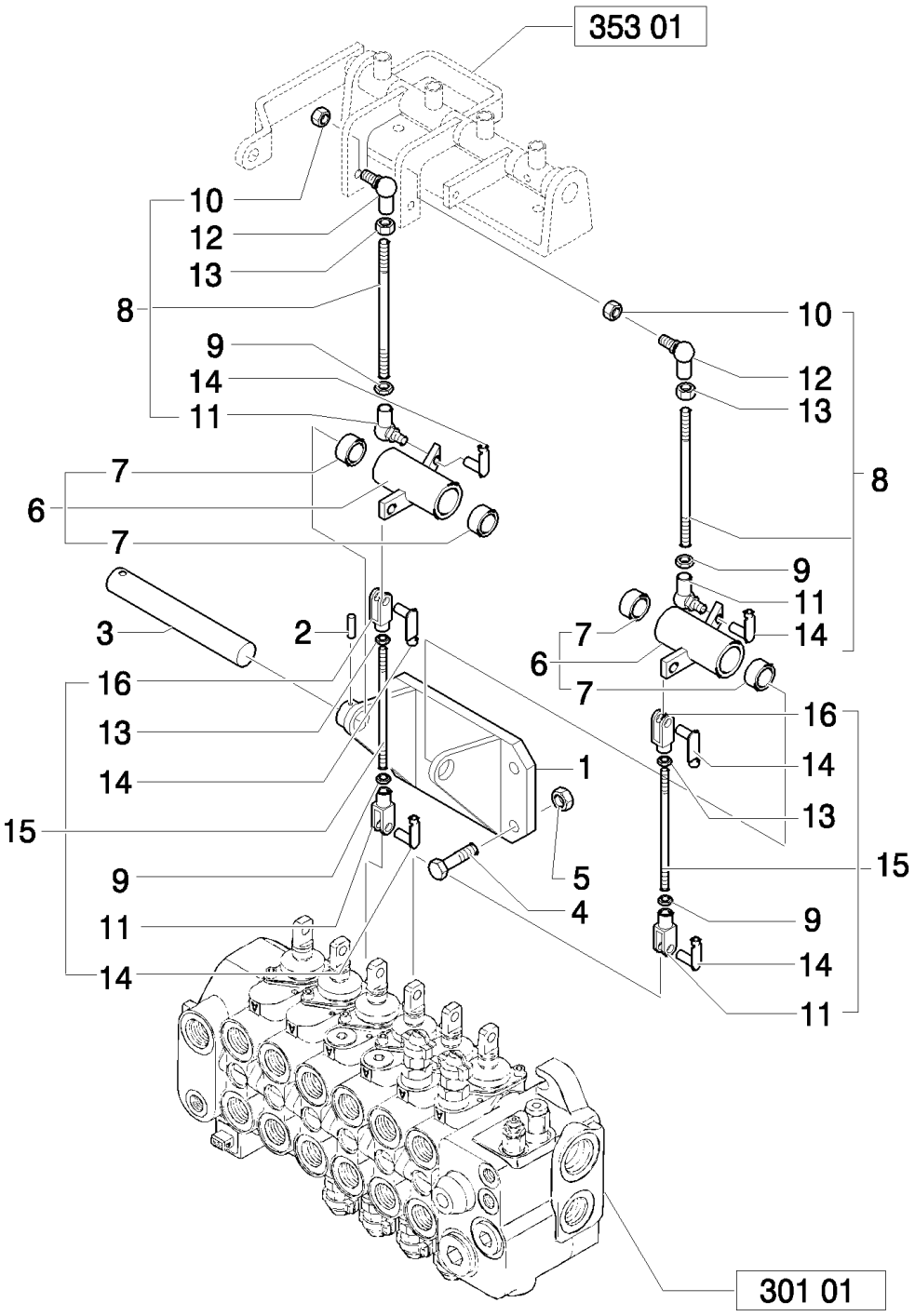

LB115.B EUR BACKHOE LOADER (1/05-)

353(03) 4 LEVER BACKHOE CONTROLS, LOWER TIE-ROD ASSEMBLY

Ref	Part Number	Qty	Description
1	85803360	1	SUPPORT,
2	13940370	1	PIN, ROLL, M5 x 26, Coiled,
3	85803364	1	PIN,
4	16043621	4	BOLT, Hex, M8 x 25, 8.8,
5	16104111	4	NUT, M8 x 1.25, Cl 8,
6	85807926	2	BELLCRANK,
7	85802494	4	BUSHING,
8	85805498	2	TIE-ROD,
9	16102911	4	NUT, Thin, M8 x 1.25, Cl 04, LH,
10	14048211	2	NUT, M8 x 1.25, Cl 8,
11	11991971	4	CLEVIS,
12	85804375	2	BALL JOINT,
13	16102311	4	NUT, Thin, M8 x 1.25, Cl 04,
14	85802738	6	PIN,
15	85807914	2	TIE-ROD,
16	10007871	2	YOKE,

Mechanical Version

354(01) ISO 2 LEVER BACKHOE CONTROLS, TIE-ROD ASSEMBLY, BOOT & DECALS (SIDE SHIFT)

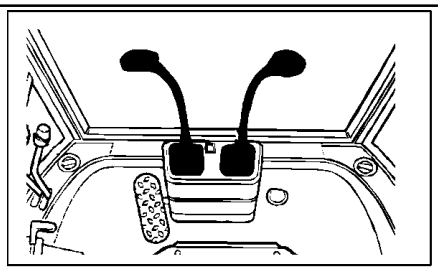

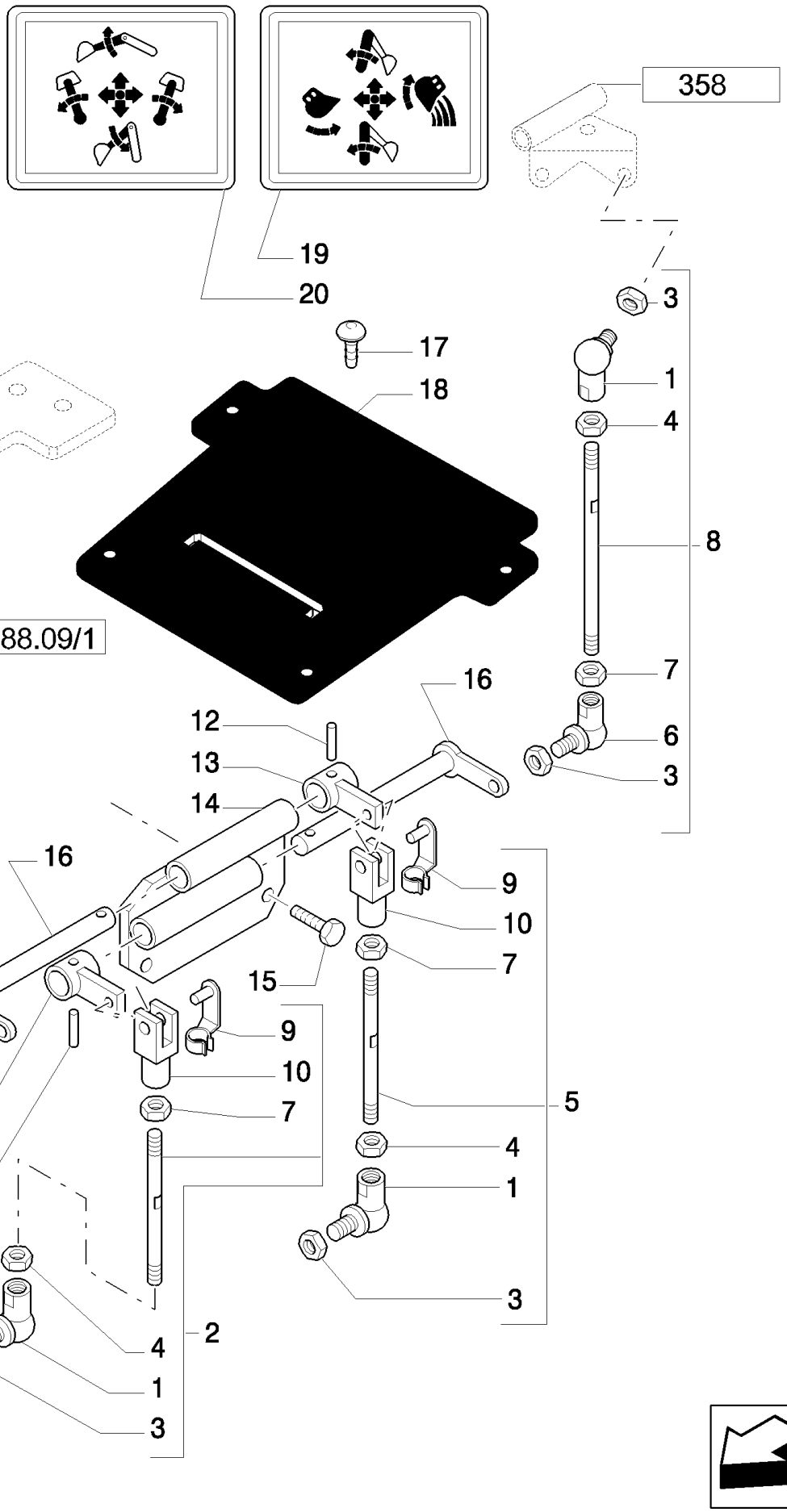

LB115.B EUR BACKHOE LOADER (1/05-)

354(01) ISO 2 LEVER BACKHOE CONTROLS, TIE-ROD ASSEMBLY, BOOT & DECALS (SIDE SHIFT)

Ref	Part Number	Qty	Description
1	85804375	4	BALL JOINT,
2	85805806	1	TIE-ROD, Assy
3	14048211	8	NUT, M8 x 1.25, Cl 8,
4	16102311	4	NUT, Thin, M8 x 1.25, Cl 04,
5	85805867	1	TIE-ROD, Assy
6	85804376	1	BALL JOINT,
7	16102911	4	NUT, Thin, M8 x 1.25, Cl 04, LH,
8	85803477	1	TIE-ROD, Assy
9	85802738	2	PIN,
10	11991971	2	CLEVIS, LH
11	85803474	1	TIE-ROD, Assy
12	13940370	2	PIN, ROLL, M5 x 26, Coiled,
13	85805866	2	LEVER, IDLER,
14	85803493	1	SUPPORT,
15	16043621	3	BOLT, Hex, M8 x 25, 8.8,
16	85803489	2	PIN,
17	14568887	8	BUTTON,
18	85804541	1	BOOT,
19	85803782	1	DECAL,
20	85803783	1	DECAL,

Mechanical Version

358(01) ISO 2 LEVER BACKHOE CONTROLS, LEVERS, BOOT & DECALS

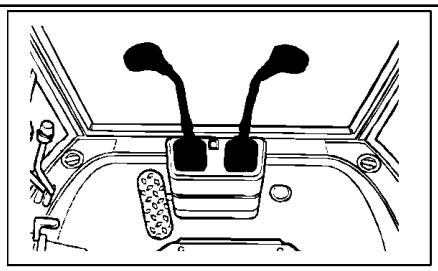

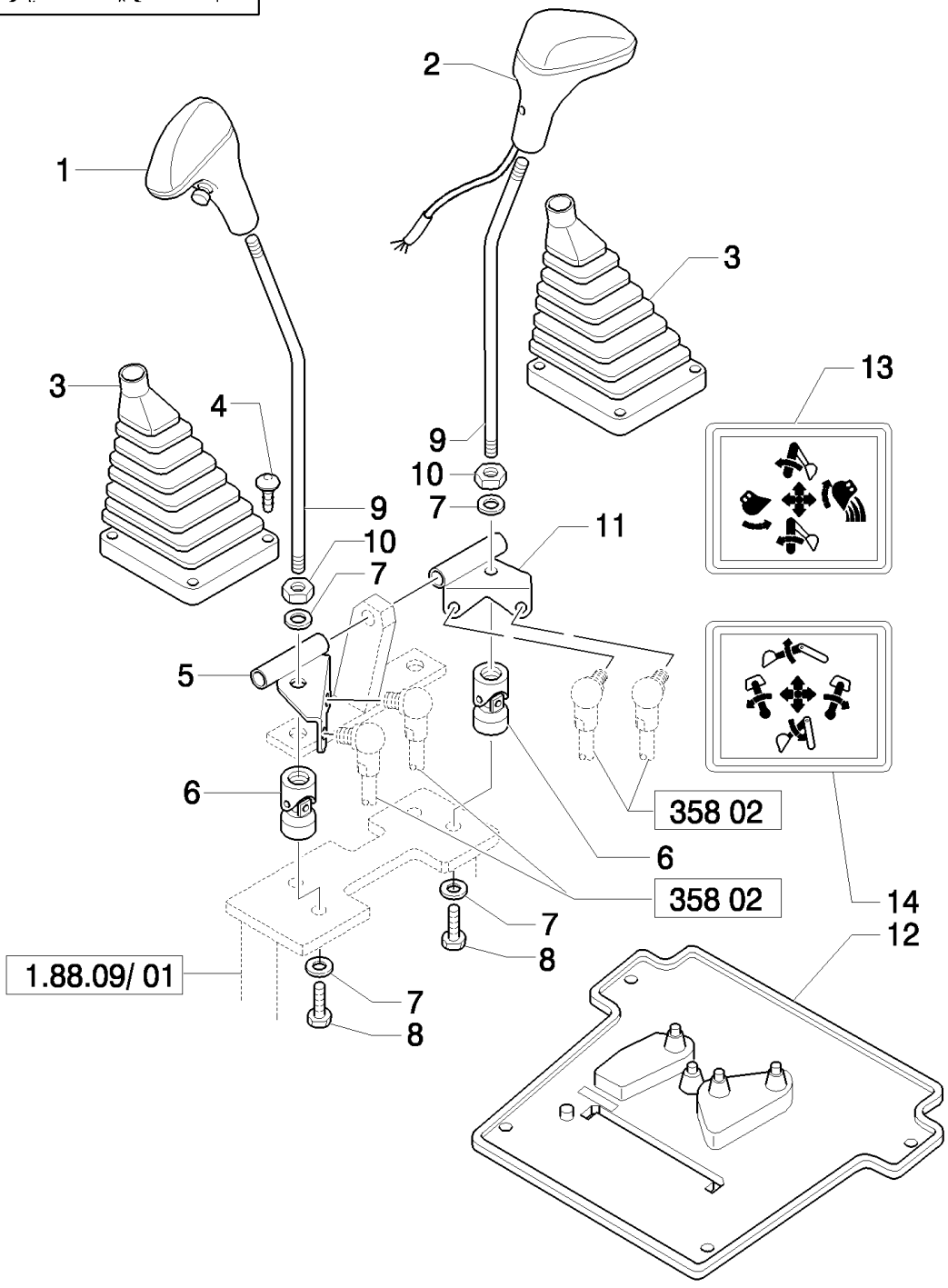

Mechanical Version

LB115.B EUR BACKHOE LOADER (1/05-)

358(01) ISO 2 LEVER BACKHOE CONTROLS, LEVERS, BOOT & DECALS

Ref	Part Number	Qty	Description
1	85801502	1	KNOB,
2	85802682	1	KNOB,
3	85802843	2	BOOT,
4	14568887	8	BUTTON, 8X20
5	85803124	1	BRACKET, LH
6	85801518	2	JOINT, UNIVERSAL,
7	11190779	4	WASHER, SPRING, Belleville, M13,
8	15540321	2	SCREW, Hex, M12 x 1.25 x 25, 8.8, Full Thd,
9	85801488	2	LEVER,
10	16101511	2	NUT, M12 x 1.25, Cl 8,
11	85803107	1	BRACKET, RH
12	85804541	1	BOOT,
13	85803783	1	DECAL,
14	85803782	1	DECAL,

Mechanical Version

358(02) ISO 2 LEVER BACKHOE CONTROLS, TIE-ROD ASSEMBLY

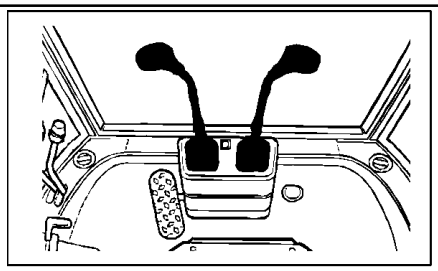

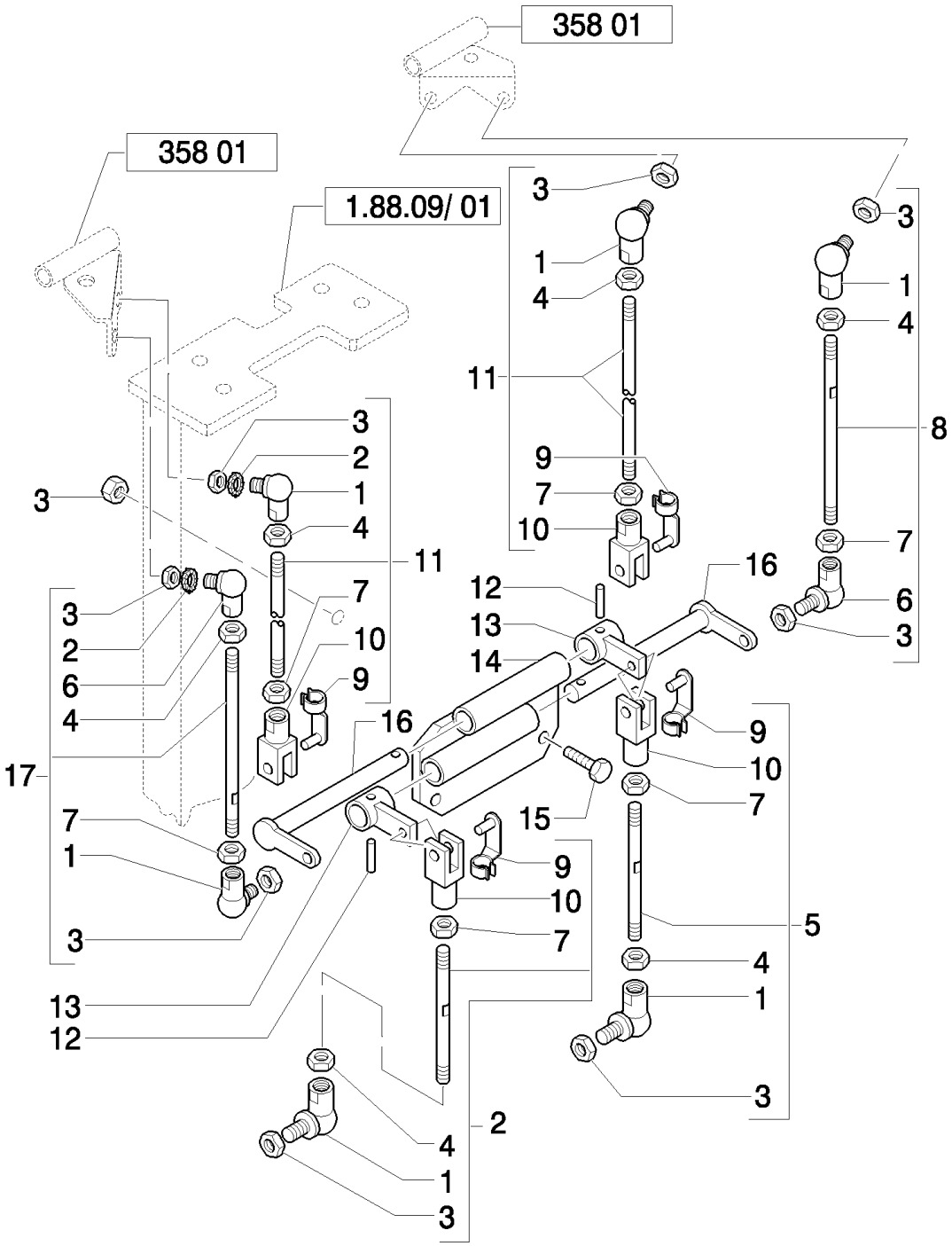

LB115.B EUR BACKHOE LOADER (1/05-)

358(02) ISO 2 LEVER BACKHOE CONTROLS, TIE-ROD ASSEMBLY

Ref	Part Number	Qty	Description
1	85804375	6	BALL JOINT,
2	85805806	1	TIE-ROD, Assy
3	14048211	8	NUT, M8 x 1.25, Cl 8,
4	16102311	4	NUT, Thin, M8 x 1.25, Cl 04,
5	85805867	1	TIE-ROD, Assy
6	85804376	2	BALL JOINT,
7	16102911	6	NUT, Thin, M8 x 1.25, Cl 04, LH,
8	85803477	1	TIE-ROD, Assy
9	85802738	4	PIN,
10	11991971	4	CLEVIS, LH
11	85805237	2	TIE-ROD, Assy
12	13940370	2	PIN, ROLL, M5 x 26, Coiled,
13	85805866	2	LEVER, IDLER,
14	85803493	1	SUPPORT,
15	16043621	3	BOLT, Hex, M8 x 25, 8.8,
16	85803489	2	PIN,
17	85803474	1	TIE-ROD,

Mechanical Version

375(01) TRANSPORT LOCK - EUROPE (POWER SHUTTLE)(CAB)

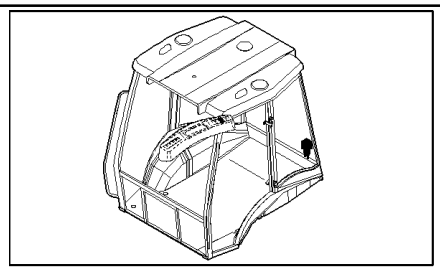

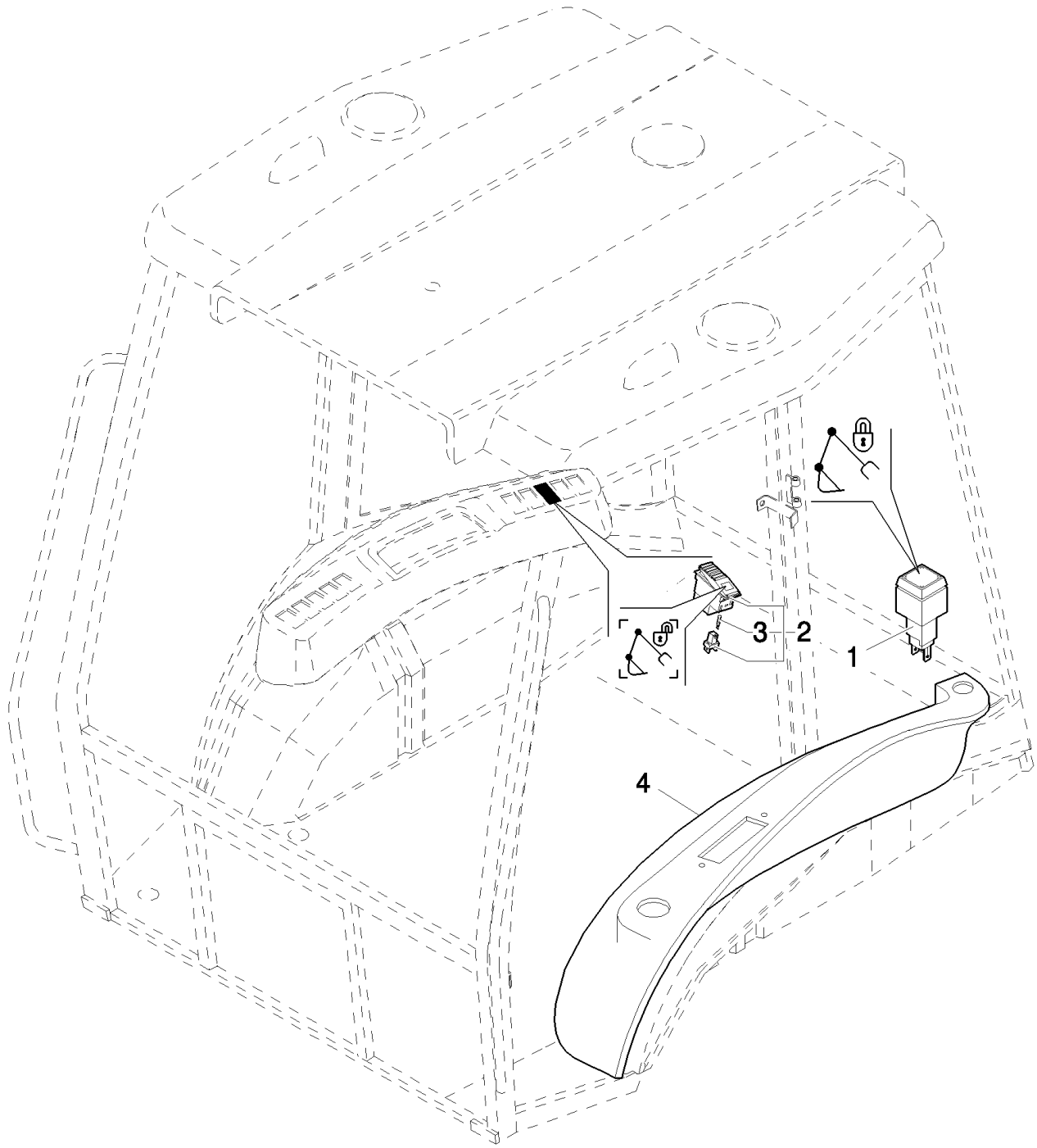

LB115.B EUR BACKHOE LOADER (1/05-)

375(01) TRANSPORT LOCK - EUROPE (POWER SHUTTLE)(CAB)

Ref	Part Number	Qty	Description
1	85802160	1	LIGHT, WARNING,
2	85819141	1	SWITCH,
3	14143790	1	BULB,
4	87362094	1	SOFT TRIM,

379(01) TRANSPORT LOCK" REAR LOCKING" (SIDE SHIFT)

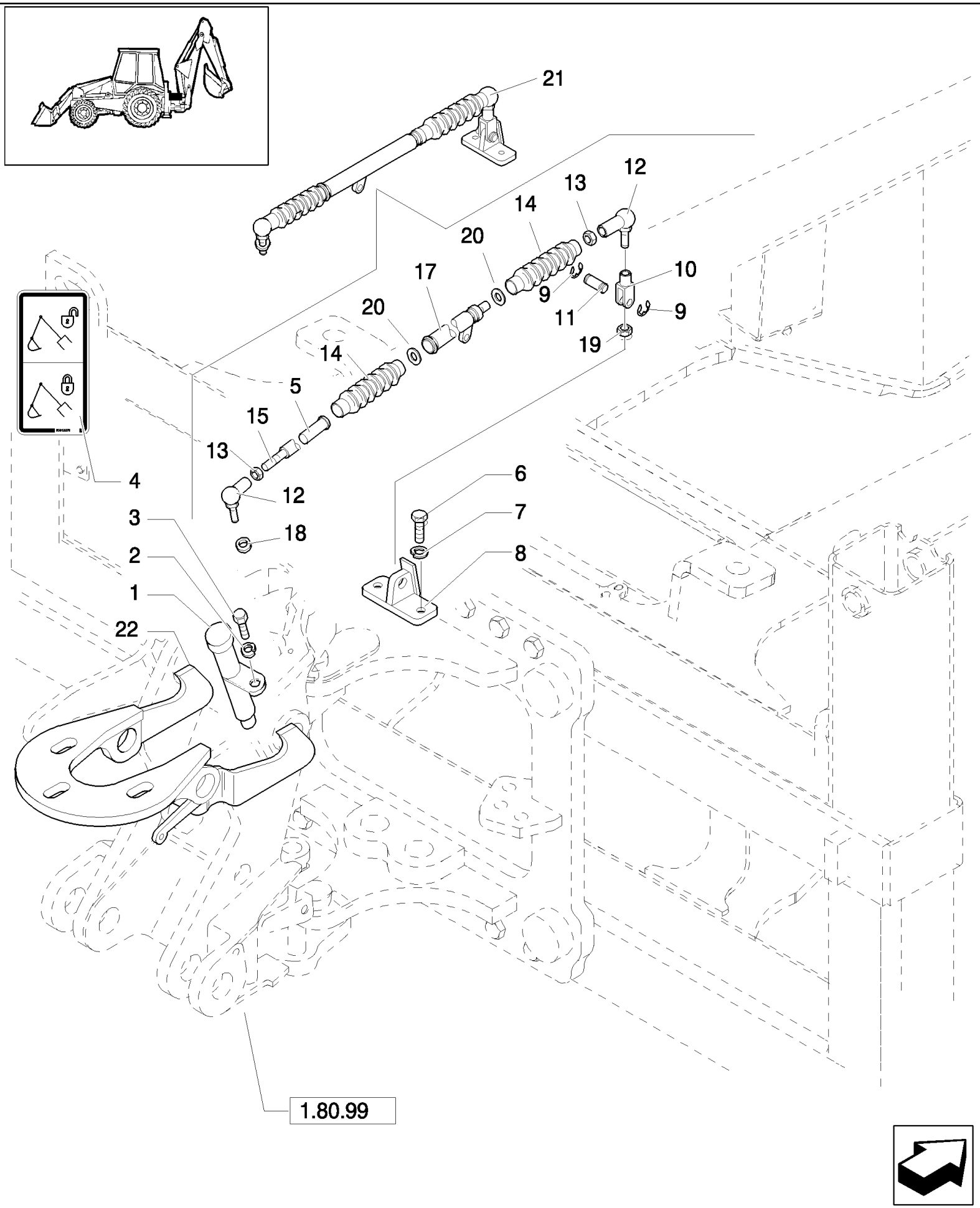

LB115.B EUR BACKHOE LOADER (1/05-)

379(01) TRANSPORT LOCK" REAR LOCKING" (SIDE SHIFT)

Ref	Part Number	Qty	Description
1	85821268	1	SHOCK ABSORBER, , Only for LB90.B - LB95.B - LB110.B
2	11193879	1	WASHER, SPRING, Belleville, M8.4,
3	16043621	1	BOLT, Hex, M8 x 25, 8.8,
4	85812278	1	DECAL, , Only for LB90.B - LB95.B - LB110.B
5	85819482	1	BUSHING,
6	11106221	2	SCREW, Hex, M10 x 25, 8.8, Full Thd,
7	11190579	2	WASHER, SPRING, Belleville, M10.5,
8	85819485	1	BASE, , Only for EUROPE Version
9	85813407	2	RING,
10	85819468	1	CLEVIS,
11	87302958	1	PIN, CLEVIS,
12	85819477	2	BALL JOINT,
13	85819478	1	NUT, M10
14	85819479	1	BELLOWS,
15	85819481	1	ROD,
17	85819480	1	TUBE,
18	85821270	1	WASHER,
19	85821271	1	NUT, M16
20	85824227	2	CLAMP,
21	87302956	1	TIE-ROD, , Only for EUROPE Version, Only for LB90.B - LB95.B - LB110.B
22	85819493	1	HOOK, , Only for LB 90.B - LB95.B - LB110.B
22	85803637	1	HOOK, , Only for EUROPE Version

379(02) TRANSPORT LOCK" REAR LOCKING" (SIDE SHIFT)

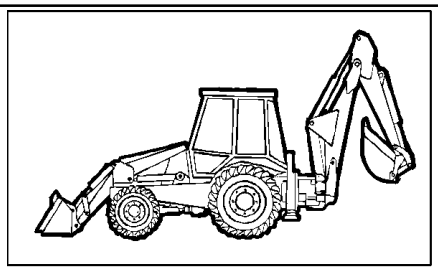

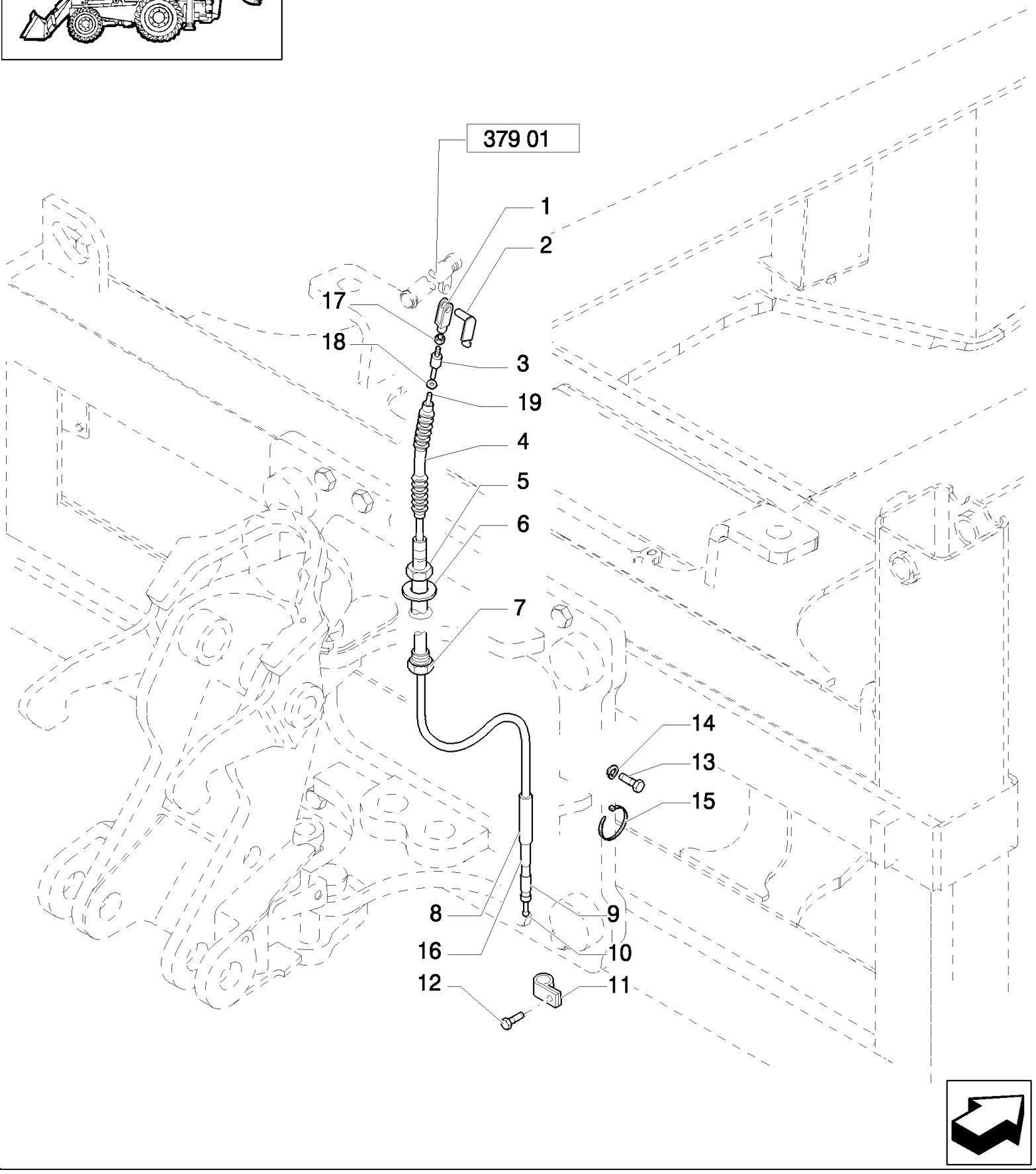

LB115.B EUR BACKHOE LOADER (1/05-)

379(02) TRANSPORT LOCK" REAR LOCKING" (SIDE SHIFT)

Ref	Part Number	Qty	Description
1	85819467	1	CLEVIS,
2	85819469	1	CLIP, D=8
3	85819471	1	RING, D=19
4	85821278	1	BELLOWS,
5	87302960	1	NUT, M30
6	87302959	1	WASHER, D=46
7	87302961	1	
8	85825233	1	CABLE,
9	85825240	1	
10	85825241	1	
11	10450190	1	CLAMP,
12	16043021	1	SCREW, Hex, M8 x 12, 8.8, Full Thd,
13	16043021	1	SCREW, Hex, M8 x 12, 8.8, Full Thd,
14	11193879	1	WASHER, SPRING, Belleville, M8.4,
15	79072960	3	STRAP, CABLE,
16	85825239	1	M16
17	85821273	1	NUT, M8 x 1.25
18	85821277	1	RING, RUBBER,
19	85821279	1	ROD,

391(01) LOCK VALVE FOR BUCKET 4X1 / 6X1

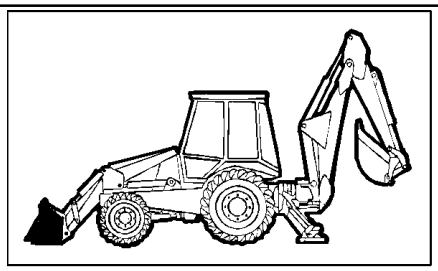

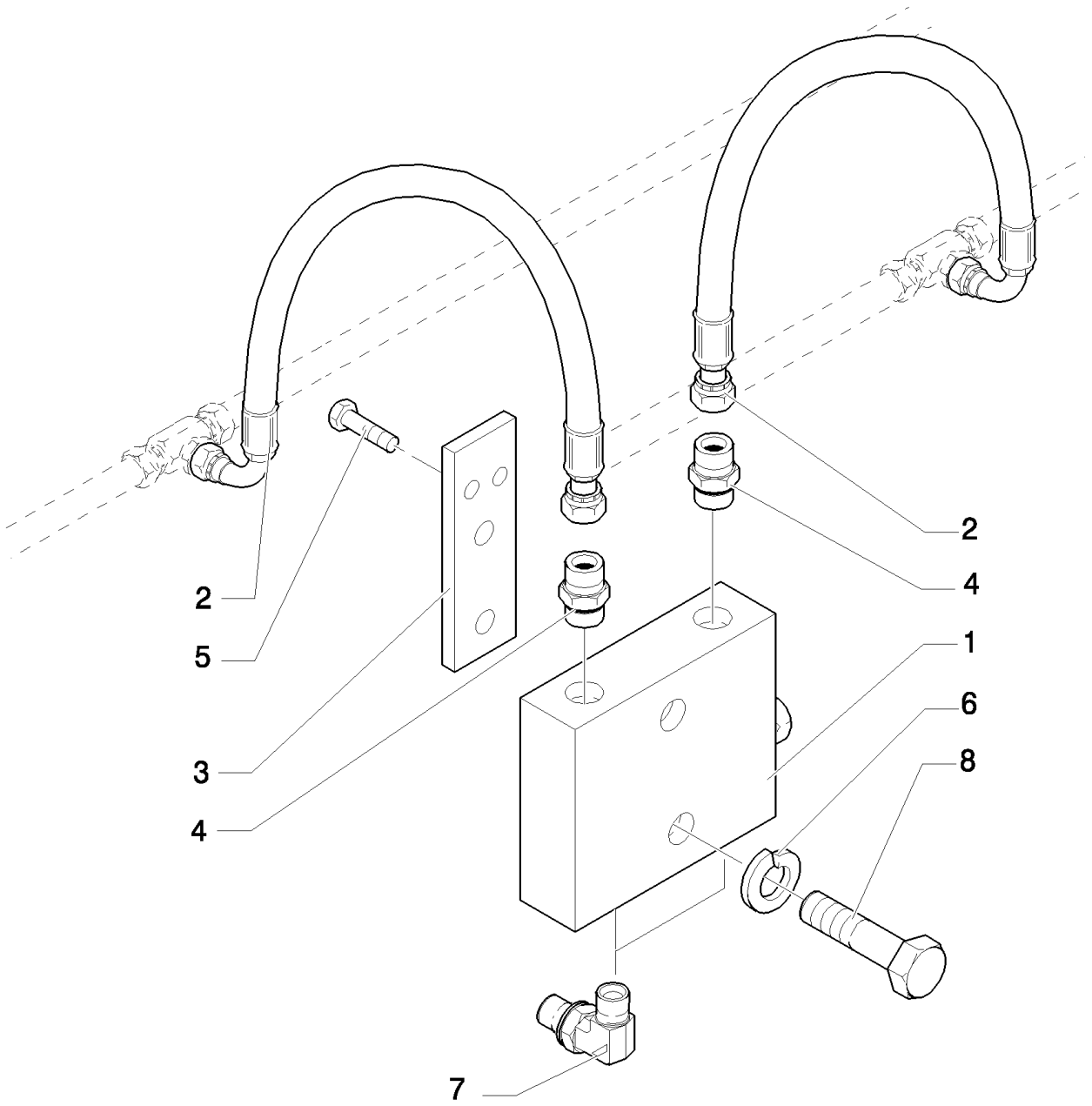

LB115.B EUR BACKHOE LOADER (1/05-)

391(01) LOCK VALVE FOR BUCKET 4X1 / 6X1

Ref	Part Number	Qty	Description
1	85820844	1	VALVE, HYDRAULIC,
2	85821127	2	HOSE, FLEXIBLE,
3	87316861	1	PLATE,
4	390953S36	4	CONNECTOR, HYD., {PP:83963374}
5	16044321	4	SCREW, Hex, M8 x 55, 8.8,
6	11193874	2	WASHER, SPRING, Belleville, M8.4,
7	390967S36	2	ELBOW, {PP:83971549}
8	16044121	2	SCREW, Hex, M8 x 45, 8.8,

392(01) LOCKING VALVE ON BACKHOE LIFT AND DIPP. CYLINDER

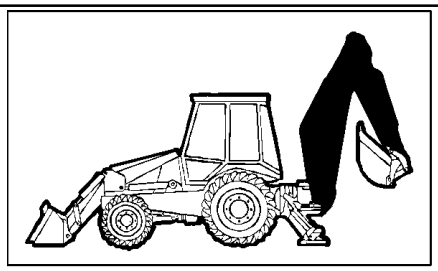

KIT KIT KIT 15 = ●

SEE ALSO 392 02

KIT KIT KIT 16 = ▲

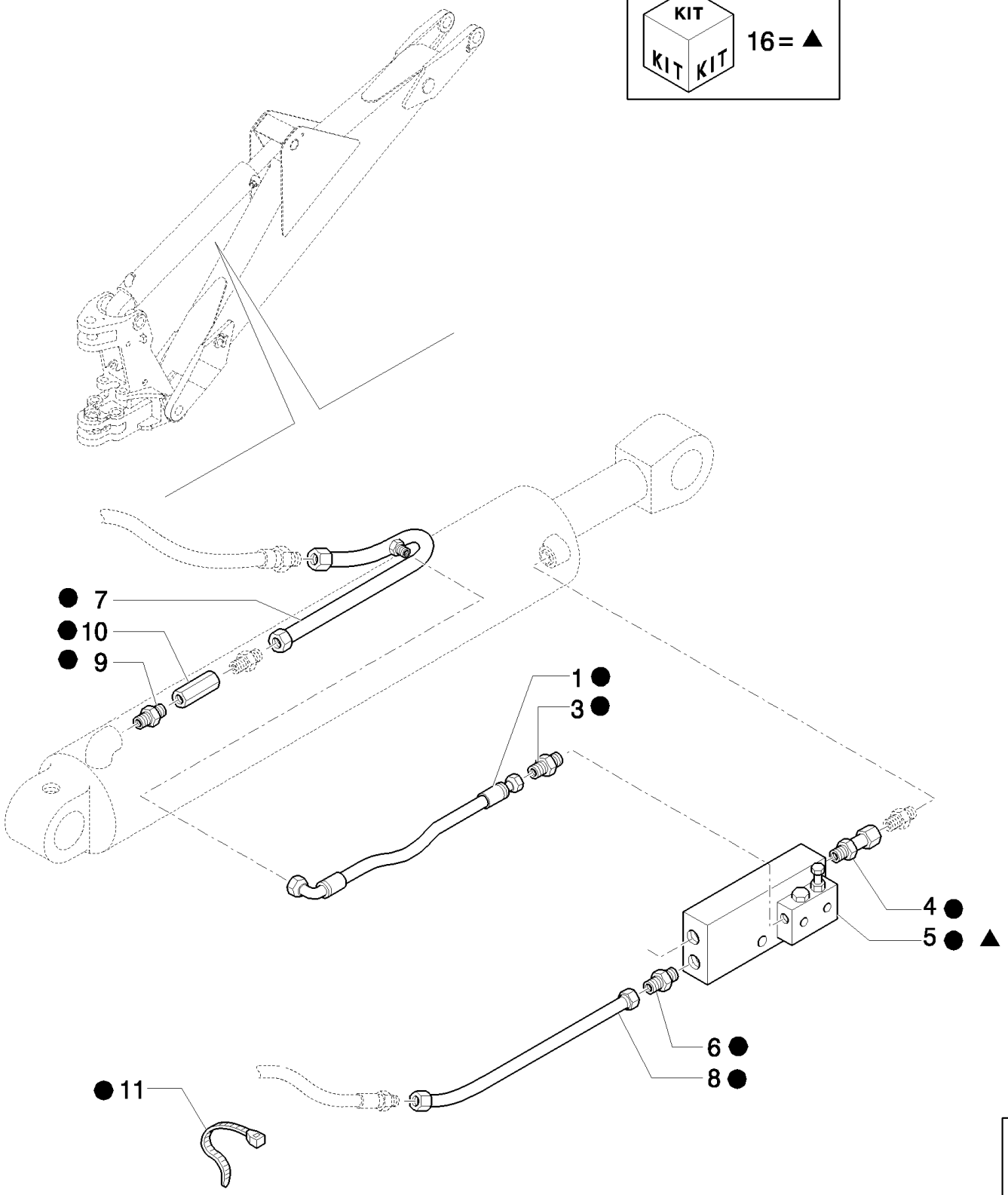

LB115.B EUR BACKHOE LOADER (1/05-)

392(01) LOCKING VALVE ON BACKHOE LIFT AND DIPP. CYLINDER

Ref	Part Number	Qty	Description
1	85815505	2	HOSE, FLEXIBLE,
3	85802803	3	CONNECTOR, HYD.,
4	85805124	2	CONNECTOR, HYD.,
5	87353316	1	VALVE, SAFETY, ASSY, Includes 16
6	83963000	2	CONNECTOR, HYD.,
7	85820835	1	TUBE, HYD,
8	85820836	1	TUBE, HYD,
9	85804879	1	CONNECTOR, HYD.,
10	85824308	1	VALVE, HYDRAULIC,
11	79072960	4	STRAP, CABLE,
15	87356232	1	KIT,
16	85820912	1	KIT,

392(02) BACKHOE LIFT & DIPPERSTICK CYLINDER LOCK VALVE

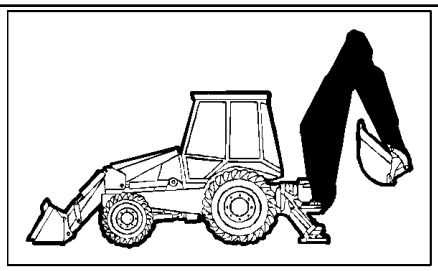

KIT 15= ●
SEE ALSO 392 01

KIT 14 = ▲

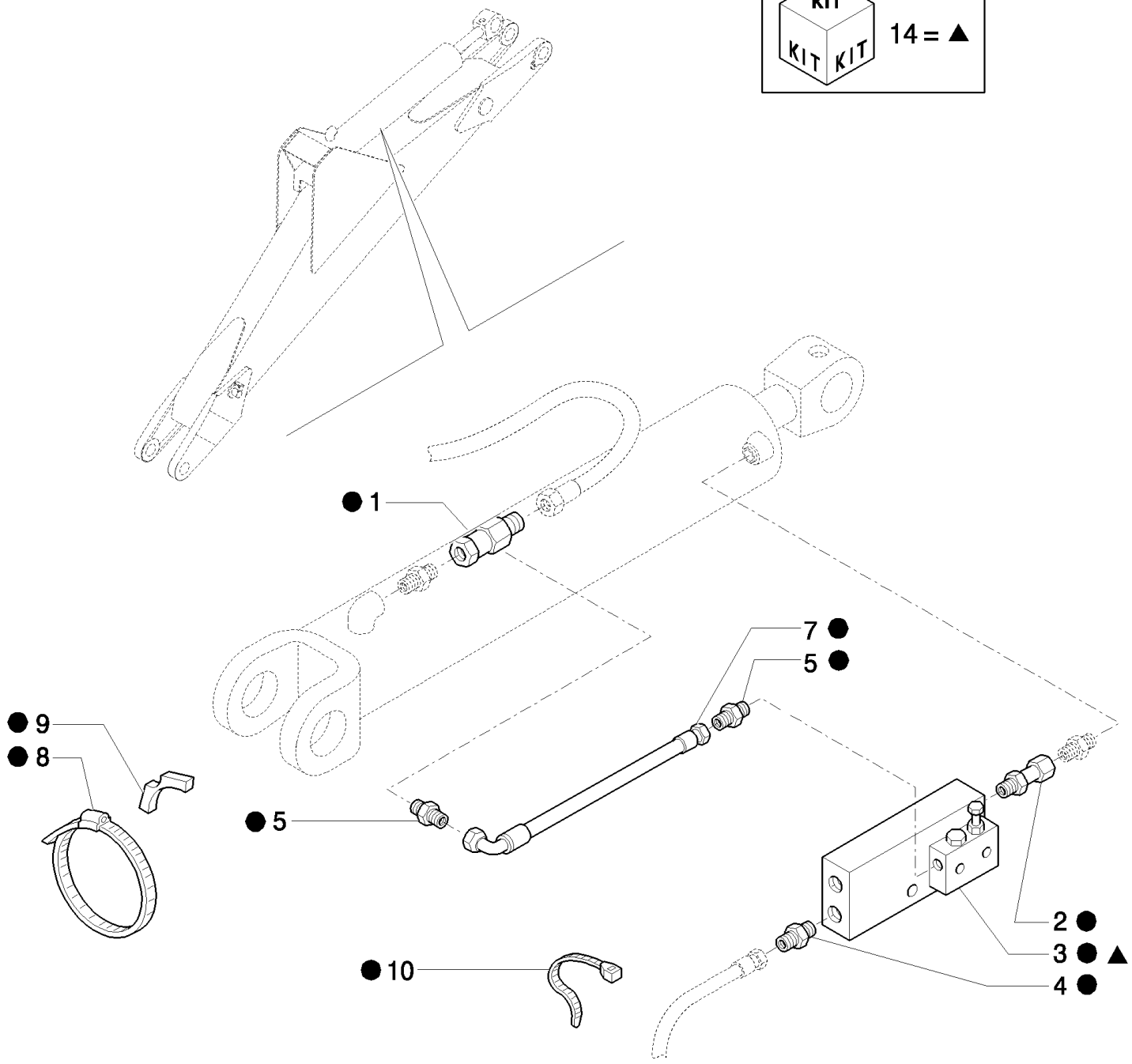

LB115.B EUR BACKHOE LOADER (1/05-)

392(02) BACKHOE LIFT & DIPPERSTICK CYLINDER LOCK VALVE

Ref	Part Number	Qty	Description
1	85805115	1	CONNECTOR, HYD.,
2	85805124	2	CONNECTOR, HYD.,
3	87353314	1	VALVE, SAFETY, ASSY, Includes 14
4	83963000	2	CONNECTOR, HYD.,
5	85802803	3	CONNECTOR, HYD.,
7	85815505	2	HOSE, FLEXIBLE,
8	85805126	1	CLAMP,
9	85805123	1	SPACER,
10	79072960	4	STRAP, CABLE,
14	85820913	1	KIT,
15	87356232	1	KIT,

393(03) LOCKING VALVE ON BACKHOE LIFT CYLINDER

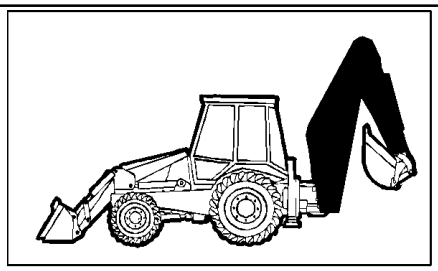

KIT KIT KIT 2=●

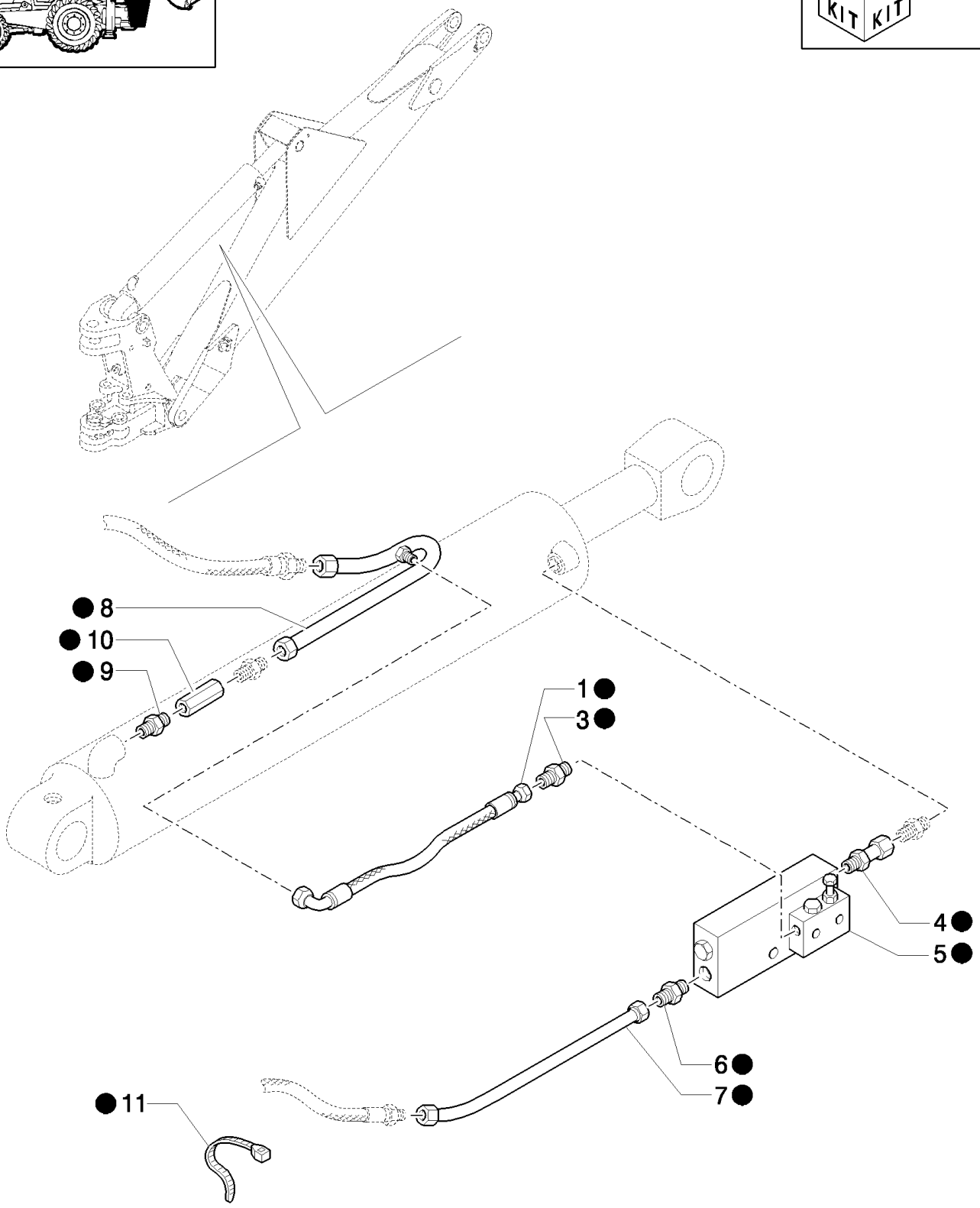

LB115.B EUR BACKHOE LOADER (1/05-)

393(03) LOCKING VALVE ON BACKHOE LIFT CYLINDER

Ref	Part Number	Qty	Description
1	85815505	1	HOSE, FLEXIBLE,
2	87356233	1	
3	85802803	1	CONNECTOR, HYD.,
4	85805124	1	CONNECTOR, HYD.,
5	87353316	1	VALVE, SAFETY, ASSY
6	83963000	1	CONNECTOR, HYD.,
7	85820835	1	TUBE, HYD,
8	85820836	1	TUBE, HYD,
9	85804879	1	CONNECTOR, HYD.,
10	85824308	1	VALVE, HYDRAULIC,
11	79072960	2	STRAP, CABLE,

400(01) FRONT AXLE (4WS) - BOX

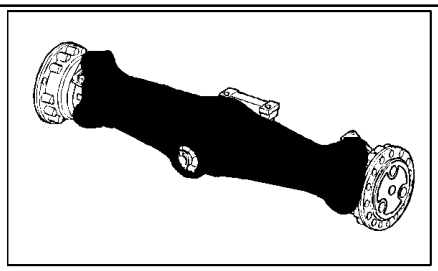

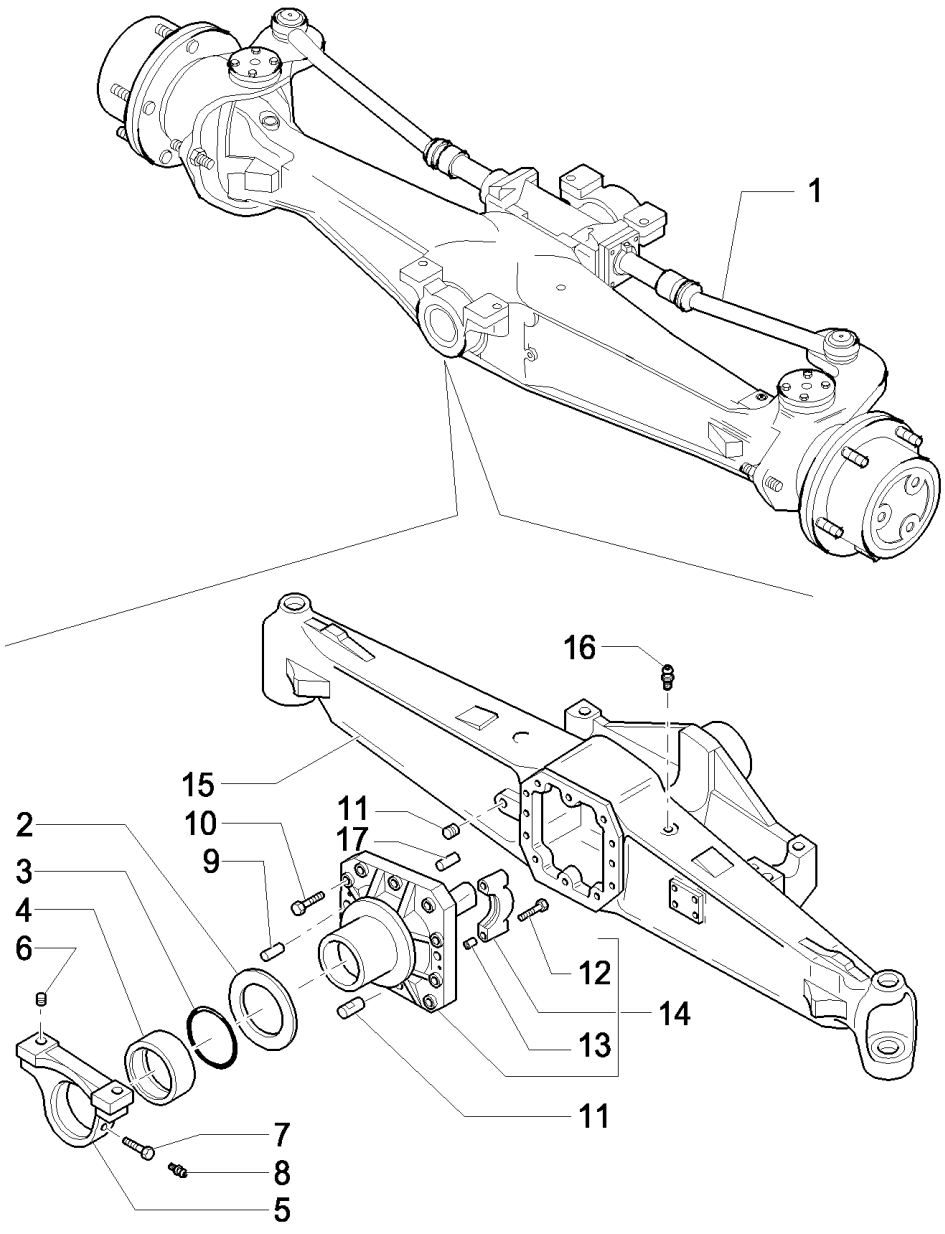

LB115.B EUR BACKHOE LOADER (1/05-)

400(01) FRONT AXLE (4WS) - BOX

Ref	Part Number	Qty	Description
1	85821297	1	AXLE, , Standard
1	85821298	1	AXLE, FRONT, , Self Locking
2	85807957	1	WASHER, THRUST,
3	85807958	1	O-RING,
4	9967992	1	BUSHING,
5	85807959	1	SUPPORT,
6	9967990	2	BUSHING,
7	9967995	1	SCREW,
8	321204	1	NIPPLE, LUBE, M6 x 1, 16mm lg,
9	9967683	2	PIN, ROLL, 15X35
10	9967769	10	SCREW, M12X1,75X33
11	9968005	2	PLUG, DRAIN,
12	9967681	4	SCREW,
13	9967682	4	BUSHING,
14	85817778	1	SUPPORT, Assy
15	85821293	1	BODY,
16	9967672	1	PLUG, M10
17	85817794	1	PIN, ROLL,

400(02) FRONT AXLE (4WS) - BOX

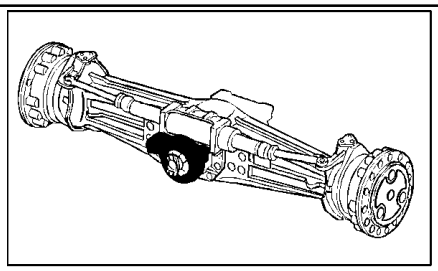

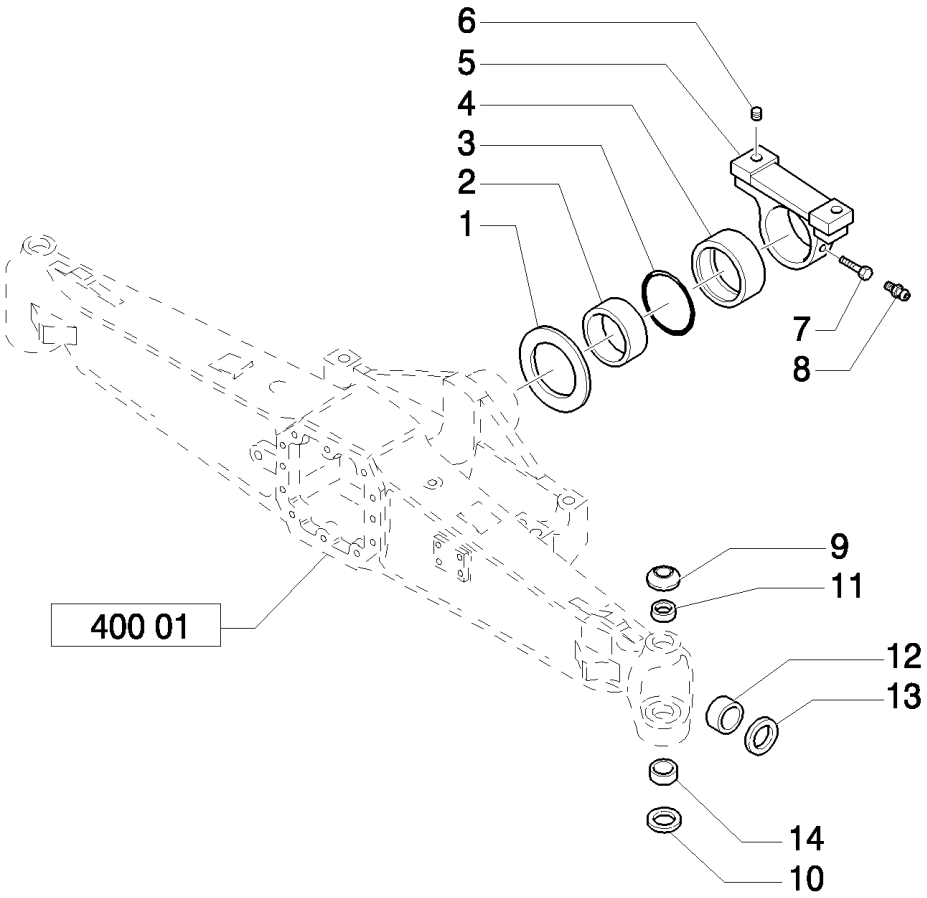

LB115.B EUR BACKHOE LOADER (1/05-)

400(02) FRONT AXLE (4WS) - BOX

Ref	Part Number	Qty	Description
1	9967994	1	WASHER, THRUST,
2	9967993	1	BUSHING,
3	85807958	1	O-RING,
4	9967992	1	BUSHING,
5	85807959	1	SUPPORT,
6	9967990	2	BUSHING,
7	9967995	1	SCREW,
8	321204	1	NIPPLE, LUBE, M6 x 1, 16mm lg,
9	85807961	2	WASHER,
10	85807967	2	WASHER,
11	85824470	2	BUSHING,
12	85807965	2	BUSHING,
13	85821295	2	RING, M40 ID x 60 OD x 18.5 Thick
14	85807966	2	BEARING,

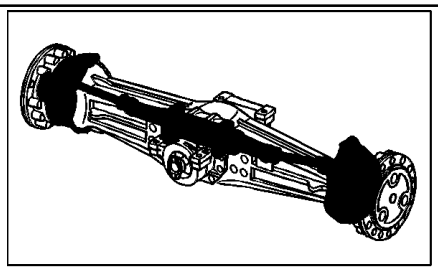

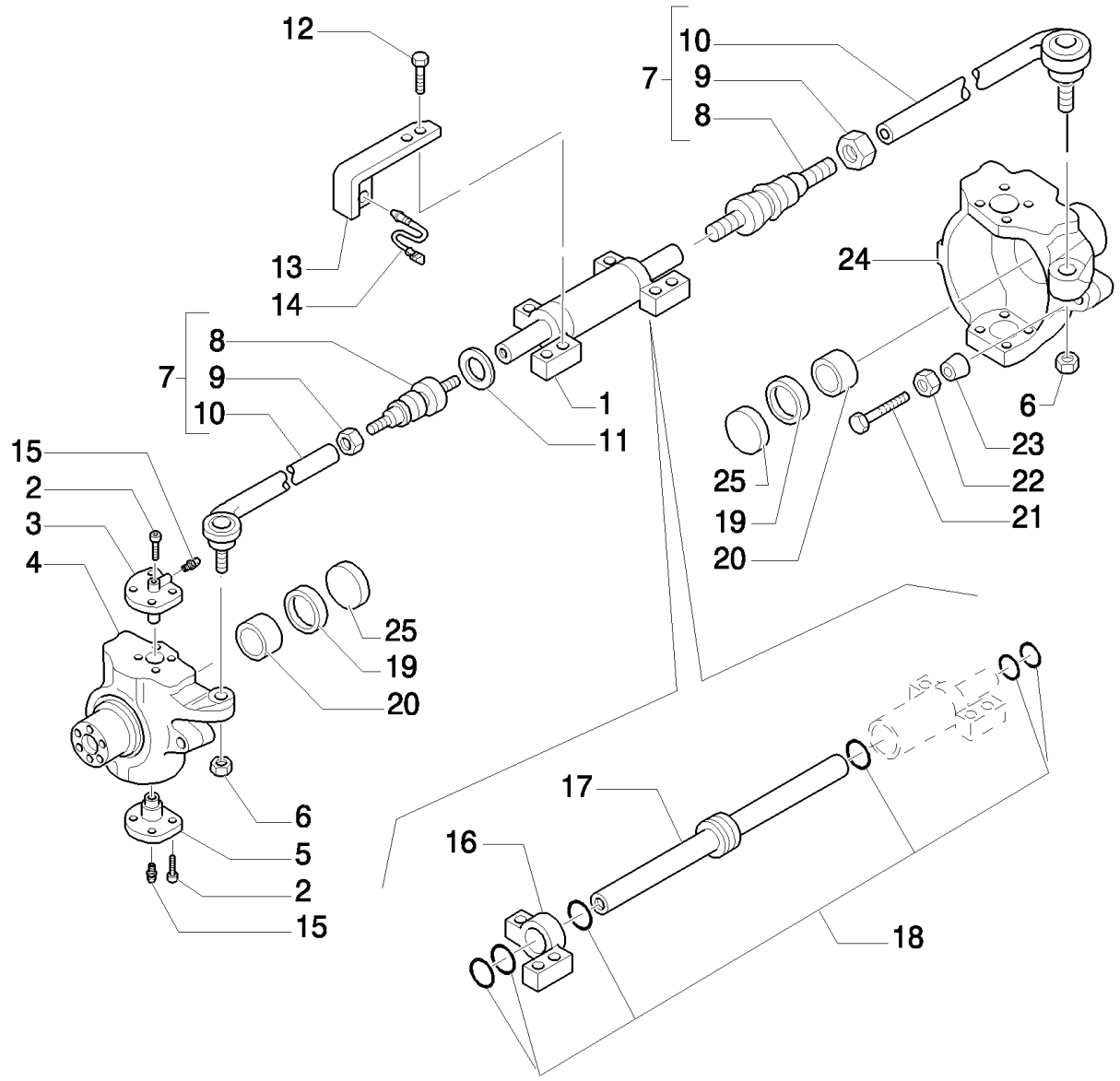
12
13
14
10
7
9
8
24
8
7
9
10
1
11
6
23
22
21
25
19
20
15
2
3
4
25
19
20
6
5
2
15
17
16
18

LB115.B EUR BACKHOE LOADER (1/05-)

400(03) FRONT AXLE (4WS) - STEERING AXLES

Ref	Part Number	Qty	Description
1	85807979	1	CYLINDER STEERING, Assy
2	85807969	16	SCREW, M16 x 2 x 38
3	85807970	2	PIN,
4	85821289	1	KNOTTER, LH
5	85807972	2	PIN,
6	85807973	2	NUT, M24 x 1.5
7	85807974	2	TIE-ROD, Assy
8	85807975	2	BALL JOINT,
9	9968017	2	NUT, M24X1,5
10	85807976	2	TIE-ROD,
11	85807977	1	WASHER,
12	85807978	6	SCREW, M20 x 80
13	85807986	1	BRACKET,
14	85807987	1	SENSOR,
15	9968021	4	NIPPLE, LUBE, M6
16	85807983	2	CYLINDER HEAD,
17	85807984	1	ROD,
18	85807985	1	KIT, Seal, 42mm rod
19	85821287	2	RING,
20	85807981	2	BUSHING,
21	85805987	4	SCREW, M16X100
22	85805986	4	NUT, M16,
23	85807982	8	SLEEVE,
24	85821290	1	KNOTTER, RH
25	85825033	2	COVER,

400(04) FRONT AXLE (4WS) - BEVEL GEAR PAIR

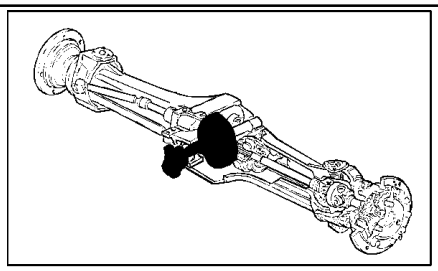

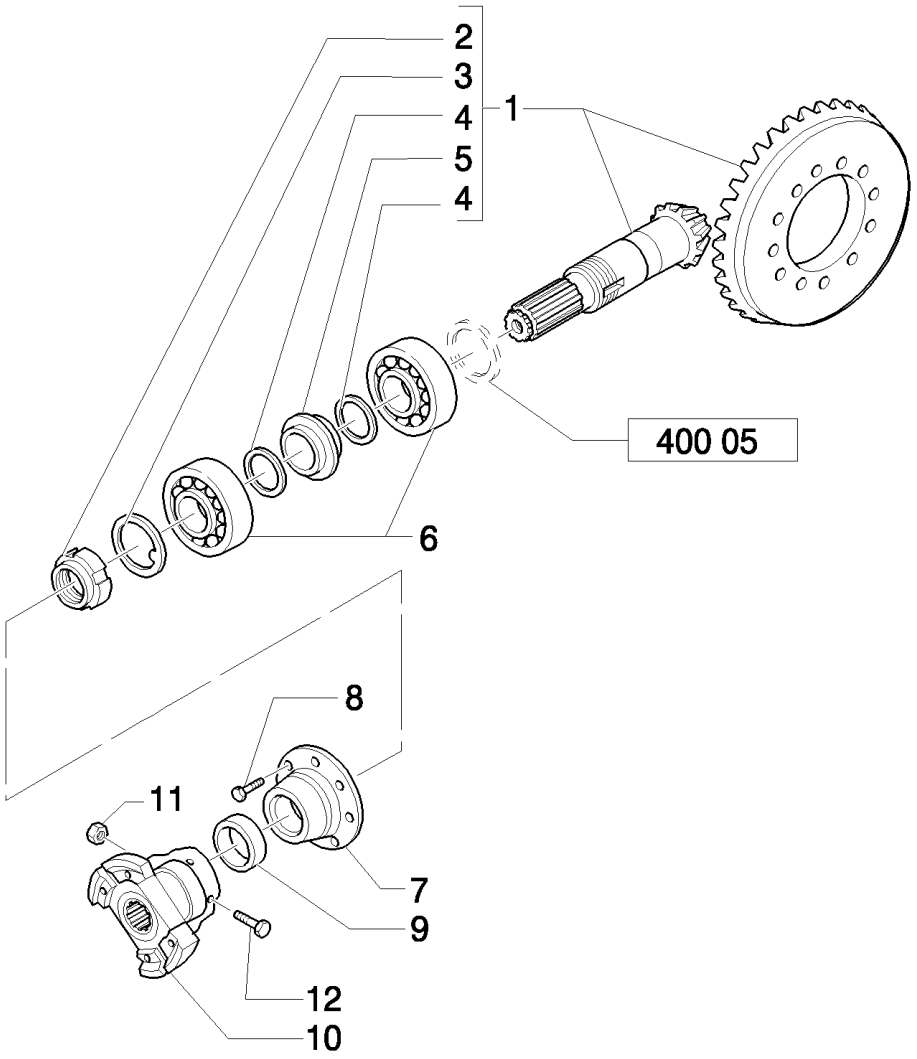

LB115.B EUR BACKHOE LOADER (1/05-)

400(04) FRONT AXLE (4WS) - BEVEL GEAR PAIR

Ref	Part Number	Qty	Description
1	85807988	1	GEAR SET, (Z=12/32)
2	9968031	1	WASHER, LOCK,
3	9968032	1	NUT, RING, M40X1 ,5
4	9968033	2	WASHER, 50X40,5X2
5	9968034	1	SPACER,
6	9968047	2	BEARING, ROLLER, TAPERED,
7	85827005	1	FLANGE,
8	85807990	6	SCREW, M6 x 16
9	85821296	1	SPACER,
10	9968049	1	FLANGE,
11	9968050	2	NUT, M10 x 1.25,
12	9968048	2	SCREW, M10X60

400(05) FRONT AXLE (4WS) - BEVEL GEAR PAIR

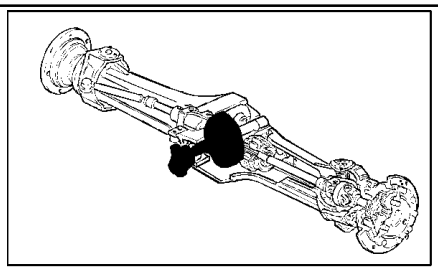

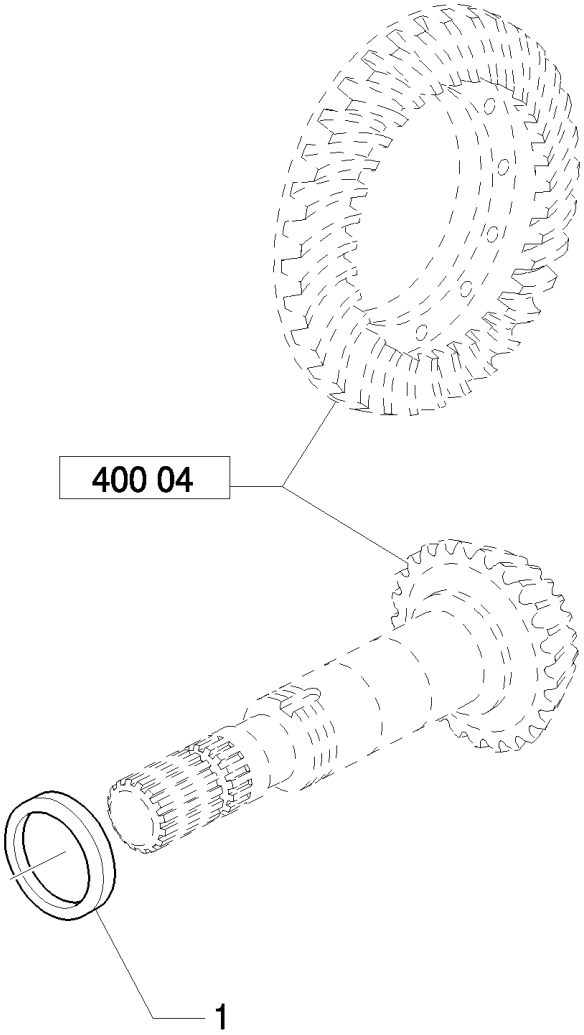

LB115.B EUR BACKHOE LOADER (1/05-)

400(05) FRONT AXLE (4WS) - BEVEL GEAR PAIR

Ref	Part Number	Qty	Description
1	9968037	AR	SHIM, 2.5 mm
1	9968038	AR	SHIM, MM2,6
1	9968039	AR	SHIM, MM2,7
1	9968040	AR	SHIM, MM2,8
1	9968041	AR	SHIM, MM2,9
1	9968042	AR	SHIM, MM3,0
1	9968043	AR	SHIM, MM3,1
1	9968044	AR	SHIM, MM3,2
1	9968045	AR	SHIM, MM3,3
1	9968046	AR	SHIM, MM3,4

400(06) FRONT AXLE (4WS) - DIFFERENTIAL LOCKING

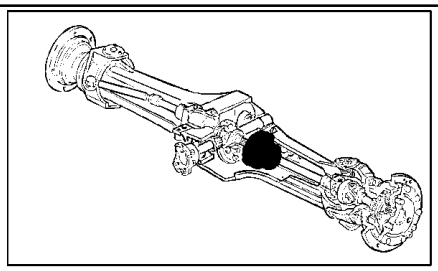

KIT KIT KIT 10 = ●

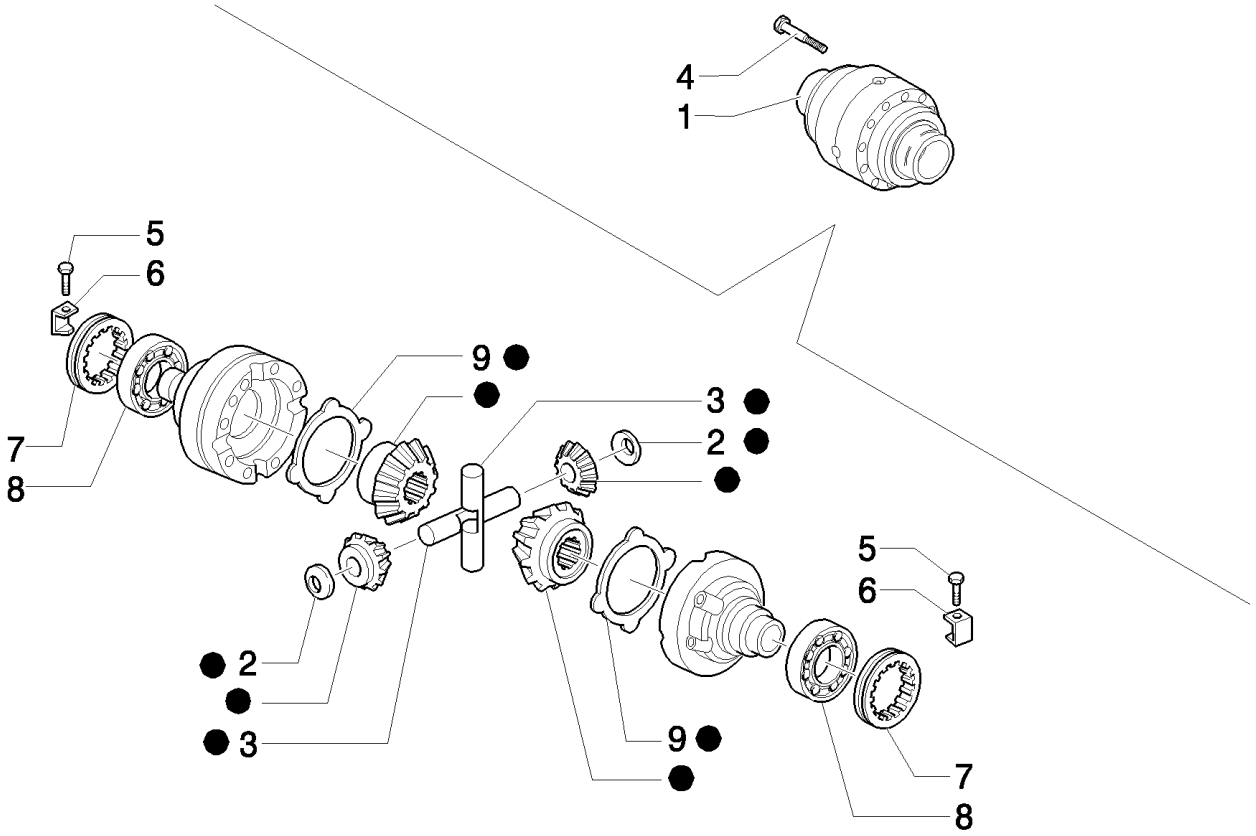

LB115.B EUR BACKHOE LOADER (1/05-)

400(06) FRONT AXLE (4WS) - DIFFERENTIAL LOCKING

Ref	Part Number	Qty	Description
1	85807993	1	HOUSING,
2	9966352	4	WASHER, THRUST,
3	85807992	2	PIN,
4	9967736	12	SCREW, M10 x 1.5 x 75
5	9967739	2	SCREW, M6 x 10
6	85817785	2	CLIP,
7	9967741	2	NUT, RING,
8	9968054	2	BEARING, ROLLER, TAPERED,
9	9967734	2	PLATE, DRIVE,
10	85807991	1	KIT,

400(06A) SELF-LOCKING FRONT AXLE: DIFFERENTIAL AUTOMATIC LOCKING 4WS

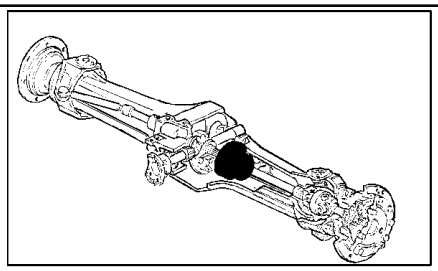

KIT KIT KIT 8 = ●

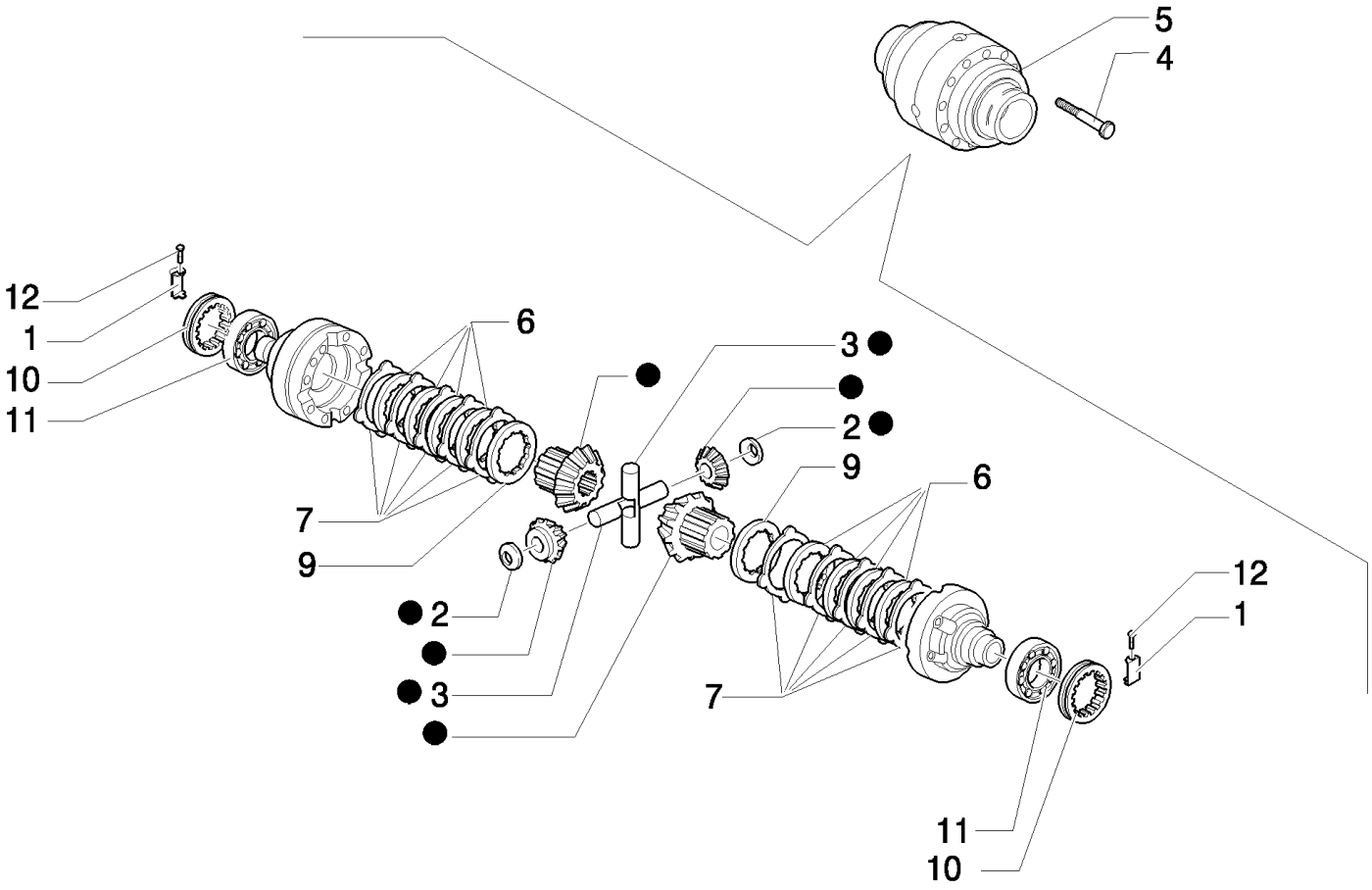

LB115.B EUR BACKHOE LOADER (1/05-)

400(06A) SELF-LOCKING FRONT AXLE: DIFFERENTIAL AUTOMATIC LOCKING 4WS

Ref	Part Number	Qty	Description
1	85817785	2	CLIP,
2	9966352	4	WASHER, THRUST,
3	85807992	2	PIN,
4	9967736	12	SCREW, M10 x 1.5 x 75
5	85807993	1	HOUSING,
6	9966310	8	PLATE,
7	9966309	10	DISC,
8	85812250	1	KIT, M27 x 2
9	9966308	2	PLATE,
10	9967741	2	NUT, RING,
11	9968054	2	BEARING, ROLLER, TAPERED,
12	9967739	2	SCREW, M6 x 10

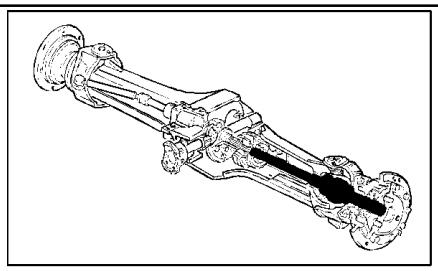

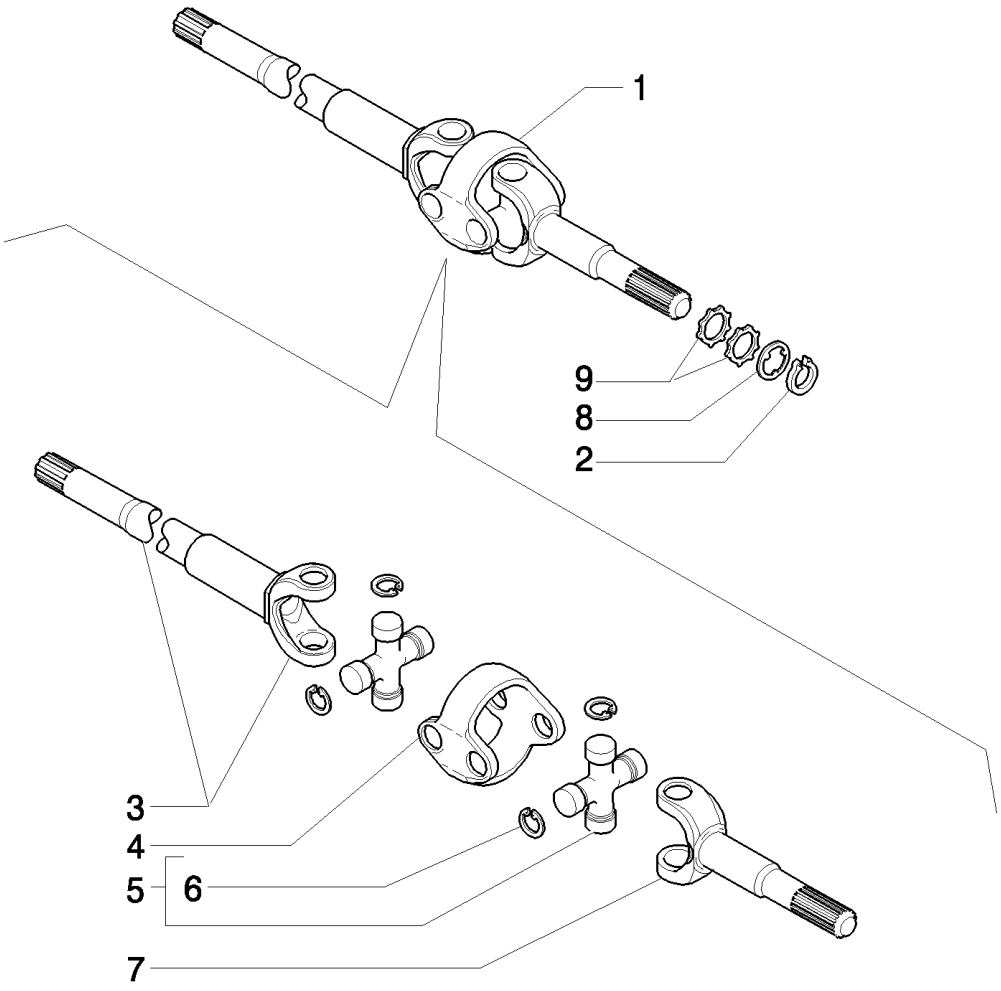
1
9
8
2
3
4
5
6
7

LB115.B EUR BACKHOE LOADER (1/05-)

400(07) FRONT AXLE (4WS) - AXLE-SHAFT ARTICULATED

Ref	Part Number	Qty	Description
1	87306642	2	SHAFT, ARTICULATED,
2	85826293	2	RING,
3	85827004	2	HALF SHAFT,
4	87306744	2	BODY,
5	85827008	4	SPIDER, Assy
6	85826290	16	RING, SNAP,
7	85826291	1	SHAFT,
8	85826292	2	WASHER,
9	85825176	4	BUSHING, 58 x 47 x 2.5

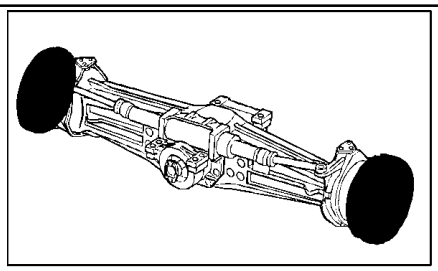

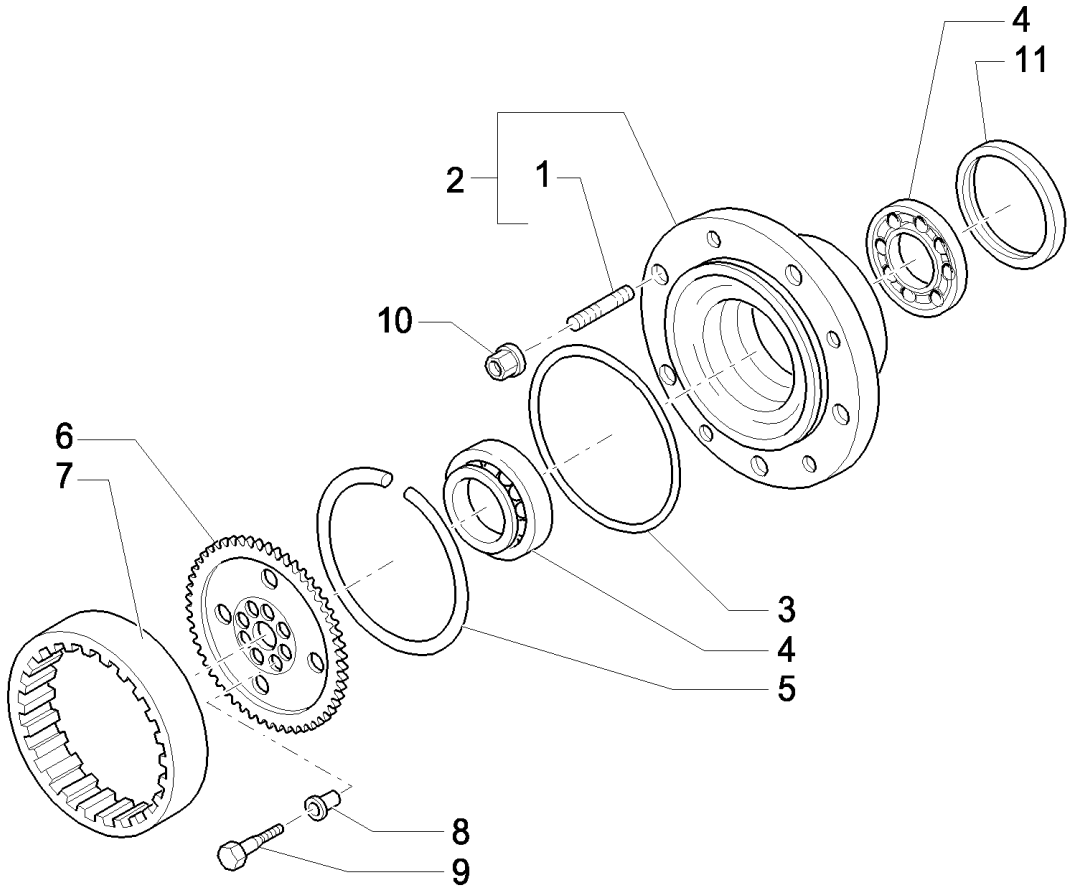
4
11
2
1
10
6
7
3
4
5
8
9

LB115.B EUR BACKHOE LOADER (1/05-)

400(08) FRONT AXLE (4WS) - HUBS

Ref	Part Number	Qty	Description
1	85808260	20	STUD,
2	85827000	2	KIT,
2	85821286	2	KIT,
3	85808262	2	O-RING,
4	85827001	4	BEARING, ROLLER,
4	9967690	4	RING,
5	85808263	2	RING, LOCKING,
6	85817684	2	GEAR,
7	85808265	2	GEAR, RING, (Z=77)
8	9968067	16	BUSHING, DIAM.20
9	9968068	16	BOLT, M14X1,5X65
10	85808266	10	NUT, M22 x 1.5,
11	85821288	2	SEAL,
11	85825035	2	SEAL,

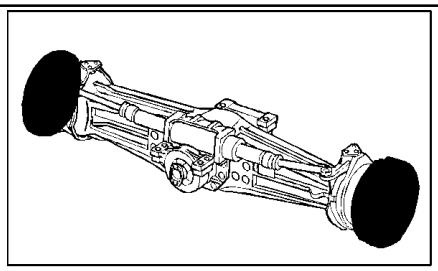

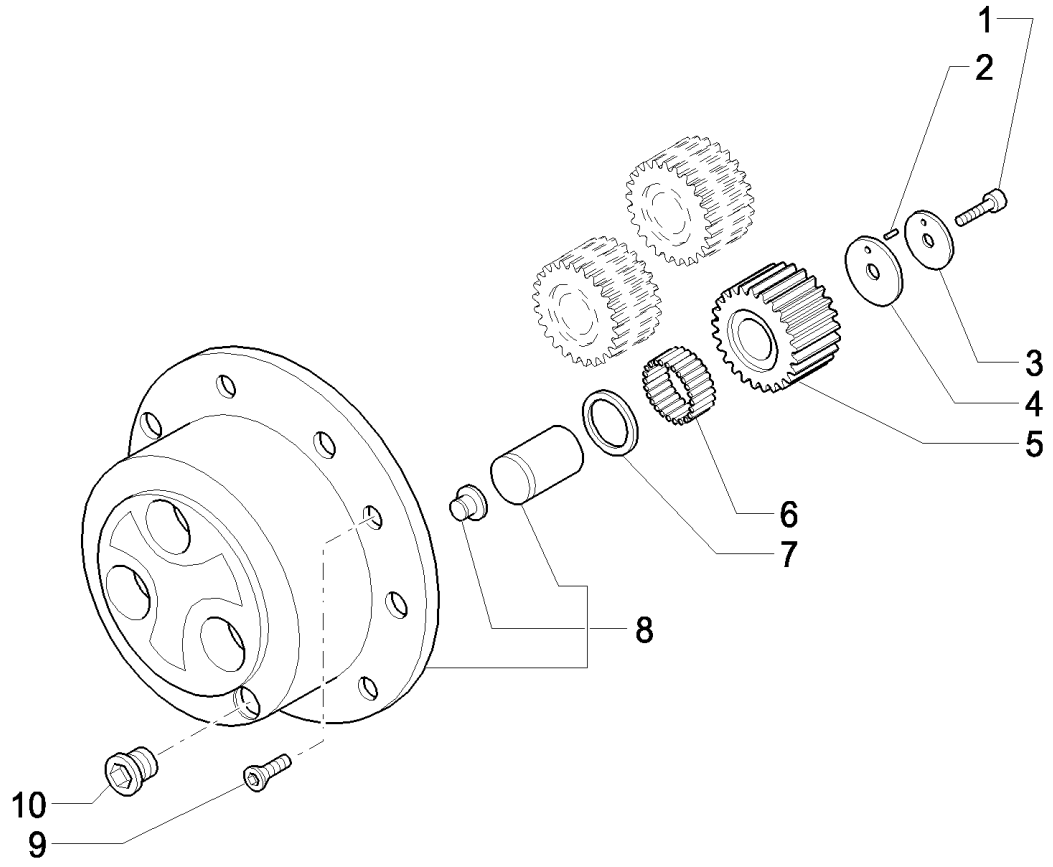
1
2
3
4
5
6
7
8
10
9

LB115.B EUR BACKHOE LOADER (1/05-)

400(09) FRONT AXLE (4WS) - HUBS

Ref	Part Number	Qty	Description
1	85808267	6	SCREW, M10X1,25X50
2	85808268	6	PIN,
3	85808269	6	WASHER, THRUST, 60 x 11 x 3
4	85808270	6	WASHER, THRUST, 60X11X3
5	85808271	6	GEAR, PLANETARY,
6	85808272	AR	KIT OF 10 NEEDLE BRG, (Qty 1=10 Pieces)
7	85808273	6	WASHER, THRUST, 60 x 40 x 1.5
8	85808274	2	KIT, Assy
9	85805709	4	SCREW, M8X20
10	85806012	2	PLUG, M30X2

400A(01) REAR AXLE, RH & CENTER HOUSING

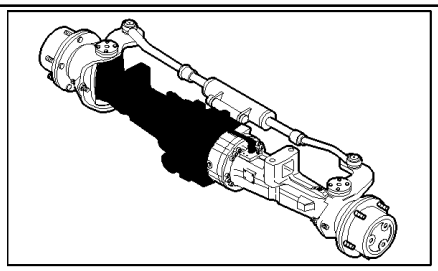

LB115.B EUR BACKHOE LOADER (1/05-)

400A(01) REAR AXLE, RH & CENTER HOUSING

Ref	Part Number	Qty	Description
1	85826234	1	AXLE, REAR, Assy, UP TO S/N XXX, Standard Axle, Consists Of 2 to 9, Also Page 400A 02 to 400A 11
1	85826235	1	AXLE, REAR, ASSY, Self Locking Axle, Consists Of 2 to 9, Also Page 400A 02 to 400A 11, UP TO S/N 031059890
1	87392731	1	AXLE, REAR, , FROM S/N XXX, Standard Axle, Consists Of 2 to 9, Also Page 400A 02 to 400A 11
1	87392732	1	AXLE, REAR, , Self Locking Axle, Consists Of 2 to 9, Also Page 400A 02 to 400A 11, FROM S/N 031059891
2	85808276	2	O-RING,
3	85827753	1	BRAKE CYLINDER, Rear, LH
4	85808278	2	O-RING,
5	85808282	1	BREATHER, M10x1
6	85806012	2	PLUG, M30
7	85827755	1	BARREL,
8	85827756	1	HOUSING, AXLE,
9	85805703	1	PLUG,
10	87317057		PLUG,
11	85827762		SCREW, M8 x 45
12	87306639		TUBE,
13	85827760		WASHER, Ř 8
14	87317058	1	WASHER,
15	85826368	4	SCREW,
16	14497431	8	WASHER,
17	85806146	4	NUT, M27 x 2
18	85805655	2	ELBOW,

400A(02) REAR AXLE, LH HOUSING & BUSHINGS

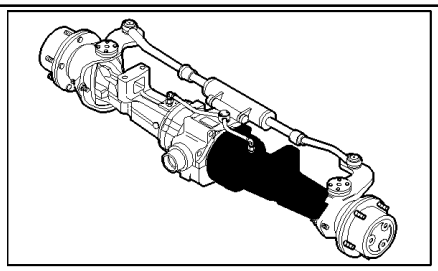

KIT 20 = ✸

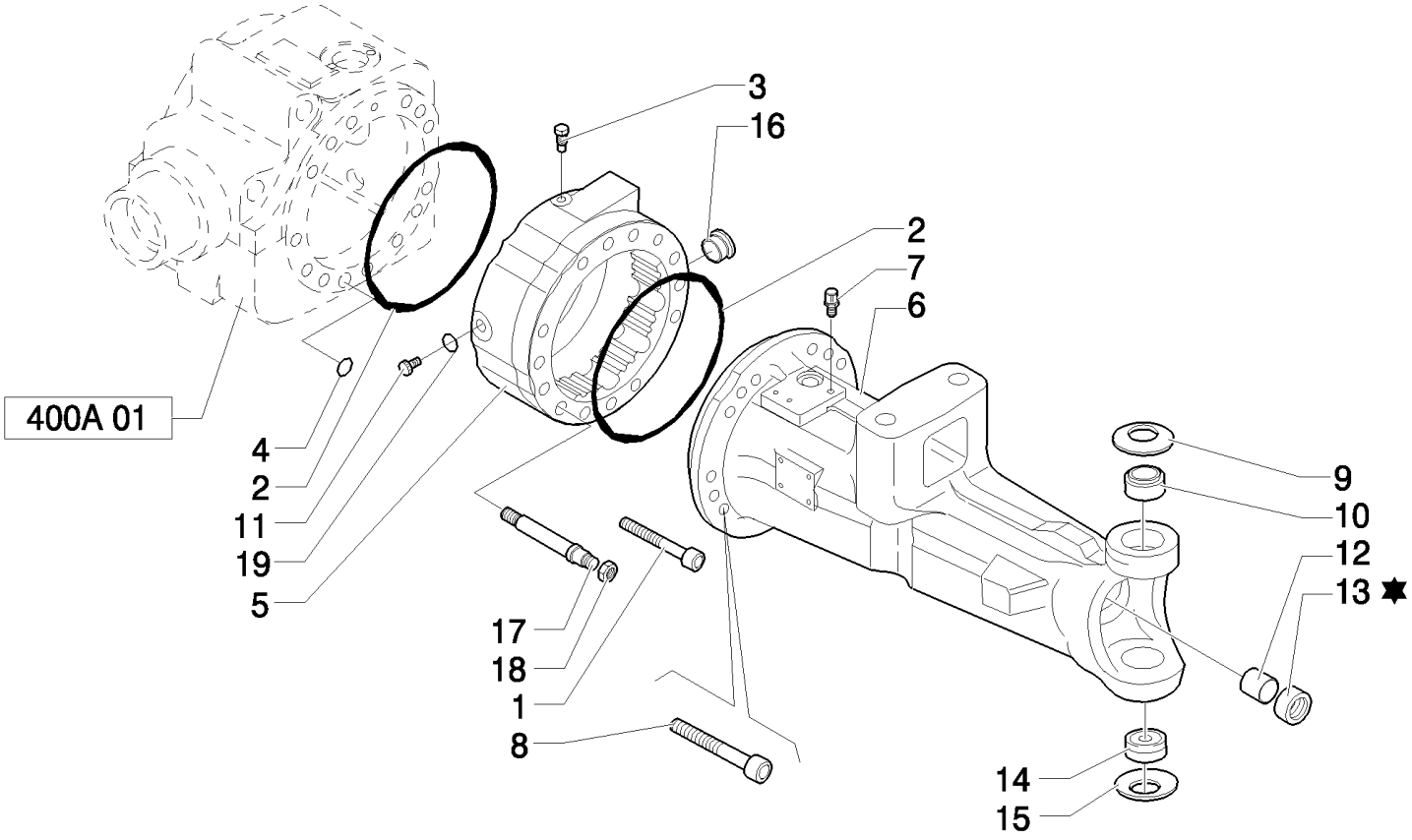

LB115.B EUR BACKHOE LOADER (1/05-)

400A(02) REAR AXLE, LH HOUSING & BUSHINGS

Ref	Part Number	Qty	Description
1	85808283	2	SCREW, M12 x 110
2	85808276	2	O-RING,
3	85808282	1	BREATHER, M10x1
4	85808278	1	O-RING,
5	85827754	1	HOUSING,
6	85827756	1	HOUSING, AXLE,
7	9967672	1	PLUG, M10x1
8	85808281	26	BOLT,
9	85807961	2	WASHER,
10	85824470	2	BUSHING,
11	87317057	2	PLUG,
12	85807965	2	BUSHING,
13	87415749	2	SEAL, OIL, 40mm ID x 55mm OD x 15.5 Thick
14	85807966	2	BEARING,
15	85807967	2	WASHER,
16	85806012	1	PLUG, M30x2
17	85817678	2	STUD, M16 x 2, UP TO S/N XXX
18	85817680	2	NUT, M16 x 2, UP TO S/N XXX
19	87317058	2	WASHER,
20	87538312	1	KIT,

400A(03) REAR AXLE, RH SWIVEL HOUSING, STEERING CYLINDER & SENSOR

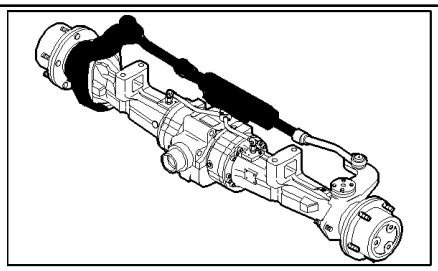

KIT KIT KIT 20 = ✸

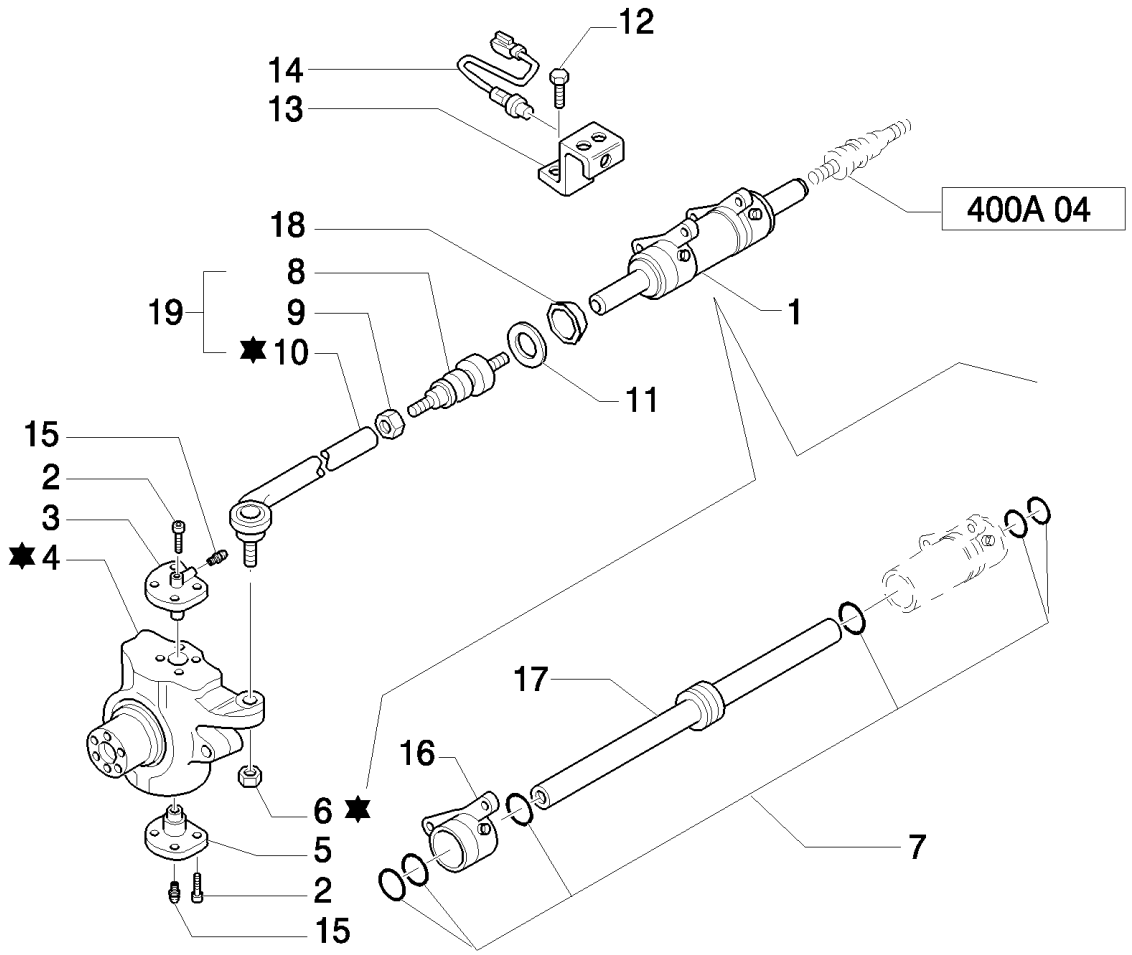

LB115.B EUR BACKHOE LOADER (1/05-)

400A(03) REAR AXLE, RH SWIVEL HOUSING, STEERING CYLINDER & SENSOR

Ref	Part Number	Qty	Description
1	85808289	1	CYLINDER STEERING,
2	85807969	16	SCREW, M16 x 2 x 38
3	85807970	2	PIN,
4	85825029V	1	REAR RH, UP TO S/N XXX
4	87538266	1	HOUSING, , FROM S/N XXX
5	85807972	2	PIN,
6	85807973	1	NUT, M24 x 1.5
7	85820809	1	KIT, SEALS, Seal, 40 mm rod
8	85807975	1	BALL JOINT,
9	9968017	1	NUT, M24x1,5
10	85825030	1	TIE-ROD, Rear, UP TO S/N XXX
10	87538343	1	STUD, , FROM S/N XXX
11	85807977	1	WASHER,
12	85808295	2	SCREW, M8 x 20
13	85826285	1	BRACKET,
14	85807987	1	SENSOR,
15	9968021	4	NIPPLE, LUBE, M6x1
16	85820808	2	CYLINDER HEAD,
17	85820807	1	ROD,
18	85825033	2	COVER, , Self Locking Axle, UP TO S/N 031049356
18	85825033	2	COVER, , Standard, FROM TO S/N 031050239
19	85825031	2	, UP TO S/N XXX
19	87535704	2	ARM, STEERING, , FROM S/N XXX
20	87538312	1	KIT,

400A(04) REAR AXLE, LH SWIVEL HOUSING

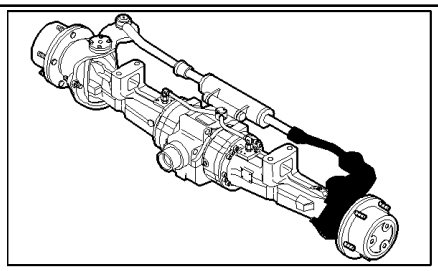

KIT 14 = ✸

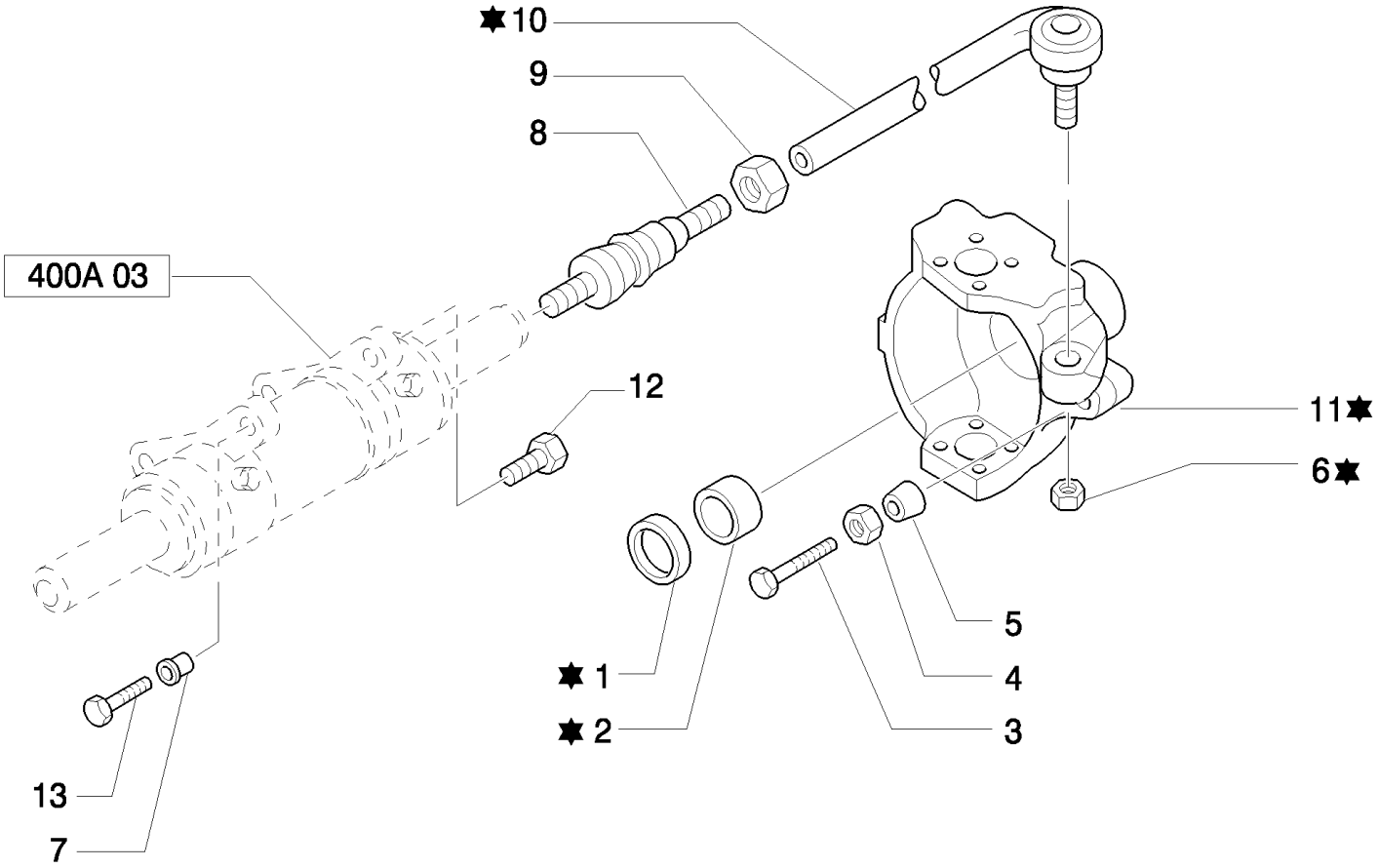

LB115.B EUR BACKHOE LOADER (1/05-)

400A(04) REAR AXLE, LH SWIVEL HOUSING

Ref	Part Number	Qty	Description
1	85821287	2	RING,
2	85807981	2	BUSHING,
3	85812281	4	SCREW, M16 x 130
4	85805986	4	NUT, M16,
5	85807982	4	SLEEVE,
6	85807973	1	NUT, M24 x 1.5
7	85808294	1	SLEEVE,
8	85807975	1	BALL JOINT,
9	9968017	1	NUT,
10	85825030V	1	REAR, UP TO S/N XXX
10	87538743	1	, FROM S/N XXX
11	85825032	1	KNOTTER, Rear, LH, UP TO S/N XXX
11	87538268	1	HOUSING, , FROM S/N XXX
12	85808293	2	SCREW, M22 x 55
13	9968068	2	BOLT, M14x65
14	87538312	1	KIT,

400A(05) REAR AXLE, RING GEAR & PINION ASSEMBLY

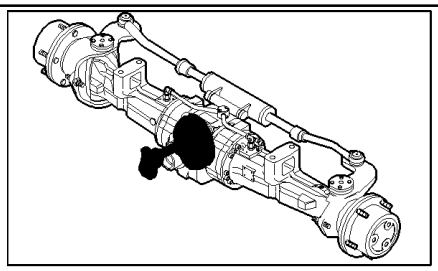

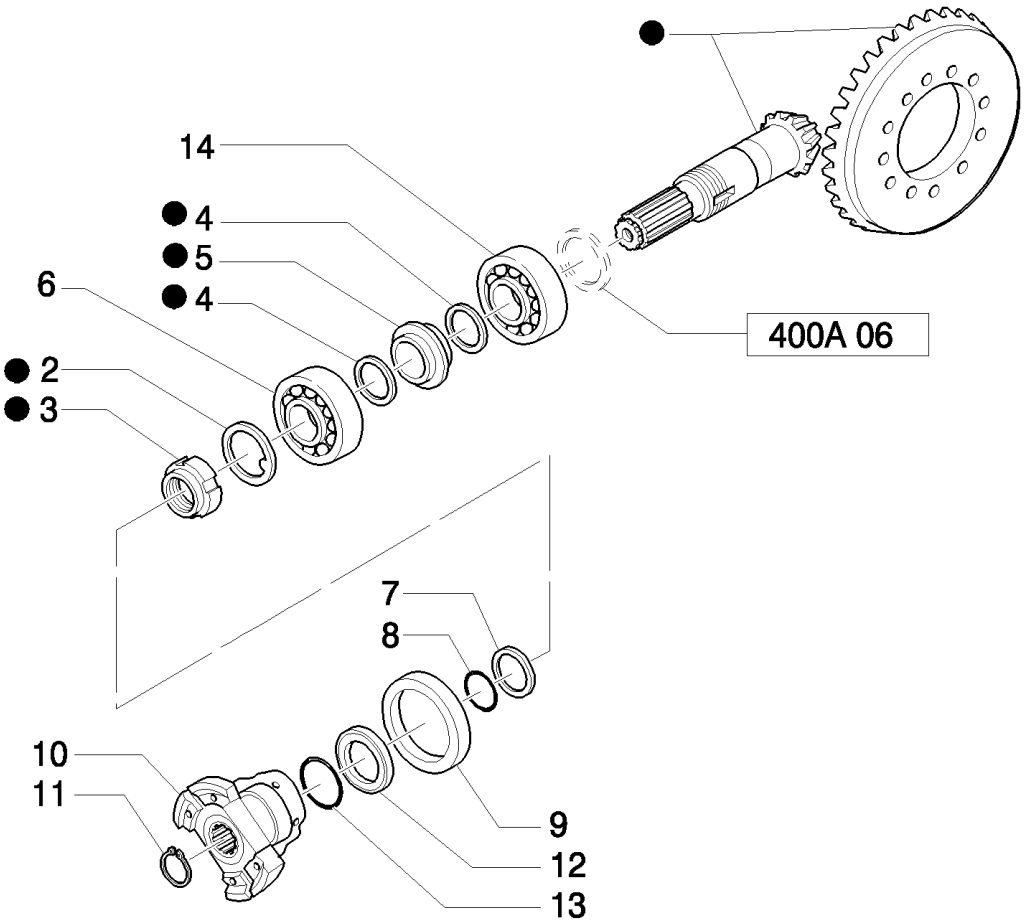

KIT
KIT KIT
1 = ●

LB115.B EUR BACKHOE LOADER (1/05-)

400A(05) REAR AXLE, RING GEAR & PINION ASSEMBLY

Ref	Part Number	Qty	Description
1	85812286	1	GEAR SET, (Z=12/33)
2	9968031	1	WASHER, LOCK,
3	9968032	1	NUT, RING, M40X1,5
4	9968033	2	WASHER, 50X40,5X2
5	85812287	1	SPACER,
6	9968047	1	BEARING, ROLLER, TAPERED,
7	85808297	1	WASHER,
8	85808298	1	O-RING,
9	85825034	1	SEAL, 65 x 92 x 14
10	85808300	1	FLANGE,
11	9968083	1	RING, SNAP,
12	85808301	1	SPACER,
13	85808302	1	O-RING,
14	85812298	1	BEARING, ROLLER, TAPERED, , Self Locking Axle, UP TO S/N 031049356
14	85812298	1	BEARING, ROLLER, TAPERED, , Standard Axle, UP TO S/N 031050239
14	9968047	1	BEARING, ROLLER, TAPERED, , Self Locking Axle, FROM TO S/N 031049357
14	9968047	1	BEARING, ROLLER, TAPERED, , Standard Axle, FROM TO S/N 031050240

400A(06) REAR AXLE, PINION SHIMS

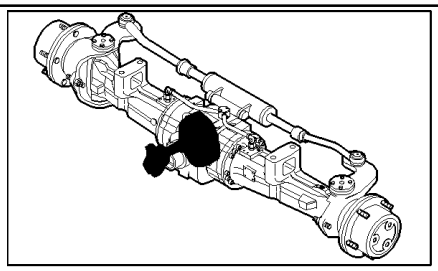

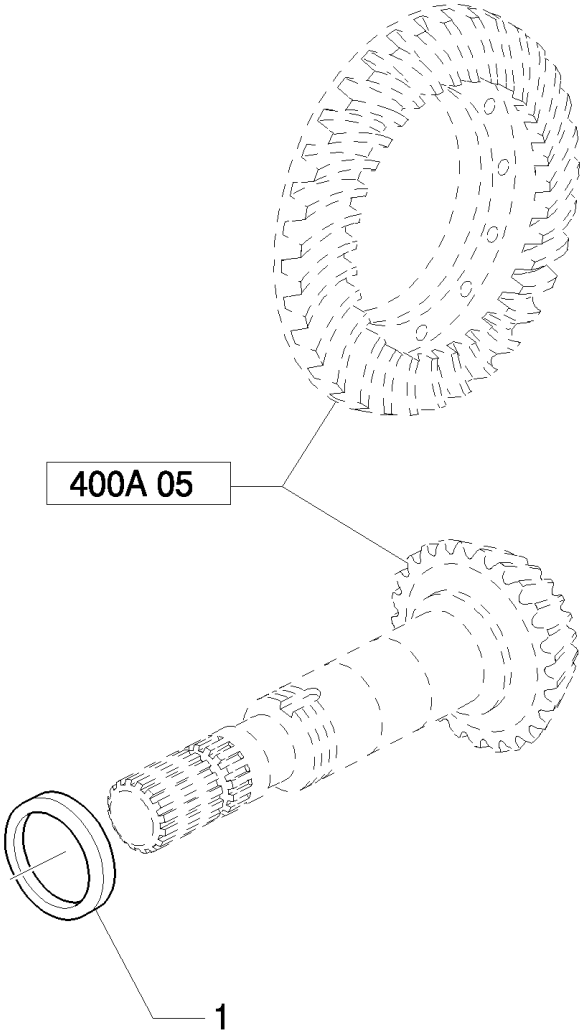

LB115.B EUR BACKHOE LOADER (1/05-)

400A(06) REAR AXLE, PINION SHIMS

Ref	Part Number	Qty	Description
1	85812288	AR	SHIM, 2.5 mm
1	85812289	AR	SHIM, 2.6 mm
1	85812290	AR	SHIM, 2.7 mm
1	85812291	AR	SHIM, 2.8 mm
1	85812292	AR	SHIM, 2.9 mm
1	85812293	AR	SHIM, 3.0 mm
1	85812294	AR	SHIM, 3.1 mm
1	85812295	AR	SHIM, 3.2 mm
1	85812296	AR	SHIM, 3.3 mm
1	85812297	AR	SHIM, 3.4 mm

400A(07) REAR AXLE, DIFFERENTIAL (STANDARD)

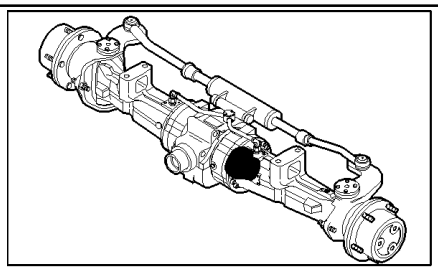

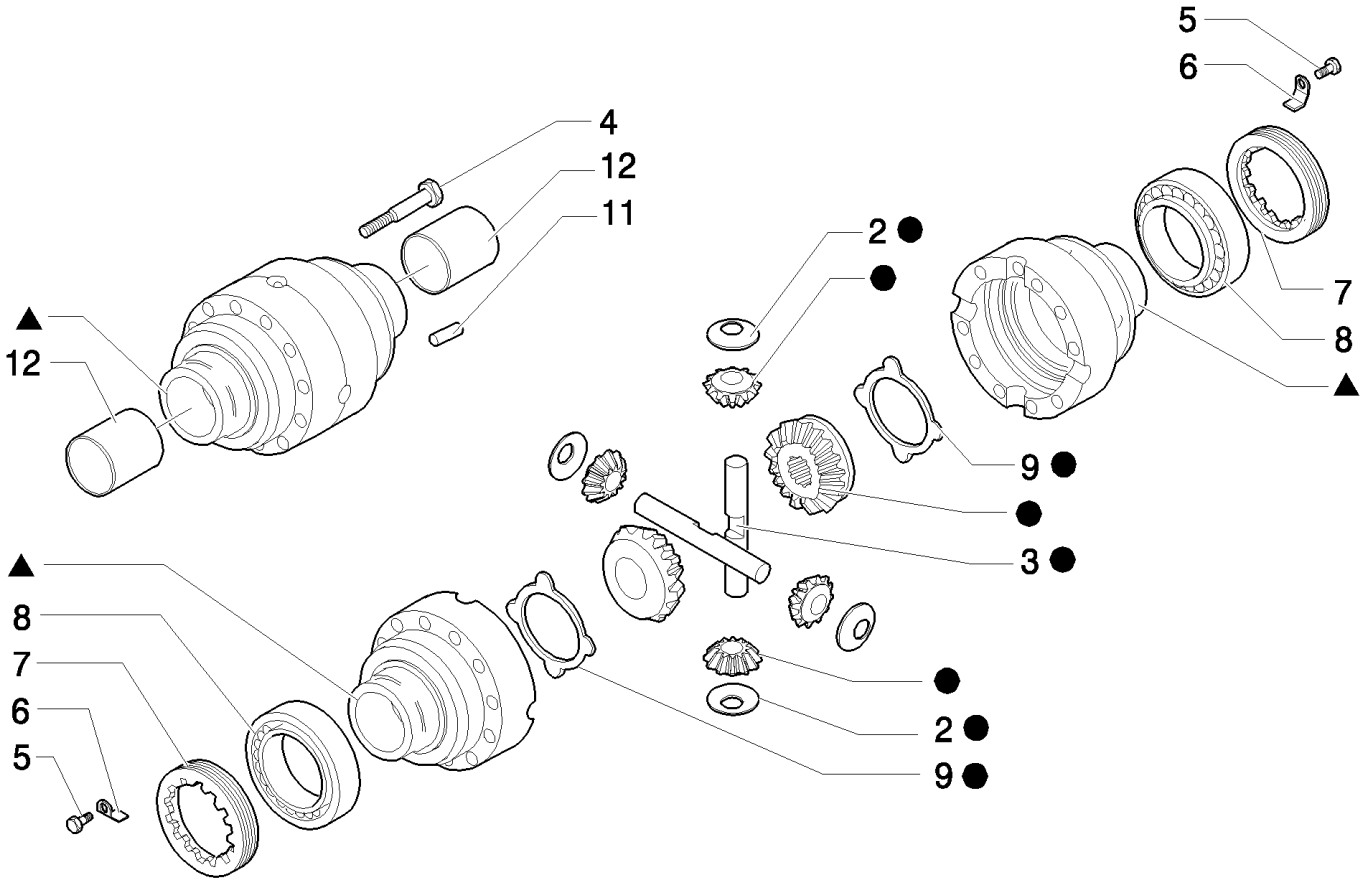

KIT

10 = ●

1 = ▲

LB115.B EUR BACKHOE LOADER (1/05-)

400A(07) REAR AXLE, DIFFERENTIAL (STANDARD)

Ref	Part Number	Qty	Description
1	85827752	1	HOUSING,
2	85812301	4	WASHER, THRUST,
3	85812300	2	PIN,
4	85812308	10	SCREW, M10x90
5	9967739	2	SCREW, M6 x 10
6	85817785	2	CLIP,
7	85827745	2	NUT, RING,
8	85827751	2	BEARING, ROLLER, TAPERED,
9	85812343	2	PLATE, DRIVE,
10	85812342	1	KIT, , UP TO S/N XXX
10	87542772	1	KIT, , FROM S/N XXX
11	85812306	2	PIN, ROLL,
12	85827758	2	BUSHING,

400A(08) SELF-LOCKING REAR AXLE, DIFFERENTIAL (SELF LOCKING)

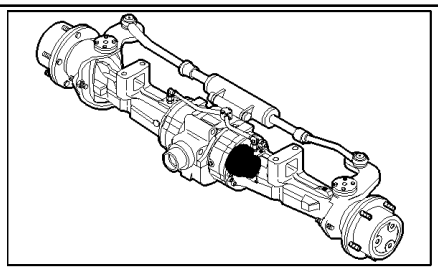

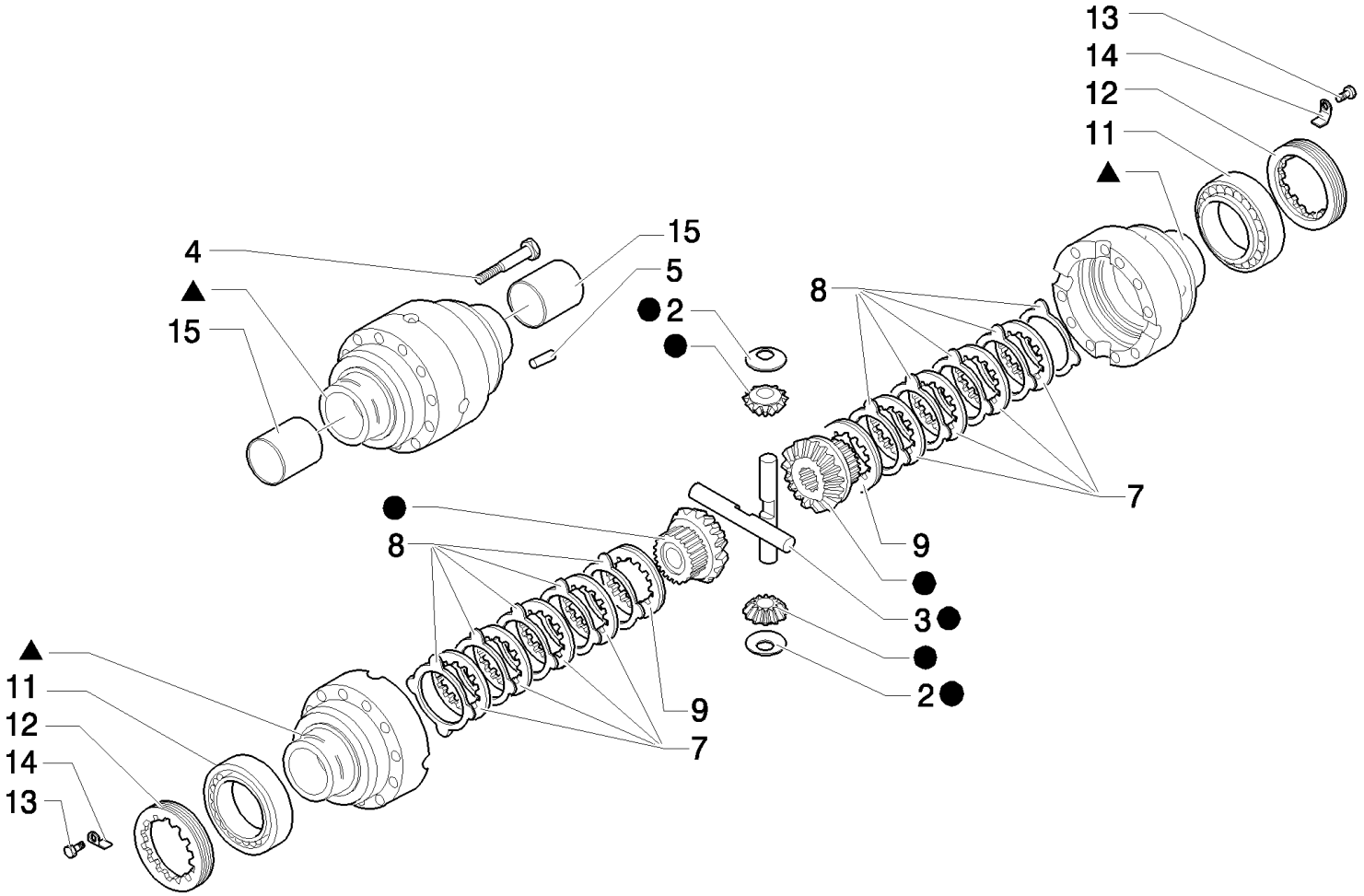

KIT 10 = ●
KIT KIT 6 = ▲

LB115.B EUR BACKHOE LOADER (1/05-)

400A(08) SELF-LOCKING REAR AXLE, DIFFERENTIAL (SELF LOCKING)

Ref	Part Number	Qty	Description
2	85812301	4	WASHER, THRUST,
3	85812300	2	PIN,
4	85812308	10	SCREW, M12x75
5	85812306	2	PIN, ROLL,
6	85827752	1	HOUSING,
7	85812304	8	PLATE,
8	85812303	10	DISC,
9	85812302	2	DISC,
10	85812299	1	KIT, , UP TO S/N XXX
10	87542787	1	KIT, , FROM S/N XXX
11	85827751	2	BEARING, ROLLER, TAPERED,
12	85827745	2	NUT, RING,
13	9967739	2	SCREW, M6 x 10
14	85817785	2	CLIP,
15	85827758	2	BUSHING,

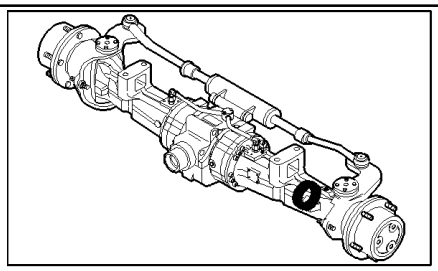

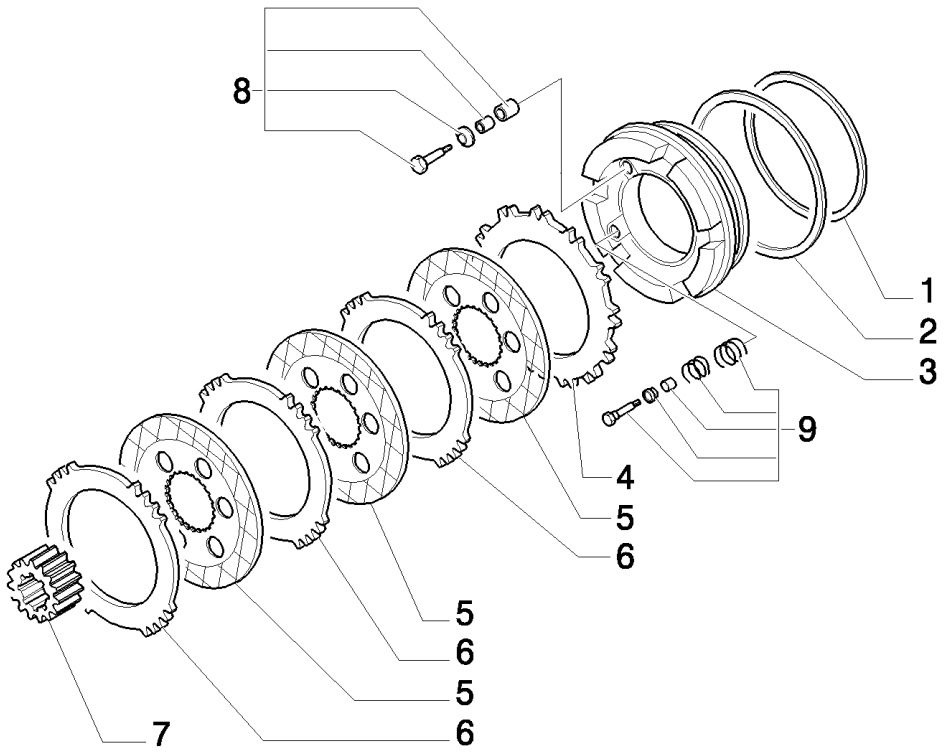
8
1
2
3
9
4
5
6
5
6
5
6
7

LB115.B EUR BACKHOE LOADER (1/05-)

400A(09) REAR AXLE, BRAKES

Ref	Part Number	Qty	Description
1	85819720	2	RING,
2	85819719	2	RING,
3	85827746	2	PISTON,
4	85827748	2	PLATE, DRIVE,
5	85827747	6	BRAKE DISC,
6	85808316	6	PLATE, DRIVE,
7	85808311	2	SLEEVE,
8	85827750	2	KIT,
9	85827749	2	KIT,

400A(10) REAR AXLE, WHEEL CARRIER & HUB

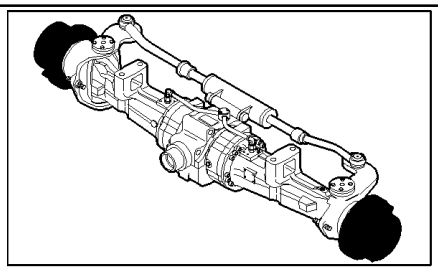

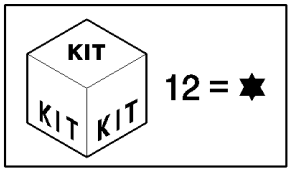

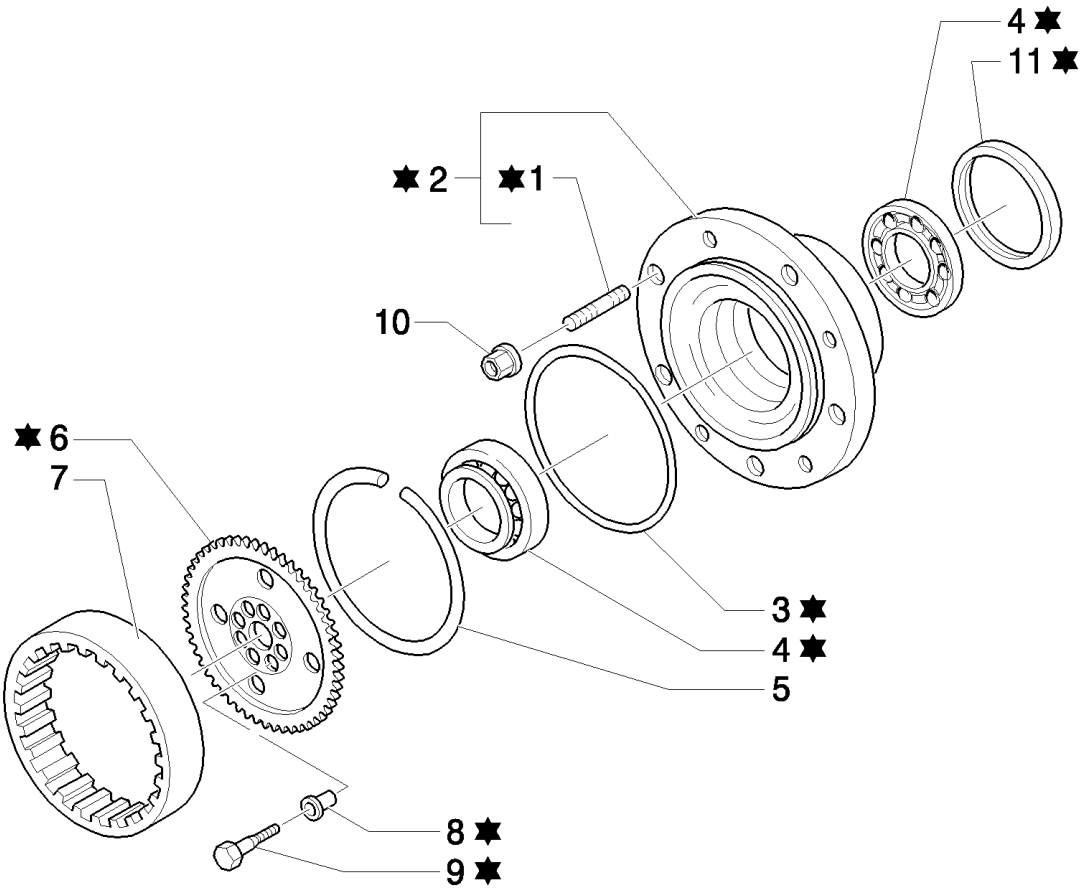

LB115.B EUR BACKHOE LOADER (1/05-)

400A(10) REAR AXLE, WHEEL CARRIER & HUB

Ref	Part Number	Qty	Description
1	85808260	20	STUD,
2	85825037	2	HUB, , UP TO S/N XXX
2	87542777	2	HUB, , FROM S/N XXX
3	85808262	2	O-RING,
4	85825036	4	BEARING ASSY, , UP TO S/N XXX
4	87538060	2	BEARING, , FROM S/N XXX
5	85808263	2	RING, LOCKING,
6	85817684	2	GEAR, , UP TO S/N XXX
6	87538275	2	HUB, , FROM S/N XXX
7	85808265	2	GEAR, RING, Z=77
8	9968067	16	BUSHING, DIAM.20
9	9968068	16	BOLT, M14x65
10	85808266	20	NUT, M22 x 1.5,
11	85825035	2	SEAL, M150x180x14.5, UP TO S/N XXX
11	87538281	2	RING, , FROM S/N XXX
12	87538312	1	KIT,

400A(11) REAR AXLE, PLANETARY GEARS & COVER

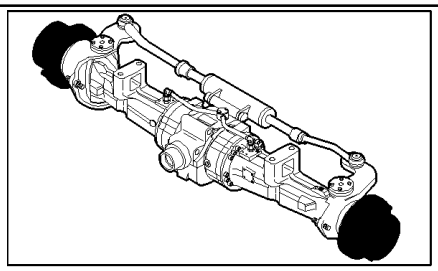

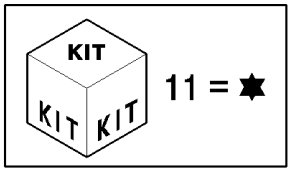

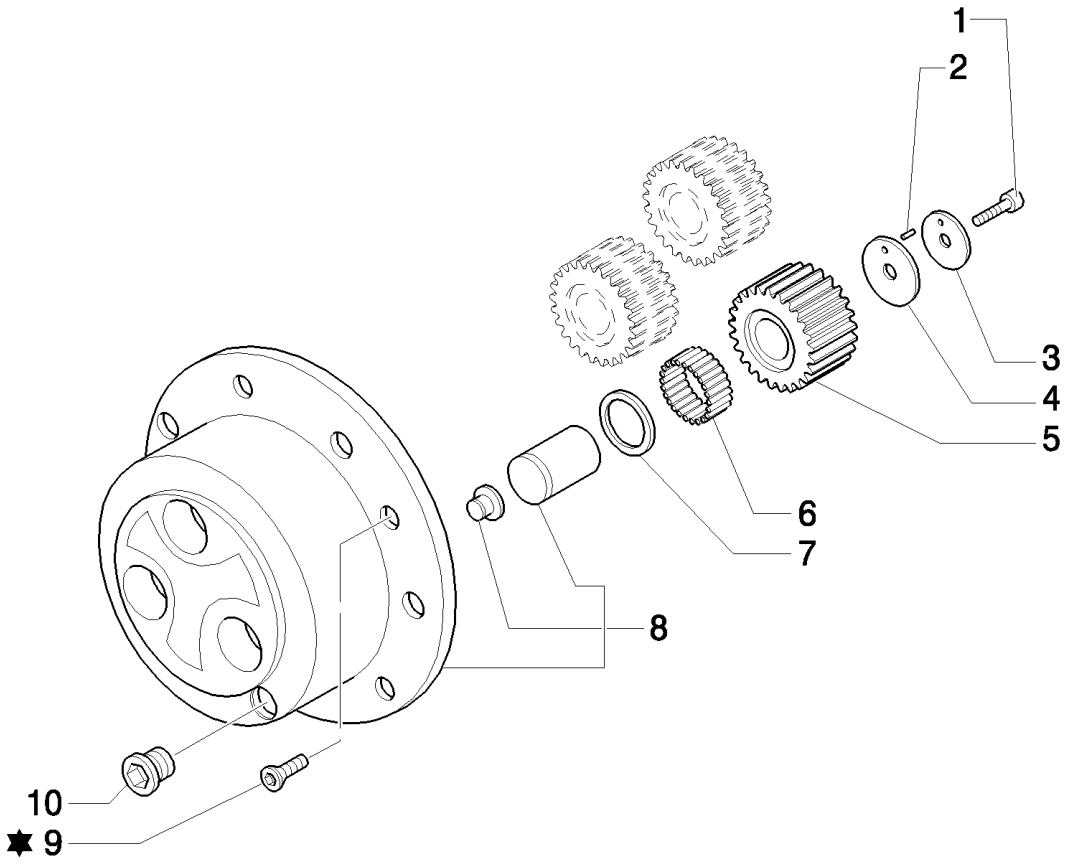

LB115.B EUR BACKHOE LOADER (1/05-)

400A(11) REAR AXLE, PLANETARY GEARS & COVER

Ref	Part Number	Qty	Description
1	85808267	6	SCREW, M10x50
2	85808268	6	PIN, , UP TO S/N XXX
3	85808269	6	WASHER, THRUST, 60 x 11 x 3, UP TO S/N XXX
4	85808270	6	WASHER, THRUST, 60X11X3, UP TO S/N XXX
4	87542762	6	WASHER, THRUST, , FROM S/N XXX
5	85808271	6	GEAR, PLANETARY, , UP TO S/N XXX
5	87532769	6	, FROM S/N XXX
6	85808272	AR	KIT OF 10 NEEDLE BRG, (Qty 1=10 Pieces)
7	85808273	6	WASHER, THRUST, 60 x 40 x 1.5
8	85808274	2	KIT, Assy
9	85805709	4	SCREW, M8X20
10	85806012	2	PLUG, M30 x 2
11	87538312	1	KIT,

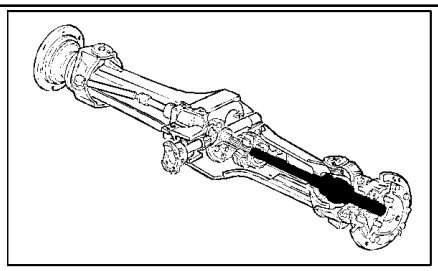

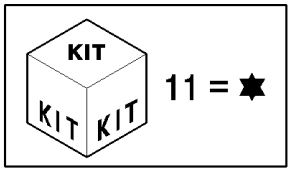
KIT
KIT KIT
11 = ✸

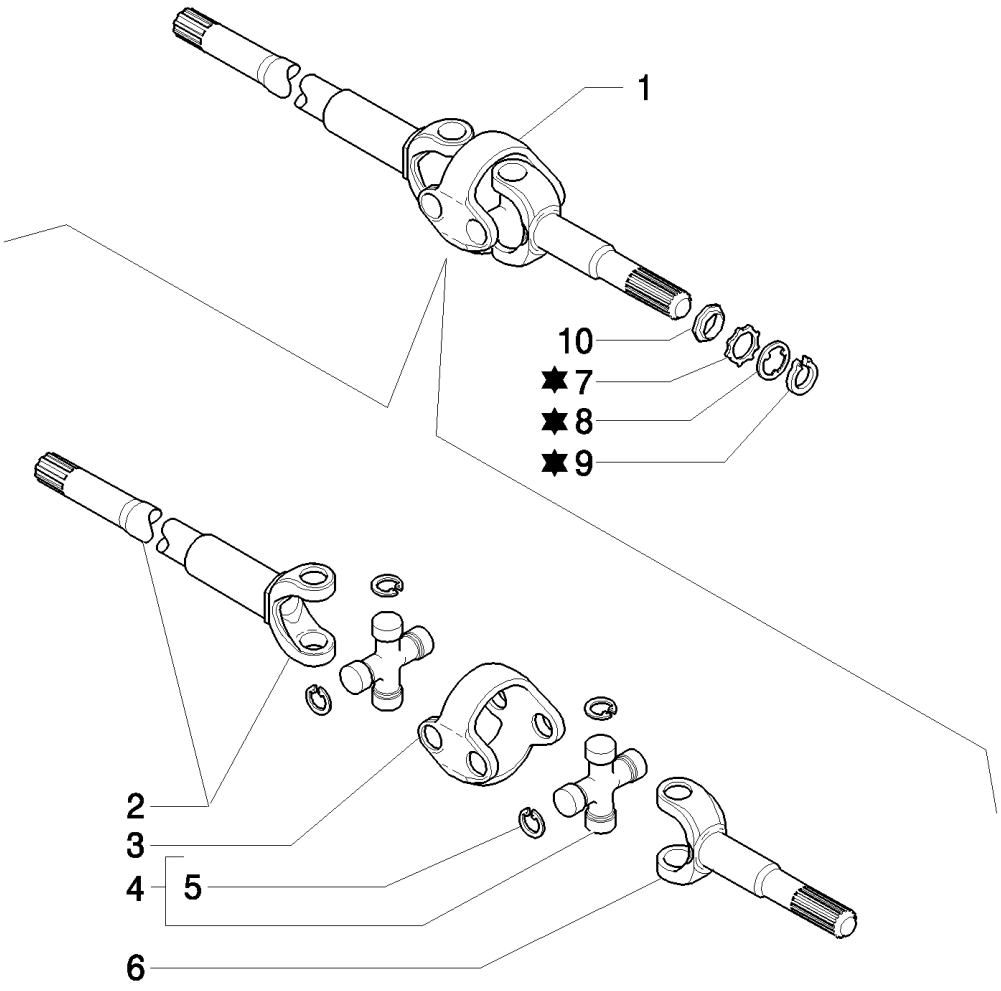
1
10
✸7
✸8
✸9
2
3
4
5
6

LB115.B EUR BACKHOE LOADER (1/05-)

400A(12) REAR AXLE, DIFFERENTIAL

Ref	Part Number	Qty	Description
1	87306644	1	SHAFT, ARTICULATED,
2	85827763	1	SHAFT,
3	87306744	1	BODY,
4	85827008	2	SPIDER, 1
5	85826290	8	RING, SNAP,
6	85826291	1	SHAFT,
7	85825176	4	BUSHING, 58 x 47 x 2.5
8	85826292	2	WASHER,
9	85826293	2	RING,
10	85825033	1	COVER, , UP TO S/N XXX
11	87538312	1	KIT,

416-417(01) SYSTEM HAMMER COMPONENTS (CAB)

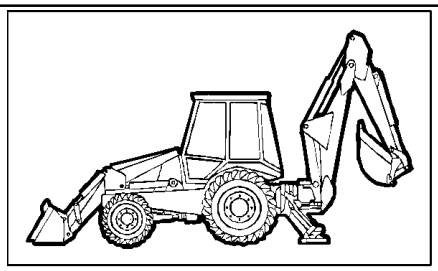

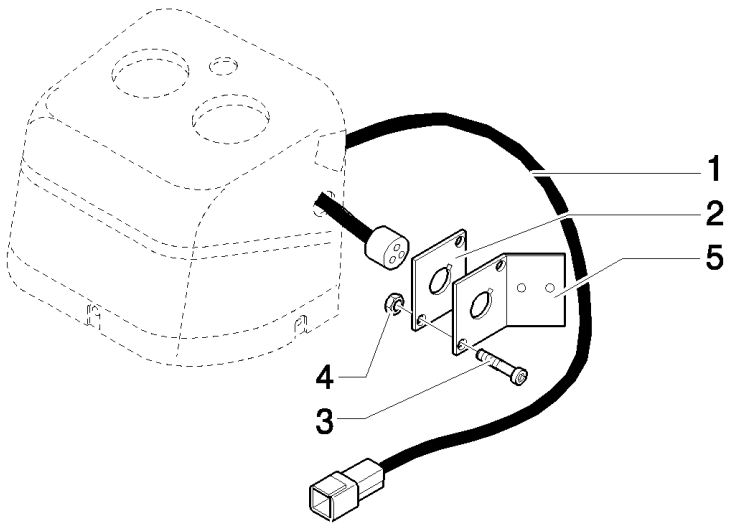

LB115.B EUR BACKHOE LOADER (1/05-)

416-417(01) SYSTEM HAMMER COMPONENTS (CAB)

Ref	Part Number	Qty	Description
1	85819237	1	HARNESS, WIRE,
2	85816760	1	PLATE,
3	13272477	2	SCREW, Cross Pan Hd, M4 x 20, 12.9,
4	12574011	2	NUT, M4 x .7, Cl 8,
5	85827822	1	PLATE, MOUNTING, , Only for ROPS

437(01) GLIDE RIDE VALVE,HYDRAULIC SYSTEM FOR MACHINE FRAME LEVELLING & ON/OFF SWITCH

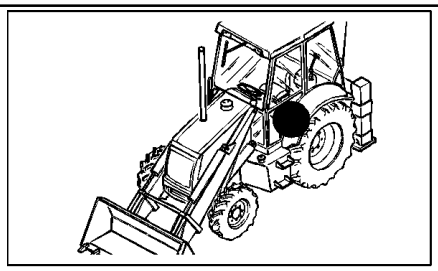

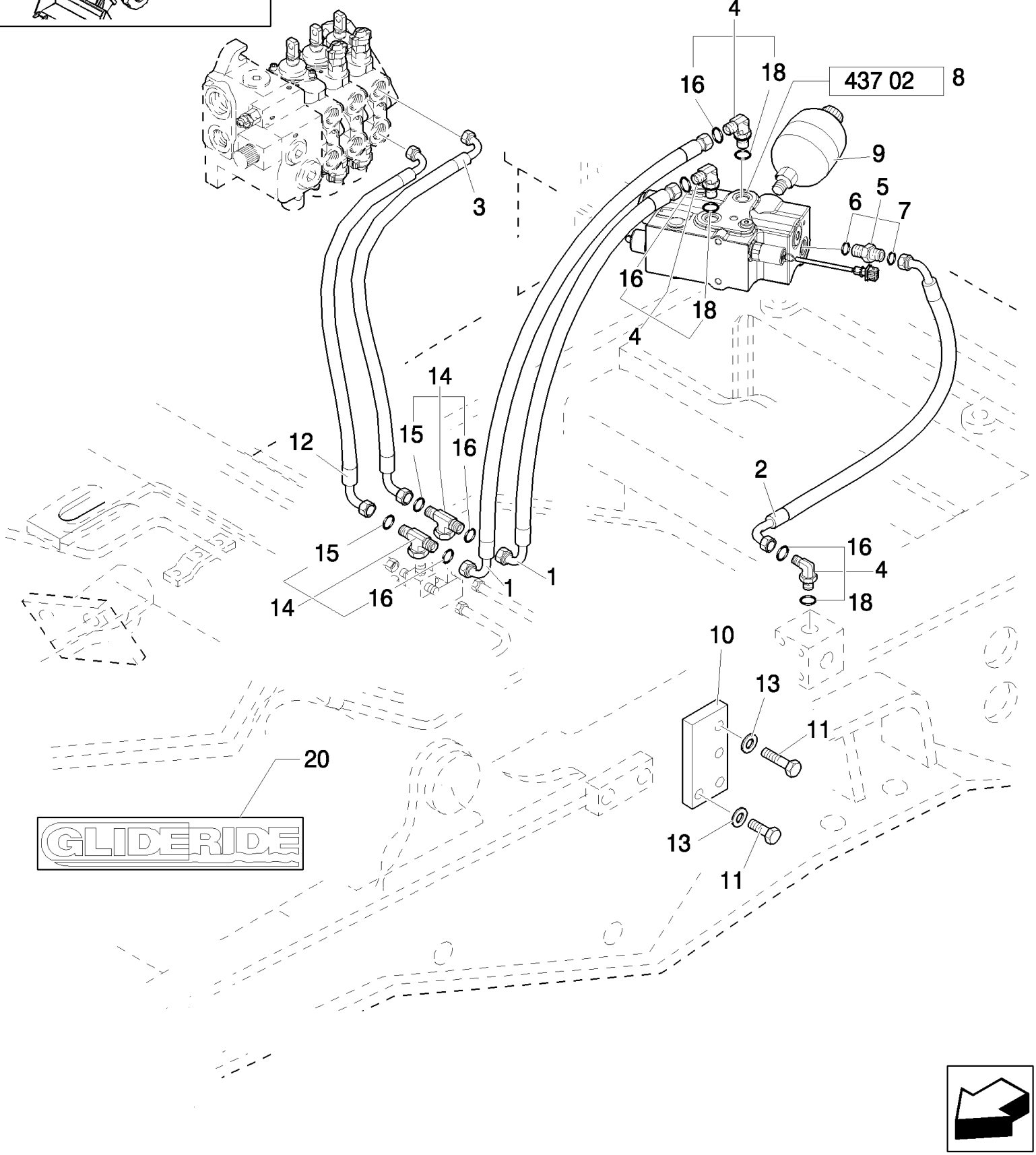

LB115.B EUR BACKHOE LOADER (1/05-)

437(01) GLIDE RIDE VALVE,HYDRAULIC SYSTEM FOR MACHINE FRAME LEVELLING & ON/OFF SWITCH

Ref	Part Number	Qty	Description
1	85815589	2	HOSE, FLEXIBLE,
2	85815620	1	HOSE, FLEXIBLE,
3	85817222	1	HOSE, FLEXIBLE,
4	390967S36	3	ELBOW, {PP:83971549} , Includes 16, 18
5	390955S36	1	CONNECTOR, HYD., {PP:83963376}
6	167269	1	O-RING, 10-1, 90 Duro, .755" ID x .097" Thk,
7	9992298	1	O-RING, {PP:89992298} -014, 90 Duro, .489" ID x .070" Thk,
8	85826144	1	VALVE, HYDRAULIC,
9	85818888	1	ACCUMULATOR, , UP TO S/N 031057032
9	87342882	1	ACCUMULATOR, , FROM TO S/N 031057033
10	85827961	1	PLATE,
11	11106421	4	SCREW, Hex, M10 x 30, 8.8,
12	85817223	1	HOSE, FLEXIBLE,
13	11190579	4	WASHER, SPRING, Belleville, M10.5,
14	85815583	2	TEE, , Includes 15, 16
15	9992069	1	O-RING, -016, 90 Duro, .614" ID x .070" Thk,
16	9992298	2	O-RING, -014, 90 Duro, .489" ID x .070" Thk,
18	128825	1	O-RING, 8-1, 90 Duro, .644" ID x .087" Thk,
20	86982600	2	DECAL,

437(02) GLIDE RIDE VALVE

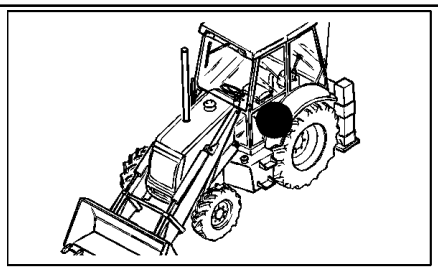

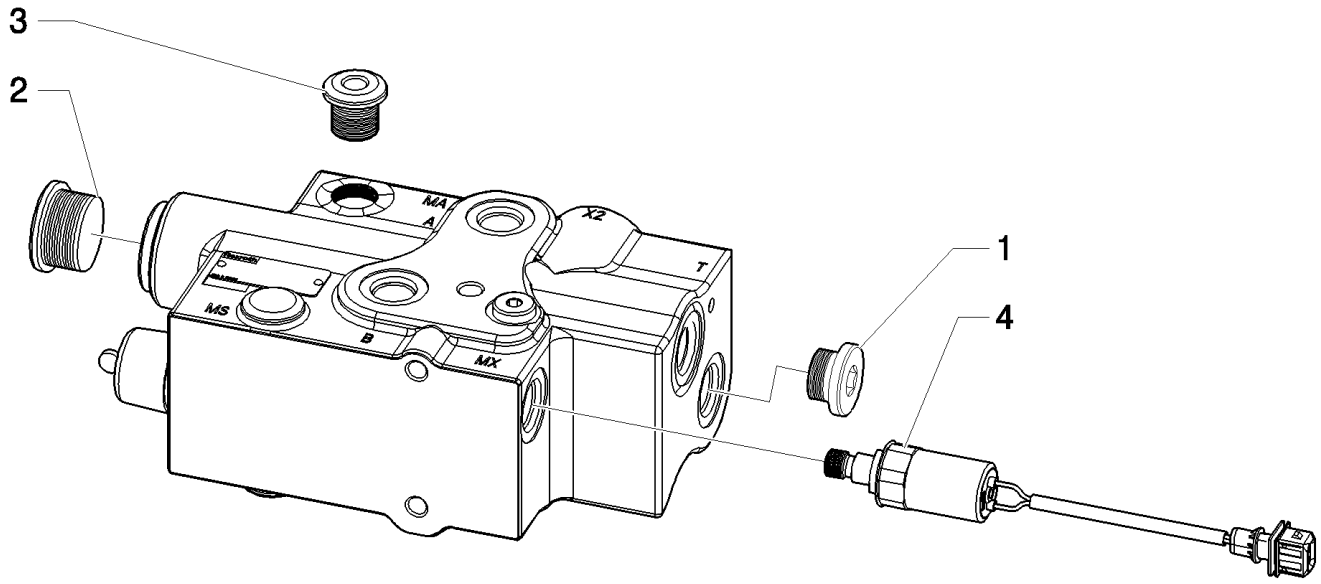

LB115.B EUR BACKHOE LOADER (1/05-)

437(02) GLIDE RIDE VALVE

Ref	Part Number	Qty	Description
1	85826214	1	PLUG,
2	85826215	1	PLUG,
3	85826216	1	PLUG,
4	85826217	1	VALVE, HYDRAULIC,

437/ 1(01) GLIDE RIDE VALVE,HYDRAULIC SYSTEM FOR MACHINE FRAME LEVELLING

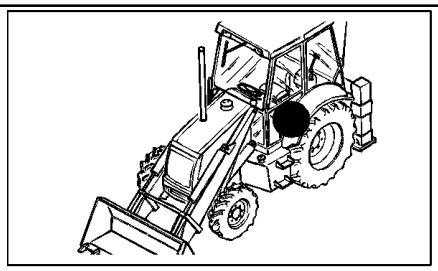

KIT KIT KIT 22= ●

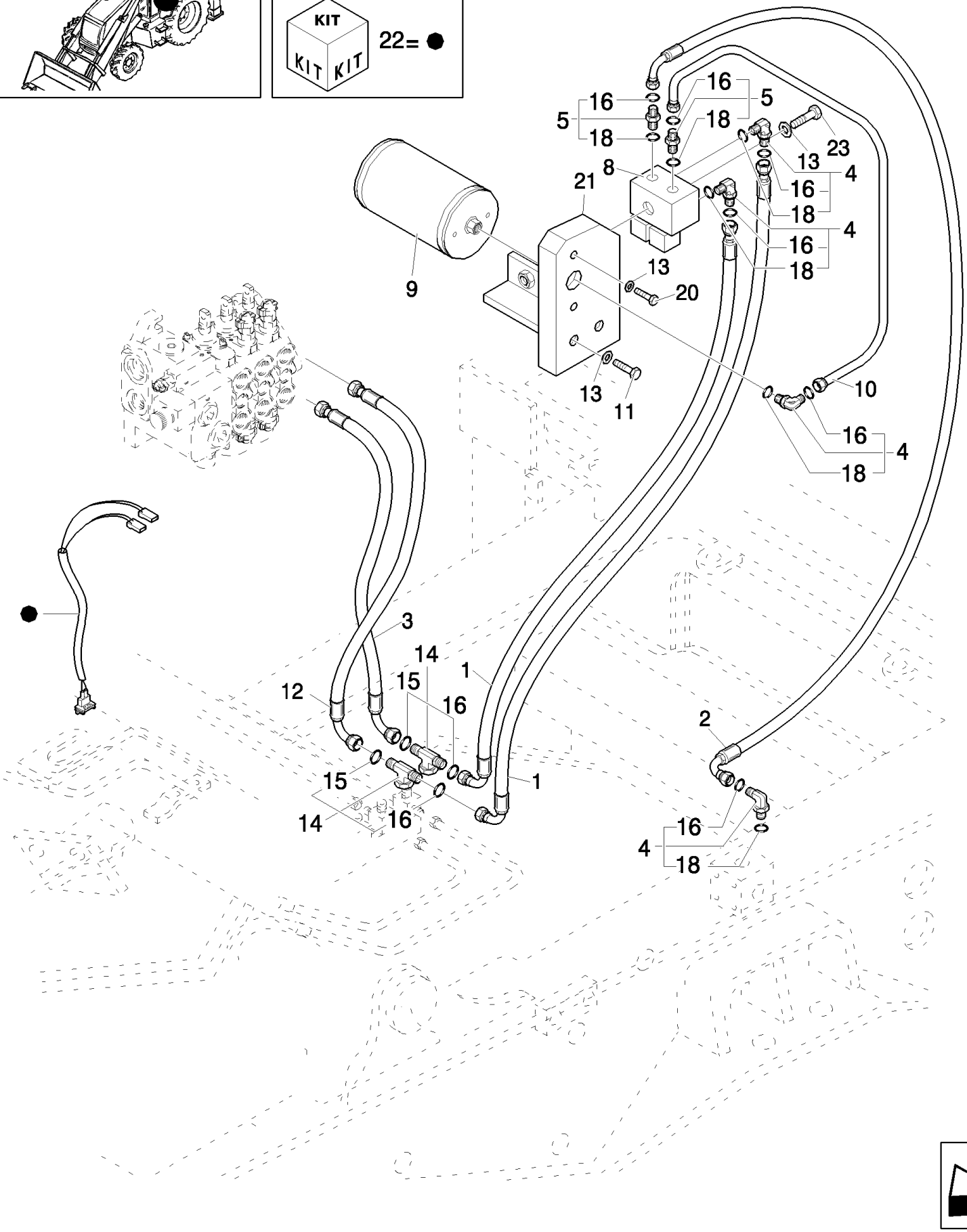

LB115.B EUR BACKHOE LOADER (1/05-)

437/ 1(01) GLIDE RIDE VALVE,HYDRAULIC SYSTEM FOR MACHINE FRAME LEVELLING

Ref	Part Number	Qty	Description
1	87358815	2	HOSE, FLEXIBLE,
2	85815620	1	HOSE, FLEXIBLE,
3	85817222	1	HOSE, FLEXIBLE,
4	83971549	4	ELBOW,
5	83963374	2	CONNECTOR, HYD.,
8	87358817	1	VALVE, HYDRAULIC,
9	87342882	1	ACCUMULATOR, , Only for EUROPE Version, UP TO S/N 031058026
9	87358818	1	ACCUMULATOR, , FROM TO S/N 031058027
10	87386551	1	PIPE,
11	11106421	2	SCREW, Hex, M10 x 30, 8.8,
12	85817223	1	HOSE, FLEXIBLE,
13	11190579	5	WASHER, SPRING, Belleville, M10.5,
14	85815583	2	TEE,
15	9992069	1	O-RING, -016, 90 Duro, .614" ID x .070" Thk,
16	9992298	2	O-RING, -014, 90 Duro, .489" ID x .070" Thk,

LB115.B EUR BACKHOE LOADER (1/05-)

469(01) BUCKET 6X1 (1,15 M3) WITH BLADE

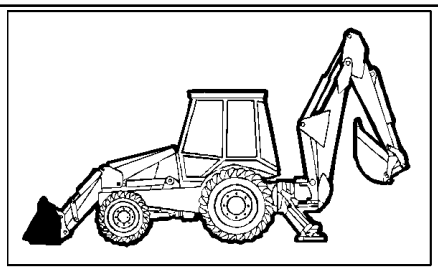

LB115.B EUR BACKHOE LOADER (1/05-)

469(01) BUCKET 6X1 (1,15 M3) WITH BLADE

Ref	Part Number	Qty	Description
1	85820075	1	BUCKET,
2	85820076	1	BUCKET,
3	85820018	4	SCREW, M10 x 90
4	85820035	4	NUT, M10X1,5
5	85820021	1	SCREW, M8 x 120
6	85820031	5	NUT, M8
7	85820034	12	SCREW, M6 x 30
8	85820026	2	PLATE,
9	85820028	12	CLAMP,
10	85820081	2	PIN,
11	85824249	2	SUPPORT,
12	85820014	8	NIPPLE, LUBE, M10 x 1,
13	85820062	2	FORK, BUCKET,
14	85820067	2	PIN,
15	85820068	2	PIN, LOCK,
16	85820016	2	PIN, ROLL, 10 x 80
17	85820017	2	PIN,
18	87573861	2	CYLINDER,
19	85820013	4	BUSHING,
20	85820015	2	PIN,
21	85820007	8	SCREW, M14 x 35
22	85820009	8	WASHER, SEALING,
23	85820008	10	NUT, M14 x 2
24	85820072	1	EDGE, CUTTING,
25	85820025	4	CONNECTOR, HYD.,
26	NSS	3	NOT SERVICED SEPARATELY,
27	85824362	2	HOSE, FLEXIBLE,
28	85824361	2	HOSE, FLEXIBLE,
29	85820039	2	TUBE, HYD,
30	85820040	2	TEE,
31	85820038	2	TUBE, HYD,
32	85820064	2	PIN,
33	85820069	2	PLUG,
34	85820065	2	BRACKET,
35	85820027	4	CLAMP,
36	85820019	2	PIN,
37	85820020	2	SCREW, M14 x 30
38	85820011	4	SCREW, M8X16
39	85820012	4	WASHER, SEALING,
40	85820010	2	GUARD,
41	85820030	2	SCREW, M8 x 45
42	NSS	1	NOT SERVICED SEPARATELY,

469(02) BUCKET 6X1 (1,15 M3) WITH BLADE

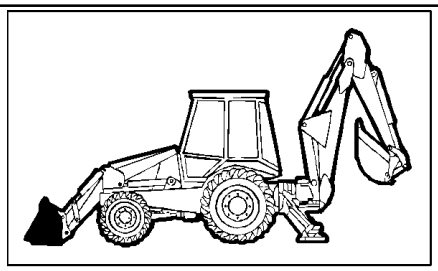

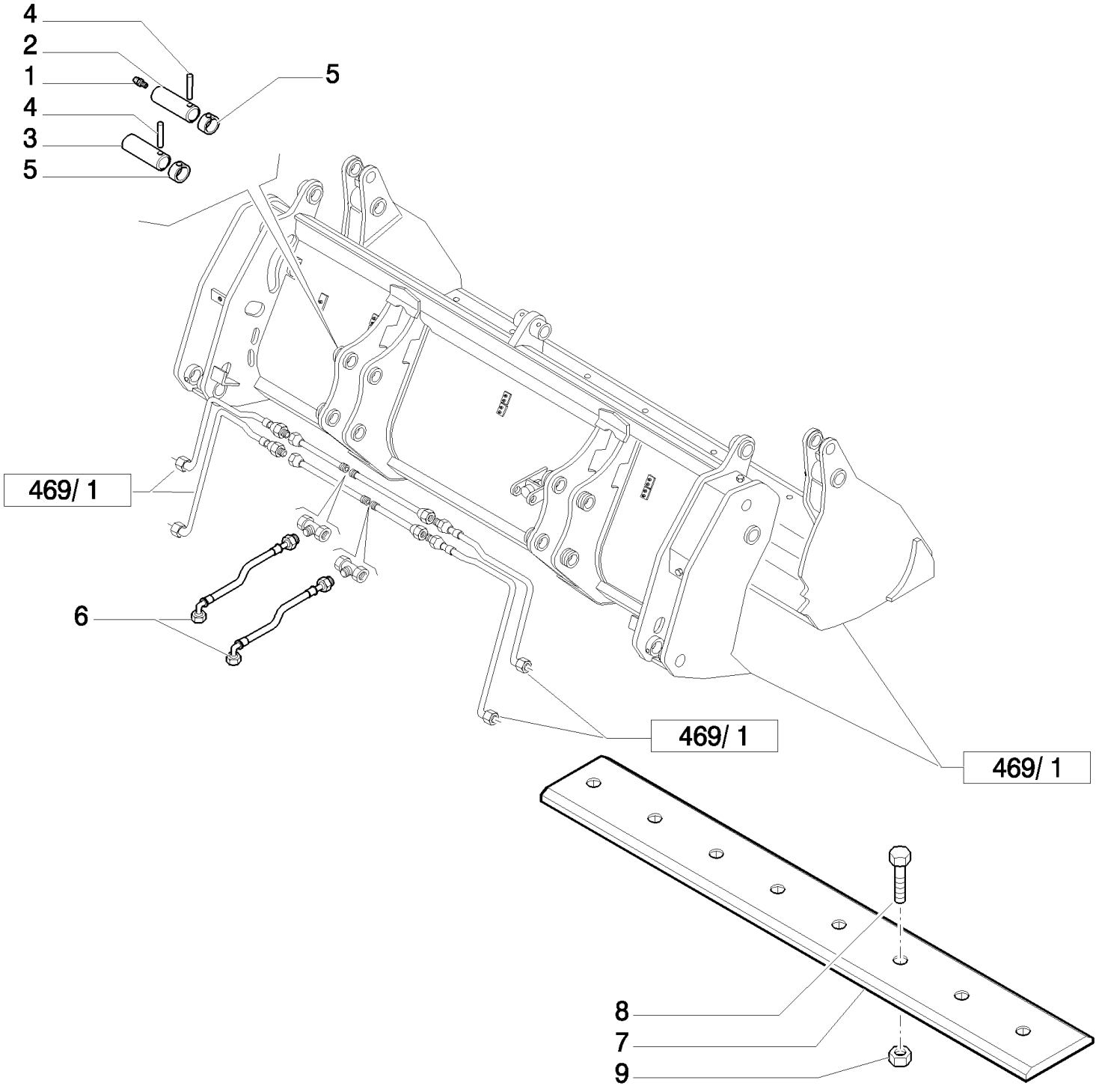

LB115.B EUR BACKHOE LOADER (1/05-)

469(02) BUCKET 6X1 (1,15 M3) WITH BLADE

Ref	Part Number	Qty	Description
1	87901S8	2	NIPPLE, LUBE, 1/8"-27 X .66" lg,
2	85804533	2	PIN,
3	85805306	2	PIN,
4	85804534	4	PIN, ROLL,
5	85802974	4	RING,
6	85820819	2	HOSE, FLEXIBLE, L=800 mm
7	85812242	1	EDGE, CUTTING, L=2400 MM.
8	85801371	8	BOLT, PLOW, 5/8"-11 x 2 1/4",
9	85801470	8	NUT, 5/8"-11, G8,

469/ A(01) HYDRAULIC CYLINDER (BUCKET 4X1-6X1)

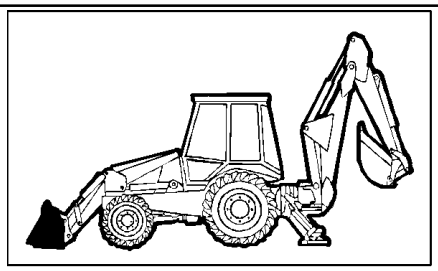

KIT KIT KIT 9 = ●

LB115.B EUR BACKHOE LOADER (1/05-)

469/ A(01) HYDRAULIC CYLINDER (BUCKET 4X1-6X1)

Ref	Part Number	Qty	Description
1	87573861	1	CYLINDER,
2	85820051	1	BARREL, , Up To S/N XXX
2	87574523	1	LINER, , From To S/N XXX
3	87574080	1	SCRAPER,
4	87574092	1	SEAL,
5	85820053	1	CAP CYLINDER END, , Up To S/N XXX
5	87574524	1	BOTTOM, , From To S/N XXX
6	87574099	1	SEAL,
7	87574097	1	SEAL,
8	87574098	1	O-RING,
9	87573868	1	PACKAGE, SEALS, , Insludes Ref. 3, 4, 6, 7, 8
10	85820054	1	PISTON, Part May or May Not Have Hole For 85820055 Roll Pin; If Part Does Not Have Hole, The Piston Is Fixed To The Rod With Loctite 243
11	85820052	1	ROD, Part May or May Not Have Hole For 85820055 Roll Pin; If Part Does Not Have Hole, The Piston Is Fixed To The Rod With Loctite 243
12	85820056	1	BUSHING,

469/ 1(01) BUCKET 6X1 (1,15 M3) WITH BLADE "COMMON GREY"

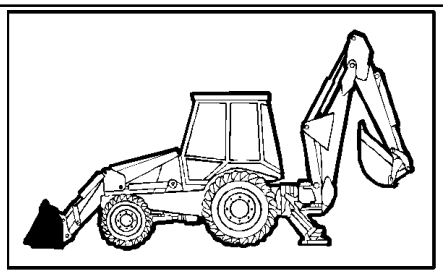

KIT KIT KIT 8 = ●

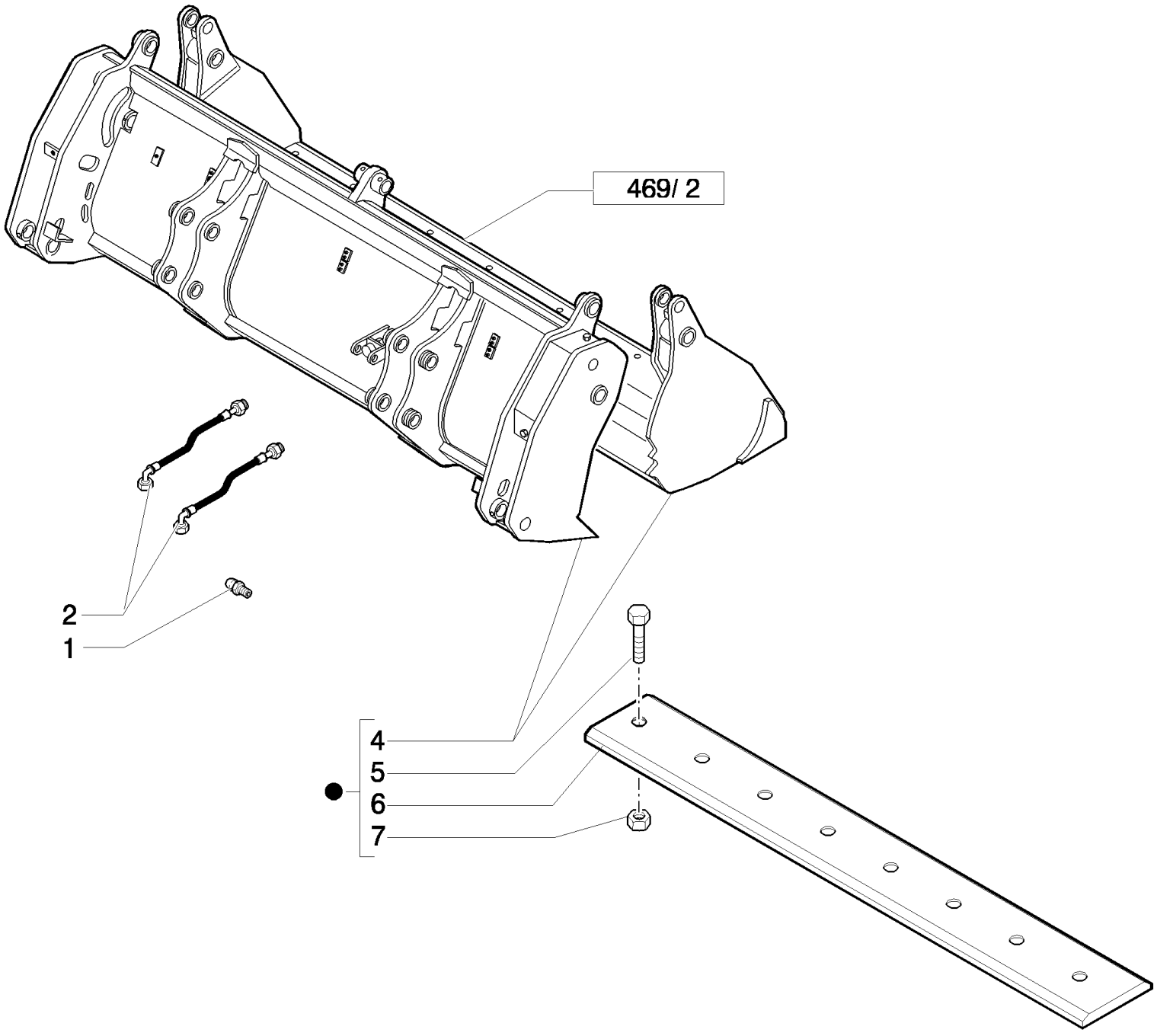

LB115.B EUR BACKHOE LOADER (1/05-)

469/ 1(01) BUCKET 6X1 (1,15 M3) WITH BLADE "COMMON GREY"

Ref	Part Number	Qty	Description
1	87901S8	2	NIPPLE, LUBE, 1/8"-27 X .66" lg,
2	85820819	1	HOSE, FLEXIBLE, L=800 mm
4	87573490	1	BUCKET, 4 IN 1,
5	85801371	8	BOLT, PLOW, 5/8"-11 x 2 1/4",
6	85820230	1	EDGE, CUTTING,
7	85801470	8	NUT, 5/8"-11, G8,
8	47334640	1	

LB115.B EUR BACKHOE LOADER (1/05-)

469/ 2(01) BUCKET 6X1 (1,15 M3) WITH BLADE "COMMON GREY"

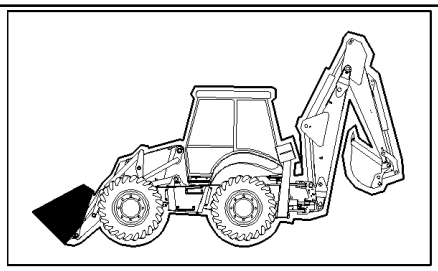

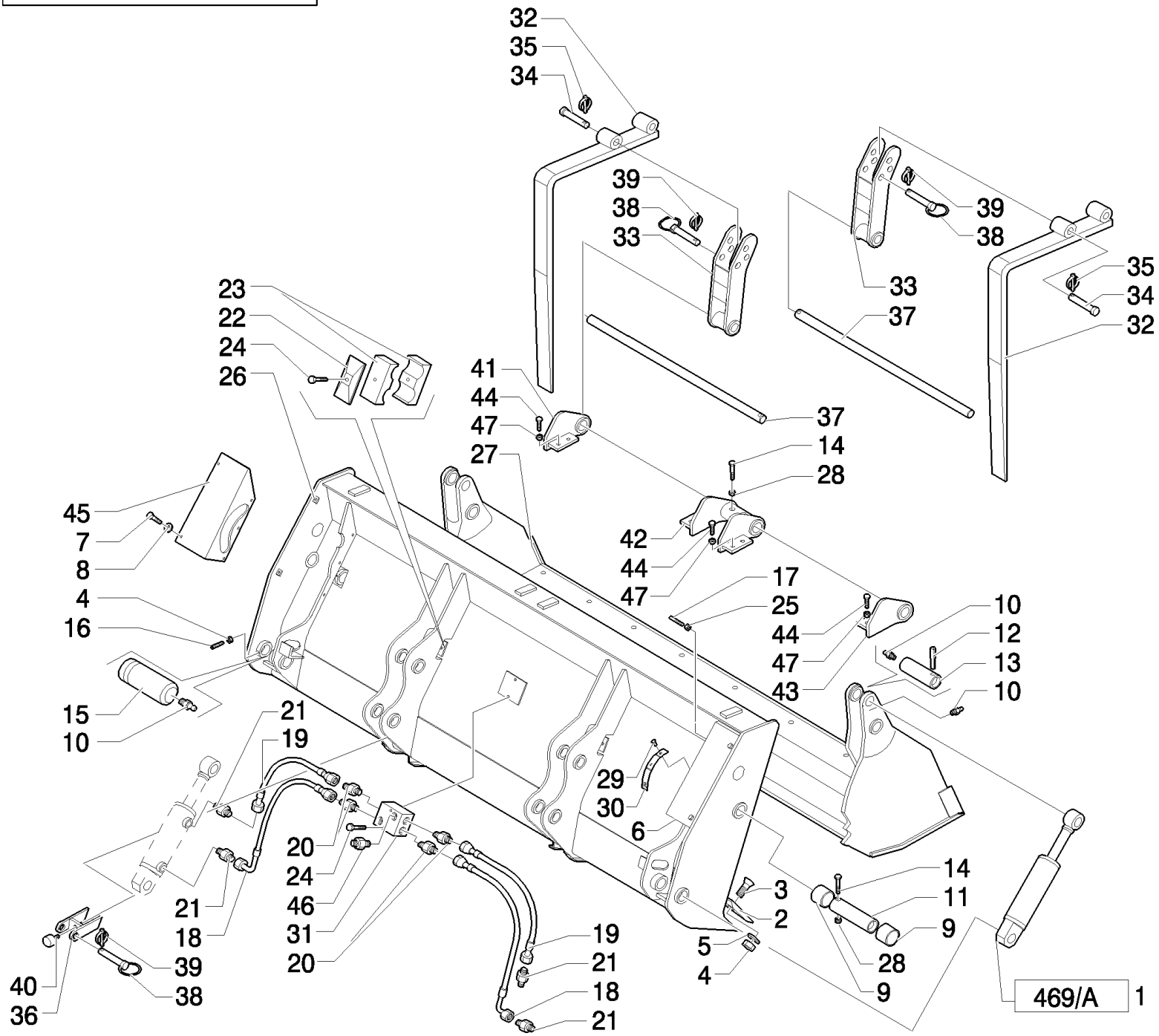

LB115.B EUR BACKHOE LOADER (1/05-)

469/ 2(01) BUCKET 6X1 (1,15 M3) WITH BLADE "COMMON GREY"

Ref	Part Number	Qty	Description
1	87573861	2	CYLINDER,
2	87308642	1	EDGE, CUTTING,
3	87312328	8	SCREW, M14 x 40
4	85820008	10	NUT, M14 x 2
5	85820009	8	WASHER, SEALING,
6	87312330	1	GUARD, RH
7	85820011	10	SCREW,
8	85820012	10	WASHER, SEALING,
9	85820013	4	BUSHING,
10	85820014	6	NIPPLE, LUBE, M10 x 1,
11	85820015	2	PIN,
12	85820016	2	PIN, ROLL, 10 x 80
13	85820017	2	PIN,
14	85820018	4	SCREW, M10 x 90
15	87310286	2	PIN,
16	85820020	2	SCREW, M14 x 30
17	87312331	1	SCREW, M8 x 120
18	87312427	2	HOSE, FLEXIBLE,
19	87312436	2	HOSE, FLEXIBLE,
20	87312343	4	CONNECTOR, HYD.,
21	87312333	2	CONNECTOR, HYD.,
22	85820026	2	PLATE,
23	85820027	4	CLAMP,
24	85820030	4	SCREW, M8 x 45
25	85820031	5	NUT, M8
26	87308638	1	BUCKET,
27	87308915	1	BUCKET,
28	85820035	4	NUT, M10x1,5
29	85820036	3	4x10
30	85820037	1	
31	87312335	1	FITTING,
32	87310367	2	FORK, BUCKET,
33	87310368	2	SUPPORT,
34	87310369	2	PIN,
35	85825177	2	PIN, LOCK, D=8
36	87310370	2	BRACKET,
37	87310378	2	SHAFT,
38	85820064	2	PIN,
39	85820068	2	PIN, LOCK, D=11
40	85820069	2	PLUG,
41	87310373	1	HINGE, LH
42	87310374	1	HINGE,
43	87310375	1	HINGE, RH

LB115.B EUR BACKHOE LOADER (1/05-)

469/ 2(01) BUCKET 6X1 (1,15 M3) WITH BLADE "COMMON GREY"

Ref	Part Number	Qty	Description
44	87557215	8	SCREW, M16x35
45	87395481	1	GUARD, LH
46	87395482	2	CONNECTOR, HYD.,
47	87395486	8	

470(01) BUCKET 6X1 (1,15 M3) WITH TINE

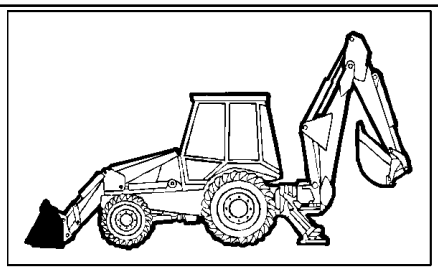

LB115.B EUR BACKHOE LOADER (1/05-)

470(01) BUCKET 6X1 (1,15 M3) WITH TINE

Ref	Part Number	Qty	Description
1	85820075	1	BUCKET,
2	85820076	1	BUCKET,
3	85820018	4	SCREW, M10 x 90
4	85820035	4	NUT, M10X1,5
5	85820021	1	SCREW, M8 x 120
6	85820031	5	NUT, M8
7	85820034	12	SCREW, M6 x 30
8	85820026	2	PLATE,
9	85820028	12	CLAMP,
10	85820081	2	PIN,
11	85824249	2	SUPPORT,
12	85820014	5	NIPPLE, LUBE, M10 x 1,
13	85820062	2	FORK, BUCKET,
14	85820067	2	PIN,
15	85820068	2	PIN, LOCK,
16	85820016	2	PIN, ROLL, 10 x 80
17	85820017	2	PIN,
18	87573861	2	CYLINDER,
19	85820013	4	BUSHING,
20	85820015	2	PIN,
21	85820007	8	SCREW, M14 x 35
22	85820009	8	WASHER, SEALING,
23	85820008	10	NUT, M14 x 2
24	85820072	1	EDGE, CUTTING,
25	85820025	4	CONNECTOR, HYD.,
26	NSS	3	NOT SERVICED SEPARATELY,
27	85824362	2	HOSE, FLEXIBLE,
28	85824361	2	HOSE, FLEXIBLE,
29	85820039	2	TUBE, HYD,
30	85820040	2	TEE,
31	85820038	2	TUBE, HYD,
32	85820064	2	PIN,
33	85820069	2	PLUG,
34	85820065	2	BRACKET,
35	85820027	4	CLAMP,
36	85820019	2	PIN,
37	85820020	2	SCREW, M14 x 30
38	85820011	4	SCREW, M8X16
39	85820012	4	WASHER, SEALING,
40	85820010	2	GUARD,
41	85820030	2	SCREW, M8 x 45
42	NSS	1	NOT SERVICED SEPARATELY,

470(02) BUCKET 6X1 (1,15 M3) WITH TINE

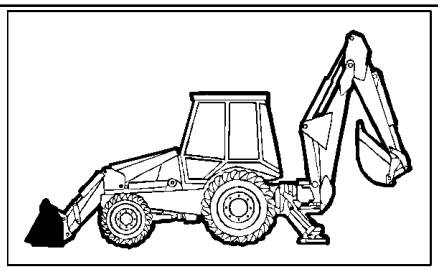

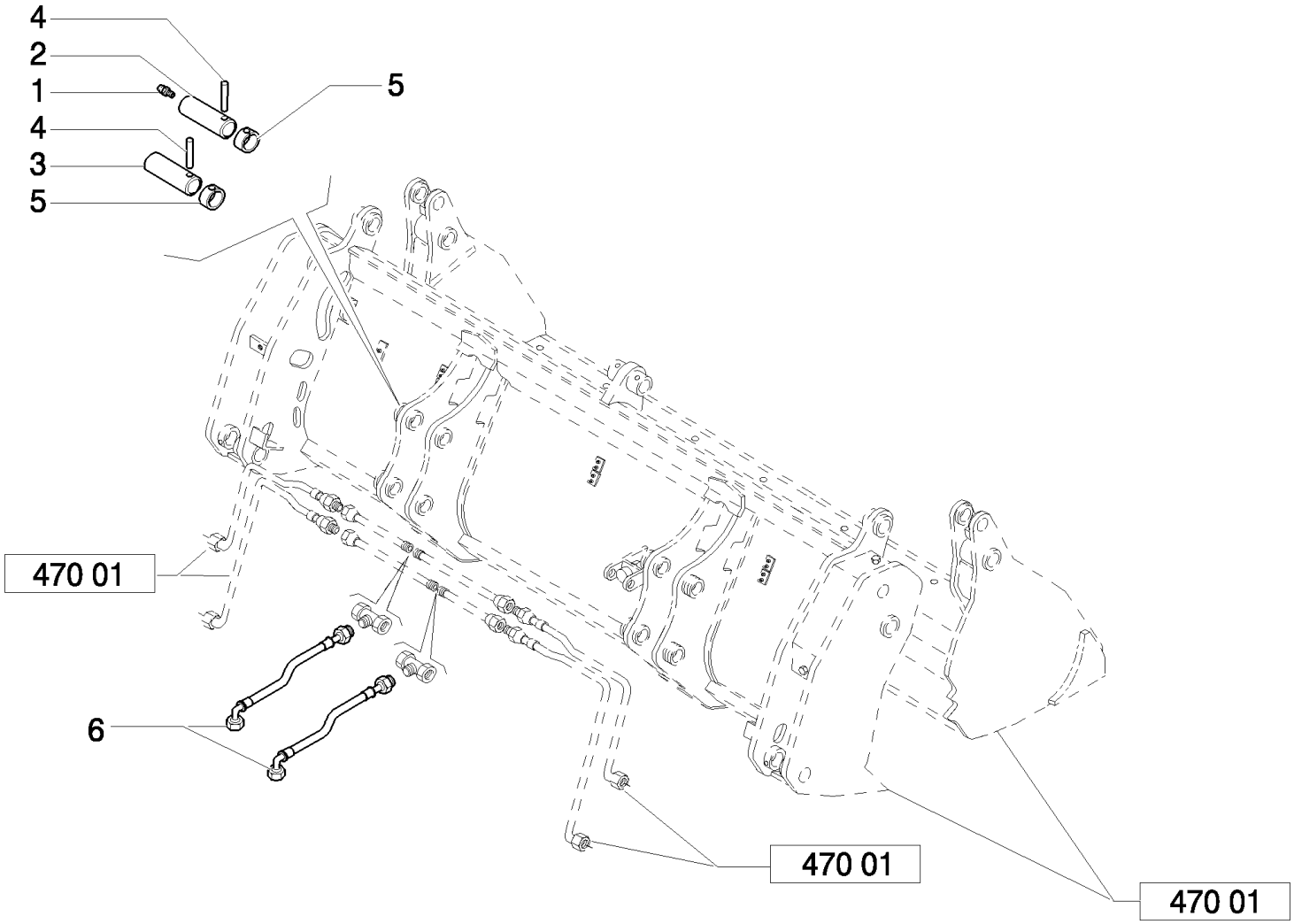

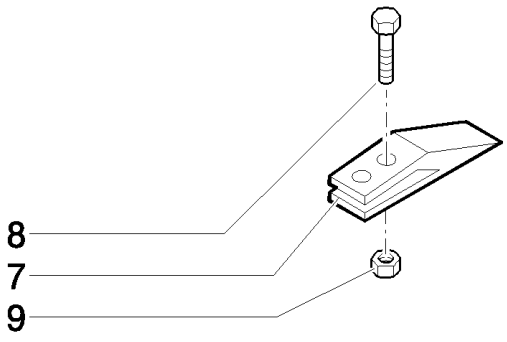

LB115.B EUR BACKHOE LOADER (1/05-)

470(02) BUCKET 6X1 (1,15 M3) WITH TINE

Ref	Part Number	Qty	Description
1	87901S8	2	NIPPLE, LUBE, 1/8"-27 X .66" lg,
2	85804533	2	PIN,
3	85805306	2	PIN,
4	85804534	4	PIN, ROLL,
5	85802974	4	RING,
6	85820819	2	HOSE, FLEXIBLE, L=800 mm
7	85811440	8	SHANK, BUCKET TOOTH,
8	85801371	16	BOLT, PLOW, 5/8"-11 x 2 1/4",
9	85801470	16	NUT, 5/8"-11, G8,

470/ 1(01) BUCKET 6X1 (1,15 M3) WITH TINE "COMMON GREY"

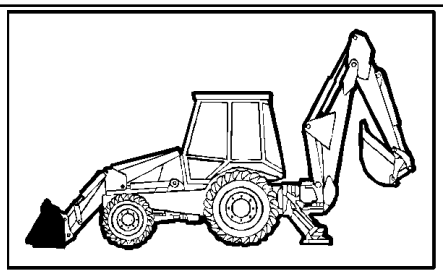

KIT KIT KIT 8=●

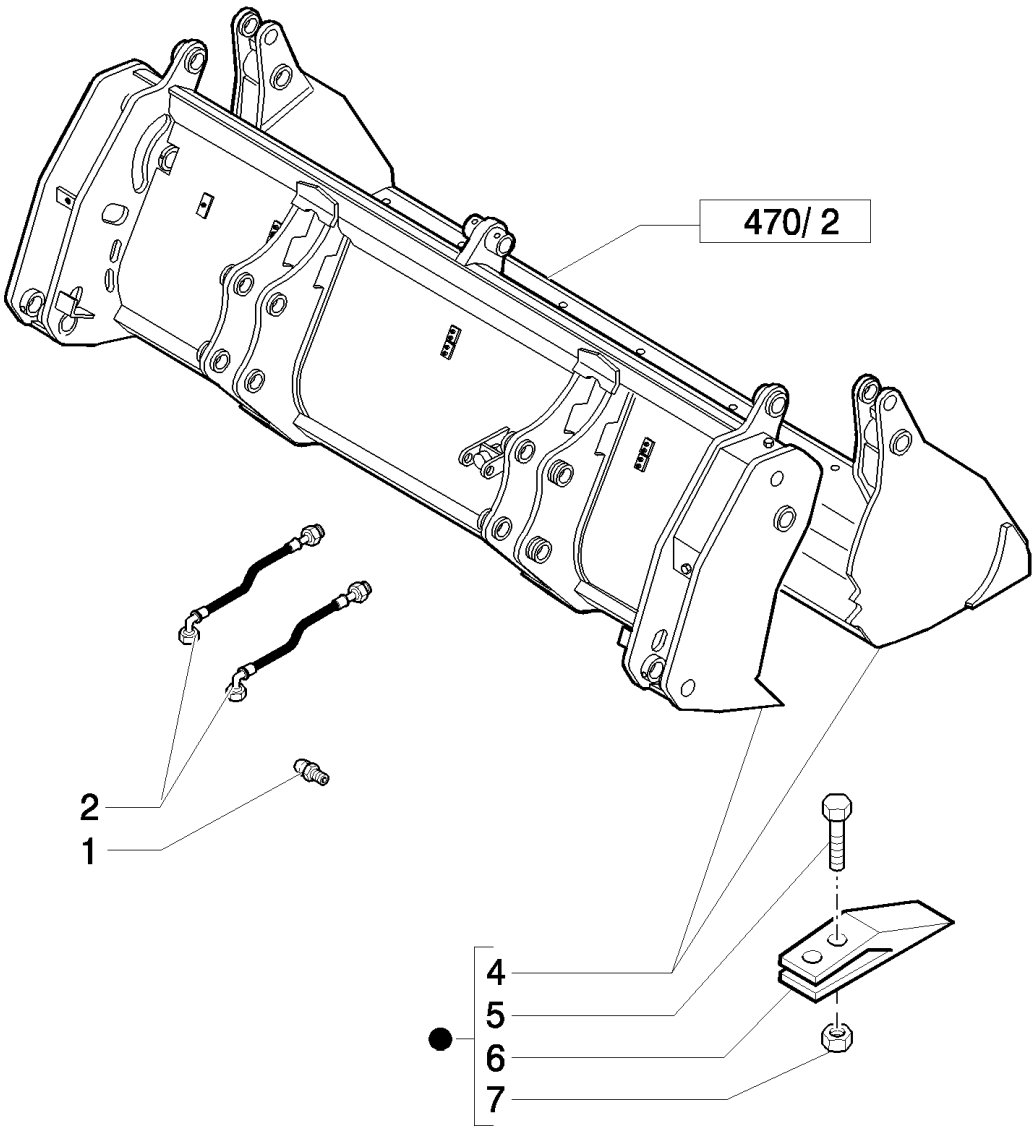

LB115.B EUR BACKHOE LOADER (1/05-)

470/ 1(01) BUCKET 6X1 (1,15 M3) WITH TINE "COMMON GREY"

Ref	Part Number	Qty	Description
1	87901S8	2	NIPPLE, LUBE, 1/8"-27 X .66" lg,
2	85820819	2	HOSE, FLEXIBLE, L=800 mm
4	87573490	1	BUCKET, 4 IN 1, 6x1
5	85801371	8	BOLT, PLOW, 5/8"-11 x 2 1/4",
6	85811440	8	SHANK, BUCKET TOOTH,
7	85801470	8	NUT, 5/8"-11, G8,
8	47334650	1	

LB115.B EUR BACKHOE LOADER (1/05-)

470/ 2(01) BUCKET 6X1 (1,15 M3) WITH TINE "COMMON GREY"

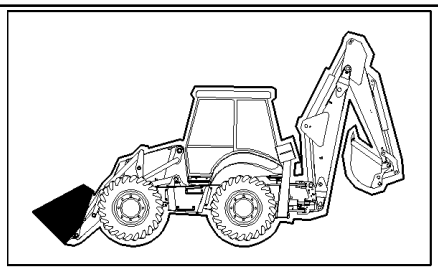

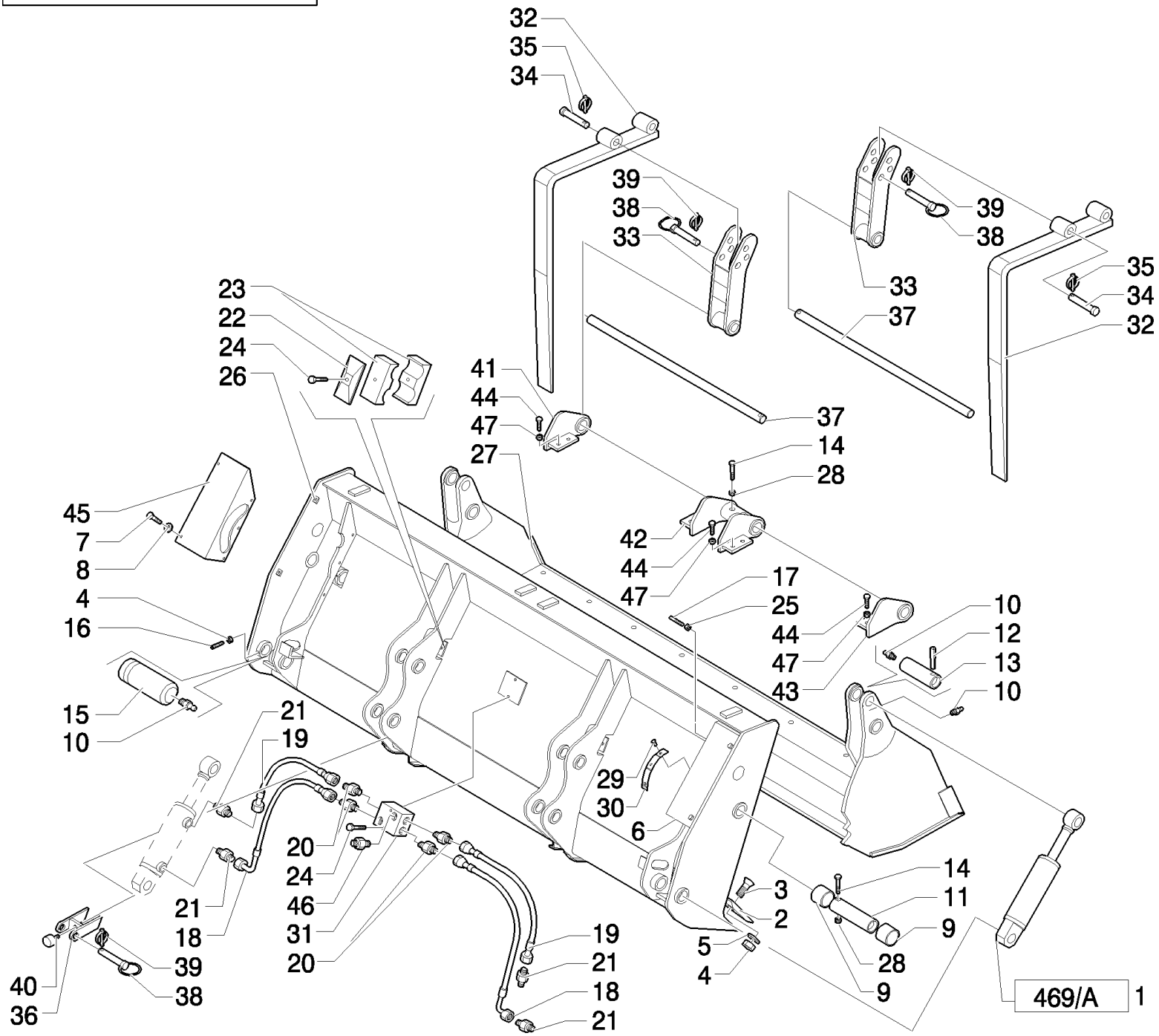

LB115.B EUR BACKHOE LOADER (1/05-)

470/ 2(01) BUCKET 6X1 (1,15 M3) WITH TINE "COMMON GREY"

Ref	Part Number	Qty	Description
1	87573861	2	CYLINDER,
2	87308642	1	EDGE, CUTTING,
3	87312328	8	SCREW, M14 x 40
4	85820008	10	NUT, M14 x 2
5	85820009	8	WASHER, SEALING,
6	87312330	1	GUARD, RH
7	85820011	10	SCREW,
8	85820012	10	WASHER, SEALING,
9	85820013	4	BUSHING,
10	85820014	6	NIPPLE, LUBE, M10 x 1,
11	85820015	2	PIN,
12	85820016	2	PIN, ROLL, 10 x 80
13	85820017	2	PIN,
14	85820018	4	SCREW, M10 x 90
15	87310286	2	PIN,
16	85820020	2	SCREW, M14 x 30
17	87312331	1	SCREW, M8 x 120
18	87312427	2	HOSE, FLEXIBLE,
19	87312436	2	HOSE, FLEXIBLE,
20	87312343	4	CONNECTOR, HYD.,
21	87312333	2	CONNECTOR, HYD.,
22	85820026	2	PLATE,
23	85820027	4	CLAMP,
24	85820030	4	SCREW, M8 x 45
25	85820031	5	NUT, M8
26	87308638	1	BUCKET,
27	87308915	1	BUCKET,
28	85820035	4	NUT, M10x1,5
29	85820036	3	4x10
30	85820037	1	
31	87312335	1	FITTING,
32	87310367	2	FORK, BUCKET,
33	87310368	2	SUPPORT,
34	87310369	2	PIN,
35	85825177	2	PIN, LOCK, D=8
36	87310370	2	BRACKET,
37	87310378	2	SHAFT,
38	85820064	2	PIN,
39	85820068	2	PIN, LOCK, D=11
40	85820069	2	PLUG,
41	87310373	1	HINGE, LH
42	87310374	1	HINGE,
43	87310375	1	HINGE, RH

LB115.B EUR BACKHOE LOADER (1/05-)

470/ 2(01) BUCKET 6X1 (1,15 M3) WITH TINE "COMMON GREY"

Ref	Part Number	Qty	Description
44	87557215	8	SCREW, M16x35
45	87395481	1	GUARD, LH
46	87395482	2	CONNECTOR, HYD.,
47	87395486	8	

475(01) BUCKET 4X1 (1,15 M3) WITH BLADE

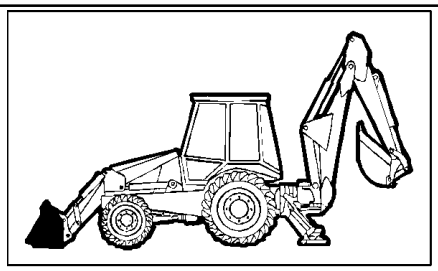

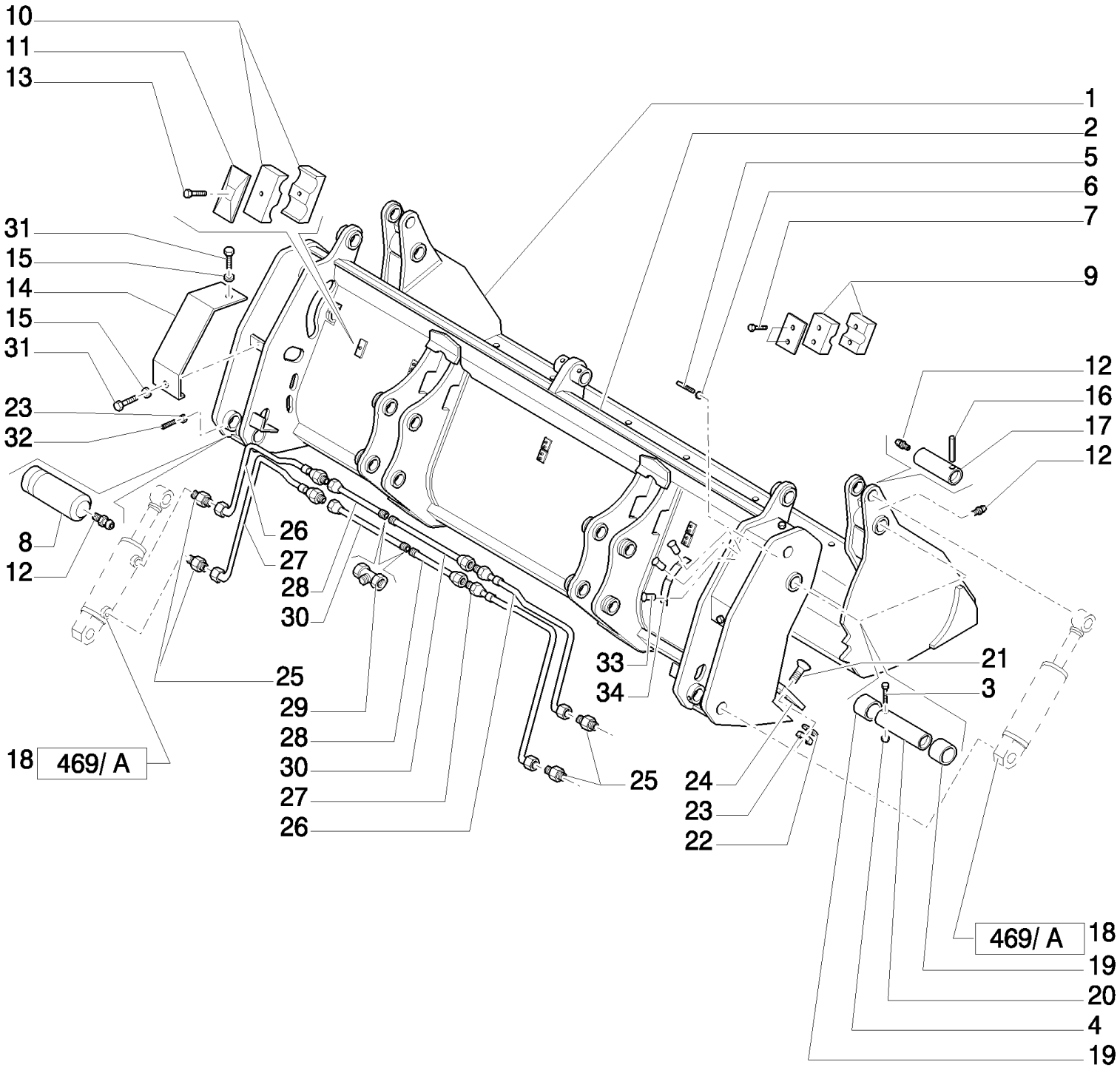

LB115.B EUR BACKHOE LOADER (1/05-)

475(01) BUCKET 4X1 (1,15 M3) WITH BLADE

Ref	Part Number	Qty	Description
1	85820075	1	BUCKET,
2	85820076	1	BUCKET,
3	85820018	2	SCREW, M10 x 90
4	85820035	2	NUT, M10X1,5
5	85820021	1	SCREW, M8 x 120
6	85820031	1	NUT, M8
7	85820034	12	SCREW, M6 x 30
8	85820019	2	PIN,
9	85820028	12	CLAMP,
10	85820027	2	CLAMP,
11	85820026	2	PLATE,
12	85820014	6	NIPPLE, LUBE, M10 x 1,
13	85820030	2	SCREW,
14	85820010	2	GUARD,
15	85820012	4	WASHER, SEALING,
16	85820016	2	PIN, ROLL, 10 x 80
17	85820017	2	PIN,
18	87573861	2	CYLINDER,
19	85820013	4	BUSHING,
20	85820015	2	PIN,
21	85820007	8	SCREW, M14 x 35
22	85820009	8	WASHER, SEALING,
23	85820008	10	NUT, M14 x 2
24	85820072	1	EDGE, CUTTING,
25	85820025	4	CONNECTOR, HYD.,
26	85824362	2	HOSE, FLEXIBLE,
27	85824361	2	HOSE, FLEXIBLE,
28	85820039	2	TUBE, HYD,
29	85820040	2	TEE,
30	85820038	2	TUBE, HYD,
31	85820011	2	SCREW,
32	85820020	2	SCREW,
33	NSS	3	NOT SERVICED SEPARATELY,
34	NSS	1	NOT SERVICED SEPARATELY,

475(02) BUCKET 4X1 (1,15 M3) WITH BLADE

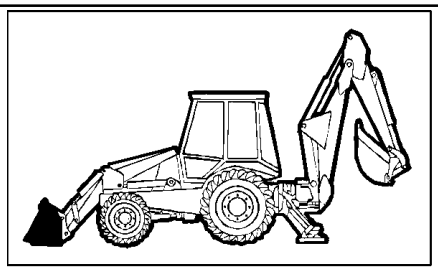

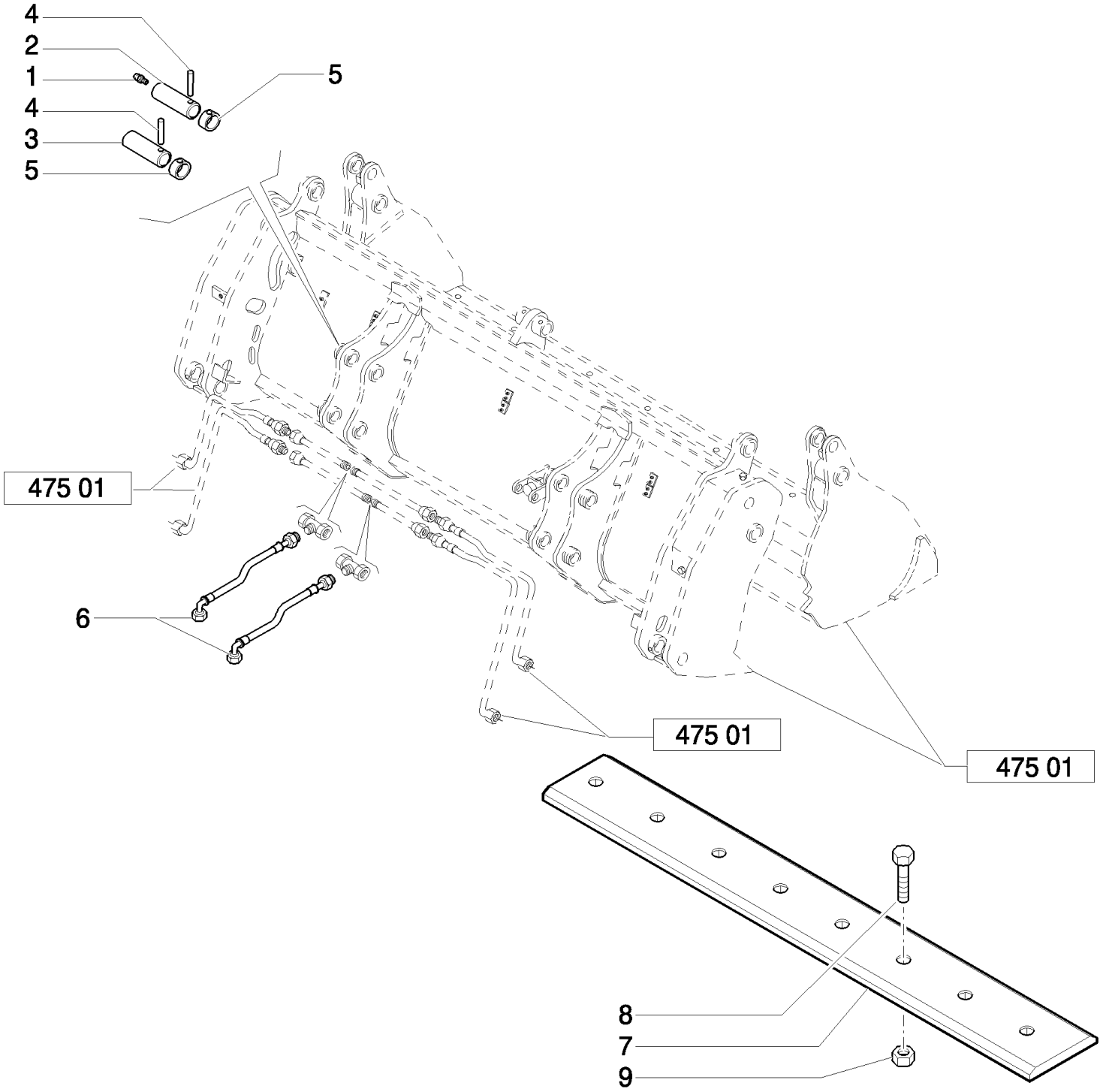

LB115.B EUR BACKHOE LOADER (1/05-)

475(02) BUCKET 4X1 (1,15 M3) WITH BLADE

Ref	Part Number	Qty	Description
1	87901S8	2	NIPPLE, LUBE, 1/8"-27 X .66" lg,
2	85804533	2	PIN,
3	85805306	2	PIN,
4	85804534	4	PIN, ROLL,
5	85802974	4	RING,
6	85820819	2	HOSE, FLEXIBLE, L=800 mm
7	85812242	1	EDGE, CUTTING, L=2400 MM.
8	85801371	8	BOLT, PLOW, 5/8"-11 x 2 1/4",
9	85801470	8	NUT, 5/8"-11, G8,

475/ 1(01) BUCKET 4X1 (1,15 M3) WITH BLADE "COMMON GREY"

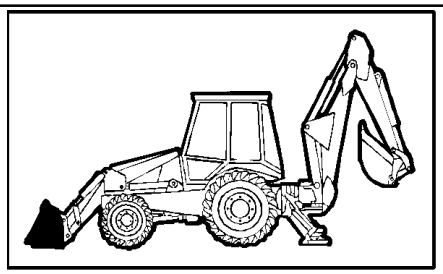

KIT KIT KIT 7 = ●

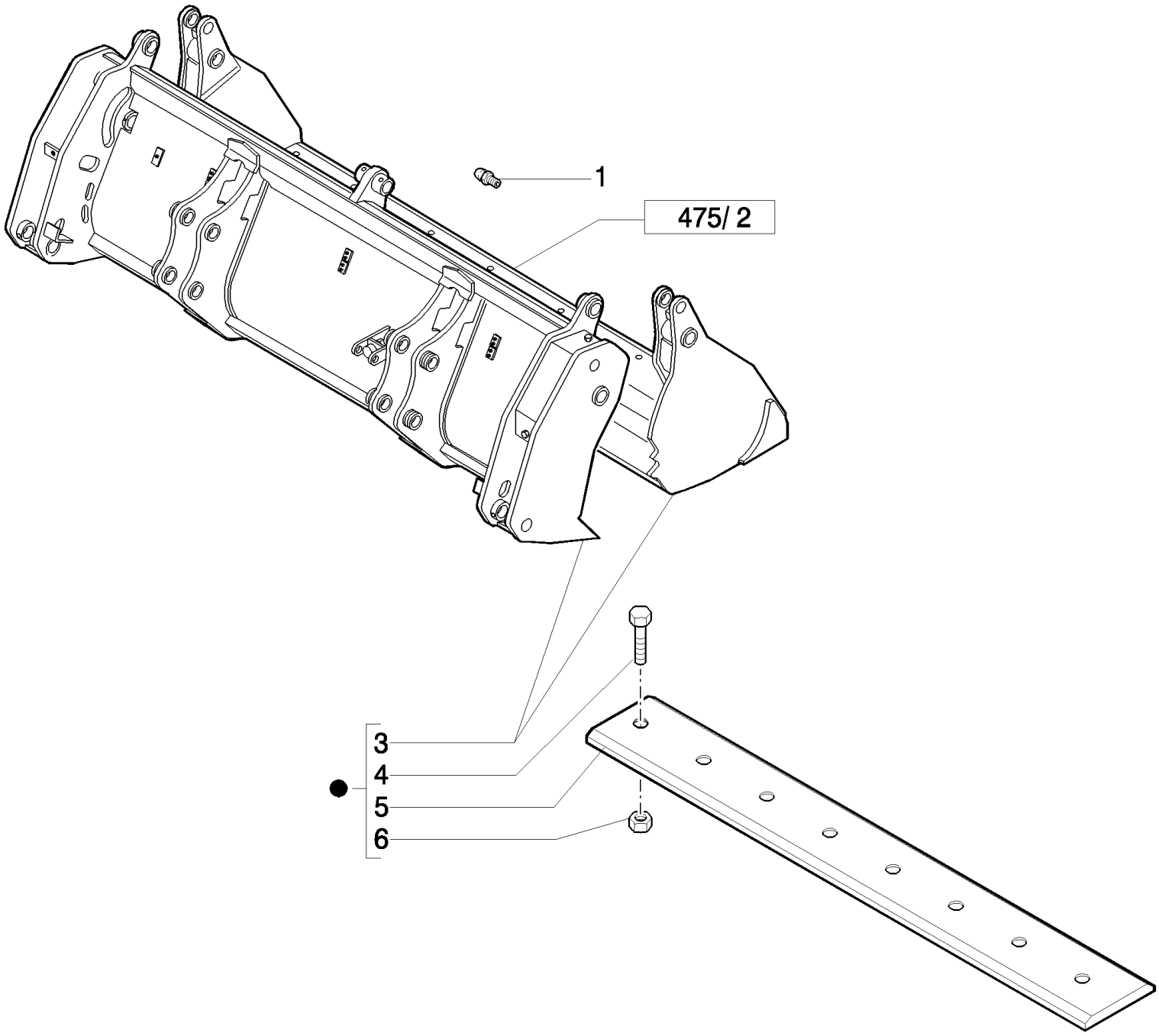

LB115.B EUR BACKHOE LOADER (1/05-)

475/ 1(01) BUCKET 4X1 (1,15 M3) WITH BLADE "COMMON GREY"

Ref	Part Number	Qty	Description
1	87901S8	2	NIPPLE, LUBE, 1/8"-27 X .66" lg,
3	87573487	1	BUCKET, 4 IN 1,
4	85801371	8	BOLT, PLOW, 5/8"-11 x 2 1/4",
5	85812242	1	EDGE, CUTTING,
6	85801470	8	NUT, 5/8"-11, G8,
7	47334610	1	

475/ 2(01) BUCKET 4X1 (1,15 M3) WITH BLADE "COMMON GREY"

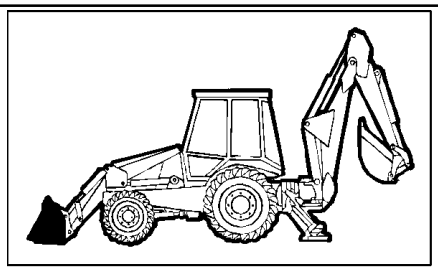

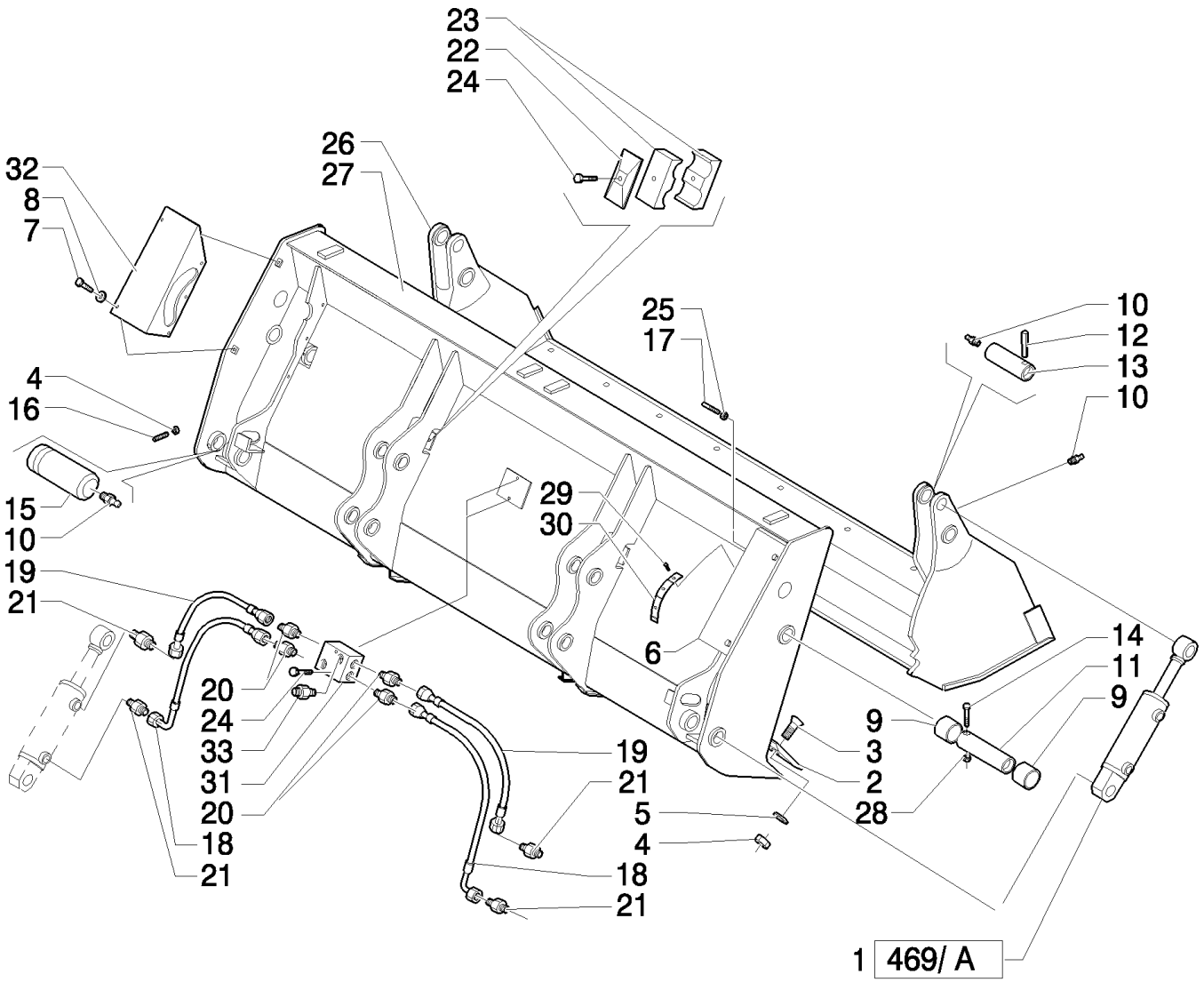

LB115.B EUR BACKHOE LOADER (1/05-)

475/ 2(01) BUCKET 4X1 (1,15 M3) WITH BLADE "COMMON GREY"

Ref	Part Number	Qty	Description
1	87573861	2	CYLINDER,
2	87308642	1	EDGE, CUTTING,
3	87312328	8	SCREW, M14 x 40
4	85820008	8	NUT, M14 x 2
5	85820009	10	WASHER, SEALING,
6	87312330	1	GUARD, RH
7	85820011	10	SCREW, M8x16
8	85820012	10	WASHER, SEALING,
9	85820013	4	BUSHING,
10	85820014	6	NIPPLE, LUBE, M10 x 1,
11	85820015	2	PIN,
12	85820016	2	PIN, ROLL, 10 x 80
13	85820017	2	PIN,
14	85820018	2	SCREW, M10 x 90
15	87310286	2	PIN,
16	85820020	2	SCREW, M14 x 30
17	87312331	1	SCREW, M8 x 120
18	87312427	2	HOSE, FLEXIBLE,
19	87312436	2	HOSE, FLEXIBLE,
20	87312343	4	CONNECTOR, HYD.,
21	87312333	2	CONNECTOR, HYD.,
22	85820026	2	PLATE,
23	85820027	4	CLAMP,
24	85820030	4	SCREW, M8 x 45
25	85820031	1	NUT, M8
26	87308915	1	BUCKET,
27	87308638	1	BUCKET,
28	85820035	2	NUT, M10x1,5
29	85820036	3	4x10
30	85820037	1	
31	87312335	1	FITTING,
32	87395481	1	GUARD, LH
33	87395482	2	CONNECTOR, HYD.,

476(01) BUCKET 4X1 (1,15 M3) WITH TINE

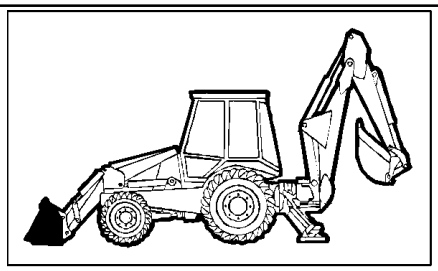

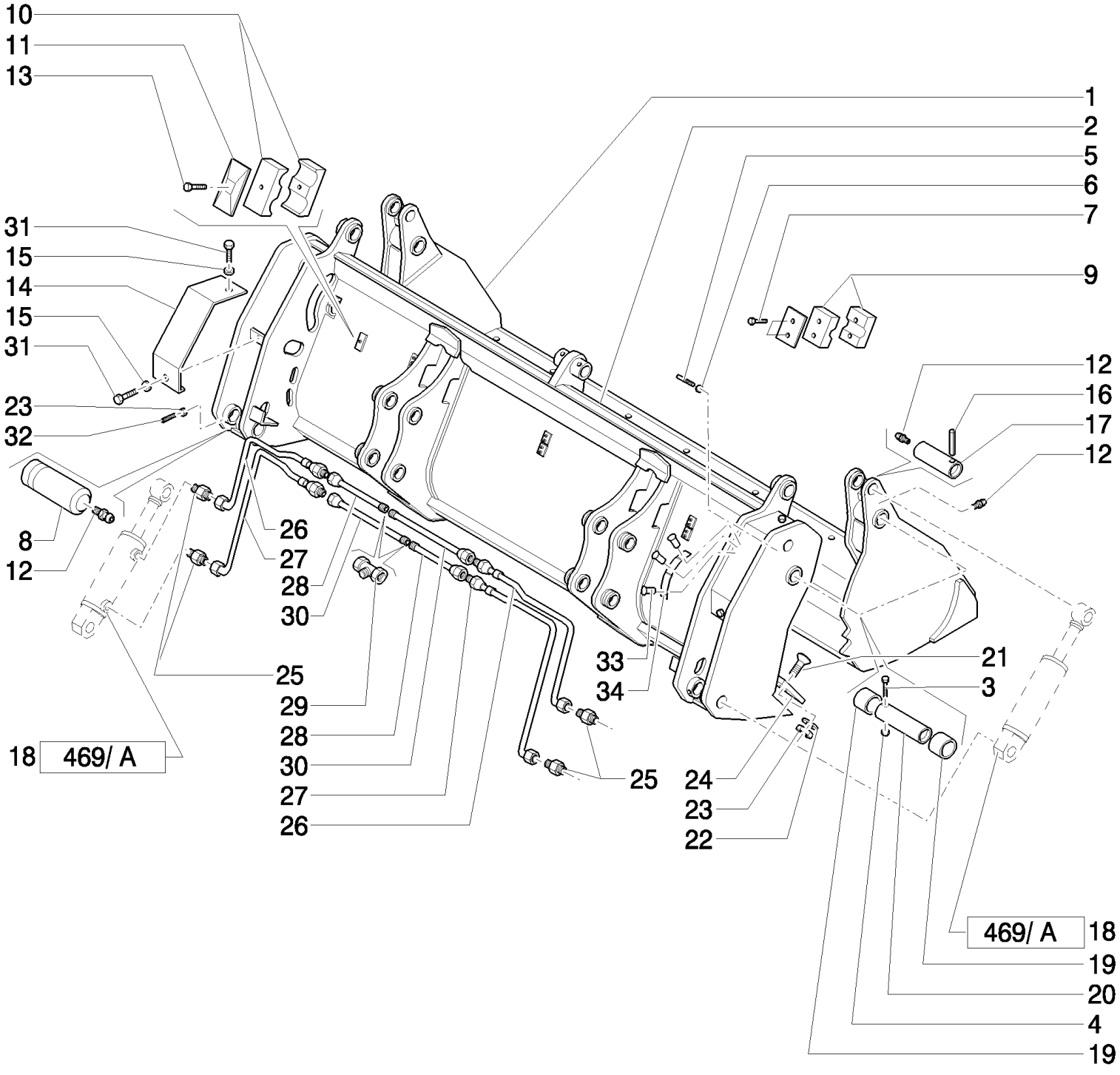

LB115.B EUR BACKHOE LOADER (1/05-)

476(01) BUCKET 4X1 (1,15 M3) WITH TINE

Ref	Part Number	Qty	Description
1	85820075	1	BUCKET,
2	85820076	1	BUCKET,
3	85820018	2	SCREW, M10 x 90
4	85820035	2	NUT, M10X1,5
5	85820021	1	SCREW, M8 x 120
6	85820031	1	NUT, M8
7	85820034	12	SCREW, M6 x 30
8	85820019	2	PIN,
9	85820028	12	CLAMP,
10	85820027	2	CLAMP,
11	85820026	2	PLATE,
12	85820014	6	NIPPLE, LUBE, M10 x 1,
13	85820030	2	SCREW,
14	85820010	2	GUARD,
15	85820012	4	WASHER, SEALING,
16	85820016	2	PIN, ROLL, 10 x 80
17	85820017	2	PIN,
18	87573861	2	CYLINDER,
19	85820013	4	BUSHING,
20	85820015	2	PIN,
21	85820007	8	SCREW, M14 x 35
22	85820009	8	WASHER, SEALING,
23	85820008	10	NUT, M14 x 2
24	85820072	1	EDGE, CUTTING,
25	85820025	4	CONNECTOR, HYD.,
26	85824362	2	HOSE, FLEXIBLE,
27	85824361	2	HOSE, FLEXIBLE,
28	85820039	2	TUBE, HYD,
29	85820040	2	TEE,
30	85820038	2	TUBE, HYD,
31	85820011	2	SCREW,
32	85820020	2	SCREW,
33	NSS	3	NOT SERVICED SEPARATELY,
34	NSS	1	NOT SERVICED SEPARATELY,

476(02) BUCKET 4X1 (1,15 M3) WITH TINE

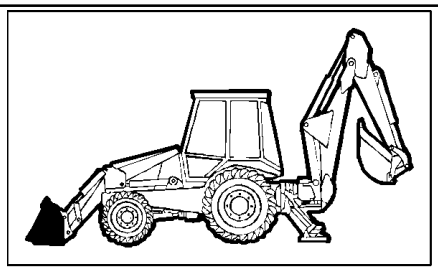

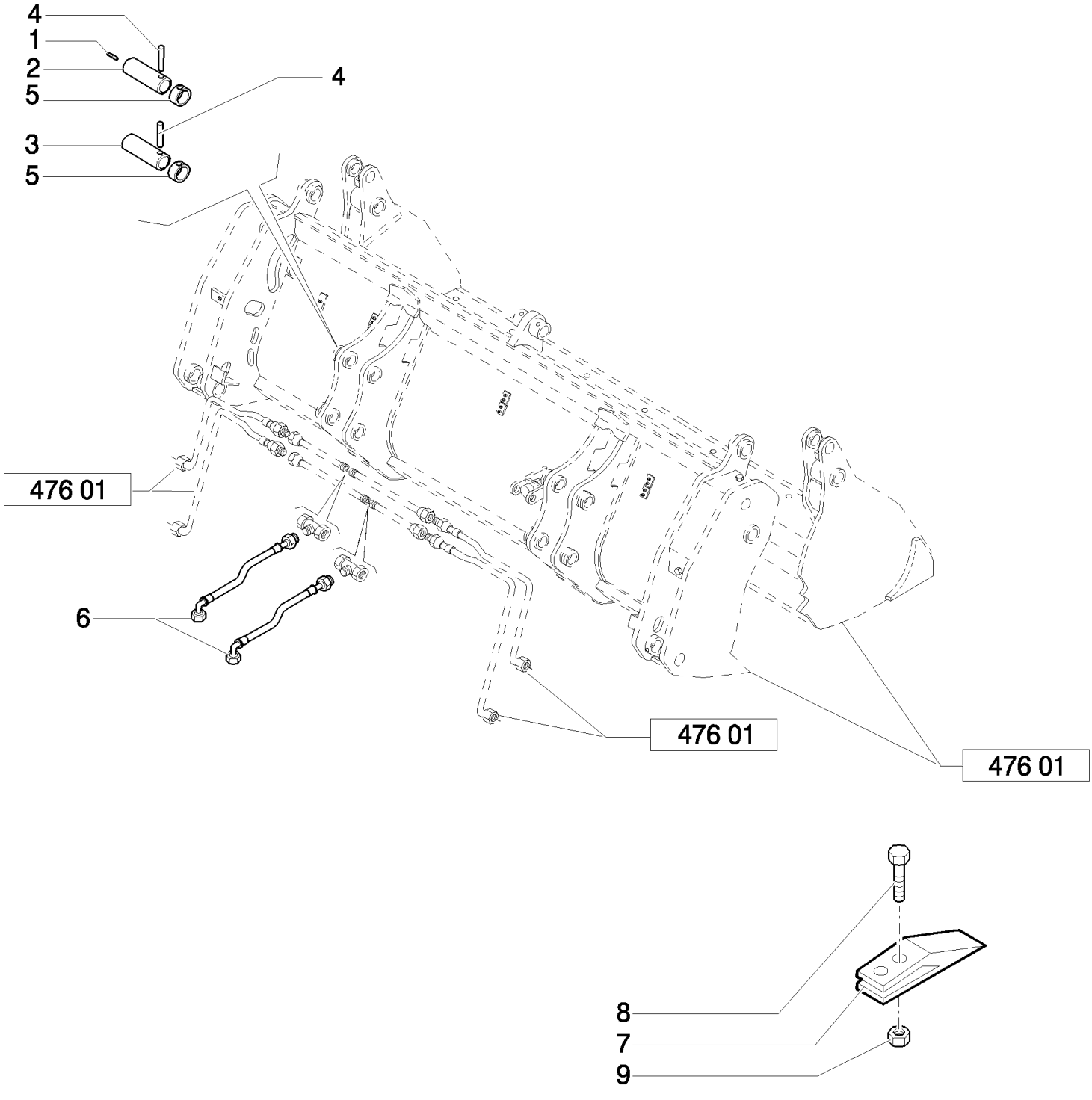

LB115.B EUR BACKHOE LOADER (1/05-)

476(02) BUCKET 4X1 (1,15 M3) WITH TINE

Ref	Part Number	Qty	Description
1	85816242	2	FILTER, AIR,
2	85804533	2	PIN,
3	85805306	2	PIN,
4	85804534	4	PIN, ROLL,
5	85802974	4	RING,
6	85820819	2	HOSE, FLEXIBLE, L=800 mm
7	85811440	8	SHANK, BUCKET TOOTH,
8	85801371	16	BOLT, PLOW, 5/8"-11 x 2 1/4",
9	85801470	16	NUT, 5/8"-11, G8,

476/ 1(01) BUCKET 4X1 (1,15 M3) WITH TINE "COMMON GREY"

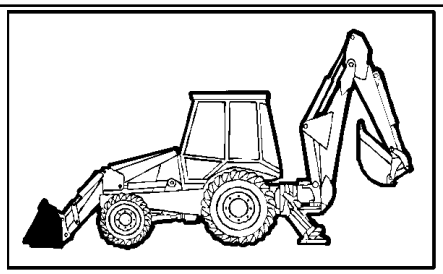

KIT KIT KIT 8=●

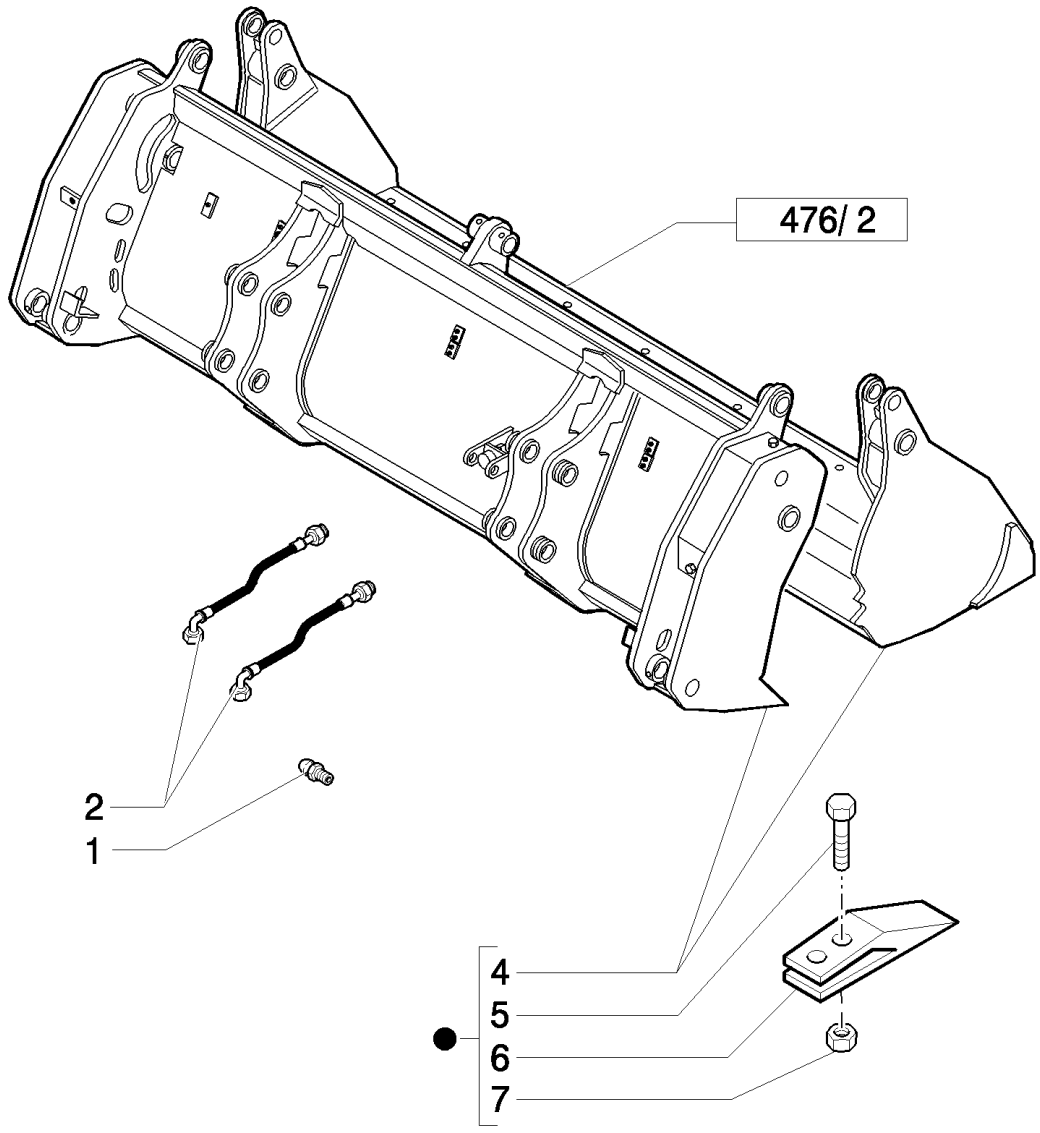

LB115.B EUR BACKHOE LOADER (1/05-)

476/ 1(01) BUCKET 4X1 (1,15 M3) WITH TINE "COMMON GREY"

Ref	Part Number	Qty	Description
1	87901S8	2	NIPPLE, LUBE, 1/8"-27 X .66" lg,
2	85820819	2	HOSE, FLEXIBLE, L=800 mm
4	87573487	1	BUCKET, 4 IN 1, 4x1
5	85801371	8	BOLT, PLOW, 5/8"-11 x 2 1/4",
6	85811440	8	SHANK, BUCKET TOOTH,
7	85801470	8	NUT, 5/8"-11, G8,
8	47334660	1	

476/ 2(01) BUCKET 4X1 (1,15 M3) WITH TINE "COMMON GREY"

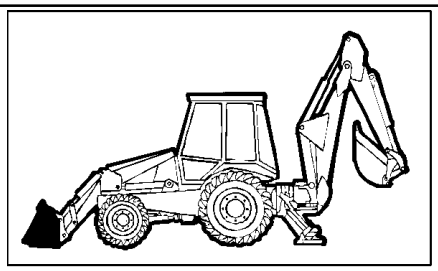

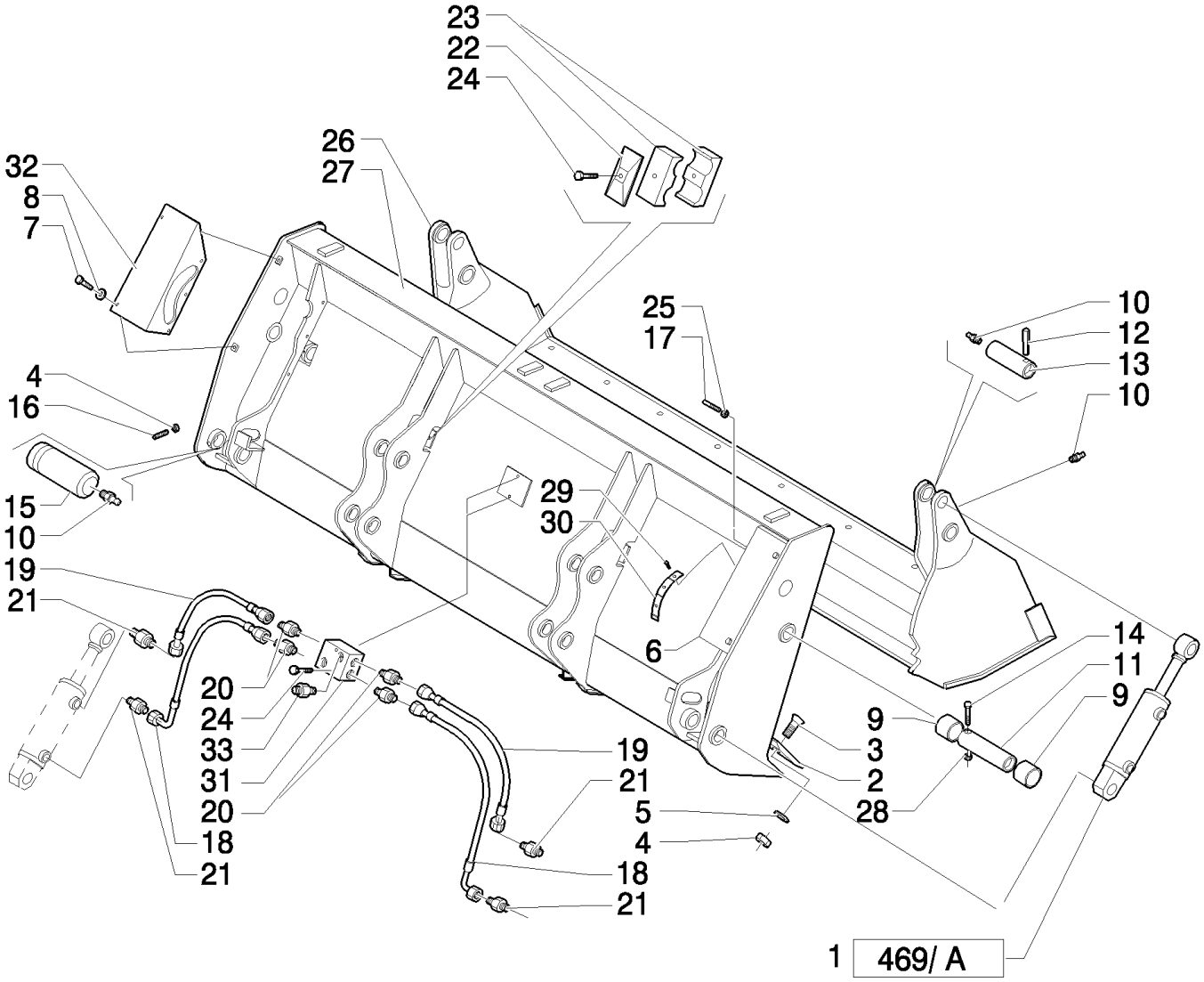

LB115.B EUR BACKHOE LOADER (1/05-)

476/ 2(01) BUCKET 4X1 (1,15 M3) WITH TINE "COMMON GREY"

Ref	Part Number	Qty	Description
1	87573861	2	CYLINDER,
2	87308642	1	EDGE, CUTTING,
3	87312328	8	SCREW, M14 x 40
4	85820008	8	NUT, M14 x 2
5	85820009	10	WASHER, SEALING,
6	87312330	1	GUARD, RH
7	85820011	10	SCREW, M8x16
8	85820012	10	WASHER, SEALING,
9	85820013	4	BUSHING,
10	85820014	6	NIPPLE, LUBE, M10 x 1,
11	85820015	2	PIN,
12	85820016	2	PIN, ROLL, 10 x 80
13	85820017	2	PIN,
14	85820018	2	SCREW, M10 x 90
15	87310286	2	PIN,
16	85820020	2	SCREW, M14 x 30
17	87312331	1	SCREW, M8 x 120
18	87312427	2	HOSE, FLEXIBLE,
19	87312436	2	HOSE, FLEXIBLE,
20	87312343	4	CONNECTOR, HYD.,
21	87312333	2	CONNECTOR, HYD.,
22	85820026	2	PLATE,
23	85820027	4	CLAMP,
24	85820030	4	SCREW, M8 x 45
25	85820031	1	NUT, M8
26	87308915	1	BUCKET,
27	87308638	1	BUCKET,
28	85820035	2	NUT, M10x1,5
29	85820036	3	4x10
30	85820037	1	
31	87312335	1	FITTING,
32	87395481	1	GUARD,
33	87395482	2	CONNECTOR, HYD.,

505(01) EXTRA REVERSIBLE BLADE

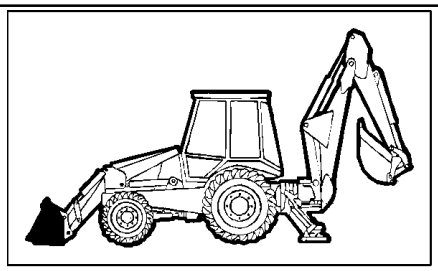

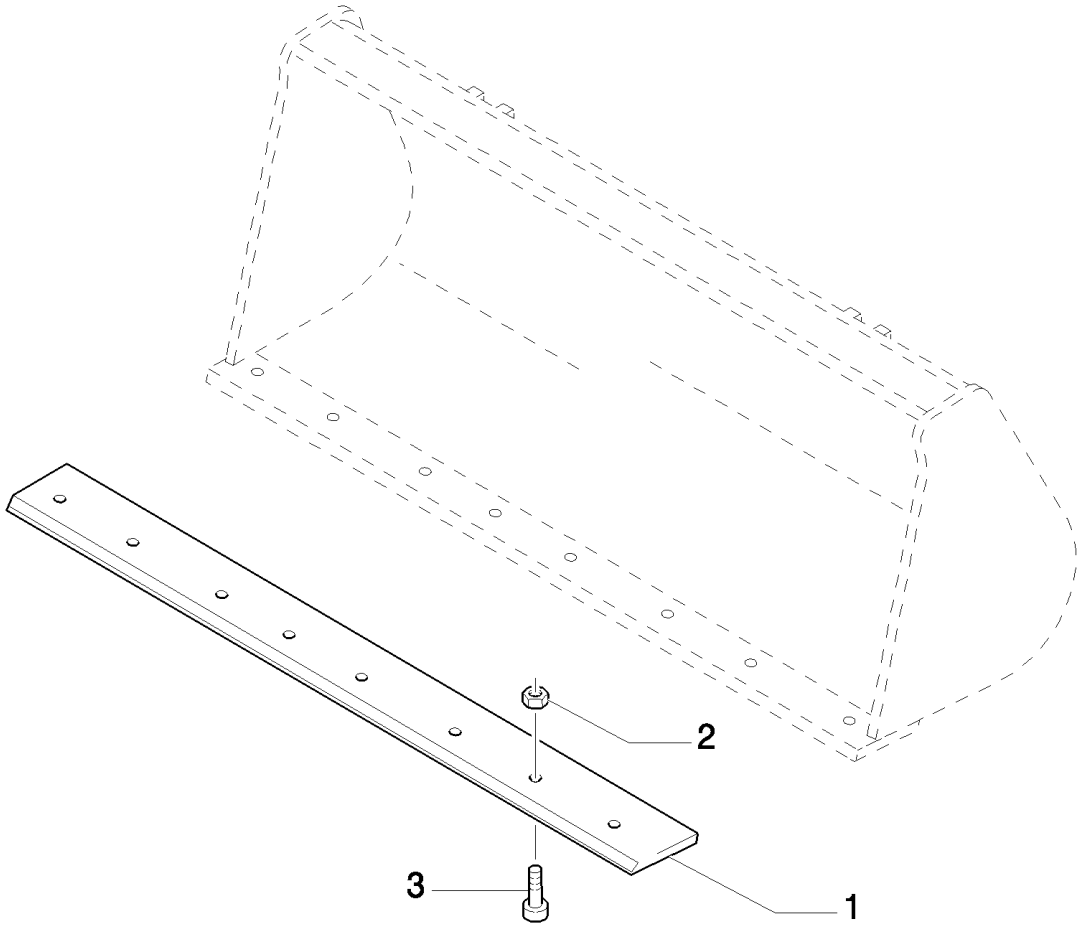

LB115.B EUR BACKHOE LOADER (1/05-)

505(01) EXTRA REVERSIBLE BLADE

Ref	Part Number	Qty	Description
1	85812242	1	EDGE, CUTTING, L= 2400 MM.
2	85801470	8	NUT, 5/8"-11, G8,
3	85801371	8	BOLT, PLOW, 5/8"-11 x 2 1/4",

514/ C(01) HYDRAULIC BUCKET CYLINDER

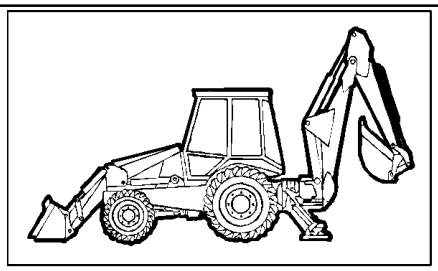

KIT KIT KIT 17 = ●

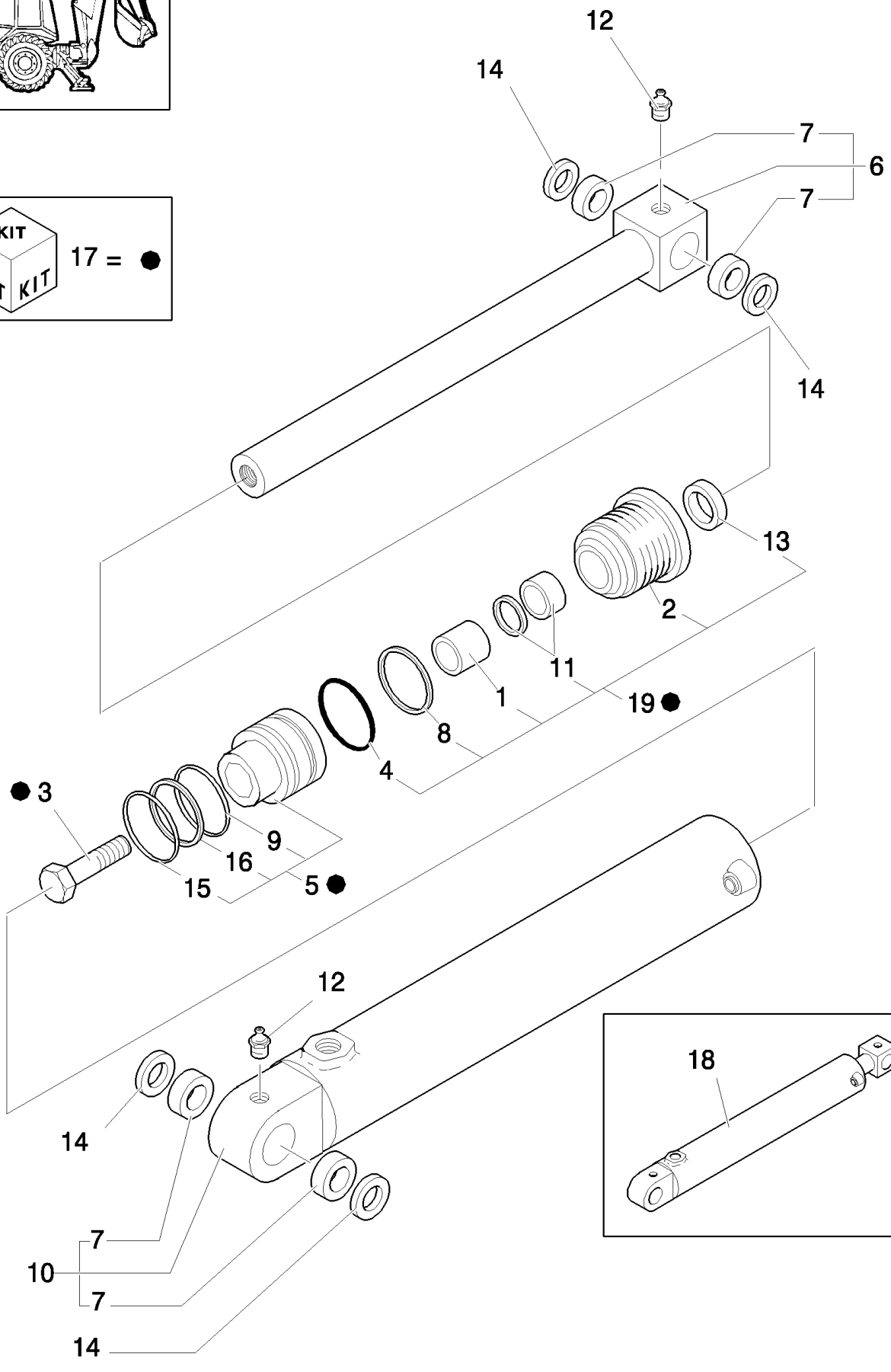

LB115.B EUR BACKHOE LOADER (1/05-)

514/ C(01) HYDRAULIC BUCKET CYLINDER

Ref	Part Number	Qty	Description
1	87414976	1	BEARING, NYLON,
2	87414506	1	GLAND,
3	87427999	1	SCREW,
4	87421144	1	O-RING,
5	87408120	1	PISTON, , Includes 9, 15, 16
6	83963252	1	ROD, , Includes 7
7	83910547	4	BUSHING,
8	87440401	1	BACK-UP RING,
9	87408634	1	Ring, Wear,
10	83963280	1	LINER, ENGINE CYLINDER, , Includes 7
11	87414980	1	KIT, SEALS,
12	83416242	2	NIPPLE, LUBE, 1/8"-27
13	87414979	1	WIPER,
14	83931289	4	SEAL,
15	87414333	1	SEAL,
16	87414341	1	RING,
17	87424197	1	KIT,
18	87315527	1	HYDRAULIC CYLINDER,
19	87415117	1	GLAND, , Includes 1, 2, 4, 8, 11, 13

514/ E(01) HYDRAULIC DITCHING CYLINDER

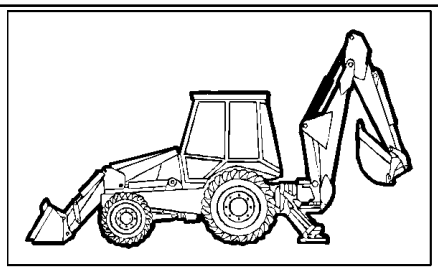

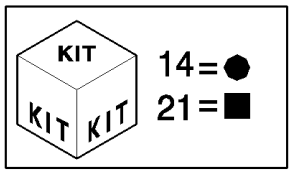

LB115.B EUR BACKHOE LOADER (1/05-)

514/ E(01) HYDRAULIC DITCHING CYLINDER

Ref	Part Number	Qty	Description
1	87315531	1	HYDRAULIC CYLINDER,
2	86982444	1	BOLT, SPECIAL,
3	87415119	1	GLAND, , Includes 8 to 13
4	87425174	1	PLUNGER, , Includes 5, 6
5	87414336	1	SEAL, HYD-CYLINDER,
6	87414344	1	RING,
7	83931281	1	SEAL,
8	87414976	1	BEARING, NYLON,
9	87421147	1	O-RING,
10	87440411	1	BACK-UP RING,
11	87414508	1	GLAND,
12	87414980	1	KIT, SEALS,
13	87414979	1	WIPER,
14	87428632	1	KIT, SEALS,
15	87425131	1	ROD, , Includes 16
16	83910547	2	BUSHING,
17	83416242	1	NIPPLE, LUBE, 1/8"-27
18	83931289	2	SEAL,
19	87425142	1	BARREL, , Includes 20
20	83910558	2	RING,
21	87424199	1	KIT, REPAIR,

515(01) 12" (305MM) BACKHOE BUCKET WITH PIN TEETH

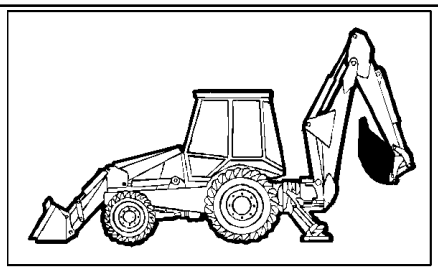

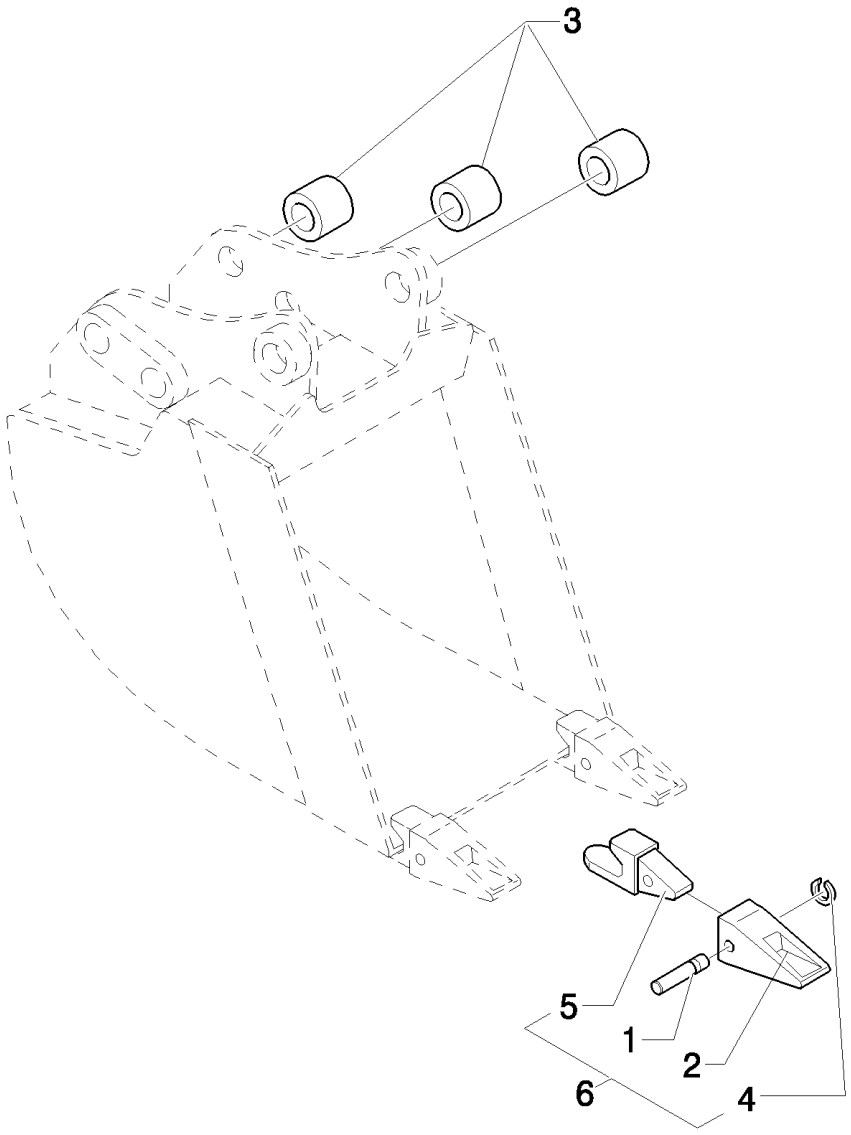

LB115.B EUR BACKHOE LOADER (1/05-)

515(01) 12" (305MM) BACKHOE BUCKET WITH PIN TEETH

Ref	Part Number	Qty	Description
1	85801097	3	PIN,
2	85811432	3	TOOTH, BUCKET,
3	D7NNC584A	6	BUSHING, {PP:83910634}
4	85801098	3	RING,
5	85821788	3	SHANK, BUCKET TOOTH,
6	NSS	3	NOT SERVICED SEPARATELY, , Includes 1 To 5

515(02) 12" (305MM) BACKHOE BUCKET WITH BOLT-ON TEETH

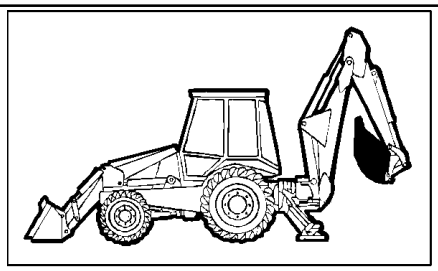

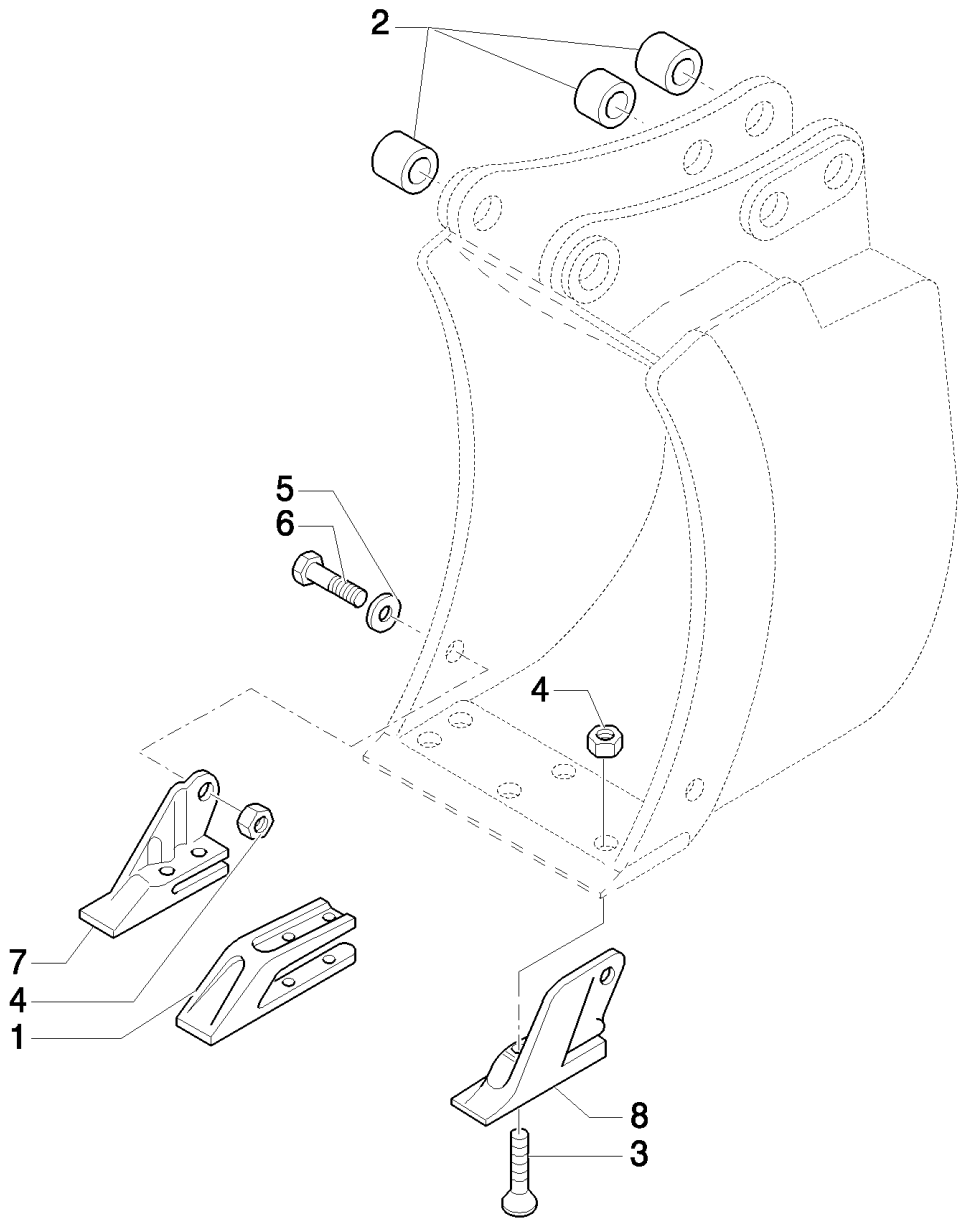

LB115.B EUR BACKHOE LOADER (1/05-)

515(02) 12" (305MM) BACKHOE BUCKET WITH BOLT-ON TEETH

Ref	Part Number	Qty	Description
1	85811440	1	SHANK, BUCKET TOOTH,
2	D7NNC584A	6	BUSHING, {PP:83910634}
3	85801371	6	BOLT, PLOW, 5/8"-11 x 2 1/4",
4	85801470	8	NUT, 5/8"-11, G8,
5	10520211	2	WASHER,
6	D5NN94420N02B	2	WEATHERSTRIP, {PP:83904568} 5/8"-11X1.75
7	85801377	1	TOOTH, BUCKET, RH
8	85801376	1	TOOTH, BUCKET, LH

516(01) 18" (457MM) BACKHOE BUCKET WITH PIN TEETH

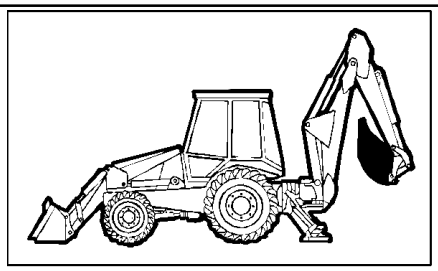

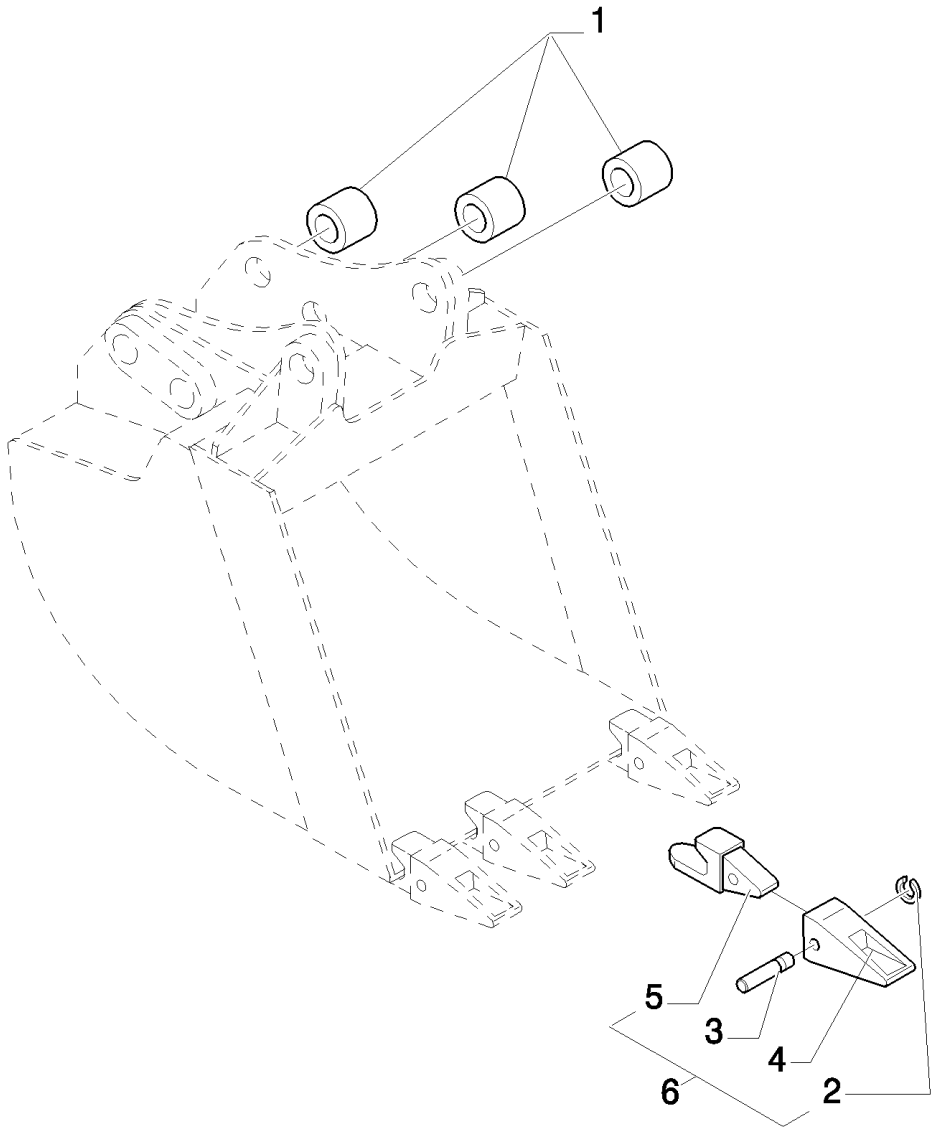

LB115.B EUR BACKHOE LOADER (1/05-)

516(01) 18" (457MM) BACKHOE BUCKET WITH PIN TEETH

Ref	Part Number	Qty	Description
1	D7NNC584A	6	BUSHING, {PP:83910634}
2	85801098	4	RING,
3	85801097	4	PIN,
4	85811432	4	TOOTH, BUCKET,
5	85821788	4	SHANK, BUCKET TOOTH,
6	NSS	4	NOT SERVICED SEPARATELY, , Includes 1 To 5

516(02) 18" (457MM) BACKHOE BUCKET WITH BOLT-ON TEETH

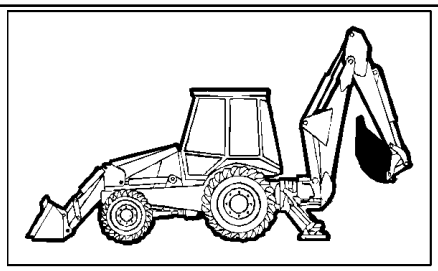

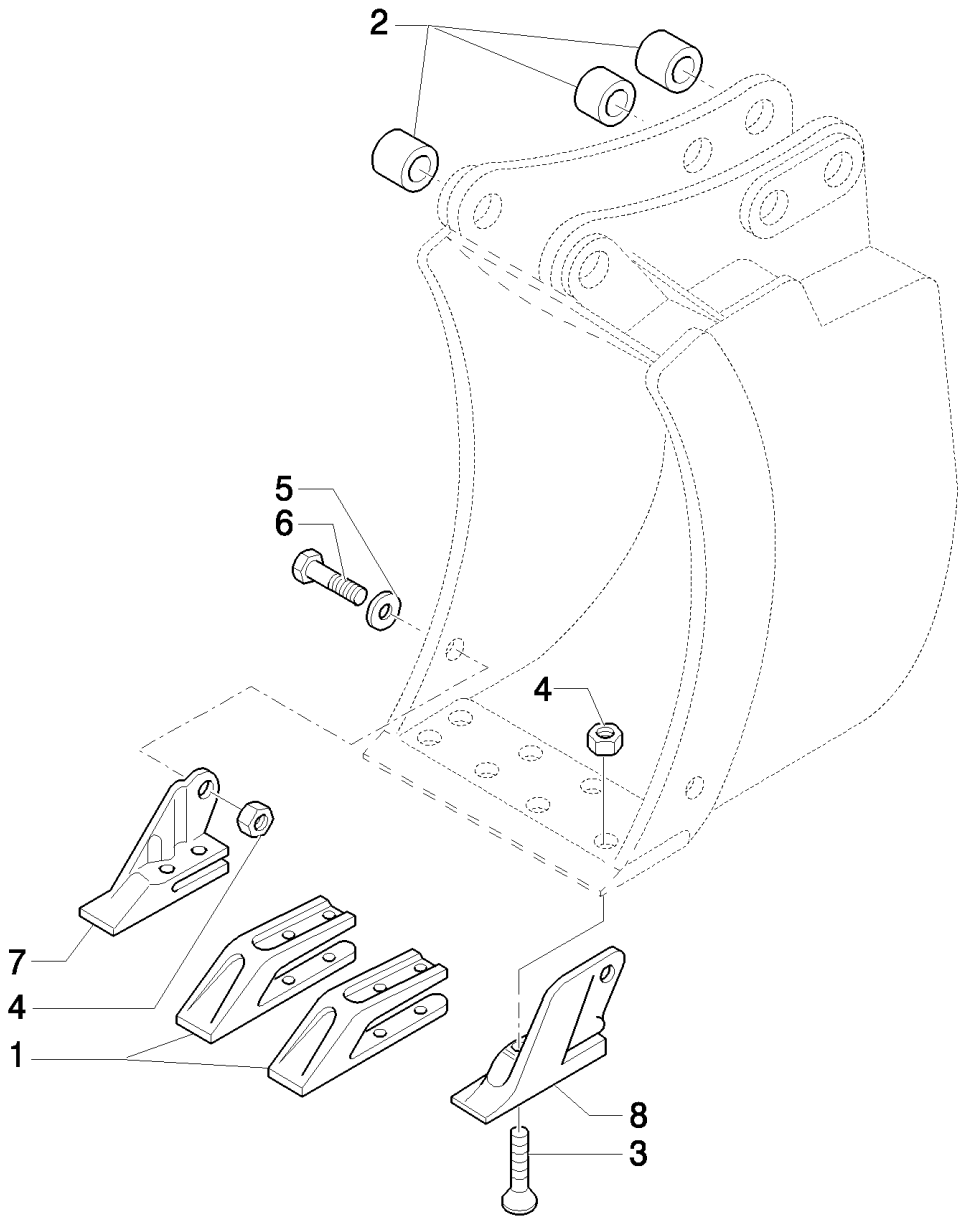

LB115.B EUR BACKHOE LOADER (1/05-)

516(02) 18" (457MM) BACKHOE BUCKET WITH BOLT-ON TEETH

Ref	Part Number	Qty	Description
1	85811440	2	SHANK, BUCKET TOOTH,
2	D7NNC584A	6	BUSHING, {PP:83910634}
3	85801371	8	BOLT, PLOW, 5/8"-11 x 2 1/4",
4	85801470	10	NUT, 5/8"-11, G8,
5	10520211	2	WASHER,
6	D5NN94420N02B	2	WEATHERSTRIP, {PP:83904568} 5/8"-11X1.75
7	85801377	1	TOOTH, BUCKET, RH
8	85801376	1	TOOTH, BUCKET, LH

517(01) 24" (610MM) BACKHOE BUCKET WITH PIN TEETH

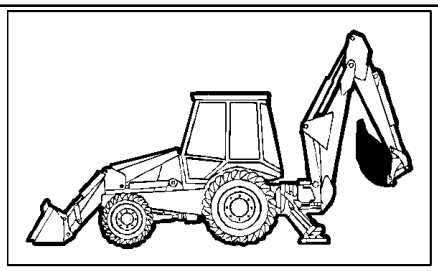

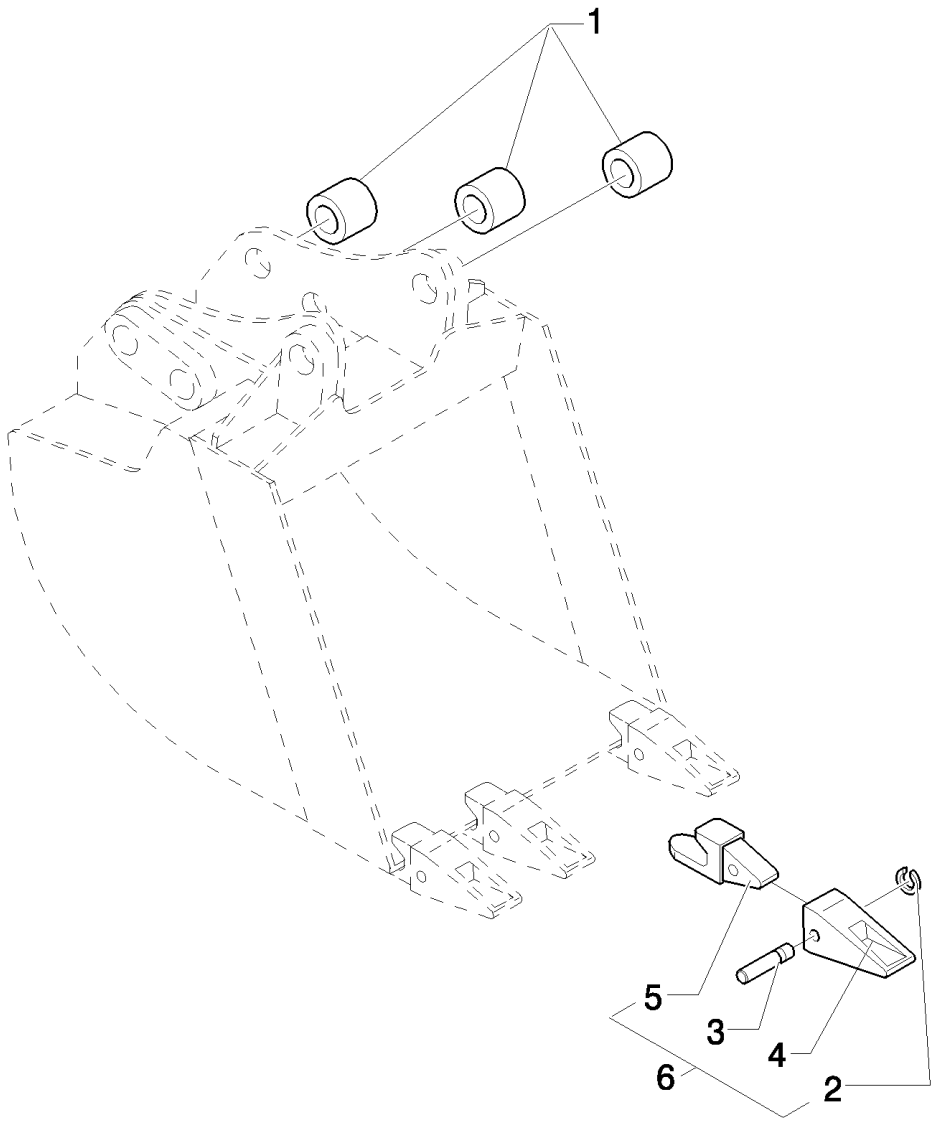

LB115.B EUR BACKHOE LOADER (1/05-)

517(01) 24" (610MM) BACKHOE BUCKET WITH PIN TEETH

Ref	Part Number	Qty	Description
1	D7NNC584A	6	BUSHING, {PP:83910634}
2	85801098	4	RING,
3	85801097	4	PIN,
4	85811432	4	TOOTH, BUCKET,
5	85821788	4	SHANK, BUCKET TOOTH,
6	NSS	4	NOT SERVICED SEPARATELY, , Includes 1 To 5

517(02) 24" (610MM) BACKHOE BUCKET WITH BOLT-ON TEETH

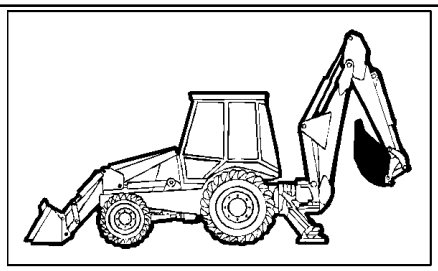

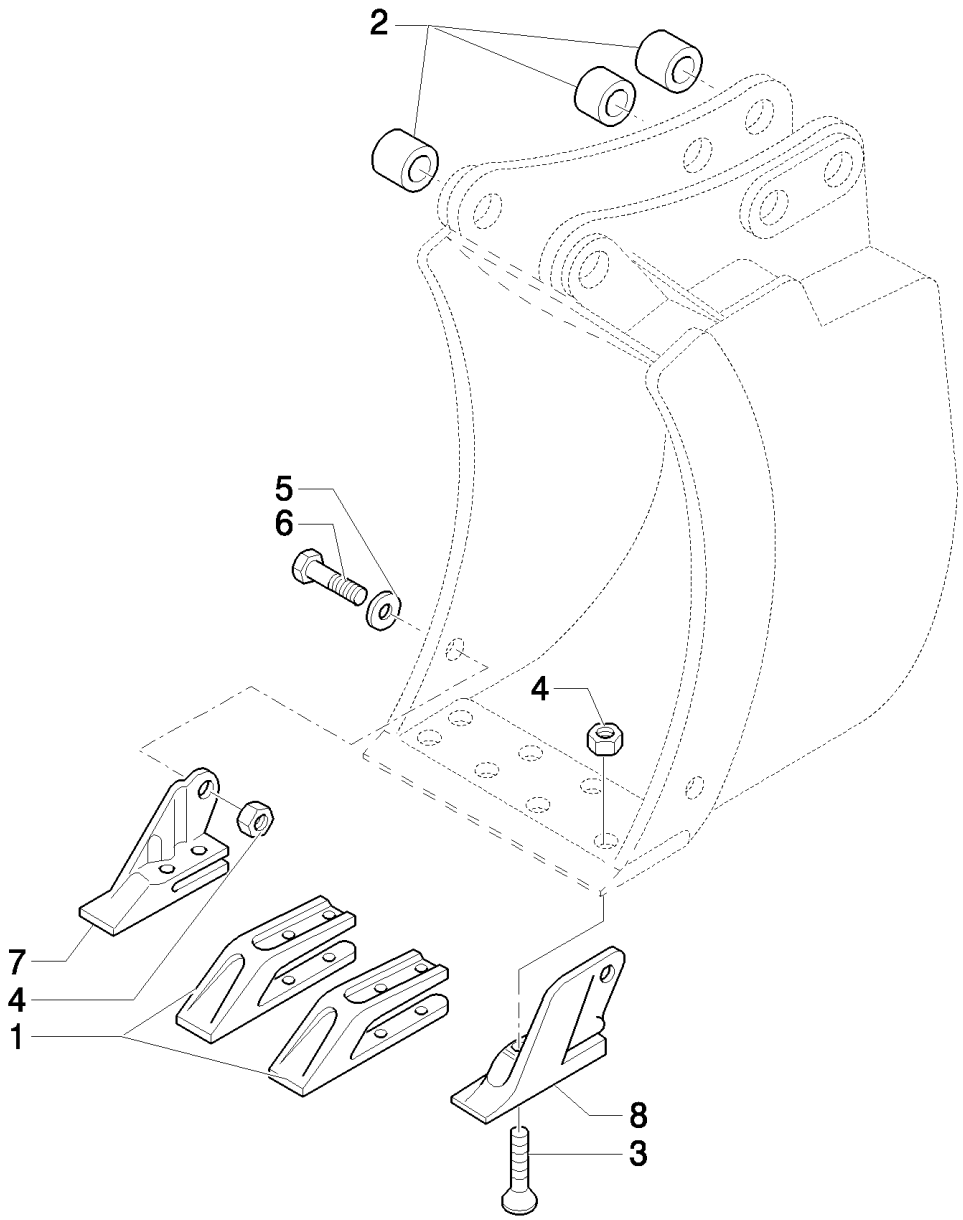

LB115.B EUR BACKHOE LOADER (1/05-)

517(02) 24" (610MM) BACKHOE BUCKET WITH BOLT-ON TEETH

Ref	Part Number	Qty	Description
1	85811440	2	SHANK, BUCKET TOOTH,
2	D7NNC584A	6	BUSHING, {PP:83910634}
3	85801371	8	BOLT, PLOW, 5/8"-11 x 2 1/4",
4	85801470	10	NUT, 5/8"-11, G8,
5	10520211	2	WASHER,
6	88706	2	BOLT, Hex, 5/8"-11 x 1 3/4", G8, Full Thd,
7	85801377	1	TOOTH, BUCKET, RH
8	85801376	1	TOOTH, BUCKET, LH

518(01) 30" (762MM) BACKHOE BUCKET WITH PIN TEETH

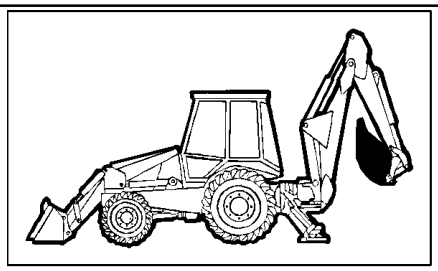

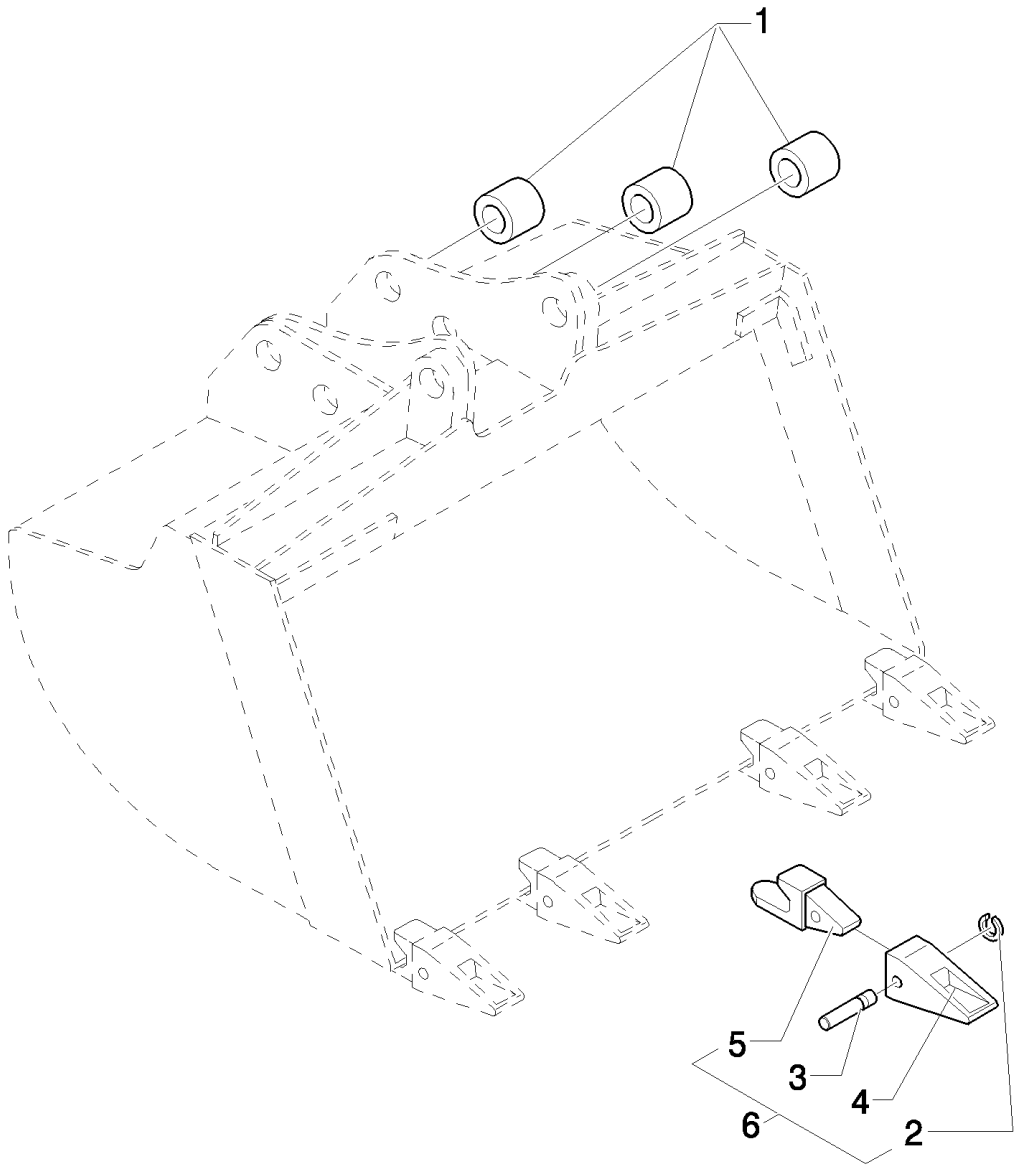

LB115.B EUR BACKHOE LOADER (1/05-)

518(01) 30" (762MM) BACKHOE BUCKET WITH PIN TEETH

Ref	Part Number	Qty	Description
1	D7NNC584A	6	BUSHING, {PP:83910634}
2	85801098	5	RING,
3	85801097	5	PIN,
4	85811432	5	TOOTH, BUCKET,
5	85821788	5	SHANK, BUCKET TOOTH,
6	85824018	5	

518(02) 30" (762MM) BACKHOE BUCKET WITH BOLT-ON TEETH

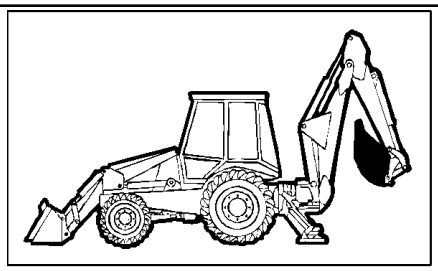

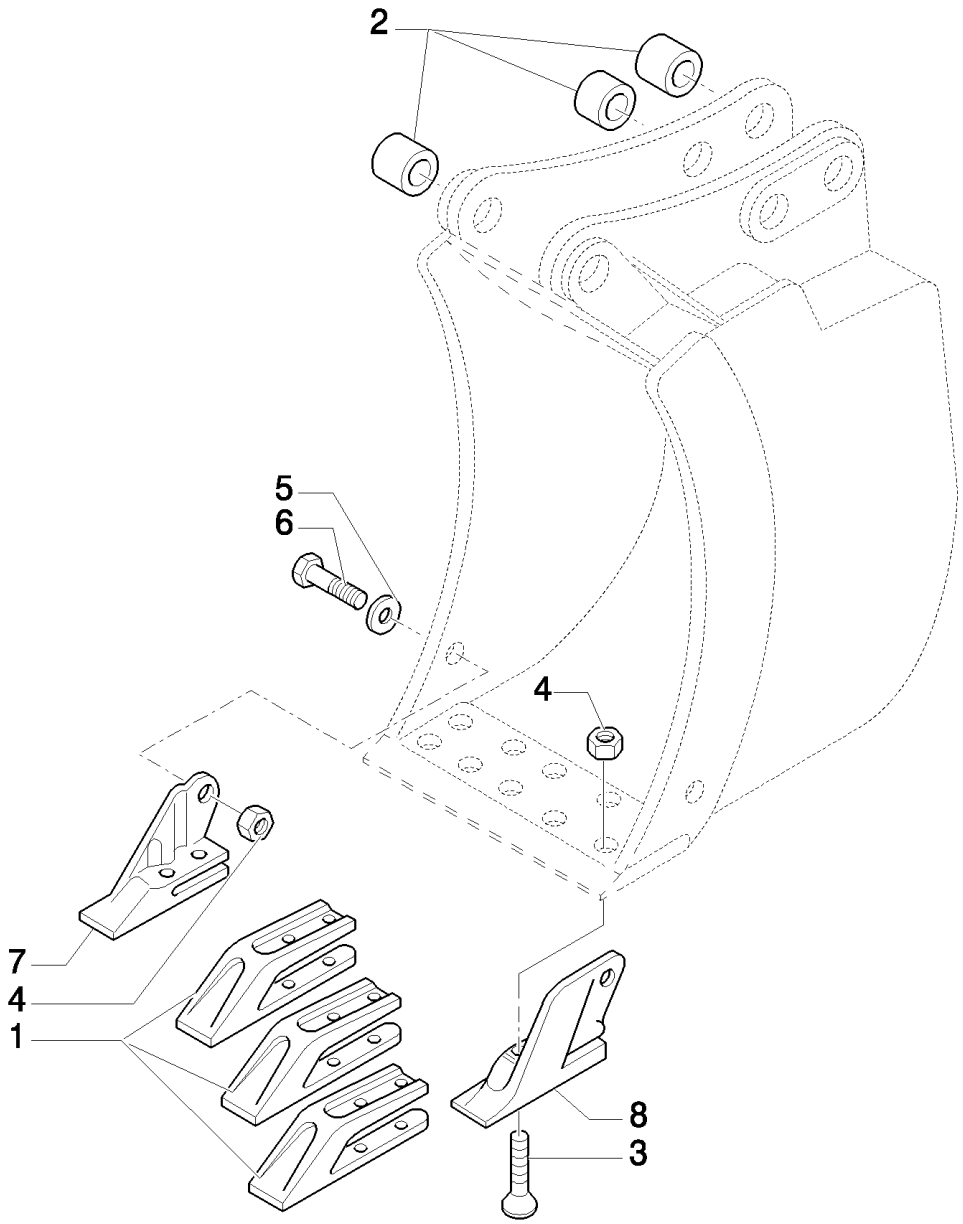

LB115.B EUR BACKHOE LOADER (1/05-)

518(02) 30" (762MM) BACKHOE BUCKET WITH BOLT-ON TEETH

Ref	Part Number	Qty	Description
1	85811440	3	SHANK, BUCKET TOOTH,
2	D7NNC584A	6	BUSHING, {PP:83910634}
3	85801371	10	BOLT, PLOW, 5/8"-11 x 2 1/4",
4	85801470	12	NUT, 5/8"-11, G8,
5	10520211	2	WASHER,
6	88706	2	BOLT, Hex, 5/8"-11 x 1 3/4", G8, Full Thd,
7	85801377	1	TOOTH, BUCKET, RH
8	85801376	1	TOOTH, BUCKET, LH

519(01) 36" (914MM) BACKHOE BUCKET WITH PIN TEETH

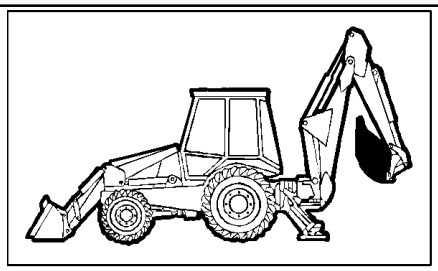

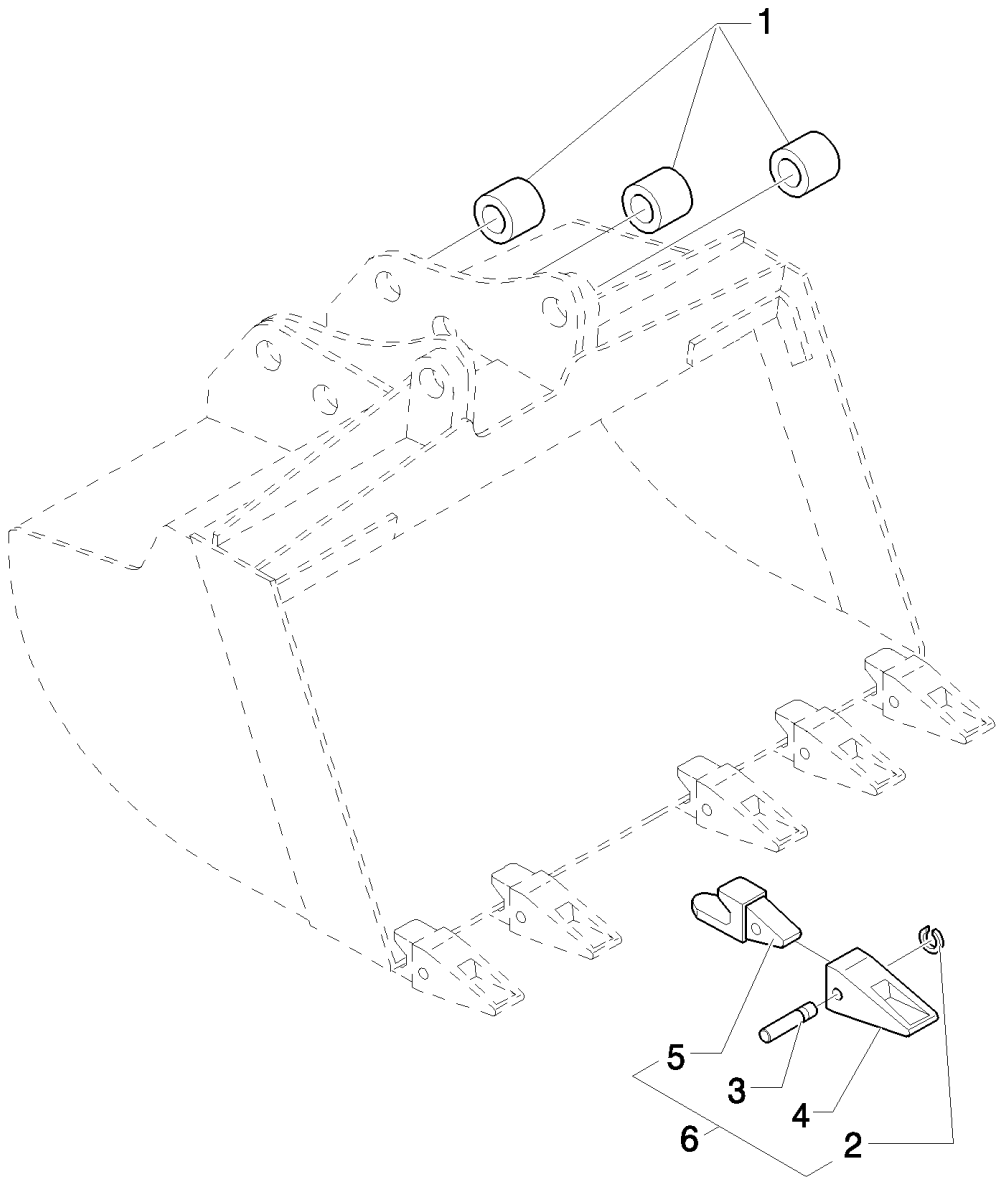

LB115.B EUR BACKHOE LOADER (1/05-)

519(01) 36" (914MM) BACKHOE BUCKET WITH PIN TEETH

Ref	Part Number	Qty	Description
1	D7NNC584A	6	BUSHING, {PP:83910634}
2	85801098	6	RING,
3	85801097	6	PIN,
4	85811432	6	TOOTH, BUCKET,
5	85821788	6	SHANK, BUCKET TOOTH,
6	NSS	6	NOT SERVICED SEPARATELY, , Includes 1 To 5

519(02) 36" (914MM) BACKHOE BUCKET WITH BOLT-ON TEETH

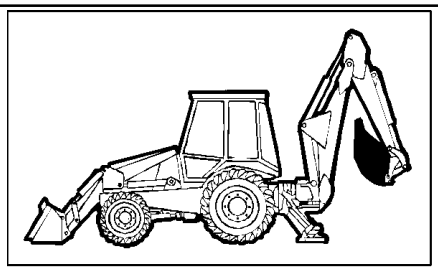

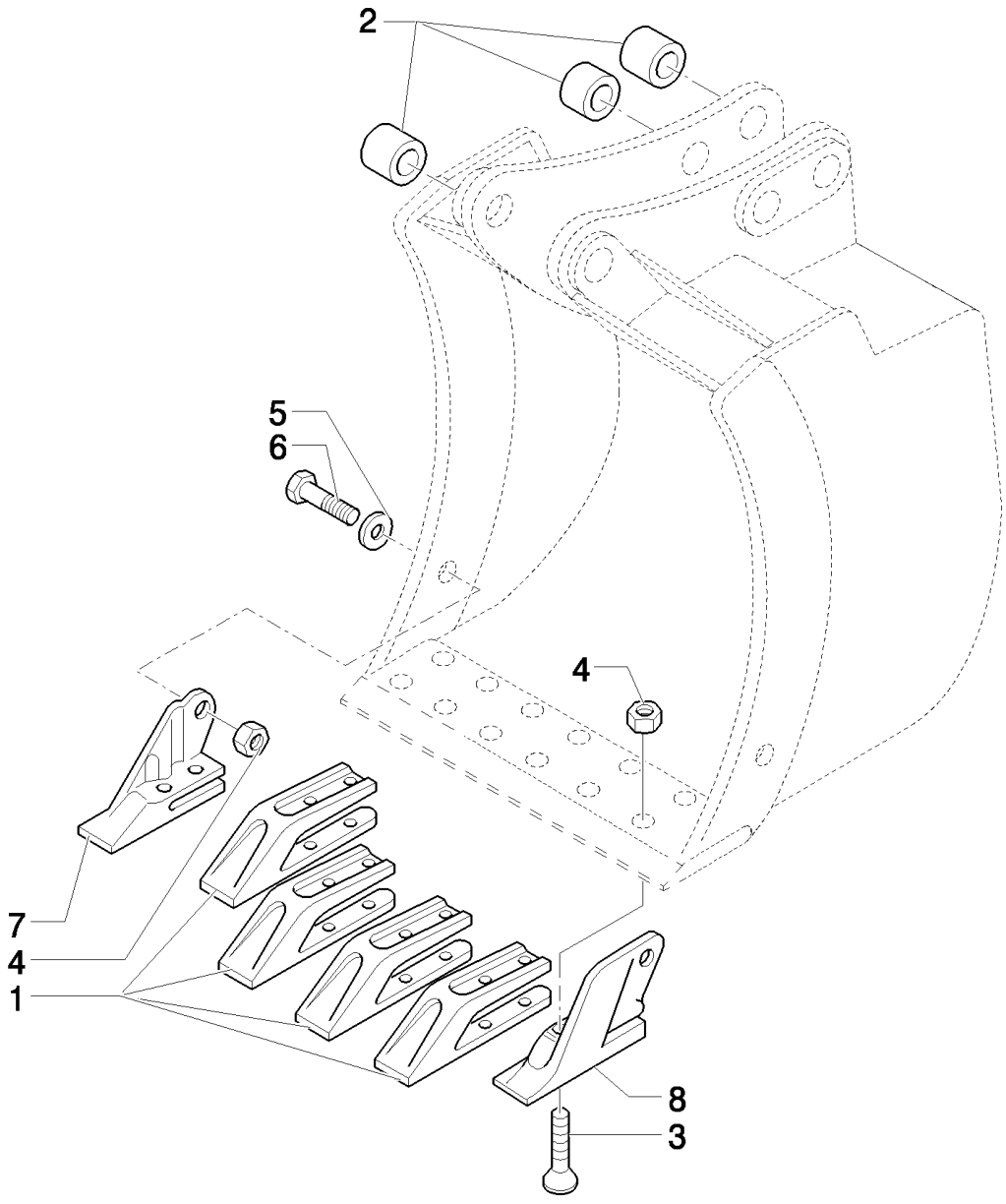

LB115.B EUR BACKHOE LOADER (1/05-)

519(02) 36" (914MM) BACKHOE BUCKET WITH BOLT-ON TEETH

Ref	Part Number	Qty	Description
1	85811440	4	SHANK, BUCKET TOOTH,
2	D7NNC584A	6	BUSHING, {PP:83910634}
3	85801371	12	BOLT, PLOW, 5/8"-11 x 2 1/4",
4	85801470	14	NUT, 5/8"-11, G8,
5	10520211	2	WASHER,
6	88706	2	BOLT, Hex, 5/8"-11 x 1 3/4", G8, Full Thd,
7	85801377	1	TOOTH, BUCKET, RH
8	85801376	1	TOOTH, BUCKET, LH

526(01) BOLT-ON TOOTH KIT, 12" (305MM) BACKHOE BUCKET

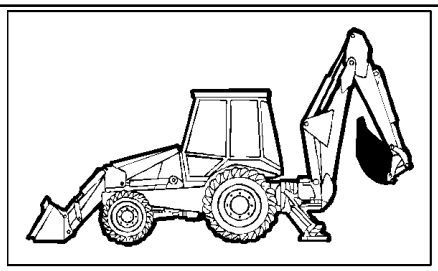

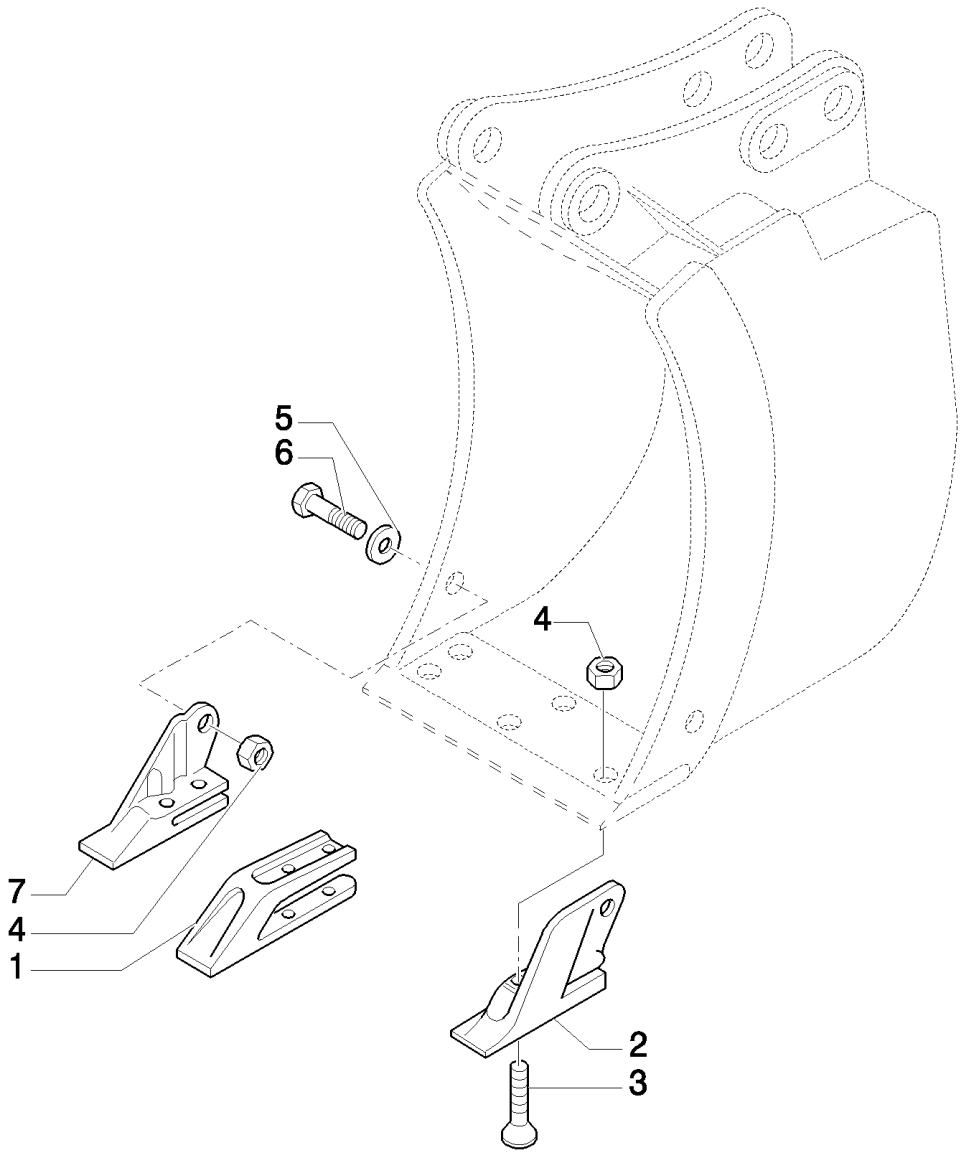

LB115.B EUR BACKHOE LOADER (1/05-)

526(01) BOLT-ON TOOTH KIT, 12" (305MM) BACKHOE BUCKET

Ref	Part Number	Qty	Description
1	85811440	1	SHANK, BUCKET TOOTH,
2	85801376	1	TOOTH, BUCKET, LH
3	85801371	6	BOLT, PLOW, 5/8"-11 x 2 1/4",
4	85801470	8	NUT, 5/8"-11, G8,
5	10520211	2	WASHER,
6	88706	2	BOLT, Hex, 5/8"-11 x 1 3/4", G8, Full Thd,
7	85801377	1	TOOTH, BUCKET, RH

527(01) BOLT-ON TOOTH KIT, 18" (457MM) & 24" (610MM) BACKHOE BUCKETS

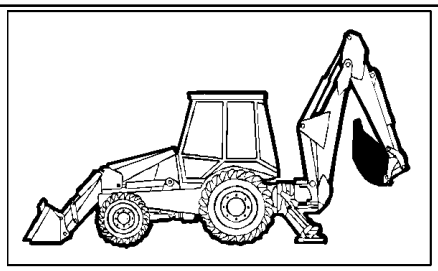

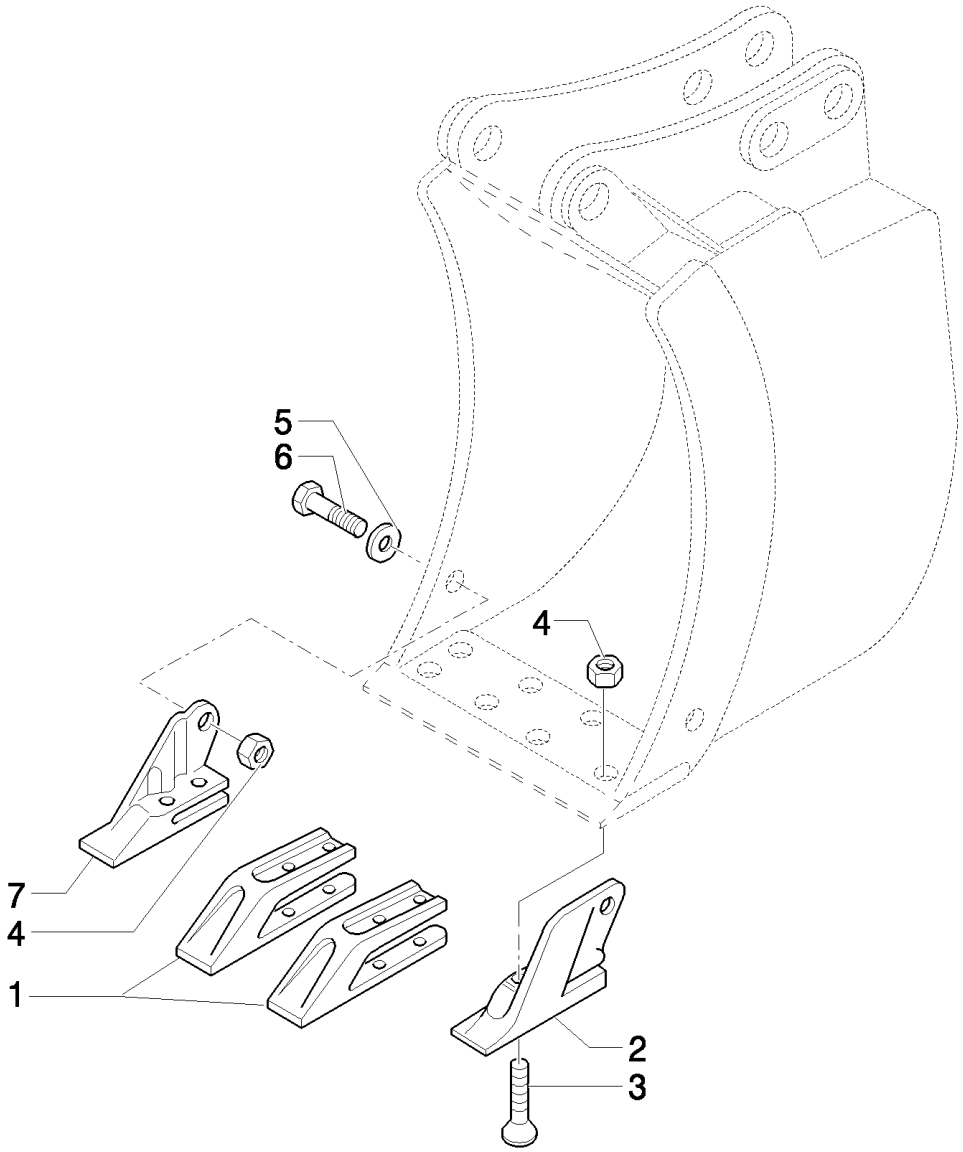

LB115.B EUR BACKHOE LOADER (1/05-)

527(01) BOLT-ON TOOTH KIT, 18" (457MM) & 24" (610MM) BACKHOE BUCKETS

Ref	Part Number	Qty	Description
1	85811440	2	SHANK, BUCKET TOOTH,
2	85801376	1	TOOTH, BUCKET, LH
3	85801371	8	BOLT, PLOW, 5/8"-11 x 2 1/4",
4	85801470	10	NUT, 5/8"-11, G8,
5	10520211	2	WASHER,
6	88706	2	BOLT, Hex, 5/8"-11 x 1 3/4", G8, Full Thd,
7	85801377	1	TOOTH, BUCKET, RH

528(01) BOLT-ON TOOTH KIT, 30" (762MM) BACKHOE BUCKET

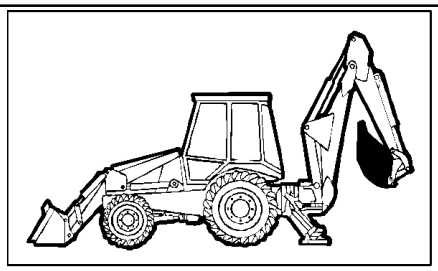

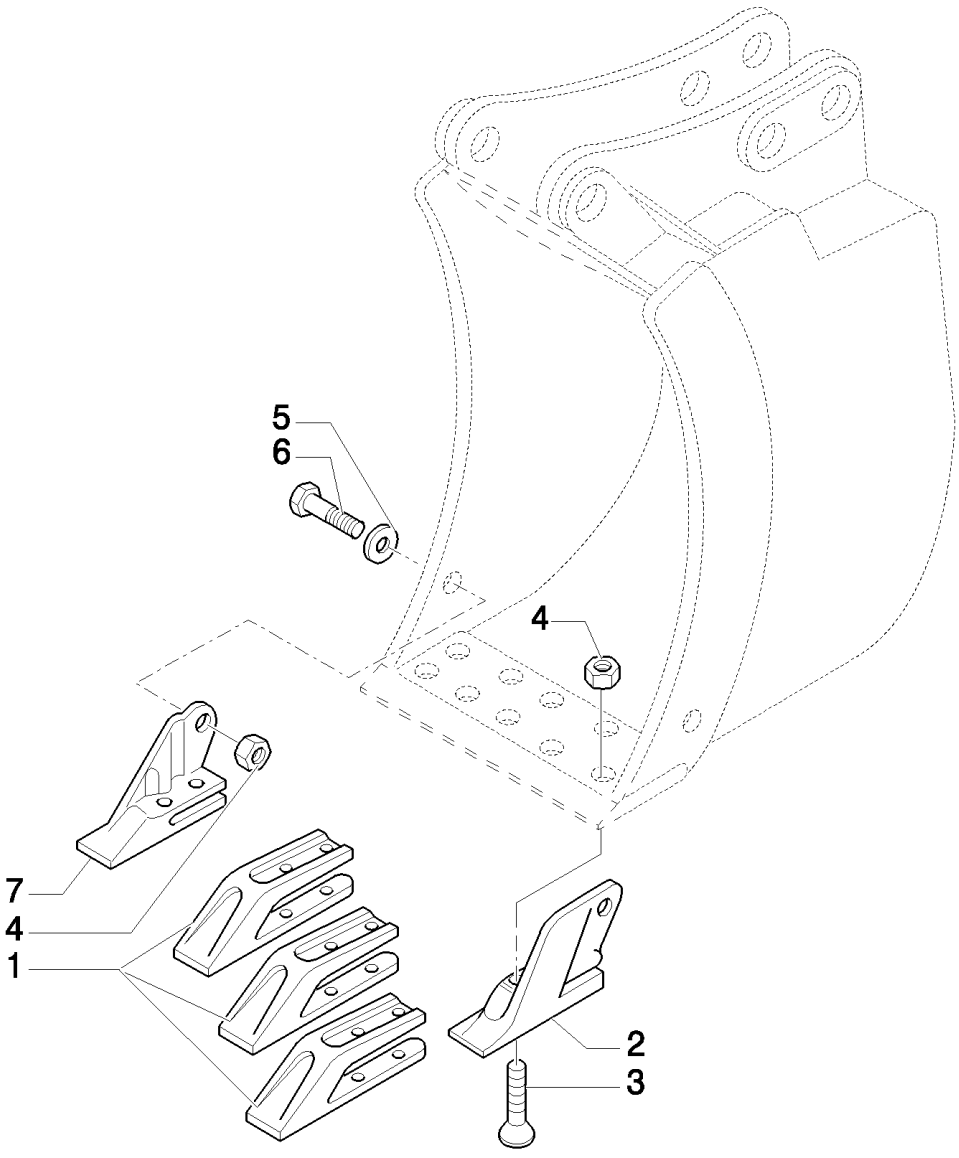

LB115.B EUR BACKHOE LOADER (1/05-)

528(01) BOLT-ON TOOTH KIT, 30" (762MM) BACKHOE BUCKET

Ref	Part Number	Qty	Description
1	85811440	3	SHANK, BUCKET TOOTH,
2	85801376	1	TOOTH, BUCKET, LH
3	85801371	10	BOLT, PLOW, 5/8"-11 x 2 1/4",
4	85801470	12	NUT, 5/8"-11, G8,
5	10520211	2	WASHER,
6	88706	2	BOLT, Hex, 5/8"-11 x 1 3/4", G8, Full Thd,
7	85801377	1	TOOTH, BUCKET, RH

529(01) BOLT-ON TOOTH KIT, 36" (914MM) BACKHOE BUCKET

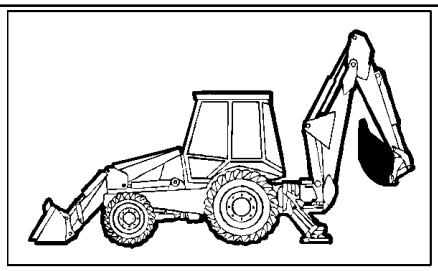

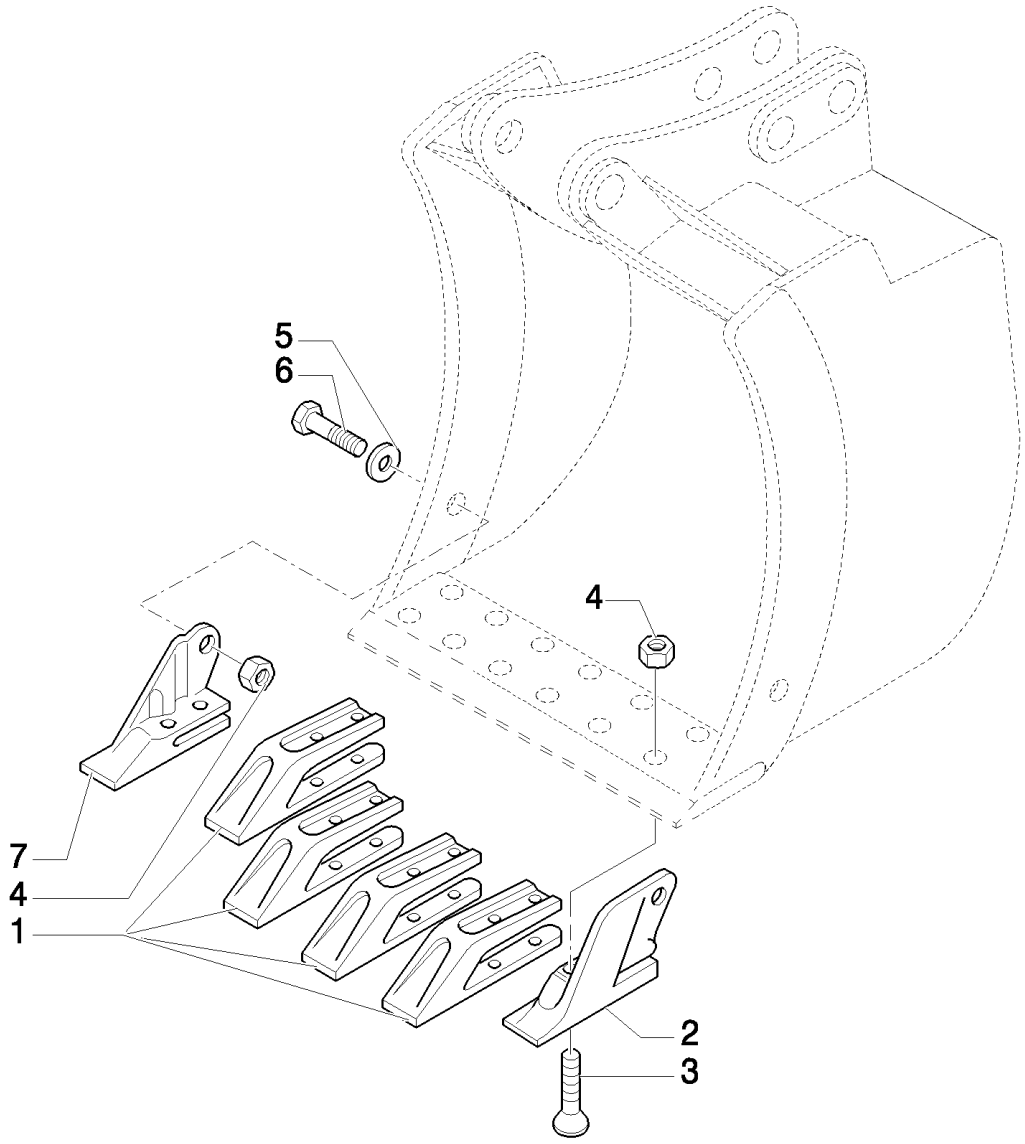

LB115.B EUR BACKHOE LOADER (1/05-)

529(01) BOLT-ON TOOTH KIT, 36" (914MM) BACKHOE BUCKET

Ref	Part Number	Qty	Description
1	85811440	4	SHANK, BUCKET TOOTH,
2	85801376	1	TOOTH, BUCKET, LH
3	85801371	12	BOLT, PLOW, 5/8"-11 x 2 1/4",
4	85801470	14	NUT, 5/8"-11, G8,
5	10520211	2	WASHER,
6	88706	2	BOLT, Hex, 5/8"-11 x 1 3/4", G8, Full Thd,
7	85801377	1	TOOTH, BUCKET, RH

529/ 1(01) STABILIZER FOOT STREET PAD (SIDE SHIFT)

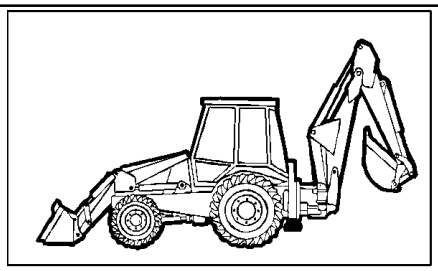

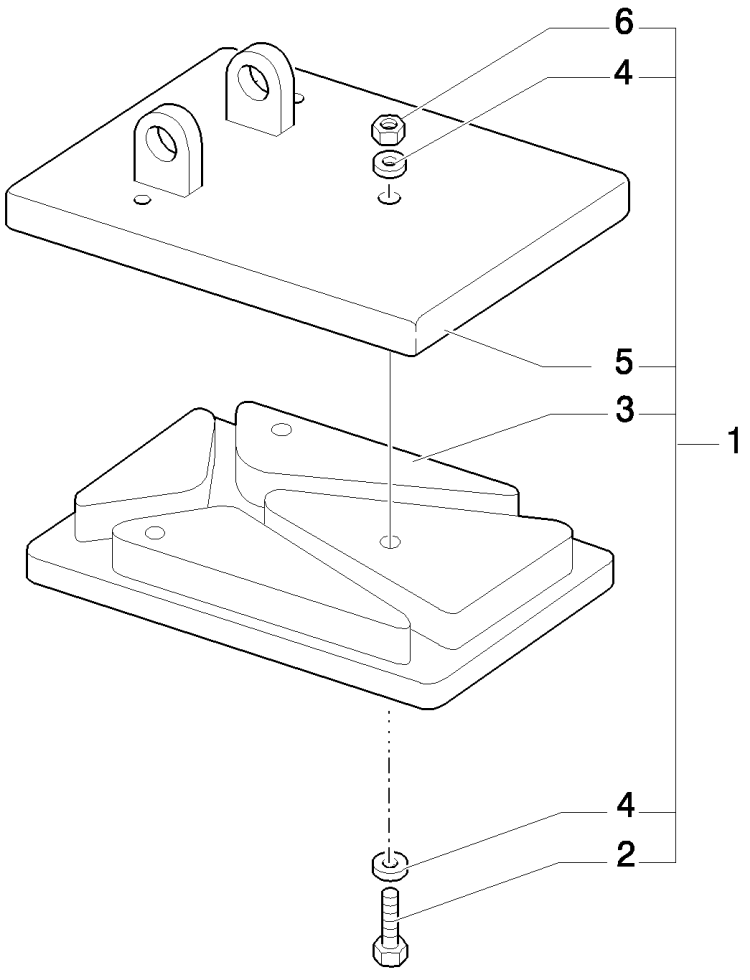

LB115.B EUR BACKHOE LOADER (1/05-)

529/ 1(01) STABILIZER FOOT STREET PAD (SIDE SHIFT)

Ref	Part Number	Qty	Description
1	87574544	2	STABILIZER,
2	15981221	6	SCREW, Hex, M16 x 65, 8.8,
3	85817788	2	PAD, RUBBER,
4	14496921	12	WASHER, M16 x 30 x 3,
5	87574541	2	STABILIZER,
6	12574911	6	NUT, M16 x 1.5, Cl 8,

530(01) PIN TOOTH KIT, 12" (305MM) BACKHOE BUCKET

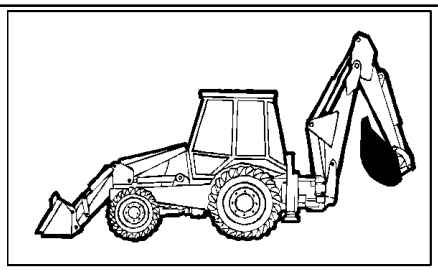

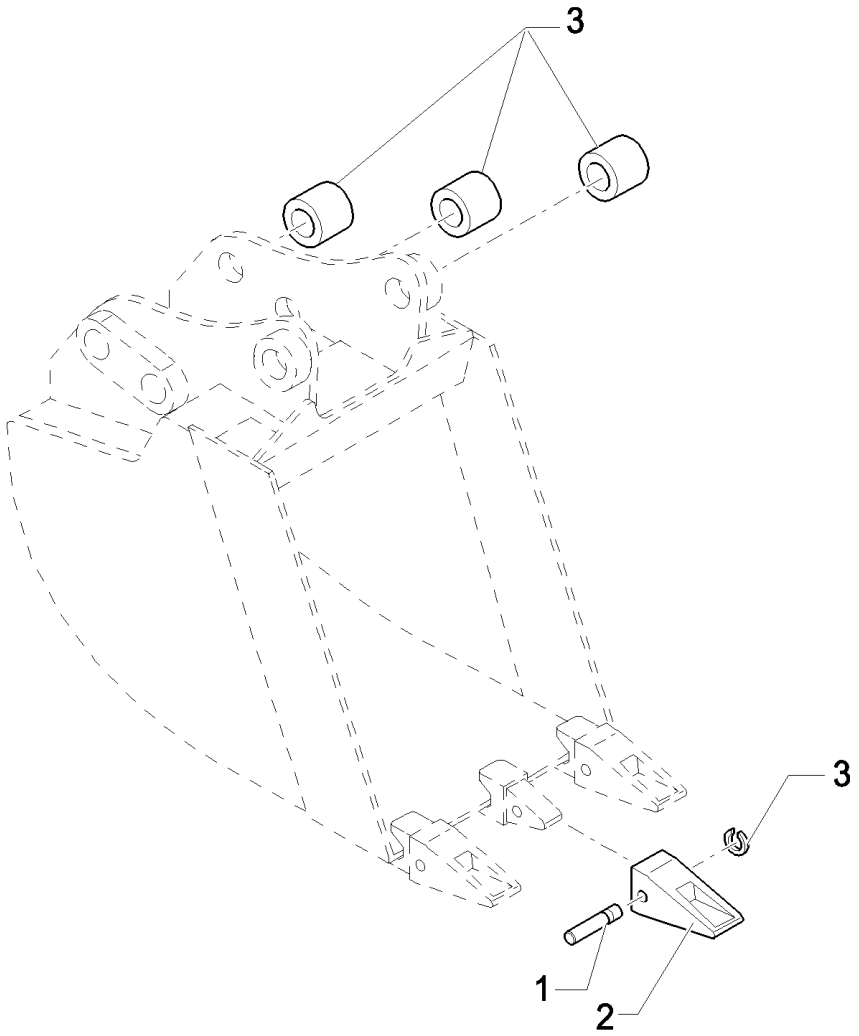

LB115.B EUR BACKHOE LOADER (1/05-)

530(01) PIN TOOTH KIT, 12" (305MM) BACKHOE BUCKET

Ref	Part Number	Qty	Description
1	85801097	3	PIN,
2	85811432	3	TOOTH, BUCKET,
3	85801098	3	RING,

530/ 1(01) STABILIZER FOOT GROUND (SIDE SHIFT)

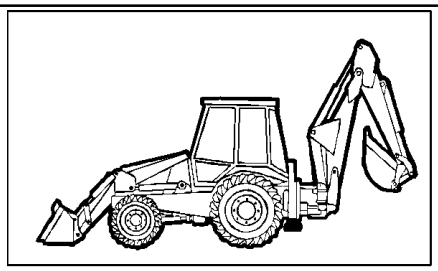

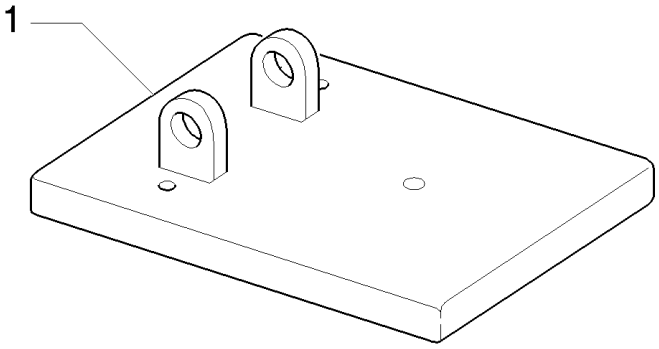

LB115.B EUR BACKHOE LOADER (1/05-)

530/ 1(01) STABILIZER FOOT GROUND (SIDE SHIFT)

Ref	Part Number	Qty	Description
1	87574541	2	STABILIZER,

531(01) PIN TOOTH KIT, 18" (457MM) & 24" (610MM) BACKHOE BUCKETS

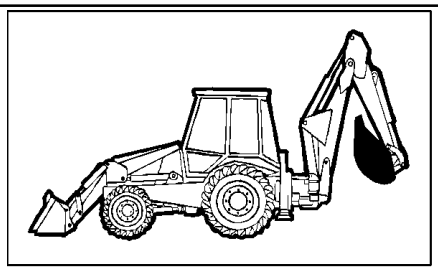

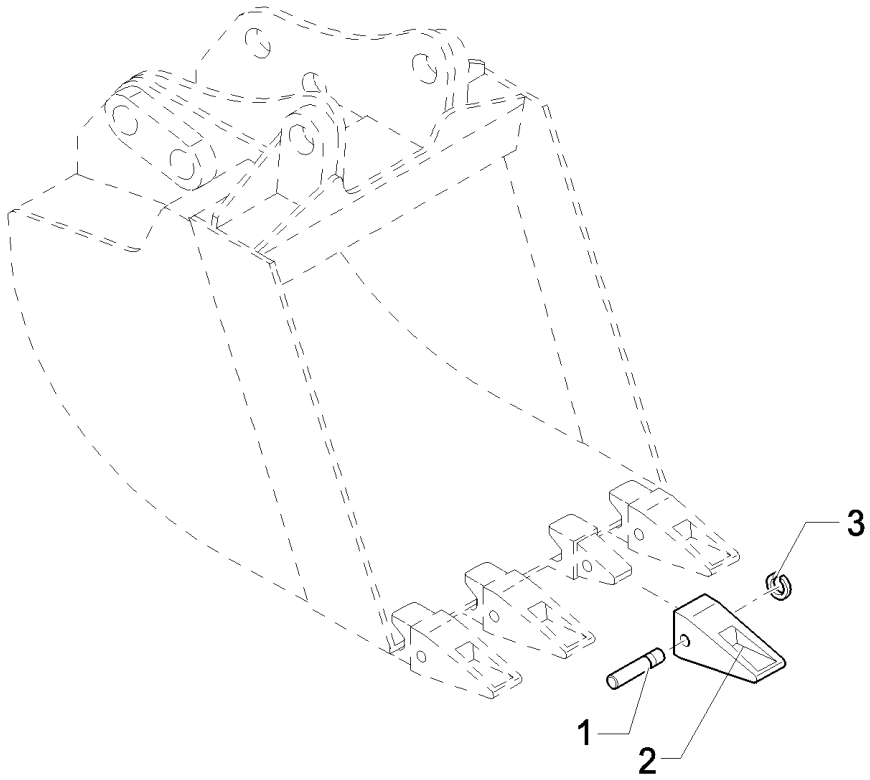

LB115.B EUR BACKHOE LOADER (1/05-)

531(01) PIN TOOTH KIT, 18" (457MM) & 24" (610MM) BACKHOE BUCKETS

Ref	Part Number	Qty	Description
1	85801097	4	PIN,
2	85811432	4	TOOTH, BUCKET,
3	85801098	4	RING,

532(01) PIN TOOTH KIT, 30" (762MM) BACKHOE BUCKET

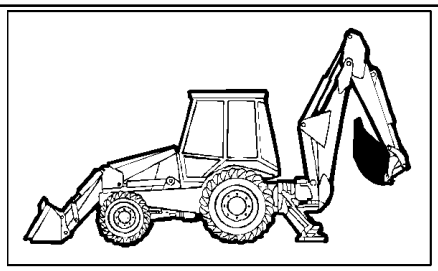

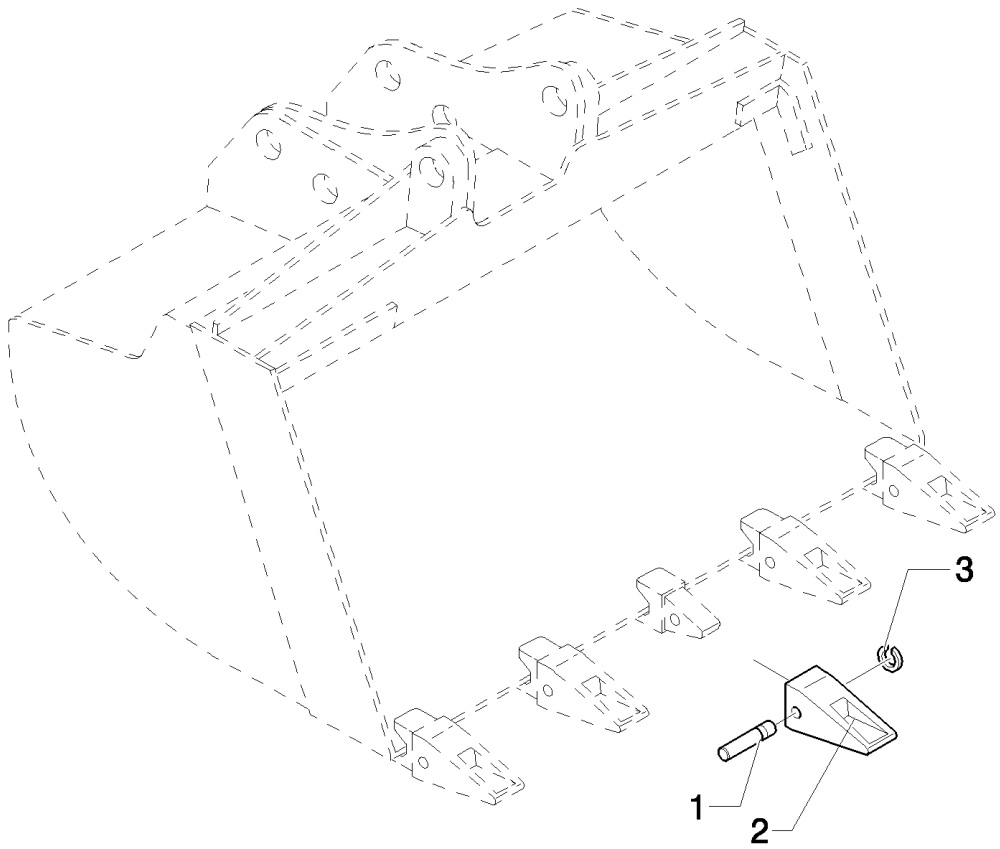

LB115.B EUR BACKHOE LOADER (1/05-)

532(01) PIN TOOTH KIT, 30" (762MM) BACKHOE BUCKET

Ref	Part Number	Qty	Description
1	85801097	5	PIN,
2	85811432	5	TOOTH, BUCKET,
3	85801098	5	RING,

533(01) PIN TOOTH KIT, 36" (914MM) BACKHOE BUCKET

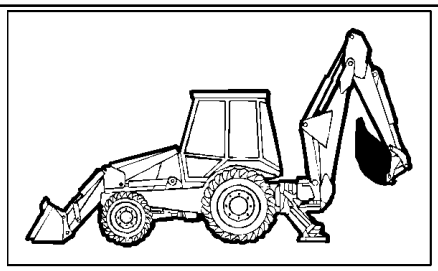

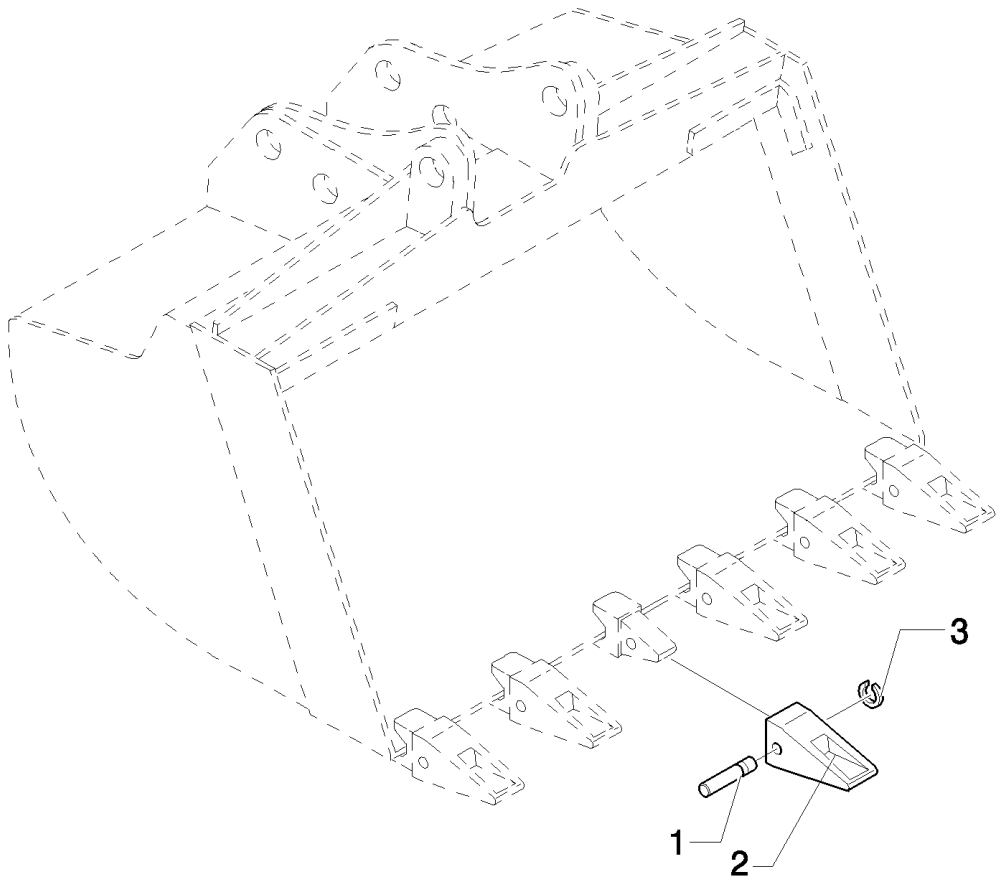

LB115.B EUR BACKHOE LOADER (1/05-)

533(01) PIN TOOTH KIT, 36" (914MM) BACKHOE BUCKET

Ref	Part Number	Qty	Description
1	85801097	6	PIN,
2	85811432	6	TOOTH, BUCKET,
3	85801098	6	RING,

533/ 1(02) 1.15 M3 BUCKET WITH FORKS AND CUTTER BLADE

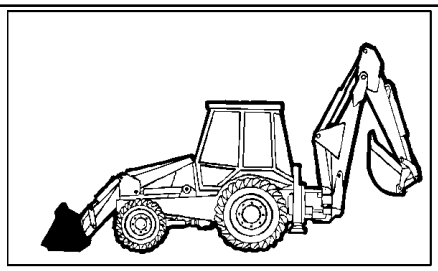

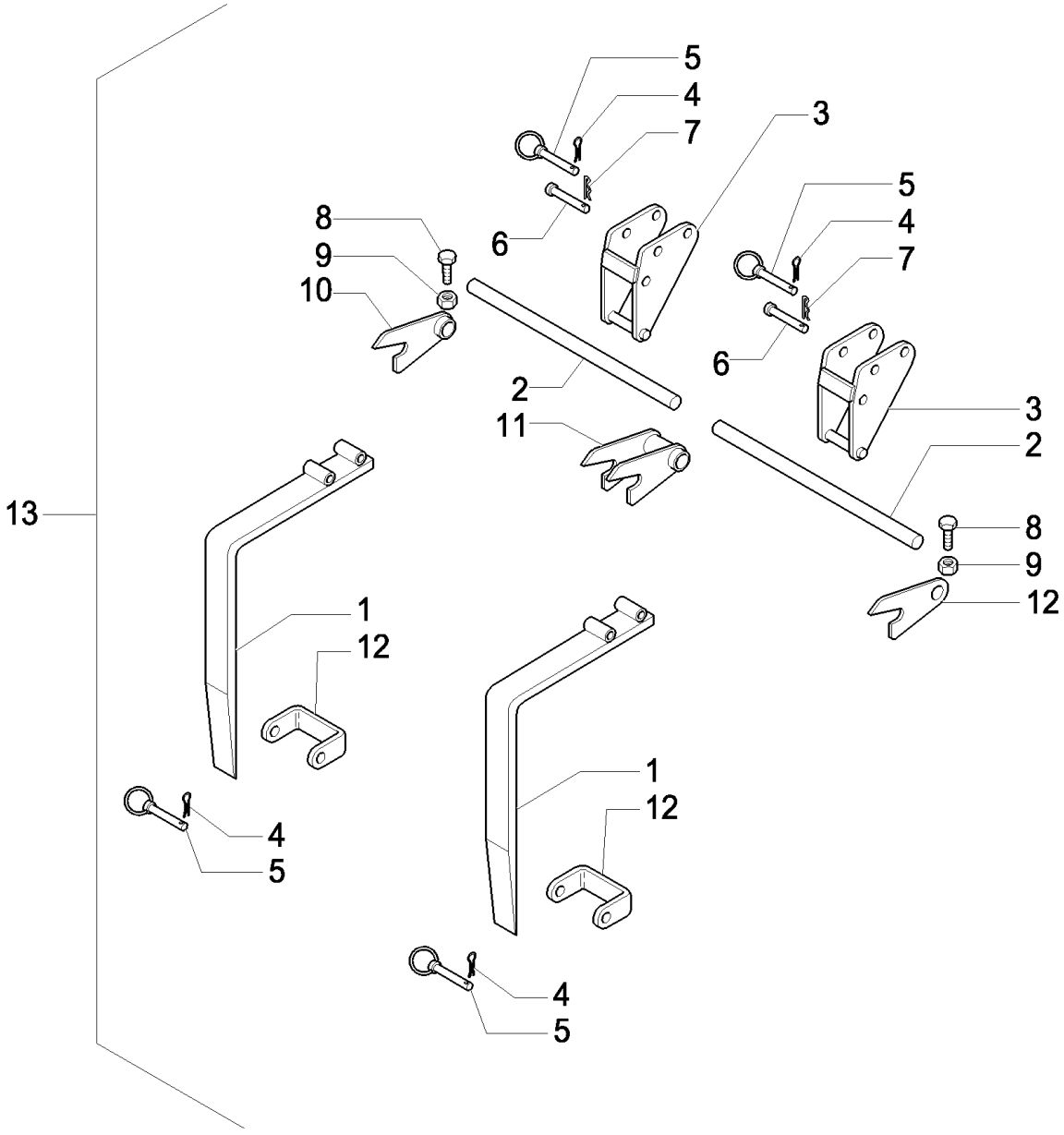

LB115.B EUR BACKHOE LOADER (1/05-)

533/ 1(02) 1.15 M3 BUCKET WITH FORKS AND CUTTER BLADE

Ref	Part Number	Qty	Description
1	85805932	2	FORK,
2	9968585	2	ROD,
3	85805933	2	SUPPORT,
4	9968147	4	PIN, ROLL,
5	9968148	4	PIN, LOCK,
6	9968149	2	PIN,
7	9968150	2	PIN, SPLIT (COTTER),
8	9968586	2	SCREW,
9	9968152	2	NUT,
10	85805935	2	HINGE,
11	85805936	1	HINGE,
12	85805934	2	HINGE,
13	85805931	1	KIT, (Bucket)

534(01) 1,15 M3 BUCKET WITH FORKS AND EXTRA REVERSIBLE BLADE

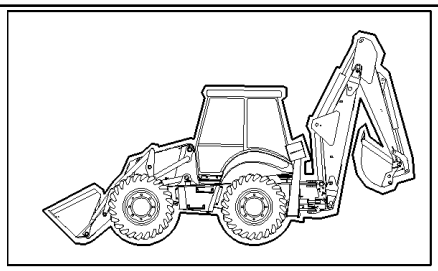

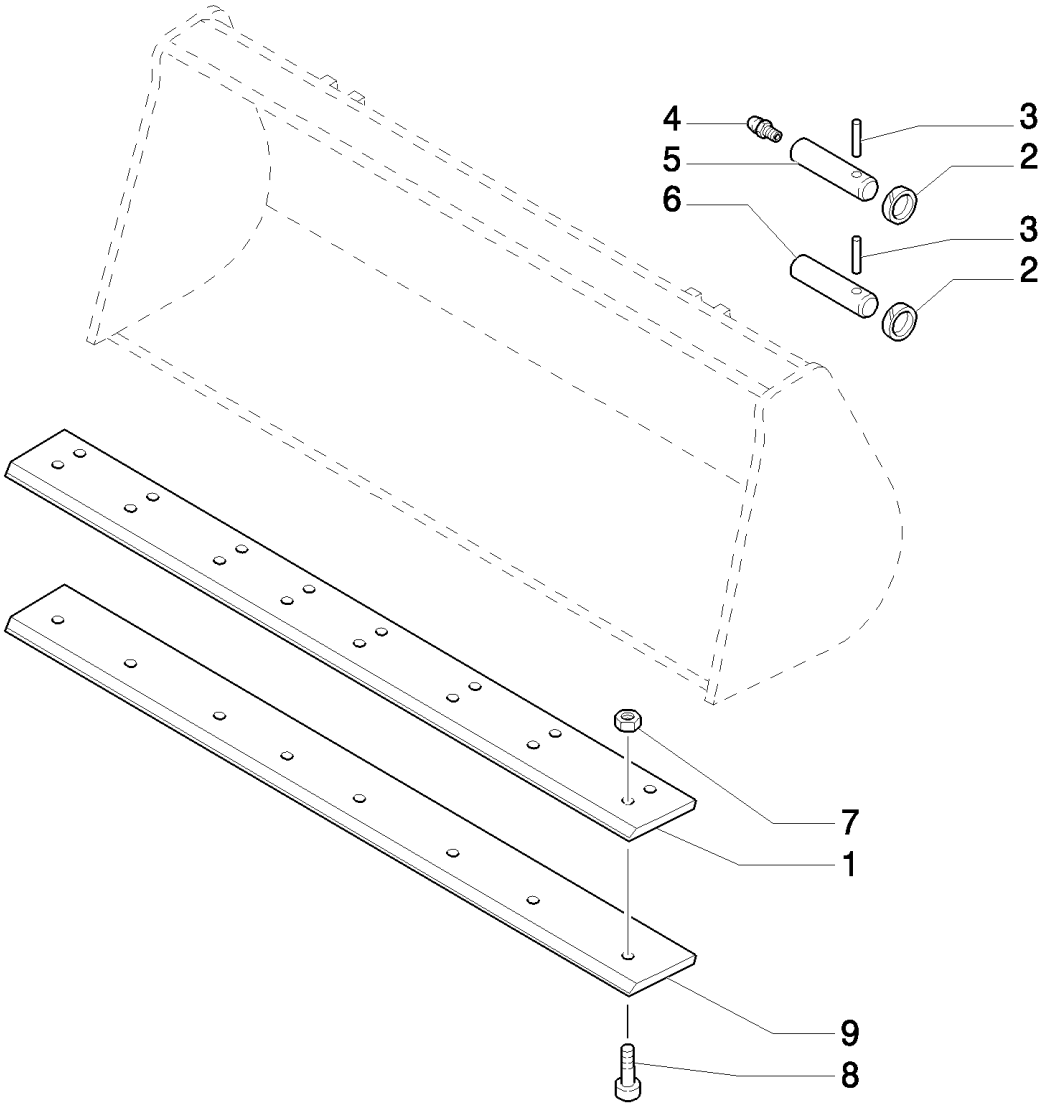

LB115.B EUR BACKHOE LOADER (1/05-)

534(01) 1,15 M3 BUCKET WITH FORKS AND EXTRA REVERSIBLE BLADE

Ref	Part Number	Qty	Description
1	85812238	1	EDGE, CUTTING, , PART WELDED TO BUCKET
2	85802974	4	RING,
3	85804534	4	PIN, ROLL,
4	87901S8	2	NIPPLE, LUBE, 1/8"-27 X .66" lg,
5	85804533	2	PIN,
6	85805306	2	PIN,
7	85801470	8	NUT, 5/8"-11, G8,
8	85801371	8	BOLT, PLOW, 5/8"-11 x 2 1/4",
9	85812242	1	EDGE, CUTTING, REVERSIBLE, L= 2400 MM.

534(02) 1,15 M3 BUCKET WITH FORKS AND EXTRA REVERSIBLE BLADE

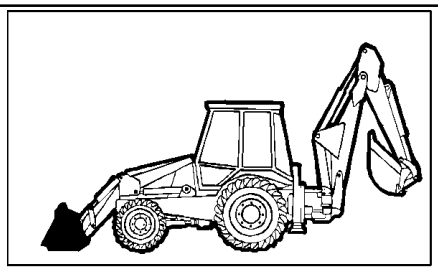

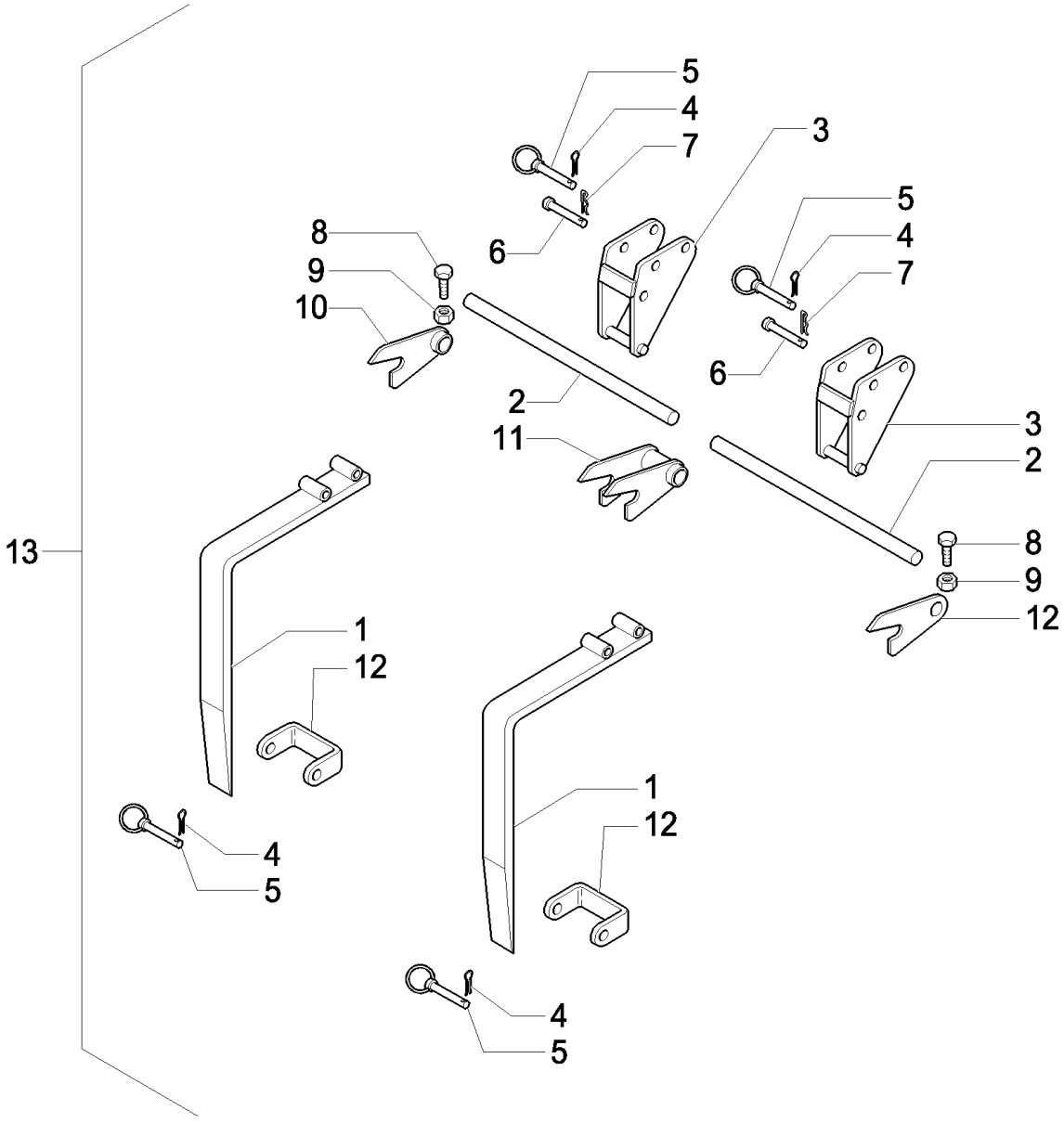

LB115.B EUR BACKHOE LOADER (1/05-)

534(02) 1,15 M3 BUCKET WITH FORKS AND EXTRA REVERSIBLE BLADE

Ref	Part Number	Qty	Description
1	85805932	2	FORK,
2	9968585	2	ROD,
3	85805933	2	SUPPORT,
4	9968147	4	PIN, ROLL,
5	9968148	4	PIN, LOCK,
6	9968149	2	PIN,
7	9968150	2	PIN, SPLIT (COTTER),
8	9968586	2	SCREW,
9	9968152	2	NUT,
10	85805935	2	HINGE,
11	85805936	1	HINGE,
12	85805934	2	HINGE,
13	85805931	1	KIT,

535(01) STABILIZER FOOT GROUND (CENTER PIVOT)

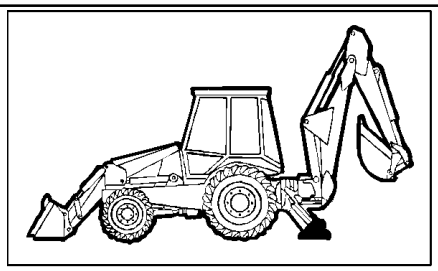

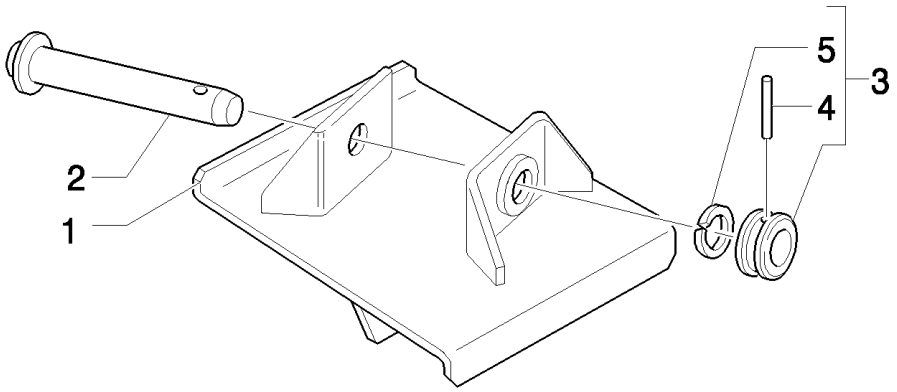

LB115.B EUR BACKHOE LOADER (1/05-)

535(01) STABILIZER FOOT GROUND (CENTER PIVOT)

Ref	Part Number	Qty	Description
1	85804847	1	PAD, RH
1	85804848	1	PAD, LH
2	85803141	2	PIN,
3	85803139	2	PIN, LOCK, Assy, Includes 4, 5
4	85802992	2	RING,
5	85802993	2	PIN,

535/ 1(01) STABILIZER FOOT STREET PAD (CENTER PIVOT)

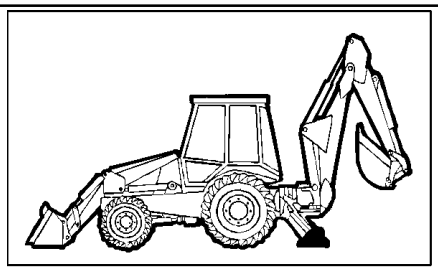

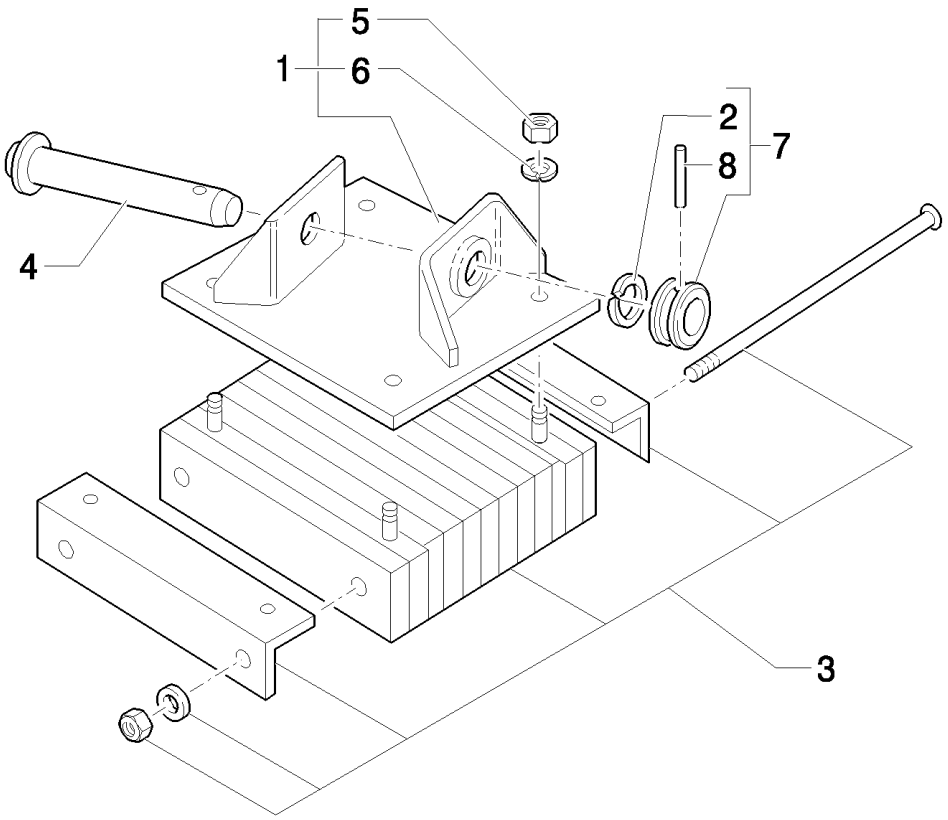

LB115.B EUR BACKHOE LOADER (1/05-)

535/ 1(01) STABILIZER FOOT STREET PAD (CENTER PIVOT)

Ref	Part Number	Qty	Description
1	85804845	1	PAD, RH, Includes 3, 5, 6
1	85804846	1	PAD, LH, Includes 3, 5, 6
2	85802992	2	RING,
3	D7NNB694A12Z	2	PAD, RUBBER, {PP:83911040} ASSY
4	85803141	2	PIN,
5	N620017S36	8	NUT, M20, Cl 8,
6	N630177S36	8	WASHER, LOCK, M20,
7	85803139	2	PIN, LOCK, Assy, Includes 2, 8
8	85802993	2	PIN,

535/ 2(01) 1,15MC BUCKET WITH FORKS AND TINE

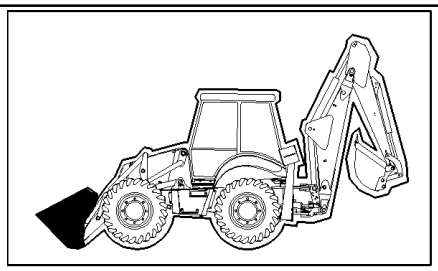

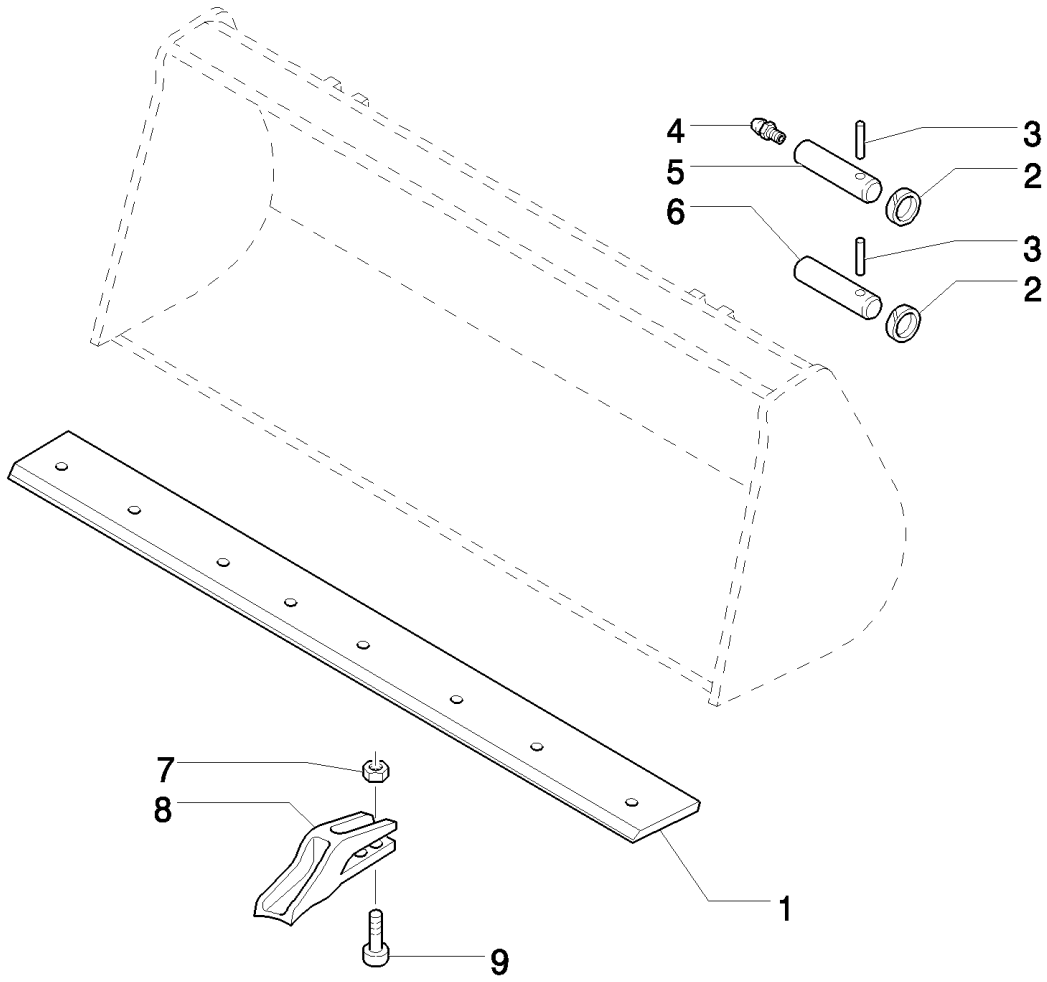

LB115.B EUR BACKHOE LOADER (1/05-)

535/ 2(01) 1,15MC BUCKET WITH FORKS AND TINE

Ref	Part Number	Qty	Description
1	85812238	1	EDGE, CUTTING, , PART WELDED TO BUCKET
2	85802974	4	RING,
3	85804534	4	PIN, ROLL,
4	87901S8	2	NIPPLE, LUBE, 1/8"-27 X .66" lg,
5	85804533	2	PIN,
6	85805306	2	PIN,
7	85801470	16	NUT, 5/8"-11, G8,
8	85811440	8	SHANK, BUCKET TOOTH,
9	85801371	16	BOLT, PLOW, 5/8"-11 x 2 1/4",

535/ 2(02) 1,15MC BUCKET WITH FORKS AND TINE

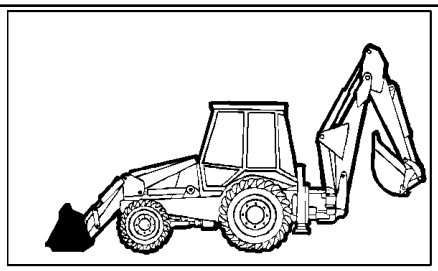

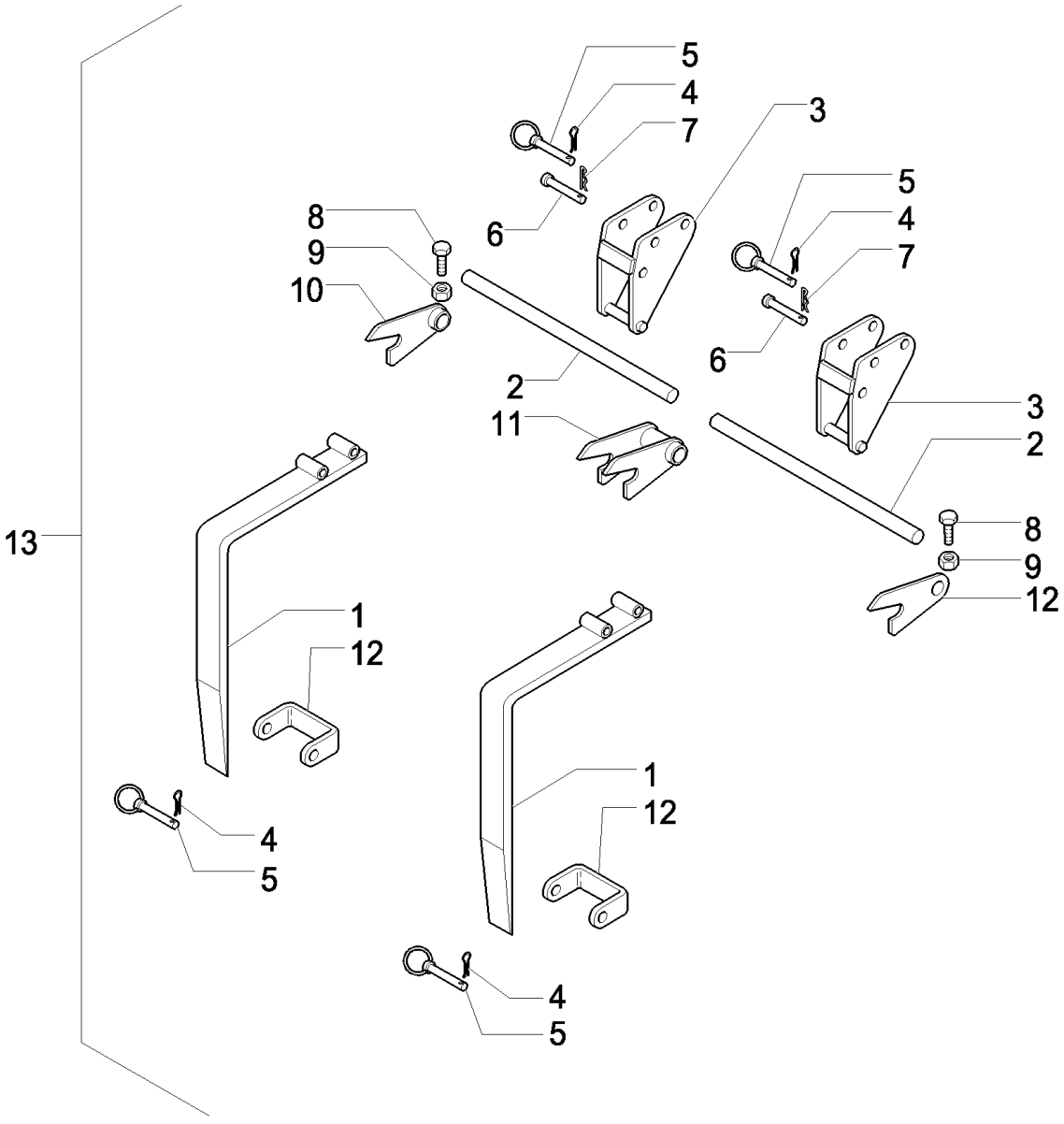

LB115.B EUR BACKHOE LOADER (1/05-)

535/ 2(02) 1,15MC BUCKET WITH FORKS AND TINE

Ref	Part Number	Qty	Description
1	85805932	2	FORK,
2	9968585	2	ROD,
3	85805933	2	SUPPORT,
4	9968147	4	PIN, ROLL,
5	9968148	4	PIN, LOCK,
6	9968149	2	PIN,
7	9968150	2	PIN, SPLIT (COTTER),
8	9968586	2	SCREW, M10X90
9	9968152	2	NUT, M10
10	85805935	2	HINGE,
11	85805936	1	HINGE,
12	85805934	2	HINGE,
13	85805931	1	KIT,

536(01) REVERSIBLE STABILIZER FOOT (CENTER PIVOT)

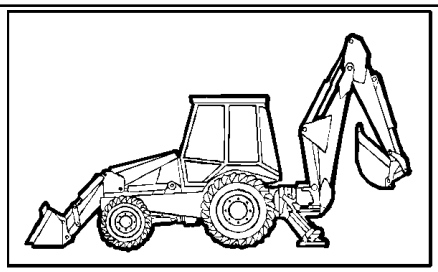

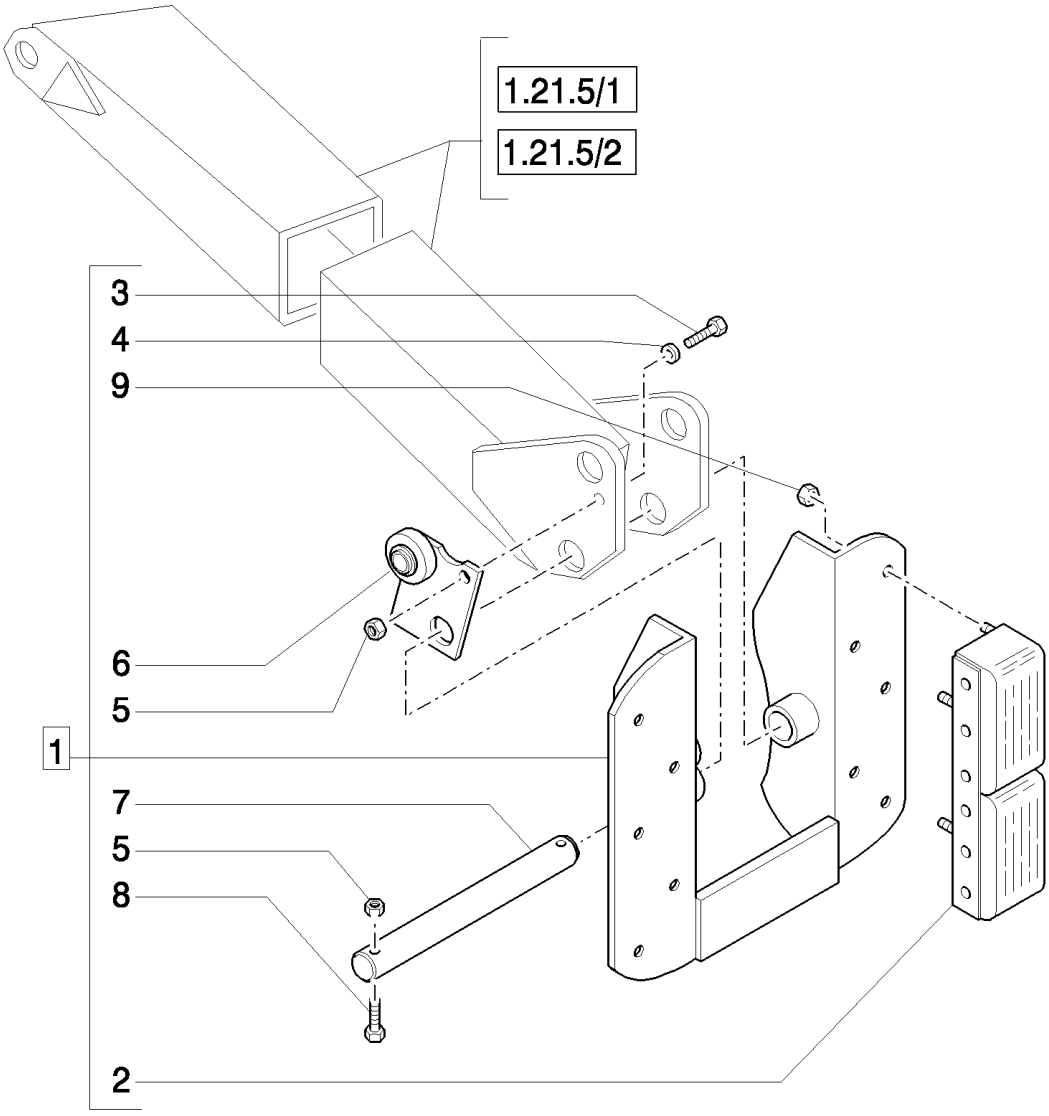

LB115.B EUR BACKHOE LOADER (1/05-)

536(01) REVERSIBLE STABILIZER FOOT (CENTER PIVOT)

Ref	Part Number	Qty	Description
1	85811985	1	PAD, LH
1	85811986	1	PAD, RH
2	85811992	4	PAD, RUBBER,
3	88044	2	BOLT, Hex, 3/8"-16 x 1 1/2", G5,
4	12641004	2	WASHER, M10 x 20 x 3,
5	33799S36	6	NUT, 3/8"-16, G5,
6	85811990	1	BRACKET,
6	85811991	1	BRACKET,
7	85811989	2	PIN,
8	85804878	2	SCREW,
9	34670S36	20	NUT, 7/16"-14, G5,

537(01) STABILIZER FOOT STREET PAD (CENTER PIVOT)

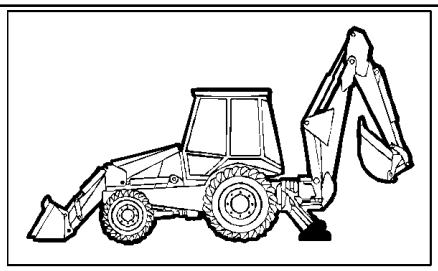

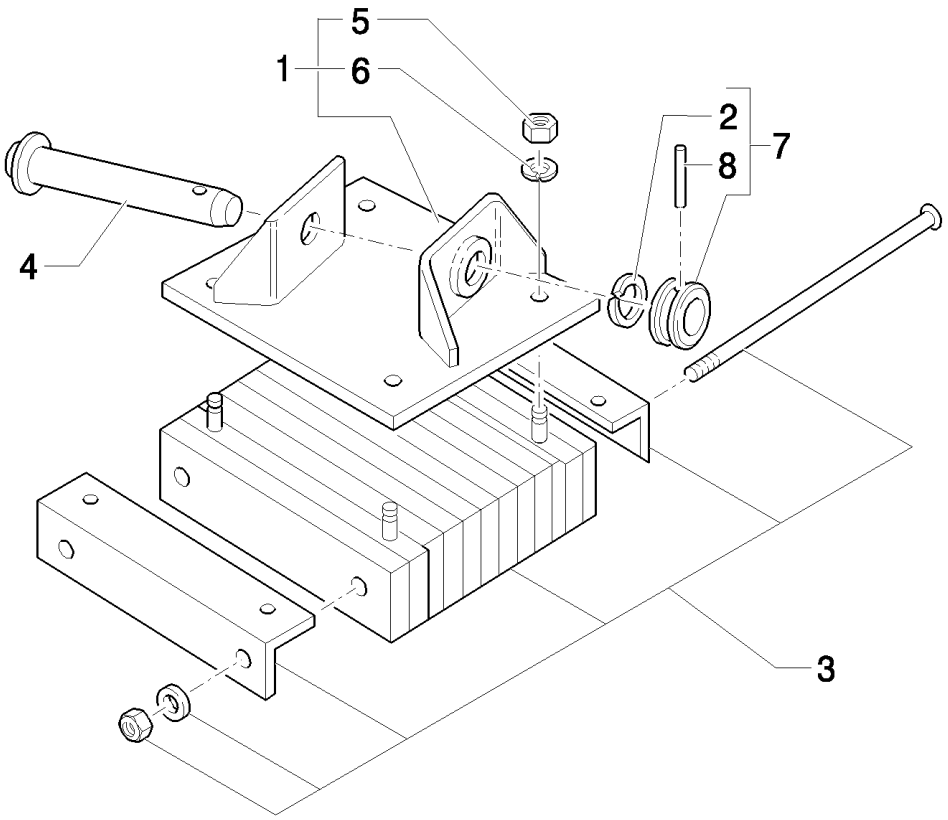

LB115.B EUR BACKHOE LOADER (1/05-)

537(01) STABILIZER FOOT STREET PAD (CENTER PIVOT)

Ref	Part Number	Qty	Description
1	85824095	1	PAD, RH, Includes 3, 5, 6
1	85825000	1	PAD, LH, Includes 3, 5, 6
2	85802992	2	RING,
3	D7NNB694A12Z	2	PAD, RUBBER, {PP:83911040} ASSY
4	85825003	2	PIN,
5	N620017S36	8	NUT, {PP:83911041} M20, Cl 8,
6	N630177S36	8	WASHER, LOCK, {PP:83911042} M20,
7	85803139	2	PIN, LOCK, Assy, Includes 2, 8
8	85802993	2	PIN,

548(01) DITCH CLEANING BUCKET

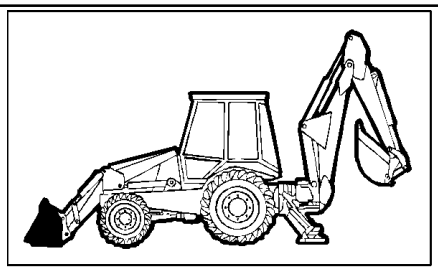

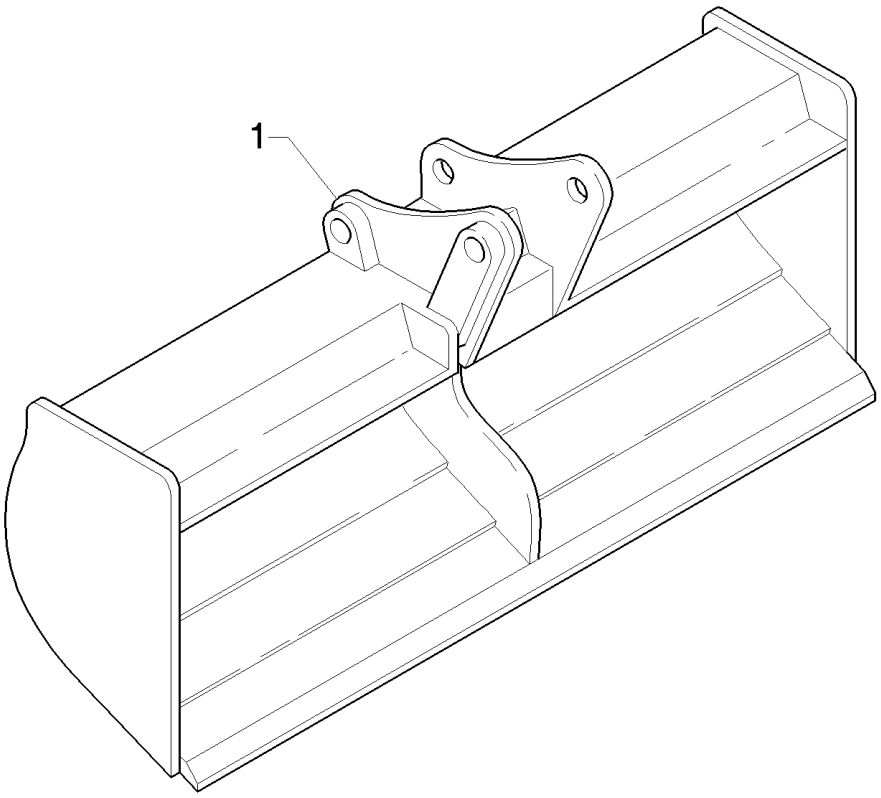

LB115.B EUR BACKHOE LOADER (1/05-)

548(01) DITCH CLEANING BUCKET

Ref	Part Number	Qty	Description
1	85824356	1	BUCKET,

555(01) FRONT BUCKET TEETH

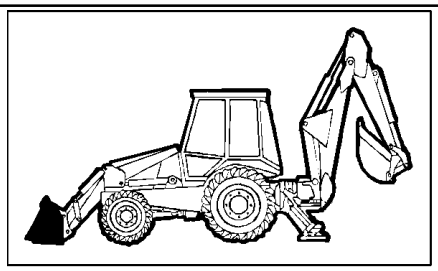

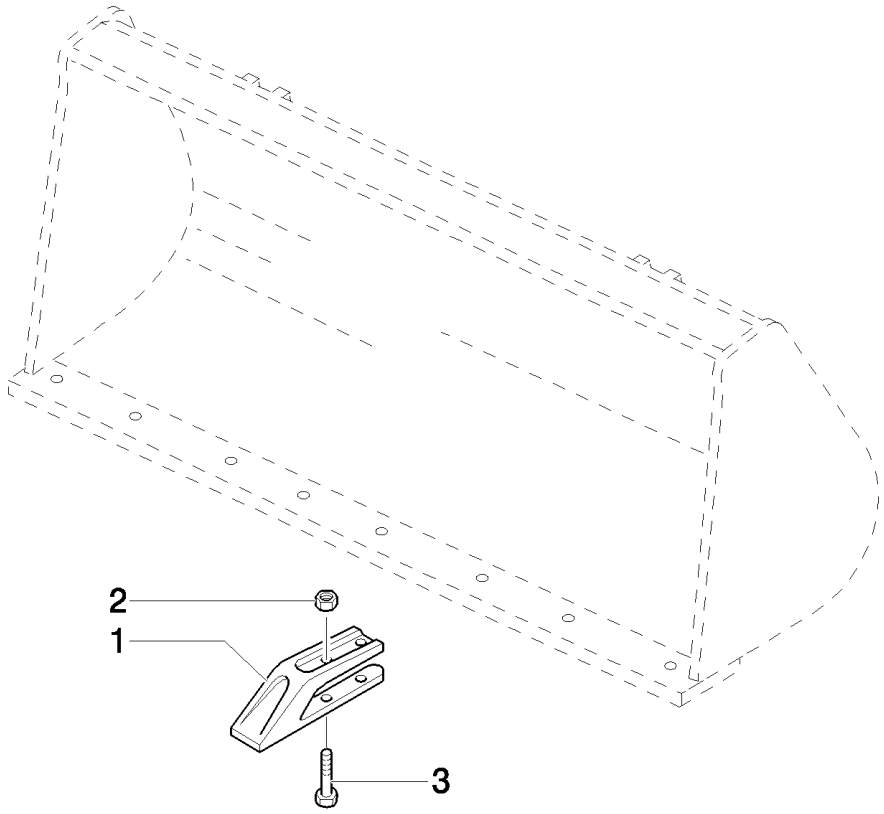

LB115.B EUR BACKHOE LOADER (1/05-)

555(01) FRONT BUCKET TEETH

Ref	Part Number	Qty	Description
1	85811440	8	SHANK, BUCKET TOOTH,
2	85801470	16	NUT, 5/8"-11, G8,
3	85801371	16	BOLT, PLOW, 5/8"-11 x 2 1/4",

599(01) STABILIZER FOOTSTREET PAD (SIDE SHIFT)

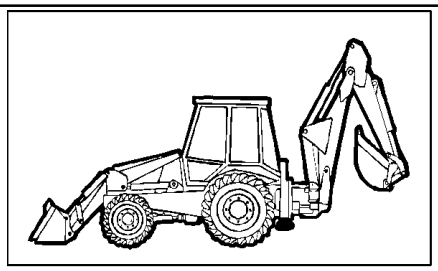

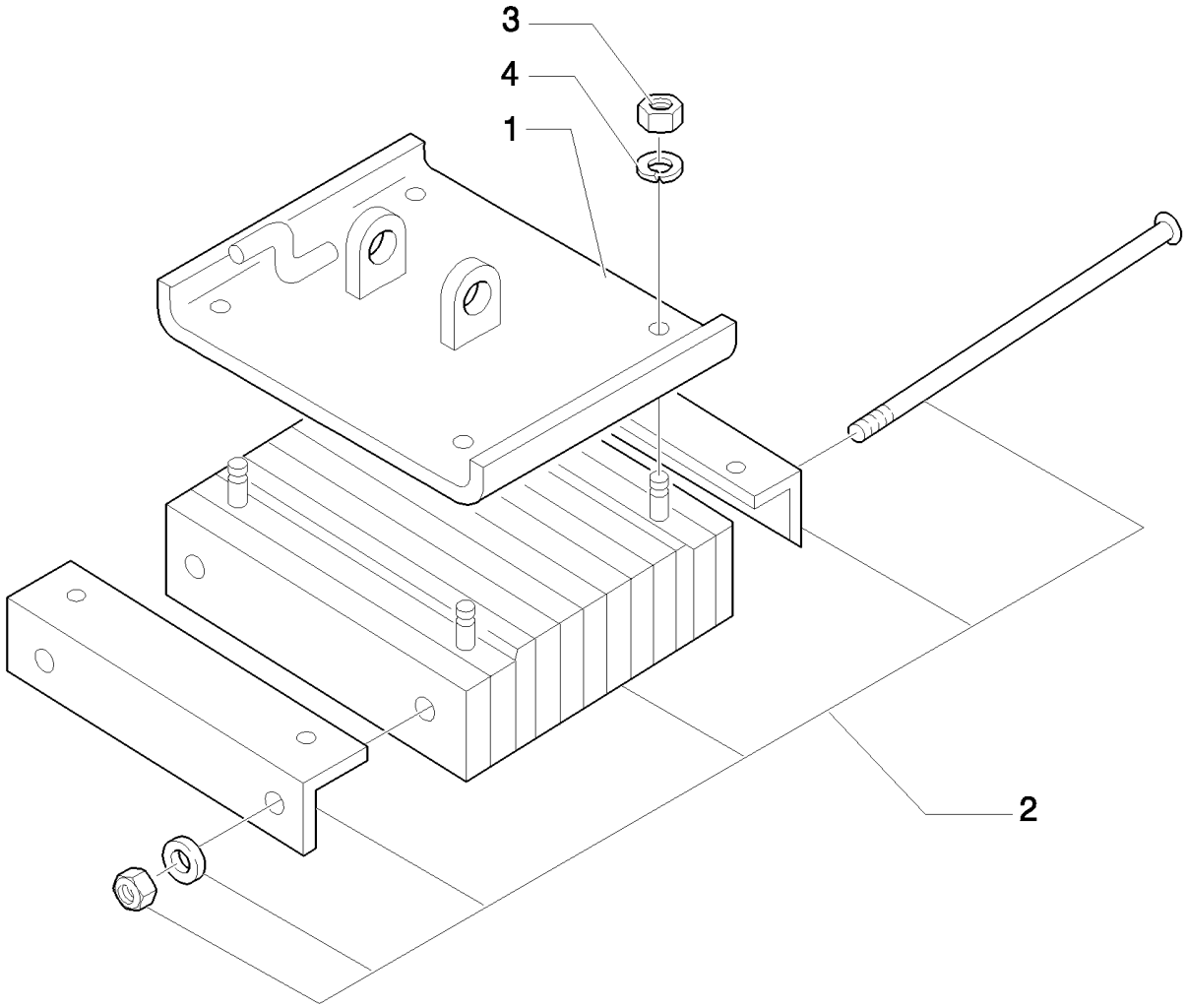

LB115.B EUR BACKHOE LOADER (1/05-)

599(01) STABILIZER FOOTSTREET PAD (SIDE SHIFT)

Ref	Part Number	Qty	Description
1	87575197	1	STABILIZER, LH
1	87575200	1	STABILIZER, RH
2	83911040	2	PAD,
3	12163511	8	NUT, M20, Cl 8,
4	10520424	8	WASHER, 20X35

606(01) STABILIZER FOOT, GROUND (SIDE SHIFT)

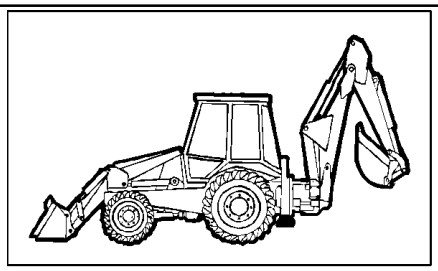

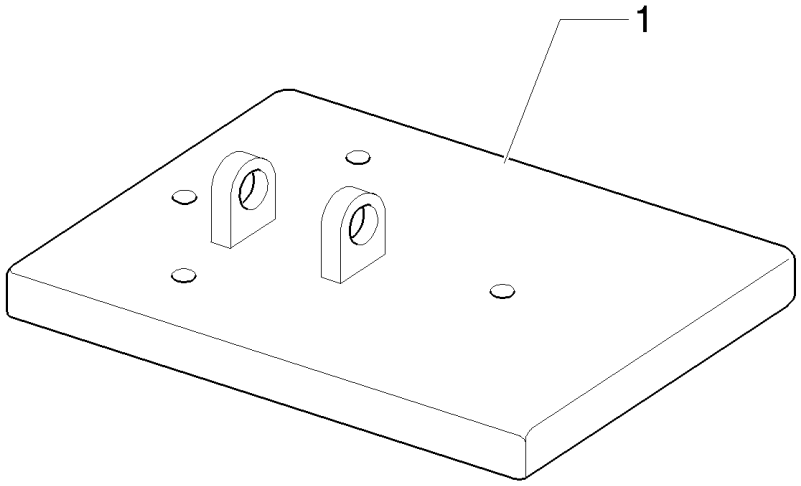

LB115.B EUR BACKHOE LOADER (1/05-)

606(01) STABILIZER FOOT, GROUND (SIDE SHIFT)

Ref	Part Number	Qty	Description
1	85817769	1	PAD, LH
1	85817771	1	PAD, RH

622(01) INTERNAL FAN

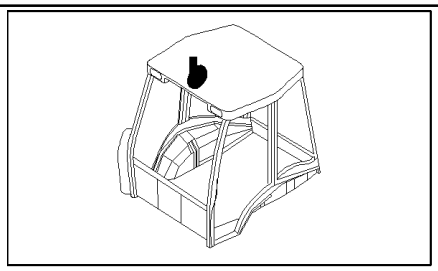

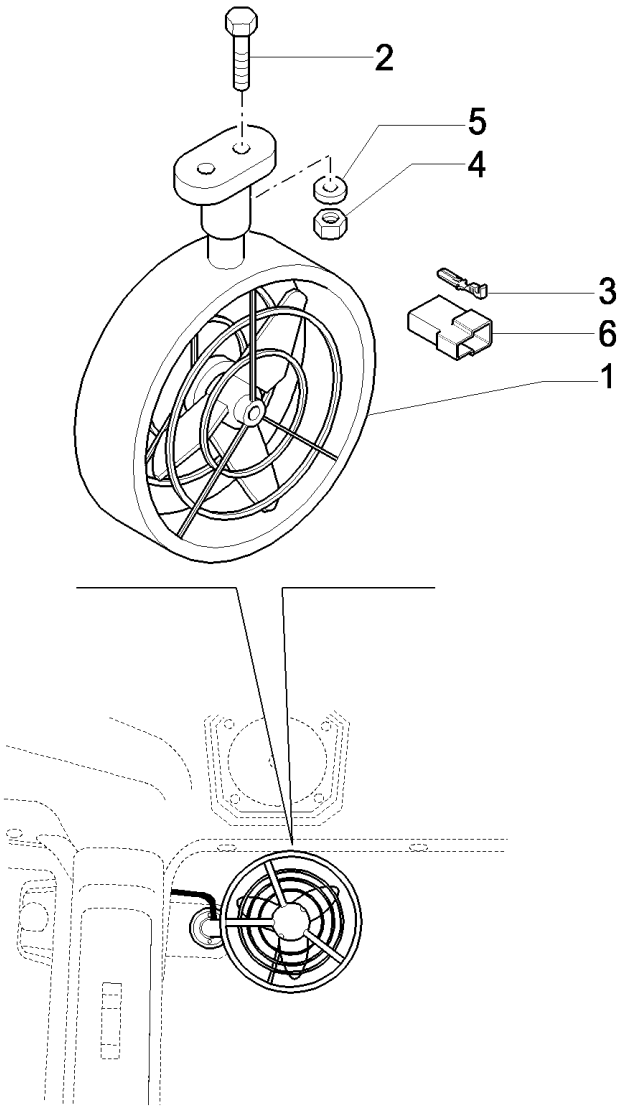

LB115.B EUR BACKHOE LOADER (1/05-)

622(01) INTERNAL FAN

Ref	Part Number	Qty	Description
1	85804323	1	FAN,
2	14303324	2	SCREW, Hex Soc Hd, M4 x 20, 8.8, Full Thd,
3	10250644	2	CABLE TERMINAL,
4	12574011	2	NUT, M4 x .7, Cl 8,
5	12642804	2	WASHER, M4 x 12 x 1,
6	12059980	1	CONNECTOR, ELEC,

636A(01) ACCESSORY ENGINE

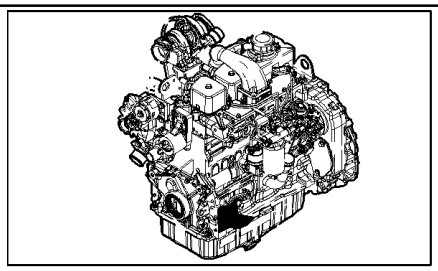

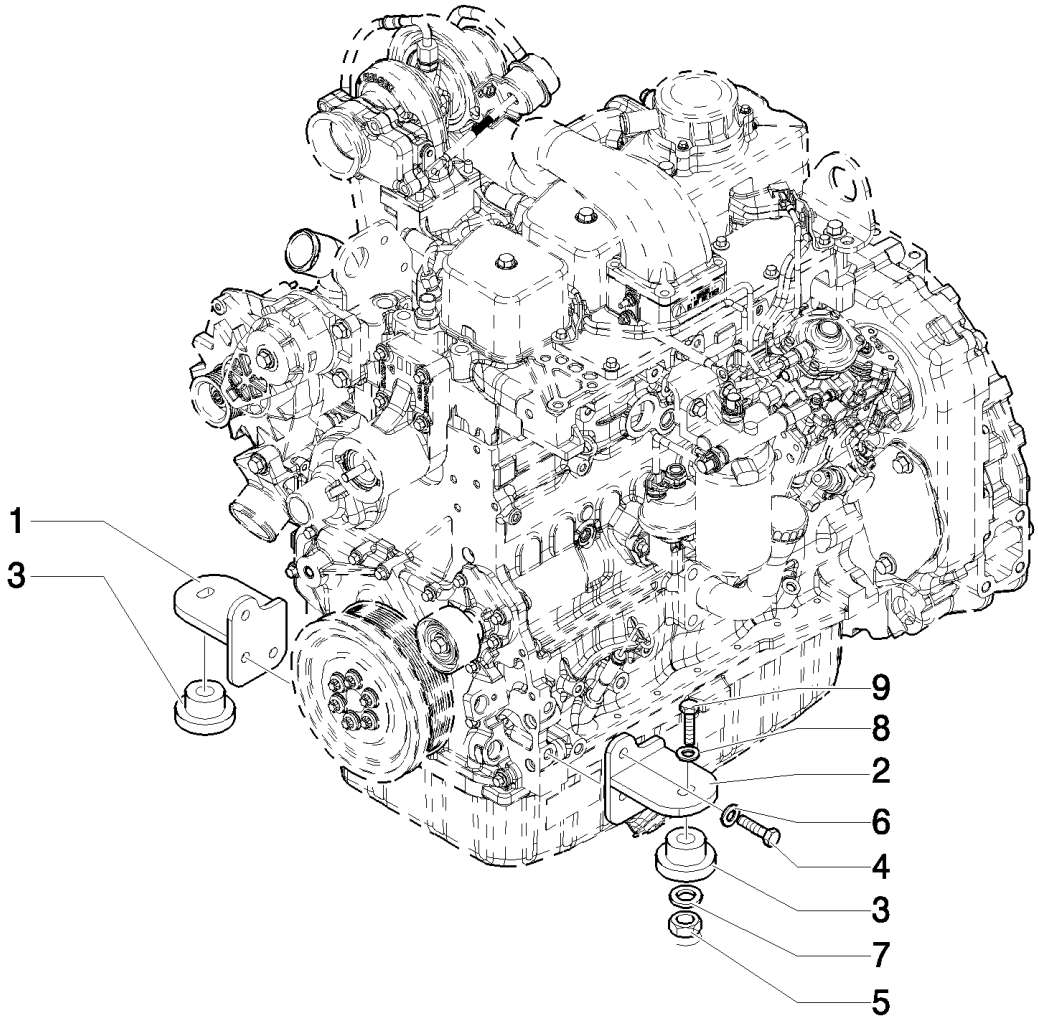

LB115.B EUR BACKHOE LOADER (1/05-)

636A(01) ACCESSORY ENGINE

Ref	Part Number	Qty	Description
1	87407275	1	SWITCH, WINDSHIELD WIPER,
2	87407276	1	MOUNT, ENGINE,
3	87416966	2	ISOLATOR,
4	11112421	6	SCREW, Hex, M12 x 30, 8.8,
5	16105011	2	NUT, LOCK,
6	47048976	6	WASHER,
7	85801585	2	WASHER, SEALING, 65mm OD
8	85802618	2	WASHER, SEALING,
9	87410647	2	SCREW,

636A(04) ACCESSORY ENGINE- ALTERNATOR

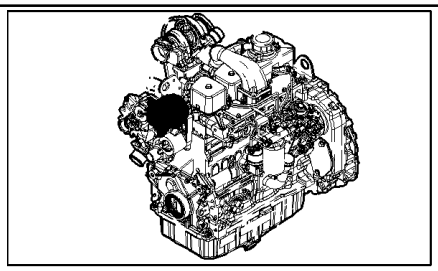

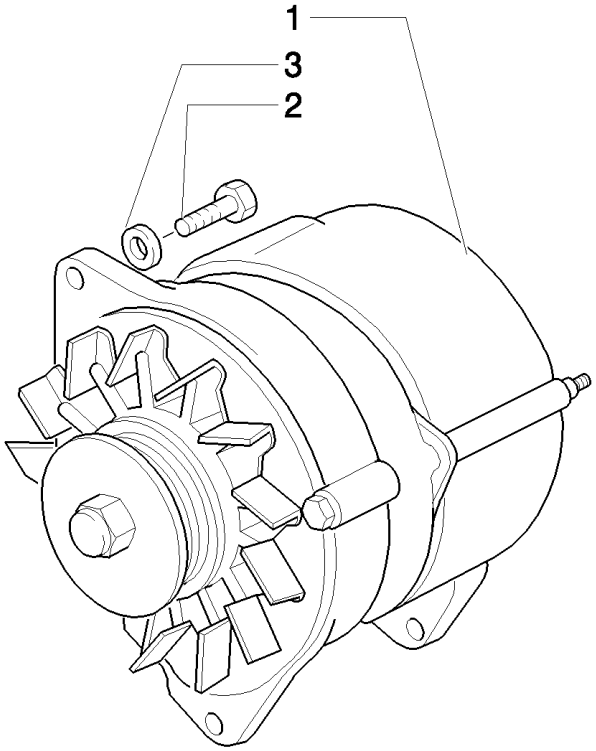

LB115.B EUR BACKHOE LOADER (1/05-)

636A(04) ACCESSORY ENGINE- ALTERNATOR

Ref	Part Number	Qty	Description
1	87422777	1	ALTERNATOR,
2	47049160	1	SCREW, Hex, M8 x 20, 8.8,
2	16043621	1	BOLT, Hex, M8 x 25, 8.8,
3	47048992	1	WASHER,

636A(05) ACCESSORY ENGINE - BRACKET MUFFLER

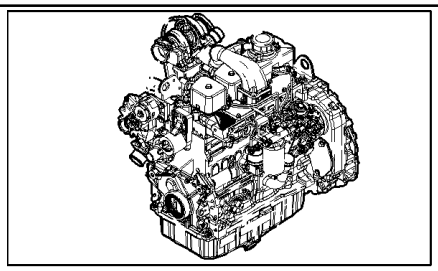

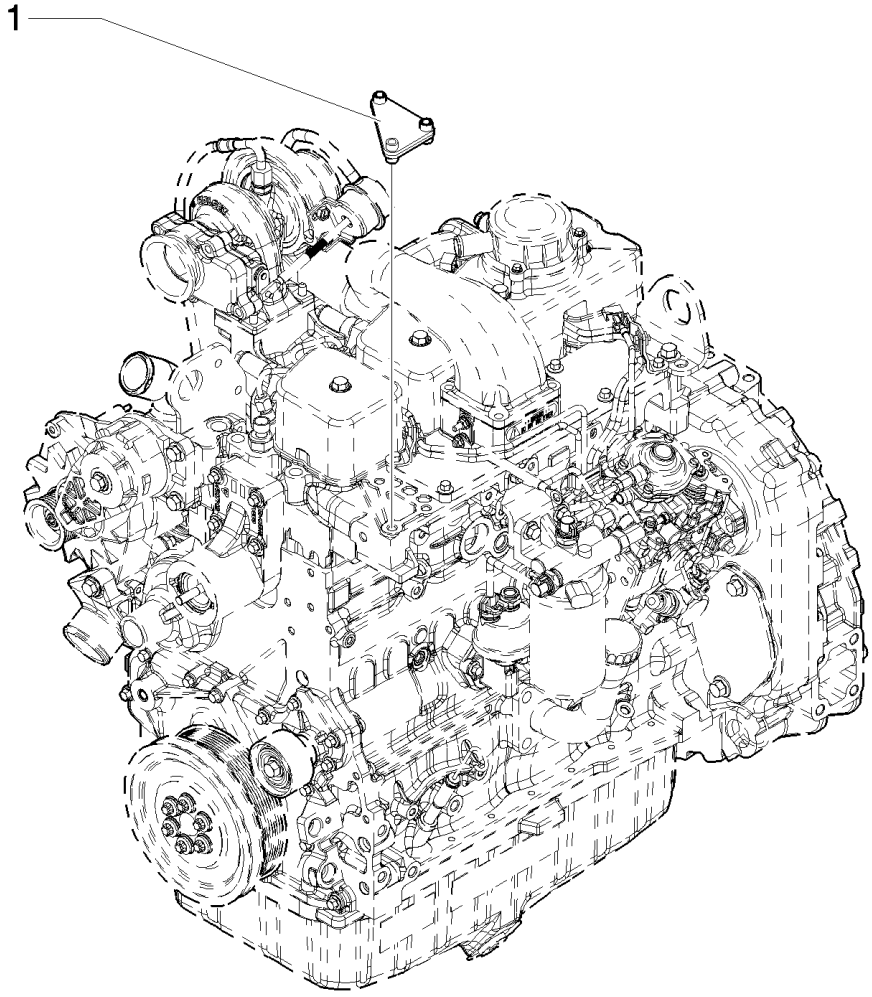

Without Air Conditioner

LB115.B EUR BACKHOE LOADER (1/05-)

636A(05) ACCESSORY ENGINE - BRACKET MUFFLER

Ref	Part Number	Qty	Description
1	87437661	1	

Without Air Conditioner

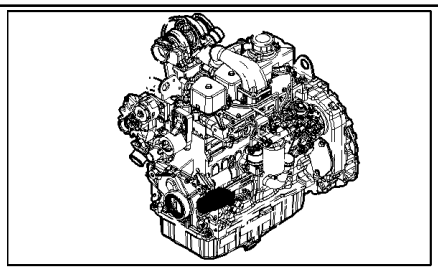

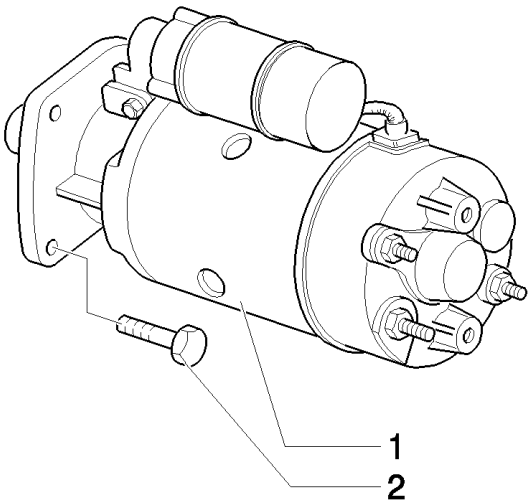
1
2

LB115.B EUR BACKHOE LOADER (1/05-)

636A(06) ACCESSORY ENGINE - STARTER

Ref	Part Number	Qty	Description
1	86992395	1	MOTOR, STARTER,
2	86511845	1	BOLT, Hex Flg, M10 x 35, 8.8,

638(01) RADIATOR

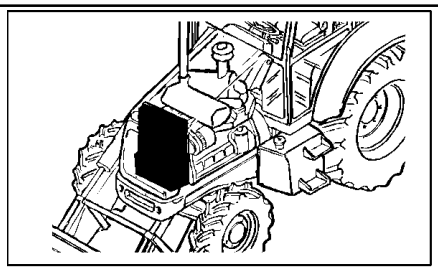

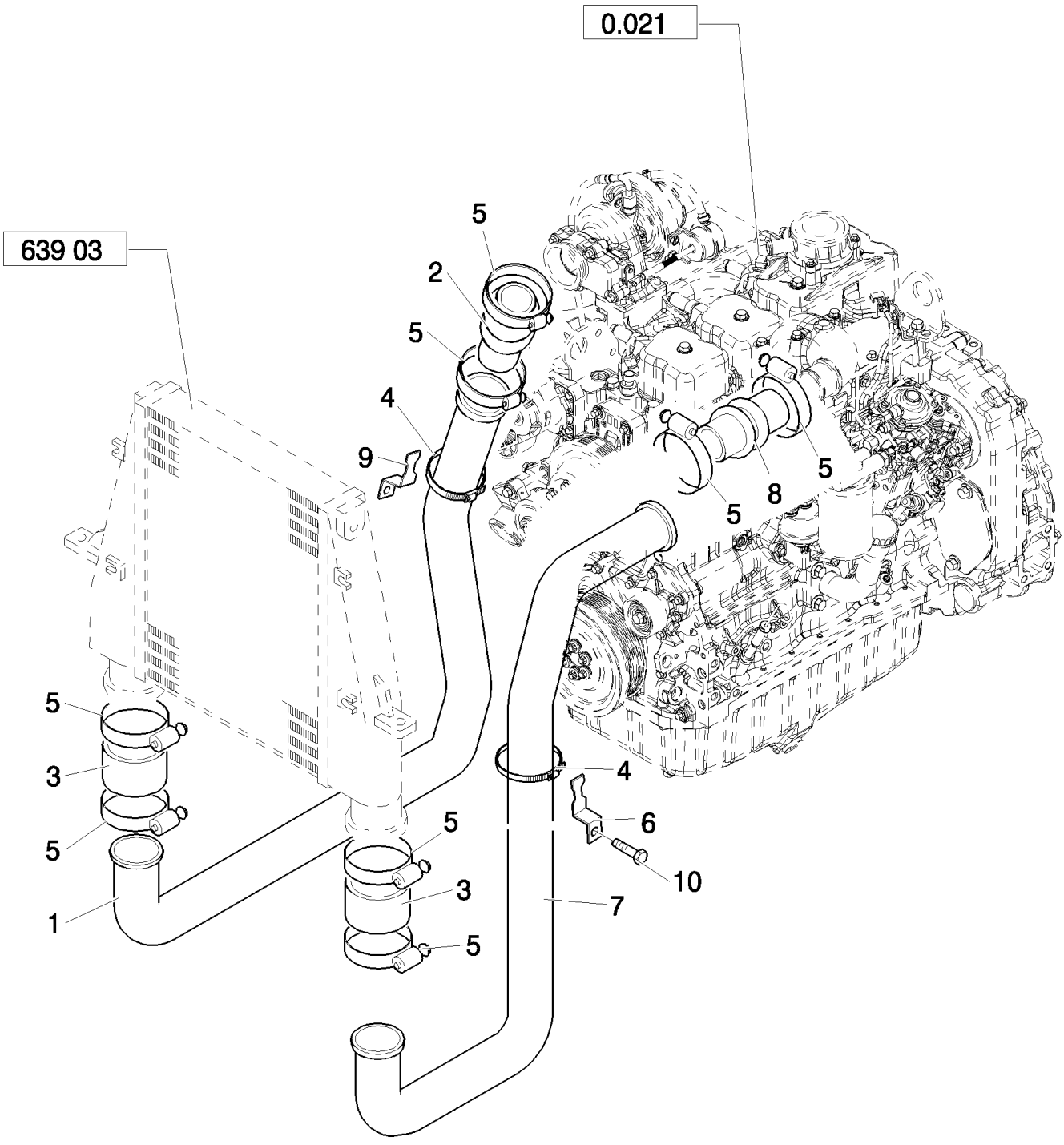

Charge Air Cooler/ Without Air Conditioner

LB115.B EUR BACKHOE LOADER (1/05-)

638(01) RADIATOR

Ref	Part Number	Qty	Description
1	87408660	1	TUBE,
2	86982962	1	HOSE, M10X40
3	86982960	2	HOSE,
4	86624194	4	CLAMP, HOSE, #36, 1.81/2.75 Type F Worm, M10X35
5	87410724	8	CLAMP,
6	87415977	1	BRACKET,
7	86982964	1	TUBE, HYD,
8	86994498	1	HOSE,
9	86983163	1	BRACKET,

Charge Air Cooler/ Without Air Conditioner

638(02) RADIATOR

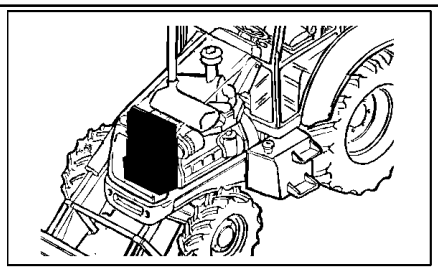

636 01
637 01

Charger Air Cooler/ Without Air Conditioner

LB115.B EUR BACKHOE LOADER (1/05-)

638(02) RADIATOR

Ref	Part Number	Qty	Description
1	87410100	1	COOLER ASSY.,
2	14496601	4	WASHER, M10 x 20 x 2,
3	10979221	4	SCREW, Hex, M10 x 16, 8.8, Full Thd,
4	87302284	1	BRACKET,
5	87302283	1	BRACKET,
6	47048440	4	WASHER,
7	47049187	4	SCREW, M10x35
8	47048759	2	GROMMET,
9	47048646	2	SPACER,
10	47049088	2	SCREW, M10x50
11	47048963	4	WASHER, 11x20x2.0mm
12	47048668	2	GASKET,
13	87404427	2	BRACKET,
14	47049041	2	NUT,

Charger Air Cooler/ Without Air Conditioner

638A(01) ACCESSORY ENGINE

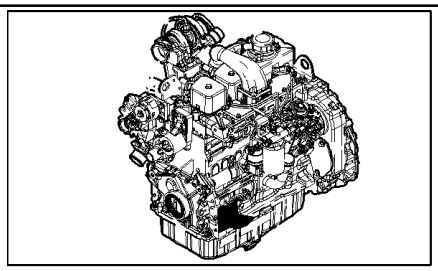

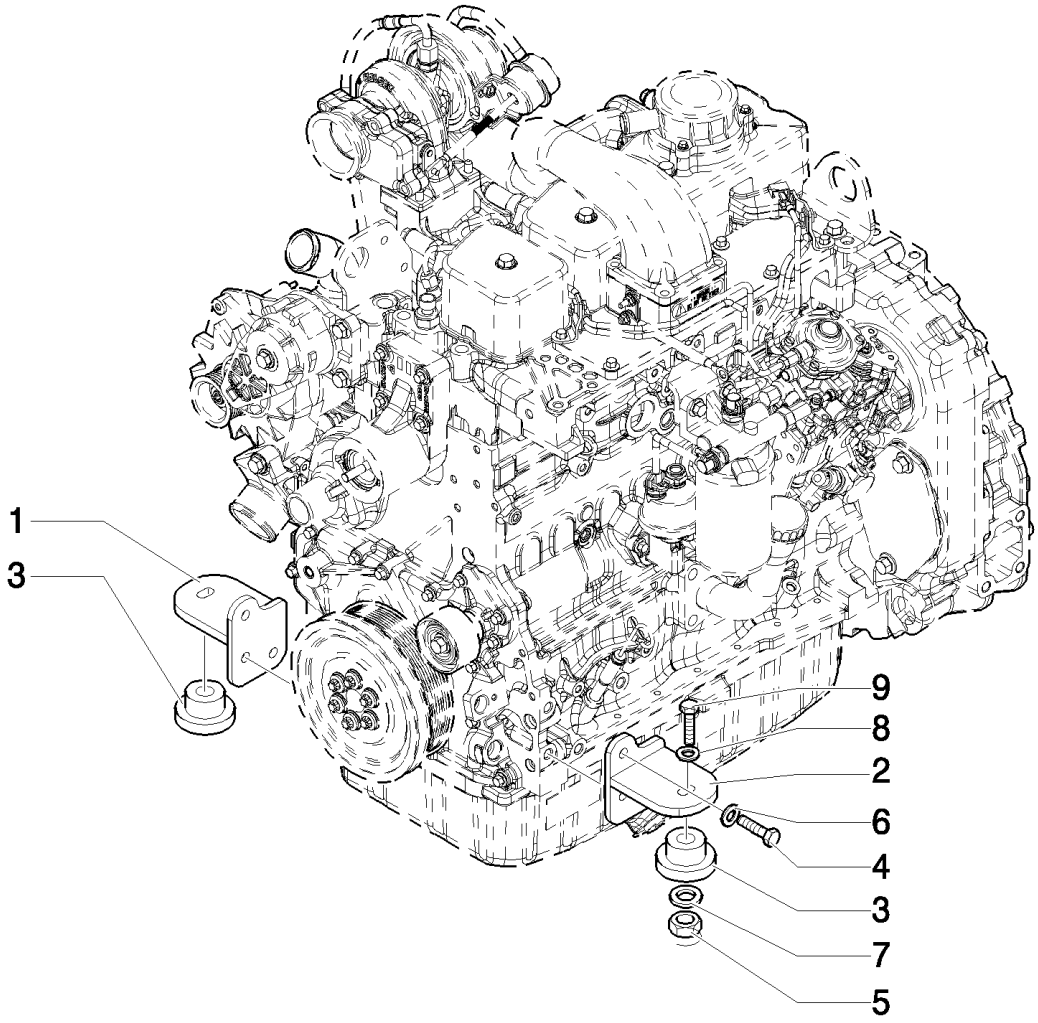

LB115.B EUR BACKHOE LOADER (1/05-)

638A(01) ACCESSORY ENGINE

Ref	Part Number	Qty	Description
1	87407275	1	SWITCH, WINDSHIELD WIPER,
2	87407276	1	MOUNT, ENGINE,
3	87416966	2	ISOLATOR,
4	11112421	6	SCREW, Hex, M12 x 30, 8.8,
5	16105011	2	NUT, LOCK, M12x1.25
6	47048976	6	WASHER, M12
7	85801585	2	WASHER, SEALING, 65mm OD
8	85802618	2	WASHER, SEALING,
9	87410647	2	SCREW, M12x1.25x90

638A(02) ACCESSORY ENGINE - VENTILATOR

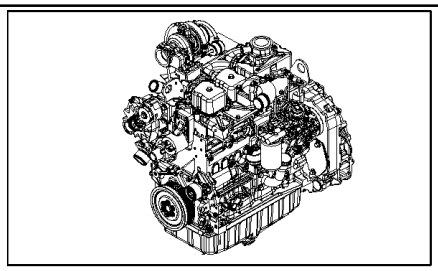

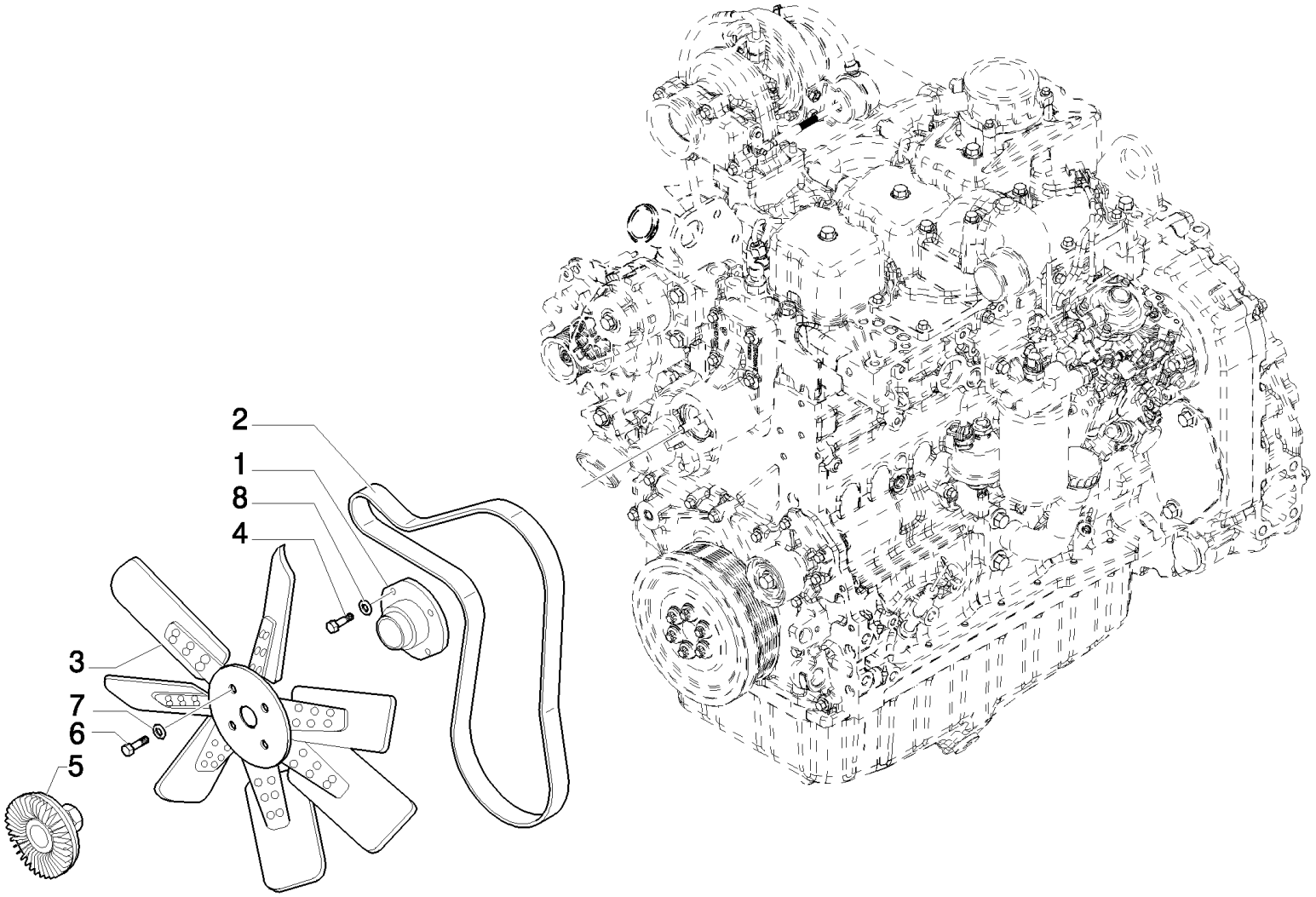

LB115.B EUR BACKHOE LOADER (1/05-)

638A(02) ACCESSORY ENGINE - VENTILATOR

Ref	Part Number	Qty	Description
1	47049809	1	ADAPTER,
2	87415774	1	BELT,
3	47049943	1	FAN,
4	47049186	4	BOLT, Hex, M10 x 30, 8.8,
5	87340008	1	DRIVE ASSY.,
6	47042342	4	SCREW,
7	47048992	7	WASHER,
8	47048972	4	WASHER,

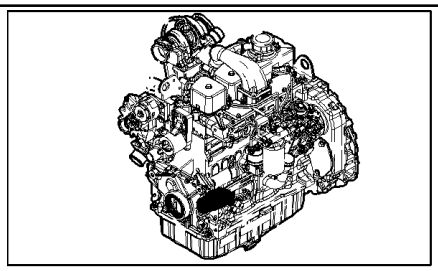

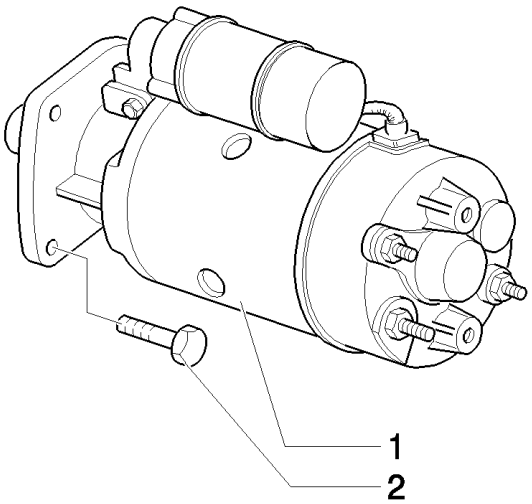
1
2

LB115.B EUR BACKHOE LOADER (1/05-)

638A(03) ACCESSORY ENGINE - STARTER

Ref	Part Number	Qty	Description
1	86992395	1	MOTOR, STARTER,
2	86511845	2	BOLT, Hex Flg, M10 x 35, 8.8, M10x35

638A(04) ACCESSORY ENGINE- ALTERNATOR

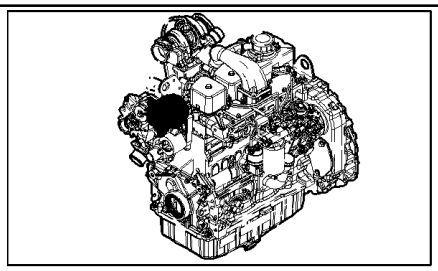

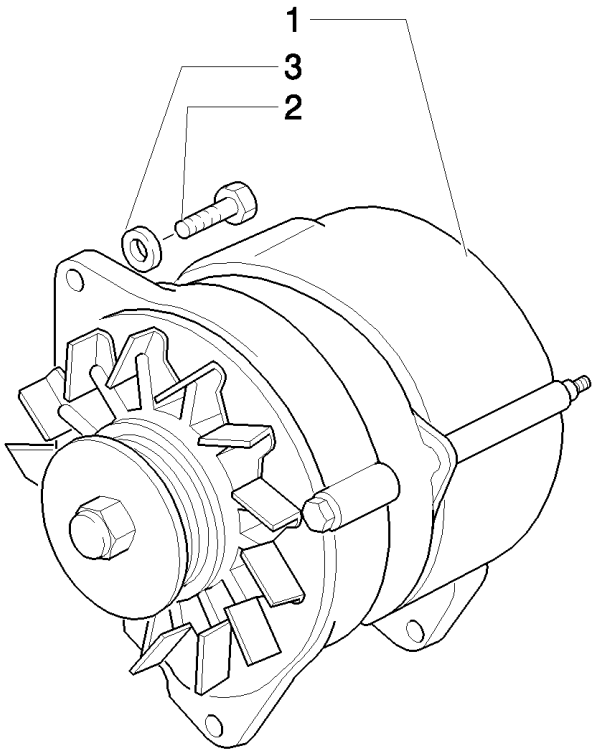

LB115.B EUR BACKHOE LOADER (1/05-)

638A(04) ACCESSORY ENGINE- ALTERNATOR

Ref	Part Number	Qty	Description
1	87422777	1	ALTERNATOR,
2	47049160	1	SCREW, Hex, M8 x 20, 8.8,
2	16043621	1	BOLT, Hex, M8 x 25, 8.8,
3	47048992	1	WASHER,

638A(05) ACCESSORY ENGINE - BRACKET MUFFLER

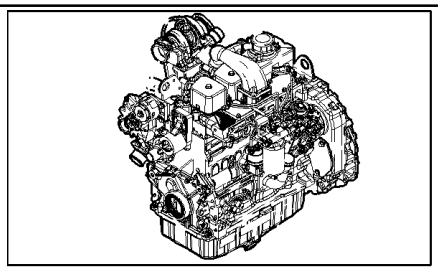

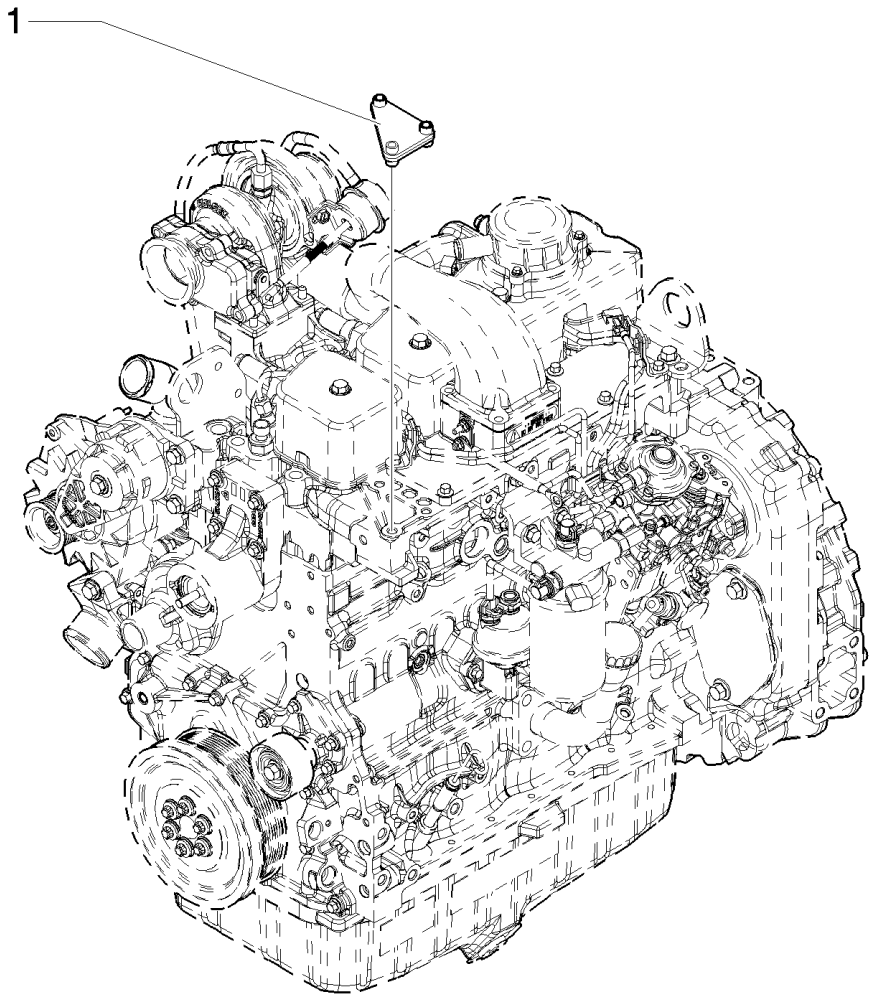

Without Air Conditioner

LB115.B EUR BACKHOE LOADER (1/05-)

638A(05) ACCESSORY ENGINE - BRACKET MUFFLER

Ref	Part Number	Qty	Description
1	87437661	1	

Without Air Conditioner

639(01) RADIATOR

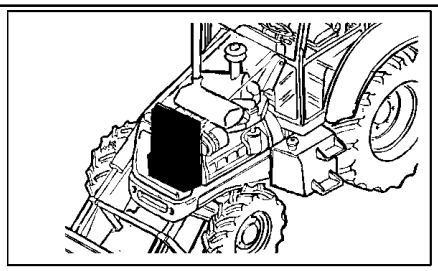

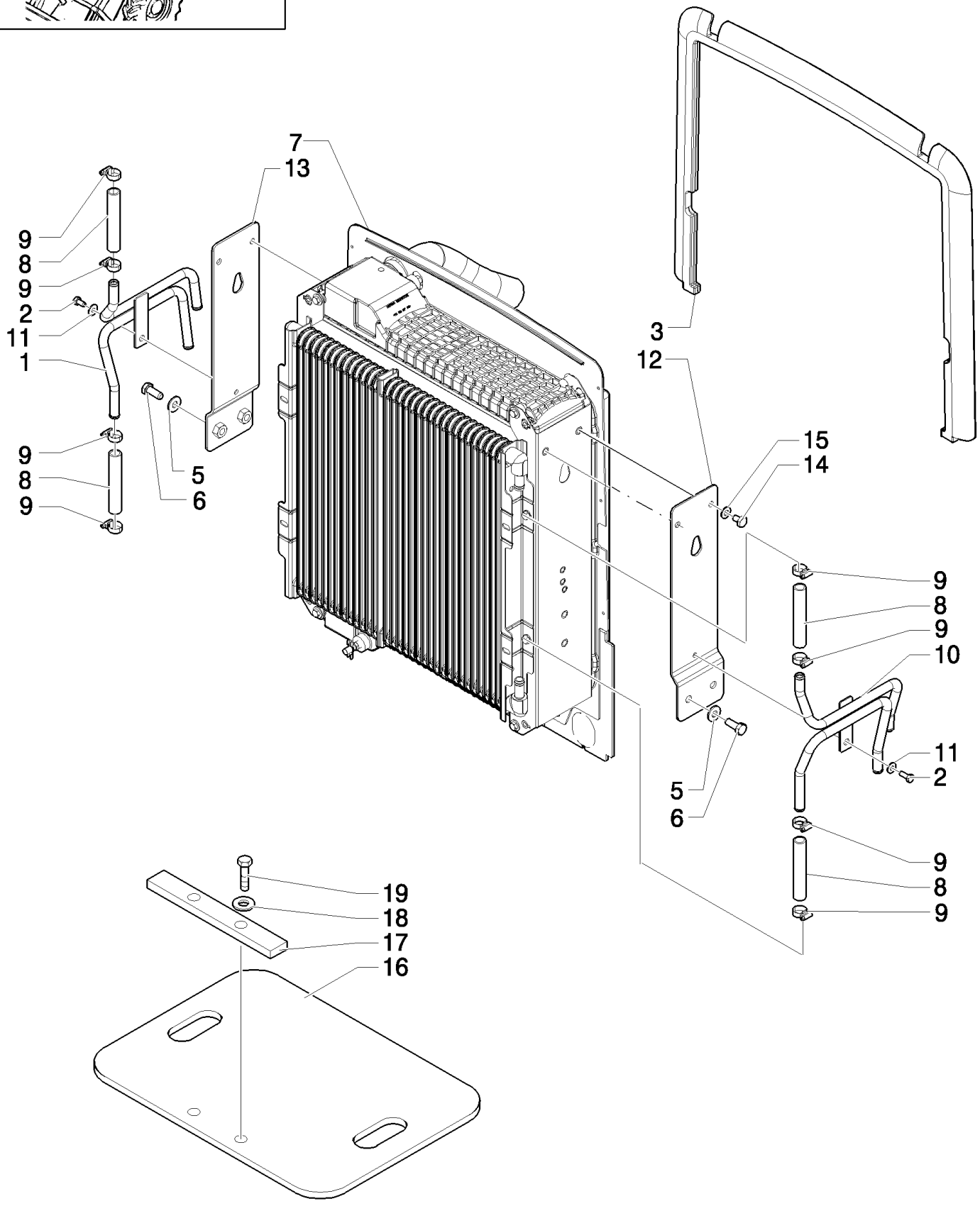

Without Air Conditioner

LB115.B EUR BACKHOE LOADER (1/05-)

639(01) RADIATOR

Ref	Part Number	Qty	Description
1	87302280	1	TUBE,
2	16043221	2	SCREW, Hex, M8 x 16, 8.8,
3	87303120	1	SEAL,
5	12646901	4	WASHER, 12x28x3
6	11112421	4	SCREW, Hex, M12 x 30, 8.8,
7	REF	1	INSTRUCTION, , See Page 637 02
8	87302508	4	HOSE, FLEXIBLE,
9	87314076	8	COLLAR,
10	87302279	1	TUBE,
11	12646701	2	WASHER, M8 x 20 x 2,
12	85828168	1	BRACKET,
13	87302922	1	BRACKET,
14	87306887	4	SCREW, M10x6
15	87306886	4	WASHER,
16	85827830	1	SEAL, RUBBER,
17	85827831	1	PLATE,
18	11193879	2	WASHER, SPRING, Belleville, M8.4,
19	16043821	2	SCREW, Hex, M8 x 30, 8.8,

Without Air Conditioner

639(02) RADIATOR

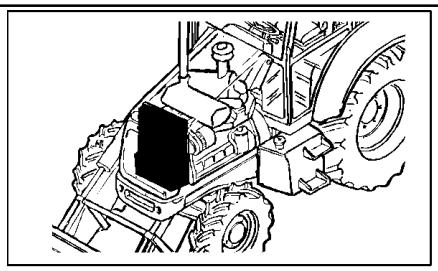

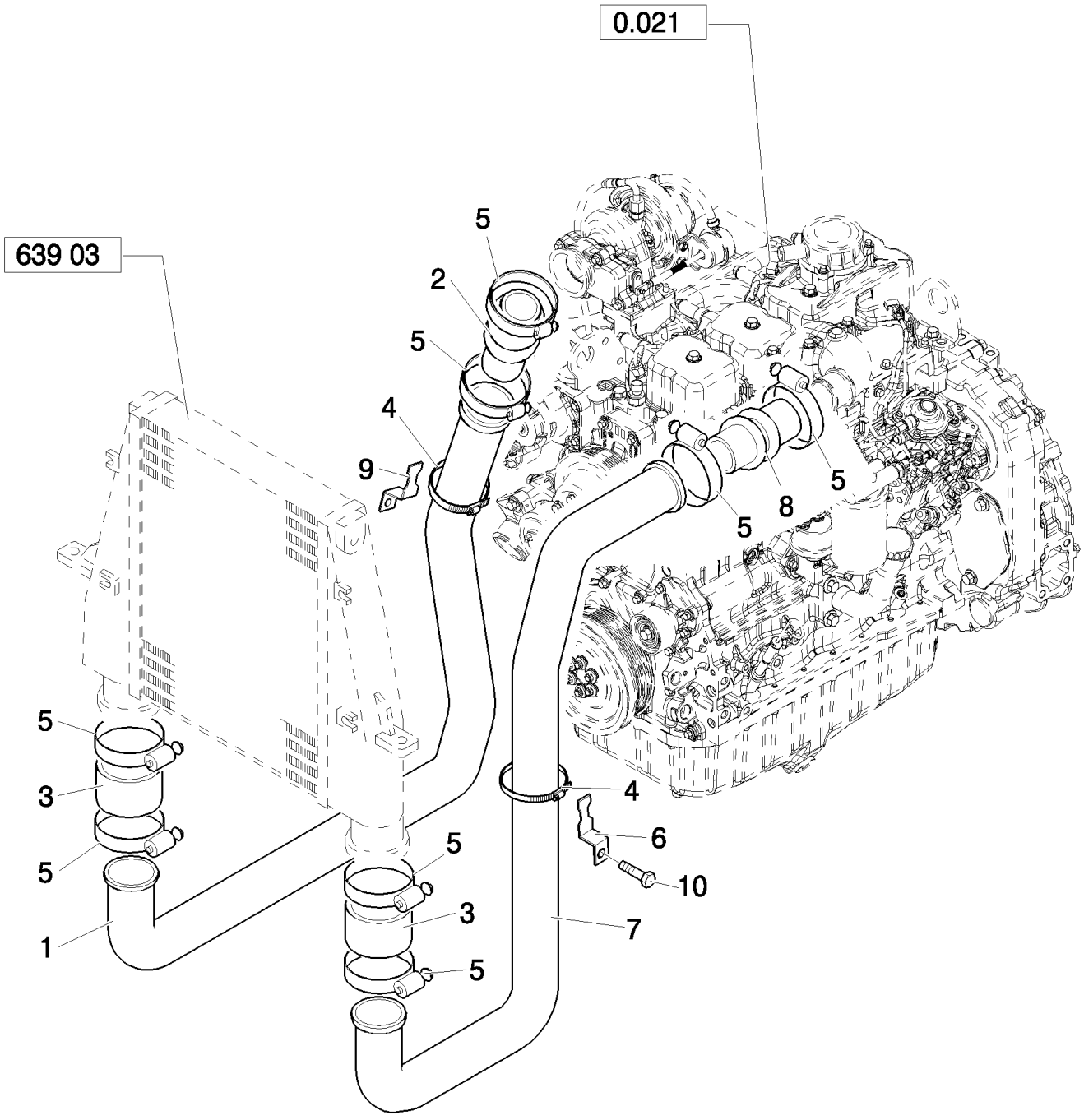

Charge Air Cooler/ Without Air Conditioner

LB115.B EUR BACKHOE LOADER (1/05-)

639(02) RADIATOR

Ref	Part Number	Qty	Description
1	87408660	1	TUBE,
2	86982962	1	HOSE, M10X40
3	86982960	2	HOSE,
4	86624194	4	CLAMP, HOSE, #36, 1.81/2.75 Type F Worm, M10X35
5	87410724	8	CLAMP,
6	87415977	1	BRACKET,
7	86982964	1	TUBE, HYD,
8	86994498	1	HOSE,
9	86983163	1	BRACKET,
10	16043621	1	BOLT, Hex, M8 x 25, 8.8,

Charge Air Cooler/ Without Air Conditioner

639(03) RADIATOR

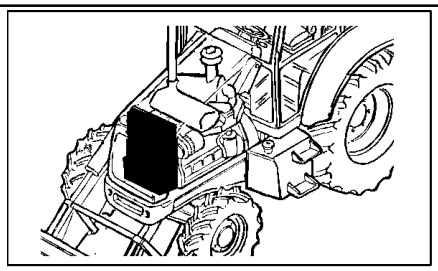

Charger Air Cooler/Without Air Conditioner

LB115.B EUR BACKHOE LOADER (1/05-)

639(03) RADIATOR

Ref	Part Number	Qty	Description
1	87410100	1	COOLER ASSY.,
2	14496601	4	WASHER, M10 x 20 x 2,
3	10979221	4	SCREW, Hex, M10 x 16, 8.8, Full Thd,
4	87302284	1	BRACKET,
5	87302283	1	BRACKET,
6	47048440	4	WASHER,
7	47049187	4	SCREW, M10x35
8	47048759	2	GROMMET,
9	47048646	2	SPACER,
10	47049088	2	SCREW, M10x50
11	47048963	4	WASHER, 11x20x2.0mm
12	47048668	2	GASKET,
13	87404427	2	BRACKET,
14	47049041	2	NUT,

Charger Air Cooler/□□Without Air Conditioner□□

639A(01) ACCESSORY ENGINE

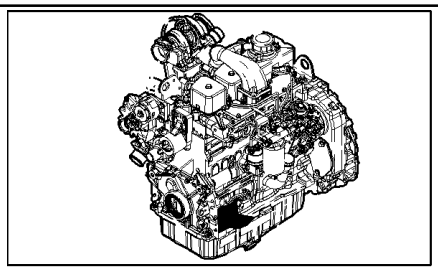

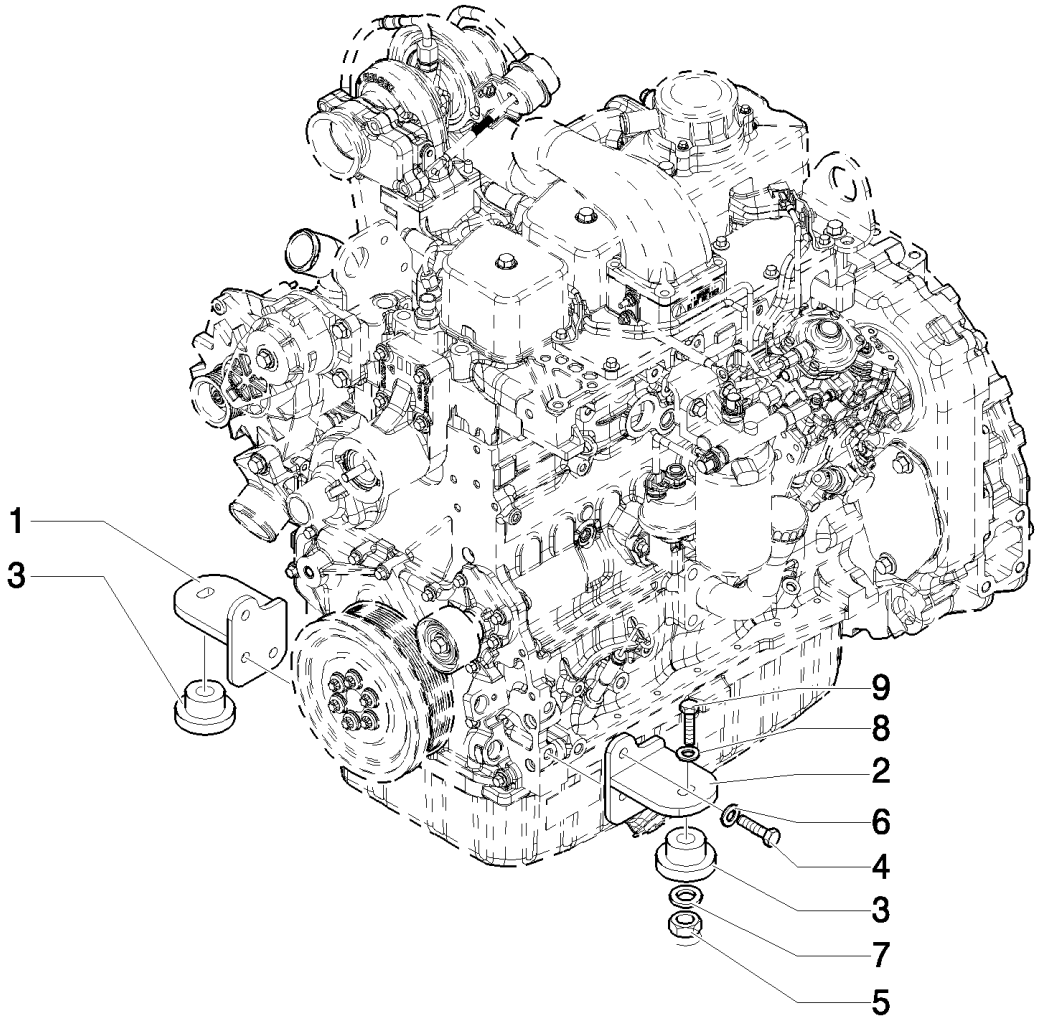

LB115.B EUR BACKHOE LOADER (1/05-)

639A(01) ACCESSORY ENGINE

Ref	Part Number	Qty	Description
1	87407275	1	SWITCH, WINDSHIELD WIPER,
2	87407276	1	MOUNT, ENGINE,
3	87416966	2	ISOLATOR,
4	11112421	6	SCREW, Hex, M12 x 30, 8.8,
5	16105011	2	NUT, LOCK, M12x1.25
6	47048976	6	WASHER, M12
7	85801585	2	WASHER, SEALING, 65mm OD
8	85802618	2	WASHER, SEALING,
9	87410647	2	SCREW, M12x1.25x90

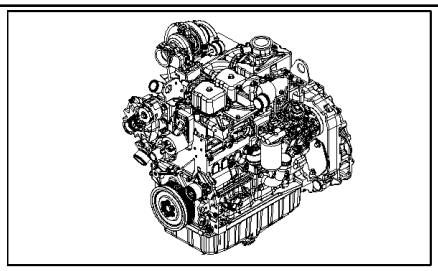

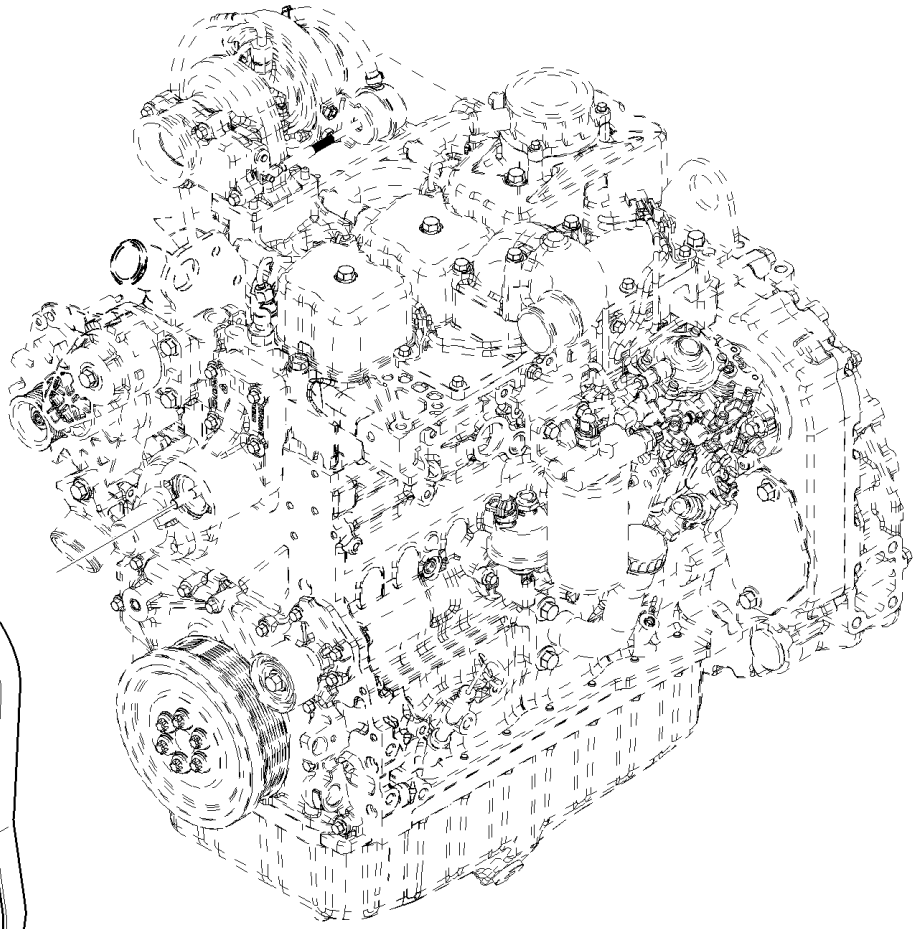

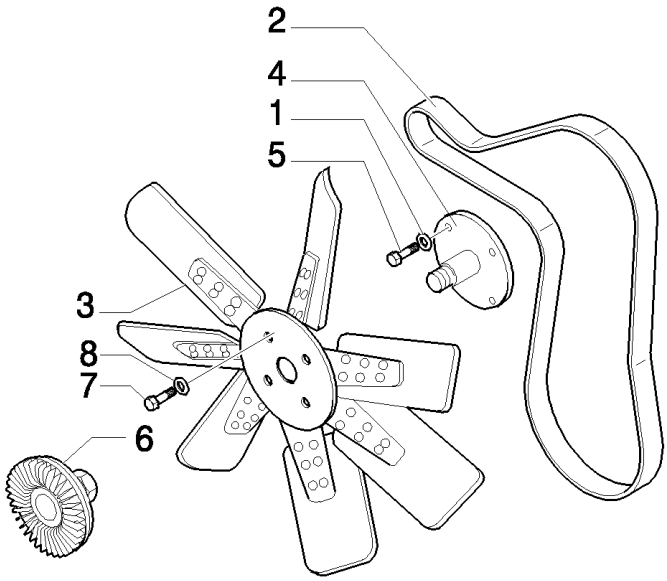

With Air Conditioner

LB115.B EUR BACKHOE LOADER (1/05-)

639A(02) ACCESSORY ENGINE - VENTILATOR

Ref	Part Number	Qty	Description
1	47048972	1	WASHER,
2	87415774	1	BELT,
3	47049943	1	FAN,
4	47049809	1	ADAPTER,
5	47049186	4	BOLT, Hex, M10 x 30, 8.8,
6	87340008	1	DRIVE ASSY.,
7	47042342	4	SCREW,
8	47048992	6	WASHER,

With Air Conditioner

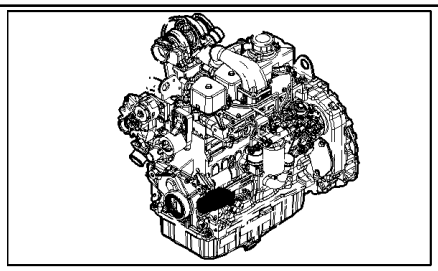

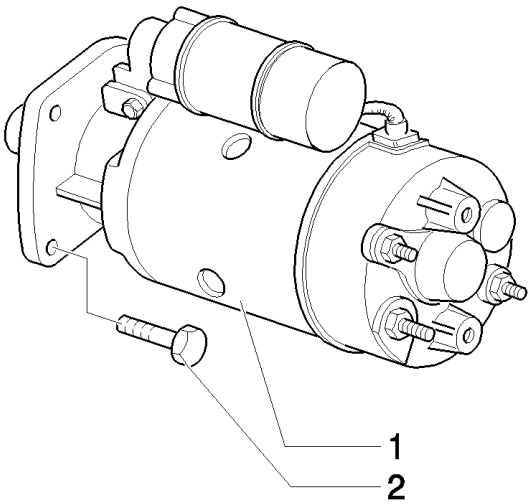
1
2

LB115.B EUR BACKHOE LOADER (1/05-)

639A(03) ACCESSORY ENGINE - STARTER

Ref	Part Number	Qty	Description
1	86992395	1	MOTOR, STARTER,
2	86511845	2	BOLT, Hex Flg, M10 x 35, 8.8, M10x35

639A(04) ACCESSORY ENGINE- ALTERNATOR

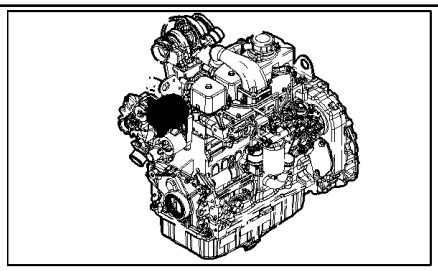

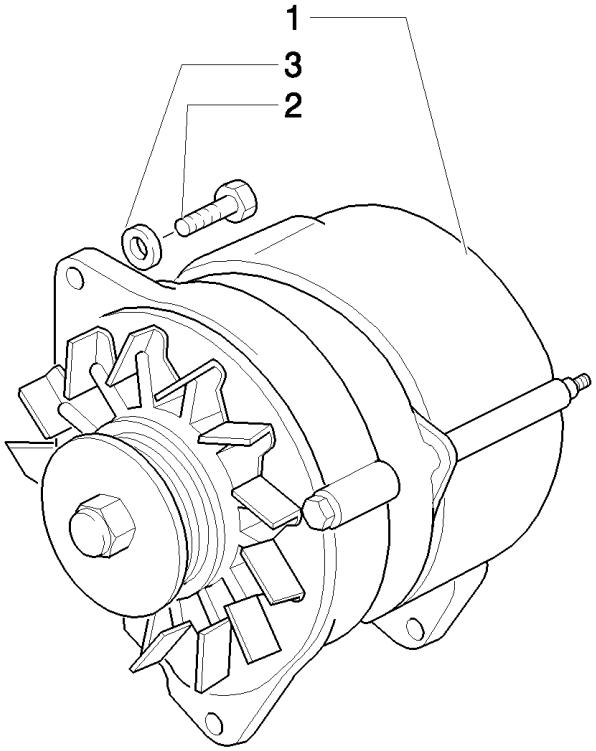

LB115.B EUR BACKHOE LOADER (1/05-)

639A(04) ACCESSORY ENGINE- ALTERNATOR

Ref	Part Number	Qty	Description
1	87422777	1	ALTERNATOR,
2	11106021	2	SCREW, Hex, M10 x 20, 8.8, Full Thd,
2	16043621	1	BOLT, Hex, M8 x 25, 8.8,
3	47048992	2	WASHER,

642(01) EGS CONTROL, 20 & 40KM/H (POWER SHIFT)

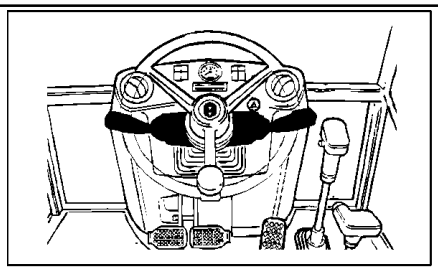

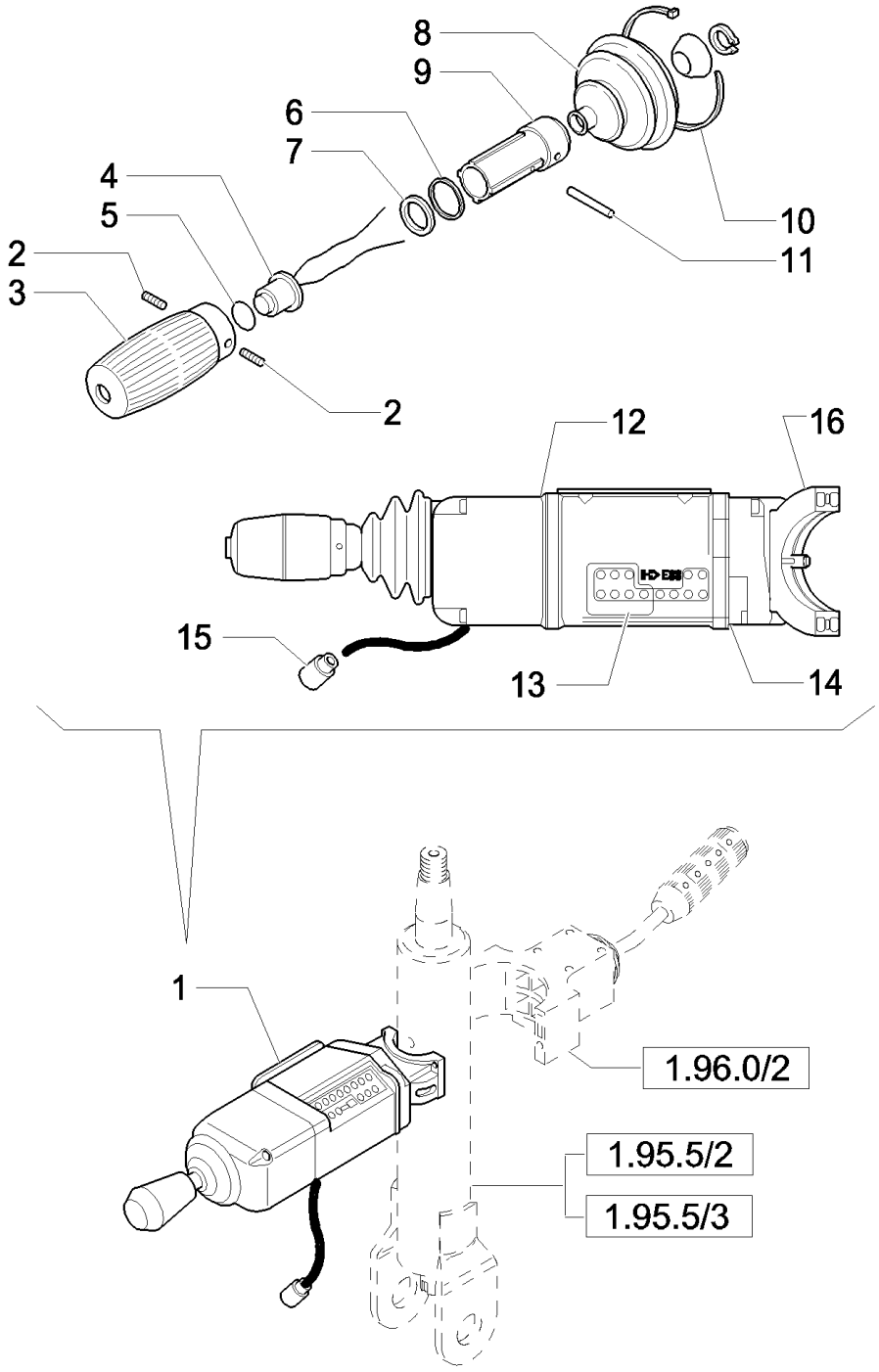

LB115.B EUR BACKHOE LOADER (1/05-)

642(01) EGS CONTROL, 20 & 40KM/H (POWER SHIFT)

Ref	Part Number	Qty	Description
1	85818993	1	CONTROL, (Equip.642) 40KM/H, Up To S/N xxx
1	87571318	1	CONTROL, , From To S/N xxx
1	85818992	1	CONTROL, (Equip.643) 20KM/H, Up To S/N xxx
1	87571319	1	CONTROL, , From To S/N xxx
2	9969356	2	SCREW,
3	9969351	1	HANDLE GRIP,
4	9969358	1	SWITCH,
5	9969357	1	O-RING,
6	9969360	1	O-RING,
7	9969359	1	SHIM,
8	9969352	1	BOOT,
9	9969361	1	BODY,
10	9969363	1	STRAP, CABLE,
11	9969362	1	PIN,
12	9969353	1	SEAL, Transmission
13	9969354	1	DECAL,
14	9969355	1	COVER, Rear
15	85819152	1	HARNESS, WIRE,
16	85817619	1	COLLAR,

644(01) A/C HOUSING & FILTERS

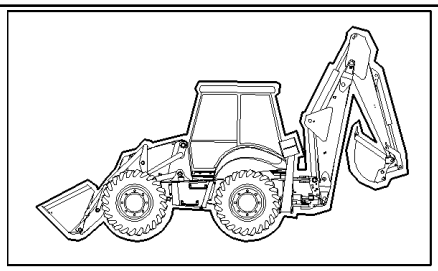

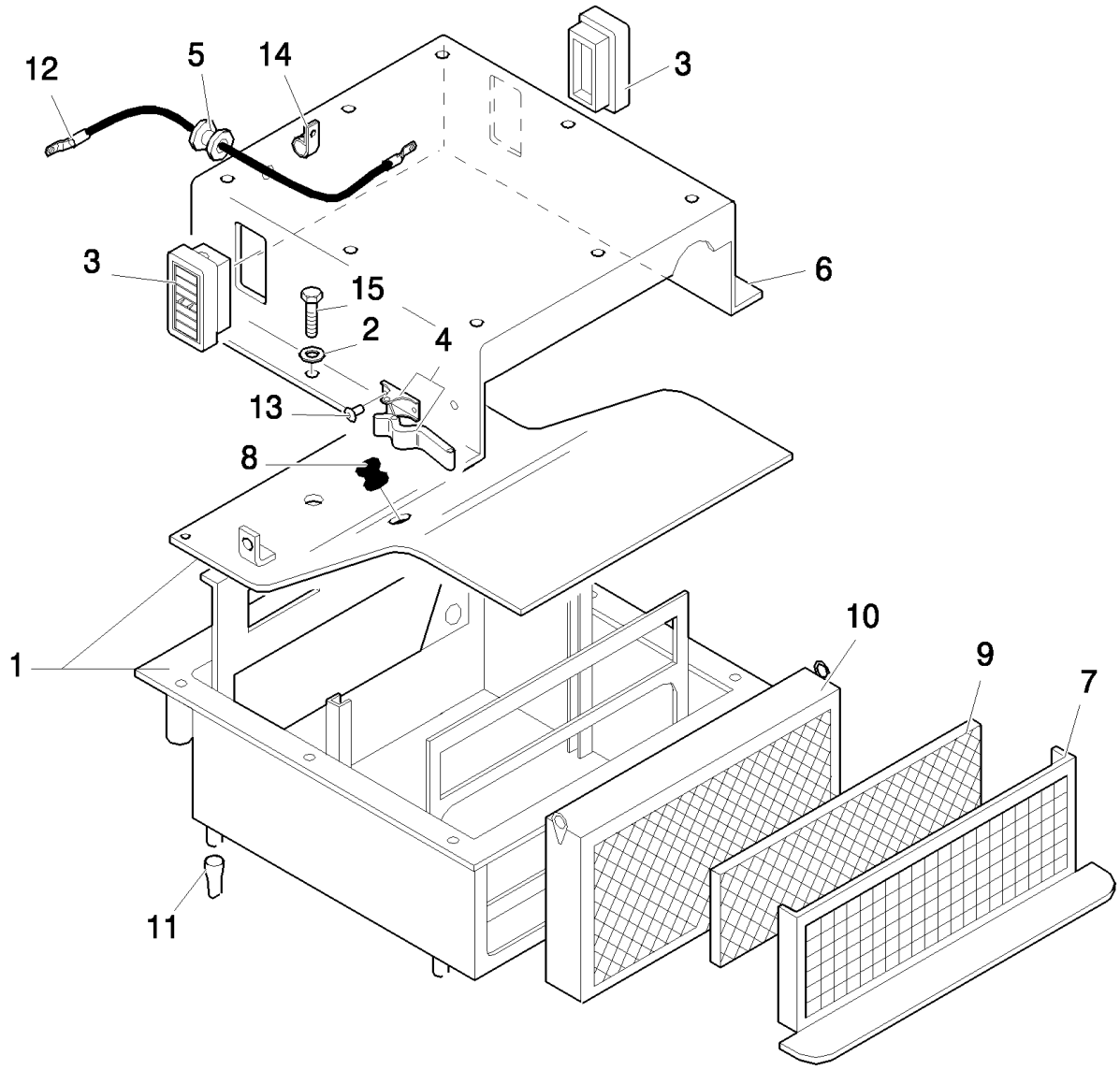

LB115.B EUR BACKHOE LOADER (1/05-)

644(01) A/C HOUSING & FILTERS

Ref	Part Number	Qty	Description
1	85819574	1	HOUSING,
2	11193874	6	WASHER, SPRING, Belleville, M8.4,
3	85804044	2	DIFFUSER,
4	85812043	2	LATCH,
5	85804412	1	GROMMET,
6	85819637	1	COVER,
7	85811969	1	GRILLE,
8	10398980	1	GROMMET,
9	85811970	1	FILTER, AIR,
10	85804072	1	FILTER, AIR,
11	85804043	4	VALVE, DRAIN,
12	85817293	1	CABLE, GROUND,
13	85811972	4	RIVET,
14	85817187	1	CLAMP,
15	14305224	6	SCREW, Hex Soc Hd, M6 x 16, 8.8,

Mechanical Version

644(02) A/C BLOWER & COILS

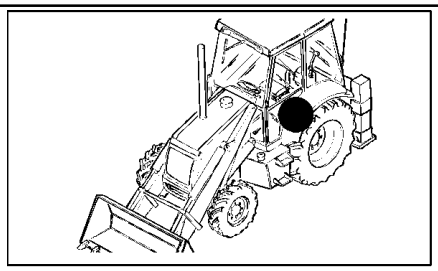

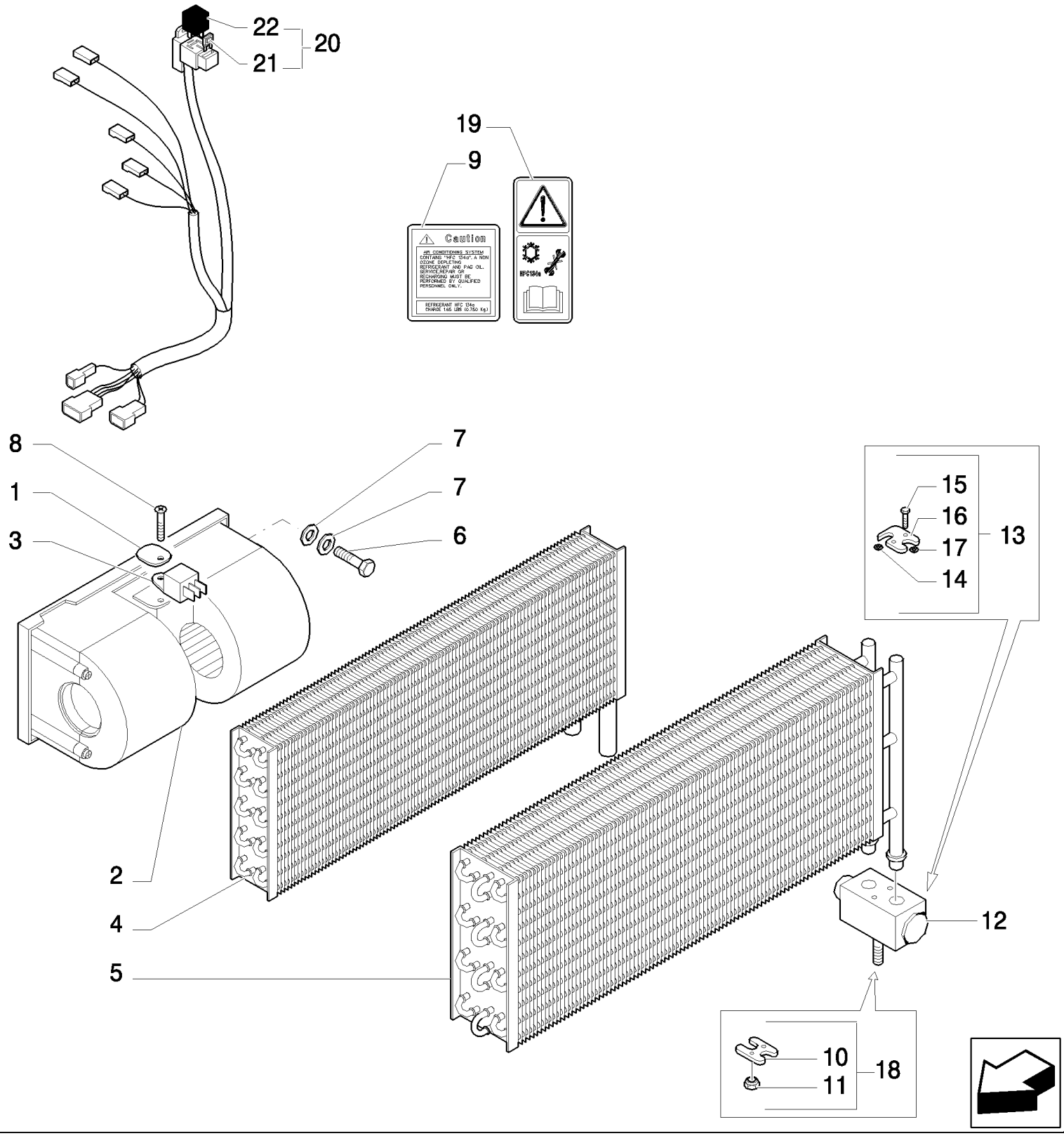

LB115.B EUR BACKHOE LOADER (1/05-)

644(02) A/C BLOWER & COILS

Ref	Part Number	Qty	Description
1	85817289	1	PLATE, RETAINING,
2	85813079	1	MOTOR, ELECTRIC, SMALL,
3	85804041	1	RESISTOR,
4	85819636	1	HEATER,
5	85819635	1	EVAPORATOR,
6	10902424	2	SCREW, Hex, M6 x 20, 8.8, Full Thd,
7	11193274	4	WASHER, SPRING, Belleville, M6.4,
8	85817189	1	SCREW,
9	85826326	1	DECAL,
10	85805008	1	FLANGE,
11	14040611	1	NUT,
12	85821130	1	VALVE, CONTROL,
13	85804038	1	FLANGE,
14	85805003	1	O-RING,
15	85805004	2	SCREW,
16	85805005	1	FLANGE,
17	85805006	1	O-RING,
18	85821131	1	FLANGE,
19	85804441	1	DECAL,
20	85819183	1	HARNESS, WIRE,
21	11055290	1	FUSE,
22	85805144	1	RELAY,

Mechanical Version

644(03) HEATER COIL HOSES

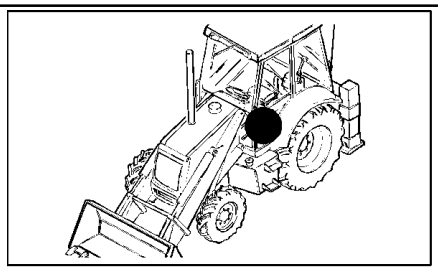

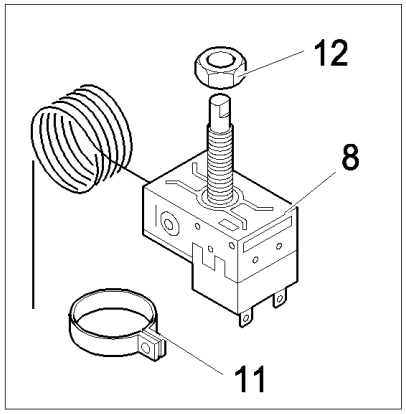

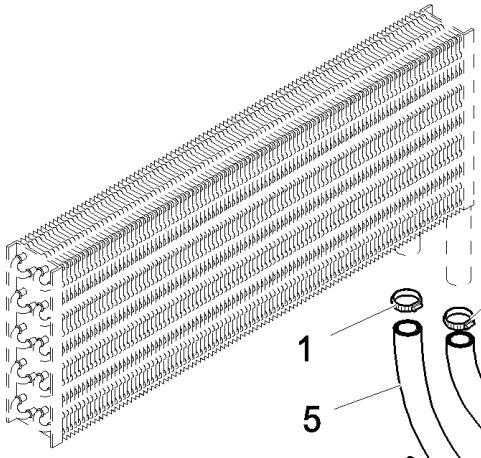

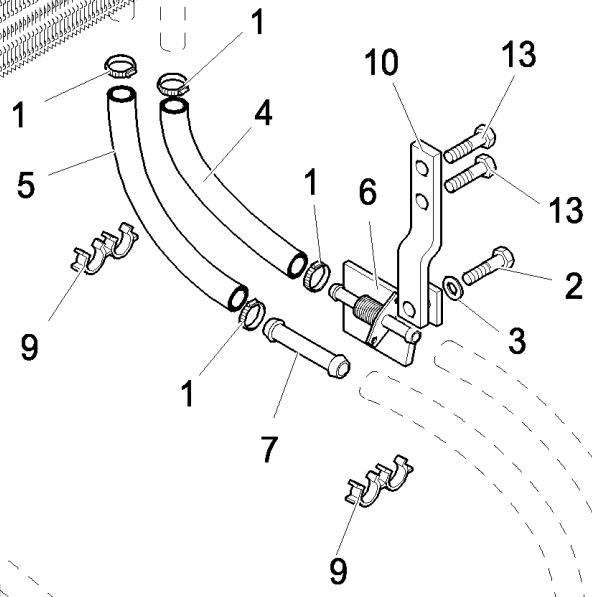

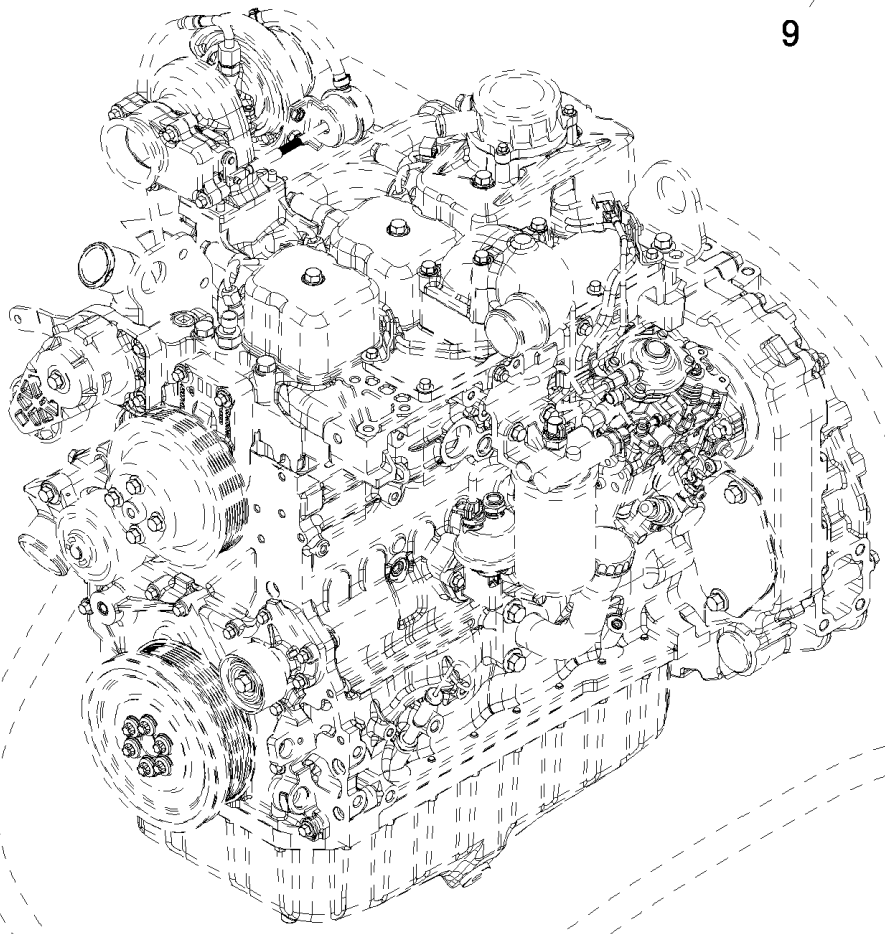

LB115.B EUR BACKHOE LOADER (1/05-)

644(03) HEATER COIL HOSES

Ref	Part Number	Qty	Description
1	85803079	4	CLAMP, HOSE,
2	10902224	1	SCREW, Hex, M6 x 16, 8.8, Full Thd,
3	11193274	1	WASHER, SPRING, Belleville, M6.4,
4	85817303	1	HOSE, FLEXIBLE,
5	85817299	1	HOSE, FLEXIBLE,
6	85804980	1	VALVE,
7	85804051	1	TUBE,
8	85817294	1	THERMOSTAT,
9	85804975	2	CLIP,
10	85804989	1	SUPPORT,
11	85812217	1	CLAMP,
12	85817295	1	NUT,
13	10902424	2	SCREW, Hex, M6 x 20, 8.8, Full Thd,

Mechanical Version

644(04) A/C & HEATER CONTROL PANEL

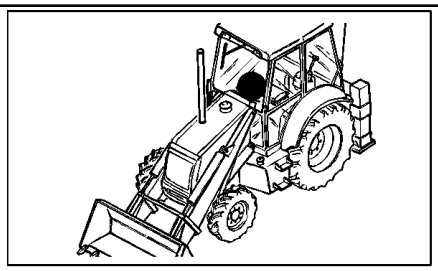

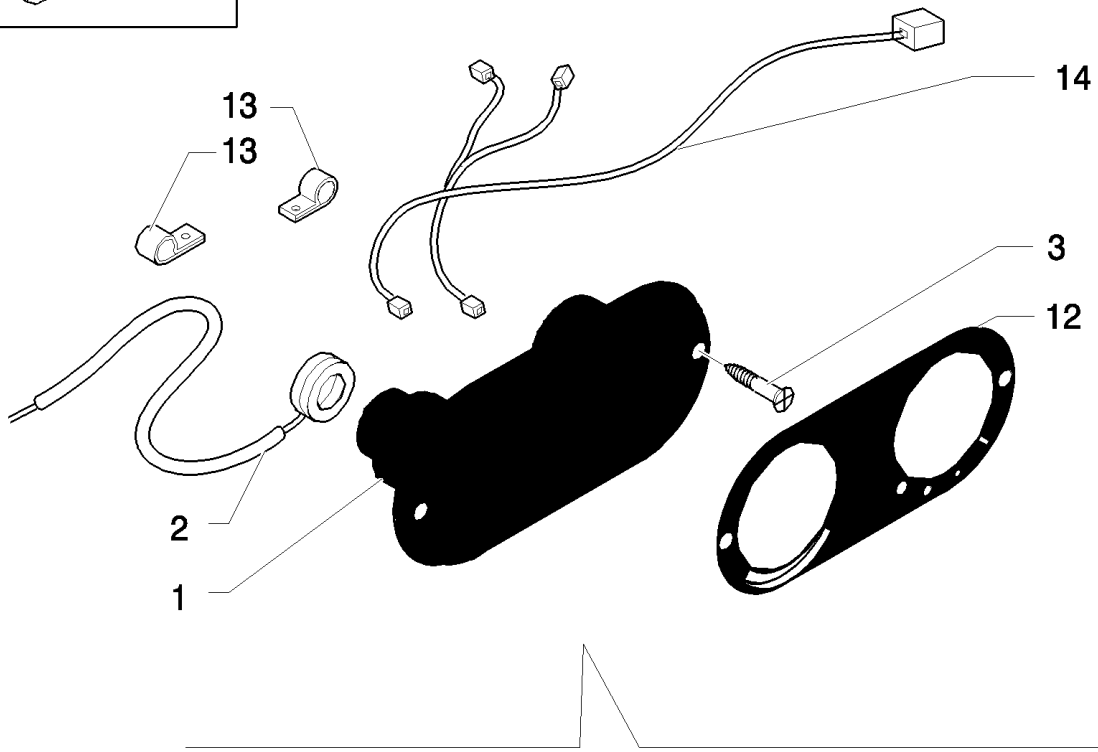

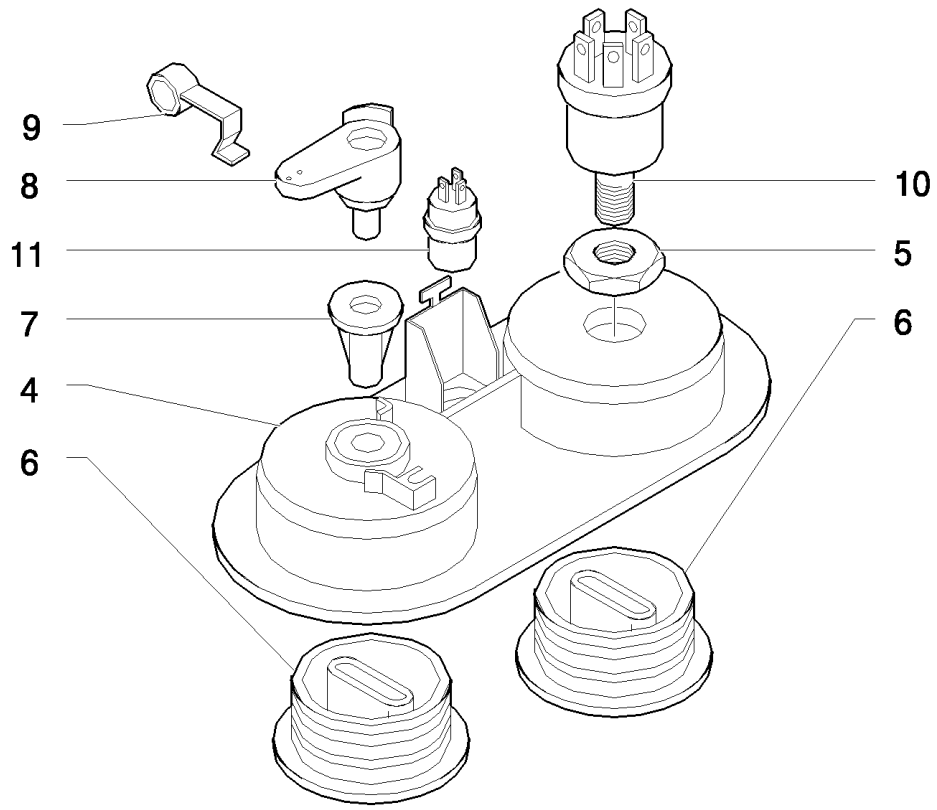

LB115.B EUR BACKHOE LOADER (1/05-)

644(04) A/C & HEATER CONTROL PANEL

Ref	Part Number	Qty	Description
1	85817570	1	DASHBOARD,
2	85805160	1	CABLE, FLEXIBLE,
3	15693507	2	SCREW, Cross Oval Hd, M4.8 x 22,
4	85817569	2	BEZEL, M6
5	9966239	1	NUT,
6	85817568	2	KNOB,
7	9966241	1	WASHER, LOCK,
8	82002777	1	LEVER,
9	9971567	1	SPRING,
10	9966238	1	SWITCH, FAN,
11	5189486	1	SWITCH,
12	85811976	1	DECAL,
13	14372671	2	NUT, M4.2, U, 12.4mm long,
14	85819638	1	HARNESS, WIRE,

Mechanical Version

644(04A) A/C & HEATER CONTROL PANEL

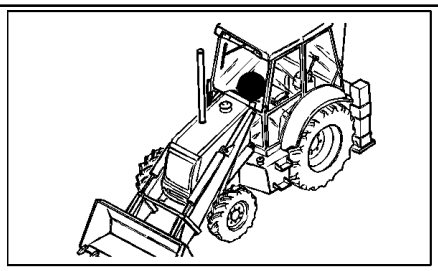

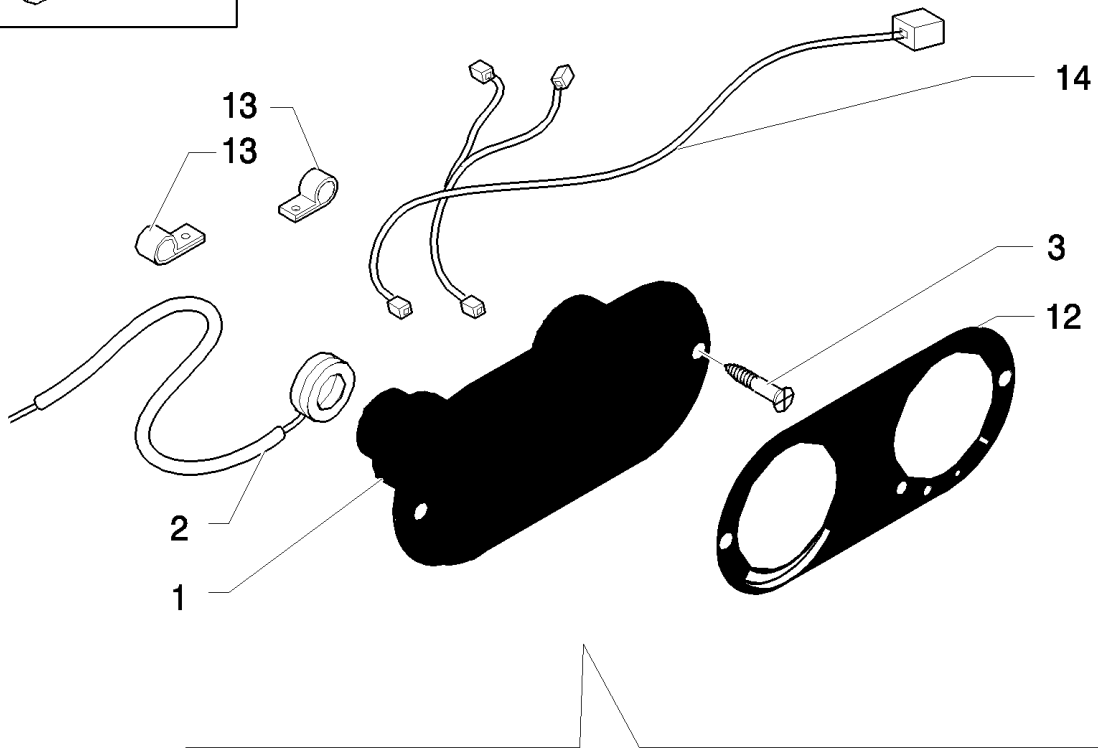

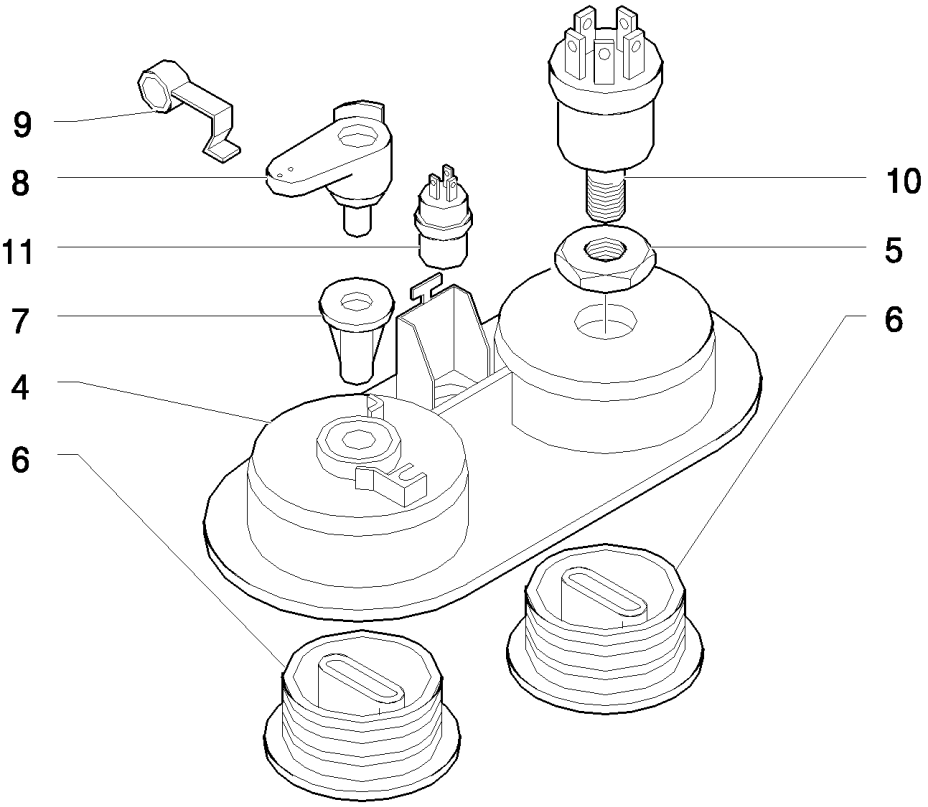

Pilot Control Version

LB115.B EUR BACKHOE LOADER (1/05-)

644(04A) A/C & HEATER CONTROL PANEL

Ref	Part Number	Qty	Description
1	85817570	1	DASHBOARD,
2	85805160	1	CABLE, FLEXIBLE,
3	15693507	2	SCREW, Cross Oval Hd, M4.8 x 22,
4	85817569	2	BEZEL, M6
5	9966239	1	NUT,
6	85817568	2	KNOB,
7	9966241	1	WASHER, LOCK,
8	82002777	1	LEVER,
9	9971567	1	SPRING,
10	9966238	1	SWITCH, FAN,
11	5189486	1	SWITCH,
12	85811976	1	DECAL,
13	14372671	2	NUT, M4.2, U, 12.4mm long,
14	85826113	1	HARNESS, WIRE,

Pilot Control Version

644(05) A/C & HEATER CONSOLE DUCTS

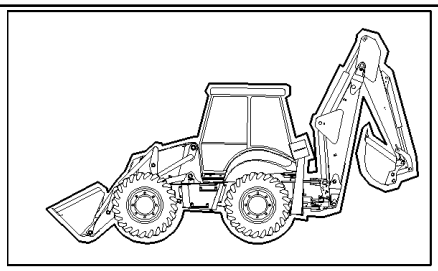

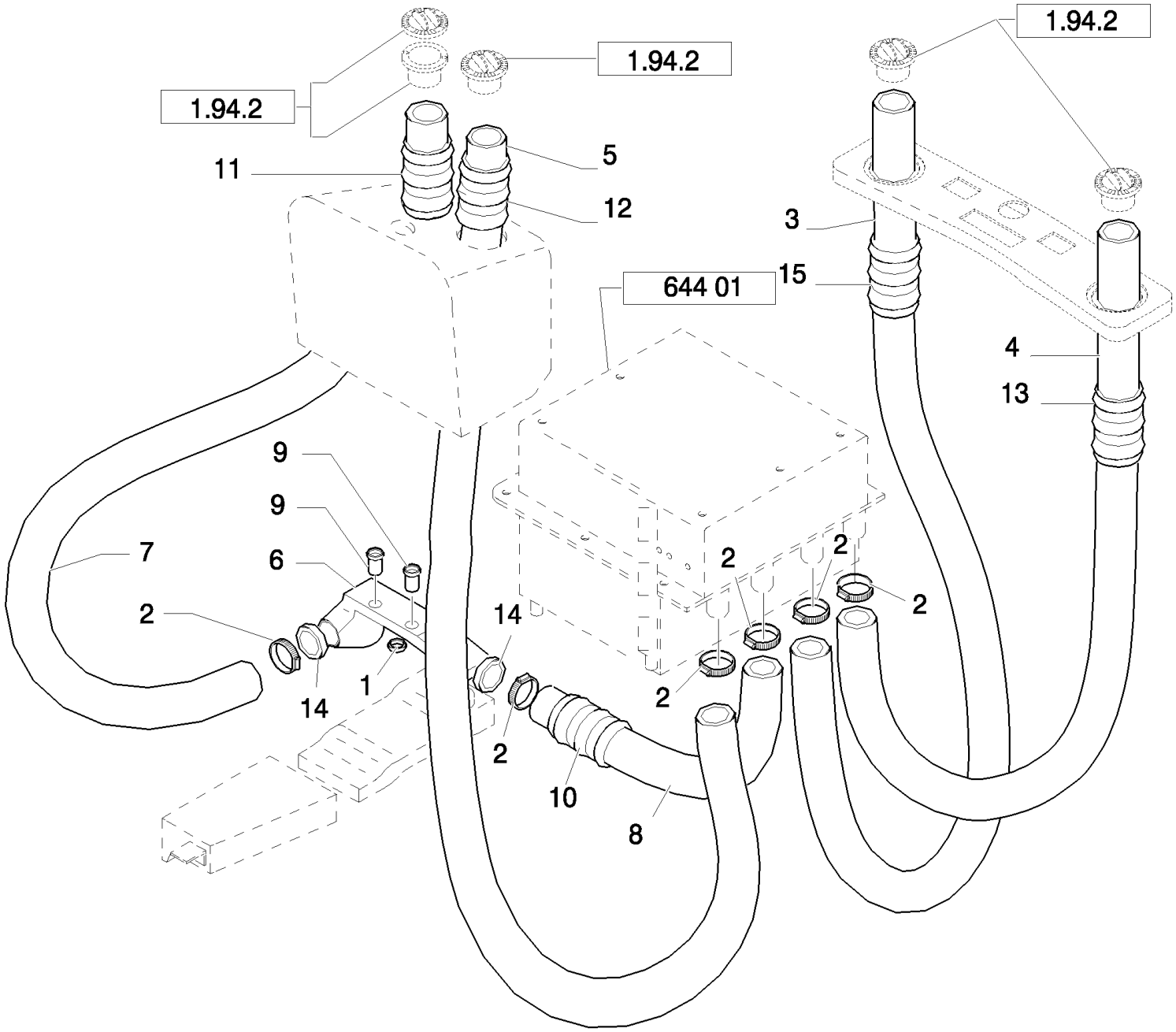

LB115.B EUR BACKHOE LOADER (1/05-)

644(05) A/C & HEATER CONSOLE DUCTS

Ref	Part Number	Qty	Description
1	85817664	1	SEAL, Assy
2	13000990	AR	CLAMP, HOSE,
3	85804984	1	DUCT, AIR,
4	85804983	1	DUCT, AIR,
5	85804981	1	SLEEVE,
6	NSS	1	NOT SERVICED SEPARATELY,
7	85805884	1	DUCT, AIR,
8	85805885	1	DUCT, AIR,
9	85805347	2	BUSHING, THREADED,
10	85805887	1	DUCT, AIR,
11	85805886	1	DUCT, AIR,
12	85804985	1	HOSE,
13	85804988	1	HOSE,
14	85806048	2	TERMINAL,
15	85804987	1	HOSE,

Mechanical Version

644(05A) A/C & HEATER CONSOLE DUCTS

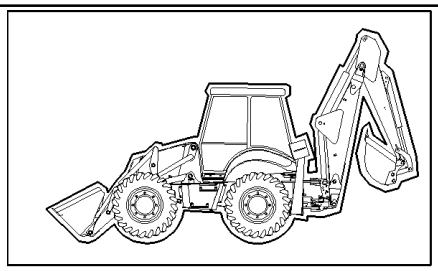

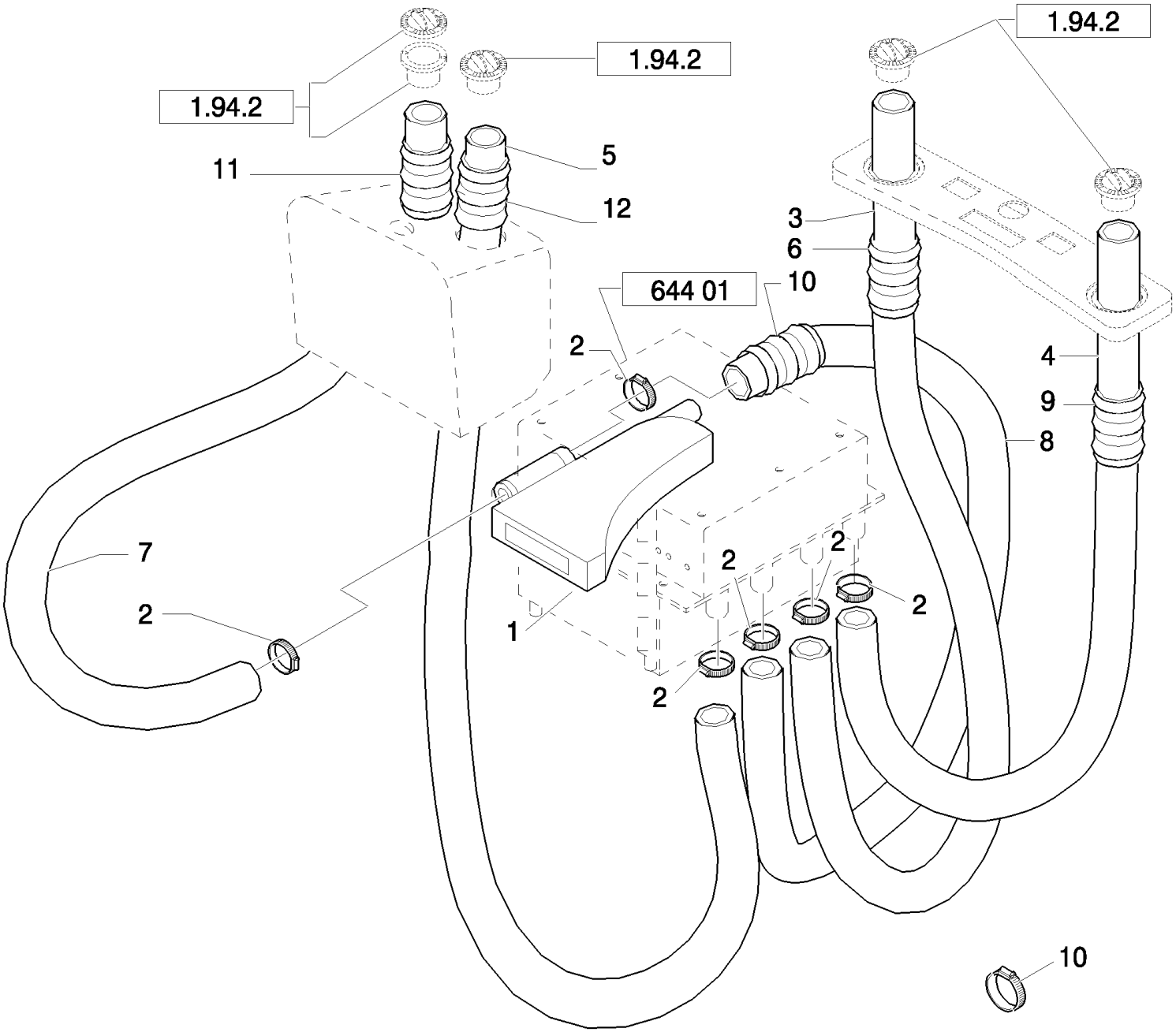

LB115.B EUR BACKHOE LOADER (1/05-)

644(05A) A/C & HEATER CONSOLE DUCTS

Ref	Part Number	Qty	Description
1	86987511	1	DUCT, AIR,
2	13000990	AR	CLAMP, HOSE,
3	85804984	1	DUCT, AIR,
4	85804983	1	DUCT, AIR,
5	85826936	1	HOSE, FLEXIBLE,
6	85804987	1	HOSE,
7	85805885	1	DUCT, AIR,
8	85804983	1	DUCT, AIR,
9	85804988	1	HOSE,
10	85804988	8	HOSE,
11	85805887	1	DUCT, AIR,
12	85826937	1	HOSE, FLEXIBLE,
13	85808307	10	STRAP, CABLE,

Pilot Control Version

644(06) A/C & HEATER CONVEYOR

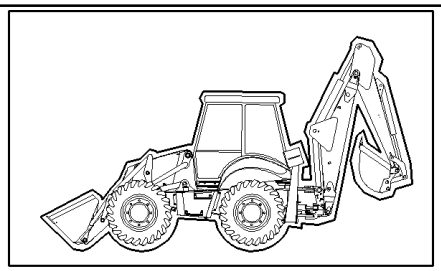

644 05

644 05

644 01

2

10

3

8

6 ■

5 ■

■

■

13

1 ●

9 ●

KIT KIT KIT

4 = ■

7 = ●

LB115.B EUR BACKHOE LOADER (1/05-)

644(06) A/C & HEATER CONVEYOR

Ref	Part Number	Qty	Description
1	85811965	1	PANEL,
2	85808307	10	STRAP, CABLE,
3	85805347	1	BUSHING, THREADED,
4	85820152	1	DUCT, AIR,
5	85806023	2	STRIP, SEALING,
6	85812021	1	STRIP, SEALING,
7	85805200	1	DUCT, AIR,
8	85811963	1	PANEL,
9	85811964	1	PANEL,
10	14644190	2	RIVET,
11	85805347	2	BUSHING, THREADED,
12	85812021	1	STRIP, SEALING,
13	85805509	1	BRACKET,

Mechanical Version

644(07) A/C HOUSING SIDE PANELS

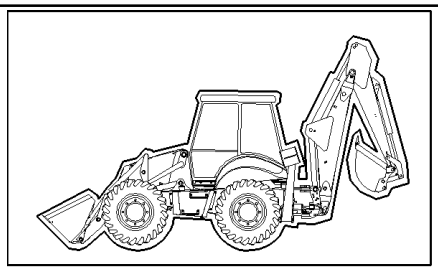

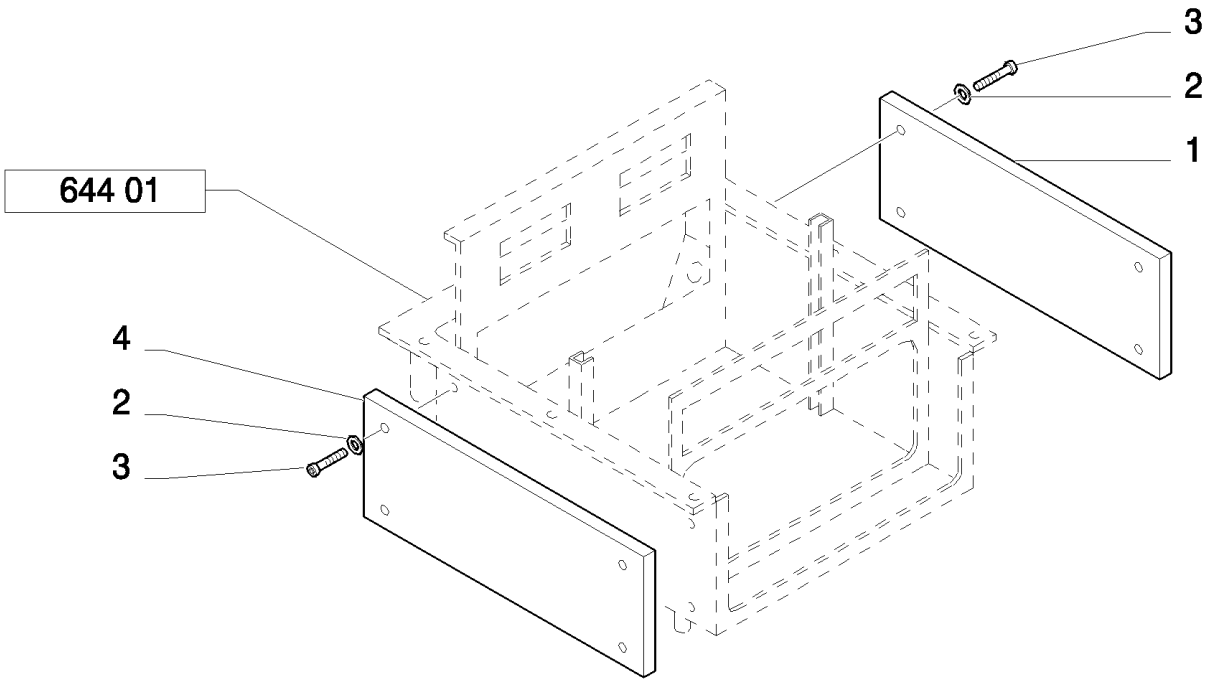

LB115.B EUR BACKHOE LOADER (1/05-)

644(07) A/C HOUSING SIDE PANELS

Ref	Part Number	Qty	Description
1	85817298	1	PANEL,
2	11193274	6	WASHER, SPRING, Belleville, M6.4,
3	14305224	6	SCREW, Hex Soc Hd, M6 x 16, 8.8,
4	85817297	1	PANEL, Front

Mechanical Version

644(08) RH CAB TRIM WITH VENT

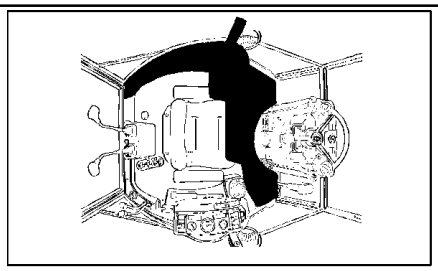

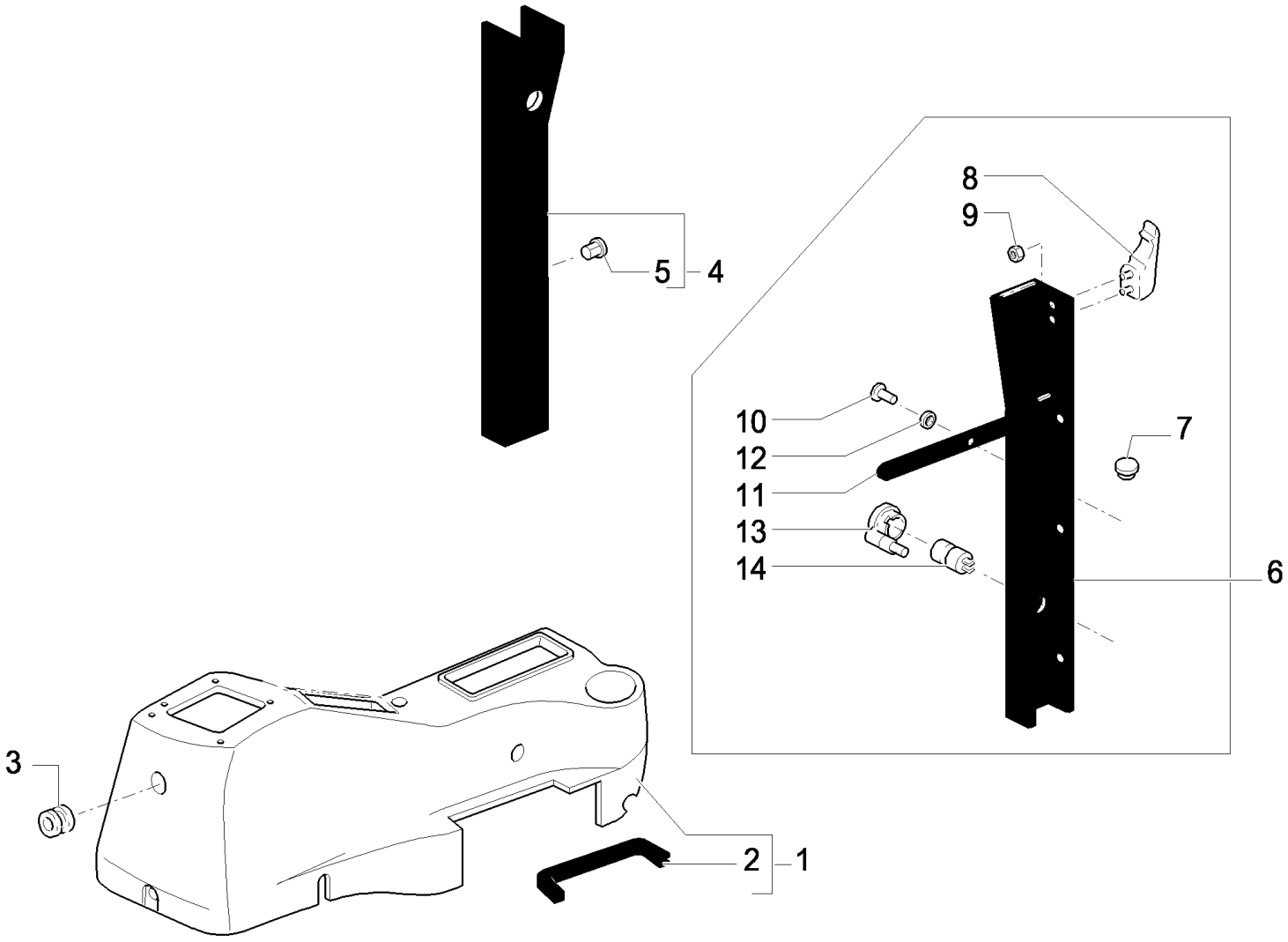

LB115.B EUR BACKHOE LOADER (1/05-)

644(08) RH CAB TRIM WITH VENT

Ref	Part Number	Qty	Description
1	85819276	1	SOFT TRIM,
2	85819675	1	SEAL,
3	10398980	1	GROMMET,
4	85819285	1	SOFT TRIM, RH
5	85819591	6	BUSHING,
6	85819287	1	SOFT TRIM, LH
7	79111978	1	PLUG,
8	5178468	1	GRAB STRAP,
9	14084011	1	NUT, M4 x .7, Flg,
10	85806154	1	RIVET,
11	E7NN94290N06AA	1	STRAP, {PP:83961823}
12	12638107	1	SPACER, 5x14
13	5148132	1	SOCKET, LAMP,
14	5148131	1	SOCKET, POWER,

Mechanical Version

644(09) A/C & HEATER CAB ROOF DUCTS

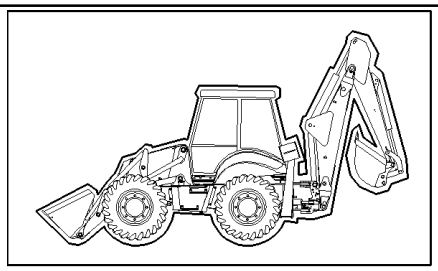

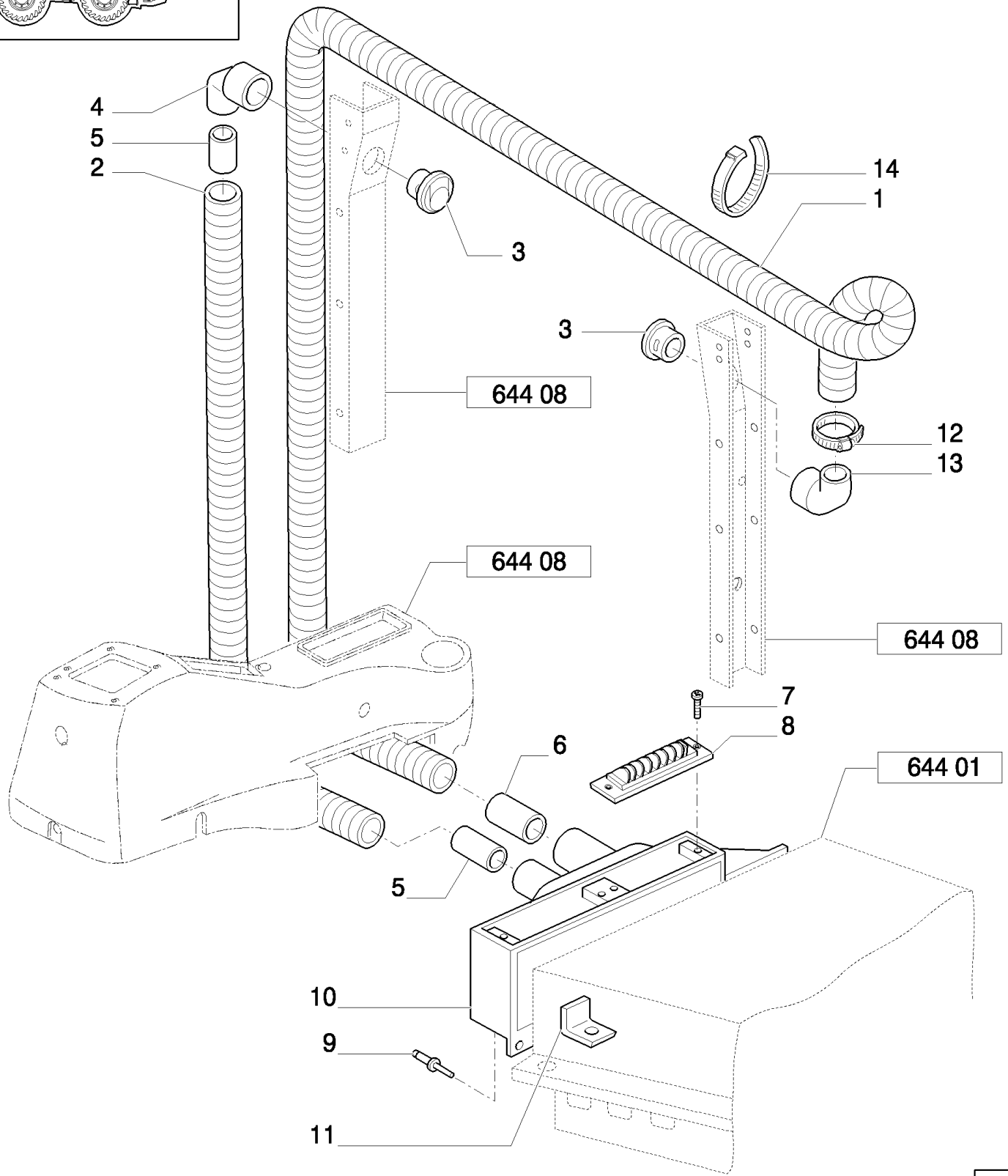

LB115.B EUR BACKHOE LOADER (1/05-)

644(09) A/C & HEATER CAB ROOF DUCTS

Ref	Part Number	Qty	Description
1	85819576	1	DUCT, AIR, Dia. 50 mm, L=4100 mm
2	85819578	1	DUCT, AIR, Dia. 45 mm, L=1600 mm
3	85819544	2	DIFFUSER,
4	85819453	1	ELBOW,
5	85819451	2	HOSE, Dia. 45 mm
6	85819452	1	HOSE,
7	85819581	4	SCREW,
8	85819454	2	DIFFUSER,
9	85811972	4	RIVET,
10	85819575	1	DUCT, AIR,
11	85819577	1	BRACKET,
12	13000690	1	CLAMP, HOSE, 32x50
13	85818891	1	ELBOW,
14	14560087	10	CLIP,

Mechanical Version

646(01) A/C DRYER FILTER HOSES

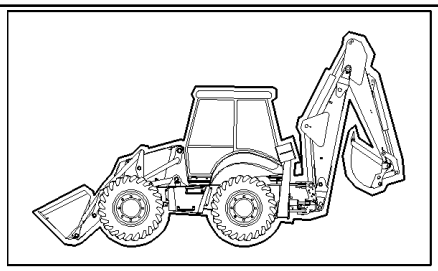

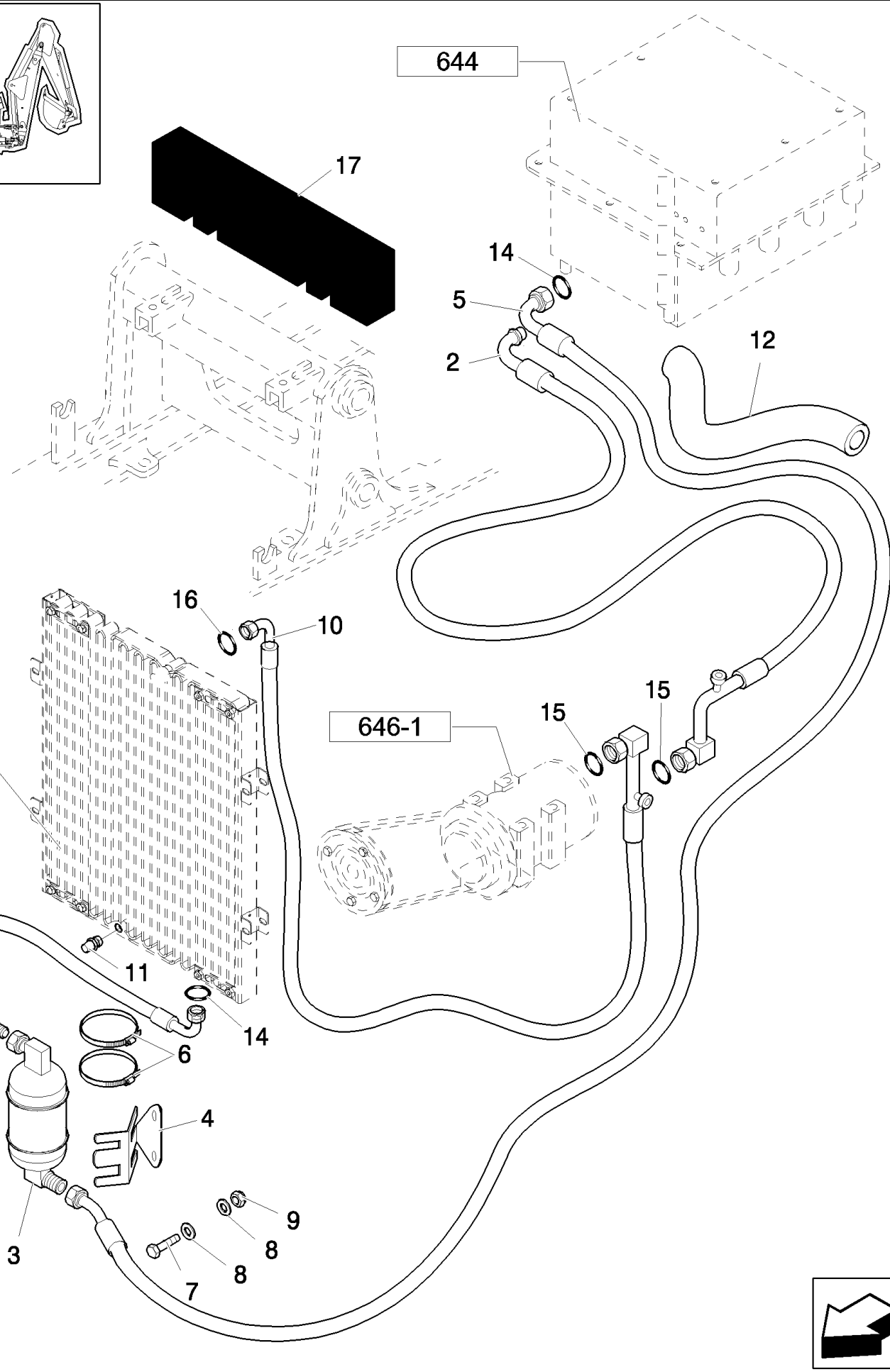

LB115.B EUR BACKHOE LOADER (1/05-)

646(01) A/C DRYER FILTER HOSES

Ref	Part Number	Qty	Description
1	87410674	1	HOSE, FLEXIBLE,
2	87410676	1	HOSE, FLEXIBLE,
3	87410678	1	RECEIVER-DRYER,
4	87302503	1	BRACKET,
5	87410677	1	HOSE, FLEXIBLE,
6	85802743	2	CLAMP, HOSE,
7	47049186	2	BOLT, Hex, M10 x 30, 8.8,
8	47048963	4	WASHER,
9	47049031	2	NUT,
10	87410675	1	HOSE, FLEXIBLE,
11	85804065	1	SENDER UNIT,
12	47050883	1	SHIELD,
13	14560187	2	STRAP, CABLE, L=203.2 mm
14	128483A1	1	O-RING,
15	128485A1	1	O-RING,
16	128484A1	1	O-RING,
17	85817287	1	SEAL,

Up To S/N XXX

646/1(01) MACHINE PART AIR CONDITIONING SET

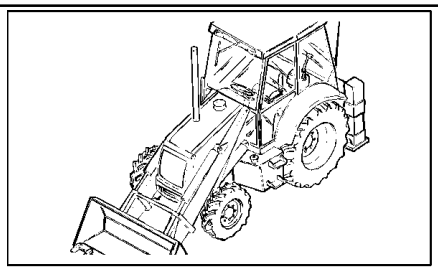

LB115.B EUR BACKHOE LOADER (1/05-)

646/1(01) MACHINE PART AIR CONDITIONING SET

Ref	Part Number	Qty	Description
1	87315364	1	HOSE, FLEXIBLE, , Includes 8 in q.ty 2
2	87315368	1	HOSE, FLEXIBLE, , Includes 8 in q.ty 2
3	87315371	1	HOSE, FLEXIBLE, , Includes 9, 10 in q.ty 1
4	87315381	1	HOSE, FLEXIBLE, , Includes 10 in q.ty 1, 11
5	85817287	1	SEAL,
6	14560187	2	STRAP, CABLE, L=203.2 mm
7	47048451	4	STRAP, CABLE,
8	85805013	4	O-RING,
9	85805006	1	O-RING,
10	85817186	2	O-RING,
11	85805014	1	O-RING,

From To S/N XXX

646/1(02) A/C COMPRESSOR ATTACHING GROUP

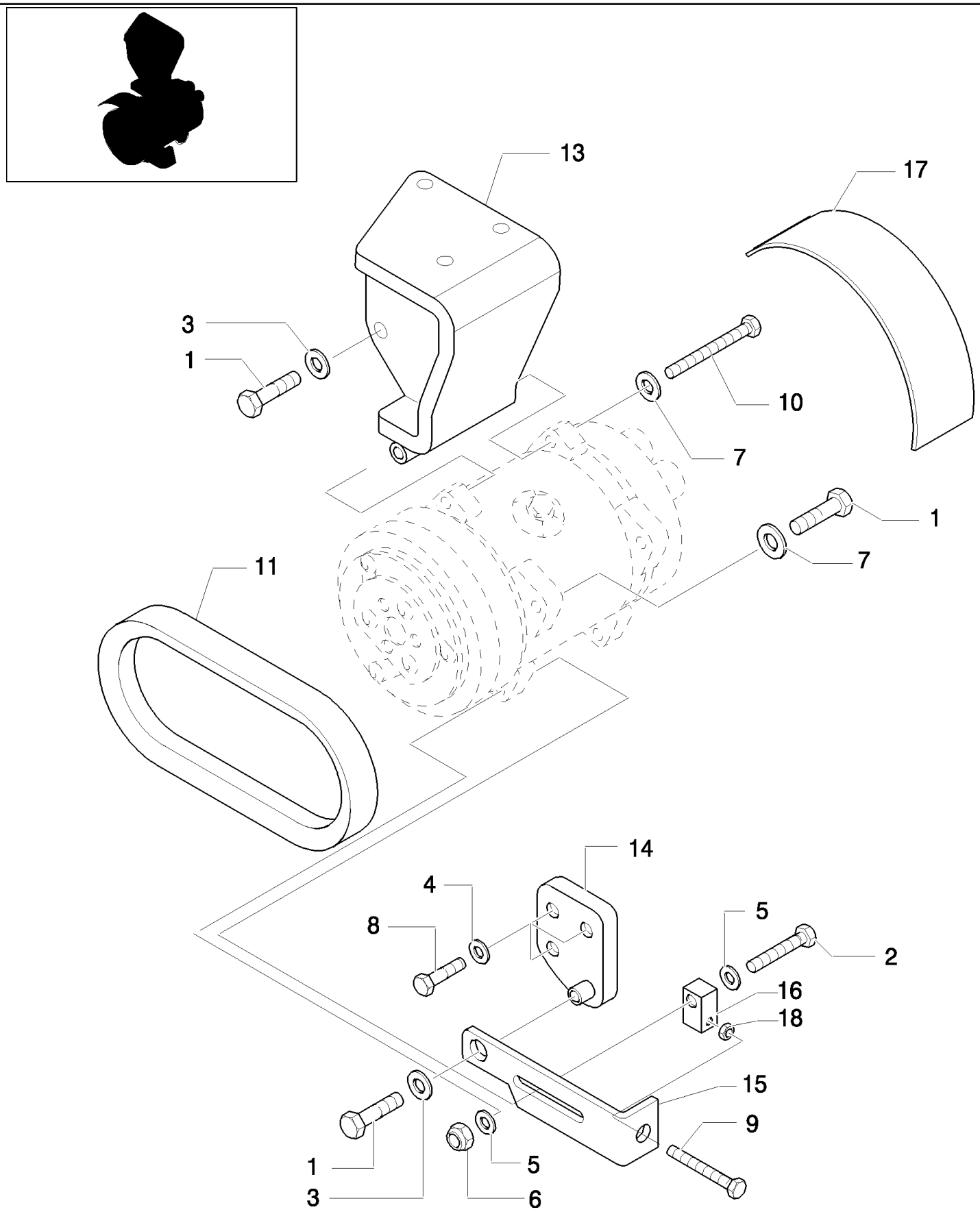

LB115.B EUR BACKHOE LOADER (1/05-)

646/1(02) A/C COMPRESSOR ATTACHING GROUP

Ref	Part Number	Qty	Description
1	11106421	3	SCREW, Hex, M10 x 30, 8.8,
2	11107421	1	SCREW, Hex, M10 x 60, 8.8,
3	11190574	2	WASHER, SPRING, Belleville, M10.5,
4	11193874	3	WASHER, SPRING, Belleville, M8.4,
5	14496601	2	WASHER, M10 x 20 x 2,
6	12577211	1	NUT, M10 x 1.5, Cl 8,
7	12601471	2	WASHER, LOCK,
8	16043621	3	BOLT, Hex, M8 x 25, 8.8,
9	15214521	1	SCREW,
10	11108821	1	SCREW, Hex, M10 x 130, 8.8,
11	87304910	1	BELT,
13	87315441	1	SUPPORT,
14	87315446	1	SUPPORT,
15	87315457	1	TENSIONER, BELT,
16	87315459	1	BLOCK,
17	87315460	1	GUARD,
18	16102211	1	NUT, M8, Cl 10,

From To S/N XXX

646/1(03) A/C COMPRESSOR

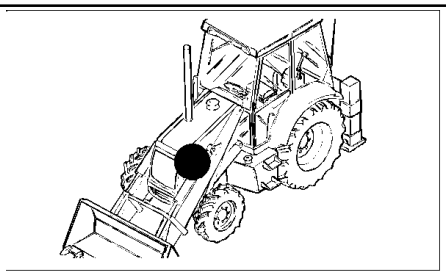

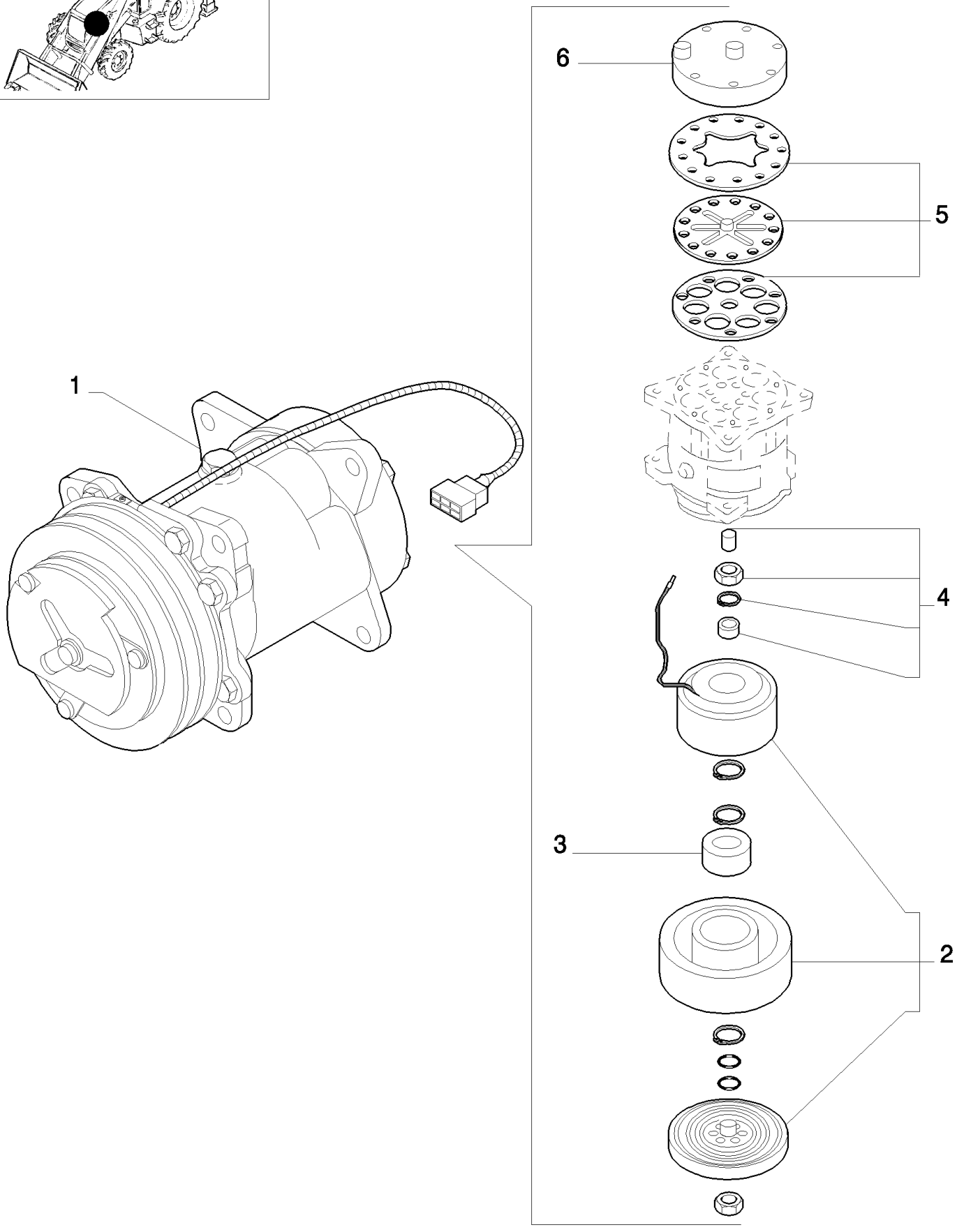

LB115.B EUR BACKHOE LOADER (1/05-)

646/1(03) A/C COMPRESSOR

Ref	Part Number	Qty	Description
1	85817170	1	COMPRESSOR, AIRCOND., (SD7H15) Assy
2	85817171	1	KIT,
3	85817172	3	BEARING ASSY,
4	85817173	1	KIT,
5	85817174	1	KIT,
6	85817175	1	KIT,

646/1(04) A/C FILTER & CONDENSER ATTACHING GROUP

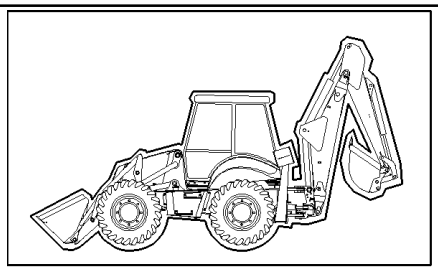

LB115.B EUR BACKHOE LOADER (1/05-)

646/1(04) A/C FILTER & CONDENSER ATTACHING GROUP

Ref	Part Number	Qty	Description
1	14496534	4	WASHER,
2	16043421	2	SCREW, Hex, M8 x 20, 8.8,
3	16104111	2	NUT, M8 x 1.25, Cl 8,
4	87315252	1	BRACKET,
5	85819184	7	SCREW,
6	85804065	1	SENDER UNIT, , Includes 20
7	87315214	1	BRACKET,
8	87315219	1	BRACKET,
9	87315221	1	BRACKET, RH
10	87315225	1	BRACKET, LH
11	87315236	1	BRACKET,
12	87315239	2	CLAMP, HOSE,
13	87314566	1	CONDENSER,
14	87315241	1	FILTER, CAB,
15	16043621	4	BOLT, Hex, M8 x 25, 8.8,
16	85819185	1	GASKET,
17	87319438	1	SUPPORT, , Only For Version Without Intercooler
18	14040711	8	WASHER, , Only For Version Without Intercooler
19	87319441	1	SUPPORT, , Only For Version Without Intercooler

LB115.B EUR BACKHOE LOADER (1/05-)

646A(01) A/C COMPRESSOR ATTACHING GROUP

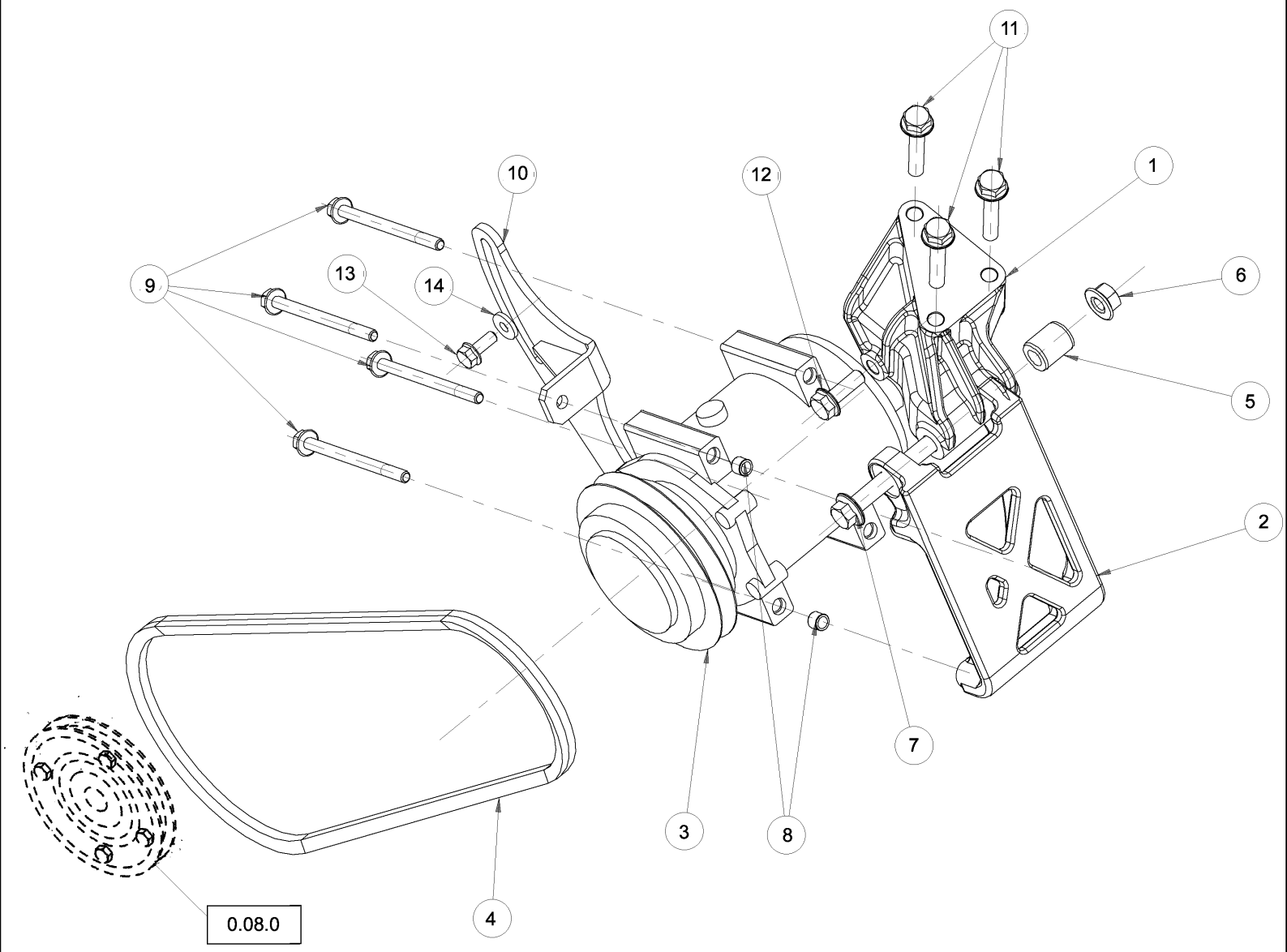

LB115.B EUR BACKHOE LOADER (1/05-)

646A(01) A/C COMPRESSOR ATTACHING GROUP

Ref	Part Number	Qty	Description
1	2852622	1	SUPPORT,
2	2852623	1	SUPPORT,
3	87430122	1	COMPRESSOR, AIRCOND.,
4	2852625	1	BELT,
5	98433179	1	SPACER,
6	17044921	1	NUT, M12
7	2852925	1	SCREW,
8	4895227	2	DOWEL,
9	2852628	4	SCREW,
10	2852629	1	TENSIONER,
11	2852630	3	SCREW,
12	16675834	1	SCREW,
13	87803136	1	SCREW,
14	12647121	1	WASHER, M8 x 20 x 3,

649(01) 1.15 BUCKET FORK KIT FOR CONVERSION FROM 4X1 TO 6X1

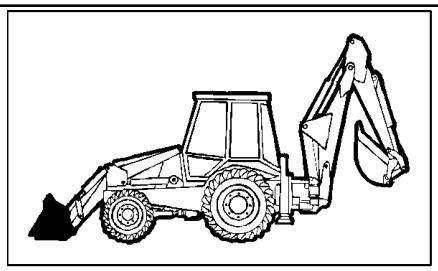

KIT 13= ●

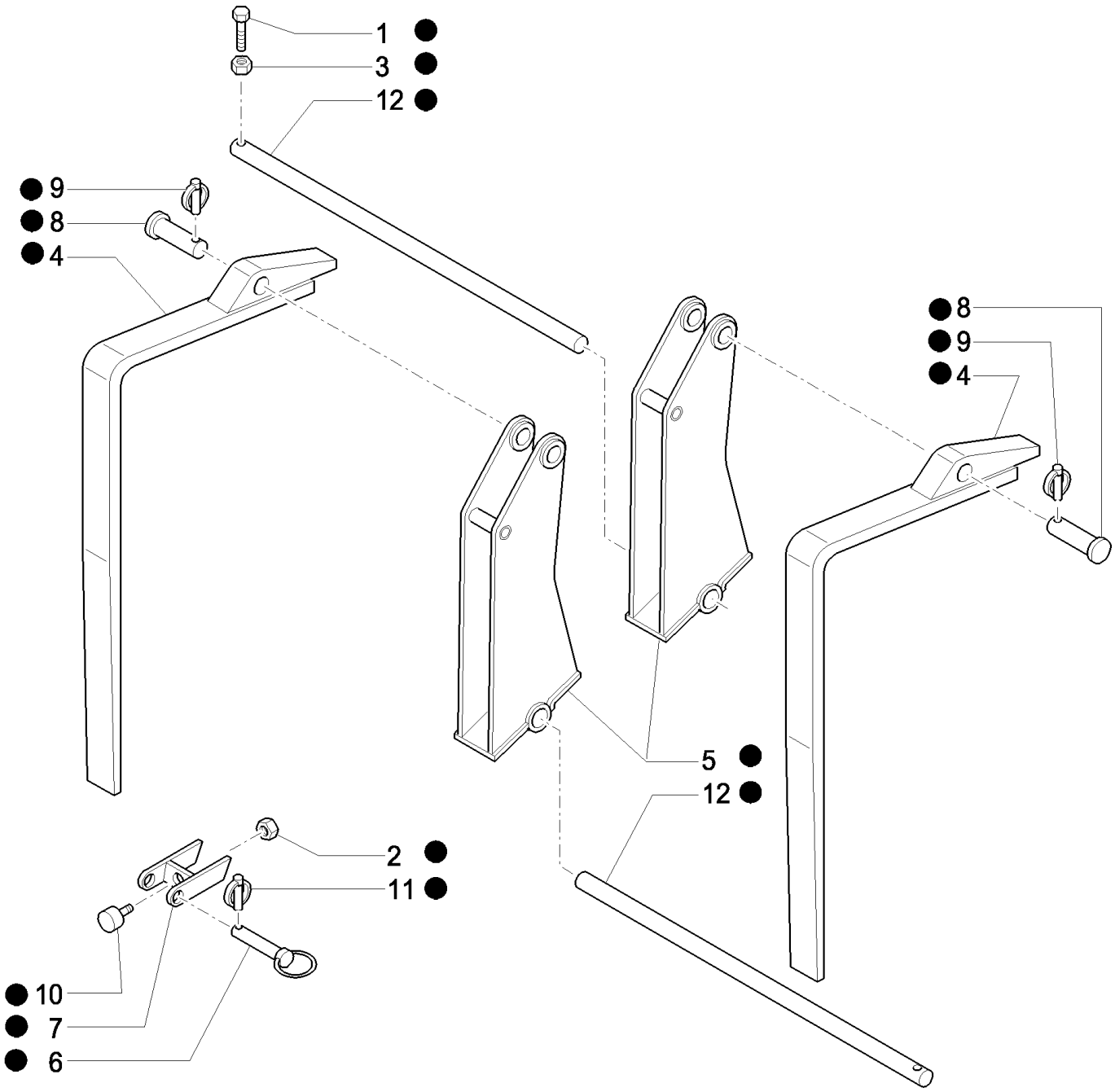

LB115.B EUR BACKHOE LOADER (1/05-)

649(01) 1.15 BUCKET FORK KIT FOR CONVERSION FROM 4X1 TO 6X1

Ref	Part Number	Qty	Description
1	85820018	2	SCREW, M10 x 90
2	85820031	2	NUT, M8
3	85820035	2	NUT, M10
4	85820062	2	FORK, BUCKET,
5	85824249	2	SUPPORT,
6	85820064	2	PIN,
7	85820065	2	BRACKET,
8	85820067	2	PIN,
9	85820068	2	PIN, LOCK,
10	85820069	2	PLUG,
11	85825177	2	PIN, LOCK,
12	85820081	2	PIN,
13	85820907	1	KIT, CONVERSION,

698(01) GLIDE RIDE VALVE,HYDRAULIC SYSTEM FOR MACHINE FRAME LEVELLING & ON/OFF SWITCH

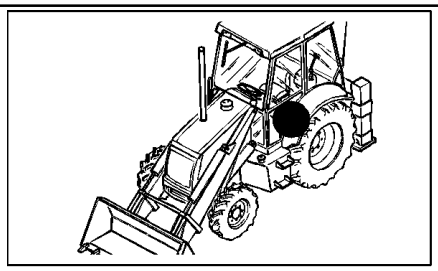

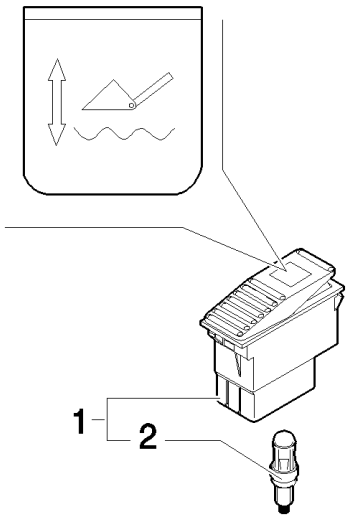

LB115.B EUR BACKHOE LOADER (1/05-)

698(01) GLIDE RIDE VALVE,HYDRAULIC SYSTEM FOR MACHINE FRAME LEVELLING & ON/OFF SWITCH

Ref	Part Number	Qty	Description
1	85817674	1	SWITCH,
2	14143790	1	BULB,

699(01) HAND HAMMER SWITCH

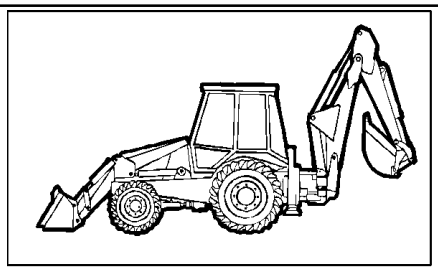

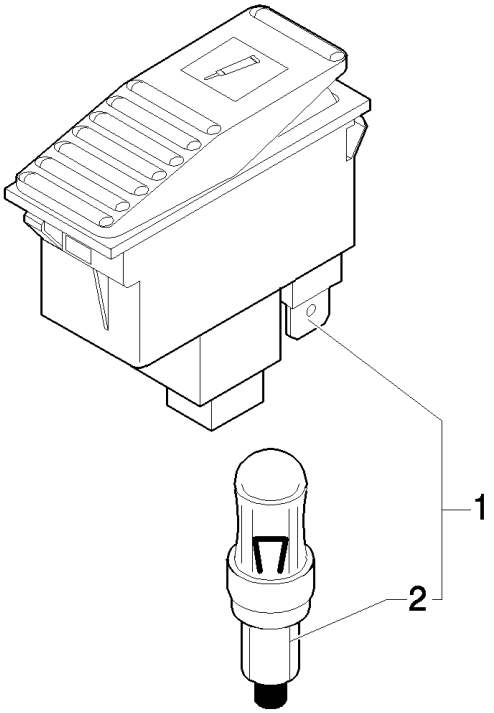

LB115.B EUR BACKHOE LOADER (1/05-)

699(01) HAND HAMMER SWITCH

Ref	Part Number	Qty	Description
1	85819072	1	SWITCH,
2	14143790	1	BULB,

700(01) 4X1 & 6X1 BUCKET HYDRAULIC LINES (4WS)

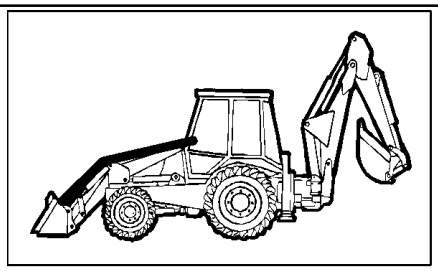

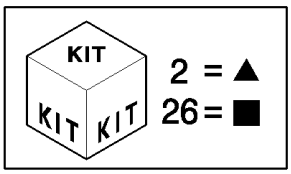

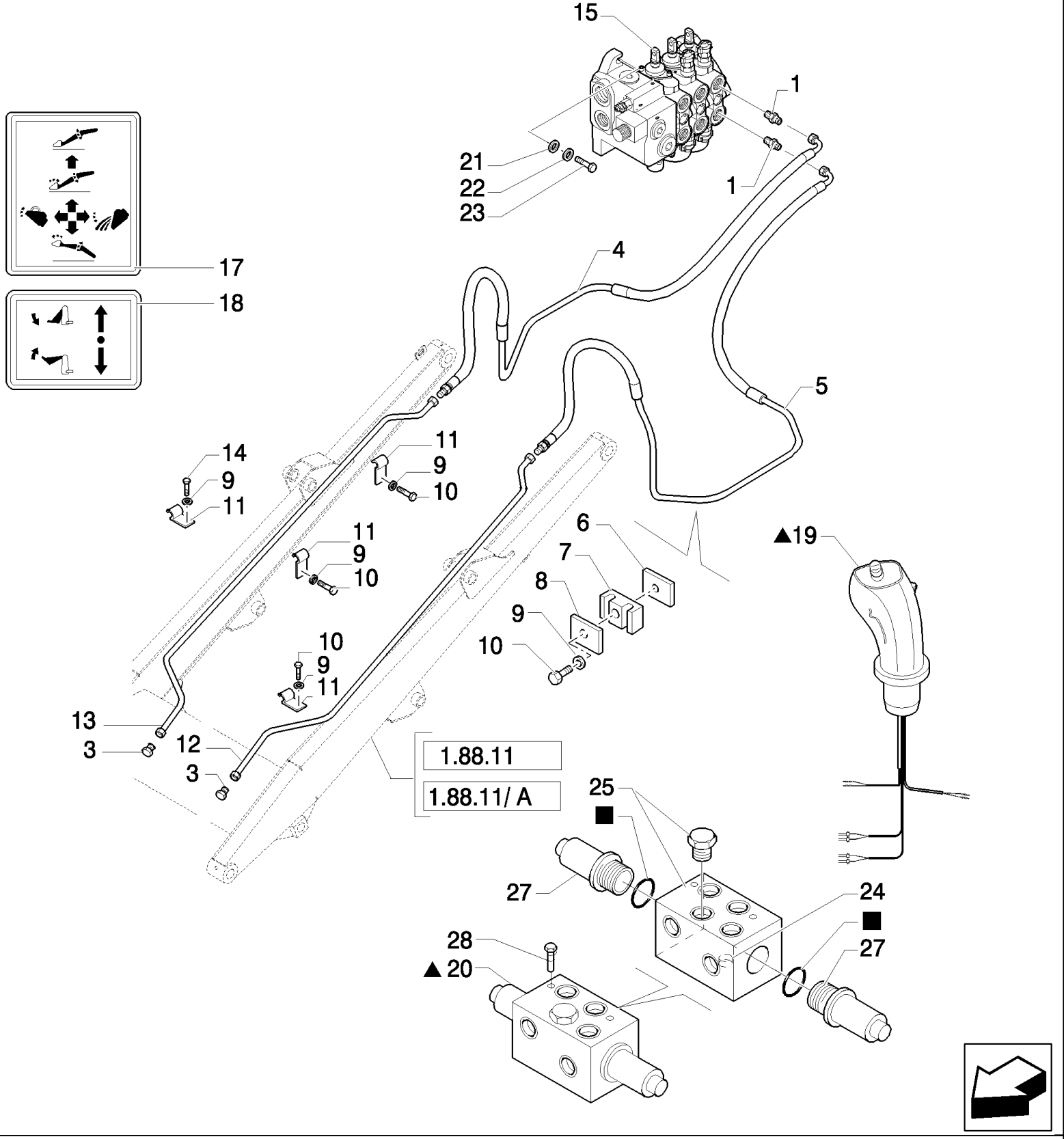

LB115.B EUR BACKHOE LOADER (1/05-)

700(01) 4X1 & 6X1 BUCKET HYDRAULIC LINES (4WS)

Ref	Part Number	Qty	Description
1	85805258	2	CONNECTOR, HYD., 9/16"-16 ORS x 1 1/16"-12, O-Ring,
2	87311104	1	JOYSTICK, {PP:87384364}
3	85803408	2	PLUG,
4	85805341	1	TUBE, HYD, RH
5	85805342	1	TUBE, HYD, LH
6	85805340	2	PLATE,
7	85805193	2	CLAMP,
8	85805195	2	PLATE,
9	11193979	8	WASHER, SPRING, Belleville, M8.4,
10	16043821	8	SCREW, Hex, M8 x 30, 8.8,
11	85805247	6	CLAMP,
12	87307151	1	TUBE, HYD, LH
13	87307150	1	TUBE, HYD, RH
14	16044021	2	SCREW, Hex, M8 x 40, 8.8,
15	87305111	1	VALVE, CONTROL,
17	85804346	1	DECAL,
18	87305209	1	DECAL,
19	87382109	1	HANDLE,
20	87304801	1	VALVE, CONTROL, , Includes 24 To 27
21	11190679	3	WASHER, SPRING, Belleville, M10.5,
22	13578621	3	WASHER, 10x30x2
23	11234721	3	SCREW, Hex, M10 x 1.25 x 45, 8.8,
24	87311363	1	ORIFICE,
25	85827997	1	VALVE,
26	85828001	1	KIT, SEALS,
27	85827993	2	SOLENOID,
28	14300521	2	SCREW, Hex Soc Hd, M6 x 75, 8.8, M6x75

700(02) 4X1 & 6X1 BUCKET HYDRAULIC LINES (4WS)

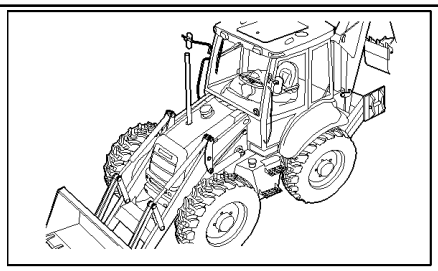

LB115.B EUR BACKHOE LOADER (1/05-)

700(02) 4X1 & 6X1 BUCKET HYDRAULIC LINES (4WS)

Ref	Part Number	Qty	Description
1	85802234	1	ELBOW,
2	85803312	1	CONNECTOR, HYD.,
3	47050685	2	CONNECTOR, HYD.,
4	47050686	3	CONNECTOR, HYD., , UP TO S/N 031054045
4	47050686	4	CONNECTOR, HYD., , FROM TO S/N 031054046
5	85826100	1	REDUCER,
6	85828211	1	COUPLING, QUICK, MALE,
7	87305211	1	HOSE, FLEXIBLE,
8	87303401	1	HOSE, FLEXIBLE,
9	87303400	2	HOSE, FLEXIBLE,

702(01) PEDAL-OPERATED TELESCOPIC DIPPER HYDRAULIC SYSTEM (SIDE SHIFT)

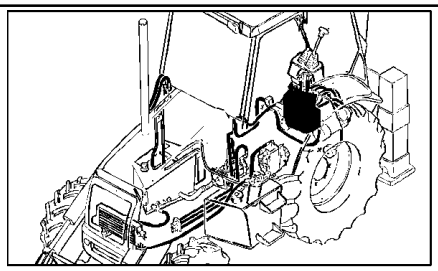

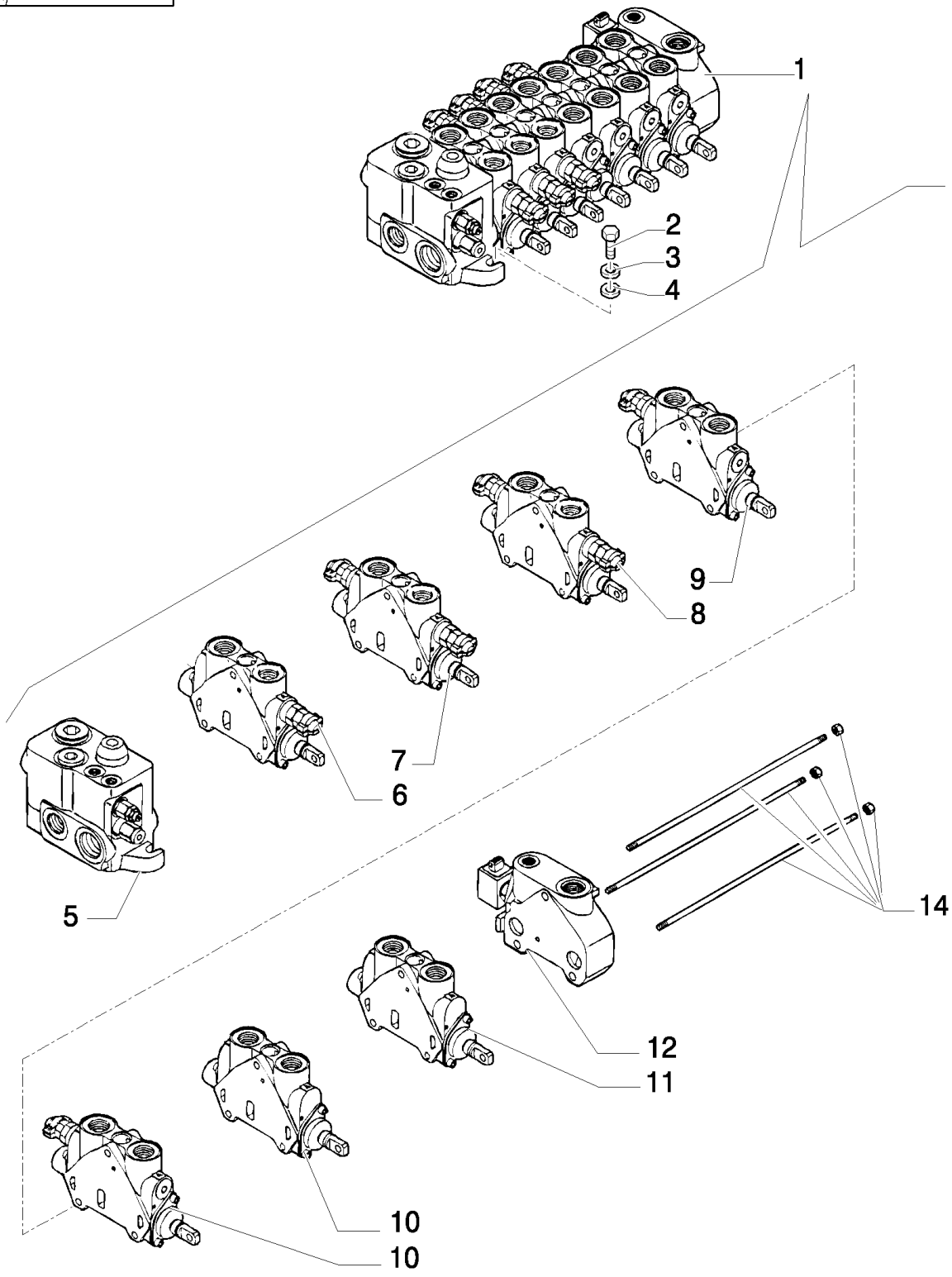

LB115.B EUR BACKHOE LOADER (1/05-)

702(01) PEDAL-OPERATED TELESCOPIC DIPPER HYDRAULIC SYSTEM (SIDE SHIFT)

Ref	Part Number	Qty	Description
1	85824224	1	VALVE, CONTROL, , UP TO S/N 031057761
1	87327763	1	VALVE, HYDRAULIC, , FROM TO S/N 031057762, UP TO S/N 031058525
1	87376085	1	VALVE, HYDRAULIC, , FROM TO S/N 031058526
2	15888721	3	SCREW, Hex, M10 x 1.25 x 55, 8.8,
3	11190679	3	WASHER, SPRING, Belleville, M10.5,
4	85818943	3	SPACER,
5	85826255	1	SECTOR, TOOTHED, , See Page 300 02
6	85826245	1	SECTOR, TOOTHED, , Boom Cylinder, See Page 300 03
7	85826253	1	SECTOR, TOOTHED, , Swing Cylinder, See Page 300 04
8	85826246	1	SECTOR, TOOTHED, , Bucket Cylinder, See Page 300 05
9	85826248	1	SECTOR, TOOTHED, , Arm Cylinder, See Page 300 06
10	85826252	2	SECTOR, TOOTHED, , Stabilizer Cylinder, See Page 301 02
11	85826254	1	SECTOR, TOOTHED, , UP TO S/N XXX, Telescopic Cylinder, See Page 702 02
11	87558571	1	SECTOR, , FROM S/N XXX, Telescopic Cylinder, See Page 702/1 02
12	85826249	1	SECTOR, TOOTHED, , See Page 301 03
14	85811959	1	KIT,

Mechanical Version

702(02) PEDAL-OPERATED TELESCOPIC DIPPER HYDRAULIC SYSTEM (SIDE SHIFT)

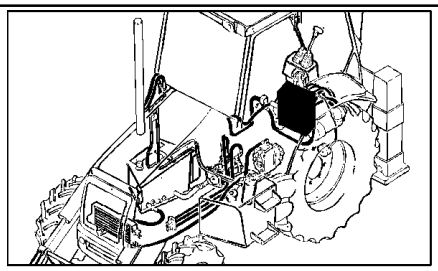

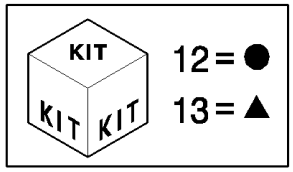

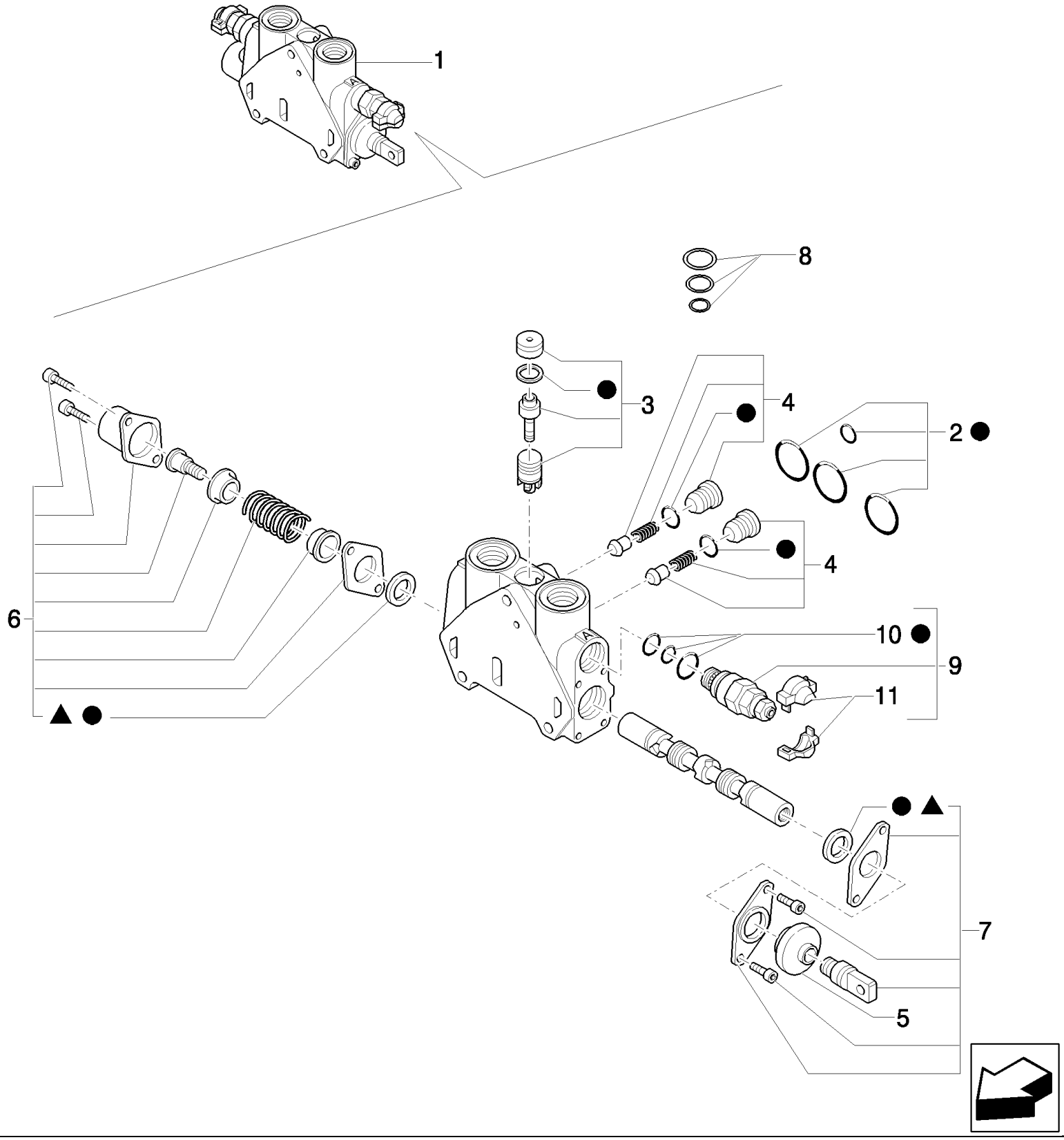

Mechanical Version, Up To S/N XXX

LB115.B EUR BACKHOE LOADER (1/05-)

702(02) PEDAL-OPERATED TELESCOPIC DIPPER HYDRAULIC SYSTEM (SIDE SHIFT)

Ref	Part Number	Qty	Description
1	85826254	1	SECTOR, TOOTHED,
2	85819148	1	KIT, SEALS,
3	85819378	1	KIT, SEALS,
4	85811938	2	VALVE, CHECK,
5	85820130	1	BOOT,
6	85824279	1	KIT,
7	85824278	1	KIT,
8	85819040	1	KIT, SEALS,
9	85812113	1	VALVE, HYDRAULIC,
10	85811933	1	KIT, SEALS,
11	85811935	1	KIT,
12	85824281	1	KIT, SEALS,
13	85824283	1	KIT, SEALS,

Mechanical Version, Up To S/N XXX

702(07) PEDAL-OPERATED TELESCOPIC DIPPER HYDRAULIC SYSTEM (SIDE SHIFT)

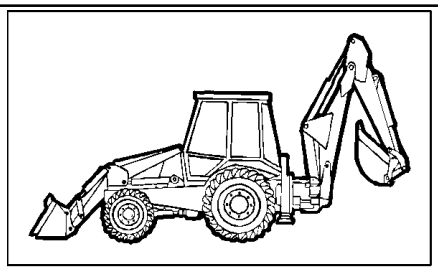

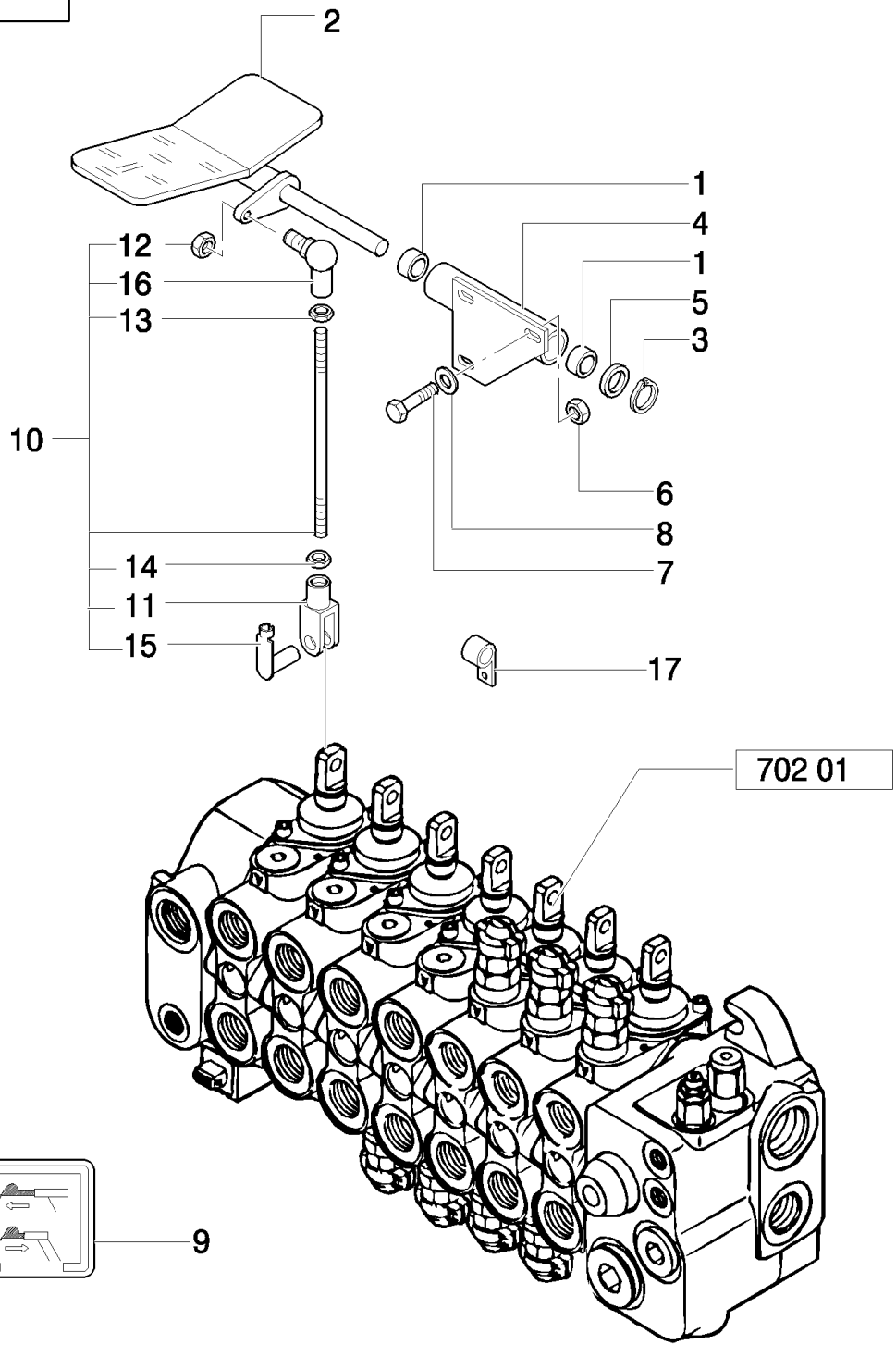

LB115.B EUR BACKHOE LOADER (1/05-)

702(07) PEDAL-OPERATED TELESCOPIC DIPPER HYDRAULIC SYSTEM (SIDE SHIFT)

Ref	Part Number	Qty	Description
1	85802494	2	BUSHING, ASSY
2	85805362	1	PEDAL,
3	N663114S36	1	RING, SNAP, {PP:83911366}
4	85805358	1	SUPPORT,
5	14496901	1	WASHER, M16 x 30 x 3,
6	16104111	3	NUT, M8 x 1.25, Cl 8,
7	16043621	3	BOLT, Hex, M8 x 25, 8.8,
8	11193879	3	WASHER, SPRING, Belleville, M8.4,
9	85803786	1	DECAL,
10	85805364	1	TIE-ROD,
11	11991971	1	CLEVIS,
12	14048221	1	NUT, M8 x 1.25, Cl 10,
13	16102311	1	NUT, Thin, M8 x 1.25, Cl 04,
14	16102911	1	NUT, Thin, M8 x 1.25, Cl 04, LH,
15	85802738	1	PIN,
16	85804375	1	BALL JOINT,
17	85803393	1	CLAMP,

Mechanical Version

702/ 1(02) PEDAL-OPERATED TELESCOPIC DIPPER HYDRAULIC SYSTEM (CENTER PIVOT)

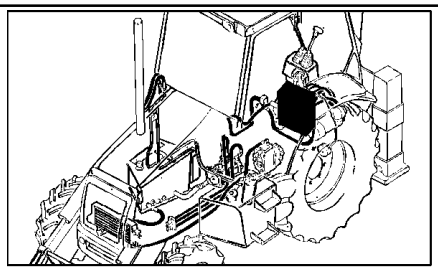

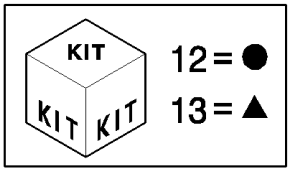

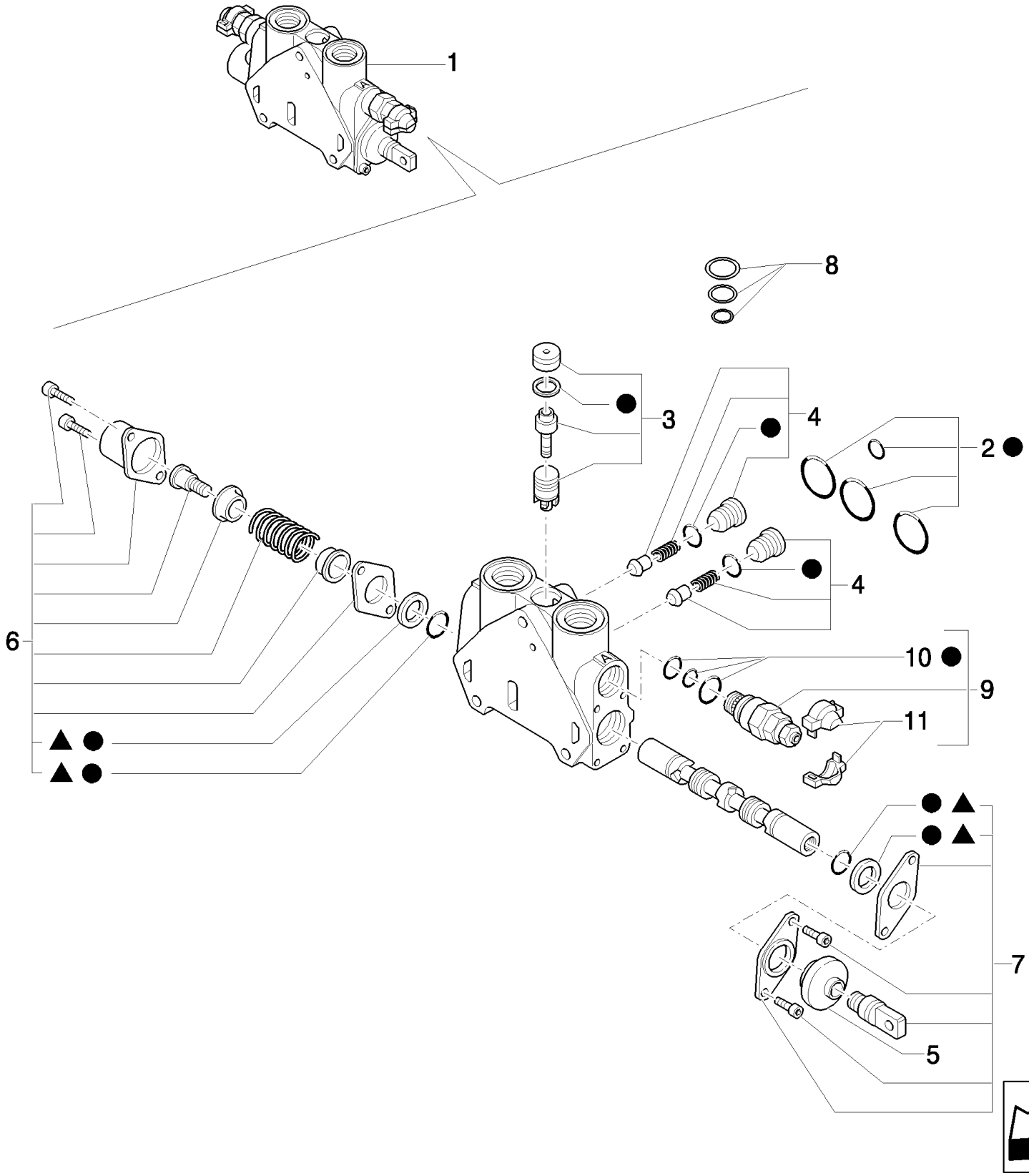

Mechanical Version FROM S/N XXX

LB115.B EUR BACKHOE LOADER (1/05-)

702/ 1(02) PEDAL-OPERATED TELESCOPIC DIPPER HYDRAULIC SYSTEM (CENTER PIVOT)

Ref	Part Number	Qty	Description
1	87558571	1	SECTOR,
2	85819148	1	KIT, SEALS,
3	85819378	1	KIT, SEALS,
4	85811938	2	VALVE, CHECK,
5	85820130	1	BOOT,
6	85824279	1	KIT,
7	85824278	1	KIT,
8	85819040	1	KIT, SEALS,
9	87341088	1	VALVE, HYDRAULIC,
10	85811933	1	KIT, SEALS,
11	85811935	1	KIT,
12	85824281	1	KIT, SEALS,
13	85824283	1	KIT, SEALS,

Mechanical Version FROM S/N XXX

703(01) PEDAL-OPERATED TELESCOPIC DIPPER HYDRAULIC SYSTEM

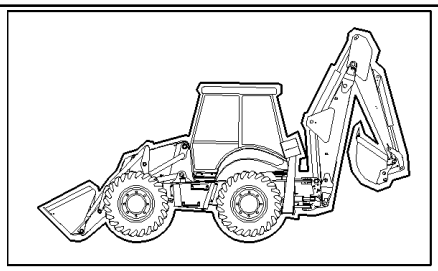

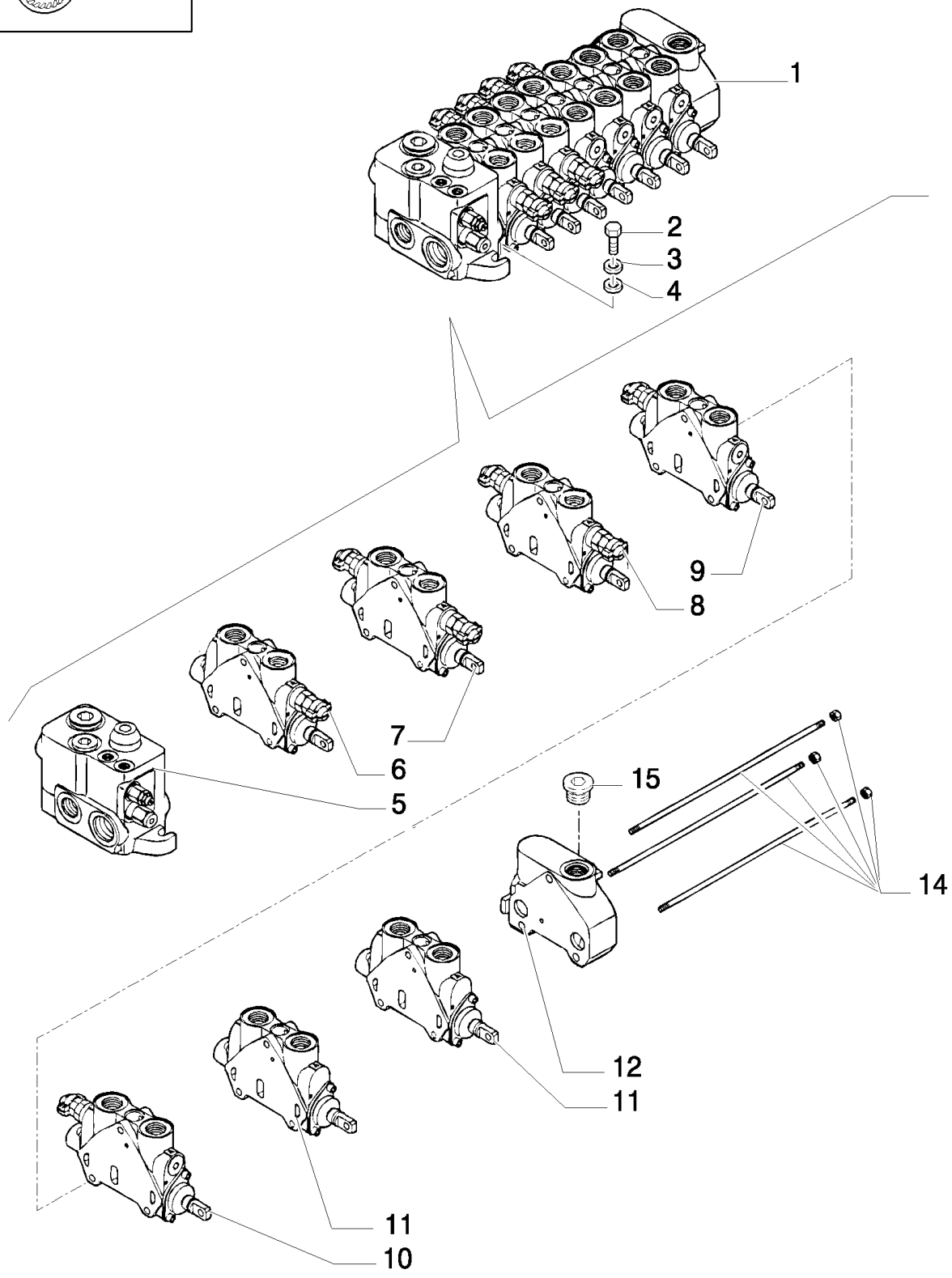

703(01) PEDAL-OPERATED TELESCOPIC DIPPER HYDRAULIC SYSTEM

Ref	Part Number	Qty	Description
1	85824223	1	VALVE, CONTROL, , UP TO S/N 031057761
1	87327762	1	VALVE, HYDRAULIC, , FROM TO S/N 031057762
2	15888721	3	SCREW, Hex, M10 x 1.25 x 55, 8.8,
3	11190679	3	WASHER, SPRING, Belleville, M10.5,
4	85818943	3	SPACER,
5	85826255	1	SECTOR, TOOTHED, , See Page 300 02
6	85826254	1	SECTOR, TOOTHED, , UP TO S/N XXX, Telescopic Cylinder, See Page 702 02
6	87558571	1	SECTOR, , FROM S/N XXX, Telescopic Cylinder
7	85826245	1	SECTOR, TOOTHED, , Boom Cylinder, See Page 300 03
8	85826253	1	SECTOR, TOOTHED, , Swing Cylinder, See Page 300 04
9	85826246	1	SECTOR, TOOTHED, , Bucket Cylinder, See Page 300 05
10	85826248	1	SECTOR, TOOTHED, , Arm Cylinder, See Page 300 06
11	85826251	2	SECTOR, TOOTHED, , Stabilizer Cylinder, See Page 300 07
12	85826250	1	VALVE SECTION, HYD, , Includes 15
14	85811959	1	KIT,
15	85811921	1	PLUG, 1-1/16"-12 UNF 2A

703(02) PEDAL-OPERATED TELESCOPIC DIPPER HYDRAULIC SYSTEM

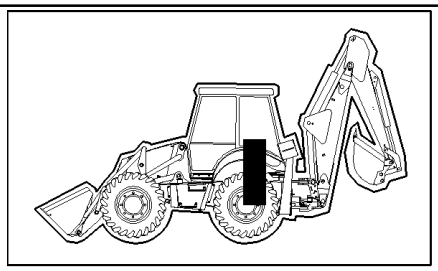

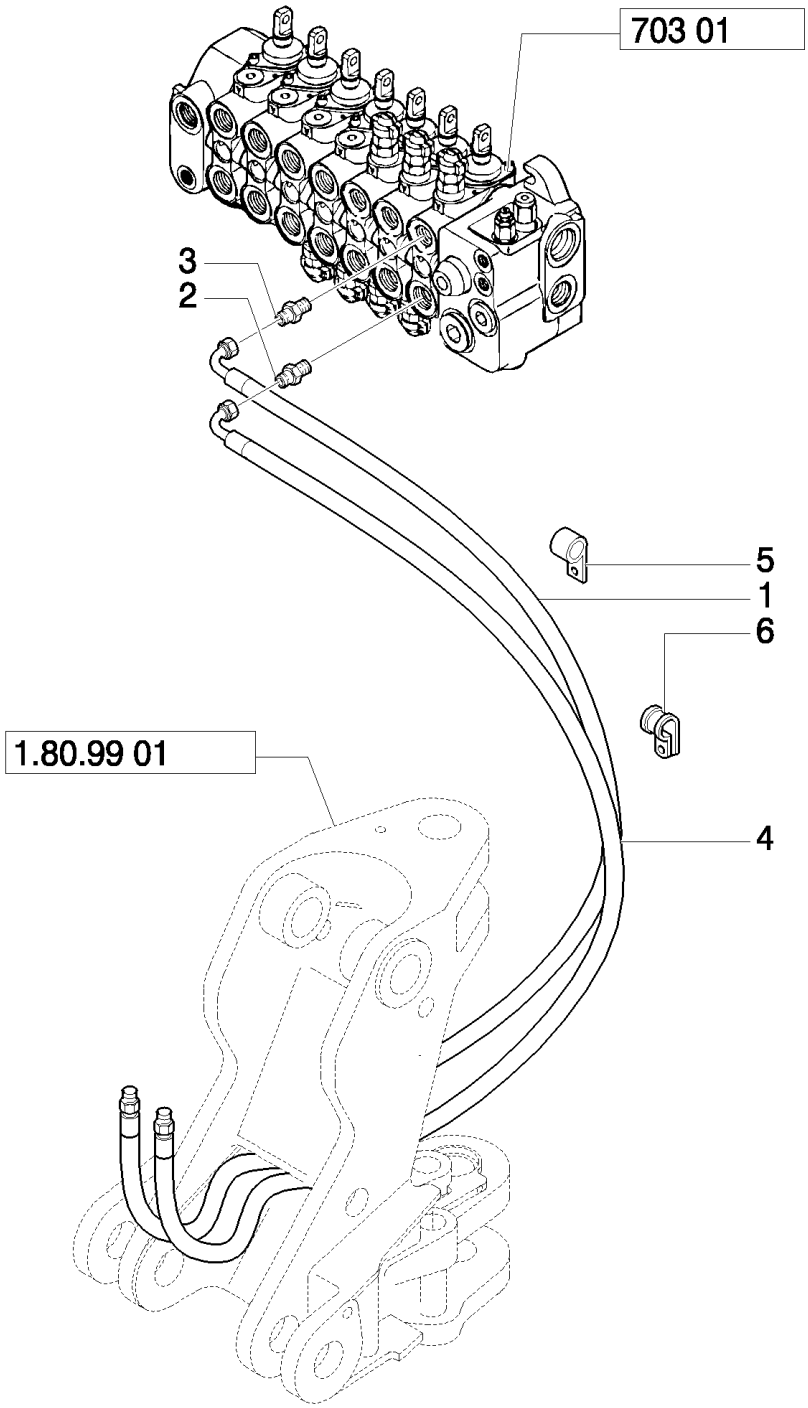

LB115.B EUR BACKHOE LOADER (1/05-)

703(02) PEDAL-OPERATED TELESCOPIC DIPPER HYDRAULIC SYSTEM

Ref	Part Number	Qty	Description
1	85812192	1	HOSE, FLEXIBLE,
2	85805258	1	CONNECTOR, HYD., 9/16"-16 ORS x 1 1/16"-12, O-Ring,
3	390938S36	1	CONNECTOR, HYD., 1-1/16-12 ORB x 1-14 ORFS; Incl. 167266, 9992069 O-Rings
4	85812211	1	HOSE, FLEXIBLE,
5	85803393	2	CLAMP,
6	85812029	5	CLAMP,

Mechanical Version

703(03) PEDAL-OPERATED TELESCOPIC DIPPER HYDRAULIC SYSTEM

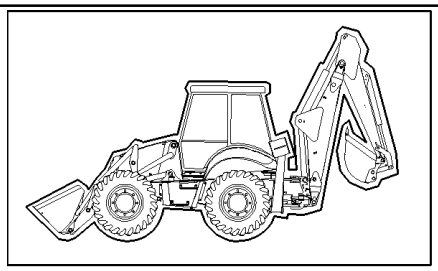

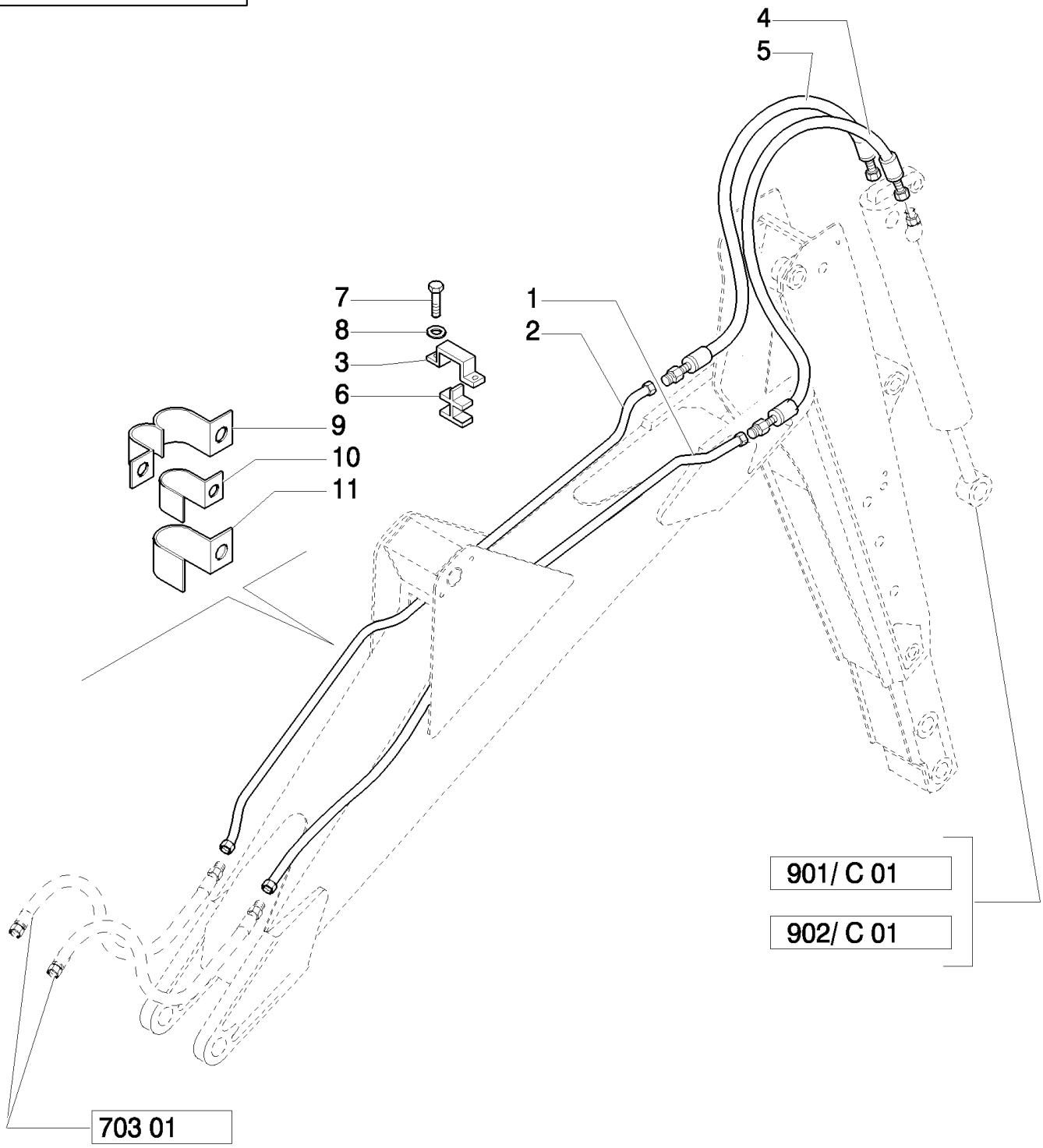

LB115.B EUR BACKHOE LOADER (1/05-)

703(03) PEDAL-OPERATED TELESCOPIC DIPPER HYDRAULIC SYSTEM

Ref	Part Number	Qty	Description
1	85815642	1	TUBE, HYD, 16 mm OD Tube
2	85815640	1	TUBE, HYD, 12 mm OD Tube
3	85803402	1	PLATE,
4	85817109	1	HOSE, FLEXIBLE,
5	85817108	1	HOSE, FLEXIBLE,
6	85802532	1	CLIP, HOSE,
7	16043621	2	BOLT, Hex, M8 x 25, 8.8,
8	11193879	2	WASHER, SPRING, Belleville, M8.4,
9	85802529	2	CLAMP,
10	85802527	2	CLAMP,
11	85802528	2	CLAMP,

Mechanical Version

703(04) PEDAL-OPERATED TELESCOPIC DIPPER HYDRAULIC SYSTEM

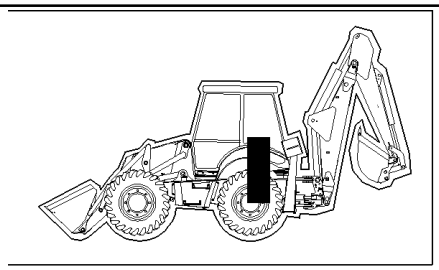

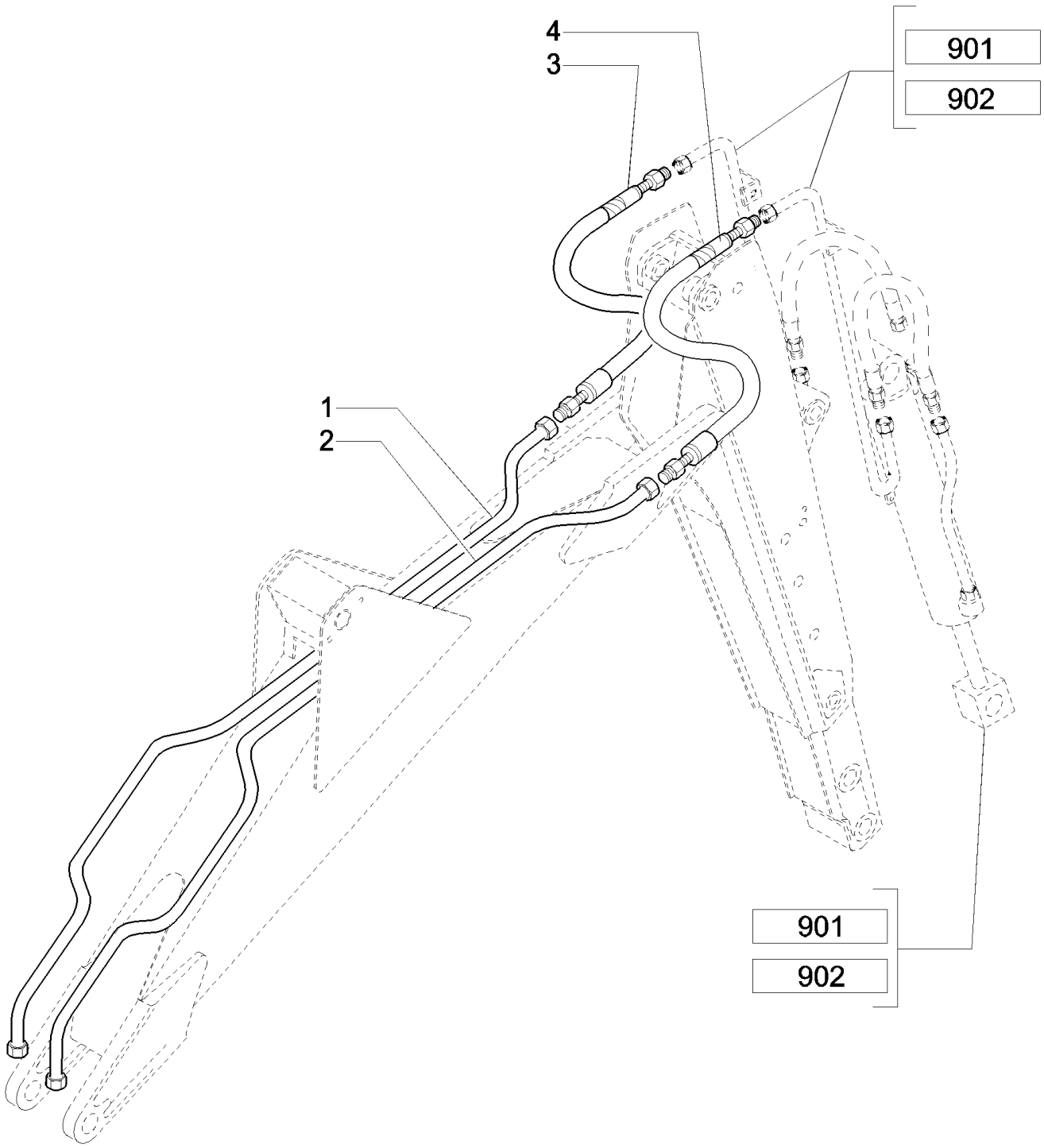

LB115.B EUR BACKHOE LOADER (1/05-)

703(04) PEDAL-OPERATED TELESCOPIC DIPPER HYDRAULIC SYSTEM

Ref	Part Number	Qty	Description
1	85815674	1	TUBE, HYD, 20 mm OD Tube
2	85815676	1	TUBE, HYD, 16 mm OD Tube
3	85817106	1	HOSE, FLEXIBLE, , Includes 3A
3A	9991976	2	O-RING, -018, 90 Duro, .739" ID x .070" Thk,
4	85817107	1	HOSE, FLEXIBLE, , Includes 4A
4A	9992069	2	O-RING, -016, 90 Duro, .614" ID x .070" Thk,

Mechanical Version

703(05) PEDAL-OPERATED TELESCOPIC DIPPER HYDRAULIC SYSTEM

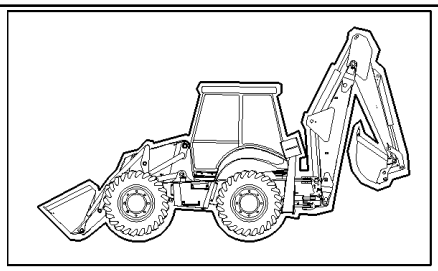

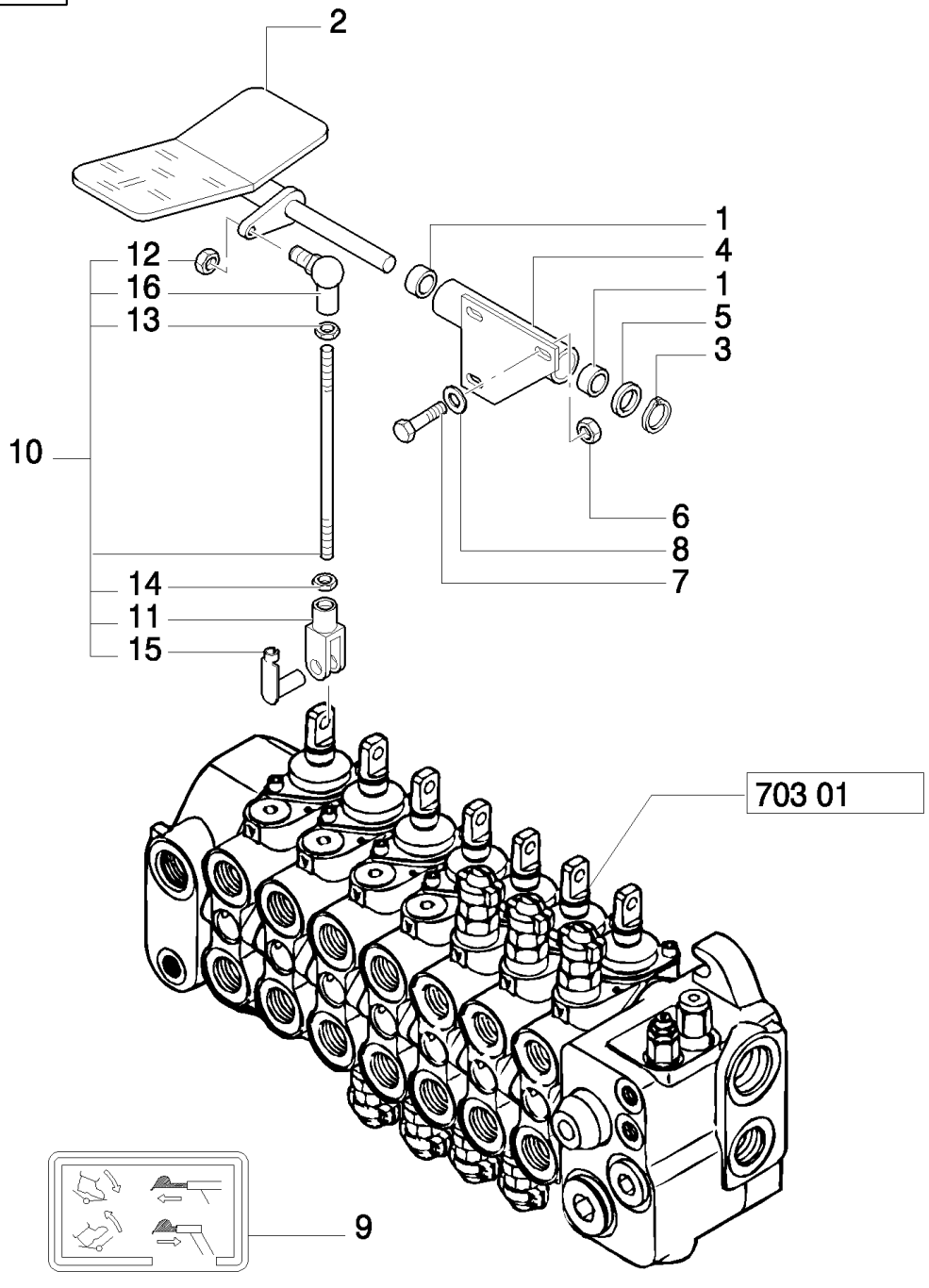

LB115.B EUR BACKHOE LOADER (1/05-)

703(05) PEDAL-OPERATED TELESCOPIC DIPPER HYDRAULIC SYSTEM

Ref	Part Number	Qty	Description
1	85802494	1	BUSHING, ASSY
2	85805362	1	PEDAL,
3	N663114S36	1	RING, SNAP, {PP:83911366}
4	85805358	1	SUPPORT,
5	14496901	1	WASHER, M16 x 30 x 3,
6	16104111	3	NUT, M8 x 1.25, Cl 8,
7	16043621	3	BOLT, Hex, M8 x 25, 8.8,
8	11193879	3	WASHER, SPRING, Belleville, M8.4,
9	85803786	1	DECAL,
10	85805364	1	TIE-ROD,
11	11991971	1	CLEVIS,
12	14048221	1	NUT, M8 x 1.25, Cl 10,
13	16102311	1	NUT, Thin, M8 x 1.25, Cl 04,
14	16102911	1	NUT, Thin, M8 x 1.25, Cl 04, LH,
15	85802738	1	PIN,
16	85804375	1	BALL JOINT,

Mechanical Version

705(01) SEAT BELTS, 2" & 3"

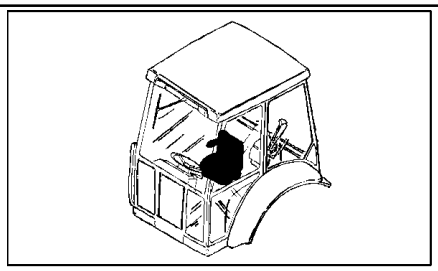

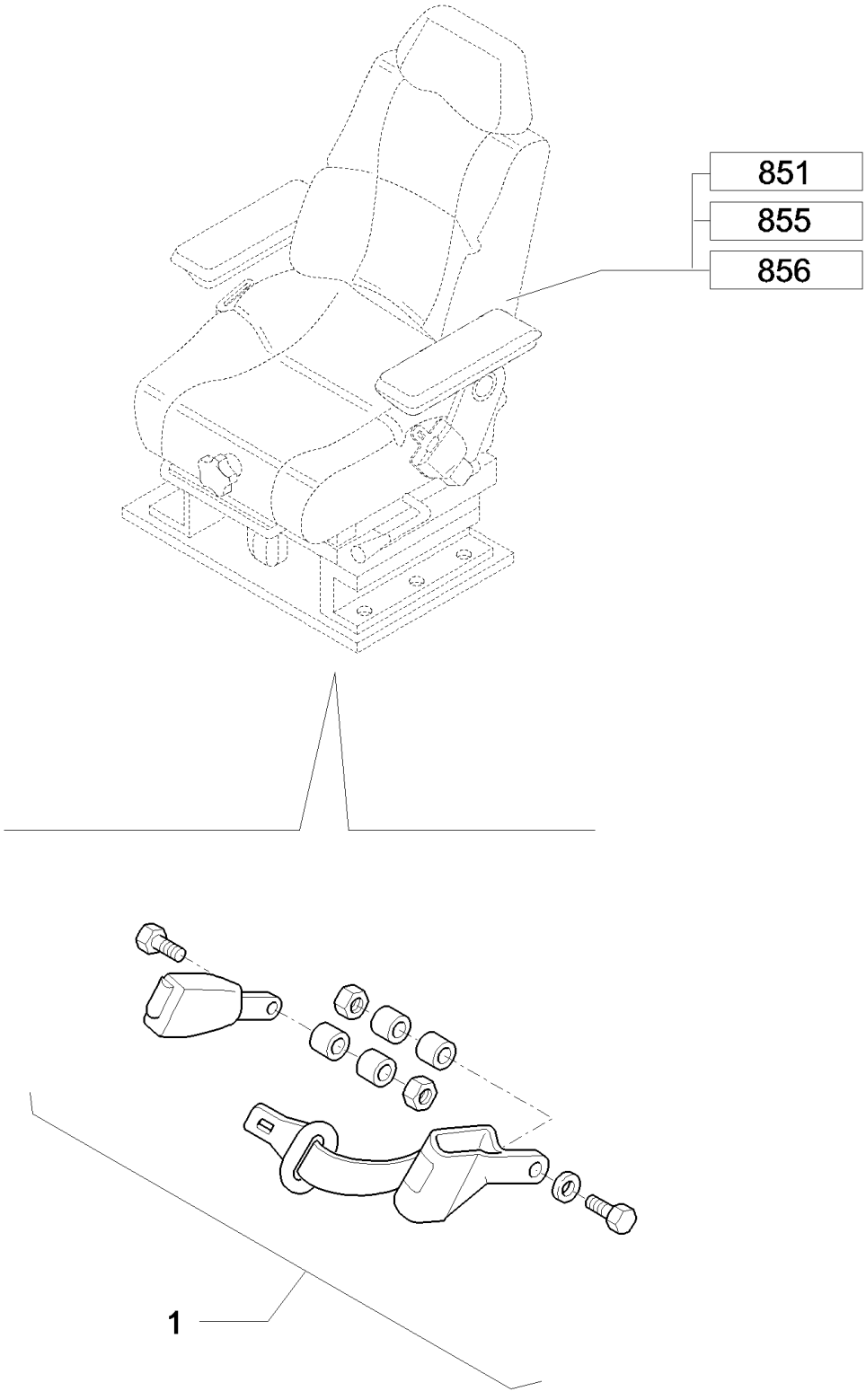

LB115.B EUR BACKHOE LOADER (1/05-)

705(01) SEAT BELTS, 2" & 3"

Ref	Part Number	Qty	Description
1	85815578	1	SEAT BELT, 2" (Equip.705)
1	85815579	1	SEAT BELT, 3" (Equip.706)

707(01) KIT-HYDRAULIC SYSTEM WITH 3 SECTION FOR BUCKET 4X1 / 6X1

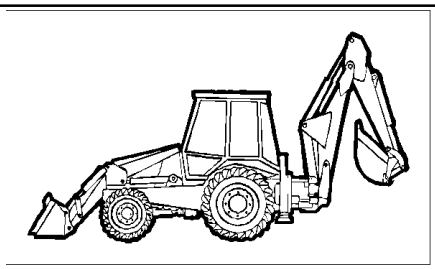

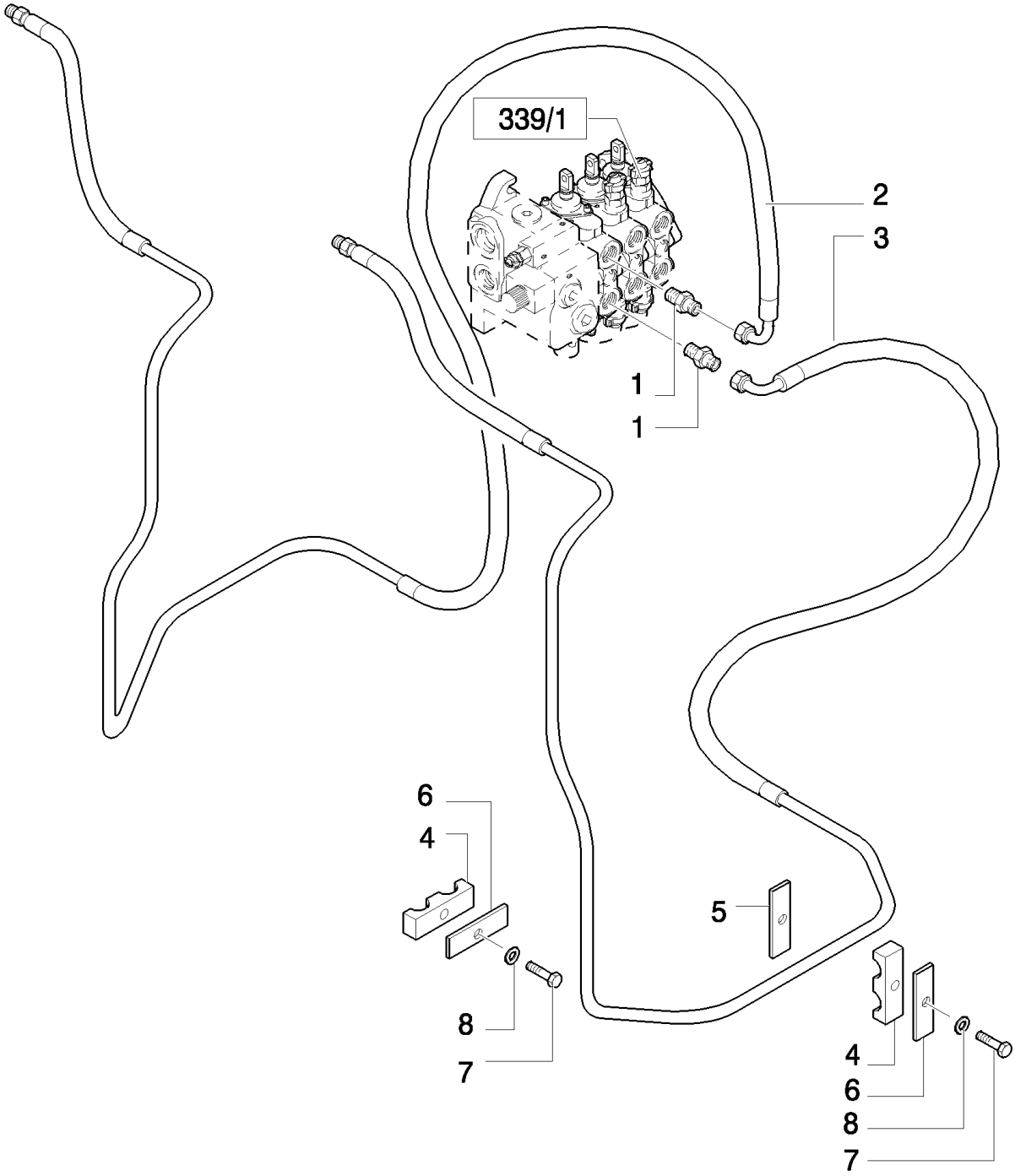

LB115.B EUR BACKHOE LOADER (1/05-)

707(01) KIT-HYDRAULIC SYSTEM WITH 3 SECTION FOR BUCKET 4X1 / 6X1

Ref	Part Number	Qty	Description
1	85805258	2	CONNECTOR, HYD., 9/16"-16 ORS x 1 1/16"-12, O-Ring,
2	85805341	1	TUBE, HYD, RH
3	85805342	1	TUBE, HYD, LH
4	85805193	4	CLAMP,
5	85805340	2	PLATE,
6	85805195	4	PLATE,
7	16043821	4	SCREW, Hex, M8 x 30, 8.8,
8	11193979	4	WASHER, SPRING, Belleville, M8.4,

707(02) KIT-HYDRAULIC SYSTEM WITH 3 SECTION FOR BUCKET 4X1 / 6X1

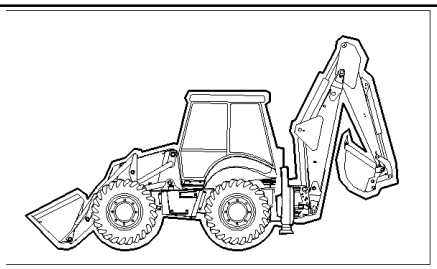

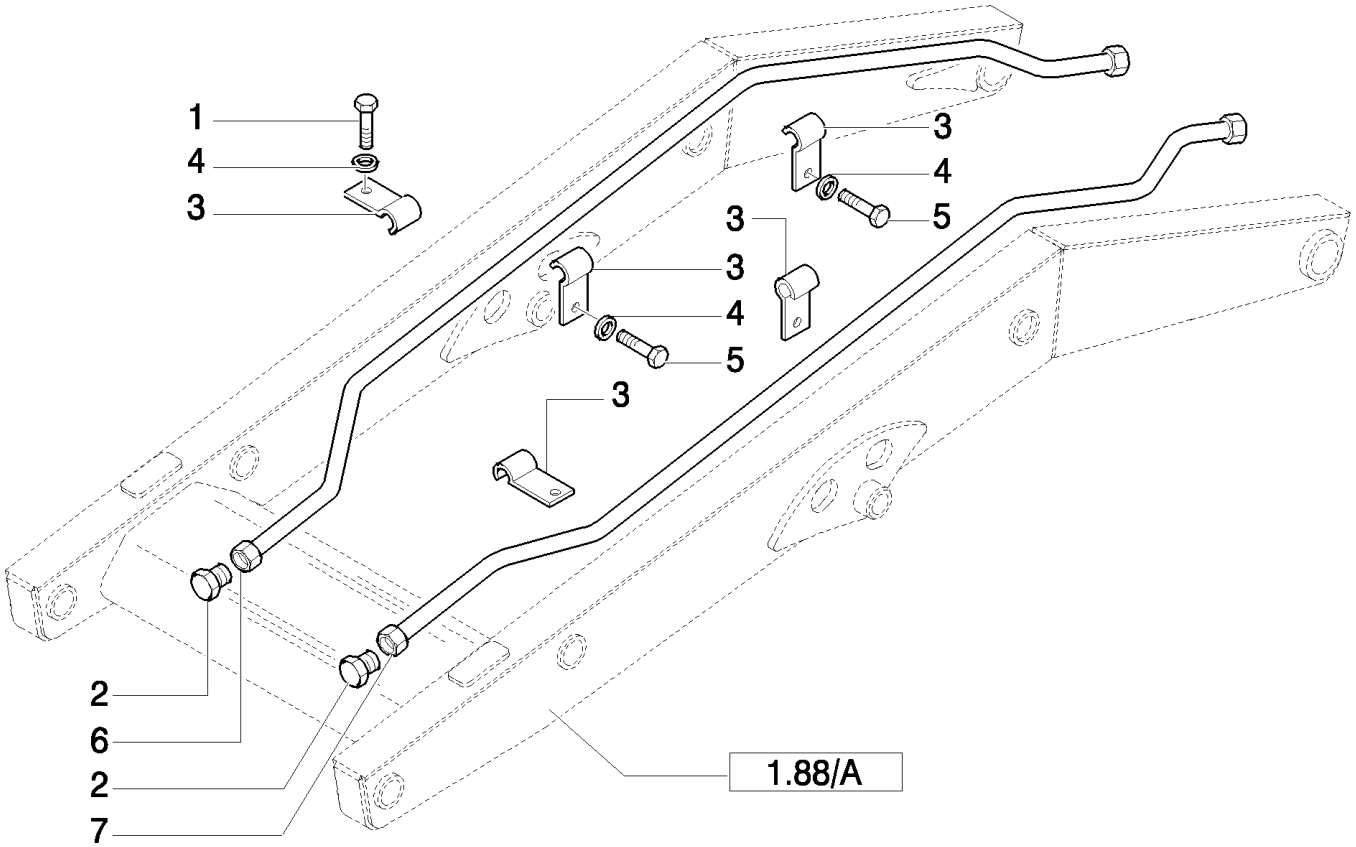

LB115.B EUR BACKHOE LOADER (1/05-)

707(02) KIT-HYDRAULIC SYSTEM WITH 3 SECTION FOR BUCKET 4X1 / 6X1

Ref	Part Number	Qty	Description
1	16044021	2	SCREW, Hex, M8 x 40, 8.8,
2	85803408	2	PLUG,
3	85805247	6	CLAMP,
4	11193979	6	WASHER, SPRING, Belleville, M8.4,
5	16043821	4	SCREW, Hex, M8 x 30, 8.8,
6	85813052	1	TUBE, HYD, RH
7	85813053	1	TUBE, HYD, LH

708(01) THREE-SECTION CONTROL VALVE FOR LOADER

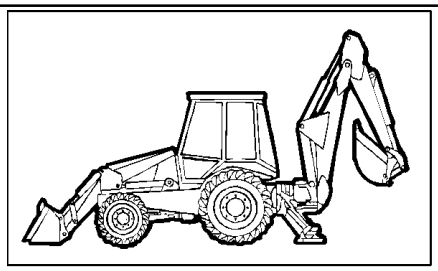

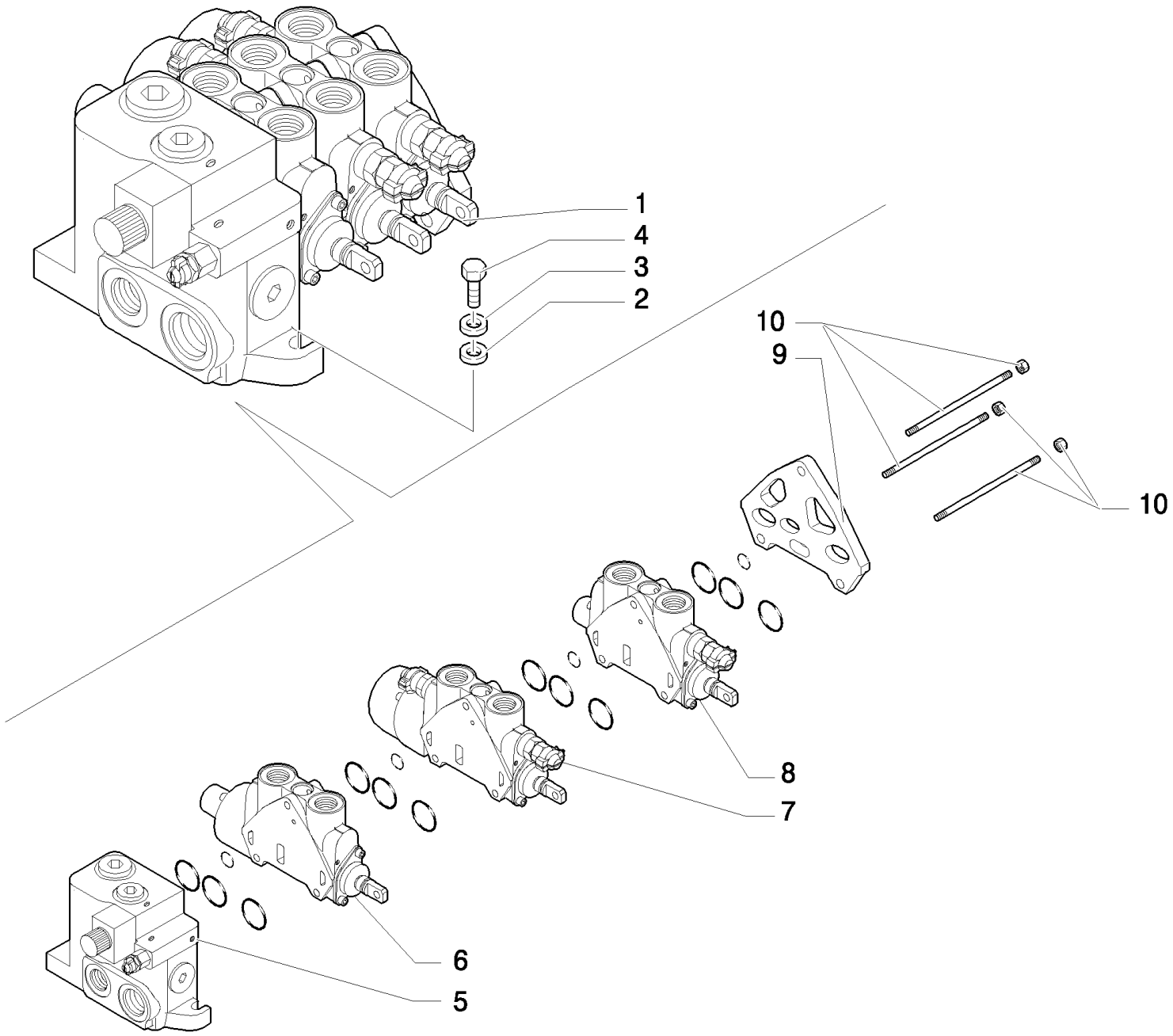

LB115.B EUR BACKHOE LOADER (1/05-)

708(01) THREE-SECTION CONTROL VALVE FOR LOADER

Ref	Part Number	Qty	Description
1	87305111	1	VALVE, CONTROL,
2	11190679	3	WASHER, SPRING, Belleville, M10.5,
3	13578621	3	WASHER, 10x30x2
4	11234721	3	SCREW, Hex, M10 x 1.25 x 45, 8.8,
5	85825468	1	VALVE SECTION, HYD, , See Page 302 02
6	87558567	1	SECTOR, , See Page 302 03
7	85825469	1	VALVE SECTION, HYD, , See Page 302 04
8	87346911	1	ELEMENT, JOINING, , See Page 708 02
9	85826924	1	SECTOR, TOOTHED,
10	85825474	1	TIE-ROD, THREADED,

708(02) THREE-SECTION CONTROL VALVE FOR LOADER

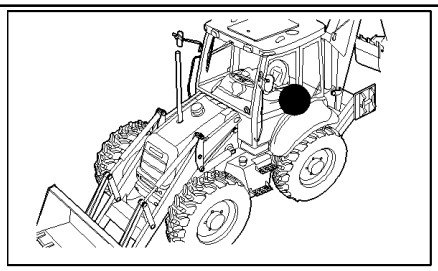

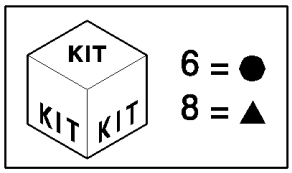

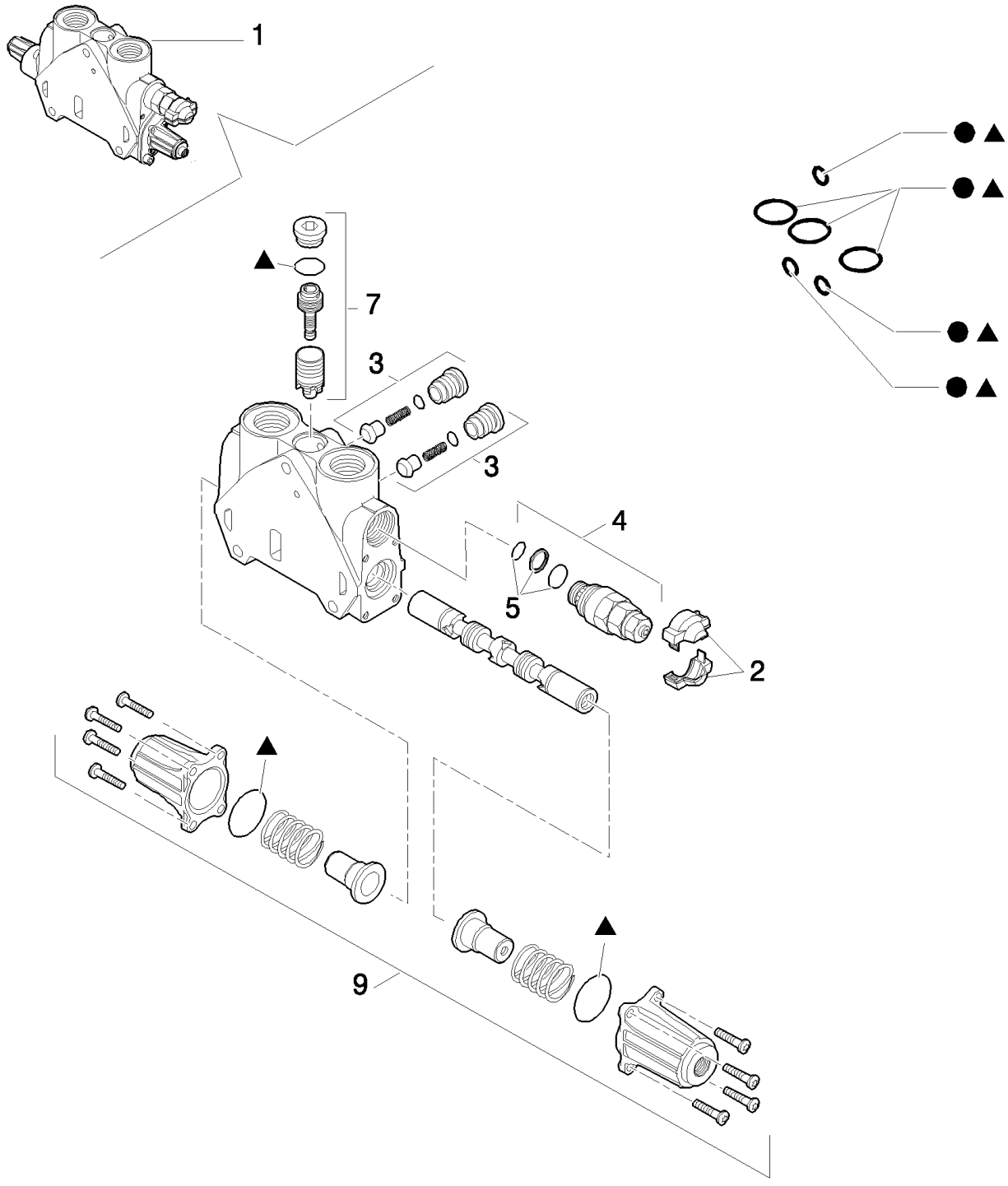

Pilot Control Version

LB115.B EUR BACKHOE LOADER (1/05-)

708(02) THREE-SECTION CONTROL VALVE FOR LOADER

Ref	Part Number	Qty	Description
1	87346911	1	ELEMENT, JOINING,
2	85811934	1	KIT, Cover
3	85811938	2	VALVE, CHECK, Valve
4	85812116	1	VALVE, PRESSURE RELIEF, , Includes 5, 124 BAR
5	85811933	1	KIT, SEALS, Valve Seals
6	85819148	1	KIT, SEALS, Seals
7	85819378	1	KIT, SEALS, Valve
8	85824281	1	KIT, SEALS, Seals
9	87346914	1	KIT, Cover Assy

Pilot Control Version

724(01) HYDRAULIC SYSTEM FOR HAMMER (CENTER PIVOT)

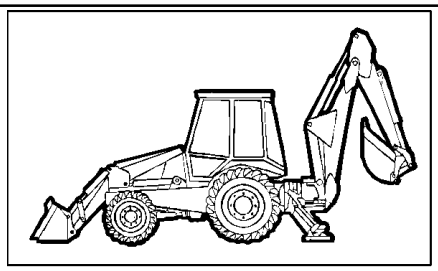

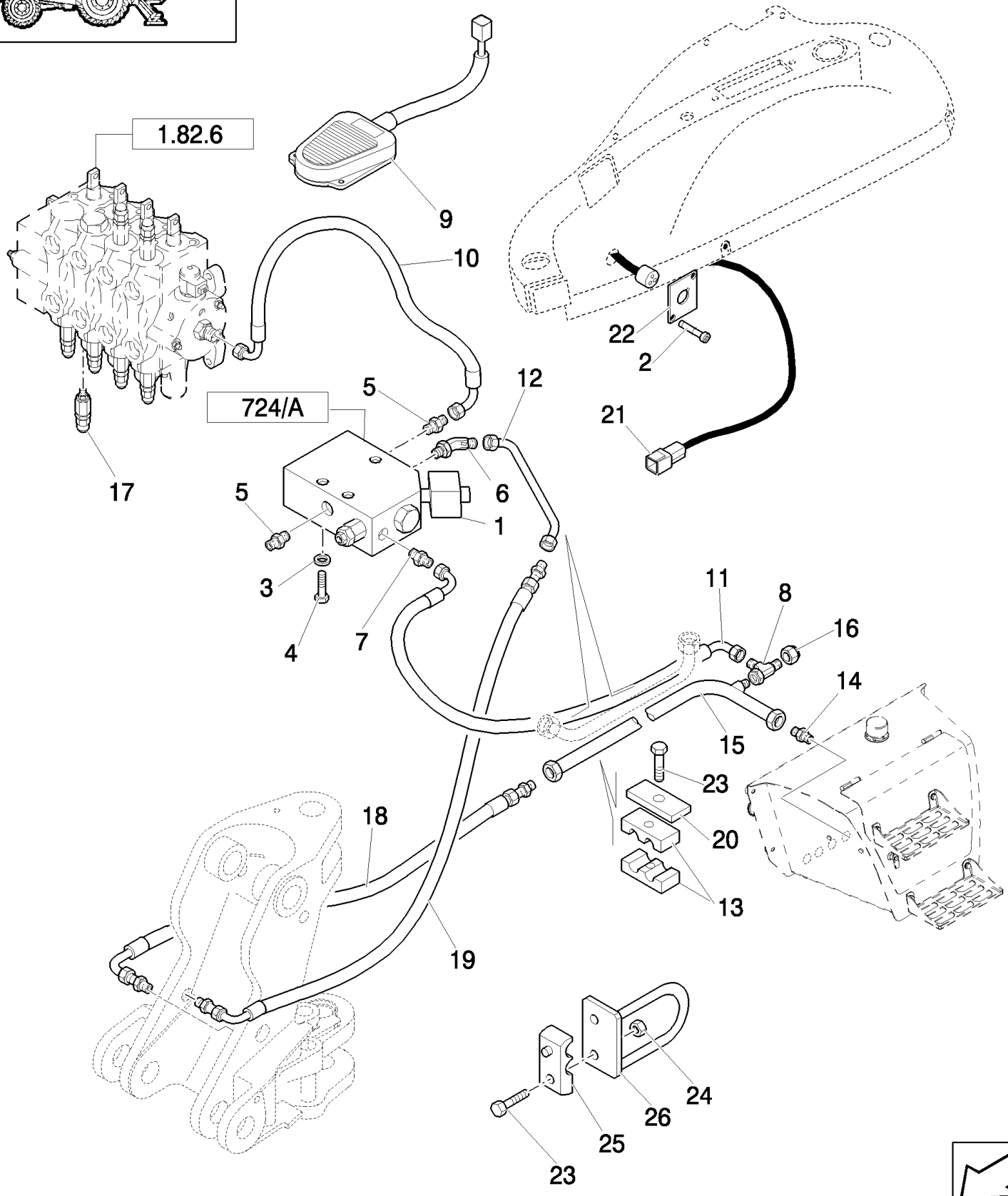

LB115.B EUR BACKHOE LOADER (1/05-)

724(01) HYDRAULIC SYSTEM FOR HAMMER (CENTER PIVOT)

Ref	Part Number	Qty	Description
1	87358199	1	VALVE, HYDRAULIC,
2	13272477	2	SCREW, Cross Pan Hd, M4 x 20, 12.9,
3	11193879	3	WASHER, SPRING, Belleville, M8.4,
4	16044821	3	SCREW, Hex, M8 x 80, 8.8,
5	85803486	2	CONNECTOR, HYD.,
6	85803487	1	ELBOW,
7	83963371	1	CONNECTOR, HYD.,
8	85807876	1	TEE,
9	85826123	1	SWITCH, ASSY,
10	85803428	1	HOSE, FLEXIBLE,
11	85817633	1	HOSE, FLEXIBLE,
12	85817629	1	TUBE, HYD,
13	87390530	1	CLAMP,
14	85802801	1	CONNECTOR, HYD.,
15	85826987	1	TUBE, HYD,
16	83987627	1	PLUG,
17	9968595	1	VALVE, PRESSURE RELIEF,
18	85817635	1	HOSE, FLEXIBLE,
19	85817634	1	HOSE, FLEXIBLE,
20	87390531	1	PLATE,
21	85819237	1	HARNESS, WIRE,
22	85816760	1	PLATE,
23	16044221	2	SCREW, Hex, M8 x 50, 8.8,
24	16104111	1	NUT, M8 x 1.25, Cl 8,
25	85804442	2	BRACKET,
26	85802214	2	SUPPORT,

724(02) HYDRAULIC SYSTEM FOR HAMMER (CENTER PIVOT)

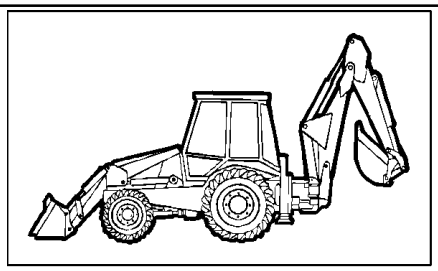

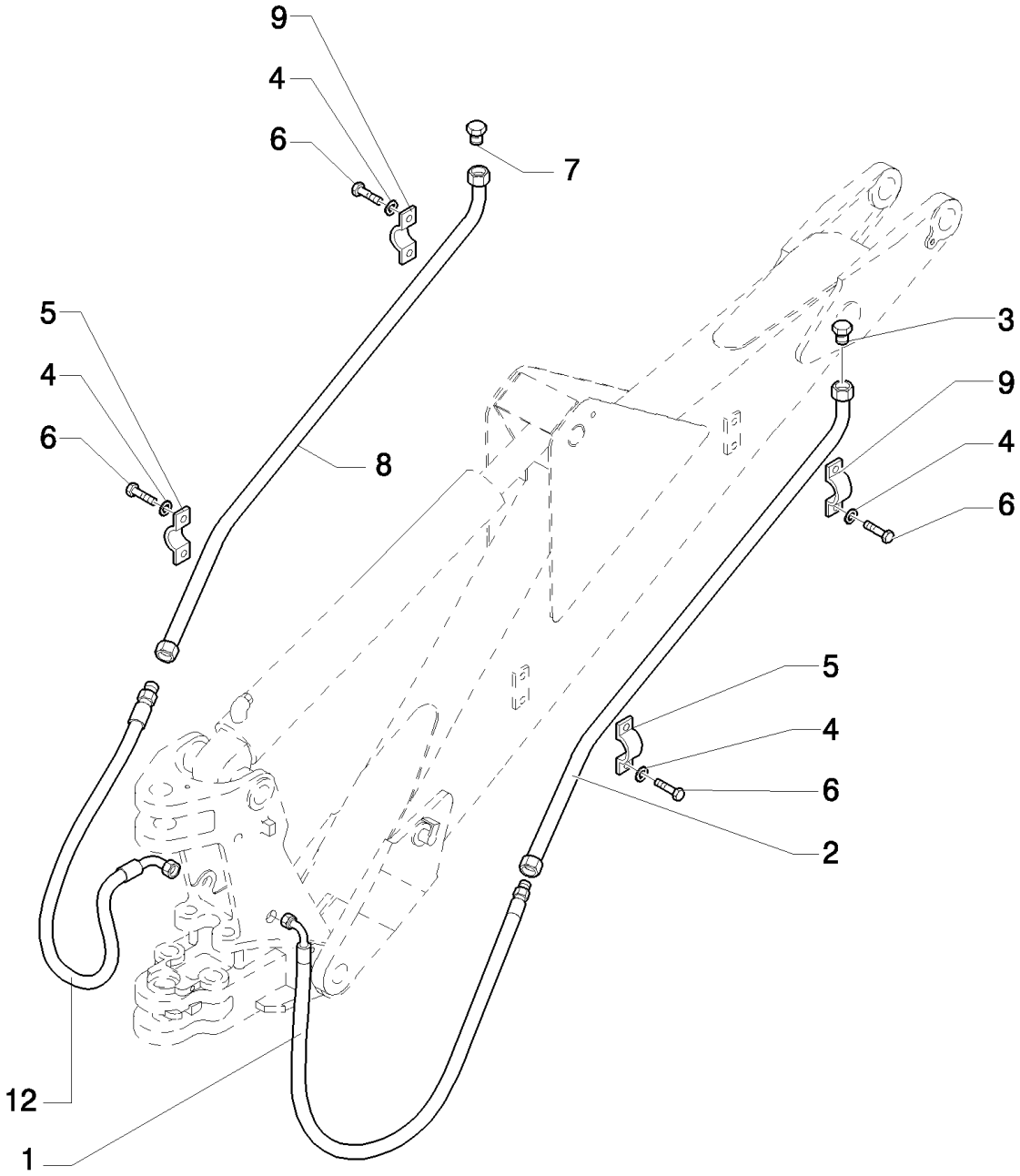

LB115.B EUR BACKHOE LOADER (1/05-)

724(02) HYDRAULIC SYSTEM FOR HAMMER (CENTER PIVOT)

Ref	Part Number	Qty	Description
1	85819619	1	HOSE, FLEXIBLE,
2	85802454	1	TUBE, HYD,
3	85801397	1	PLUG,
4	11190579	8	WASHER, SPRING, Belleville, M10.5,
5	87310951	2	CLAMP,
6	10979221	8	SCREW, Hex, M10 x 16, 8.8, Full Thd, M6x16
7	85801452	1	PLUG,
8	85803184	1	TUBE, HYD,
9	87310952	2	CLAMP,
12	85819618	1	HOSE, FLEXIBLE,

724/ A(01) REAR HAMMER CONTROL VALVE

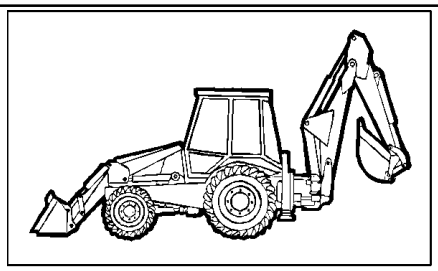

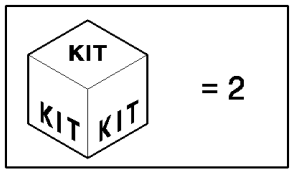

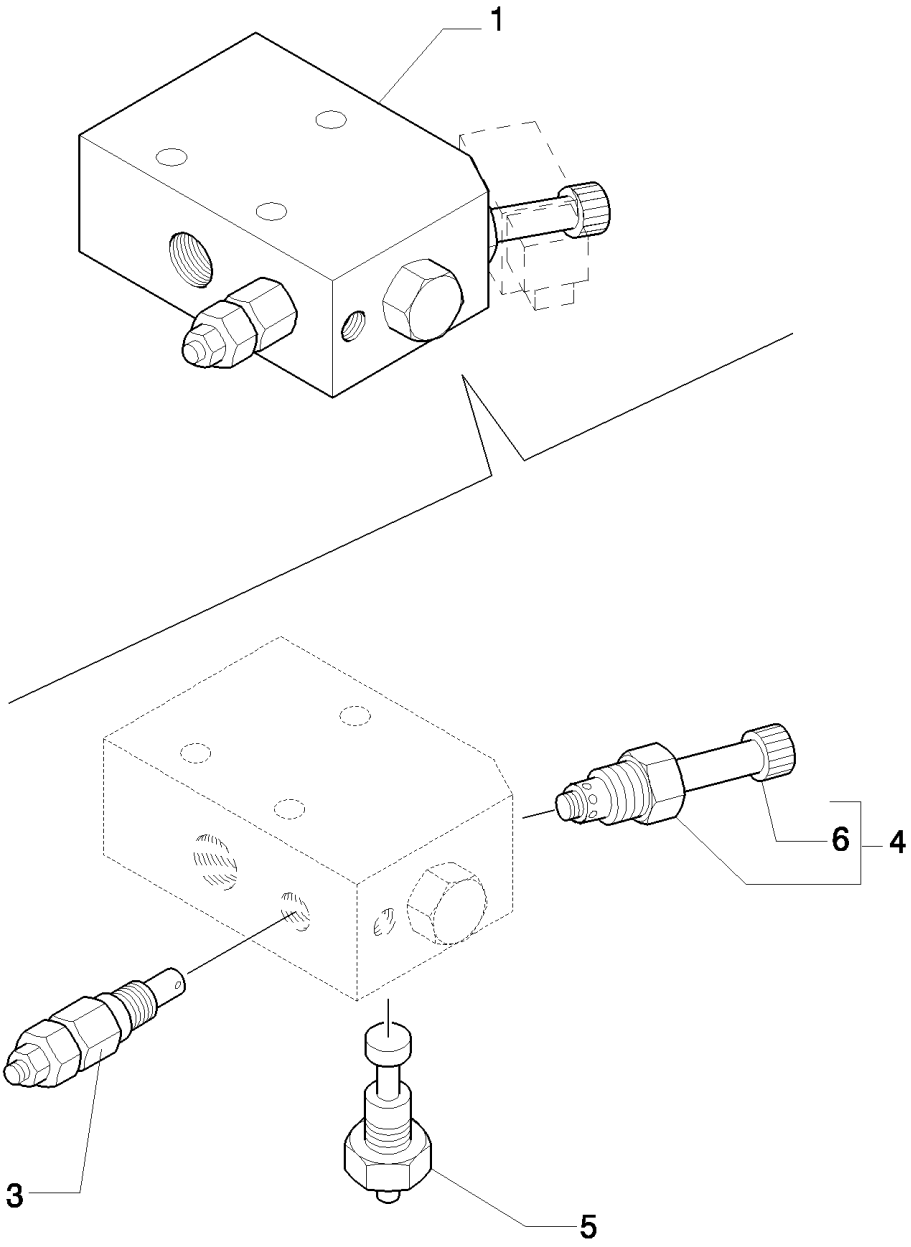

LB115.B EUR BACKHOE LOADER (1/05-)

724/ A(01) REAR HAMMER CONTROL VALVE

Ref	Part Number	Qty	Description
1	87358199	1	VALVE, HYDRAULIC, ASSY
2	9970181	1	KIT, SEALS, Gaskets
3	9970178	1	VALVE, PRESSURE RELIEF, Assy
4	9970180	1	VALVE, HYDRAULIC, Assy
5	9970179	1	VALVE, HYDRAULIC, Assy
6	9970384	1	NUT,

724/ 1(01) HYDRAULIC SYSTEM FOR HAMMER (SIDE SHIFT)

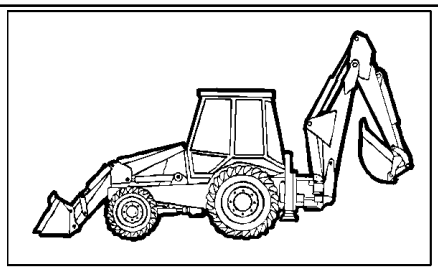

LB115.B EUR BACKHOE LOADER (1/05-)

724/ 1(01) HYDRAULIC SYSTEM FOR HAMMER (SIDE SHIFT)

Ref	Part Number	Qty	Description
1	87358199	1	VALVE, HYDRAULIC,
2	87357715	1	SENDER UNIT,
3	11193879	3	WASHER, SPRING, Belleville, M8.4,
4	16044821	3	SCREW, Hex, M8 x 80, 8.8,
5	85803486	2	CONNECTOR, HYD.,
6	85803487	1	ELBOW,
7	390951S36	1	CONNECTOR, HYD., {PP:83963371}
8	85807876	1	TEE,
9	85826123	1	SWITCH, ASSY,
10	87516888	1	HOSE, FLEXIBLE,
11	85803428	1	HOSE, FLEXIBLE,
12	85819237	1	HARNESS, WIRE,
13	85816760	1	PLATE,
14	13272477	2	SCREW, Cross Pan Hd, M4 x 20, 12.9,
16	85820123	1	HOSE, FLEXIBLE,
17	85820122	1	HOSE, FLEXIBLE,
18	85817633	1	HOSE, FLEXIBLE,
19	85817421	1	TUBE, HYD,
20	85803346	2	BRACKET,
21	87390530	1	CLAMP,
22	85802801	1	CONNECTOR, HYD., 1-11/16"-12 ORS x 1-5/16"-12 SAE O-ring
23	85819091	1	TUBE, HYD, , UP TO S/N 031049425
23	85827926	1	TUBE, HYD, , FROM TO S/N 031049426
24	83987627	1	PLUG,
25	85812116	1	VALVE, PRESSURE RELIEF,
26	87390531	1	PLATE,

Mechanical Version

724/ 2(01) HYDRAULIC SYSTEM FOR HAMMER (CENTER PIVOT)

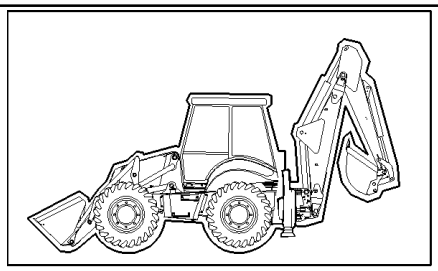

Mechanical Version

LB115.B EUR BACKHOE LOADER (1/05-)

724/ 2(01) HYDRAULIC SYSTEM FOR HAMMER (CENTER PIVOT)

Ref	Part Number	Qty	Description
1	87358199	1	VALVE, HYDRAULIC,
2	87357715	1	SENDER UNIT,
3	11193879	3	WASHER, SPRING, Belleville, M8.4,
4	16044821	3	SCREW, Hex, M8 x 80, 8.8,
5	85803486	2	CONNECTOR, HYD.,
6	85803487	1	ELBOW, 45°
7	390951S36	1	CONNECTOR, HYD., {PP:83963371}
8	85807876	1	TEE,
9	85826123	1	SWITCH, ASSY,
10	87516888	1	HOSE, FLEXIBLE, L=MM.1150
11	85803428	1	HOSE, FLEXIBLE,
12	85819237	1	HARNESS, WIRE,
13	85816760	1	PLATE,
14	13272477	2	SCREW, Cross Pan Hd, M4 x 20, 12.9,
15	85817633	1.	HOSE, FLEXIBLE,
16	85817629	1	TUBE, HYD,
17	87390530	1	CLAMP,
18	85802214	2	SUPPORT,
19	16104111	1	NUT, M8 x 1.25, Cl 8,
20	85804442	2	BRACKET,
21	16044221	1	SCREW, Hex, M8 x 50, 8.8,
22	85802801	1	CONNECTOR, HYD., 1-11/16"-12 ORS x 1-5/16"-12 SAE O-ring
23	85826987	1	TUBE, HYD,
24	83987627	1	PLUG,
25	85812116	1	VALVE, PRESSURE RELIEF,
26	85817635	1	HOSE, FLEXIBLE, 1400 mm (55-1/8 in)
27	85817634	1	HOSE, FLEXIBLE, 1750 mm (68-29/32 in)
28	87390531	1	PLATE,

Mechanical Version

724/ 2(02) HYDRAULIC SYSTEM FOR HAMMER

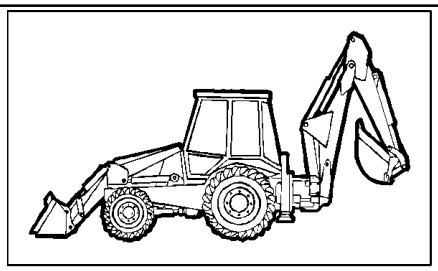

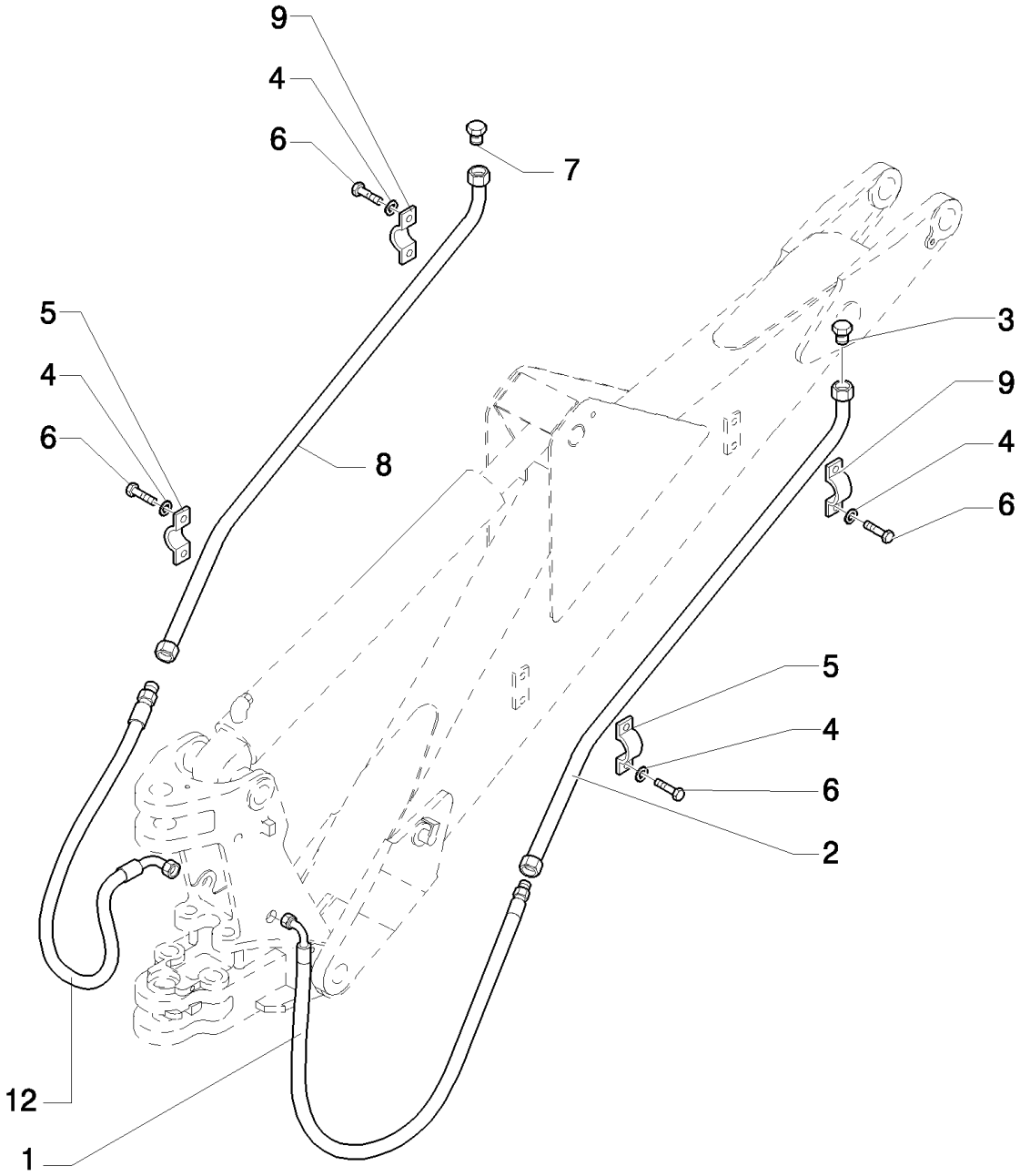

LB115.B EUR BACKHOE LOADER (1/05-)

724/ 2(02) HYDRAULIC SYSTEM FOR HAMMER

Ref	Part Number	Qty	Description
1	85819619	1	HOSE, FLEXIBLE,
2	85802454	1	TUBE, HYD,
3	85801397	1	PLUG,
4	11190579	8	WASHER, SPRING, Belleville, M10.5,
5	87310951	2	CLAMP,
6	10979221	8	SCREW, Hex, M10 x 16, 8.8, Full Thd,
7	85801452	1	PLUG,
8	85803184	1	TUBE, HYD,
9	87310952	2	CLAMP,
12	85819618	1	HOSE, FLEXIBLE,

Mechanical Version

724/ 3(01) HYDRAULIC SYSTEM FOR HAMMER (CENTER PIVOT)

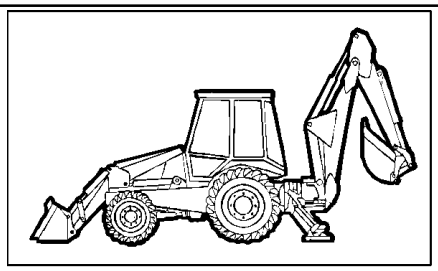

Pilot Control Version

LB115.B EUR BACKHOE LOADER (1/05-)

724/ 3(01) HYDRAULIC SYSTEM FOR HAMMER (CENTER PIVOT)

Ref	Part Number	Qty	Description
1	87358199	1	VALVE, HYDRAULIC,
2	87357715	1	SENDER UNIT,
3	11193879	3	WASHER, SPRING, Belleville, M8.4,
4	16044821	3	SCREW, Hex, M8 x 80, 8.8,
5	85803486	2	CONNECTOR, HYD.,
6	85803487	1	ELBOW,
7	390951S36	1	CONNECTOR, HYD., {PP:83963371}
8	85807876	1	TEE,
9	85826123	1	SWITCH, ASSY,
10	85802776	1	HOSE, FLEXIBLE,
11	85803428	1	HOSE, FLEXIBLE,
12	85819237	1	HARNESS, WIRE,
13	85816760	1	PLATE,
14	13272477	2	SCREW, Cross Pan Hd, M4 x 20, 12.9,
15	85817633	1	HOSE, FLEXIBLE,
16	85817629	1	TUBE, HYD,
17	87390530	1	CLAMP,
18	85802214	2	SUPPORT,
19	16104111	1	NUT, M8 x 1.25, Cl 8,
20	85804442	2	BRACKET,
21	16044221	1	SCREW, Hex, M8 x 50, 8.8,
22	85802801	1	CONNECTOR, HYD., 1-11/16"-12 ORSx1-5/16"-12 SAE O-ring
23	85826987	1	TUBE, HYD, , Only for LB 90.B - LB95.B - LB110.B - LB115.B
24	83987627	1	PLUG,
25	85812116	1	VALVE, PRESSURE RELIEF,
26	85817635	1	HOSE, FLEXIBLE, 1400 mm (55-1/8 in)
27	85817634	1	HOSE, FLEXIBLE, 1750 mm (68-29/32 in)
28	87390531	1	PLATE,

Pilot Control Version

724/ 3(02) HYDRAULIC SYSTEM FOR HAMMER (CENTER PIVOT)

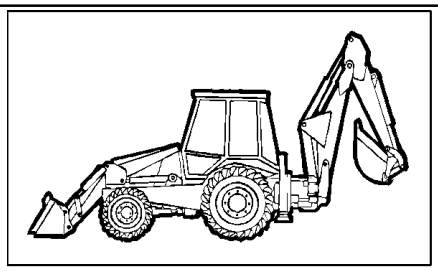

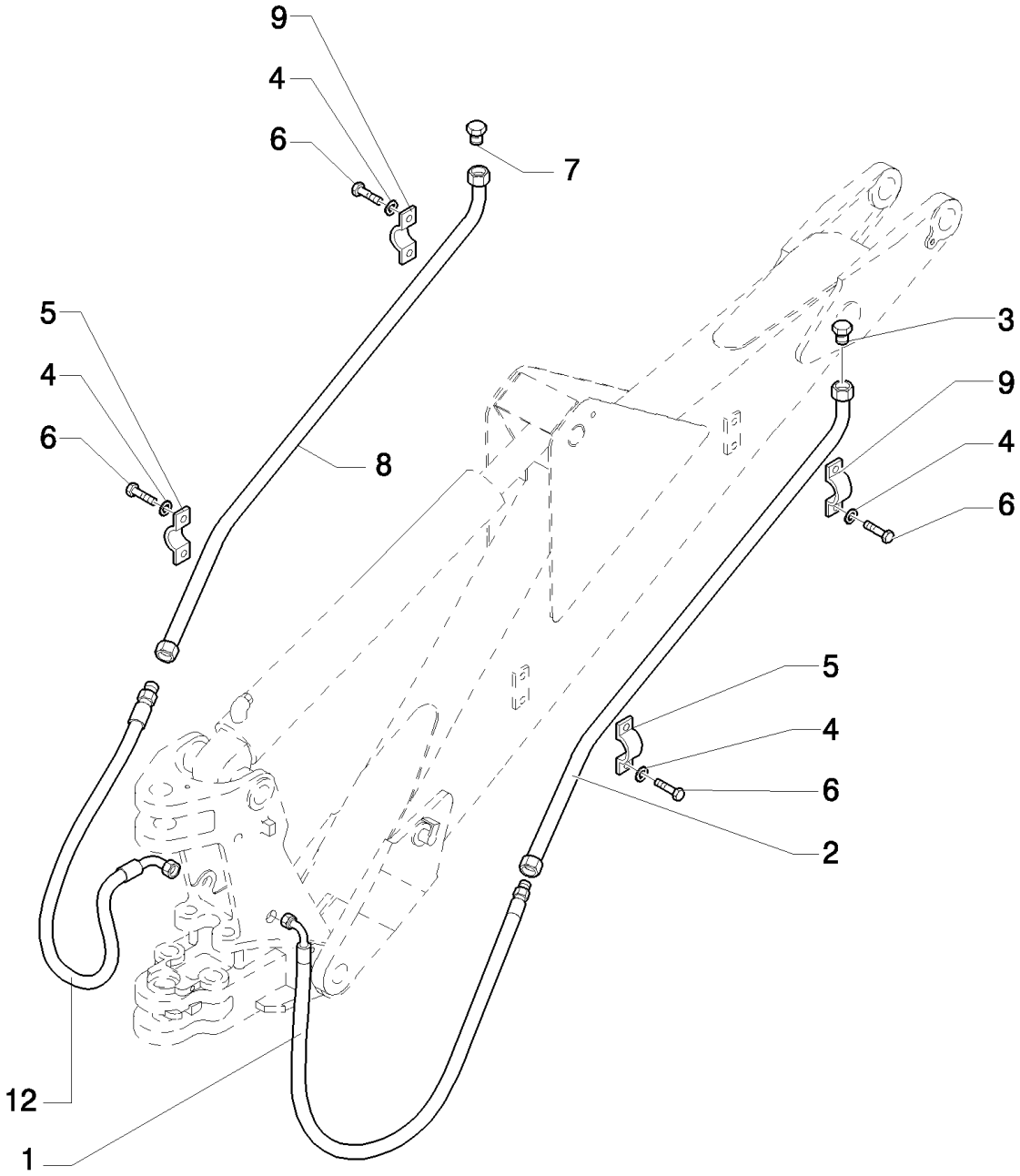

Pilot Control Version

LB115.B EUR BACKHOE LOADER (1/05-)

724/ 3(02) HYDRAULIC SYSTEM FOR HAMMER (CENTER PIVOT)

Ref	Part Number	Qty	Description
1	85819619	1	HOSE, FLEXIBLE,
2	85802454	1	TUBE, HYD,
3	85801397	1	PLUG,
4	11190579	8	WASHER, SPRING, Belleville, M10.5,
5	87310951	2	CLAMP,
6	10979221	4	SCREW, Hex, M10 x 16, 8.8, Full Thd, M6x16
7	85801452	1	PLUG,
8	85803184	1	TUBE, HYD,
9	87310952	2	CLAMP,
12	85819618	1	HOSE, FLEXIBLE,

Pilot Control Version

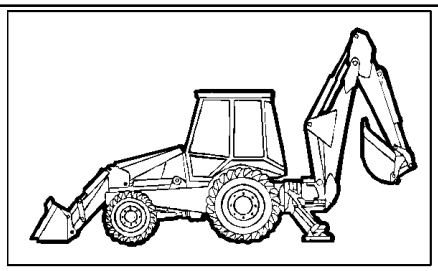

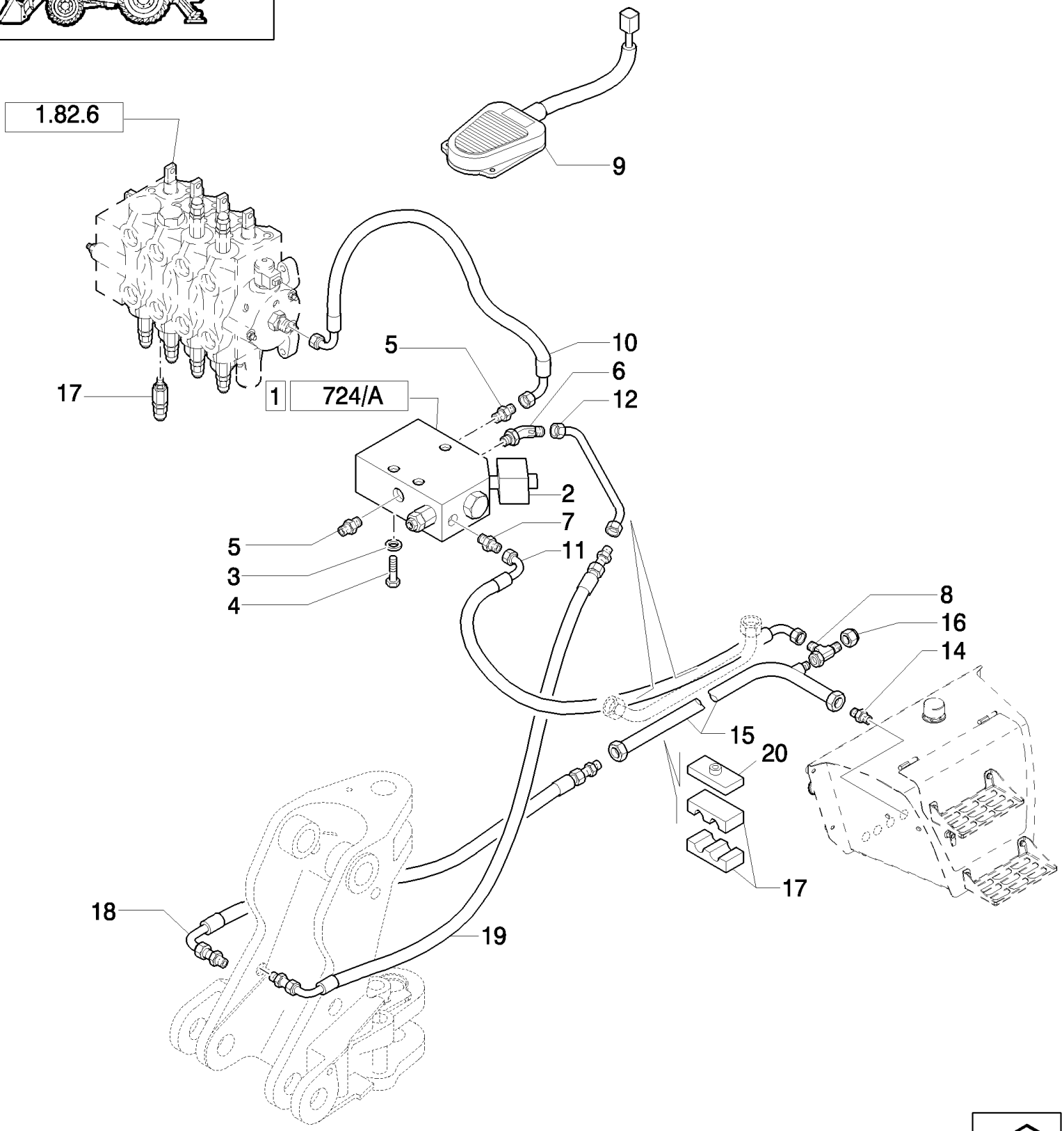
1.82.6
9
5
10
6
12
17
1
724/A
2
7
11
5
3
4
8
16
14
15
20
17
18
19

LB115.B EUR BACKHOE LOADER (1/05-)

724/ 5(01) HYDRAULIC SYSTEM FOR HAMMER (4WS)

Ref	Part Number	Qty	Description
1	87358199	1	VALVE, HYDRAULIC,
2	87357715	1	SENDER UNIT,
3	11193879	3	WASHER, SPRING, Belleville, M8.4,
4	16044821	3	SCREW, Hex, M8 x 80, 8.8,
5	85803486	2	CONNECTOR, HYD.,
6	85803487	1	ELBOW,
7	390951S36	1	CONNECTOR, HYD., {PP:83963371}
8	85807876	1	TEE,
9	85826123	1	SWITCH, ASSY,
10	85803428	1	HOSE, FLEXIBLE,
11	85817633	1	HOSE, FLEXIBLE,
12	85817629	1	TUBE, HYD,
13	87390530	1	CLAMP,
14	85802801	1	CONNECTOR, HYD., 1-11/16"-12 ORSx1-5/16"-12 SAE O-ring
15	85826987	1	TUBE, HYD, , BSN XXX
16	83987627	1	PLUG, , ASN XXX
17	85812116	1	VALVE, PRESSURE RELIEF,
18	85817635	1	HOSE, FLEXIBLE, 1400 mm (55-1/8 in)
19	85817634	1	HOSE, FLEXIBLE, 1750 mm (68-29/32 in)
20	87390531	1	PLATE,

724/ 6(01) HYDRAULIC SYSTEM FOR HAMMER (SIDE SHIFT EUROPA)

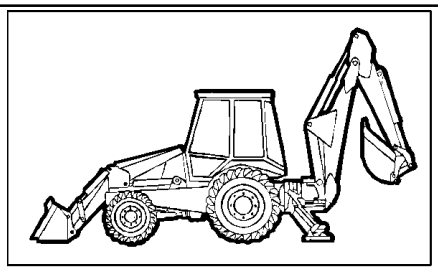

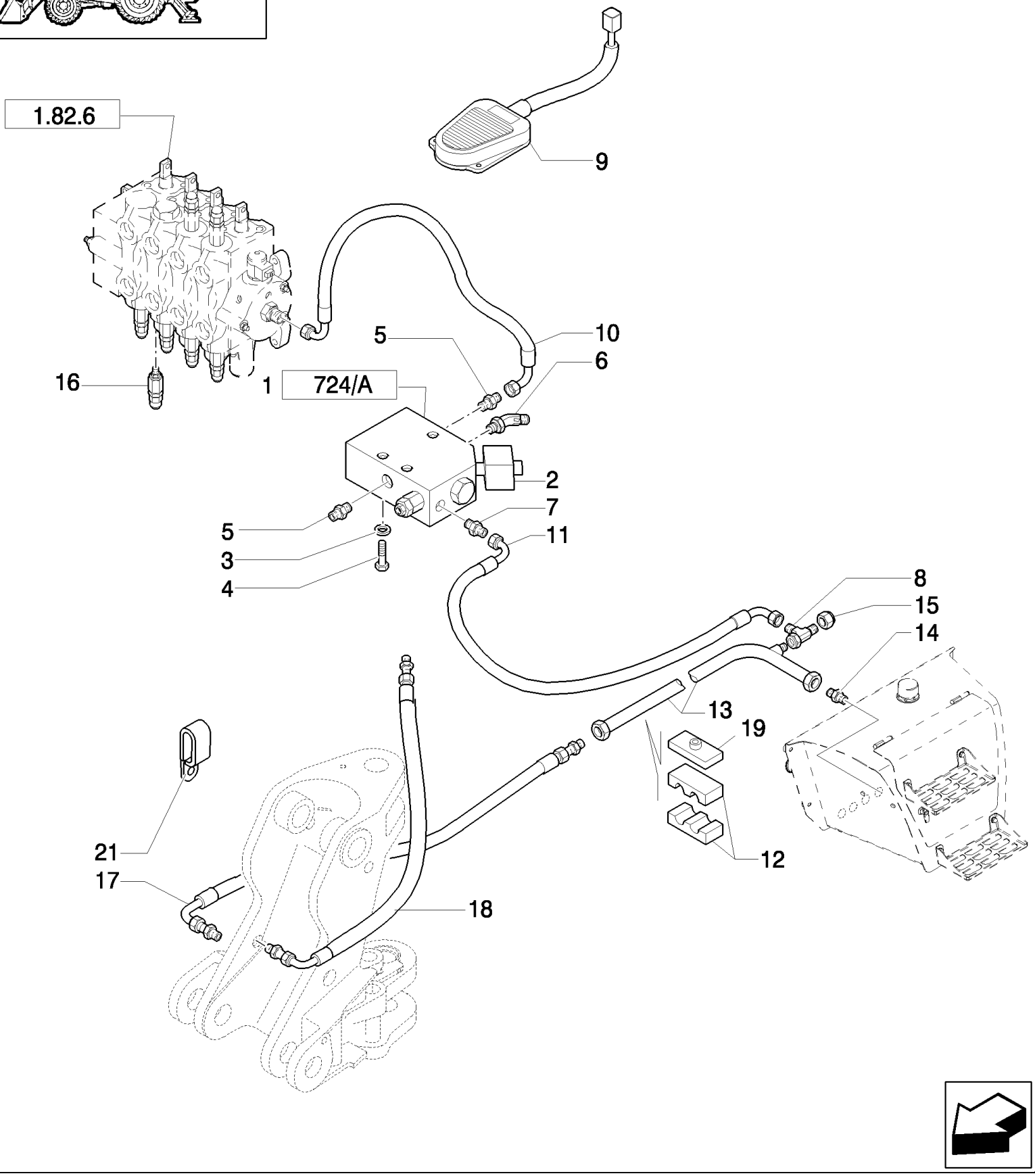

LB115.B EUR BACKHOE LOADER (1/05-)

724/ 6(01) HYDRAULIC SYSTEM FOR HAMMER (SIDE SHIFT EUROPA)

Ref	Part Number	Qty	Description
1	87358199	1	VALVE, HYDRAULIC,
2	87357715	1	SENDER UNIT,
3	11193879	3	WASHER, SPRING, Belleville, M8.4,
4	16044821	3	SCREW, Hex, M8 x 80, 8.8,
5	85803486	2	CONNECTOR, HYD.,
6	85803487	1	ELBOW,
7	390951S36	1	CONNECTOR, HYD., {PP:83963371}
8	85807876	2	TEE,
9	85826123	1	SWITCH, ASSY,
10	85803428	1	HOSE, FLEXIBLE,
11	85817633	1	HOSE, FLEXIBLE,
12	87390530	1	CLAMP,
13	85802801	1	CONNECTOR, HYD., 1-11/16"-12 ORSx1-5/16"-12 SAE O-ring
14	85827926	1	TUBE, HYD, , BSN XXX
15	83987627	1	PLUG,
16	85812116	1	VALVE, PRESSURE RELIEF,
17	85820122	1	HOSE, FLEXIBLE,
18	85820123	1	HOSE, FLEXIBLE,
19	87390531	1	PLATE,
21	85803346	2	BRACKET,

725(01) HAMMER KIT FROM LIFTING ARM TO DEMOLITION ARM

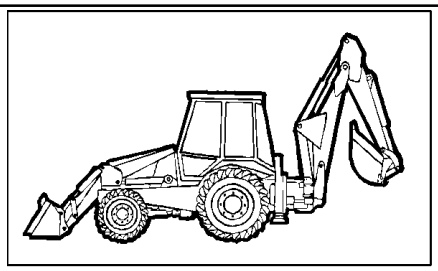

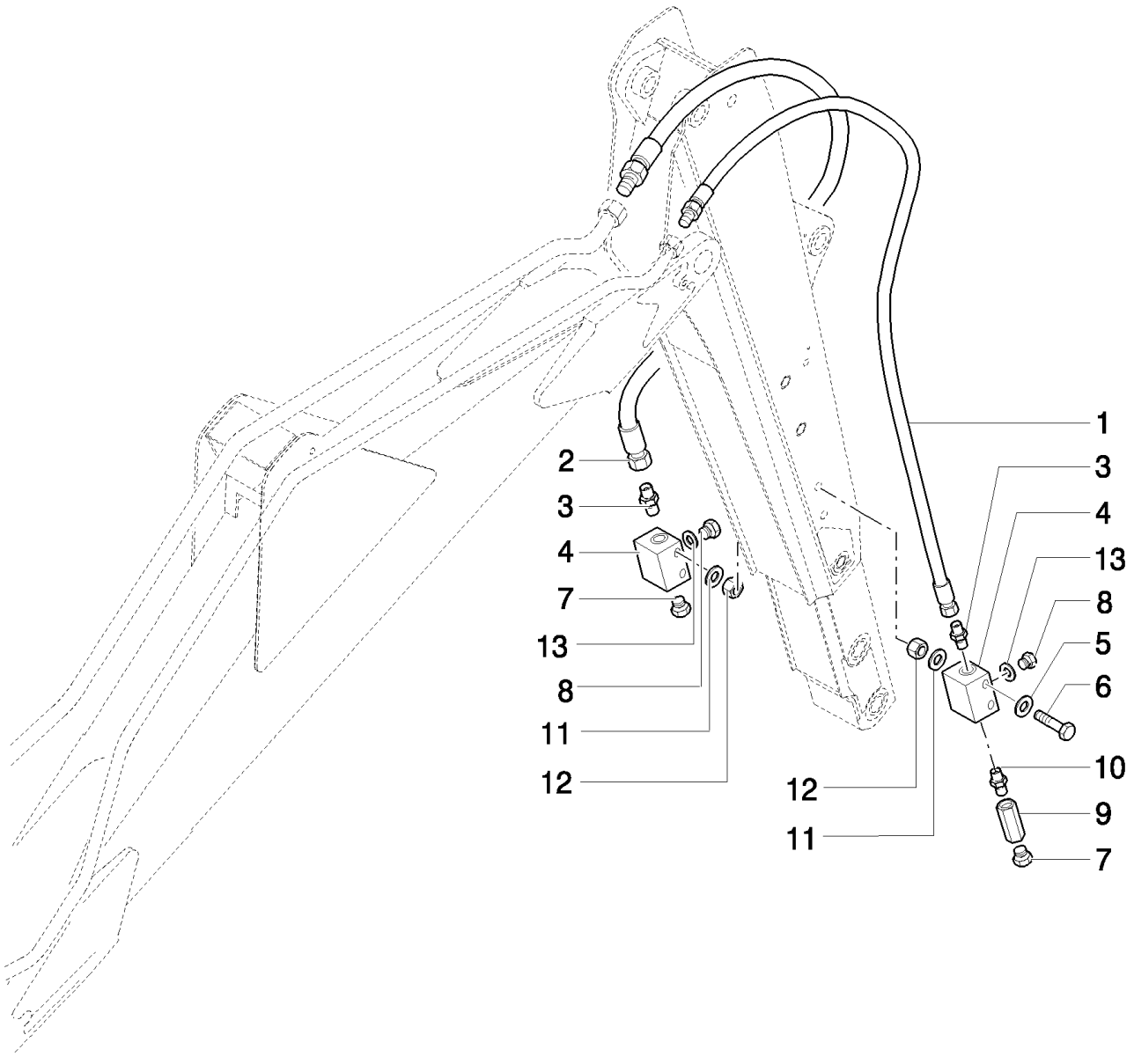

LB115.B EUR BACKHOE LOADER (1/05-)

725(01) HAMMER KIT FROM LIFTING ARM TO DEMOLITION ARM

Ref	Part Number	Qty	Description
1	85819621	1	HOSE, FLEXIBLE,
2	85819620	1	HOSE, FLEXIBLE,
3	85803486	2	CONNECTOR, HYD.,
4	85802247	2	BLOCK,
5	11193879	4	WASHER, SPRING, Belleville, M8.4,
6	16045021	4	SCREW, Hex, M8 x 90, 8.8,
7	85802457	2	PLUG,
8	85803409	2	PLUG,
9	85802372	1	VALVE, HYDRAULIC, 10 Bar
10	85804879	1	CONNECTOR, HYD.,
11	12647121	6	WASHER, M8 x 20 x 3,
12	14048211	2	NUT, M8 x 1.25, Cl 8,
13	167269	2	O-RING, 10-1, 90 Duro, .755" ID x .097" Thk,

Mechanical Version

727/ 2(01) HYDRAULIC SYSTEM PRESETTING FOR TELESCOPIC LINKS PEDAL OPERATED(SIDE SHIFT)

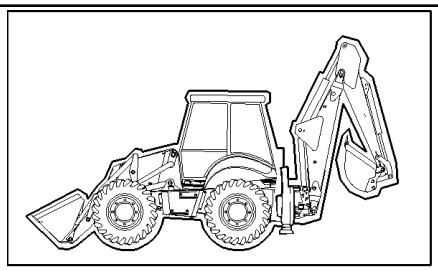

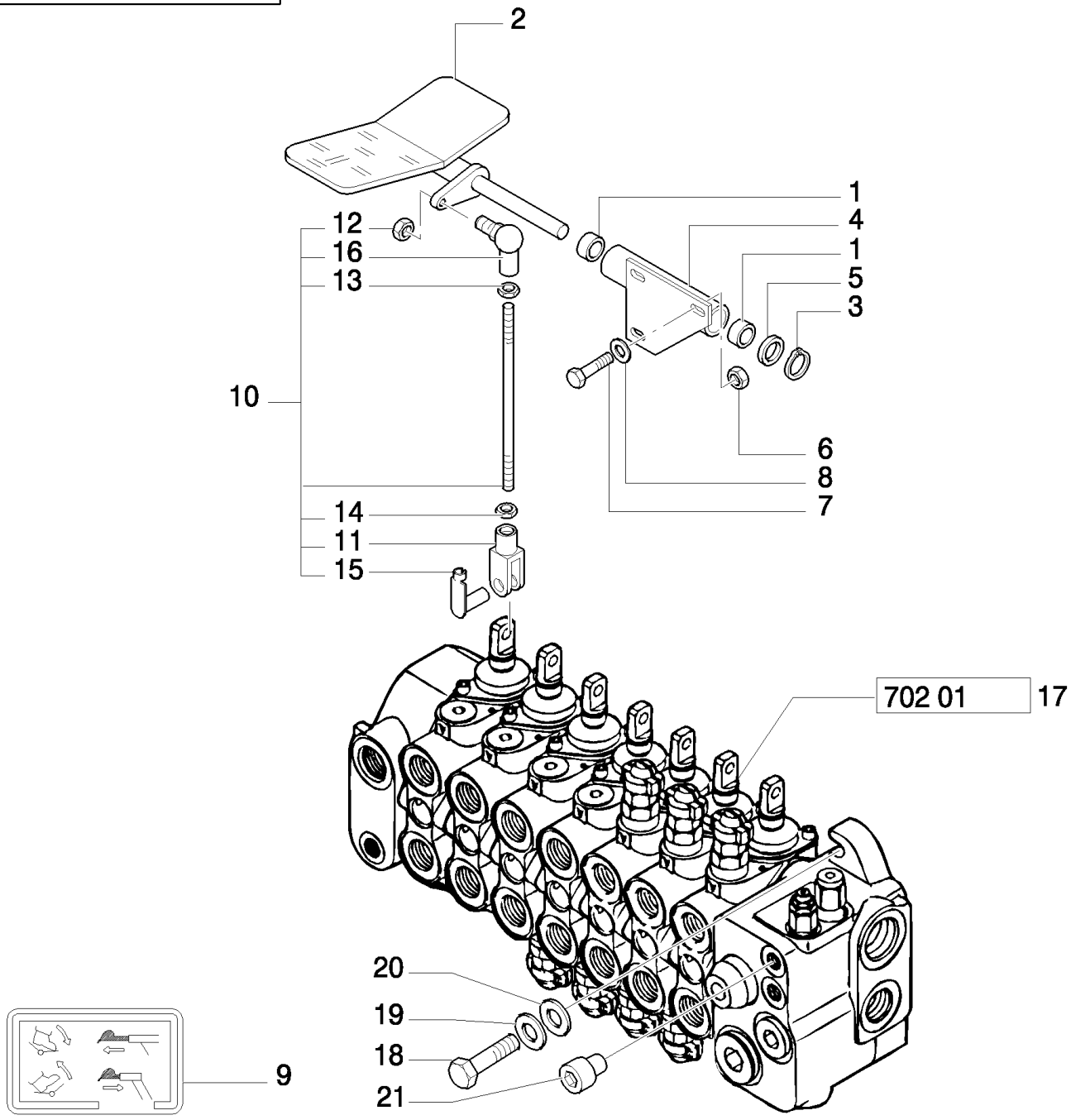

LB115.B EUR BACKHOE LOADER (1/05-)

727/ 2(01) HYDRAULIC SYSTEM PRESETTING FOR TELESCOPIC LINKS PEDAL OPERATED(SIDE SHIFT)

Ref	Part Number	Qty	Description
1	85802494	2	BUSHING, ASSY
2	85805362	1	PEDAL,
3	N663114S36	1	RING, SNAP, {PP:83911366}
4	85805358	1	SUPPORT,
5	14496901	1	WASHER, M16 x 30 x 3,
6	16104111	3	NUT, M8 x 1.25, Cl 8,
7	16043621	3	BOLT, Hex, M8 x 25, 8.8,
8	11193879	3	WASHER, SPRING, Belleville, M8.4,
9	85803786	1	DECAL,
10	85805364	1	TIE-ROD,
11	11991971	1	CLEVIS,
12	14048211	1	NUT, M8 x 1.25, Cl 8,
13	16102311	1	NUT, Thin, M8 x 1.25, Cl 04,
14	16102911	1	NUT, Thin, M8 x 1.25, Cl 04, LH,
15	85802738	1	PIN,
16	85804375	1	BALL JOINT,
17	85824224	1	VALVE, CONTROL, , UP TO S/N 031057761
17	87327763	1	VALVE, HYDRAULIC, , FROM TO S/N 031057762, UP TO S/N 031058525
17	87376085	1	VALVE, HYDRAULIC, , FROM TO S/N 031058526
18	15888721	3	SCREW, Hex, M10 x 1.25 x 55, 8.8,
19	11190679	3	WASHER, SPRING, Belleville, M10.5,
20	85818943	3	SPACER,
21	85802457	1	PLUG,

Mechanical Version

727/ 3(01) HYDRAULIC SYSTEM PRESETTING FOR TELESCOPIC LINKS PEDAL OPERATED(CENTER PIVOT)

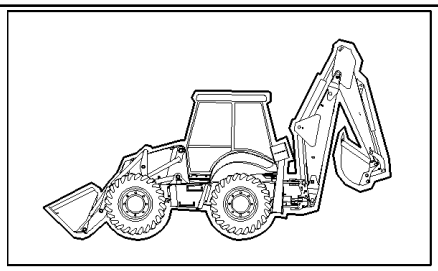

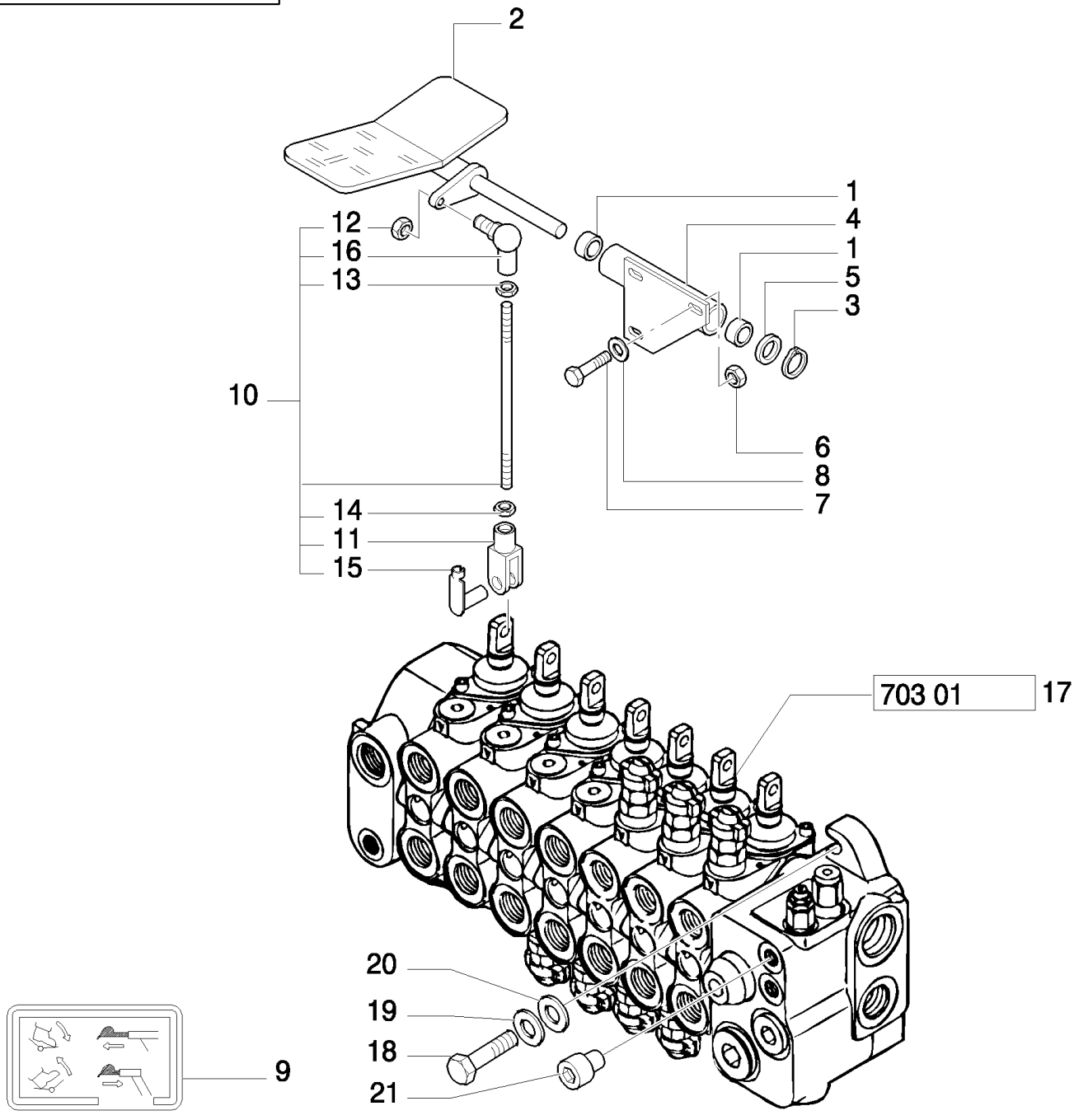

LB115.B EUR BACKHOE LOADER (1/05-)

727/ 3(01) HYDRAULIC SYSTEM PRESETTING FOR TELESCOPIC LINKS PEDAL OPERATED(CENTER PIVOT)

Ref	Part Number	Qty	Description
1	85802494	1	BUSHING, ASSY
2	85805362	1	PEDAL,
3	N663114S36	1	RING, SNAP, {PP:83911366}
4	85805358	1	SUPPORT,
5	14496901	1	WASHER, M16 x 30 x 3,
6	16104111	3	NUT, M8 x 1.25, Cl 8,
7	16043621	3	BOLT, Hex, M8 x 25, 8.8,
8	11193879	3	WASHER, SPRING, Belleville, M8.4,
9	85803786	1	DECAL,
10	85805364	1	TIE-ROD,
11	11991971	1	CLEVIS,
12	14048221	1	NUT, M8 x 1.25, Cl 10,
13	16102311	1	NUT, Thin, M8 x 1.25, Cl 04,
14	16102911	1	NUT, Thin, M8 x 1.25, Cl 04, LH,
15	85802738	1	PIN,
16	85804375	1	BALL JOINT,
17	85824223	1	VALVE, CONTROL, , UP TO S/N 031057761
17	87327762	1	VALVE, HYDRAULIC, , FROM TO S/N 031057762
18	15888724	3	SCREW, Hex, M10 x 1.25 x 55, 8.8,
19	11190679	3	WASHER, SPRING, Belleville, M10.5,
20	85818943	3	SPACER,
21	85802457	1	PLUG,

Mechanical Version

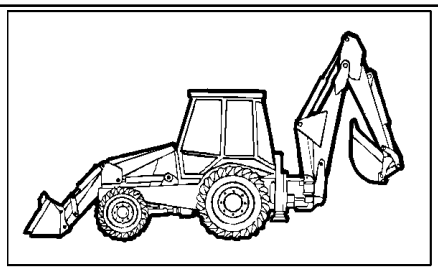

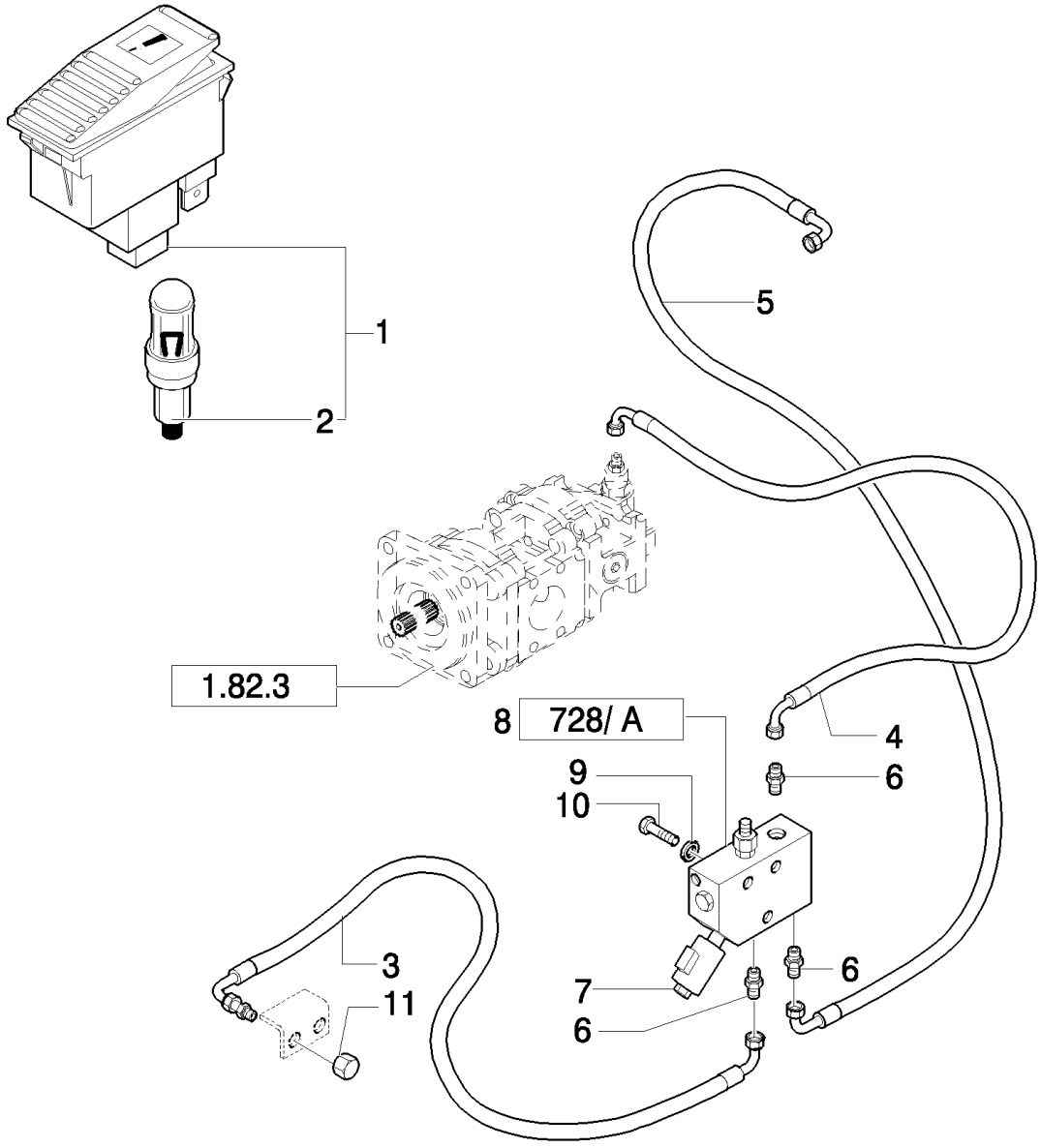
1
2
5
1.82.3
8
728/ A
4
9
6
10
3
11
7
6
6

LB115.B EUR BACKHOE LOADER (1/05-)

728(01) MANUAL HAMMER SYSTEM

Ref	Part Number	Qty	Description
1	85819072	1	SWITCH,
2	14143790	1	BULB, 12V - 1,2W
3	85812184	1	HOSE, FLEXIBLE, L=1230 mm
4	85825187	1	HOSE, FLEXIBLE, 680 MM.
5	85826092	1	HOSE, FLEXIBLE,
6	85803234	3	CONNECTOR, HYD.,
7	87357715	1	SENDER UNIT, , Includes 7
8	87358190	1	VALVE, HYDRAULIC,
9	11193879	3	WASHER, SPRING, Belleville, M8.4,
10	16044521	3	SCREW, Hex, M8 x 65, 8.8,
11	83987627	1	PLUG,

728(02) MANUAL HAMMER SYSTEM

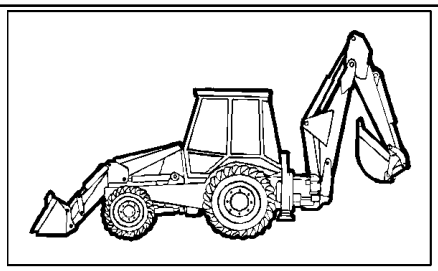

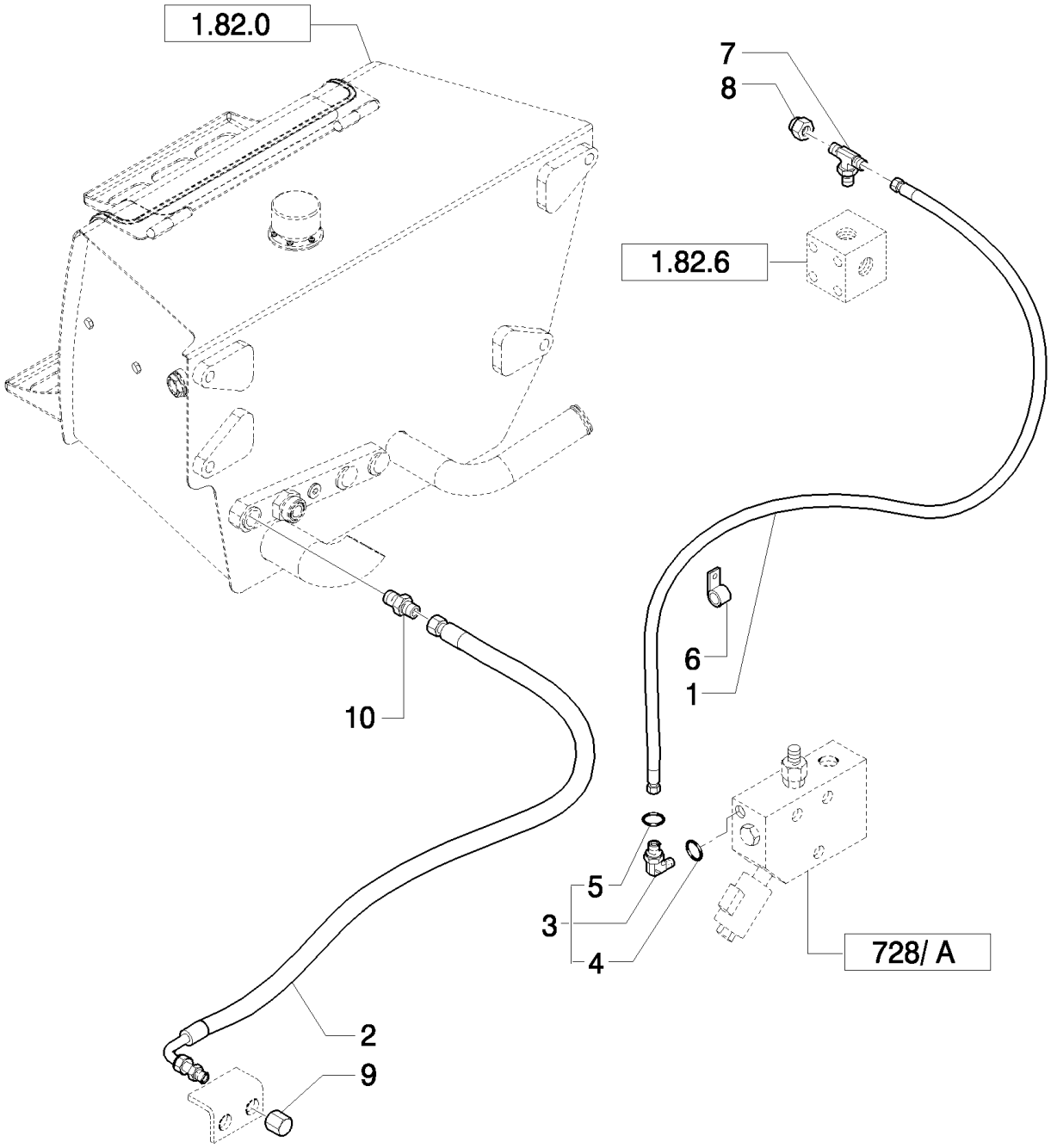

LB115.B EUR BACKHOE LOADER (1/05-)

728(02) MANUAL HAMMER SYSTEM

Ref	Part Number	Qty	Description
1	85803230	1	HOSE, FLEXIBLE, 1050MM.
2	85803231	1	HOSE, FLEXIBLE, L=900 mm
3	83961741	1	ELBOW, , Includes 4, 5
4	81844851	1	O-RING,
5	81845037	1	O-RING,
6	85803393	1	CLAMP,
7	85802780	1	TEE,
8	81871325	1	COVER,
9	83987627	1	PLUG,
10	85803241	1	CONNECTOR, HYD.,

728/ A(01) MANUAL HAMMER VALVE

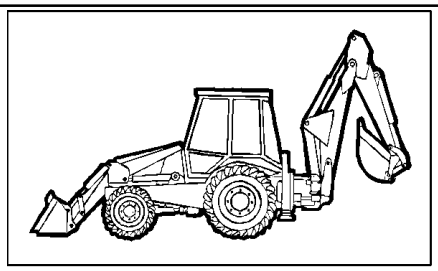

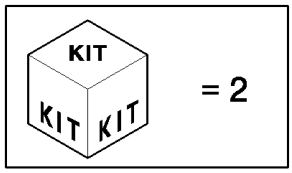

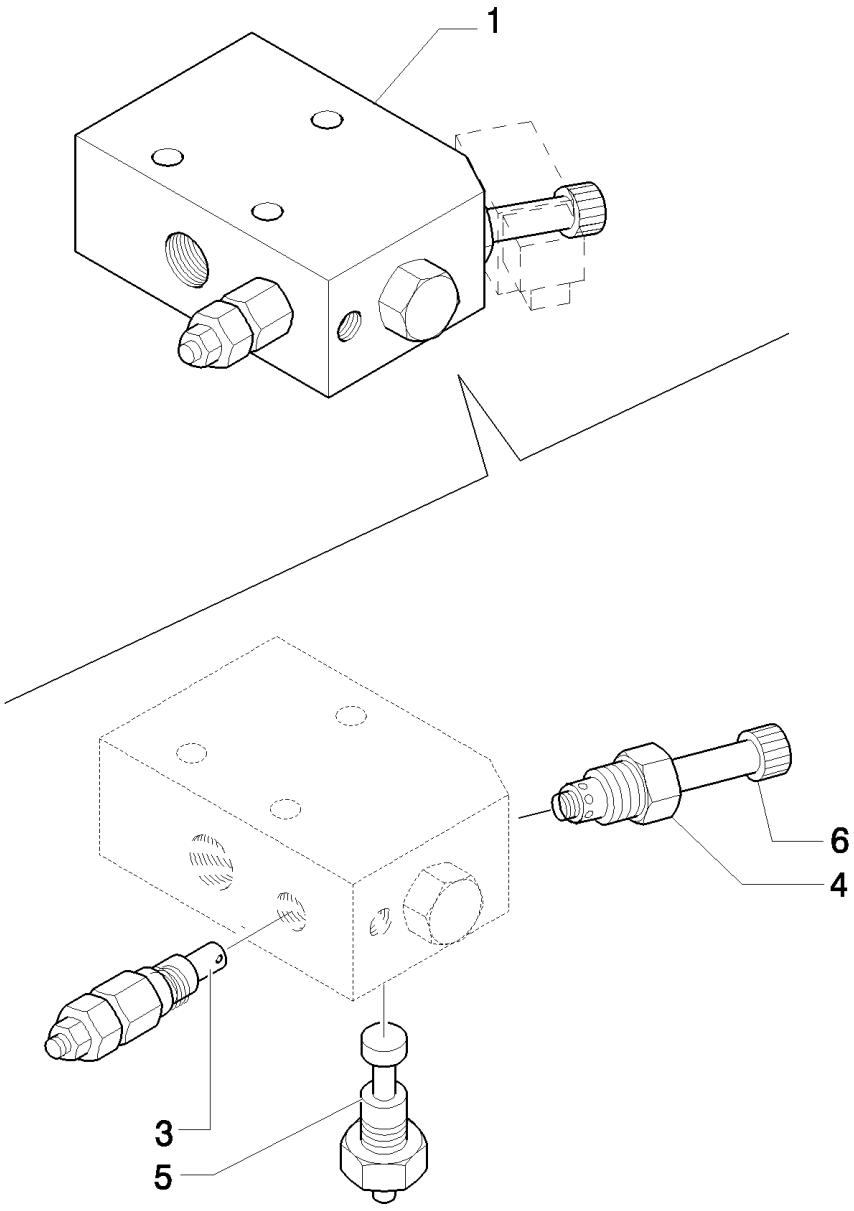

LB115.B EUR BACKHOE LOADER (1/05-)

728/ A(01) MANUAL HAMMER VALVE

Ref	Part Number	Qty	Description
1	87358190	1	VALVE, HYDRAULIC,
2	87358193	1	KIT, GASKETS
3	87358196	1	VALVE, HYDRAULIC,
4	87358194	1	VALVE, HYDRAULIC,
5	9970383	1	VALVE, HYDRAULIC,
6	9970384	1	NUT,

732(01) REAR MECHANICAL QUICK-COUPLING

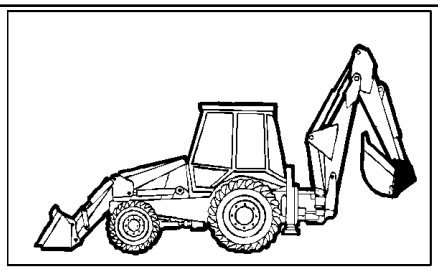

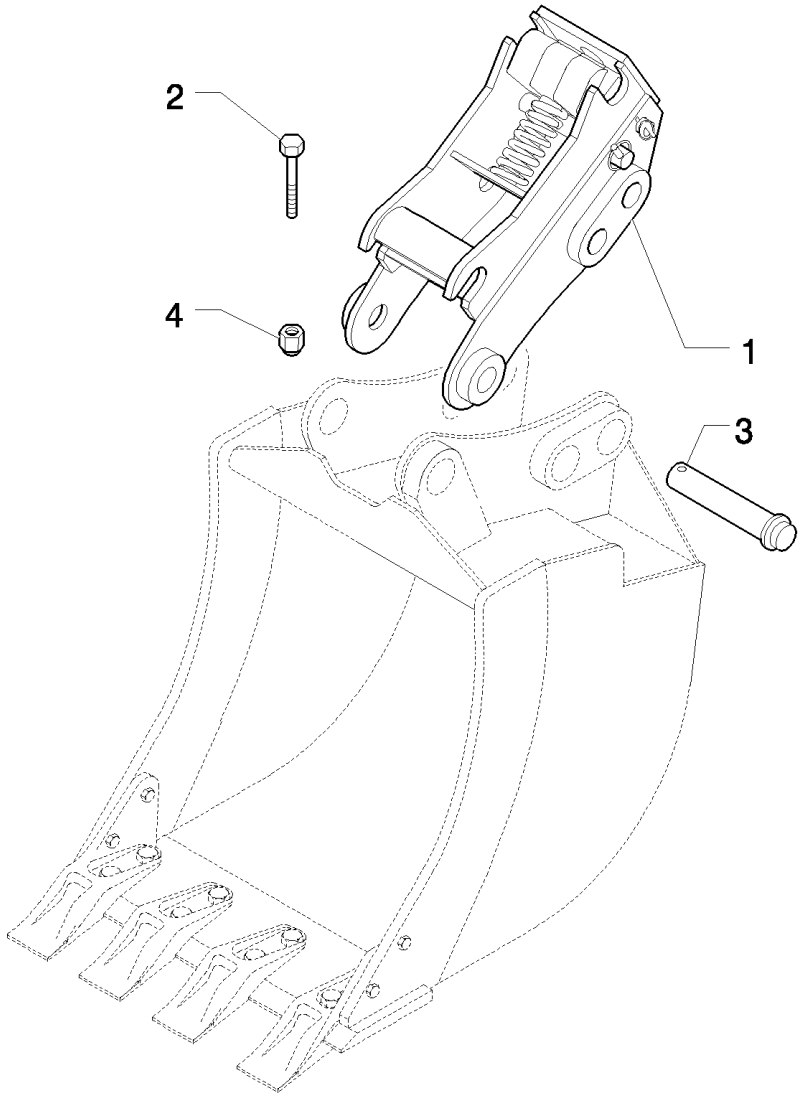

LB115.B EUR BACKHOE LOADER (1/05-)

732(01) REAR MECHANICAL QUICK-COUPLING

Ref	Part Number	Qty	Description
1	85801542	1	COUPLING, QUICK, MALE,
2	15972034	2	BOLT, Hex, M10 x 110, 10.9,
3	85803005	2	PIN,
4	12574511	2	NUT, M10 x 1.25, Cl 8,

Mechanical Version

732/ A(01) REAR MECHANICAL QUICK-COUPLING

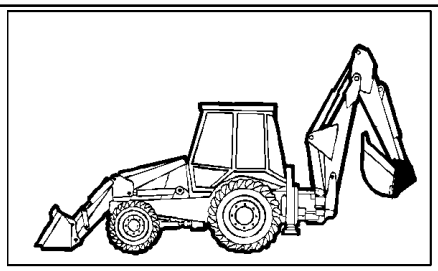

KIT KIT KIT 1 = ●

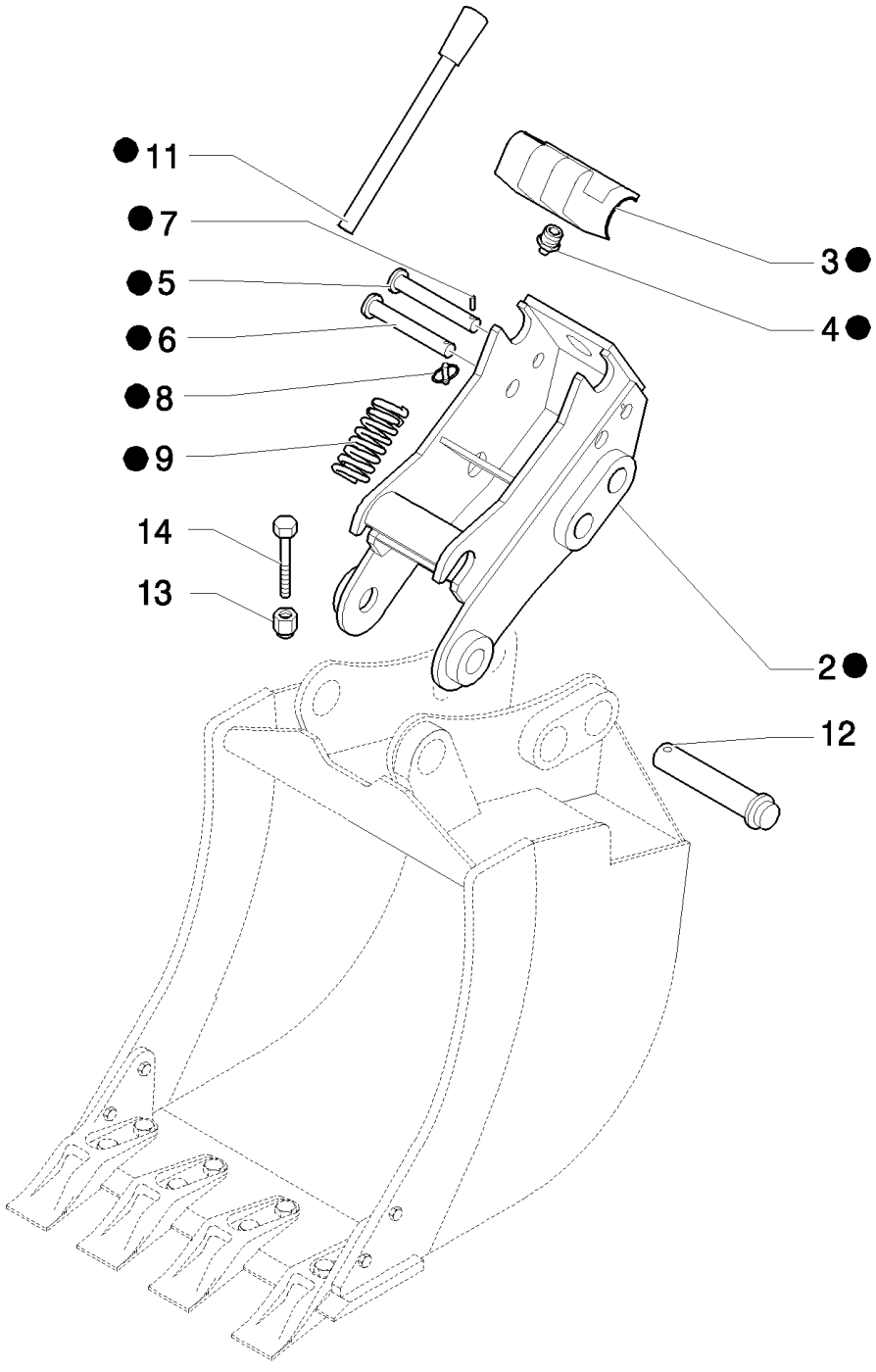

LB115.B EUR BACKHOE LOADER (1/05-)

732/ A(01) REAR MECHANICAL QUICK-COUPLING

Ref	Part Number	Qty	Description
1	85801542	1	COUPLING, QUICK, MALE,
2	85827551	1	
3	87302836	1	
4	85824266	1	NIPPLE, LUBE,
5	87302837	1	PIN,
6	87302838	1	PIN,
7	85825285	1	PIN,
8	85824265	1	PIN,
9	87302840	1	SPRING,
11	85824267	1	HANDLE,
12	85803005	2	PIN,
13	12574511	2	NUT, M10 x 1.25, Cl 8,
14	15972034	2	BOLT, Hex, M10 x 110, 10.9,

758(01) ROTATING BEACON

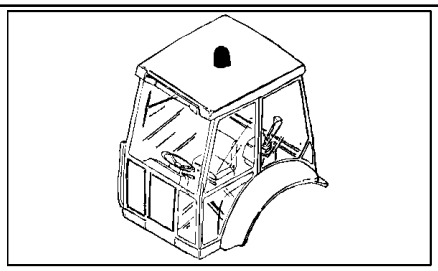

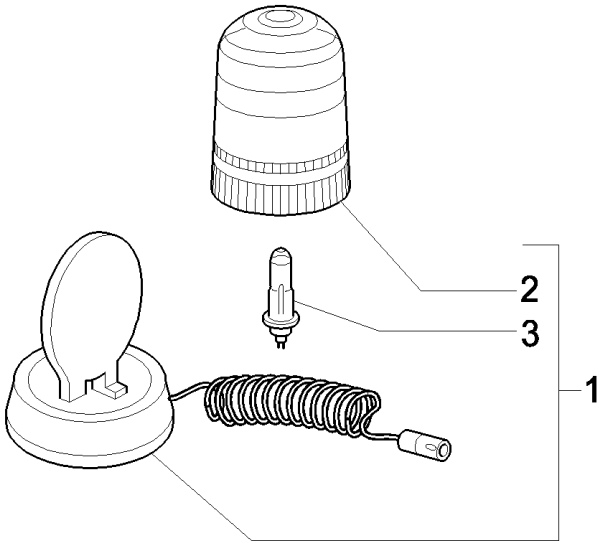

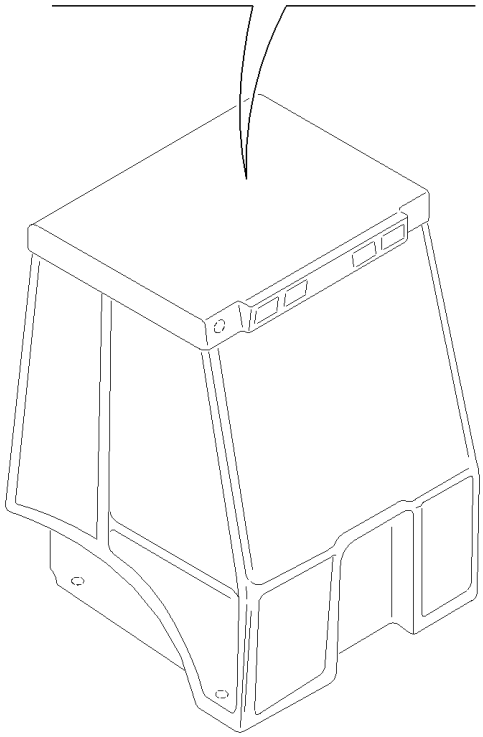

LB115.B EUR BACKHOE LOADER (1/05-)

758(01) ROTATING BEACON

Ref	Part Number	Qty	Description
1	85817129	1	BEACON,
2	85817131	1	LENS,
3	85817130	1	BULB,

789(01) SPEED SENSOR(P.SHUTTLE)

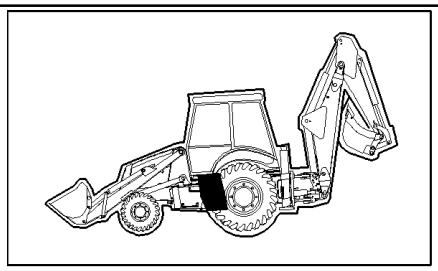

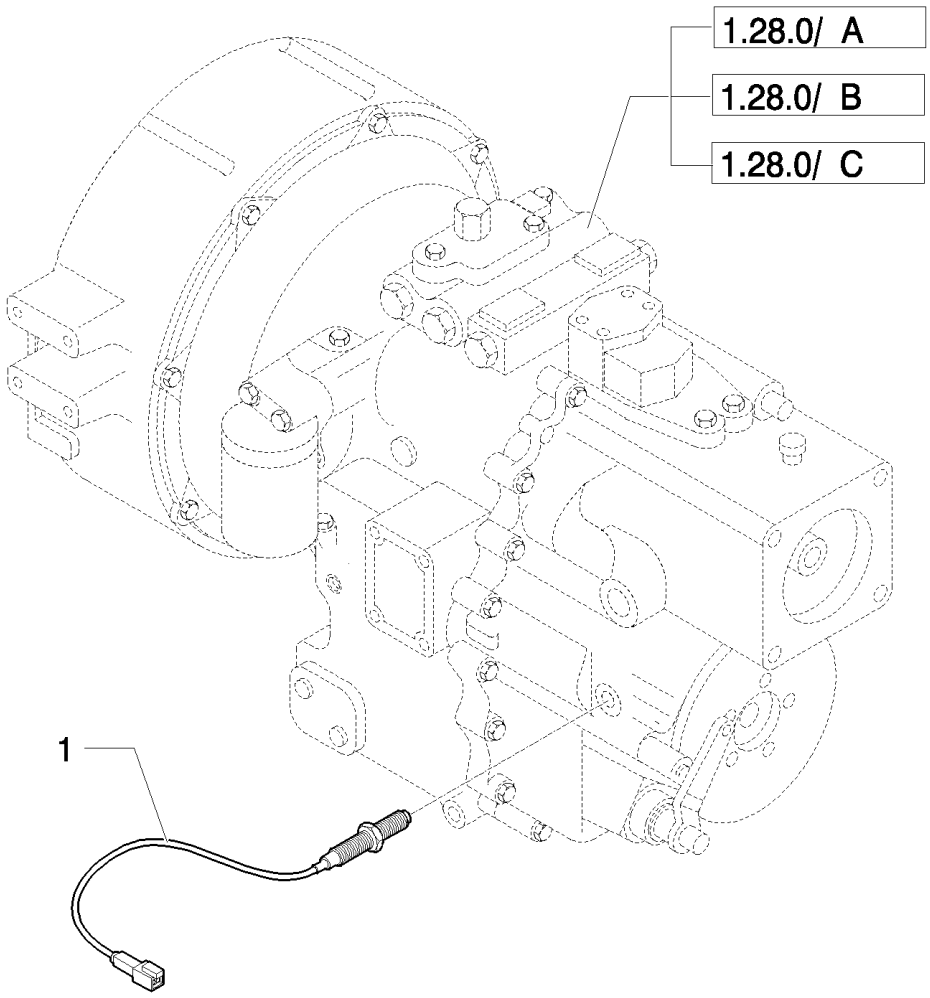

LB115.B EUR BACKHOE LOADER (1/05-)

789(01) SPEED SENSOR(P.SHUTTLE)

Ref	Part Number	Qty	Description
1	85804156	1	SENSOR,

791(01) RH CONSOLE WITH INSTRUMENTS

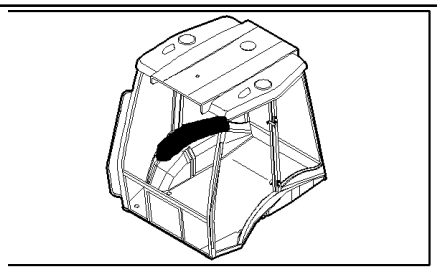

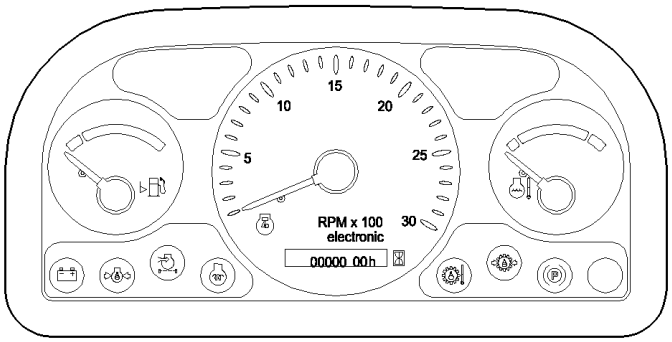

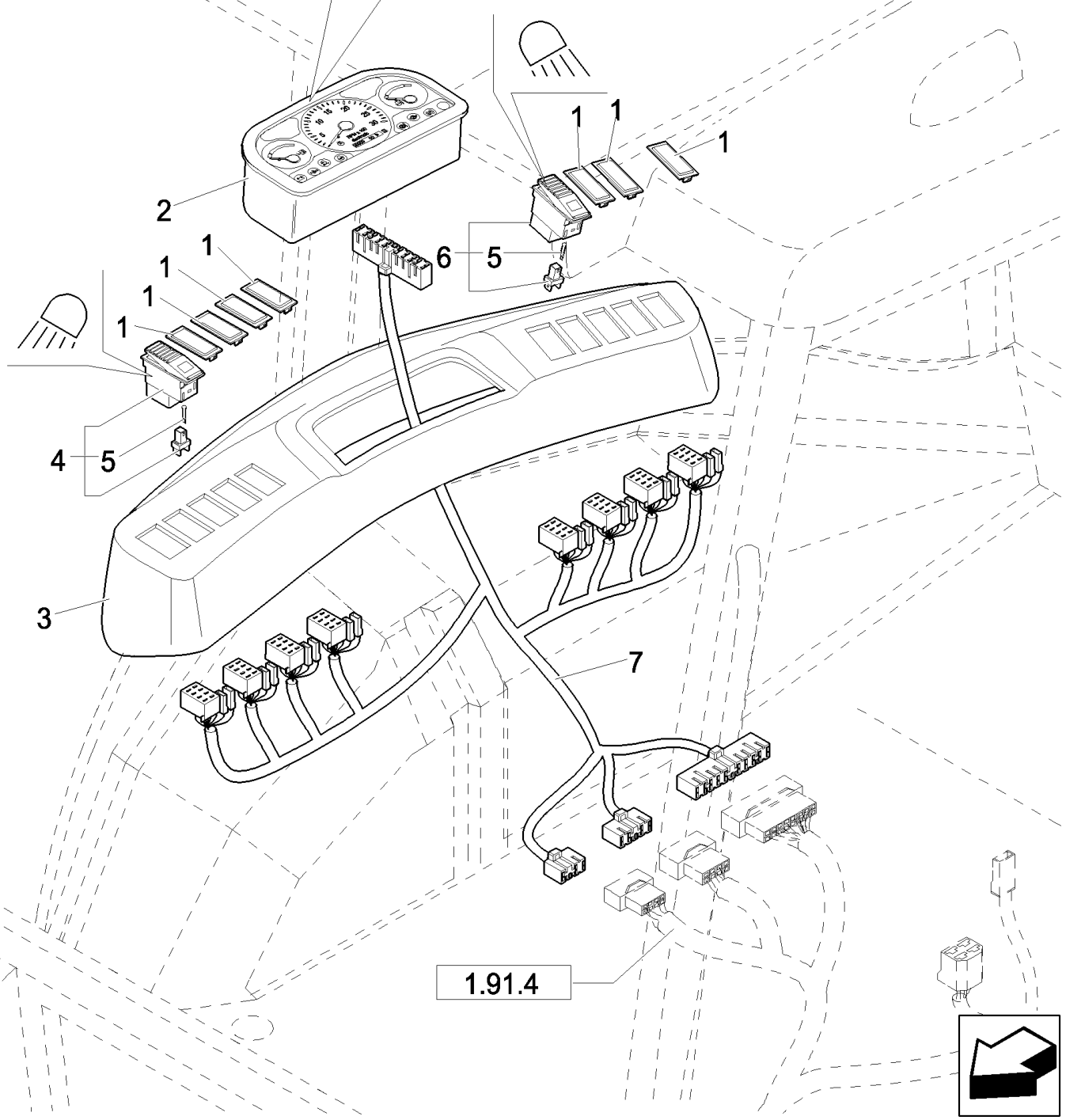

LB115.B EUR BACKHOE LOADER (1/05-)

791(01) RH CONSOLE WITH INSTRUMENTS

Ref	Part Number	Qty	Description
1	85825254	7	PLUG,
2	87412250	1	INSTRUMENT CLUSTER,
3	85818817	1	DASHBOARD,
4	85818818	1	SWITCH, LIGHTS,
5	14143790	2	BULB,
6	85818819	1	SWITCH,
7	87431463	1	HARNESS, WIRE,

792(01) RH CONSOLE WITH INSTRUMENTS AND DIAGNOSTICS

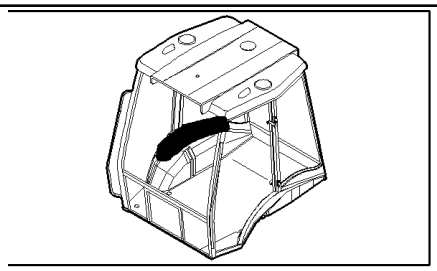

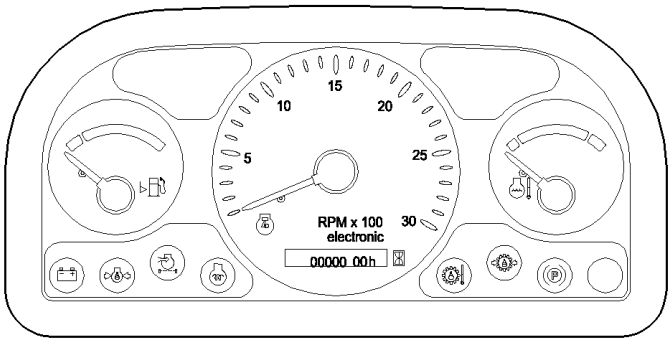

LB115.B EUR BACKHOE LOADER (1/05-)

792(01) RH CONSOLE WITH INSTRUMENTS AND DIAGNOSTICS

Ref	Part Number	Qty	Description
1	85825254	7	PLUG,
2	87412252	1	INSTRUMENT CLUSTER,
3	85818817	1	DASHBOARD,
4	85818818	1	SWITCH, LIGHTS,
5	14143790	2	BULB,
6	85818819	1	SWITCH,
7	87431463	1	HARNESS, WIRE,
8	85819214	1	HARNESS, WIRE,

795(01) RH CONSOLE WITH INSTRUMENTS AND DIAGNOSTICS

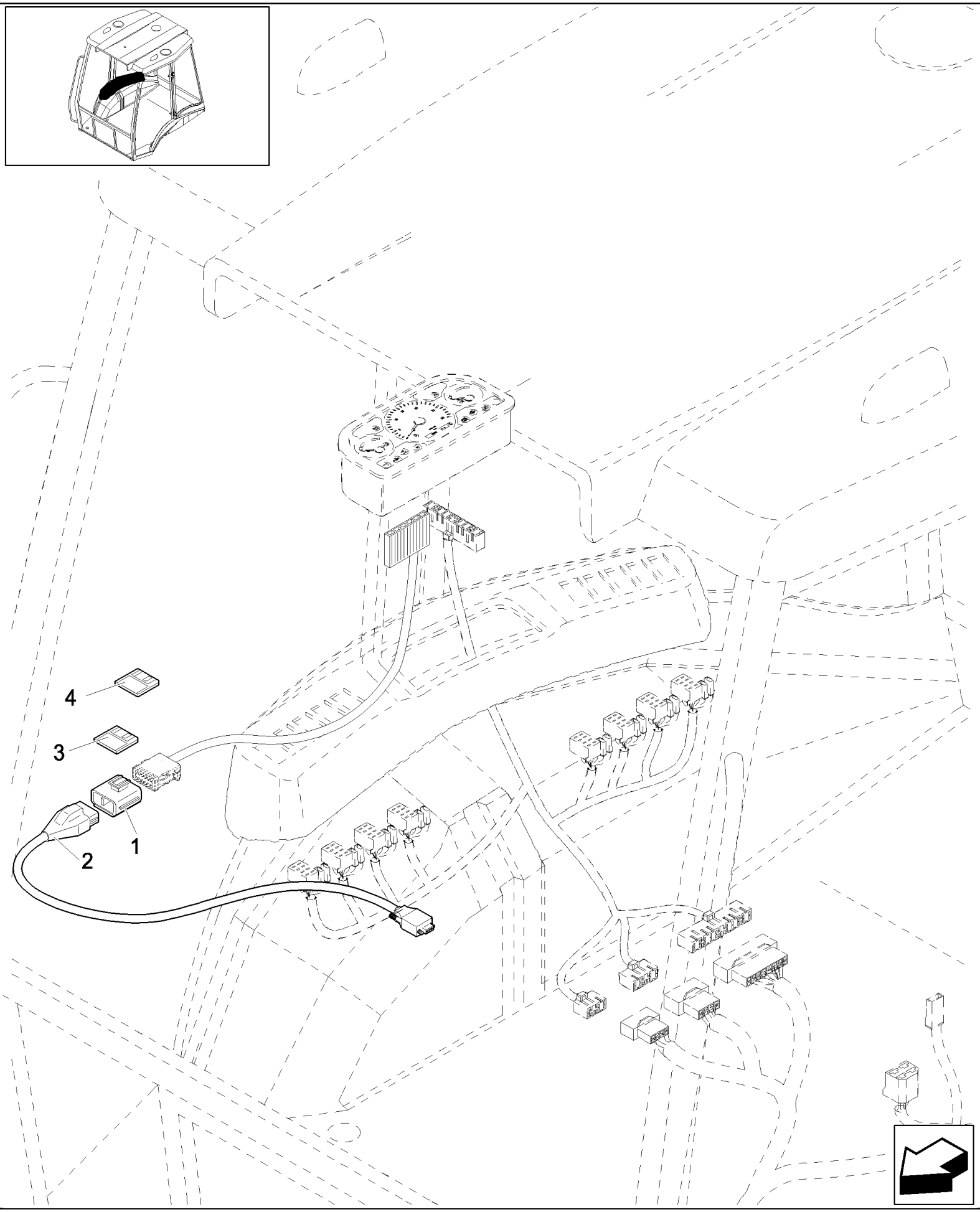

LB115.B EUR BACKHOE LOADER (1/05-)

795(01) RH CONSOLE WITH INSTRUMENTS AND DIAGNOSTICS

Ref	Part Number	Qty	Description
1	85819758	1	SWITCH,
2	297449	1	HARNESS, WIRE,
3	NSS	1	NOT SERVICED SEPARATELY,
4	NSS	1	NOT SERVICED SEPARATELY,

796(01) ANTITHEFT

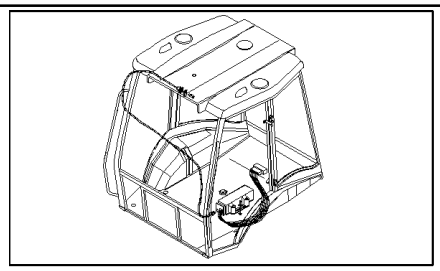

LB115.B EUR BACKHOE LOADER (1/05-)

796(01) ANTITHEFT

Ref	Part Number	Qty	Description
1	85819765	1	KIT,
2	12574011	2	NUT, M4 x .7, Cl 8,
3	12642821	2	WASHER, M4 x 12 x 1,
4	14303324	2	SCREW, Hex Soc Hd, M4 x 20, 8.8, Full Thd,
5	85819766	1	COVER,
6	NSS	1	NOT SERVICED SEPARATELY,

848(01) BATTERY CONNECTION

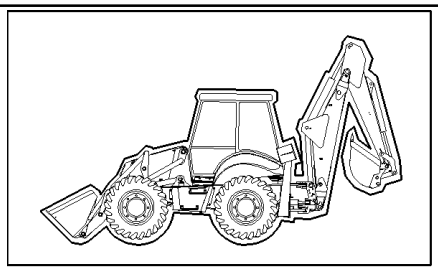

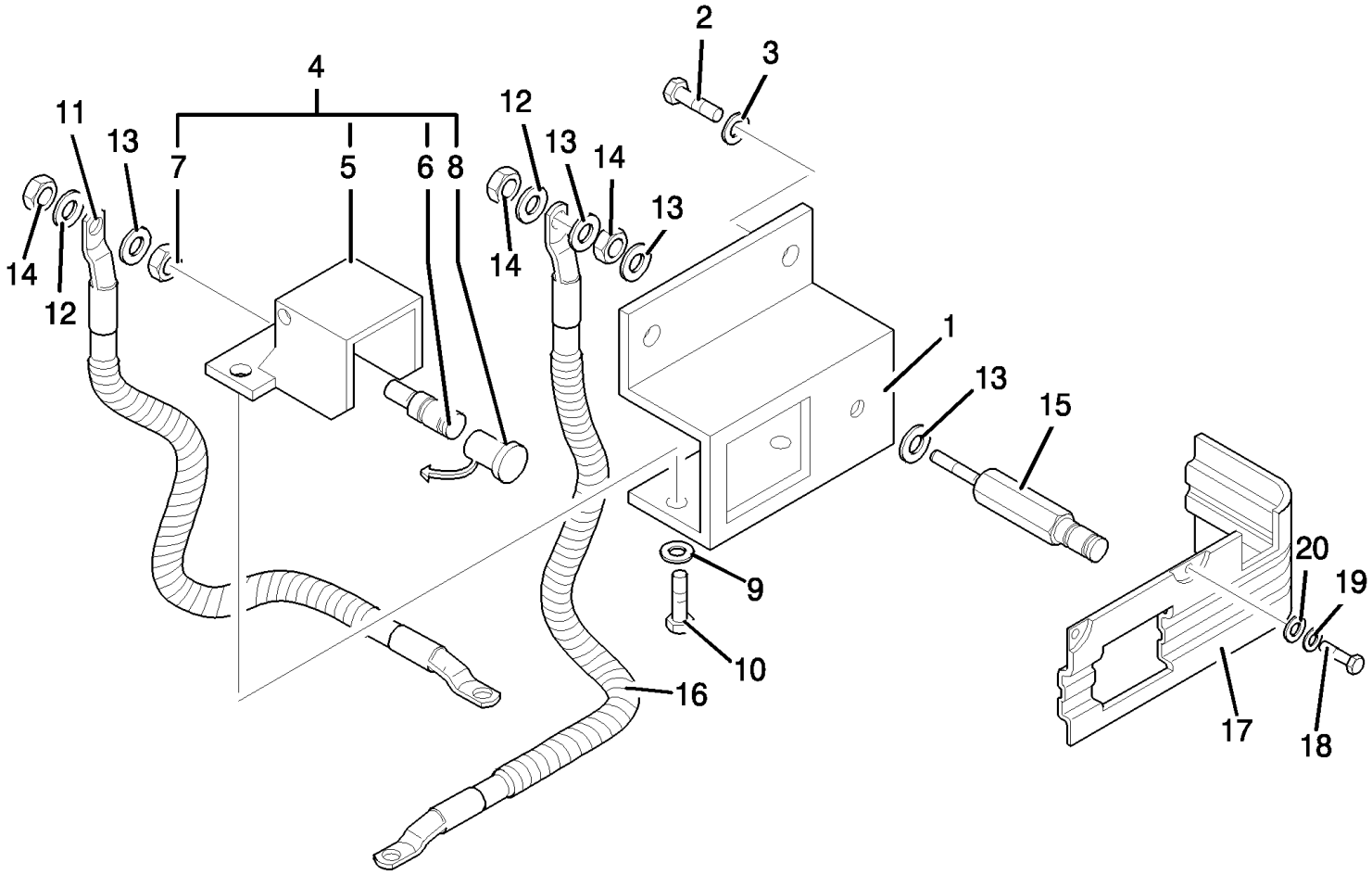

LB115.B EUR BACKHOE LOADER (1/05-)

848(01) BATTERY CONNECTION

Ref	Part Number	Qty	Description
1	85821205	1	SUPPORT,
2	10902424	2	SCREW, Hex, M6 x 20, 8.8, Full Thd,
3	11197774	2	WASHER, SPRING, Belleville, M6.4,
4	82013379	1	BRACKET,
5	82013446	1	
6	82014590	1	TERMINAL,
7	10717511	1	NUT, Thin, M16 x 2, Cl 04,
8	82013445	1	COVER,
9	10571474	2	WASHER, LOCK,
10	13274214	2	SCREW, Cross Pan Hd, M5 x 16,
11	85827743	1	CABLE, GROUND,
12	11190579	2	WASHER, SPRING, Belleville, M10.5,
13	14496601	4	WASHER, M10 x 20 x 2,
14	15500111	3	NUT, M10 x 1.5
15	82012402	1	TERMINAL,
16	85827744	1	CABLE, GROUND,
17	85824113	1	GUARD,
18	10902421	3	SCREW, Hex, M6 x 20, 8.8,
19	11194679	3	WASHER, SPRING, Belleville, M6.4,
20	12643721	3	WASHER, M6 x 18 x 1.5,

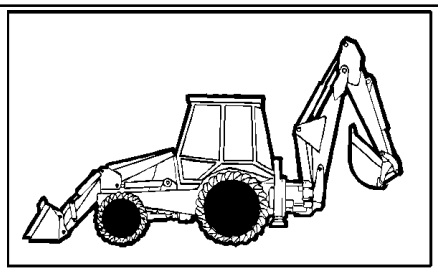

CENTER PIVOT

EQUIP	TIRE SIZE	RIM
85.64	16.9-24 R4-12PR	W15LX24
85.65	16.9-28 R4-12PR	W15LX28

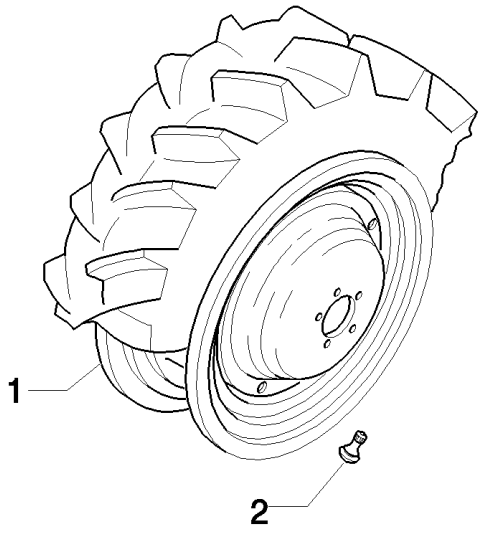

SIDE SHIFT

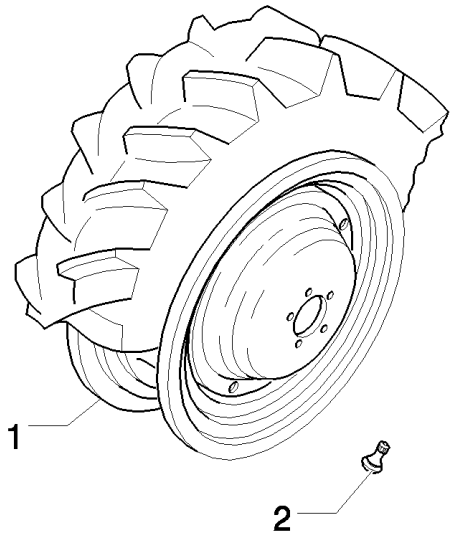

EQUIP	TIRE SIZE	RIM
85.64	16.9-24 R4-12PR(I.S.G.)	W14LX24
85.65	16.9-28 R4-12PLY GY(I.S.G.T)	W14LX28
85.66	440/80R28 156A8 IT530	W14LX28
85.67	440/80R28 156A8 IT520	W14LX28

LB115.B EUR BACKHOE LOADER (1/05-)

85.00(01) WHEELS

Ref	Part Number	Qty	Description
1	87305221	4	WHEEL, W14Lx28
1	85804812	4	WHEEL, W15Lx24, Only For B115
1	85805876	4	WHEEL, W15L x 28, Only For B115
1	87305208	4	WHEEL, W14Lx24
2	85700224	4	VALVE STEM,

851(01) CLOTH SEAT & ATTACHING HARDWARE (CAB)

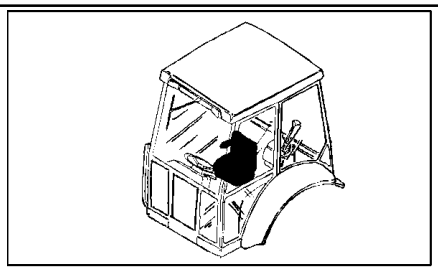

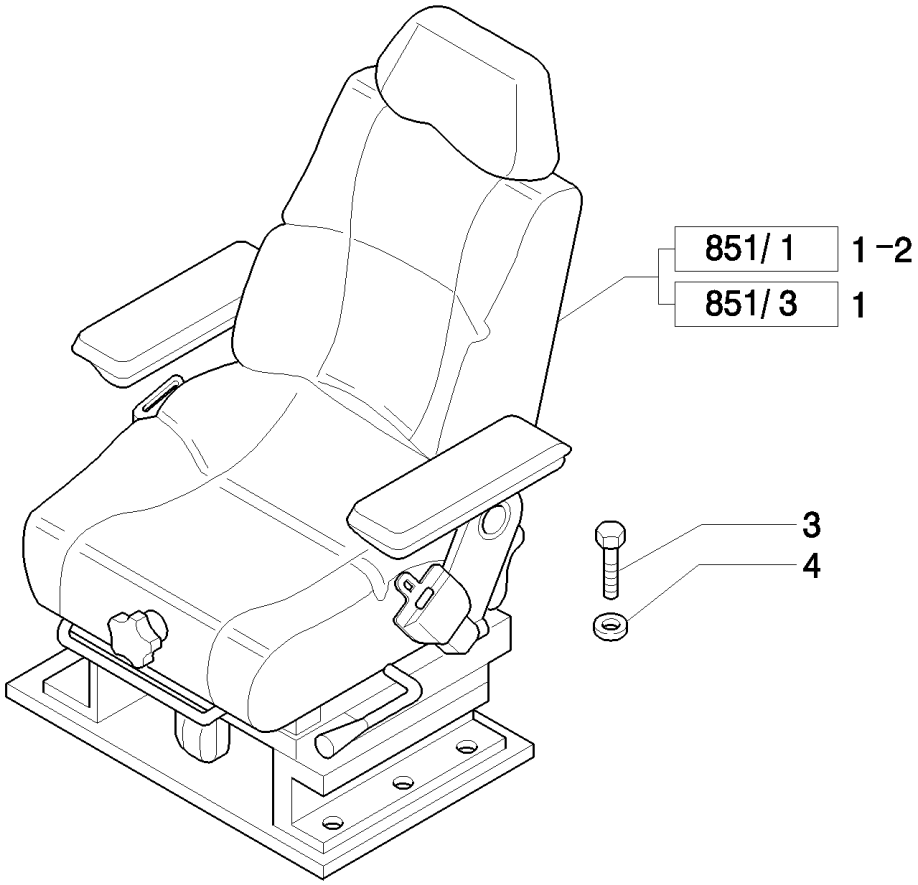

LB115.B EUR BACKHOE LOADER (1/05-)

851(01) CLOTH SEAT & ATTACHING HARDWARE (CAB)

Ref	Part Number	Qty	Description
1	85826267	1	SEAT, DRIVER, , Consists Of Page 851/ 1 01 to 851/ 1 04, 2" Seat Belt, Only for Mechanical Control Version
1	85827708	1	SEAT, DRIVER, , Consists Of Page 851/ 1 01 to 851/ 1 04, 2" Seat Belt, Only for Pilot Control Version
1	87576859	1	SEAT, , 2" Seat Belt, Only for Mechanical Control Version, Consists Of Page 851/ 3 01 to 851/ 3 04
1	87576867	1	SEAT, , 2" Seat Belt, Only for Pilot Control Version, Consists Of Page 851/ 3 01 to 851/ 3 04
2	85826266	1	SEAT, DRIVER, , Mechanical Control Version, Consists Of Page 851/ 1 01 to 851/ 1 04, 3" Seat Belt
2	85827707	1	SEAT, DRIVER, , Only for NA Pilot Control Version, Consists Of Page 851/ 1 01 to 851/ 1 04, 3" Seat Belt
3	16043424	8	SCREW, Hex, M8 x 20, 8.8, Full Thd,
4	11198074	8	WASHER, SPRING, Belleville, M8.4,

851/ 1(01) CLOTH SEAT CUSHIONS, ARMRESTS & RELATED PARTS

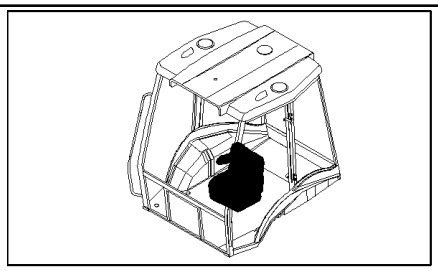

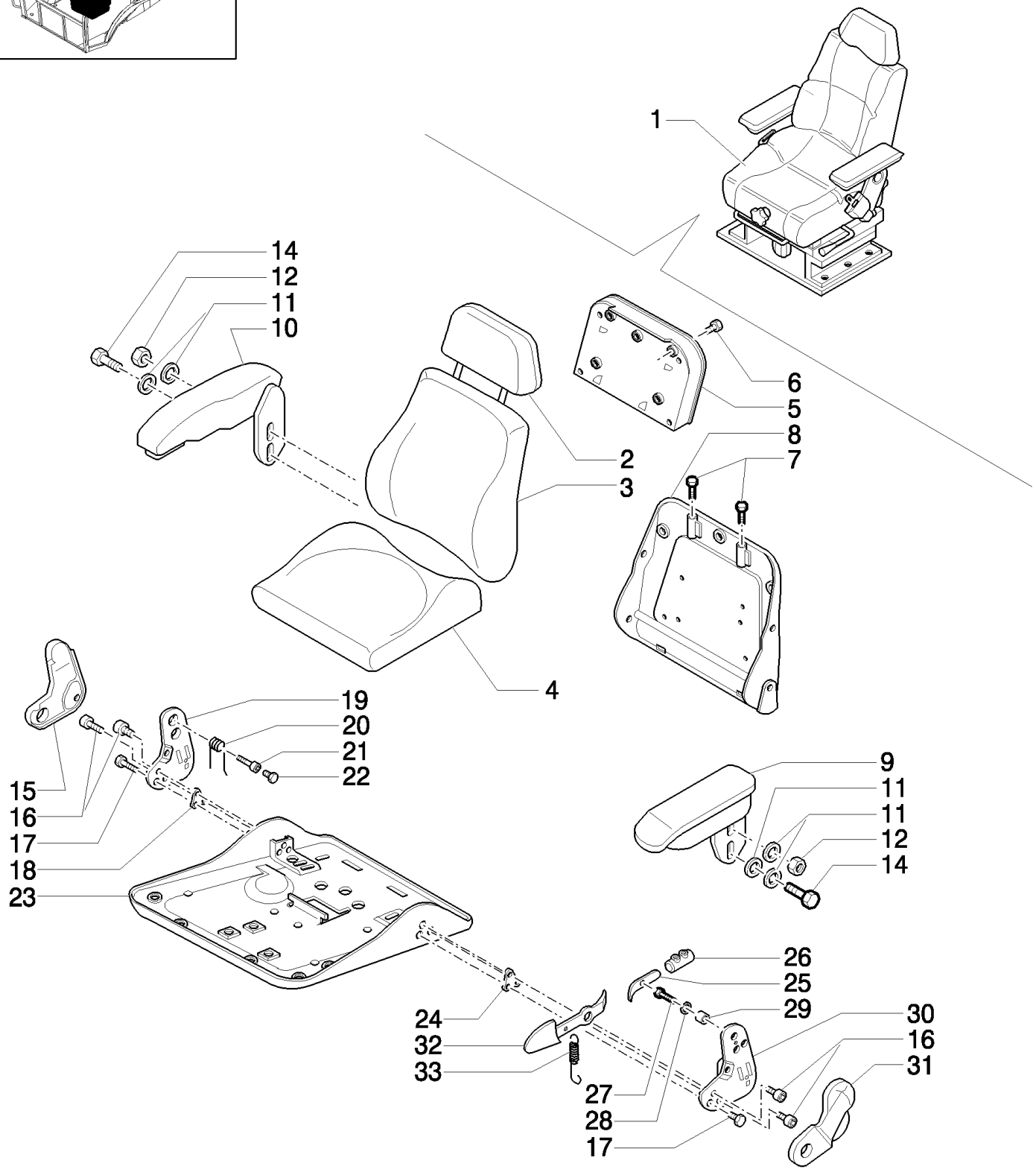

LB115.B EUR BACKHOE LOADER (1/05-)

851/ 1(01) CLOTH SEAT CUSHIONS, ARMRESTS & RELATED PARTS

Ref	Part Number	Qty	Description
1	85826267	1	SEAT, DRIVER, , Mechanical Control Version, 2" Seat Belt, Consists Of Page 851/ 1 02, 851/ 1 03, 851/ 1 04
1	85826266	1	SEAT, DRIVER, , Mechanical Control Version, 3" Seat Belt, Consists Of Page 851/ 1 02, 851/ 1 03, 851/ 1 04
1	85827708	1	SEAT, DRIVER, , Only for NA Pilot Control Version, 2" Seat Belt, Consists Of Page 851/ 1 02, 851/ 1 03, 851/ 1 04
1	85827707	1	SEAT, DRIVER, , Only for NA Pilot Control Version, 3" Seat Belt, Consists Of Page 851/ 1 02, 851/ 1 03, 851/ 1 04
2	85817452	1	HEADREST, SEAT,
3	85817454	1	SEAT, BACK,
4	85817455	1	CUSHION, SEAT,
5	85817481	1	BOX, , Includes 6
6	85817480	4	SCREW,
7	9958845	2	BUSHING,
8	85817485	1	SEAT, BACK, , Includes 7, 21
9	85817453	1	ARMREST, LH, Includes 11 To 13
9	85828196	1	ARMREST, LH, Only for NA Pilot Control Version, Includes 11 To 13
10	85827918	1	ARMREST, RH, Mechanical Control Version, Includes 11, 12, 14
11	10519601	AR	WASHER, M8 x 17 x 2,
12	85817459	2	NUT,
14	13838071	1	SCREW, Hex Serr Flg, M8 x 20,
15	85817466	1	COVER, RH
16	85817467	AR	SCREW, M8x25
17	85817468	2	SCREW, 7/16"-20UNF x 60.0
18	85817470	1	PLATE,
19	9960795	1	PLATE, RH
20	9960793	1	SPRING,
21	85817469	1	BUSHING,
22	85817471	1	SCREW, M8 x 40
23	85821419	1	PLATE, RETAINING,
24	85817476	1	PLATE,
25	85817460	1	LEVER,
26	85821418	1	STOP DEVICE,
27	15213321	1	SCREW, Hex, M8 x 35, 8.8,
28	9960692	AR	SPACER,
29	85817477	1	SPACER,
30	9960803	1	PLATE, LH
31	85817479	1	COVER, RH
32	85817478	1	LEVER,
33	9960797	1	SPRING,
13	16043224	1	SCREW, Hex, M8 x 16, 8.8, Full Thd,

851/ 1(02) CLOTH SEAT MOUNTING PLATE, ADJUSTING RAILS & SEAT BELT

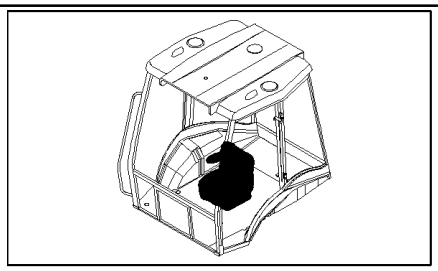

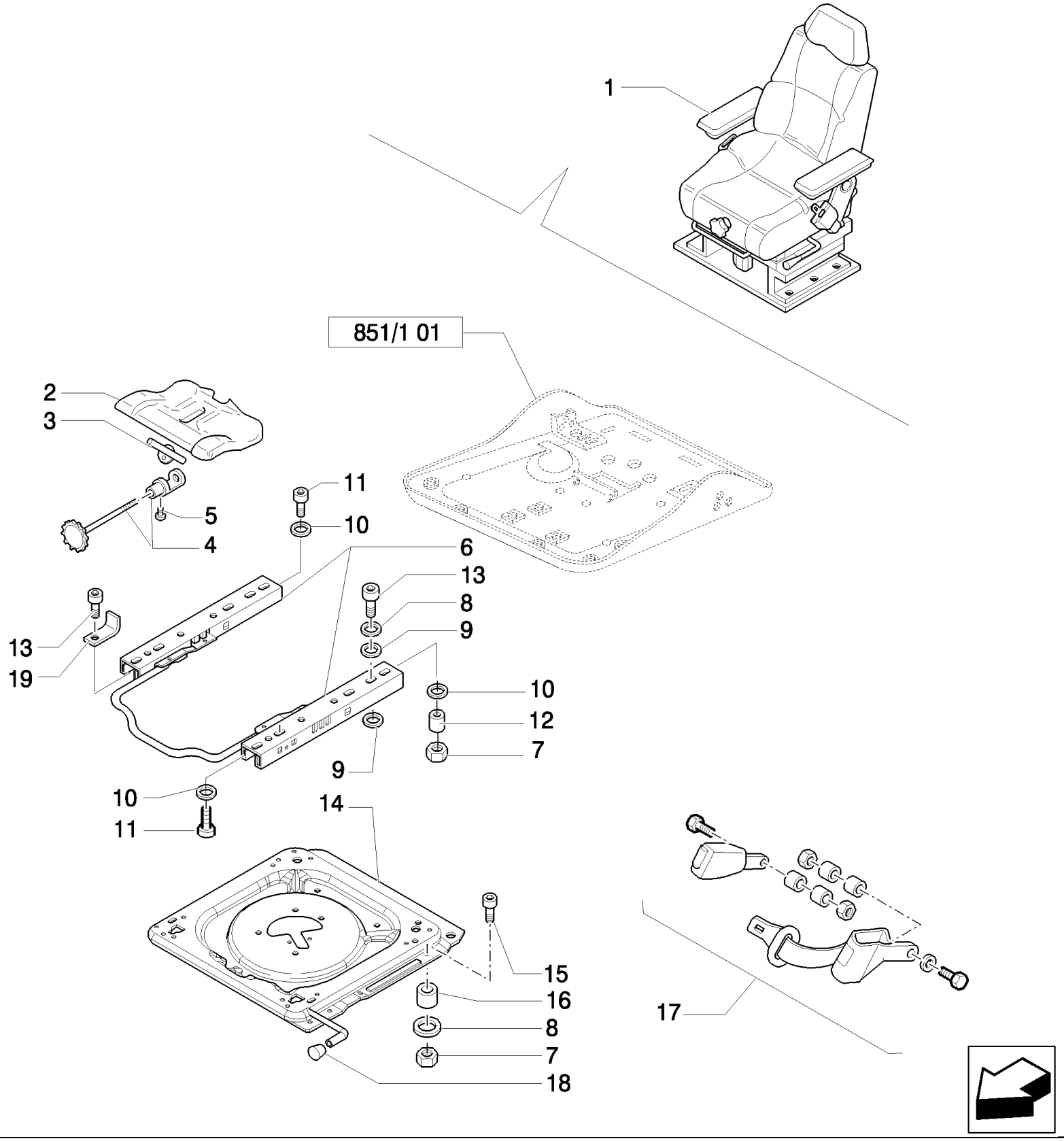

LB115.B EUR BACKHOE LOADER (1/05-)

851/ 1(02) CLOTH SEAT MOUNTING PLATE, ADJUSTING RAILS & SEAT BELT

Ref	Part Number	Qty	Description
1	85826267	1	SEAT, DRIVER, , Mechanical Control Version, 2" Seat Belt, Consists Of Page 851/ 1 01, 851/ 1 03, 851/ 1 04
1	85827708	1	SEAT, DRIVER, , Only for NA Pilot Control Version, 2" Seat Belt, Consists Of Page 851/ 1 01, 851/ 1 03, 851/ 1 04
1	85826266	1	SEAT, DRIVER, , Mechanical Control Version, 3" Seat Belt, Consists Of Page 851/ 1 01, 851/ 1 03, 851/ 1 04
1	85827707	1	SEAT, DRIVER, , Only for NA Pilot Control Version, 3" Seat Belt, Consists Of Page 851/ 1 01, 851/ 1 03, 851/ 1 04
2	71485488	1	CONTROL, , Includes 4
3	85817463	1	PLATE,
4	85817464	1	SCREW, ADJUSTMENT, , Includes 3, 5
5	9962962	1	SCREW, M5 x 10
6	85817484	1	KIT,
7	85817458	9	NUT,
8	9960692	AR	SPACER,
9	9958776	9	SPACER,
10	10519601	AR	WASHER, M8 x 17 x 2,
11	14306321	4	SCREW, Hex Soc Hd, M8 x 20, 8.8,
12	85819813	1	BUSHING,
13	85817467	AR	SCREW, M8x25
14	85827919	1	PLATE, MOUNTING, , Includes 18
15	85817465	4	SCREW, M8 x 40
16	85817456	4	SPACER,
17	85815578	1	SEAT BELT, , 2" Seat Belt
17	85815579	1	SEAT BELT, , 3" Seat Belt
18	85817482	1	KNOB,
19	85824204	2	BRACKET,

851/ 1(03) CLOTH SEAT UPPER SUSPENSION PARTS

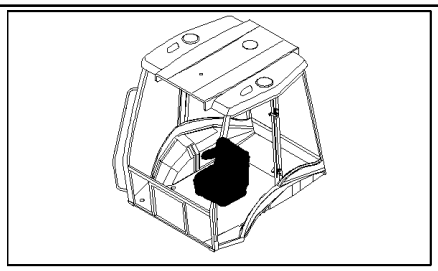

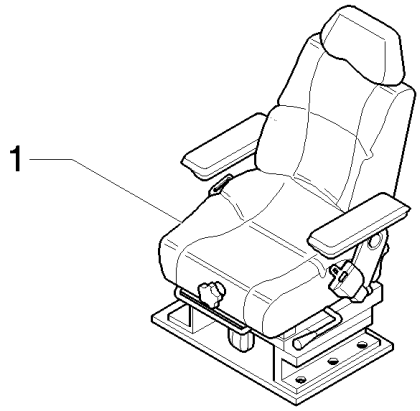

2 SEE ALSO TAV. 851/1 04

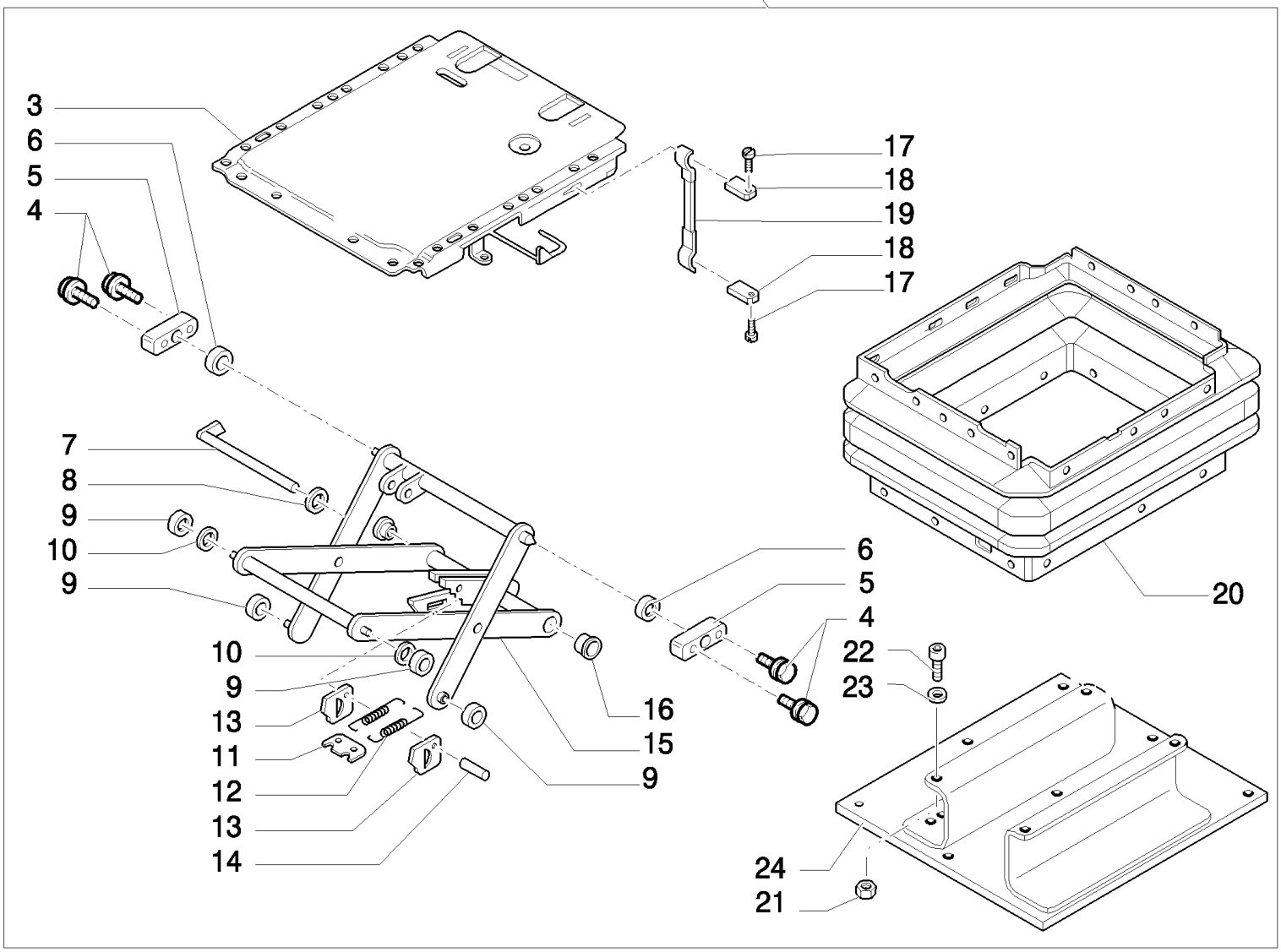

LB115.B EUR BACKHOE LOADER (1/05-)

851/ 1(03) CLOTH SEAT UPPER SUSPENSION PARTS

Ref	Part Number	Qty	Description
1	85826267	1	SEAT, DRIVER, , Mechanical Control Version, 2" Seat Belt, Consists Of Page 851/ 1 01, 851/ 1 02, 851/ 1 04
1	85826266	1	SEAT, DRIVER, , Mechanical Control Version, 3" Seat Belt, Consists Of Page 851/ 1 01, 851/ 1 02, 851/ 1 04
1	85827708	1	SEAT, DRIVER, , Only for NA Pilot Control Version, 2" Seat Belt, Consists Of Page 851/ 1 01, 851/ 1 02, 851/ 1 04
1	85827707	1	SEAT, DRIVER, , Only for NA Pilot Control Version, 3" Seat Belt, Consists Of Page 851/ 1 01, 851/ 1 02, 851/ 1 04
2	85817426	1	SUSPENSION,
3	85817450	1	PLATE,
4	85817444	4	SCREW, M6 x 16
5	9967960	2	BEARING, , Includes 16, 17
6	85817445	2	BUSHING,
7	85817429	1	BOLT,
8	11088076	1	CIRCLIP, M10,
9	9958784	4	SPACER,
10	85817442	2	BUSHING,
11	9958782	1	PLATE,
12	85817430	2	SPRING,
13	9958792	2	PLATE,
14	9958793	1	BOLT,
15	85817446	1	SUSPENSION, , Includes 7, 9 to 14, 16
16	9960755	2	BUSHING,
17	85817448	2	RIVET,
18	85817449	2	PLATE,
19	85817447	1	SOFT TRIM, , Includes 17, 18
20	85817428	1	BELLOWS,
21	85817458	4	NUT, M8
22	14306321	4	SCREW, Hex Soc Hd, M8 x 20, 8.8,
23	10519601	4	WASHER, M8 x 17 x 2,
24	85817427	1	PLATE, RETAINING,

851/ 1(04) CLOTH SEAT LOWER SUSPENSION PARTS

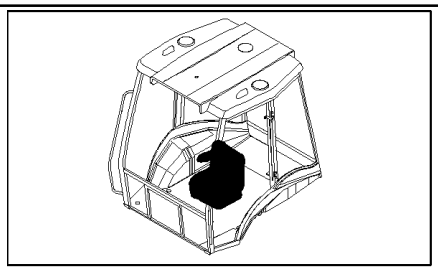

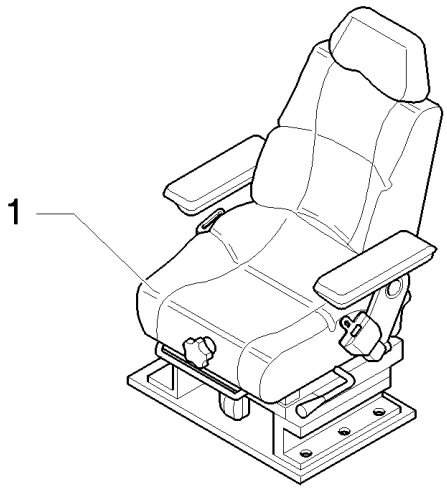

2 SEE ALSO TAV. 851/1 03

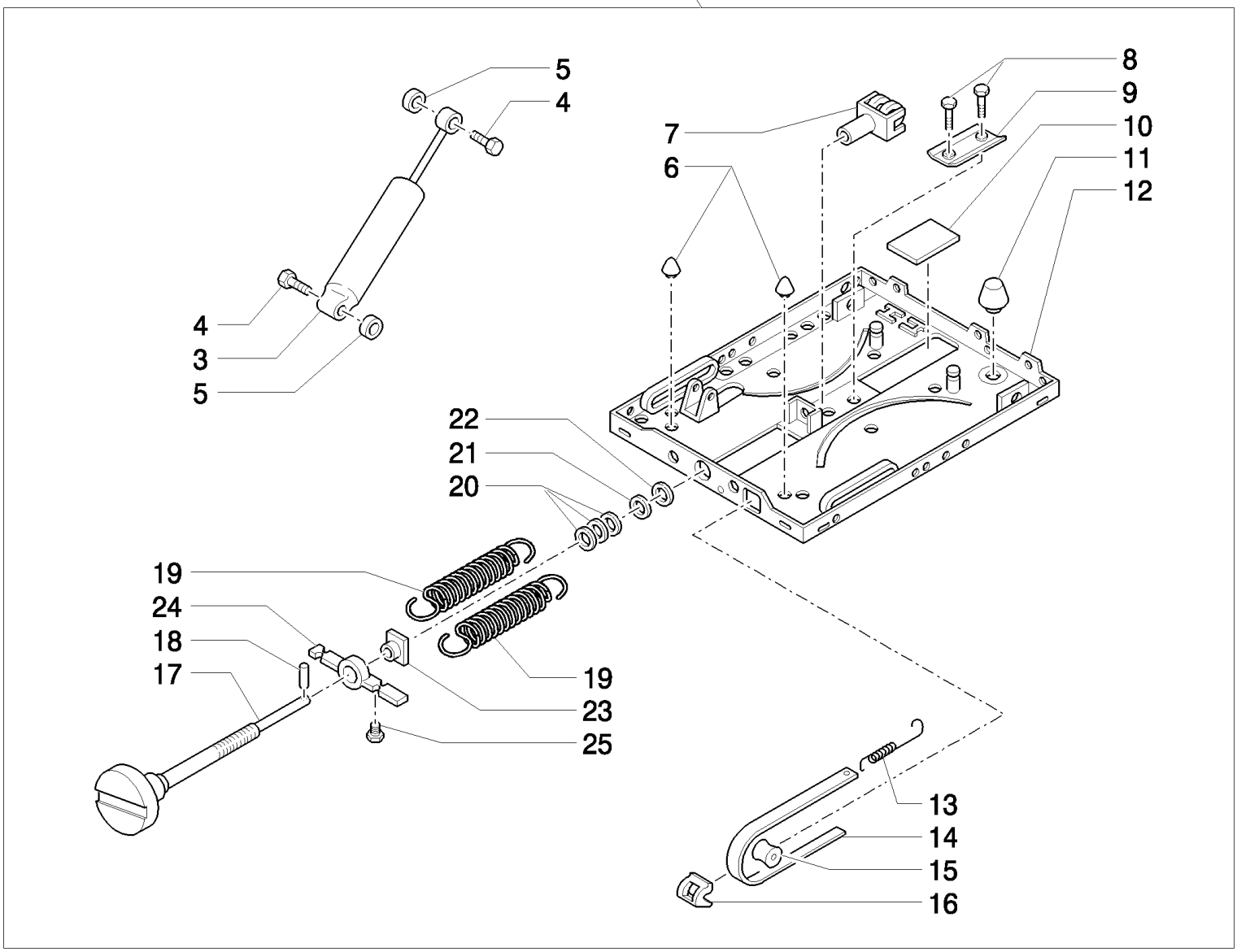

LB115.B EUR BACKHOE LOADER (1/05-)

851/ 1(04) CLOTH SEAT LOWER SUSPENSION PARTS

Ref	Part Number	Qty	Description
1	85826267	1	SEAT, DRIVER, , Mechanical Control Version, 2" Seat Belt, Consists Of Page 851/ 1 01, 851/ 1 02, 851/ 1 03
1	85826266	1	SEAT, DRIVER, , Mechanical Control Version, 3" Seat Belt, Consists Of Page 851/ 1 01, 851/ 1 02, 851/ 1 03
1	85827708	1	SEAT, DRIVER, , Only for NA Pilot Control Version, 2" Seat Belt, Consists Of Page 851/ 1 01, 851/ 1 02, 851/ 1 03
1	85827707	1	SEAT, DRIVER, , Only for NA Pilot Control Version, 3" Seat Belt, Consists Of Page 851/ 1 01, 851/ 1 02, 851/ 1 03
2	85817426	1	SUSPENSION,
3	85817431	1	SHOCK ABSORBER, , Includes 4, 5
4	9959588	2	BOLT,
5	85817432	2	WASHER,
6	85817440	2	BUMPER, RUBBER,
7	9960736	1	FORK,
8	9959585	2	PLUG,
9	9960767	1	CLIP,
10	9959580	1	COVER,
11	85817441	1	BUMPER, RUBBER,
12	85817436	1	SUSPENSION, , Includes 6, 8 to 11
13	9958790	1	SPRING,
14	85817443	1	INDICATOR, , Includes 13, 15, 16, 25
15	9958785	1	ROLLER,
16	9958786	1	GUIDE,
17	85817451	1	SCREW, ADJUSTMENT, , Includes 18
18	85817433	1	DOWEL,
19	85817434	2	SPRING,
20	9958800	1	WASHER,
21	9958788	1	O-RING,
22	85817435	1	BUSHING,
23	9959583	1	NUT,
24	9959577	1	BRACKET,
25	9958789	1	PLUG,

851/ 3(01) CLOTH SEAT CUSHIONS, ARMRESTS & RELATED PARTS

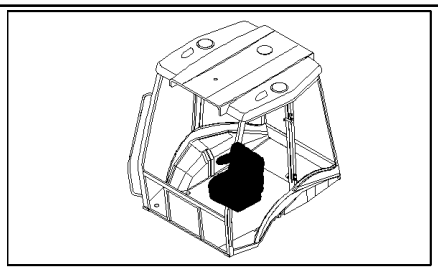

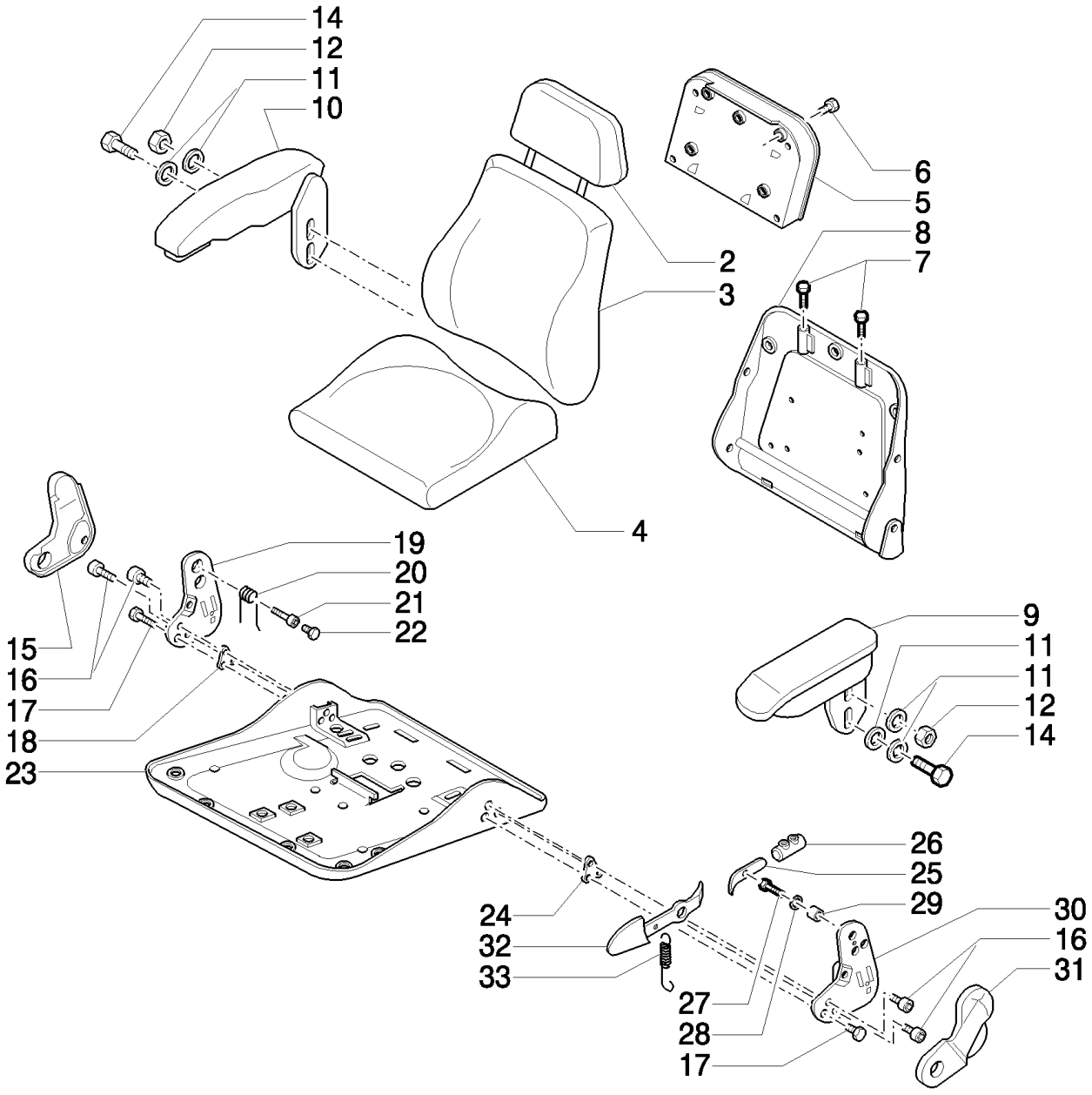

LB115.B EUR BACKHOE LOADER (1/05-)

851/ 3(01) CLOTH SEAT CUSHIONS, ARMRESTS & RELATED PARTS

Ref	Part Number	Qty	Description
2	85817452	1	HEADREST, SEAT,
3	85817454	1	SEAT, BACK,
4	85817455	1	CUSHION, SEAT,
5	85817481	1	BOX, , Includes 6
6	82034863	4	SCREW,
7	47335213	2	BUSHING,
8	85817485	1	SEAT, BACK, , Includes 7
9	85817453	1	ARMREST, LH, Includes 11, 12, 14, Only for Mechanical Control Version
9	85828196	1	ARMREST, LH, Includes 11, 12, 14, Only for Pilot Control Version
10	85827918	1	ARMREST, RH, Includes 11, 12, 14
11	82034881	AR	WASHER,
12	85817459	2	NUT,
14	83984666	1	SCREW,
15	85817466	1	COVER, RH
16	9972160	AR	SCREW, M8x25
17	87395582	2	BOLT, 7/16"-20UNF x 60.0
18	85817470	1	PLATE,
19	9960795	1	PLATE, RH
20	9960793	1	SPRING,
21	85817469	1	BUSHING,
22	85817471	1	SCREW, M8 x 40
23	85821419	1	PLATE, RETAINING,
24	85817476	1	PLATE,
25	85817460	1	LEVER,
26	85821418	1	STOP DEVICE,
27	82035038	1	SCREW,
28	9960692	AR	SPACER,
29	85817477	1	SPACER,
30	9960803	1	PLATE, LH
31	85817479	1	COVER, RH
32	85817478	1	LEVER,
33	9960797	1	SPRING,

851/ 3(02) CLOTH SEAT MOUNTING PLATE, ADJUSTING RAILS & SEAT BELT

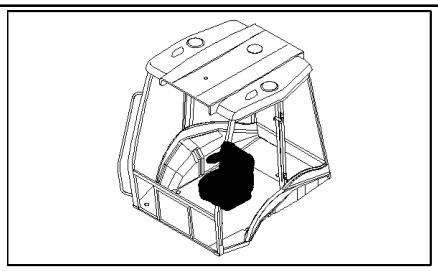

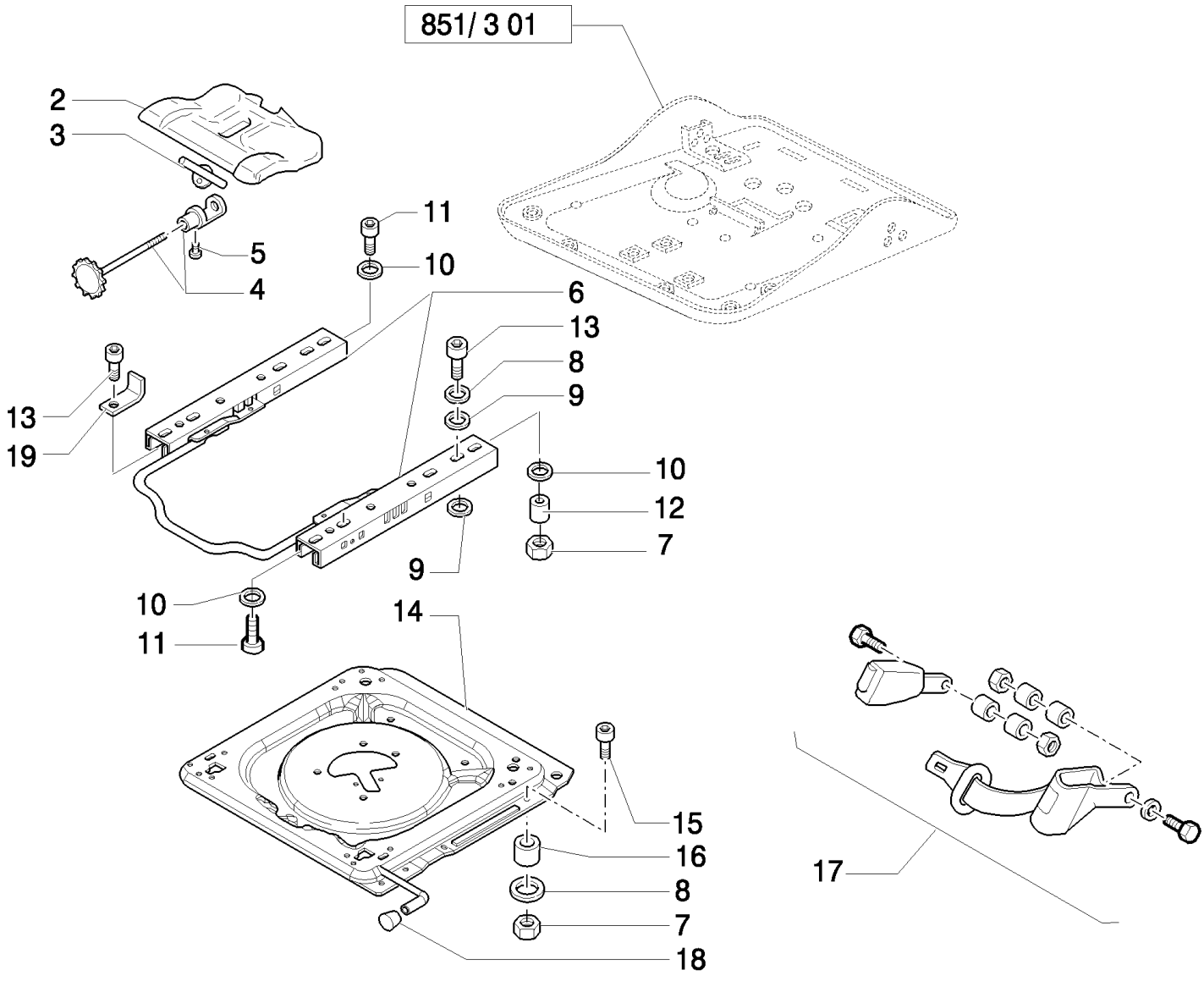

LB115.B EUR BACKHOE LOADER (1/05-)

851/ 3(02) CLOTH SEAT MOUNTING PLATE, ADJUSTING RAILS & SEAT BELT

Ref	Part Number	Qty	Description
2	71485488	1	CONTROL, , Includes 3 to 5
3	85817463	1	PLATE,
4	85817464	1	SCREW, ADJUSTMENT, , Includes 3, 5
5	9962962	1	SCREW, M5 x 10
6	85817484	1	KIT,
7	85817458	9	NUT,
8	9960692	AR	SPACER,
9	9958776	9	SPACER,
10	82034881	AR	WASHER,
11	82034893	4	SCREW,
12	85819813	1	BUSHING,
13	9972160	AR	SCREW, M8x25
14	87395588	1	PLATE, , Includes 18
15	85817465	4	SCREW, M8 x 40
16	85817456	4	SPACER,
17	87364220	1	SEAT BELT, , 2" Seat Belt
17	87364221	1	SEAT BELT, , 3" Seat Belt
18	85817482	1	KNOB,
19	85824204	2	BRACKET,

851/ 3(03) CLOTH SEAT UPPER SUSPENSION PARTS

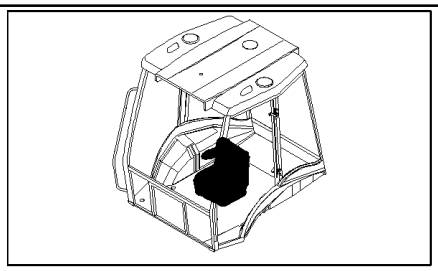

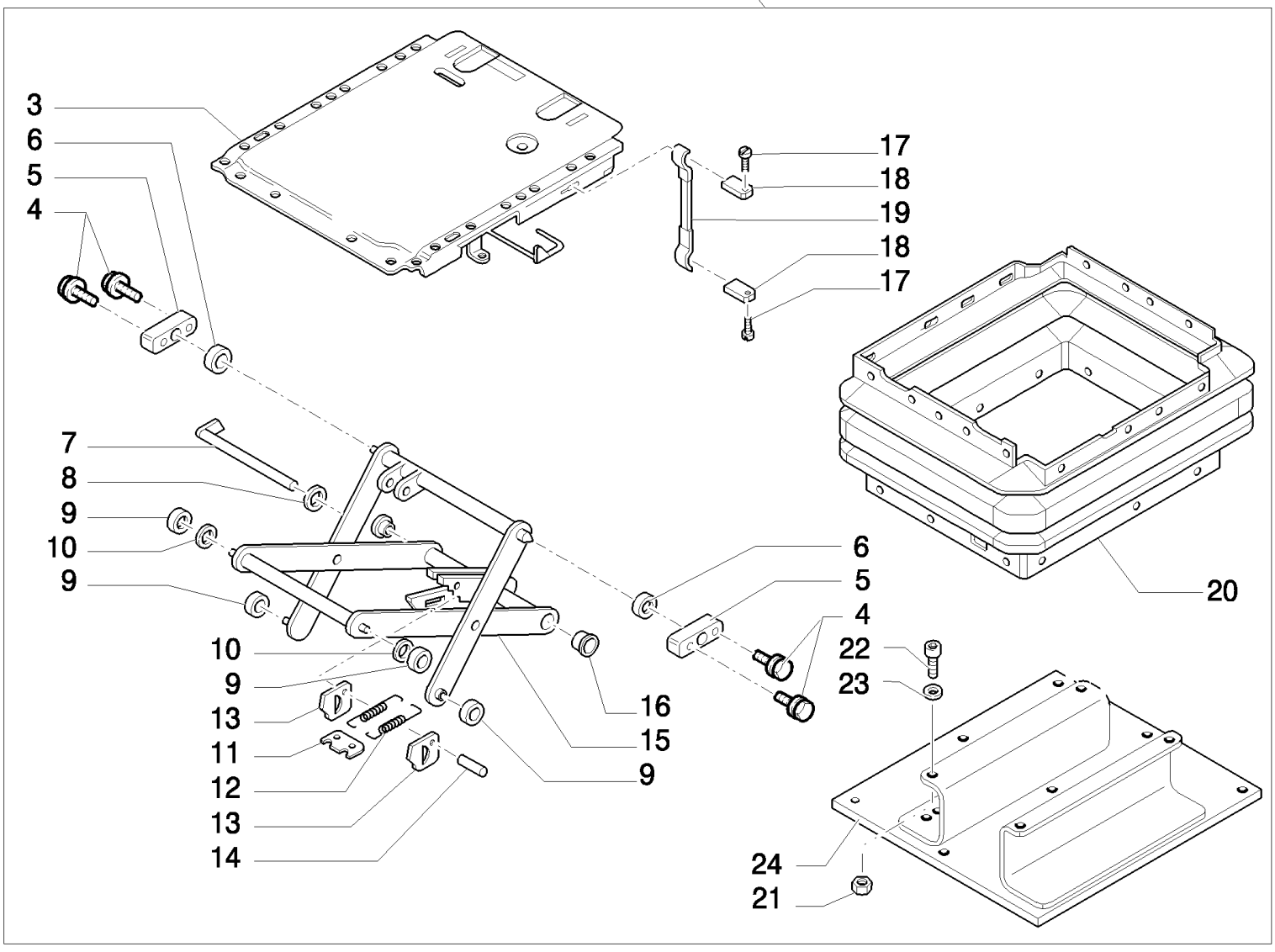

LB115.B EUR BACKHOE LOADER (1/05-)

851/ 3(03) CLOTH SEAT UPPER SUSPENSION PARTS

Ref	Part Number	Qty	Description
2	85817426	1	SUSPENSION,
3	85817450	1	PLATE,
4	85817444	4	SCREW, M6 x 16
5	82035094	2	BEARING, , Includes 4, 6
6	85817445	2	BUSHING,
7	85817429	1	BOLT,
8	82035127	1	WASHER,
9	82035031	4	ROLLER,
10	85817442	2	BUSHING,
11	82035030	1	PLATE,
12	85817430	2	SPRING,
13	9958792	2	PLATE,
14	82035036	1	BOLT,
15	85817446	1	SUSPENSION, , Includes 7, 9 to 14, 16
16	9960755	2	BUSHING,
17	85817448	2	RIVET,
18	85817449	2	PLATE,
19	85817447	1	SOFT TRIM, , Includes 17, 18
20	85817428	1	BELLOWS,
21	85817458	4	NUT, M8
22	82034893	4	SCREW,
23	82034881	4	WASHER,
24	85817427	1	PLATE, RETAINING,

851/ 3(04) CLOTH SEAT LOWER SUSPENSION PARTS

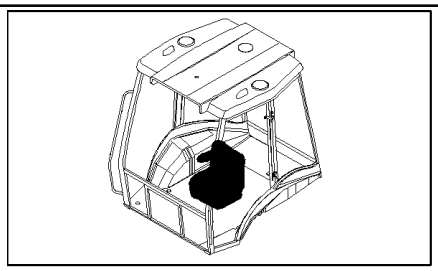

2 SEE ALSO TAV. 851/ 3 03

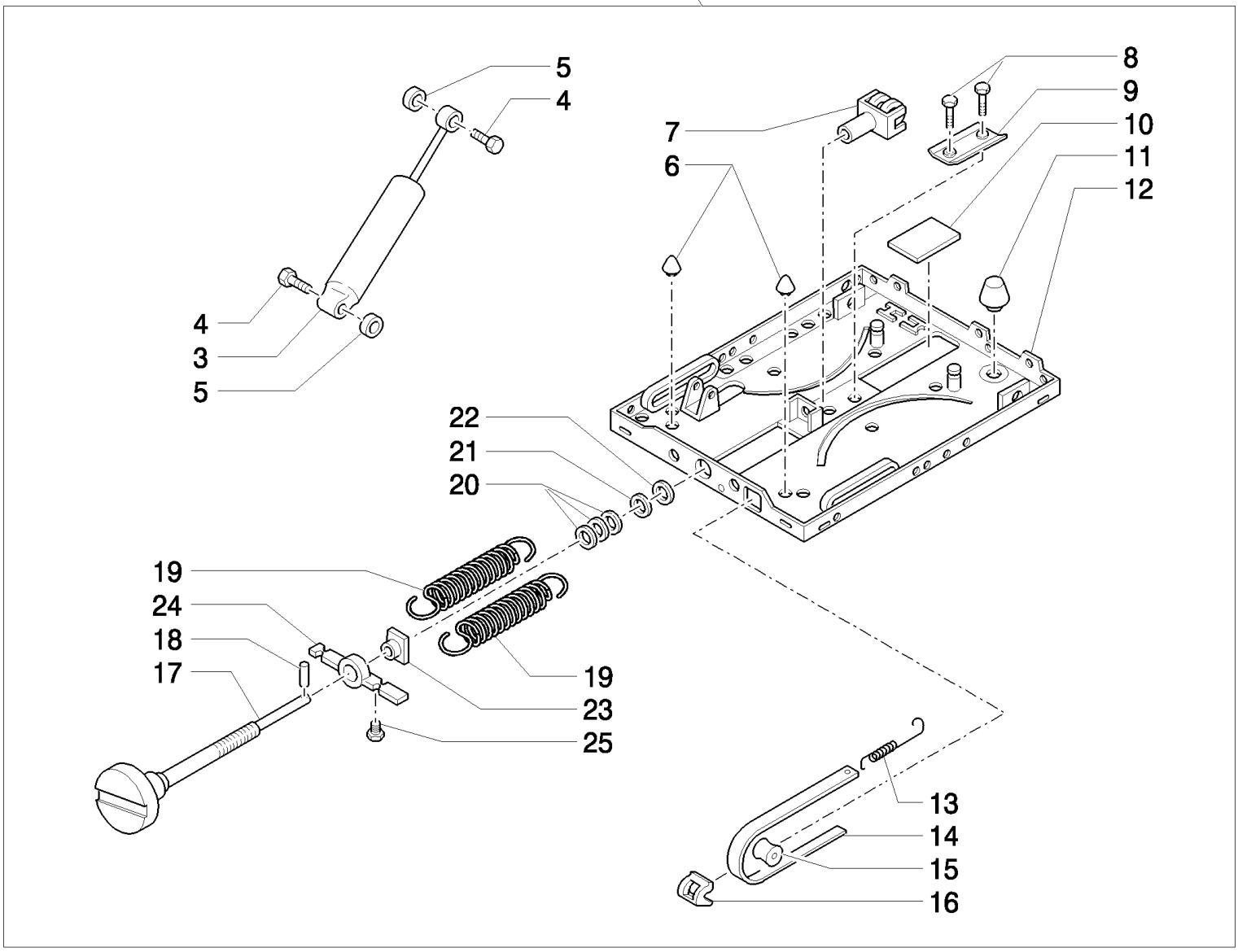

LB115.B EUR BACKHOE LOADER (1/05-)

851/ 3(04) CLOTH SEAT LOWER SUSPENSION PARTS

Ref	Part Number	Qty	Description
2	85817426	1	SUSPENSION,
3	85817431	1	SHOCK ABSORBER, , Includes 4, 5
4	82035040	2	BOLT,
5	82035128	2	WASHER,
6	85817440	2	BUMPER, RUBBER,
7	82035043	1	FORK,
8	82035037	2	RIVET,
9	82035054	1	PROFILE,
10	82035032	1	PLATE,
11	85817441	1	BUMPER, RUBBER,
12	85817436	1	SUSPENSION, , Includes 6, 8 to 11
13	82035039	1	SPRING,
14	85817443	1	INDICATOR, , Includes 13, 15, 16, 25
15	82035029	1	ROLLER,
16	82035025	1	GUIDE,
17	85817451	1	SCREW, ADJUSTMENT, , Includes 18
18	85817433	1	DOWEL,
19	85817434	2	SPRING,
20	82035035	1	SET OF WASHERS,
21	82035028	1	WASHER,
22	85817435	1	BUSHING,
23	82035034	1	NUT,
24	82035027	1	BRACKET,
25	82035033	1	RETAINER,

855(01) AIR RIDE CLOTH SEAT & ATTACHING HARDWARE (CABINA)

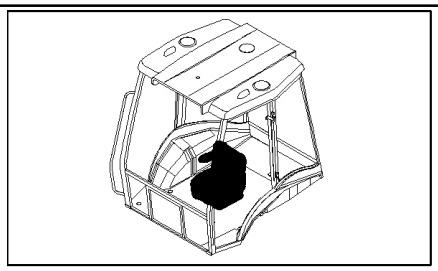

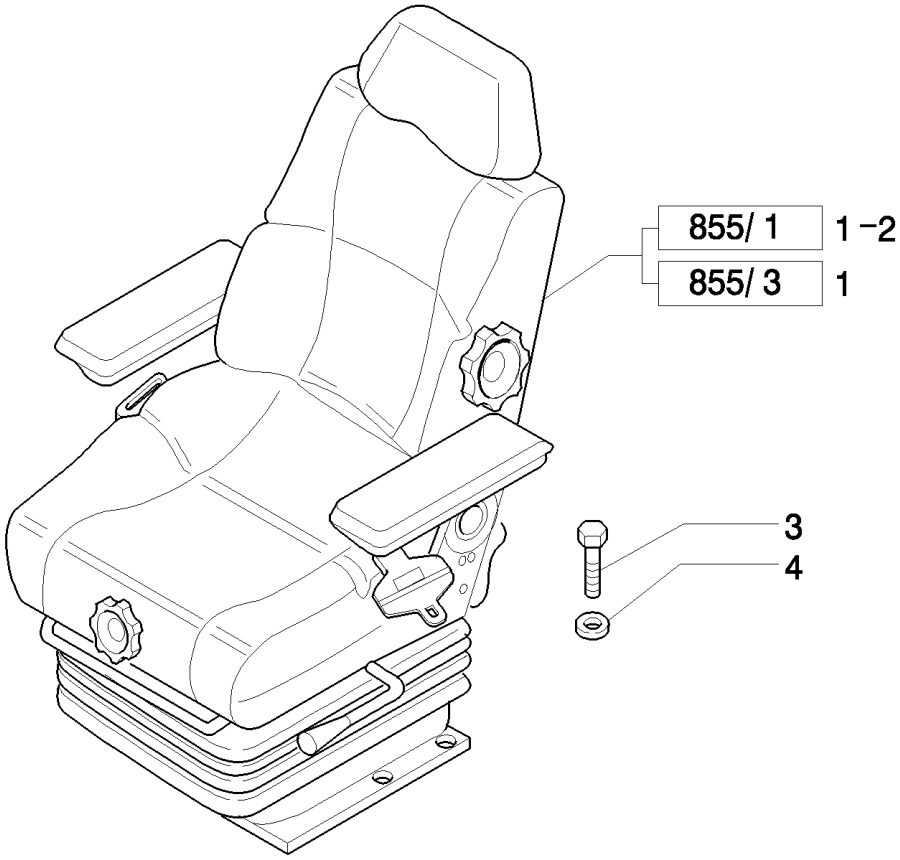

LB115.B EUR BACKHOE LOADER (1/05-)

855(01) AIR RIDE CLOTH SEAT & ATTACHING HARDWARE (CABINA)

Ref	Part Number	Qty	Description
1	85826268	1	SEAT, DRIVER, , Mechanical Control Version, 2" Seat Belt, Consists Of Page 855/ 1 01 To 855/ 1 05
1	85827709	1	SEAT, DRIVER, , 3" Seat Belt, Consists Of Page 855/ 1 01 To 855/ 1 05, Only for Pilot Control Version
1	87576861	1	SEAT, , Mechanical Control Version, 2" Seat Belt, Consists Of Page 855/3 01 To 855/3 05
1	87576868	1	SEAT, , 2" Seat Belt, Only for Pilot Control Version, Consists Of Page 855/3 01 To 855/3 05
2	85826269	1	SEAT, DRIVER, , Mechanical Control Version, 2" Seat Belt, Consists Of Page 855/ 1 01 To 855/ 1 05
2	85827710	1	SEAT, DRIVER, , Only for NA Pilot Control Version, 3" Seat Belt, Consists Of Page 855/ 1 01 To 855/ 1 05
3	16043424	8	SCREW, Hex, M8 x 20, 8.8, Full Thd,
4	11198074	8	WASHER, SPRING, Belleville, M8.4,

855/ 1(01) AIR RIDE CLOTH SEAT CUSHIONS, ARMRESTS & RELATED PARTS

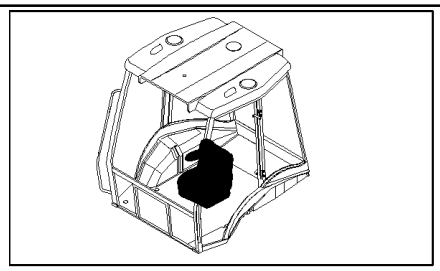

LB115.B EUR BACKHOE LOADER (1/05-)

855/ 1(01) AIR RIDE CLOTH SEAT CUSHIONS, ARMRESTS & RELATED PARTS

Ref	Part Number	Qty	Description
1	85826268	1	SEAT, DRIVER, , Mechanical Control Version, 2" Seat Belt, Consists Of Page 855/ 1 02, 855/ 1 03, 855/ 1 04, 855/ 1 05
1	85826269	1	SEAT, DRIVER, , Mechanical Control Version, 3" Seat Belt, Consists Of Page 855/ 1 02, 855/ 1 03, 855/ 1 04, 855/ 1 05
1	85827709	1	SEAT, DRIVER, , Only for NA Pilot Control Version, 2" Seat Belt, Consists Of Page 855/ 1 02, 855/ 1 03, 855/ 1 04, 855/ 1 05
1	85827710	1	SEAT, DRIVER, , Only for NA Pilot Control Version, 3" Seat Belt, Consists Of Page 855/ 1 02, 855/ 1 03, 855/ 1 04, 855/ 1 05
2	85817452	1	HEADREST, SEAT,
3	85817535	1	SEAT, BACK,
4	85817455	1	CUSHION, SEAT,
5	85817481	1	BOX, , Includes 6
6	85817480	4	SCREW,
7	9958845	2	BUSHING,
8	85817532	1	HEADREST, SEAT, , Includes 7, 21, 34
9	85817453	1	ARMREST, LH, Mechanical Control Version, Includes 11 To 13
9	85828196	7	ARMREST, , Only for NA Pilot Control Version, Includes 11 To 13
10	85827918	1	ARMREST, RH, Includes 11, 12, 14
11	10519601	AR	WASHER, M8 x 17 x 2,
12	85817459	2	NUT, M8
14	13838071	2	SCREW, Hex Serr Flg, M8 x 20,
15	85817466	1	COVER, RH
16	85817467	8	SCREW,
17	85817468	2	SCREW, 7/16"-20UNF x 60.0
18	85817470	1	PLATE,
19	9960795	1	PLATE, RH
20	9960793	1	SPRING,
21	85817469	1	BUSHING,
22	85817471	1	SCREW,
23	85821419	1	PLATE, RETAINING,
24	85817476	1	PLATE,
25	85817460	1	LEVER,
26	85821418	1	STOP DEVICE,
27	15213321	1	SCREW, Hex, M8 x 35, 8.8,
28	9960692	AR	SPACER,
29	85817477	1	SPACER,
30	9960803	1	PLATE, LH
31	85817479	1	COVER, LH
32	85817478	1	LEVER,
33	9960797	1	SPRING,
34	9967970	1	KIT,
35	85817533	3	RIVET,
36	85817534	1	SCREW, ADJUSTMENT,

855/ 1(01) AIR RIDE CLOTH SEAT CUSHIONS, ARMRESTS & RELATED PARTS

Ref	Part Number	Qty	Description
13	16043224	1	SCREW, Hex, M8 x 16, 8.8, Full Thd,

855/ 1(02) AIR RIDE CLOTH SEAT MOUNTING PLATE, ADJUSTING RAILS & SEAT BELT

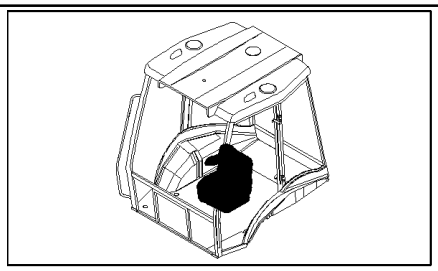

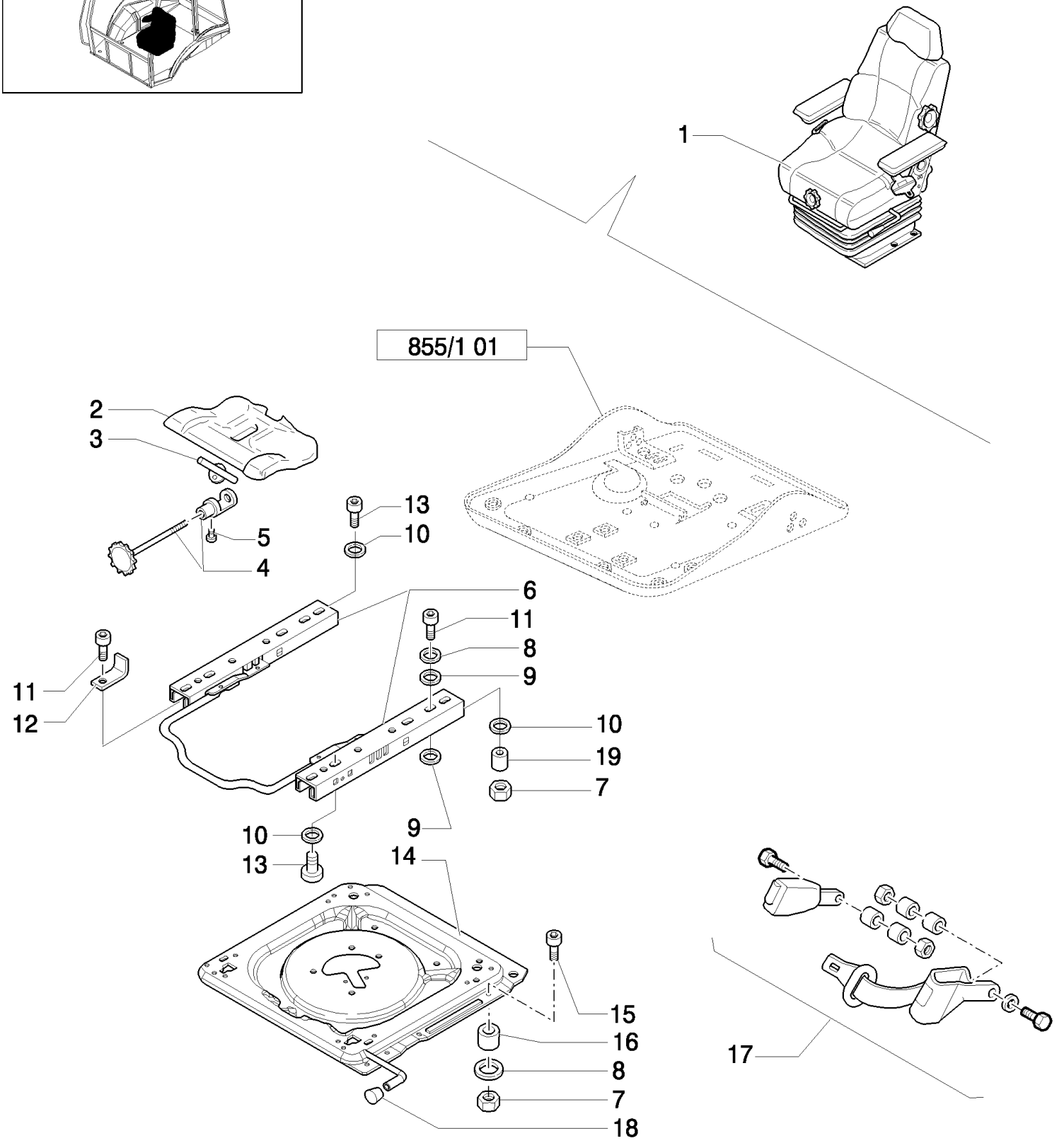

LB115.B EUR BACKHOE LOADER (1/05-)

855/ 1(02) AIR RIDE CLOTH SEAT MOUNTING PLATE, ADJUSTING RAILS & SEAT BELT

Ref	Part Number	Qty	Description
1	85826268	1	SEAT, DRIVER, , Mechanical Control Version, 2" Seat Belt, Consists Of Page 855/ 1 02, 855/ 1 03, 855/ 1 04, 855/ 1 05
1	85827709	1	SEAT, DRIVER, , Only for NA Pilot Control Version, 2" Seat Belt, Consists Of Page 855/ 1 02, 855/ 1 03, 855/ 1 04, 855/ 1 05
1	85826269	1	SEAT, DRIVER, , Mechanical Control Version, 3" Seat Belt, Consists Of Page 855/ 1 02, 855/ 1 03, 855/ 1 04, 855/ 1 05
1	85827710	1	SEAT, DRIVER, , Only for NA Pilot Control Version, 3" Seat Belt, Consists Of Page 855/ 1 02, 855/ 1 03, 855/ 1 04, 855/ 1 05
2	71485488	1	CONTROL, , Includes 4
3	85817463	1	PLATE,
4	85817464	1	SCREW, ADJUSTMENT, , Includes 3, 5
5	9962962	1	SCREW, M5 x 10
6	85817484	1	KIT,
7	85817458	8	NUT,
8	9960692	AR	SPACER,
9	9958776	8	SPACER,
10	10519601	AR	WASHER, M8 x 17 x 2,
11	85817467	AR	SCREW, M8x25
12	85824204	1	BRACKET,
13	14306321	AR	SCREW, Hex Soc Hd, M8 x 20, 8.8,
14	85827919	1	PLATE, MOUNTING, , Includes 18
15	85817536	4	SCREW,
16	85817456	4	SPACER,
17	85815578	1	SEAT BELT, , 2" Seat Belt
17	85815579	1	SEAT BELT, , 3" Seat Belt
18	85817482	1	KNOB,
19	85819813	1	BUSHING,

855/ 1(03) AIR RIDE CLOTH SEAT UPPER SUSPENSION PARTS

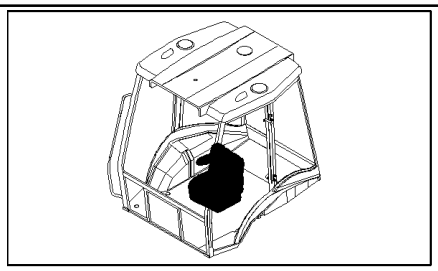

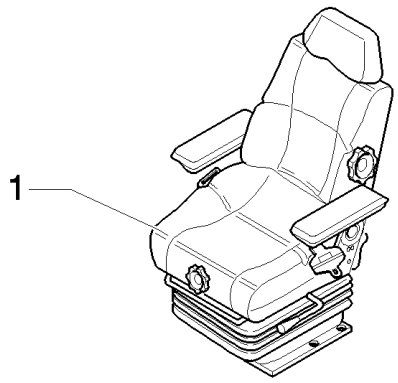

2 SEE ALSO TAV. 855/1 04
SEE ALSO TAV. 855/1 05

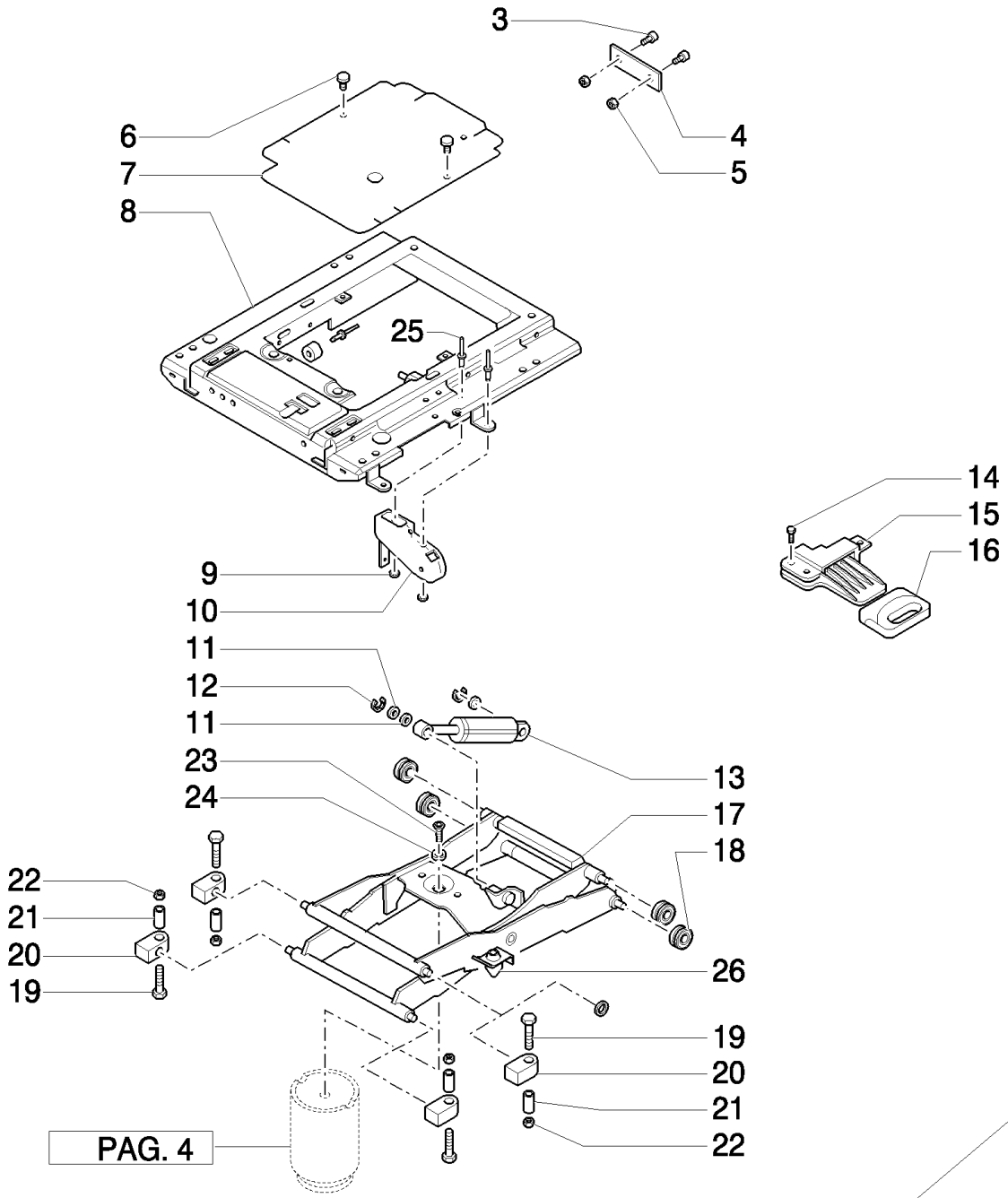

PAG. 4

LB115.B EUR BACKHOE LOADER (1/05-)

855/ 1(03) AIR RIDE CLOTH SEAT UPPER SUSPENSION PARTS

Ref	Part Number	Qty	Description
1	85826268	1	SEAT, DRIVER, , Mechanical Control Version, 2" Seat Belt, Consists Of Page 855/ 1 01, 855/ 1 02, 855/ 1 04, 855/ 1 05
1	85826269	1	SEAT, DRIVER, , Mechanical Control Version, 3" Seat Belt, Consists Of Page 855/ 1 01, 855/ 1 02, 855/ 1 04, 855/ 1 05
1	85827709	1	SEAT, DRIVER, , Only for NA Pilot Control Version, 2" Seat Belt, Consists Of Page 855/ 1 01, 855/ 1 02, 855/ 1 04, 855/ 1 05
1	85827710	1	SEAT, DRIVER, , Only for NA Pilot Control Version, 3" Seat Belt, Consists Of Page 855/ 1 01, 855/ 1 02, 855/ 1 04, 855/ 1 05
2	85817529	1	SHOCK ABSORBER,
3	9962736	2	SCREW,
4	85817494	1	PLATE,
5	85817458	2	NUT,
6	14592587	AR	SCREW,
7	85817486	1	COVER, , Includes 6
8	85824436	1	SHOCK ABSORBER, , Includes 6, 9, 10, 18
9	85817489	2	WASHER,
10	85817490	1	ARM, , Includes 6, 9, 25
11	9961887	3	WASHER,
12	85817496	2	WASHER,
13	85824434	1	SHOCK ABSORBER, , Includes 6, 11, 12
14	85819815	3	SCREW,
15	85817493	1	CONTROL, , Includes 6, 14, 16
16	85817492	1	HANDLE,
17	85817497	1	SUSPENSION, , Includes 6, 18, 20 to 24 And 5, 6, 10 Page 855/ 1 05
18	71485474	4	NEEDLE ROLLER,
19	85817499	4	WASHER,
20	85817498	AR	BEARING,
21	9962749	AR	PIN,
22	85817459	AR	NUT,
23	9968924	AR	SCREW,
24	10519601	AR	WASHER, M8 x 17 x 2,
25	85817488	2	RIVET,
26	71485476	2	BUMPER,

855/ 1(04) AIR RIDE CLOTH SEAT LOWER SUSPENSION PARTS

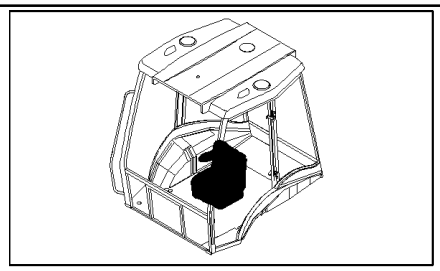

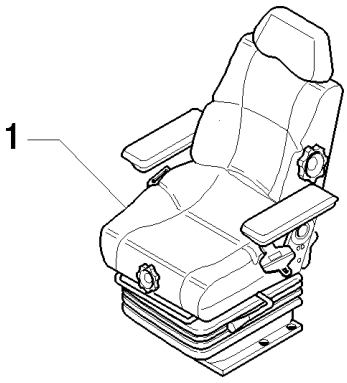

2 SEE ALSO TAV. 855/1 03
SEE ALSO TAV. 855/1 05

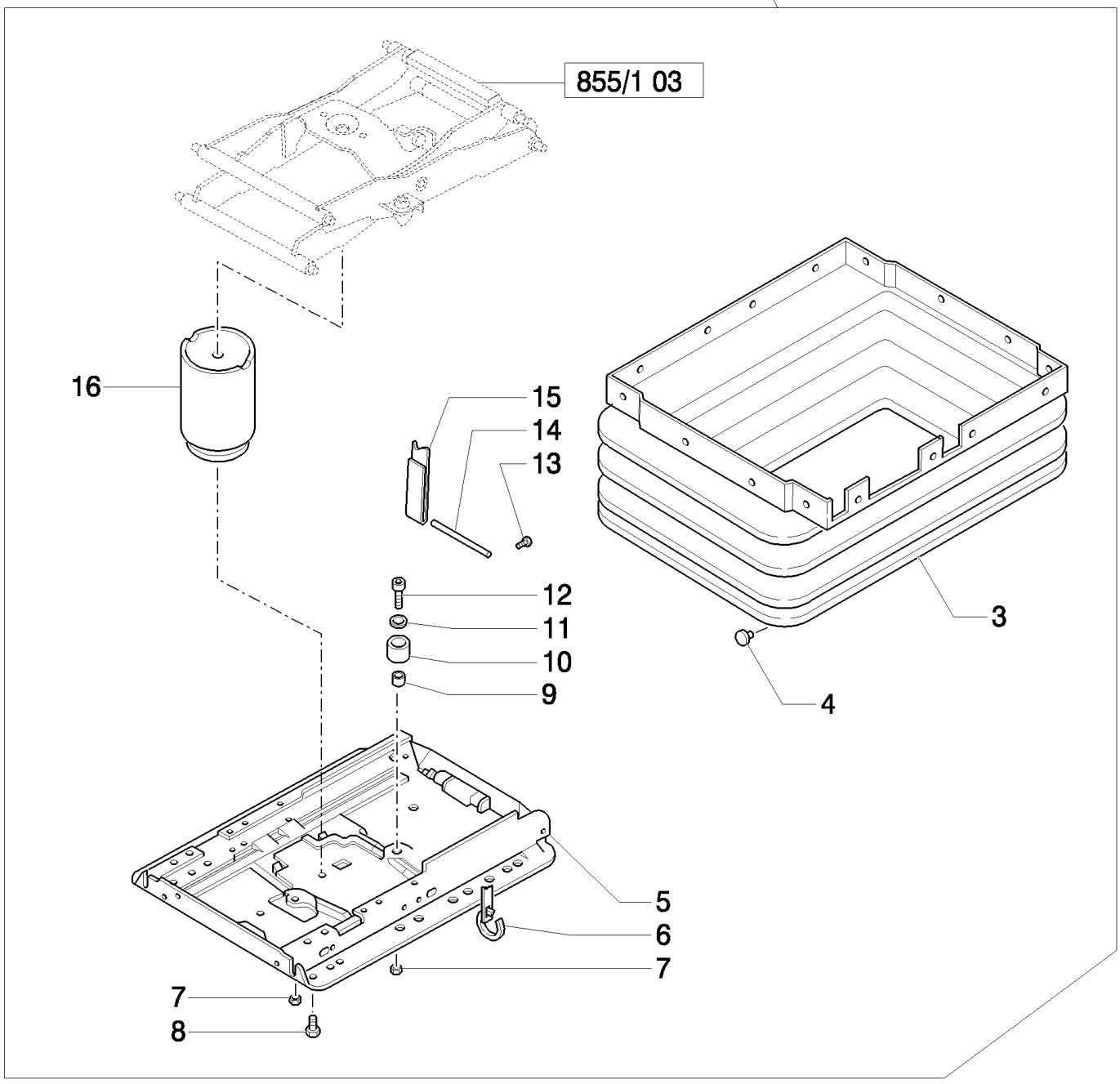

LB115.B EUR BACKHOE LOADER (1/05-)

855/ 1(04) AIR RIDE CLOTH SEAT LOWER SUSPENSION PARTS

Ref	Part Number	Qty	Description
1	85826268	1	SEAT, DRIVER, , Mechanical Control Version, 2" Seat Belt, Consists Of Page 855/ 1 01, 855/ 1 02, 855/ 1 03, 855/ 1 05
1	85826269	1	SEAT, DRIVER, , Only for NA Pilot Control Version, 3" Seat Belt, Consists Of Page 855/ 1 01, 855/ 1 02, 855/ 1 03, 855/ 1 05
1	85827709	1	SEAT, DRIVER, , Mechanical Control Version, 2" Seat Belt, Consists Of Page 855/ 1 01, 855/ 1 02, 855/ 1 03, 855/ 1 05
1	85827710	1	SEAT, DRIVER, , Only for NA Pilot Control Version, 3" Seat Belt, Consists Of Page 855/ 1 01, 855/ 1 02, 855/ 1 03, 855/ 1 05
2	85817529	1	SHOCK ABSORBER,
3	85827920	1	BELLOWS, , Includes 7
4	14592587	AR	SCREW,
5	85817526	1	SHOCK ABSORBER, , Includes 4, 7, 10 And 18, 23 Page 855/ 1 03 And 10 Page 855/ 1 05
6	9968911	AR	STRAP, CABLE,
7	85817459	AR	NUT,
8	9968924	1	SCREW, M8x20
9	85817525	1	SPACER,
10	85817523	1	GUARD, , Includes 4, 7, 9, 11, 12
11	10519601	1	WASHER, M8 x 17 x 2,
12	85817524	1	SCREW, M8 x 20
13	9962962	1	SCREW,
14	85817513	1	PIN,
15	85817512	1	SOFT TRIM,
16	85817500	1	SPRING, , Includes 4, 8, 11 And 4, 9 Page 855/ 1 05

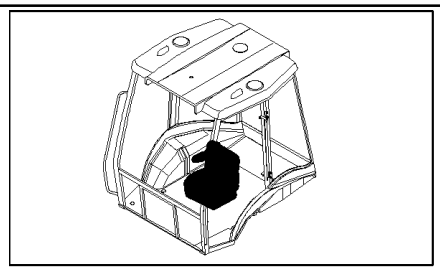

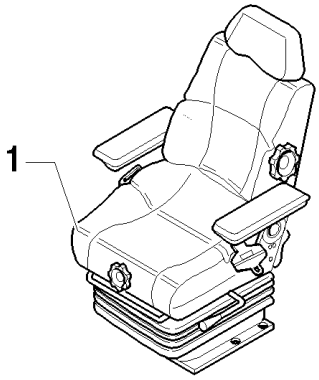

2 SEE ALSO TAV. 855/1 03
SEE ALSO TAV. 855/1 04

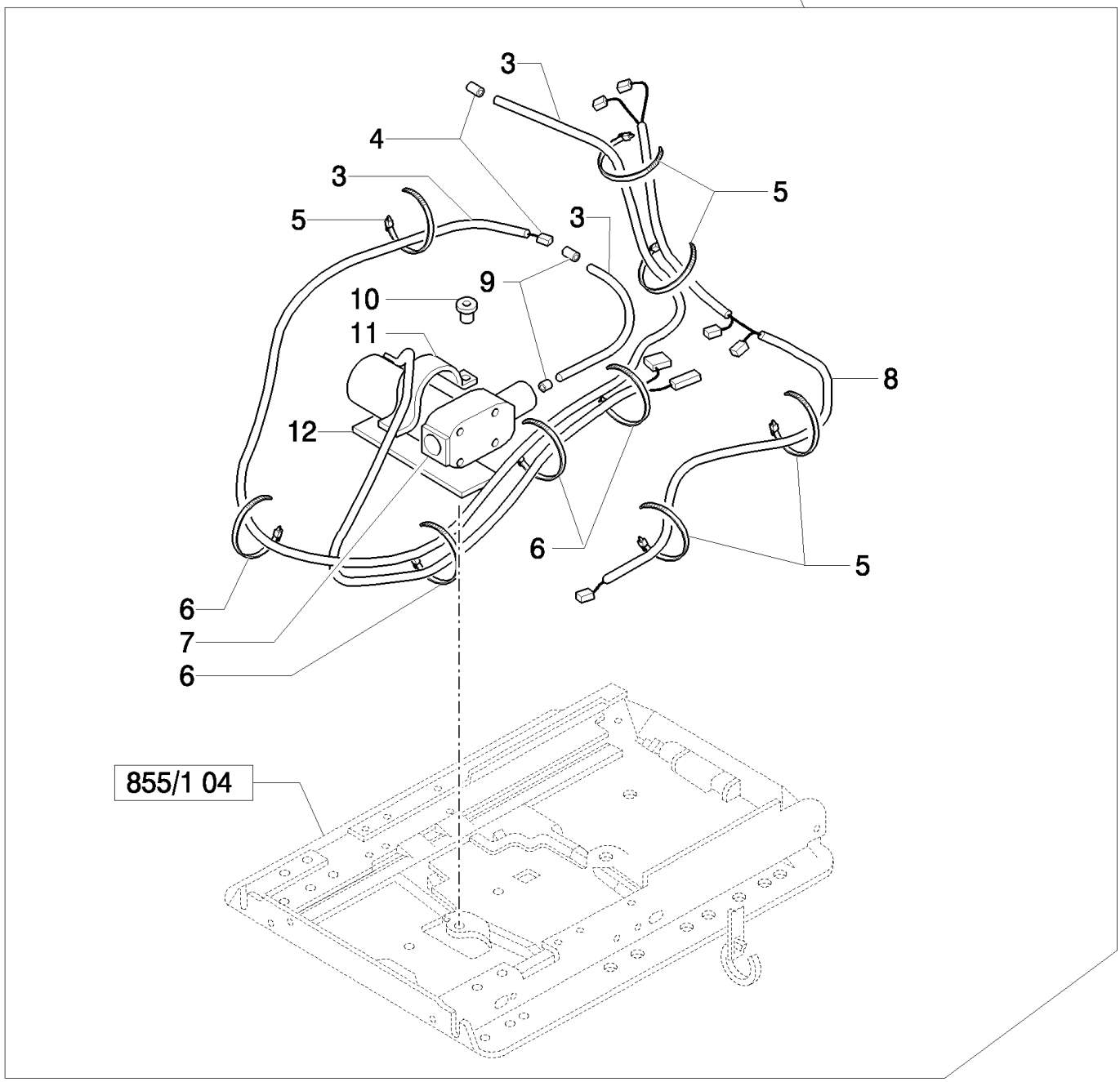

LB115.B EUR BACKHOE LOADER (1/05-)

855/ 1(05) AIR RIDE CLOTH SEAT COMPRESSOR & TUBING

Ref	Part Number	Qty	Description
1	85826268	1	SEAT, DRIVER, , Mechanical Control Version, 2" Seat Belt, Consists Of Page 855/ 1 01, 855/ 1 02, 855/ 1 04, 855/ 1 05
1	85826269	1	SEAT, DRIVER, , Mechanical Control Version, 3" Seat Belt, Consists Of Page 855/ 1 01, 855/ 1 02, 855/ 1 04, 855/ 1 05
1	85827709	1	SEAT, DRIVER, , Only for NA Pilot Control Version, 2" Seat Belt, Consists Of Page 855/ 1 01, 855/ 1 02, 855/ 1 04, 855/ 1 05
1	85827710	1	SEAT, DRIVER, , Only for NA Pilot Control Version, 3" Seat Belt, Consists Of Page 855/ 1 01, 855/ 1 02, 855/ 1 04, 855/ 1 05
2	85817529	1	SHOCK ABSORBER,
3	87313729	1	TUBE, HYD, , Includes 4 to 6, 9
4	85817514	2	FITTING,
5	9968911	AR	STRAP, CABLE,
6	85817515	4	STRAP, CABLE,
7	9968633	1	KIT, , Includes 5, 6, 9 to 12
8	85819814	1	HARNESS, WIRE, , Includes 5, 6
9	9962741	2	CLAMP,
10	85817516	1	SCREW,
11	85817517	1	BRACKET,
12	9971526	1	PLATE,

855/ 3(01) AIR RIDE CLOTH SEAT CUSHIONS, ARMRESTS & RELATED PARTS

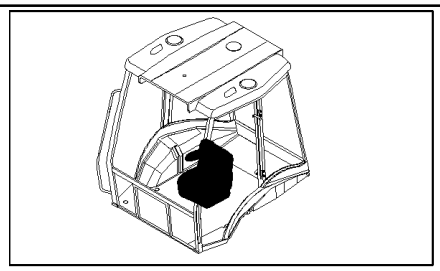

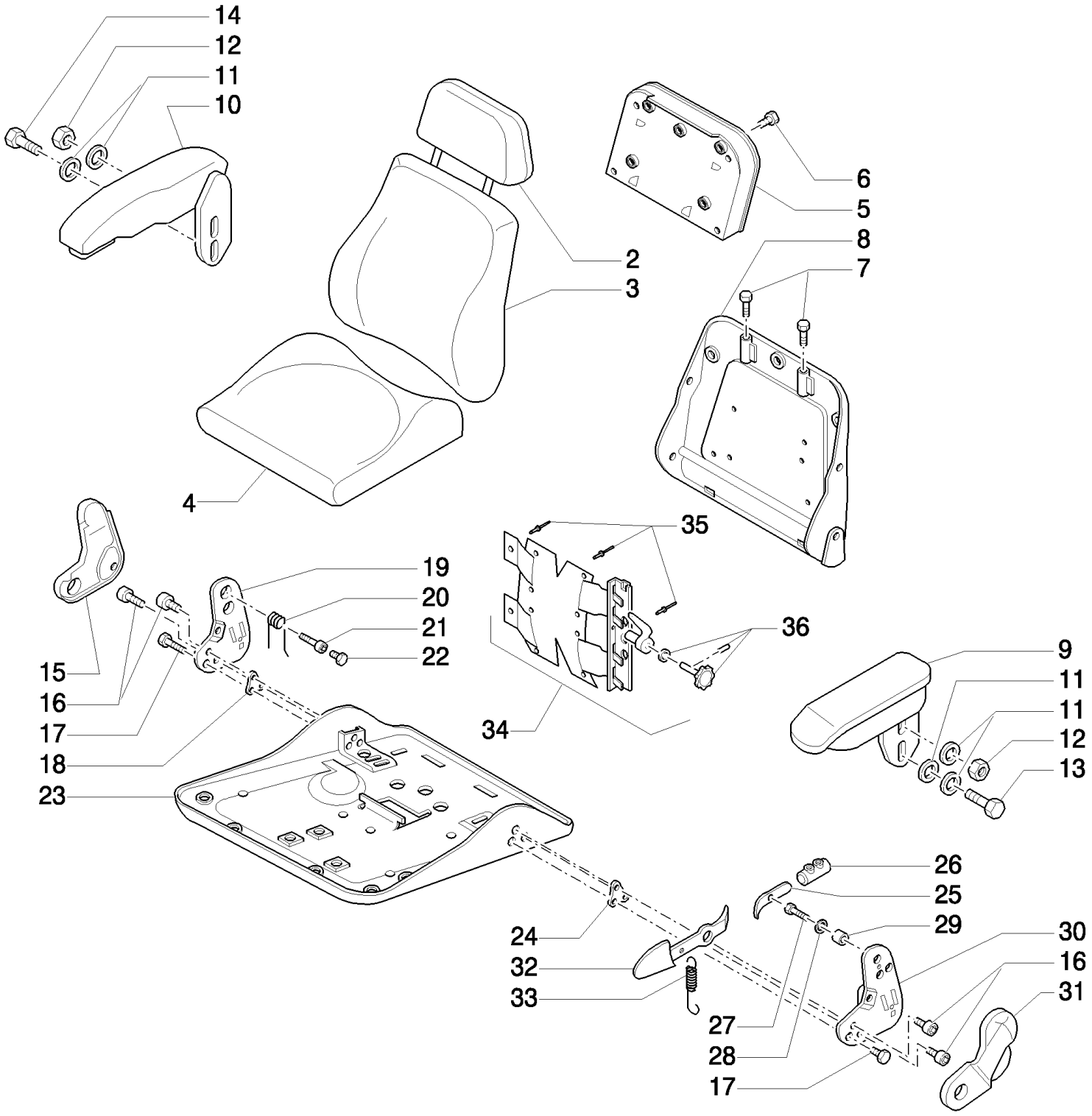

LB115.B EUR BACKHOE LOADER (1/05-)

855/ 3(01) AIR RIDE CLOTH SEAT CUSHIONS, ARMRESTS & RELATED PARTS

Ref	Part Number	Qty	Description
2	85817452	1	HEADREST, SEAT,
3	85817535	1	SEAT, BACK,
4	85817455	1	CUSHION, SEAT,
5	85817481	1	BOX, , Includes 6
6	82034863	4	SCREW,
7	47335213	2	BUSHING,
8	85817532	1	HEADREST, SEAT, , Includes 7, 34
9	85817453	1	ARMREST, LH, Mechanical Control Version, Includes 11 To 13
9	85828196	7	ARMREST, , Includes 11 To 13, Only for Pilot Control Version
10	85827918	1	ARMREST, RH, Includes 11, 12, 14
11	82034881	AR	WASHER,
12	85817459	2	NUT, M8
13	83984666	1	SCREW,
14	13838071	2	SCREW, Hex Serr Flg, M8 x 20,
15	85817466	1	COVER, RH
16	9972160	8	SCREW,
17	87395582	2	BOLT, 7/16"-20UNF x 60.0
18	85817470	1	PLATE,
19	9960795	1	PLATE, RH
20	9960793	1	SPRING,
21	85817469	1	BUSHING,
22	85817471	1	SCREW,
23	85821419	1	PLATE, RETAINING,
24	85817476	1	PLATE,
25	85817460	1	LEVER,
26	85821418	1	STOP DEVICE,
27	82035038	1	SCREW,
28	9960692	AR	SPACER,
29	85817477	1	SPACER,
30	9960803	1	PLATE, LH
31	85817479	1	COVER, LH
32	85817478	1	LEVER,
33	9960797	1	SPRING,
34	9967970	1	KIT,
35	82034897	3	RIVET,
36	85817534	1	SCREW, ADJUSTMENT,

855/ 3(02) AIR RIDE CLOTH SEAT MOUNTING PLATE, ADJUSTING RAILS & SEAT BELT

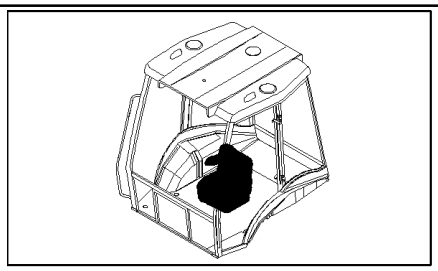

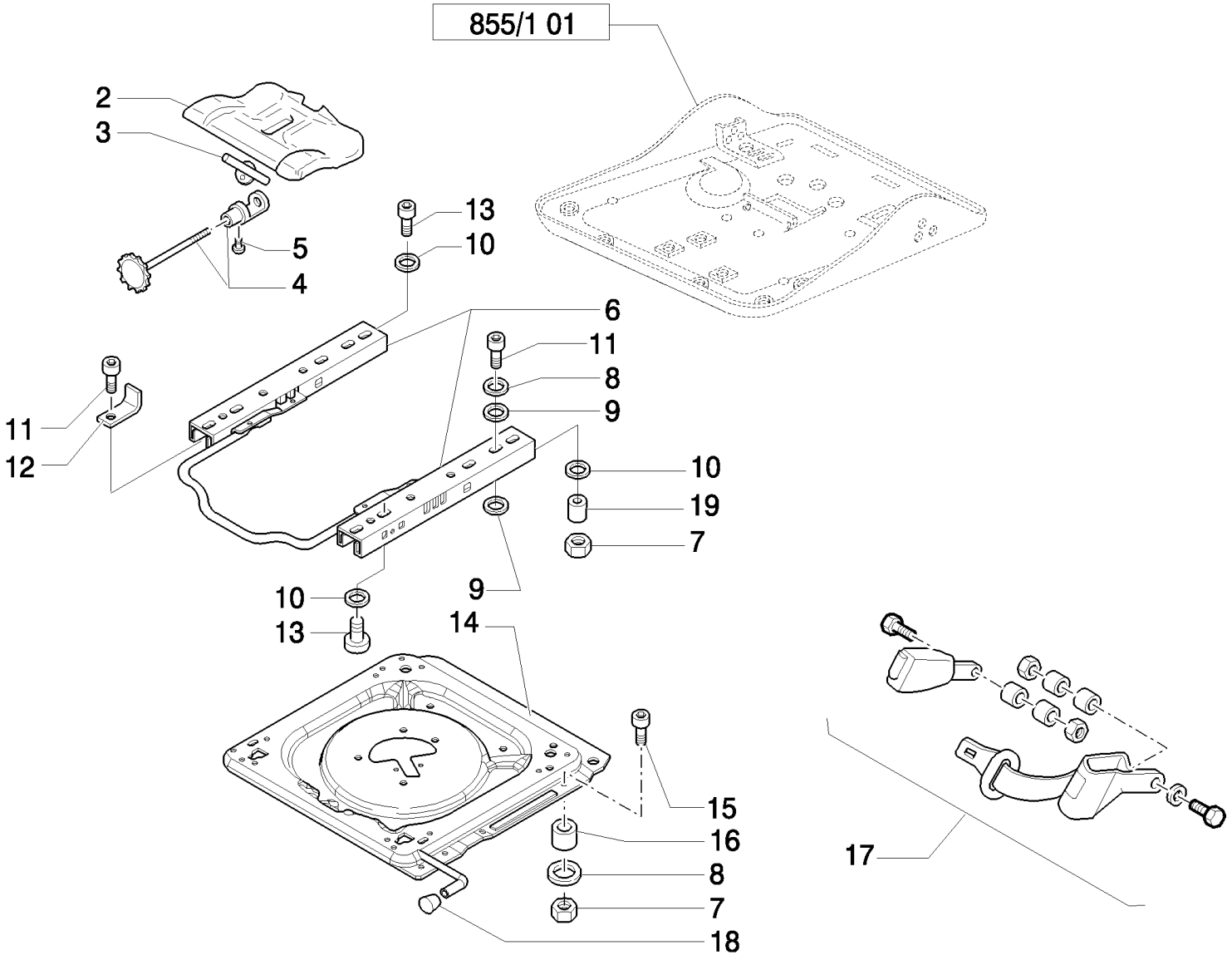

LB115.B EUR BACKHOE LOADER (1/05-)

855/ 3(02) AIR RIDE CLOTH SEAT MOUNTING PLATE, ADJUSTING RAILS & SEAT BELT

Ref	Part Number	Qty	Description
2	71485488	1	CONTROL, , Includes 3, 4
3	85817463	1	PLATE,
4	85817464	1	SCREW, ADJUSTMENT, , Includes 3, 5
5	9962962	1	SCREW, M5 x 10
6	85817484	1	KIT,
7	85817458	8	NUT,
8	9960692	AR	SPACER,
9	9958776	8	SPACER,
10	82034881	AR	WASHER,
11	9972160	AR	SCREW, M8x25
12	85824204	1	BRACKET,
13	82034893	AR	SCREW,
14	87395588	1	PLATE, , Includes 18
15	85817536	4	SCREW,
16	85817456	4	SPACER,
17	87364220	1	SEAT BELT, , 2" Seat Belt
17	87364221	1	SEAT BELT, , 3" Seat Belt
18	85817482	1	KNOB,
19	85819813	1	BUSHING,

855/ 3(03) AIR RIDE CLOTH SEAT UPPER SUSPENSION PARTS

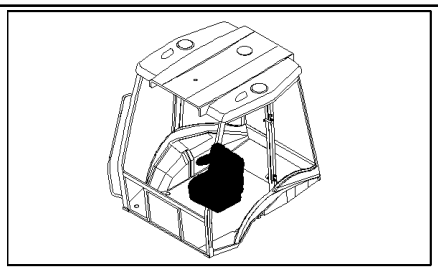

KIT KIT KIT 1 = ●

2 SEE ALSO TAV. 855/ 3 04
SEE ALSO TAV. 855/ 3 05

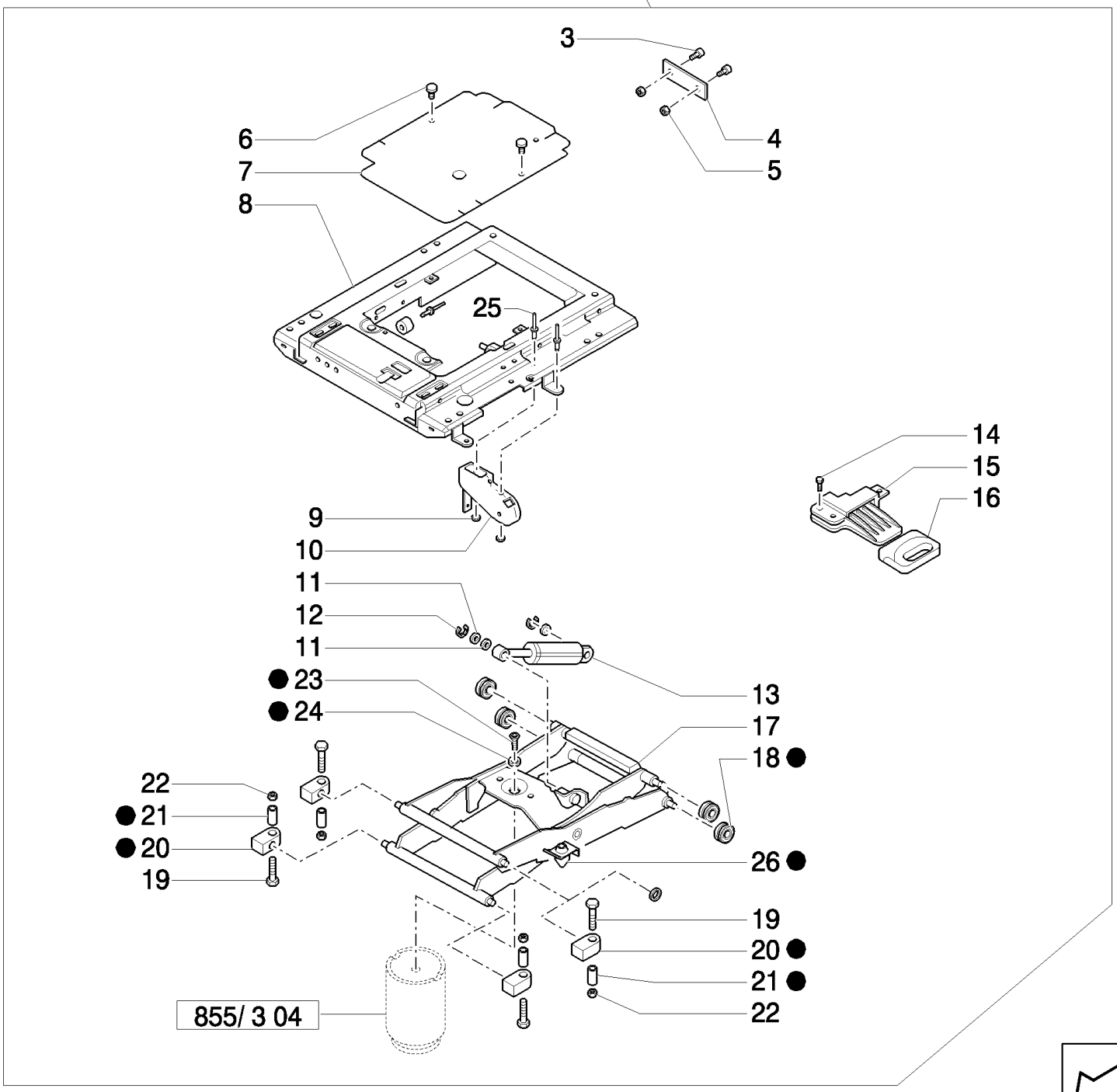

LB115.B EUR BACKHOE LOADER (1/05-)

855/ 3(03) AIR RIDE CLOTH SEAT UPPER SUSPENSION PARTS

Ref	Part Number	Qty	Description
1	82848105	1	KIT,
2	85817529	1	SHOCK ABSORBER,
3	82034894	2	SCREW,
4	85817494	1	PLATE,
5	85817458	2	NUT,
6	NS	AR	NOT SERVICED,
7	85817486	1	COVER, , Includes 6
8	85824436	1	SHOCK ABSORBER, , Includes 9, 10, 18
9	85817489	2	WASHER,
10	85817490	1	ARM, , Includes 6, 9, 25
11	NS	3	NOT SERVICED,
12	85817496	2	WASHER,
13	85824434	1	SHOCK ABSORBER, , Includes 6, 11, 12
14	85819815	3	SCREW,
15	85817493	1	CONTROL, , Includes 6, 14, 16
16	85817492	1	HANDLE,
17	87396449	1	DRAWBAR, SWINGING, , Includes 6, 18, 20 to 24 And 5, 6, 10 Page 855/ 3 05
18	82035057	4	ROLLER,
19	NS	4	NOT SERVICED,
20	85817498	AR	BEARING,
21	82035053	AR	TUBE,
22	NS	AR	NOT SERVICED,
23	NS	AR	NOT SERVICED,
24	NS	AR	NOT SERVICED,
25	85817488	2	RIVET,
26	82035126	2	BUMPER,

855/ 3(04) AIR RIDE CLOTH SEAT LOWER SUSPENSION PARTS

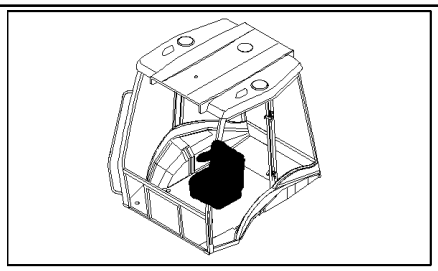

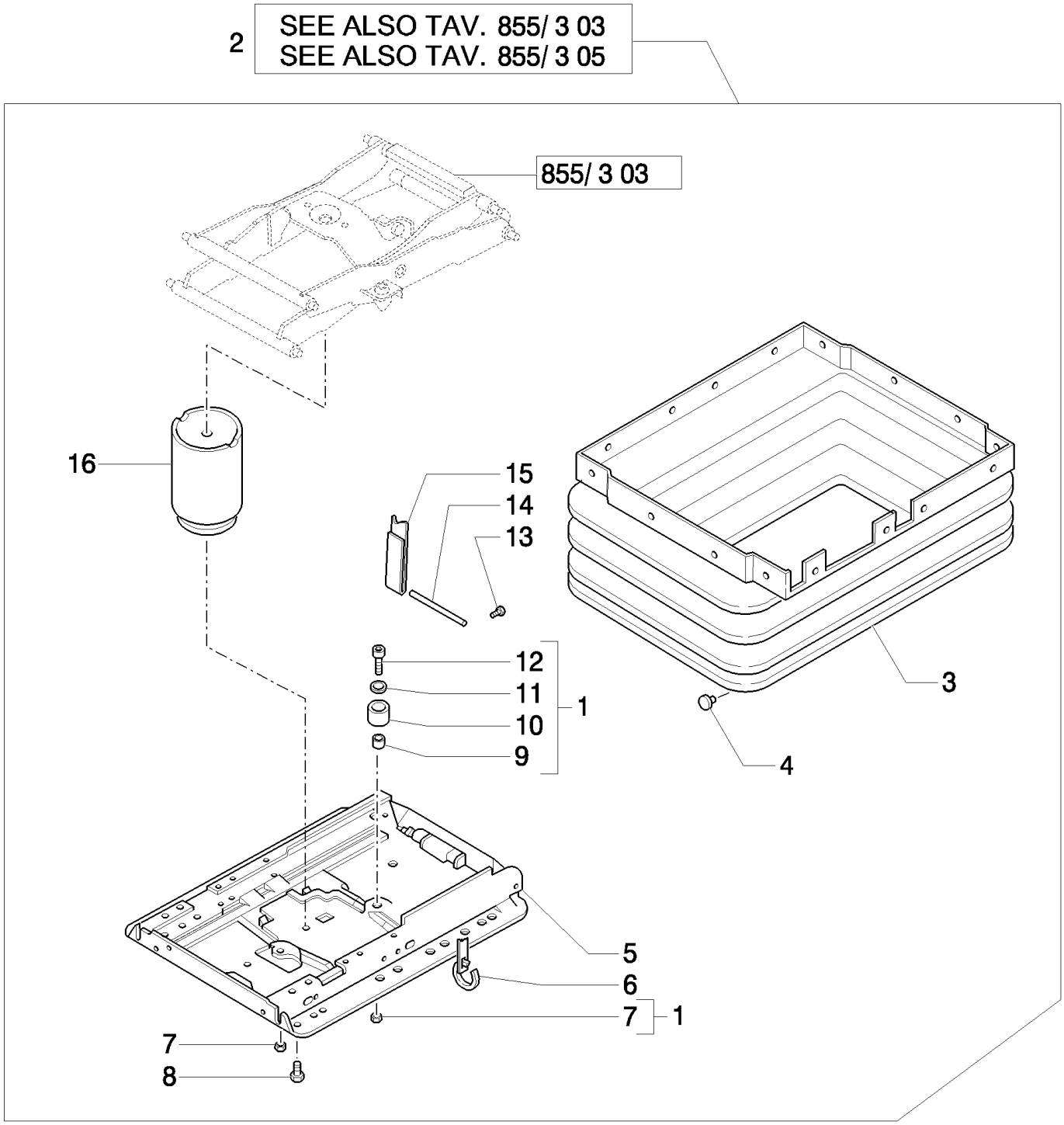

LB115.B EUR BACKHOE LOADER (1/05-)

855/ 3(04) AIR RIDE CLOTH SEAT LOWER SUSPENSION PARTS

Ref	Part Number	Qty	Description
1	85817523	1	GUARD,
2	85817529	1	SHOCK ABSORBER,
3	85827920	1	BELLOWS, , Includes 4
4	NS	AR	NOT SERVICED,
5	87396451	1	SUSPENSION, , Includes 4, 7, 10 And 18, 23 Page 855/3 03 And 10 Page 855/3 05
6	NS	AR	NOT SERVICED,
7	NS	AR	NOT SERVICED,
8	NS	1	NOT SERVICED, M8x20
9	NS	1	NOT SERVICED,
10	NS	1	NOT SERVICED, , Includes 4, 7, 9, 11, 12
11	NS	1	NOT SERVICED,
12	NS	1	NOT SERVICED, M8x20
13	9962962	1	SCREW,
14	85817513	1	PIN,
15	85817512	1	SOFT TRIM,
16	87396450	1	SPRING, , Includes 4, 8, 11 And 4, 9 Page 855/3 05

855/ 3(05) AIR RIDE CLOTH SEAT COMPRESSOR & TUBING

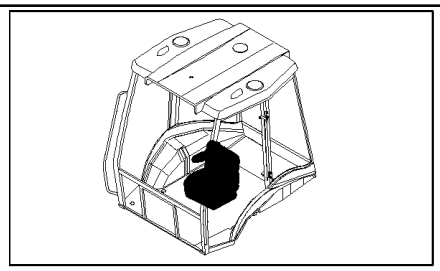

KIT KIT KIT 1 = ●

2 SEE ALSO TAV. 855/ 3 03
SEE ALSO TAV. 855/ 3 04

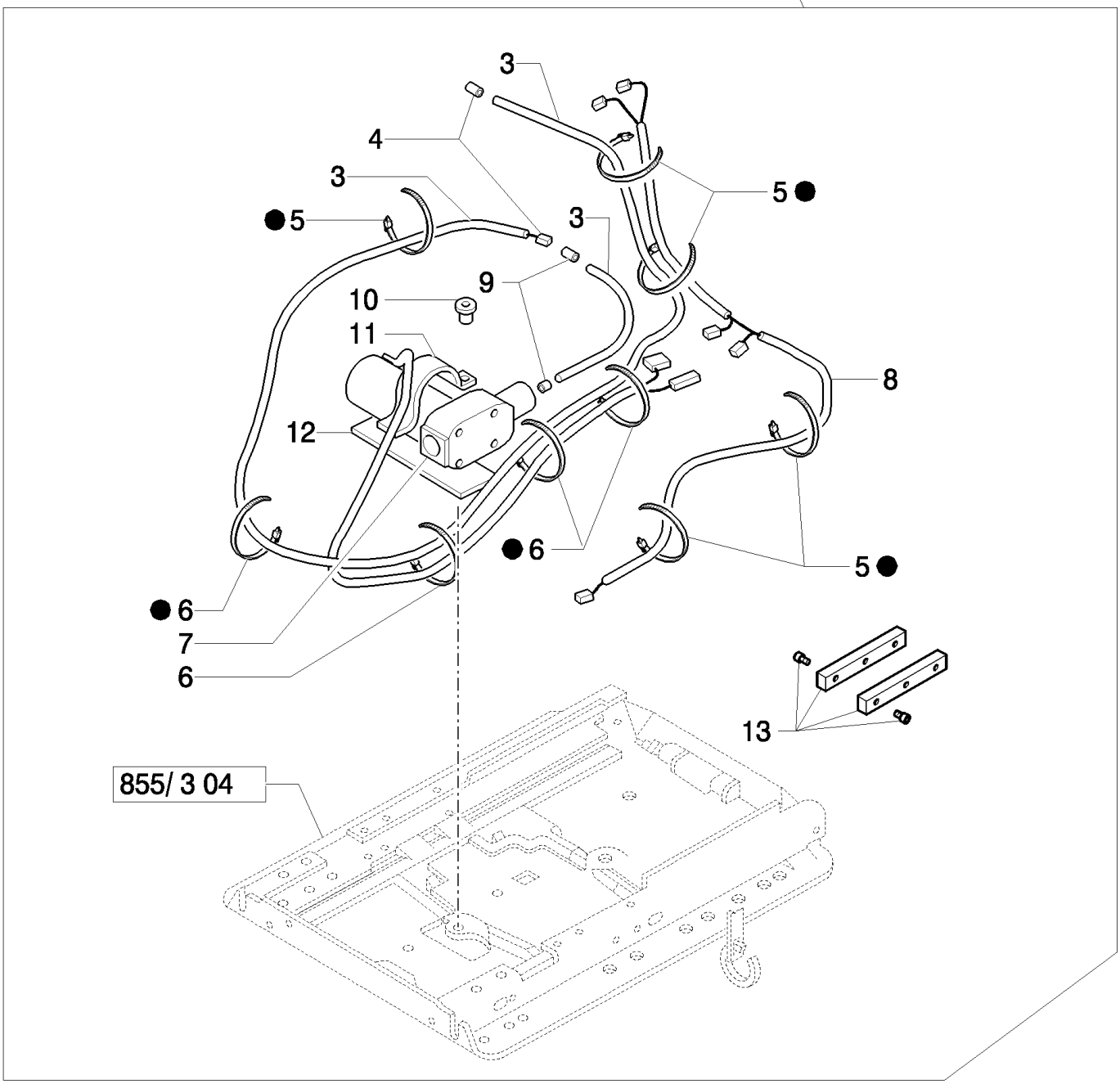

LB115.B EUR BACKHOE LOADER (1/05-)

855/ 3(05) AIR RIDE CLOTH SEAT COMPRESSOR & TUBING

Ref	Part Number	Qty	Description
1	82848105	1	KIT,
2	85817529	1	SHOCK ABSORBER,
3	87313729	1	TUBE, HYD, , Includes 4 to 6, 9
4	NS	2	NOT SERVICED,
5	NS	AR	NOT SERVICED,
6	NS	4	NOT SERVICED,
7	82035076	1	COMPRESSOR, , Includes 5, 6, 9 to 12
8	85819814	1	HARNESS, WIRE, , Includes 5, 6
9	NS	2	NOT SERVICED,
10	NS	1	NOT SERVICED,
11	NS	1	NOT SERVICED,
12	NS	1	NOT SERVICED,
13	47335175	1	STOP,

860(01) FENDERS, FRONT

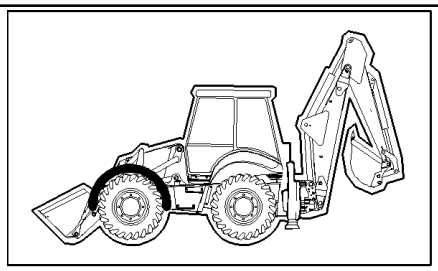

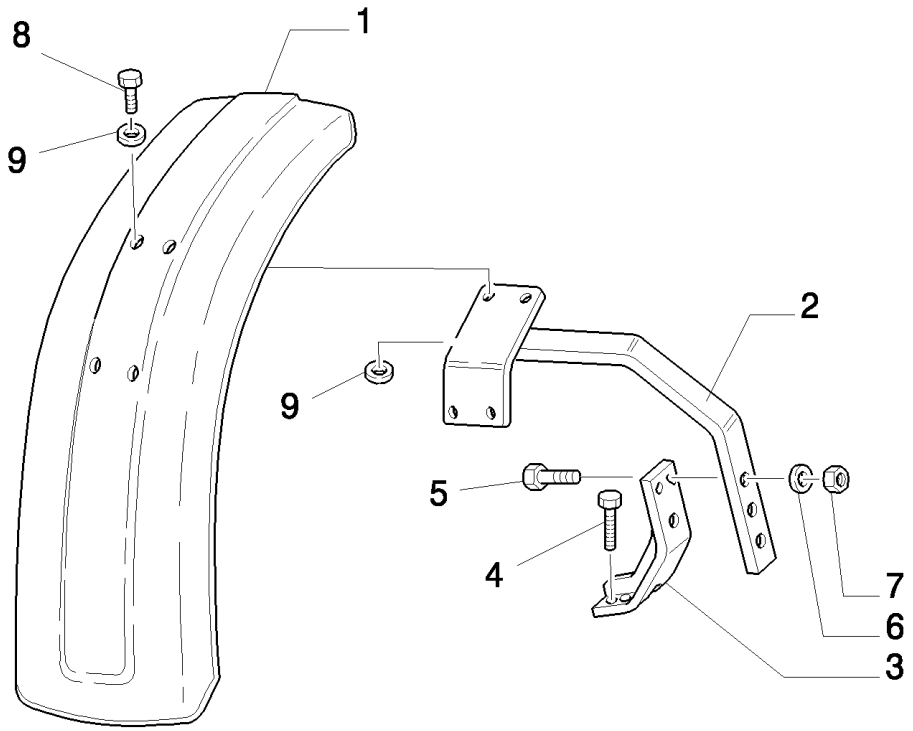

LB115.B EUR BACKHOE LOADER (1/05-)

860(01) FENDERS, FRONT

Ref	Part Number	Qty	Description
1	85817214	1	FENDER, FRONT, RH
1	85817215	1	FENDER, FRONT, LH
2	85806215	1	SUPPORT, RH
2	85806219	1	SUPPORT, LH
3	85806220	2	BRACKET,
4	87345246	8	SCREW, M16x2x48
5	15540821	4	SCREW, Hex, M12 x 1.25 x 50, 8.8,
6	11190879	4	WASHER, SPRING, Belleville, M13,
7	16105011	4	NUT, LOCK,
8	16043421	8	SCREW, Hex, M8 x 20, 8.8,
9	11193979	8	WASHER, SPRING, Belleville, M8.4,

Mechanical Version

900(01) BOOM - LONG DIPPER

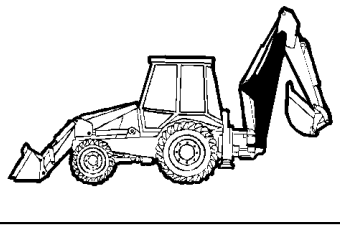

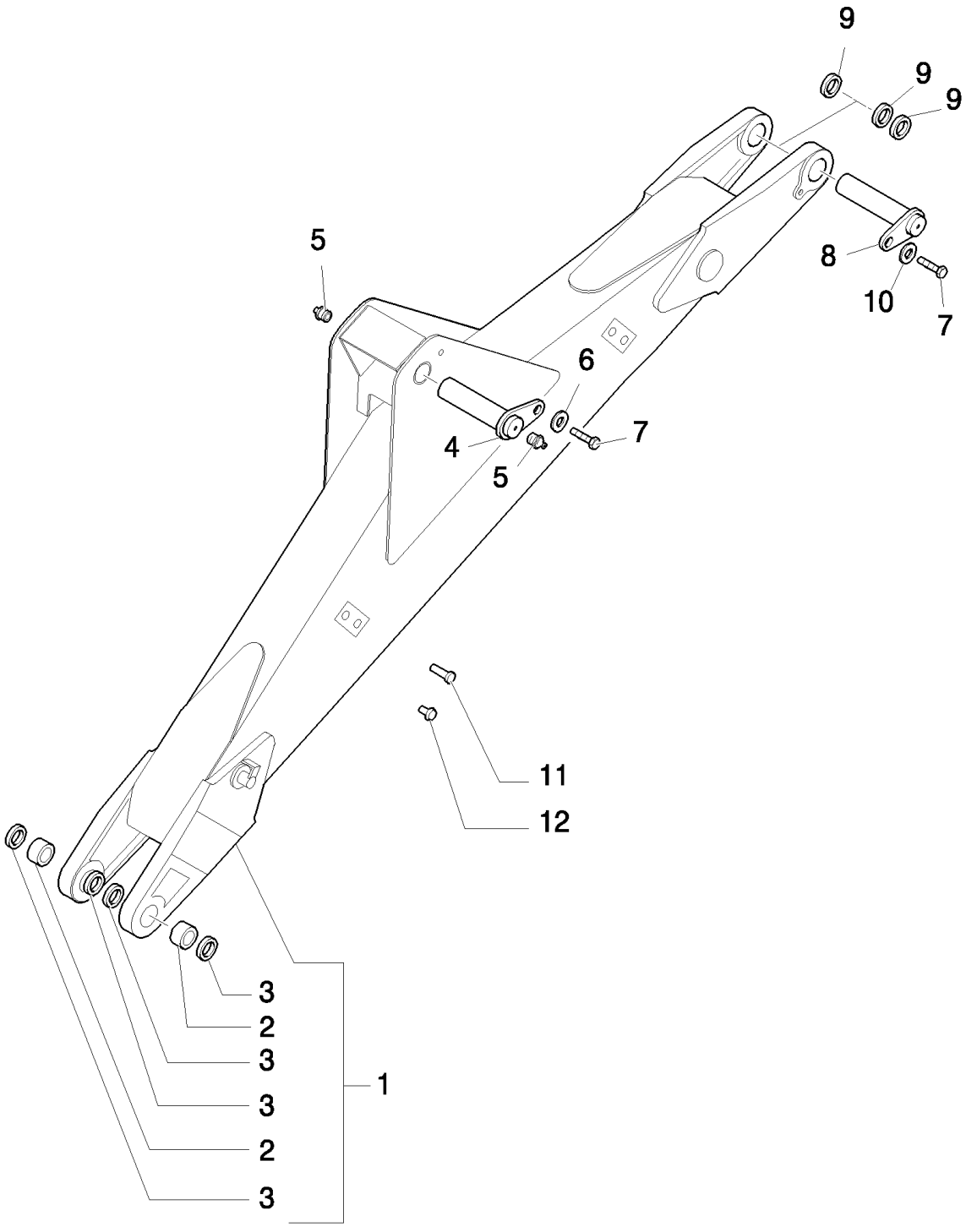

LB115.B EUR BACKHOE LOADER (1/05-)

900(01) BOOM - LONG DIPPER

Ref	Part Number	Qty	Description
1	87372186	1	BOOM, Replaces 87311190 Boom, Includes 2, 3
2	83910557	2	RING,
3	83931281	4	SEAL,
4	85815698	1	PIN,
5	83416242	2	NIPPLE, LUBE, 1/8"-27
6	85802396	1	WASHER,
7	85802397	2	SCREW,
8	85815607	1	PIN,
9	85805296	3	SHIM,
10	85815609	1	WASHER,
11	81870039	3	STUD,
12	87310961	8	PLUG,

900(02) LONG DIPPER

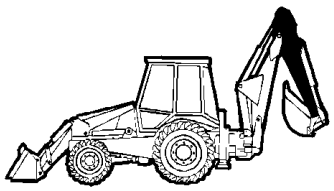

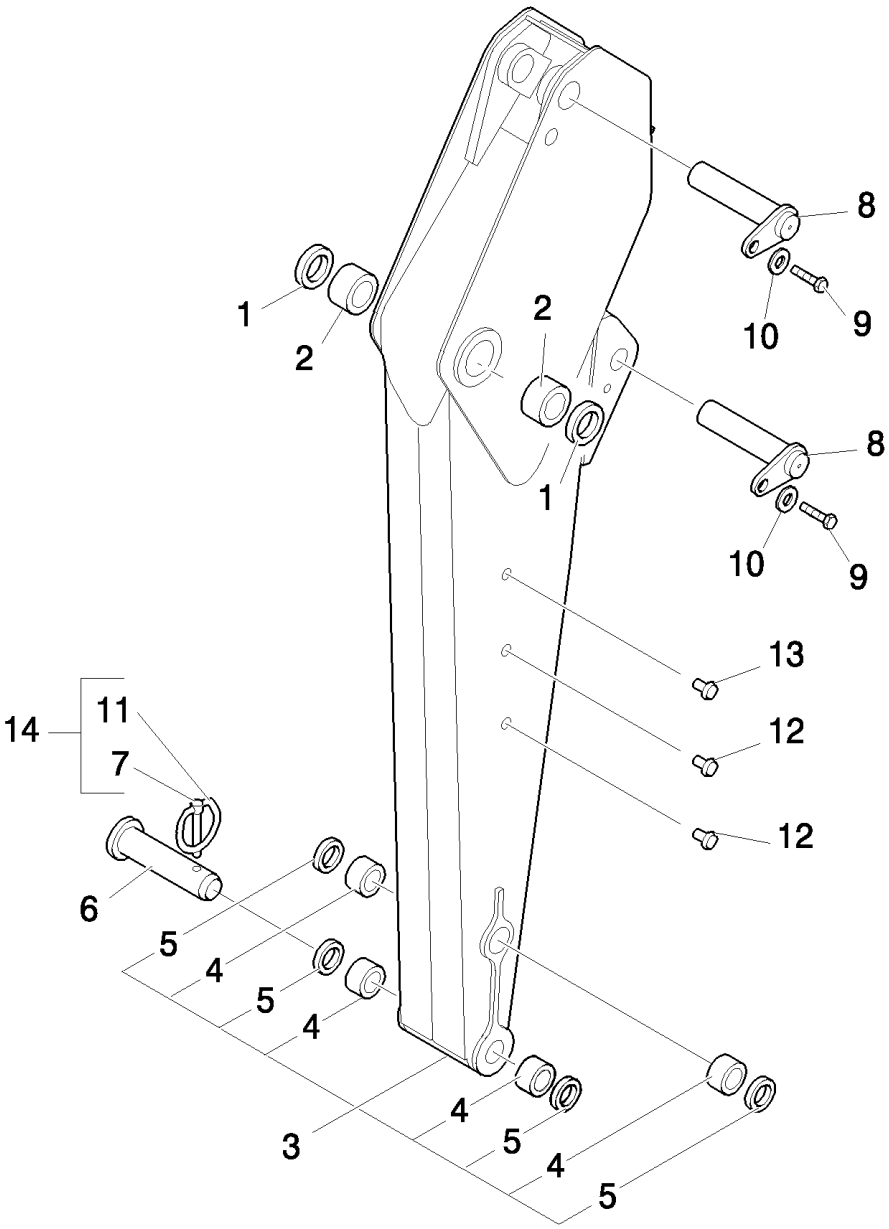

LB115.B EUR BACKHOE LOADER (1/05-)

900(02) LONG DIPPER

Ref	Part Number	Qty	Description
1	83931281	2	SEAL,
2	83910546	2	BUSHING, 2.175" ID x 2.80" OD x 1.969"
3	85817039	1	DIPPER, , Includes 1, 2, 4, 5
4	83910548	4	BUSHING,
5	83931289	4	SEAL,
6	85803005	1	PIN,
7	85802976	1	PIN,
8	85803002	2	PIN,
9	85802397	2	SCREW, M16x40
10	85802396	2	WASHER,
11	85802974	1	RING,
12	85804447	4	PLUG,
13	F1NN94000Z36AA	4	STUD,
14	85802975	1	PIN, LOCK,

900(03) LONG/SHORT DIPPER - BUCKET MOTION

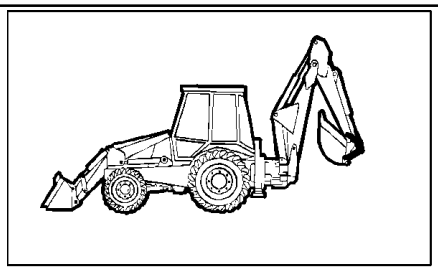

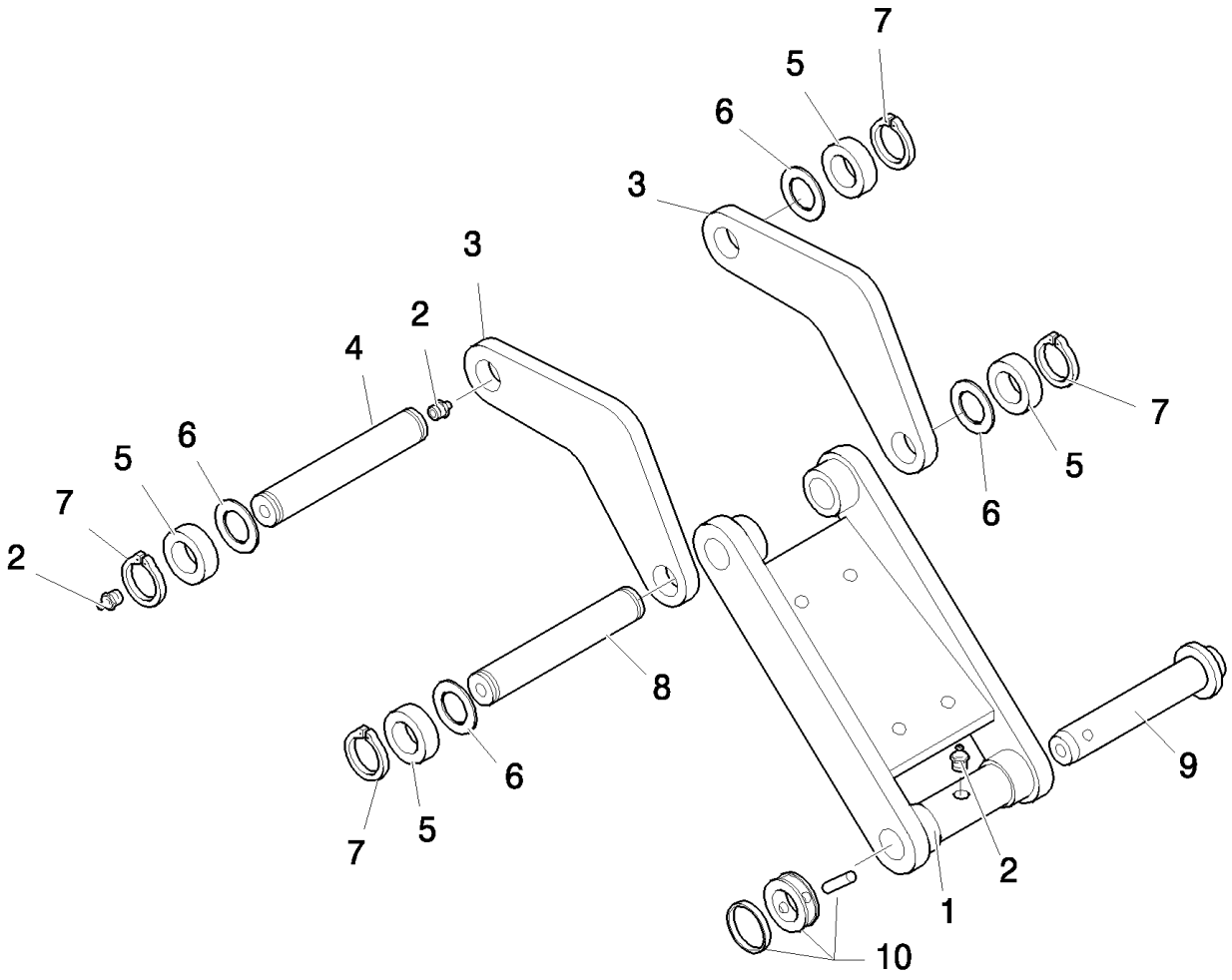

LB115.B EUR BACKHOE LOADER (1/05-)

900(03) LONG/SHORT DIPPER - BUCKET MOTION

Ref	Part Number	Qty	Description
1	85803613	1	LINK,
2	83416242	5	NIPPLE, LUBE, 1/8"-27
3	85817133	2	LINK CONROD,
4	85815517	1	PIN,
5	85802396	4	WASHER,
6	83910977	4	SPACER,
7	11069071	4	RING, SNAP, M45, Ext,
8	85813469	1	PIN,
9	85803005	1	PIN,
10	85802975	1	PIN, LOCK,

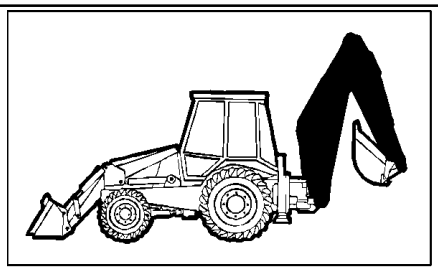

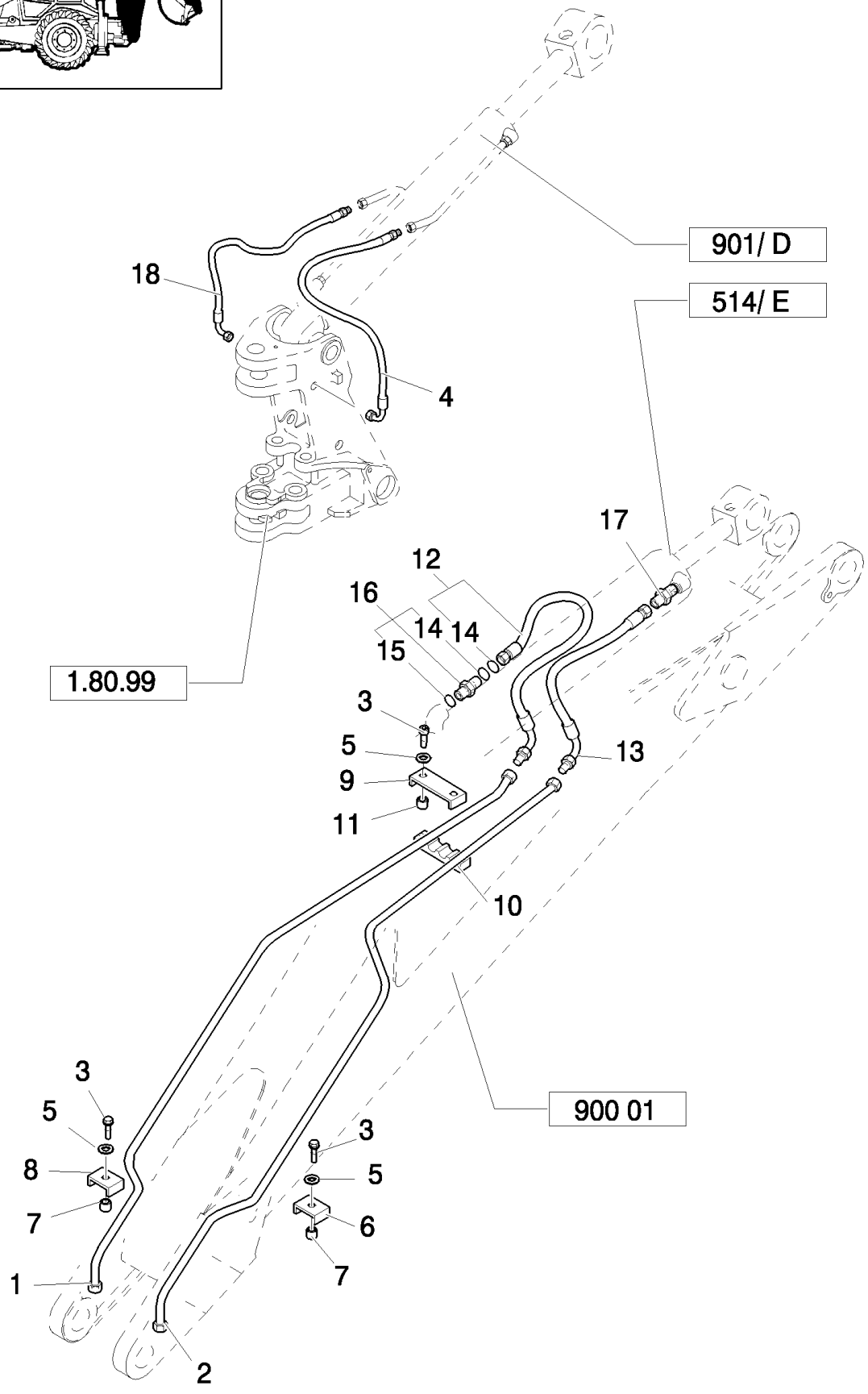
901/ D
514/ E
18
4
17
12
16
14
14
15
1.80.99
3
5
9
11
13
10
900 01
3
5
8
7
1
2
3
5
6
7

LB115.B EUR BACKHOE LOADER (1/05-)

900(04) LONG DIPPER - HYDRAULIC SYSTEM

Ref	Part Number	Qty	Description
1	85815632	1	TUBE, HYD,
2	85815630	1	TUBE, HYD,
3	16044421	4	SCREW, Hex, M8 x 60, 8.8,
4	85826212	1	HOSE, FLEXIBLE,
5	11193979	4	WASHER, SPRING, Belleville, M8.4,
6	85802899	1	CLAMP, M8x50
7	85802902	1	SPACER,
8	85802900	1	CLAMP,
9	85802894	1	U-BRACKET,
10	85802895	1	CLAMP,
11	85802893	2	SPACER,
12	85812154	1	HOSE, FLEXIBLE, , Includes 14
13	85812178	1	HOSE, FLEXIBLE,
14	9991976	1	O-RING, -018, 90 Duro, .739" ID x .070" Thk,
15	80167266	1	O-RING, 90 Duro, .924" ID x .116" Thk
16	83962538	1	CONNECTOR, HYD., 1-3/16"-12 ORS x 1-1/16"-12 SAE O-Ring, Includes 14, 15
17	83962539	1	CONNECTOR, HYD.,
18	85816213	1	

900(05) LONG DIPPER - HYDRAULIC SYSTEM

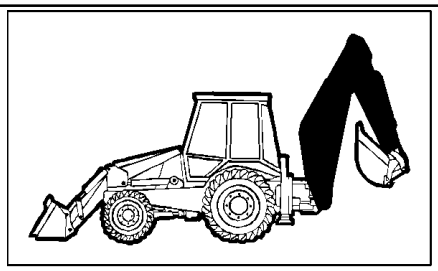

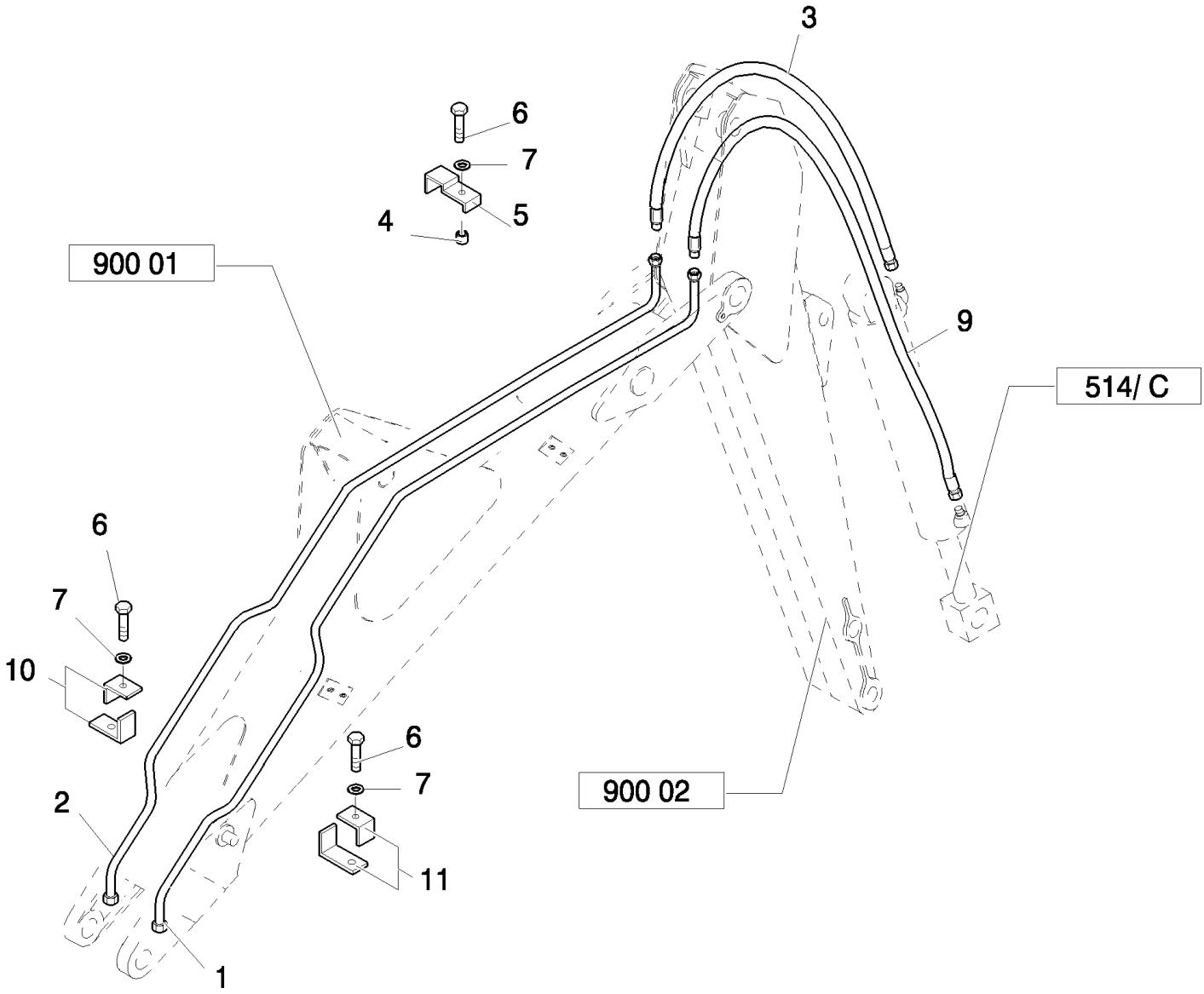

LB115.B EUR BACKHOE LOADER (1/05-)

900(05) LONG DIPPER - HYDRAULIC SYSTEM

Ref	Part Number	Qty	Description
1	85815636	1	TUBE, HYD,
2	85815634	1	TUBE, HYD,
3	85826222	1	HOSE, FLEXIBLE,
4	85802901	1	SPACER,
5	85802909	1	CLAMP,
6	16044221	3	SCREW, Hex, M8 x 50, 8.8,
7	11193979	3	WASHER, SPRING, Belleville, M8.4,
9	85826224	1	HOSE, FLEXIBLE,
10	85815628	2	CLAMP,
11	85815627	2	CLAMP,

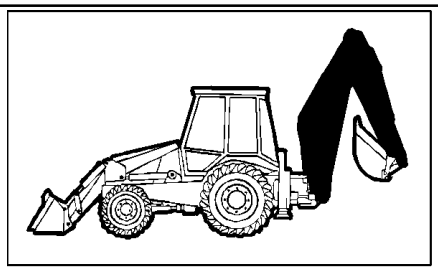

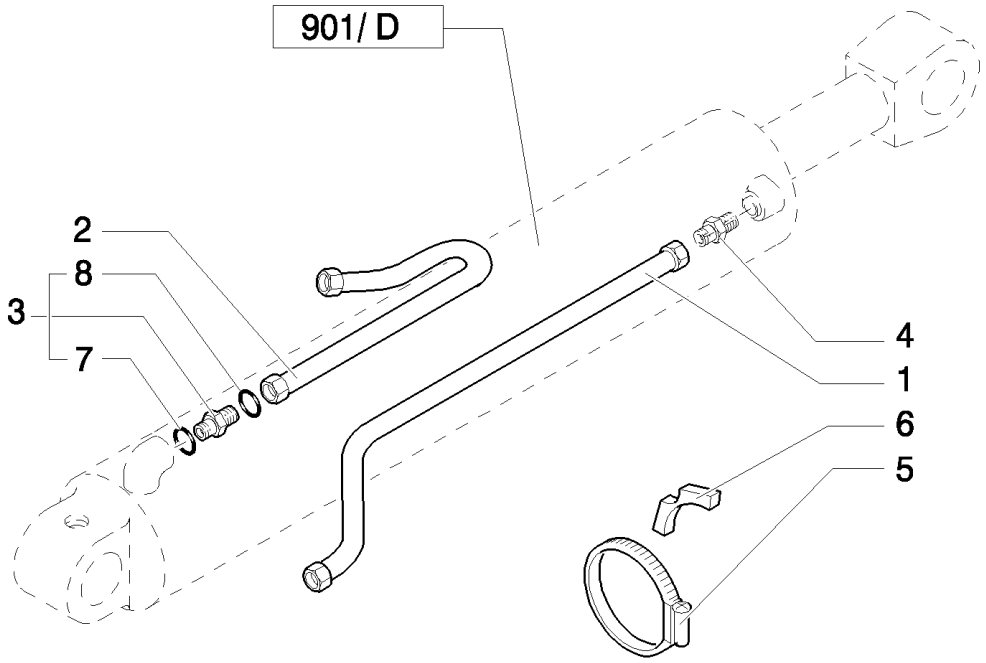
901/ D
2
8
3
7
4
1
6
5

LB115.B EUR BACKHOE LOADER (1/05-)

900(06) LONG DIPPER - HYDRAULIC SYSTEM

Ref	Part Number	Qty	Description
1	85815683	1	TUBE, HYD,
2	85816813	1	TUBE, HYD,
3	83962538	1	CONNECTOR, HYD., 1-3/16"-12 ORS x 1-1/16"-12 SAE O-Ring, Includes 7, 8
4	83962539	1	CONNECTOR, HYD.,
5	85802744	1	CLAMP, HOSE,
6	87303912	2	BLOCK,
7	80167266	1	O-RING, 90 Duro, .924" ID x .116" Thk
8	89991976	1	O-RING, 90 Duro, .739" ID x .070" Thk

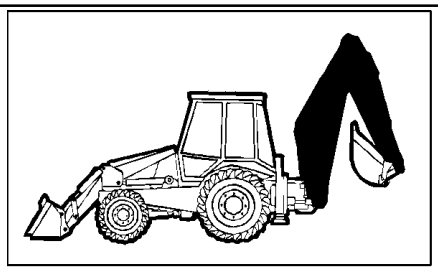

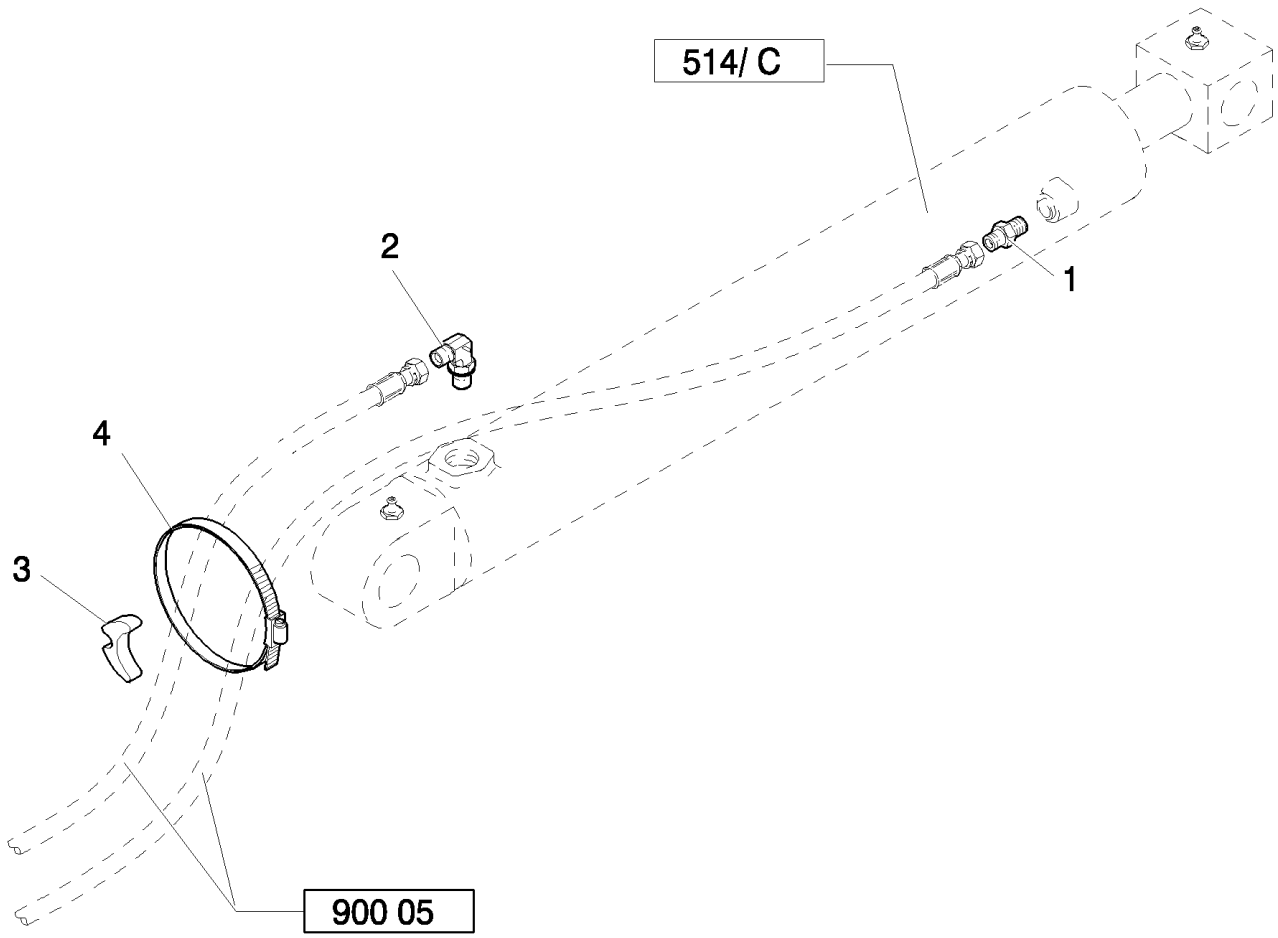
514/ C
2
1
4
3
900 05

LB115.B EUR BACKHOE LOADER (1/05-)

900(07) LONG DIPPER - HYDRAULIC SYSTEM

Ref	Part Number	Qty	Description
1	83962539	1	CONNECTOR, HYD.,
2	85802957	1	ELBOW, 90ş, 1 3/16"-12 ORS x 1 1/16"-12 SAE O-Ring,
3	87565305	1	ANCHOR,
4	85817474	1	STRAP, CABLE,

901(01) TELESCOPIC DIPPER LONG/SHORT - HYDRAULIC SYSTEM

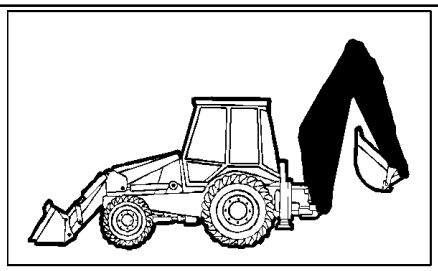

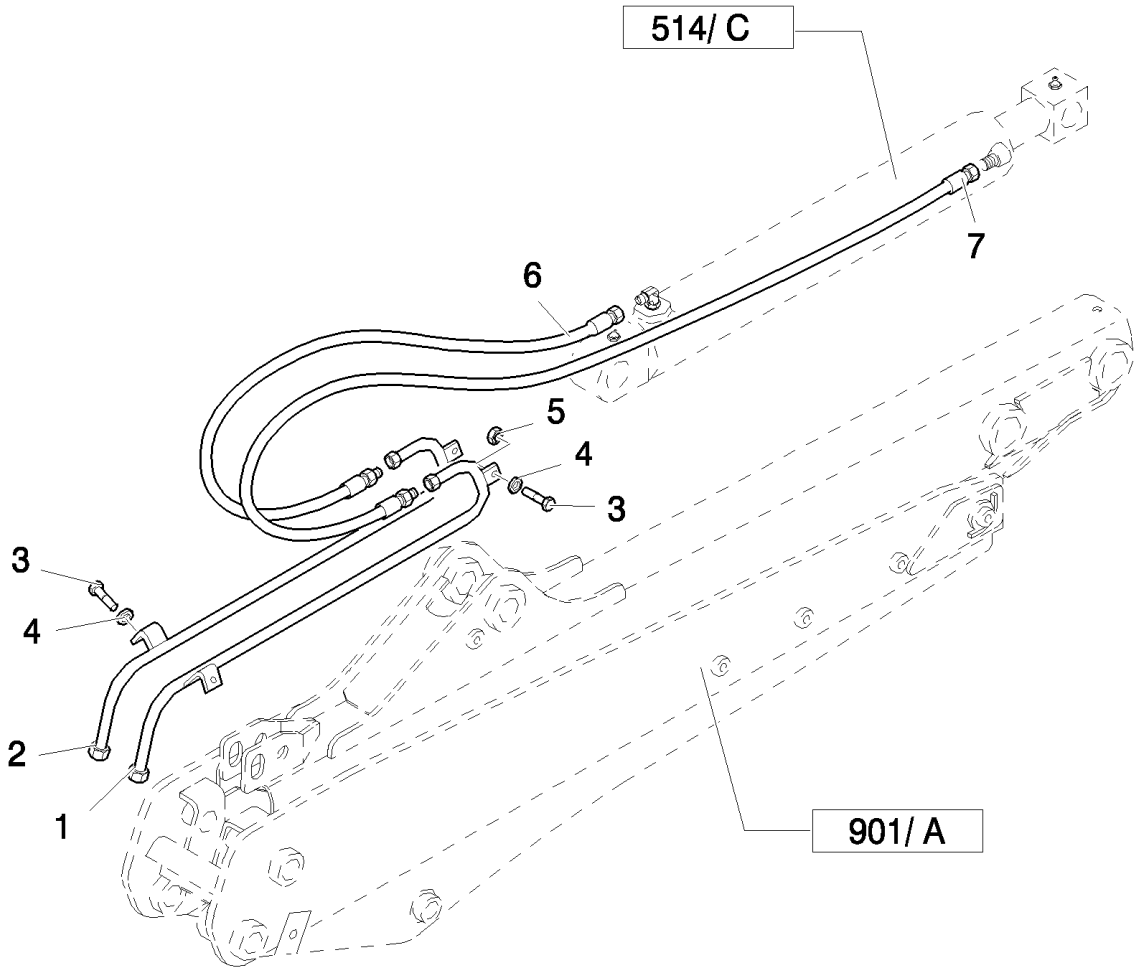

LB115.B EUR BACKHOE LOADER (1/05-)

901(01) TELESCOPIC DIPPER LONG/SHORT - HYDRAULIC SYSTEM

Ref	Part Number	Qty	Description
1	85816815	1	TUBE, HYD,
2	85816817	1	TUBE, HYD,
3	16043621	4	BOLT, Hex, M8 x 25, 8.8,
4	11193979	4	WASHER, SPRING, Belleville, M8.4,
5	14048211	2	NUT, M8 x 1.25, Cl 8,
6	85812165	1	HOSE, FLEXIBLE,
7	85826110	1	HOSE, FLEXIBLE,

901/ A(01) TELESCOPIC DIPPER LONG

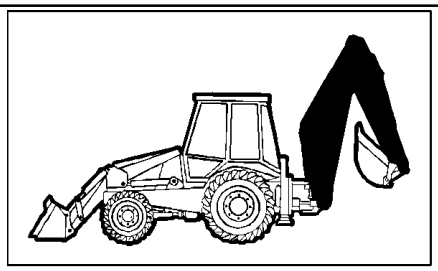

KIT
25 = ●
26 = ▲

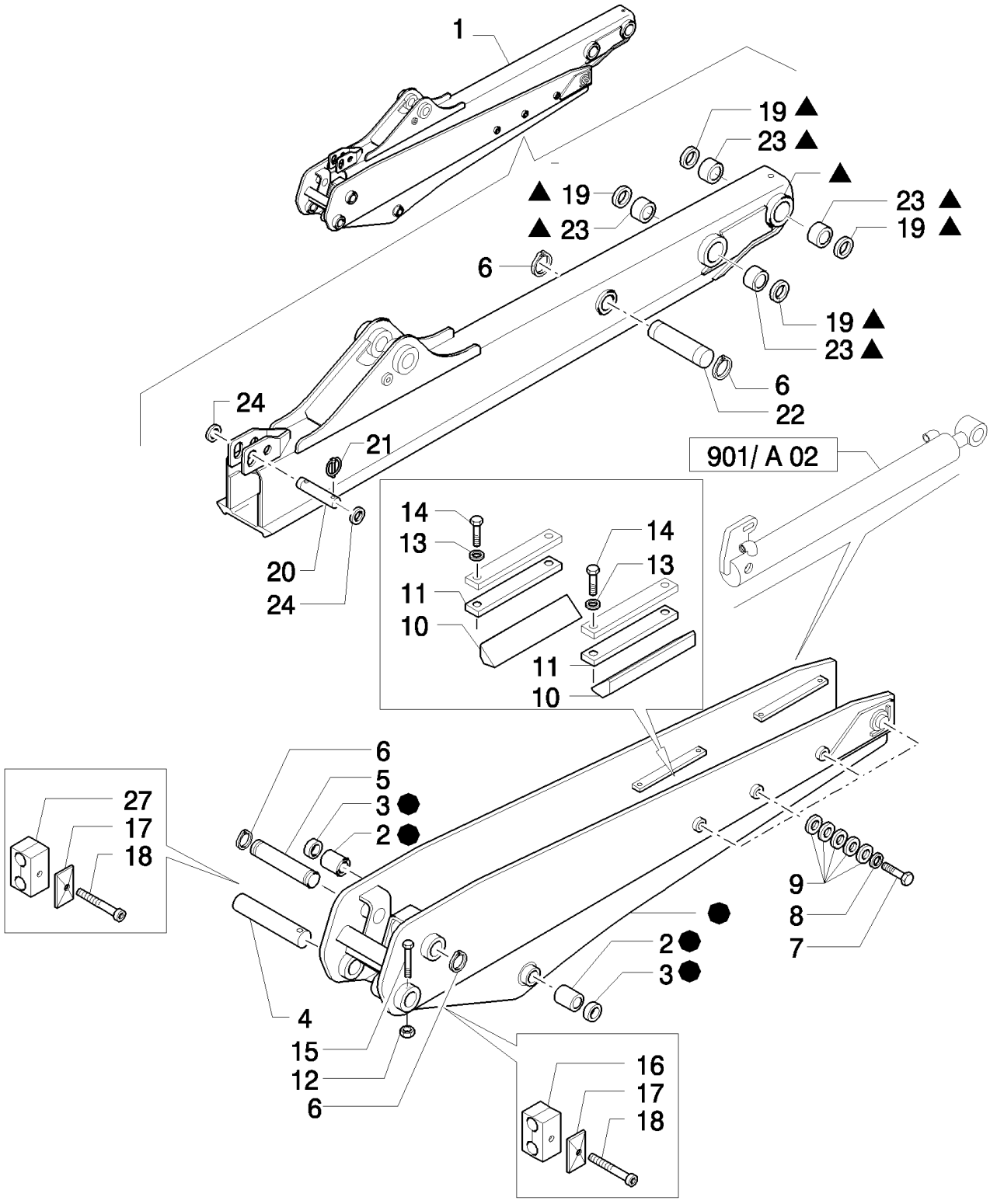

LB115.B EUR BACKHOE LOADER (1/05-)

901/ A(01) TELESCOPIC DIPPER LONG

Ref	Part Number	Qty	Description
1	85817137	1	ARM, LIFT,
2	83910546	2	BUSHING,
3	83931281	2	SEAL,
4	85801310	1	PIN,
5	85801309	1	PIN,
6	83911019	4	RING, SNAP,
7	11124421	8	SCREW, Hex, M20 x 40, 8.8,
8	14497121	8	WASHER, M20 x 37 x 3,
9	85801307	40	WASHER,
10	85808473	4	PAD, SLIDING,
11	85808472	4	PAD, SLIDING,
12	16105011	1	NUT, LOCK,
13	11190579	8	WASHER, SPRING, Belleville, M10.5,
14	11106721	8	SCREW, Hex, M10 x 38, 8.8, Full Thd,
15	14332521	1	SCREW, Hex Soc Hd, M12 x 1.25 x 100, 8.8,
16	87392513	2	CLAMP,
17	87392509	2	PLATE,
18	16044121	2	SCREW, Hex, M8 x 45, 8.8,
19	83931289	4	SEAL,
20	85801314	1	PIN,
21	83902702	2	PIN, SPLIT (COTTER),
22	85801308	1	PIN,
23	83910548	4	BUSHING,
24	14497401	2	WASHER, LOCK,
25	85817138	1	DIPPER, , Includes 2, 3
26	85802750	1	DIPPER, , Includes 19, 23
27	87392516	2	CLAMP,

901/ B(01) TELESCOPIC DIPPER LONG- HYDRAULIC LIFTING CYLINDER

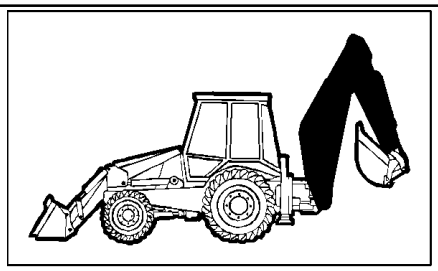

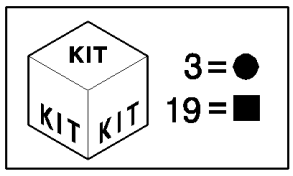

LB115.B EUR BACKHOE LOADER (1/05-)

901/ B(01) TELESCOPIC DIPPER LONG- HYDRAULIC LIFTING CYLINDER

Ref	Part Number	Qty	Description
1	87411473	1	HYDRAULIC CYLINDER,
2	85815681	1	TUBE, HYD,
3	87428620	1	KIT, SEALS,
5	E9NN3R862AA	2	CONNECTOR, HYD., {PP:83985067} 13/16"-16 ORS x 9/16"-18, O-Ring,
4	87414339	1	RING,
6	87303910	1	SPACER,
7	87414331	1	SEAL,
8	85800705	1	ROD,
9	87414969	1	SEAL,
10	87415113	1	GLAND,
11	87414970	1	KIT, SEALS,
12	D8NNA233AB	1	WIRE, RETAINING, {PP:83913375}
13	85800706	1	BARREL,
14	87428020	1	SCREW,
15	87405560	1	PISTON, , Includes 7
16	87421142	1	O-RING,
17	87440399	1	BACK-UP RING,
18	85803010	1	CLAMP, HOSE,
19	87424184	1	KIT,
20	9617873	2	O-RING, 6-1, 90 Duro, .468" ID x .078" Thk,

From to S/N 031052799

901/ C(01) TELESCOPIC DIPPER LONG - HYDRAULIC LIFTING CYLINDER

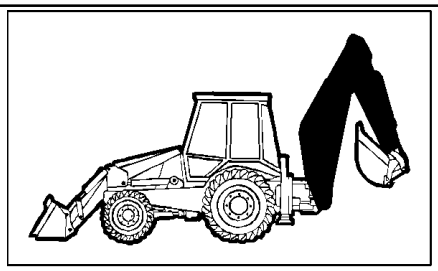

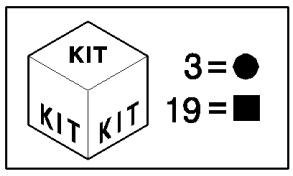

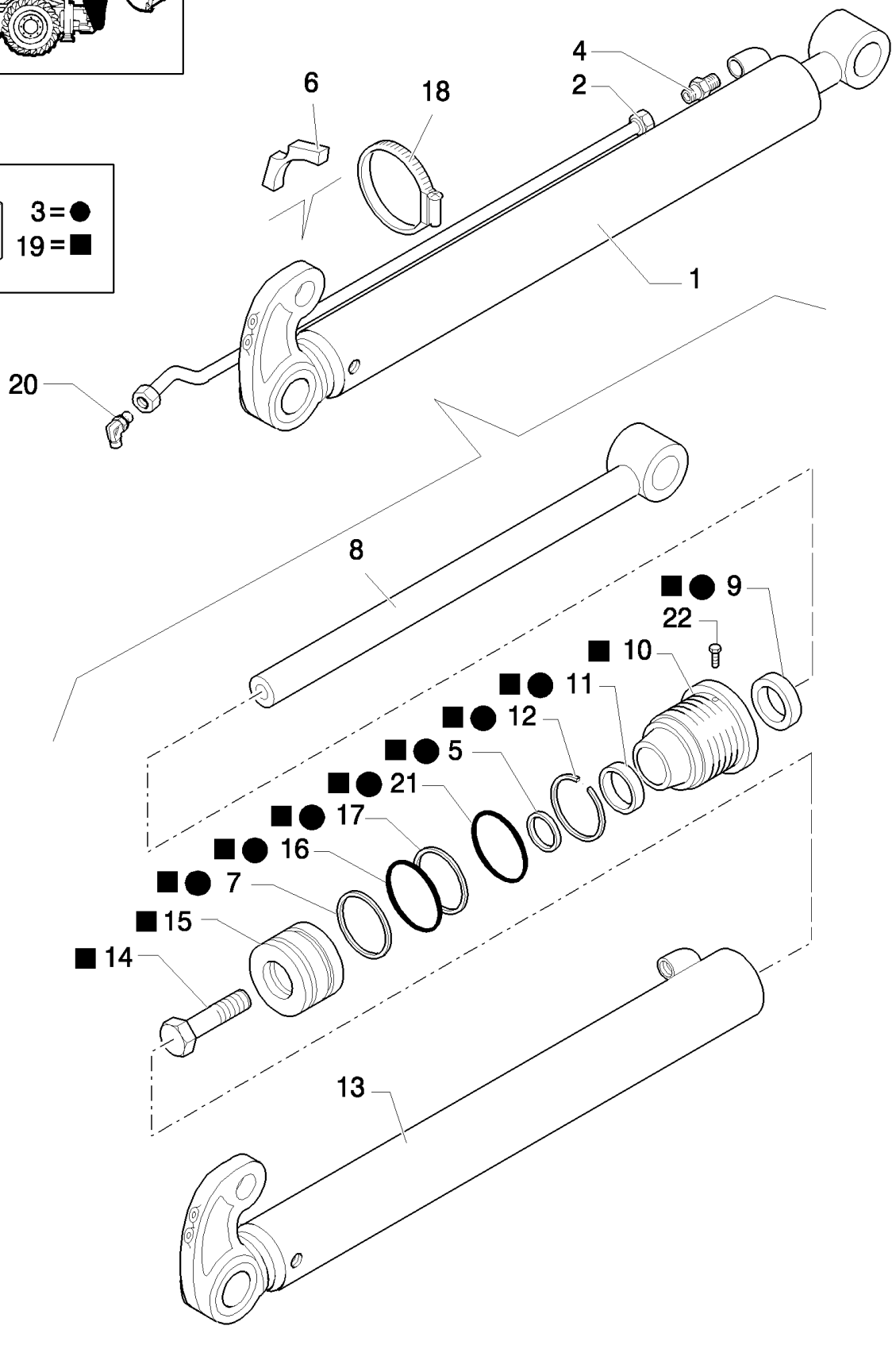

LB115.B EUR BACKHOE LOADER (1/05-)

901/ C(01) TELESCOPIC DIPPER LONG - HYDRAULIC LIFTING CYLINDER

Ref	Part Number	Qty	Description
1	87327256	1	HYDRAULIC CYLINDER, , Only for NA Version B110, B115
1	87327259	1	HYDRAULIC CYLINDER, , Only for EUROPE Version
2	87327251	1	TUBE, RIGID, , Includes 5, 9 to 12, 21
3	87342131	1	KIT,
4	83963374	1	CONNECTOR, HYD., , Includes 7, 15 to 17
5	1542875C1	1	SET OF PARTS,
6	238-5231	1	O-RING, -231, 70 Duro, 2.609" ID x .139" Thk,
7	G100444	1	SEAL,
8	87313722	1	ROD,
9	D95143	1	SEAL,
10	297281A1	1	CAP CYLINDER END,
11	G102425	1	BUSHING, LARGE,
12	G109298	1	RING,
13	87313720	1	LINER, ENGINE CYLINDER,
14	86982435	1	BOLT, SPECIAL,
15	G107277	1	PISTON,
16	G100443	1	GASKET,
17	G100449	1	Ring, Wear,
18	85803010	1	CLAMP, HOSE,
19	110692A4	1	PISTON,
20	83971549	1	ELBOW,
21	238-5231	1	O-RING, -231, 70 Duro, 2.609" ID x .139" Thk,
22	86642312	1	SCREW, SELF TAPPING, Hex Hd, #8 x 3/8",

From To S/N 031057762

901/ D(01) HYDRAULIC LIFTING CYLINDER - TELESCOPIC DIPPER LONG

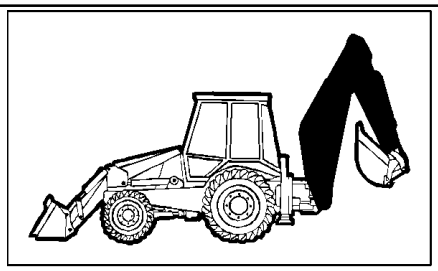

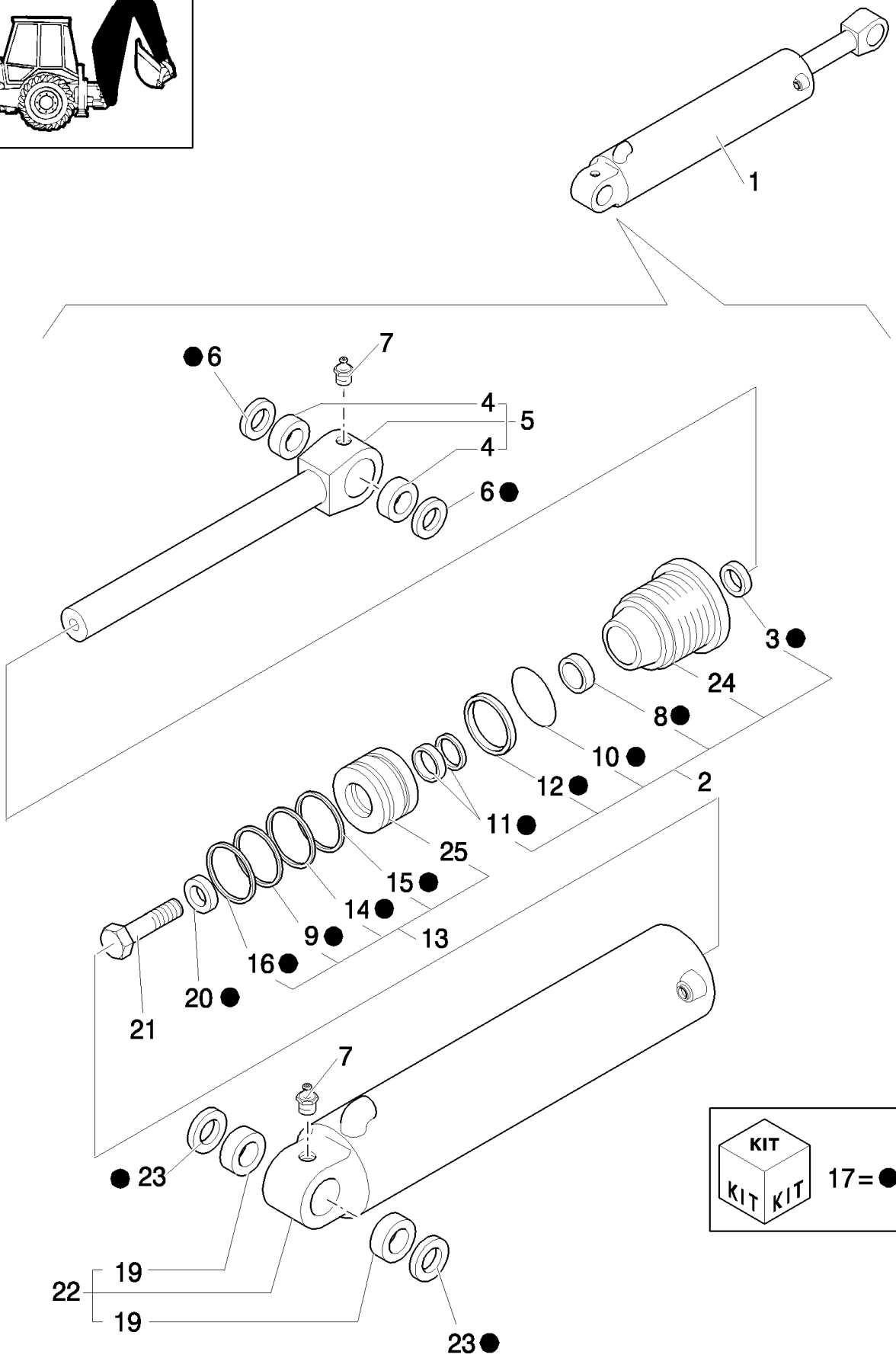

LB115.B EUR BACKHOE LOADER (1/05-)

901/ D(01) HYDRAULIC LIFTING CYLINDER - TELESCOPIC DIPPER LONG

Ref	Part Number	Qty	Description
1	87315535	1	HYDRAULIC CYLINDER, ASSY
2	87415120	1	GLAND, , Includes 3, 8, 10, 11, 12, 24
3	87414979	1	WIPER,
4	83910551	2	BUSHING,
5	83962145	1	ROD, , Includes 4
6	83931281	2	SEAL,
7	83416242	2	NIPPLE, LUBE, 1/8"-27
8	87414976	1	BEARING, NYLON,
9	87414346	1	RING,
10	87421149	1	O-RING, 4.734" ID x .139" Thk
11	87414980	1	KIT, SEALS,
12	87441149	1	BACK-UP RING,
13	87407249	1	PISTON, , Includes 9, 14 to 16, 25
14	87401160	1	Ring, Wear,
15	87414338	1	SEAL, HYD-CYLINDER,
16	85800823	1	O-RING,
17	87428634	1	KIT, SEALS,
19	85800202	2	BUSHING,
20	83964188	1	WASHER,
21	87428018	1	SCREW, M33x2x90
22	85800824	1	BARREL, , Includes 19
23	85801025	2	SEAL,
24	87414509	1	CAP CYLINDER END,
25	87403203	1	PISTON,

966(01) PLATE SUPPORT

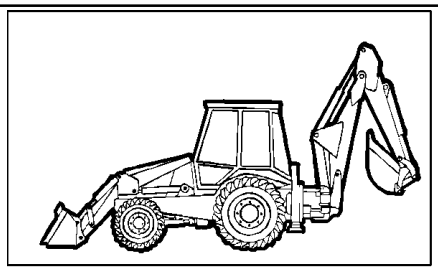

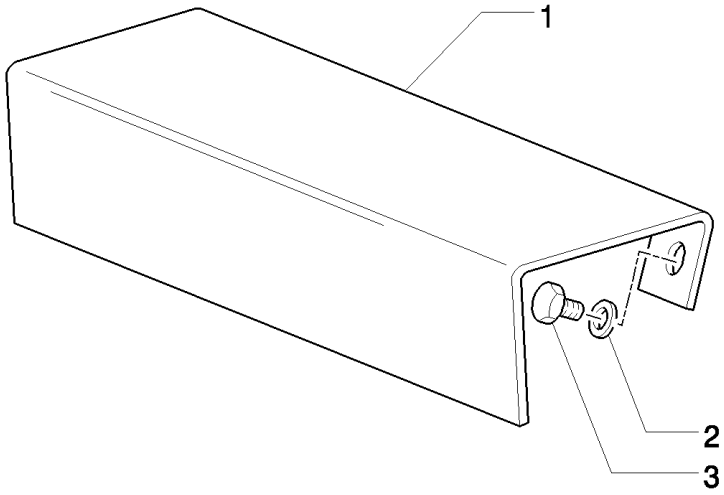

LB115.B EUR BACKHOE LOADER (1/05-)

966(01) PLATE SUPPORT

Ref	Part Number	Qty	Description
1	85804437	1	SUPPORT,
2	11193279	2	WASHER, SPRING, Belleville, M6.4,
3	10902221	2	SCREW, Hex, M6 x 16, 8.8,

990/ 1(01) TOOL KIT

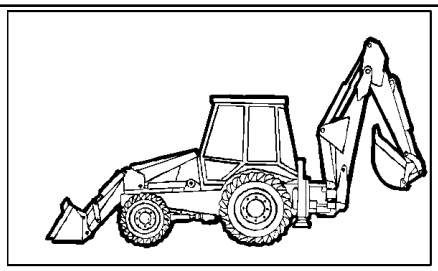

KIT 1 = ●

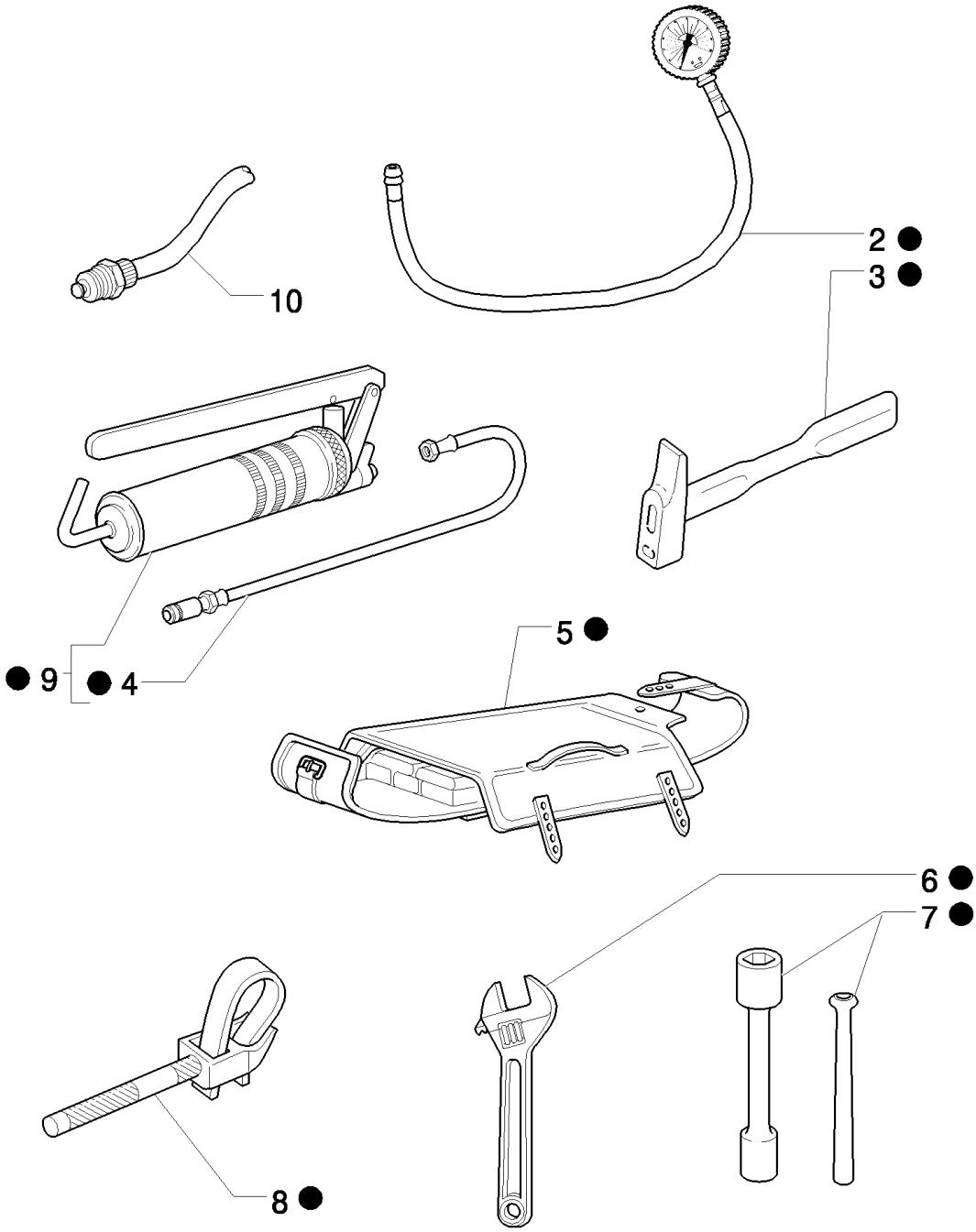

LB115.B EUR BACKHOE LOADER (1/05-)

990/ 1(01) TOOL KIT

Ref	Part Number	Qty	Description
1	85813111	1	KIT,
2	85803396	1	INSTRUMENT, MEASURING,
3	14582790	1	HAMMER,
4	79028981	1	HOSE, FLEXIBLE,
5	79062734	1	TOOL BAG,
6	71431438	1	WRENCH, ADJUSTING,
7	85813110	1	SPANNER, BOX,
8	71304923	1	WRENCH, SPECIAL,
9	79028977	1	GUN, GREASE,
10	85826260	1	VALVE, DRAIN,

995(01) COLD START

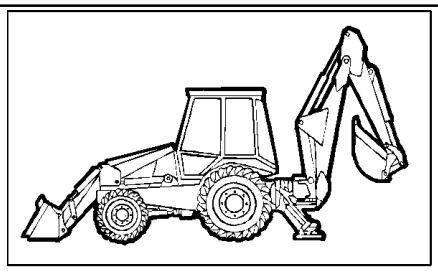

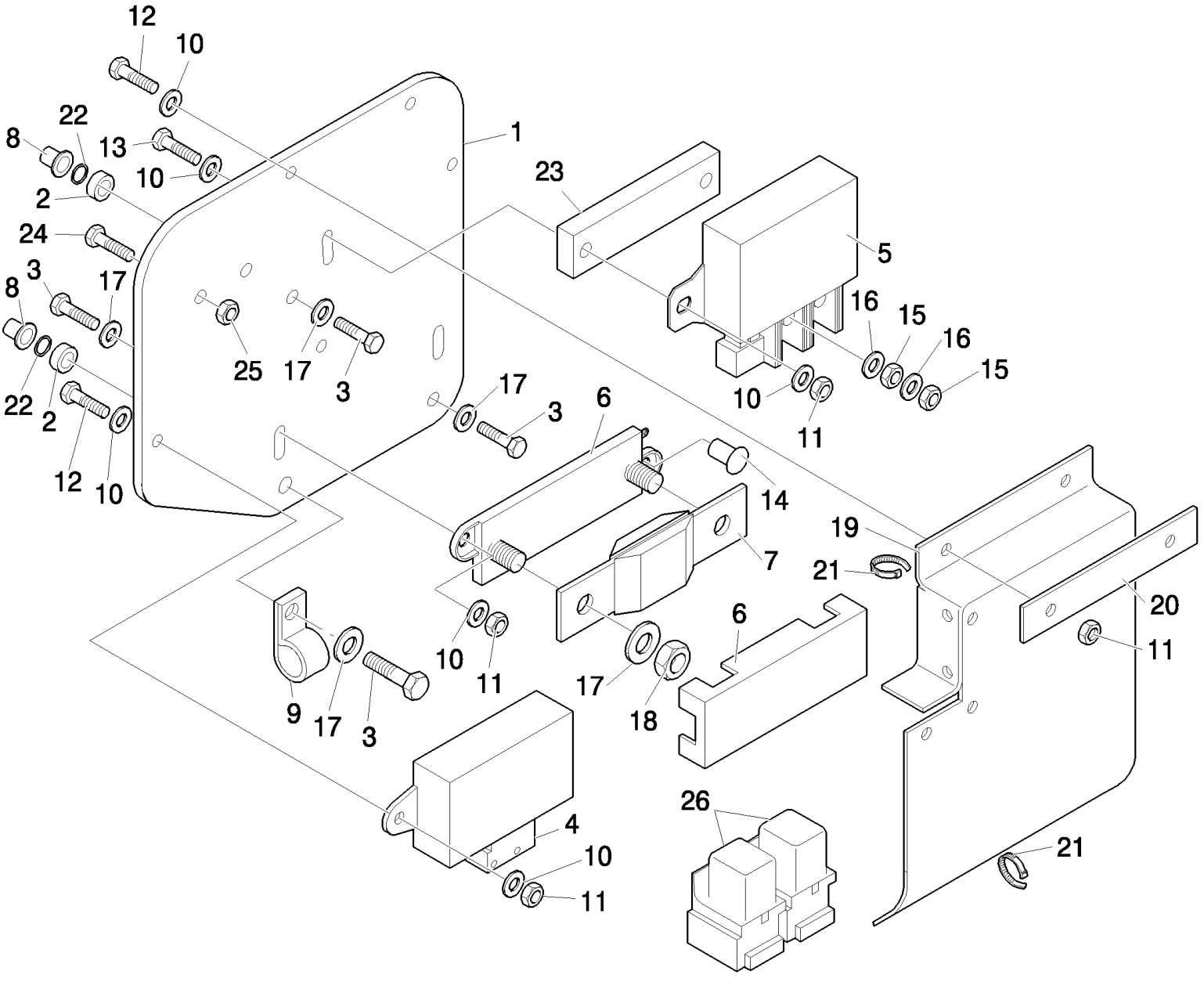

LB115.B EUR BACKHOE LOADER (1/05-)

995(01) COLD START

Ref	Part Number	Qty	Description
1	87397601	1	BRACKET, SUPPORTING,
2	85825169	3	SPACER,
3	47049164	3	SCREW, THD TO HD M8x40 CL8.8 ZND
4	47132002	1	ELECTRONIC UNIT, CONTROL,
5	86619908	1	RELAY,
6	87302554	1	CONNECTOR, ELEC,
7	87410602	1	FUSE, 300 AMP
8	85801492	3	INSERT, THREADED,
9	47049195	1	COLLAR, M8
10	47048961	15	WASHER,
11	47054518	8	NUT, M6
12	47049157	5	BOLT, M6x20
13	47120207	2	SCREW, M6x35
14	85821538	1	SCREW, M6x16
15	47049029	4	NUT, M6
16	322357	2	WASHER, SPRING, Belleville, M6,
17	47048992	5	WASHER, 8mm Spring Lock
18	47049030	2	NUT, M8
19	87411092	1	COVER,
20	87411090	1	BAR,
21	47048702	5	STRAP, CABLE,
22	85821539	3	O-RING,
23	87414237	1	PLATE,
24	87301687	2	SCREW, Hex Wash Hd, #10-32 x 1/2",
25	231-24409	2	NUT, LOCK, #10-32,
26	87436836	2	RELAY,

995(02) COLD START

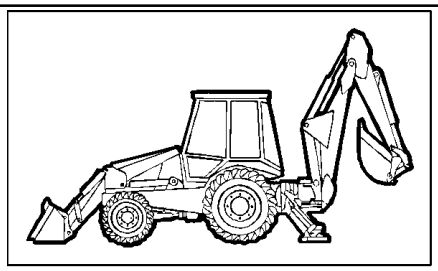

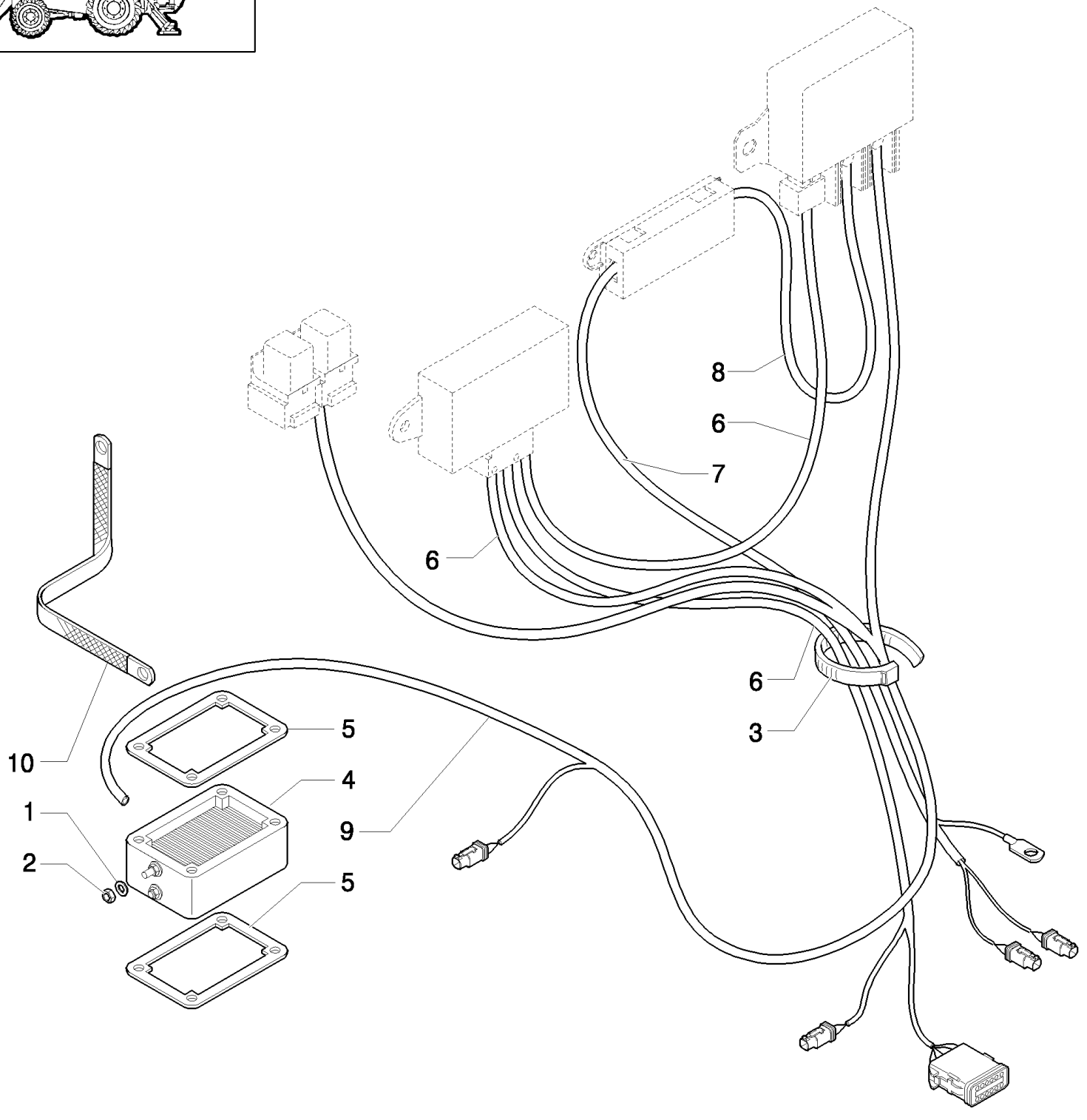

LB115.B EUR BACKHOE LOADER (1/05-)

995(02) COLD START

Ref	Part Number	Qty	Description
1	47048961	15	WASHER,
2	47049029	4	NUT, M6
3	47048702	5	STRAP, CABLE,
4	82017872	3	HEATER,
5	86014151	1	GASKET,
6	87380322	1	HARNESS,
7	87410264	1	HARNESS, WIRE,
8	87410265	1	HARNESS, WIRE,
9	87410266	1	HARNESS, WIRE,
10	87413162	1	Strap, Ground,