RUTHZIL TRATOR COMERCIAL DE PEÇAS LTDA 11 97083-6812 ROLANDO CITRANGULO

LB75.B
BACKHOE LOADER

FEVEREIRO 2004

PARTS CATALOG

Publication Part Number: 6036803200NA

Serial Number 031044851 and After

This unit first become available in February, 2004.

TABLE OF CONTENTS
GENERAL INFORMATION
SECTION 2 – ENGINE
SECTION 3 – FUEL SYSTEM
SECTION 4 – ELECTRICAL SYSTEM
SECTION 5 – TRACKS / STEERING
SECTION 6 – POWER TRAIN
SECTION 7 – BRAKES
SECTION 8 – HYDRAULICS
SECTION 9 – CHASSIS/ATTACHMENTS
INDEX

Issued February 2004 • 6036803200NA • Bur
Copyright © 2004 CNH America LLC. All Rights Reserved.

TABLE OF CONTENTS

MAIN	00	SECTIONS
MPARTS	00	MAINTENANCE PARTS
SEC. 01	00	ENGINE 1/2
SEC. 01	01	ENGINE 2/2
0.021	01	ENGINE
0.040	01	CYLINDER BLOCK
0.040	02	CYLINDER BLOCK
0.042	01	OIL PUMP, PAN
0.043	01	CYLINDER BLOCK - COVERS
0.043	02	CYLINDER BLOCK - COVERS
0.043	03	CYLINDER BLOCK - COVERS
0.045	01	BREATHER - ENGINE
0.060	01	CYLINDER HEAD
0.063	01	CYLINDER HEAD - COVERS
0.066	01	CYLINDER HEAD - VALVE MECHANISM
0.071	01	MANIFOLD - INTAKE
0.077	01	MANIFOLD - EXHAUST
0.080	01	CRANKSHAFT
0.081	01	PISTONS - CONNECTING ROD
0.082	01	PISTONS - CONNECTING ROD
0.083	01	FLYWHEEL - ENGINE
0.084	01	PULLEY - CRANKSHAFT
0.105	01	DYNAMIC BALANCER, GEARS & SHAFTS
0.105	02	DYNAMIC BALANCER, GEARS & SHAFTS (2830952)
0.120	01	CAMSHAFT
0.140	01	FUEL INJECTION PUMP
0.140	02	FUEL INJECTION SYSTEM
0.142	01	FUEL INJECTION SYSTEM
0.149	01	FUEL INJECTION SYSTEM
0.200	01	FUEL FILTER
0.201	01	FUEL PUMP
0.203	01	FUEL INJECTION SYSTEM
0.204	01	FUEL INJECTION SYSTEM
0.240	01	TURBOCHARGER
0.270	01	ENGINE, OIL
0.300	01	OIL PUMP - ENGINE
0.302	01	OIL FILTERS - ENGINE
0.305	01	PIPING - ENGINE OIL
0.315	01	OIL FILTER AND COOLER
0.320	01	WATER PUMP
0.323	01	COOLING SYSTEM - ENGINE
0.326	01	THERMOSTAT - ENGINE COOLING SYSTEM
0.340	01	WATER PUMP - CONTROL
0.345	01	FAN DRIVE
0.350	01	POWER TAKE-OFF
0.360	01	STARTER MOTOR
0.400	01	ALTERNATOR
0.450	01	ENGINE - LIFT HOOK
636A	01	ACCESSORY ENGINE
636A	02	ACCESSORY ENGINE - VENTILATOR
636A	03	ACCESSORY ENGINE - STARTER

TABLE OF CONTENTS

636A	04	ACCESSORY ENGINE- ALTERNATOR
636A	05	ACCESSORY ENGINE - BRACKET MUFFLER
SEC. 02	00	FUEL TANK - MUFFLER - RADIATOR - AIR CLEANER - CHASSIS
1.14.0	01	FUEL TANK & RELATED PARTS
1.15.0	01	MUFFLER & EXTENSIONS
1.15.0	02	MUFFLER & EXTENSIONS
1.17.2	01	EXPANSION TANK
1.19.1	01	AIR CLEANER & HOSES
1.21.5/ 1	01	FRAME (CENTER PIVOT)
175	01	AIR INTAKE CAP & PRE-CLEANER
176	01	AIR INTAKE CAP & PRE-CLEANER
203	01	FRONT WEIGHTS
215	01	FRONT WEIGHTS
636	01	RADIATOR
636	02	RADIATOR
637	01	RADIATOR
SEC. 03	00	TRANSMISSION 1/2
SEC. 03	01	TRANSMISSION 2/2
1.28.0	01	GEARING SPEED GEAR
1.28.0/ A	01	TRANSMISSIONGEARING SPEED GEAR (2WD POWER-SHUTTLE)
1.28.0/ A	02	TRANSMISSIONGEARING SPEED GEAR (2WD POWER-SHUTTLE)
1.28.0/ A	03	TRANSMISSIONGEARING SPEED GEAR (2WD POWER-SHUTTLE)
1.28.0/ A	04	TRANSMISSIONGEARING SPEED GEAR (2WD POWER-SHUTTLE)
1.28.0/ A	05	TRANSMISSIONGEARING SPEED GEAR (2WD POWER-SHUTTLE)
1.28.0/ A	06	TRANSMISSIONGEARING SPEED GEAR (2WD POWER-SHUTTLE)
1.28.0/ A	07	TRANSMISSIONGEARING SPEED GEAR (2WD POWER-SHUTTLE)
1.28.0/ B	01	TRANSMISSIONGEARING SPEED GEAR (4WD POWER-SHUTTLE)
1.28.0/ B	02	TRANSMISSIONGEARING SPEED GEAR (4WD POWER-SHUTTLE)
1.28.0/ B	03	TRANSMISSIONGEARING SPEED GEAR (4WD POWER-SHUTTLE)
1.28.0/ B	04	TRANSMISSIONGEARING SPEED GEAR (4WD POWER-SHUTTLE)
1.28.0/ B	05	TRANSMISSIONGEARING SPEED GEAR (4WD POWER-SHUTTLE)
1.28.0/ B	06	TRANSMISSIONGEARING SPEED GEAR (4WD POWER-SHUTTLE)
1.28.0/ B	07	TRANSMISSIONGEARING SPEED GEAR (4WD POWER-SHUTTLE)
1.28.0/ B	08	TRANSMISSIONGEARING SPEED GEAR (4WD POWER-SHUTTLE)
1.28.6	01	GEAR FILTER PIPES (POWER-SHUTTLE)
1.29.1	01	TRANSMISSION ESTERNALSHIFTING CONTROLS (POWER-SHUTTLE)
1.38.1	01	FRONT & REAR DRIVESHAFT, POWER-SHUTTLE
1.39.8	01	TRANSMISSION OIL COOLING PIPES (POWER-SHUTTLE)
SEC. 04	01	FRONT AXLE
1.40.0	01	FRONT AXLE (2WD)
1.40.0	02	FRONT AXLE (2WD)
1.42.0	01	POWER STEERING HYDRAULIC SYSTEM
1.42.0/ A	01	POWER STEERING HYDRAULIC SYSTEM
402	01	4WD FRONT AXLE, HOUSING, BUSHINGS & SUPPORTS
402	02	4WD FRONT AXLE, SWIVEL HOUSING & STEERING CYLINDER
402	03	4WD FRONT AXLE, HUBS
402	04	4WD FRONT AXLE, RING GEAR & PINION ASSEMBLY
402	05	4WD FRONT AXLE, DIFFERENTIAL
402	06	4WD FRONT AXLE, DRIVE SHAFT
415	01	FRONT AXLE - (4WD) W/GEAR,BEVEL
415	02	FRONT AXLE - (4WD) W/GEAR,BEVEL

TABLE OF CONTENTS

415	03	FRONT AXLE - (4WD) W/GEAR,BEVEL
415	04	FRONT AXLE - (4WD) W/GEAR,BEVEL
415	05	FRONT AXLE - (4WD) W/GEAR,BEVEL
415	06	FRONT AXLE - (4WD) W/GEAR,BEVEL
SEC. 05	00	REAR AXLE
1.44.0A	01	REAR AXLE (POWER-SHUTTLE)
1.44.0A	02	REAR AXLE (POWER-SHUTTLE)
1.44.0A	03	REAR AXLE (POWER-SHUTTLE)
1.44.0A	04	REAR AXLE (POWER-SHUTTLE)
SEC. 06	00	ELECTRICAL
1.75.2	01	CHASSIS HARNESS & GROUND WIRE (POWER SHUTTLE)
1.75.2	02	BATTERY LOCK-OUT SWITCH & GROUND WIRE (POWER SHUTTLE)
1.75.2	03	ENGINE HARNESS (POWER SHUTTLE)
1.75.2/ 3	01	CHASSIS HARNESS & GROUND WIRE (POWER SHUTTLE)
1.75.2/ 3	02	BATTERY LOCK-OUT SWITCH & GROUND WIRE (POWER SHUTTLE)
1.75.2/ 3	03	ENGINE HARNESS (POWER SHUTTLE)
131	01	SINGLE BATTERY
321	01	DOUBLE BATTERY
995	01	COLD START
995	02	COLD START
SEC. 07	00	SLIDES VALVES
1.82.0	01	HYDRAULIC OIL RESERVOIR
1.82.3	01	HYDRAULIC PUMP (35+35-154L/MM)
1.82.6	01A	HYDRAULIC SYSTEM PIPING (CENTER PIVOT)
1.82.6	01B	FRONT HYDRAULIC PUMP INTAKE & OUTLET HOSES (CENTER PIVOT)
1.82.6	02A	HYDRAULIC SYSTEM PIPING(CENTER PIVOT)
1.82.6	02B	REAR HYDRAULIC PUMP STABILIZER, LOADER & BACKHOE VALVE HOSES (CENTER PIVOT)
1.82.6	03A	HYDRAULIC SYSTEM PIPING(CENTER PIVOT)
1.82.6	03B	QUICK RELEASE COUPLERS & HOSES (CENTER PIVOT)
1.82.6	04A	RETURN MANIFOLD HOSES (CENTER PIVOT)
1.82.6	04B	RETURN MANIFOLD HOSES (CENTER PIVOT)
1.82.6	05F	OIL COOLER & FILTER HOSES (CENTER PIVOT)
1.82.6	05G	HYDRAULIC SYSTEM PIPING (CENTER PIVOT)
1.82.6	06A	FILTER ASSEMBLY & HOSE TO RETURN MANIFOLD (CENTER PIVOT)
1.82.6	06B	FILTER ASSEMBLY & HOSE TO RETURN MANIFOLD (CENTER PIVOT)
1.82.6	07	HYDRAULIC SYSTEM PIPING
1.82.6	08A	LOADER LIFT CYLINDER HOSES (CENTER PIVOT)
1.82.6	08C	LOADER LIFT CYLINDER HOSES (CENTER PIVOT)
1.82.6	09A	LOADER BUCKET CYLINDER HOSES (CENTER PIVOT)
1.82.6	09B	LOADER BUCKET CYLINDER HOSES (CENTER PIVOT)
1.82.6	09C	BACKHOE SWING CYLINDER HOSES (CENTER PIVOT)
1.82.6	11A	BACKHOE CONTROL VALVE HOSES (CENTER PIVOT)
1.82.6	11B	HYDRAULIC SYSTEM PIPING(CENTER PIVOT)
1.82.6	12B	HYDRAULIC SYSTEM PIPING(CENTER PIVOT)
1.82.6	13A	ROTATION PLATE HOSE CLAMPS (CENTER PIVOT)
1.82.6	16	BACKHOE CONTROL VALVE(CENTER PIVOT)
1.82.6	17	DIPPER VALVE SECTION (CENTER PIVOT)
1.82.6	18	BUCKET, SWING, & BOOM VALVE SECTION (CENTER PIVOT)
302	01	TWO-SECTION CONTROL VALVE FOR LOADER
302	02	TWO-SECTION CONTROL VALVE FOR LOADER

TABLE OF CONTENTS

302	03	TWO-SECTION CONTROL VALVE FOR LOADER
302	04	TWO-SECTION CONTROL VALVE FOR LOADER
331	01	BACKHOE CONTROL VALVE, 6 SECTIONS (CENTER PIVOT) NORTH AMERICA
331/A	01	6 SECTION PILOT CONTROL VALVE SUPPORT,COMPLETE
331/A	02	6 SECTION PILOT CONTROL VALVE SUPPORT,COMPLETE
331/B	01	PILOT CONTROL VALVE SUPPORT,COMPLETE
331/C	01	6 SECTION PILOT CONTROL VALVE SUPPORT,COMPLETE
331/C	02	6 SECTION PILOT CONTROL VALVE SUPPORT,COMPLETE
331/C	03	6 SECTION PILOT CONTROL VALVE SUPPORT,COMPLETE
331/C	04	6 SECTION PILOT CONTROL VALVE SUPPORT,COMPLETE
331/C	05	6 SECTION PILOT CONTROL VALVE SUPPORT,COMPLETE
331/C	06	6 SECTION PILOT CONTROL VALVE SUPPORT,COMPLETE (CENTER PIVOT)
333/1	01	7-SECTIONS EXCAVATOR CONTROL VALVE (CENTER PIVOT) NORTH AMERICA
333/1	02	7-SECTIONS EXCAVATOR CONTROL VALVE (CENTER PIVOT) NORTH AMERICA
333/1	03	7-SECTIONS EXCAVATOR CONTROL VALVE (CENTER PIVOT) NORTH AMERICA
333/1	04	7-SECTIONS EXCAVATOR CONTROL VALVE (CENTER PIVOT) NORTH AMERICA
333/1	05	7-SECTIONS EXCAVATOR CONTROL VALVE (CENTER PIVOT) NORTH AMERICA
333/1	06	7-SECTIONS EXCAVATOR CONTROL VALVE (CENTER PIVOT) NORTH AMERICA
333/1	07	7-SECTIONS EXCAVATOR CONTROL VALVE (CENTER PIVOT) NORTH AMERICA
333/A	02	7 SECTION PILOT CONTROL VALVE SUPPORT,COMPLETE
333/A	03	7 SECTION PILOT CONTROL VALVE SUPPORT,COMPLETE
333/B	01	7 SECTION PILOT CONTROL VALVE SUPPORT,COMPLETE
333/B	02	7 SECTION PILOT CONTROL VALVE SUPPORT,COMPLETE (CENTER PIVOT) EUROPE
333/B	03	7 SECTION PILOT CONTROL VALVE SUPPORT,COMPLETE
333/B	04	7 SECTION PILOT CONTROL VALVE SUPPORT,COMPLETE
333/B	05	7 SECTION PILOT CONTROL VALVE SUPPORT,COMPLETE
333/B	06	7 SECTION PILOT CONTROL VALVE SUPPORT,COMPLETE (CENTER PIVOT) EUROPE
333/B	07	7 SECTION PILOT CONTROL VALVE SUPPORT,COMPLETE (CENTER PIVOT) EUROPE
333/B	08	7 SECTION PILOT CONTROL VALVE SUPPORT,COMPLETE
333/B	09	7 SECTION PILOT CONTROL VALVE SUPPORT,COMPLETE (CENTER PIVOT) EUROPE
334	09	7-SECTIONS EXCAVATOR CONTROL VALVE
334	11	7-SECTIONS EXCAVATOR CONTROL VALVE
336/ A	01	THREE-SECTION CONTROL VALVE FOR LOADER(CENTER PIVOT)
336/ 1	01	LOADER CONTROL VALVE, TWO SECTION, LOADER, BUCKET & DUMP VALVES (CENTER PIVOT)
336/ 1	02	LOADER CONTROL VALVE, TWO SECTION, CAP & UNLOAD VALVE (CENTER PIVOT)
336/ 1	03	LOADER CONTROL VALVE, TWO SECTION, RELIEF & CHECK VALVES (CENTER PIVOT)
336/ 1	04	LOADER CONTROL VALVE, TWO SECTION, BY-PASS KIT (CENTER PIVOT)
336/ 1	05	LOADER CONTROL VALVE, TWO SECTION, UNLOAD KIT OR DUMP VALVE (CENTER PIVOT)
337	01	LOCK VALVE ON LOADER TILTING CYLINDERS
337	02	LOCK VALVE ON LOADER LIFT CYLINDERS
339	01	LOADER CONTROL VALVE, THREE SECTION, LOADER & BUCKET VALVES (CENTER PIVOT)
339	02	LOADER CONTROL VALVE, THREE SECTION, CAP & THIRD SECTION RELIEF VALVE (CENTER PIVOT)
339	03	LOADER CONTROL VALVE, THREE SECTION, RELIEF, UNLOAD, DUMP & CHECK VALVES (CENTER PIVOT)
339	04	LOADER CONTROL VALVE, THREE SECTION, BY-PASS KIT (CENTER PIVOT)

TABLE OF CONTENTS

339	05	LOADER CONTROL VALVE, THREE SECTION, UNLOAD KIT OR DUMP VALVE (CENTER PIVOT)
339/ 1	01	LOADER CONTROL VALVE
339/ 1	02	LOADER CONTROL VALVE, INLET SECTION
339/ 1	03	LOADER CONTROL VALVE, BOOM SECTION
339/ 1	04	TWO-SECTION CONTROL VALVE FOR LOADER
339/ 1	05	LOADER CONTROL VALVE, 4X1& 6X1 BUCKET SECTION
344	01	STABILIZER CONTROL VALVE, TWO SECTION (CENTER PIVOT)
344/ A	01	STABILIZER CONTROL VALVE, LH & RH SECTION (CENTER PIVOT)
356/ A	01	STABILIZER CONTROL VALVE, THIRD SECTION, HED (CENTER PIVOT)
391	01	LOCK VALVE FOR BUCKET 4X1 / 6X1
392	01	LOCKING VALVE ON BACKHOE LIFT AND DIPP. CYLINDER
392	02	BACKHOE LIFT & DIPPERSTICK CYLINDER LOCK VALVE
437	01	GLIDE RIDE VALVE,HYDRAULIC SYSTEM FOR MACHINE FRAME LEVELLING & ON/OFF SWITCH
437	02	GLIDE RIDE VALVE
721	01	TELESCOPIC CONTROL VALVE, 3 SECTIONS(CENTER PIVOT)
721	02	HED TELESCOPIC CONTORL VALVE, SECTION HOSES(CENTER PIVOT)
721	03	HED CYLINDER PISTON END HYDRAULIC LINES(CENTER PIVOT)
721	04	HED CYLINDER ROD END HYDRAULIC LINES(CENTER PIVOT)
721	05	HED FOOT PEDAL, CABLE & DECALS(CENTER PIVOT)
SEC. 08	00	BODY & HOOD
1.83.0	01	HOOD, GRILLE & RELATED PARTS
1.87.2	01	CAB SCREEN
1.87.8	01	CAB FASTENERS
SEC. 09	00	LOADER 1/1
SEC. 09	01	BACKHOE 1/2
SEC. 09	02	BACKHOE 2/2
1.88.01	01	TRANSPORT LOCK" REAR LOCKING" (CENTER PIVOT)
1.88.01	02	TRANSPORT LOCK" REAR LOCKING" (CENTER PIVOT)
1.88.08	01	SWING POST ASSEMBLY, BUSHINGS & PINS
1.88.08	02	SWING POST PINS & TRANSPORT LOCK HOOK
1.88.09	01	DISTRIBUTOR VALVE SUPPORT (CENTER PIVOT)
1.88.11	01	ARMS AND JOINTS
1.88.11/ 1	01	LOADER CYLINDER
1.88.11/ 2	01	LOADER BUCKET CONTROL CYLINDER
1.88.11/ 2	02	LOADER BUCKET CONTROL CYLINDER
1.88.11/ 3	01	LIFT CYLINDER AND BUCKET PIPES
1.88.11/ 5	01	SELF-LEVELING LINKAGE, LOADER CONTROLS (CENTER PIVOT)
1.88.11/ 5	02	SELF-LEVELING LINKAGE, LOADER ARM (CENTER PIVOT)
1.88.11/ 6	01	STABILIZER CYLINDERS (CENTER PIVOT)
1.88.11/ 7	01	PIPES FOR STABILIZER CYLINDERS (CENTER PIVOT)
1.88.11/ 8	01	RETURN TO DIG SENSOR
1.88.11/ 9	01	CYLINDERS AND ROTATION PLATE (SIDE SHIFT)
1.88.11/ 9A	01	CYLINDERS AND ROTATION PLATE (CENTER PIVOT)
1.88.11/ 9B	01	SWING CYLINDERS, THREADED TRUNNION
1.88.12/ 3	01	FRONT CONTROL VALVE SUPPORT AND TRANSMISSIONS (CENTER PIVOT)
200	01	SHOVEL AND REAR LIFTING HOOKS
469-A	01	HYDRAULIC CYLINDER (BUCKET 4X1-6X1)
471	01	BUCKET 4X1 (1 M3) WITH BLADE
471	02	BUCKET 4X1 (1 M3) WITH BLADE

TABLE OF CONTENTS

472	01	BUCKET 4X1 (1 M3) WITH TINE
472	02	BUCKET 4X1 (1 M3) WITH TINE
473	01	BUCKET 6X1 (1 M3) WITH BLADE
473	02	BUCKET 6X1 (1 M3) WITH BLADE
474	01	BUCKET 6X1 (1 M3) WITH TINE
474	02	BUCKET 6X1 (1 M3) WITH TINE
514	01	BOOM - DIPPER SHORT
514	02	SHORT DIPPER
514	03	SHORT DIPPER - BUCKET MOTION
514	04	SHORT DIPPER - HYDRAULIC SYSTEM
514	05	SHORT DIPPER - HYDRAULIC SYSTEM
514	06	SHORT DIPPER - HYDRAULIC SYSTEM
514	07	SHORT DIPPER - HYDRAULIC SYSTEM
514	08	SHORT DIPPER - HYDRAULIC SYSTEM
514-A	01	HYDRAULIC LIFTING CYLINDER
514-B	01	HYDRAULIC DITCHING CYLINDER
514-C	01	HYDRAULIC BUCKET CYLINDER
515	01	12" (305MM) BACKHOE BUCKET WITH PIN TEETH
515	02	12" (305MM) BACKHOE BUCKET WITH BOLT-ON TEETH
516	01	18" (457MM) BACKHOE BUCKET WITH PIN TEETH
516	02	18" (457MM) BACKHOE BUCKET WITH BOLT-ON TEETH
517	01	24" (610MM) BACKHOE BUCKET WITH PIN TEETH
517	02	24" (610MM) BACKHOE BUCKET WITH BOLT-ON TEETH
518	01	30" (762MM) BACKHOE BUCKET WITH PIN TEETH
518	02	30" (762MM) BACKHOE BUCKET WITH BOLT-ON TEETH
519	01	36" (914MM) BACKHOE BUCKET WITH PIN TEETH
519	02	36" (914MM) BACKHOE BUCKET WITH BOLT-ON TEETH
520	01	0.88 M3 BUCKET WITHOUT TINES
522-B	01	1 M3 BUCKET
522-C	01	STANDARD 1MC BUCKET WITH FORKS
525	01	STANDARD 1M3 BUCKET WITH FORKS AND EXTRA REVERSIBLE BLADE
525	02	STANDARD 1M3 BUCKET WITH FORKS AND EXTRA REVERSIBLE BLADE
526	01	BOLT-ON TOOTH KIT, 12" (305MM) BACKHOE BUCKET
526-1	01	STANDARD 1M3 BUCKET WITH FORKS AND TINE
527	01	BOLT-ON TOOTH KIT, 18" (457MM) & 24" (610MM) BACKHOE BUCKETS
527-1	01	0.88 M3 BUCKET AND EXTRA REVERSIBLE BLADE
528	01	BOLT-ON TOOTH KIT, 30" (762MM) BACKHOE BUCKET
529	01	BOLT-ON TOOTH KIT, 36" (914MM) BACKHOE BUCKET
530	01	PIN TOOTH KIT, 12" (305MM) BACKHOE BUCKET
531	01	PIN TOOTH KIT, 18" (457MM) & 24" (610MM) BACKHOE BUCKETS
532	01	PIN TOOTH KIT, 30" (762MM) BACKHOE BUCKET
533	01	PIN TOOTH KIT, 36" (914MM) BACKHOE BUCKET
533/ 1	01	1.15 M3 BUCKET WITH FORKS AND CUTTER BLADE
536/ 1	01	STANDARD 1MC BUCKET WITH TINE
537/ 1	01	STANDARD 1MC BUCKET WITH EXTRA REVERSIBLE BLADE
548	01	DITCH CLEANING BUCKET
555	01	FRONT BUCKET TEETH
556	01	LOADER BUCKET REVERSIBLE BLADE
626	01	SCRAB GRAB
648	01	FORK KIT, CONVERTS4X1 BUCKET TO 6X1
699	01	HAND HAMMER SWITCH

TABLE OF CONTENTS

700	01	4X1 & 6X1 BUCKET CONTROL LEVER, CABLE & DECALS
700	02	4X1 & 6X1 BUCKET HYDRAULIC LINES
704	01	MANUAL HAMMER SYSTEM
704	02	MANUAL HAMMER SYSTEM
704/ A	01	MANUAL HAMMER VALVE
718	01	4X1 & 6X1 BUCKET HYDRAULIC LINES CENTER PIVOT)
718	02	4X1 & 6X1 BUCKET CONTROL LEVER, CABLE & DECALS (CENTER PIVOT)
724	01	HYDRAULIC SYSTEM FOR HAMMER (CENTER PIVOT)
724	02	HYDRAULIC SYSTEM FOR HAMMER (CENTER PIVOT)
724/ A	01	REAR HAMMER CONTROL VALVE
724/ 3	01	HYDRAULIC SYSTEM FOR HAMMER (CENTER PIVOT)
724/ 3	02	HYDRAULIC SYSTEM FOR HAMMER (CENTER PIVOT)
725	01	HAMMER KIT FROM LIFTING ARM TO DEMOLITION ARM
725/ 1	01	4X1 & 6X1 BUCKET CONTROL LEVER, CABLE & DECALS(CENTER PIVOT)
725/ 1	02	4X1 & 6X1 BUCKET HYDRAULIC LINES(CENTER PIVOT)
732	01	REAR MECHANICAL QUICK-COUPLING
732-A	01	REAR MECHANICAL QUICK-COUPLING
734	01	FRONT MECHANICAL QUICK-COUPLING
902	01	BOOM - TELESCOPIC DIPPER SHORT
902	02	TELESCOPIC DIPPER SHORT - HYDRAULIC SYSTEM
902	03	TELESCOPIC DIPPER SHORT - HYDRAULIC SYSTEM
902	04	TELESCOPIC DIPPER SHORT- BUCKET MOTION
902	05	TELESCOPIC DIPPER SHORT - HYDRAULIC SYSTEM
902	06	TELESCOPIC DIPPER SHORT - HYDRAULIC SYSTEM
902	07	TELESCOPIC DIPPER SHORT - HYDRAULIC SYSTEM
902/ A	01	TELESCOPIC DIPPER SHORT
902/ A	02	TELESCOPIC DIPPER SHORT - HYDRAULIC SYSTEMM
SEC. 10	00	BODY, HOOD & DRIVER"S POST 1/3
SEC. 10	01	BODY, HOOD & DRIVER"S POST 2/3
SEC. 10	02	BODY, HOOD & DRIVER"S POST 3/3
095	01	STABILIZER CONTROL WITHOUT AUTO-UP (CENTER PIVOT)
096	01	STABILIZER CONTROL WITH AUTO-UP (CENTER PIVOT)
1.91.1	01	CAB / CEILING LIGHT
1.91.1/ 1	01	SAFETY FRAME- INSTRUMENTS AND GAUGES
1.91.3	01	BACK-UP ALARM
1.91.4	01	IGNITON SWITCH, POWER POINT, FUSE PANEL & SIDE CONSOLE HARNESS (ROPS CP POWER SHUTTLE)
1.91.4	02	IGNITON SWITCH, POWER POINT, FUSE PANEL & SIDE CONSOLE HARNESS (ROPS CP POWER SHUTTLE)
1.91.4	03	IGNITON SWITCH, POWER POINT, FUSE PANEL & SIDE CONSOLE HARNESS (ROPS CP POWER SHUTTLE)
1.91.4	04	IGNITON SWITCH, POWER POINT, FUSE PANEL & SIDE CONSOLE HARNESS (ROPS CP POWER SHUTTLE)
1.91.4	05	RH SIDE CONSOLE TRIM, INSTRUMENT CLUSTER & SWITCHES (ROPS CP POWER SHUTTLE)
1.91.4/ 2	01	IGNITON SWITCH, POWER POINT, FUSE PANEL & SIDE CONSOLE HARNESS (CAB CP POWER SHUTTLE)
1.91.4/ 2	02	IGNITON SWITCH, POWER POINT, FUSE PANEL & SIDE CONSOLE HARNESS (CAB CP POWER SHUTTLE)
1.91.4/ 2	03	IGNITON SWITCH, POWER POINT, FUSE PANEL & SIDE CONSOLE HARNESS (CAB CP POWER SHUTTLE)

TABLE OF CONTENTS

1.91.4/ 2	04	IGNITON SWITCH, POWER POINT, FUSE PANEL & SIDE CONSOLE HARNESS (CAB CP POWER SHUTTLE)
1.91.4/ 2	05	IGNITON SWITCH, POWER POINT, FUSE PANEL & SIDE CONSOLE HARNESS (CAB CP POWER SHUTTLE)
1.91.5	01	FRONT AND REAR WINDSCREEN WIPERS
1.91.5	02	WINDSCREEN WIPERS RESERVOIR & NOZZLES
1.91.6	01	RADIO ANTENNA & SPEAKER COVER
1.91.7/ 1	01	LAMPS & LIGHTS - CAB (USA)
1.91.7/ 3	01	LAMPS & LIGHTS - ROPS (USA)
1.92.1	01	CAB - FRAME-DOOR
1.92.1/ 1	01	ROPS - SAFETY FRAME
1.92.1/ 2	01	CAB - FRAME-DOOR
1.92.1/ 3	01	ROPS - SAFETY FRAME
1.92.3	01	WINDOWS
1.92.4	01	WINDOWS
1.92.4	02	WINDOWS
1.92.4	03	WINDOWS
1.92.5	01	FENDERS, REAR
1.92.6	01	DOOR COMPONENTS
1.92.6	02	DOOR COMPONENTS
1.92.6	03	DOOR COMPONENTS
1.92.8	01	FIREWALL SEAL, ROPS
1.92.9	01	REAR WINDOWS
1.92.9	02	REAR WINDOWS
1.92.9	03	REAR WINDOWS
1.93.0	01	CAB / SOFT TRIM
1.93.0	02	CAB / SOFT TRIM (POWER SHUTTLE)
1.93.0	03	CAB / SOFT TRIM
1.93.0	04	CAB / SOFT TRIM
1.93.0/ 2	01	RH & BACKHOE CONSOLE TRIM, ROPS (CENTER PIVOT)
1.93.0/ 3	01	CAB / SOFT TRIM
1.93.0/ 3	04	CAB / SOFT TRIM
1.93.0/ 5	01	RH & BACKHOE CONSOLE TRIM, ROPS (CENTER PIVOT)
1.93.4	01	REAR MIRROR- SUN SCREEN
1.93.5	01	FRONT CONSOLE - ROPS (POWER SHUTTLE)
1.93.5	02	RH SIDE CONSOLE SEAL & CLIPS - ROPS (POWER SHUTTLE)
1.93.5/ 1	01	CAB / PANEL DASH
1.93.5/ 1	02	CAB / PANEL DASH
1.94.0	01	CAB/ CANOPY
1.94.0/ 1	01	ROOF, ROPS
1.94.2	01	HEATER HOUSING, COIL, BLOWER & VALVE
1.94.2	02	HEATER ASSEMBLY & FILTERS
1.94.2	03	HEATER WATER HOSES
1.94.2	04	AIR DUCTS & VENTS
1.94.2	05	HEATER CONTROL PANEL
1.94.2/ 1	01	HEATER HOUSING, COIL, BLOWER & VALVE
1.94.2/ 1	04	AIR DUCTS & VENTS
1.95.0	01	CAB-SAFETY FRAME / BRAKE PEDAL
1.95.0	02	CAB-SAFETY FRAME / BRAKE PEDAL
1.95.0	03	CAB-SAFETY FRAME / BRAKE PEDAL
1.95.0/ A	01	CAB-SAFETY FRAME / BRAKE PEDAL

TABLE OF CONTENTS

1.95.1	01	CAB-SAFETY FRAME / HAND BRAKE
1.95.2	01	TRANSPORT LOCK CONTROL
1.95.3	01	HAND-OPERATED AND PEDAL-OPERATED ACCELERATOR CONTROL
1.95.5	01	POWER STEERING MOTOR, WHEEL & COLUMN TRIM (POWER-SHUTTLE)
1.95.5	02	POWER STEERING MOTOR HOSES
1.95.5/ A	01	POWER STEERING MOTOR
1.95.5/ B	01	POWER STEERING MOTOR
1.96.0	01	FOWARD/REVERSE & MULTI-PURPOSE LEVER (POWER-SHUTTLE - CENTER PIVOT)
1.96.2	01	STABILIZER CONTROL
1.96.2	02	STABILIZER CONTROL
1.96.2/ 1	01	PILOT CONTROL DIAGNOSTICS
1.96.7	01	CAB PLUGS, FLOOR PLATES & AIR CONVEYER, CENTER PIVOT
1.96.7/ 4	01	ROPS PLUGS & FLOOR PLATE (CENTER PIVOT)
1.96.7/ 6	01	CAB PLUGS, FLOOR PLATES & AIR CONVEYER, CENTER PIVOT
1.96.7/10	01	ROPS PLUGS & FLOOR PLATE (CENTER PIVOT)
1.98.0	01	INFORMATION SYMBOL DECALS - USA (POWER SHUTTLE)
1.98.0	02	CAB WARNING & INFORMATION DECALS (POWER SHUTTLE)
1.98.0	03	BACKHOE, LOADER & ENGINE WARNING DECALS (POWER SHUTTLE)
1.98.0	04	BACKHOE, LOADER & ENGINE WARNING DECALS (POWER SHUTTLE)
1.98.1	01	LB75.B MODEL IDENTIFICATION (POWER SHUTTLE)
343	01	LOADER CONTROL VALVE, THREE SECTION, CONTROL LEVER (CENTER PIVOT)
343	02	LOADER CONTROL VALVE, THREE SECTION, CONTROL LEVER CABLE (CENTER PIVOT)
343/ 1	01	LOADER CONTROL VALVE, CONTROL LEVER & CABLE (SIDE SHIFT & LB115)
351	04	CASE 3 LEVER BACKHOE CONTROLS, CONSOLE & LEVERS
351	05	CASE 3 LEVER BACKHOE CONTROLS, BELLCRANK & SUPPORT
351	06	CASE 3 LEVER BACKHOE CONTROLS, BUCKET TIE-ROD ASSEMBLY
351	07	CASE 3 LEVER BACKHOE CONTROLS, UPPER SWING TIE-ROD ASSEMBLY
351	08	CASE 3 LEVER BACKHOE CONTROLS, DIPPER, SWING & BOOM LINKAGE
351	09	CASE 3 LEVER BACKHOE CONTROLS, SWING CONTROL PEDAL
353	01	4 LEVER BACKHOE CONTROLS, CONSOLE, LEVERS & BELLCRANK (SIDE SHIFT & LB115)
353	02	4 LEVER BACKHOE CONTROLS, UPPER TIE-ROD ASSEMBLY (SIDE SHIFT)
353	03	4 LEVER BACKHOE CONTROLS, LOWER TIE-ROD ASSEMBLY (SIDE SHIFT)
390	01	LOADER CONTROL VALVE, TWO SECTION, LEVER & DECAL (CENTER PIVOT)
390/ 1	01	2 LEVER BACKHOE CONTROLS, LEVER, BOOT & DECALS (CENTER PIVOT)
393	01	LOCKING VALVE ON BACKHOE LIFT CYLINDER
394-397	01	ISO 2 LEVER BACKHOE CONTROLS, LEVERS, BOOT & DECALS (CENTER PIVOT)
394-397	02	ISO 2 LEVER BACKHOE CONTROLS, TIE-ROD ASSEMBLY (CENTER PIVOT)
394/ 1	01	4 LEVER BACKHOE CONTROLS, CONSOLE, LEVERS & BELLCRANK (CENTER PIVOT)
394/ 1	02	4 LEVER BACKHOE CONTROLS, UPPER TIE-ROD ASSEMBLY, CENTER PIVOT
394/ 1	03	4 LEVER BACKHOE CONTROLS, LOWER TIE-ROD ASSEMBLY (CENTER PIVOT)
522-A	01	THREE-SECTION LOADER CONTROL VALVE LEVER, CABLE & DECALS
622	01	INTERNAL FAN
644	01	A/C HOUSING & FILTERS
644	02	A/C BLOWER & COILS
644	03	HEATER COIL HOSES
644	04	A/C & HEATER CONTROL PANEL
644	04A	A/C & HEATER CONTROL PANEL
644	05	A/C & HEATER CONSOLE DUCTS
644	05A	A/C & HEATER CONSOLE DUCTS

TABLE OF CONTENTS

644	06	A/C & HEATER CONVEYOR
644	07	A/C HOUSING SIDE PANELS
644	08	RH CAB TRIM WITH VENT
644	09	A/C & HEATER CAB ROOF DUCTS
646	01	A/C DRYER FILTER HOSES
646A	01	A/C COMPRESSOR ATTACHING GROUP
650	01	STEERING COLUMN, FIXED & ADJUSTABLE
705	01	SEAT BELTS, 2" & 3"
758	01	ROTATING BEACON
782	01	FRONT CONSOLE WITH SPEEDOMETER, 4WD
787/ 1	01	FRONT CONSOLE WITHOUT SPEEDOMETER (CAB)
787/ 2	01	FRONT CONSOLE WITHOUT SPEEDOMETER (CAB)
788/ 1	01	FRONT CONSOLE WITH SPEEDOMETER, 4WD
788/ 2	01	FRONT CONSOLE WITH SPEEDOMETER, 4WD
789	01	SPEED SENSOR(P.SHUTTLE)
791	01	RH CONSOLE WITH INSTRUMENTS
792	01	RH CONSOLE WITH INSTRUMENTS AND DIAGNOSTICS
795	01	RH CONSOLE WITH INSTRUMENTS AND DIAGNOSTICS
796	01	ANTITHEFT
851	01	CLOTH SEAT & ATTACHING HARDWARE
851/ 1	01	CLOTH SEAT CUSHIONS, ARMRESTS & RELATED PARTS
851/ 1	02	CLOTH SEAT MOUNTING PLATE, ADJUSTING RAILS & 2" SEAT BELT
851/ 1	03	CLOTH SEAT UPPER SUSPENSION PARTS
851/ 1	04	CLOTH SEAT LOWER SUSPENSION PARTS
851/ 2	02	CLOTH SEAT MOUNTING PLATE, ADJUSTING RAILS & 3" SEAT BELT
855	01	AIR RIDE CLOTH SEAT & ATTACHING HARDWARE
855/ 1	01	AIR RIDE CLOTH SEAT CUSHIONS, ARMRESTS & RELATED PARTS
855/ 1	02	AIR RIDE CLOTH SEAT MOUNTING PLATE, ADJUSTING RAILS & 2" SEAT BELT
855/ 1	03	AIR RIDE CLOTH SEAT UPPER SUSPENSION PARTS
855/ 1	04	AIR RIDE CLOTH SEAT LOWER SUSPENSION PARTS
855/ 1	05	AIR RIDE CLOTH SEAT COMPRESSOR & TUBING
855/ 2	02	AIR RIDE CLOTH SEAT MOUNTING PLATE, ADJUSTING RAILS & 3" SEAT BELT
856	01	VINYL SEAT CUSHIONS, ARMRESTS & RELATED PARTS (ROPS)
856/ 1	01	VINYL SEAT WITH ARMRESTS & MOUNTING HARDWARE (ROPS)
856/ 1	02	VINYL SEAT MOUNTING PLATE, ADJUSTING RAILS & 2" SEAT BELT (ROPS)
856/ 1	03	VINYL SEAT UPPER SUSPENSION PARTS (ROPS)
856/ 1	04	VINYL SEAT LOWER SUSPENSION PARTS (ROPS)
856/ 2	02	VINYL SEAT MOUNTING PLATE, ADJUSTING RAILS & 3" SEAT BELT (ROPS)
869	01	NON-SUSPENSION SEAT
869/ 1	01	NON-SUSPENSION SEAT CUSHIONS, RELATED PARTS & 2" SEAT BELT
869/ 1	02	NON-SUSPENSION SEAT ADJUSTING MECHANISM
869/ 1	03	NON-SUSPENSION SEAT PEDESTAL & BASE
870/ 1	01	NON-SUSPENSION SEAT CUSHIONS, RELATED PARTS & 3" SEAT BELT
990	01	TOOL KIT
SEC. 11	00	WHEELS
81.00	01	FRONT WHEELS, 2WD
82.00	01	DRIVING WHEELS(4WD)
83.00	01	DRIVE WHEELS
SEC. 18	00	VARIATION
535	01	STABILIZER FOOT GROUND (CENTER PIVOT)
535/ 1	01	STABILIZER FOOT STREET PAD (CENTER PIVOT)

TABLE OF CONTENTS

536	01	REVERSIBLE STABILIZER FOOT (CENTER PIVOT)
537	01	STABILIZER FOOT STREET PAD (CENTER PIVOT)
628	01	4WD STEERING LOCK
685	01	CABINET ACCESSORY
803	01	FENDERS, FRONT

NOTES

GENERAL INFORMATION

PROPRIETARY NOTICE

The contents of this manual are proprietary data of this company. Reproduction or use of any part for other than the operation and maintenance of our equipment is permissible only if expressly authorized in writing.

Additional copies may be obtained from your dealer. Address requests for copies to your Dealer and refer to the publication part number appearing on the bottom of the rear catalog cover or on the title page.

COMPANY POLICY

Company policy, which is one of continuous improvement, reserves the right to change prices and to make changes in design and specification at any time without notice and without obligation to modify units previously built.

All data given in this book is subject to production variations. Dimensions and weights are approximate only and the illustrations do not necessarily show machines in standard condition. For exact information about any particular machine please consult your dealer.

PARTS AND ACCESSORIES

Genuine parts and accessories have been specifically designed for these machines.

We would like to point out that “non-genuine” parts and accessories have NOT been examined and released by the Company. The installation and or use of such products could have negative effects upon the design characteristics of your machine and thereby affect its safety. The company is not liable for any damage caused by the use of “non-genuine” parts and accessories.

IMPROVEMENTS

We are continually striving to improve our products. We reserve the right to make improvements or changes when it becomes practical and possible to do so, without incurring any obligation to make changes or additions to the equipment sold previously.

MODEL CODES

The range of machines listed may not be available in all countries or markets therefore, for the latest information consult your local dealer.

OWNER ASSISTANCE

We want you to be completely satisfied with your investment. Normally any problems with your equipment will be handled by your dealer's Service Department; however, misunderstandings can occur. If your problem has not been handled to your satisfaction, we suggest the following:

1. Contact the owner or General Manager of the dealership, explain the problem, and request assistance. When additional assistance is needed, your dealer has direct access to our office.
2. Provide your dealer with:
   - Your Name, Address, and Telephone number
   - Machine Model and Serial Number
   - Dealership Name and Address
   - Machine purchase date and amount of use
   - Nature of problem

Be aware that your problem will likely be resolved in the dealership using the dealer's facilities, equipment, and personnel. So it is important that your initial contact be with the dealer.

SPARE PARTS

To maintain operating efficiency, use original spare parts.

When ordering parts, give the following information:

- Machine Model
- Machine and Engine Serial Numbers
- Part Number from the Parts Catalog

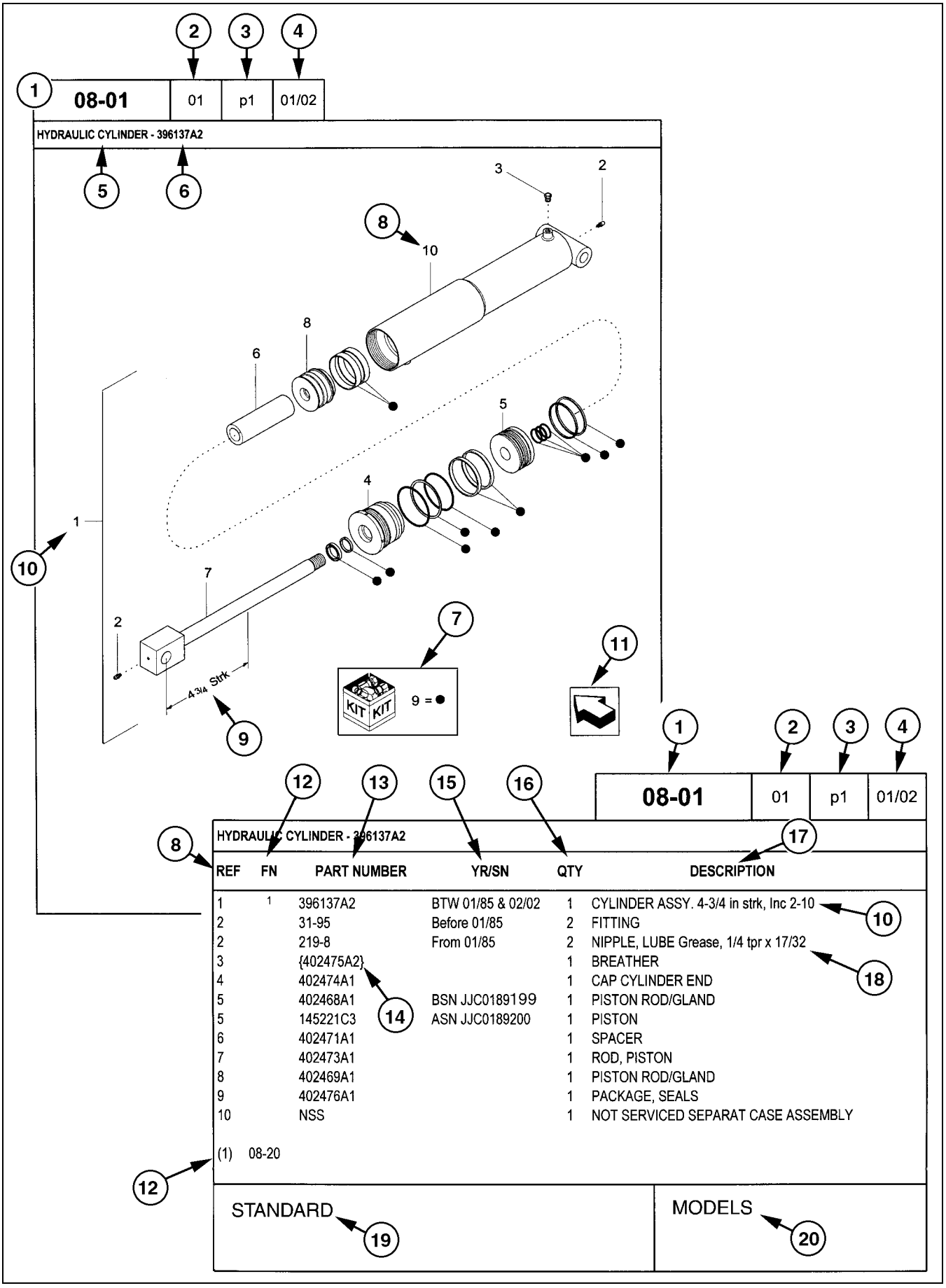

REF	FN	PART NUMBER	YR/SN	QTY	DESCRIPTION
1	1	396137A2	BTW 01/85 & 02/02	1	CYLINDER ASSY. 4-3/4 in strk, Inc 2-10
2		31-95	Before 01/85	2	FITTING
2		219-8	From 01/85	2	NIPPLE, LUBE Grease, 1/4 tpr x 17/32
3		{402475A2}		1	BREATHER
4		402474A1		1	CAP CYLINDER END
5		402468A1	BSN JJC0189199	1	PISTON ROD/GLAND
5		145221C3	ASN JJC0189200	1	PISTON
6		402471A1		1	SPACER
7		402473A1		1	ROD, PISTON
8		402469A1		1	PISTON ROD/GLAND
9		402476A1		1	PACKAGE, SEALS
10		NSS		1	NOT SERVICED SEPARAT CASE ASSEMBLY

(1) 08-20

STANDARD

MODELS

HOW TO USE YOUR PARTS CATALOG

1. Figure Number
2. Sequence Code within the Figure Number
3. Page Number within the Sequence Code
4. Date of Printing (month / year)
5. Figure Description
6. General information regarding the figure
7. Parts supplied in repair kits per symbol reference
8. Figure call-out of the part number (REF)
9. Technical specifications relating to the part indicated
10. Figure call-out includes bracketed items, the included items may also be listed in the additional description area
11. Orientation - Arrow indicates front of the machine
12. Footnote - Additional information relating to the part number. In this example, 08-20 equals another figure that this part is shown on
13. Part Number
    NSS = Not Serviced Separately (Non-serviced parts)
    Bracketed numbers = not available as service parts in this market
14. Not Available as service part in this market
15. YR/SN
    Year
    Before 01/85 = Part valid for production January 1985 and before
    From 01/85 = Part valid for production from January 1985 and after
    BTW 01/85 & 02/02 = Part valid for machines produced between January 1985 and February 2002.
    Serial Number (P.I.N.)
    BSN JJC0268800 = Part valid for serial number JJC0268800 and below
    ASN JJC0268800 = Part valid for serial number JJC0268800 and above
    BTW JJC0178000 & JJC0179000 = Part valid for serial numbers between JJC0178000 & JJC0179000
16. Total Quantity of the Part referred to in the page. The quantity can be replaced by the following indications:
    AR = As Required
    X = As required
17. Part Description
18. Additional description of the part to help confirm identification
19. Figure Notes
20. Model Number(s)

RIGHT-HAND AND LEFT-HAND

The reference to right-hand and left-hand in this catalog is identified by the operator standing at the rear of the basic unit (without rear attachment), looking toward the front of the machine (in normal forward travel).

For pages covering any machine attachments, right-hand and left-hand are defined by the operator sitting in the position for proper operation of the attachment.

DIMENSIONS

Metric and U.S. hardware dimensions do not show the numeric designations of standard coarse threads. A number following a semi colon (;) is the class or grade of hardware. A comma (,) represents the decimal point (.) used in U.S. dimensions.

EXPLANATION OF ABBREVIATIONS

AC	Alternating Current
adj	adjustable
amp	ampere
AR	As required
ASN	Serial number and after P.I.N. and after
blkhd	bulkhead
br	branch
BSN	before Serial number before P.I.N.
BTW	between
cc	cubic centimetre
cl	class
cmprsn	compression
cn pt	cone point
cp pt	cup point
CRS	Chrome Alloy Steel
CST	Carbon Steel
cu yd	cubic yard
DC	Direct Current
deg	degree
dg pt	dog point
dia	diameter
dr type	drive type
fc	face
fc sl	face seal
fem	female
fem PT	female pipe thread
fl	flare
flat pt	flat point
ft	feet or foot
ga	gauge
gal	gallon or gallons
gpm	gallons per minute
gr	grade
hd	head
hdg pt	half dog point
hp	horsepower
ID	inside diameter
in	inch or inches
Incl.	Includes
inv fl	inverted flare
K	kilo
kg	kilogram
km/h	kilometers per hour
L	litre
lb	pounds
lb-ft	pound-foot
lg	long
LH	left-hand
LH thd	left-hand thread
M	(prefix) metric thread size
m	metre
ml	milliliter
mm	millimetre
NF	National Fine
No.	number
NPT	National Pipe Thread
NS	National Super Fine
OD	outside diameter
ohm	electrical unit of resistance
Or	O-ring
ORB	O-ring boss
ORFS	O-ring face seal
ov cntr	over center
ov pt	oval point
oz	ounce
P	pitch
psi	pounds per square inch
pt	pint
PT	pipe thread
rd	round
rd holes	round holes
RH	right-hand
RH thd	right-hand thread
rpm	revolutions per minute
sl	self-locking
sq	square
SST	Stainless Steel
st	self-tapping
strk	stroke
sw	swivel
T	teeth
thk	thick
tpr	taper
tube OD	tube outside diameter
V	volt or volts
W	watt or watts
X	as required
yd	yard

SECTION INDEX

MAIN	00	SECTIONS
MPARTS	00	MAINTENANCE PARTS

MAIN	00	p1	06/03

SECTIONS

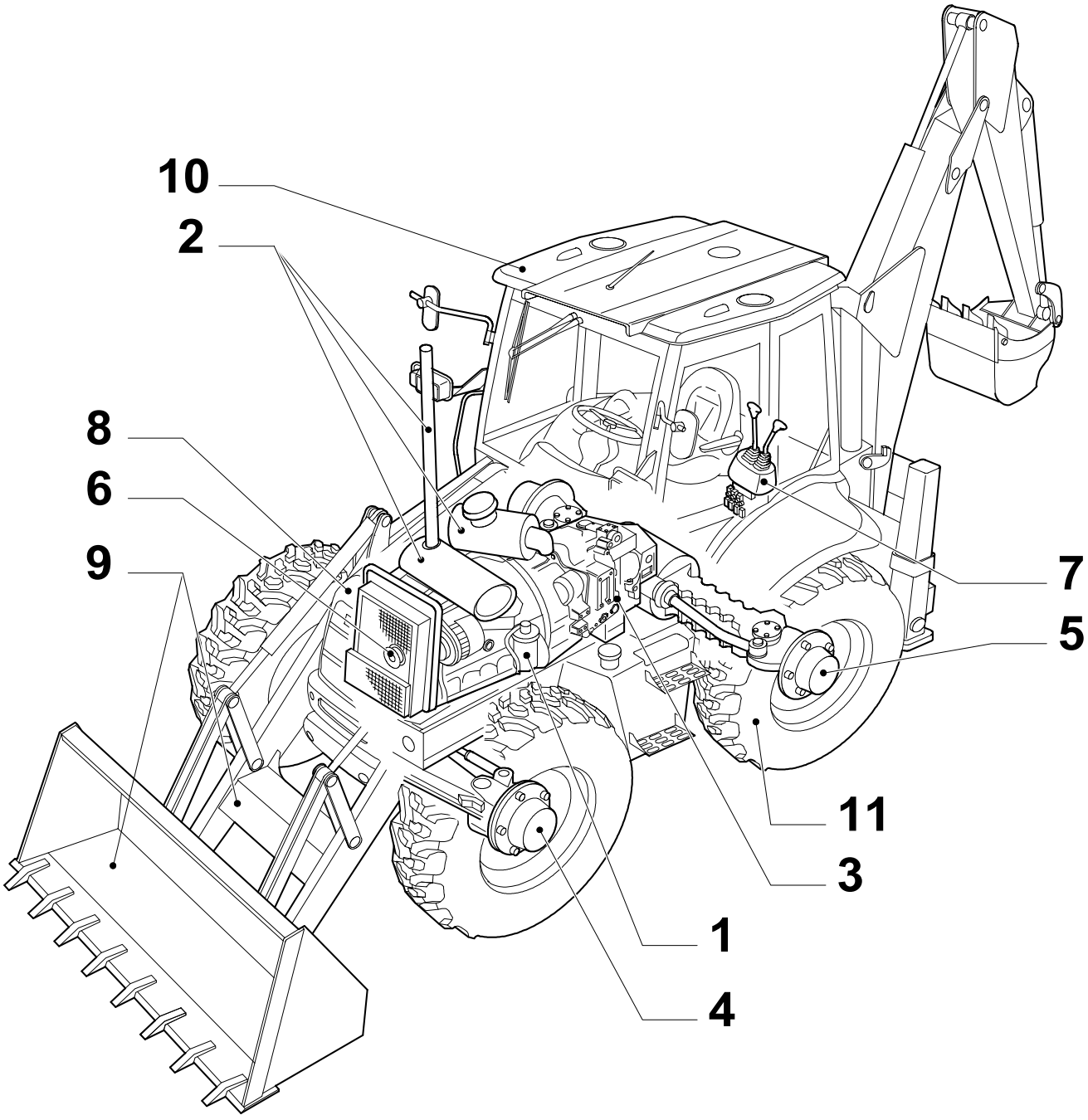

SECTIONS

REF	FN	PART NUMBER	YR/SN	QTY	DESCRIPTION

MAINTENANCE PARTS

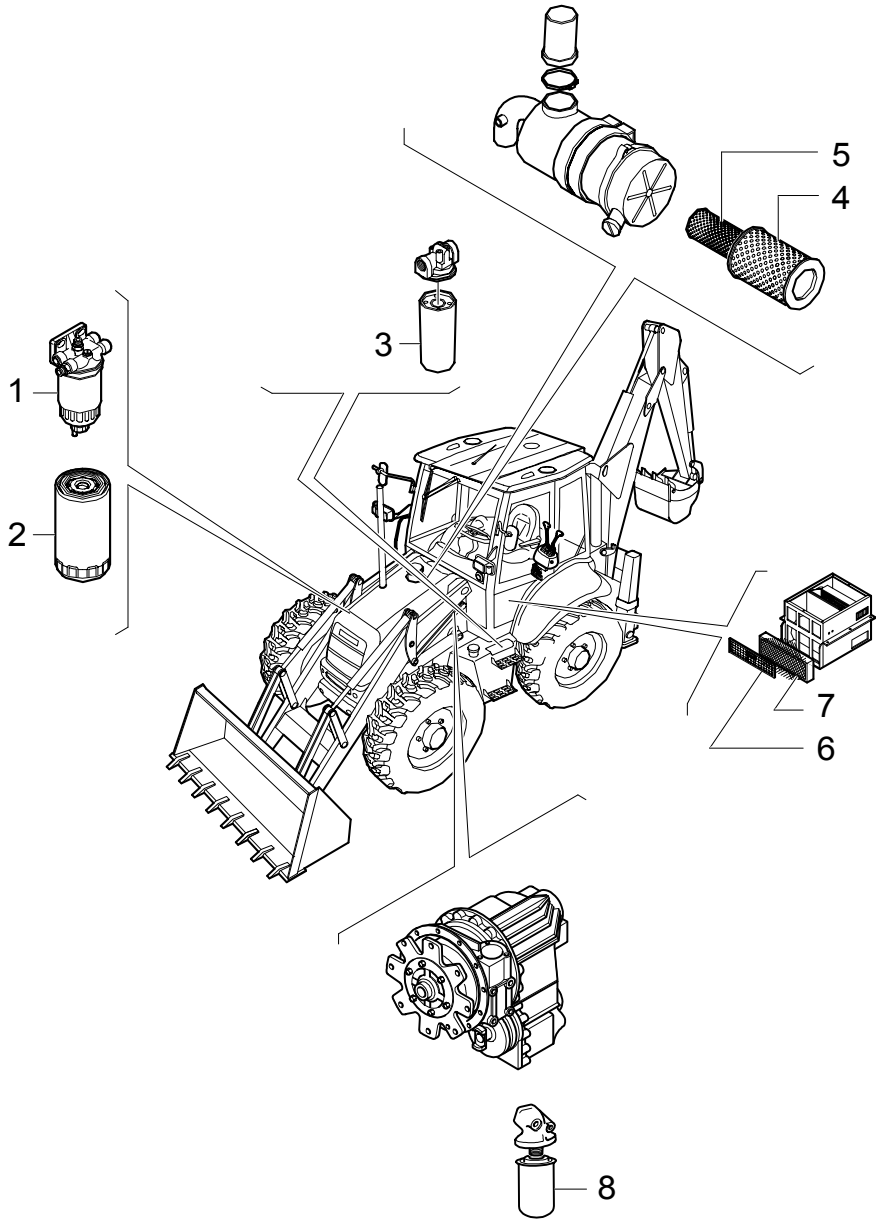

MAINTENANCE PARTS

REF	FN	PART NUMBER	YR/SN	QTY	DESCRIPTION
1	1	1930010		1	FILTER, FUEL
2	2	87803260		1	FILTER, ENGINE OIL
3	3	86989733		1	FILTER, ELEMENT
4	4	87438249		1	FILTER, AIR
5	5	87438246		1	FILTER, AIR
6	6	85826026		1	FILTER, AIR
7	7	85826032		1	FILTER, AIR
8	8	85817004		1	FILTER
8	9	9968988		1	FILTER, HYDRAULIC OIL

(1) See Page 0.200 Ref : 6
(2) See Page 0.302 Ref : 1
(3) See Page 1.821.6 Ref : 6
(4) See Page 1.19.1 Ref : 4
(5) See Page 1.19.1 Ref : 3
(6) See Page 1.94.2 Ref : 4
(7) See Page 1.94.2 Ref : 2
(8) Power Shuttle 2 WD See Page 1.28.0/ A Ref : 14 And 4 WD See Page 1.28.0/ B Ref : 14
(9) Power Shift See Page 1.28.0/ C Ref : 14

SECTION INDEX

SEC. 01	00	ENGINE 1/2
SEC. 01	01	ENGINE 2/2
0.021	01	ENGINE
0.040	01	CYLINDER BLOCK
0.040	02	CYLINDER BLOCK
0.042	01	OIL PUMP, PAN
0.043	01	CYLINDER BLOCK - COVERS
0.043	02	CYLINDER BLOCK - COVERS
0.043	03	CYLINDER BLOCK - COVERS
0.045	01	BREATHER - ENGINE
0.060	01	CYLINDER HEAD
0.063	01	CYLINDER HEAD - COVERS
0.066	01	CYLINDER HEAD - VALVE MECHANISM
0.071	01	MANIFOLD - INTAKE
0.077	01	MANIFOLD - EXHAUST
0.080	01	CRANKSHAFT
0.081	01	PISTONS - CONNECTING ROD
0.082	01	PISTONS - CONNECTING ROD
0.083	01	FLYWHEEL - ENGINE
0.084	01	PULLEY - CRANKSHAFT
0.105	01	DYNAMIC BALANCER, GEARS & SHAFTS
0.105	02	DYNAMIC BALANCER, GEARS & SHAFTS (2830952)
0.120	01	CAMSHAFT
0.140	01	FUEL INJECTION PUMP
0.140	02	FUEL INJECTION SYSTEM
0.142	01	FUEL INJECTION SYSTEM
0.149	01	FUEL INJECTION SYSTEM
0.200	01	FUEL FILTER
0.201	01	FUEL PUMP
0.203	01	FUEL INJECTION SYSTEM
0.204	01	FUEL INJECTION SYSTEM
0.240	01	TURBOCHARGER
0.270	01	ENGINE, OIL
0.300	01	OIL PUMP - ENGINE
0.302	01	OIL FILTERS - ENGINE
0.305	01	PIPING - ENGINE OIL
0.315	01	OIL FILTER AND COOLER
0.320	01	WATER PUMP
0.323	01	COOLING SYSTEM - ENGINE
0.326	01	THERMOSTAT - ENGINE COOLING SYSTEM
0.340	01	WATER PUMP - CONTROL
0.345	01	FAN DRIVE
0.350	01	POWER TAKE-OFF
0.360	01	STARTER MOTOR
0.400	01	ALTERNATOR
0.450	01	ENGINE - LIFT HOOK
636A	01	ACCESSORY ENGINE
636A	02	ACCESSORY ENGINE - VENTILATOR
636A	03	ACCESSORY ENGINE - STARTER
636A	04	ACCESSORY ENGINE- ALTERNATOR
636A	05	ACCESSORY ENGINE - BRACKET MUFFLER

ENGINE 1/2

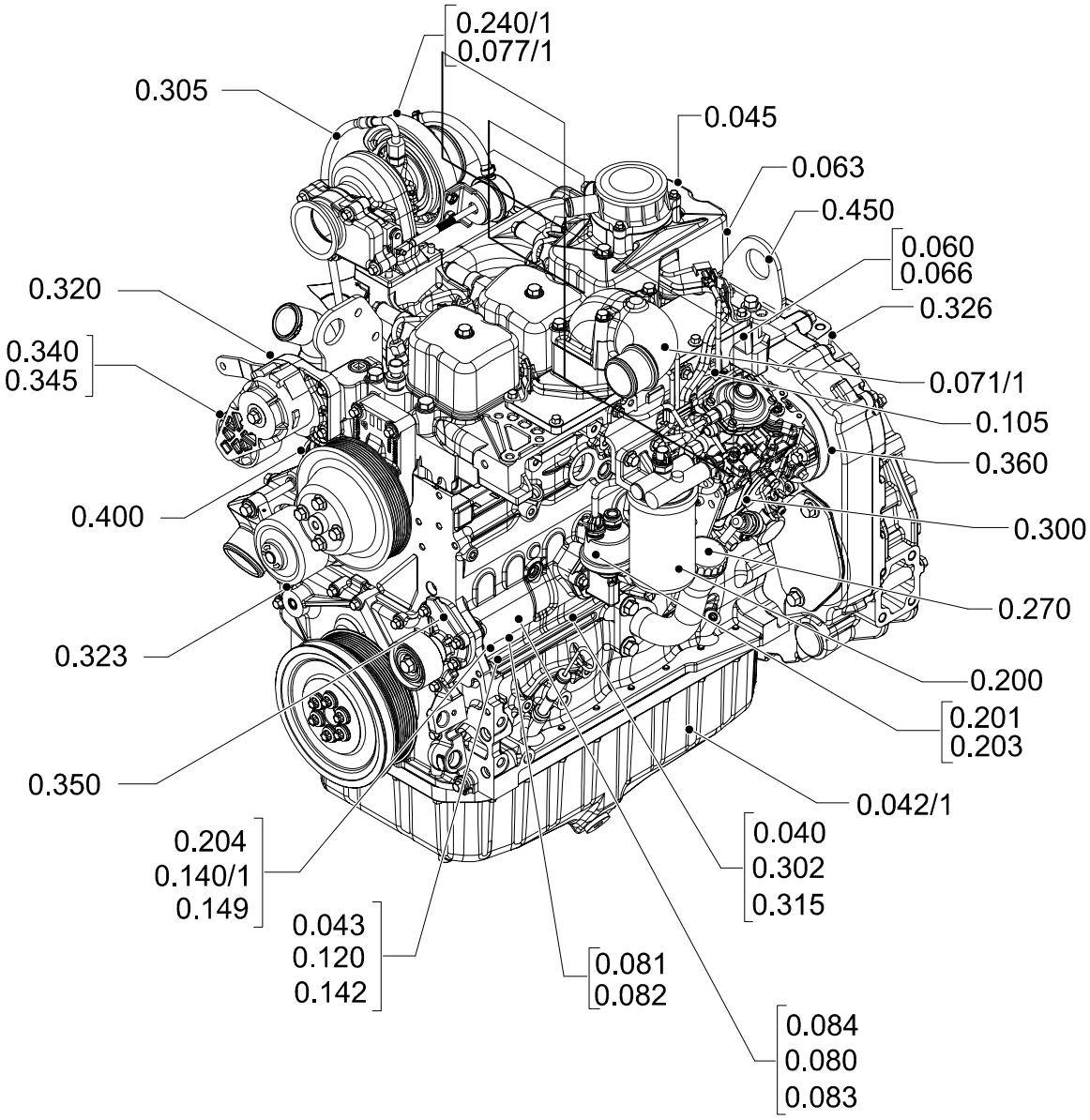
0.240/1
0.077/1
0.305
0.045
0.063
0.450
0.060
0.066
0.320
0.326
0.340
0.345
0.071/1
0.105
0.360
0.400
0.300
0.270
0.323
0.200
0.201
0.203
0.350
0.042/1
0.204
0.140/1
0.149
0.040
0.302
0.315
0.043
0.120
0.142
0.081
0.082
0.084
0.080
0.083

ENGINE 1/2

REF	FN	PART NUMBER	YR/SN	QTY	DESCRIPTION

ENGINE 2/2

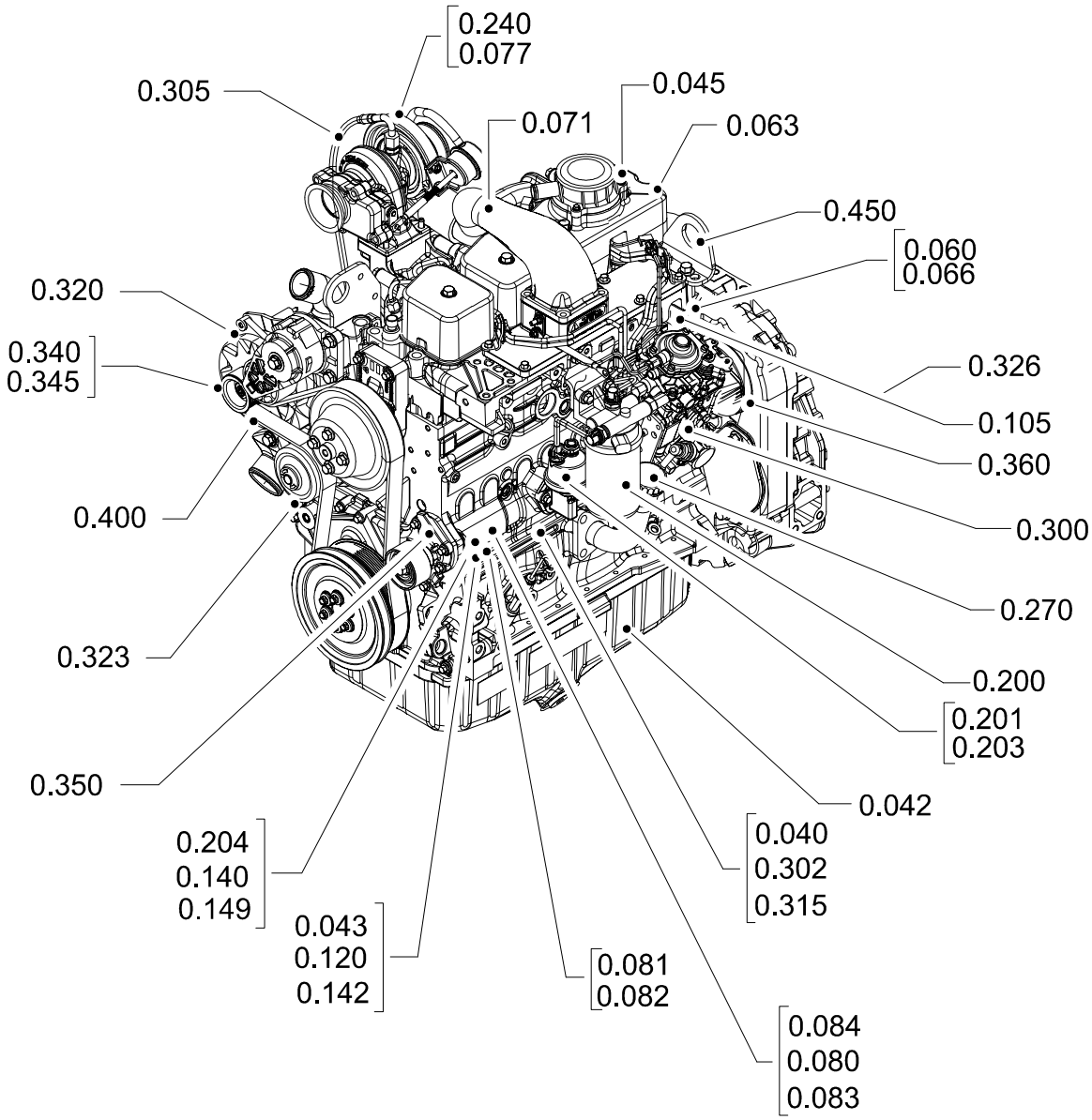
0.240
0.077
0.305
0.045
0.071
0.063
0.450
0.060
0.066
0.320
0.340
0.345
0.326
0.105
0.360
0.400
0.300
0.270
0.323
0.200
0.201
0.203
0.350
0.042
0.204
0.140
0.149
0.040
0.302
0.315
0.043
0.120
0.142
0.081
0.082
0.084
0.080
0.083

ENGINE 2/2

REF	FN	PART NUMBER	YR/SN	QTY	DESCRIPTION

ENGINE

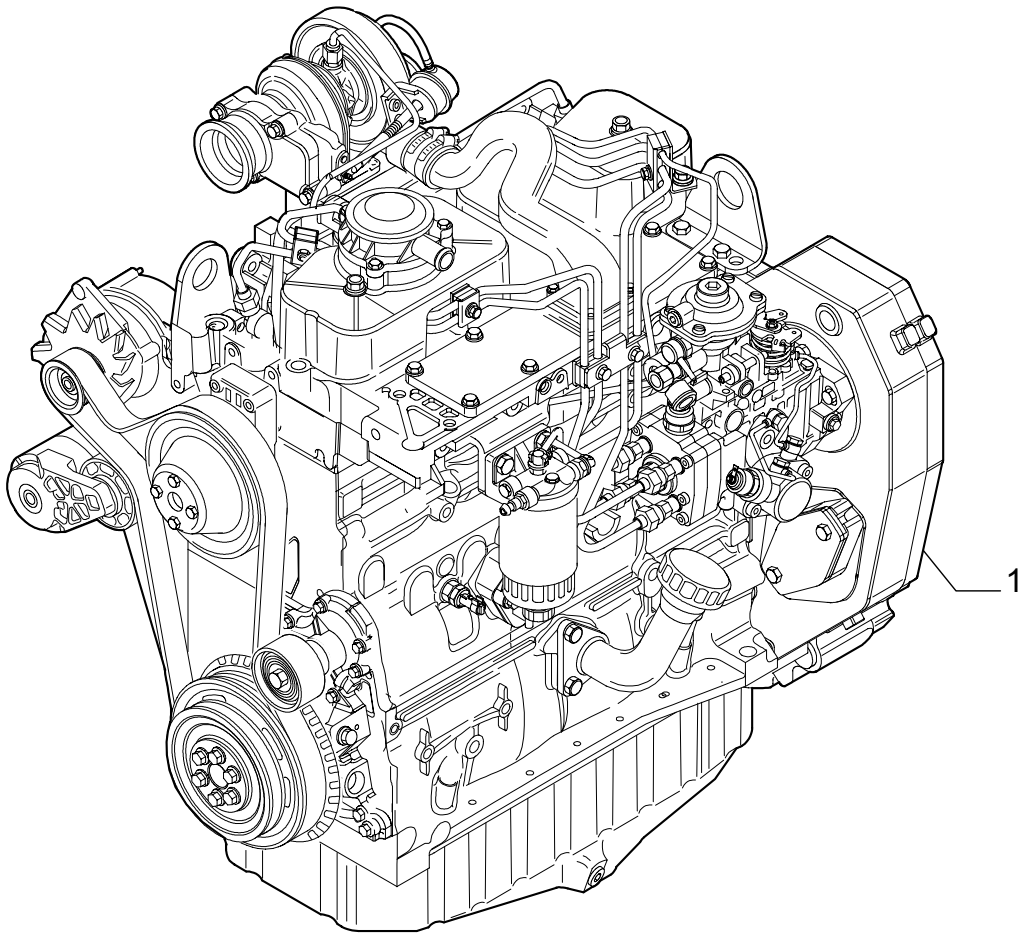

ENGINE

REF	FN	PART NUMBER	YR/SN	QTY	DESCRIPTION
1		86990710		1	ENGINE - ASSY

CYLINDER BLOCK

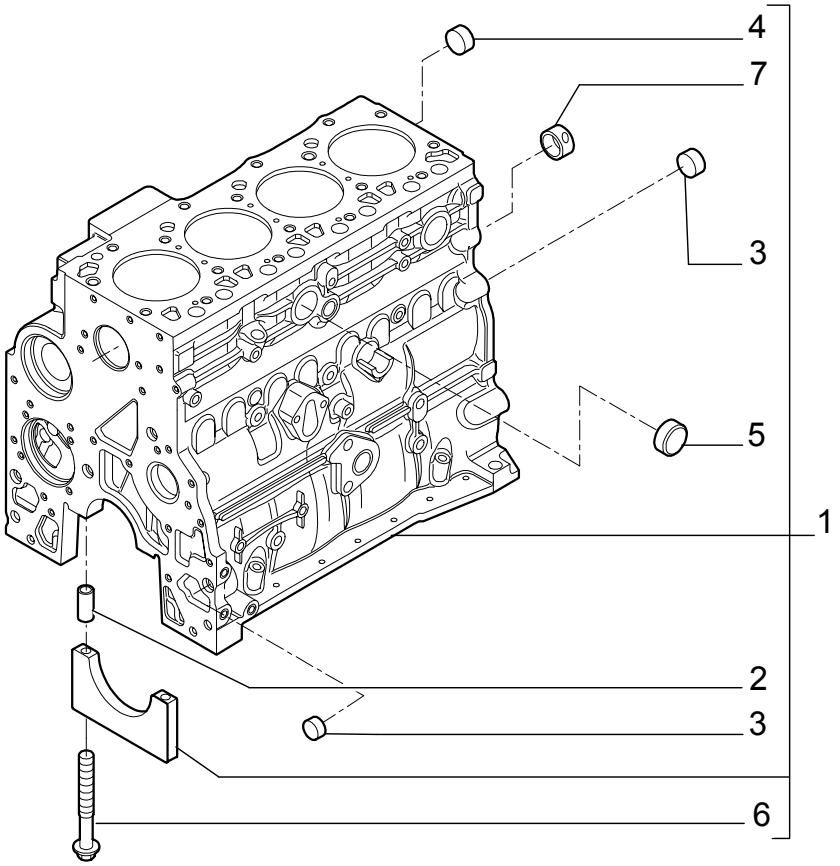

CYLINDER BLOCK

REF	FN	PART NUMBER	YR/SN	QTY	DESCRIPTION
1		2830082		1	CYLINDER BLOCK - ASSY
2		4899026		10	DOWEL
3		4895039		3	PLUG
4		4895038		4	PLUG
5		4895228		2	PLUG
6		4891353		10	SCREW 12X120
7		4895040		1	BUSHING

0.040	02	p1	06/03

CYLINDER BLOCK

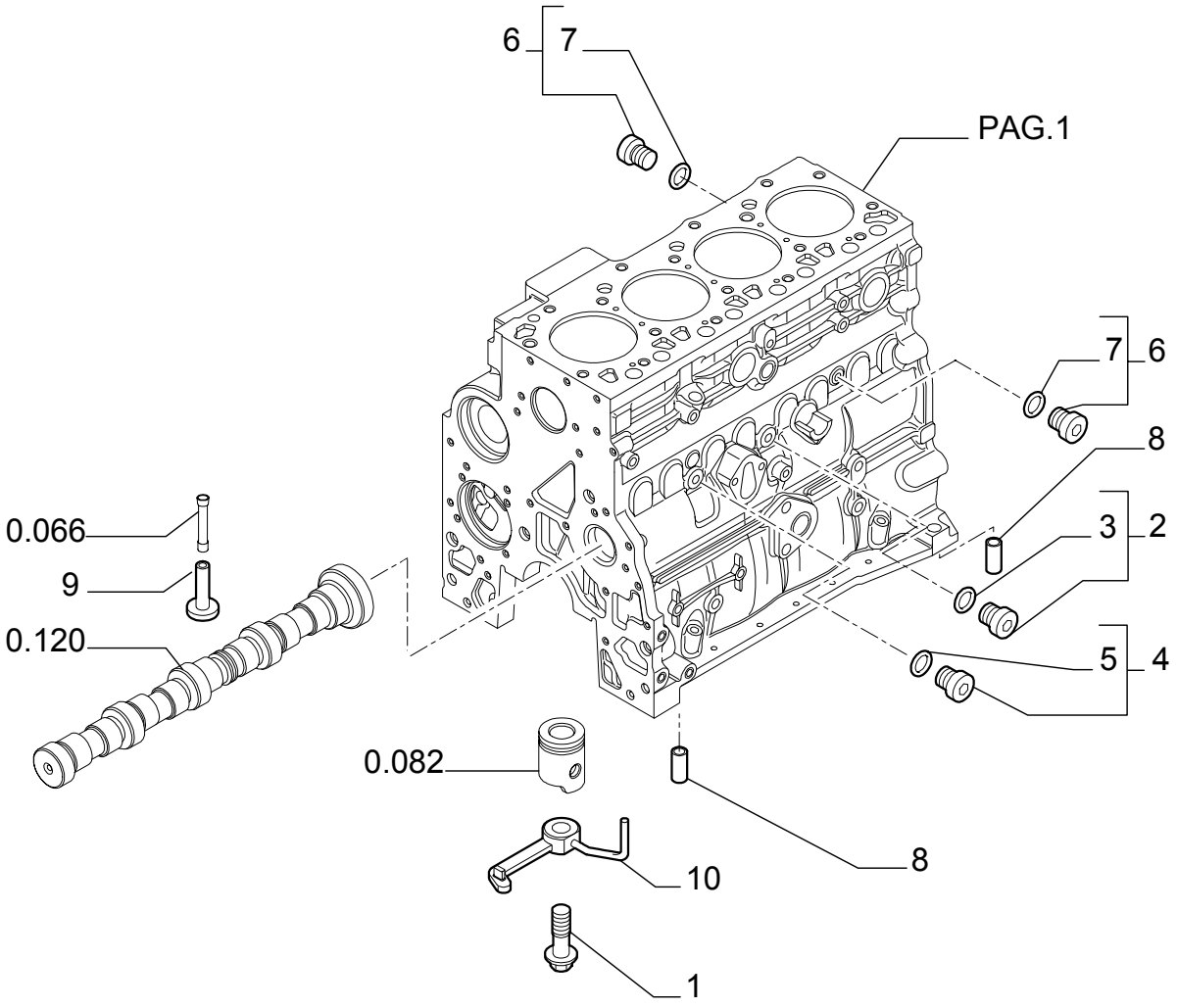

CYLINDER BLOCK

REF	FN	PART NUMBER	YR/SN	QTY	DESCRIPTION
1		4894218		4	SCREW
2		4895605		1	PLUG 14X1.5 - ASSY
3		4899115		1	O-RING
4		4899009		1	PLUG 10X1.5 - ASSY
5		4899072		1	O-RING
6		4895392		2	PLUG 18X1.5 - ASSY
7		4895393		1	O-RING
8		4895049		2	DOWEL
9		4895180		8	TAPPET
10		504047260		4	NOZZLE, LUB. OIL JET

0.042	01	p1	04/03

OIL PUMP, PAN

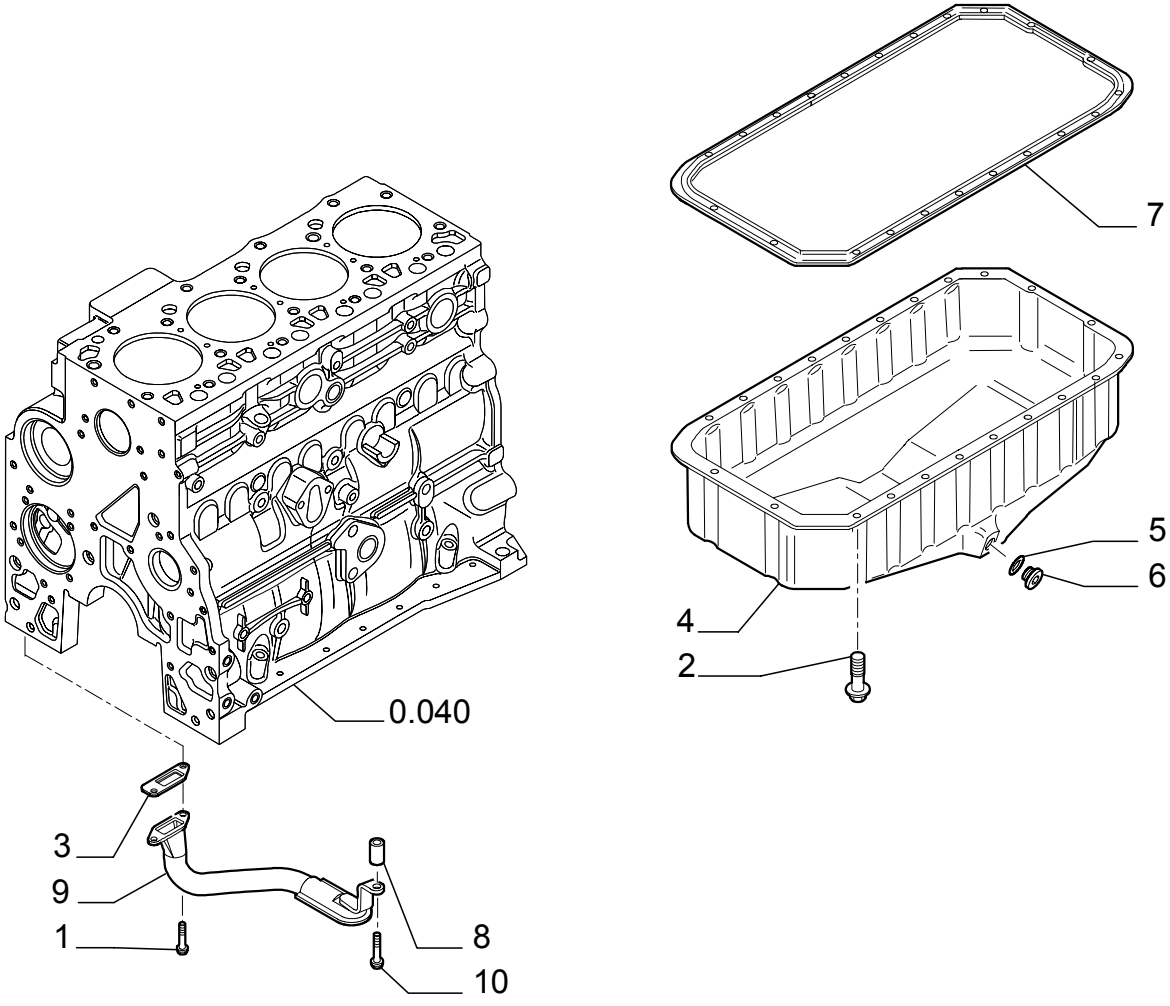

OIL PUMP, PAN

REF	FN	PART NUMBER	YR/SN	QTY	DESCRIPTION
1		4899020		2	SCREW 8X20
2		4899091		22	SCREW
2		4895489		2	SCREW
3		4898301		1	GASKET
4		504043550		1	PAN, ENGINE OIL
5		4895584		1	GASKET
6		4894139		1	PLUG 22X1.5
7		504069777		1	GASKET
8		504062812		1	SPACER
9		504042165		1	STRAINER ASSY.
10		4895538		1	SCREW

0.043	01	p1	04/03

CYLINDER BLOCK - COVERS

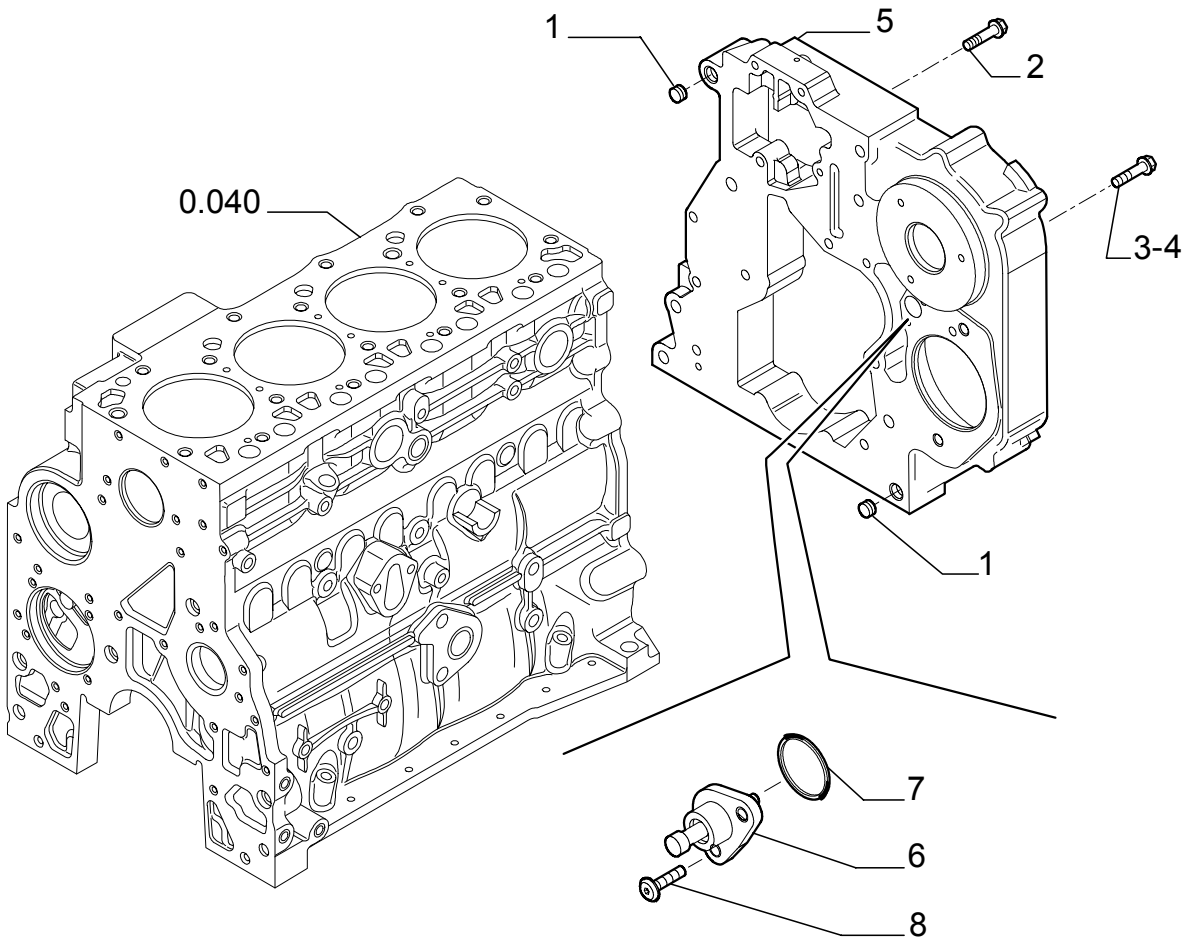

CYLINDER BLOCK - COVERS

REF	FN	PART NUMBER	YR/SN	QTY	DESCRIPTION
1		4899026		2	DOWEL
2		4899091		4	SCREW
3		4899093		5	SCREW
4		4899073		2	SCREW
5		504050848		1	COVER
6		504074001		1	COVER
7		17278780		1	O-RING
8		4895355		2	SCREW 5X17

0.043	02	p1	06/03

CYLINDER BLOCK - COVERS

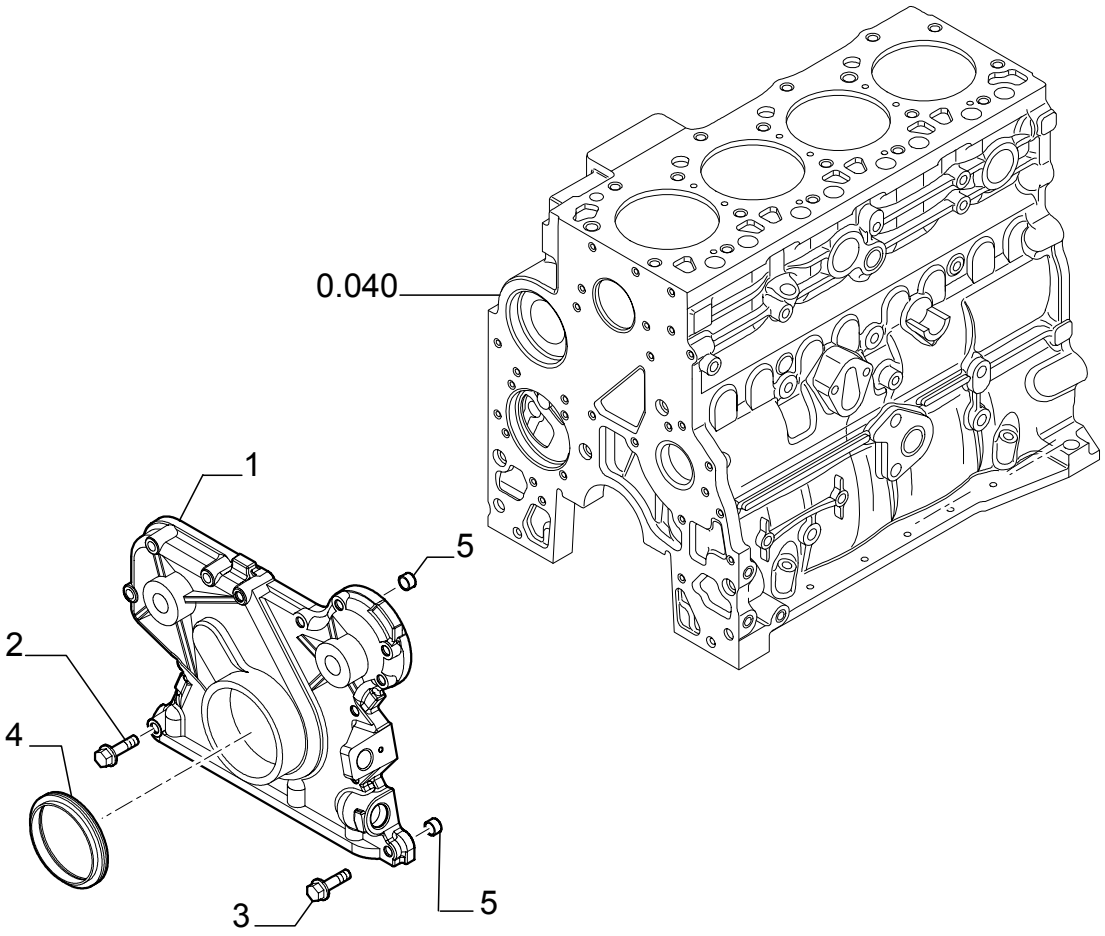

CYLINDER BLOCK - COVERS

REF	FN	PART NUMBER	YR/SN	QTY	DESCRIPTION
1		4897024		1	COVER
2		4899078		5	SCREW
3		4899063		8	SCREW M8X30
4		4890832		1	GASKET
5		4891209		2	DOWEL

0.043	03	p1	03/04

CYLINDER BLOCK - COVERS

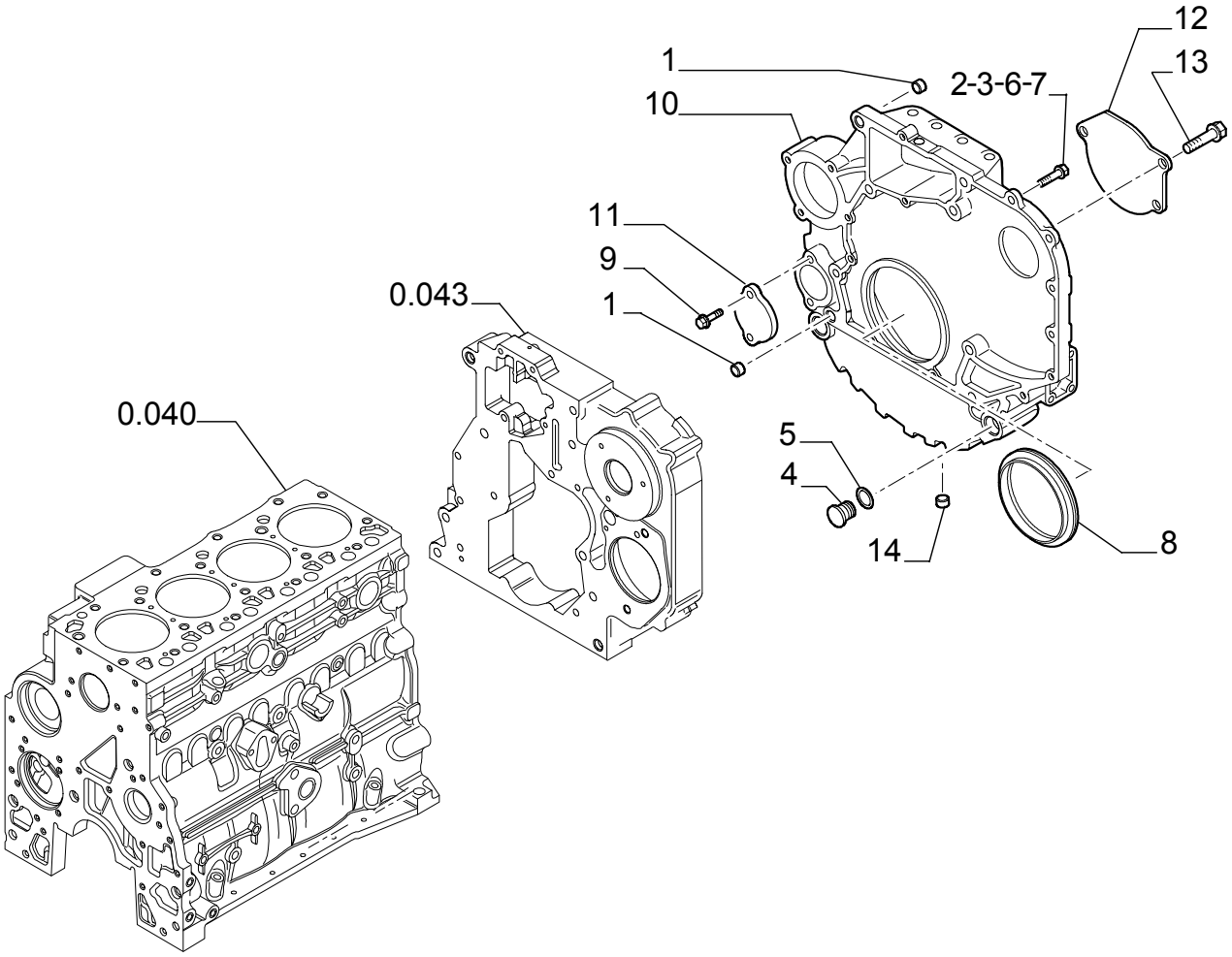

CYLINDER BLOCK - COVERS

REF	FN	PART NUMBER	YR/SN	QTY	DESCRIPTION
1		4899026		2	DOWEL
2		4899109		3	SCREW M10X1.5X80
3		4899075		8	SCREW M10X1.5X40
4		4895378		2	PLUG
5		4895379		2	O-RING M21.82 ID x 3.53 Thk
6		4899076		5	SCREW M12X80
7		4899074		2	SCREW
8		4890833		1	GASKET
9		4899103		2	SCREW
10		504069775		1	COVER
11		4895358		1	COVER
12		504030423		1	COVER
13		4899020		1	SCREW M8X20
13		504062964		2	SCREW
14		4895079		1	PLUG

0.045	01	p1	04/03

BREATHER - ENGINE

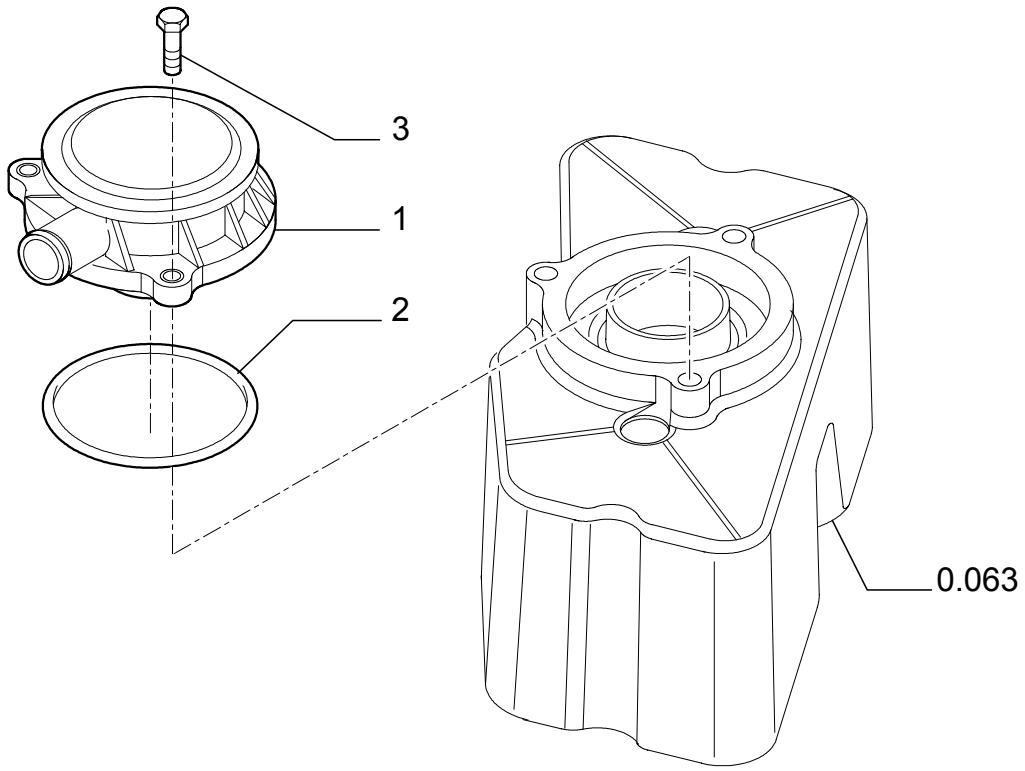

BREATHER - ENGINE

REF	FN	PART NUMBER	YR/SN	QTY	DESCRIPTION
1		504069558		1	BREATHER
2		500315795		1	GASKET
3		4899110		3	SCREW

0.060	01	p1	04/03

CYLINDER HEAD

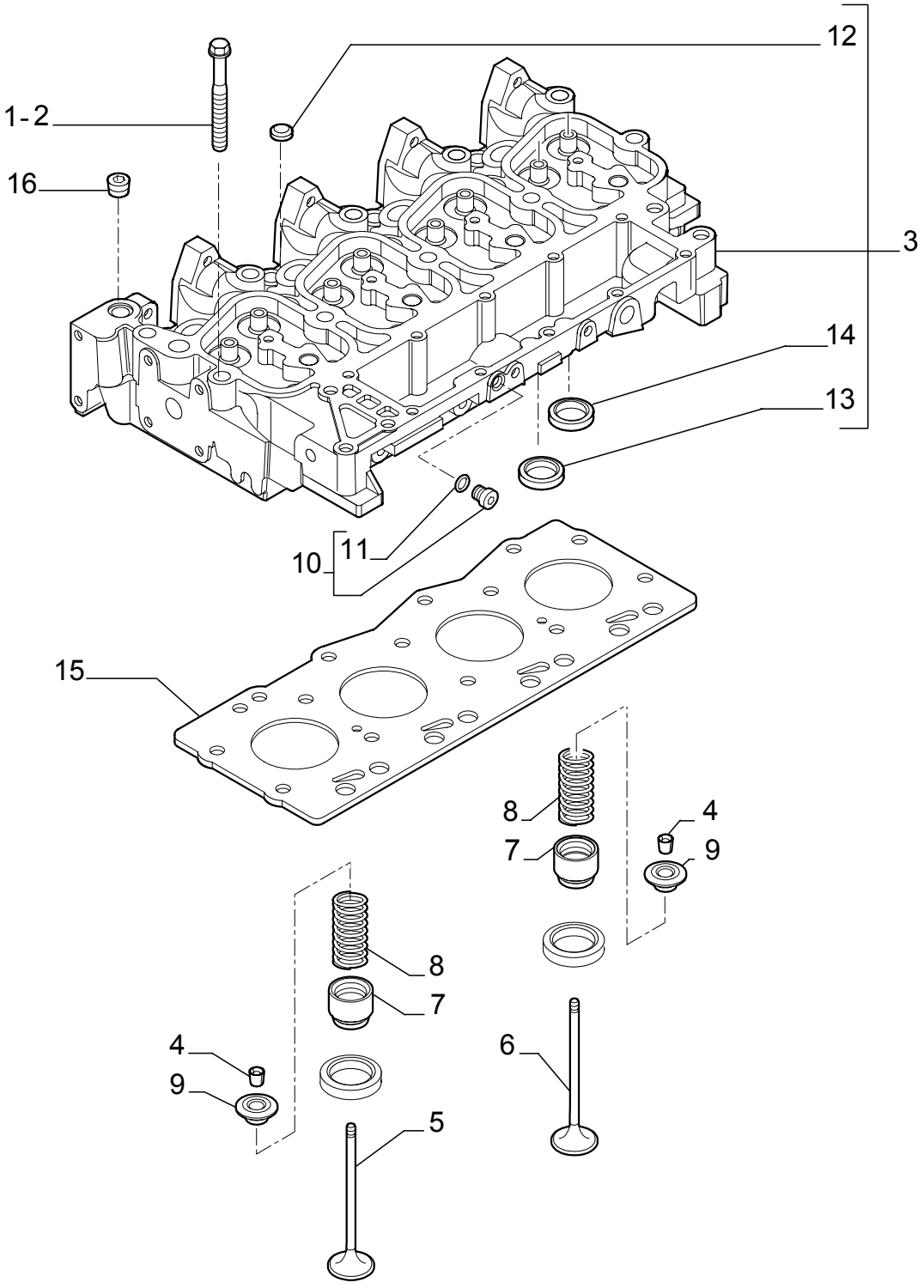

CYLINDER HEAD

REF	FN	PART NUMBER	YR/SN	QTY	DESCRIPTION
1		4892861		4	SCREW
2		4892859		10	SCREW
3		4895790		1	CYLINDER HEAD - ASSY
4		4895183		16	COTTER, ROCKER ARM
5		4895188		4	VALVE, ENG EXHAUST, STD
6		4895187		4	VALVE, ENGINE, INLET, STD
7		4895347		8	CUP
8		4895215		8	SPRING
9		4895184		8	CUP
10		4899009		1	PLUG - ASSY 10X1.5
11		4899072		1	O-RING
12		4895179		3	PLUG
13		4897178		4	VALVE SEAT
14		4897179		4	VALVE SEAT
15		2830919		1	GASKET, CYLINDER HEAD SP= 1.25
16		4895078		5	PLUG

0.063	01	p1	04/03

CYLINDER HEAD - COVERS

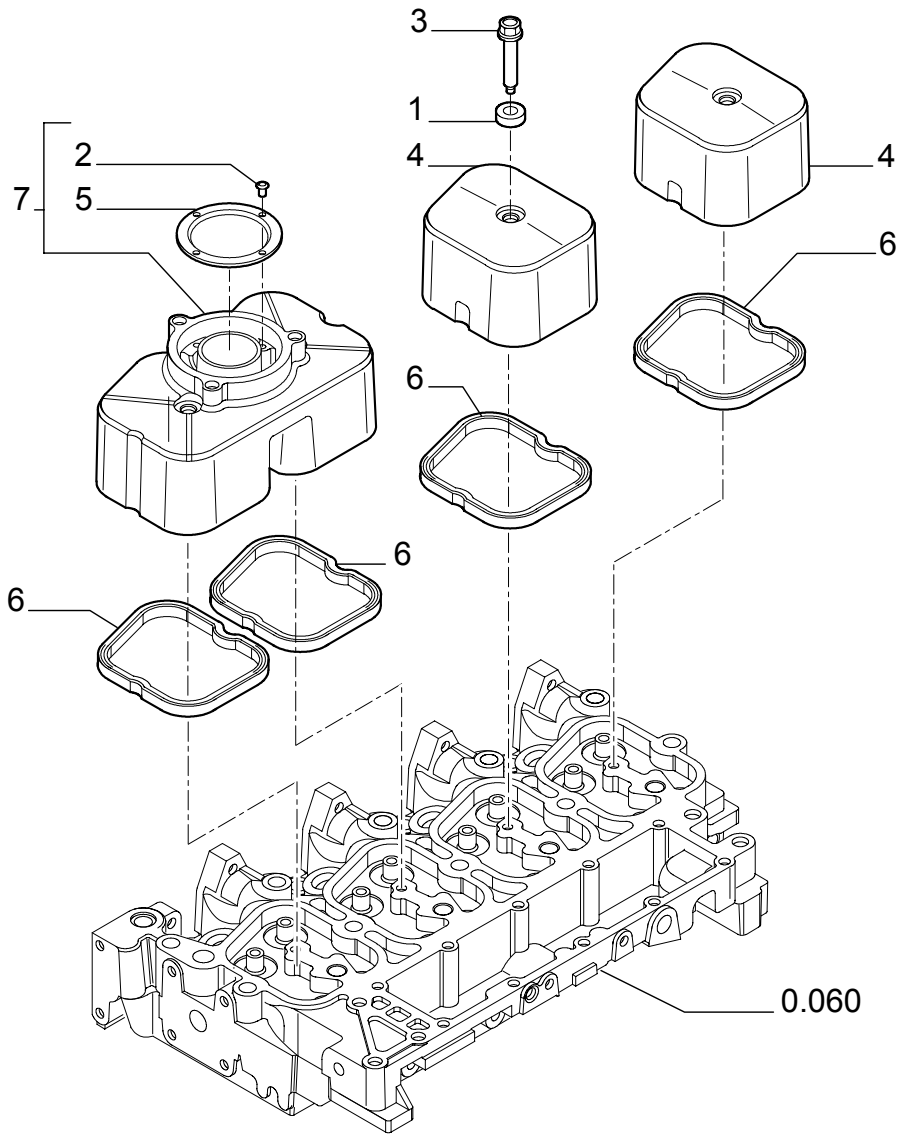

CYLINDER HEAD - COVERS

REF	FN	PART NUMBER	YR/SN	QTY	DESCRIPTION
1		4895360		4	BUSHING
2		16784504		4	SCREW
3		4895214		4	SCREW
4		504065040		2	COVER
5		2830775		1	BAFFLE ASSY.
6		504053522		4	GASKET
7		2830784		1	COVER - ASSY

CYLINDER HEAD - VALVE MECHANISM

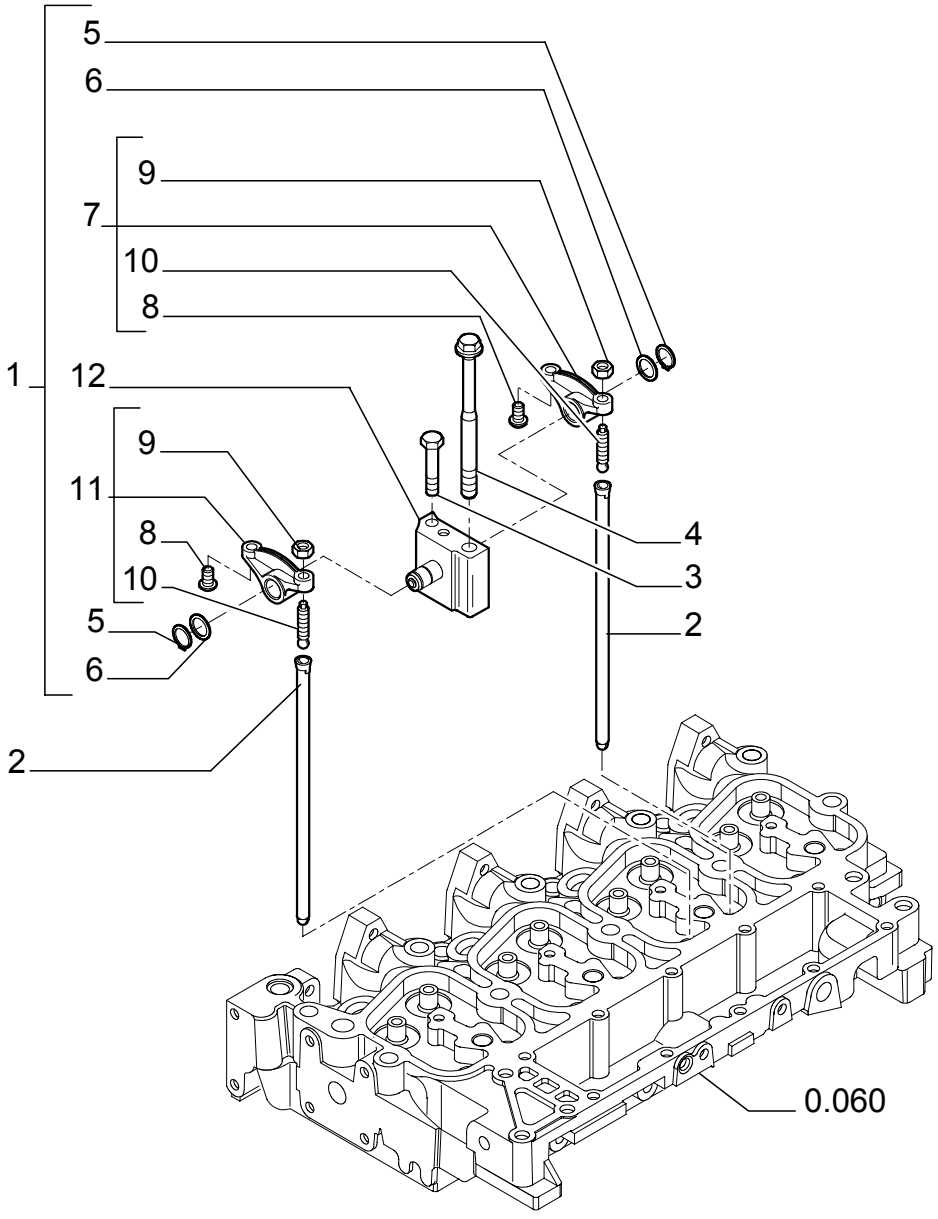

CYLINDER HEAD - VALVE MECHANISM

REF	FN	PART NUMBER	YR/SN	QTY	DESCRIPTION
1		4895195		4	ROCKER ARM - ASSY
2		4895361		8	ROD, PUSH
3		4895193		4	SCREW
4		4892860		4	SCREW
5		4895363		2	RING
6		4895364		2	WASHER
7		4895196		1	ROCKER ARM - ASSY
8		4895365		2	SPACER
9		4895198		2	NUT
10		4895199		2	SCREW
11		4895200		1	ROCKER ARM - ASSY
12		4895204		1	SUPPORT

0.071	01	p1	04/03

MANIFOLD - INTAKE

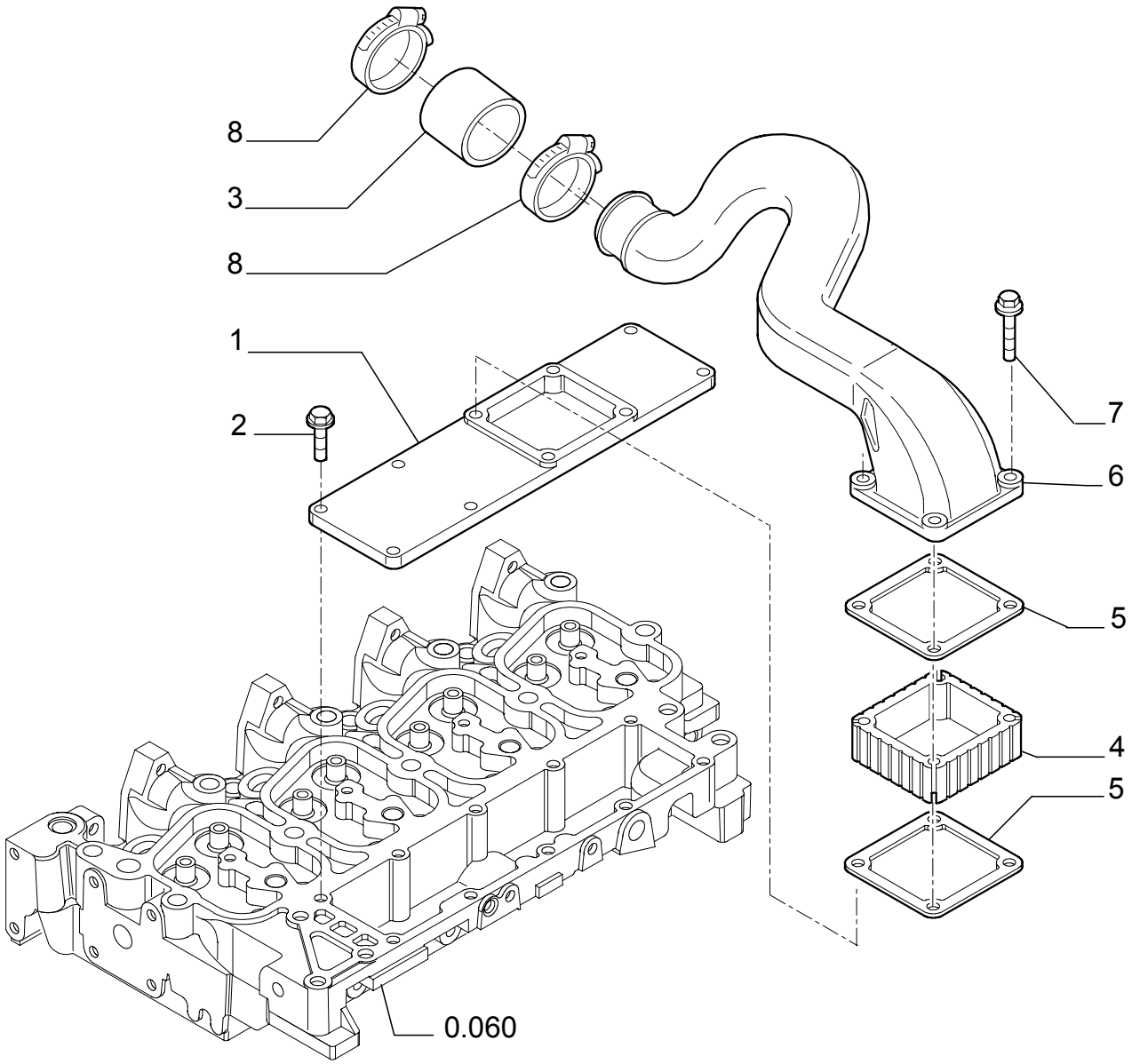

MANIFOLD - INTAKE

REF	FN	PART NUMBER	YR/SN	QTY	DESCRIPTION
1		504064865		1	COVER
2		4899039		6	SCREW 8X1.25X25
3		504063980		1	SLEEVE
4		4895648		1	SPACER
5		4899921		2	GASKET
6		504052006		1	HOSE ASSY.
7		4895294		4	SCREW 8X140
8		4899629		2	COLLAR, RETAINER

0.077	01	p1	08/03

MANIFOLD - EXHAUST

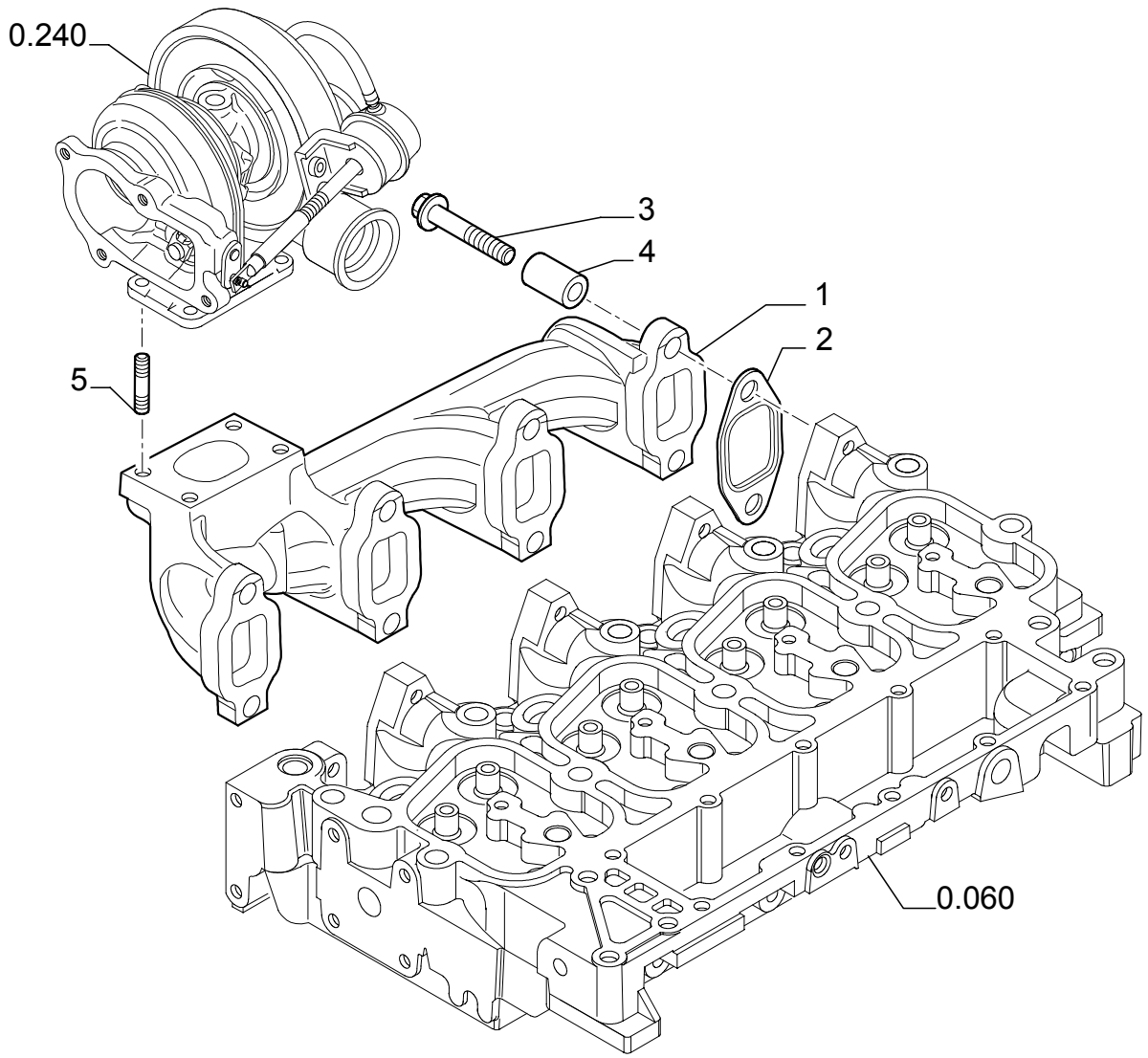

MANIFOLD - EXHAUST

REF	FN	PART NUMBER	YR/SN	QTY	DESCRIPTION
1		4895273		1	MANIFOLD, EXHAUST
2		2830445		4	GASKET
3		4895174		8	SCREW
4		4895336		8	SPACER
5		4899119		4	STUD

CRANKSHAFT

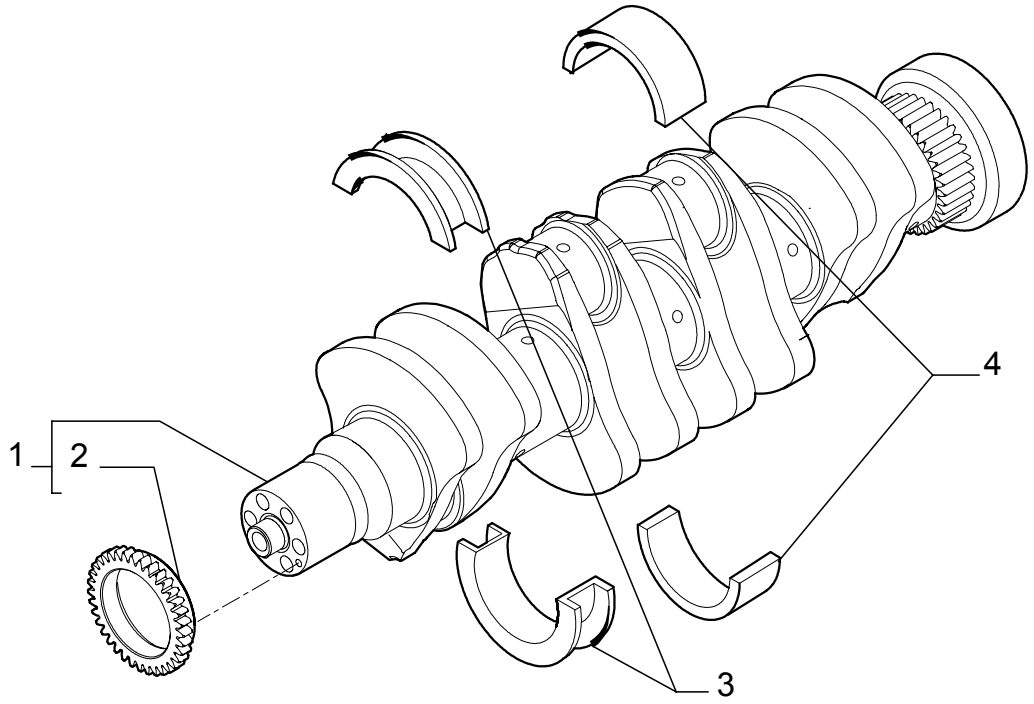

CRANKSHAFT

REF	FN	PART NUMBER	YR/SN	QTY	DESCRIPTION
1		504048350		1	CRANKSHAFT - ASSY
2		4893386		1	GEAR
4		2992147		4	SET, CONN ROD BRGS (STD) (- 0.000) (- 0.000)
4		2992148		4	SET, CONN ROD BRGS (STD) (- 0.254) (- 0.250)
4		2992149		4	SET, CONN ROD BRGS (STD) (- 0.508) (- 0.500)
3		2992153		1	SET, CONN ROD BRGS (STD) (+ 0.000) (+ 0.000)
3		2992154		1	SET, CONN ROD BRGS (STD) (+ 0.254) (+ 0.250)
3		2992155		1	SET, CONN ROD BRGS (STD) (+ 0.508) (+ 0.500)

PISTONS - CONNECTING ROD

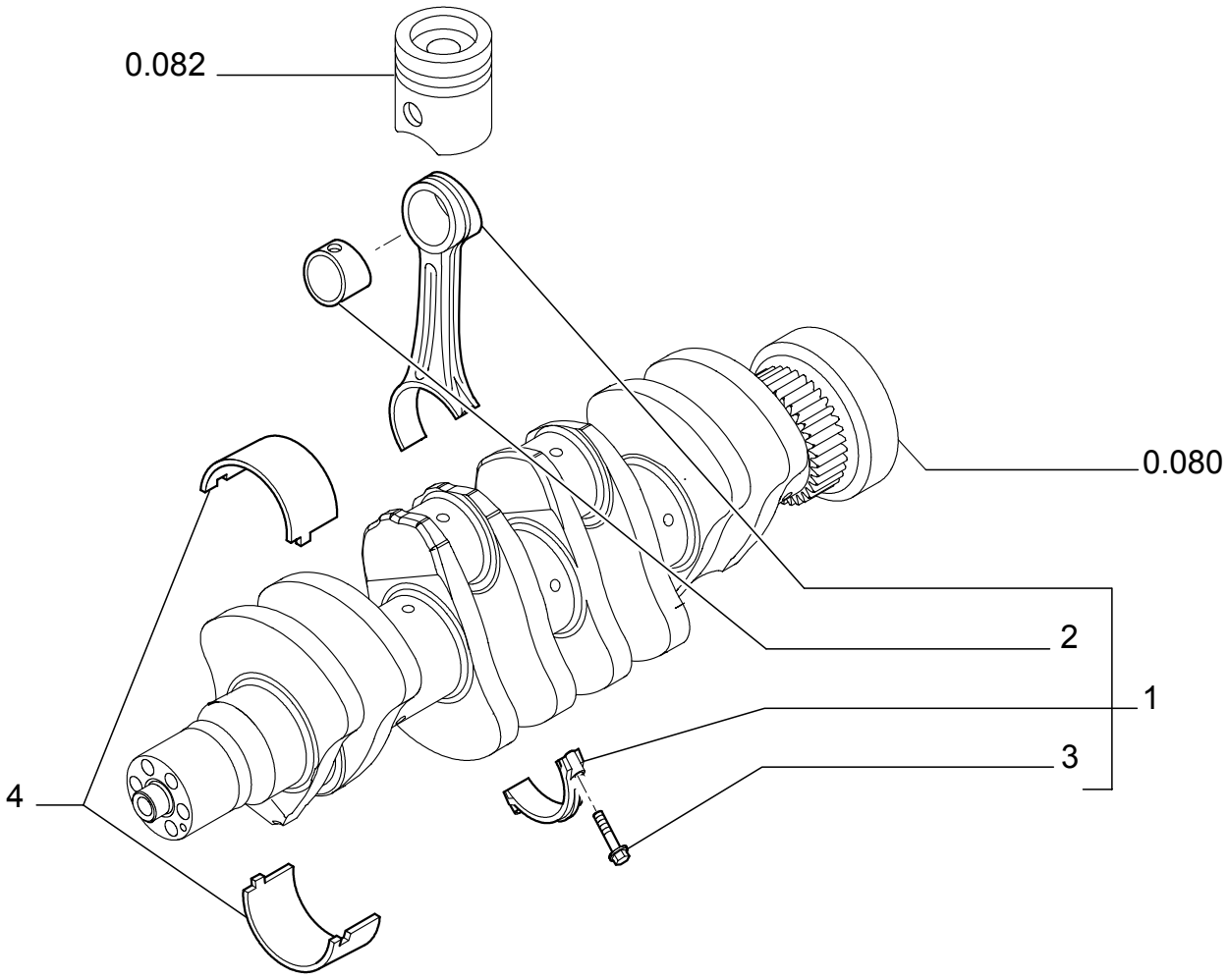

PISTONS - CONNECTING ROD

REF	FN	PART NUMBER	YR/SN	QTY	DESCRIPTION
1		4895748		4	ROD, CONNECTING - ASSY
2		4892708		1	BUSHING
3		4892707		2	SCREW
4		8093882		4	SET, CONN ROD BRGS (STD)

0.082	01	p1	11/03

PISTONS - CONNECTING ROD

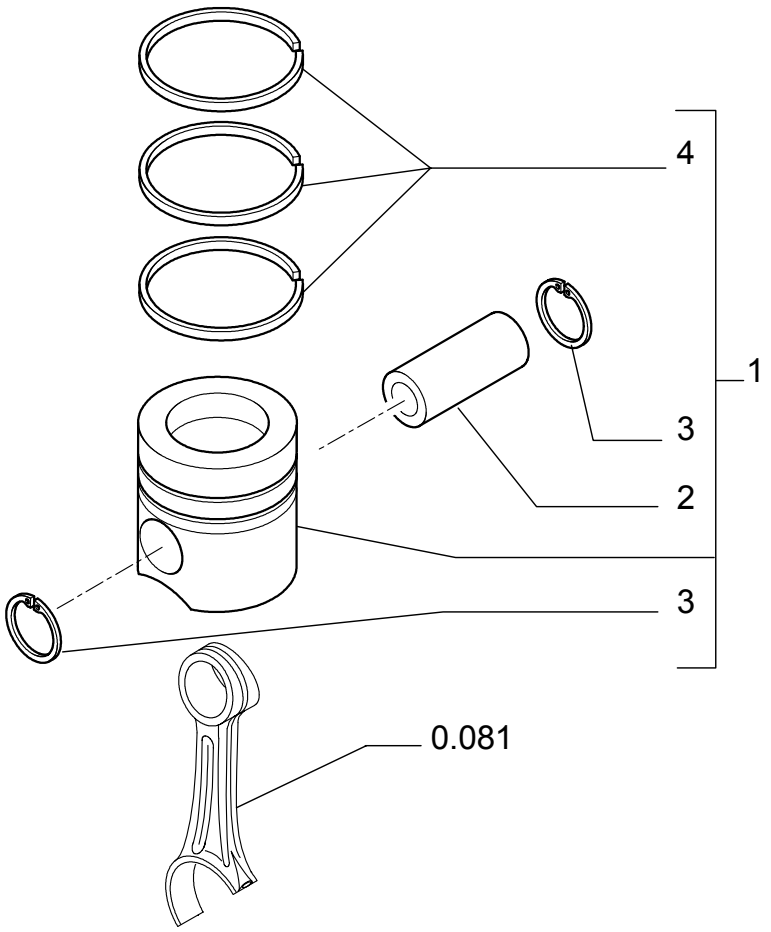

PISTONS - CONNECTING ROD

REF	FN	PART NUMBER	YR/SN	QTY	DESCRIPTION
1		8093880		4	KIT, PISTON & RINGS
2		4892712		1	PIN, PISTON
3		4892713		2	RING, LOCKING
4		8093881		1	KIT, PISTON RINGS

0.083	01	p1	06/03

FLYWHEEL - ENGINE

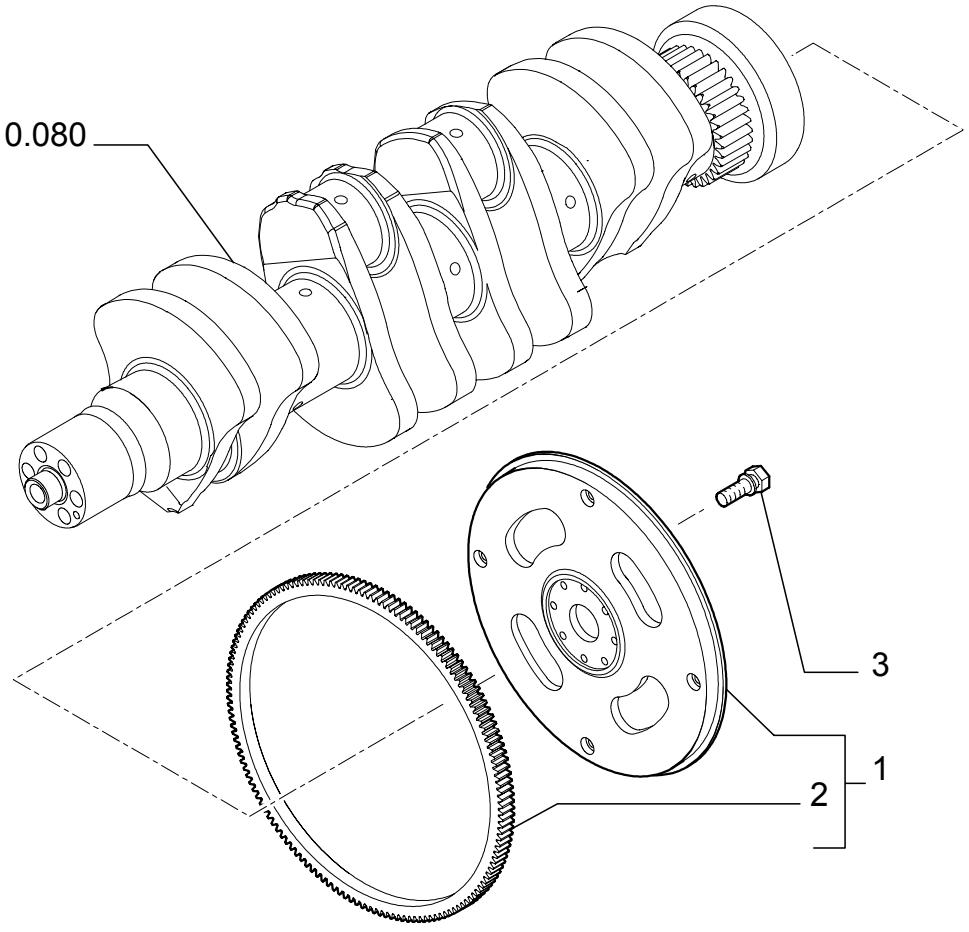

FLYWHEEL - ENGINE

REF	FN	PART NUMBER	YR/SN	QTY	DESCRIPTION
1		504057736		1	FLYWHEEL - ASSY
2		504062460		1	GEAR, RING
3		4894641		8	SCREW

PULLEY - CRANKSHAFT

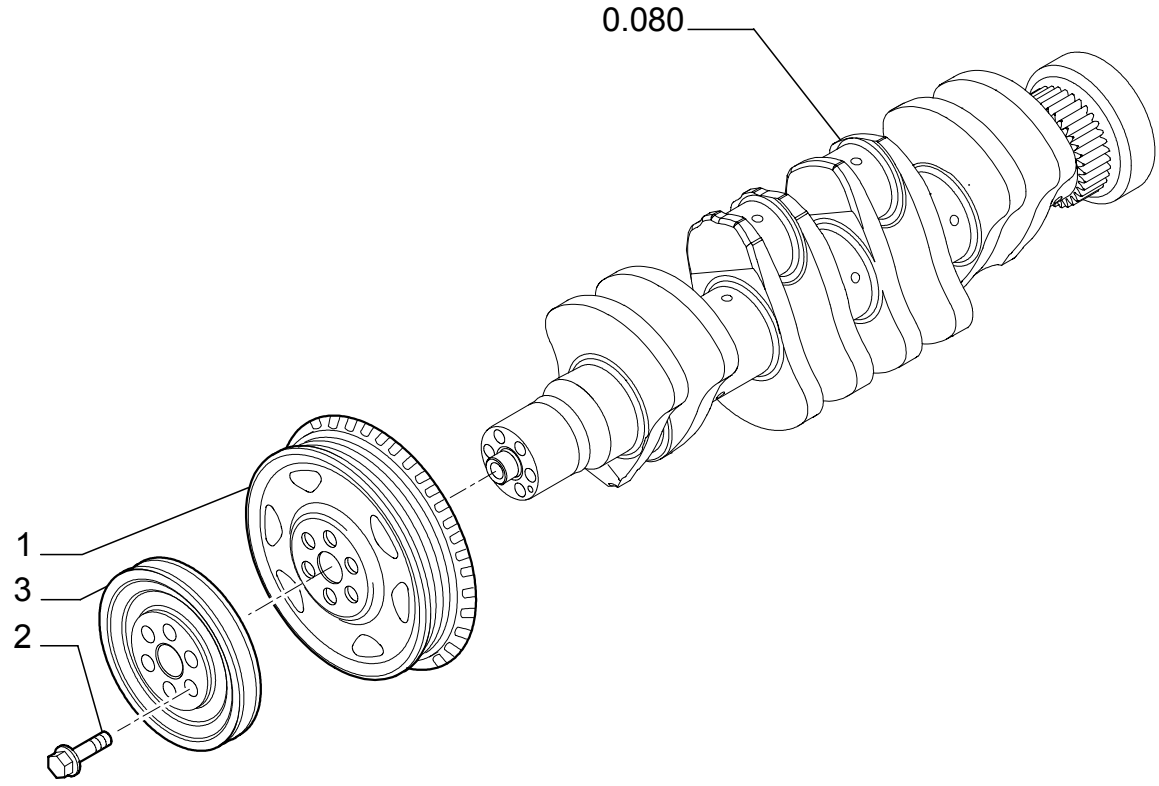

PULLEY - CRANKSHAFT

REF	FN	PART NUMBER	YR/SN	QTY	DESCRIPTION
1		504035087		1	PULLEY
2		4892867		6	SCREW
3		504061622		1	PULLEY

0.105	01	p1	04/03

DYNAMIC BALANCER, GEARS & SHAFTS

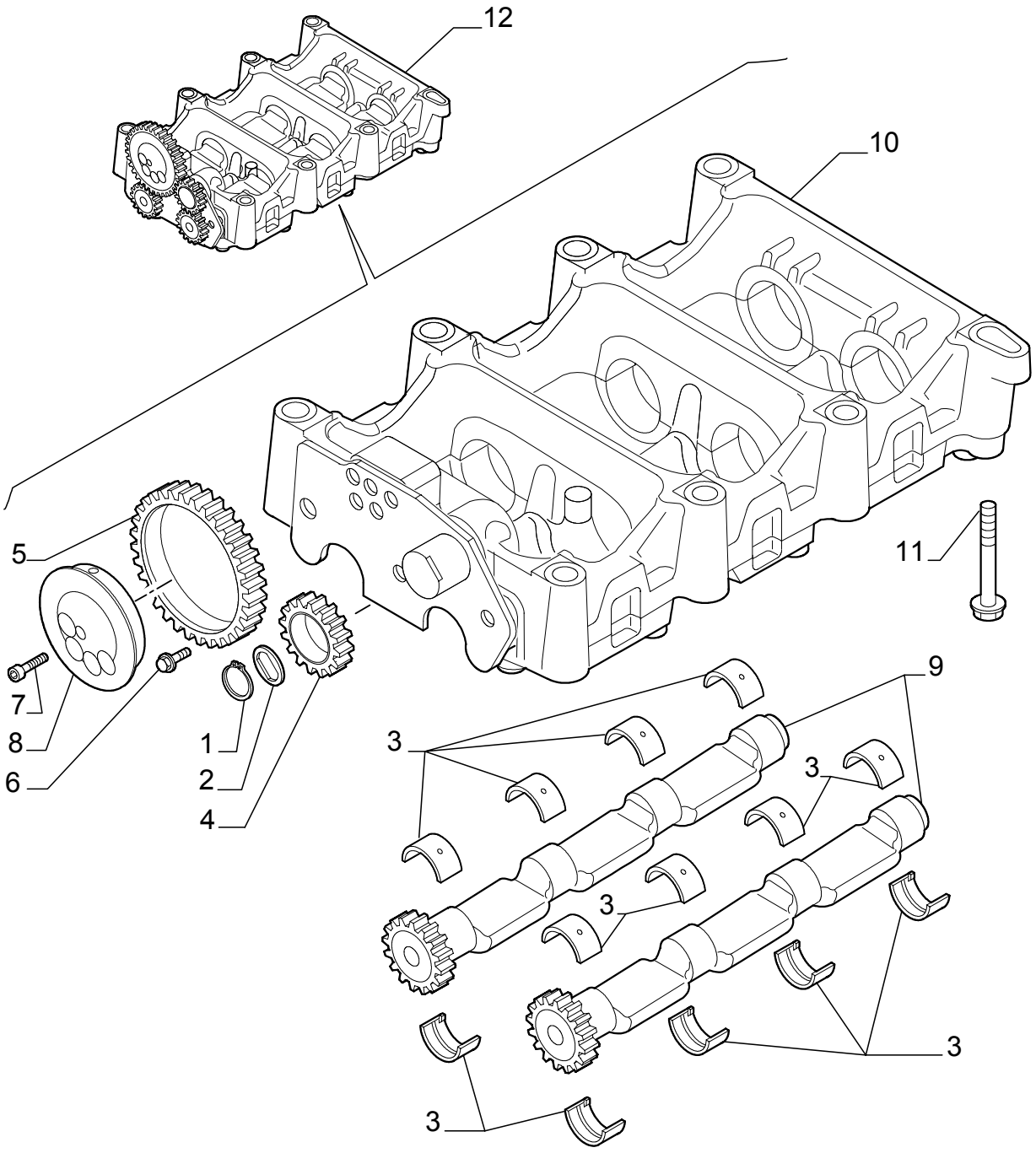

DYNAMIC BALANCER, GEARS & SHAFTS

REF	FN	PART NUMBER	YR/SN	QTY	DESCRIPTION
1		16866473		1	CIRCLIP
2		4897123		1	PLATE, THRUST
3		4897071		16	BUSHING
4		4897048		1	GEAR, DRIVEN
5		4896947		1	GEAR, DRIVEN
6		4895586		3	SCREW
7		2830433		4	SCREW
8		2831031		1	SHAFT, IDLE
9		2831023		2	SHAFT
10	1	2830952		1	HOUSING - ASSY
11		4899109		7	SCREW
11		4897934		1	SCREW
12		2830953		1	BALANCER - ASSY

(1) ASSY SEE PAGE 2

DYNAMIC BALANCER, GEARS & SHAFTS (2830952)

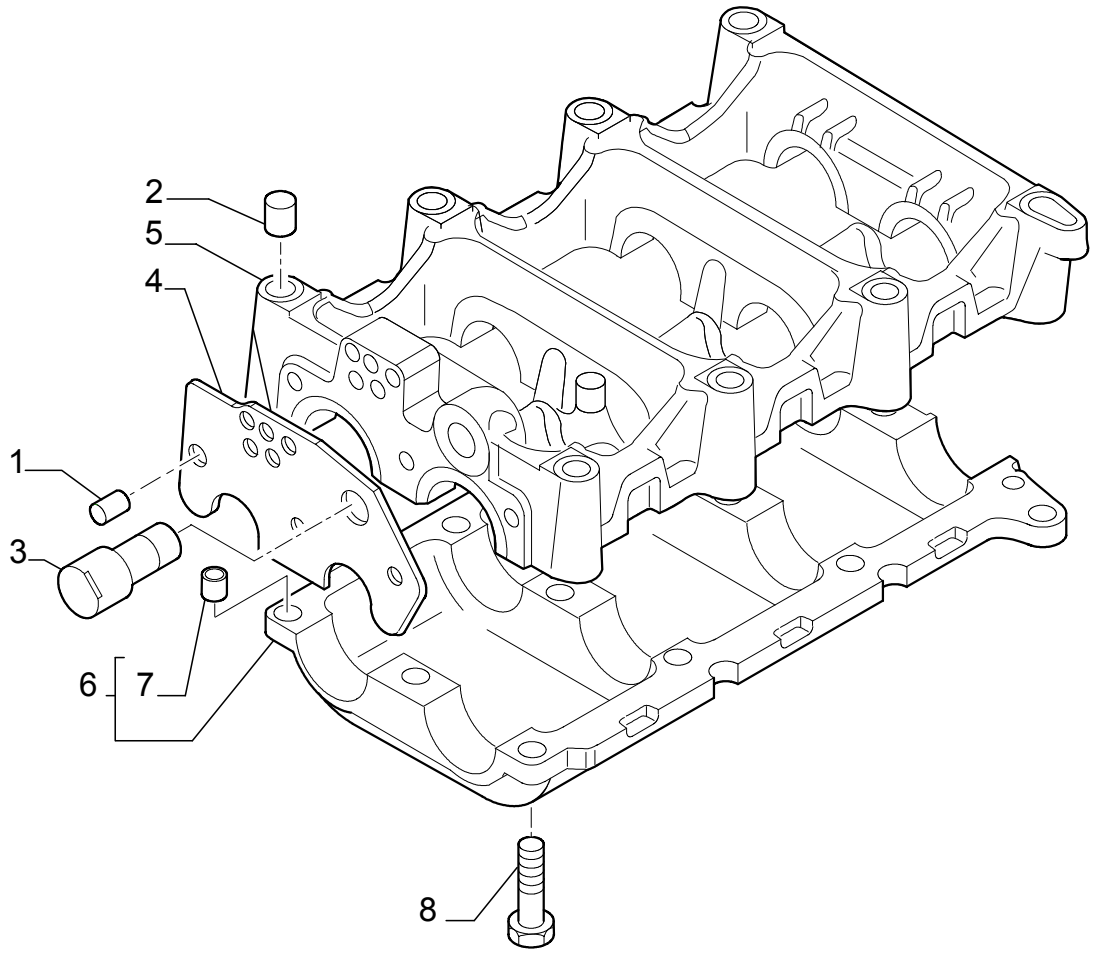

DYNAMIC BALANCER, GEARS & SHAFTS (2830952)

REF	FN	PART NUMBER	YR/SN	QTY	DESCRIPTION
1		4892836		1	DOWEL
2		4899027		2	DOWEL
3		2830948		1	SHAFT, IDLE
4		2830905		1	PLATE, THRUST
5		2830934		1	HOUSING
6		2831101		1	HOUSING - ASSY
7		4891209		2	DOWEL
8		2830411		3	SCREW
8		4895323		9	SCREW

0.120	01	p1	04/03

CAMSHAFT

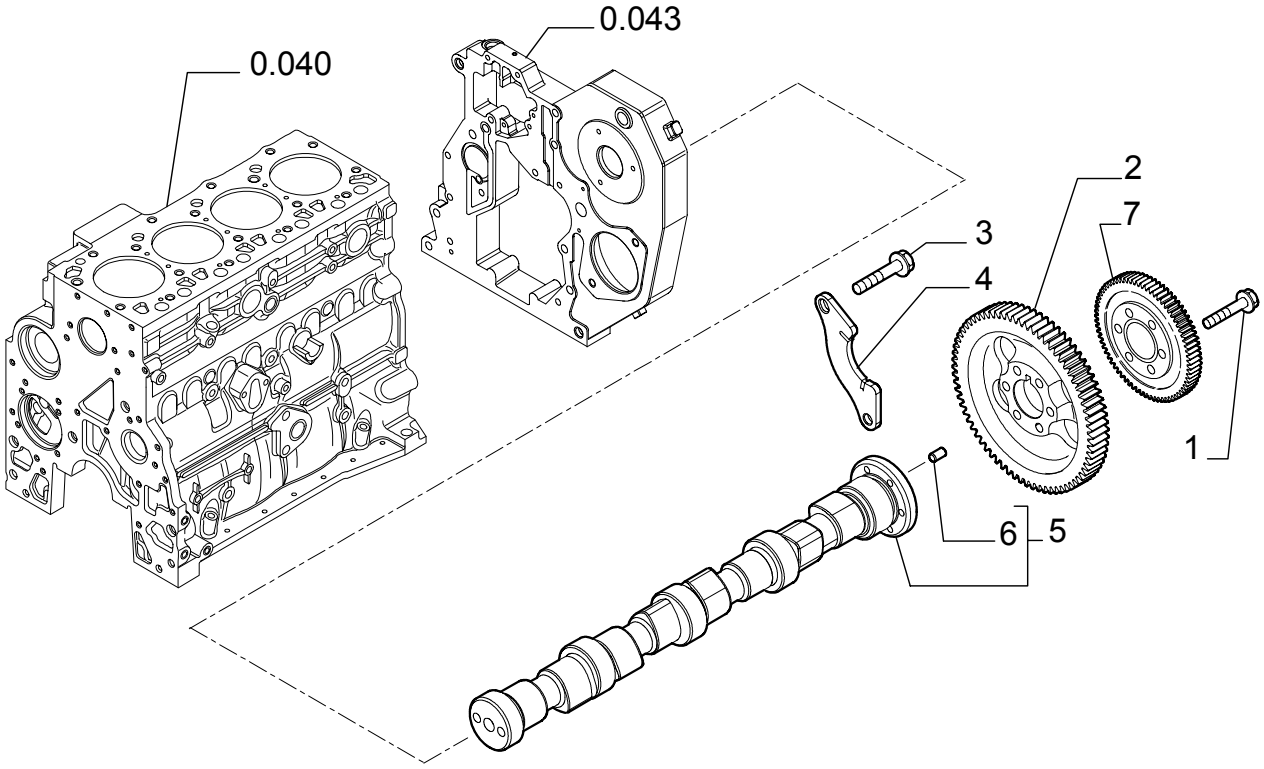

CAMSHAFT

REF	FN	PART NUMBER	YR/SN	QTY	DESCRIPTION
1		4895323		6	SCREW
2		504062752		1	GEAR
3		4899068		2	SCREW 8X17
4		4897457		1	FLANGE
5		4899610		1	CAMSHAFT - ASSY
6		4899080		1	DOWEL
7		504034954		1	GEAR, DRIVEN

FUEL INJECTION PUMP

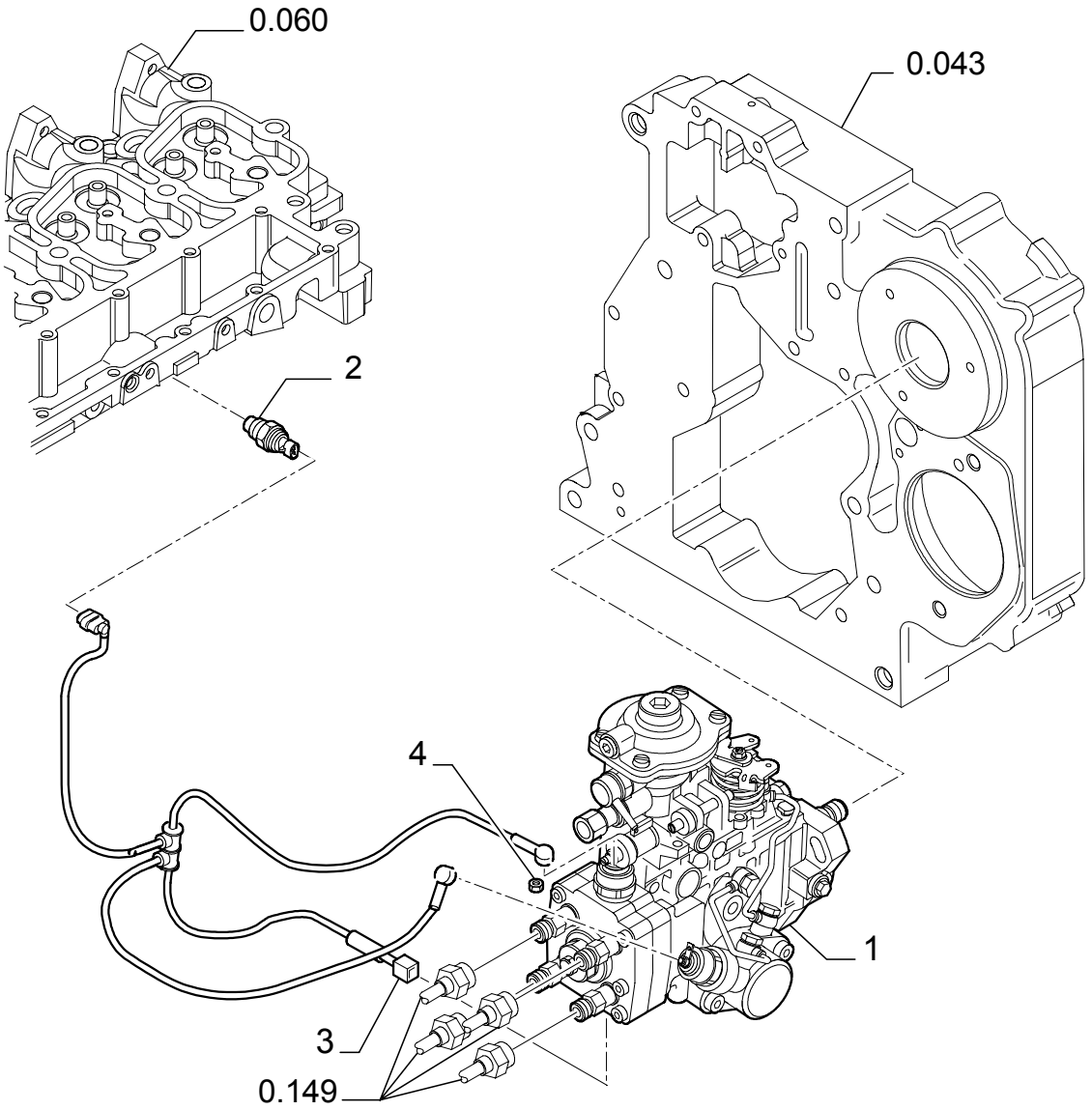

FUEL INJECTION PUMP

REF	FN	PART NUMBER	YR/SN	QTY	DESCRIPTION
1		504063450		1	PUMP, FUEL - ASSY
2		504032877		1	SENDER UNIT
3		504060728		1	CONNECTOR, WIRE
4		16979231		2	NUT

FUEL INJECTION SYSTEM

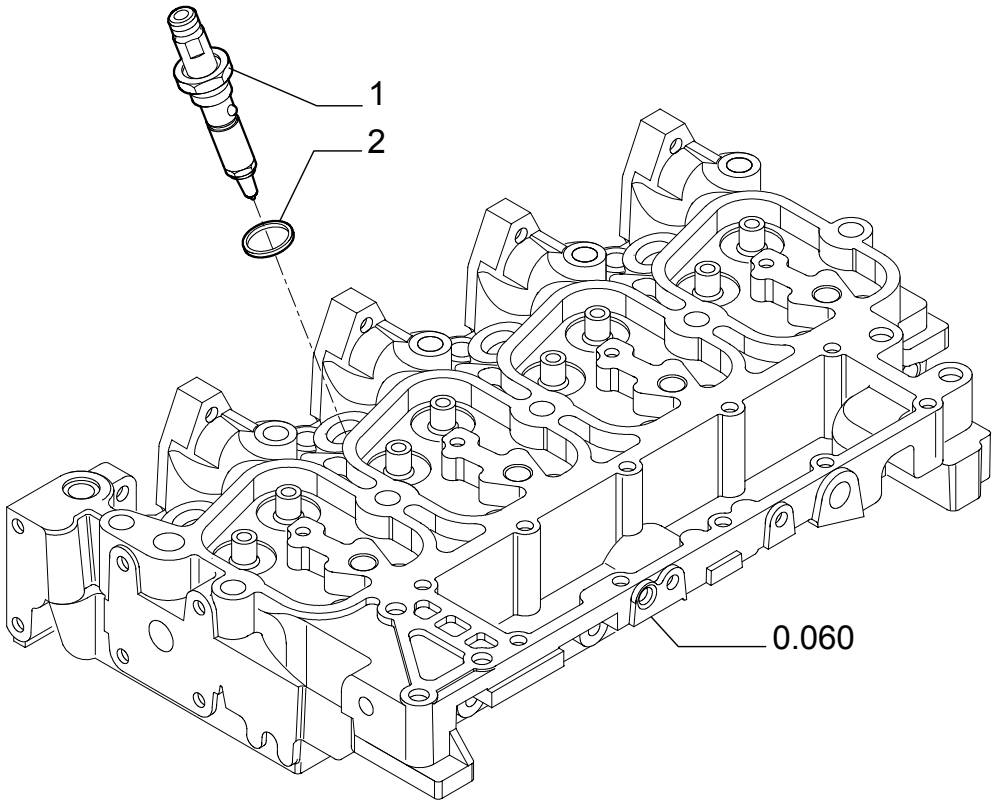

FUEL INJECTION SYSTEM

REF	FN	PART NUMBER	YR/SN	QTY	DESCRIPTION
1		500390441		4	INJECTOR, FUEL SYSTEM
2		4895297		4	GASKET

FUEL INJECTION SYSTEM

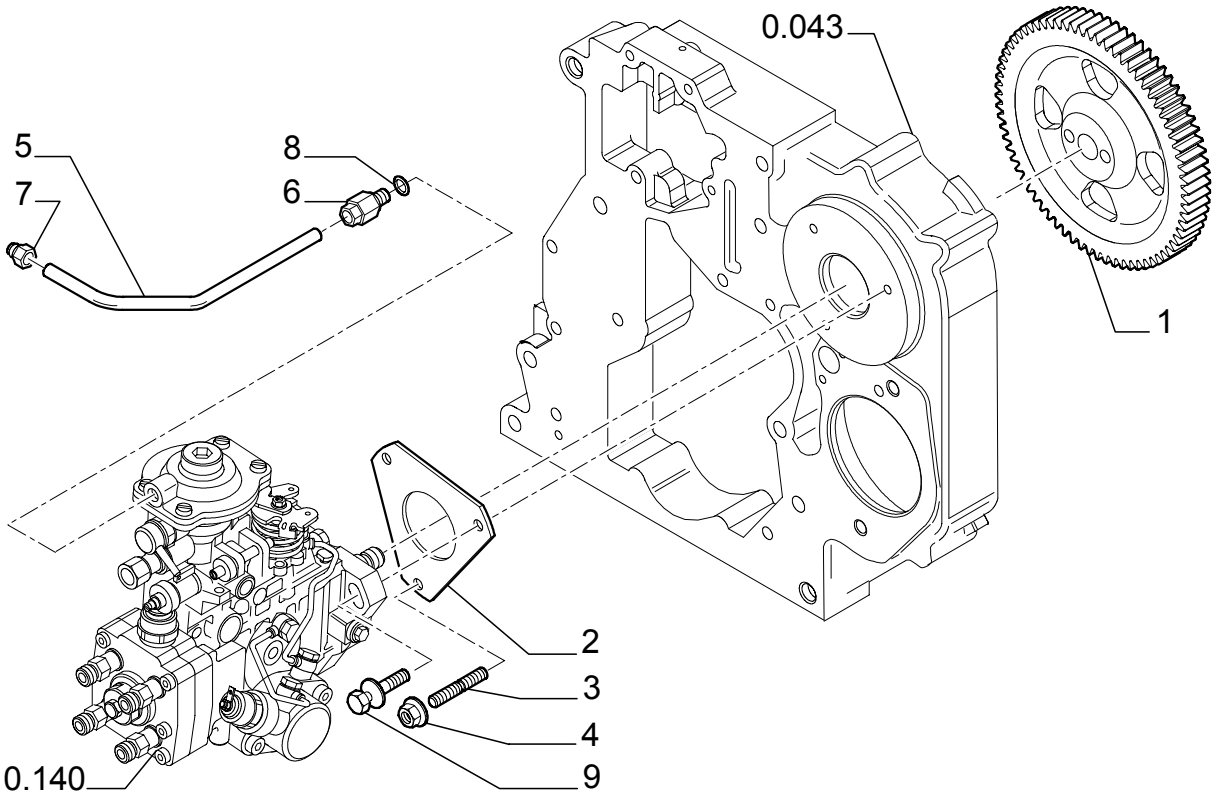

FUEL INJECTION SYSTEM

REF	FN	PART NUMBER	YR/SN	QTY	DESCRIPTION
1		4894774		1	GEAR, DRIVEN
2		4895090		1	GASKET
3		16746824		2	STUD
4		4899003		2	NUT 8X1.25
5		504057292		1	TUBE, RIGID
6		4893518		1	CONNECTOR, HYD. 8X1
7		4896770		1	CONNECTOR, HYD. 10X1
8		4858605		1	GASKET
9		504065099		1	SCREW

FUEL INJECTION SYSTEM

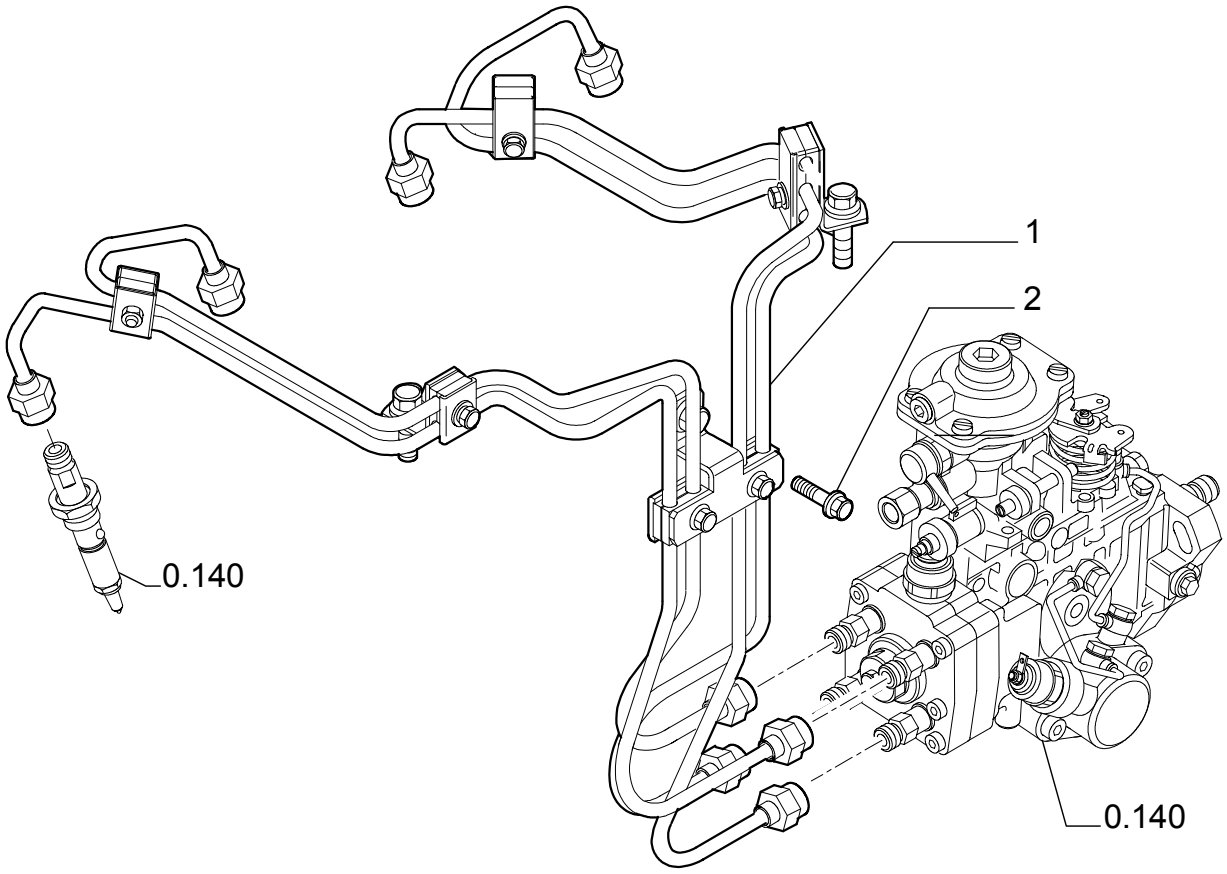

FUEL INJECTION SYSTEM

REF	FN	PART NUMBER	YR/SN	QTY	DESCRIPTION
1		504042116		1	KIT - ASSY
2		4899068		1	SCREW

0.200	01	p1	11/03

FUEL FILTER

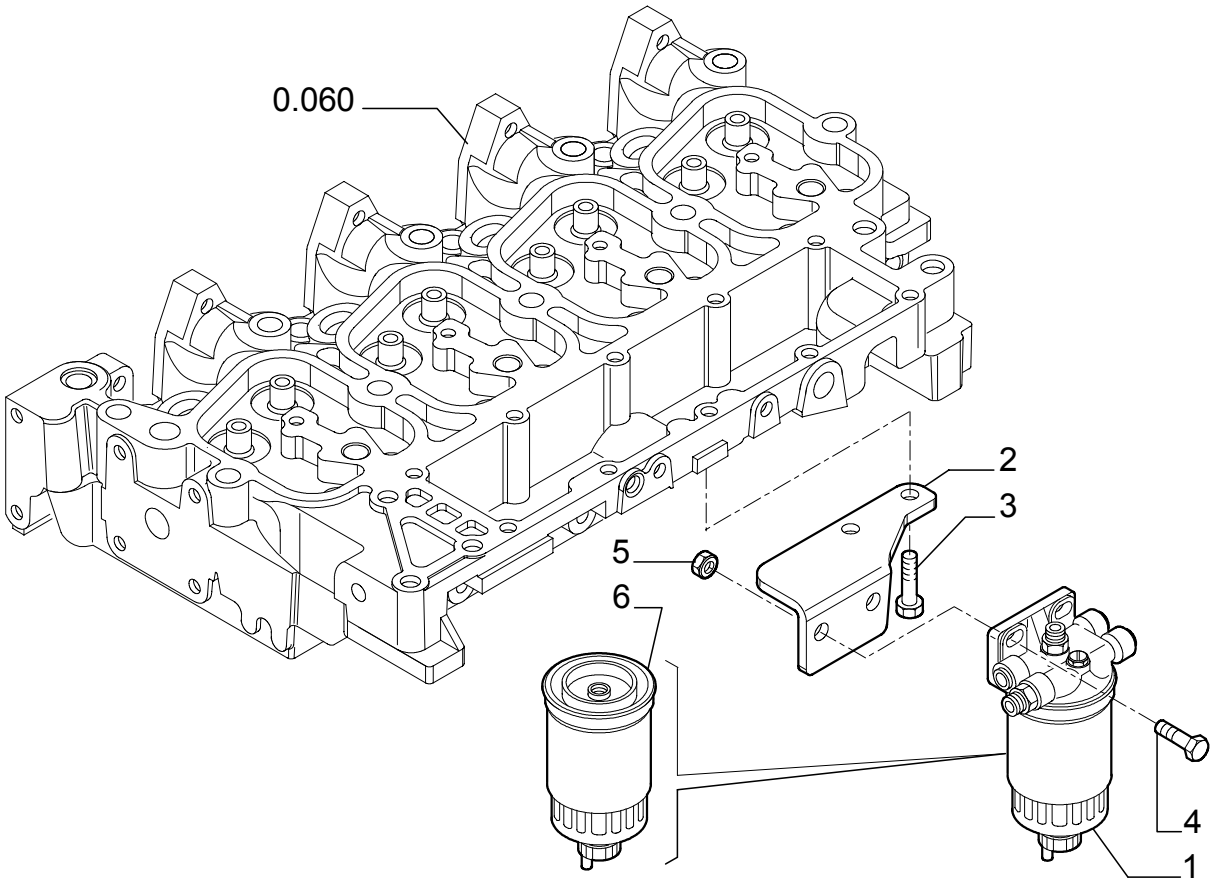

FUEL FILTER

REF	FN	PART NUMBER	YR/SN	QTY	DESCRIPTION
1		504066077		1	FILTER ASSY - ASSY
2		504001088		1	SUPPORT
3		4899068		2	SCREW 8X17
4		4899093		2	SCREW
5		4895166		2	NUT 10X1.5
6		1930010		1	FILTER, FUEL

FUEL PUMP

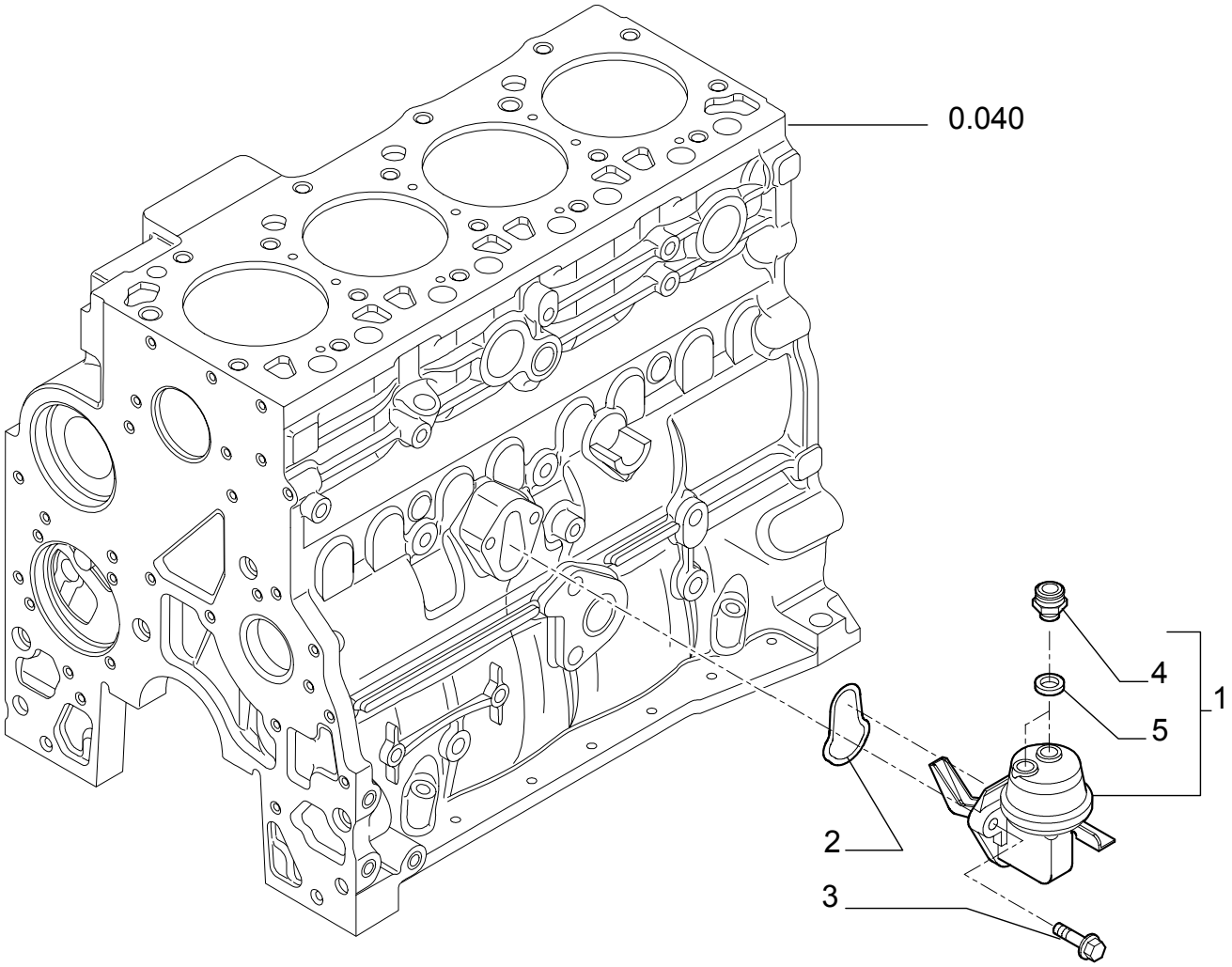

FUEL PUMP

REF	FN	PART NUMBER	YR/SN	QTY	DESCRIPTION
1		2830266		1	PUMP, FUEL - ASSY
2		2830156		1	O-RING
3		4899031		2	SCREW 8X25
4		4890964		2	CONNECTOR, HYD.
5		4894721		2	GASKET

FUEL INJECTION SYSTEM

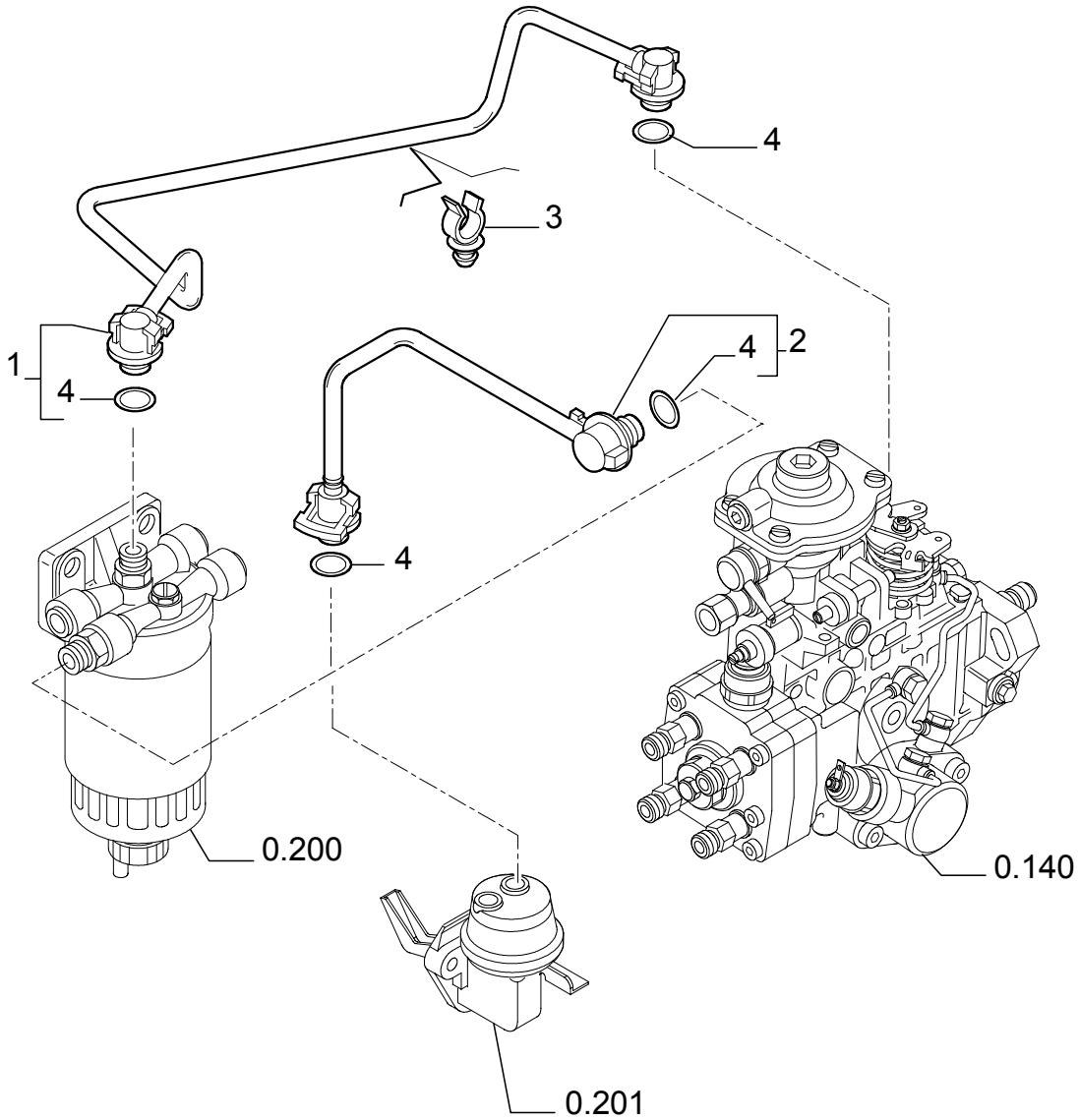

FUEL INJECTION SYSTEM

REF	FN	PART NUMBER	YR/SN	QTY	DESCRIPTION
1		504057288		1	TUBE - ASSY
2		504046458		1	TUBE, RIGID - ASSY
3		504065285		1	CLAMP
4		4894095		2	O-RING

FUEL INJECTION SYSTEM

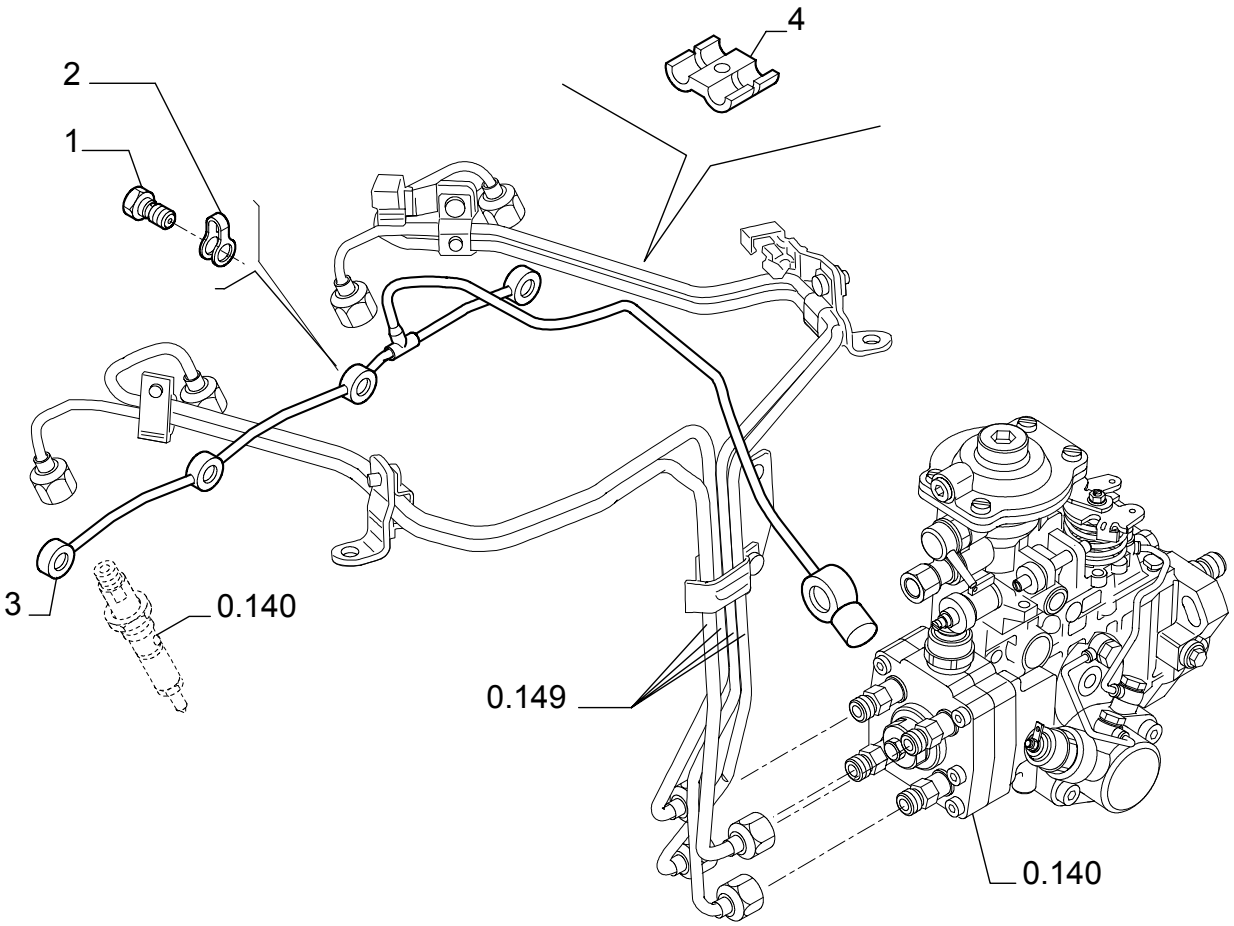

FUEL INJECTION SYSTEM

REF	FN	PART NUMBER	YR/SN	QTY	DESCRIPTION
1		4895244		4	JACK SCREW
2		4895305		4	GASKET
3		504051276		1	TUBE, RIGID
4		98429625		1	CLIP, SPRING

0.240	01	p1	04/03

TURBOCHARGER

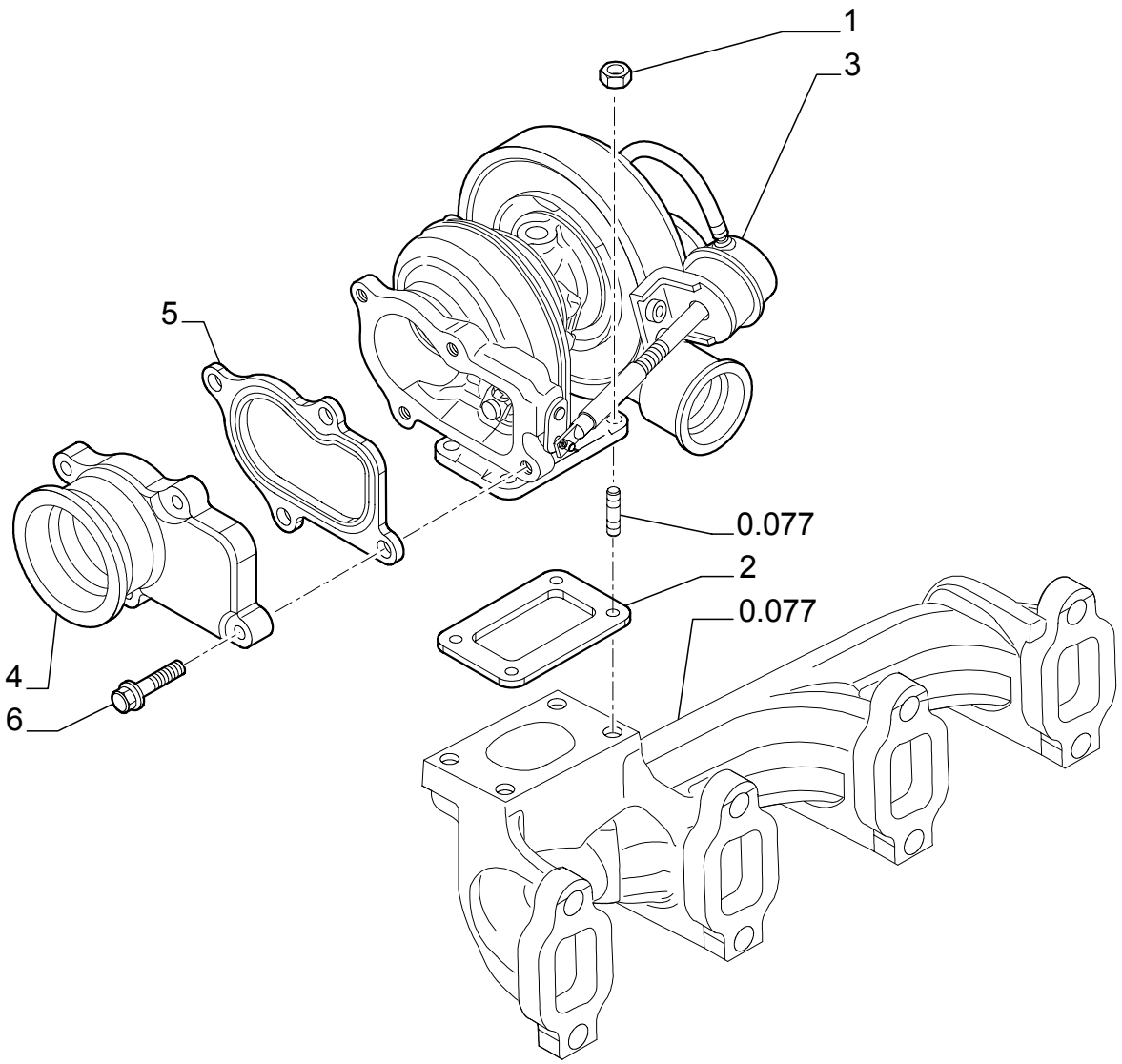

TURBOCHARGER

REF	FN	PART NUMBER	YR/SN	QTY	DESCRIPTION
1		4899118		4	NUT
2		4895133		1	GASKET
3		504061374		1	TURBOCHARGER
4		504010786		1	MANIFOLD, EXHAUST
5		504035094		1	GASKET
6		4898482		4	SCREW

0.270	01	p1	04/03

ENGINE, OIL

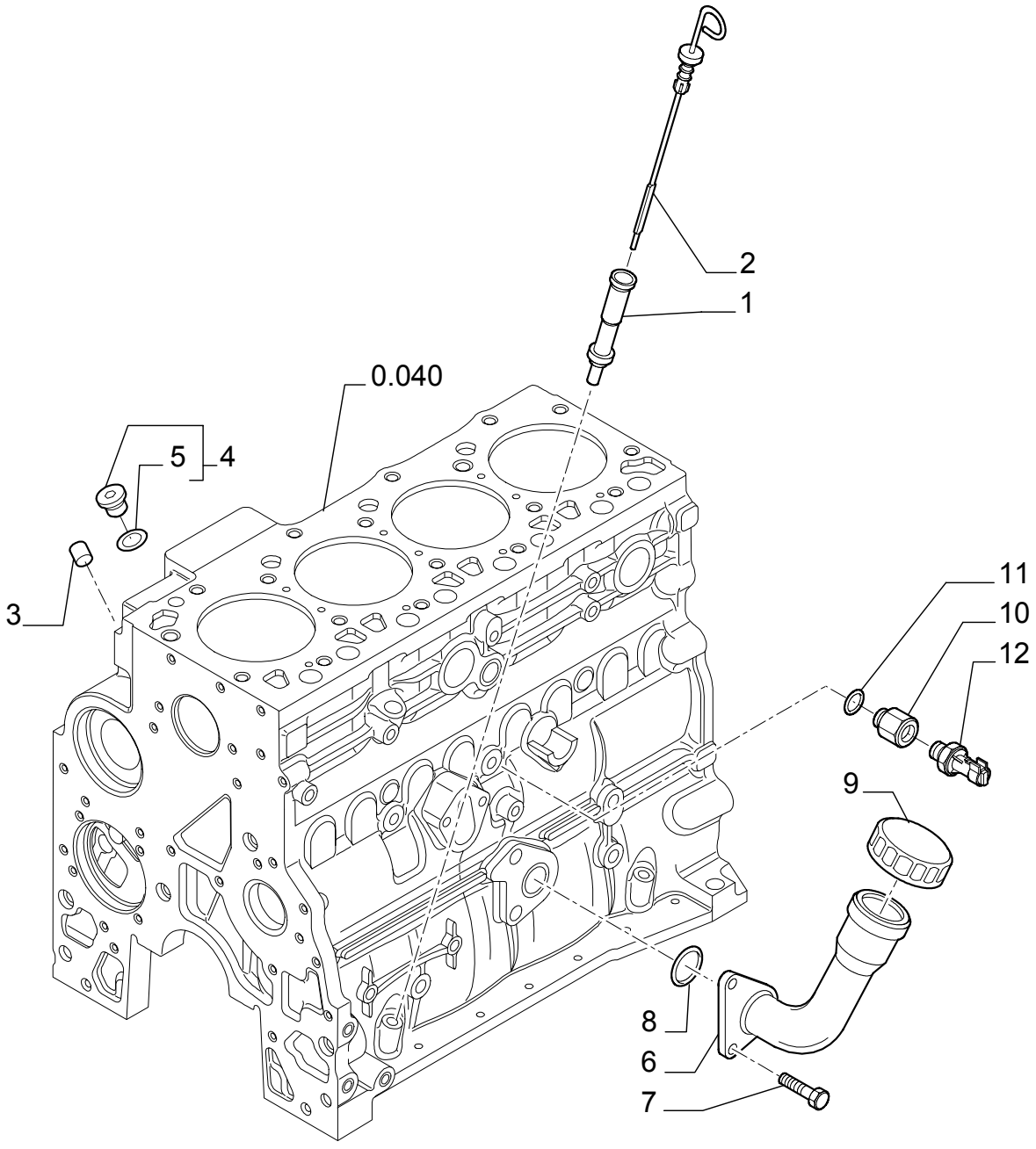

ENGINE, OIL

REF	FN	PART NUMBER	YR/SN	QTY	DESCRIPTION
1		504011329		1	TUBE, RIGID
2		504062795		1	DIPSTICK
3		4899036		1	PLUG
4		4897330		2	PLUG - ASSY
5		4895610		1	O-RING
6		504011338		1	TUBE, RIGID
7		16587924		2	SCREW
8		17283181		1	O-RING
9		98429552		1	CAP, INTRODUCTION
10		504036358		1	CONNECTOR, HYD.
11		4899115		1	O-RING
12	1	98442879		1	SWITCH
12	2	98445111		1	SWITCH

(1) Version : SIPEA
(2) Version : BORLETTI

OIL PUMP - ENGINE

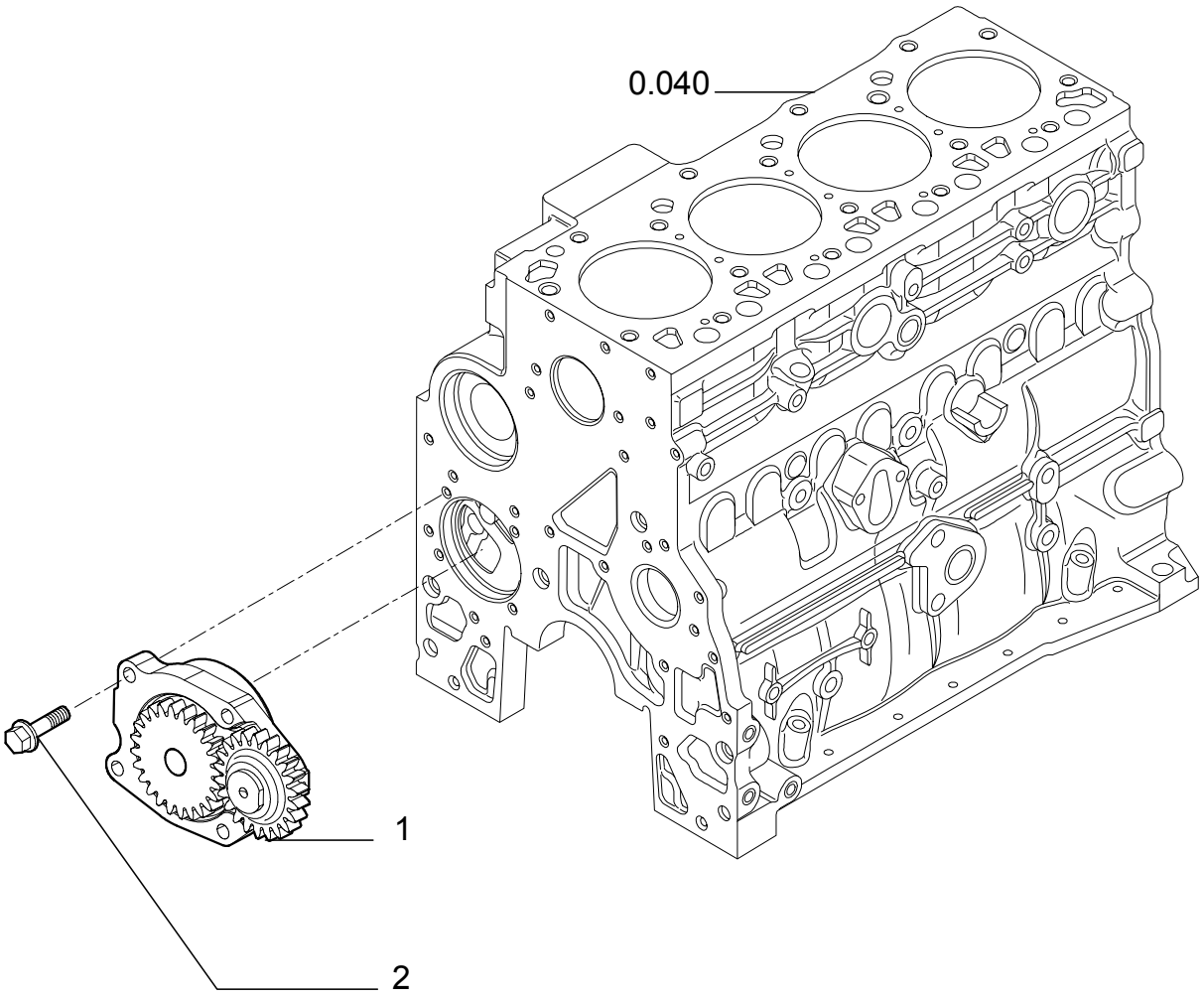

OIL PUMP - ENGINE

REF	FN	PART NUMBER	YR/SN	QTY	DESCRIPTION
1		4897480		1	PUMP, ENGINE OIL
2		4899090		4	SCREW

0.302	01	p1	02/04

OIL FILTERS - ENGINE

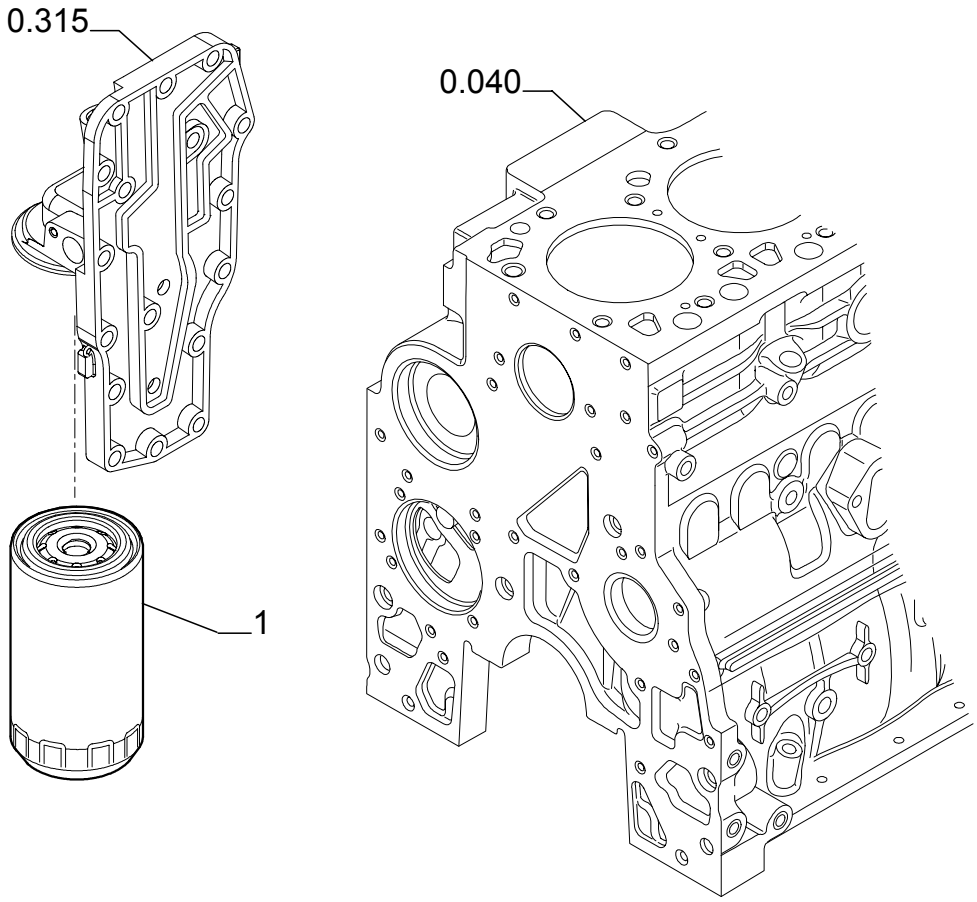

OIL FILTERS - ENGINE

REF	FN	PART NUMBER	YR/SN	QTY	DESCRIPTION
1		87803260		1	FILTER, ENGINE OIL

0.305	01	p1	03/04

PIPING - ENGINE OIL

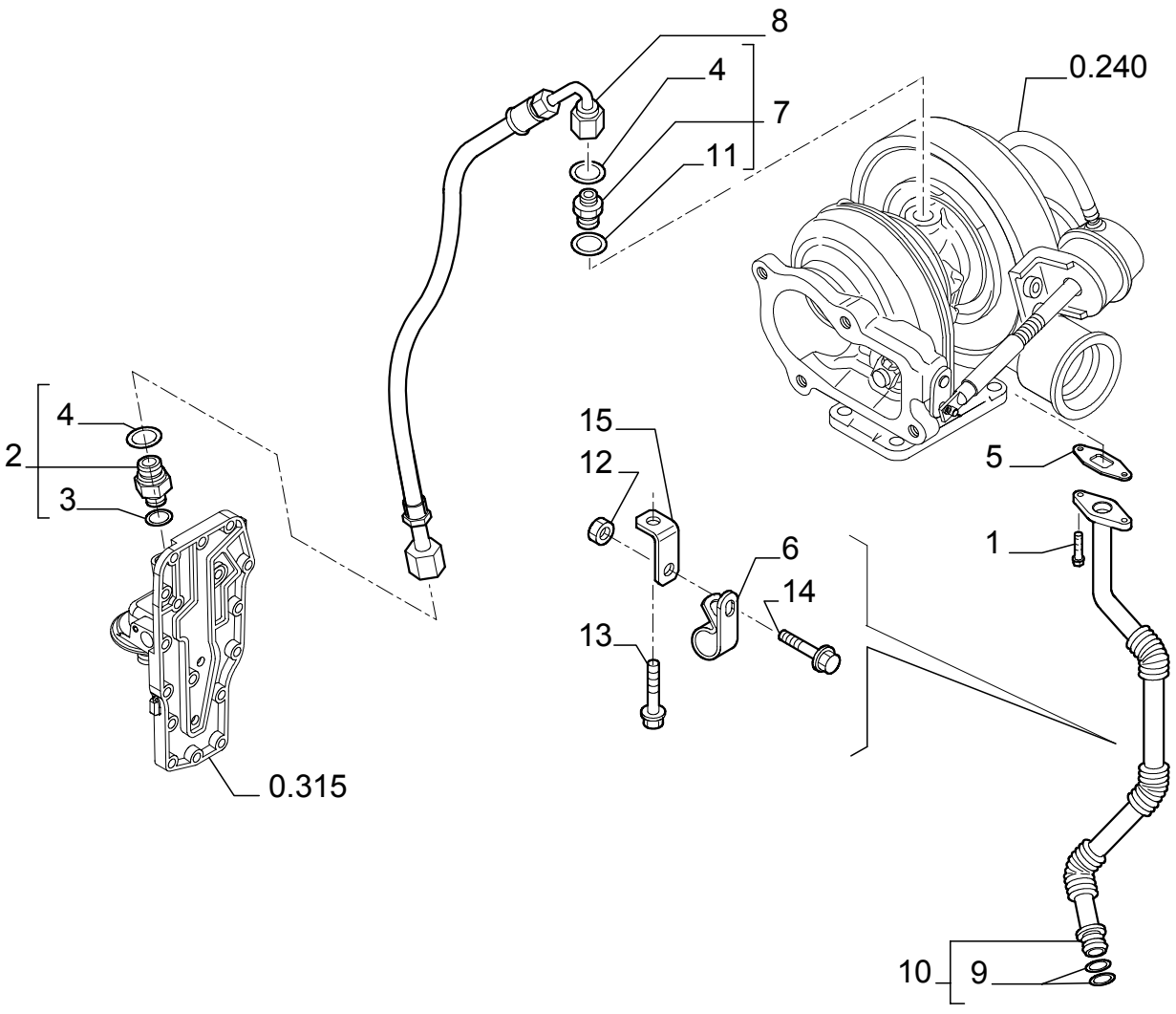

PIPING - ENGINE OIL

REF	FN	PART NUMBER	YR/SN	QTY	DESCRIPTION
1		4895164		2	SCREW
2		4895107		1	CONNECTOR, HYD. - ASSY
3		4899107		1	O-RING
4		4899108		2	O-RING
5		4899467		1	GASKET
6		4899519		1	BRACKET
7		4899106		1	CONNECTOR, HYD.
8		504053173		1	HOSE ASSY.
9		4899058		2	O-RING M17.12 ID x 2.62 Thk
10		504053166		1	TUBE, RIGID - ASSY
11		4899121		1	GASKET
12		17044625		1	NUT M6
13		18138324		1	SCREW M8X1.25X16
14		18137824		1	SCREW M8X16
15		504053894		1	BRACKET

0.315	01	p1	03/04

OIL FILTER AND COOLER

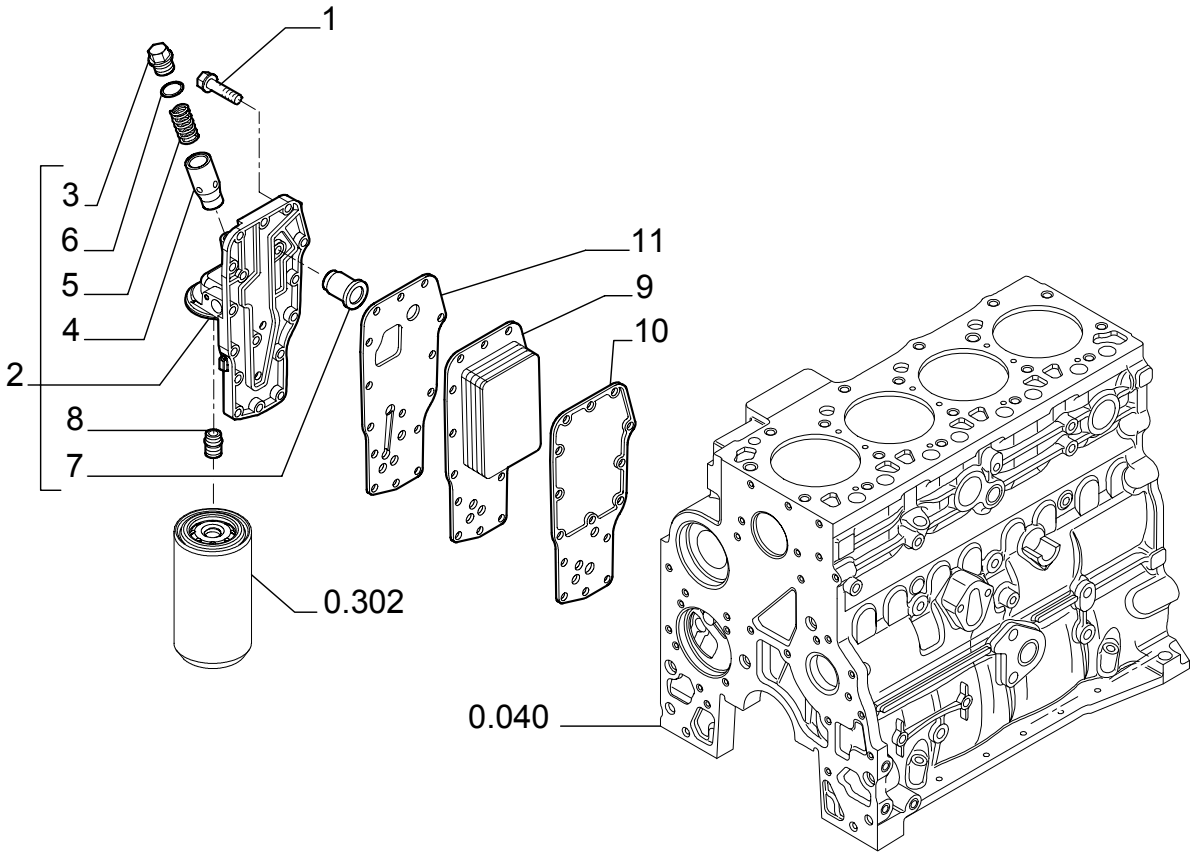

OIL FILTER AND COOLER

REF	FN	PART NUMBER	YR/SN	QTY	DESCRIPTION
1		4899019		15	SCREW 8X35
2		4892774		1	HEAT EXCHANGER - ASSY
3		4895043		1	PLUG
4		4896404		1	HOUSING
5		4895045		1	SPRING, VALVE
6		4899035		1	O-RING M18.39 ID x 2.69 Thk
7		4896410		1	VALVE, HYDRAULIC
8		4893391		1	CONNECTOR, HYD.
9		4896406		1	RADIATOR
10		4895742		1	GASKET
11		4896409		1	GASKET

WATER PUMP

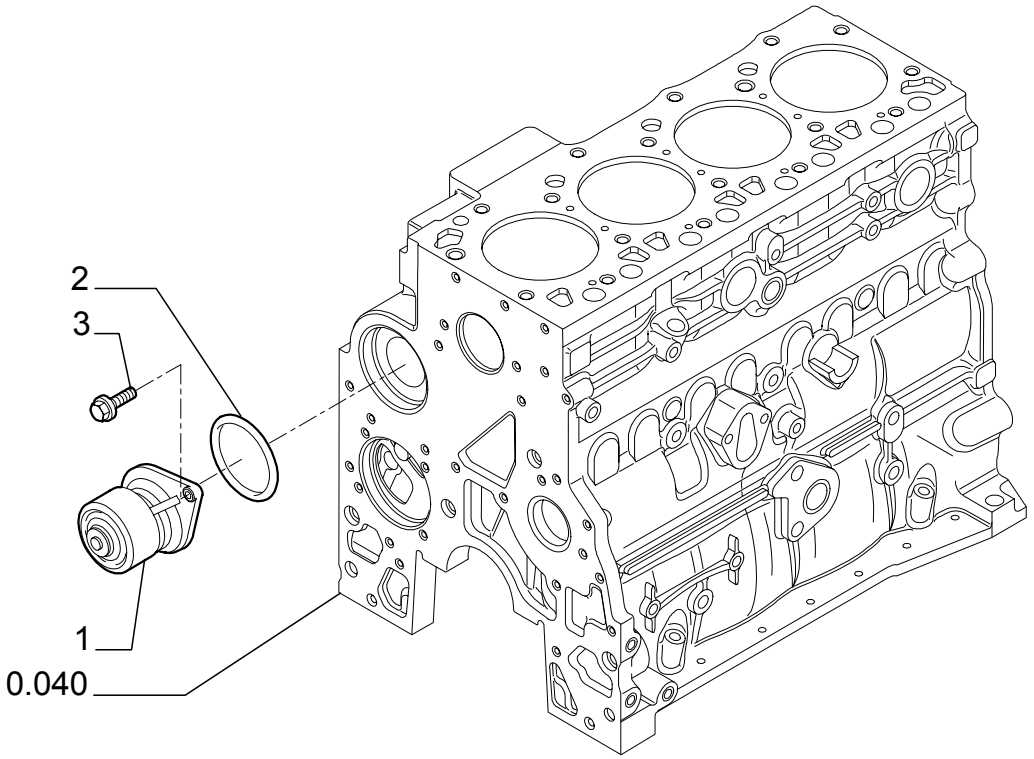

WATER PUMP

REF	FN	PART NUMBER	YR/SN	QTY	DESCRIPTION
1		4891252		1	PUMP, WATER
2		504062856		1	GASKET
3		4899031		2	SCREW 8X25

0.323	01	p1	04/03

COOLING SYSTEM - ENGINE

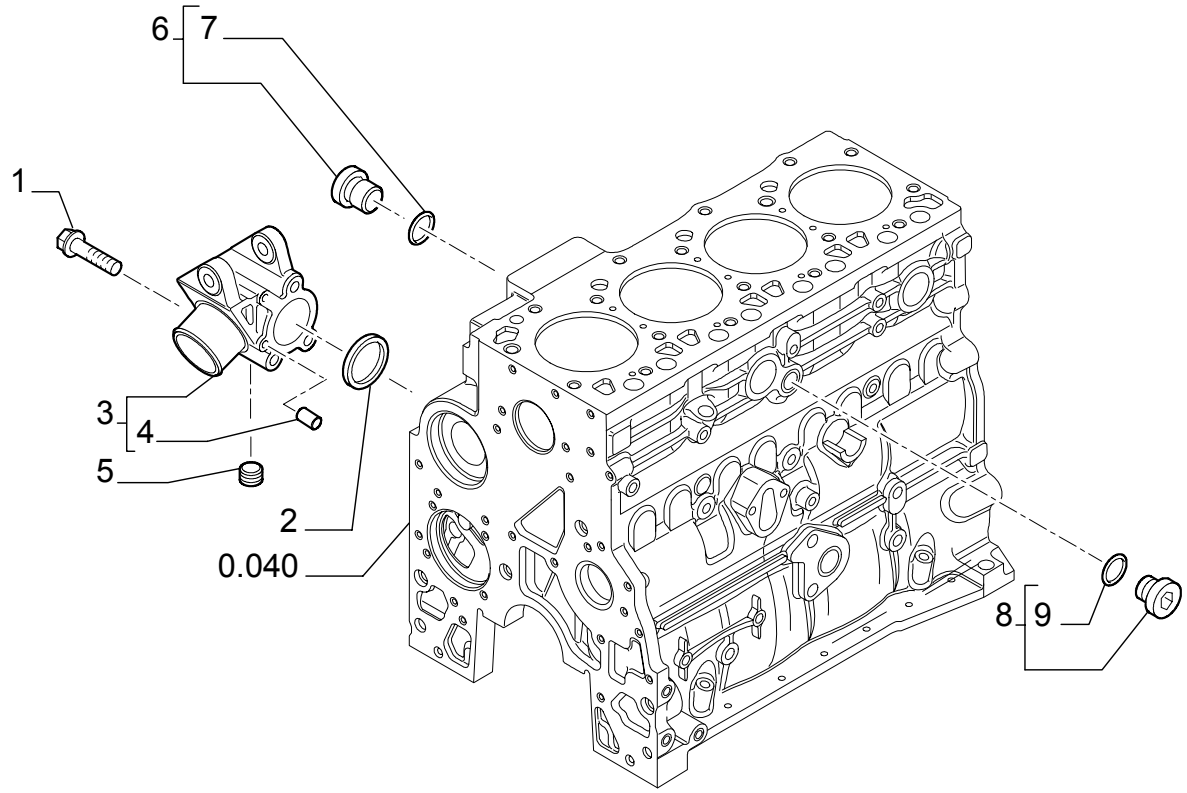

COOLING SYSTEM - ENGINE

REF	FN	PART NUMBER	YR/SN	QTY	DESCRIPTION
1		4899109		3	SCREW
2		4895121		1	GASKET
3		504064336		1	SUPPORT - ASSY
4		4895576		2	DOWEL
5		504074178		1	PLUG
6		4895392		1	PLUG - ASSY M18X1.5
7		4895393		1	O-RING
8		4895623		1	PLUG - ASSY
9		4895625		1	O-RING

0.326	01	p1	04/03

THERMOSTAT - ENGINE COOLING SYSTEM

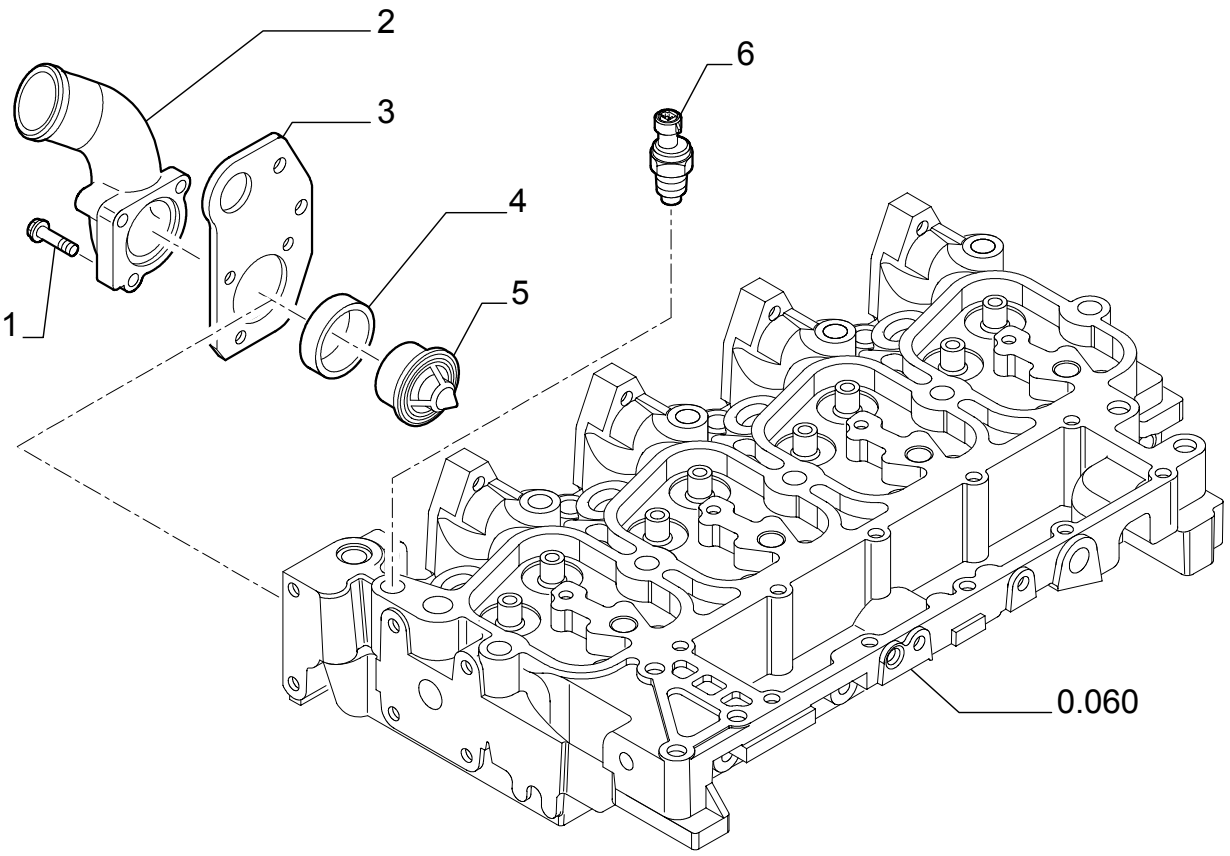

THERMOSTAT - ENGINE COOLING SYSTEM

REF	FN	PART NUMBER	YR/SN	QTY	DESCRIPTION
1		16586624		1	SCREW 8X35
1		16592624		2	SCREW
2		504051210		1	ELBOW
3		504052013		1	RING, LIFTING
4		504053512		1	GASKET
5		504038890		1	THERMOSTAT
6		504025599		1	SENDER, TEMPERATURE

0.340	01	p1	11/03

WATER PUMP - CONTROL

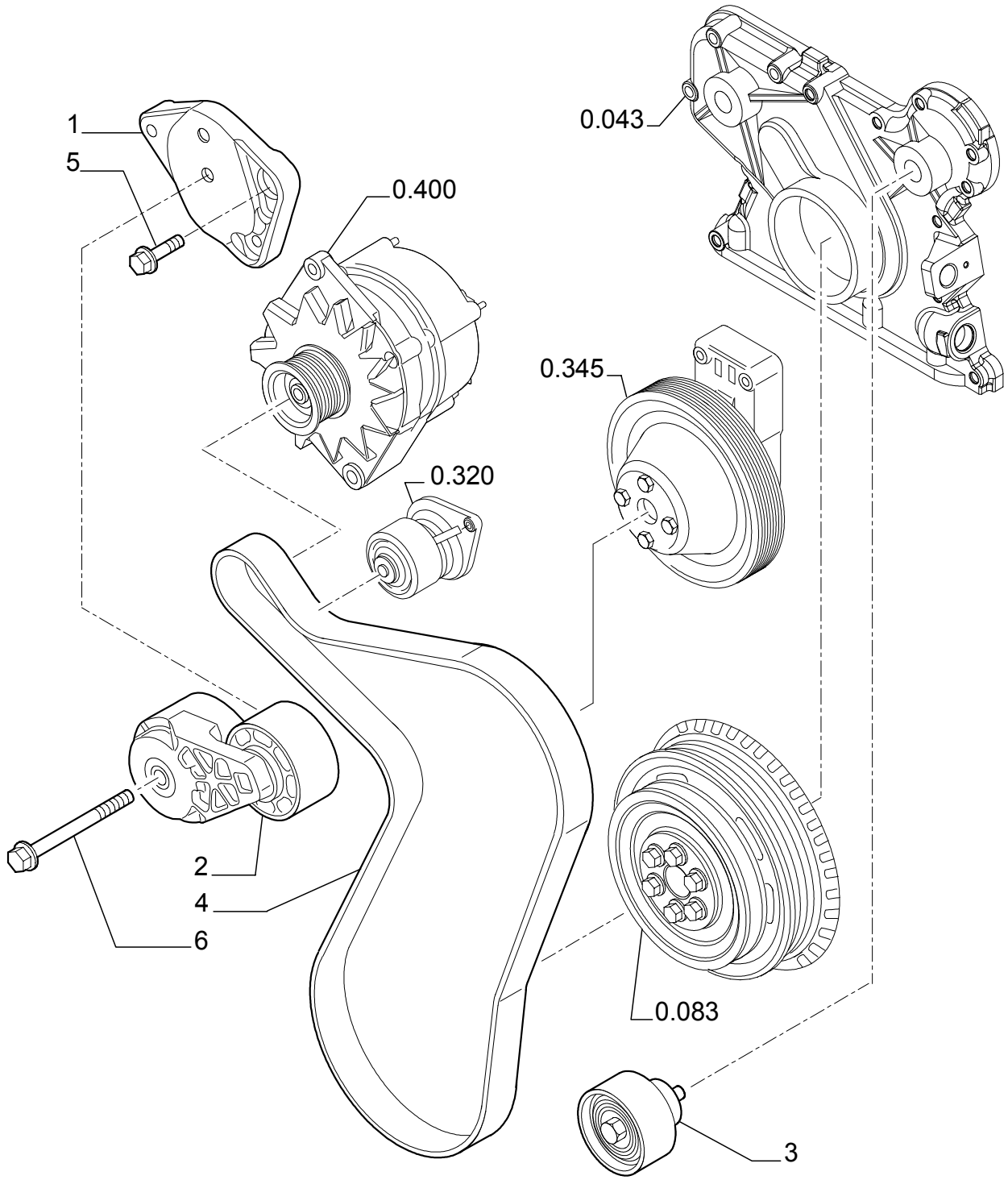

WATER PUMP - CONTROL

REF	FN	PART NUMBER	YR/SN	QTY	DESCRIPTION
1		504064340		1	BRACKET
2		504028028		1	TENSIONER, BELT
3		{504065880}		1	PULLEY
4		504064342		1	BELT
5		4899031		1	SCREW
6		4899109		1	SCREW

0.345	01	p1	04/03

FAN DRIVE

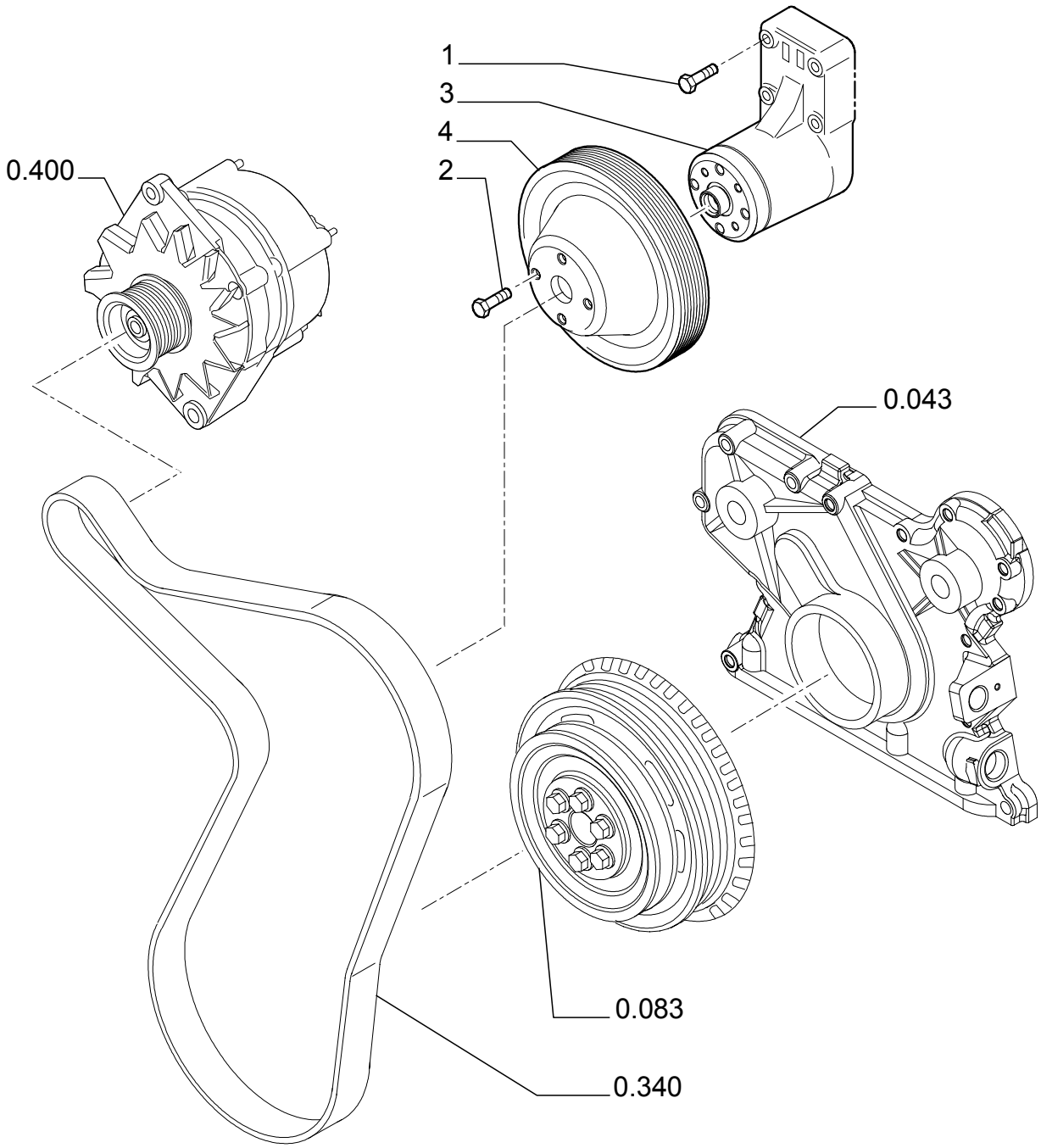

FAN DRIVE

REF	FN	PART NUMBER	YR/SN	QTY	DESCRIPTION
1		4899053		4	SCREW
2		4895291		4	SCREW
3		504035148		1	SUPPORT M10X1.5X80
4		4895301		1	PULLEY

0.350	01	p1	04/03

POWER TAKE-OFF

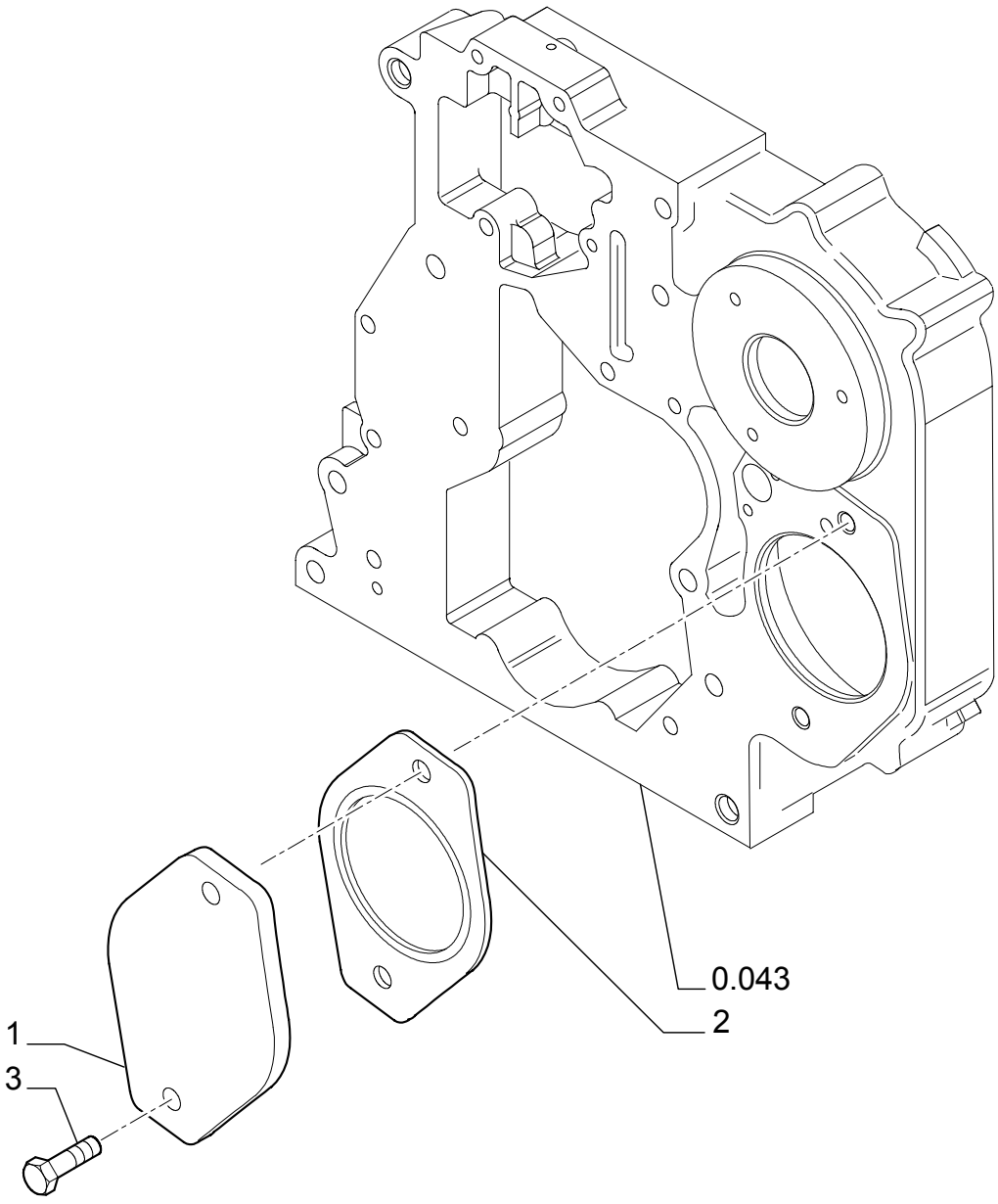

POWER TAKE-OFF

REF	FN	PART NUMBER	YR/SN	QTY	DESCRIPTION
1		504049033		1	COVER
2		4896897		1	GASKET
3		4895327		2	SCREW

0.360	01	p1	04/03

STARTER MOTOR

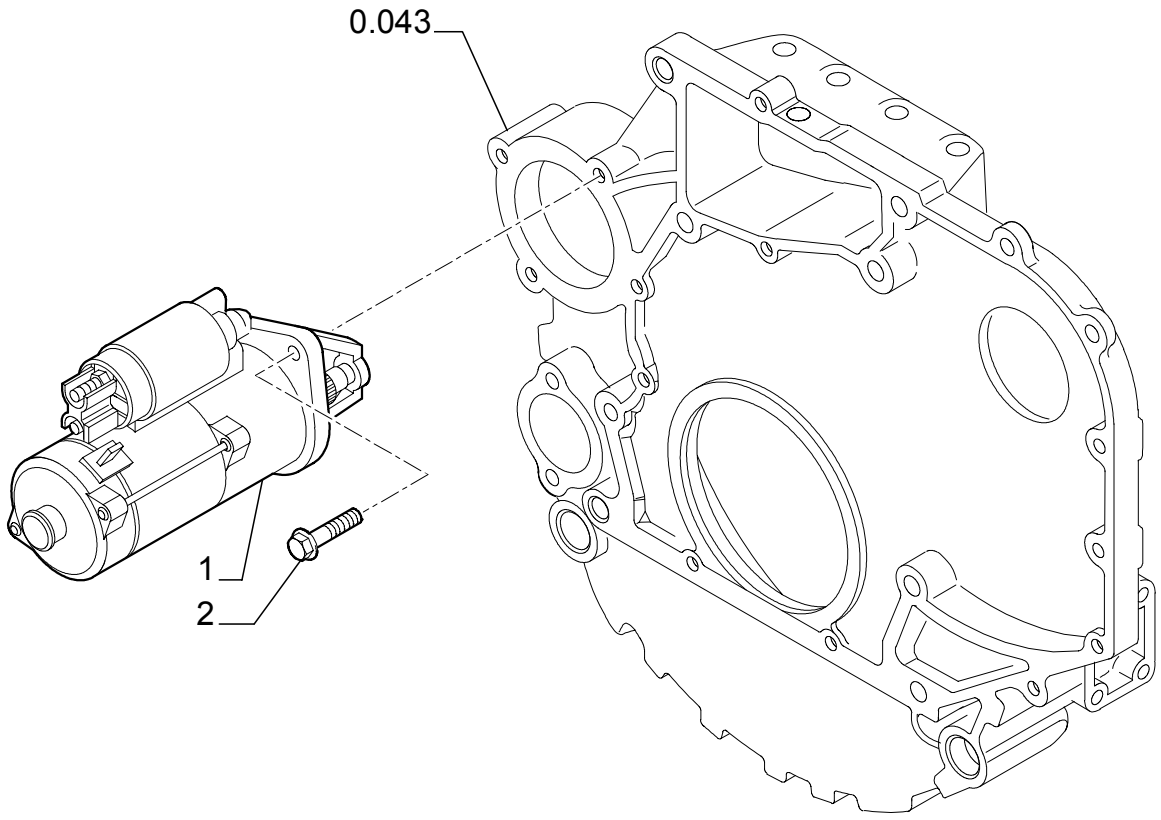

STARTER MOTOR

REF	FN	PART NUMBER	YR/SN	QTY	DESCRIPTION
1		504031929		1	MOTOR, STARTER
2		18139524		3	SCREW M10X1.5X30

ALTERNATOR

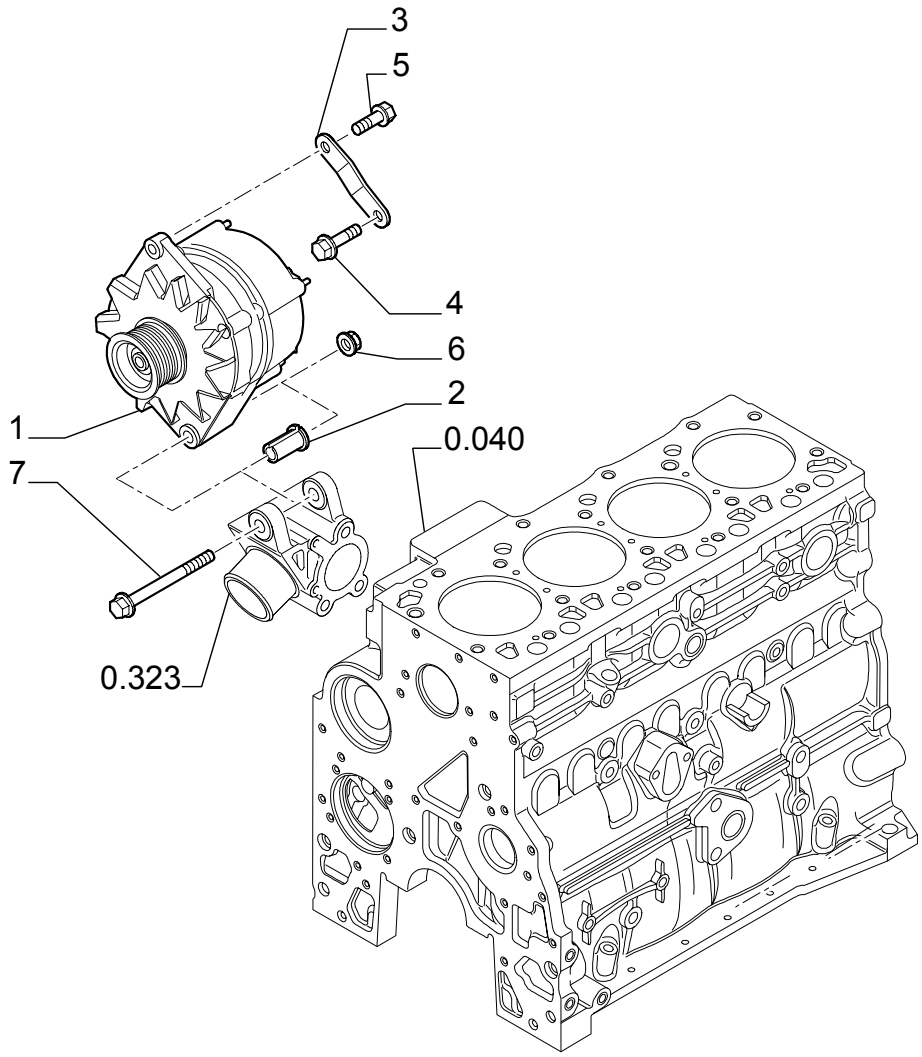

ALTERNATOR

REF	FN	PART NUMBER	YR/SN	QTY	DESCRIPTION
1	1			1	- ASSY
2		{504060839}		1	
3		504061464		1	BRACKET
4		4895291		1	SCREW M10X1.5X20
5		4899031		1	SCREW M8X25
6		4895166		1	NUT M10X1.5
7		4895538		1	SCREW

(1) SEE PAGE 636-637/A 04, 638-639 03

0.450	01	p1	04/03

ENGINE - LIFT HOOK

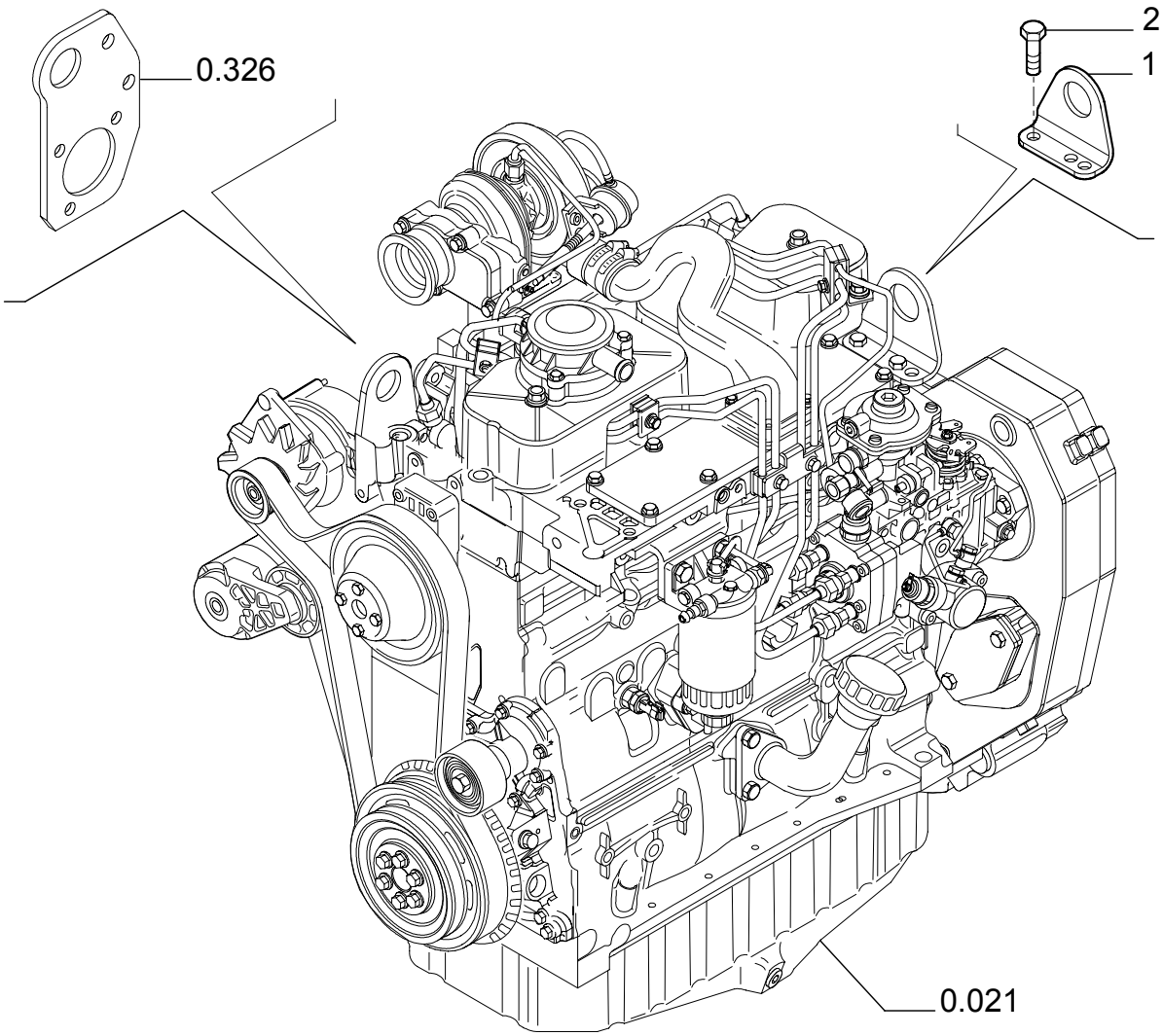

ENGINE - LIFT HOOK

REF	FN	PART NUMBER	YR/SN	QTY	DESCRIPTION
1		504026078		1	RING, LIFTING
2		4899073		2	SCREW

ACCESSORY ENGINE

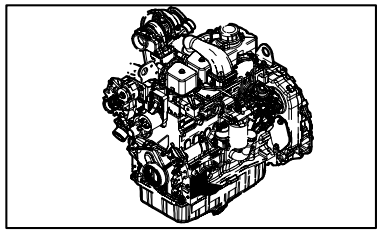

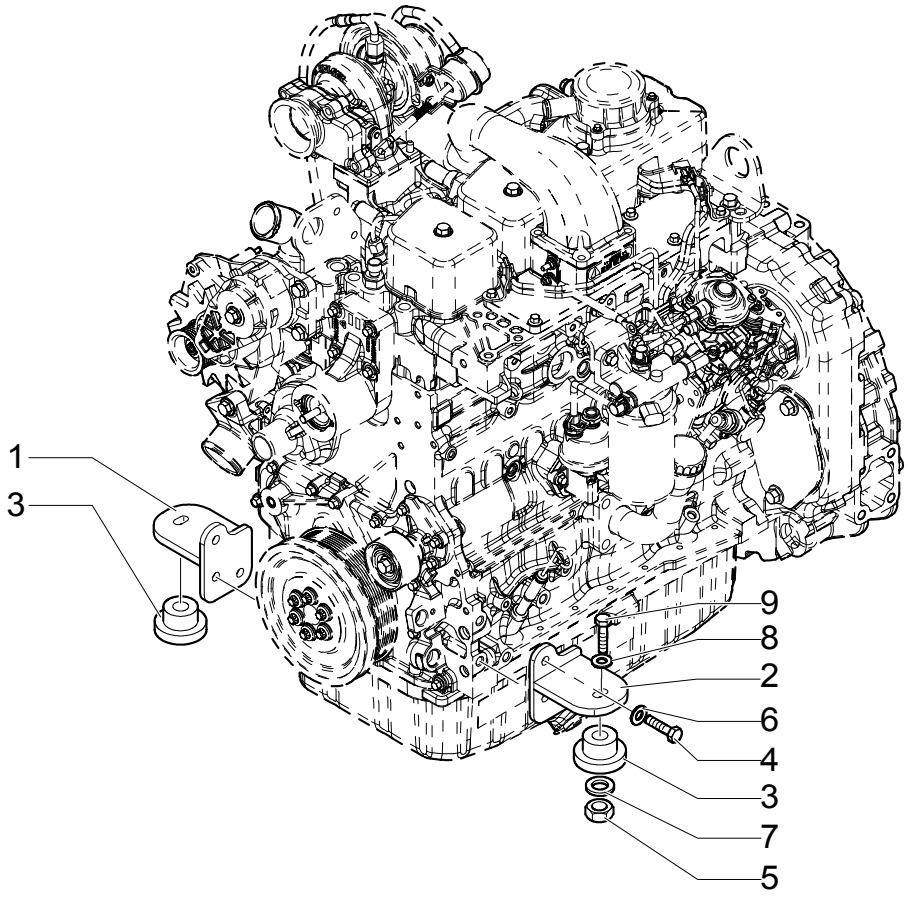

ACCESSORY ENGINE

REF	FN	PART NUMBER	YR/SN	QTY	DESCRIPTION
1		87407275		1	BRACKET
2		87407276		1	BRACKET
3		87416966		2	SUPPORT
4		11112421		6	SCREW
5		16105011		2	NUT
6		47048976		6	WASHER
7		85801585		2	WASHER, SEALING 65mm OD
8		85802618		2	WASHER, SEALING
9		87410647		2	SCREW

ACCESSORY ENGINE - VENTILATOR

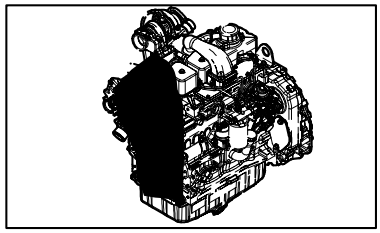

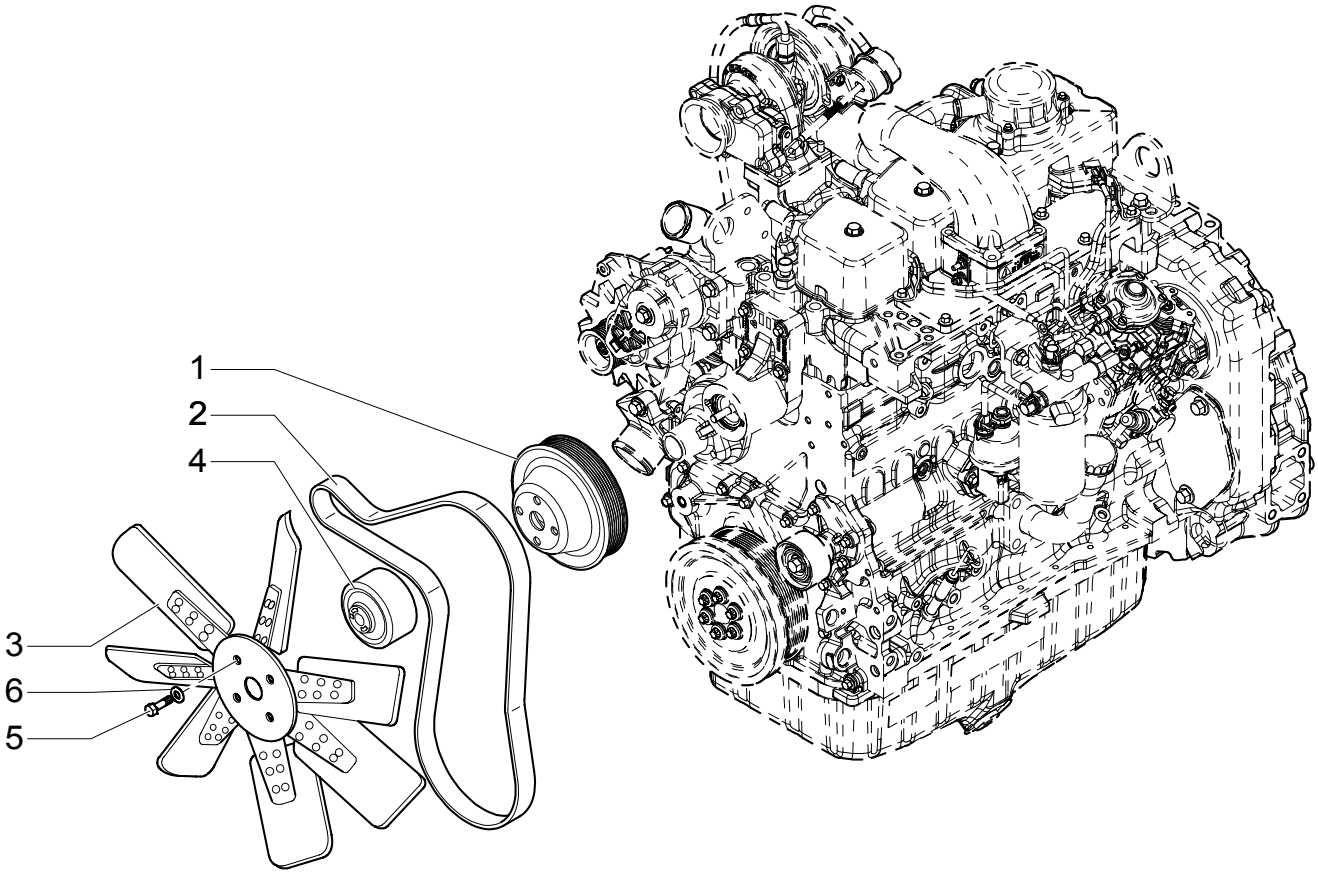

ACCESSORY ENGINE - VENTILATOR

REF	FN	PART NUMBER	YR/SN	QTY	DESCRIPTION
1		87410253		1	KIT
2		87411602		1	BELT
3		85825164		1	FAN
4		87410667		1	SPACER
5		47049101		4	SCREW
6		47049372		4	WASHER

Without Air Conditioner

ACCESSORY ENGINE - STARTER

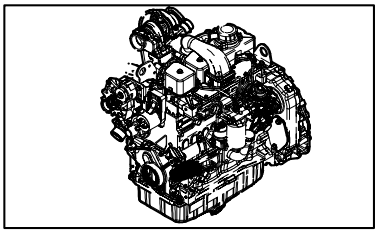

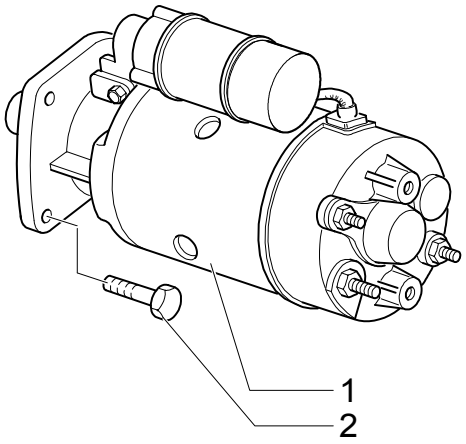

ACCESSORY ENGINE - STARTER

REF	FN	PART NUMBER	YR/SN	QTY	DESCRIPTION
1		86992395		1	MOTOR, STARTER
2		86511845		1	SCREW

ACCESSORY ENGINE- ALTERNATOR

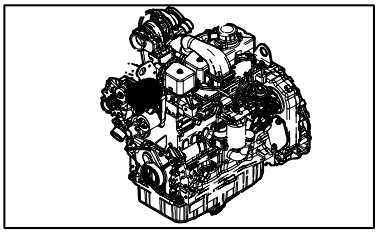

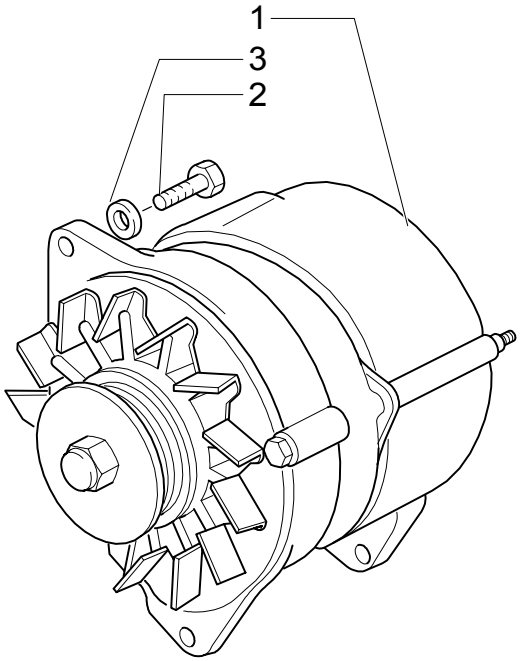

ACCESSORY ENGINE- ALTERNATOR

REF	FN	PART NUMBER	YR/SN	QTY	DESCRIPTION
1		87422777		1	ALTERNATOR
2		47049160		1	SCREW M8 x 20
2		16043621		1	SCREW M8 x 1.25 x 25
3		47048992		1	WASHER

ACCESSORY ENGINE - BRACKET MUFFLER

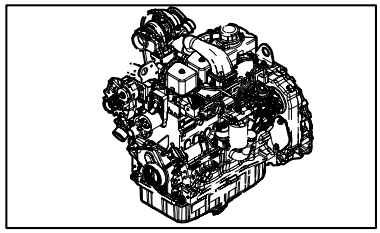

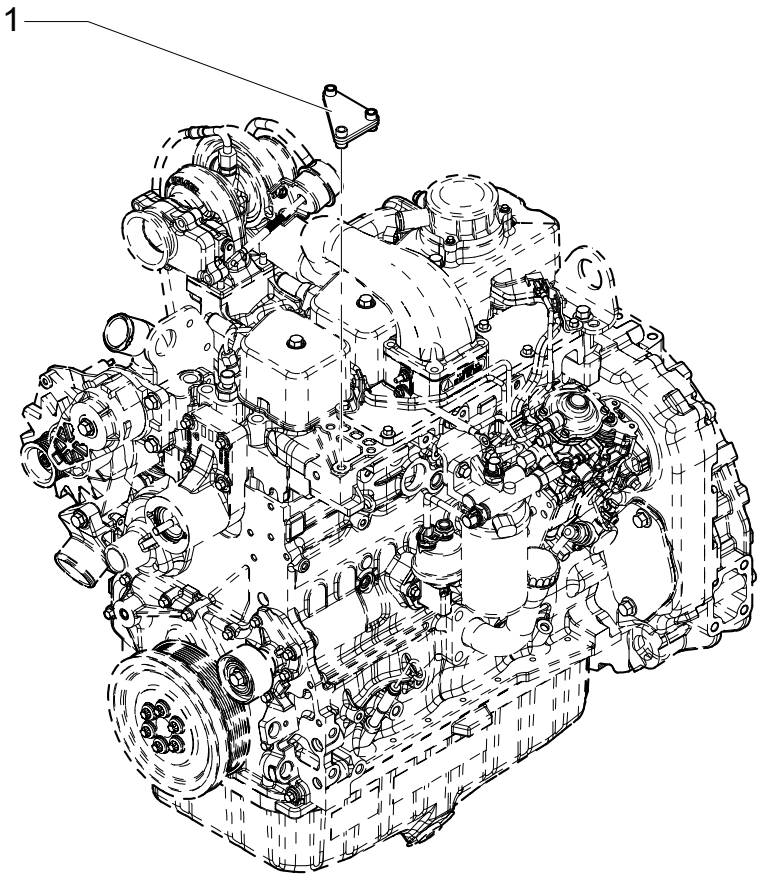

ACCESSORY ENGINE - BRACKET MUFFLER

REF	FN	PART NUMBER	YR/SN	QTY	DESCRIPTION
1		87405380		1	ARM

Without Air Conditioner

LB75.B

SECTION INDEX

SEC. 02	00	FUEL TANK - MUFFLER - RADIATOR - AIR CLEANER - CHASSIS
1.14.0	01	FUEL TANK & RELATED PARTS
1.15.0	01	MUFFLER & EXTENSIONS
1.15.0	02	MUFFLER & EXTENSIONS
1.17.2	01	EXPANSION TANK
1.19.1	01	AIR CLEANER & HOSES
1.21.5/ 1	01	FRAME (CENTER PIVOT)
175	01	AIR INTAKE CAP & PRE-CLEANER
176	01	AIR INTAKE CAP & PRE-CLEANER
203	01	FRONT WEIGHTS
215	01	FRONT WEIGHTS
636	01	RADIATOR
636	02	RADIATOR
637	01	RADIATOR

FUEL TANK - MUFFLER - RADIATOR - AIR CLEANER - CHASSIS

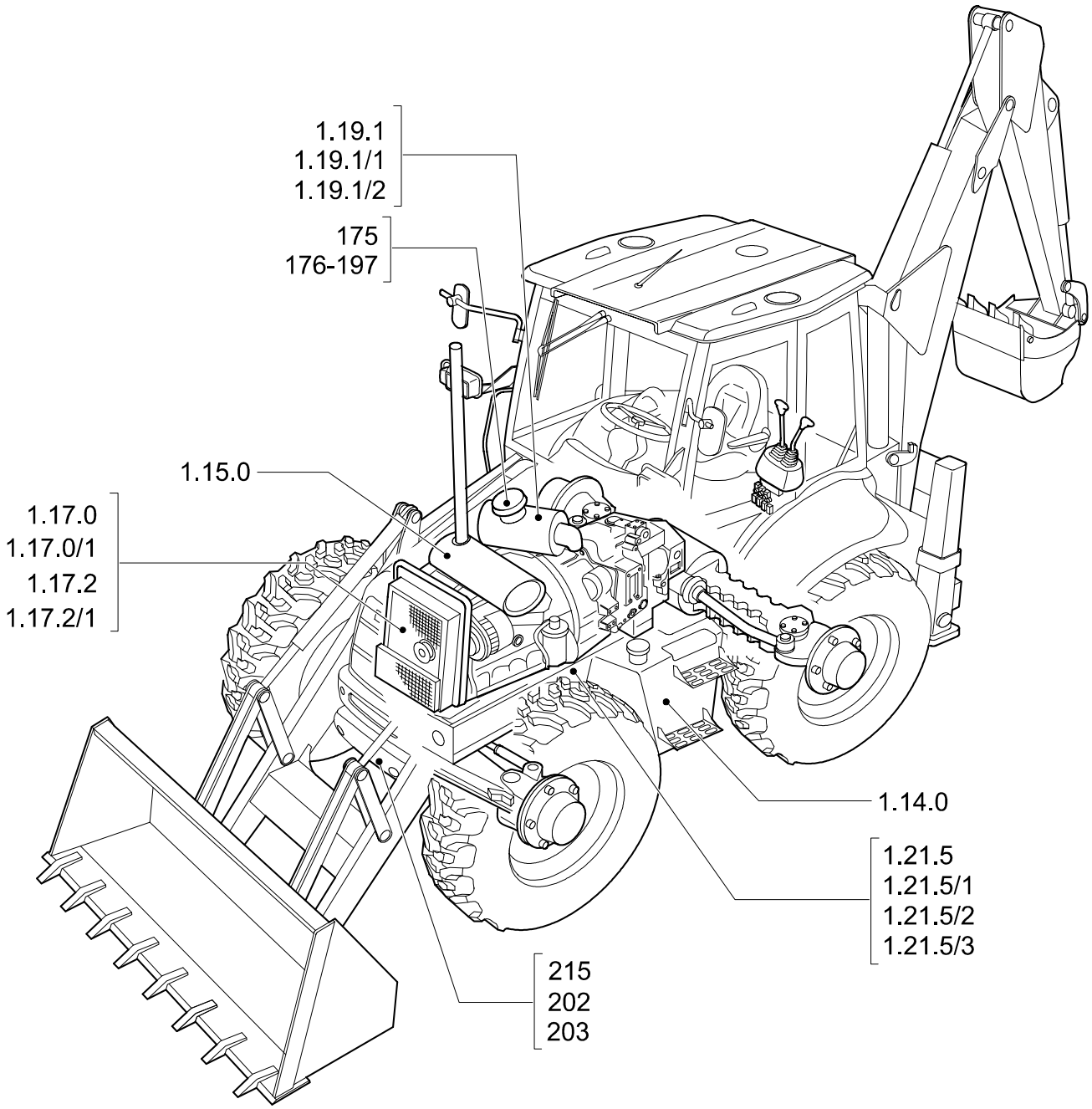

FUEL TANK - MUFFLER - RADIATOR - AIR CLEANER - CHASSIS

REF	FN	PART NUMBER	YR/SN	QTY	DESCRIPTION

1.14.0	01	p1	08/03

FUEL TANK & RELATED PARTS

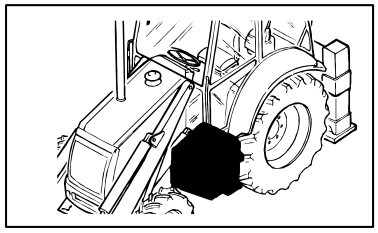

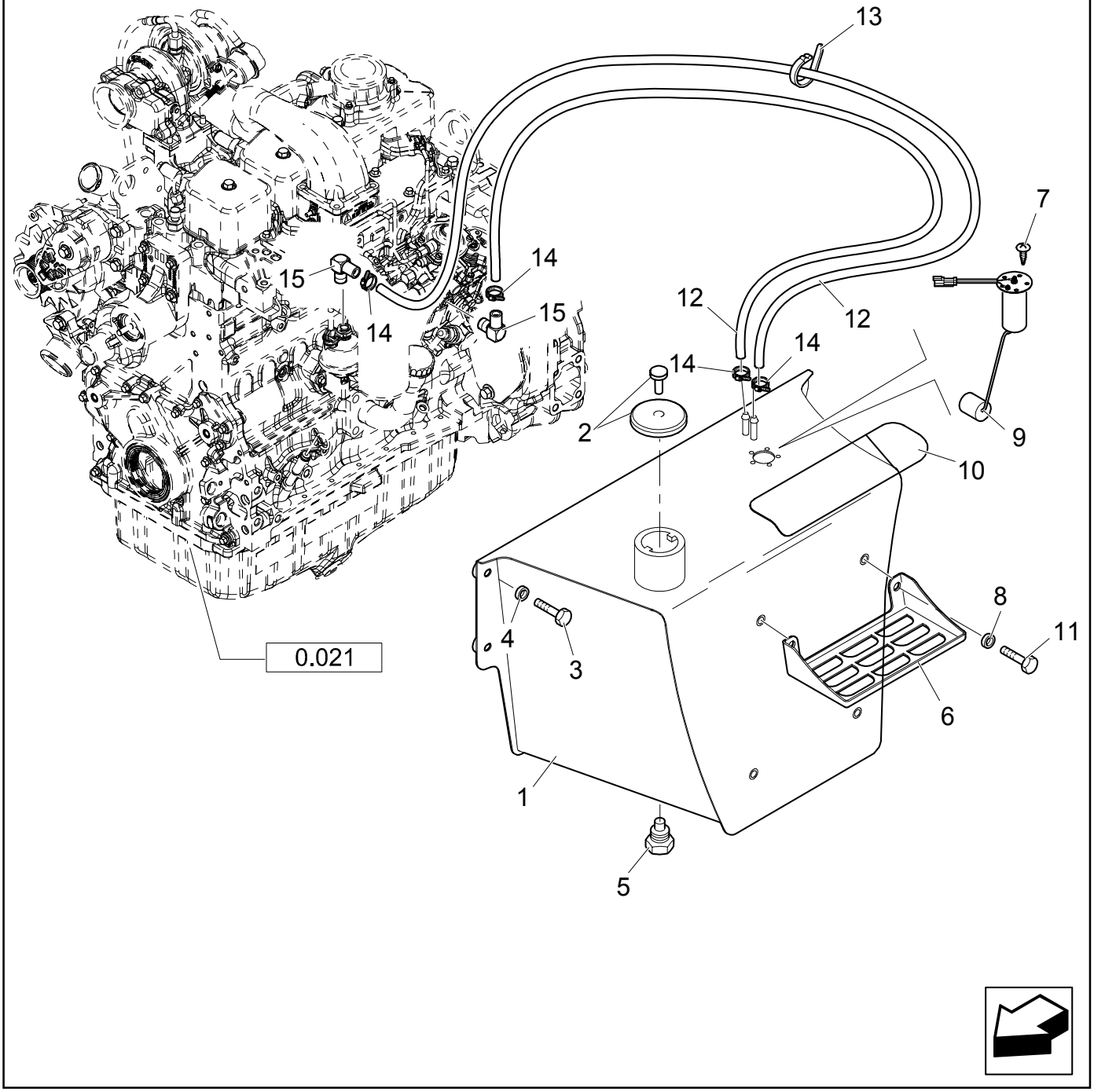

FUEL TANK & RELATED PARTS

REF	FN	PART NUMBER	YR/SN	QTY	DESCRIPTION
1		87406278		1	FUEL TANK
2		85825392		1	CAP
3		11112421		4	SCREW M12X30
4		47048973		4	WASHER
5		47050671		1	PLUG
6		85801218		2	FOOT REST
7		85825158		5	SCREW M5X12
8		47048976		4	WASHER M12
9		86985587		1	SENSOR
10		87404910		1	FOOT BOARD
11		15540721		4	SCREW
12		87403672		2	HOSE, FLEXIBLE
13		14560187		4	COLLAR
14		85824381		4	COLLAR
15		87414560		2	CONNECTOR, HYD.

MUFFLER & EXTENSIONS

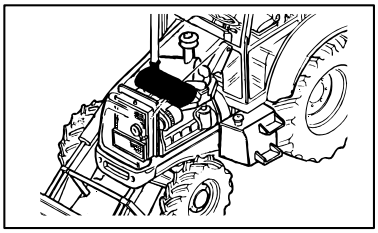

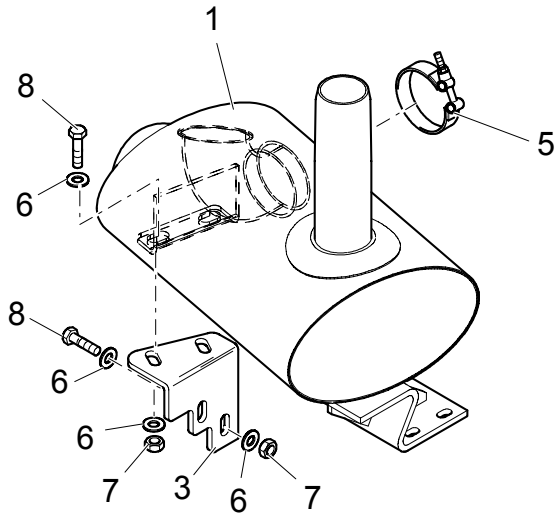

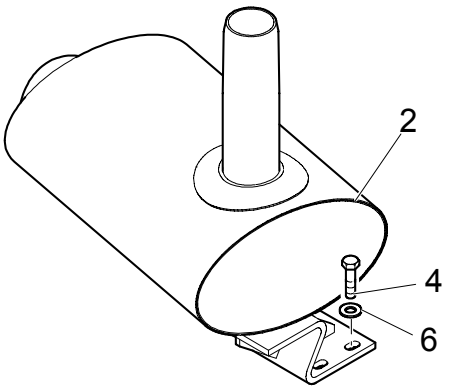

MUFFLER & EXTENSIONS

REF	FN	PART NUMBER	YR/SN	QTY	DESCRIPTION
1		87436824		1	MUFFLER
2	1	87415902		1	MUFFLER
3		87412988		1	BRACKET
4		11107321		3	SCREW M10X55
5		47048898		1	COLLAR
6		47048972		11	WASHER M10
7		47049041		4	NUT M10
8		47049186		4	BOLT M10X30

(1) With Spark Arrester

MUFFLER & EXTENSIONS

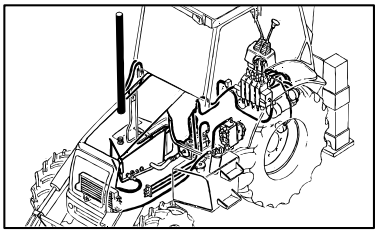

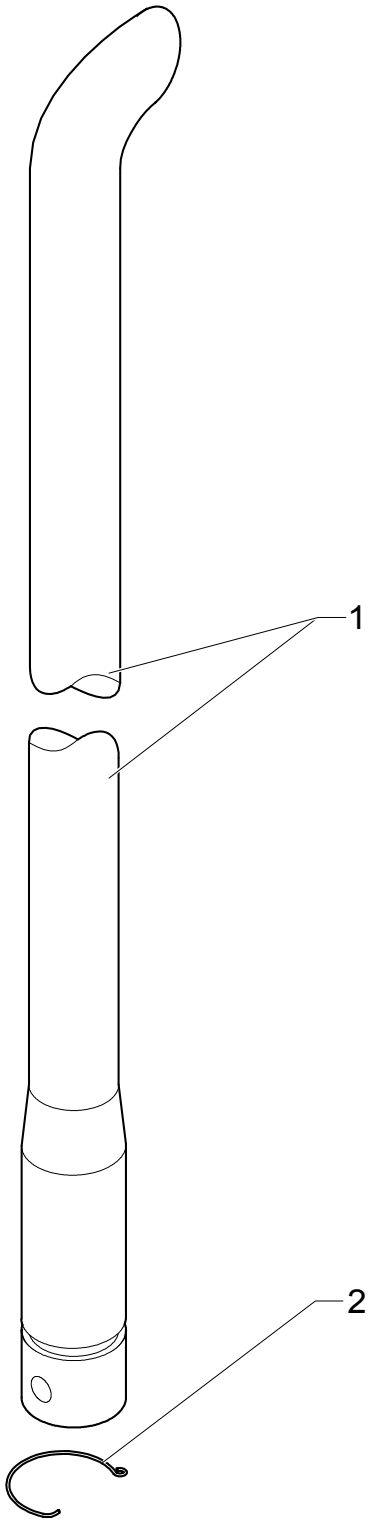

MUFFLER & EXTENSIONS

REF	FN	PART NUMBER	YR/SN	QTY	DESCRIPTION
1		86983125		1	PIPE, EXHAUST SYSTEM
2		87416643		1	SPRING

1.17.2	01	p1	06/03

EXPANSION TANK

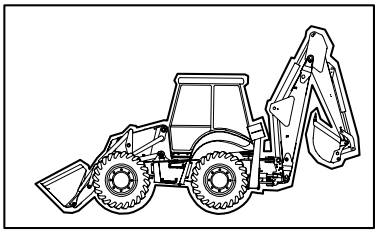

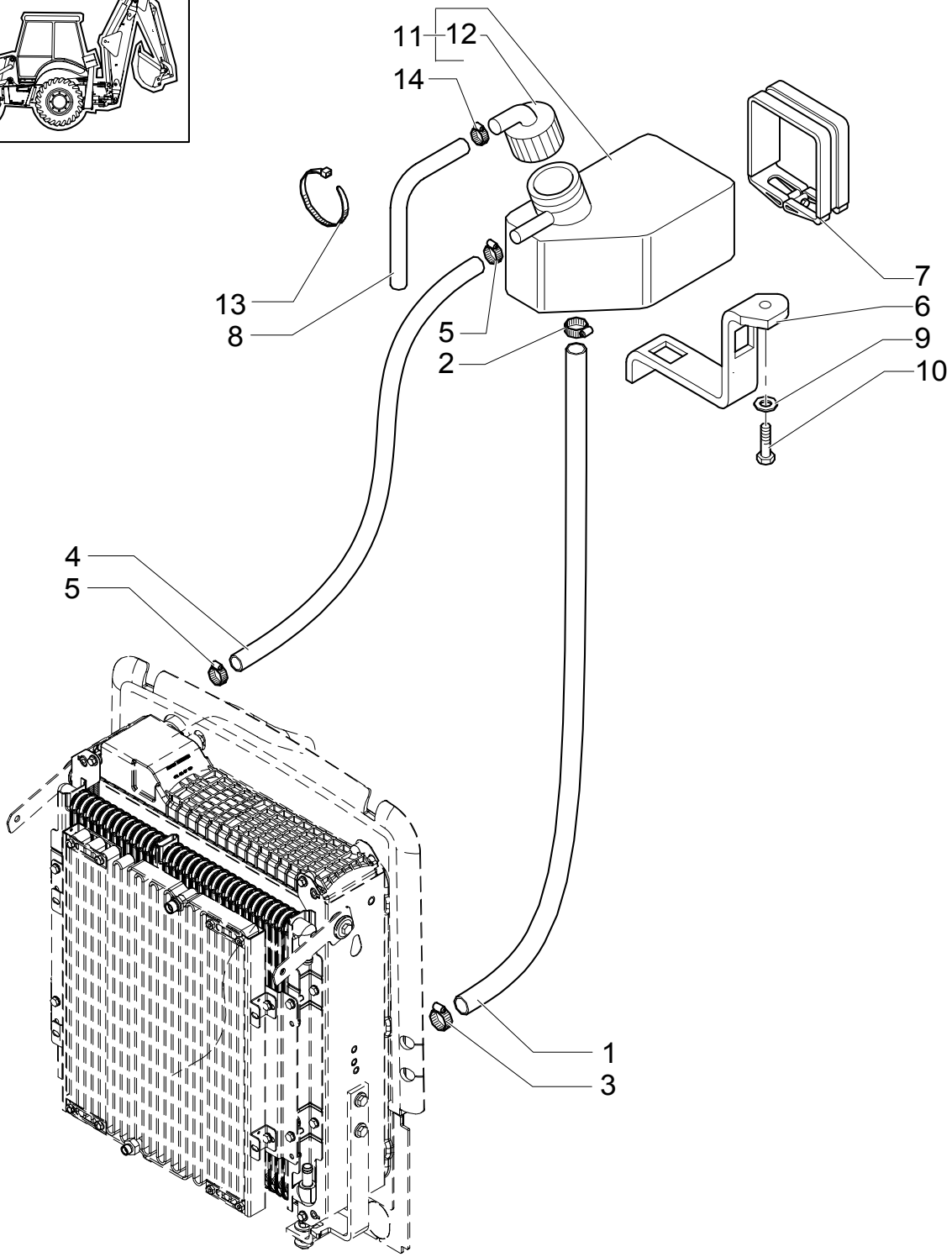

EXPANSION TANK

REF	FN	PART NUMBER	YR/SN	QTY	DESCRIPTION
1		87410546		1	TUBE, RIGID
2		47050733		1	COLLAR
3		47050734		1	COLLAR
4		87410547		1	TUBE, RIGID
5		85803013		2	CLAMP
6		87413053		1	SUPPORT
7		85804302		1	COLLAR
8		85803226		1	HOSE, FLEXIBLE
9		11193979		2	WASHER, LOCK
10		16043821		2	SCREW
11		85802804		1	PAN
12		85803019		1	CAP ASSY.
13		14560187		4	COLLAR
14		85824381		3	COLLAR

1.19.1	01	p1	02/04

AIR CLEANER & HOSES

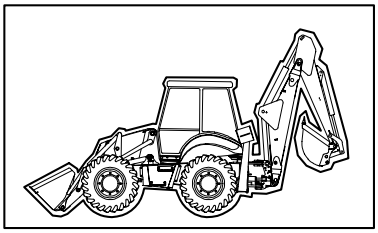

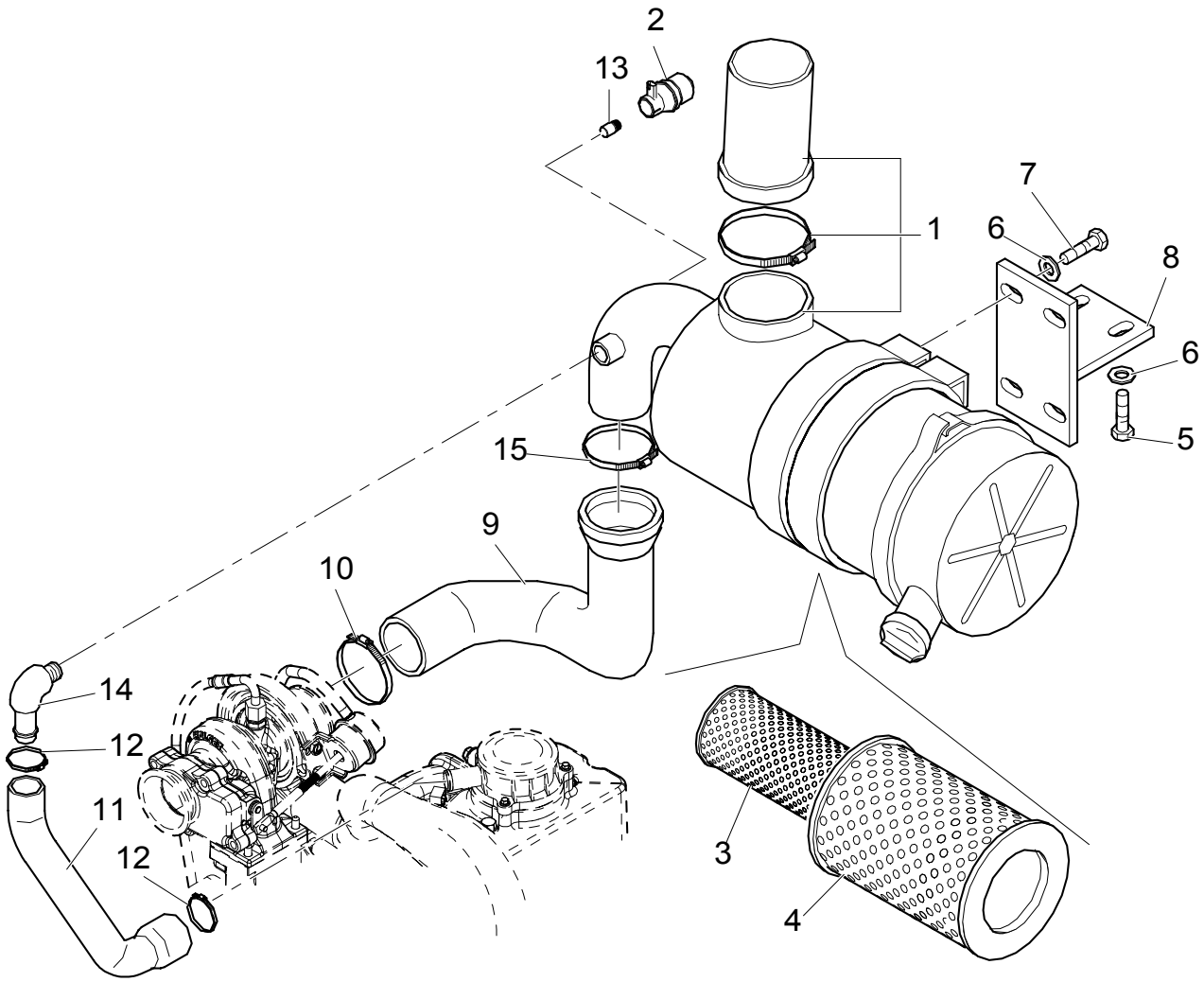

AIR CLEANER & HOSES

REF	FN	PART NUMBER	YR/SN	QTY	DESCRIPTION
1		87413128		1	FILTER, AIR ASSY
2		87405661		1	SWITCH
3	1	87438246		1	FILTER, AIR
4	2	87438249		1	FILTER, AIR
5		16043821		2	SCREW
6		47048962		6	WASHER
7		47049160		4	SCREW
8		87412754		1	BRACKET
9		87412991		1	HOSE
10		85803010		1	CLAMP
11		87413794		1	HOSE, FLEXIBLE
12		85803013		2	CLAMP
13		47048450		1	CONNECTOR, HYD.
14		87021860		1	HOSE, FLEXIBLE
15		85802743		1	SEALING RING COLLAR

(1) Primary
(2) Secondary

1.21.5/ 1	01	p1	07/03

FRAME (CENTER PIVOT)

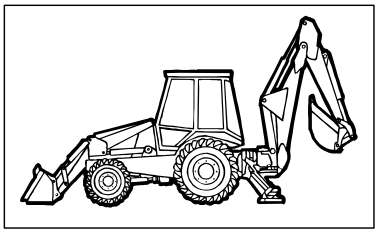

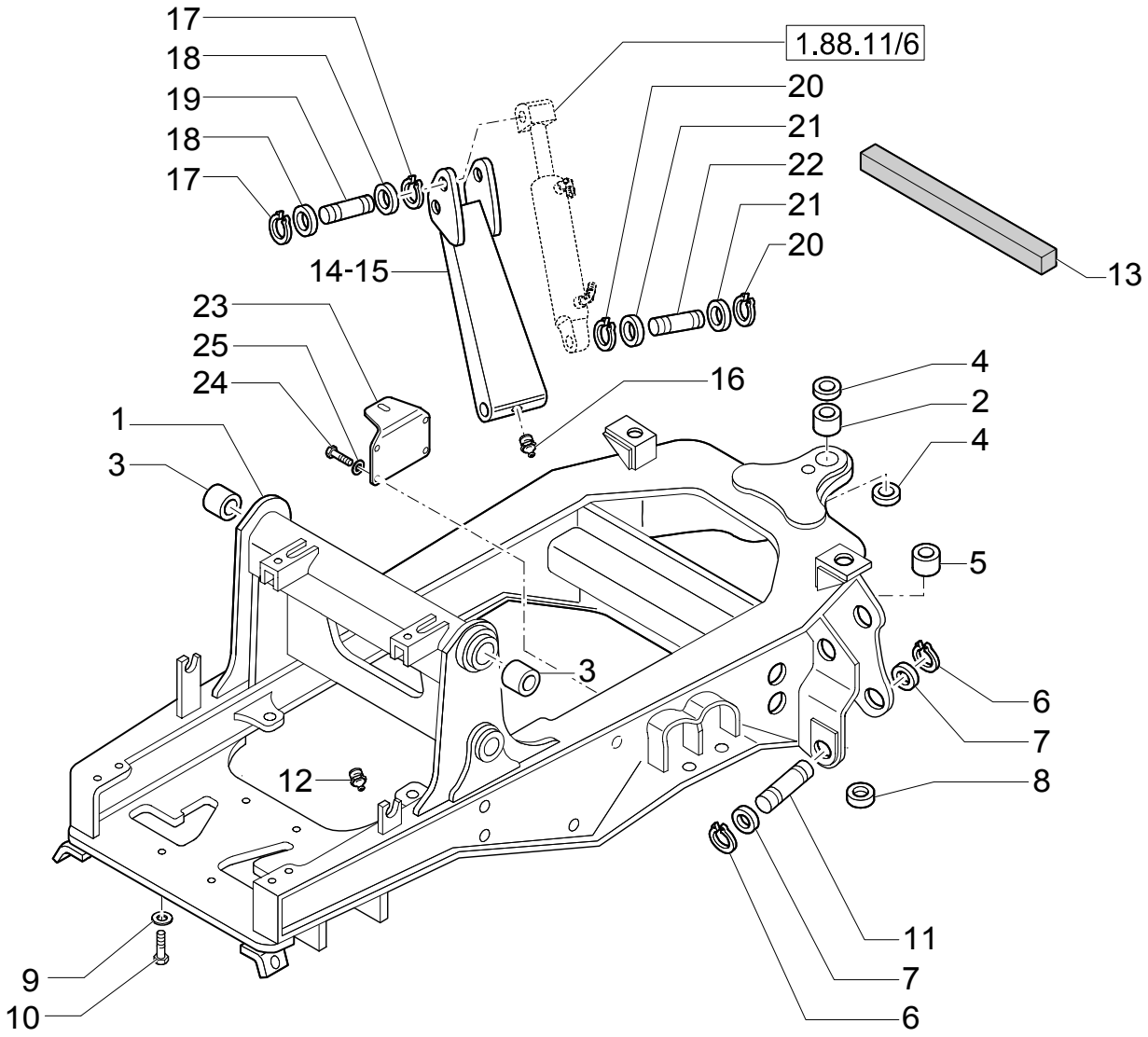

FRAME (CENTER PIVOT)

REF	FN	PART NUMBER	YR/SN	QTY	DESCRIPTION
1	1	85825078		1	FRAME
2		85700728		2	BUSHING
3		85801110		2	BUSHING
4		81875248		4	SEAL
5		83910645		2	BUSHING
6		83911020		4	RING
7		81901837		4	WASHER
8		85802903		2	INSULATOR
9		10520431		6	WASHER
10		15989134		6	SCREW M20X1,5X100
12		83416242		2	NIPPLE, LUBE
11		83911000		2	PIN
13		85802338		1	RUBBER BAND
14	2	85825300		1	ARM, SUPPORTING LH
15	2	85825302		1	ARM, SUPPORTING RH
16		81818824		2	NIPPLE, LUBE
17		83910630		4	RING
18		83910629		4	WASHER
19		83999466		2	PIN
20		83911019		4	RING, SNAP
21		83910977		4	SPACER
22		85801262		2	PIN
23		85804171		1	SUPPORT
24		15540534		4	SCREW M12X35
25		11198679		4	WASHER, LOCK

(1) Includes 2,3,4,5,12
(2) Includes 16

175	01	p1	05/03

AIR INTAKE CAP & PRE-CLEANER

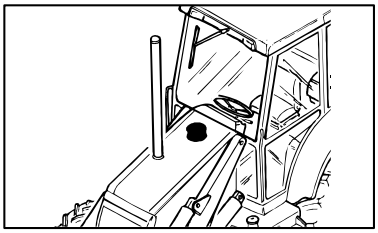

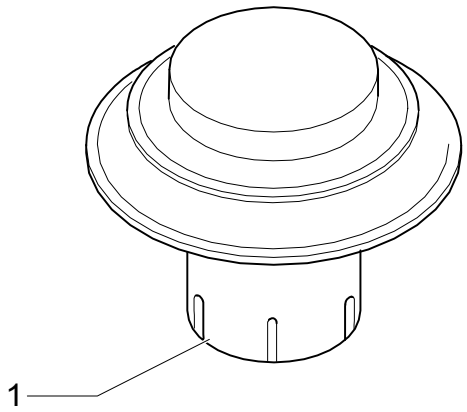

AIR INTAKE CAP & PRE-CLEANER

REF	FN	PART NUMBER	YR/SN	QTY	DESCRIPTION
1		85804602		1	INTAKE, AIR

AIR INTAKE CAP & PRE-CLEANER

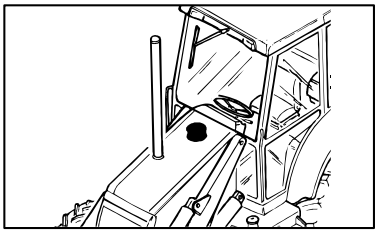

EQUIP. 176

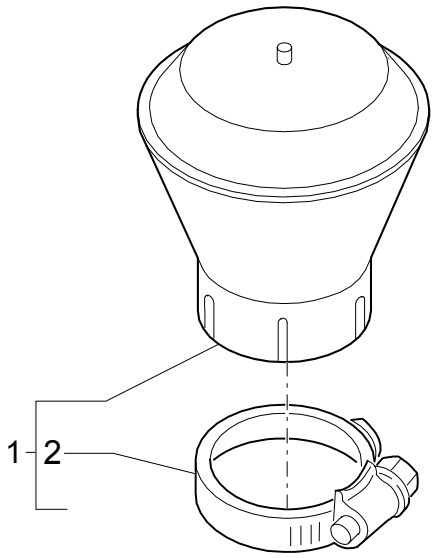

EQUIP. 197

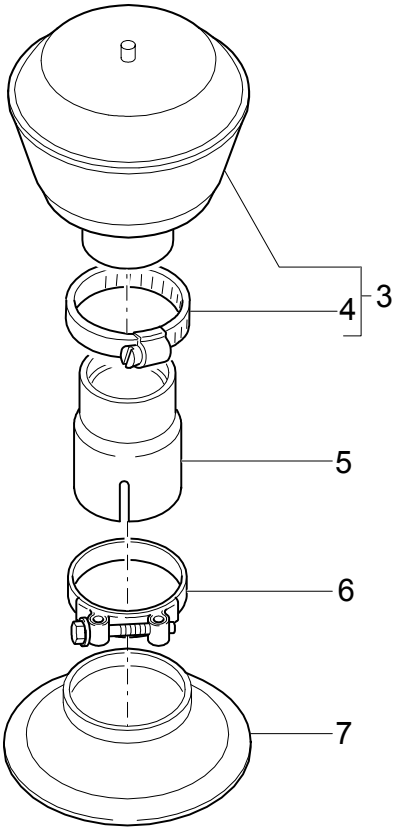

AIR INTAKE CAP & PRE-CLEANER

REF	FN	PART NUMBER	YR/SN	QTY	DESCRIPTION
1		85804347		1	PRE-CLEANER ASSY, AIR
2		85802743		1	SEALING RING COLLAR
3		85804347		1	PRE-CLEANER ASSY, AIR
4		85802743		1	SEALING RING COLLAR
5		85804349		1	EXTENSION
6		85811975		1	COLLAR
7		85802829		1	GUARD

FRONT WEIGHTS

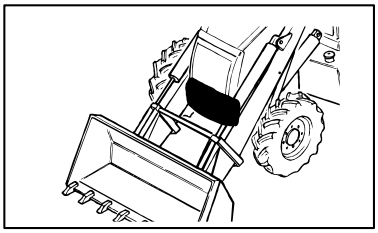

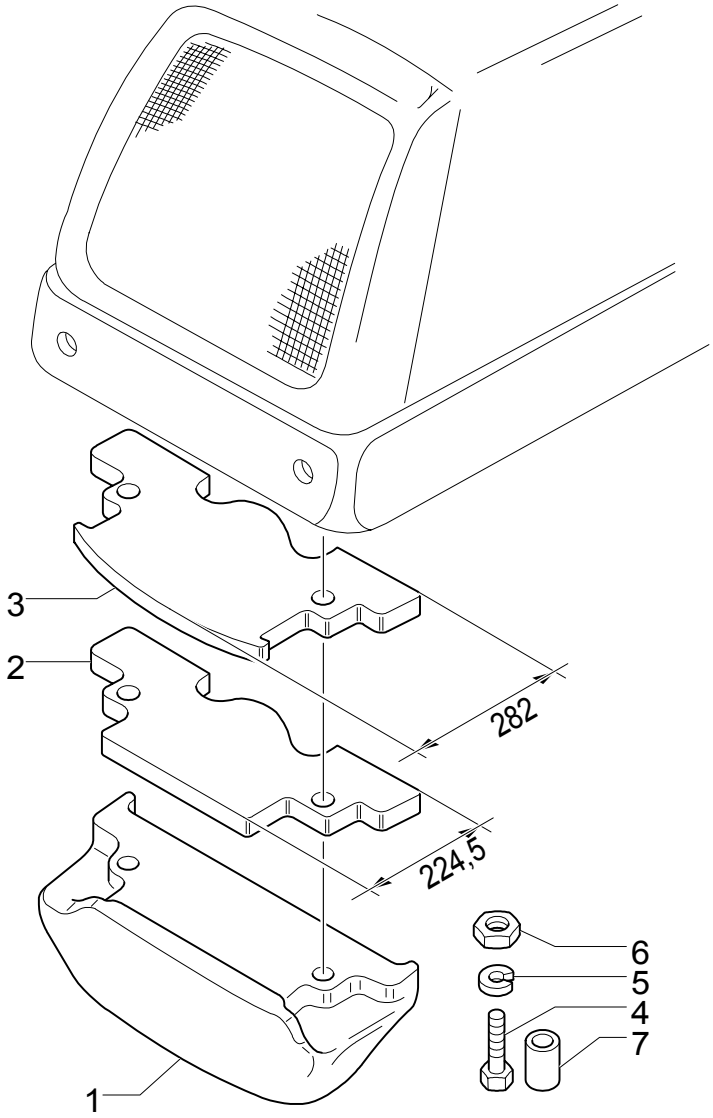

FRONT WEIGHTS

REF	FN	PART NUMBER	YR/SN	QTY	DESCRIPTION
1		85804838		1	WEIGHT
2		85805071		1	WEIGHT
3		85805069		1	WEIGHT
4		85805300		2	SCREW M20X1,5X300
5		10520431		4	WASHER
6		12575121		2	NUT M20X1,5
7		85801324		2	TUBE, RIGID 21X30X50

FRONT WEIGHTS

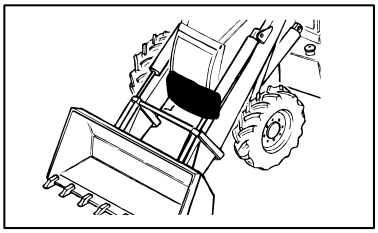

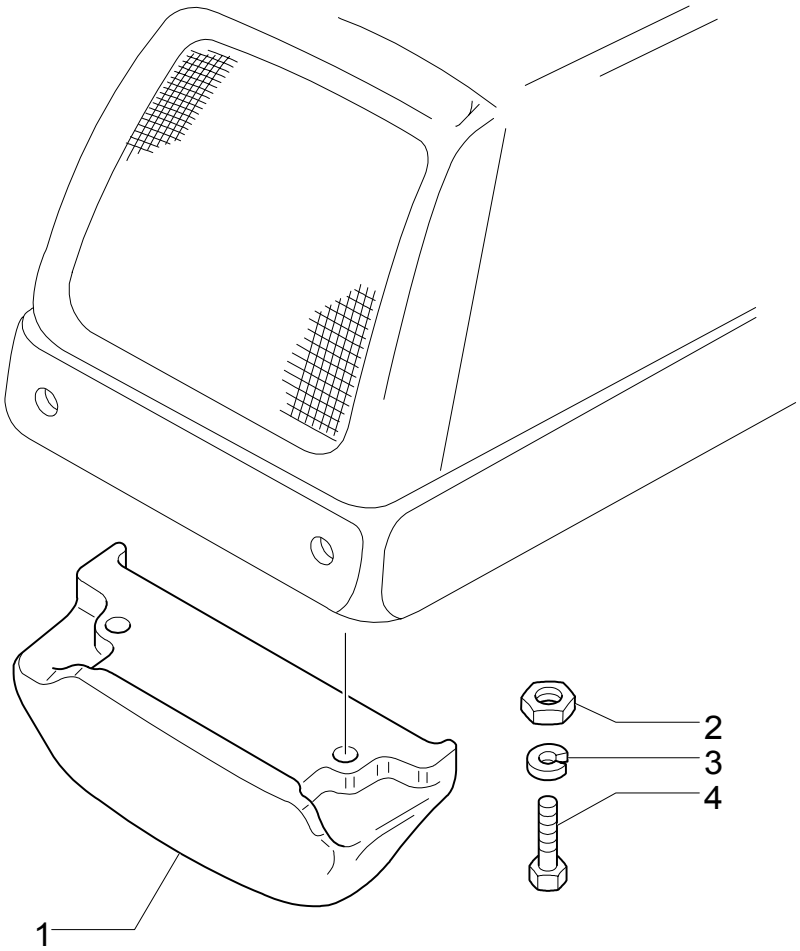

FRONT WEIGHTS

REF	FN	PART NUMBER	YR/SN	QTY	DESCRIPTION
1		85804838		1	WEIGHT
2		12575121		2	NUT M20X1,5
3		10520431		4	WASHER
4		15991134		2	SCREW M20X1,5X200

636	01	p1	02/04

RADIATOR

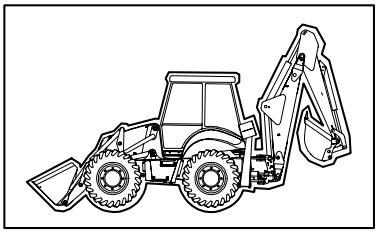

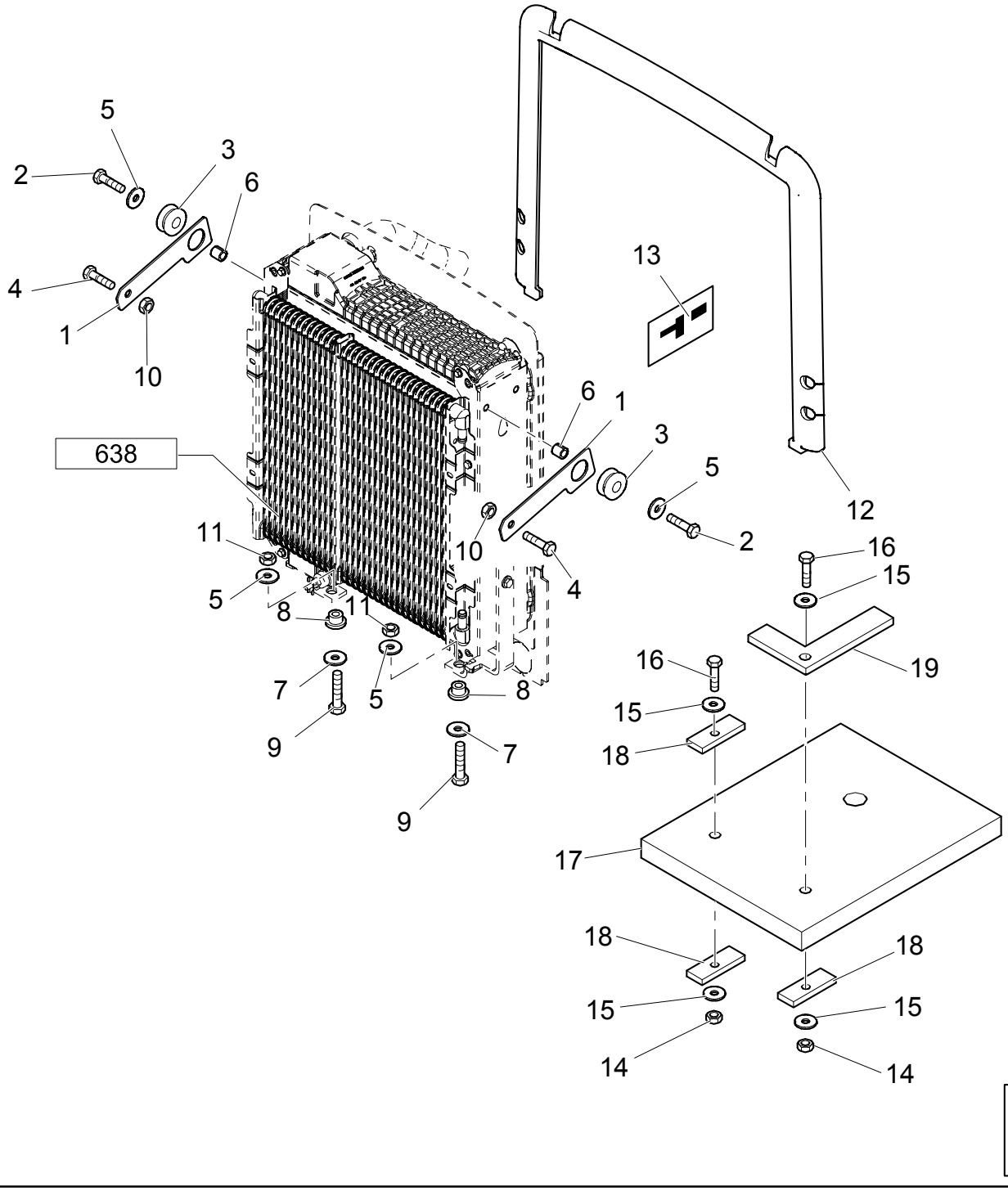

RADIATOR

REF	FN	PART NUMBER	YR/SN	QTY	DESCRIPTION
1		86982972		2	PLATE
2		47049086		2	SCREW M10X40
3		47048759		2	RING
4		47049187		2	SCREW M10X35
5		47048440		6	WASHER
6		{47048646}		2	SPACER
7		47048963		4	WASHER
8		47048668		2	PLUG
9		86625071		2	NUT
10		47049041		2	NUT M10
11		47049088		2	SCREW M10X50
12		86983077		1	GASKET
13		87415930		2	DECAL
14		{47042260}		4	
15		47048962		8	WASHER
16		47049163		4	SCREW
17		87440497		2	COVER
18		87440498		6	PLATE, RETAINING
19		87440499		2	PLATE, RETAINING

Without Air Conditioner

LB75.B

RADIATOR

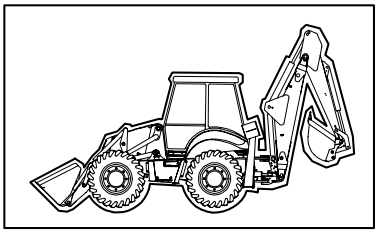

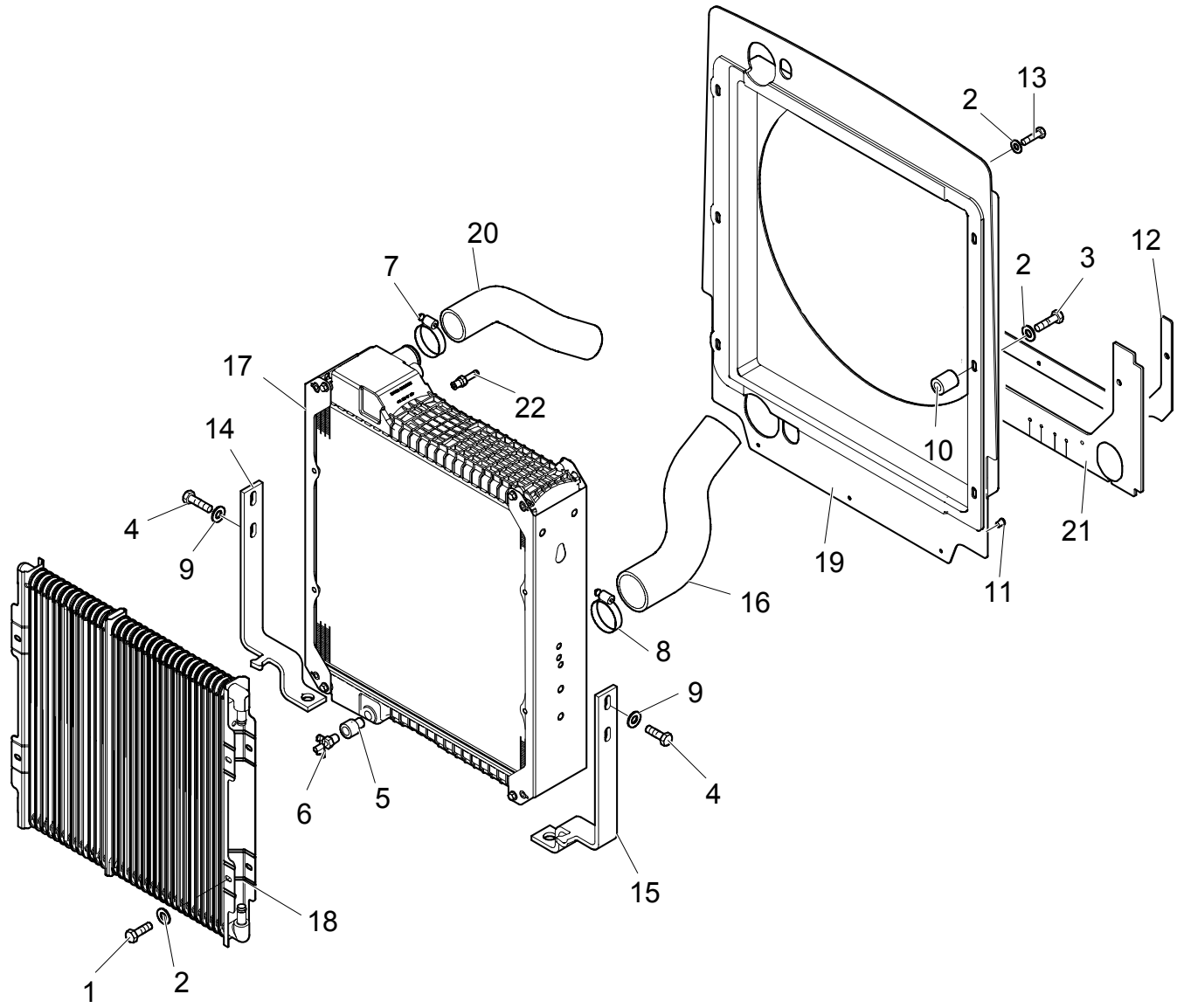

RADIATOR

REF	FN	PART NUMBER	YR/SN	QTY	DESCRIPTION
1		16043021		4	SCREW M8X12
2		47048962		10	WASHER
3		47049095		4	SCREW M8X16
4		47049184		4	SCREW M8X20
5		{47049581}		1	GASKET
6		47050674		1	VALVE, ENG EXHAUST, STD
7		47050733		1	COLLAR
8		47050734		1	COLLAR
9		47120179		4	WASHER
10		85825169		2	SPACER
11		85825170		3	BUTTON
12		SBA610600030		1	COVER
13		{87026277}		2	SCREW
14		87404557		1	BRACKET
15		87404628		1	BRACKET
16		87407272		1	TUBE, RIGID
17	1	87410096		1	RADIATOR
18	2	87410099		1	PLATE
19		87410916		1	FAN
20		87413237		1	TUBE, RIGID
21		87416637		1	GASKET
22		{87419240}		1	CONNECTOR, HYD.

(1) Water
(2) Oil Cooler

637	01	p1	02/04

RADIATOR

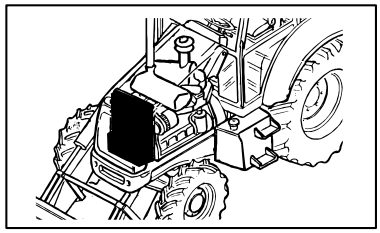

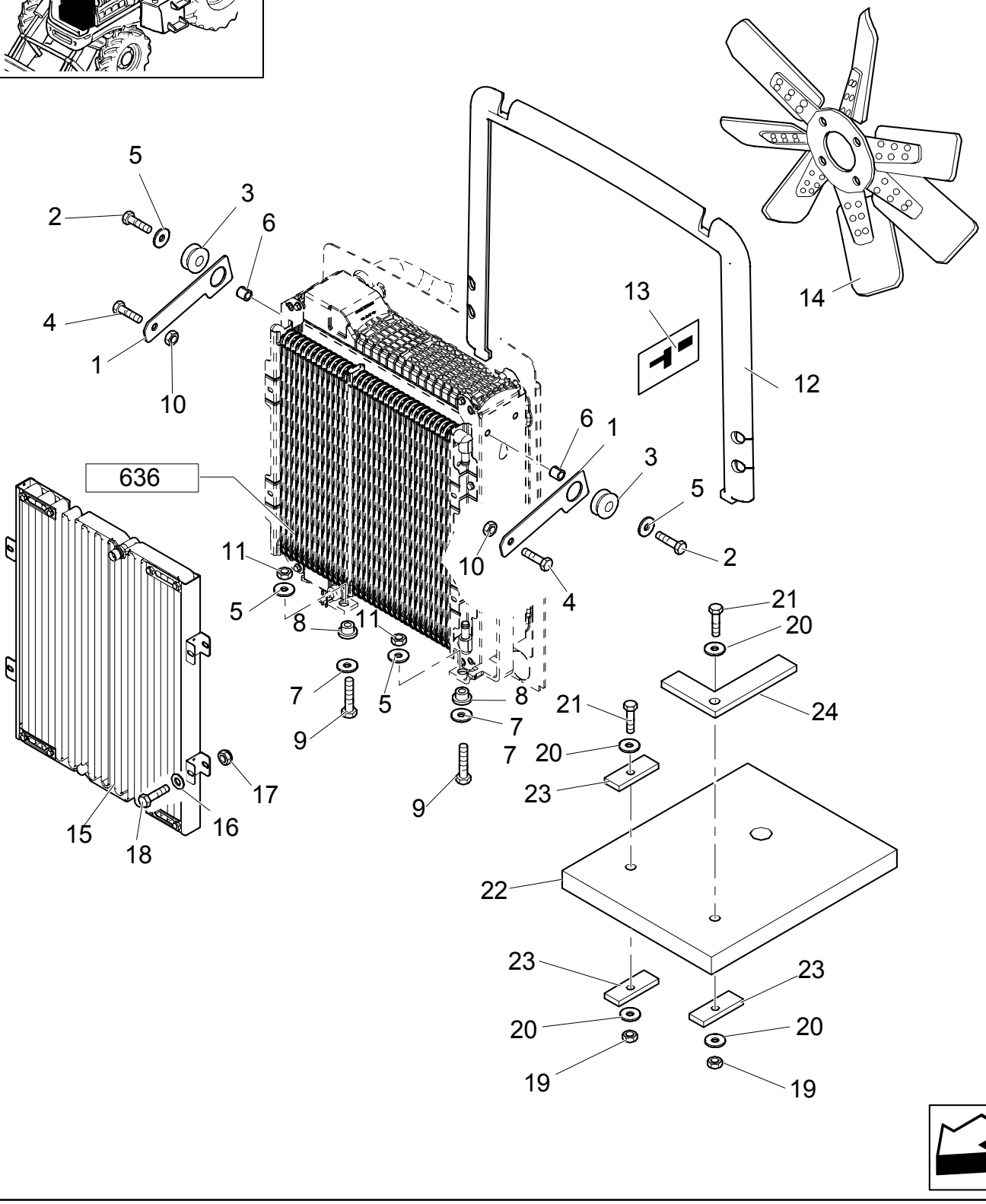

RADIATOR

REF	FN	PART NUMBER	YR/SN	QTY	DESCRIPTION
1		86982972		2	PLATE
2		47049086		2	SCREW M10X40
3		47048759		2	RING
4		47049187		2	SCREW M10X35
5		47048440		6	WASHER
6		{47048646}		2	SPACER
7		47048963		4	WASHER
8		47048668		2	PLUG
9		86625071		2	NUT
10		47049041		2	NUT M10
11		47049088		2	SCREW M10X50
12		86983077		1	GASKET
13		87415930		2	DECAL
14		85825164		1	FAN
15		87410102		1	CONDENSER -ASSY
16		47048962		4	WASHER
17		47049030		4	NUT M8
18		47049095		4	SCREW M8X16
19		{47042260}		4	
20		47048962		8	WASHER
21		47049163		4	SCREW
22		87440497		2	COVER
23		87440498		6	PLATE, RETAINING
24		87440499		2	PLATE, RETAINING

With Air Conditioner

SECTION INDEX

SEC. 03	00	TRANSMISSION 1/2
SEC. 03	01	TRANSMISSION 2/2
1.28.0	01	GEARING SPEED GEAR
1.28.0/ A	01	TRANSMISSIONGEARING SPEED GEAR (2WD POWER-SHUTTLE)
1.28.0/ A	02	TRANSMISSIONGEARING SPEED GEAR (2WD POWER-SHUTTLE)
1.28.0/ A	03	TRANSMISSIONGEARING SPEED GEAR (2WD POWER-SHUTTLE)
1.28.0/ A	04	TRANSMISSIONGEARING SPEED GEAR (2WD POWER-SHUTTLE)
1.28.0/ A	05	TRANSMISSIONGEARING SPEED GEAR (2WD POWER-SHUTTLE)
1.28.0/ A	06	TRANSMISSIONGEARING SPEED GEAR (2WD POWER-SHUTTLE)
1.28.0/ A	07	TRANSMISSIONGEARING SPEED GEAR (2WD POWER-SHUTTLE)
1.28.0/ B	01	TRANSMISSIONGEARING SPEED GEAR (4WD POWER-SHUTTLE)
1.28.0/ B	02	TRANSMISSIONGEARING SPEED GEAR (4WD POWER-SHUTTLE)
1.28.0/ B	03	TRANSMISSIONGEARING SPEED GEAR (4WD POWER-SHUTTLE)
1.28.0/ B	04	TRANSMISSIONGEARING SPEED GEAR (4WD POWER-SHUTTLE)
1.28.0/ B	05	TRANSMISSIONGEARING SPEED GEAR (4WD POWER-SHUTTLE)
1.28.0/ B	06	TRANSMISSIONGEARING SPEED GEAR (4WD POWER-SHUTTLE)
1.28.0/ B	07	TRANSMISSIONGEARING SPEED GEAR (4WD POWER-SHUTTLE)
1.28.0/ B	08	TRANSMISSIONGEARING SPEED GEAR (4WD POWER-SHUTTLE)
1.28.6	01	GEAR FILTER PIPES (POWER-SHUTTLE)
1.29.1	01	TRANSMISSION ESTERNALSHIFTING CONTROLS (POWER-SHUTTLE)
1.38.1	01	FRONT & REAR DRIVESHAFT, POWER-SHUTTLE
1.39.8	01	TRANSMISSION OIL COOLING PIPES (POWER-SHUTTLE)

TRANSMISSION 1/2

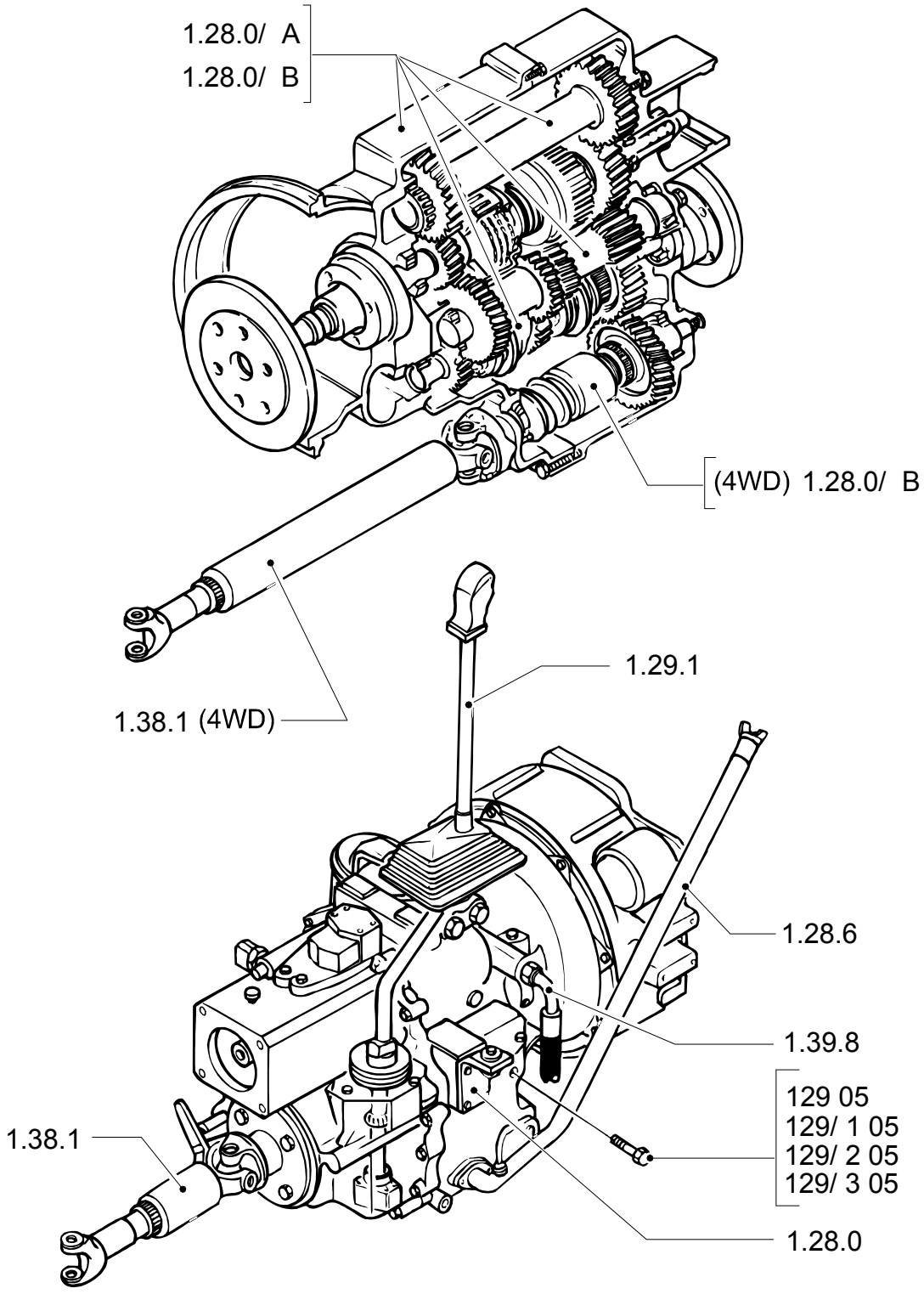

TRANSMISSION 1/2

REF	FN	PART NUMBER	YR/SN	QTY	DESCRIPTION

TRANSMISSION 2/2

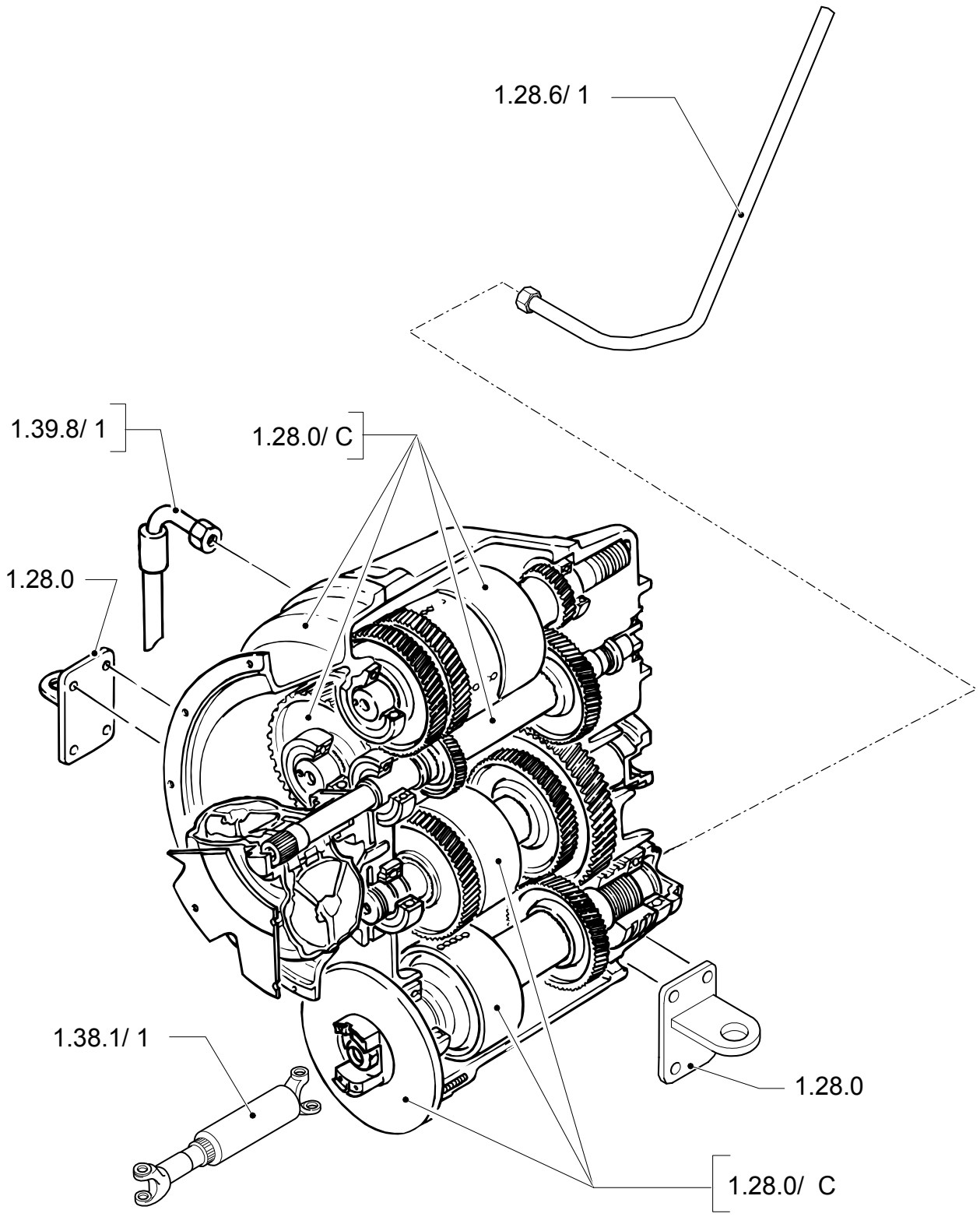

TRANSMISSION 2/2

REF	FN	PART NUMBER	YR/SN	QTY	DESCRIPTION

GEARING SPEED GEAR

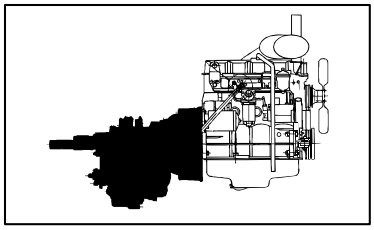

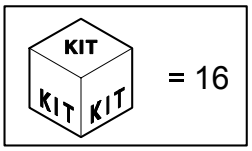

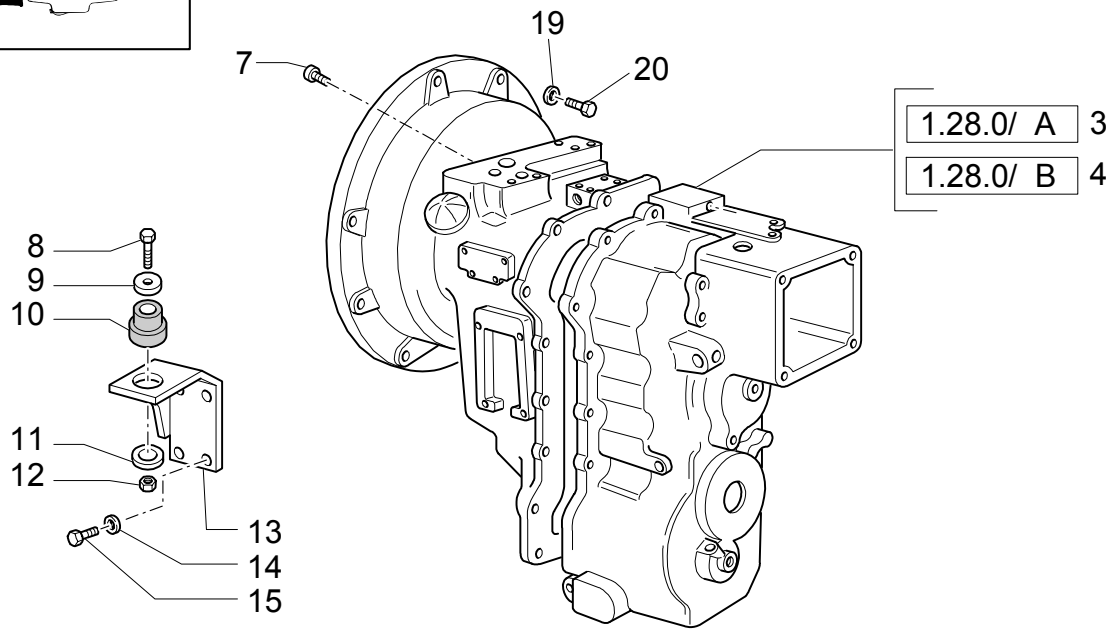

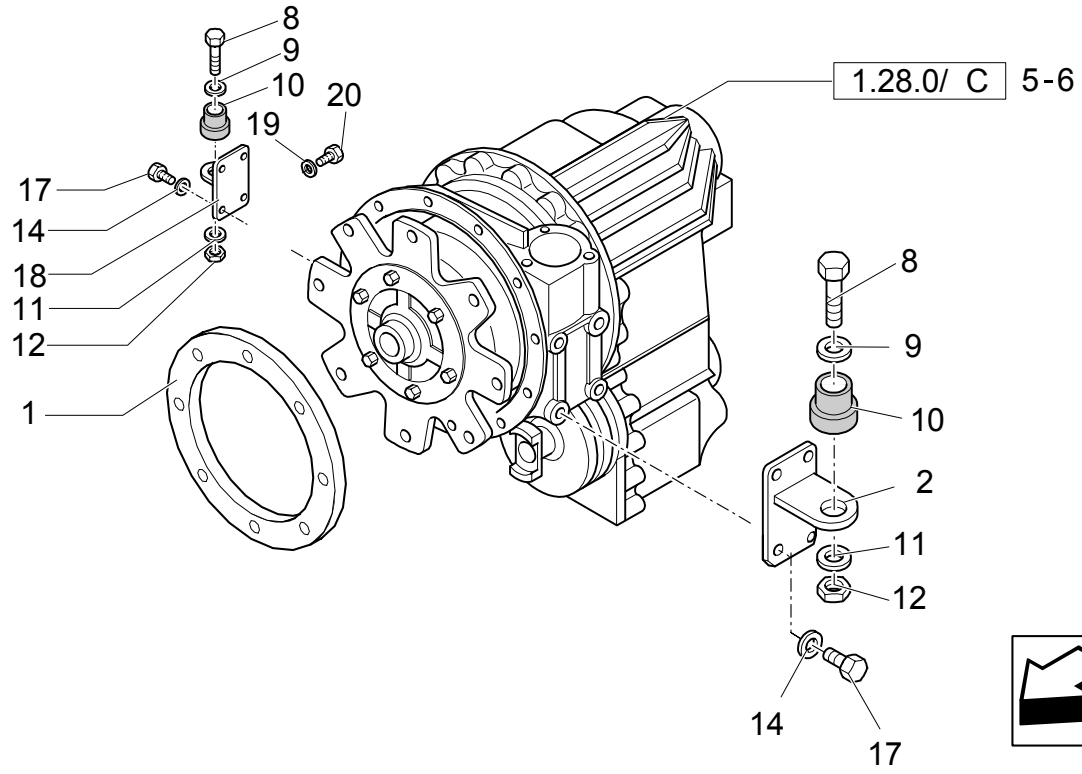

GEARING SPEED GEAR

REF	FN	PART NUMBER	YR/SN	QTY	DESCRIPTION
1		87407758		1	RING
2		85804276		1	SUPPORT LH
3	1	86990712		1	TRANSMISSION
4	2	86990713		1	TRANSMISSION
5	3	86990714		1	TRANSMISSION
6	4	86990715		1	TRANSMISSION
7		280251		8	PIN, SPLIT (COTTER) 3/8"-16X2,50
8		87410647		2	SCREW M12X1,25X90
9		85801585		2	WASHER, SEALING 65mm OD
10				2	
11		85802618		2	WASHER, SEALING
12		16105011		2	NUT M12X1,25
13		87405629		1	SUPPORT LH
13		87405628		1	SUPPORT RH
14		11198679		8	WASHER, LOCK
15		11112634		8	SCREW M12X1,75X35
16	5	85806019		AR	KIT
17		11112434		8	SCREW M12X1,75X30
18		85804275		1	SUPPORT RH
19		47049372		12	WASHER
20		47049168		12	SCREW

(1) Only for LB75.B 2WD, Power Shuttle
(2) Only for 4WD, Power Shuttle
(3) Only for LB110.B 4WD, Power Shift
(4) Only for LB115.B 4WS, Power Shift
(5) Kit o-ring for directional control valve

TRANSMISSIONGEARING SPEED GEAR (2WD POWER-SHUTTLE)

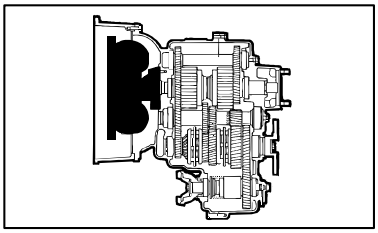

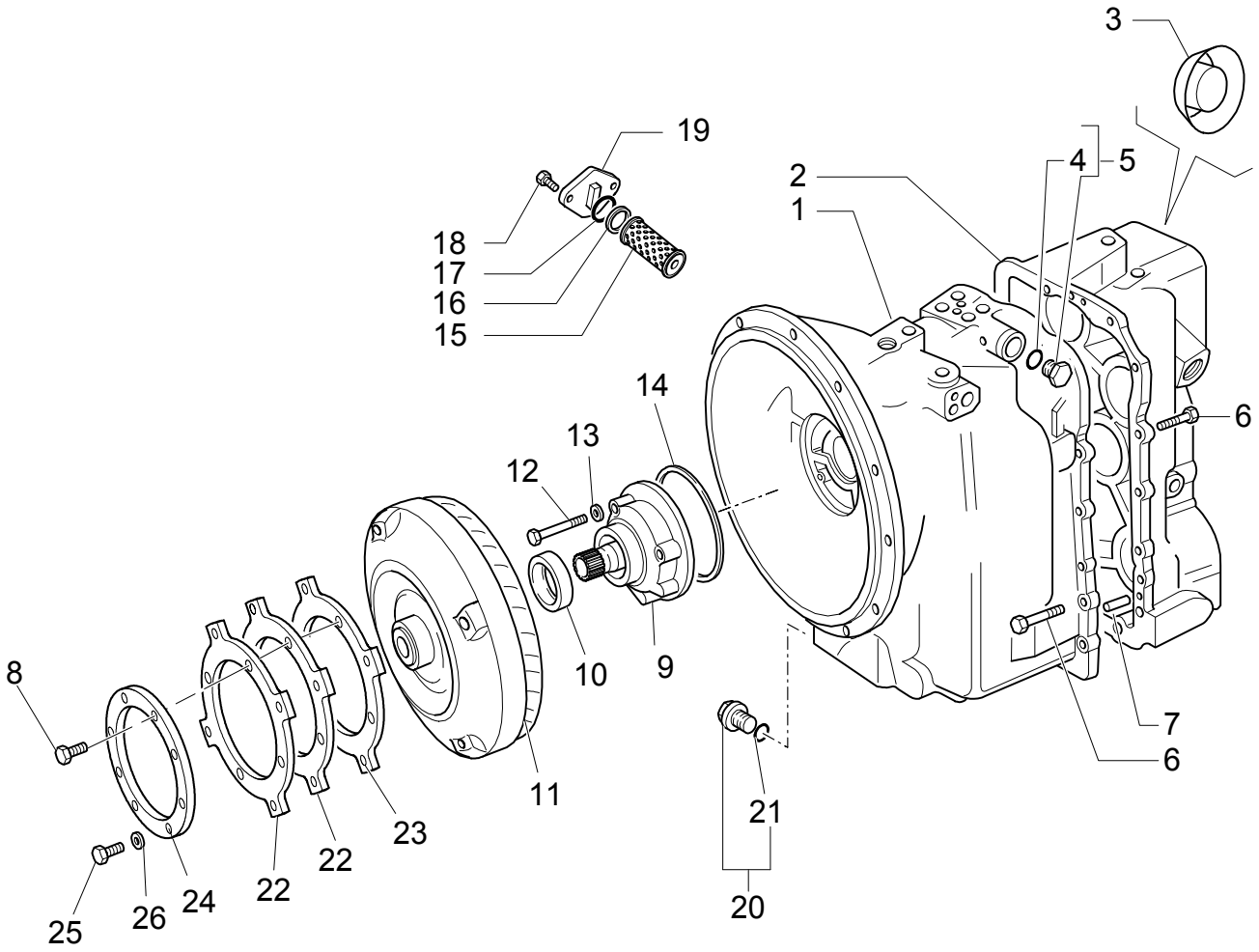

TRANSMISSIONGEARING SPEED GEAR (2WD POWER-SHUTTLE)

REF	FN	PART NUMBER	YR/SN	QTY	DESCRIPTION
1		9968394		1	BOX
2		9968395		1	BOX
3		85812096		1	PLUG
4		9968218		1	O-RING 9/16"
5		9968219		1	PLUG 9/16" UNF, 2
6		85817164		17	SCREW
7		9968356		2	DOWEL
8		87019767		4	SCREW
9	1	9968311		1	PUMP, ENGINE OIL M10X30
10		9968312		1	GASKET
11		87400114		1	TORQUE CONVERTER
12		85817163		7	SCREW
13		85817001		4	WASHER
14		9968313		1	GASKET
15		9968359		1	FILTER
16		9968361		1	WASHER
17		9968360		1	O-RING
18		85817169		2	SCREW
19		9968362		1	COVER
20	2	9968339		1	PLUG
21		9968365		1	O-RING
22		86993546		1	PLATE, RETAINING
23		87406934		1	PLATE, RETAINING
24		87409201		1	PLATE, RETAINING
25		11106021		4	SCREW
26		47049372		4	WASHER

(1) Includes 10
(2) Includes 21

1.28.0/ A	02	p1	11/03

TRANSMISSIONGEARING SPEED GEAR (2WD POWER-SHUTTLE)

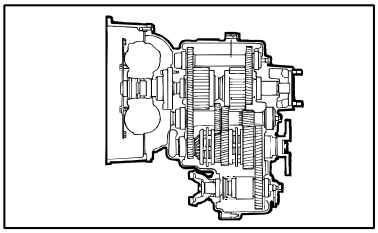

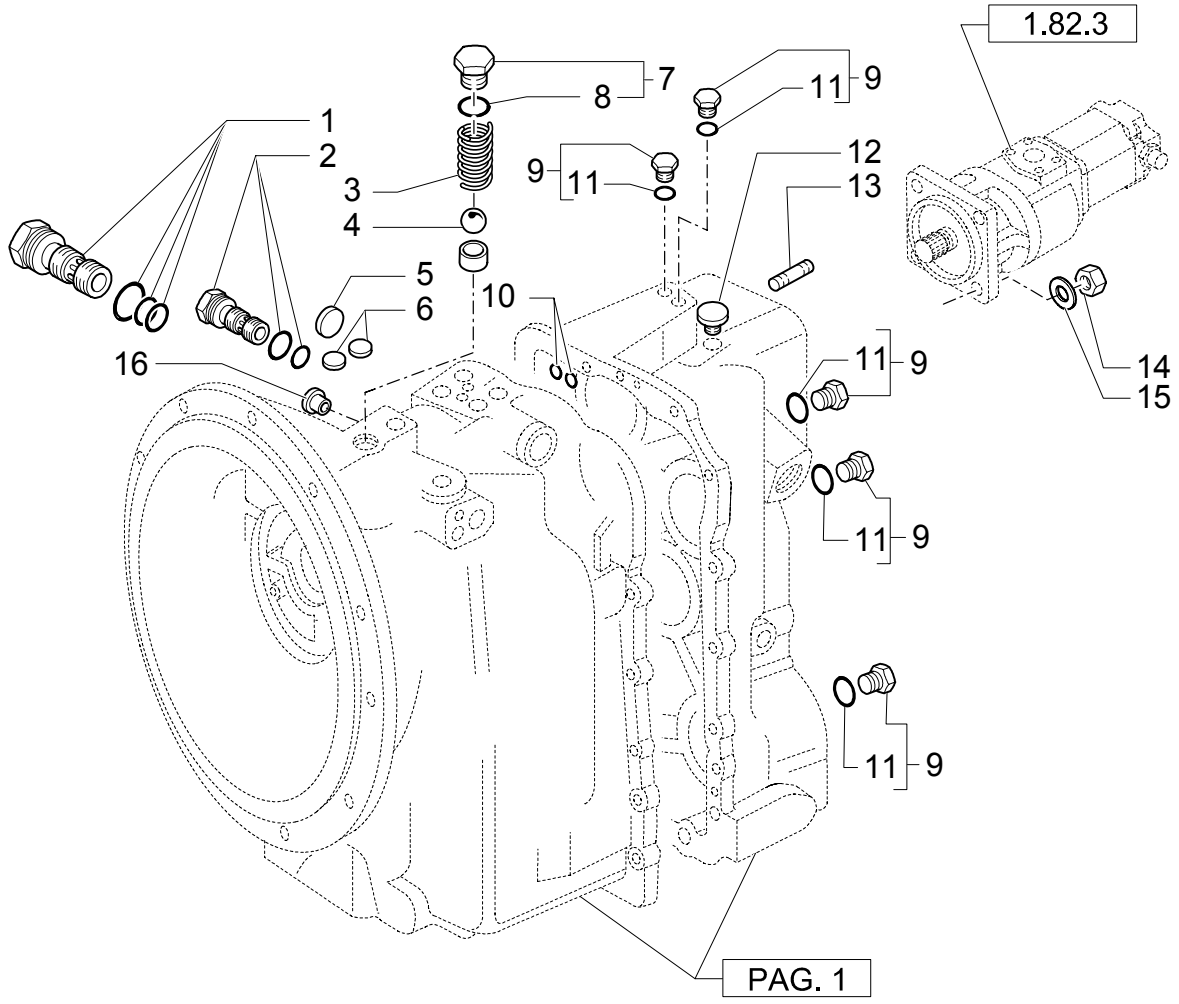

TRANSMISSIONGEARING SPEED GEAR (2WD POWER-SHUTTLE)

REF	FN	PART NUMBER	YR/SN	QTY	DESCRIPTION
1		9968350		1	VALVE, HYDRAULIC HYDR.PRESSURE REGULATOR
2		9968334		1	VALVE, HYDRAULIC HYDR.CONVERTER RELIEF
3		9968378		1	SPRING
4		9968379		1	BALL
5		9968371		1	PLUG Expansion, 1"
6		9968333		2	PLUG Tyers, .5"
7		85817003		1	PLUG
8		9968377		1	O-RING .924" ID x .116" Thk
9		9968219		AR	PLUG 9/16" UNF
10		9968368		3	O-RING .512" ID x .094" Thk
11		9968218		AR	O-RING
12		9968364		1	BREATHER
13		85802683		4	STUD 1/2"
14		85802684		4	NUT
15		11190779		4	WASHER, LOCK
16		85812094		2	SHIELD

TRANSMISSIONGEARING SPEED GEAR (2WD POWER-SHUTTLE)

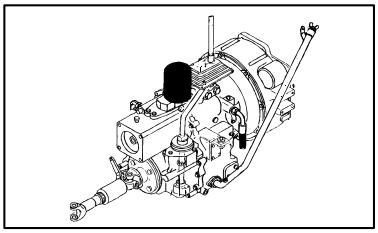

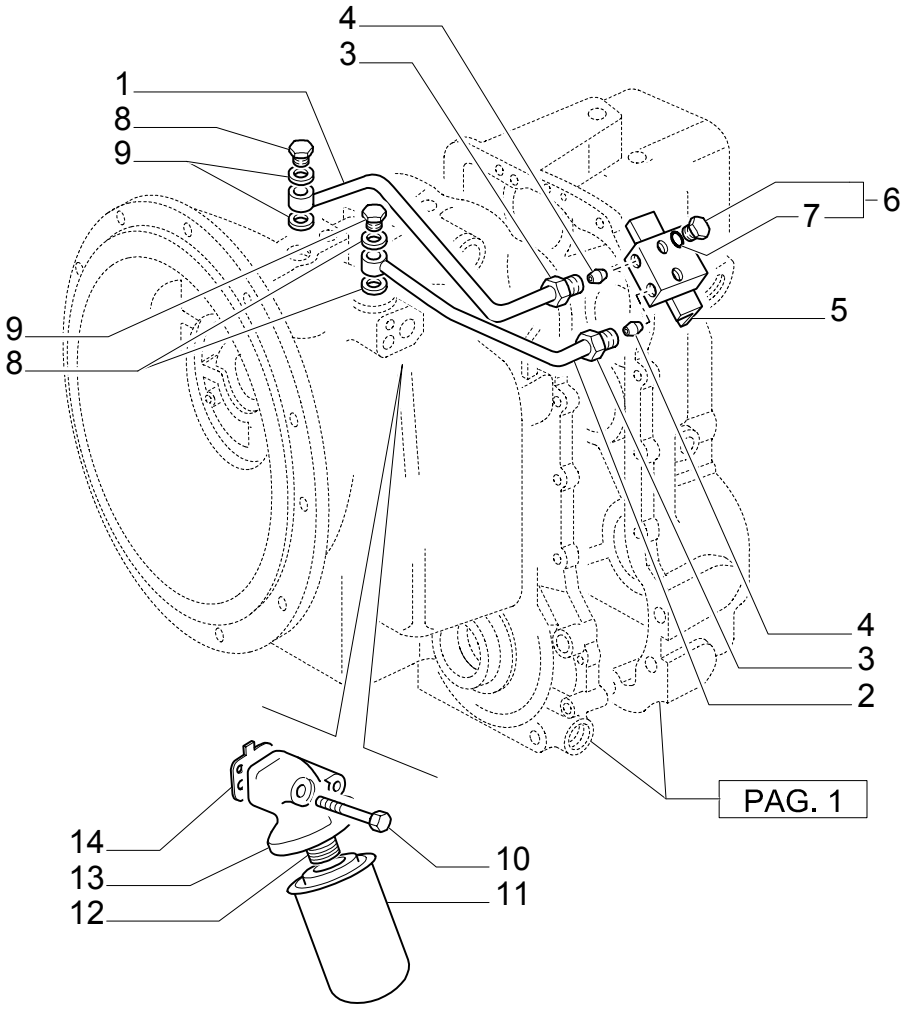

TRANSMISSIONGEARING SPEED GEAR (2WD POWER-SHUTTLE)

REF	FN	PART NUMBER	YR/SN	QTY	DESCRIPTION
1		85812087		1	TUBE, RIGID
2		85812086		1	TUBE, RIGID
3		9968336		2	NUT
4		9969449		4	CONNECTOR, HYD.
5		85812085		1	BLOCK
6		9968219		2	PLUG 9/16" UNF
7		9968218		2	O-RING 9/16"
8		9968676		2	BOLT, BANJO
9		85817002		4	WASHER
10		85817165		2	SCREW
11		85817004		1	FILTER
12		9968354		1	ADAPTER
13		9968374		1	HOUSING
14		9968375		1	GASKET

1.28.0/ A	04	p1	03/04

TRANSMISSIONGEARING SPEED GEAR (2WD POWER-SHUTTLE)

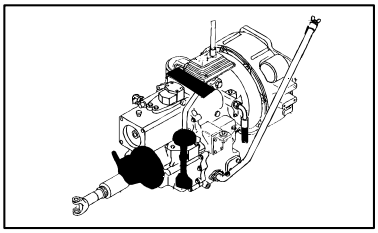

TRANSMISSIONGEARING SPEED GEAR (2WD POWER-SHUTTLE)

REF	FN	PART NUMBER	YR/SN	QTY	DESCRIPTION
1	1	85805818		1	VALVE, HYDRAULIC
2		9969344		2	KIT
3		85812092		3	WASHER
4		9969445		4	SCREW
5		85817163		3	SCREW
6		85813304		2	KIT
7	2	85813300		1	BRAKE CALIPER
8		9968678		4	PLUG 2WD
9		9968324		1	LEVER
10		9968327		1	PIN
11		9968326		1	SUPPORT
12		9968328		1	BOOT
13		9969281		2	NUT
14		9968299		2	BOLT
15		85813318		1	KIT, REPAIR
16	3	85813338		1	KIT
17		9968926		1	SET OF PARTS
18		9968927		1	KIT
19		9968370		2	PLUG Plastic, .25"
20		9968331		1	CLIP, HOSE
21		85817006		2	GASKET
22		85817007		2	GASKET

(1) Includes 2,6
(2) Includes 17, 18
(3) KIT FORSOLENOID REPLACEMENT WITHOUT CHANGEING THE DIRECTIONAL VALVE GROUP.
COMPOSITION = CORE TUBE, NUT AND WASHERS

1.28.0/ A	05	p1	11/03

TRANSMISSIONGEARING SPEED GEAR (2WD POWER-SHUTTLE)

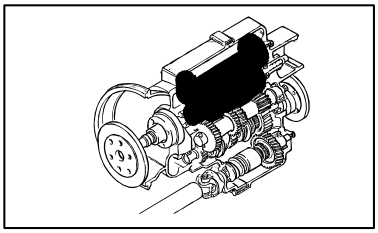

TRANSMISSIONGEARING SPEED GEAR (2WD POWER-SHUTTLE)

REF	FN	PART NUMBER	YR/SN	QTY	DESCRIPTION
1		9968279		3	WASHER
2		9968228		2	BEARING ASSY
3		9968304		4	BEARING ASSY 50X5X17
4		9968302		2	SPACER
5		9968286		1	GEAR 50T
6		9968291		3	RING, LOCKING
7		9968292		2	RING
8		9968293		2	SPRING
9		9968287		2	CIRCLIP
10		9968288		2	PLATE
11		9968290		12	PLATE
12		9968289		12	PLATE
13		9968294		2	PISTON
14		9968296		2	O-RING
15		9968295		2	GASKET
16		9968298		2	O-RING 2.234 ID x .139" Thk
17		9968297		2	O-RING
18		9968226		4	GASKET
19		9968341		1	O-RING M80 x 70 x 2
20		9968342		AR	SHIM 24T-25T
20		9968343		AR	SHIM 80X70X0,076
20		9968344		AR	SHIM 80X70X0,178
20		9968345		AR	SHIM 80X70X0,599
21		9968285		1	GEAR
22		9968305		1	BEARING ASSY
23		9968347		1	SHAFT
24		9968268		2	BEARING ASSY
25		9968281		1	GEAR 24T-25T
26		9968262		AR	SHIM MM.0,002
26		9968263		AR	SHIM MM.0,003
26		9968264		AR	SHIM MM.0,003
26		9968265		AR	SHIM MM.0,007
26		9968266		AR	SHIM MM.0,015
26		9968267		AR	SHIM MM.0,020
27		9968261		1	SPACER
28		9968282		1	SHAFT

TRANSMISSIONGEARING SPEED GEAR (2WD POWER-SHUTTLE)

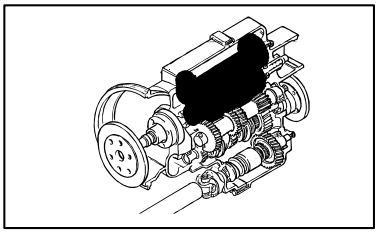

TRANSMISSIONGEARING SPEED GEAR (2WD POWER-SHUTTLE)

REF	FN	PART NUMBER	YR/SN	QTY	DESCRIPTION
29		9968314		1	GASKET MM.40
30		9968230		1	WASHER 40X70X4
31		9968276		1	BEARING ASSY

1.28.0/ A	06	p1	11/03

TRANSMISSIONGEARING SPEED GEAR (2WD POWER-SHUTTLE)

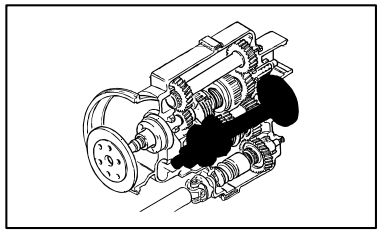

TRANSMISSIONGEARING SPEED GEAR (2WD POWER-SHUTTLE)

REF	FN	PART NUMBER	YR/SN	QTY	DESCRIPTION
1		9968308		1	SCREW
2		9968306		1	WASHER
3		9968309		1	O-RING 1.29" ID x .139" Thk
4		85820909		1	FLANGE
5		9968357		1	GASKET M48 x 62 x 8
6		9968271		1	SPACER
7		9968272		AR	SHIM 0.051mm
7		9968273		AR	SHIM 0.076mm
7		9968274		AR	SHIM 0.178mm
7		9968275		AR	SHIM 0.559mm
8		9968270		1	BEARING ASSY
9		9968245		1	GEAR 19T 4TH
10		9968252		1	BUSHING
11		9968250		2	BEARING ASSY
12		9968251		1	SPACER
13		9968248		1	GEAR 43T 1ST
14		9968307		2	SYNCHRONIZER
15		9968223		2	RING
16		9968247		1	GEAR 37T 2ND
17		9968269		1	SHAFT
18		9968246		1	GEAR 28T 3RD
19		9968396		1	SPACER
20		9968358		1	RING Sealing Cap, 2.25"
21		9968253		1	RING, LOCKING
22		9968278		1	BEARING ASSY
23		9968260		1	WASHER 55X35X4

TRANSMISSIONGEARING SPEED GEAR (2WD POWER-SHUTTLE)

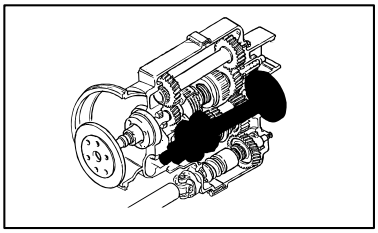

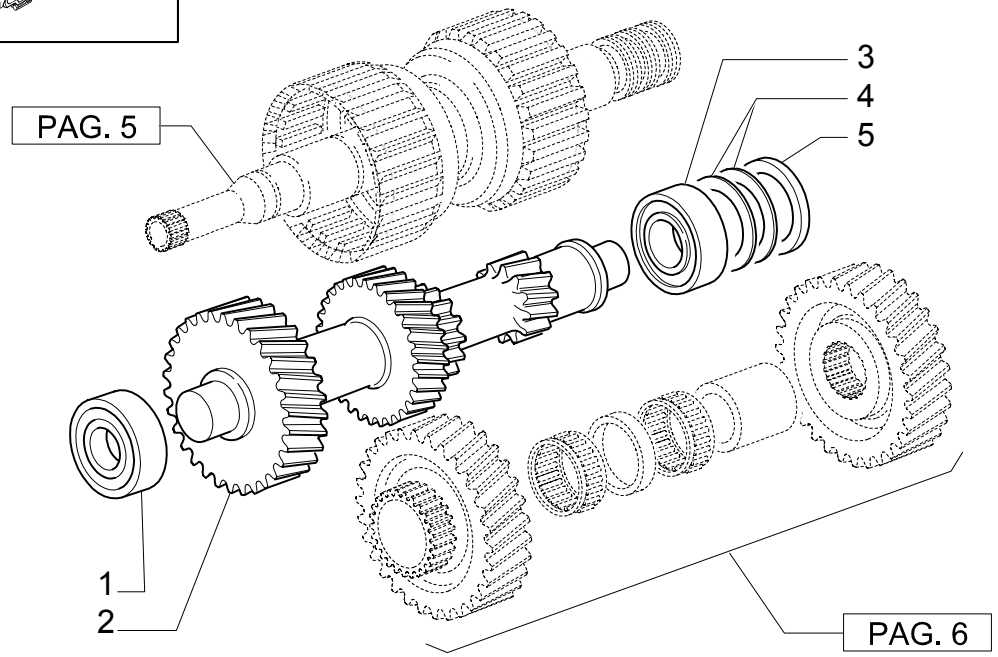

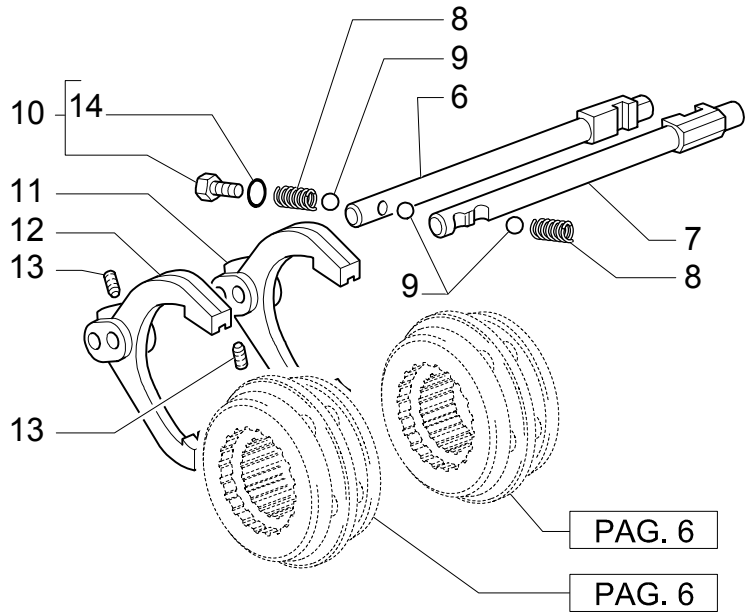

TRANSMISSIONGEARING SPEED GEAR (2WD POWER-SHUTTLE)

REF	FN	PART NUMBER	YR/SN	QTY	DESCRIPTION
1		9968277		1	BEARING ASSY
2		9968280		1	SHAFT 35T-29T-20T-13T
3		9968270		1	BEARING ASSY
4		9968272		AR	SHIM 0.051mm
4		9968273		AR	SHIM 0.076mm
4		9968274		AR	SHIM 0.178mm
4		9968275		AR	SHIM 0.559mm
5		9968271		1	SPACER
6		9968319		1	ROD 1ST-2ND
7		9968322		1	ROD 3RD-4TH
8		9968316		2	SPRING
9		9968315		3	BALL
10		9968219		AR	PLUG 9/16" UNF
11		9968317		1	YOKE 1ST-2ND
12		9968318		1	YOKE 3RD-4TH
13		9968323		2	SCREW
14		9968218		AR	O-RING

TRANSMISSIONGEARING SPEED GEAR (4WD POWER-SHUTTLE)

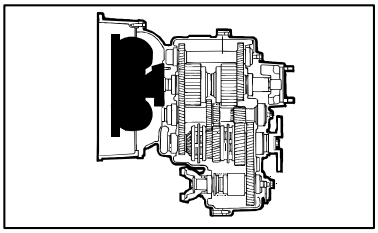

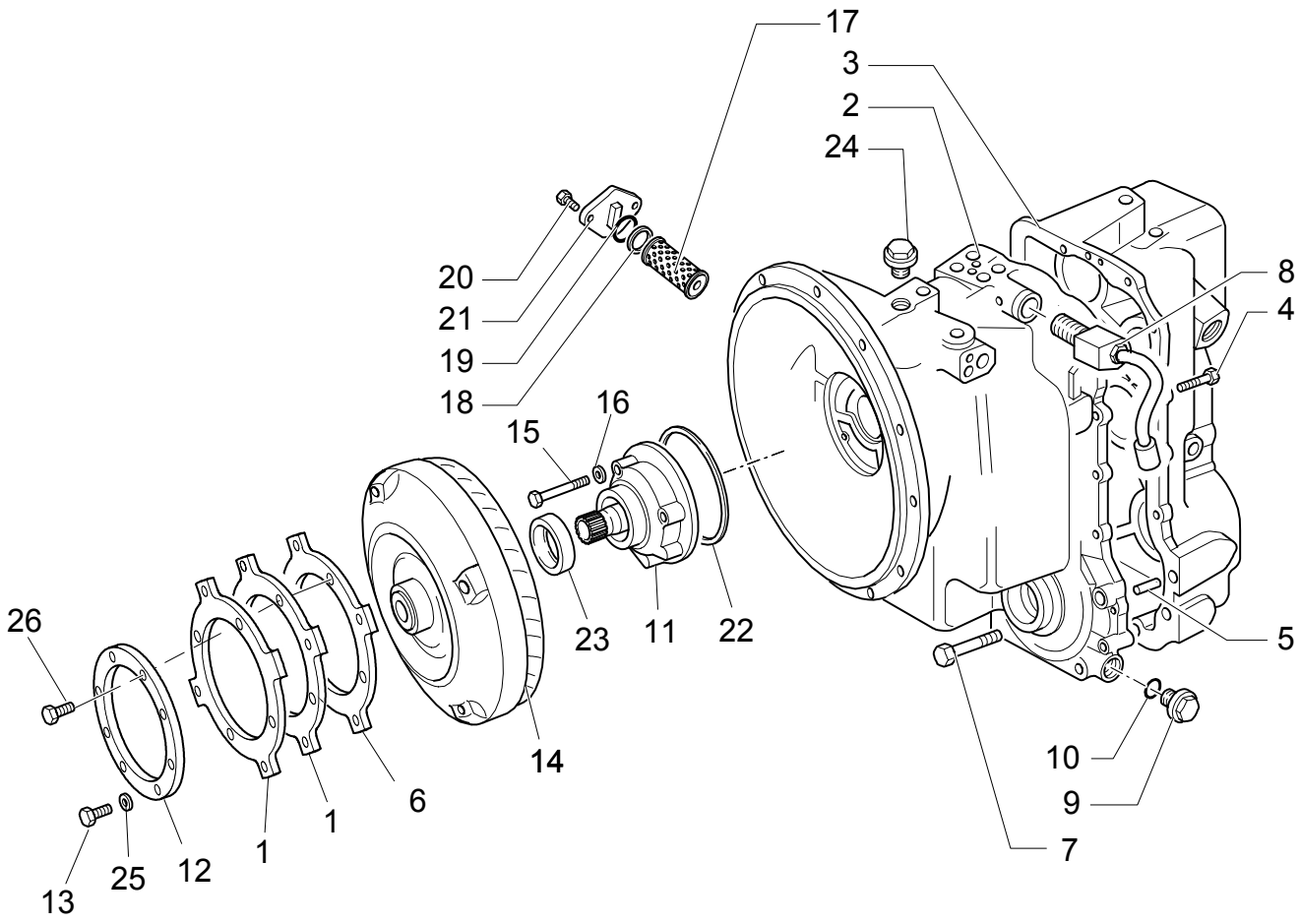

TRANSMISSIONGEARING SPEED GEAR (4WD POWER-SHUTTLE)

REF	FN	PART NUMBER	YR/SN	QTY	DESCRIPTION
1		86993546		2	PLATE, RETAINING
2		9968216		1	BOX
3		9968217		1	BOX
4		85817164		14	SCREW
5		9968356		2	DOWEL
6		87406934		1	PLATE, RETAINING
7		85817190		4	SCREW
8		9968351		1	VALVE, HYDRAULIC
9		9968339		1	PLUG
10		9968365		1	O-RING
11		9968311		1	PUMP, ENGINE OIL
12		87409201		1	PLATE, RETAINING
13		11106021		4	SCREW
14		87400114		1	TORQUE CONVERTER
15		85817163		7	SCREW
16		85817001		4	WASHER
17		9968359		1	FILTER
18		9968361		1	WASHER
19		9968360		1	O-RING
20		85817169		2	SCREW
21		9968362		1	COVER
22		9968313		1	GASKET
23		9968312		1	GASKET
24		85821453		1	PLUG
25		47049372		4	WASHER
26		87019767		4	SCREW

TRANSMISSIONGEARING SPEED GEAR (4WD POWER-SHUTTLE)

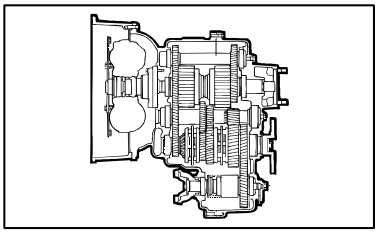

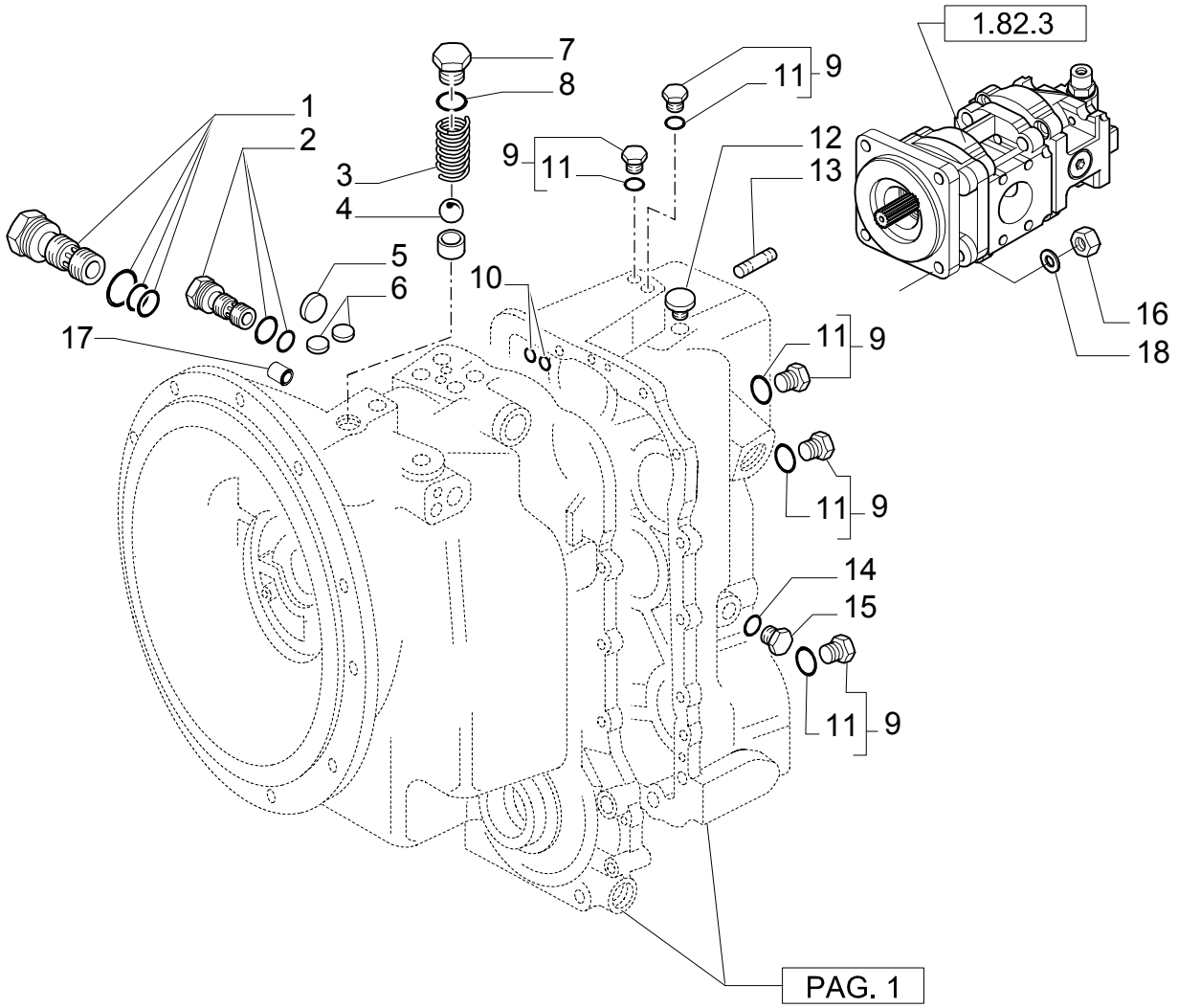

TRANSMISSIONGEARING SPEED GEAR (4WD POWER-SHUTTLE)

REF	FN	PART NUMBER	YR/SN	QTY	DESCRIPTION
1		9968350		1	VALVE, HYDRAULIC HYDR.PRESSURE REGULATOR
2		9968334		1	VALVE, HYDRAULIC HYDR.CONVERTER RELIEF
3		9968378		1	SPRING
4		9968379		1	BALL
5		9968371		1	PLUG Expansion, 1"
6		9968333		2	PLUG Tyers, .5"
7		85817003		1	PLUG
8		9968377		1	O-RING .924" ID x .116" Thk
9		9968219		AR	PLUG 9/16" UNF
10		9968368		4	O-RING .512" ID x .094" Thk
11		9968218		AR	O-RING
12		9968364		1	BREATHER
13		85802683		4	STUD 1/2"
14		9968383		1	WASHER
15		9968382		1	PLUG
16		85802684		4	NUT
17		85812094		2	SHIELD
18		11190779		4	WASHER, LOCK

1.28.0/ B	03	p1	11/03

TRANSMISSIONGEARING SPEED GEAR (4WD POWER-SHUTTLE)

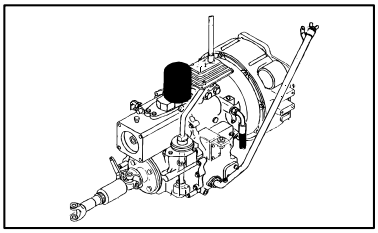

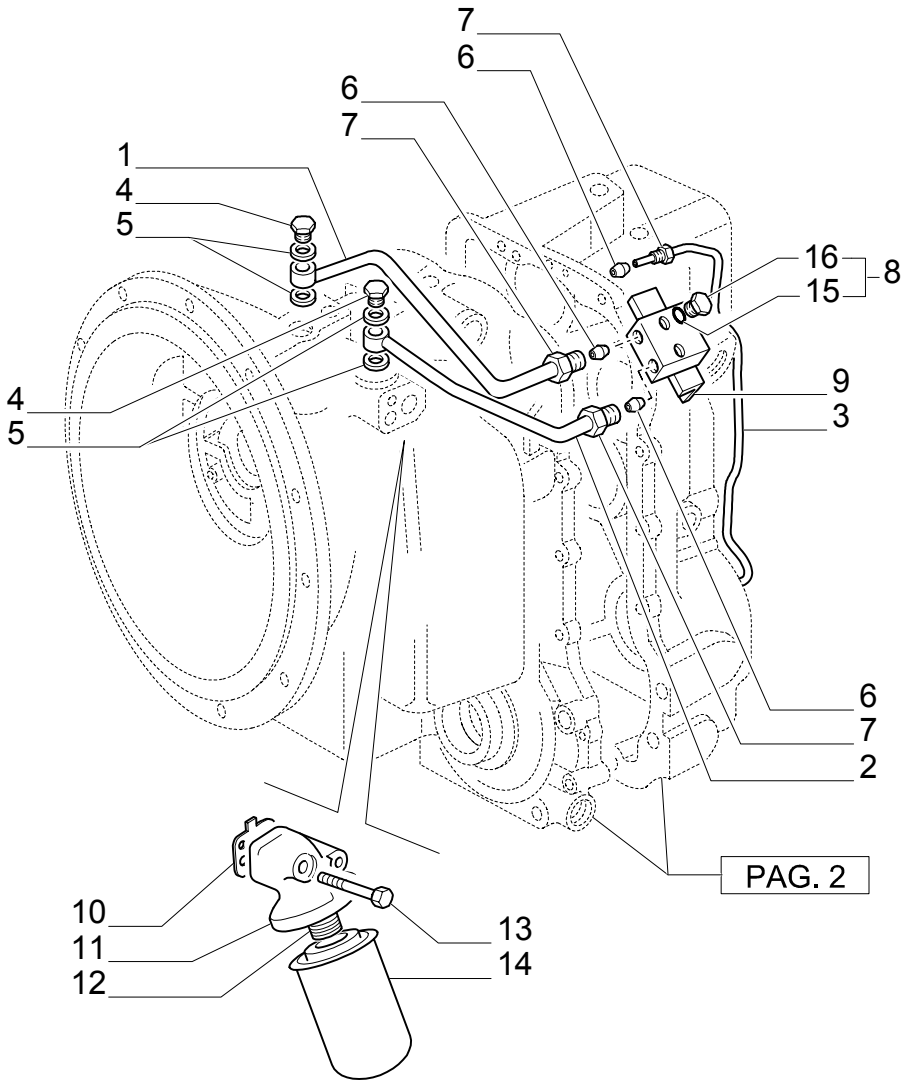

TRANSMISSIONGEARING SPEED GEAR (4WD POWER-SHUTTLE)

REF	FN	PART NUMBER	YR/SN	QTY	DESCRIPTION
1		85812086		1	TUBE, RIGID
2		85812087		1	TUBE, RIGID
3		9968337		1	TUBE, RIGID 4WD
4		9968676		2	BOLT, BANJO
5		85817002		4	WASHER
6		9968340		AR	CONNECTOR, HYD.
7		9968336		AR	NUT
8		9968219		2	PLUG 9/16" UNF
9		85812085		1	BLOCK
10		9968375		1	GASKET
11		9968374		1	HOUSING
12		9968354		1	ADAPTER
13		85817165		2	SCREW
14		85817004		1	FILTER
15		9968218		AR	O-RING
16		85812091		1	PLUG

1.28.0/ B	04	p1	11/03

TRANSMISSIONGEARING SPEED GEAR (4WD POWER-SHUTTLE)

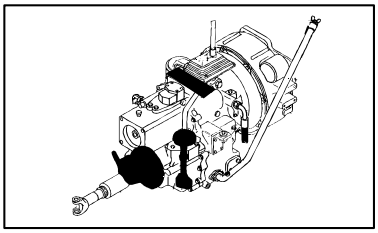

TRANSMISSIONGEARING SPEED GEAR (4WD POWER-SHUTTLE)

REF	FN	PART NUMBER	YR/SN	QTY	DESCRIPTION
1	1	85805818		1	VALVE, HYDRAULIC
2		9969344		2	KIT
3		85812092		3	WASHER
4		9969445		4	SCREW
5		85817163		3	SCREW
6		85813304		2	KIT
7	2	85813300		1	BRAKE CALIPER
8		9968678		2	PLUG 2WD
9		9968324		1	LEVER
10		9968327		1	PIN
11		9968326		1	SUPPORT
12		9968328		1	BOOT
13		9969281		2	NUT
14		9968299		2	BOLT
15		85813318		1	KIT, REPAIR
16	3	85813338		1	KIT
17		9968926		1	SET OF PARTS
18		9968927		1	KIT
19		9968370		2	PLUG Plastic, .25"
20		9968331		1	CLIP, HOSE
21		85817006		2	GASKET
22		85817007		2	GASKET

(1) Includes 2,6
(2) Includes 17, 18
(3) KIT FORSOLENOID REPLACEMENT WITHOUT CHANGEING THE DIRECTIONAL VALVE GROUP.
COMPOSITION = CORE TUBE, NUT AND WASHERS

TRANSMISSIONGEARING SPEED GEAR (4WD POWER-SHUTTLE)

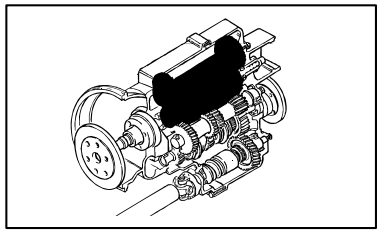

TRANSMISSIONGEARING SPEED GEAR (4WD POWER-SHUTTLE)

REF	FN	PART NUMBER	YR/SN	QTY	DESCRIPTION
1		9968279		3	WASHER 50X70X4
2		9968228		2	BEARING ASSY
3		9968304		4	BEARING ASSY 50X5X17
4		9968302		2	SPACER
5		9968286		1	GEAR 50T
6		9968291		3	RING, LOCKING
7		9968292		2	RING
8		9968293		2	SPRING
9		9968287		2	CIRCLIP
10		9968288		2	PLATE
11		9968290		12	PLATE
12		9968289		12	PLATE
13		9968294		2	PISTON
14		9968296		2	O-RING
15		9968295		2	GASKET
16		9968298		3	O-RING 2.234 ID x .139" Thk
17		9968297		3	O-RING
18		9968226		4	GASKET
19		9968341		1	O-RING M80 x 70 x 2
20		9968342		AR	SHIM 24T-25T
20		9968343		AR	SHIM 80X70X0,076
20		9968344		AR	SHIM 80X70X0,178
20		9968345		AR	SHIM 80X70X0,599
21		9968285		1	GEAR
22		9968305		1	BEARING ASSY
23		9968347		1	SHAFT
24		9968268		2	BEARING ASSY
25		9968281		1	GEAR 24T-25T
26		9968262		AR	SHIM MM.0,002
26		9968263		AR	SHIM MM.0,003
26		9968264		AR	SHIM MM.0,003
26		9968265		AR	SHIM MM.0,007
26		9968266		AR	SHIM MM.0,015
26		9968267		AR	SHIM MM.0,020
27		9968261		1	SPACER
28		9968282		1	SHAFT

TRANSMISSIONGEARING SPEED GEAR (4WD POWER-SHUTTLE)

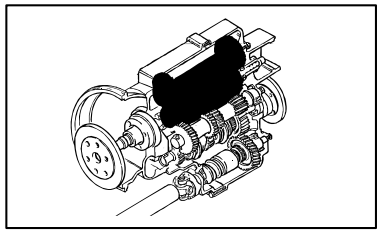

TRANSMISSIONGEARING SPEED GEAR (4WD POWER-SHUTTLE)

REF	FN	PART NUMBER	YR/SN	QTY	DESCRIPTION
29		9968314		1	GASKET MM.40
30		9968230		1	WASHER 40X70X4
31		9968276		1	BEARING ASSY

1.28.0/ B	06	p1	11/03

TRANSMISSIONGEARING SPEED GEAR (4WD POWER-SHUTTLE)

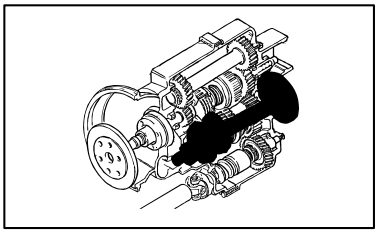

TRANSMISSIONGEARING SPEED GEAR (4WD POWER-SHUTTLE)

REF	FN	PART NUMBER	YR/SN	QTY	DESCRIPTION
1		9968308		1	SCREW
2		9968306		1	WASHER
3		9968309		1	O-RING 1.29" ID x .139" Thk
4		85820909		1	FLANGE
5		9968357		1	GASKET M48 x 62 x 8
6		9968271		1	SPACER
7		9968272		AR	SHIM 0.051mm
7		9968273		AR	SHIM 0.076mm
7		9968274		AR	SHIM 0.178mm
7		9968275		AR	SHIM 0.559mm
8		9968270		1	BEARING ASSY
9		9968249		1	GEAR 4WD
10		9968252		1	BUSHING
11		9968250		2	BEARING ASSY
12		9968251		1	SPACER
13		9968248		1	GEAR 43T 1ST
14		9968307		2	SYNCHRONIZER
15		9968223		2	RING
16		9968247		1	GEAR 37T 2ND
17		9968269		1	SHAFT
18		9968246		1	GEAR 28T 3RD
19		9968278		1	BEARING ASSY
20		9968358		1	RING Sealing Cap, 2.25"
21		9968253		1	RING, LOCKING
22		9968245		1	GEAR 19T 4TH
23		9968260		1	WASHER 55X35X4

1.28.0/ B	07	p1	11/03

TRANSMISSIONGEARING SPEED GEAR (4WD POWER-SHUTTLE)

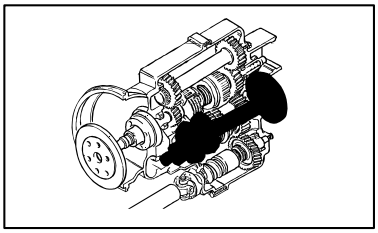

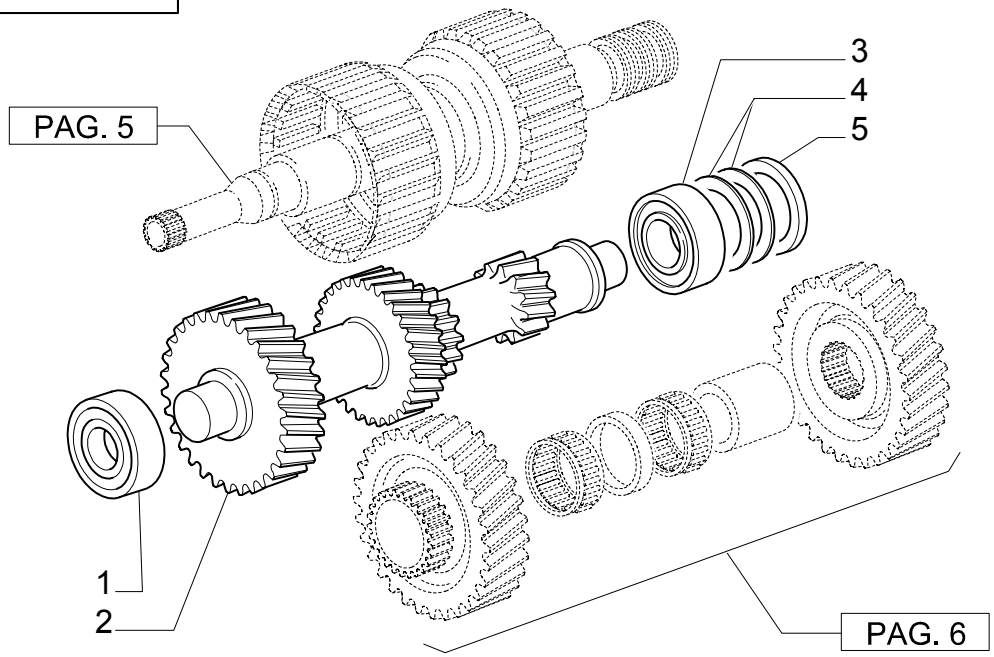

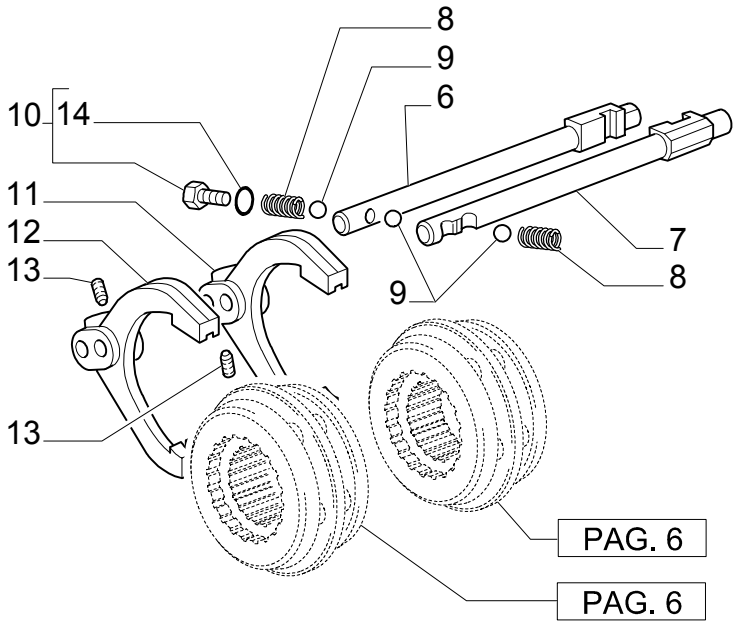

TRANSMISSIONGEARING SPEED GEAR (4WD POWER-SHUTTLE)

REF	FN	PART NUMBER	YR/SN	QTY	DESCRIPTION
1		9968277		1	BEARING ASSY
2		9968280		1	SHAFT 35T-29T-20T-13T
3		9968270		1	BEARING ASSY
4		9968272		AR	SHIM 0.051mm
4		9968273		AR	SHIM 0.076mm
4		9968274		AR	SHIM 0.178mm
4		9968275		AR	SHIM 0.559mm
5		9968271		1	SPACER
6		9968319		1	ROD 1ST-2ND
7		9968322		1	ROD 3RD-4TH
8		9968316		2	SPRING
9		9968315		3	BALL
10		9968219		AR	PLUG 9/16" UNF
11		9968317		1	YOKE 1ST-2ND
12		9968318		1	YOKE 3RD-4TH
13		9968323		2	SCREW
14		9968218		AR	O-RING

1.28.0/ B	08	p1	11/03

TRANSMISSIONGEARING SPEED GEAR (4WD POWER-SHUTTLE)

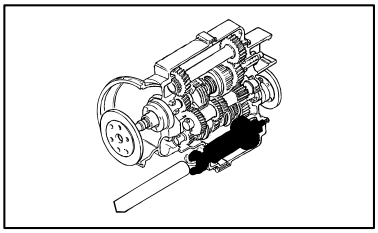

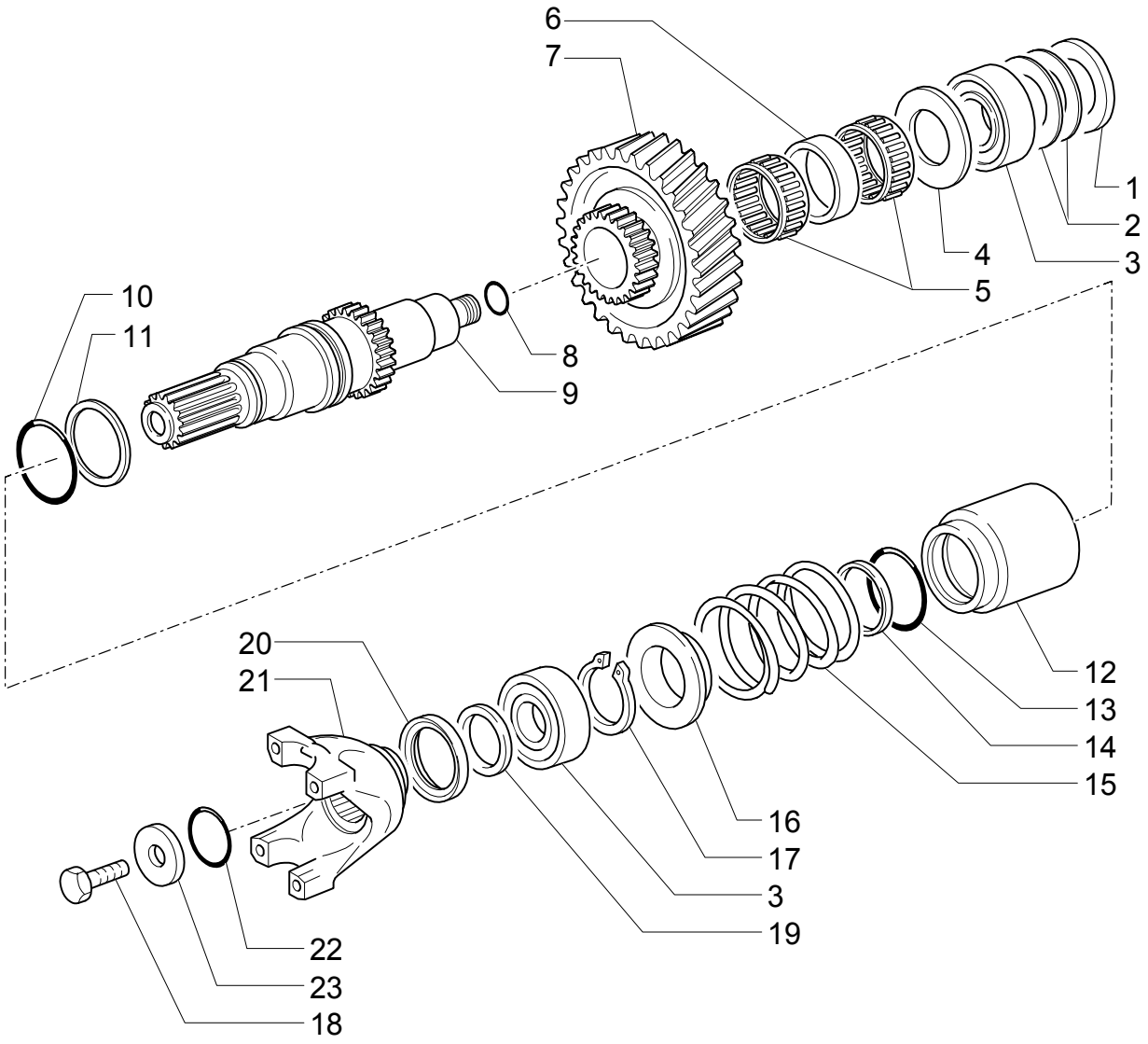

TRANSMISSIONGEARING SPEED GEAR (4WD POWER-SHUTTLE)

REF	FN	PART NUMBER	YR/SN	QTY	DESCRIPTION
1		9968255		1	SPACER
2		9968256		AR	SHIM 67,5 x 58 x 0.051mm
2		9968257		AR	SHIM 67,5 x 58 x 0.076mm
2		9968258		AR	SHIM 67,5 x 58 x 0,178mm
2		9968259		AR	SHIM 67,5 x 58 x 0.599mm
3		9968276		2	BEARING ASSY
4		9968244		1	WASHER, THRUST 65X40,5X4
5		9968392		2	NEEDLE ROLLER
6		9968393		1	SPACER
7		9968240		1	GEAR 35T
8		9968254		1	GASKET
9		9968239		1	SHAFT
10		9968232		1	O-RING 1.859" ID x .139" Thk
11		9968229		1	GASKET
12		9968234		1	CLUTCH
13		9968298		1	O-RING 2.234 ID x .139" Thk
14		9968297		1	O-RING
15		9968235		1	SPRING
16		9968236		1	SUPPORT
17		9968233		1	RING, SNAP
18		9968308		1	SCREW
19		9968301		1	SPACER
20		9968357		1	GASKET M48 x 62 x 8
21		9968300		1	FLANGE
22		9968309		1	O-RING 1.29" ID x .139" Thk
23		9968306		1	WASHER

1.28.6	01	p1	05/03

GEAR FILTER PIPES (POWER-SHUTTLE)

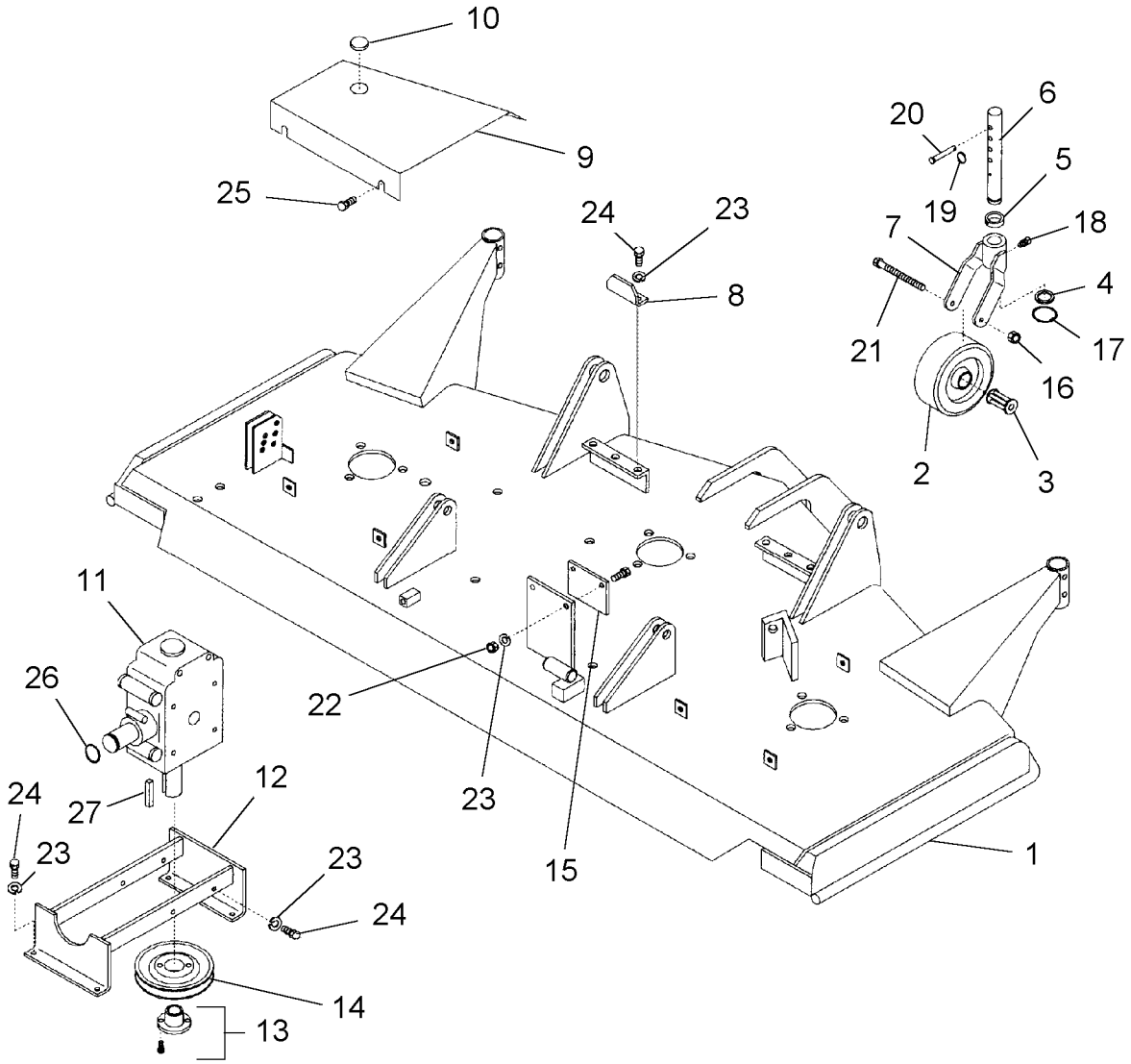

GEAR FILTER PIPES (POWER-SHUTTLE)

REF	FN	PART NUMBER	YR/SN	QTY	DESCRIPTION
1		87408479		1	TUBE, RIGID
2		87408557		1	TUBE, RIGID
3		47050658		1	CONNECTOR, HYD.
4		47049176		1	COLLAR

TRANSMISSION ESTERNALSHIFTING CONTROLS (POWER-SHUTTLE)

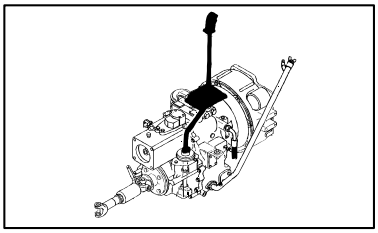

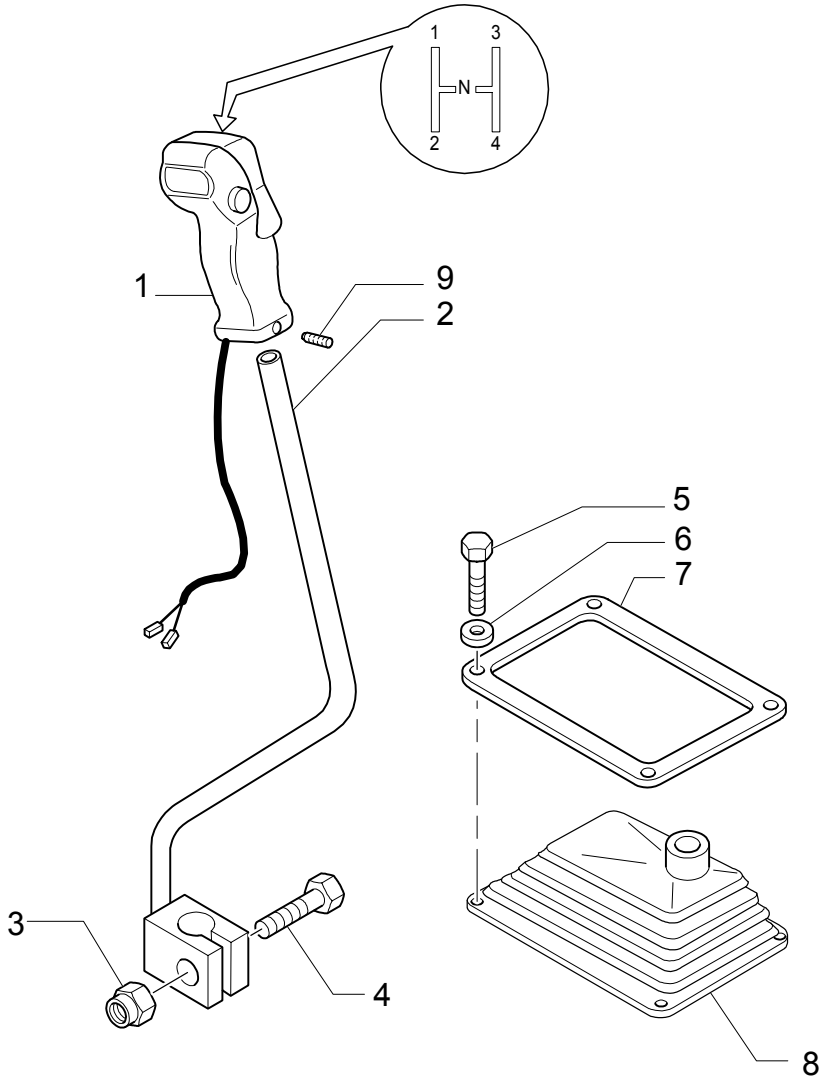

TRANSMISSION ESTERNALSHIFTING CONTROLS (POWER-SHUTTLE)

REF	FN	PART NUMBER	YR/SN	QTY	DESCRIPTION
1		85802947		1	KNOB ASSY
2		85802679		1	ARM, TRIP
3		16105011		1	NUT M12X1.25
4		15540821		1	SCREW M12X1.25X50
5		10903021		4	SCREW M6X35
6		11197779		4	WASHER, LOCK
7		85824187		1	DETECTOR
8		85802847		1	BOOT
9		13736611		1	DOWEL M5 x 14

FRONT & REAR DRIVESHAFT, POWER-SHUTTLE

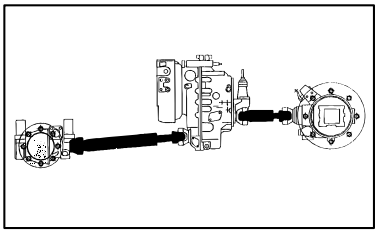

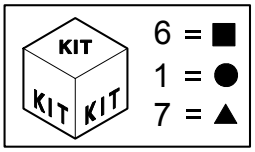

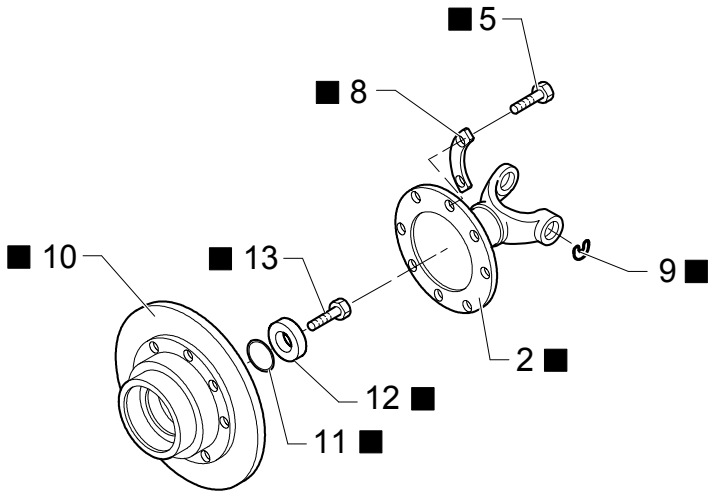

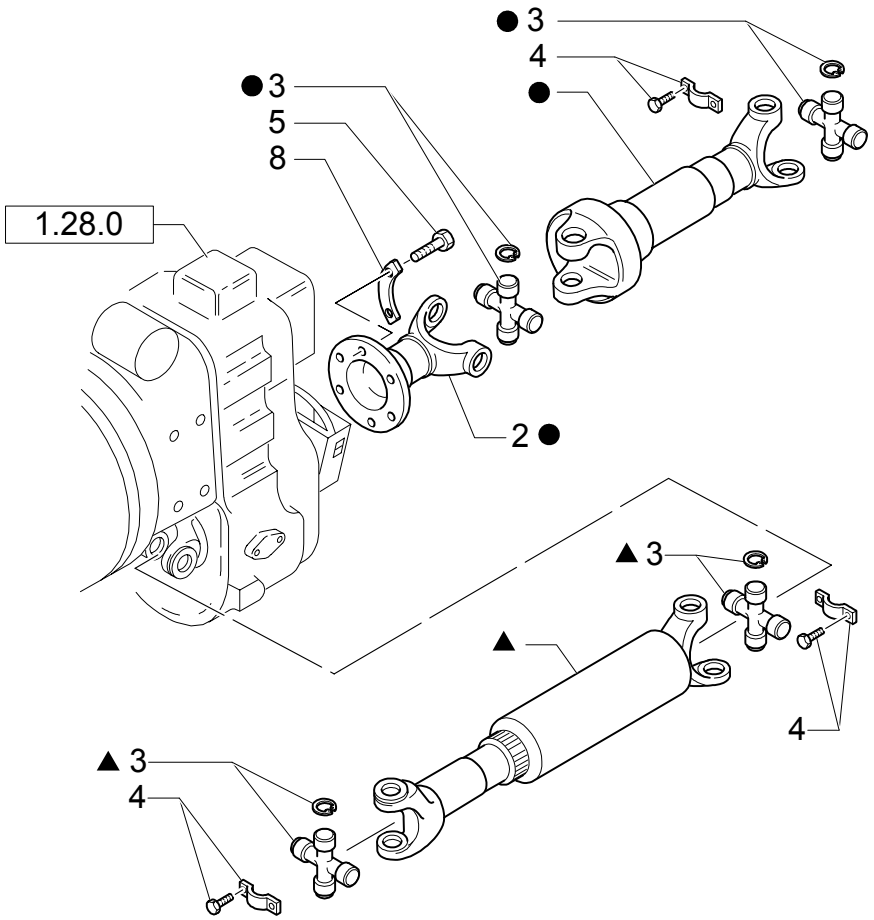

FRONT & REAR DRIVESHAFT, POWER-SHUTTLE

REF	FN	PART NUMBER	YR/SN	QTY	DESCRIPTION
1	1	85820155		1	SHAFT
2		85820157		1	FLANGE
3		9968410		4	SPIDER
4		85801573		AR	KIT
5		85820154		8	SCREW
6	2	85820908		1	KIT
7	3	85801002		1	SHAFT, PROPELLOR Front
8		85819186		4	PLATE, COVER
9		85820914		2	CIRCLIP
10		85820909		1	FLANGE
11		9968309		1	O-RING 1.29" ID x .139" Thk
12		9968306		1	WASHER
13		9968308		1	SCREW

(1) Includes 2, 3
(2) Includes 2, 5, 8 To 13
(3) Includes 3

1.39.8	01	p1	08/03

TRANSMISSION OIL COOLING PIPES (POWER-SHUTTLE)

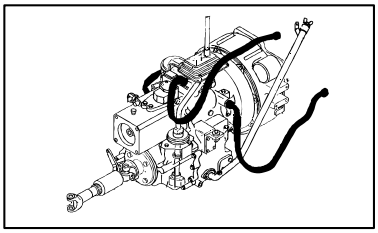

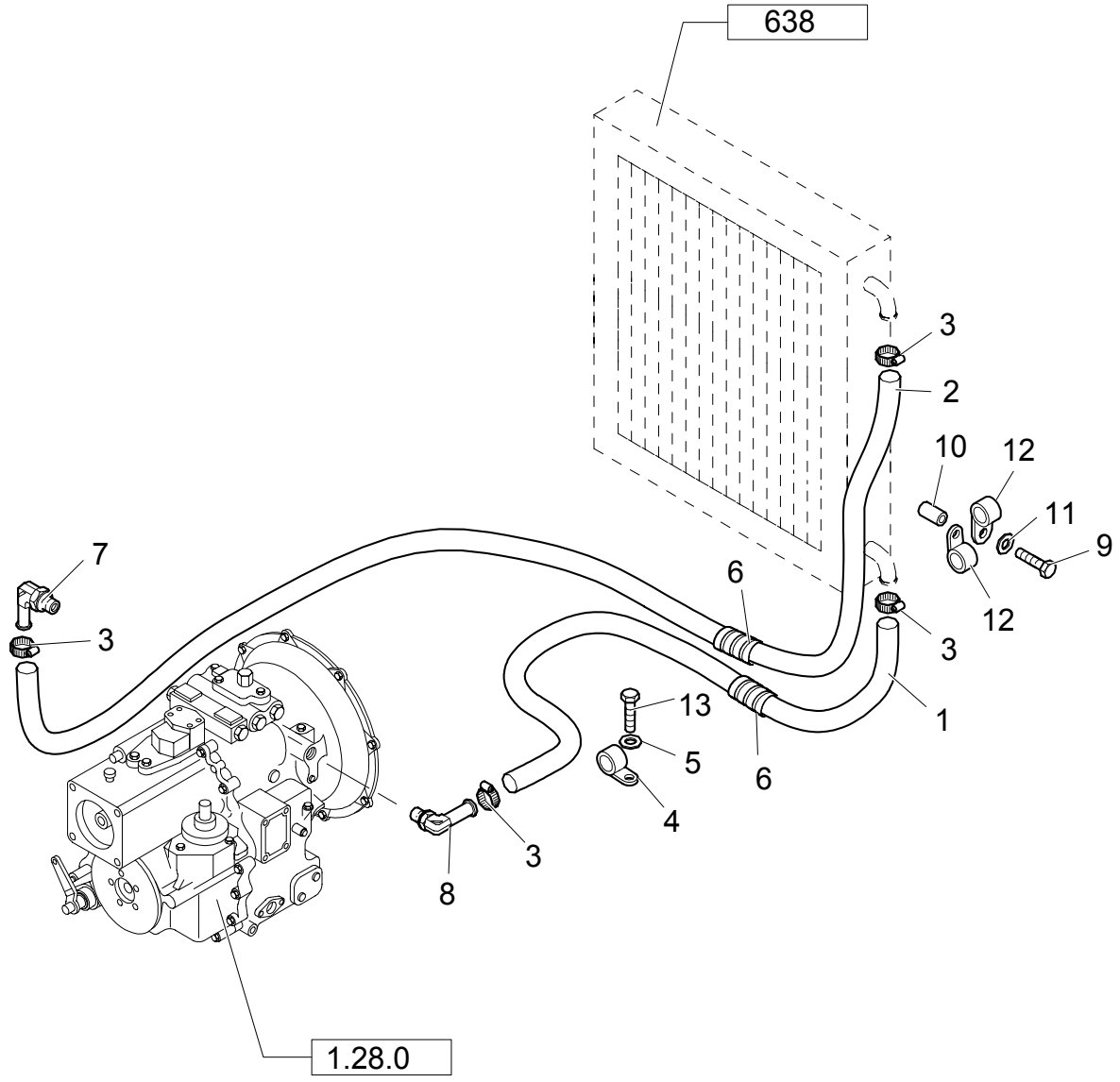

TRANSMISSION OIL COOLING PIPES (POWER-SHUTTLE)

REF	FN	PART NUMBER	YR/SN	QTY	DESCRIPTION
1		87410671		1	TUBE, RIGID
2		87410672		1	TUBE, RIGID
3		47049644		4	COLLAR
4		47048664		2	COLLAR
5		47048964		2	WASHER
6		{47048760}		2	SHIELD
7		87017744		1	CONNECTOR, HYD.
8		87017743		1	CONNECTOR, HYD.
9		47049161		1	SCREW
10		85825169		1	SPACER
11		47048962		1	WASHER
12		47049171		2	COLLAR
13		47042364		1	SCREW

SECTION INDEX

SEC. 04	01	FRONT AXLE
1.40.0	01	FRONT AXLE (2WD)
1.40.0	02	FRONT AXLE (2WD)
1.42.0	01	POWER STEERING HYDRAULIC SYSTEM
1.42.0/ A	01	POWER STEERING HYDRAULIC SYSTEM
402	01	4WD FRONT AXLE, HOUSING, BUSHINGS & SUPPORTS
402	02	4WD FRONT AXLE, SWIVEL HOUSING & STEERING CYLINDER
402	03	4WD FRONT AXLE, HUBS
402	04	4WD FRONT AXLE, RING GEAR & PINION ASSEMBLY
402	05	4WD FRONT AXLE, DIFFERENTIAL
402	06	4WD FRONT AXLE, DRIVE SHAFT
415	01	FRONT AXLE - (4WD) W/GEAR,BEVEL
415	02	FRONT AXLE - (4WD) W/GEAR,BEVEL
415	03	FRONT AXLE - (4WD) W/GEAR,BEVEL
415	04	FRONT AXLE - (4WD) W/GEAR,BEVEL
415	05	FRONT AXLE - (4WD) W/GEAR,BEVEL
415	06	FRONT AXLE - (4WD) W/GEAR,BEVEL

FRONT AXLE

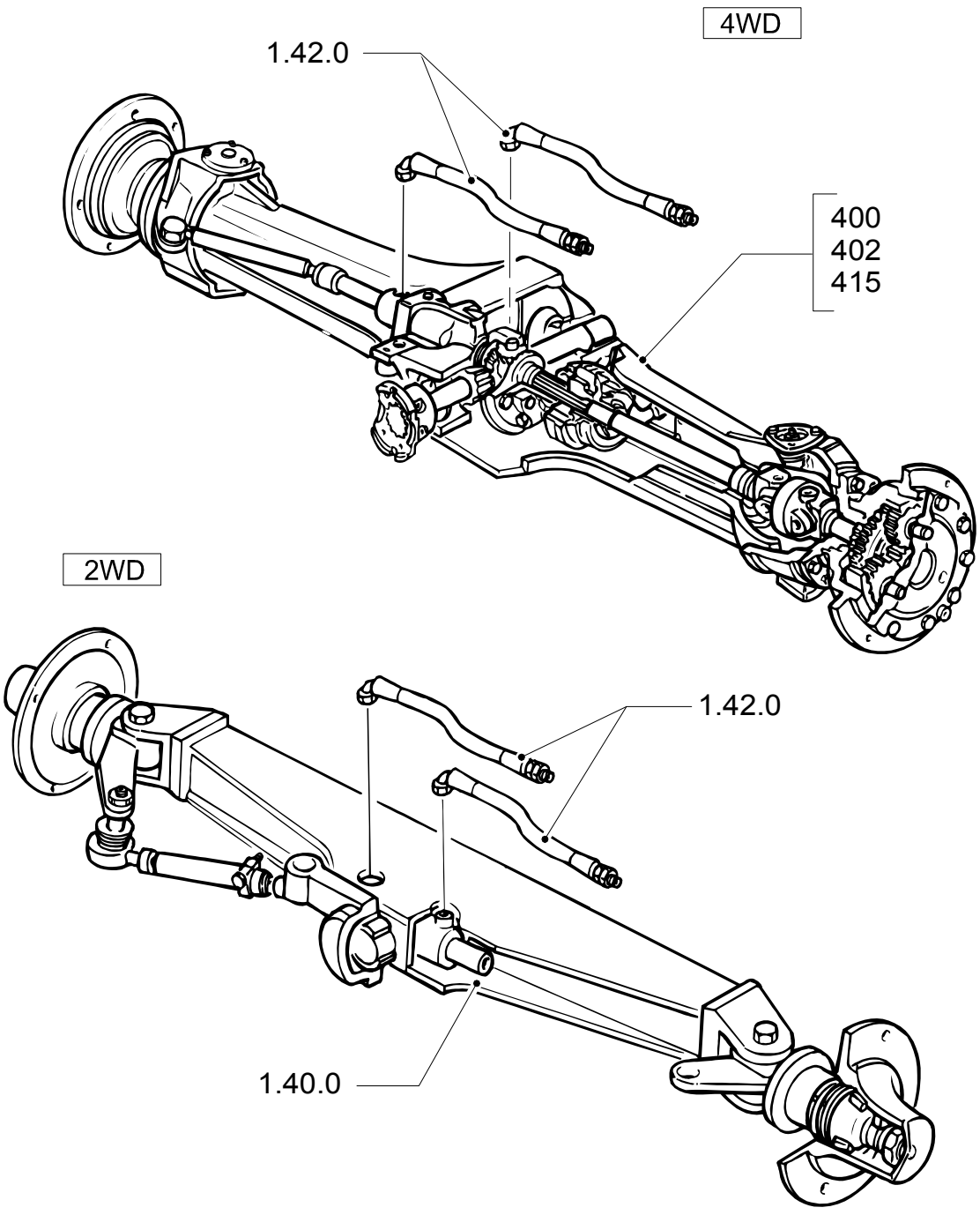

FRONT AXLE

REF	FN	PART NUMBER	YR/SN	QTY	DESCRIPTION

FRONT AXLE (2WD)

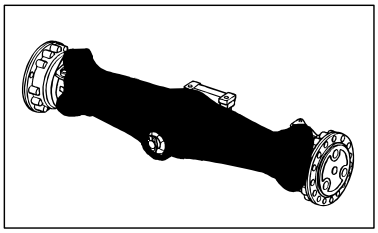

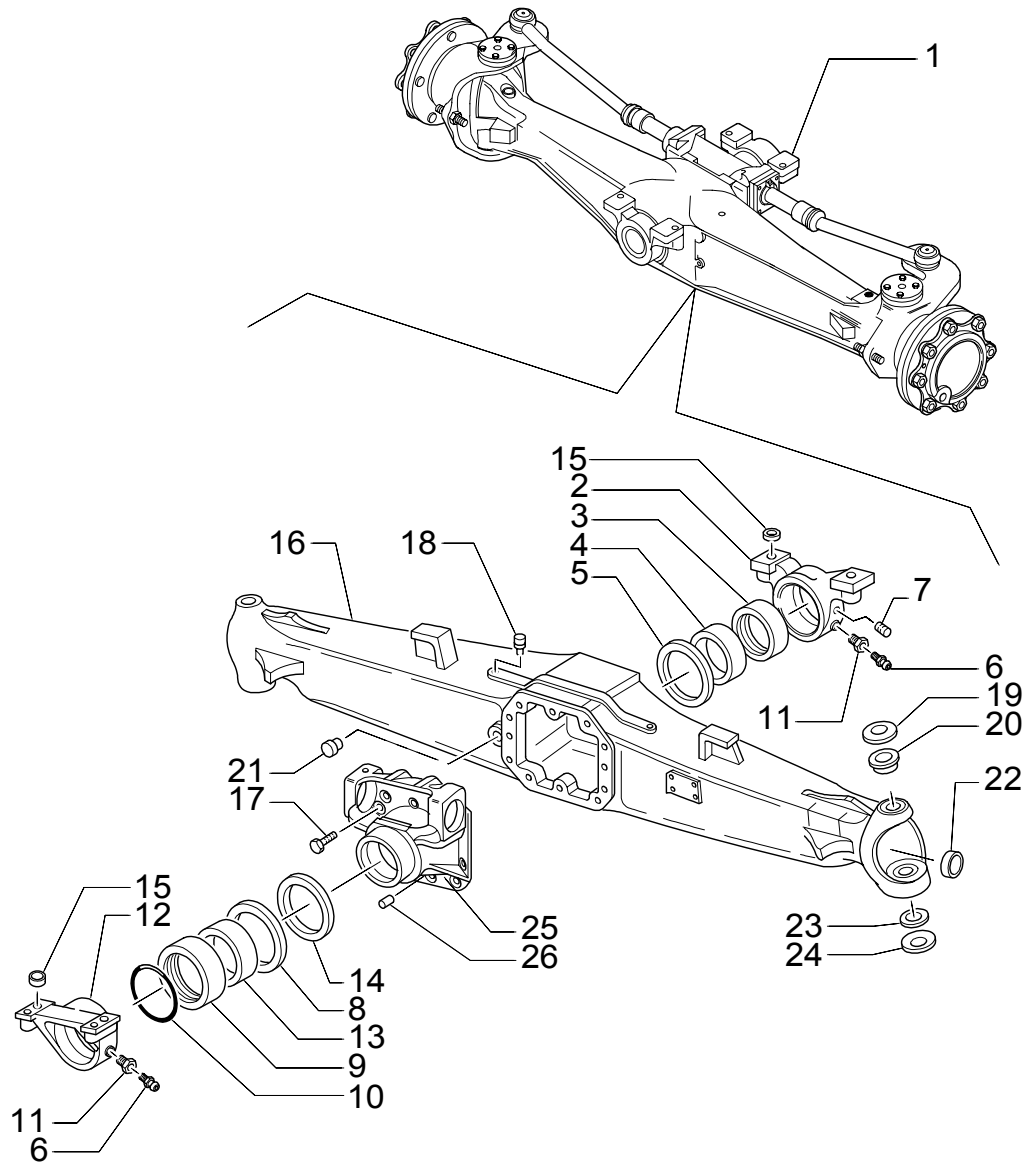

FRONT AXLE (2WD)

REF	FN	PART NUMBER	YR/SN	QTY	DESCRIPTION
1		85824339		1	AXLE, FRONT, LIVE
2		9967991		1	SUPPORT
3		9967992		1	BUSHING 125X115X5
4		9967993		1	BUSHING 115X105X44
5		9967994		1	WASHER, THRUST
6		9967996		2	NIPPLE, LUBE M8X1
7		85805973		1	PLUG M8X1
8		9968006		1	WASHER, THRUST
9		9968007		1	BUSHING 135X125X5
10		9968008		1	RING, RUBBER
11		9967995		2	SCREW
12		9968009		1	SUPPORT
13		9968010		1	BUSHING
14		85805706		1	PLUG DIA=92X12
15		9967990		4	BUSHING, DRIVE 30X21X16,5
16		85824347		1	BEAM
17		9967769		10	SCREW M12X1,75X33
18		85805703		1	PLUG M10X1
19		9967673		2	SPRING
20		85824469		2	BUSHING
21		85805707		3	PLUG
22		85805704		2	PLUG
23		9967678		2	ARTICULATION
24		9967679		2	SPRING
25		85805705		1	SUPPORT
26		9967683		2	PIN, ROLL 15X35

FRONT AXLE (2WD)

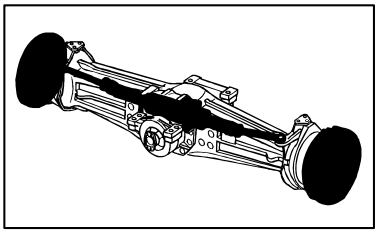

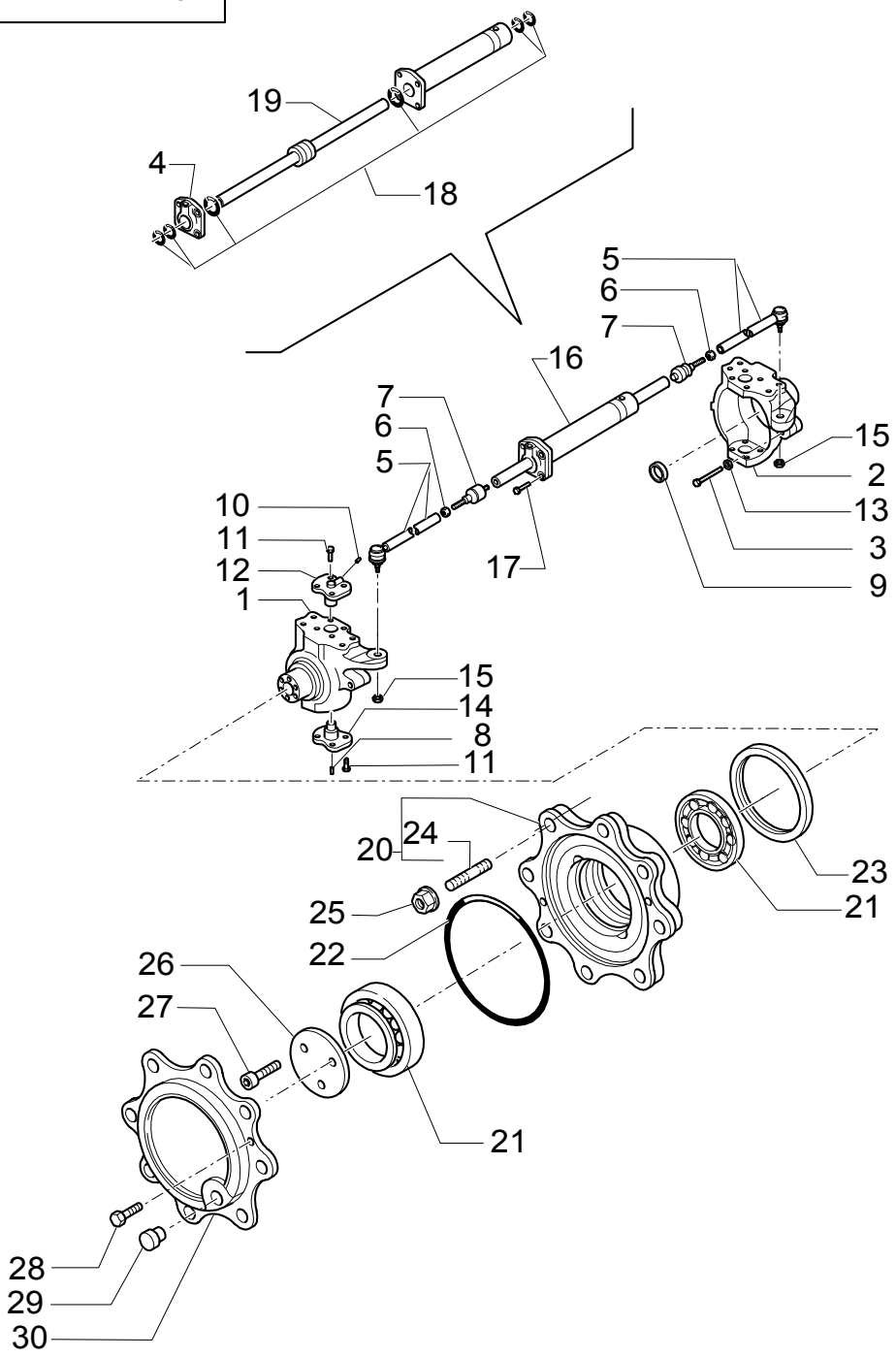

FRONT AXLE (2WD)

REF	FN	PART NUMBER	YR/SN	QTY	DESCRIPTION
1		85824351		1	CUP, COVER LH
2		85824350		1	CUP, COVER RH
3		85805987		4	SCREW M16X100
4		85805989		1	PISTON SWIVEL HEAD
5		85805977		2	TIE-ROD
6		85805976		2	NUT M18X1,5
7		85805975		2	ARTICULATION
8		85805984		2	NIPPLE, LUBE M6X1
9		85824352		2	PLUG
10		9968021		2	NIPPLE, LUBE M6X2
11		85805979		16	SCREW M12X1,75X30
12		85805980		2	PIN
13		85805986		4	NUT M16
14		85805983		2	PIN
15		85805982		2	NUT M18X1,5
16		85805978		1	CYLINDER ASSY
17		9968028		4	SCREW M12X45
18		85805990		1	KIT
19		85805992		1	ROD
20		85806003		2	KIT
21		85806002		4	BEARING ASSY
22		85805711		2	O-RING
23		85827067		2	RING
24		9968070		16	STUD
25		9968071		16	NUT M18X1,5
26		85813054		2	WASHER, THRUST
27		85806010		6	SCREW M10X4,5
28		85805709		4	SCREW M8X20
29		85805707		2	PLUG M22X1,5
30		85805710		2	COVER

POWER STEERING HYDRAULIC SYSTEM

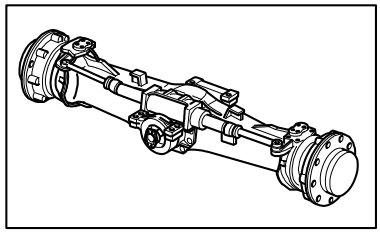

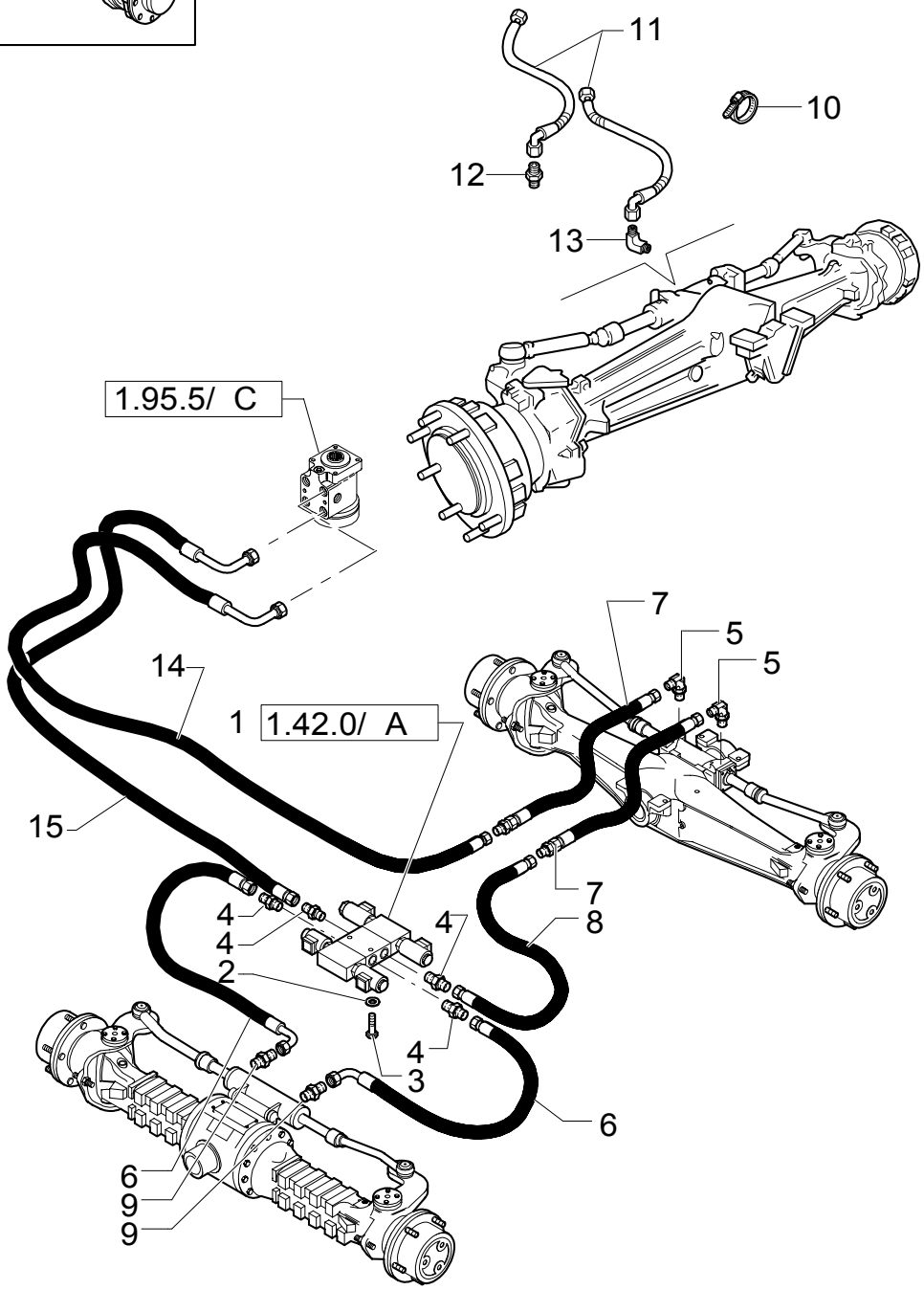

POWER STEERING HYDRAULIC SYSTEM

REF	FN	PART NUMBER	YR/SN	QTY	DESCRIPTION
1		85805232		1	VALVE, HYDRAULIC
2		11193879		2	WASHER, LOCK
3		16043421		2	SCREW
4		83963371		4	CONNECTOR, HYD.
5		85805318		2	ELBOW
6		85815615		2	HOSE, FLEXIBLE
7		85813377		2	HOSE, FLEXIBLE
8		85812202		2	HOSE, FLEXIBLE
9		85815614		2	CONNECTOR, HYD.
10		85803332		1	COLLAR
11		85812212		2	HOSE, FLEXIBLE
12		83985067		1	CONNECTOR, HYD.
13		83983763		1	CONNECTOR, HYD.
14		85813369		1	HOSE, FLEXIBLE L=MM.1200
15		85805231		1	HOSE, FLEXIBLE L=MM.2100

POWER STEERING HYDRAULIC SYSTEM

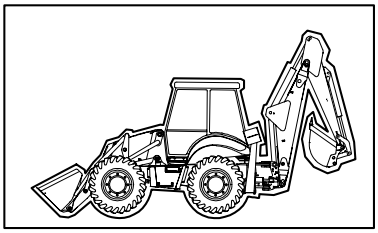

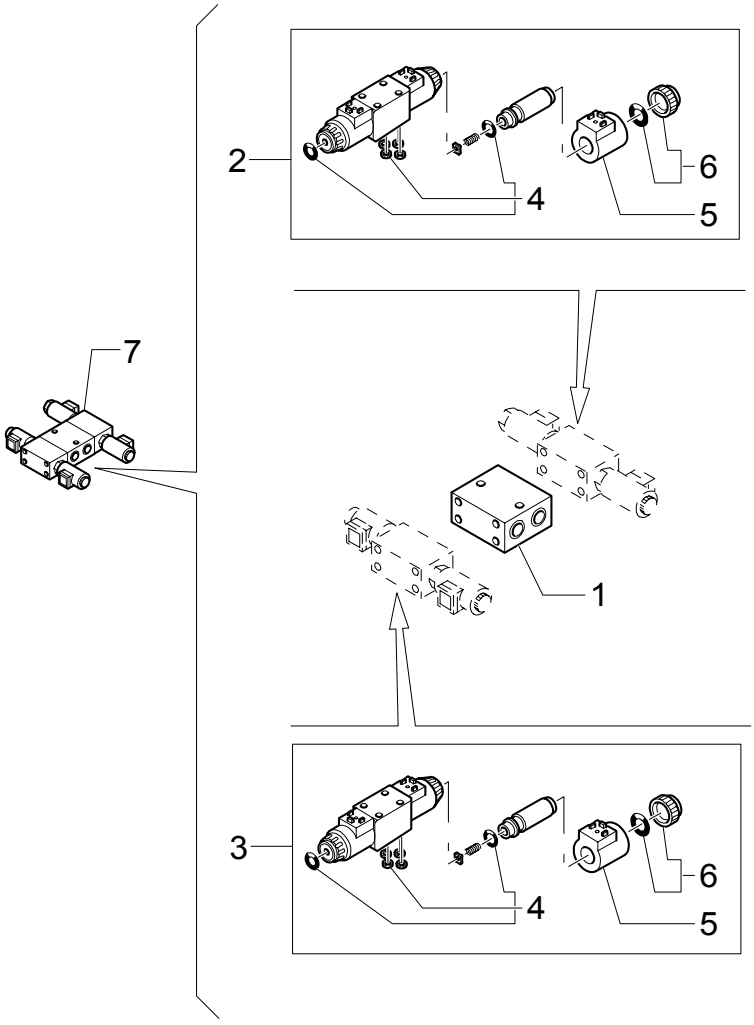

POWER STEERING HYDRAULIC SYSTEM

REF	FN	PART NUMBER	YR/SN	QTY	DESCRIPTION
1		85812014		1	PLATE, COVER PLATE
2		85812017		1	VALVE, REMOTE CONTROL FRONT
3		85812019		1	VALVE, REMOTE CONTROL REAR
4		85812018		2	KIT
5		85812015		4	COIL
6		85812016		4	KIT
7		85805232		1	VALVE, HYDRAULIC ASSY

402	01	p1	11/03

4WD FRONT AXLE, HOUSING, BUSHINGS & SUPPORTS

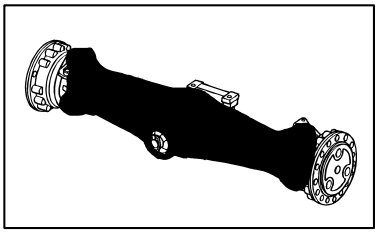

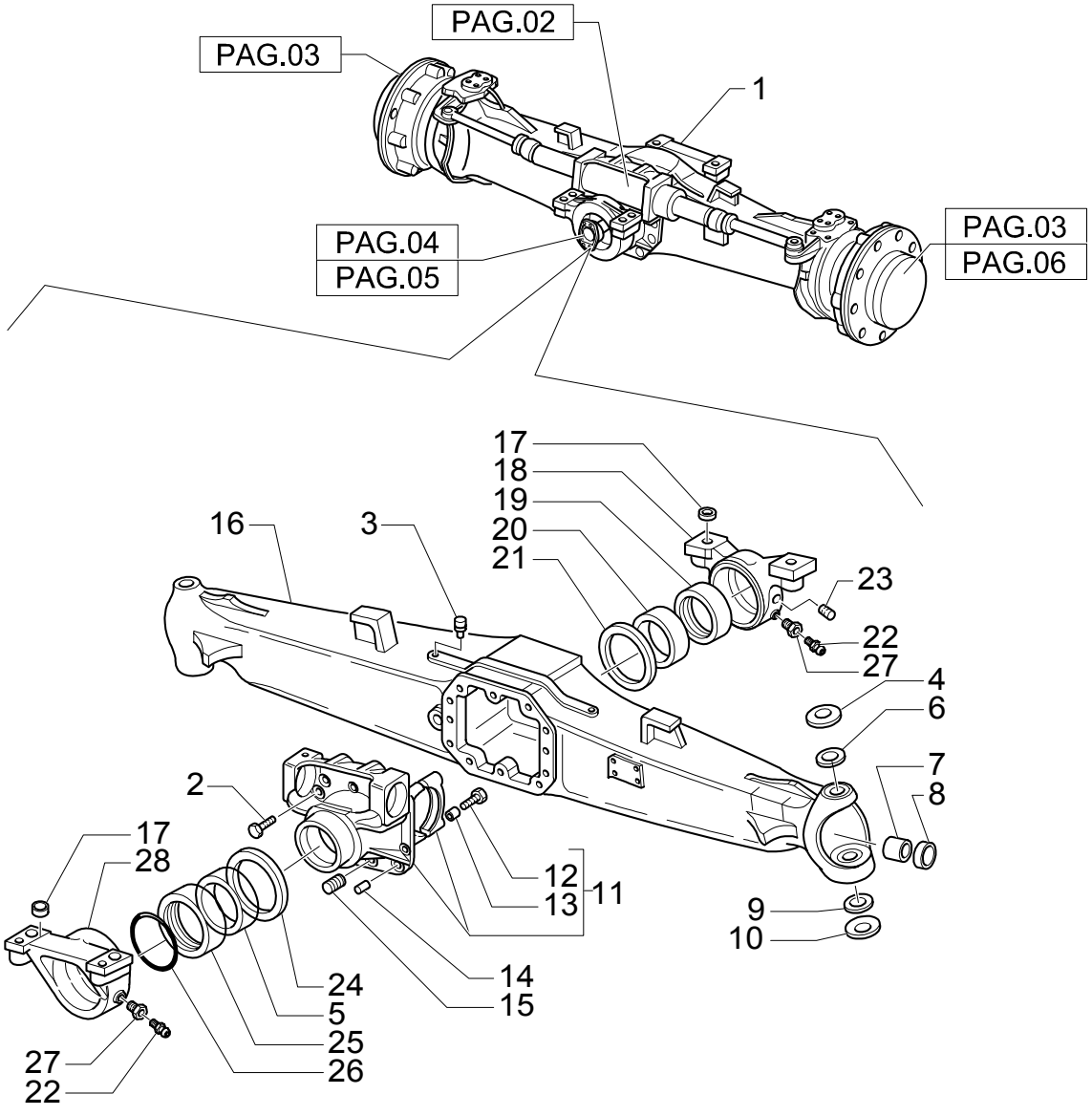

4WD FRONT AXLE, HOUSING, BUSHINGS & SUPPORTS

REF	FN	PART NUMBER	YR/SN	QTY	DESCRIPTION
1	1	85824329		1	AXLE, FRONT, LIVE
1	2	85824331		1	AXLE, FRONT, LIVE
2		9967769		10	SCREW Cap, HH, M12X1.75X33
3		9967672		1	PLUG M10X1
4		9967673		2	SPRING
5		9968010		1	BUSHING
6		85824469		2	BUSHING
7		85805969		2	BUSHING
8		85824343		2	SEAL
9		9967678		2	ARTICULATION
10		9967679		2	SPRING
11		9968004		1	SUPPORT
12		9967681		4	SCREW
13		9967682		4	BUSHING
14		9968005		2	PLUG, DRAIN
15		9967683		2	PIN, ROLL
16		85824347		1	BEAM
17		9967990		4	BUSHING, DRIVE
18		9967991		1	SUPPORT Front
19		9967992		1	BUSHING
20		9967993		1	BUSHING
21		9967994		1	WASHER, THRUST
22		9967996		2	NIPPLE, LUBE
23		85805973		1	PLUG M8X1
24		9968006		1	WASHER, THRUST
25		9968007		1	BUSHING
26		9968008		1	RING, RUBBER
27		9967995		2	SCREW
28		9968009		1	SUPPORT Rear

(1) Ratio 14.308-75HP
(2) Ratio 13.714-75HP

402	02	p1	11/03

4WD FRONT AXLE, SWIVEL HOUSING & STEERING CYLINDER

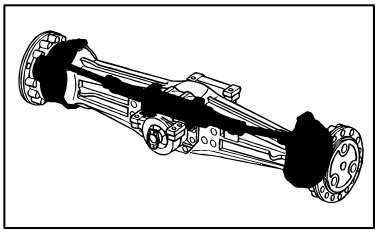

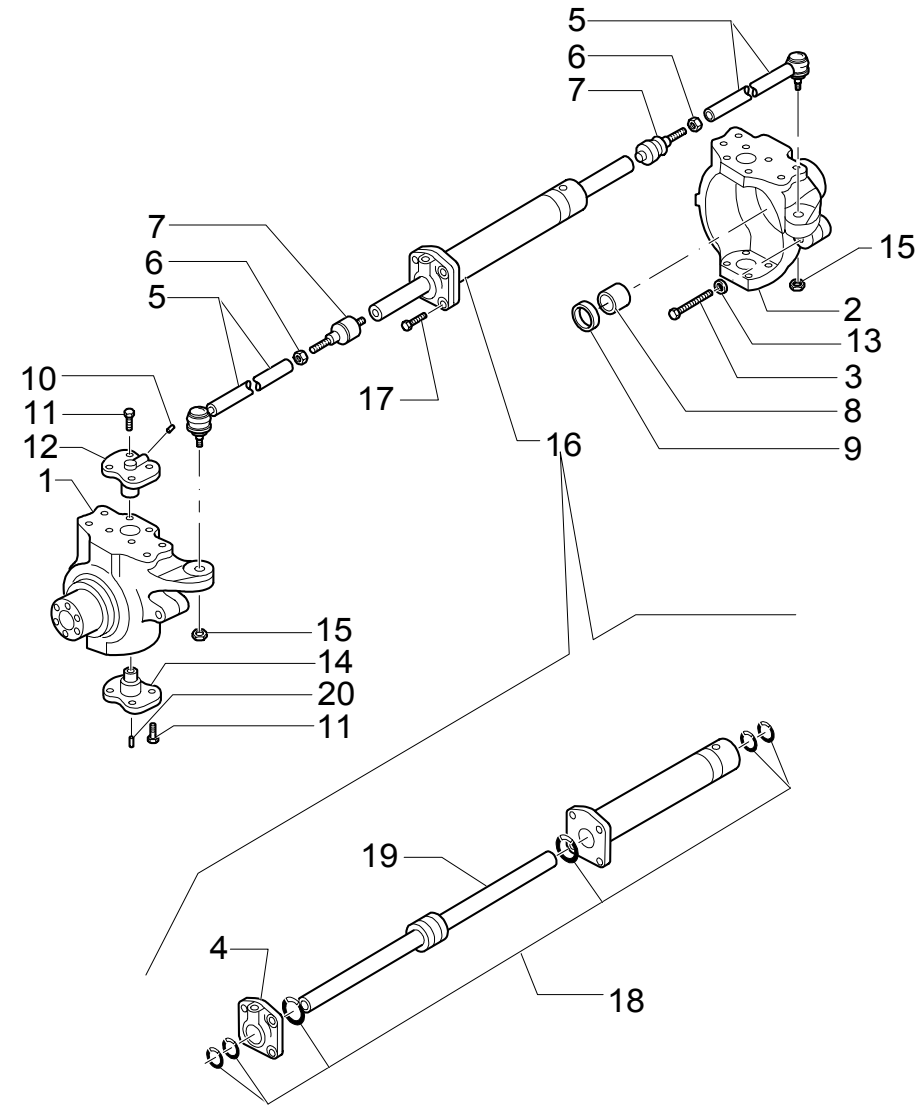

4WD FRONT AXLE, SWIVEL HOUSING & STEERING CYLINDER

REF	FN	PART NUMBER	YR/SN	QTY	DESCRIPTION
1		85824349		1	CUP, COVER LH
2		85824348		1	CUP, COVER RH
3		85805987		2	SCREW M16X100
4		85805989		1	PISTON SWIVEL HEAD
5		85805977		2	TIE-ROD
6		85805976		2	NUT M18X1,5
7		85805975		2	ARTICULATION
8		85805988		2	BUSHING
9		85824345		2	SEAL
10		9968021		2	NIPPLE, LUBE M6X2
11		85805979		16	SCREW M12X1,75X30
12		85805980		2	PIN
13		85805986		2	NUT M16
14		85805983		2	PIN
15		85805982		2	NUT M18X1,5
16		85805978		1	CYLINDER ASSY
17		9968028		4	SCREW M12X45
18		85805990		1	KIT
19		85805992		1	ROD
20		85805984		2	NIPPLE, LUBE M6X1

402	03	p1	11/03

4WD FRONT AXLE, HUBS

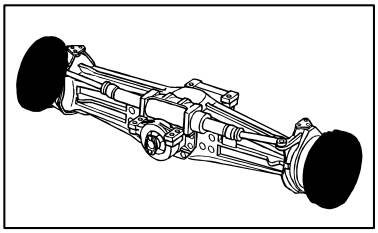

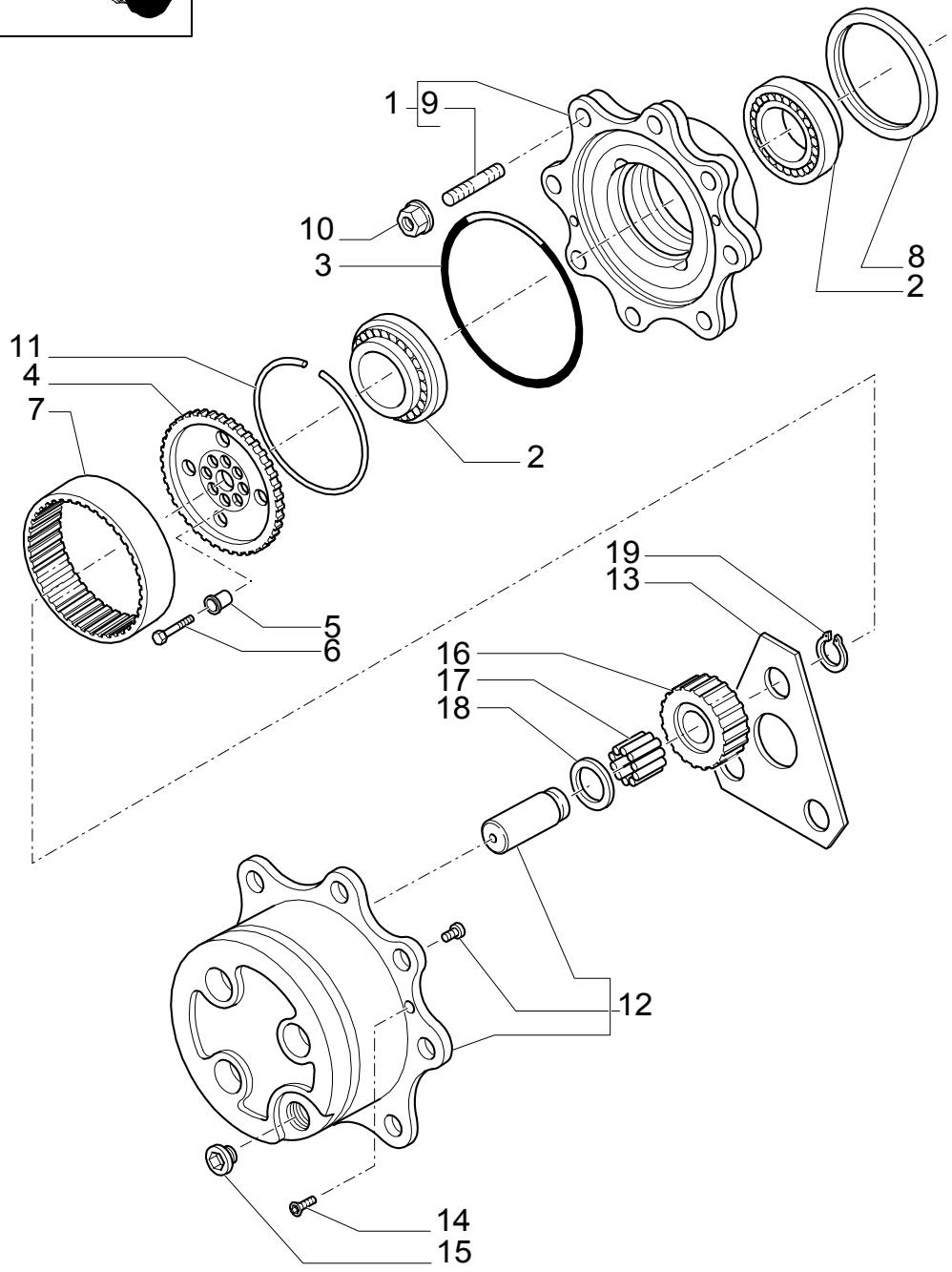

4WD FRONT AXLE, HUBS

REF	FN	PART NUMBER	YR/SN	QTY	DESCRIPTION
1		85827067		2	RING
2		85806002		4	BEARING ASSY
3		85805711		2	O-RING
4		85817698		2	HUB
5		85806009		16	INSTALLER JIG
6		85806010		16	SCREW M10X45
7		85806008		2	GEAR, RING
8		85824344		2	SEAL Seal, Oil
9		9968070		16	STUD
10		9968071		16	NUT M18X1,5
11		85806006		2	RING
12		85806011		2	KIT
13		85806016		2	WASHER, THRUST
14		85805709		4	SCREW
15		85806012		2	PLUG M30X2
16		85806014		6	GEAR T23
17		85806015		AR	KIT OF 10 NEEDLE BRG (QTY 1=10 PIECES)
18		9968084		6	WASHER, THRUST M55X34.6X1.5
19		9968083		6	CIRCLIP

4WD FRONT AXLE, RING GEAR & PINION ASSEMBLY

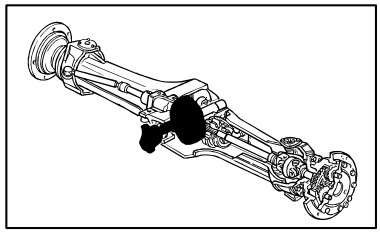

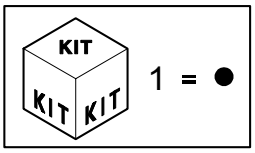

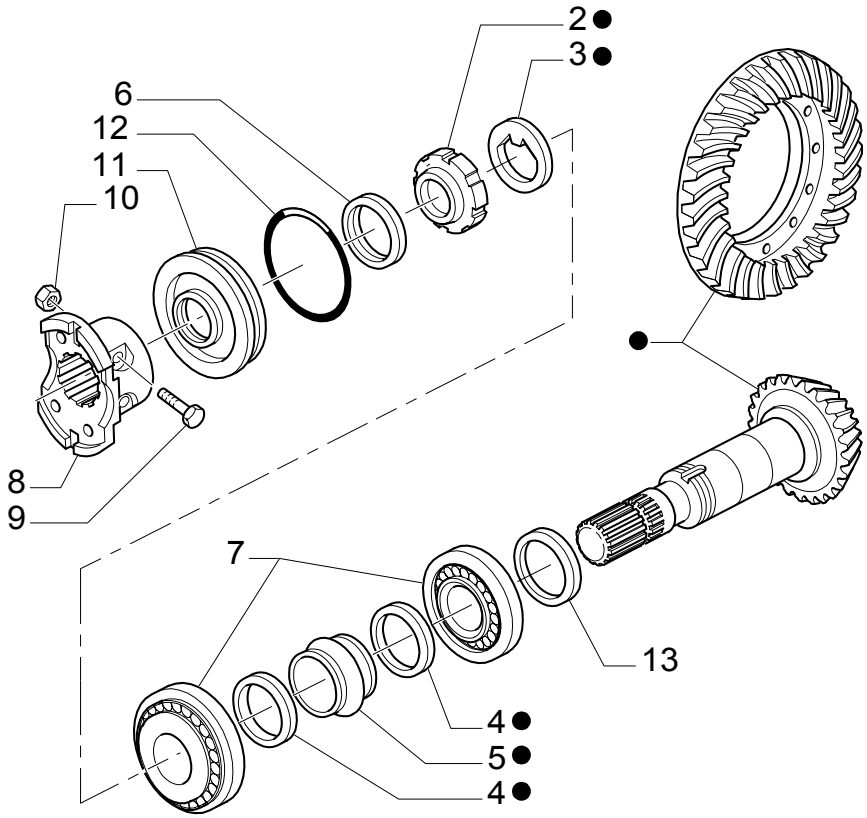

4WD FRONT AXLE, RING GEAR & PINION ASSEMBLY

REF	FN	PART NUMBER	YR/SN	QTY	DESCRIPTION
1	1	85813060		1	KIT
1	2	85813059		1	KIT
2		9968032		1	NUT, RING M40X1,5
3		9968031		1	WASHER, SEALING
4		9968033		2	WASHER 50X40,5X2
5		9968034		1	SPACER
6		85824346		1	RING Seal, Oil, M35X52X16
7		9968047		2	BEARING ASSY
8		9968049		1	FLANGE
9		9968048		2	SCREW M10X6 0
10		9968050		2	NUT M10X1,25
11		9968051		1	COVER
12		9968052		1	O-RING
13		9968037		AR	SHIM MM2,5
13		9968038		AR	SHIM MM2,6
13		9968039		AR	SHIM MM2,7
13		9968040		AR	SHIM MM2,8
13		9968041		AR	SHIM MM2,9
13		9968042		AR	SHIM MM3,0
13		9968043		AR	SHIM MM3,1
13		9968044		AR	SHIM MM3,2
13		9968045		AR	SHIM MM3,3
13		9968046		AR	SHIM MM3,4

(1) Ratio 14,308 - 75HP
(2) Ratio 14,714 - 75HP

4WD FRONT AXLE, DIFFERENTIAL

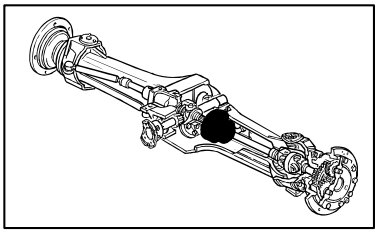

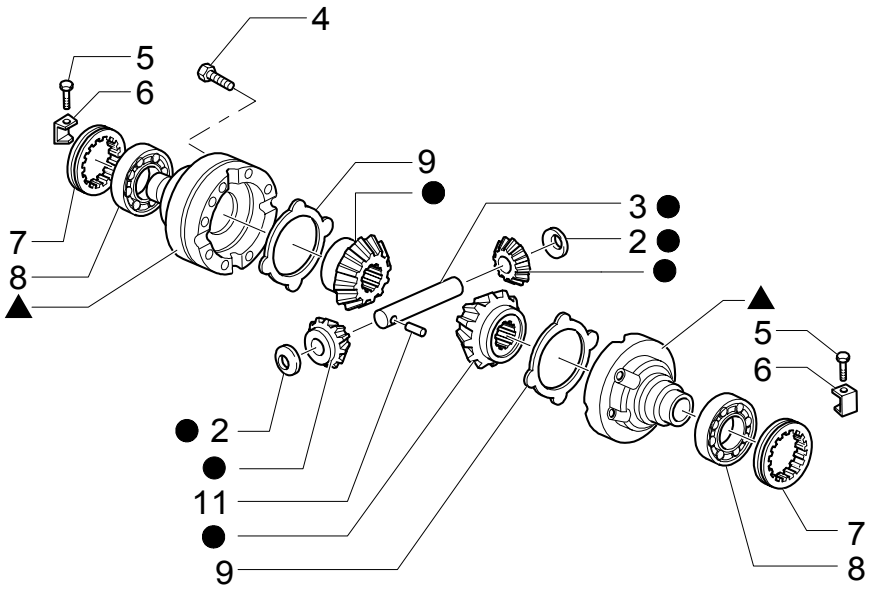

KIT KIT KIT

10 = ●

1 = ▲

4WD FRONT AXLE, DIFFERENTIAL

REF	FN	PART NUMBER	YR/SN	QTY	DESCRIPTION
1		85827068		1	DIFFERENTIAL GEAR
2		9966352		2	WASHER, THRUST
3		9966354		1	PIN
4		9967736		12	SCREW M10X1,5X75
5		9967739		2	SCREW M6X10
6		9967740		2	CLIP
7		9967741		2	NUT, RING
8		9968054		2	BEARING ASSY
9		9967734		2	DISC
10		85806004		1	KIT
11		9966356		1	PIN, ROLL 7X40

4WD FRONT AXLE, DRIVE SHAFT

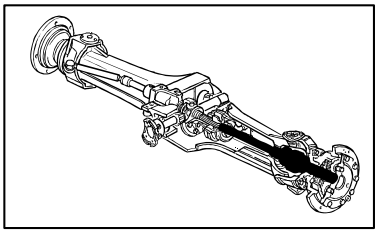

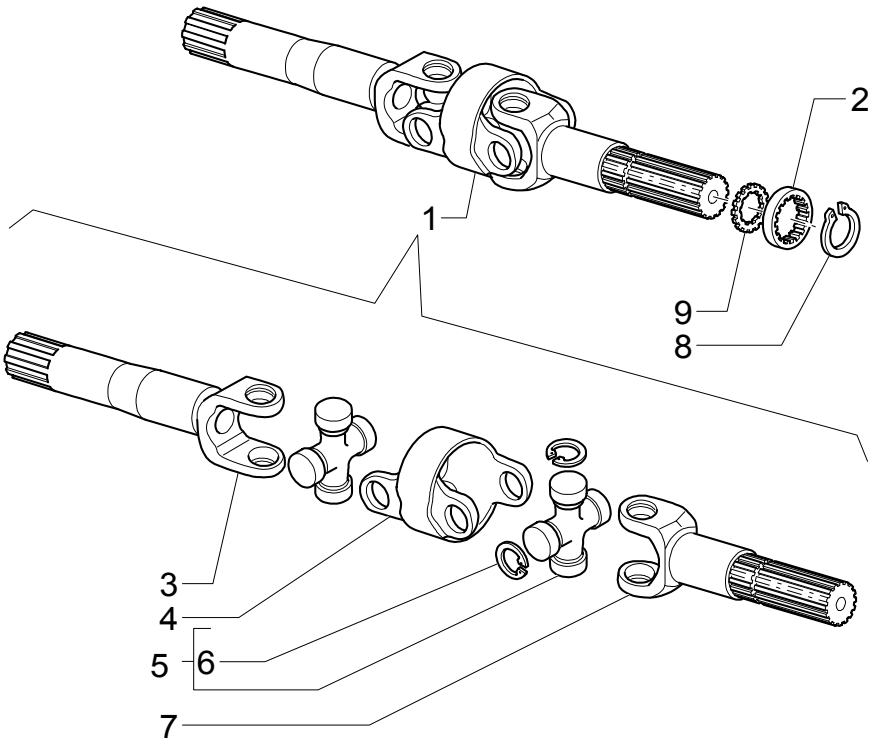

4WD FRONT AXLE, DRIVE SHAFT

REF	FN	PART NUMBER	YR/SN	QTY	DESCRIPTION
1		85805993		2	JOINT, UNIVERSAL ASSY
2		85805999		2	PLATE, ANTI-WRAP
3		85827069		2	FORK, BUCKET (DIFF.)
4		85827070		2	BODY
5		85807283		2	SPIDER WATER PROOF
5		85805996		2	SPIDER
6		85807284		1	KIT WATER PROOF
6		9968060		16	RING, LOCKING
7		85805997		2	YOKE (WHEEL)
8		85806000		2	CIRCLIP
9		85817697		2	WASHER

FRONT AXLE - (4WD) W/GEAR,BEVEL

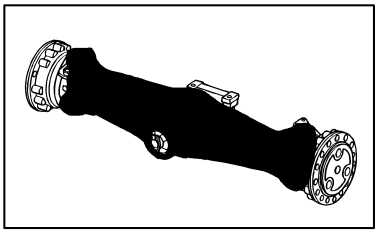

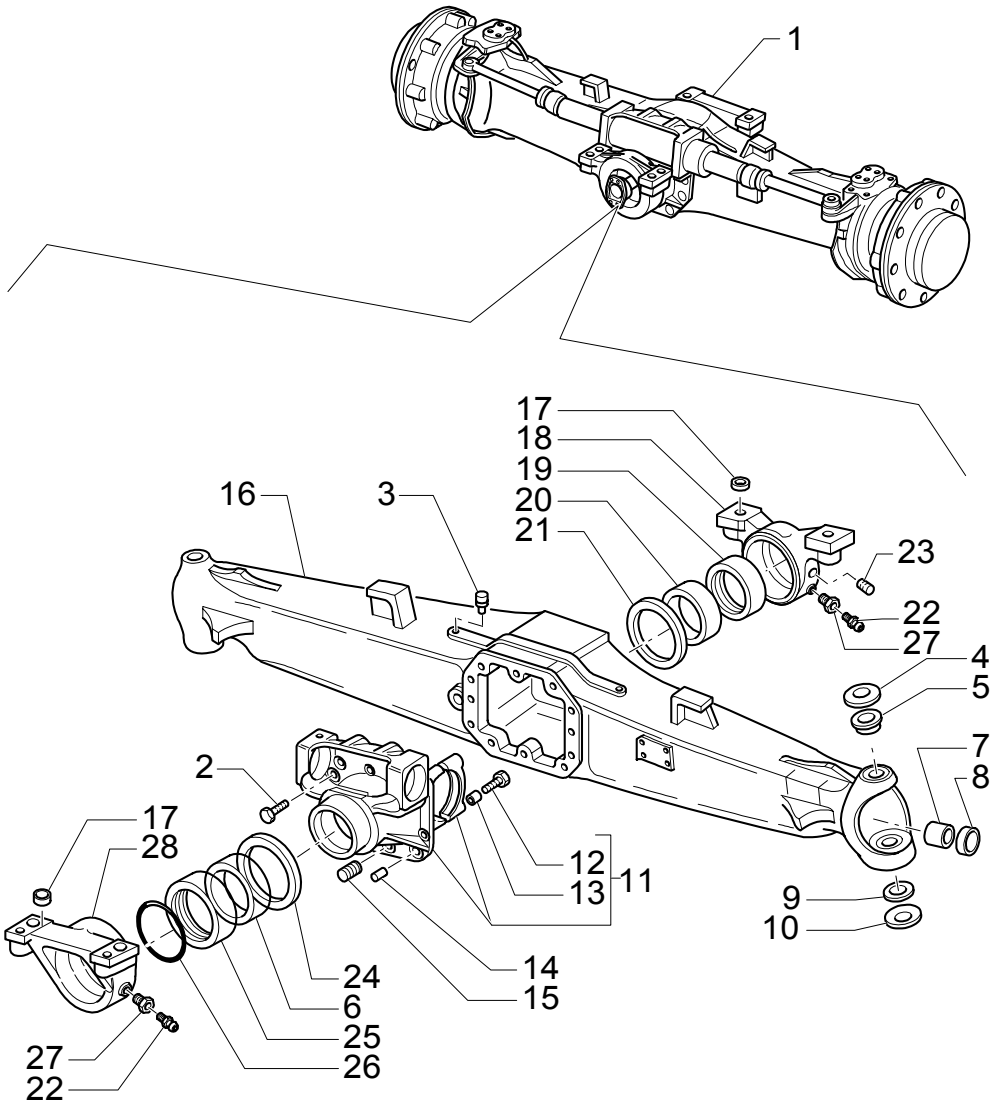

FRONT AXLE - (4WD) W/GEAR,BEVEL

REF	FN	PART NUMBER	YR/SN	QTY	DESCRIPTION
1	1, 2, 3	85824337		1	AXLE, FRONT, LIVE
1	4, 2, 5	85824335		1	AXLE, FRONT, LIVE
1	1, 6, 7	85824333		1	AXLE, FRONT, LIVE
1	4, 6, 8	85824341		1	AXLE, FRONT, LIVE
2		9967769		10	SCREW M12X1,75X33
3		9967672		1	PLUG M10X1
4		9967673		2	SPRING
5		85824469		2	BUSHING
6		9968010		1	BUSHING
7		85805969		2	BUSHING
8		85824343		2	SEAL
9		9967678		2	ARTICULATION
10		9967679		2	SPRING
11		9968004		1	SUPPORT
12		9967681		4	SCREW
13		9967682		4	BUSHING
14		9967683		2	PIN, ROLL 15X35
15		9968005		2	PLUG, DRAIN
16		85824347		1	BEAM
17		9967990		4	BUSHING, DRIVE
18		9967991		1	SUPPORT
19		9967992		1	BUSHING
20		9967993		1	BUSHING
21		9967994		1	WASHER, THRUST
22		9967996		2	NIPPLE, LUBE
23		85805973		1	PLUG M8X1
24		9968006		1	WASHER, THRUST
25		9968007		1	BUSHING

(1) POWER SHUTTLE
(2) RATIO=12,8
(3) Consists Of 2 to 28, Also Page 415 02 to 415 06
(4) POWER SHIFT
(5) Consists Of 2 to 28, Also Page 415 02 to 415 06
(6) RATIO=12,333
(7) Consists Of 2 to 28, Also Page 415 02 to 415 06
(8) Consists Of 2 to 28, Also Page 415 02 to 415 06

FRONT AXLE - (4WD) W/GEAR,BEVEL

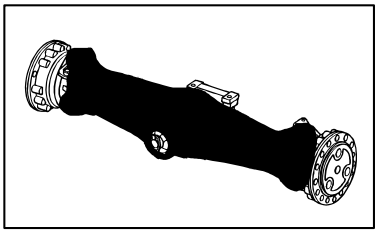

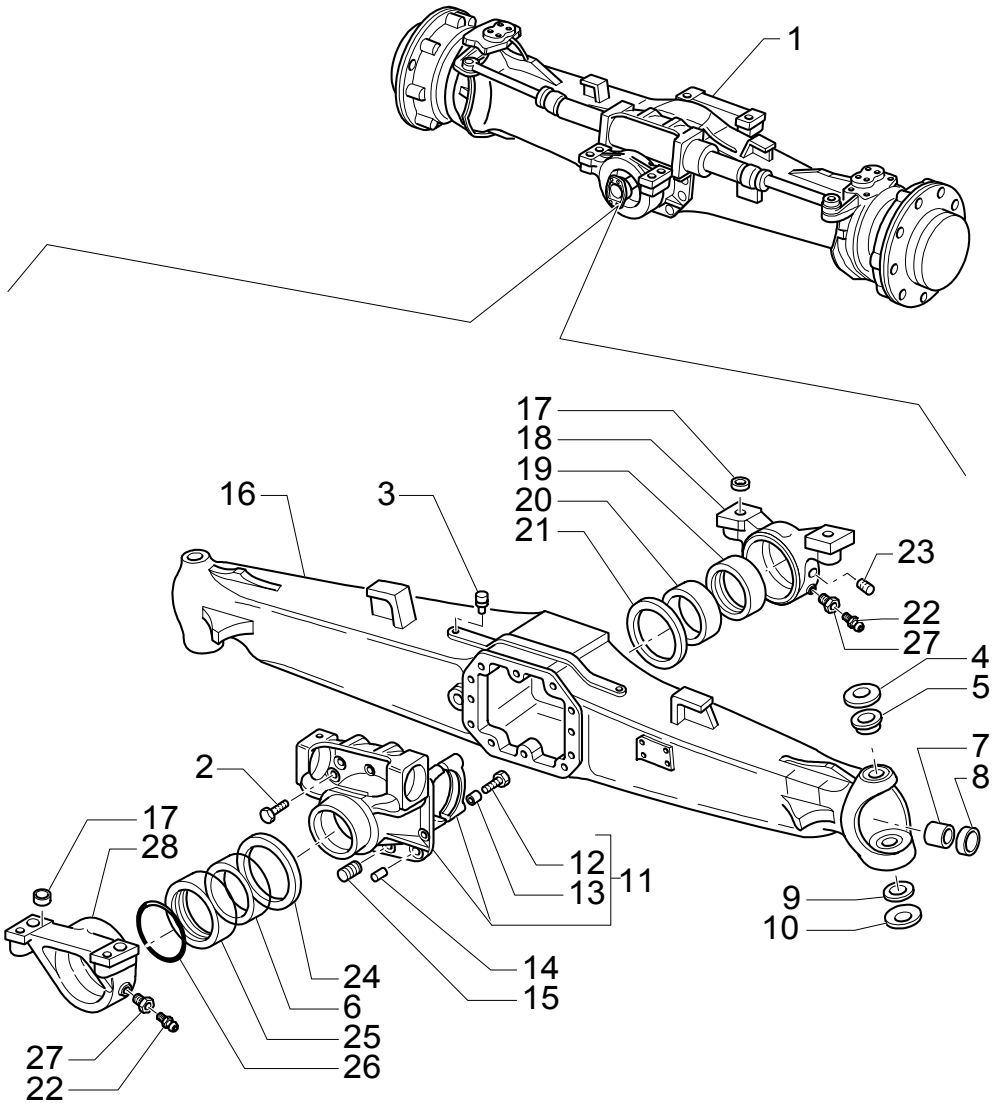

FRONT AXLE - (4WD) W/GEAR,BEVEL

REF	FN	PART NUMBER	YR/SN	QTY	DESCRIPTION
26		9968008		1	RING, RUBBER
27		9967995		2	SCREW
28		9968009		1	SUPPORT

FRONT AXLE - (4WD) W/GEAR,BEVEL

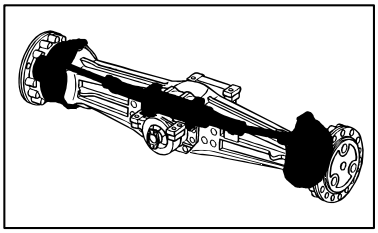

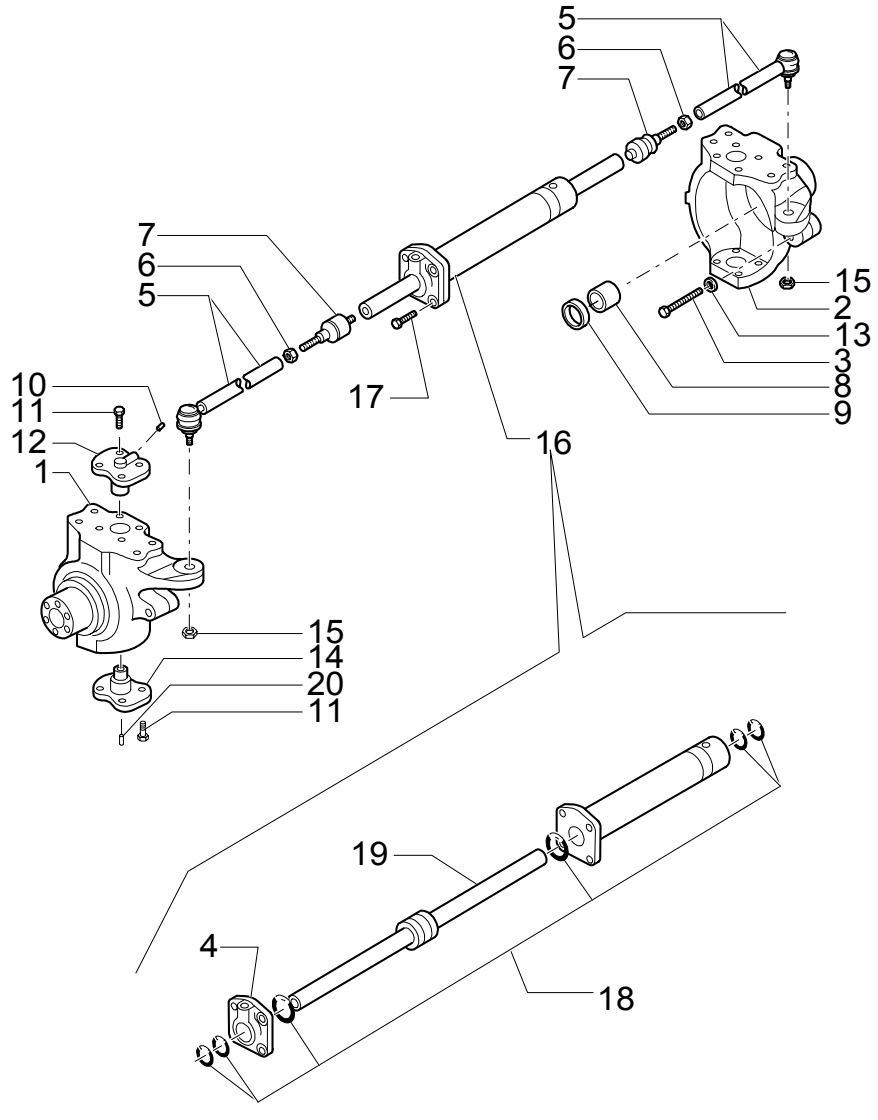

FRONT AXLE - (4WD) W/GEAR,BEVEL

REF	FN	PART NUMBER	YR/SN	QTY	DESCRIPTION
1		85824349		1	CUP, COVER LH
2		85824348		1	CUP, COVER RH
3		85805987		2	SCREW M16X100
4		85805989		1	PISTON SWIVEL HEAD
5		85805977		2	TIE-ROD
6		85805976		2	NUT M18X1,5
7		85805975		2	ARTICULATION
8		85805988		2	BUSHING
9		85824345		2	SEAL
10		9968021		2	NIPPLE, LUBE M6X2
11		85805979		16	SCREW M12X1,75X30
12		85805980		2	PIN
13		85805986		2	NUT M16
14		85805983		2	PIN
15		85805982		2	NUT M18X1,5
16		85805978		1	CYLINDER ASSY
17		9968028		4	SCREW M12X5
18		85805990		1	KIT
19		85805992		1	ROD
20		85805984		2	NIPPLE, LUBE M6X1

415	03	p1	11/03

FRONT AXLE - (4WD) W/GEAR,BEVEL

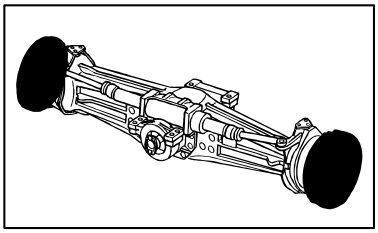

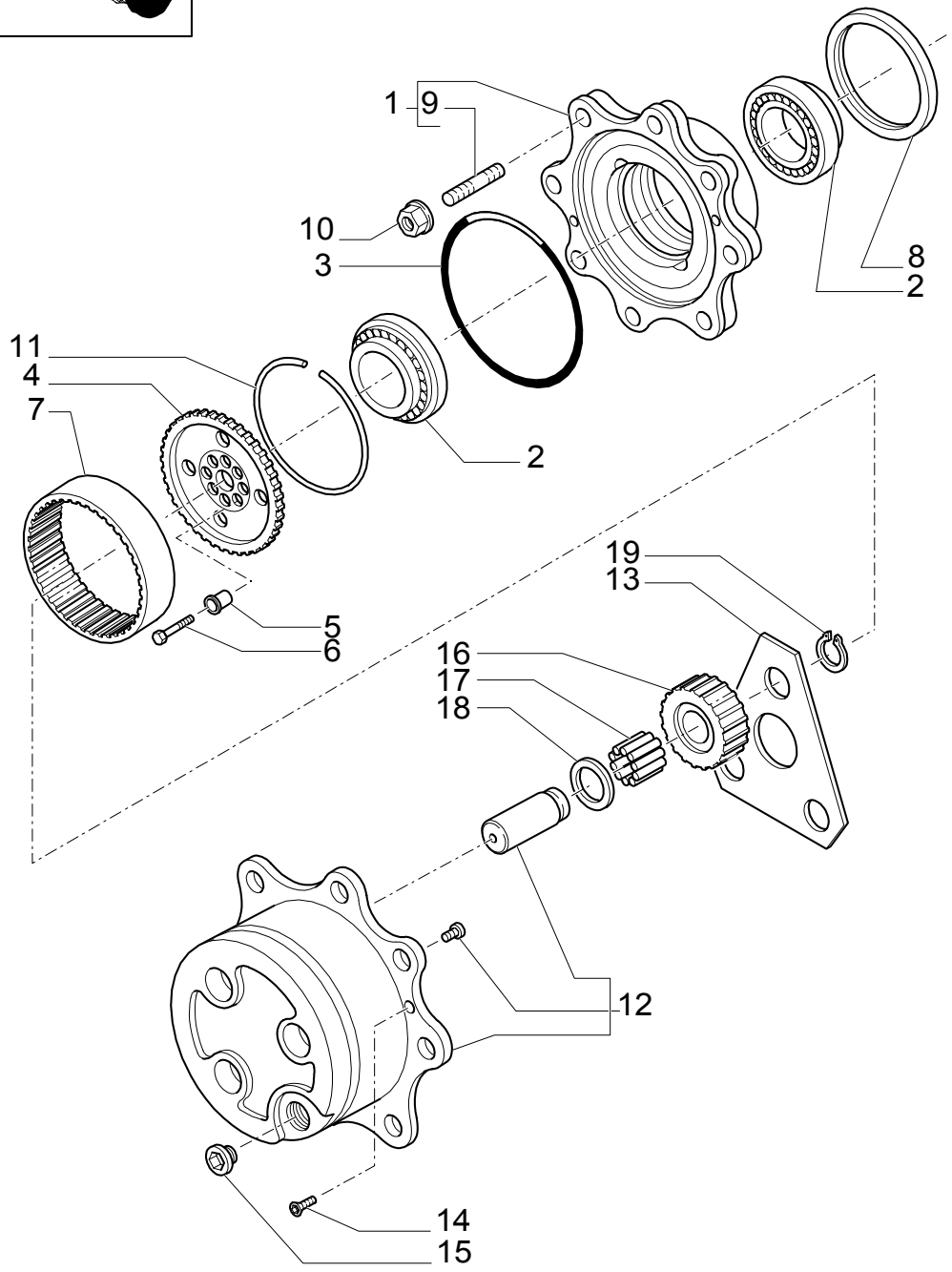

FRONT AXLE - (4WD) W/GEAR,BEVEL

REF	FN	PART NUMBER	YR/SN	QTY	DESCRIPTION
1		85806003		2	KIT
2		85806002		4	BEARING ASSY
3		85805711		2	O-RING
4		85817698		2	HUB
5		85806009		16	INSTALLER JIG
6		85806010		16	SCREW M10X45
7		85806008		2	GEAR, RING
8		85827067		2	RING
9		9968070		16	STUD
10		9968071		16	NUT M18X1,5
11		85806006		2	RING
12		85806011		2	KIT
13		85806016		2	WASHER, THRUST
14		85805709		4	SCREW
15		85806012		2	PLUG
16		85806014		6	GEAR T23
17		85806015		AR	KIT OF 10 NEEDLE BRG (QTY 1=10 PIECES)
18		9968084		6	WASHER, THRUST 55X34,6X1,5
19		9968083		6	CIRCLIP

FRONT AXLE - (4WD) W/GEAR,BEVEL

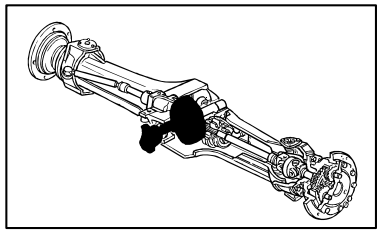

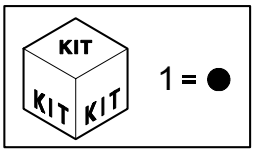

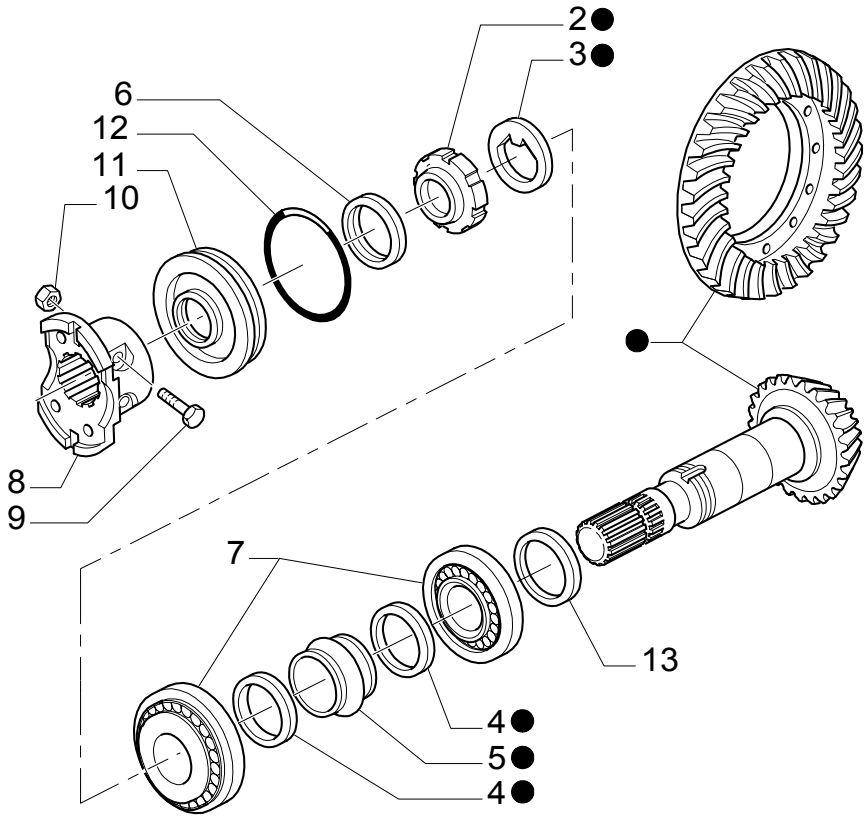

FRONT AXLE - (4WD) W/GEAR,BEVEL

REF	FN	PART NUMBER	YR/SN	QTY	DESCRIPTION
1	1, 2	9968035		1	GEAR, BEVEL
1	3, 2	9968925		1	GEAR, BEVEL
1	4	9968036		1	GEAR, BEVEL
2		9968032		1	NUT, RING M40X1,5
3		9968031		1	WASHER, SEALING
4		9968033		2	WASHER 50X40,5X2
5		9968034		1	SPACER
6		85824346		1	RING 32X52X16
7		9968047		2	BEARING ASSY
8		9968049		1	FLANGE
9		9968048		2	SCREW M10X60
10		9968050		2	NUT M10X1,25
11		9968051		1	COVER
12		9968052		1	O-RING
13		9968037		AR	SHIM MM2,5
13		9968038		AR	SHIM MM2,6
13		9968039		AR	SHIM MM2,7
13		9968040		AR	SHIM MM2,8
13		9968041		AR	SHIM MM2,9
13		9968042		AR	SHIM MM3,0
13		9968043		AR	SHIM MM3,1
13		9968044		AR	SHIM MM3,2
13		9968045		AR	SHIM MM3,3
13		9968046		AR	SHIM MM3,4

(1) POWER SHUTTLE
(2) RATIO=12,8
(3) POWER SHIFT
(4) RATIO=12,333

FRONT AXLE - (4WD) W/GEAR,BEVEL

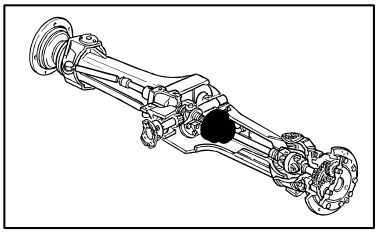

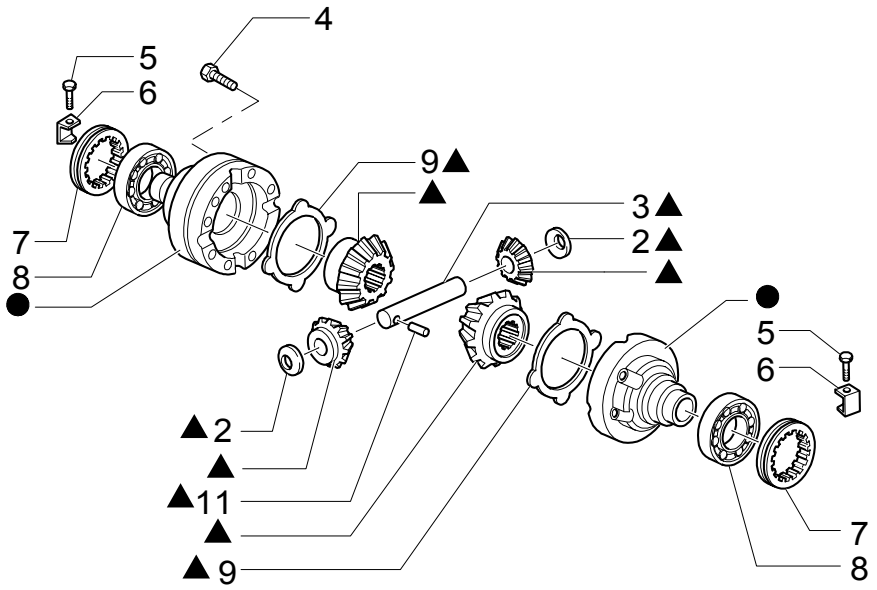

KIT
KIT KIT
10 = ●
1 = ▲

FRONT AXLE - (4WD) W/GEAR,BEVEL

REF	FN	PART NUMBER	YR/SN	QTY	DESCRIPTION
1		85806004		1	KIT
2		9966352		2	WASHER, THRUST
3		9966354		1	PIN
4		9967736		12	SCREW M10X1,5X7 5
5		9967739		2	SCREW M6X10
6		9967740		2	CLIP
7		9967741		2	NUT, RING
8		9968054		2	BEARING ASSY
9		9967734		2	DISC
10		85827068		1	DIFFERENTIAL GEAR
11		9966356		1	PIN, ROLL 7X40

FRONT AXLE - (4WD) W/GEAR,BEVEL

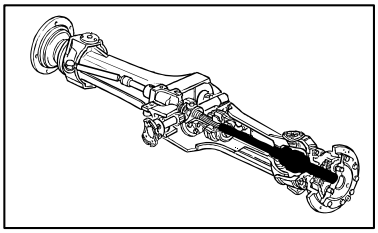

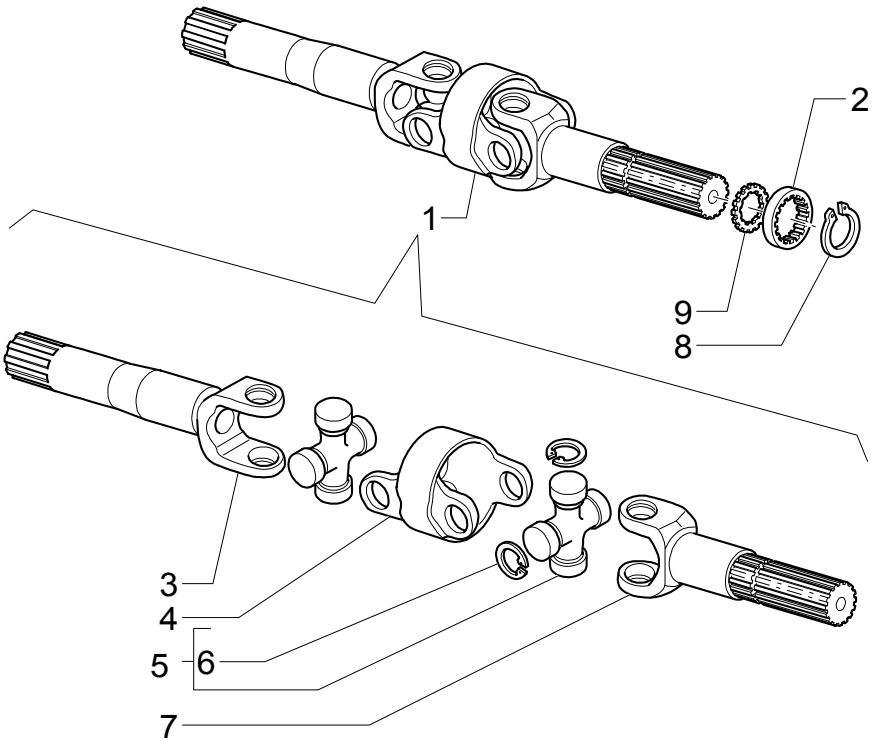

FRONT AXLE - (4WD) W/GEAR,BEVEL

REF	FN	PART NUMBER	YR/SN	QTY	DESCRIPTION
1		85805993		2	JOINT, UNIVERSAL ASSY
2		85805999		2	PLATE, ANTI-WRAP
3		85827069		2	FORK, BUCKET (DIFF.)
4		85827070		2	BODY
5		85807283		2	SPIDER WATER PROOF
5		85805996		2	SPIDER
6		85807284		1	KIT WATER PROOF
6		9968060		16	RING, LOCKING
7		85805997		2	YOKE (WHEEL)
8		85806000		2	CIRCLIP
9		85817697		2	WASHER

SECTION INDEX

SEC. 05	00	REAR AXLE
1.44.0A	01	REAR AXLE (POWER-SHUTTLE)
1.44.0A	02	REAR AXLE (POWER-SHUTTLE)
1.44.0A	03	REAR AXLE (POWER-SHUTTLE)
1.44.0A	04	REAR AXLE (POWER-SHUTTLE)

REAR AXLE

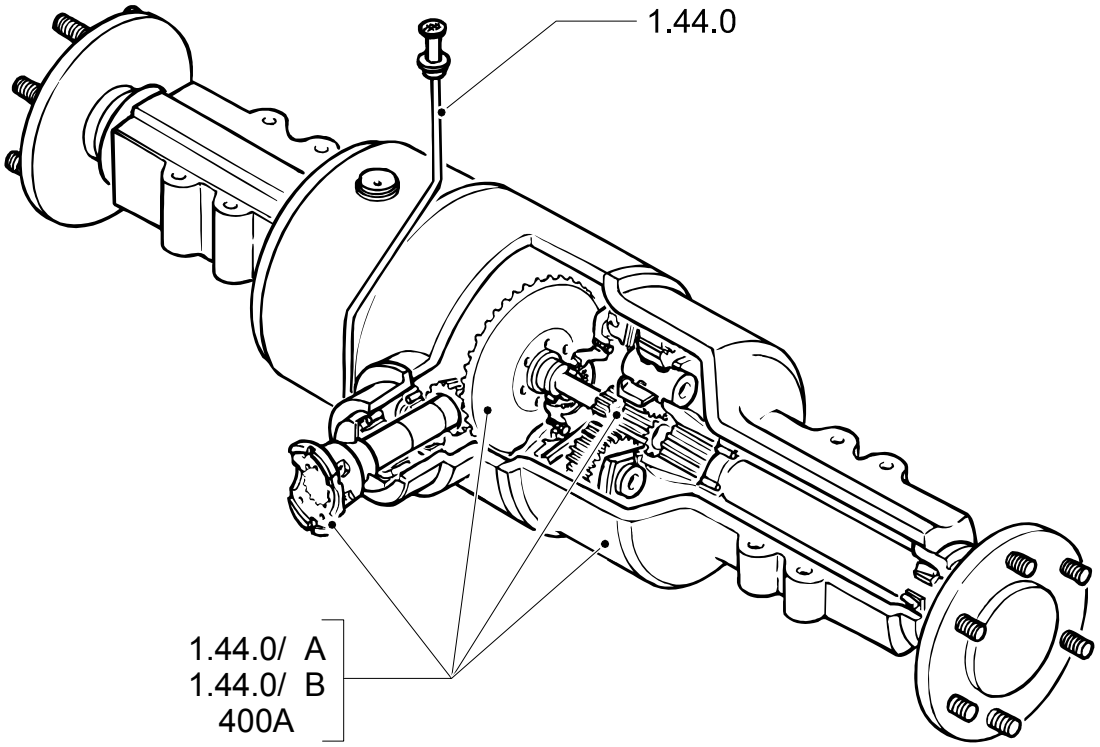

REAR AXLE

REF	FN	PART NUMBER	YR/SN	QTY	DESCRIPTION

REAR AXLE (POWER-SHUTTLE)

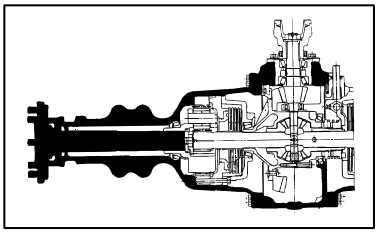

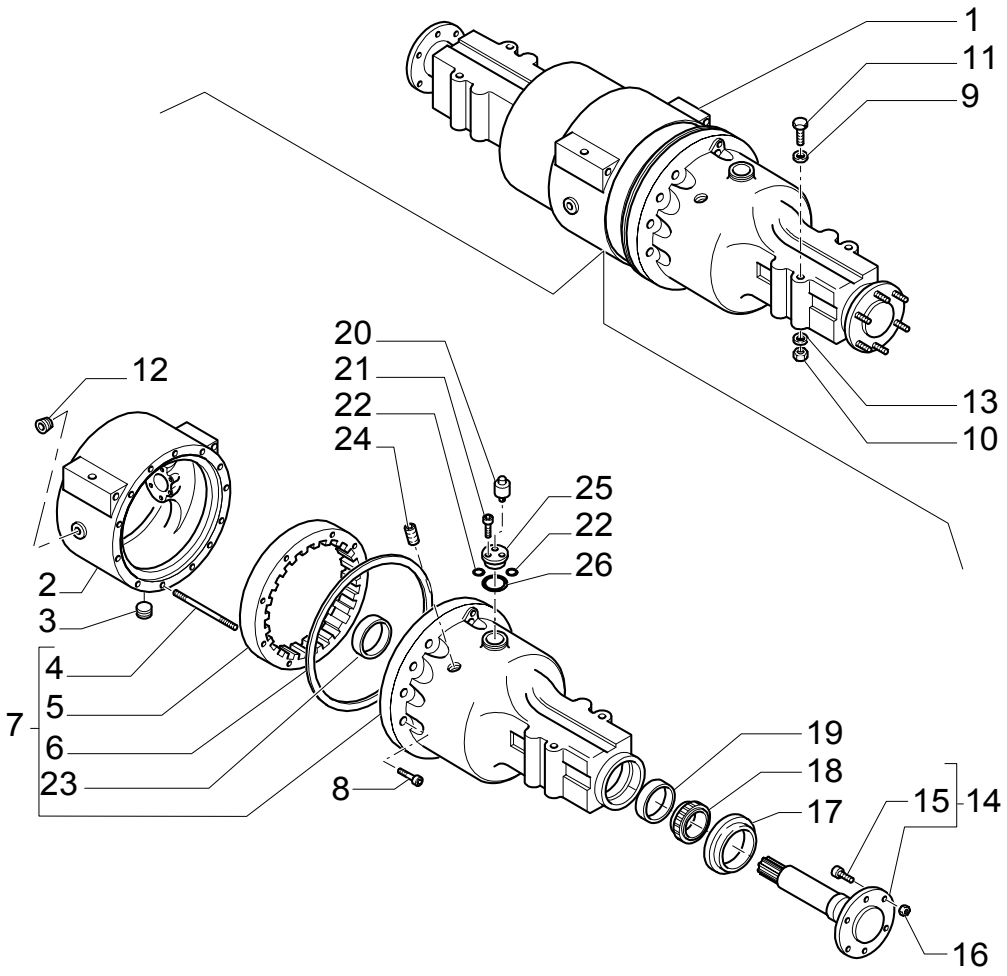

REAR AXLE (POWER-SHUTTLE)

REF	FN	PART NUMBER	YR/SN	QTY	DESCRIPTION
1	1, 2	85825119		1	AXLE, REAR 4,62
1	3, 4	85825120		1	AXLE, REAR 4,11
2		83955462		1	HOUSING
3		263136		1	PLUG, MAGNETIC
4		86536748		4	STUD 1/2-13-18X7.88
5		86536749		2	GEAR, PLANETARY
6		83417133		2	O-RING
7		86552793		1	HOUSING LH
7		86552794		1	HOUSING RH
8		86505999		25	SCREW 5/8-11X2,00
9		14497331		4	WASHER
10		12575321		4	NUT M24X2
11		15999434		4	SCREW M24X2X220
12		83909107		1	PLUG
13		11200679		4	WASHER, LOCK
14		86511646		2	SHAFT
15		83955490		16	BOLT
16		85802758		16	NUT
17		81866390		2	GASKET
18		81818397		2	BEARING, CONE
19		163044		2	CUP
20		81820047		2	SCREW, BLEED
21		82895716		4	SCREW 1/4-20X1,75
22		83925620		4	O-RING 375X103
23		81825865		2	BEARING, CUP
24		678966		2	PLUG 1/2-11X1/2
25		81878514		2	MANIFOLD
26		87111S95		2	O-RING

(1) Only for LB75.B - LB90.B - LB110.B, Center Pivot
(2) Consists Of 2 to 26, Also Page 1.44.0A 02, 1.44.0A 03, 1.44.0A 04
(3) Only for LB90.B - LB95.B - LB110.B, Side Shift
(4) Consists Of 2 to 26, Also Page 1.44.0A 02, 1.44.0A 03, 1.44.0A 04

REAR AXLE (POWER-SHUTTLE)

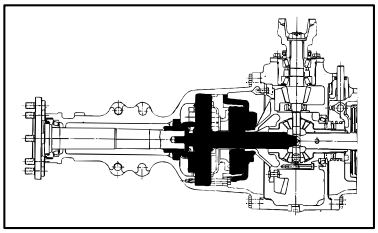

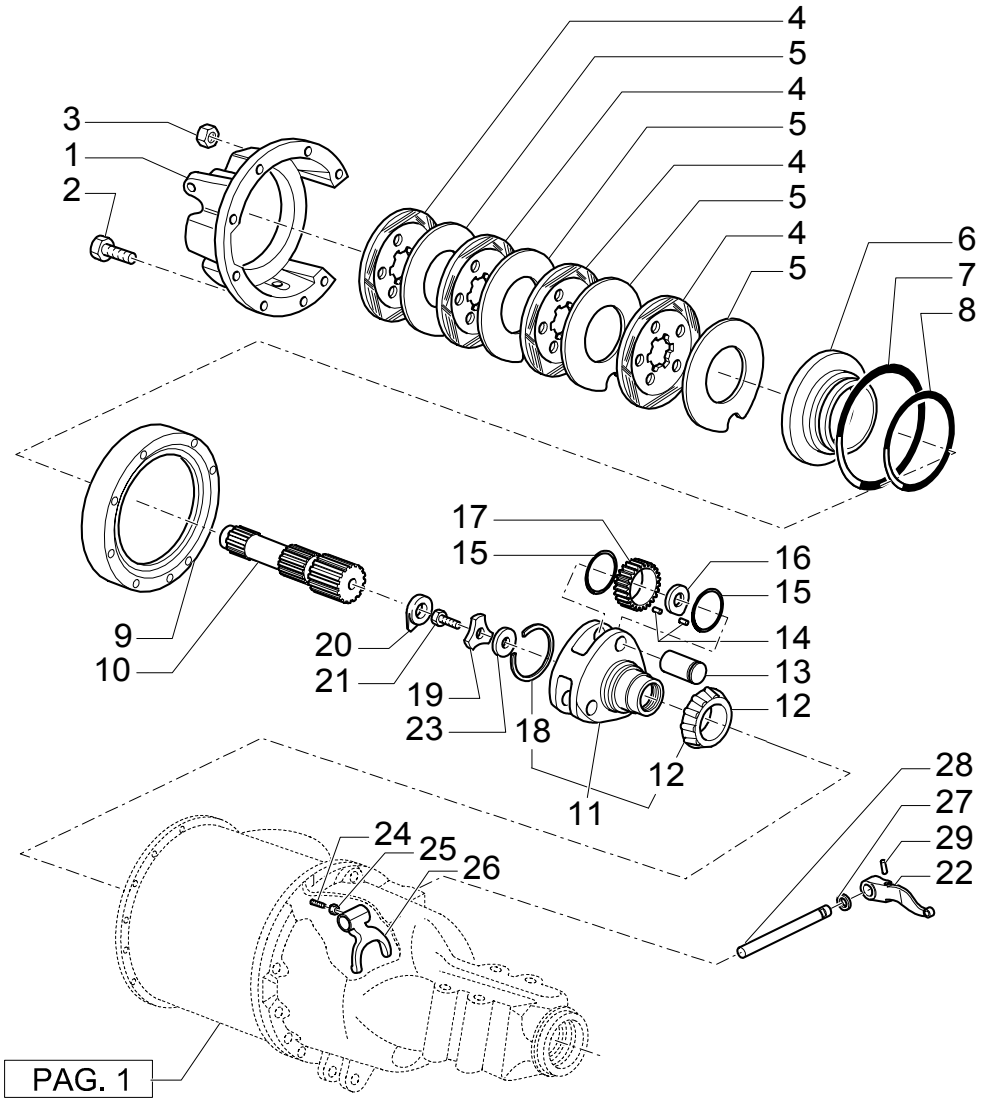

REAR AXLE (POWER-SHUTTLE)

REF	FN	PART NUMBER	YR/SN	QTY	DESCRIPTION
1		86536752		1	HOUSING RH
1		86536753		1	HOUSING LH
2		86539458		12	SCREW Cap, HH, G8, 9/16"-12 x 5"
3		86539263		4	NUT G8, 9/16"-18
4		47123297		8	DISC
5		81874478		8	DISC
6		81874462		2	PISTON
7		81875252		2	GASKET
8		81875253		2	GASKET
9		86536750		1	HOUSING RH
9		86536751		1	SPACER LH
10		81803334		2	SUN GEAR
11		86584273		2	CARRIER
12		81854753		2	BEARING, CONE
13		81820849		6	SHAFT
14		81803295		96	KIT
15		81803273		12	WASHER, THRUST
16		81803275		6	SPACER
17		86584272		6	GEAR, PLANETARY
18		81820846		2	RETAINER
19		81803450		2	WASHER
20		83949811		2	PLATE, LOCKING
21		81846884		2	BOLT HH, 7/8"-14 x 1-5/8"
22		81802560		1	LEVER
23		81803502		AR	SPACER 1,346/1,372
23		81803503		AR	SPACER 1,448/1,473
23		81803504		AR	SPACER 1,549/1,575
23		81803505		AR	SPACER 1,651/1,676
23		81803506		AR	SPACER 1,753/1,778
23		81803507		AR	SPACER 1,854/1,880
23		81803508		AR	SPACER 1,956/1,981
23		81803509		AR	SPACER 2,057/2,083
23		81803510		AR	SPACER 2,159/2,184
23		81803511		AR	SPACER 2,261/2,286
24		81804978		1	SCREW Set, 3/8"-24 x 7/16"
25		87308		1	NUT Jam, G2, 3/8"-24

REAR AXLE (POWER-SHUTTLE)

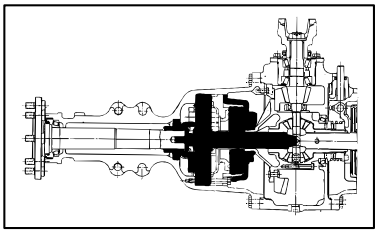

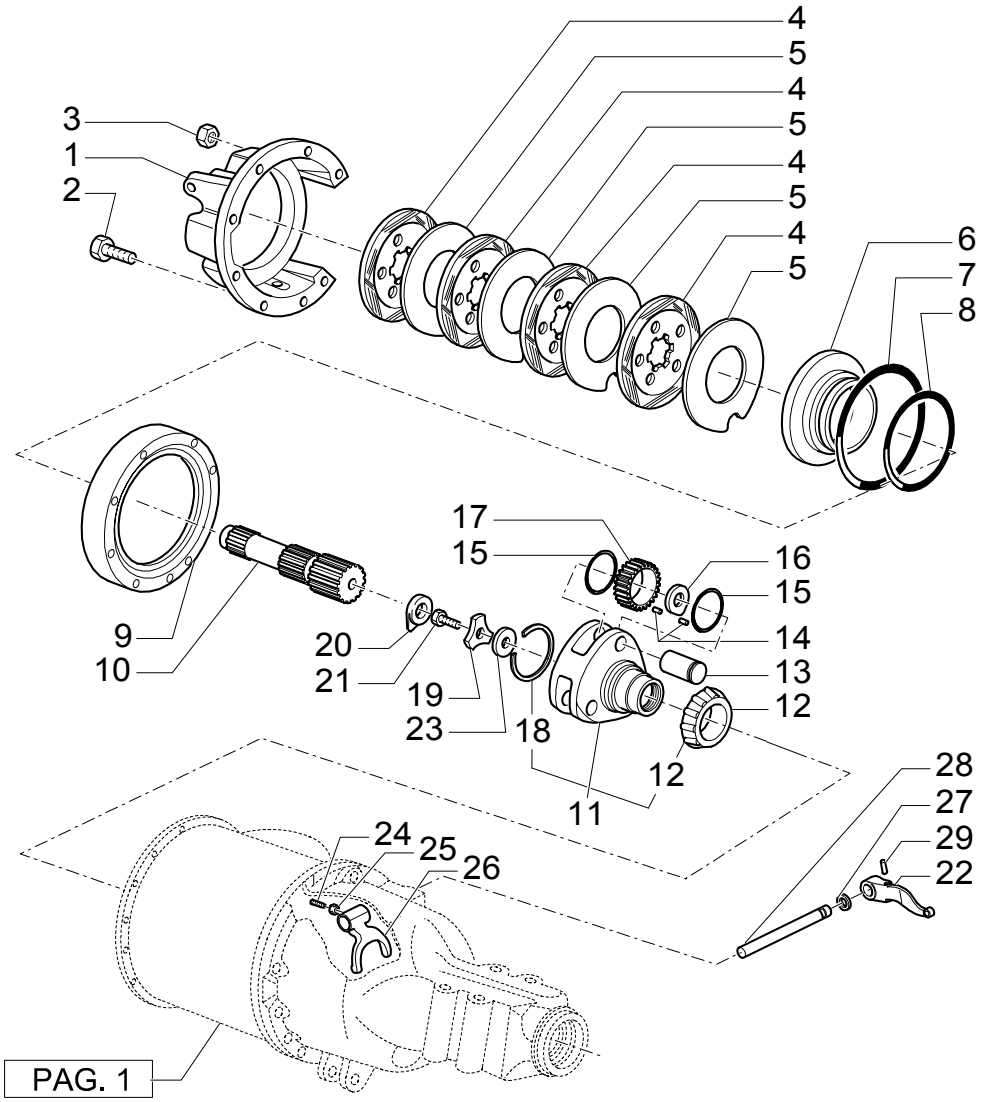

REAR AXLE (POWER-SHUTTLE)

REF	FN	PART NUMBER	YR/SN	QTY	DESCRIPTION
26		81803336		1	FORK
27		81800480		1	SEAL
28		81803345		1	SHAFT
29		82958118		1	PIN, ROLL

REAR AXLE (POWER-SHUTTLE)

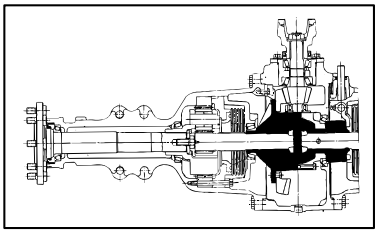

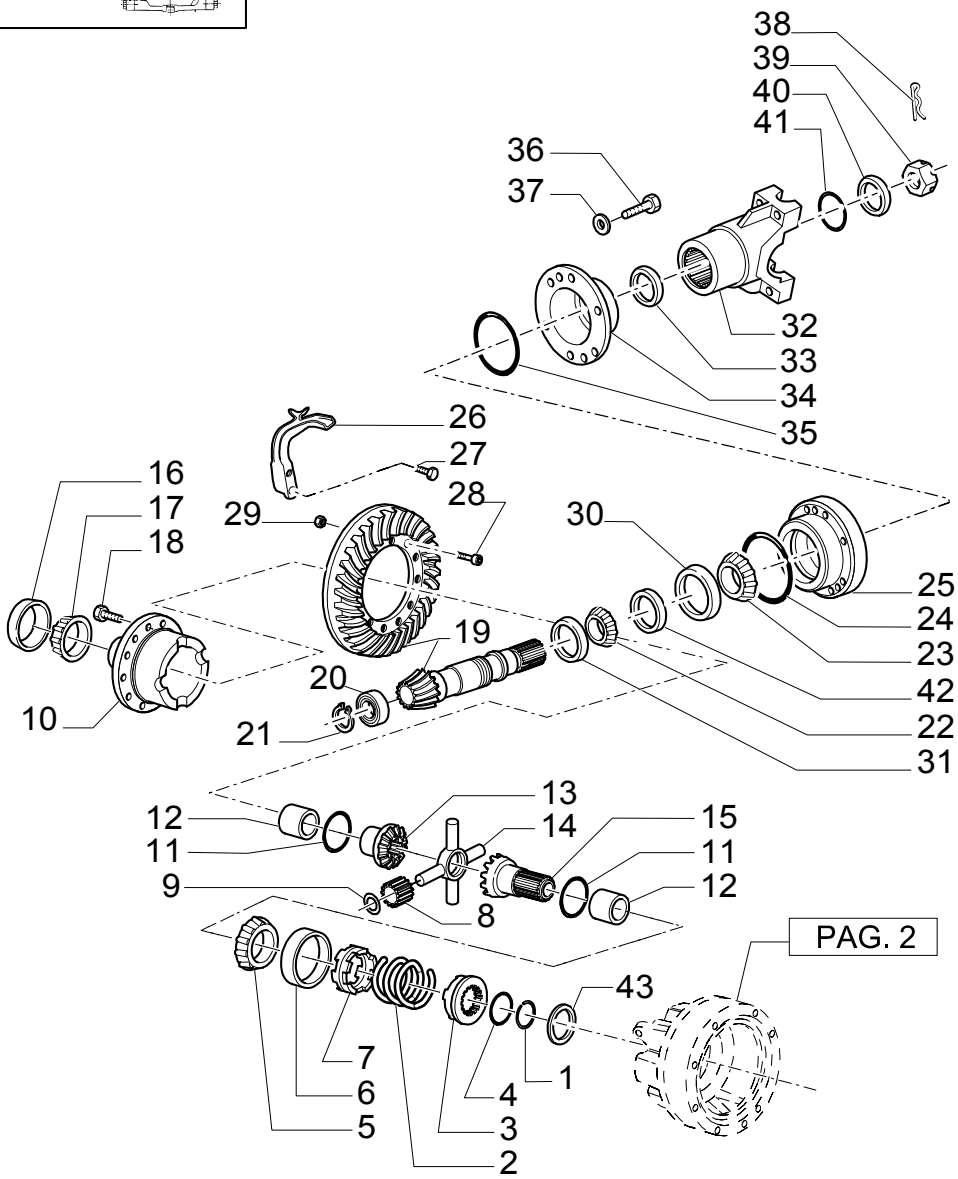

REAR AXLE (POWER-SHUTTLE)

REF	FN	PART NUMBER	YR/SN	QTY	DESCRIPTION
1		81803474		1	RING
2		81800474		1	SPRING Differential Lock Coupler
3		81812261		1	COUPLING
4		81800475		1	WASHER Differential Lock, Coupler Stop
5		81803413		1	BEARING, CONE
6		81803420		1	BEARING, CUP RH
7		81800472		1	ADAPTER Differential Lock Gear Case
8		81728114		4	PINION
9		83989915		4	WASHER, LOCK
10		81816246		1	HOUSING
11		81803424		2	WASHER, THRUST RH
12		81800471		2	BUSHING RH
13		81803445		1	GEAR
14		81876885		1	SPIDER
15		81803451		1	GEAR RH
16		510892		2	NUT, RING
17		510884		1	BEARING, CONE
18		83994579		8	SCREW Cap, HH, G8, Self-Locking, 1/2"-13 x 2-7/8"
19	1	E2NN4209DA		1	GEAR SET 4,62
19	2	83958890		1	GEAR SET 4,11
20		81824478		1	BEARING ASSY
21		81803542		1	RING
22		82958961		1	BEARING ASSY
23		81845711		1	BEARING, CONE
24		81827354		1	O-RING 4.625" ID x .139" Thk
25		81847146		1	RETAINER
26		81803369		1	BLOCK
27		9706729		2	SCREW Cap, HH, G5, 7/16"-14 x 1"
28		83957533		12	BOLT HH, G8, 1/2"-20 x 1-5/8"
29		83417169		12	NUT Lock, G2, 1/2"-20
30		52491		1	CUP
31		83912252		1	BEARING, CUP
32		83949810		1	FLANGE
33		81834073		1	GASKET RETENTOR DO PINHÃO

(1) Only for LB75.B - LB90.B - LB110.B, Center Pivot
(2) Only for LB90.B - LB95.B - LB110.B, Side Shift

REAR AXLE (POWER-SHUTTLE)

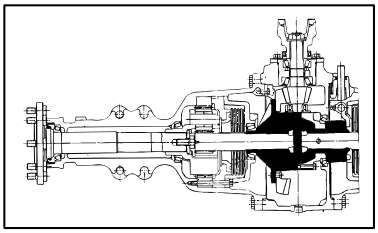

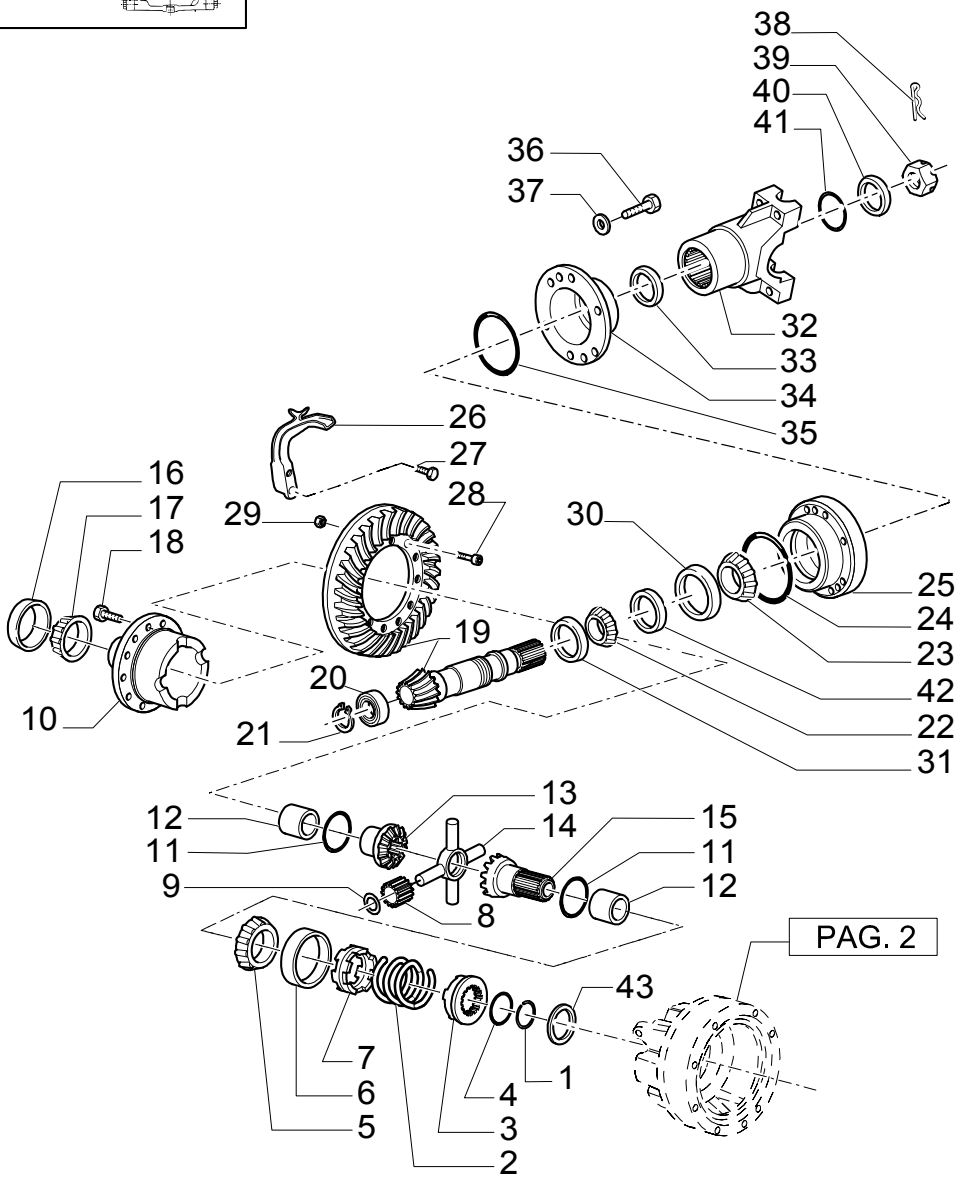

REAR AXLE (POWER-SHUTTLE)

REF	FN	PART NUMBER	YR/SN	QTY	DESCRIPTION
34		83912246		1	RETAINER
35		81845713		1	SEAL
36		81821267		6	BOLT 9/16-12X1,50
37		280248		6	WASHER, LOCK 9/16"
38		83947107		1	PIN Cotter, 3/16" x 2.125"
39		83949812		1	NUT Slotted, 1-1/4"-18
40		81834042		1	WASHER
41		81845714		1	SEAL PROTECTION
42		81847148		AR	SPACER 31,852/31,864
42		81847149		AR	SPACER 31,902/31,915
42		81847150		AR	SPACER 31,953/31,966
42		81847151		AR	SPACER 32,004/32,017
42		81847152		AR	SPACER 32,055/32,068
42		81847153		AR	SPACER 32,106/32,118
42		81847154		AR	SPACER 32,156/32,169
42		81847155		AR	SPACER 32,207/32,220
42		81847156		AR	SPACER 32,258/32,271
42		81847157		AR	SPACER 32,309/32,322
42		81847158		AR	SPACER 32,360/32,372
42		81847159		AR	SPACER 32,410/32,423
42		81847160		AR	SPACER 32,461/32,474
42		81847161		AR	SPACER 32,512/32,525
42		81847162		AR	SPACER 32,563/32,576
43		81803515		AR	SHIM 0,965/1,016
43		81803516		AR	SHIM 1,118/1,168
43		81803517		AR	SHIM 1,270/1,321
43		81803518		AR	SHIM 1,422/1,473
43		81803519		AR	SHIM 1,575/1,626
43		81803520		AR	SHIM 1,727/1,778
43		81803521		AR	SHIM 1/880/1,930
43		81803522		AR	SHIM 2,032/2,083

REAR AXLE (POWER-SHUTTLE)

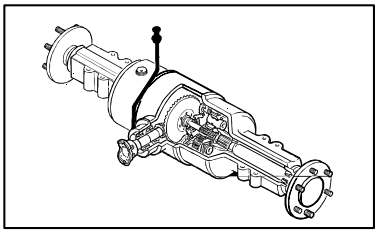

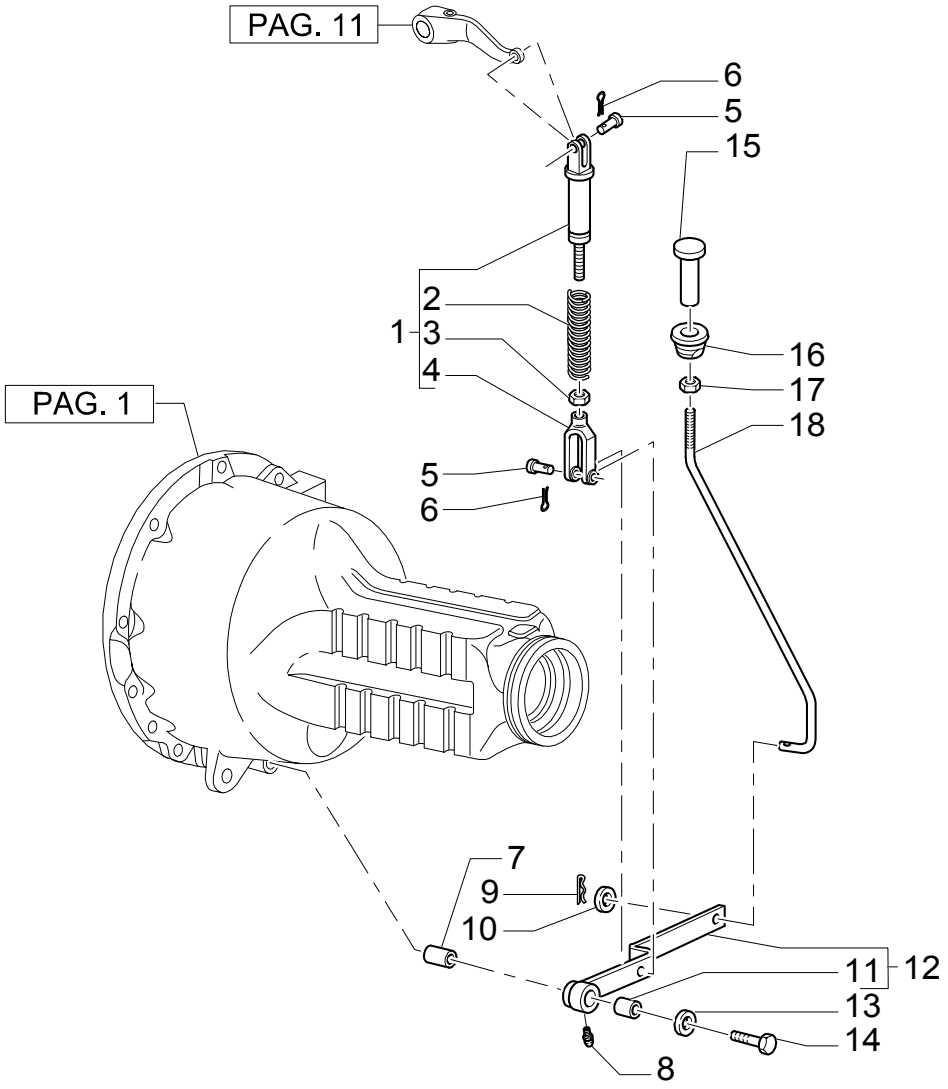

REAR AXLE (POWER-SHUTTLE)

REF	FN	PART NUMBER	YR/SN	QTY	DESCRIPTION
1		83949838		1	ROD
2		81800486		1	SPRING
3		33923S36		1	NUT
4		83952932		1	CLEVIS
5		83948308		2	PIN
6		10802801		2	PIN, SPLIT (COTTER)
7		81800488		1	SPACER
8		13406911		1	NIPPLE, LUBE
9		10766901		1	PIN, SPLIT (COTTER)
10		12644921		1	WASHER
11		81805231		1	BUSHING
12		85802513		1	LEVER
13		14497121		1	WASHER
14		304911S36		1	SCREW
15		83971567		1	PEDAL
16		83904750		1	BUSHING
17		87309		1	NUT
18	1	85802515		1	TIE-ROD, THREADED
18	2	85819013		1	TIE-ROD

(1) Only for LB75.B-LB90.B-LB110.B, Center Pivot
(2) Only for LB90.B - LB95.B - LB110.B, Side Shift

SECTION INDEX

SEC. 06	00	ELECTRICAL
1.75.2	01	CHASSIS HARNESS & GROUND WIRE (POWER SHUTTLE)
1.75.2	02	BATTERY LOCK-OUT SWITCH & GROUND WIRE (POWER SHUTTLE)
1.75.2	03	ENGINE HARNESS (POWER SHUTTLE)
1.75.2/ 3	01	CHASSIS HARNESS & GROUND WIRE (POWER SHUTTLE)
1.75.2/ 3	02	BATTERY LOCK-OUT SWITCH & GROUND WIRE (POWER SHUTTLE)
1.75.2/ 3	03	ENGINE HARNESS (POWER SHUTTLE)
131	01	SINGLE BATTERY
321	01	DOUBLE BATTERY
995	01	COLD START
995	02	COLD START

ELECTRICAL

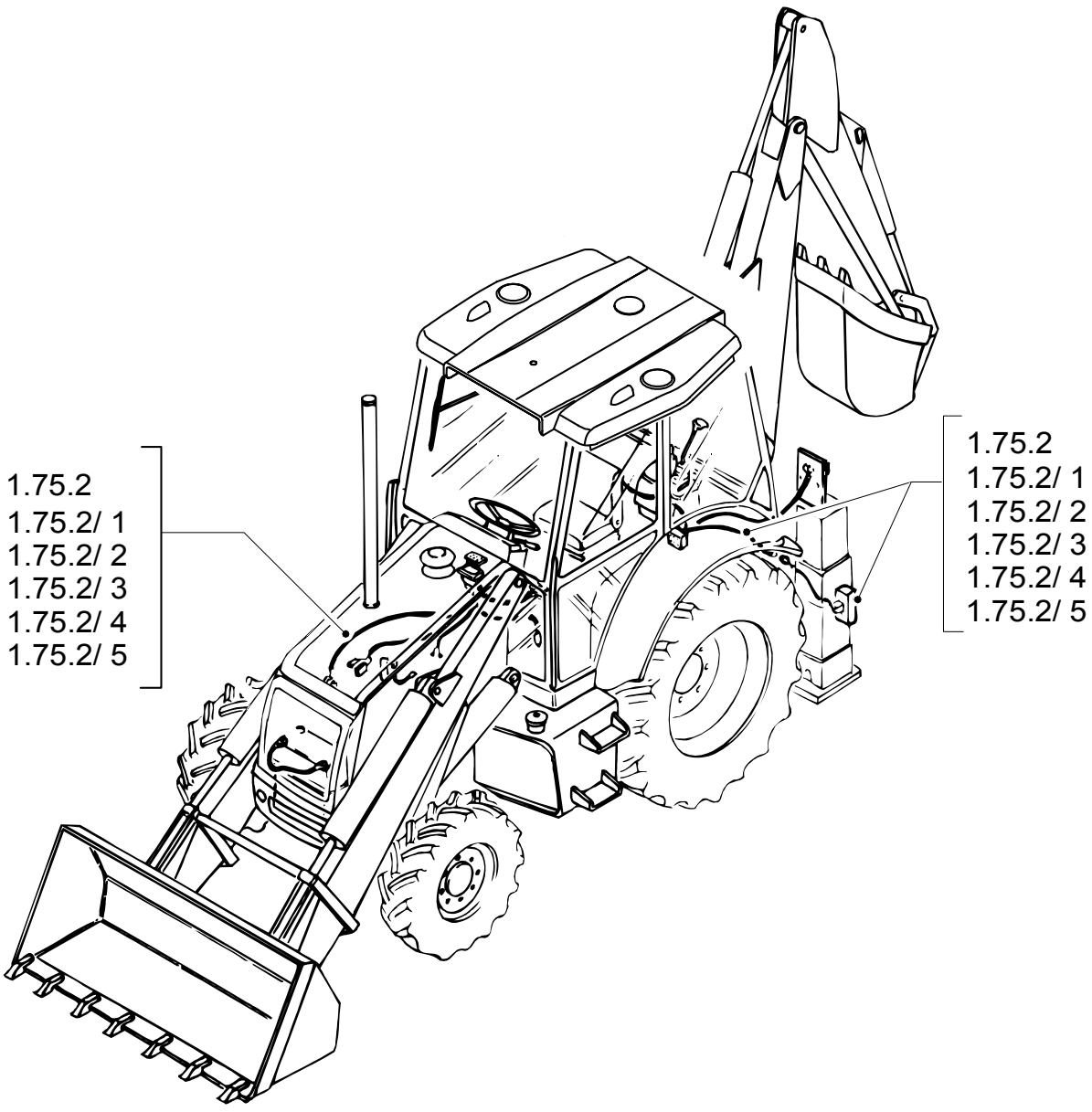
1.75.2
1.75.2/ 1
1.75.2/ 2
1.75.2/ 3
1.75.2/ 4
1.75.2/ 5
1.75.2
1.75.2/ 1
1.75.2/ 2
1.75.2/ 3
1.75.2/ 4
1.75.2/ 5

ELECTRICAL

REF	FN	PART NUMBER	YR/SN	QTY	DESCRIPTION

CHASSIS HARNESS & GROUND WIRE (POWER SHUTTLE)

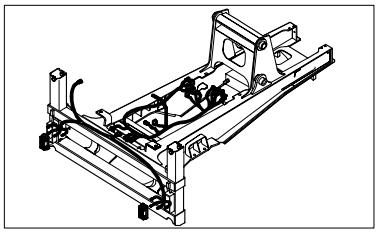

KIT KIT KIT = 14

CHASSIS HARNESS & GROUND WIRE (POWER SHUTTLE)

REF	FN	PART NUMBER	YR/SN	QTY	DESCRIPTION
1		87406399		1	CABLE, ELECTRIC
2		85805686		4	CLIP, HOSE
3		85805685		2	CLIP, HOSE
4		14560187		55	COLLAR
5		85803884		1	CABLE, ELECTRIC
6		16043021		1	SCREW M8X12
7		11193879		1	WASHER, LOCK
8		14048211		1	NUT
9		12647121		1	WASHER M8
10		85802374		1	CABLE, ELECTRIC
11		85803854		2	LAMP, TAIL
12		12647601		4	WASHER
13		14305321		4	SCREW
14		87406389		1	CABLE, ELECTRIC

1.75.2	02	p1	12/03

BATTERY LOCK-OUT SWITCH & GROUND WIRE (POWER SHUTTLE)

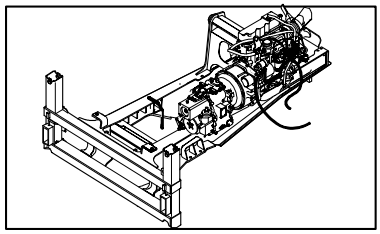

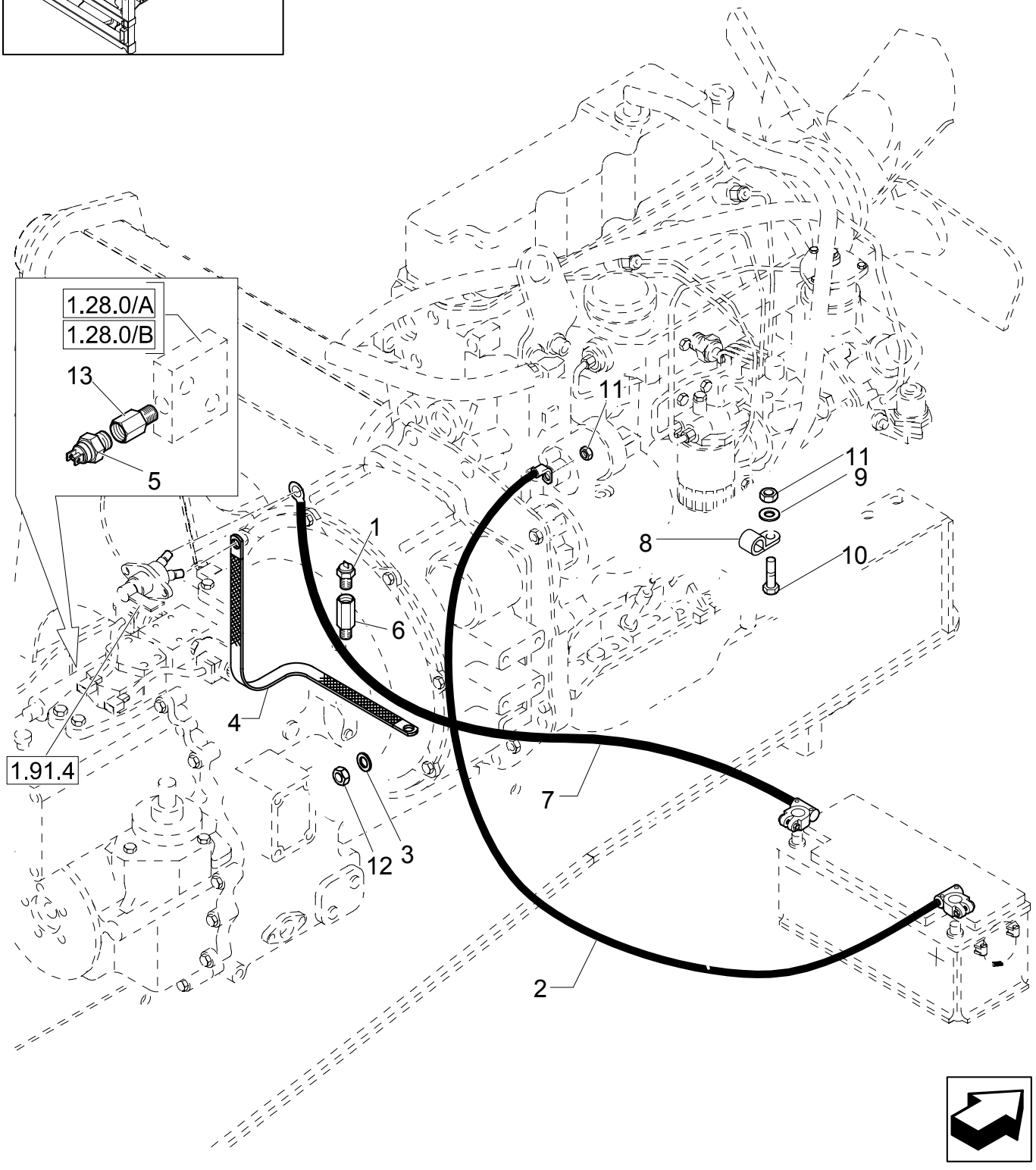

BATTERY LOCK-OUT SWITCH & GROUND WIRE (POWER SHUTTLE)

REF	FN	PART NUMBER	YR/SN	QTY	DESCRIPTION
1		85803879		1	SENDER UNIT
2		{87424795}		1	CABLE, GROUND POSITIVE
3		12647121		1	WASHER M8
4		{87405018}		1	CABLE, GROUND
5		85817672		1	SENDER UNIT
6		85803524		1	CONNECTOR, HYD.
7		{87404248}		1	CABLE, GROUND NEGATIVE
8		{47050861}		2	COLLAR
9		{47048993}		1	WASHER
10		{47049010}		1	SCREW
11		47049031		3	NUT
12		16104111		1	NUT
13		85820156		1	CONNECTOR, HYD.

ENGINE HARNESS (POWER SHUTTLE)

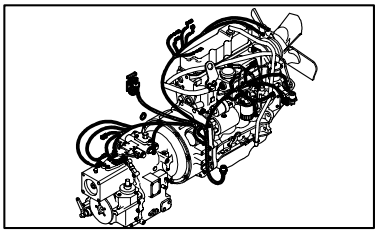

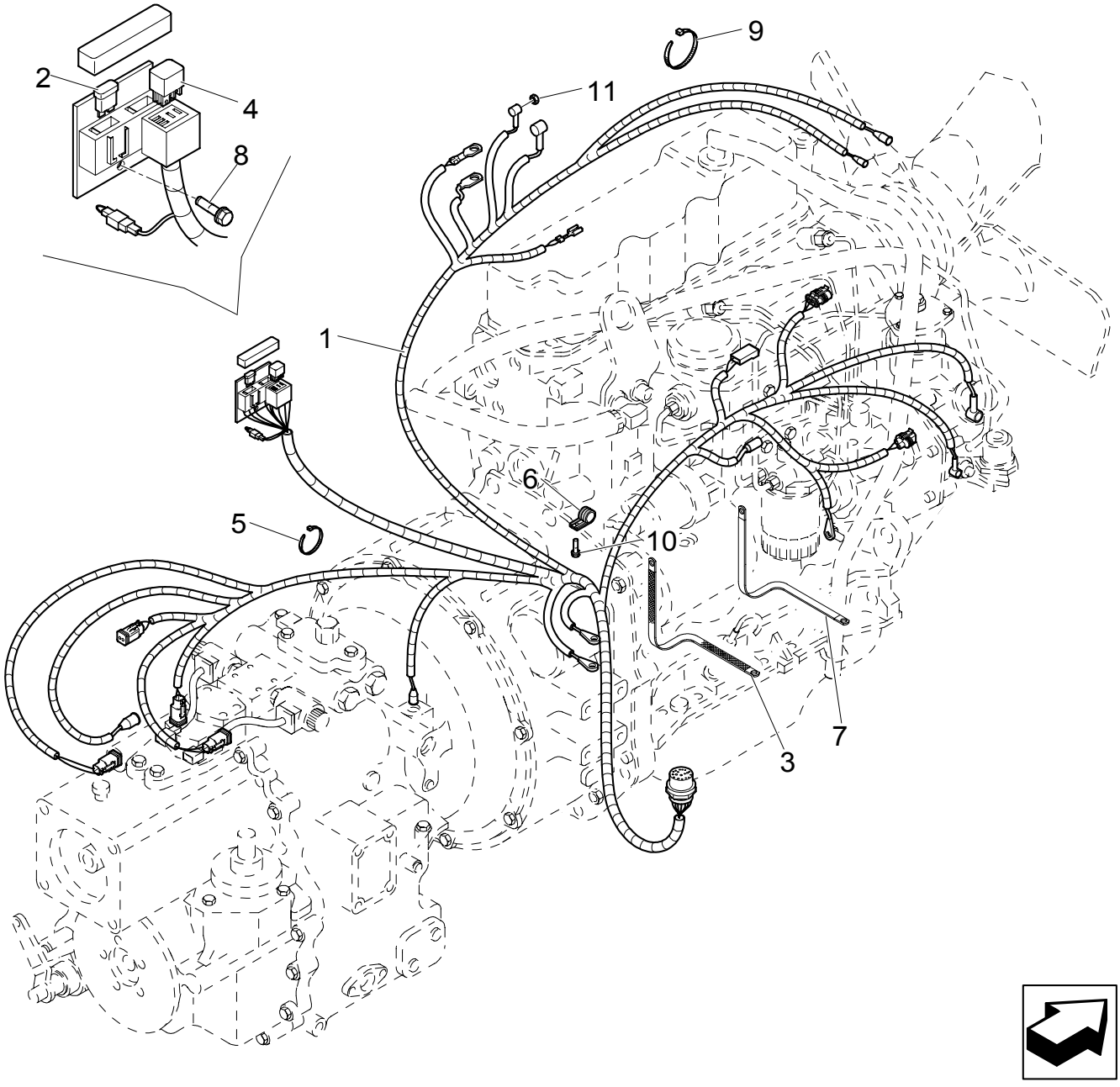

ENGINE HARNESS (POWER SHUTTLE)

REF	FN	PART NUMBER	YR/SN	QTY	DESCRIPTION
1	1	87406398		1	CABLE, ELECTRIC
2		11055890		1	FUSE 80A
2		11055790		1	FUSE 70A
3		{87407206}		1	CABLE, GROUND
4		85805162		1	RELAY 12V-70A
5		{47049173}		1	COLLAR
6		85802889		1	COLLAR, RETAINER
7		{87410268}		1	CABLE, GROUND
8		16043824		1	SCREW
9		{47049196}		1	COLLAR
10		47049185		2	SCREW
11		47049186		1	BOLT

(1) Includes 2,3,4

1.75.2/ 3	01	p1	12/03

CHASSIS HARNESS & GROUND WIRE (POWER SHUTTLE)

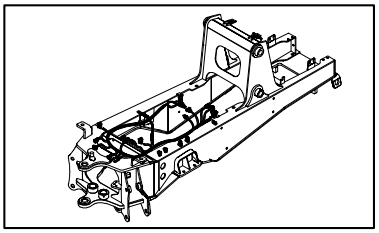

KIT KIT KIT = 10

CHASSIS HARNESS & GROUND WIRE (POWER SHUTTLE)

REF	FN	PART NUMBER	YR/SN	QTY	DESCRIPTION
1		87406399		1	CABLE, ELECTRIC
2		85805686		4	CLIP, HOSE
3		85805685		2	CLIP, HOSE
4		14560187		55	COLLAR
5		85803884		1	CABLE, ELECTRIC
6		16043021		1	SCREW M8X12
7		11193879		1	WASHER, LOCK
8		14048211		1	NUT
9		12647121		1	WASHER M8
10		87406389		1	CABLE, ELECTRIC

1.75.2/ 3	02	p1	12/03

BATTERY LOCK-OUT SWITCH & GROUND WIRE (POWER SHUTTLE)

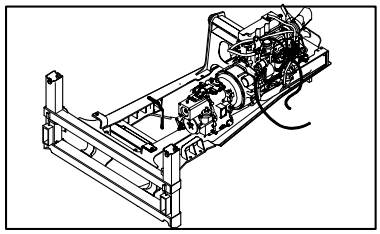

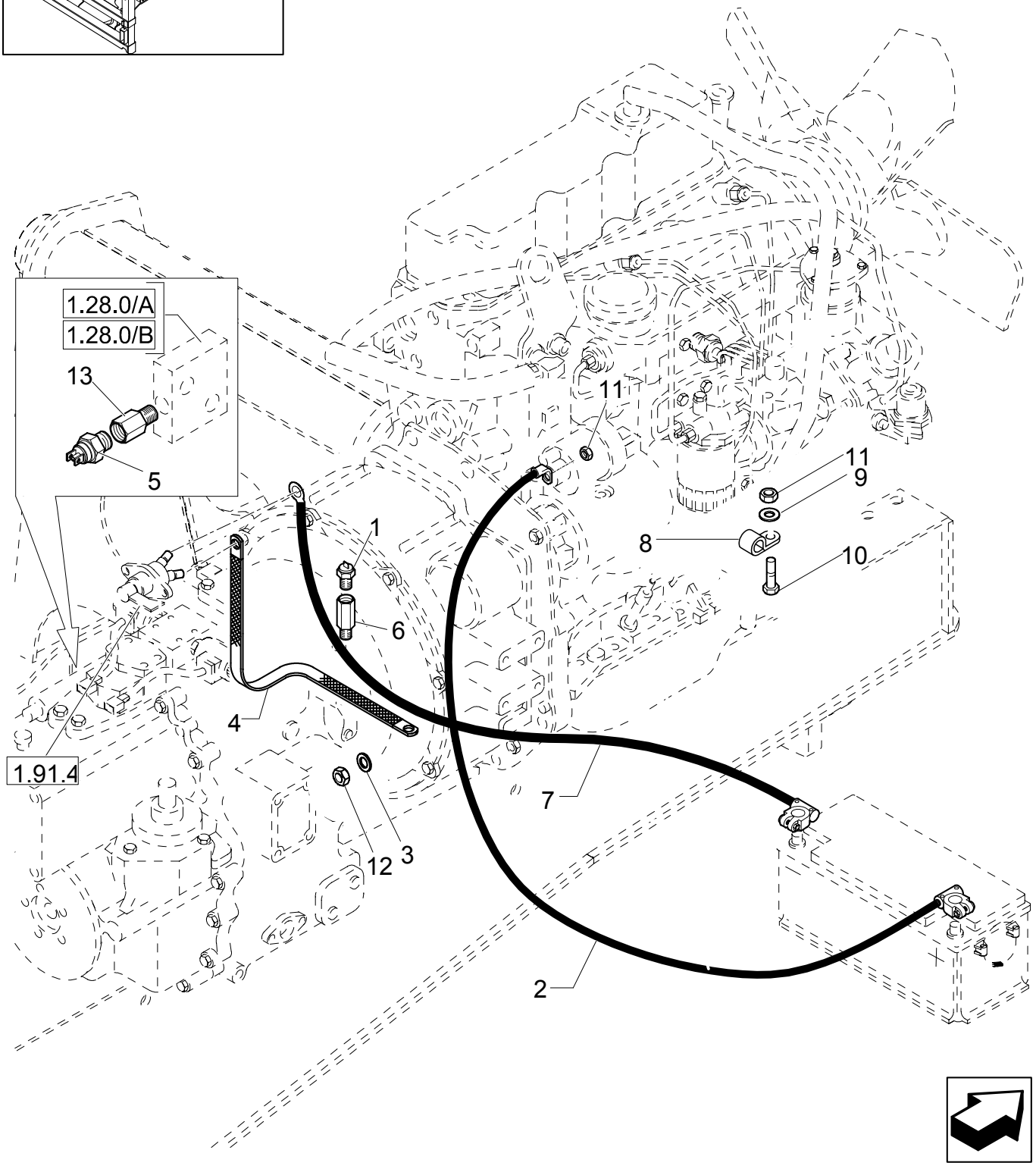

BATTERY LOCK-OUT SWITCH & GROUND WIRE (POWER SHUTTLE)

REF	FN	PART NUMBER	YR/SN	QTY	DESCRIPTION
1		85803879		1	SENDER UNIT
2		{87424795}		1	CABLE, GROUND
3		12647121		1	WASHER M8
4		{87405018}		1	CABLE, GROUND
5		85817672		1	SENDER UNIT
6		85803524		1	CONNECTOR, HYD.
7		{87404248}		1	CABLE, GROUND
8		{47050861}		2	COLLAR
9		{47048993}		1	WASHER
10		{47049010}		1	SCREW
11		47049031		3	NUT
12		16104111		1	NUT
13		85820156		1	CONNECTOR, HYD.

1.75.2/ 3	03	p1	08/03

ENGINE HARNESS (POWER SHUTTLE)

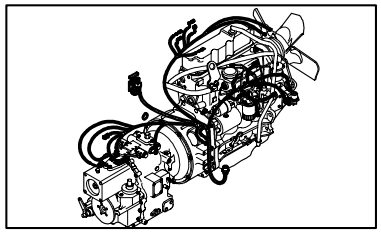

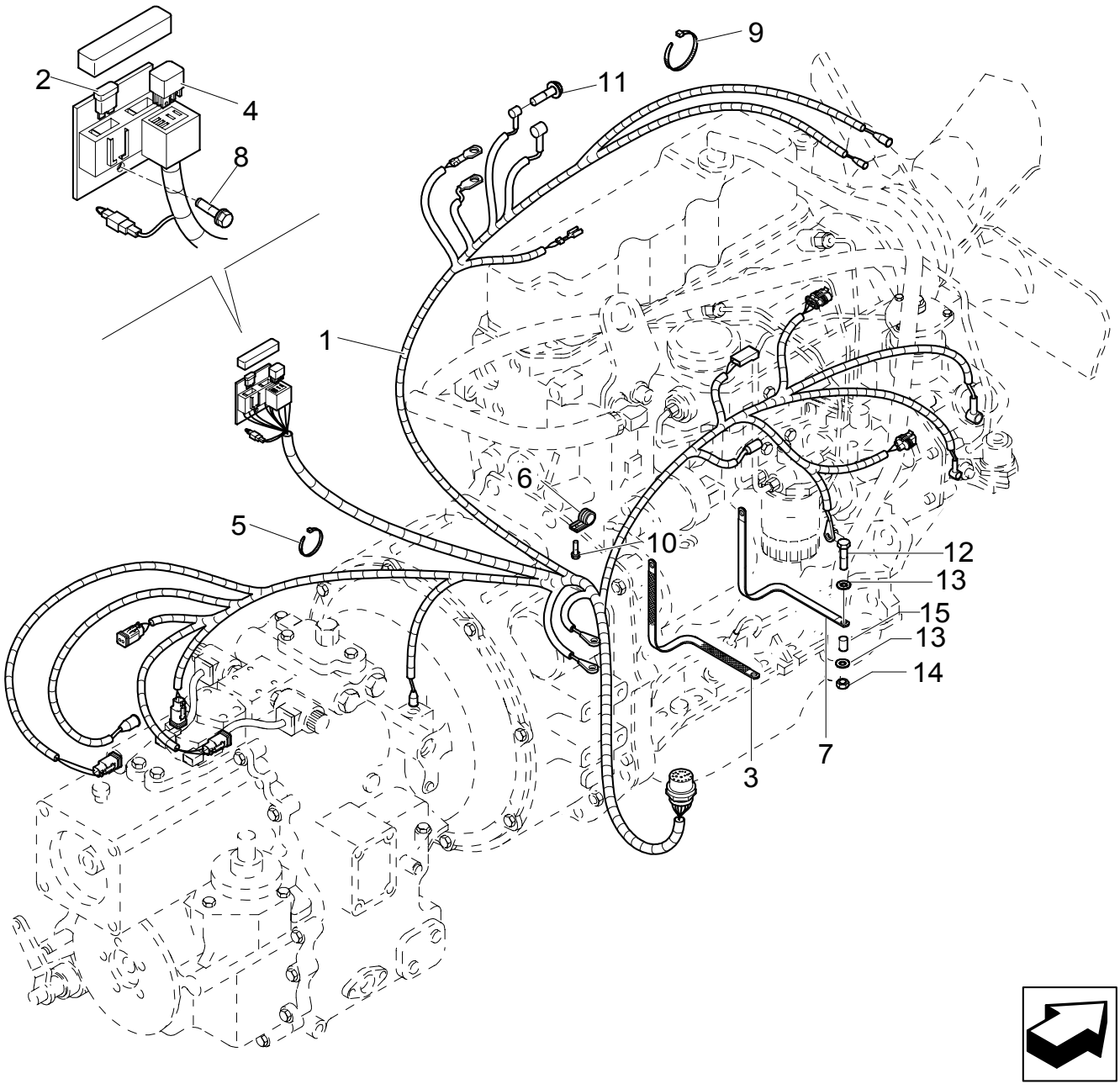

ENGINE HARNESS (POWER SHUTTLE)

REF	FN	PART NUMBER	YR/SN	QTY	DESCRIPTION
1	1	87406398		1	CABLE, ELECTRIC
2		11055890		1	FUSE 80A
3		{87407206}		1	CABLE, GROUND
4		85805162		1	RELAY 12V-70A
5		{47049173}		1	COLLAR
6		85802889		1	COLLAR, RETAINER
7		{87410268}		1	CABLE, GROUND
8		16043824		1	SCREW
9		{47049196}		1	COLLAR
10		47049185		2	SCREW
11		47049186		1	BOLT
12		16044221		1	SCREW
13		12638511		2	WASHER
14		14048211		1	NUT
15		87415208		1	SPACER

(1) Includes 2,3,4

131	01	p1	12/03

SINGLE BATTERY

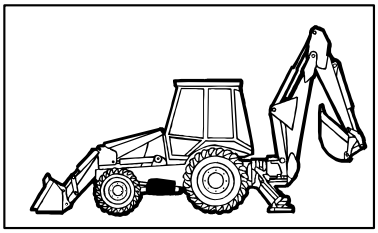

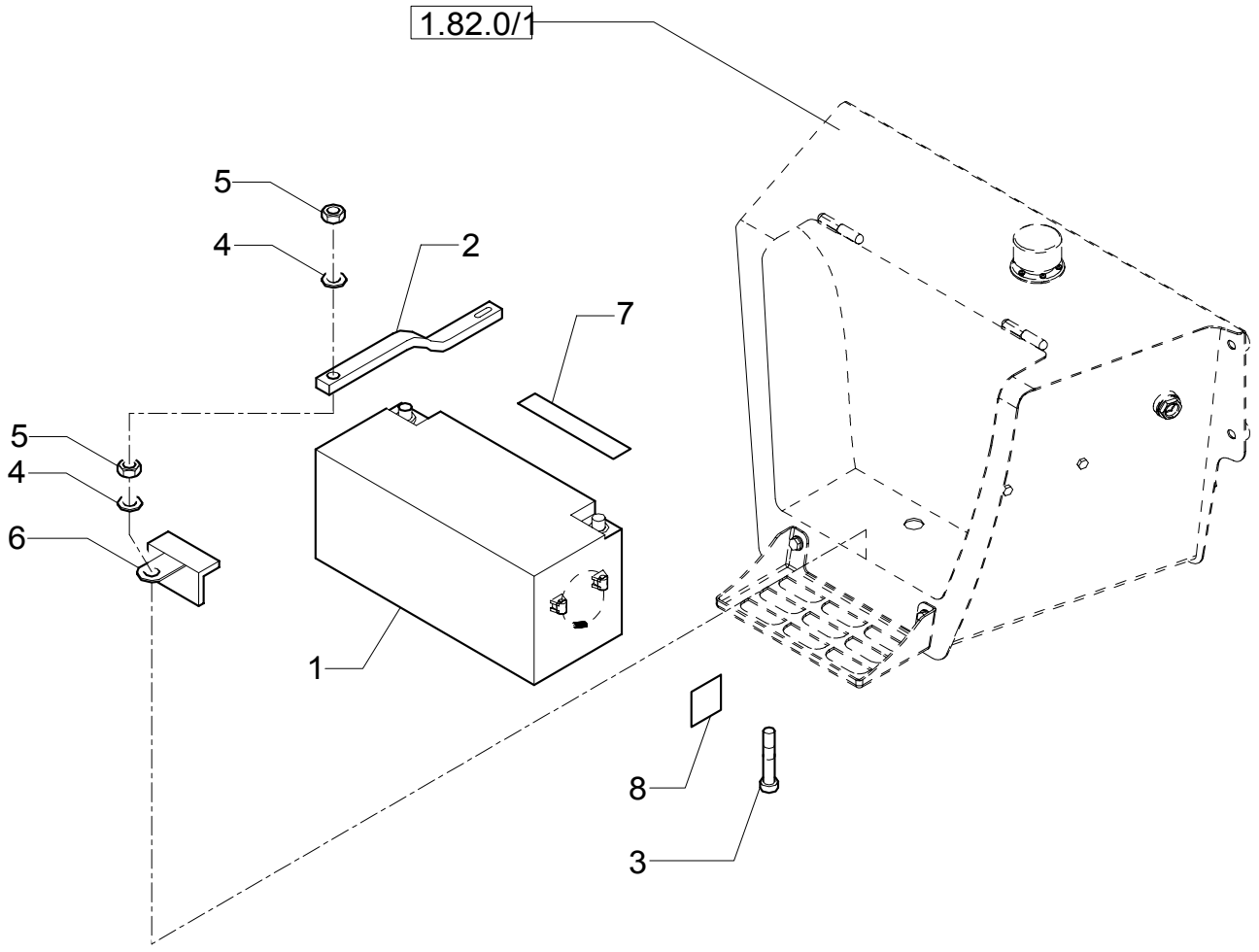

SINGLE BATTERY

REF	FN	PART NUMBER	YR/SN	QTY	DESCRIPTION
1		85825440		1	BATTERY, WET
2		87416929		1	BRACKET
3		412005		2	SCREW
4		47048963		2	WASHER
5		47049041		2	NUT
6		47048788		2	ANGLE BAR
7		47049590		1	DECAL
8		87407281		1	DECAL

DOUBLE BATTERY

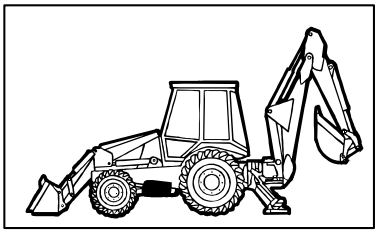

DOUBLE BATTERY

REF	FN	PART NUMBER	YR/SN	QTY	DESCRIPTION
1		87422014		2	BATTERY, DRY
2		412005		4	SCREW
3		{87427926}		1	CABLE, GROUND
4		{87427922}		1	CABLE, GROUND
5		47049041		4	NUT M10
6		47049590		0,5	DECAL
7		87404127		2	DECAL
8		{87415781}		2	BRACKET
9		47048788		4	ANGLE BAR
10		47048963		4	WASHER
11		{87423468}		4	PLATE, RETAINING
12		{87427923}		1	CABLE, GROUND
13		{87427925}		1	CABLE, GROUND
14		{85826906}		1	GUARD

995	01	p1	02/04

COLD START

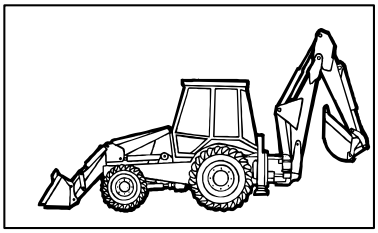

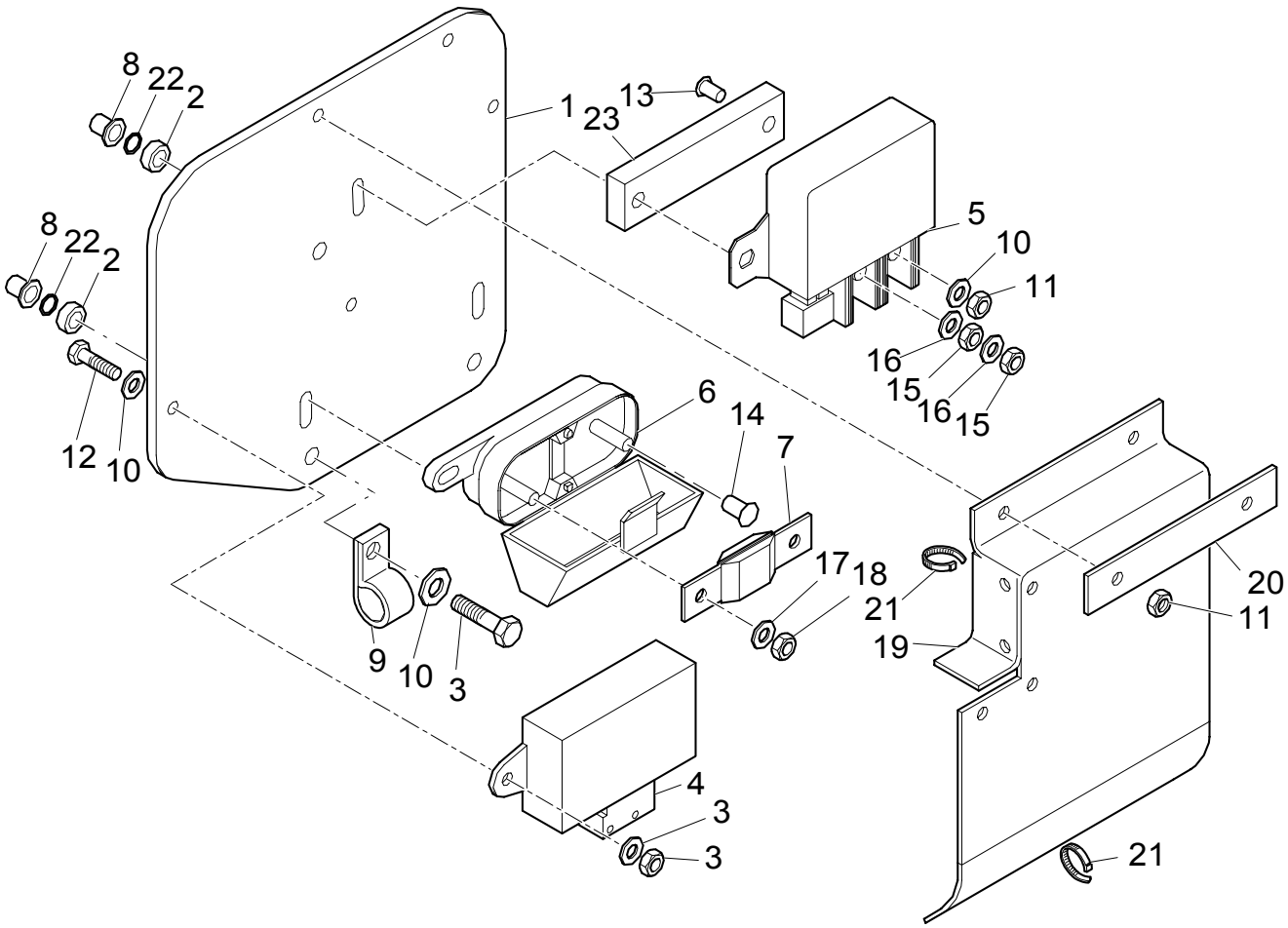

COLD START

REF	FN	PART NUMBER	YR/SN	QTY	DESCRIPTION
1		87410603		1	PLATE
2		85825169		3	SPACER
3		{47049164}		3	SCREW THD TO HD M8x40 CL8.8 ZND
4		87409046		1	ELECTRONIC UNIT, CONTROL
5		86619908		1	RELAY
6		76088638		1	CONNECTOR
7		87410602		1	FUSE 300 AMP
8		85801492		3	INSERT, THREADED
9		47049195		1	COLLAR M8
10		47048961		15	WASHER
11		47054518		8	NUT M6
12		47049157		5	BOLT M6x20
13		47120207		2	SCREW M6x35
14		85821538		1	SCREW M6x16
15		47049029		4	NUT M6
16		322357		2	SPRING, BELLEVILLE LW BV 6
17		47048992		5	WASHER 8mm Spring Lock
18		47049030		2	NUT M8
19		87411092		1	COVER
20		87411090		1	PLATE, COVER
21		47048702		5	COLLAR, RETAINER
22		85821539		3	O-RING
23		87414237		1	PLATE M14

995	02	p1	03/04

COLD START

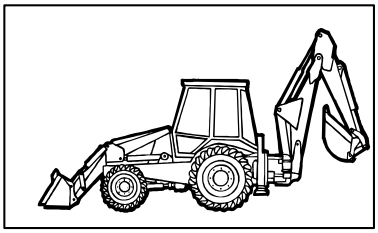

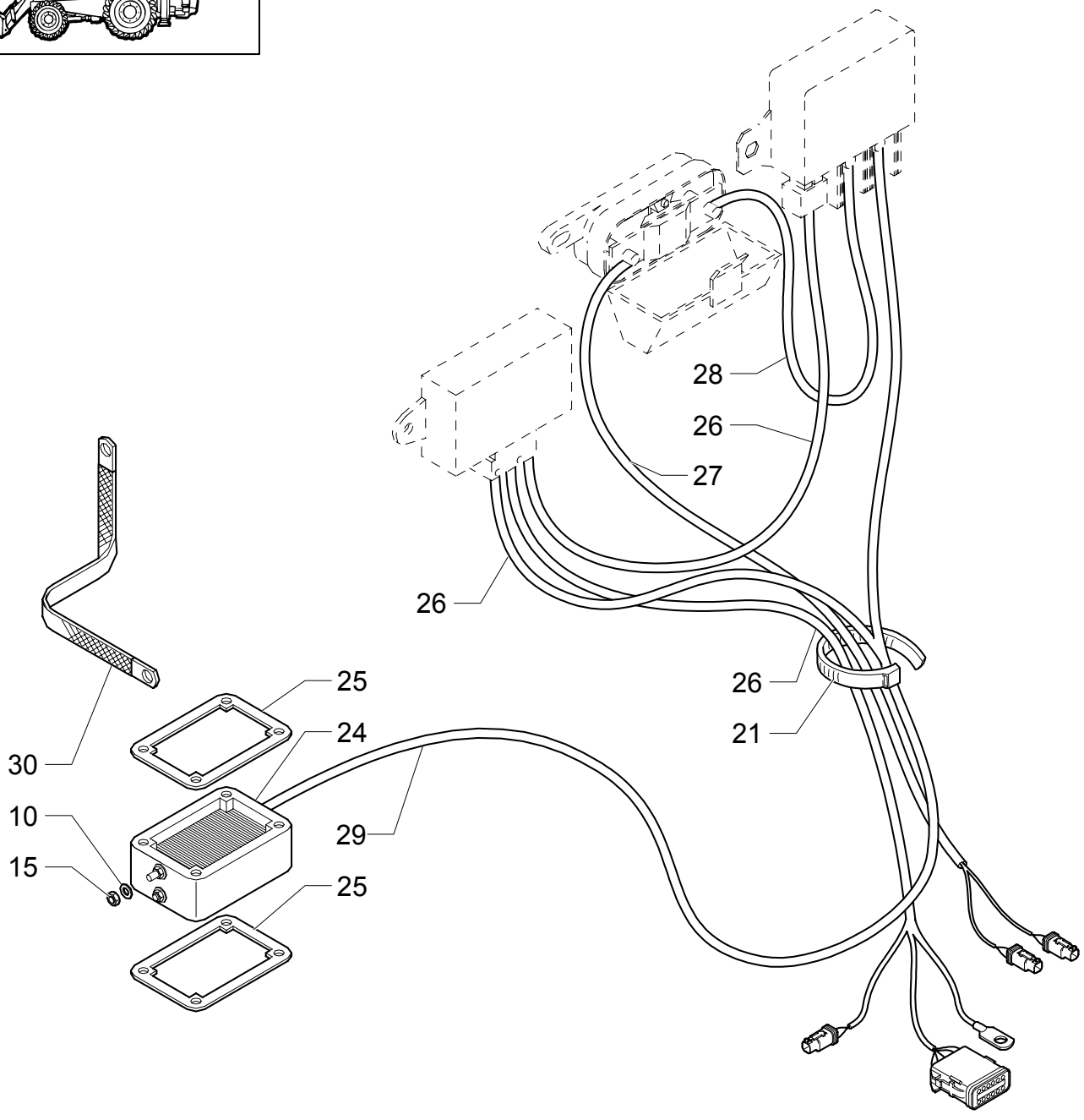

COLD START

REF	FN	PART NUMBER	YR/SN	QTY	DESCRIPTION
10		47048961		15	WASHER
15		47049029		4	NUT M6
21		47048702		5	COLLAR, RETAINER
24		82017872		3	HEATER
25		86014151		1	GASKET
26		87410263		1	CABLE, ELECTRIC
27		87410264		1	CABLE, GROUND
28		87410265		1	CABLE, GROUND
29		87410266		1	CABLE, GROUND
30		87413162		1	CABLE, GROUND

SECTION INDEX

SEC. 07	00	SLIDES VALVES
1.82.0	01	HYDRAULIC OIL RESERVOIR
1.82.3	01	HYDRAULIC PUMP (35+35-154L/MM)
1.82.6	01A	HYDRAULIC SYSTEM PIPING (CENTER PIVOT)
1.82.6	01B	FRONT HYDRAULIC PUMP INTAKE & OUTLET HOSES (CENTER PIVOT)
1.82.6	02A	HYDRAULIC SYSTEM PIPING(CENTER PIVOT)
1.82.6	02B	REAR HYDRAULIC PUMP STABILIZER, LOADER & BACKHOE VALVE HOSES (CENTER PIVOT)
1.82.6	03A	HYDRAULIC SYSTEM PIPING(CENTER PIVOT)
1.82.6	03B	QUICK RELEASE COUPLERS & HOSES (CENTER PIVOT)
1.82.6	04A	RETURN MANIFOLD HOSES (CENTER PIVOT)
1.82.6	04B	RETURN MANIFOLD HOSES (CENTER PIVOT)
1.82.6	05F	OIL COOLER & FILTER HOSES (CENTER PIVOT)
1.82.6	05G	HYDRAULIC SYSTEM PIPING (CENTER PIVOT)
1.82.6	06A	FILTER ASSEMBLY & HOSE TO RETURN MANIFOLD (CENTER PIVOT)
1.82.6	06B	FILTER ASSEMBLY & HOSE TO RETURN MANIFOLD (CENTER PIVOT)
1.82.6	07	HYDRAULIC SYSTEM PIPING
1.82.6	08A	LOADER LIFT CYLINDER HOSES (CENTER PIVOT)
1.82.6	08C	LOADER LIFT CYLINDER HOSES (CENTER PIVOT)
1.82.6	09A	LOADER BUCKET CYLINDER HOSES (CENTER PIVOT)
1.82.6	09B	LOADER BUCKET CYLINDER HOSES (CENTER PIVOT)
1.82.6	09C	BACKHOE SWING CYLINDER HOSES (CENTER PIVOT)
1.82.6	11A	BACKHOE CONTROL VALVE HOSES (CENTER PIVOT)
1.82.6	11B	HYDRAULIC SYSTEM PIPING(CENTER PIVOT)
1.82.6	12B	HYDRAULIC SYSTEM PIPING(CENTER PIVOT)
1.82.6	13A	ROTATION PLATE HOSE CLAMPS (CENTER PIVOT)
1.82.6	16	BACKHOE CONTROL VALVE(CENTER PIVOT)
1.82.6	17	DIPPER VALVE SECTION (CENTER PIVOT)
1.82.6	18	BUCKET, SWING, & BOOM VALVE SECTION (CENTER PIVOT)
302	01	TWO-SECTION CONTROL VALVE FOR LOADER
302	02	TWO-SECTION CONTROL VALVE FOR LOADER
302	03	TWO-SECTION CONTROL VALVE FOR LOADER
302	04	TWO-SECTION CONTROL VALVE FOR LOADER
331	01	BACKHOE CONTROL VALVE, 6 SECTIONS (CENTER PIVOT) NORTH AMERICA
331/A	01	6 SECTION PILOT CONTROL VALVE SUPPORT,COMPLETE
331/A	02	6 SECTION PILOT CONTROL VALVE SUPPORT,COMPLETE
331/B	01	PILOT CONTROL VALVE SUPPORT,COMPLETE
331/C	01	6 SECTION PILOT CONTROL VALVE SUPPORT,COMPLETE
331/C	02	6 SECTION PILOT CONTROL VALVE SUPPORT,COMPLETE
331/C	03	6 SECTION PILOT CONTROL VALVE SUPPORT,COMPLETE
331/C	04	6 SECTION PILOT CONTROL VALVE SUPPORT,COMPLETE
331/C	05	6 SECTION PILOT CONTROL VALVE SUPPORT,COMPLETE
331/C	06	6 SECTION PILOT CONTROL VALVE SUPPORT,COMPLETE (CENTER PIVOT)
333/1	01	7-SECTIONS EXCAVATOR CONTROL VALVE (CENTER PIVOT) NORTH AMERICA
333/1	02	7-SECTIONS EXCAVATOR CONTROL VALVE (CENTER PIVOT) NORTH AMERICA
333/1	03	7-SECTIONS EXCAVATOR CONTROL VALVE (CENTER PIVOT) NORTH AMERICA
333/1	04	7-SECTIONS EXCAVATOR CONTROL VALVE (CENTER PIVOT) NORTH AMERICA
333/1	05	7-SECTIONS EXCAVATOR CONTROL VALVE (CENTER PIVOT) NORTH AMERICA
333/1	06	7-SECTIONS EXCAVATOR CONTROL VALVE (CENTER PIVOT) NORTH AMERICA
333/1	07	7-SECTIONS EXCAVATOR CONTROL VALVE (CENTER PIVOT) NORTH AMERICA
333/A	02	7 SECTION PILOT CONTROL VALVE SUPPORT,COMPLETE

SECTION INDEX

333/A	03	7 SECTION PILOT CONTROL VALVE SUPPORT,COMPLETE
333/B	01	7 SECTION PILOT CONTROL VALVE SUPPORT,COMPLETE
333/B	02	7 SECTION PILOT CONTROL VALVE SUPPORT,COMPLETE (CENTER PIVOT) EUROPE
333/B	03	7 SECTION PILOT CONTROL VALVE SUPPORT,COMPLETE
333/B	04	7 SECTION PILOT CONTROL VALVE SUPPORT,COMPLETE
333/B	05	7 SECTION PILOT CONTROL VALVE SUPPORT,COMPLETE
333/B	06	7 SECTION PILOT CONTROL VALVE SUPPORT,COMPLETE (CENTER PIVOT) EUROPE
333/B	07	7 SECTION PILOT CONTROL VALVE SUPPORT,COMPLETE (CENTER PIVOT) EUROPE
333/B	08	7 SECTION PILOT CONTROL VALVE SUPPORT,COMPLETE
333/B	09	7 SECTION PILOT CONTROL VALVE SUPPORT,COMPLETE (CENTER PIVOT) EUROPE
334	09	7-SECTIONS EXCAVATOR CONTROL VALVE
334	11	7-SECTIONS EXCAVATOR CONTROL VALVE
336/ A	01	THREE-SECTION CONTROL VALVE FOR LOADER(CENTER PIVOT)
336/ 1	01	LOADER CONTROL VALVE, TWO SECTION, LOADER, BUCKET & DUMP VALVES (CENTER PIVOT)
336/ 1	02	LOADER CONTROL VALVE, TWO SECTION, CAP & UNLOAD VALVE (CENTER PIVOT)
336/ 1	03	LOADER CONTROL VALVE, TWO SECTION, RELIEF & CHECK VALVES (CENTER PIVOT)
336/ 1	04	LOADER CONTROL VALVE, TWO SECTION, BY-PASS KIT (CENTER PIVOT)
336/ 1	05	LOADER CONTROL VALVE, TWO SECTION, UNLOAD KIT OR DUMP VALVE (CENTER PIVOT)
337	01	LOCK VALVE ON LOADER TILTING CYLINDERS
337	02	LOCK VALVE ON LOADER LIFT CYLINDERS
339	01	LOADER CONTROL VALVE, THREE SECTION, LOADER & BUCKET VALVES (CENTER PIVOT)
339	02	LOADER CONTROL VALVE, THREE SECTION, CAP & THIRD SECTION RELIEF VALVE (CENTER PIVOT)
339	03	LOADER CONTROL VALVE, THREE SECTION, RELIEF, UNLOAD, DUMP & CHECK VALVES (CENTER PIVOT)
339	04	LOADER CONTROL VALVE, THREE SECTION, BY-PASS KIT (CENTER PIVOT)
339	05	LOADER CONTROL VALVE, THREE SECTION, UNLOAD KIT OR DUMP VALVE (CENTER PIVOT)
339/ 1	01	LOADER CONTROL VALVE
339/ 1	02	LOADER CONTROL VALVE, INLET SECTION
339/ 1	03	LOADER CONTROL VALVE, BOOM SECTION
339/ 1	04	TWO-SECTION CONTROL VALVE FOR LOADER
339/ 1	05	LOADER CONTROL VALVE, 4X1& 6X1 BUCKET SECTION
344	01	STABILIZER CONTROL VALVE, TWO SECTION (CENTER PIVOT)
344/ A	01	STABILIZER CONTROL VALVE, LH & RH SECTION (CENTER PIVOT)
356/ A	01	STABILIZER CONTROL VALVE, THIRD SECTION, HED (CENTER PIVOT)
391	01	LOCK VALVE FOR BUCKET 4X1 / 6X1
392	01	LOCKING VALVE ON BACKHOE LIFT AND DIPP. CYLINDER
392	02	BACKHOE LIFT & DIPPERSTICK CYLINDER LOCK VALVE
437	01	GLIDE RIDE VALVE,HYDRAULIC SYSTEM FOR MACHINE FRAME LEVELLING & ON/OFF SWITCH
437	02	GLIDE RIDE VALVE
721	01	TELESCOPIC CONTROL VALVE, 3 SECTIONS(CENTER PIVOT)
721	02	HED TELESCOPIC CONTORL VALVE, SECTION HOSES(CENTER PIVOT)
721	03	HED CYLINDER PISTON END HYDRAULIC LINES(CENTER PIVOT)
721	04	HED CYLINDER ROD END HYDRAULIC LINES(CENTER PIVOT)
721	05	HED FOOT PEDAL, CABLE & DECALS(CENTER PIVOT)

SLIDES VALVES

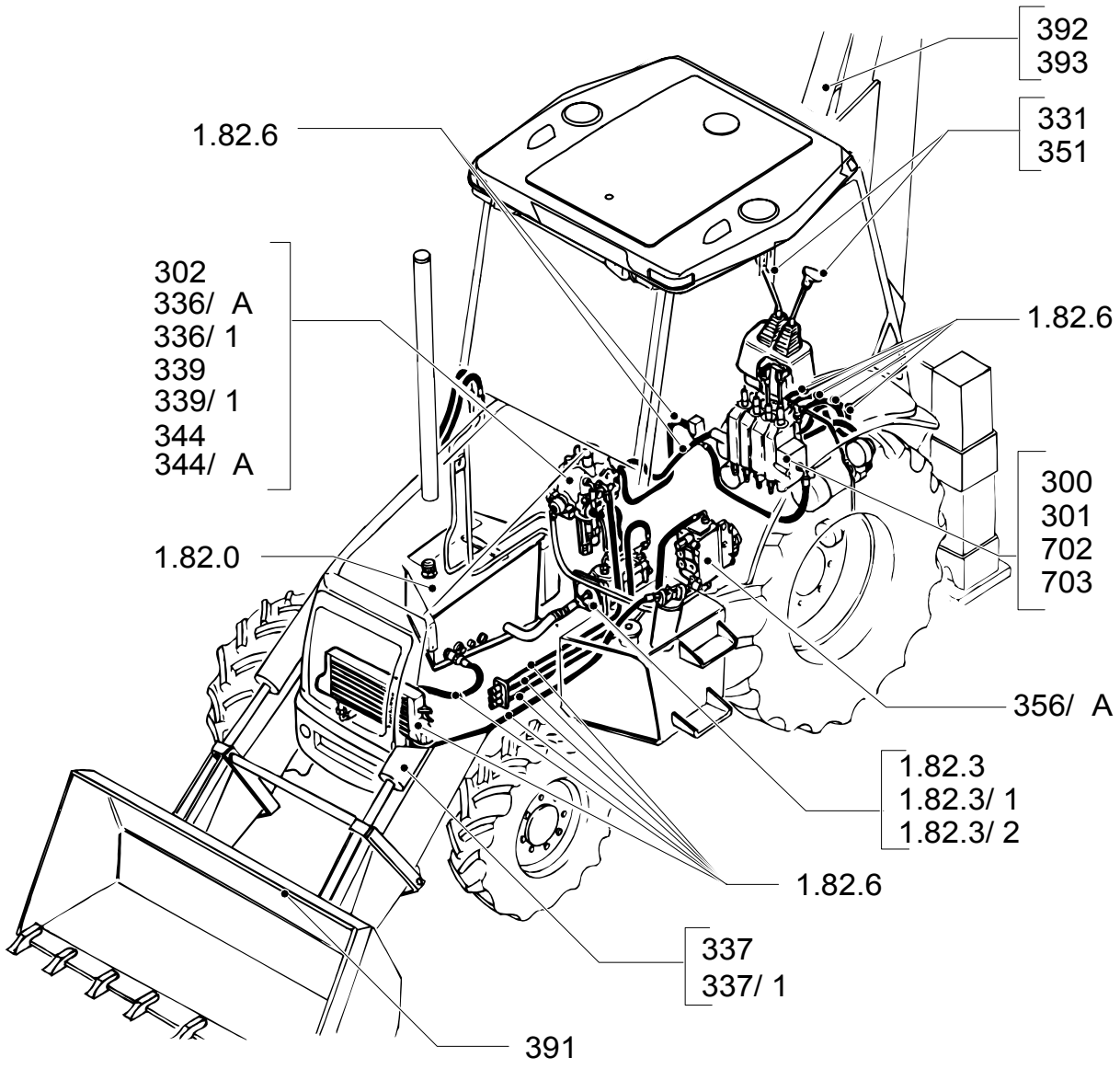

SLIDES VALVES

REF	FN	PART NUMBER	YR/SN	QTY	DESCRIPTION

1.82.0	01	p1	08/03

HYDRAULIC OIL RESERVOIR

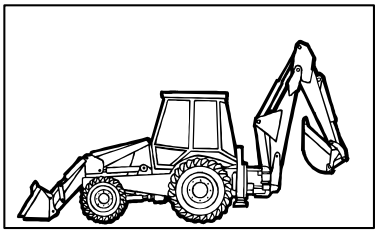

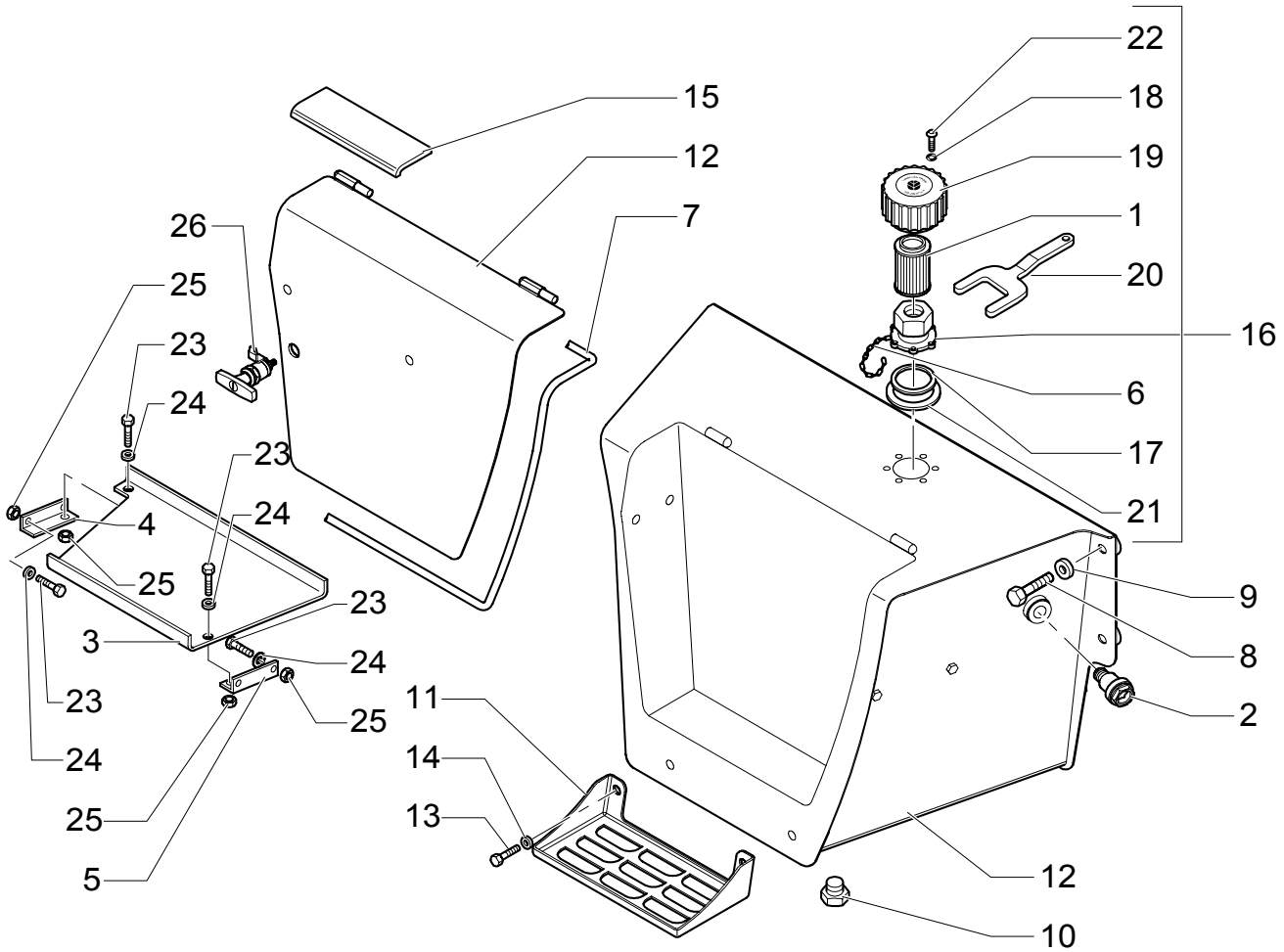

HYDRAULIC OIL RESERVOIR

REF	FN	PART NUMBER	YR/SN	QTY	DESCRIPTION
1		87407928		1	FILTER
2		85801249		1	GAUGE, LEVEL
3		87407463		1	BOX, TOOL
4		87407464		1	BRACKET
5		87407465		1	BRACKET M6X22
6		85813352		1	FLANGE
7		87417207		1	GASKET
8		15540721		4	SCREW M12X1,25X25
9		47048976		4	WASHER
10		47050671		1	PLUG M33X2
11		85801218		2	FOOT REST
12		87406285		1	RESERVOIR, HYDRAULIC OIL
13		11112421		4	SCREW M12X1,25X25
14		47048973		4	WASHER
15		87404910		1	FOOT BOARD
16		87403241		1	VALVE, HYDRAULIC ASSY
17		85813351		1	O-RING 39,35X2,62
18		85813354		6	O-RING 6X1.5
19		85813350		1	PLUG
20		85802580		1	KEY, LOCK
21		9969380		1	GASKET
22		85813353		6	SCREW M5X16
23		47049185		6	SCREW
24		47048972		6	WASHER
25		47049041		6	NUT M5X12
26		87406289		1	LOCK

1.82.3	01	p1	11/03

HYDRAULIC PUMP (35+35-154L/MM)

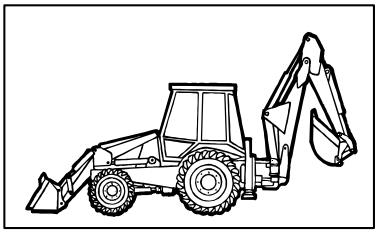

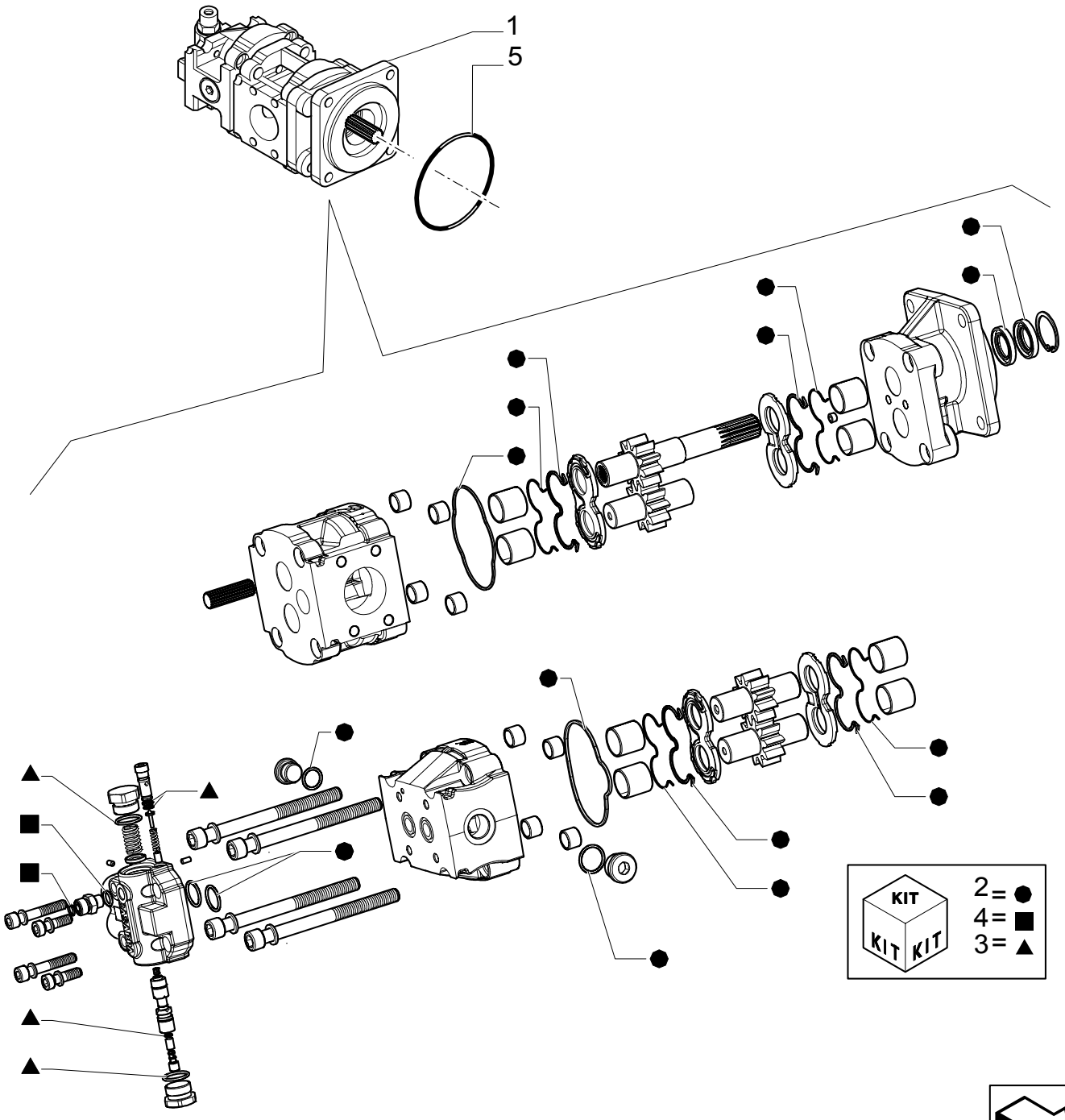

HYDRAULIC PUMP (35+35-154L/MM)

REF	FN	PART NUMBER	YR/SN	QTY	DESCRIPTION
1	1	85826147		1	PUMP, HYDRAULIC
2		85813244		1	KIT
3		85819027		1	VALVE, HYDRAULIC
4		85824196		1	CONNECTOR, HYD.
5		14466880		1	O-RING

(1) Includes 2,3,4

1.82.6	01A	p1	02/04

HYDRAULIC SYSTEM PIPING (CENTER PIVOT)

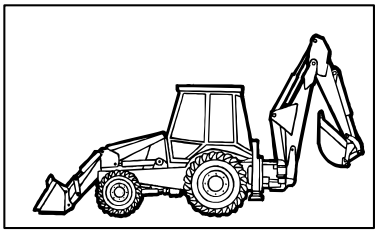

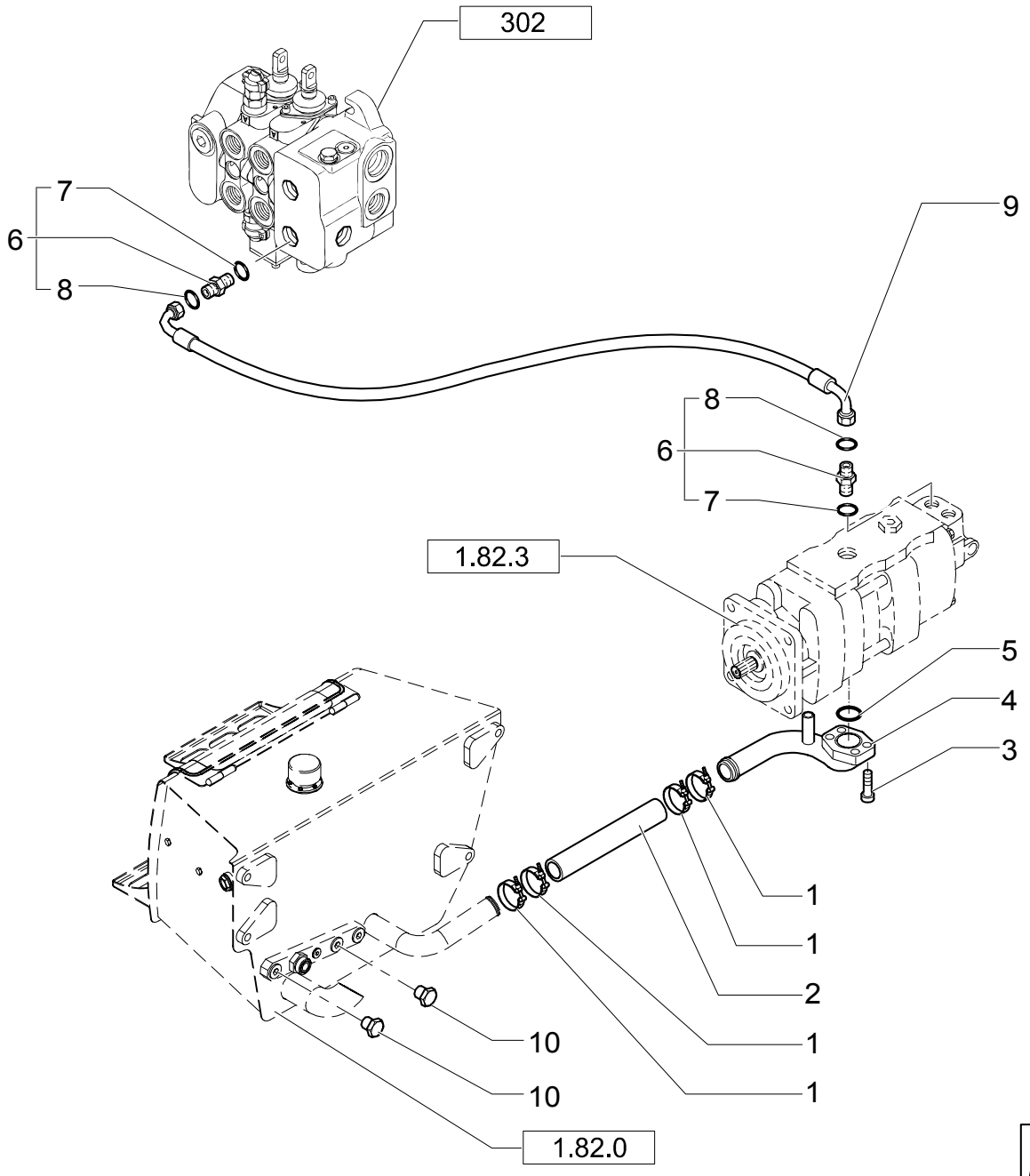

HYDRAULIC SYSTEM PIPING (CENTER PIVOT)

REF	FN	PART NUMBER	YR/SN	QTY	DESCRIPTION
1		85803012		4	CLAMP
2		85811870		1	HOSE
3		14422021		3	SCREW M12X30
4		85827041		1	TUBE, RIGID
5		14464680		1	GASKET
6	1	83962538		2	CONNECTOR, HYD.
7		167266		2	O-RING 90 Duro, .924" ID x .116" Thk
8		9991976		2	O-RING 90 Duro, .739" ID x .070" Thk
9		85826228		1	HOSE, FLEXIBLE
10		85802800		2	PLUG

(1) Includes 7,8

1.82.6	01B	p1	11/03

FRONT HYDRAULIC PUMP INTAKE & OUTLET HOSES (CENTER PIVOT)

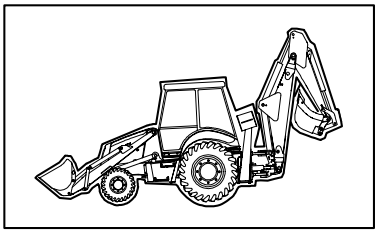

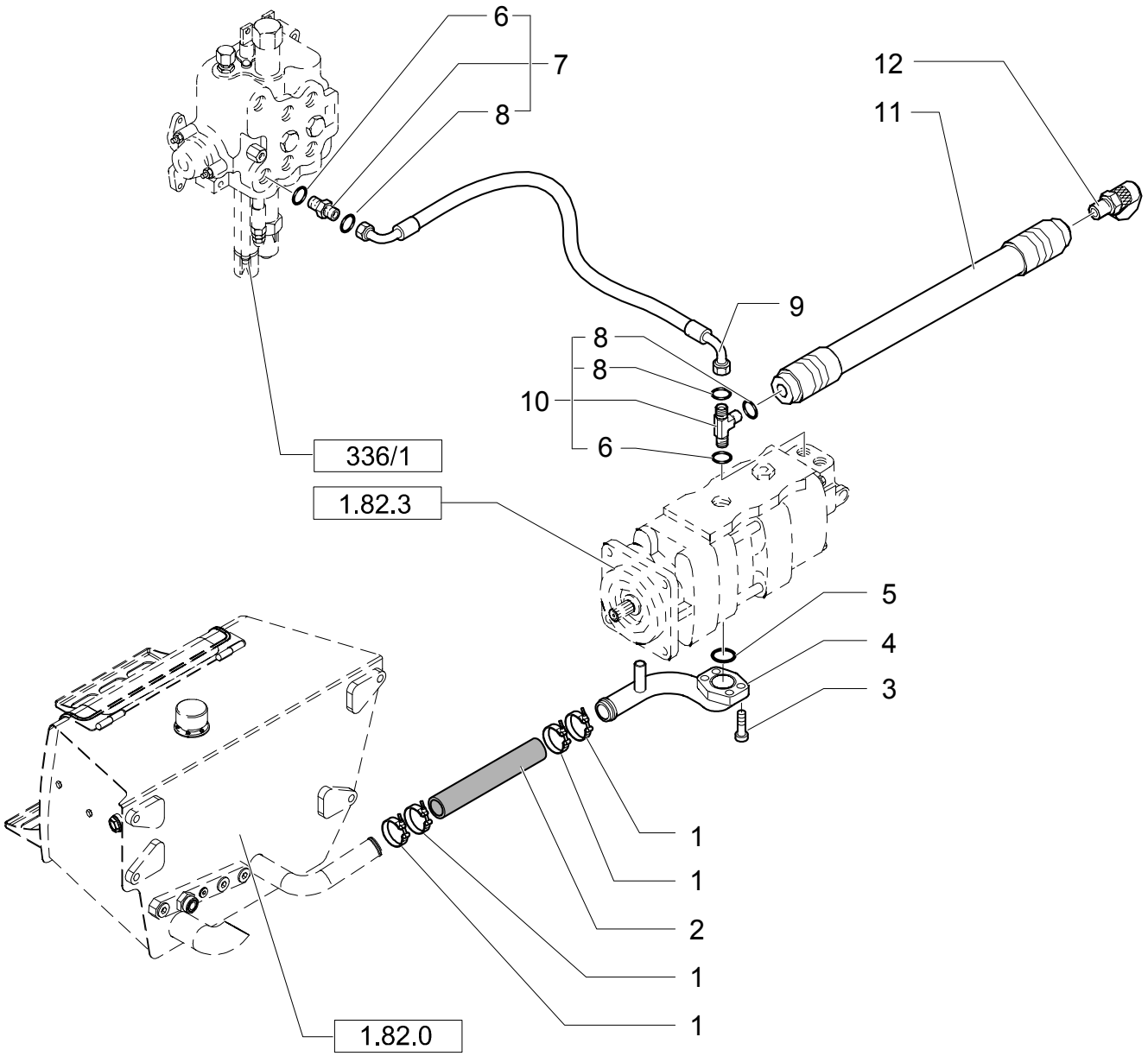

FRONT HYDRAULIC PUMP INTAKE & OUTLET HOSES (CENTER PIVOT)

REF	FN	PART NUMBER	YR/SN	QTY	DESCRIPTION
1		85803012		4	CLAMP
2		85811870		1	HOSE
3		14422021		3	SCREW M12X30
4		87409515		1	TUBE, RIGID
5		14464680		1	GASKET
6		167266		2	O-RING 90 Duro, .924" ID x .116" Thk
7	1	83962538		1	CONNECTOR, HYD. 1-3/16"-12 ORS x 1-1/16"-12 SAE O-Ring
8		9991976		3	O-RING 90 Duro, .739" ID x .070" Thk
9		85824378		1	HOSE, FLEXIBLE
10	2	85815581		1	CONNECTOR, HYD.
11		85815568		1	HOSE, FLEXIBLE
12		85817596		1	COUPLING, QUICK, MALE

(1) Includes 7,8
(2) Includes 6,8

1.82.6	02A	p1	11/03

HYDRAULIC SYSTEM PIPING(CENTER PIVOT)

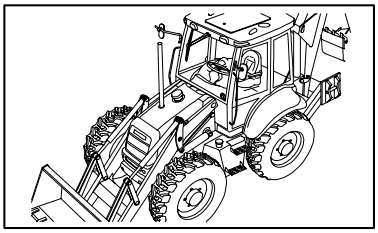

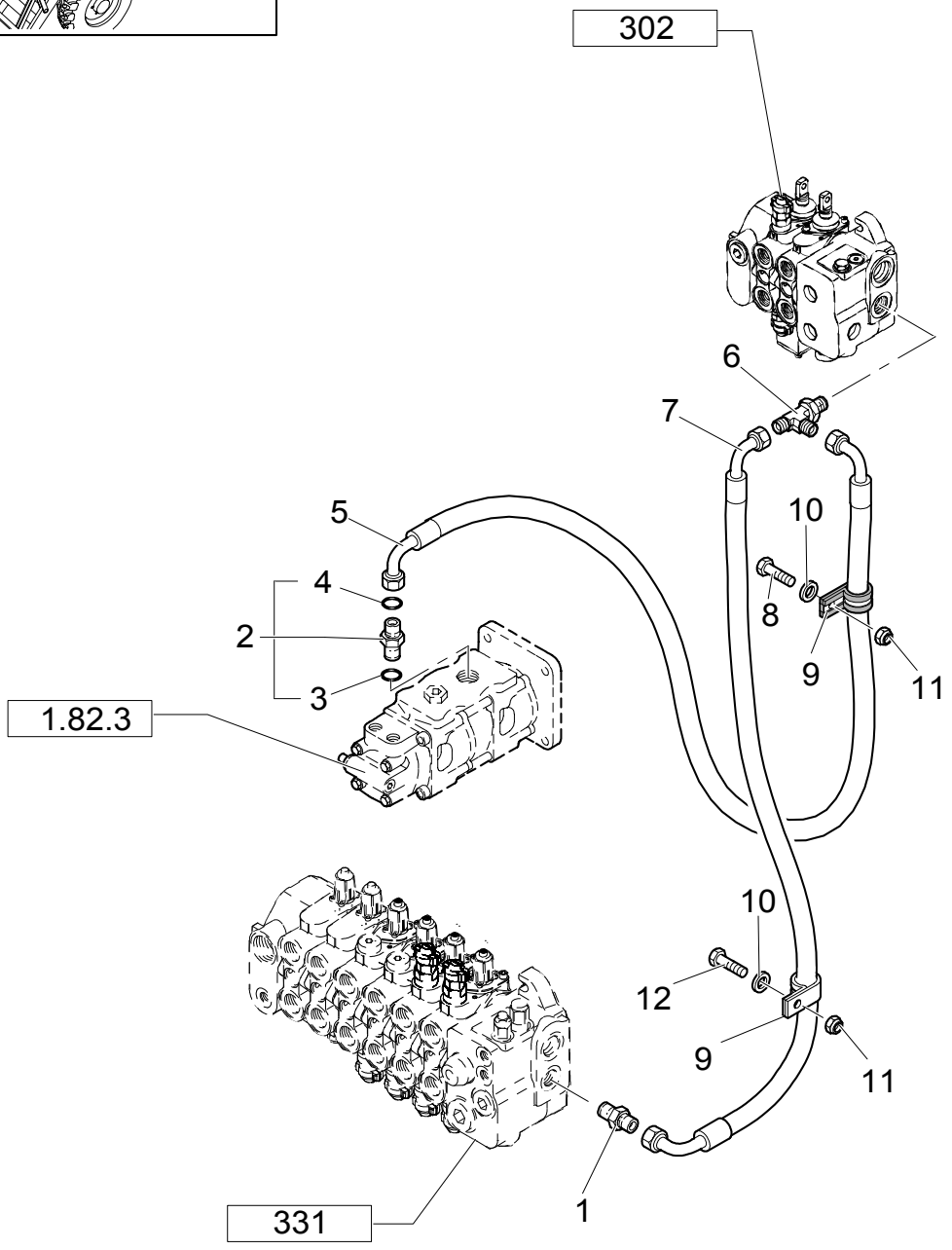

HYDRAULIC SYSTEM PIPING(CENTER PIVOT)

REF	FN	PART NUMBER	YR/SN	QTY	DESCRIPTION
1		85803486		1	CONNECTOR, HYD.
2	1	83963000		1	CONNECTOR, HYD.
3		167269		1	O-RING 90 Duro, .755" ID x .097" Thk
4		87016S95		1	O-RING 90 Duro, .625" ID x .070" Thk
5		85825187		1	HOSE, FLEXIBLE
6		85826093		1	CONNECTOR, HYD.
7		85817220		1	HOSE, FLEXIBLE L=MM.1080
8		47049082		1	SCREW
9		85802890		2	COLLAR, RETAINER
10		11193979		2	WASHER, LOCK
11		14048211		2	NUT
12		47049161		1	SCREW

(1) Includes 3,4

REAR HYDRAULIC PUMP STABILIZER, LOADER & BACKHOE VALVE HOSES (CENTER PIVOT)

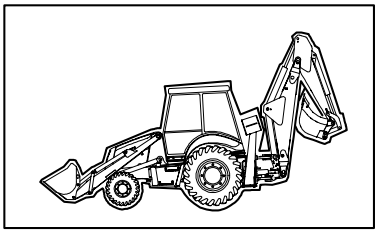

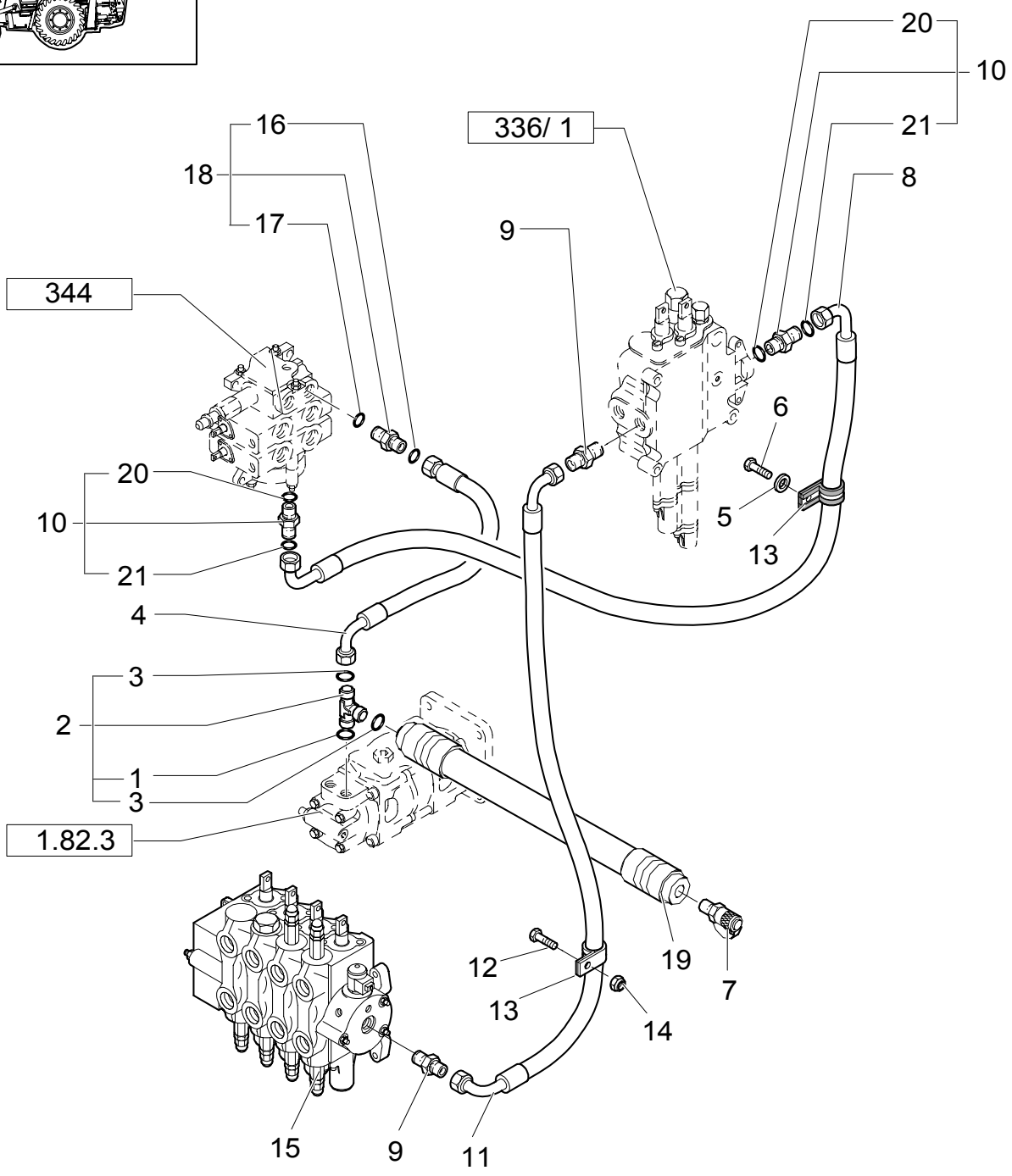

REAR HYDRAULIC PUMP STABILIZER, LOADER & BACKHOE VALVE HOSES (CENTER PIVOT)

REF	FN	PART NUMBER	YR/SN	QTY	DESCRIPTION
1		167269		1	O-RING 90 Duro, .755" ID x .097" Thk
2	1	85815580		1	CONNECTOR, HYD.
3		87016S95		2	O-RING 90 Duro, .625" ID x .070" Thk
4		85812149		1	HOSE, FLEXIBLE
5		11190579		2	WASHER, LOCK
6		15970921		1	SCREW
7		85817596		1	COUPLING, QUICK, MALE
8		85812161		1	HOSE, FLEXIBLE
9		85802958		2	CONNECTOR, HYD.
10		85802642		2	CONNECTOR, HYD. 1-3/16"-12 ORS x 7/8"-14 SAE O-Ring
11		85802776		1	HOSE, FLEXIBLE
12		15970721		2	SCREW M10X1.25X25
13		85802890		2	COLLAR, RETAINER
14		12574511		1	NUT
15		85806102		1	VALVE, CONTROL
16		167269		1	O-RING 90 Duro, .755" ID x .097" Thk
17		87016S95		1	O-RING 90 Duro, .625" ID x .070" Thk
18	2	83963000		1	CONNECTOR, HYD.
19		85815567		1	HOSE, FLEXIBLE

(1) Includes 1,3
(2) Includes 16,17

HYDRAULIC SYSTEM PIPING(CENTER PIVOT)

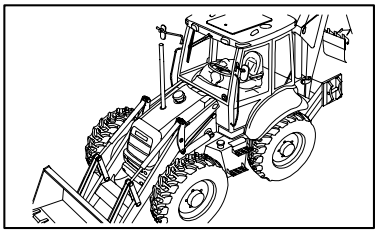

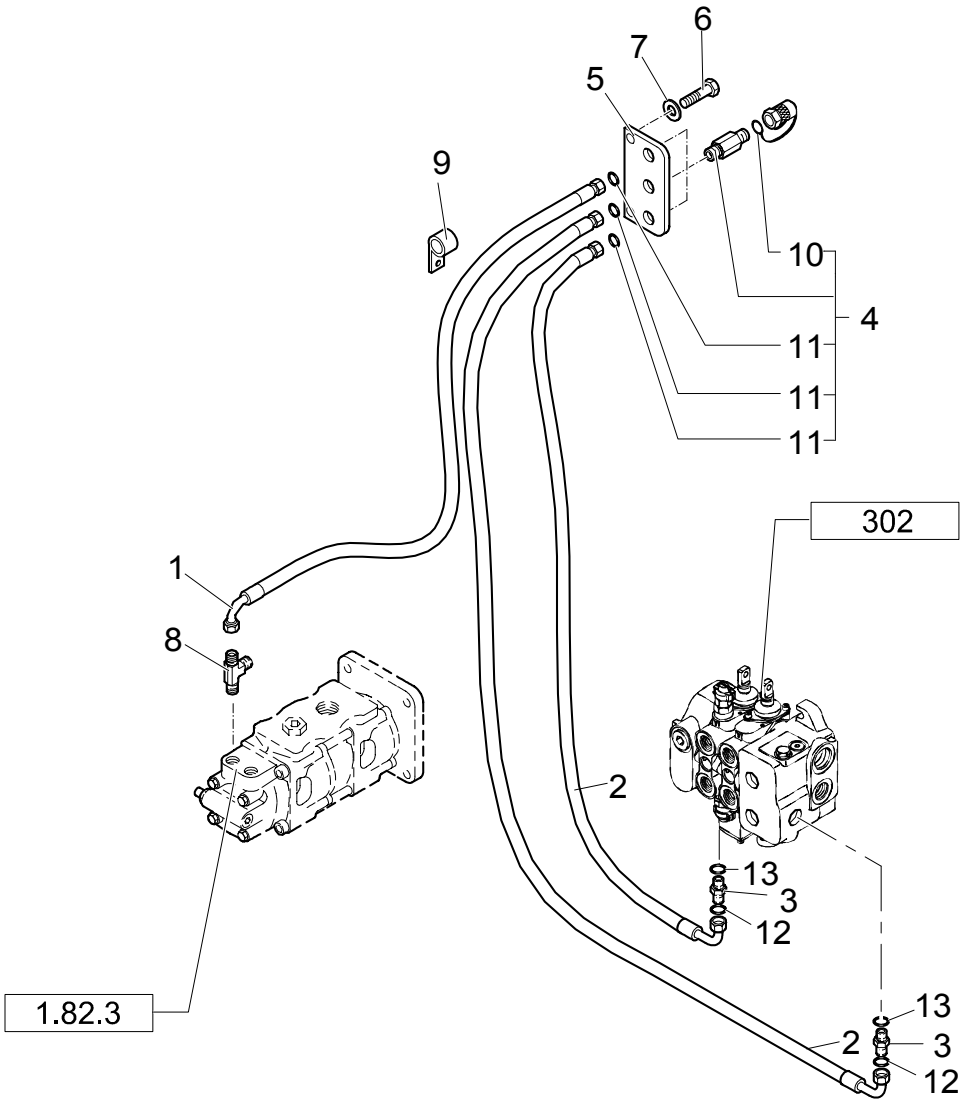

HYDRAULIC SYSTEM PIPING(CENTER PIVOT)

REF	FN	PART NUMBER	YR/SN	QTY	DESCRIPTION
1		85812171		1	HOSE, FLEXIBLE
2		85812173		2	HOSE, FLEXIBLE
3	1	83963371		2	CONNECTOR, HYD.
4		85817226		3	CONNECTOR, HYD.
5		85802846		1	PLATE
6		16043221		2	SCREW
7		12647121		2	WASHER M8
8		85805502		1	CONNECTION, 3 WAY
9		85802889		1	COLLAR, RETAINER
10		9968791		3	PLUG
11		87008S95		5	O-RING
12		86482S95		2	O-RING

(1) Includes 11,12

1.82.6	03B	p1	12/03

QUICK RELEASE COUPLERS & HOSES (CENTER PIVOT)

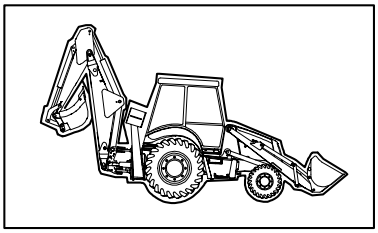

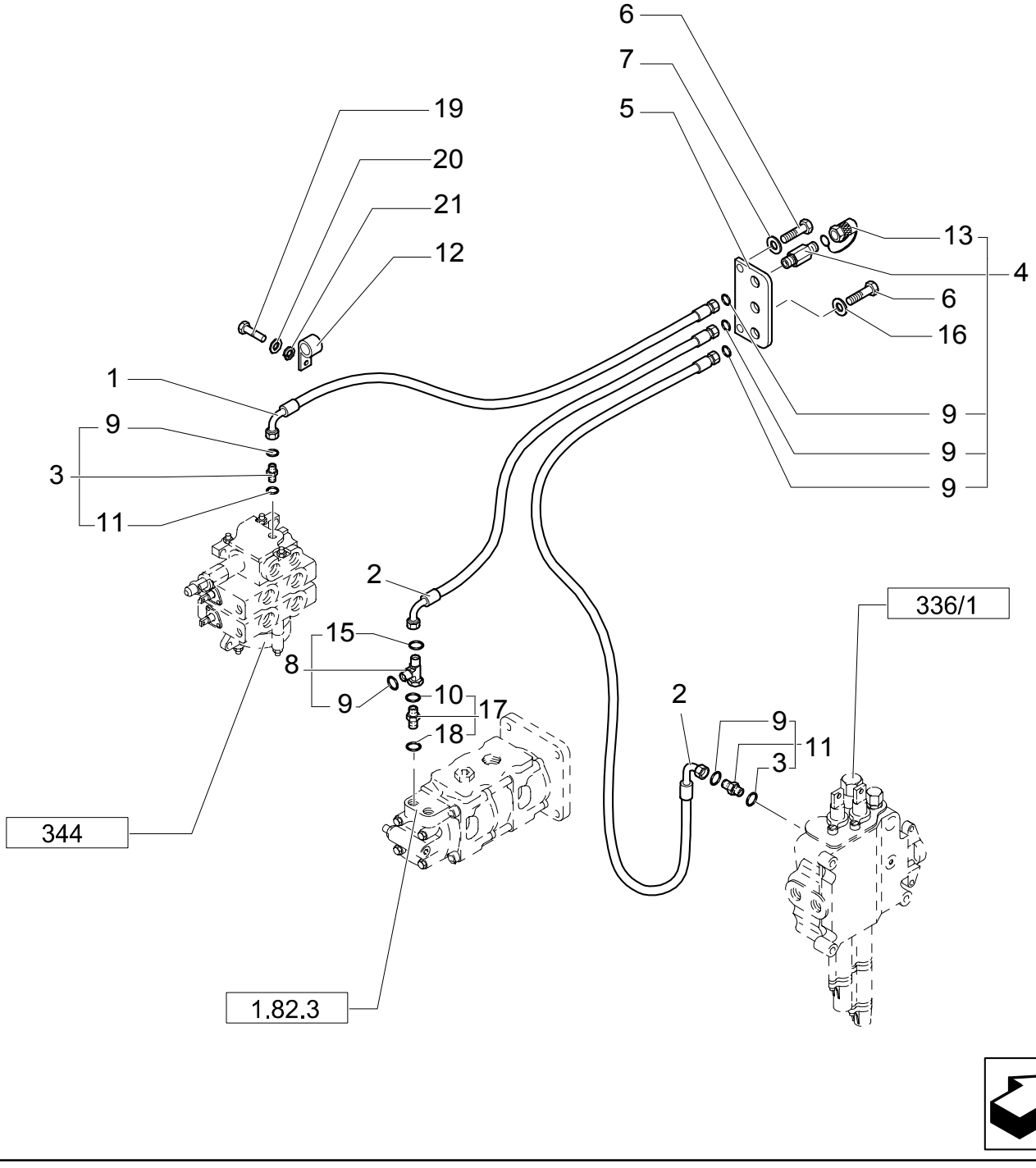

QUICK RELEASE COUPLERS & HOSES (CENTER PIVOT)

REF	FN	PART NUMBER	YR/SN	QTY	DESCRIPTION
1		85812170		1	HOSE, FLEXIBLE
2		85812171		2	HOSE, FLEXIBLE
3	1	83963371		2	CONNECTOR, HYD.
4		85817226		3	CONNECTOR, HYD.
5		85802846		1	PLATE
6		16043221		2	SCREW
7		11193879		2	WASHER, LOCK
8	2	85815582		1	CONNECTOR, HYD.
9		87008S95		6	O-RING
10		9992298		1	O-RING 90 Duro, .489" ID x .070" Thk
11		86482S95		2	O-RING
12		85802890		1	COLLAR, RETAINER
13		9968791		3	PLUG
15		9992298		1	O-RING 90 Duro, .489" ID x .070" Thk
16		12647121		1	WASHER M8
17	3	83963374		1	CONNECTOR, HYD.
18		128825		1	O-RING 90 Duro, .644" ID x .087" Thk
19		15540821		1	SCREW
20		12646921		1	WASHER, LOCK
21		11190779		1	WASHER, LOCK

(1) Includes 9,11
(2) Includes 9,15
(3) Includes 10,18

1.82.6	04A	p1	02/04

RETURN MANIFOLD HOSES (CENTER PIVOT)

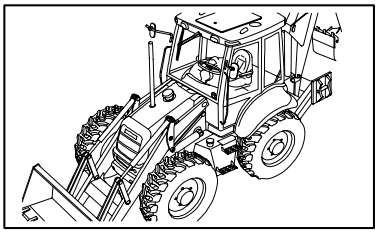

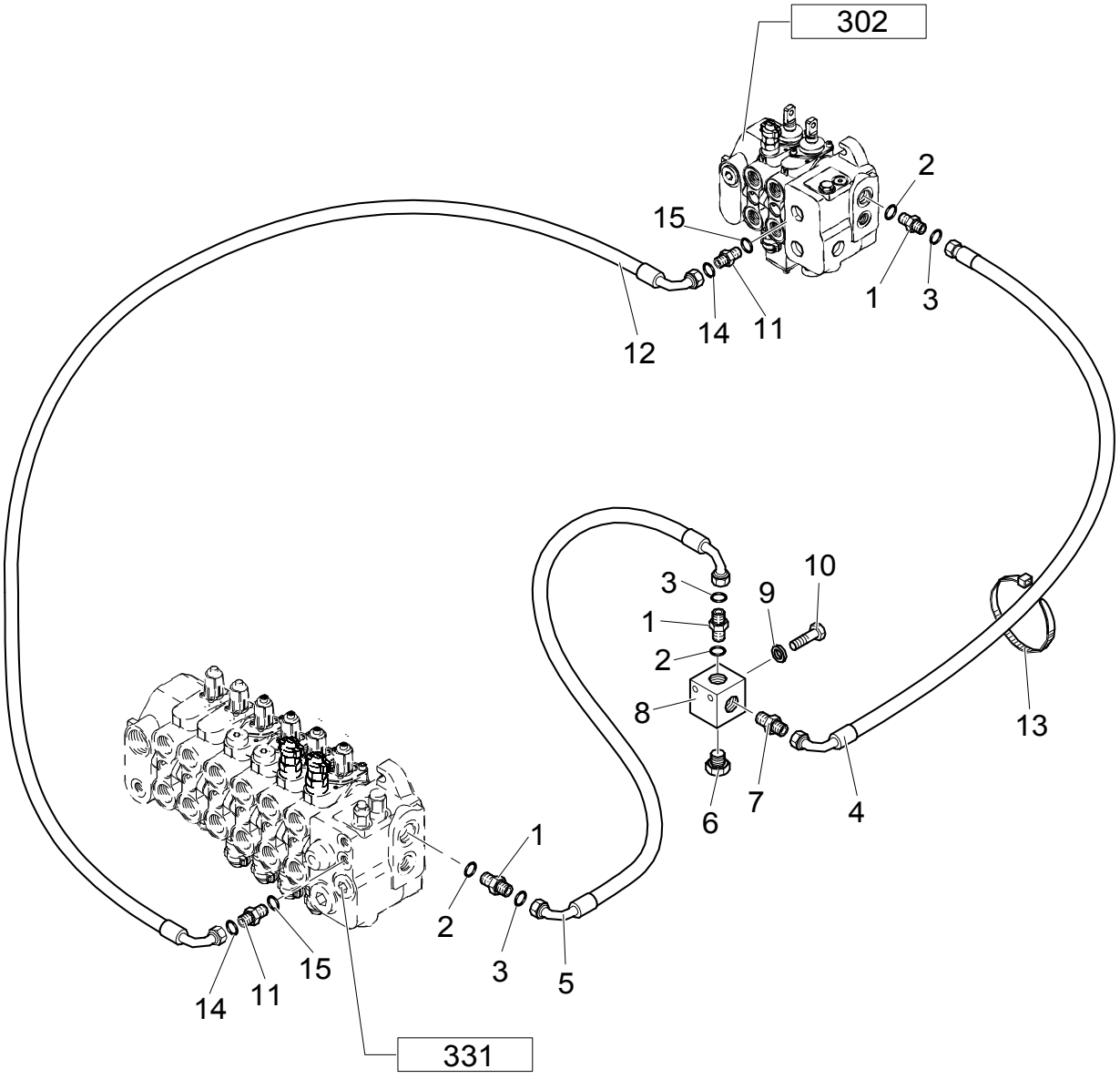

RETURN MANIFOLD HOSES (CENTER PIVOT)

REF	FN	PART NUMBER	YR/SN	QTY	DESCRIPTION
1	1	390954S36		3	CONNECTOR, HYD.
2		167268		3	O-RING
3		9824050		3	O-RING 90 Duro, .926 IDx0.70 Thk
4		85818909		1	HOSE, FLEXIBLE L=MM 1150
5		{85827823}		1	
6		85802955		1	PLUG
7		85805168		1	CONNECTOR, HYD.
8		85805166		1	BLOCK
9		11190779		2	WASHER, LOCK
10		15541621		2	SCREW
11	2	83963371		2	CONNECTOR, HYD.
12		85812174		1	HOSE, FLEXIBLE
13		85802954		1	COLLAR, RETAINER
14		10519411		1	WASHER
15		10902221		1	SCREW
16		12574211		1	NUT
17		86482S95		1	O-RING
18		87008S95		1	O-RING

(1) Includes 2,3
(2) Includes 17, 18

RETURN MANIFOLD HOSES (CENTER PIVOT)

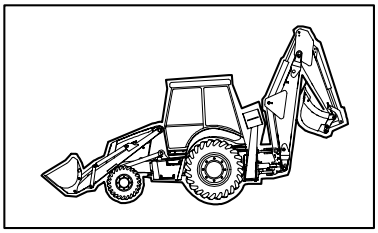

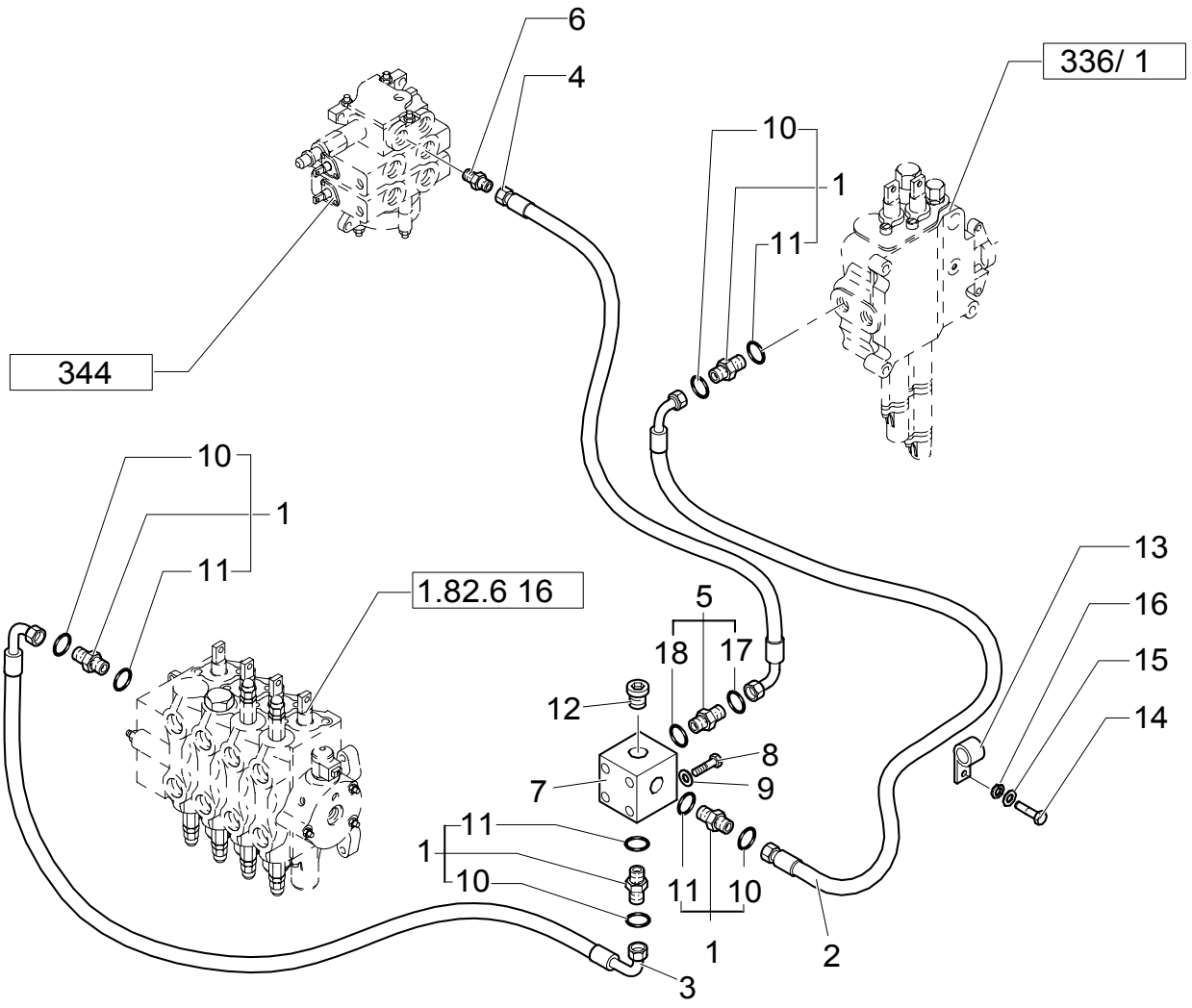

RETURN MANIFOLD HOSES (CENTER PIVOT)

REF	FN	PART NUMBER	YR/SN	QTY	DESCRIPTION
1	1	390954S36		4	CONNECTOR, HYD.
2		85802777		1	HOSE, FLEXIBLE
3		85802839		1	HOSE, FLEXIBLE
4		85802838		1	HOSE
5	2	83962538		1	CONNECTOR, HYD. 1-3/16"-12 ORS x 1-1/16"-12 SAE O-Ring
6		85802642		1	CONNECTOR, HYD. 1-3/16"-12 ORS x 7/8"-14 SAE O-Ring
7		85802799		1	BLOCK
8		15541621		2	SCREW M12X1.25X100
9		11190779		2	WASHER, LOCK
10		9824050		4	O-RING 90 Duro, .926" ID x .070" Thk
11		167268		4	O-RING 90 Duro, 1.171" ID x .116" Thk
12		85802955		1	PLUG
13		85802890		1	COLLAR, RETAINER
14		15540821		1	SCREW
15		12646921		1	WASHER, LOCK
16		11190779		1	WASHER, LOCK
17		9991976		1	O-RING 90 Duro, .739" ID x .070" Thk
18		167266		1	O-RING 90 Duro, .924" ID x .116" Thk

(1) Includes 10, 11
(2) Includes 17, 18

1.82.6	05F	p1	11/03

OIL COOLER & FILTER HOSES (CENTER PIVOT)

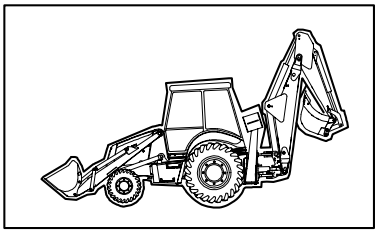

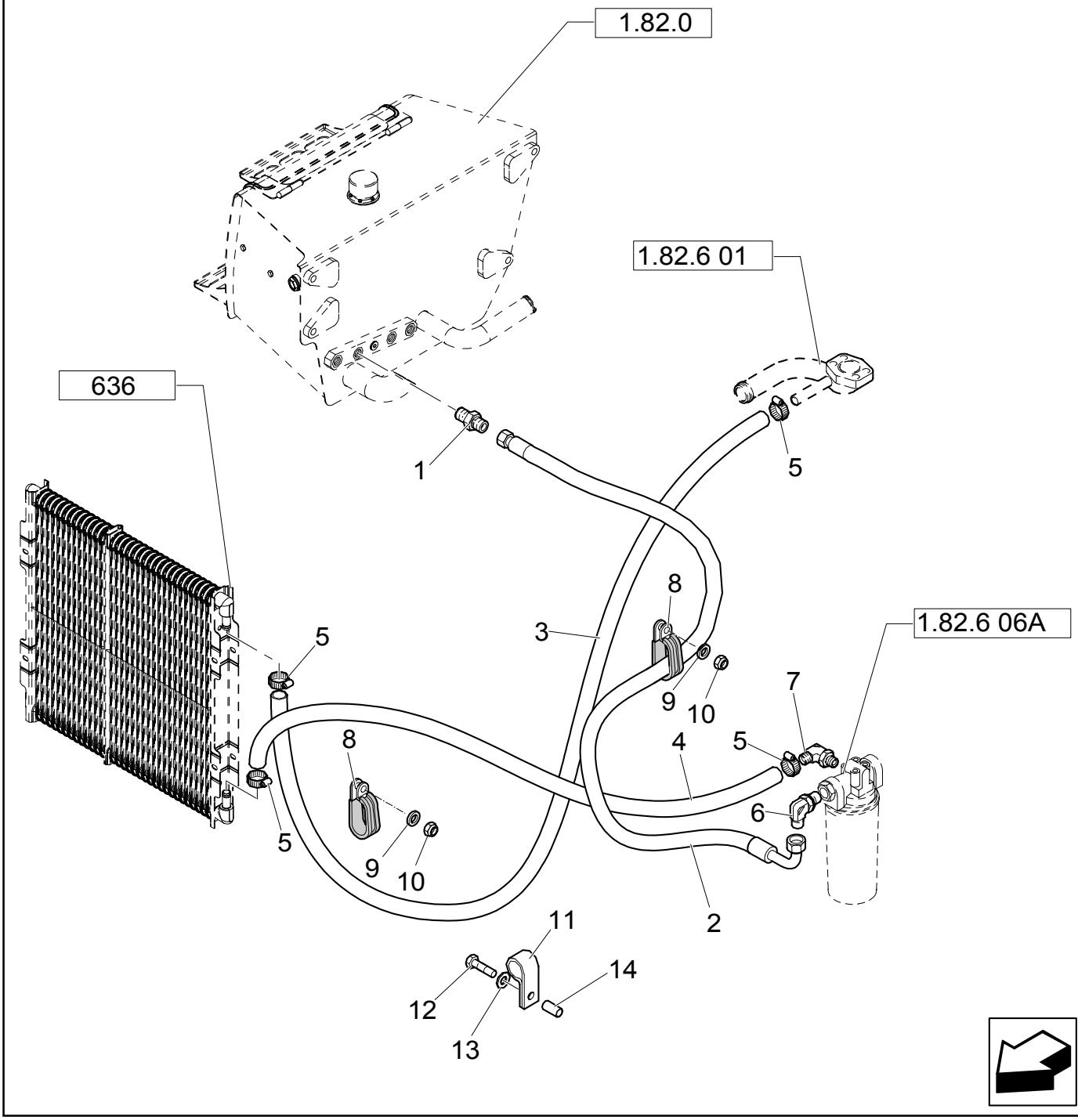

OIL COOLER & FILTER HOSES (CENTER PIVOT)

REF	FN	PART NUMBER	YR/SN	QTY	DESCRIPTION
1		85802801		1	CONNECTOR, HYD. 1-11/16"-12 ORS x 1-5/16"-12 SAE O-ring
2		85802833		1	HOSE, FLEXIBLE
3	1	87410548		1	HOSE, FLEXIBLE
3	2	87416576		1	TUBE, RIGID
4		87410673		1	TUBE, RIGID
5		47049170		4	COLLAR
6		87024874		1	CONNECTOR, HYD.
7		85824060		1	CONNECTOR, HYD.
8		85802889		1	COLLAR, RETAINER
9		11193979		2	WASHER, LOCK
10		14048211		2	NUT
11		47048664		2	COLLAR
12		47049161		1	SCREW
13		47048964		1	WASHER
14		85825169		1	SPACER

(1) Only for POWER SHUTTLE
(2) Only for POWER SHIFT

1.82.6	05G	p1	11/03

HYDRAULIC SYSTEM PIPING (CENTER PIVOT)

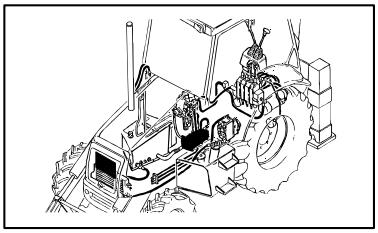

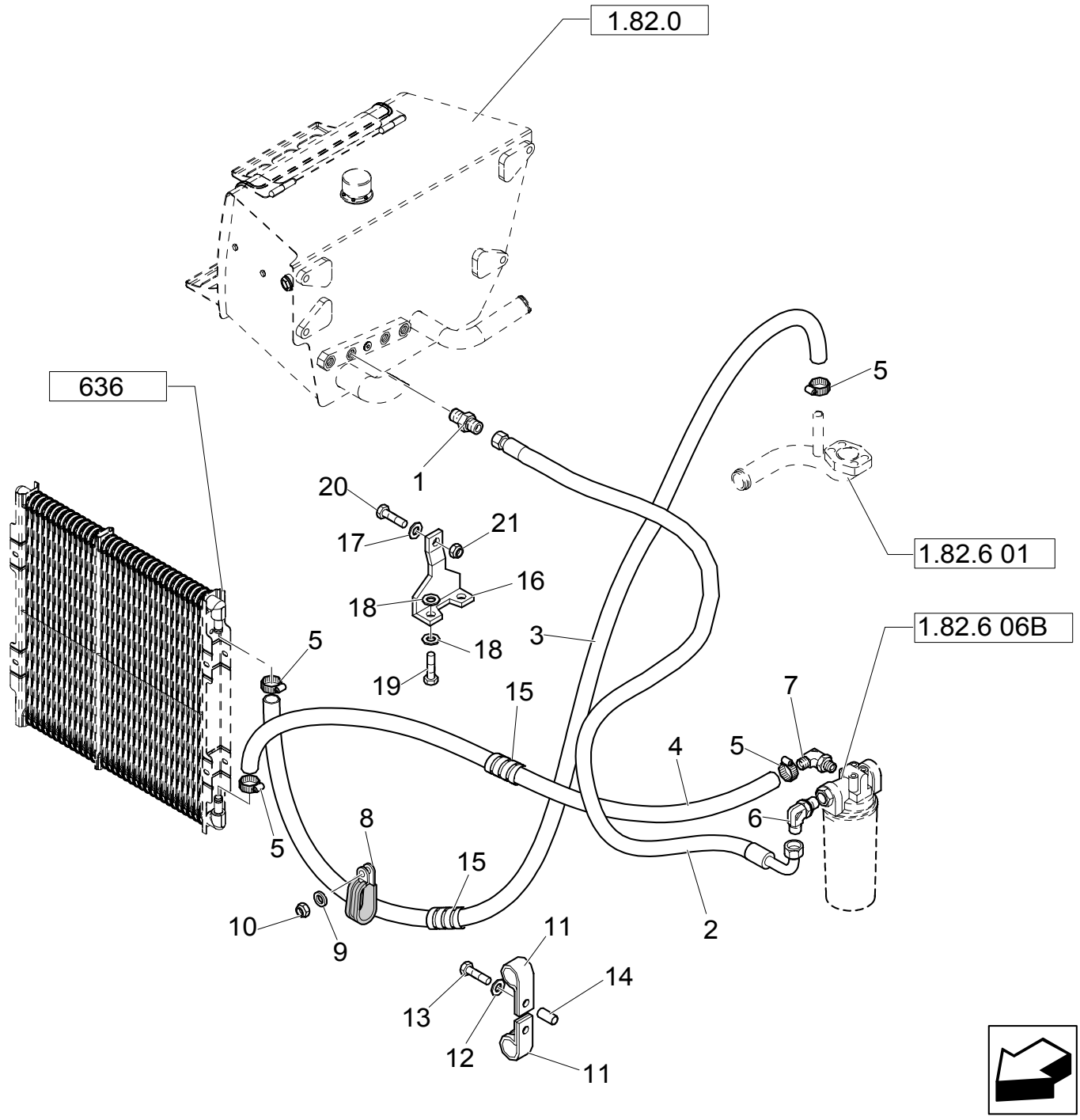

HYDRAULIC SYSTEM PIPING (CENTER PIVOT)

REF	FN	PART NUMBER	YR/SN	QTY	DESCRIPTION
1		85802801		1	CONNECTOR, HYD. 1-11/16"-12 ORSx1-5/16"-12 SAE O-ring
2		85802833		1	HOSE, FLEXIBLE
3	1	87410548		1	HOSE, FLEXIBLE
3	2	87416576		1	TUBE, RIGID
4		87410673		1	TUBE, RIGID
5		47049170		4	COLLAR
6		87024874		1	CONNECTOR, HYD.
7		85824060		1	CONNECTOR, HYD.
8		85802889		1	COLLAR, RETAINER
9		11193979		2	WASHER, LOCK
10		14048211		2	NUT
11		47048664		2	COLLAR
12		47048964		2	WASHER
13		47049161		1	SCREW
14		{47248328}		1	
15		{47048760}		2	SHIELD
16		87405334		1	BRACKET
17		47048962		1	WASHER
18		47048964		4	WASHER
19		47049184		4	SCREW
20		47049160		1	SCREW
21		47049030		1	NUT

(1) POWER SHUTTLE
(2) POWER SHIFT

Pilot Control Version

LB75.B

1.82.6	06A	p1	02/04

FILTER ASSEMBLY & HOSE TO RETURN MANIFOLD (CENTER PIVOT)

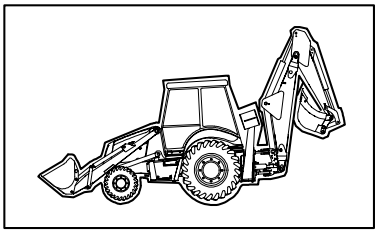

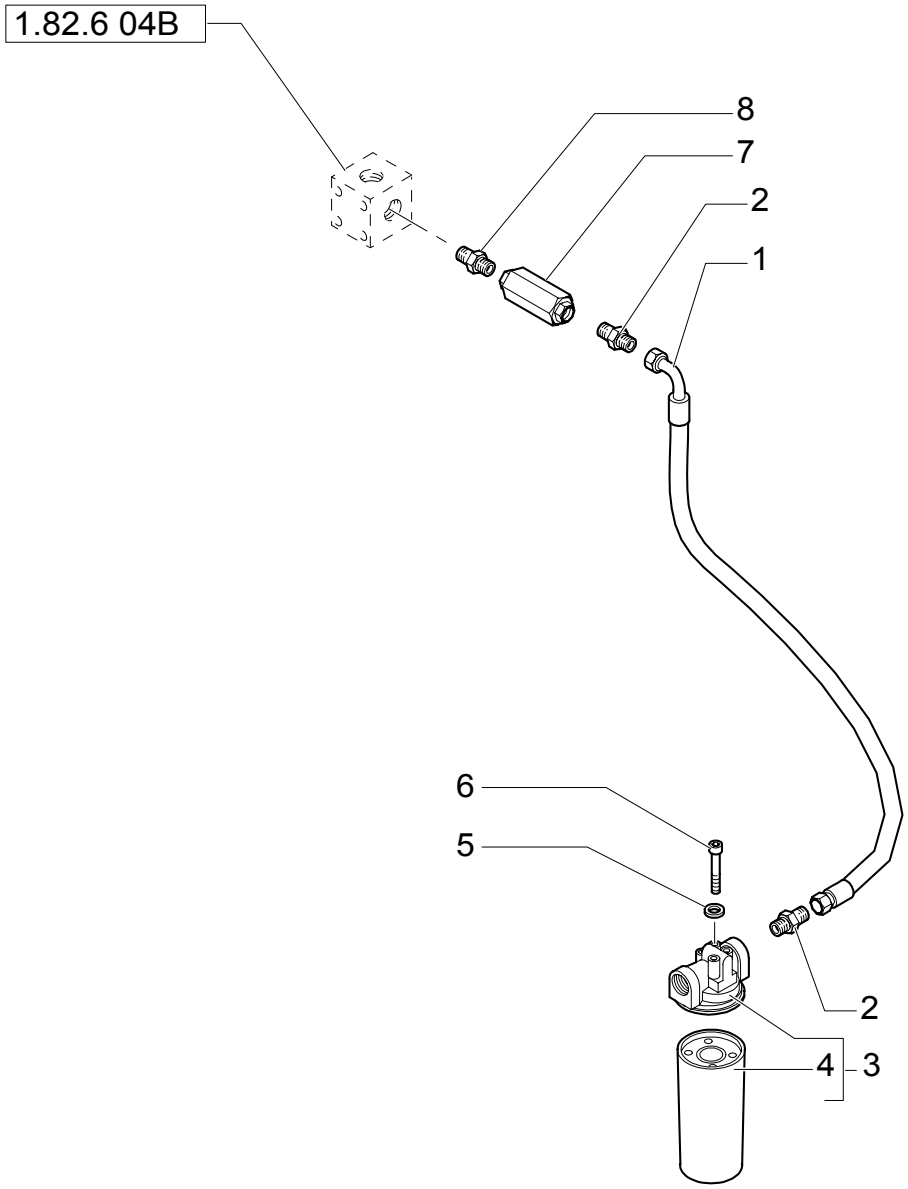

FILTER ASSEMBLY & HOSE TO RETURN MANIFOLD (CENTER PIVOT)

REF	FN	PART NUMBER	YR/SN	QTY	DESCRIPTION
1		85805840		1	HOSE, FLEXIBLE
2		85802801		2	CONNECTOR, HYD.
3		87416331		1	FILTER ASSY
4		86989733		1	FILTER, ELEMENT
5		11190579		4	WASHER, LOCK
6		11106221		4	SCREW
7		85805824		1	VALVE, HYDRAULIC
8		85805825		1	CONNECTOR, HYD.

1.82.6	06B	p1	02/04

FILTER ASSEMBLY & HOSE TO RETURN MANIFOLD (CENTER PIVOT)

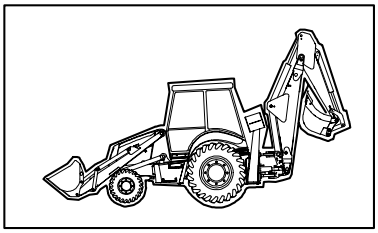

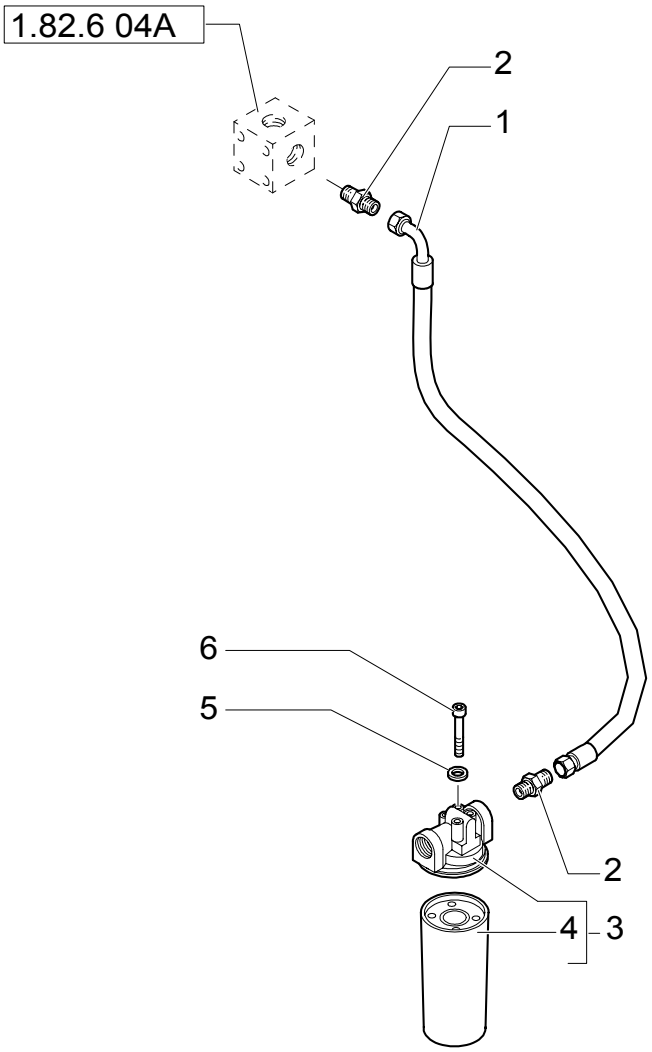

FILTER ASSEMBLY & HOSE TO RETURN MANIFOLD (CENTER PIVOT)

REF	FN	PART NUMBER	YR/SN	QTY	DESCRIPTION
1		87414983		1	HOSE, FLEXIBLE
2		85802960		2	CONNECTOR, HYD.
3		87416331		1	FILTER ASSY
4		86989733		1	FILTER, ELEMENT
5		11190579		4	WASHER, LOCK
6		11106221		4	SCREW

Pilot Control Version

LB75.B

1.82.6	07	p1	11/03

HYDRAULIC SYSTEM PIPING

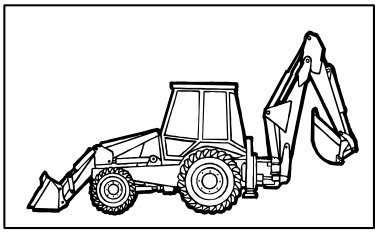

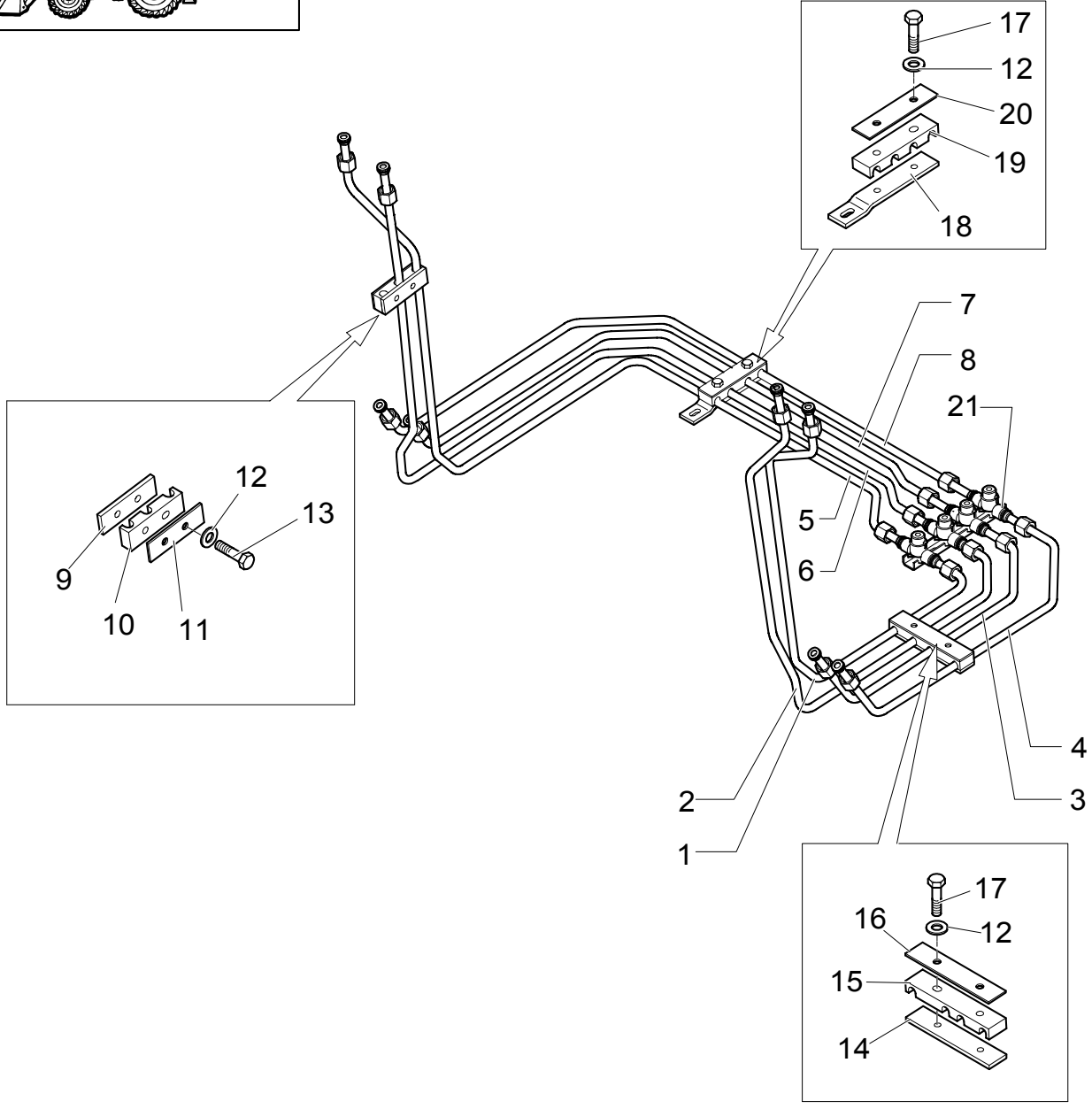

HYDRAULIC SYSTEM PIPING

REF	FN	PART NUMBER	YR/SN	QTY	DESCRIPTION
1		85805854		1	TUBE, RIGID LH
2		85805855		1	TUBE, RIGID LH
3		85805858		1	TUBE, RIGID LH
4		85805859		1	TUBE, RIGID LH
5		85805856		1	TUBE, RIGID RH
6		85805857		1	TUBE, RIGID RH
7		85805860		1	TUBE, RIGID RH
8		85805861		1	TUBE, RIGID RH
9		85805870		2	PLATE
10		85805872		2	PLATE, FIXING
11		85805869		2	HALF-DISC
12		11193979		10	WASHER, LOCK
13		16043621		4	SCREW
14		85805210		2	PLATE
15		85805211		2	CLAMP
16		85805209		2	PLATE
17		16043821		6	SCREW
18		85805206		1	PLATE
19		85805208		1	CLAMP
20		85805207		1	PLATE
21		85805203		1	CONNECTOR, HYD.

1.82.6	08A	p1	12/03

LOADER LIFT CYLINDER HOSES (CENTER PIVOT)

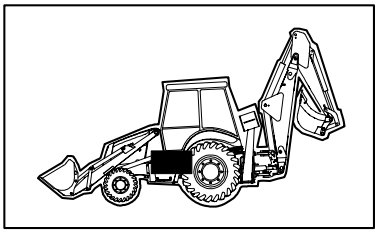

LOADER LIFT CYLINDER HOSES (CENTER PIVOT)

REF	FN	PART NUMBER	YR/SN	QTY	DESCRIPTION
1		85812186		1	HOSE, FLEXIBLE
2		85812185		1	HOSE, FLEXIBLE
3		87016S95		2	O-RING 90 Duro, .625" ID x .070" Thk
4	1	83963000		2	CONNECTOR, HYD.
5		167269		2	O-RING 90 Duro, .755" ID x .097" Thk
6		85813363		2	HOSE, FLEXIBLE
7		14048211		2	NUT
8		16044021		2	SCREW M8X1,25X40
9		85802891		1	SPACER
10		12647121		3	WASHER M8
11		85813380		2	HOSE, FLEXIBLE

(1) Includes 3,5

1.82.6	08C	p1	12/03

LOADER LIFT CYLINDER HOSES (CENTER PIVOT)

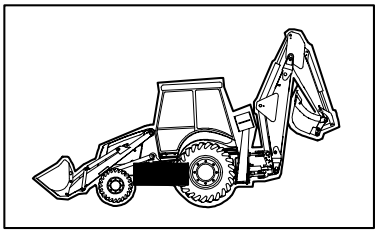

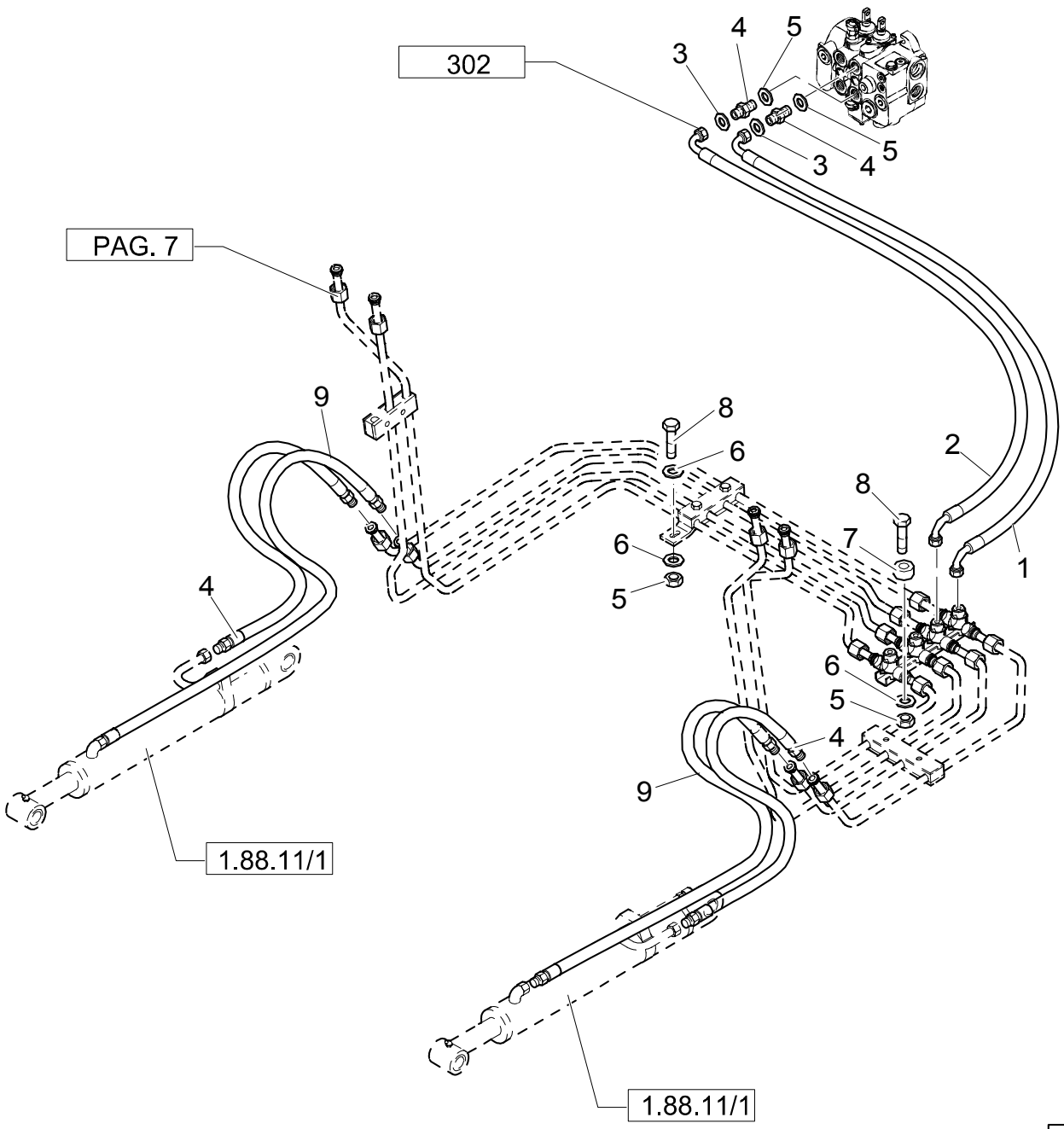

LOADER LIFT CYLINDER HOSES (CENTER PIVOT)

REF	FN	PART NUMBER	YR/SN	QTY	DESCRIPTION
1		85826089		1	HOSE, FLEXIBLE
2		85826086		1	HOSE, FLEXIBLE
3		87016S95		2	O-RING 90 Duro, .625" ID x .070" Thk
4	1	83963000		2	CONNECTOR, HYD.
5		167269		2	O-RING 90 Duro, .755" ID x .097" Thk
6		85813363		2	HOSE, FLEXIBLE
7		14048211		2	NUT
8		16044021		2	SCREW M8X1,25X40
9		85802891		1	SPACER
10		12647121		3	WASHER M8
11		85813380		2	HOSE, FLEXIBLE

(1) Includes 3,5

1.82.6	09A	p1	11/03

LOADER BUCKET CYLINDER HOSES (CENTER PIVOT)

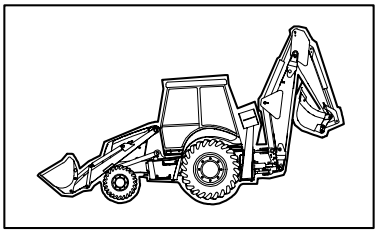

LOADER BUCKET CYLINDER HOSES (CENTER PIVOT)

REF	FN	PART NUMBER	YR/SN	QTY	DESCRIPTION
1	1	83963000		2	CONNECTOR, HYD.
2		167269		2	O-RING 90 Duro, .755" ID x .097" Thk
3		87016S95		2	O-RING 90 Duro, .625" ID x .070" Thk
4		85812185		1	HOSE, FLEXIBLE
5		85812186		1	HOSE, FLEXIBLE
6		85813362		2	HOSE, FLEXIBLE
7		11193979		2	WASHER, LOCK
8		16044021		2	SCREW
9		85813379		2	HOSE, FLEXIBLE

(1) Includes 2,3

1.82.6	09B	p1	11/03

LOADER BUCKET CYLINDER HOSES (CENTER PIVOT)

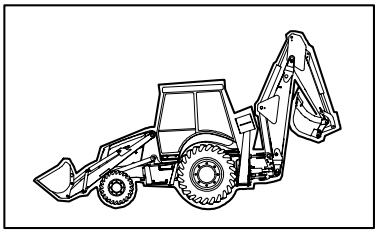

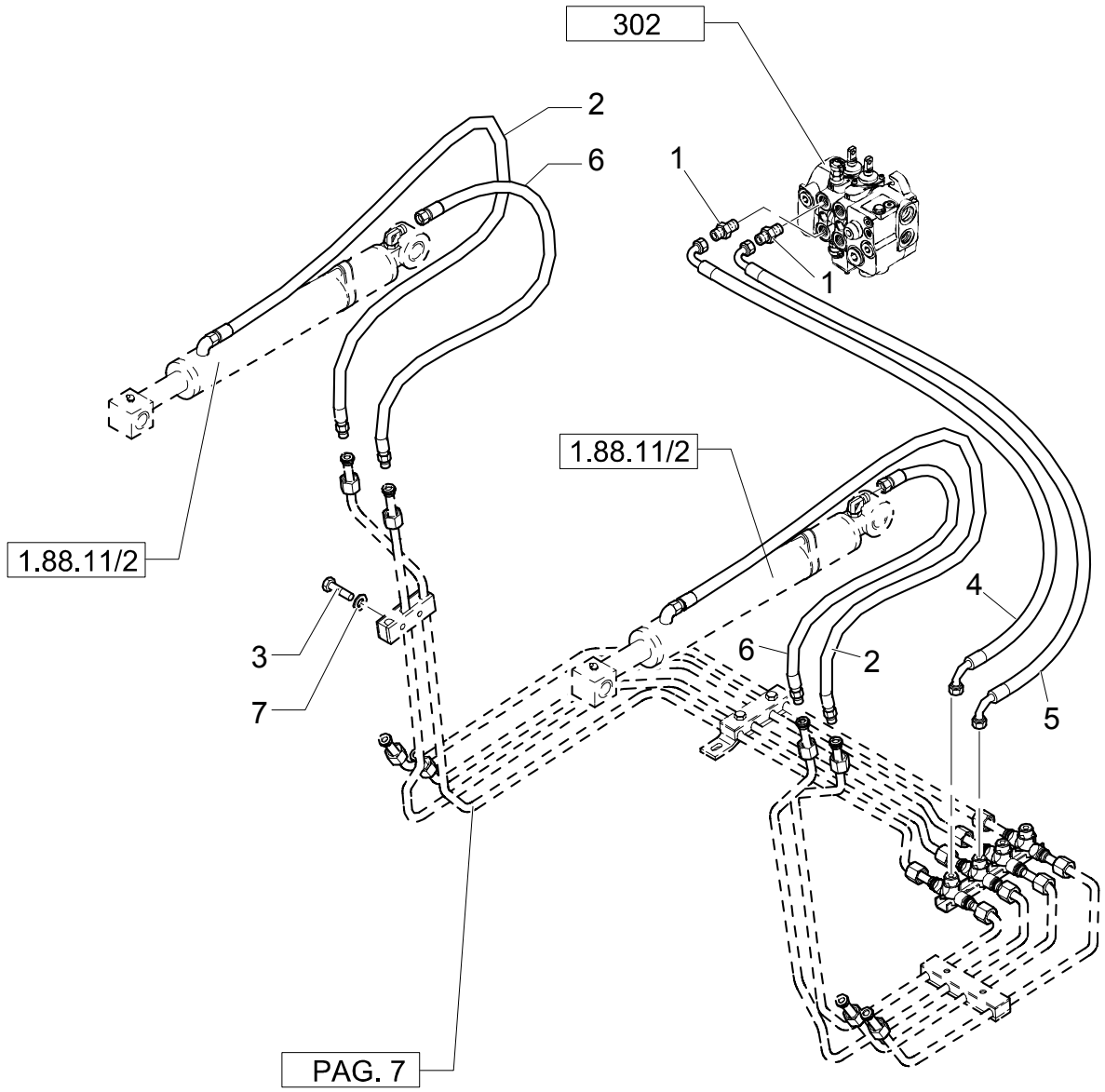

LOADER BUCKET CYLINDER HOSES (CENTER PIVOT)

REF	FN	PART NUMBER	YR/SN	QTY	DESCRIPTION
1	1	83962539		2	CONNECTOR, HYD.
2		85813379		2	HOSE, FLEXIBLE
3		16044021		2	SCREW
4		85826088		1	HOSE, FLEXIBLE
5		85826087		1	HOSE, FLEXIBLE
6		85813362		2	HOSE, FLEXIBLE
7		11193979		2	WASHER, LOCK

(1) Includes 2,3

1.82.6	09C	p1	11/03

BACKHOE SWING CYLINDER HOSES (CENTER PIVOT)

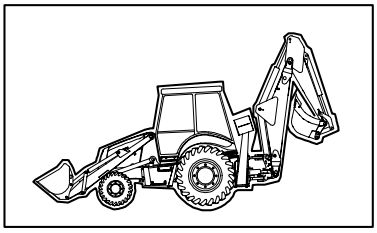

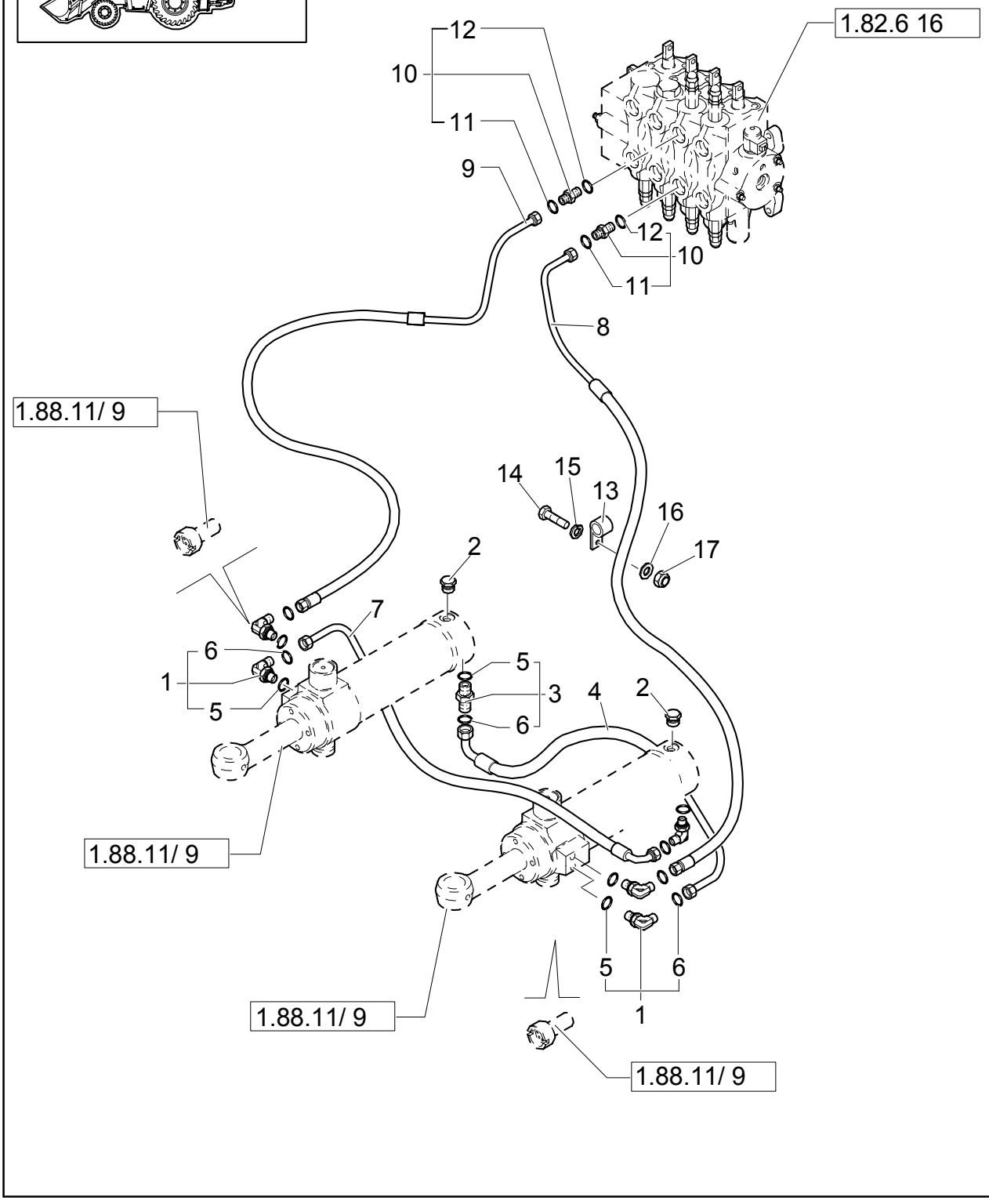

BACKHOE SWING CYLINDER HOSES (CENTER PIVOT)

REF	FN	PART NUMBER	YR/SN	QTY	DESCRIPTION
1	1	83971549		5	ELBOW
2		85802955		2	PLUG
3		83963374		1	CONNECTOR, HYD.
4		85819727		1	TUBE, RIGID
5		128825		6	O-RING 90 Duro, .644" ID x .087" Thk
6		9992298		6	O-RING 90 Duro, .489" ID x .070" Thk
7		85819729		1	TUBE, RIGID
8		85819730		1	TUBE, RIGID
9		85819728		1	TUBE, RIGID
10	2	83963376		2	CONNECTOR, HYD.
11		9992298		2	O-RING 90 Duro, .489" ID x .070" Thk
12		167269		2	O-RING 90 Duro, .755" ID x .097" Thk
13		85802954		1	COLLAR, RETAINER
14		15540821		1	SCREW
15		11190779		1	WASHER, LOCK
16		12646921		1	WASHER, LOCK
17		16101511		1	NUT

(1) Includes 5,6
(2) Includes 11,12

BACKHOE CONTROL VALVE HOSES (CENTER PIVOT)

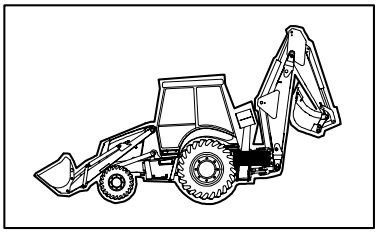

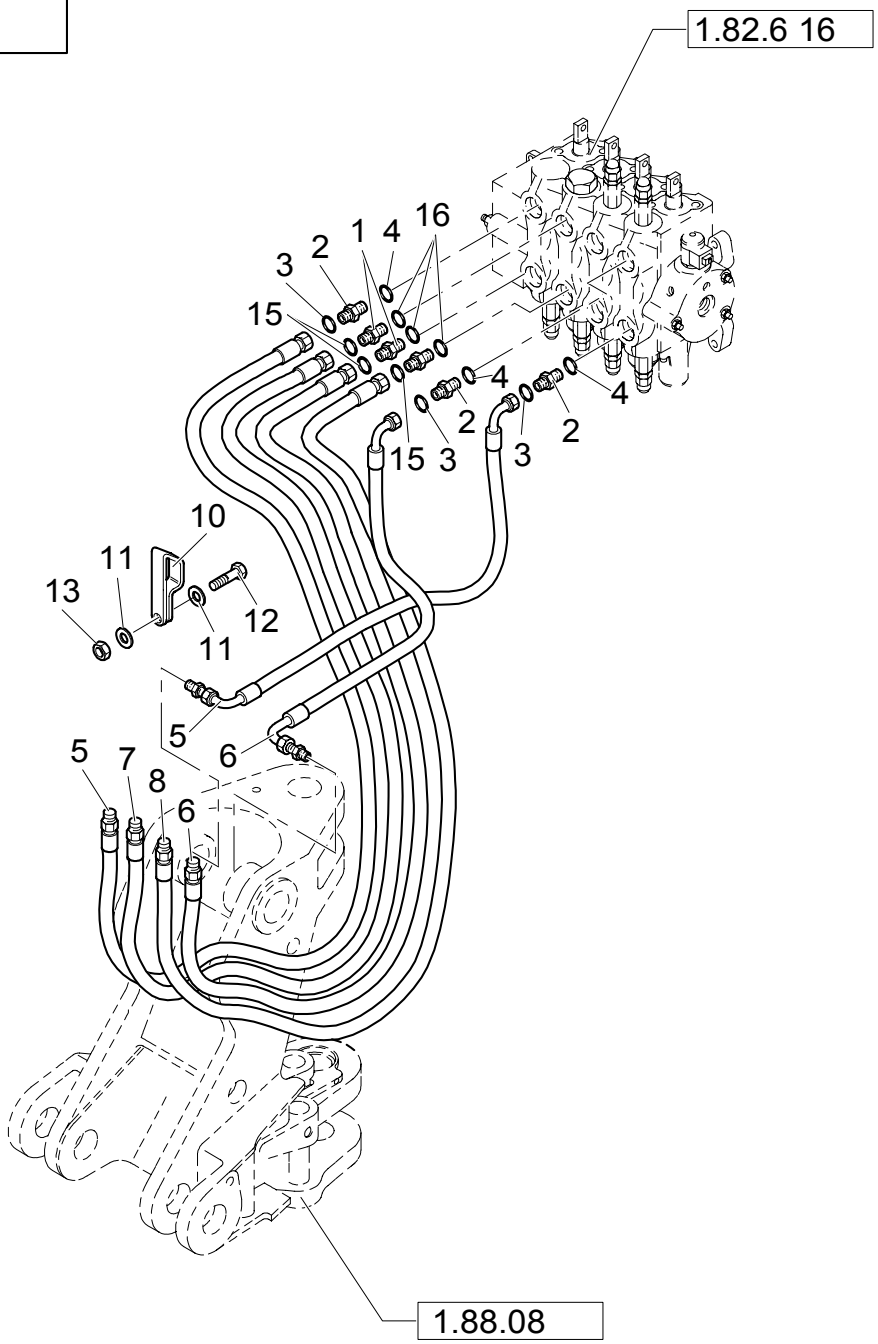

BACKHOE CONTROL VALVE HOSES (CENTER PIVOT)

REF	FN	PART NUMBER	YR/SN	QTY	DESCRIPTION
1		85802642		3	CONNECTOR, HYD. 1-3/16"-12 ORS x 7/8"-14 SAE O-Ring
2	1	83963000		3	CONNECTOR, HYD.
3		87016S95		3	O-RING 90 Duro, .625" ID x .070" Thk
4		167269		3	O-RING 90 Duro, .755" ID x .097" Thk
5		85812151		1	HOSE, FLEXIBLE
6		85812143		1	HOSE, FLEXIBLE
7		85812176		1	HOSE, FLEXIBLE
8		85812153		1	HOSE, FLEXIBLE
9		85812177		1	HOSE, FLEXIBLE
10		85804947		1	COLLAR, RETAINER
11		10519411		2	WASHER
12		10902221		1	SCREW
13		12574211		1	NUT
14		85812152		1	HOSE, FLEXIBLE
15		{9991976}		3	RING
16		167269		3	O-RING 90 Duro, .755" ID x .097" Thk

(1) Includes 3,4

HYDRAULIC SYSTEM PIPING(CENTER PIVOT)

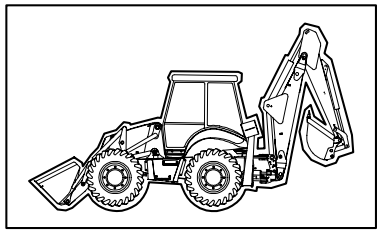

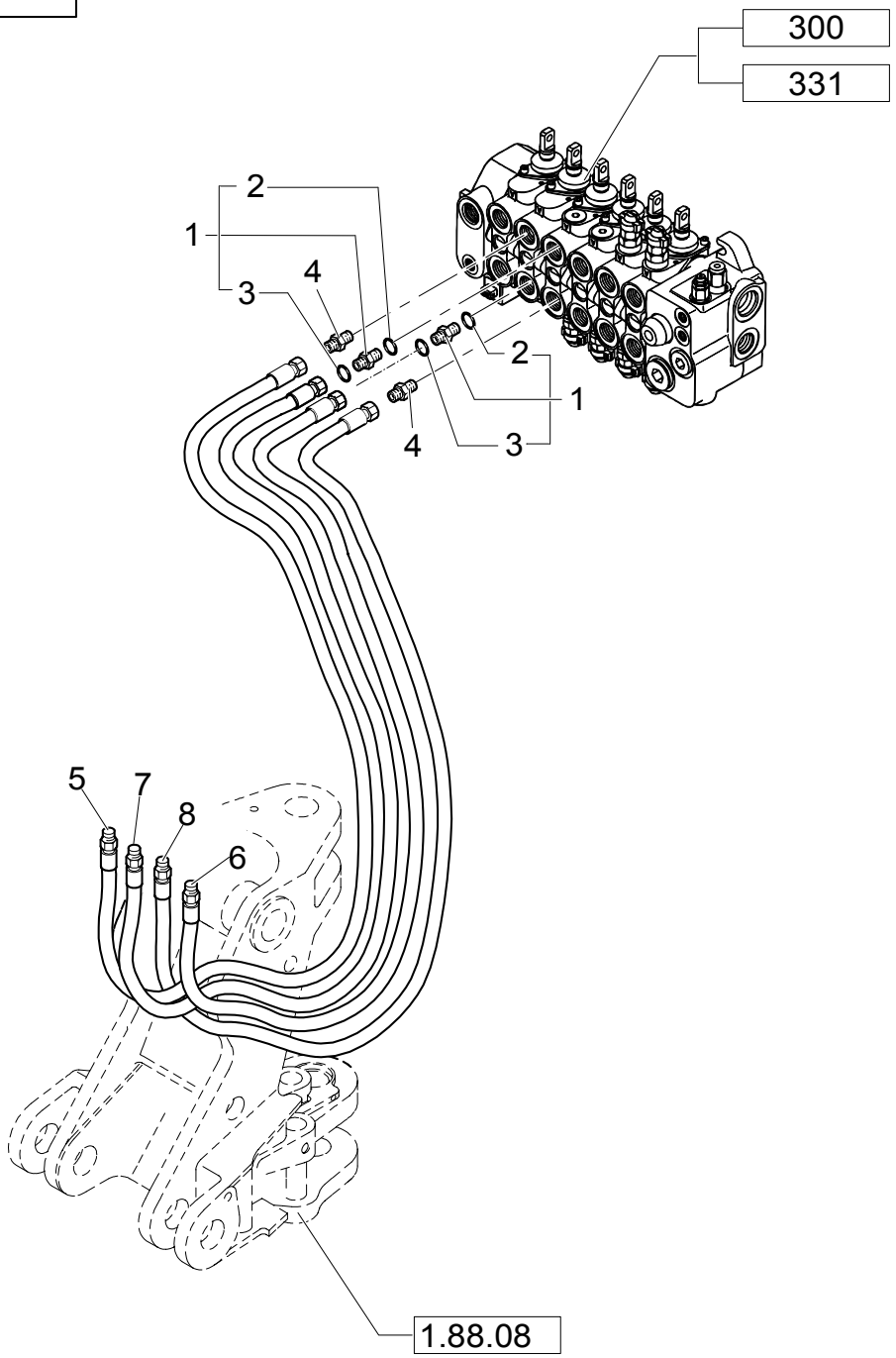

HYDRAULIC SYSTEM PIPING(CENTER PIVOT)

REF	FN	PART NUMBER	YR/SN	QTY	DESCRIPTION
1	1	83962538		2	CONNECTOR, HYD. 1-3/16"-12 ORS x 1-1/16"-12 SAE O-Ring
2		167266		2	O-RING 90 Duro, .924" ID x .116" Thk
3		9991976		2	O-RING 90 Duro, .739" ID x .070" Thk
4		83962539		2	CONNECTOR, HYD.
5		85812176		1	HOSE, FLEXIBLE
6		85812152		1	HOSE, FLEXIBLE
7		85812177		1	HOSE, FLEXIBLE
8	2	85812155		1	HOSE, FLEXIBLE
8	3	85826222		1	HOSE, FLEXIBLE

(1) Includes 2,3
(2) Mechanical Version
(3) Pilot Control Version

1.82.6	12B	p1	11/03

HYDRAULIC SYSTEM PIPING(CENTER PIVOT)

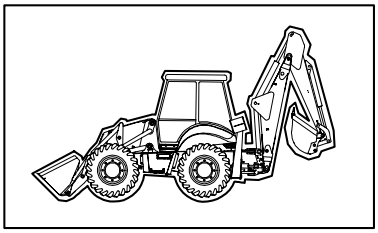

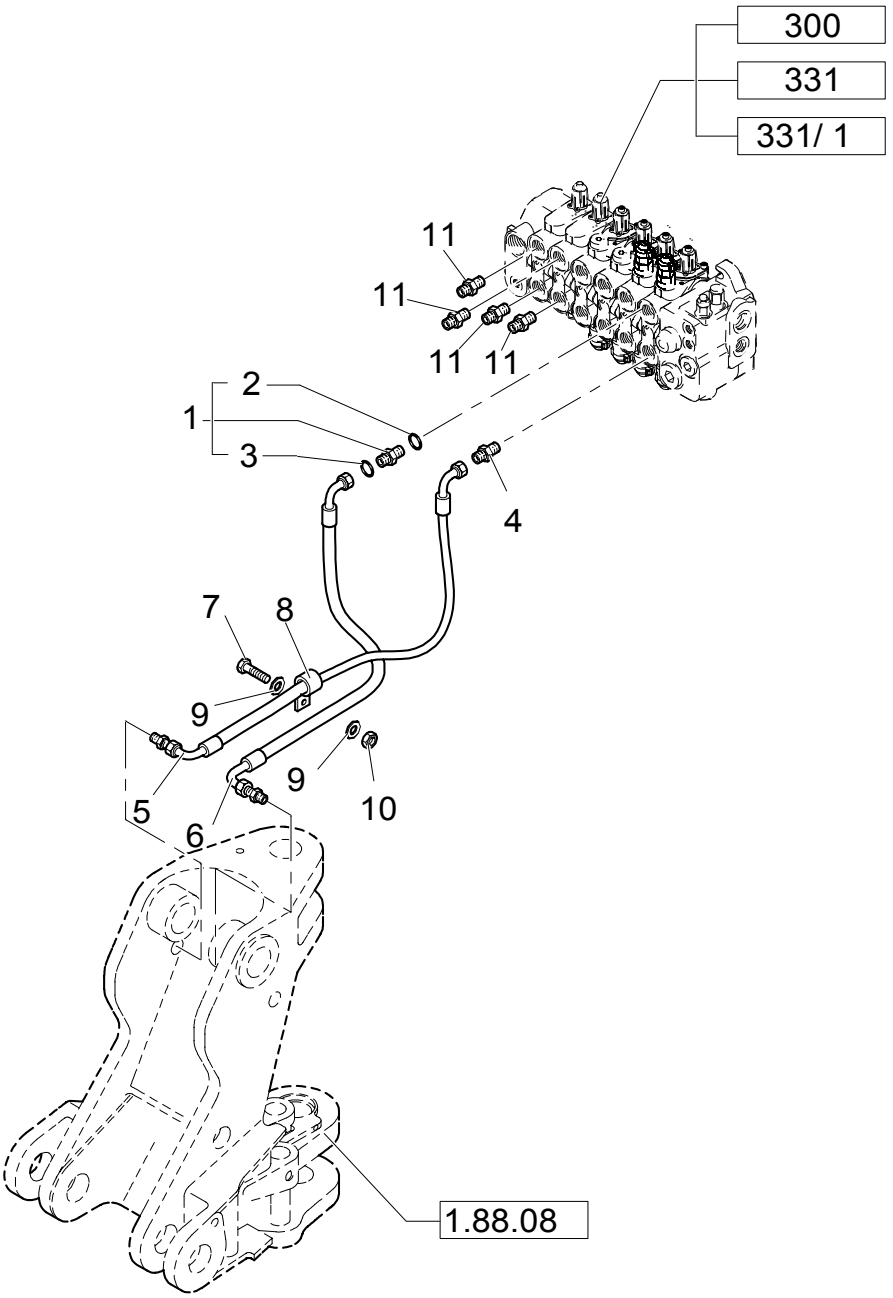

HYDRAULIC SYSTEM PIPING(CENTER PIVOT)

REF	FN	PART NUMBER	YR/SN	QTY	DESCRIPTION
1	1	83962538		1	CONNECTOR, HYD. 1-3/16"-12 ORS x 1-1/16"-12 SAE O-Ring
2		167266		1	O-RING 90 Duro, .924" ID x .116" Thk
3		9991976		1	O-RING 90 Duro, .739" ID x .070" Thk
4		83962539		1	CONNECTOR, HYD.
5		85812143		1	HOSE, FLEXIBLE
6		85812151		1	HOSE, FLEXIBLE
7		10902221		1	SCREW
8		85804947		1	COLLAR, RETAINER
9		10519411		2	WASHER
10		12574211		1	NUT
11	2	85805258		4	CONNECTOR, HYD.

(1) Includes 2,3
(2) Pilot Control Version

ROTATION PLATE HOSE CLAMPS (CENTER PIVOT)

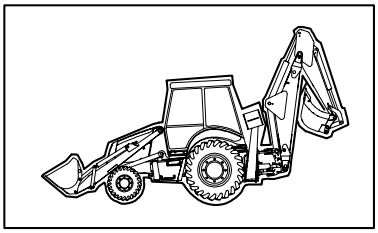

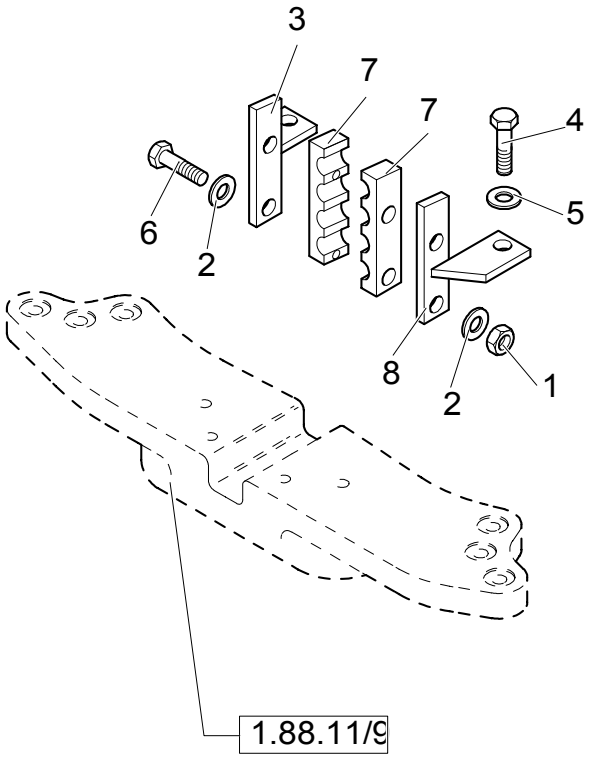

ROTATION PLATE HOSE CLAMPS (CENTER PIVOT)

REF	FN	PART NUMBER	YR/SN	QTY	DESCRIPTION
1		14048221		1	NUT
2		12647121		3	WASHER M8
3		85804573		1	SUPPORT
4		11106221		2	SCREW
5		11190574		2	WASHER, LOCK
6		16044421		2	SCREW
7		85802731		2	BRACKET
8		85804574		1	SUPPORT

1.82.6	16	p1	11/03

BACKHOE CONTROL VALVE(CENTER PIVOT)

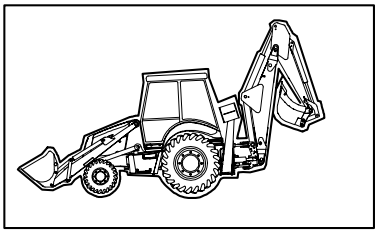

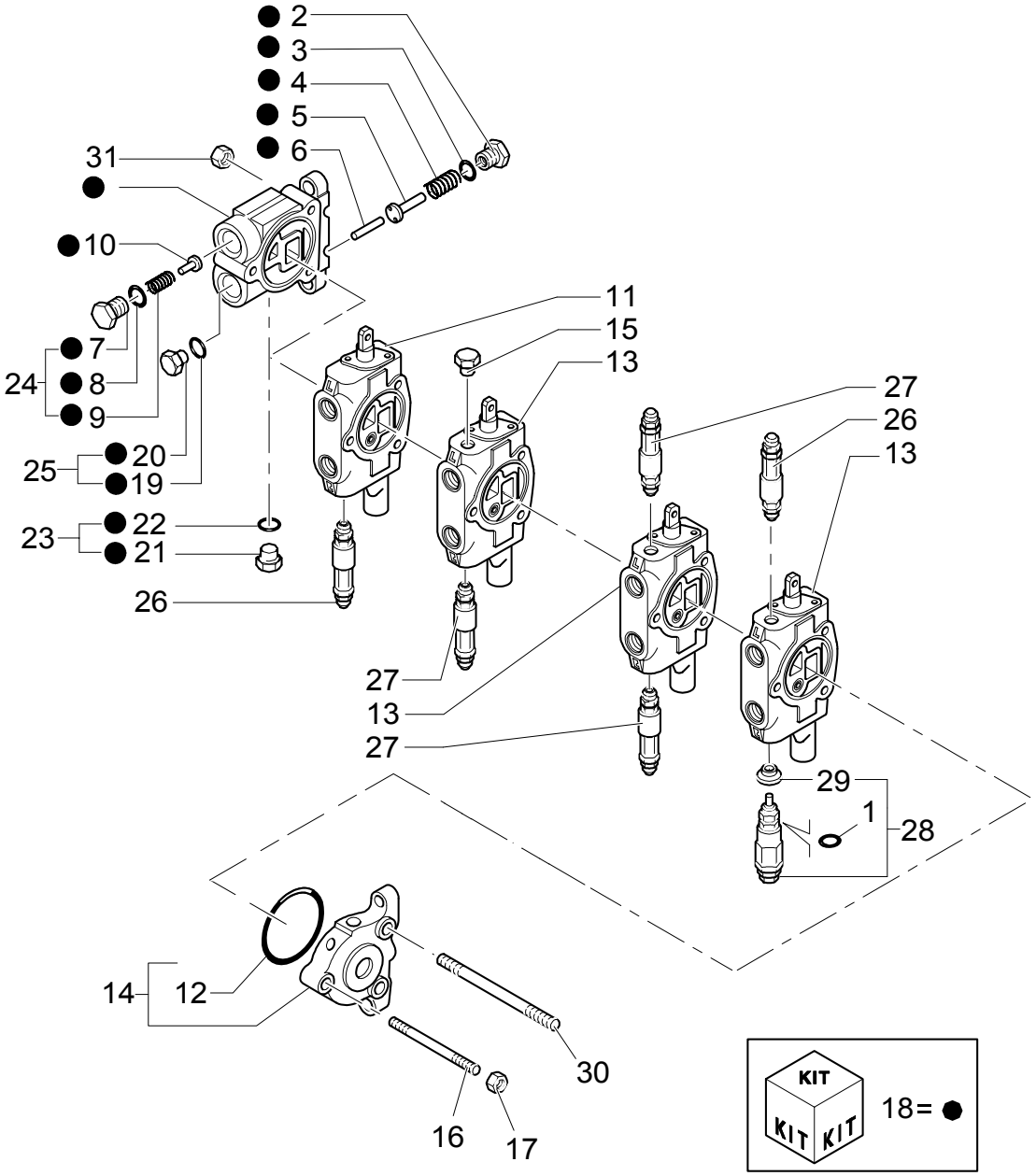

BACKHOE CONTROL VALVE(CENTER PIVOT)

REF	FN	PART NUMBER	YR/SN	QTY	DESCRIPTION
1		9968466		1	O-RING
2		9968501		1	PLUG
3		9968502		1	O-RING
4		9968500		1	SPRING
5		9968503		1	PLUNGER
6		9968497		1	PIN
7		9968498		1	PLUG
8		9968468		1	O-RING
9		9968448		1	SPRING
10		9968447		1	PLUNGER
11	1	9968492		1	ELEMENT, JOINING
12		9968495		1	O-RING
13	2	9968493		3	ELEMENT, JOINING
14		9968494		1	SIDE PANEL
15		85807832		1	PLUG
16		9968506		1	STUD
17		9968507		1	NUT
18		85807827		1	VALVE, CONTROL
19		85807830		1	O-RING
20		85807831		1	PLUG
21		85807828		1	PLUG
22		85807829		1	O-RING
23		9968523		1	PLUG
24		85807834		1	PLUG
25		85807833		1	PLUG
26		9968595		2	VALVE, HYDRAULIC
27		9968596		3	VALVE, HYDRAULIC
28		9968508		1	VALVE, HYDRAULIC
29		9968509		1	GASKET
30		9968505		1	STUD
31		9968504		1	NUT

(1) See Page 1.82.6 17
(2) See Page 1.82.6 18

DIPPER VALVE SECTION (CENTER PIVOT)

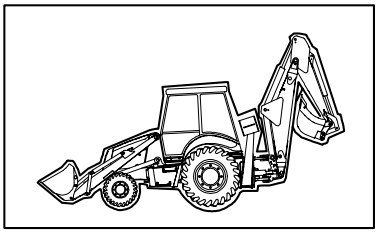

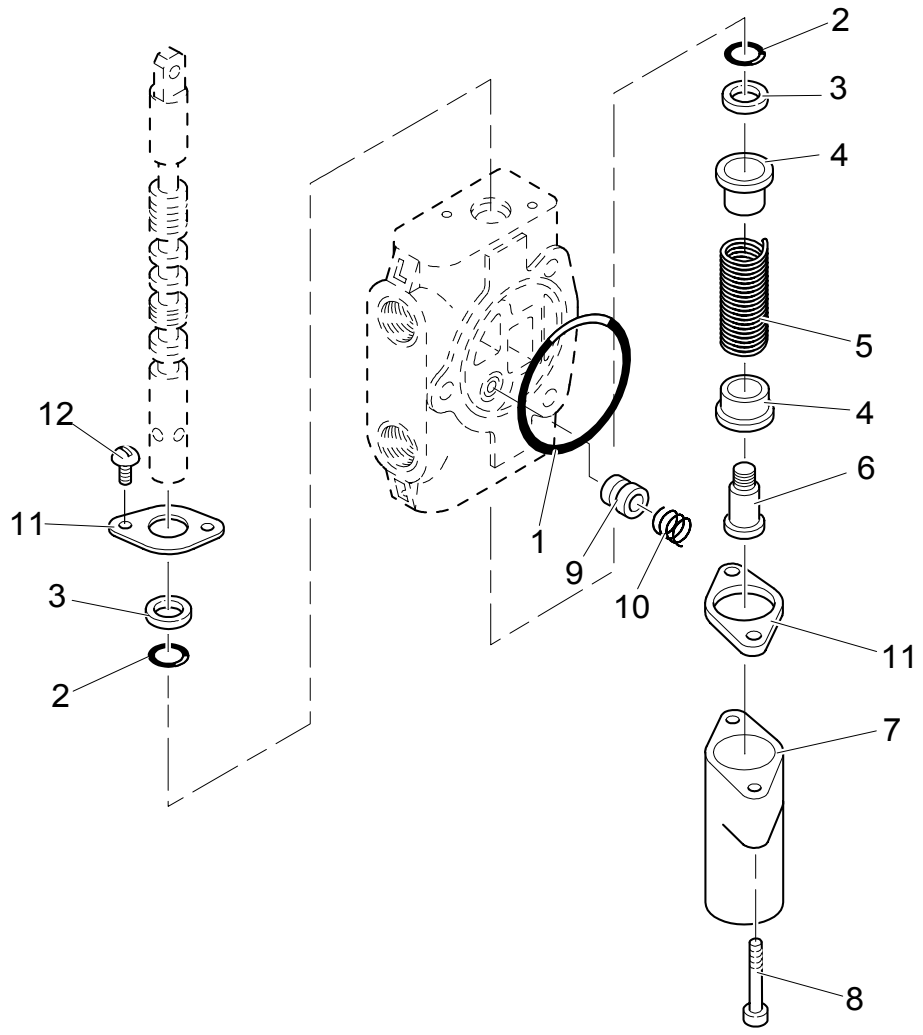

DIPPER VALVE SECTION (CENTER PIVOT)

REF	FN	PART NUMBER	YR/SN	QTY	DESCRIPTION
1		9968495		1	O-RING
2		9968489		1	GASKET
3		9968490		1	RING, OIL SCRAPER
4		9968512		1	SEAT/SLOT
5		9968514		1	SPRING
6		9968515		1	SCREW
7		9968513		1	COVER
8		9968516		1	SCREW
9		9968510		2	PLUNGER
10		9968511		1	SPRING
11		9968458		2	PLATE, COVER
12		9968460		1	SCREW

1.82.6	18	p1	11/03

BUCKET, SWING, & BOOM VALVE SECTION (CENTER PIVOT)

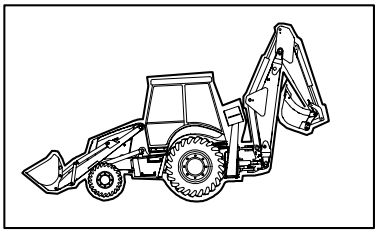

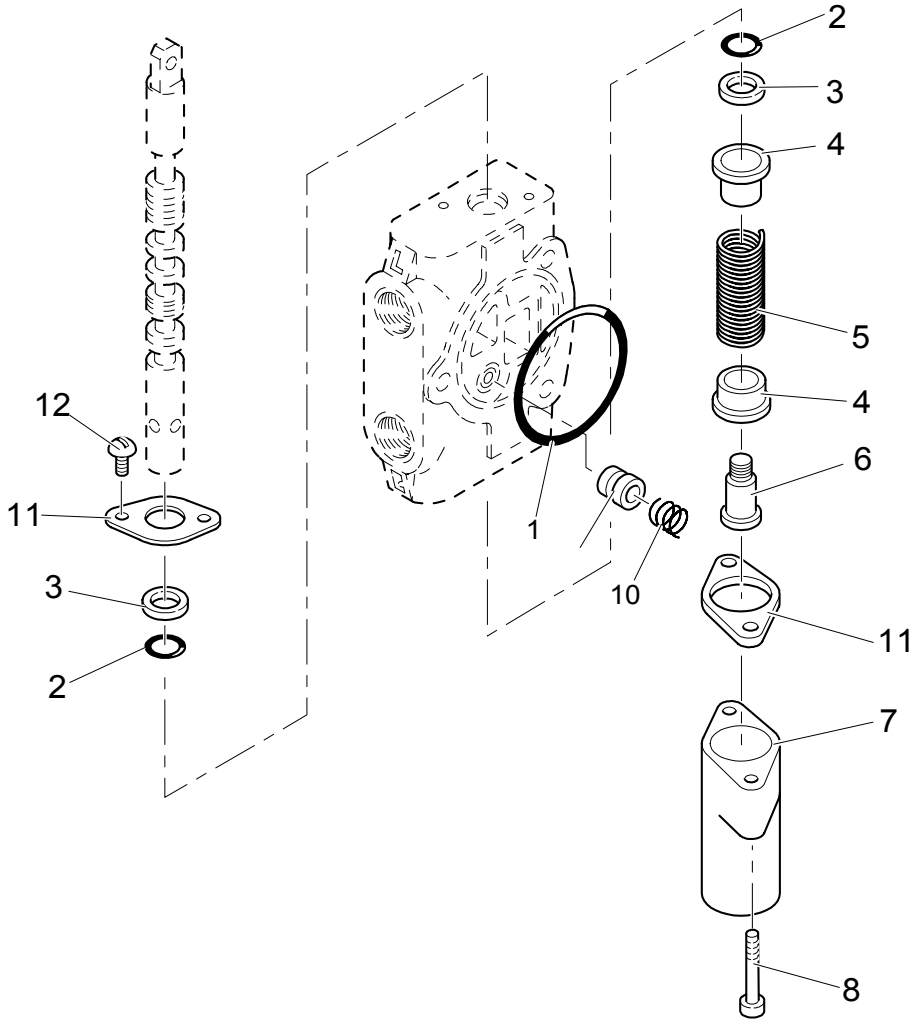

BUCKET, SWING, & BOOM VALVE SECTION (CENTER PIVOT)

REF	FN	PART NUMBER	YR/SN	QTY	DESCRIPTION
1		9968495		1	O-RING
2		9968489		1	GASKET
3		9968490		1	RING, OIL SCRAPER
4		9968512		2	SEAT/SLOT
5		9968514		1	SPRING
6		9968515		1	SCREW
7		9968513		1	COVER
8		9968516		1	SCREW
9		9968510		1	PLUNGER
10		9968511		1	SPRING
11		9968458		2	PLATE, COVER
12		9968460		1	SCREW

302	01	p1	08/03

TWO-SECTION CONTROL VALVE FOR LOADER

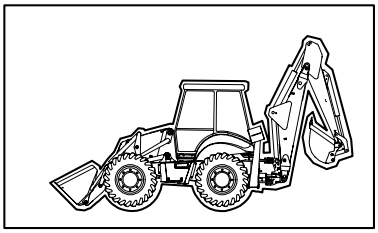

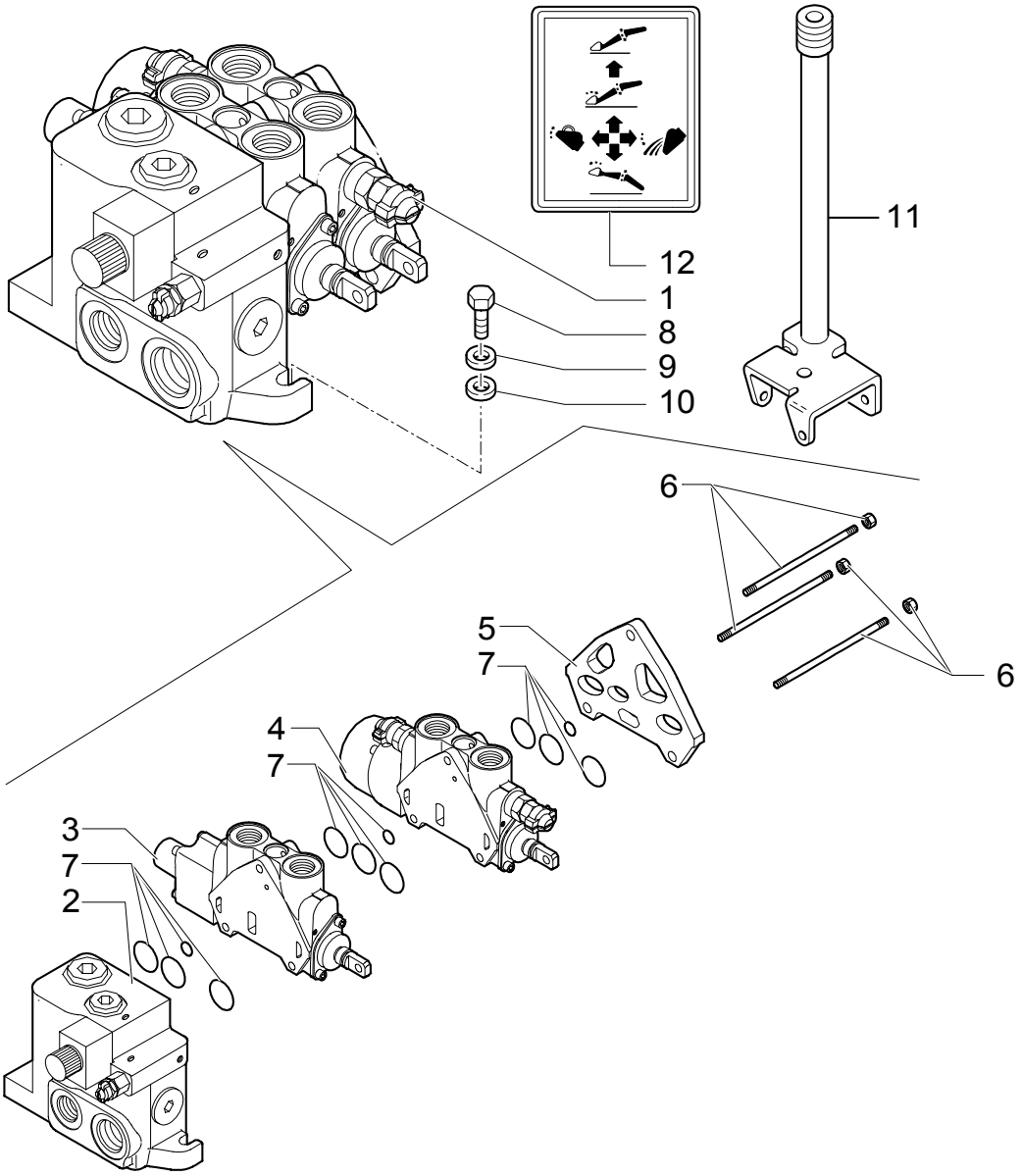

TWO-SECTION CONTROL VALVE FOR LOADER

REF	FN	PART NUMBER	YR/SN	QTY	DESCRIPTION
1		85825188		1	VALVE, CONTROL ASSY
2	1	85825468		1	SECTOR, TOOTHED ASSY
3	2, 3	85813484		1	SECTOR, TOOTHED
4	4, 5	85825469		1	SECTOR, TOOTHED
5		85825470		1	SECTOR, TOOTHED ASSY
6		85825475		1	TIE-ROD, THREADED TIE RODS
7		85825473		3	KIT
8		11234721		3	SCREW M10X45
9		13578621		3	WASHER
10		13578621		3	WASHER
11		85805813		1	LEVER
12		85804346		1	DECAL

(1) See Page 332 02
(2) LOADER
(3) See Page 332 03
(4) Bucket
(5) See Page 332 04

TWO-SECTION CONTROL VALVE FOR LOADER

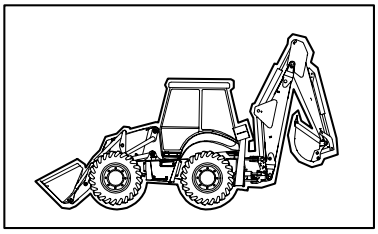

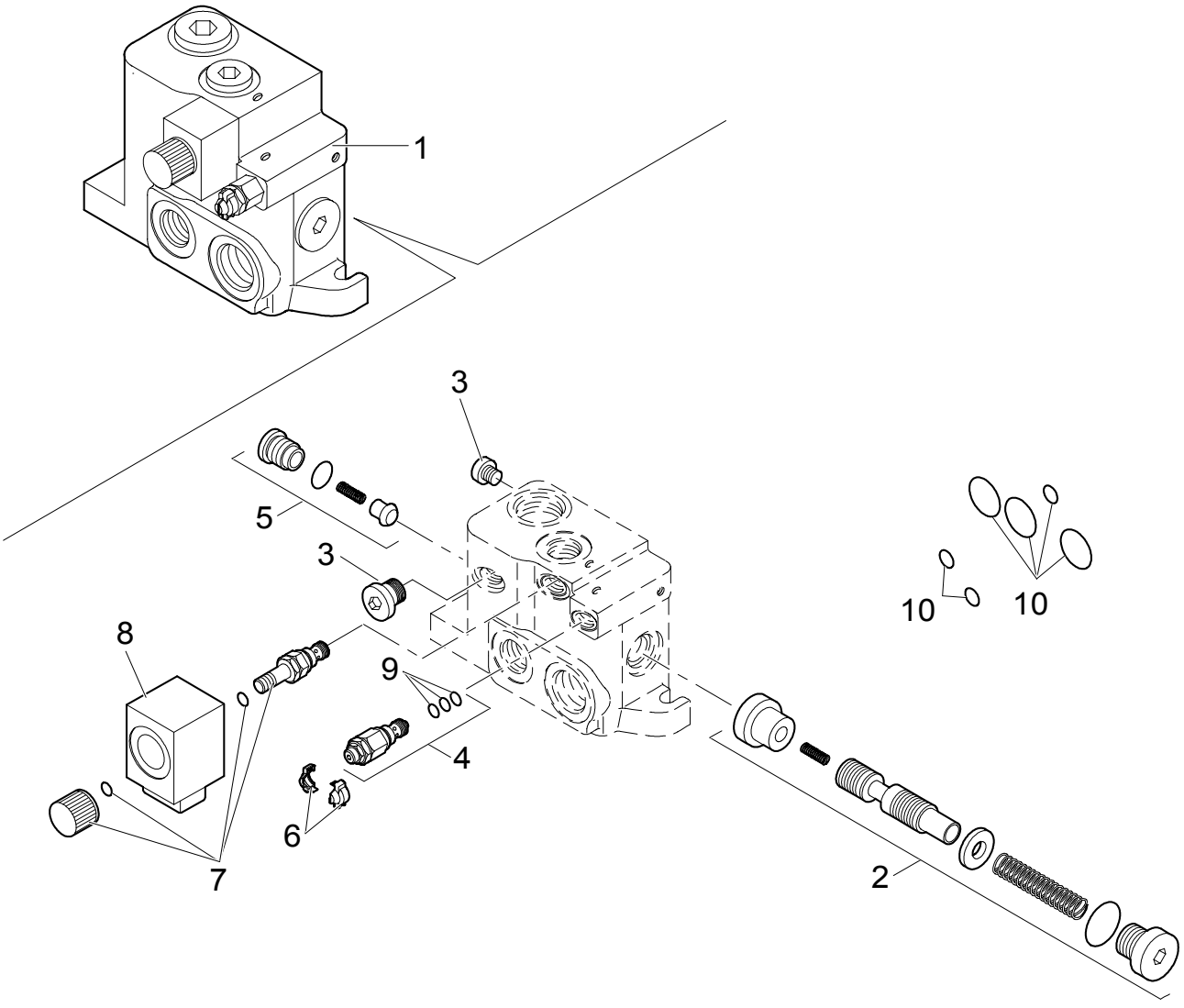

TWO-SECTION CONTROL VALVE FOR LOADER

REF	FN	PART NUMBER	YR/SN	QTY	DESCRIPTION
1		85825468		1	SECTOR, TOOTHED ASSY
2		85825472		1	KIT
3		85811923		2	PLUG
4		85811946		1	VALVE, HYDRAULIC
5		85811938		1	KIT
6		85811934		0	KIT 1" 1/16-12 12UNF 2A
7		85811954		1	KIT 1" 1/16-12 UNF 2A
8		85811953		1	COIL 9/16-18 UNF
9		85821236		1	KIT SEALS
10		85819148		1	KIT

TWO-SECTION CONTROL VALVE FOR LOADER

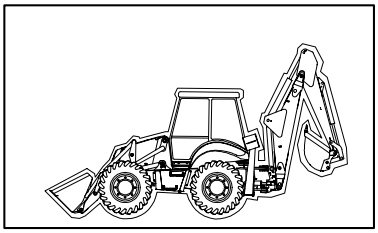

KIT
KIT KIT
8 = ●
10 = ▲

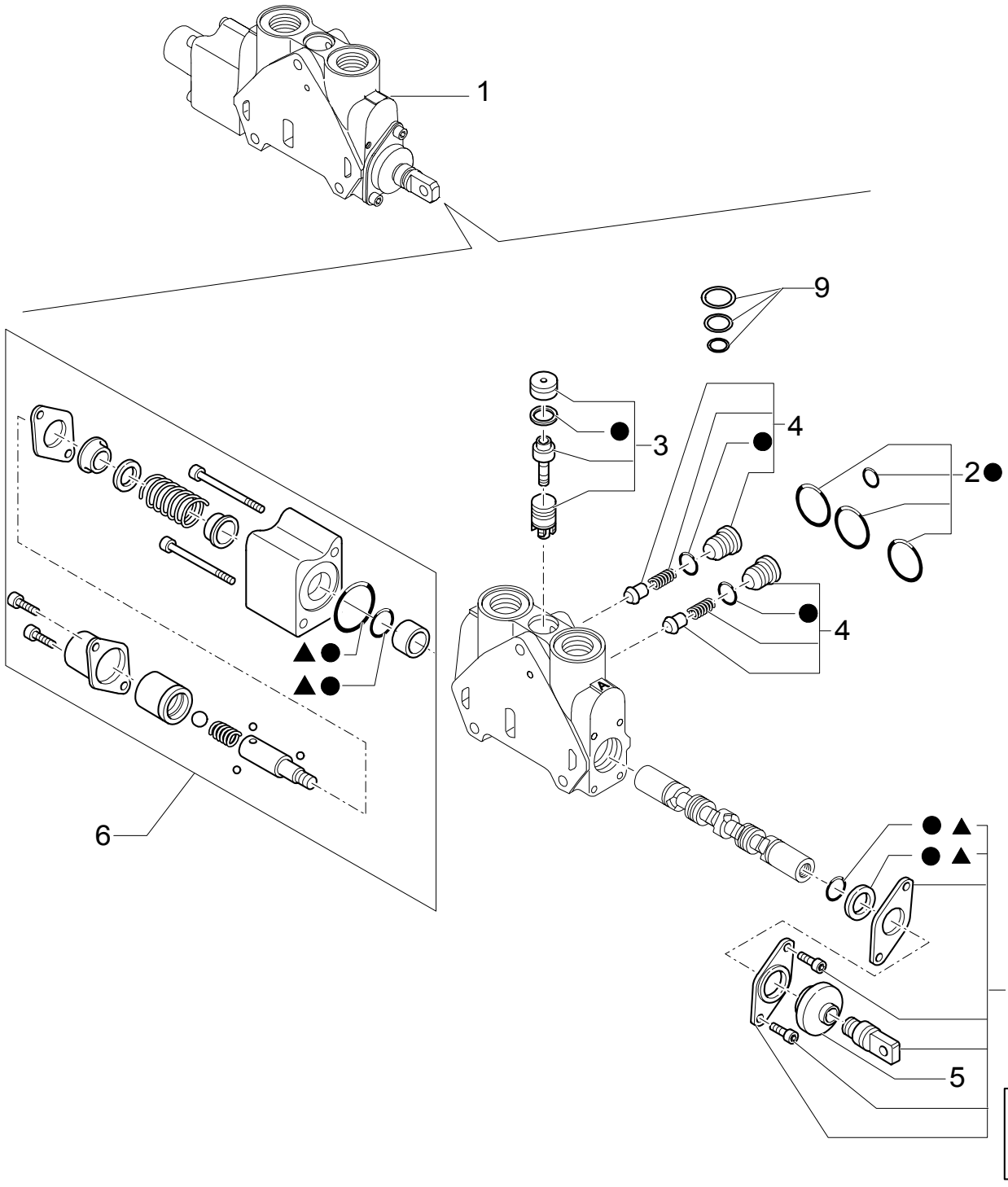

TWO-SECTION CONTROL VALVE FOR LOADER

REF	FN	PART NUMBER	YR/SN	QTY	DESCRIPTION
1		85813484		1	SECTOR, TOOTHED ASSY
2		85819148		1	KIT SEALS
3		85819378		1	KIT
4		85811938		2	KIT VALVE
5		85820130		1	BELLOWS
6		85824280		1	KIT COVER
7		85824278		1	KIT
8		85824281		1	KIT SEALS
9		85819040		1	KIT COMPENSATOR SEAL
10		85824283		1	KIT SPOOL SEAL

302	04	p1	07/03

TWO-SECTION CONTROL VALVE FOR LOADER

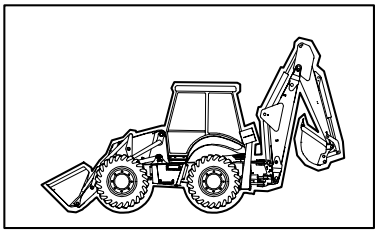

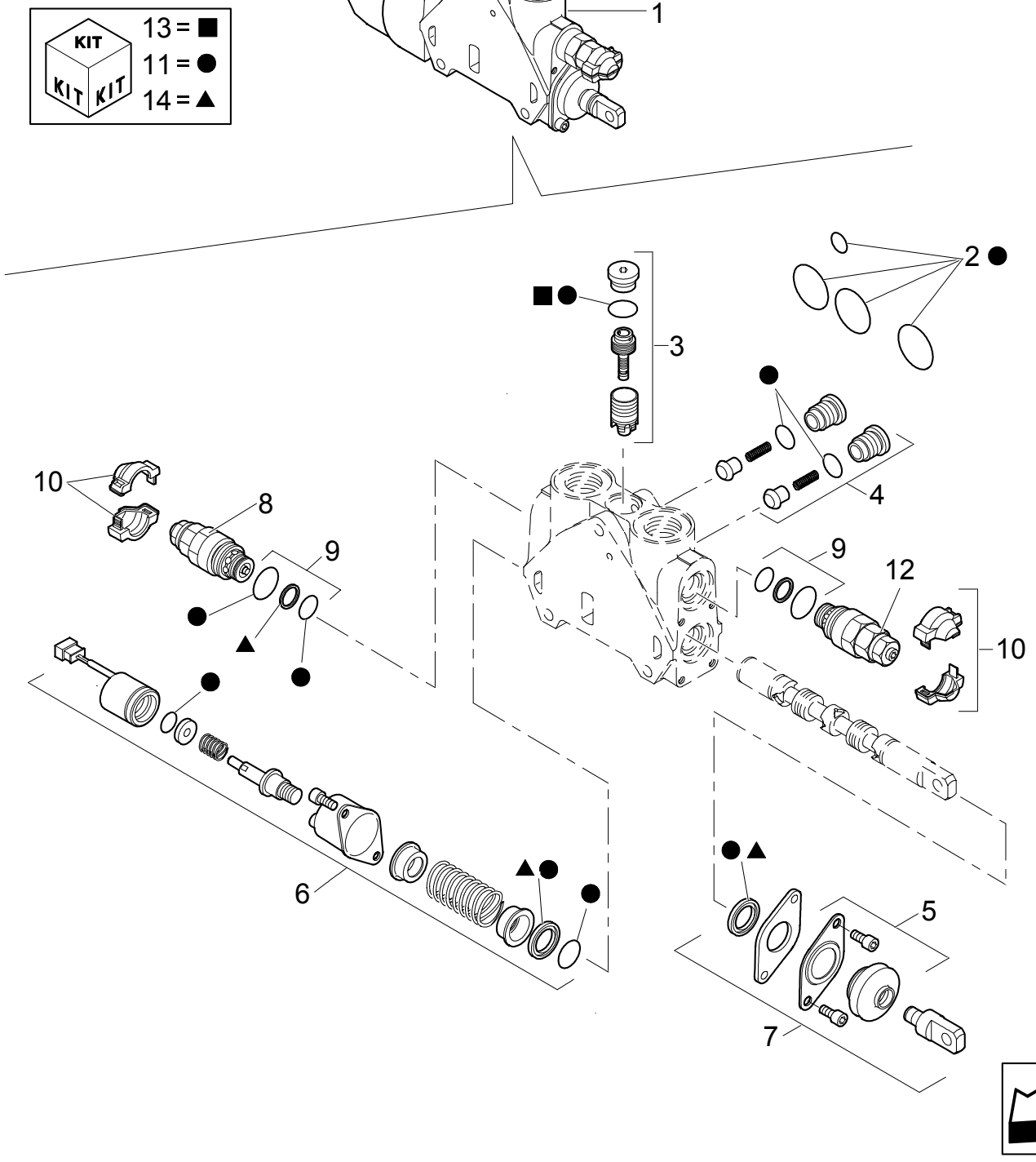

TWO-SECTION CONTROL VALVE FOR LOADER

REF	FN	PART NUMBER	YR/SN	QTY	DESCRIPTION
1		85825469		1	SECTOR, TOOTHED ASSY
2		85819148		1	KIT SEALS
3		85819378		1	KIT
4		85811938		2	KIT VALVE
5		85820130		1	BELLOWS
6		85825471		1	KIT
7		85824278		1	KIT
8	1, 2	85812116		1	VALVE, HYDRAULIC
9		85811933		2	KIT
10		85811934		2	KIT SEALS
11		85824281		1	KIT SEALS
12	1, 3	85812113		1	VALVE, HYDRAULIC
13		85819040		1	KIT COMPENSATOR SEAL
14		85824283		1	KIT SPOOL SEAL

(1) Includes 9, 10
(2) 230 BAR
(3) 160 BAR

331	01	p1	02/04

BACKHOE CONTROL VALVE, 6 SECTIONS (CENTER PIVOT) NORTH AMERICA

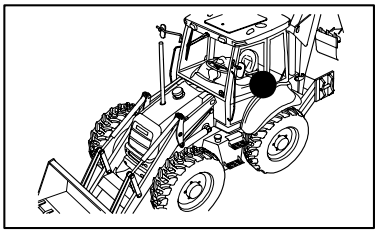

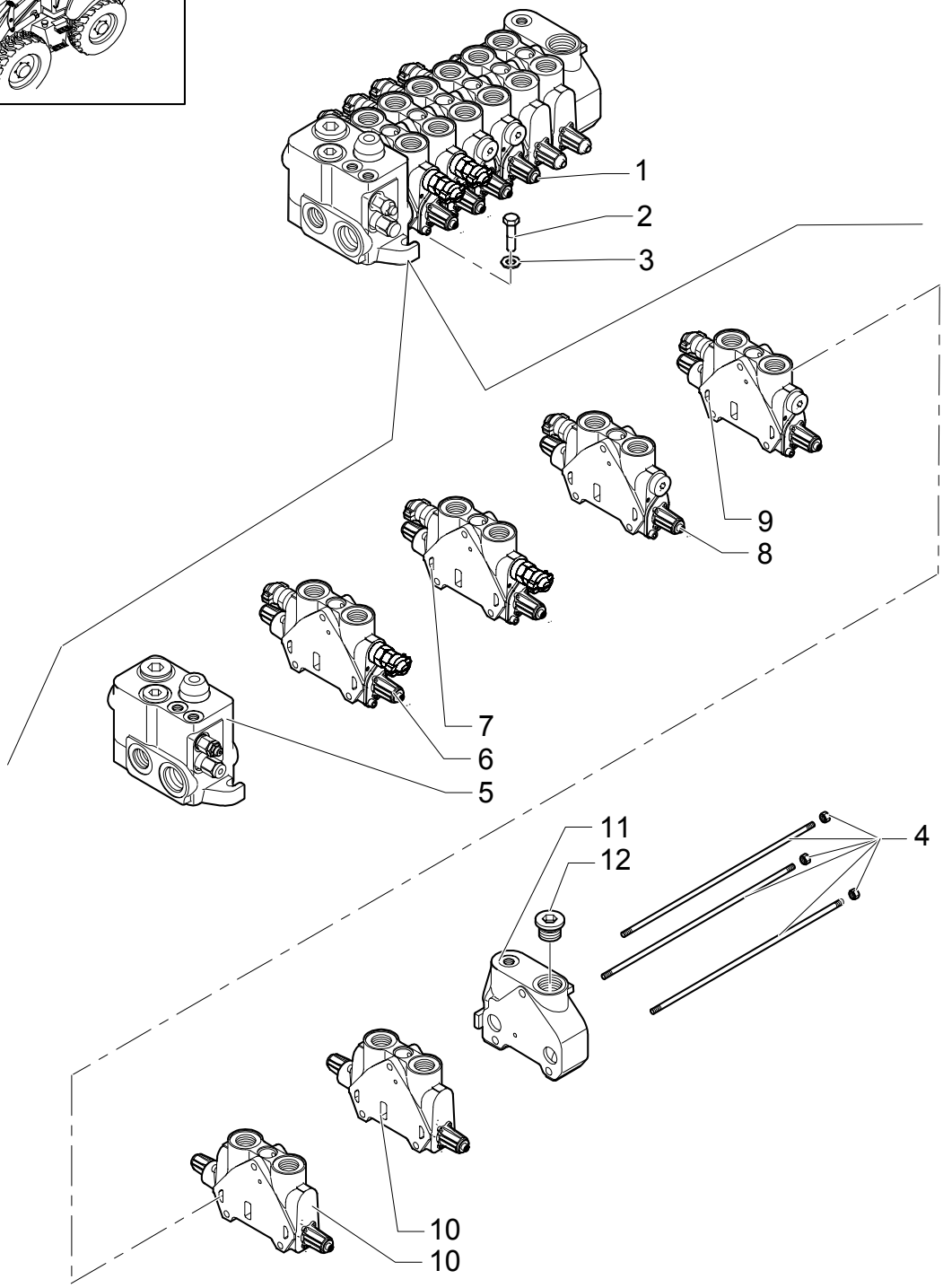

BACKHOE CONTROL VALVE, 6 SECTIONS (CENTER PIVOT) NORTH AMERICA

REF	FN	PART NUMBER	YR/SN	QTY	DESCRIPTION
1		87413179		1	VALVE, CONTROL
2		47049188		3	SCREW M10 x 40
3		47048971		3	WASHER M10
4		85811958		1	KIT
5	1	85826255		1	VALVE SECTION, HYD
6	2, 3	85826901		1	SECTOR, TOOTHED
7	4, 5	{85826339}		1	SECTOR, TOOTHED
8	6, 7	85826903		1	SECTOR, TOOTHED
9	8, 9	85826902		1	SECTOR, TOOTHED
10	10, 11	{85826340}		2	SECTOR, TOOTHED
11	12	{85826250}		1	SECTOR, TOOTHED
12		85811921		1	PLUG

(1) See Page 331/1 02
(2) Boom Cylinder
(3) See Page 333/1 03
(4) Swing Cylinder
(5) See Page 333/1 04
(6) Bucket Cylinder
(7) See Page 333/1 05
(8) Dipperstick Cylinder
(9) See Page 333/1 06
(10) Stabilizer Cylinder
(11) See Page 333/1 07
(12) Includes 12

Pilot Control Version

LB75.B

331/A	01	p1	11/03

6 SECTION PILOT CONTROL VALVE SUPPORT,COMPLETE

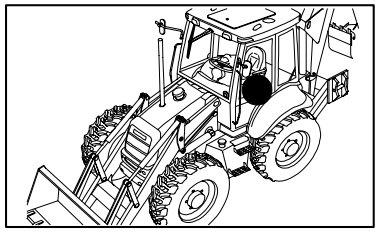

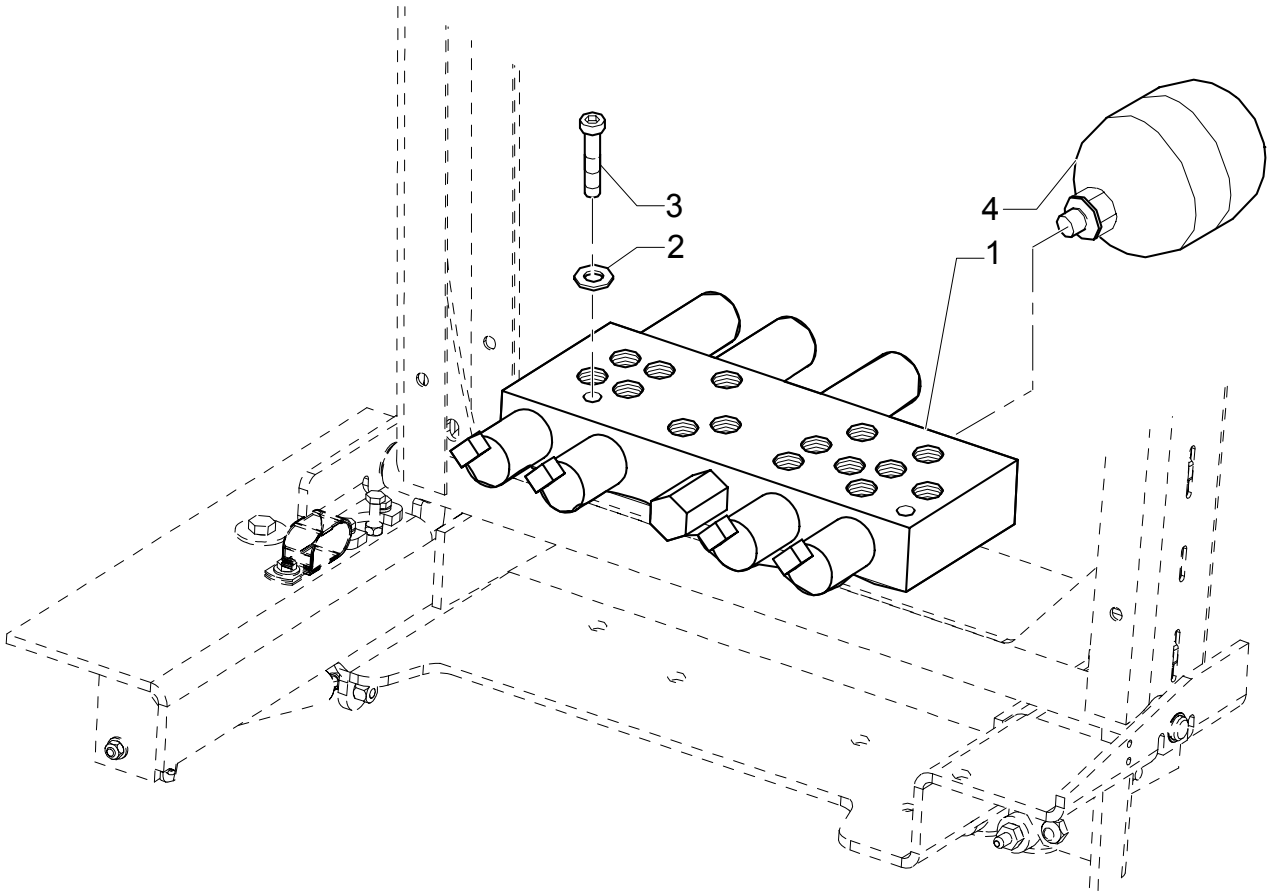

6 SECTION PILOT CONTROL VALVE SUPPORT,COMPLETE

REF	FN	PART NUMBER	YR/SN	QTY	DESCRIPTION
1		85827472		1	VALVE, HYDRAULIC
2		47048961		2	WASHER
3		47049078		2	SCREW M6x60
4		{87425225}		1	ACCUMULATOR

Pilot Control Version

LB75.B

331/A	02	p1	02/04

6 SECTION PILOT CONTROL VALVE SUPPORT,COMPLETE

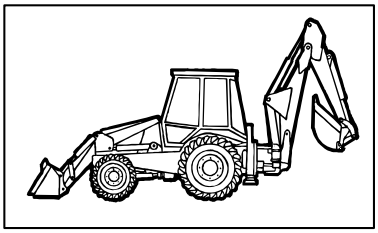

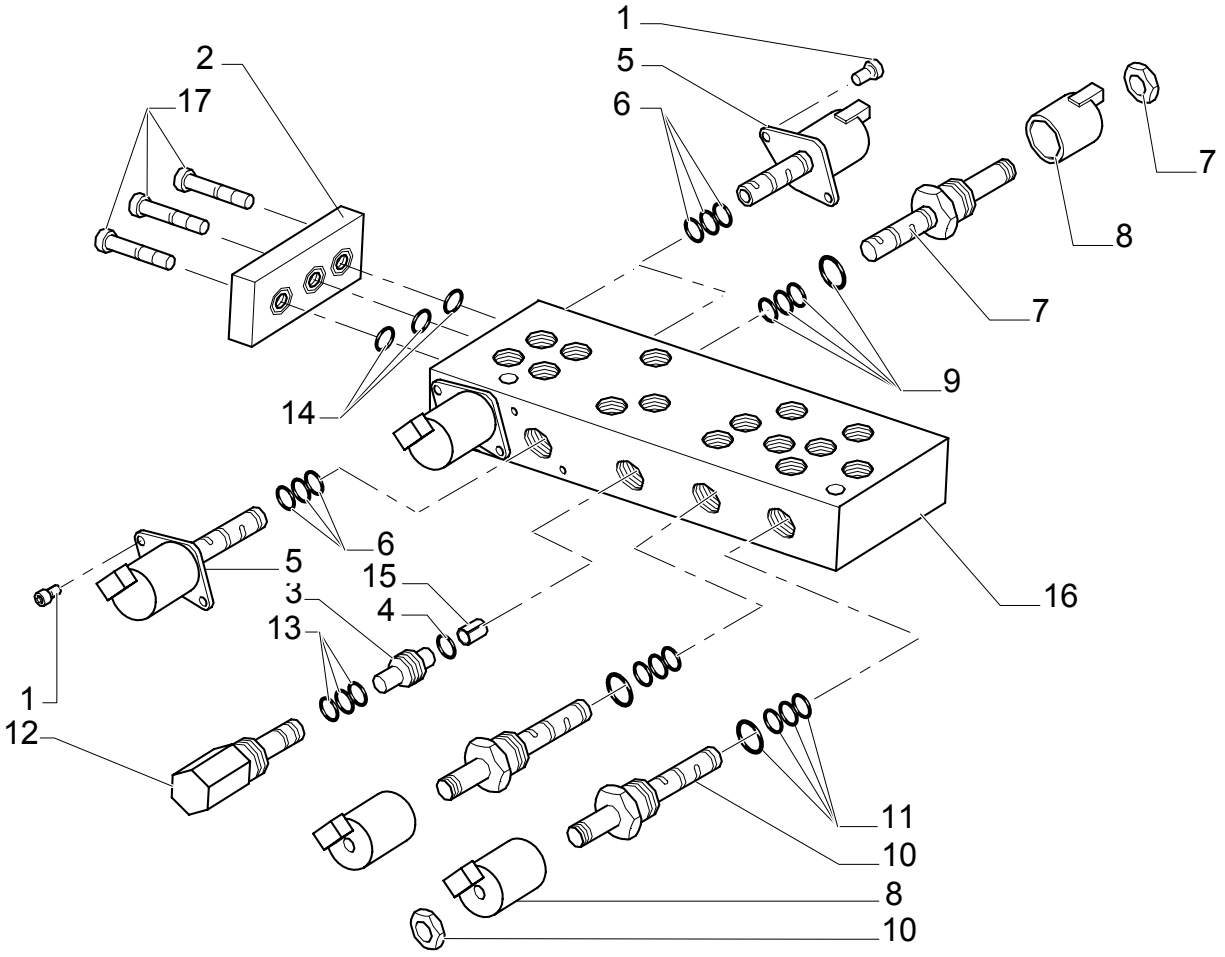

6 SECTION PILOT CONTROL VALVE SUPPORT,COMPLETE

REF	FN	PART NUMBER	YR/SN	QTY	DESCRIPTION
1		14302921		8	SCREW M4x10
2		{85827991}		1	
3		{85827992}		1	
4		{85828003}		1	
5		{85827993}		4	
6		{85828000}		0	
7		{85827994}		1	
8		{85827995}		1	
9		{85827998}		0	
10		{85827996}		1	
11		{85828002}		0	
12		{85827997}		1	
13		{85828001}		0	
14		{85827999}		0	
15		{85828005}		1	
16		{85828013}		1	
17		14304021		3	SCREW M5x10

Pilot Control Version

LB75.B

331/B	01	p1	02/04

PILOT CONTROL VALVE SUPPORT,COMPLETE

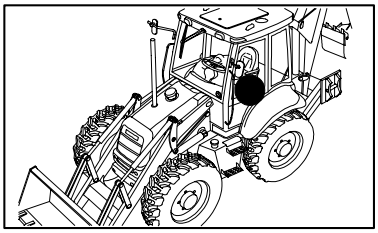

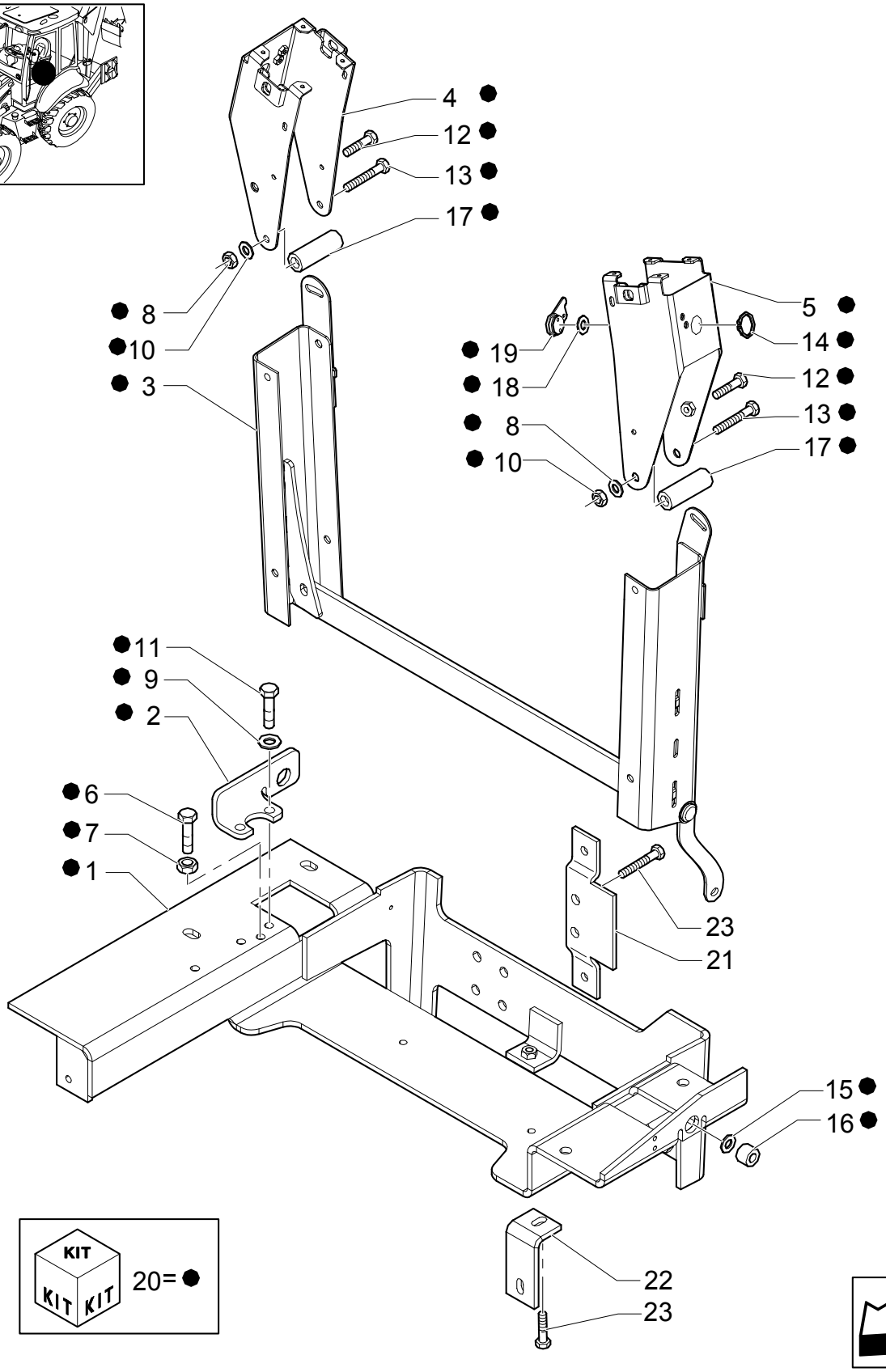

KIT KIT KIT 20= ●

PILOT CONTROL VALVE SUPPORT,COMPLETE

REF	FN	PART NUMBER	YR/SN	QTY	DESCRIPTION
1		87434992		1	SUPPORT
2		87427004		1	SUPPORT
3		87426960		1	PIVOT ASSY.
4		87431299		1	BRACKET, SUPPORTING
5		87431298		1	BRACKET, SUPPORTING
6		15213721		1	SCREW M8 x 60
7		16100811		1	NUT M8
8		47048969		6	WASHER M11 x 24
9		47048992		2	WASHER M8
10		47049041		2	NUT M10
11		47049082		2	SCREW M8 x 35
12		47049184		2	SCREW M8 x 20
13		84058418		2	SCREW
14		85824053		1	RING
15		85824054		4	WASHER
16		85824059		2	BUSHING
17		86983278		2	TUBE
18		87405706		1	WASHER
19		{87431529}		1	LEVER
20	1	NSS		1	NOT SERVICED SEPARATELY
21		86990460		1	PLATE, MOUNTING
22		87402306		1	BRACKET
23		47049188		2	SCREW M10 x 40

(1) Includes1 To 19

Pilot Control Version

LB75.B

331/C	01	p1	03/04

6 SECTION PILOT CONTROL VALVE SUPPORT,COMPLETE

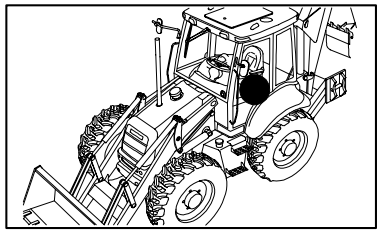

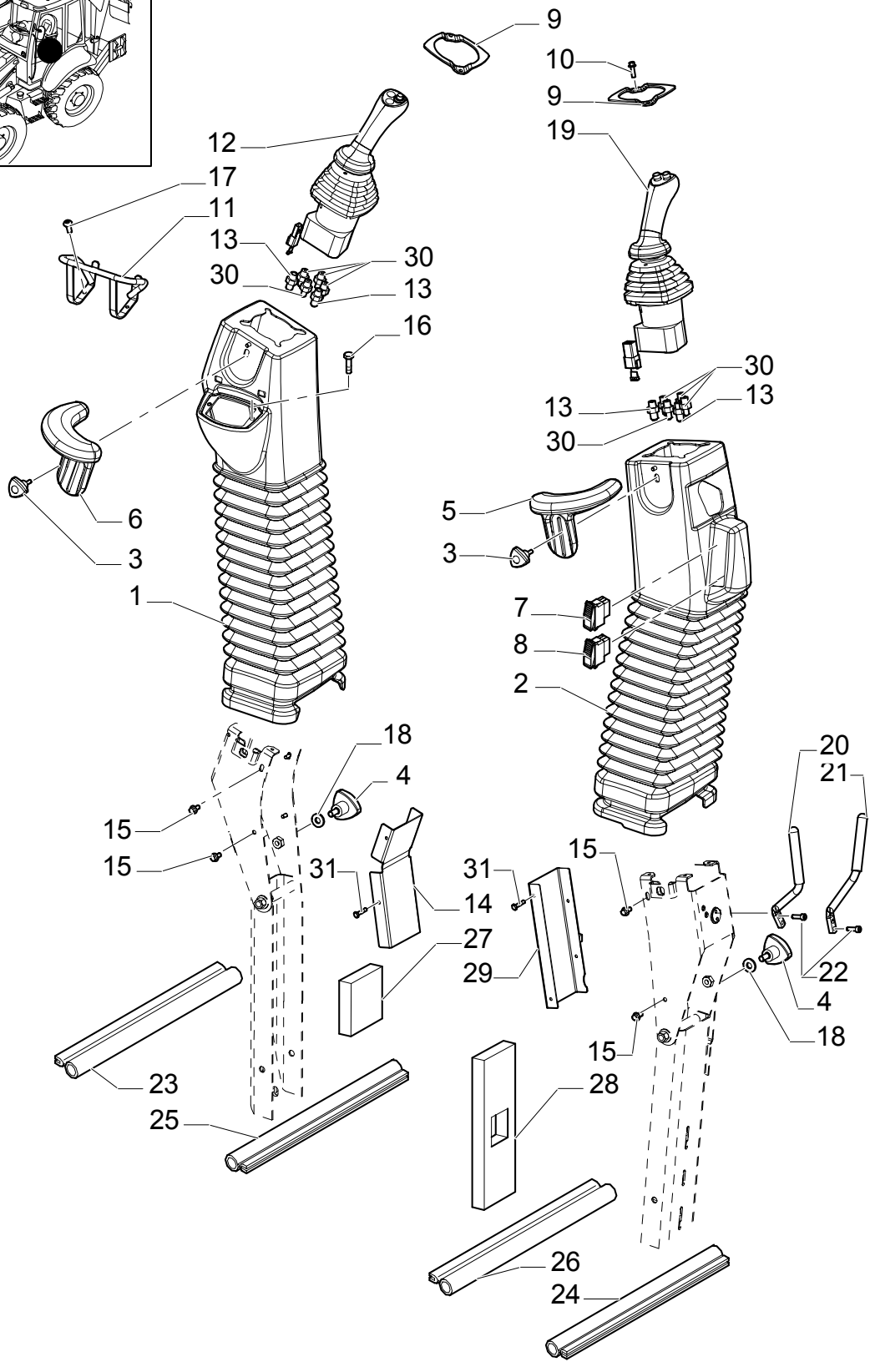

6 SECTION PILOT CONTROL VALVE SUPPORT,COMPLETE

REF	FN	PART NUMBER	YR/SN	QTY	DESCRIPTION
1		{87422675}		1	BELLOWS
2		{87422678}		1	BELLOWS
3		{87413734}		2	KNOB
4		{87437688}		2	KNOB
5		86992074		1	PIN, LOCK
6		86992077		1	STOP
7		{87423802}		1	SWITCH, ASSY
8		{87410105}		1	SWITCH
9	1	87435372		2	PLATE, MOUNTING
9	2	87410723		2	PLATE
10		85821519		8	PIN, ROLL
11	1	{87436396}		1	GUARD
11	2	{87423337}		1	
12	1	{87435510}		1	MANIPULATOR
12	2	{87427981}		1	
13		47050686		4	CONNECTION, 3 WAY
14	1	{87431301}		1	GUARD
14	2	{87427962}		1	
15		87016552		8	SCREW
16		{87022296}		8	SCREW M3 x 8
17		{85821534}		2	SCREW
18		47048971		2	WASHER M10
19	1	87437733		1	VALVE, CONTROL
19	2	87427983		1	VALVE, CONTROL
20		{87418368}		1	ROD
21		{87418369}		1	ROD
22		85821513		4	SCREW M6 x 20
23		{87424301}		1	GASKET
24		{87427991}		1	GASKET
25		{87427989}		1	GASKET
26		{87427993}		1	GASKET
27		{87425696}		2	PANEL, INSULATING
28		{87425697}		2	PANEL, INSULATING
29	1	{87431300}		1	GUARD

(1) CENTER PIVOT
(2) SIDE SHIFT

Pilot Control Version

LB75.B

331/C	01	p2	03/04

6 SECTION PILOT CONTROL VALVE SUPPORT,COMPLETE

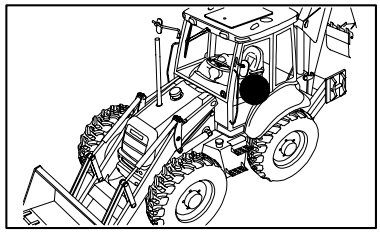

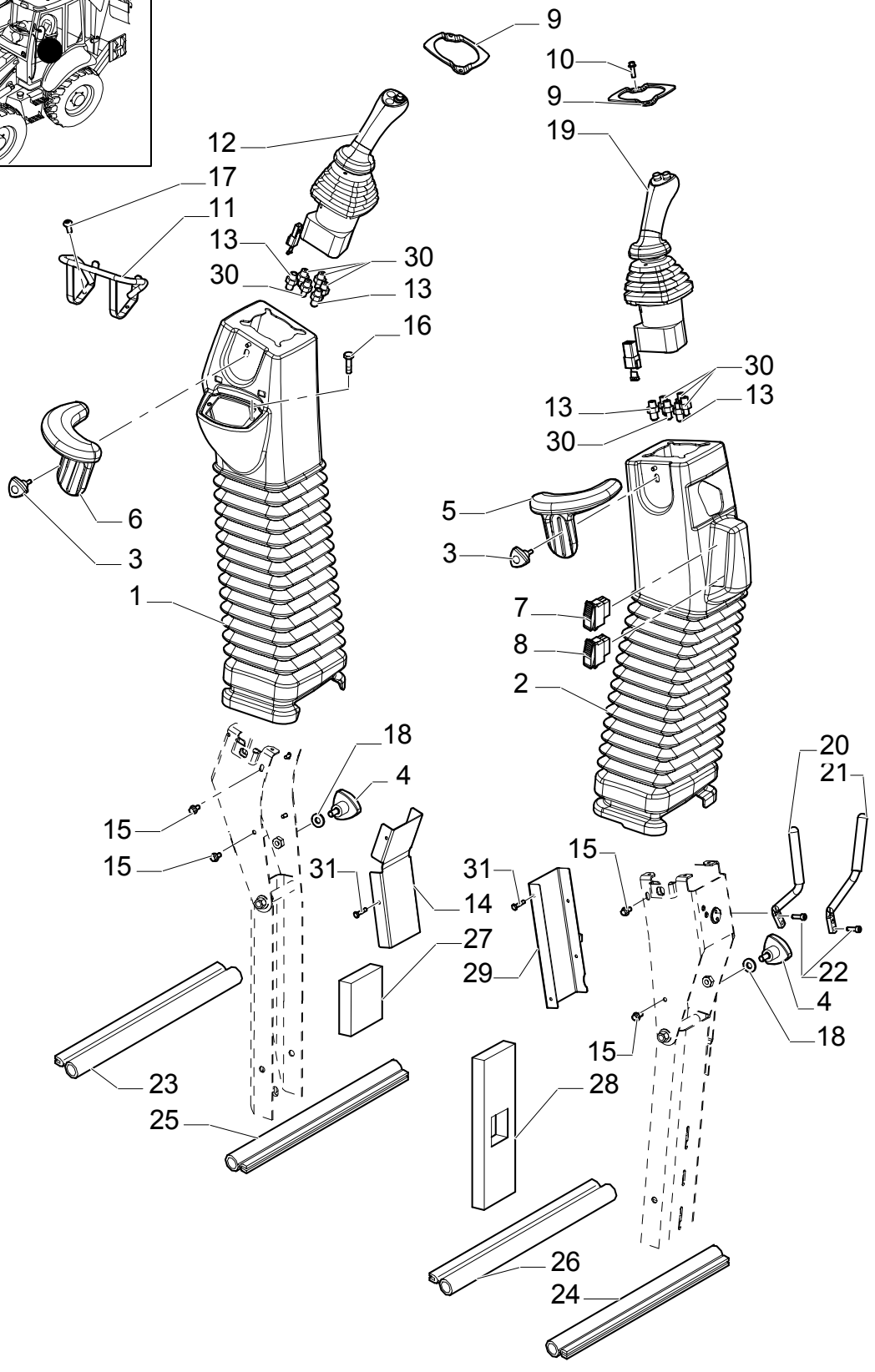

6 SECTION PILOT CONTROL VALVE SUPPORT,COMPLETE

REF	FN	PART NUMBER	YR/SN	QTY	DESCRIPTION
29	1	{87427963}		1	
30		85803312		8	CONNECTOR, HYD.
31		86625199		8	SCREW

(1) SIDE SHIFT

Pilot Control Version

LB75.B

6 SECTION PILOT CONTROL VALVE SUPPORT,COMPLETE

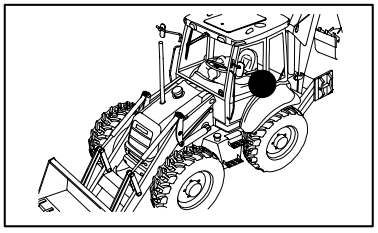

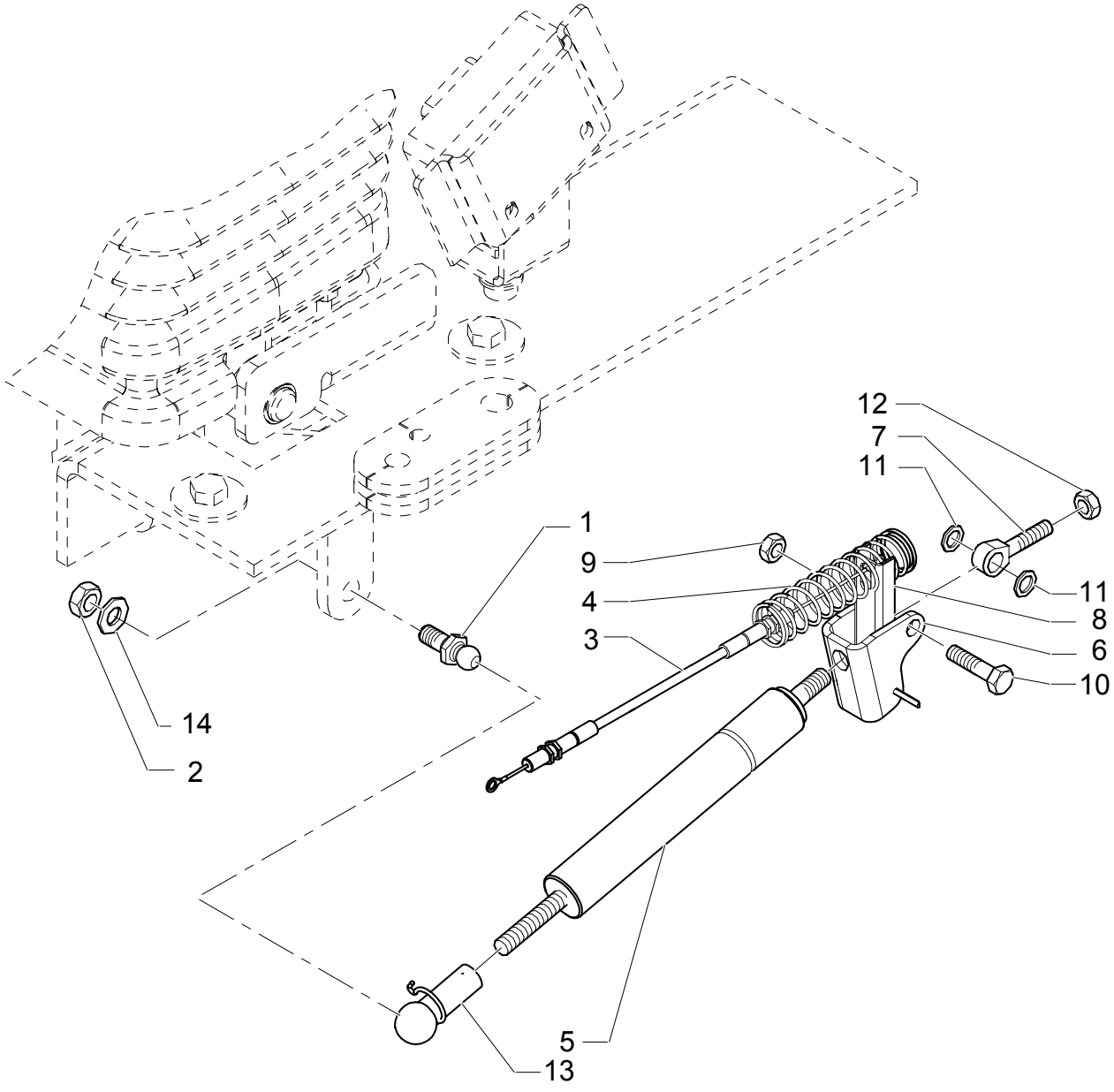

6 SECTION PILOT CONTROL VALVE SUPPORT,COMPLETE

REF	FN	PART NUMBER	YR/SN	QTY	DESCRIPTION
1		85824067		1	TRACK ROD END
2		47049041		1	NUT M10
3		87430028		1	CABLE
4		87405362		1	SPRING
5		86989616		1	GAS STRUT
6		85824080		1	BRACKET
7		85821514		2	PIN
7		85824081		1	BALL JOINT
8		86984549		1	EXTRUSION
9		85821516		1	NUT
10		85821515		1	BOLT
10		85821516		1	NUT
11		85821520		2	SPACER
12		47049442		2	NUT
13		{86999310}		1	CLIP
14		47049404		1	WASHER

Pilot Control Version

LB75.B

331/C	03	p1	12/03

6 SECTION PILOT CONTROL VALVE SUPPORT,COMPLETE

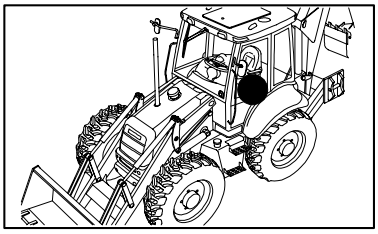

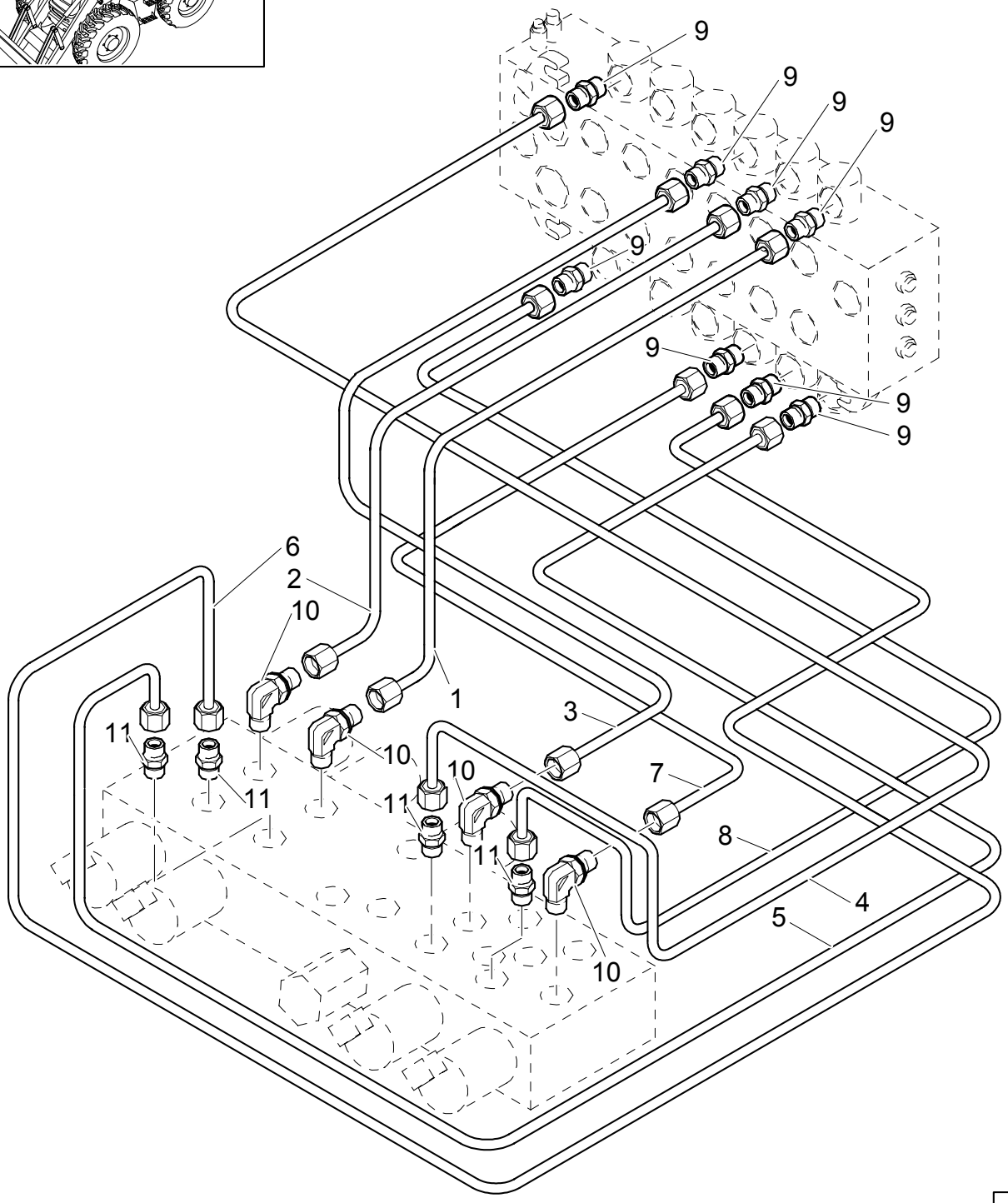

6 SECTION PILOT CONTROL VALVE SUPPORT,COMPLETE

REF	FN	PART NUMBER	YR/SN	QTY	DESCRIPTION
1		85827093		1	TUBE, RIGID
2		85827094		1	TUBE, RIGID
3		85827091		1	TUBE, RIGID
4		85827089		1	TUBE, RIGID
5		85827092		1	TUBE, RIGID
6		85827095		1	TUBE, RIGID
7		85827090		1	TUBE, RIGID
8		85827088		1	TUBE, RIGID
9		85803312		8	CONNECTOR, HYD.
10		47050653		4	CONNECTION, 3 WAY
11		47050685		4	CONNECTION, 3 WAY

Pilot Control Version

LB75.B

331/C	04	p1	12/03

6 SECTION PILOT CONTROL VALVE SUPPORT,COMPLETE

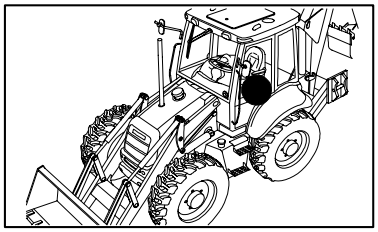

6 SECTION PILOT CONTROL VALVE SUPPORT,COMPLETE

REF	FN	PART NUMBER	YR/SN	QTY	DESCRIPTION
1		85827084		1	HOSE, FLEXIBLE
2		85827085		1	HOSE, FLEXIBLE
3		85827086		1	HOSE, FLEXIBLE
4		85827077		1	HOSE, FLEXIBLE
5		85827087		1	HOSE, FLEXIBLE
6		85827082		2	HOSE, FLEXIBLE
7		85827467		1	CONNECTOR, HYD.
8		85827466		2	CONNECTOR, HYD.
9		85827076		2	HOSE, FLEXIBLE
10		85827080		2	HOSE, FLEXIBLE
11		85827078		2	HOSE, FLEXIBLE
12		47120173		2	CONNECTION, 3 WAY
13		47050686		3	CONNECTION, 3 WAY
14		47050653		3	CONNECTION, 3 WAY
15		85803312		4	CONNECTOR, HYD.

Pilot Control Version

LB75.B

331/C	05	p1	12/03

6 SECTION PILOT CONTROL VALVE SUPPORT,COMPLETE

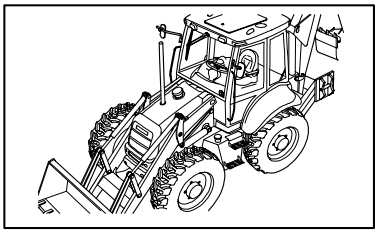

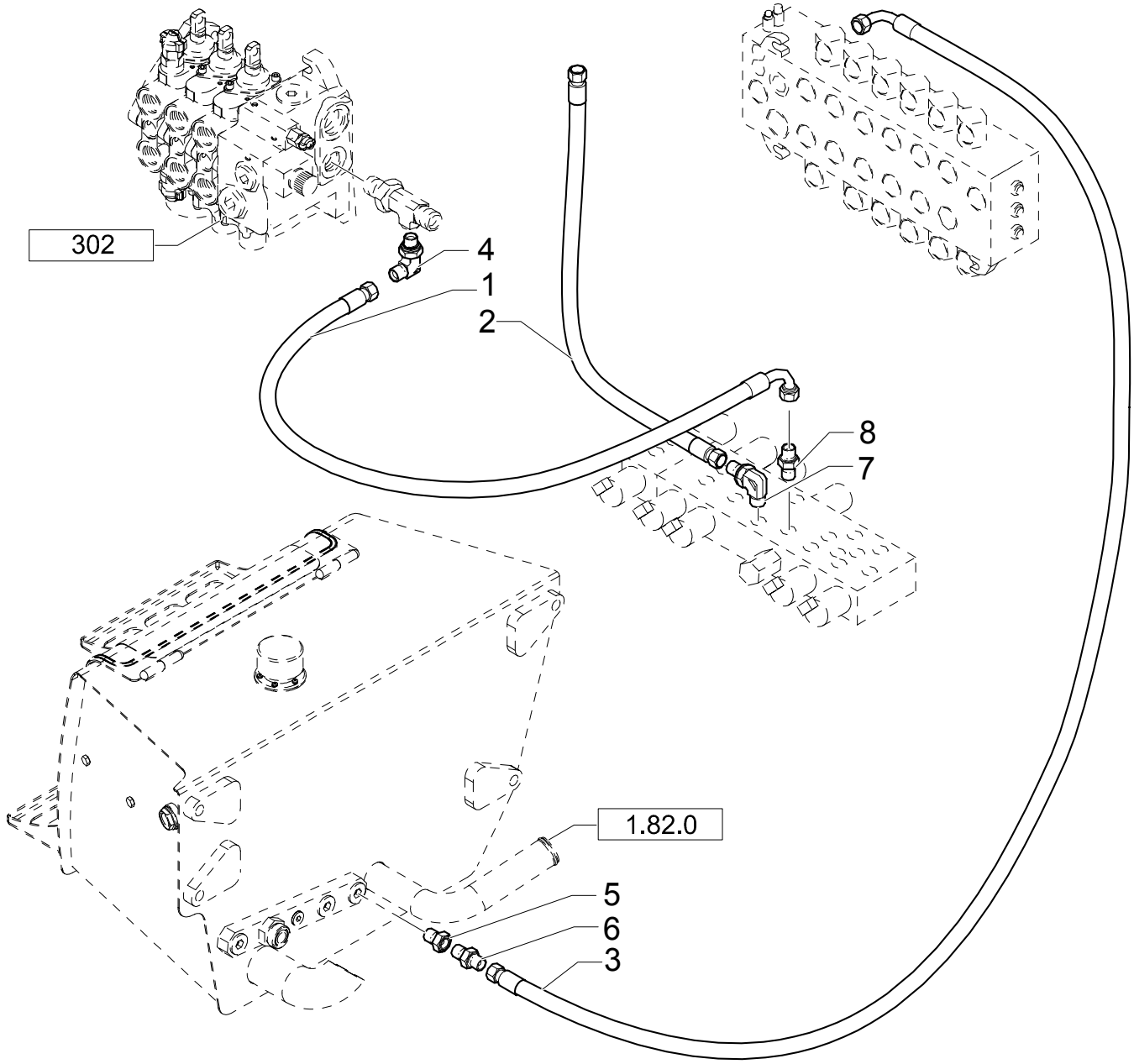

6 SECTION PILOT CONTROL VALVE SUPPORT,COMPLETE

REF	FN	PART NUMBER	YR/SN	QTY	DESCRIPTION
1		85827476		1	HOSE, FLEXIBLE
2		85827477		1	HOSE, FLEXIBLE
3		85827475		1	HOSE, FLEXIBLE
4		85805318		1	ELBOW
5		{85826100}		1	GEAR REDUCTION UNIT
6		47050686		1	CONNECTION, 3 WAY
7		83961741		1	ELBOW
8		83963371		1	CONNECTOR, HYD.

Pilot Control Version

LB75.B

331/C	06	p1	12/03

6 SECTION PILOT CONTROL VALVE SUPPORT,COMPLETE (CENTER PIVOT)

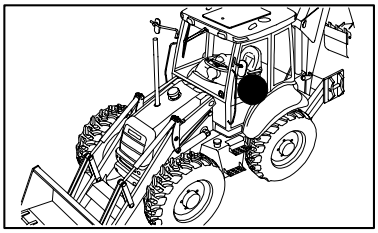

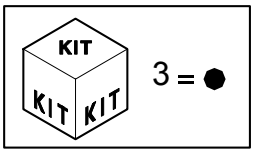

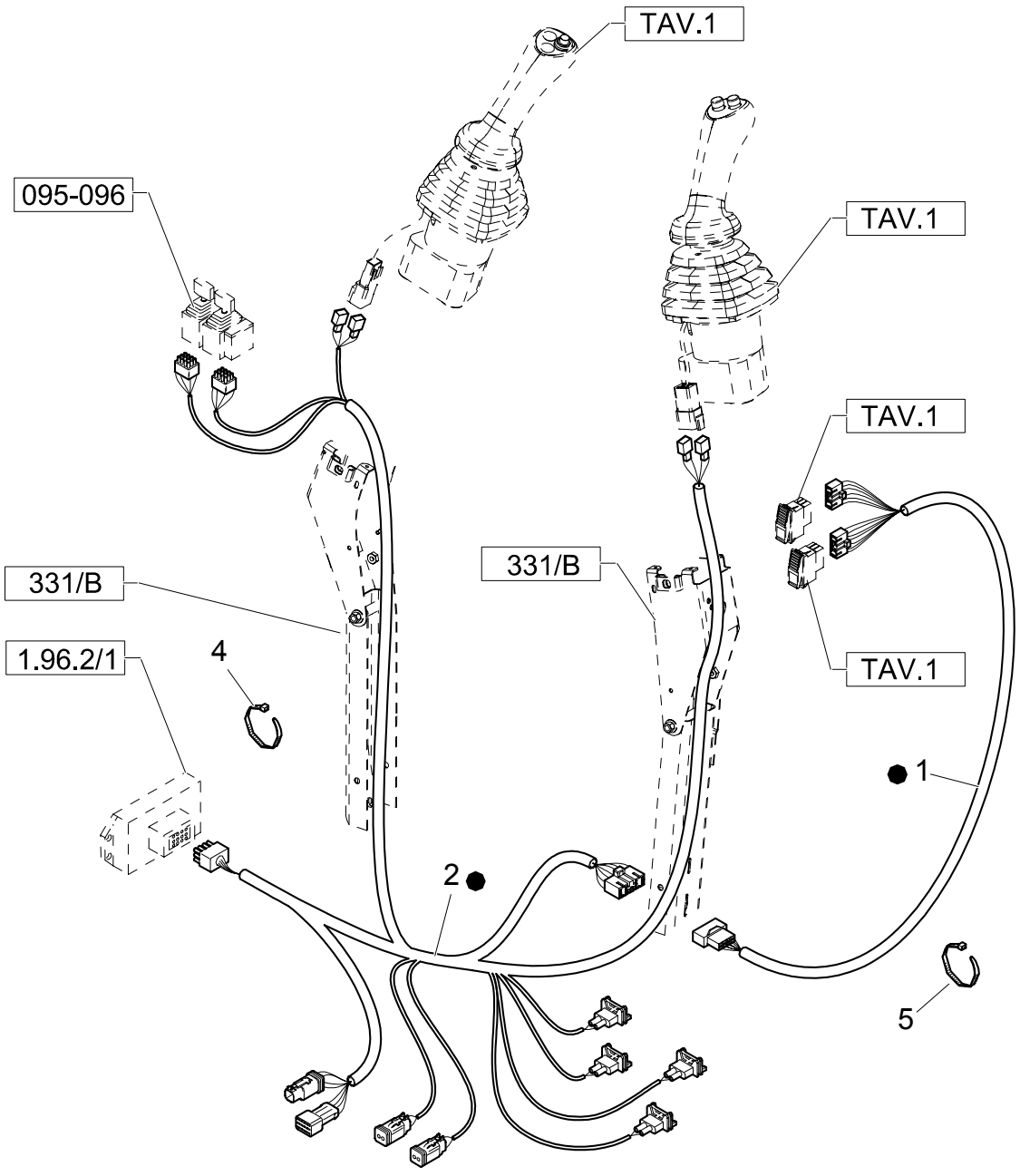

6 SECTION PILOT CONTROL VALVE SUPPORT,COMPLETE (CENTER PIVOT)

REF	FN	PART NUMBER	YR/SN	QTY	DESCRIPTION
1		NSS		1	NOT SERVICED SEPARATELY
2		NSS		1	NOT SERVICED SEPARATELY
3	1	85827518		1	CABLE, ELECTRIC
4		14560187		6	COLLAR
5		386170C1		4	STRAP

(1) Includes 1, 2

333/1	01	p1	02/04

7-SECTIONS EXCAVATOR CONTROL VALVE (CENTER PIVOT) NORTH AMERICA

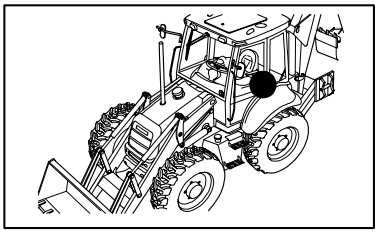

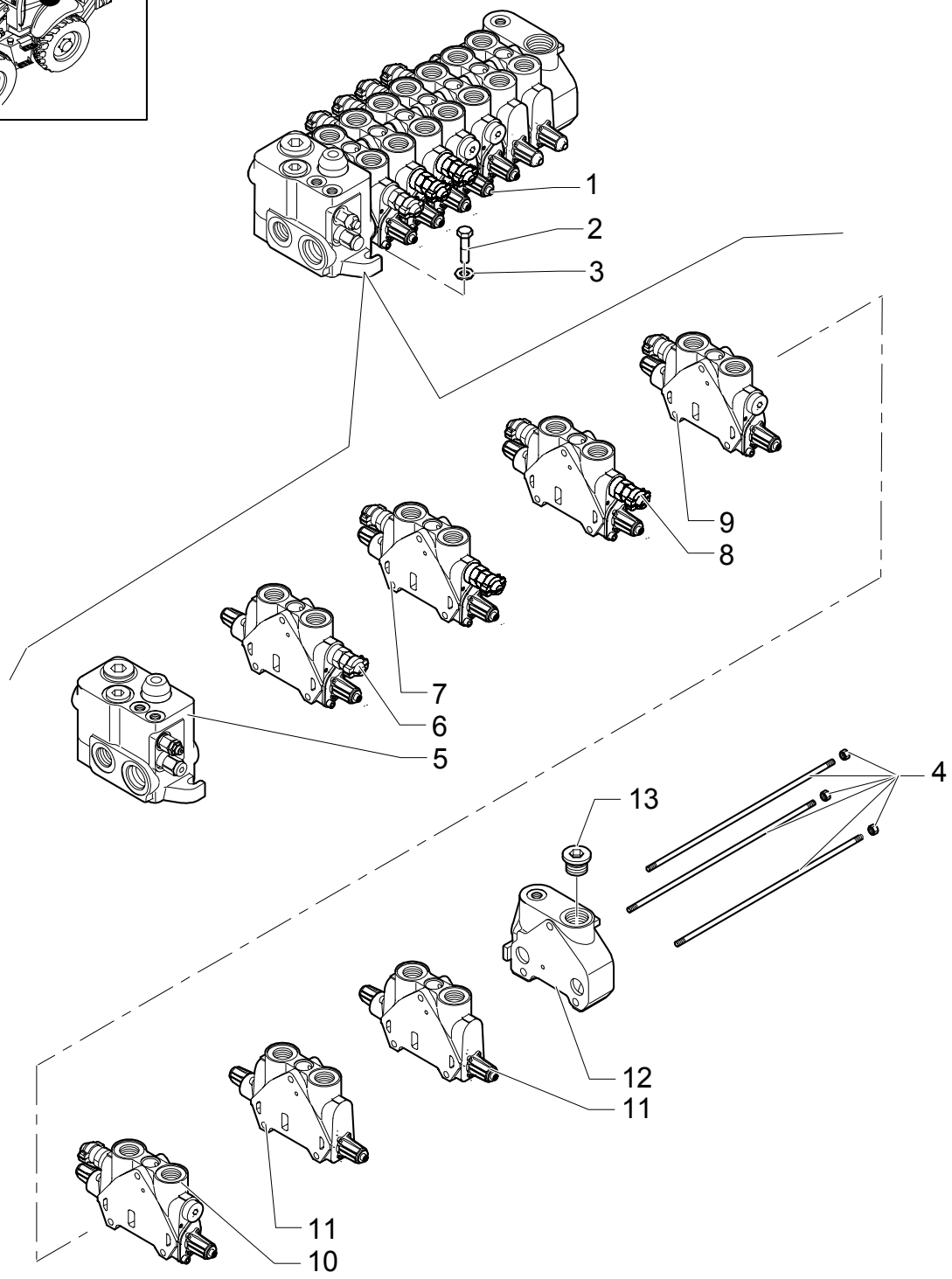

7-SECTIONS EXCAVATOR CONTROL VALVE (CENTER PIVOT) NORTH AMERICA

REF	FN	PART NUMBER	YR/SN	QTY	DESCRIPTION
1		87413180		1	VALVE, CONTROL
2		47049188		3	SCREW M10X40
3		47048971		3	WASHER M10
4		85811959		1	KIT
5	1	85826255		1	VALVE SECTION, HYD
6	2, 3	85826904		1	SECTOR, TOOTHED
7	4, 5	85826901		1	SECTOR, TOOTHED
8	6, 7	{85826339}		1	SECTOR, TOOTHED
9	8, 9			1	
10	10, 11	85826902		1	SECTOR, TOOTHED
11	12, 13	{85826340}		2	SECTOR, TOOTHED
12	14	{85826250}		1	SECTOR, TOOTHED
13		85811921		1	PLUG

(1) See Page 331/1 02
(2) Telescopic Cylinder
(3) See Page 333/1 02
(4) Boom Cylinder
(5) See Page 333/1 03
(6) Swing Cylinder
(7) See Page 333/1 04
(8) Bucket Cylinder
(9) See Page 333/1 05
(10) Dipperstick Cylinder
(11) See Page 333/1 06
(12) Stabilizer Cylinder
(13) See Page 333/1 07
(14) Includes 13

Pilot Control Version

LB75.B

7-SECTIONS EXCAVATOR CONTROL VALVE (CENTER PIVOT) NORTH AMERICA

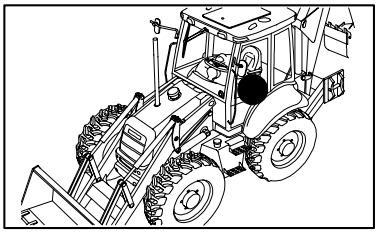

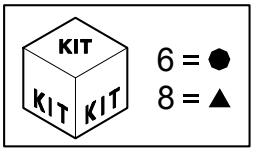

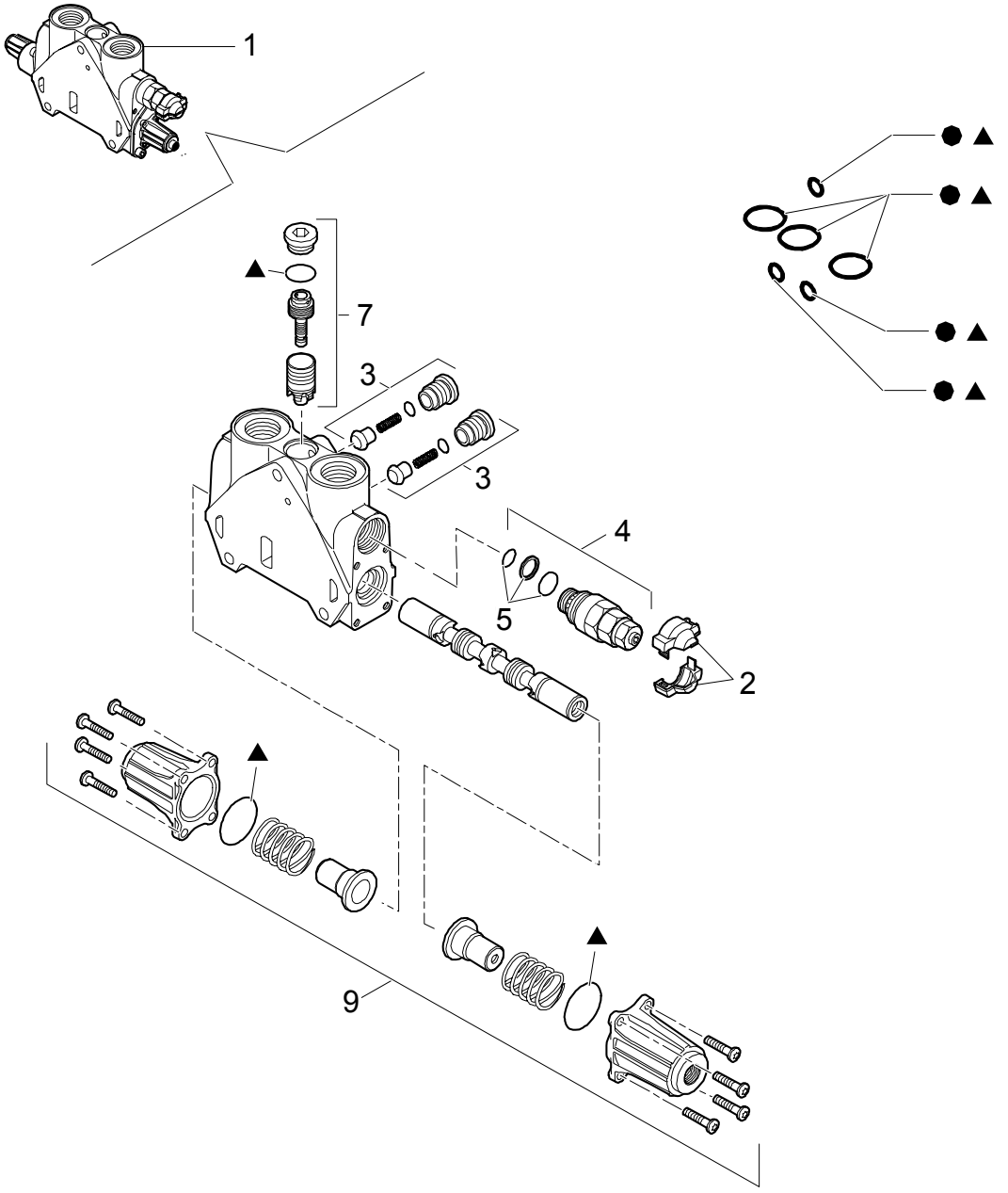

7-SECTIONS EXCAVATOR CONTROL VALVE (CENTER PIVOT) NORTH AMERICA

REF	FN	PART NUMBER	YR/SN	QTY	DESCRIPTION
1		85826904		1	SECTOR, TOOTHED
2		85811934		2	KIT
3		85811938		2	KIT
4	1, 2	85812113		2	VALVE, HYDRAULIC
5		85811933		1	KIT
6		85819148		1	KIT SEALS
7		85819378		1	KIT
8		85824281		1	KIT
9		{85826344}		1	KIT

(1) Includes 4
(2) 165 BAR

Pilot Control Version

LB75.B

333/1	03	p1	02/04

7-SECTIONS EXCAVATOR CONTROL VALVE (CENTER PIVOT) NORTH AMERICA

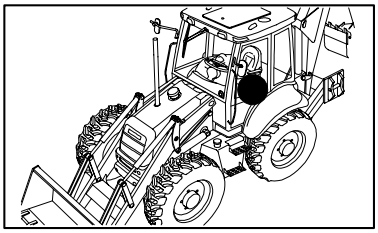

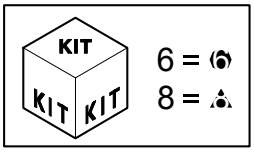

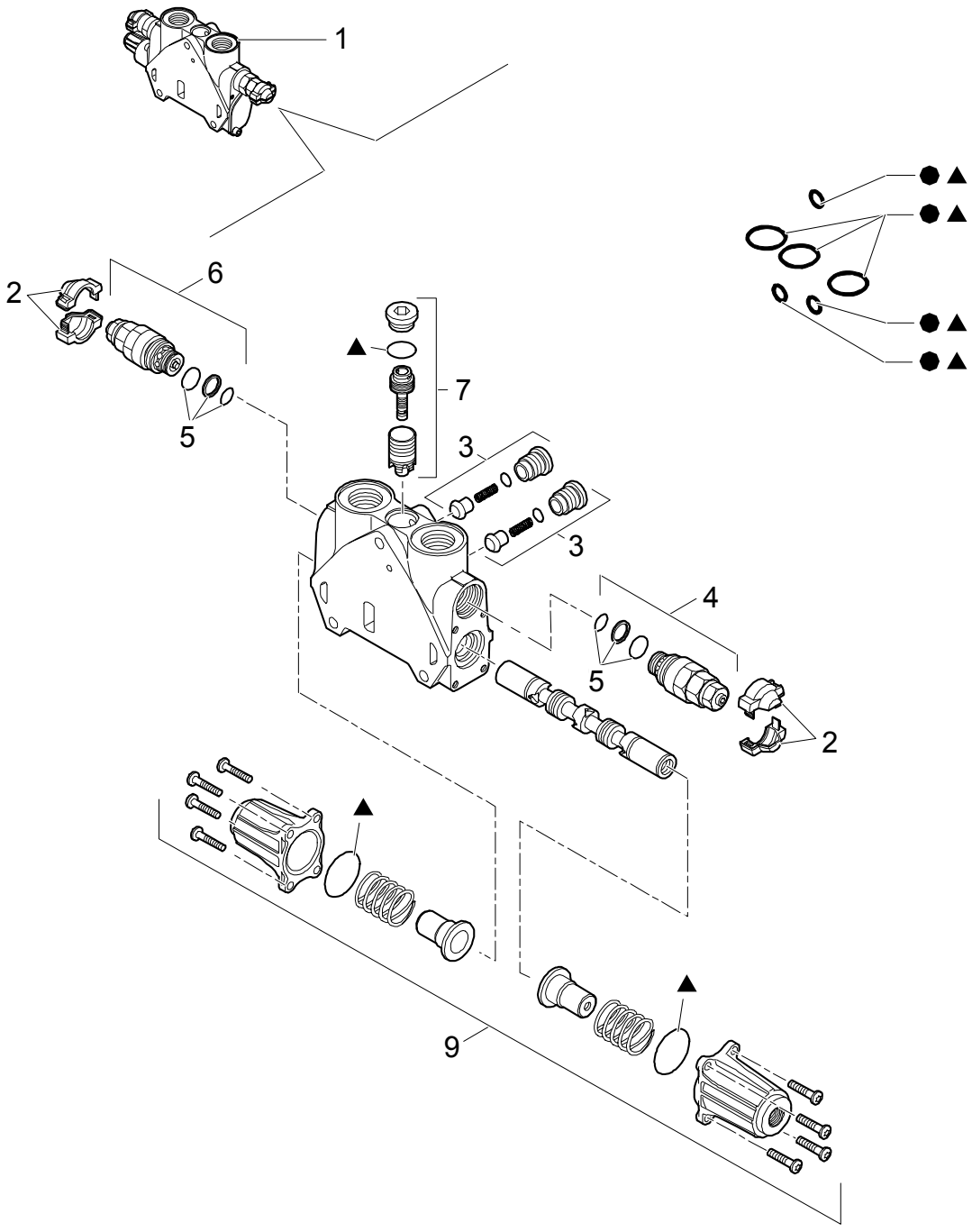

7-SECTIONS EXCAVATOR CONTROL VALVE (CENTER PIVOT) NORTH AMERICA

REF	FN	PART NUMBER	YR/SN	QTY	DESCRIPTION
1		85826901		1	SECTOR, TOOTHED
2		85811934		2	KIT
3		85811938		2	KIT
4	1, 2	85812116		1	VALVE, HYDRAULIC
5		85811933		1	KIT
6	1, 3	85812117		1	VALVE, HYDRAULIC
6		85819148		1	KIT
7		85819378		1	KIT
8		85824281		1	KIT
9		{85826344}		1	KIT

(1) Includes 5
(2) 240 BAR
(3) 315 BAR

333/1	04	p1	02/04

7-SECTIONS EXCAVATOR CONTROL VALVE (CENTER PIVOT) NORTH AMERICA

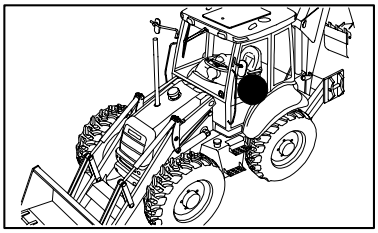

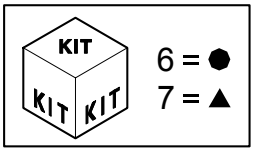

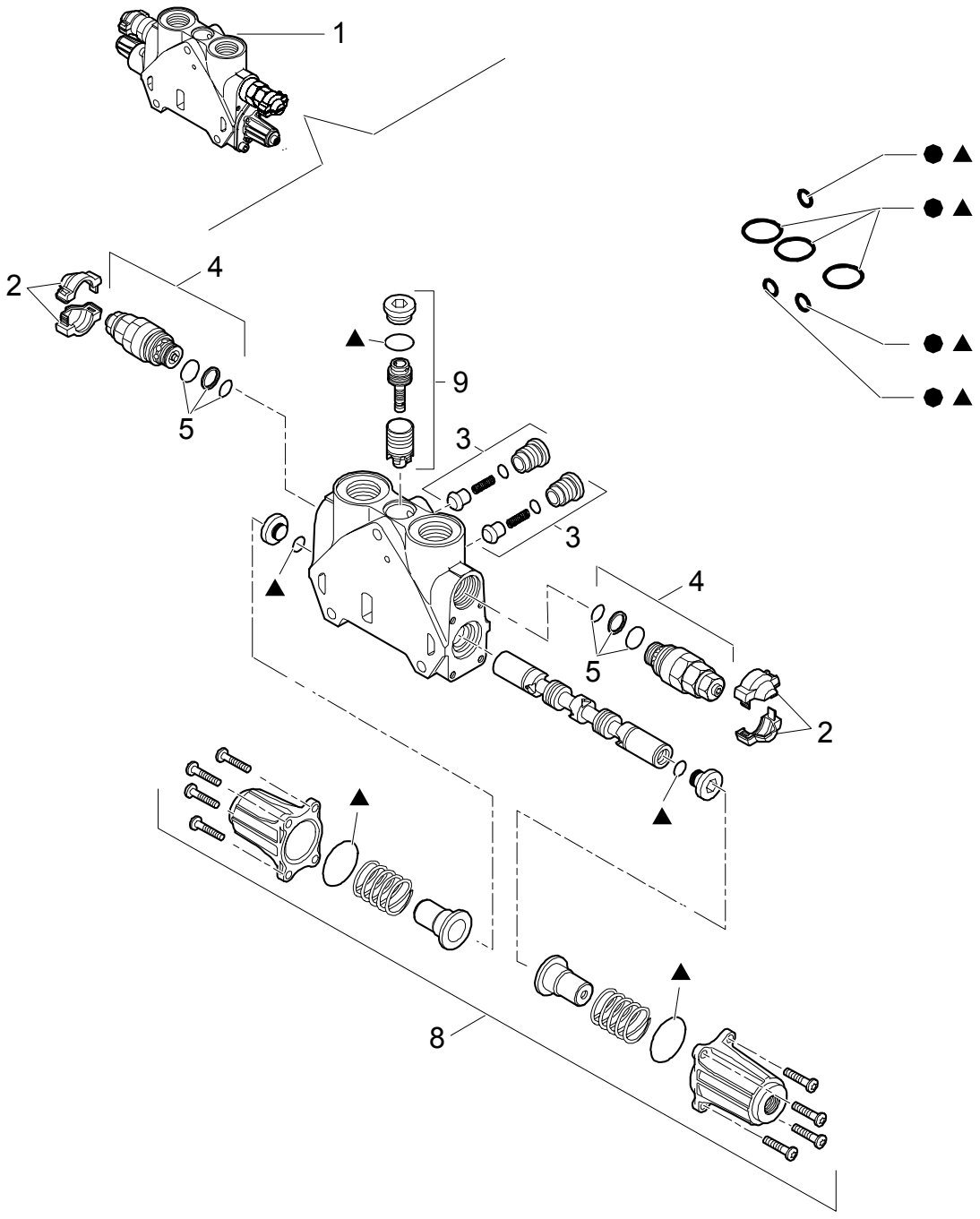

7-SECTIONS EXCAVATOR CONTROL VALVE (CENTER PIVOT) NORTH AMERICA

REF	FN	PART NUMBER	YR/SN	QTY	DESCRIPTION
1		{85826339}		1	SECTOR, TOOTHED
2		85811934		2	KIT
3		85811938		2	KIT
4	1, 2	85812114		2	VALVE, HYDRAULIC
5		85811933		2	KIT
6		85819148		1	KIT SEALS
7		85824282		1	KIT
8		{85826344}		1	KIT
9		85826345		1	KIT

(1) Includes 5
(2) 205 BAR

333/1	05	p1	02/04

7-SECTIONS EXCAVATOR CONTROL VALVE (CENTER PIVOT) NORTH AMERICA

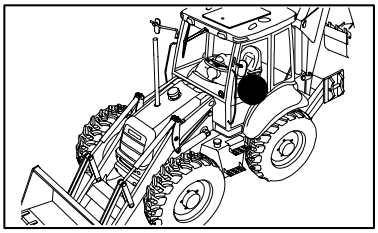

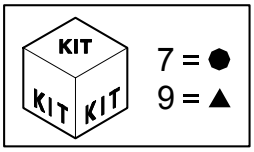

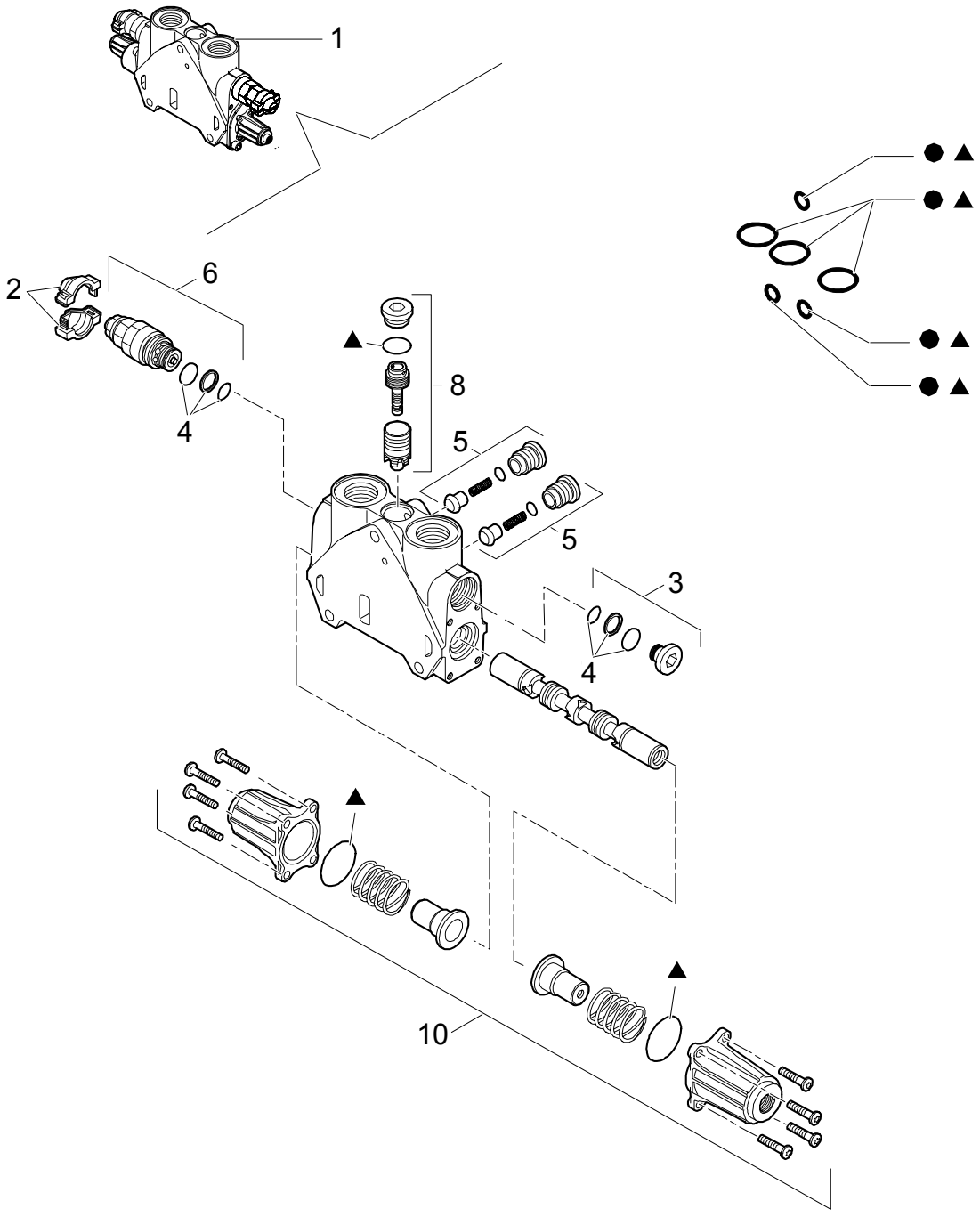

7-SECTIONS EXCAVATOR CONTROL VALVE (CENTER PIVOT) NORTH AMERICA

REF	FN	PART NUMBER	YR/SN	QTY	DESCRIPTION
1		85826903		1	SECTOR, TOOTHED
2		85811934		1	KIT
3	1, 2	85811937		1	PLUG
4		85811933		1	KIT
5		85811938		2	KIT
6	1, 2	85812115		1	VALVE, HYDRAULIC
7		85819148		1	KIT
8		85819378		1	KIT
9		85824281		1	KIT
10		{85826344}		1	KIT

(1) Includes 4
(2) 220 BAR

Pilot Control Version

LB75.B

333/1	06	p1	02/04

7-SECTIONS EXCAVATOR CONTROL VALVE (CENTER PIVOT) NORTH AMERICA

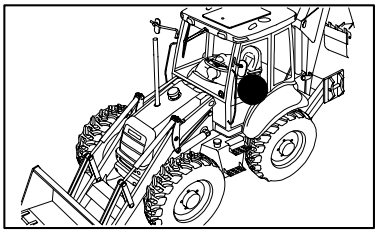

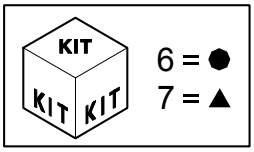

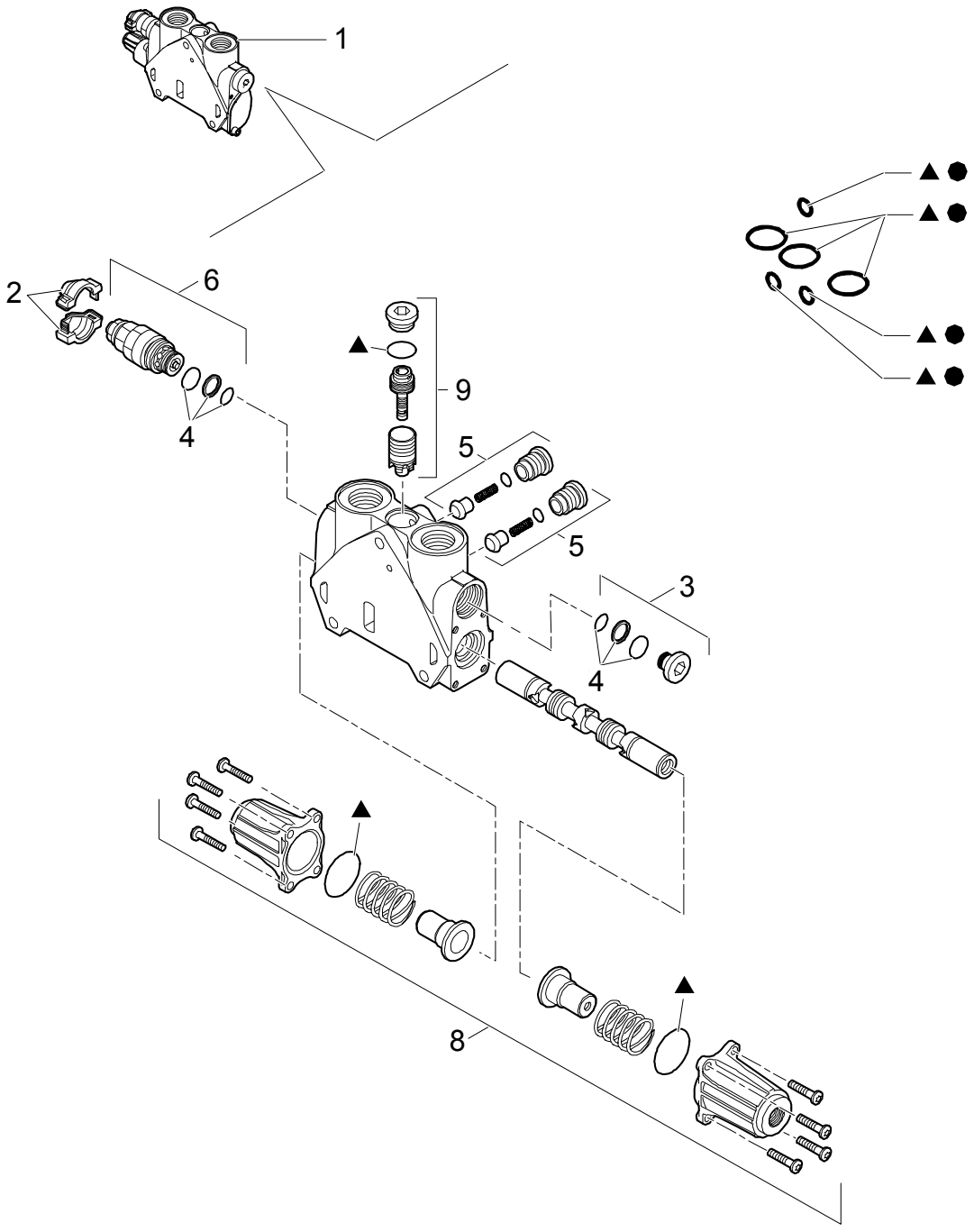

7-SECTIONS EXCAVATOR CONTROL VALVE (CENTER PIVOT) NORTH AMERICA

REF	FN	PART NUMBER	YR/SN	QTY	DESCRIPTION
1		85826902		1	SECTOR, TOOTHED
2		85811934		1	KIT
3	1, 2	85811937		1	PLUG
4		85811933		1	KIT
5		85811938		2	KIT
6	1, 2	85812116		1	VALVE, HYDRAULIC
6		85819148		1	KIT
7		85824281		1	KIT
8		{85826344}		1	KIT
9		85826345		1	KIT

(1) Includes 4
(2) 240 BAR

333/1	07	p1	02/04

7-SECTIONS EXCAVATOR CONTROL VALVE (CENTER PIVOT) NORTH AMERICA

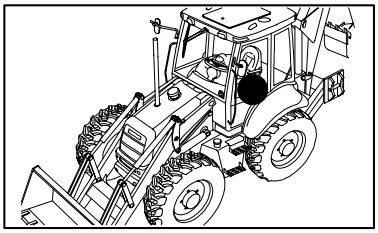

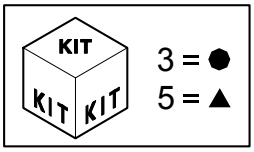

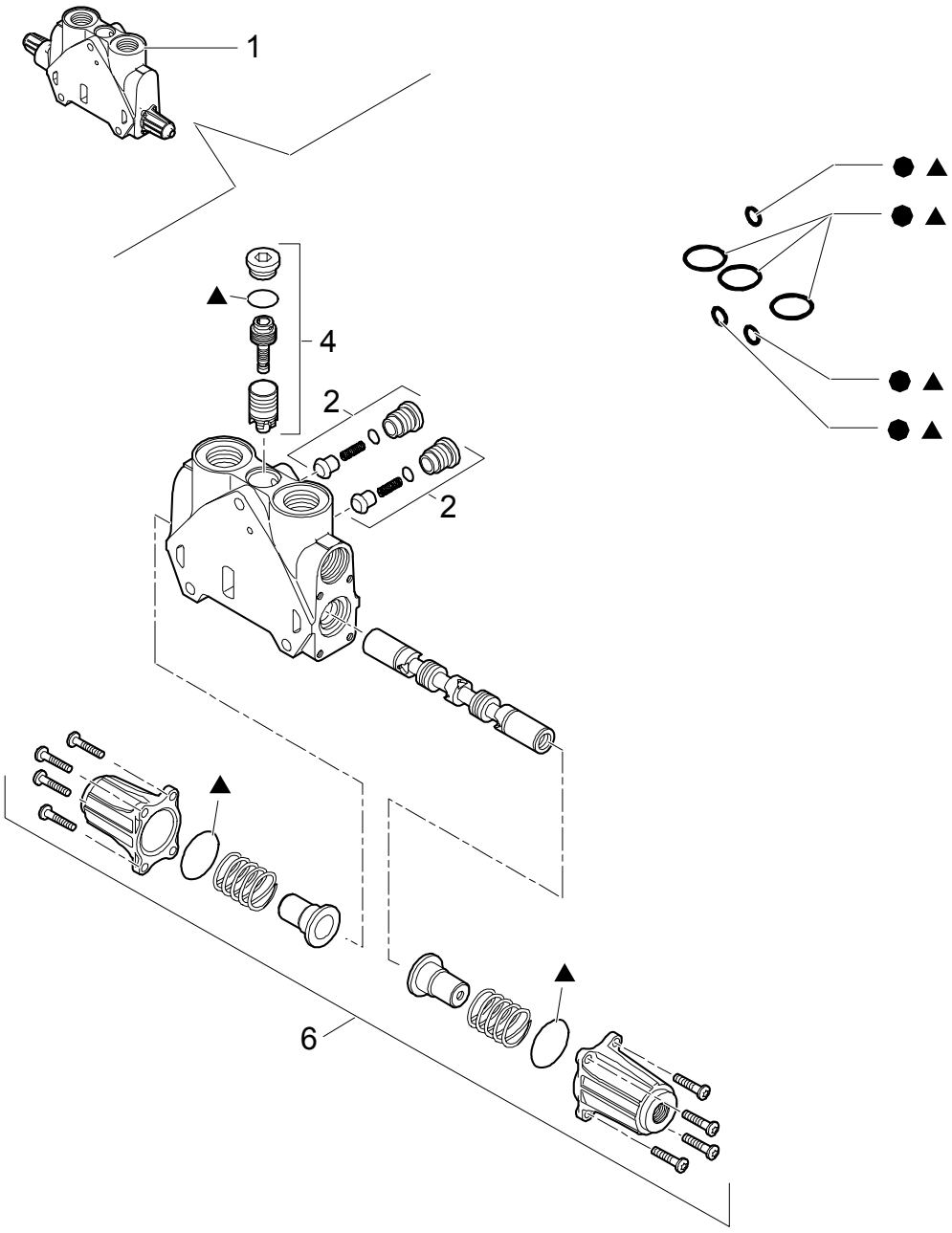

7-SECTIONS EXCAVATOR CONTROL VALVE (CENTER PIVOT) NORTH AMERICA

REF	FN	PART NUMBER	YR/SN	QTY	DESCRIPTION
1		{85826340}		2	SECTOR, TOOTHED
2		85811938		2	KIT
3		85819148		1	KIT SEALS
4		85819378		1	KIT
5		85824281		1	KIT
6		{85826344}		1	KIT

Pilot Control Version

LB75.B

333/A	02	p1	02/04

7 SECTION PILOT CONTROL VALVE SUPPORT,COMPLETE

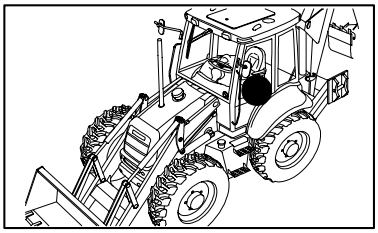

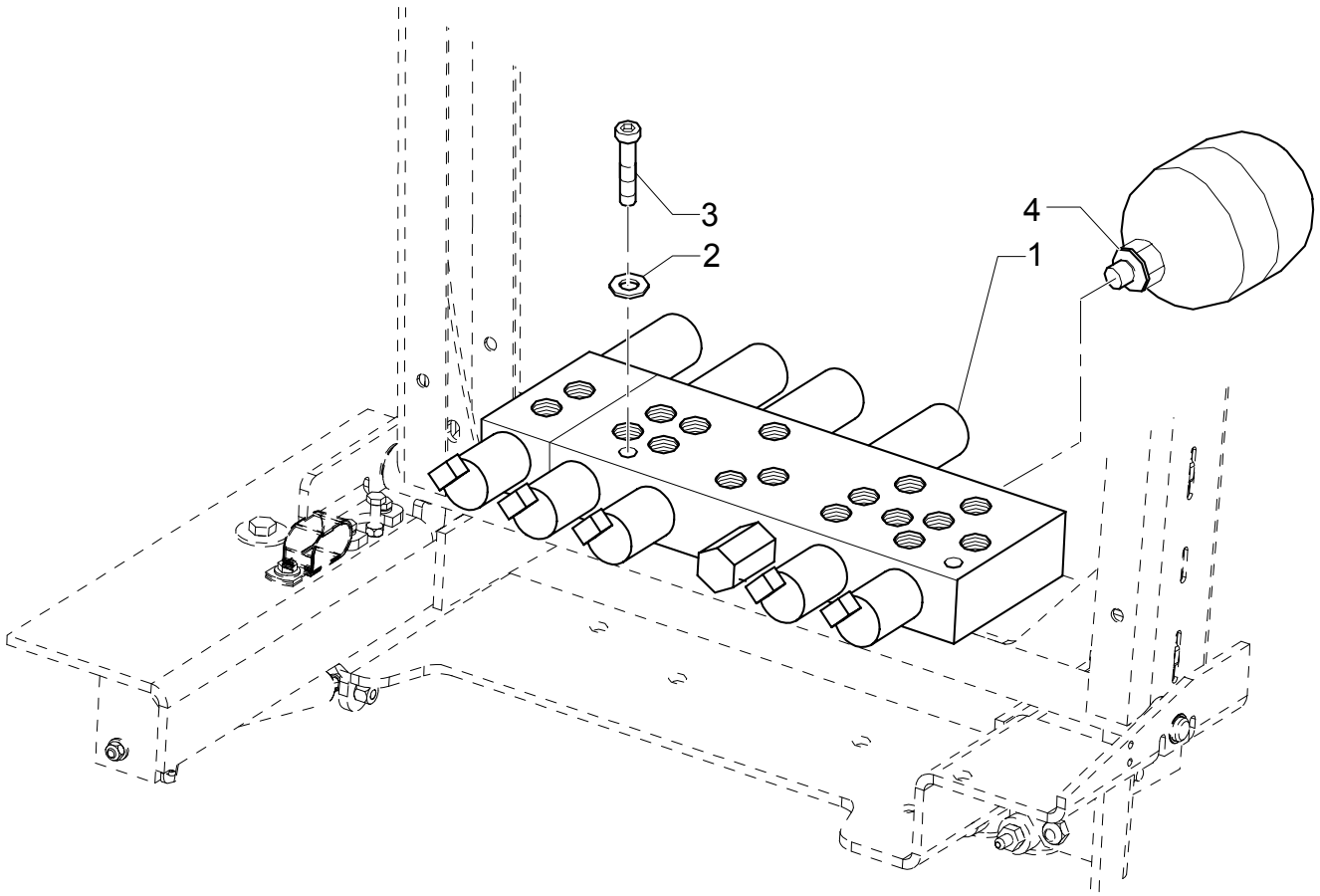

7 SECTION PILOT CONTROL VALVE SUPPORT,COMPLETE

REF	FN	PART NUMBER	YR/SN	QTY	DESCRIPTION
1		{85827471}		1	VALVE, HYDRAULIC
2		47048961		2	WASHER
3		47049078		2	SCREW M6x60
4		{87425225}		1	ACCUMULATOR

Pilot Control Version

LB75.B

333/A	03	p1	02/04

7 SECTION PILOT CONTROL VALVE SUPPORT,COMPLETE

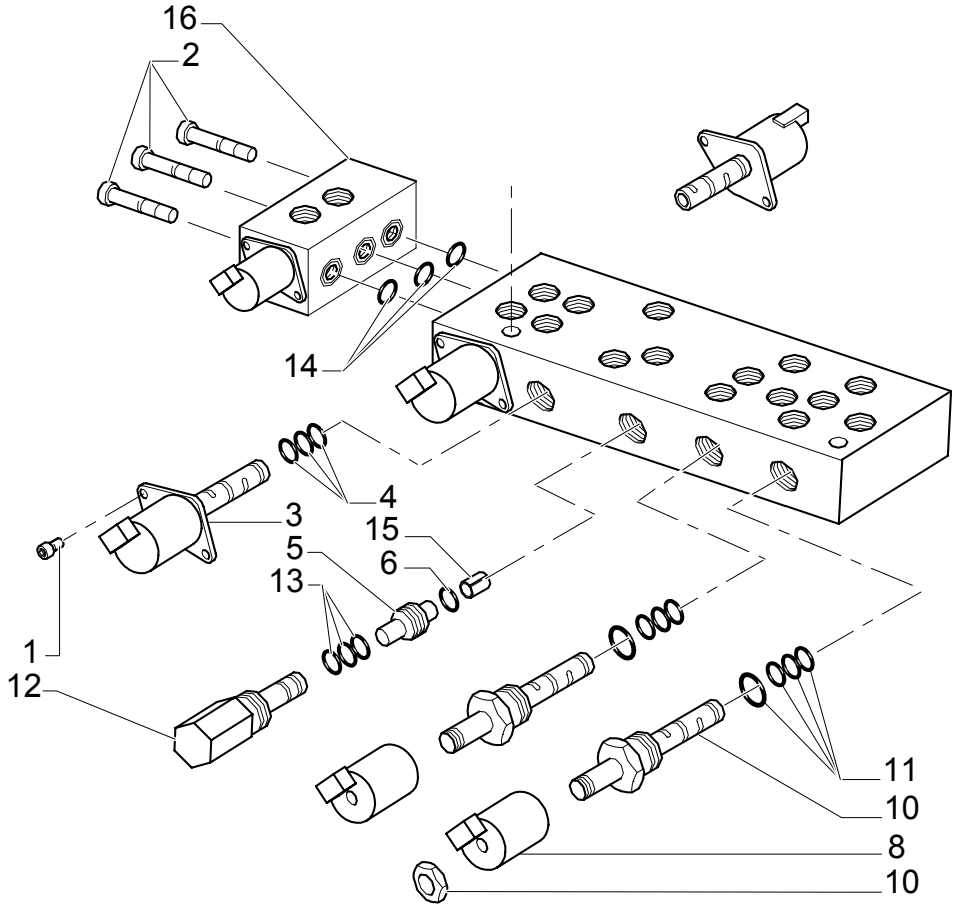

7 SECTION PILOT CONTROL VALVE SUPPORT,COMPLETE

REF	FN	PART NUMBER	YR/SN	QTY	DESCRIPTION
1		14302921		12	SCREW M4x10
2		14358921		3	SCREW M5x45
3		{85827993}		6	
4		{85828000}		1	
5		{85827992}		1	
6		{85828003}		1	
7		{85827994}		1	
8		{85827995}		3	
9		{85827998}		0	
10		{85827996}		2	
11		{85828002}		0	
12		{85827997}		1	
13		{85828001}		0	
14		{85827999}		0	
15		{85828005}		1	
16		{85828014}			
17		{85828013}		1	

Pilot Control Version

LB75.B

333/B	01	p1	03/04

7 SECTION PILOT CONTROL VALVE SUPPORT,COMPLETE

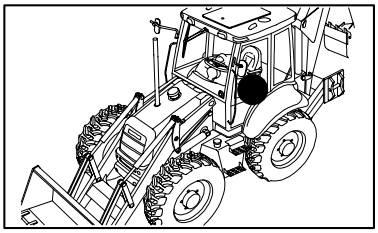

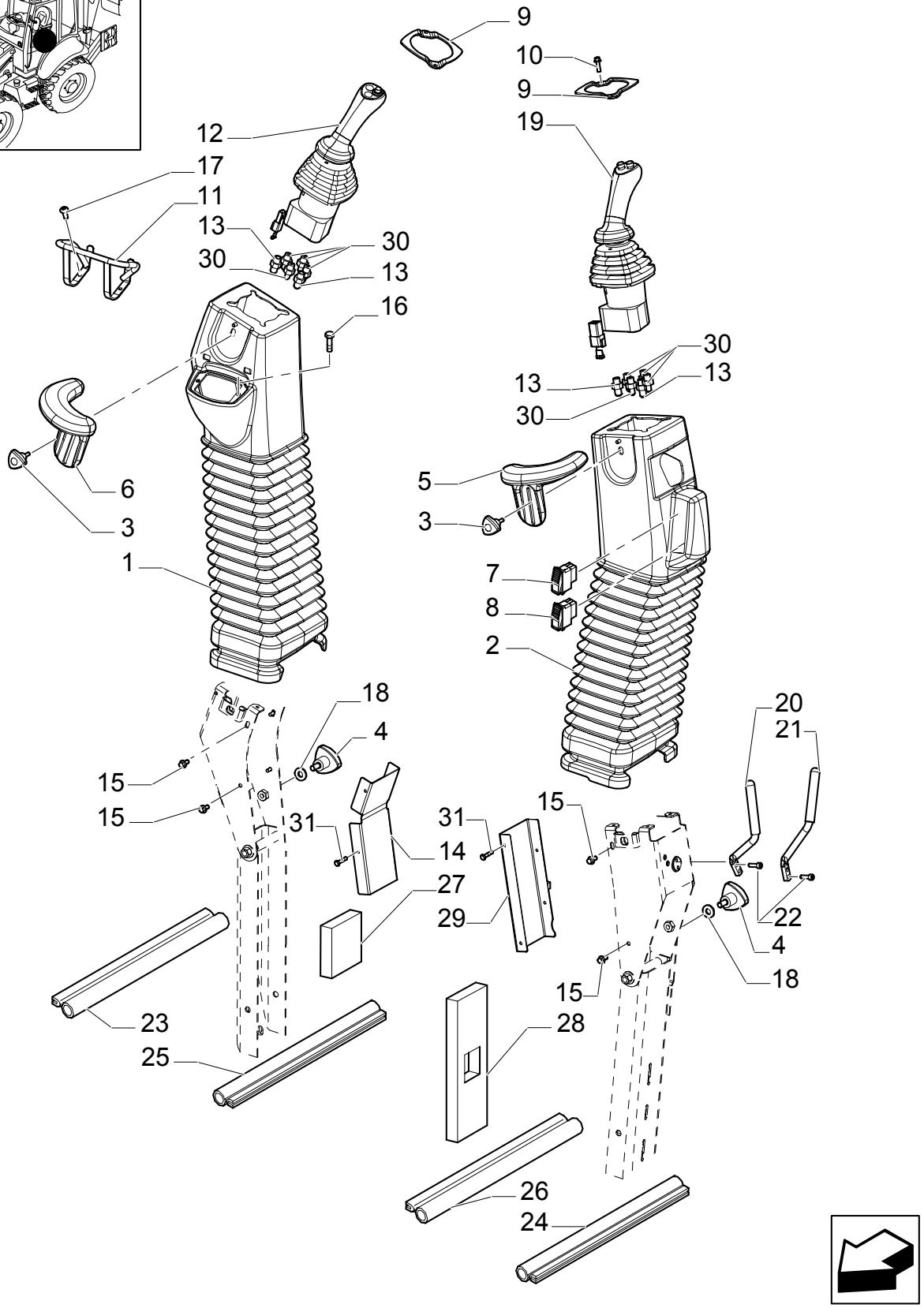

7 SECTION PILOT CONTROL VALVE SUPPORT,COMPLETE

REF	FN	PART NUMBER	YR/SN	QTY	DESCRIPTION
1		{87422675}		1	BELLOWS
2		{87422678}		1	BELLOWS
3		{87413734}		2	KNOB
4		{87437688}		2	KNOB
5		86992074		1	PIN, LOCK
6		86992077		1	STOP
7		{87423802}		1	SWITCH, ASSY
8		{87410105}		1	SWITCH
9		87435372		2	PLATE, MOUNTING
10		85821519		8	PIN, ROLL
11		{87436396}		1	GUARD
12		{87437736}		1	MANIPULATOR
13		47050686		4	CONNECTION, 3 WAY
14		{87431301}		1	GUARD
15		87016552		8	SCREW
16		{87022296}		8	SCREW M3 x 8
17		{85821534}		2	SCREW
18		47048971		2	WASHER M10
19		87437733		1	VALVE, CONTROL
20		{87418368}		1	ROD
21		{87418369}		1	ROD
22		85821513		4	SCREW M6 x 20
23		{87424301}		1	GASKET
24		{87427991}		1	GASKET
25		{87427989}		1	GASKET
26		{87427993}		1	GASKET
27		{87425696}		2	PANEL, INSULATING
28		{87425697}		2	PANEL, INSULATING
29		{87431300}		1	GUARD
30		85803312		8	CONNECTOR, HYD.
31		86625199		8	SCREW

Pilot Control Version

LB75.B

333/B	02	p1	11/03

7 SECTION PILOT CONTROL VALVE SUPPORT,COMPLETE (CENTER PIVOT) EUROPE

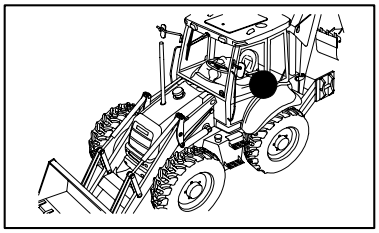

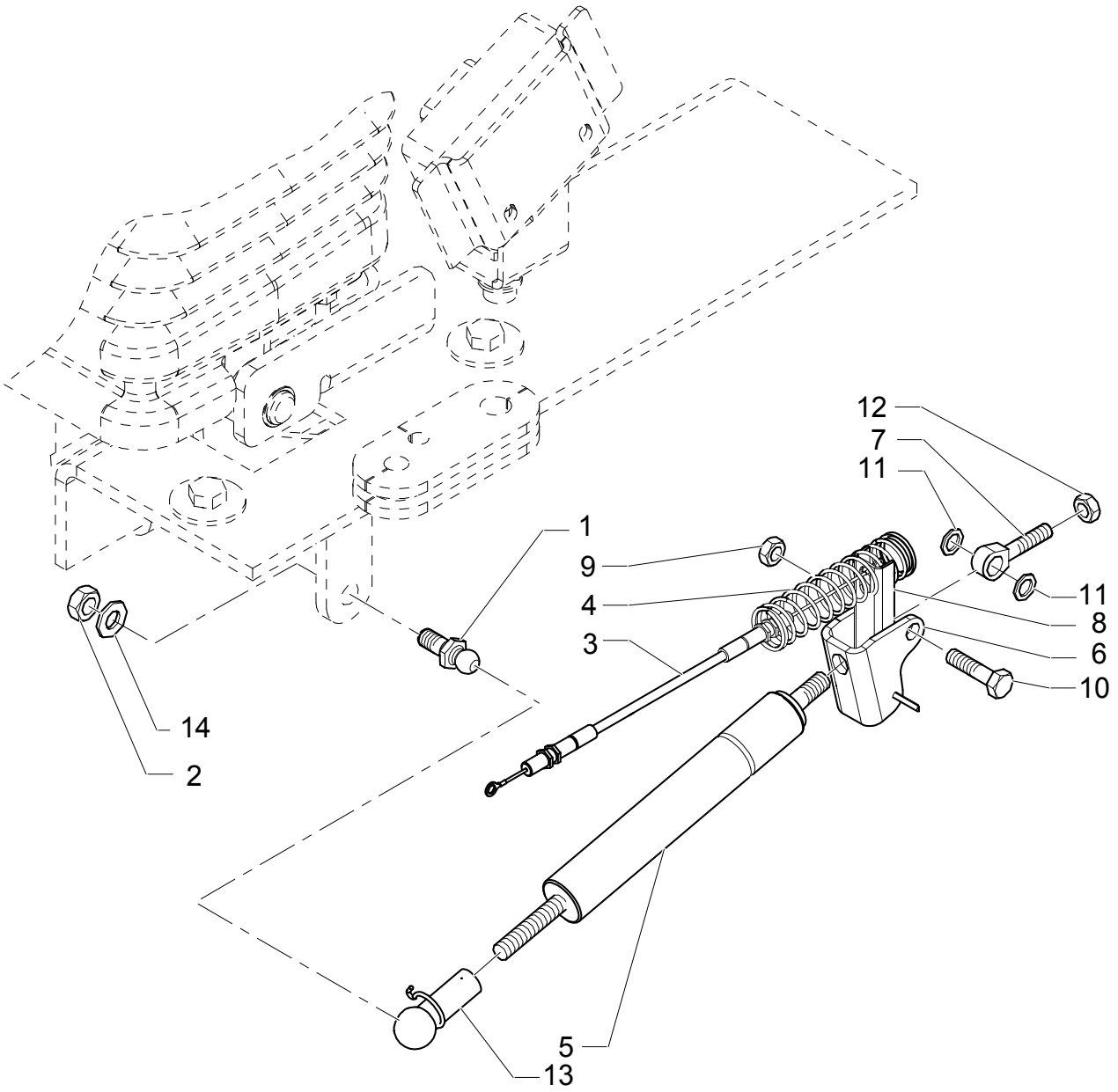

7 SECTION PILOT CONTROL VALVE SUPPORT,COMPLETE (CENTER PIVOT) EUROPE

REF	FN	PART NUMBER	YR/SN	QTY	DESCRIPTION
1		85824067		1	TRACK ROD END
2		47049041		1	NUT M10
3		87430028		1	CABLE
4		87405362		1	SPRING
5		86989616		1	GAS STRUT
6		85824080		1	BRACKET
7		85821514		2	PIN
7		85824081		1	BALL JOINT
8		86984549		1	EXTRUSION
9		85821515		1	BOLT
10		85821516		1	NUT
11		85821520		2	SPACER
12		47049442		2	NUT
13		{86999310}		1	CLIP
14		47049404		1	WASHER

333/B	03	p1	12/03

7 SECTION PILOT CONTROL VALVE SUPPORT,COMPLETE

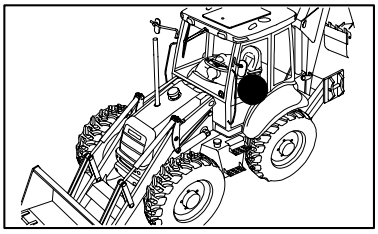

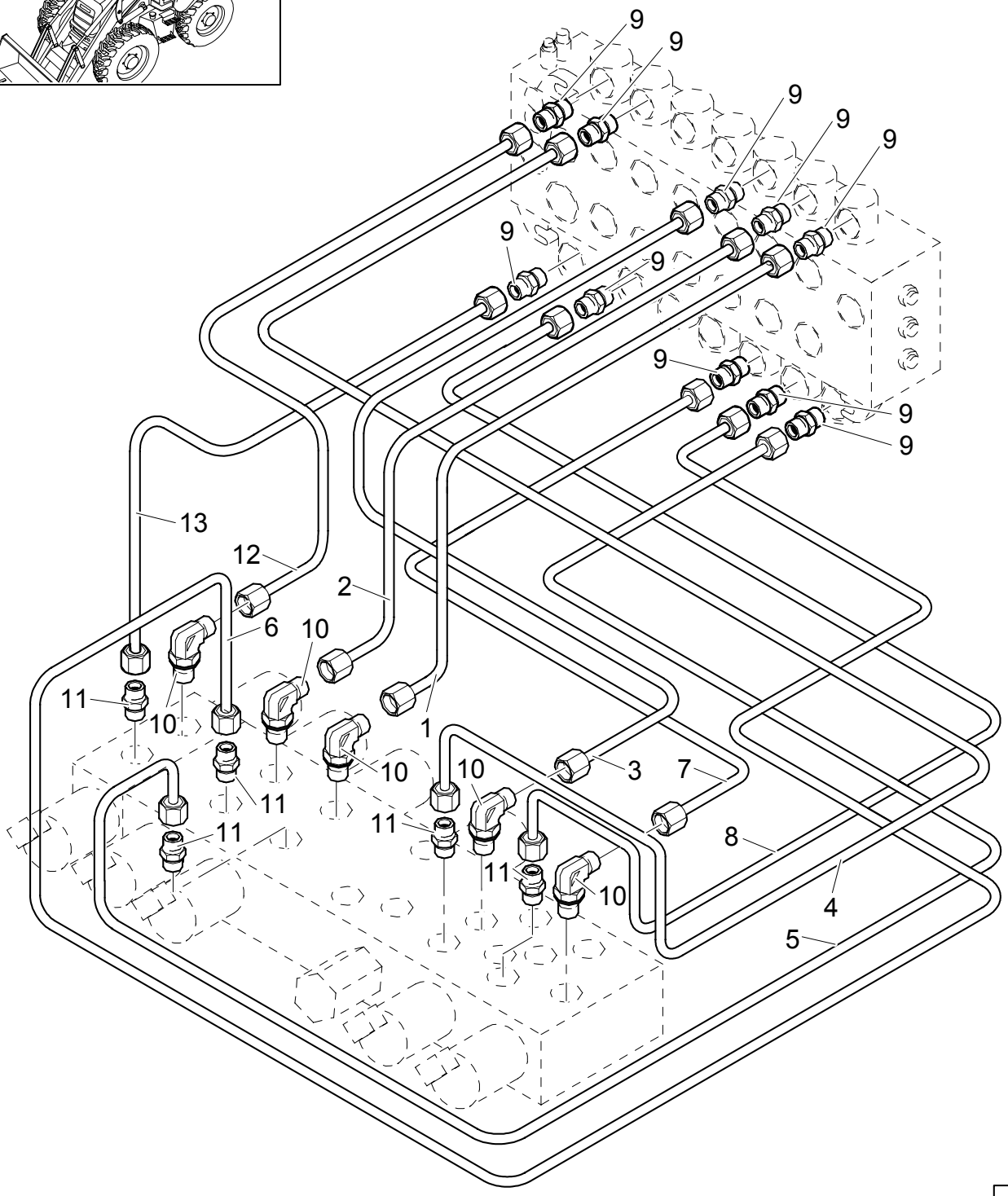

7 SECTION PILOT CONTROL VALVE SUPPORT,COMPLETE

REF	FN	PART NUMBER	YR/SN	QTY	DESCRIPTION
1		85827093		1	TUBE, RIGID
2		85827094		1	TUBE, RIGID
3		85827091		1	TUBE, RIGID
4		85827089		1	TUBE, RIGID
5		85827092		1	TUBE, RIGID
6		85827095		1	TUBE, RIGID
7		85827090		1	TUBE, RIGID
8		85827088		1	TUBE, RIGID
9		85803312		2	CONNECTOR, HYD.
9		85803312		8	CONNECTOR, HYD.
10		47050653		5	CONNECTION, 3 WAY
11		47050685		5	CONNECTION, 3 WAY
12		85827097		1	TUBE, RIGID
13		85827096		1	TUBE, RIGID

333/B	04	p1	12/03

7 SECTION PILOT CONTROL VALVE SUPPORT,COMPLETE

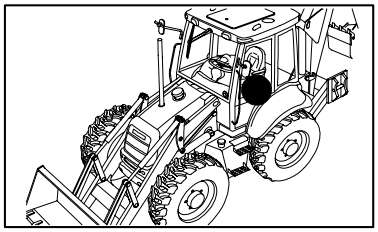

7 SECTION PILOT CONTROL VALVE SUPPORT,COMPLETE

REF	FN	PART NUMBER	YR/SN	QTY	DESCRIPTION
1		85827084		1	HOSE, FLEXIBLE
2		85827085		1	HOSE, FLEXIBLE
3		85827086		2	HOSE, FLEXIBLE
4		85827077		1	HOSE, FLEXIBLE
5		85827087		1	HOSE, FLEXIBLE
6		85827082		2	HOSE, FLEXIBLE
7		85827467		1	CONNECTOR, HYD.
8		85827466		2	CONNECTOR, HYD.
9		85827076		2	HOSE, FLEXIBLE
10		85827080		2	HOSE, FLEXIBLE
11		85827078		1	HOSE, FLEXIBLE
12		47120173		2	CONNECTION, 3 WAY
13		47050686		3	CONNECTION, 3 WAY
14		47050653		3	CONNECTION, 3 WAY
15		85803312		4	CONNECTOR, HYD.

333/B	05	p1	12/03

7 SECTION PILOT CONTROL VALVE SUPPORT,COMPLETE

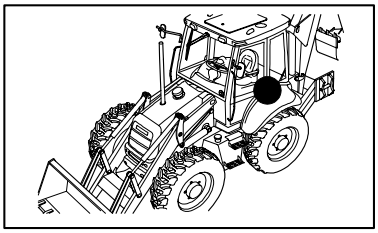

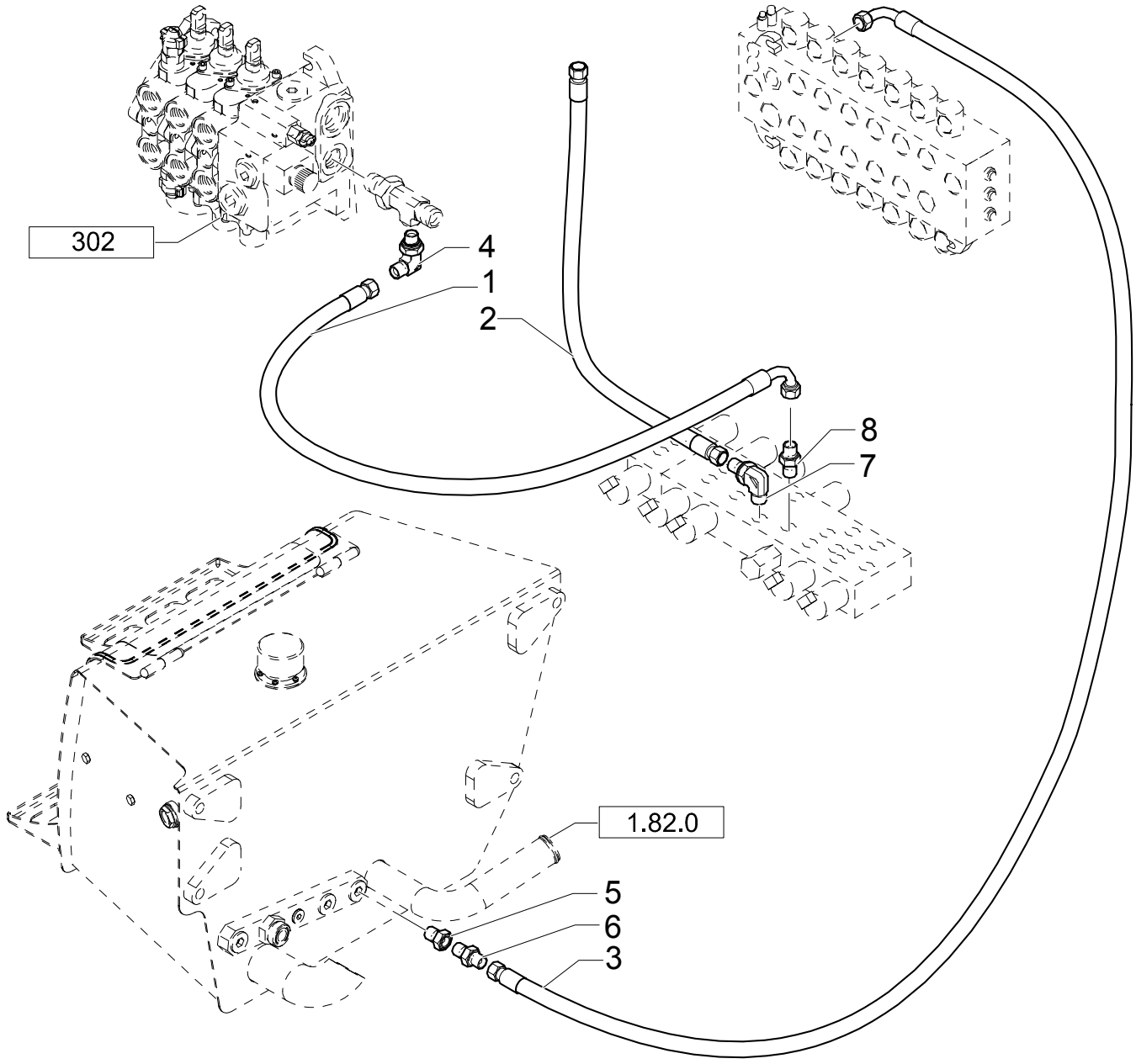

7 SECTION PILOT CONTROL VALVE SUPPORT,COMPLETE

REF	FN	PART NUMBER	YR/SN	QTY	DESCRIPTION
1		85827476		1	HOSE, FLEXIBLE
2		85827477		1	HOSE, FLEXIBLE
3		85827475		1	HOSE, FLEXIBLE
4		85805318		1	ELBOW
5		{85826100}		1	GEAR REDUCTION UNIT
6		47050686		1	CONNECTION, 3 WAY
7		83961741		1	ELBOW
8		83963371		1	CONNECTOR, HYD.

333/B	06	p1	12/03

7 SECTION PILOT CONTROL VALVE SUPPORT,COMPLETE (CENTER PIVOT) EUROPE

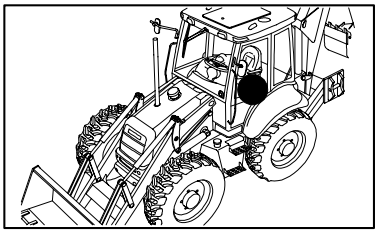

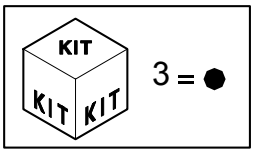

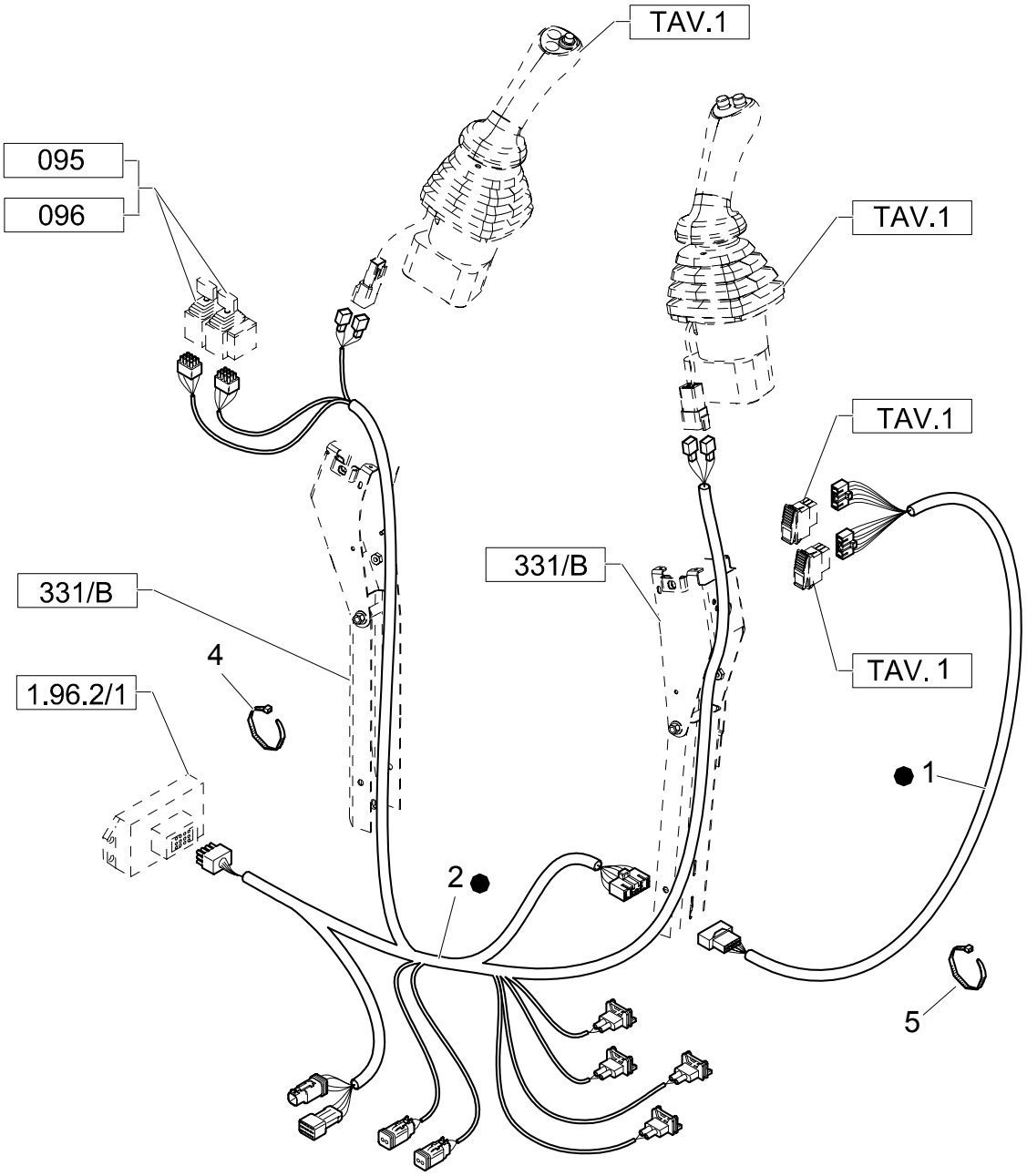

7 SECTION PILOT CONTROL VALVE SUPPORT,COMPLETE (CENTER PIVOT) EUROPE

REF	FN	PART NUMBER	YR/SN	QTY	DESCRIPTION
1		NSS		1	NOT SERVICED SEPARATELY
2		NSS		1	NOT SERVICED SEPARATELY
3	1	85827518		1	CABLE, ELECTRIC
4		14560187		6	COLLAR
5		386170C1		4	STRAP

(1) Includes 1, 2

333/B	07	p1	10/03

7 SECTION PILOT CONTROL VALVE SUPPORT,COMPLETE (CENTER PIVOT) EUROPE

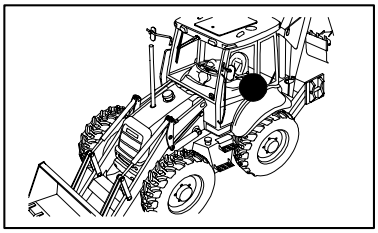

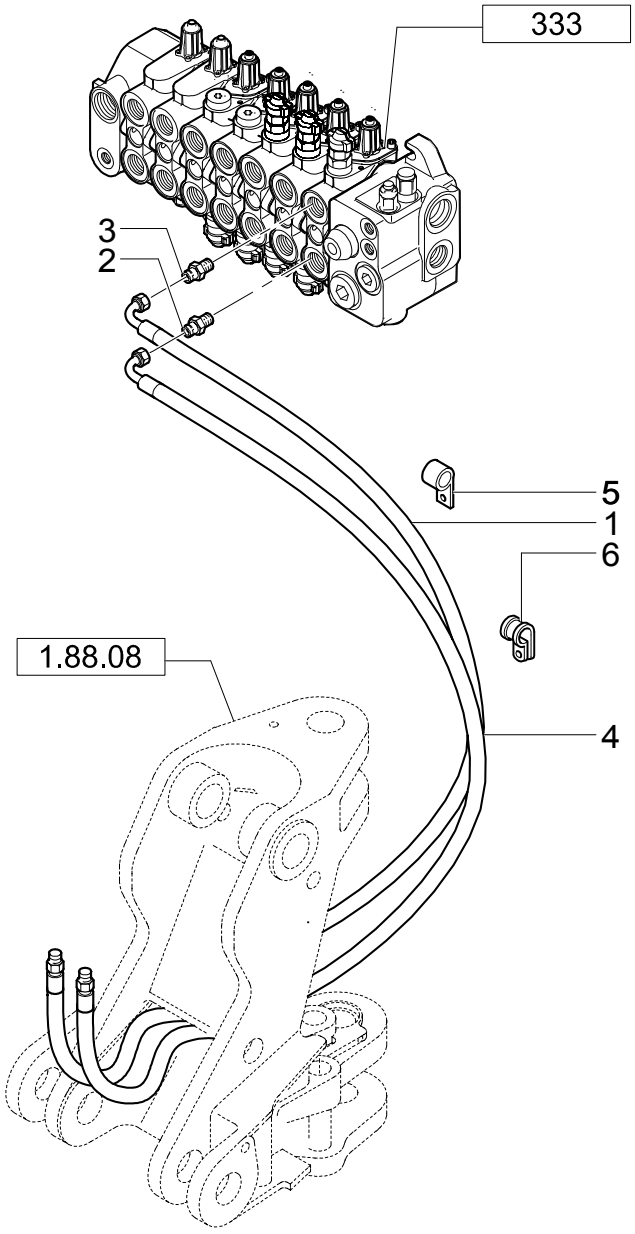

7 SECTION PILOT CONTROL VALVE SUPPORT,COMPLETE (CENTER PIVOT) EUROPE

REF	FN	PART NUMBER	YR/SN	QTY	DESCRIPTION
1		85812192		1	HOSE, FLEXIBLE
2		85805258		1	CONNECTOR, HYD.
3		83962539		1	CONNECTOR, HYD.
4		85812211		1	HOSE, FLEXIBLE
5		85803393		2	COLLAR, RETAINER
6		85812029		4	COLLAR, RETAINER

333/B	08	p1	12/03

7 SECTION PILOT CONTROL VALVE SUPPORT,COMPLETE

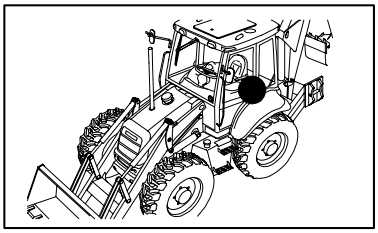

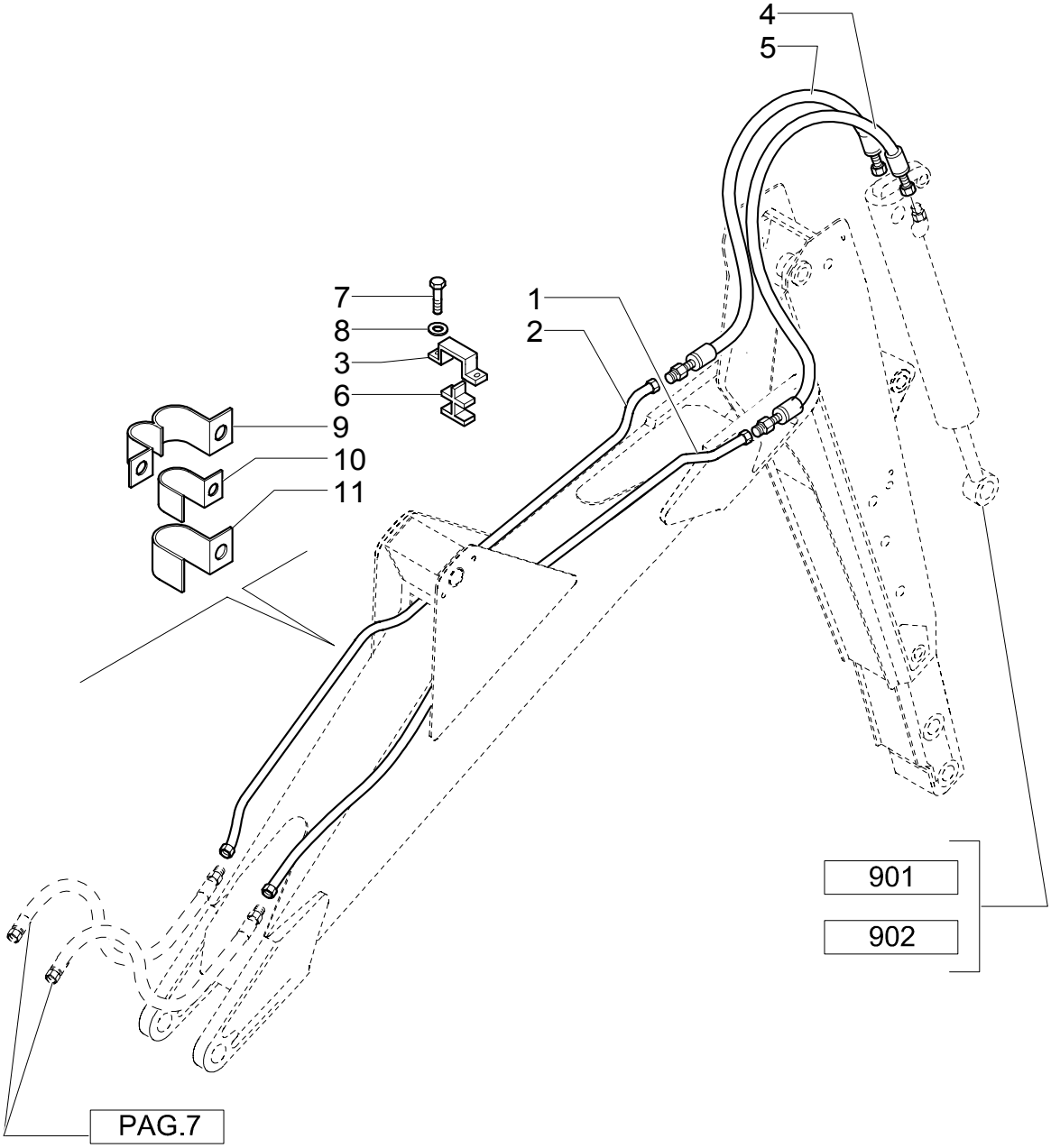

7 SECTION PILOT CONTROL VALVE SUPPORT,COMPLETE

REF	FN	PART NUMBER	YR/SN	QTY	DESCRIPTION
1		85815642		1	TUBE, RIGID
2		85815640		1	TUBE, RIGID
3		85803402		1	PLATE
4		85817109		1	HOSE, FLEXIBLE
5		85817108		1	HOSE, FLEXIBLE
6		85802532		1	CLIP, HOSE
7		16043621		2	SCREW
8		11193879		2	WASHER, LOCK
9		85802529		2	CLIP
10		85802527		2	CLIP
11		85802528		2	CLIP

Pilot Control Version

LB75.B

333/B	09	p1	10/03

7 SECTION PILOT CONTROL VALVE SUPPORT,COMPLETE (CENTER PIVOT) EUROPE

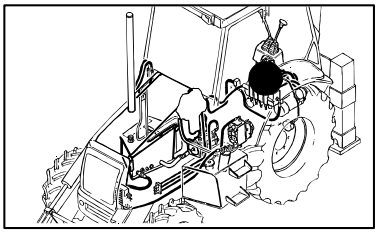

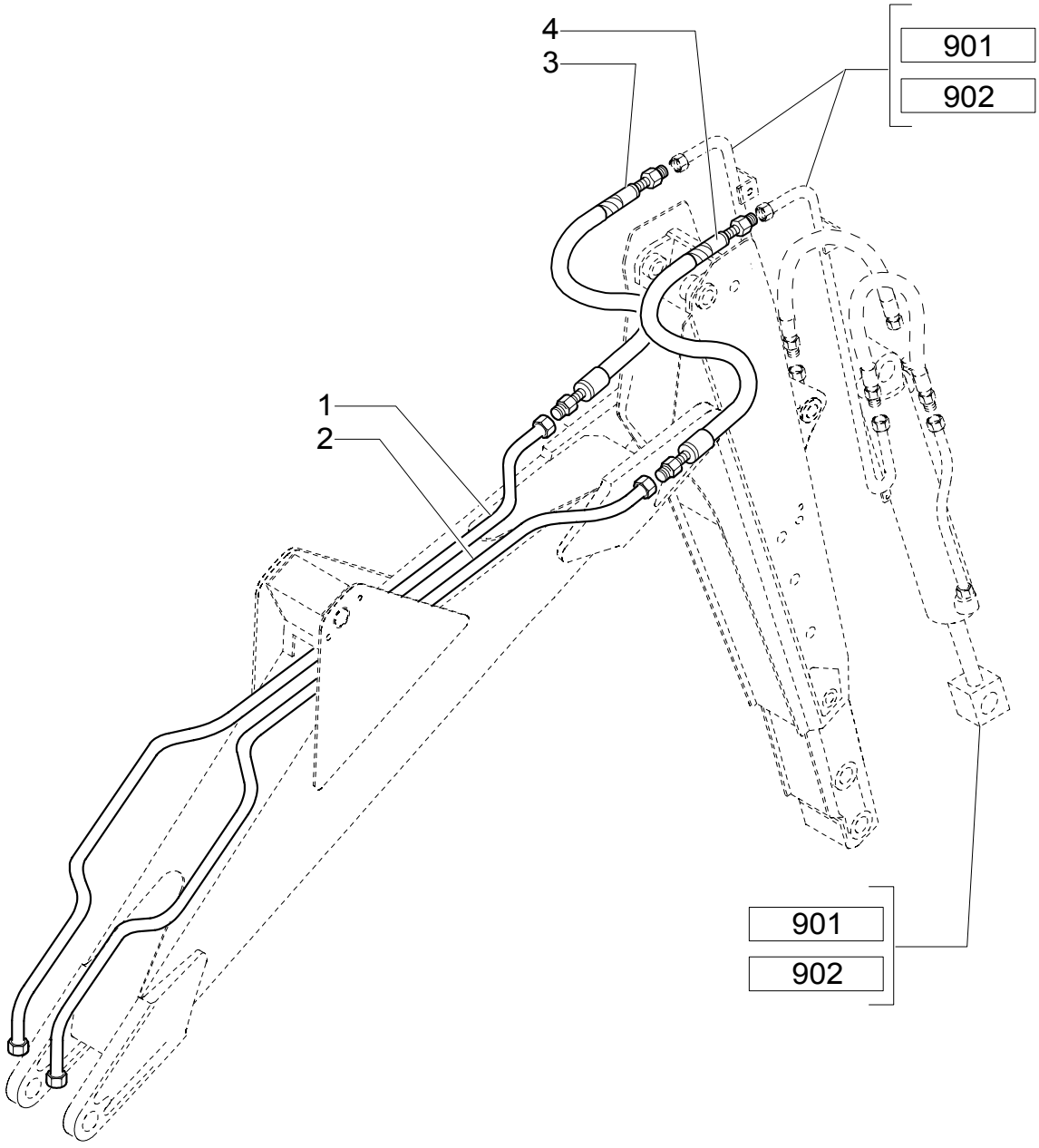

7 SECTION PILOT CONTROL VALVE SUPPORT,COMPLETE (CENTER PIVOT) EUROPE

REF	FN	PART NUMBER	YR/SN	QTY	DESCRIPTION
1		85815674		1	TUBE, RIGID
2		85815676		1	TUBE, RIGID
3		85817106		1	HOSE, FLEXIBLE
4		85817107		1	HOSE, FLEXIBLE

334	09	p1	11/03

7-SECTIONS EXCAVATOR CONTROL VALVE

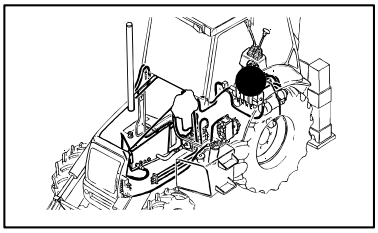

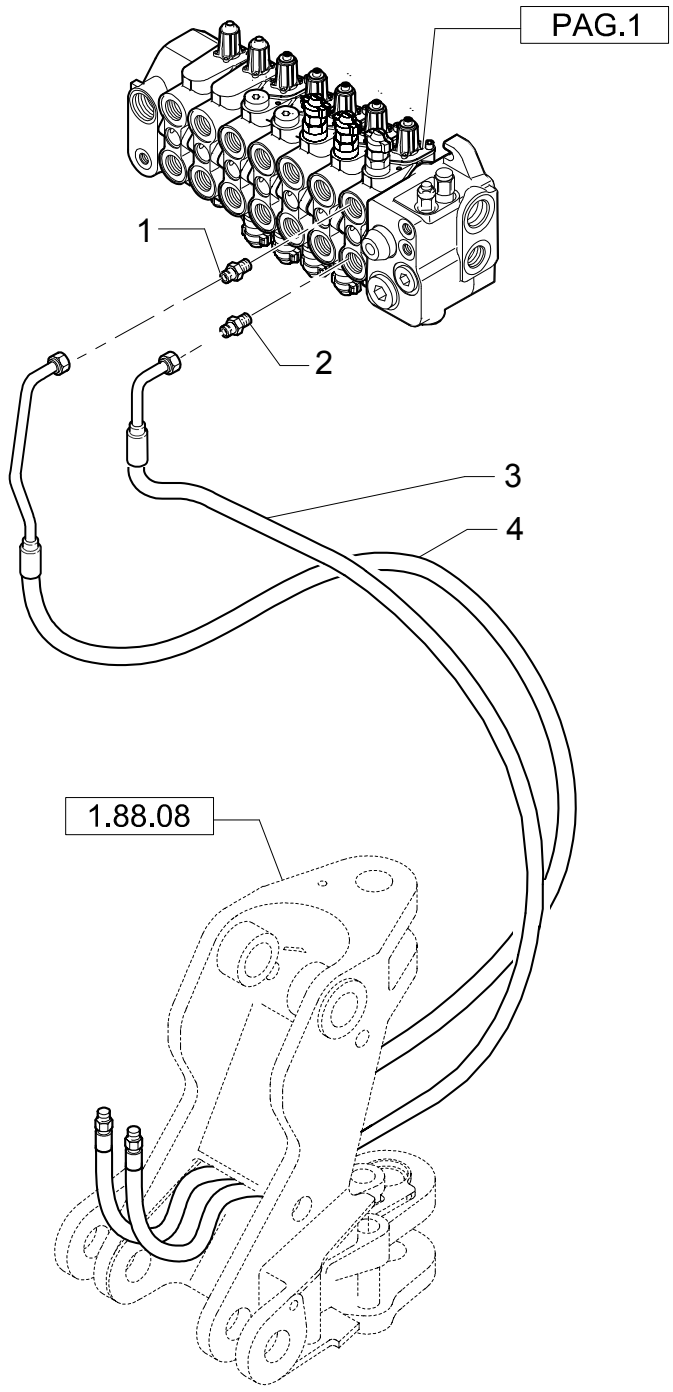

7-SECTIONS EXCAVATOR CONTROL VALVE

REF	FN	PART NUMBER	YR/SN	QTY	DESCRIPTION
1		83962539		1	CONNECTOR, HYD.
2		85805258		1	CONNECTOR, HYD.
3		85819067		1	TUBE, RIGID
4		85819066		1	TUBE, RIGID

334	11	p1	11/03

7-SECTIONS EXCAVATOR CONTROL VALVE

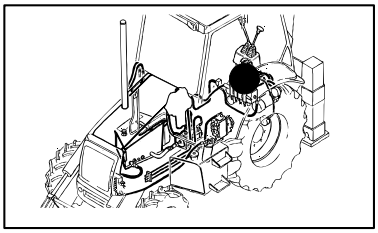

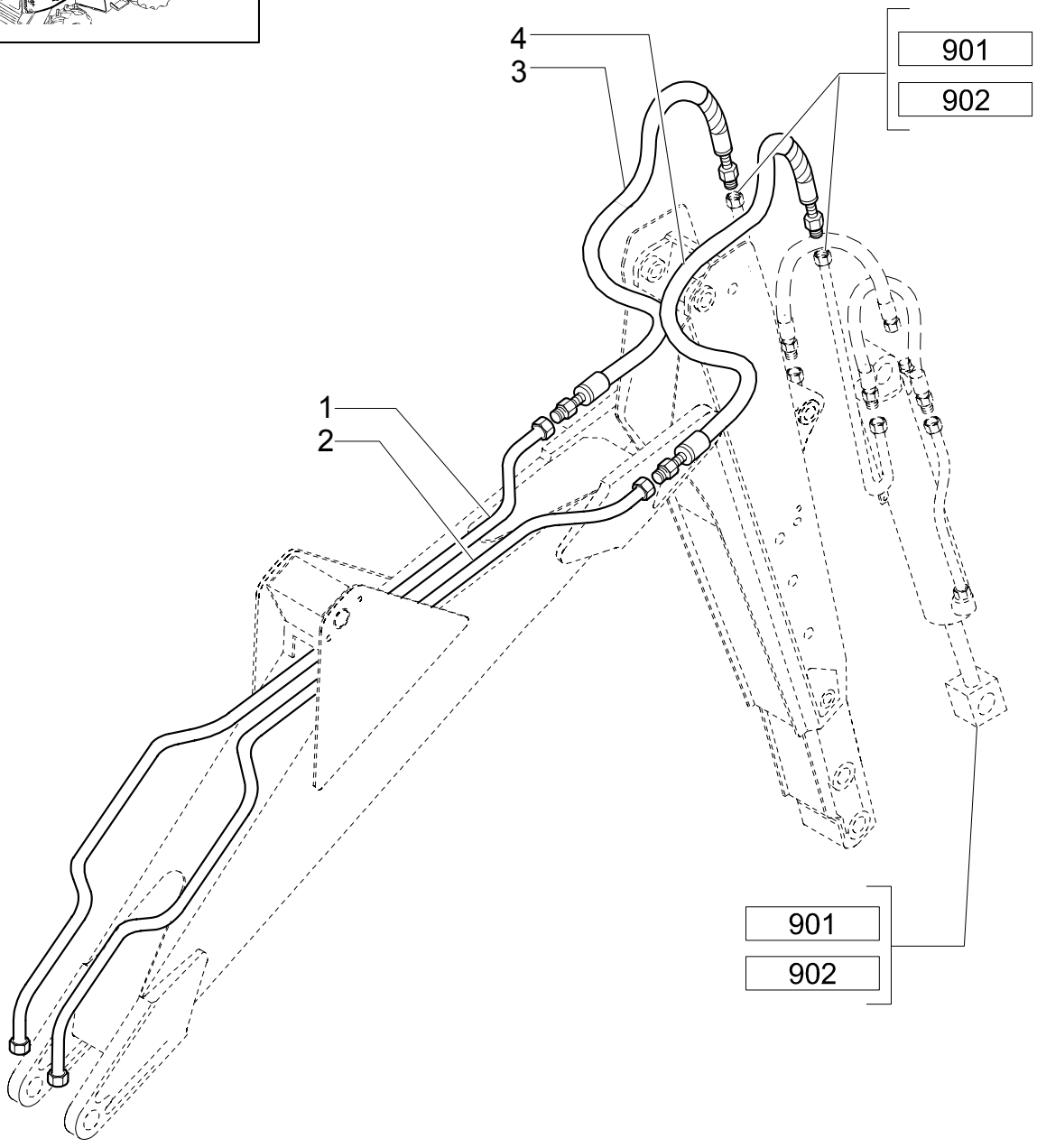

7-SECTIONS EXCAVATOR CONTROL VALVE

REF	FN	PART NUMBER	YR/SN	QTY	DESCRIPTION
1		85815674		1	TUBE, RIGID
2		85815676		1	TUBE, RIGID
3	1	85817106		1	HOSE, FLEXIBLE
3A		9991976		2	O-RING
4	2	85817107		1	HOSE, FLEXIBLE
4A		9992069		2	O-RING

(1) Includes 3A
(2) Includes 4A

336/ A	01	p1	04/03

THREE-SECTION CONTROL VALVE FOR LOADER(CENTER PIVOT)

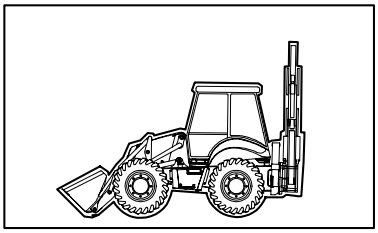

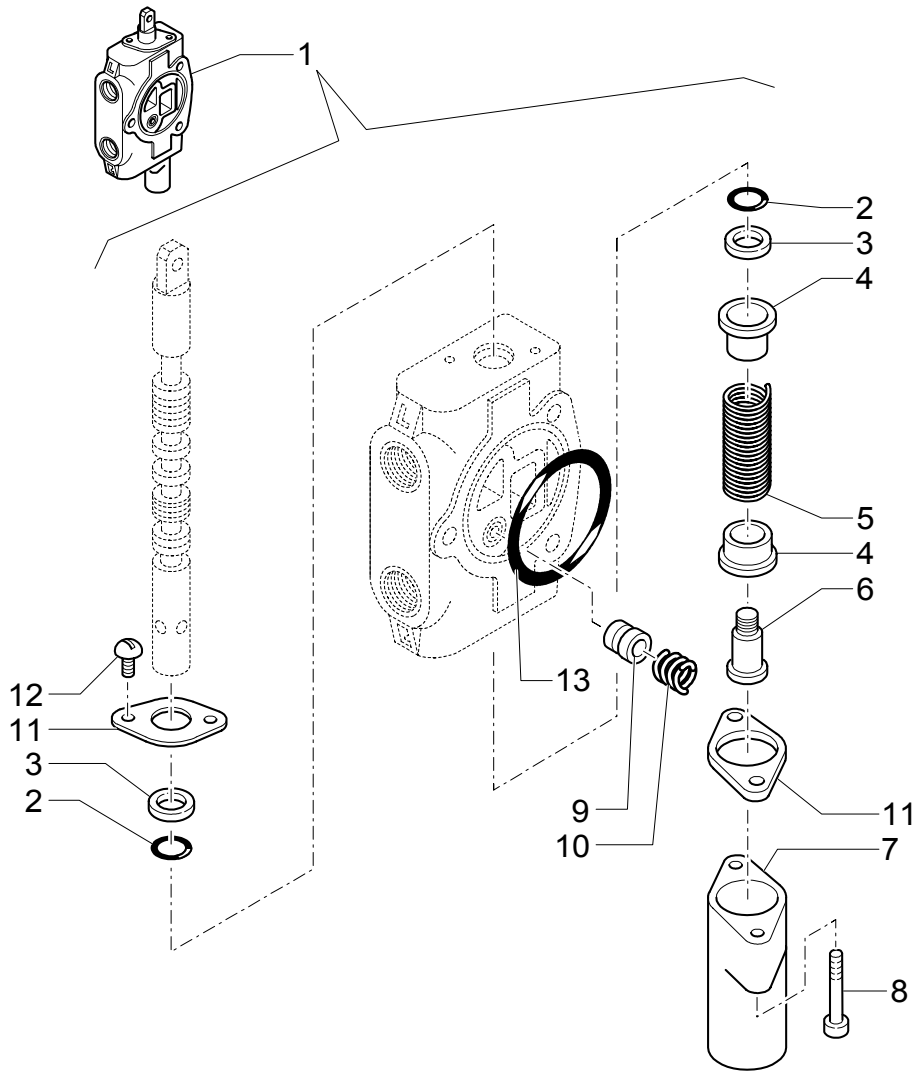

THREE-SECTION CONTROL VALVE FOR LOADER(CENTER PIVOT)

REF	FN	PART NUMBER	YR/SN	QTY	DESCRIPTION
1		85808402		1	ELEMENT, JOINING ASSY
2		85813418		2	GASKET
3		85813419		2	RING, OIL SCRAPER
4		9968481		2	SEAT/SLOT
5		85808401		1	SPRING
6		9968483		1	SCREW
7		9968484		1	COVER
8		9968486		2	SCREW
9		9968477		1	PLUNGER
10		9968478		1	SPRING
11		9968480		2	PLATE, COVER
12		9968460		2	SCREW
13		9968476		1	O-RING

336/ 1	01	p1	09/03

LOADER CONTROL VALVE, TWO SECTION, LOADER, BUCKET & DUMP VALVES (CENTER PIVOT)

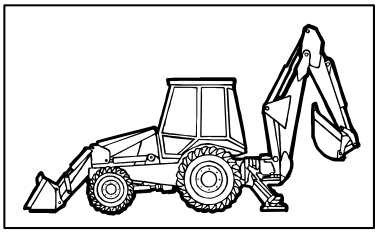

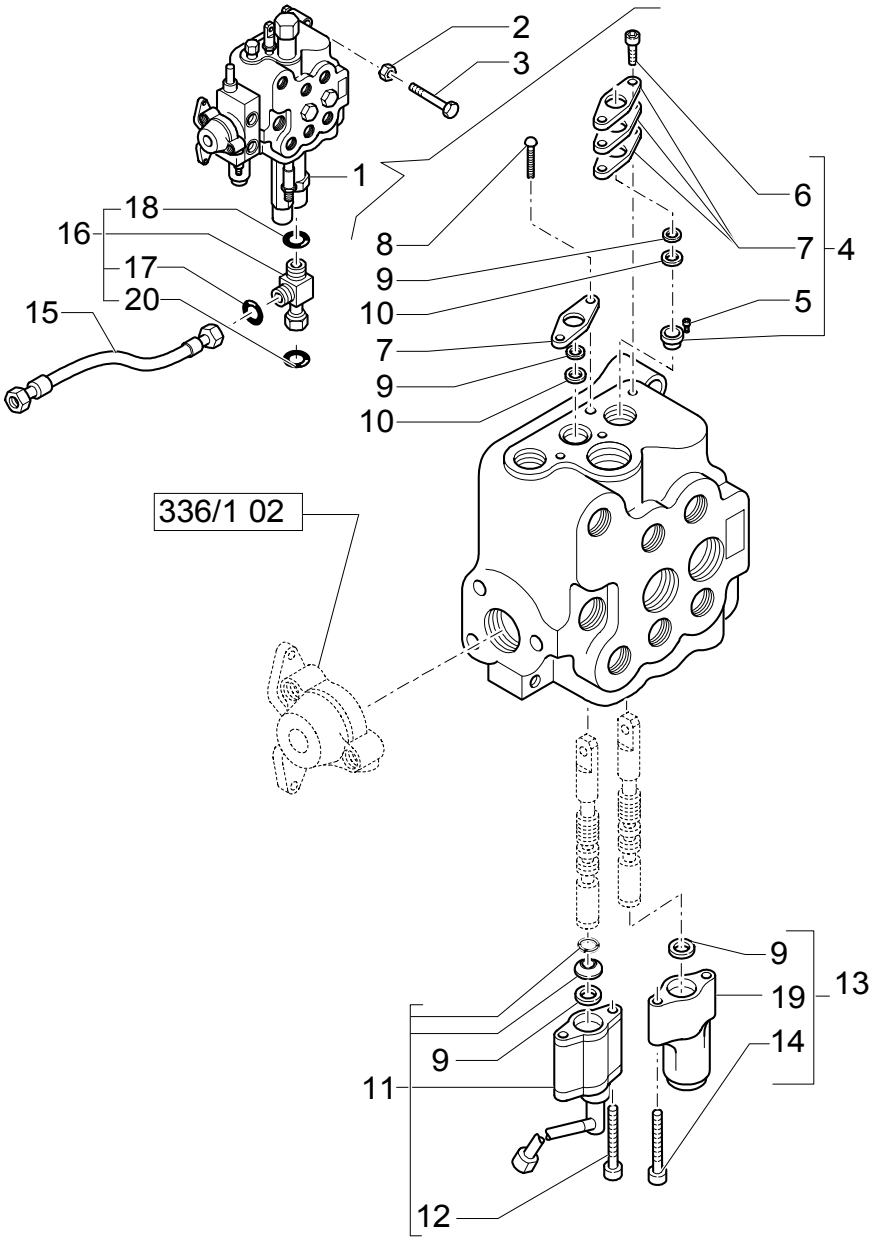

LOADER CONTROL VALVE, TWO SECTION, LOADER, BUCKET & DUMP VALVES (CENTER PIVOT)

REF	FN	PART NUMBER	YR/SN	QTY	DESCRIPTION
1		85819649		1	DISTRIBUTOR ASSY
2		11190579		3	WASHER, LOCK
3		14308221		3	SCREW M10X1,25X65
4		9968455		1	SUPPORT
5		9968457		1	SPACER
6		9968456		2	SCREW
7		9968458		3	PLATE, COVER
8		9968460		2	SCREW
9		85999136		4	O-RING
10		85999138		2	O-RING
11		85808403		1	STOP
12		9968451		2	SCREW
13		85817025		1	VALVE, FLOAT
14		9968454		2	SCREW
15		85816804		1	HOSE, FLEXIBLE
16	1	85817531		1	CONNECTOR, HYD.
17		9825770		1	O-RING 90 Duro, .301" ID x .070" Thk
18		9824050		1	O-RING 90 Duro, .926" ID x .070" Thk
19		9968513		1	COVER
20		89626929		1	GASKET 90 Duro, 1.048" ID x .116" Thk

(1) Includes 17,18,20

Mechanical Version

LB75.B

336/ 1	02	p1	04/03

LOADER CONTROL VALVE, TWO SECTION, CAP & UNLOAD VALVE (CENTER PIVOT)

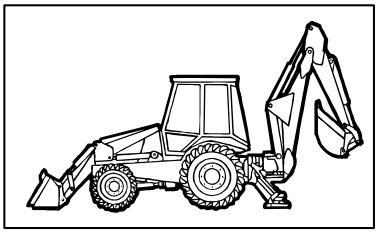

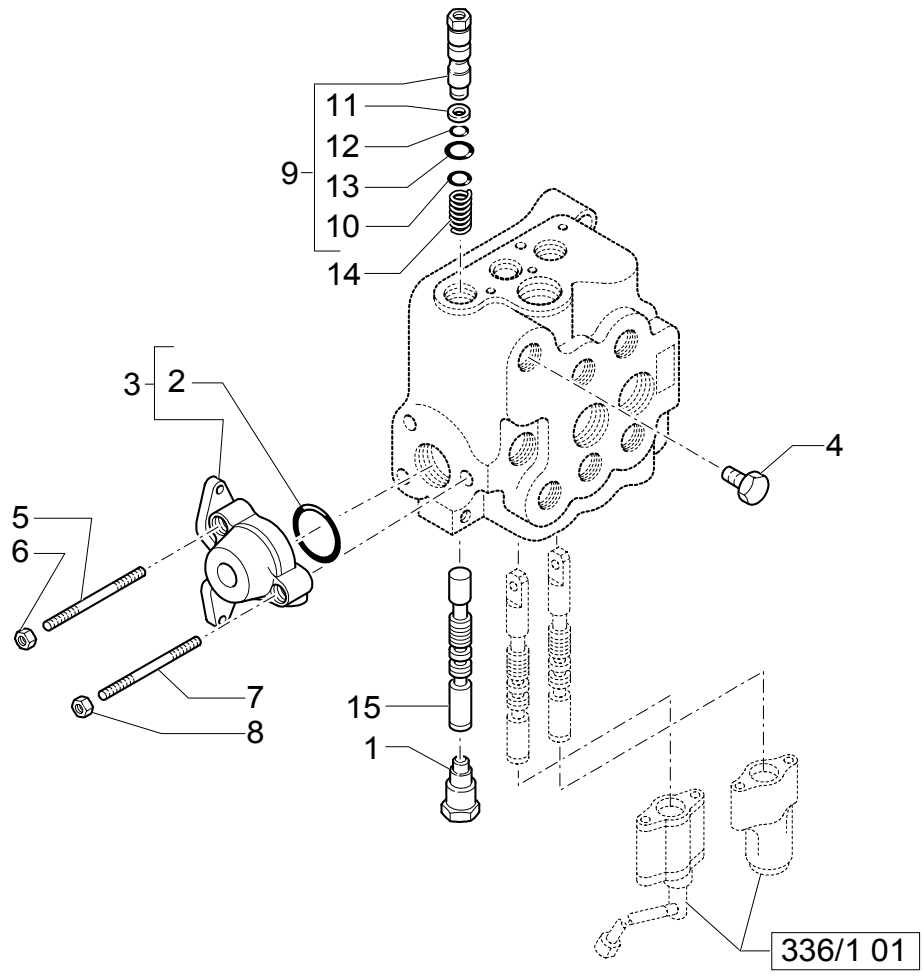

LOADER CONTROL VALVE, TWO SECTION, CAP & UNLOAD VALVE (CENTER PIVOT)

REF	FN	PART NUMBER	YR/SN	QTY	DESCRIPTION
1		9968464		1	PLUG ASSY
2		9968476		1	O-RING
3		9968443		1	SIDE PANEL
4		85807857		1	PLUG
5		9968521		2	STUD
6		9968441		2	NUT
7		9968520		1	STUD
8		9968440		1	NUT
9		85815667		1	VALVE, HYDRAULIC
10		85815668		1	RING
11		9968467		1	RING
12		9968466		1	O-RING
13		9968468		1	O-RING
14		9968488		1	SPRING
15		85807858		1	PLUNGER AND VALVE

Mechanical Version

LB75.B

336/ 1	03	p1	04/03

LOADER CONTROL VALVE, TWO SECTION, RELIEF & CHECK VALVES (CENTER PIVOT)

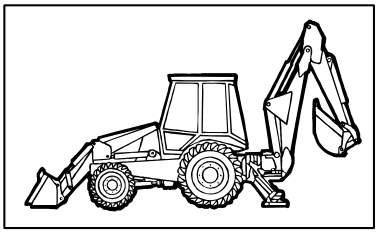

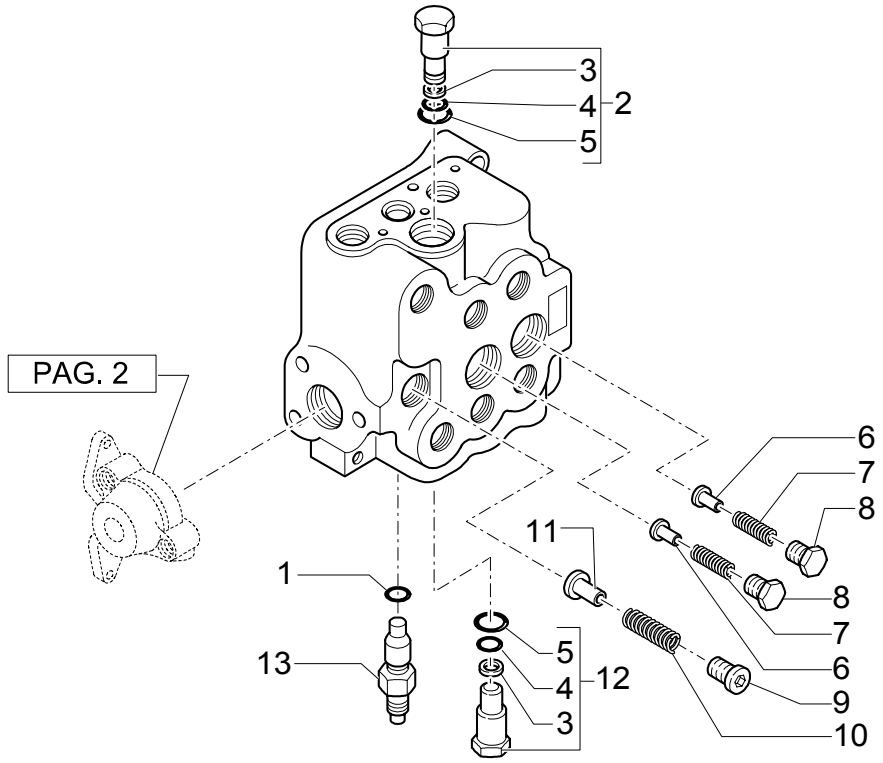

LOADER CONTROL VALVE, TWO SECTION, RELIEF & CHECK VALVES (CENTER PIVOT)

REF	FN	PART NUMBER	YR/SN	QTY	DESCRIPTION
1		85819945		1	RING ASSY
2		9968473		1	VALVE, HYDRAULIC
3		9968472		2	RING
4		9968471		2	O-RING
5		9968470		2	O-RING
6		9968444		2	PLUNGER
7		9968445		2	SPRING
8		9968446		2	PLUG
9		9968449		1	PLUG
10		9968448		1	SPRING
11		9968447		1	PLUNGER
12		9968469		1	VALVE, HYDRAULIC
13		85819722		1	VALVE, HYDRAULIC

Mechanical Version

LB75.B

LOADER CONTROL VALVE, TWO SECTION, BY-PASS KIT (CENTER PIVOT)

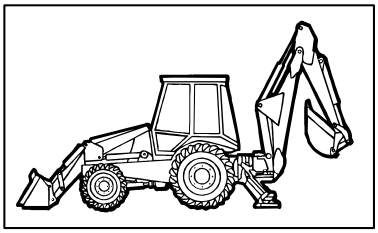

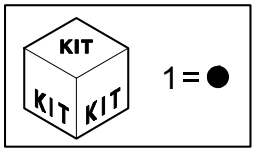

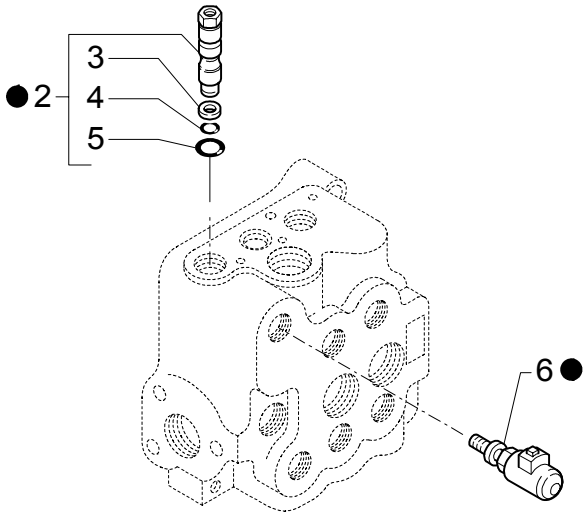

LOADER CONTROL VALVE, TWO SECTION, BY-PASS KIT (CENTER PIVOT)

REF	FN	PART NUMBER	YR/SN	QTY	DESCRIPTION
1		85817201		1	KIT
2		9968465		1	VALVE, HYDRAULIC
3		9968467		1	RING
4		9968466		1	O-RING
5		9968468		1	O-RING
6		9968461		1	SENDER UNIT

336/ 1	05	p1	09/03

LOADER CONTROL VALVE, TWO SECTION, UNLOAD KIT OR DUMP VALVE (CENTER PIVOT)

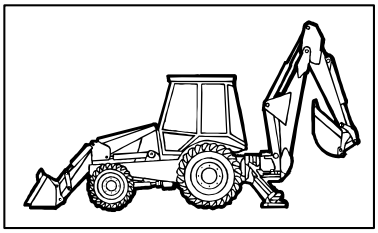

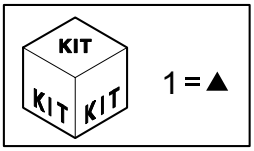

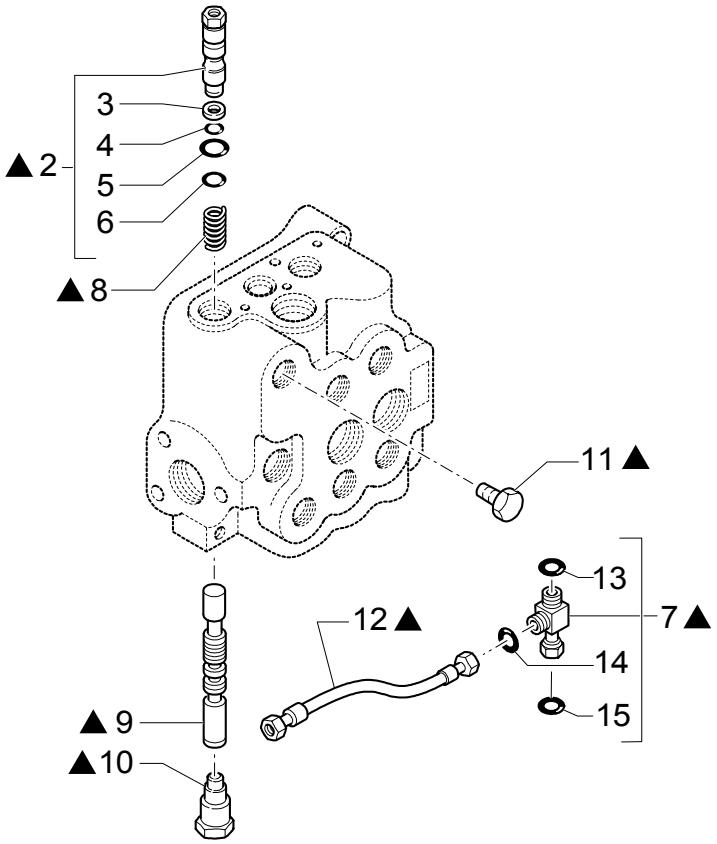

LOADER CONTROL VALVE, TWO SECTION, UNLOAD KIT OR DUMP VALVE (CENTER PIVOT)

REF	FN	PART NUMBER	YR/SN	QTY	DESCRIPTION
1		85816793		1	KIT
2		85815667		1	VALVE, HYDRAULIC
3		9968467		1	RING
4		9968466		1	O-RING
5		9968468		1	O-RING
6		85815668		1	RING
7		85817531		1	CONNECTOR, HYD.
8		9968488		1	SPRING
9		85807858		1	PLUNGER AND VALVE
10		9968464		1	PLUG
11		85807857		1	PLUG
12		85816804		1	HOSE, FLEXIBLE
13		9824050		1	O-RING 90 Duro, .926" ID x .070" Thk
14		9825770		1	O-RING 90 Duro, .301" ID x .070" Thk
15		89626929		1	GASKET 90 Duro, 1.048" ID x .116" Thk

LOCK VALVE ON LOADER TILTING CYLINDERS

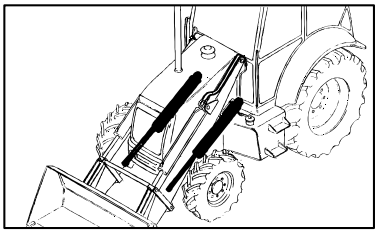

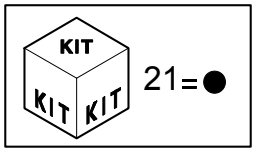

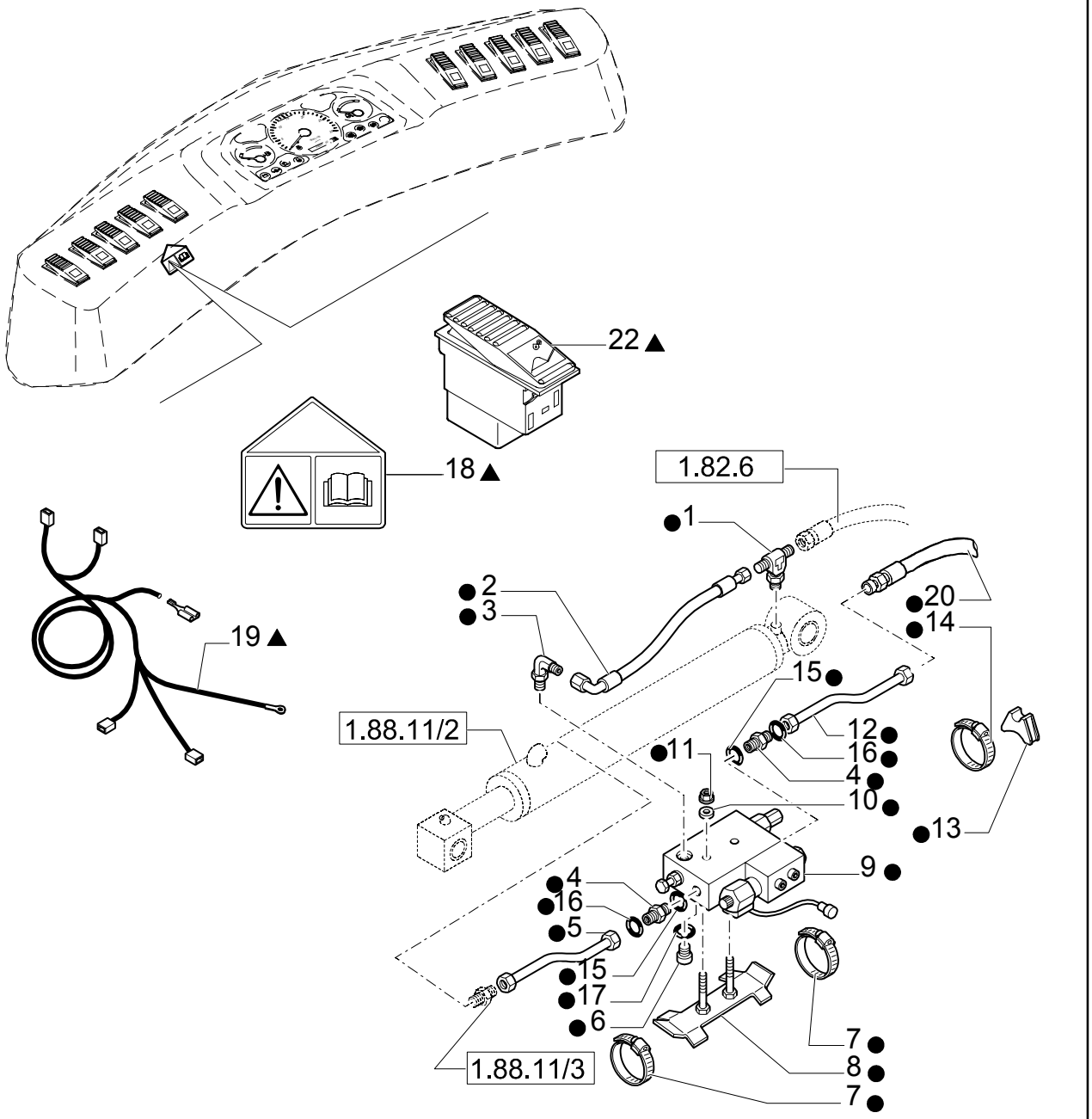

LOCK VALVE ON LOADER TILTING CYLINDERS

REF	FN	PART NUMBER	YR/SN	QTY	DESCRIPTION
1		85805218		2	CONNECTOR, HYD.
2		85815506		2	HOSE, FLEXIBLE
3		85805220		2	CONNECTOR, HYD.
4	1	83963374		4	CONNECTOR, HYD.
5		85805262		2	TUBE, RIGID
6	2	85802805		2	PLUG
7		85803010		4	CLAMP
8		85805221		2	SUPPORT
9		85805224		2	VALVE, HYDRAULIC ASSY
10		11193879		4	WASHER, LOCK
11		14048221		4	NUT M8X1,25
12		85805264		2	TUBE, RIGID
13		E7NNB165AA		2	SPACER
14		85802743		2	SEALING RING COLLAR
15		128825		2	O-RING 90 Duro, .644" ID x .087" Thk
16		9992298		2	O-RING 90 Duro, .489" ID x .070" Thk
17		9825770		1	O-RING 90 Duro, .301" ID x .070" Thk
18		85805228		1	DECAL
19	3	{85826274}		1	
20		85813361		1	HOSE, FLEXIBLE
21	4	NSS		1	NOT SERVICED SEPARATELY
22		85819074		1	SWITCH

(1) Includes 15,16
(2) Includes 17
(3) Includes 18
(4) Includes 1 To 20 Also Page 337 02

337	02	p1	12/03

LOCK VALVE ON LOADER LIFT CYLINDERS

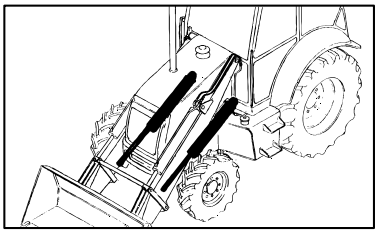

KIT KIT KIT 19 = ●

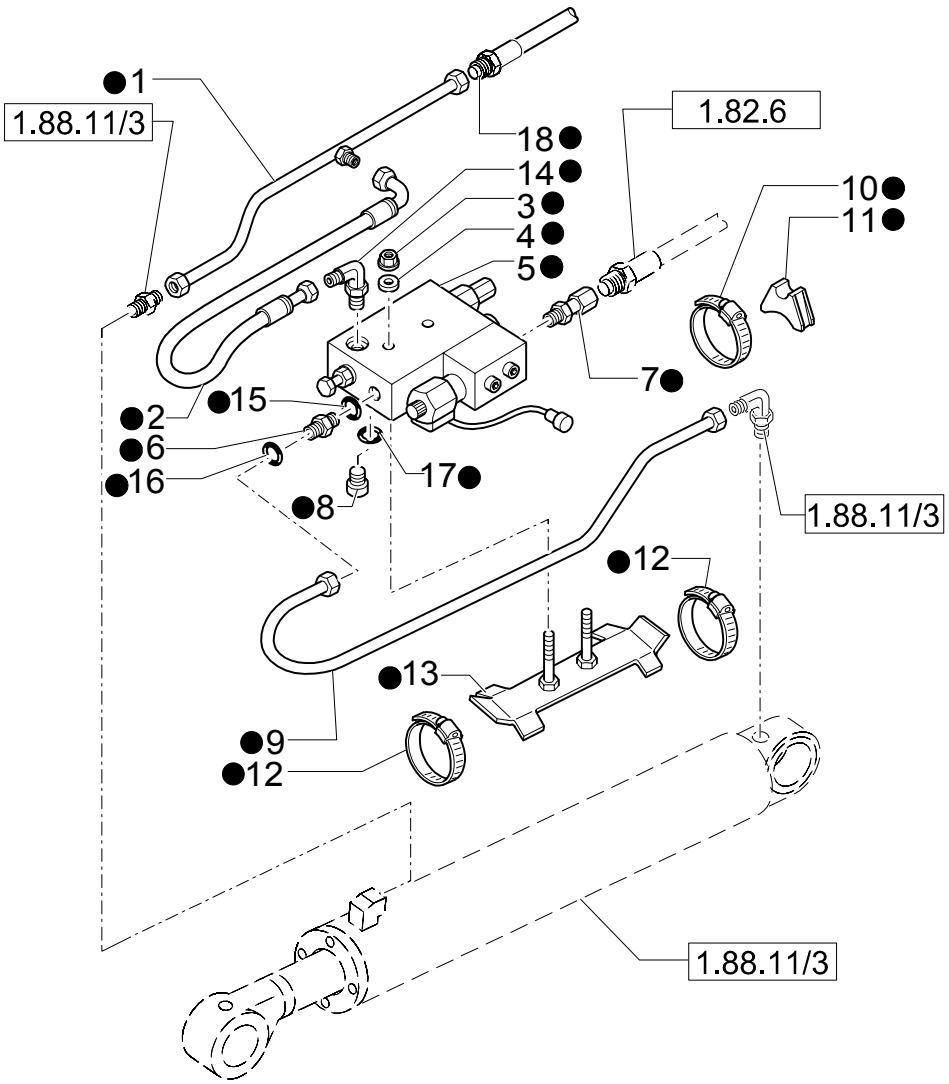

LOCK VALVE ON LOADER LIFT CYLINDERS

REF	FN	PART NUMBER	YR/SN	QTY	DESCRIPTION
1		85805266		2	TUBE, RIGID
2		85815506		2	HOSE, FLEXIBLE
3		14048221		4	NUT M8X1,25
4		11193879		4	WASHER, LOCK
5		85805223		2	VALVE, HYDRAULIC ASSY
6	1	83963374		2	CONNECTOR, HYD.
7		85805217		2	CONNECTOR, HYD.
8	2	85802805		2	PLUG
9		85805271		1	TUBE, RIGID LH
9		85805273		1	TUBE, RIGID RH
10		85803008		2	COLLAR
11		E7NNB165AA		2	SPACER
12		85802743		4	SEALING RING COLLAR
13		85805221		1	SUPPORT
14		85805220		2	CONNECTOR, HYD.
15		128825		2	O-RING 90 Duro, .644" ID x .087" Thk
16		9992298		2	O-RING 90 Duro, .489" ID x .070" Thk
17		9825770		2	O-RING 90 Duro, .301" ID x .070" Thk
18		85813363		2	HOSE, FLEXIBLE
19	3	NSS		1	NOT SERVICED SEPARATELY

(1) Includes 15,16
(2) Includes 17
(3) Includes 1 To 18 Also Page 337 01

339	01	p1	12/03

LOADER CONTROL VALVE, THREE SECTION, LOADER & BUCKET VALVES (CENTER PIVOT)

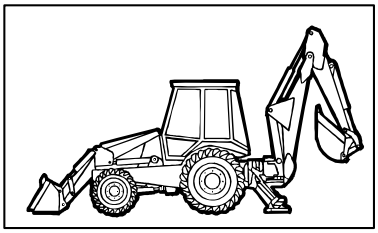

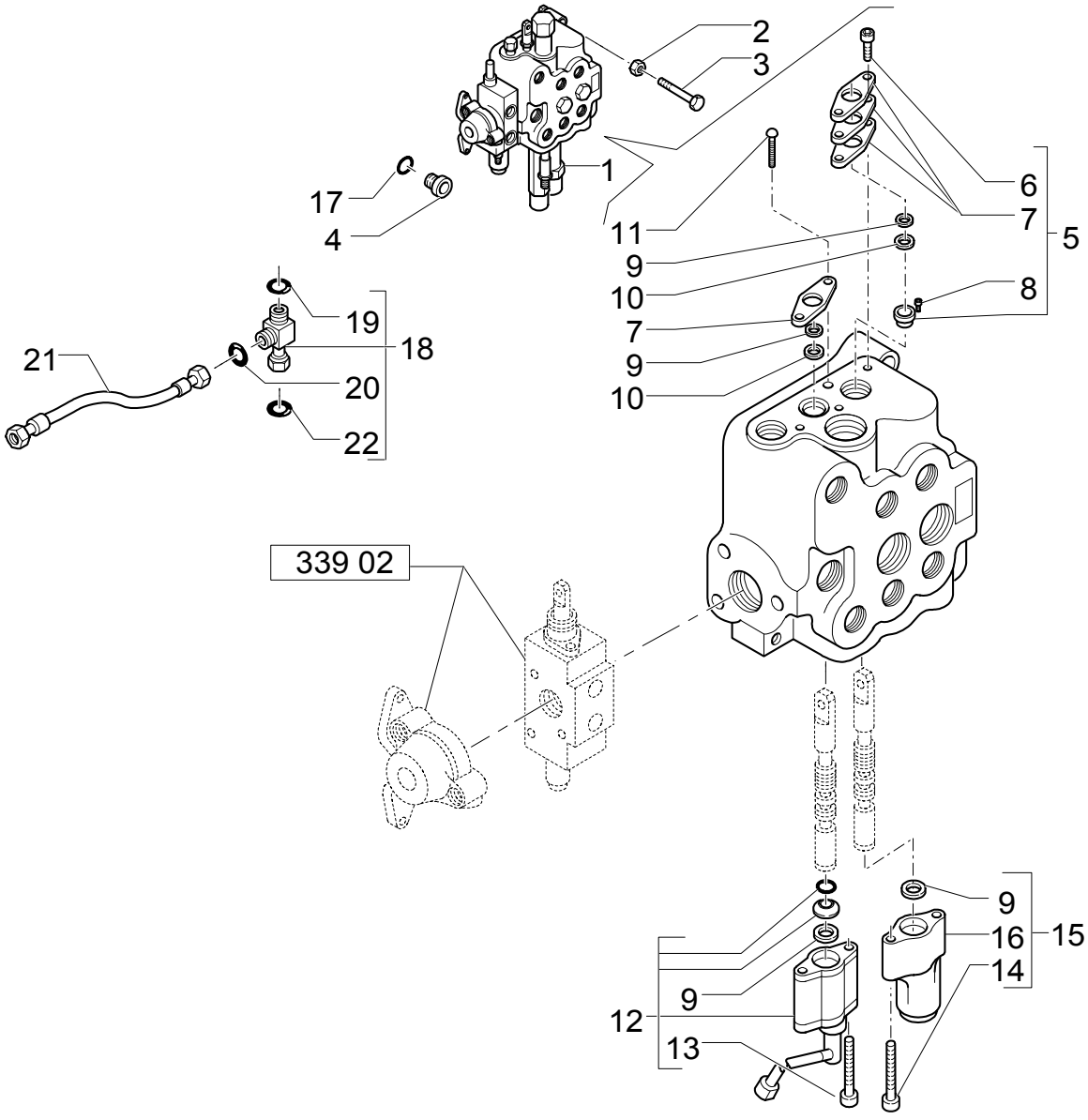

LOADER CONTROL VALVE, THREE SECTION, LOADER & BUCKET VALVES (CENTER PIVOT)

REF	FN	PART NUMBER	YR/SN	QTY	DESCRIPTION
1		85819650		1	DISTRIBUTOR ASSY
2		11190579		3	WASHER, LOCK
3		14308221		3	SCREW M10X1,25X65
4		85803409		2	PLUG 7/8-14
5		9968455		1	SUPPORT
6		9968456		2	SCREW
7		9968458		4	PLATE, COVER
8		9968457		2	SPACER
9		85999136		4	O-RING
10		85999138		2	O-RING
11		9968460		2	SCREW
12		85808403		1	STOP
13		9968451		2	SCREW
14		9968454		2	SCREW
15		85817025		1	VALVE, FLOAT
16		9968513		1	COVER
17		167269		2	O-RING 90 Duro, .755" ID x .097" Thk
18	1	85817531		1	CONNECTOR, HYD.
19		9824050		1	O-RING 90 Duro, .926" ID x .070" Thk
20		9825770		1	O-RING 90 Duro, .301" ID x .070" Thk
21		85816804		1	HOSE, FLEXIBLE
22		89626929		1	GASKET 90 Duro, 1.048" ID x .116" Thk

(1) Includes 19,20,22

Mechanical Version

LB75.B

LOADER CONTROL VALVE, THREE SECTION, CAP & THIRD SECTION RELIEF VALVE (CENTER PIVOT)

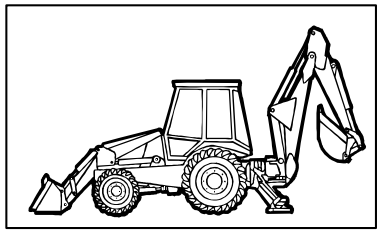

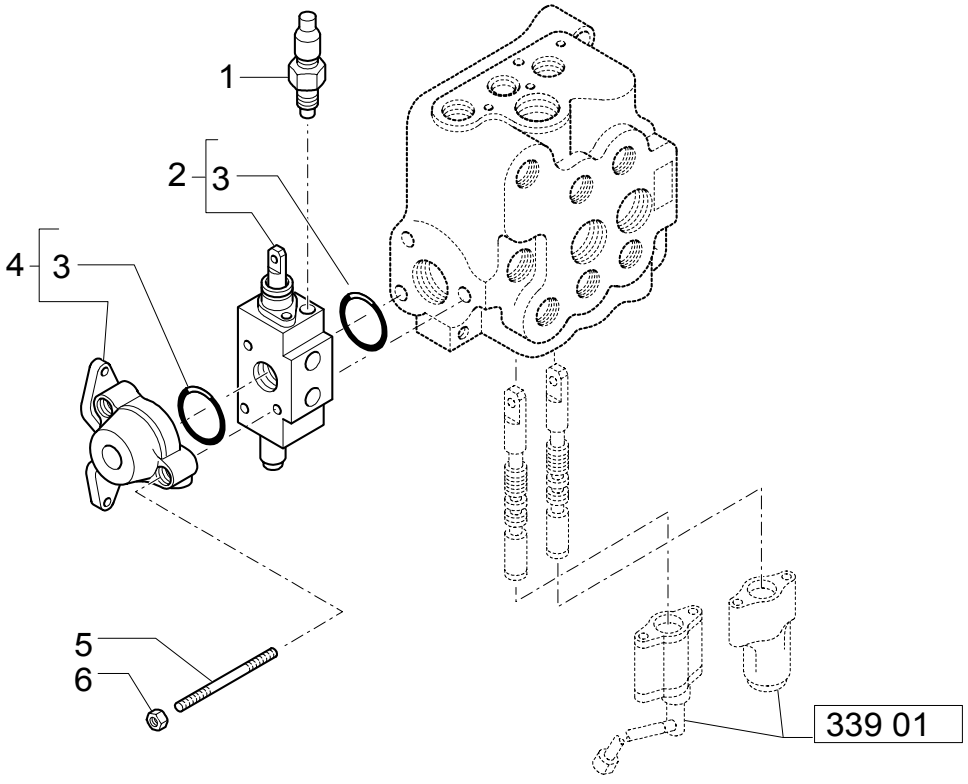

LOADER CONTROL VALVE, THREE SECTION, CAP & THIRD SECTION RELIEF VALVE (CENTER PIVOT)

REF	FN	PART NUMBER	YR/SN	QTY	DESCRIPTION
1		9968595		1	VALVE, HYDRAULIC ASSY
2	1	85808402		1	ELEMENT, JOINING
3		9968476		2	O-RING
4		9968443		1	SIDE PANEL
5		9968438		1	TIE-ROD, THREADED
5		9968439		2	STUD
6		9968440		1	NUT
6		9968441		2	NUT

(1) See Page 336A

LOADER CONTROL VALVE, THREE SECTION, RELIEF, UNLOAD, DUMP & CHECK VALVES (CENTER PIVOT)

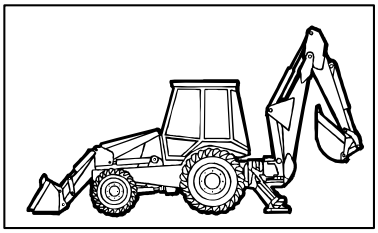

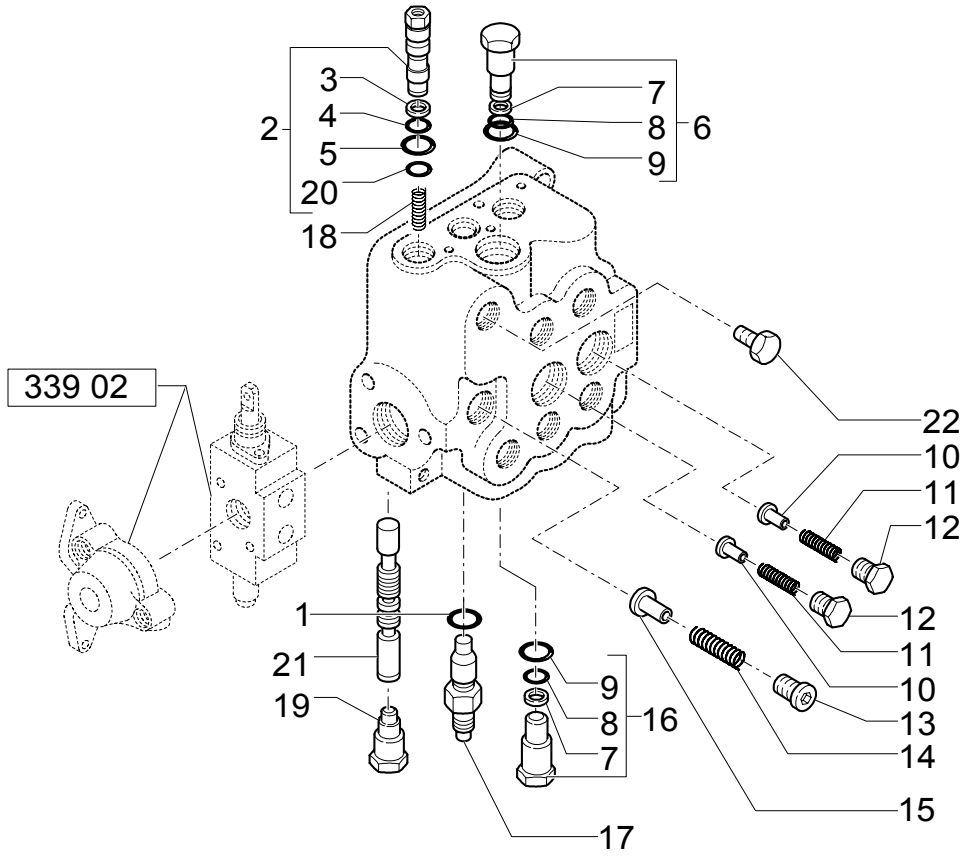

LOADER CONTROL VALVE, THREE SECTION, RELIEF, UNLOAD, DUMP & CHECK VALVES (CENTER PIVOT)

REF	FN	PART NUMBER	YR/SN	QTY	DESCRIPTION
1		85819945		1	RING
2		85815667		1	VALVE, HYDRAULIC
3		9968467		1	RING
4		9968466		1	O-RING
5		9968468		1	O-RING
6		9968473		1	VALVE, HYDRAULIC
7		9968472		2	RING
8		9968471		2	O-RING
9		9968470		2	O-RING
10		9968444		2	PLUNGER
11		9968445		2	SPRING
12		9968446		2	PLUG
13		9968449		1	PLUG
14		9968448		1	SPRING
15		9968447		1	PLUNGER
16		9968469		1	VALVE, HYDRAULIC
17		85819722		1	VALVE, HYDRAULIC
18		9968488		1	SPRING
19		9968464		1	PLUG
20		85815668		1	RING
21		85807858		1	PLUNGER AND VALVE
22		85807857		1	PLUG

Mechanical Version

LB75.B

339	04	p1	05/03

LOADER CONTROL VALVE, THREE SECTION, BY-PASS KIT (CENTER PIVOT)

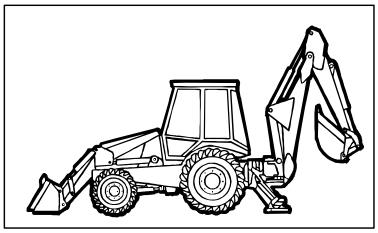

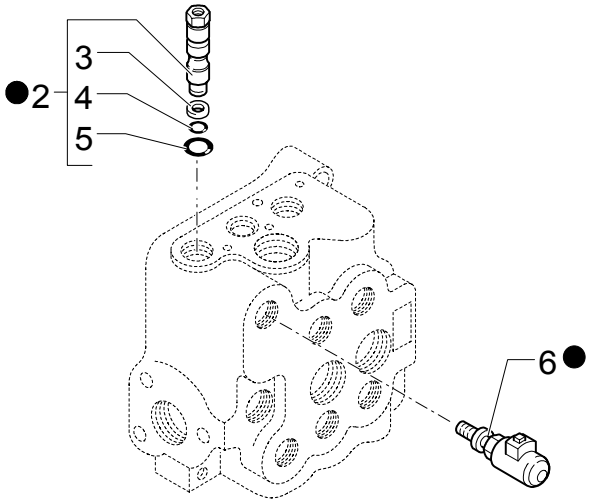

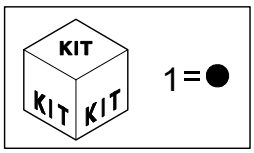

LOADER CONTROL VALVE, THREE SECTION, BY-PASS KIT (CENTER PIVOT)

REF	FN	PART NUMBER	YR/SN	QTY	DESCRIPTION
1		85817201		1	KIT
2		9968465		1	VALVE, HYDRAULIC
3		9968467		1	RING
4		9968466		1	O-RING
5		9968468		1	O-RING
6		9968461		1	SENDER UNIT

Mechanical Version

LB75.B

LOADER CONTROL VALVE, THREE SECTION, UNLOAD KIT OR DUMP VALVE (CENTER PIVOT)

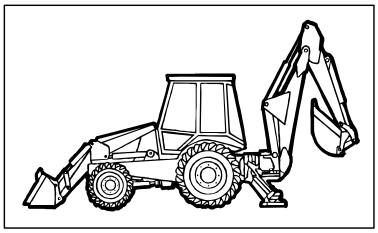

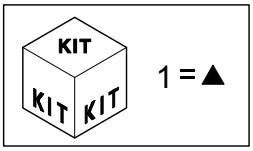

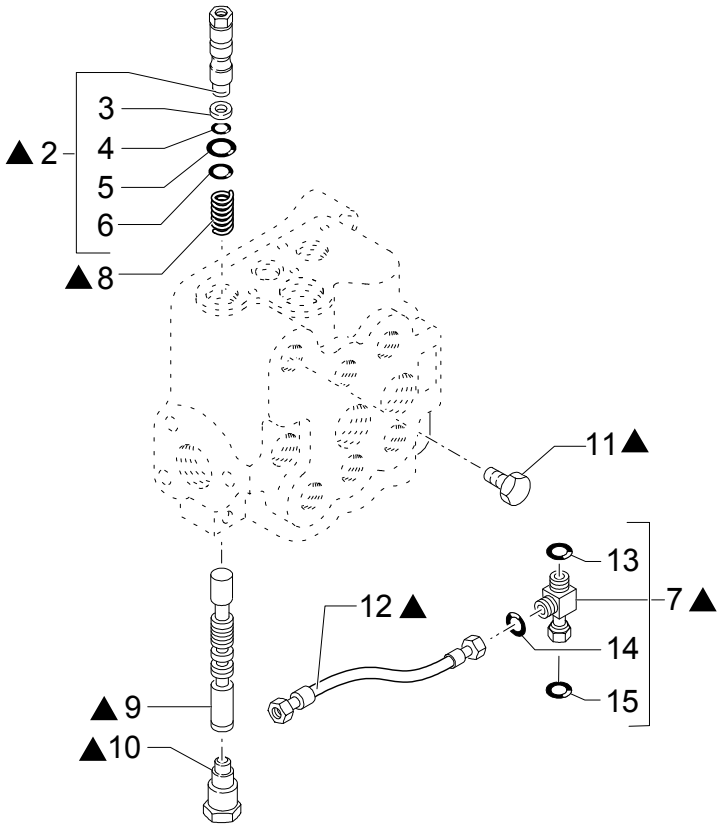

LOADER CONTROL VALVE, THREE SECTION, UNLOAD KIT OR DUMP VALVE (CENTER PIVOT)

REF	FN	PART NUMBER	YR/SN	QTY	DESCRIPTION
1		85816793		1	KIT
2		85815667		1	VALVE, HYDRAULIC
3		9968467		1	RING
4		9968466		1	O-RING
5		9968468		1	O-RING
6		85815668		1	RING
7		85817531		1	CONNECTOR, HYD.
8		9968488		1	SPRING
9		85807858		1	PLUNGER AND VALVE
10		9968464		1	PLUG
11		85807857		1	PLUG
12		85816804		1	HOSE, FLEXIBLE
13		9824050		1	O-RING 90 Duro, .926" ID x .070" Thk
14		9825770		1	O-RING 90 Duro, .301" ID x .070" Thk
15		89626929		1	GASKET 90 Duro, 1.048" ID x .116" Thk

Mechanical Version

LB75.B

339/ 1	01	p1	09/03

LOADER CONTROL VALVE

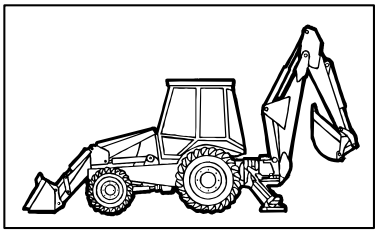

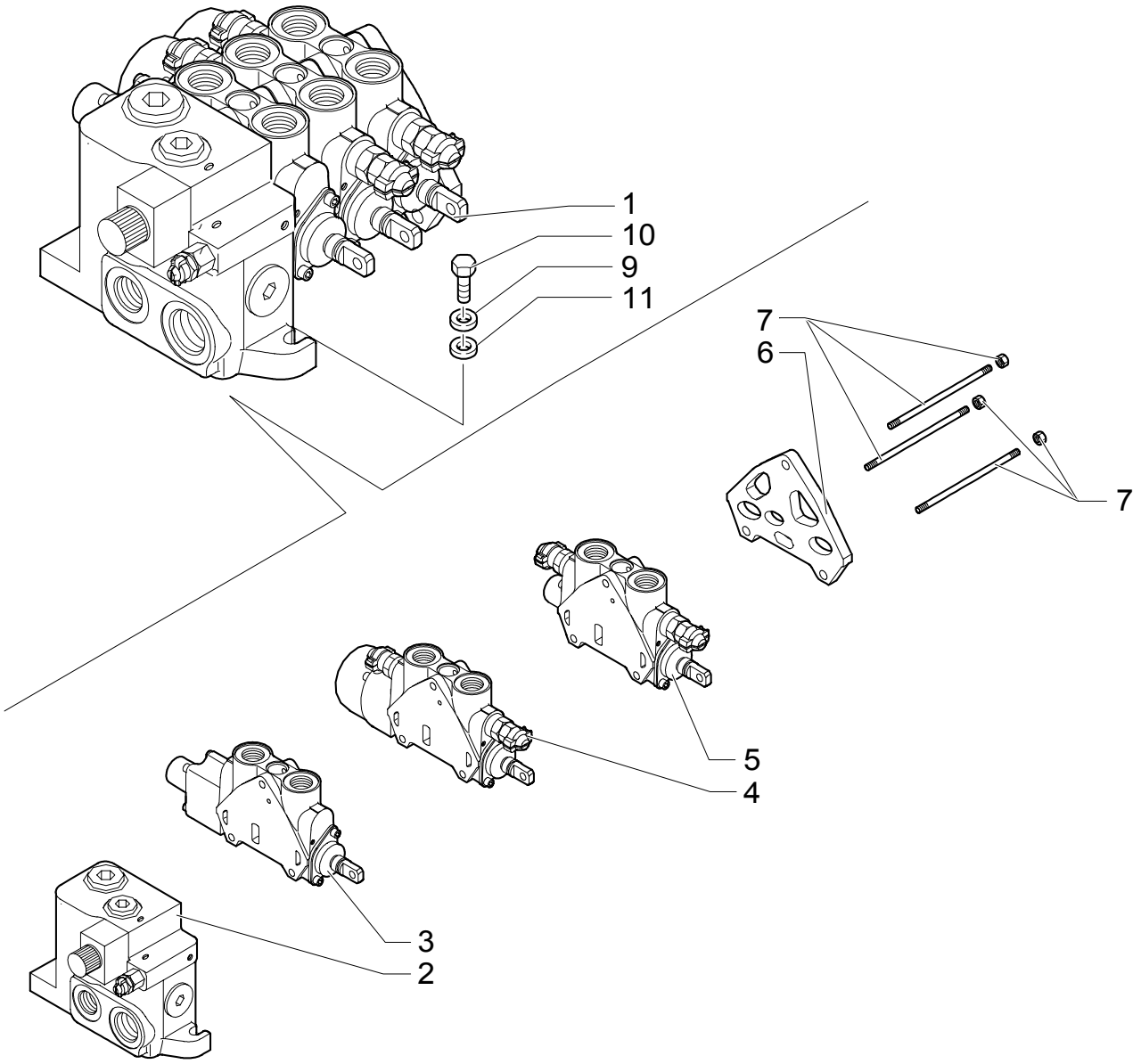

LOADER CONTROL VALVE

REF	FN	PART NUMBER	YR/SN	QTY	DESCRIPTION
1		85825189		1	VALVE, CONTROL ASSY
2	1	85825468		1	SECTOR, TOOTHED
3	2, 3	85813484		1	SECTOR, TOOTHED
4	4, 5	85825469		1	SECTOR, TOOTHED
5	6, 7	85813475		1	ELEMENT, JOINING
6		85825470		1	SECTOR, TOOTHED
7		85825474		1	TIE-ROD, THREADED
9		11190679		3	WASHER, LOCK
10		11234721		3	SCREW M10X45
11		13578621		3	WASHER

(1) See Page 339/1 02
(2) Boom
(3) See Page 339/1 03
(4) Bucket
(5) See Page 339/1 04
(6) Bucket 4x1 - 6x1
(7) See Page 339/1 05

339/ 1	02	p1	09/03

LOADER CONTROL VALVE, INLET SECTION

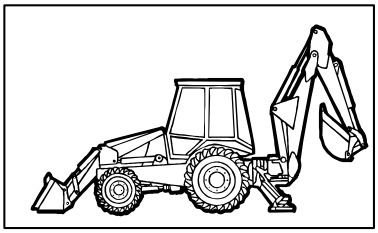

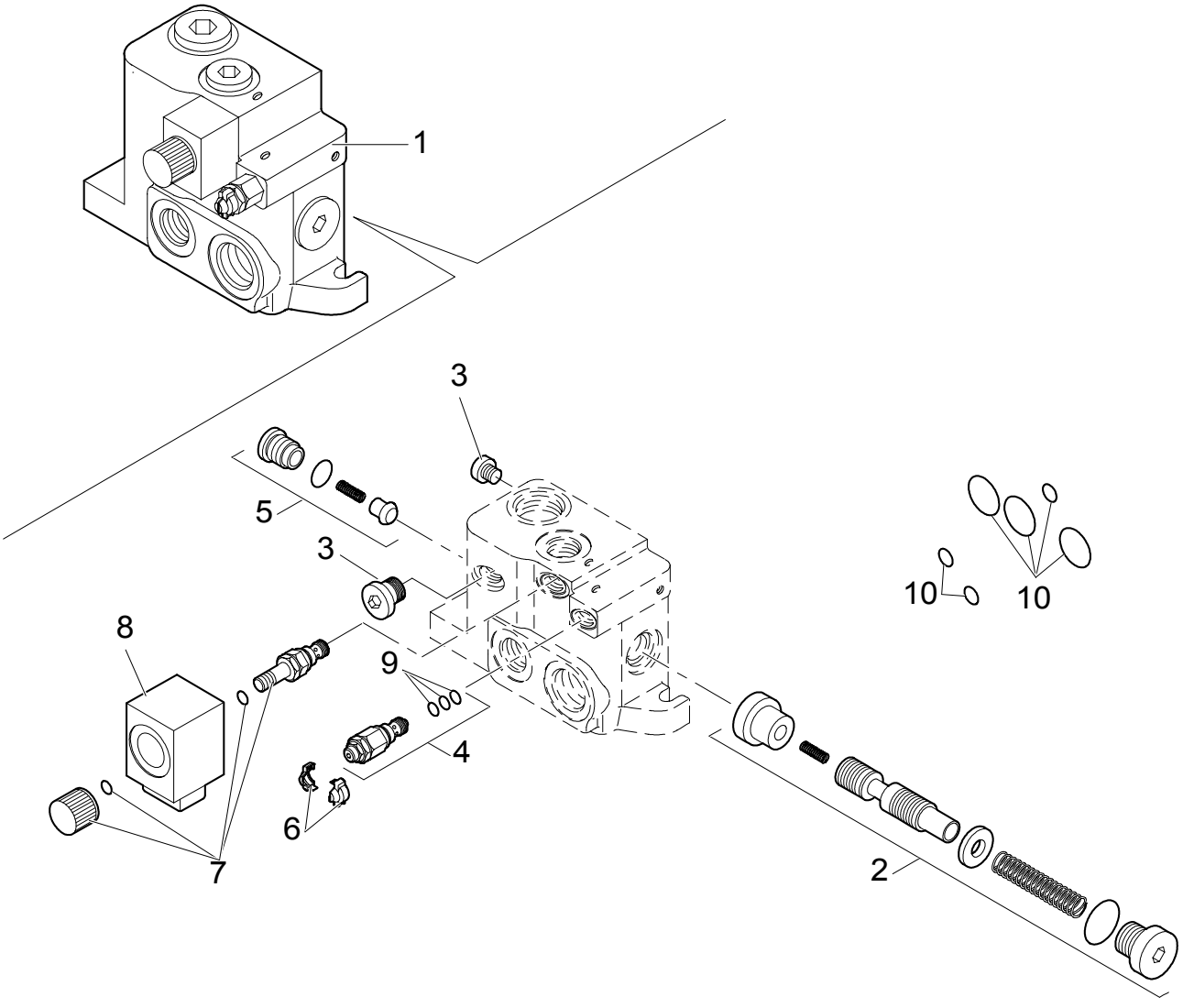

LOADER CONTROL VALVE, INLET SECTION

REF	FN	PART NUMBER	YR/SN	QTY	DESCRIPTION
1		85825468		1	SECTOR, TOOTHED ASSY
2		85825472		1	KIT
3		85811923		2	PLUG
4		85811946		1	VALVE, HYDRAULIC
5		85811938		1	KIT
6		85811934		0	KIT 1- 1/16-12 UNF2A
7		85811954		1	KIT 1-1/16-12 UNF2A
8		85811953		1	COIL 9/16-18 UNF
9		85821236		1	KIT
10		85819148		1	KIT

339/ 1	03	p1	09/03

LOADER CONTROL VALVE, BOOM SECTION

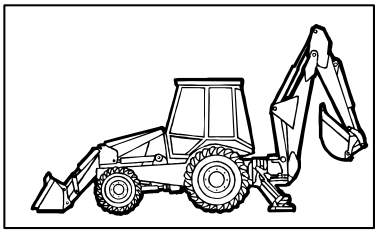

KIT KIT KIT

8 = ●
9 = ▲

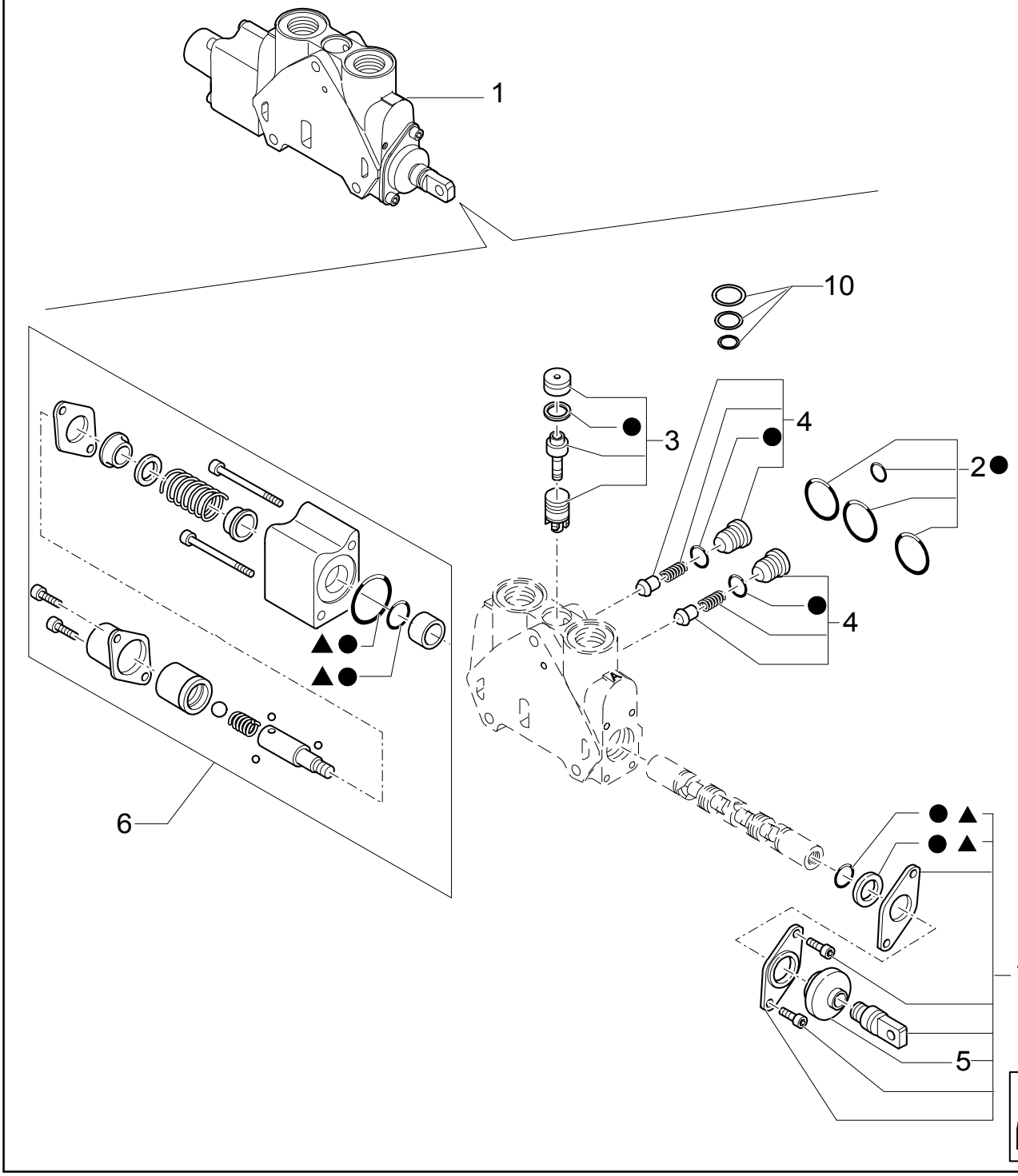

LOADER CONTROL VALVE, BOOM SECTION

REF	FN	PART NUMBER	YR/SN	QTY	DESCRIPTION
1		85813484		1	SECTOR, TOOTHED
2		85819148		1	KIT
3		85819378		1	KIT
4		85811938		2	KIT
5		85820130		1	BELLOWS
6		85824280		1	KIT
7		85824278		1	KIT
8		85824281		1	KIT
9		85824283		1	KIT
10		85819040		1	KIT COMPENSATOR

339/ 1	04	p1	09/03

TWO-SECTION CONTROL VALVE FOR LOADER

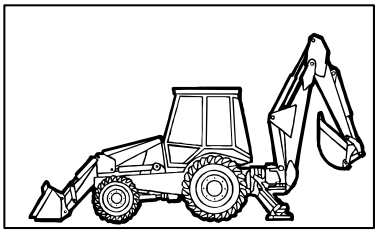

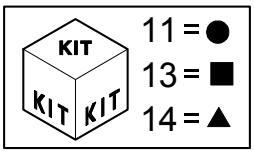

TWO-SECTION CONTROL VALVE FOR LOADER

REF	FN	PART NUMBER	YR/SN	QTY	DESCRIPTION
1		85825469		1	SECTOR, TOOTHED
2		85819148		1	KIT
3		85819378		1	KIT
4		85811938		2	KIT
5		85820130		1	BELLOWS
6		85825471		1	KIT
7		85824278		1	KIT
8	1	85812116		1	VALVE, HYDRAULIC 240 BAR
9		85811933		2	KIT
10		85811934		2	KIT
11		85824281		1	KIT
12	1	85812213		1	HOSE, FLEXIBLE 165 BAR
13		85819040		1	KIT COMPENSATOR SEAL
14		85824283		1	KIT SPOOL SEAL

(1) Includes 9,10

339/ 1	05	p1	09/03

LOADER CONTROL VALVE, 4X1& 6X1 BUCKET SECTION

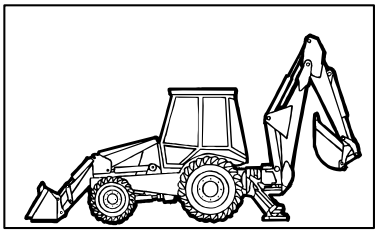

KIT KIT KIT

12 = ●
13 = ▲

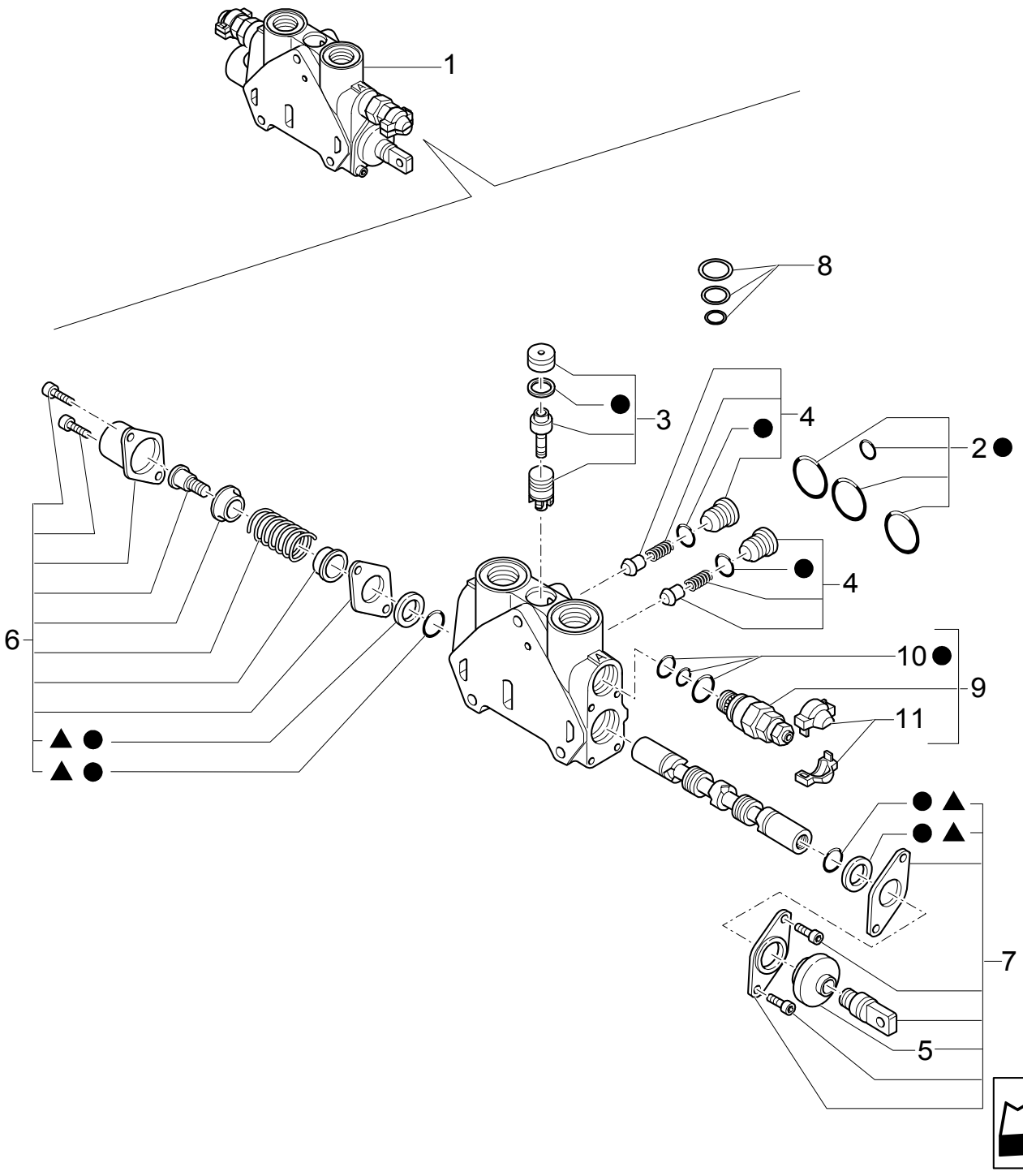

LOADER CONTROL VALVE, 4X1& 6X1 BUCKET SECTION

REF	FN	PART NUMBER	YR/SN	QTY	DESCRIPTION
1		85813475		1	ELEMENT, JOINING
2		85819148		1	KIT
3		85819378		1	KIT
4		85811938		2	KIT
5		85820130		1	BELLOWS
6		85824279		1	KIT
7		85824278		1	KIT
8		85819040		1	KIT
9		85812116		1	VALVE, HYDRAULIC 240 BAR
10		85811933		2	KIT
11		85811935		1	KIT
12		85824281		1	KIT
13		85824283		1	KIT

STABILIZER CONTROL VALVE, TWO SECTION (CENTER PIVOT)

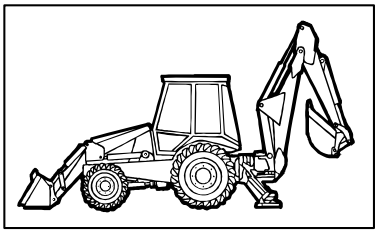

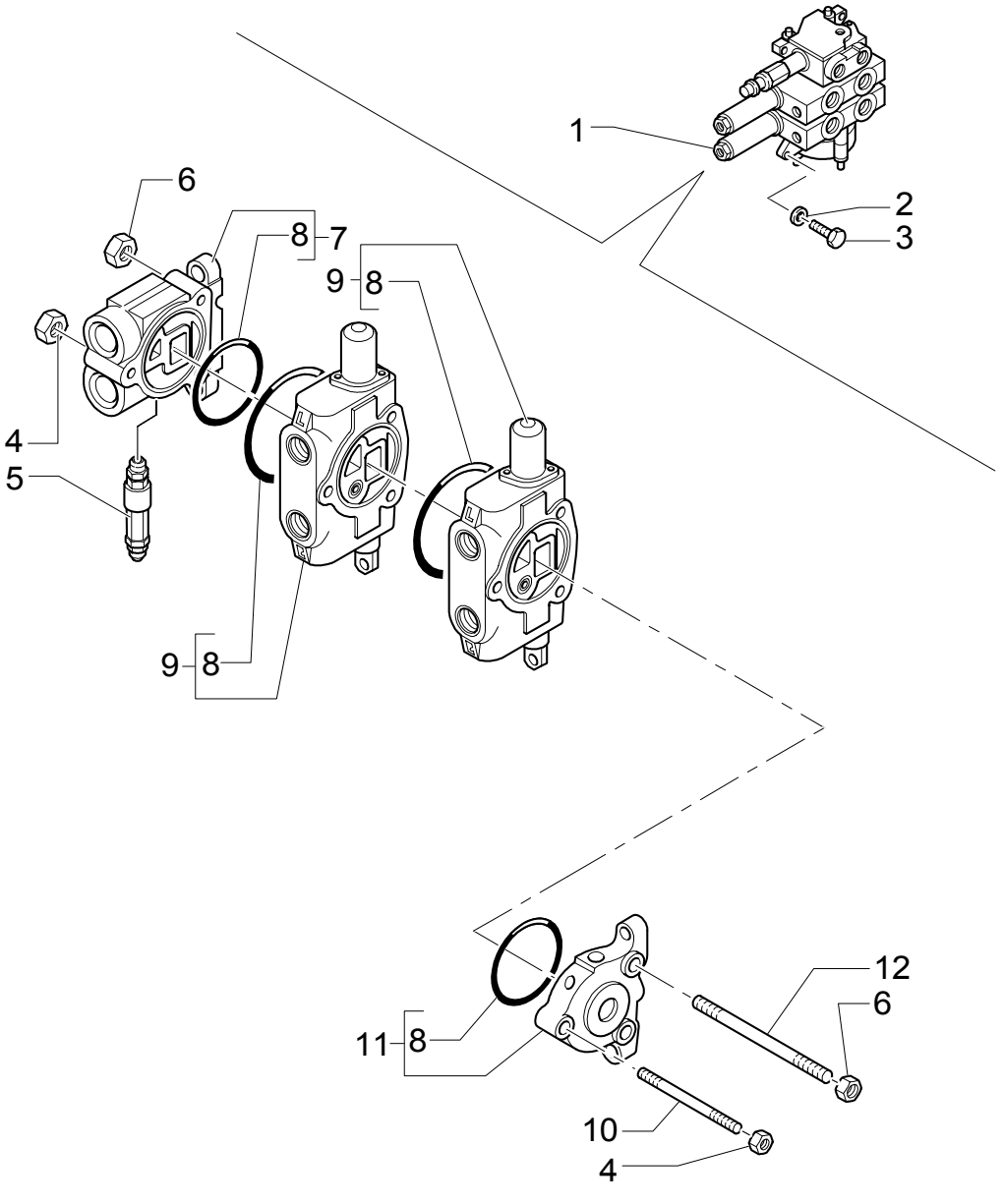

STABILIZER CONTROL VALVE, TWO SECTION (CENTER PIVOT)

REF	FN	PART NUMBER	YR/SN	QTY	DESCRIPTION
1		85819684		1	DISTRIBUTOR ASSY
2		11193879		3	WASHER, LOCK
3		16043921		3	SCREW
4		9968440		2	NUT
5		85819721		1	VALVE, HYDRAULIC
6		9968441		4	NUT
7		9968524		1	SIDE PANEL
8		9968476		4	O-RING
9	1	9970107		2	ELEMENT, JOINING
10		9968533		1	STUD
11		9968527		1	SIDE PANEL
12		9968532		2	STUD

(1) See Page 344A

344/ A	01	p1	04/03

STABILIZER CONTROL VALVE, LH & RH SECTION (CENTER PIVOT)

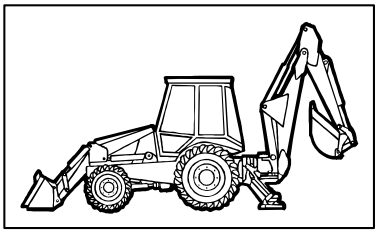

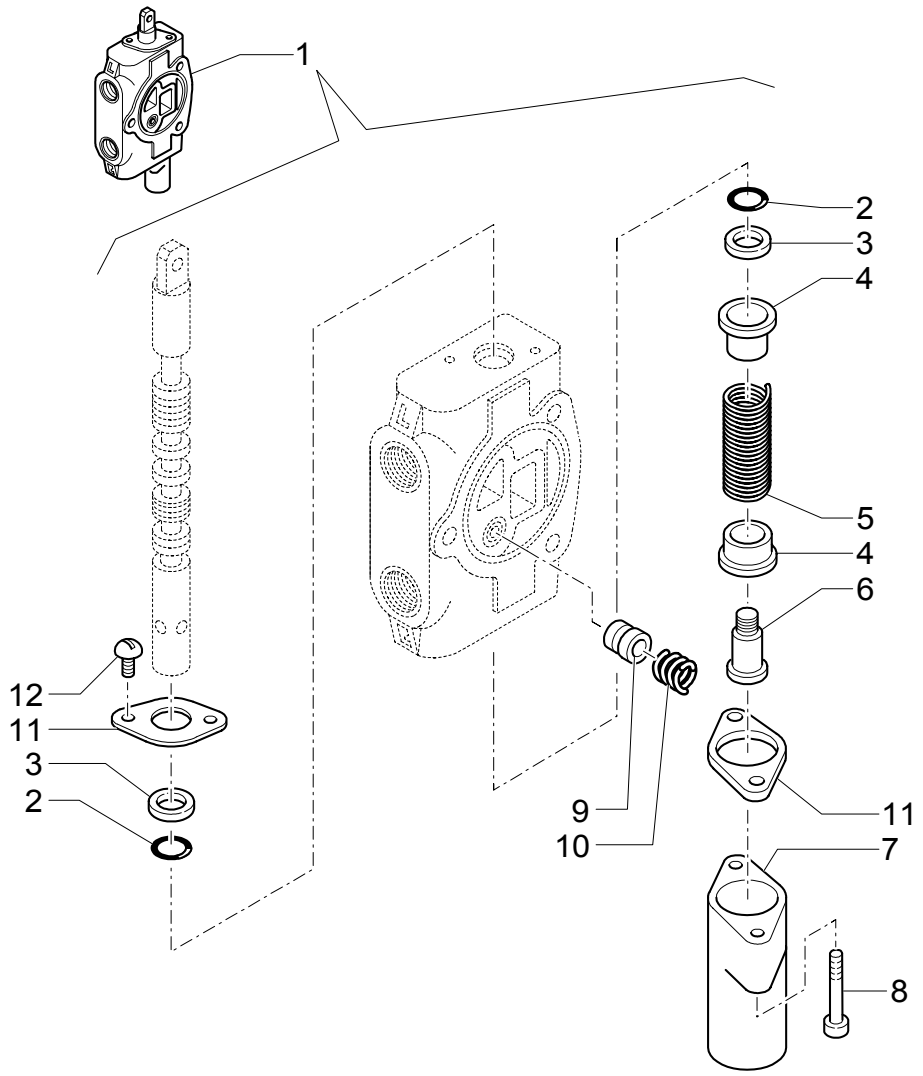

STABILIZER CONTROL VALVE, LH & RH SECTION (CENTER PIVOT)

REF	FN	PART NUMBER	YR/SN	QTY	DESCRIPTION
1		9970107		1	ELEMENT, JOINING ASSY
2		85813418		2	GASKET
3		85813419		2	RING, OIL SCRAPER
4		9968481		2	SEAT/SLOT
5		9968531		1	SPRING
6		9968483		1	SCREW
7		9968484		1	COVER
8		9968486		2	SCREW
9		9968477		1	PLUNGER
10		9968478		1	SPRING
11		9968480		2	PLATE, COVER
12		9968460		2	SCREW

356/ A	01	p1	04/03

STABILIZER CONTROL VALVE, THIRD SECTION, HED (CENTER PIVOT)

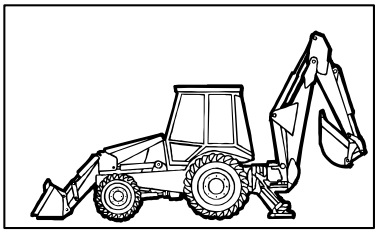

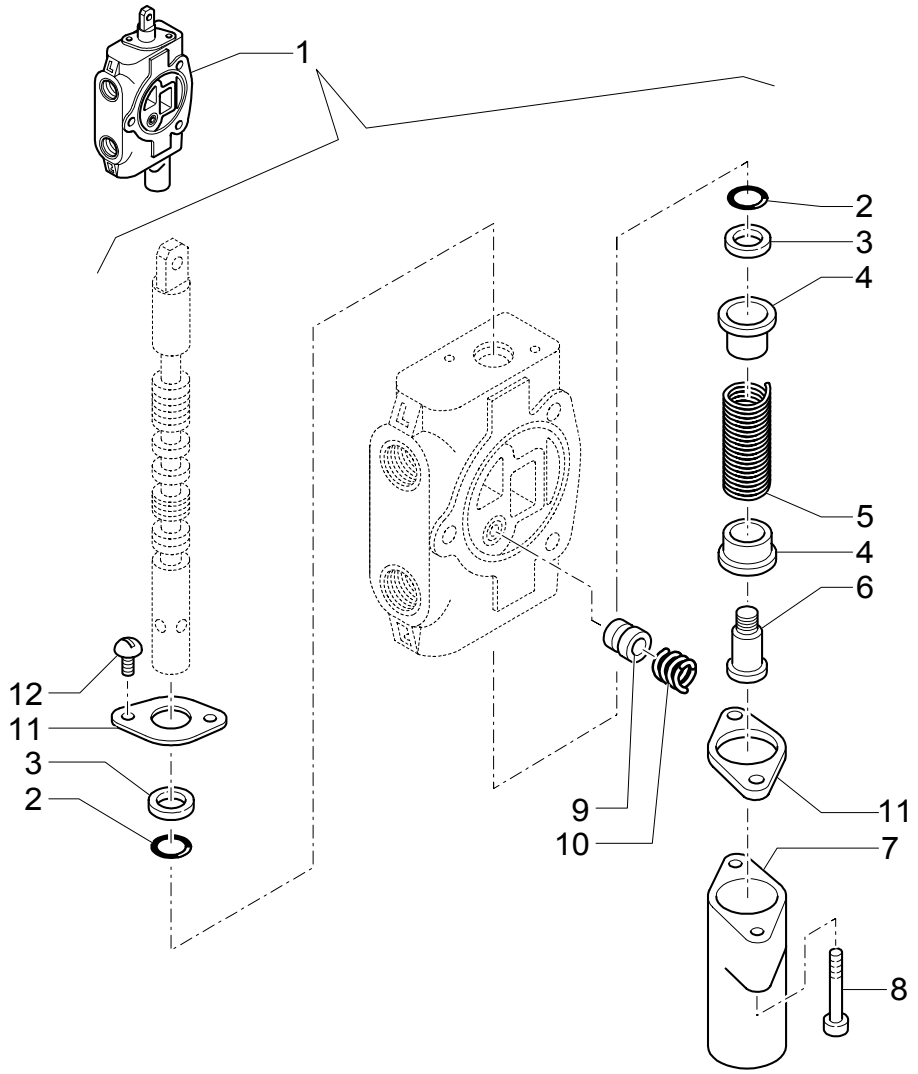

STABILIZER CONTROL VALVE, THIRD SECTION, HED (CENTER PIVOT)

REF	FN	PART NUMBER	YR/SN	QTY	DESCRIPTION
1		9968526		1	ELEMENT, JOINING ASSY
2		85813418		2	GASKET
3		85813419		2	RING, OIL SCRAPER
4		9968481		2	SEAT/SLOT
5		9968531		1	SPRING
6		9968483		1	SCREW
7		9968484		1	COVER
8		9968486		2	SCREW
9		9968477		1	PLUNGER
10		9968478		1	SPRING
11		9968480		2	PLATE, COVER
12		9968460		2	SCREW

391	01	p1	04/03

LOCK VALVE FOR BUCKET 4X1 / 6X1

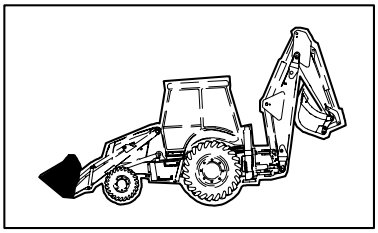

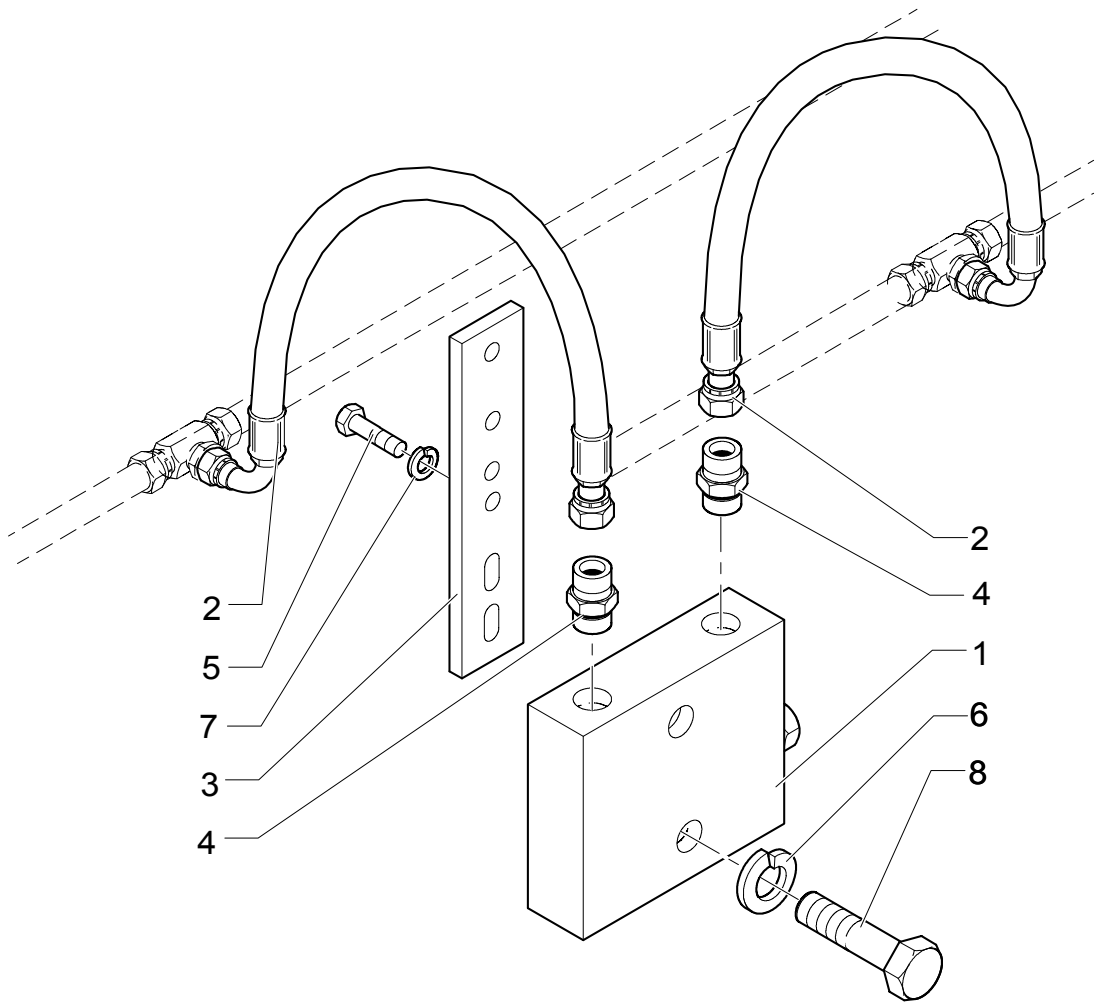

LOCK VALVE FOR BUCKET 4X1 / 6X1

REF	FN	PART NUMBER	YR/SN	QTY	DESCRIPTION
1		85820844		1	VALVE, HYDRAULIC
2		85821127		2	HOSE, FLEXIBLE
3		85820846		1	PLATE
4		83963374		4	CONNECTOR, HYD.
5		10903021		4	SCREW
6		11193874		2	WASHER, LOCK
7		11197774		4	WASHER, LOCK
8		16044121		2	SCREW

392	01	p1	04/03

LOCKING VALVE ON BACKHOE LIFT AND DIPP. CYLINDER

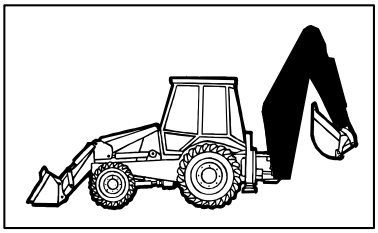

KIT 15= ●

SEE ALSO PAG.2

KIT 16= ▲
17= ■

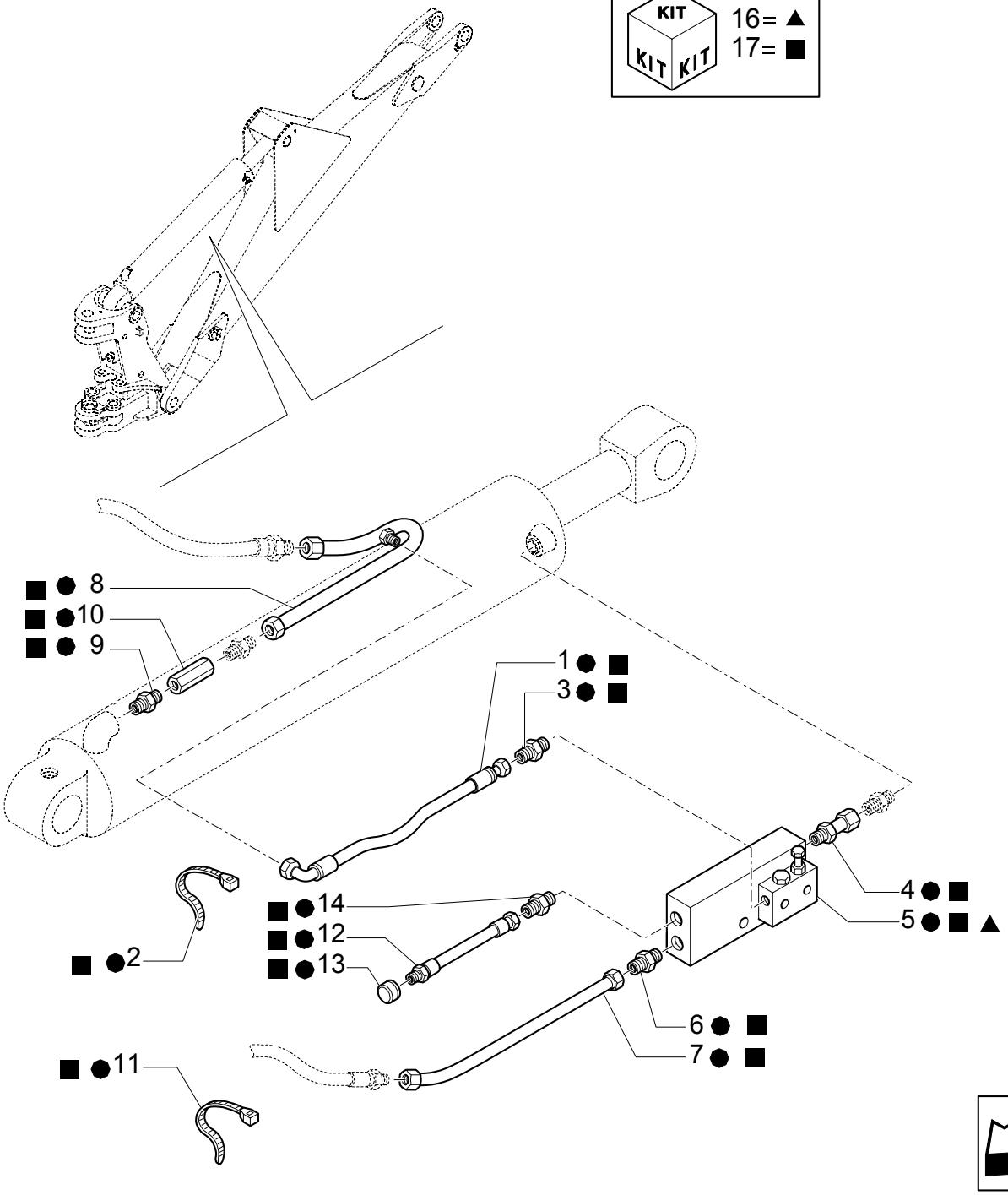

LOCKING VALVE ON BACKHOE LIFT AND DIPP. CYLINDER

REF	FN	PART NUMBER	YR/SN	QTY	DESCRIPTION
1		85815505		1	HOSE, FLEXIBLE
2		85803332		1	COLLAR
3		85802803		1	CONNECTOR, HYD.
4		85805124		1	CONNECTOR, HYD.
5	1	85820910		1	VALVE, SAFETY ASSY
6		83963000		1	CONNECTOR, HYD.
7		85820836		1	TUBE, RIGID
8		85820835		1	TUBE, RIGID
9		85804879		1	CONNECTOR, HYD.
10		85824308		1	VALVE, HYDRAULIC
11		79072960		2	COLLAR
12		85820158		1	HOSE, FLEXIBLE
13		85819673		1	VALVE, HYDRAULIC
14		83985067		1	CONNECTOR, HYD.
15		85820286		1	KIT
16		85820912		1	KIT
17		85820287		1	KIT

(1) Includes 16

BACKHOE LIFT & DIPPERSTICK CYLINDER LOCK VALVE

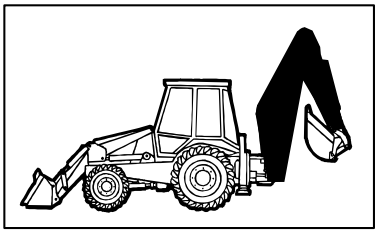

KIT KIT KIT 15= ●

SEE ALSO PAG.1

KIT KIT KIT 14= ▲

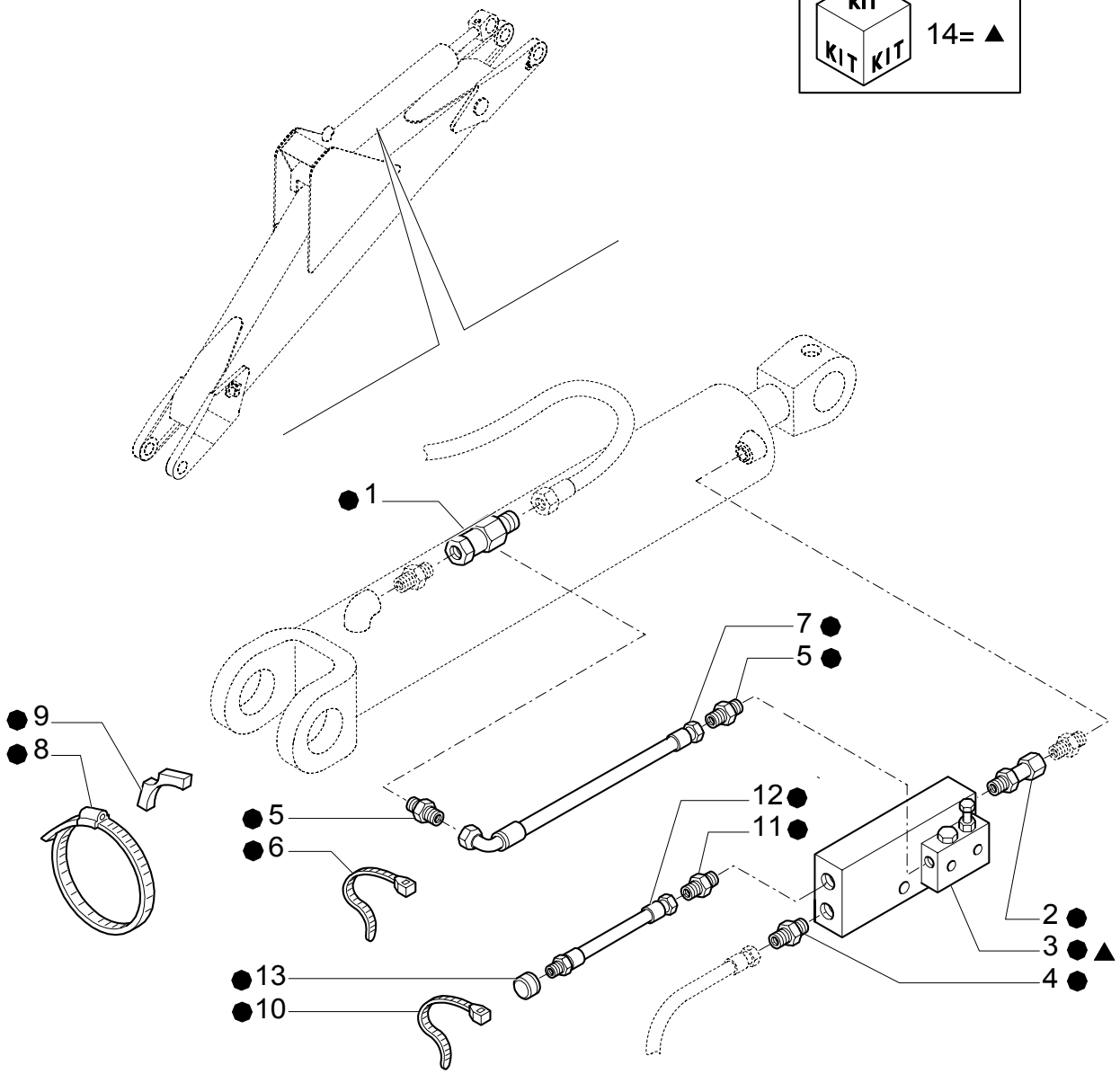

BACKHOE LIFT & DIPPERSTICK CYLINDER LOCK VALVE

REF	FN	PART NUMBER	YR/SN	QTY	DESCRIPTION
1		85805115		1	CONNECTOR, HYD.
2		85805124		1	CONNECTOR, HYD.
3	1	85820910		1	VALVE, SAFETY ASSY
4		83963000		1	CONNECTOR, HYD.
5		85802803		2	CONNECTOR, HYD.
6		85803332		1	COLLAR
7		85815505		1	HOSE, FLEXIBLE
8		85805126		1	COLLAR
9		85805123		1	PLATE, FIXING
10		79072960		2	COLLAR
11		83985067		1	CONNECTOR, HYD.
12		85820158		1	HOSE, FLEXIBLE
13		85819673		1	VALVE, HYDRAULIC
14		85820913		1	KIT
15		85820286		1	KIT

(1) Includes 15

437	01	p1	02/04

GLIDE RIDE VALVE,HYDRAULIC SYSTEM FOR MACHINE FRAME LEVELLING & ON/OFF SWITCH

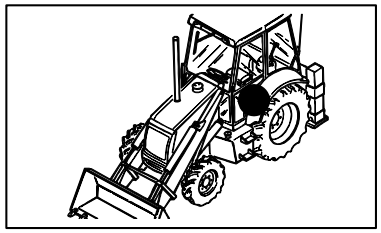

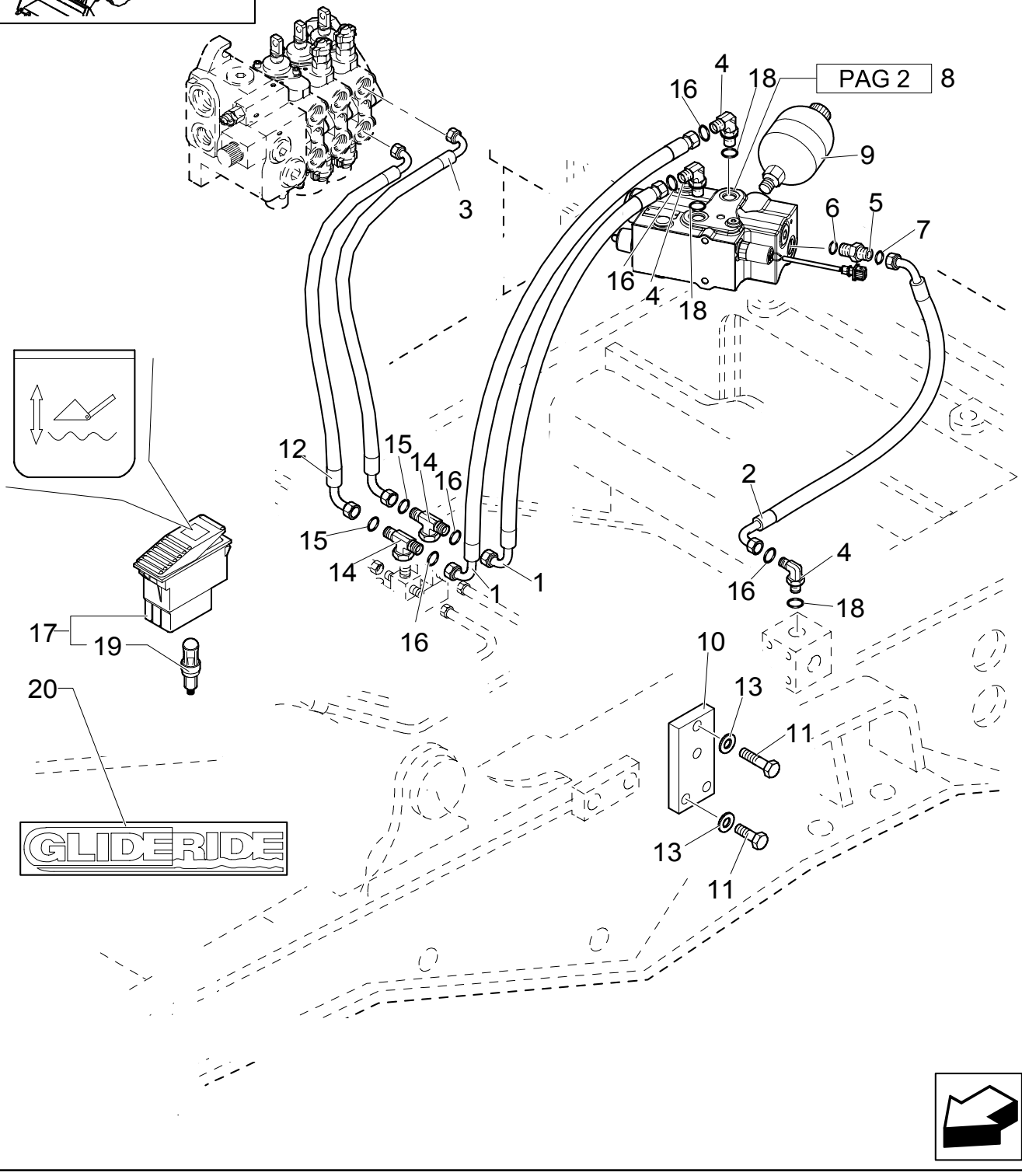

GLIDE RIDE VALVE,HYDRAULIC SYSTEM FOR MACHINE FRAME LEVELLING & ON/OFF SWITCH

REF	FN	PART NUMBER	YR/SN	QTY	DESCRIPTION
1		85815589		2	HOSE, FLEXIBLE
2		85815620		1	HOSE, FLEXIBLE
3		85817222		1	HOSE, FLEXIBLE
4	1	83971549		3	ELBOW
5		83963376		1	CONNECTOR, HYD.
6		167269		1	O-RING 90 Duro, .755" ID x .097" Thk
7		9992298		1	O-RING 90 Duro, .489" ID x .070" Thk
8	2	85815581		1	CONNECTOR, HYD.
8	3	85826144		1	VALVE, HYDRAULIC
9		85818888		1	ACCUMULATOR
10	2	85815597		1	PLATE
10	3	{85827961}		1	PLATE
11		11106421		4	SCREW
12		85817223		1	HOSE, FLEXIBLE
13		11190579		4	WASHER, LOCK
14	4	85815583		2	CONNECTOR, HYD.
15		87016S95		1	O-RING 90 Duro, .625" ID x .070" Thk
16		9992298		2	O-RING 90 Duro, .489" ID x .070" Thk
17		85817674		1	SWITCH
18		128825		1	O-RING 90 Duro, .644" ID x .087" Thk
19		14143790		1	BULB
20		86982600		2	DECAL

(1) Includes 16,18
(2) Serial Number: -031046312
(3) Serial Number: 031046313-
(4) Includes 15,16

437	02	p1	02/04

GLIDE RIDE VALVE

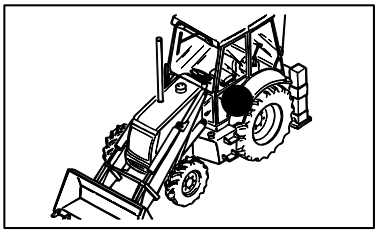

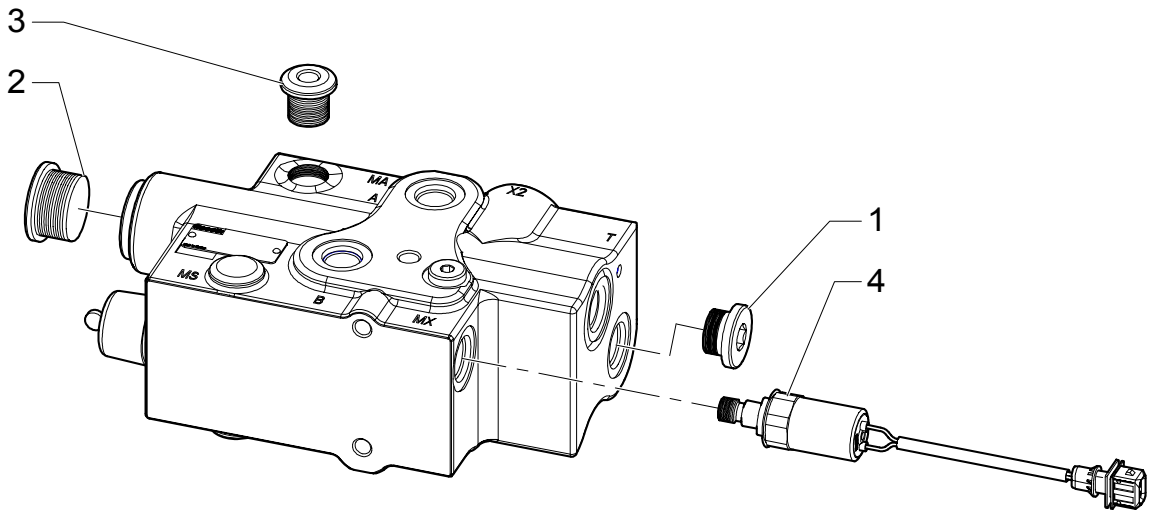

GLIDE RIDE VALVE

REF	FN	PART NUMBER	YR/SN	QTY	DESCRIPTION
1		85826214		1	PLUG
2		85826215		1	PLUG
3		85826216		1	PLUG
4		{85826217}		1	VALVE, HYDRAULIC

721	01	p1	07/03

TELESCOPIC CONTROL VALVE, 3 SECTIONS(CENTER PIVOT)

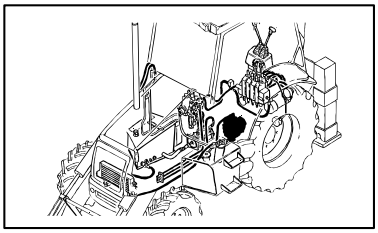

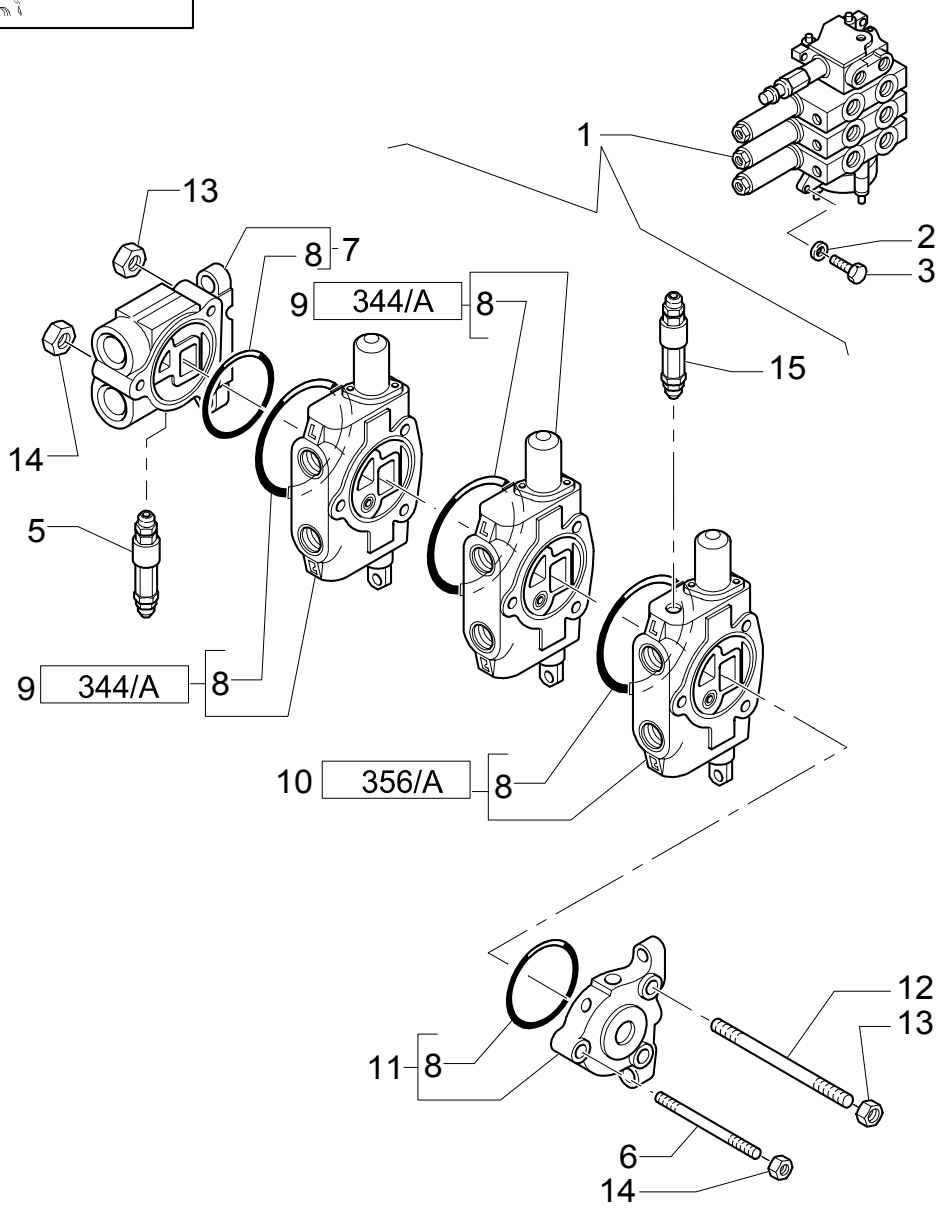

TELESCOPIC CONTROL VALVE, 3 SECTIONS(CENTER PIVOT)

REF	FN	PART NUMBER	YR/SN	QTY	DESCRIPTION
1		85819685		1	DISTRIBUTOR ASSY
2		11193879		3	WASHER, LOCK
3		16043921		3	SCREW M8X1,25X35
5		85819721		1	VALVE, HYDRAULIC
6		9968528		1	STUD
7		9968524		1	SIDE PANEL
8		9968476		5	O-RING
9	1	9970107		2	ELEMENT, JOINING
10	2	9968526		1	ELEMENT, JOINING
11		9968527		1	SIDE PANEL
12		9968529		2	STUD
13		9968441		4	NUT
14		9968440		2	NUT
15		9968594		1	VALVE, HYDRAULIC

(1) See Page 344/ A
(2) See Page 356

721	02	p1	09/03

HED TELESCOPIC CONTORL VALVE, SECTION HOSES(CENTER PIVOT)

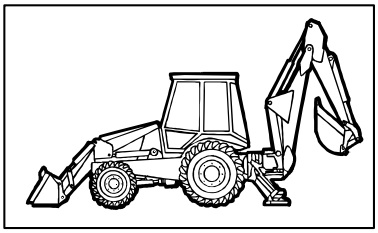

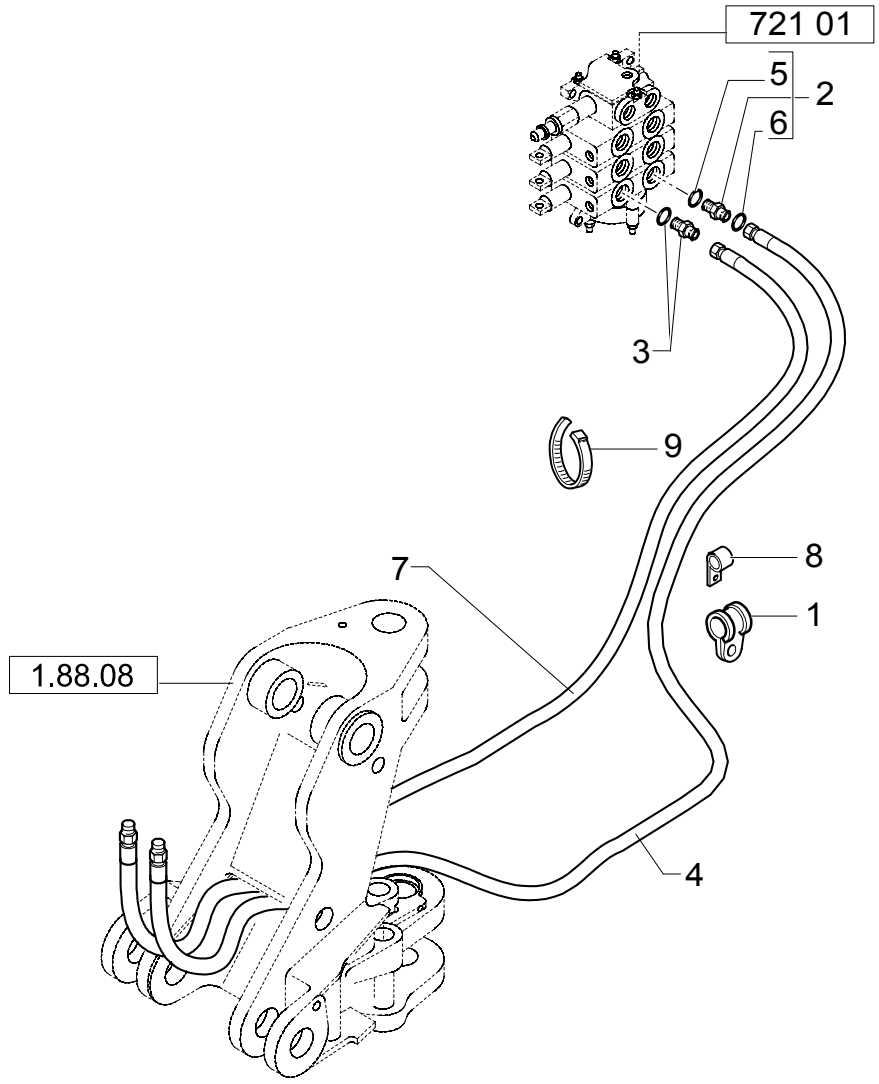

HED TELESCOPIC CONTORL VALVE, SECTION HOSES(CENTER PIVOT)

REF	FN	PART NUMBER	YR/SN	QTY	DESCRIPTION
1		85812029		1	COLLAR, RETAINER
2		83963374		1	CONNECTOR, HYD.
3		85803234		1	CONNECTOR, HYD.
4		85812214		1	HOSE, FLEXIBLE
5		128825		3	O-RING 90 Duro, .644" ID x .087" Thk
6		9992298		3	O-RING 90 Duro, .489" ID x .070" Thk
7		85812193		1	HOSE, FLEXIBLE
8		85803393		1	COLLAR, RETAINER
9		85803332		4	COLLAR

HED CYLINDER PISTON END HYDRAULIC LINES(CENTER PIVOT)

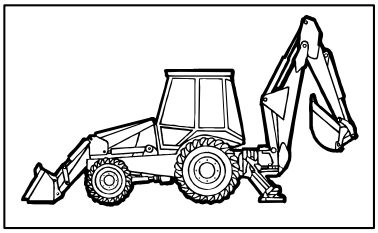

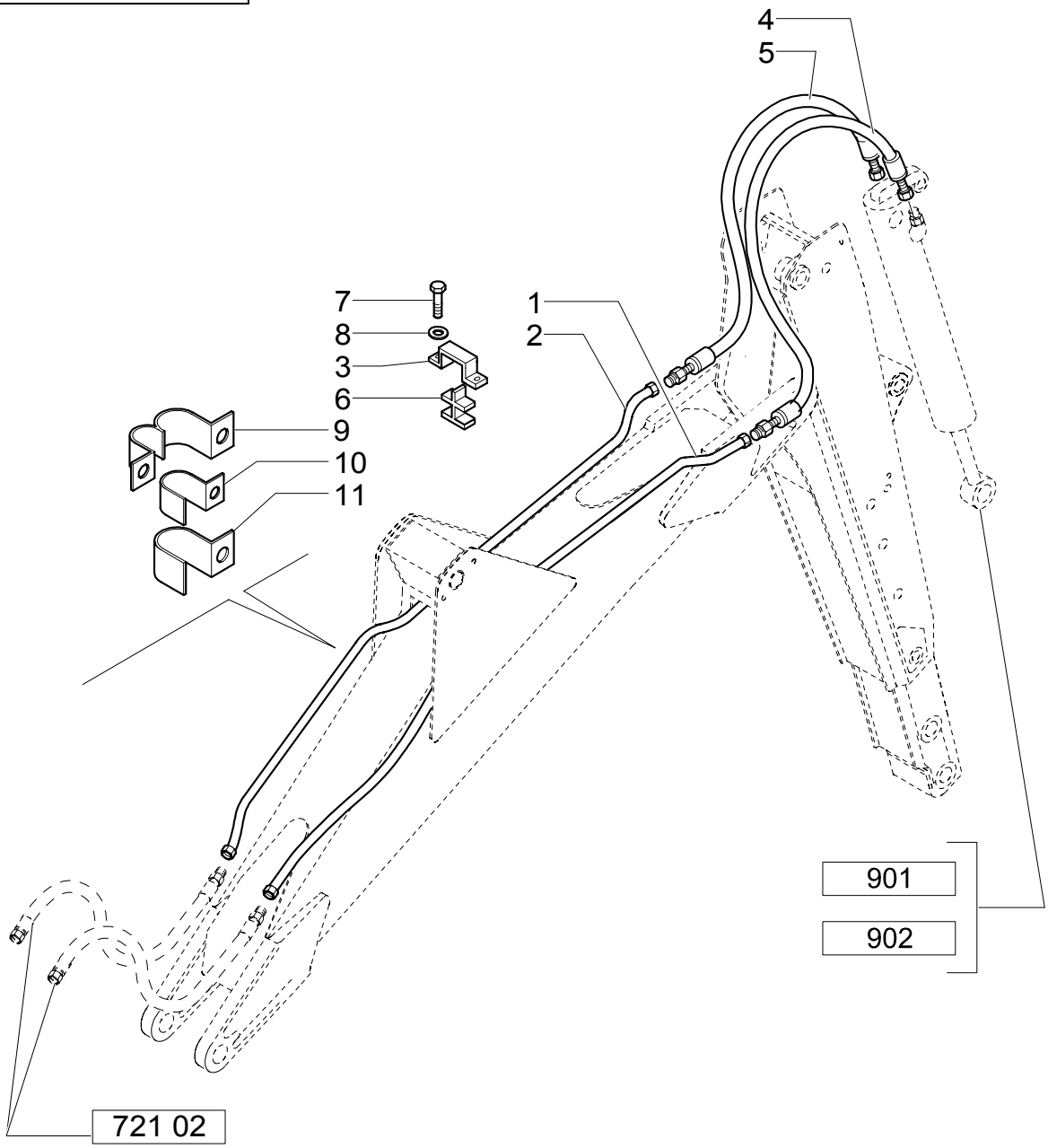

HED CYLINDER PISTON END HYDRAULIC LINES(CENTER PIVOT)

REF	FN	PART NUMBER	YR/SN	QTY	DESCRIPTION
1		85815642		1	TUBE, RIGID
2		85815640		1	TUBE, RIGID
3		85803402		1	PLATE
4		85817109		1	HOSE, FLEXIBLE
5		85817108		1	HOSE, FLEXIBLE
6		85802532		1	CLIP, HOSE
7		16043621		2	SCREW
8		11193879		2	WASHER, LOCK
9		85802529		2	CLIP
10		85802527		2	CLIP
11		85802528		2	CLIP

721	04	p1	09/03

HED CYLINDER ROD END HYDRAULIC LINES(CENTER PIVOT)

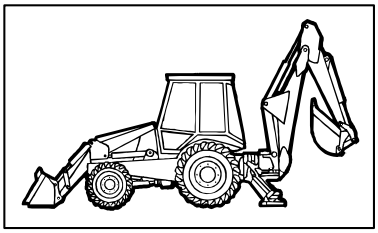

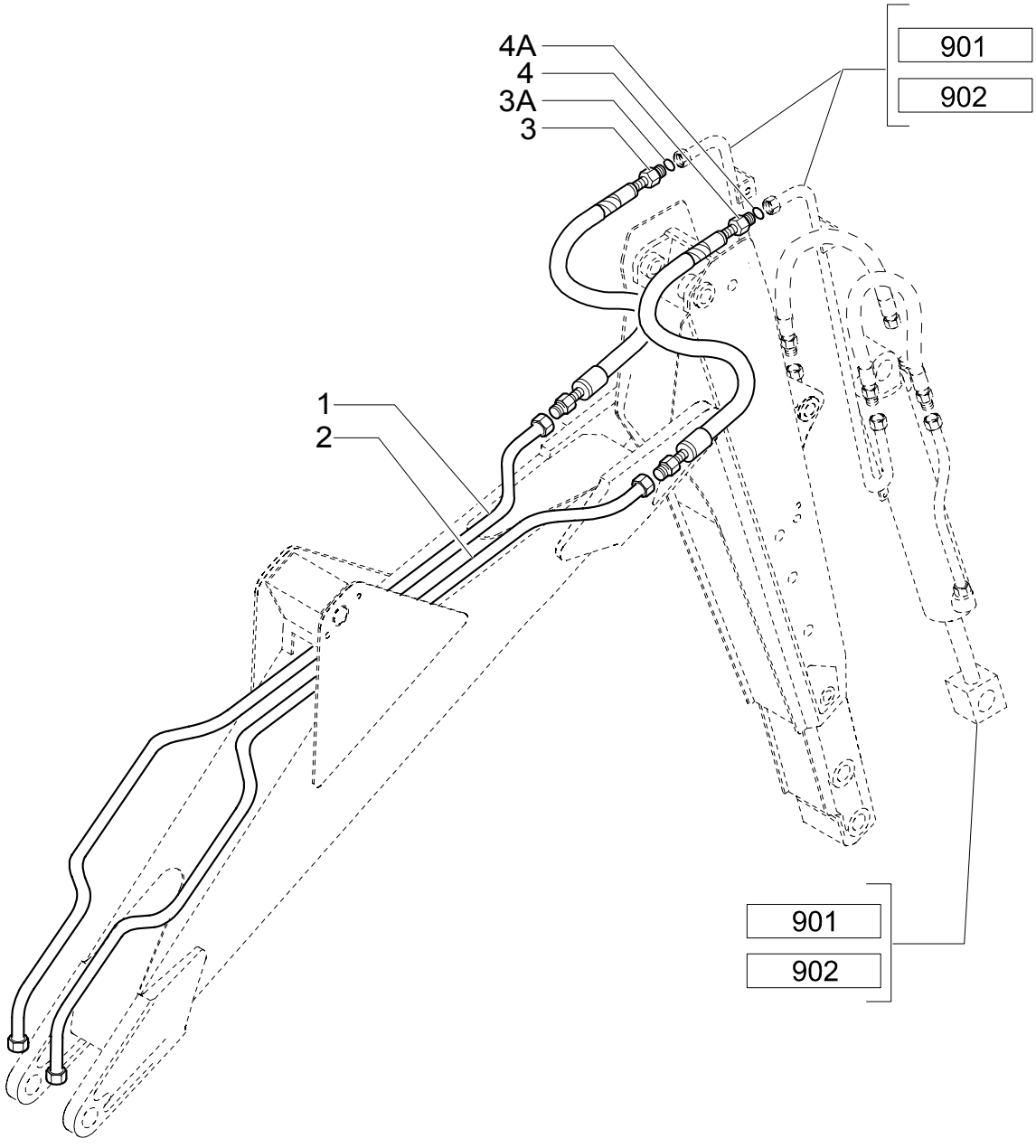

HED CYLINDER ROD END HYDRAULIC LINES(CENTER PIVOT)

REF	FN	PART NUMBER	YR/SN	QTY	DESCRIPTION
1		85815674		1	TUBE, RIGID
2		85815676		1	TUBE, RIGID
3	1	85817106		1	HOSE, FLEXIBLE
3A		9991976		2	O-RING 90 Duro, .739" ID x .070" Thk
4	2	85817107		1	HOSE, FLEXIBLE
4A		9992069		2	O-RING 90 Duro, .614" ID x .070" Thk

(1) Includes 3A
(2) Includes 4A

HED FOOT PEDAL, CABLE & DECALS(CENTER PIVOT)

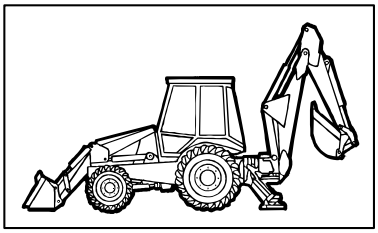

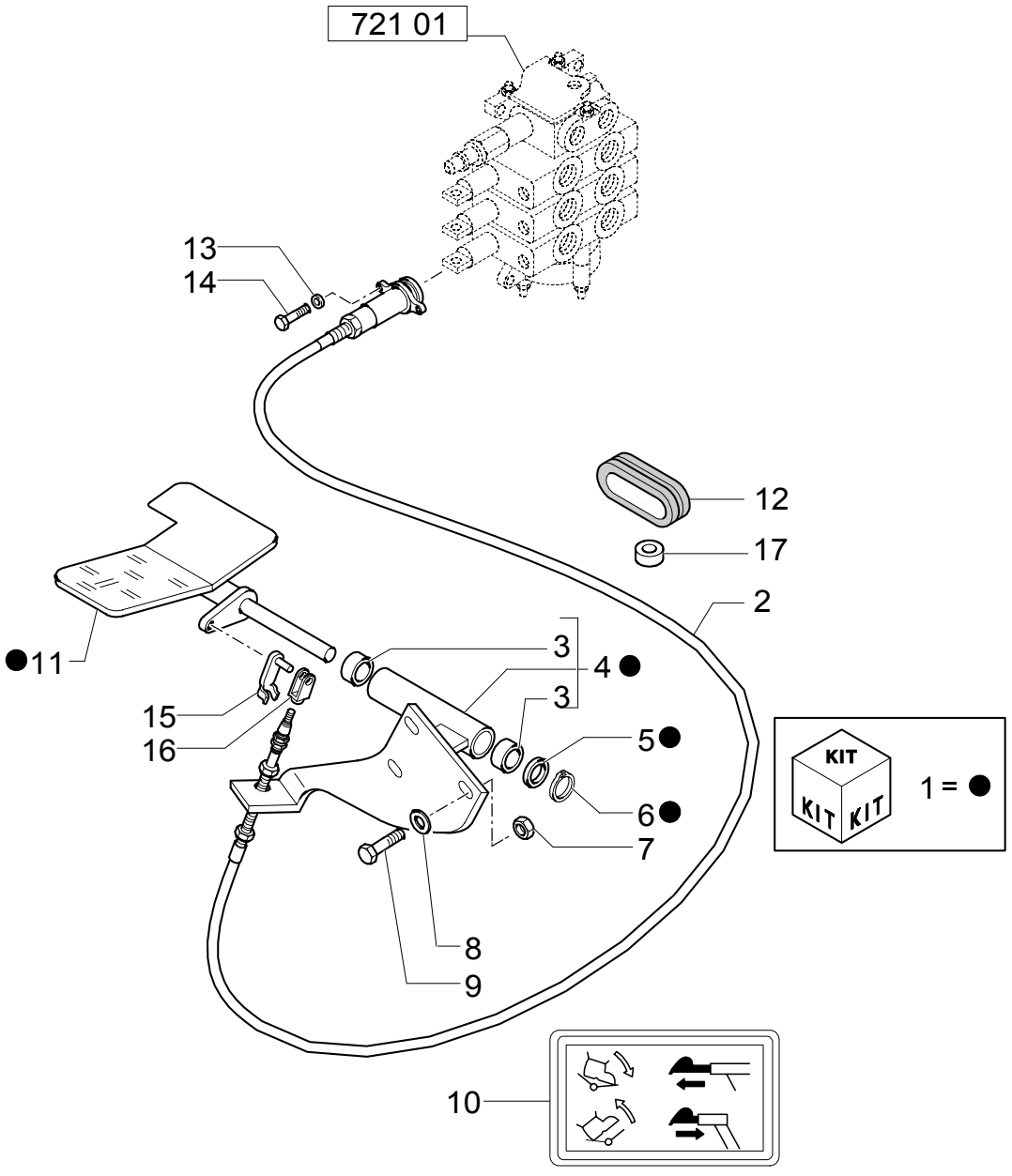

HED FOOT PEDAL, CABLE & DECALS(CENTER PIVOT)

REF	FN	PART NUMBER	YR/SN	QTY	DESCRIPTION
1		85802509		1	PEDAL ASSY
2	1	85813103		1	CABLE
3		85802494		2	BUSHING
4		85801599		1	PLATE
5		14496901		1	WASHER
6		83911366		1	RING, SNAP
7		16104111		3	NUT
8		16043621		3	SCREW M8X1.25X25
9		11193879		3	WASHER, LOCK
10		85803786		1	DECAL
11		85802510		1	PEDAL
12		85803517		2	BUSHING, RUBBER
13		85813201		4	WASHER
14		85813200		4	SCREW
15		85813186		2	CLIP
16		85813187		2	YOKE
17		85802903		1	INSULATOR

(1) Includes 13,14,15,16

Mechanical Version

LB75.B

SECTION INDEX

SEC. 08	00	BODY & HOOD
1.83.0	01	HOOD, GRILLE & RELATED PARTS
1.87.2	01	CAB SCREEN
1.87.8	01	CAB FASTENERS

BODY & HOOD

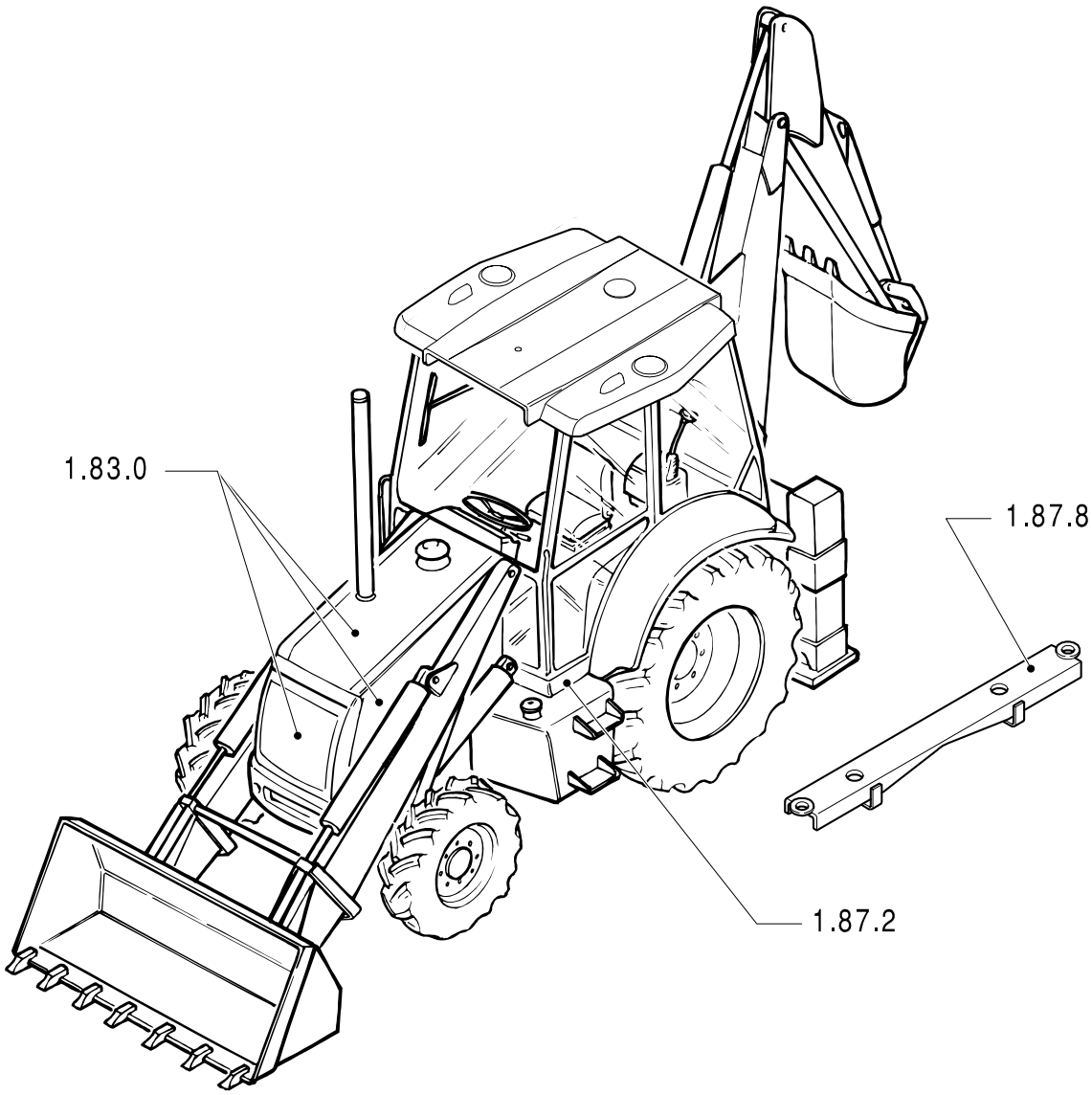

BODY & HOOD

REF	FN	PART NUMBER	YR/SN	QTY	DESCRIPTION

1.83.0	01	p1	02/04

HOOD, GRILLE & RELATED PARTS

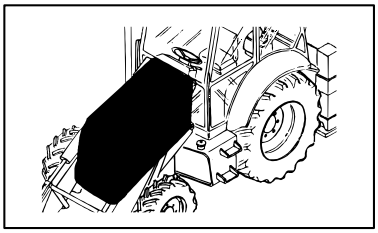

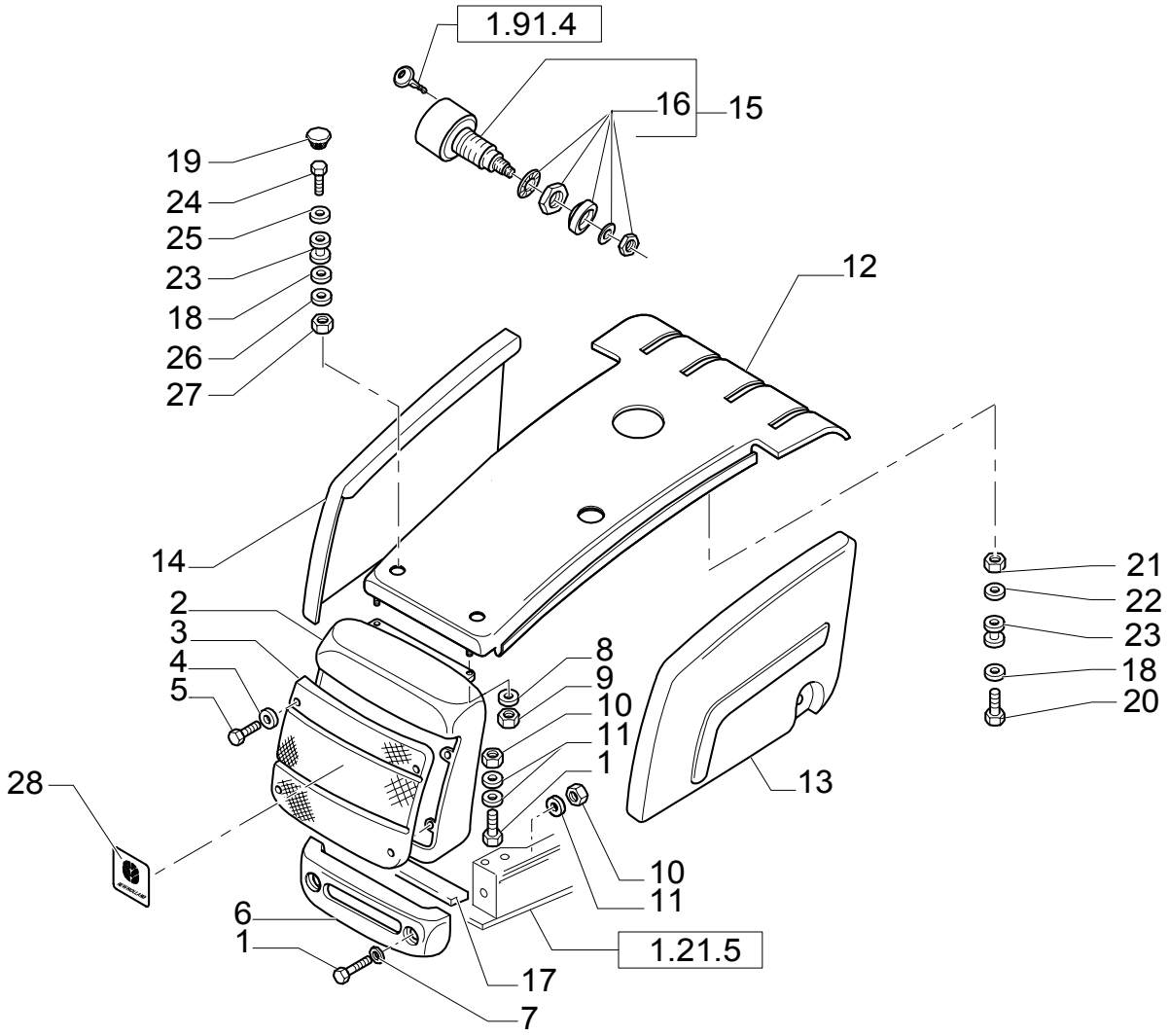

HOOD, GRILLE & RELATED PARTS

REF	FN	PART NUMBER	YR/SN	QTY	DESCRIPTION
1		15840521		6	SCREW M16X1,5X50
2		85825070		1	GRILLE
3		85811421		1	GRILLE
4		11193979		4	WASHER, LOCK
5		16043121		4	SCREW M8X1,25X14
6		85803625		1	GRILLE, RADIATOR
7		13580001		3	WASHER
8		11190879		4	WASHER M12 x 30 x 3
9		86981462		2	NUT M12X1,25
10		12164111		6	NUT M16X1,5
11		11191579		6	WASHER, LOCK
12		85826084		1	PANEL, ENGINE HOOD
13		85825103		1	PANEL LH
14		85825102		1	PANEL RH
15		85824087		2	KIT
16		85806128		AR	KIT
17		85817795		1	STRIP-GASKET
18		86592700		4	WASHER
19		85827683		1	PLUG
20		11107021		4	SCREW
21		86625071		2	NUT
22		13578621		2	WASHER
23		{47048468}		4	
24		85826361		2	SCREW
25		{47054521}		2	
26		47048972		2	WASHER
27		12577211		2	NUT
28		87802964		1	DECAL

1.87.2	01	p1	09/03

CAB SCREEN

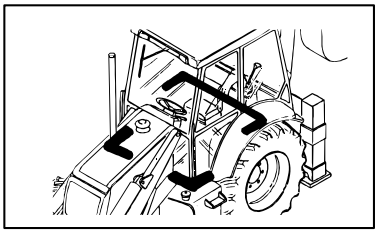

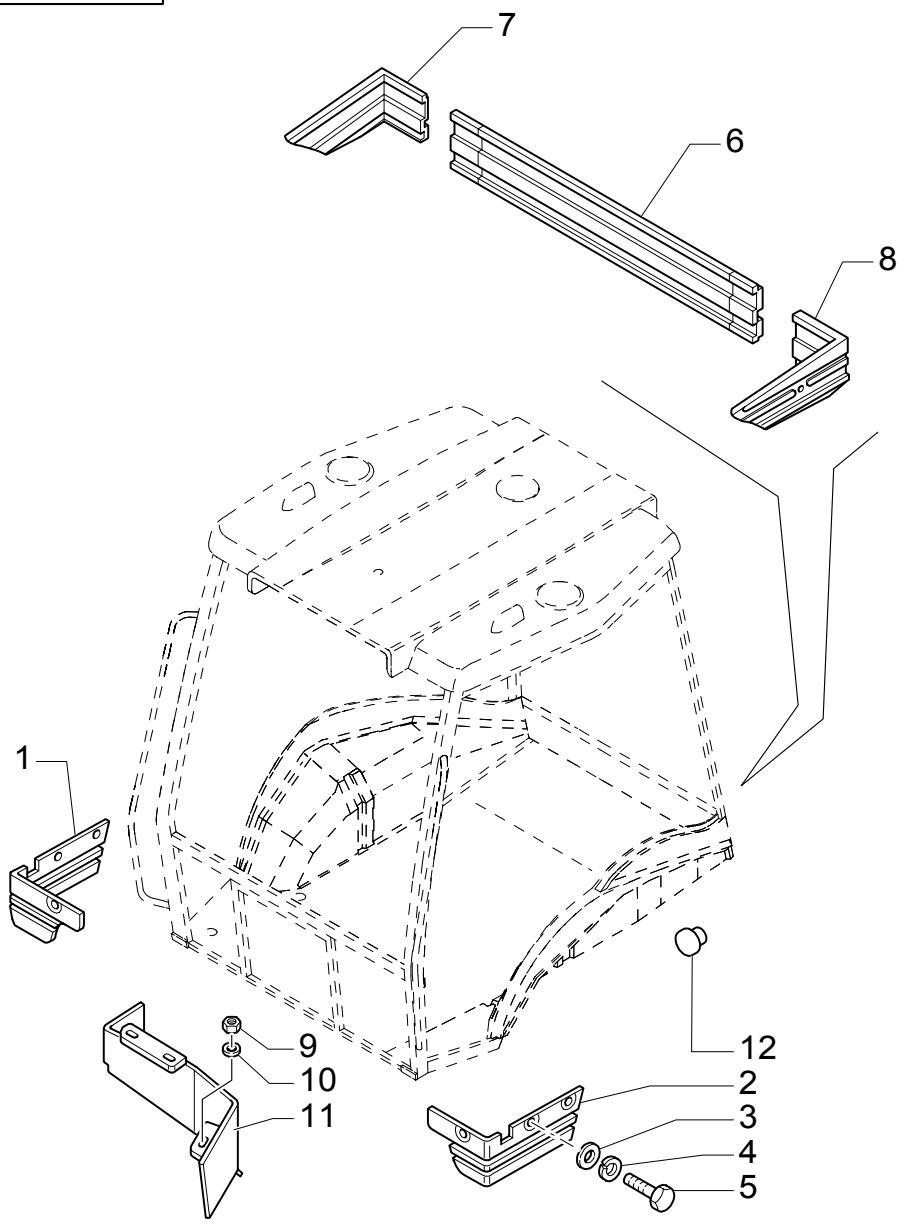

CAB SCREEN

REF	FN	PART NUMBER	YR/SN	QTY	DESCRIPTION
1		85805301		1	GUARD RH
2		85805302		1	GUARD LH
3		12643721		11	WASHER
4		11194679		11	WASHER
5		10902424		11	SCREW M6X20
6		85805303		1	GUARD
7		85805304		1	GUARD LH
8		85805305		1	GUARD RH
9		16104111		3	NUT M8
10		11193979		3	WASHER, LOCK 8X22X1,5
11		85805142		1	GUARD
12		85808422		2	PLUG

CAB FASTENERS

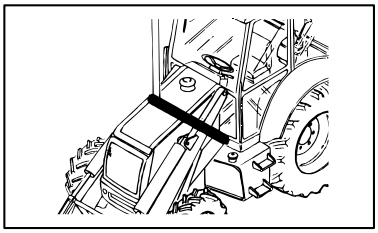

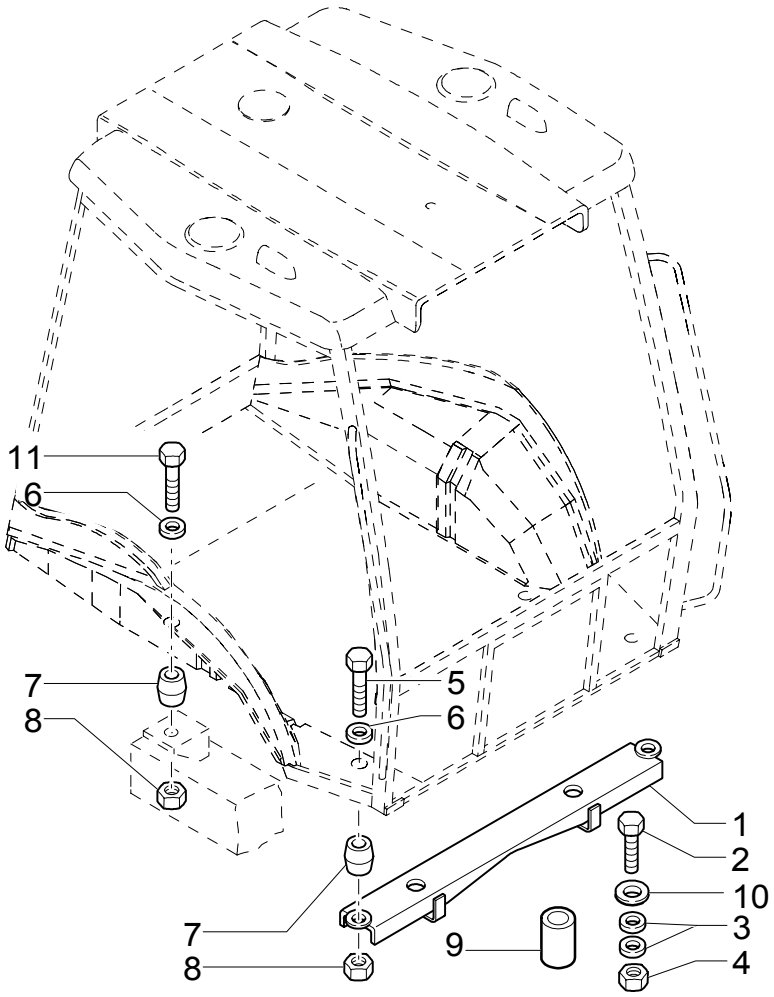

CAB FASTENERS

REF	FN	PART NUMBER	YR/SN	QTY	DESCRIPTION
1		85801319		1	CROSSRAIL
2		15989334		2	SCREW M20X1,5X110
3		10520431		4	WASHER
4		12575121		2	NUT M20X1,5
5		15982134		2	SCREW M16X1,5X140
6		14496931		4	WASHER
7		85802970		4	SHOCK ABSORBER
8		12574921		4	NUT M16X1,5
9		85801324		2	TUBE, RIGID
10		85804493		2	WASHER 21X40X6
11		15981834		2	SCREW M16X1,5X120

SECTION INDEX

SEC. 09	00	LOADER 1/1
SEC. 09	01	BACKHOE 1/2
SEC. 09	02	BACKHOE 2/2
1.88.01	01	TRANSPORT LOCK" REAR LOCKING" (CENTER PIVOT)
1.88.01	02	TRANSPORT LOCK" REAR LOCKING" (CENTER PIVOT)
1.88.08	01	SWING POST ASSEMBLY, BUSHINGS & PINS
1.88.08	02	SWING POST PINS & TRANSPORT LOCK HOOK
1.88.09	01	DISTRIBUTOR VALVE SUPPORT (CENTER PIVOT)
1.88.11	01	ARMS AND JOINTS
1.88.11/ 1	01	LOADER CYLINDER
1.88.11/ 2	01	LOADER BUCKET CONTROL CYLINDER
1.88.11/ 2	02	LOADER BUCKET CONTROL CYLINDER
1.88.11/ 3	01	LIFT CYLINDER AND BUCKET PIPES
1.88.11/ 5	01	SELF-LEVELING LINKAGE, LOADER CONTROLS (CENTER PIVOT)
1.88.11/ 5	02	SELF-LEVELING LINKAGE, LOADER ARM (CENTER PIVOT)
1.88.11/ 6	01	STABILIZER CYLINDERS (CENTER PIVOT)
1.88.11/ 7	01	PIPES FOR STABILIZER CYLINDERS (CENTER PIVOT)
1.88.11/ 8	01	RETURN TO DIG SENSOR
1.88.11/ 9	01	CYLINDERS AND ROTATION PLATE (SIDE SHIFT)
1.88.11/ 9A	01	CYLINDERS AND ROTATION PLATE (CENTER PIVOT)
1.88.11/ 9B	01	SWING CYLINDERS, THREADED TRUNNION
1.88.12/ 3	01	FRONT CONTROL VALVE SUPPORT AND TRANSMISSIONS (CENTER PIVOT)
200	01	SHOVEL AND REAR LIFTING HOOKS
469-A	01	HYDRAULIC CYLINDER (BUCKET 4X1-6X1)
471	01	BUCKET 4X1 (1 M3) WITH BLADE
471	02	BUCKET 4X1 (1 M3) WITH BLADE
472	01	BUCKET 4X1 (1 M3) WITH TINE
472	02	BUCKET 4X1 (1 M3) WITH TINE
473	01	BUCKET 6X1 (1 M3) WITH BLADE
473	02	BUCKET 6X1 (1 M3) WITH BLADE
474	01	BUCKET 6X1 (1 M3) WITH TINE
474	02	BUCKET 6X1 (1 M3) WITH TINE
514	01	BOOM - DIPPER SHORT
514	02	SHORT DIPPER
514	03	SHORT DIPPER - BUCKET MOTION
514	04	SHORT DIPPER - HYDRAULIC SYSTEM
514	05	SHORT DIPPER - HYDRAULIC SYSTEM
514	06	SHORT DIPPER - HYDRAULIC SYSTEM
514	07	SHORT DIPPER - HYDRAULIC SYSTEM
514	08	SHORT DIPPER - HYDRAULIC SYSTEM
514-A	01	HYDRAULIC LIFTING CYLINDER
514-B	01	HYDRAULIC DITCHING CYLINDER
514-C	01	HYDRAULIC BUCKET CYLINDER
515	01	12" (305MM) BACKHOE BUCKET WITH PIN TEETH
515	02	12" (305MM) BACKHOE BUCKET WITH BOLT-ON TEETH
516	01	18" (457MM) BACKHOE BUCKET WITH PIN TEETH
516	02	18" (457MM) BACKHOE BUCKET WITH BOLT-ON TEETH
517	01	24" (610MM) BACKHOE BUCKET WITH PIN TEETH
517	02	24" (610MM) BACKHOE BUCKET WITH BOLT-ON TEETH
518	01	30" (762MM) BACKHOE BUCKET WITH PIN TEETH
518	02	30" (762MM) BACKHOE BUCKET WITH BOLT-ON TEETH

SECTION INDEX

519	01	36" (914MM) BACKHOE BUCKET WITH PIN TEETH
519	02	36" (914MM) BACKHOE BUCKET WITH BOLT-ON TEETH
520	01	0.88 M3 BUCKET WITHOUT TINES
522-B	01	1 M3 BUCKET
522-C	01	STANDARD 1MC BUCKET WITH FORKS
525	01	STANDARD 1M3 BUCKET WITH FORKS AND EXTRA REVERSIBLE BLADE
525	02	STANDARD 1M3 BUCKET WITH FORKS AND EXTRA REVERSIBLE BLADE
526	01	BOLT-ON TOOTH KIT, 12" (305MM) BACKHOE BUCKET
526-1	01	STANDARD 1M3 BUCKET WITH FORKS AND TINE
527	01	BOLT-ON TOOTH KIT, 18" (457MM) & 24" (610MM) BACKHOE BUCKETS
527-1	01	0.88 M3 BUCKET AND EXTRA REVERSIBLE BLADE
528	01	BOLT-ON TOOTH KIT, 30" (762MM) BACKHOE BUCKET
529	01	BOLT-ON TOOTH KIT, 36" (914MM) BACKHOE BUCKET
530	01	PIN TOOTH KIT, 12" (305MM) BACKHOE BUCKET
531	01	PIN TOOTH KIT, 18" (457MM) & 24" (610MM) BACKHOE BUCKETS
532	01	PIN TOOTH KIT, 30" (762MM) BACKHOE BUCKET
533	01	PIN TOOTH KIT, 36" (914MM) BACKHOE BUCKET
533/ 1	01	1.15 M3 BUCKET WITH FORKS AND CUTTER BLADE
536/ 1	01	STANDARD 1MC BUCKET WITH TINE
537/ 1	01	STANDARD 1MC BUCKET WITH EXTRA REVERSIBLE BLADE
548	01	DITCH CLEANING BUCKET
555	01	FRONT BUCKET TEETH
556	01	LOADER BUCKET REVERSIBLE BLADE
626	01	SCRAB GRAB
648	01	FORK KIT, CONVERTS4X1 BUCKET TO 6X1
699	01	HAND HAMMER SWITCH
700	01	4X1 & 6X1 BUCKET CONTROL LEVER, CABLE & DECALS
700	02	4X1 & 6X1 BUCKET HYDRAULIC LINES
704	01	MANUAL HAMMER SYSTEM
704	02	MANUAL HAMMER SYSTEM
704/ A	01	MANUAL HAMMER VALVE
718	01	4X1 & 6X1 BUCKET HYDRAULIC LINES CENTER PIVOT)
718	02	4X1 & 6X1 BUCKET CONTROL LEVER, CABLE & DECALS (CENTER PIVOT)
724	01	HYDRAULIC SYSTEM FOR HAMMER (CENTER PIVOT)
724	02	HYDRAULIC SYSTEM FOR HAMMER (CENTER PIVOT)
724/ A	01	REAR HAMMER CONTROL VALVE
724/ 3	01	HYDRAULIC SYSTEM FOR HAMMER (CENTER PIVOT)
724/ 3	02	HYDRAULIC SYSTEM FOR HAMMER (CENTER PIVOT)
725	01	HAMMER KIT FROM LIFTING ARM TO DEMOLITION ARM
725/ 1	01	4X1 & 6X1 BUCKET CONTROL LEVER, CABLE & DECALS(CENTER PIVOT)
725/ 1	02	4X1 & 6X1 BUCKET HYDRAULIC LINES(CENTER PIVOT)
732	01	REAR MECHANICAL QUICK-COUPLING
732-A	01	REAR MECHANICAL QUICK-COUPLING
734	01	FRONT MECHANICAL QUICK-COUPLING
902	01	BOOM - TELESCOPIC DIPPER SHORT
902	02	TELESCOPIC DIPPER SHORT - HYDRAULIC SYSTEM
902	03	TELESCOPIC DIPPER SHORT - HYDRAULIC SYSTEM
902	04	TELESCOPIC DIPPER SHORT- BUCKET MOTION
902	05	TELESCOPIC DIPPER SHORT - HYDRAULIC SYSTEM
902	06	TELESCOPIC DIPPER SHORT - HYDRAULIC SYSTEM
902	07	TELESCOPIC DIPPER SHORT - HYDRAULIC SYSTEM

SECTION INDEX

902/ A	01	TELESCOPIC DIPPER SHORT
902/ A	02	TELESCOPIC DIPPER SHORT - HYDRAULIC SYSTEMM

LOADER 1/1

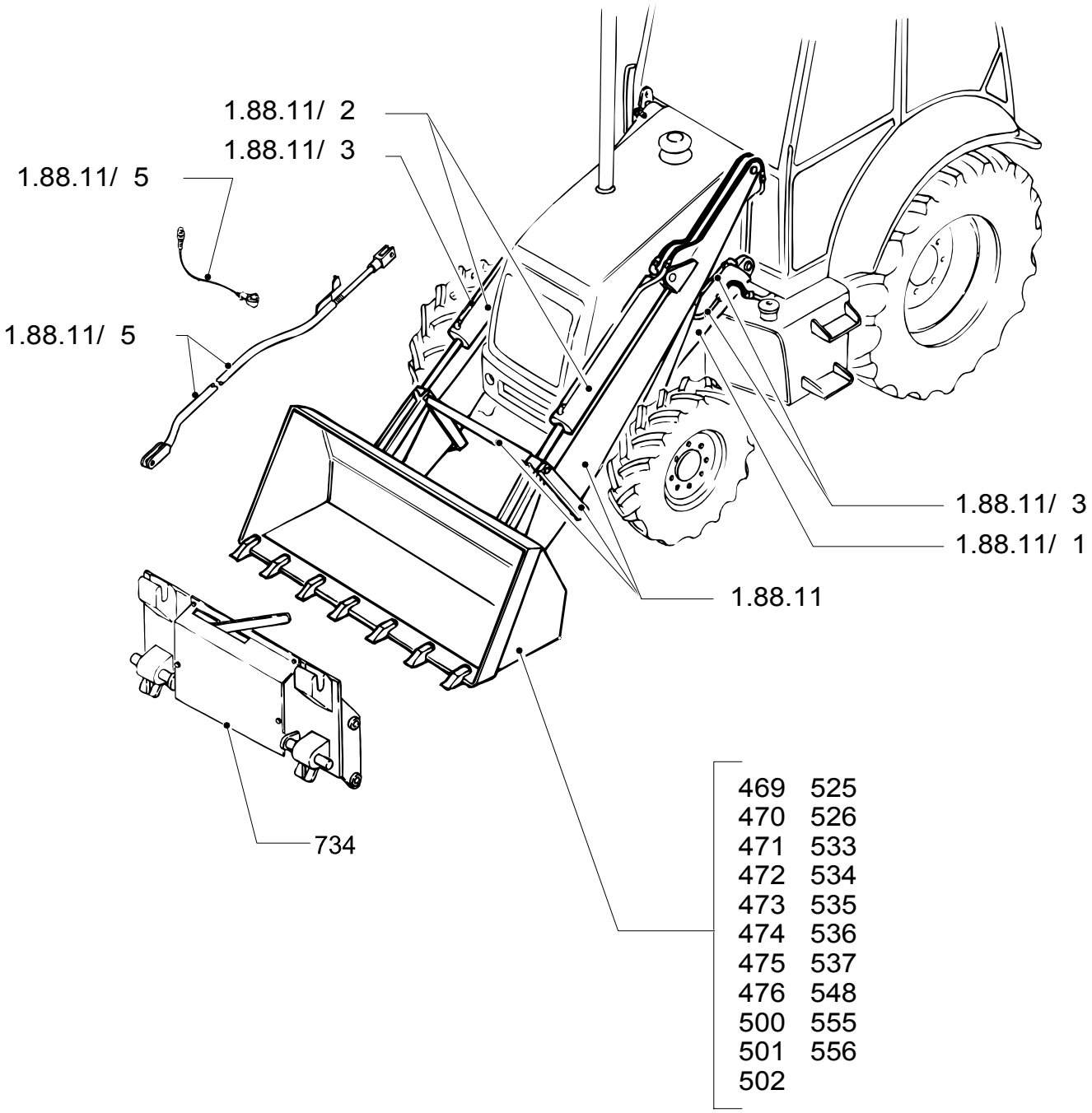
1.88.11/ 2
1.88.11/ 3
1.88.11/ 5
1.88.11/ 5
1.88.11/ 3
1.88.11/ 1
1.88.11
734
469 525
470 526
471 533
472 534
473 535
474 536
475 537
476 548
500 555
501 556
502

LOADER 1/1

REF	FN	PART NUMBER	YR/SN	QTY	DESCRIPTION

BACKHOE 1/2

SIDE SHIFT

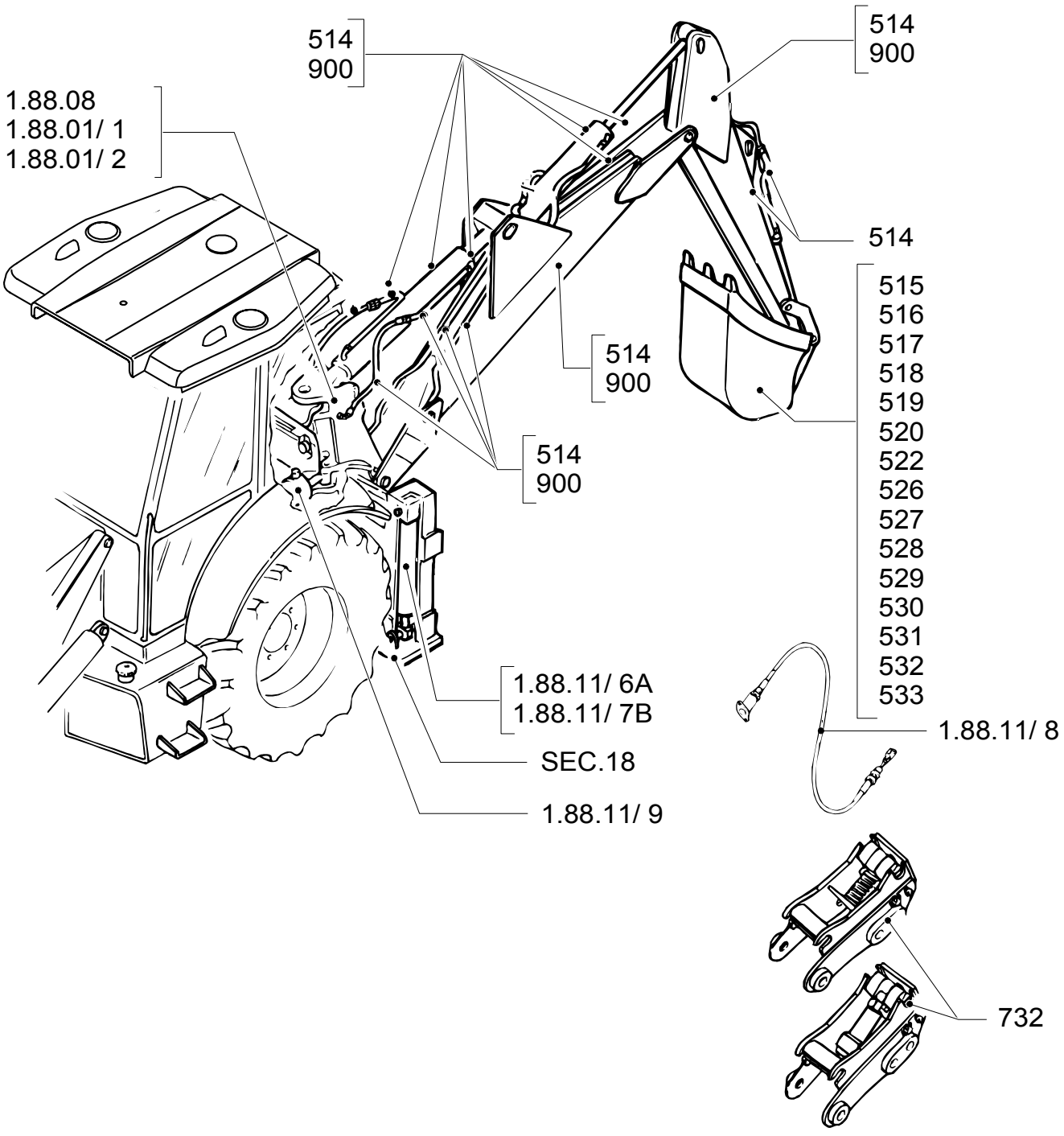

BACKHOE 1/2

REF	FN	PART NUMBER	YR/SN	QTY	DESCRIPTION

BACKHOE 2/2

CENTER PIVOT

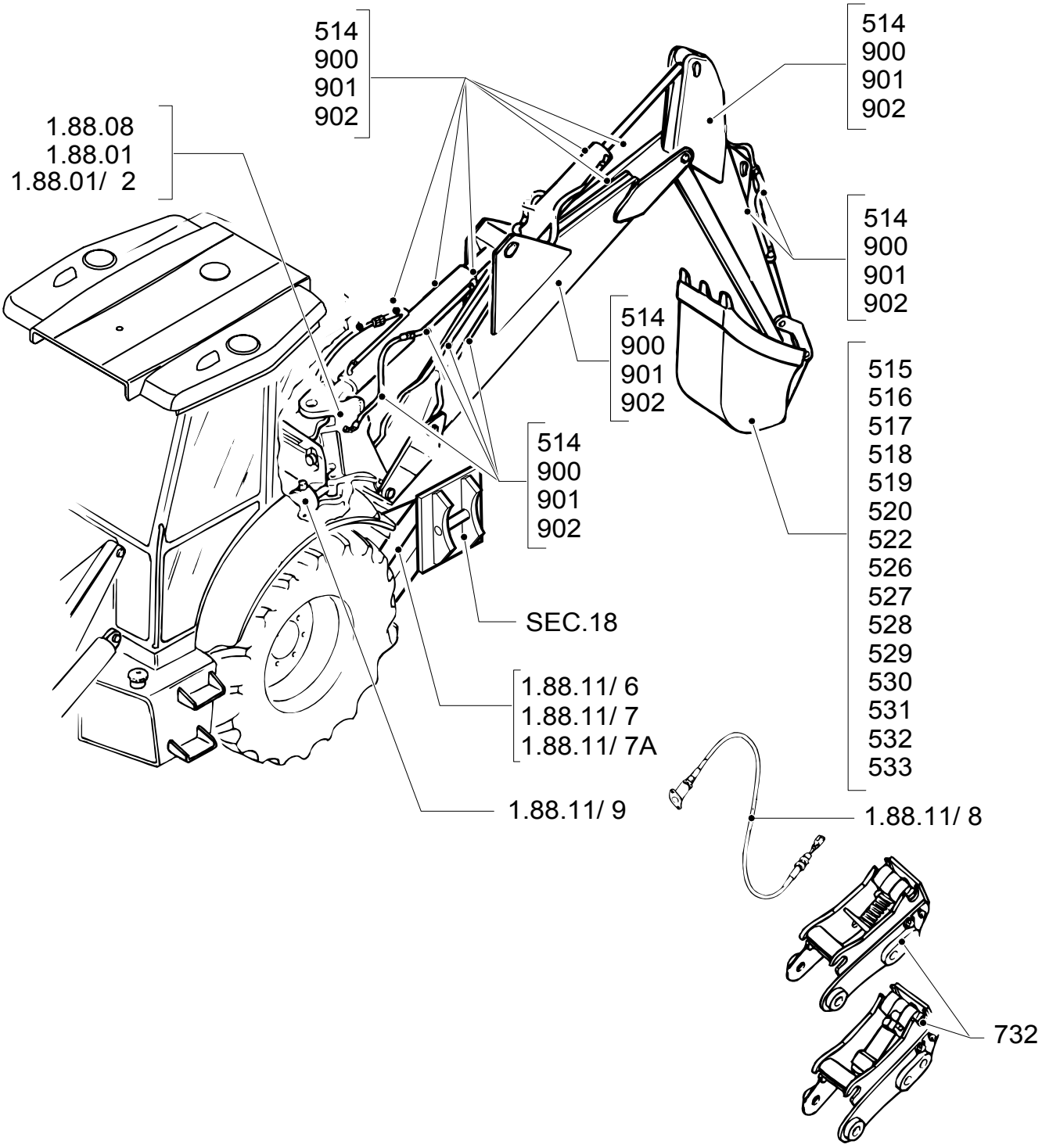

BACKHOE 2/2

REF	FN	PART NUMBER	YR/SN	QTY	DESCRIPTION

1.88.01	01	p1	05/03

TRANSPORT LOCK" REAR LOCKING" (CENTER PIVOT)

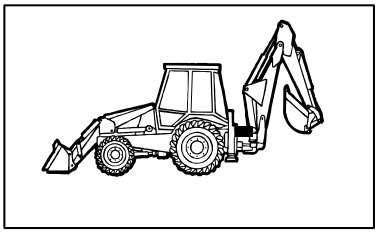

TRANSPORT LOCK" REAR LOCKING" (CENTER PIVOT)

REF	FN	PART NUMBER	YR/SN	QTY	DESCRIPTION
1		85821268		1	SHOCK ABSORBER
2		11193879		1	WASHER, LOCK
3		16043621		1	SCREW
4		85812278		1	DECAL
5		85819488		1	SUPPORT
6		11106221		2	SCREW M10X25
7		11190579		2	WASHER, LOCK
8		85819485		1	BASE
9		85813407		1	RING
10		85819468		1	YOKE
11		85819472		1	PIN
12		85819477		2	ARTICULATION
13		85819478		3	NUT
14		85819479		2	BELLOWS
15		85819481		1	ROD
16		85819482		1	BUSHING
17		85819480		1	TUBE, RIGID
18		85821270		1	WASHER
19		85821271		1	NUT
20		85824227		2	COLLAR

1.88.01	02	p1	02/04

TRANSPORT LOCK" REAR LOCKING" (CENTER PIVOT)

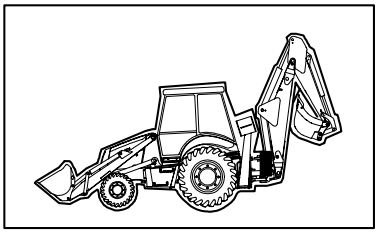

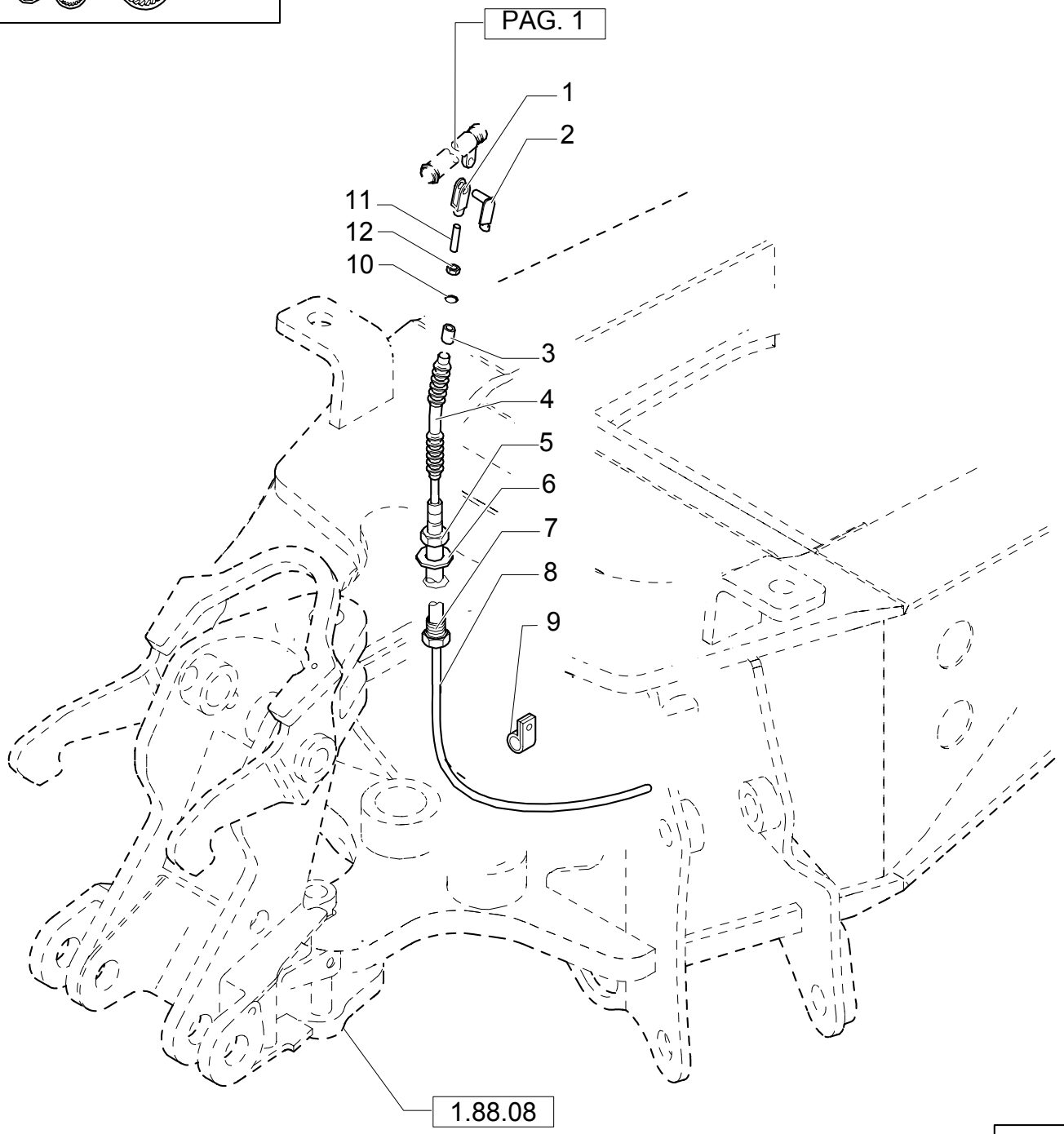

TRANSPORT LOCK" REAR LOCKING" (CENTER PIVOT)

REF	FN	PART NUMBER	YR/SN	QTY	DESCRIPTION
1		85819467		1	YOKE
2		85819469		1	CLIP
3		85819471		1	RING
4		85821278		1	BELLOWS
5		85819475		2	NUT
6		85819474		1	WASHER
7		85819486		1	NUT
8		85827702		1	CABLE
9		10450190		1	COLLAR, RETAINER
10		85821277		1	RING, RUBBER
11		85821279		1	ROD
12		85821273		1	NUT M8x1.25

1.88.08	01	p1	03/03

SWING POST ASSEMBLY, BUSHINGS & PINS

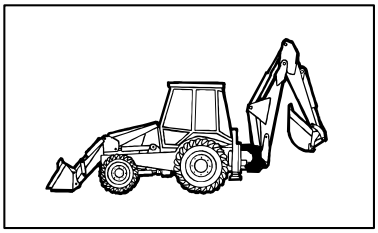

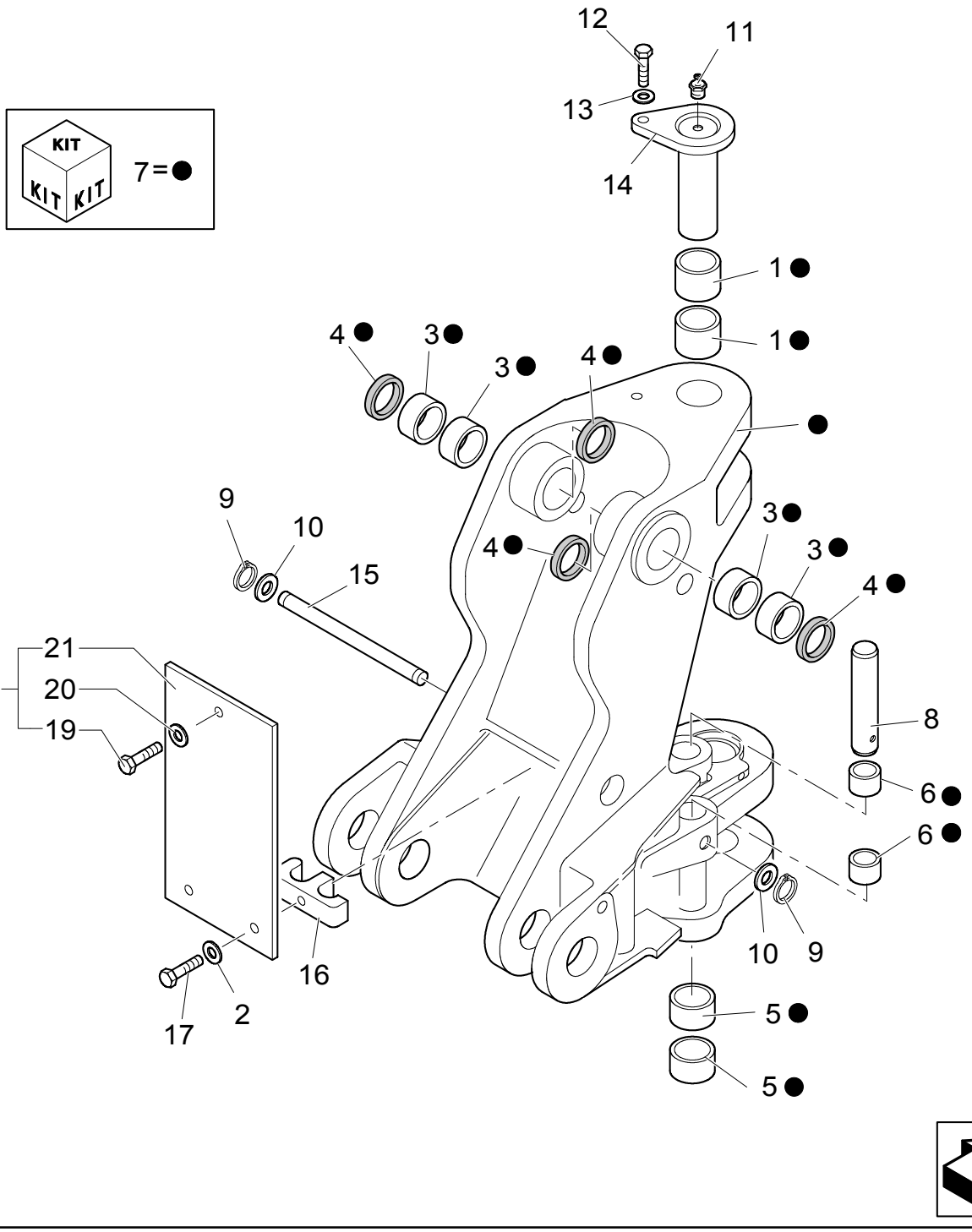

SWING POST ASSEMBLY, BUSHINGS & PINS

REF	FN	PART NUMBER	YR/SN	QTY	DESCRIPTION
1		85803196		2	BUSHING
2		11190579		2	WASHER, LOCK
3		85801029		4	BUSHING
4		85801025		4	SEAL
5		85803197		2	BUSHING
6		85803193		4	BUSHING
7		85803623		1	SWING CARRIAGE
8		85803192		2	PIN
9		85803195		2	RING, SNAP
10		10523211		2	WASHER, LOCK
11		83416242		AR	NIPPLE, LUBE
12		85802397		1	SCREW M16X40
13		85802396		1	WASHER
14		85801076		1	PIN
15		85803194		1	PIN
16		85803639		1	PLATE, FIXING
17		11107321		2	SCREW M10X55
18		85805648		1	KIT
19		16043621		1	SCREW M8X25
20		11193979		1	WASHER, LOCK
21		85805137		1	PLATE

1.88.08	02	p1	09/03

SWING POST PINS & TRANSPORT LOCK HOOK

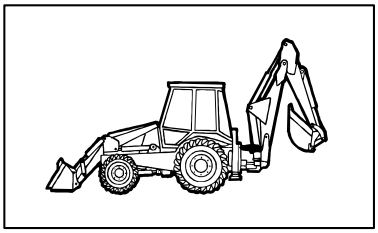

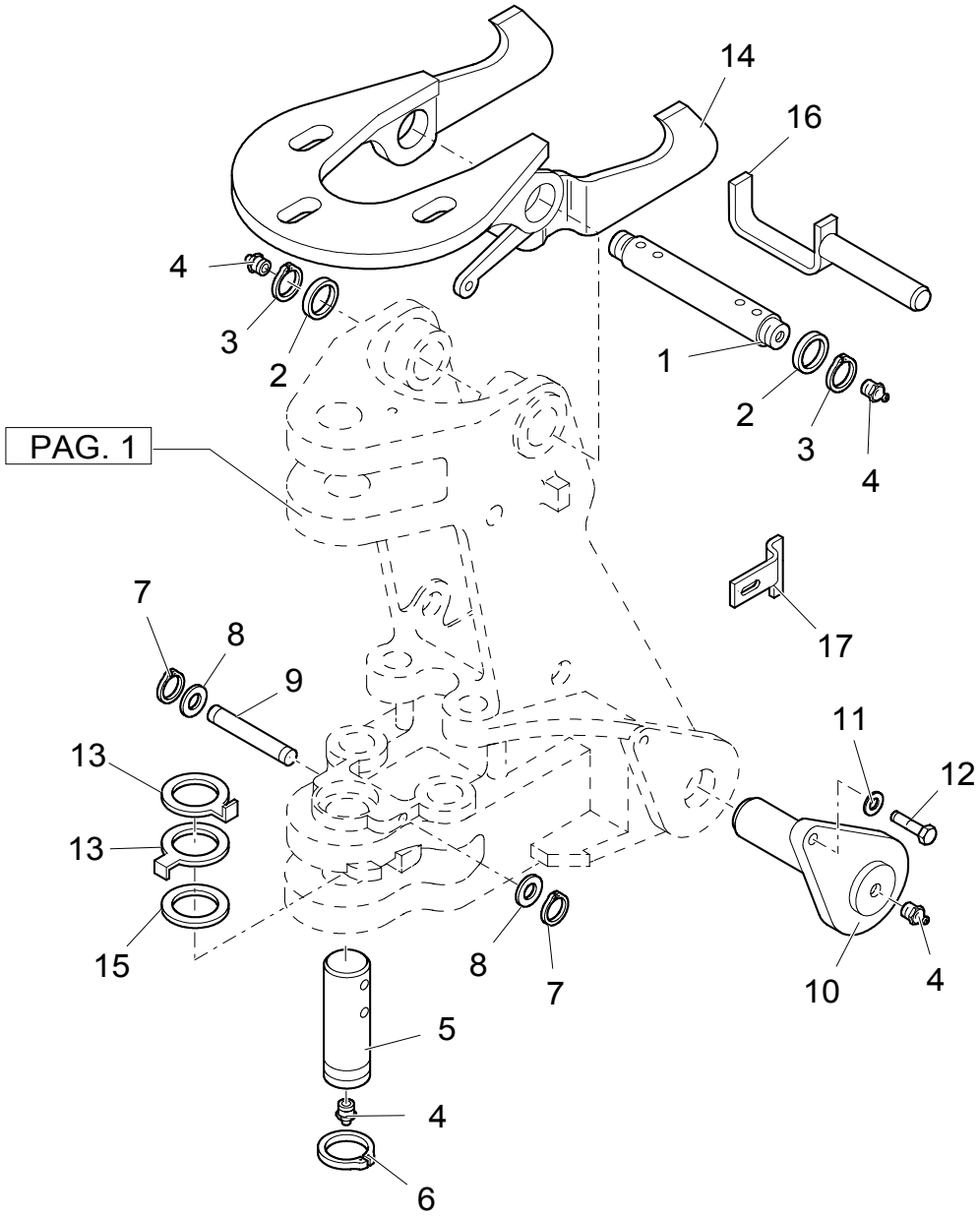

SWING POST PINS & TRANSPORT LOCK HOOK

REF	FN	PART NUMBER	YR/SN	QTY	DESCRIPTION
1		85801026		1	SPINDLE
2		83910977		2	SPACER M45X66X3
3		83911019		2	RING, SNAP
4		83416242		AR	NIPPLE, LUBE
5		85801079		1	PIN
6		85803198		1	RING, SNAP
7		85803195		2	RING, SNAP
8		10523211		2	WASHER, LOCK
9		85803246		1	PIN
10		85802872		2	PIN
11		85802396		2	WASHER
12		85802397		2	SCREW M16X40
13		85801191		2	SPACER
14	1	85803637		1	HOOK
14	2	85819490		1	HOOK
15		8274447		1	SHIM
16	1	85819613		1	PIN
16	2	85819702		1	PIN
17	3	85816776		1	KIT

(1) Only for LB110.B - LB115.B
(2) Only for LB75.B - LB90.B - LB95.B
(3) Kit composed of N.4 LH retaining plate and N.4 RH retaining plate

1.88.09	01	p1	04/03

DISTRIBUTOR VALVE SUPPORT (CENTER PIVOT)

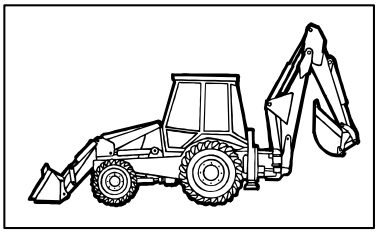

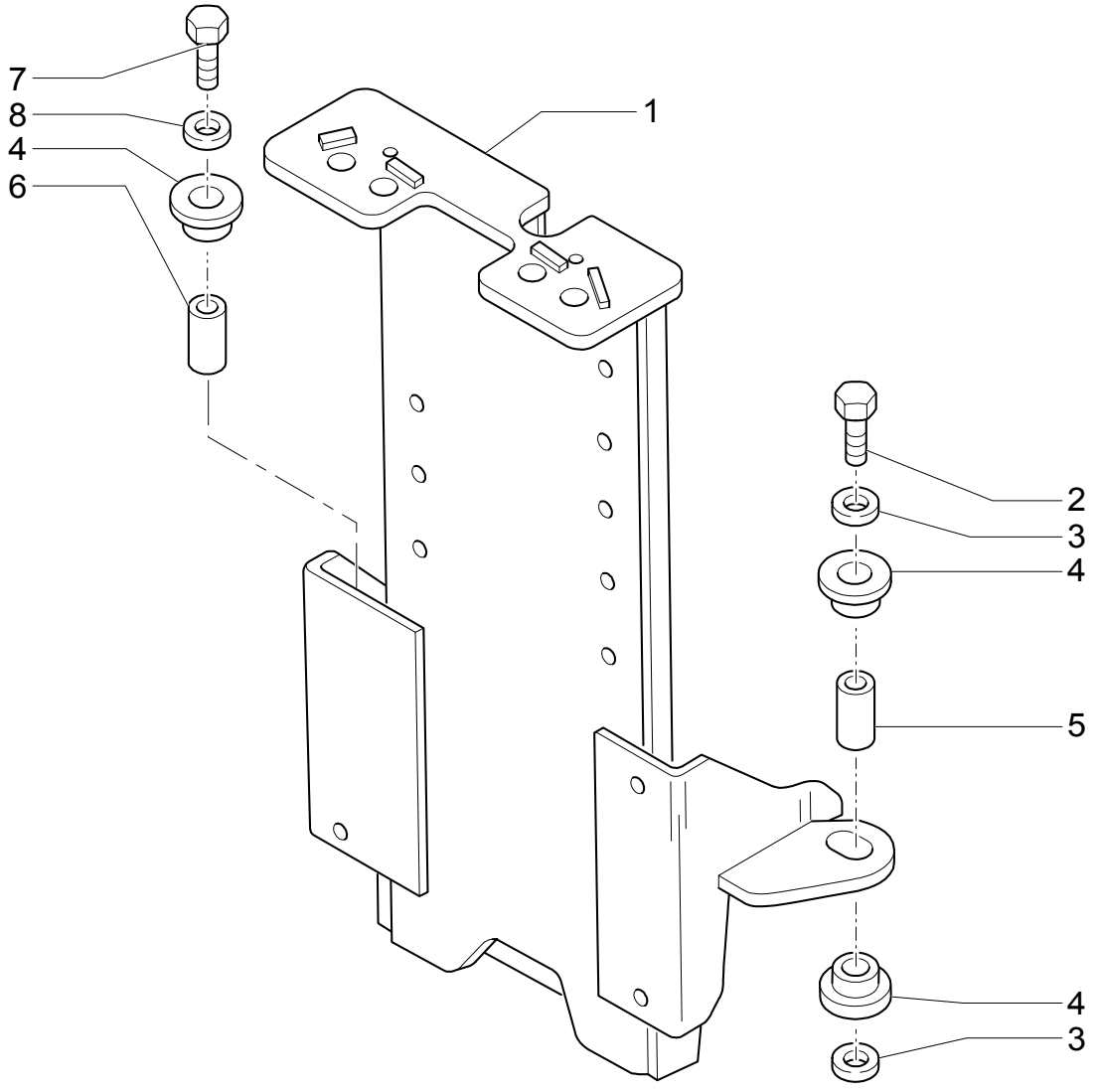

DISTRIBUTOR VALVE SUPPORT (CENTER PIVOT)

REF	FN	PART NUMBER	YR/SN	QTY	DESCRIPTION
1		85820167		1	SUPPORT
2		15215821		2	SCREW M12X60
3		85802618		5	WASHER, SEALING 13X41X3
4		85817251		6	BUSHING, SHEAR BOLT
5		85817252		2	BUSHING 12,5X16,5X24
6		85820172		1	BUSHING 12,5X16,5X22
7		15216421		1	SCREW
8		85820170		1	SPACER

1.88.11	01	p1	09/03

ARMS AND JOINTS

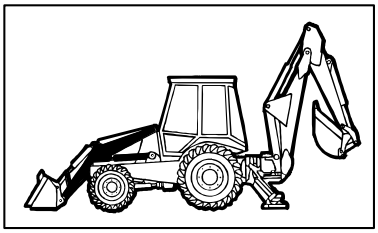

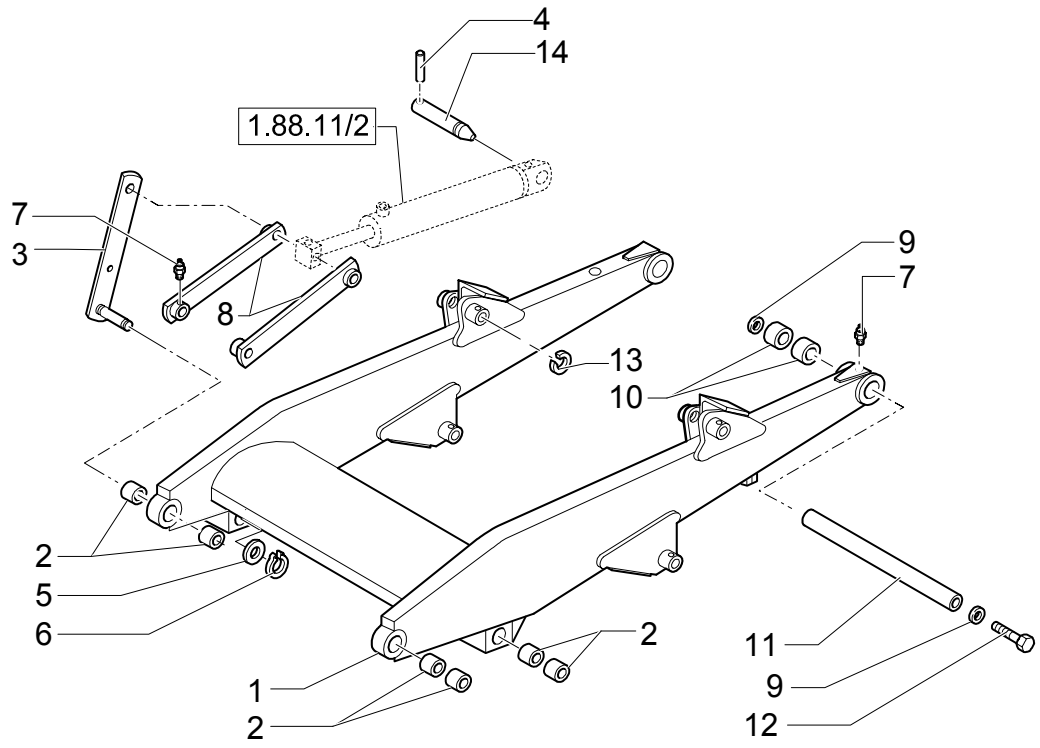

ARMS AND JOINTS

REF	FN	PART NUMBER	YR/SN	QTY	DESCRIPTION
1		85801011		1	ARM
2		81901809		8	BUSHING
3		85801052		1	ROD RH
3		85801053		1	TIE-ROD LH
4		85802993		6	PIN
5		191823		2	WASHER
6		81902463		2	RING
7		83416242		10	NIPPLE, LUBE
8		85801057		4	LINK CONROD
9		85700130		2	WASHER
10		81901896		4	BUSHING
11		85801087		1	SPINDLE
12		11383634		1	SCREW M20X50
12		15988734		1	SCREW M20X80
13		85802992		1	O-RING
14		85801051		2	PIN M8X23

1.88.11/ 1	01	p1	08/03

LOADER CYLINDER

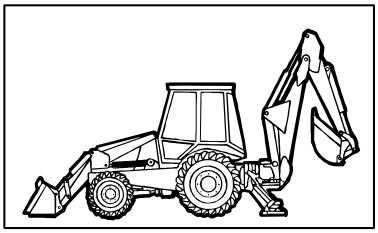

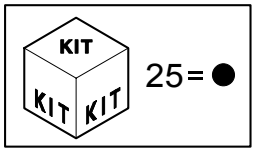

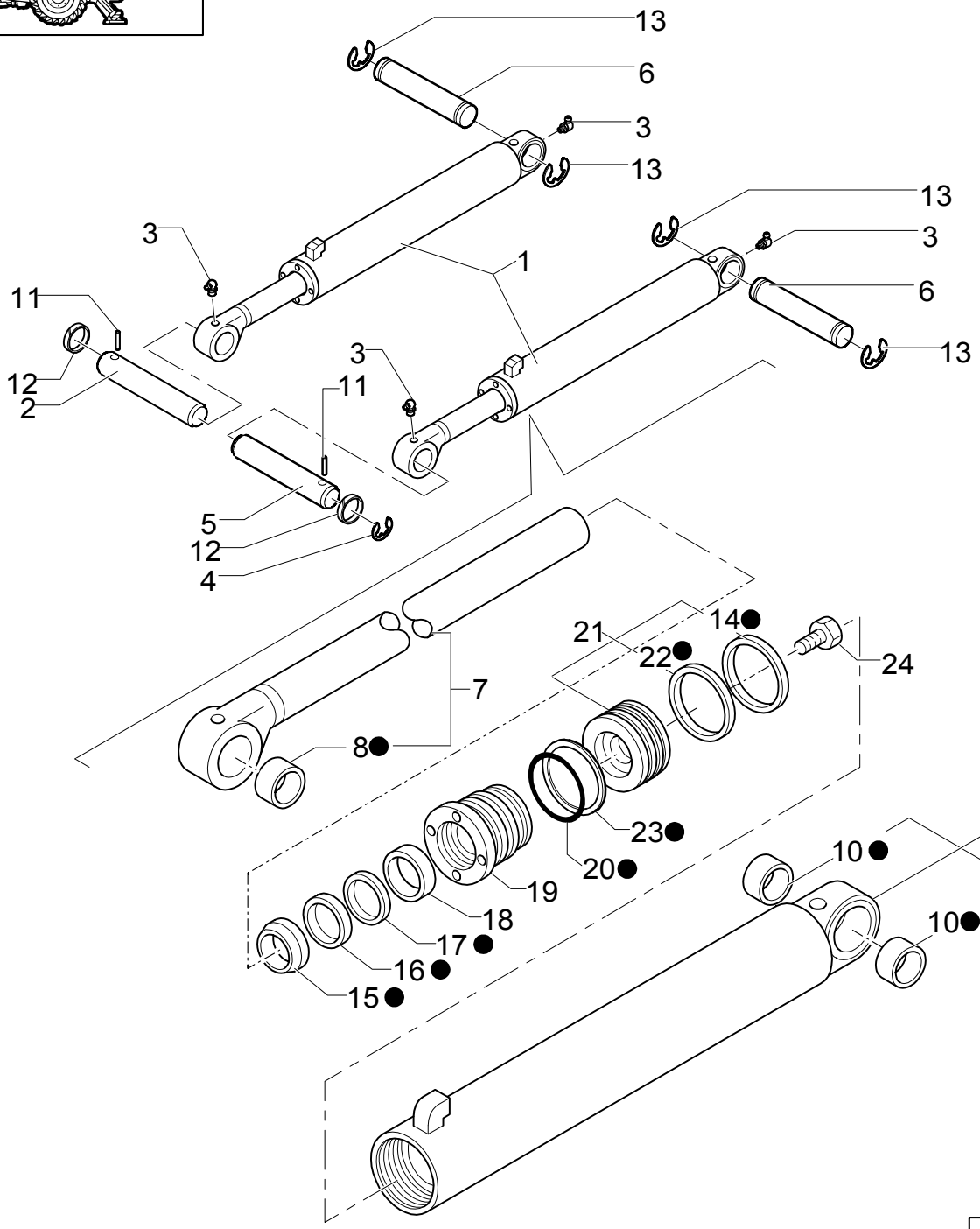

LOADER CYLINDER

REF	FN	PART NUMBER	YR/SN	QTY	DESCRIPTION
1		85800160		2	CYLINDER ASSY,LOADER
2		85801049		1	PIN 38mm x 159mm
3		81818824		4	NIPPLE, LUBE
4		83911020		1	RING
5		85801050		1	PIN 38mm x 183mm
6		87402742		2	PIN
7	1	85800103		2	ROD
8		81902174		4	BUSHING
9		85800105		2	LINER, ENGINE CYLINDER
10		81901897		4	BUSHING
11		85802993		2	PIN
12		85802992		2	O-RING
13		47049094		4	CIRCLIP
14		83931399		2	SEAL
15		85800082		2	GASKET
16		85800086		2	GASKET
17		85800090		2	GASKET
18		85800093		2	RING
19		85800973		2	PLATE, BASE
20		83911410		2	O-RING 5/8X0.097
21	2	85800981		2	PLUNGER
22		85800960		2	EXPANDER
23		85800003		2	RING
24		82866949		2	BOLT
25		85819352		AR	KIT

(1) Includes 8
(2) Includes 14,22

1.88.11/ 2	01	p1	09/03

LOADER BUCKET CONTROL CYLINDER

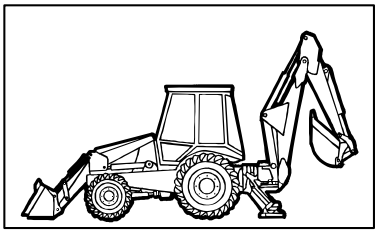

KIT KIT KIT 13= ●

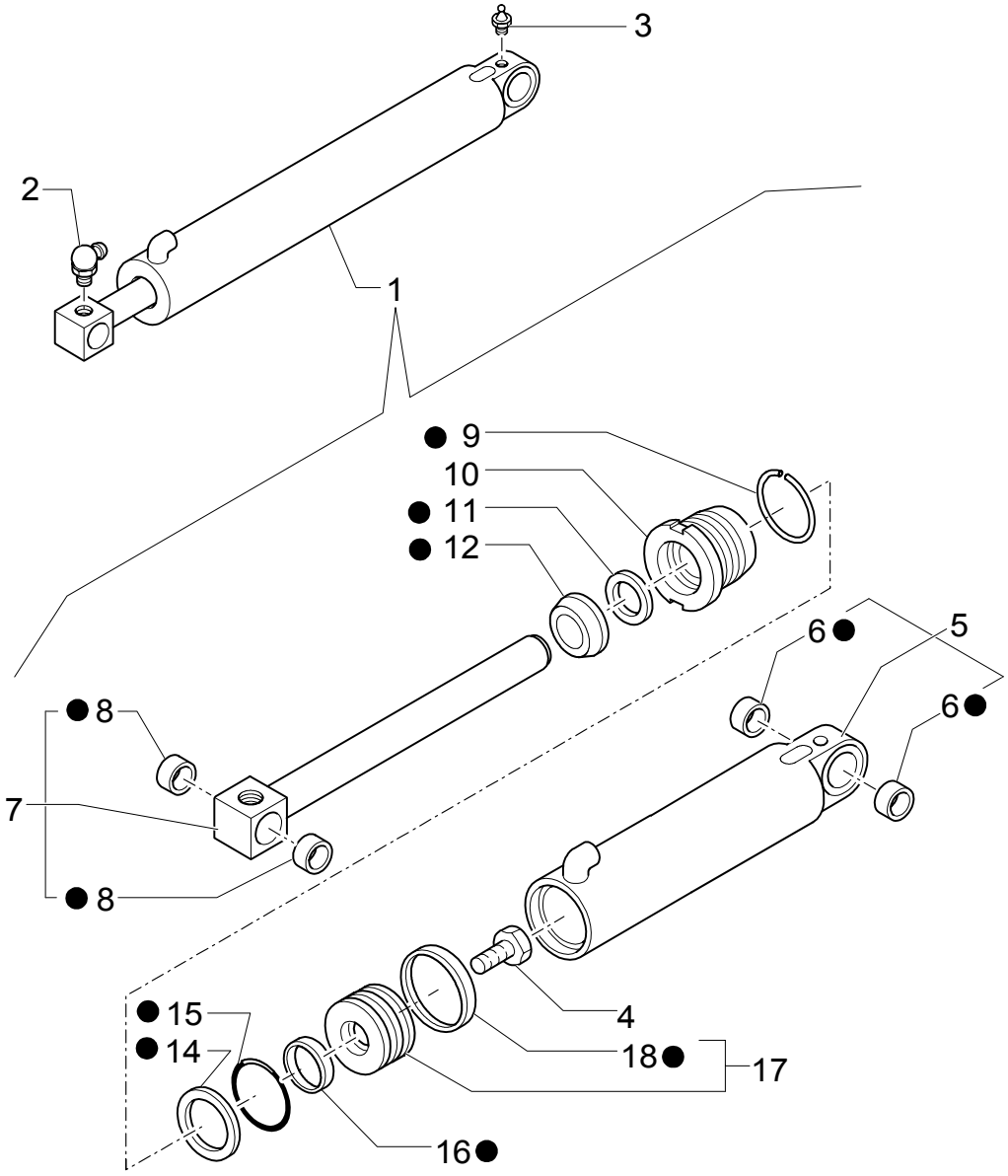

LOADER BUCKET CONTROL CYLINDER

REF	FN	PART NUMBER	YR/SN	QTY	DESCRIPTION
1		85800560		1	CYLINDER ASSY,LOADER BUCKET
2		81818824		2	NIPPLE, LUBE 1/8-27-90GR
3		83416242		4	NIPPLE, LUBE
4		82866949		2	BOLT
5	1	85800504		2	LINER, ENGINE CYLINDER
6		81902174		4	BUSHING
7		83962811		2	ROD
8		83902710		4	BUSHING
9		83937315		2	WIRE, RETAINING
10		85800978		2	PLATE, BASE
11		85800081		2	GASKET
12		85800085		2	GASKET
13		85819355		AR	KIT
14		85800002		2	RING
15		83911409		2	O-RING
16		85800089		2	GASKET
17	2	83962807		2	PISTON ASSY.
18		83912413		2	SEAL

(1) Includes 6
(2) Includes 18

1.88.11/ 2	02	p1	09/03

LOADER BUCKET CONTROL CYLINDER

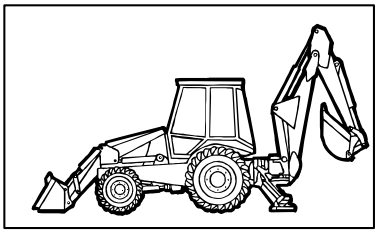

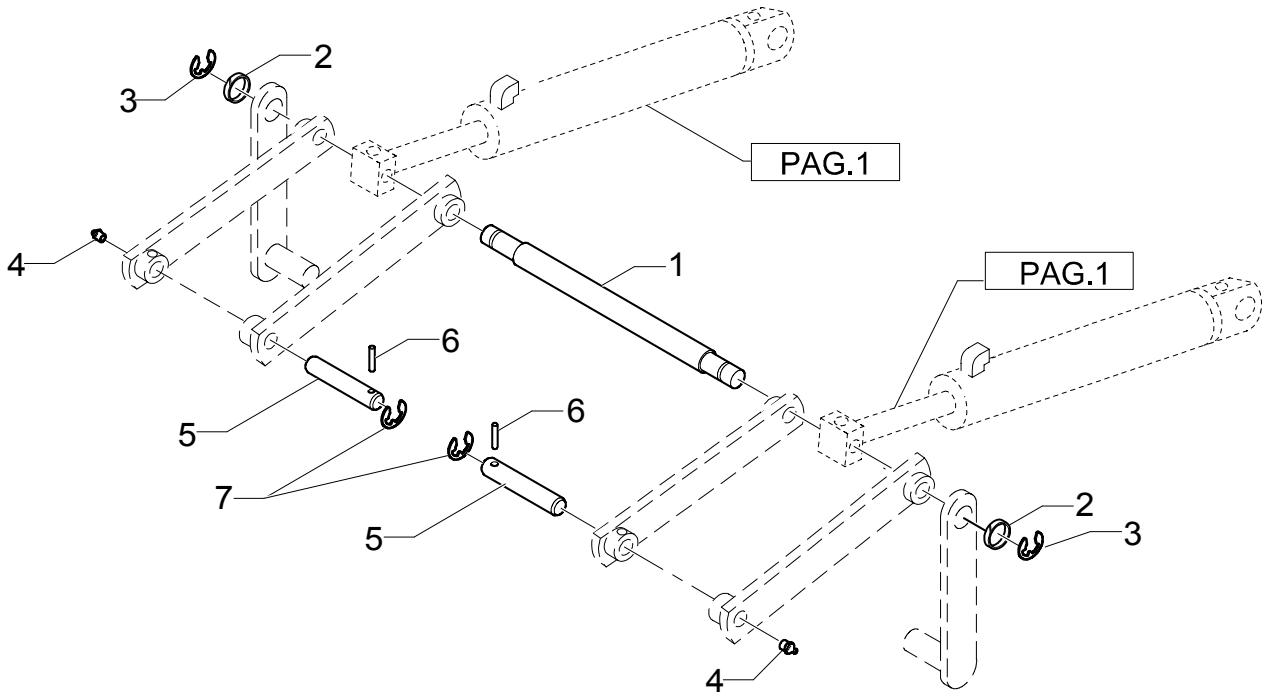

LOADER BUCKET CONTROL CYLINDER

REF	FN	PART NUMBER	YR/SN	QTY	DESCRIPTION
1				1	ASSY,LOADER BUCKET
2		191823		2	WASHER 1/8-27-90GR
3		81902463		2	RING
4		83416242		2	NIPPLE, LUBE
5		85801049		2	PIN 38mm x 159mm
6		85802993		2	PIN
7		85802992		2	O-RING

1.88.11/ 3	01	p1	09/03

LIFT CYLINDER AND BUCKET PIPES

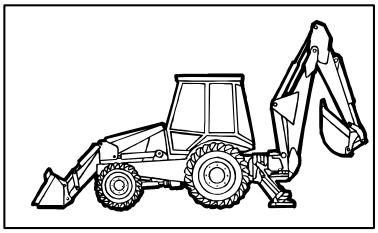

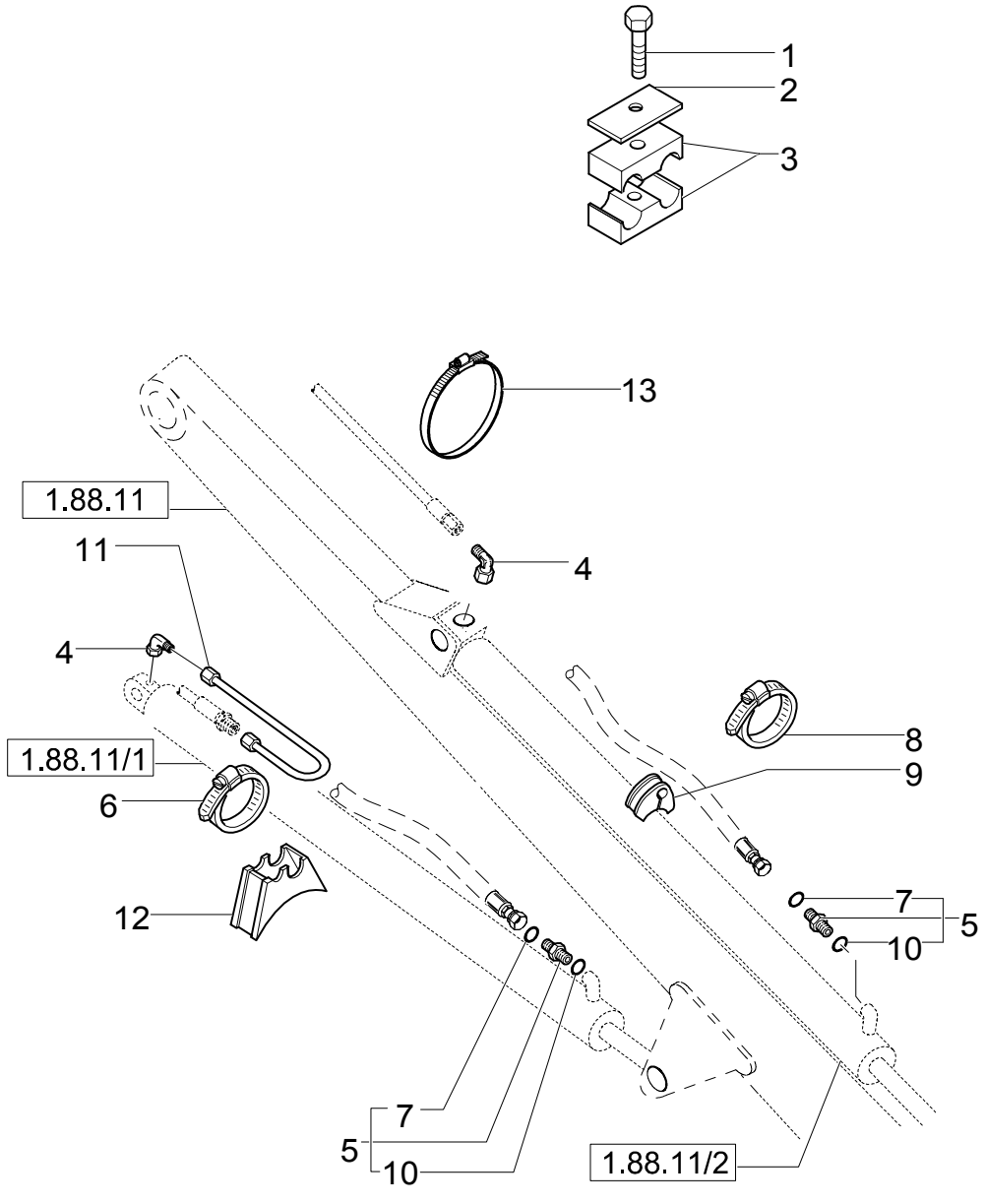

LIFT CYLINDER AND BUCKET PIPES

REF	FN	PART NUMBER	YR/SN	QTY	DESCRIPTION
1		16044321		2	SCREW M8X55
2		85802911		2	PLATE, COVER
3		85802910		4	CLAMP
4		85802961		4	CONNECTOR, HYD.
5	1	83963376		4	CONNECTOR, HYD.
6		85802743		2	SEALING RING COLLAR
7		9992298		8	O-RING 90 Duro, .489" ID x .070" Thk
8		85803008		2	COLLAR
9		85805567		2	PLATE, FIXING
10		167269		10	O-RING 90 Duro, .755" ID x .097" Thk
11		85801596		2	TUBE, RIGID
12		85807824		2	PLATE, FIXING
13		14560187		2	COLLAR 13/16"

(1) Includes 7,10

1.88.11/ 5	01	p1	04/03

SELF-LEVELING LINKAGE, LOADER CONTROLS (CENTER PIVOT)

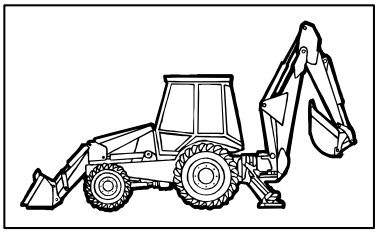

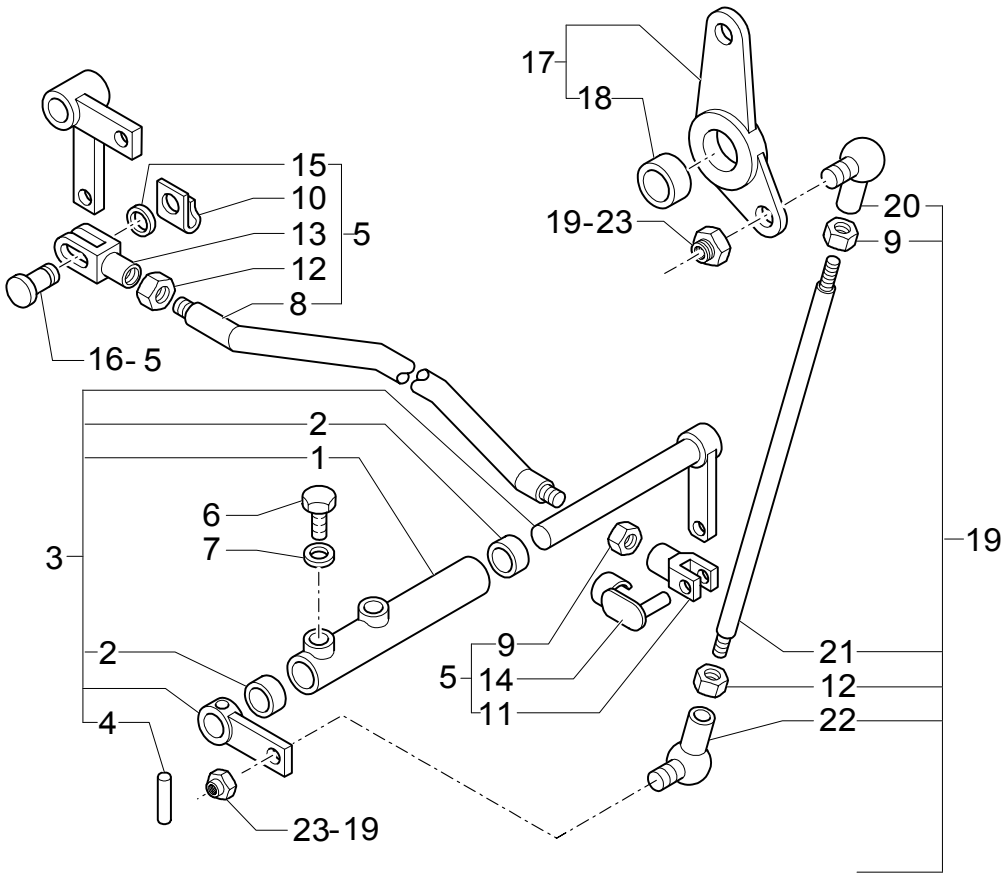

SELF-LEVELING LINKAGE, LOADER CONTROLS (CENTER PIVOT)

REF	FN	PART NUMBER	YR/SN	QTY	DESCRIPTION
1	1	85802724		1	LEVER, IDLER ASSY
2		85802494		2	BUSHING
3		85801591		1	LEVER, IDLER ASSY
4		13940370		1	PIN, ROLL 5X26
5		85802734		1	TIE-ROD ASSY
6		15970524		2	SCREW M10X20
7		11190679		2	WASHER, LOCK
8		85802736		1	TIE-ROD
9		16102311		2	NUT
10		11064071		1	CLIP
11		11991971		1	YOKE
12		16102911		2	NUT
13		85802735		1	YOKE
14		85802738		1	PIN
15		14496521		1	WASHER
16		85802737		2	PIN
17		85803215		1	LEVER, IDLER
18		81855916		1	BUSHING, DRIVE
19		85802741		1	TIE-ROD
20		85804376		1	JOINT, UNIVERSAL
21		85802742		1	TIE-ROD
22		85804375		1	JOINT, UNIVERSAL
23		14048211		2	NUT

(1) Includes 2

1.88.11/ 5	02	p1	11/03

SELF-LEVELING LINKAGE, LOADER ARM (CENTER PIVOT)

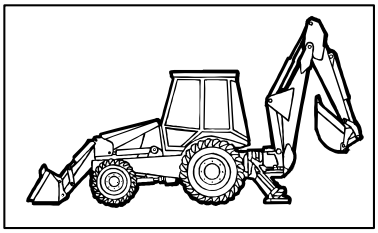

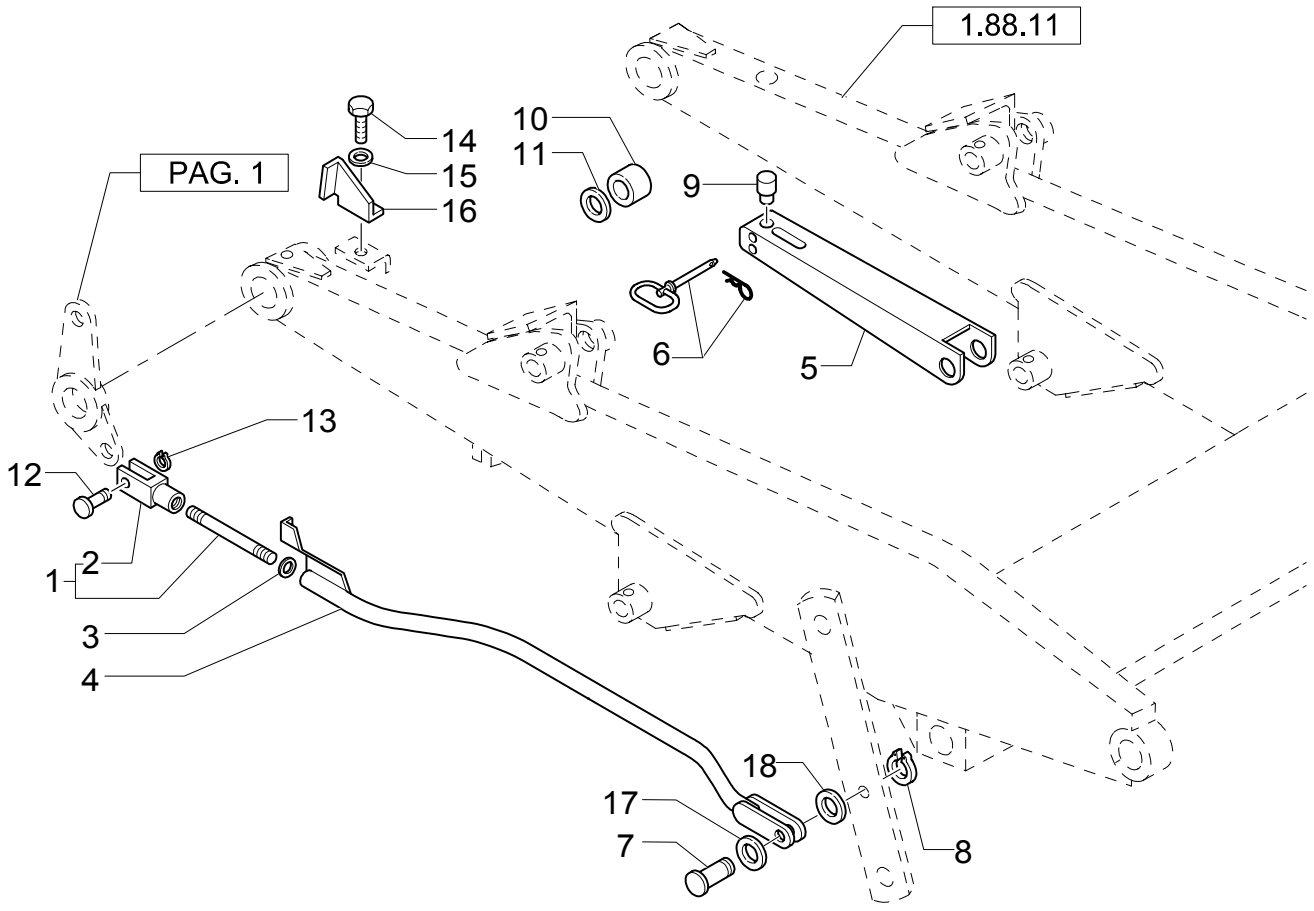

SELF-LEVELING LINKAGE, LOADER ARM (CENTER PIVOT)

REF	FN	PART NUMBER	YR/SN	QTY	DESCRIPTION
1		83963433		1	ROD, CONNECTING ASSY
2		83962659		1	CLEVIS
3		82879400		1	WASHER
4		85804026		1	ROD
5		85801048		1	PILLAR
6		86507337		1	PIN
7		85803297		1	PIN
8		83911366		1	RING, SNAP
9		85802403		1	PLUG
10		83963422		1	SPACER
11		85804366		1	WASHER
12		85819179		1	PIN
13		85700341		1	CIRCLIP
14		10979421		1	SCREW M6X10
15		11193279		1	WASHER, LOCK
16		85803277		1	PLATE
17		85817622		AR	WASHER, SEALING
18		85817623		AR	WASHER, SEALING

1.88.11/ 6	01	p1	04/03

STABILIZER CYLINDERS (CENTER PIVOT)

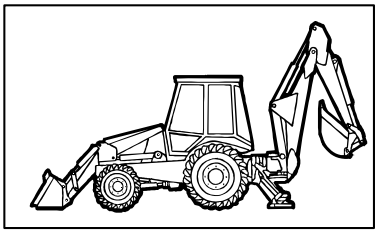

KIT KIT KIT 15=●

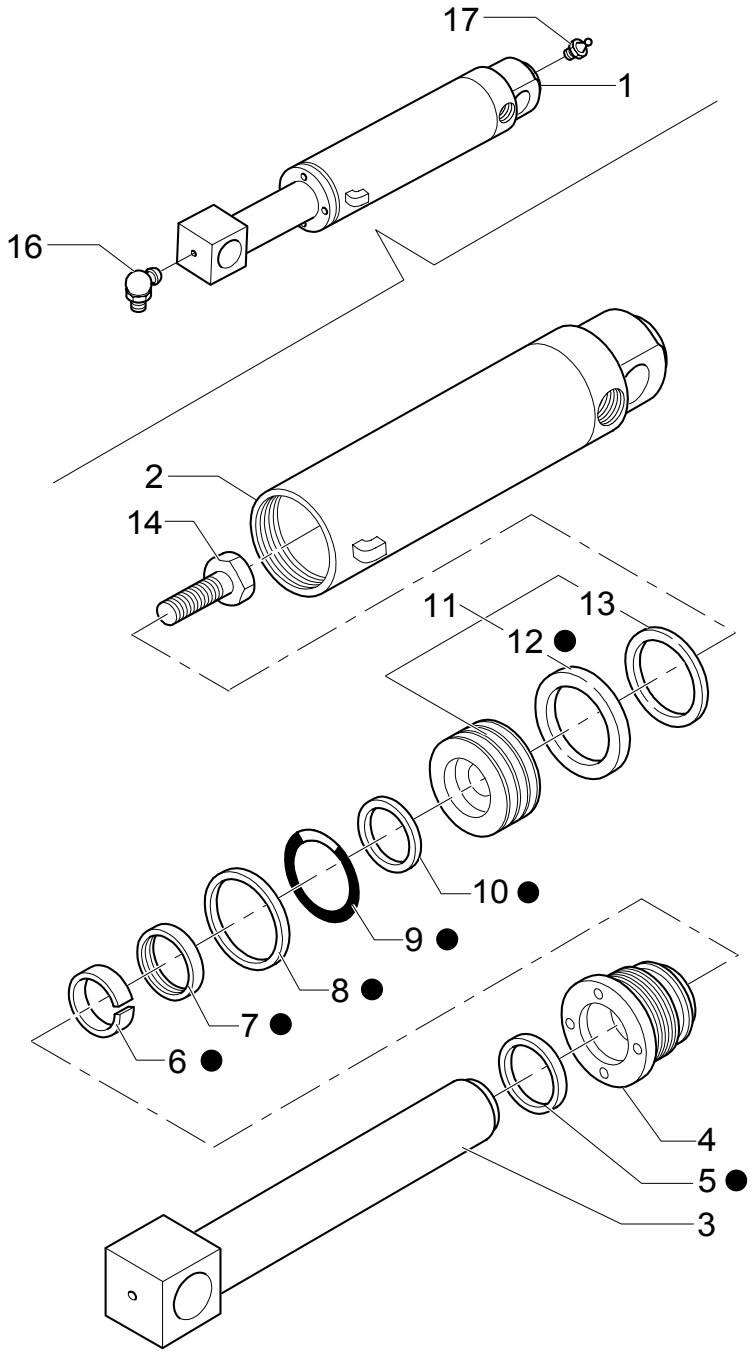

STABILIZER CYLINDERS (CENTER PIVOT)

REF	FN	PART NUMBER	YR/SN	QTY	DESCRIPTION
1		85800660		2	CYLINDER ASSY
2		85800604		2	LINER, ENGINE CYLINDER
3		85800603		2	ROD
4		85800979		2	PLATE, BASE
5		85800083		2	GASKET
6		85800094		2	GASKET
7		85800087		2	GASKET
8		85800004		2	RING
9		83963231		2	O-RING
10		85800091		2	GASKET
11	1	85800982		2	PLUNGER
12		83937326		2	SEAL
13		85800961		2	EXPANDER
14		82866947		2	BOLT
15		85819356		AR	KIT
16		81818824		2	NIPPLE, LUBE
17		83416242		2	NIPPLE, LUBE

(1) Includes 12, 13

PIPES FOR STABILIZER CYLINDERS (CENTER PIVOT)

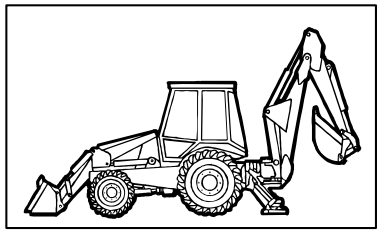

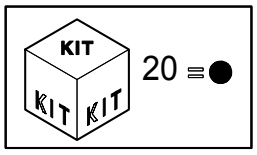

PIPES FOR STABILIZER CYLINDERS (CENTER PIVOT)

REF	FN	PART NUMBER	YR/SN	QTY	DESCRIPTION
1	1	83963374		6	CONNECTOR, HYD.
2		9992298		6	O-RING 90 Duro, .489" ID x .070" Thk
3		128825		6	O-RING 90 Duro, .644" ID x .087" Thk
4		83985067		8	CONNECTOR, HYD.
5	2	85802820		2	VALVE, HYDRAULIC
6		85807873		4	HOSE, FLEXIBLE
7		85802965		2	CONNECTOR, HYD.
8		85803008		2	COLLAR
9		83911131		2	U-BOLT
10		85802911		2	PLATE, COVER
11		15213621		2	SCREW M8X55
12		14048211		2	NUT M8X1,25
13		11193879		6	WASHER, LOCK
14		85802912		2	PLATE, COVER
15		85807874		4	HOSE, FLEXIBLE
16		85802910		4	CLAMP
17		85802620		2	TUBE, RIGID
18		16044421		4	SCREW M8X60
19		85803517		2	BUSHING, RUBBER
20		85821126		2	KIT
21		9992298		4	O-RING
22		85820159		1	PLUNGER
23		85820160		2	VALVE, HYDRAULIC

(1) Includes 2,3
(2) Includes 20,22,23

RETURN TO DIG SENSOR

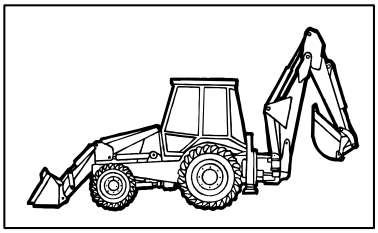

LB75.B-LB90.B-LB95.B-LB110.B

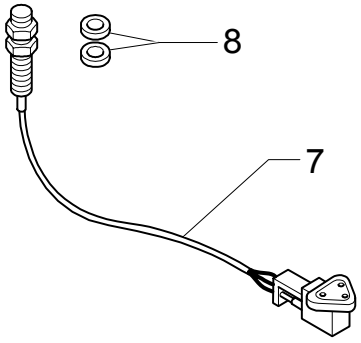

LB115.B

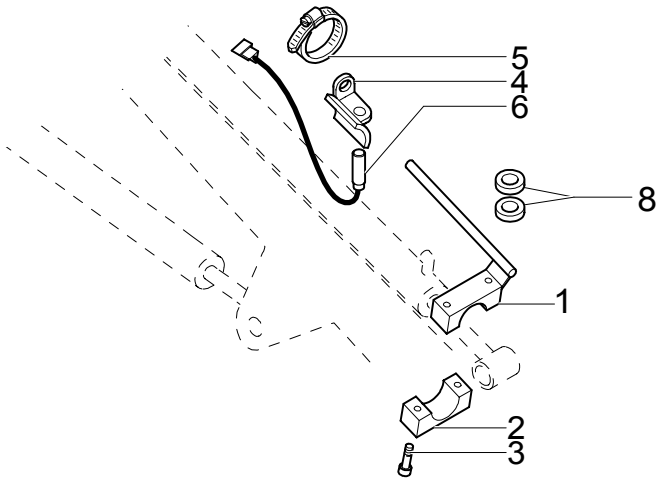

RETURN TO DIG SENSOR

REF	FN	PART NUMBER	YR/SN	QTY	DESCRIPTION
1		85805108		1	ROD
2		85805111		1	BLOCK
3		14305621		2	SCREW M6X35
4		85805113		1	SUPPORT
5		85803010		2	CLAMP
6		85805619		1	SENSOR
7		85802950		1	SENSOR
8		14497001		4	WASHER, LOCK 19X34X3

CYLINDERS AND ROTATION PLATE (SIDE SHIFT)

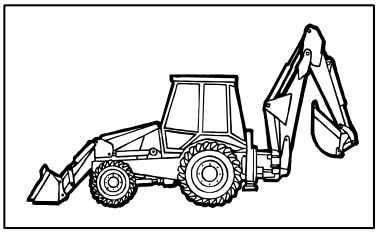

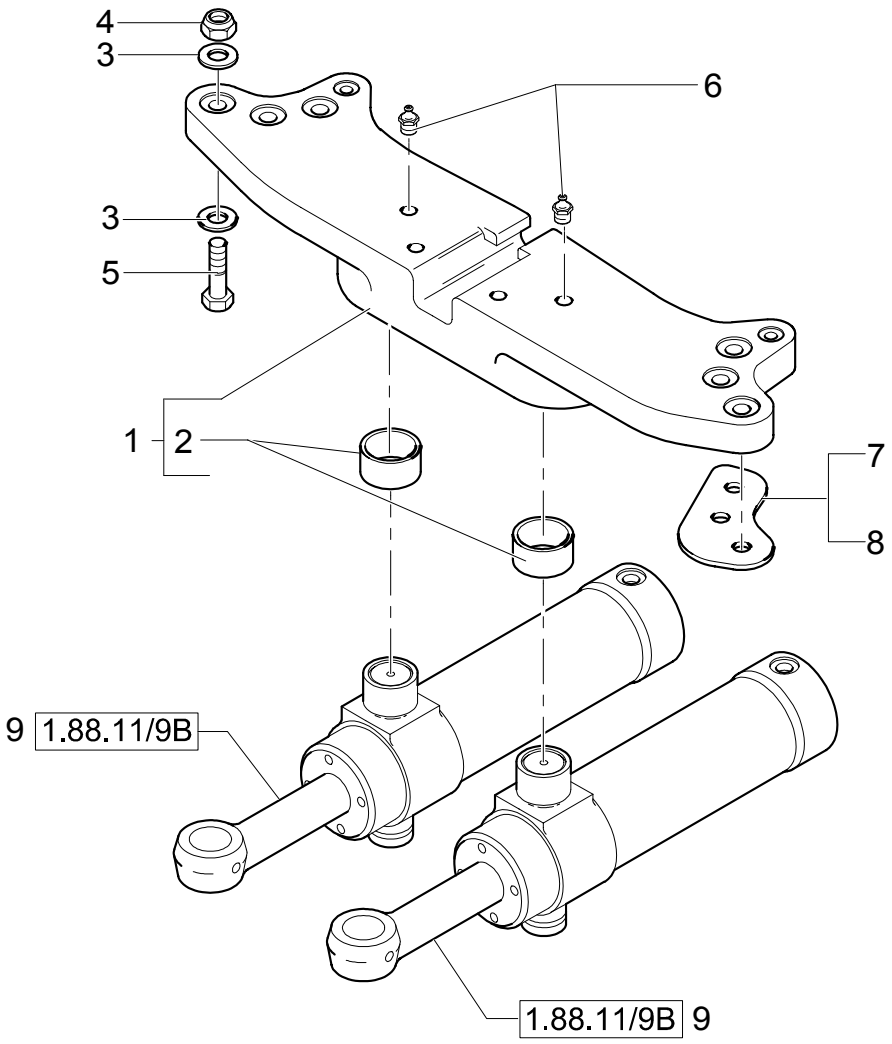

CYLINDERS AND ROTATION PLATE (SIDE SHIFT)

REF	FN	PART NUMBER	YR/SN	QTY	DESCRIPTION
1		85818900		1	PLATE, RETAINING
2		83910645		2	BUSHING
3		10520431		12	WASHER 20X35
4		12575121		6	NUT M20X1,5
5		15988934		6	SCREW M20X1,5X90
6		83416242		4	NIPPLE, LUBE
7		85801153		4	SHIM
8		85803039		2	SHIM
9		85824430		2	CYLINDER

1.88.11/ 9A	01	p1	04/03

CYLINDERS AND ROTATION PLATE (CENTER PIVOT)

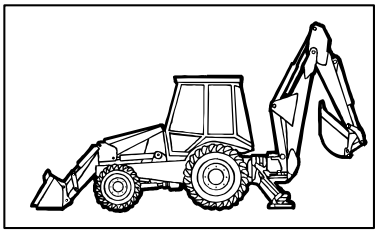

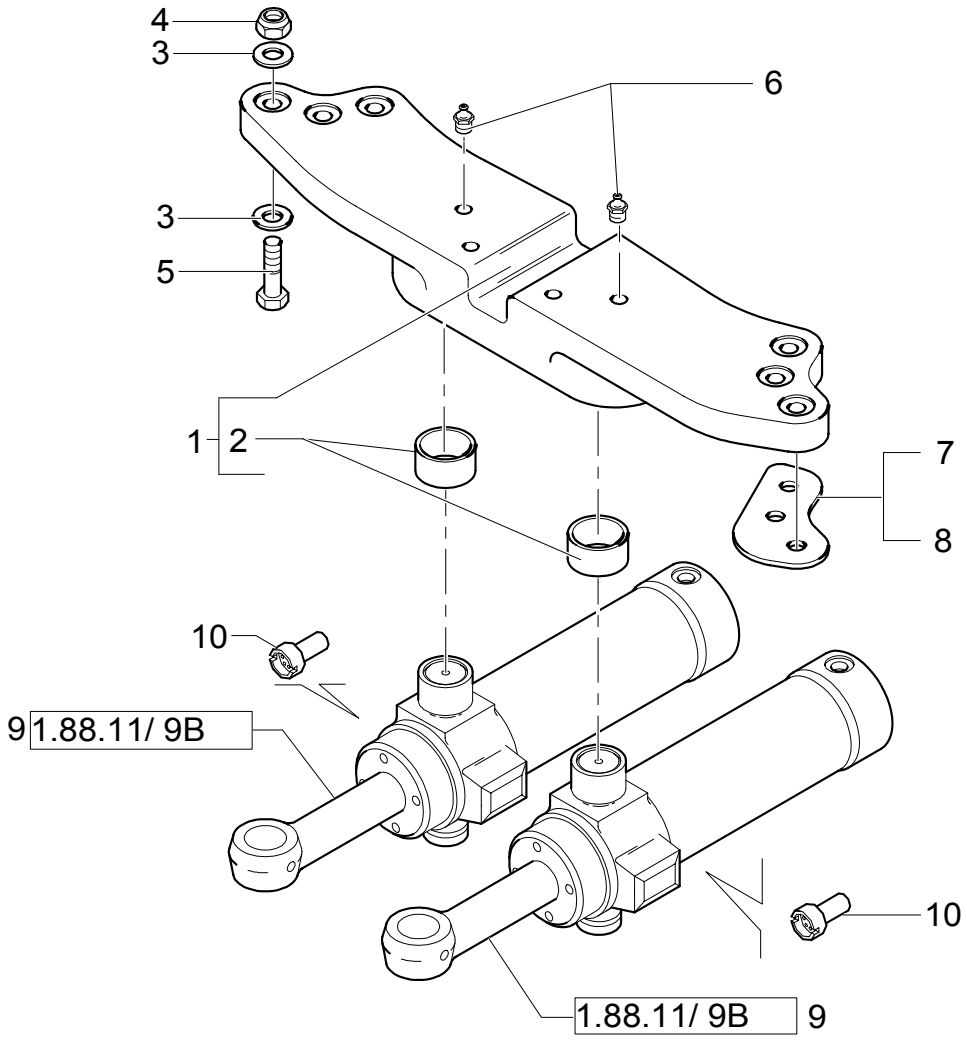

CYLINDERS AND ROTATION PLATE (CENTER PIVOT)

REF	FN	PART NUMBER	YR/SN	QTY	DESCRIPTION
1		85803617		1	PLATE
2		83910645		2	BUSHING
3		10520431		12	WASHER
4		12575121		6	NUT
5		15988934		6	SCREW
6		83416242		4	NIPPLE, LUBE
7		85801153		4	SHIM
8		85803039		2	SHIM
9		85824430		2	CYLINDER
10		85800965		2	REDUCER

1.88.11/ 9B	01	p1	04/03

SWING CYLINDERS, THREADED TRUNNION

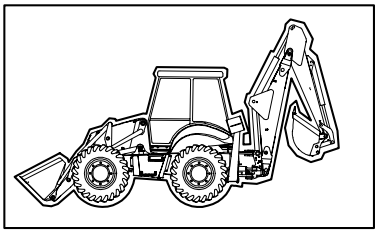

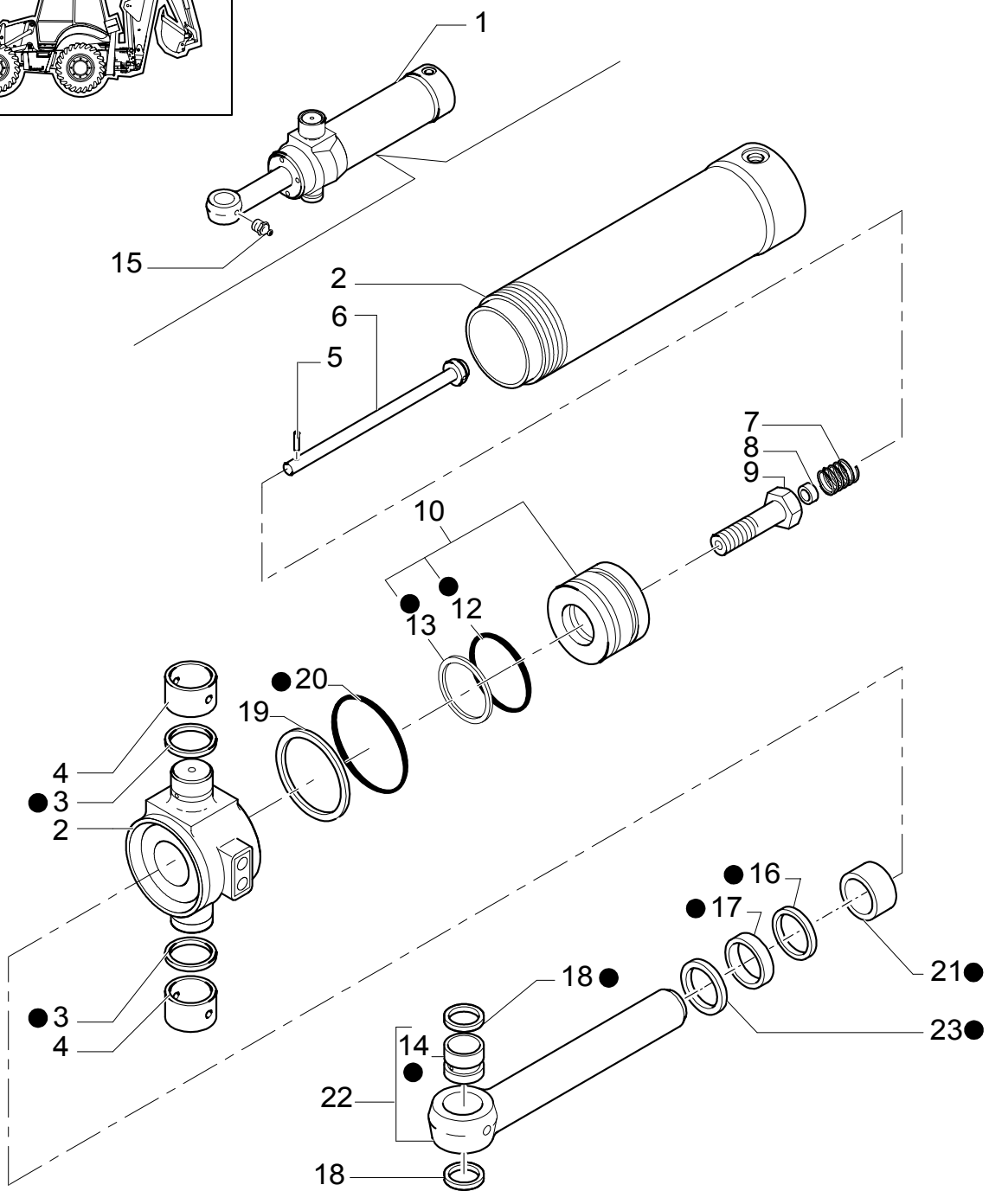

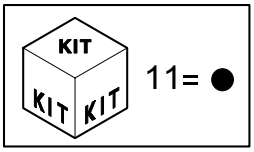

SWING CYLINDERS, THREADED TRUNNION

REF	FN	PART NUMBER	YR/SN	QTY	DESCRIPTION
1		85824430		1	CYLINDER
2		86983072		1	CYLINDER HEAD
3		83910601		2	SEAL Seal, M63X70
4		83912378		2	BUSHING
5		83910599		1	PIN
6		85800990		1	SPINDLE
7		83931313		1	SPRING
8		83998909		1	BUSHING, DRIVE
9		82866945		1	SCREW
10	1	81875232		1	PISTON
11		85819353		1	KIT
12		81875256		1	SEAL
13		82853846		1	GASKET
14		85800303		1	BUSHING
15		83416242		2	NIPPLE, LUBE
16		85800090		1	GASKET 50 MM ROD
17		85800086		1	GASKET 50 MM ROD
18		83931289		2	SEAL
19		85800007		1	RING Back-up
20		85800018		1	RING 4.734" IDX.139" Thk
21		85800093		1	RING 50 MM ROD
22		85800307		1	ROD
23		85800082		1	GASKET 50 MM ROD

(1) Includes 12, 13

1.88.12/ 3	01	p1	03/04

FRONT CONTROL VALVE SUPPORT AND TRANSMISSIONS (CENTER PIVOT)

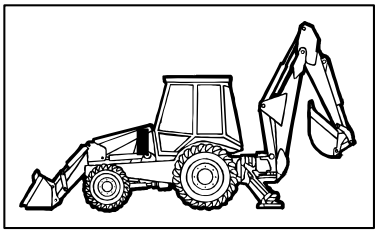

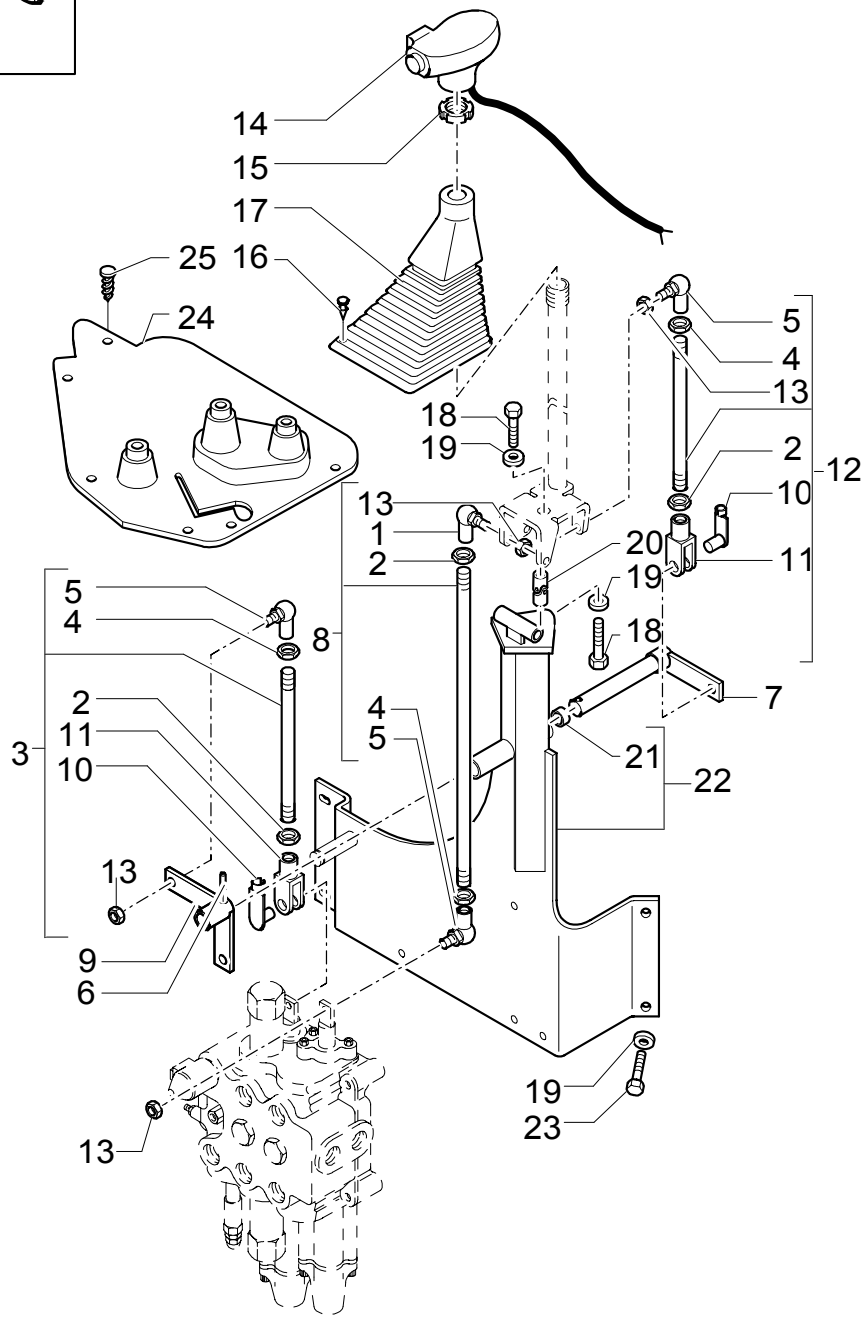

FRONT CONTROL VALVE SUPPORT AND TRANSMISSIONS (CENTER PIVOT)

REF	FN	PART NUMBER	YR/SN	QTY	DESCRIPTION
1		85804376		1	JOINT, UNIVERSAL
2		16102311		3	NUT
3		85801564		1	TIE-ROD
4		16102911		3	NUT LH
5		85804375		3	JOINT, UNIVERSAL
6		85805616		1	PIN
7		85805692		1	PIN
8		85801566		1	TIE-ROD
9		85805690		1	LEVER, IDLER
10		85802738		2	PIN
11		11991971		2	YOKE
12		85801562		1	TIE-ROD
13		14048211		4	NUT M8X1,25
14	1	85803055		1	KNOB
14	2	{82802378}		1	
15		83977174		1	NUT
16		14568887		AR	BUTTON
17		85802842		1	BOOT
18		15540321		2	SCREW Cap, HH, CL 8.8, M12 x 1.25 x 25
19		11190779		6	WASHER, LOCK
20		85801518		1	JOINT, UNIVERSAL
21		85802494		2	BUSHING
22		85817789		1	SUPPORT
23		11112821		4	SCREW M12X40
24		85804539		1	BOOT W/CAB
25		85808422		6	PLUG W/CAB

(1) Only for LB75.B-LB90.B
(2) Only for LB110.B

SHOVEL AND REAR LIFTING HOOKS

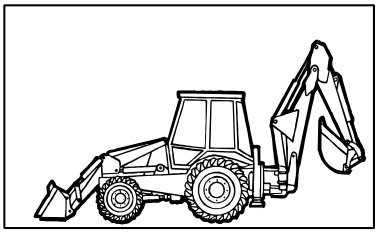

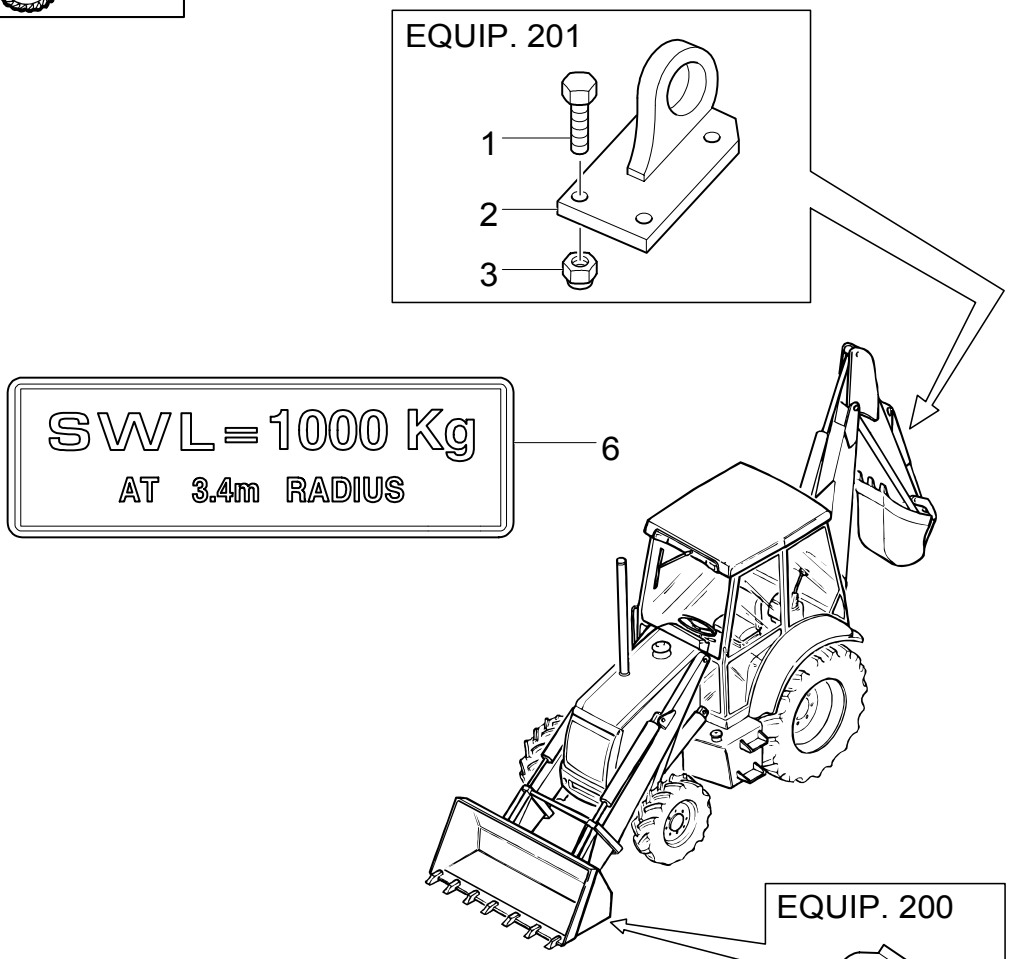

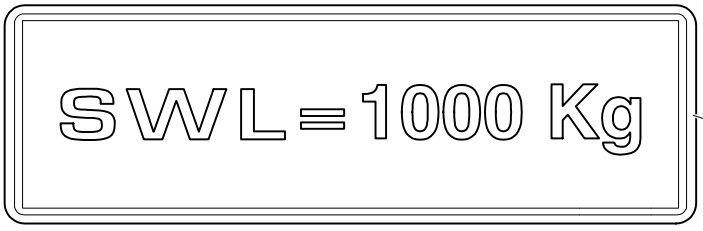

SHOVEL AND REAR LIFTING HOOKS

REF	FN	PART NUMBER	YR/SN	QTY	DESCRIPTION
1		11394334		4	SCREW M14X1,5X45(EQUIP.201)
2		85802599		1	HOOK (EQUIP.201)
3		12574825		4	NUT M14X1,5(EQUIP.201)
4		85805807		1	HOOK (EQUIP.200)
5		85805663		1	DECAL (EQUIP.200)
6		85805664		1	DECAL (EQUIP.201)

469-A	01	p1	11/03

HYDRAULIC CYLINDER (BUCKET 4X1-6X1)

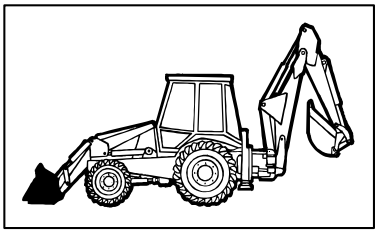

HYDRAULIC CYLINDER (BUCKET 4X1-6X1)

REF	FN	PART NUMBER	YR/SN	QTY	DESCRIPTION
1		85820005		1	CYLINDER
2		85820051		1	BARREL
3		85820057		1	RING, OIL SCRAPER
4		85820058		1	GASKET
5		85820053		1	PLATE, BASE
6		85820061		1	GASKET
7		85820059		1	GASKET
8		85820060		1	GASKET
9		85820055		1	PIN, ROLL
10		85820054		1	PISTON
11		85820052		1	ROD
12		85820056		1	BUSHING

471	01	p1	12/03

BUCKET 4X1 (1 M3) WITH BLADE

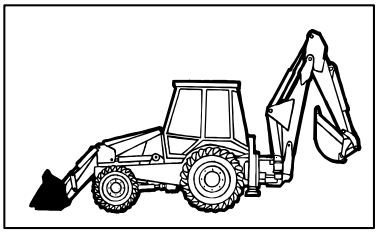

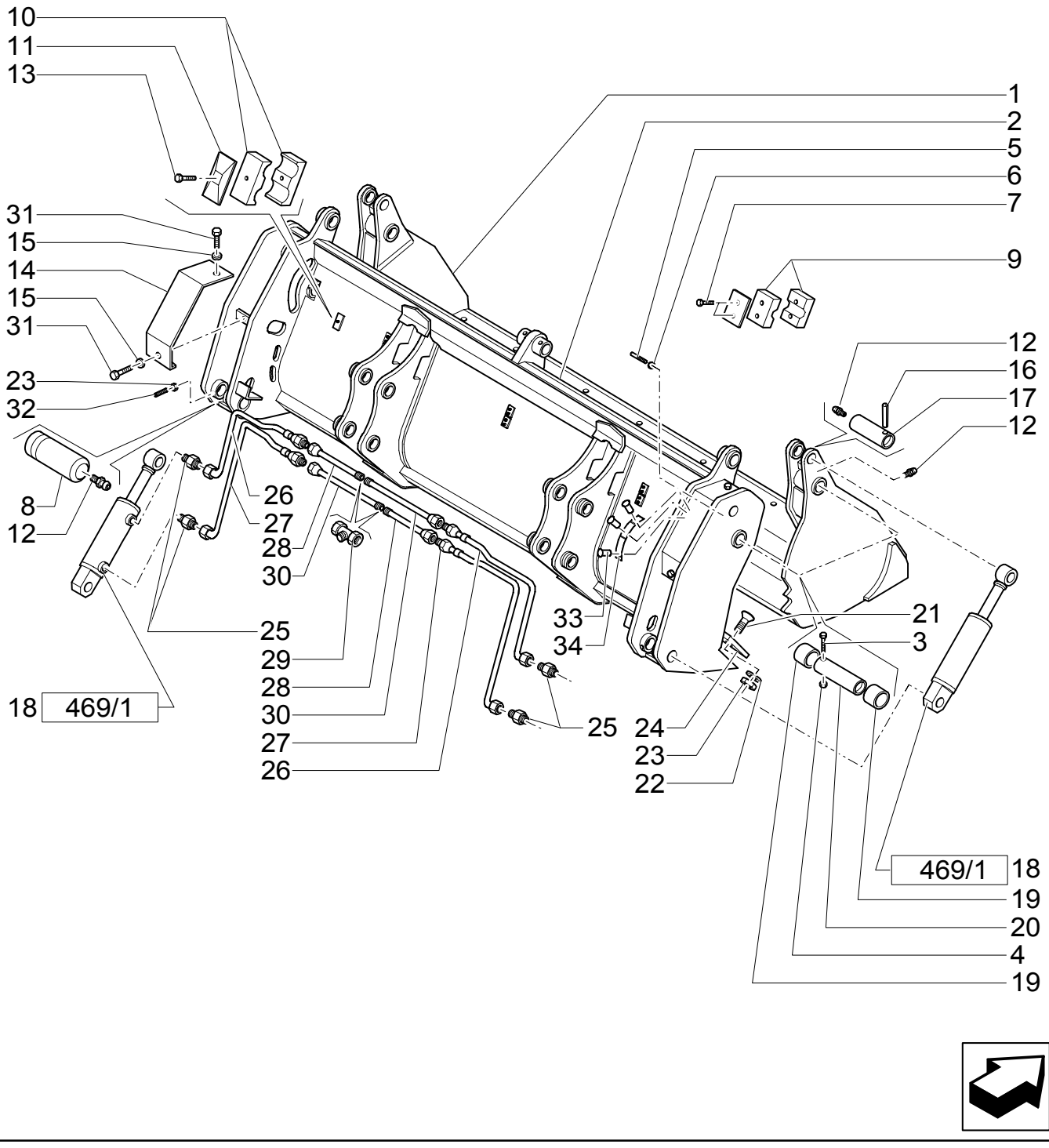

BUCKET 4X1 (1 M3) WITH BLADE

REF	FN	PART NUMBER	YR/SN	QTY	DESCRIPTION
1		85820032		1	BUCKET
2		85820033		1	BUCKET
3		85820018		2	SCREW M10X90
4		85820035		2	NUT M10X1,5
5		85820021		1	SCREW M8X120
6		85820031		1	NUT M8
7		85820034		12	SCREW M6X30
8		85820019		2	PIN
9		85820028		12	CLAMP
10		85820027		2	CLAMP
11		85820026		2	PLATE
12		85820014		6	NIPPLE, LUBE M10X1
13		85820030		2	SCREW
14		85820010		2	GUARD
15		85820012		4	WASHER, SEALING
16		85820016		2	PIN, ROLL 10X80
17		85820017		2	PIN
18		85820005		2	CYLINDER
19		85820013		4	BUSHING
20		85820015		2	PIN
21		85820007		8	SCREW M14X35
22		85820009		8	WASHER, SEALING
23		85820008		10	NUT M14X2
24		85820006		1	BLADE, KNIFE
25		85820025		4	CONNECTOR, HYD.
26		85824364		2	HOSE, FLEXIBLE
27		85824363		2	HOSE, FLEXIBLE
28		85820039		2	TUBE, RIGID
29		85820040		2	CONNECTOR, HYD.
30		85820038		2	TUBE, RIGID
31		85820011		2	SCREW
32		85820020		2	SCREW
33		NSS		3	NOT SERVICED SEPARATELY
34		NSS		1	NOT SERVICED SEPARATELY

471	02	p1	09/03

BUCKET 4X1 (1 M3) WITH BLADE

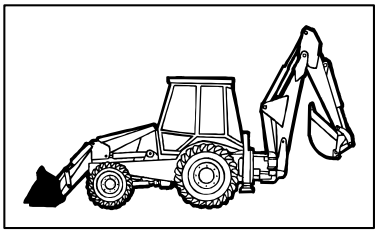

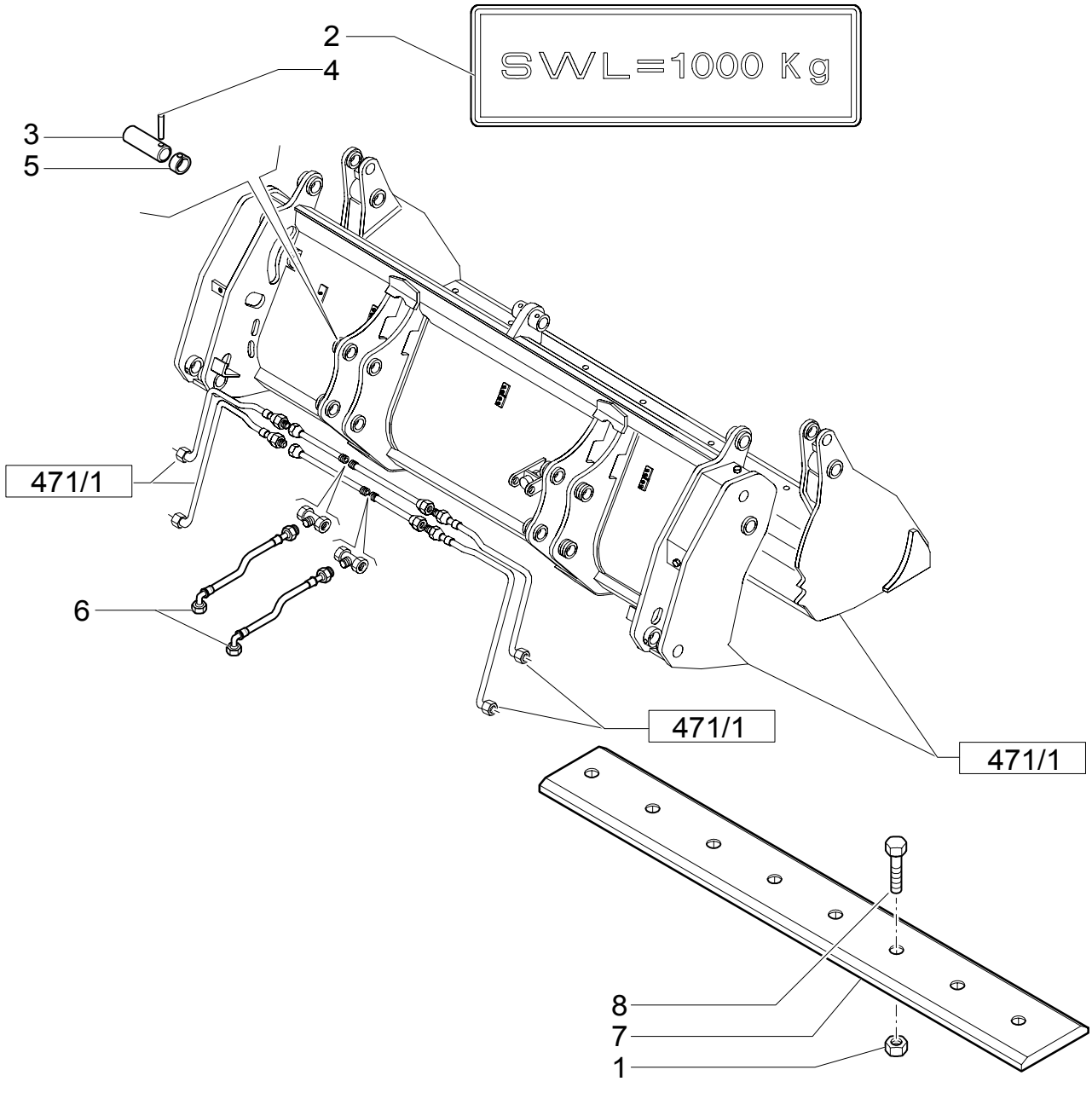

BUCKET 4X1 (1 M3) WITH BLADE

REF	FN	PART NUMBER	YR/SN	QTY	DESCRIPTION
1		85801470		8	NUT 5/8"-11
2		85805663		1	DECAL
3		85801051		4	PIN
4		85802993		4	PIN
5		85802992		4	O-RING
6		85820819		2	HOSE, FLEXIBLE L=800 MM.
7	1	85801161		1	EDGE, CUTTING 35 Deg. cutting edge
8		85801371		8	BOLT

(1) Reversible bolt on

472	01	p1	12/03

BUCKET 4X1 (1 M3) WITH TINE

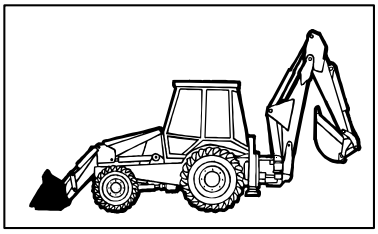

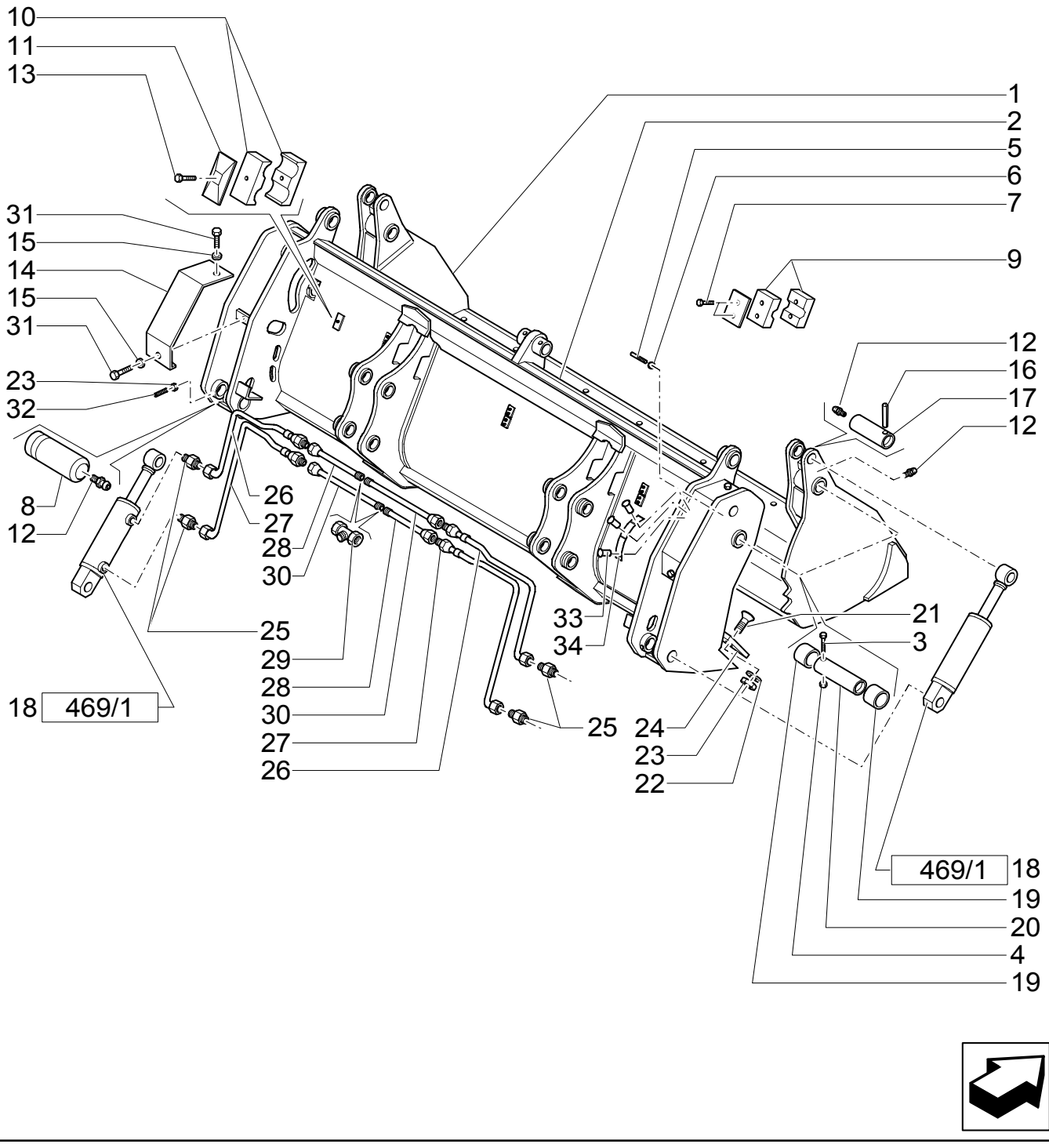

BUCKET 4X1 (1 M3) WITH TINE

REF	FN	PART NUMBER	YR/SN	QTY	DESCRIPTION
1		85820032		1	BUCKET
2		85820033		1	BUCKET
3		85820018		2	SCREW M10X90
4		85820035		2	NUT M10X1,5
5		85820021		1	SCREW M8X120
6		85820031		1	NUT M8
7		85820034		12	SCREW M6X30
8		85820019		2	PIN
9		85820028		12	CLAMP
10		85820027		2	CLAMP
11		85820026		2	PLATE
12		85820014		6	NIPPLE, LUBE M10X1
13		85820030		2	SCREW
14		85820010		2	GUARD
15		85820012		4	WASHER, SEALING
16		85820016		2	PIN, ROLL 10X80
17		85820017		2	PIN
18		85820005		2	CYLINDER
19		85820013		4	BUSHING
20		85820015		2	PIN
21		85820007		8	SCREW M14X35
22		85820009		8	WASHER, SEALING
23		85820008		10	NUT M14X2
24		85820006		1	BLADE, KNIFE
25		85820025		4	CONNECTOR, HYD.
26		85824364		2	HOSE, FLEXIBLE
27		85824363		2	HOSE, FLEXIBLE
28		85820039		2	TUBE, RIGID
29		85820040		2	CONNECTOR, HYD.
30		85820038		2	TUBE, RIGID
31		85820011		2	SCREW
32		85820020		2	SCREW
33		NSS		3	NOT SERVICED SEPARATELY
34		NSS		1	NOT SERVICED SEPARATELY

472	02	p1	06/03

BUCKET 4X1 (1 M3) WITH TINE

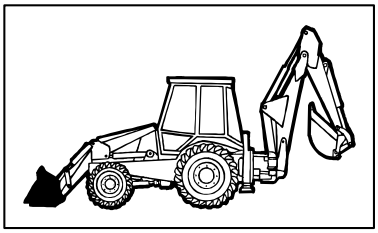

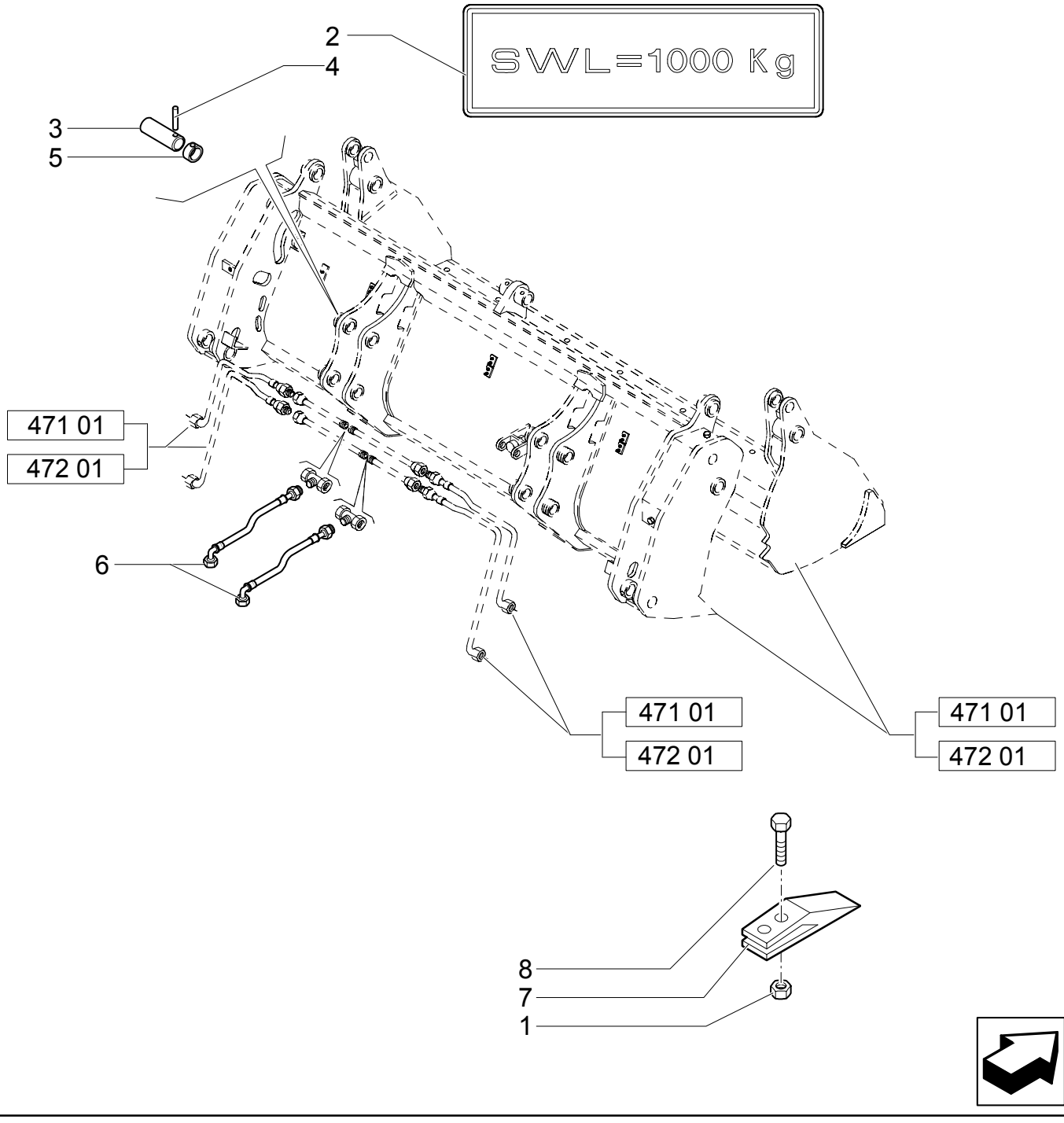

BUCKET 4X1 (1 M3) WITH TINE

REF	FN	PART NUMBER	YR/SN	QTY	DESCRIPTION
1		85801470		16	NUT 5/8"-11
2		85805663		1	DECAL
3		85801051		4	PIN
4		85802993		4	PIN
5		85802992		4	O-RING
6		85820819		2	HOSE, FLEXIBLE L=800 MM.
7		85811440		8	LUG
8		85801371		16	BOLT

473	01	p1	12/03

BUCKET 6X1 (1 M3) WITH BLADE

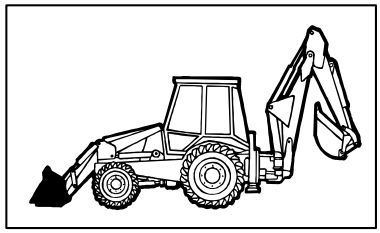

BUCKET 6X1 (1 M3) WITH BLADE

REF	FN	PART NUMBER	YR/SN	QTY	DESCRIPTION
1		85820032		1	BUCKET
2		85820033		1	BUCKET
3		85820018		4	SCREW M10X90
4		85820035		4	NUT M10X1,5
5		85820021		1	SCREW M8X120
6		85820031		5	NUT M8
7		85820034		12	SCREW M6X30
8		85820026		2	PLATE
9		85820028		12	CLAMP
10		85820066		2	PIN
11		85820063		2	SUPPORT
12		85820014		8	NIPPLE, LUBE M10X1
13		85820062		2	FORK, BUCKET
14		85820067		2	PIN
15		85820068		2	PIN, SPLIT (COTTER)
16		85820016		2	PIN, ROLL 10X80
17		85820017		2	PIN
18		85820005		2	CYLINDER
19		85820013		4	BUSHING
20		85820015		2	PIN
21		85820007		8	SCREW M14X35
22		85820009		8	WASHER, SEALING
23		85820008		10	NUT M14X2
24		85820006		1	BLADE, KNIFE
25		85820025		4	CONNECTOR, HYD.
26		85825177		2	PIN, SPLIT (COTTER)
27		85824364		2	HOSE, FLEXIBLE
28		85824363		2	HOSE, FLEXIBLE
29		85820039		2	TUBE, RIGID
30		85820040		2	CONNECTOR, HYD.
31		85820038		2	TUBE, RIGID
32		85820064		2	PIN
33		85820069		2	PLUG
34		85820065		2	BRACKET
35		85820027		4	CLAMP
36		85820019		2	PIN

473	01	p2	12/03

BUCKET 6X1 (1 M3) WITH BLADE

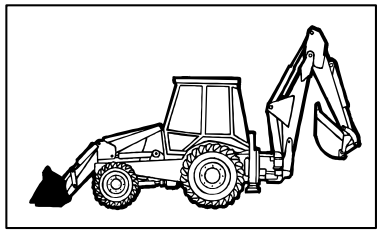

BUCKET 6X1 (1 M3) WITH BLADE

REF	FN	PART NUMBER	YR/SN	QTY	DESCRIPTION
37		85820020		2	SCREW M14X30
38		85820011		4	SCREW M8X16
39		85820012		4	WASHER, SEALING
40		85820010		2	GUARD
41		85820030		2	SCREW M8X45
42		NSS		3	NOT SERVICED SEPARATELY
43		NSS		1	NOT SERVICED SEPARATELY

473	02	p1	09/03

BUCKET 6X1 (1 M3) WITH BLADE

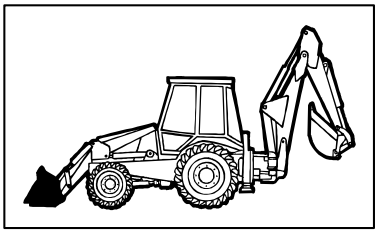

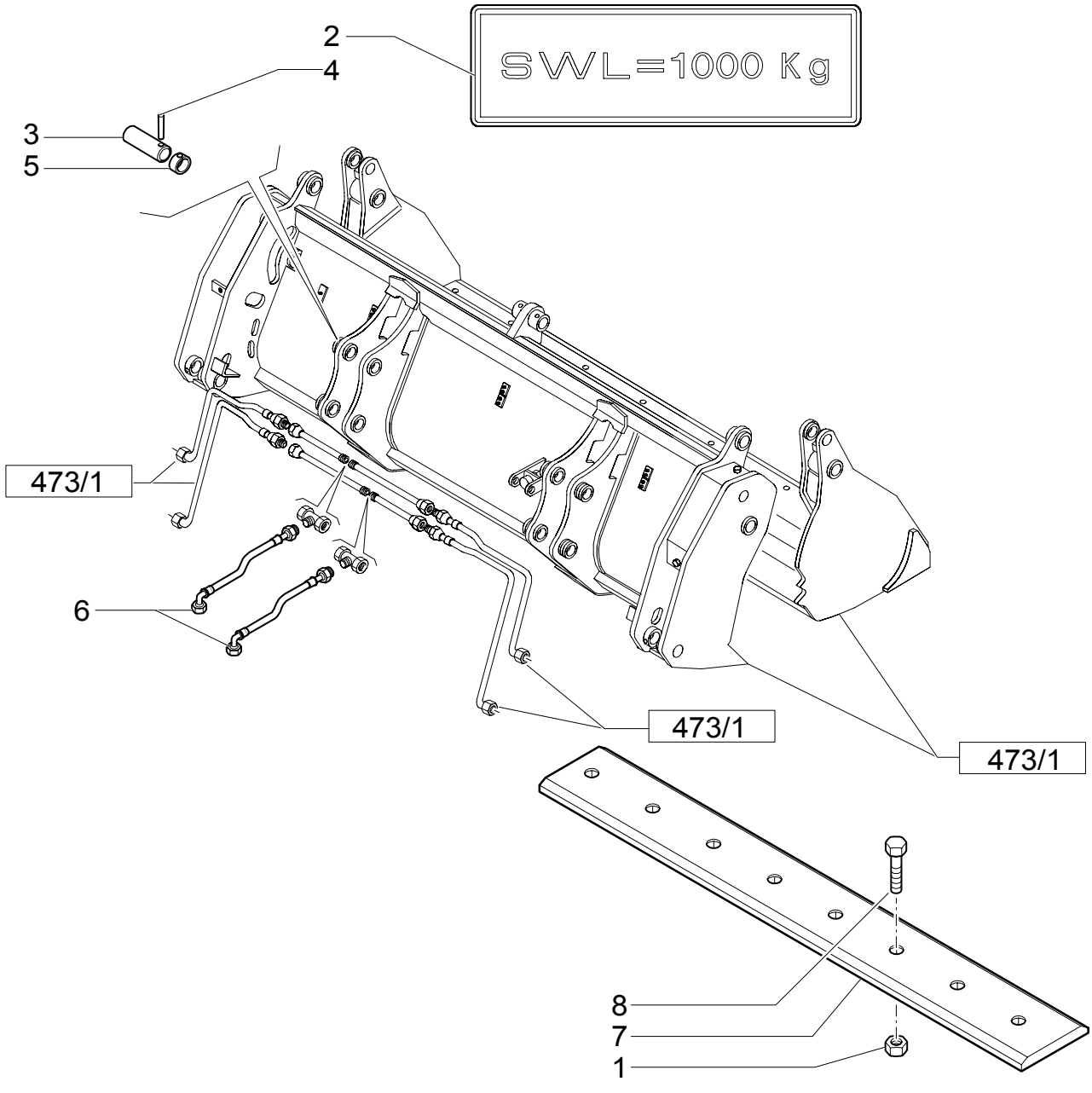

BUCKET 6X1 (1 M3) WITH BLADE

REF	FN	PART NUMBER	YR/SN	QTY	DESCRIPTION
1		85801470		8	NUT 5/8"-11
2		85805663		1	DECAL
3		85801051		4	PIN
4		85802993		4	PIN
5		85802992		4	O-RING
6		85820819		2	HOSE, FLEXIBLE L=800 MM.
7	1	85801161		1	EDGE, CUTTING 35 Deg. cutting edge
8		85801371		8	BOLT

(1) Reversible bolt on

474	01	p1	12/03

BUCKET 6X1 (1 M3) WITH TINE

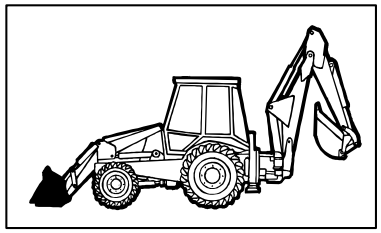

BUCKET 6X1 (1 M3) WITH TINE

REF	FN	PART NUMBER	YR/SN	QTY	DESCRIPTION
1		85820032		1	BUCKET
2		85820033		1	BUCKET
3		85820018		4	SCREW M10X90
4		85820035		4	NUT M10X1,5
5		85820021		1	SCREW M8X120
6		85820031		1	NUT M8
7		85820034		12	SCREW M6X30
8		85820026		2	PLATE
9		85820028		12	CLAMP
10		85820066		2	PIN
11		85820063		2	SUPPORT
12		85820014		8	NIPPLE, LUBE M10X1
13		85820062		2	FORK, BUCKET
14		85820067		2	PIN
15		85820068		2	PIN, SPLIT (COTTER)
16		85820016		2	PIN, ROLL 10X80
17		85820017		2	PIN
18		85820005		2	CYLINDER
19		85820013		4	BUSHING
20		85820015		2	PIN
21		85820007		8	SCREW M14X35
22		85820009		8	WASHER, SEALING
23		85820008		10	NUT M14X2
24		85820006		1	BLADE, KNIFE
25		85820025		4	CONNECTOR, HYD.
26		85825177		2	PIN, SPLIT (COTTER)
27		85824364		2	HOSE, FLEXIBLE
28		85824363		2	HOSE, FLEXIBLE
29		85820039		2	TUBE, RIGID
30		85820040		2	CONNECTOR, HYD.
31		85820038		2	TUBE, RIGID
32		85820064		2	PIN
33		85820069		2	PLUG
34		85820065		2	BRACKET
35		85820027		4	CLAMP
36		85820019		2	PIN

474	01	p2	12/03

BUCKET 6X1 (1 M3) WITH TINE

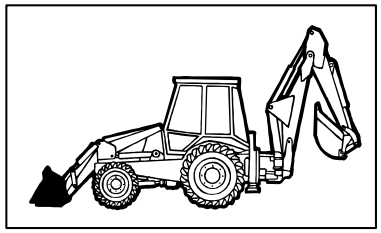

BUCKET 6X1 (1 M3) WITH TINE

REF	FN	PART NUMBER	YR/SN	QTY	DESCRIPTION
37		85820020		2	SCREW M14X30
38		85820011		4	SCREW M8X16
39		85820012		4	WASHER, SEALING
40		85820010		2	GUARD
41		85820030		2	SCREW M8X45
42		NSS		3	NOT SERVICED SEPARATELY
43		NSS		1	NOT SERVICED SEPARATELY

BUCKET 6X1 (1 M3) WITH TINE

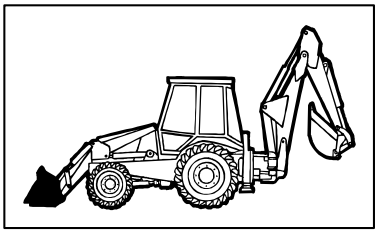

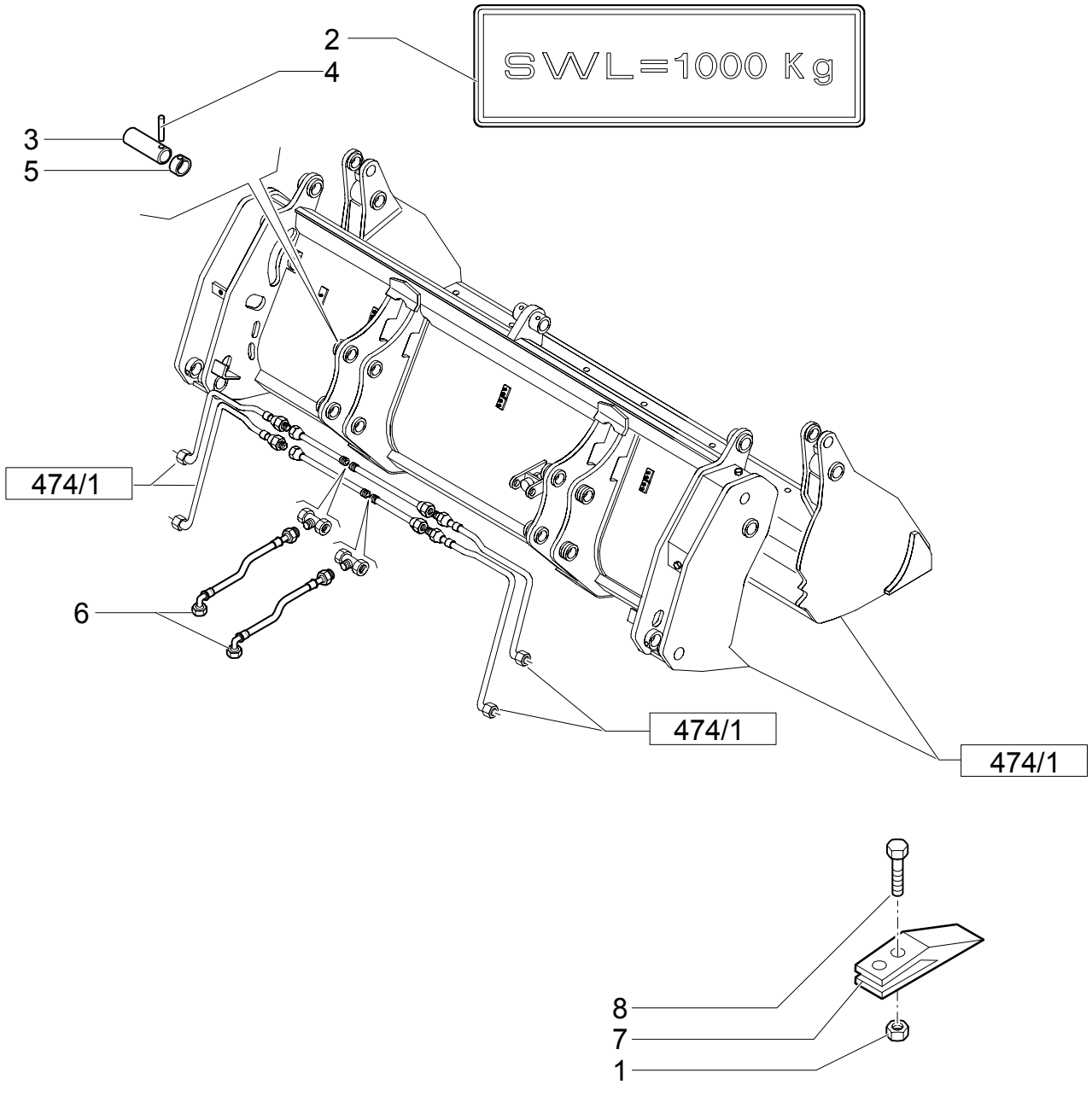

BUCKET 6X1 (1 M3) WITH TINE

REF	FN	PART NUMBER	YR/SN	QTY	DESCRIPTION
1		85801470		16	NUT 5/8"-11
2		85805663		1	DECAL
3		85801051		4	PIN
4		85802993		4	PIN
5		85802992		4	O-RING
6		85820819		2	HOSE, FLEXIBLE L=800 MM.
7		85811440		8	LUG
8		85801371		8	BOLT

514	01	p1	04/04

BOOM - DIPPER SHORT

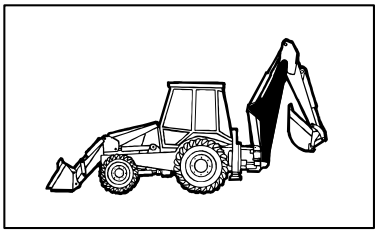

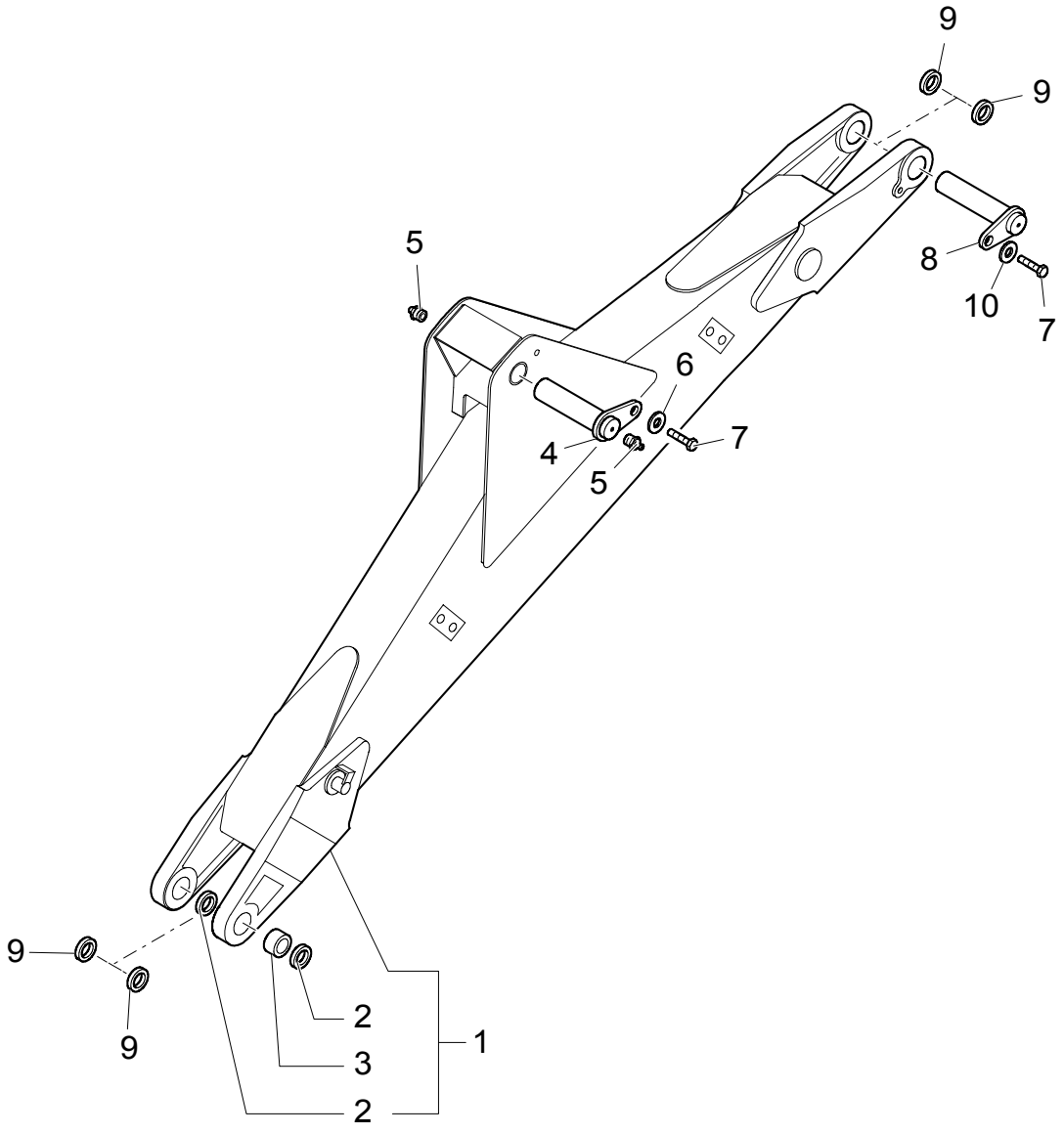

BOOM - DIPPER SHORT

REF	FN	PART NUMBER	YR/SN	QTY	DESCRIPTION
1	1	85816801		1	ARM
2		D7NNC512C		2	BUSHING, DRIVE
3		83931281		4	SEAL
4		85815698		1	PIN
5		83416242		2	NIPPLE, LUBE
6		85802396		1	WASHER
7		85802397		2	SCREW
8		85815607		1	PIN
9		85818916		4	SHIM
10		85815609		1	WASHER

(1) Includes 2,3

514	02	p1	04/04

SHORT DIPPER

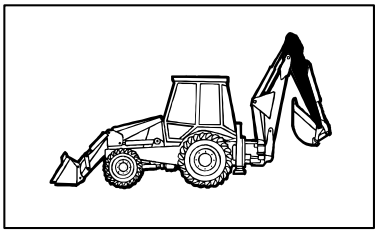

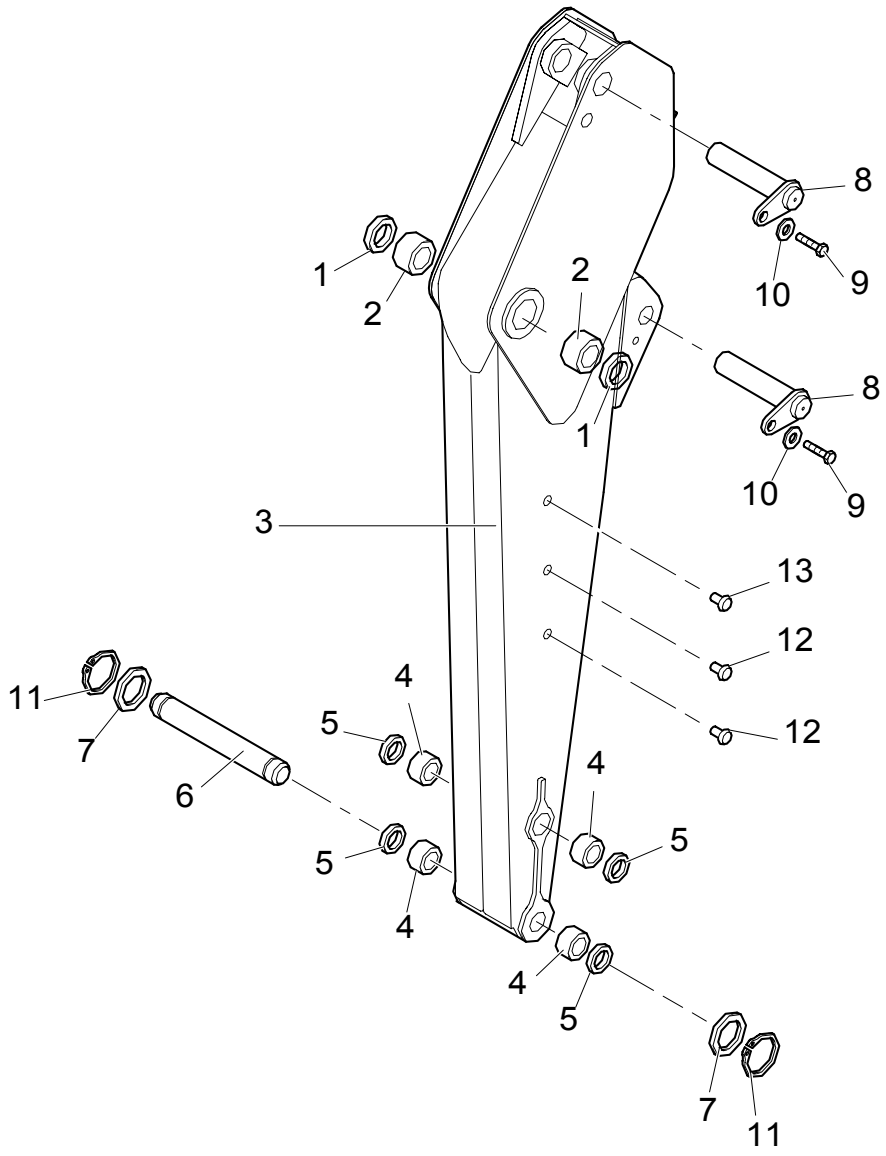

SHORT DIPPER

REF	FN	PART NUMBER	YR/SN	QTY	DESCRIPTION
1		83931281		2	SEAL
2		83910546		2	BUSHING 2.175" ID x 2.80" OD x 1.969"
3	1	85817069		1	ARM
4		83910548		4	BUSHING
5		83931289		4	SEAL
6		86992966		1	PIN
7		83910977		2	SPACER
8		85803002		2	PIN
9		85802397		2	SCREW
10		85802396		2	WASHER
11		11069071		2	RING, LOCKING
12		85804447		4	PLUG
13		F1NN94000Z36AA		3	STUD

(1) Includes 1,2,4,5

SHORT DIPPER - BUCKET MOTION

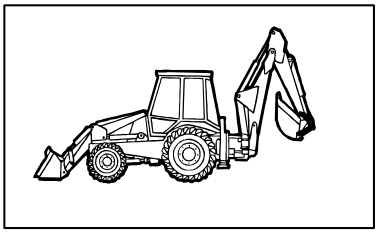

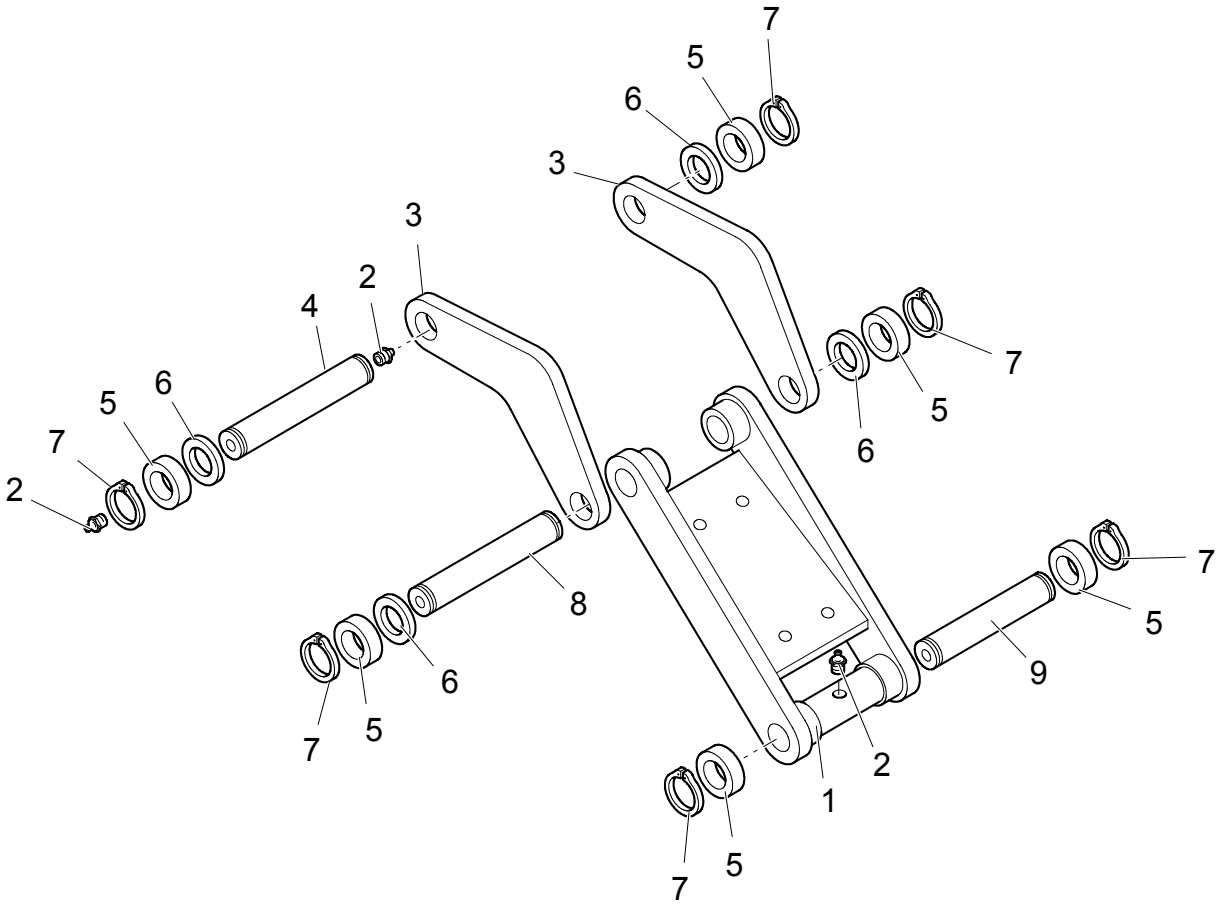

SHORT DIPPER - BUCKET MOTION

REF	FN	PART NUMBER	YR/SN	QTY	DESCRIPTION
1				1	
2		83416242		5	NIPPLE, LUBE
3		{85817133}		2	
4		85815517		1	PIN
5		83910977		6	SPACER
6		85818916		4	SHIM
7		11069071		6	RING, LOCKING
8		85813469		1	PIN
9		86992966		1	PIN

514	04	p1	04/04

SHORT DIPPER - HYDRAULIC SYSTEM

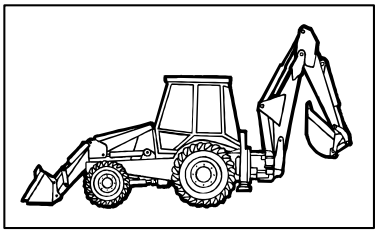

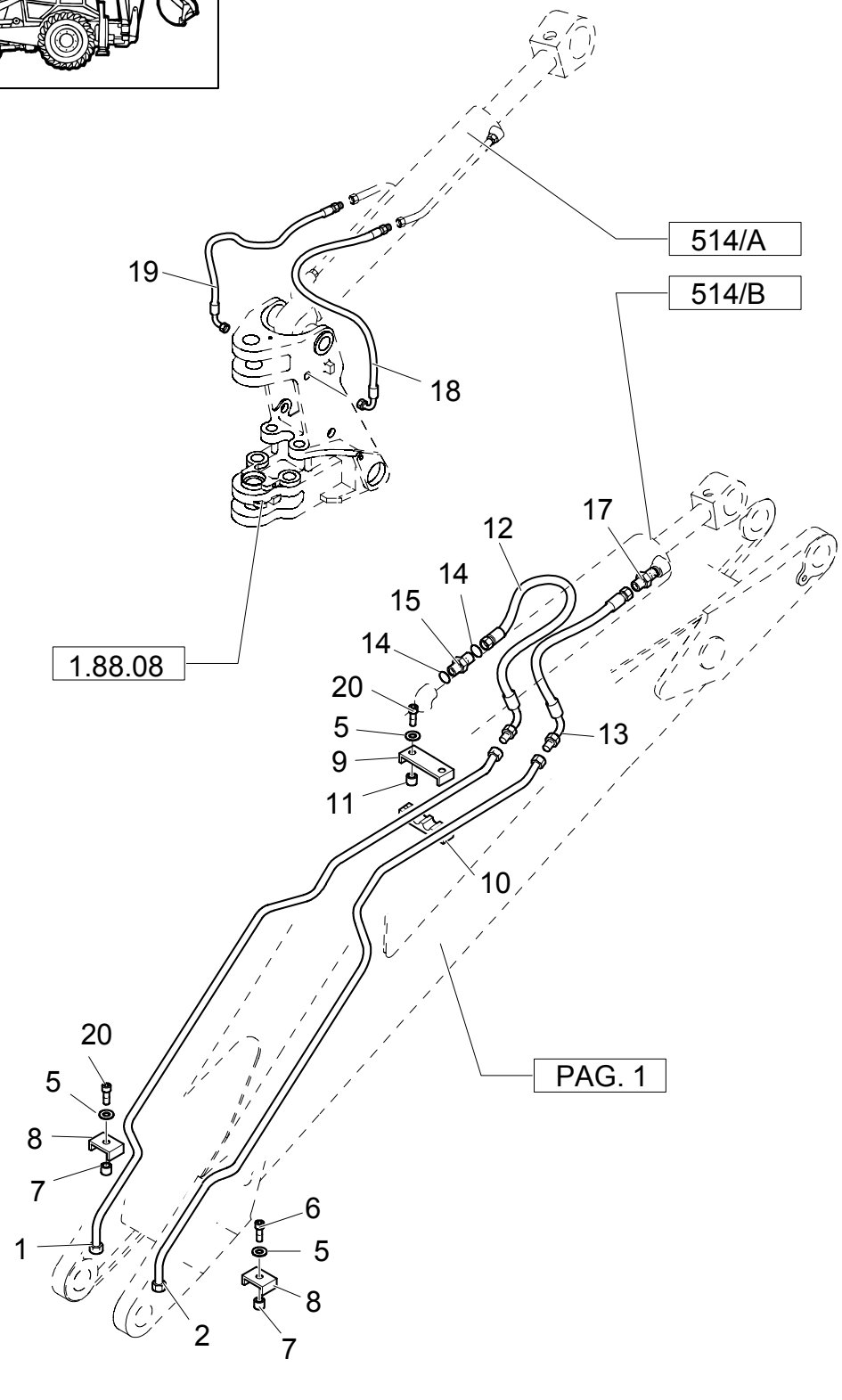

SHORT DIPPER - HYDRAULIC SYSTEM

REF	FN	PART NUMBER	YR/SN	QTY	DESCRIPTION
1		85815632		1	TUBE, RIGID
2		85815630		1	TUBE, RIGID
3		85802901		1	SPACER
4		85802899		1	CLAMP
5		11193979		4	WASHER, LOCK
6		16044221		1	SCREW
7		85802902		1	SPACER
8		85802900		1	CLAMP
9		85802894		1	U-BRACKET
10		85802895		1	CLAMP
11		85802893		2	SPACER
12		85812154		1	HOSE, FLEXIBLE
13		85812178		1	HOSE, FLEXIBLE
14		9991976		1	O-RING 90 Duro, .739" ID x .070" Thk
15		167266		1	O-RING 90 Duro, .924" ID x .116" Thk
16	1	83962538		1	CONNECTOR, HYD. 1-3/16"-12 ORS x 1-1/16"-12 SAE O-Ring
17		83962539		1	CONNECTOR, HYD.
18		85812142		1	HOSE, FLEXIBLE
19		85812150		1	HOSE, FLEXIBLE
20		16044421		3	SCREW

(1) Includes 14,15

SHORT DIPPER - HYDRAULIC SYSTEM

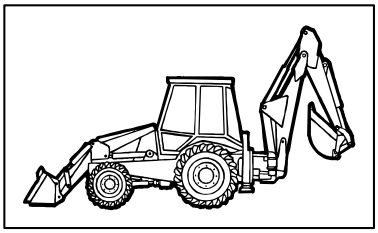

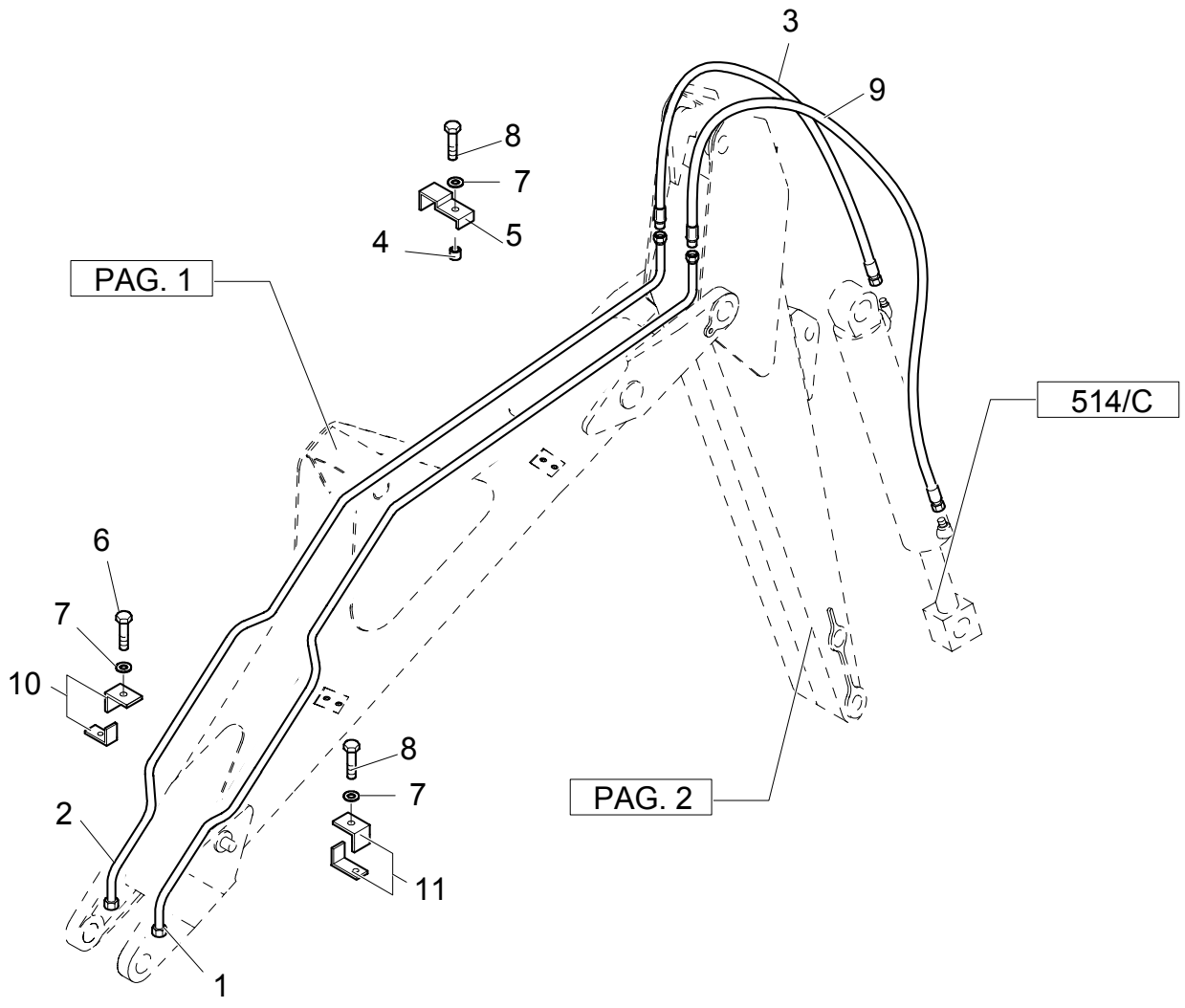

SHORT DIPPER - HYDRAULIC SYSTEM

REF	FN	PART NUMBER	YR/SN	QTY	DESCRIPTION
1		85815636		1	TUBE, RIGID
2		85815634		1	TUBE, RIGID
3	1	85812156		1	HOSE, FLEXIBLE
3	2	85826223		1	HOSE, FLEXIBLE
4		85802901		1	SPACER
5		85802909		1	CLAMP
6		16044421		1	SCREW
7		11193979		3	WASHER, LOCK
8		16044221		2	SCREW M8X50
9	1	85812180		1	HOSE, FLEXIBLE
9	2	85826225		1	HOSE, FLEXIBLE
10		85815628		2	HALF-CONNECTOR
11		85815627		2	HALF-CONNECTOR ASSY

(1) Serial Number: -031045565
(2) Serial Number: 031045566-

SHORT DIPPER - HYDRAULIC SYSTEM

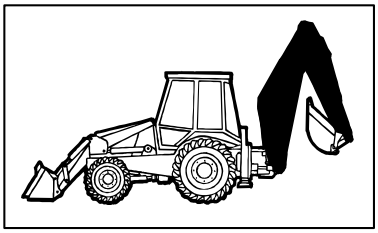

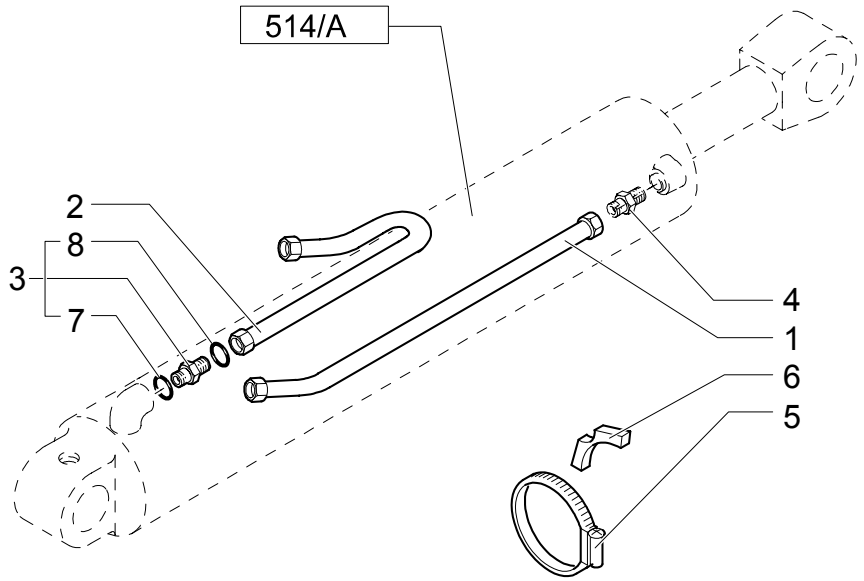

SHORT DIPPER - HYDRAULIC SYSTEM

REF	FN	PART NUMBER	YR/SN	QTY	DESCRIPTION
1		85815683		1	TUBE, RIGID
2		85816813		1	TUBE, RIGID
3	1	83962538		1	CONNECTOR, HYD. 1-3/16"-12 ORS x 1-1/16"-12 SAE O-Ring
4		83962539		1	CONNECTOR, HYD.
5		85802744		1	CLAMP
6		83911131		2	U-BOLT
7		167266		1	O-RING 90 Duro, .924" ID x .116" Thk
8		9991976		1	O-RING 90 Duro, .739" ID x .070" Thk

(1) Includes 7,8

SHORT DIPPER - HYDRAULIC SYSTEM

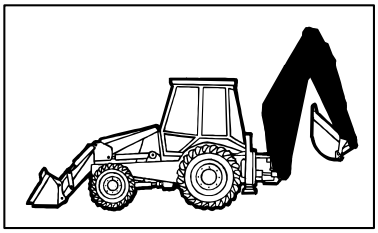

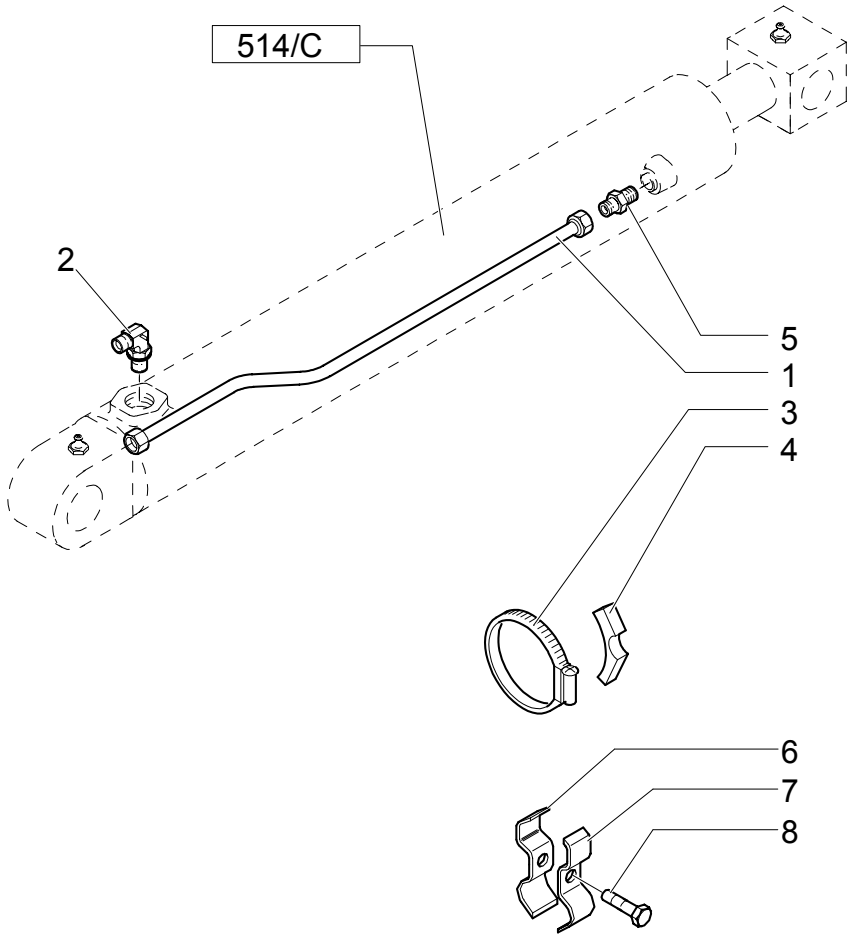

SHORT DIPPER - HYDRAULIC SYSTEM

REF	FN	PART NUMBER	YR/SN	QTY	DESCRIPTION
1	1	85815638		1	TUBE, RIGID
2		85802957		1	ELBOW
3	1	85803008		1	COLLAR
4	1	E7NNB165AA		1	SPACER
5		83962539		1	CONNECTOR, HYD.
6	2	85825442		1	COLLAR
7	2	85825441		1	COLLAR
8	2	14305321		1	SCREW

(1) Serial Number: -031045565
(2) Serial Number: 031045566-

SHORT DIPPER - HYDRAULIC SYSTEM

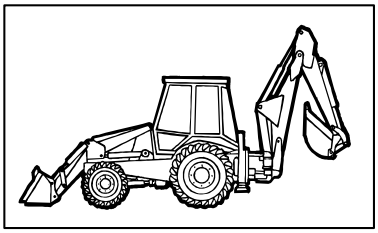

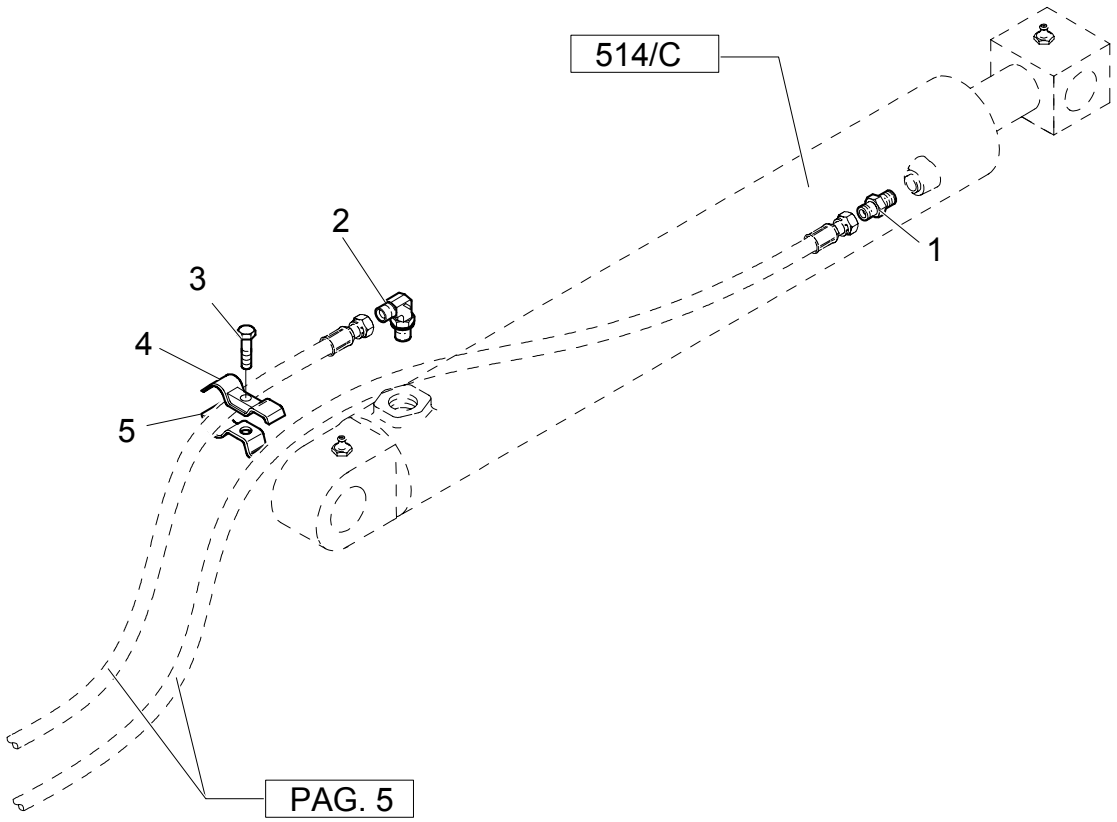

SHORT DIPPER - HYDRAULIC SYSTEM

REF	FN	PART NUMBER	YR/SN	QTY	DESCRIPTION
1		83962539		1	CONNECTOR, HYD.
2		85802957		1	ELBOW
3		14305321		1	SCREW
4		85825441		1	COLLAR
5		85825442		1	COLLAR

514-A	01	p1	11/03

HYDRAULIC LIFTING CYLINDER

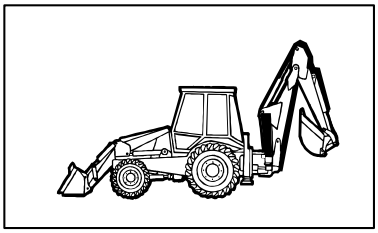

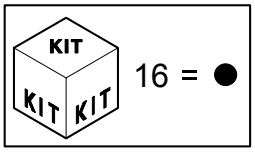

HYDRAULIC LIFTING CYLINDER

REF	FN	PART NUMBER	YR/SN	QTY	DESCRIPTION
1		85800211		1	GASKET
2		85800975		1	PLATE, BASE
3		85800084		1	GASKET
4		83910551		2	BUSHING
5	1	83962145		1	ROD
6		83931281		2	SEAL
7		83416242		2	NIPPLE, LUBE
8		85800088		1	GASKET
9		85800007		1	RING
10		85800212		1	O-RING
11		85800092		1	GASKET
12		85800095		1	BUSHING
13	2	85800985		1	PLUNGER
14		85800964		1	EXPANDER
15		85800206		1	GASKET
16		85819299		1	KIT
17	3	85800210		1	LINER, ENGINE CYLINDER
18		85800203		1	BRAKE
19		85800202		1	BUSHING
20		83964188		1	WASHER
21		81871346		1	BOLT
22		85801025		2	SEAL
23		85800260		1	CYLINDER

(1) Includes 4
(2) Includes 14,15
(3) Includes 19

514-B	01	p1	11/03

HYDRAULIC DITCHING CYLINDER

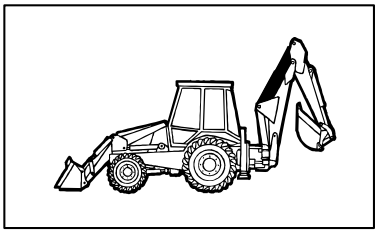

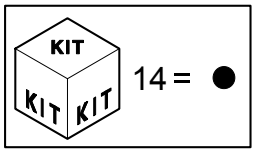

HYDRAULIC DITCHING CYLINDER

REF	FN	PART NUMBER	YR/SN	QTY	DESCRIPTION
1		83931281		4	SEAL ASSY
2		81871346		1	BOLT
3		83964188		1	WASHER
4	1	85800983		1	PLUNGER
5		83931383		1	SEAL
6		85800962		1	EXPANDER
7		85800095		1	BUSHING
8		85800092		1	GASKET
9		83931389		1	O-RING
10		85800005		1	RING
11		85800991		1	PLATE, BASE
12		85800088		1	GASKET
13		85800084		1	GASKET
14		85819350		1	KIT
15	2	85800971		1	ROD
16		83910547		2	BUSHING
17		83416242		1	NIPPLE, LUBE
18		83931289		2	SEAL
19	3	85800970		1	TUBE, RIGID
20		83910558		2	RING
21		85800940		1	CYLINDER

(1) Includes 5,6
(2) Includes 16
(3) Includes 20

514-C	01	p1	11/03

HYDRAULIC BUCKET CYLINDER

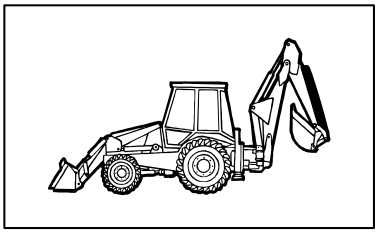

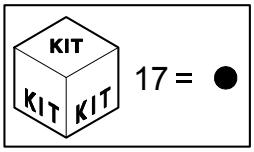

HYDRAULIC BUCKET CYLINDER

REF	FN	PART NUMBER	YR/SN	QTY	DESCRIPTION
1		85800095		1	BUSHING
2		85800992		1	PLATE, BASE
3		82866944		1	SCREW
4		83911410		1	O-RING
5	1	85800980		1	PLUNGER
6	2	83963252		1	ROD
7		83910547		4	BUSHING
8		85800003		1	RING
9		85800088		1	GASKET
10	2	83963280		1	LINER, ENGINE CYLINDER
11		85800092		1	GASKET
12		83416242		2	NIPPLE, LUBE
13		85800084		1	GASKET
14		83931289		4	SEAL
15		83931399		1	SEAL
16		85800960		1	EXPANDER
17		85819358		1	KIT
18		85800912		1	CYLINDER, OPERATING

(1) Includes 15,16
(2) Includes 7

515	01	p1	12/03

12" (305MM) BACKHOE BUCKET WITH PIN TEETH

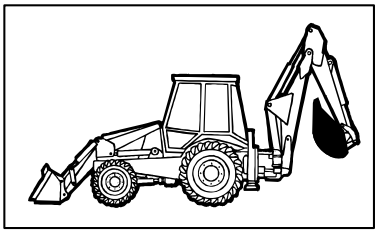

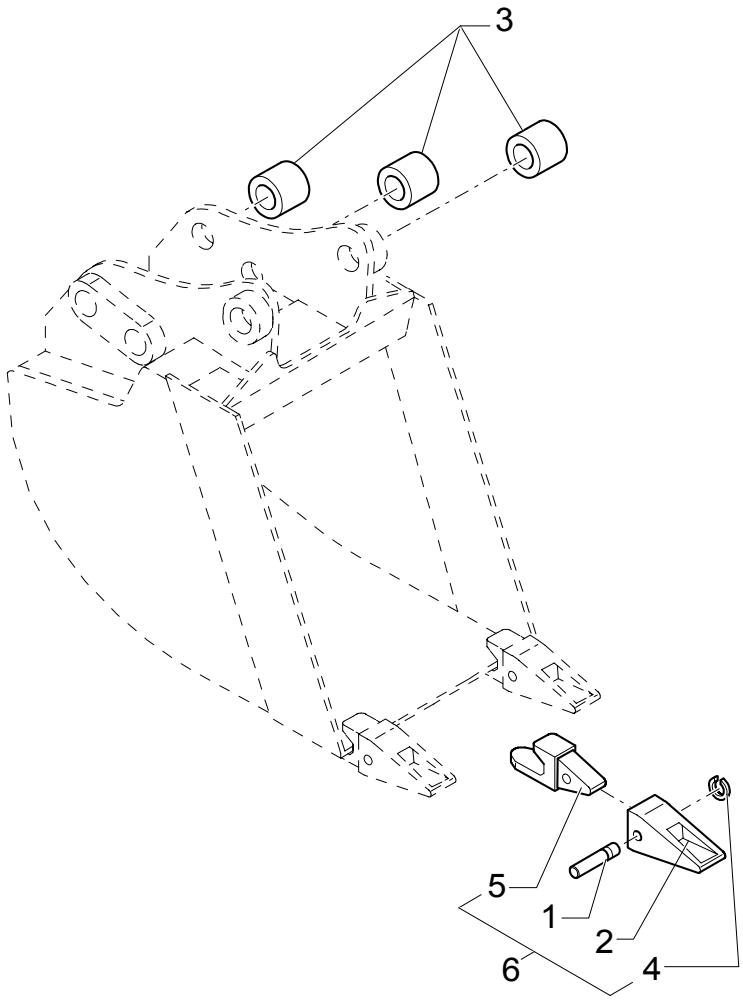

12" (305MM) BACKHOE BUCKET WITH PIN TEETH

REF	FN	PART NUMBER	YR/SN	QTY	DESCRIPTION
1		85801097		3	PIN
2		85811432		3	SHANK, BUCKET TOOTH
3		83910634		6	BUSHING
4		85801098		3	STOP
5		85821788		3	SHANK, BUCKET TOOTH
6	1	NSS		3	NOT SERVICED SEPARATELY

(1) Includes 1 To 5

515	02	p1	11/03

12" (305MM) BACKHOE BUCKET WITH BOLT-ON TEETH

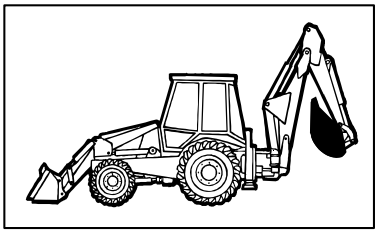

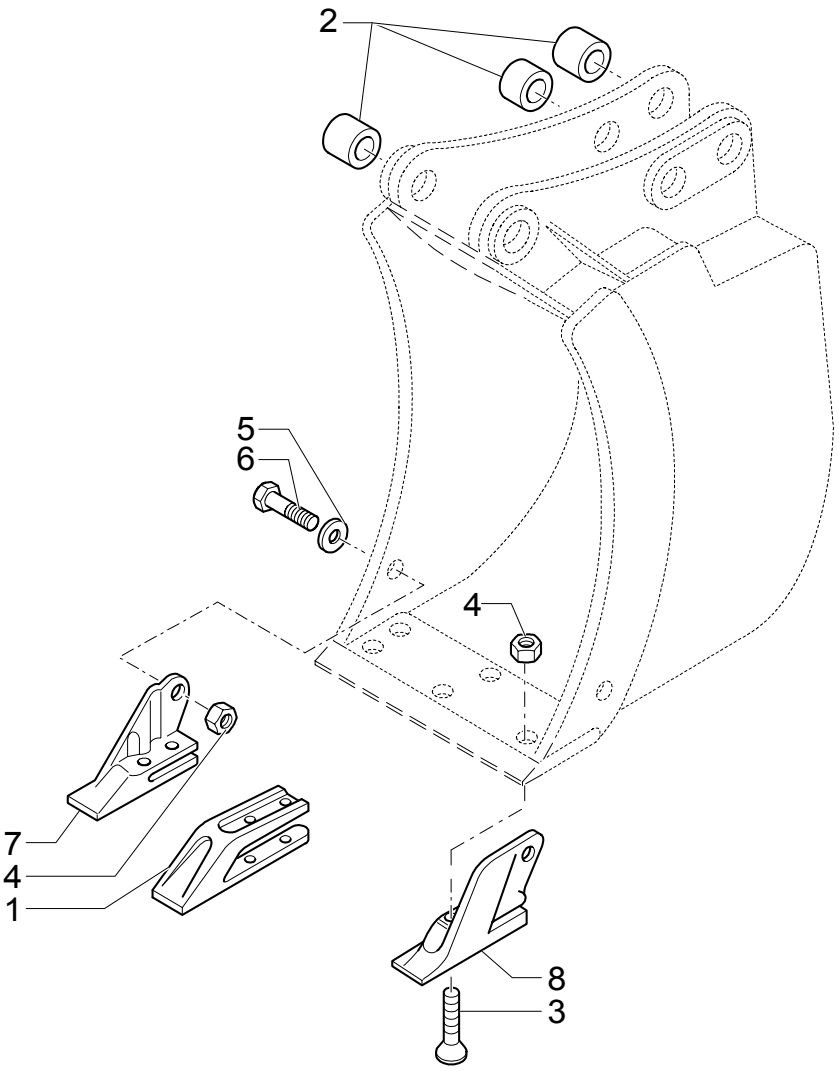

12" (305MM) BACKHOE BUCKET WITH BOLT-ON TEETH

REF	FN	PART NUMBER	YR/SN	QTY	DESCRIPTION
1		85811440		1	LUG
2		83910634		6	BUSHING
3		85801371		6	BOLT
4		85801470		8	NUT 5/8"-11
5		10520211		2	WASHER
6		D5NN94420N02B		2	WEATHERSTRIP 5/8"-11X1.75
7		85801377		1	LUG RH
8		85801376		1	LUG LH

18" (457MM) BACKHOE BUCKET WITH PIN TEETH

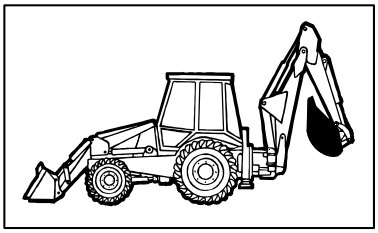

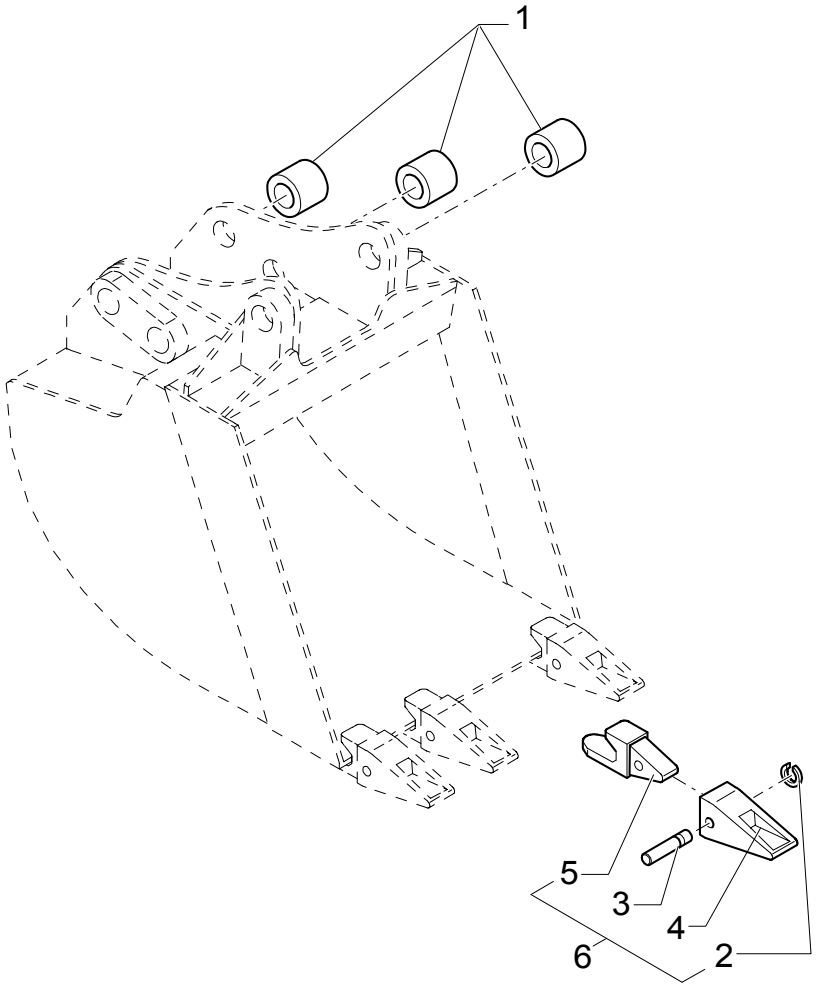

18" (457MM) BACKHOE BUCKET WITH PIN TEETH

REF	FN	PART NUMBER	YR/SN	QTY	DESCRIPTION
1		83910634		6	BUSHING
2		85801098		4	STOP
3		85801097		4	PIN
4		85811432		4	SHANK, BUCKET TOOTH
5		85821788		4	SHANK, BUCKET TOOTH
6	1	NSS		4	NOT SERVICED SEPARATELY

(1) Includes 1 To 5

18" (457MM) BACKHOE BUCKET WITH BOLT-ON TEETH

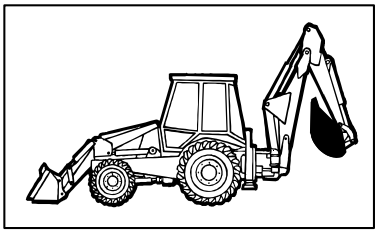

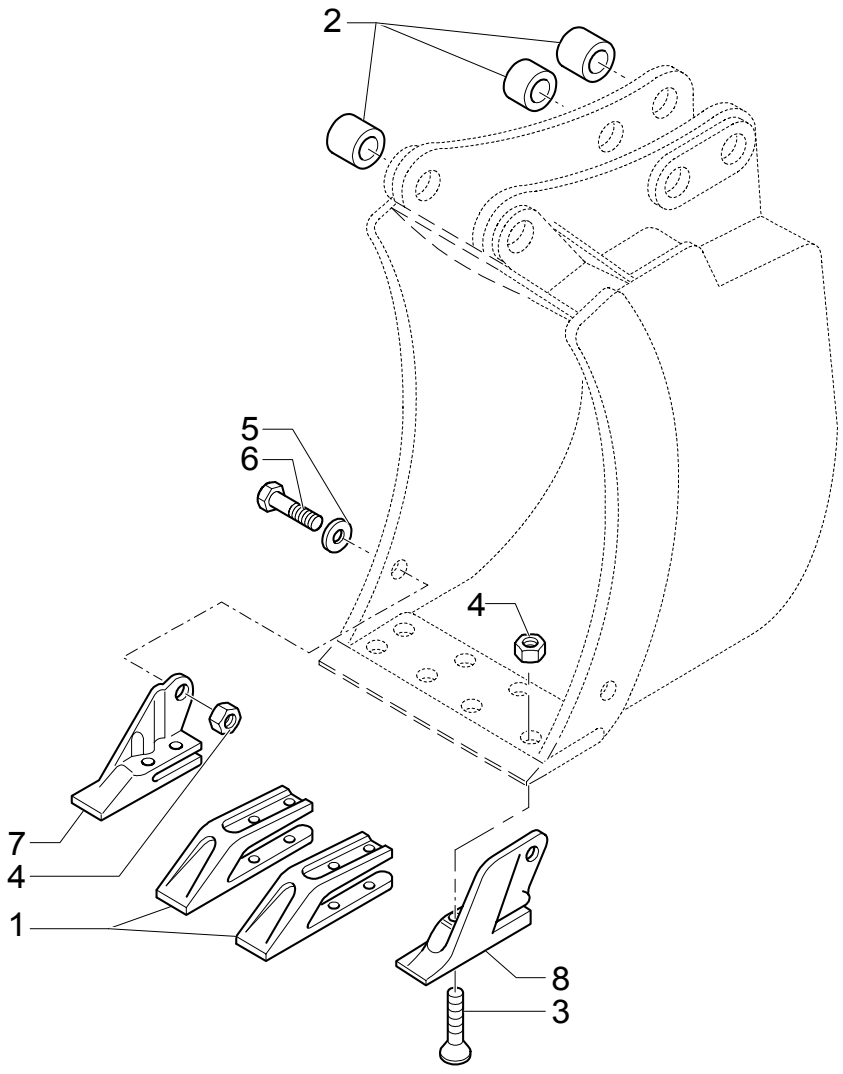

18" (457MM) BACKHOE BUCKET WITH BOLT-ON TEETH

REF	FN	PART NUMBER	YR/SN	QTY	DESCRIPTION
1		85811440		2	LUG
2		83910634		6	BUSHING
3		85801371		8	BOLT
4		85801470		10	NUT 5/8"-11
5		10520211		2	WASHER
6		D5NN94420N02B		2	WEATHERSTRIP 5/8"-11X1.75
7		85801377		1	LUG RH
8		85801376		1	LUG LH

517	01	p1	12/03

24" (610MM) BACKHOE BUCKET WITH PIN TEETH

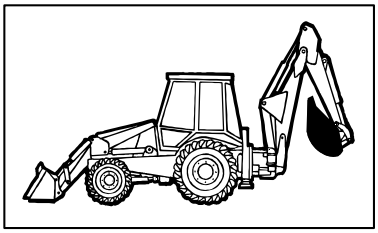

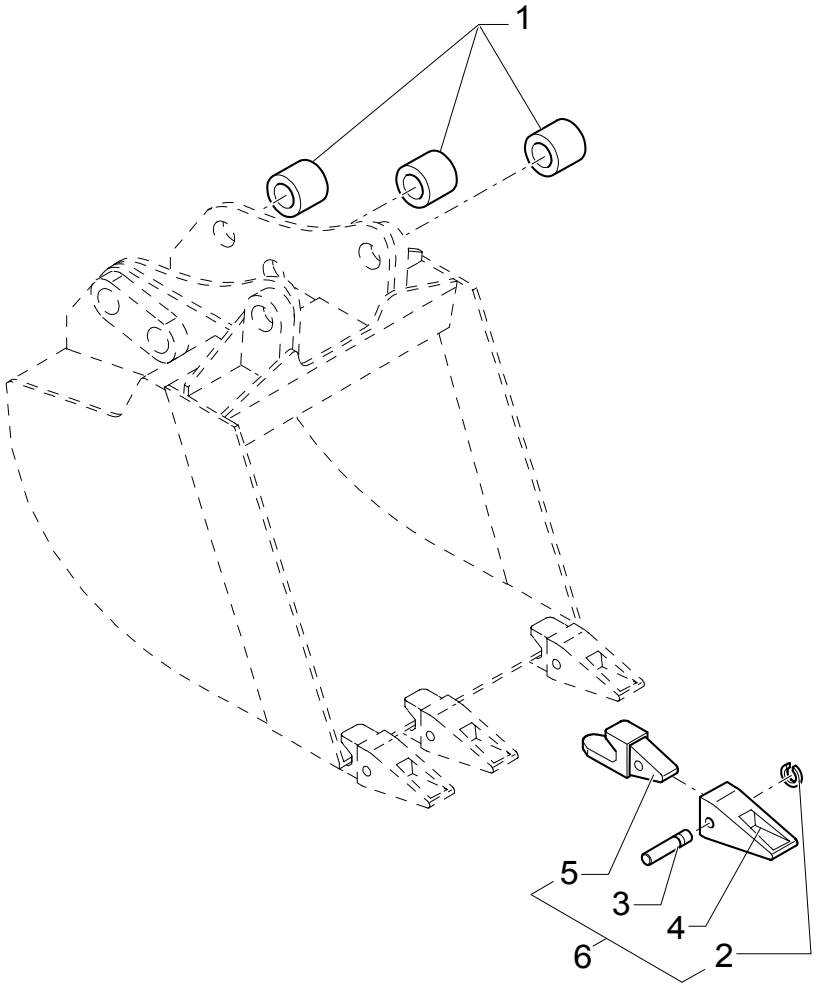

24" (610MM) BACKHOE BUCKET WITH PIN TEETH

REF	FN	PART NUMBER	YR/SN	QTY	DESCRIPTION
1		83910634		6	BUSHING
2		85801098		4	STOP
3		85801097		4	PIN
4		85811432		4	SHANK, BUCKET TOOTH
5		85821788		4	SHANK, BUCKET TOOTH
6	1	NSS		4	NOT SERVICED SEPARATELY

(1) Includes 1 To 5

517	02	p1	11/03

24" (610MM) BACKHOE BUCKET WITH BOLT-ON TEETH

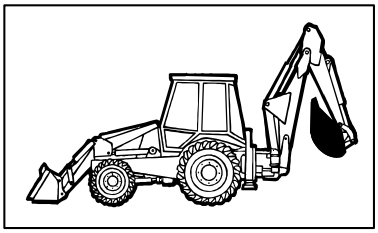

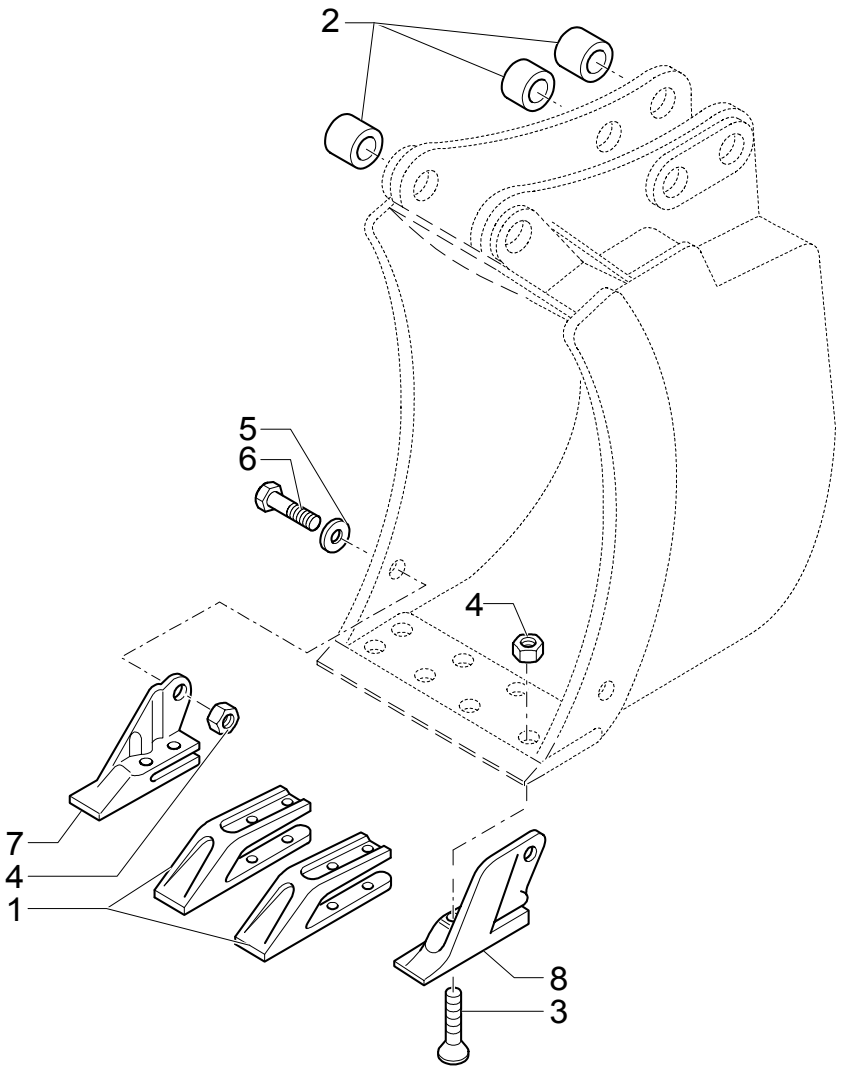

24" (610MM) BACKHOE BUCKET WITH BOLT-ON TEETH

REF	FN	PART NUMBER	YR/SN	QTY	DESCRIPTION
1		85811440		2	LUG
2		83910634		6	BUSHING
3		85801371		8	BOLT
4		85801470		10	NUT 5/8"-11
5		10520211		2	WASHER
6		88706		2	SCREW Cap, HH, G8, 5/8"-11 x 1-3/4"
7		85801377		1	LUG RH
8		85801376		1	LUG LH

518	01	p1	11/03

30" (762MM) BACKHOE BUCKET WITH PIN TEETH

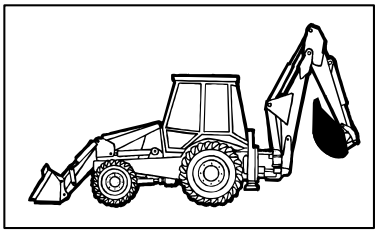

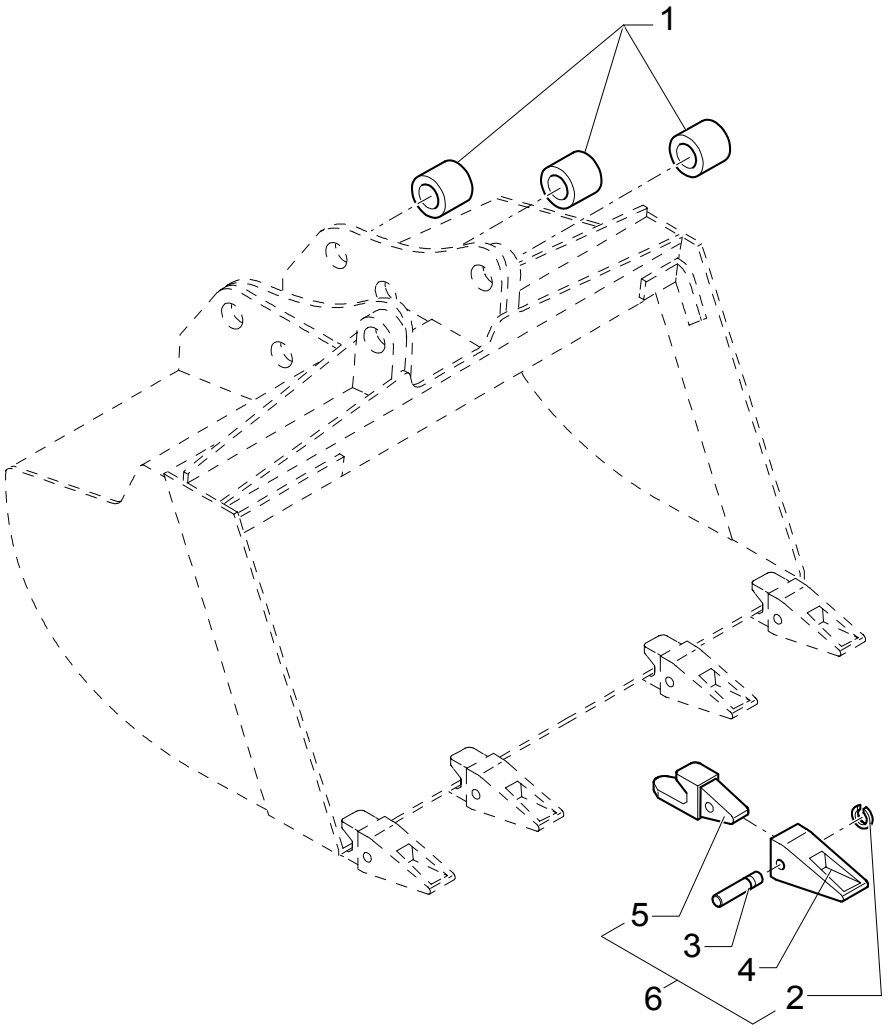

30" (762MM) BACKHOE BUCKET WITH PIN TEETH

REF	FN	PART NUMBER	YR/SN	QTY	DESCRIPTION
1		83910634		6	BUSHING
2		85801098		5	STOP
3		85801097		5	PIN
4		85811432		5	SHANK, BUCKET TOOTH
5		85821788		5	SHANK, BUCKET TOOTH
6		{85824018}		5	

30" (762MM) BACKHOE BUCKET WITH BOLT-ON TEETH

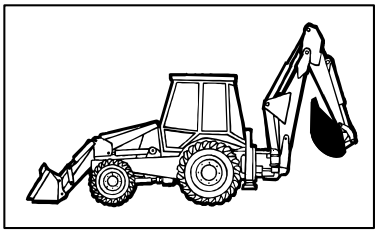

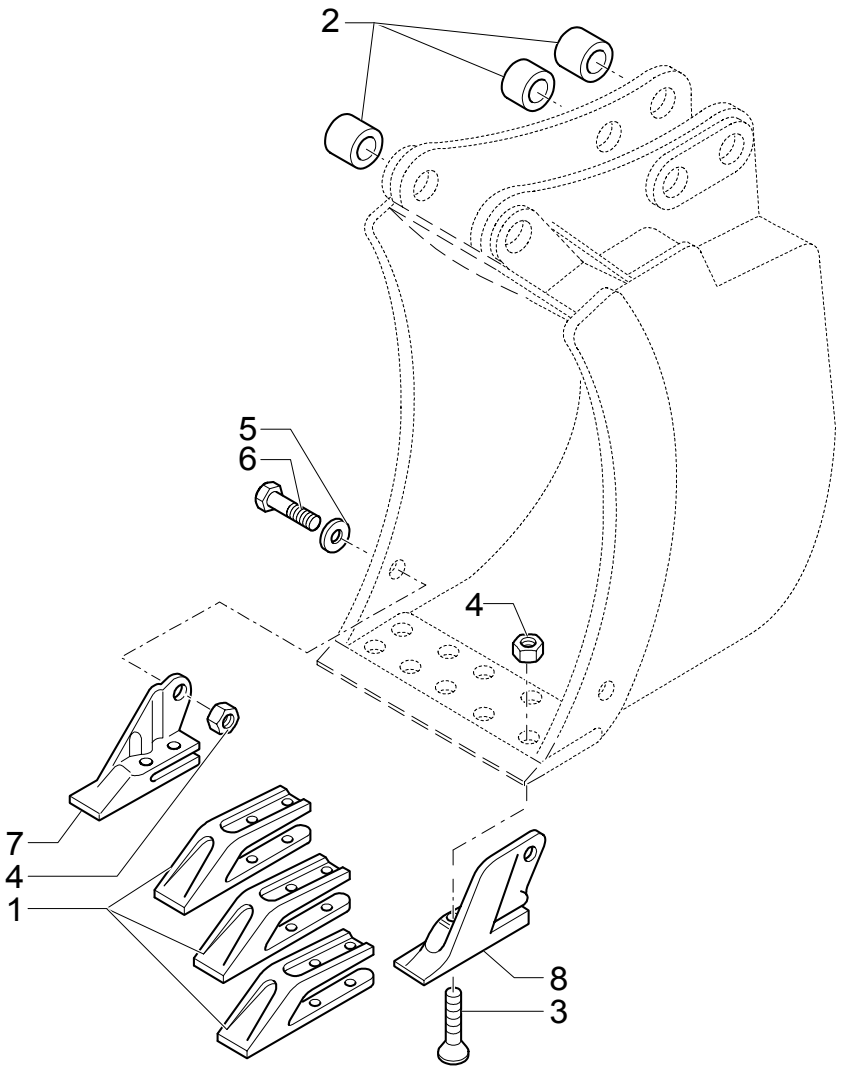

30" (762MM) BACKHOE BUCKET WITH BOLT-ON TEETH

REF	FN	PART NUMBER	YR/SN	QTY	DESCRIPTION
1		85811440		3	LUG
2		83910634		6	BUSHING
3		85801371		10	BOLT
4		85801470		12	NUT 5/8"-11
5		10520211		2	WASHER
6		88706		2	SCREW Cap, HH, G8, 5/8"-11 x 1-3/4"
7		85801377		1	LUG RH
8		85801376		1	LUG LH

36" (914MM) BACKHOE BUCKET WITH PIN TEETH

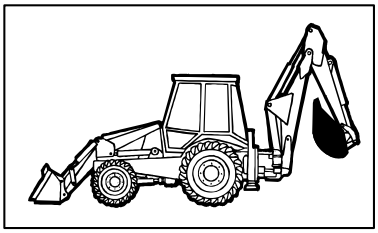

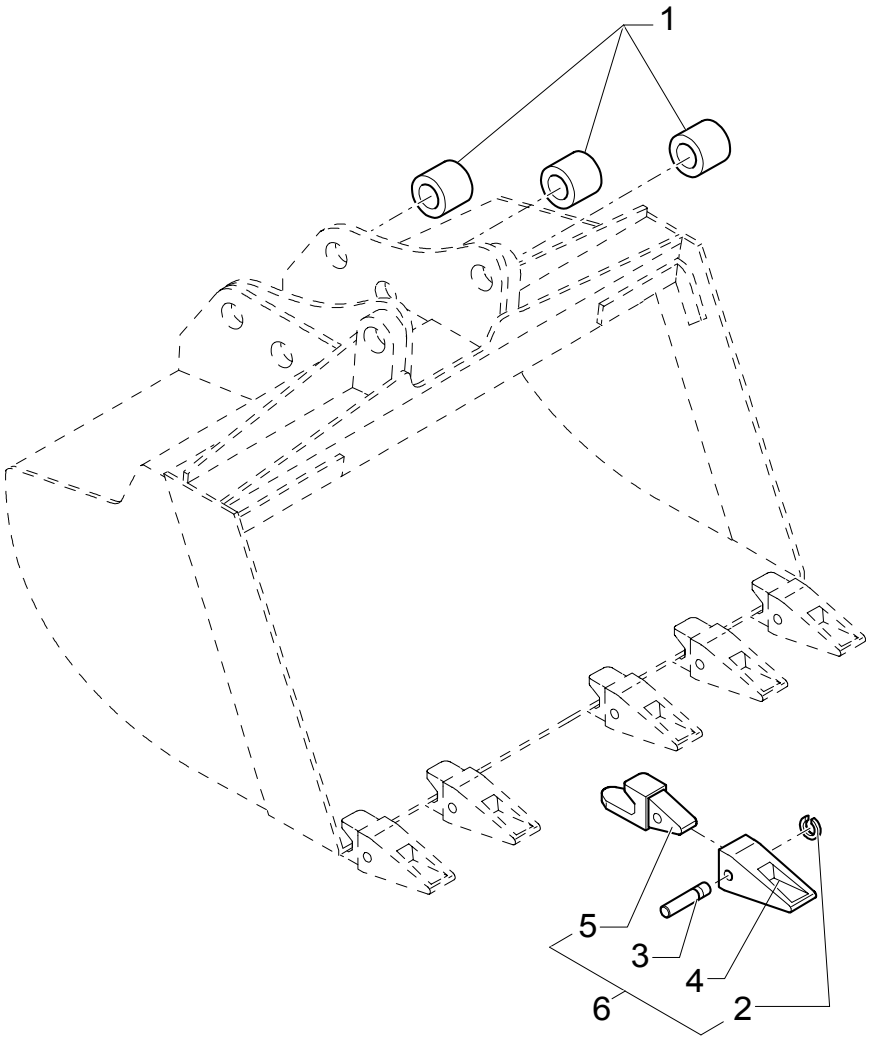

36" (914MM) BACKHOE BUCKET WITH PIN TEETH

REF	FN	PART NUMBER	YR/SN	QTY	DESCRIPTION
1		83910634		6	BUSHING
2		85801098		6	STOP
3		85801097		6	PIN
4		85811432		6	SHANK, BUCKET TOOTH
5		85821788		6	SHANK, BUCKET TOOTH
6	1	NSS		6	NOT SERVICED SEPARATELY

(1) Includes 1 To 5

519	02	p1	11/03

36" (914MM) BACKHOE BUCKET WITH BOLT-ON TEETH

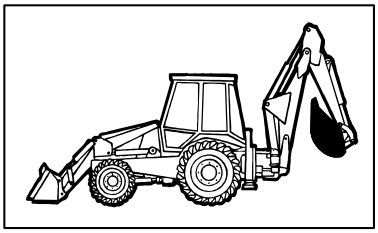

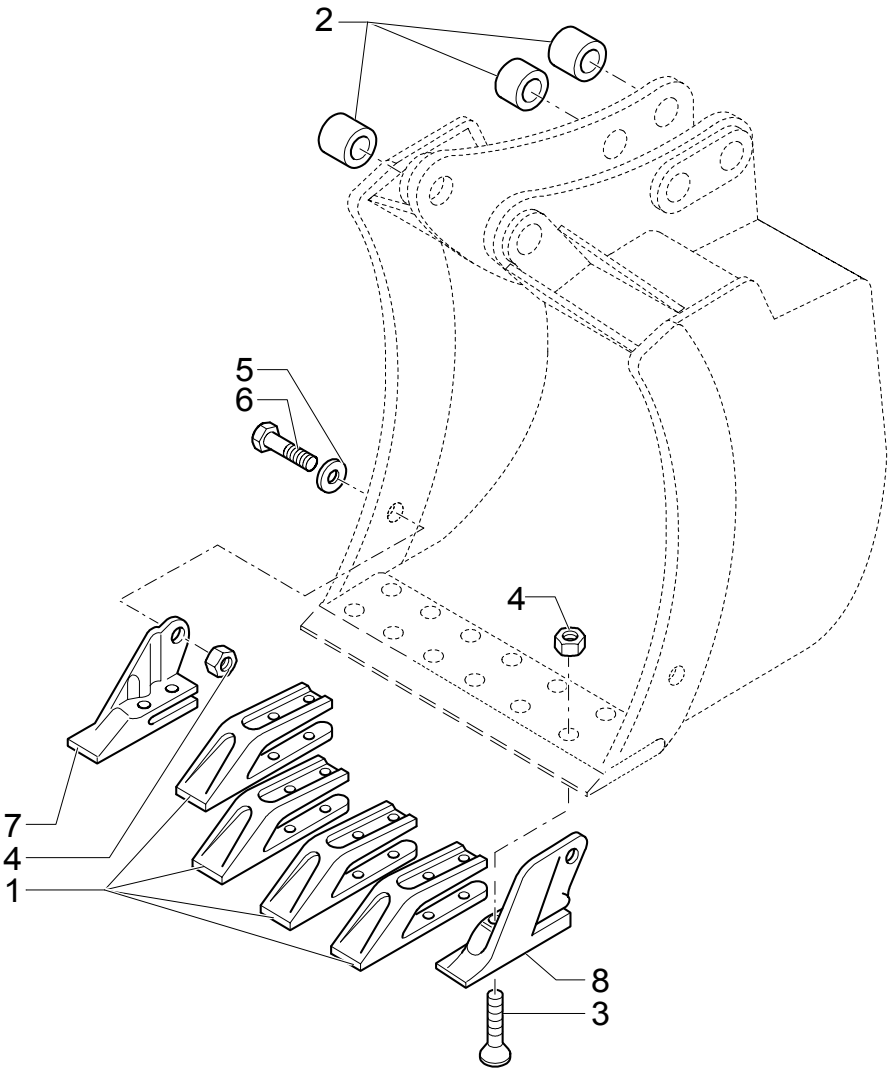

36" (914MM) BACKHOE BUCKET WITH BOLT-ON TEETH

REF	FN	PART NUMBER	YR/SN	QTY	DESCRIPTION
1		85811440		4	LUG
2		83910634		6	BUSHING
3		85801371		12	BOLT
4		85801470		14	NUT 5/8"-11
5		10520211		2	WASHER
6		88706		2	SCREW Cap, HH, G8, 5/8"-11 x 1-3/4"
7		85801377		1	LUG RH
8		85801376		1	LUG LH

0.88 M3 BUCKET WITHOUT TINES

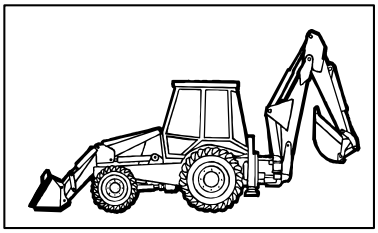

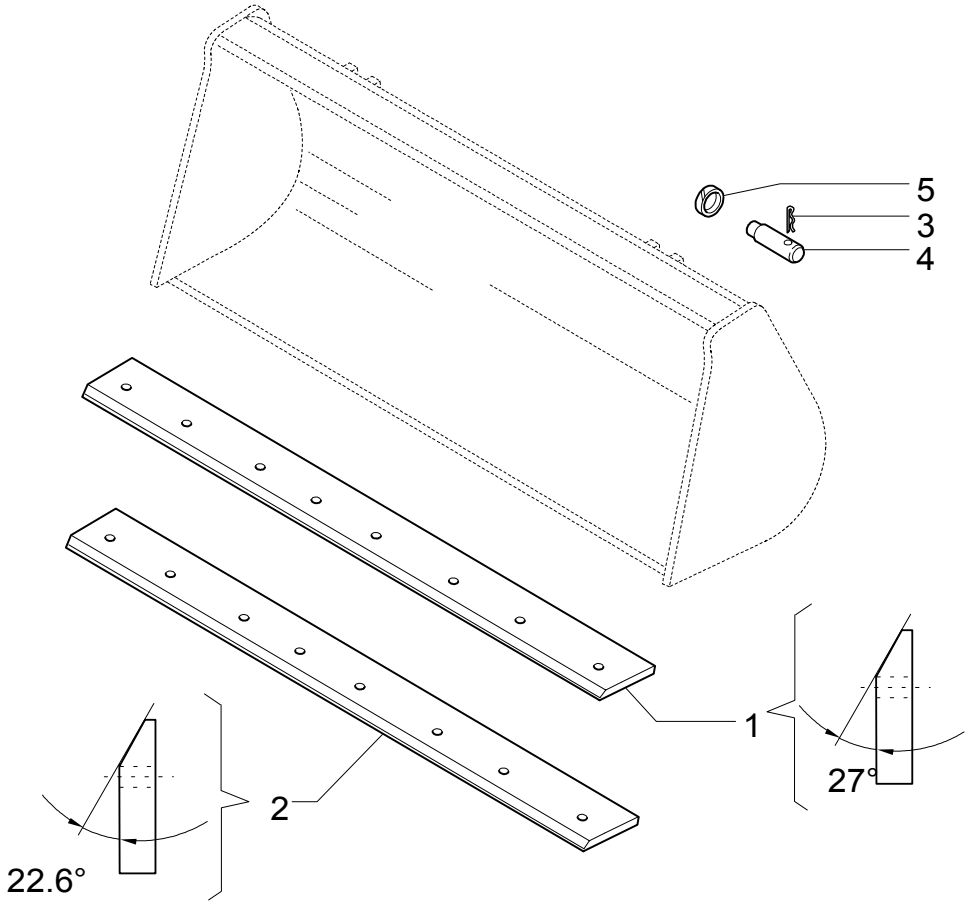

0.88 M3 BUCKET WITHOUT TINES

REF	FN	PART NUMBER	YR/SN	QTY	DESCRIPTION
1	1	85801044		1	BLADE, KNIFE 27 Deg. cutting edge
2		85807868		1	BLADE, KNIFE
3		85801051		4	PIN
4		85802993		4	PIN
5		85802992		4	O-RING

(1) Non-reversible weld on

522-B	01	p1	11/03

1 M3 BUCKET

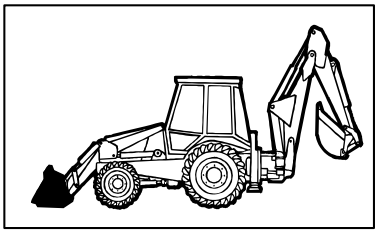

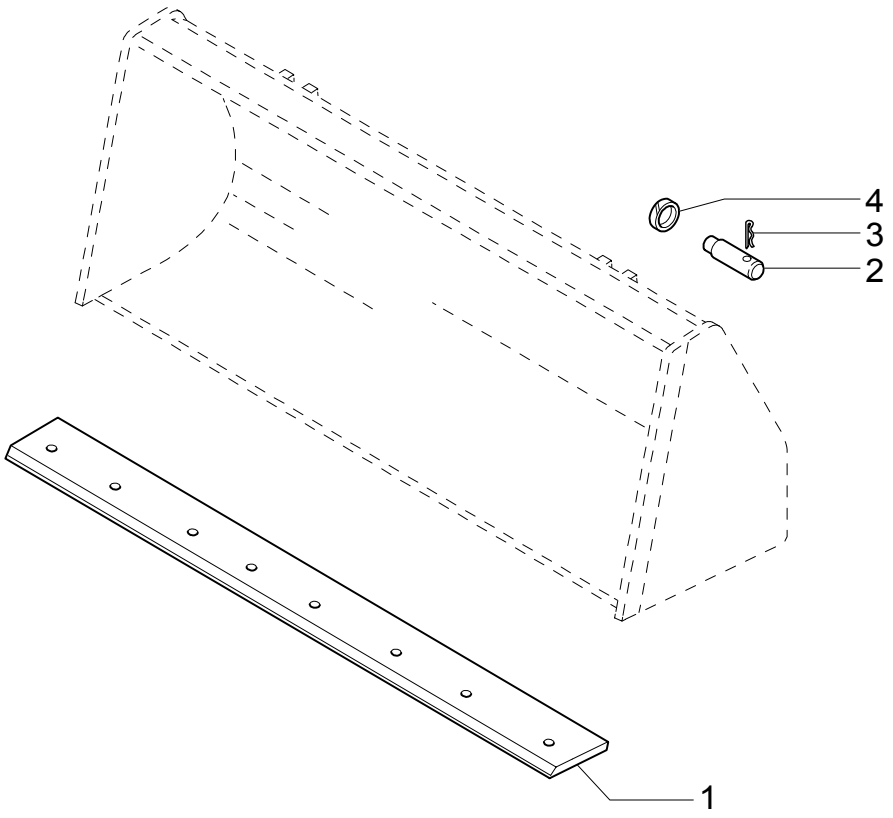

1 M3 BUCKET

REF	FN	PART NUMBER	YR/SN	QTY	DESCRIPTION
1	1	85801034		1	BLADE, KNIFE
1	2	85807867		1	BLADE, KNIFE
2		85801051		4	PIN
3		85802993		4	PIN
4		85802992		4	O-RING

(1) Only for SIDE SHIFT
(2) Only for Center Pivot

522-C	01	p1	11/03

STANDARD 1MC BUCKET WITH FORKS

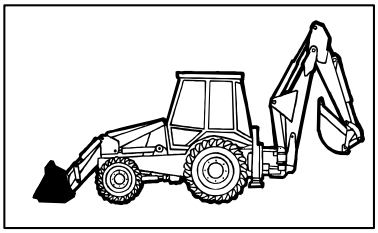

KIT 14= ●

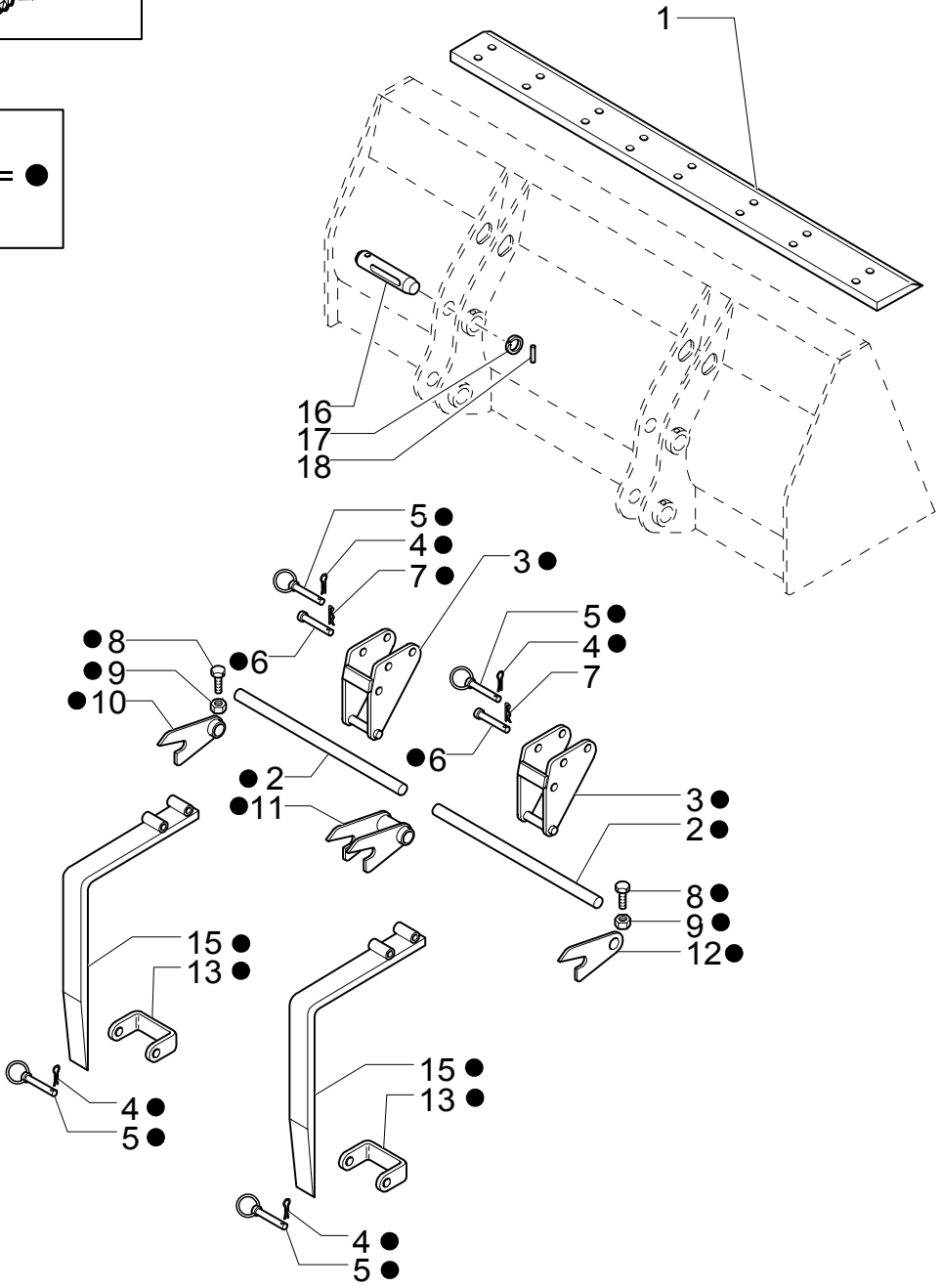

STANDARD 1MC BUCKET WITH FORKS

REF	FN	PART NUMBER	YR/SN	QTY	DESCRIPTION
1		85801034		1	BLADE, KNIFE
2		9969170		2	ROD
3		9968146		2	SUPPORT
4		9968147		4	PIN, ROLL
5		9968148		4	PIN
6		9968149		2	PIN
7		9968150		2	PIN, SPLIT (COTTER)
8		9968151		2	SCREW
9		9968152		4	NUT M10
10		9968153		1	SUPPORT
11		9968154		1	SUPPORT
12		9968155		1	SUPPORT
13		9968156		2	U-BRACKET
14		85801486		1	KIT FORKS
15		9968144		2	FORK
16		85801051		4	PIN
17		85802992		4	O-RING
18		85802993		4	PIN

525	01	p1	05/03

STANDARD 1M3 BUCKET WITH FORKS AND EXTRA REVERSIBLE BLADE

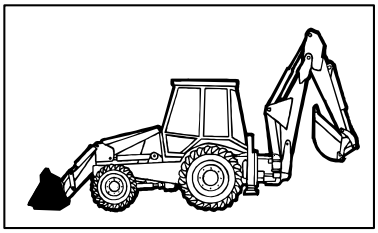

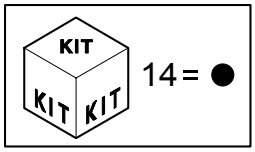

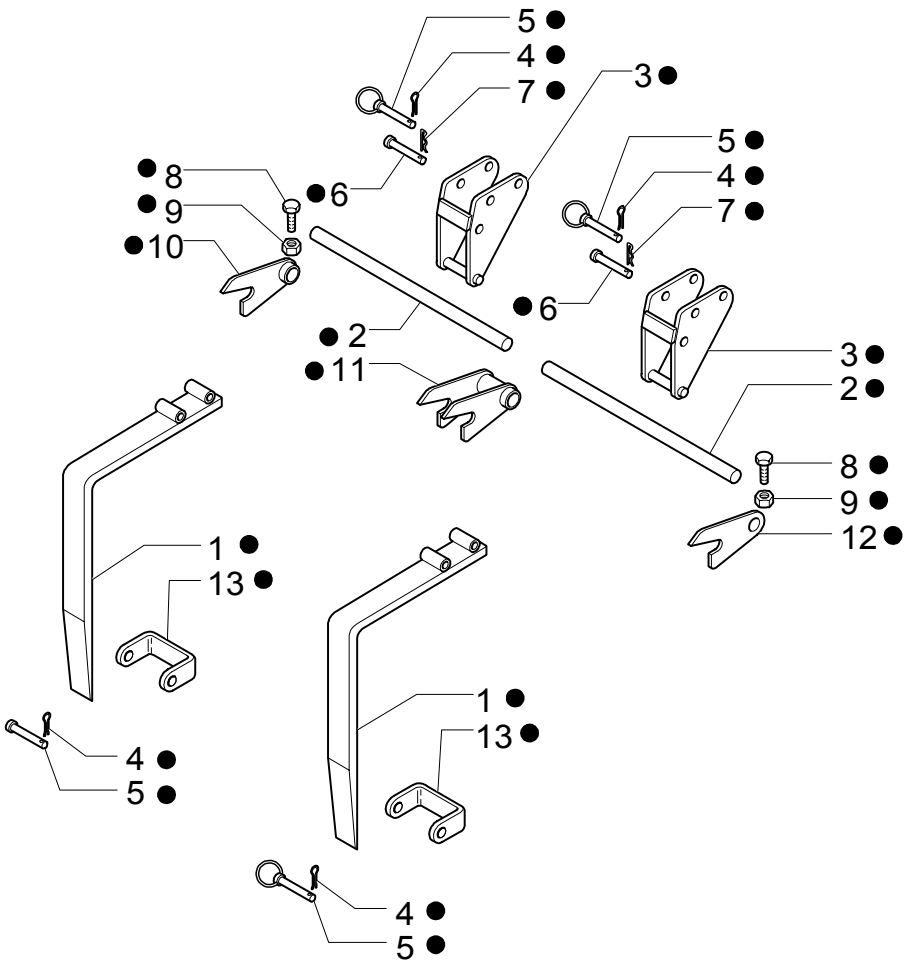

STANDARD 1M3 BUCKET WITH FORKS AND EXTRA REVERSIBLE BLADE

REF	FN	PART NUMBER	YR/SN	QTY	DESCRIPTION
1		9968144		2	FORK
2		9969170		2	ROD
3		9968146		2	SUPPORT
4		9968147		4	PIN, ROLL
5		9968148		4	PIN
6		9968149		2	PIN
7		9968150		2	PIN, SPLIT (COTTER)
8		9968151		2	SCREW M10X90
9		9968152		2	NUT M10
10		9968153		1	SUPPORT
11		9968154		1	SUPPORT
12		9968155		1	SUPPORT
13		9968156		2	U-BRACKET
14		85801486		1	KIT FORKS

525	02	p1	09/03

STANDARD 1M3 BUCKET WITH FORKS AND EXTRA REVERSIBLE BLADE

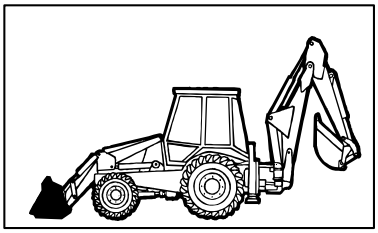

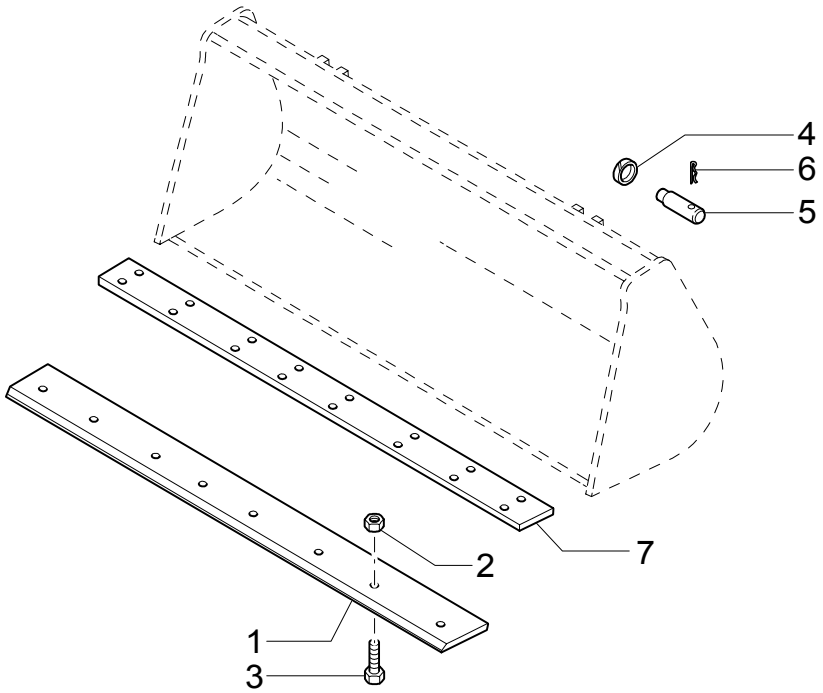

STANDARD 1M3 BUCKET WITH FORKS AND EXTRA REVERSIBLE BLADE

REF	FN	PART NUMBER	YR/SN	QTY	DESCRIPTION
1	1	85801161		1	EDGE, CUTTING 35 Deg. cutting edge
2		85801470		8	NUT 5/8"-11
3		85801371		8	BOLT
4		85802992		4	O-RING
5		85802993		4	PIN
6		85801051		4	PIN
7	2	85801034		1	BLADE, KNIFE

(1) Reversible bolt on
(2) PART WELDED TO BUCKET

526	01	p1	10/03

BOLT-ON TOOTH KIT, 12" (305MM) BACKHOE BUCKET

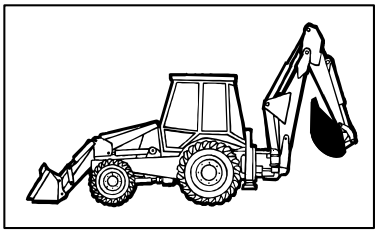

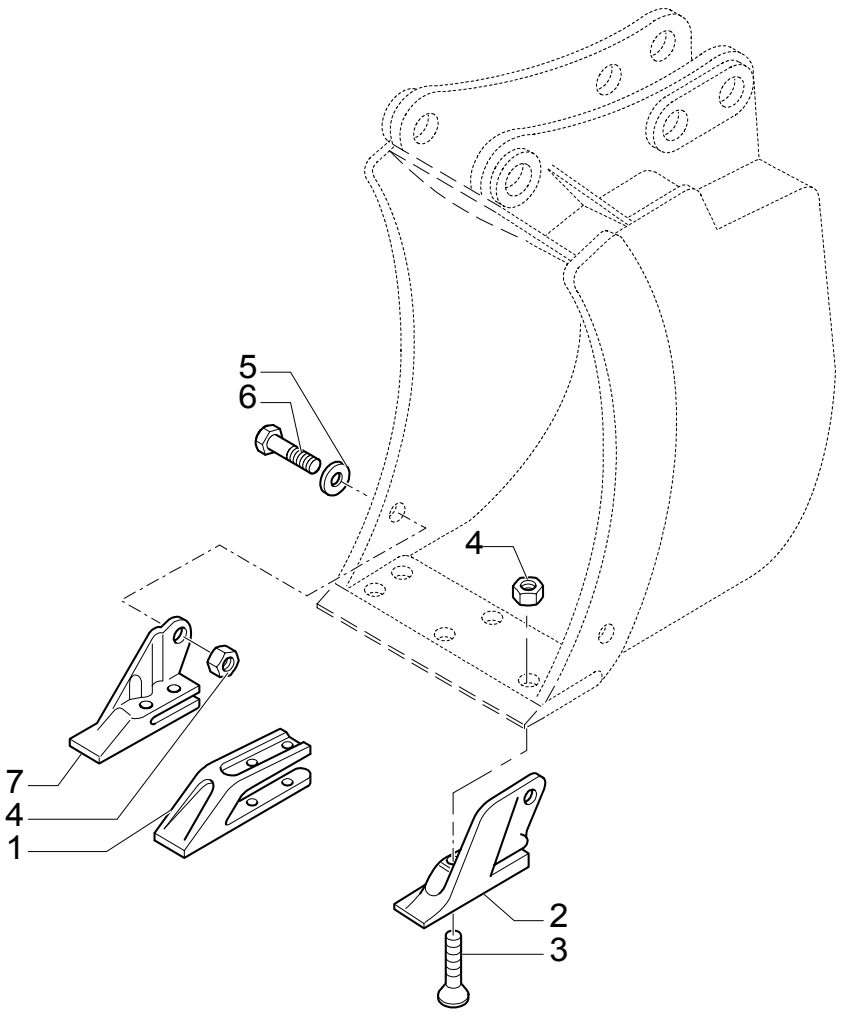

BOLT-ON TOOTH KIT, 12" (305MM) BACKHOE BUCKET

REF	FN	PART NUMBER	YR/SN	QTY	DESCRIPTION
1		85811440		1	LUG
2		85801376		1	LUG LH
3		85801371		6	BOLT
4		85801470		8	NUT 5/8"-11
5		10520211		2	WASHER
6		88706		2	SCREW Cap, HH, G8, 5/8"-11 x 1-3/4"
7		85801377		1	LUG RH

526-1	01	p1	11/03

STANDARD 1M3 BUCKET WITH FORKS AND TINE

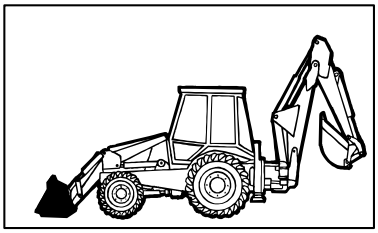

KIT
KIT KIT
14 = ●

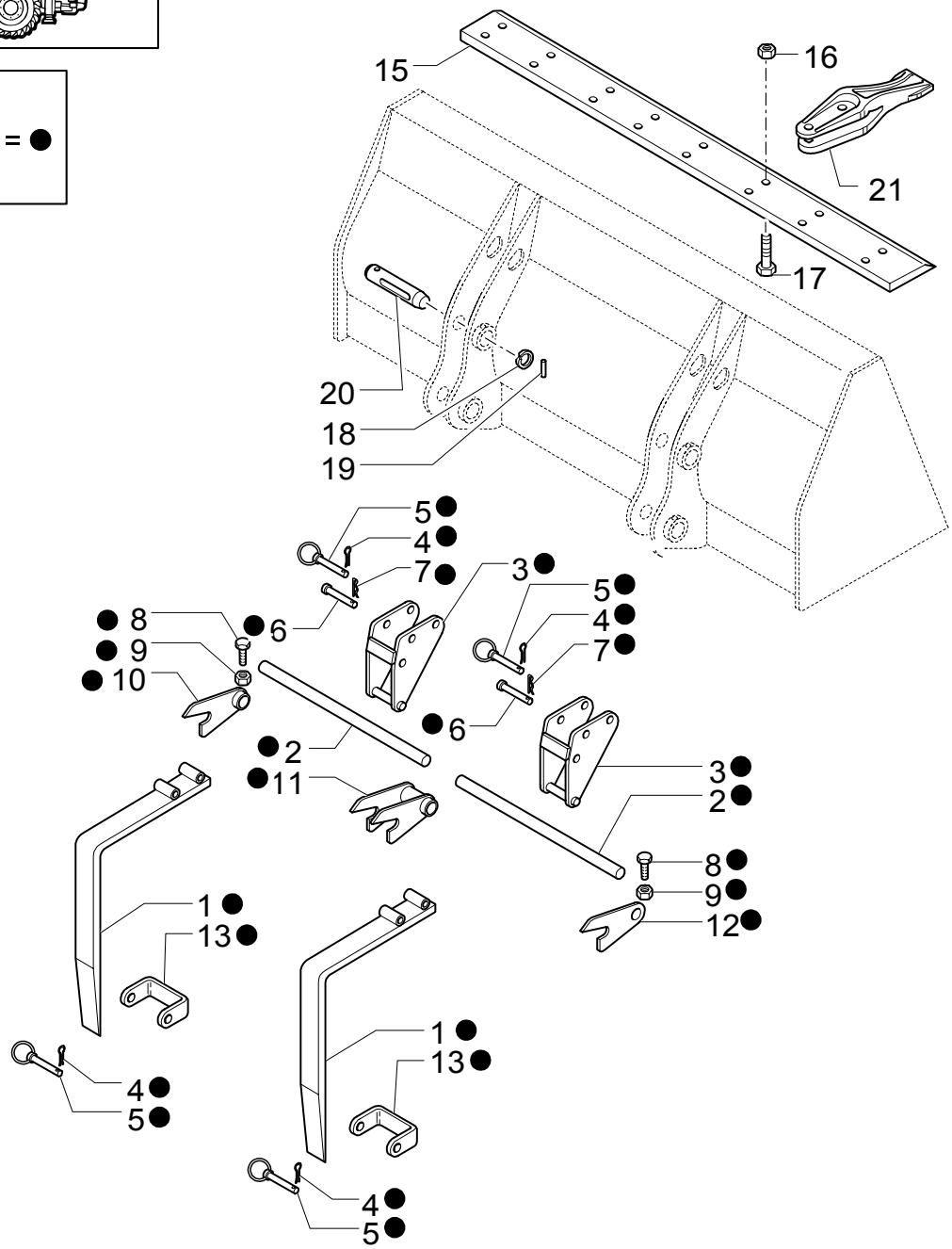

STANDARD 1M3 BUCKET WITH FORKS AND TINE

REF	FN	PART NUMBER	YR/SN	QTY	DESCRIPTION
1		9968144		2	FORK
2		9969170		2	ROD
3		9968146		2	SUPPORT
4		9968147		4	PIN, ROLL
5		9968148		4	PIN
6		9968149		2	PIN
7		9968150		2	PIN, SPLIT (COTTER)
8		9968151		2	SCREW M10X90
9		9968152		2	NUT M10
10		9968153		1	SUPPORT
11		9968154		1	SUPPORT
12		9968155		1	SUPPORT
13		9968156		2	U-BRACKET
14		85801486		1	KIT FORKS
15		85801034		1	BLADE, KNIFE
16		85801470		16	NUT 5/8"-11
17		85801371		16	BOLT
18		85802992		4	O-RING
19		85802993		4	PIN
20		85801051		4	PIN
21		85811440		8	LUG

527	01	p1	10/03

BOLT-ON TOOTH KIT, 18" (457MM) & 24" (610MM) BACKHOE BUCKETS

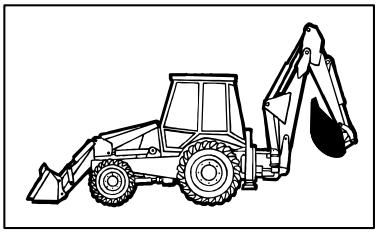

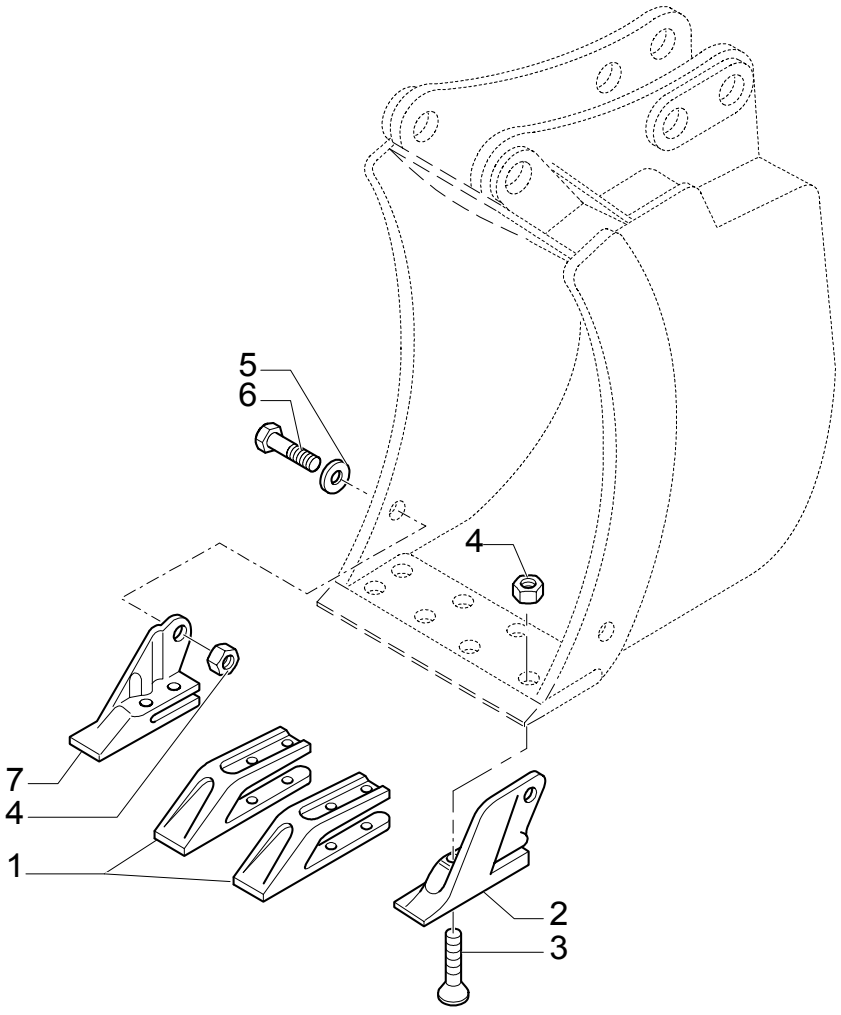

BOLT-ON TOOTH KIT, 18" (457MM) & 24" (610MM) BACKHOE BUCKETS

REF	FN	PART NUMBER	YR/SN	QTY	DESCRIPTION
1		85811440		2	LUG
2		85801376		1	LUG LH
3		85801371		8	BOLT
4		85801470		10	NUT 5/8"-11
5		10520211		2	WASHER
6		88706		2	SCREW Cap, HH, G8, 5/8"-11 x 1-3/4"
7		85801377		1	LUG RH

0.88 M3 BUCKET AND EXTRA REVERSIBLE BLADE

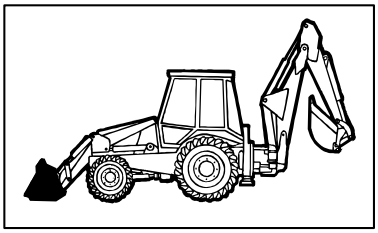

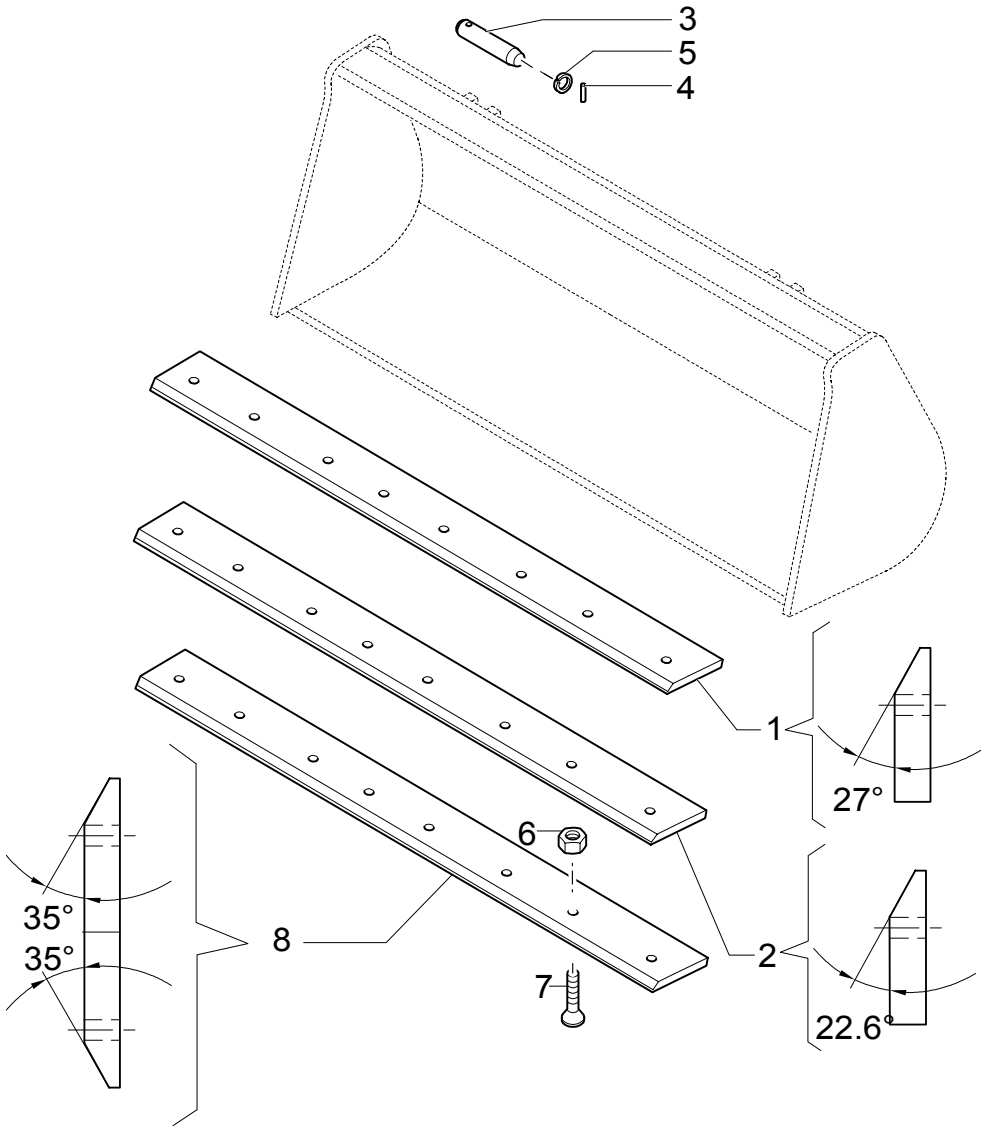

0.88 M3 BUCKET AND EXTRA REVERSIBLE BLADE

REF	FN	PART NUMBER	YR/SN	QTY	DESCRIPTION
1	1	85801044		1	BLADE, KNIFE 27 Deg. cutting edge
2		85807868		1	BLADE, KNIFE N.A. ONLY
3		85801051		4	PIN
4		85802993		4	PIN
5		85802992		4	O-RING
6		85801470		8	NUT 5/8"-11
7		85801371		8	BOLT
8	2	85801161		1	EDGE, CUTTING 35 Deg. cutting edge

(1) Non-reversible weld on
(2) Reversible bolt on

528	01	p1	10/03

BOLT-ON TOOTH KIT, 30" (762MM) BACKHOE BUCKET

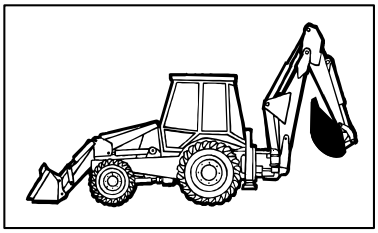

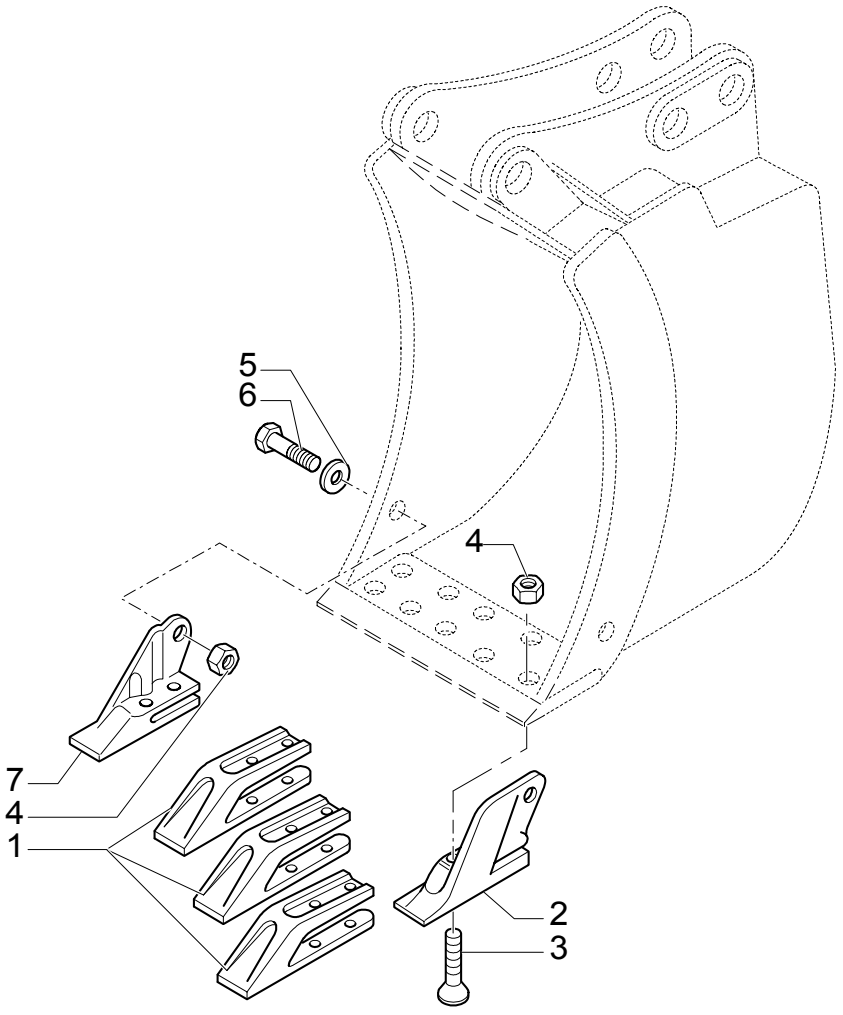

BOLT-ON TOOTH KIT, 30" (762MM) BACKHOE BUCKET

REF	FN	PART NUMBER	YR/SN	QTY	DESCRIPTION
1		85811440		3	LUG
2		85801376		1	LUG LH
3		85801371		10	BOLT
4		85801470		12	NUT 5/8"-11
5		10520211		2	WASHER
6		88706		2	SCREW Cap, HH, G8, 5/8"-11 x 1-3/4"
7		85801377		1	LUG RH

529	01	p1	10/03

BOLT-ON TOOTH KIT, 36" (914MM) BACKHOE BUCKET

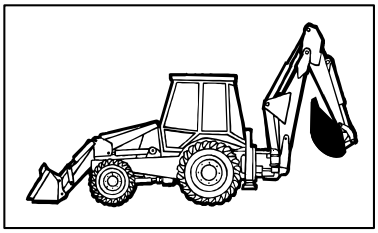

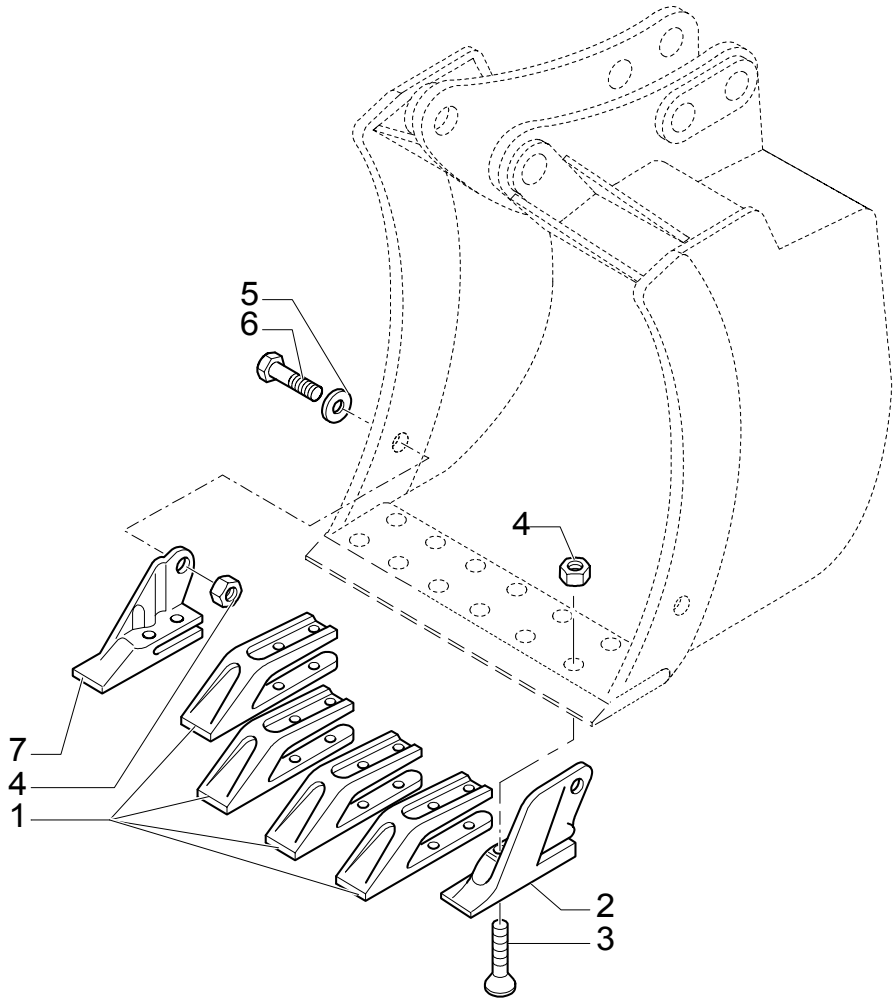

BOLT-ON TOOTH KIT, 36" (914MM) BACKHOE BUCKET

REF	FN	PART NUMBER	YR/SN	QTY	DESCRIPTION
1		85811440		4	LUG
2		85801376		1	LUG LH
3		85801371		12	BOLT
4		85801470		14	NUT 5/8"-11
5		10520211		2	WASHER
6		88706		2	SCREW Cap, HH, G8, 5/8"-11 x 1-3/4"
7		85801377		1	LUG RH

530	01	p1	05/03

PIN TOOTH KIT, 12" (305MM) BACKHOE BUCKET

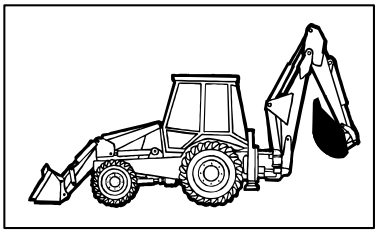

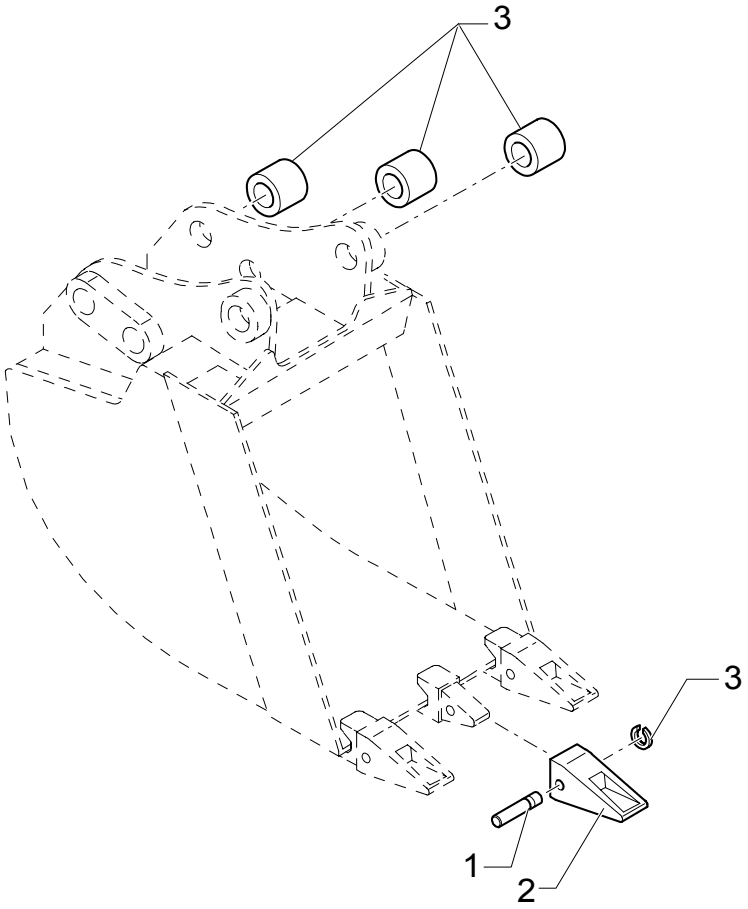

PIN TOOTH KIT, 12" (305MM) BACKHOE BUCKET

REF	FN	PART NUMBER	YR/SN	QTY	DESCRIPTION
1		85801097		3	PIN
2		85811432		3	SHANK, BUCKET TOOTH
3		85801098		3	STOP

531	01	p1	05/03

PIN TOOTH KIT, 18" (457MM) & 24" (610MM) BACKHOE BUCKETS

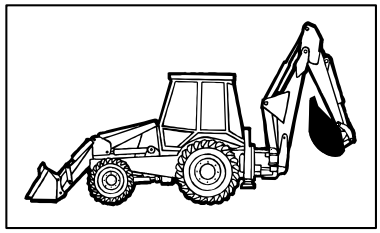

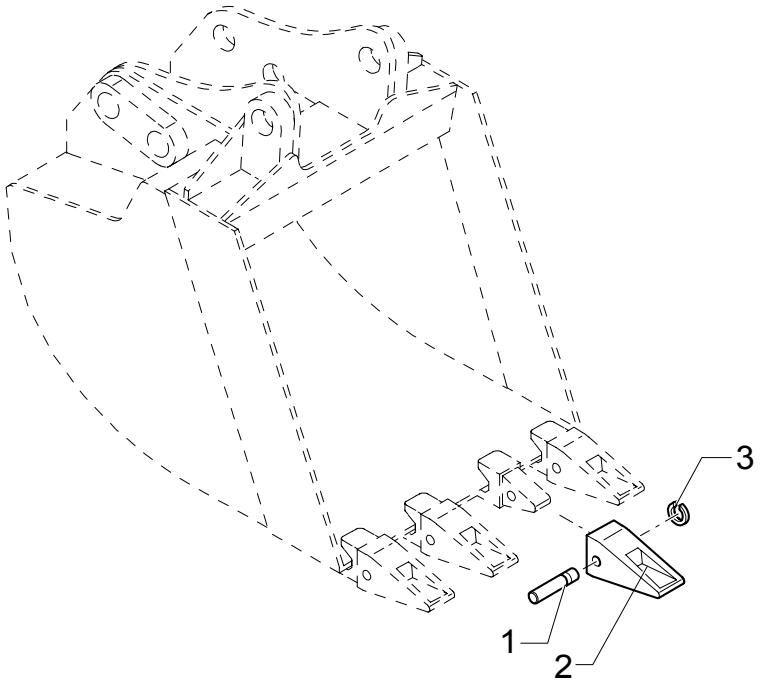

PIN TOOTH KIT, 18" (457MM) & 24" (610MM) BACKHOE BUCKETS

REF	FN	PART NUMBER	YR/SN	QTY	DESCRIPTION
1		85801097		4	PIN
2		85811432		4	SHANK, BUCKET TOOTH
3		85801098		4	STOP

532	01	p1	05/03

PIN TOOTH KIT, 30" (762MM) BACKHOE BUCKET

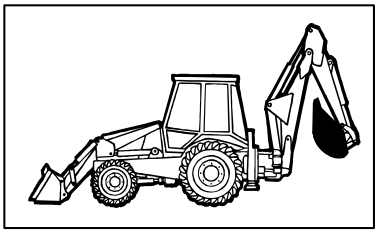

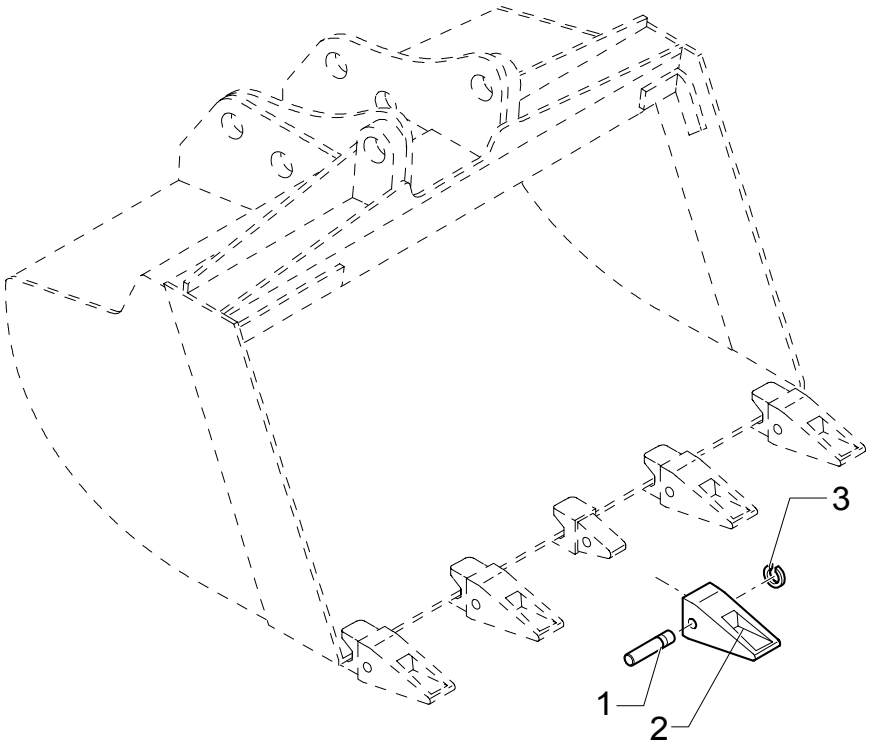

PIN TOOTH KIT, 30" (762MM) BACKHOE BUCKET

REF	FN	PART NUMBER	YR/SN	QTY	DESCRIPTION
1		85801097		5	PIN
2		85811432		5	SHANK, BUCKET TOOTH
3		85801098		5	STOP

533	01	p1	05/03

PIN TOOTH KIT, 36" (914MM) BACKHOE BUCKET

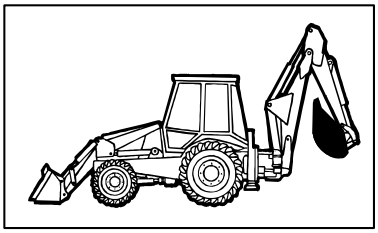

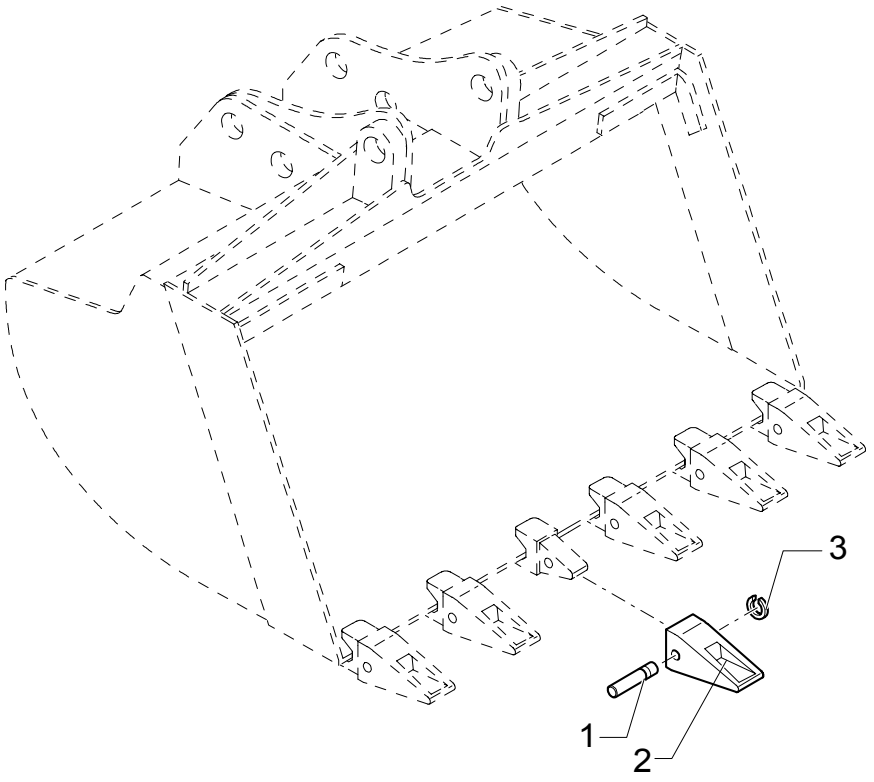

PIN TOOTH KIT, 36" (914MM) BACKHOE BUCKET

REF	FN	PART NUMBER	YR/SN	QTY	DESCRIPTION
1		85801097		6	PIN
2		85811432		6	SHANK, BUCKET TOOTH
3		85801098		6	STOP

533/ 1	01	p1	05/03

1.15 M3 BUCKET WITH FORKS AND CUTTER BLADE

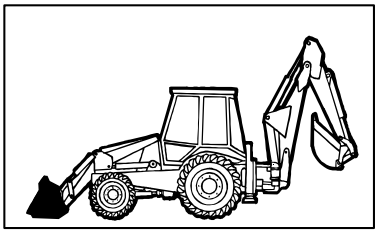

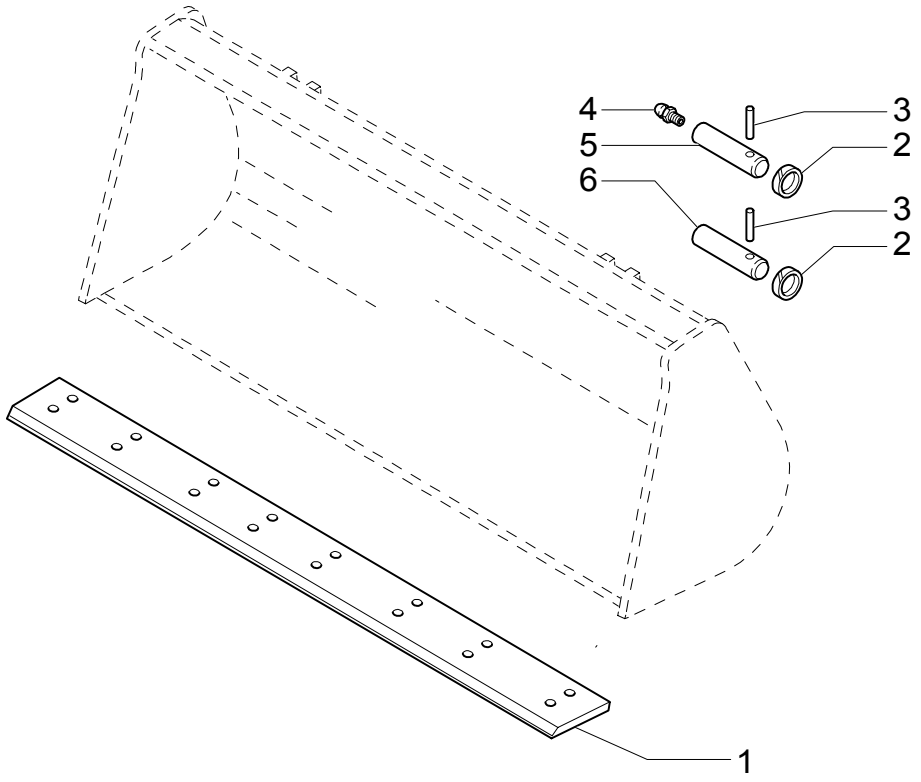

1.15 M3 BUCKET WITH FORKS AND CUTTER BLADE

REF	FN	PART NUMBER	YR/SN	QTY	DESCRIPTION
1	1	85812238		1	BLADE, KNIFE
2		85802974		4	RING
3		85804534		4	PIN, ROLL
4		83416242		2	NIPPLE, LUBE 1/8-27
5		85804533		2	PIN, ROLL
6		85805306		2	PIN, ROLL

(1) PART WELDED TO BUCKET

536/ 1	01	p1	06/03

STANDARD 1MC BUCKET WITH TINE

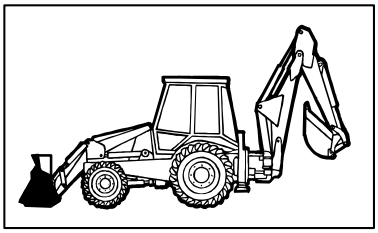

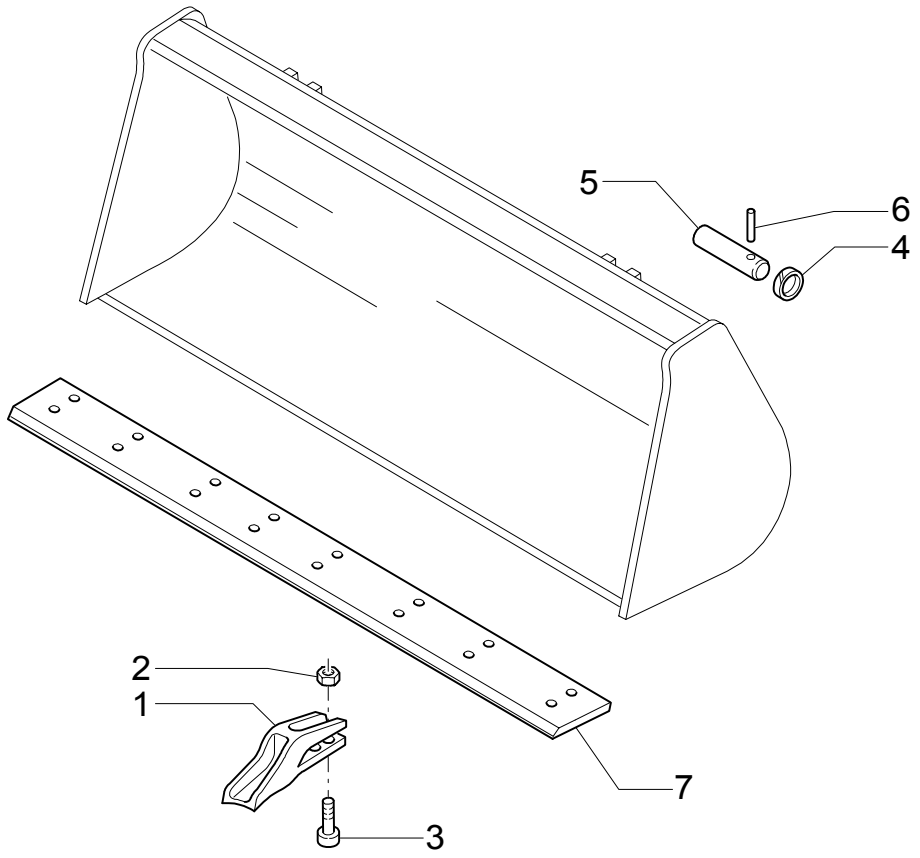

STANDARD 1MC BUCKET WITH TINE

REF	FN	PART NUMBER	YR/SN	QTY	DESCRIPTION
1		85811440		8	LUG
2		85801470		16	NUT 5/8"-11
3		85801371		16	BOLT
4		85802992		4	O-RING
5		85802993		4	PIN
6		85801051		4	PIN
7	1	85801034		1	BLADE, KNIFE
7		85807867		1	BLADE, KNIFE

(1) PART WELDED TO BUCKET

537/ 1	01	p1	09/03

STANDARD 1MC BUCKET WITH EXTRA REVERSIBLE BLADE

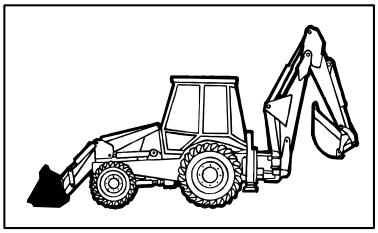

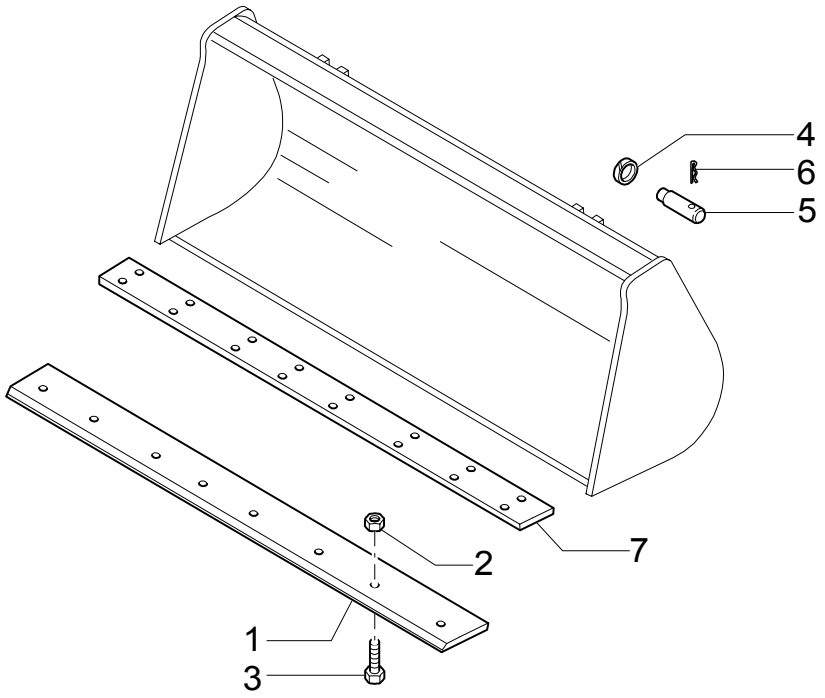

STANDARD 1MC BUCKET WITH EXTRA REVERSIBLE BLADE

REF	FN	PART NUMBER	YR/SN	QTY	DESCRIPTION
1	1	85801161		1	EDGE, CUTTING 35 Deg. cutting edge
2		85801470		8	NUT 5/8"-11
3		85801371		8	BOLT
4		85802992		4	O-RING
5		85802993		4	PIN
6		85801051		4	PIN
7	2	85801034		1	BLADE, KNIFE
7		85807867		1	BLADE, KNIFE

(1) Reversible bolt on
(2) PART WELDED TO BUCKET

548	01	p1	05/03

DITCH CLEANING BUCKET

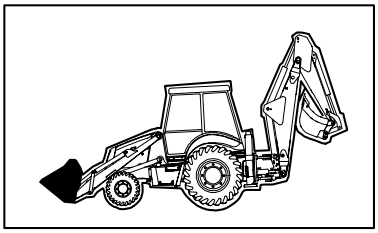

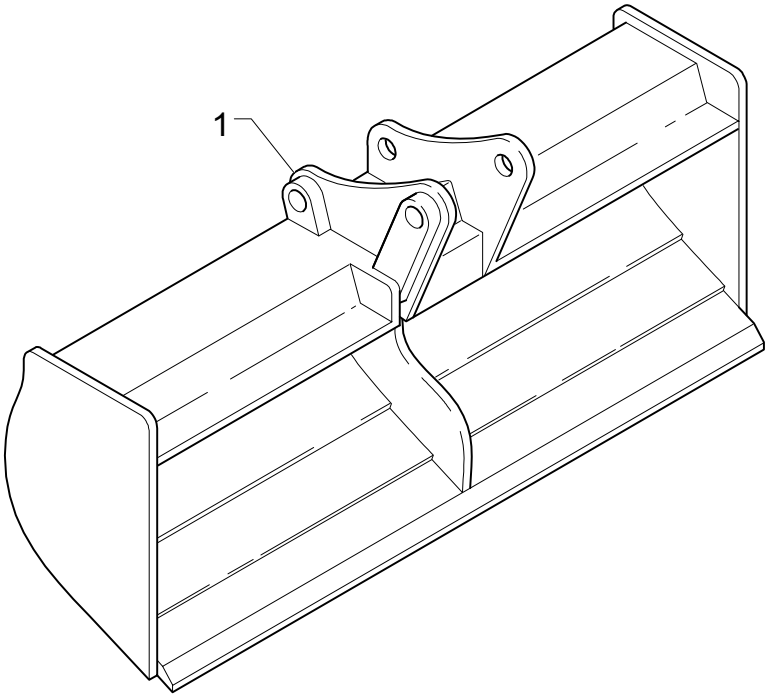

DITCH CLEANING BUCKET

REF	FN	PART NUMBER	YR/SN	QTY	DESCRIPTION
1		85824356		1	BUCKET

555	01	p1	06/03

FRONT BUCKET TEETH

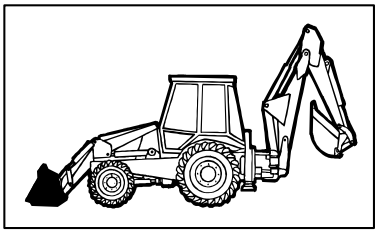

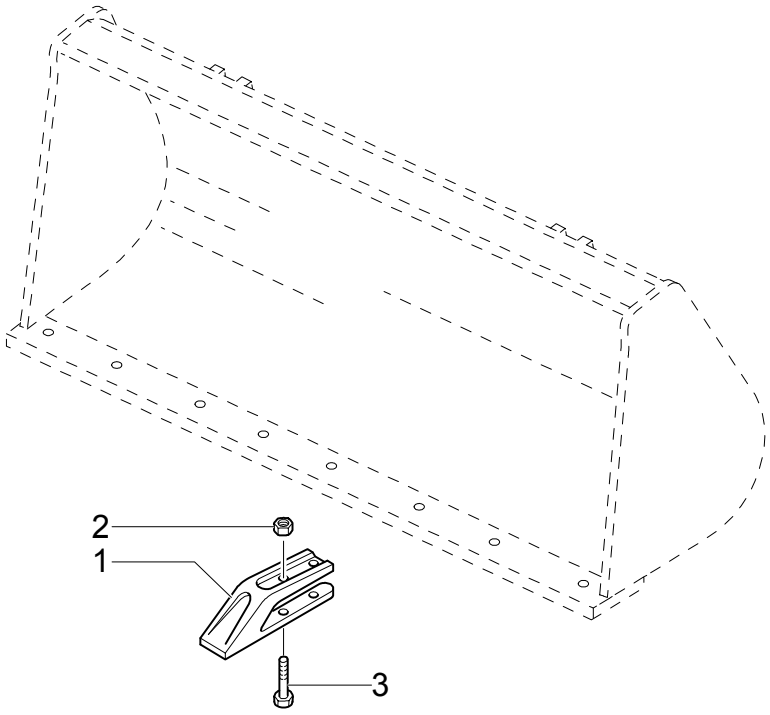

FRONT BUCKET TEETH

REF	FN	PART NUMBER	YR/SN	QTY	DESCRIPTION
1		85811440		8	LUG
2		85801470		16	NUT 5/8"-11
3		85801371		16	BOLT 5/8"

556	01	p1	09/03

LOADER BUCKET REVERSIBLE BLADE

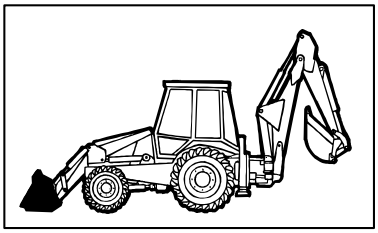

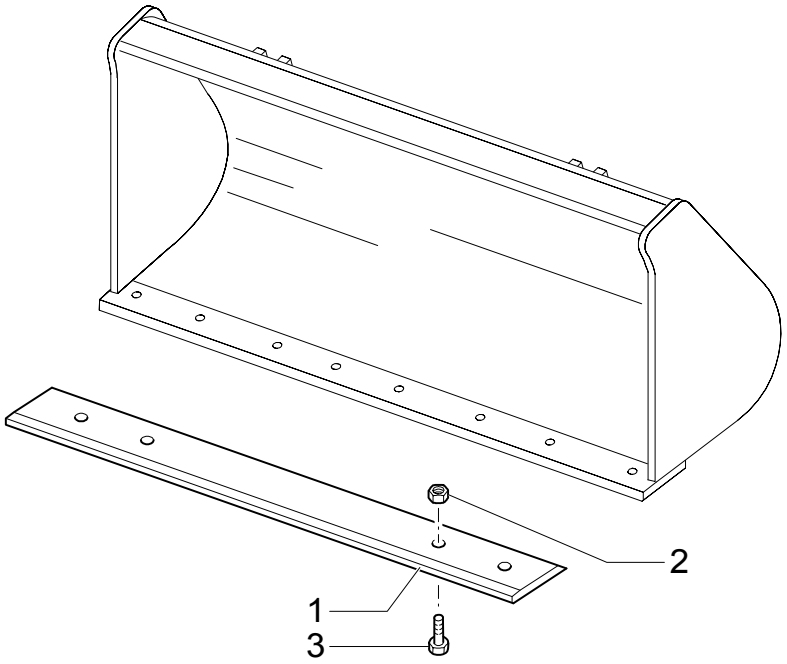

LOADER BUCKET REVERSIBLE BLADE

REF	FN	PART NUMBER	YR/SN	QTY	DESCRIPTION
1	1	85801161		1	EDGE, CUTTING 35 Deg. cutting edge
2		85801470		8	NUT 5/8"-11
3		85801371		8	BOLT 5/8"X2" 1/4

(1) Reversible bolt on

626	01	p1	05/03

SCRAB GRAB

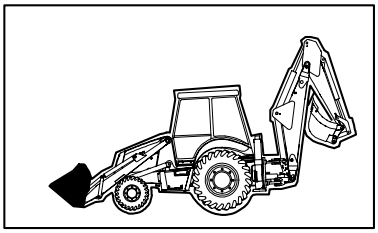

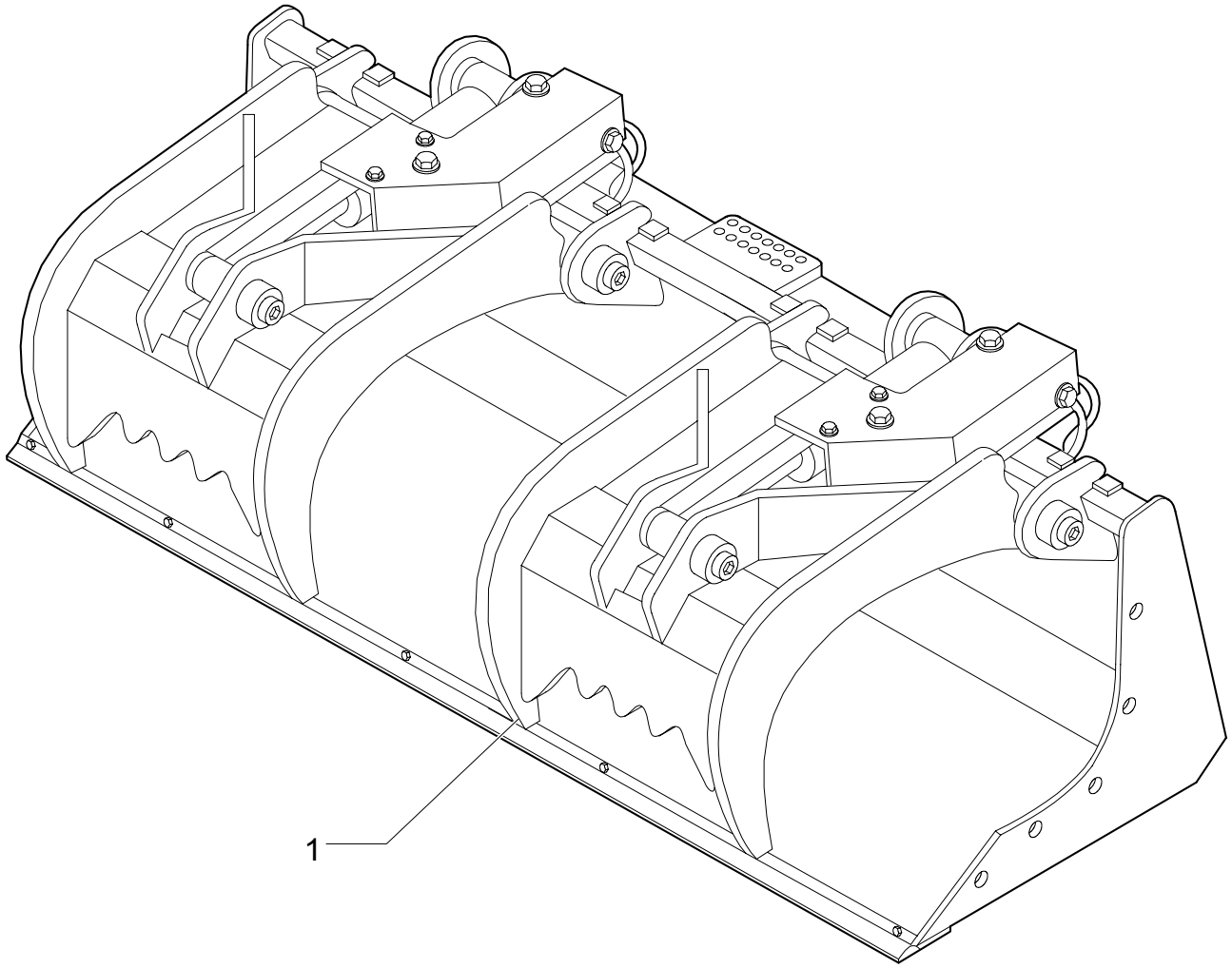

SCRAB GRAB

REF	FN	PART NUMBER	YR/SN	QTY	DESCRIPTION
1		{85819330}		1	

648	01	p1	05/03

FORK KIT, CONVERTS4X1 BUCKET TO 6X1

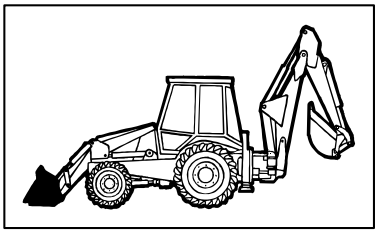

KIT KIT KIT 1=●

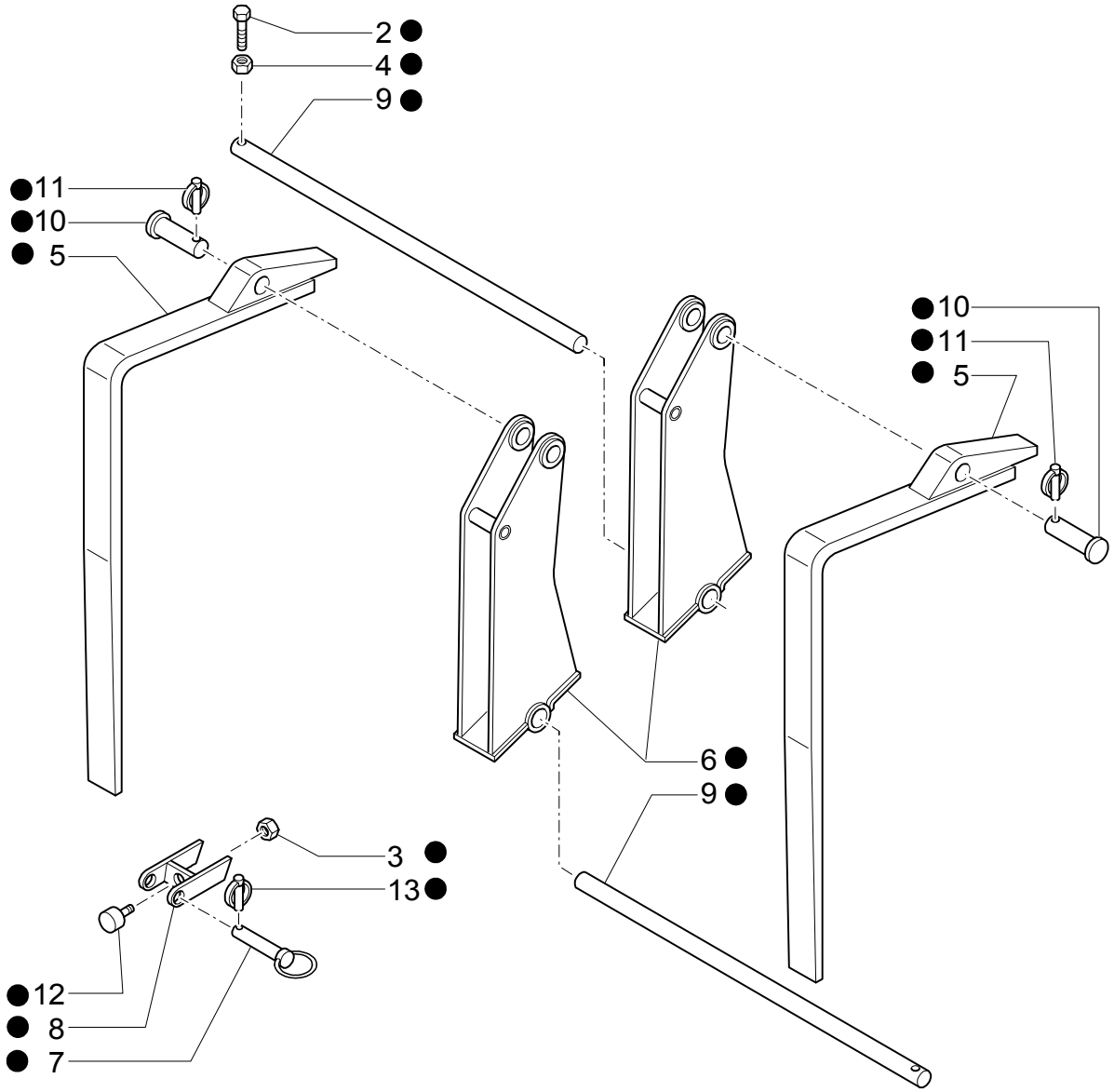

FORK KIT, CONVERTS4X1 BUCKET TO 6X1

REF	FN	PART NUMBER	YR/SN	QTY	DESCRIPTION
1		85820906		1	KIT, CONVERSION
2		85820018		2	SCREW M10X90
3		85820031		2	NUT M8
4		85820035		2	NUT M10
5		85820062		2	FORK, BUCKET
6		85820063		2	SUPPORT
7		85820064		2	PIN
8		85820065		2	BRACKET
9		85820066		2	PIN
10		85820067		2	PIN
11		85820068		2	PIN, SPLIT (COTTER)
12		85820069		2	PLUG
13		85825177		2	PIN, SPLIT (COTTER)

699	01	p1	03/03

HAND HAMMER SWITCH

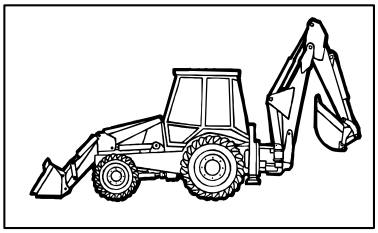

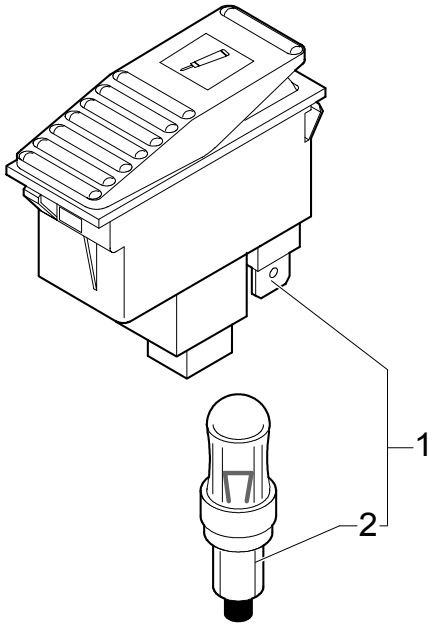

HAND HAMMER SWITCH

REF	FN	PART NUMBER	YR/SN	QTY	DESCRIPTION
1		85819072		1	SWITCH
2		14143790		1	BULB

700	01	p1	04/03

4X1 & 6X1 BUCKET CONTROL LEVER, CABLE & DECALS

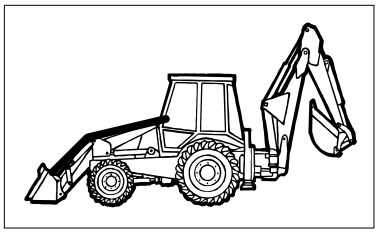

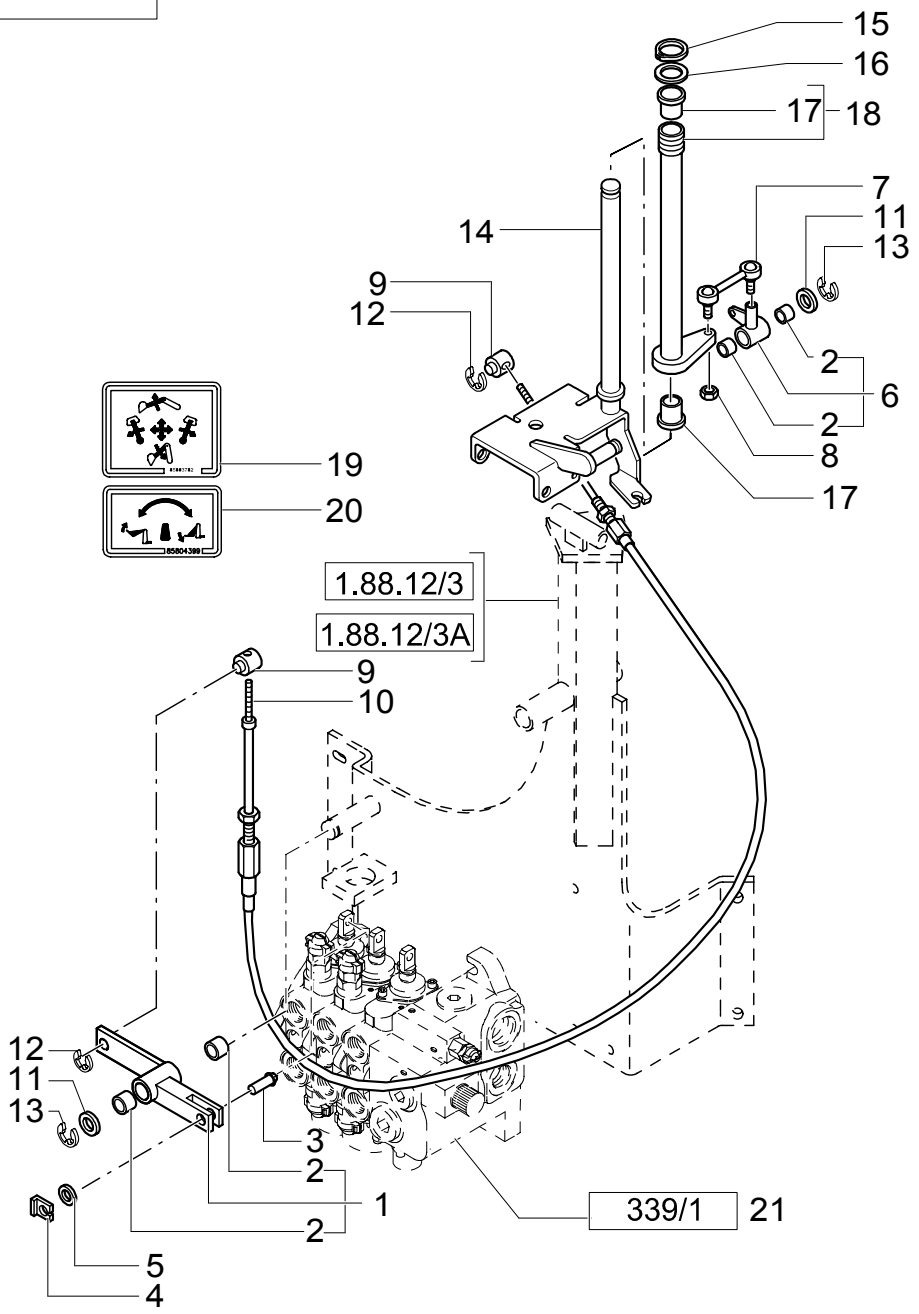

4X1 & 6X1 BUCKET CONTROL LEVER, CABLE & DECALS

REF	FN	PART NUMBER	YR/SN	QTY	DESCRIPTION
1		85805541		1	LEVER, IDLER
2		85802494		4	BUSHING
3		85805408		1	PIN, ROLL
4		11064071		1	CLIP
5		14499401		1	WASHER
6		85802587		1	YOKE
7		85805764		1	LINK CONROD
8		12574211		1	NUT M6
9		83962205		2	PIN
10		85805542		1	CABLE, FLEXIBLE
11		14496901		1	WASHER
12		83947277		2	CIRCLIP
13		83911366		2	RING, SNAP
14		85805536		1	LEVER
15		83962223		1	CIRCLIP
16		83962203		1	WASHER
17		83962208		2	BUSHING
18	1	85805782		1	LEVER
19		85804346		1	DECAL
20		85804399		1	DECAL
21		85825189		1	VALVE, CONTROL

(1) Includes 17

4X1 & 6X1 BUCKET HYDRAULIC LINES

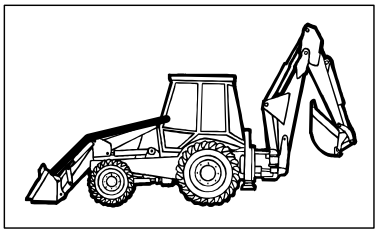

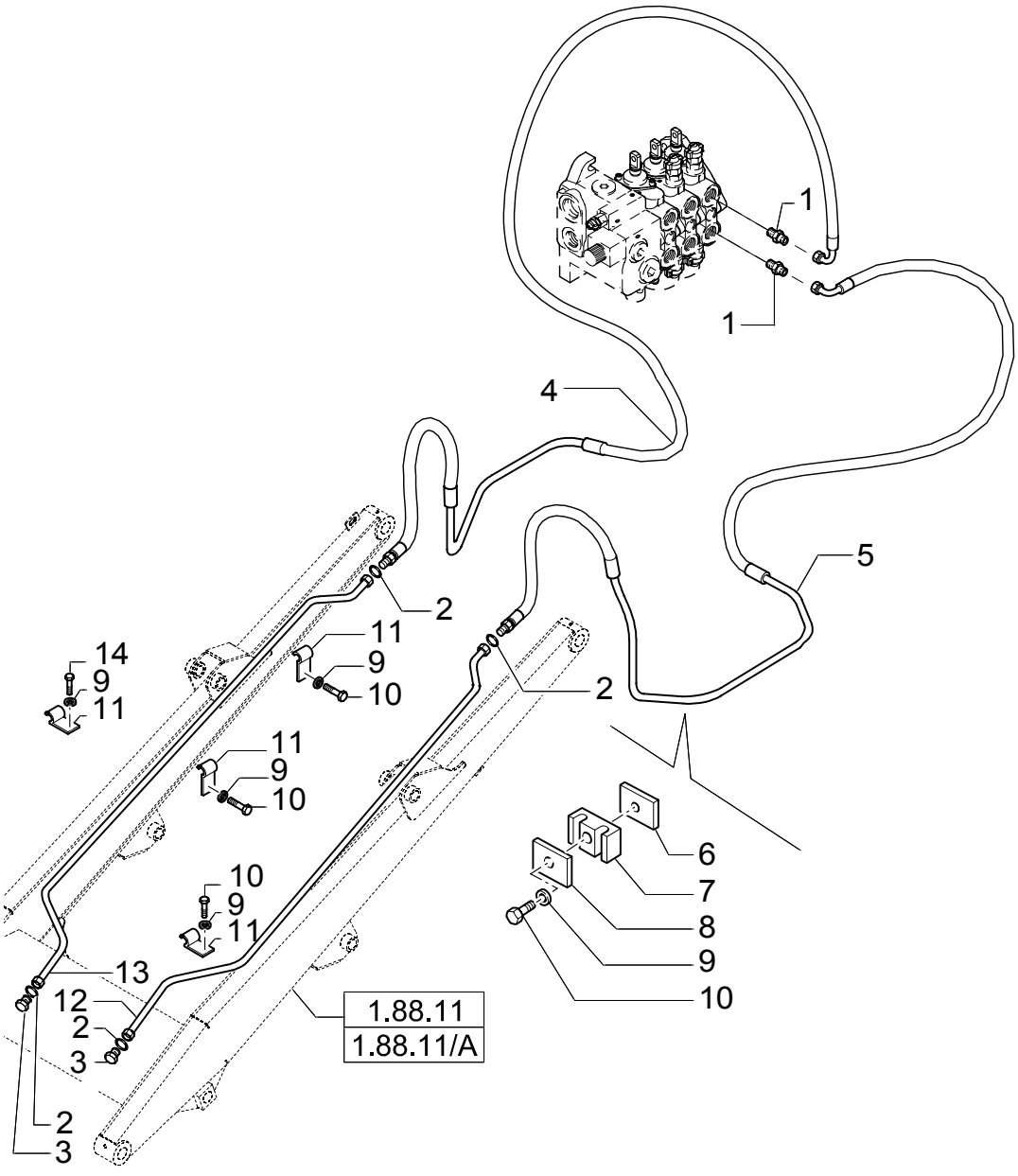

4X1 & 6X1 BUCKET HYDRAULIC LINES

REF	FN	PART NUMBER	YR/SN	QTY	DESCRIPTION
1		85805258		2	CONNECTOR, HYD.
2		9992298		4	O-RING 90 Duro, .489" ID x .070" Thk
3	1	85803408		2	PLUG
4	1, 2	85819572		1	PIPE RH
4	3	85805341		1	TUBE, RIGID RH
5	1, 2	85819571		1	PIPE LH
5	3	85805342		1	TUBE, RIGID LH
6		85805340		2	PLATE, COVER
7	4	85805193		AR	CLAMP
8	4	85805195		AR	PLATE
9		11193979		AR	WASHER, LOCK 8X22X1,5
10		16043821		8	SCREW M8X30
11		85805247		6	CLAMP
12	2	85805864		1	TUBE, RIGID LH
12	3	85813053		1	TUBE, RIGID LH
13	2	85805865		1	TUBE, RIGID RH
13	3	85813052		1	TUBE, RIGID RH
14	3	16044021		2	SCREW M8X1,25X40

(1) Includes 2
(2) Only for LB75.B - LB90.B - LB95.B - LB110.B
(3) Only for LB115.B
(4) Q.TY4 FOR LB115.B, Q.TY2 FOR LB75.B - LB90.B - LB95.B - LB110.B

MANUAL HAMMER SYSTEM

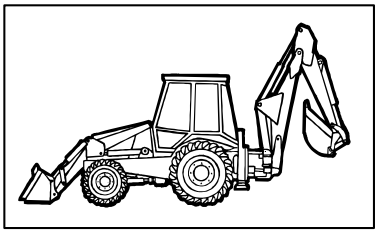

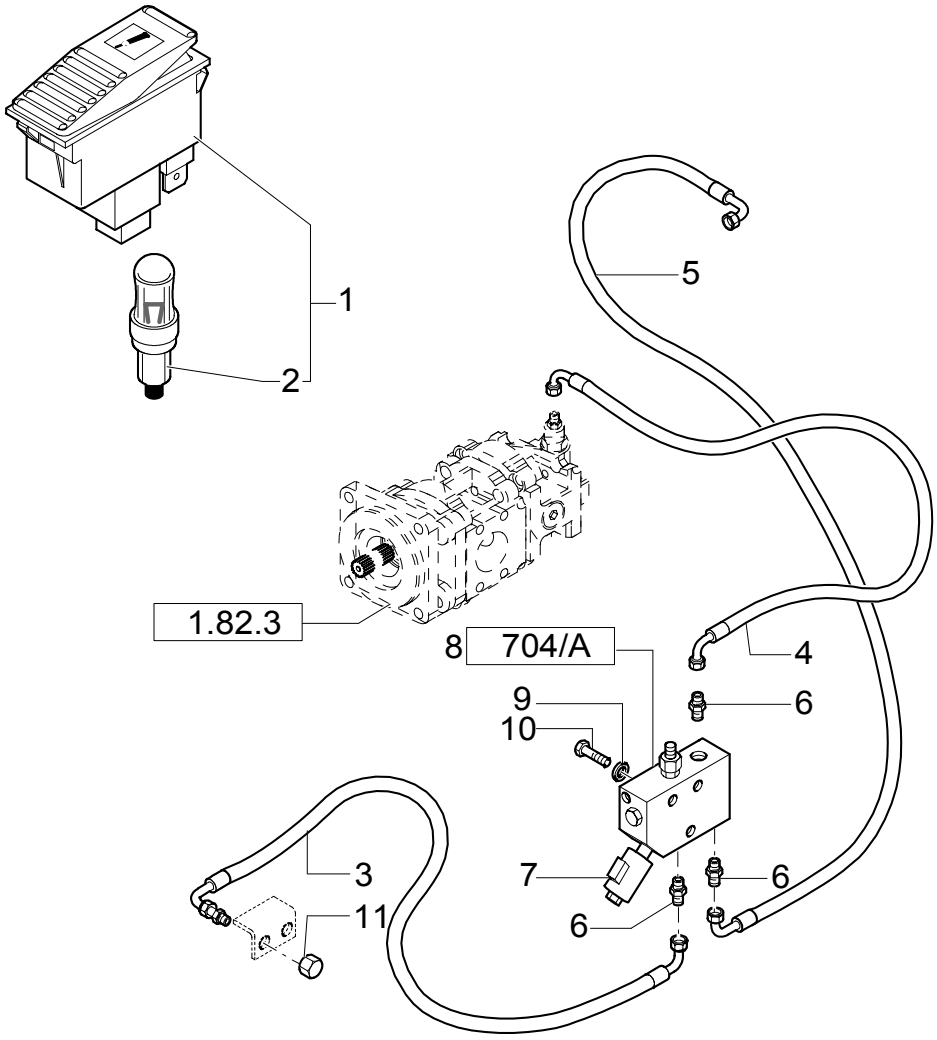

MANUAL HAMMER SYSTEM

REF	FN	PART NUMBER	YR/SN	QTY	DESCRIPTION
1		85819072		1	SWITCH
2		14143790		1	BULB 12V - 1,2W
3		85812184		1	HOSE, FLEXIBLE 1230 MM.
4	1	85817236		1	HOSE, FLEXIBLE 490 MM.
4	2	85812168		1	HOSE, FLEXIBLE 680 MM.
5		{85826092}		1	HOSE, FLEXIBLE
6		85803234		3	CONNECTOR, HYD.
7		85801211		1	SENDER UNIT
8		85801209		1	VALVE, CONTROL
9		11193879		3	WASHER, LOCK
10		16044521		3	SCREW M8X65
11		83987627		1	PLUG

(1) Only for CENTER PIVOT
(2) Only for SIDE SHIFT

704	02	p1	11/03

MANUAL HAMMER SYSTEM

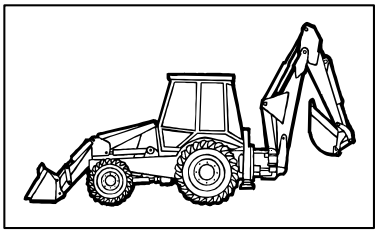

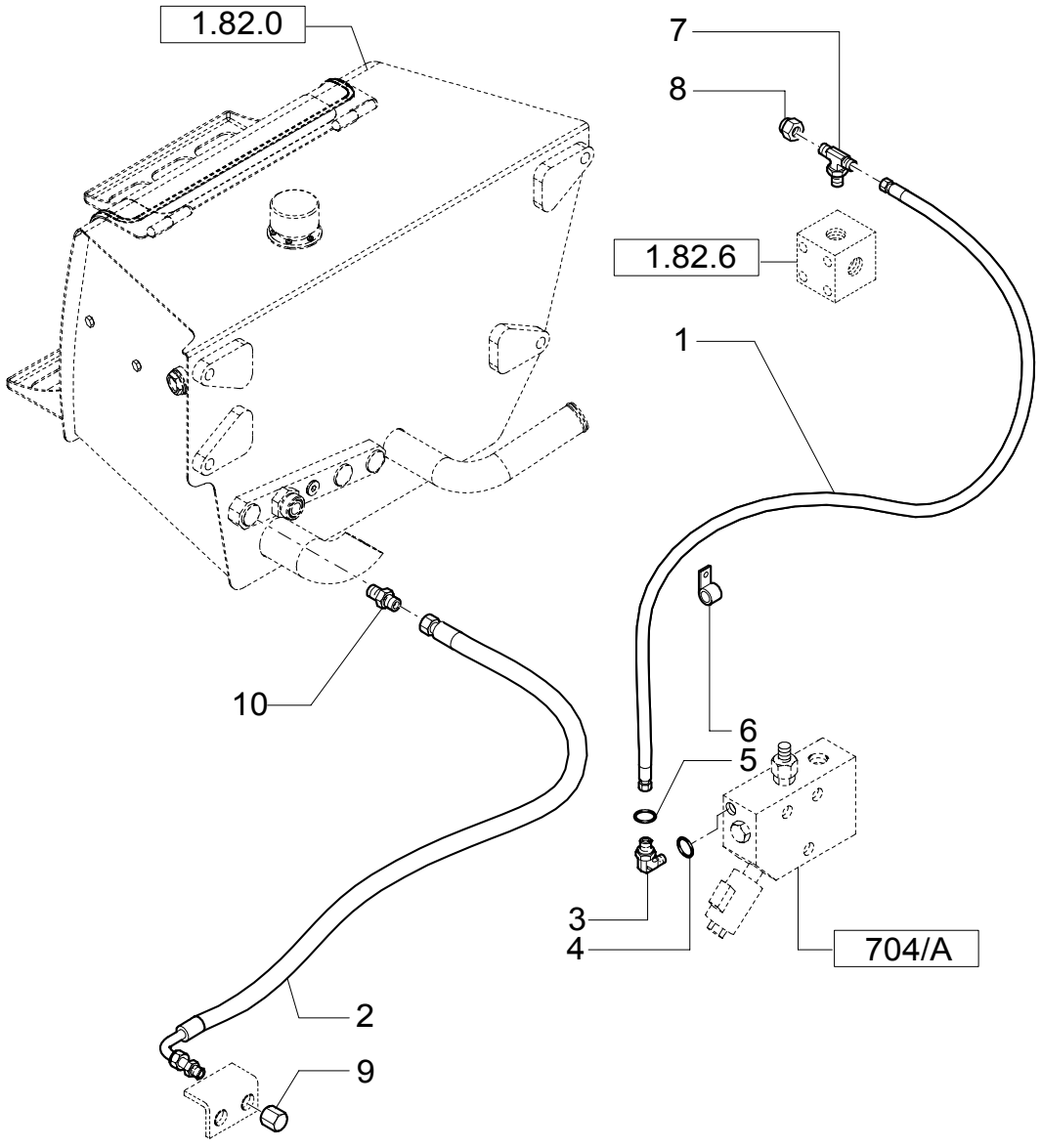

MANUAL HAMMER SYSTEM

REF	FN	PART NUMBER	YR/SN	QTY	DESCRIPTION
1		85803230		1	HOSE, FLEXIBLE 1050MM.
2		85803231		1	HOSE, FLEXIBLE 900 MM.
3	1	83961741		1	ELBOW
4		87008S95		1	O-RING
5		86482S95		1	O-RING
6		85803393		1	COLLAR, RETAINER
7		85802780		1	CONNECTOR, HYD.
8		E9NNP864CA		1	COVER
9		83987627		1	PLUG
10		85803241		1	CONNECTOR, HYD.

(1) Includes 4,5

MANUAL HAMMER VALVE

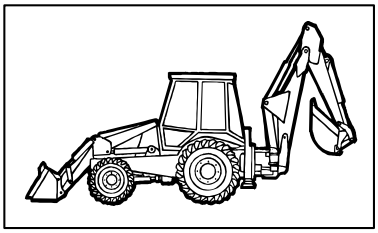

KIT = 2

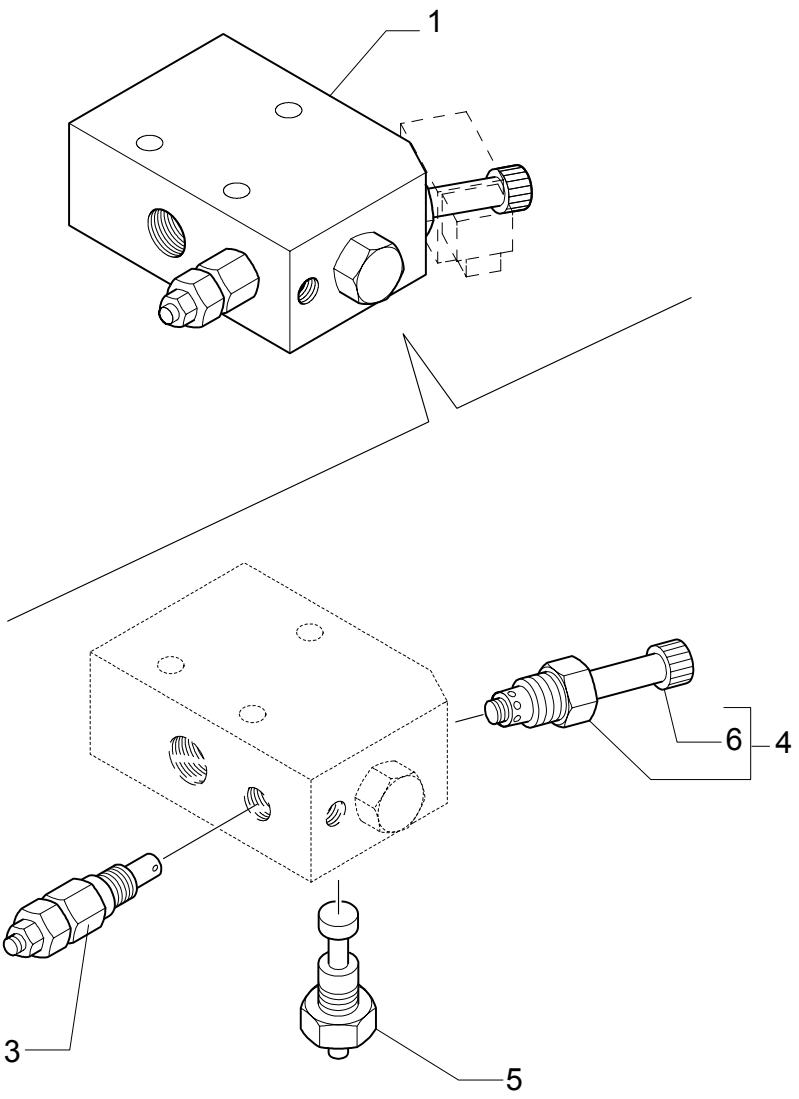

MANUAL HAMMER VALVE

REF	FN	PART NUMBER	YR/SN	QTY	DESCRIPTION
1		85801209		1	VALVE, CONTROL
2		9970382		1	SET OF PARTS GASKETS
3		9970178		1	VALVE, PRESSURE RELIEF
4		9970180		1	VALVE, HYDRAULIC
5		9970383		1	VALVE, HYDRAULIC
6		9970384		1	NUT, RING

718	01	p1	11/03

4X1 & 6X1 BUCKET HYDRAULIC LINES CENTER PIVOT)

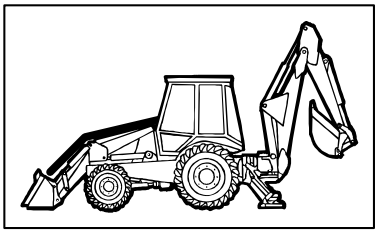

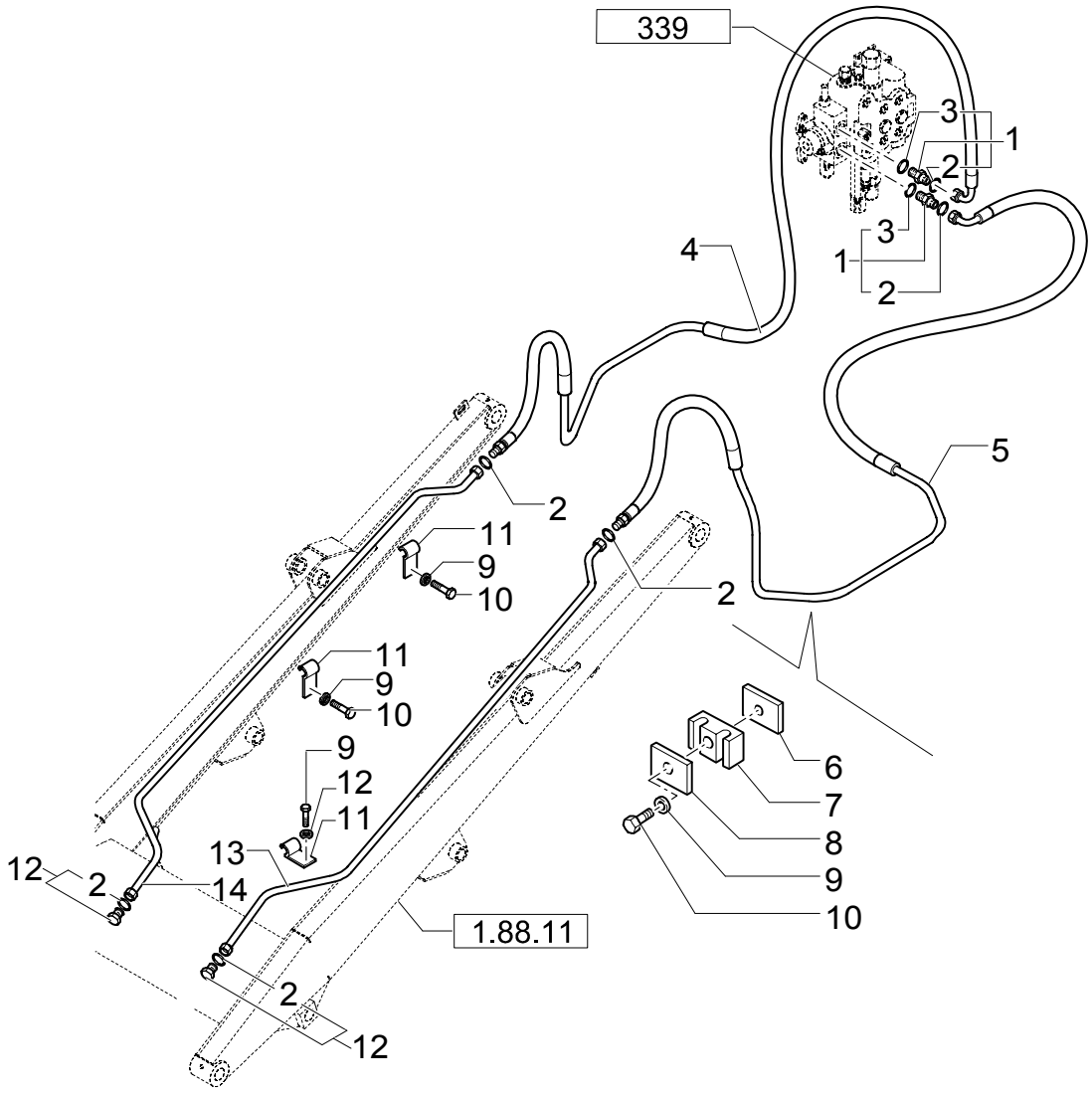

4X1 & 6X1 BUCKET HYDRAULIC LINES CENTER PIVOT)

REF	FN	PART NUMBER	YR/SN	QTY	DESCRIPTION
1		83963376		2	CONNECTOR, HYD.
2		9992298		6	O-RING 90 Duro, .489" ID x .070" Thk
3		167269		2	O-RING 90 Duro, .755" ID x .097" Thk
4		85805863		1	HOSE, FLEXIBLE RH
5		85805862		1	HOSE, FLEXIBLE LH
6		85805340		2	PLATE, COVER
7		85805193		2	CLAMP
8		85805195		2	PLATE
9		11193979		8	WASHER, LOCK
10		16043821		8	SCREW M8X30
11		85805247		6	CLAMP
12		85803408		2	PLUG
13		85805864		1	TUBE, RIGID LH
14		85805865		1	TUBE, RIGID RH

718	02	p1	05/03

4X1 & 6X1 BUCKET CONTROL LEVER, CABLE & DECALS (CENTER PIVOT)

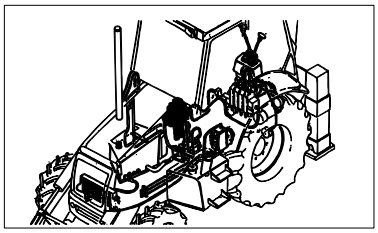

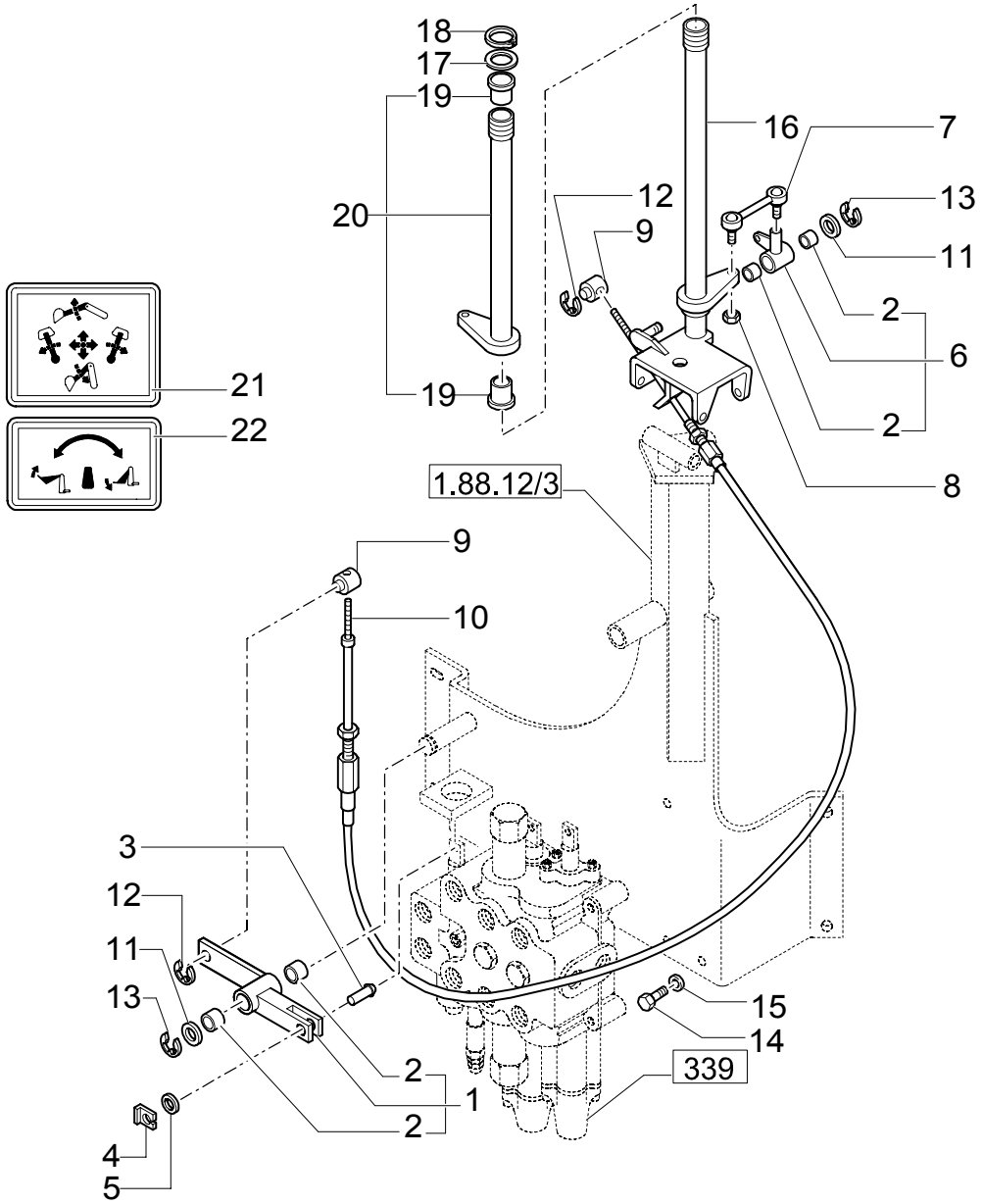

4X1 & 6X1 BUCKET CONTROL LEVER, CABLE & DECALS (CENTER PIVOT)

REF	FN	PART NUMBER	YR/SN	QTY	DESCRIPTION
1		85802816		1	LEVER, IDLER
2		85802494		4	BUSHING
3		85801561		1	PIN
4		11063971		1	CLIP
5		10519411		1	WASHER
6		85802587		1	YOKE
7		83962218		1	LINK CONROD
8		12574211		1	NUT M6
9		83962205		2	PIN
10		85806155		1	CABLE
11		14496901		2	WASHER
12		83947277		1	CIRCLIP
13		83911366		2	RING, SNAP
14		14308221		3	SCREW
15		11190579		3	WASHER, LOCK
16		85802601		3	LEVER
17		83962203		1	WASHER
18		83962223		1	CIRCLIP
19		83962208		2	BUSHING
20		85802615		1	ARM, TRIP
21		85804346		1	DECAL
22		85804399		1	DECAL

Mechanical Version

LB75.B

724	01	p1	11/03

HYDRAULIC SYSTEM FOR HAMMER (CENTER PIVOT)

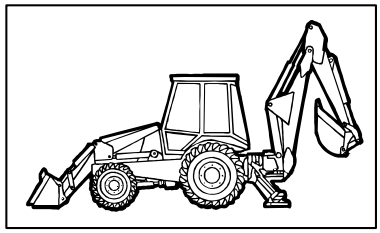

HYDRAULIC SYSTEM FOR HAMMER (CENTER PIVOT)

REF	FN	PART NUMBER	YR/SN	QTY	DESCRIPTION
1		85801210		1	VALVE, HYDRAULIC
2		85801211		1	SENDER UNIT
3		11193879		3	WASHER, LOCK
4		16044821		3	SCREW M8X80
5		85803486		2	CONNECTOR, HYD.
6		85803487		1	ELBOW
7		83963371		1	CONNECTOR, HYD.
8		85807876		1	CONNECTOR, HYD.
9		85826123		1	SWITCH, ASSY
10		85802776		1	HOSE, FLEXIBLE
11		85803428		1	HOSE, FLEXIBLE
12		85819237		1	CABLE, ELECTRIC
13		85816760		1	PLATE, COVER
14		13272477		2	SCREW
15		85817633		1	HOSE, FLEXIBLE
16		85817629		1	TUBE, RIGID
17		85819492		1	CLAMP
18		85802214		2	SUPPORT
19		16104111		1	NUT
20		85804442		2	BRACKET
21		16044221		1	SCREW M8X1.25X50
22		85826987		1	TUBE, RIGID 1-11/16"-12 ORS x 1-5/16"-12 SAE O-ring
23	1	85817628		1	TUBE, RIGID
23	2	85802801		1	CONNECTOR, HYD.
24		83987627		1	PLUG
25		9968595		1	VALVE, HYDRAULIC
26		85817635		1	HOSE, FLEXIBLE
27		85817634		1	HOSE, FLEXIBLE
28		85820222		1	PLATE, COVER

(1) Only for LB 75.B
(2) Only for LB 90.B LB95.B LB110.B

HYDRAULIC SYSTEM FOR HAMMER (CENTER PIVOT)

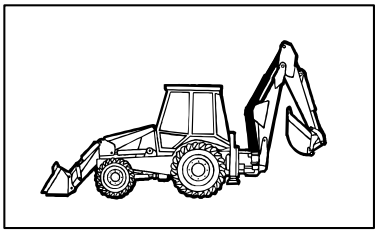

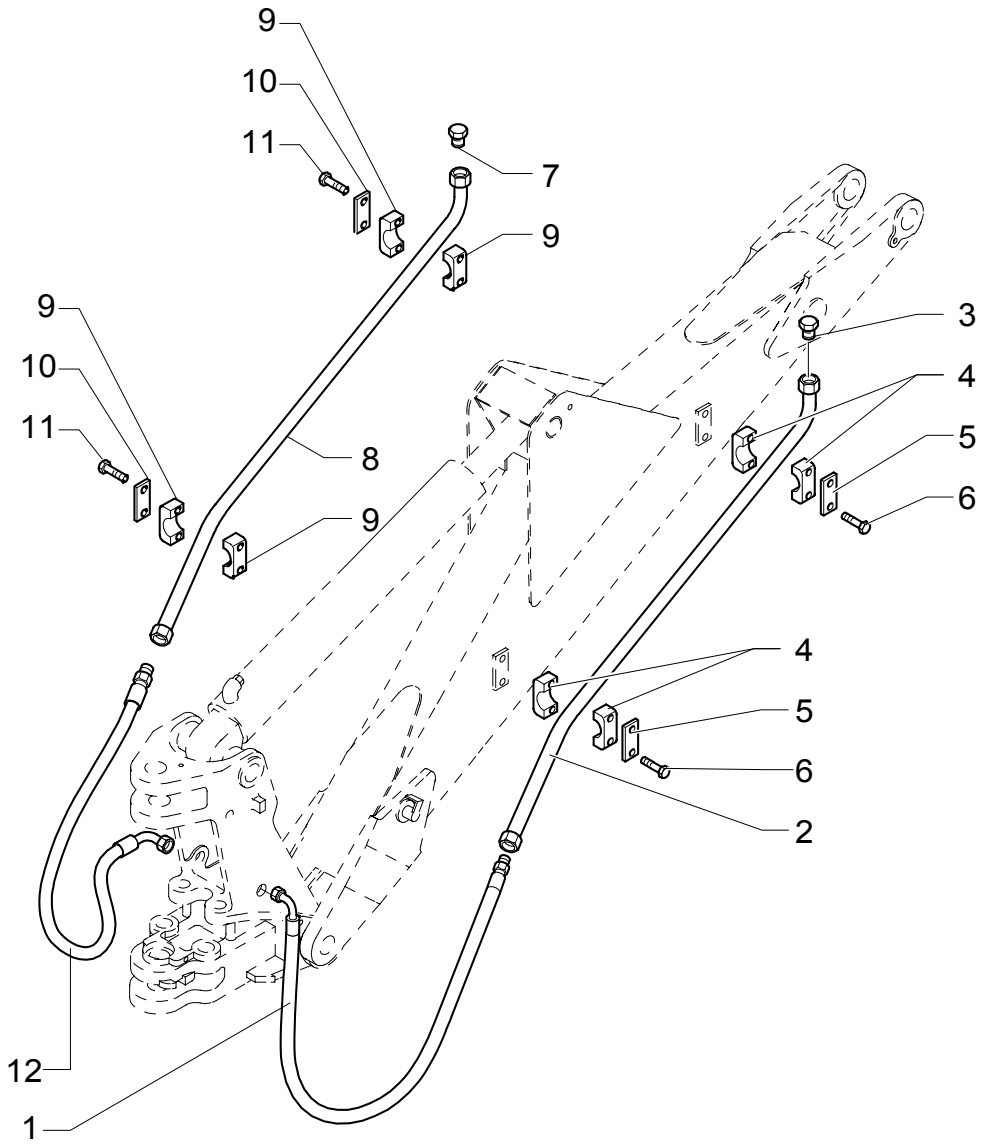

HYDRAULIC SYSTEM FOR HAMMER (CENTER PIVOT)

REF	FN	PART NUMBER	YR/SN	QTY	DESCRIPTION
1		85819619		1	HOSE, FLEXIBLE
2		85802454		1	TUBE, RIGID
3		85801397		1	PLUG
4		85803484		4	CLAMP
5		85803485		2	PLATE
6		10903221		4	SCREW M6X40
7		85801452		1	PLUG
8		85803184		1	TUBE, RIGID
9		85803483		4	CLAMP
10		85803440		2	PLATE
11		10903421		4	SCREW M6X45
12		85819618		1	HOSE, FLEXIBLE

724/ A	01	p1	03/03

REAR HAMMER CONTROL VALVE

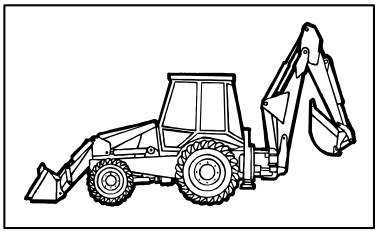

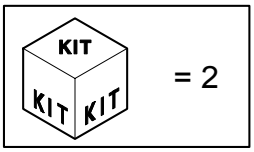

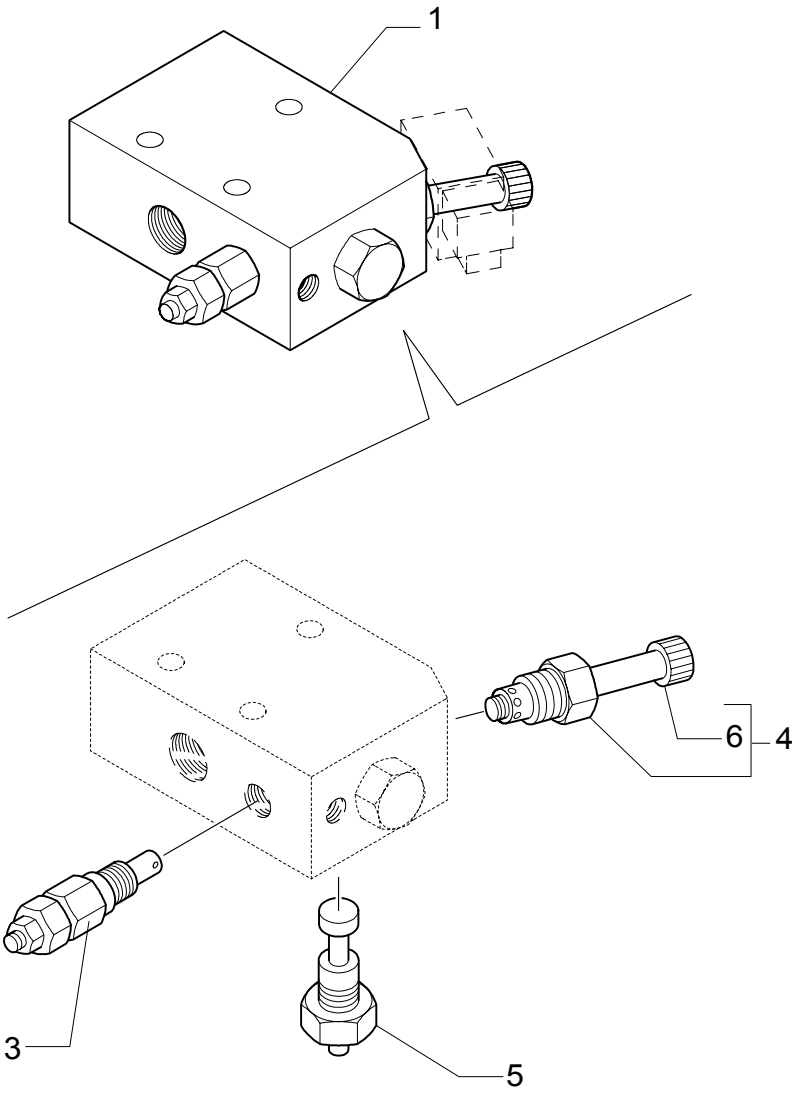

REAR HAMMER CONTROL VALVE

REF	FN	PART NUMBER	YR/SN	QTY	DESCRIPTION
1		85801210		1	VALVE, HYDRAULIC ASSY
2		9970181		1	KIT, SEALS GASKETS
3		9970178		1	VALVE, PRESSURE RELIEF ASSY
4		9970180		1	VALVE, HYDRAULIC ASSY
5		9970179		1	REGULATOR, VOLTAGE ASSY
6		9970384		1	NUT, RING

724/ 3	01	p1	11/03

HYDRAULIC SYSTEM FOR HAMMER (CENTER PIVOT)

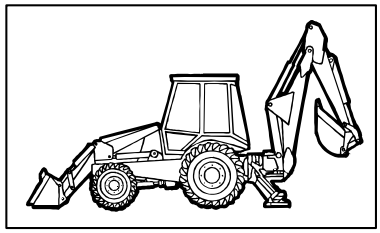

HYDRAULIC SYSTEM FOR HAMMER (CENTER PIVOT)

REF	FN	PART NUMBER	YR/SN	QTY	DESCRIPTION
1		85801210		1	VALVE, HYDRAULIC
2		85801211		1	SENDER UNIT
3		11193879		3	WASHER, LOCK
4		16044821		3	SCREW M8X80
5		85803486		2	CONNECTOR, HYD.
6		85803487		1	ELBOW
7		83963371		1	CONNECTOR, HYD.
8		85807876		1	CONNECTOR, HYD.
9		85826123		1	SWITCH, ASSY
10		85802776		1	HOSE, FLEXIBLE
11		85803428		1	HOSE, FLEXIBLE
12		85819237		1	CABLE, ELECTRIC
13		85816760		1	PLATE, COVER
14		13272477		2	SCREW
15		85817633		1	HOSE, FLEXIBLE
16		85817629		1	TUBE, RIGID
17		85819492		1	CLAMP
18		85802214		2	SUPPORT
19		16104111		1	NUT
20		85804442		2	BRACKET
21		16044221		1	SCREW M8X1.25X50
22		85802801		1	CONNECTOR, HYD. 1-11/16"-12 ORS x 1-5/16"-12 SAE O-ring
23	1	85817628		1	TUBE, RIGID
23	2	85826987		1	TUBE, RIGID
24		83987627		1	PLUG
25		85812116		1	VALVE, HYDRAULIC
26		85817635		1	HOSE, FLEXIBLE
27		85817634		1	HOSE, FLEXIBLE
28		85820222		1	PLATE, COVER

(1) Only for LB 75.B
(2) Only for LB 90.B LB95.B LB110.B

Pilot Control Version

LB75.B

724/ 3	02	p1	10/03

HYDRAULIC SYSTEM FOR HAMMER (CENTER PIVOT)

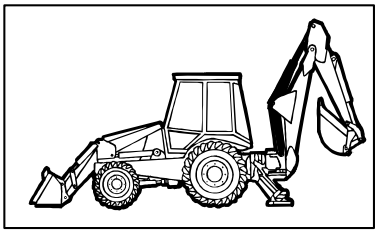

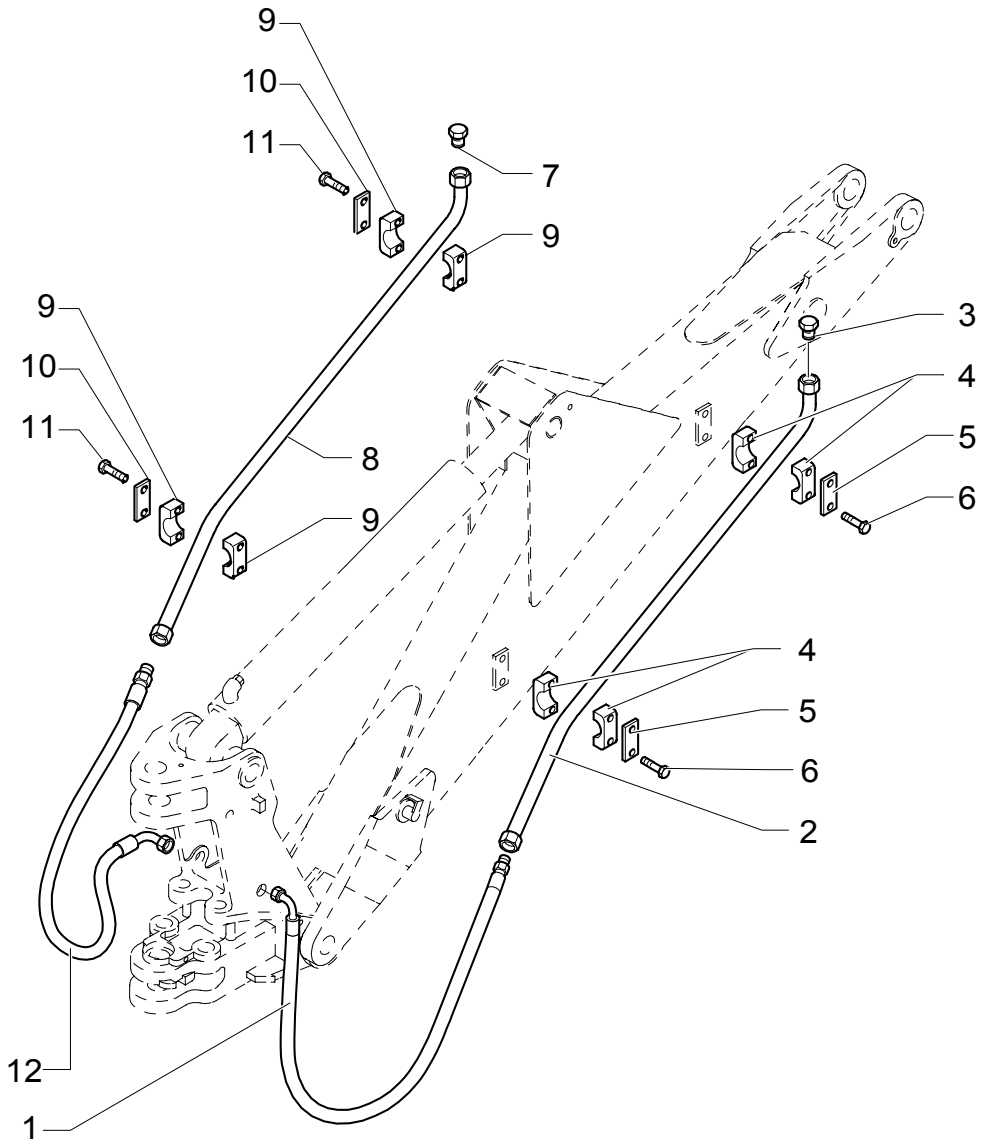

HYDRAULIC SYSTEM FOR HAMMER (CENTER PIVOT)

REF	FN	PART NUMBER	YR/SN	QTY	DESCRIPTION
1		85819619		1	HOSE, FLEXIBLE
2		85802454		1	TUBE, RIGID
3		85801397		1	PLUG
4		85803484		4	CLAMP
5		85803485		2	PLATE
6		10903221		4	SCREW M6X40
7		85801452		1	PLUG
8		85803184		1	TUBE, RIGID
9		85803483		4	CLAMP
10		85803440		2	PLATE
11		10903421		4	SCREW M6X45
12		85819618		1	HOSE, FLEXIBLE

Pilot Control Version

LB75.B

725	01	p1	12/03

HAMMER KIT FROM LIFTING ARM TO DEMOLITION ARM

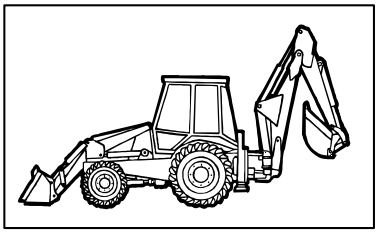

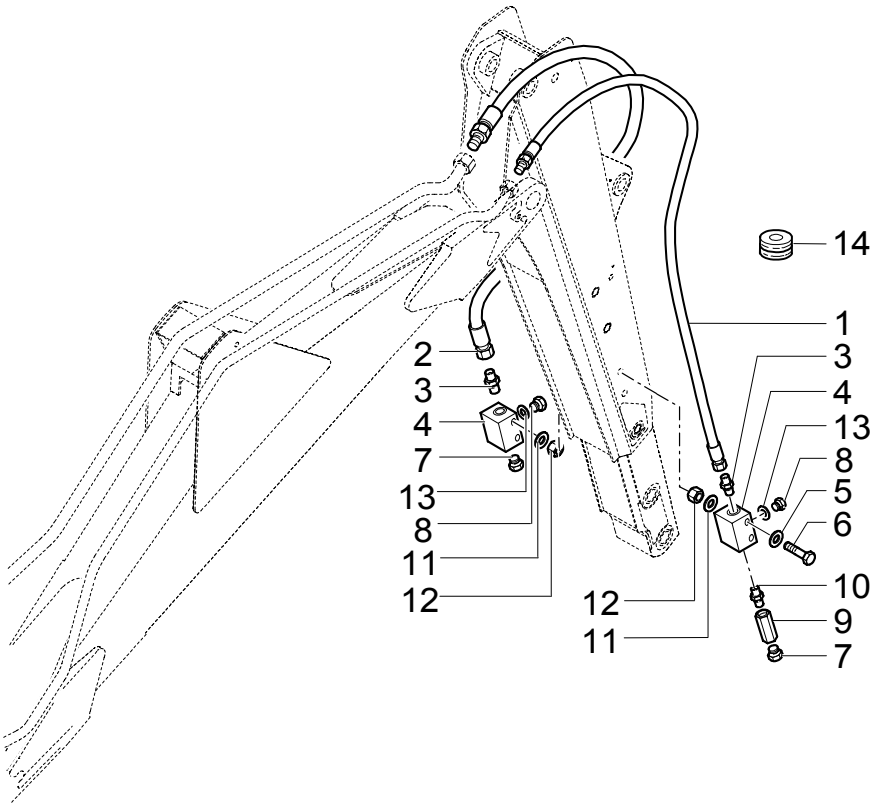

HAMMER KIT FROM LIFTING ARM TO DEMOLITION ARM

REF	FN	PART NUMBER	YR/SN	QTY	DESCRIPTION
1		85819621		1	HOSE, FLEXIBLE
2		85819620		1	HOSE, FLEXIBLE
3		85803486		2	CONNECTOR, HYD.
4		85802247		2	BLOCK
5		11193879		4	WASHER, LOCK
6		16045021		4	SCREW
7		85802457		2	PLUG
8		85803409		2	PLUG
9		85802372		1	VALVE, HYDRAULIC 10BAR
10		85804879		1	CONNECTOR, HYD.
11		12647121		6	WASHER M8
12		14048211		2	NUT
13		167269		2	O-RING 90 Duro, .755" ID x .097" Thk
14		10398580		1	RING

725/ 1	01	p1	04/03

4X1 & 6X1 BUCKET CONTROL LEVER, CABLE & DECALS(CENTER PIVOT)

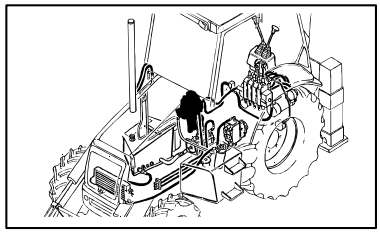

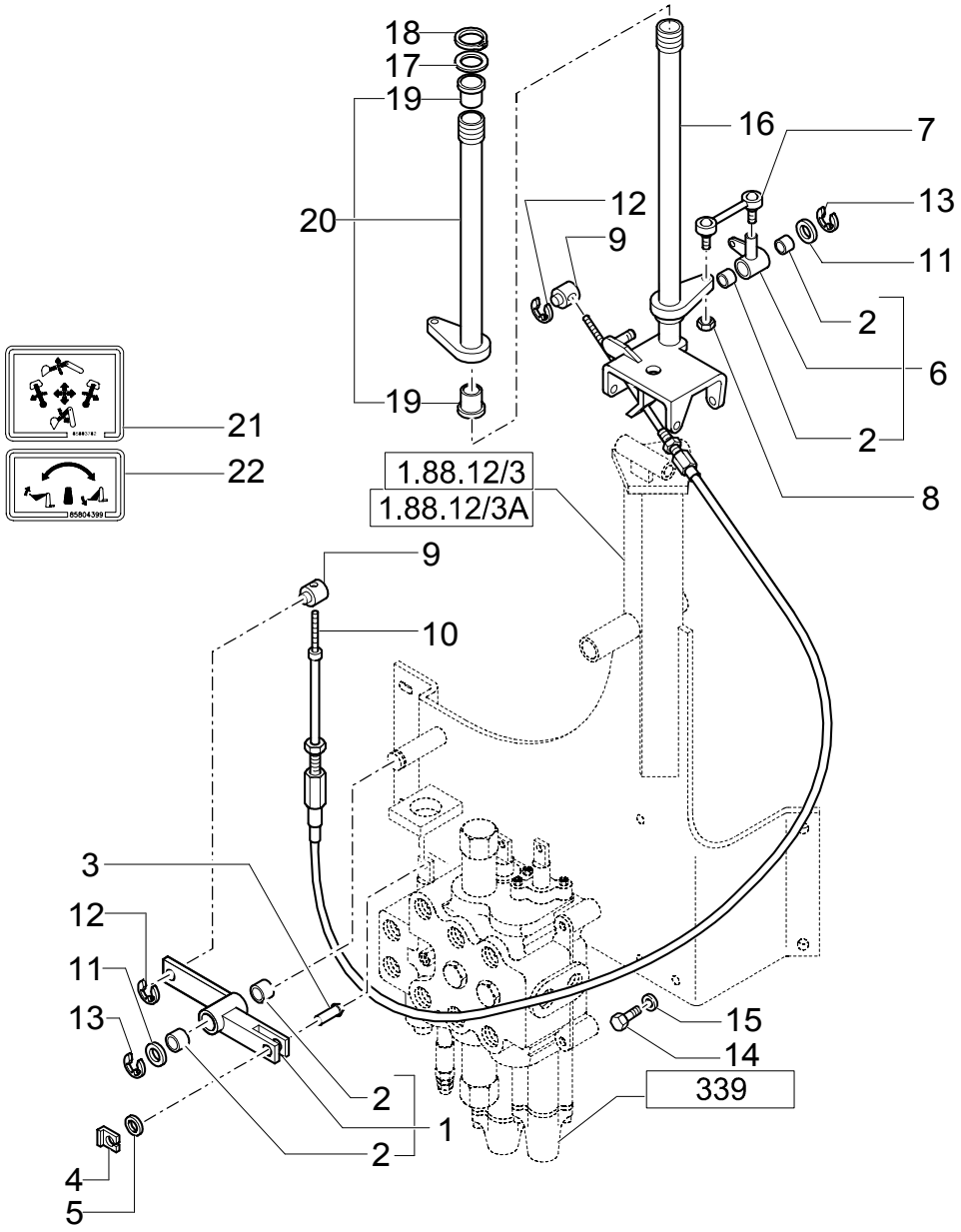

4X1 & 6X1 BUCKET CONTROL LEVER, CABLE & DECALS(CENTER PIVOT)

REF	FN	PART NUMBER	YR/SN	QTY	DESCRIPTION
1		85802816		1	LEVER, IDLER
2		85802494		4	BUSHING
3		85801561		1	PIN
4		11063971		1	CLIP
5		10519411		1	WASHER
6		85802587		1	YOKE
7		83962218		1	LINK CONROD
8		12574211		1	NUT M6
9		83962205		2	PIN
10		85806155		1	CABLE
11		14496901		2	WASHER
12		83947277		1	CIRCLIP
13		83911366		2	RING, SNAP
14		14308221		3	SCREW
15		11190579		3	WASHER, LOCK
16		85802601		3	LEVER
17		83962203		1	WASHER
18		83962223		1	CIRCLIP
19		83962208		2	BUSHING
20		85802615		1	ARM, TRIP
21		85804346		1	DECAL
22		85804399		1	DECAL

Mechanical Version

LB75.B

725/ 1	02	p1	09/03

4X1 & 6X1 BUCKET HYDRAULIC LINES(CENTER PIVOT)

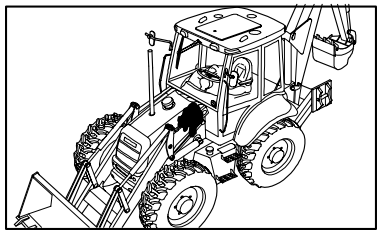

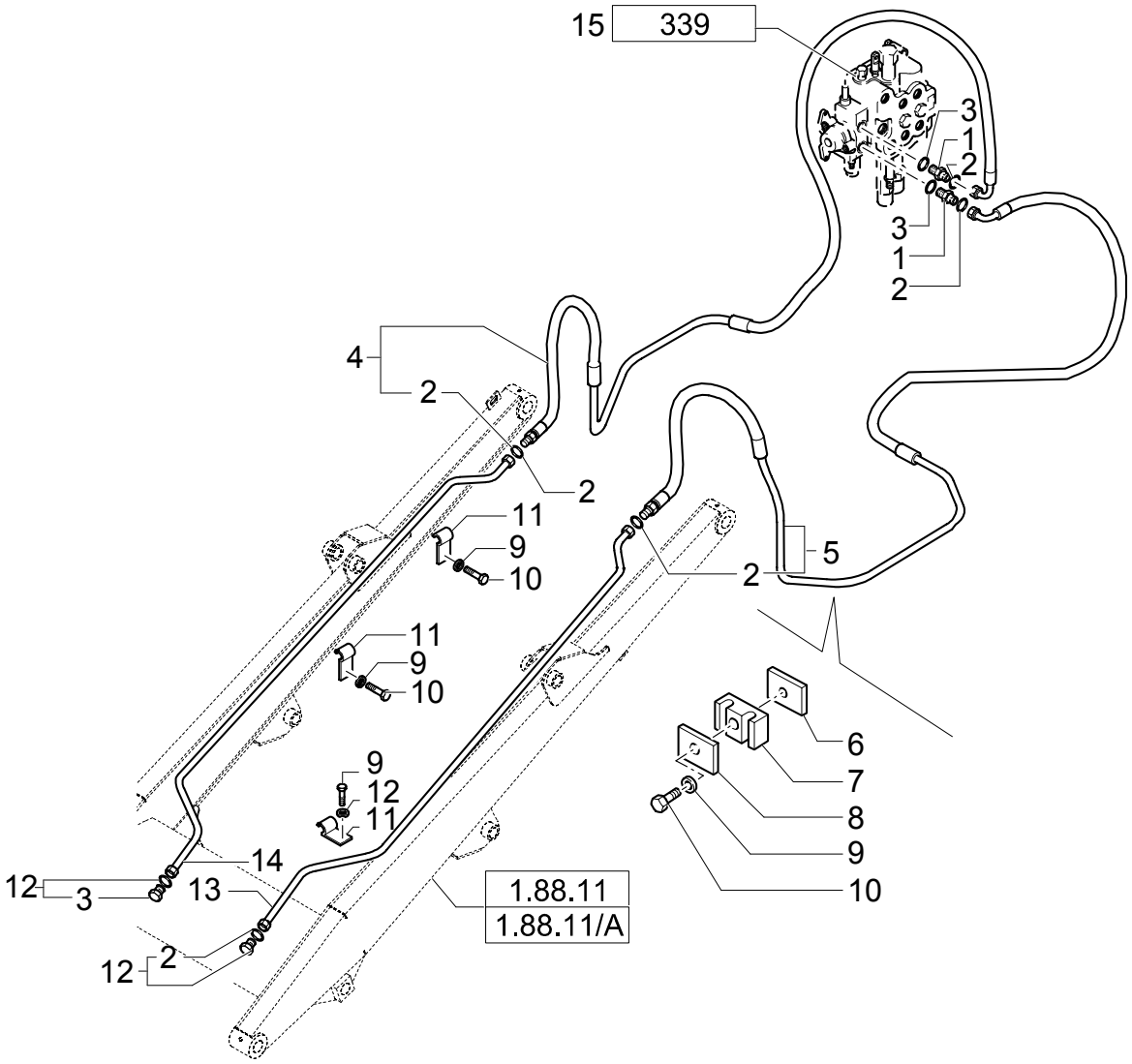

4X1 & 6X1 BUCKET HYDRAULIC LINES(CENTER PIVOT)

REF	FN	PART NUMBER	YR/SN	QTY	DESCRIPTION
1		83963376		2	CONNECTOR, HYD.
2		9992298		6	O-RING 90 Duro, .489" ID x .070" Thk
3		167269		2	O-RING 90 Duro, .755" ID x .097" Thk
4	1	85805863		1	HOSE, FLEXIBLE RH
5	1	85805862		1	HOSE, FLEXIBLE LH
6		85805340		2	PLATE, COVER
7		85805193		2	CLAMP
8		85805195		2	PLATE
9		11193979		8	WASHER, LOCK
10		16043821		8	SCREW M8X30
11	1	85805247		6	CLAMP
12		85803408		2	PLUG
13		85805864		1	TUBE, RIGID LH
14		85805865		1	TUBE, RIGID RH
15		85819650		1	DISTRIBUTOR

(1) Includes 2

732	01	p1	11/03

REAR MECHANICAL QUICK-COUPLING

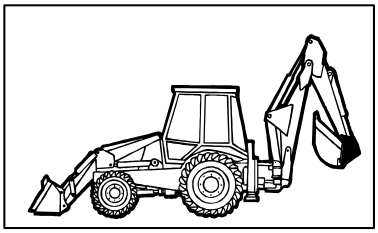

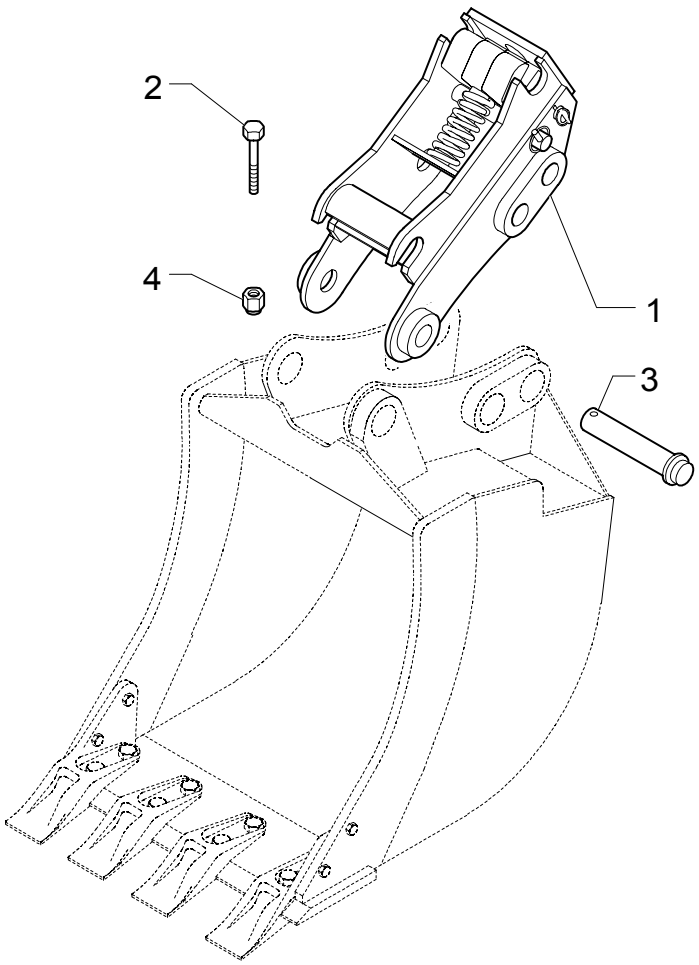

REAR MECHANICAL QUICK-COUPLING

REF	FN	PART NUMBER	YR/SN	QTY	DESCRIPTION
1		85801542		1	COUPLING, QUICK, MALE
2		15972034		2	BOLT M10X1,25X110
3		85803005		2	PIN
4		12574511		2	NUT M10X1,25

Mechanical Version

LB75.B

732-A	01	p1	11/03

REAR MECHANICAL QUICK-COUPLING

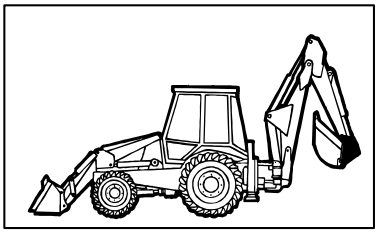

KIT
KIT KIT
1 = ●

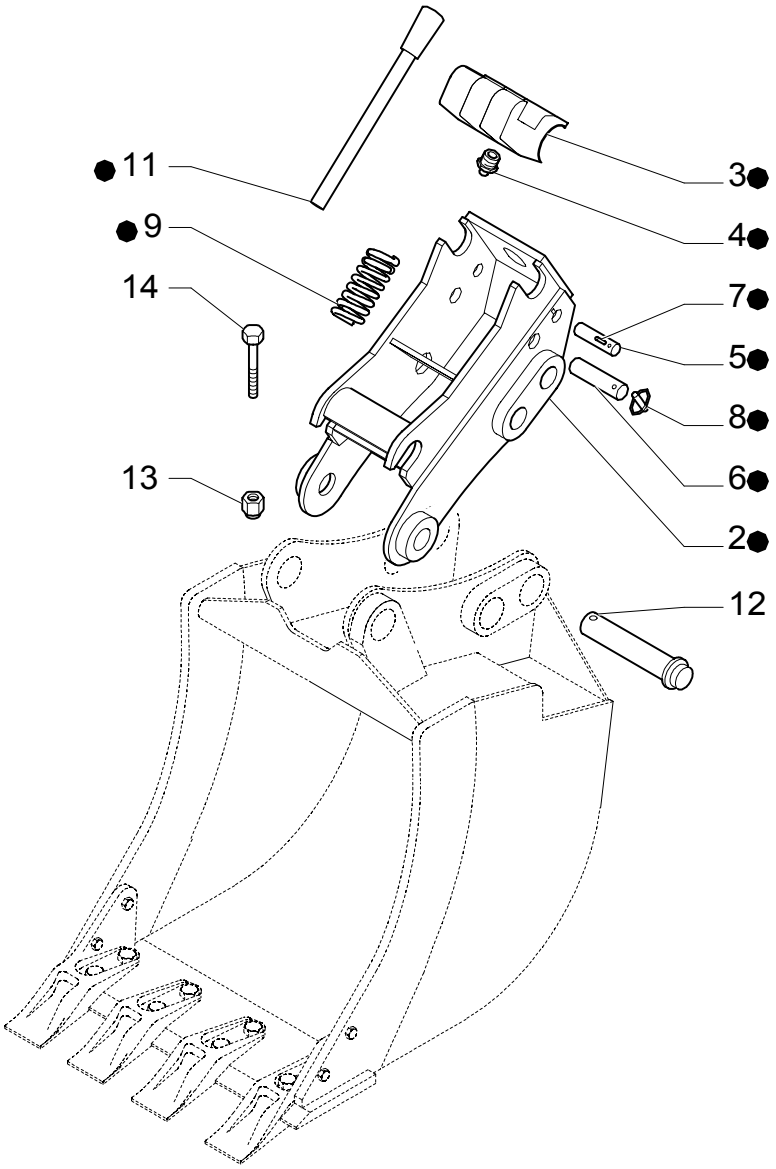

REAR MECHANICAL QUICK-COUPLING

REF	FN	PART NUMBER	YR/SN	QTY	DESCRIPTION
1		85801542		1	COUPLING, QUICK, MALE
2		{85827551}		1	BODY
3		85827552		1	HOOK
4		{85824266}		1	NIPPLE, LUBE
5		85827553		1	HOOK
6		85827554		1	PIN
7		{85825285}		1	PIN
8		{85824265}		1	PIN
9		{85824268}		1	SPRING
11		85824267		1	HANDLE
12		85803005		2	PIN
13		12574511		2	NUT
14		15972034		2	BOLT M10x110

734	01	p1	05/03

FRONT MECHANICAL QUICK-COUPLING

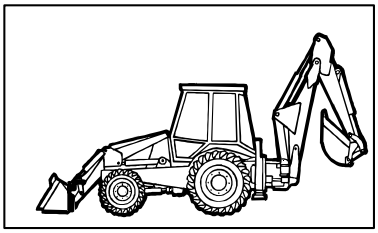

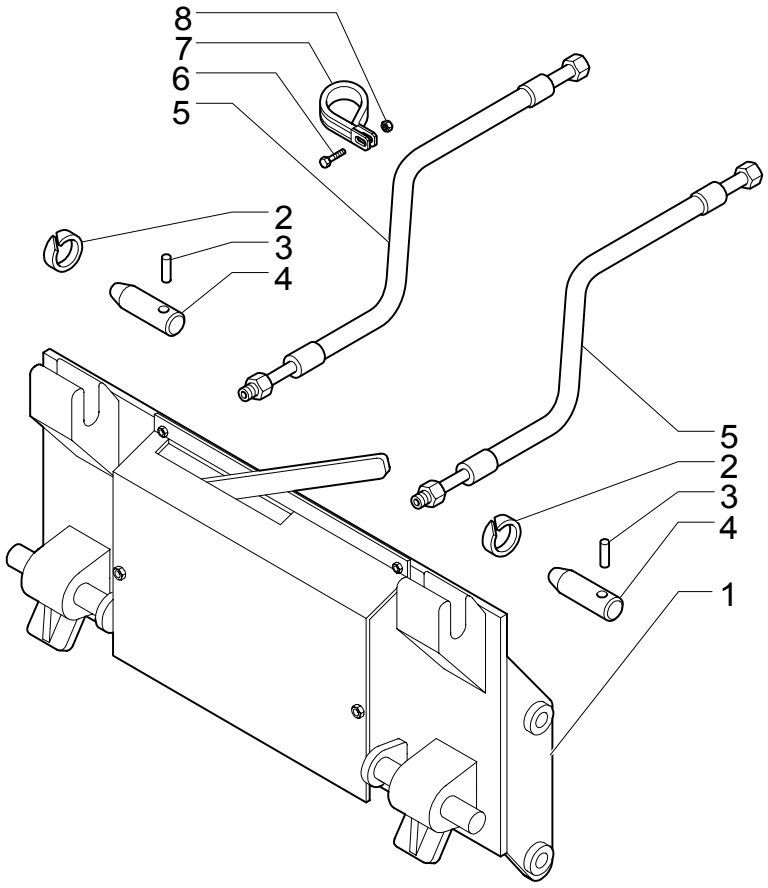

FRONT MECHANICAL QUICK-COUPLING

REF	FN	PART NUMBER	YR/SN	QTY	DESCRIPTION
1		85824397		1	COUPLING, QUICK, MALE
2		85802992		2	O-RING
3		85802993		2	PIN
4		85801051		2	PIN
5		85813378		2	HOSE, FLEXIBLE
6		16043921		2	SCREW M8X1,25X35
7		85803393		2	COLLAR, RETAINER
8		16104111		2	NUT M8

902	01	p1	04/04

BOOM - TELESCOPIC DIPPER SHORT

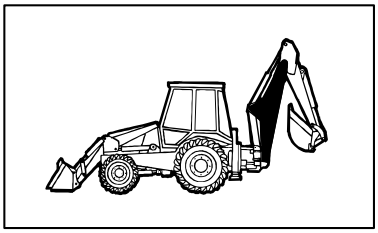

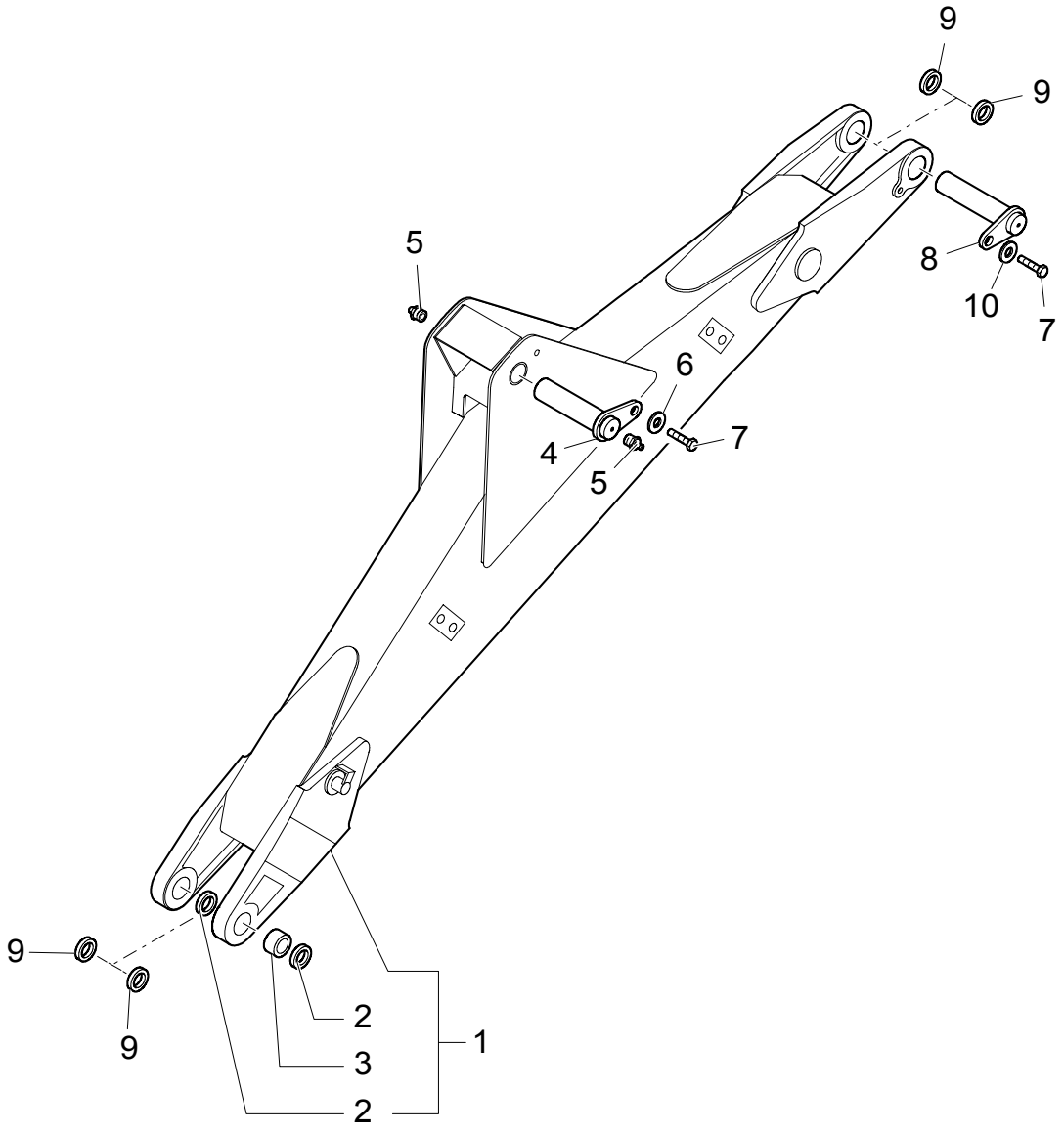

BOOM - TELESCOPIC DIPPER SHORT

REF	FN	PART NUMBER	YR/SN	QTY	DESCRIPTION
1	1	85816801		1	ARM
2		D7NNC512C		2	BUSHING, DRIVE
3		D8NND659AB		4	KNIFE SECTION
4		85815698		1	PIN
5		83416242		2	NIPPLE, LUBE
6		85802396		1	WASHER
7		85802397		2	SCREW
8		85815607		1	PIN
9		85818916		4	SHIM
10		85815609		1	WASHER

(1) Includes 2,3

TELESCOPIC DIPPER SHORT - HYDRAULIC SYSTEM

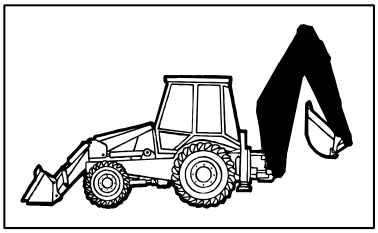

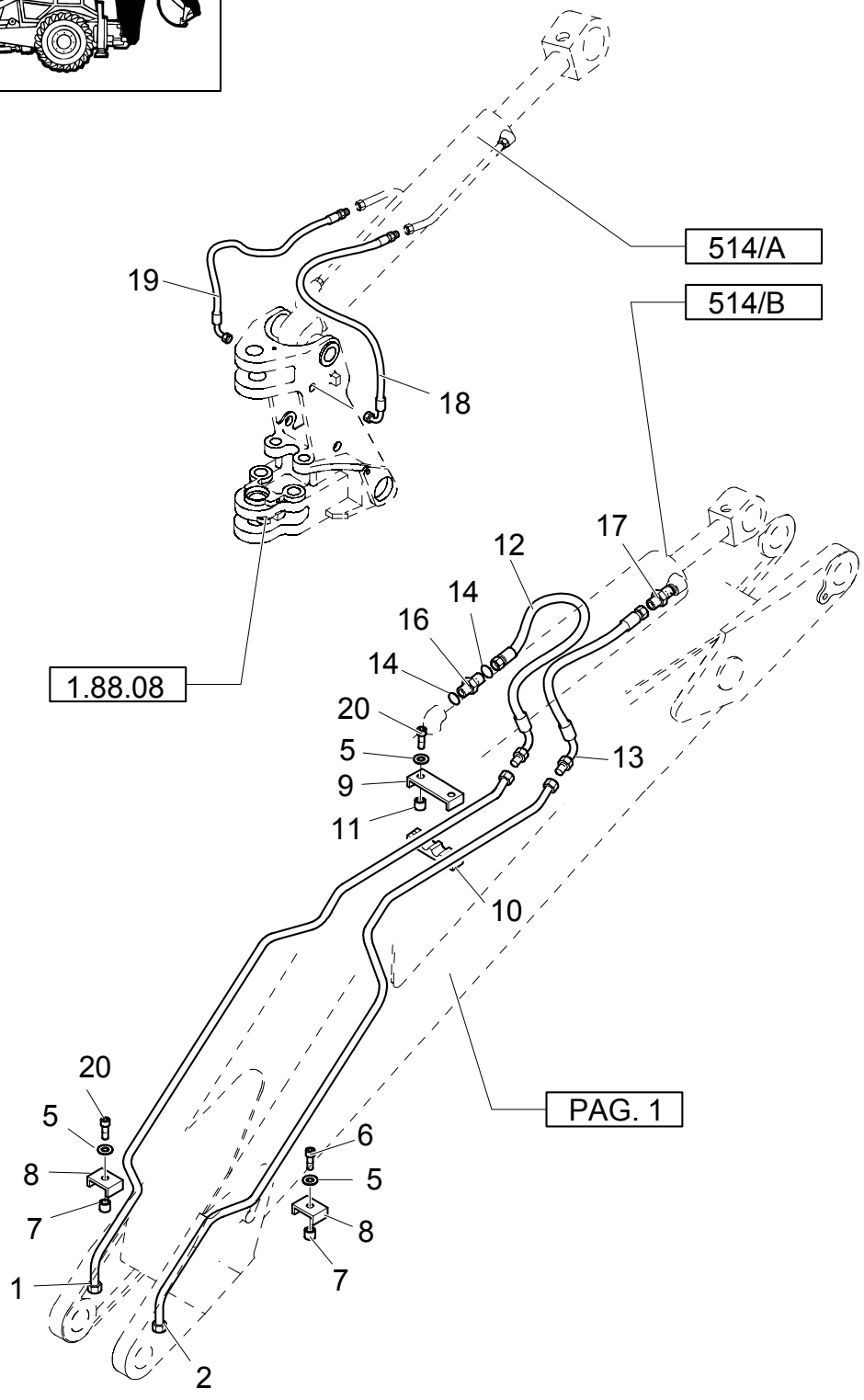

TELESCOPIC DIPPER SHORT - HYDRAULIC SYSTEM

REF	FN	PART NUMBER	YR/SN	QTY	DESCRIPTION
1		85815632		1	TUBE, RIGID
2		85815630		1	TUBE, RIGID
3		85802901		1	SPACER
4		85802899		1	CLAMP
5		11193879		4	WASHER, LOCK
6		16044221		1	SCREW M8X50
7		85802902		1	SPACER
8		85802900		1	CLAMP
9		85802894		2	U-BRACKET
10		85802895		2	CLAMP
11		85802893		2	SPACER
12		85812154		1	HOSE, FLEXIBLE
13		85812178		1	HOSE, FLEXIBLE
14		9991976		1	O-RING 90 Duro, .739" ID x .070" Thk
15		167266		1	O-RING 90 Duro, .924" ID x .116" Thk
16	1	83962538		1	CONNECTOR, HYD. 1-3/16"-12 ORS x 1-1/16"-12 SAE O-Ring
17		83962539		1	CONNECTOR, HYD.
18		85812142		1	HOSE, FLEXIBLE
19		85812150		1	HOSE, FLEXIBLE
20		16044421		2	SCREW M8X60

(1) Includes 14,15

TELESCOPIC DIPPER SHORT - HYDRAULIC SYSTEM

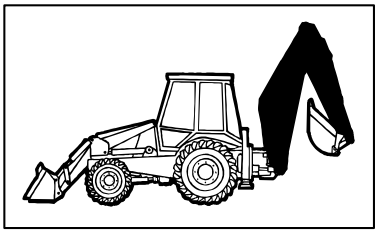

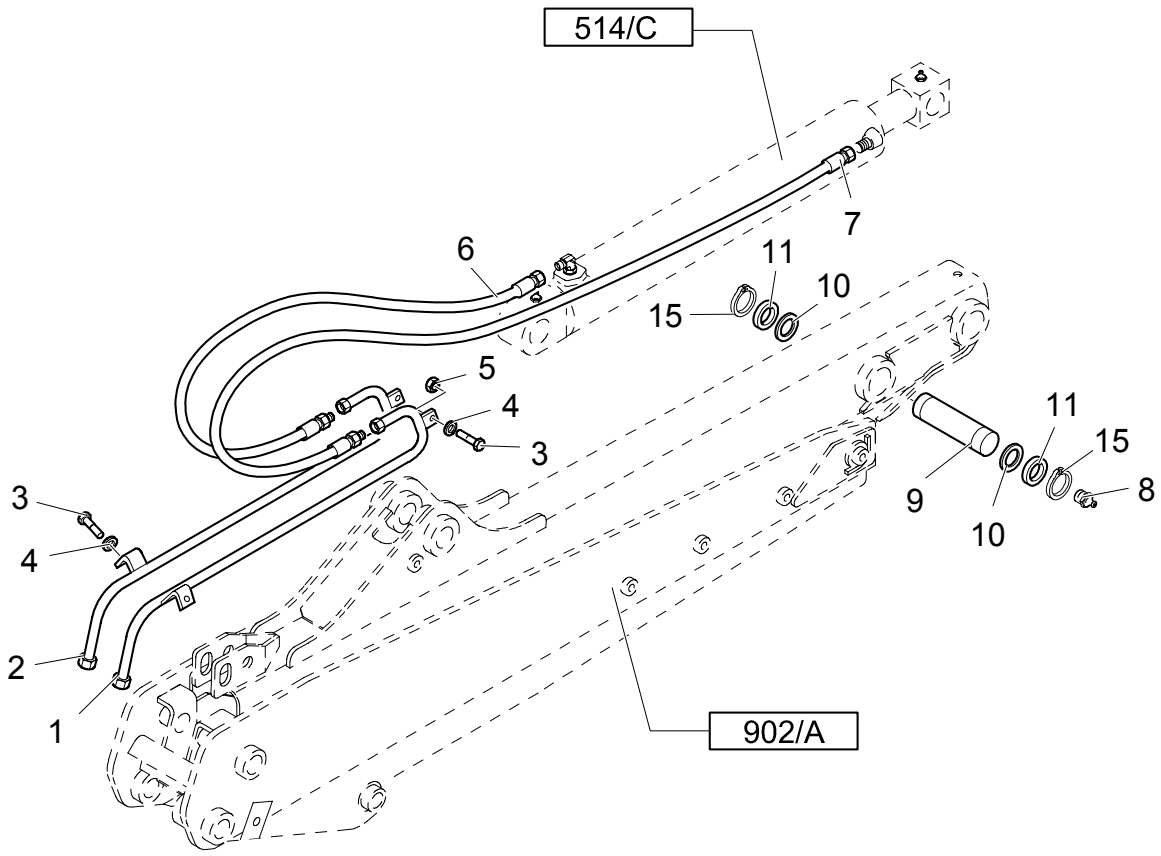

TELESCOPIC DIPPER SHORT - HYDRAULIC SYSTEM

REF	FN	PART NUMBER	YR/SN	QTY	DESCRIPTION
1		85815679		1	TUBE, RIGID
2		85815677		1	TUBE, RIGID
3		16043621		4	SCREW
4		11193979		4	WASHER, LOCK
5		14048211		2	NUT
6	1	85812164		1	HOSE, FLEXIBLE
6	2	85826108		1	HOSE, FLEXIBLE
7	1	85812164		1	HOSE, FLEXIBLE
7	2	85812189		1	HOSE, FLEXIBLE
8		83416242		1	NIPPLE, LUBE
9		86992966		1	PIN
10		85818916		2	SHIM
11		83910977		2	SPACER
12		85802396		1	WASHER
13		85802397		1	SCREW
14		85803002		1	PIN
15		11069071		2	RING, LOCKING

(1) Serial Number: -031045865
(2) Serial Number: 031045866-

TELESCOPIC DIPPER SHORT- BUCKET MOTION

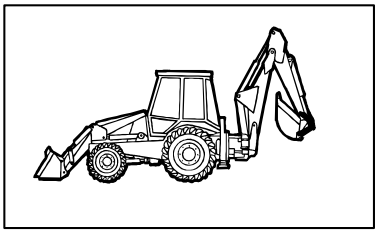

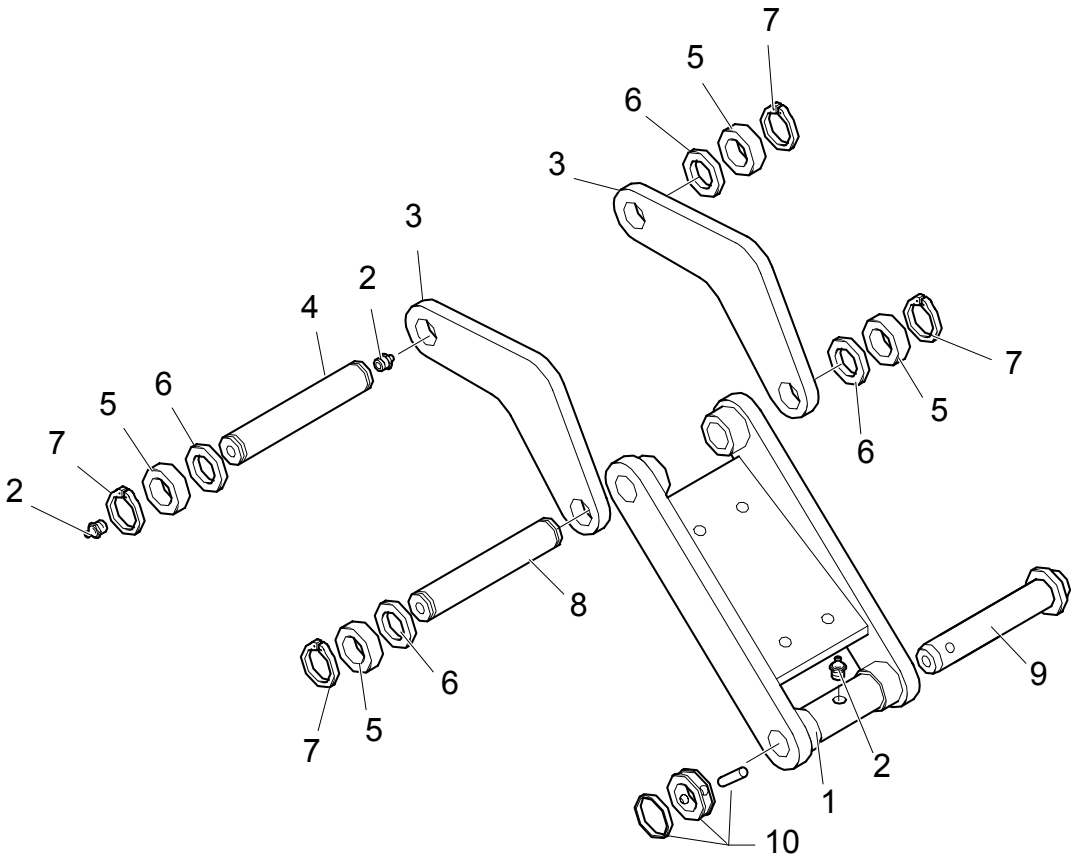

TELESCOPIC DIPPER SHORT- BUCKET MOTION

REF	FN	PART NUMBER	YR/SN	QTY	DESCRIPTION
1		85803613		1	LINK CONROD
2		83416242		3	NIPPLE, LUBE
3		{85817133}		2	
4		85815517		1	PIN
5		83910977		4	SPACER
6		85818916		4	SHIM
7		11069071		4	RING, LOCKING
8		85813469		1	PIN
9		85803005		1	PIN
10		85802975		1	PIN

Mechanical Version

LB75.B

TELESCOPIC DIPPER SHORT - HYDRAULIC SYSTEM

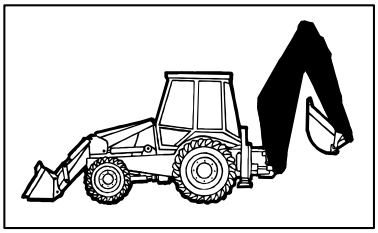

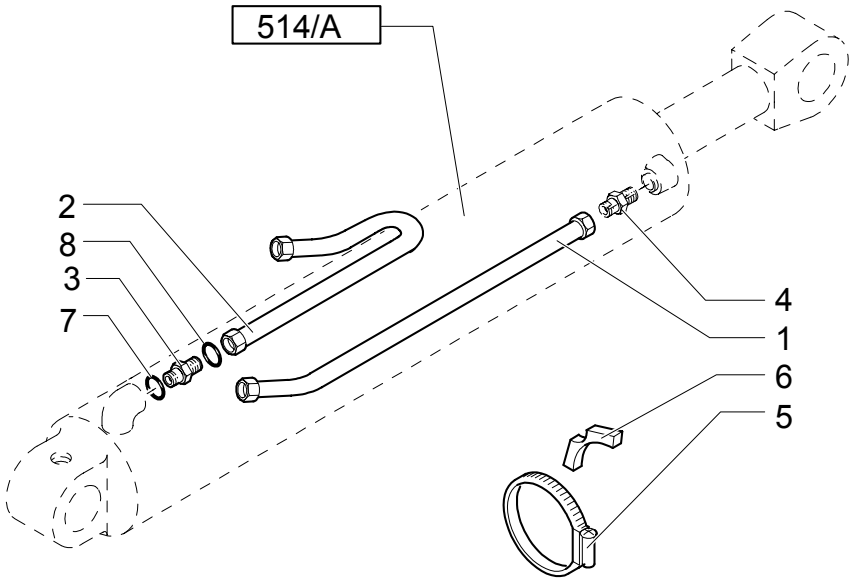

TELESCOPIC DIPPER SHORT - HYDRAULIC SYSTEM

REF	FN	PART NUMBER	YR/SN	QTY	DESCRIPTION
1		85815683		1	TUBE, RIGID
2		85816813		1	TUBE, RIGID
3	1	83962538		1	CONNECTOR, HYD. 1-3/16"-12 ORS x 1-1/16"-12 SAE O-Ring
4		83962539		1	CONNECTOR, HYD.
5		85802744		1	CLAMP
6		83911131		2	U-BOLT
7		167266		1	O-RING 90 Duro, .924" ID x .116" Thk
8		9991976		1	O-RING 90 Duro, .739" ID x .070" Thk

(1) Includes 7,8

TELESCOPIC DIPPER SHORT - HYDRAULIC SYSTEM

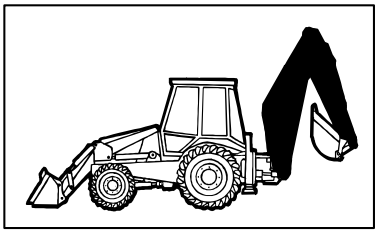

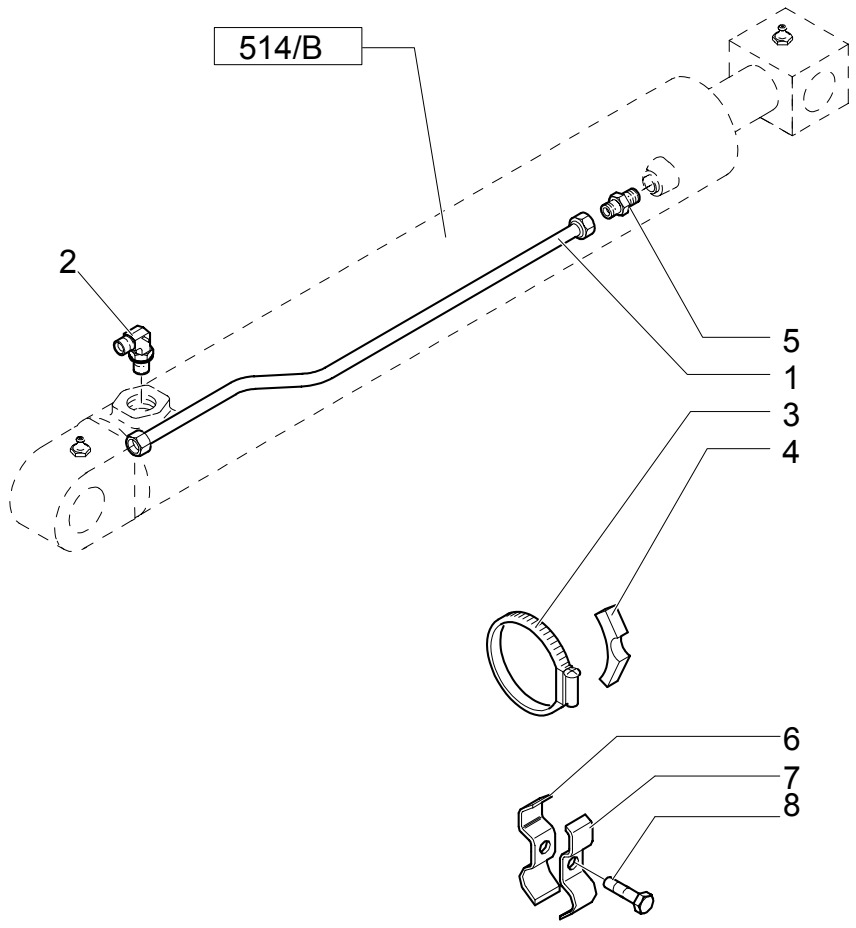

TELESCOPIC DIPPER SHORT - HYDRAULIC SYSTEM

REF	FN	PART NUMBER	YR/SN	QTY	DESCRIPTION
1	1	85815638		1	TUBE, RIGID
2		85802957		1	ELBOW
3	1	85803008		1	COLLAR
4	1	E7NNB165AA		1	SPACER
5		83962539		1	CONNECTOR, HYD.
6	2	85825442		1	COLLAR
7	2	85825441		1	COLLAR
8	2	14305321		1	SCREW

(1) Serial Number: -031045565
(2) Serial Number: 031045566-

TELESCOPIC DIPPER SHORT - HYDRAULIC SYSTEM

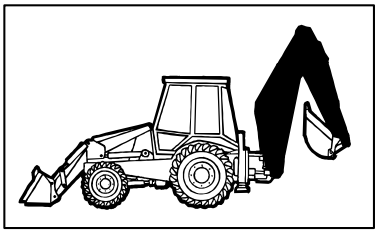

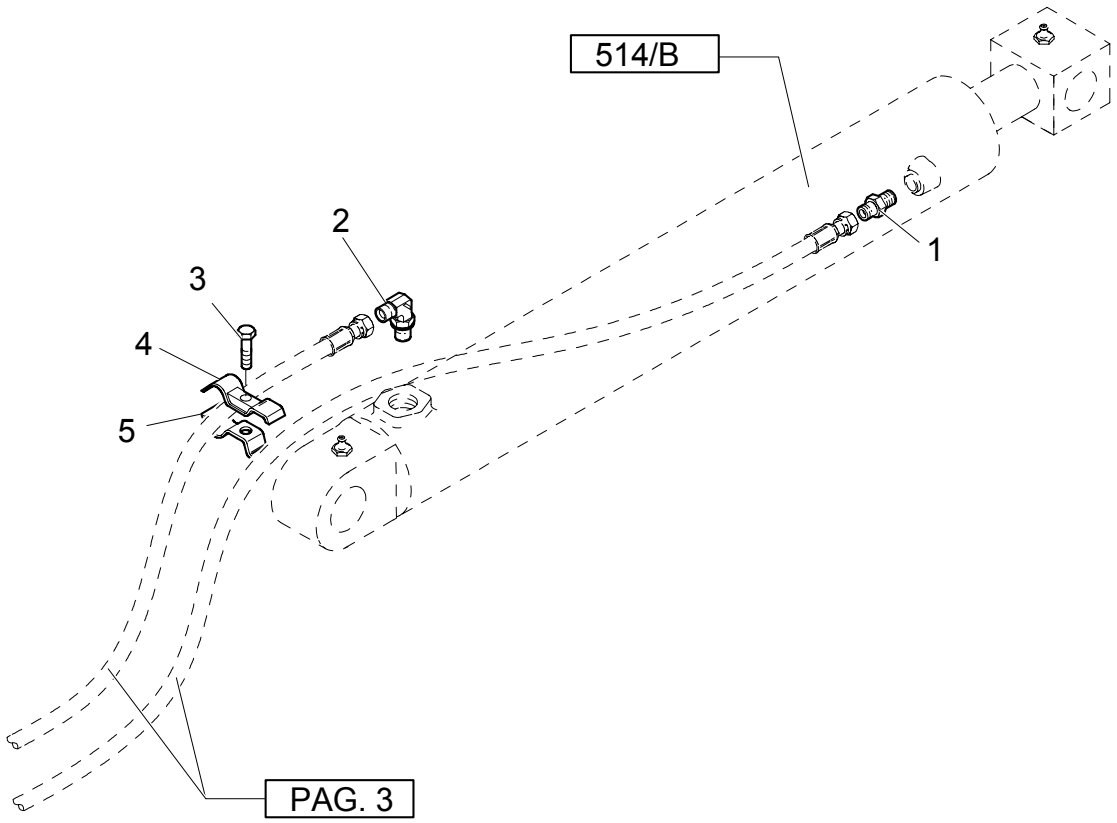

TELESCOPIC DIPPER SHORT - HYDRAULIC SYSTEM

REF	FN	PART NUMBER	YR/SN	QTY	DESCRIPTION
1		83962539		1	CONNECTOR, HYD.
2		85802957		1	ELBOW
3		14305321		1	SCREW
4		85825441		1	COLLAR
5		85825442		1	COLLAR

Mechanical Version

LB75.B

902/ A	01	p1	04/04

TELESCOPIC DIPPER SHORT

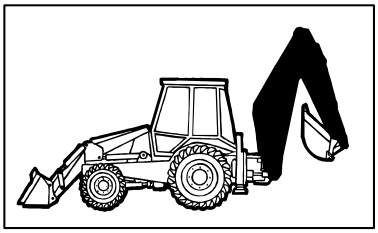

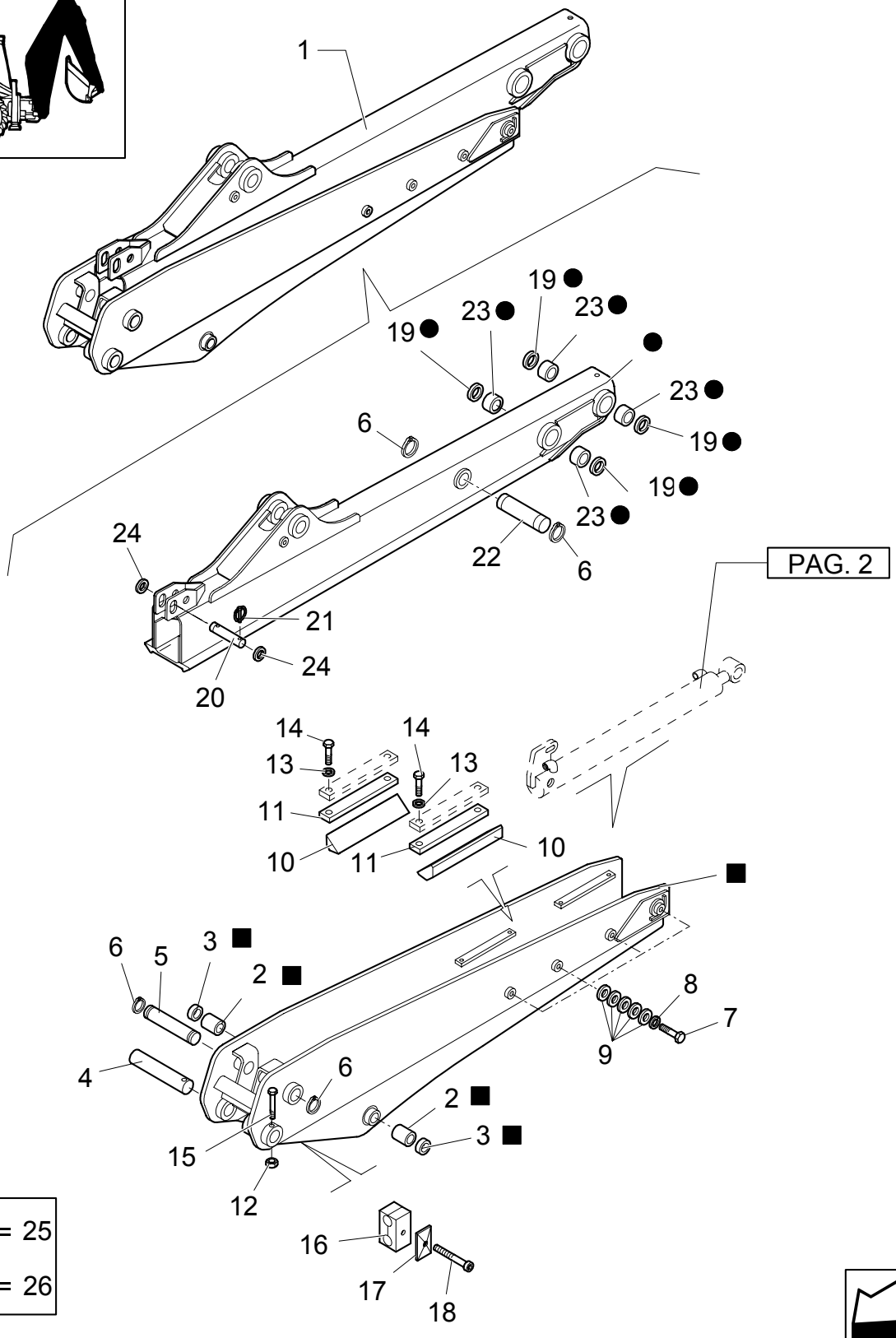

KIT ■ = 25
KIT ● = 26

TELESCOPIC DIPPER SHORT

REF	FN	PART NUMBER	YR/SN	QTY	DESCRIPTION
1		{85817150}		1	
2		83910546		2	BUSHING 2.175" ID x 2.80" OD x 1.969"
3		83931281		2	SEAL
4		85801310		1	PIN
5		85801309		1	PIN
6		83911019		4	RING, SNAP
7		11124421		8	SCREW
8		14497121		8	WASHER
9		85801307		40	WASHER
10		85808473		4	PAD, SLIDING
11		85808472		4	PAD, SLIDING
12		16105011		1	NUT
13		11190579		8	WASHER, LOCK
14		11106721		8	SCREW M10X38
15		14332521		1	SCREW
16		85803088		1	CLAMP
17		85803289		2	PLATE, COVER
18		16044121		2	SCREW
19		83931289		4	SEAL
20		85801314		1	PIN
21		83902702		2	PIN, SPLIT (COTTER)
22		85801308		1	PIN
23		83910548		4	BUSHING
24		14497401		2	WASHER, LOCK
25	1	85817152		1	ARM, LIFT
26	2	85801258		1	ARM

(1) Includes 2,3
(2) Includes 19,23

Mechanical Version

LB75.B

902/ A	02	p1	04/04

TELESCOPIC DIPPER SHORT - HYDRAULIC SYSTEMM

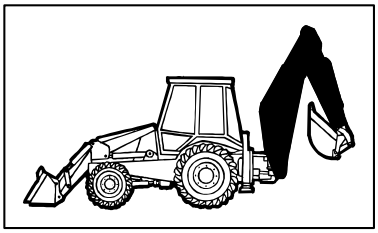

KIT KIT KIT ● = 3

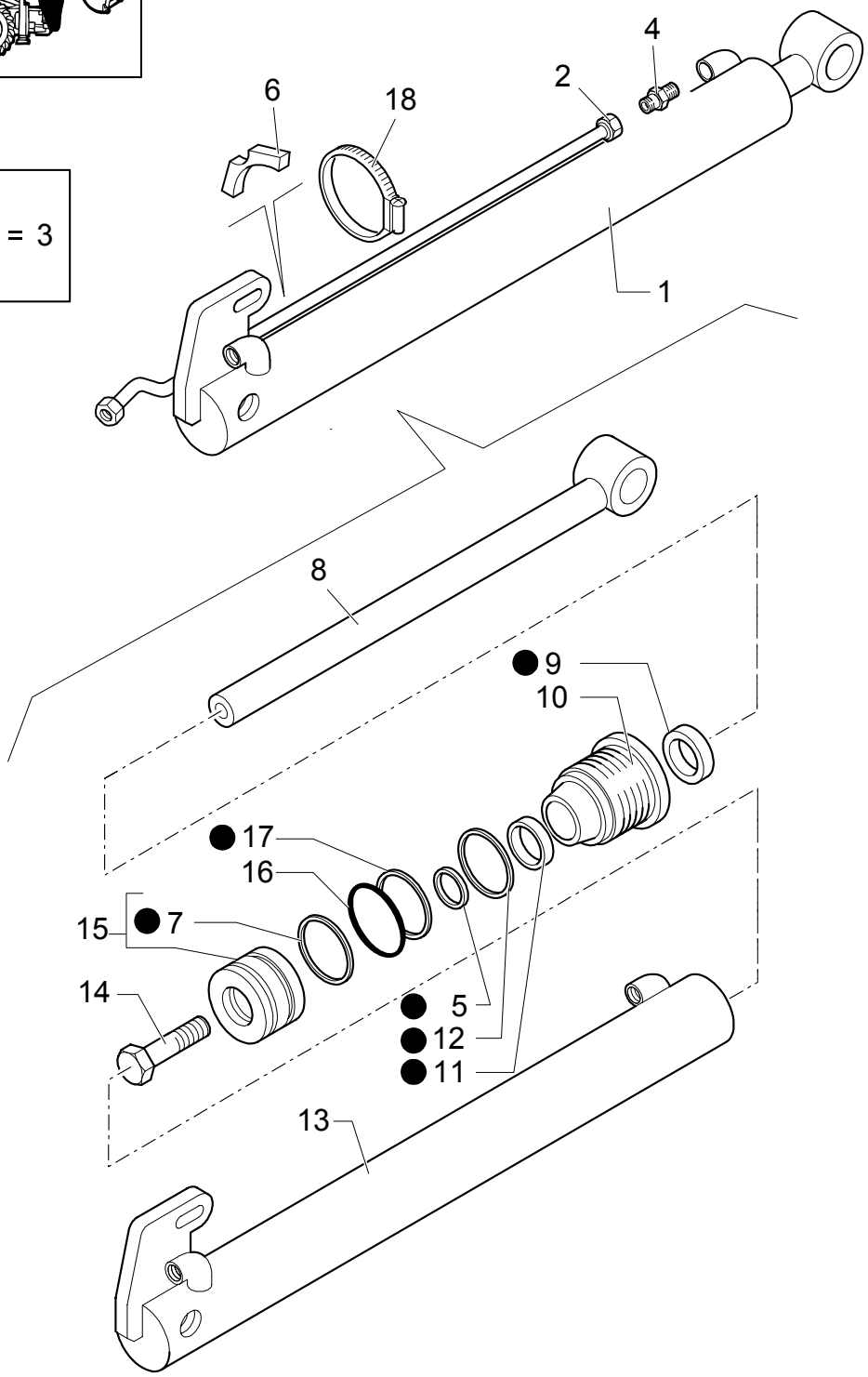

TELESCOPIC DIPPER SHORT - HYDRAULIC SYSTEMM

REF	FN	PART NUMBER	YR/SN	QTY	DESCRIPTION
1		85800860		1	CYLINDER ASSY
2		85816811		1	TUBE, RIGID
3		85819357		1	KIT
4		83985067		2	CONNECTOR, HYD.
5		85800090		1	GASKET
6		E7NNB165AA		1	SPACER
7		83912412		1	SEAL
8		85800805		1	ROD
9		85800082		1	GASKET
10		85800972		1	PLATE, BASE
11		85800086		1	GASKET
12		83913375		1	RING
13		85800806		1	LINER, ENGINE CYLINDER
14		82866949		1	BOLT
15	1	83962615		1	PISTON
16		83917181		1	O-RING
17		85800001		1	RING
18		85803010		1	CLAMP

(1) Includes 7

SECTION INDEX

SEC. 10	00	BODY, HOOD & DRIVER"S POST 1/3
SEC. 10	01	BODY, HOOD & DRIVER"S POST 2/3
SEC. 10	02	BODY, HOOD & DRIVER"S POST 3/3
095	01	STABILIZER CONTROL WITHOUT AUTO-UP (CENTER PIVOT)
096	01	STABILIZER CONTROL WITH AUTO-UP (CENTER PIVOT)
1.91.1	01	CAB / CEILING LIGHT
1.91.1/ 1	01	SAFETY FRAME- INSTRUMENTS AND GAUGES
1.91.3	01	BACK-UP ALARM
1.91.4	01	IGNITON SWITCH, POWER POINT, FUSE PANEL & SIDE CONSOLE HARNESS (ROPS CP POWER SHUTTLE)
1.91.4	02	IGNITON SWITCH, POWER POINT, FUSE PANEL & SIDE CONSOLE HARNESS (ROPS CP POWER SHUTTLE)
1.91.4	03	IGNITON SWITCH, POWER POINT, FUSE PANEL & SIDE CONSOLE HARNESS (ROPS CP POWER SHUTTLE)
1.91.4	04	IGNITON SWITCH, POWER POINT, FUSE PANEL & SIDE CONSOLE HARNESS (ROPS CP POWER SHUTTLE)
1.91.4	05	RH SIDE CONSOLE TRIM, INSTRUMENT CLUSTER & SWITCHES (ROPS CP POWER SHUTTLE)
1.91.4/ 2	01	IGNITON SWITCH, POWER POINT, FUSE PANEL & SIDE CONSOLE HARNESS (CAB CP POWER SHUTTLE)
1.91.4/ 2	02	IGNITON SWITCH, POWER POINT, FUSE PANEL & SIDE CONSOLE HARNESS (CAB CP POWER SHUTTLE)
1.91.4/ 2	03	IGNITON SWITCH, POWER POINT, FUSE PANEL & SIDE CONSOLE HARNESS (CAB CP POWER SHUTTLE)
1.91.4/ 2	04	IGNITON SWITCH, POWER POINT, FUSE PANEL & SIDE CONSOLE HARNESS (CAB CP POWER SHUTTLE)
1.91.4/ 2	05	IGNITON SWITCH, POWER POINT, FUSE PANEL & SIDE CONSOLE HARNESS (CAB CP POWER SHUTTLE)
1.91.5	01	FRONT AND REAR WINDSCREEN WIPERS
1.91.5	02	WINDSCREEN WIPERS RESERVOIR & NOZZLES
1.91.6	01	RADIO ANTENNA & SPEAKER COVER
1.91.7/ 1	01	LAMPS & LIGHTS - CAB (USA)
1.91.7/ 3	01	LAMPS & LIGHTS - ROPS (USA)
1.92.1	01	CAB - FRAME-DOOR
1.92.1/ 1	01	ROPS - SAFETY FRAME
1.92.1/ 2	01	CAB - FRAME-DOOR
1.92.1/ 3	01	ROPS - SAFETY FRAME
1.92.3	01	WINDOWS
1.92.4	01	WINDOWS
1.92.4	02	WINDOWS
1.92.4	03	WINDOWS
1.92.5	01	FENDERS, REAR
1.92.6	01	DOOR COMPONENTS
1.92.6	02	DOOR COMPONENTS
1.92.6	03	DOOR COMPONENTS
1.92.8	01	FIREWALL SEAL, ROPS
1.92.9	01	REAR WINDOWS
1.92.9	02	REAR WINDOWS
1.92.9	03	REAR WINDOWS
1.93.0	01	CAB / SOFT TRIM
1.93.0	02	CAB / SOFT TRIM (POWER SHUTTLE)

SECTION INDEX

1.93.0	03	CAB / SOFT TRIM
1.93.0	04	CAB / SOFT TRIM
1.93.0/ 2	01	RH & BACKHOE CONSOLE TRIM, ROPS (CENTER PIVOT)
1.93.0/ 3	01	CAB / SOFT TRIM
1.93.0/ 3	04	CAB / SOFT TRIM
1.93.0/ 5	01	RH & BACKHOE CONSOLE TRIM, ROPS (CENTER PIVOT)
1.93.4	01	REAR MIRROR- SUN SCREEN
1.93.5	01	FRONT CONSOLE - ROPS (POWER SHUTTLE)
1.93.5	02	RH SIDE CONSOLE SEAL & CLIPS - ROPS (POWER SHUTTLE)
1.93.5/ 1	01	CAB / PANEL DASH
1.93.5/ 1	02	CAB / PANEL DASH
1.94.0	01	CAB/ CANOPY
1.94.0/ 1	01	ROOF, ROPS
1.94.2	01	HEATER HOUSING, COIL, BLOWER & VALVE
1.94.2	02	HEATER ASSEMBLY & FILTERS
1.94.2	03	HEATER WATER HOSES
1.94.2	04	AIR DUCTS & VENTS
1.94.2	05	HEATER CONTROL PANEL
1.94.2/ 1	01	HEATER HOUSING, COIL, BLOWER & VALVE
1.94.2/ 1	04	AIR DUCTS & VENTS
1.95.0	01	CAB-SAFETY FRAME / BRAKE PEDAL
1.95.0	02	CAB-SAFETY FRAME / BRAKE PEDAL
1.95.0	03	CAB-SAFETY FRAME / BRAKE PEDAL
1.95.0/ A	01	CAB-SAFETY FRAME / BRAKE PEDAL
1.95.1	01	CAB-SAFETY FRAME / HAND BRAKE
1.95.2	01	TRANSPORT LOCK CONTROL
1.95.3	01	HAND-OPERATED AND PEDAL-OPERATED ACCELERATOR CONTROL
1.95.5	01	POWER STEERING MOTOR, WHEEL & COLUMN TRIM (POWER-SHUTTLE)
1.95.5	02	POWER STEERING MOTOR HOSES
1.95.5/ A	01	POWER STEERING MOTOR
1.95.5/ B	01	POWER STEERING MOTOR
1.96.0	01	FOWARD/REVERSE & MULTI-PURPOSE LEVER (POWER-SHUTTLE - CENTER PIVOT)
1.96.2	01	STABILIZER CONTROL
1.96.2	02	STABILIZER CONTROL
1.96.2/ 1	01	PILOT CONTROL DIAGNOSTICS
1.96.7	01	CAB PLUGS, FLOOR PLATES & AIR CONVEYER, CENTER PIVOT
1.96.7/ 4	01	ROPS PLUGS & FLOOR PLATE (CENTER PIVOT)
1.96.7/ 6	01	CAB PLUGS, FLOOR PLATES & AIR CONVEYER, CENTER PIVOT
1.96.7/10	01	ROPS PLUGS & FLOOR PLATE (CENTER PIVOT)
1.98.0	01	INFORMATION SYMBOL DECALS - USA (POWER SHUTTLE)
1.98.0	02	CAB WARNING & INFORMATION DECALS (POWER SHUTTLE)
1.98.0	03	BACKHOE, LOADER & ENGINE WARNING DECALS (POWER SHUTTLE)
1.98.0	04	BACKHOE, LOADER & ENGINE WARNING DECALS (POWER SHUTTLE)
1.98.1	01	LB75.B MODEL IDENTIFICATION (POWER SHUTTLE)
343	01	LOADER CONTROL VALVE, THREE SECTION, CONTROL LEVER (CENTER PIVOT)
343	02	LOADER CONTROL VALVE, THREE SECTION, CONTROL LEVER CABLE (CENTER PIVOT)
343/ 1	01	LOADER CONTROL VALVE, CONTROL LEVER & CABLE (SIDE SHIFT & LB115)
351	04	CASE 3 LEVER BACKHOE CONTROLS, CONSOLE & LEVERS
351	05	CASE 3 LEVER BACKHOE CONTROLS, BELLCRANK & SUPPORT
351	06	CASE 3 LEVER BACKHOE CONTROLS, BUCKET TIE-ROD ASSEMBLY

SECTION INDEX

351	07	CASE 3 LEVER BACKHOE CONTROLS, UPPER SWING TIE-ROD ASSEMBLY
351	08	CASE 3 LEVER BACKHOE CONTROLS, DIPPER, SWING & BOOM LINKAGE
351	09	CASE 3 LEVER BACKHOE CONTROLS, SWING CONTROL PEDAL
353	01	4 LEVER BACKHOE CONTROLS, CONSOLE, LEVERS & BELLCRANK (SIDE SHIFT & LB115)
353	02	4 LEVER BACKHOE CONTROLS, UPPER TIE-ROD ASSEMBLY (SIDE SHIFT)
353	03	4 LEVER BACKHOE CONTROLS, LOWER TIE-ROD ASSEMBLY (SIDE SHIFT)
390	01	LOADER CONTROL VALVE, TWO SECTION, LEVER & DECAL (CENTER PIVOT)
390/ 1	01	2 LEVER BACKHOE CONTROLS, LEVER, BOOT & DECALS (CENTER PIVOT)
393	01	LOCKING VALVE ON BACKHOE LIFT CYLINDER
394-397	01	ISO 2 LEVER BACKHOE CONTROLS, LEVERS, BOOT & DECALS (CENTER PIVOT)
394-397	02	ISO 2 LEVER BACKHOE CONTROLS, TIE-ROD ASSEMBLY (CENTER PIVOT)
394/ 1	01	4 LEVER BACKHOE CONTROLS, CONSOLE, LEVERS & BELLCRANK (CENTER PIVOT)
394/ 1	02	4 LEVER BACKHOE CONTROLS, UPPER TIE-ROD ASSEMBLY, CENTER PIVOT
394/ 1	03	4 LEVER BACKHOE CONTROLS, LOWER TIE-ROD ASSEMBLY (CENTER PIVOT)
522-A	01	THREE-SECTION LOADER CONTROL VALVE LEVER, CABLE & DECALS
622	01	INTERNAL FAN
644	01	A/C HOUSING & FILTERS
644	02	A/C BLOWER & COILS
644	03	HEATER COIL HOSES
644	04	A/C & HEATER CONTROL PANEL
644	04A	A/C & HEATER CONTROL PANEL
644	05	A/C & HEATER CONSOLE DUCTS
644	05A	A/C & HEATER CONSOLE DUCTS
644	06	A/C & HEATER CONVEYOR
644	07	A/C HOUSING SIDE PANELS
644	08	RH CAB TRIM WITH VENT
644	09	A/C & HEATER CAB ROOF DUCTS
646	01	A/C DRYER FILTER HOSES
646A	01	A/C COMPRESSOR ATTACHING GROUP
650	01	STEERING COLUMN, FIXED & ADJUSTABLE
705	01	SEAT BELTS, 2" & 3"
758	01	ROTATING BEACON
782	01	FRONT CONSOLE WITH SPEEDOMETER, 4WD
787/ 1	01	FRONT CONSOLE WITHOUT SPEEDOMETER (CAB)
787/ 2	01	FRONT CONSOLE WITHOUT SPEEDOMETER (CAB)
788/ 1	01	FRONT CONSOLE WITH SPEEDOMETER, 4WD
788/ 2	01	FRONT CONSOLE WITH SPEEDOMETER, 4WD
789	01	SPEED SENSOR(P.SHUTTLE)
791	01	RH CONSOLE WITH INSTRUMENTS
792	01	RH CONSOLE WITH INSTRUMENTS AND DIAGNOSTICS
795	01	RH CONSOLE WITH INSTRUMENTS AND DIAGNOSTICS
796	01	ANTITHEFT
851	01	CLOTH SEAT & ATTACHING HARDWARE
851/ 1	01	CLOTH SEAT CUSHIONS, ARMRESTS & RELATED PARTS
851/ 1	02	CLOTH SEAT MOUNTING PLATE, ADJUSTING RAILS & 2" SEAT BELT
851/ 1	03	CLOTH SEAT UPPER SUSPENSION PARTS
851/ 1	04	CLOTH SEAT LOWER SUSPENSION PARTS
851/ 2	02	CLOTH SEAT MOUNTING PLATE, ADJUSTING RAILS & 3" SEAT BELT
855	01	AIR RIDE CLOTH SEAT & ATTACHING HARDWARE
855/ 1	01	AIR RIDE CLOTH SEAT CUSHIONS, ARMRESTS & RELATED PARTS

SECTION INDEX

855/ 1	02	AIR RIDE CLOTH SEAT MOUNTING PLATE, ADJUSTING RAILS & 2" SEAT BELT
855/ 1	03	AIR RIDE CLOTH SEAT UPPER SUSPENSION PARTS
855/ 1	04	AIR RIDE CLOTH SEAT LOWER SUSPENSION PARTS
855/ 1	05	AIR RIDE CLOTH SEAT COMPRESSOR & TUBING
855/ 2	02	AIR RIDE CLOTH SEAT MOUNTING PLATE, ADJUSTING RAILS & 3" SEAT BELT
856	01	VINYL SEAT CUSHIONS, ARMRESTS & RELATED PARTS (ROPS)
856/ 1	01	VINYL SEAT WITH ARMRESTS & MOUNTING HARDWARE (ROPS)
856/ 1	02	VINYL SEAT MOUNTING PLATE, ADJUSTING RAILS & 2" SEAT BELT (ROPS)
856/ 1	03	VINYL SEAT UPPER SUSPENSION PARTS (ROPS)
856/ 1	04	VINYL SEAT LOWER SUSPENSION PARTS (ROPS)
856/ 2	02	VINYL SEAT MOUNTING PLATE, ADJUSTING RAILS & 3" SEAT BELT (ROPS)
869	01	NON-SUSPENSION SEAT
869/ 1	01	NON-SUSPENSION SEAT CUSHIONS, RELATED PARTS & 2" SEAT BELT
869/ 1	02	NON-SUSPENSION SEAT ADJUSTING MECHANISM
869/ 1	03	NON-SUSPENSION SEAT PEDESTAL & BASE
870/ 1	01	NON-SUSPENSION SEAT CUSHIONS, RELATED PARTS & 3" SEAT BELT
990	01	TOOL KIT

BODY, HOOD & DRIVER'S POST 1/3

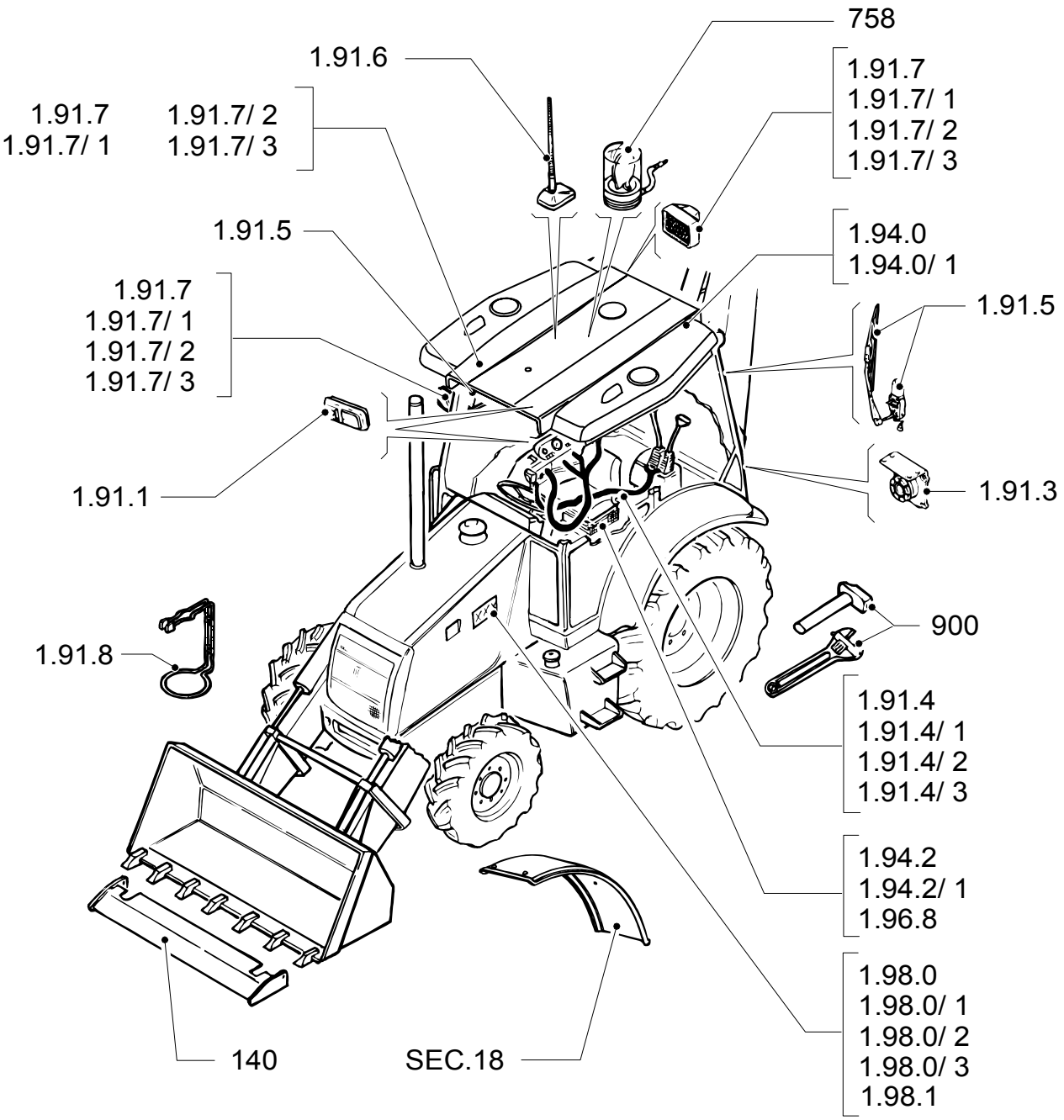

BODY, HOOD & DRIVER'S POST 1/3

REF	FN	PART NUMBER	YR/SN	QTY	DESCRIPTION

BODY, HOOD & DRIVER'S POST 2/3

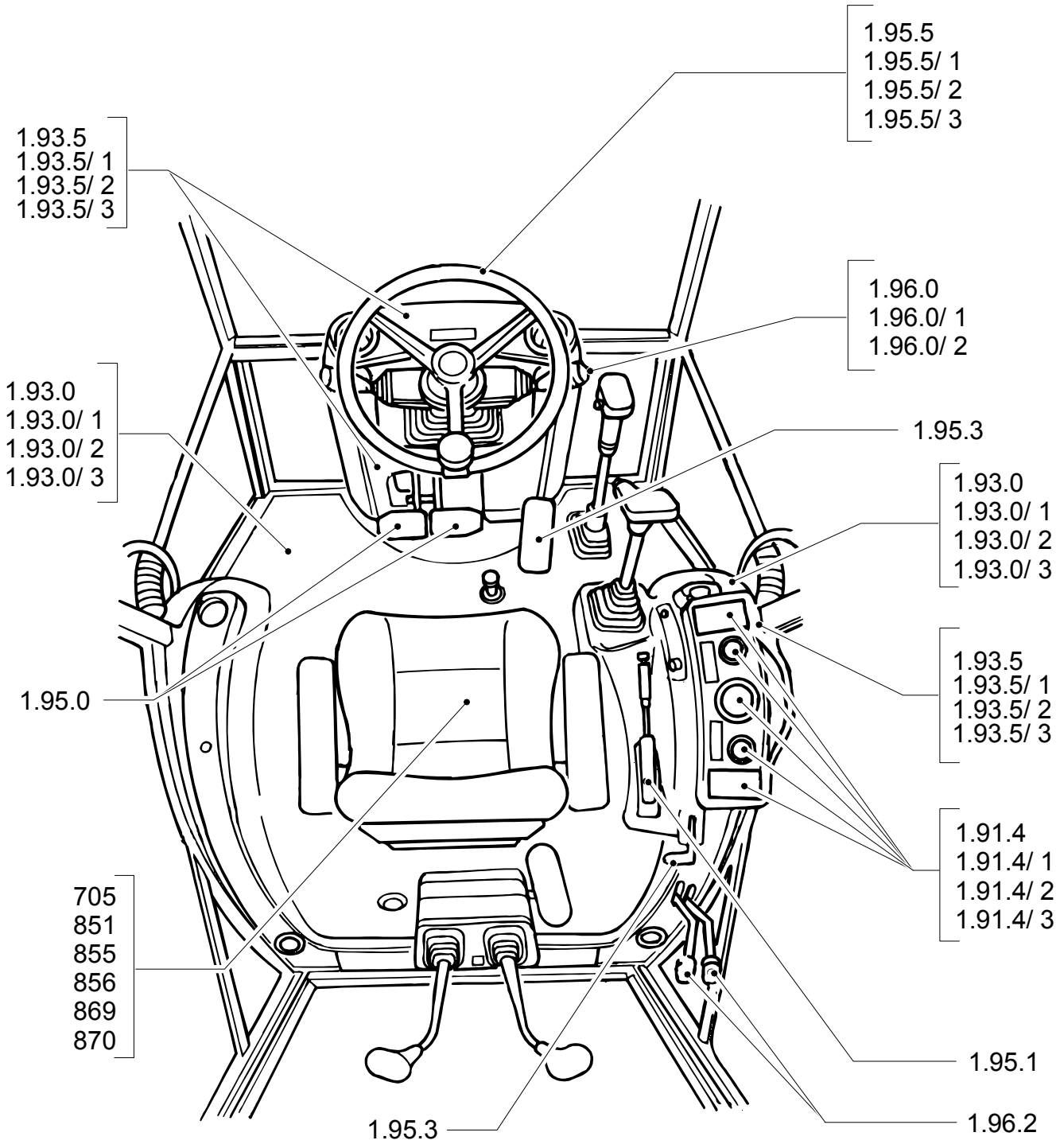

BODY, HOOD & DRIVER'S POST 2/3

REF	FN	PART NUMBER	YR/SN	QTY	DESCRIPTION

BODY, HOOD & DRIVER'S POST 3/3

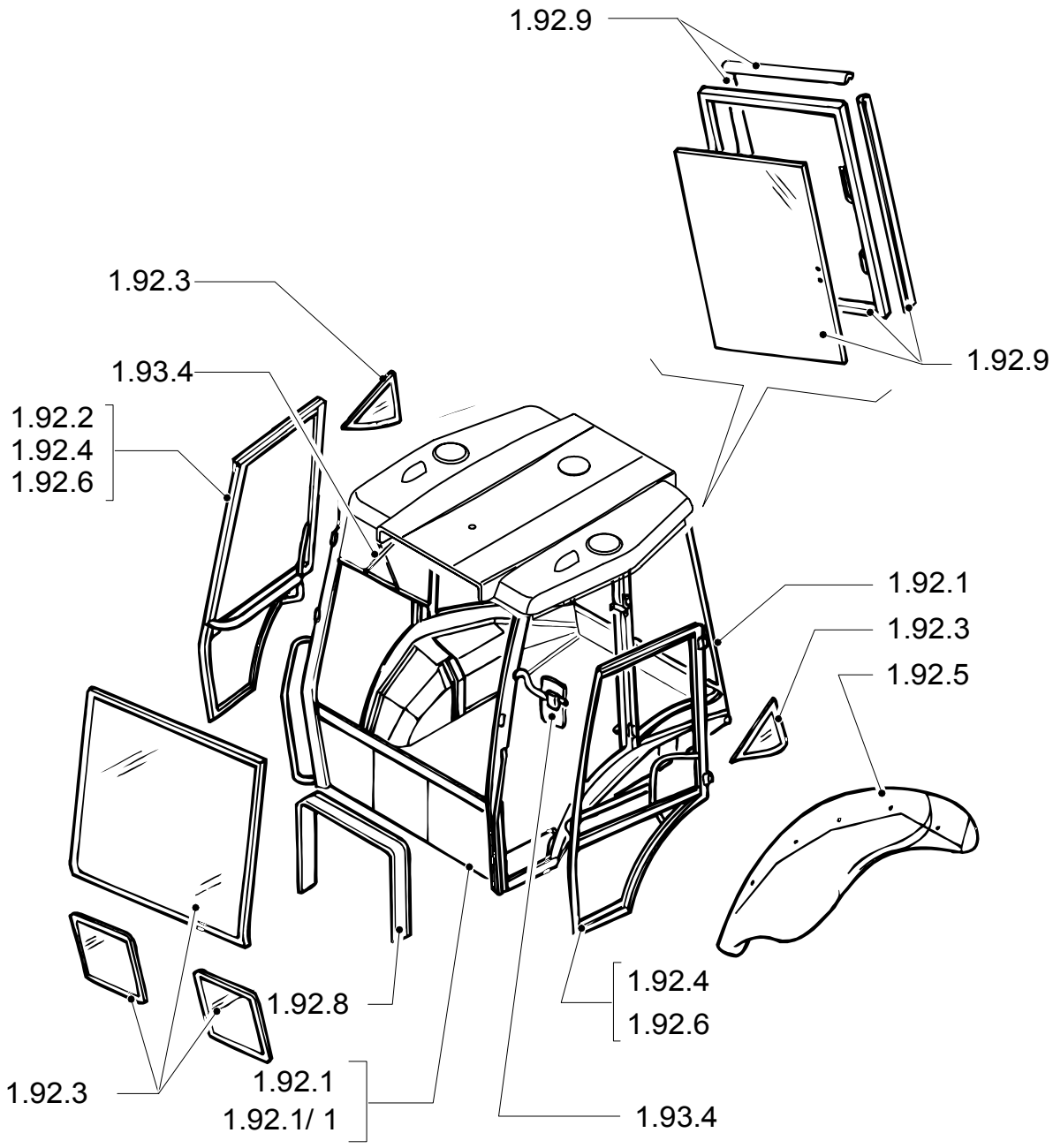

BODY, HOOD & DRIVER'S POST 3/3

REF	FN	PART NUMBER	YR/SN	QTY	DESCRIPTION

095	01	p1	11/03

STABILIZER CONTROL WITHOUT AUTO-UP (CENTER PIVOT)

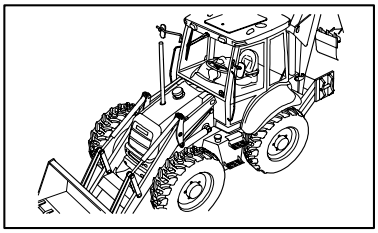

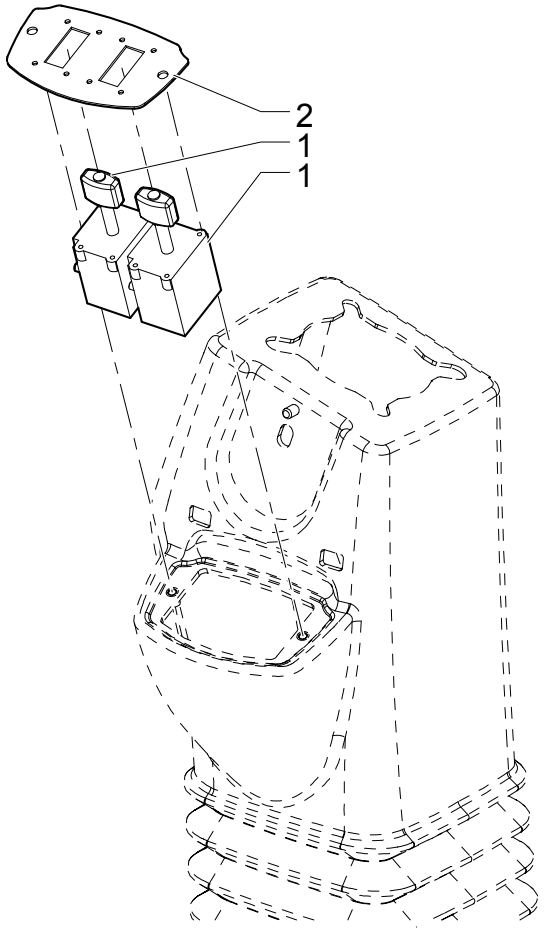

STABILIZER CONTROL WITHOUT AUTO-UP (CENTER PIVOT)

REF	FN	PART NUMBER	YR/SN	QTY	DESCRIPTION
1		86988086		2	SWITCH, TOGGLE
2		{87435381}		1	BRACKET

Pilot Control Version

LB75.B

096	01	p1	11/03

STABILIZER CONTROL WITH AUTO-UP (CENTER PIVOT)

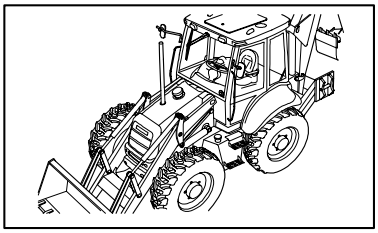

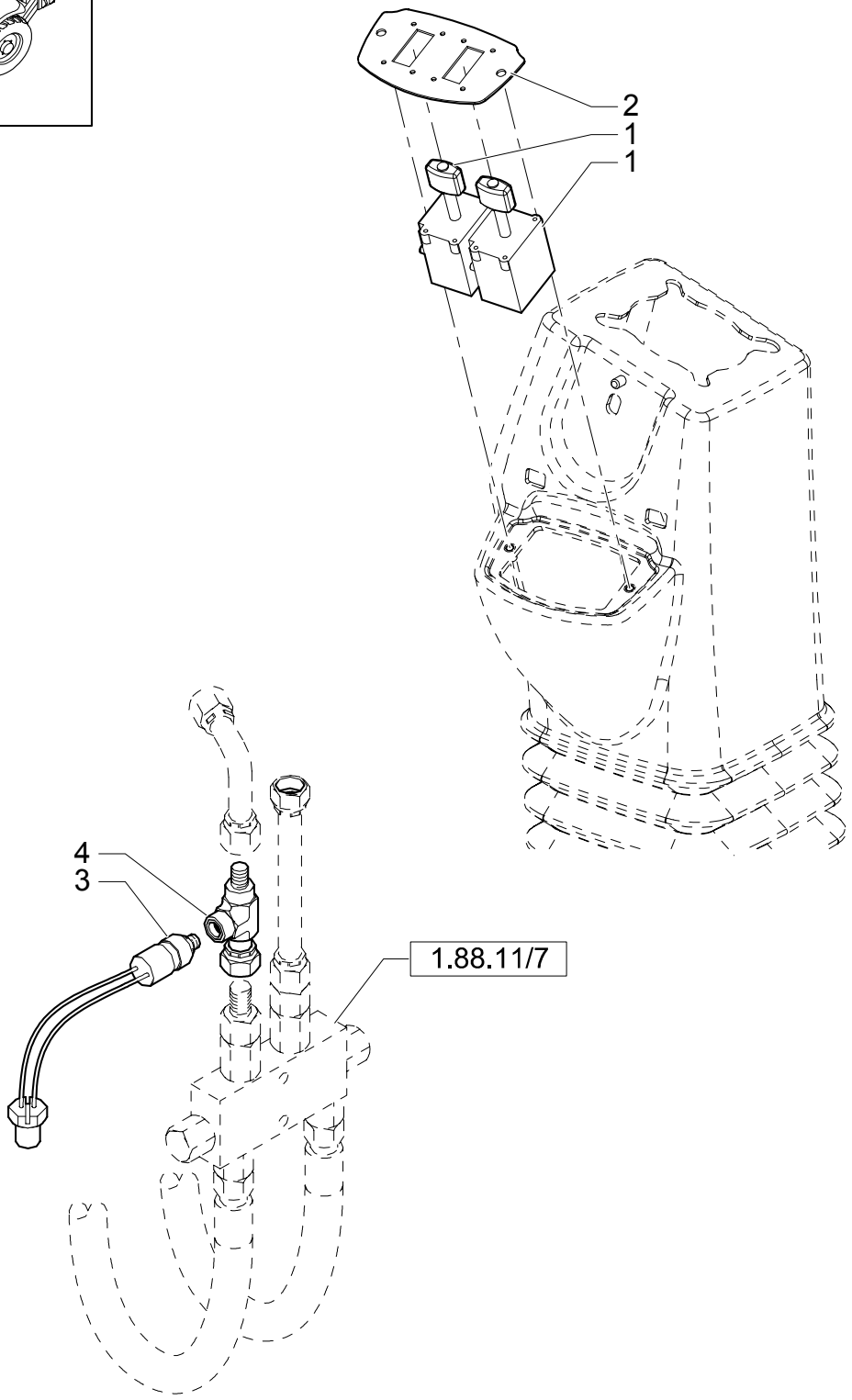

STABILIZER CONTROL WITH AUTO-UP (CENTER PIVOT)

REF	FN	PART NUMBER	YR/SN	QTY	DESCRIPTION
1		86988086		2	SWITCH, TOGGLE
2		{87435381}		1	BRACKET
3		86992557		2	SWITCH
4		87401111		2	CONNECTOR, HYD.

Pilot Control Version

LB75.B

CAB / CEILING LIGHT

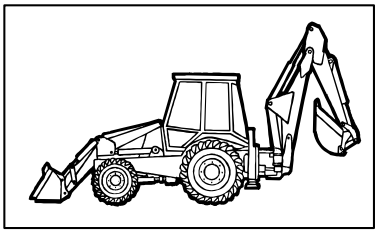

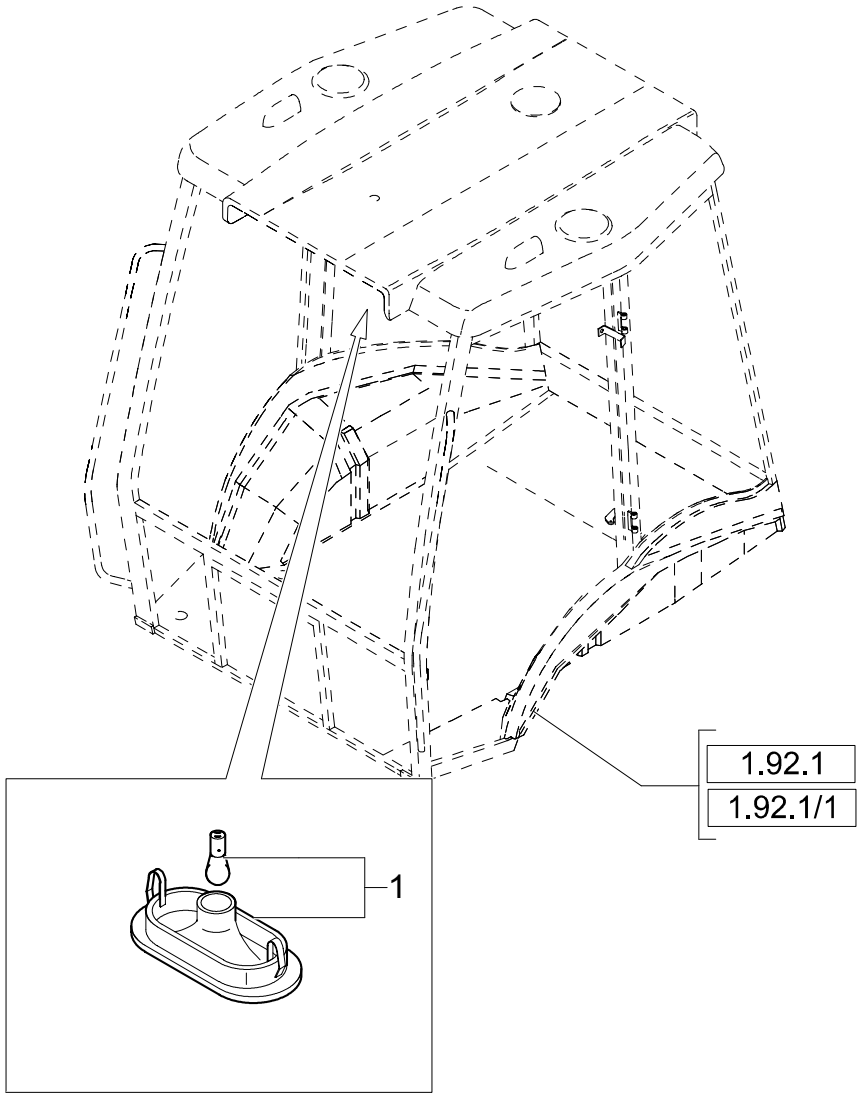

CAB / CEILING LIGHT

REF	FN	PART NUMBER	YR/SN	QTY	DESCRIPTION
1		82022833		1	LAMP, CEILING

SAFETY FRAME- INSTRUMENTS AND GAUGES

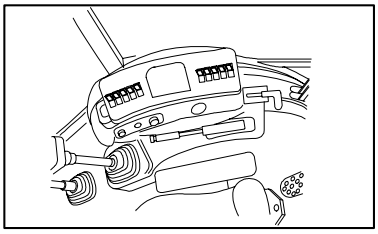

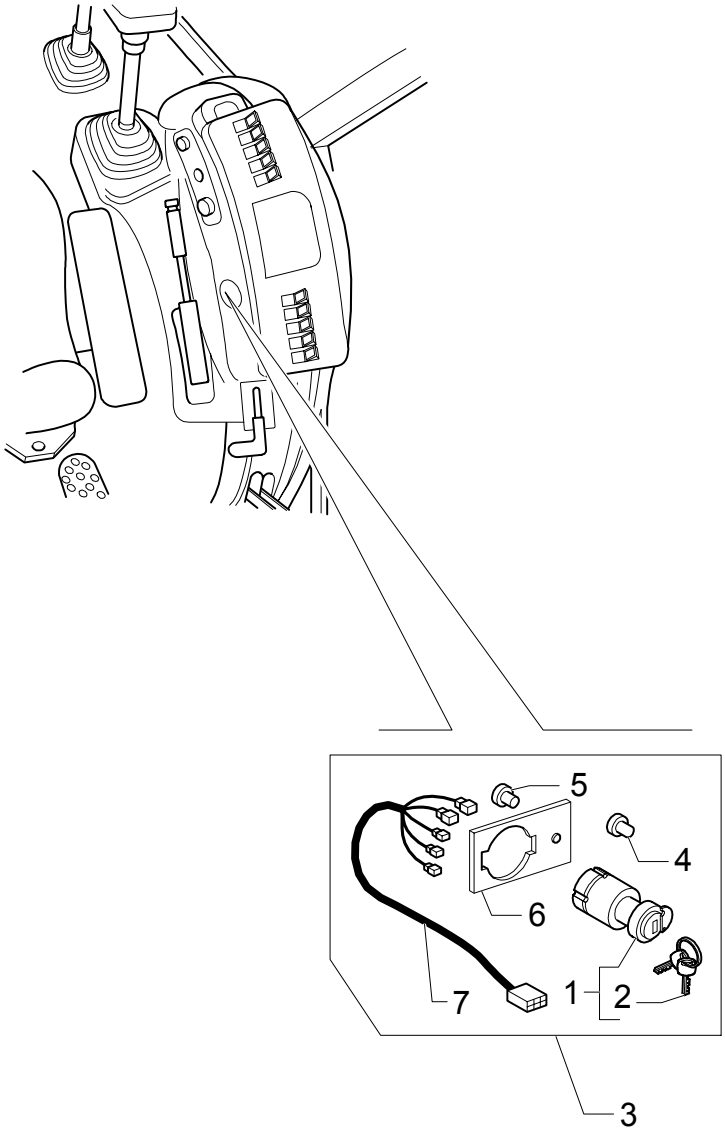

SAFETY FRAME- INSTRUMENTS AND GAUGES

REF	FN	PART NUMBER	YR/SN	QTY	DESCRIPTION
1		{87431469}		1	SWITCH
2		85804675		2	KEY, LOCK
3		85807866		1	KIT
4		784122		1	PLUG
5		10427200		1	RIVET
6		85827548		1	SEAT/SLOT
7		85807855		1	CABLE, ELECTRIC

BACK-UP ALARM

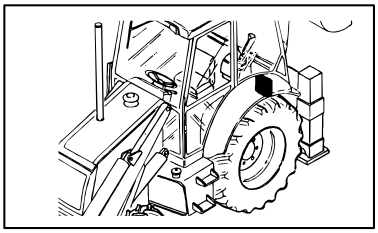

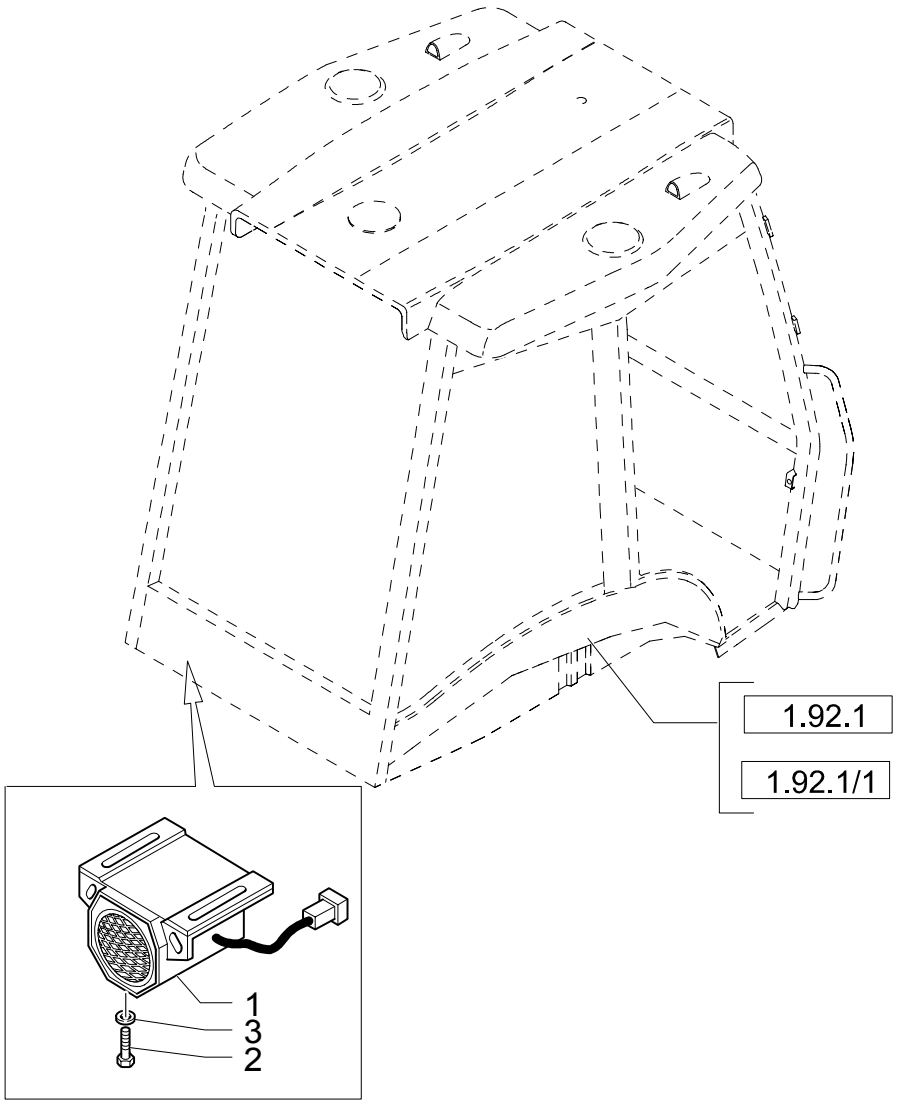

BACK-UP ALARM

REF	FN	PART NUMBER	YR/SN	QTY	DESCRIPTION
1		85804568		1	ALARM
2		13276424		2	SCREW M6X20
3		11197774		2	WASHER, LOCK 6X15X1.2

1.91.4	01	p1	05/03

IGNITON SWITCH, POWER POINT, FUSE PANEL & SIDE CONSOLE HARNESS (ROPS CP POWER SHUTTLE)

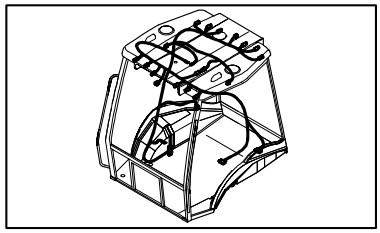

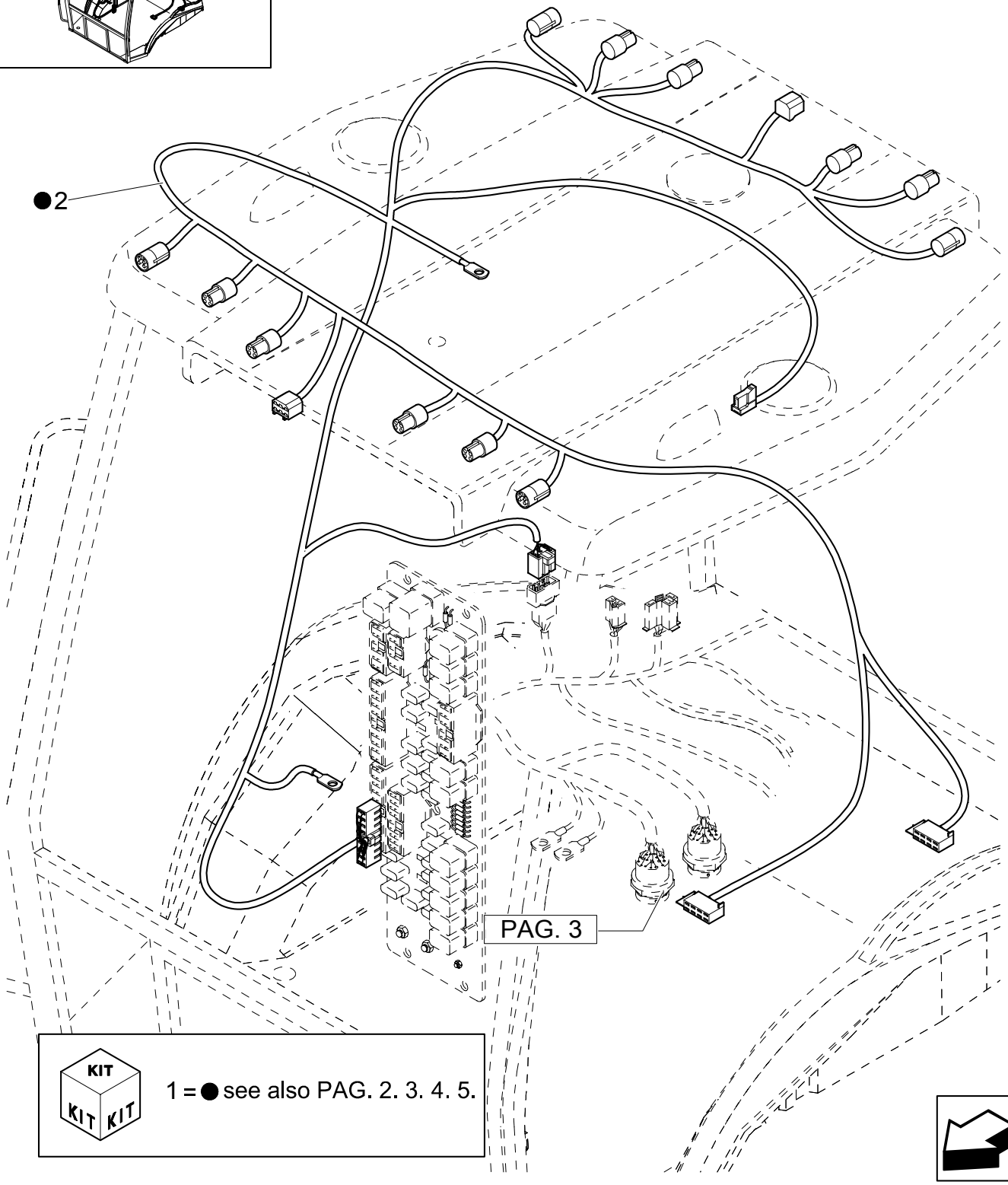

KIT KIT KIT

1 = ● see also PAG. 2. 3. 4. 5.

IGNITON SWITCH, POWER POINT, FUSE PANEL & SIDE CONSOLE HARNESS (ROPS CP POWER SHUTTLE)

REF	FN	PART NUMBER	YR/SN	QTY	DESCRIPTION
1	1	87406387		1	CABLE, ELECTRIC
2		85819724		1	CABLE, ELECTRIC

(1) SEE PAGE 1.91.4.02, 1.91.4.03, 1.91.4.04, 1.91.4.05

1.91.4	02	p1	12/03

IGNITON SWITCH, POWER POINT, FUSE PANEL & SIDE CONSOLE HARNESS (ROPS CP POWER SHUTTLE)

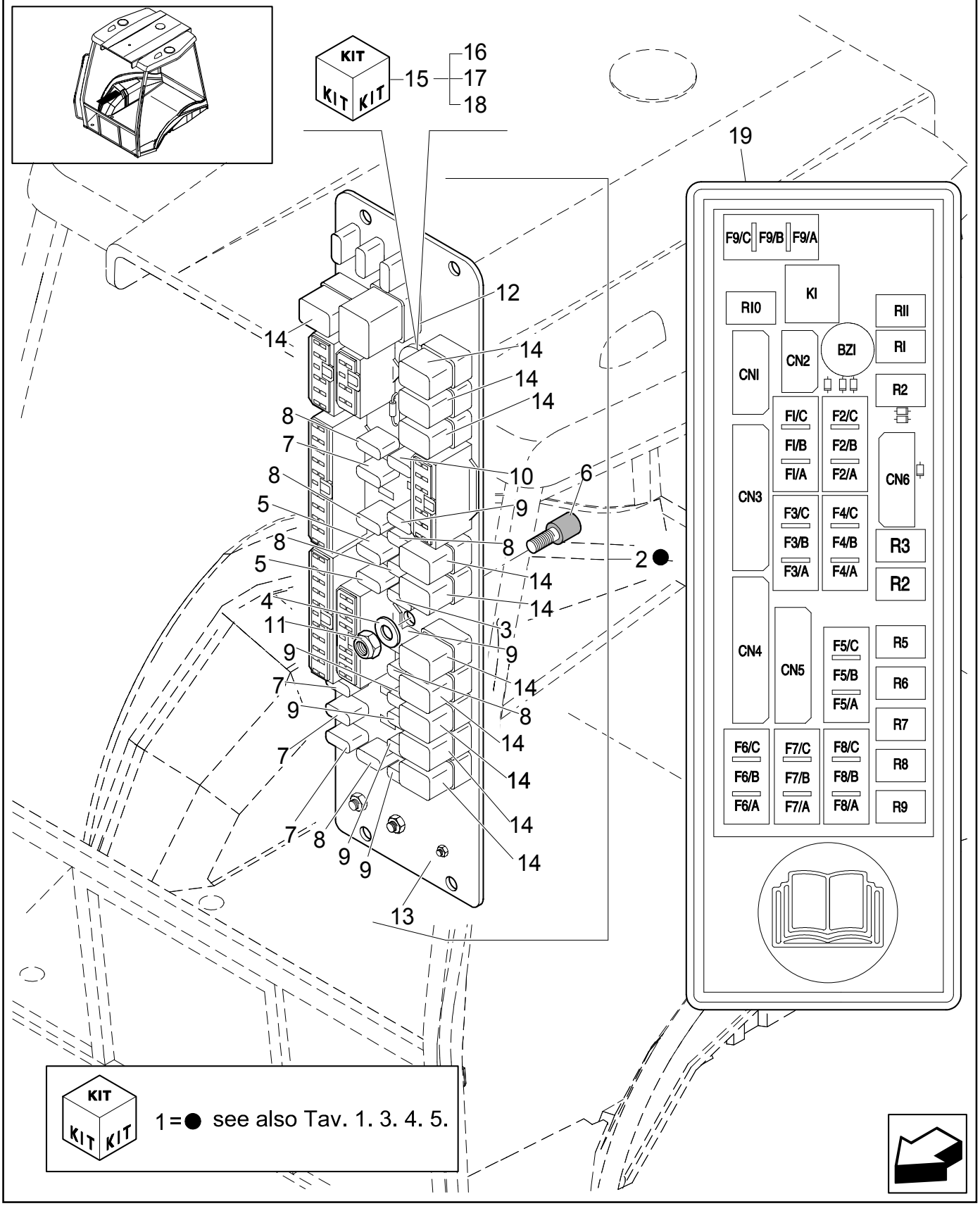

IGNITON SWITCH, POWER POINT, FUSE PANEL & SIDE CONSOLE HARNESS (ROPS CP POWER SHUTTLE)

REF	FN	PART NUMBER	YR/SN	QTY	DESCRIPTION
1		87406387		1	CABLE, ELECTRIC
2		{{87431459}}		1	
3		11054790		1	FUSE 5A
4		89824840		1	WASHER M4
5		11054590		2	FUSE 3A
6		85806135		1	SILENTBLOC
7		11054890		4	FUSE 7,5A
8		11054990		6	FUSE 10A
9		11055090		6	FUSE 15A
10		11055190		1	FUSE 20A
11		12574011		1	NUT M4
12		85803986		1	RELAY
13		85825197		1	BODY
14		85825198		11	RELAY
15		85826012		1	KIT
16		NSS		1	NOT SERVICED SEPARATELY
17		85826014		1	CABLE, ELECTRIC
18		NSS		1	NOT SERVICED SEPARATELY
19		85826071		1	DECAL

1.91.4	03	p1	02/04

IGNITON SWITCH, POWER POINT, FUSE PANEL & SIDE CONSOLE HARNESS (ROPS CP POWER SHUTTLE)

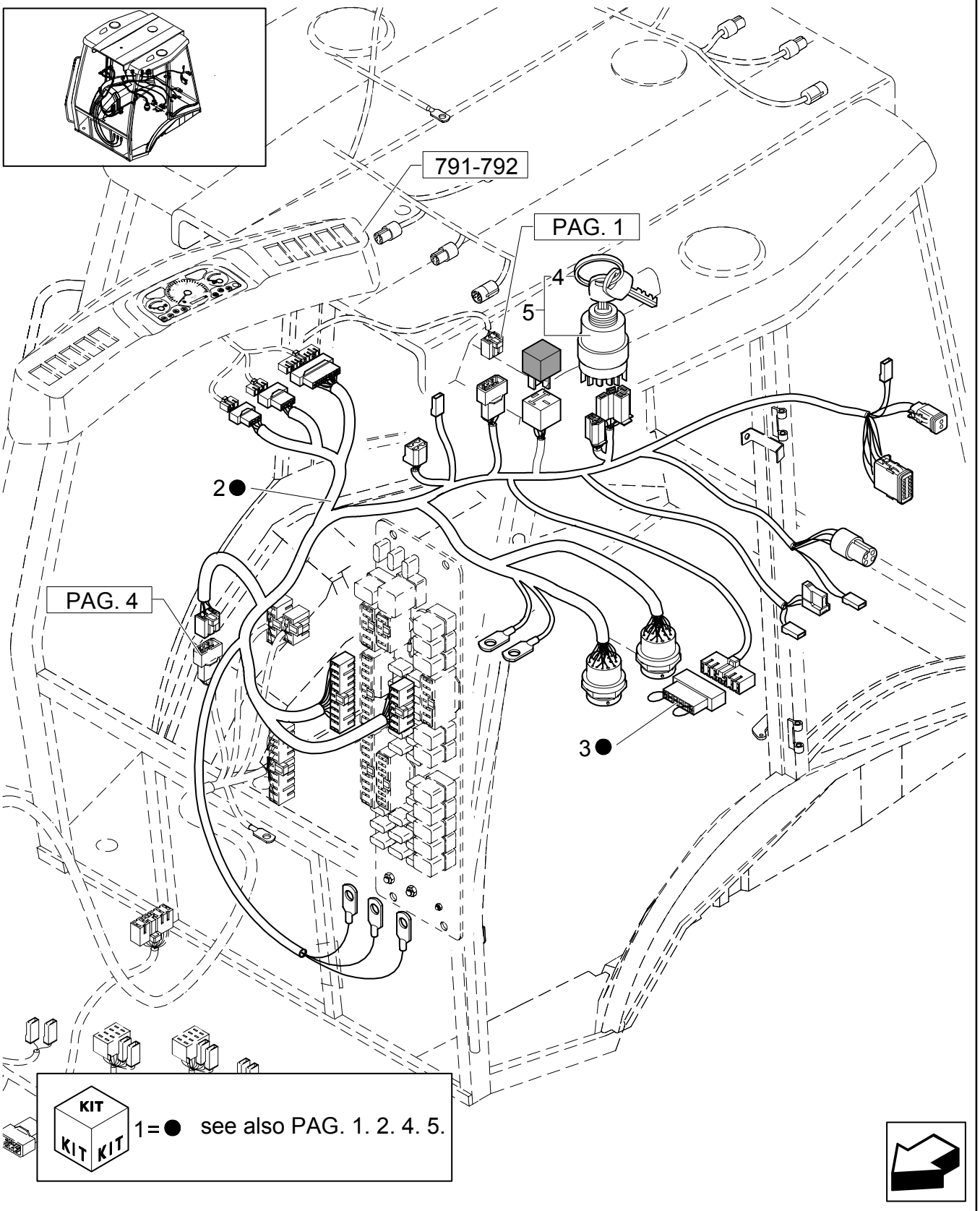

IGNITON SWITCH, POWER POINT, FUSE PANEL & SIDE CONSOLE HARNESS (ROPS CP POWER SHUTTLE)

REF	FN	PART NUMBER	YR/SN	QTY	DESCRIPTION
1	1	87406387		1	CABLE, ELECTRIC
2		{87431461}		1	
3		85821410		1	BLOCK
4		85804675		2	KEY, LOCK
5		{87431469}		1	SWITCH

(1) SEE PAGE 1.91.4.01, 1.91.4.02, 1.91.4.04, 1.91.4.05

1.91.4	04	p1	05/03

IGNITON SWITCH, POWER POINT, FUSE PANEL & SIDE CONSOLE HARNESS (ROPS CP POWER SHUTTLE)

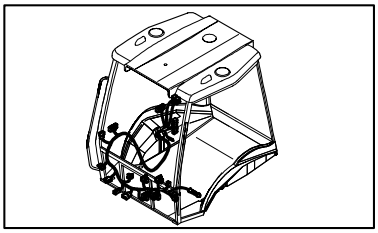

KIT KIT KIT 1 = ● see also PAG. 1. 2. 3. 5.

IGNITON SWITCH, POWER POINT, FUSE PANEL & SIDE CONSOLE HARNESS (ROPS CP POWER SHUTTLE)

REF	FN	PART NUMBER	YR/SN	QTY	DESCRIPTION
1	1	87406387		1	CABLE, ELECTRIC
2		85819586		1	CABLE, ELECTRIC
3		85806133		1	PUSH BUTTON
4		14143790		1	BULB
5		85819144		1	SWITCH

(1) SEE PAGE 1.91.4.01, 1.91.4.02, 1.91.4.03, 1.91.4.05

1.91.4	05	p1	08/03

RH SIDE CONSOLE TRIM, INSTRUMENT CLUSTER & SWITCHES (ROPS CP POWER SHUTTLE)

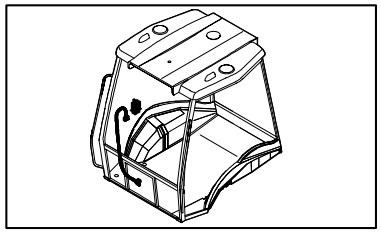

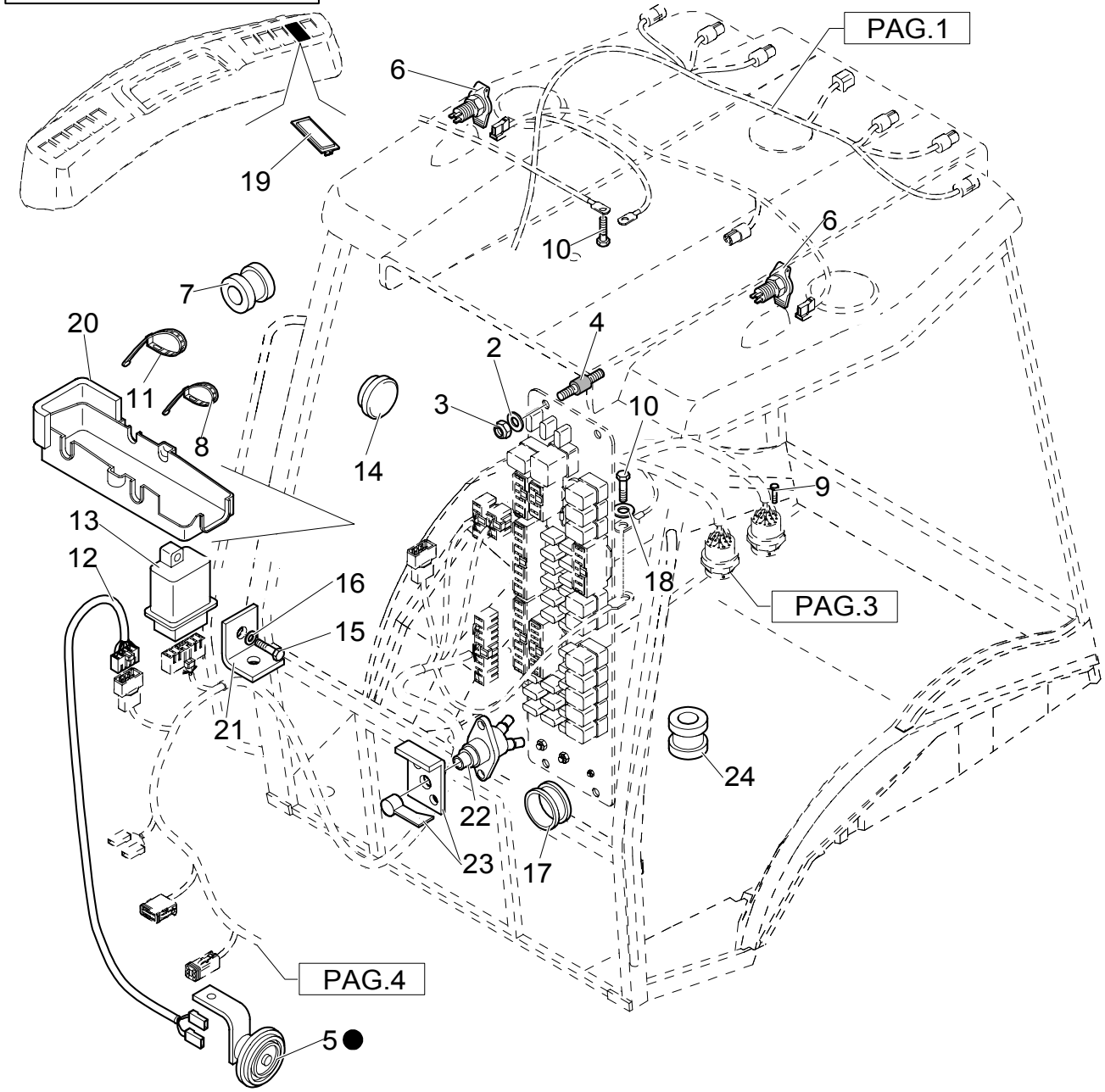

KIT

1 = ● see also PAG. 1. 2. 3. 4.

RH SIDE CONSOLE TRIM, INSTRUMENT CLUSTER & SWITCHES (ROPS CP POWER SHUTTLE)

REF	FN	PART NUMBER	YR/SN	QTY	DESCRIPTION
1	1	87406387		1	CABLE, ELECTRIC
2		10615274		4	WASHER, LOCK
3		12574011		4	NUT
4		85825129		4	SHOCK ABSORBER
5		5169413		1	HORN
6		82002966		2	SOCKET, POWER
7		10398980		2	RING, INSULATING
8		5112712		5	COLLAR
9		13272214		2	SCREW
10		16043121		2	SCREW
11		85805383		26	RETAINER, CABLE
12		87410259		1	CABLE, ELECTRIC
13		85806132		1	ELECTRONIC UNIT, CONTROL
14		85808460		1	PLUG
15		10902624		1	SCREW
16		11193274		1	WASHER, LOCK
17		10398680		5	RING, INSULATING
18		11193879		2	WASHER, LOCK
19		85825254		1	PLUG
20		85825136		1	COVER
21		85821326		1	SUPPORT
22		87409316		1	SWITCH
23		87409315		1	SWITCH
24		10398980		1	RING, INSULATING

(1) SEE PAGE 1.91.4.01, 1.91.4.02, 1.91.4.03, 1.91.4.04

1.91.4/ 2	01	p1	12/03

IGNITON SWITCH, POWER POINT, FUSE PANEL & SIDE CONSOLE HARNESS (CAB CP POWER SHUTTLE)

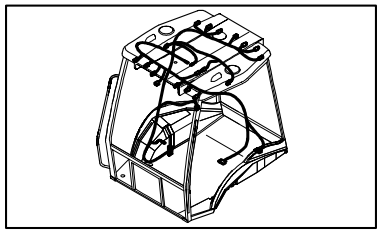

KIT KIT KIT 1 = ● see also PAG. 2. 3. 4. 5.

IGNITON SWITCH, POWER POINT, FUSE PANEL & SIDE CONSOLE HARNESS (CAB CP POWER SHUTTLE)

REF	FN	PART NUMBER	YR/SN	QTY	DESCRIPTION
1	1	87406390		1	CABLE, ELECTRIC
2		85825330		1	CABLE, ELECTRIC
3		85819568		1	CABLE, ELECTRIC Rotary Beacon
4		85825331		1	CABLE

(1) SEE PAGE 1.91.4/2.02, 1.91.4/2.03, 1.91.4/2.04, 1.91.4/2.05

1.91.4/ 2	02	p1	12/03

IGNITON SWITCH, POWER POINT, FUSE PANEL & SIDE CONSOLE HARNESS (CAB CP POWER SHUTTLE)

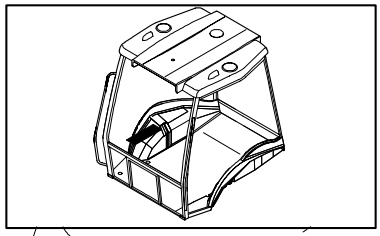

KIT
KIT KIT

1=● see also Tav. 1. 3. 4. 5.

IGNITON SWITCH, POWER POINT, FUSE PANEL & SIDE CONSOLE HARNESS (CAB CP POWER SHUTTLE)

REF	FN	PART NUMBER	YR/SN	QTY	DESCRIPTION
1	1	87406390		1	CABLE, ELECTRIC
2		{87431451}		1	
3		85806135		1	SILENTBLOC
4		10519204		1	WASHER M4
5		11054590		2	FUSE 3A
6		11054790		1	FUSE 5A
7		11054890		4	FUSE 7,5A
8		11054990		7	FUSE 10A
9		11055090		8	FUSE 15A
10		11055190		1	FUSE 20A
11		12574011		1	NUT M4
12		85803986		1	RELAY
13		85825127		1	ELECTRONIC UNIT, CONTROL
14		85825198		11	RELAY
15		85806134		1	FUSE
16		85826071		1	DECAL
17		85826012		1	KIT
18		NSS		1	NOT SERVICED SEPARATELY
19		85826014		1	CABLE, ELECTRIC
20		NSS		1	NOT SERVICED SEPARATELY

(1) SEE PAGE 1.91.4/2.01, 1.91.4/2.03, 1.91.4/2.04, 1.91.4/2.05

1.91.4/ 2	03	p1	02/04

IGNITON SWITCH, POWER POINT, FUSE PANEL & SIDE CONSOLE HARNESS (CAB CP POWER SHUTTLE)

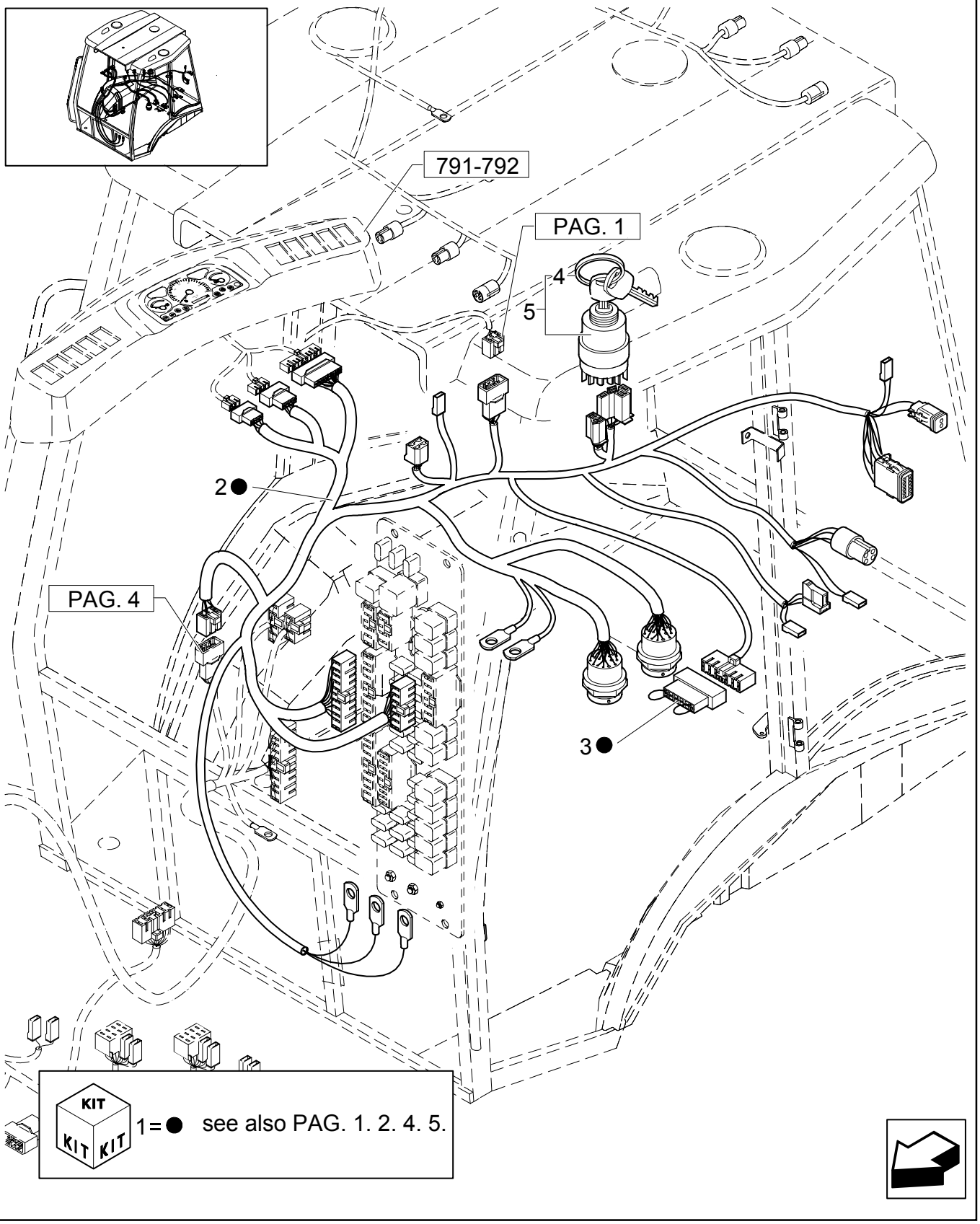

IGNITON SWITCH, POWER POINT, FUSE PANEL & SIDE CONSOLE HARNESS (CAB CP POWER SHUTTLE)

REF	FN	PART NUMBER	YR/SN	QTY	DESCRIPTION
1	1	87406390		1	CABLE, ELECTRIC
2		{87431450}		1	
3		85821410		1	BLOCK
4		85804675		2	KEY, LOCK
5		{87431469}		1	SWITCH

(1) SEE PAGE 1.91.4/2.01, 1.91.4/2.02, 1.91.4/2.04, 1.91.4/2.05

1.91.4/ 2	04	p1	05/03

IGNITON SWITCH, POWER POINT, FUSE PANEL & SIDE CONSOLE HARNESS (CAB CP POWER SHUTTLE)

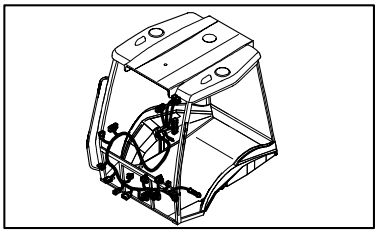

KIT KIT KIT 1 = ● see also PAG. 1. 2. 3. 5.

IGNITON SWITCH, POWER POINT, FUSE PANEL & SIDE CONSOLE HARNESS (CAB CP POWER SHUTTLE)

REF	FN	PART NUMBER	YR/SN	QTY	DESCRIPTION
1	1	87406390		1	CABLE, ELECTRIC
2		85818820		1	CABLE, ELECTRIC
3		85806133		1	PUSH BUTTON

(1) SEE PAGE 1.91.4/2.01, 1.91.4/2.03, 1.91.4/2.04, 1.91.4/2.05

1.91.4/ 2	05	p1	12/03

IGNITON SWITCH, POWER POINT, FUSE PANEL & SIDE CONSOLE HARNESS (CAB CP POWER SHUTTLE)

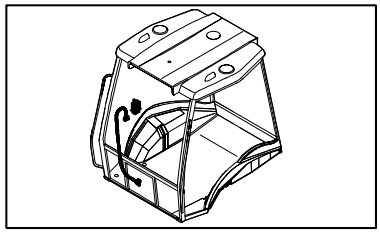

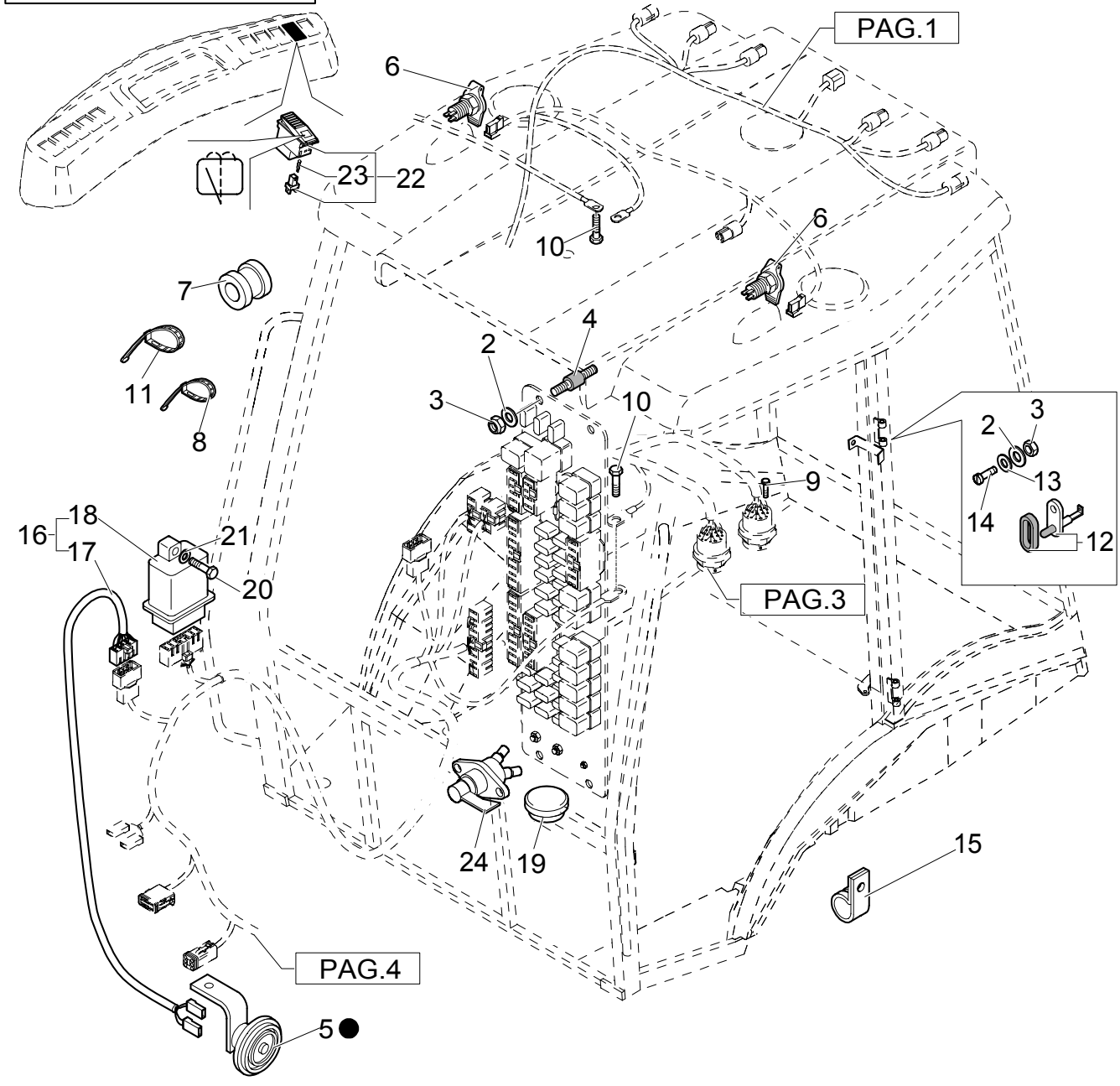

KIT KIT KIT 1 = ● see also PAG. 1. 2. 3. 4.

IGNITON SWITCH, POWER POINT, FUSE PANEL & SIDE CONSOLE HARNESS (CAB CP POWER SHUTTLE)

REF	FN	PART NUMBER	YR/SN	QTY	DESCRIPTION
1		87406390		1	CABLE, ELECTRIC
2		10615274		6	WASHER, LOCK
3		12574011		6	NUT
4		85802478		4	SILENTBLOC
5		5169413		1	HORN
6		82002966		2	SOCKET, POWER
7		10398980		1	RING, INSULATING
8		5112712		5	COLLAR
9		13272214		2	SCREW M4X16
10		16042924		2	SCREW M8X10
11		85805383		30	RETAINER, CABLE
12		83961521		2	SWITCH, ASSY
13		10519204		2	WASHER M4
14		13309417		2	SCREW M4X20
15		10450090		1	COLLAR, RETAINER
16	1	NSS		1	NOT SERVICED SEPARATELY
17		87410259		1	CABLE, ELECTRIC
18		85806132		1	ELECTRONIC UNIT, CONTROL
19		85808460		1	PLUG
20		10902624		1	SCREW M6X25
21		11193274		1	WASHER, LOCK
22		85818823		1	SWITCH
23		14143790		1	BULB
24		87409316		1	SWITCH

(1) Includes 17, 18

FRONT AND REAR WINDSCREEN WIPERS

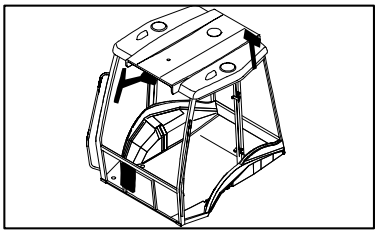

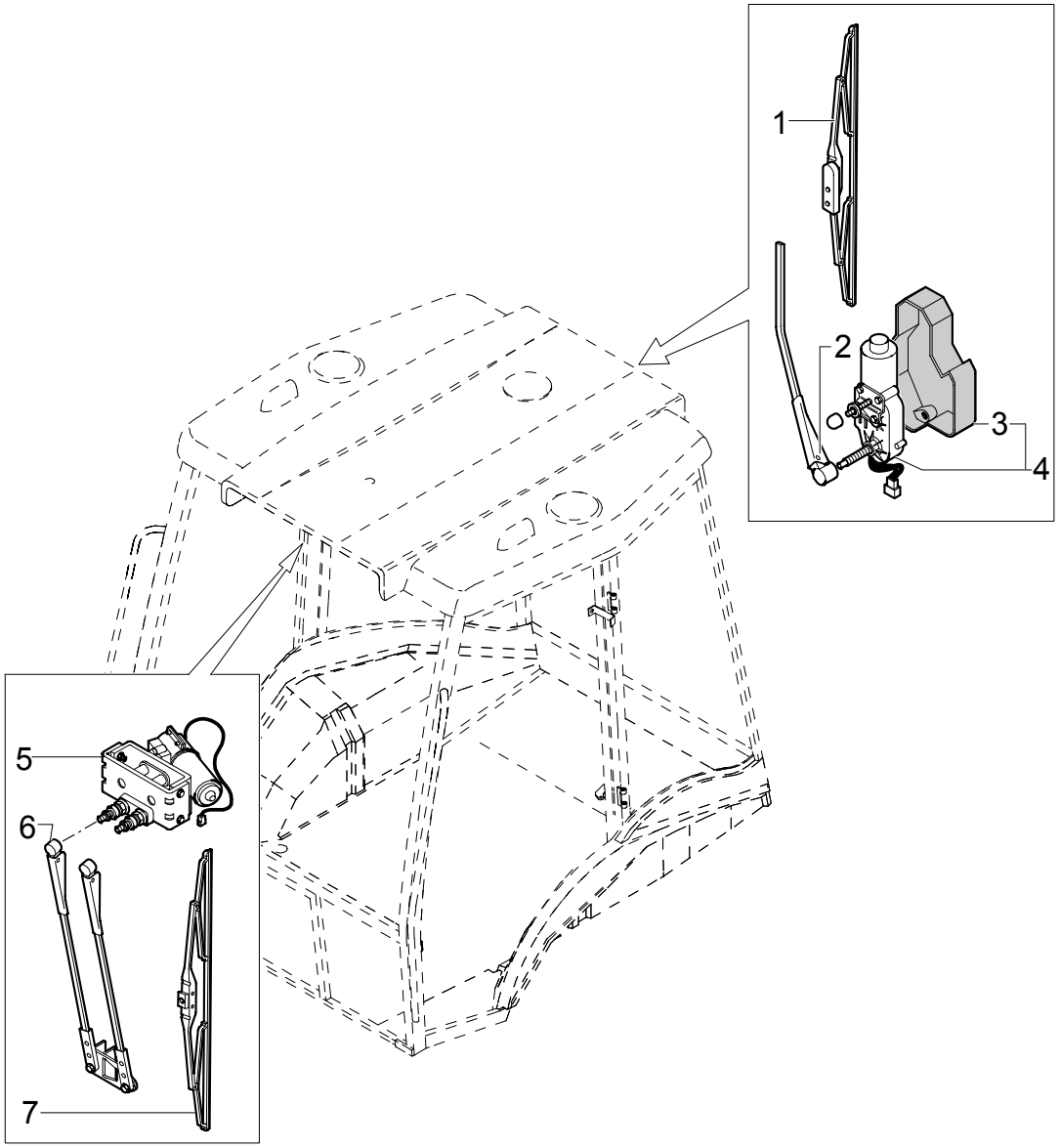

FRONT AND REAR WINDSCREEN WIPERS

REF	FN	PART NUMBER	YR/SN	QTY	DESCRIPTION
1		85819827		1	WIPER BLADE REAR
2		85806098		1	WIPER ARM REAR
3		85806095		1	BOX REAR
4	1	85806097		1	MOTOR, ELECTRIC, SMALL REAR
5		85806184		1	MOTOR, ELECTRIC, SMALL FRONT
6		85806185		1	WIPER ARM FRONT
7		85819826		1	WIPER BLADE FRONT

(1) Includes 3

1.91.5	02	p1	02/04

WINDSCREEN WIPERS RESERVOIR & NOZZLES

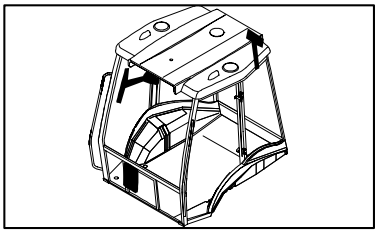

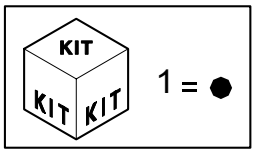

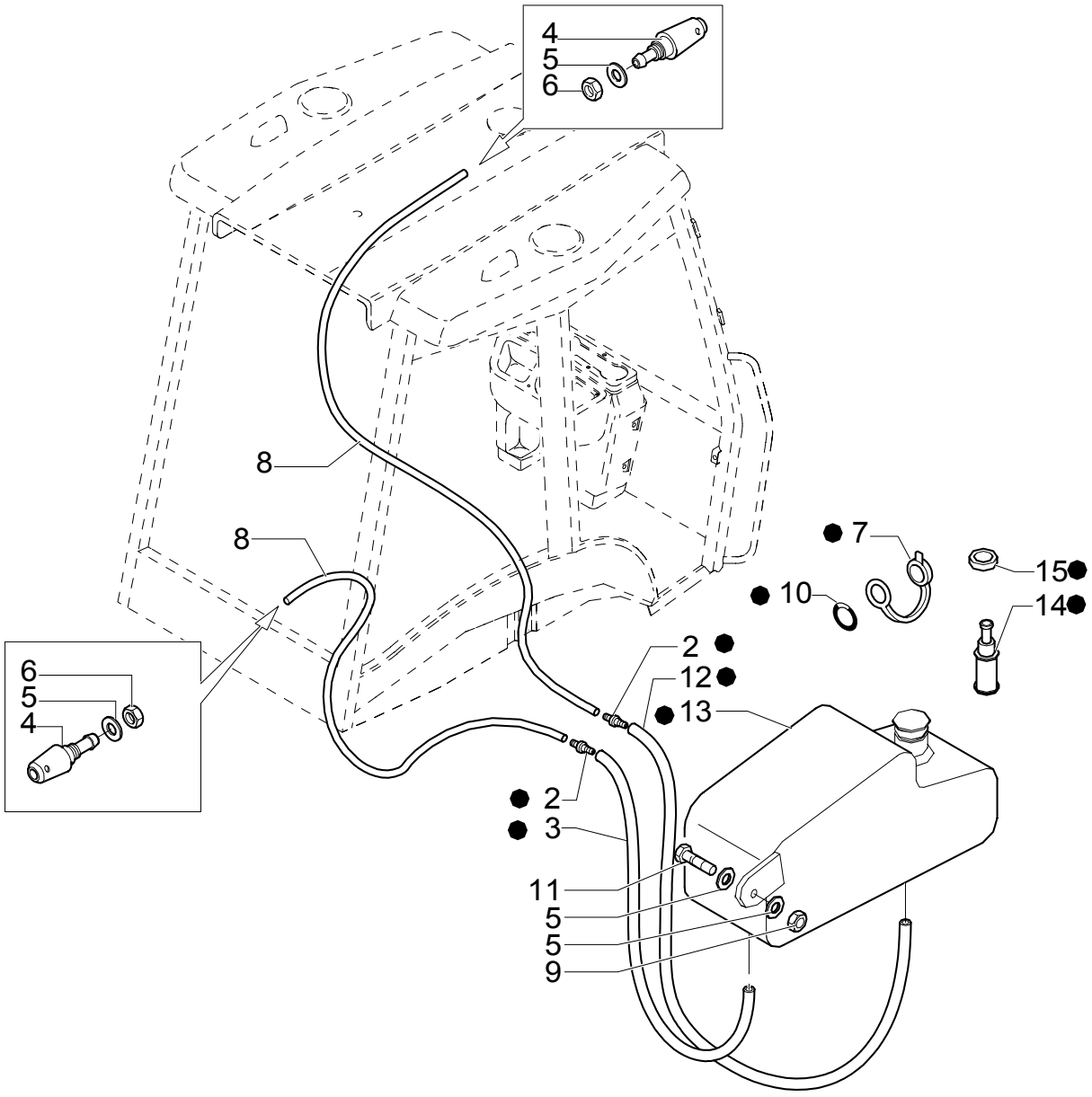

WINDSCREEN WIPERS RESERVOIR & NOZZLES

REF	FN	PART NUMBER	YR/SN	QTY	DESCRIPTION
1		85821153		1	PAN
2		85821337		2	VALVE, HYDRAULIC
3		85821335		2	HOSE, FLEXIBLE
4		85802398		2	TOOL, SPECIAL
5		12646704		4	WASHER
6		16102411		2	NUT
7		5175736		1	PLUG
8		85821338		2	HOSE, FLEXIBLE
9		12574211		1	NUT
10		85820237		1	RING
11		13313417		1	SCREW
12		85824450		1	HOSE, FLEXIBLE
13		{85821334}		1	
14		85821333		2	PUMP, HYDRAULIC
15		85821336		2	SEAL, RUBBER

1.91.6	01	p1	11/03

RADIO ANTENNA & SPEAKER COVER

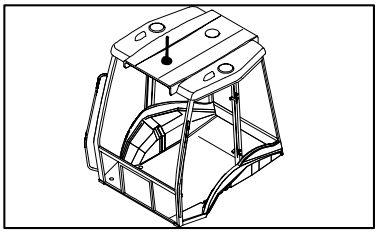

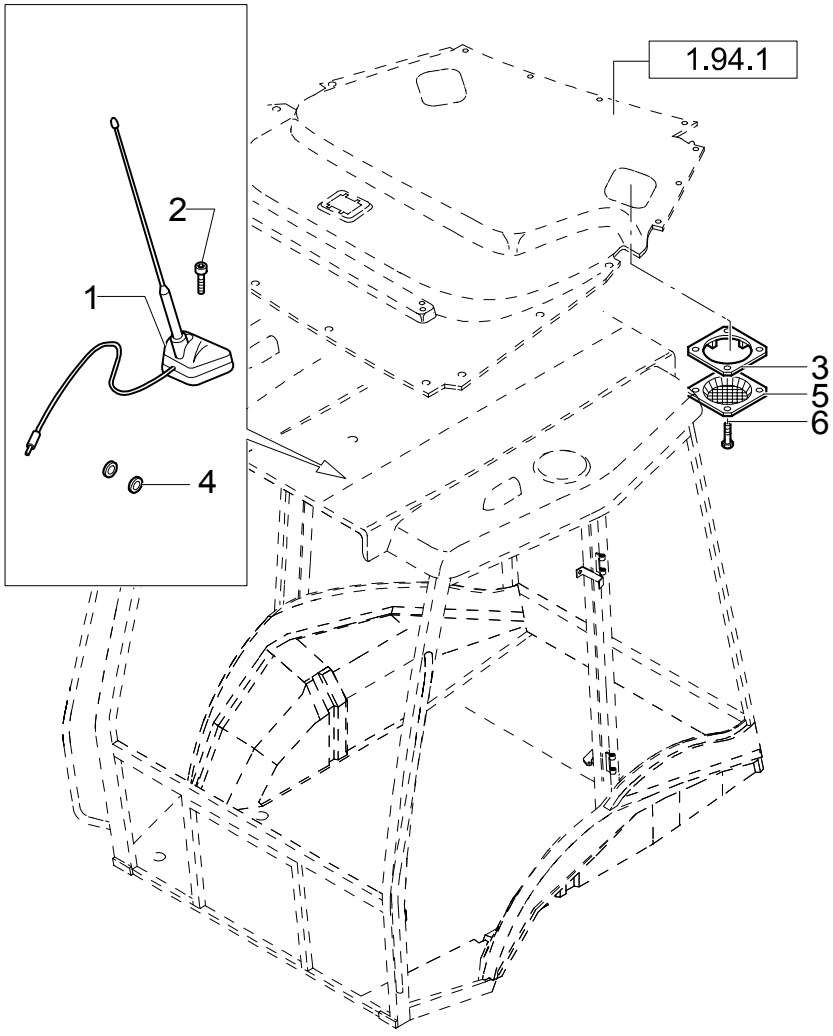

RADIO ANTENNA & SPEAKER COVER

REF	FN	PART NUMBER	YR/SN	QTY	DESCRIPTION
1		85819569		1	ANTENNA
2		13311817		1	SCREW M5X40
3		85802107		2	PLATE, MOUNTING
4		10399580		1	RING, INSULATING
5		85804362		2	GRILLE
6		13297842		8	SCREW

LAMPS & LIGHTS - CAB (USA)

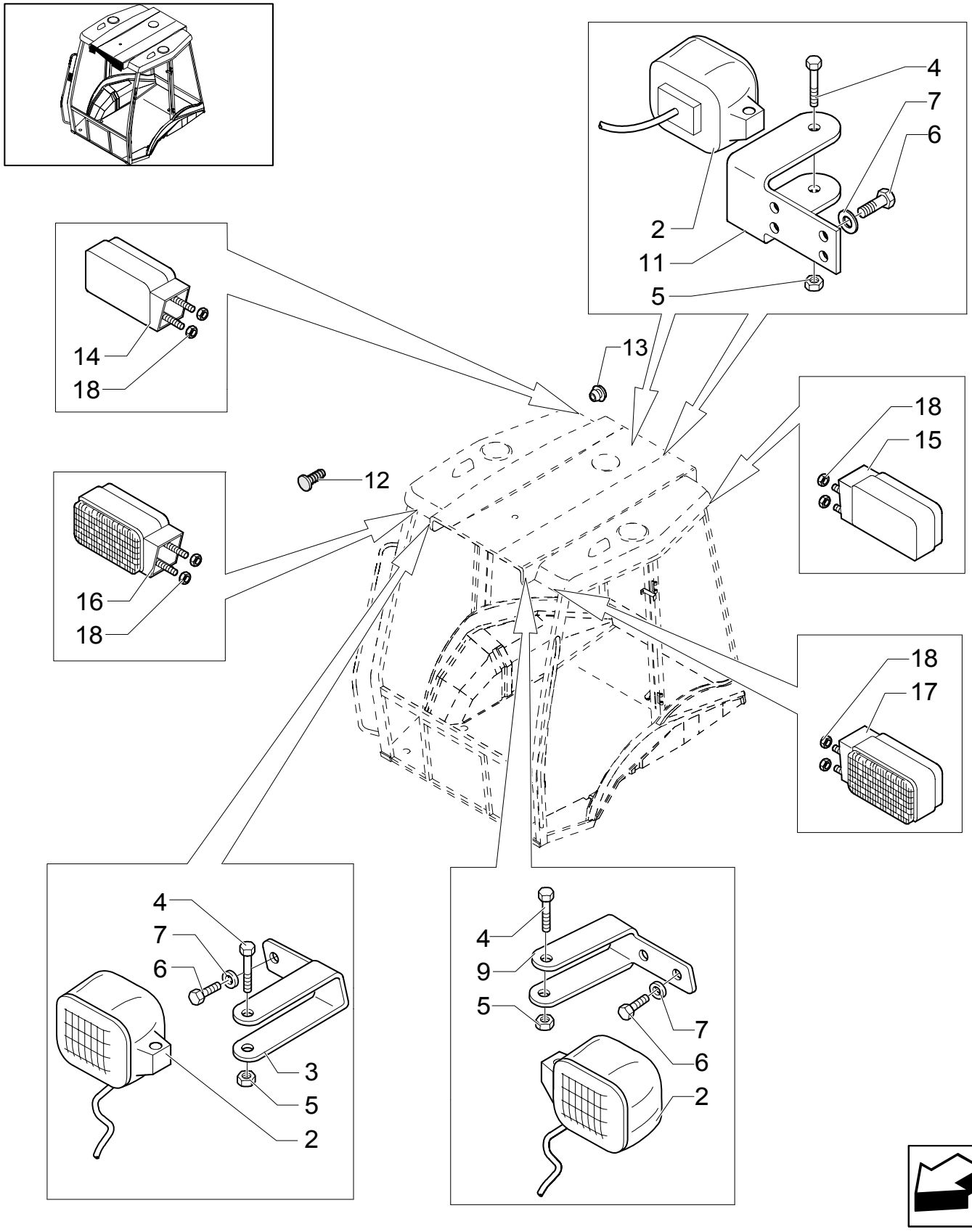

LAMPS & LIGHTS - CAB (USA)

REF	FN	PART NUMBER	YR/SN	QTY	DESCRIPTION
2		85819200		8	HEADLAMP
3		85819190		1	BRACKET RH
4		16044324		8	SCREW M8x55
5		16104111		8	NUT M8
6		10902124		24	SCREW Cap,HH,CL8.8, M6x14
7		11197774		24	WASHER, LOCK Ø 6
9		85819191		1	BRACKET LH
11		85819194		2	BRACKET
12		83994150		1	PLUG
13		5118658		1	PLUG
14		85819198		1	LAMP, TAIL RH
15		85819199		1	LAMP, TAIL LH
16		85819196		2	LAMP, FRONT RH
17		85819197		2	LAMP, FRONT LH
18		14084111		1	NUT

LAMPS & LIGHTS - ROPS (USA)

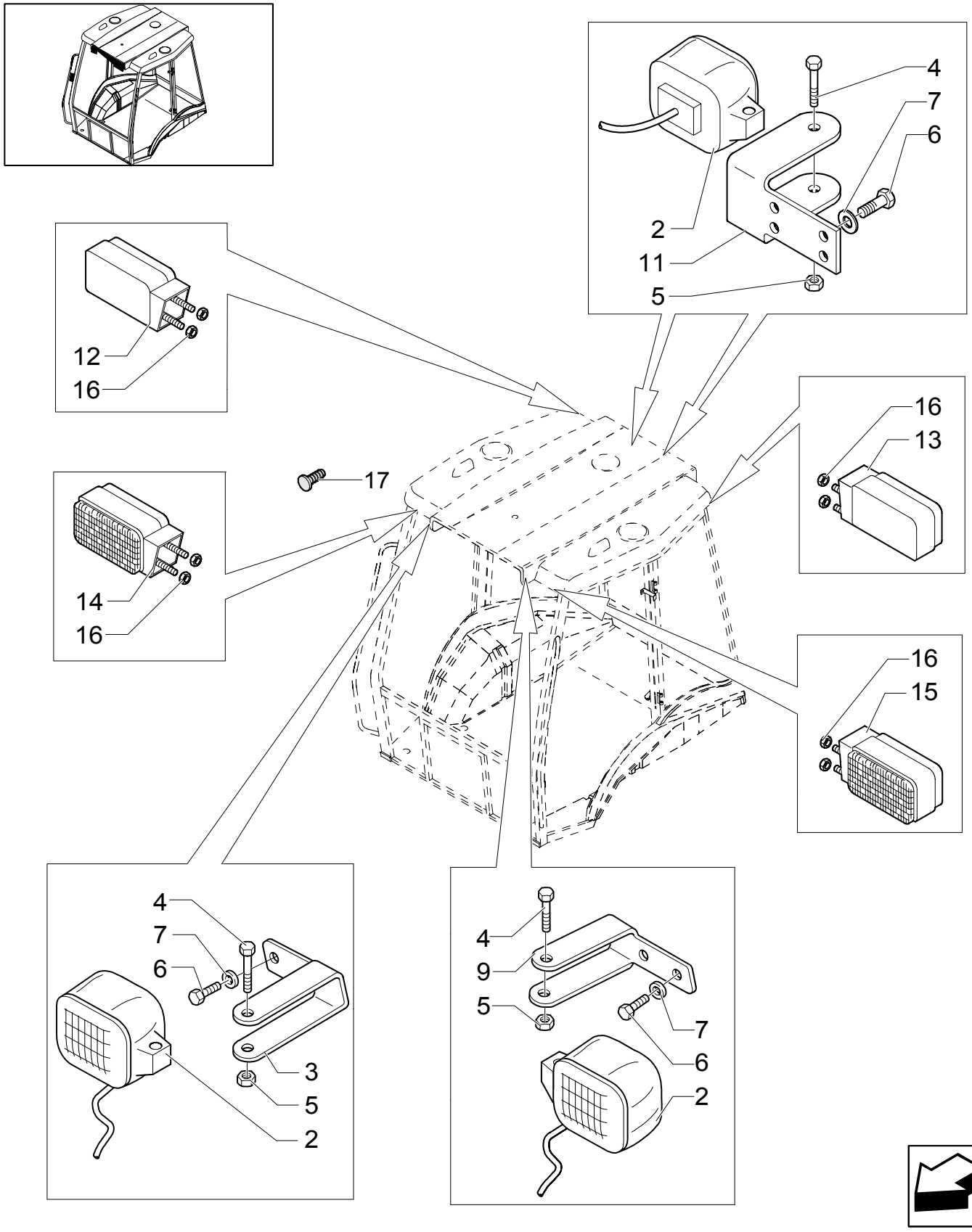

LAMPS & LIGHTS - ROPS (USA)

REF	FN	PART NUMBER	YR/SN	QTY	DESCRIPTION
2		85819200		4	HEADLAMP
3		85819190		1	BRACKET RH
4		16044324		4	SCREW M8X55
5		16104111		4	NUT M8
6		10902124		12	SCREW Cap, HH, CL 8.8, M6 x 1 x 14
7		11197774		12	WASHER, LOCK Ø 6
9		85819191		1	BRACKET LH
11		85819194		2	BRACKET
12		85819198		1	LAMP, TAIL RH
13		85819199		1	LAMP, TAIL RH
14		85819196		1	LAMP, FRONT LH
15		85819197		1	LAMP, FRONT LH
16		14084111		8	NUT
17		14591687		1	BUTTON

1.92.1	01	p1	08/03

CAB - FRAME-DOOR

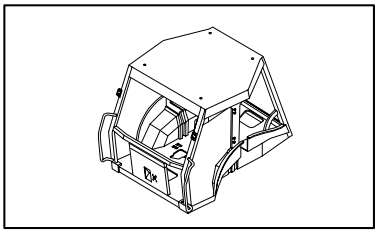

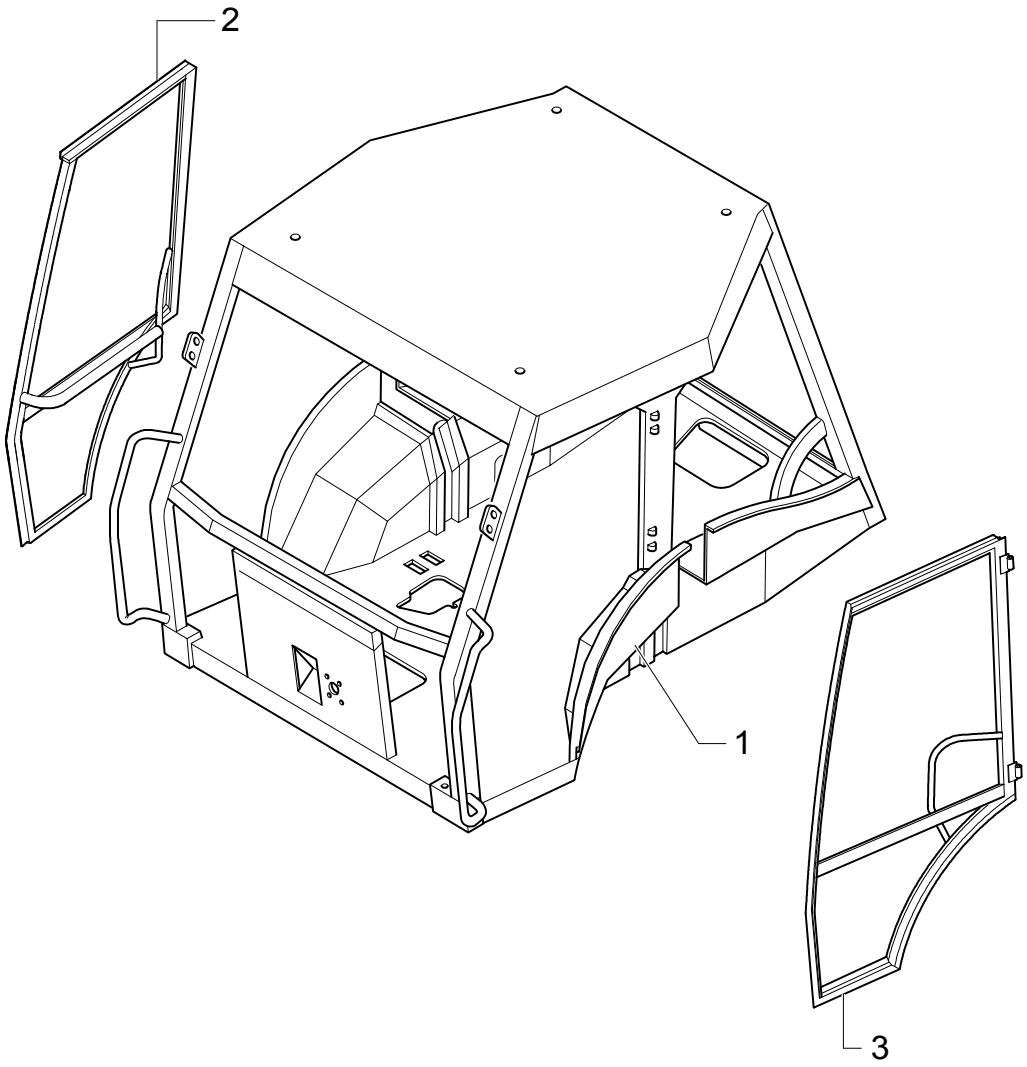

CAB - FRAME-DOOR

REF	FN	PART NUMBER	YR/SN	QTY	DESCRIPTION
1		{85826042}		1	SHELL, CAB
2		85801654		1	FRAME RH
3		85801655		1	FRAME LH

1.92.1/ 1	01	p1	08/03

ROPS - SAFETY FRAME

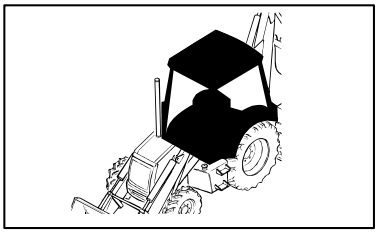

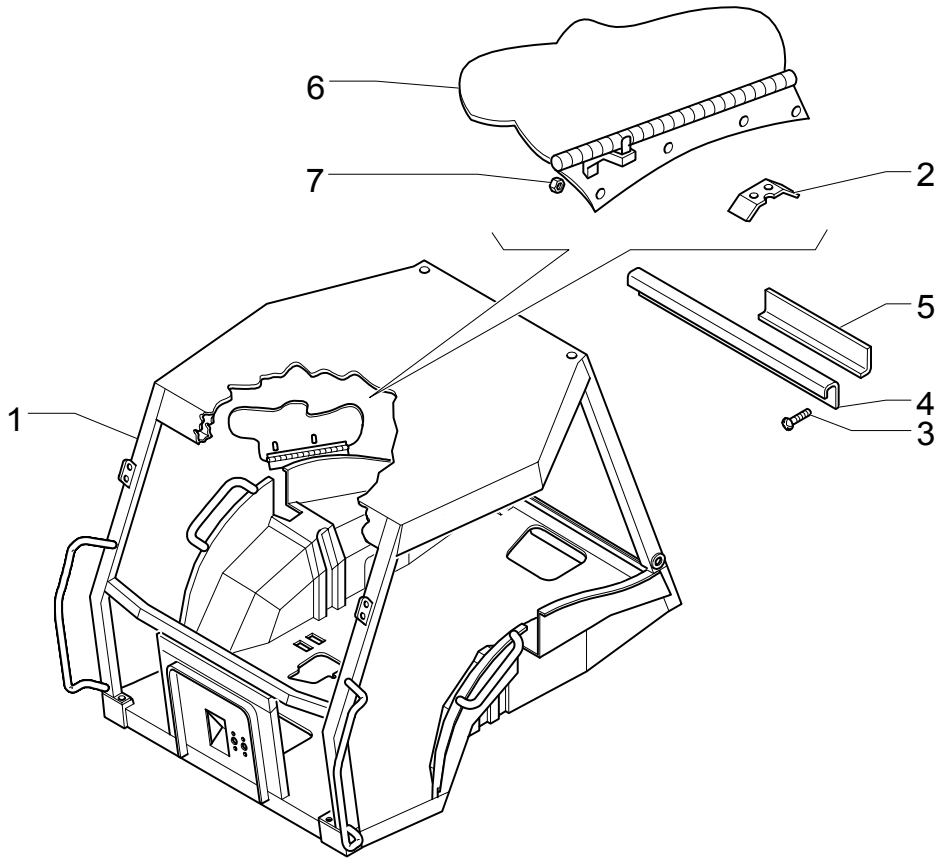

ROPS - SAFETY FRAME

REF	FN	PART NUMBER	YR/SN	QTY	DESCRIPTION
1	1	85826047		1	FRAME ASSY
2		85801863		1	BRACKET
3		13271814		6	SCREW M4X8
4		85805067		2	COVER
5		85807880		8	PLATE
6		85806187		1	SHIELD
7		15896219		4	NUT M6

(1) Includes 2,6,7

1.92.1/ 2	01	p1	11/03

CAB - FRAME-DOOR

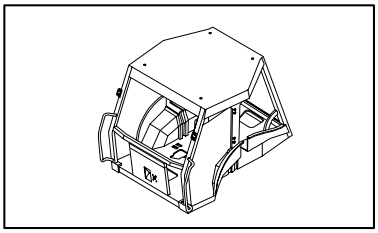

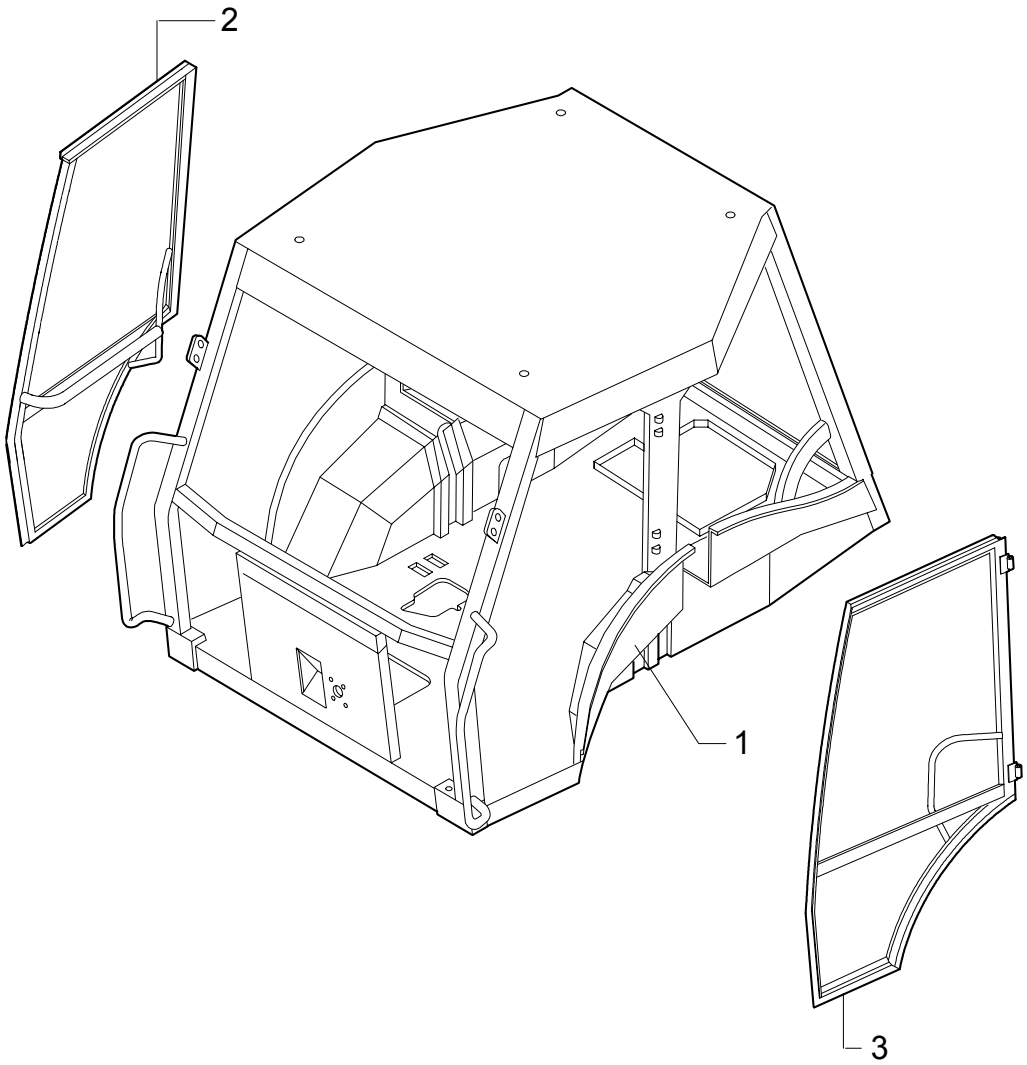

CAB - FRAME-DOOR

REF	FN	PART NUMBER	YR/SN	QTY	DESCRIPTION
1		{87410408}		1	SHELL, CAB
2		85801654		1	FRAME RH
3		85801655		1	FRAME LH

1.92.1/ 3	01	p1	12/03

ROPS - SAFETY FRAME

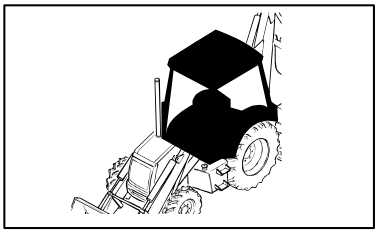

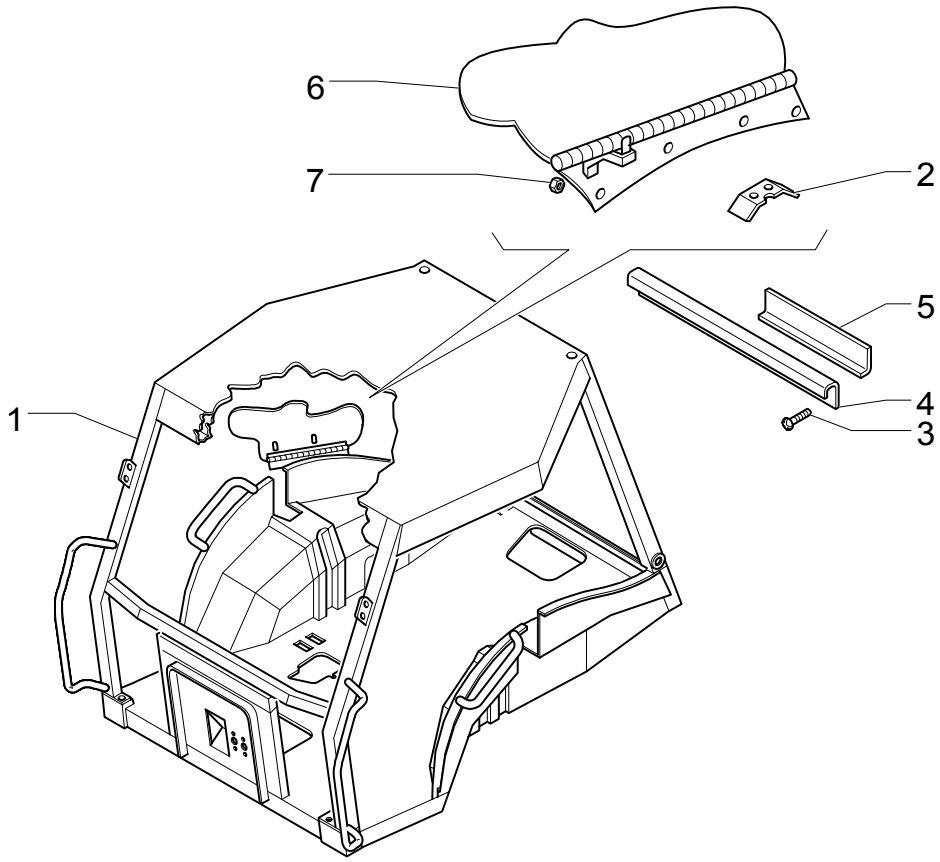

ROPS - SAFETY FRAME

REF	FN	PART NUMBER	YR/SN	QTY	DESCRIPTION
1	1	87410409		1	SHELL, CAB ASSY
2		85801863		1	BRACKET
3		13271814		6	SCREW M4X8
4		85805067		2	COVER
5		85807880		8	PLATE
6		NSS		1	NOT SERVICED SEPARATELY
7		15896219		4	NUT M6

(1) Includes 2,6,7

WINDOWS

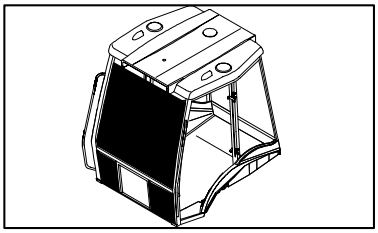

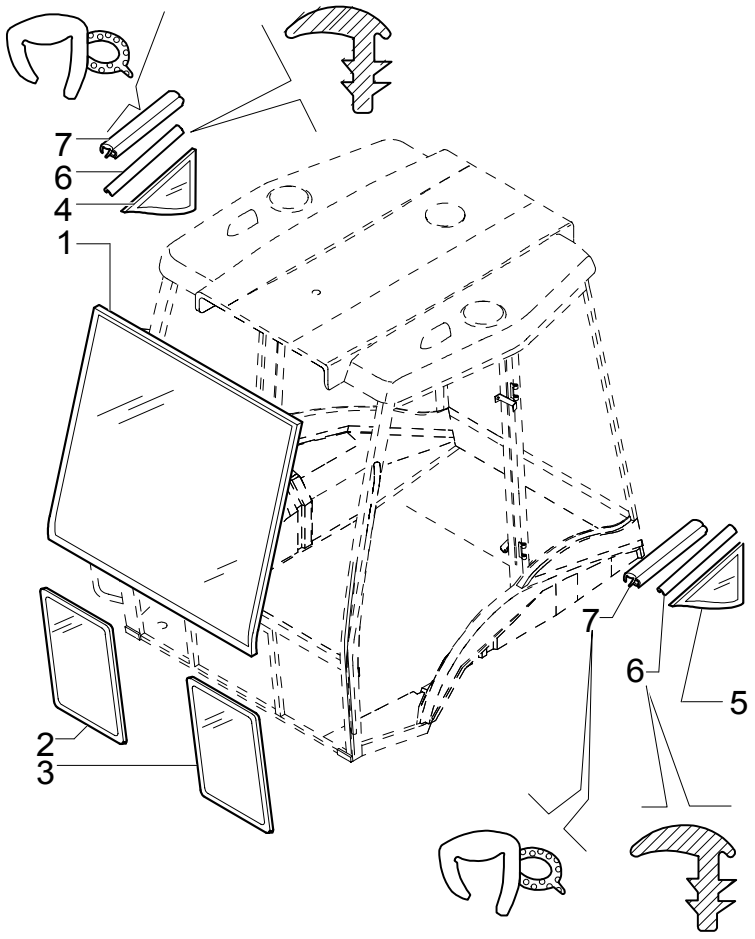

WINDOWS

REF	FN	PART NUMBER	YR/SN	QTY	DESCRIPTION
1		85801621		1	GLASS
2		85801622		1	GLASS ASSY, CAB RH
3		85801623		1	GLASS ASSY, CAB LH
4		85801630		1	GLASS ASSY, CAB RH
5		85801631		1	GLASS ASSY, CAB LH
6		85802334		M	GASKET
7		85805065		2	GASKET

1.92.4	01	p1	05/03

WINDOWS

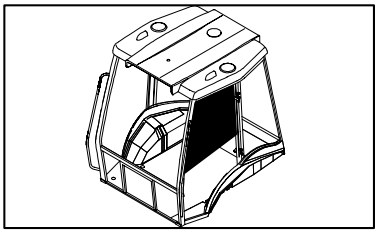

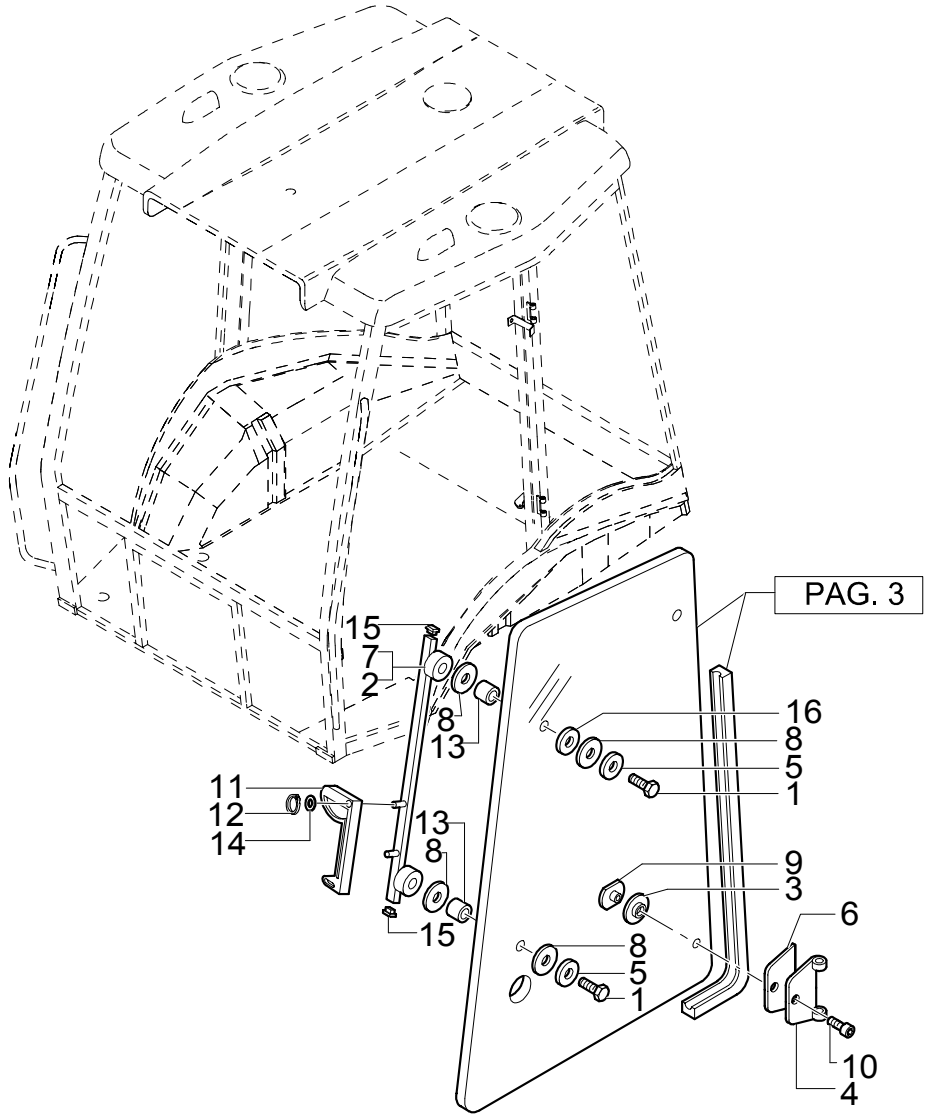

WINDOWS

REF	FN	PART NUMBER	YR/SN	QTY	DESCRIPTION
1		82859922		4	SCREW
2		85802063		1	SUPPORT RH
3		83961985		4	SPACER
4		85804869		4	HINGE
5		E7NN94305N22BA		4	SPACER
6		81872036		4	GASKET
7		85802062		1	SUPPORT LH
8		83962050		12	RING
9		85805448		4	NUT, RING
10		81871864		4	SCREW Socket Drive, M8 x 1.25 x 16
11		85801804		4	HANDLE
12		11087871		4	RING, LOCKING
13		83961987		4	SPACER
14		10519404		2	WASHER
15		81871439		8	PLUG
16		12638504		4	WASHER 8X15

WINDOWS

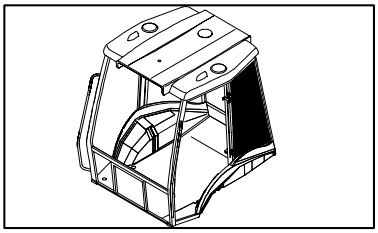

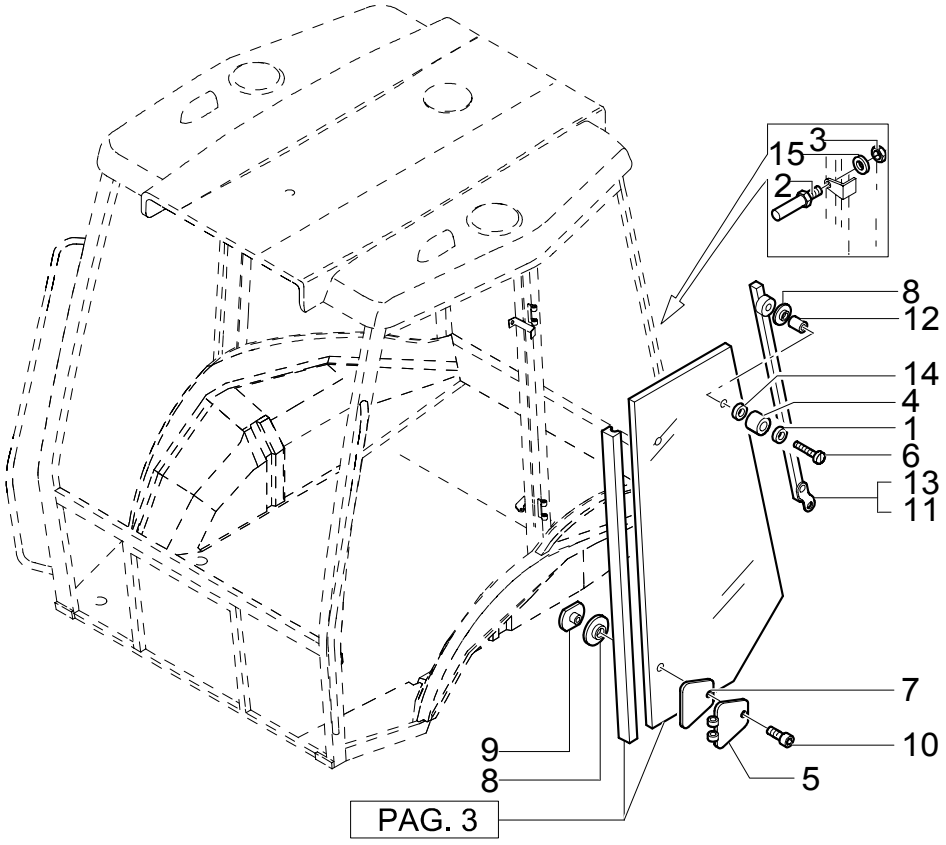

WINDOWS

REF	FN	PART NUMBER	YR/SN	QTY	DESCRIPTION
1		10519404		2	WASHER
2		85801806		4	STUD
3		12574211		4	NUT
4		83976357		2	BUMPER
5		85804870		4	HINGE
6		10903224		2	VALVE, HYDRAULIC M6X40
7		81872028		4	SPACER
8		83961985		8	SPACER
9		85805448		4	NUT, RING
10		81871864		4	SCREW Socket Drive, M8 x 1.25 x 16
11		85801883		1	SUPPORT RH
12		83961987		2	SPACER
13		85801884		1	SUPPORT LH
14		12638504		2	WASHER
15		12643701		8	WASHER

WINDOWS

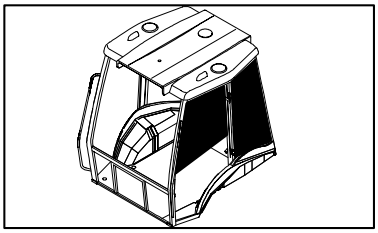

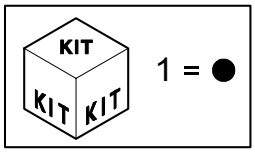

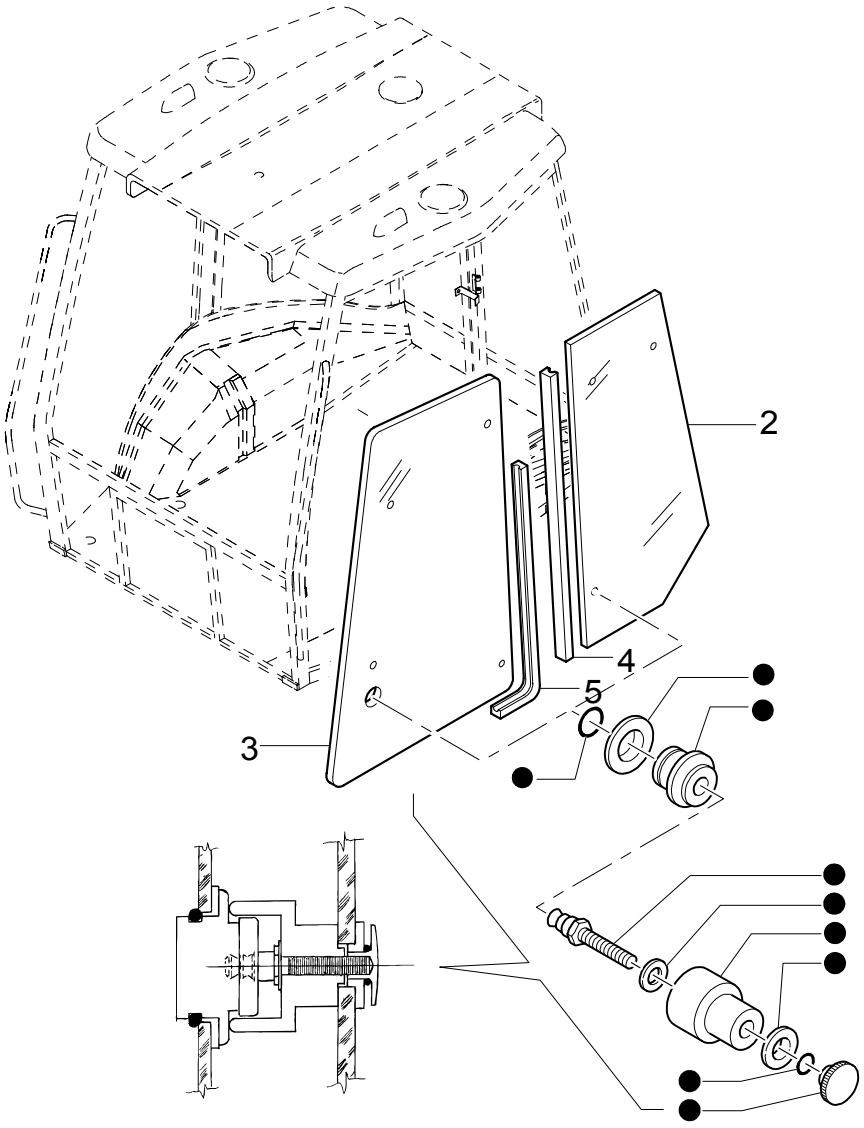

WINDOWS

REF	FN	PART NUMBER	YR/SN	QTY	DESCRIPTION
1		85804617		2	KIT
2		85801628		2	GLASS ASSY, CAB
3		85801626		2	GLASS ASSY, CAB
4		85812254		2	SEAL, RUBBER L=3150
5		85812255		2	SEAL, RUBBER L=3315

1.92.5	01	p1	04/03

FENDERS, REAR

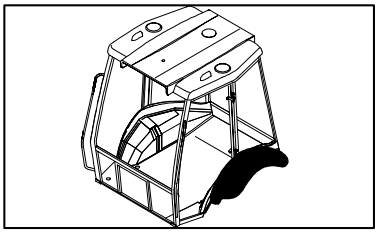

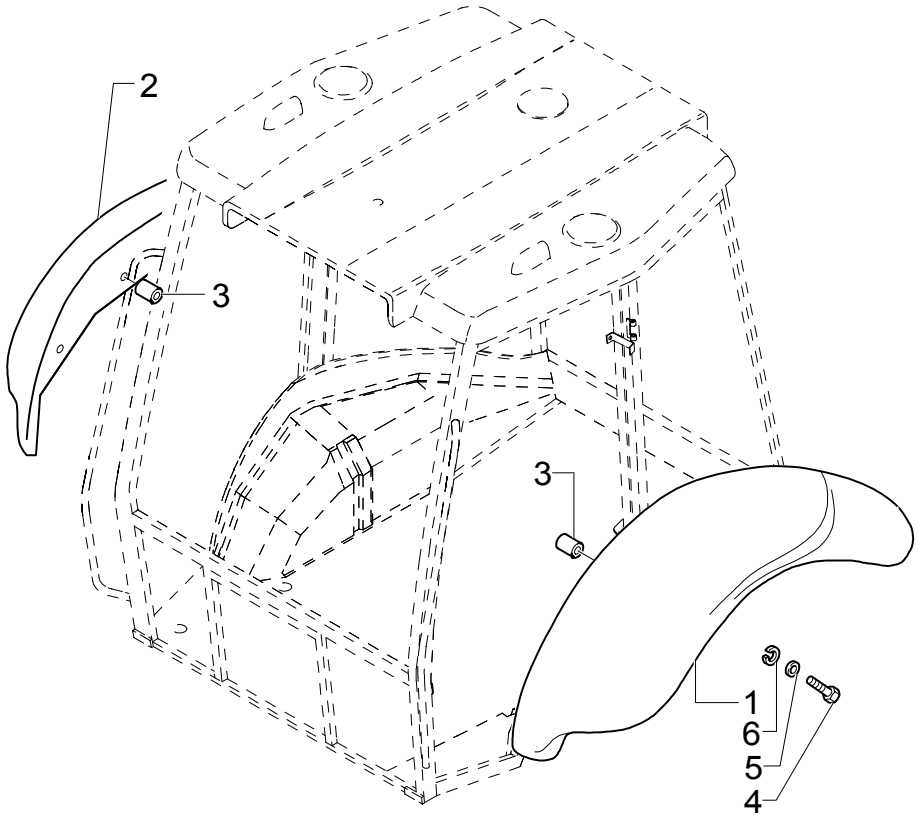

FENDERS, REAR

REF	FN	PART NUMBER	YR/SN	QTY	DESCRIPTION
1	1	85817211		1	FENDER, REAR LH
1	2	85817213		1	FENDER, REAR LH
2	1	85817210		1	FENDER, REAR RH
2	2	85817212		1	FENDER, REAR RH
3		85812338		12	INSERT, THREADED
4		16044124		10	SCREW M8X1,25X45
5		12646204		10	WASHER 8X35
6		11193874		10	WASHER, LOCK 8X16X1.4

(1) Only for LB75.B - LB90.B - LB95.B - LB110.B
(2) Only for LB115.B

1.92.6	01	p1	02/04

DOOR COMPONENTS

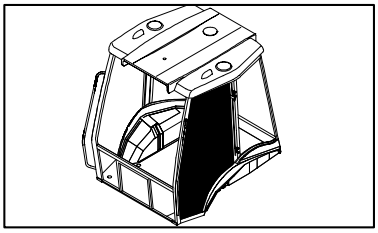

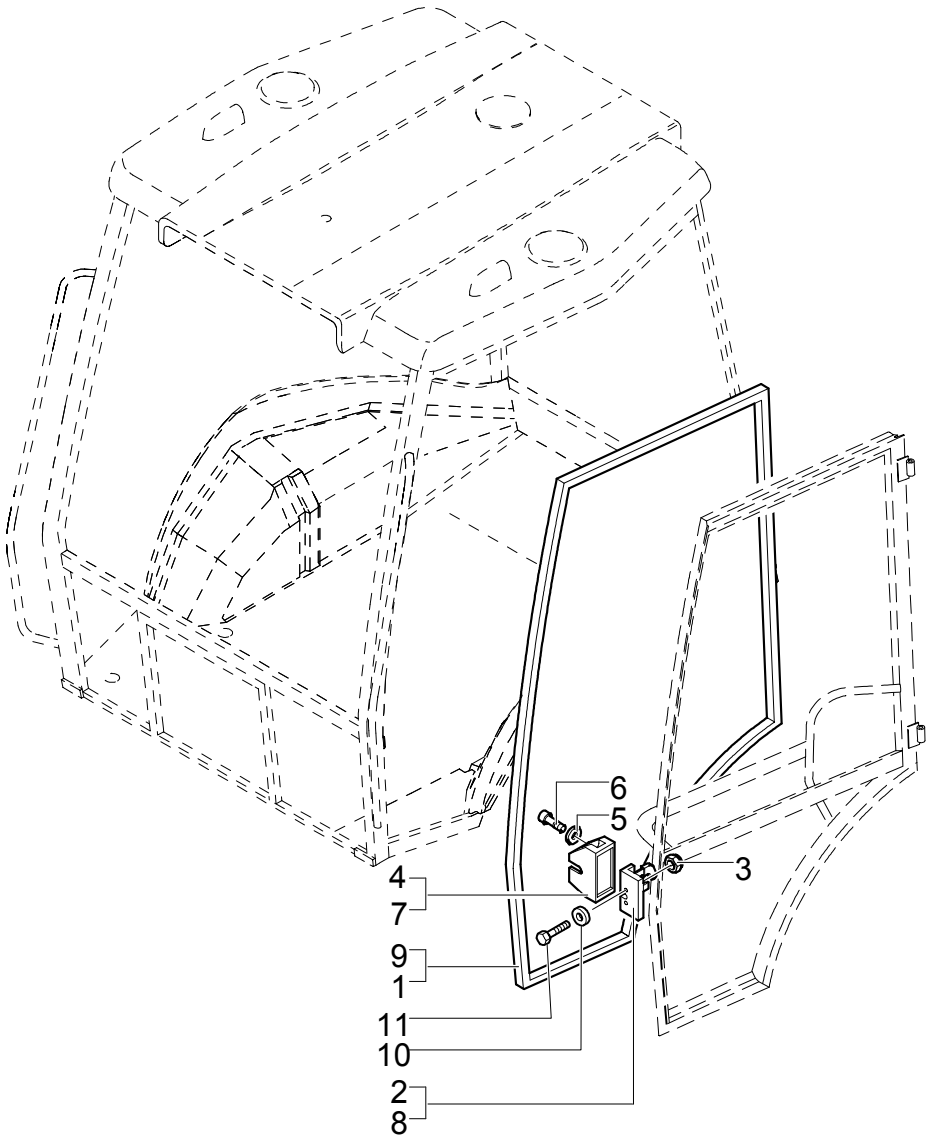

DOOR COMPONENTS

REF	FN	PART NUMBER	YR/SN	QTY	DESCRIPTION
1		85812252		1	SEAL, RUBBER RH
2		44910052		1	LOCK, CYLINDER RH
3		{14048214}		4	SPARE PART M8X1.25
4		85805771		1	COVER RH
5		12643701		4	WASHER
6		13273911		4	SCREW M5X10
7		85805770		1	COVER LH
8		44910053		1	LOCK, CYLINDER LH
9		85812253		1	SEAL, RUBBER
10		10519604		2	WASHER
11		14442421		2	SCREW

1.92.6	02	p1	04/03

DOOR COMPONENTS

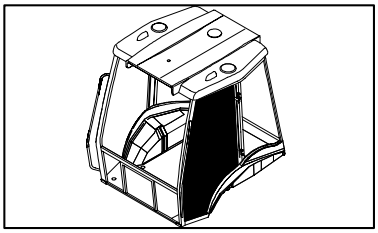

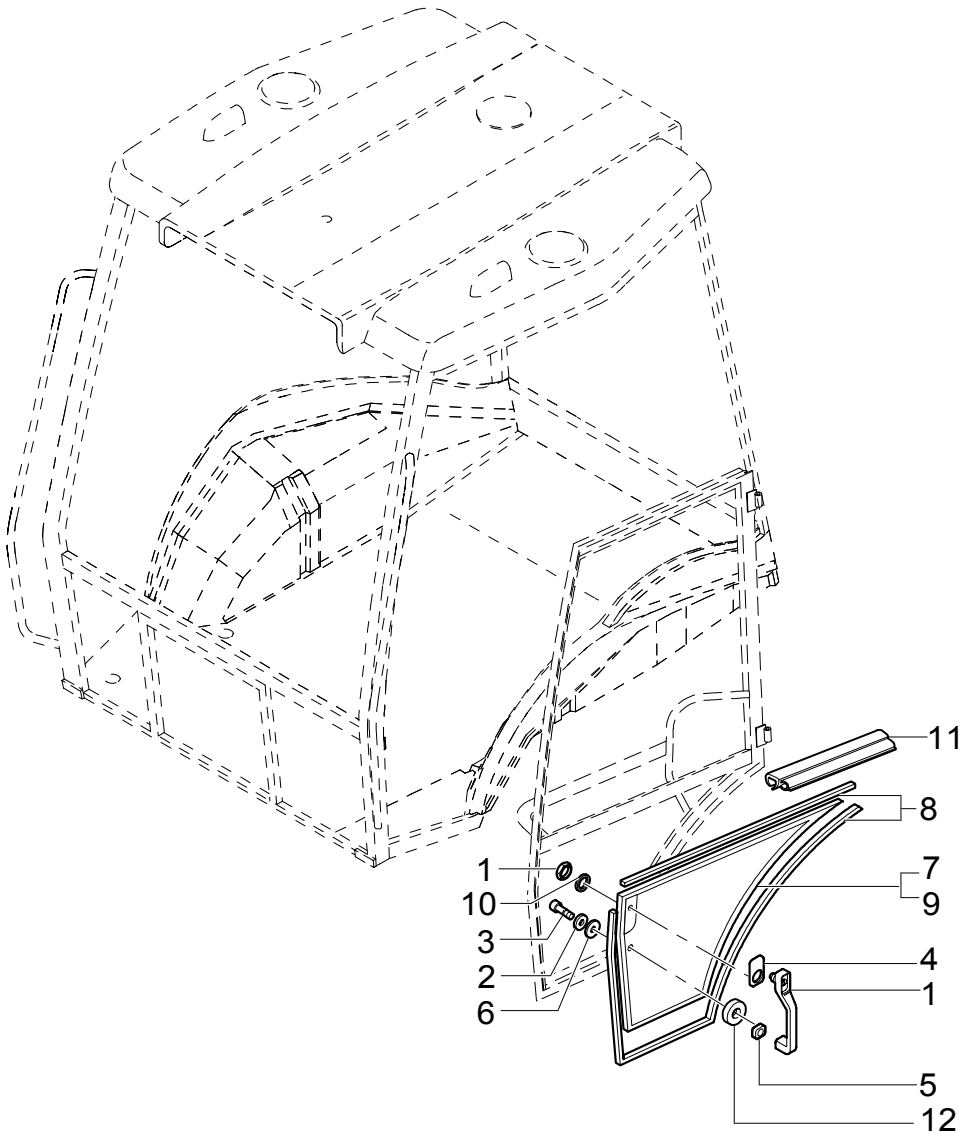

DOOR COMPONENTS

REF	FN	PART NUMBER	YR/SN	QTY	DESCRIPTION
1		85805659		2	HANDLE
2		12640601		2	WASHER
3		13276621		2	SCREW M6
4		85801799		2	GASKET
5		85801800		2	GASKET
6		83961987		4	SPACER
7		85801624		1	GLASS ASSY, CAB RH
8		85802334		MT	GASKET
9		85801625		1	GLASS ASSY, CAB LH
10		85802307		2	GASKET
11		85805065		2	GASKET
12		85801801		2	GASKET 24X6X2

DOOR COMPONENTS

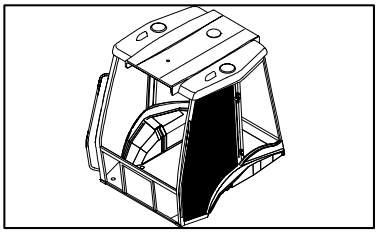

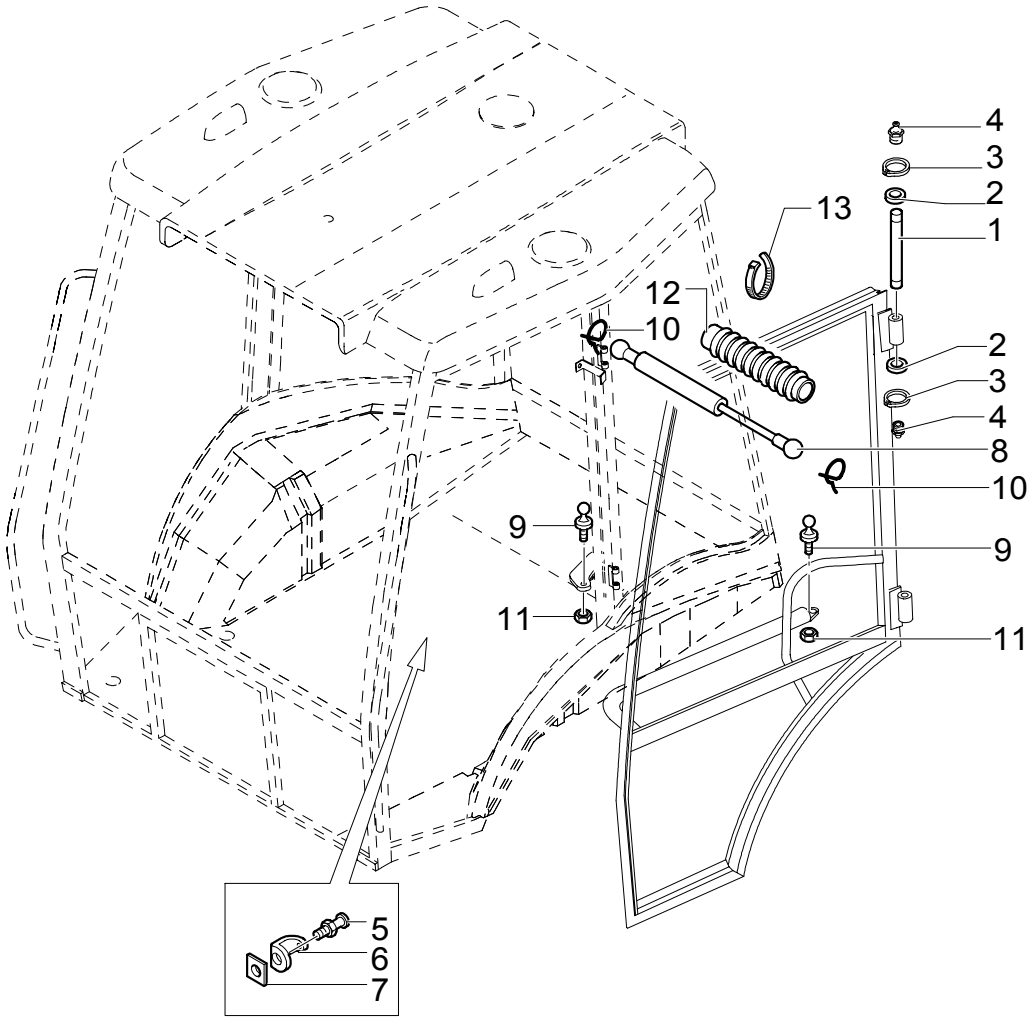

DOOR COMPONENTS

REF	FN	PART NUMBER	YR/SN	QTY	DESCRIPTION
1		85801798		4	PIN
2		83964146		8	WASHER
3		11065976		8	RING, LOCKING
4		13406911		4	NIPPLE, LUBE
5		83994395		2	PLATE, STEEL
6		83994372		2	GUARD
7		83994378		2	NUT
8		5183854		2	SHOCK ABSORBER
9		82000409		4	STUD
10		81869714		4	CLIP
11		16104511		4	NUT
12		81867742		2	BOOT
13		5112712		4	COLLAR

1.92.8	01	p1	04/03

FIREWALL SEAL, ROPS

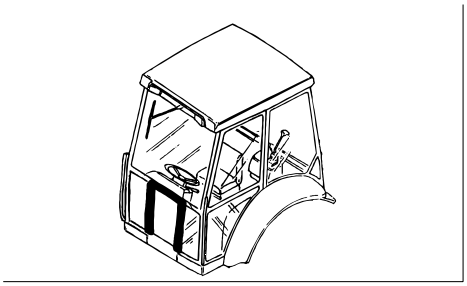

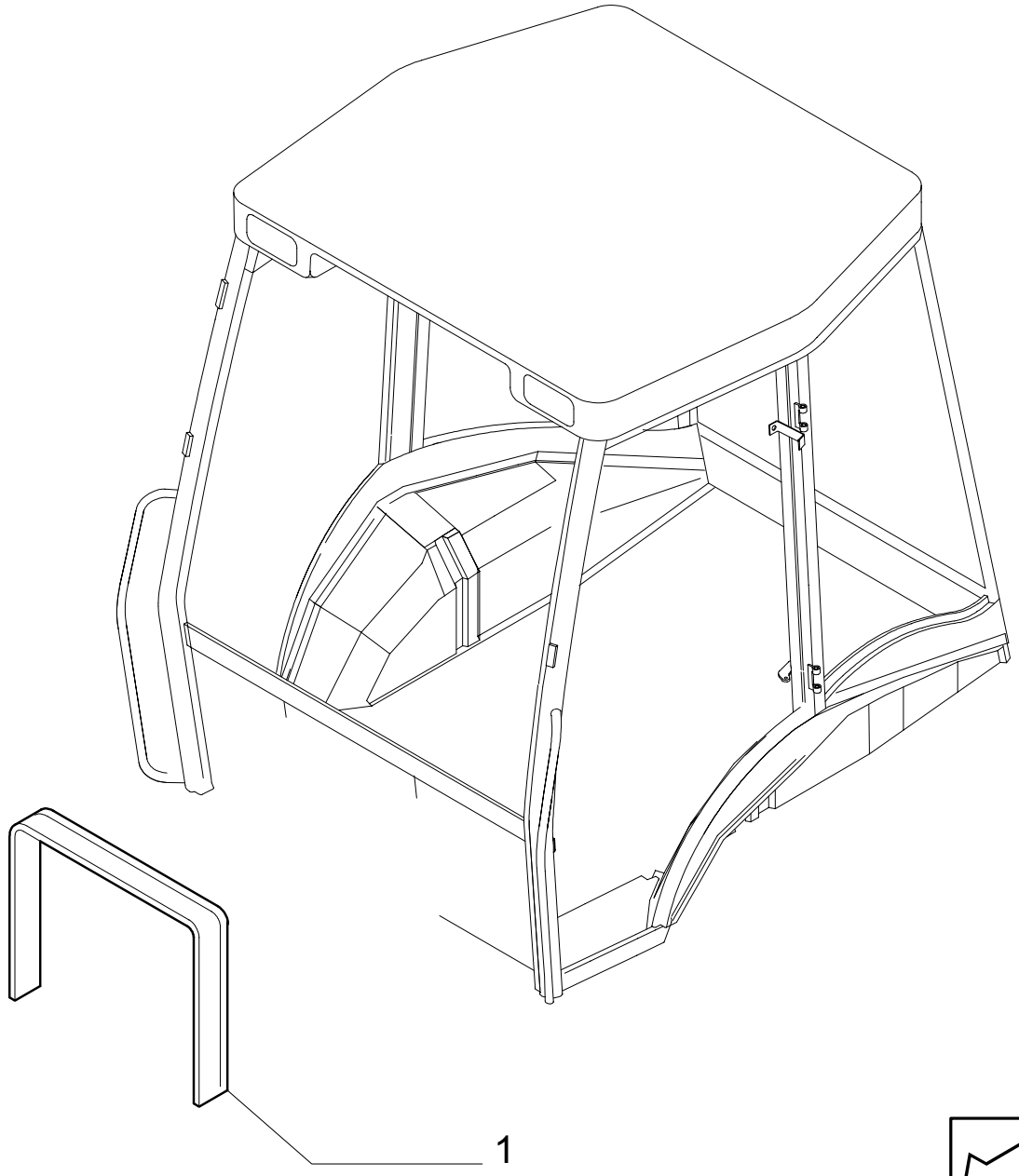

FIREWALL SEAL, ROPS

REF	FN	PART NUMBER	YR/SN	QTY	DESCRIPTION
1		85805571		1	GASKET

1.92.9	01	p1	04/03

REAR WINDOWS

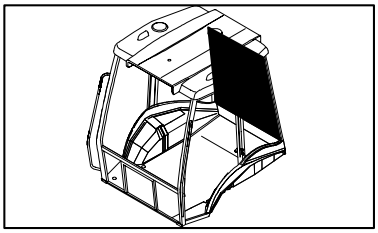

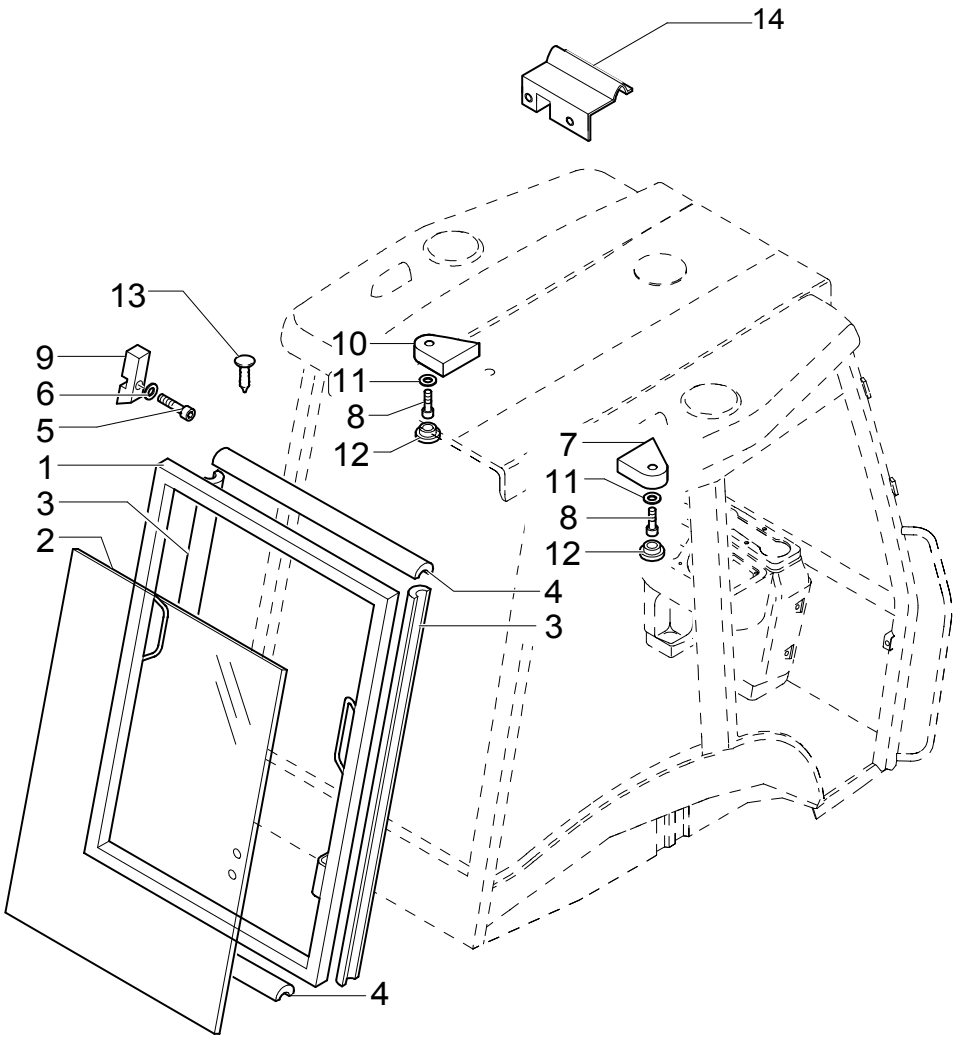

REAR WINDOWS

REF	FN	PART NUMBER	YR/SN	QTY	DESCRIPTION
1		85801739		1	FRAME
2		85801632		1	GLASS ASSY, CAB
3		85801811		2	EXTRUSION
4		85819017		1	GASKET L=1010
4		85819018		1	GASKET L=965
5		16043324		6	SCREW
6		12646704		6	WASHER
7		85801828		1	PAD RH
8		13313417		2	SCREW
9		85801826		2	STOP
10		85801829		1	PAD LH
11		85801991		2	WASHER
12		79111978		2	PLUG
13		83994150		2	PLUG
14		85812365		1	COLLAR, RETAINER

1.92.9	02	p1	04/03

REAR WINDOWS

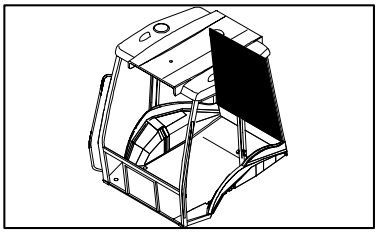

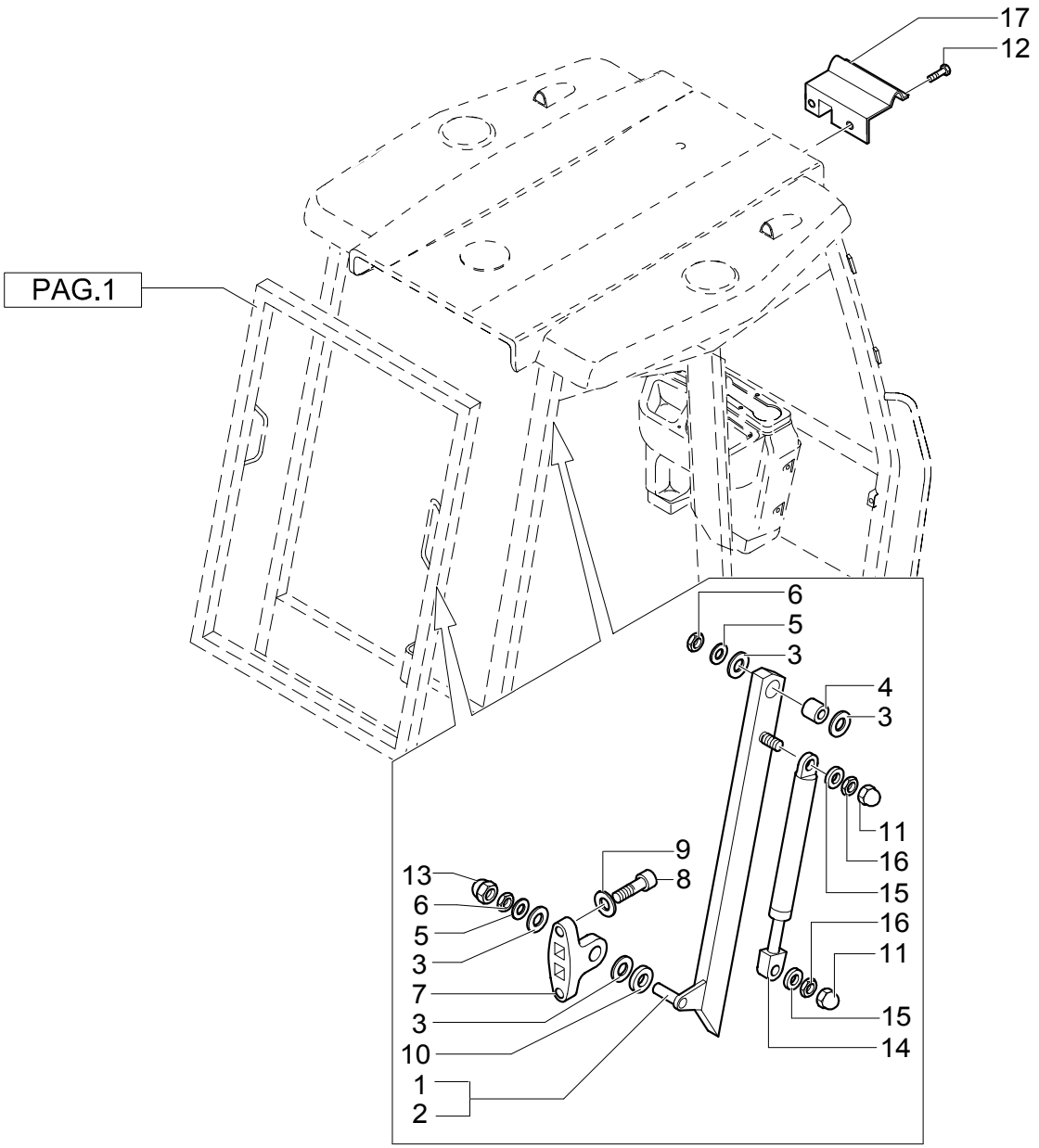

REAR WINDOWS

REF	FN	PART NUMBER	YR/SN	QTY	DESCRIPTION
1		85801812		1	TIE-ROD RH
2		85801813		1	TIE-ROD LH
3		85801814		12	SPACER
4		85801815		2	BUSHING
5		12646904		4	WASHER
6		16104111		4	NUT
7		85801816		2	SUPPORT
8		12638501		4	WASHER
9		14306424		4	SCREW
10		12647004		2	WASHER
11		15811387		4	PROTECTION CAP
12		13276217		2	SCREW M6X16
13		5132136		2	GUARD
14		85801827		2	SHOCK ABSORBER
15		14496407		4	WASHER
16		12574215		4	NUT
17		85812364		1	COLLAR, RETAINER

1.92.9	03	p1	11/03

REAR WINDOWS

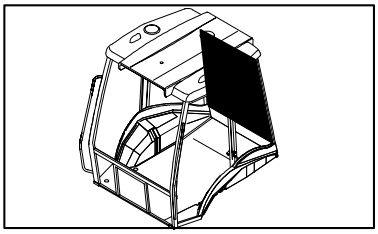

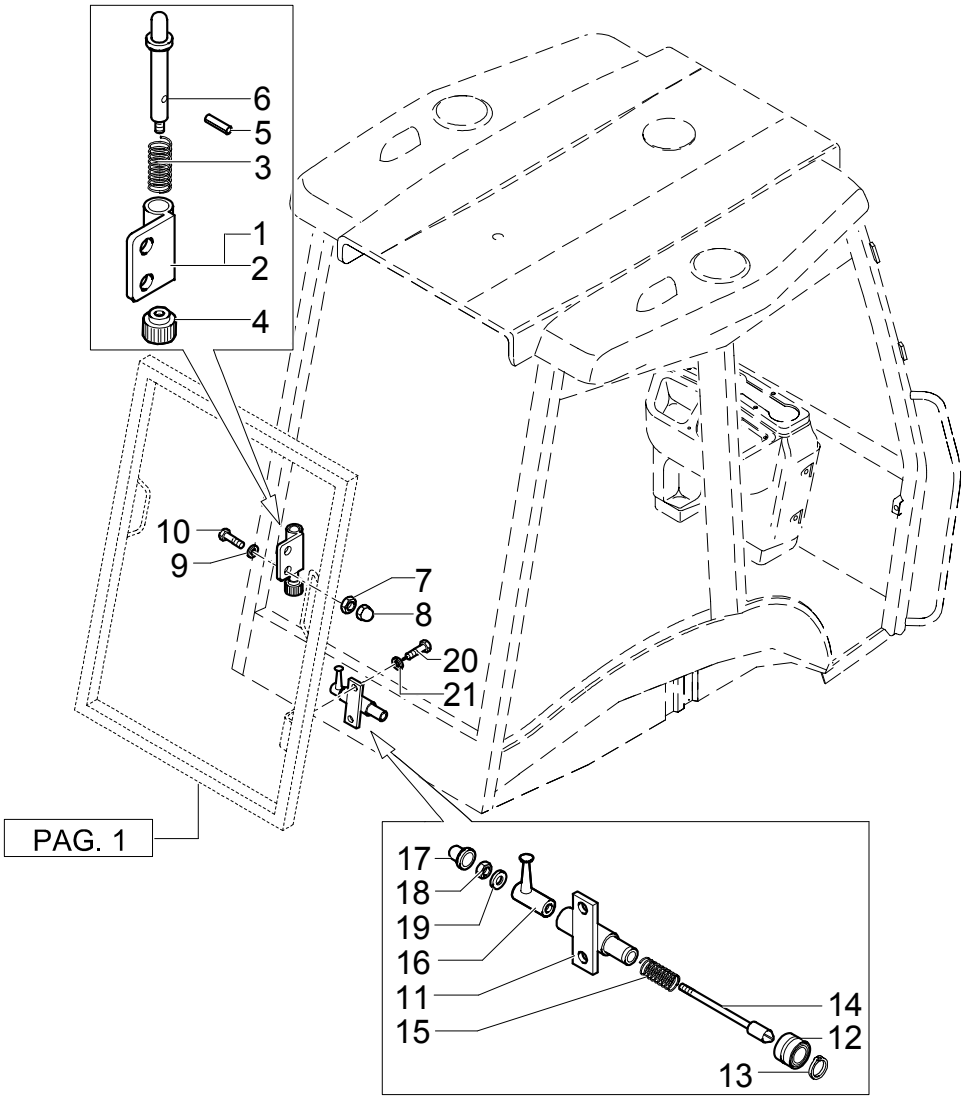

REAR WINDOWS

REF	FN	PART NUMBER	YR/SN	QTY	DESCRIPTION
1		85801831		1	CLIP LH
2		85801830		1	BLOCK RH
3		85801832		2	SPRING
4		85801833		2	KNOB
5		14161771		2	PIN, ROLL
6		85801834		2	PIN
7		16104111		4	NUT
8		5132136		4	GUARD
9		12638504		4	WASHER
10		16043624		4	SCREW Cap, HH, CL 8.8, M8 x 1.25 x 25
11		85801820		1	PIN RH
11		85801821		2	PIN LH
12		85802018		2	RING
13		85802351		2	RING, LOCKING
14		85801823		2	PIN
15		85801824		2	SPRING
16		85801825		2	ARM, TRIP
17		15811387		2	PROTECTION CAP
18		12574111		4	NUT
19		12637821		4	WASHER
20		14306424		4	SCREW
21		11198074		4	WASHER, SEALING

1.93.0	01	p1	02/04

CAB / SOFT TRIM

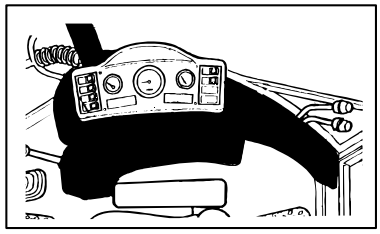

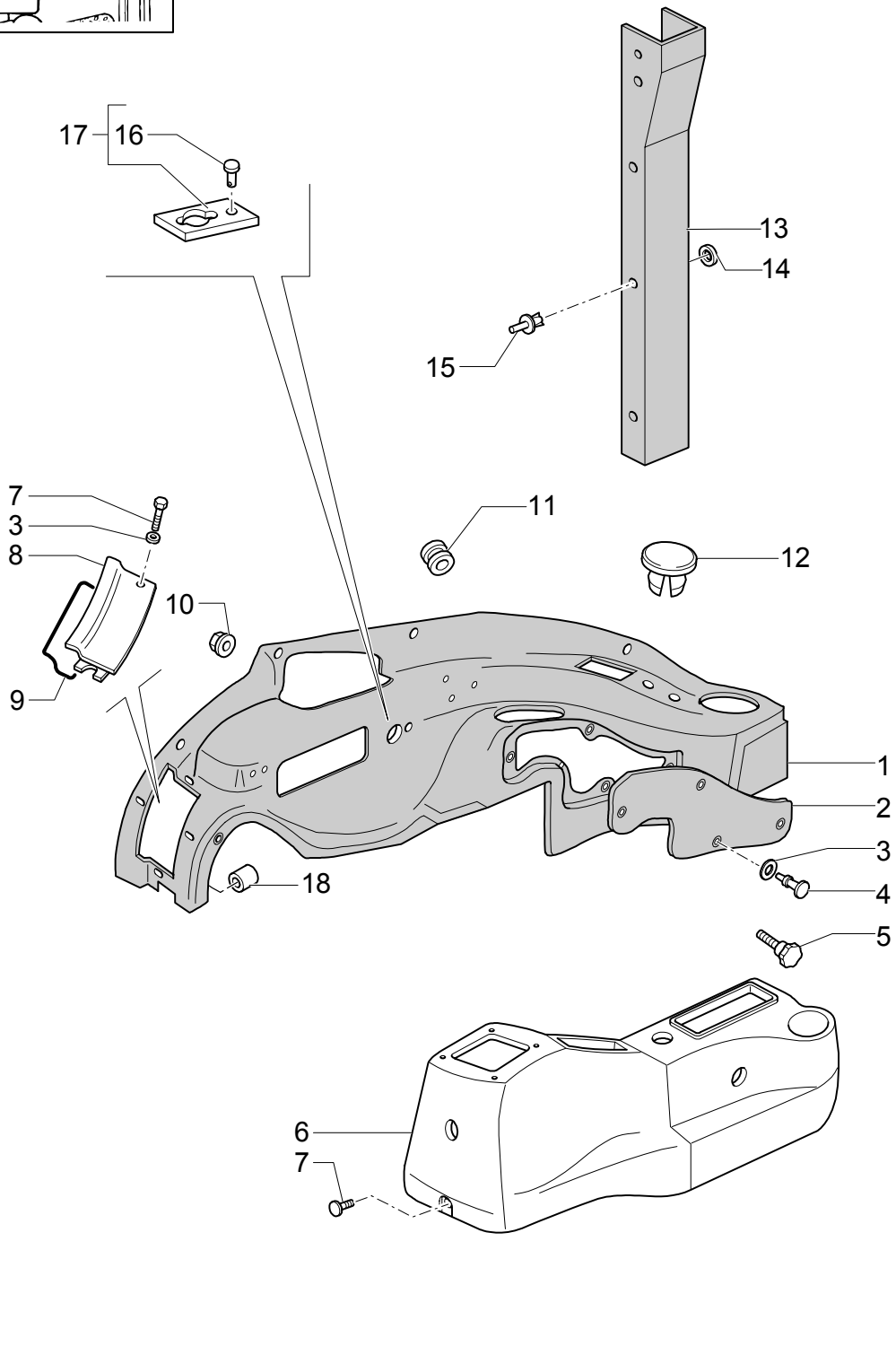

CAB / SOFT TRIM

REF	FN	PART NUMBER	YR/SN	QTY	DESCRIPTION
1	1	85821318		1	SOFT TRIM RH
2		85801649		1	SOFT TRIM
3		85801991		AR	WASHER
4		13311217		5	SCREW M5X20
5		85805323		1	KNOB
6		85819275		1	SOFT TRIM
7		13311017		AR	SCREW M5X16
8		85825191		1	COVER
9		85806023		1	GASKET
10		14084814		5	NUT M8
11		10398980		1	RING, INSULATING 46X5
12		79111815		1	PLUG
13		85819281		1	SOFT TRIM RH
14		85801991		4	WASHER
15		F1NN94000Z36AA		6	STUD
16		10427200		1	RIVET
17		85827548		1	SEAT/SLOT
18		85805819		6	BUSHING, THREADED

(1) Includes 2,8,9,18

CAB / SOFT TRIM (POWER SHUTTLE)

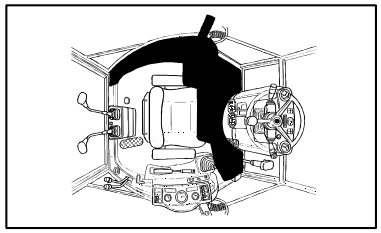

CAB / SOFT TRIM (POWER SHUTTLE)

REF	FN	PART NUMBER	YR/SN	QTY	DESCRIPTION
1		85819277		1	SOFT TRIM LH
2		79089592		6	WASHER D=24
3		13313417		6	SCREW M6X20
4		85819283		1	SOFT TRIM LH
5		5178468		1	GRAB STRAP
6		14084011		1	NUT M4
7		14084814		4	NUT M8
8		85801991		4	WASHER
9		15627011		12	RIVET
10		E7NN94290N06AA		1	STRAP
11		12638107		1	SPARE PART 5X14
12		85806154		1	RIVET
13		79111978		1	PLUG
14		5148132		1	SOCKET, LAMP
15		14143790		1	BULB 1,2W
16		F1NN94000Z36AA		6	STUD
17		5148131		1	SEAT/SLOT
18		79111978		1	PLUG D=23
19		85808460		1	PLUG

CAB / SOFT TRIM

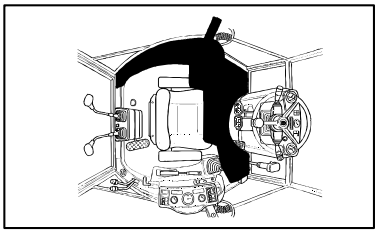

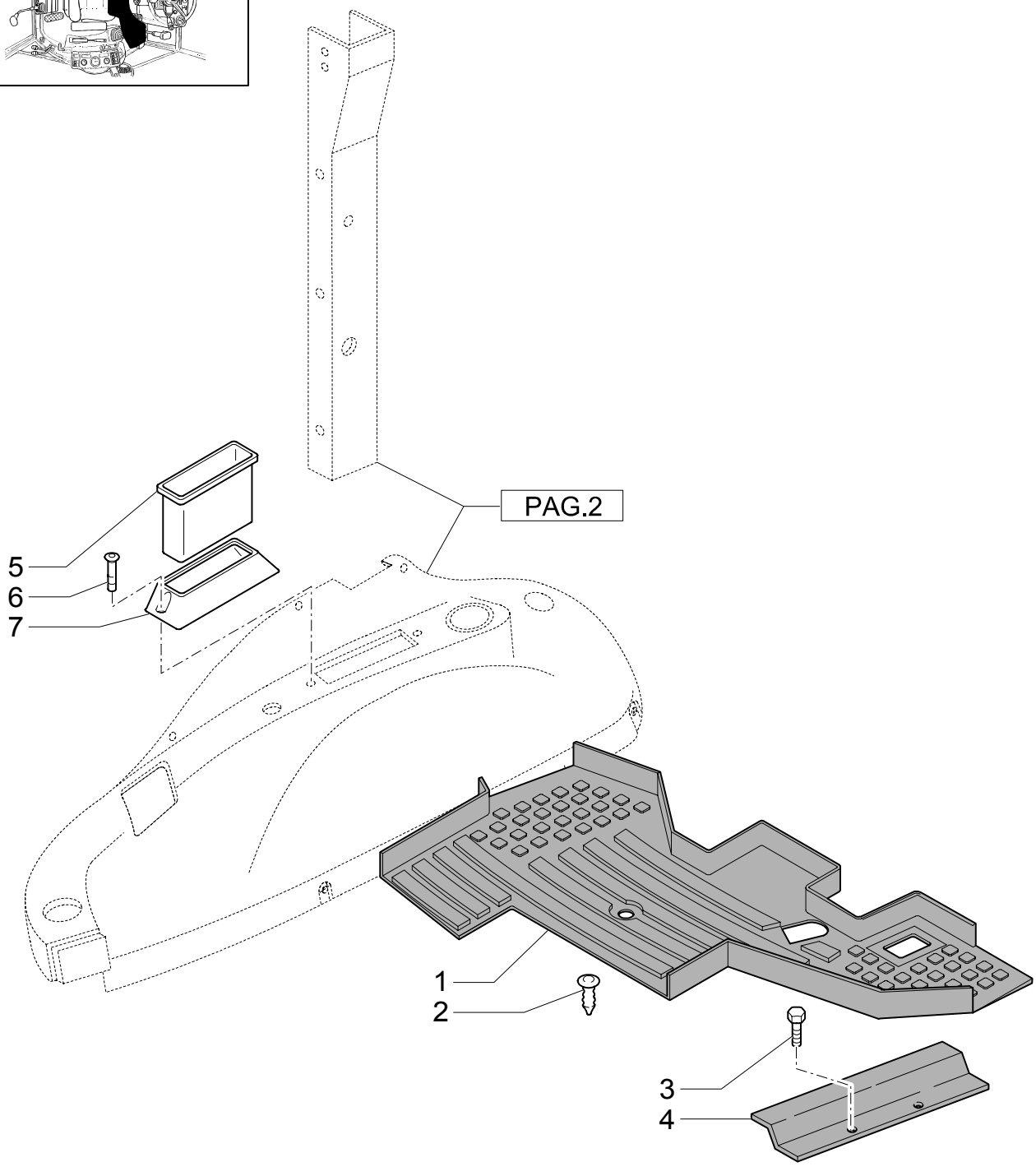

CAB / SOFT TRIM

REF	FN	PART NUMBER	YR/SN	QTY	DESCRIPTION
1		85804865		1	MAT
2		14568887		2	BUTTON
3		14441521		5	SCREW M6X25
4		85805591		2	MOULDING, DOOR SILL
5		85801979		1	CONTAINER
6		13276617		2	SCREW
7		85801651		1	HOUSING

CAB / SOFT TRIM

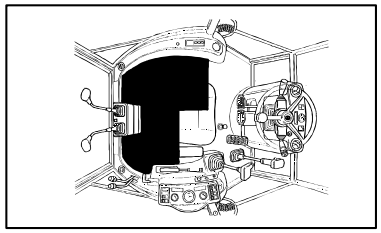

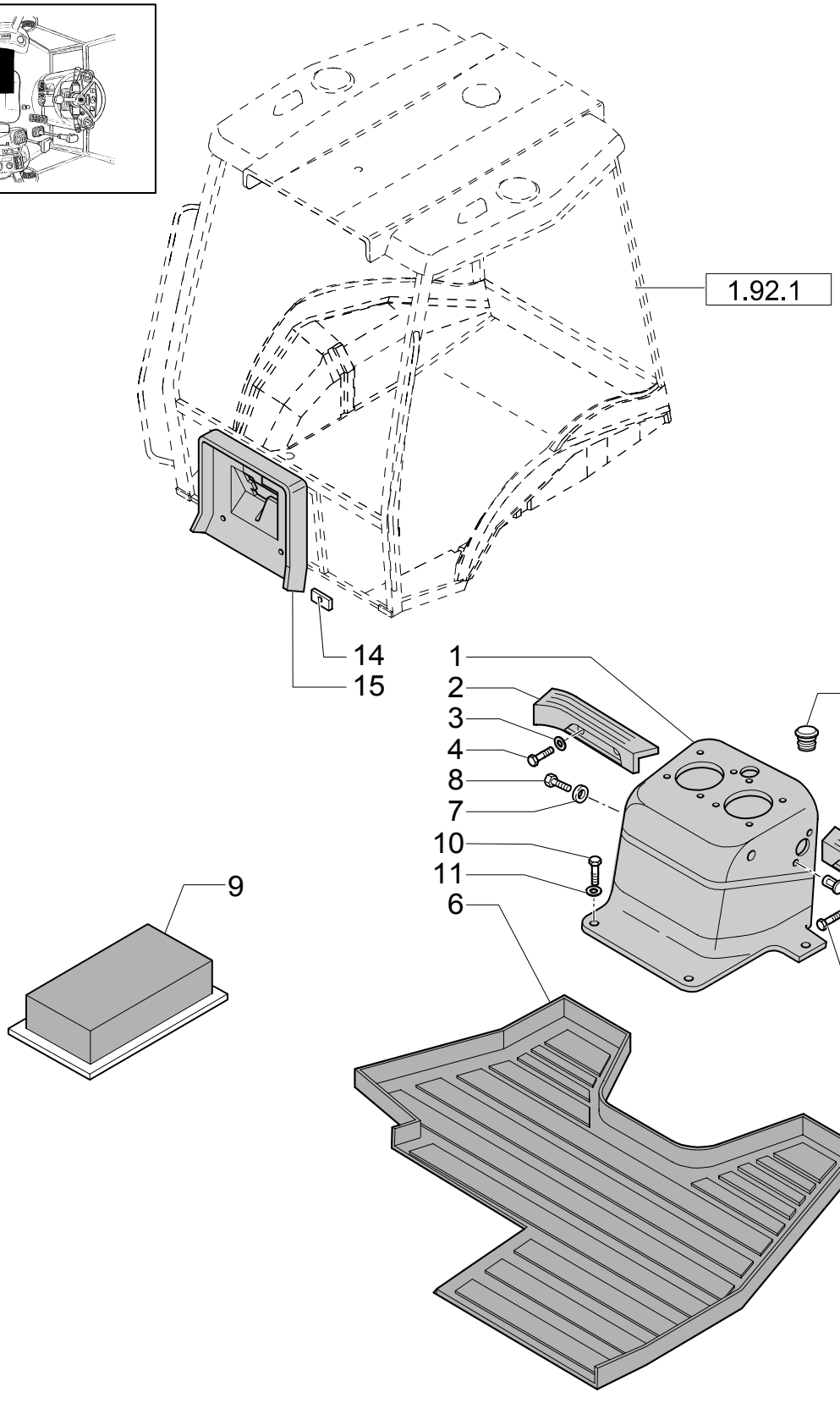

CAB / SOFT TRIM

REF	FN	PART NUMBER	YR/SN	QTY	DESCRIPTION
1		85816762		1	BLISTER
2		85804863		1	FOOT REST
3		10519604		4	WASHER
4		16043824		4	SCREW
5		85804864		1	FOOT REST
6		85804866		1	MAT
7		79089592		1	WASHER
8		79105220		1	SCREW
9		4999021		1	GASKET
10		10902624		4	SCREW
11		12640621		4	WASHER
12		85802259		2	BUSHING, THREADED
13		82001909		1	PLUG
14		85812080		4	NUT
15		87408893		1	PANEL

1.93.0/ 2	01	p1	02/04

RH & BACKHOE CONSOLE TRIM, ROPS (CENTER PIVOT)

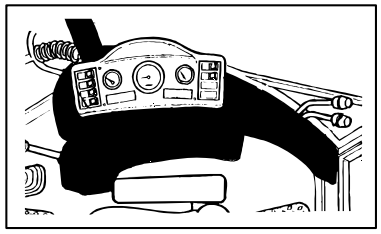

RH & BACKHOE CONSOLE TRIM, ROPS (CENTER PIVOT)

REF	FN	PART NUMBER	YR/SN	QTY	DESCRIPTION
1	1	85821320		1	SOFT TRIM
2		85801649		1	SOFT TRIM
3		85801991		AR	WASHER
4		13311217		5	SCREW M5X20
5		85805323		1	KNOB
6		85805803		1	UTILITY HOLDER
7		16043424		2	SCREW M6X20
8		85825191		1	COVER Fuse Panel
9		85806023		1	GASKET
10		14084814		5	NUT M8
11		85805308		1	GASKET
12		79111815		1	PLUG
13		79089592		2	WASHER D=24
14		13311017		4	SCREW M5X16
15		85812081		1	GASKET
16		10427200		1	RIVET
17		85827548		1	SEAT/SLOT
18		85804750		6	BUSHING, THREADED
19	2	85816763		1	BLISTER
20		85802259		2	BUSHING, THREADED
21		10902624		4	SCREW Cap, HH, CL 8.8, M8 x 1.25 x 20
22		11193974		4	WASHER, LOCK M8
23		79111978		1	PLUG
24		82001909		1	PLUG
25		4999021		1	GASKET

(1) Includes 2, 8, 9, 18
(2) Includes 20

Mechanical Version

LB75.B

1.93.0/ 3	01	p1	02/04

CAB / SOFT TRIM

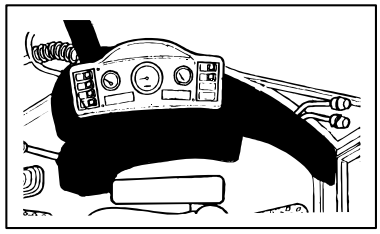

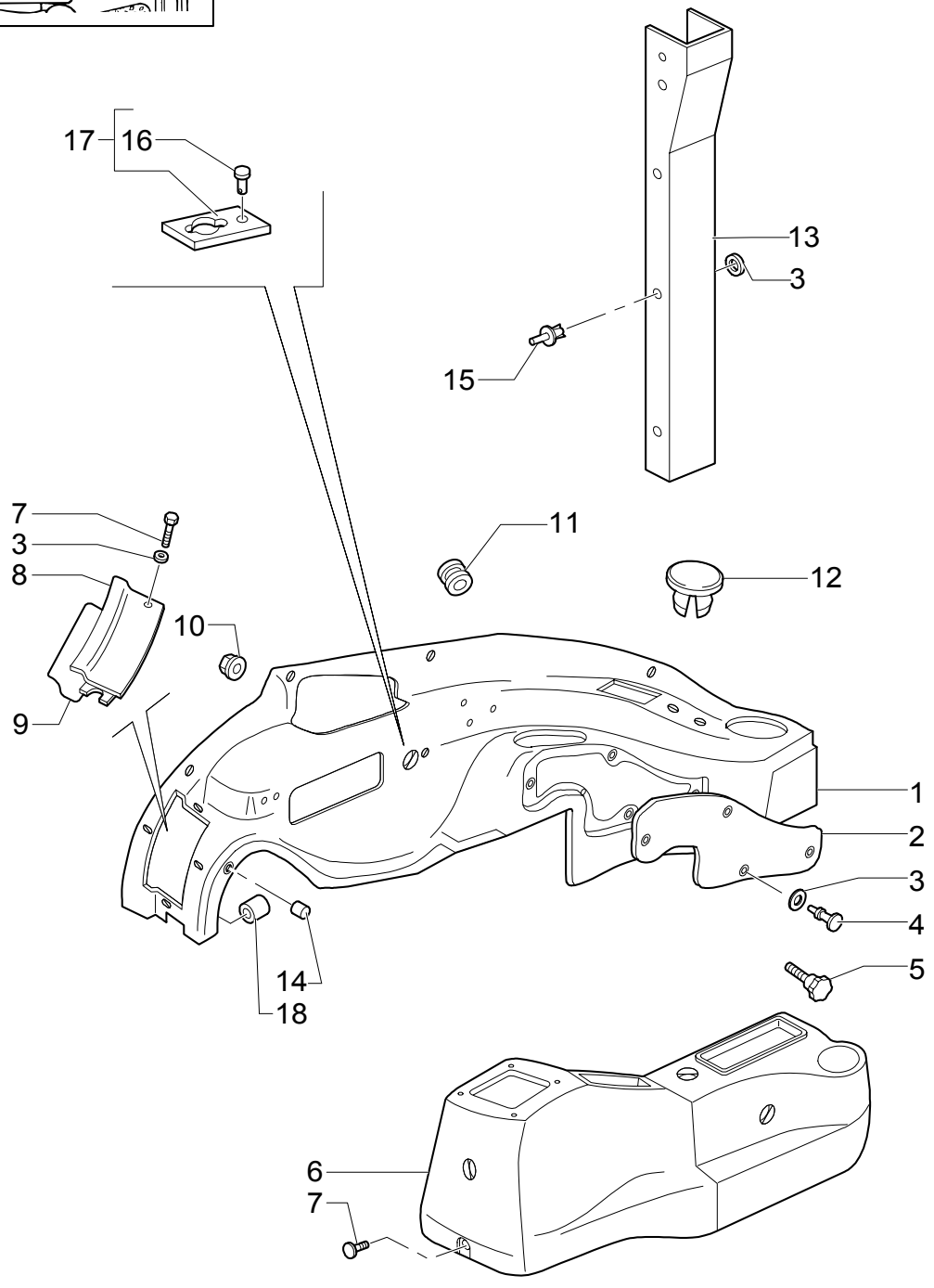

CAB / SOFT TRIM

REF	FN	PART NUMBER	YR/SN	QTY	DESCRIPTION
1	1	85825277		1	SOFT TRIM RH
2		85801649		1	SOFT TRIM
3		85801991		AR	WASHER
4		13311217		5	SCREW M5X20
5		85805323		1	KNOB
6		85819275		1	SOFT TRIM
7		13311017		AR	SCREW M5X16
8		85825191		1	COVER
9		85806023		1	GASKET
10		14084814		5	NUT M8
11		10398980		1	RING, INSULATING 46X5
12		79111815		1	PLUG
13		85819281		1	SOFT TRIM RH
14		85805819		4	BUSHING, THREADED
15		F1NN94000Z36AA		6	STUD
16		10427200		1	RIVET
17		85827548		1	SEAT/SLOT
18		85804750		6	BUSHING, THREADED

(1) Includes 2,8,9,14,18

1.93.0/ 3	04	p1	11/03

CAB / SOFT TRIM

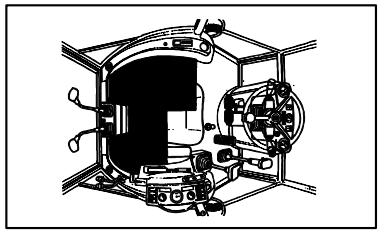

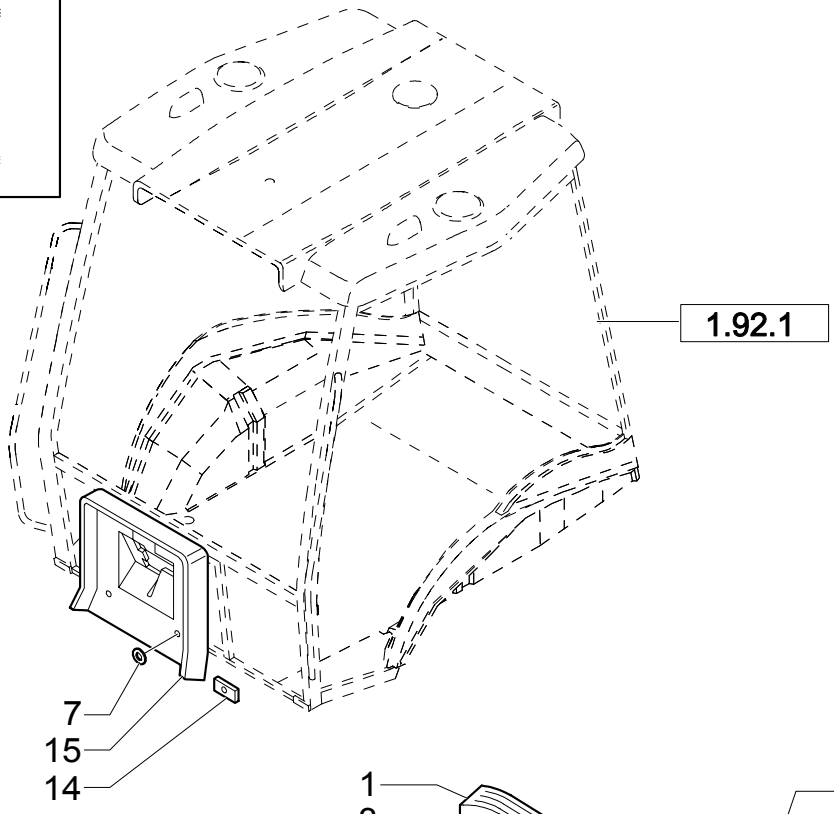

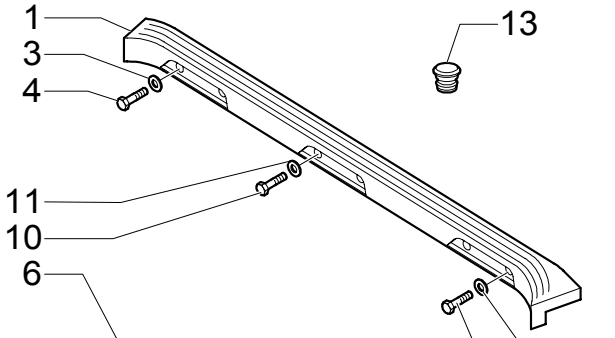

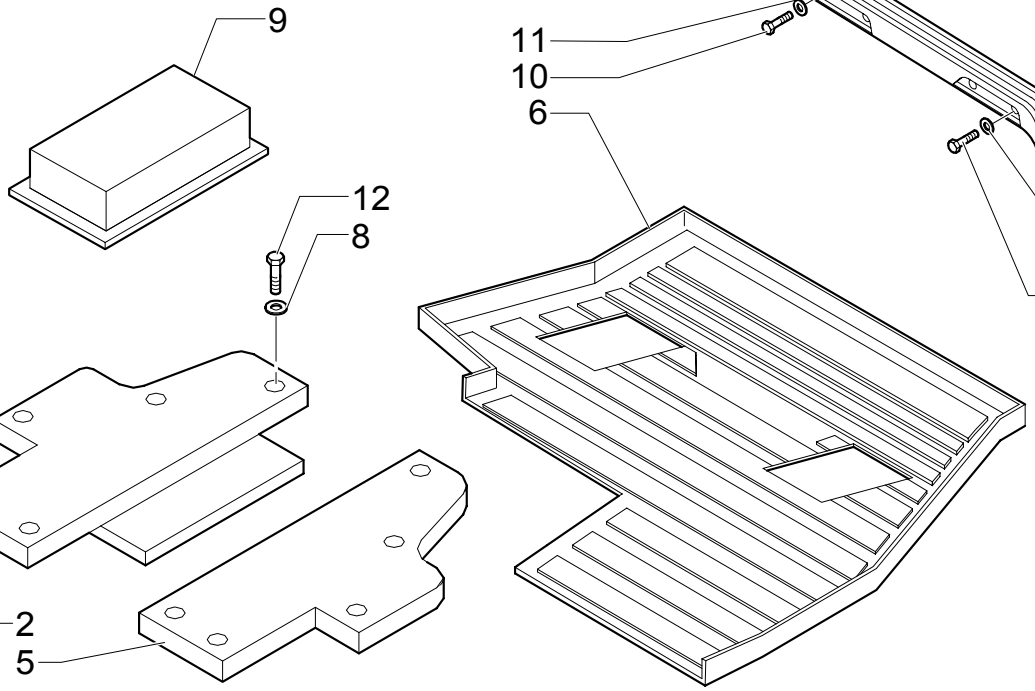

CAB / SOFT TRIM

REF	FN	PART NUMBER	YR/SN	QTY	DESCRIPTION
1		{87410385}		1	PANEL
2		{87426550}		1	COVER, TOP
3		10519604		4	WASHER
4		16043824		4	SCREW
5		{87426546}		1	COVER, TOP
6		87410108		1	DRUM
7		79089592		1	WASHER
8		11193274		10	WASHER, LOCK
9		4999021		1	GASKET
10		10902624		4	SCREW
11		12640621		4	WASHER
12		10902524		10	SCREW
13		82001909		1	PLUG
14		85812080		4	NUT
15		87408893		1	PANEL

1.93.0/ 5	01	p1	02/04

RH & BACKHOE CONSOLE TRIM, ROPS (CENTER PIVOT)

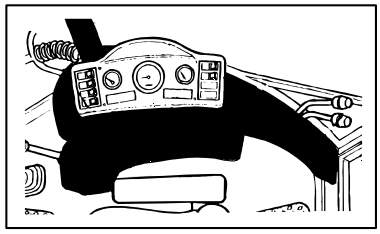

RH & BACKHOE CONSOLE TRIM, ROPS (CENTER PIVOT)

REF	FN	PART NUMBER	YR/SN	QTY	DESCRIPTION
1	1	85825272		1	SOFT TRIM
2		85801649		1	SOFT TRIM
3		85801991		AR	WASHER
4		13311217		5	SCREW M5x20
5		85805323		1	KNOB
6		85805803		1	UTILITY HOLDER
7		16043424		2	SCREW M6x20
8		85825191		1	COVER Fuse Panel
9		85806023		1	GASKET
10		14084814		5	NUT M8
11		85805308		1	GASKET
12		79111815		1	PLUG
13		79089592		2	WASHER D=24
14		13311017		4	SCREW M5x16
15		85812081		1	GASKET
16		10427200		1	RIVET
17		85827548		1	SEAT/SLOT
18		85804750		6	BUSHING, THREADED
19		85819016		1	GASKET
20		85808460		1	PLUG
21		{87426550}		1	COVER, TOP
22		11193974		4	WASHER, LOCK M8
23		79111978		1	PLUG
24		82001909		1	PLUG
25		4999021		1	GASKET
26		{87426546}		1	COVER, TOP
27		10902524		10	SCREW
28		11193274		10	WASHER, LOCK

(1) Includes 2,8,9,18

Pilot Control Version

LB75.B

1.93.4	01	p1	04/03

REAR MIRROR- SUN SCREEN

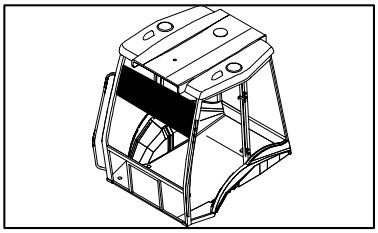

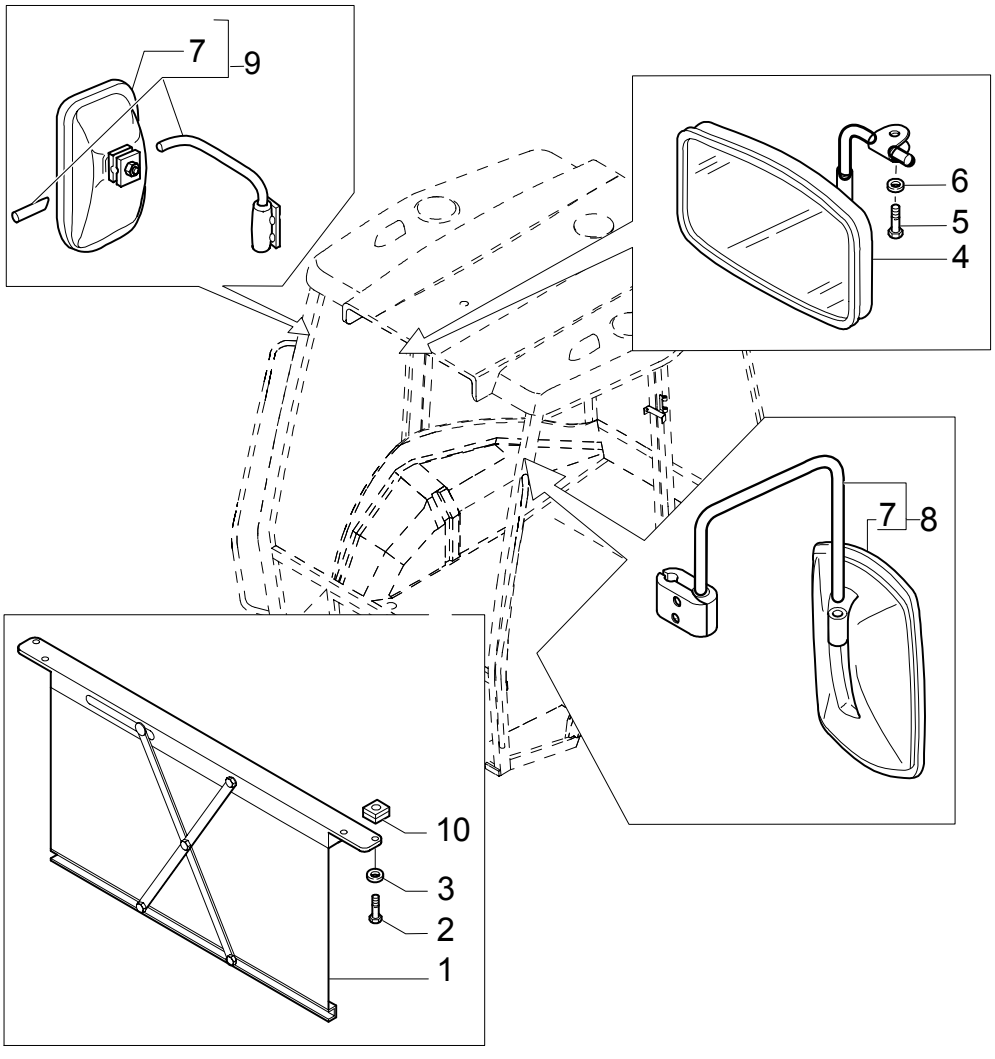

REAR MIRROR- SUN SCREEN

REF	FN	PART NUMBER	YR/SN	QTY	DESCRIPTION
1		5176441		1	SUN CURTAIN
2		14303324		4	SCREW
3		14197790		4	NUT
4		83995298		1	MIRROR, LH CAB
5		13313417		1	SCREW CAB M6X25
6		11193274		2	WASHER, LOCK ROPS
7		85820138		1	MIRROR, REAR-VIEW
8		85820139		1	MIRROR, LH
9		85820136		1	MIRROR, RH (EQUIP.879)
10		12642821		4	WASHER, LOCK 4X12.5

FRONT CONSOLE - ROPS (POWER SHUTTLE)

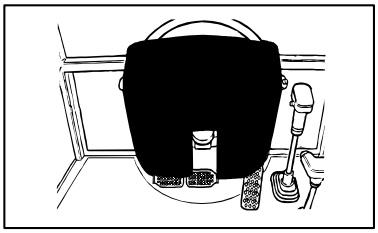

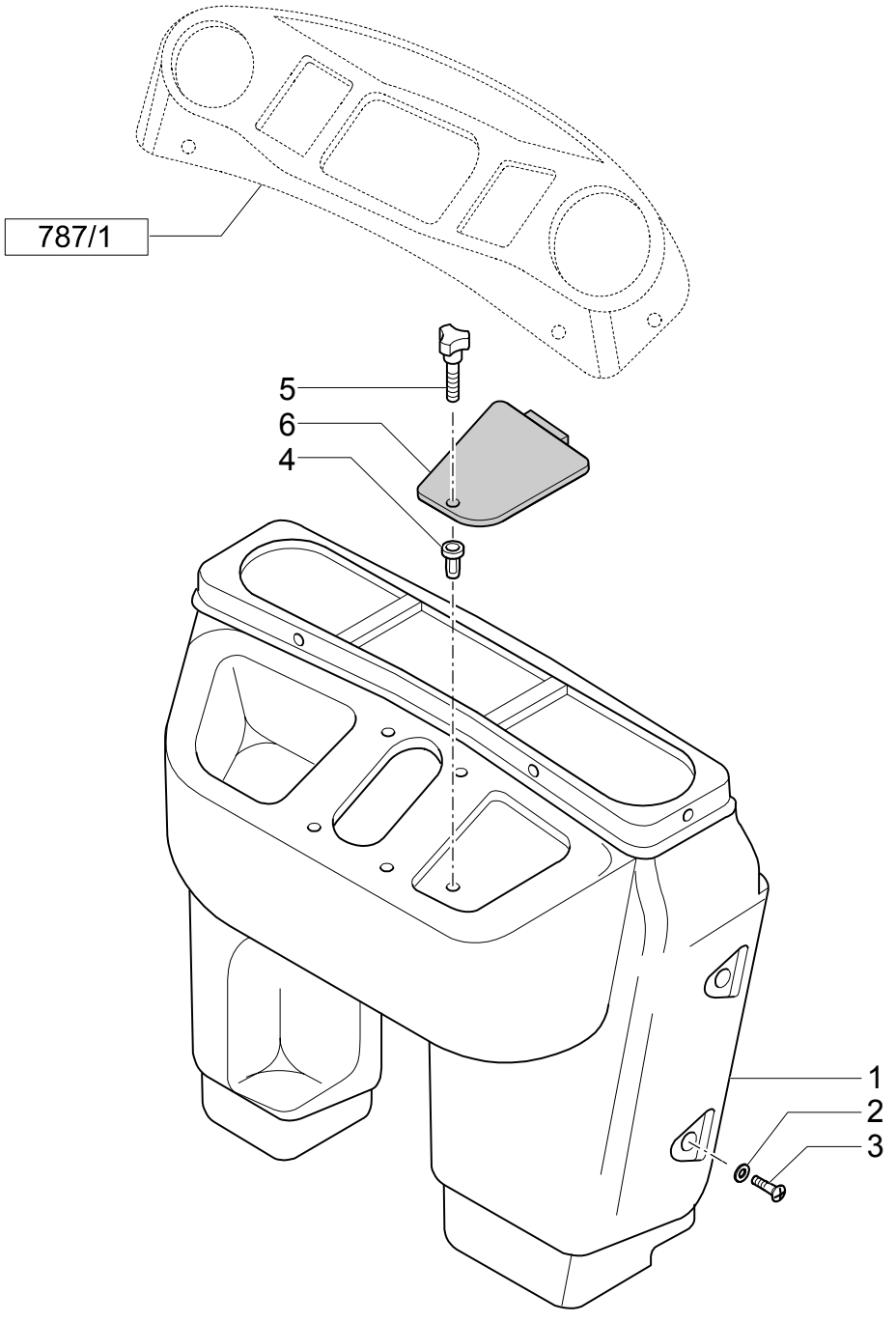

FRONT CONSOLE - ROPS (POWER SHUTTLE)

REF	FN	PART NUMBER	YR/SN	QTY	DESCRIPTION
1	1	85819407		1	PANEL, DASH ASSY ROPS
2		79089592		2	WASHER D=24
3		79105220		2	SCREW M6X20
4		85804750		4	BUSHING, THREADED M5
5		85805323		1	KNOB M5
6		85806089		1	COVER

(1) Includes 4,5,6

1.93.5	02	p1	05/03

RH SIDE CONSOLE SEAL & CLIPS - ROPS (POWER SHUTTLE)

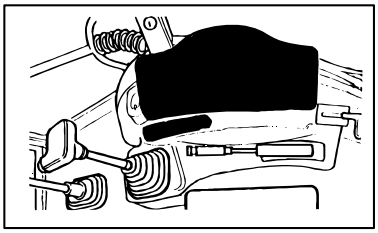

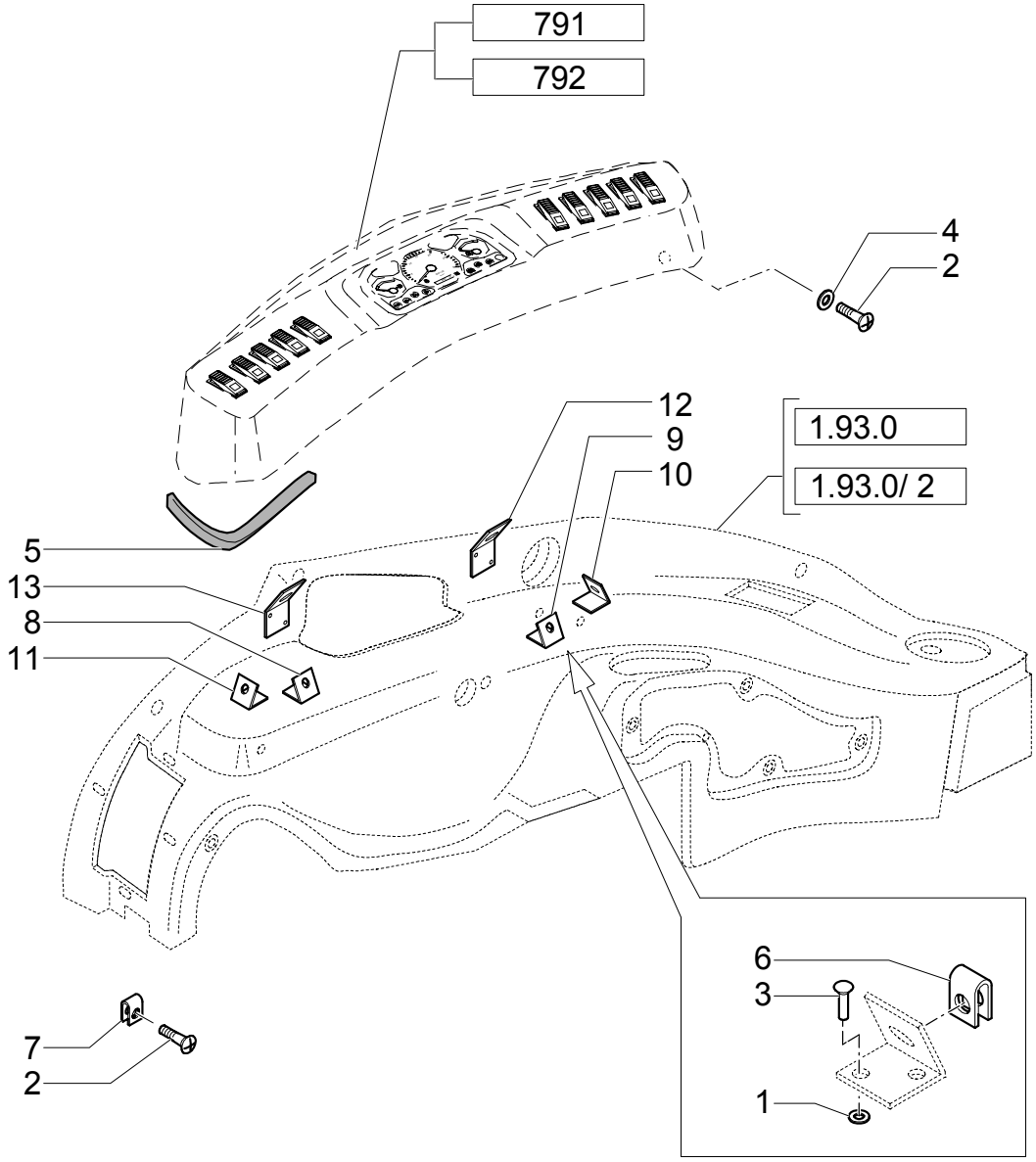

RH SIDE CONSOLE SEAL & CLIPS - ROPS (POWER SHUTTLE)

REF	FN	PART NUMBER	YR/SN	QTY	DESCRIPTION
1		12642804		12	WASHER
2		15693507		AR	SCREW
3				12	
4		85801991		AR	WASHER
5		85824393		1	SEAL, RUBBER
6		14189176		6	COLLAR, RETAINER
7		14372671		2	NUT
8		85802141		1	COLLAR, RETAINER
9		85802142		1	COLLAR, RETAINER
10		85802143		1	COLLAR, RETAINER
11		85802144		1	COLLAR, RETAINER
12		85802145		1	COLLAR, RETAINER
13		85802146		1	COLLAR, RETAINER

1.93.5/ 1	01	p1	11/03

CAB / PANEL DASH

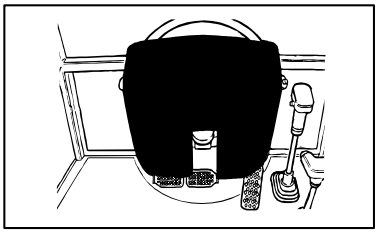

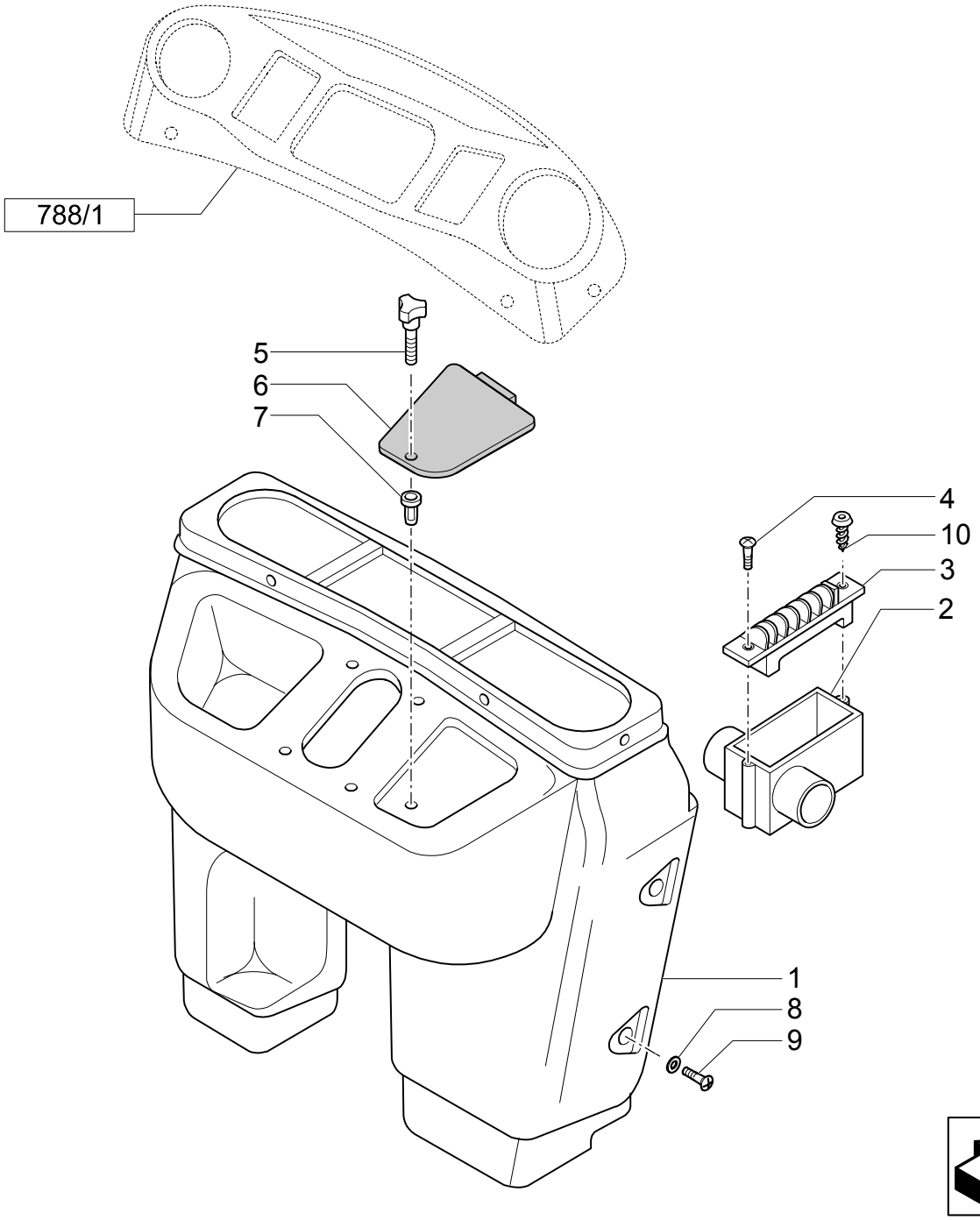

CAB / PANEL DASH

REF	FN	PART NUMBER	YR/SN	QTY	DESCRIPTION
1	1	85819289		1	PANEL, DASH ASSY CAB
2		85819567		2	CONVEYOR CAB
3		85819454		2	DIFFUSER CAB
4		14440327		4	SCREW CAB M4X20
5		85805323		1	KNOB M5
6		85806089		1	COVER
7		85804750		5	BUSHING, THREADED M5
8		79089592		AR	WASHER D=24
9		79105220		AR	SCREW M6X20
10		14568887		4	BUTTON CAB 8X20

(1) Includes 2,3,4,5,6

1.93.5/ 1	02	p1	11/03

CAB / PANEL DASH

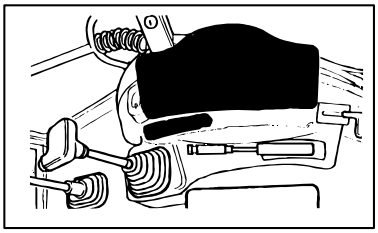

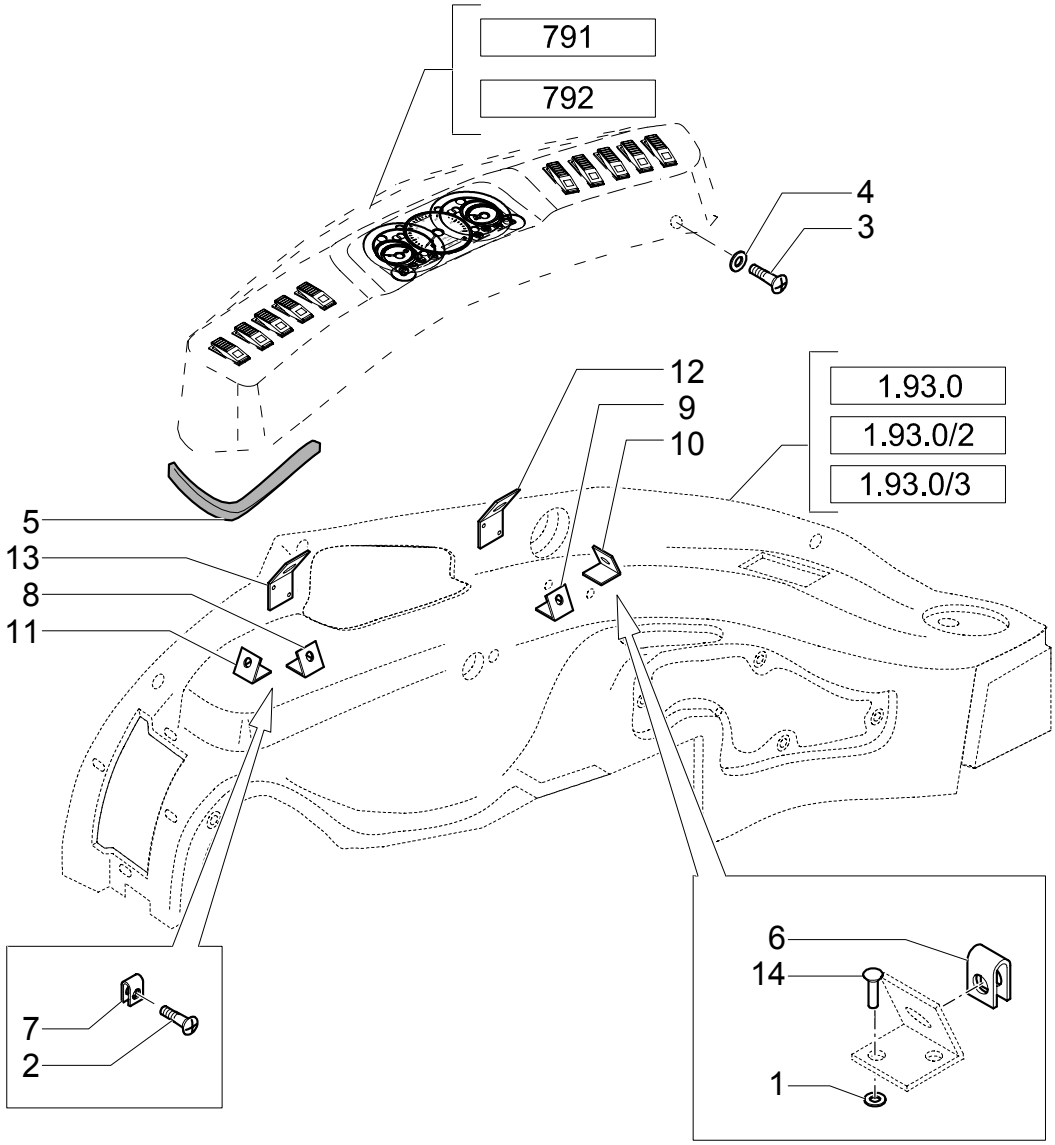

CAB / PANEL DASH

REF	FN	PART NUMBER	YR/SN	QTY	DESCRIPTION
1		12642804		1	WASHER
2		15693301		2	SCREW CAB
3		15693507		AR	SCREW
4		85801991		AR	WASHER
5		85824393		1	SEAL, RUBBER
6		14189176		6	COLLAR, RETAINER
7		14372671		2	NUT CAB
8		85802141		1	COLLAR, RETAINER
9		85802142		1	COLLAR, RETAINER
10		85802143		1	COLLAR, RETAINER
11		85802144		1	COLLAR, RETAINER
12		85802145		1	COLLAR, RETAINER
13		85802146		1	COLLAR, RETAINER
14		14642192		12	RIVET

1.94.0	01	p1	11/03

CAB/ CANOPY

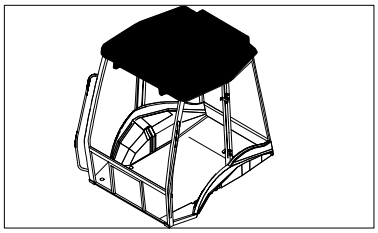

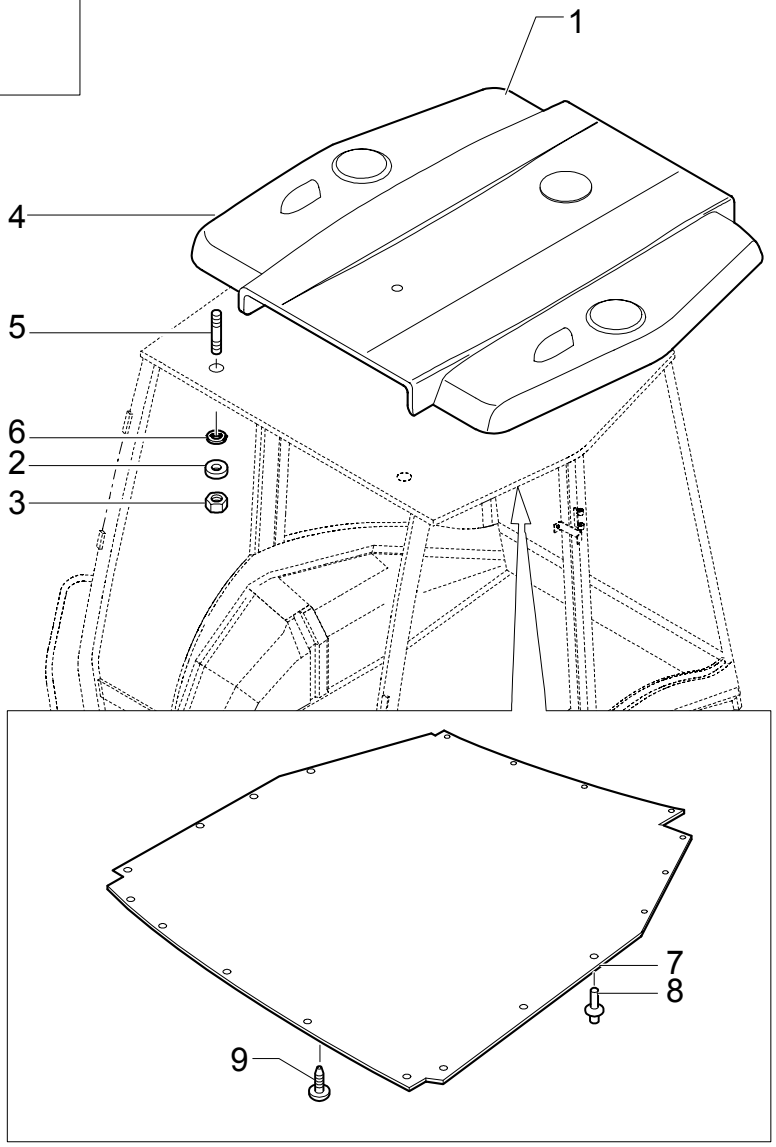

CAB/ CANOPY

REF	FN	PART NUMBER	YR/SN	QTY	DESCRIPTION
1	1, 2	85819441		1	ROOF CAB
1	1, 3	85818935		1	ROOF CAB
2		12647004		8	WASHER
3		16104111		8	NUT
4		85819549		8	PLUG CAB
5		13517021		8	STUD
6		85801801		8	GASKET
7		85825335		1	PANEL
8		5162852		21	BUTTON
9		85805777		1	PLUG

(1) Includes 5
(2) Only for Center Pivot
(3) Only for SIDE SHIFT

1.94.0/ 1	01	p1	04/03

ROOF, ROPS

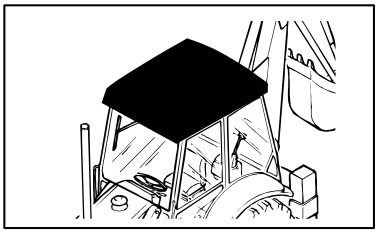

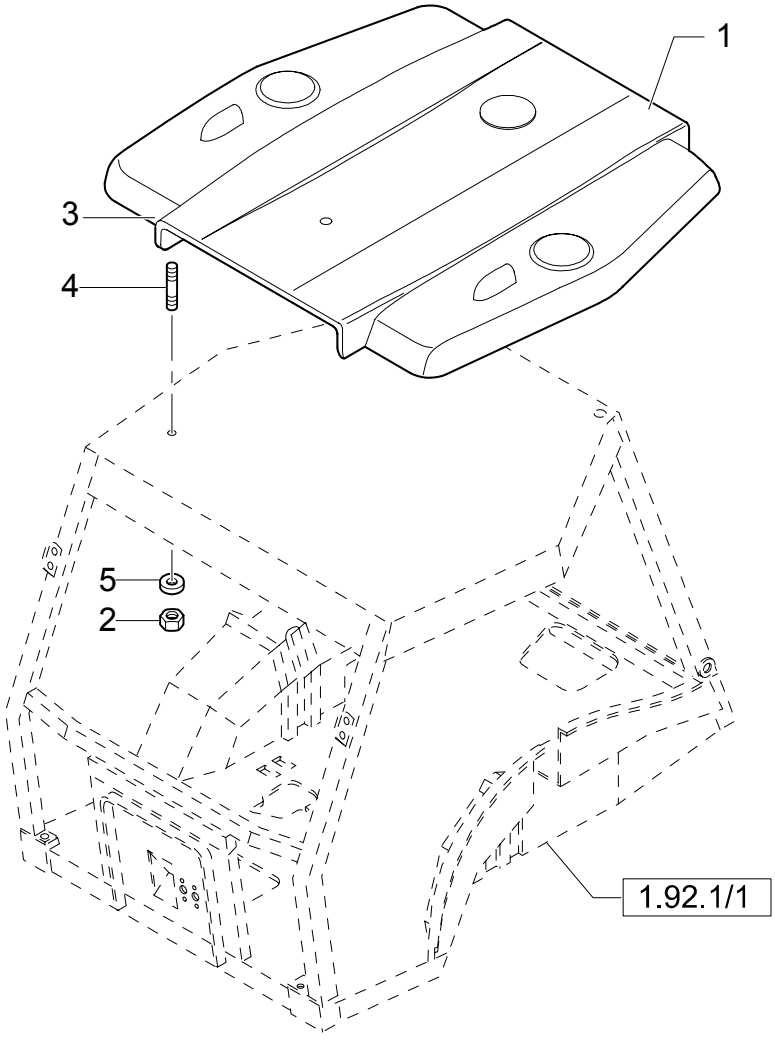

ROOF, ROPS

REF	FN	PART NUMBER	YR/SN	QTY	DESCRIPTION
1	1, 2	85819439		1	ROOF
1	3, 1	85818931		1	ROOF
2		16104111		8	NUT
3		85819549		8	PLUG
4		13517021		8	STUD
5		12647004		8	WASHER

(1) Includes 4
(2) Only for Center Pivot
(3) Only for SIDE SHIFT

1.94.2	01	p1	05/03

HEATER HOUSING, COIL, BLOWER & VALVE

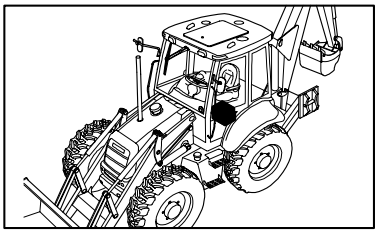

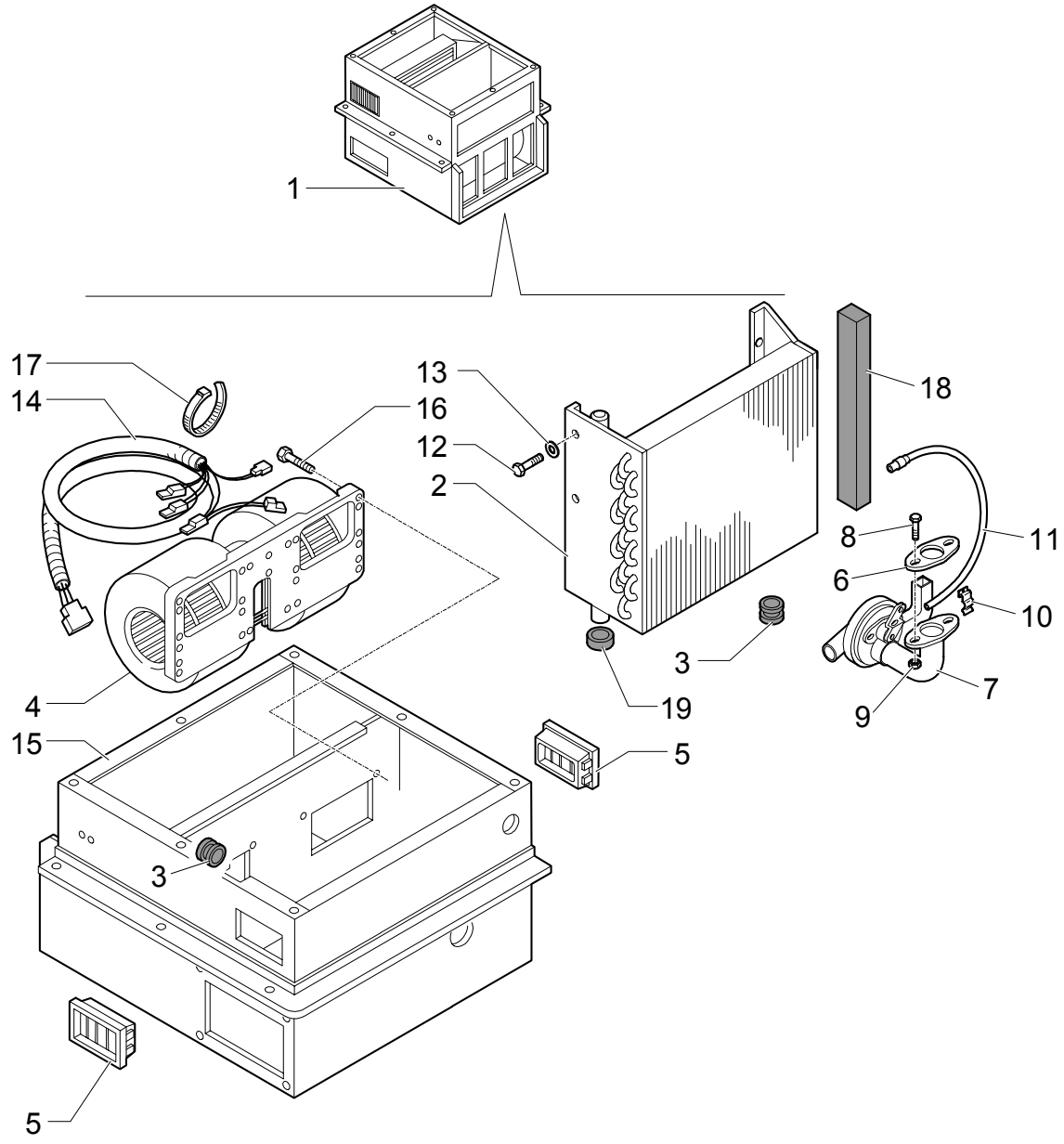

HEATER HOUSING, COIL, BLOWER & VALVE

REF	FN	PART NUMBER	YR/SN	QTY	DESCRIPTION
1		85820880		1	HEATER
2		85821348		1	HEAT EXCHANGER
3		85804412		2	RING, RUBBER
4		85820883		1	BLOWER, ELECTRIC
5		85804044		2	SPOUT, DISCHARGE
6		85820885		1	GASKET
7		85820884		1	DRAINCOCK/TAP, SUPPLY
8		85820887		2	SCREW
9		85820886		2	NUT
10		85820889		1	SPRING
11		85820890		1	CABLE
12		85820893		4	SCREW
13		85820894		4	WASHER
14		85820895		1	CABLE, ELECTRIC
15		85821347		1	HEATER
16		85820899		8	SCREW
17		85820900		1	COLLAR
18		85821345		1	SEAL, RUBBER
19		85821346		1	SEAL, RUBBER

Mechanical Version

LB75.B

1.94.2	02	p1	02/04

HEATER ASSEMBLY & FILTERS

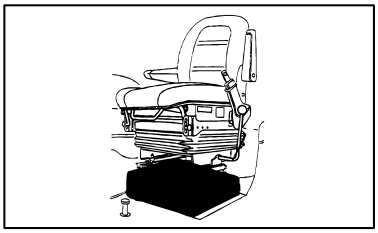

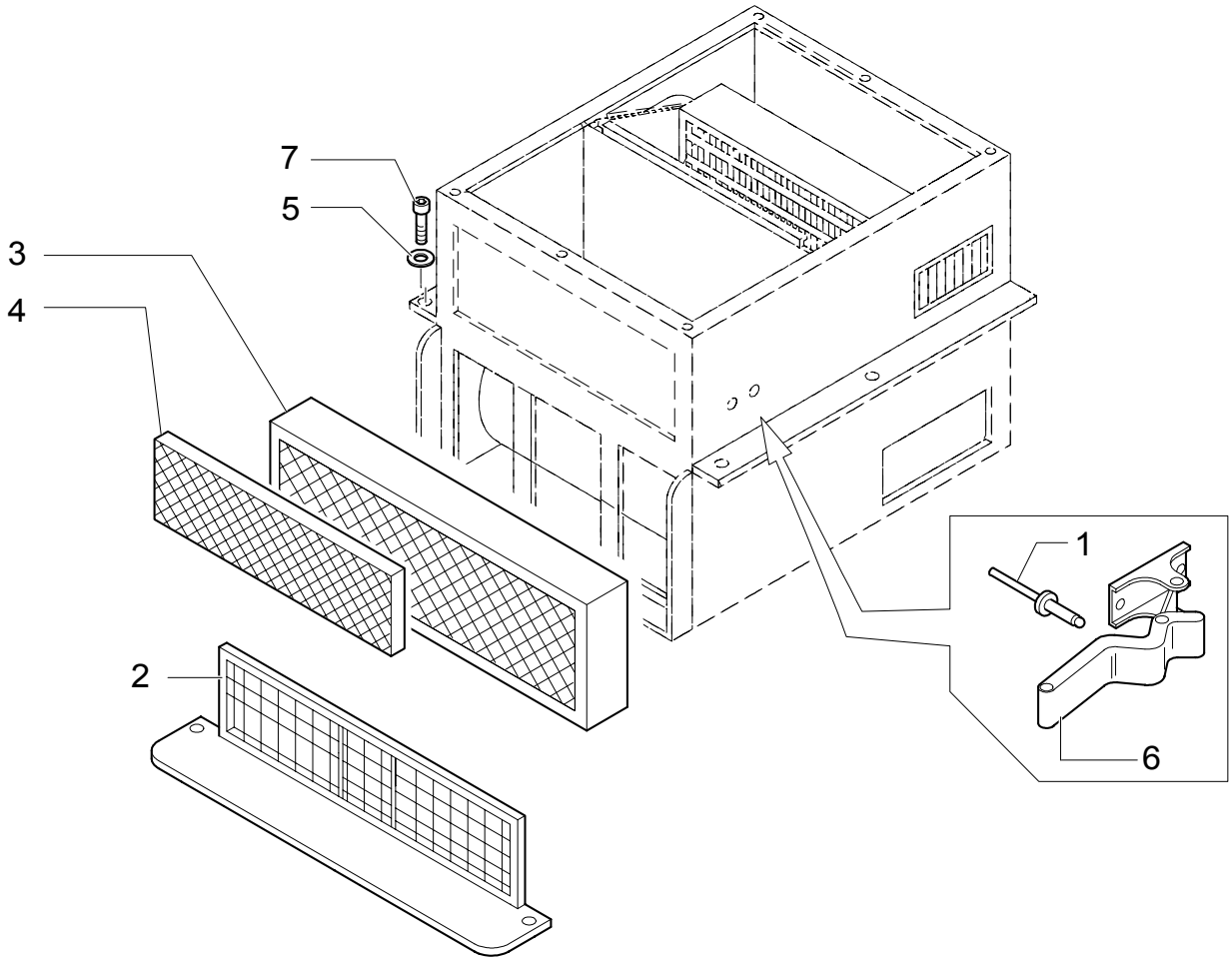

HEATER ASSEMBLY & FILTERS

REF	FN	PART NUMBER	YR/SN	QTY	DESCRIPTION
1		85820896		4	RIVET
2		85820897		1	CONTAINER
3		85826032		1	FILTER, AIR
4		85826026		1	FILTER, AIR
5		11193874		6	WASHER, LOCK
6		85812043		2	HOOK
7		16043424		6	SCREW

1.94.2	03	p1	08/03

HEATER WATER HOSES

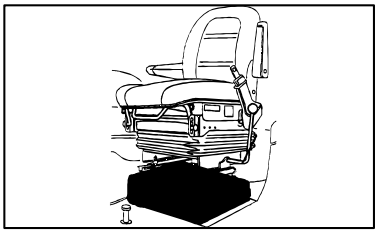

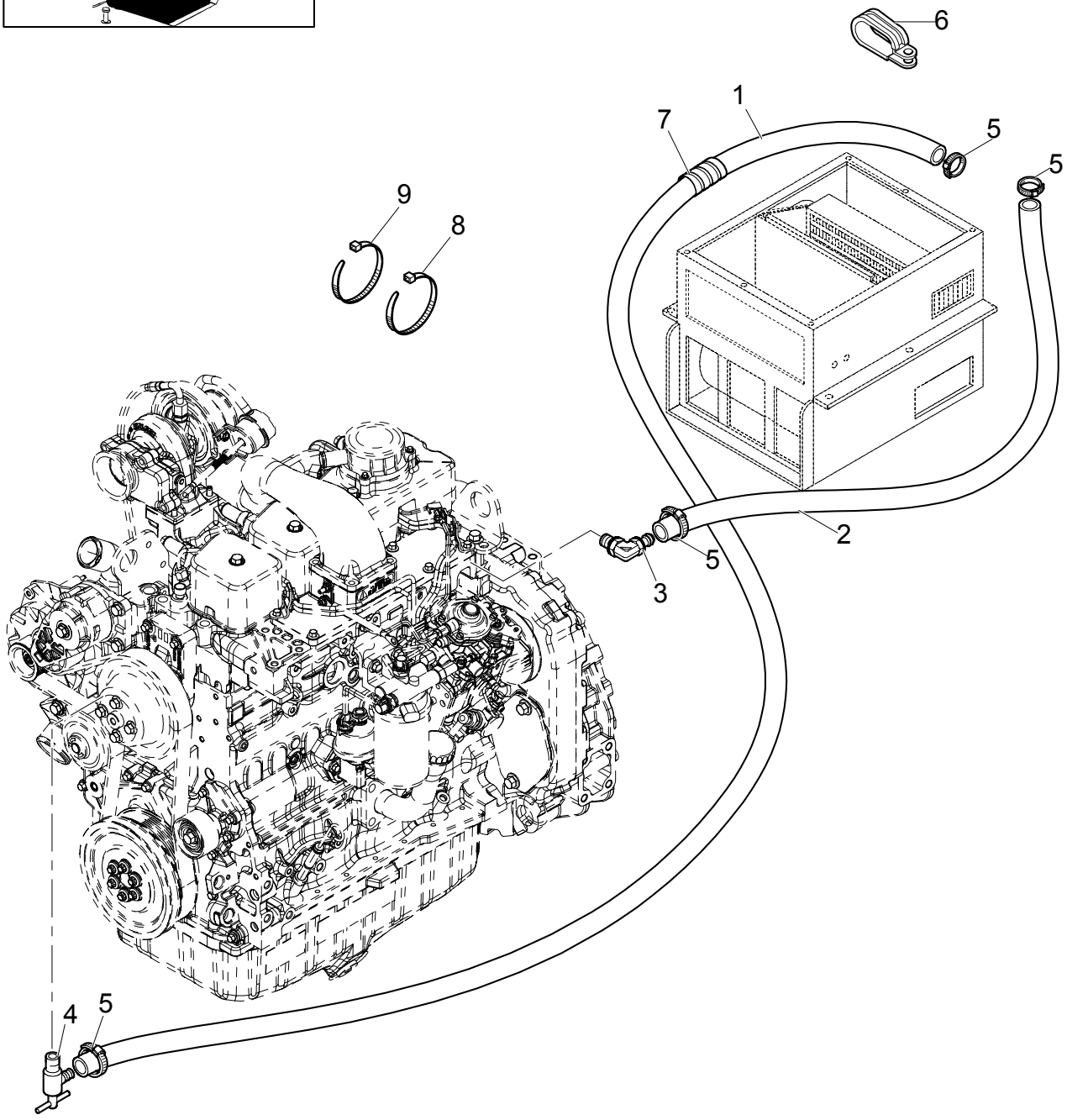

HEATER WATER HOSES

REF	FN	PART NUMBER	YR/SN	QTY	DESCRIPTION
1		87403646		1	HOSE, FLEXIBLE
2		87403647		1	HOSE, FLEXIBLE
3		86637716		1	STEM
4		47048896		1	VALVE, HYDRAULIC
5		85824094		4	COLLAR
6		47048653		2	COLLAR
7		{47048760}		3	SHIELD
8		47048448		1	COLLAR
9		47048451		3	COLLAR

1.94.2	04	p1	05/03

AIR DUCTS & VENTS

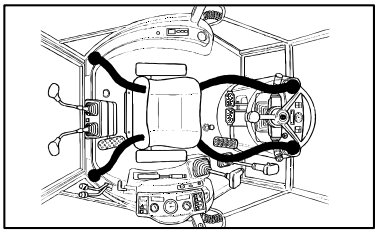

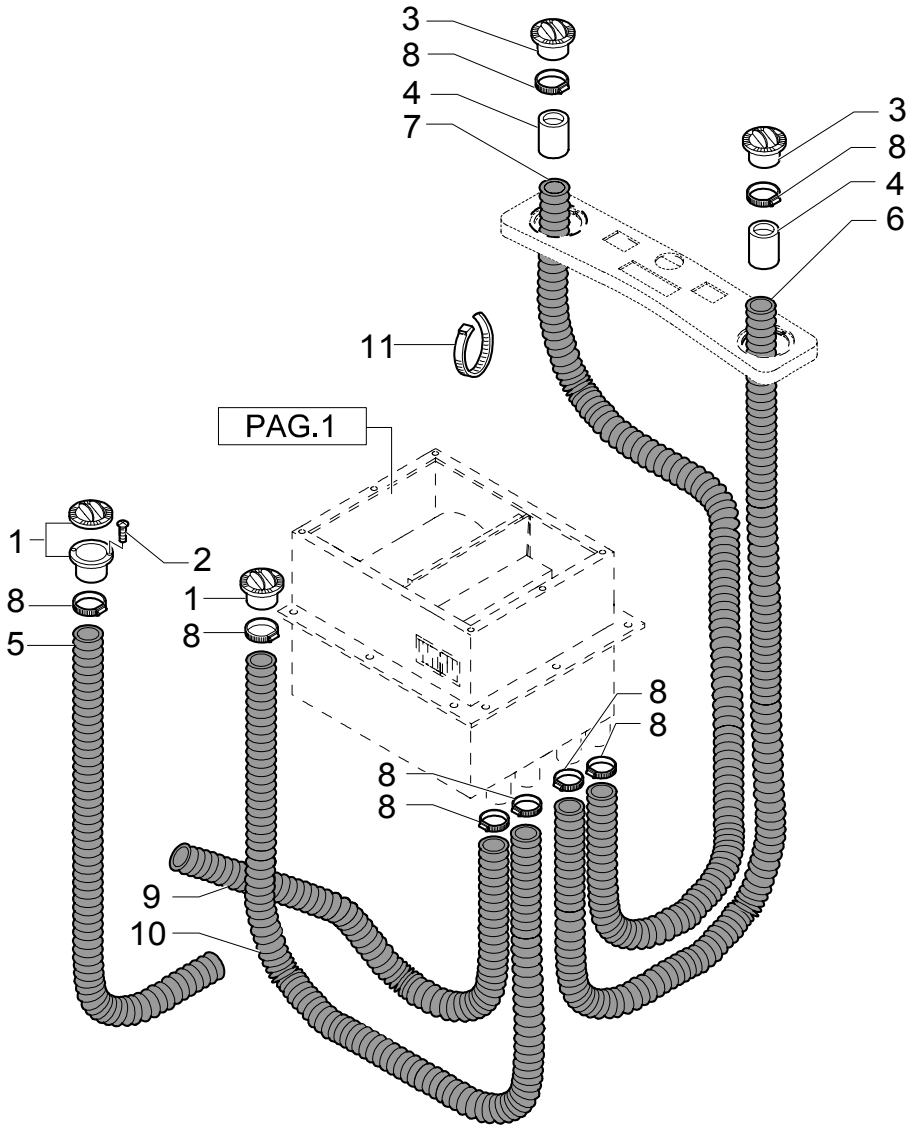

AIR DUCTS & VENTS

REF	FN	PART NUMBER	YR/SN	QTY	DESCRIPTION
1		70741298		2	DIFFUSER
2		15916901		4	SCREW 8 x 16
3		85819543		2	DIFFUSER
4		85819592		2	SLEEVE
5		85820905		1	PIPE, VENTILATION
6		85820901		1	HOSE, FLEXIBLE FRONT, LH
7		85820902		1	PIPE, VENTILATION FRONT, RH
8		13000990		10	CLIP, HOSE
9		85820904		1	PIPE, VENTILATION REAR, RH
10		85820903		1	PIPE, VENTILATION REAR, LH
11		5112712		11	COLLAR

1.94.2	05	p1	05/03

HEATER CONTROL PANEL

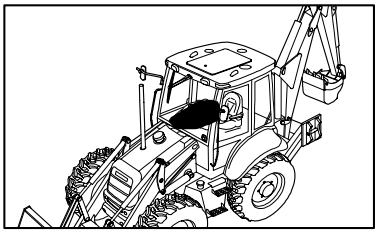

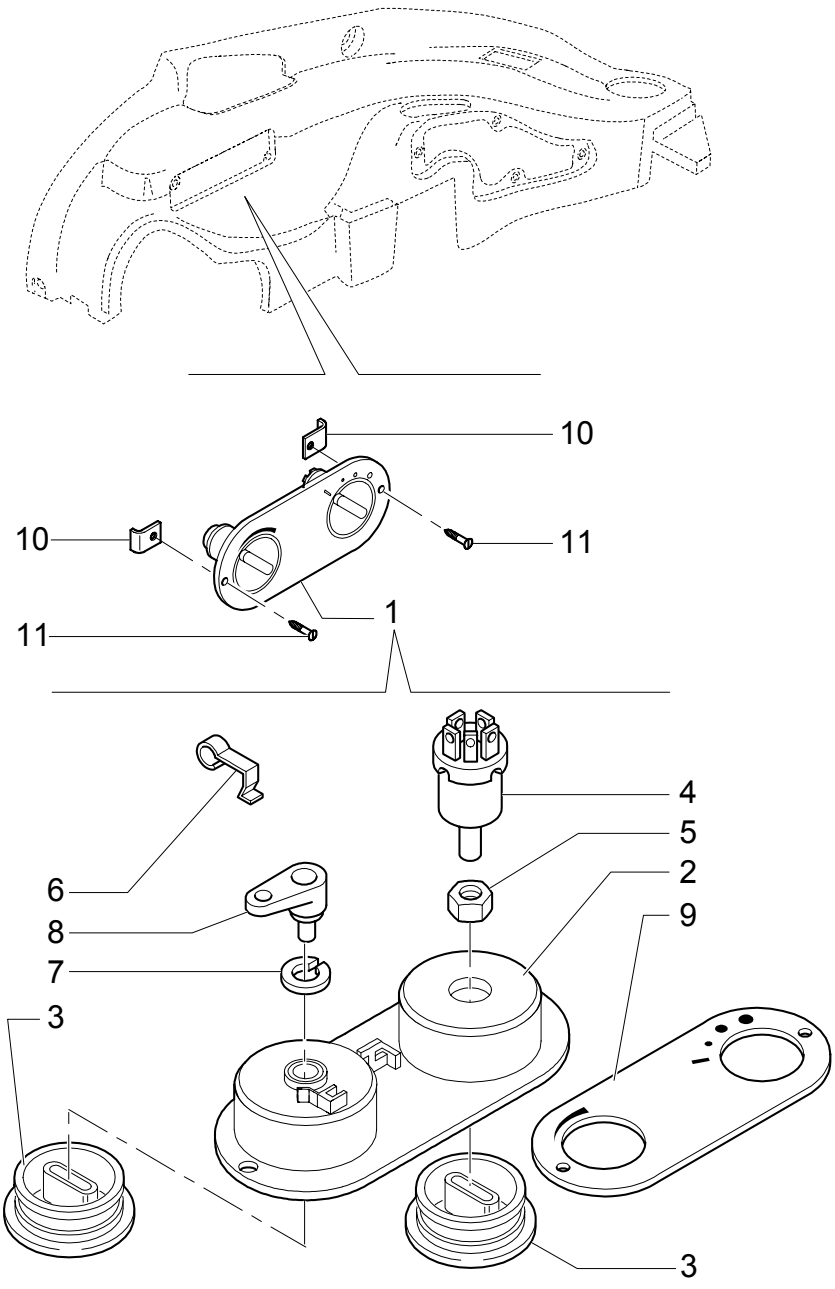

HEATER CONTROL PANEL

REF	FN	PART NUMBER	YR/SN	QTY	DESCRIPTION
1		85817567		1	DASHBOARD
2		85817569		1	BEZEL
3		85817568		1	KNOB
4		9966238		1	SWITCH, FAN
5		9966239		1	NUT
6		9971567		2	SPRING
7		9966241		1	WASHER, LOCK
8		82002777		1	TERMINAL
9		9970494		1	DECAL
10		14372671		2	NUT
11		15693507		2	SCREW

1.94.2/ 1	01	p1	12/03

HEATER HOUSING, COIL, BLOWER & VALVE

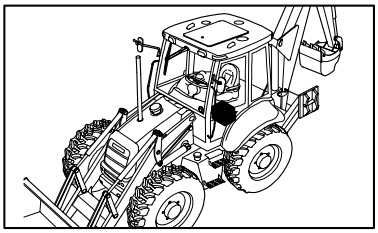

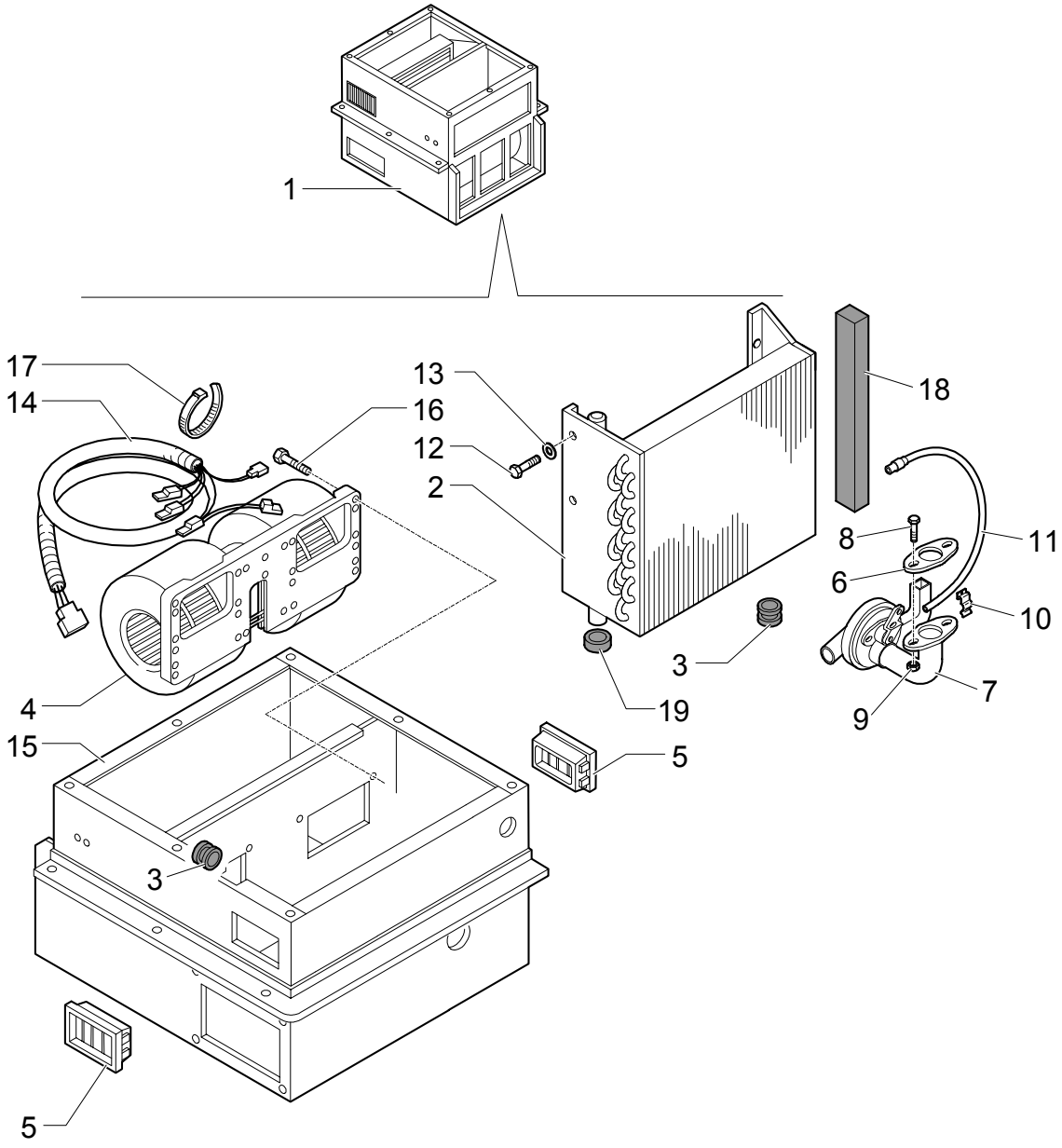

HEATER HOUSING, COIL, BLOWER & VALVE

REF	FN	PART NUMBER	YR/SN	QTY	DESCRIPTION
1	1	NSS		1	NOT SERVICED SEPARATELY
2		85821348		1	HEAT EXCHANGER
3		85804412		2	RING, RUBBER
4		85820883		1	BLOWER, ELECTRIC
5		85804044		2	SPOUT, DISCHARGE
6		85820885		1	GASKET
7		85820884		1	DRAINCOCK/TAP, SUPPLY
8		85820887		2	SCREW
9		85820886		2	NUT
10		85820889		1	SPRING
11		85820890		1	CABLE
12		85820893		4	SCREW
13		85820894		4	WASHER
14		85820895		1	CABLE, ELECTRIC
15		85826284		1	CONTAINER
16		85820899		8	SCREW
17		85820900		1	COLLAR
18		85821345		1	SEAL, RUBBER
19		85821346		1	SEAL, RUBBER

(1) Includes 2 To 19 And Figure 1.94.2 02 Ref. 1 To 4, 6

1.94.2/ 1	04	p1	02/04

AIR DUCTS & VENTS

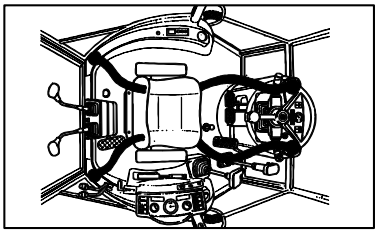

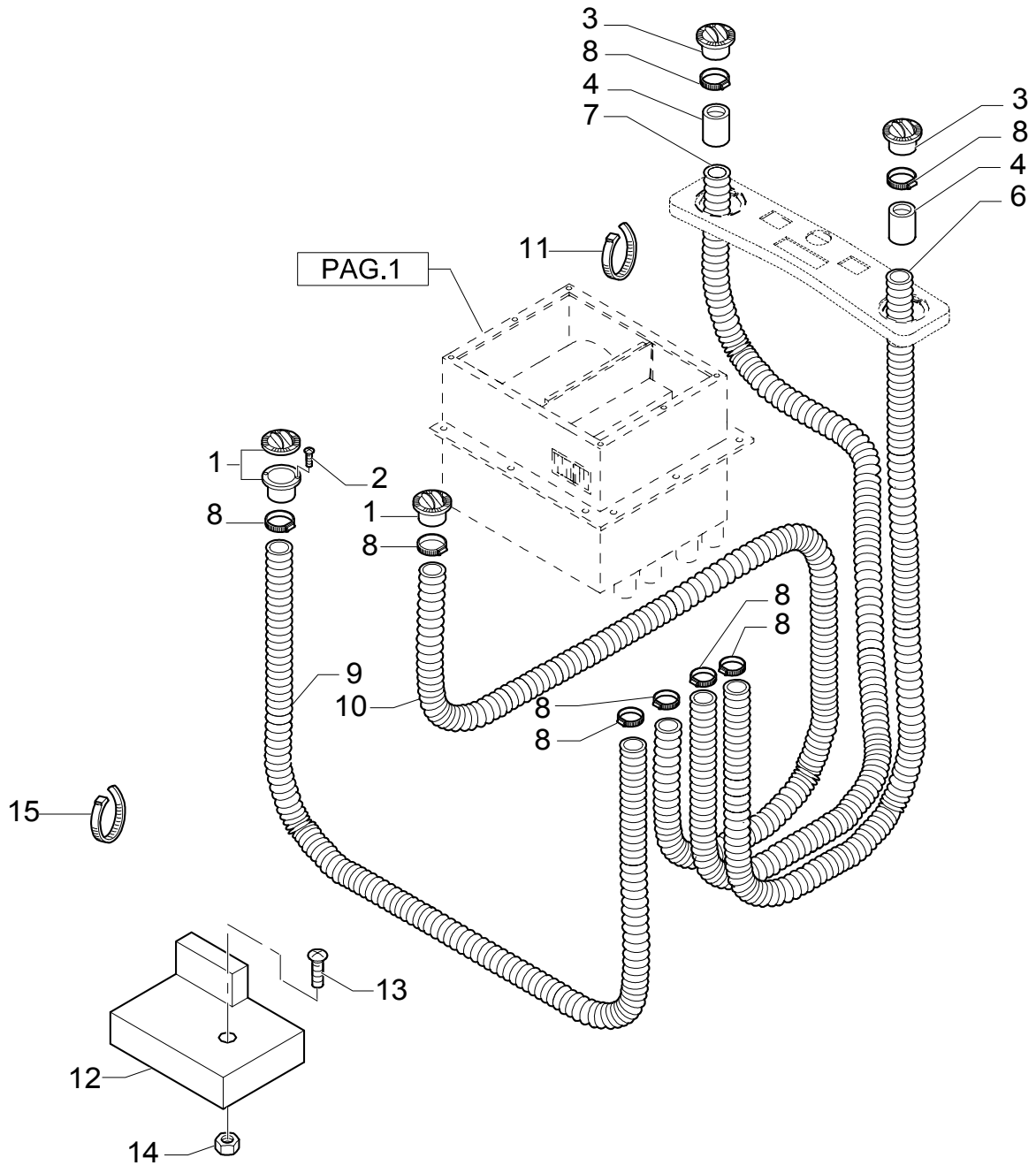

AIR DUCTS & VENTS

REF	FN	PART NUMBER	YR/SN	QTY	DESCRIPTION
1		70741298		2	DIFFUSER
2		15916901		4	SCREW 8 x 16
3		85819543		2	DIFFUSER
4		85819592		2	SLEEVE
6		85820902		1	PIPE, VENTILATION FRONT, LH
7		85820901		1	HOSE, FLEXIBLE FRONT, RH
8		13000990		10	CLIP, HOSE
9		85820904		1	PIPE, VENTILATION REAR, RH
10		85825476		1	HOSE, FLEXIBLE REAR, LH
11		5112712		11	COLLAR
12		85826934		1	PLATE
13		10902221		1	SCREW
14		12574211		1	NUT
15		386170C1		1	STRAP

CAB-SAFETY FRAME / BRAKE PEDAL

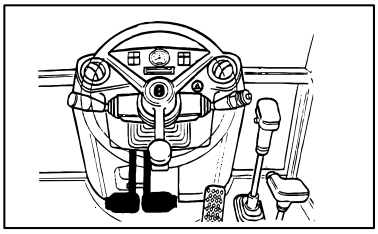

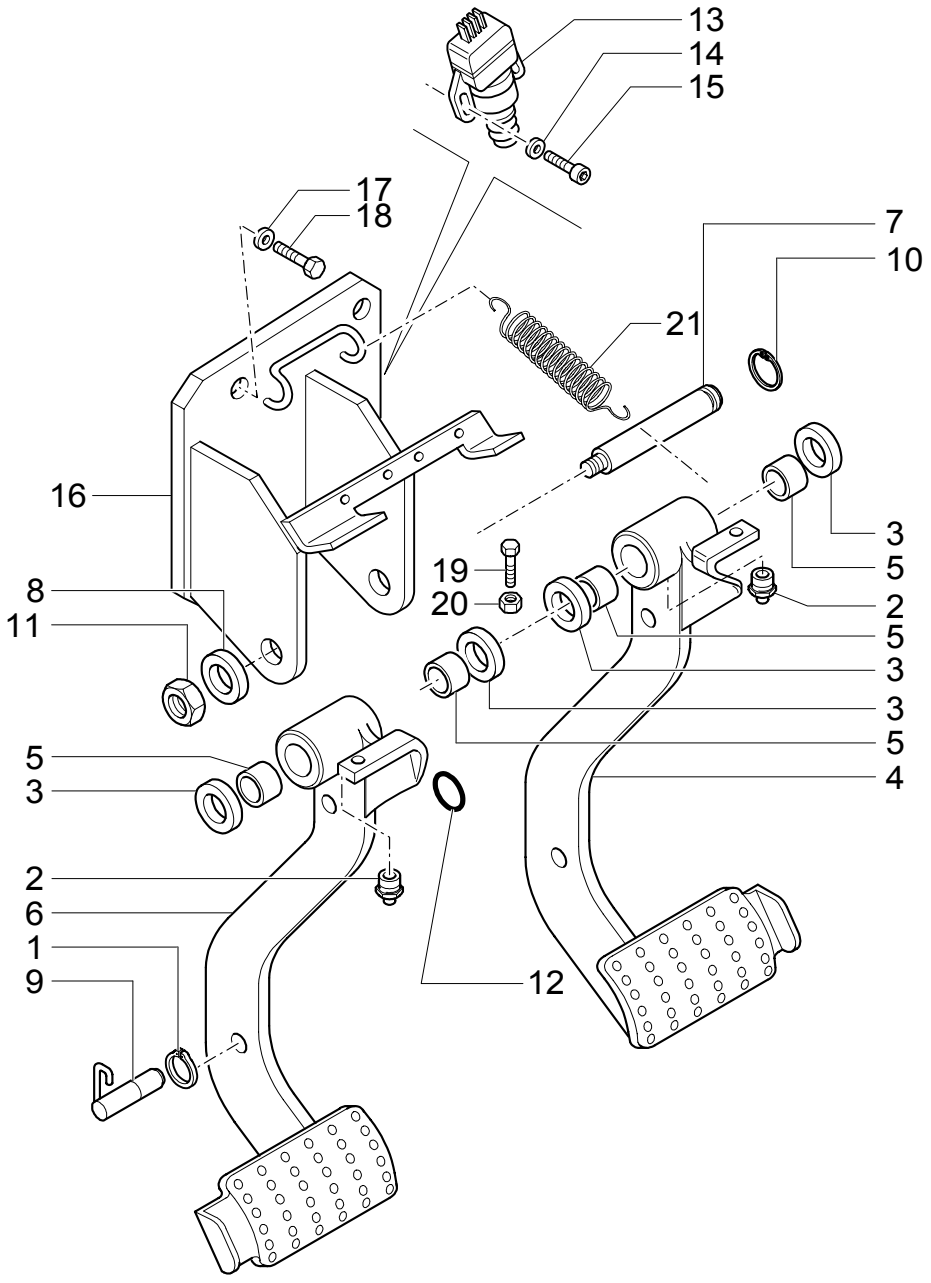

CAB-SAFETY FRAME / BRAKE PEDAL

REF	FN	PART NUMBER	YR/SN	QTY	DESCRIPTION
1		11088176		1	RING, LOCKING
2		13407214		2	NIPPLE, LUBE
3		5148062		4	WASHER
4		85805285		1	PEDAL RH
5		4983992		4	BEARING ASSY
6		85805283		1	PEDAL LH
7		85801860		1	PIN
8		10517274		1	WASHER, LOCK
9		5142152		1	BLOCK
10		11067376		1	RING, LOCKING
11		12164114		1	NUT
12		13399076		2	RING
13		82026949		2	SWITCH
14		12642821		4	WASHER, LOCK W/CAB
15		14303324		4	SCREW M4 x 20 W/CAB
16		85805277		1	SUPPORT
17		11190574		4	WASHER, LOCK
18		15970524		4	SCREW
19		16043921		2	SCREW M8 x 1,25 x 35
20		11701621		2	NUT M8
21		5153180		1	SPRING

1.95.0	02	p1	10/03

CAB-SAFETY FRAME / BRAKE PEDAL

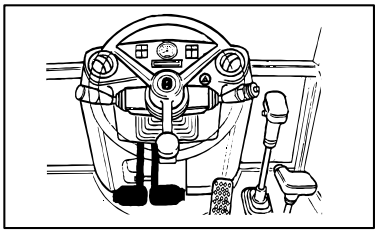

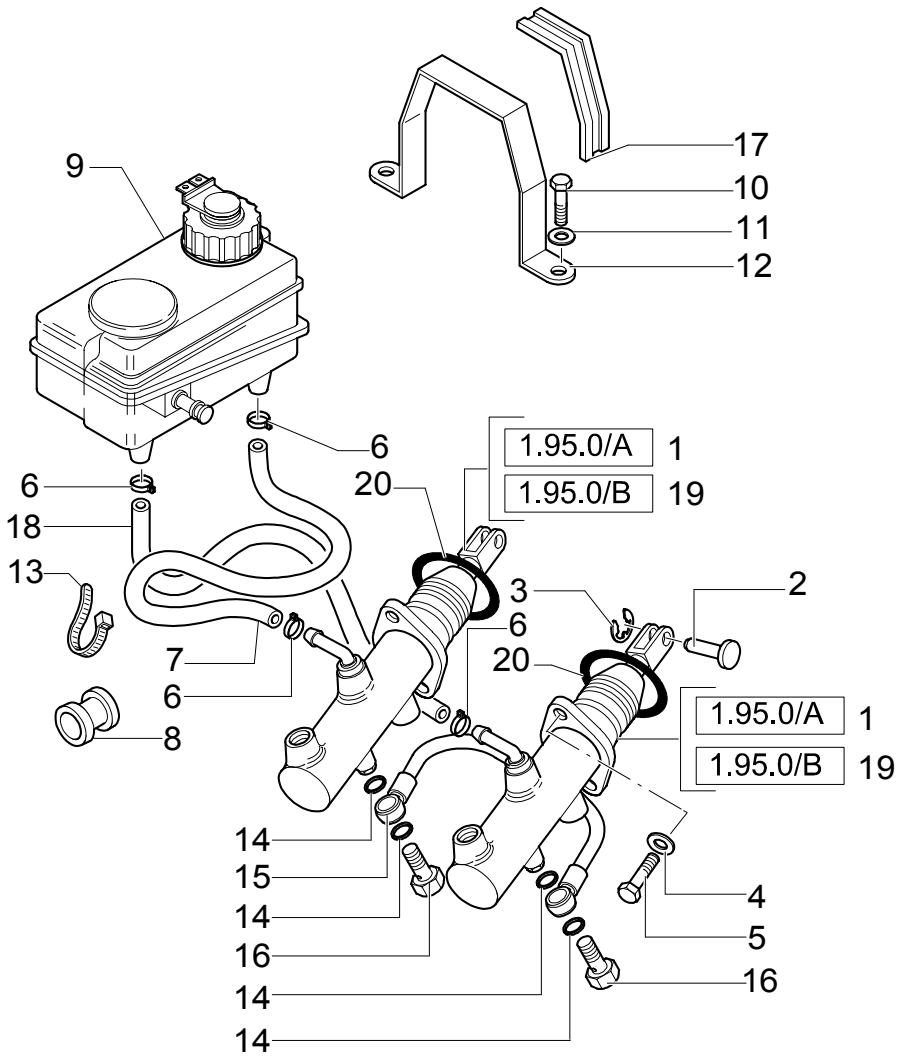

CAB-SAFETY FRAME / BRAKE PEDAL

REF	FN	PART NUMBER	YR/SN	QTY	DESCRIPTION
1	1	85805257		2	MASTER CYLINDER
2		5155381		2	PIN
3		11064176		2	CLIP
4	2	11193874		4	WASHER, LOCK
5	3	14306324		4	SCREW M8X20
6		13423271		4	CLIP, HOSE
7		19053282		1	HOSE, FLEXIBLE 510 mm
8		85801941		2	RING, RUBBER
9	4	82003369		1	TANK
10		10902624		2	SCREW
11		11193274		2	WASHER, LOCK M6X15X1.2
12		85801092		1	BRACKET
13		14560187		1	COLLAR
14		4858607		8	GASKET
15		5155701		1	TUBE, RIGID
16		5155703		4	CONNECTOR, HYD.
17		85801093		1	STRIP-GASKET
18		19053282		1	HOSE, FLEXIBLE 430 mm
19		85824114		2	PUMP, HYDRAULIC
20		13399076		2	RING
21	5	85806176		AR	PLUG

(1) Only for LB75.B-LB90.B-LB95.B-LB110.B
(2) ROPS
(3) CAB
(4) Brake Fluid, Cap is P/N 85806176
(5) Not Illustrated

CAB-SAFETY FRAME / BRAKE PEDAL

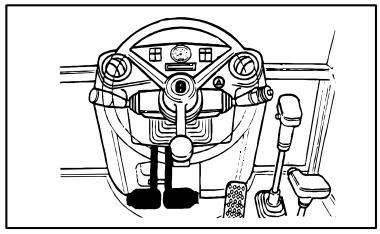

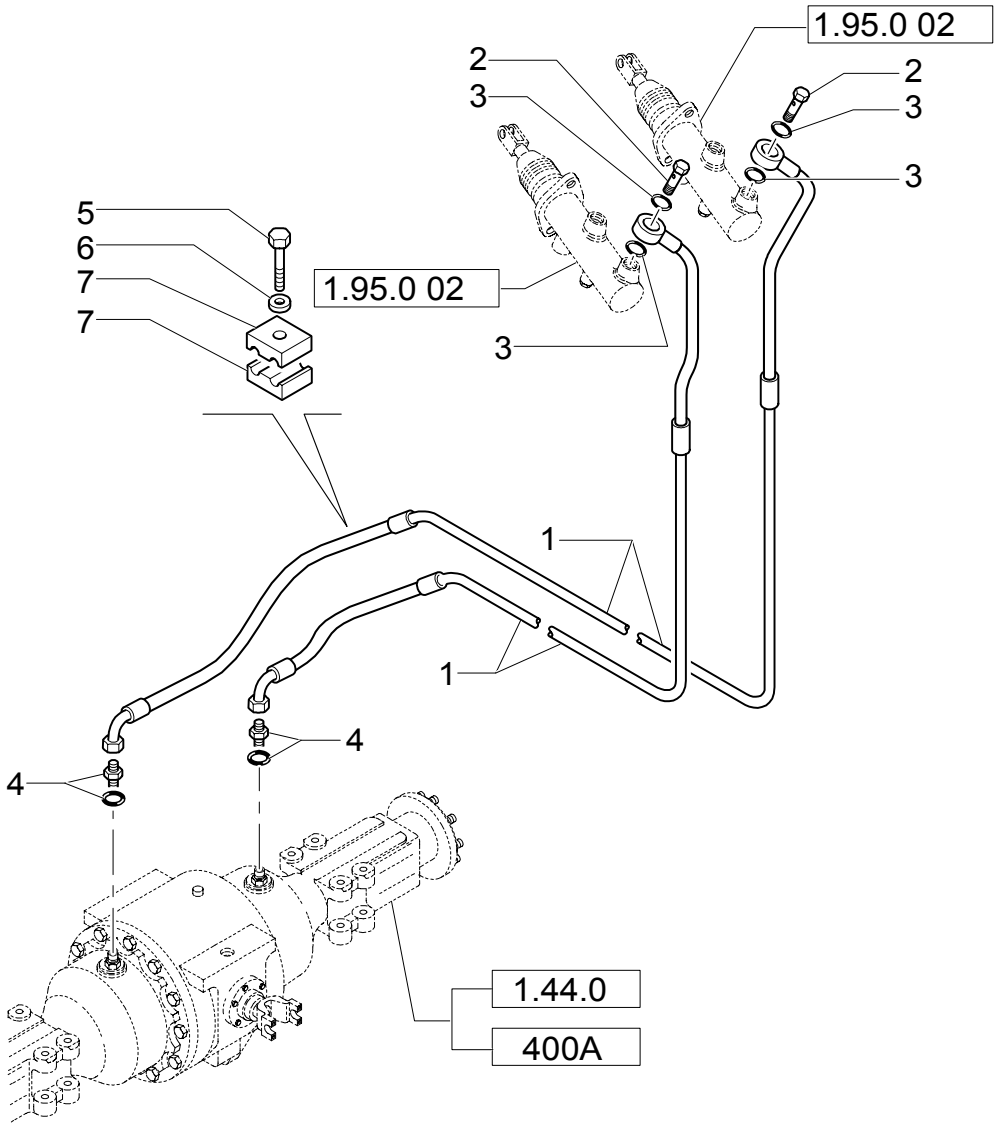

CAB-SAFETY FRAME / BRAKE PEDAL

REF	FN	PART NUMBER	YR/SN	QTY	DESCRIPTION
1		85819177		2	TUBE, RIGID
2		5155703		2	CONNECTOR, HYD.
3		4858607		4	GASKET
4		85803312		2	CONNECTOR, HYD.
5		15212721		2	SCREW M6X40
6		14447021		2	WASHER
7		85805548		4	CLIP

CAB-SAFETY FRAME / BRAKE PEDAL

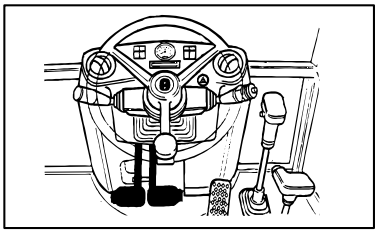

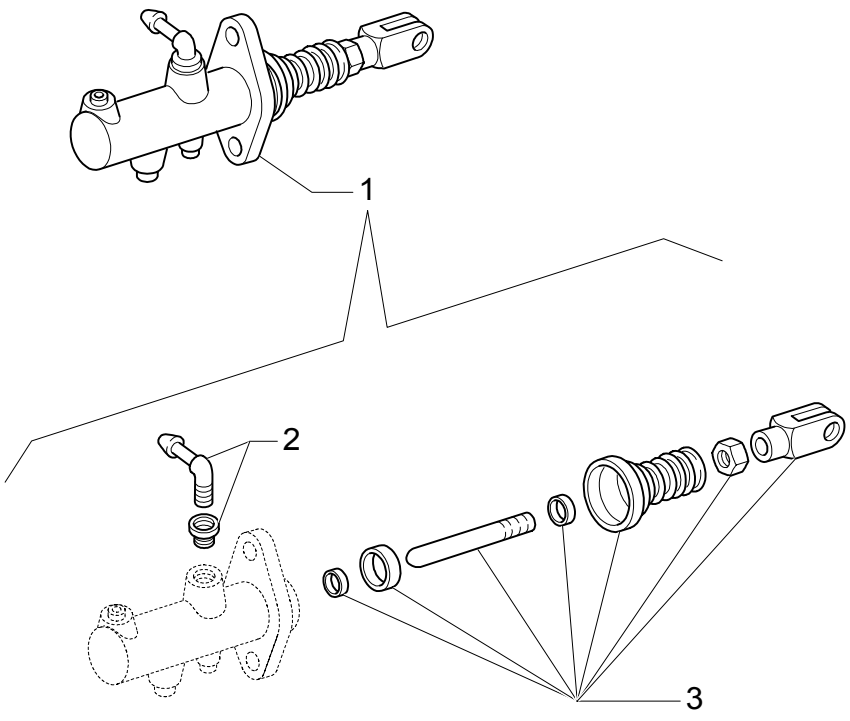

CAB-SAFETY FRAME / BRAKE PEDAL

REF	FN	PART NUMBER	YR/SN	QTY	DESCRIPTION
1		85805257		1	MASTER CYLINDER ASSY
2		85817242		1	KIT
3		85817241		1	KIT

CAB-SAFETY FRAME / HAND BRAKE

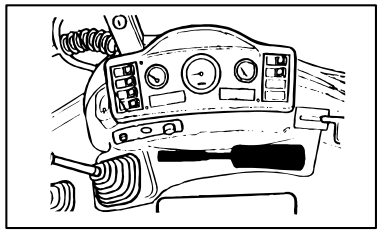

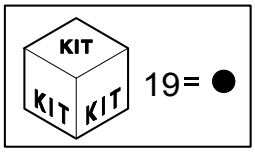

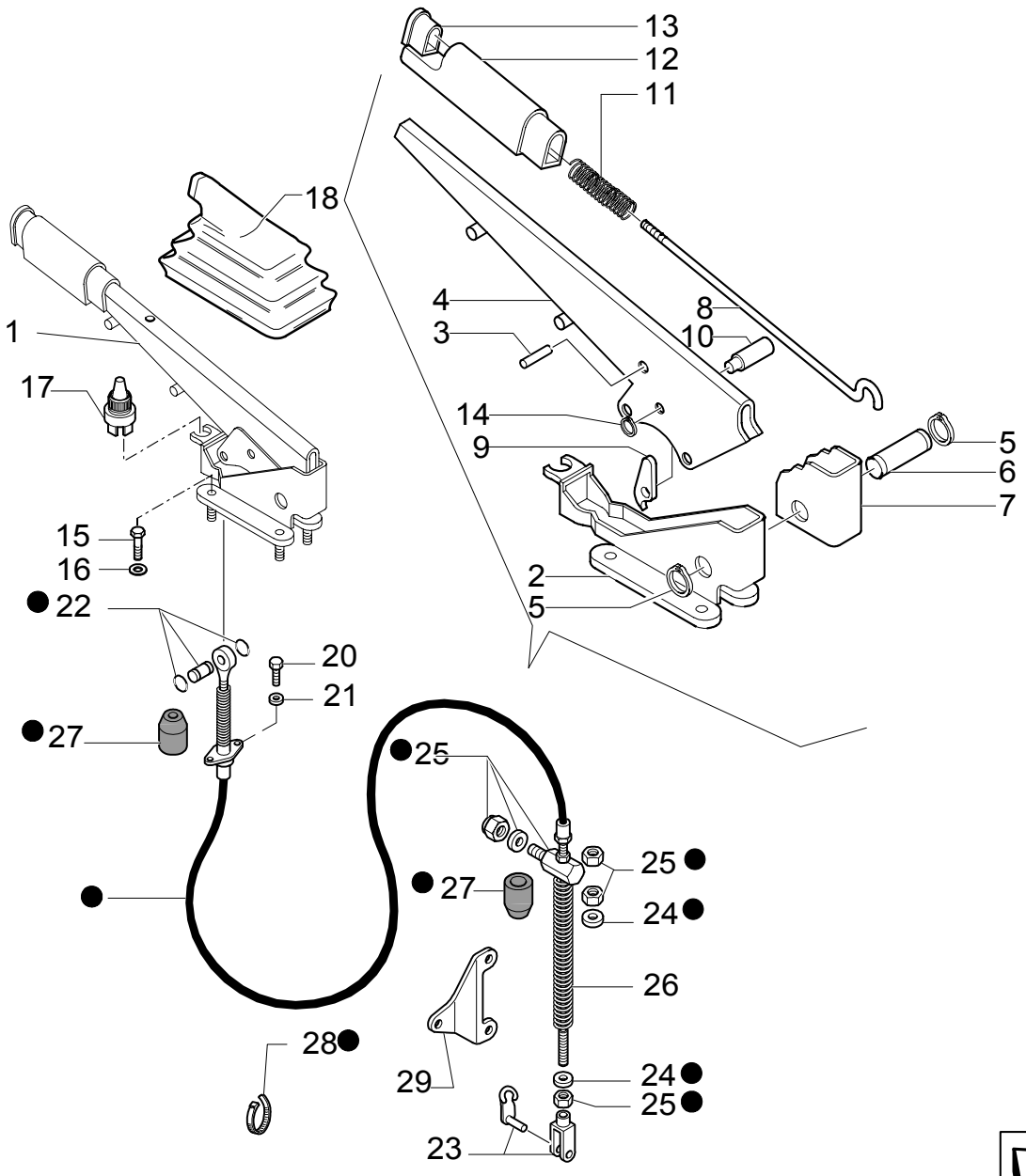

CAB-SAFETY FRAME / HAND BRAKE

REF	FN	PART NUMBER	YR/SN	QTY	DESCRIPTION
1		85805438		1	LEVER ASSY
2		85805441		1	SUPPORT
3		4985127		1	RIVET
4		85805440		1	LEVER
5		13400776		2	RING, LOCKING
6		4988275		1	PIN
7		5110153		1	TOOTHED SECTOR
8		5128712		1	TIE-ROD
9		5110155		1	PAWL
10		5131437		1	PIN
11		5105729		1	SPRING
12		5128431		1	HANDLE, CRANKED
13		5174275		1	PUSH BUTTON
14		11065476		1	RING, SNAP
15		14306424		4	SCREW M8X25
16		11197874		4	WASHER, LOCK 8X16X1.4
17		85816770		1	SWITCH, ASSY
18		5106733		1	BOOT
19		85815536		1	CABLE
20		10978024		2	SCREW M5X20
21		10615371		2	WASHER, LOCK
22		85815550		1	CONNECTOR
23		85815556		1	CONNECTOR
24		85815555		1	WASHER 22X10.2X2
25		85815552		1	JOINT, UNIVERSAL
26		85821173		1	SPRING
27		85821172		2	GASKET
28		85815549		1	COLLAR
29		85826099		1	SUPPORT

TRANSPORT LOCK CONTROL

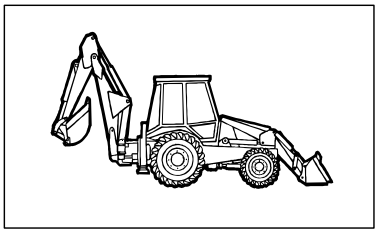

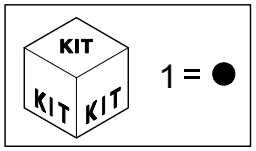

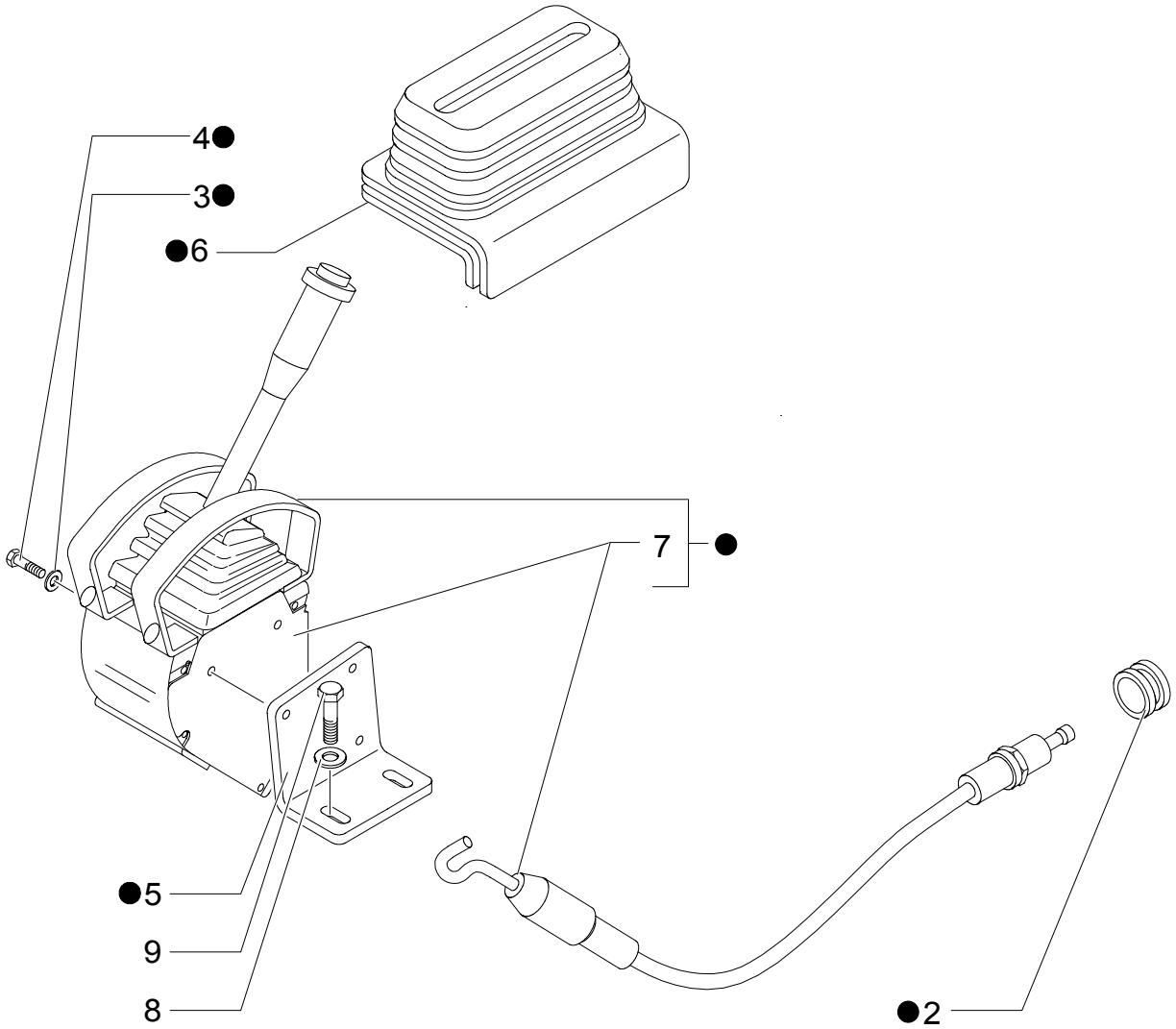

TRANSPORT LOCK CONTROL

REF	FN	PART NUMBER	YR/SN	QTY	DESCRIPTION
1		85821196		1	LEVER
1		85821203		1	LEVER
2		10398680		1	RING, INSULATING
3		11193274		3	WASHER, LOCK
4		15212921		3	SCREW
5		85808419		1	SUPPORT
6		85813132		1	BOOT
7		85819629		1	CABLE
8		11193874		2	WASHER, LOCK
9		16043624		2	SCREW Cap, HH, CL 8.8, M8 x 1.25 x 25

HAND-OPERATED AND PEDAL-OPERATED ACCELERATOR CONTROL

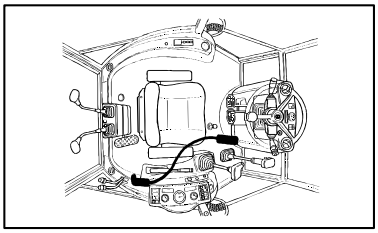

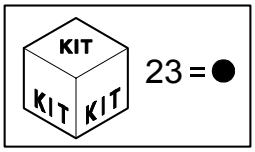

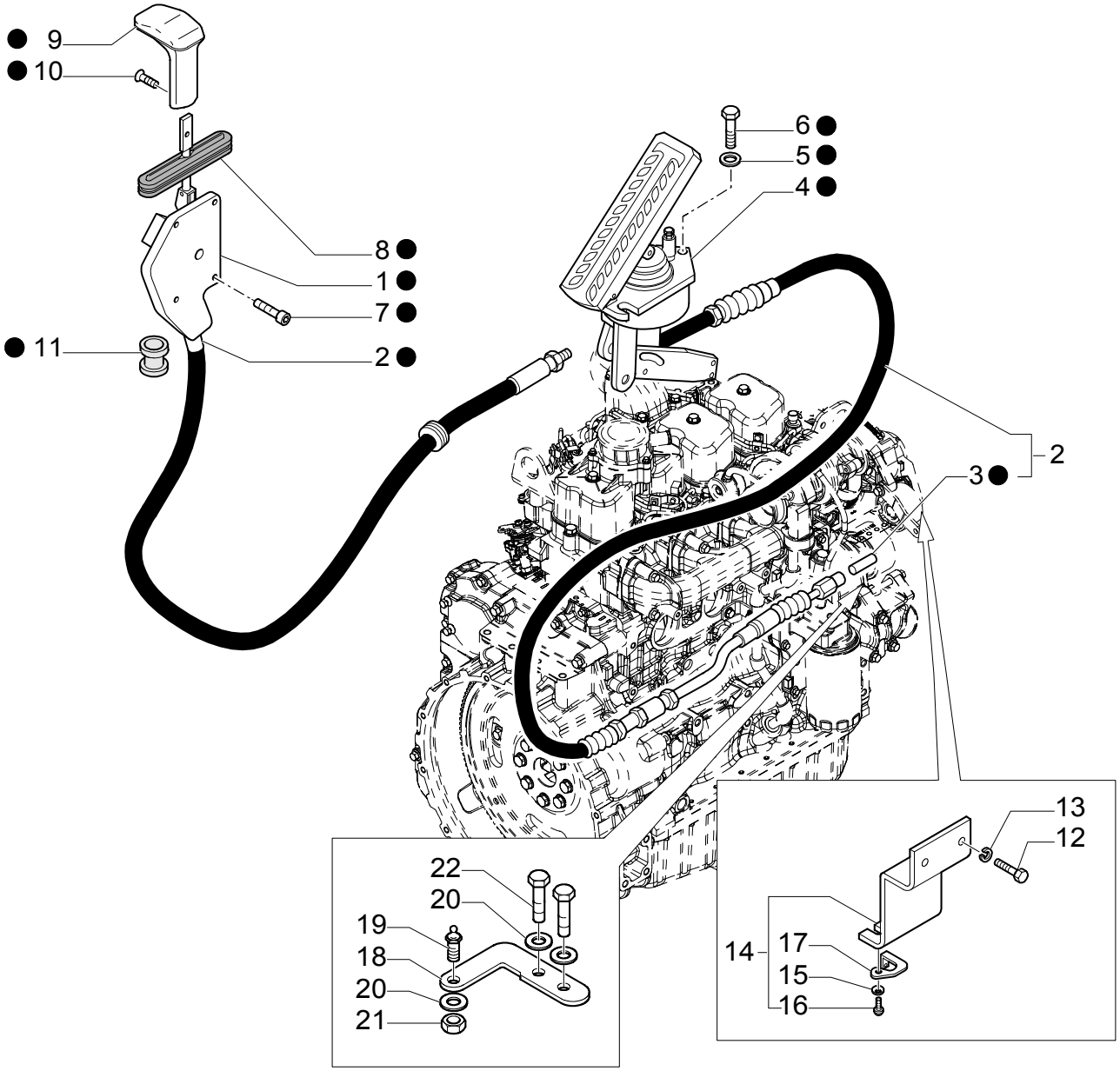

HAND-OPERATED AND PEDAL-OPERATED ACCELERATOR CONTROL

REF	FN	PART NUMBER	YR/SN	QTY	DESCRIPTION
1		85821328		1	LEVER ASSY
2		85821324		1	CABLE ASSY,
3		85813140		1	BALL JOINT, HEAD
4		85813096		1	PEDAL
5		11193274		3	WASHER, LOCK
6		10902424		3	SCREW M6X20
7		13311217		4	SCREW M5X30
8		85803380		1	BOOT W/CAB
9		13312721		1	SCREW
10		82002692		1	KNOB
11		10398280		1	RING
12		47049149		2	SCREW M12X25
13		47048994		2	WASHER
14		86988396		1	BRACKET CPL
15		12604179		1	WASHER
16		13769401		1	RIVET
17		85803040		1	KEY
18		86989315		1	LEVER
19		85813311		1	PIN
20		47048991		3	WASHER
21		47049029		1	NUT
22		86977726		2	SCREW
23	1	{85827825}		0	

(1) Includes 1-11

POWER STEERING MOTOR, WHEEL & COLUMN TRIM (POWER-SHUTTLE)

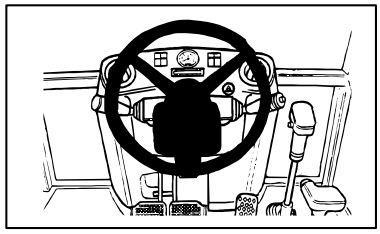

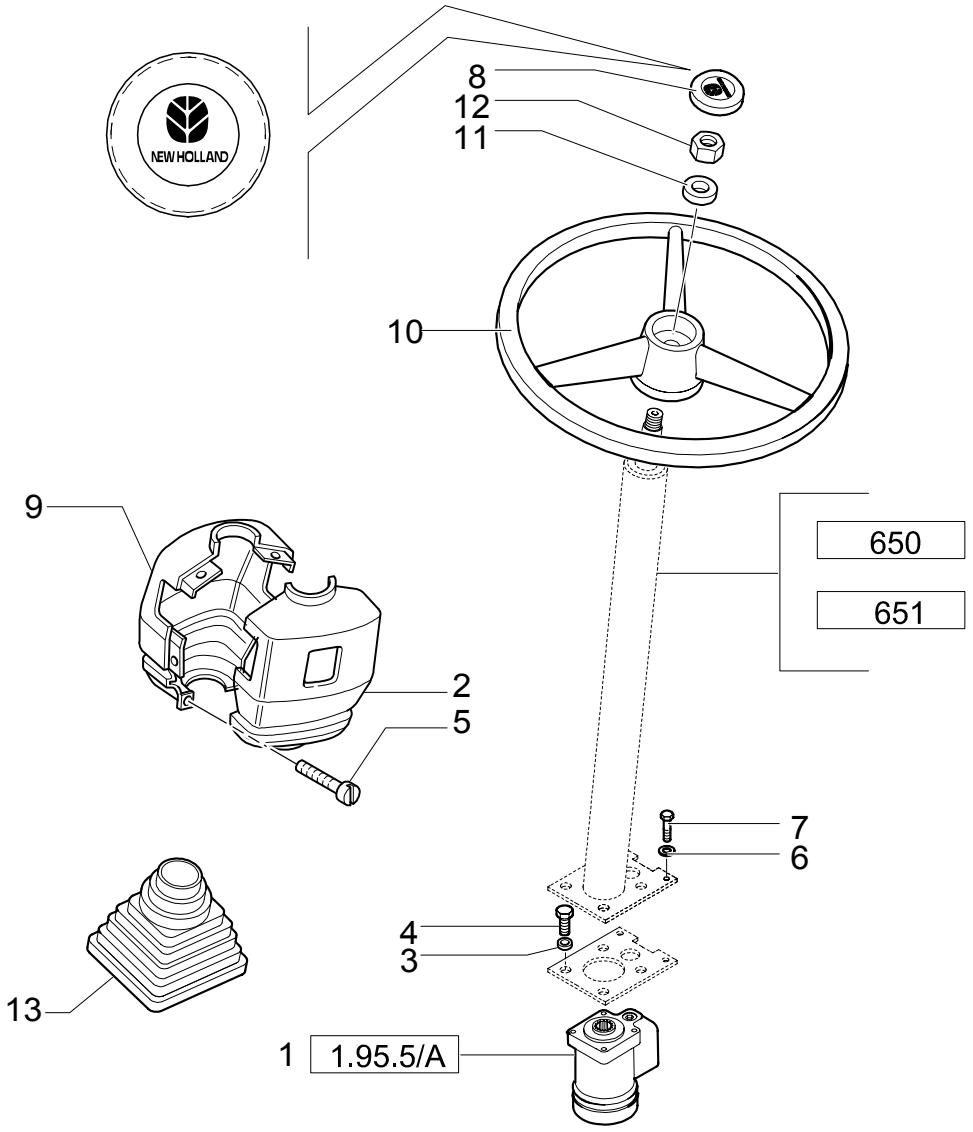

POWER STEERING MOTOR, WHEEL & COLUMN TRIM (POWER-SHUTTLE)

REF	FN	PART NUMBER	YR/SN	QTY	DESCRIPTION
1		85805624		1	STEERING HYDRAULIC ASSY
2		85805775		1	SOFT TRIM UPPER
3		10615771		4	WASHER, LOCK
4		85804705		4	SCREW 3/8-16X7/8
5		14303324		4	SCREW M4X20
6		11190574		4	WASHER, LOCK 10X20X2.3
7		15970724		4	SCREW M10X1.25X25
8		85820105		1	COVER, CAP
9		85805772		1	SOFT TRIM LOWER
10		5148946		1	STEERING WHEEL
11		4998760		1	WASHER
12		10791414		1	NUT M16X1,5
13		85801976		1	BELLOWS

POWER STEERING MOTOR HOSES

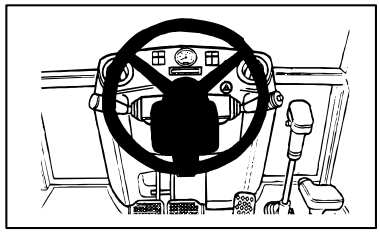

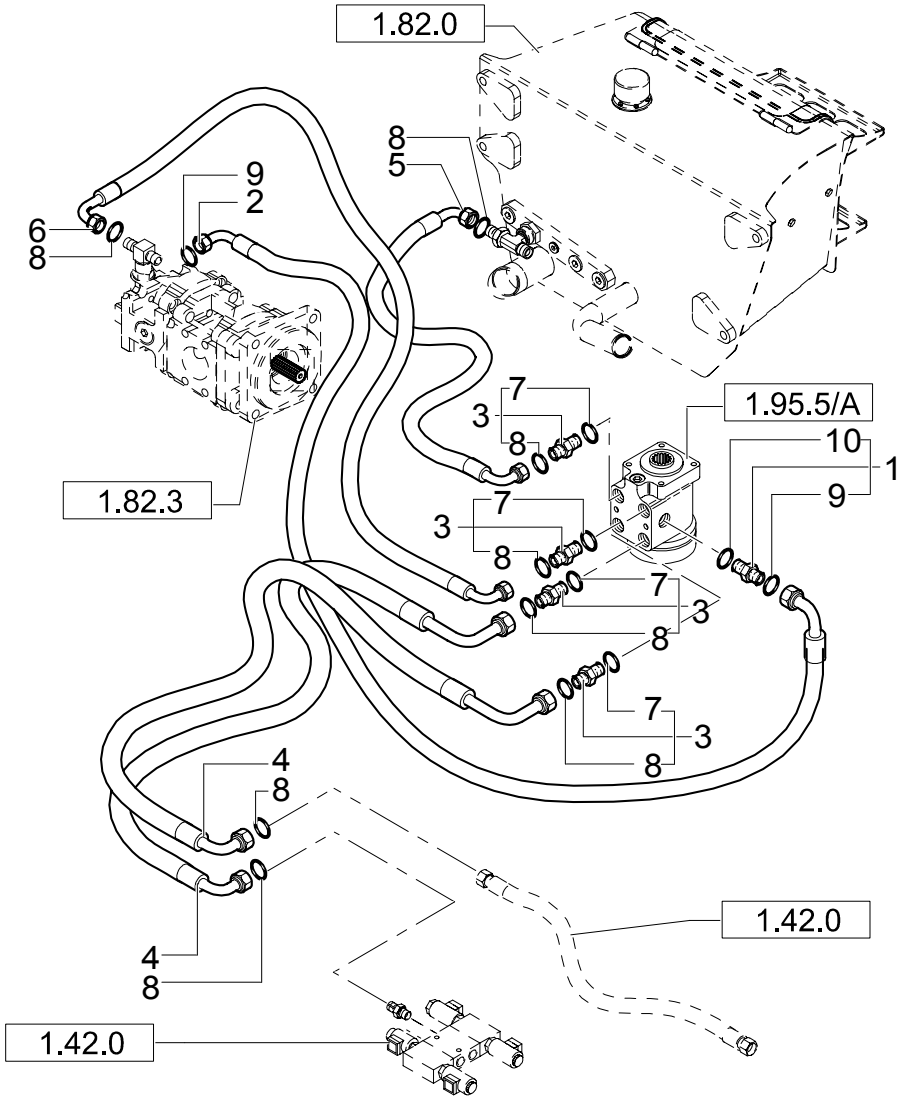

POWER STEERING MOTOR HOSES

REF	FN	PART NUMBER	YR/SN	QTY	DESCRIPTION
1	1	85802640		1	CONNECTOR, HYD.
2		85819041		1	HOSE, FLEXIBLE
3	2	83963374		4	CONNECTOR, HYD.
4		{85826080}		2	HOSE, FLEXIBLE RH CYLINDER
5		85802761		1	HOSE, FLEXIBLE
6		85820282		1	HOSE, FLEXIBLE
7		128825		4	O-RING 90 Duro, .644" ID x .087" Thk
8		9992298		8	O-RING 90 Duro, .489" ID x .070" Thk
9		9993141		2	O-RING 90 Duro, .364" ID x .070" Thk
10		165202		1	O-RING 90 Duro, .351" ID x .072" Thk

(1) Includes 9,10
(2) Includes 7,8

POWER STEERING MOTOR

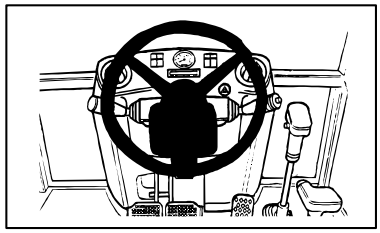

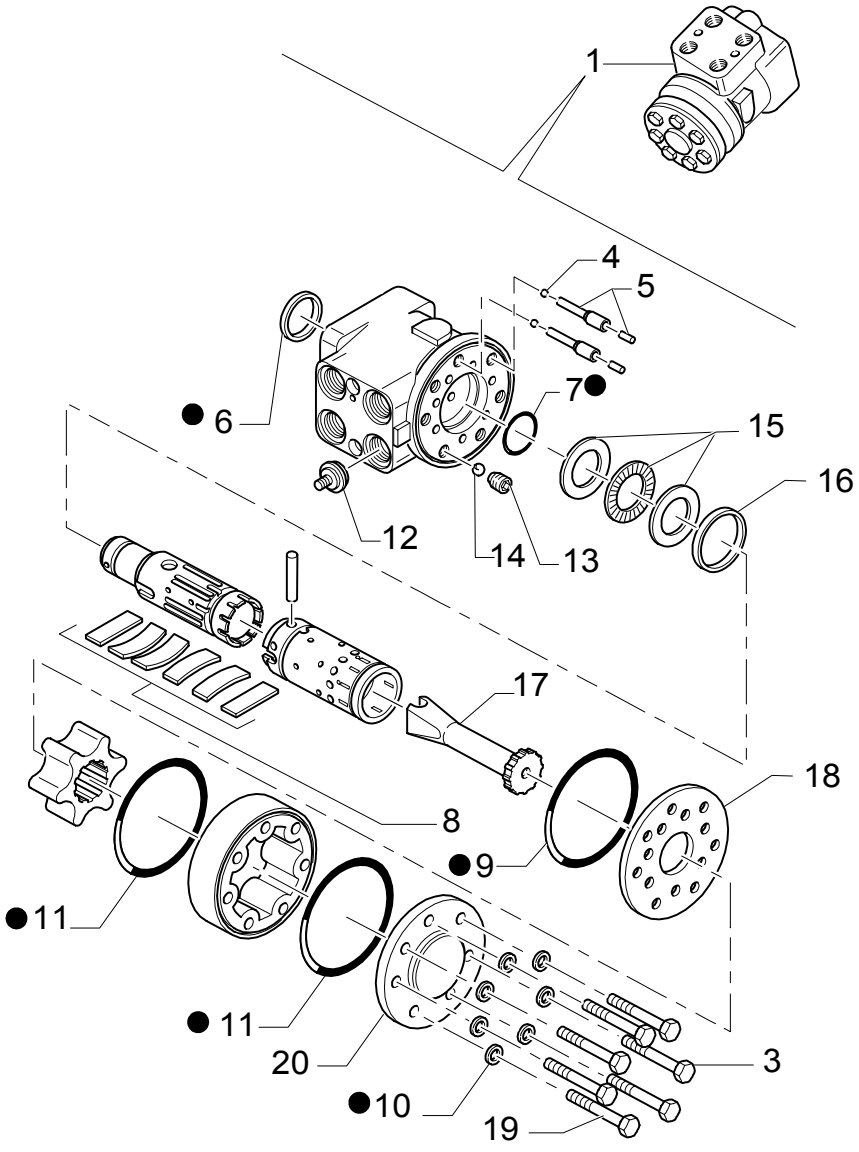

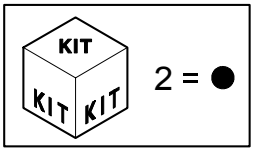

POWER STEERING MOTOR

REF	FN	PART NUMBER	YR/SN	QTY	DESCRIPTION
1		85805624		1	STEERING HYDRAULIC
2		85808390		1	KIT
3		85812135		6	SCREW
4		85808385		2	BALL
5		9961829		2	PIN
6		85812109		1	O-RING
7		85808380		1	O-RING
8		9960181		1	SET OF PARTS
9		85812110		1	O-RING
10		85812112		7	WASHER
11		85812111		2	O-RING
12		85808386		1	VALVE, HYDRAULIC
13		85812132		1	BUSHING, THREADED
14		85812131		1	BALL
15		9961810		1	KIT
16		85812133		1	RING
17		85808381		1	SHAFT
18		85808382		1	PLATE
19		85808383		1	SCREW W/PIN
20		85812134		1	COVER

POWER STEERING MOTOR

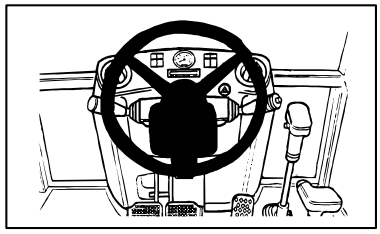

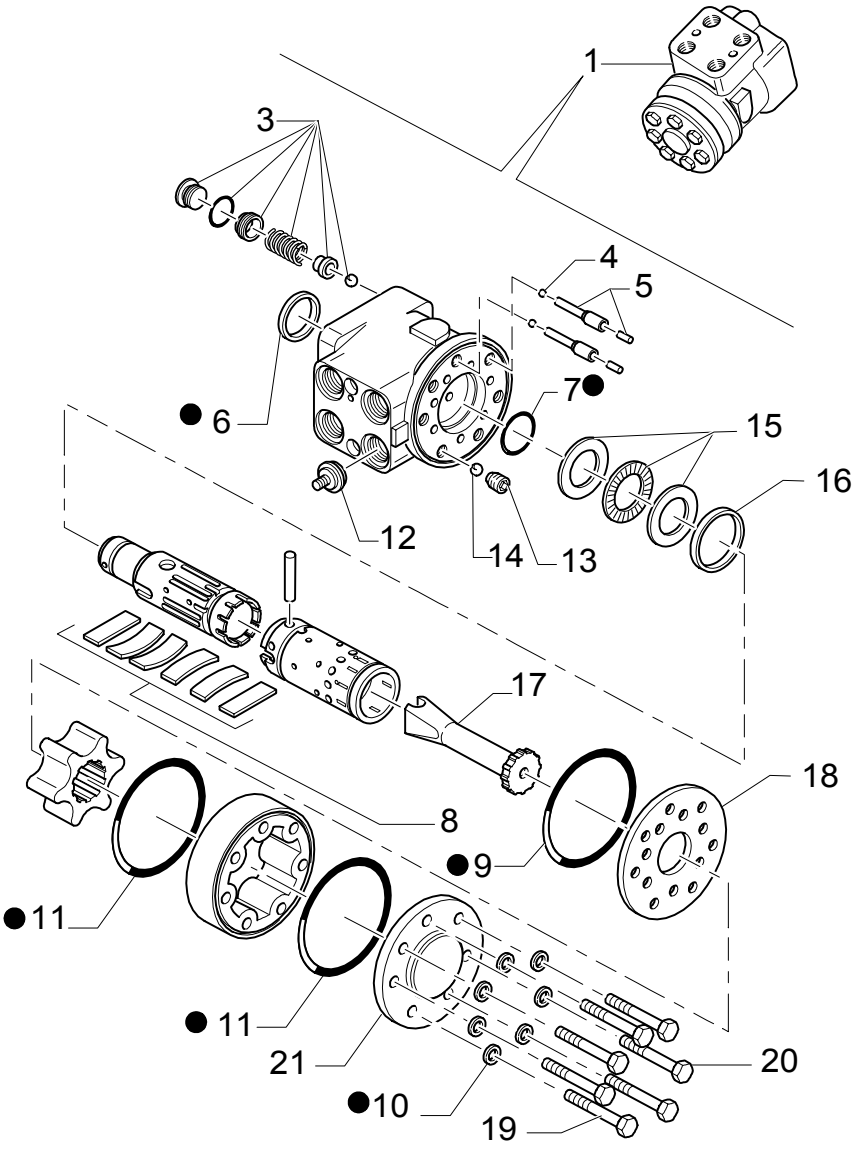

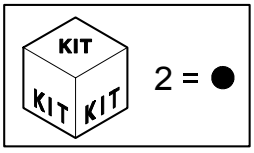

POWER STEERING MOTOR

REF	FN	PART NUMBER	YR/SN	QTY	DESCRIPTION
1		85802221		1	STEERING HYDRAULIC
2		85808390		1	KIT
3		9970370		2	VALVE, HYDRAULIC
4		85808385		2	BALL
5		9961829		2	PIN
6		85812109		1	O-RING
7		85808380		1	O-RING
8		9960181		1	SET OF PARTS
9		85812110		1	O-RING
10		85812112		7	WASHER
11		85812111		2	O-RING
12		85808386		1	VALVE, HYDRAULIC
13		85812132		1	BUSHING, THREADED
14		85812131		1	BALL
15		9961810		1	KIT
16		85812133		1	RING
17		85808381		1	SHAFT
18		85808382		1	PLATE
19		85808383		1	SCREW W/PIN
20		85812135		6	SCREW
21		85812134		1	COVER

.

FOWARD/REVERSE & MULTI-PURPOSE LEVER (POWER-SHUTTLE - CENTER PIVOT)

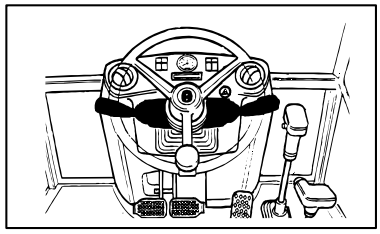

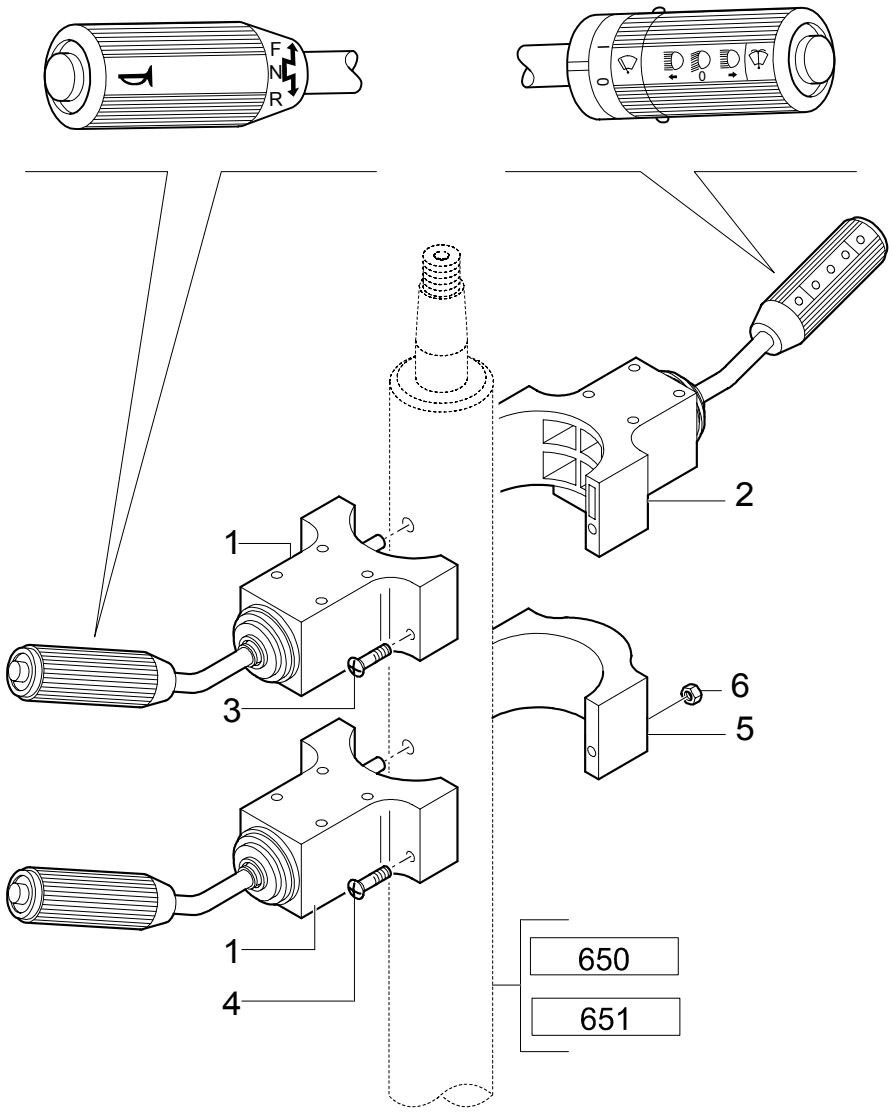

FOWARD/REVERSE & MULTI-PURPOSE LEVER (POWER-SHUTTLE - CENTER PIVOT)

REF	FN	PART NUMBER	YR/SN	QTY	DESCRIPTION
1		85801938		1	REVERSER
2		85801939		1	SHUNTER CAB
3		14304724		2	SCREW M5X50 CAB
4		14301521		2	SCREW M5X60 ROPS
5		85804676		1	U-BOLT ROPS
6		12574111		2	NUT ROPS

1.96.2	01	p1	12/03

STABILIZER CONTROL

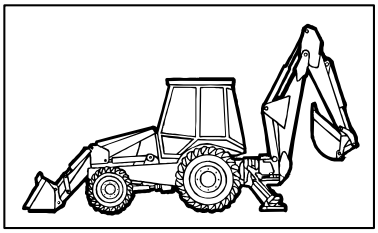

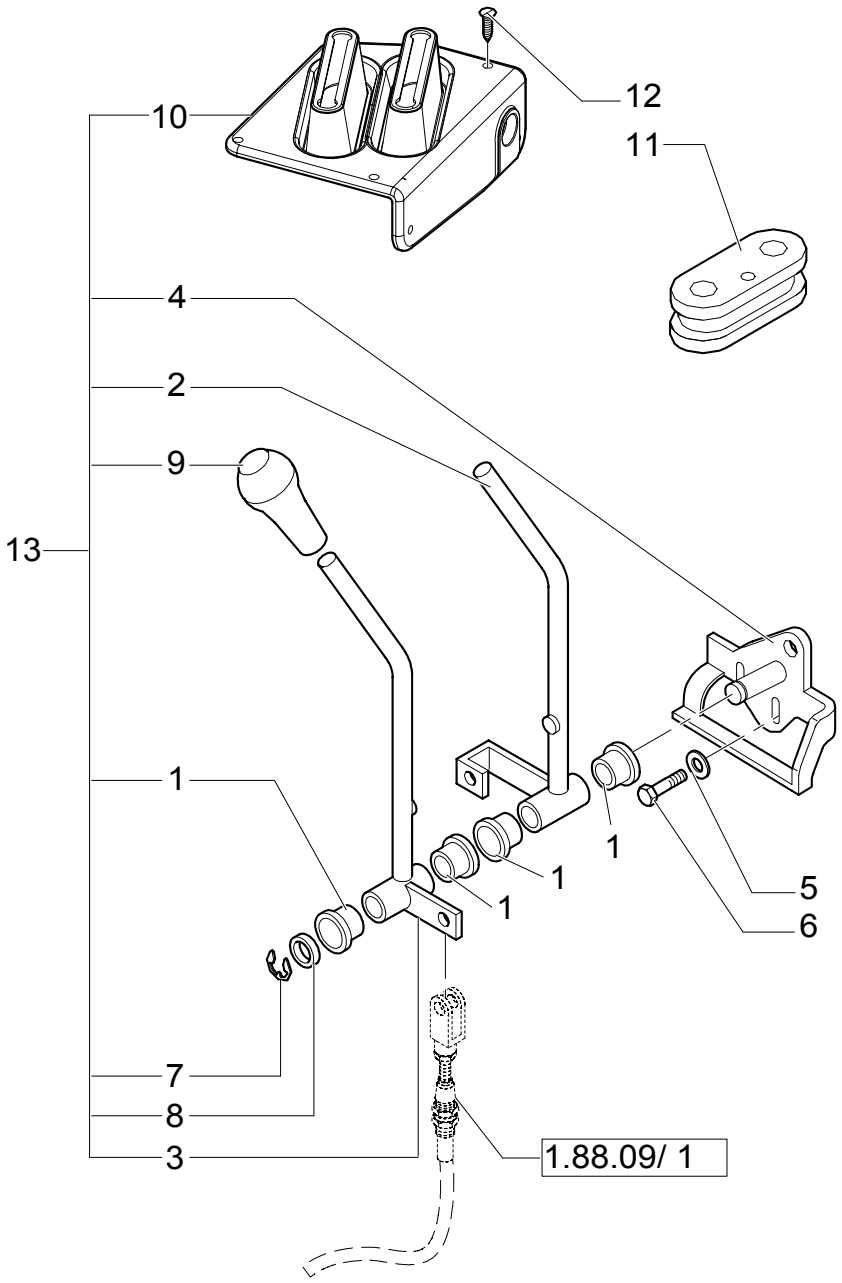

STABILIZER CONTROL

REF	FN	PART NUMBER	YR/SN	QTY	DESCRIPTION
1		85813136		4	BUSHING
2		85813134		1	LEVER RH
3		85813135		1	LEVER LH
4		85813133		1	SUPPORT
5		11193874		2	WASHER, LOCK
6		16043624		2	SCREW Cap, HH, CL 8.8, M8 x 1.25 x 25
7		85813138		1	CIRCLIP
8		85813137		1	WASHER
9		85802763		2	KNOB
10		85821316		1	BOOT
11		{87407927}		1	FOOT BOARD
12		83994150		6	PLUG
13	1	NSS		1	NOT SERVICED SEPARATELY

(1) Includes 1 To 4, 7 To 10

STABILIZER CONTROL

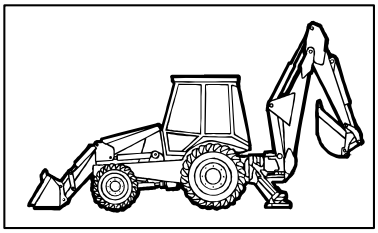

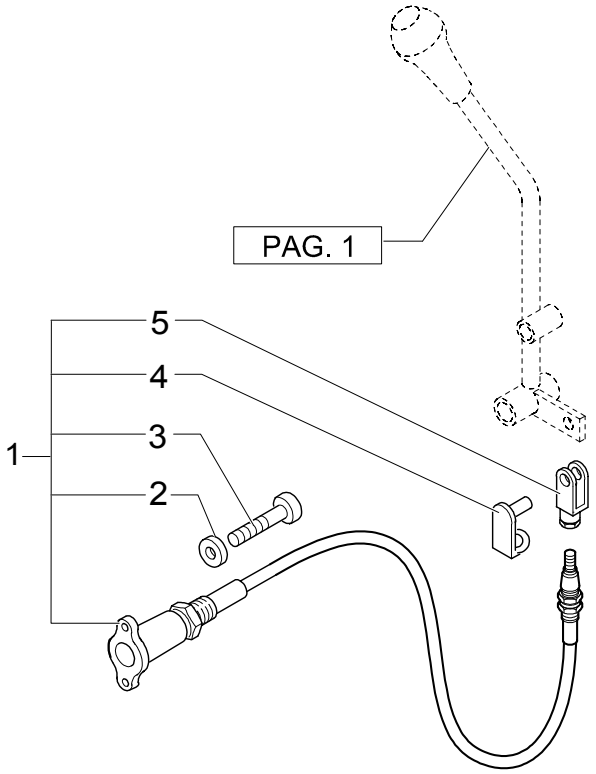

STABILIZER CONTROL

REF	FN	PART NUMBER	YR/SN	QTY	DESCRIPTION
1		85813104		2	CABLE
2		85813201		4	WASHER
3		85813200		4	SCREW M6x15
4		85813186		2	CLIP
5		85813187		2	YOKE

Mechanical Version

LB75.B

1.96.2/ 1	01	p1	11/03

PILOT CONTROL DIAGNOSTICS

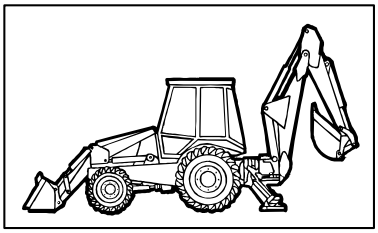

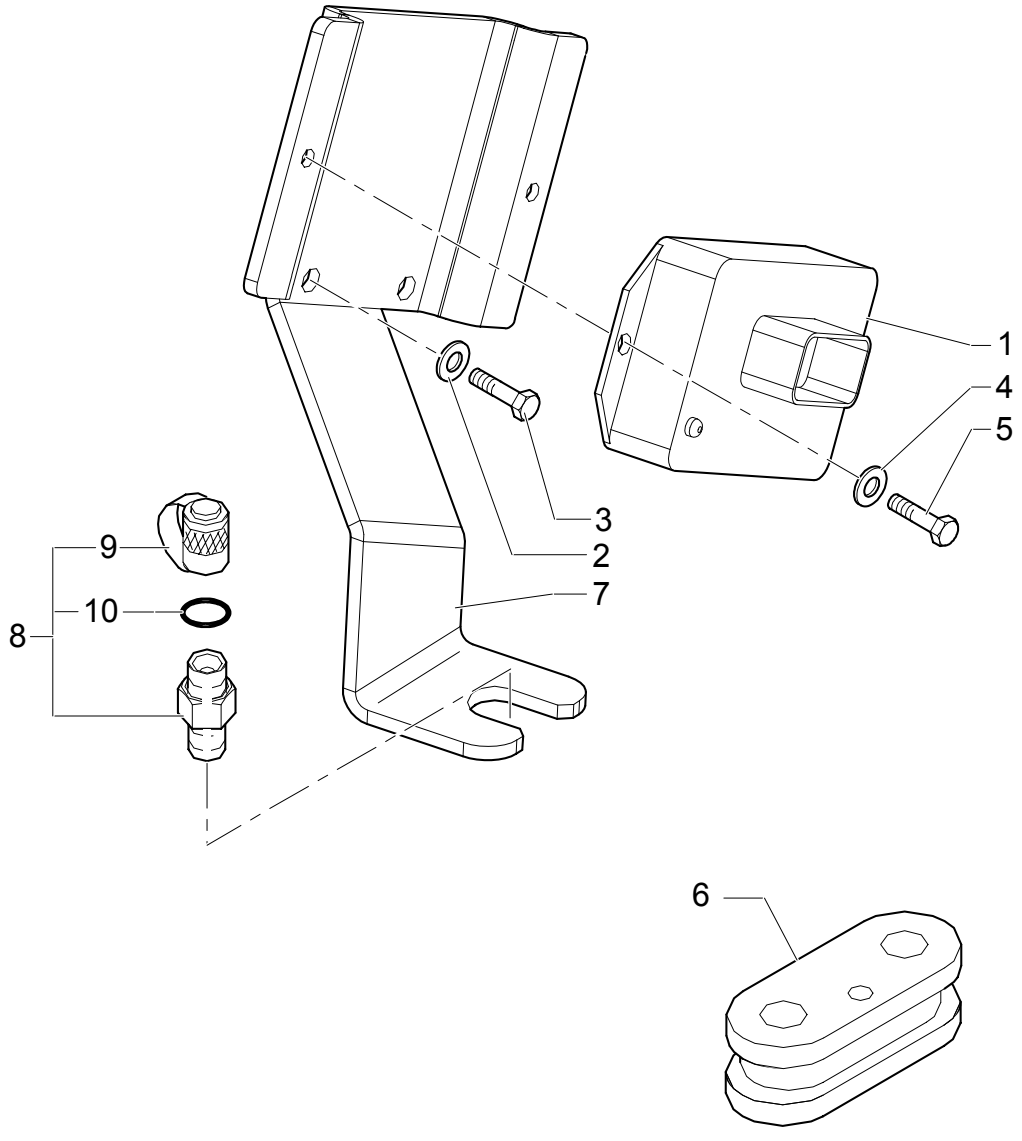

PILOT CONTROL DIAGNOSTICS

REF	FN	PART NUMBER	YR/SN	QTY	DESCRIPTION
1		87419454		1	CONTROL UNIT
2		11193874		2	WASHER, LOCK
3		16043624		2	SCREW TE M8x25
4		47048959		2	WASHER
5		85824079		2	SCREW M4x20
6		{87407927}		1	FOOT BOARD
7		87410945		1	SUPPORT
8		85817226		1	CONNECTOR, HYD.
9		9968791		1	PLUG
10		87008S95		1	O-RING

Pilot Crontrol Version

LB75.B

1.96.7	01	p1	09/03

CAB PLUGS, FLOOR PLATES & AIR CONVEYER, CENTER PIVOT

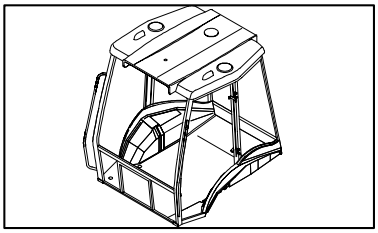

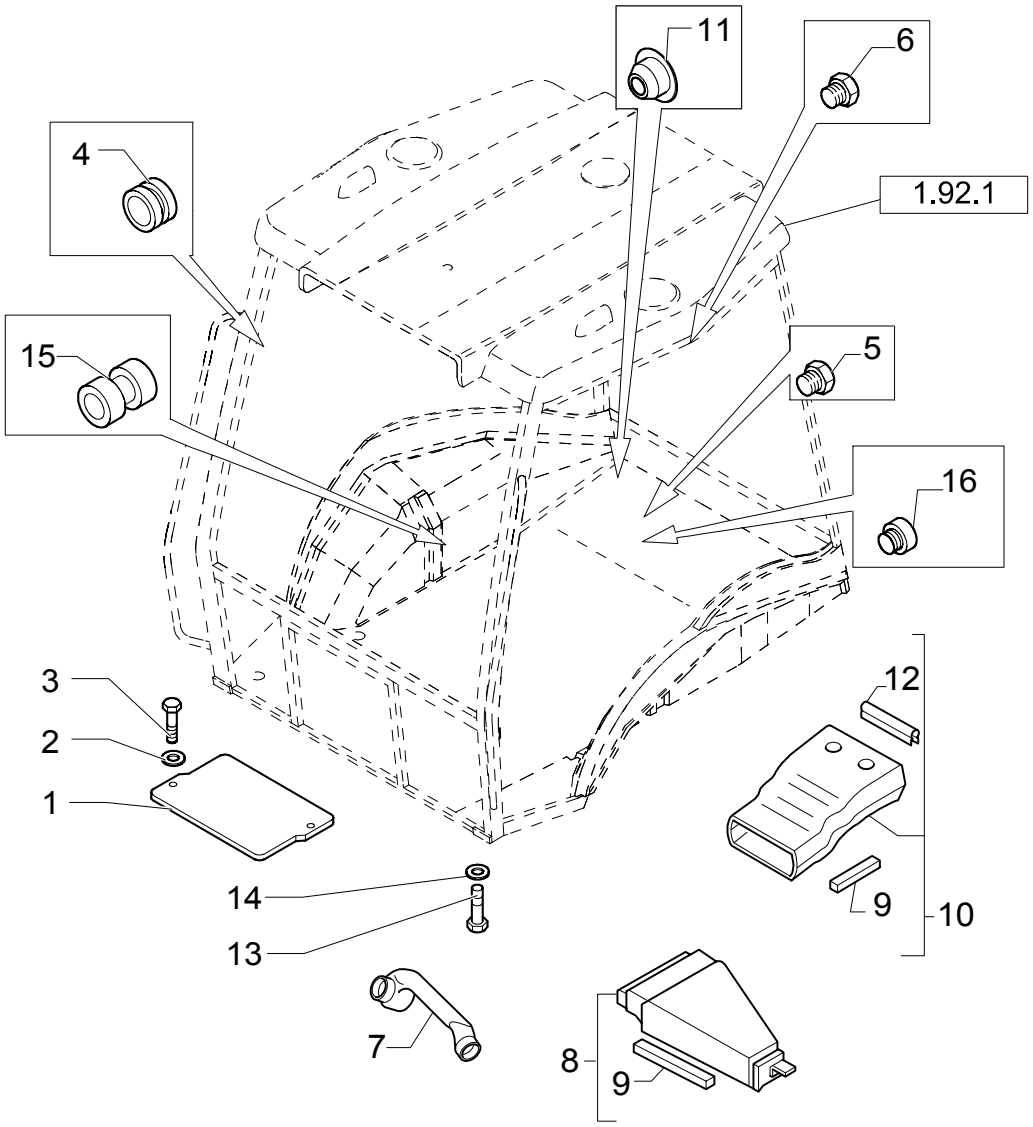

CAB PLUGS, FLOOR PLATES & AIR CONVEYER, CENTER PIVOT

REF	FN	PART NUMBER	YR/SN	QTY	DESCRIPTION
1		85801968		1	PLATE
2		11198074		2	WASHER, SEALING
3		16043424		2	SCREW Cap, HH, CL 8.8, M8 x 1.25 x 20
4		85801953		2	RIVET
5		79111978		5	PLUG
6		83994150		2	PLUG
7		85825224		1	MANIFOLD
8		85805200		1	CONVEYOR FRONT
9		85806023		11	GASKET
10		85820141		1	CONVEYOR REAR
11		85802310		4	PLUG
12		85812021		1	GASKET
13		10902224		7	SCREW Cap, HH, CL 8.8, M6 x 1 x 16
14		11193274		7	WASHER, LOCK
15		10398580		2	RING
16		85802309		4	PLUG

1.96.7/ 4	01	p1	04/03

ROPS PLUGS & FLOOR PLATE (CENTER PIVOT)

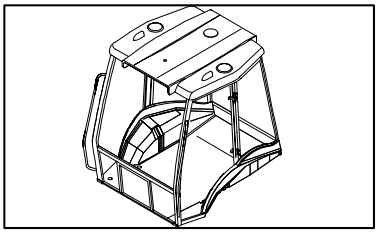

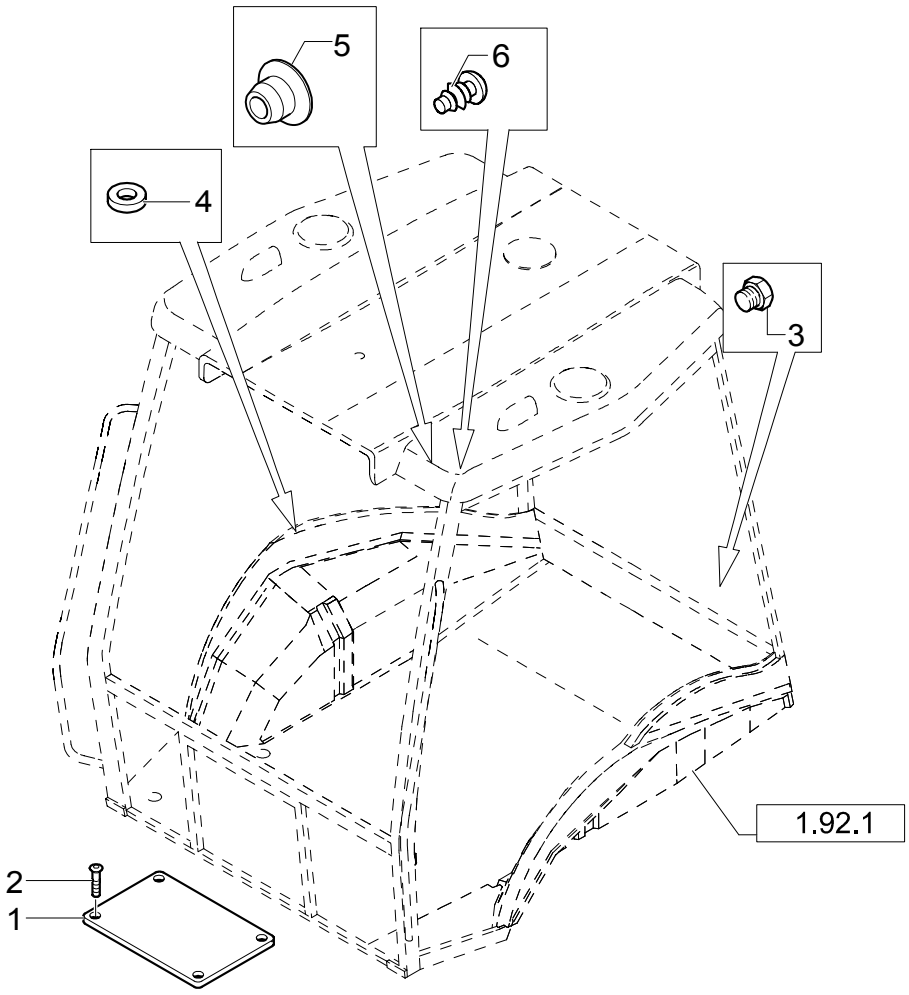

ROPS PLUGS & FLOOR PLATE (CENTER PIVOT)

REF	FN	PART NUMBER	YR/SN	QTY	DESCRIPTION
1		85804688		1	COVER
2		13313417		4	SCREW 6X25
3		85802309		4	PLUG
4		85804734		5	PAD, RUBBER
5		82003283		4	PLUG
6		85802310		4	PLUG

Mechanical Version

LB75.B

1.96.7/ 6	01	p1	11/03

CAB PLUGS, FLOOR PLATES & AIR CONVEYER, CENTER PIVOT

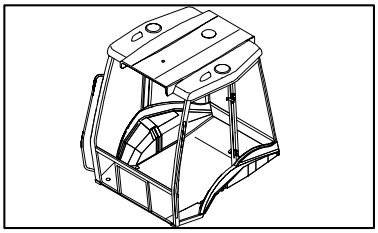

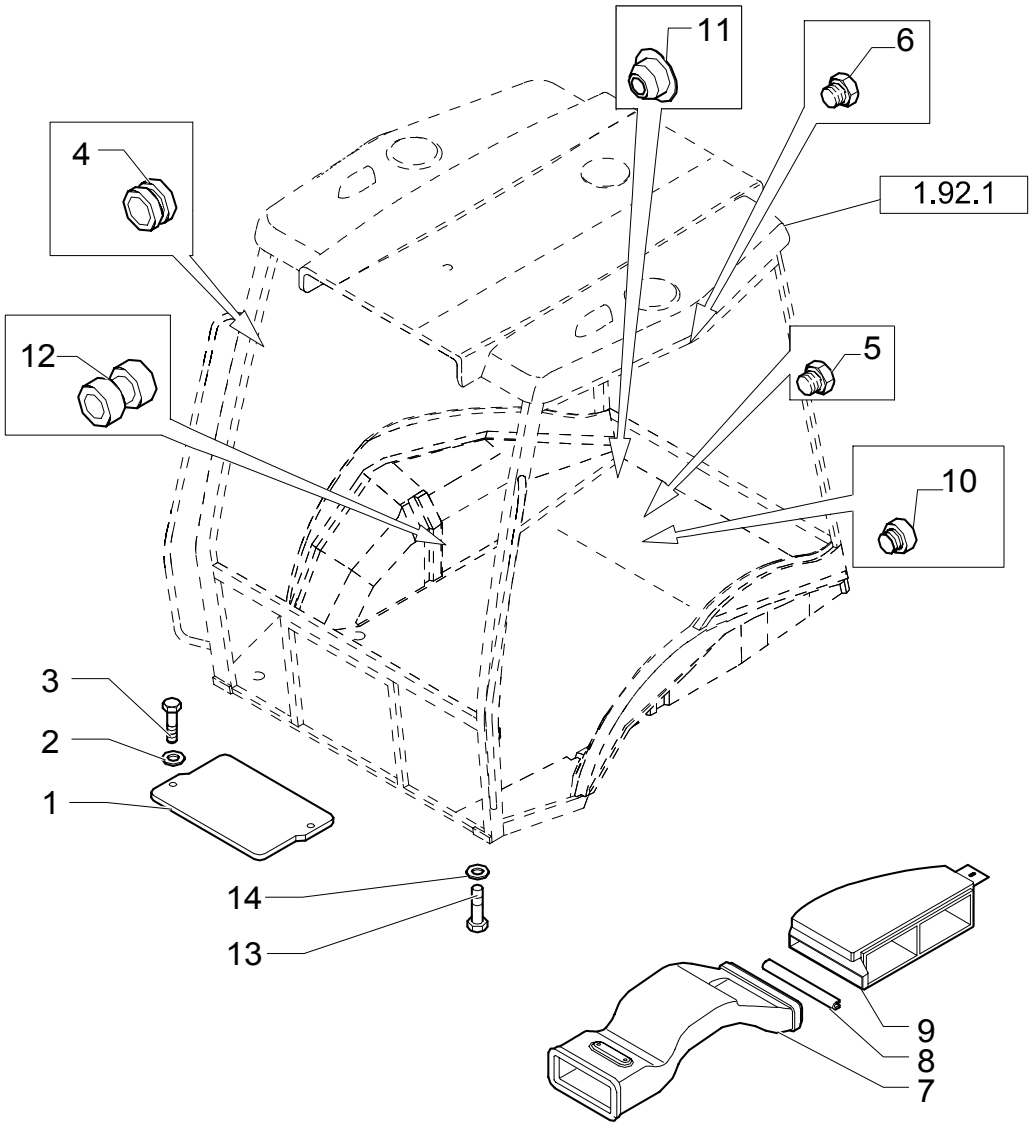

CAB PLUGS, FLOOR PLATES & AIR CONVEYER, CENTER PIVOT

REF	FN	PART NUMBER	YR/SN	QTY	DESCRIPTION
1		85801968		1	PLATE
2		11198074		2	WASHER, SEALING
3		16043424		2	SCREW Cap, HH, CL 8.8, M8 x 1.25 x 20
4		85801953		2	RIVET
5		79111978		5	PLUG
6		83994150		2	PLUG
7		{87408277}		1	DUCT, AIR
8		{87812021}		1	
9		{87408358}		1	PANEL
10		85802309		4	PLUG REAR
11		85802310		4	PLUG
12		10398580		2	RING
13		10902224		7	SCREW Cap, HH, CL 8.8, M6 x 1 x 16
14		11193274		7	WASHER, LOCK

1.96.7/10	01	p1	10/03

ROPS PLUGS & FLOOR PLATE (CENTER PIVOT)

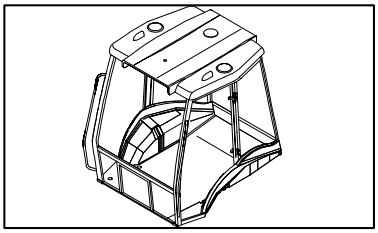

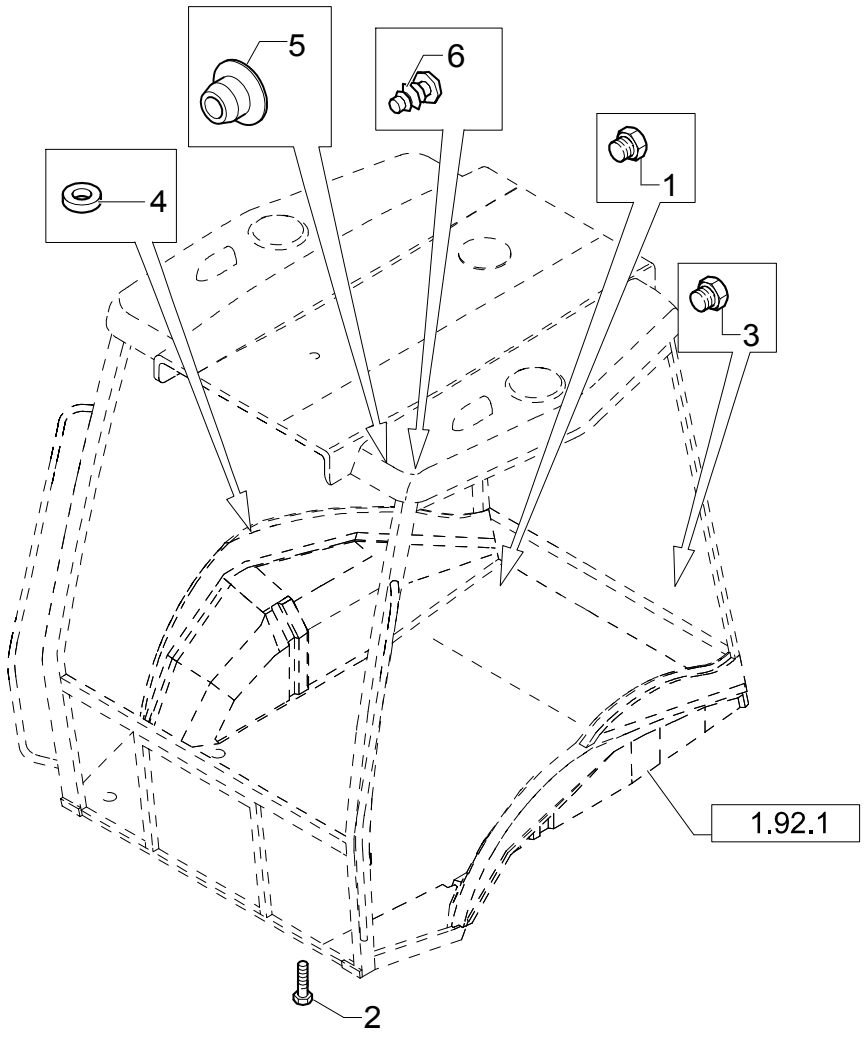

ROPS PLUGS & FLOOR PLATE (CENTER PIVOT)

REF	FN	PART NUMBER	YR/SN	QTY	DESCRIPTION
1		85802309		2	PLUG
2		13313417		4	SCREW 6X25
3		85802309		4	PLUG
4		85804734		5	PAD, RUBBER
5		82003283		4	PLUG
6		85802310		4	PLUG

INFORMATION SYMBOL DECALS - USA (POWER SHUTTLE)

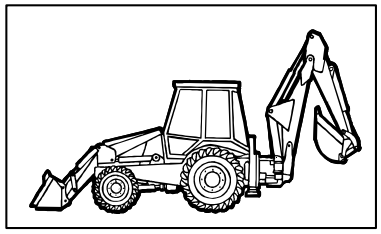

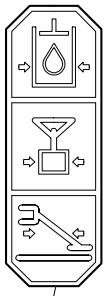

1

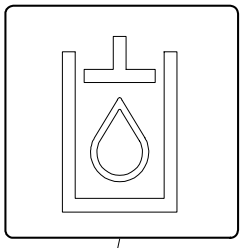

2

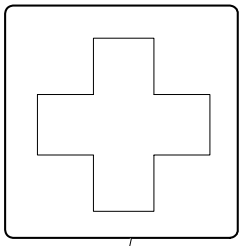

3

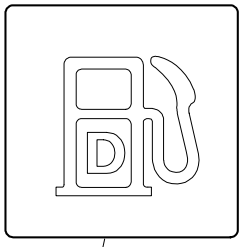

4

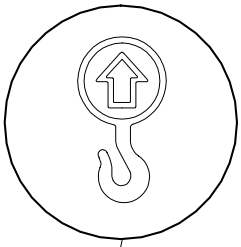

5

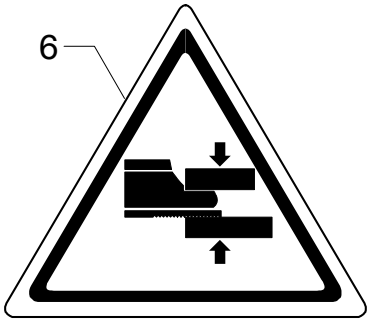

6

11

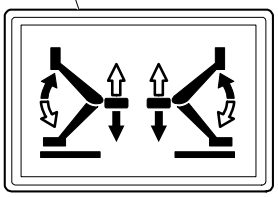

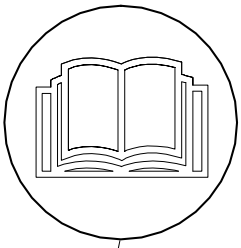

7

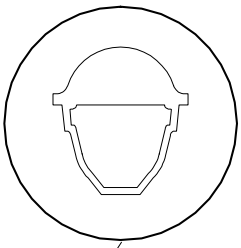

8

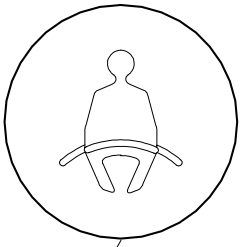

9

12

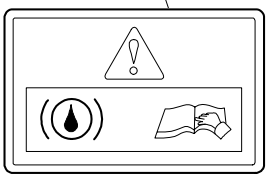

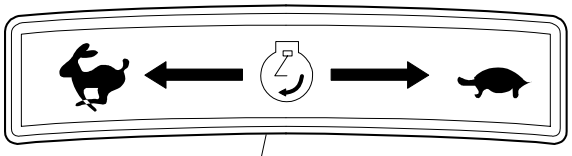

10

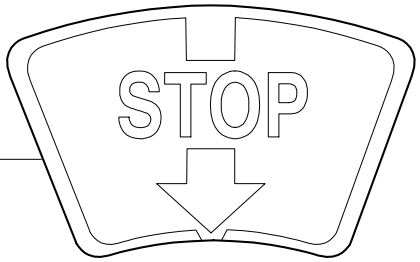

13

14





INFORMATION SYMBOL DECALS - USA (POWER SHUTTLE)

REF	FN	PART NUMBER	YR/SN	QTY	DESCRIPTION
1		85804395		1	DECAL
2		85804341		1	DECAL
3		85804339		1	DECAL
4		85804338		1	DECAL
5		85804336		4	DECAL
6		85804332		1	DECAL
7		85804333		3	DECAL
8		85804334		2	DECAL
9		85804335		1	DECAL
10		85803789		1	DECAL
11		85803788		1	DECAL
12		85807870		1	DECAL
13		85802441		1	DECAL
14		85804083		1	DECAL MM.600X60

CAB WARNING & INFORMATION DECALS (POWER SHUTTLE)

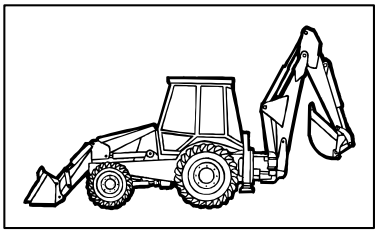

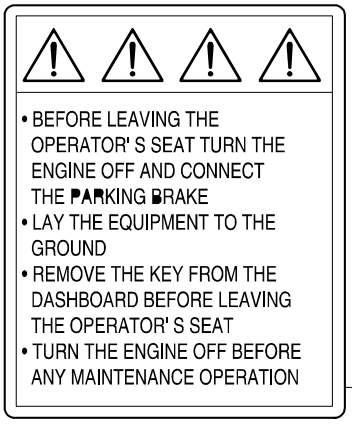

5



6



3

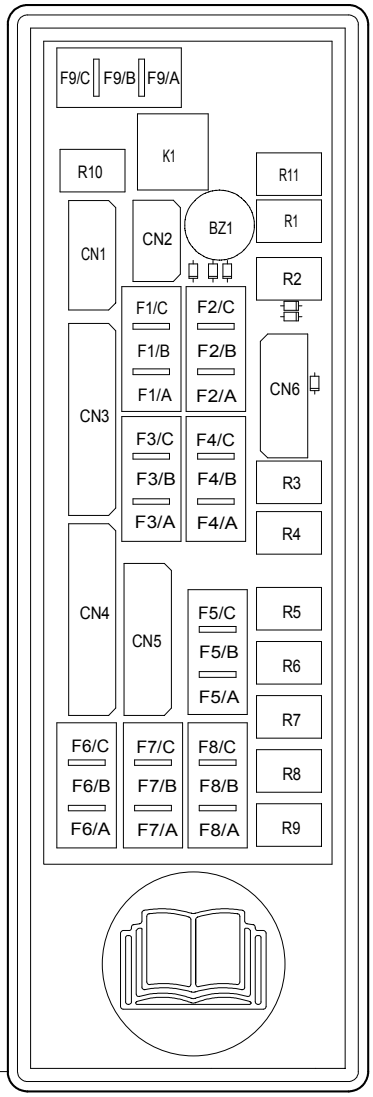

2

WATCH YOUR PROOF - METER HOURS

LUBRICATION AND MAINTENANCE SERVICE INTERVALS

LUBRICATION AND MAINTENANCE ITEM	CHECK	CLEAN	LUBE	SERVIC INTERVAL
AIR CLEANER OUTER ELEMENT (I) HYDRAULIC SYSTEM OIL FILTER		● ●		WHE IN INDICATED
HYDRAULIC OIL LEVEL ENGIME OIL LEVEL RADIATOR COOLANT LEVEL	● ● ●			DAILY
BACKHOE PIVOTS LOADER PIVOTS SEAT RAILS FRONT AXLE AND STEERING PIVOTS DIFF LOCK PEDAL PIVOT			● ● ● ● ●	EVERY 50 HOURS

I) NOTE: IMPROPER CLEANING CAN DAMAGE THE FILTER. REFER TO THE OPERATOR'S MANUAL FOR CORRECT CLEANING PROCEDURE. (LUBRICATION AND MAINTENANCE SECTION).

● REFER TO YOUR OPERATOR'S MANUAL FOR EXTENOED SERVICE INTERVAL REQUIREMENTS PF OTHER MAJOR COMPONENTS.

ALWAYS USE BENUINE NEWHOLLAND PARTS AND LUBRICANTS

1

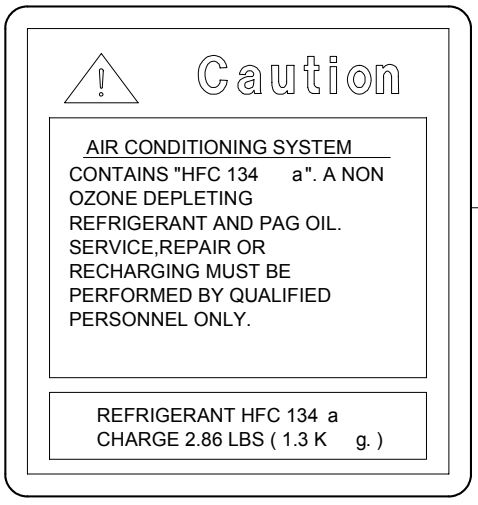

4

CAB WARNING & INFORMATION DECALS (POWER SHUTTLE)

REF	FN	PART NUMBER	YR/SN	QTY	DESCRIPTION
1		85802243		1	DECAL FINNISH
1		85802246		1	DECAL SWEDISH
1		85802249		1	DECAL NORWEGIAN
1		85802261		1	DECAL DANISH
1		85803868		1	DECAL ENGLISH
1		85803874		1	DECAL FRENCH
1		85803876		1	DECAL SPANISH
1		85802252		1	DECAL DUTCH
1		85802255		1	DECAL POTUGUESE
1		85802258		1	DECAL GREEK
1		85803867		1	DECAL ITALIAN
1		85803875		1	DECAL GERMAN
2		85826071		1	DECAL
3		85804087		1	DECAL ENGLISH
3		85804550		1	DECAL FRENCH
3		85804563		1	DECAL SPANISH
4		85812064		1	DECAL ENGLISH
4		85819180		1	DECAL FRENCH
4		85819181		1	DECAL SPANISH
5		85802242		2	DECAL FINNISH
5		85802245		2	DECAL SWEDISH
5		85802248		2	DECAL NORWEGIAN
5		85802251		2	DECAL DUTCH
5		85802254		2	DECAL POTUGUESE
5		85802257		2	DECAL GREEK
5		85802260		2	DECAL DANISH
5		85804328		2	DECAL ITALIAN
5		85804400		2	DECAL ENGLISH
5		85804401		2	DECAL FRENCH
5		85804402		2	DECAL GERMAN
5		85804403		2	DECAL SPANISH
6		85804358		3	DECAL

BACKHOE, LOADER & ENGINE WARNING DECALS (POWER SHUTTLE)

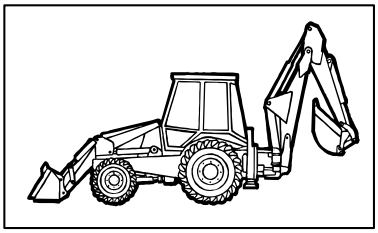

1

WARNING

WITHOUT THE LOADER BUCKET ATTACHED THIS MACHINECAN BECOME UNSTABLE WHEN BACKED DOWN A RAMP.
TO UNLOAD THIS MACHINE, EITHER:

(1) INSTALL LOADER BUCKET.
(2) DRIVE FORWARD DOWN THE RAMP.
(3) TURN BACKHOE 90 DEGREES.

2

DANGER

EXPLOSIVE
CAN CAUSE BLINDNESS OR SEVERE INJURI.
PROTECT EYES. SPARKS, FLAMES AND CIGARETTES CAN CAUSE EXPOSION. TOLLS AND CABLE CLAMPS CAN CAUSE SPARKS. DO NOT USE WITHOUT PROPER INSTRUCTION. KEEP CAPS TIGHT AND LEVEL.

ACID-POISON
CAUSES SEVERE BURNS. CONTAINS SULFURIC ACID.
IN EVENT OF CONTACT, FLUSH WITH WATER AND SEE A DOCTOR.
KEEP OUT OF REACH OF CHILDREN

DISTIBUITED BY
NEW HOLLAND, INC.

3

WARNING

TO JUMP START (Negative Grounded Battery)

1. Shield eyes. 2. Connect one end of one cable to positive (+) terminals of each battery 3. Connect one end of other cable to negative (-) terminal of "Good" battery. 4. Connect other and to engine block of vehicle being started. TO PREVENT DAMAGE le other electrical components on vehicle being started. make certain that engine is at idle speed before disconnecting jopmper cables.

5

WARNING

FOR SAFETY
DO NOT ENTER PLATFORM FROM THE REAR
OPERATE BACKHOE FROM OPERATOR' S SEAT ONLY

4

WARNING

DO NOT WORK
UNDER RAISED LOADER
UNLESS SUPPORTED

6

WARNING

DO NOT USE TRANSPORT LOCK WHILE CRANING TO AVOID VEHICLE DAMAGE AND PERSONAL INJURY.

ATTENTION

CENTER & RAISE THE BOOM BEFORE ENGAGING OR DISENGAGIN THE TRANSPORT LOCK TO AVOID VEHICLE DAMAGE.

BOOM MAY HIT RAISED STABILIZER CYLINDER WHEN SWINGING TO FULL LEFT OR RIGHT.



BACKHOE, LOADER & ENGINE WARNING DECALS (POWER SHUTTLE)

REF	FN	PART NUMBER	YR/SN	QTY	DESCRIPTION
1		85804077		1	DECAL ENGLISH
1		85804542		1	DECAL FRENCH
1		85804555		1	DECAL SPANISH
2		85804079		1	DECAL ENGLISH
2		85804544		1	DECAL FRENCH
2		85804557		1	DECAL SPANISH
3		85804080		1	DECAL ENGLISH
3		85804545		1	DECAL FRENCH
3		85804558		1	DECAL SPANISH
4		85804086		3	DECAL ENGLISH
4		85804549		3	DECAL FRENCH
4		85804562		3	DECAL SPANISH
5		85804089		1	DECAL ENGLISH
5		85804552		1	DECAL FRENCH
5		85804565		1	DECAL SPANISH
6		85804078		1	DECAL ENGLISH
6		85804543		1	DECAL FRENCH
6		85804556		1	DECAL SPANISH

BACKHOE, LOADER & ENGINE WARNING DECALS (POWER SHUTTLE)

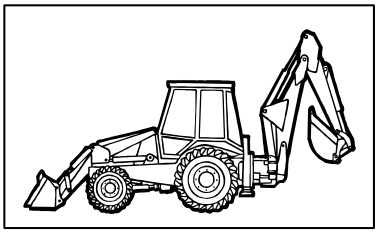

TRANSPORT HEIGHT
13'
(3962 mm)

WARNING

LOADER SAFETY

- know all operation, warning and safety Instructions in the operator' s manual before operating.
- Operate only from the operator's seat.
- Stay out from under raised loader arms unless supported
- Carry bucket low during transport for better visibility and to avoid overturns.
- Using front end loaders without special attachments for handling large heavy object such as large bales, logs, and oil drums, is NOT recommended. Handling large heavy object with the loader can be extremely dangerous due to the object rolling or sliding down the loader arms onto the operator.
- Use wheel ballast and/or rear weight for stability as recommended in the operator' s manual.
- When parking or servicing:
  -Lower the bucket to the ground.
  -Stop the engine.
  -Set the parking brake.

FAILURE TO FOLLOW ANY OF THE INSTRUCTIONS ABOVE CAN CAUSE SERIOUS INJURY TO THE OPERATOR OR OTHER PERSONS.

1
2
3

EMERGENCY STOPPING AND PARKING BRAKE

TORQUE CONVERTER TRANSMISSION WITH CLUTCH DISCONNECT

F
N
R

BEFORE STARTING - Place both shuttle (power reversing) and gear shift lever in neutral and assure parking brake is applied.

TO SHIFT - Select operating gear (1, 2, 3, or 4), then use shuttle lever to select direction of travel

1 3 N 2 4

SHUTTLE SHIFTING - Reduce engine speed when changing direction of travel from (F) to (R)

CLUTCH DISCONNECT - Press button on loader control or gear shift levers to disconnect hydraulic clutch during loader lift cycle or gear changes.

4

"NOTE"

WARRANTY ON THIS ENGINE AND/OR POWER TRAIN COMPONENTS SMALL NOT APPLY TO ANY FAILURE RESULTING FROM UNSPECIFIED ADJUSTMENTS OF THE FUEL INJECTION SYSTEM.

5

WARNING

- Start engine only from operator's seat. If safety start switch is bypassed engine can start with transmission in gear.
- Do not connector or short across terminals on starter solenoid.
- Attach beester cables as shown on battery decal.

Starting in gear causing runaway can result in serious ingury.

6

WARNING

KEEP HANDS AND CLOTHING AWAY FROM ROTATING FAN AND BELTS TO PREVENT SERIOUS INJURY

7

BACKHOE, LOADER & ENGINE WARNING DECALS (POWER SHUTTLE)

REF	FN	PART NUMBER	YR/SN	QTY	DESCRIPTION
1		85805829		1	DECAL
2		85804088		1	DECAL ENGLISH
2		85804551		1	DECAL FRENCH
2		85804564		1	DECAL SPANISH
3		85804081		1	DECAL ENGLISH
3		85804546		1	DECAL FRENCH
3		85804559		1	DECAL SPANISH
4		85804091		1	DECAL ENGLISH
4		85804554		1	DECAL FRENCH
4		85804567		1	DECAL SPANISH
5		85804090		1	DECAL ENGLISH
5		85804553		1	DECAL FRENCH
5		85804566		1	DECAL SPANISH
6		85804084		1	DECAL ENGLISH
6		85804547		1	DECAL FRENCH
6		85804560		1	DECAL SPANISH
7		85804085		2	DECAL ENGLISH
7		85804548		2	DECAL FRENCH
7		85804561		2	DECAL SPANISH

1.98.1	01	p1	03/04

LB75.B MODEL IDENTIFICATION (POWER SHUTTLE)

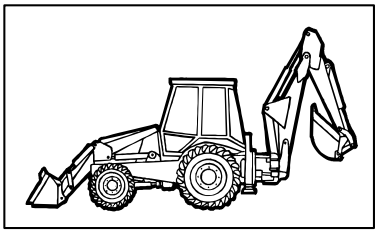

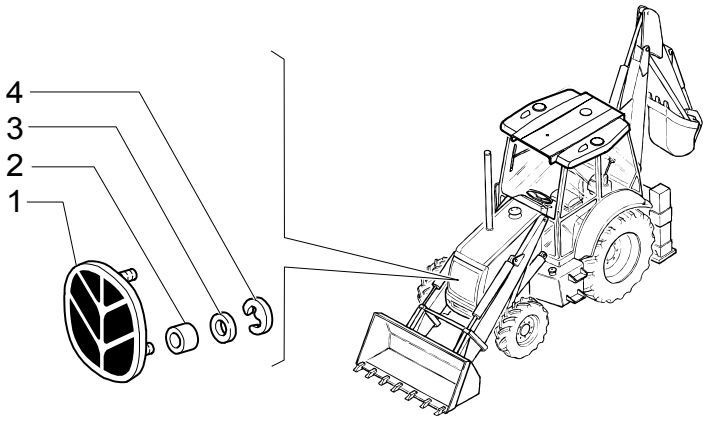

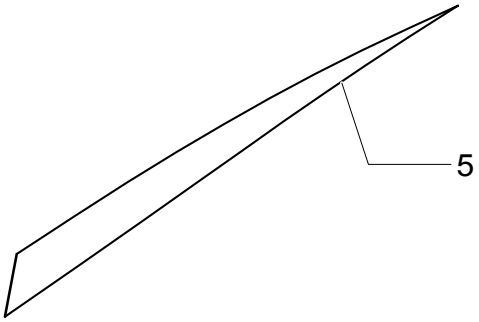



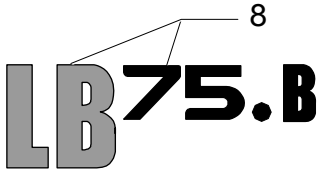



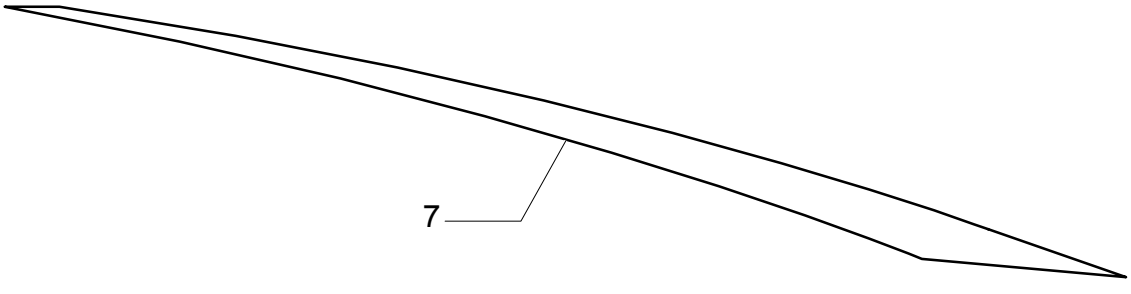

LB75.B MODEL IDENTIFICATION (POWER SHUTTLE)

REF	FN	PART NUMBER	YR/SN	QTY	DESCRIPTION
1		85820107		1	EMBLEM
2		12643711		2	WASHER
3		5188360		2	SPACER
4		5135069		2	CLIP
5		85820816		1	DECAL RH
5		85820815		1	DECAL LH
6		85811896		2	DECAL L=MM.1000
6		85811895		1	DECAL L=MM.600
6		85820938		1	DECAL L=MM.690
7		85820818		1	DECAL LH, HOOD
7		85820817		1	DECAL RH, HOOD
8		85820821		1	DECAL
9		F0NN16605AA		1	DECAL

343	01	p1	04/03

LOADER CONTROL VALVE, THREE SECTION, CONTROL LEVER (CENTER PIVOT)

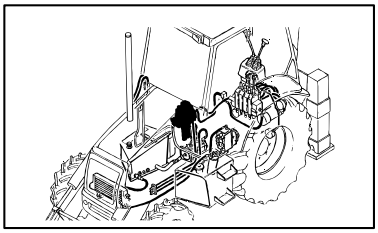

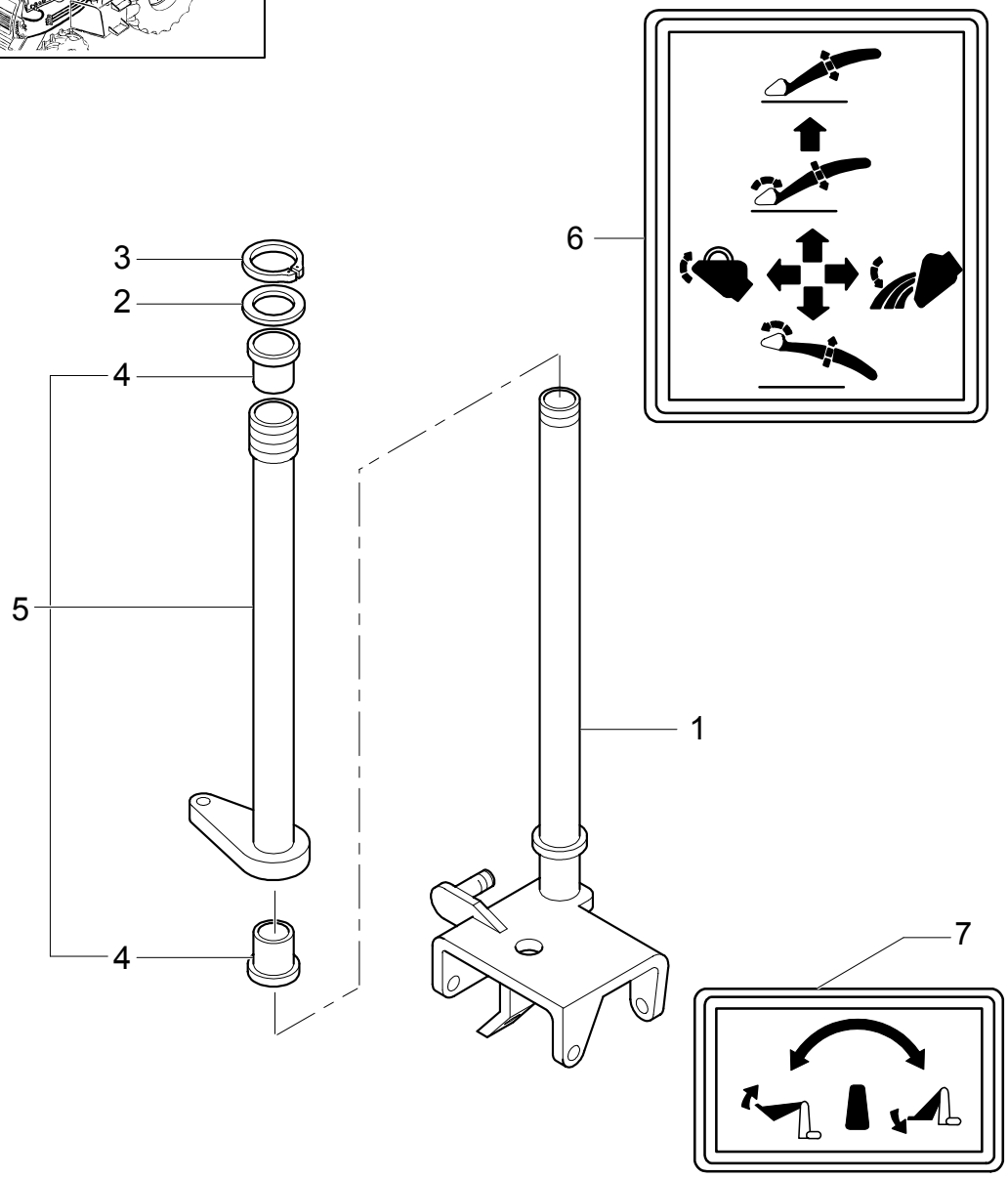

LOADER CONTROL VALVE, THREE SECTION, CONTROL LEVER (CENTER PIVOT)

REF	FN	PART NUMBER	YR/SN	QTY	DESCRIPTION
1		85802601		1	LEVER
2		83962203		1	WASHER
3		83962223		1	CIRCLIP
4		83962208		2	BUSHING
5		85802615		1	ARM, TRIP
6		85804346		1	DECAL
7		85804399		1	DECAL

Mechanical Version

LB75.B

343	02	p1	05/03

LOADER CONTROL VALVE, THREE SECTION, CONTROL LEVER CABLE (CENTER PIVOT)

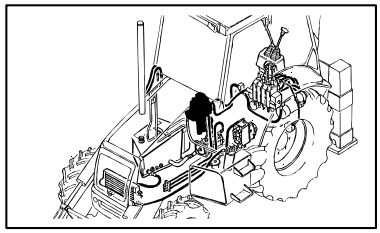

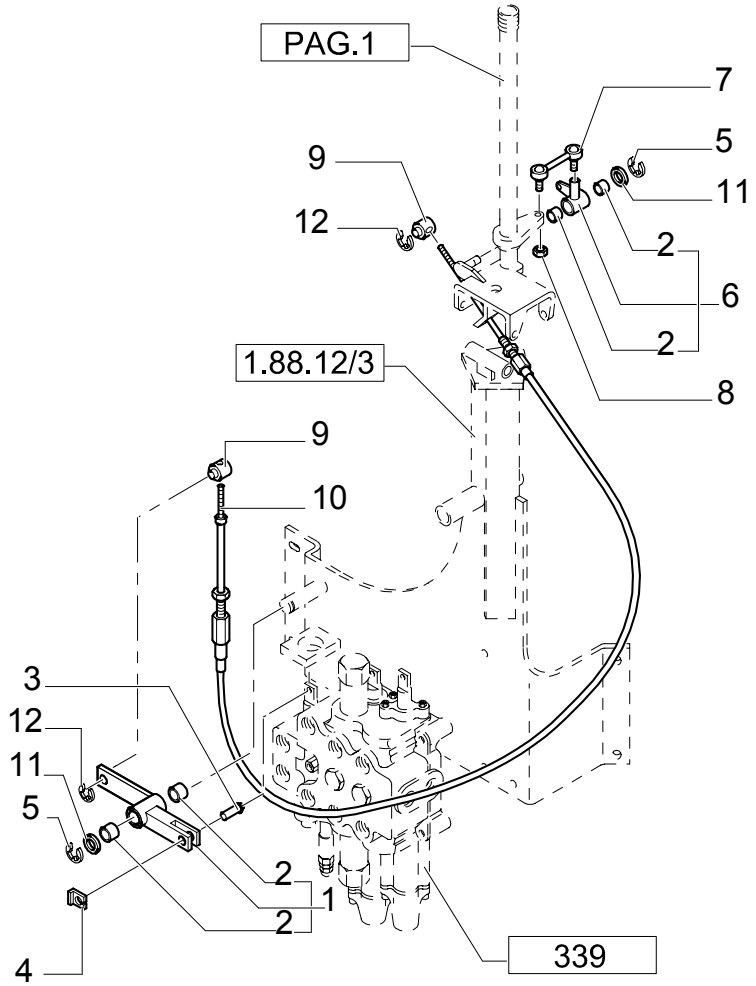

LOADER CONTROL VALVE, THREE SECTION, CONTROL LEVER CABLE (CENTER PIVOT)

REF	FN	PART NUMBER	YR/SN	QTY	DESCRIPTION
1		85802816		1	LEVER, IDLER
2		85802494		4	BUSHING
3		85801561		1	PIN
4		11063971		1	CLIP
5		83911366		2	RING, SNAP
6		85802587		1	YOKE
7		83962218		1	LINK CONROD
8		15896221		1	NUT
9		83962205		2	PIN
10		85806155		1	CABLE
11		14496901		2	WASHER
12		83947277		2	CIRCLIP

343/ 1	01	p1	05/03

LOADER CONTROL VALVE, CONTROL LEVER & CABLE (SIDE SHIFT & LB115)

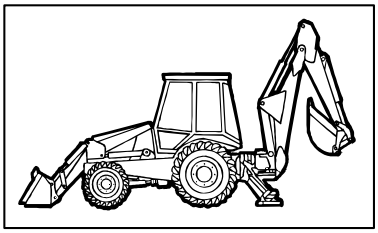

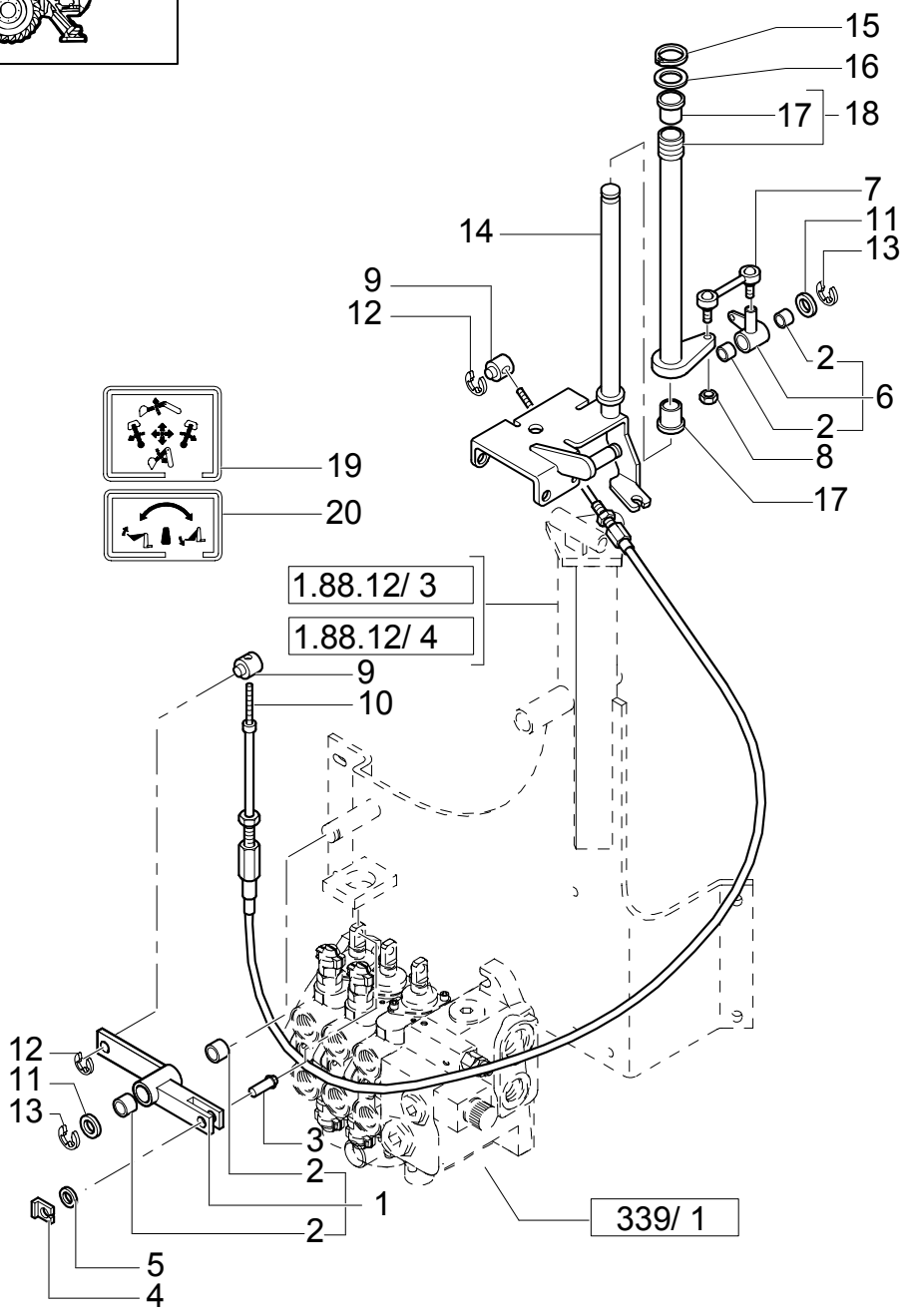

LOADER CONTROL VALVE, CONTROL LEVER & CABLE (SIDE SHIFT & LB115)

REF	FN	PART NUMBER	YR/SN	QTY	DESCRIPTION
1		85805541		1	LEVER, IDLER
2		85802494		4	BUSHING
3		85805408		1	PIN, ROLL
4		11064071		1	CLIP
5		14499401		1	WASHER
6		85802587		1	YOKE
7		85805764		1	LINK CONROD
8		15896211		1	NUT
9		83962205		2	PIN
10		85805542		1	CABLE, FLEXIBLE
11		14496901		1	WASHER
12		83947277		2	CIRCLIP
13		83911366		2	RING, SNAP
14		85805536		1	LEVER
15		83962223		1	CIRCLIP
16		83962203		1	WASHER
17		83962208		2	BUSHING
18		85805782		1	LEVER INCL.REF.17
19		85804346		1	DECAL
20		85804399		1	DECAL

351	04	p1	11/03

CASE 3 LEVER BACKHOE CONTROLS, CONSOLE & LEVERS

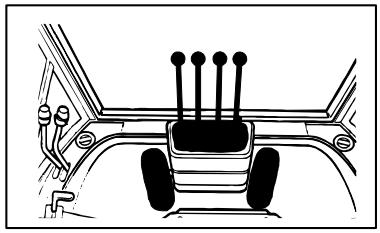

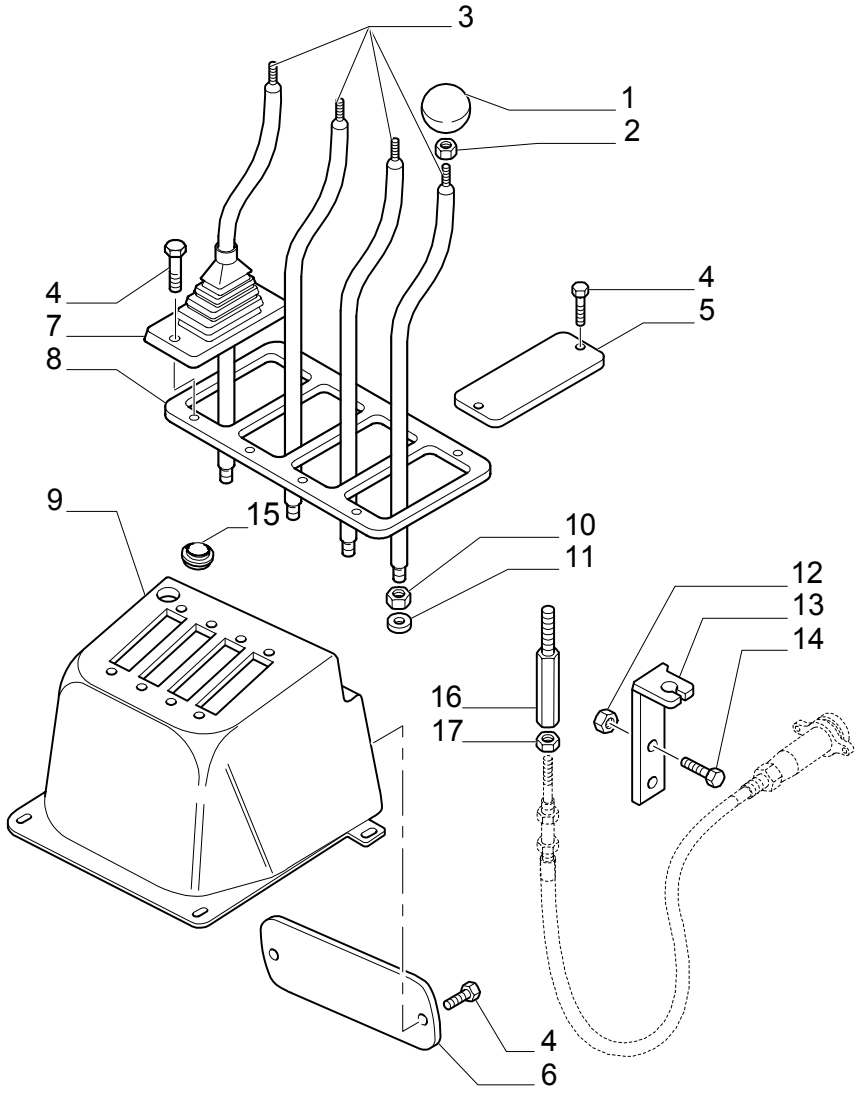

CASE 3 LEVER BACKHOE CONTROLS, CONSOLE & LEVERS

REF	FN	PART NUMBER	YR/SN	QTY	DESCRIPTION
1		85805242		4	KNOB
2		15500111		4	NUT M10X1,5
3		85804780		4	ARM, TRIP
4		13272477		10	SCREW M4X20
5		85804159		1	PLATE
6		85804781		1	COVER
7		85803382		4	BOOT
8		85803540		1	PLATE
9		85805239		1	CONSOLE
10		16101511		4	NUT M12X1,25
11		11190779		4	WASHER, LOCK
12		16104121		2	NUT M8 W/CAB
13		85805635		1	SUPPORT W/CAB
14		16043621		2	SCREW M8X25 W/CAB
15		85802227		1	PLUG
16		85804271		1	EXTENSION W/ROPS
17		15896221		1	NUT M6 W/ROPS

Mechanical Version

LB75.B

CASE 3 LEVER BACKHOE CONTROLS, BELLCRANK & SUPPORT

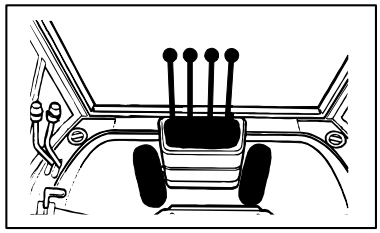

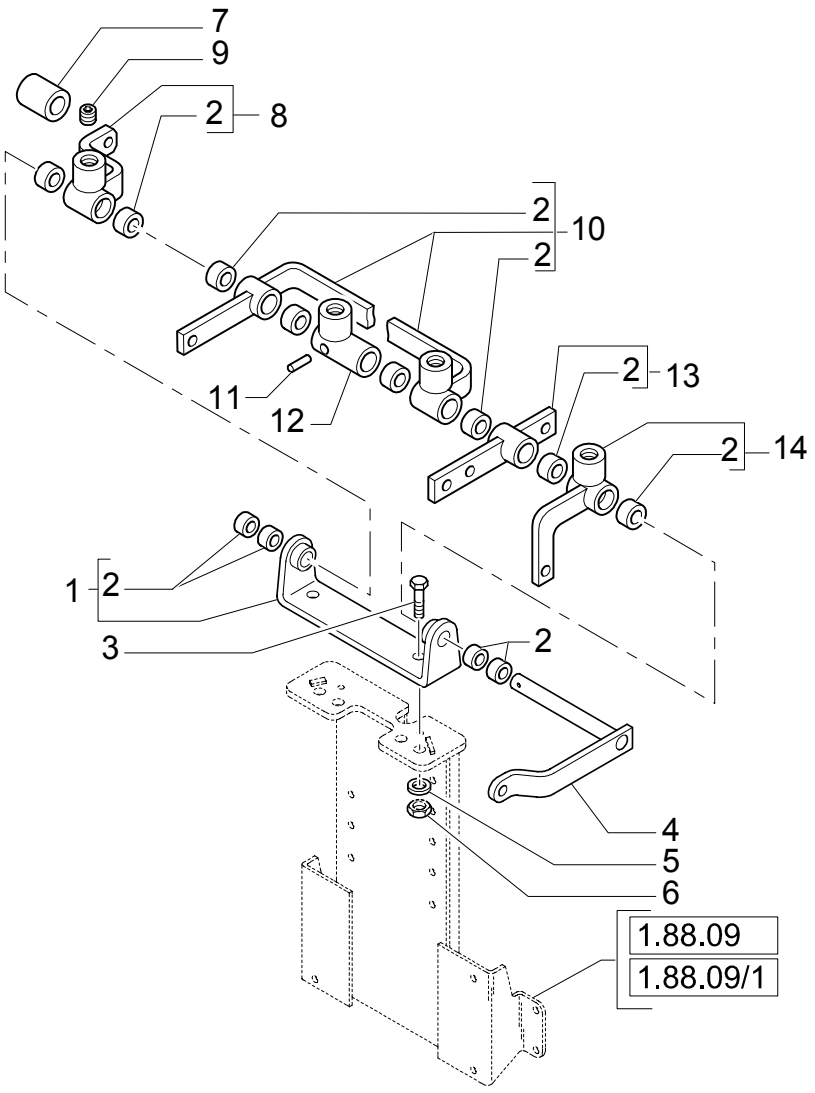

CASE 3 LEVER BACKHOE CONTROLS, BELLCRANK & SUPPORT

REF	FN	PART NUMBER	YR/SN	QTY	DESCRIPTION
1		85802647		1	SUPPORT
2		85802494		AR	BUSHING 16X19X8
3		15540421		2	SCREW M12X1,25X30
4		85805059		1	PIN
5		11190779		2	WASHER, LOCK
6		16101511		2	NUT M12X1,25
7		85805056		1	SPACER
8		85805632		1	LEVER, IDLER W/CAB
8		85805250		1	LEVER, IDLER W/ROPS
9		13812631		1	DOWEL M12X1,25
10		85805047		1	LEVER, IDLER ASSY
11		13940370		1	PIN, ROLL
12		85805057		1	LEVER, IDLER
13		85805049		1	LEVER, IDLER ASSY
14		85805053		1	LEVER, IDLER ASSY

Mechanical Version

LB75.B

351	06	p1	11/03

CASE 3 LEVER BACKHOE CONTROLS, BUCKET TIE-ROD ASSEMBLY

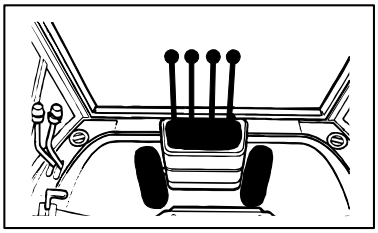

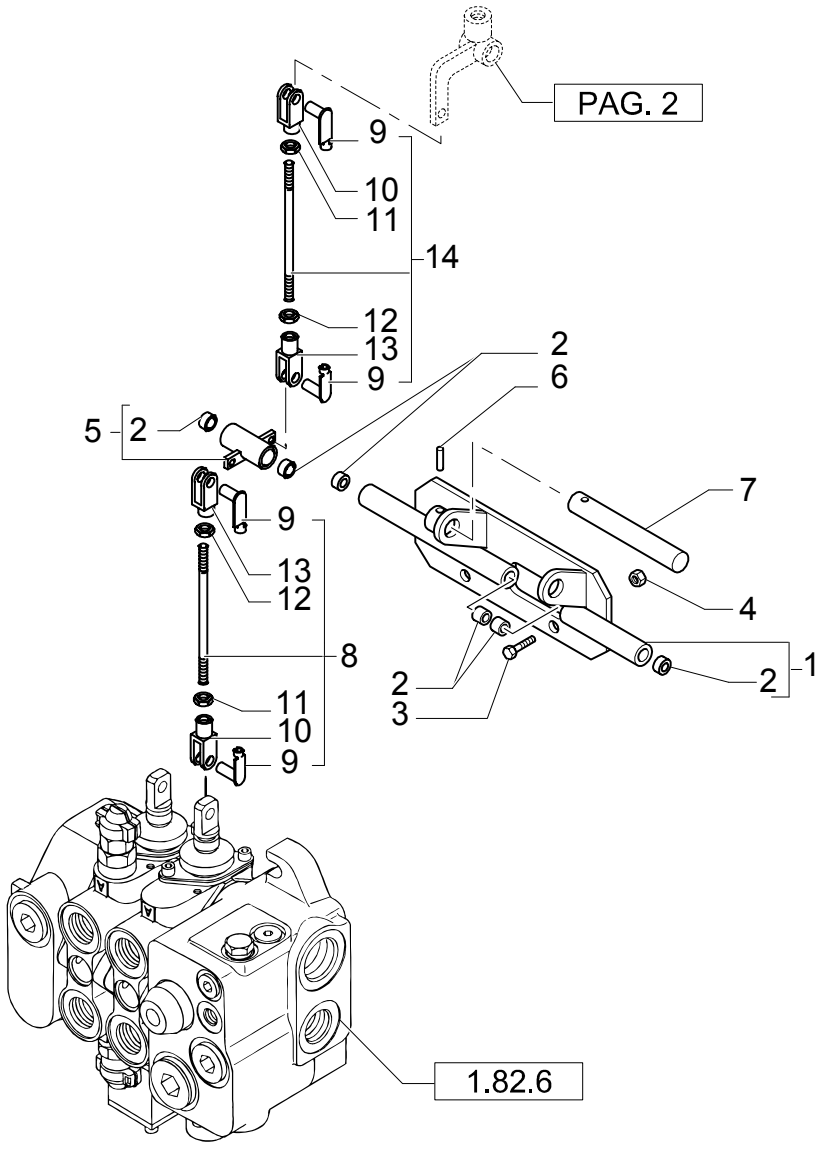

CASE 3 LEVER BACKHOE CONTROLS, BUCKET TIE-ROD ASSEMBLY

REF	FN	PART NUMBER	YR/SN	QTY	DESCRIPTION
1		85805625		1	SUPPORT W/CAB
1		85805040		1	SUPPORT W/ROPS
2		85802494		AR	BUSHING 16X19X8
3		16043621		4	SCREW M8X25
4		16104111		4	NUT M8
5		85805043		1	LEVER, IDLER
6		13940370		1	PIN, ROLL
7		85805042		1	PIN
8		85803447		1	TIE-ROD
9		85802738		4	PIN
10		10007871		2	YOKE RH
11		16102311		2	NUT RH
12		16102911		2	NUT LH
13		11991971		2	YOKE LH
14		85805046		1	TIE-ROD

Mechanical Version

LB75.B

CASE 3 LEVER BACKHOE CONTROLS, UPPER SWING TIE-ROD ASSEMBLY

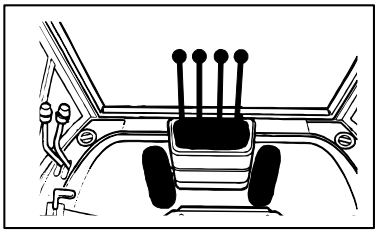

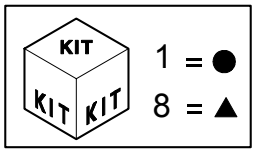

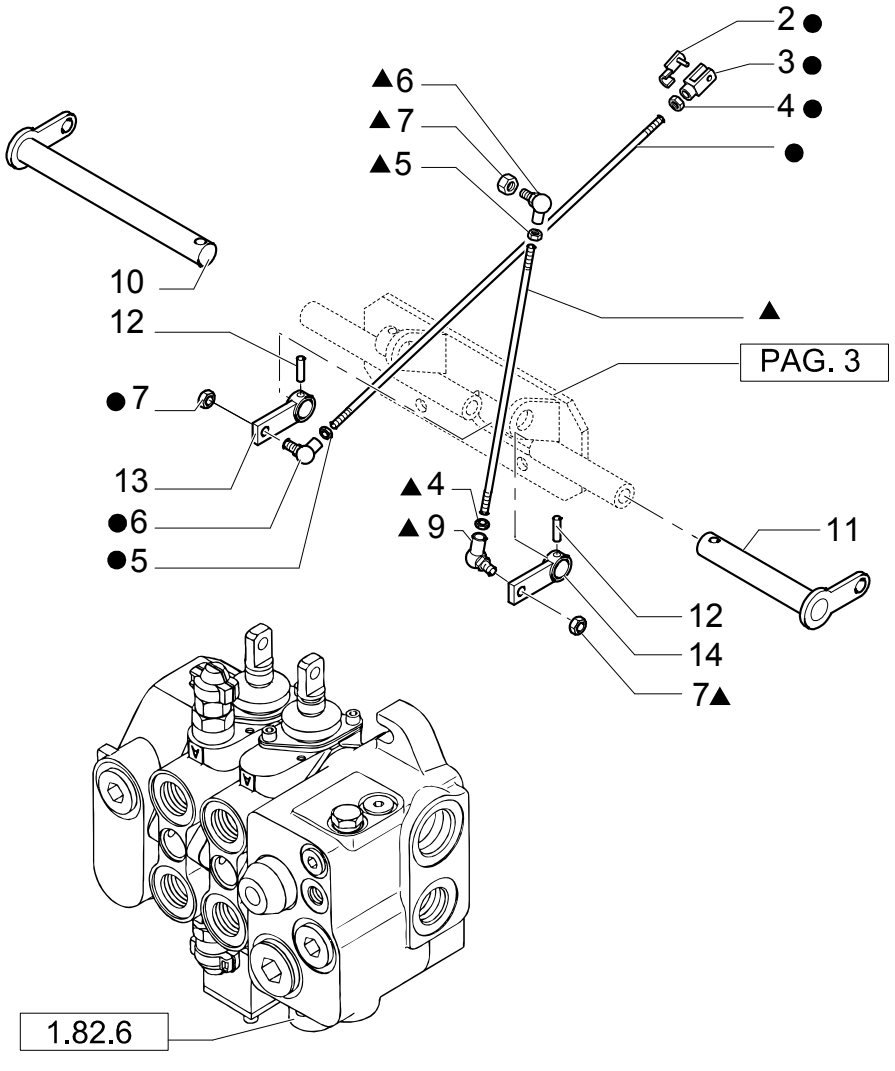

CASE 3 LEVER BACKHOE CONTROLS, UPPER SWING TIE-ROD ASSEMBLY

REF	FN	PART NUMBER	YR/SN	QTY	DESCRIPTION
1		85805033		1	TIE-ROD
2		85802738		1	PIN
3		11991971		1	YOKE LH
4		16102911		2	NUT LH
5		16102311		2	NUT RH
6		85804375		2	JOINT, UNIVERSAL RH
7		14048211		3	NUT
8		85805035		1	TIE-ROD
9		85804376		1	JOINT, UNIVERSAL LH
10		85805629		1	PIN LH W/CAB
10		85805039		1	PIN LH W/ROPS
11		85805038		1	PIN RH
12		13940370		2	PIN, ROLL
13		85803492		1	LEVER, IDLER
14		85805037		1	LEVER, IDLER

Mechanical Version

LB75.B

351	08	p1	11/03

CASE 3 LEVER BACKHOE CONTROLS, DIPPER, SWING & BOOM LINKAGE

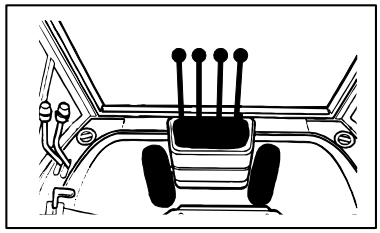

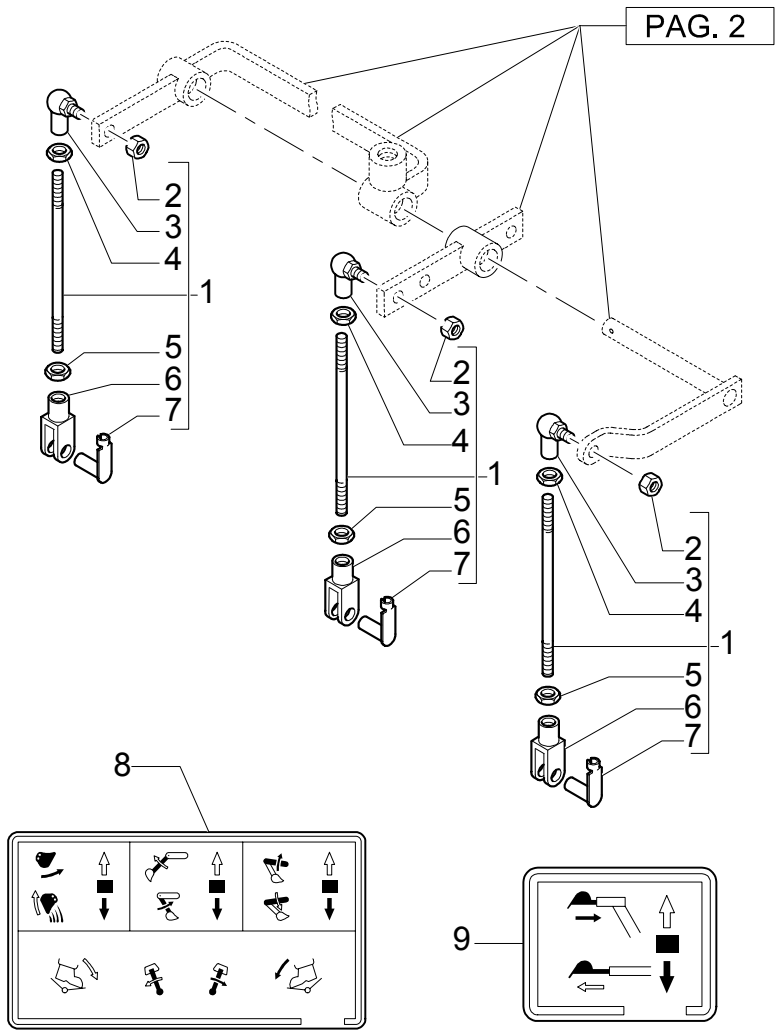

CASE 3 LEVER BACKHOE CONTROLS, DIPPER, SWING & BOOM LINKAGE

REF	FN	PART NUMBER	YR/SN	QTY	DESCRIPTION
1		85804803		3	TIE-ROD
2		14048221		3	NUT
3		85804375		3	JOINT, UNIVERSAL
4		16102311		3	NUT RH
5		16102911		3	NUT LH
6		11991971		3	YOKE LH
7		85802738		3	PIN
8		85803916		1	DECAL
9		85803787		1	DECAL

Mechanical Version

LB75.B

CASE 3 LEVER BACKHOE CONTROLS, SWING CONTROL PEDAL

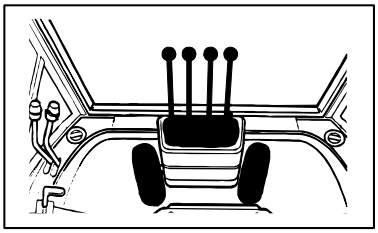

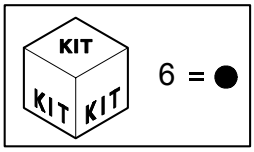

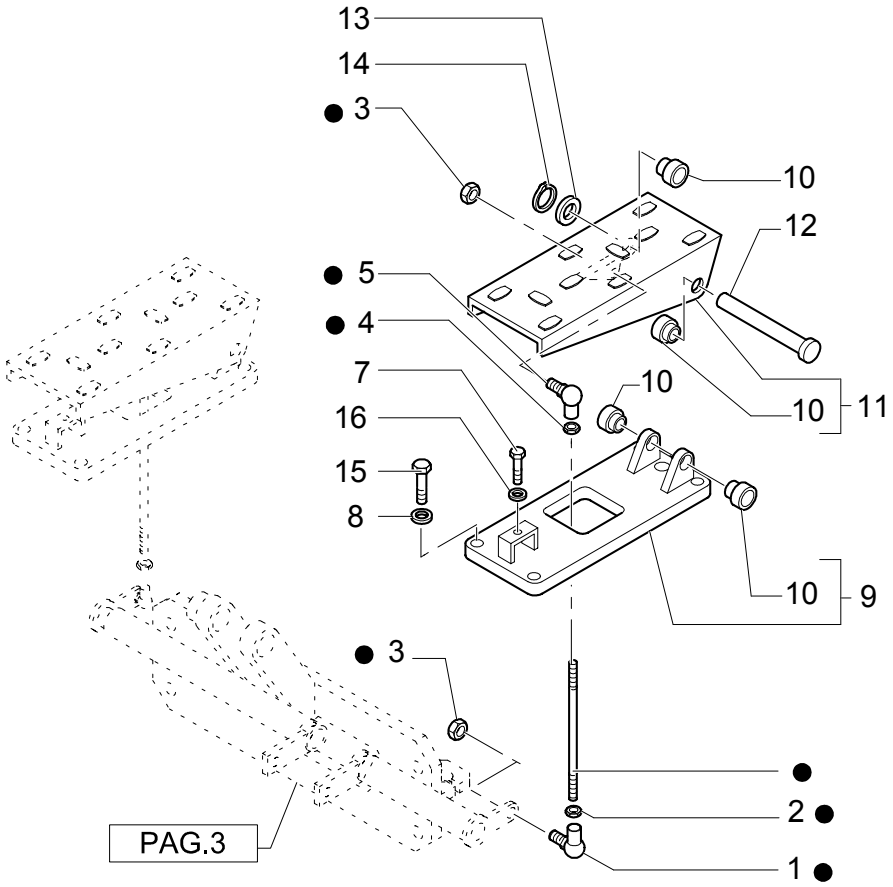

CASE 3 LEVER BACKHOE CONTROLS, SWING CONTROL PEDAL

REF	FN	PART NUMBER	YR/SN	QTY	DESCRIPTION
1		85804375		2	JOINT, UNIVERSAL
2		16102311		2	NUT RH
3		9628098		4	NUT, LOCK CL 10, M8 x 1.25
4		16102911		2	NUT LH
5		85804376		2	JOINT, UNIVERSAL LH
6		85804151		2	TIE-ROD
7		16043621		2	SCREW M8X25
8		11190679		6	WASHER, LOCK
9		85804141		2	SUPPORT
10		85803587		8	BUSHING
11		85804136		2	PEDAL
12		85804153		2	PIN
13		14499521		2	WASHER
14		83972855		2	RING, SNAP
15		15970721		6	SCREW
16		16100811		2	NUT CL 5, M8 x 1.25

353	01	p1	11/03

4 LEVER BACKHOE CONTROLS, CONSOLE, LEVERS & BELLCRANK (SIDE SHIFT & LB115)

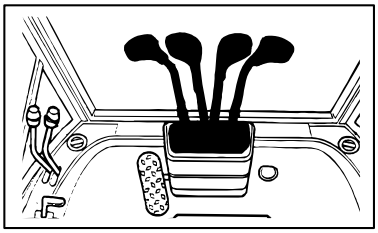

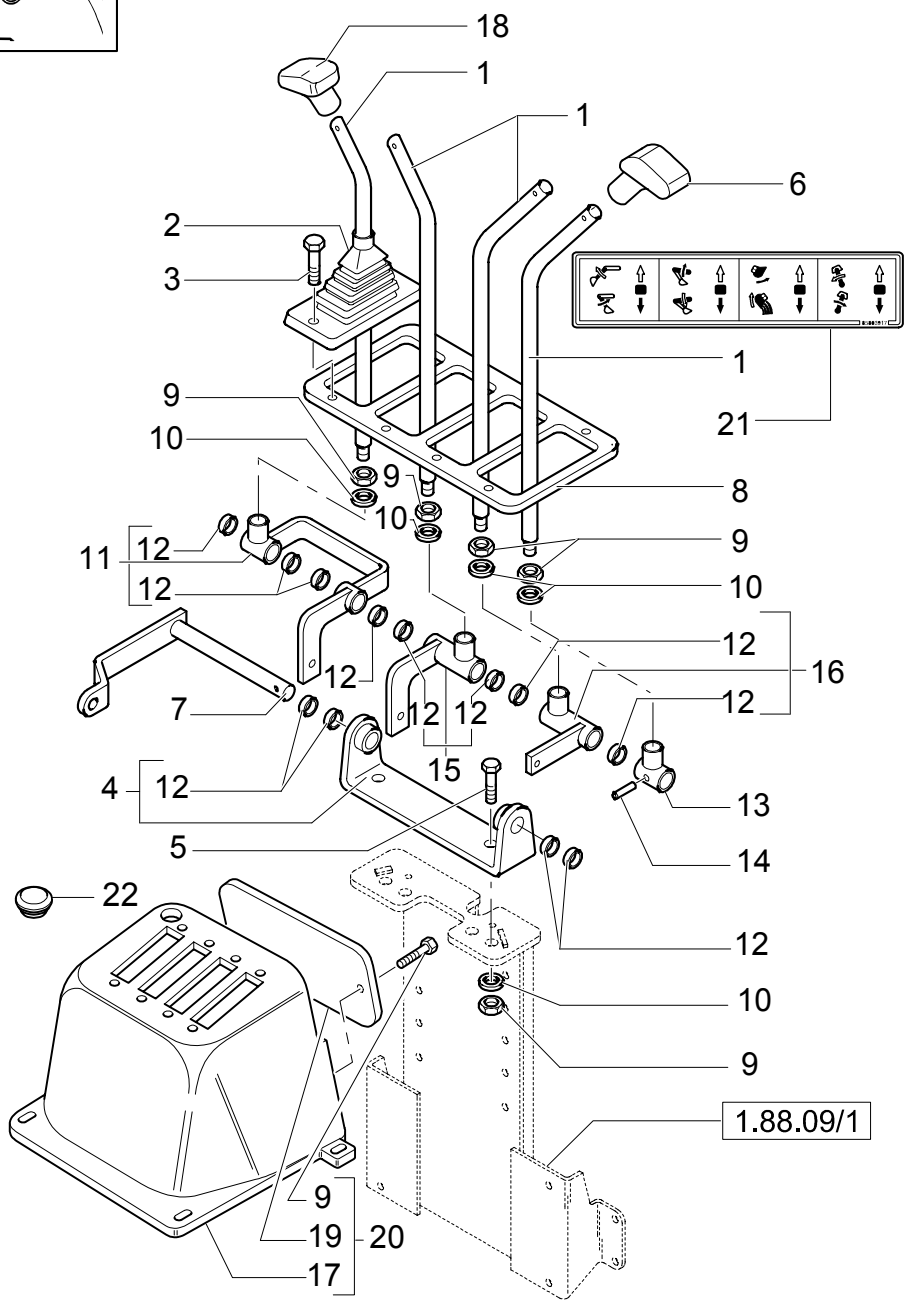

4 LEVER BACKHOE CONTROLS, CONSOLE, LEVERS & BELLCRANK (SIDE SHIFT & LB115)

REF	FN	PART NUMBER	YR/SN	QTY	DESCRIPTION
1		85804780		4	ARM, TRIP
2		85803382		4	BOOT
3		13272477		10	SCREW
4		85802647		1	SUPPORT
5		15540421		2	SCREW
6		83962919		2	HANDLE R.H.
7		85804782		1	PIN
8		85803540		1	PLATE
9		16101511		6	NUT
10		11190779		6	WASHER, LOCK
11		85804801		1	LEVER, IDLER
12		85802494		12	BUSHING
13		85804787		1	LEVER, IDLER
14		13940370		1	PIN, ROLL
15		85804794		1	LEVER, IDLER
16		85804791		1	LEVER, IDLER
17		85805239		1	CONSOLE
18		83962918		2	HANDLE L.H.
19		85804781		1	COVER
20		85804821		1	CONTAINER INCL.22
21		85803917		1	DECAL
22		85802227		1	PLUG

Mechanical Version

LB75.B

4 LEVER BACKHOE CONTROLS, UPPER TIE-ROD ASSEMBLY (SIDE SHIFT)

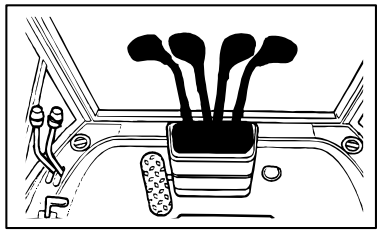

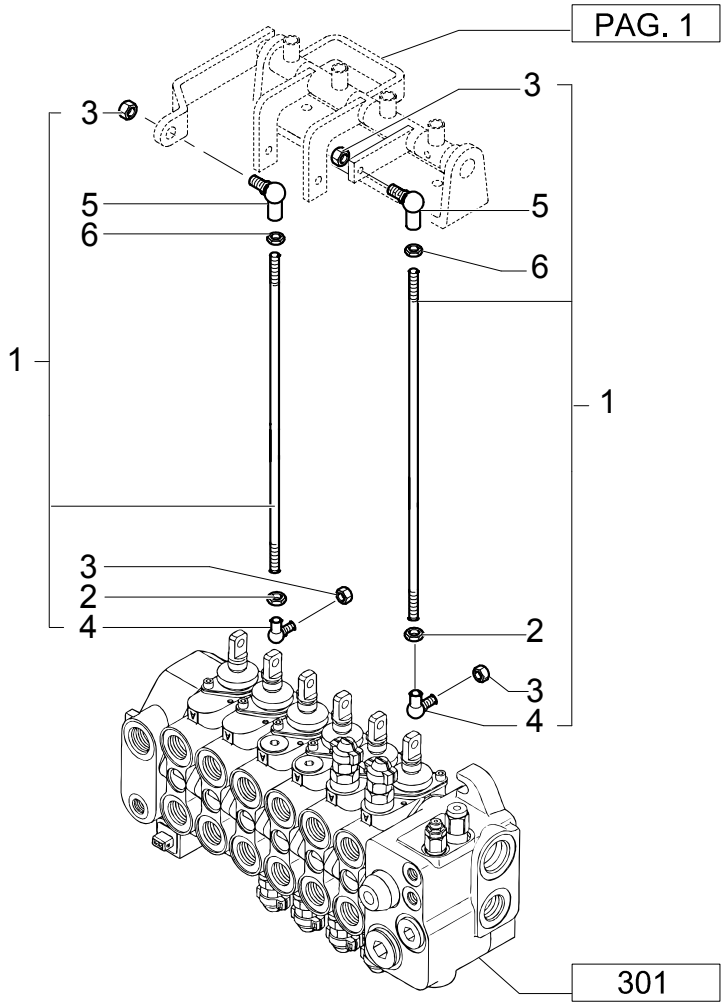

4 LEVER BACKHOE CONTROLS, UPPER TIE-ROD ASSEMBLY (SIDE SHIFT)

REF	FN	PART NUMBER	YR/SN	QTY	DESCRIPTION
1		85804736		2	TIE-ROD
2		16102911		2	NUT
3		9628098		4	NUT, LOCK CL 10, M8 x 1.25
4		85804376		2	JOINT, UNIVERSAL
5		85804375		2	JOINT, UNIVERSAL
6		16102311		2	NUT

4 LEVER BACKHOE CONTROLS, LOWER TIE-ROD ASSEMBLY (SIDE SHIFT)

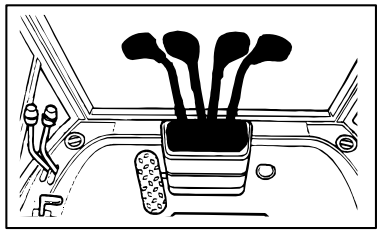

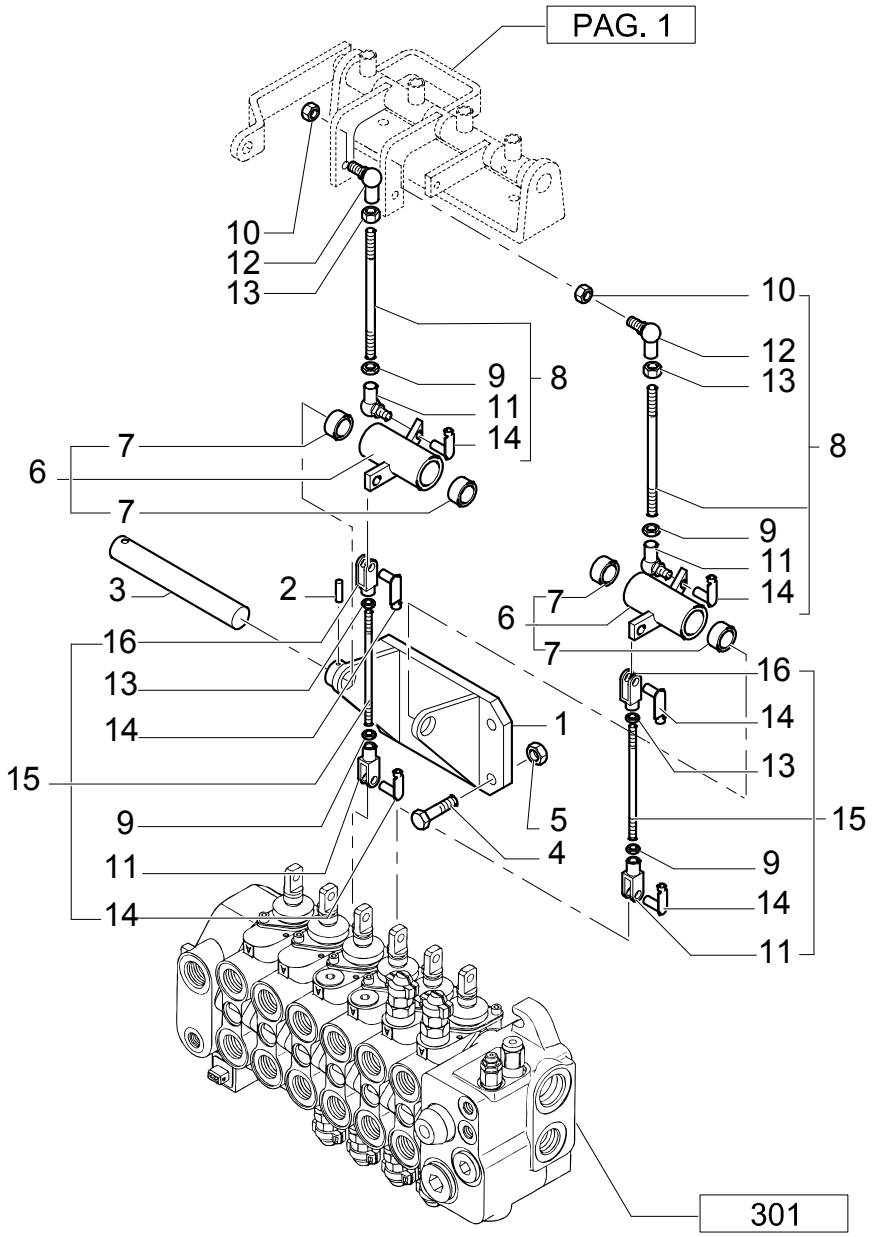

4 LEVER BACKHOE CONTROLS, LOWER TIE-ROD ASSEMBLY (SIDE SHIFT)

REF	FN	PART NUMBER	YR/SN	QTY	DESCRIPTION
1		85803360		1	SUPPORT
2		13940370		1	PIN, ROLL
3		85803364		1	PIN
4		16043621		4	SCREW
5		16104121		4	NUT
6		85807926		2	LEVER, IDLER
7		85802494		4	BUSHING
8		85805498		2	TIE-ROD
9		16102911		4	NUT
10		14048211		2	NUT
11		11991971		4	YOKE
12		85804375		2	JOINT, UNIVERSAL
13		16102311		4	NUT
14		85802738		6	PIN
15		85807914		2	TIE-ROD
16		10007871		2	YOKE

LOADER CONTROL VALVE, TWO SECTION, LEVER & DECAL (CENTER PIVOT)

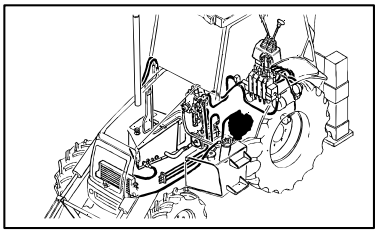

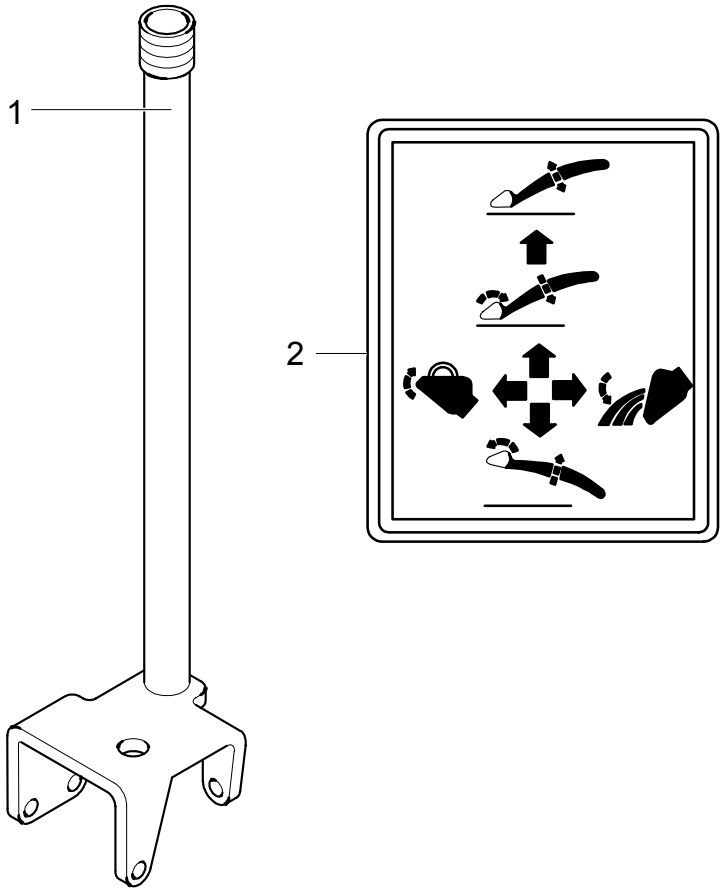

LOADER CONTROL VALVE, TWO SECTION, LEVER & DECAL (CENTER PIVOT)

REF	FN	PART NUMBER	YR/SN	QTY	DESCRIPTION
1		85802617		1	LEVER
2		85804346		1	DECAL

390/ 1	01	p1	06/03

2 LEVER BACKHOE CONTROLS, LEVER, BOOT & DECALS (CENTER PIVOT)

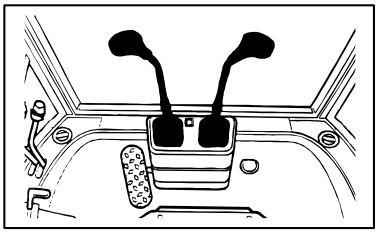

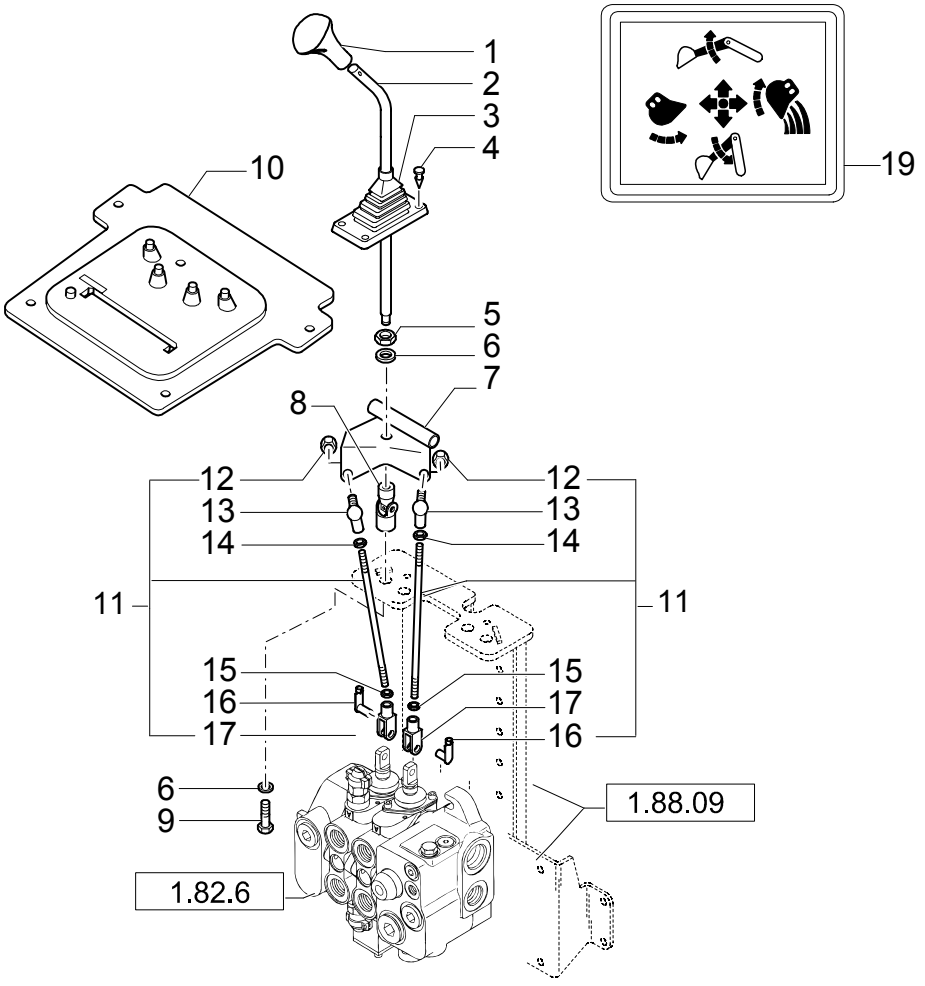

2 LEVER BACKHOE CONTROLS, LEVER, BOOT & DECALS (CENTER PIVOT)

REF	FN	PART NUMBER	YR/SN	QTY	DESCRIPTION
1		85801502		1	KNOB
1		85802682		1	KNOB W/SWITCH
2		85801488		2	ARM, TRIP
3		85802843		1	BOOT
4		14568887		4	BUTTON
5		16101511		2	NUT
6		11190779		4	WASHER, LOCK
7		85803107		1	COUPLING RH
7		85803124		1	COUPLING LH
8		85801518		2	JOINT, UNIVERSAL
9		15540321		2	SCREW Cap, HH, CL 8.8, M12 x 1.25 x 25
10		85804540		1	BOOT W/CAB
11		85801514		4	TIE-ROD
12		14048211		4	NUT
13		85804375		4	JOINT, UNIVERSAL
14		16102311		4	NUT
15		16102911		4	NUT
16		85802738		4	PIN
17		11991971		4	YOKE
18		85804345		1	DECAL
19		85804344		1	DECAL

Mechanical Version

LB75.B

393	01	p1	04/03

LOCKING VALVE ON BACKHOE LIFT CYLINDER

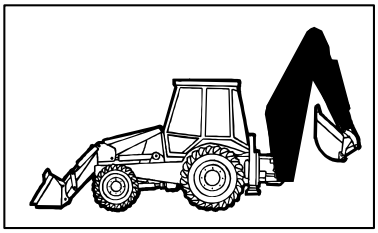

KIT KIT KIT 15 = ●

KIT KIT KIT = 16

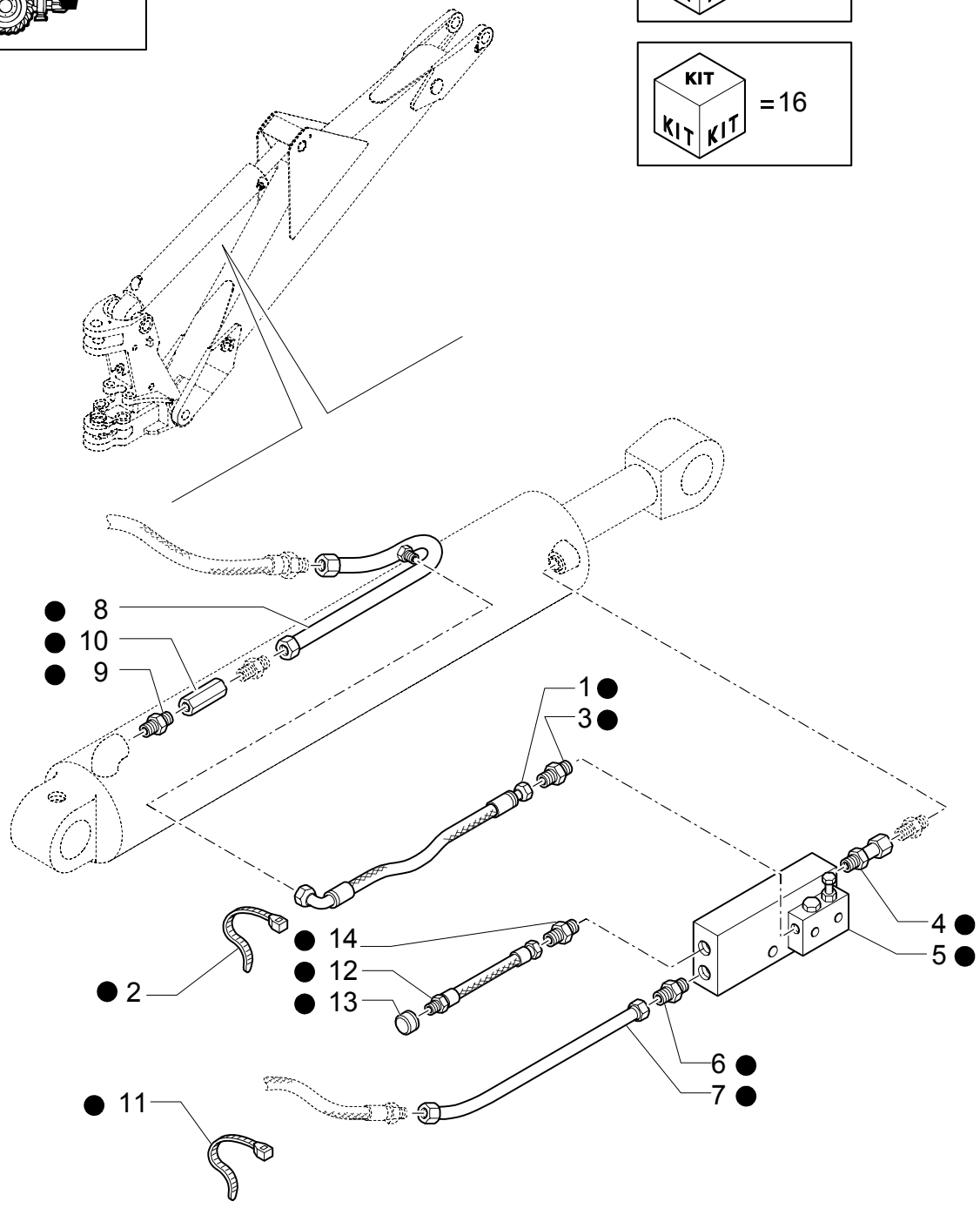

LOCKING VALVE ON BACKHOE LIFT CYLINDER

REF	FN	PART NUMBER	YR/SN	QTY	DESCRIPTION
1		85815505		1	HOSE, FLEXIBLE
2		85803332		1	COLLAR
3		85802803		1	CONNECTOR, HYD.
4		85805124		1	CONNECTOR, HYD.
5		85820910		1	VALVE, SAFETY ASSY
6		83963000		1	CONNECTOR, HYD.
7		85820836		1	TUBE, RIGID
8		85820835		1	TUBE, RIGID
9		85804879		1	CONNECTOR, HYD.
10		85824308		1	VALVE, HYDRAULIC
11		79072960		2	COLLAR
12		85820158		1	HOSE, FLEXIBLE
13		85819673		1	VALVE, HYDRAULIC
14		83985067		1	CONNECTOR, HYD.
15		85820287		1	KIT
16		85820912		1	KIT

394-397	01	p1	06/03

ISO 2 LEVER BACKHOE CONTROLS, LEVERS, BOOT & DECALS (CENTER PIVOT)

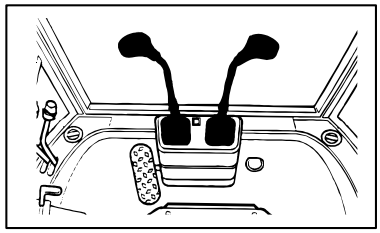

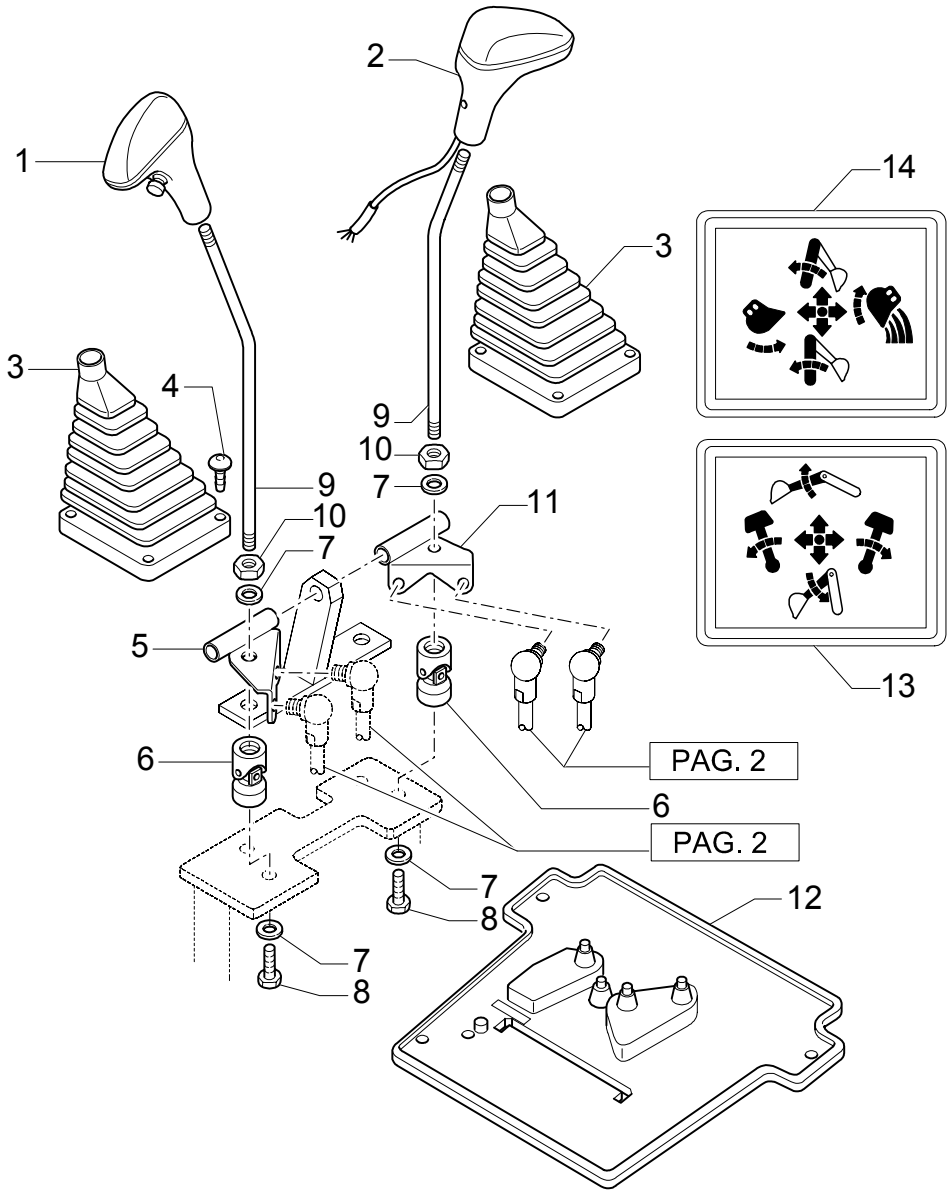

ISO 2 LEVER BACKHOE CONTROLS, LEVERS, BOOT & DECALS (CENTER PIVOT)

REF	FN	PART NUMBER	YR/SN	QTY	DESCRIPTION
1		85801502		1	KNOB
2		85802682		1	KNOB
3		85802843		2	BOOT
4		14568887		8	BUTTON 8X20
5		85803124		1	COUPLING L.H.
6		85801518		2	JOINT, UNIVERSAL
7		11190779		4	WASHER, LOCK
8		15540321		2	SCREW Cap, HH, CL 8.8, M12 x 1.25 x 25
9		85801488		2	ARM, TRIP
10		16101511		2	NUT M12X1.25
11		85803107		1	COUPLING R.H.
12		85804541		1	BOOT W/CAB
13		85803782		1	DECAL
14		85803783		1	DECAL

Mechanical Version

LB75.B

394-397	02	p1	04/03

ISO 2 LEVER BACKHOE CONTROLS, TIE-ROD ASSEMBLY (CENTER PIVOT)

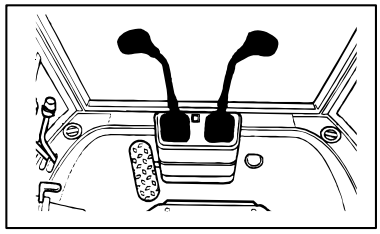

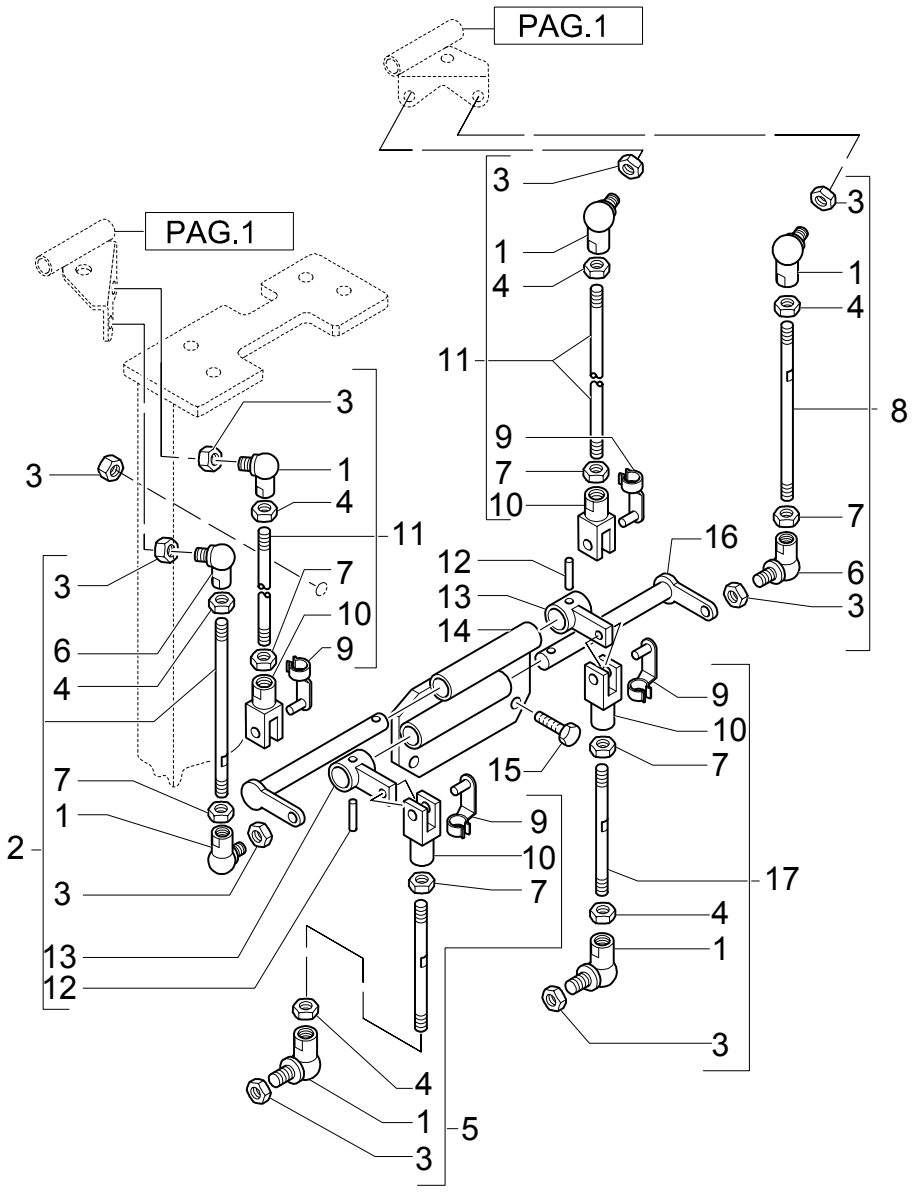

ISO 2 LEVER BACKHOE CONTROLS, TIE-ROD ASSEMBLY (CENTER PIVOT)

REF	FN	PART NUMBER	YR/SN	QTY	DESCRIPTION
1		85804375		6	JOINT, UNIVERSAL
2		85803474		8	TIE-ROD
3		14048211		11	NUT
4		16102311		4	NUT M8X1.25
5		85803479		3	ROD, THREADED
6		85804376		1	JOINT, UNIVERSAL
7		16102911		6	NUT M8
8		85803477		1	TIE-ROD, THREADED
9		85802738		4	PIN
10		11991971		9	YOKE L.H.
11		85801514		2	TIE-ROD
12		13940370		2	PIN, ROLL
13		85803492		2	LEVER, IDLER
14		85803493		1	SUPPORT
15		16043621		3	SCREW M8X25
16		85803489		2	PIN
17		85803476		1	TIE-ROD, THREADED

394/ 1	01	p1	05/03

4 LEVER BACKHOE CONTROLS, CONSOLE, LEVERS & BELLCRANK (CENTER PIVOT)

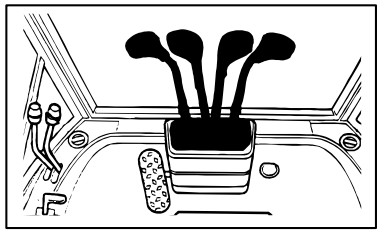

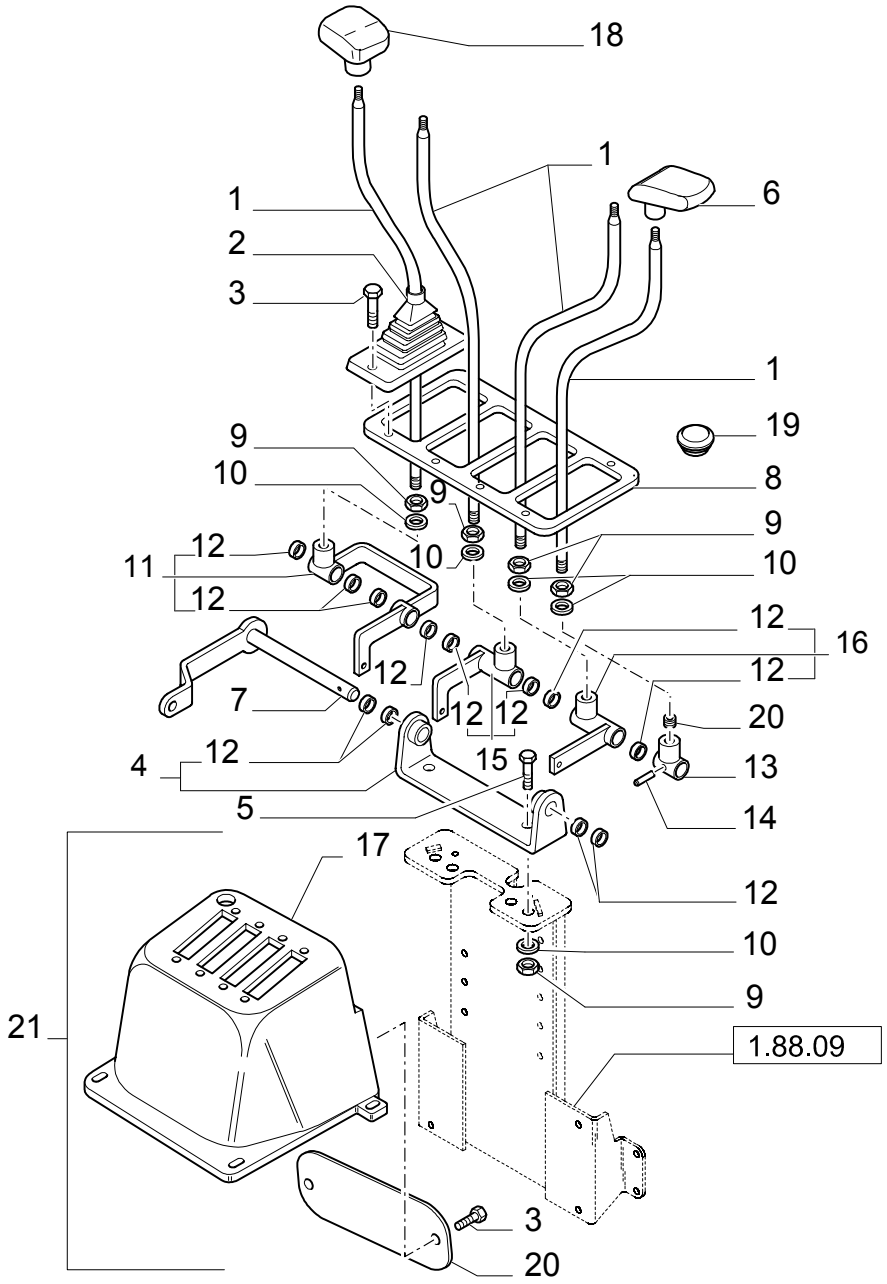

4 LEVER BACKHOE CONTROLS, CONSOLE, LEVERS & BELLCRANK (CENTER PIVOT)

REF	FN	PART NUMBER	YR/SN	QTY	DESCRIPTION
1		85804780		4	ARM, TRIP
2		85803382		4	BOOT
3		13272477		10	SCREW
4		85802647		1	SUPPORT
5		15540421		2	SCREW
6		83962918		2	HANDLE LH
7		85804782		1	PIN
8		85803540		1	PLATE
9		16101511		6	NUT M12X1,25
10		11190779		6	WASHER, LOCK
11		85804801		1	LEVER, IDLER
12		85802494		12	BUSHING
13		85804787		1	LEVER, IDLER
14		13940370		1	PIN, ROLL
15		85804794		1	LEVER, IDLER
16		85804791		1	LEVER, IDLER
17		85805239		1	CONSOLE
18		83962919		2	HANDLE RH
19		85802227		1	PLUG
20		85804781		1	COVER
21	1	85804821		1	CONTAINER

(1) Includes 19

Mechanical Version

LB75.B

394/ 1	02	p1	04/03

4 LEVER BACKHOE CONTROLS, UPPER TIE-ROD ASSEMBLY, CENTER PIVOT

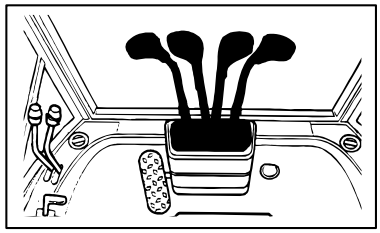

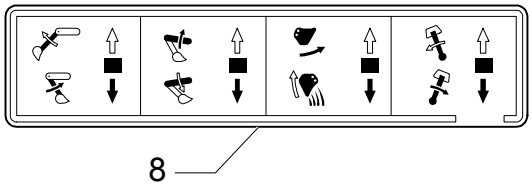

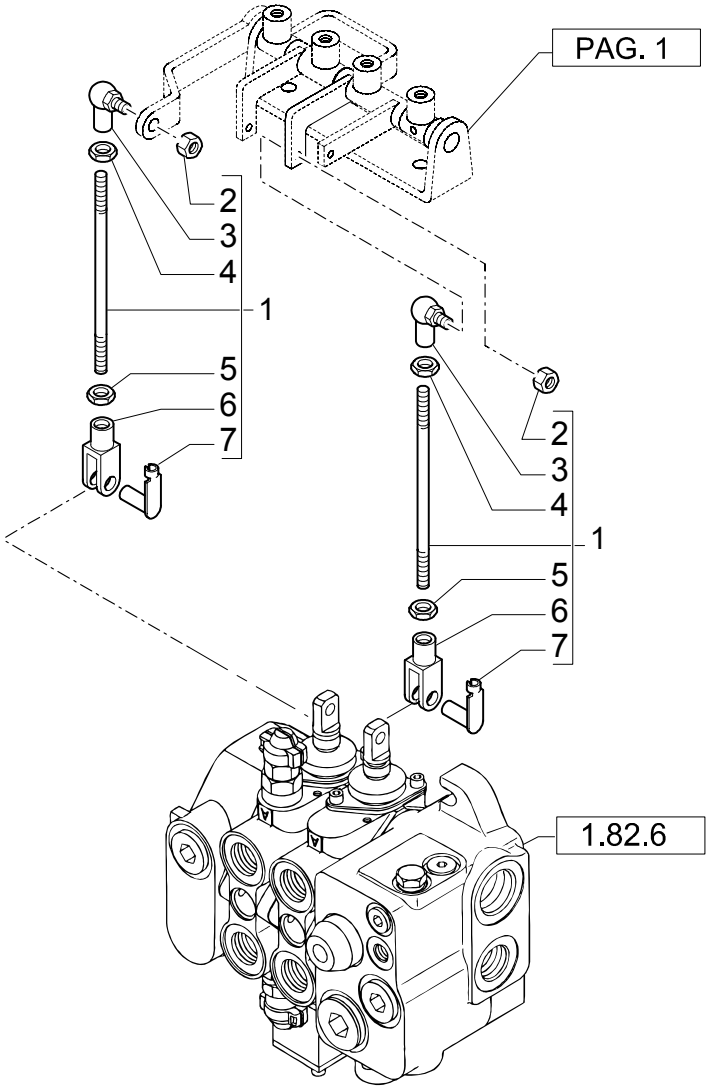

4 LEVER BACKHOE CONTROLS, UPPER TIE-ROD ASSEMBLY, CENTER PIVOT

REF	FN	PART NUMBER	YR/SN	QTY	DESCRIPTION
1		85804803		3	TIE-ROD
2		14048211		3	NUT
3		85804375		3	JOINT, UNIVERSAL
4		16102311		3	NUT
5		16102911		3	NUT
6		11991971		3	YOKE
7		85802738		3	PIN
8		85803917		1	DECAL

Mechanical Version

LB75.B

394/ 1	03	p1	04/03

4 LEVER BACKHOE CONTROLS, LOWER TIE-ROD ASSEMBLY (CENTER PIVOT)

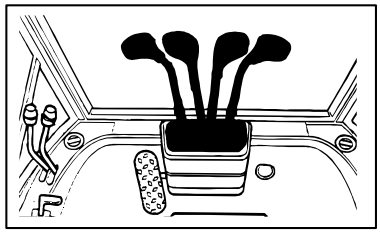

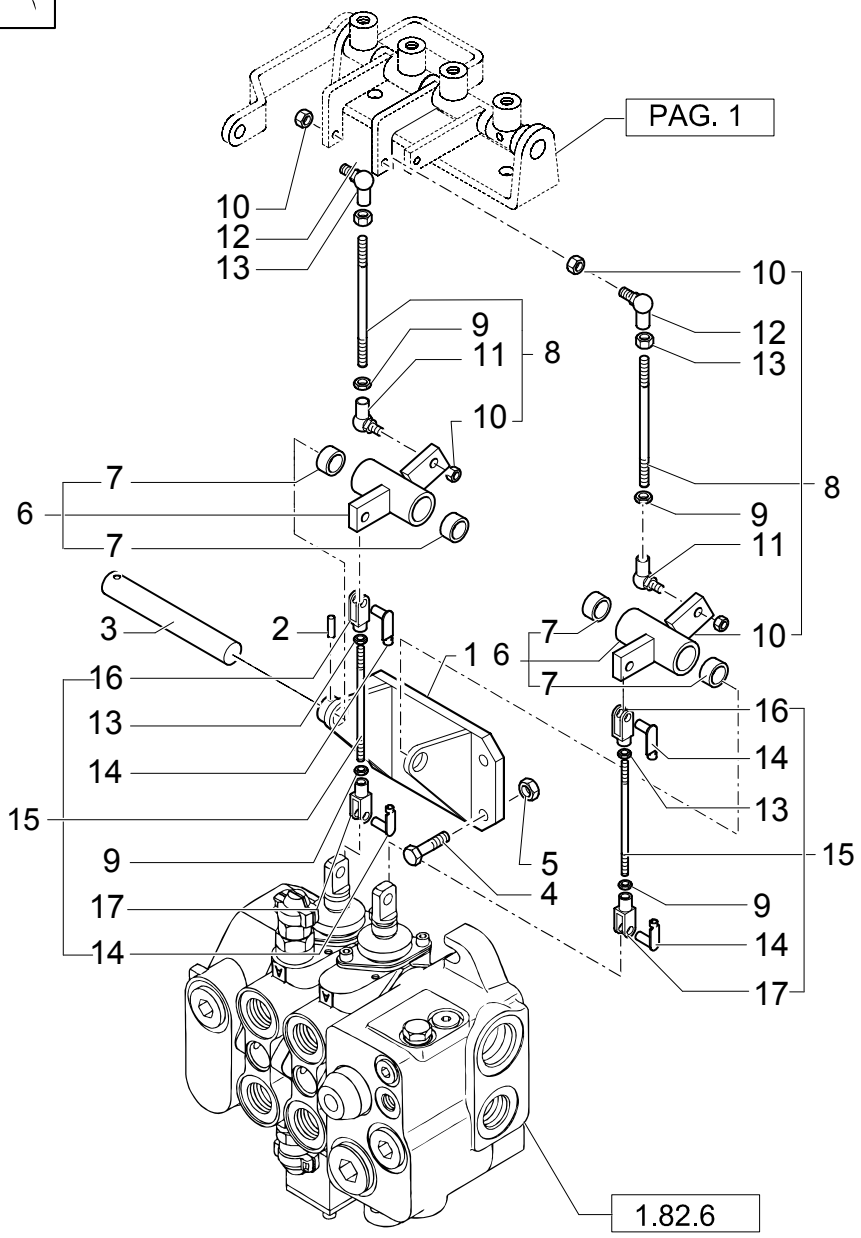

4 LEVER BACKHOE CONTROLS, LOWER TIE-ROD ASSEMBLY (CENTER PIVOT)

REF	FN	PART NUMBER	YR/SN	QTY	DESCRIPTION
1		85803360		1	SUPPORT
2		13940370		1	PIN, ROLL
3		85803364		1	PIN
4		16043621		4	SCREW M8X25
5		16104111		4	NUT
6		85807926		2	LEVER, IDLER
7		85802494		4	BUSHING
8		85804736		2	TIE-ROD
9		16102911		4	NUT
10		14048211		4	NUT
11		85804376		2	JOINT, UNIVERSAL
12		85804375		2	JOINT, UNIVERSAL
13		16102311		6	NUT
14		85802738		4	PIN
15		85803447		2	TIE-ROD
16		10007871		2	YOKE
17		11991971		2	YOKE

Mechanical Version

LB75.B

522-A	01	p1	11/03

THREE-SECTION LOADER CONTROL VALVE LEVER, CABLE & DECALS

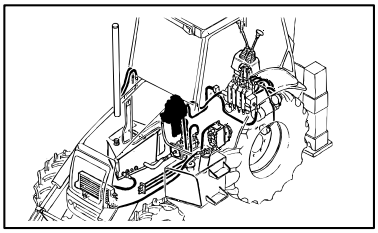

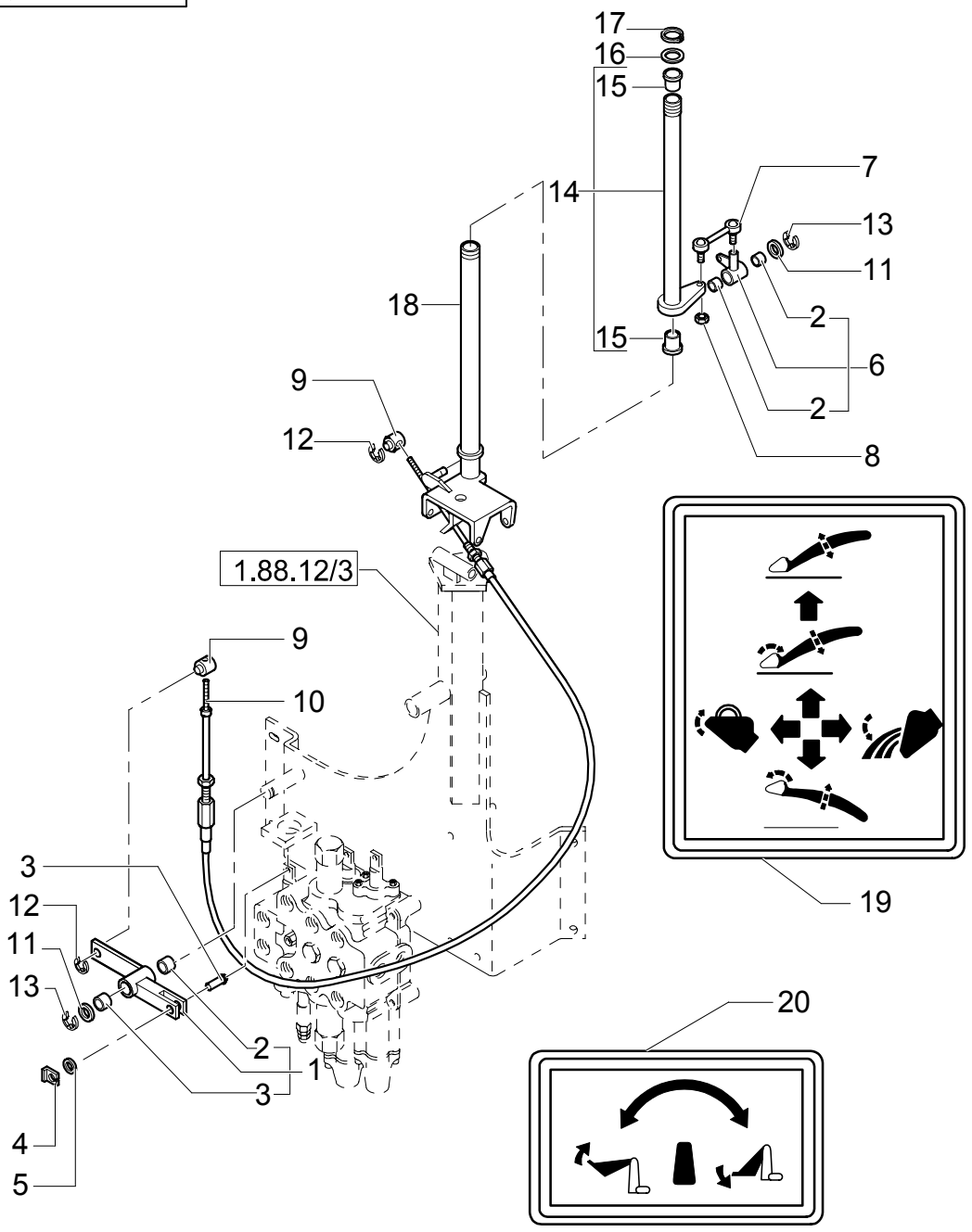

THREE-SECTION LOADER CONTROL VALVE LEVER, CABLE & DECALS

REF	FN	PART NUMBER	YR/SN	QTY	DESCRIPTION
1		85802816		1	LEVER, IDLER
2		85802494		4	BUSHING
3		85801561		1	PIN
4		11063971		1	CLIP
5		14496401		1	WASHER, LOCK
6		85802587		1	YOKE
7		83962218		1	LINK CONROD
8		15896211		1	NUT
9		83962205		2	PIN
10		85806155		1	CABLE
11		14496901		2	WASHER
12		83947277		2	CIRCLIP
13		83911366		2	RING, SNAP
14		85802615		1	ARM, TRIP
15		83962208		2	BUSHING
16		83962203		1	WASHER
17		83962223		1	CIRCLIP
18		85802601		1	LEVER
19		85804346		1	DECAL
20		85804399		1	DECAL

Mechanical Version

LB75.B

622	01	p1	02/04

INTERNAL FAN

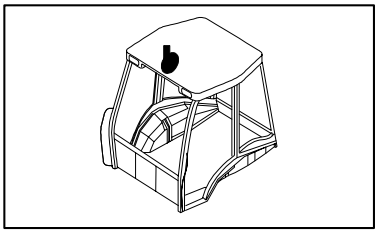

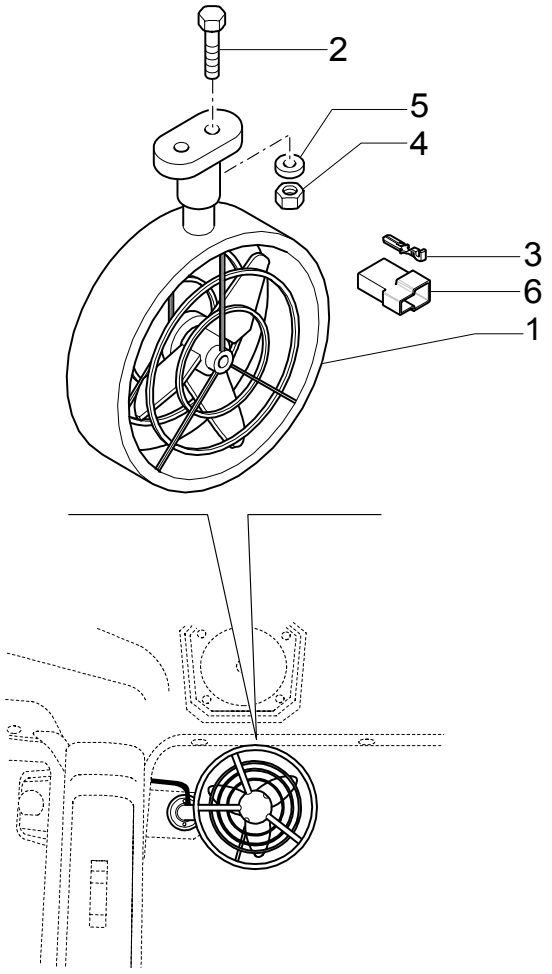

INTERNAL FAN

REF	FN	PART NUMBER	YR/SN	QTY	DESCRIPTION
1		85804323		1	FAN
2		14303324		2	SCREW M4X20
3		10250644		2	CABLE TERMINAL
4		12574011		2	NUT M4
5		12642804		2	WASHER
6		12059980		1	JOINT, UNIVERSAL

644	01	p1	05/03

A/C HOUSING & FILTERS

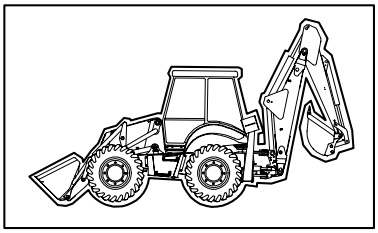

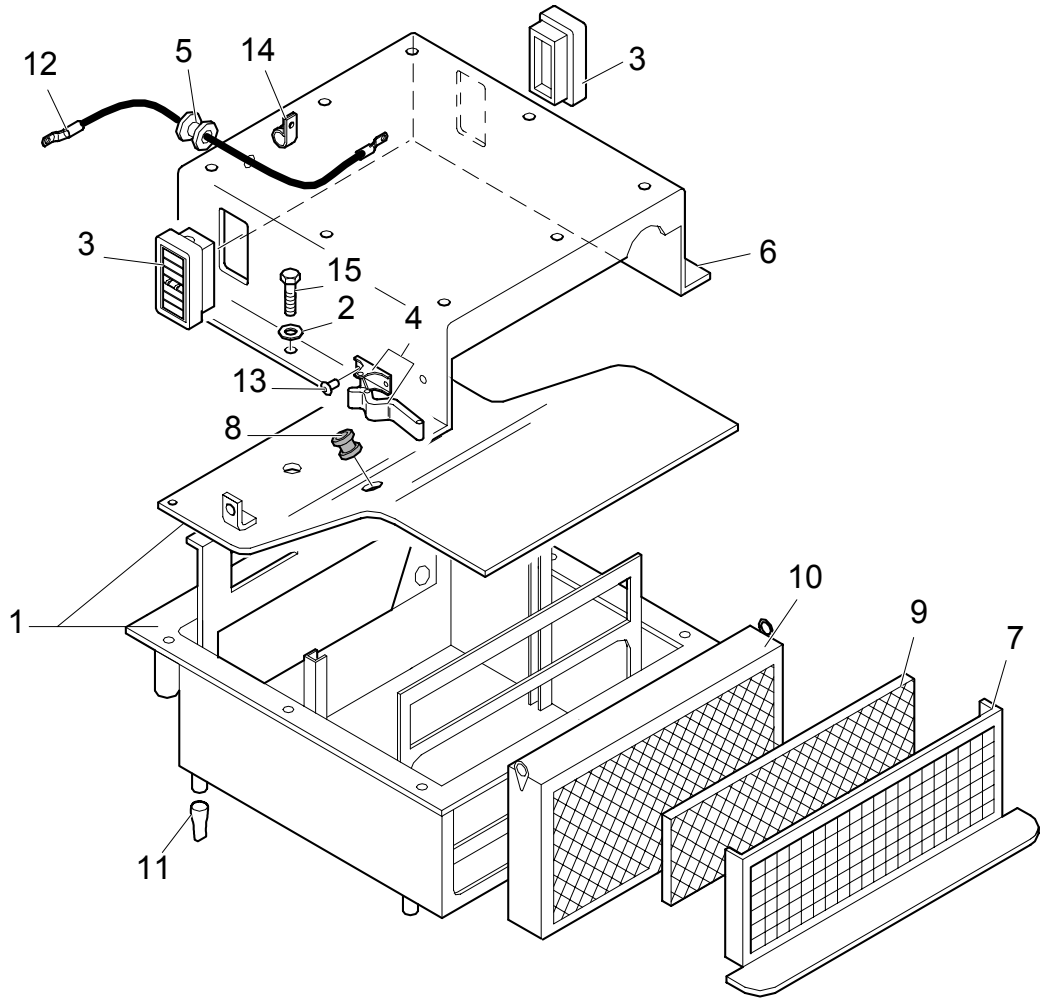

A/C HOUSING & FILTERS

REF	FN	PART NUMBER	YR/SN	QTY	DESCRIPTION
1		85819574		1	CONVEYOR
2		11193874		6	WASHER, LOCK
3		85804044		2	SPOUT, DISCHARGE
4		85812043		2	HOOK
5		85804412		1	RING, RUBBER
6		85819637		1	COVER
7		85811969		1	SUPPORT
8		10398980		1	RING, INSULATING
9		85811970		1	FILTER, AIR
10		85804072		1	FILTER, AIR
11		85804043		4	GUTTER
12		85817293		1	CABLE, GROUND
13		85811972		4	RIVET
14		85817187		1	COLLAR
15		14305224		6	SCREW

644	02	p1	11/03

A/C BLOWER & COILS

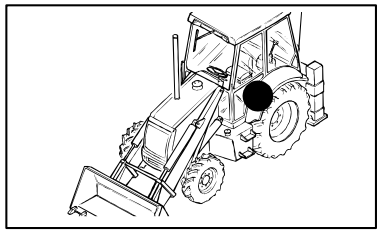

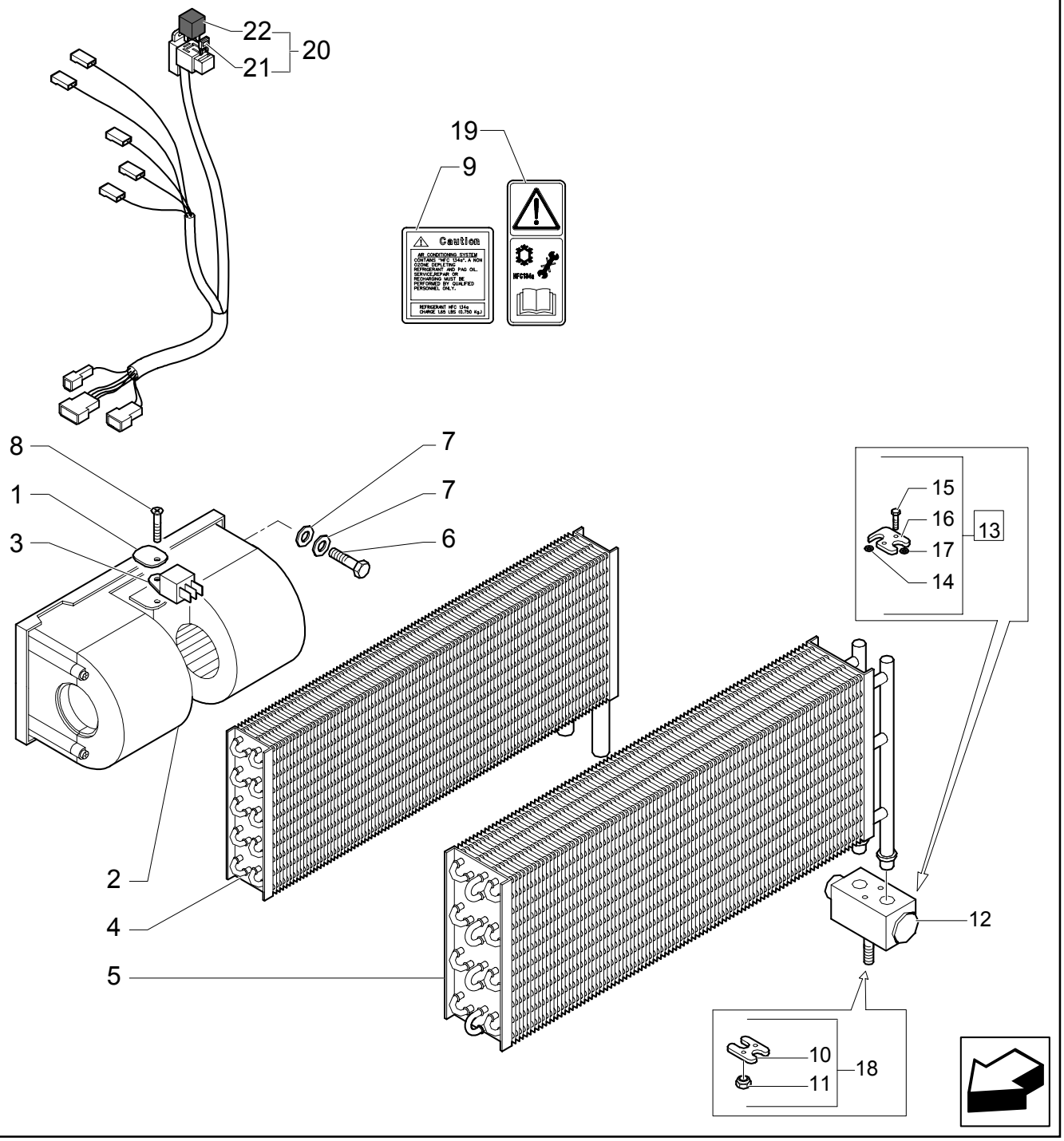

A/C BLOWER & COILS

REF	FN	PART NUMBER	YR/SN	QTY	DESCRIPTION
1		85817289		1	COLLAR, RETAINER
2		85813079		1	MOTOR, ELECTRIC, SMALL
3		85804041		1	RESISTOR
4		85819636		1	HEATER
5		85819635		1	EVAPORATOR
6		10902424		2	SCREW
7		11193274		4	WASHER, LOCK
8		85817189		1	SCREW
9		{85826326}		1	DECAL
10		85805008		1	FLANGE
11		14040611		1	NUT
12		85821130		1	VALVE, HYDRAULIC
13		85804038		1	FLANGE
14		85805003		1	O-RING
15		85805004		2	SCREW
16		85805005		1	FLANGE
17		85805006		1	O-RING
18		85821131		1	FLANGE
19		85804441		1	DECAL
20		85819183		1	CABLE, GROUND
21		11055290		1	FUSE
22		85805144		1	RELAY

Mechanical Version

LB75.B

644	03	p1	09/03

HEATER COIL HOSES

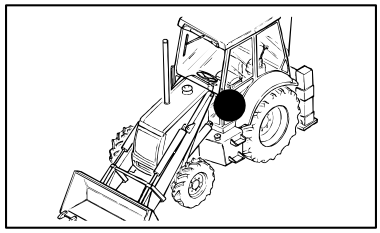

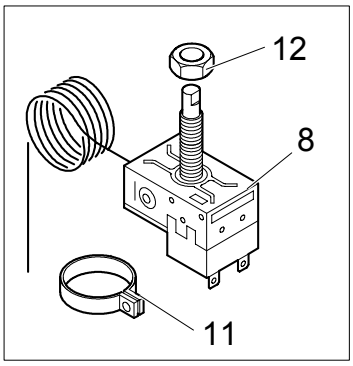

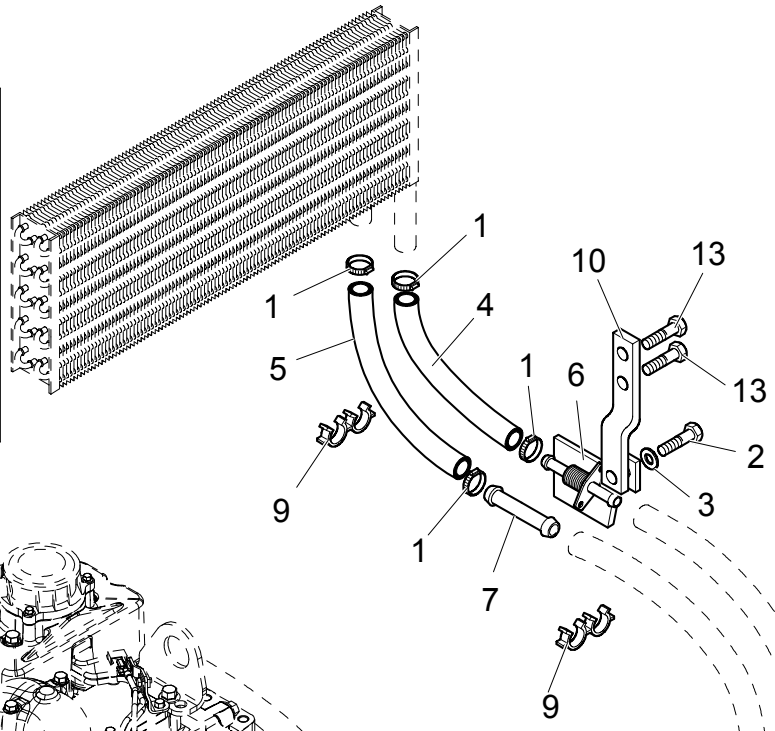

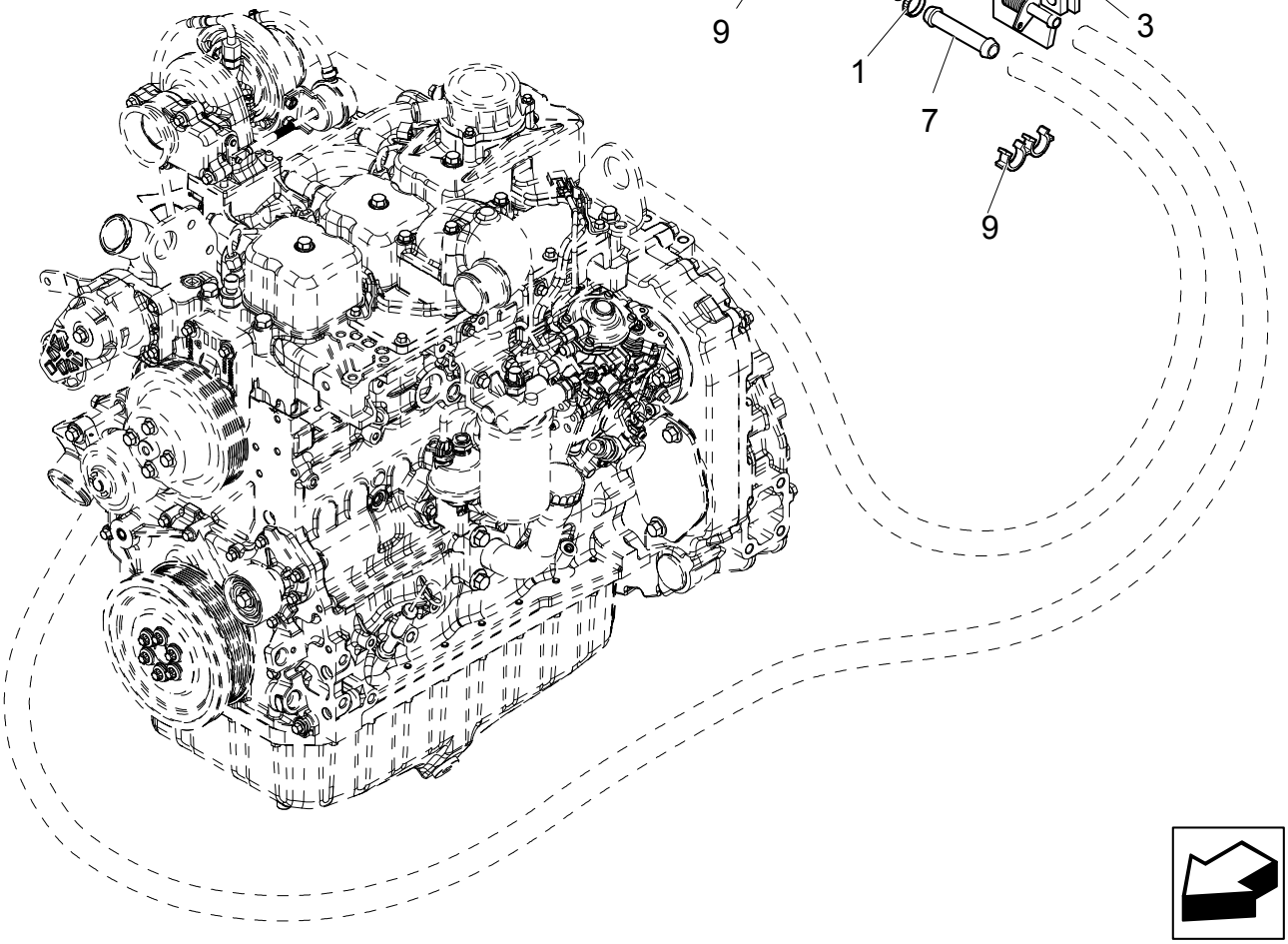

HEATER COIL HOSES

REF	FN	PART NUMBER	YR/SN	QTY	DESCRIPTION
1		85803079		4	CLAMP
2		10902224		1	SCREW Cap, HH, CL 8.8, M6 x 1 x 16
3		11193274		1	WASHER, LOCK
4		85817303		1	HOSE, FLEXIBLE
5		85817299		1	HOSE, FLEXIBLE
6		85804980		1	DRAINCOCK/TAP, SUPPLY
7		85804051		1	TUBE, RIGID
8		85817294		1	THERMOSTAT
9		85804975		2	CLIP
10		85804989		1	SUPPORT
11		85812217		1	SPRING
12		85817295		1	NUT
13		10902424		2	SCREW M6X20

Mechanical Version

LB75.B

A/C & HEATER CONTROL PANEL

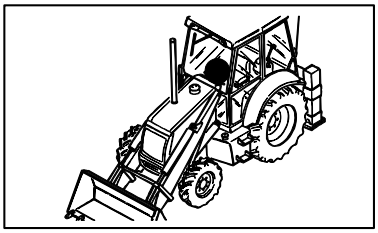

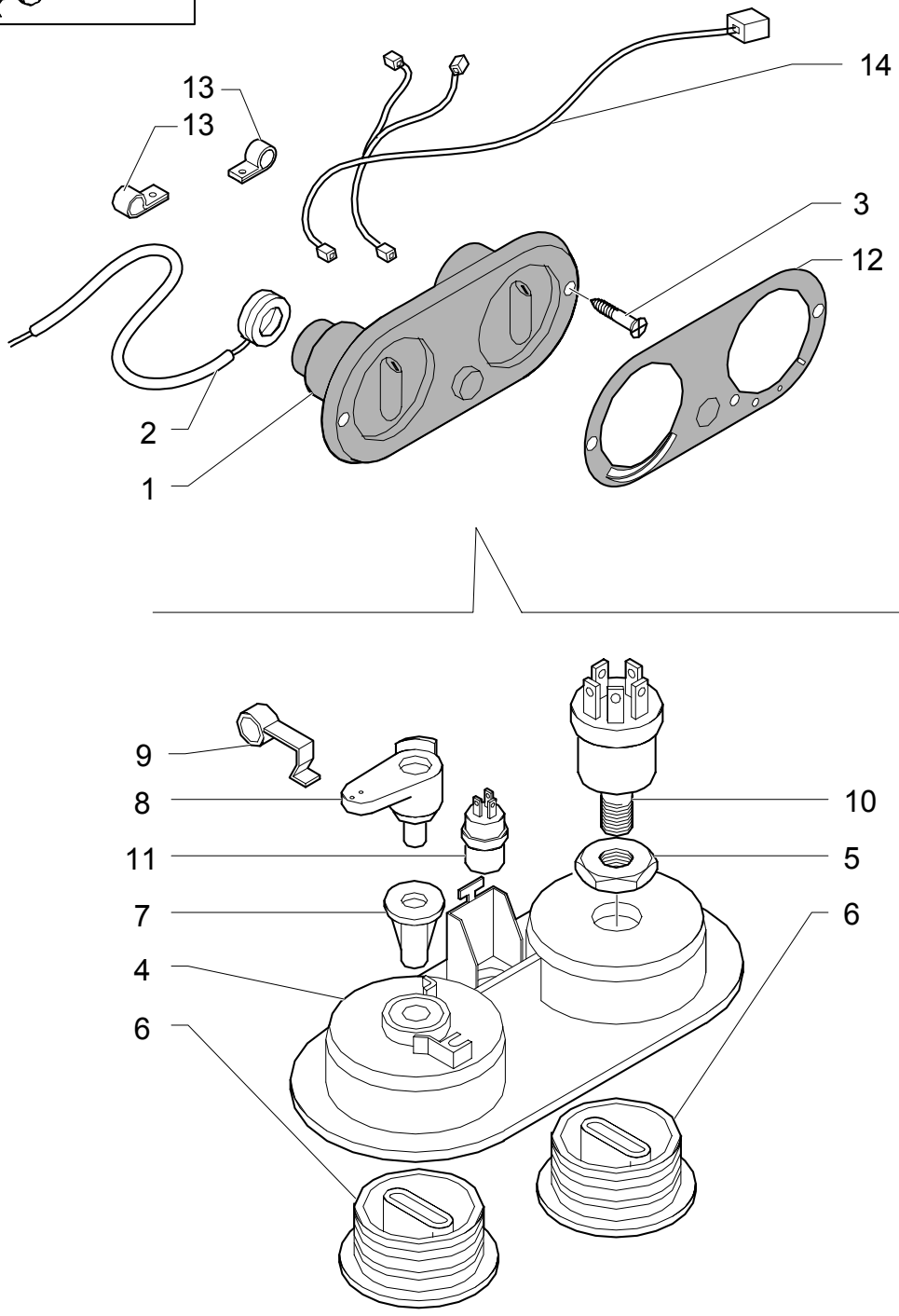

A/C & HEATER CONTROL PANEL

REF	FN	PART NUMBER	YR/SN	QTY	DESCRIPTION
1		85817569		1	BEZEL
2		85805160		1	CABLE, FLEXIBLE
3		15693507		2	SCREW M6X16
4		85817569		2	BEZEL M6
5		9966239		1	NUT
6		85817568		2	KNOB
7		9966241		1	WASHER, LOCK
8		82002777		1	TERMINAL
9		9971567		1	SPRING
10		9966238		1	SWITCH, FAN
11		5189486		1	SWITCH, ASSY
12		85811976		1	DECAL
13		14372671		2	NUT
14		85819638		1	CABLE, ELECTRIC

Mechanical Version

LB75.B

A/C & HEATER CONTROL PANEL

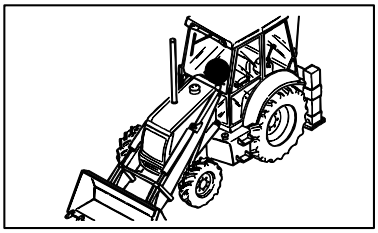

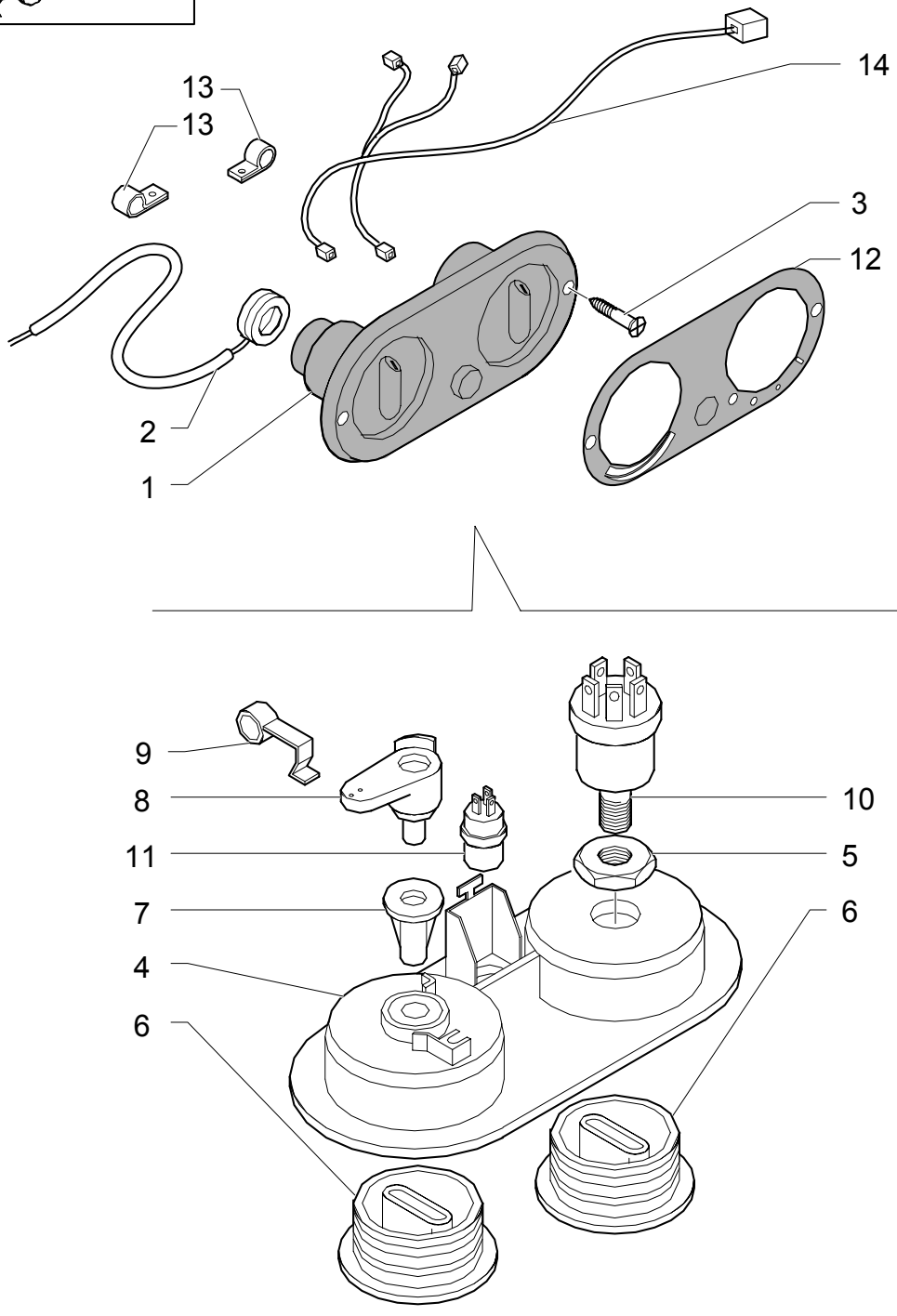

A/C & HEATER CONTROL PANEL

REF	FN	PART NUMBER	YR/SN	QTY	DESCRIPTION
1		85817569		1	BEZEL
2		85805160		1	CABLE, FLEXIBLE
3		15693507		2	SCREW M6X16
4		85817569		2	BEZEL M6
5		9966239		1	NUT
6		85817568		2	KNOB
7		9966241		1	WASHER, LOCK
8		82002777		1	TERMINAL
9		9971567		1	SPRING
10		9966238		1	SWITCH, FAN
11		5189486		1	SWITCH, ASSY
12		85811976		1	DECAL
13		14372671		2	NUT
14		{85826113}		1	CONTROL

Pilot Control Version

LB75.B

644	05	p1	12/03

A/C & HEATER CONSOLE DUCTS

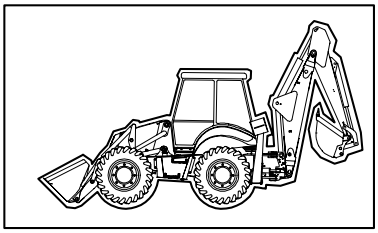

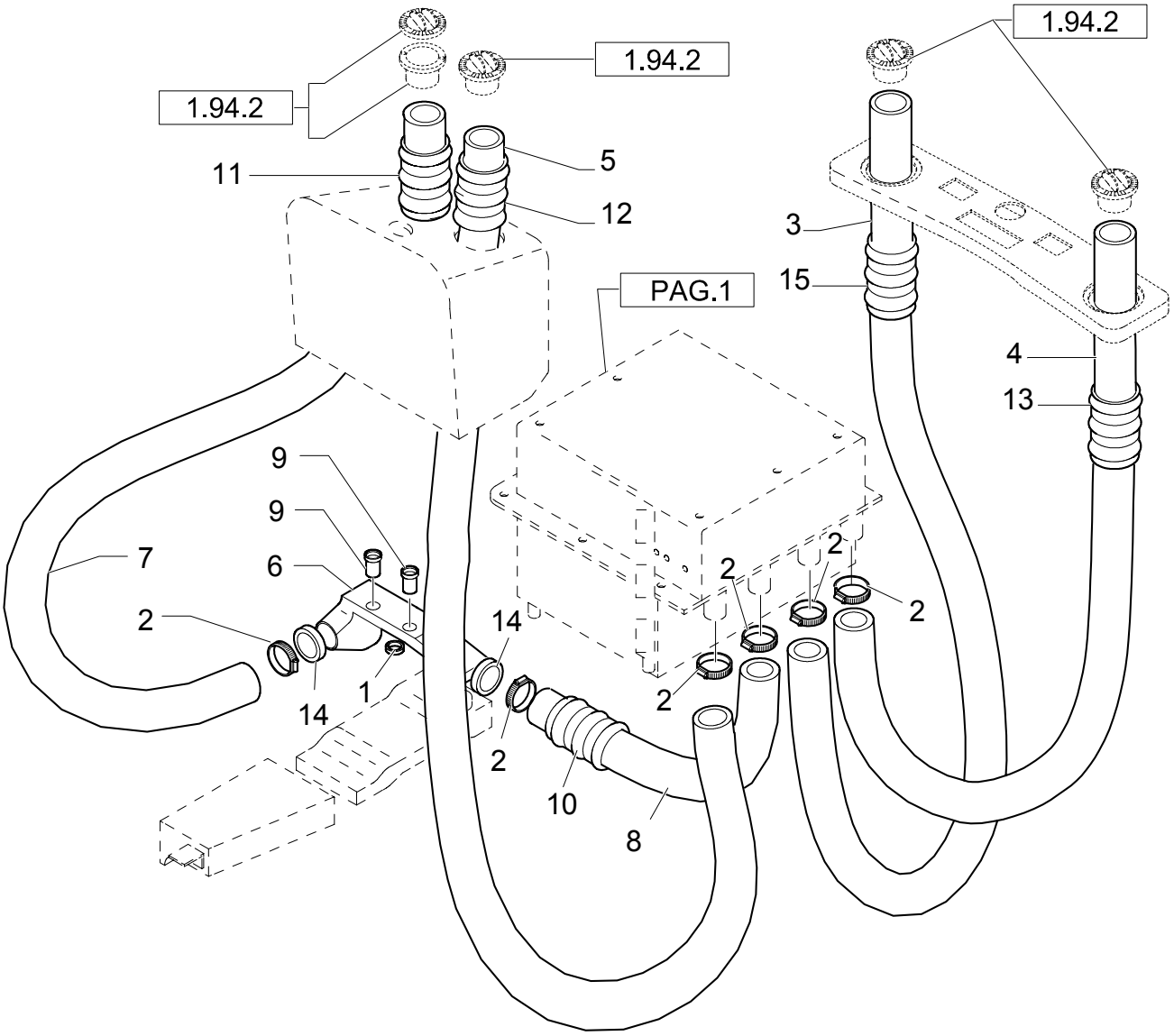

A/C & HEATER CONSOLE DUCTS

REF	FN	PART NUMBER	YR/SN	QTY	DESCRIPTION
1		85817664		1	GASKET ASSY
2		13000990		AR	CLIP, HOSE
3		85804984		1	HOSE, FLEXIBLE
4		85804983		1	HOSE, FLEXIBLE
5		85804981		1	SLEEVE
6		NSS		1	NOT SERVICED SEPARATELY
7		85805884		1	HOSE, FLEXIBLE
8		85805885		1	HOSE, FLEXIBLE
9		85805347		2	BUSHING, THREADED
10		85805887		1	HOSE, FLEXIBLE
11		85805886		1	HOSE, FLEXIBLE
12		85804985		1	HOSE
13		85804988		1	HOSE
14		85806048		2	TERMINAL
15		85804987		1	HOSE

644	05A	p1	11/03

A/C & HEATER CONSOLE DUCTS

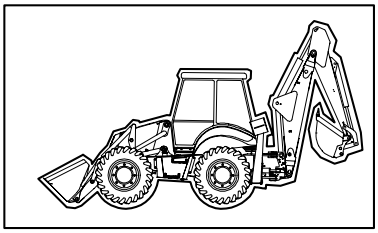

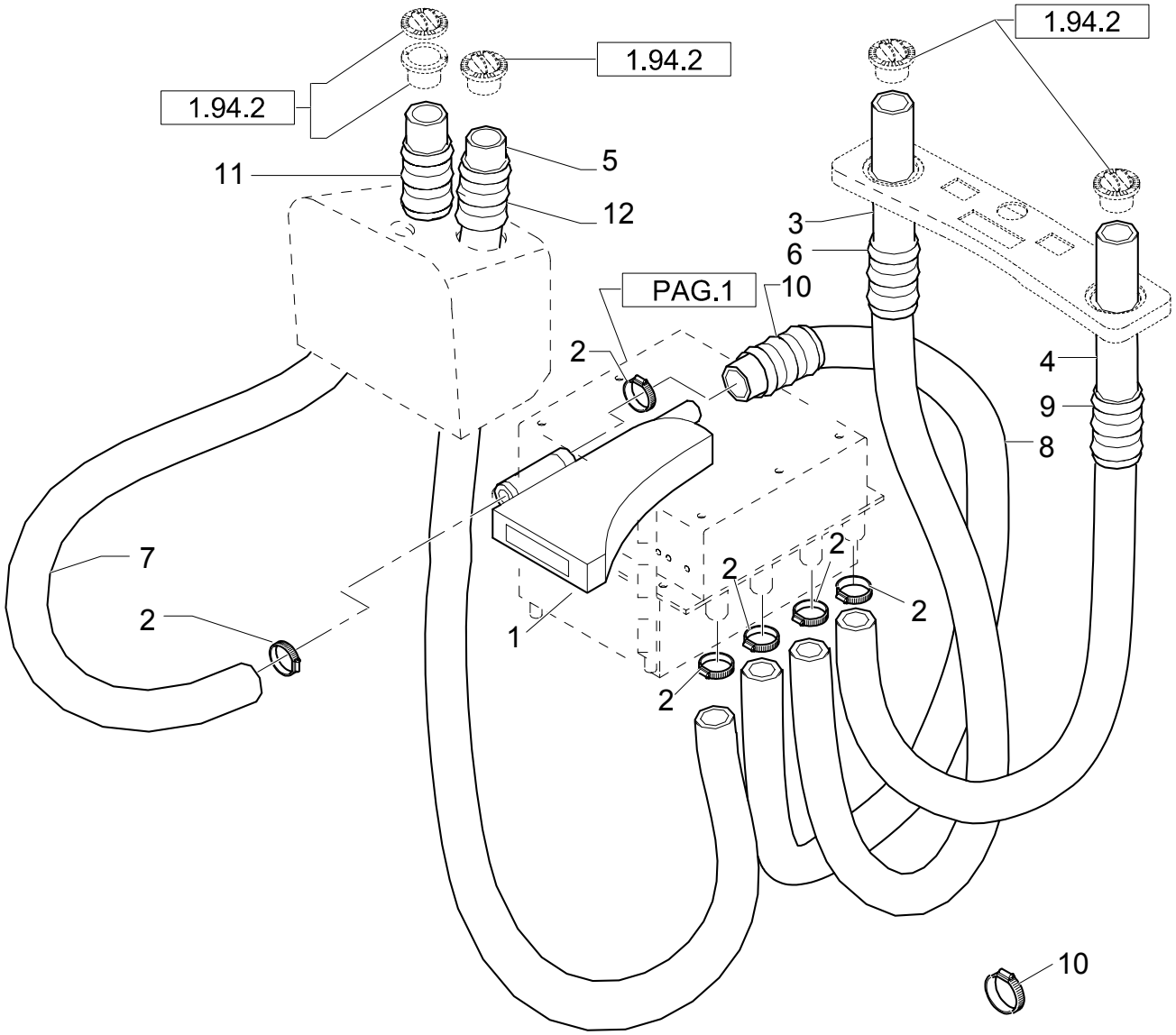

A/C & HEATER CONSOLE DUCTS

REF	FN	PART NUMBER	YR/SN	QTY	DESCRIPTION
1		{86987511}		1	PANEL
2		13000990		AR	CLIP, HOSE
3		85804984		1	HOSE, FLEXIBLE
4		85804983		1	HOSE, FLEXIBLE
5		{85826936}		1	HOSE, FLEXIBLE
6		85804987		1	HOSE
7		85805885		1	HOSE, FLEXIBLE
8		85804983		1	HOSE, FLEXIBLE
9		85804988		1	HOSE
10		85804988		8	HOSE
11		85805887		1	HOSE, FLEXIBLE
12		{85826937}		1	HOSE, FLEXIBLE
13		85808307		10	COLLAR

644	06	p1	05/03

A/C & HEATER CONVEYOR

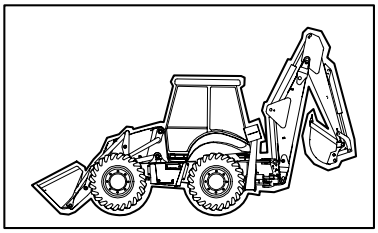

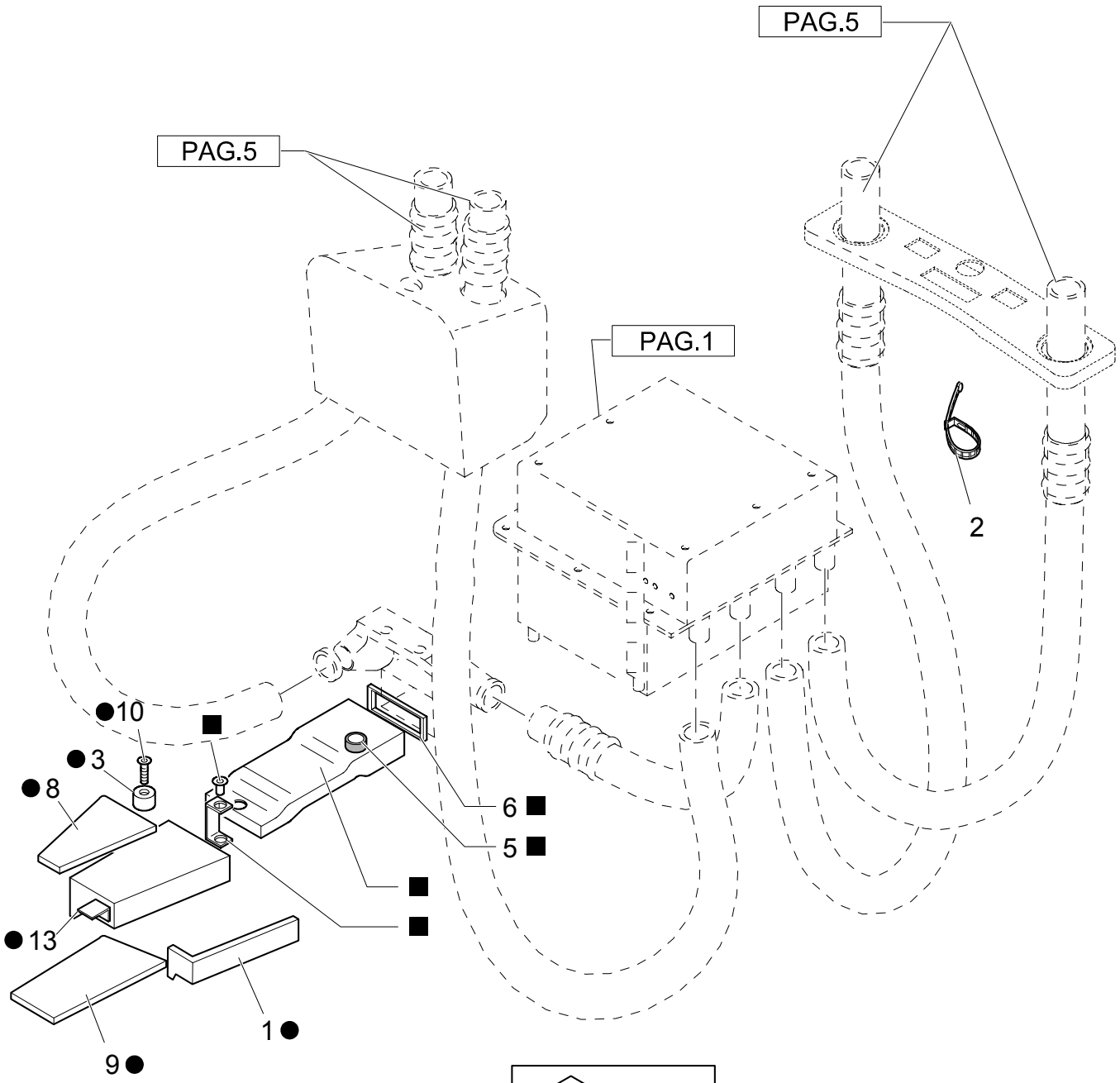

A/C & HEATER CONVEYOR

REF	FN	PART NUMBER	YR/SN	QTY	DESCRIPTION
1		85811965		1	PANEL
2		85808307		10	COLLAR
3		85805347		1	BUSHING, THREADED
4		85820152		1	CONVEYOR
5		85806023		2	GASKET
6		85812021		1	GASKET
7		85805200		1	CONVEYOR
8		85811963		1	PANEL
9		85811964		1	PANEL
10		14644190		2	RIVET
11		85805347		2	BUSHING, THREADED
12		85812021		1	GASKET
13		85805509		1	BRACKET

644	07	p1	05/03

A/C HOUSING SIDE PANELS

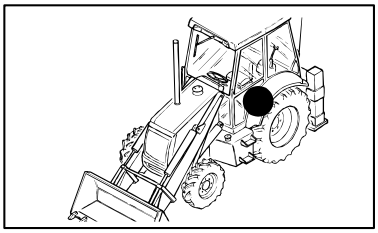

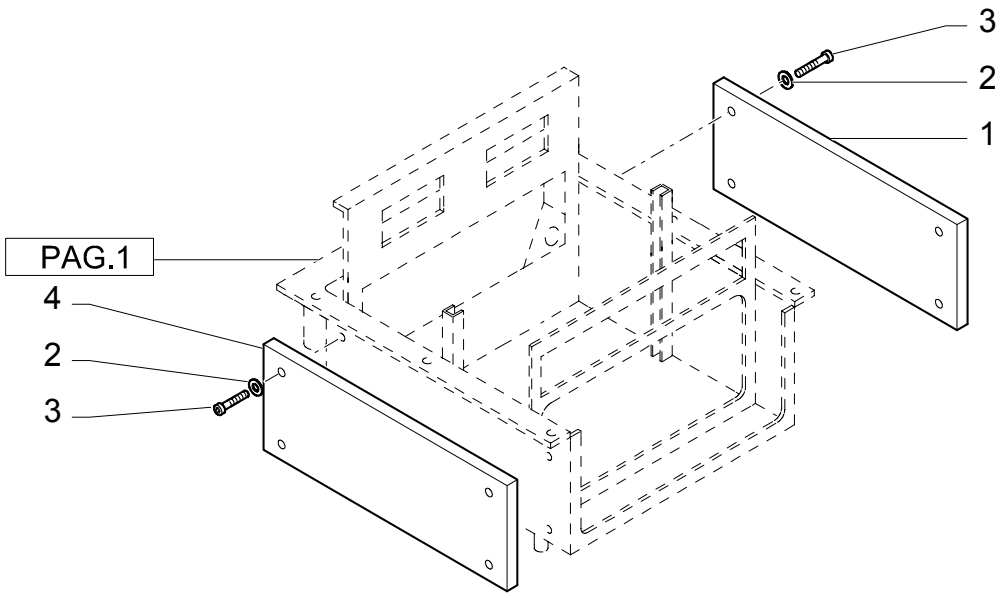

A/C HOUSING SIDE PANELS

REF	FN	PART NUMBER	YR/SN	QTY	DESCRIPTION
1		85817298		1	PANEL
2		11193274		6	WASHER, LOCK
3		14305224		6	SCREW M6X16
4		85817297		1	PANEL FRONT

Mechanical Version

LB75.B

644	08	p1	05/03

RH CAB TRIM WITH VENT

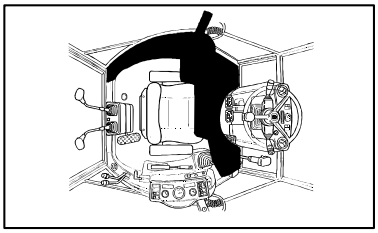

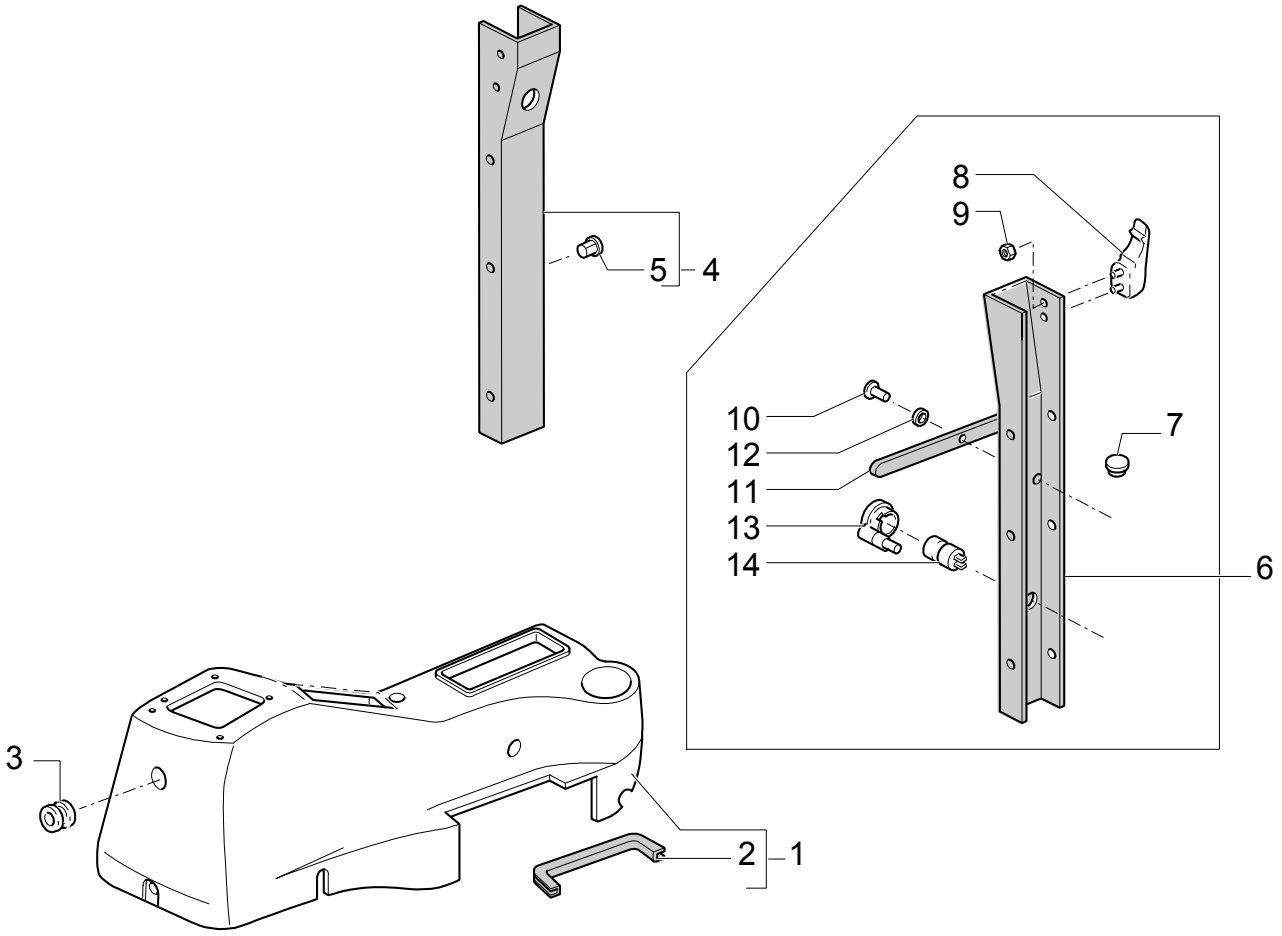

RH CAB TRIM WITH VENT

REF	FN	PART NUMBER	YR/SN	QTY	DESCRIPTION
1		85819276		1	SOFT TRIM
2		85819675		1	GASKET
3		10398980		1	RING, INSULATING
4		85819285		1	SOFT TRIM RH
5		85819591		6	BUSHING
6		85819287		1	SOFT TRIM LH
7		79111978		1	PLUG
8		5178468		1	GRAB STRAP
9		14084011		1	NUT M4
10		85806154		1	RIVET
11		E7NN94290N06AA		1	STRAP
12		12638107		1	SPARE PART 5X14
13		5148132		1	SOCKET, LAMP
14		5148131		1	SEAT/SLOT

Mechanical Version

LB75.B

644	09	p1	05/03

A/C & HEATER CAB ROOF DUCTS

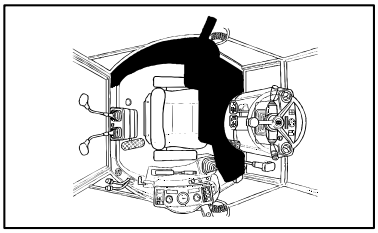

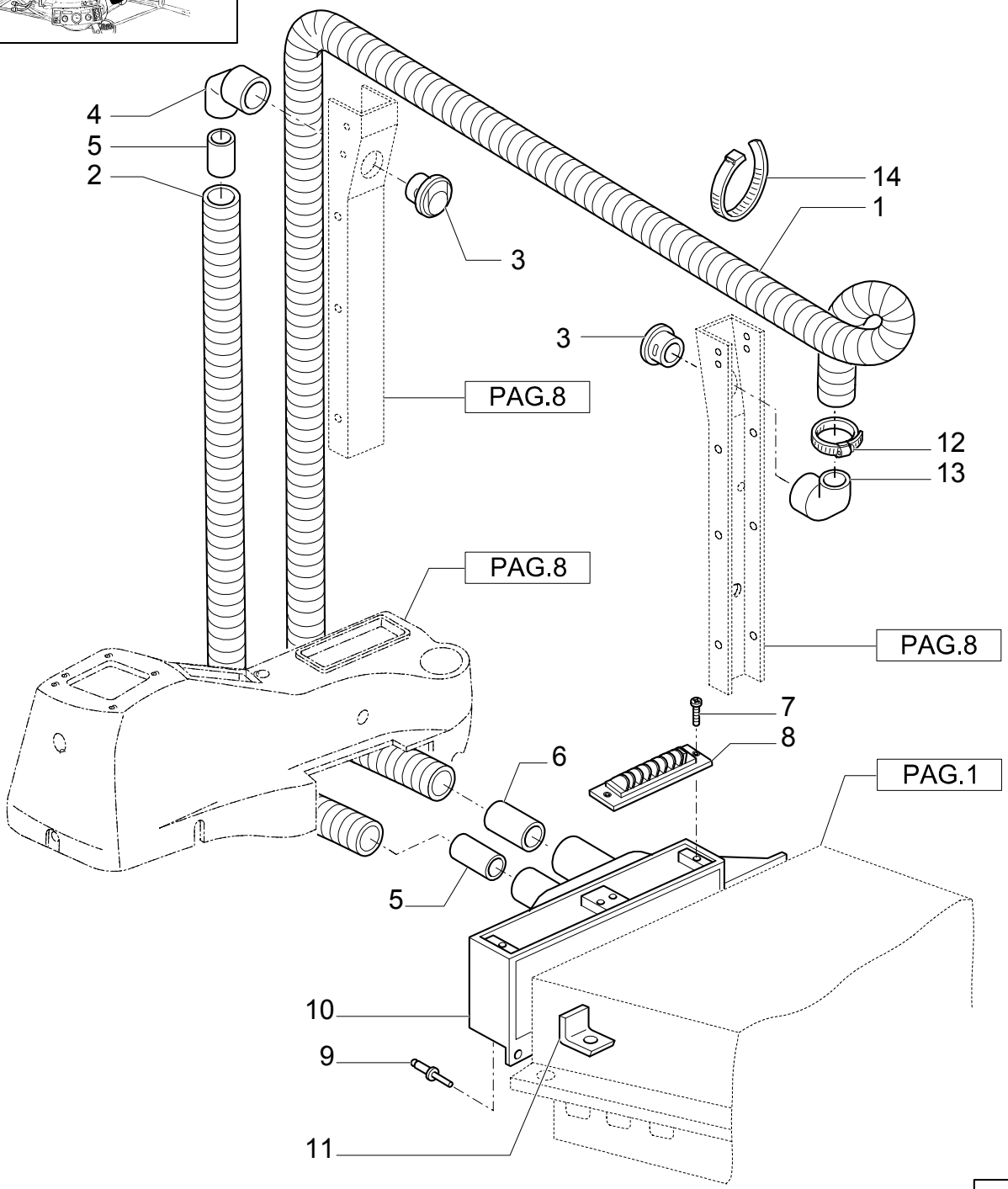

A/C & HEATER CAB ROOF DUCTS

REF	FN	PART NUMBER	YR/SN	QTY	DESCRIPTION
1		85819576		1	PIPE DIA. 50 MM, L=4100 MM
2		85819578		1	PIPE DIA. 45 MM, L=1600 MM
3		85819544		2	DIFFUSER
4		85819453		1	CONNECTOR, HYD.
5		85819451		2	PIPE DIA. 45 MM
6		85819452		1	PIPE
7		85819581		4	SCREW
8		85819454		2	DIFFUSER
9		85811972		4	RIVET
10		85819575		1	CONVEYOR
11		85819577		1	PLATE, COVER
12		85813324		1	COLLAR 32X50
13		85818891		1	JOINT, UNIVERSAL
14		14560087		10	COLLAR

646	01	p1	02/04

A/C DRYER FILTER HOSES

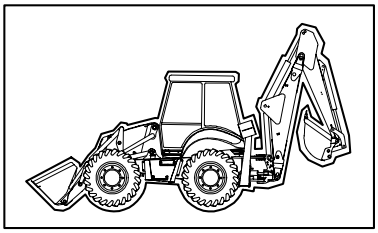

A/C DRYER FILTER HOSES

REF	FN	PART NUMBER	YR/SN	QTY	DESCRIPTION
1		87410674		1	TUBE, RIGID
2		87410676		1	TUBE, RIGID
3		87410678		1	FILTER
4		87408564		1	BRACKET
5		87410677		1	TUBE, RIGID
6		85802743		2	SEALING RING COLLAR
7		47049186		2	BOLT
8		47048963		4	WASHER
9		47049031		2	NUT
10		87410675		1	TUBE, RIGID
11		85804065		1	SENDER UNIT
12		{47050883}		1	SHIELD
13		14560187		2	COLLAR
14		{128483A1}		1	
15		{128485A1}		1	
16		{128484A1}		1	
17		85817287		1	STRIP-GASKET

A/C COMPRESSOR ATTACHING GROUP

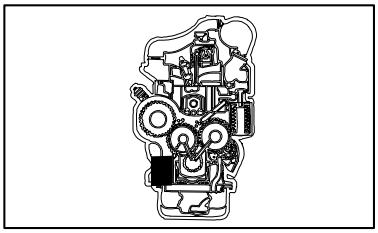

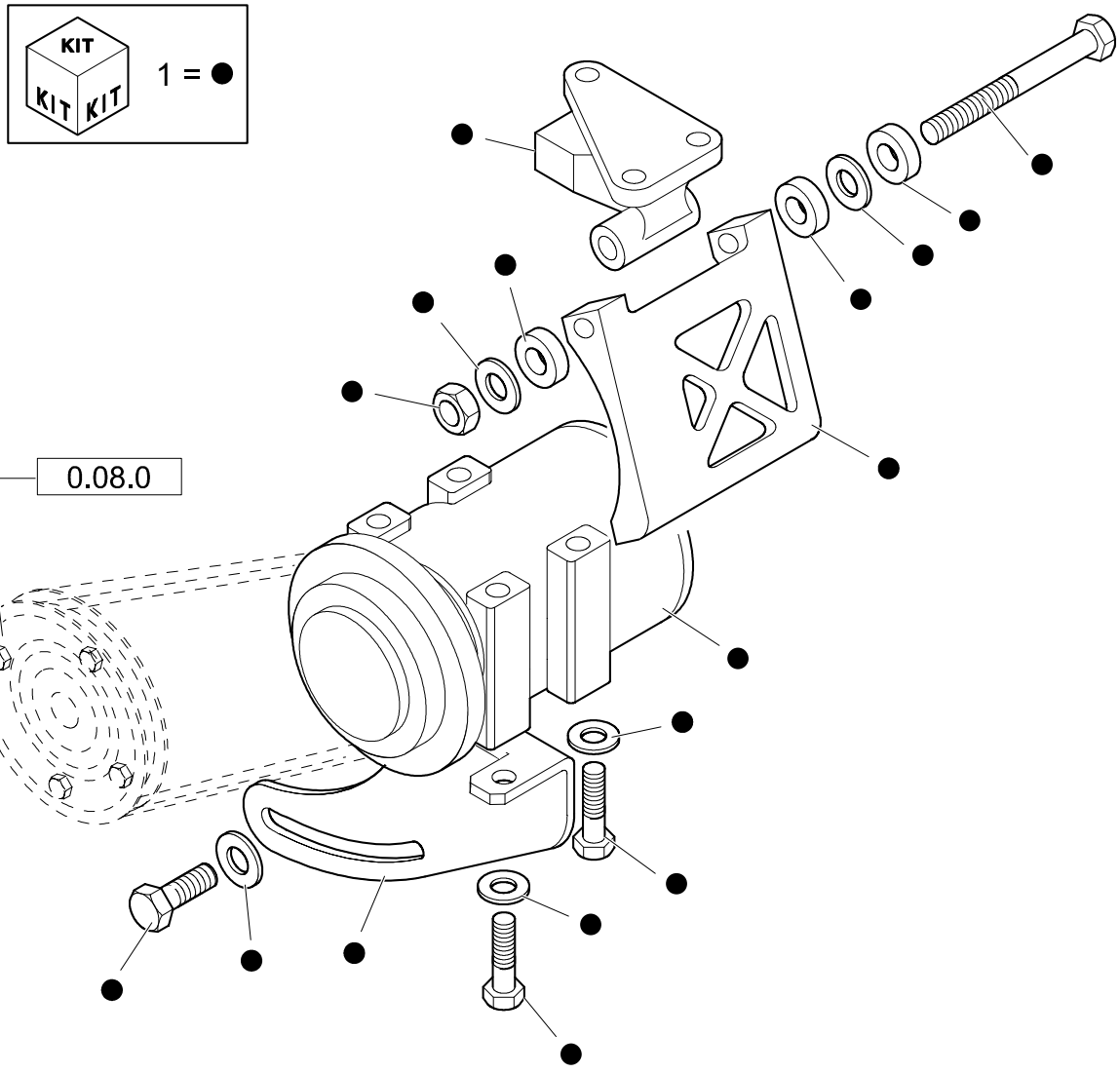

A/C COMPRESSOR ATTACHING GROUP

REF	FN	PART NUMBER	YR/SN	QTY	DESCRIPTION
1		{87403721}		1	KIT ASSY

STEERING COLUMN, FIXED & ADJUSTABLE

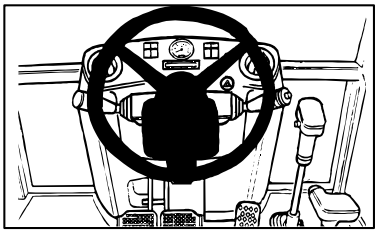

EQUIP.650

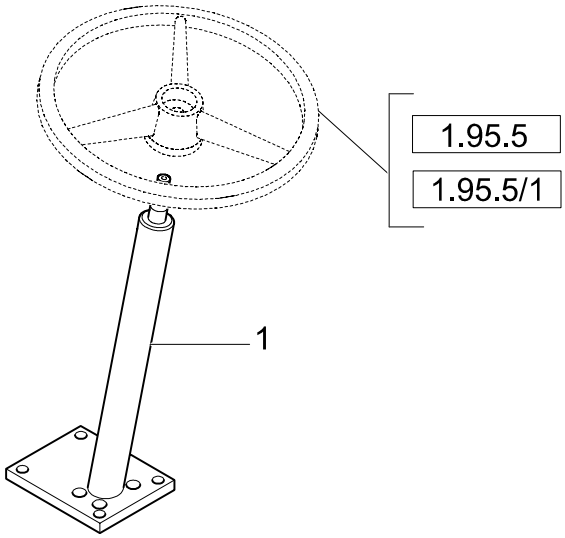

EQUIP.651

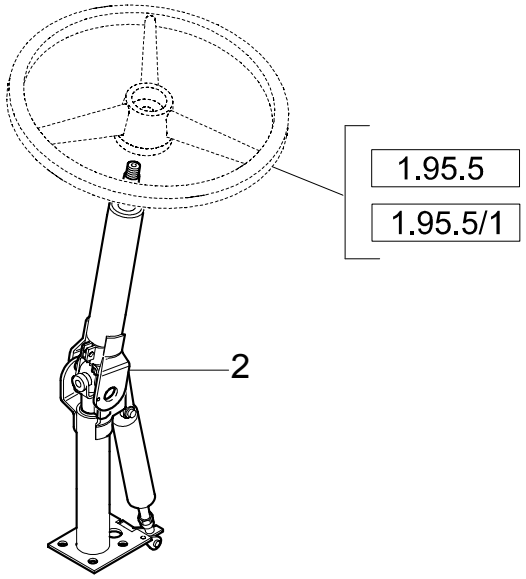

KIT = 3

STEERING COLUMN, FIXED & ADJUSTABLE

REF	FN	PART NUMBER	YR/SN	QTY	DESCRIPTION
1		85804706		1	STEERING COLUMN
2		85805545		1	STEERING COLUMN
3		85824197		1	SHOCK ABSORBER

705	01	p1	11/03

SEAT BELTS, 2" & 3"

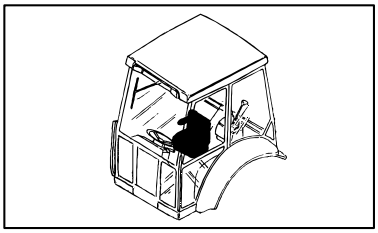

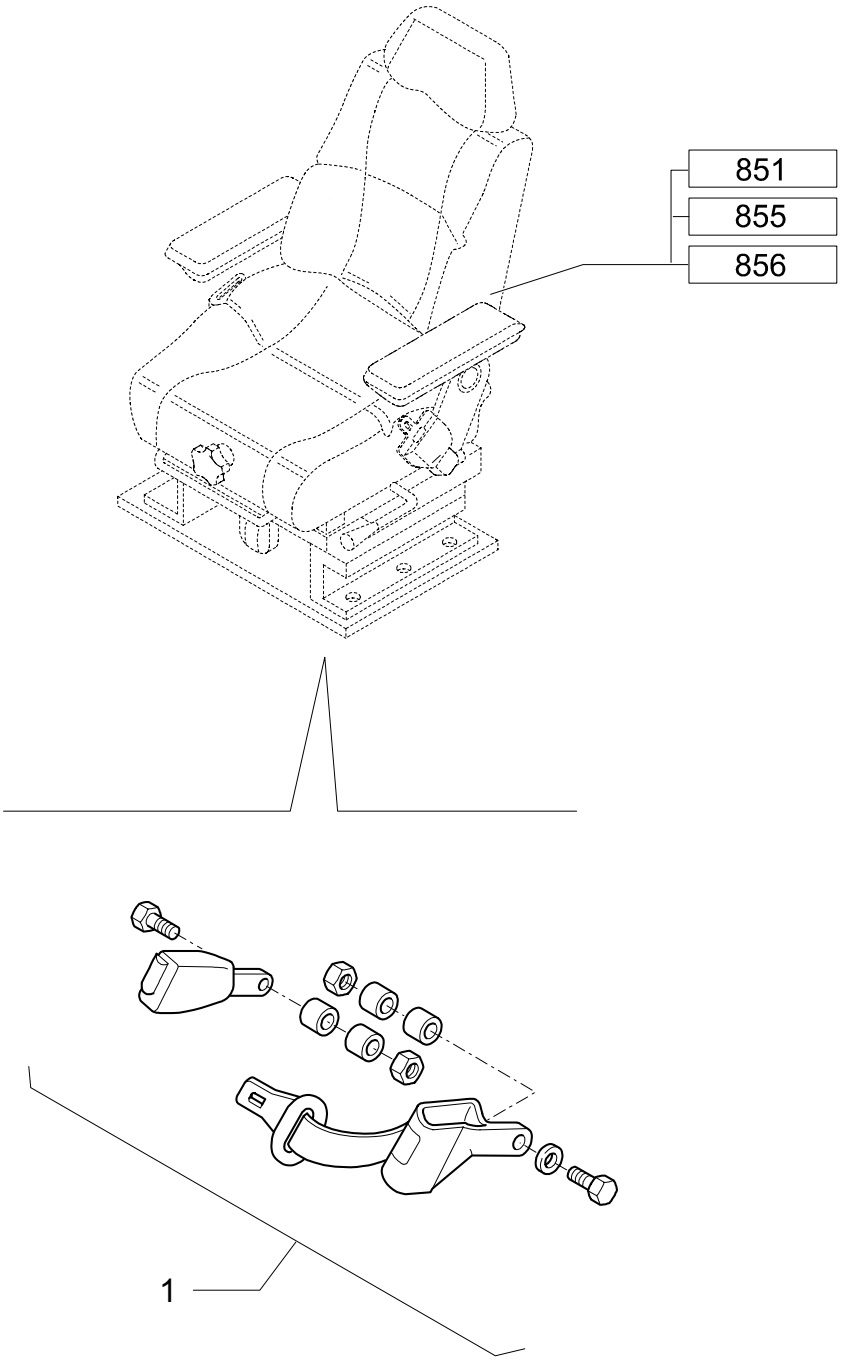

SEAT BELTS, 2" & 3"

REF	FN	PART NUMBER	YR/SN	QTY	DESCRIPTION
1		85815578		1	SEAT BELT 2" (EQUIP.705)
1		85815579		1	SEAT BELT 3" (EQUIP.706)

758	01	p1	05/03

ROTATING BEACON

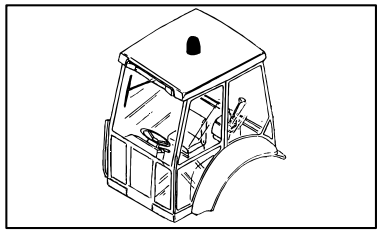

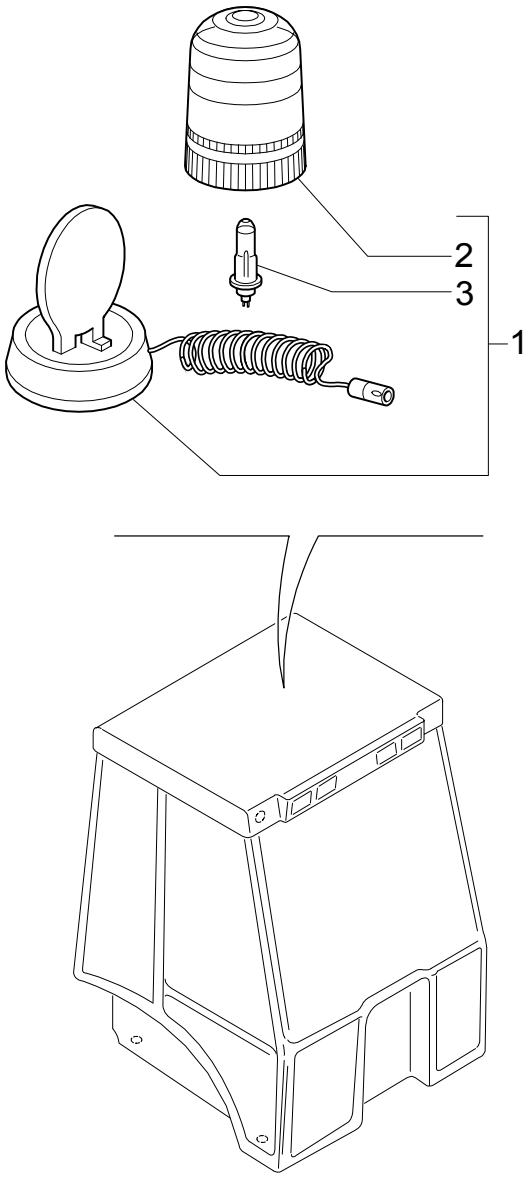

ROTATING BEACON

REF	FN	PART NUMBER	YR/SN	QTY	DESCRIPTION
1		85817129		1	BEACON, ROTATING
2		85817131		1	LENS
3		85817130		1	BULB

782	01	p1	05/03

FRONT CONSOLE WITH SPEEDOMETER, 4WD

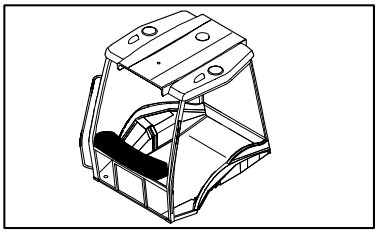

FRONT CONSOLE WITH SPEEDOMETER, 4WD

REF	FN	PART NUMBER	YR/SN	QTY	DESCRIPTION
1		85817587		1	INSTRUMENT CLUSTER
2		85804156		1	SENSOR

787/ 1	01	p1	05/03

FRONT CONSOLE WITHOUT SPEEDOMETER (CAB)

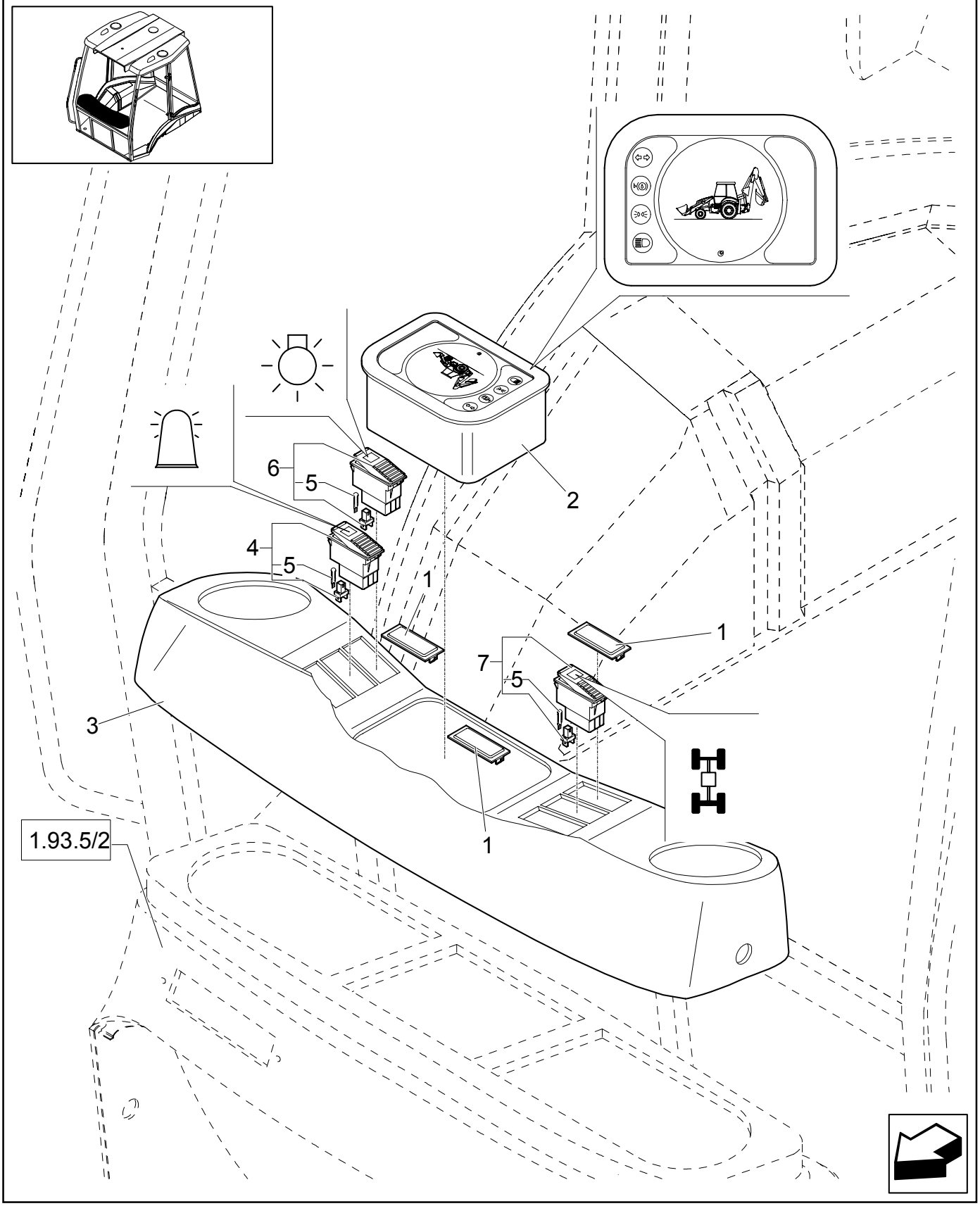

FRONT CONSOLE WITHOUT SPEEDOMETER (CAB)

REF	FN	PART NUMBER	YR/SN	QTY	DESCRIPTION
1		85825254		4	PLUG
2		85817586		1	INSTRUMENT CLUSTER
3		85818826		1	DASHBOARD
4		85818827		1	SWITCH
5		14143790		4	BULB
6		85818828		1	SWITCH
7		85819134		1	SWITCH FWD

787/ 2	01	p1	05/03

FRONT CONSOLE WITHOUT SPEEDOMETER (CAB)

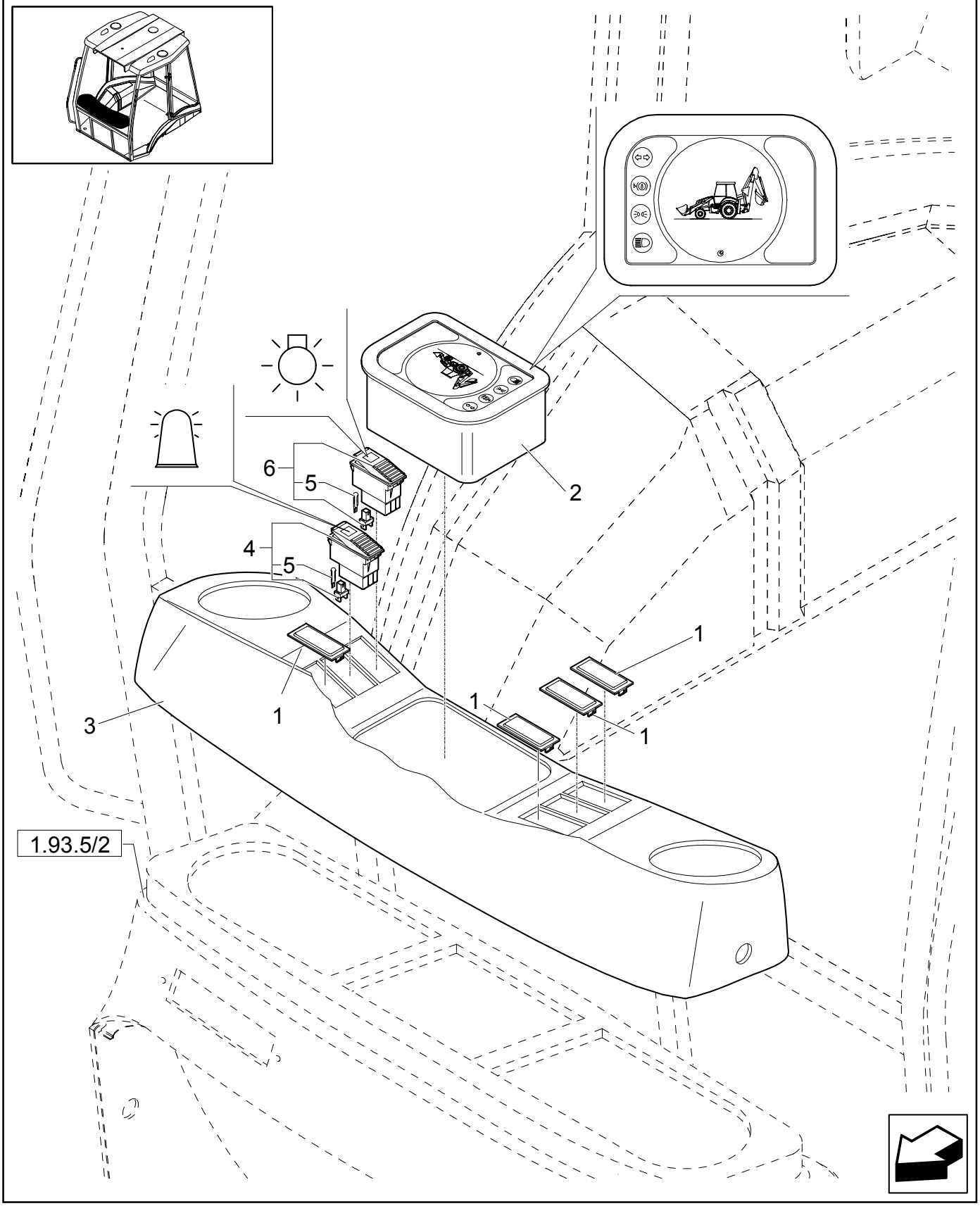

FRONT CONSOLE WITHOUT SPEEDOMETER (CAB)

REF	FN	PART NUMBER	YR/SN	QTY	DESCRIPTION
1		85825254		4	PLUG
2		85817586		1	INSTRUMENT CLUSTER
3		85818827		1	SWITCH
4		14143790		2	BULB
5		85818828		1	SWITCH
6		85818940		1	DASHBOARD

788/ 1	01	p1	05/03

FRONT CONSOLE WITH SPEEDOMETER, 4WD

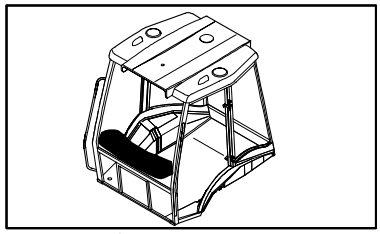

FRONT CONSOLE WITH SPEEDOMETER, 4WD

REF	FN	PART NUMBER	YR/SN	QTY	DESCRIPTION
1		85825254		4	PLUG
2		85817587		1	INSTRUMENT CLUSTER
3		85818826		1	DASHBOARD
4		85818827		1	SWITCH
5		14143790		2	BULB
6		85818828		1	SWITCH

788/ 2	01	p1	05/03

FRONT CONSOLE WITH SPEEDOMETER, 4WD

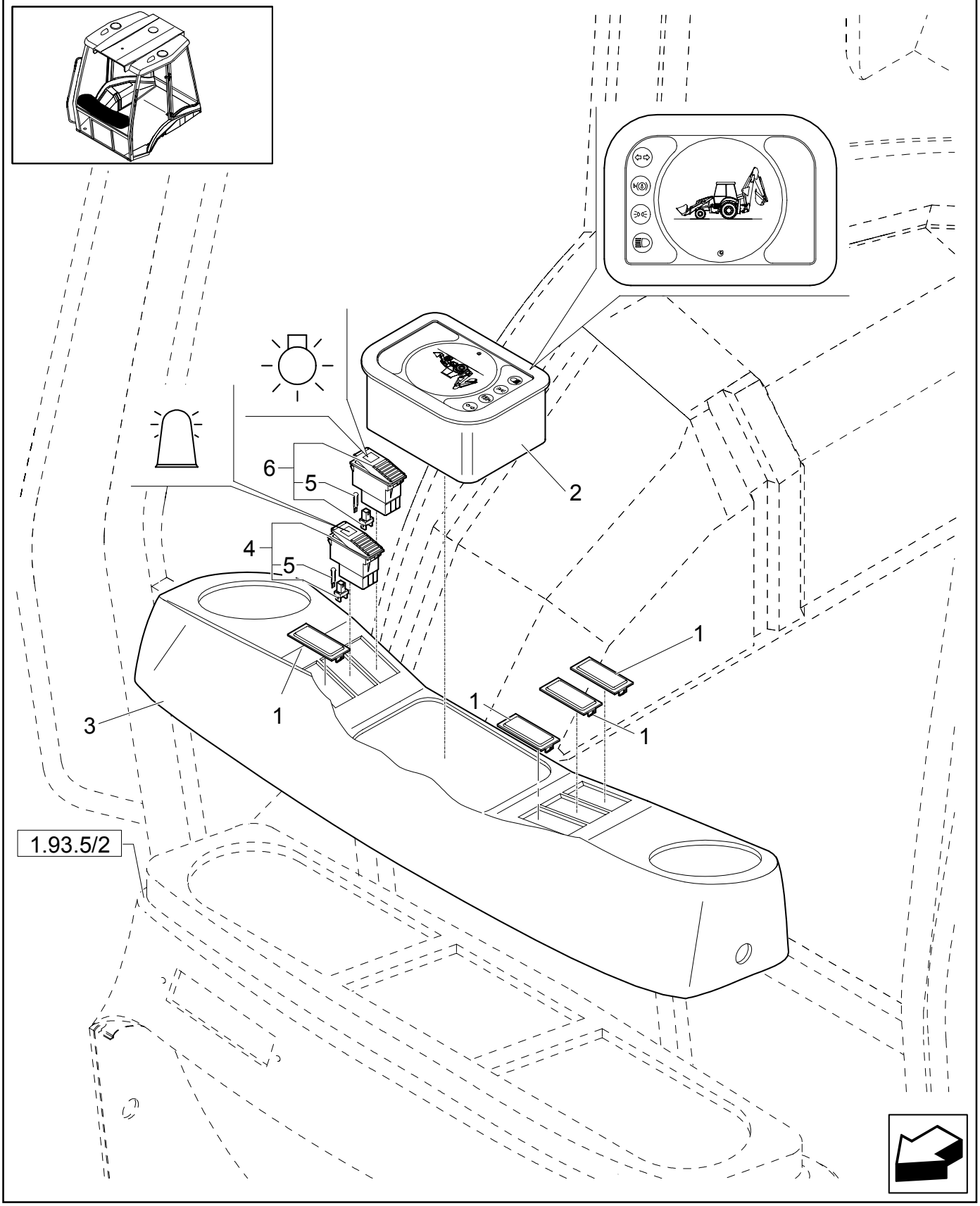

FRONT CONSOLE WITH SPEEDOMETER, 4WD

REF	FN	PART NUMBER	YR/SN	QTY	DESCRIPTION
1		85825254		4	PLUG
2		85817587		1	INSTRUMENT CLUSTER
3		85818827		1	SWITCH
4		14143790		2	BULB
5		85818828		1	SWITCH
6		85818940		1	DASHBOARD

789	01	p1	05/03

SPEED SENSOR(P.SHUTTLE)

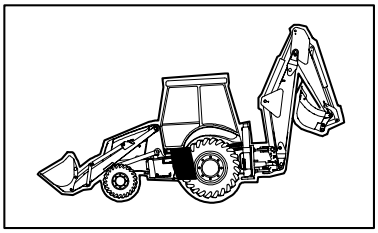

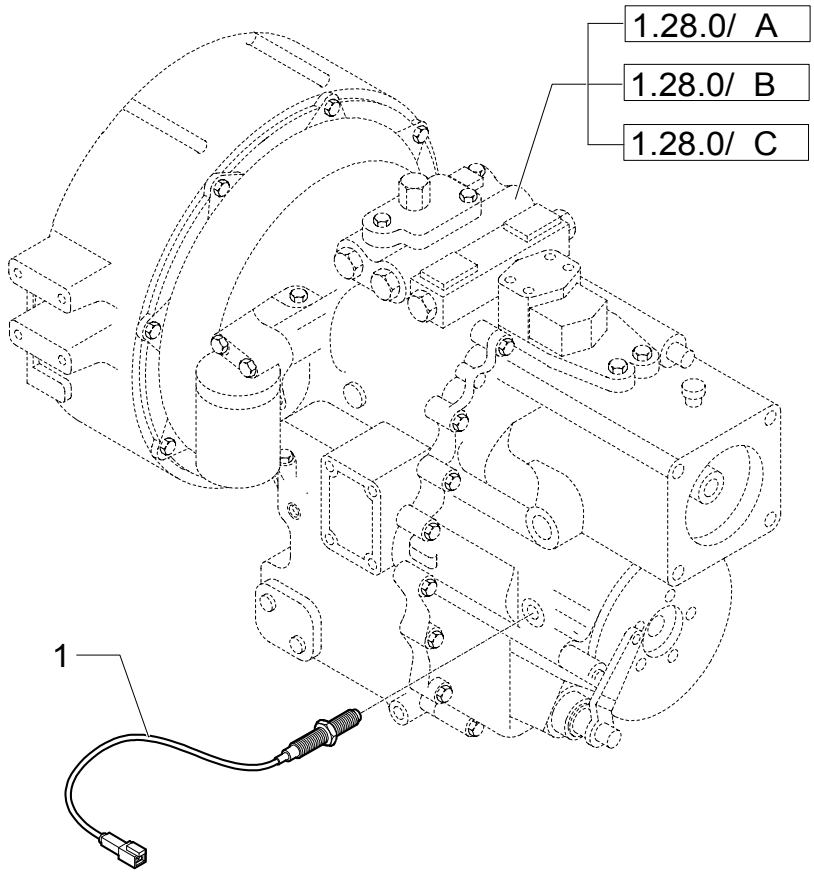

SPEED SENSOR(P.SHUTTLE)

REF	FN	PART NUMBER	YR/SN	QTY	DESCRIPTION
1		85804156		1	SENSOR

791	01	p1	09/03

RH CONSOLE WITH INSTRUMENTS

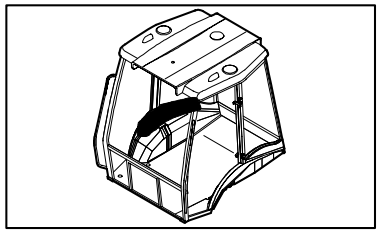

RH CONSOLE WITH INSTRUMENTS

REF	FN	PART NUMBER	YR/SN	QTY	DESCRIPTION
1		85825254		7	PLUG
2		{87412250}		1	INSTRUMENT CLUSTER
3		85818817		1	DASHBOARD
4		85818818		1	SWITCH
5		14143790		2	BULB
6		85818819		1	SWITCH
7		{87431463}		1	

792	01	p1	09/03

RH CONSOLE WITH INSTRUMENTS AND DIAGNOSTICS

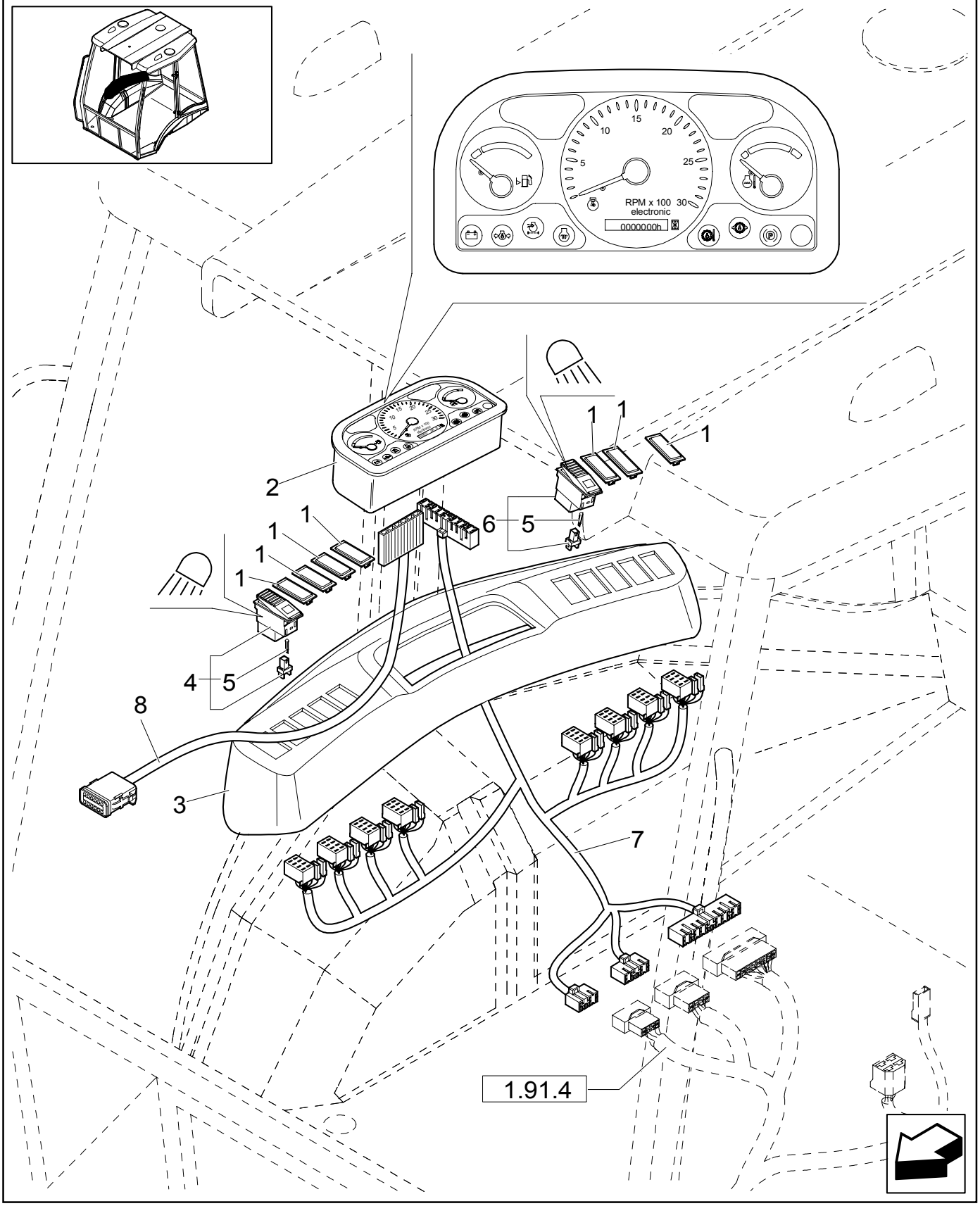

RH CONSOLE WITH INSTRUMENTS AND DIAGNOSTICS

REF	FN	PART NUMBER	YR/SN	QTY	DESCRIPTION
1		85825254		7	PLUG
2		{87412252}		1	TESTER
3		85818817		1	DASHBOARD
4		85818818		1	SWITCH
5		14143790		2	BULB
6		85818819		1	SWITCH
7		{87431463}		1	
8		85819214		1	CABLE, ELECTRIC

795	01	p1	12/03

RH CONSOLE WITH INSTRUMENTS AND DIAGNOSTICS

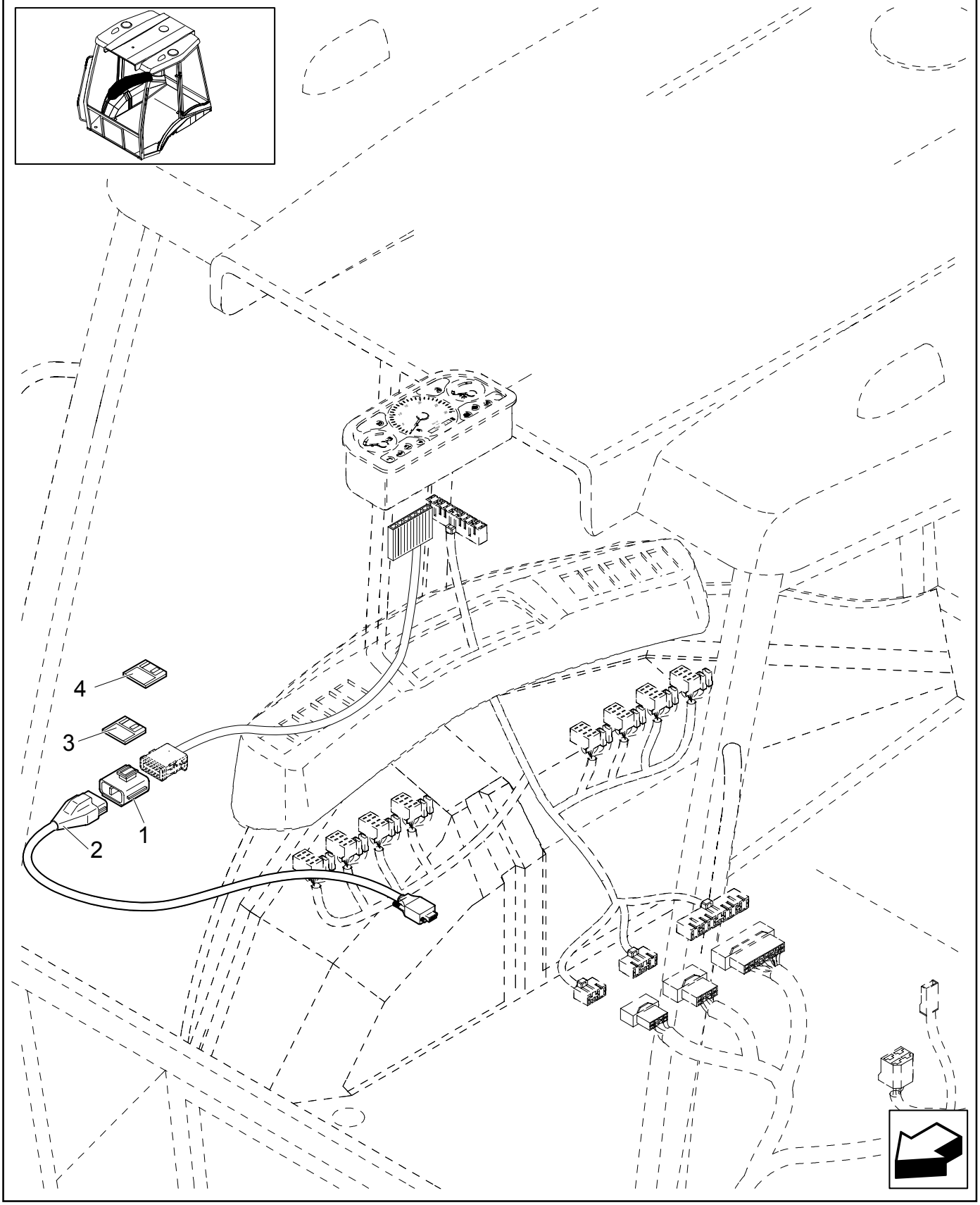

RH CONSOLE WITH INSTRUMENTS AND DIAGNOSTICS

REF	FN	PART NUMBER	YR/SN	QTY	DESCRIPTION
1		85819758		1	TOOL, SPECIAL
2		297449		1	CABLE, ELECTRIC
3		NSS		1	NOT SERVICED SEPARATELY
4		NSS		1	NOT SERVICED SEPARATELY

796	01	p1	12/03

ANTITHEFT

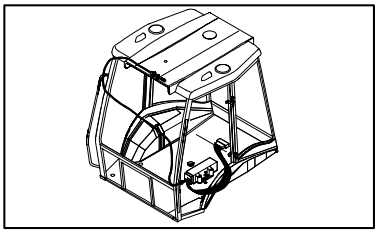

ANTITHEFT

REF	FN	PART NUMBER	YR/SN	QTY	DESCRIPTION
1		85819765		1	KIT
2		12574011		2	NUT
3		12642821		2	WASHER, LOCK
4		14303324		2	SCREW
5		85819766		1	COVER
6		NSS		1	NOT SERVICED SEPARATELY

851	01	p1	08/03

CLOTH SEAT & ATTACHING HARDWARE

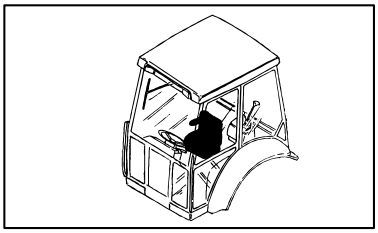

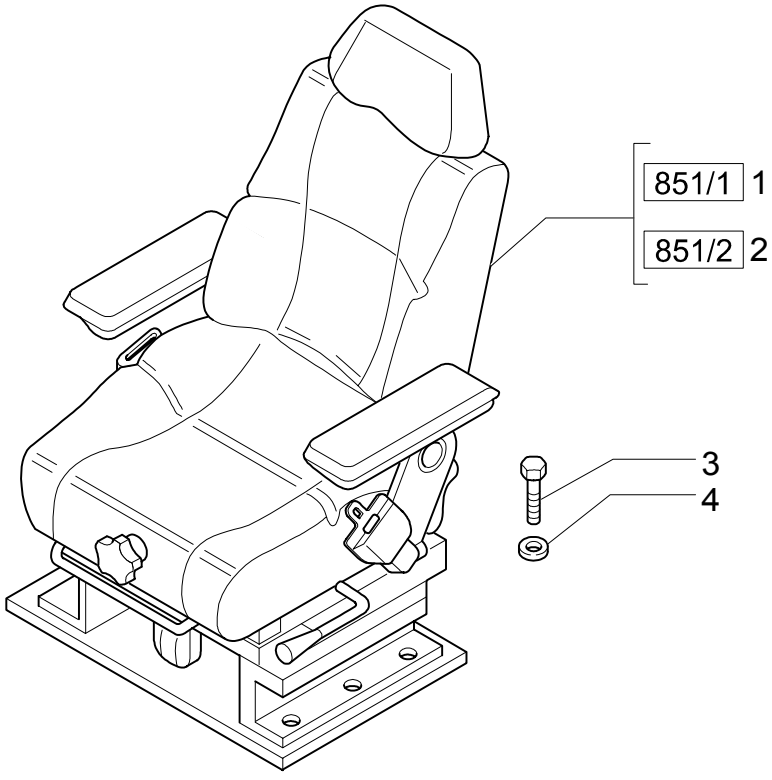

CLOTH SEAT & ATTACHING HARDWARE

REF	FN	PART NUMBER	YR/SN	QTY	DESCRIPTION
1	1, 2	85821407		1	SEAT, DRIVER
2	3, 4	85821406		1	SEAT, DRIVER
3		16043424		8	SCREW Cap, HH, CL 8.8, M8X1,25X20
4		11198074		8	WASHER, SEALING

(1) Consists Of Page 851/ 1 01 to 851/ 1 04
(2) 2" SEAT BELT
(3) 3" SEAT BELT
(4) Consists Of Page 851/ 1 01, 851/ 2 02, 851/ 1 03, 851/ 1 04

851/ 1	01	p1	08/03

CLOTH SEAT CUSHIONS, ARMRESTS & RELATED PARTS

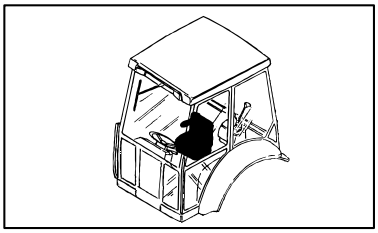

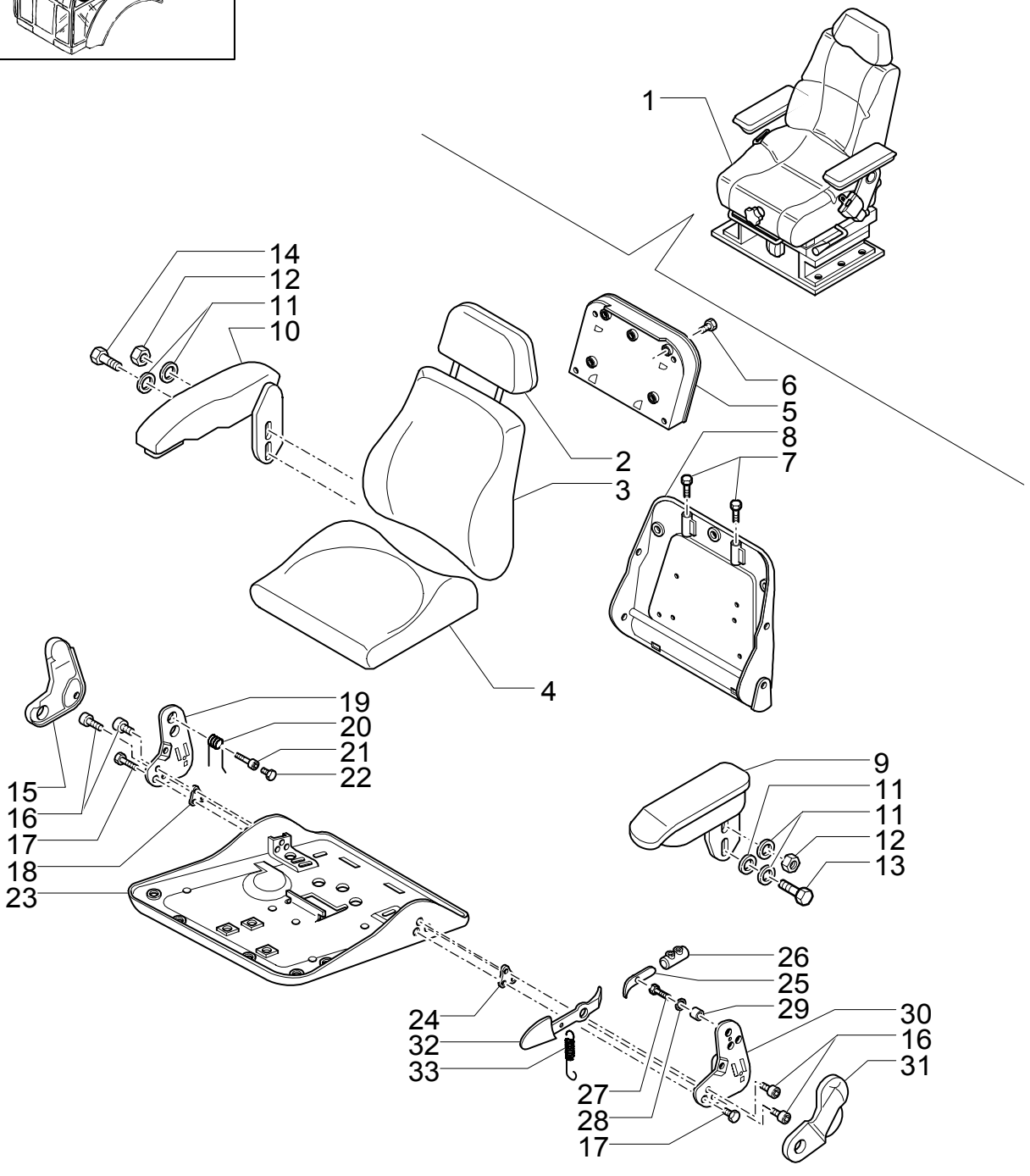

CLOTH SEAT CUSHIONS, ARMRESTS & RELATED PARTS

REF	FN	PART NUMBER	YR/SN	QTY	DESCRIPTION
1	1, 2	85821407		1	SEAT, DRIVER
1	3, 4	85821406		1	SEAT, DRIVER
2		85817452		1	HEADREST, SEAT
3		85817454		1	SEAT, BACK
4		85817455		1	CUSHION, SEAT
5	5	85817481		1	BOX
6		85817480		4	SCREW
7		9958845		2	BUSHING
8	6	85817485		1	SEAT, BACK
9	7	85817453		1	ARMREST LH
10	8	85817462		1	ARMREST RH
11		10519601		AR	WASHER
12		85817459		2	NUT
13		16043224		1	SCREW M8X16
14		13838071		1	SCREW M8X20
15		85817466		1	COVER RH
16		85817467		AR	SCREW M8X25
17		85817468		2	SCREW 7/16"-20UNF x 60.0
18		85817470		1	PLATE, COVER
19		9960795		1	PLATE RH
20		9960793		1	SPRING
21		85817469		1	BUSHING
22		85817471		1	SCREW M8X40
23		85821419		1	SUPPORT
24		85817476		1	PLATE
25		85817460		1	LEVER
26		85821418		1	STOP DEVICE
27		15213321		1	SCREW M8X35

(1) Consists Of Page 851/ 1 02, 851/ 1 03, 851/ 1 04
(2) 2" SEAT BELT
(3) Consists Of Page 851/ 2 02, 851/ 1 03, 851/ 1 04
(4) 3" SEAT BELT
(5) Includes 6
(6) Includes 7, 21
(7) Includes 11, 12, 13
(8) Includes 11, 12, 14

851/ 1	01	p2	08/03

CLOTH SEAT CUSHIONS, ARMRESTS & RELATED PARTS

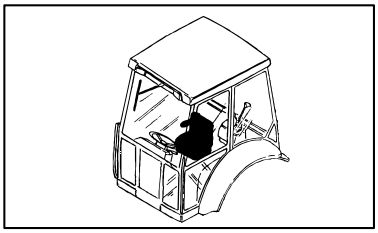

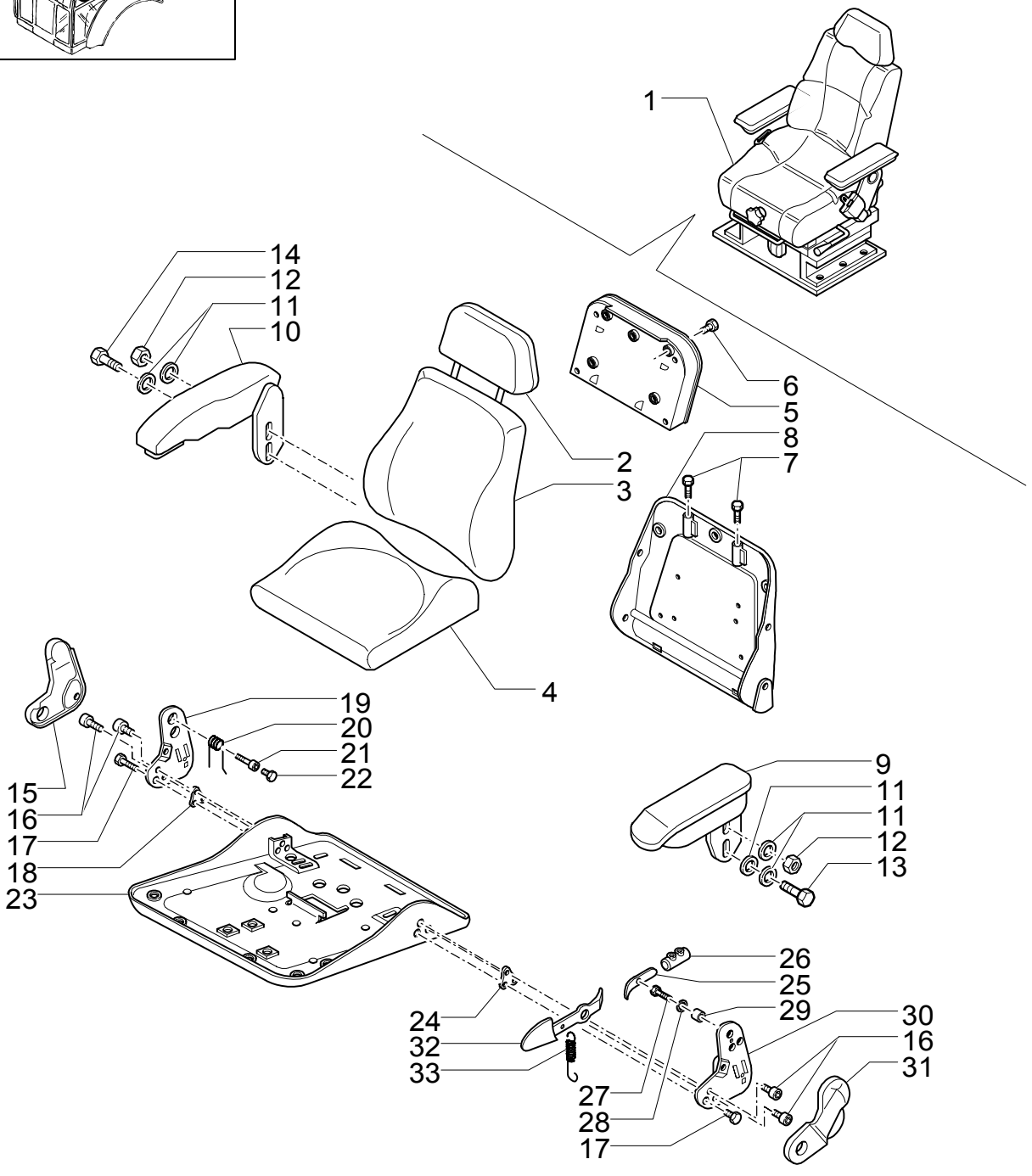

CLOTH SEAT CUSHIONS, ARMRESTS & RELATED PARTS

REF	FN	PART NUMBER	YR/SN	QTY	DESCRIPTION
28		9960692		AR	SPACER
29		85817477		1	TUBE, RIGID
30		9960803		1	PLATE LH
31		85817479		1	COVER RH
32		85817478		1	LEVER
33		9960797		1	SPRING

851/ 1	02	p1	08/03

CLOTH SEAT MOUNTING PLATE, ADJUSTING RAILS & 2" SEAT BELT

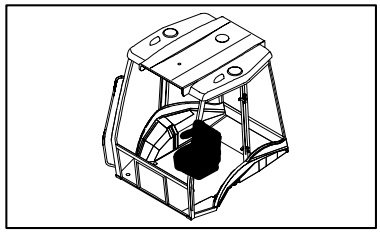

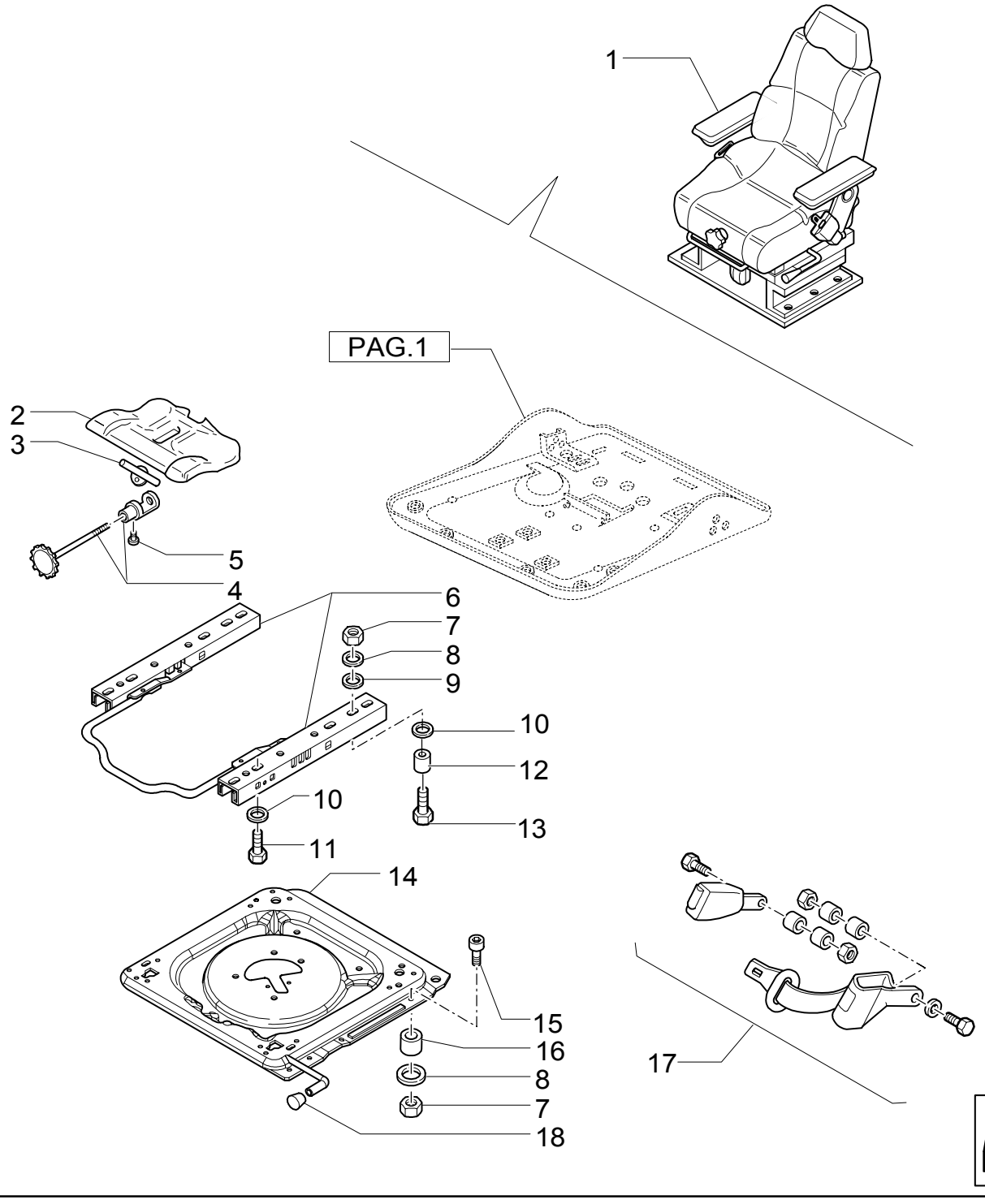

CLOTH SEAT MOUNTING PLATE, ADJUSTING RAILS & 2" SEAT BELT

REF	FN	PART NUMBER	YR/SN	QTY	DESCRIPTION
1	1, 2	85821407		1	SEAT, DRIVER
2	3	71485488		1	CONTROL
3		85817463		1	PLATE
4	4	85817464		1	SPINDLE
5		9962962		1	SCREW M5X10
6		85817484		1	KIT
7		85817458		9	NUT
8		9960692		10	SPACER
9		9958776		9	SPACER
10		10519601		AR	WASHER
11		14306321		8	SCREW M8X20
12		85819813		1	BUSHING
13		85817467		AR	SCREW M8X25
14	5	85817483		1	FLOOR STAND
15		85817465		4	SCREW M8X40
16		85817456		4	TUBE, RIGID
17	2	85815578		1	SEAT BELT
18		85817482		1	PUSH BUTTON

(1) Consists Of Page 851/ 1 01, 851/ 1 03, 851/ 1 04
(2) 2" SEAT BELT
(3) Includes 3, 4, 5
(4) Includes 3, 5
(5) Includes 18

851/ 1	03	p1	08/03

CLOTH SEAT UPPER SUSPENSION PARTS

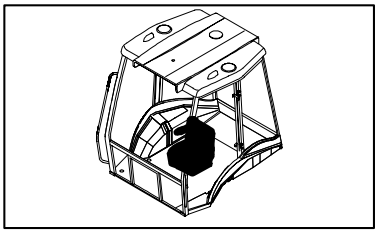

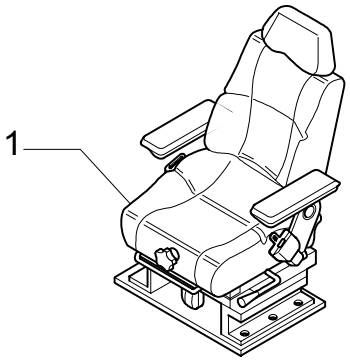

2 SEE ALSO PAG.5

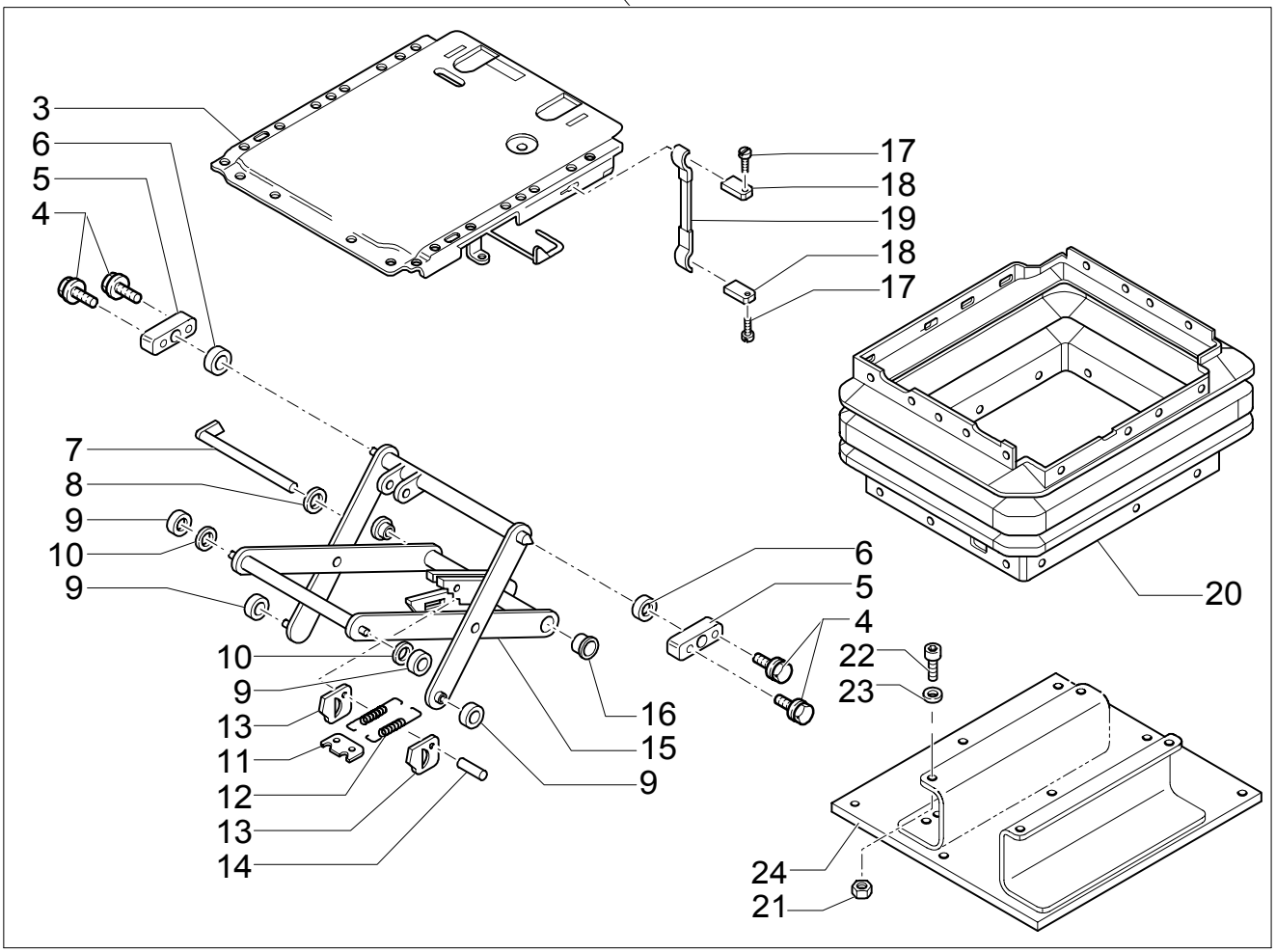

CLOTH SEAT UPPER SUSPENSION PARTS

REF	FN	PART NUMBER	YR/SN	QTY	DESCRIPTION
1	1, 2	85821407		1	SEAT, DRIVER
1	3, 4	85821406		1	SEAT, DRIVER
2		85817426		1	SUSPENSION
3		85817450		1	PLATE
4		85817444		4	SCREW M6X16
5	5	9967960		2	SEAT, DRIVER
6		85817445		2	BUSHING
7		85817429		1	BOLT
8		11088076		1	RING, LOCKING
9		9958784		4	SPACER
10		85817442		2	BUSHING
11		9958782		1	PLATE, COVER
12		85817430		2	SPRING
13		9958792		2	PLATE, COVER
14		9958793		1	BOLT
15	6	85817446		1	SHOCK ABSORBER
16		9960755		2	BUSHING
17		85817448		2	RIVET
18		85817449		2	PLATE
19	7	85817447		1	SOFT TRIM
20		85817428		1	BELLOWS
21		85817458		4	NUT M8
22		14306321		4	SCREW M8X20
23		10519601		4	WASHER 8X17
24		85817427		1	DASHBOARD

(1) Consists Of Page 851/ 1 01, 851/ 1 02, 851/ 1 04
(2) 2" SEAT BELT
(3) 3" SEAT BELT
(4) Consists Of Page 851/ 1 01, 851/ 2 02, 851/ 1 04
(5) Includes 4, 6
(6) Includes 7, 9, 10 to 14, 16, Also Page 851/ 1 04 Ref. 3, 4, 5
(7) Includes 17, 18

851/ 1	04	p1	08/03

CLOTH SEAT LOWER SUSPENSION PARTS

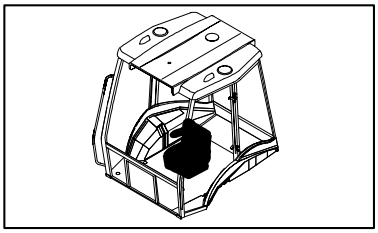

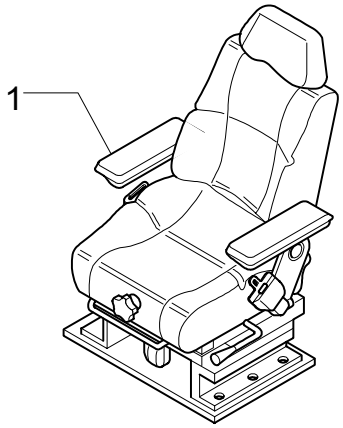

2 SEE ALSO PAG.4

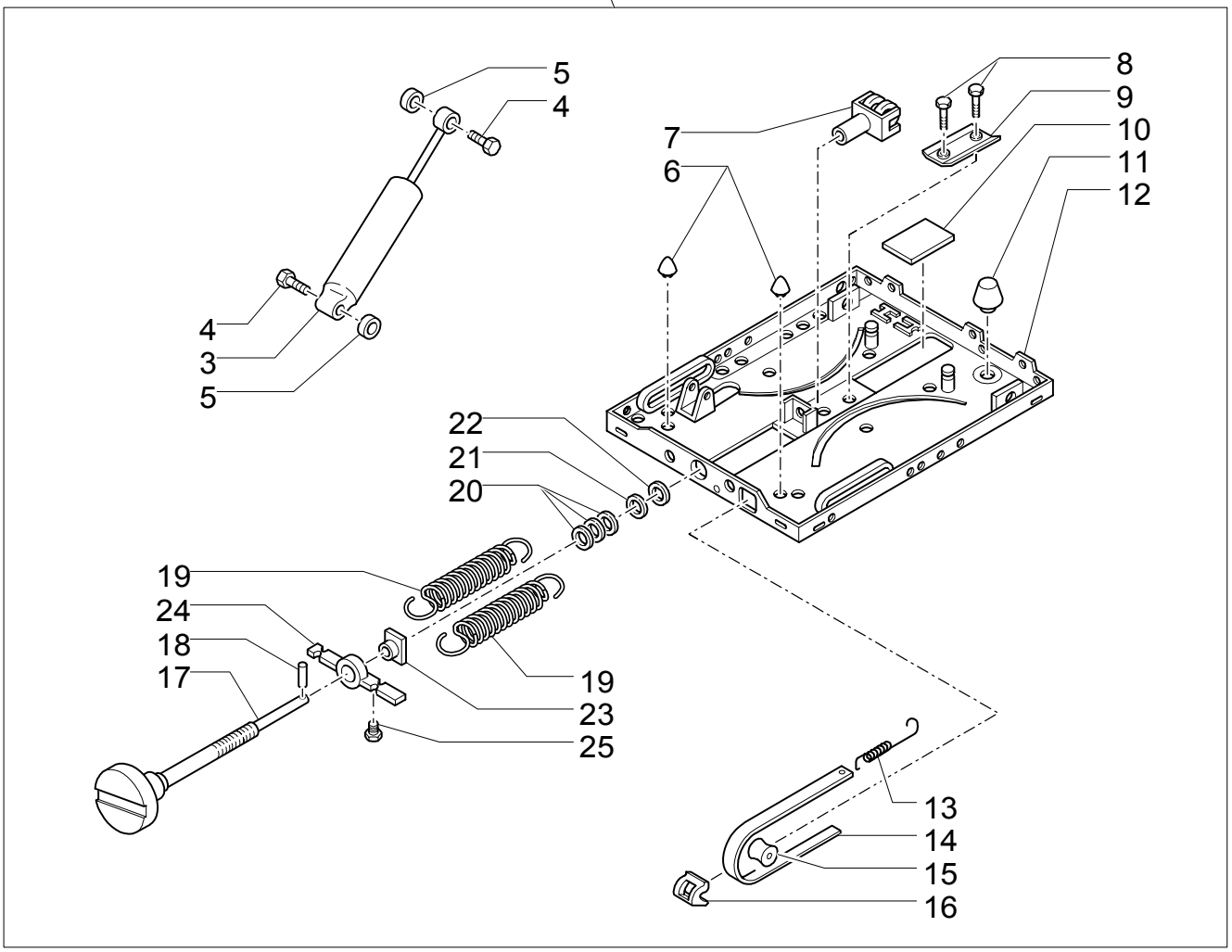

CLOTH SEAT LOWER SUSPENSION PARTS

REF	FN	PART NUMBER	YR/SN	QTY	DESCRIPTION
1	1, 2	85821407		1	SEAT, DRIVER
1	3, 4	85821406		1	SEAT, DRIVER
2		85817426		1	SUSPENSION
3	5	85817431		1	SHOCK ABSORBER
4		9959588		2	BOLT
5		85817432		2	WASHER
6		85817440		2	GUARD
7		9960736		1	YOKE
8		9959585		2	PLUG
9	6	9960767		1	CLIP
10		9959580		1	PLATE, COVER
11		85817441		1	GUARD
12	7	85817436		1	SUSPENSION
13		9958790		1	SPRING
14		85817443		1	GAUGE, LEVEL
15		9958785		1	NEEDLE ROLLER
16		9958786		1	GUARD
17	8	85817451		1	REGULATING SYSTEM
18		85817433		1	DOWEL
19		85817434		2	SPRING
20		9958800		1	WASHER
21		9958788		1	O-RING
22		85817435		1	BUSHING
23		9959583		1	NUT
24		9959577		1	PLATE, FIXING
25		9958789		1	PLUG

(1) Consists Of Page 851/ 1 01, 851/ 1 02, 851/ 1 03
(2) 2" SEAT BELT
(3) Consists Of Page 851/ 1 01, 851/ 2 02, 851/ 1 03
(4) 3" SEAT BELT
(5) Includes 4, 5
(6) Includes 8
(7) Includes 6, 8 to 11
(8) Includes 13, 15 16, 25

851/ 2	02	p1	08/03

CLOTH SEAT MOUNTING PLATE, ADJUSTING RAILS & 3" SEAT BELT

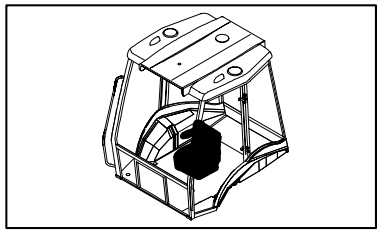

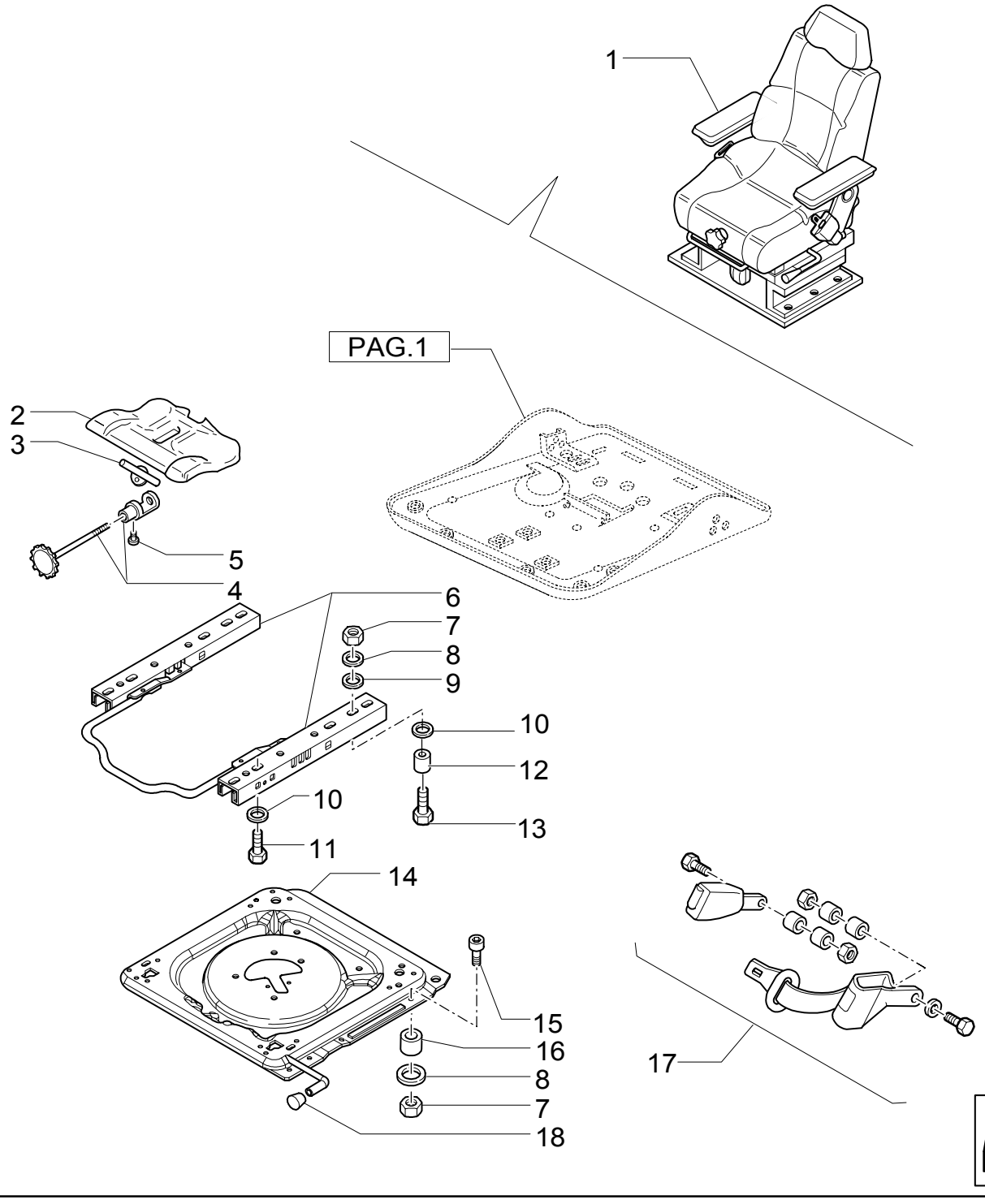

CLOTH SEAT MOUNTING PLATE, ADJUSTING RAILS & 3" SEAT BELT

REF	FN	PART NUMBER	YR/SN	QTY	DESCRIPTION
1	1, 2	85821406		1	SEAT, DRIVER
2	3	71485488		1	CONTROL
3		85817463		1	PLATE
4	4	85817464		1	SPINDLE
5		9962962		1	SCREW M5X10
6		85817484		1	KIT
7		85817458		9	NUT
8		9960692		10	SPACER
9		9958776		9	SPACER
10		10519601		AR	WASHER
11		14306321		8	SCREW M8X20
12		85819813		1	BUSHING
13		85817467		AR	SCREW M8X25
14	5	85817483		1	FLOOR STAND
15		85817465		4	SCREW M8X40
16		85817456		4	TUBE, RIGID
17	2	85815579		1	SEAT BELT
18		85817482		1	PUSH BUTTON

(1) Consists Of Page 851/ 1 01, 851/ 1 03, 851/ 1 04
(2) 3" SEAT BELT
(3) Includes 3, 4, 5
(4) Includes 3, 5
(5) Includes 18

855	01	p1	05/03

AIR RIDE CLOTH SEAT & ATTACHING HARDWARE

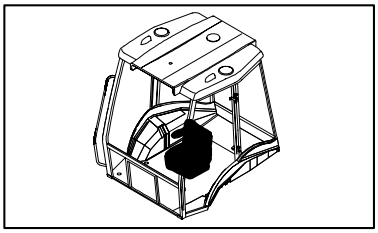

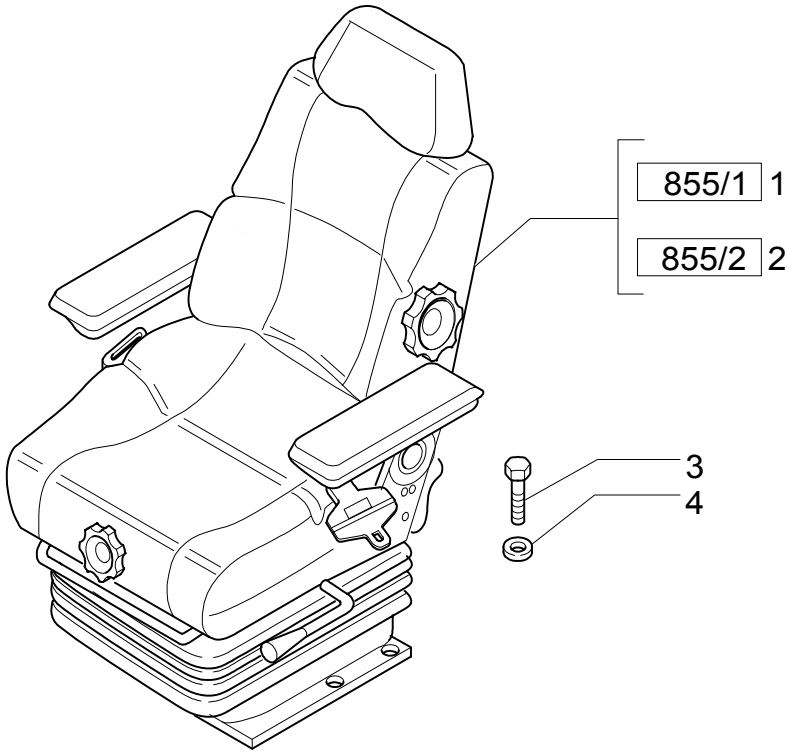

AIR RIDE CLOTH SEAT & ATTACHING HARDWARE

REF	FN	PART NUMBER	YR/SN	QTY	DESCRIPTION
1	1, 2	85821408		1	SEAT, DRIVER 2" SEAT BELT
2	3, 4	85821409		1	SEAT, DRIVER 3" SEAT BELT
3		16043424		8	SCREW Cap, HH, CL 8.8, M8X1.25X20
4		11198074		8	WASHER, SEALING

(1) Consists Of Page 855/ 1 01 to 855/ 1 05
(2) 2" SEAT BELT
(3) 3" SEAT BELT
(4) Consists Of Page 855/ 1 01, 855/ 2 02, 855/ 1 03, 855/ 1 04, 855/ 1 05

855/ 1	01	p1	08/03

AIR RIDE CLOTH SEAT CUSHIONS, ARMRESTS & RELATED PARTS

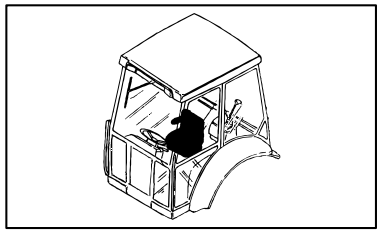

AIR RIDE CLOTH SEAT CUSHIONS, ARMRESTS & RELATED PARTS

REF	FN	PART NUMBER	YR/SN	QTY	DESCRIPTION
1	1, 2	85821408		1	SEAT, DRIVER
1	3, 4	85821409		1	SEAT, DRIVER
2		85817452		1	HEADREST, SEAT
3		85817535		1	SEAT, BACK
4		85817455		1	CUSHION, SEAT
5	5	85817481		1	BOX
6		85817480		4	SCREW
7		9958845		2	BUSHING
8	6	85817532		1	HEADREST, SEAT
9	7	85817453		1	ARMREST LH
10	8	85817462		1	ARMREST RH
11		10519601		AR	WASHER
12		85817459		2	NUT M8
13		16043224		1	SCREW M8X16
14		13838071		1	SCREW M8X20
15		85817466		1	COVER RH
16		85817467		8	SCREW
17		85817468		2	SCREW 7/16"-20UNF x 60.0
18		85817470		1	PLATE, COVER
19		9960795		1	PLATE RH
20		9960793		1	SPRING
21		85817469		1	BUSHING
22		85817471		1	SCREW
23		85821419		1	SUPPORT
24		85817476		1	PLATE
25		85817460		1	LEVER
26		85821418		1	STOP DEVICE
27		15213321		1	SCREW M8X35

(1) Consists Of Page 855/ 1 02, 855/ 1 03, 855/ 1 04, 855/ 1 05
(2) 2" SEAT BELT
(3) Consists Of Page 855/ 2 02, 855/ 1 03, 855/ 1 04, 855/ 1 05
(4) 3" SEAT BELT
(5) Includes 6
(6) Includes 7, 21, 34, 35, 36
(7) Includes 11, 12, 13
(8) Includes 11, 12, 14

855/ 1	01	p2	08/03

AIR RIDE CLOTH SEAT CUSHIONS, ARMRESTS & RELATED PARTS

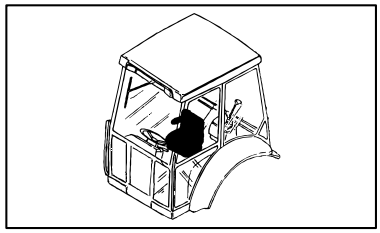

AIR RIDE CLOTH SEAT CUSHIONS, ARMRESTS & RELATED PARTS

REF	FN	PART NUMBER	YR/SN	QTY	DESCRIPTION
28		9960692		AR	SPACER
29		85817477		1	TUBE, RIGID
30		9960803		1	PLATE LH
31		85817479		1	COVER LH
32		85817478		1	LEVER
33		9960797		1	SPRING
34	1	9967970		1	KIT
35		85817533		3	RIVET
36		85817534		1	SPINDLE

(1) Inlcudes 35, 36

855/ 1	02	p1	08/03

AIR RIDE CLOTH SEAT MOUNTING PLATE, ADJUSTING RAILS & 2" SEAT BELT

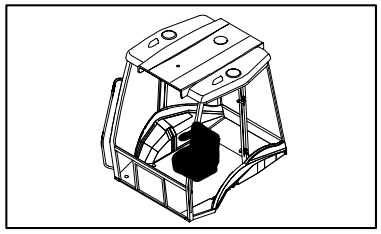

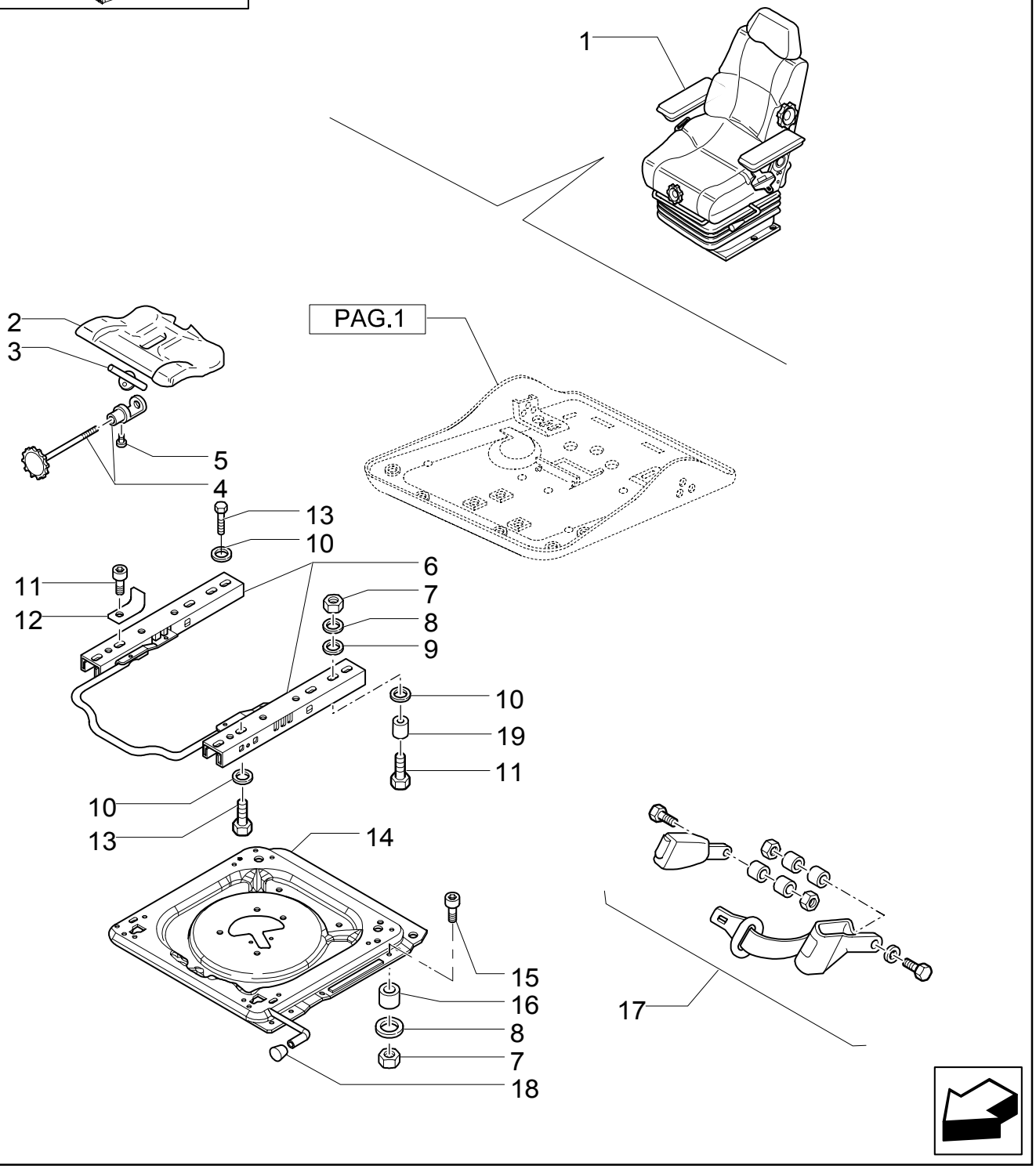

AIR RIDE CLOTH SEAT MOUNTING PLATE, ADJUSTING RAILS & 2" SEAT BELT

REF	FN	PART NUMBER	YR/SN	QTY	DESCRIPTION
1	1, 2	85821408		1	SEAT, DRIVER
2	3	71485488		1	CONTROL
3		85817463		1	PLATE
4	4	85817464		1	SPINDLE
5		9962962		1	SCREW M5X10
6		85817484		1	KIT
7		85817458		8	NUT
8		9960692		5	SPACER
9		9958776		8	SPACER
10		10519601		AR	WASHER
11		85817467		7	SCREW M8X20
12		85824204		1	BRACKET
13		14306321		AR	SCREW
14	5	85817483		1	FLOOR STAND
15		85817536		4	SCREW
16		85817456		4	TUBE, RIGID
17	2	85815578		1	SEAT BELT
18		85817482		1	PUSH BUTTON
19		85819813		1	BUSHING

(1) Consists Of Page 855/ 1 01, 855/ 1 03, 855/ 1 04, 855/ 1 05
(2) 2" SEAT BELT
(3) Includes 3, 4, 5
(4) Includes 3, 5
(5) Includes 18

855/ 1	03	p1	08/03

AIR RIDE CLOTH SEAT UPPER SUSPENSION PARTS

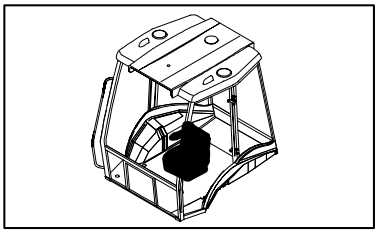

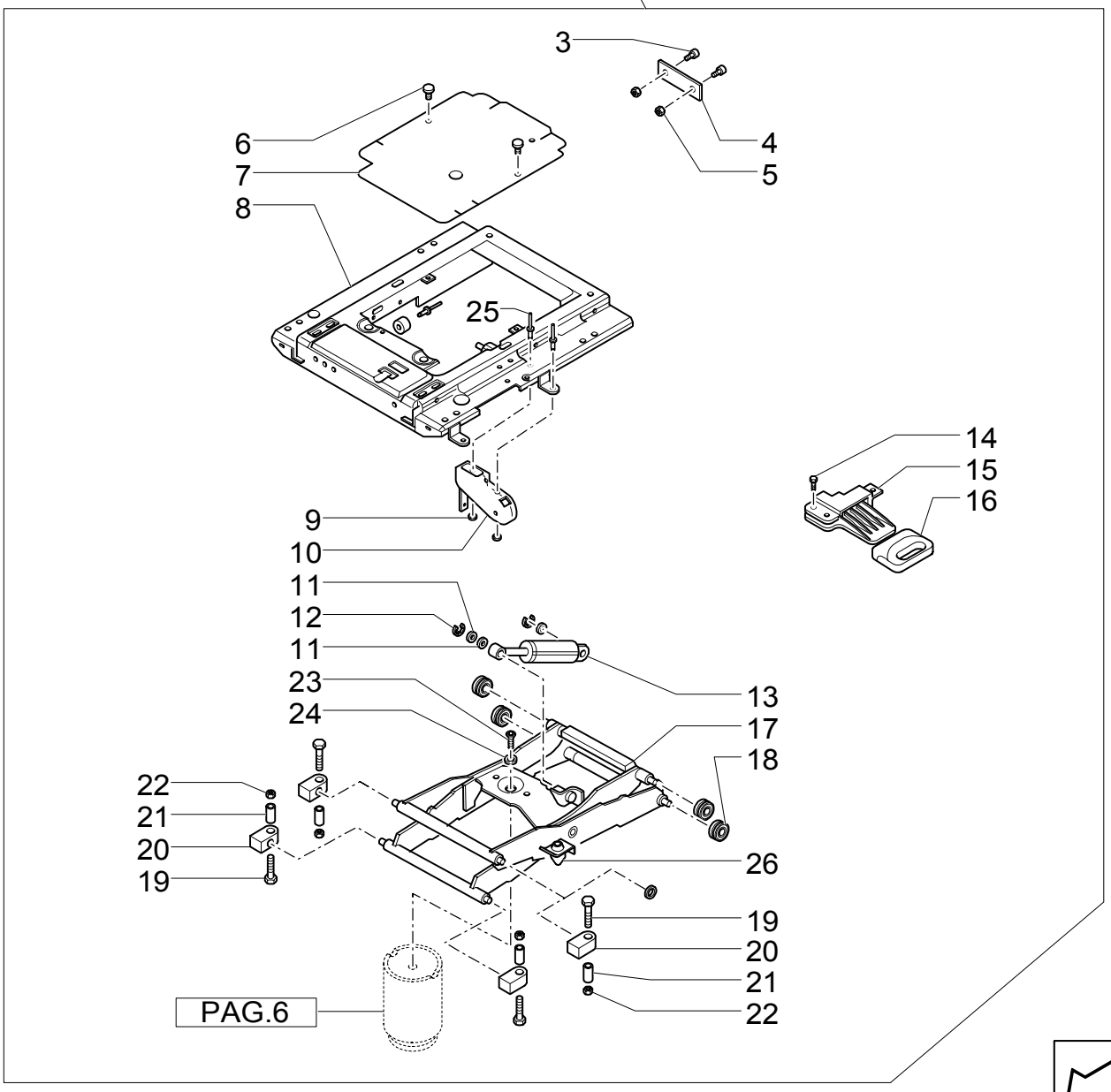

AIR RIDE CLOTH SEAT UPPER SUSPENSION PARTS

REF	FN	PART NUMBER	YR/SN	QTY	DESCRIPTION
1	1, 2	85821408		1	SEAT, DRIVER
1	3, 4	85821409		1	SEAT, DRIVER
2		85817529		1	SHOCK ABSORBER
3		9962736		2	SCREW
4		85817494		1	PLATE
5		85817458		2	NUT
6		14592587		2	SCREW
7	5	85817486		1	COVER
8	6	85817487		1	SHOCK ABSORBER
9		85817489		2	WASHER
10	7	85817490		1	ARM, TRIP
11		9961887		3	WASHER
12		85817496		2	WASHER
13	8	85817495		1	SHOCK ABSORBER
14		85819815		3	SCREW
15	9	85817493		1	CONTROL
16		85817492		1	HANDLE
17	10	85817497		1	DRAWBAR, SWINGING
18		71485474		4	NEEDLE ROLLER
19		85817499		4	SCREW
20		85817498		4	BEARING ASSY
21		9962749		4	PIN
22		85817459		4	NUT
23		9968924		1	SCREW
24		10519601		2	WASHER
25		85817488		2	RIVET

(1) Consists Of Page 855 / 1 01, 855/ 1 02, 855/ 1 04, 855/ 1 05
(2) 2" SEAT BELT
(3) 3" SEAT BELT
(4) Consists Of Page 855/ 1 01, 855/ 2 02, 855/ 1 04, 855/ 1 05
(5) Includes 6
(6) Includes 9, 10, 18, Also Page 855/ 1 04 Ref. 4
(7) Includes 9, 25
(8) Includes 9, 10, 12, Also Page 855/ 1 04 Ref. 4
(9) Includes 6, 14, 16
(10) Includes 18, 20 to 24, 26, Also Page 855/ 1 05 Ref. 5, 6, 10

855/ 1	03	p2	08/03

AIR RIDE CLOTH SEAT UPPER SUSPENSION PARTS

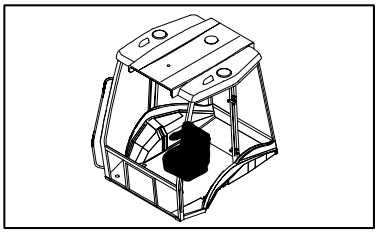

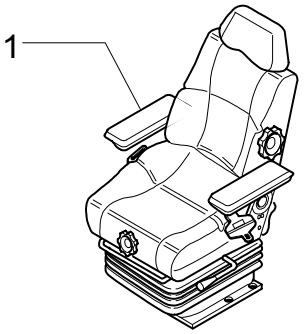

2 SEE ALSO PAG.5-6-7

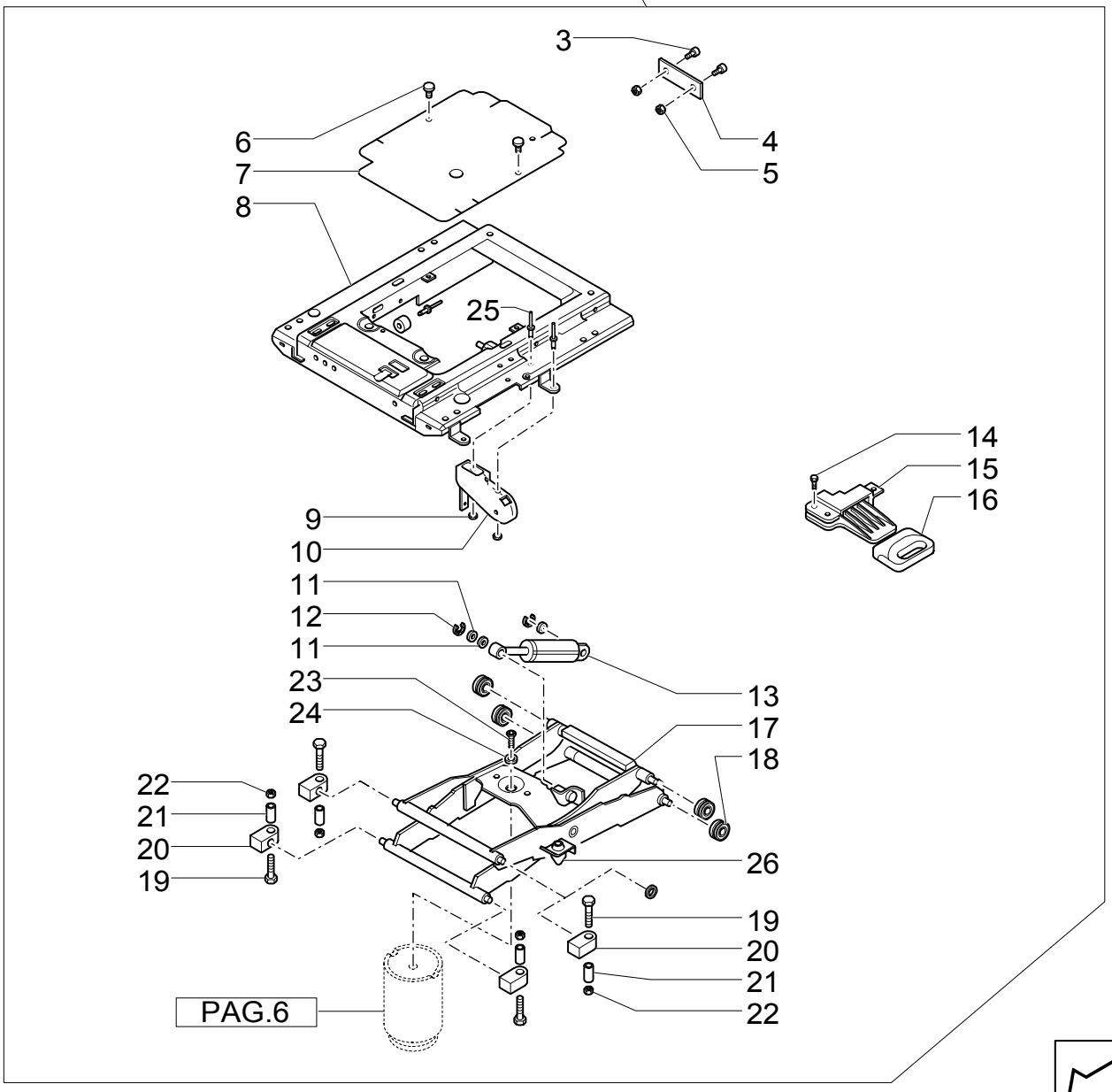

AIR RIDE CLOTH SEAT UPPER SUSPENSION PARTS

REF	FN	PART NUMBER	YR/SN	QTY	DESCRIPTION
26		71485476		2	BUMPER, RUBBER

855/ 1	04	p1	08/03

AIR RIDE CLOTH SEAT LOWER SUSPENSION PARTS

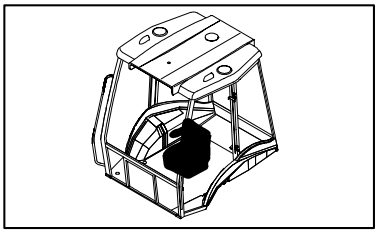

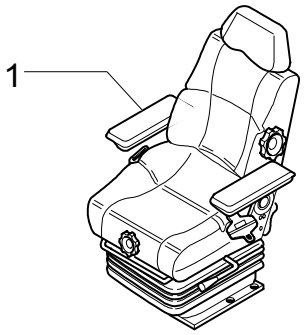

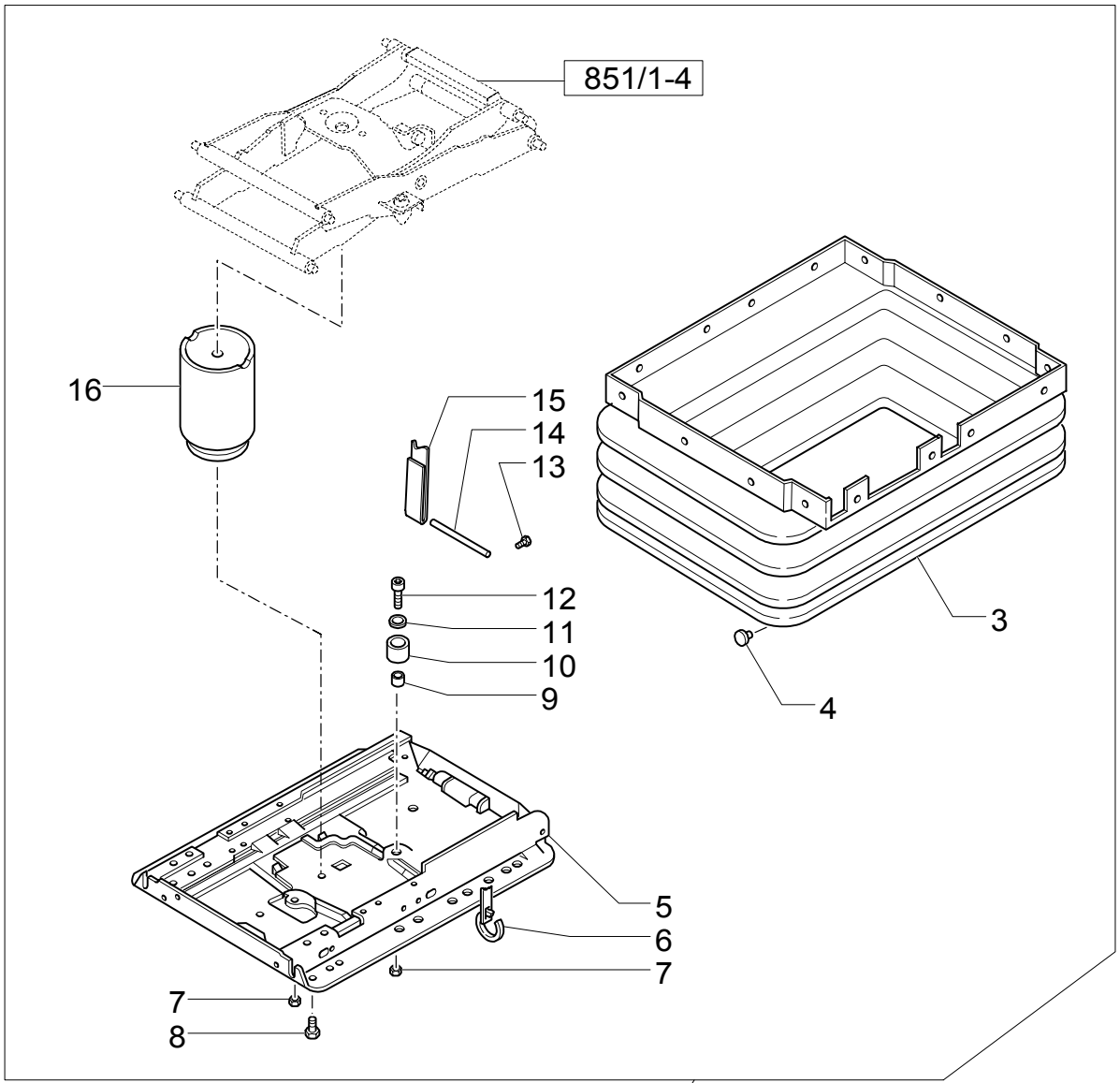

2 SEE ALSO PAG.4-5-7

AIR RIDE CLOTH SEAT LOWER SUSPENSION PARTS

REF	FN	PART NUMBER	YR/SN	QTY	DESCRIPTION
1	1, 2	85821408		1	SEAT, DRIVER
1	3, 4	85821409		1	SEAT, DRIVER
2		85817529		1	SHOCK ABSORBER
3	5	85817527		1	BELLOWS
4		14592587		22	SCREW
5	6	85817526		1	SHOCK ABSORBER
6		9968911		AR	COLLAR
7		85817459		2	NUT
8		9968924		1	SCREW M8X20
9		85817525		1	TUBE, RIGID
10	7	85817523		1	GUARD
11		10519601		1	WASHER
12		85817524		1	SCREW M8X20
13		9962962		1	SCREW
14		85817513		1	BOLT
15		85817512		1	SOFT TRIM
16		85817500		1	SHOCK ABSORBER

(1) Consists Of Page 855/ 1 01, 855/ 1 02, 855/ 1 03, 855/ 1 05
(2) 2" SEAT BELT
(3) 3" SEAT BELT
(4) Consists Of Page 855/ 1 01, 855/ 2 02, 855/ 1 03, 855/ 1 05
(5) Includes 4
(6) Includes 4, 6, 10, Also Page 855/ 1 03 Ref. 18, 20, 22, 23, Also Page 855/ 1 05 Ref. 10
(7) Includes 9, 12, Also Page 855/ 1 03 Ref. 24

855/ 1	05	p1	08/03

AIR RIDE CLOTH SEAT COMPRESSOR & TUBING

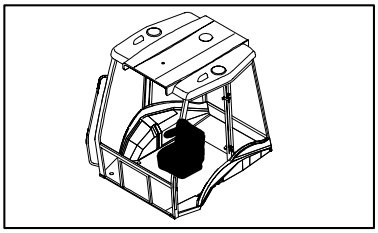

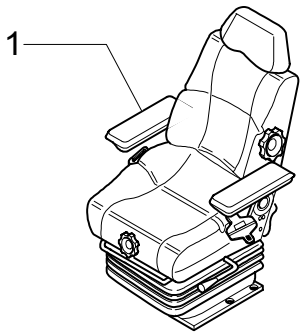

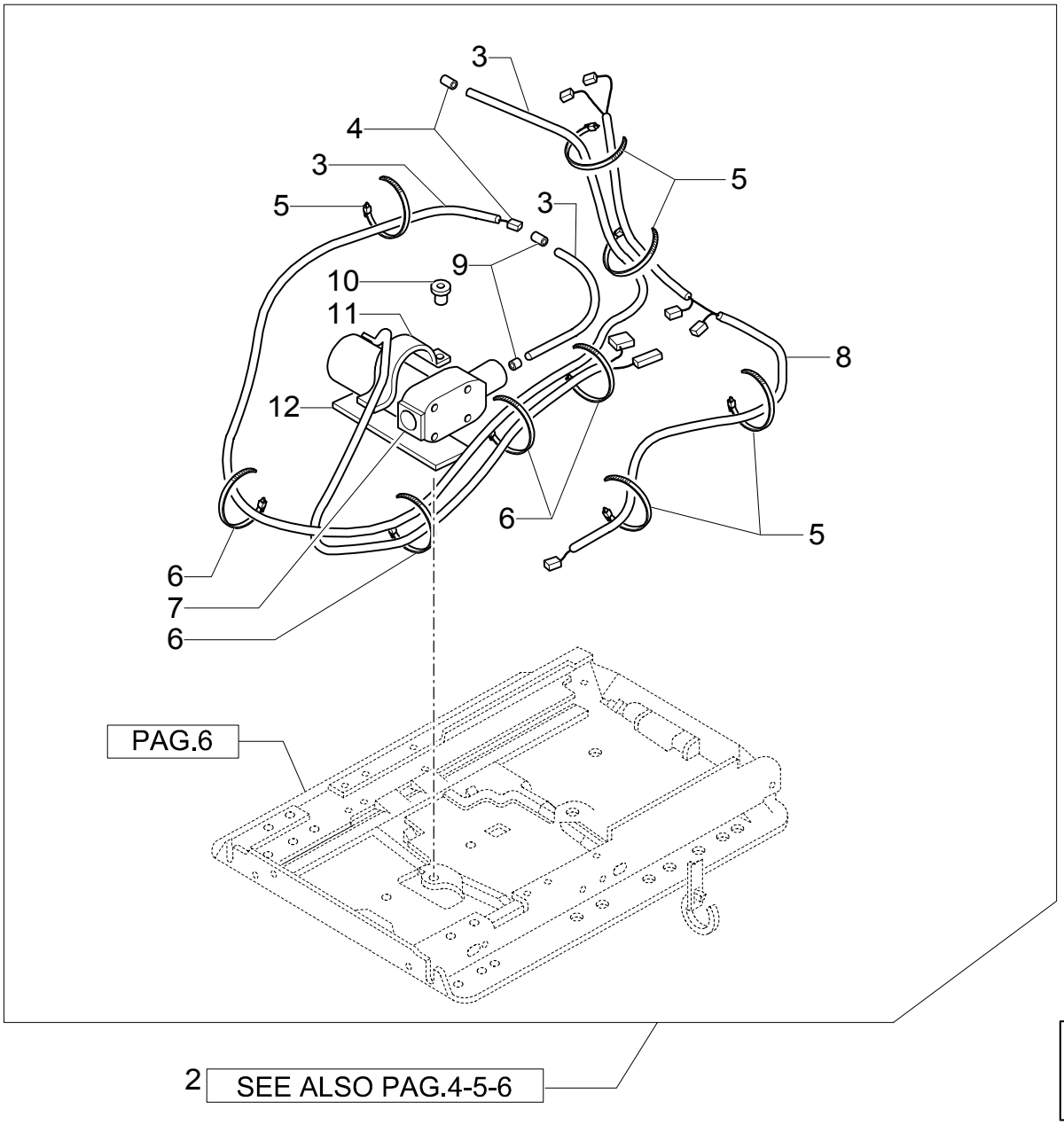

2 SEE ALSO PAG.4-5-6

AIR RIDE CLOTH SEAT COMPRESSOR & TUBING

REF	FN	PART NUMBER	YR/SN	QTY	DESCRIPTION
1	1, 2	85821408		1	SEAT, DRIVER
1	3, 4	85821409		1	SEAT, DRIVER
2		85817529		1	SHOCK ABSORBER
3	5	85817521		1	TUBE, RIGID
4		85817514		2	HOSE, FLEXIBLE
5		9968911		AR	COLLAR
6		85817515		4	CLAMP, WIRE
7	6	9968633		1	KIT
8	7	85819814		1	CABLE
9		9962741		2	COLLAR
10		85817516		1	SCREW
11		85817517		1	ARMREST
12		9971526		1	PLATE

(1) Consists Of Page 855 / 1 01, 855/ 1 02, 855/ 1 04, 855/ 1 05
(2) 2" SEAT BELT
(3) 3" SEAT BELT
(4) Consists Of Page 855/ 1 01, 855/ 2 02, 855/ 1 03, 855/ 1 04
(5) Includes 4, 5, 6, 9, Also Page 855/ 1 04 Ref. 4
(6) Includes 5, 6, 9 to 12, Also Page 855/ 1 03 Ref. 22, Also Page 855/ 1 04 Ref. 4
(7) Includes 5, 6, Also Page 855/ 1 04 Ref. 4

855/ 2	02	p1	08/03

AIR RIDE CLOTH SEAT MOUNTING PLATE, ADJUSTING RAILS & 3" SEAT BELT

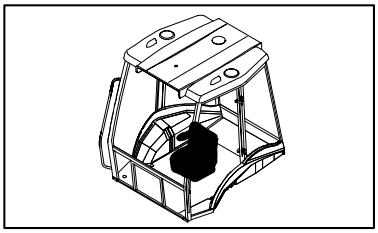

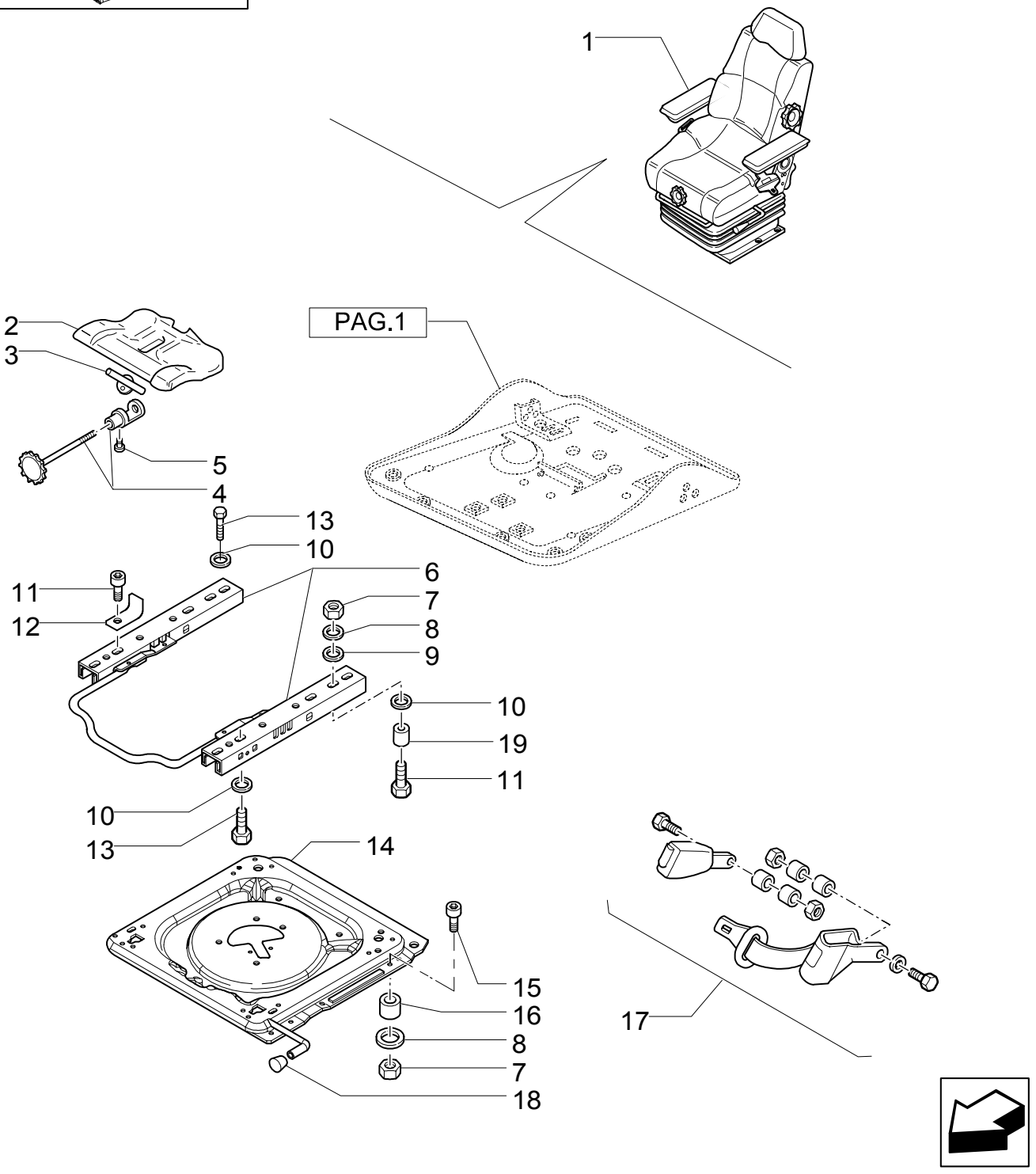

AIR RIDE CLOTH SEAT MOUNTING PLATE, ADJUSTING RAILS & 3" SEAT BELT

REF	FN	PART NUMBER	YR/SN	QTY	DESCRIPTION
1	1, 2	85821409		1	SEAT, DRIVER
2	3	71485488		1	CONTROL
3		85817463		1	PLATE
4	4	85817464		1	SPINDLE
5		9962962		1	SCREW M5X10
6		85817484		1	KIT
7		85817458		8	NUT
8		9960692		5	SPACER
9		9958776		8	SPACER
10		10519601		AR	WASHER
11		85817467		7	SCREW M8X20
12		85824204		1	BRACKET
13		14306321		AR	SCREW
14	5	85817483		1	FLOOR STAND
15		85817536		4	SCREW
16		85817456		4	TUBE, RIGID
17	2	85815579		1	SEAT BELT
18		85817482		1	PUSH BUTTON
19		85819813		1	BUSHING

(1) Consists Of Page 855/ 1 01, 855/ 1 03, 855/ 1 04, 855/ 1 05
(2) 3" SEAT BELT
(3) Includes 3, 4, 5
(4) Includes 3, 5
(5) Includes 18

856	01	p1	05/03

VINYL SEAT CUSHIONS, ARMRESTS & RELATED PARTS (ROPS)

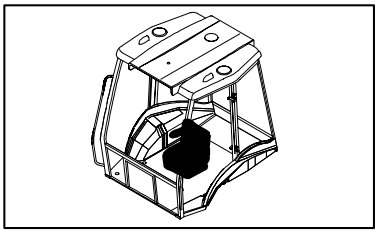

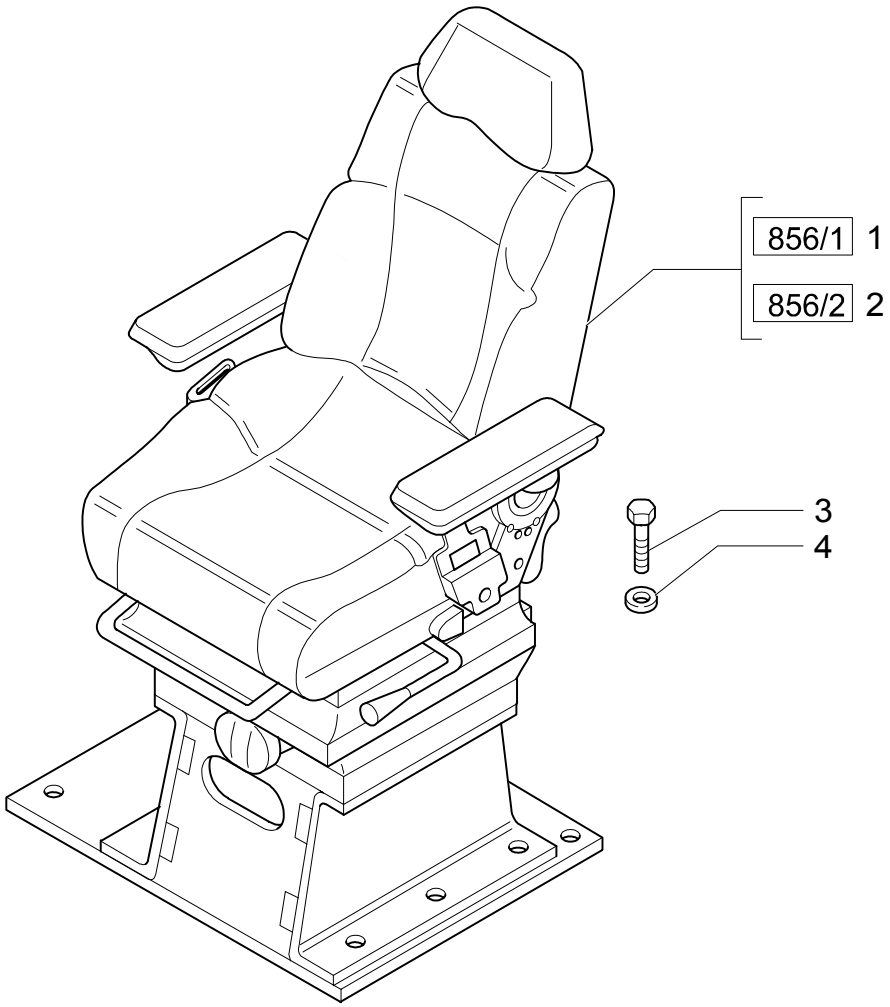

VINYL SEAT CUSHIONS, ARMRESTS & RELATED PARTS (ROPS)

REF	FN	PART NUMBER	YR/SN	QTY	DESCRIPTION
1	1, 2	85821402		1	SEAT, DRIVER 2" SEAT BELT
2	3, 4	85821403		1	SEAT, DRIVER 3" SEAT BELT
3		16043424		8	SCREW Cap, HH, CL 8.8, M8X1.25X20
4		11198074		8	WASHER, SEALING

(1) Consists Of Page 856/ 1 01 to 856/ 1 04
(2) 2" SEAT BELT
(3) Consists Of Page 856/ 1 01, 856/ 2 02, 856/ 1 03, 856/ 1 04
(4) 3" SEAT BELT

856/ 1	01	p1	08/03

VINYL SEAT WITH ARMRESTS & MOUNTING HARDWARE (ROPS)

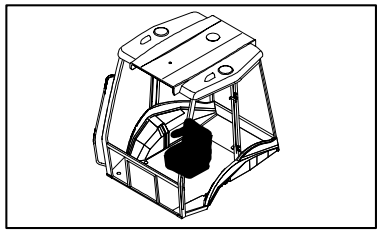

VINYL SEAT WITH ARMRESTS & MOUNTING HARDWARE (ROPS)

REF	FN	PART NUMBER	YR/SN	QTY	DESCRIPTION
1	1, 2	85821402		1	SEAT, DRIVER
1	3, 4	85821403		1	SEAT, DRIVER
2		85817562		1	HEADREST, SEAT
3		85817563		1	SEAT, BACK Cap, HH, CL 8.8, M8 x 1.25 x 20
4		85817564		1	CUSHION, SEAT
5	5	85817481		1	BOX
6		85817480		4	SCREW
7		9958845		2	BUSHING
8	6	85817485		1	SEAT, BACK
9	7	85817453		1	ARMREST
10	8	85817462		1	ARMREST
11		10519601		AR	WASHER
12		85817459		2	NUT
13		16043224		1	SCREW
14		13838071		1	SCREW
15		85817466		1	COVER
16		85817467		AR	SCREW
17		85817468		1	SCREW 7/16"-20UNF x 60.0
18		85817470		1	PLATE, COVER
19		9960795		1	PLATE
20		9960793		1	SPRING
21		85817469		1	BUSHING
22		85817471		1	SCREW
23		85821419		1	SUPPORT
24		85817476		1	PLATE
25		85817460		1	LEVER
26		85821418		1	STOP DEVICE
27		15213321		1	SCREW

(1) Consists Of Page 856/ 1 02, 856/ 1 03, 856/ 1 04
(2) 2" SEAT BELT
(3) Consists Of Page 856/ 2 02, 856/ 1 03, 856/ 1 04
(4) 3" SEAT BELT
(5) Includes 6
(6) Includes 7, 21, 34, 35, 36
(7) Includes 11, 12, 13
(8) Includes 11, 12, 14

856/ 1	01	p2	08/03

VINYL SEAT WITH ARMRESTS & MOUNTING HARDWARE (ROPS)

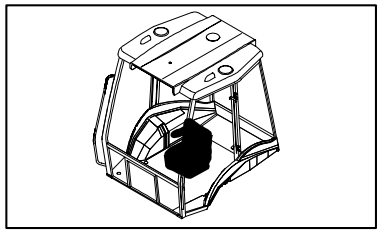

VINYL SEAT WITH ARMRESTS & MOUNTING HARDWARE (ROPS)

REF	FN	PART NUMBER	YR/SN	QTY	DESCRIPTION
28		9960692		AR	SPACER
29		85817477		1	TUBE, RIGID
30		9960803		1	PLATE
31		85817479		1	COVER
32		85817478		1	LEVER
33		9960797		1	SPRING

856/ 1	02	p1	08/03

VINYL SEAT MOUNTING PLATE, ADJUSTING RAILS & 2" SEAT BELT (ROPS)

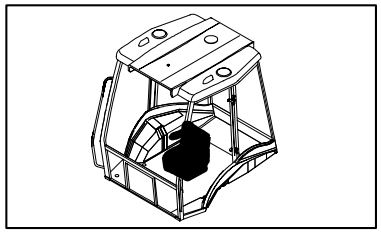

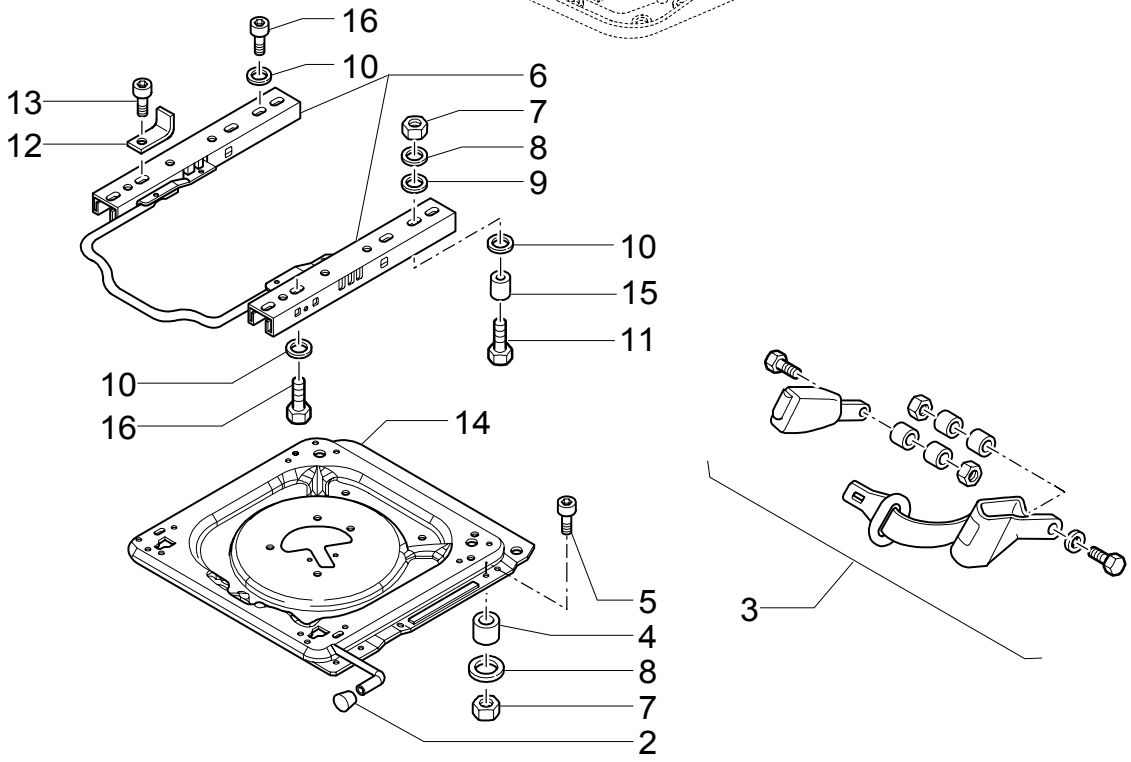

VINYL SEAT MOUNTING PLATE, ADJUSTING RAILS & 2" SEAT BELT (ROPS)

REF	FN	PART NUMBER	YR/SN	QTY	DESCRIPTION
1	1, 2	85821402		1	SEAT, DRIVER
2		85817482		1	PUSH BUTTON
3	1	85815578		1	SEAT BELT
4		85817456		4	TUBE, RIGID
5		85817465		4	SCREW M8X40
6		85817484		1	KIT
7		85817458		8	NUT
8		9960692		10	SPACER
9		9958776		8	SPACER
10		10519601		AR	WASHER
11		85817467		8	SCREW M8X20
12		85824204		1	BRACKET
13		85817467		AR	SCREW M8X25
14	3	85817483		1	FLOOR STAND
15		85819813		1	BUSHING
16		14306321		4	SCREW M8X20

(1) 2" SEAT BELT
(2) Consists Of Page 856/ 1 01, 856/ 1 03, 856/ 1 04
(3) Includes 18

856/ 1	03	p1	08/03

VINYL SEAT UPPER SUSPENSION PARTS (ROPS)

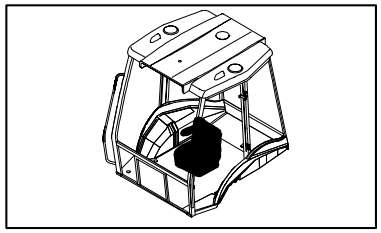

VINYL SEAT UPPER SUSPENSION PARTS (ROPS)

REF	FN	PART NUMBER	YR/SN	QTY	DESCRIPTION
1	1, 2	85821402		1	SEAT, DRIVER
1	3, 4	85821403		1	SEAT, DRIVER
2		85817556		1	SHOCK ABSORBER
3		85817450		1	PLATE
4		85817444		4	SCREW M6X16
5	5	9967960		2	SEAT, DRIVER
6		85817445		2	BUSHING
7		85817429		1	BOLT
8		11088076		1	RING, LOCKING
9		9958784		4	SPACER
10		85817442		2	BUSHING
11		9958782		1	PLATE, COVER
12		85817430		2	SPRING
13		9958792		2	PLATE, COVER
14		9958793		1	BOLT
15	6	85817446		1	SHOCK ABSORBER
16		9960755		2	BUSHING
17		85817448		2	RIVET
18		85817449		2	PLATE
19	7	85817447		1	SOFT TRIM
20		85817428		1	BELLOWS
21		85817561		1	DASHBOARD
22		85817559		2	BOLT
23		85817560		2	WASHER
24		85817558		1	DASHBOARD
25		85817458		4	NUT M8
26		10519601		4	WASHER 8X17
27		14306321		4	SCREW M8X20

(1) 2" SEAT BELT
(2) Consists Of Page 856/ 1 01, 856/ 1 02, 856/ 1 04
(3) 3" SEAT BELT
(4) Consists Of Page 856/ 1 01, 856/ 2 02, 856/ 1 04
(5) Includes 4, 6
(6) Includes 7, 9, 10 to 14, 16, Also Page 856/ 1 04 Ref. 3, 4, 5
(7) Includes 17, 18

856/ 1	04	p1	08/03

VINYL SEAT LOWER SUSPENSION PARTS (ROPS)

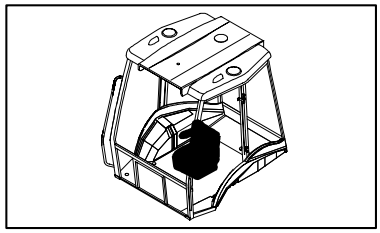

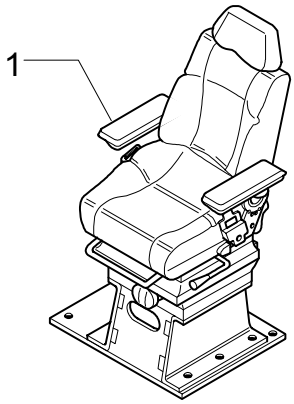

2 SEE ALSO PAG.4-5

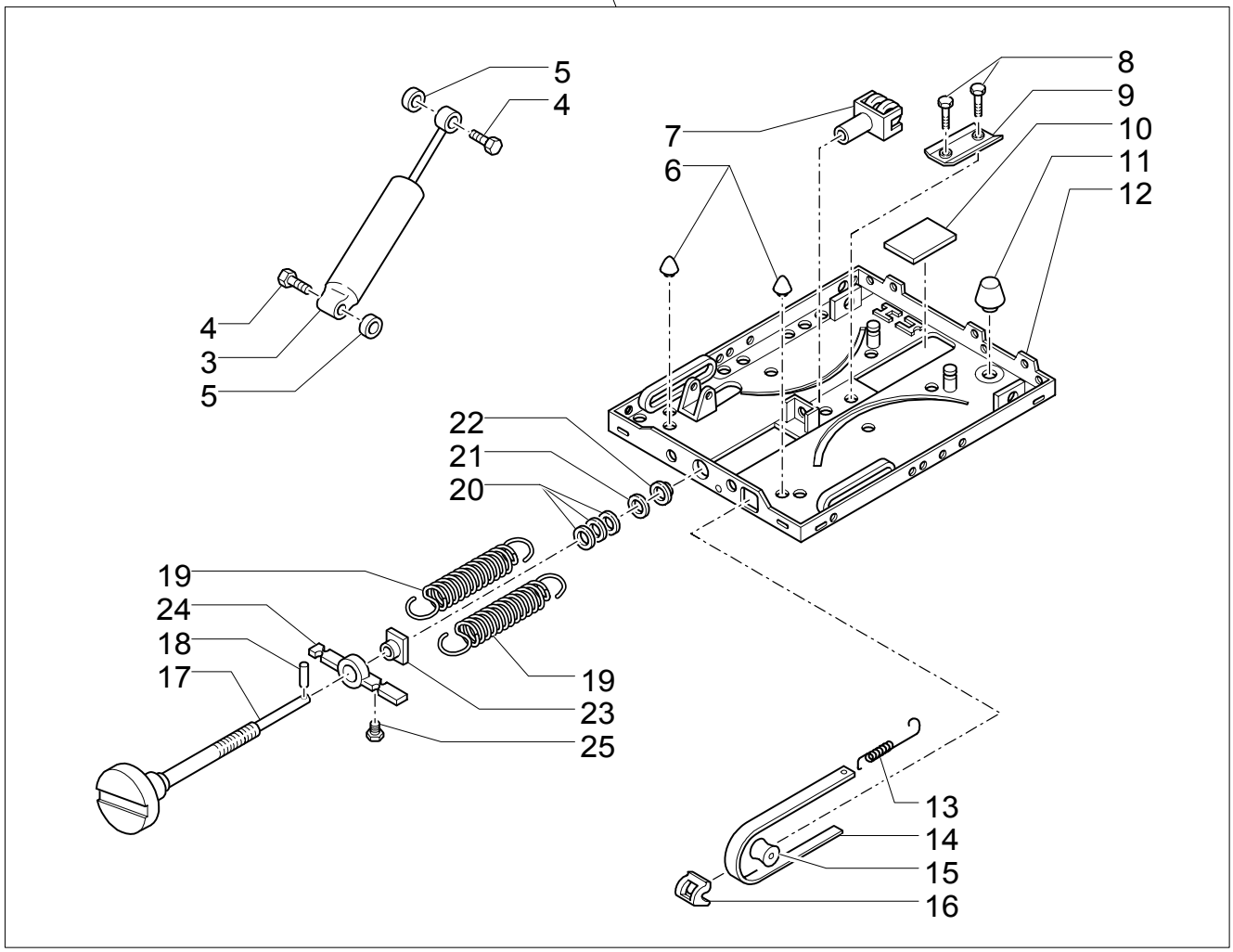

VINYL SEAT LOWER SUSPENSION PARTS (ROPS)

REF	FN	PART NUMBER	YR/SN	QTY	DESCRIPTION
1	1, 2	85821402		1	SEAT, DRIVER
1	3, 4	85821403		1	SEAT, DRIVER
2		85817556		1	SHOCK ABSORBER
3	5	85817431		1	SHOCK ABSORBER
4		9959588		2	BOLT
5		85817432		2	WASHER
6		85817440		2	GUARD
7		9960736		1	YOKE
8		9959585		2	PLUG
9	6	9960767		1	CLIP
10		9959580		1	PLATE, COVER
11		85817441		1	GUARD
12	7	85817436		1	SUSPENSION
13		9958790		1	SPRING
14		85817443		1	GAUGE, LEVEL
15		9958785		1	NEEDLE ROLLER
16		9958786		1	GUARD
17	8	85817451		1	REGULATING SYSTEM
18		85817433		1	DOWEL
19		85817434		2	SPRING
20		9958800		1	WASHER
21		9958788		1	O-RING
22		85817435		1	BUSHING
23		9959583		1	NUT
24		9959577		1	PLATE, FIXING
25		9958789		1	PLUG

(1) 2" SEAT BELT
(2) Consists Of Page 856/ 1 01, 856/ 1 02, 856/ 1 03
(3) 3" SEAT BELT
(4) Consists Of Page 856/ 1 01, 856/ 2 02, 851/ 1 03
(5) Includes 4, 5
(6) Includes 8
(7) Includes 6, 8 to 11
(8) Includes 13, 15 16, 25

856/ 2	02	p1	08/03

VINYL SEAT MOUNTING PLATE, ADJUSTING RAILS & 3" SEAT BELT (ROPS)

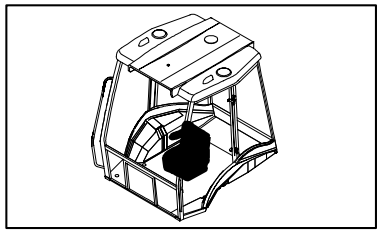

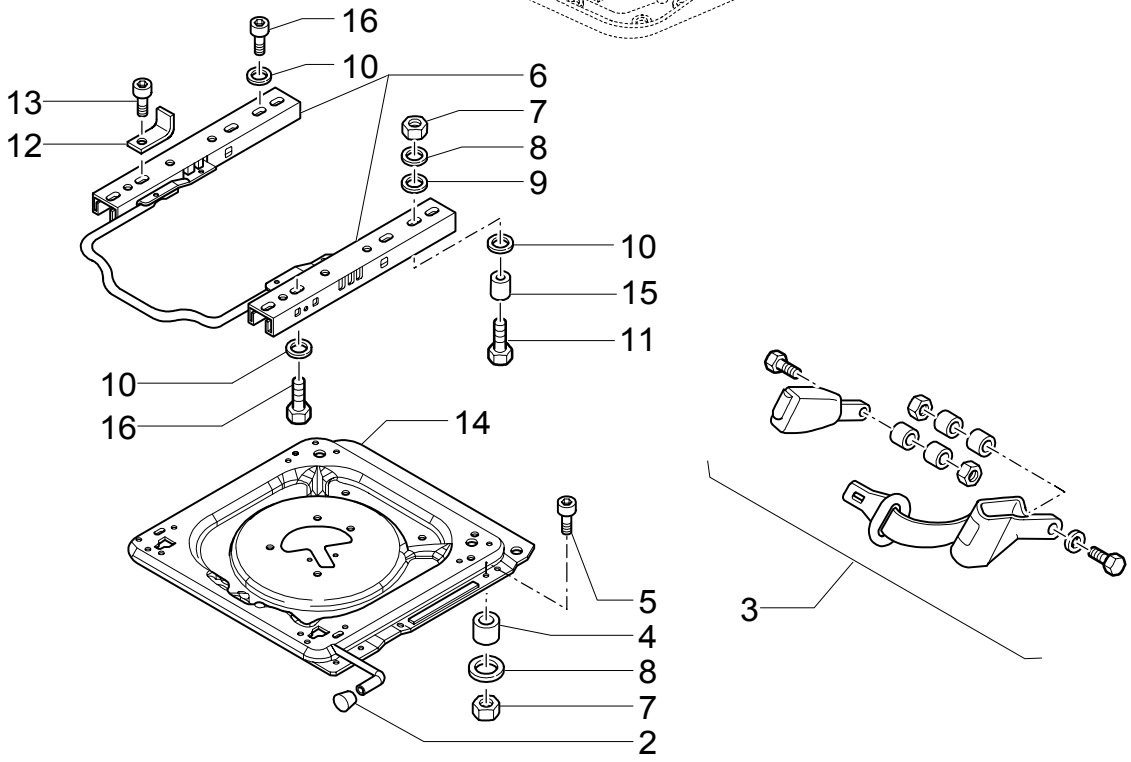

VINYL SEAT MOUNTING PLATE, ADJUSTING RAILS & 3" SEAT BELT (ROPS)

REF	FN	PART NUMBER	YR/SN	QTY	DESCRIPTION
1	1, 2	85821403		1	SEAT, DRIVER
2		85817482		1	PUSH BUTTON
3	1	85815579		1	SEAT BELT
4		85817456		4	TUBE, RIGID
5		85817465		4	SCREW M8X40
6		85817484		1	KIT
7		85817458		8	NUT
8		9960692		10	SPACER
9		9958776		8	SPACER
10		10519601		AR	WASHER
11		85817467		8	SCREW M8X20
12		85824204		1	BRACKET
13		85817467		AR	SCREW M8X25
14	3	85817483		1	FLOOR STAND
15		85819813		1	BUSHING
16		14306321		4	SCREW M8X20

(1) 3" SEAT BELT
(2) Consists Of Page 856/ 1 01, 856/ 1 03, 856/ 1 04
(3) Includes 18

869	01	p1	11/03

NON-SUSPENSION SEAT

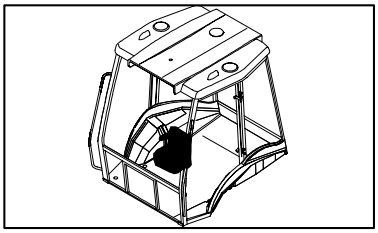

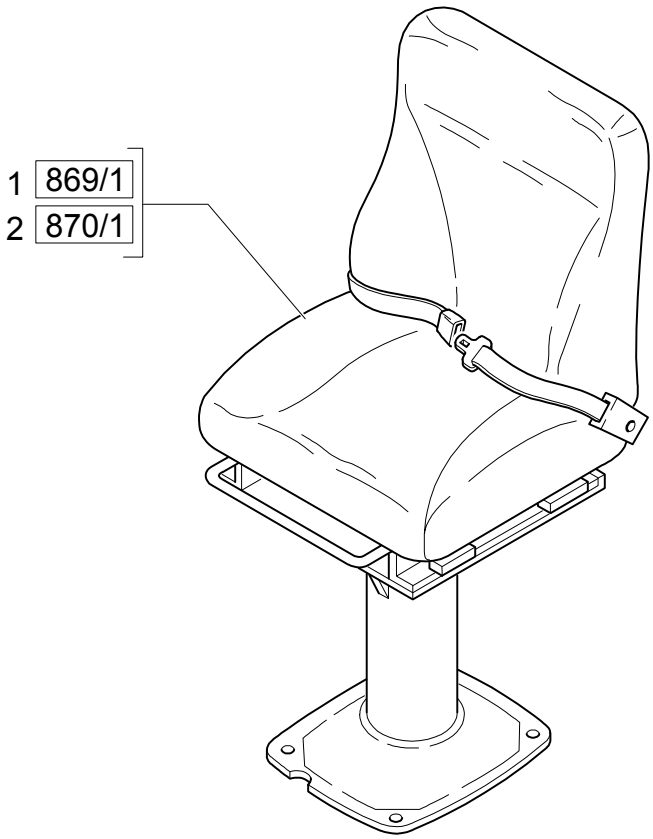

NON-SUSPENSION SEAT

REF	FN	PART NUMBER	YR/SN	QTY	DESCRIPTION
1	1, 2	85818929		1	SEAT, DRIVER
2	3, 4	85818930		1	SEAT, DRIVER

(1) 2" SEAT BELT
(2) Consists Of Page 869/ 1 01, 869/ 1 02, 869/ 1 03
(3) 3" SEAT BELT
(4) Consists Of Page 870/ 1 01, 869/ 1 02, 869/ 1 03

869/ 1	01	p1	08/03

NON-SUSPENSION SEAT CUSHIONS, RELATED PARTS & 2" SEAT BELT

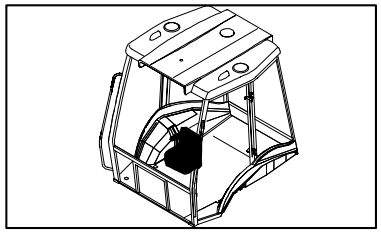

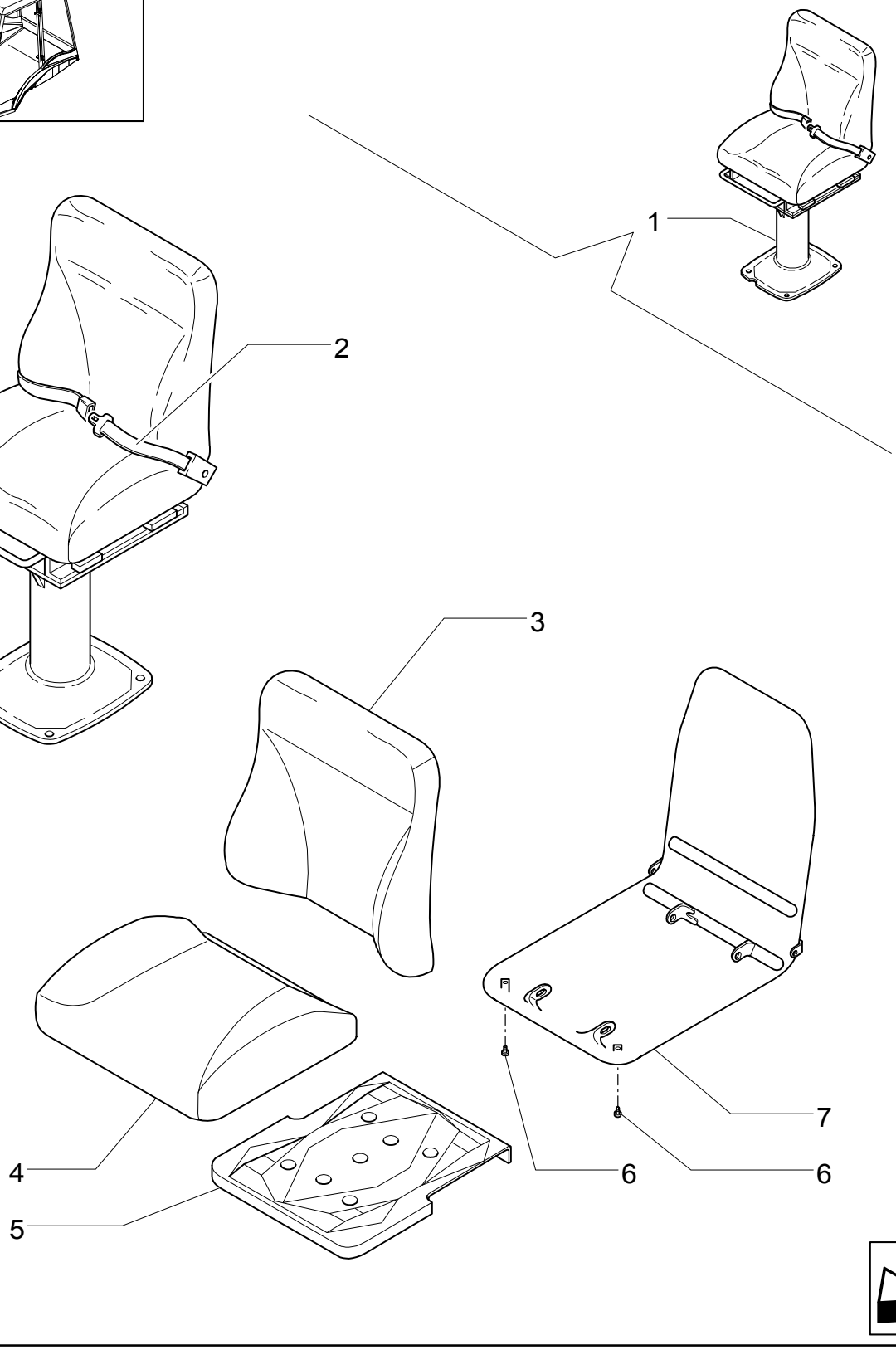

NON-SUSPENSION SEAT CUSHIONS, RELATED PARTS & 2" SEAT BELT

REF	FN	PART NUMBER	YR/SN	QTY	DESCRIPTION
1	1, 2	85818929		1	SEAT, DRIVER
2	1	85815578		1	SEAT BELT
3		85818977		1	SEAT, BACK
4		85818976		1	CUSHION, SEAT
5		85818968		1	HOLDER
6		85818978		2	SCREW
7		85818975		1	FRAME

(1) 2" SEAT BELT
(2) Consists Of Page 869/ 1 02, 869/ 1 03

869/ 1	02	p1	08/03

NON-SUSPENSION SEAT ADJUSTING MECHANISM

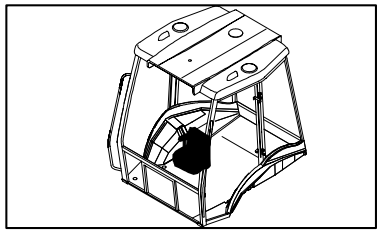

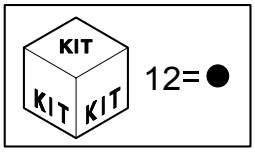

NON-SUSPENSION SEAT ADJUSTING MECHANISM

REF	FN	PART NUMBER	YR/SN	QTY	DESCRIPTION
1	1, 2	85818929		1	SEAT, DRIVER
1	3, 4	85818930		1	SEAT, DRIVER
2		85818964		2	SCREW M10
3		85818965		2	NUT M10
4		85820178		10	NUT
5		85818969		1	BODY
6		85818966		2	KNOB
7		85818967		2	PIN, LOCK
8		85818968		6	HOLDER
9		85818958		2	NUT M8
10		85820177		6	SCREW
11		85820176		4	SCREW
12		85820175		1	GUIDE
13		85818959		2	WASHER, SEALING
14		85820179		2	GUIDE

(1) 2" SEAT BELT
(2) Consists Of Page 869/ 1 01, 869/ 1 03
(3) 3" SEAT BELT
(4) Consists Of Page 870/ 1 01, 869/ 1 03

869/ 1	03	p1	08/03

NON-SUSPENSION SEAT PEDESTAL & BASE

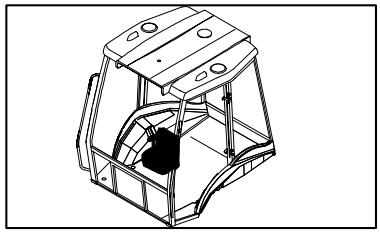

NON-SUSPENSION SEAT PEDESTAL & BASE

REF	FN	PART NUMBER	YR/SN	QTY	DESCRIPTION
1	1, 2	85818929		1	SEAT, DRIVER
1	3, 4	85818930		1	SEAT, DRIVER
2		85818956		1	NUT M16X1,5
3		85818957		2	SPRING 60X20,4X2,5
4		85818955		1	PIN, SPLIT (COTTER)
5		85818954		1	WASHER, SEALING 17X30
6		85818953		1	WASHER, SEALING 16,2X30X1,5
7		85818958		1	NUT M8
8		85818959		1	WASHER, SEALING
9		85818960		1	LEVER
10		85818963		1	SHIELD
11		85818961		1	SPRING
12		85818962		1	PIN, LOCK M8X35
13		85818952		1	PLATE, RETAINING
14		85818950		1	SEAL
15		85818949		36	BALL
16		85818951		1	HOLDER
17		85819643		4	SCREW M10X25
18		85818946		1	PLATE
19		85819644		4	NUT

(1) 2" SEAT BELT
(2) Consists Of Page 869/ 1 01, 869/ 1 02
(3) 3" SEAT BELT
(4) Consists Of Page 870/ 1 01, 869/ 1 02

870/ 1	01	p1	08/03

NON-SUSPENSION SEAT CUSHIONS, RELATED PARTS & 3" SEAT BELT

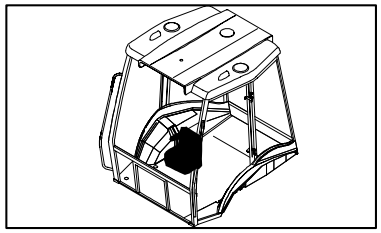

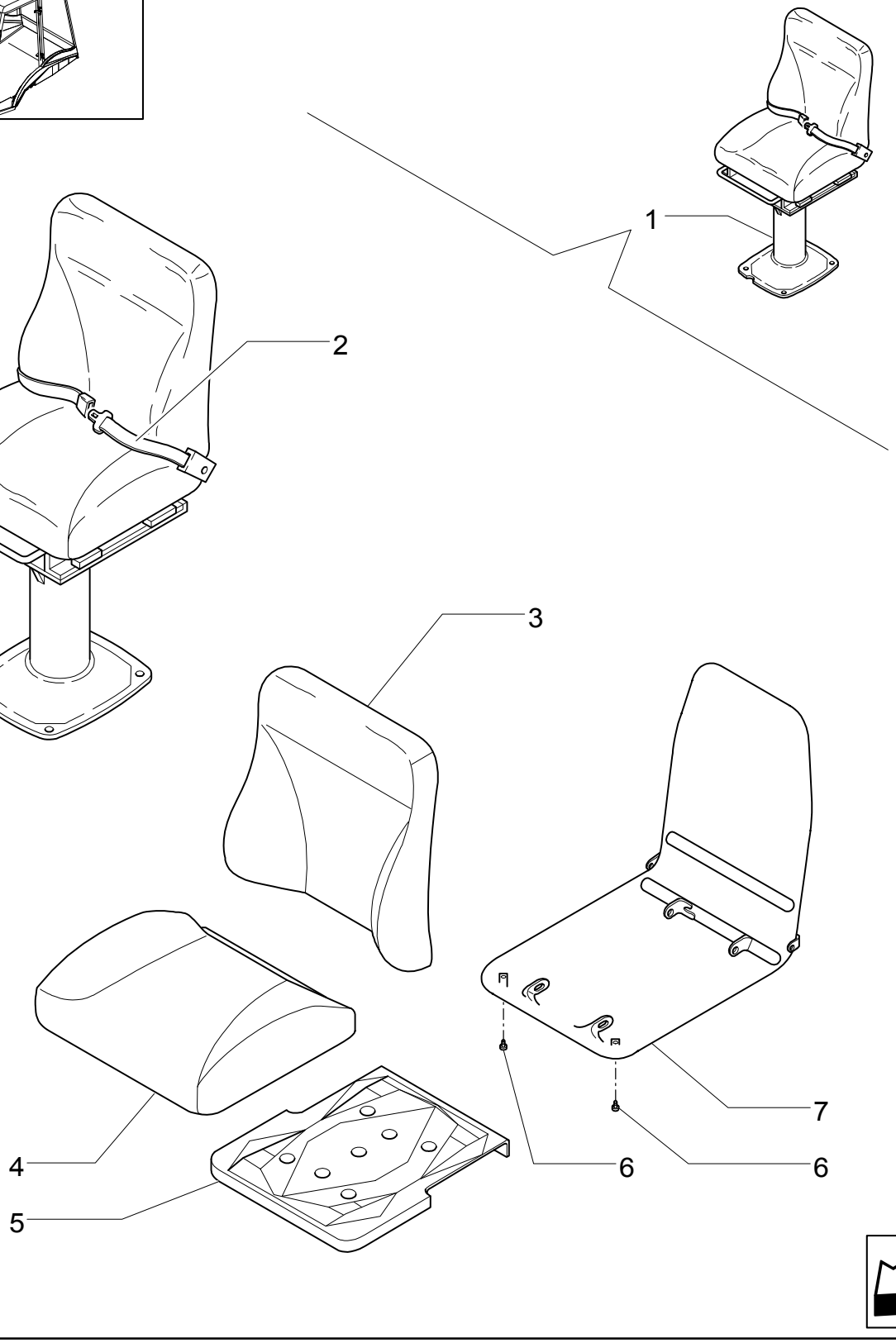

NON-SUSPENSION SEAT CUSHIONS, RELATED PARTS & 3" SEAT BELT

REF	FN	PART NUMBER	YR/SN	QTY	DESCRIPTION
1	1, 2	85818930		1	SEAT, DRIVER
2	1	85815579		1	SEAT BELT
3		85818977		1	SEAT, BACK
4		85818976		1	CUSHION, SEAT
5		85818968		1	HOLDER
6		85818978		2	SCREW
7		85818975		1	FRAME

(1) 3" SEAT BELT
(2) Consists Of Page 869/ 1 02, 869/ 1 03

990	01	p1	11/03

TOOL KIT

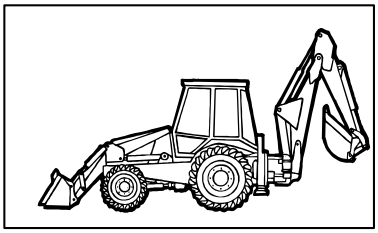

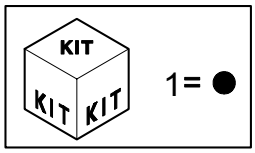

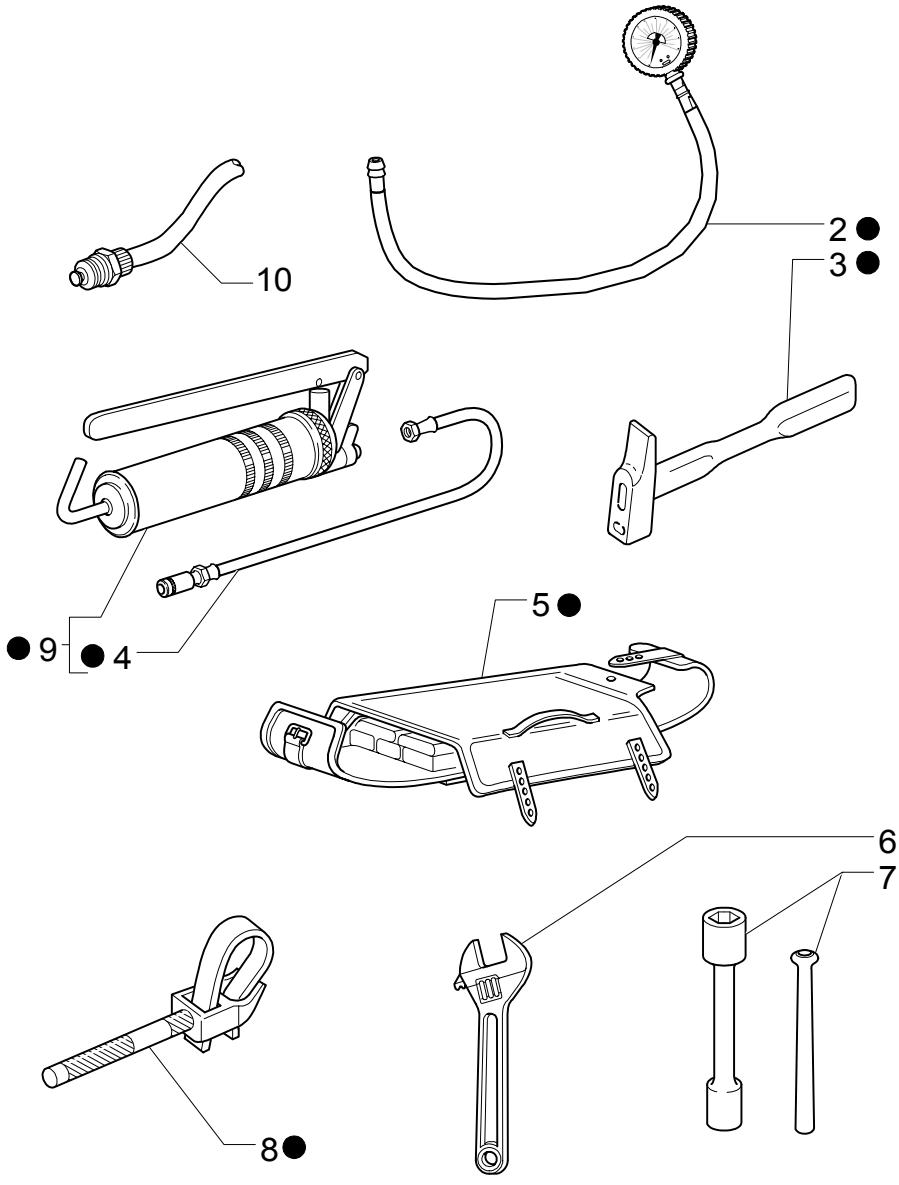

TOOL KIT

REF	FN	PART NUMBER	YR/SN	QTY	DESCRIPTION
1		85803394		1	TOOL, SPECIAL
2		85803396		1	INSTRUMENT, MEASURING
3		14582790		1	HAMMER
4		79028981		1	HOSE, FLEXIBLE
5		79062734		1	TOOL BAG
6		71431438		1	KEY, LOCK
7		85803395		1	SPANNER, BOX
8		71304923		1	KEY, LOCK
9		79028977		1	PUMP, HYDRAULIC
10		{85826260}		1	VALVE, HYDRAULIC

SECTION INDEX

SEC. 11	00	WHEELS
81.00	01	FRONT WHEELS, 2WD
82.00	01	DRIVING WHEELS(4WD)
83.00	01	DRIVE WHEELS

WHEELS

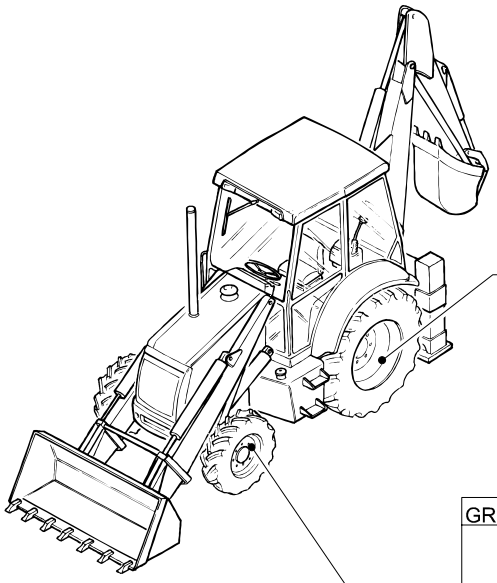

GROUP	EQUIP	TIRE SIZE	RIM
83.00	83.52	16.9 - 28 R4 - 8PR	W15LX 28
	83.62	16.9 - 28 R4 - 10PR	W15LX 28
	83.64	16.9 - 24 R4 - 10PR	W15LX 24
	83.65	17.5 - L24 R4 - 10PR	W15LX 24
	83.91	19.5 - 24 R4 - 10PR	W16LX 24
	83.92	18.4 - 26 R4 - 12PR	DW16 X 26
	83.93	18.4 - 26 R1 - 12PR	DW16 X 26
	83.92	21L24 R4 - 10PR	W18L X24
	83.93	19,5 x 24 "JUMBO NJLK"	W16L X24

GROUP	EQUIP	TIRE SIZE	RIM
82.00	82.75	14 -17.5NHS - 8PR	10.5 X 17.5
	82.76	12 -16.5NHS -8PR	9,75 X 16,5
	82.78	10.5/80 -18I3 - 10PR	9 X 18
	82.79	12.5/80 -18I3 - 10PR	9 X 18
	82.80	12.5/80 -18I3 - 10PR	9 X 18

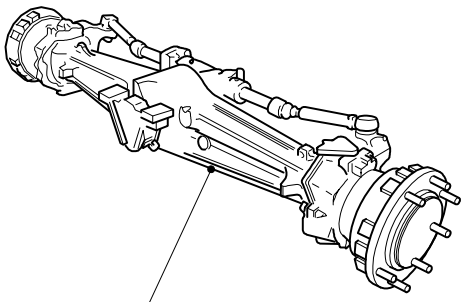

GROUP	EQUIP	TIRE SIZE	RIM
81.00	81.35	11L - 16F3 - 10PR	W8LX 16
	81.38	11L - 16SLF3 - 10PR	W8LX 16

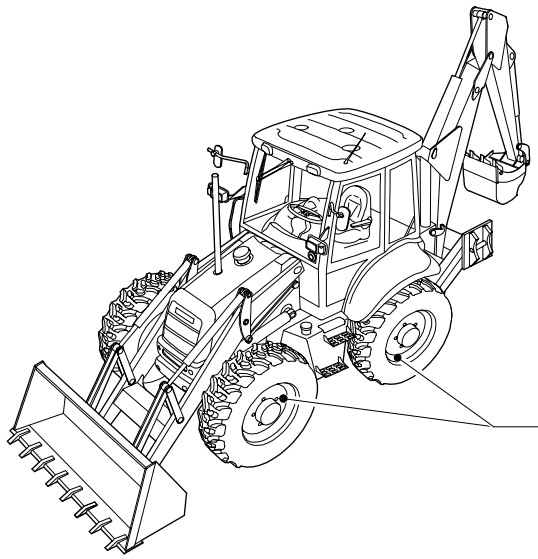

GROUP	EQUIP	TIRE SIZE	RIM
85.00	85.64	16.9 - 24 R4 - 12PR	W15LX 24
	85.64	16.9 - 24 R4 - 12PR (I.S.G.)	W15LX 24
	85.65	16.9 - 28 R4 - 12PR	W15LX 28
	85.65	16.9 - 28 R4 12PR(I.S.G.T.)	W15LX 28
	85.66	440/80 R28 156A8 IT530	W15LX 28
	85.67	440/80 R28 156A8 IT520	W15LX 28

WHEELS

REF	FN	PART NUMBER	YR/SN	QTY	DESCRIPTION

FRONT WHEELS, 2WD

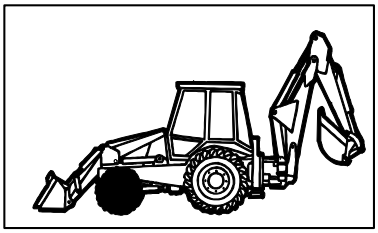

EQUIP	TIRE SIZE	RIM
81.35	11L-16F3-10PR	W8LX16
81.38	11L-16SL F3-10PR	W8LX16

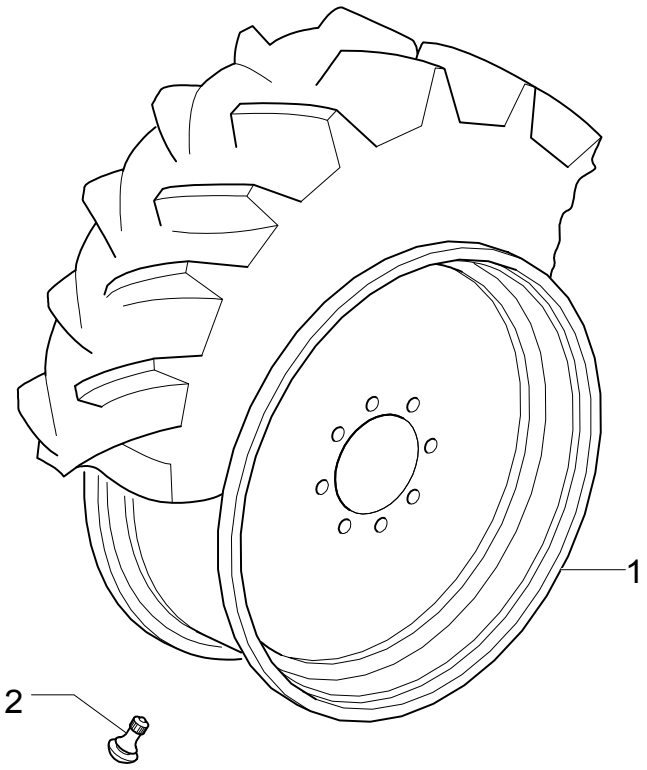

FRONT WHEELS, 2WD

REF	FN	PART NUMBER	YR/SN	QTY	DESCRIPTION
1		85812260		2	RIM W8LX16
2		85700224		2	VALVE

Mechanical Version

LB75.B

DRIVING WHEELS(4WD)

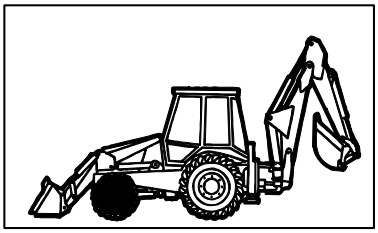

EQUIP	TIRE SIZE	RIM
82.75	14-17.5NHS-8PR	10.5X17.5
82.76	12-16.5NHS-8PR	9.75x16.5

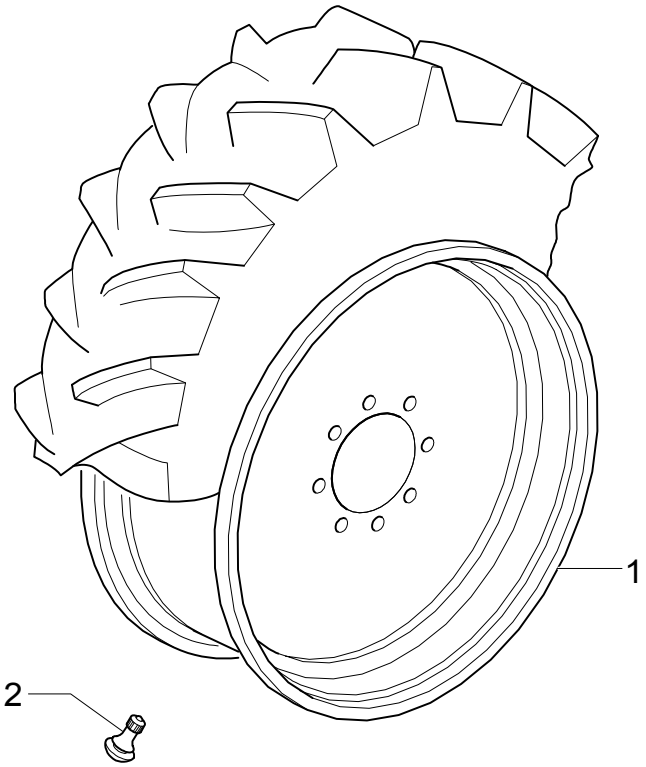

DRIVING WHEELS(4WD)

REF	FN	PART NUMBER	YR/SN	QTY	DESCRIPTION
1		{85803676}		2	RIM 10,5X17,5
1		85803675		2	RIM 9,75X16,5
2		85700224		2	VALVE

DRIVE WHEELS

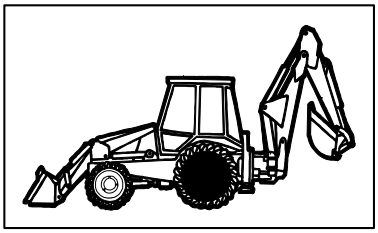

EQUIP	TIRE SIZE	RIM
83.52	16.9-28 R4-8PR	W15LX28
83.64	16.9-24R4-10R	W15LX24
83.65	17.5L24 R4-10PR	W15LX24
83.91	19.5L24 R4-10PR	W16LX24
83.92	21L24 R4 - 10PR	W18 L X 24
83.93	13,5 x 24 "JUMBO NJLK"	W16 L=24

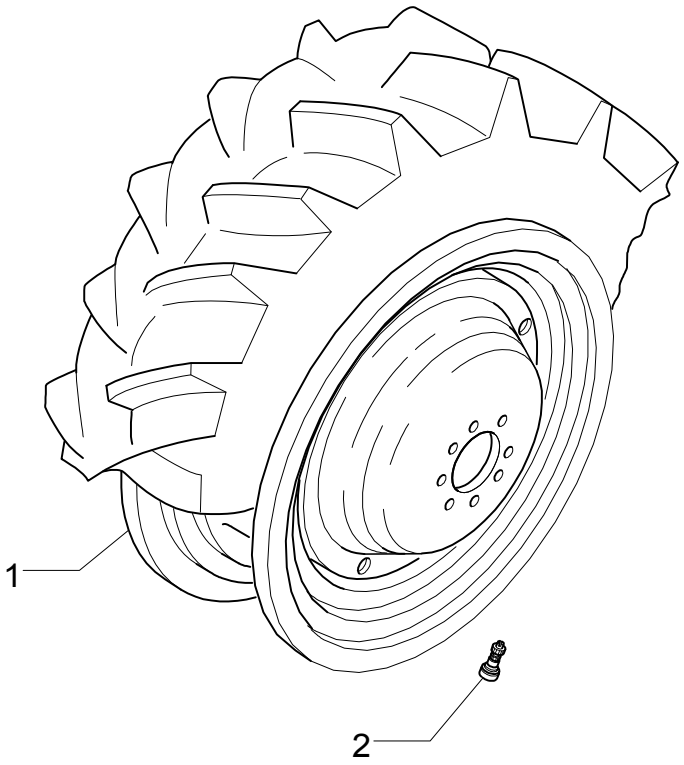

DRIVE WHEELS

REF	FN	PART NUMBER	YR/SN	QTY	DESCRIPTION
1		{85803678}		2	RIM W15LX28
1		{85803682}		2	RIM DW16X26
1		85803681		2	RIM W16LX24
1		85824195		2	RIM W18LX24
2		85700224		2	VALVE

SECTION INDEX

SEC. 18	00	VARIATION
535	01	STABILIZER FOOT GROUND (CENTER PIVOT)
535/ 1	01	STABILIZER FOOT STREET PAD (CENTER PIVOT)
536	01	REVERSIBLE STABILIZER FOOT (CENTER PIVOT)
537	01	STABILIZER FOOT STREET PAD (CENTER PIVOT)
628	01	4WD STEERING LOCK
685	01	CABINET ACCESSORY
803	01	FENDERS, FRONT

VARIATION

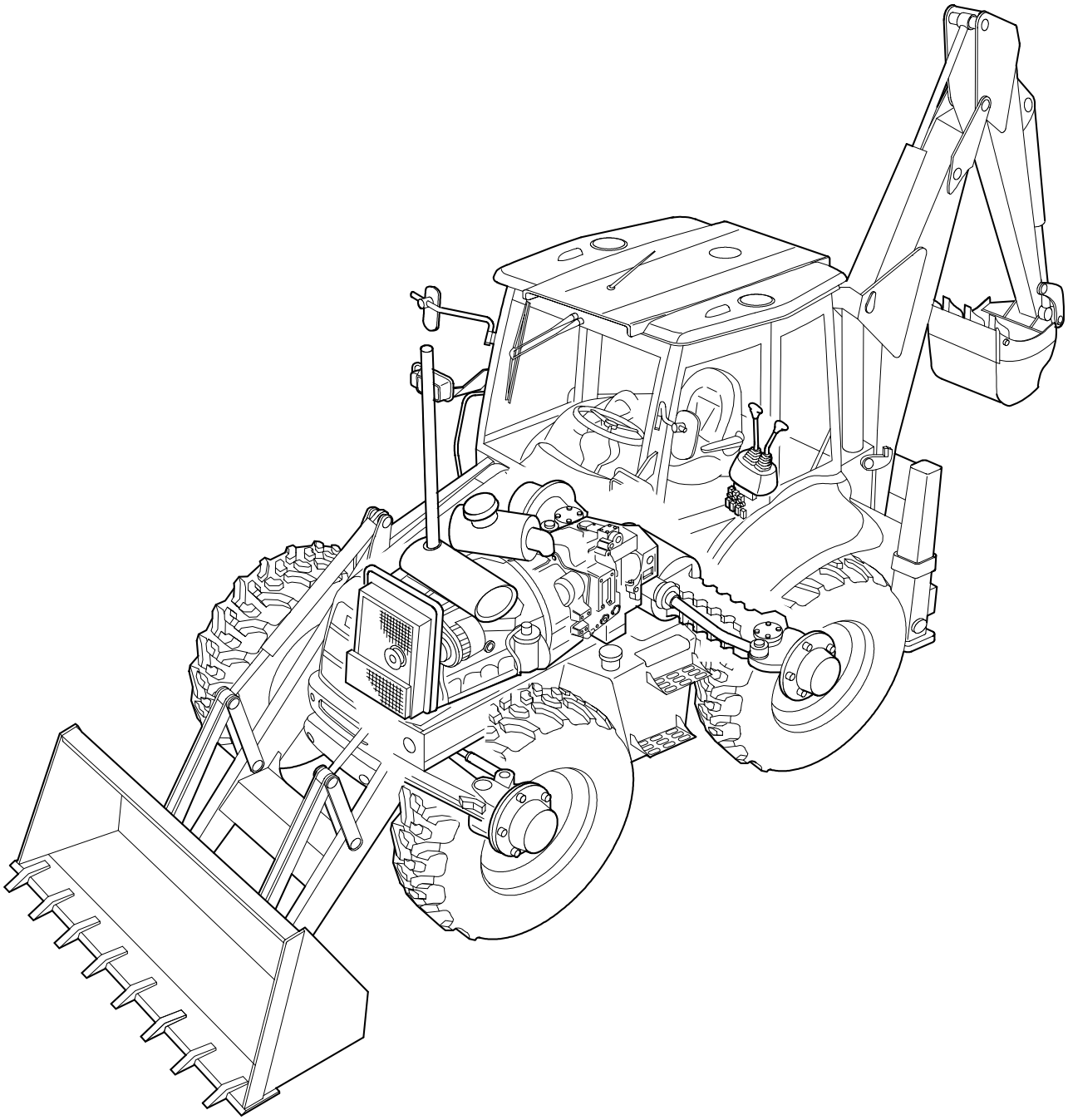

VARIATION

REF	FN	PART NUMBER	YR/SN	QTY	DESCRIPTION

STABILIZER FOOT GROUND (CENTER PIVOT)

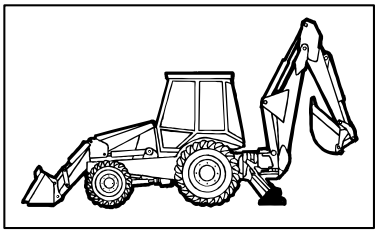

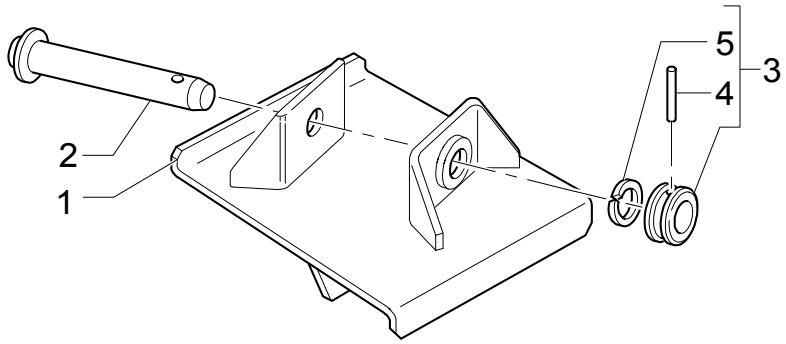

STABILIZER FOOT GROUND (CENTER PIVOT)

REF	FN	PART NUMBER	YR/SN	QTY	DESCRIPTION
1		85825005		1	SHOCK ABSORBER RH
1		85825007		1	SHOCK ABSORBER LH
2		85825003		2	PIN
3	1	85803139		2	PIN, LOCK ASSY
4		85802992		2	O-RING
5		85802993		2	PIN

(1) Includes 4,5

535/ 1	01	p1	04/03

STABILIZER FOOT STREET PAD (CENTER PIVOT)

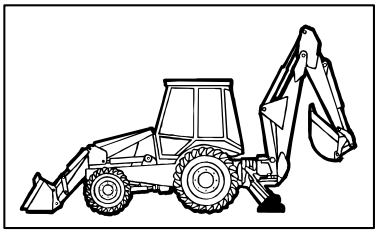

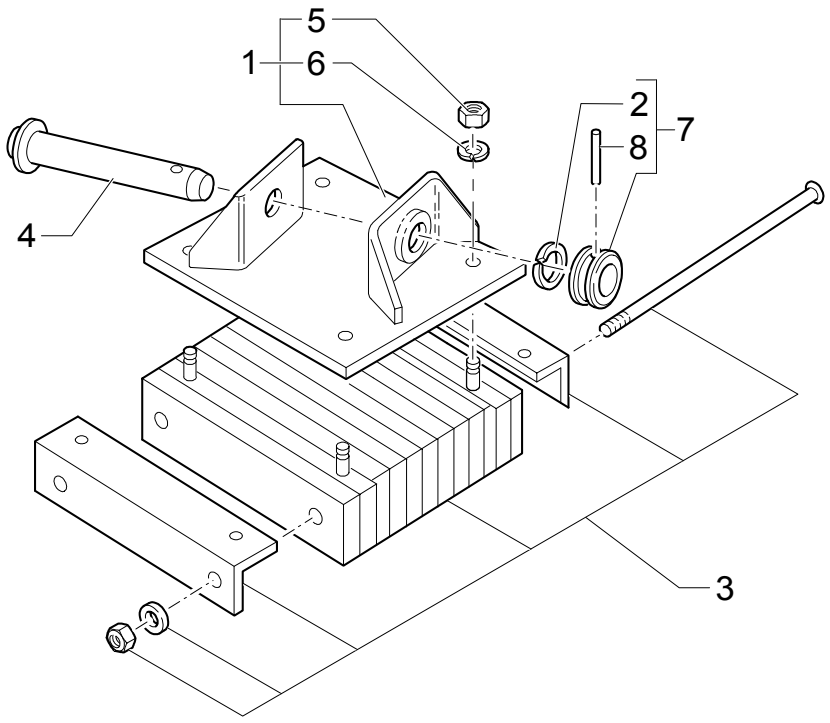

STABILIZER FOOT STREET PAD (CENTER PIVOT)

REF	FN	PART NUMBER	YR/SN	QTY	DESCRIPTION
1	1	85824095		1	SHOCK ABSORBER RH
1	1	85825000		1	SHOCK ABSORBER LH
2		85802992		2	O-RING
3		83911040		2	PAD, RUBBER ASSY
4		85825003		2	PIN
5		N620017S36		8	NUT
6		N630177S36		8	WASHER
7	2	85803139		2	PIN, LOCK ASSY
8		85802993		2	PIN

(1) Includes 3,5,6
(2) Includes 2,8

536	01	p1	04/03

REVERSIBLE STABILIZER FOOT (CENTER PIVOT)

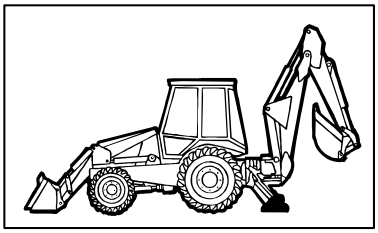

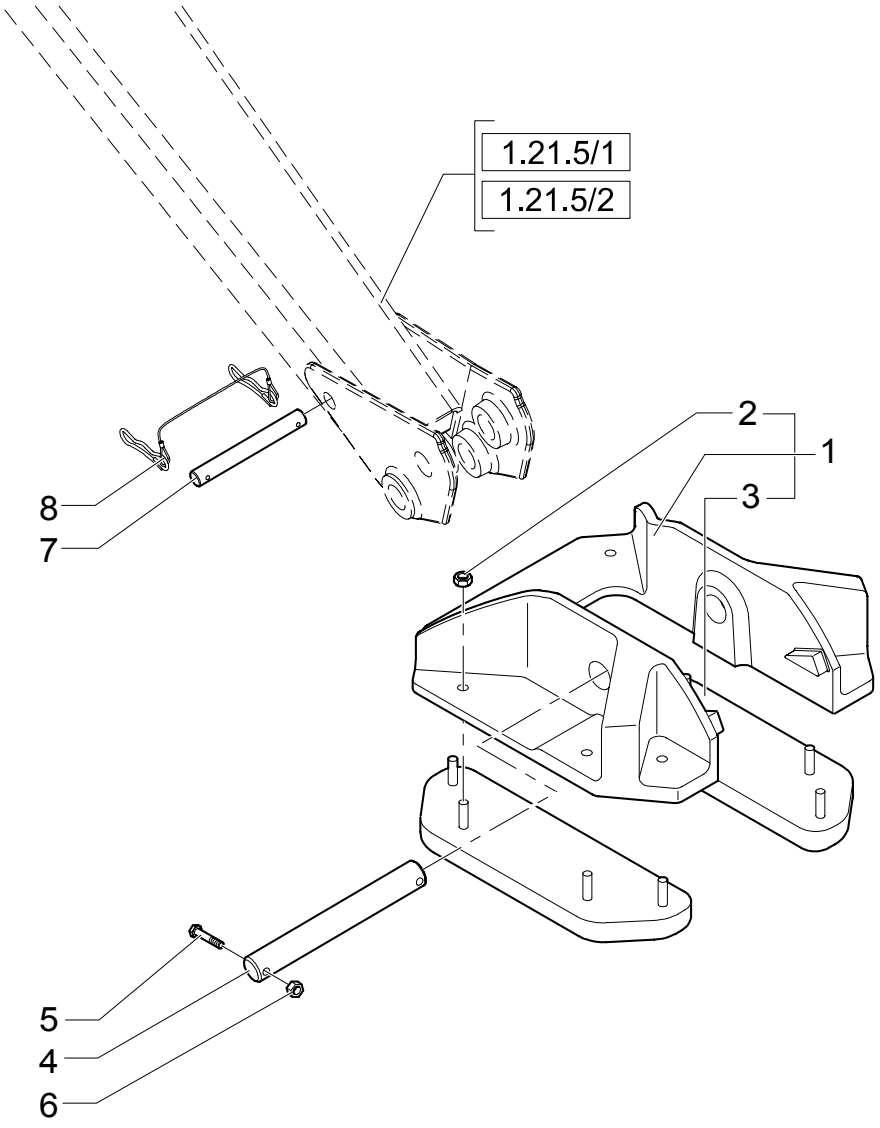

REVERSIBLE STABILIZER FOOT (CENTER PIVOT)

REF	FN	PART NUMBER	YR/SN	QTY	DESCRIPTION
1	1	87406510		2	FOOT BOARD
2		10719311		16	NUT M12
3		85825009		2	PLATE, STREET
4		87404081		2	PIN
5		15214821		4	SCREW M10X60
6		11701711		4	NUT M10
7		87406547		2	PIN
8		85825299		2	PIN, SPLIT (COTTER)

(1) Includes 2,3

537	01	p1	04/03

STABILIZER FOOT STREET PAD (CENTER PIVOT)

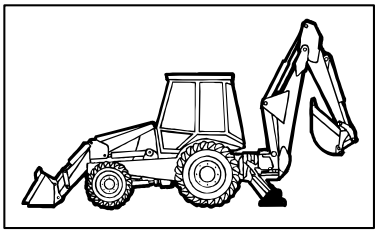

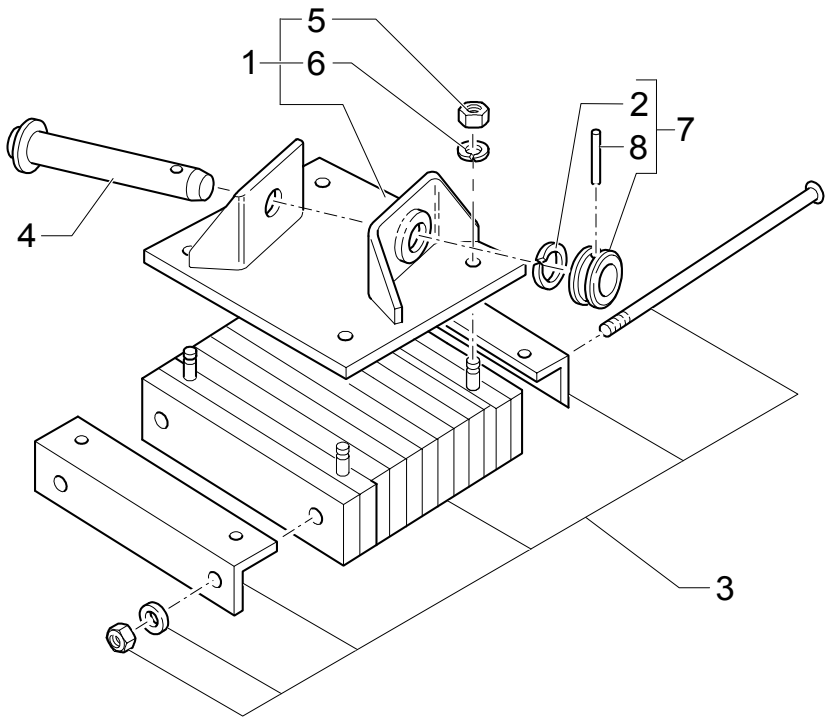

STABILIZER FOOT STREET PAD (CENTER PIVOT)

REF	FN	PART NUMBER	YR/SN	QTY	DESCRIPTION
1	1	85824095		1	SHOCK ABSORBER RH
1	1	85825000		1	SHOCK ABSORBER LH
2		85802992		2	O-RING
3		83911040		2	PAD, RUBBER ASSY
4		85825003		2	PIN
5		N620017S36		8	NUT
6		N630177S36		8	WASHER
7	2	85803139		2	PIN, LOCK ASSY
8		85802993		2	PIN

(1) Includes 3,5,6
(2) Includes 2,8

628	01	p1	05/03

4WD STEERING LOCK

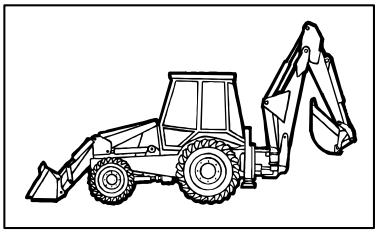

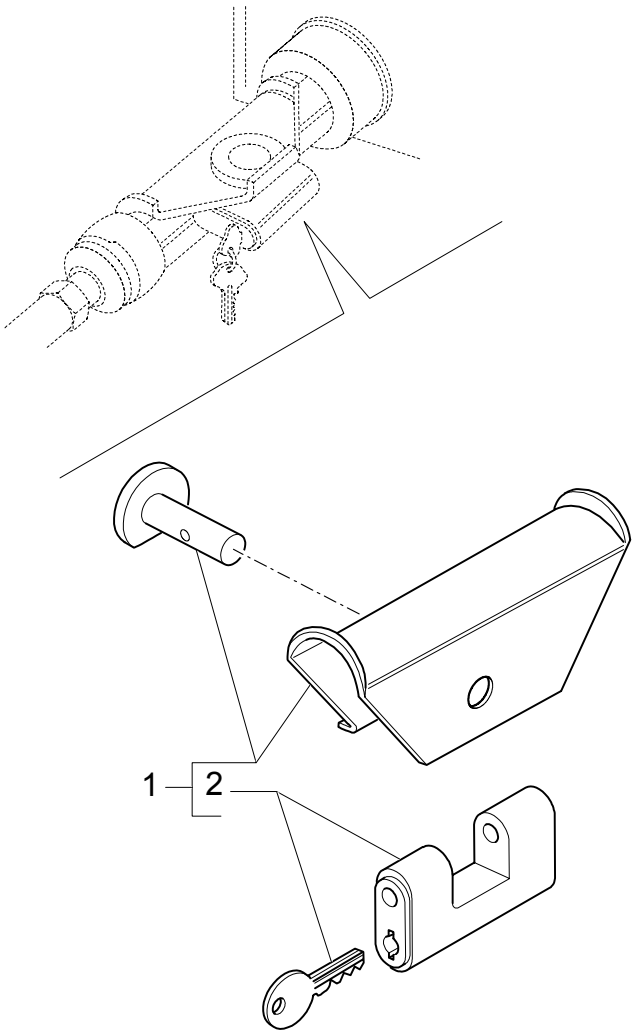

4WD STEERING LOCK

REF	FN	PART NUMBER	YR/SN	QTY	DESCRIPTION
1		85816802		1	LOCK, CYLINDER
2		85803372		1	LOCK, CYLINDER

685	01	p1	11/03

CABINET ACCESSORY

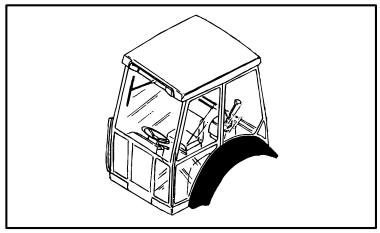

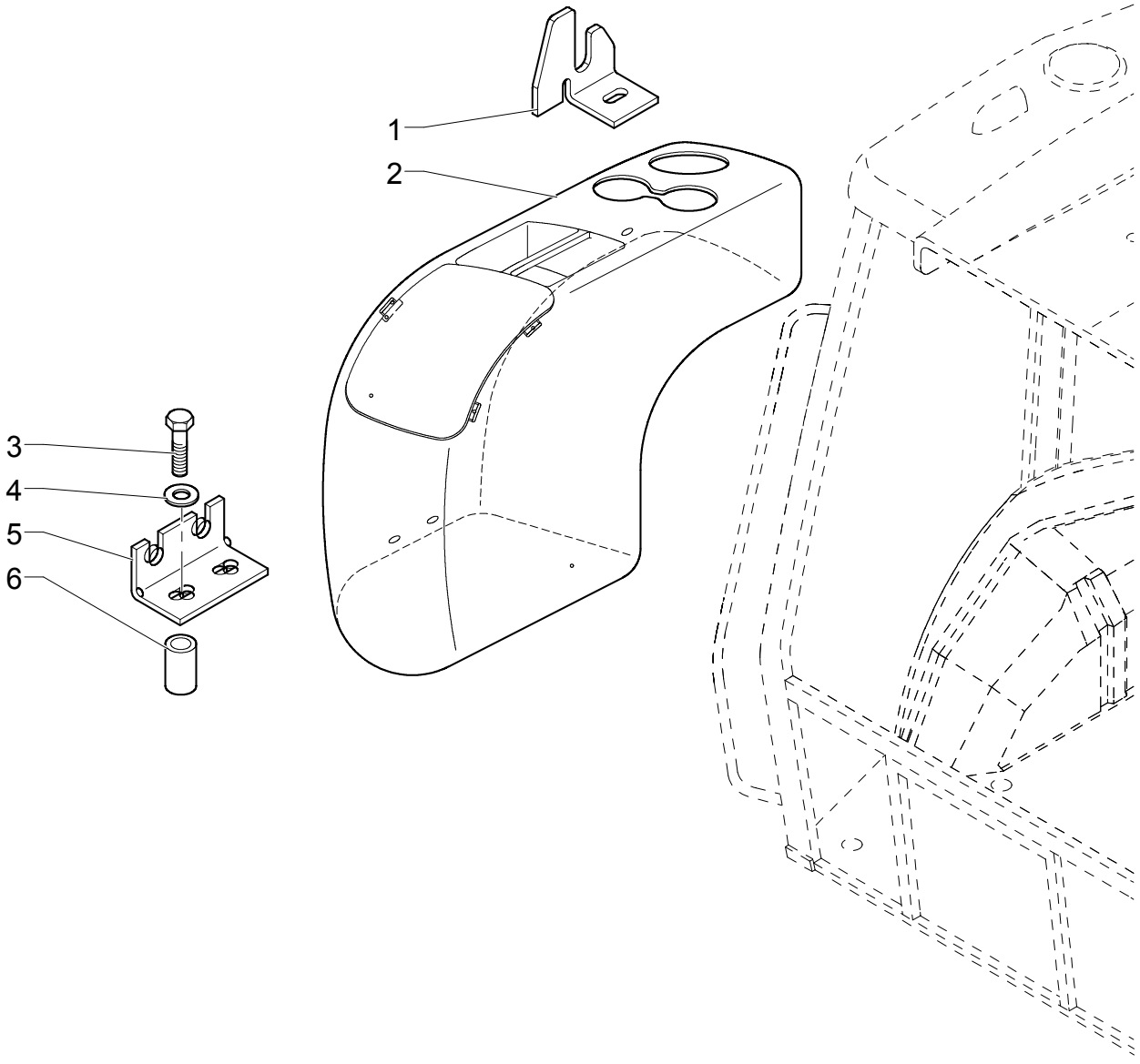

CABINET ACCESSORY

REF	FN	PART NUMBER	YR/SN	QTY	DESCRIPTION
1		{85826106}		1	SUPPORT
2		85818939		1	UTILITY HOLDER
3		10903224		2	VALVE, HYDRAULIC
4		12643701		2	WASHER
5		{85826105}		1	SUPPORT
6		{47048328}		2	SPACER

FENDERS, FRONT

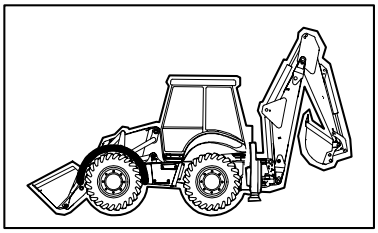

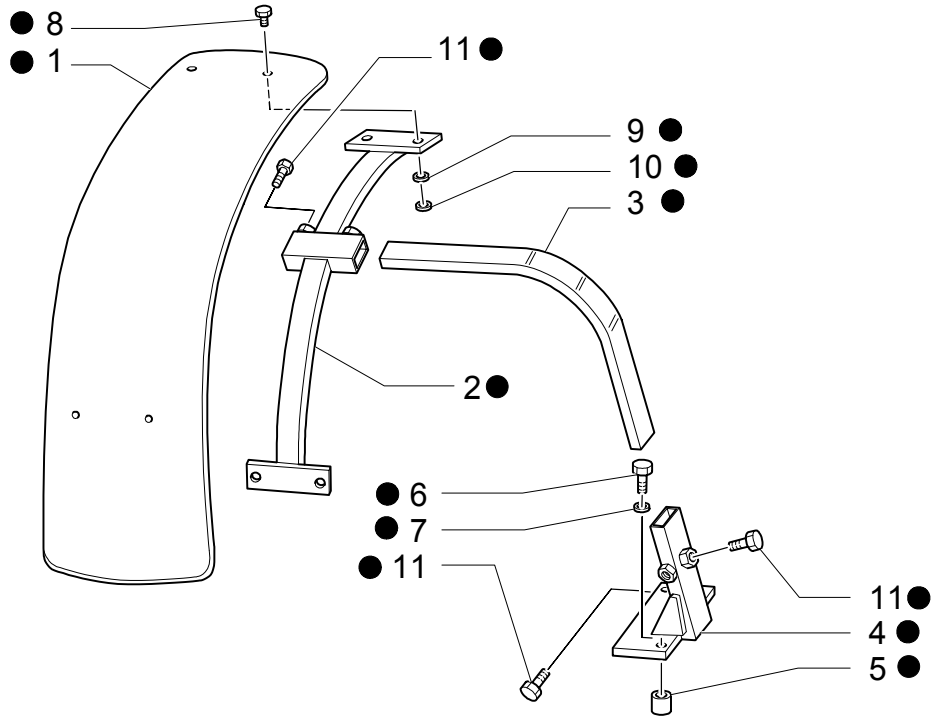

KIT KIT KIT 12 = ●

FENDERS, FRONT

REF	FN	PART NUMBER	YR/SN	QTY	DESCRIPTION
1		85819012		2	FENDER
2		85819011		2	SUPPORT
3		85819010		2	TUBE, RIGID
4		85819004		1	SUPPORT RH
4		85819005		1	SUPPORT LH
5		85805890		6	SPACER
6		11119121		6	SCREW M16X2X60
7		14496921		6	WASHER 16X30X3
8		13177511		8	SCREW M6X25
9		11194679		8	WASHER 6X18X1
10		15896221		8	NUT M6
11		11106021		8	SCREW M10X20
12	1	NSS		1	NOT SERVICED SEPARATELY

(1) Includes 1 To 11

Number	Figure	Sequence	Ref.	Number	Figure	Sequence	Ref.
{{87431459}}	1.91.4	02	2	{85827992}	331/A	02	3
{128483A1}	646	01	14		333/A	03	5
{128484A1}	646	01	16	{85827993}	331/A	02	5
{128485A1}	646	01	15		333/A	03	3
{14048214}	1.92.6	01	3	{85827994}	331/A	02	7
{47042260}	636	01	14		333/A	03	7
	637	01	19	{85827995}	331/A	02	8
{47048328}	685	01	6		333/A	03	8
{47048468}	1.83.0	01	23	{85827996}	331/A	02	10
{47048646}	636	01	6		333/A	03	10
	637	01	6	{85827997}	331/A	02	12
{47048760}	1.39.8	01	6		333/A	03	12
	1.82.6	05G	15	{85827998}	331/A	02	9
	1.94.2	03	7		333/A	03	9
{47048993}	1.75.2	02	9	{85827999}	331/A	02	14
	1.75.2/ 3	02	9		333/A	03	14
{47049010}	1.75.2	02	10	{85828000}	331/A	02	6
	1.75.2/ 3	02	10		333/A	03	4
{47049164}	995	01	3	{85828001}	331/A	02	13
{47049173}	1.75.2	03	5		333/A	03	13
	1.75.2/ 3	03	5	{85828002}	331/A	02	11
{47049196}	1.75.2	03	9		333/A	03	11
	1.75.2/ 3	03	9	{85828003}	331/A	02	4
{47049581}	636	02	5		333/A	03	6
{47050861}	1.75.2	02	8	{85828005}	331/A	02	15
	1.75.2/ 3	02	8		333/A	03	15
{47050883}	646	01	12	{85828013}	331/A	02	16
{47054521}	1.83.0	01	25		333/A	03	17
{47248328}	1.82.6	05G	14	{85828014}	333/A	03	16
{504060839}	0.400	01	2	{86987511}	644	05A	1
{504065880}	0.340	01	3	{86999310}	331/C	02	13
{82802378}	1.88.12/ 3	01	14		333/B	02	13
{85803676}	82.00	01	1	{87022296}	331/C	01	16
{85803678}	83.00	01	1		333/B	01	16
{85803682}	83.00	01	1	{87026277}	636	02	13
{85817133}	514	03	3	{87403721}	646A	01	1
	902	04	3	{87404248}	1.75.2	02	7
{85817150}	902/ A	01	1		1.75.2/ 3	02	7
{85819330}	626	01	1	{87405018}	1.75.2	02	4
{85821334}	1.91.5	02	13		1.75.2/ 3	02	4
{85821534}	331/C	01	17	{87407206}	1.75.2	03	3
	333/B	01	17		1.75.2/ 3	03	3
{85824018}	518	01	6	{87407927}	1.96.2	01	11
{85824265}	732-A	01	8		1.96.2/ 1	01	6
{85824266}	732-A	01	4	{87408277}	1.96.7/ 6	01	7
{85824268}	732-A	01	9	{87408358}	1.96.7/ 6	01	9
{85825285}	732-A	01	7	{87410105}	331/C	01	8
{85826042}	1.92.1	01	1		333/B	01	8
{85826080}	1.95.5	02	4	{87410268}	1.75.2	03	7
{85826092}	704	01	5		1.75.2/ 3	03	7
{85826100}	331/C	05	5	{87410385}	1.93.0/ 3	04	1
	333/B	05	5	{87410408}	1.92.1/ 2	01	1
{85826105}	685	01	5	{87412250}	791	01	2
{85826106}	685	01	1	{87412252}	792	01	2
{85826113}	644	04A	14	{87413734}	331/C	01	3
{85826217}	437	02	4		333/B	01	3
{85826250}	331	01	11	{87415781}	321	01	8
	333/1	01	12	{87418368}	331/C	01	20
{85826260}	990	01	10		333/B	01	20
{85826274}	337	01	19	{87418369}	331/C	01	21
{85826326}	644	02	9		333/B	01	21
{85826339}	331	01	7	{87419240}	636	02	22
	333/1	01	8	{87422675}	331/C	01	1
	333/1	04	1		333/B	01	1
{85826340}	331	01	10	{87422678}	331/C	01	2
	333/1	01	11		333/B	01	2
	333/1	07	1	{87423337}	331/C	01	11
{85826344}	333/1	02	9	{87423468}	321	01	11
	333/1	03	9	{87423802}	331/C	01	7
	333/1	04	8		333/B	01	7
	333/1	05	10	{87424301}	331/C	01	23
	333/1	06	8		333/B	01	23
	333/1	07	6	{87424795}	1.75.2	02	2
{85826906}	321	01	14		1.75.2/ 3	02	2
{85826936}	644	05A	5	{87425225}	331/A	01	4
{85826937}	644	05A	12		333/A	02	4
{85827471}	333/A	02	1	{87425696}	331/C	01	27
{85827551}	732-A	01	2		333/B	01	27
{85827823}	1.82.6	04A	5	{87425697}	331/C	01	28
{85827825}	1.95.3	01	23		333/B	01	28
{85827961}	437	01	10	{87426546}	1.93.0/ 3	04	5
{85827991}	331/A	02	2		1.93.0/ 5	01	26

Number	Figure	Sequence	Ref.
{87426550}	1.93.0/ 3	04	2
	1.93.0/ 5	01	21
{87427922}	321	01	4
{87427923}	321	01	12
{87427925}	321	01	13
{87427926}	321	01	3
{87427962}	331/C	01	14
{87427963}	331/C	01	29
{87427981}	331/C	01	12
{87427989}	331/C	01	25
	333/B	01	25
{87427991}	331/C	01	24
	333/B	01	24
{87427993}	331/C	01	26
	333/B	01	26
{87431300}	331/C	01	29
	333/B	01	29
{87431301}	331/C	01	14
	333/B	01	14
{87431450}	1.91.4/ 2	03	2
{87431451}	1.91.4/ 2	02	2
{87431461}	1.91.4	03	2
{87431463}	791	01	7
	792	01	7
{87431469}	1.91.1/ 1	01	1
	1.91.4	03	5
	1.91.4/ 2	03	5
{87431529}	331/B	01	19
{87435381}	095	01	2
	096	01	2
{87435510}	331/C	01	12
{87436396}	331/C	01	11
	333/B	01	11
{87437688}	331/C	01	4
	333/B	01	4
{87437736}	333/B	01	12
{87812021}	1.96.7/ 6	01	8
{9991976}	1.82.6	11A	15
10007871	351	06	10
	353	03	16
	394/ 1	03	16
10250644	622	01	3
10398280	1.95.3	01	11
10398580	1.96.7	01	15
	1.96.7/ 6	01	12
	725	01	14
10398680	1.91.4	05	17
	1.95.2	01	2
10398980	1.91.4	05	24
	1.91.4	05	7
	1.91.4/ 2	05	7
	1.93.0	01	11
	1.93.0/ 3	01	11
	644	01	8
	644	08	3
10399580	1.91.6	01	4
10427200	1.91.1/ 1	01	5
	1.93.0	01	16
	1.93.0/ 2	01	16
	1.93.0/ 3	01	16
	1.93.0/ 5	01	16
10450090	1.91.4/ 2	05	15
10450190	1.88.01	02	9
10517274	1.95.0	01	8
10519204	1.91.4/ 2	02	4
	1.91.4/ 2	05	13
10519404	1.92.4	01	14
	1.92.4	02	1
10519411	1.82.6	04A	14
	1.82.6	11A	11
	1.82.6	12B	9
	718	02	5
	725/ 1	01	5
10519601	851/ 1	01	11
	851/ 1	02	10
	851/ 1	03	23
	851/ 2	02	10
	855/ 1	01	11
	855/ 1	02	10
	855/ 1	03	24
	855/ 1	04	11
	855/ 2	02	10
10519601	856/ 1	01	11
	856/ 1	02	10
	856/ 1	03	26
	856/ 2	02	10
10519604	1.92.6	01	10
	1.93.0	04	3
	1.93.0/ 3	04	3
10520211	515	02	5
	516	02	5
	517	02	5
	518	02	5
	519	02	5
	526	01	5
	527	01	5
	528	01	5
	529	01	5
10520431	1.21.5/ 1	01	9
	1.87.8	01	3
	1.88.11/ 9	01	3
	1.88.11/ 9A	01	3
	203	01	5
	215	01	3
10523211	1.88.08	01	10
	1.88.08	02	8
10615274	1.91.4	05	2
	1.91.4/ 2	05	2
10615371	1.95.1	01	21
10615771	1.95.5	01	3
10719311	536	01	2
10766901	1.44.0A	04	9
10791414	1.95.5	01	12
10802801	1.44.0A	04	6
10902124	1.91.7/ 1	01	6
	1.91.7/ 3	01	6
10902221	1.82.6	04A	15
	1.82.6	11A	12
	1.82.6	12B	7
	1.94.2/ 1	04	13
10902224	1.96.7	01	13
	1.96.7/ 6	01	13
	644	03	2
10902424	1.87.2	01	5
	1.95.3	01	6
	644	02	6
	644	03	13
10902524	1.93.0/ 3	04	12
	1.93.0/ 5	01	27
10902624	1.91.4	05	15
	1.91.4/ 2	05	20
	1.93.0	04	10
	1.93.0/ 2	01	21
	1.93.0/ 3	04	10
	1.95.0	02	10
10903021	1.29.1	01	5
	391	01	5
10903221	724	02	6
	724/ 3	02	6
10903224	1.92.4	02	6
	685	01	3
10903421	724	02	11
	724/ 3	02	11
10978024	1.95.1	01	20
10979421	1.88.11/ 5	02	14
11054590	1.91.4	02	5
	1.91.4/ 2	02	5
11054790	1.91.4	02	3
	1.91.4/ 2	02	6
11054890	1.91.4	02	7
	1.91.4/ 2	02	7
11054990	1.91.4	02	8
	1.91.4/ 2	02	8
11055090	1.91.4	02	9
	1.91.4/ 2	02	9
11055190	1.91.4	02	10
	1.91.4/ 2	02	10
11055290	644	02	21
11055790	1.75.2	03	2
11055890	1.75.2	03	2
	1.75.2/ 3	03	2
11063971	343	02	4
	522-A	01	4
	718	02	4

Number	Figure	Sequence	Ref.	Number	Figure	Sequence	Ref.
11063971	725/ 1	01	4	11193279	1.88.11/ 5	02	15
11064071	1.88.11/ 5	01	10	11193874	1.92.5	01	6
	343/ 1	01	4		1.94.2	02	5
	700	01	4		1.95.0	02	4
11064176	1.95.0	02	3		1.95.2	01	8
11065476	1.95.1	01	14		1.96.2	01	5
11065976	1.92.6	03	3		1.96.2/ 1	01	2
11067376	1.95.0	01	10		391	01	6
11069071	514	02	11		644	01	2
	514	03	7	11193879	1.42.0	01	2
	902	03	15		1.75.2	01	7
	902	04	7		1.75.2/ 3	01	7
11087871	1.92.4	01	12		1.82.6	03B	7
11088076	851/ 1	03	8		1.88.01	01	2
	856/ 1	03	8		1.88.11/ 7	01	13
11088176	1.95.0	01	1		1.91.4	05	18
11106021	1.28.0/ A	01	25		333/B	08	8
	1.28.0/ B	01	13		337	01	10
	803	01	11		337	02	4
11106221	1.82.6	06A	6		344	01	2
	1.82.6	06B	6		704	01	9
	1.82.6	13A	4		721	01	2
	1.88.01	01	6		721	03	8
11106421	437	01	11		721	05	9
11106721	902/ A	01	14		724	01	3
11107021	1.83.0	01	20		724/ 3	01	3
11107321	1.15.0	01	4		725	01	5
	1.88.08	01	17		902	02	5
11112421	1.14.0	01	3	11193974	1.93.0/ 2	01	22
	1.82.0	01	13		1.93.0/ 5	01	22
	636A	01	4	11193979	1.17.2	01	9
11112434	1.28.0	01	17		1.82.6	02A	10
11112634	1.28.0	01	15		1.82.6	05F	9
11112821	1.88.12/ 3	01	23		1.82.6	05G	9
11119121	803	01	6		1.82.6	07	12
11124421	902/ A	01	7		1.82.6	09A	7
11190574	1.82.6	13A	5		1.82.6	09B	7
	1.95.0	01	17		1.83.0	01	4
	1.95.5	01	6		1.87.2	01	10
11190579	1.82.6	02B	5		1.88.08	01	20
	1.82.6	06A	5		514	04	5
	1.82.6	06B	5		514	05	7
	1.88.01	01	7		700	02	9
	1.88.08	01	2		718	01	9
	336/ 1	01	2		725/ 1	02	9
	339	01	2		902	03	4
	437	01	13	11194679	1.87.2	01	4
	718	02	15		803	01	9
	725/ 1	01	15	11197774	1.91.3	01	3
	902/ A	01	13		1.91.7/ 1	01	7
11190679	1.88.11/ 5	01	7		1.91.7/ 3	01	7
	339/ 1	01	9		391	01	7
	351	09	8	11197779	1.29.1	01	6
11190779	1.28.0/ A	02	15	11197874	1.95.1	01	16
	1.28.0/ B	02	18	11198074	1.92.9	03	21
	1.82.6	03B	21		1.96.7	01	2
	1.82.6	04A	9		1.96.7/ 6	01	2
	1.82.6	04B	16		851	01	4
	1.82.6	04B	9		855	01	4
	1.82.6	09C	15		856	01	4
	1.88.12/ 3	01	19	11198679	1.21.5/ 1	01	25
	351	04	11		1.28.0	01	14
	351	05	5	11200679	1.44.0A	01	13
	353	01	10	11234721	302	01	8
	390/ 1	01	6		339/ 1	01	10
	394-397	01	7	11383634	1.88.11	01	12
	394/ 1	01	10	11394334	200	01	1
11190879	1.83.0	01	8	11701621	1.95.0	01	20
11191579	1.83.0	01	11	11701711	536	01	6
11193274	1.91.4	05	16	11991971	1.88.11/ 5	01	11
	1.91.4/ 2	05	21		1.88.12/ 3	01	11
	1.93.0/ 3	04	8		351	06	13
	1.93.0/ 5	01	28		351	07	3
	1.93.4	01	6		351	08	6
	1.95.0	02	11		353	03	11
	1.95.2	01	3		390/ 1	01	17
	1.95.3	01	5		394-397	02	10
	1.96.7	01	14		394/ 1	02	6
	1.96.7/ 6	01	14		394/ 1	03	17
	644	02	7	12059980	622	01	6
	644	03	3	12164111	1.83.0	01	10
	644	07	2	12164114	1.95.0	01	11

Number	Figure	Sequence	Ref.
12574011	1.91.4	02	11
	1.91.4	05	3
	1.91.4/ 2	02	11
	1.91.4/ 2	05	3
	622	01	4
	796	01	2
12574111	1.92.9	03	18
	1.96.0	01	6
12574211	1.82.6	04A	16
	1.82.6	11A	13
	1.82.6	12B	10
	1.91.5	02	9
	1.92.4	02	3
	1.94.2/ 1	04	14
	700	01	8
	718	02	8
	725/ 1	01	8
12574215	1.92.9	02	16
12574511	1.82.6	02B	14
	732	01	4
	732-A	01	13
12574825	200	01	3
12574921	1.87.8	01	8
12575121	1.87.8	01	4
	1.88.11/ 9	01	4
	1.88.11/ 9A	01	4
	203	01	6
	215	01	2
12575321	1.44.0A	01	10
12577211	1.83.0	01	27
12604179	1.95.3	01	15
12637821	1.92.9	03	19
12638107	1.93.0	02	11
	644	08	12
12638501	1.92.9	02	8
12638504	1.92.4	01	16
	1.92.4	02	14
	1.92.9	03	9
12638511	1.75.2/ 3	03	13
12640601	1.92.6	02	2
12640621	1.93.0	04	11
	1.93.0/ 3	04	11
12642804	1.93.5	02	1
	1.93.5/ 1	02	1
	622	01	5
12642821	1.93.4	01	10
	1.95.0	01	14
	796	01	3
12643701	1.92.4	02	15
	1.92.6	01	5
	685	01	4
12643711	1.98.1	01	2
12643721	1.87.2	01	3
12644921	1.44.0A	04	10
12646204	1.92.5	01	5
12646704	1.91.5	02	5
	1.92.9	01	6
12646904	1.92.9	02	5
12646921	1.82.6	03B	20
	1.82.6	04B	15
	1.82.6	09C	16
12647004	1.92.9	02	10
	1.94.0	01	2
	1.94.0/ 1	01	5
12647121	1.75.2	01	9
	1.75.2	02	3
	1.75.2/ 3	01	9
	1.75.2/ 3	02	3
	1.82.6	03A	7
	1.82.6	03B	16
	1.82.6	08A	10
	1.82.6	08C	10
	1.82.6	13A	2
	725	01	11
12647601	1.75.2	01	12
128825	1.82.6	03B	18
	1.82.6	09C	5
	1.88.11/ 7	01	3
	1.95.5	02	7
	337	01	15
	337	02	15
	437	01	18
128825	721	02	5
13000990	1.94.2	04	8
	1.94.2/ 1	04	8
	644	05	2
	644	05A	2
13177511	803	01	8
13271814	1.92.1/ 1	01	3
	1.92.1/ 3	01	3
13272214	1.91.4	05	9
	1.91.4/ 2	05	9
13272477	351	04	4
	353	01	3
	394/ 1	01	3
	724	01	14
	724/ 3	01	14
13273911	1.92.6	01	6
13276217	1.92.9	02	12
13276424	1.91.3	01	2
13276617	1.93.0	03	6
13276621	1.92.6	02	3
13297842	1.91.6	01	6
13309417	1.91.4/ 2	05	14
13311017	1.93.0	01	7
	1.93.0/ 2	01	14
	1.93.0/ 3	01	7
	1.93.0/ 5	01	14
13311217	1.93.0	01	4
	1.93.0/ 2	01	4
	1.93.0/ 3	01	4
	1.93.0/ 5	01	4
	1.95.3	01	7
13311817	1.91.6	01	2
13312721	1.95.3	01	9
13313417	1.91.5	02	11
	1.92.9	01	8
	1.93.0	02	3
	1.93.4	01	5
	1.96.7/ 4	01	2
	1.96.7/10	01	2
13399076	1.95.0	01	12
	1.95.0	02	20
13400776	1.95.1	01	5
13406911	1.44.0A	04	8
	1.92.6	03	4
13407214	1.95.0	01	2
13423271	1.95.0	02	6
13517021	1.94.0	01	5
	1.94.0/ 1	01	4
13578621	1.83.0	01	22
	302	01	10
	302	01	9
	339/ 1	01	11
13580001	1.83.0	01	7
13736611	1.29.1	01	9
13769401	1.95.3	01	16
13812631	351	05	9
13838071	851/ 1	01	14
	855/ 1	01	14
	856/ 1	01	14
13940370	1.88.11/ 5	01	4
	351	05	11
	351	06	6
	351	07	12
	353	01	14
	353	03	2
	394-397	02	12
	394/ 1	01	14
	394/ 1	03	2
14040611	644	02	11
14048211	1.75.2	01	8
	1.75.2/ 3	01	8
	1.75.2/ 3	03	14
	1.82.6	02A	11
	1.82.6	05F	10
	1.82.6	05G	10
	1.82.6	08A	7
	1.82.6	08C	7
	1.88.11/ 5	01	23
	1.88.11/ 7	01	12
	1.88.12/ 3	01	13
	351	07	7
	353	03	10

Number	Figure	Sequence	Ref.
14048211	390/ 1	01	12
	394-397	02	3
	394/ 1	02	2
	394/ 1	03	10
	725	01	12
	902	03	5
14048221	1.82.6	13A	1
	337	01	11
	337	02	3
	351	08	2
14084011	1.93.0	02	6
	644	08	9
14084111	1.91.7/ 1	01	18
	1.91.7/ 3	01	16
14084814	1.93.0	01	10
	1.93.0	02	7
	1.93.0/ 2	01	10
	1.93.0/ 3	01	10
	1.93.0/ 5	01	10
14143790	1.91.4	04	4
	1.91.4/ 2	05	23
	1.93.0	02	15
	437	01	19
	699	01	2
	704	01	2
	787/ 1	01	5
	787/ 2	01	4
	788/ 1	01	5
	788/ 2	01	4
	791	01	5
	792	01	5
14161771	1.92.9	03	5
14189176	1.93.5	02	6
	1.93.5/ 1	02	6
14197790	1.93.4	01	3
14301521	1.96.0	01	4
14302921	331/A	02	1
	333/A	03	1
14303324	1.93.4	01	2
	1.95.0	01	15
	1.95.5	01	5
	622	01	2
	796	01	4
14304021	331/A	02	17
14304724	1.96.0	01	3
14305224	644	01	15
	644	07	3
14305321	1.75.2	01	13
	514	07	8
	514	08	3
	902	06	8
	902	07	3
14305621	1.88.11/ 8	01	3
14306321	851/ 1	02	11
	851/ 1	03	22
	851/ 2	02	11
	855/ 1	02	13
	855/ 2	02	13
	856/ 1	02	16
	856/ 1	03	27
	856/ 2	02	16
14306324	1.95.0	02	5
14306424	1.92.9	02	9
	1.92.9	03	20
	1.95.1	01	15
14308221	336/ 1	01	3
	339	01	3
	718	02	14
	725/ 1	01	14
14332521	902/ A	01	15
14358921	333/A	03	2
14372671	1.93.5	02	7
	1.93.5/ 1	02	7
	1.94.2	05	10
	644	04	13
	644	04A	13
14422021	1.82.6	01A	3
	1.82.6	01B	3
14440327	1.93.5/ 1	01	4
14441521	1.93.0	03	3
14442421	1.92.6	01	11
14447021	1.95.0	03	6
14464680	1.82.6	01A	5
	1.82.6	01B	5
14466880	1.82.3	01	5
14496401	522-A	01	5
14496407	1.92.9	02	15
14496521	1.88.11/ 5	01	15
14496901	343	02	11
	343/ 1	01	11
	522-A	01	11
	700	01	11
	718	02	11
	721	05	5
	725/ 1	01	11
14496921	803	01	7
14496931	1.87.8	01	6
14497001	1.88.11/ 8	01	8
14497121	1.44.0A	04	13
	902/ A	01	8
14497331	1.44.0A	01	9
14497401	902/ A	01	24
14499401	343/ 1	01	5
	700	01	5
14499521	351	09	13
14560087	644	09	14
14560187	1.14.0	01	13
	1.17.2	01	13
	1.75.2	01	4
	1.75.2/ 3	01	4
	1.88.11/ 3	01	13
	1.95.0	02	13
	331/C	06	4
	333/B	06	4
	646	01	13
14568887	1.88.12/ 3	01	16
	1.93.0	03	2
	1.93.5/ 1	01	10
	390/ 1	01	4
	394-397	01	4
14582790	990	01	3
14591687	1.91.7/ 3	01	17
14592587	855/ 1	03	6
	855/ 1	04	4
14642192	1.93.5/ 1	02	14
14644190	644	06	10
15212721	1.95.0	03	5
15212921	1.95.2	01	4
15213321	851/ 1	01	27
	855/ 1	01	27
	856/ 1	01	27
15213621	1.88.11/ 7	01	11
15213721	331/B	01	6
15214821	536	01	5
15215821	1.88.09	01	2
15216421	1.88.09	01	7
15500111	351	04	2
15540321	1.88.12/ 3	01	18
	390/ 1	01	9
	394-397	01	8
15540421	351	05	3
	353	01	5
	394/ 1	01	5
15540534	1.21.5/ 1	01	24
15540721	1.14.0	01	11
	1.82.0	01	8
15540821	1.29.1	01	4
	1.82.6	03B	19
	1.82.6	04B	14
	1.82.6	09C	14
15541621	1.82.6	04A	10
	1.82.6	04B	8
15627011	1.93.0	02	9
15693301	1.93.5/ 1	02	2
15693507	1.93.5	02	2
	1.93.5/ 1	02	3
	1.94.2	05	11
	644	04	3
	644	04A	3
15811387	1.92.9	02	11
	1.92.9	03	17
15840521	1.83.0	01	1
15896211	343/ 1	01	8
	522-A	01	8

Number	Figure	Sequence	Ref.
15896219	1.92.1/ 1	01	7
	1.92.1/ 3	01	7
15896221	343	02	8
	351	04	17
	803	01	10
15916901	1.94.2	04	2
	1.94.2/ 1	04	2
15970524	1.88.11/ 5	01	6
	1.95.0	01	18
15970721	1.82.6	02B	12
	351	09	15
15970724	1.95.5	01	7
15970921	1.82.6	02B	6
15972034	732	01	2
	732-A	01	14
15981834	1.87.8	01	11
15982134	1.87.8	01	5
15988734	1.88.11	01	12
15988934	1.88.11/ 9	01	5
	1.88.11/ 9A	01	5
15989134	1.21.5/ 1	01	10
15989334	1.87.8	01	2
15991134	215	01	4
15999434	1.44.0A	01	11
16042924	1.91.4/ 2	05	10
16043021	1.75.2	01	6
	1.75.2/ 3	01	6
	636	02	1
16043121	1.83.0	01	5
	1.91.4	05	10
16043221	1.82.6	03A	6
	1.82.6	03B	6
16043224	851/ 1	01	13
	855/ 1	01	13
	856/ 1	01	13
16043324	1.92.9	01	5
16043421	1.42.0	01	3
16043424	1.93.0/ 2	01	7
	1.93.0/ 5	01	7
	1.94.2	02	7
	1.96.7	01	3
	1.96.7/ 6	01	3
	851	01	3
	855	01	3
	856	01	3
16043621	1.82.6	07	13
	1.88.01	01	3
	1.88.08	01	19
	333/B	08	7
	351	04	14
	351	06	3
	351	09	7
	353	03	4
	394-397	02	15
	394/ 1	03	4
	636A	04	2
	721	03	7
	721	05	8
	902	03	3
16043624	1.92.9	03	10
	1.95.2	01	9
	1.96.2	01	6
	1.96.2/ 1	01	3
16043821	1.17.2	01	10
	1.19.1	01	5
	1.82.6	07	17
	700	02	10
	718	01	10
	725/ 1	02	10
16043824	1.75.2	03	8
	1.75.2/ 3	03	8
	1.93.0	04	4
	1.93.0/ 3	04	4
16043921	1.95.0	01	19
	344	01	3
	721	01	3
	734	01	6
16044021	1.82.6	08A	8
	1.82.6	08C	8
	1.82.6	09A	8
	1.82.6	09B	3
	700	02	14
16044121	391	01	8
	902/ A	01	18
16044124	1.92.5	01	4
16044221	1.75.2/ 3	03	12
	514	04	6
	514	05	8
	724	01	21
	724/ 3	01	21
	902	02	6
16044321	1.88.11/ 3	01	1
16044324	1.91.7/ 1	01	4
	1.91.7/ 3	01	4
16044421	1.82.6	13A	6
	1.88.11/ 7	01	18
	514	04	20
	514	05	6
	902	02	20
16044521	704	01	10
16044821	724	01	4
	724/ 3	01	4
16045021	725	01	6
16100811	331/B	01	7
	351	09	16
16101511	1.82.6	09C	17
	351	04	10
	351	05	6
	353	01	9
	390/ 1	01	5
	394-397	01	10
	394/ 1	01	9
16102311	1.88.11/ 5	01	9
	1.88.12/ 3	01	2
	351	06	11
	351	07	5
	351	08	4
	351	09	2
	353	02	6
	353	03	13
	390/ 1	01	14
	394-397	02	4
	394/ 1	02	4
	394/ 1	03	13
16102411	1.91.5	02	6
16102911	1.88.11/ 5	01	12
	1.88.12/ 3	01	4
	351	06	12
	351	07	4
	351	08	5
	351	09	4
	353	02	2
	353	03	9
	390/ 1	01	15
	394-397	02	7
	394/ 1	02	5
	394/ 1	03	9
16104111	1.75.2	02	12
	1.75.2/ 3	02	12
	1.87.2	01	9
	1.91.7/ 1	01	5
	1.91.7/ 3	01	5
	1.92.9	02	6
	1.92.9	03	7
	1.94.0	01	3
	1.94.0/ 1	01	2
	351	06	4
	394/ 1	03	5
	721	05	7
	724	01	19
	724/ 3	01	19
	734	01	8
16104121	351	04	12
	353	03	5
16104511	1.92.6	03	11
16105011	1.28.0	01	12
	1.29.1	01	3
	636A	01	5
	902/ A	01	12
163044	1.44.0A	01	19
165202	1.95.5	02	10
16586624	0.326	01	1
16587924	0.270	01	7
16592624	0.326	01	1

Number	Figure	Sequence	Ref.
167266	1.82.6	01A	7
	1.82.6	01B	6
	1.82.6	04B	18
	1.82.6	11B	2
	1.82.6	12B	2
	514	04	15
	514	06	7
	902	02	15
	902	05	7
167268	1.82.6	04A	2
	1.82.6	04B	11
167269	1.82.6	02A	3
	1.82.6	02B	1
	1.82.6	02B	16
	1.82.6	08A	5
	1.82.6	08C	5
	1.82.6	09A	2
	1.82.6	09C	12
	1.82.6	11A	16
	1.82.6	11A	4
	1.88.11/ 3	01	10
	339	01	17
	437	01	6
	718	01	3
	725	01	13
	725/ 1	02	3
16746824	0.142	01	3
16784504	0.063	01	2
16866473	0.105	01	1
16979231	0.140	01	4
17044625	0.305	01	12
17278780	0.043	01	7
17283181	0.270	01	8
18137824	0.305	01	14
18138324	0.305	01	13
18139524	0.360	01	2
19053282	1.95.0	02	18
	1.95.0	02	7
191823	1.88.11	01	5
	1.88.11/ 2	02	2
1930010	MPARTS	00	1
	0.200	01	6
263136	1.44.0A	01	3
280248	1.44.0A	03	37
280251	1.28.0	01	7
2830082	0.040	01	1
2830156	0.201	01	2
2830266	0.201	01	1
2830411	0.105	02	8
2830433	0.105	01	7
2830445	0.077	01	2
2830775	0.063	01	5
2830784	0.063	01	7
2830905	0.105	02	4
2830919	0.060	01	15
2830934	0.105	02	5
2830948	0.105	02	3
2830952	0.105	01	10
2830953	0.105	01	12
2831023	0.105	01	9
2831031	0.105	01	8
2831101	0.105	02	6
297449	795	01	2
2992147	0.080	01	4
2992148	0.080	01	4
2992149	0.080	01	4
2992153	0.080	01	3
2992154	0.080	01	3
2992155	0.080	01	3
304911S36	1.44.0A	04	14
322357	995	01	16
33923S36	1.44.0A	04	3
386170C1	1.94.2/ 1	04	15
	331/C	06	5
	333/B	06	5
390954S36	1.82.6	04A	1
	1.82.6	04B	1
412005	131	01	3
	321	01	2
44910052	1.92.6	01	2
44910053	1.92.6	01	8
47042364	1.39.8	01	13
47048440	636	01	5
	637	01	5
47048448	1.94.2	03	8
47048450	1.19.1	01	13
47048451	1.94.2	03	9
47048653	1.94.2	03	6
47048664	1.39.8	01	4
	1.82.6	05F	11
	1.82.6	05G	11
47048668	636	01	8
	637	01	8
47048702	995	01	21
	995	02	21
47048759	636	01	3
	637	01	3
47048788	131	01	6
	321	01	9
47048896	1.94.2	03	4
47048898	1.15.0	01	5
47048959	1.96.2/ 1	01	4
47048961	331/A	01	2
	333/A	02	2
	995	01	10
	995	02	10
47048962	1.19.1	01	6
	1.39.8	01	11
	1.82.6	05G	17
	636	01	15
	636	02	2
	637	01	16
	637	01	20
47048963	131	01	4
	321	01	10
	636	01	7
	637	01	7
	646	01	8
47048964	1.39.8	01	5
	1.82.6	05F	13
	1.82.6	05G	12
	1.82.6	05G	18
47048969	331/B	01	8
47048971	331	01	3
	331/C	01	18
	333/1	01	3
	333/B	01	18
47048972	1.15.0	01	6
	1.82.0	01	24
	1.83.0	01	26
47048973	1.14.0	01	4
	1.82.0	01	14
47048976	1.14.0	01	8
	1.82.0	01	9
	636A	01	6
47048991	1.95.3	01	20
47048992	331/B	01	9
	636A	04	3
	995	01	17
47048994	1.95.3	01	13
47049029	1.95.3	01	21
	995	01	15
	995	02	15
47049030	1.82.6	05G	21
	637	01	17
	995	01	18
47049031	1.75.2	02	11
	1.75.2/ 3	02	11
	646	01	9
47049041	1.15.0	01	7
	1.82.0	01	25
	131	01	5
	321	01	5
	331/B	01	10
	331/C	02	2
	333/B	02	2
	636	01	10
	637	01	10
47049078	331/A	01	3
	333/A	02	3
47049082	1.82.6	02A	8
	331/B	01	11
47049086	636	01	2
	637	01	2

Number	Figure	Sequence	Ref.	Number	Figure	Sequence	Ref.
47049088	636	01	11	4891209	0.105	02	7
	637	01	11	4891252	0.320	01	1
47049094	1.88.11/ 1	01	13	4891353	0.040	01	6
47049095	636	02	3	4892707	0.081	01	3
	637	01	18	4892708	0.081	01	2
47049101	636A	02	5	4892712	0.082	01	2
47049149	1.95.3	01	12	4892713	0.082	01	3
47049157	995	01	12	4892774	0.315	01	2
47049160	1.19.1	01	7	4892836	0.105	02	1
	1.82.6	05G	20	4892859	0.060	01	2
	636A	04	2	4892860	0.066	01	4
47049161	1.39.8	01	9	4892861	0.060	01	1
	1.82.6	02A	12	4892867	0.084	01	2
	1.82.6	05F	12	4893386	0.080	01	2
	1.82.6	05G	13	4893391	0.315	01	8
47049163	636	01	16	4893518	0.142	01	6
	637	01	21	4894095	0.203	01	4
47049168	1.28.0	01	20	4894139	0.042	01	6
47049170	1.82.6	05F	5	4894218	0.040	02	1
	1.82.6	05G	5	4894641	0.083	01	3
47049171	1.39.8	01	12	4894721	0.201	01	5
47049176	1.28.6	01	4	4894774	0.142	01	1
47049184	1.82.6	05G	19	4895038	0.040	01	4
	331/B	01	12	4895039	0.040	01	3
	636	02	4	4895040	0.040	01	7
47049185	1.75.2	03	10	4895043	0.315	01	3
	1.75.2/ 3	03	10	4895045	0.315	01	5
	1.82.0	01	23	4895049	0.040	02	8
47049186	1.15.0	01	8	4895078	0.060	01	16
	1.75.2	03	11	4895079	0.043	03	14
	1.75.2/ 3	03	11	4895090	0.142	01	2
	646	01	7	4895107	0.305	01	2
47049187	636	01	4	4895121	0.323	01	2
	637	01	4	4895133	0.240	01	2
47049188	331	01	2	4895164	0.305	01	1
	331/B	01	23	4895166	0.200	01	5
	333/1	01	2		0.400	01	6
47049195	995	01	9	4895174	0.077	01	3
47049372	1.28.0	01	19	4895179	0.060	01	12
	1.28.0/ A	01	26	4895180	0.040	02	9
	1.28.0/ B	01	25	4895183	0.060	01	4
	636A	02	6	4895184	0.060	01	9
47049404	331/C	02	14	4895187	0.060	01	6
	333/B	02	14	4895188	0.060	01	5
47049442	331/C	02	12	4895193	0.066	01	3
	333/B	02	12	4895195	0.066	01	1
47049590	131	01	7	4895196	0.066	01	7
	321	01	6	4895198	0.066	01	9
47049644	1.39.8	01	3	4895199	0.066	01	10
47050653	331/C	03	10	4895200	0.066	01	11
	331/C	04	14	4895204	0.066	01	12
	333/B	03	10	4895214	0.063	01	3
	333/B	04	14	4895215	0.060	01	8
47050658	1.28.6	01	3	4895228	0.040	01	5
47050671	1.14.0	01	5	4895244	0.204	01	1
	1.82.0	01	10	4895273	0.077	01	1
47050674	636	02	6	4895291	0.345	01	2
47050685	331/C	03	11		0.400	01	4
	333/B	03	11	4895294	0.071	01	7
47050686	331/C	01	13	4895297	0.140	02	2
	331/C	04	13	4895301	0.345	01	4
	331/C	05	6	4895305	0.204	01	2
	333/B	01	13	4895323	0.105	02	8
	333/B	04	13		0.120	01	1
	333/B	05	6	4895327	0.350	01	3
47050733	1.17.2	01	2	4895336	0.077	01	4
	636	02	7	4895347	0.060	01	7
47050734	1.17.2	01	3	4895355	0.043	01	8
	636	02	8	4895358	0.043	03	11
47054518	995	01	11	4895360	0.063	01	1
47120173	331/C	04	12	4895361	0.066	01	2
	333/B	04	12	4895363	0.066	01	5
47120179	636	02	9	4895364	0.066	01	6
47120207	995	01	13	4895365	0.066	01	8
47123297	1.44.0A	02	4	4895378	0.043	03	4
4858605	0.142	01	8	4895379	0.043	03	5
4858607	1.95.0	02	14	4895392	0.040	02	6
	1.95.0	03	3		0.323	01	6
4890832	0.043	02	4	4895393	0.040	02	7
4890833	0.043	03	8		0.323	01	7
4890964	0.201	01	4	4895489	0.042	01	2
4891209	0.043	02	5	4895538	0.042	01	10

Number	Figure	Sequence	Ref.	Number	Figure	Sequence	Ref.
4895538	0.400	01	7	4899467	0.305	01	5
4895576	0.323	01	4	4899519	0.305	01	6
4895584	0.042	01	5	4899610	0.120	01	5
4895586	0.105	01	6	4899629	0.071	01	8
4895605	0.040	02	2	4899921	0.071	01	5
4895610	0.270	01	5	4983992	1.95.0	01	5
4895623	0.323	01	8	4985127	1.95.1	01	3
4895625	0.323	01	9	4988275	1.95.1	01	6
4895648	0.071	01	4	4998760	1.95.5	01	11
4895742	0.315	01	10	4999021	1.93.0	04	9
4895748	0.081	01	1		1.93.0/ 2	01	25
4895790	0.060	01	3		1.93.0/ 3	04	9
4896404	0.315	01	4		1.93.0/ 5	01	25
4896406	0.315	01	9	500315795	0.045	01	2
4896409	0.315	01	11	500390441	0.140	02	1
4896410	0.315	01	7	504001088	0.200	01	2
4896770	0.142	01	7	504010786	0.240	01	4
4896897	0.350	01	2	504011329	0.270	01	1
4896947	0.105	01	5	504011338	0.270	01	6
4897024	0.043	02	1	504025599	0.326	01	6
4897048	0.105	01	4	504026078	0.450	01	1
4897071	0.105	01	3	504028028	0.340	01	2
4897123	0.105	01	2	504030423	0.043	03	12
4897178	0.060	01	13	504031929	0.360	01	1
4897179	0.060	01	14	504032877	0.140	01	2
4897330	0.270	01	4	504034954	0.120	01	7
4897457	0.120	01	4	504035087	0.084	01	1
4897480	0.300	01	1	504035094	0.240	01	5
4897934	0.105	01	11	504035148	0.345	01	3
4898301	0.042	01	3	504036358	0.270	01	10
4898482	0.240	01	6	504038890	0.326	01	5
4899003	0.142	01	4	504042116	0.149	01	1
4899009	0.040	02	4	504042165	0.042	01	9
	0.060	01	10	504043550	0.042	01	4
4899019	0.315	01	1	504046458	0.203	01	2
4899020	0.042	01	1	504047260	0.040	02	10
	0.043	03	13	504048350	0.080	01	1
4899026	0.040	01	2	504049033	0.350	01	1
	0.043	01	1	504050848	0.043	01	5
	0.043	03	1	504051210	0.326	01	2
4899027	0.105	02	2	504051276	0.204	01	3
4899031	0.201	01	3	504052006	0.071	01	6
	0.320	01	3	504052013	0.326	01	3
	0.340	01	5	504053166	0.305	01	10
	0.400	01	5	504053173	0.305	01	8
4899035	0.315	01	6	504053512	0.326	01	4
4899036	0.270	01	3	504053522	0.063	01	6
4899039	0.071	01	2	504053894	0.305	01	15
4899053	0.345	01	1	504057288	0.203	01	1
4899058	0.305	01	9	504057292	0.142	01	5
4899063	0.043	02	3	504057736	0.083	01	1
4899068	0.120	01	3	504060728	0.140	01	3
	0.149	01	2	504061374	0.240	01	3
	0.200	01	3	504061464	0.400	01	3
4899072	0.040	02	5	504061622	0.084	01	3
	0.060	01	11	504062460	0.083	01	2
4899073	0.043	01	4	504062752	0.120	01	2
	0.450	01	2	504062795	0.270	01	2
4899074	0.043	03	7	504062812	0.042	01	8
4899075	0.043	03	3	504062856	0.320	01	2
4899076	0.043	03	6	504062964	0.043	03	13
4899078	0.043	02	2	504063450	0.140	01	1
4899080	0.120	01	6	504063980	0.071	01	3
4899090	0.300	01	2	504064336	0.323	01	3
4899091	0.042	01	2	504064340	0.340	01	1
	0.043	01	2	504064342	0.340	01	4
4899093	0.043	01	3	504064865	0.071	01	1
	0.200	01	4	504065040	0.063	01	4
4899103	0.043	03	9	504065099	0.142	01	9
4899106	0.305	01	7	504065285	0.203	01	3
4899107	0.305	01	3	504066077	0.200	01	1
4899108	0.305	01	4	504069558	0.045	01	1
4899109	0.043	03	2	504069775	0.043	03	10
	0.105	01	11	504069777	0.042	01	7
	0.323	01	1	504074001	0.043	01	6
	0.340	01	6	504074178	0.323	01	5
4899110	0.045	01	3	5105729	1.95.1	01	11
4899115	0.040	02	3	5106733	1.95.1	01	18
	0.270	01	11	510884	1.44.0A	03	17
4899118	0.240	01	1	510892	1.44.0A	03	16
4899119	0.077	01	5	5110153	1.95.1	01	7
4899121	0.305	01	11	5110155	1.95.1	01	9

Number	Figure	Sequence	Ref.	Number	Figure	Sequence	Ref.
5112712	1.91.4	05	8	81800471	1.44.0A	03	12
	1.91.4/ 2	05	8	81800472	1.44.0A	03	7
	1.92.6	03	13	81800474	1.44.0A	03	2
	1.94.2	04	11	81800475	1.44.0A	03	4
	1.94.2/ 1	04	11	81800480	1.44.0A	02	27
5118658	1.91.7/ 1	01	13	81800486	1.44.0A	04	2
5128431	1.95.1	01	12	81800488	1.44.0A	04	7
5128712	1.95.1	01	8	81802560	1.44.0A	02	22
5131437	1.95.1	01	10	81803273	1.44.0A	02	15
5132136	1.92.9	02	13	81803275	1.44.0A	02	16
	1.92.9	03	8	81803295	1.44.0A	02	14
5135069	1.98.1	01	4	81803334	1.44.0A	02	10
5142152	1.95.0	01	9	81803336	1.44.0A	02	26
5148062	1.95.0	01	3	81803345	1.44.0A	02	28
5148131	1.93.0	02	17	81803369	1.44.0A	03	26
	644	08	14	81803413	1.44.0A	03	5
5148132	1.93.0	02	14	81803420	1.44.0A	03	6
	644	08	13	81803424	1.44.0A	03	11
5148946	1.95.5	01	10	81803445	1.44.0A	03	13
5153180	1.95.0	01	21	81803450	1.44.0A	02	19
5155381	1.95.0	02	2	81803451	1.44.0A	03	15
5155701	1.95.0	02	15	81803474	1.44.0A	03	1
5155703	1.95.0	02	16	81803502	1.44.0A	02	23
	1.95.0	03	2	81803503	1.44.0A	02	23
5162852	1.94.0	01	8	81803504	1.44.0A	02	23
5169413	1.91.4	05	5	81803505	1.44.0A	02	23
	1.91.4/ 2	05	5	81803506	1.44.0A	02	23
5174275	1.95.1	01	13	81803507	1.44.0A	02	23
5175736	1.91.5	02	7	81803508	1.44.0A	02	23
5176441	1.93.4	01	1	81803509	1.44.0A	02	23
5178468	1.93.0	02	5	81803510	1.44.0A	02	23
	644	08	8	81803511	1.44.0A	02	23
5183854	1.92.6	03	8	81803515	1.44.0A	03	43
5188360	1.98.1	01	3	81803516	1.44.0A	03	43
5189486	644	04	11	81803517	1.44.0A	03	43
	644	04A	11	81803518	1.44.0A	03	43
52491	1.44.0A	03	30	81803519	1.44.0A	03	43
678966	1.44.0A	01	24	81803520	1.44.0A	03	43
70741298	1.94.2	04	1	81803521	1.44.0A	03	43
	1.94.2/ 1	04	1	81803522	1.44.0A	03	43
71304923	990	01	8	81803542	1.44.0A	03	21
71431438	990	01	6	81804978	1.44.0A	02	24
71485474	855/ 1	03	18	81805231	1.44.0A	04	11
71485476	855/ 1	03	26	81812261	1.44.0A	03	3
71485488	851/ 1	02	2	81816246	1.44.0A	03	10
	851/ 2	02	2	81818397	1.44.0A	01	18
	855/ 1	02	2	81818824	1.21.5/ 1	01	16
	855/ 2	02	2		1.88.11/ 1	01	3
76088638	995	01	6		1.88.11/ 2	01	2
784122	1.91.1/ 1	01	4		1.88.11/ 6	01	16
79028977	990	01	9	81820047	1.44.0A	01	20
79028981	990	01	4	81820846	1.44.0A	02	18
79062734	990	01	5	81820849	1.44.0A	02	13
79072960	392	01	11	81821267	1.44.0A	03	36
	392	02	10	81824478	1.44.0A	03	20
	393	01	11	81825865	1.44.0A	01	23
79089592	1.93.0	02	2	81827354	1.44.0A	03	24
	1.93.0	04	7	81834042	1.44.0A	03	40
	1.93.0/ 2	01	13	81834073	1.44.0A	03	33
	1.93.0/ 3	04	7	81845711	1.44.0A	03	23
	1.93.0/ 5	01	13	81845713	1.44.0A	03	35
	1.93.5	01	2	81845714	1.44.0A	03	41
	1.93.5/ 1	01	8	81846884	1.44.0A	02	21
79105220	1.93.0	04	8	81847146	1.44.0A	03	25
	1.93.5	01	3	81847148	1.44.0A	03	42
	1.93.5/ 1	01	9	81847149	1.44.0A	03	42
79111815	1.93.0	01	12	81847150	1.44.0A	03	42
	1.93.0/ 2	01	12	81847151	1.44.0A	03	42
	1.93.0/ 3	01	12	81847152	1.44.0A	03	42
	1.93.0/ 5	01	12	81847153	1.44.0A	03	42
79111978	1.92.9	01	12	81847154	1.44.0A	03	42
	1.93.0	02	13	81847155	1.44.0A	03	42
	1.93.0	02	18	81847156	1.44.0A	03	42
	1.93.0/ 2	01	23	81847157	1.44.0A	03	42
	1.93.0/ 5	01	23	81847158	1.44.0A	03	42
	1.96.7	01	5	81847159	1.44.0A	03	42
	1.96.7/ 6	01	5	81847160	1.44.0A	03	42
	644	08	7	81847161	1.44.0A	03	42
8093880	0.082	01	1	81847162	1.44.0A	03	42
8093881	0.082	01	4	81854753	1.44.0A	02	12
8093882	0.081	01	4	81855916	1.88.11/ 5	01	18
81728114	1.44.0A	03	8	81866390	1.44.0A	01	17

Number	Figure	Sequence	Ref.
81867742	1.92.6	03	12
81869714	1.92.6	03	10
81871346	514-A	01	21
	514-B	01	2
81871439	1.92.4	01	15
81871864	1.92.4	01	10
	1.92.4	02	10
81872028	1.92.4	02	7
81872036	1.92.4	01	6
81874462	1.44.0A	02	6
81874478	1.44.0A	02	5
81875232	1.88.11/ 9B	01	10
81875248	1.21.5/ 1	01	4
81875252	1.44.0A	02	7
81875253	1.44.0A	02	8
81875256	1.88.11/ 9B	01	12
81876885	1.44.0A	03	14
81878514	1.44.0A	01	25
81901809	1.88.11	01	2
81901837	1.21.5/ 1	01	7
81901896	1.88.11	01	10
81901897	1.88.11/ 1	01	10
81902174	1.88.11/ 1	01	8
	1.88.11/ 2	01	6
81902463	1.88.11	01	6
	1.88.11/ 2	02	3
82000409	1.92.6	03	9
82001909	1.93.0	04	13
	1.93.0/ 2	01	24
	1.93.0/ 3	04	13
	1.93.0/ 5	01	24
82002692	1.95.3	01	10
82002777	1.94.2	05	8
	644	04	8
	644	04A	8
82002966	1.91.4	05	6
	1.91.4/ 2	05	6
82003283	1.96.7/ 4	01	5
	1.96.7/10	01	5
82003369	1.95.0	02	9
82017872	995	02	24
82022833	1.91.1	01	1
82026949	1.95.0	01	13
8274447	1.88.08	02	15
82853846	1.88.11/ 9B	01	13
82859922	1.92.4	01	1
82866944	514-C	01	3
82866945	1.88.11/ 9B	01	9
82866947	1.88.11/ 6	01	14
82866949	1.88.11/ 1	01	24
	1.88.11/ 2	01	4
	902/ A	02	14
82879400	1.88.11/ 5	02	3
82895716	1.44.0A	01	21
82958118	1.44.0A	02	29
82958961	1.44.0A	03	22
83416242	1.21.5/ 1	01	12
	1.88.08	01	11
	1.88.08	02	4
	1.88.11	01	7
	1.88.11/ 2	01	3
	1.88.11/ 2	02	4
	1.88.11/ 6	01	17
	1.88.11/ 9	01	6
	1.88.11/ 9A	01	6
	1.88.11/ 9B	01	15
	514	01	5
	514	03	2
	514-A	01	7
	514-B	01	17
	514-C	01	12
	533/ 1	01	4
	902	01	5
	902	03	8
	902	04	2
83417133	1.44.0A	01	6
83417169	1.44.0A	03	29
83902702	902/ A	01	21
83902710	1.88.11/ 2	01	8
83904750	1.44.0A	04	16
83909107	1.44.0A	01	12
83910546	514	02	2
83910546	902/ A	01	2
83910547	514-B	01	16
	514-C	01	7
83910548	514	02	4
	902/ A	01	23
83910551	514-A	01	4
83910558	514-B	01	20
83910599	1.88.11/ 9B	01	5
83910601	1.88.11/ 9B	01	3
83910629	1.21.5/ 1	01	18
83910630	1.21.5/ 1	01	17
83910634	515	01	3
	515	02	2
	516	01	1
	516	02	2
	517	01	1
	517	02	2
	518	01	1
	518	02	2
	519	01	1
	519	02	2
83910645	1.21.5/ 1	01	5
	1.88.11/ 9	01	2
	1.88.11/ 9A	01	2
83910977	1.21.5/ 1	01	21
	1.88.08	02	2
	514	02	7
	514	03	5
	902	03	11
	902	04	5
83911000	1.21.5/ 1	01	11
83911019	1.21.5/ 1	01	20
	1.88.08	02	3
	902/ A	01	6
83911020	1.21.5/ 1	01	6
	1.88.11/ 1	01	4
83911040	535/ 1	01	3
	537	01	3
83911131	1.88.11/ 7	01	9
	514	06	6
	902	05	6
83911366	1.88.11/ 5	02	8
	343	02	5
	343/ 1	01	13
	522-A	01	13
	700	01	13
	718	02	13
	721	05	6
	725/ 1	01	13
83911409	1.88.11/ 2	01	15
83911410	1.88.11/ 1	01	20
	514-C	01	4
83912246	1.44.0A	03	34
83912252	1.44.0A	03	31
83912378	1.88.11/ 9B	01	4
83912412	902/ A	02	7
83912413	1.88.11/ 2	01	18
83913375	902/ A	02	12
83917181	902/ A	02	16
83925620	1.44.0A	01	22
83931281	514	01	3
	514	02	1
	514-A	01	6
	514-B	01	1
	902/ A	01	3
83931289	1.88.11/ 9B	01	18
	514	02	5
	514-B	01	18
	514-C	01	14
	902/ A	01	19
83931313	1.88.11/ 9B	01	7
83931383	514-B	01	5
83931389	514-B	01	9
83931399	1.88.11/ 1	01	14
	514-C	01	15
83937315	1.88.11/ 2	01	9
83937326	1.88.11/ 6	01	12
83947107	1.44.0A	03	38
83947277	343	02	12
	343/ 1	01	12
	522-A	01	12
	700	01	12

Number	Figure	Sequence	Ref.
83947277	718	02	12
	725/ 1	01	12
83948308	1.44.0A	04	5
83949810	1.44.0A	03	32
83949811	1.44.0A	02	20
83949812	1.44.0A	03	39
83949838	1.44.0A	04	1
83952932	1.44.0A	04	4
83955462	1.44.0A	01	2
83955490	1.44.0A	01	15
83957533	1.44.0A	03	28
83958890	1.44.0A	03	19
83961521	1.91.4/ 2	05	12
83961741	331/C	05	7
	333/B	05	7
	704	02	3
83961985	1.92.4	01	3
	1.92.4	02	8
83961987	1.92.4	01	13
	1.92.4	02	12
	1.92.6	02	6
83962050	1.92.4	01	8
83962145	514-A	01	5
83962203	343	01	2
	343/ 1	01	16
	522-A	01	16
	700	01	16
	718	02	17
	725/ 1	01	17
83962205	343	02	9
	343/ 1	01	9
	522-A	01	9
	700	01	9
	718	02	9
	725/ 1	01	9
83962208	343	01	4
	343/ 1	01	17
	522-A	01	15
	700	01	17
	718	02	19
	725/ 1	01	19
83962218	343	02	7
	522-A	01	7
	718	02	7
	725/ 1	01	7
83962223	343	01	3
	343/ 1	01	15
	522-A	01	17
	700	01	15
	718	02	18
	725/ 1	01	18
83962538	1.82.6	01A	6
	1.82.6	01B	7
	1.82.6	04B	5
	1.82.6	11B	1
	1.82.6	12B	1
	514	04	16
	514	06	3
	902	02	16
	902	05	3
83962539	1.82.6	09B	1
	1.82.6	11B	4
	1.82.6	12B	4
	333/B	07	3
	334	09	1
	514	04	17
	514	06	4
	514	07	5
	514	08	1
	902	02	17
	902	05	4
	902	06	5
	902	07	1
83962615	902/ A	02	15
83962659	1.88.11/ 5	02	2
83962807	1.88.11/ 2	01	17
83962811	1.88.11/ 2	01	7
83962918	353	01	18
	394/ 1	01	6
83962919	353	01	6
	394/ 1	01	18
83963000	1.82.6	02A	2
83963000	1.82.6	02B	18
	1.82.6	08A	4
	1.82.6	08C	4
	1.82.6	09A	1
	1.82.6	11A	2
	392	01	6
	392	02	4
	393	01	6
83963231	1.88.11/ 6	01	9
83963252	514-C	01	6
83963280	514-C	01	10
83963371	1.42.0	01	4
	1.82.6	03A	3
	1.82.6	03B	3
	1.82.6	04A	11
	331/C	05	8
	333/B	05	8
	724	01	7
	724/ 3	01	7
83963374	1.82.6	03B	17
	1.82.6	09C	3
	1.88.11/ 7	01	1
	1.95.5	02	3
	337	01	4
	337	02	6
	391	01	4
	721	02	2
83963376	1.82.6	09C	10
	1.88.11/ 3	01	5
	437	01	5
	718	01	1
	725/ 1	02	1
83963422	1.88.11/ 5	02	10
83963433	1.88.11/ 5	02	1
83964146	1.92.6	03	2
83964188	514-A	01	20
	514-B	01	3
83971549	1.82.6	09C	1
	437	01	4
83971567	1.44.0A	04	15
83972855	351	09	14
83976357	1.92.4	02	4
83977174	1.88.12/ 3	01	15
83983763	1.42.0	01	13
83985067	1.42.0	01	12
	1.88.11/ 7	01	4
	392	01	14
	392	02	11
	393	01	14
	902/ A	02	4
83987627	704	01	11
	704	02	9
	724	01	24
	724/ 3	01	24
83989915	1.44.0A	03	9
83994150	1.91.7/ 1	01	12
	1.92.9	01	13
	1.96.2	01	12
	1.96.7	01	6
	1.96.7/ 6	01	6
83994372	1.92.6	03	6
83994378	1.92.6	03	7
83994395	1.92.6	03	5
83994579	1.44.0A	03	18
83995298	1.93.4	01	4
83998909	1.88.11/ 9B	01	8
83999466	1.21.5/ 1	01	19
84058418	331/B	01	13
85700130	1.88.11	01	9
85700224	81.00	01	2
	82.00	01	2
	83.00	01	2
85700341	1.88.11/ 5	02	13
85700728	1.21.5/ 1	01	2
85800001	902/ A	02	17
85800002	1.88.11/ 2	01	14
85800003	1.88.11/ 1	01	23
	514-C	01	8
85800004	1.88.11/ 6	01	8
85800005	514-B	01	10
85800007	1.88.11/ 9B	01	19
	514-A	01	9

Number	Figure	Sequence	Ref.
85800018	1.88.11/ 9B	01	20
85800081	1.88.11/ 2	01	11
85800082	1.88.11/ 1	01	15
	1.88.11/ 9B	01	23
	902/ A	02	9
85800083	1.88.11/ 6	01	5
85800084	514-A	01	3
	514-B	01	13
	514-C	01	13
85800085	1.88.11/ 2	01	12
85800086	1.88.11/ 1	01	16
	1.88.11/ 9B	01	17
	902/ A	02	11
85800087	1.88.11/ 6	01	7
85800088	514-A	01	8
	514-B	01	12
	514-C	01	9
85800089	1.88.11/ 2	01	16
85800090	1.88.11/ 1	01	17
	1.88.11/ 9B	01	16
	902/ A	02	5
85800091	1.88.11/ 6	01	10
85800092	514-A	01	11
	514-B	01	8
	514-C	01	11
85800093	1.88.11/ 1	01	18
	1.88.11/ 9B	01	21
85800094	1.88.11/ 6	01	6
85800095	514-A	01	12
	514-B	01	7
	514-C	01	1
85800103	1.88.11/ 1	01	7
85800105	1.88.11/ 1	01	9
85800160	1.88.11/ 1	01	1
85800202	514-A	01	19
85800203	514-A	01	18
85800206	514-A	01	15
85800210	514-A	01	17
85800211	514-A	01	1
85800212	514-A	01	10
85800260	514-A	01	23
85800303	1.88.11/ 9B	01	14
85800307	1.88.11/ 9B	01	22
85800504	1.88.11/ 2	01	5
85800560	1.88.11/ 2	01	1
85800603	1.88.11/ 6	01	3
85800604	1.88.11/ 6	01	2
85800660	1.88.11/ 6	01	1
85800805	902/ A	02	8
85800806	902/ A	02	13
85800860	902/ A	02	1
85800912	514-C	01	18
85800940	514-B	01	21
85800960	1.88.11/ 1	01	22
	514-C	01	16
85800961	1.88.11/ 6	01	13
85800962	514-B	01	6
85800964	514-A	01	14
85800965	1.88.11/ 9A	01	10
85800970	514-B	01	19
85800971	514-B	01	15
85800972	902/ A	02	10
85800973	1.88.11/ 1	01	19
85800975	514-A	01	2
85800978	1.88.11/ 2	01	10
85800979	1.88.11/ 6	01	4
85800980	514-C	01	5
85800981	1.88.11/ 1	01	21
85800982	1.88.11/ 6	01	11
85800983	514-B	01	4
85800985	514-A	01	13
85800990	1.88.11/ 9B	01	6
85800991	514-B	01	11
85800992	514-C	01	2
85801002	1.38.1	01	7
85801011	1.88.11	01	1
85801025	1.88.08	01	4
	514-A	01	22
85801026	1.88.08	02	1
85801029	1.88.08	01	3
85801034	522-B	01	1
	522-C	01	1
85801034	525	02	7
	526-1	01	15
	536/ 1	01	7
	537/ 1	01	7
85801044	520	01	1
	527-1	01	1
85801048	1.88.11/ 5	02	5
85801049	1.88.11/ 1	01	2
	1.88.11/ 2	02	5
85801050	1.88.11/ 1	01	5
85801051	1.88.11	01	14
	471	02	3
	472	02	3
	473	02	3
	474	02	3
	520	01	3
	522-B	01	2
	522-C	01	16
	525	02	6
	526-1	01	20
	527-1	01	3
	536/ 1	01	6
	537/ 1	01	6
	734	01	4
85801052	1.88.11	01	3
85801053	1.88.11	01	3
85801057	1.88.11	01	8
85801076	1.88.08	01	14
85801079	1.88.08	02	5
85801087	1.88.11	01	11
85801092	1.95.0	02	12
85801093	1.95.0	02	17
85801097	515	01	1
	516	01	3
	517	01	3
	518	01	3
	519	01	3
	530	01	1
	531	01	1
	532	01	1
	533	01	1
85801098	515	01	4
	516	01	2
	517	01	2
	518	01	2
	519	01	2
	530	01	3
	531	01	3
	532	01	3
	533	01	3
85801110	1.21.5/ 1	01	3
85801153	1.88.11/ 9	01	7
	1.88.11/ 9A	01	7
85801161	471	02	7
	473	02	7
	525	02	1
	527-1	01	8
	537/ 1	01	1
	556	01	1
85801191	1.88.08	02	13
85801209	704	01	8
	704/ A	01	1
85801210	724	01	1
	724/ A	01	1
	724/ 3	01	1
85801211	704	01	7
	724	01	2
	724/ 3	01	2
85801218	1.14.0	01	6
	1.82.0	01	11
85801249	1.82.0	01	2
85801258	902/ A	01	26
85801262	1.21.5/ 1	01	22
85801307	902/ A	01	9
85801308	902/ A	01	22
85801309	902/ A	01	5
85801310	902/ A	01	4
85801314	902/ A	01	20
85801319	1.87.8	01	1
85801324	1.87.8	01	9
	203	01	7
85801371	471	02	8

Number	Figure	Sequence	Ref.	Number	Figure	Sequence	Ref.
85801371	472	02	8	85801566	1.88.12/ 3	01	8
	473	02	8	85801573	1.38.1	01	4
	474	02	8	85801585	1.28.0	01	9
	515	02	3		636A	01	7
	516	02	3	85801591	1.88.11/ 5	01	3
	517	02	3	85801596	1.88.11/ 3	01	11
	518	02	3	85801599	721	05	4
	519	02	3	85801621	1.92.3	01	1
	525	02	3	85801622	1.92.3	01	2
	526	01	3	85801623	1.92.3	01	3
	526-1	01	17	85801624	1.92.6	02	7
	527	01	3	85801625	1.92.6	02	9
	527-1	01	7	85801626	1.92.4	03	3
	528	01	3	85801628	1.92.4	03	2
	529	01	3	85801630	1.92.3	01	4
	536/ 1	01	3	85801631	1.92.3	01	5
	537/ 1	01	3	85801632	1.92.9	01	2
	555	01	3	85801649	1.93.0	01	2
	556	01	3		1.93.0/ 2	01	2
85801376	515	02	8		1.93.0/ 3	01	2
	516	02	8		1.93.0/ 5	01	2
	517	02	8	85801651	1.93.0	03	7
	518	02	8	85801654	1.92.1	01	2
	519	02	8		1.92.1/ 2	01	2
	526	01	2	85801655	1.92.1	01	3
	527	01	2		1.92.1/ 2	01	3
	528	01	2	85801739	1.92.9	01	1
	529	01	2	85801798	1.92.6	03	1
85801377	515	02	7	85801799	1.92.6	02	4
	516	02	7	85801800	1.92.6	02	5
	517	02	7	85801801	1.92.6	02	12
	518	02	7		1.94.0	01	6
	519	02	7	85801804	1.92.4	01	11
	526	01	7	85801806	1.92.4	02	2
	527	01	7	85801811	1.92.9	01	3
	528	01	7	85801812	1.92.9	02	1
	529	01	7	85801813	1.92.9	02	2
85801397	724	02	3	85801814	1.92.9	02	3
	724/ 3	02	3	85801815	1.92.9	02	4
85801452	724	02	7	85801816	1.92.9	02	7
	724/ 3	02	7	85801820	1.92.9	03	11
85801470	471	02	1	85801821	1.92.9	03	11
	472	02	1	85801823	1.92.9	03	14
	473	02	1	85801824	1.92.9	03	15
	474	02	1	85801825	1.92.9	03	16
	515	02	4	85801826	1.92.9	01	9
	516	02	4	85801827	1.92.9	02	14
	517	02	4	85801828	1.92.9	01	7
	518	02	4	85801829	1.92.9	01	10
	519	02	4	85801830	1.92.9	03	2
	525	02	2	85801831	1.92.9	03	1
	526	01	4	85801832	1.92.9	03	3
	526-1	01	16	85801833	1.92.9	03	4
	527	01	4	85801834	1.92.9	03	6
	527-1	01	6	85801860	1.95.0	01	7
	528	01	4	85801863	1.92.1/ 1	01	2
	529	01	4		1.92.1/ 3	01	2
	536/ 1	01	2	85801883	1.92.4	02	11
	537/ 1	01	2	85801884	1.92.4	02	13
	555	01	2	85801938	1.96.0	01	1
	556	01	2	85801939	1.96.0	01	2
85801486	522-C	01	14	85801941	1.95.0	02	8
	525	01	14	85801953	1.96.7	01	4
	526-1	01	14		1.96.7/ 6	01	4
85801488	390/ 1	01	2	85801968	1.96.7	01	1
	394-397	01	9		1.96.7/ 6	01	1
85801492	995	01	8	85801976	1.95.5	01	13
85801502	390/ 1	01	1	85801979	1.93.0	03	5
	394-397	01	1	85801991	1.92.9	01	11
85801514	390/ 1	01	11		1.93.0	01	14
	394-397	02	11		1.93.0	01	3
85801518	1.88.12/ 3	01	20		1.93.0	02	8
	390/ 1	01	8		1.93.0/ 2	01	3
	394-397	01	6		1.93.0/ 3	01	3
85801542	732	01	1		1.93.0/ 5	01	3
	732-A	01	1		1.93.5	02	4
85801561	343	02	3		1.93.5/ 1	02	4
	522-A	01	3	85802018	1.92.9	03	12
	718	02	3	85802062	1.92.4	01	7
	725/ 1	01	3	85802063	1.92.4	01	2
85801562	1.88.12/ 3	01	12	85802107	1.91.6	01	3
85801564	1.88.12/ 3	01	3	85802141	1.93.5	02	8

Number	Figure	Sequence	Ref.
85802141	1.93.5/ 1	02	8
85802142	1.93.5	02	9
	1.93.5/ 1	02	9
85802143	1.93.5	02	10
	1.93.5/ 1	02	10
85802144	1.93.5	02	11
	1.93.5/ 1	02	11
85802145	1.93.5	02	12
	1.93.5/ 1	02	12
85802146	1.93.5	02	13
	1.93.5/ 1	02	13
85802214	724	01	18
	724/ 3	01	18
85802221	1.95.5/ B	01	1
85802227	351	04	15
	353	01	22
	394/ 1	01	19
85802242	1.98.0	02	5
85802243	1.98.0	02	1
85802245	1.98.0	02	5
85802246	1.98.0	02	1
85802247	725	01	4
85802248	1.98.0	02	5
85802249	1.98.0	02	1
85802251	1.98.0	02	5
85802252	1.98.0	02	1
85802254	1.98.0	02	5
85802255	1.98.0	02	1
85802257	1.98.0	02	5
85802258	1.98.0	02	1
85802259	1.93.0	04	12
	1.93.0/ 2	01	20
85802260	1.98.0	02	5
85802261	1.98.0	02	1
85802307	1.92.6	02	10
85802309	1.96.7	01	16
	1.96.7/ 4	01	3
	1.96.7/ 6	01	10
	1.96.7/10	01	1
	1.96.7/10	01	3
85802310	1.96.7	01	11
	1.96.7/ 4	01	6
	1.96.7/ 6	01	11
	1.96.7/10	01	6
85802334	1.92.3	01	6
	1.92.6	02	8
85802338	1.21.5/ 1	01	13
85802351	1.92.9	03	13
85802372	725	01	9
85802374	1.75.2	01	10
85802396	1.88.08	01	13
	1.88.08	02	11
	514	01	6
	514	02	10
	902	01	6
	902	03	12
85802397	1.88.08	01	12
	1.88.08	02	12
	514	01	7
	514	02	9
	902	01	7
	902	03	13
85802398	1.91.5	02	4
85802403	1.88.11/ 5	02	9
85802441	1.98.0	01	13
85802454	724	02	2
	724/ 3	02	2
85802457	725	01	7
85802478	1.91.4/ 2	05	4
85802494	1.88.11/ 5	01	2
	1.88.12/ 3	01	21
	343	02	2
	343/ 1	01	2
	351	05	2
	351	06	2
	353	01	12
	353	03	7
	394/ 1	01	12
	394/ 1	03	7
	522-A	01	2
	700	01	2
	718	02	2
85802494	721	05	3
	725/ 1	01	2
85802509	721	05	1
85802510	721	05	11
85802513	1.44.0A	04	12
85802515	1.44.0A	04	18
85802527	333/B	08	10
	721	03	10
85802528	333/B	08	11
	721	03	11
85802529	333/B	08	9
	721	03	9
85802532	333/B	08	6
	721	03	6
85802580	1.82.0	01	20
85802587	343	02	6
	343/ 1	01	6
	522-A	01	6
	700	01	6
	718	02	6
	725/ 1	01	6
85802599	200	01	2
85802601	343	01	1
	522-A	01	18
	718	02	16
	725/ 1	01	16
85802615	343	01	5
	522-A	01	14
	718	02	20
	725/ 1	01	20
85802617	390	01	1
85802618	1.28.0	01	11
	1.88.09	01	3
	636A	01	8
85802620	1.88.11/ 7	01	17
85802640	1.95.5	02	1
85802642	1.82.6	02B	10
	1.82.6	04B	6
	1.82.6	11A	1
85802647	351	05	1
	353	01	4
	394/ 1	01	4
85802679	1.29.1	01	2
85802682	390/ 1	01	1
	394-397	01	2
85802683	1.28.0/ A	02	13
	1.28.0/ B	02	13
85802684	1.28.0/ A	02	14
	1.28.0/ B	02	16
85802724	1.88.11/ 5	01	1
85802731	1.82.6	13A	7
85802734	1.88.11/ 5	01	5
85802735	1.88.11/ 5	01	13
85802736	1.88.11/ 5	01	8
85802737	1.88.11/ 5	01	16
85802738	1.88.11/ 5	01	14
	1.88.12/ 3	01	10
	351	06	9
	351	07	2
	351	08	7
	353	03	14
	390/ 1	01	16
	394-397	02	9
	394/ 1	02	7
	394/ 1	03	14
85802741	1.88.11/ 5	01	19
85802742	1.88.11/ 5	01	21
85802743	1.19.1	01	15
	1.88.11/ 3	01	6
	176	01	2
	176	01	4
	337	01	14
	337	02	12
	646	01	6
85802744	514	06	5
	902	05	5
85802758	1.44.0A	01	16
85802761	1.95.5	02	5
85802763	1.96.2	01	9
85802776	1.82.6	02B	11
	724	01	10
	724/ 3	01	10

Number	Figure	Sequence	Ref.
85802777	1.82.6	04B	2
85802780	704	02	7
85802799	1.82.6	04B	7
85802800	1.82.6	01A	10
85802801	1.82.6	05F	1
	1.82.6	05G	1
	1.82.6	06A	2
	724	01	23
	724/ 3	01	22
85802803	392	01	3
	392	02	5
	393	01	3
85802804	1.17.2	01	11
85802805	337	01	6
	337	02	8
85802816	343	02	1
	522-A	01	1
	718	02	1
	725/ 1	01	1
85802820	1.88.11/ 7	01	5
85802829	176	01	7
85802833	1.82.6	05F	2
	1.82.6	05G	2
85802838	1.82.6	04B	4
85802839	1.82.6	04B	3
85802842	1.88.12/ 3	01	17
85802843	390/ 1	01	3
	394-397	01	3
85802846	1.82.6	03A	5
	1.82.6	03B	5
85802847	1.29.1	01	8
85802872	1.88.08	02	10
85802889	1.75.2	03	6
	1.75.2/ 3	03	6
	1.82.6	03A	9
	1.82.6	05F	8
	1.82.6	05G	8
85802890	1.82.6	02A	9
	1.82.6	02B	13
	1.82.6	03B	12
	1.82.6	04B	13
85802891	1.82.6	08A	9
	1.82.6	08C	9
85802893	514	04	11
	902	02	11
85802894	514	04	9
	902	02	9
85802895	514	04	10
	902	02	10
85802899	514	04	4
	902	02	4
85802900	514	04	8
	902	02	8
85802901	514	04	3
	514	05	4
	902	02	3
85802902	514	04	7
	902	02	7
85802903	1.21.5/ 1	01	8
	721	05	17
85802909	514	05	5
85802910	1.88.11/ 3	01	3
	1.88.11/ 7	01	16
85802911	1.88.11/ 3	01	2
	1.88.11/ 7	01	10
85802912	1.88.11/ 7	01	14
85802947	1.29.1	01	1
85802950	1.88.11/ 8	01	7
85802954	1.82.6	04A	13
	1.82.6	09C	13
85802955	1.82.6	04A	6
	1.82.6	04B	12
	1.82.6	09C	2
85802957	514	07	2
	514	08	2
	902	06	2
	902	07	2
85802958	1.82.6	02B	9
85802960	1.82.6	06B	2
85802961	1.88.11/ 3	01	4
85802965	1.88.11/ 7	01	7
85802970	1.87.8	01	7
85802974	533/ 1	01	2
85802975	902	04	10
85802992	1.88.11	01	13
	1.88.11/ 1	01	12
	1.88.11/ 2	02	7
	471	02	5
	472	02	5
	473	02	5
	474	02	5
	520	01	5
	522-B	01	4
	522-C	01	17
	525	02	4
	526-1	01	18
	527-1	01	5
	535	01	4
	535/ 1	01	2
	536/ 1	01	4
	537	01	2
	537/ 1	01	4
	734	01	2
85802993	1.88.11	01	4
	1.88.11/ 1	01	11
	1.88.11/ 2	02	6
	471	02	4
	472	02	4
	473	02	4
	474	02	4
	520	01	4
	522-B	01	3
	522-C	01	18
	525	02	5
	526-1	01	19
	527-1	01	4
	535	01	5
	535/ 1	01	8
	536/ 1	01	5
	537	01	8
	537/ 1	01	5
	734	01	3
85803002	514	02	8
	902	03	14
85803005	732	01	3
	732-A	01	12
	902	04	9
85803008	1.88.11/ 3	01	8
	1.88.11/ 7	01	8
	337	02	10
	514	07	3
	902	06	3
85803010	1.19.1	01	10
	1.88.11/ 8	01	5
	337	01	7
	902/ A	02	18
85803012	1.82.6	01A	1
	1.82.6	01B	1
85803013	1.17.2	01	5
	1.19.1	01	12
85803019	1.17.2	01	12
85803039	1.88.11/ 9	01	8
	1.88.11/ 9A	01	8
85803040	1.95.3	01	17
85803055	1.88.12/ 3	01	14
85803079	644	03	1
85803088	902/ A	01	16
85803107	390/ 1	01	7
	394-397	01	11
85803124	390/ 1	01	7
	394-397	01	5
85803139	535	01	3
	535/ 1	01	7
	537	01	7
85803184	724	02	8
	724/ 3	02	8
85803192	1.88.08	01	8
85803193	1.88.08	01	6
85803194	1.88.08	01	15
85803195	1.88.08	01	9
	1.88.08	02	7
85803196	1.88.08	01	1
85803197	1.88.08	01	5
85803198	1.88.08	02	6

Number	Figure	Sequence	Ref.
85803215	1.88.11/ 5	01	17
85803226	1.17.2	01	8
85803230	704	02	1
85803231	704	02	2
85803234	704	01	6
	721	02	3
85803241	704	02	10
85803246	1.88.08	02	9
85803277	1.88.11/ 5	02	16
85803289	902/ A	01	17
85803297	1.88.11/ 5	02	7
85803312	1.95.0	03	4
	331/C	01	30
	331/C	03	9
	331/C	04	15
	333/B	01	30
	333/B	03	9
	333/B	03	9
	333/B	04	15
85803332	1.42.0	01	10
	392	01	2
	392	02	6
	393	01	2
	721	02	9
85803360	353	03	1
	394/ 1	03	1
85803364	353	03	3
	394/ 1	03	3
85803372	628	01	2
85803380	1.95.3	01	8
85803382	351	04	7
	353	01	2
	394/ 1	01	2
85803393	333/B	07	5
	704	02	6
	721	02	8
	734	01	7
85803394	990	01	1
85803395	990	01	7
85803396	990	01	2
85803402	333/B	08	3
	721	03	3
85803408	700	02	3
	718	01	12
	725/ 1	02	12
85803409	339	01	4
	725	01	8
85803428	724	01	11
	724/ 3	01	11
85803440	724	02	10
	724/ 3	02	10
85803447	351	06	8
	394/ 1	03	15
85803474	394-397	02	2
85803476	394-397	02	17
85803477	394-397	02	8
85803479	394-397	02	5
85803483	724	02	9
	724/ 3	02	9
85803484	724	02	4
	724/ 3	02	4
85803485	724	02	5
	724/ 3	02	5
85803486	1.82.6	02A	1
	724	01	5
	724/ 3	01	5
	725	01	3
85803487	724	01	6
	724/ 3	01	6
85803489	394-397	02	16
85803492	351	07	13
	394-397	02	13
85803493	394-397	02	14
85803517	1.88.11/ 7	01	19
	721	05	12
85803524	1.75.2	02	6
	1.75.2/ 3	02	6
85803540	351	04	8
	353	01	8
	394/ 1	01	8
85803587	351	09	10
85803613	902	04	1
85803617	1.88.11/ 9A	01	1
85803623	1.88.08	01	7
85803625	1.83.0	01	6
85803637	1.88.08	02	14
85803639	1.88.08	01	16
85803675	82.00	01	1
85803681	83.00	01	1
85803782	394-397	01	13
85803783	394-397	01	14
85803786	721	05	10
85803787	351	08	9
85803788	1.98.0	01	11
85803789	1.98.0	01	10
85803854	1.75.2	01	11
85803867	1.98.0	02	1
85803868	1.98.0	02	1
85803874	1.98.0	02	1
85803875	1.98.0	02	1
85803876	1.98.0	02	1
85803879	1.75.2	02	1
	1.75.2/ 3	02	1
85803884	1.75.2	01	5
	1.75.2/ 3	01	5
85803916	351	08	8
85803917	353	01	21
	394/ 1	02	8
85803986	1.91.4	02	12
	1.91.4/ 2	02	12
85804026	1.88.11/ 5	02	4
85804038	644	02	13
85804041	644	02	3
85804043	644	01	11
85804044	1.94.2	01	5
	1.94.2/ 1	01	5
	644	01	3
85804051	644	03	7
85804065	646	01	11
85804072	644	01	10
85804077	1.98.0	03	1
85804078	1.98.0	03	6
85804079	1.98.0	03	2
85804080	1.98.0	03	3
85804081	1.98.0	04	3
85804083	1.98.0	01	14
85804084	1.98.0	04	6
85804085	1.98.0	04	7
85804086	1.98.0	03	4
85804087	1.98.0	02	3
85804088	1.98.0	04	2
85804089	1.98.0	03	5
85804090	1.98.0	04	5
85804091	1.98.0	04	4
85804136	351	09	11
85804141	351	09	9
85804151	351	09	6
85804153	351	09	12
85804156	782	01	2
	789	01	1
85804159	351	04	5
85804171	1.21.5/ 1	01	23
85804271	351	04	16
85804275	1.28.0	01	18
85804276	1.28.0	01	2
85804302	1.17.2	01	7
85804323	622	01	1
85804328	1.98.0	02	5
85804332	1.98.0	01	6
85804333	1.98.0	01	7
85804334	1.98.0	01	8
85804335	1.98.0	01	9
85804336	1.98.0	01	5
85804338	1.98.0	01	4
85804339	1.98.0	01	3
85804341	1.98.0	01	2
85804344	390/ 1	01	19
85804345	390/ 1	01	18
85804346	302	01	12
	343	01	6
	343/ 1	01	19
	390	01	2
	522-A	01	19
	700	01	19

Number	Figure	Sequence	Ref.
85804346	718	02	21
	725/ 1	01	21
85804347	176	01	1
	176	01	3
85804349	176	01	5
85804358	1.98.0	02	6
85804362	1.91.6	01	5
85804366	1.88.11/ 5	02	11
85804375	1.88.11/ 5	01	22
	1.88.12/ 3	01	5
	351	07	6
	351	08	3
	351	09	1
	353	02	5
	353	03	12
	390/ 1	01	13
	394-397	02	1
	394/ 1	02	3
	394/ 1	03	12
85804376	1.88.11/ 5	01	20
	1.88.12/ 3	01	1
	351	07	9
	351	09	5
	353	02	4
	394-397	02	6
	394/ 1	03	11
85804395	1.98.0	01	1
85804399	343	01	7
	343/ 1	01	20
	522-A	01	20
	700	01	20
	718	02	22
	725/ 1	01	22
85804400	1.98.0	02	5
85804401	1.98.0	02	5
85804402	1.98.0	02	5
85804403	1.98.0	02	5
85804412	1.94.2	01	3
	1.94.2/ 1	01	3
	644	01	5
85804441	644	02	19
85804442	724	01	20
	724/ 3	01	20
85804447	514	02	12
85804493	1.87.8	01	10
85804533	533/ 1	01	5
85804534	533/ 1	01	3
85804539	1.88.12/ 3	01	24
85804540	390/ 1	01	10
85804541	394-397	01	12
85804542	1.98.0	03	1
85804543	1.98.0	03	6
85804544	1.98.0	03	2
85804545	1.98.0	03	3
85804546	1.98.0	04	3
85804547	1.98.0	04	6
85804548	1.98.0	04	7
85804549	1.98.0	03	4
85804550	1.98.0	02	3
85804551	1.98.0	04	2
85804552	1.98.0	03	5
85804553	1.98.0	04	5
85804554	1.98.0	04	4
85804555	1.98.0	03	1
85804556	1.98.0	03	6
85804557	1.98.0	03	2
85804558	1.98.0	03	3
85804559	1.98.0	04	3
85804560	1.98.0	04	6
85804561	1.98.0	04	7
85804562	1.98.0	03	4
85804563	1.98.0	02	3
85804564	1.98.0	04	2
85804565	1.98.0	03	5
85804566	1.98.0	04	5
85804567	1.98.0	04	4
85804568	1.91.3	01	1
85804573	1.82.6	13A	3
85804574	1.82.6	13A	8
85804602	175	01	1
85804617	1.92.4	03	1
85804675	1.91.1/ 1	01	2
85804675	1.91.4	03	4
	1.91.4/ 2	03	4
85804676	1.96.0	01	5
85804688	1.96.7/ 4	01	1
85804705	1.95.5	01	4
85804706	650	01	1
85804734	1.96.7/ 4	01	4
	1.96.7/10	01	4
85804736	353	02	1
	394/ 1	03	8
85804750	1.93.0/ 2	01	18
	1.93.0/ 3	01	18
	1.93.0/ 5	01	18
	1.93.5	01	4
	1.93.5/ 1	01	7
85804780	351	04	3
	353	01	1
	394/ 1	01	1
85804781	351	04	6
	353	01	19
	394/ 1	01	20
85804782	353	01	7
	394/ 1	01	7
85804787	353	01	13
	394/ 1	01	13
85804791	353	01	16
	394/ 1	01	16
85804794	353	01	15
	394/ 1	01	15
85804801	353	01	11
	394/ 1	01	11
85804803	351	08	1
	394/ 1	02	1
85804821	353	01	20
	394/ 1	01	21
85804838	203	01	1
	215	01	1
85804863	1.93.0	04	2
85804864	1.93.0	04	5
85804865	1.93.0	03	1
85804866	1.93.0	04	6
85804869	1.92.4	01	4
85804870	1.92.4	02	5
85804879	392	01	9
	393	01	9
	725	01	10
85804947	1.82.6	11A	10
	1.82.6	12B	8
85804975	644	03	9
85804980	644	03	6
85804981	644	05	5
85804983	644	05	4
	644	05A	4
	644	05A	8
85804984	644	05	3
	644	05A	3
85804985	644	05	12
85804987	644	05	15
	644	05A	6
85804988	644	05	13
	644	05A	10
	644	05A	9
85804989	644	03	10
85805003	644	02	14
85805004	644	02	15
85805005	644	02	16
85805006	644	02	17
85805008	644	02	10
85805033	351	07	1
85805035	351	07	8
85805037	351	07	14
85805038	351	07	11
85805039	351	07	10
85805040	351	06	1
85805042	351	06	7
85805043	351	06	5
85805046	351	06	14
85805047	351	05	10
85805049	351	05	13
85805053	351	05	14
85805056	351	05	7
85805057	351	05	12

Number	Figure	Sequence	Ref.
85805059	351	05	4
85805065	1.92.3	01	7
	1.92.6	02	11
85805067	1.92.1/ 1	01	4
	1.92.1/ 3	01	4
85805069	203	01	3
85805071	203	01	2
85805108	1.88.11/ 8	01	1
85805111	1.88.11/ 8	01	2
85805113	1.88.11/ 8	01	4
85805115	392	02	1
85805123	392	02	9
85805124	392	01	4
	392	02	2
	393	01	4
85805126	392	02	8
85805137	1.88.08	01	21
85805142	1.87.2	01	11
85805144	644	02	22
85805160	644	04	2
	644	04A	2
85805162	1.75.2	03	4
	1.75.2/ 3	03	4
85805166	1.82.6	04A	8
85805168	1.82.6	04A	7
85805193	700	02	7
	718	01	7
	725/ 1	02	7
85805195	700	02	8
	718	01	8
	725/ 1	02	8
85805200	1.96.7	01	8
	644	06	7
85805203	1.82.6	07	21
85805206	1.82.6	07	18
85805207	1.82.6	07	20
85805208	1.82.6	07	19
85805209	1.82.6	07	16
85805210	1.82.6	07	14
85805211	1.82.6	07	15
85805217	337	02	7
85805218	337	01	1
85805220	337	01	3
	337	02	14
85805221	337	01	8
	337	02	13
85805223	337	02	5
85805224	337	01	9
85805228	337	01	18
85805231	1.42.0	01	15
85805232	1.42.0	01	1
	1.42.0/ A	01	7
85805239	351	04	9
	353	01	17
	394/ 1	01	17
85805242	351	04	1
85805247	700	02	11
	718	01	11
	725/ 1	02	11
85805250	351	05	8
85805257	1.95.0	02	1
	1.95.0/ A	01	1
85805258	1.82.6	12B	11
	333/B	07	2
	334	09	2
	700	02	1
85805262	337	01	5
85805264	337	01	12
85805266	337	02	1
85805271	337	02	9
85805273	337	02	9
85805277	1.95.0	01	16
85805283	1.95.0	01	6
85805285	1.95.0	01	4
85805300	203	01	4
85805301	1.87.2	01	1
85805302	1.87.2	01	2
85805303	1.87.2	01	6
85805304	1.87.2	01	7
85805305	1.87.2	01	8
85805306	533/ 1	01	6
85805308	1.93.0/ 2	01	11
85805308	1.93.0/ 5	01	11
85805318	1.42.0	01	5
	331/C	05	4
	333/B	05	4
85805323	1.93.0	01	5
	1.93.0/ 2	01	5
	1.93.0/ 3	01	5
	1.93.0/ 5	01	5
	1.93.5	01	5
	1.93.5/ 1	01	5
85805340	700	02	6
	718	01	6
	725/ 1	02	6
85805341	700	02	4
85805342	700	02	5
85805347	644	05	9
	644	06	11
	644	06	3
85805383	1.91.4	05	11
	1.91.4/ 2	05	11
85805408	343/ 1	01	3
	700	01	3
85805438	1.95.1	01	1
85805440	1.95.1	01	4
85805441	1.95.1	01	2
85805448	1.92.4	01	9
	1.92.4	02	9
85805498	353	03	8
85805502	1.82.6	03A	8
85805509	644	06	13
85805536	343/ 1	01	14
	700	01	14
85805541	343/ 1	01	1
	700	01	1
85805542	343/ 1	01	10
	700	01	10
85805545	650	01	2
85805548	1.95.0	03	7
85805567	1.88.11/ 3	01	9
85805571	1.92.8	01	1
85805591	1.93.0	03	4
85805616	1.88.12/ 3	01	6
85805619	1.88.11/ 8	01	6
85805624	1.95.5	01	1
	1.95.5/ A	01	1
85805625	351	06	1
85805629	351	07	10
85805632	351	05	8
85805635	351	04	13
85805648	1.88.08	01	18
85805659	1.92.6	02	1
85805663	200	01	5
	471	02	2
	472	02	2
	473	02	2
	474	02	2
85805664	200	01	6
85805685	1.75.2	01	3
	1.75.2/ 3	01	3
85805686	1.75.2	01	2
	1.75.2/ 3	01	2
85805690	1.88.12/ 3	01	9
85805692	1.88.12/ 3	01	7
85805703	1.40.0	01	18
85805704	1.40.0	01	22
85805705	1.40.0	01	25
85805706	1.40.0	01	14
85805707	1.40.0	01	21
	1.40.0	02	29
85805709	1.40.0	02	28
	402	03	14
	415	03	14
85805710	1.40.0	02	30
85805711	1.40.0	02	22
	402	03	3
	415	03	3
85805764	343/ 1	01	7
	700	01	7
85805770	1.92.6	01	7
85805771	1.92.6	01	4
85805772	1.95.5	01	9
85805775	1.95.5	01	2

Number	Figure	Sequence	Ref.
85805777	1.94.0	01	9
85805782	343/ 1	01	18
	700	01	18
85805803	1.93.0/ 2	01	6
	1.93.0/ 5	01	6
85805807	200	01	4
85805813	302	01	11
85805818	1.28.0/ A	04	1
	1.28.0/ B	04	1
85805819	1.93.0	01	18
	1.93.0/ 3	01	14
85805824	1.82.6	06A	7
85805825	1.82.6	06A	8
85805829	1.98.0	04	1
85805840	1.82.6	06A	1
85805854	1.82.6	07	1
85805855	1.82.6	07	2
85805856	1.82.6	07	5
85805857	1.82.6	07	6
85805858	1.82.6	07	3
85805859	1.82.6	07	4
85805860	1.82.6	07	7
85805861	1.82.6	07	8
85805862	718	01	5
	725/ 1	02	5
85805863	718	01	4
	725/ 1	02	4
85805864	700	02	12
	718	01	13
	725/ 1	02	13
85805865	700	02	13
	718	01	14
	725/ 1	02	14
85805869	1.82.6	07	11
85805870	1.82.6	07	9
85805872	1.82.6	07	10
85805884	644	05	7
85805885	644	05	8
	644	05A	7
85805886	644	05	11
85805887	644	05	10
	644	05A	11
85805890	803	01	5
85805969	402	01	7
	415	01	7
85805973	1.40.0	01	7
	402	01	23
	415	01	23
85805975	1.40.0	02	7
	402	02	7
	415	02	7
85805976	1.40.0	02	6
	402	02	6
	415	02	6
85805977	1.40.0	02	5
	402	02	5
	415	02	5
85805978	1.40.0	02	16
	402	02	16
	415	02	16
85805979	1.40.0	02	11
	402	02	11
	415	02	11
85805980	1.40.0	02	12
	402	02	12
	415	02	12
85805982	1.40.0	02	15
	402	02	15
	415	02	15
85805983	1.40.0	02	14
	402	02	14
	415	02	14
85805984	1.40.0	02	8
	402	02	20
	415	02	20
85805986	1.40.0	02	13
	402	02	13
	415	02	13
85805987	1.40.0	02	3
	402	02	3
	415	02	3
85805988	402	02	8
85805988	415	02	8
85805989	1.40.0	02	4
	402	02	4
	415	02	4
85805990	1.40.0	02	18
	402	02	18
	415	02	18
85805992	1.40.0	02	19
	402	02	19
	415	02	19
85805993	402	06	1
	415	06	1
85805996	402	06	5
	415	06	5
85805997	402	06	7
	415	06	7
85805999	402	06	2
	415	06	2
85806000	402	06	8
	415	06	8
85806002	1.40.0	02	21
	402	03	2
	415	03	2
85806003	1.40.0	02	20
	415	03	1
85806004	402	05	10
	415	05	1
85806006	402	03	11
	415	03	11
85806008	402	03	7
	415	03	7
85806009	402	03	5
	415	03	5
85806010	1.40.0	02	27
	402	03	6
	415	03	6
85806011	402	03	12
	415	03	12
85806012	402	03	15
	415	03	15
85806014	402	03	16
	415	03	16
85806015	402	03	17
	415	03	17
85806016	402	03	13
	415	03	13
85806019	1.28.0	01	16
85806023	1.93.0	01	9
	1.93.0/ 2	01	9
	1.93.0/ 3	01	9
	1.93.0/ 5	01	9
	1.96.7	01	9
	644	06	5
85806048	644	05	14
85806089	1.93.5	01	6
	1.93.5/ 1	01	6
85806095	1.91.5	01	3
85806097	1.91.5	01	4
85806098	1.91.5	01	2
85806102	1.82.6	02B	15
85806128	1.83.0	01	16
85806132	1.91.4	05	13
	1.91.4/ 2	05	18
85806133	1.91.4	04	3
	1.91.4/ 2	04	3
85806134	1.91.4/ 2	02	15
85806135	1.91.4	02	6
	1.91.4/ 2	02	3
85806154	1.93.0	02	12
	644	08	10
85806155	343	02	10
	522-A	01	10
	718	02	10
	725/ 1	01	10
85806176	1.95.0	02	21
85806184	1.91.5	01	5
85806185	1.91.5	01	6
85806187	1.92.1/ 1	01	6
85807283	402	06	5
	415	06	5
85807284	402	06	6
	415	06	6

Number	Figure	Sequence	Ref.	Number	Figure	Sequence	Ref.
85807824	1.88.11/ 3	01	12	85811440	526-1	01	21
85807827	1.82.6	16	18		527	01	1
85807828	1.82.6	16	21		528	01	1
85807829	1.82.6	16	22		529	01	1
85807830	1.82.6	16	19		536/ 1	01	1
85807831	1.82.6	16	20		555	01	1
85807832	1.82.6	16	15	85811870	1.82.6	01A	2
85807833	1.82.6	16	25		1.82.6	01B	2
85807834	1.82.6	16	24	85811895	1.98.1	01	6
85807855	1.91.1/ 1	01	7	85811896	1.98.1	01	6
85807857	336/ 1	02	4	85811921	331	01	12
	336/ 1	05	11		333/1	01	13
	339	03	22	85811923	302	02	3
	339	05	11		339/ 1	02	3
85807858	336/ 1	02	15	85811933	302	04	9
	336/ 1	05	9		333/1	02	5
	339	03	21		333/1	03	5
	339	05	9		333/1	04	5
85807866	1.91.1/ 1	01	3		333/1	05	4
85807867	522-B	01	1		333/1	06	4
	536/ 1	01	7		339/ 1	04	9
	537/ 1	01	7		339/ 1	05	10
85807868	520	01	2	85811934	302	02	6
	527-1	01	2		302	04	10
85807870	1.98.0	01	12		333/1	02	2
85807873	1.88.11/ 7	01	6		333/1	03	2
85807874	1.88.11/ 7	01	15		333/1	04	2
85807876	724	01	8		333/1	05	2
	724/ 3	01	8		333/1	06	2
85807880	1.92.1/ 1	01	5		339/ 1	02	6
	1.92.1/ 3	01	5		339/ 1	04	10
85807914	353	03	15	85811935	339/ 1	05	11
85807926	353	03	6	85811937	333/1	05	3
	394/ 1	03	6		333/1	06	3
85808307	644	05A	13	85811938	302	02	5
	644	06	2		302	03	4
85808380	1.95.5/ A	01	7		302	04	4
	1.95.5/ B	01	7		333/1	02	3
85808381	1.95.5/ A	01	17		333/1	03	3
	1.95.5/ B	01	17		333/1	04	3
85808382	1.95.5/ A	01	18		333/1	05	5
	1.95.5/ B	01	18		333/1	06	5
85808383	1.95.5/ A	01	19		333/1	07	2
	1.95.5/ B	01	19		339/ 1	02	5
85808385	1.95.5/ A	01	4		339/ 1	03	4
	1.95.5/ B	01	4		339/ 1	04	4
85808386	1.95.5/ A	01	12		339/ 1	05	4
	1.95.5/ B	01	12	85811946	302	02	4
85808390	1.95.5/ A	01	2		339/ 1	02	4
	1.95.5/ B	01	2	85811953	302	02	8
85808401	336/ A	01	5		339/ 1	02	8
85808402	336/ A	01	1	85811954	302	02	7
	339	02	2		339/ 1	02	7
85808403	336/ 1	01	11	85811958	331	01	4
	339	01	12	85811959	333/1	01	4
85808419	1.95.2	01	5	85811963	644	06	8
85808422	1.87.2	01	12	85811964	644	06	9
	1.88.12/ 3	01	25	85811965	644	06	1
85808460	1.91.4	05	14	85811969	644	01	7
	1.91.4/ 2	05	19	85811970	644	01	9
	1.93.0	02	19	85811972	644	01	13
	1.93.0/ 5	01	20		644	09	9
85808472	902/ A	01	11	85811975	176	01	6
85808473	902/ A	01	10	85811976	644	04	12
85811421	1.83.0	01	3		644	04A	12
85811432	515	01	2	85812014	1.42.0/ A	01	1
	516	01	4	85812015	1.42.0/ A	01	5
	517	01	4	85812016	1.42.0/ A	01	6
	518	01	4	85812017	1.42.0/ A	01	2
	519	01	4	85812018	1.42.0/ A	01	4
	530	01	2	85812019	1.42.0/ A	01	3
	531	01	2	85812021	1.96.7	01	12
	532	01	2		644	06	12
	533	01	2		644	06	6
85811440	472	02	7	85812029	333/B	07	6
	474	02	7		721	02	1
	515	02	1	85812043	1.94.2	02	6
	516	02	1		644	01	4
	517	02	1	85812064	1.98.0	02	4
	518	02	1	85812080	1.93.0	04	14
	519	02	1		1.93.0/ 3	04	14
	526	01	1	85812081	1.93.0/ 2	01	15

Number	Figure	Sequence	Ref.
85812081	1.93.0/ 5	01	15
85812085	1.28.0/ A	03	5
	1.28.0/ B	03	9
85812086	1.28.0/ A	03	2
	1.28.0/ B	03	1
85812087	1.28.0/ A	03	1
	1.28.0/ B	03	2
85812091	1.28.0/ B	03	16
85812092	1.28.0/ A	04	3
	1.28.0/ B	04	3
85812094	1.28.0/ A	02	16
	1.28.0/ B	02	17
85812096	1.28.0/ A	01	3
85812109	1.95.5/ A	01	6
	1.95.5/ B	01	6
85812110	1.95.5/ A	01	9
	1.95.5/ B	01	9
85812111	1.95.5/ A	01	11
	1.95.5/ B	01	11
85812112	1.95.5/ A	01	10
	1.95.5/ B	01	10
85812113	302	04	12
	333/1	02	4
85812114	333/1	04	4
85812115	333/1	05	6
85812116	302	04	8
	333/1	03	4
	333/1	06	6
	339/ 1	04	8
	339/ 1	05	9
	724/ 3	01	25
85812117	333/1	03	6
85812131	1.95.5/ A	01	14
	1.95.5/ B	01	14
85812132	1.95.5/ A	01	13
	1.95.5/ B	01	13
85812133	1.95.5/ A	01	16
	1.95.5/ B	01	16
85812134	1.95.5/ A	01	20
	1.95.5/ B	01	21
85812135	1.95.5/ A	01	3
	1.95.5/ B	01	20
85812142	514	04	18
	902	02	18
85812143	1.82.6	11A	6
	1.82.6	12B	5
85812149	1.82.6	02B	4
85812150	514	04	19
	902	02	19
85812151	1.82.6	11A	5
	1.82.6	12B	6
85812152	1.82.6	11A	14
	1.82.6	11B	6
85812153	1.82.6	11A	8
85812154	514	04	12
	902	02	12
85812155	1.82.6	11B	8
85812156	514	05	3
85812161	1.82.6	02B	8
85812164	902	03	6
	902	03	7
85812168	704	01	4
85812170	1.82.6	03B	1
85812171	1.82.6	03A	1
	1.82.6	03B	2
85812173	1.82.6	03A	2
85812174	1.82.6	04A	12
85812176	1.82.6	11A	7
	1.82.6	11B	5
85812177	1.82.6	11A	9
	1.82.6	11B	7
85812178	514	04	13
	902	02	13
85812180	514	05	9
85812184	704	01	3
85812185	1.82.6	08A	2
	1.82.6	09A	4
85812186	1.82.6	08A	1
	1.82.6	09A	5
85812189	902	03	7
85812192	333/B	07	1
85812193	721	02	7
85812202	1.42.0	01	8
85812211	333/B	07	4
85812212	1.42.0	01	11
85812213	339/ 1	04	12
85812214	721	02	4
85812217	644	03	11
85812238	533/ 1	01	1
85812252	1.92.6	01	1
85812253	1.92.6	01	9
85812254	1.92.4	03	4
85812255	1.92.4	03	5
85812260	81.00	01	1
85812278	1.88.01	01	4
85812338	1.92.5	01	3
85812364	1.92.9	02	17
85812365	1.92.9	01	14
85813052	700	02	13
85813053	700	02	12
85813054	1.40.0	02	26
85813059	402	04	1
85813060	402	04	1
85813079	644	02	2
85813096	1.95.3	01	4
85813103	721	05	2
85813104	1.96.2	02	1
85813132	1.95.2	01	6
85813133	1.96.2	01	4
85813134	1.96.2	01	2
85813135	1.96.2	01	3
85813136	1.96.2	01	1
85813137	1.96.2	01	8
85813138	1.96.2	01	7
85813140	1.95.3	01	3
85813186	1.96.2	02	4
	721	05	15
85813187	1.96.2	02	5
	721	05	16
85813200	1.96.2	02	3
	721	05	14
85813201	1.96.2	02	2
	721	05	13
85813244	1.82.3	01	2
85813300	1.28.0/ A	04	7
	1.28.0/ B	04	7
85813304	1.28.0/ A	04	6
	1.28.0/ B	04	6
85813311	1.95.3	01	19
85813318	1.28.0/ A	04	15
	1.28.0/ B	04	15
85813324	644	09	12
85813338	1.28.0/ A	04	16
	1.28.0/ B	04	16
85813350	1.82.0	01	19
85813351	1.82.0	01	17
85813352	1.82.0	01	6
85813353	1.82.0	01	22
85813354	1.82.0	01	18
85813361	337	01	20
85813362	1.82.6	09A	6
	1.82.6	09B	6
85813363	1.82.6	08A	6
	1.82.6	08C	6
	337	02	18
85813369	1.42.0	01	14
85813377	1.42.0	01	7
85813378	734	01	5
85813379	1.82.6	09A	9
	1.82.6	09B	2
85813380	1.82.6	08A	11
	1.82.6	08C	11
85813407	1.88.01	01	9
85813418	336/ A	01	2
	344/ A	01	2
	356/ A	01	2
85813419	336/ A	01	3
	344/ A	01	3
	356/ A	01	3
85813469	514	03	8
	902	04	8
85813475	339/ 1	01	5
	339/ 1	05	1
85813484	302	01	3

Number	Figure	Sequence	Ref.
85813484	302	03	1
	339/ 1	01	3
	339/ 1	03	1
85815505	392	01	1
	392	02	7
	393	01	1
85815506	337	01	2
	337	02	2
85815517	514	03	4
	902	04	4
85815536	1.95.1	01	19
85815549	1.95.1	01	28
85815550	1.95.1	01	22
85815552	1.95.1	01	25
85815555	1.95.1	01	24
85815556	1.95.1	01	23
85815567	1.82.6	02B	19
85815568	1.82.6	01B	11
85815578	705	01	1
	851/ 1	02	17
	855/ 1	02	17
	856/ 1	02	3
	869/ 1	01	2
85815579	705	01	1
	851/ 2	02	17
	855/ 2	02	17
	856/ 2	02	3
	870/ 1	01	2
85815580	1.82.6	02B	2
85815581	1.82.6	01B	10
	437	01	8
85815582	1.82.6	03B	8
85815583	437	01	14
85815589	437	01	1
85815597	437	01	10
85815607	514	01	8
	902	01	8
85815609	514	01	10
	902	01	10
85815614	1.42.0	01	9
85815615	1.42.0	01	6
85815620	437	01	2
85815627	514	05	11
85815628	514	05	10
85815630	514	04	2
	902	02	2
85815632	514	04	1
	902	02	1
85815634	514	05	2
85815636	514	05	1
85815638	514	07	1
	902	06	1
85815640	333/B	08	2
	721	03	2
85815642	333/B	08	1
	721	03	1
85815667	336/ 1	02	9
	336/ 1	05	2
	339	03	2
	339	05	2
85815668	336/ 1	02	10
	336/ 1	05	6
	339	03	20
	339	05	6
85815674	333/B	09	1
	334	11	1
	721	04	1
85815676	333/B	09	2
	334	11	2
	721	04	2
85815677	902	03	2
85815679	902	03	1
85815683	514	06	1
	902	05	1
85815698	514	01	4
	902	01	4
85816760	724	01	13
	724/ 3	01	13
85816762	1.93.0	04	1
85816763	1.93.0/ 2	01	19
85816770	1.95.1	01	17
85816776	1.88.08	02	17
85816793	336/ 1	05	1
	339	05	1
85816801	514	01	1
	902	01	1
85816802	628	01	1
85816804	336/ 1	01	15
	336/ 1	05	12
	339	01	21
	339	05	12
85816811	902/ A	02	2
85816813	514	06	2
	902	05	2
85817001	1.28.0/ A	01	13
	1.28.0/ B	01	16
85817002	1.28.0/ A	03	9
	1.28.0/ B	03	5
85817003	1.28.0/ A	02	7
	1.28.0/ B	02	7
85817004	MPARTS	00	8
	1.28.0/ A	03	11
	1.28.0/ B	03	14
85817006	1.28.0/ A	04	21
	1.28.0/ B	04	21
85817007	1.28.0/ A	04	22
	1.28.0/ B	04	22
85817025	336/ 1	01	13
	339	01	15
85817069	514	02	3
85817106	333/B	09	3
	334	11	3
	721	04	3
85817107	333/B	09	4
	334	11	4
	721	04	4
85817108	333/B	08	5
	721	03	5
85817109	333/B	08	4
	721	03	4
85817129	758	01	1
85817130	758	01	3
85817131	758	01	2
85817152	902/ A	01	25
85817163	1.28.0/ A	01	12
	1.28.0/ A	04	5
	1.28.0/ B	01	15
	1.28.0/ B	04	5
85817164	1.28.0/ A	01	6
	1.28.0/ B	01	4
85817165	1.28.0/ A	03	10
	1.28.0/ B	03	13
85817169	1.28.0/ A	01	18
	1.28.0/ B	01	20
85817187	644	01	14
85817189	644	02	8
85817190	1.28.0/ B	01	7
85817201	336/ 1	04	1
	339	04	1
85817210	1.92.5	01	2
85817211	1.92.5	01	1
85817212	1.92.5	01	2
85817213	1.92.5	01	1
85817220	1.82.6	02A	7
85817222	437	01	3
85817223	437	01	12
85817226	1.82.6	03A	4
	1.82.6	03B	4
	1.96.2/ 1	01	8
85817236	704	01	4
85817241	1.95.0/ A	01	3
85817242	1.95.0/ A	01	2
85817251	1.88.09	01	4
85817252	1.88.09	01	5
85817287	646	01	17
85817289	644	02	1
85817293	644	01	12
85817294	644	03	8
85817295	644	03	12
85817297	644	07	4
85817298	644	07	1
85817299	644	03	5
85817303	644	03	4
85817426	851/ 1	03	2

Number	Figure	Sequence	Ref.	Number	Figure	Sequence	Ref.
85817426	851/ 1	04	2	85817464	851/ 1	02	4
85817427	851/ 1	03	24		851/ 2	02	4
85817428	851/ 1	03	20		855/ 1	02	4
	856/ 1	03	20		855/ 2	02	4
85817429	851/ 1	03	7	85817465	851/ 1	02	15
	856/ 1	03	7		851/ 2	02	15
85817430	851/ 1	03	12		856/ 1	02	5
	856/ 1	03	12		856/ 2	02	5
85817431	851/ 1	04	3	85817466	851/ 1	01	15
	856/ 1	04	3		855/ 1	01	15
85817432	851/ 1	04	5		856/ 1	01	15
	856/ 1	04	5	85817467	851/ 1	01	16
85817433	851/ 1	04	18		851/ 1	02	13
	856/ 1	04	18		851/ 2	02	13
85817434	851/ 1	04	19		855/ 1	01	16
	856/ 1	04	19		855/ 1	02	11
85817435	851/ 1	04	22		855/ 2	02	11
	856/ 1	04	22		856/ 1	01	16
85817436	851/ 1	04	12		856/ 1	02	11
	856/ 1	04	12		856/ 1	02	13
85817440	851/ 1	04	6		856/ 2	02	11
	856/ 1	04	6		856/ 2	02	13
85817441	851/ 1	04	11	85817468	851/ 1	01	17
	856/ 1	04	11		855/ 1	01	17
85817442	851/ 1	03	10		856/ 1	01	17
	856/ 1	03	10	85817469	851/ 1	01	21
85817443	851/ 1	04	14		855/ 1	01	21
	856/ 1	04	14		856/ 1	01	21
85817444	851/ 1	03	4	85817470	851/ 1	01	18
	856/ 1	03	4		855/ 1	01	18
85817445	851/ 1	03	6		856/ 1	01	18
	856/ 1	03	6	85817471	851/ 1	01	22
85817446	851/ 1	03	15		855/ 1	01	22
	856/ 1	03	15		856/ 1	01	22
85817447	851/ 1	03	19	85817476	851/ 1	01	24
	856/ 1	03	19		855/ 1	01	24
85817448	851/ 1	03	17		856/ 1	01	24
	856/ 1	03	17	85817477	851/ 1	01	29
85817449	851/ 1	03	18		855/ 1	01	29
	856/ 1	03	18		856/ 1	01	29
85817450	851/ 1	03	3	85817478	851/ 1	01	32
	856/ 1	03	3		855/ 1	01	32
85817451	851/ 1	04	17		856/ 1	01	32
	856/ 1	04	17	85817479	851/ 1	01	31
85817452	851/ 1	01	2		855/ 1	01	31
	855/ 1	01	2		856/ 1	01	31
85817453	851/ 1	01	9	85817480	851/ 1	01	6
	855/ 1	01	9		855/ 1	01	6
	856/ 1	01	9		856/ 1	01	6
85817454	851/ 1	01	3	85817481	851/ 1	01	5
85817455	851/ 1	01	4		855/ 1	01	5
	855/ 1	01	4		856/ 1	01	5
85817456	851/ 1	02	16	85817482	851/ 1	02	18
	851/ 2	02	16		851/ 2	02	18
	855/ 1	02	16		855/ 1	02	18
	855/ 2	02	16		855/ 2	02	18
	856/ 1	02	4		856/ 1	02	2
	856/ 2	02	4		856/ 2	02	2
85817458	851/ 1	02	7	85817483	851/ 1	02	14
	851/ 1	03	21		851/ 2	02	14
	851/ 2	02	7		855/ 1	02	14
	855/ 1	02	7		855/ 2	02	14
	855/ 1	03	5		856/ 1	02	14
	855/ 2	02	7		856/ 2	02	14
	856/ 1	02	7	85817484	851/ 1	02	6
	856/ 1	03	25		851/ 2	02	6
	856/ 2	02	7		855/ 1	02	6
85817459	851/ 1	01	12		855/ 2	02	6
	855/ 1	01	12		856/ 1	02	6
	855/ 1	03	22		856/ 2	02	6
	855/ 1	04	7	85817485	851/ 1	01	8
	856/ 1	01	12		856/ 1	01	8
85817460	851/ 1	01	25	85817486	855/ 1	03	7
	855/ 1	01	25	85817487	855/ 1	03	8
	856/ 1	01	25	85817488	855/ 1	03	25
85817462	851/ 1	01	10	85817489	855/ 1	03	9
	855/ 1	01	10	85817490	855/ 1	03	10
	856/ 1	01	10	85817492	855/ 1	03	16
85817463	851/ 1	02	3	85817493	855/ 1	03	15
	851/ 2	02	3	85817494	855/ 1	03	4
	855/ 1	02	3	85817495	855/ 1	03	13
	855/ 2	02	3	85817496	855/ 1	03	12

Number	Figure	Sequence	Ref.
85817497	855/ 1	03	17
85817498	855/ 1	03	20
85817499	855/ 1	03	19
85817500	855/ 1	04	16
85817512	855/ 1	04	15
85817513	855/ 1	04	14
85817514	855/ 1	05	4
85817515	855/ 1	05	6
85817516	855/ 1	05	10
85817517	855/ 1	05	11
85817521	855/ 1	05	3
85817523	855/ 1	04	10
85817524	855/ 1	04	12
85817525	855/ 1	04	9
85817526	855/ 1	04	5
85817527	855/ 1	04	3
85817529	855/ 1	03	2
	855/ 1	04	2
	855/ 1	05	2
85817531	336/ 1	01	16
	336/ 1	05	7
	339	01	18
	339	05	7
85817532	855/ 1	01	8
85817533	855/ 1	01	35
85817534	855/ 1	01	36
85817535	855/ 1	01	3
85817536	855/ 1	02	15
	855/ 2	02	15
85817556	856/ 1	03	2
	856/ 1	04	2
85817558	856/ 1	03	24
85817559	856/ 1	03	22
85817560	856/ 1	03	23
85817561	856/ 1	03	21
85817562	856/ 1	01	2
85817563	856/ 1	01	3
85817564	856/ 1	01	4
85817567	1.94.2	05	1
85817568	1.94.2	05	3
	644	04	6
	644	04A	6
85817569	1.94.2	05	2
	644	04	1
	644	04	4
	644	04A	1
	644	04A	4
85817586	787/ 1	01	2
	787/ 2	01	2
85817587	782	01	1
	788/ 1	01	2
	788/ 2	01	2
85817596	1.82.6	01B	12
	1.82.6	02B	7
85817622	1.88.11/ 5	02	17
85817623	1.88.11/ 5	02	18
85817628	724	01	23
	724/ 3	01	23
85817629	724	01	16
	724/ 3	01	16
85817633	724	01	15
	724/ 3	01	15
85817634	724	01	27
	724/ 3	01	27
85817635	724	01	26
	724/ 3	01	26
85817664	644	05	1
85817672	1.75.2	02	5
	1.75.2/ 3	02	5
85817674	437	01	17
85817697	402	06	9
	415	06	9
85817698	402	03	4
	415	03	4
85817789	1.88.12/ 3	01	22
85817795	1.83.0	01	17
85818817	791	01	3
	792	01	3
85818818	791	01	4
	792	01	4
85818819	791	01	6
	792	01	6
85818820	1.91.4/ 2	04	2
85818823	1.91.4/ 2	05	22
85818826	787/ 1	01	3
	788/ 1	01	3
85818827	787/ 1	01	4
	787/ 2	01	3
	788/ 1	01	4
	788/ 2	01	3
85818828	787/ 1	01	6
	787/ 2	01	5
	788/ 1	01	6
	788/ 2	01	5
85818888	437	01	9
85818891	644	09	13
85818900	1.88.11/ 9	01	1
85818909	1.82.6	04A	4
85818916	514	01	9
	514	03	6
	902	01	9
	902	03	10
	902	04	6
85818929	869	01	1
	869/ 1	01	1
	869/ 1	02	1
	869/ 1	03	1
85818930	869	01	2
	869/ 1	02	1
	869/ 1	03	1
	870/ 1	01	1
85818931	1.94.0/ 1	01	1
85818935	1.94.0	01	1
85818939	685	01	2
85818940	787/ 2	01	6
	788/ 2	01	6
85818946	869/ 1	03	18
85818949	869/ 1	03	15
85818950	869/ 1	03	14
85818951	869/ 1	03	16
85818952	869/ 1	03	13
85818953	869/ 1	03	6
85818954	869/ 1	03	5
85818955	869/ 1	03	4
85818956	869/ 1	03	2
85818957	869/ 1	03	3
85818958	869/ 1	02	9
	869/ 1	03	7
85818959	869/ 1	02	13
	869/ 1	03	8
85818960	869/ 1	03	9
85818961	869/ 1	03	11
85818962	869/ 1	03	12
85818963	869/ 1	03	10
85818964	869/ 1	02	2
85818965	869/ 1	02	3
85818966	869/ 1	02	6
85818967	869/ 1	02	7
85818968	869/ 1	01	5
	869/ 1	02	8
	870/ 1	01	5
85818969	869/ 1	02	5
85818975	869/ 1	01	7
	870/ 1	01	7
85818976	869/ 1	01	4
	870/ 1	01	4
85818977	869/ 1	01	3
	870/ 1	01	3
85818978	869/ 1	01	6
	870/ 1	01	6
85819004	803	01	4
85819005	803	01	4
85819010	803	01	3
85819011	803	01	2
85819012	803	01	1
85819013	1.44.0A	04	18
85819016	1.93.0/ 5	01	19
85819017	1.92.9	01	4
85819018	1.92.9	01	4
85819027	1.82.3	01	3
85819040	302	03	9
	302	04	13
	339/ 1	03	10
	339/ 1	04	13

Number	Figure	Sequence	Ref.	Number	Figure	Sequence	Ref.
85819040	339/ 1	05	8	85819467	1.88.01	02	1
85819041	1.95.5	02	2	85819468	1.88.01	01	10
85819066	334	09	4	85819469	1.88.01	02	2
85819067	334	09	3	85819471	1.88.01	02	3
85819072	699	01	1	85819472	1.88.01	01	11
	704	01	1	85819474	1.88.01	02	6
85819074	337	01	22	85819475	1.88.01	02	5
85819134	787/ 1	01	7	85819477	1.88.01	01	12
85819144	1.91.4	04	5	85819478	1.88.01	01	13
85819148	302	02	10	85819479	1.88.01	01	14
	302	03	2	85819480	1.88.01	01	17
	302	04	2	85819481	1.88.01	01	15
	333/1	02	6	85819482	1.88.01	01	16
	333/1	03	6	85819485	1.88.01	01	8
	333/1	04	6	85819486	1.88.01	02	7
	333/1	05	7	85819488	1.88.01	01	5
	333/1	06	6	85819490	1.88.08	02	14
	333/1	07	3	85819492	724	01	17
	339/ 1	02	10		724/ 3	01	17
	339/ 1	03	2	85819543	1.94.2	04	3
	339/ 1	04	2		1.94.2/ 1	04	3
	339/ 1	05	2	85819544	644	09	3
85819177	1.95.0	03	1	85819549	1.94.0	01	4
85819179	1.88.11/ 5	02	12		1.94.0/ 1	01	3
85819180	1.98.0	02	4	85819567	1.93.5/ 1	01	2
85819181	1.98.0	02	4	85819568	1.91.4/ 2	01	3
85819183	644	02	20	85819569	1.91.6	01	1
85819186	1.38.1	01	8	85819571	700	02	5
85819190	1.91.7/ 1	01	3	85819572	700	02	4
	1.91.7/ 3	01	3	85819574	644	01	1
85819191	1.91.7/ 1	01	9	85819575	644	09	10
	1.91.7/ 3	01	9	85819576	644	09	1
85819194	1.91.7/ 1	01	11	85819577	644	09	11
	1.91.7/ 3	01	11	85819578	644	09	2
85819196	1.91.7/ 1	01	16	85819581	644	09	7
	1.91.7/ 3	01	14	85819586	1.91.4	04	2
85819197	1.91.7/ 1	01	17	85819591	644	08	5
	1.91.7/ 3	01	15	85819592	1.94.2	04	4
85819198	1.91.7/ 1	01	14		1.94.2/ 1	04	4
	1.91.7/ 3	01	12	85819613	1.88.08	02	16
85819199	1.91.7/ 1	01	15	85819618	724	02	12
	1.91.7/ 3	01	13		724/ 3	02	12
85819200	1.91.7/ 1	01	2	85819619	724	02	1
	1.91.7/ 3	01	2		724/ 3	02	1
85819214	792	01	8	85819620	725	01	2
85819237	724	01	12	85819621	725	01	1
	724/ 3	01	12	85819629	1.95.2	01	7
85819275	1.93.0	01	6	85819635	644	02	5
	1.93.0/ 3	01	6	85819636	644	02	4
85819276	644	08	1	85819637	644	01	6
85819277	1.93.0	02	1	85819638	644	04	14
85819281	1.93.0	01	13	85819643	869/ 1	03	17
	1.93.0/ 3	01	13	85819644	869/ 1	03	19
85819283	1.93.0	02	4	85819649	336/ 1	01	1
85819285	644	08	4	85819650	339	01	1
85819287	644	08	6		725/ 1	02	15
85819289	1.93.5/ 1	01	1	85819673	392	01	13
85819299	514-A	01	16		392	02	13
85819350	514-B	01	14		393	01	13
85819352	1.88.11/ 1	01	25	85819675	644	08	2
85819353	1.88.11/ 9B	01	11	85819684	344	01	1
85819355	1.88.11/ 2	01	13	85819685	721	01	1
85819356	1.88.11/ 6	01	15	85819702	1.88.08	02	16
85819357	902/ A	02	3	85819721	344	01	5
85819358	514-C	01	17		721	01	5
85819378	302	03	3	85819722	336/ 1	03	13
	302	04	3		339	03	17
	333/1	02	7	85819724	1.91.4	01	2
	333/1	03	7	85819727	1.82.6	09C	4
	333/1	05	8	85819728	1.82.6	09C	9
	333/1	07	4	85819729	1.82.6	09C	7
	339/ 1	03	3	85819730	1.82.6	09C	8
	339/ 1	04	3	85819758	795	01	1
	339/ 1	05	3	85819765	796	01	1
85819407	1.93.5	01	1	85819766	796	01	5
85819439	1.94.0/ 1	01	1	85819813	851/ 1	02	12
85819441	1.94.0	01	1		851/ 2	02	12
85819451	644	09	5		855/ 1	02	19
85819452	644	09	6		855/ 2	02	19
85819453	644	09	4		856/ 1	02	15
85819454	1.93.5/ 1	01	3		856/ 2	02	15
	644	09	8	85819814	855/ 1	05	8

Number	Figure	Sequence	Ref.
85819815	855/ 1	03	14
85819826	1.91.5	01	7
85819827	1.91.5	01	1
85819945	336/ 1	03	1
	339	03	1
85820005	469-A	01	1
	471	01	18
	472	01	18
	473	01	18
	474	01	18
85820006	471	01	24
	472	01	24
	473	01	24
	474	01	24
85820007	471	01	21
	472	01	21
	473	01	21
	474	01	21
85820008	471	01	23
	472	01	23
	473	01	23
	474	01	23
85820009	471	01	22
	472	01	22
	473	01	22
	474	01	22
85820010	471	01	14
	472	01	14
	473	01	40
	474	01	40
85820011	471	01	31
	472	01	31
	473	01	38
	474	01	38
85820012	471	01	15
	472	01	15
	473	01	39
	474	01	39
85820013	471	01	19
	472	01	19
	473	01	19
	474	01	19
85820014	471	01	12
	472	01	12
	473	01	12
	474	01	12
85820015	471	01	20
	472	01	20
	473	01	20
	474	01	20
85820016	471	01	16
	472	01	16
	473	01	16
	474	01	16
85820017	471	01	17
	472	01	17
	473	01	17
	474	01	17
85820018	471	01	3
	472	01	3
	473	01	3
	474	01	3
	648	01	2
85820019	471	01	8
	472	01	8
	473	01	36
	474	01	36
85820020	471	01	32
	472	01	32
	473	01	37
	474	01	37
85820021	471	01	5
	472	01	5
	473	01	5
	474	01	5
85820025	471	01	25
	472	01	25
	473	01	25
	474	01	25
85820026	471	01	11
	472	01	11
	473	01	8
85820026	474	01	8
85820027	471	01	10
	472	01	10
	473	01	35
	474	01	35
85820028	471	01	9
	472	01	9
	473	01	9
	474	01	9
85820030	471	01	13
	472	01	13
	473	01	41
	474	01	41
85820031	471	01	6
	472	01	6
	473	01	6
	474	01	6
	648	01	3
85820032	471	01	1
	472	01	1
	473	01	1
	474	01	1
85820033	471	01	2
	472	01	2
	473	01	2
	474	01	2
85820034	471	01	7
	472	01	7
	473	01	7
	474	01	7
85820035	471	01	4
	472	01	4
	473	01	4
	474	01	4
	648	01	4
85820038	471	01	30
	472	01	30
	473	01	31
	474	01	31
85820039	471	01	28
	472	01	28
	473	01	29
	474	01	29
85820040	471	01	29
	472	01	29
	473	01	30
	474	01	30
85820051	469-A	01	2
85820052	469-A	01	11
85820053	469-A	01	5
85820054	469-A	01	10
85820055	469-A	01	9
85820056	469-A	01	12
85820057	469-A	01	3
85820058	469-A	01	4
85820059	469-A	01	7
85820060	469-A	01	8
85820061	469-A	01	6
85820062	473	01	13
	474	01	13
	648	01	5
85820063	473	01	11
	474	01	11
	648	01	6
85820064	473	01	32
	474	01	32
	648	01	7
85820065	473	01	34
	474	01	34
	648	01	8
85820066	473	01	10
	474	01	10
	648	01	9
85820067	473	01	14
	474	01	14
	648	01	10
85820068	473	01	15
	474	01	15
	648	01	11
85820069	473	01	33
	474	01	33
	648	01	12

Number	Figure	Sequence	Ref.
85820105	1.95.5	01	8
85820107	1.98.1	01	1
85820130	302	03	5
	302	04	5
	339/ 1	03	5
	339/ 1	04	5
	339/ 1	05	5
85820136	1.93.4	01	9
85820138	1.93.4	01	7
85820139	1.93.4	01	8
85820141	1.96.7	01	10
85820152	644	06	4
85820154	1.38.1	01	5
85820155	1.38.1	01	1
85820156	1.75.2	02	13
	1.75.2/ 3	02	13
85820157	1.38.1	01	2
85820158	392	01	12
	392	02	12
	393	01	12
85820159	1.88.11/ 7	01	22
85820160	1.88.11/ 7	01	23
85820167	1.88.09	01	1
85820170	1.88.09	01	8
85820172	1.88.09	01	6
85820175	869/ 1	02	12
85820176	869/ 1	02	11
85820177	869/ 1	02	10
85820178	869/ 1	02	4
85820179	869/ 1	02	14
85820222	724	01	28
	724/ 3	01	28
85820237	1.91.5	02	10
85820282	1.95.5	02	6
85820286	392	01	15
	392	02	15
85820287	392	01	17
	393	01	15
85820815	1.98.1	01	5
85820816	1.98.1	01	5
85820817	1.98.1	01	7
85820818	1.98.1	01	7
85820819	471	02	6
	472	02	6
	473	02	6
	474	02	6
85820821	1.98.1	01	8
85820835	392	01	8
	393	01	8
85820836	392	01	7
	393	01	7
85820844	391	01	1
85820846	391	01	3
85820880	1.94.2	01	1
85820883	1.94.2	01	4
	1.94.2/ 1	01	4
85820884	1.94.2	01	7
	1.94.2/ 1	01	7
85820885	1.94.2	01	6
	1.94.2/ 1	01	6
85820886	1.94.2	01	9
	1.94.2/ 1	01	9
85820887	1.94.2	01	8
	1.94.2/ 1	01	8
85820889	1.94.2	01	10
	1.94.2/ 1	01	10
85820890	1.94.2	01	11
	1.94.2/ 1	01	11
85820893	1.94.2	01	12
	1.94.2/ 1	01	12
85820894	1.94.2	01	13
	1.94.2/ 1	01	13
85820895	1.94.2	01	14
	1.94.2/ 1	01	14
85820896	1.94.2	02	1
85820897	1.94.2	02	2
85820899	1.94.2	01	16
	1.94.2/ 1	01	16
85820900	1.94.2	01	17
	1.94.2/ 1	01	17
85820901	1.94.2	04	6
	1.94.2/ 1	04	7
85820902	1.94.2	04	7
	1.94.2/ 1	04	6
85820903	1.94.2	04	10
85820904	1.94.2	04	9
	1.94.2/ 1	04	9
85820905	1.94.2	04	5
85820906	648	01	1
85820908	1.38.1	01	6
85820909	1.28.0/ A	06	4
	1.28.0/ B	06	4
	1.38.1	01	10
85820910	392	01	5
	392	02	3
	393	01	5
85820912	392	01	16
	393	01	16
85820913	392	02	14
85820914	1.38.1	01	9
85820938	1.98.1	01	6
85821126	1.88.11/ 7	01	20
85821127	391	01	2
85821130	644	02	12
85821131	644	02	18
85821153	1.91.5	02	1
85821172	1.95.1	01	27
85821173	1.95.1	01	26
85821196	1.95.2	01	1
85821203	1.95.2	01	1
85821236	302	02	9
	339/ 1	02	9
85821268	1.88.01	01	1
85821270	1.88.01	01	18
85821271	1.88.01	01	19
85821273	1.88.01	02	12
85821277	1.88.01	02	10
85821278	1.88.01	02	4
85821279	1.88.01	02	11
85821316	1.96.2	01	10
85821318	1.93.0	01	1
85821320	1.93.0/ 2	01	1
85821324	1.95.3	01	2
85821326	1.91.4	05	21
85821328	1.95.3	01	1
85821333	1.91.5	02	14
85821335	1.91.5	02	3
85821336	1.91.5	02	15
85821337	1.91.5	02	2
85821338	1.91.5	02	8
85821345	1.94.2	01	18
	1.94.2/ 1	01	18
85821346	1.94.2	01	19
	1.94.2/ 1	01	19
85821347	1.94.2	01	15
85821348	1.94.2	01	2
	1.94.2/ 1	01	2
85821402	856	01	1
	856/ 1	01	1
	856/ 1	02	1
	856/ 1	03	1
	856/ 1	04	1
85821403	856	01	2
	856/ 1	01	1
	856/ 1	03	1
	856/ 1	04	1
	856/ 2	02	1
85821406	851	01	2
	851/ 1	01	1
	851/ 1	03	1
	851/ 1	04	1
	851/ 2	02	1
85821407	851	01	1
	851/ 1	01	1
	851/ 1	02	1
	851/ 1	03	1
	851/ 1	04	1
85821408	855	01	1
	855/ 1	01	1
	855/ 1	02	1
	855/ 1	03	1
	855/ 1	04	1
	855/ 1	05	1
85821409	855	01	2

Number	Figure	Sequence	Ref.
85821409	855/ 1	01	1
	855/ 1	03	1
	855/ 1	04	1
	855/ 1	05	1
	855/ 2	02	1
85821410	1.91.4	03	3
	1.91.4/ 2	03	3
85821418	851/ 1	01	26
	855/ 1	01	26
	856/ 1	01	26
85821419	851/ 1	01	23
	855/ 1	01	23
	856/ 1	01	23
85821453	1.28.0/ B	01	24
85821513	331/C	01	22
	333/B	01	22
85821514	331/C	02	7
	333/B	02	7
85821515	331/C	02	10
	333/B	02	9
85821516	331/C	02	10
	331/C	02	9
	333/B	02	10
85821519	331/C	01	10
	333/B	01	10
85821520	331/C	02	11
	333/B	02	11
85821538	995	01	14
85821539	995	01	22
85821788	515	01	5
	516	01	5
	517	01	5
	518	01	5
	519	01	5
85824053	331/B	01	14
85824054	331/B	01	15
85824059	331/B	01	16
85824060	1.82.6	05F	7
	1.82.6	05G	7
85824067	331/C	02	1
	333/B	02	1
85824079	1.96.2/ 1	01	5
85824080	331/C	02	6
	333/B	02	6
85824081	331/C	02	7
	333/B	02	7
85824087	1.83.0	01	15
85824094	1.94.2	03	5
85824095	535/ 1	01	1
	537	01	1
85824114	1.95.0	02	19
85824187	1.29.1	01	7
85824195	83.00	01	1
85824196	1.82.3	01	4
85824197	650	01	3
85824204	855/ 1	02	12
	855/ 2	02	12
	856/ 1	02	12
	856/ 2	02	12
85824227	1.88.01	01	20
85824267	732-A	01	11
85824278	302	03	7
	302	04	7
	339/ 1	03	7
	339/ 1	04	7
	339/ 1	05	7
85824279	339/ 1	05	6
85824280	302	03	6
	339/ 1	03	6
85824281	302	03	8
	302	04	11
	333/1	02	8
	333/1	03	8
	333/1	05	9
	333/1	06	7
	333/1	07	5
	339/ 1	03	8
	339/ 1	04	11
	339/ 1	05	12
85824282	333/1	04	7
85824283	302	03	10
	302	04	14
85824283	339/ 1	03	9
	339/ 1	04	14
	339/ 1	05	13
85824308	392	01	10
	393	01	10
85824329	402	01	1
85824331	402	01	1
85824333	415	01	1
85824335	415	01	1
85824337	415	01	1
85824339	1.40.0	01	1
85824341	415	01	1
85824343	402	01	8
	415	01	8
85824344	402	03	8
85824345	402	02	9
	415	02	9
85824346	402	04	6
	415	04	6
85824347	1.40.0	01	16
	402	01	16
	415	01	16
85824348	402	02	2
	415	02	2
85824349	402	02	1
	415	02	1
85824350	1.40.0	02	2
85824351	1.40.0	02	1
85824352	1.40.0	02	9
85824356	548	01	1
85824363	471	01	27
	472	01	27
	473	01	28
	474	01	28
85824364	471	01	26
	472	01	26
	473	01	27
	474	01	27
85824378	1.82.6	01B	9
85824381	1.14.0	01	14
	1.17.2	01	14
85824393	1.93.5	02	5
	1.93.5/ 1	02	5
85824397	734	01	1
85824430	1.88.11/ 9	01	9
	1.88.11/ 9A	01	9
	1.88.11/ 9B	01	1
85824450	1.91.5	02	12
85824469	1.40.0	01	20
	402	01	6
	415	01	5
85825000	535/ 1	01	1
	537	01	1
85825003	535	01	2
	535/ 1	01	4
	537	01	4
85825005	535	01	1
85825007	535	01	1
85825009	536	01	3
85825070	1.83.0	01	2
85825078	1.21.5/ 1	01	1
85825102	1.83.0	01	14
85825103	1.83.0	01	13
85825119	1.44.0A	01	1
85825120	1.44.0A	01	1
85825127	1.91.4/ 2	02	13
85825129	1.91.4	05	4
85825136	1.91.4	05	20
85825158	1.14.0	01	7
85825164	636A	02	3
	637	01	14
85825169	1.39.8	01	10
	1.82.6	05F	14
	636	02	10
	995	01	2
85825170	636	02	11
85825177	473	01	26
	474	01	26
	648	01	13
85825187	1.82.6	02A	5
85825188	302	01	1
85825189	339/ 1	01	1

Number	Figure	Sequence	Ref.
85825189	700	01	21
85825191	1.93.0	01	8
	1.93.0/ 2	01	8
	1.93.0/ 3	01	8
	1.93.0/ 5	01	8
85825197	1.91.4	02	13
85825198	1.91.4	02	14
	1.91.4/ 2	02	14
85825224	1.96.7	01	7
85825254	1.91.4	05	19
	787/ 1	01	1
	787/ 2	01	1
	788/ 1	01	1
	788/ 2	01	1
	791	01	1
	792	01	1
85825272	1.93.0/ 5	01	1
85825277	1.93.0/ 3	01	1
85825299	536	01	8
85825300	1.21.5/ 1	01	14
85825302	1.21.5/ 1	01	15
85825330	1.91.4/ 2	01	2
85825331	1.91.4/ 2	01	4
85825335	1.94.0	01	7
85825392	1.14.0	01	2
85825440	131	01	1
85825441	514	07	7
	514	08	4
	902	06	7
	902	07	4
85825442	514	07	6
	514	08	5
	902	06	6
	902	07	5
85825468	302	01	2
	302	02	1
	339/ 1	01	2
	339/ 1	02	1
85825469	302	01	4
	302	04	1
	339/ 1	01	4
	339/ 1	04	1
85825470	302	01	5
	339/ 1	01	6
85825471	302	04	6
	339/ 1	04	6
85825472	302	02	2
	339/ 1	02	2
85825473	302	01	7
85825474	339/ 1	01	7
85825475	302	01	6
85825476	1.94.2/ 1	04	10
85826012	1.91.4	02	15
	1.91.4/ 2	02	17
85826014	1.91.4	02	17
	1.91.4/ 2	02	19
85826026	MPARTS	00	6
	1.94.2	02	4
85826032	MPARTS	00	7
	1.94.2	02	3
85826047	1.92.1/ 1	01	1
85826071	1.91.4	02	19
	1.91.4/ 2	02	16
	1.98.0	02	2
85826084	1.83.0	01	12
85826086	1.82.6	08C	2
85826087	1.82.6	09B	5
85826088	1.82.6	09B	4
85826089	1.82.6	08C	1
85826093	1.82.6	02A	6
85826099	1.95.1	01	29
85826108	902	03	6
85826123	724	01	9
	724/ 3	01	9
85826144	437	01	8
85826147	1.82.3	01	1
85826214	437	02	1
85826215	437	02	2
85826216	437	02	3
85826222	1.82.6	11B	8
85826223	514	05	3
85826225	514	05	9
85826228	1.82.6	01A	9
85826255	331	01	5
	333/1	01	5
85826284	1.94.2/ 1	01	15
85826345	333/1	04	9
	333/1	06	9
85826361	1.83.0	01	24
85826901	331	01	6
	333/1	01	7
	333/1	03	1
85826902	331	01	9
	333/1	01	10
	333/1	06	1
85826903	331	01	8
	333/1	05	1
85826904	333/1	01	6
	333/1	02	1
85826934	1.94.2/ 1	04	12
85826987	724	01	22
	724/ 3	01	23
85827041	1.82.6	01A	4
85827067	1.40.0	02	23
	402	03	1
	415	03	8
85827068	402	05	1
	415	05	10
85827069	402	06	3
	415	06	3
85827070	402	06	4
	415	06	4
85827076	331/C	04	9
	333/B	04	9
85827077	331/C	04	4
	333/B	04	4
85827078	331/C	04	11
	333/B	04	11
85827080	331/C	04	10
	333/B	04	10
85827082	331/C	04	6
	333/B	04	6
85827084	331/C	04	1
	333/B	04	1
85827085	331/C	04	2
	333/B	04	2
85827086	331/C	04	3
	333/B	04	3
85827087	331/C	04	5
	333/B	04	5
85827088	331/C	03	8
	333/B	03	8
85827089	331/C	03	4
	333/B	03	4
85827090	331/C	03	7
	333/B	03	7
85827091	331/C	03	3
	333/B	03	3
85827092	331/C	03	5
	333/B	03	5
85827093	331/C	03	1
	333/B	03	1
85827094	331/C	03	2
	333/B	03	2
85827095	331/C	03	6
	333/B	03	6
85827096	333/B	03	13
85827097	333/B	03	12
85827466	331/C	04	8
	333/B	04	8
85827467	331/C	04	7
	333/B	04	7
85827472	331/A	01	1
85827475	331/C	05	3
	333/B	05	3
85827476	331/C	05	1
	333/B	05	1
85827477	331/C	05	2
	333/B	05	2
85827518	331/C	06	3
	333/B	06	3
85827548	1.91.1/ 1	01	6
	1.93.0	01	17
	1.93.0/ 2	01	17

Number	Figure	Sequence	Ref.
85827548	1.93.0/ 3	01	17
	1.93.0/ 5	01	17
85827552	732-A	01	3
85827553	732-A	01	5
85827554	732-A	01	6
85827683	1.83.0	01	19
85827702	1.88.01	02	8
85999136	336/ 1	01	9
	339	01	9
85999138	336/ 1	01	10
	339	01	10
86014151	995	02	25
86482S95	1.82.6	03A	12
	1.82.6	03B	11
	1.82.6	04A	17
	704	02	5
86505999	1.44.0A	01	8
86507337	1.88.11/ 5	02	6
86511646	1.44.0A	01	14
86511845	636A	03	2
86536748	1.44.0A	01	4
86536749	1.44.0A	01	5
86536750	1.44.0A	02	9
86536751	1.44.0A	02	9
86536752	1.44.0A	02	1
86536753	1.44.0A	02	1
86539263	1.44.0A	02	3
86539458	1.44.0A	02	2
86552793	1.44.0A	01	7
86552794	1.44.0A	01	7
86584272	1.44.0A	02	17
86584273	1.44.0A	02	11
86592700	1.83.0	01	18
86619908	995	01	5
86625071	1.83.0	01	21
	636	01	9
	637	01	9
86625199	331/C	01	31
	333/B	01	31
86637716	1.94.2	03	3
86977726	1.95.3	01	22
86981462	1.83.0	01	9
86982600	437	01	20
86982972	636	01	1
	637	01	1
86983072	1.88.11/ 9B	01	2
86983077	636	01	12
	637	01	12
86983125	1.15.0	02	1
86983278	331/B	01	17
86984549	331/C	02	8
	333/B	02	8
86985587	1.14.0	01	9
86988086	095	01	1
	096	01	1
86988396	1.95.3	01	14
86989315	1.95.3	01	18
86989616	331/C	02	5
	333/B	02	5
86989733	MPARTS	00	3
	1.82.6	06A	4
	1.82.6	06B	4
86990460	331/B	01	21
86990710	0.021	01	1
86990712	1.28.0	01	3
86990713	1.28.0	01	4
86990714	1.28.0	01	5
86990715	1.28.0	01	6
86992074	331/C	01	5
	333/B	01	5
86992077	331/C	01	6
	333/B	01	6
86992395	636A	03	1
86992557	096	01	3
86992966	514	02	6
	514	03	9
	902	03	9
86993546	1.28.0/ A	01	22
	1.28.0/ B	01	1
87008S95	1.82.6	03A	11
	1.82.6	03B	9
	1.82.6	04A	18
87008S95	1.96.2/ 1	01	10
	704	02	4
87016552	331/C	01	15
	333/B	01	15
87016S95	1.82.6	02A	4
	1.82.6	02B	17
	1.82.6	02B	3
	1.82.6	08A	3
	1.82.6	08C	3
	1.82.6	09A	3
	1.82.6	11A	3
	437	01	15
87017743	1.39.8	01	8
87017744	1.39.8	01	7
87019767	1.28.0/ A	01	8
	1.28.0/ B	01	26
87021860	1.19.1	01	14
87024874	1.82.6	05F	6
	1.82.6	05G	6
87111S95	1.44.0A	01	26
87308	1.44.0A	02	25
87309	1.44.0A	04	17
87400114	1.28.0/ A	01	11
	1.28.0/ B	01	14
87401111	096	01	4
87402306	331/B	01	22
87402742	1.88.11/ 1	01	6
87403241	1.82.0	01	16
87403646	1.94.2	03	1
87403647	1.94.2	03	2
87403672	1.14.0	01	12
87404081	536	01	4
87404127	321	01	7
87404557	636	02	14
87404628	636	02	15
87404910	1.14.0	01	10
	1.82.0	01	15
87405334	1.82.6	05G	16
87405362	331/C	02	4
	333/B	02	4
87405380	636A	05	1
87405628	1.28.0	01	13
87405629	1.28.0	01	13
87405661	1.19.1	01	2
87405706	331/B	01	18
87406278	1.14.0	01	1
87406285	1.82.0	01	12
87406289	1.82.0	01	26
87406387	1.91.4	01	1
	1.91.4	02	1
	1.91.4	03	1
	1.91.4	04	1
	1.91.4	05	1
87406389	1.75.2	01	14
	1.75.2/ 3	01	10
87406390	1.91.4/ 2	01	1
	1.91.4/ 2	02	1
	1.91.4/ 2	03	1
	1.91.4/ 2	04	1
	1.91.4/ 2	05	1
87406398	1.75.2	03	1
	1.75.2/ 3	03	1
87406399	1.75.2	01	1
	1.75.2/ 3	01	1
87406510	536	01	1
87406547	536	01	7
87406934	1.28.0/ A	01	23
	1.28.0/ B	01	6
87407272	636	02	16
87407275	636A	01	1
87407276	636A	01	2
87407281	131	01	8
87407463	1.82.0	01	3
87407464	1.82.0	01	4
87407465	1.82.0	01	5
87407758	1.28.0	01	1
87407928	1.82.0	01	1
87408479	1.28.6	01	1
87408557	1.28.6	01	2
87408564	646	01	4
87408893	1.93.0	04	15
	1.93.0/ 3	04	15

Number	Figure	Sequence	Ref.
87409046	995	01	4
87409201	1.28.0/ A	01	24
	1.28.0/ B	01	12
87409315	1.91.4	05	23
87409316	1.91.4	05	22
	1.91.4/ 2	05	24
87409515	1.82.6	01B	4
87410096	636	02	17
87410099	636	02	18
87410102	637	01	15
87410108	1.93.0/ 3	04	6
87410253	636A	02	1
87410259	1.91.4	05	12
	1.91.4/ 2	05	17
87410263	995	02	26
87410264	995	02	27
87410265	995	02	28
87410266	995	02	29
87410409	1.92.1/ 3	01	1
87410546	1.17.2	01	1
87410547	1.17.2	01	4
87410548	1.82.6	05F	3
	1.82.6	05G	3
87410602	995	01	7
87410603	995	01	1
87410647	1.28.0	01	8
	636A	01	9
87410667	636A	02	4
87410671	1.39.8	01	1
87410672	1.39.8	01	2
87410673	1.82.6	05F	4
	1.82.6	05G	4
87410674	646	01	1
87410675	646	01	10
87410676	646	01	2
87410677	646	01	5
87410678	646	01	3
87410723	331/C	01	9
87410916	636	02	19
87410945	1.96.2/ 1	01	7
87411090	995	01	20
87411092	995	01	19
87411602	636A	02	2
87412754	1.19.1	01	8
87412988	1.15.0	01	3
87412991	1.19.1	01	9
87413053	1.17.2	01	6
87413128	1.19.1	01	1
87413162	995	02	30
87413179	331	01	1
87413180	333/1	01	1
87413237	636	02	20
87413794	1.19.1	01	11
87414237	995	01	23
87414560	1.14.0	01	15
87414983	1.82.6	06B	1
87415208	1.75.2/ 3	03	15
87415902	1.15.0	01	2
87415930	636	01	13
	637	01	13
87416331	1.82.6	06A	3
	1.82.6	06B	3
87416576	1.82.6	05F	3
	1.82.6	05G	3
87416637	636	02	21
87416643	1.15.0	02	2
87416929	131	01	2
87416966	636A	01	3
87417207	1.82.0	01	7
87419454	1.96.2/ 1	01	1
87422014	321	01	1
87422777	636A	04	1
87426960	331/B	01	3
87427004	331/B	01	2
87427983	331/C	01	19
87430028	331/C	02	3
	333/B	02	3
87431298	331/B	01	5
87431299	331/B	01	4
87434992	331/B	01	1
87435372	331/C	01	9
	333/B	01	9
87436824	1.15.0	01	1
87437733	331/C	01	19
	333/B	01	19
87438246	MPARTS	00	5
	1.19.1	01	3
87438249	MPARTS	00	4
	1.19.1	01	4
87440497	636	01	17
	637	01	22
87440498	636	01	18
	637	01	23
87440499	636	01	19
	637	01	24
87802964	1.83.0	01	28
87803260	MPARTS	00	2
	0.302	01	1
88706	517	02	6
	518	02	6
	519	02	6
	526	01	6
	527	01	6
	528	01	6
	529	01	6
89626929	336/ 1	01	20
	336/ 1	05	15
	339	01	22
	339	05	15
89824840	1.91.4	02	4
9628098	351	09	3
	353	02	3
9706729	1.44.0A	03	27
9824050	1.82.6	04A	3
	1.82.6	04B	10
	336/ 1	01	18
	336/ 1	05	13
	339	01	19
	339	05	13
9825770	336/ 1	01	17
	336/ 1	05	14
	337	01	17
	337	02	17
	339	01	20
	339	05	14
98429552	0.270	01	9
98429625	0.204	01	4
98442879	0.270	01	12
98445111	0.270	01	12
9958776	851/ 1	02	9
	851/ 2	02	9
	855/ 1	02	9
	855/ 2	02	9
	856/ 1	02	9
	856/ 2	02	9
9958782	851/ 1	03	11
	856/ 1	03	11
9958784	851/ 1	03	9
	856/ 1	03	9
9958785	851/ 1	04	15
	856/ 1	04	15
9958786	851/ 1	04	16
	856/ 1	04	16
9958788	851/ 1	04	21
	856/ 1	04	21
9958789	851/ 1	04	25
	856/ 1	04	25
9958790	851/ 1	04	13
	856/ 1	04	13
9958792	851/ 1	03	13
	856/ 1	03	13
9958793	851/ 1	03	14
	856/ 1	03	14
9958800	851/ 1	04	20
	856/ 1	04	20
9958845	851/ 1	01	7
	855/ 1	01	7
	856/ 1	01	7
9959577	851/ 1	04	24
	856/ 1	04	24
9959580	851/ 1	04	10
	856/ 1	04	10
9959583	851/ 1	04	23
	856/ 1	04	23

Number	Figure	Sequence	Ref.
9959585	851/ 1	04	8
	856/ 1	04	8
9959588	851/ 1	04	4
	856/ 1	04	4
9960181	1.95.5/ A	01	8
	1.95.5/ B	01	8
9960692	851/ 1	01	28
	851/ 1	02	8
	851/ 2	02	8
	855/ 1	01	28
	855/ 1	02	8
	855/ 2	02	8
	856/ 1	01	28
	856/ 1	02	8
	856/ 2	02	8
9960736	851/ 1	04	7
	856/ 1	04	7
9960755	851/ 1	03	16
	856/ 1	03	16
9960767	851/ 1	04	9
	856/ 1	04	9
9960793	851/ 1	01	20
	855/ 1	01	20
	856/ 1	01	20
9960795	851/ 1	01	19
	855/ 1	01	19
	856/ 1	01	19
9960797	851/ 1	01	33
	855/ 1	01	33
	856/ 1	01	33
9960803	851/ 1	01	30
	855/ 1	01	30
	856/ 1	01	30
9961810	1.95.5/ A	01	15
	1.95.5/ B	01	15
9961829	1.95.5/ A	01	5
	1.95.5/ B	01	5
9961887	855/ 1	03	11
9962736	855/ 1	03	3
9962741	855/ 1	05	9
9962749	855/ 1	03	21
9962962	851/ 1	02	5
	851/ 2	02	5
	855/ 1	02	5
	855/ 1	04	13
	855/ 2	02	5
9966238	1.94.2	05	4
	644	04	10
	644	04A	10
9966239	1.94.2	05	5
	644	04	5
	644	04A	5
9966241	1.94.2	05	7
	644	04	7
	644	04A	7
9966352	402	05	2
	415	05	2
9966354	402	05	3
	415	05	3
9966356	402	05	11
	415	05	11
9967672	402	01	3
	415	01	3
9967673	1.40.0	01	19
	402	01	4
	415	01	4
9967678	1.40.0	01	23
	402	01	9
	415	01	9
9967679	1.40.0	01	24
	402	01	10
	415	01	10
9967681	402	01	12
	415	01	12
9967682	402	01	13
	415	01	13
9967683	1.40.0	01	26
	402	01	15
	415	01	14
9967734	402	05	9
	415	05	9
9967736	402	05	4
9967736	415	05	4
9967739	402	05	5
	415	05	5
9967740	402	05	6
	415	05	6
9967741	402	05	7
	415	05	7
9967769	1.40.0	01	17
	402	01	2
	415	01	2
9967960	851/ 1	03	5
	856/ 1	03	5
9967970	855/ 1	01	34
9967990	1.40.0	01	15
	402	01	17
	415	01	17
9967991	1.40.0	01	2
	402	01	18
	415	01	18
9967992	1.40.0	01	3
	402	01	19
	415	01	19
9967993	1.40.0	01	4
	402	01	20
	415	01	20
9967994	1.40.0	01	5
	402	01	21
	415	01	21
9967995	1.40.0	01	11
	402	01	27
	415	01	27
9967996	1.40.0	01	6
	402	01	22
	415	01	22
9968004	402	01	11
	415	01	11
9968005	402	01	14
	415	01	15
9968006	1.40.0	01	8
	402	01	24
	415	01	24
9968007	1.40.0	01	9
	402	01	25
	415	01	25
9968008	1.40.0	01	10
	402	01	26
	415	01	26
9968009	1.40.0	01	12
	402	01	28
	415	01	28
9968010	1.40.0	01	13
	402	01	5
	415	01	6
9968021	1.40.0	02	10
	402	02	10
	415	02	10
9968028	1.40.0	02	17
	402	02	17
	415	02	17
9968031	402	04	3
	415	04	3
9968032	402	04	2
	415	04	2
9968033	402	04	4
	415	04	4
9968034	402	04	5
	415	04	5
9968035	415	04	1
9968036	415	04	1
9968037	402	04	13
	415	04	13
9968038	402	04	13
	415	04	13
9968039	402	04	13
	415	04	13
9968040	402	04	13
	415	04	13
9968041	402	04	13
	415	04	13
9968042	402	04	13
	415	04	13
9968043	402	04	13

Number	Figure	Sequence	Ref.
9968043	415	04	13
9968044	402	04	13
	415	04	13
9968045	402	04	13
	415	04	13
9968046	402	04	13
	415	04	13
9968047	402	04	7
	415	04	7
9968048	402	04	9
	415	04	9
9968049	402	04	8
	415	04	8
9968050	402	04	10
	415	04	10
9968051	402	04	11
	415	04	11
9968052	402	04	12
	415	04	12
9968054	402	05	8
	415	05	8
9968060	402	06	6
	415	06	6
9968070	1.40.0	02	24
	402	03	9
	415	03	9
9968071	1.40.0	02	25
	402	03	10
	415	03	10
9968083	402	03	19
	415	03	19
9968084	402	03	18
	415	03	18
9968144	522-C	01	15
	525	01	1
	526-1	01	1
9968146	522-C	01	3
	525	01	3
	526-1	01	3
9968147	522-C	01	4
	525	01	4
	526-1	01	4
9968148	522-C	01	5
	525	01	5
	526-1	01	5
9968149	522-C	01	6
	525	01	6
	526-1	01	6
9968150	522-C	01	7
	525	01	7
	526-1	01	7
9968151	522-C	01	8
	525	01	8
	526-1	01	8
9968152	522-C	01	9
	525	01	9
	526-1	01	9
9968153	522-C	01	10
	525	01	10
	526-1	01	10
9968154	522-C	01	11
	525	01	11
	526-1	01	11
9968155	522-C	01	12
	525	01	12
	526-1	01	12
9968156	522-C	01	13
	525	01	13
	526-1	01	13
9968216	1.28.0/ B	01	2
9968217	1.28.0/ B	01	3
9968218	1.28.0/ A	01	4
	1.28.0/ A	02	11
	1.28.0/ A	03	7
	1.28.0/ A	07	14
	1.28.0/ B	02	11
	1.28.0/ B	03	15
	1.28.0/ B	07	14
9968219	1.28.0/ A	01	5
	1.28.0/ A	02	9
	1.28.0/ A	03	6
	1.28.0/ A	07	10
9968219	1.28.0/ B	02	9
	1.28.0/ B	03	8
	1.28.0/ B	07	10
9968223	1.28.0/ A	06	15
	1.28.0/ B	06	15
9968226	1.28.0/ A	05	18
	1.28.0/ B	05	18
9968228	1.28.0/ A	05	2
	1.28.0/ B	05	2
9968229	1.28.0/ B	08	11
9968230	1.28.0/ A	05	30
	1.28.0/ B	05	30
9968232	1.28.0/ B	08	10
9968233	1.28.0/ B	08	17
9968234	1.28.0/ B	08	12
9968235	1.28.0/ B	08	15
9968236	1.28.0/ B	08	16
9968239	1.28.0/ B	08	9
9968240	1.28.0/ B	08	7
9968244	1.28.0/ B	08	4
9968245	1.28.0/ A	06	9
	1.28.0/ B	06	22
9968246	1.28.0/ A	06	18
	1.28.0/ B	06	18
9968247	1.28.0/ A	06	16
	1.28.0/ B	06	16
9968248	1.28.0/ A	06	13
	1.28.0/ B	06	13
9968249	1.28.0/ B	06	9
9968250	1.28.0/ A	06	11
	1.28.0/ B	06	11
9968251	1.28.0/ A	06	12
	1.28.0/ B	06	12
9968252	1.28.0/ A	06	10
	1.28.0/ B	06	10
9968253	1.28.0/ A	06	21
	1.28.0/ B	06	21
9968254	1.28.0/ B	08	8
9968255	1.28.0/ B	08	1
9968256	1.28.0/ B	08	2
9968257	1.28.0/ B	08	2
9968258	1.28.0/ B	08	2
9968259	1.28.0/ B	08	2
9968260	1.28.0/ A	06	23
	1.28.0/ B	06	23
9968261	1.28.0/ A	05	27
	1.28.0/ B	05	27
9968262	1.28.0/ A	05	26
	1.28.0/ B	05	26
9968263	1.28.0/ A	05	26
	1.28.0/ B	05	26
9968264	1.28.0/ A	05	26
	1.28.0/ B	05	26
9968265	1.28.0/ A	05	26
	1.28.0/ B	05	26
9968266	1.28.0/ A	05	26
	1.28.0/ B	05	26
9968267	1.28.0/ A	05	26
	1.28.0/ B	05	26
9968268	1.28.0/ A	05	24
	1.28.0/ B	05	24
9968269	1.28.0/ A	06	17
	1.28.0/ B	06	17
9968270	1.28.0/ A	06	8
	1.28.0/ A	07	3
	1.28.0/ B	06	8
	1.28.0/ B	07	3
9968271	1.28.0/ A	06	6
	1.28.0/ A	07	5
	1.28.0/ B	06	6
	1.28.0/ B	07	5
9968272	1.28.0/ A	06	7
	1.28.0/ A	07	4
	1.28.0/ B	06	7
	1.28.0/ B	07	4
9968273	1.28.0/ A	06	7
	1.28.0/ A	07	4
	1.28.0/ B	06	7
	1.28.0/ B	07	4
9968274	1.28.0/ A	06	7
	1.28.0/ A	07	4
	1.28.0/ B	06	7

Number	Figure	Sequence	Ref.
9968274	1.28.0/ B	07	4
9968275	1.28.0/ A	06	7
	1.28.0/ A	07	4
	1.28.0/ B	06	7
	1.28.0/ B	07	4
9968276	1.28.0/ A	05	31
	1.28.0/ B	05	31
	1.28.0/ B	08	3
9968277	1.28.0/ A	07	1
	1.28.0/ B	07	1
9968278	1.28.0/ A	06	22
	1.28.0/ B	06	19
9968279	1.28.0/ A	05	1
	1.28.0/ B	05	1
9968280	1.28.0/ A	07	2
	1.28.0/ B	07	2
9968281	1.28.0/ A	05	25
	1.28.0/ B	05	25
9968282	1.28.0/ A	05	28
	1.28.0/ B	05	28
9968285	1.28.0/ A	05	21
	1.28.0/ B	05	21
9968286	1.28.0/ A	05	5
	1.28.0/ B	05	5
9968287	1.28.0/ A	05	9
	1.28.0/ B	05	9
9968288	1.28.0/ A	05	10
	1.28.0/ B	05	10
9968289	1.28.0/ A	05	12
	1.28.0/ B	05	12
9968290	1.28.0/ A	05	11
	1.28.0/ B	05	11
9968291	1.28.0/ A	05	6
	1.28.0/ B	05	6
9968292	1.28.0/ A	05	7
	1.28.0/ B	05	7
9968293	1.28.0/ A	05	8
	1.28.0/ B	05	8
9968294	1.28.0/ A	05	13
	1.28.0/ B	05	13
9968295	1.28.0/ A	05	15
	1.28.0/ B	05	15
9968296	1.28.0/ A	05	14
	1.28.0/ B	05	14
9968297	1.28.0/ A	05	17
	1.28.0/ B	05	17
	1.28.0/ B	08	14
9968298	1.28.0/ A	05	16
	1.28.0/ B	05	16
	1.28.0/ B	08	13
9968299	1.28.0/ A	04	14
	1.28.0/ B	04	14
9968300	1.28.0/ B	08	21
9968301	1.28.0/ B	08	19
9968302	1.28.0/ A	05	4
	1.28.0/ B	05	4
9968304	1.28.0/ A	05	3
	1.28.0/ B	05	3
9968305	1.28.0/ A	05	22
	1.28.0/ B	05	22
9968306	1.28.0/ A	06	2
	1.28.0/ B	06	2
	1.28.0/ B	08	23
	1.38.1	01	12
9968307	1.28.0/ A	06	14
	1.28.0/ B	06	14
9968308	1.28.0/ A	06	1
	1.28.0/ B	06	1
	1.28.0/ B	08	18
	1.38.1	01	13
9968309	1.28.0/ A	06	3
	1.28.0/ B	06	3
	1.28.0/ B	08	22
	1.38.1	01	11
9968311	1.28.0/ A	01	9
	1.28.0/ B	01	11
9968312	1.28.0/ A	01	10
	1.28.0/ B	01	23
9968313	1.28.0/ A	01	14
	1.28.0/ B	01	22
9968314	1.28.0/ A	05	29
	1.28.0/ B	05	29
9968315	1.28.0/ A	07	9
	1.28.0/ B	07	9
9968316	1.28.0/ A	07	8
	1.28.0/ B	07	8
9968317	1.28.0/ A	07	11
	1.28.0/ B	07	11
9968318	1.28.0/ A	07	12
	1.28.0/ B	07	12
9968319	1.28.0/ A	07	6
	1.28.0/ B	07	6
9968322	1.28.0/ A	07	7
	1.28.0/ B	07	7
9968323	1.28.0/ A	07	13
	1.28.0/ B	07	13
9968324	1.28.0/ A	04	9
	1.28.0/ B	04	9
9968326	1.28.0/ A	04	11
	1.28.0/ B	04	11
9968327	1.28.0/ A	04	10
	1.28.0/ B	04	10
9968328	1.28.0/ A	04	12
	1.28.0/ B	04	12
9968331	1.28.0/ A	04	20
	1.28.0/ B	04	20
9968333	1.28.0/ A	02	6
	1.28.0/ B	02	6
9968334	1.28.0/ A	02	2
	1.28.0/ B	02	2
9968336	1.28.0/ A	03	3
	1.28.0/ B	03	7
9968337	1.28.0/ B	03	3
9968339	1.28.0/ A	01	20
	1.28.0/ B	01	9
9968340	1.28.0/ B	03	6
9968341	1.28.0/ A	05	19
	1.28.0/ B	05	19
9968342	1.28.0/ A	05	20
	1.28.0/ B	05	20
9968343	1.28.0/ A	05	20
	1.28.0/ B	05	20
9968344	1.28.0/ A	05	20
	1.28.0/ B	05	20
9968345	1.28.0/ A	05	20
	1.28.0/ B	05	20
9968347	1.28.0/ A	05	23
	1.28.0/ B	05	23
9968350	1.28.0/ A	02	1
	1.28.0/ B	02	1
9968351	1.28.0/ B	01	8
9968354	1.28.0/ A	03	12
	1.28.0/ B	03	12
9968356	1.28.0/ A	01	7
	1.28.0/ B	01	5
9968357	1.28.0/ A	06	5
	1.28.0/ B	06	5
	1.28.0/ B	08	20
9968358	1.28.0/ A	06	20
	1.28.0/ B	06	20
9968359	1.28.0/ A	01	15
	1.28.0/ B	01	17
9968360	1.28.0/ A	01	17
	1.28.0/ B	01	19
9968361	1.28.0/ A	01	16
	1.28.0/ B	01	18
9968362	1.28.0/ A	01	19
	1.28.0/ B	01	21
9968364	1.28.0/ A	02	12
	1.28.0/ B	02	12
9968365	1.28.0/ A	01	21
	1.28.0/ B	01	10
9968368	1.28.0/ A	02	10
	1.28.0/ B	02	10
9968370	1.28.0/ A	04	19
	1.28.0/ B	04	19
9968371	1.28.0/ A	02	5
	1.28.0/ B	02	5
9968374	1.28.0/ A	03	13
	1.28.0/ B	03	11
9968375	1.28.0/ A	03	14
	1.28.0/ B	03	10
9968377	1.28.0/ A	02	8
	1.28.0/ B	02	8

Number	Figure	Sequence	Ref.
9968378	1.28.0/ A	02	3
	1.28.0/ B	02	3
9968379	1.28.0/ A	02	4
	1.28.0/ B	02	4
9968382	1.28.0/ B	02	15
9968383	1.28.0/ B	02	14
9968392	1.28.0/ B	08	5
9968393	1.28.0/ B	08	6
9968394	1.28.0/ A	01	1
9968395	1.28.0/ A	01	2
9968396	1.28.0/ A	06	19
9968410	1.38.1	01	3
9968438	339	02	5
9968439	339	02	5
9968440	336/ 1	02	8
	339	02	6
	344	01	4
	721	01	14
9968441	336/ 1	02	6
	339	02	6
	344	01	6
	721	01	13
9968443	336/ 1	02	3
	339	02	4
9968444	336/ 1	03	6
	339	03	10
9968445	336/ 1	03	7
	339	03	11
9968446	336/ 1	03	8
	339	03	12
9968447	1.82.6	16	10
	336/ 1	03	11
	339	03	15
9968448	1.82.6	16	9
	336/ 1	03	10
	339	03	14
9968449	336/ 1	03	9
	339	03	13
9968451	336/ 1	01	12
	339	01	13
9968454	336/ 1	01	14
	339	01	14
9968455	336/ 1	01	4
	339	01	5
9968456	336/ 1	01	6
	339	01	6
9968457	336/ 1	01	5
	339	01	8
9968458	1.82.6	17	11
	1.82.6	18	11
	336/ 1	01	7
	339	01	7
9968460	1.82.6	17	12
	1.82.6	18	12
	336/ A	01	12
	336/ 1	01	8
	339	01	11
	344/ A	01	12
	356/ A	01	12
9968461	336/ 1	04	6
	339	04	6
9968464	336/ 1	02	1
	336/ 1	05	10
	339	03	19
	339	05	10
9968465	336/ 1	04	2
	339	04	2
9968466	1.82.6	16	1
	336/ 1	02	12
	336/ 1	04	4
	336/ 1	05	4
	339	03	4
	339	04	4
	339	05	4
9968467	336/ 1	02	11
	336/ 1	04	3
	336/ 1	05	3
	339	03	3
	339	04	3
	339	05	3
9968468	1.82.6	16	8
	336/ 1	02	13
9968468	336/ 1	04	5
	336/ 1	05	5
	339	03	5
	339	04	5
	339	05	5
9968469	336/ 1	03	12
	339	03	16
9968470	336/ 1	03	5
	339	03	9
9968471	336/ 1	03	4
	339	03	8
9968472	336/ 1	03	3
	339	03	7
9968473	336/ 1	03	2
	339	03	6
9968476	336/ A	01	13
	336/ 1	02	2
	339	02	3
	344	01	8
	721	01	8
9968477	336/ A	01	9
	344/ A	01	9
	356/ A	01	9
9968478	336/ A	01	10
	344/ A	01	10
	356/ A	01	10
9968480	336/ A	01	11
	344/ A	01	11
	356/ A	01	11
9968481	336/ A	01	4
	344/ A	01	4
	356/ A	01	4
9968483	336/ A	01	6
	344/ A	01	6
	356/ A	01	6
9968484	336/ A	01	7
	344/ A	01	7
	356/ A	01	7
9968486	336/ A	01	8
	344/ A	01	8
	356/ A	01	8
9968488	336/ 1	02	14
	336/ 1	05	8
	339	03	18
	339	05	8
9968489	1.82.6	17	2
	1.82.6	18	2
9968490	1.82.6	17	3
	1.82.6	18	3
9968492	1.82.6	16	11
9968493	1.82.6	16	13
9968494	1.82.6	16	14
9968495	1.82.6	16	12
	1.82.6	17	1
	1.82.6	18	1
9968497	1.82.6	16	6
9968498	1.82.6	16	7
9968500	1.82.6	16	4
9968501	1.82.6	16	2
9968502	1.82.6	16	3
9968503	1.82.6	16	5
9968504	1.82.6	16	31
9968505	1.82.6	16	30
9968506	1.82.6	16	16
9968507	1.82.6	16	17
9968508	1.82.6	16	28
9968509	1.82.6	16	29
9968510	1.82.6	17	9
	1.82.6	18	9
9968511	1.82.6	17	10
	1.82.6	18	10
9968512	1.82.6	17	4
	1.82.6	18	4
9968513	1.82.6	17	7
	1.82.6	18	7
	336/ 1	01	19
	339	01	16
9968514	1.82.6	17	5
	1.82.6	18	5
9968515	1.82.6	17	6
	1.82.6	18	6
9968516	1.82.6	17	8

Number	Figure	Sequence	Ref.
9968516	1.82.6	18	8
9968520	336/ 1	02	7
9968521	336/ 1	02	5
9968523	1.82.6	16	23
9968524	344	01	7
	721	01	7
9968526	356/ A	01	1
	721	01	10
9968527	344	01	11
	721	01	11
9968528	721	01	6
9968529	721	01	12
9968531	344/ A	01	5
	356/ A	01	5
9968532	344	01	12
9968533	344	01	10
9968594	721	01	15
9968595	1.82.6	16	26
	339	02	1
	724	01	25
9968596	1.82.6	16	27
9968633	855/ 1	05	7
9968676	1.28.0/ A	03	8
	1.28.0/ B	03	4
9968678	1.28.0/ A	04	8
	1.28.0/ B	04	8
9968791	1.82.6	03A	10
	1.82.6	03B	13
	1.96.2/ 1	01	9
9968911	855/ 1	04	6
	855/ 1	05	5
9968924	855/ 1	03	23
	855/ 1	04	8
9968925	415	04	1
9968926	1.28.0/ A	04	17
	1.28.0/ B	04	17
9968927	1.28.0/ A	04	18
	1.28.0/ B	04	18
9968988	MPARTS	00	8
9969170	522-C	01	2
	525	01	2
	526-1	01	2
9969281	1.28.0/ A	04	13
	1.28.0/ B	04	13
9969344	1.28.0/ A	04	2
	1.28.0/ B	04	2
9969380	1.82.0	01	21
9969445	1.28.0/ A	04	4
	1.28.0/ B	04	4
9969449	1.28.0/ A	03	4
9970107	344	01	9
	344/ A	01	1
	721	01	9
9970178	704/ A	01	3
	724/ A	01	3
9970179	724/ A	01	5
9970180	704/ A	01	4
	724/ A	01	4
9970181	724/ A	01	2
9970370	1.95.5/ B	01	3
9970382	704/ A	01	2
9970383	704/ A	01	5
9970384	704/ A	01	6
	724/ A	01	6
9970494	1.94.2	05	9
9971526	855/ 1	05	12
9971567	1.94.2	05	6
	644	04	9
	644	04A	9
9991976	1.82.6	01A	8
	1.82.6	01B	8
	1.82.6	04B	17
	1.82.6	11B	3
	1.82.6	12B	3
	334	11	3A
	514	04	14
	514	06	8
	721	04	3A
	902	02	14
	902	05	8
9992069	334	11	4A
	721	04	4A
9992298	1.82.6	03B	10
	1.82.6	03B	15
	1.82.6	09C	11
	1.82.6	09C	6
	1.88.11/ 3	01	7
	1.88.11/ 7	01	2
	1.88.11/ 7	01	21
	1.95.5	02	8
	337	01	16
	337	02	16
	437	01	16
	437	01	7
	700	02	2
	718	01	2
	721	02	6
	725/ 1	02	2
9993141	1.95.5	02	9
D5NN94420N02B	515	02	6
	516	02	6
D7NNC512C	514	01	2
	902	01	2
D8NND659AB	902	01	3
E2NN4209DA	1.44.0A	03	19
E7NN94290N06AA	1.93.0	02	10
	644	08	11
E7NN94305N22BA	1.92.4	01	5
E7NNB165AA	337	01	13
	337	02	11
	514	07	4
	902	06	4
	902/ A	02	6
E9NNP864CA	704	02	8
F0NN16605AA	1.98.1	01	9
F1NN94000Z36AA	1.93.0	01	15
	1.93.0	02	16
	1.93.0/ 3	01	15
	514	02	13
N620017S36	535/ 1	01	5
	537	01	5
N630177S36	535/ 1	01	6
	537	01	6
NSS	1.91.4	02	16
	1.91.4	02	18
	1.91.4/ 2	02	18
	1.91.4/ 2	02	20
	1.91.4/ 2	05	16
	1.92.1/ 3	01	6
	1.94.2/ 1	01	1
	1.96.2	01	13
	331/B	01	20
	331/C	06	1
	331/C	06	2
	333/B	06	1
	333/B	06	2
	337	01	21
	337	02	19
	471	01	33
	471	01	34
	472	01	33
	472	01	34
	473	01	42
	473	01	43
	474	01	42
	474	01	43
	515	01	6
	516	01	6
	517	01	6
	519	01	6
	644	05	6
	795	01	3
	795	01	4
	796	01	6
	803	01	12
SBA610600030	636	02	12