RUTHZIL TRATOR COMERCIAL DE PEÇAS LTDA 11 97083-6812 ROLANDO

山东临工
SDLG 沃尔沃集团成员公司

PARTS CATALOG

LG6150E

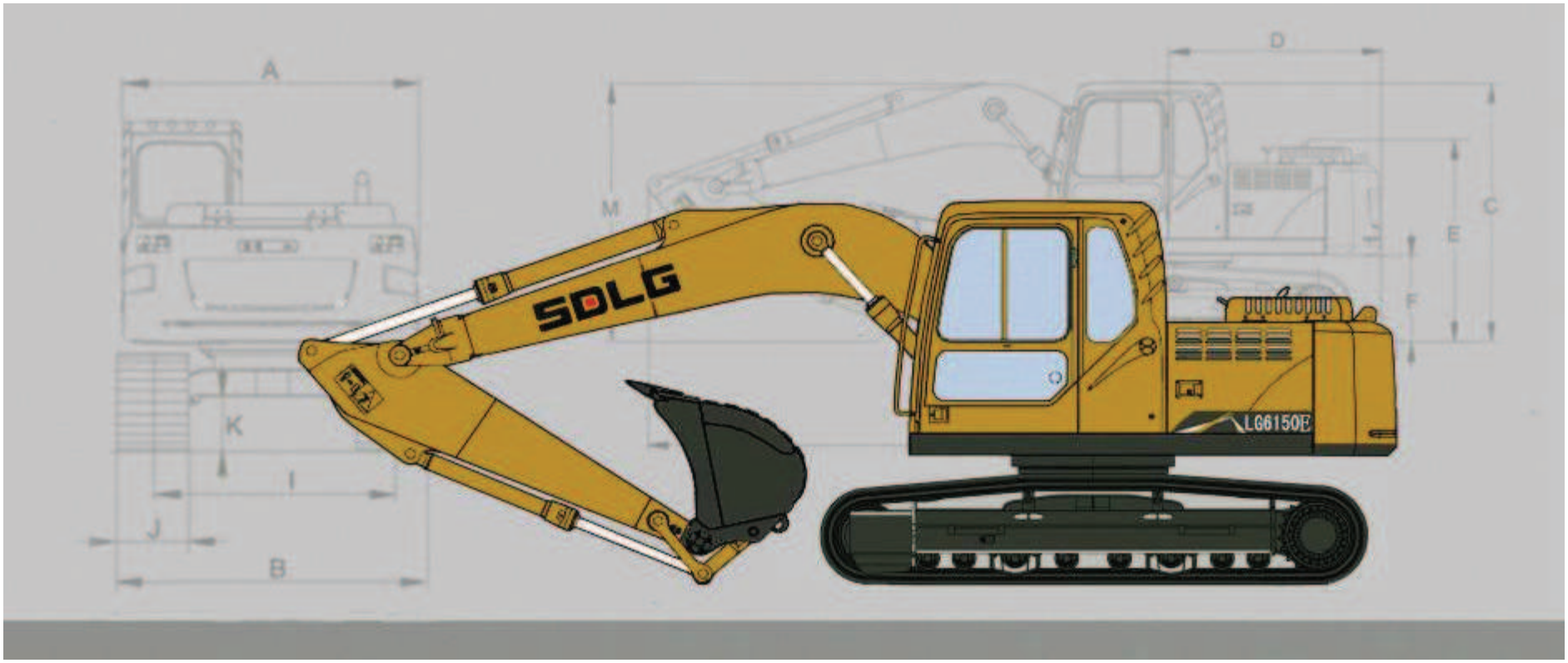

山 东 临 工 工 程 机 械 有 限 公 司

SHANDONG LINGONG CONSTRUCTION MACHINERY CO.,LTD.



www.sdlg.cn

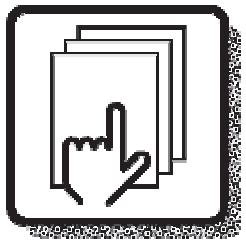

1

Preface and instructions

前言与名称

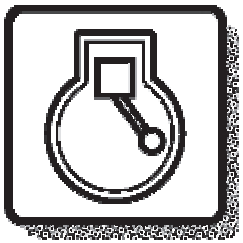

2

Engine

发动机

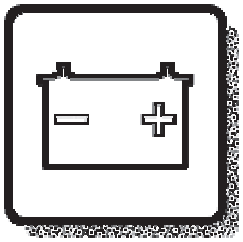

3

Electrical systems and instruments

电气系统与仪表

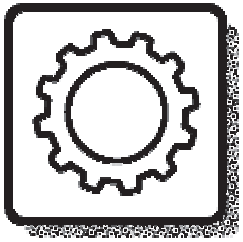

4

Power transmission

动力传动系统

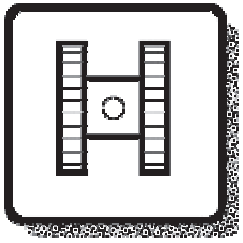

7

Frame and crawler unit

车架与履带装置

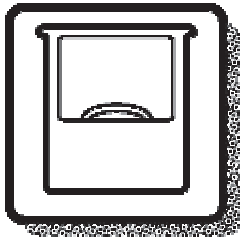

8

Body with associated parts

车身与相关部件

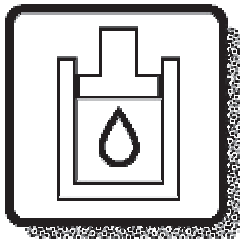

9

Miscellaneous equipment

其它装备

Only genuine parts are presented in this catalogue. These parts have been subjected to the necesry function and endurance tests, and they comply with the high quality and fety requirements that have been set for SDLG. You should note
that warranties do not cover damages that are caused or aggravated by the fact that a non-genuine part was fitted.

The illustrations shown in the catalogues should not be used as assembly or workshop instructions. Separate literature for the various specific subject areas is available for that purpose.

The owner of the machine or equipment should state the model designation, manufacturing number, part number, Quantity , and the name, or description, of the part when ordering parts.

Market-adapted equipment entered in catalogue, can be seen on page 11.

See page 7 for a "Catalogue Guide" on how to use the parts catalogue.

See page 10 for table of abbreviations.

This catalogue has been produced by SHANDONG LINGONG CONSTRUCTION MACHINERY CO.,LTD.. If you have any point of views regarding the catalogue, or if you detect any errors in the catalogue, please take a copy of the page in question, indicate the error(s), and send it to us at the following address:

Lingong Industry Park,Linyi Economic Development Zone,Shandong,China
Tel: 86-0539-8785568
Fax: 86-0539-8785542
Web: www.sdlg.cn

This catalogue lists the spare parts for Excavator LG6150E.

BASIC MACHINE
PROD NO. LG6150E,

ENGINE
Part No. 11212943, BF4M2012-10T2-0767

BUCKETS
Description:
Rock bucket;
Volume (m^3) : 0.52;
Weight(kg):606.
.

TRACK ASSEMBLY
Description:
Width of track : 600mm;
Symmetrical track;
Number of track shoes: 92.

发动机
零件号码 11212943, BF4M2012-10T2-0767

CHN

铲斗说明:
岩石铲斗;
体积（m^3）：0.52;
重量（kg）:606.

只有原装零件才列入此手册中。这些零件已经过必要的功能与耐用性测试，符合山东临工的高质量与安全要求。您必须注意到，质量保证不包括因安装非原装零件而导致或引起的损坏。

履带总成说明:
履带板宽度:600mm;
对称履带;
履带板数量: 920

此手册中的插图不可用作组装或维修厂说明。用于该目的时，另有其他特别项目的文件可用。

机器或设备的保有者在订购零件时应该说明该零件的零件名称、生产序列号、零件号码、数量，以及零件的名称或者说明。

列入手册中的因市场而调整的设备，可参看第 11 页。 关于如何使用此零件手册的 “手册指南”参看第 9 页。 缩写语表请参看第 10 页。

此手册由山东临工工程机械有限公司制作。如果您对此手册愿发表意见，或在此手册中发现错误，请将有关页复印，指明错误，按以下地址寄送本公司:

中国 · 临沂经济开发区临工工业园
电话: 86-0539-8785568
传真: 86-0539-8785542
网址: www.sdlg.cn

LG6150E

SDLG

CHN

此手册列出挖掘机 LG6150E 的备用零件。

基本机器
产品型号 LG6150E,

Fig.	Part No.编码	Quantity件数 1	2	3	PS	KIT	Description 说明	Notes
	11213553	2					Coil spring ..... 线圈弹簧.....	
1		1			NS		•Body ..... • 箱体.....	
2	**11213532**	1					••Body ..... •• 车体.....	
3	**11213522**	1					••Rod ..... •• 棒.....	
4	**11210122**	1					••Hexagon screw ..... •• 六角螺丝.....	
5	**11213531**	1					•Piston ..... • 活塞.....	
6	**11213516**	1					•Spring ..... • 弹簧.....	
7	**11213523**	1					•Stopper ..... • 行程限位装置.....	
8	**11213533**	1					•Plate ..... • 板.....	
9	**11213524**	1					•Nut ..... • 螺母.....	
10	**11213515**	1					•Plate ..... • 板.....	
11	**11213551**	1					•Valve..... • 阀.....	
12	**11210001**	1					•Lubricating nipple ..... • 润滑管嘴.....	
13	**11211813**	1					•Packing ..... • 填充物.....	
14	**11211814**	1					•Ring ..... • 密封环.....	
15	**11211812**	1					•Seal ..... • 密封.....	
100	**11211470**	1					Sealing ..... 密封.....	

7 **8** **9** **10** **11** **3** **1** **2** **12** **6** **4** **13** **5**

1) **GB:** Replacement version **CN:**更换版本

1	**11211826**	底盘,弹簧套件 **Undercarriage, spring package**
2		
3		
4		
5		

Catalogue id **111201**	Group **775**
Illustr. No **F7-6150E**	Section **700**
Issue **2638000345**	Page **299**

GBR

In addition to part numbers, the Parts Catalogue also includes a vast amount of essential information which you, the operator, should be acquainted with.
With the "Catalogue Guide", we want to show clearly how the catalogues are arranged and what sort of information is presented therein.

Group 1 Preface and Instructions
Here you can find the following information:
- Title page and lication number
- Group index
- Product signs
- Preface
- List of items of equipment adapted to market requirements that have been introduced
- Catalogue Guide
- Table of abbreviations

Group 2 - 9 Text and illustration pages

- The table of contents shows the division of the main groups into sub-groups, with reference to page number and section.
- Illustration page. The position number of the illustration refers to the text page.
- Text page

1. Heading.
2. Additional text which limits the validity of the section. An example is information relating to manufacturing numbers and equipment adapted to market requirements.
3. Designation for Quantity columns.
4. Illustrations.
5. Group, section, page, which you should use when you search for information in the catalogue.
6. Catalogue printing edition and Part No.
7. Position number of the part on the associated drawing.
8. Part number
9. Quantity. The column designation indicates the version which is shown in each column. The Quantity stated refers to the Quantity for each machine or, where appropriate, for each complete unit.
   "REQ" refers to the required amount. See also "Notes" column.
10. PS (Parts Status) indicates the status code of the part.
    "NS" means that the part is not kept in stock.
    "OP" means that the part is no longer in stock.
    "SE" means that an alternative part shall be used.
    "SS" means that the part has been replaced.
11. KIT. Parts that are marked with a "K" are included in a kit. The number of the kit is often indicated after other part numbers.
12. Description. The indentations indicate if one or more parts are included in the assembled unit described above. The parts are included when a complete unit is ordered.
13. Notes. Other information relating to a particular part is given here.
    - Footnote number is given at the bottom of the page.
    - Replaced parts.
    - Product or manufacturing number.
    - Abbreviations and technical information.
    - Reference to page and group.

Continued improvements and successes in design could result in modifications to your equipment which are not covered by this lication. Each lication is revised when required to include these modifications in later issues. For additional information,
you should contact SHANDONG LINGONG CONSTRUCTION MACHINERY CO.,LTD..

Any unauthorized reproduction of any part of this document would be in violation of SDLG rights and will be prosecuted to the fullest extent allowed by law. We reserve the right to make changes without prior notice.
SHANDONG LINGONG CONSTRUCTION MACHINERY CO.,LTD.。

Fig.	Part No. 编码	Quantity 件数 1	2	3	PS	KIT	Description 名称	Notes
	11213553	2					Coil spring ..... 线圈弹簧.....	
1		1			NS		•Body ..... • 箱体.....	
2	**11213532**	1					••Body ..... •• 车体.....	
3	**11213522**	1					••Rod ..... •• 棒.....	
4	**11210122**	1					••Hexagon screw..... •• 六角螺丝.....	
5	**11213531**	1					•Piston..... • 活塞.....	
6	**11213516**	1					•Spring ..... • 弹簧.....	
7	**11213523**	1					•Stopper ..... • 行程限位装置.....	
8	**11213533**	1					•Plate ..... • 板.....	
9	**11213524**	1					•Nut ..... • 螺母.....	
10	**11213515**	1					•Plate ..... • 板.....	
11	**11213551**	1					•Valve..... • 阀.....	
12	**11210001**	1					•Lubricating nipple ..... • 润滑管嘴.....	
13	**11211813**	1					•Packing ..... • 填充物.....	
14	**11211814**	1					•Ring ..... • 密封环.....	
15	**11211812**	1					•Seal ..... • 密封.....	
100	**11211470**	1					Sealing ..... 密封.....	

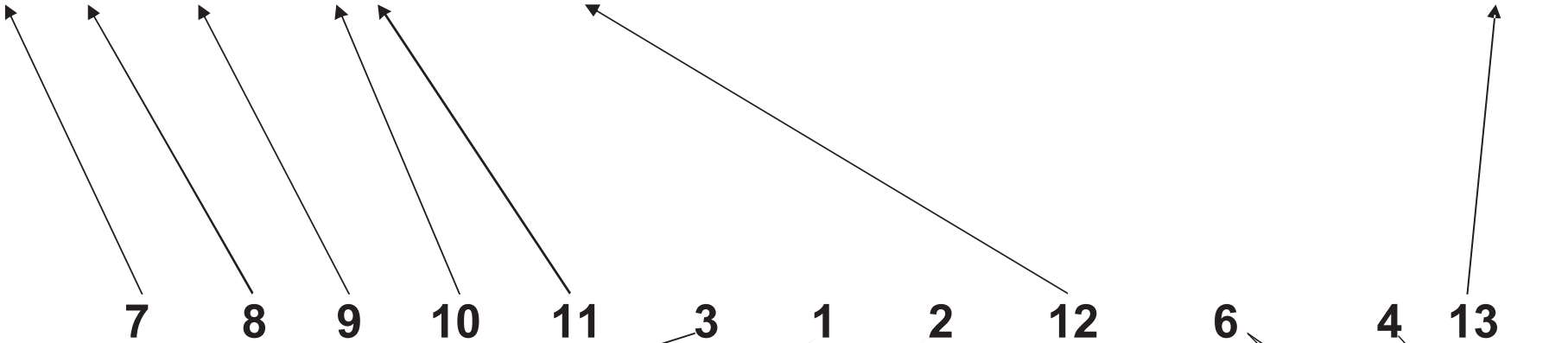

1) **GB:** Replacement version **CN:**更换版本

1	**11211826**	底盘,弹簧套件 **Undercarriage, spring package**	Catalogue id **111201**	Group **775**
2			Illustr. No **F7-6150E**	Section **700**
3				
4			Issue **2638000345**	Page **299**
5				

除了零件号码外，本 《零件手册》也包括大量
您作为操作人员应该熟悉的关键信息。
“手册指南”向您清楚地名称手册的编排
以及其中介绍哪类内容。

组 1 前言和名称 此处向
您提供以下信息:
— 标题页和出版号码
— 产品标牌
— 前言
— 配合市场要求进行改装的已引进设备项目名单
— 手册指南
— 缩略语表

组 2 — 9 文字与插图页

— 目录部分名称了从主要组到分组的划分，
并带有页码和部分的参注。
— 插图页。插图的位置号码是指相关文字页码。
— 文字页
1. 标题。
2. 限制该部分适用范围的附加文字。例如 有关生产
号码和配合市场要求进行改装的设备的信息。
3. 数量栏目的标号。
4. 插图。
5. 在本手册中检索有关信息时应该使用的
组、部分、页码。
6. 手册印刷版次及件号。
7. 零件在相关图片上的位置号码。
8. 零件号码。
9. 数量。栏目标号表示在每一栏中 显示的版
本。所列数量是指每台机器上的数量，或 在合适情
况下为每个完整单元的数量。
“REQ”指所要求数量。另可参考 “备注”栏。
10. PS （零件状态）表示零件的状态代码。
“NS”表示该部件不在库存中。
“OP”表示零件不再有库存 .
“SE”表示应该使用一个替代零件。
“SS”表示该零件已被替换掉。
11. 套件。凡表有 “K”标记的零件都包括在套件内。套件的号码通常
跟在其它零件号码之后。
12. 名称。前面有空格表示某一或更多零件是否包括在
上述组装单元内。如果订购整个单元则 这些零件也包括在
内。
13. 备注。在此会提供有关某一特别零件的其它信息。
— 脚注号码 列在该页底部。
— 替换掉零件。
— 生产或制造号码。
— 缩略语和技术信息。
— 参考页码和组。

在设计上持续的改进和获得的成功可能造成，对您的设备所做的修改没有包括在本出版物
中。每个出版物在需要在较晚版本中包括这些改动时会进行修订。如需更多信息，
可与山东临工工程机械有限公司联系。

未经本公司授权而复制本文件的任何部分都是对本公司的侵权行为，将被追究全部的法律责
任。我们也保留修订此目录而不事先通知的权利。
山东临工工程机械有限公司
（SHANDONG LINGONG CONSTRUCTION MACHINERY CO.,LTD）

LG6150E

TABLE OF ABBREVIATION 缩写语表

ABBREVIATION	ENGLISH	中文
CHN	China	中国
FORW	forward	前言
GBR	Great Britain	英国
K	included in parts kits	包括在部件套件中
L	litre, length	公升，长度
LH	left	左
MODEL	model designation	型号名称
MM	millimetre	毫米
NO	number	号码
NS	part not stocked as spare	该部件不在库存中
OP	The part is no longer in stock	该零件不再有库存
REQ#	order as required,	按照要求订货，
RH	right	右
SE	alternative spare part version	有可替代备件
SS	superseded part	更换部件
STD	standard version	标准版本
UPPER	upper	上部

Equipment	Description	Equipment	Description
11213473	Under cover for lower frame 低车架底盖	11213404	Dipper arm with leak seat 预滤器
11213474	Step 毫米级	11213428	Linkage for bucket 铲斗的连接装置 GP
11212937	Lower frame, bolted step 下车架，螺钉固定踏板	11213399	Boom cylinder, std seal 大臂油缸，固定密封
11213475	Undercarriage 底盘	11213421	Dipper arm cylinder, std seal 小臂油缸，固定密封
11213370	Boom with leak seat 带渗漏管线支座的大臂 *4,6m*	11213338	Leak-off line on dip. arm without leak. for grapp. 不带渗漏阀控制活门的小臂上的渗漏管线 *2,5M*

PRODUCT AND EQUIPMENT VARIANTS 产品和设备型号

Catalogue id 101011 | Group 1 | Issue 2638000291 | Page 12

Equipment	Description
11211823	Cab 驾驶室 *Sealed*
11211824	Operator seat 驾驶座 *Fabric*
11211825	Control joystick - semi long 控制手柄 - 半长
11211826	Master Key 主钥匙
11211827	Sun visor, internal 内部遮阳板
11213443	Bucket cylinder 铲斗油缸
11212924	Basic Machine 主机 *LG6150* *E*
11213470	Cooling system 冷却系统
11213471	Air conditioning, heater and cooler 空调，加热器和冷却器
11213472	Under cover 2,3t for superstructure 上部结构的下部护盖 2.3t

Equipment	Description	Equipment	Description
11213346	Gp Bucket with tooth 带齿的 GP 铲斗 *KHD14 520L, KOR TOOTH*	11213484	Decals, 贴纸 *FOR CAB*
11213354	Linkage for bucket 铲斗的连接装置 *A-BUCKET*	11213485	Side door 侧门
11213482	Crawler track 蠕动式履带 *TRK-600MM SHOE X 46 TRIPLE GROUSER*	11213486	Counterweight - fabrication 配重 – 制造 *2,1TON*
11213483	Cassette radio 盒式磁带放音机 *RADIO AND CD PLAYER*	11213481	Engine without Epa label 无 EPA 标签的发动机
11213331	Boom cylinder protection 大臂油缸保护		

Equipment	Description	Equipment	Description
11213332	Boom cylinder leak without Hose rupture 不带软管爆裂保护阀的大臂油缸渗漏管线	11211838	Sun visor, external 外部遮阳板
11213320	Dip arm cyl., leak-off on boom without hose ruptur 小臂油缸，大臂上的不带软管爆裂保护阀的渗漏管线 *4,6M*	11213478	Fuel filling pump, not equipped with 燃油加注泵，未装配
11212989	Main control valve 主控阀	11213479	Upper frame, with Fog mount 上车架，带雾灯安装件
11213476	Tool kit 工具套件	11213445	Servo hydraulics, Grading 伺服液压系统，平地
11213477	Power max. mode 动力最大模式	11213480	Water separator without heater 油水分离器不带加热器



www.sdlg.cn

GROUP		Section	Page
201	Engine	100	21
201	Engine mounting	200	23
202	Fuel tank with fitting parts	100	25
202	Fuel filling pump with assembling details	200	27
202	Fuel pipe - Fuel tank	300	29
202	Water separator	400	31
203	Exhaust system	100	33
203	Inlet system	200	35
204	Cooling system	37	100
204	Radiator	200	39
205	Cooling fan mounting	100	41
206	Valve drive	100	43
206	Connecting rod	200	45
206	Crankshaft	300	47
206	Cross refer. list	400	49
207	Fastenings	100	51
208	Actuator	100	53
209	Crankcase	100	55
209	Blanking parts	200	57
209	Blanking parts	300	59
209	Piston cool.nozzle	400	61
209	Control rod	500	63
209	High pressure pipe	600	65
209	Fastenings	700	67
210	Camshaft	100	69
210	Roller tappet	200	71
210	Fastenings	300	73
210	Fuel inject. pump	400	75
210	Fastenings	500	77
210	Fuel injector	600	79
211	Cylinder head	100	81
212	Blanking parts	100	83
212	Blanking parts	200	85
212	Exhaust pipe	300	87
212	Return line	400	89
212	Lubricat. oil line	500	91
212	Fastenings	600	93
213	Heating flange	100	95
213	Charge air pipe	200	97
213	Blanking parts	300	99
214	Crankcase breather	100	101
215	Manifold	100	103
215	Breather line	200	105
215	Hose clip	107	300
216	Lubricat. oil pump	100	109
216	Fastenings	111	200
217	Suction pipe	113	100
217	Oil pan	200	115
217	Hose connector	300	117
218	Oil gauge	100	119
218	Dipstick	121	200
218	Guide tube	300	123
219	Fastenings	125	100
219	Connection housing	127	200
219	Flywheel	300	129
220	Fastenings	131	100
220	Fan bracket	200	133
221	Outlet/exh.branch	100	135
221	Blanking parts	137	200

LG6150E

GROUP		Section	Page
222	V-grooved pulley	100	139
222	Generator	200	141
222	Accessories	300	143
222	Fastenings	400	145
223	Fastenings	100	147
223	V-rib.belt pulley	200	149
224	Fuel supply pump	100	151
225	Belt tensioner	100	153
225	Fastenings	200	155
225	Fan support	300	157
225	Fastenings	400	159
226	Accessories	100	161
226	Accessories	200	163
227	Blanking parts	100	165
227	Blanking parts	200	167
228	Gearcase	100	169
228	Plug	200	171
229	Valve mechan.cover	100	173
229	Rubber seal	200	175
230	Blanking parts	100	177
230	Oil cooler box	200	179
231	Blanking parts	100	181
232	Connecting parts	100	183
233	Fuel filter assy	100	185
233	Support	200	187
233	Fuel line	300	189
233	Fuel line	400	191
234	Mating part	100	193
234	Fuel line	200	195
235	Engine mounting	100	197
236	Starter	100	199
236	Fastenings	200	201
237	Pilot line	100	203
237	Accessories	200	205
238	Cable harness	100	207
238	Interconnect.cable	200	209
239	Control unit	100	211
240	Relay	100	213
241	Blanking parts	100	215
242	Oil press.monitor	100	217
242	Speed monit.system	200	219
242	Impulsetransmitter	300	221
242	Temper.transmitter	400	223

LG6150E

212 后置增压器回油堵.....200 85

SDLG

部类		部分	页
201	发动机	100	21
201	发动机座	200	23
202	燃油箱及附件	100	25
202	燃油加油泵及附件	200	27
202	燃油管 — 燃油箱	300	29
202	油水分离器	400	31
203	排气系统	100	33
203	进气系统	200	35
204	冷却系统	100	37
204	散热器	200	39
205	散热风扇安装件	100	41
206	摇臂驱动装置	100	43
206	连杆及连杆瓦总成	200	45
206	曲轴及曲轴瓦总成	300	47
206	活塞及活塞环组	400	49
207	紧固件-调速器	100	51
208	执行器	100	53
209	气缸体总成	100	55
209	堵装置	200	57
209	堵	300	59
209	活塞冷却喷嘴	400	61
209	喷油泵尺条	500	63
209	高压油管总成	600	65
209	紧固件-气缸盖	700	67
210	凸轮轴总成	100	69
210	单体泵挺柱总成	200	71
210	紧固装置-喷油泵	300	73
210	单体泵总成	400	75
210	喷油器紧固装置	500	77
210	喷油器总成	600	79
211	气缸盖总成装置	100	81

部类		部分	页	
212	排气歧管装置	300	87	
212	增压器回油装置	400	89	
212	增压器进油装置	500	91	
212	紧固件总成	600	93	
213	进气预热总成	100	95	
213	进气歧管装置	200	97	
213	堵总成	300	99	
214	曲轴箱通风装置图	100	101	
215	连接胶管-接增压器	100	103	
215	通气管装置	200	105	
215	管箍装置		300	
		107		
216	前盖总成	100	109	
216	紧固件总成-前端盖		200	
		111		
217	机油收集装置	100	113	
217	油底壳装置		200	
		115		
217	直向软管连接接头		300	
		117		
218	机油标尺管逻辑总成		100	
		119		
218	机油标尺			
		200	121	
218	导管	300	123	
219	飞轮壳紧固件总成		100	
		125		
219	飞轮壳及防尘盖板紧固件总成		200	
		127		
219	飞轮齿环总成	300	129	
220	紧固件-风扇支架			
		100	131	
220	水泵及风扇支架总成	200	133	
221	调温器盖	100	135	
221	堵盖总成		200	
		137		

部类		部分	页
222	曲轴V带轮装置	100	139
222	发电机总成	200	141
222	紧固件-发电机	300	143
222	风扇过渡法兰逻辑总成	400	145
223	紧固件-输油泵	100	147
223	多楔带轮-水泵	200	149
224	燃油输油泵总成	100	151
225	张紧轮装置	100	153
225	紧固件-风扇皮带轮	200	155
225	风扇支架多楔带轮总成	300	157
225	曲轴多楔带轮装置	400	159
226	前悬运输左支架装置	100	161
226	前悬运输右支架装置	200	163
227	PTO-A/B逻辑总成	100	165
227	PTO-C 逻辑总成	200	167
228	齿轮室罩盖装置	100	169
228	加机油口塞片总成	200	171
229	气缸盖罩盖	100	173
229	密封套装置	200	175
230	堵-机油冷却器	100	177
230	机油冷却器总成	200	179
231	堵	100	181
232	回油阀装置	100	183
233	燃油滤装置		100 185
233	滤座支撑装置	200	187
233	燃油管路逻辑总成	300	189
233	滤到缸体过渡油管装置	400	191
234	接头总成	100	193
234	油泵到滤油管装置	200	195
235	后吊耳装置	100	197
236	起动机	100	199
236	起动机紧固件装置	100	201
237	增压补偿器管装置	100	203
237	紧固件-进气传感	200	205
238	线束及线束支架总成	100	207
238	过渡线束		200 209
239	ECU总成	100	211
240	控制盒–预热器	100	213
241	预热器孔堵塞	100	215
242	油压传感器逻辑总成	100	217
242	转速传感器逻辑总成	200	219
242	脉冲信号发生器	300	221
242	冷却液温度传感器		400 223

LG6150E

Fig.	Part No.编码	Quantity件数 1	2	3	PS	KIT	Description 说明	Notes
1	**11212943**	1					Engine.....发动机.....	
2	**11210043**	1					Screw..... .....螺丝.....	

1	**11213481**	发动机 **Engine**	Catalogue id **111201**	Group **201**
2			Illustr. No **A1-6150E**	Section **100**
3				
4			Issue **2638000345**	Page **21**
5				

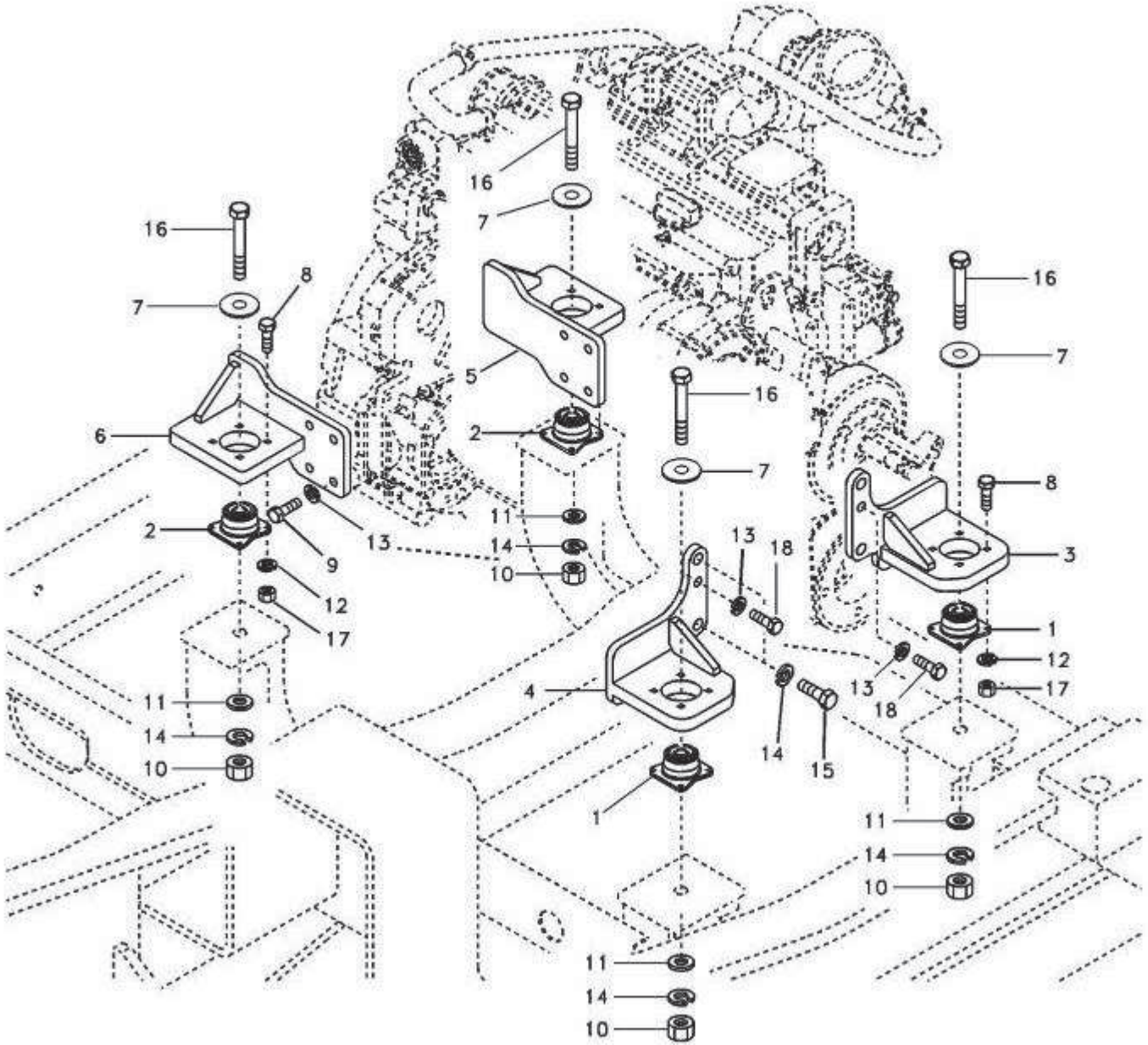
16
7
16
8
7
5
6
2
16
7
16
7
8
3
2
11
14
10
13
9
12
17
13
18
1
12
17
13
18
4
14
15
11
14
10
1
11
14
10
11
14
10

A2-6150E

Fig.	Part No.编码	Quantity件数 1	2	3	PS	KIT	Description 说明	Notes
1	**11212948**	2					Cushion.....缓冲.....	
2	**11212949**	2					Cushion.....缓冲.....	
3	**11212960**	1					Bracket.....支架.....	
4	**11212961**	1					Bracket.....支架.....	
5	**11212958**	1					Engine bracket.....发动机支架.....	
6	**11212959**	1					Bracket.....支架.....	
7	**11212957**	4					Plate.....安装板.....	
8	**11211603**	16					Bolt.....螺栓.....	
9	**11212963**	8					Bolt.....螺栓.....	
10	**11212964**	4					Lock nut .....锁紧螺母.....	
11	**11210199**	4					Washer.....垫圈.....	
12	**11210064**	16					Spring washer .....弹簧垫圈.....	
13	**11210065**	10					Spring washer .....弹簧垫圈.....	
14	**11210067**	8					Spring washer .....弹簧垫圈.....	
15	**11210103**	4					Hexagon screw .....六角螺丝.....	
16	**11212965**	4					Hexagon screw .....六角螺丝.....	
17	**11210130**	16					Hexagon nut.....六角螺母.....	
18	**11210099**	2					Hexagon screw .....六角螺丝.....	

1	**11212924**	发动机座 **Engine mounting**	Catalogue id **111201**	Group **201**
2				
3			Illustr. No **A2-6150E**	Section **200**
4				
5			Issue **2638000345**	Page **23**

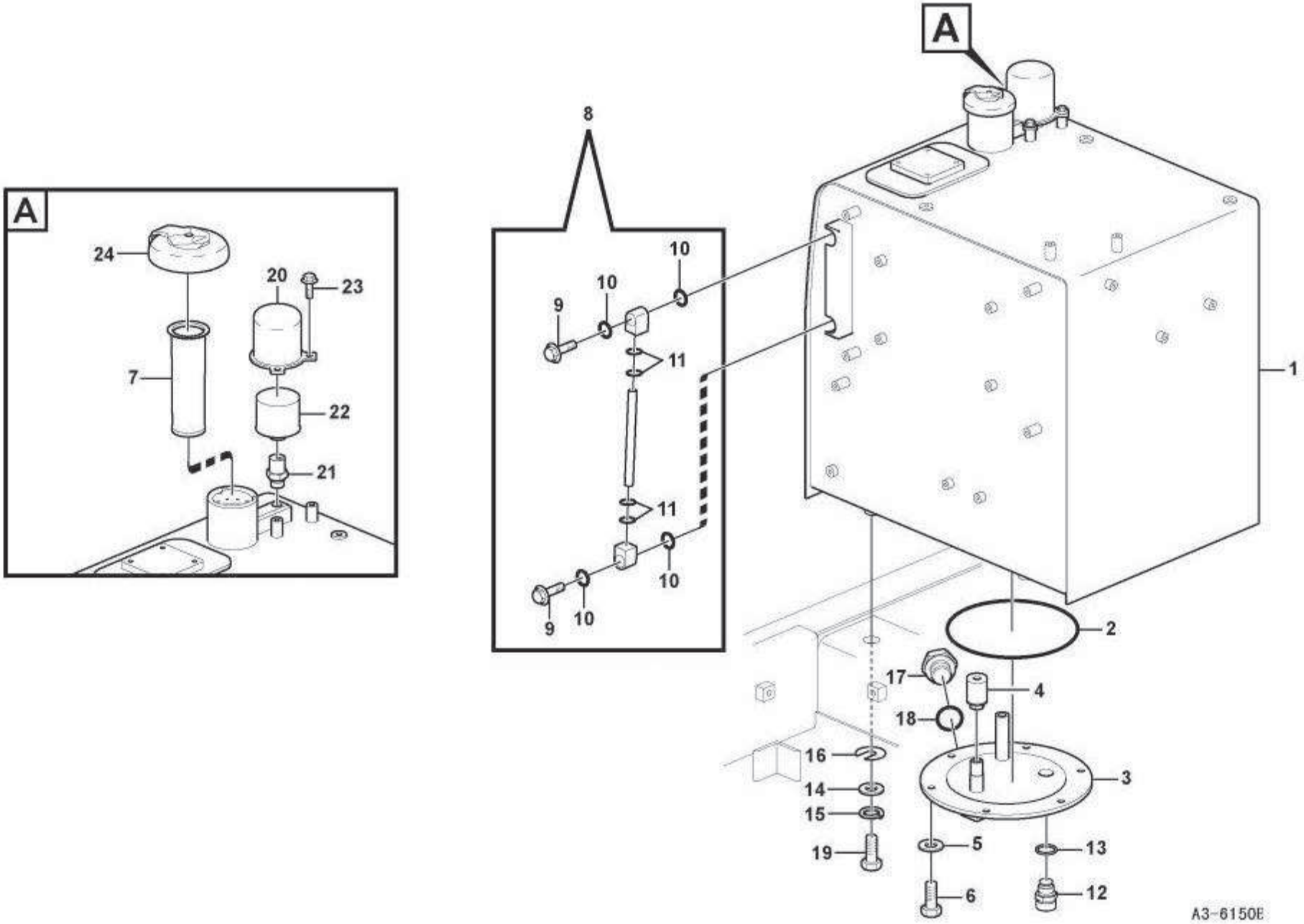
A
24
20
23
7
22
21
A
8
10
10
9
11
11
10
9
10
1
2
17
4
18
16
3
14
15
19
5
13
6
12
A3-6150E

Fig.	Part No.编码	Quantity件数 1	2	3	PS	KIT	Description 说明	Notes
1	**11213118**	1					Fuel tank ..... 燃油箱.....	
2	**11210070**	1					•O-ring.....•O 型圈.....	
3	**11210762**	1					•Cover .....• 罩盖.....	
4	**11210678**	1					•Strainer .....• 滤网.....	
5	**11210197**	6					•Washer .....• 垫圈.....	
6	**11210123**	6					•Hexagon screw .....• 六角螺丝.....	
7	**11210752**	1					Filter .....滤网.....	
8		1					Gauge .....液位指示器.....	
9		2					•Bolt .....• 螺栓.....	
10		4					•O-ring.....•O 型圈.....	
11		4					•O-ring.....•O 型圈.....	
12	**11210523**	1					Valve .....阀.....	
13	**11210052**	1					Gasket.....密封垫.....	
14	**11210200**	4					Washer.....垫圈.....	
15	**11211638**	4					Spring Washer .....弹簧垫圈.....	
16	**11211124**	5					Shim .....垫片.....	
17	**11210071**	1					Plug .....塞.....	
18	**11210044**	1					Plane gasket .....平垫片.....	
19	**11210195**	4					Bolt.....螺栓.....	
20	**11210640**	1					Cover .....罩盖.....	
21	**11210751**	1					Connector .....接头.....	
22	**11210241**	1					Air filter.....空气过滤器.....	
23	**11210034**	2					Flange screw.....法兰螺钉.....	
24	**11214318**		1				Cap .....帽.....	

1	**11212924**	燃油箱及附件 **Fuel tank with fitting parts**	Catalogue id **111201**	Group **202**
2	**11211826**		Illustr.No **A3-6150E**	Section **100**
3				
4			Issue **2638000345**	Page **25**
5				

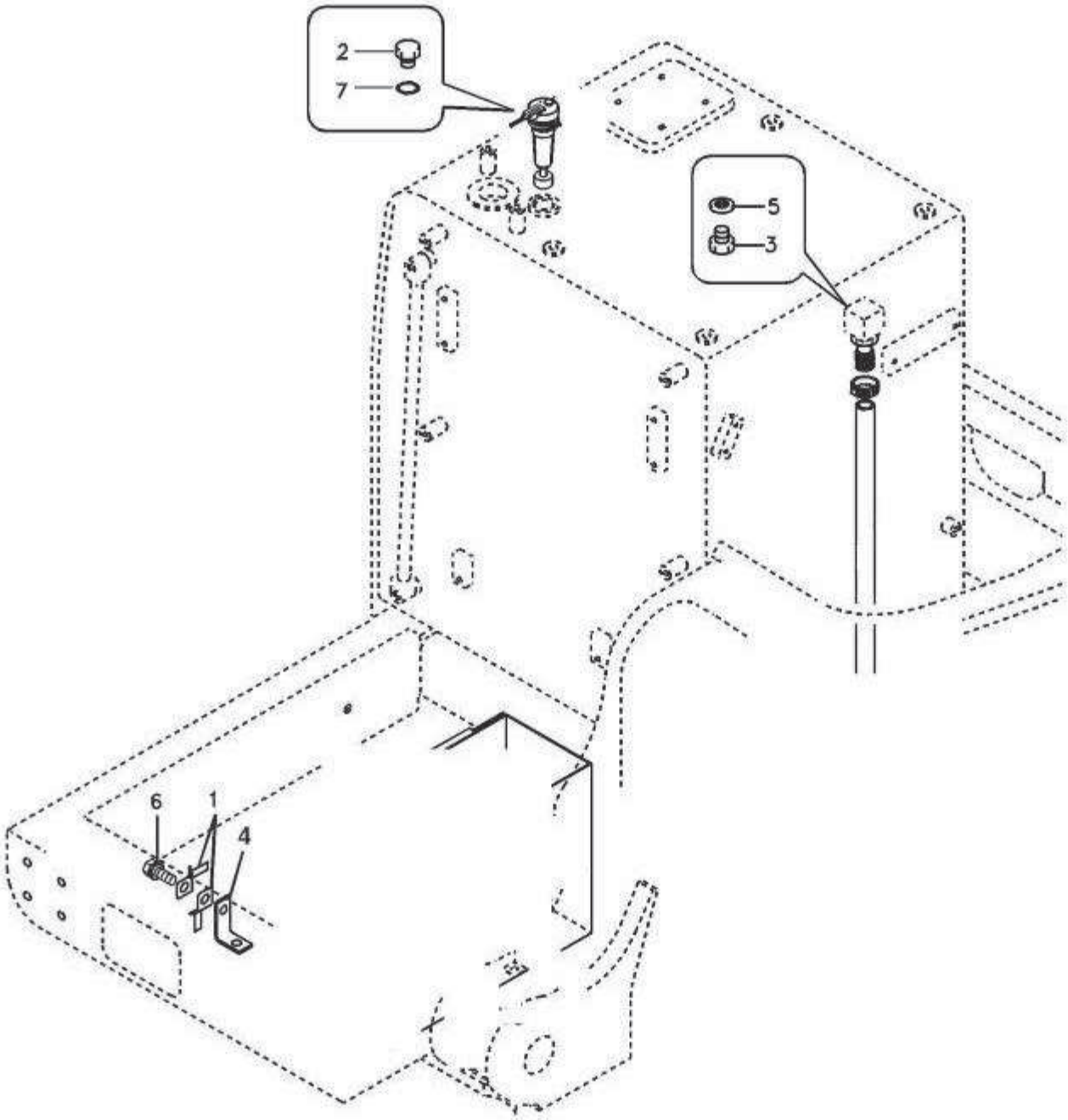

A4-6150E

Fig.	Part No.编码	Quantity件数 1	2	3	PS	KIT	Description 说明	Notes
1	**11213131**	2					Clip.....卡簧.....	
2	**11210616**	1					Plug.....堵头.....	
3	**11210003**	1					Plug.....堵头.....	
4	**11213130**	1					Bracket.....支架.....	
5	**11210045**	1					Plane gasket .....平垫片.....	
6	**11210036**	1					Flange screw..... 法兰螺钉.....	
7	**11210169**	1					O-ring ..... ◊ 形圈.....	

1	**11213478**	燃油加油泵及附件 **Fuel filling pump with assembling details**	Catalogue id **111201**	Group **202**
2				
3			Illustr. No **A4-6150E**	Section **200**
4				
5			Issue **2638000345**	Page **27**

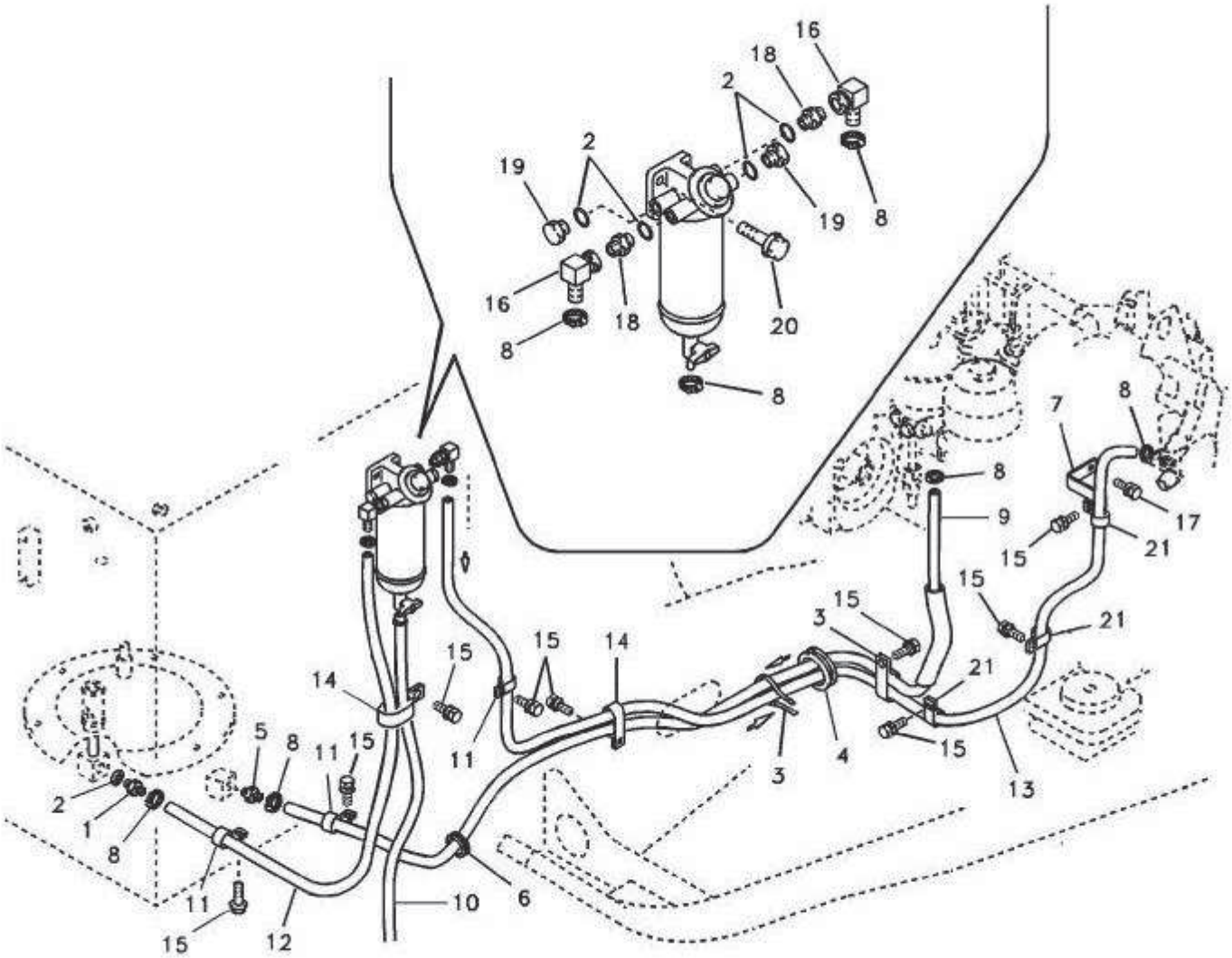
16
18
2
19
2
19
8
16
18
20
8
8
7
8
8
9
17
15
21
15
15
21
3
15
21
15
13
14
15
15
14
11
3
4
5
8
11
15
2
1
8
11
15
12
10
6

A5-61508

Fig.	Part No.编码	Quantity件数 1	2	3	PS	KIT	Description 说明	Notes
1	**11213146**	1					Connector .....接头.....	
2	**11211711**	5					Gasket.....密封垫.....	
3	**11213149**	1					Strip clamp .....带夹.....	
4	**11211808**	1					Grommet .....套环.....	
5	**11213152**	1					Connector .....连接器.....	
6	**11210621**	1					Grommet .....索环.....	
7	**11213143**	1					Bracket.....支架.....	
8	**11211643**	6					Clamp.....管夹.....	
9	**11213144**	1					Fuel hose .....燃料软管.....	
10	**11213148**	1					Hose.....软管.....	
11	**11213150**	2					Clip.....卡簧.....	
12	**11213147**	1					Fuel hose .....燃料软管.....	
13	**11213145**	1					Fuel hose .....燃料软管.....	
14	**11210324**	3					Clip.....夹.....	
15	**11210036**	8					Flange screw.....法兰螺钉.....	
16	**11213142**	2					Elbow .....弯管.....	
17	**11210038**	1					Flange screw.....法兰螺钉.....	
18	**11213153**	2					Connector .....连接器.....	
19	**11213154**	2					Plug.....塞.....	
20	**11210032**	2					Flange screw.....法兰螺钉.....	
21	**11213151**	3					Clip.....卡簧.....	

1	**11212924**	燃油管 — 燃油箱 **Fuel pipe - Fuel tank**	Catalogue id **111201**	Group **202**
2			Illustr. No **A5-6150E**	Section **300**
3				
4			Issue **2638000345**	Page **29**
5				

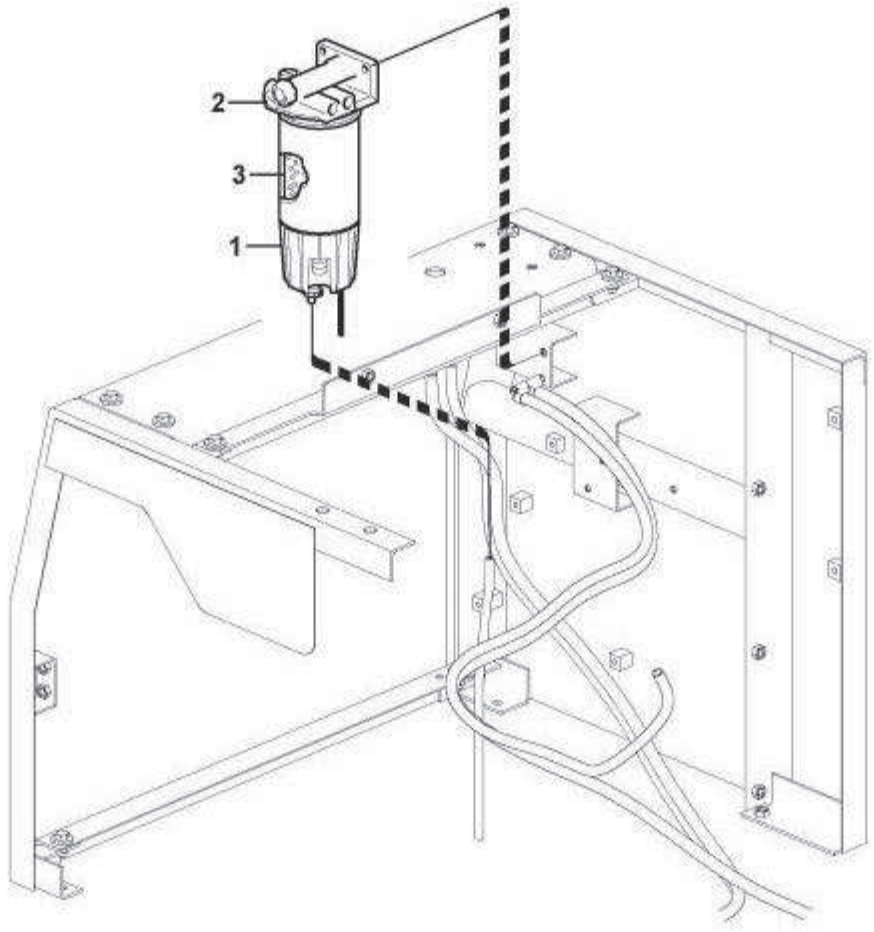

A6-6150E

Fig.	Part No.编码	Quantity件数 1	2	3	PS	KIT	Description 说明	Notes
	11214466	1					Water separator ..... 油水分离器.....	
1	**11213158**	1					•Draining bowl .....• 斗.....	
2	**11213157**	1					•Filter housing .....• 过滤器座.....	
3	**11214252**	1					•Primary filter .....• 一级过滤器.....	

1	**11213480**	油水分离器 **Water separator**	Catalogue id **111201**	Group **202**
2				
3			Illustr. No **A6-6150E**	Section **400**
4				
5			Issue **2638000345**	Page **31**

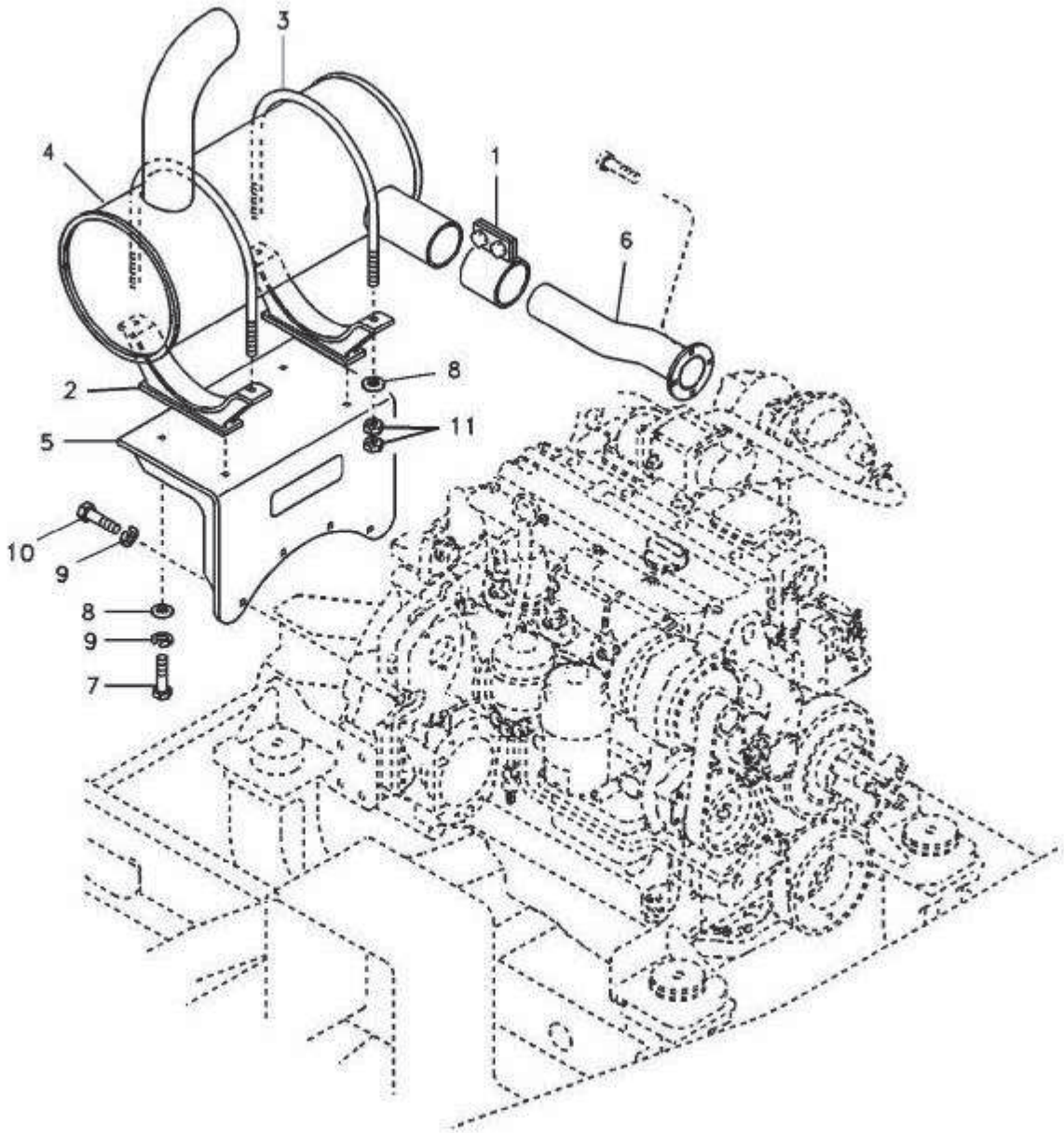

A7-6150E

Fig.	Part No.编码	Quantity件数 1	2	3	PS	KIT	Description 说明	Notes
1	**11210586**	1					Clamp.....夹.....	
2	**11213183**	2					Bracket.....支架.....	
3	**11210587**	2					U-bolt .....Ⅱ形栓.....	
4	**11213180**	1					Silencer .....消音器.....	
5	**11213182**	1					Bracket.....支架.....	
6	**11213181**	1					Tube.....缸筒.....	
7	**11210124**	4					Hexagon screw .....六角螺丝.....	
8	**11210197**	8					Washer.....垫圈.....	
9	**11210064**	8					Spring washer .....弹簧垫圈.....	
10	**11210125**	4					Hexagon screw .....六角螺丝.....	
11	**11210130**	8					Hexagon nut.....六角螺母.....	

1	**11212924**	排气系统 **Exhaust system**	Catalogue id **111201**	Group **203**
2			Illustr. No **A7-6150E**	Section **100**
3				
4			Issue **2638000345**	Page **33**
5				

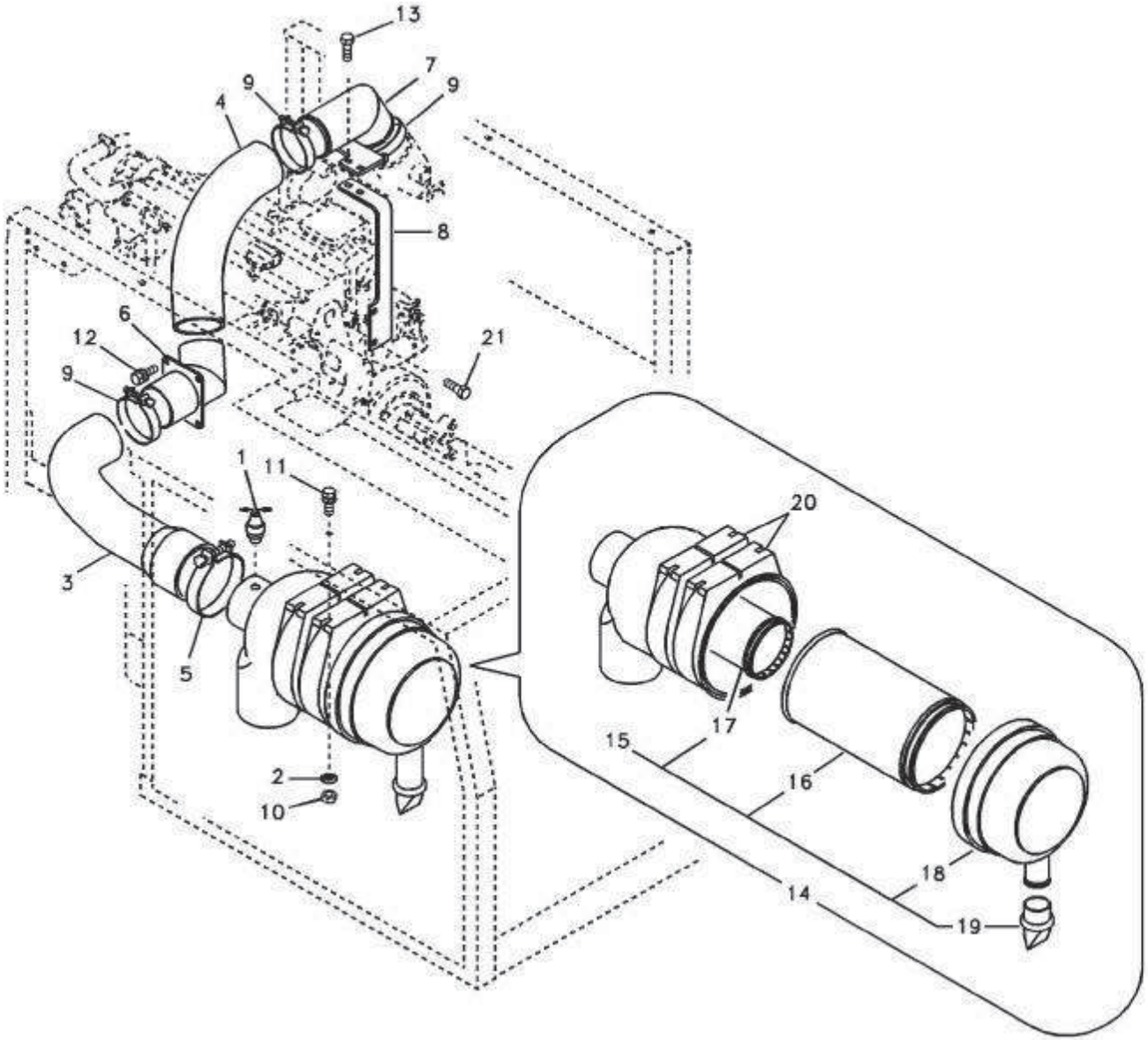

A8-6150E

Fig.	Part No.编码	Quantity件数 1	2	3	PS	KIT	Description 说明	Notes
1	**11213191**	1					Indicator .....指示器.....	
2	**11210218**	4					Washer..... .....垫圈.....	
3	**11214451**	1					Hose..... .....软管.....	
4	**11214450**	1					Hose..... .....软管.....	
5	**11211650**	1					Clamping band.....夹紧带.....	
6	**11213195**	1					Tube..... .....缸筒.....	
7	**11213197**	1					Tube..... .....缸筒.....	
8	**11213198**	1					Support .....支座.....	
9	**11211648**	3					Clamp..... .....管夹.....	
10	**11210129**	4					Hexagon nut.....六角螺母.....	
11	**11210039**	4					Flange screw.....法兰螺钉.....	
12	**11210033**	4					Flange screw.....法兰螺钉.....	
13	**11210032**	2					Flange screw.....法兰螺钉.....	
14		1			NS		Air Cleaner .....空气滤清器.....	
15	**11213193**	1					•Air cleaner .....• 空气清洁器.....	
16	**11213189**	1					••Air filter ..... •• 空气过滤器.....	
17	**11213190**	1					••Air filter ..... •• 空气过滤器.....	
18	**11213192**	1					••End plate ..... •• 尾板.....	
19	**11212288**	1					••Valve .... •• 阀.....	
20	**11213199**	2					•Band .... • 卡箍.....	
21	**11210034**	2					Flange screw.....法兰螺钉.....	

1	**11212924**	进气系统 **Inlet system**	Catalogue id **111201**	Group **203**
2			Illustr. No **A8-6150E**	Section **200**
3			Issue **2638000345**	Page **35**
4				
5				

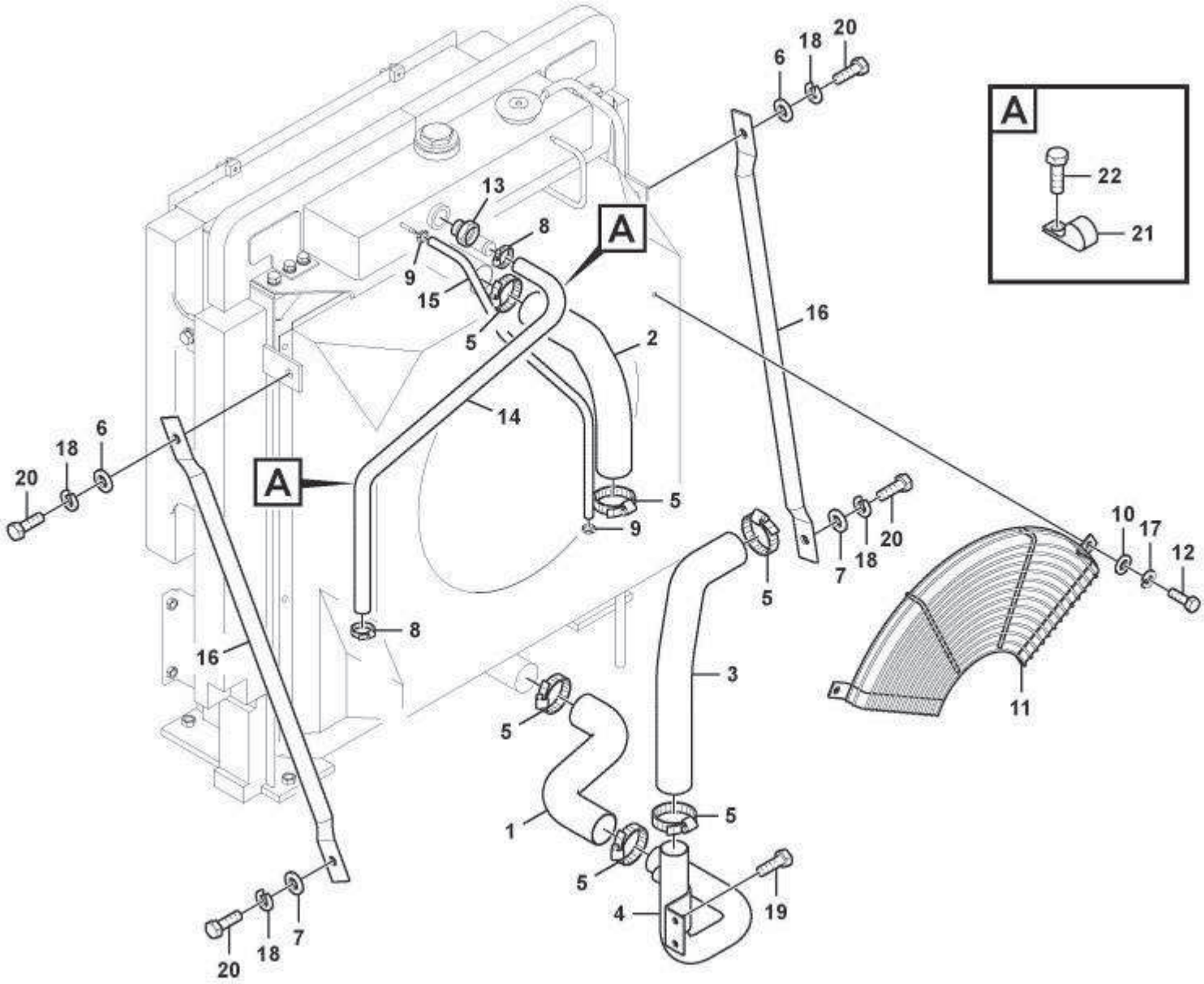
A
22
21
A
A
13
8
9
15
5
6
18
20
16
2
14
5
9
20
18
6
7
10
17
12
11
8
16
5
3
5
1
5
4
19
20
18
7

A9-6150E

Fig.	Part No.编码	Quantity件数 1	2	3	PS	KIT	Description 说明	Notes
1	**11213212**	1					Hose.....软管.....	
2	**11213211**	1					Hose.....软管.....	
3	**11213213**	1					Hose.....软管.....	
4	**11213216**	1					Pipe.....硬管总成.....	
5	**11211136**	6					Clamp.....夹.....	
6	**11210198**	2					Washer.....垫圈.....	
7	**11210695**	2					Washer.....垫圈.....	
8	**11213219**	2					Clamp.....管夹.....	
9	**11211642**	2					Clamp.....管夹.....	
10	**11210218**	2					Washer.....垫圈.....	
11	**11213215**	1					Guard .....护罩焊件.....	
12	**11210117**	2					Hexagon screw .....六角螺丝.....	
13	**11213214**	1					Gauge .....液位指示器.....	
14	**11213217**	1					Hose.....软管.....	
15	**11213218**	1					Hose.....软管.....	
16	**11213210**	2					Stay.....接头.....	
17		2					Spring Washer .....弹簧垫圈.....	
18	**11210065**	4					Spring washer .....弹簧垫圈.....	
19	**11210034**	2					Flange screw.....法兰螺钉.....	
20	**11210099**	4					Hexagon screw .....六角螺丝.....	
21	**11213220**	2					Clip.....卡簧.....	
22	**11210036**	2					Flange screw.....法兰螺钉.....	

1	**11212924**	冷却系统 **Cooling system**	Catalogue id **111201**	Group **204**
2			Illustr. No **A9-6150E**	Section **100**
3				
4			Issue **2638000345**	Page **37**
5				

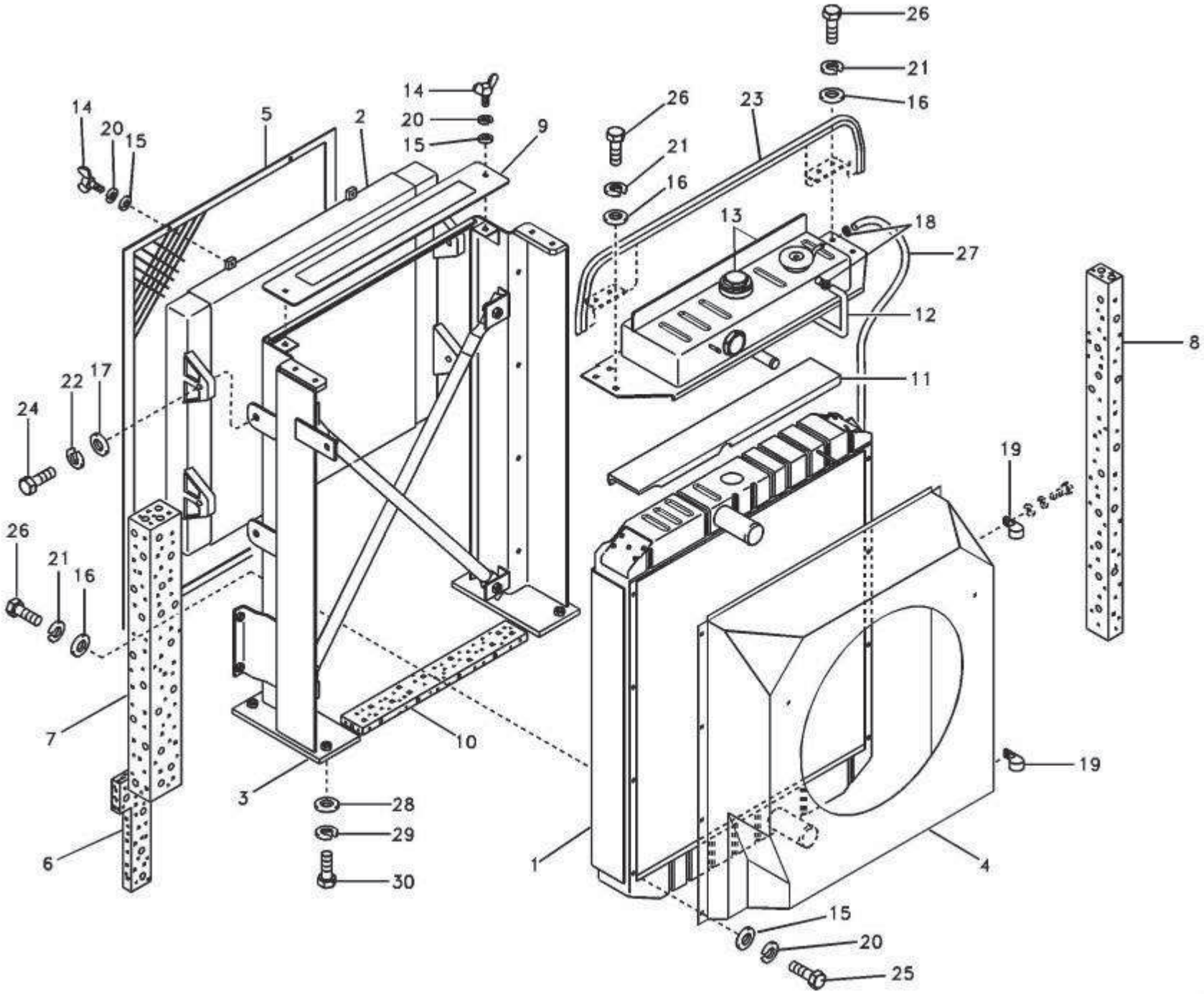
A10-6150E

Fig.	Part No.编码	Quantity件数 1	2	3	PS	KIT	Description 说明	Notes
	11214469	1			NS		Radiator .....散热器.....	
1	**11213244**	1					•Radiator .....• 散热器.....	
2	**11213243**	1					•Oil cooler .....• 油冷却器.....	
3	**11213231**	1					•Guard.....• 护罩焊件.....	
4	**11214448**	1					•Fan shroud .....• 风扇罩.....	
5	**11213232**	1					•Net .....• 网.....	
6	**11213241**	1					•Sponge .....• 海绵.....	
7	**11213240**	1					•Sponge .....• 海绵.....	
8	**11213233**	1					•Plate .....• 板.....	
9	**11213234**	1					•Cover .....• 罩盖.....	
10	**11213235**	1					•Sponge .....• 海绵.....	
11	**11213236**	1					•Pad .....• 衬垫.....	
12	**11213237**	1			SS		•Hose .....• 软管.....	
13	**11213238**	1					•Tank.....• 罐.....	
	11213230	1					••Radiator cap .....•• 散热器盖.....	
14	**11213245**	4					•Wing screw .....• 翼型螺丝.....	
15	**11210218**	12					•Washer .....• 垫圈.....	
16	**11210197**	14					•Washer .....• 垫圈.....	
17	**11210198**	4					•Washer .....• 垫圈.....	
18	**11211643**	3					•Clamp .....• 管夹.....	
19	**11213246**	2					•Insulating clip.....• 绝缘夹.....	
20	**11210063**	12					•Spring washer.....• 弹簧垫圈.....	
21	**11210064**	14					•Spring washer.....• 弹簧垫圈.....	
22	**11210065**	4					•Spring washer.....• 弹簧垫圈.....	
23	**11213242**	1					•Weatherstrip .....• 挡风带.....	
24	**11210099**	4					•Hexagon screw .....• 六角螺丝.....	
25	**11210118**	8					•Hexagon screw .....• 六角螺丝.....	
26	**11210123**	14					•Hexagon screw .....• 六角螺丝.....	
27	**11213257**	1					•Hose .....• 软管.....	
28	**11210198**	4					Washer.....垫圈.....	
29	**11210065**	4					Spring washer .....弹簧垫圈.....	
30	**11210099**	4					Hexagon screw .....六角螺丝.....	

1	**11213470**	散热器 **Radiator**	Catalogue id **111201**	Group **204**
2			Illustr. No **A10-6150E**	Section **200**
3				
4			Issue **2638000345**	Page **39**
5				

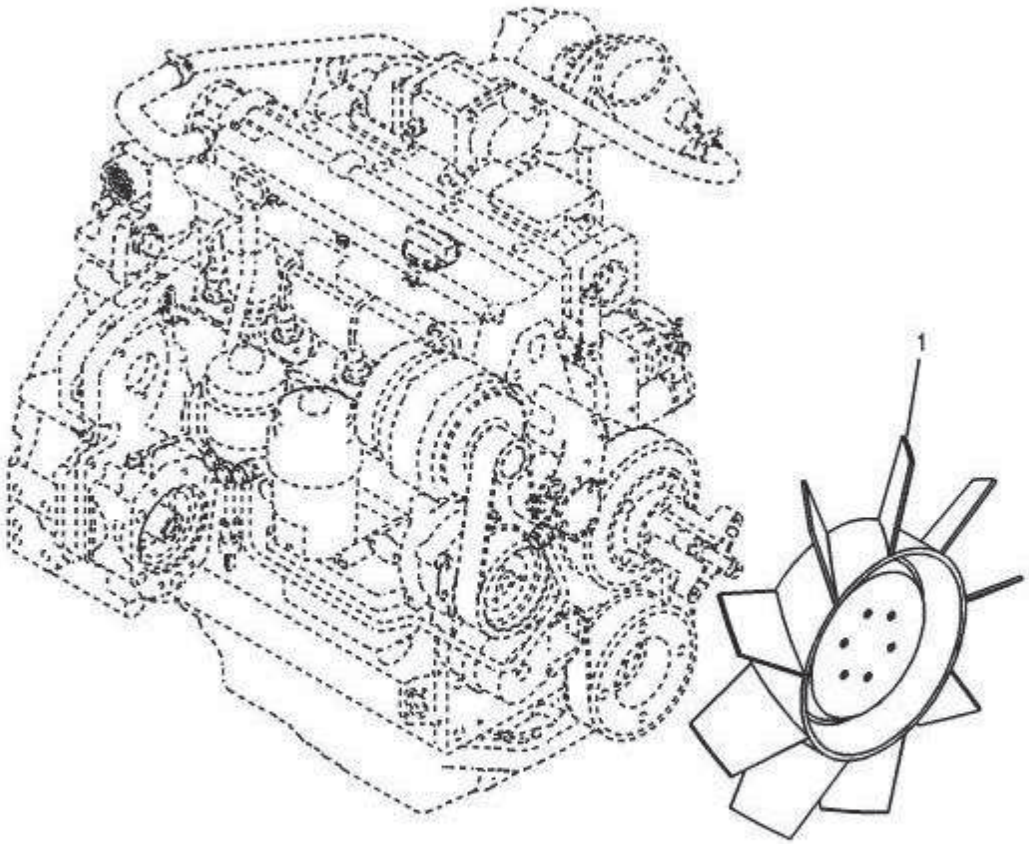

A11-6150E

Fig.	Part No.编码	Quantity件数 1	2	3	PS	KIT	Description 说明	Notes
1	**11214470**	1					Fan.....风扇.....	

1	**11213470**	散热风扇安装件 **Cooling fan mounting**	Catalogue id **111201**	Group **205**
2				
3			Illustr. No **A11-6150E**	Section **100**
4				
5			Issue **2638000345**	Page **41**

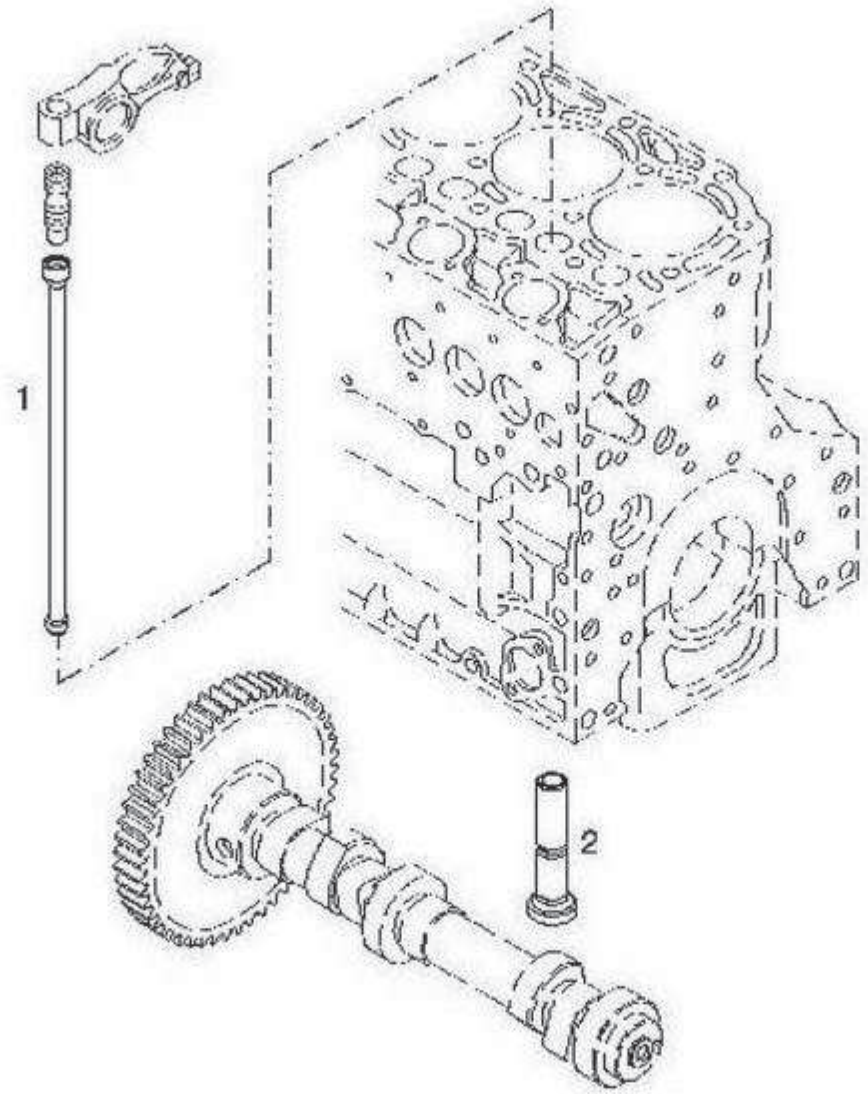

A12-6150E

Fig.	Part No.编码	Quantity件数 1	2	3	PS	KIT	Description 说明	Notes
1	**4110000509087**	8					Push rod 推杆总成1007050-56D	
2	**4110000509088**	8					Tappet .... 挺柱1007061-56D(04251064)	

1	**11213481**	摇臂驱动装置 **Valve drive**	Catalogue id **111201**	Group **206**
2				
3			Illustr. No **A12-6150E**	Section **100**
4				
5			Issue **2638000345**	Page **43**

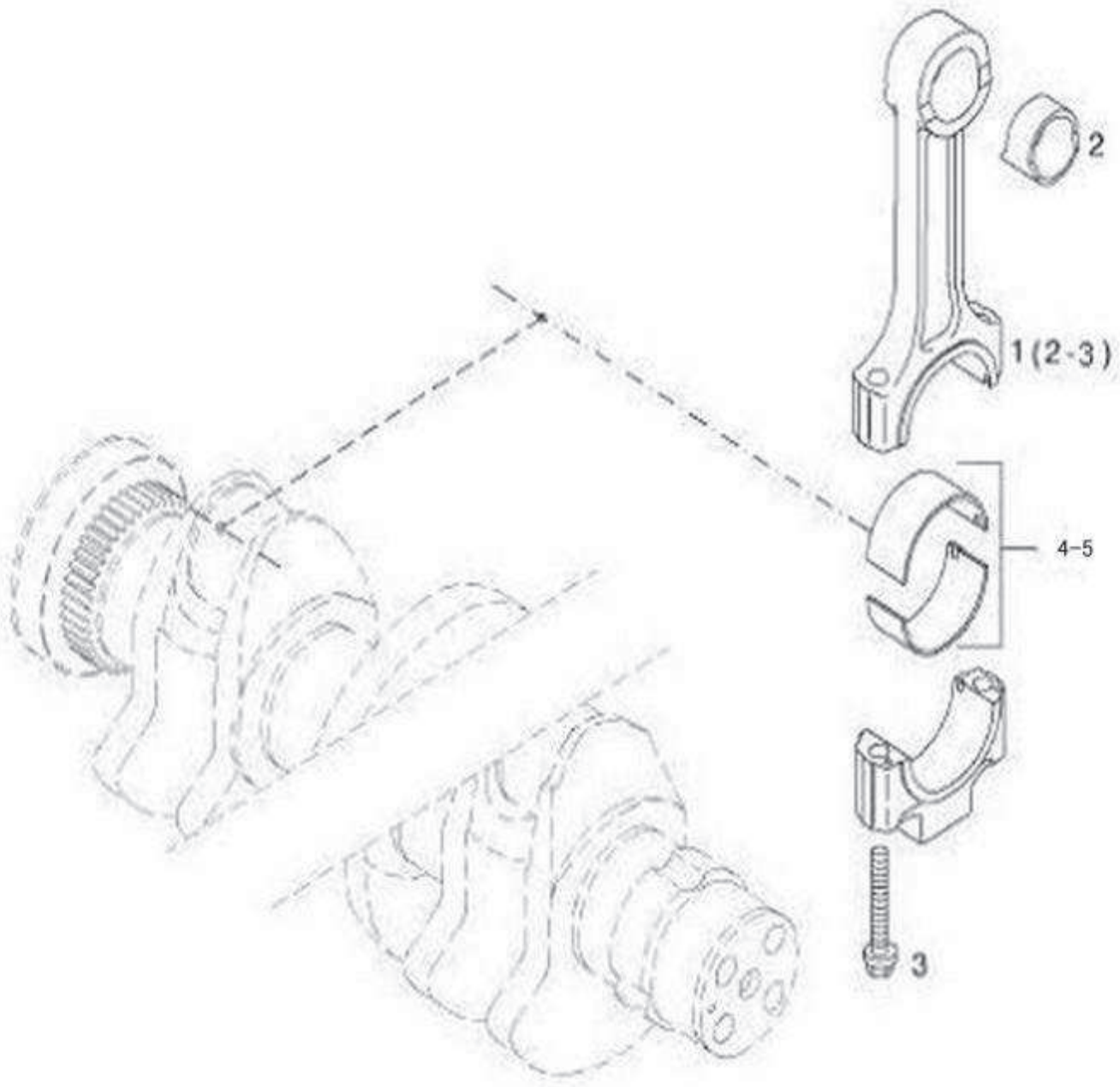

A13-6150E

Fig.	Part No.编码	Quantity件数 1	2	3	PS	KIT	Description 说明	Notes
1	**4110000509065**	4					Connecting rod..... 连杆总成(单件按分组使用)1004040-56D	
2	**4110000727184**	4					Big end bush..... 连杆小头衬套D04288314	
3	**4110000509067**	8					Big end bolt..... 连杆螺栓1004067-56D(04284184)	
4	**4110000509068**	4					Upper bearing shell..... 上连杆轴瓦1004058-56D	
5	**4110000509069**	4					Lower bearing shell..... 下连杆轴瓦1004059-56D	

1	**11213481**	连杆及连杆瓦总成 **Connecting rod**	Catalogue id **111201**	Group **206**
2			Illustr. No **A13-6150E**	Section **200**
3				
4			Issue **2638000345**	Page **45**
5				

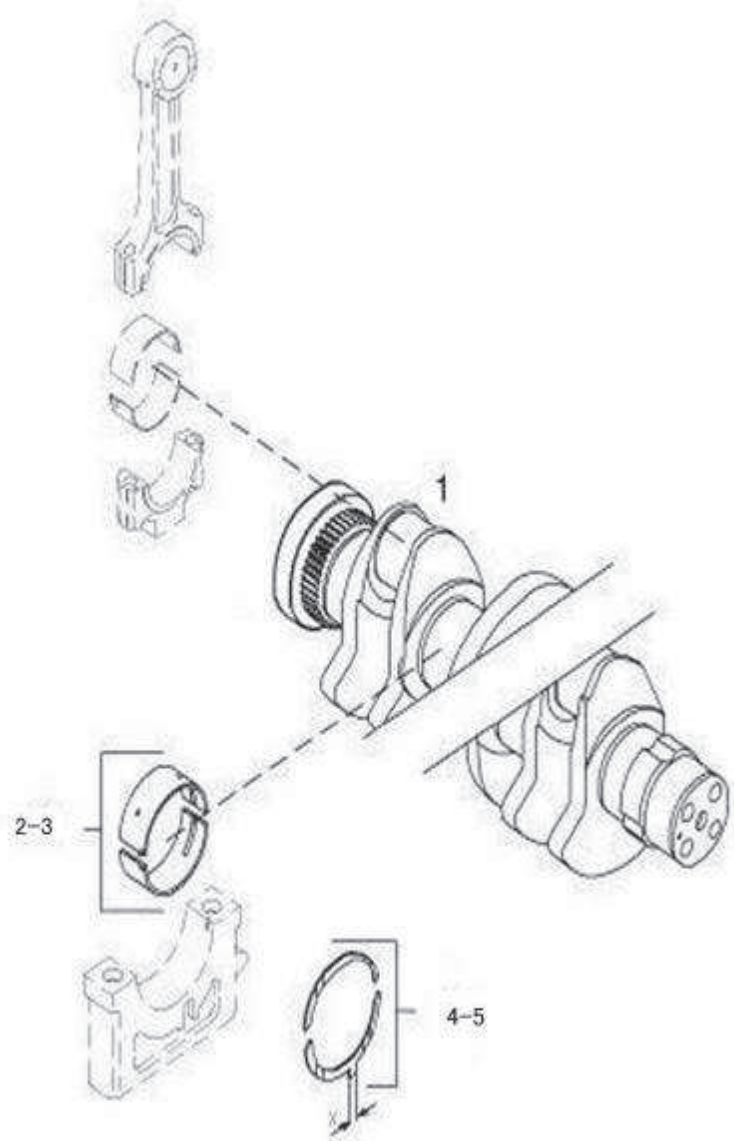

A14-6150E

Fig.	Part No.编码	Quantity件数 1	2	3	PS	KIT	Description 说明	Notes
1	**4110000988006**	1					Crankshaft..... 曲轴总成1005020-65D	
2	**4110000509060**	5					Upper main bearing liner..... 上主轴瓦1005081-56D	
3	**4110000509061**	5					Lower main bearing liner..... 下主轴瓦1005082-56D	
4	**4110000509062**	2					Upper thrust washer..... 上止推片1005086-56D	
5	**4110000509063**	2					Lower thrust washer..... 下止推片1005087-56D	

1	**11213481**	曲轴及曲轴瓦总成 **Crankshaft**	Catalogue id **111201**	Group **206**
2			Illustr. No **A14-6150E**	Section **300**
3				
4			Issue **2638000345**	Page **47**
5				

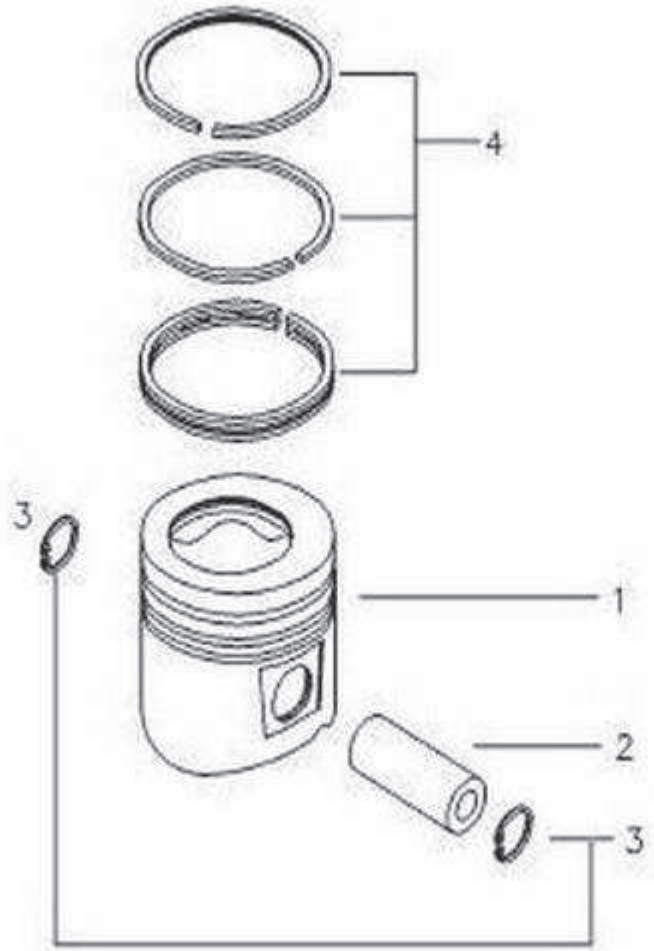

A15-6150E

Fig.	Part No.编码	Quantity件数 1	2	3	PS	KIT	Description 说明	Notes
1	**4110000727163**	6					Piston..... 活塞1004016C56D	
2	**4110000509070**	6					Piston pin.. ..... 活塞销1004021-56D	
3	**4110000509071**	12					Circlip..... 孔用弹性挡圈1004628-56D	
4	**4110000727005**	6					Piston ring set.. ..... 活塞环组1004025D56D	

1	**11213481**	活塞及活塞环组 **Cross refer. list**	Catalogue id **111201**	Group **206**
2				
3			Illustr. No **A15-6150E**	Section **400**
4				
5			Issue **2638000345**	Page **49**

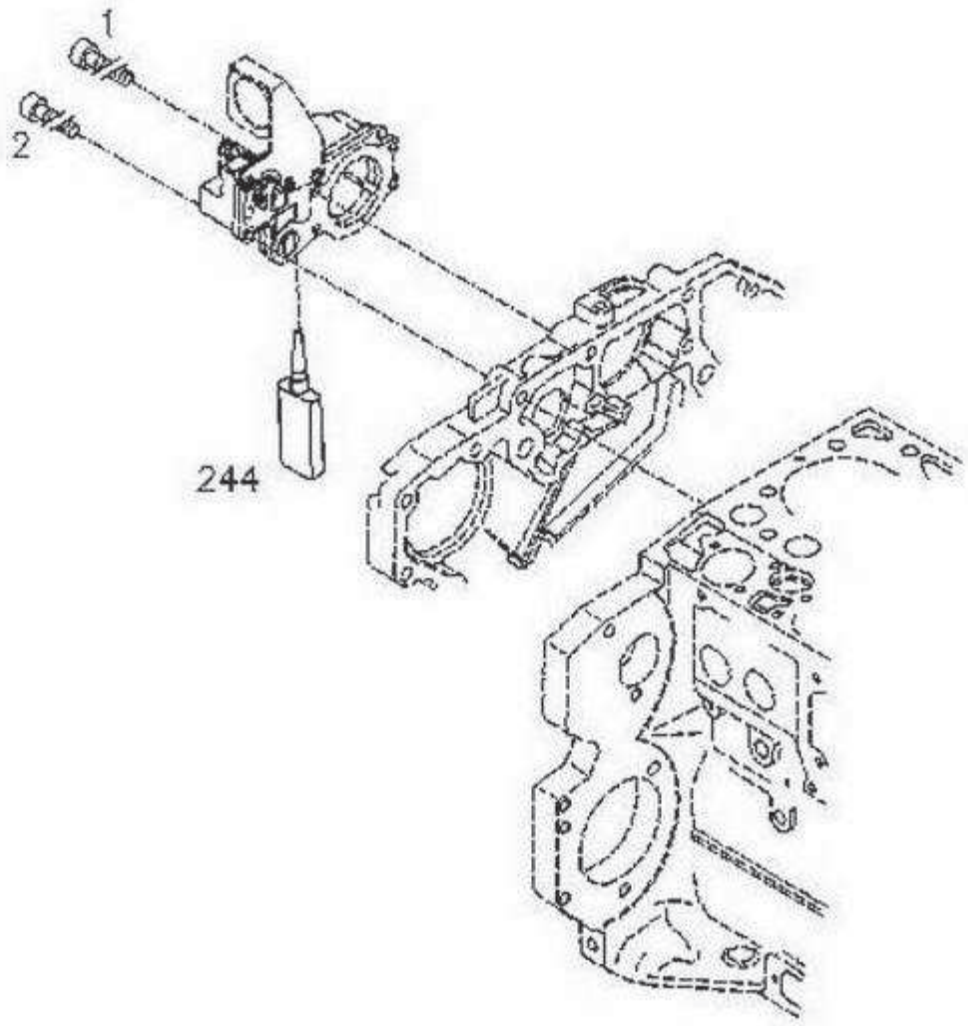

A16-6150E

Fig.	Part No.编码	Quantity件数 1	2	3	PS	KIT	Description 说明	Notes
1	**4110000727174**	2					Cheese head screw 内六角螺栓CQ2180870TF32	
2	**4110000727173**	3					Cheese head screw..... 内六角螺栓CQ2180855TF32	

1	**11213481**	紧固件–调速器 **Fastenings**	Catalogue id **111201**	Group **207**
2			Illustr. No **A16-6150E**	Section **100**
3			Issue **2638000345**	Page **51**
4				
5				

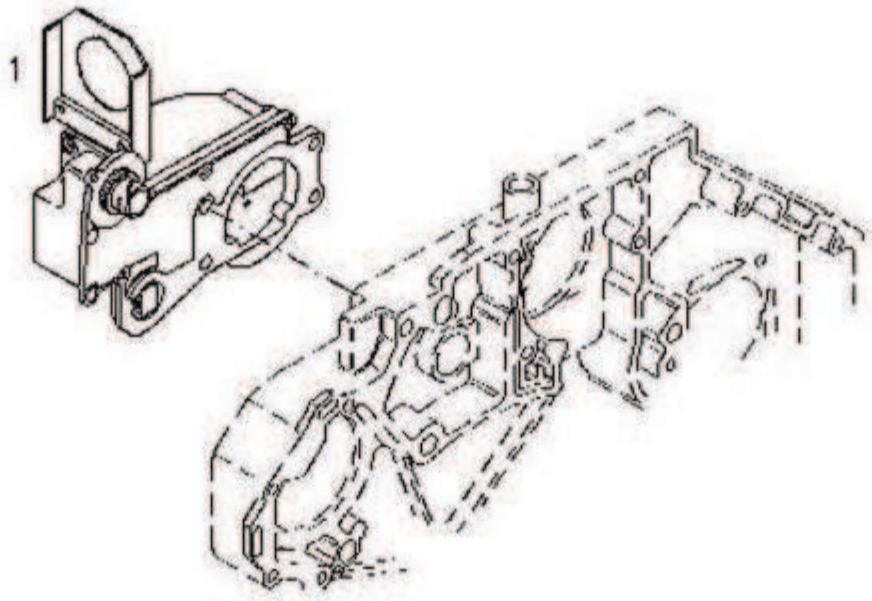
1

Fig.	Part No.编码	Quantity件数 1	2	3	PS	KIT	Description 说明	Notes
1	**4110000727096**	6					Performer.. .... 执行器D02113597	

1	**11213481**	执行器 **Actuator**	Catalogue id **111201**	Group **208**
2				
3			Illustr. No **A17-6150E**	Section **100**
4				
5			Issue **2638000345**	Page **53**

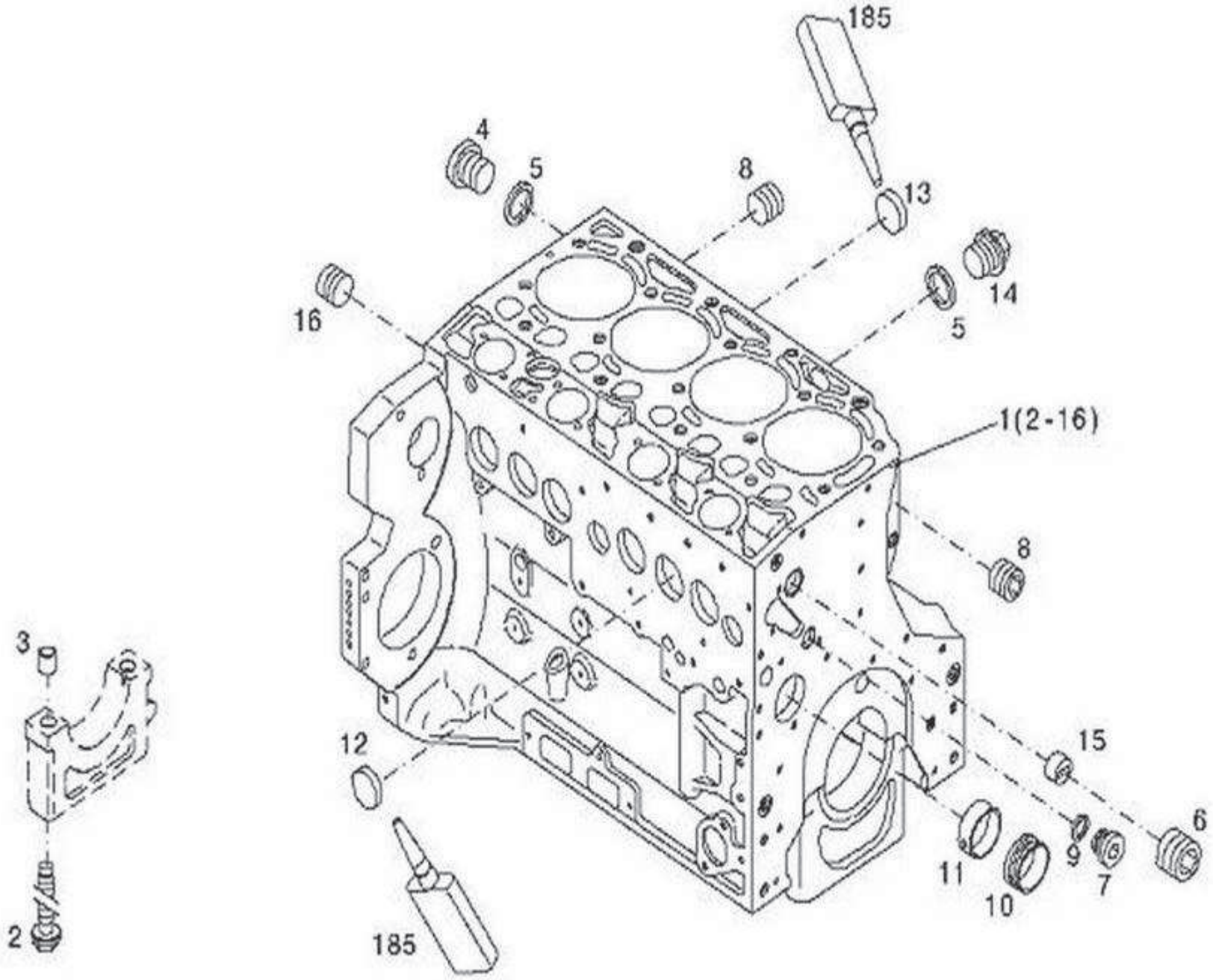

A18-6150E

Fig.	Part No.编码	Quantity件数 1	2	3	PS	KIT	Description 说明	Notes
1	**4110000988001**	1					Crankcase..... .... 气缸体总成1002015-65D	
2	**4110000509009**	10					Hexagon bolt..... ..... 主轴承螺栓1002023-56D	
3	**4110000509010**	10					Bush..... .... 螺塞DIN 908-M14X1,5-ST-ZNPHRF 1002626-52D	
4	**4110000509020**	1					Screw plug..... ..... 挺柱1007061-52D	
5	**4110000509019**	3					Sealing ring..... .... 密封垫 DIN 7603-A14X20-CU 1104617-52D	
6	**4110000727075**	1					Screw plug..... ..... 螺塞H 2812-906-M30X1.5-ST-A4C-PRE80 D01180890	
7	**4110000988086**	1					Screw plug..... .... 螺塞M22X1.5 F04292706	
8	**4110000988002**	2					Screw plug..... ..... 螺塞1002619-52D	
9	**4110000988016**	1					Sealing ring..... .... 密封垫DIN 7603-D 22 X 27 -CU B01101342	
10	**4110000727115**	4					Bearing bush..... ..... 凸轮轴衬套D04251884	
11	**4110000727114**	1					Bearing bush..... .... 凸轮轴衬套(飞轮端) D04250086	
12	**4110000988022**	6					Cover..... .... 碗形塞片DIN 443-A45-ZNPHR D011148032	
13	**4110000988029**	4					Cover..... .... 碗型塞片D01148031	
14	**4110000509018**	2					Screw plug..... ..... 螺塞 DIN 7604-AM14X1,5-ST-A4C 1002622-52D	
15	**4110000727027**	1					Guide sleeve..... .... 导套-二.三缸1110076-52D	
16	**4110000727113**	1					Screw plug..... ..... 螺塞M22×1.5 D04226536	

1	**11213481**	气缸体总成 **Crankcase**	Catalogue id **111201**	Group **209**
2				
3			Illustr. No **A18-6150E**	Section **100**
4				
5			Issue **2638000345**	Page **55**

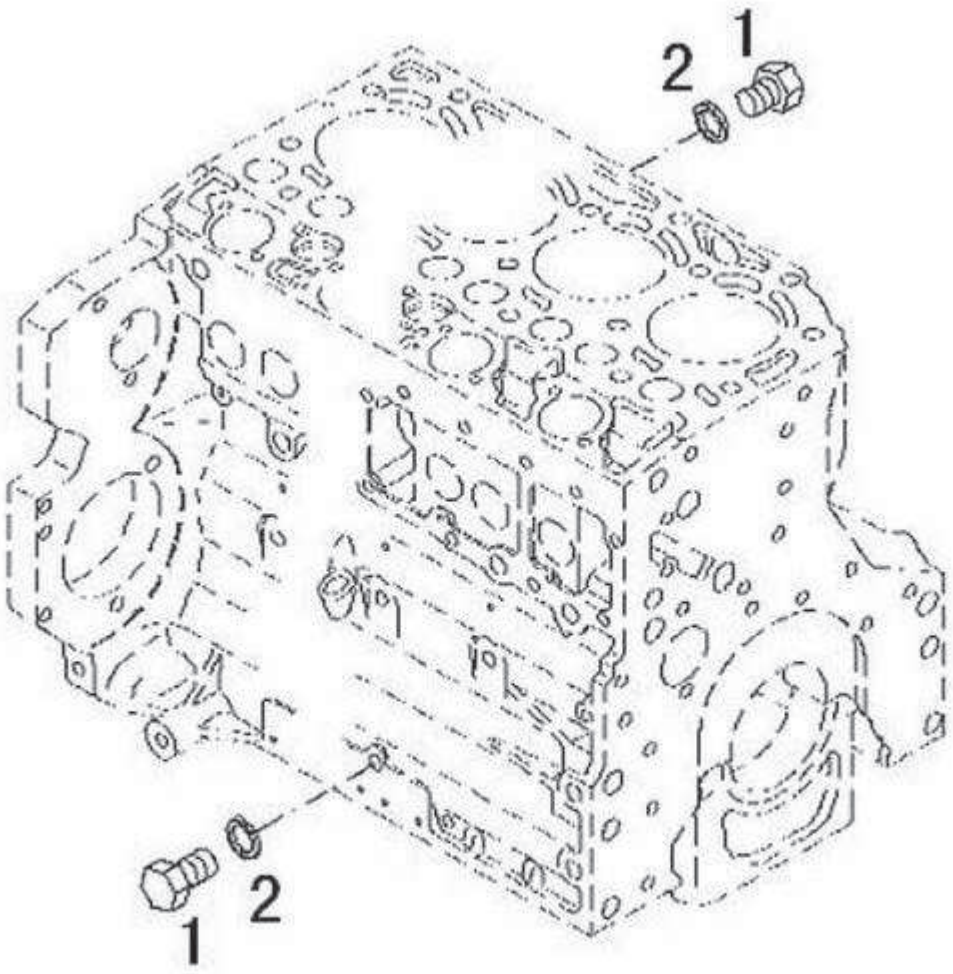

A19-6150E

Fig.	Part No.编码	Quantity件数 1	2	3	PS	KIT	Description 说明	Notes
1	**4110000988088**	2					Hexagon bolt..... 六角头螺栓CQ1500810TF36	
2	**4110000727007**	2					Plain washer..... 垫片1005659-65D	

1	**11213481**	堵装置 **Blanking parts**	Catalogue id **111201**	Group **209**
2			Illustr. No **A19-6150E**	Section **200**
3				
4			Issue **2638000345**	Page **57**
5				

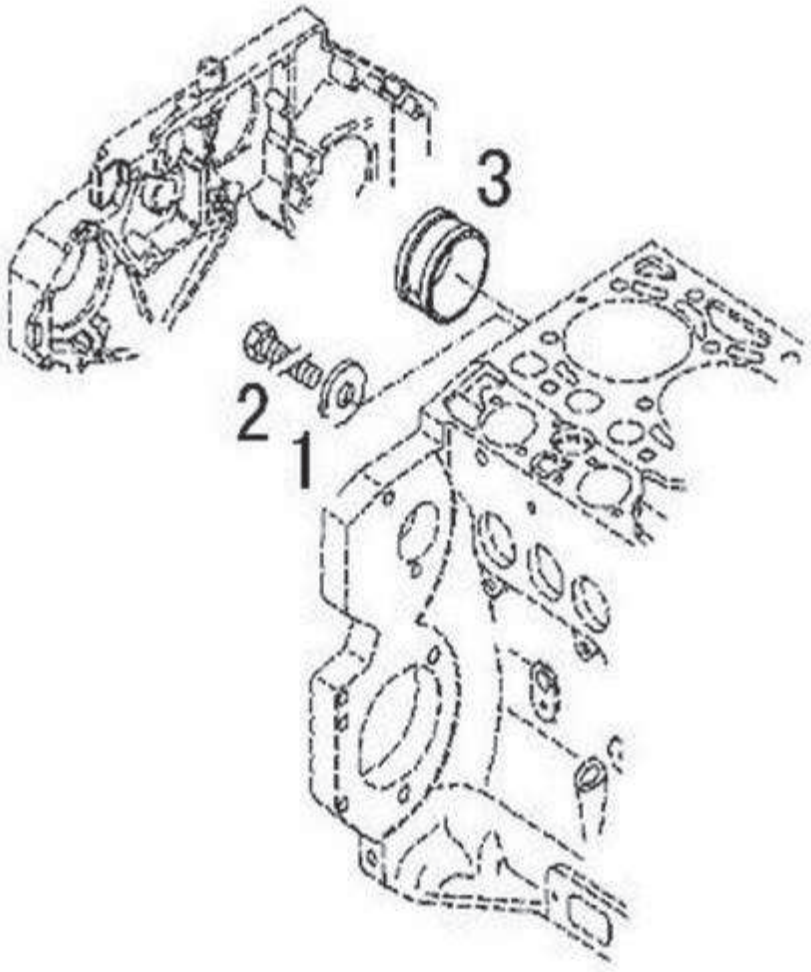

A20-6150E

Fig.	Part No.编码	Quantity件数 1	2	3	PS	KIT	Description 说明	Notes
1	**4110000509226**	1					Plain washer..... 垫片1110016-30D	
2	**4110000509227**	1					Hexagon bolt..... 六角头导颈螺栓ISO 4017-M8X12-10.9-A4C CQ1500812TF36	
3	**4110000727026**	1					Rubber seal..... 密封套1110018-56D	

1	**11213481**	堵 **Blanking parts**	Catalogue id **111201**	Group **209**
2			Illustr. No **A20-6150E**	Section **300**
3				
4			Issue **2638000345**	Page **59**
5				

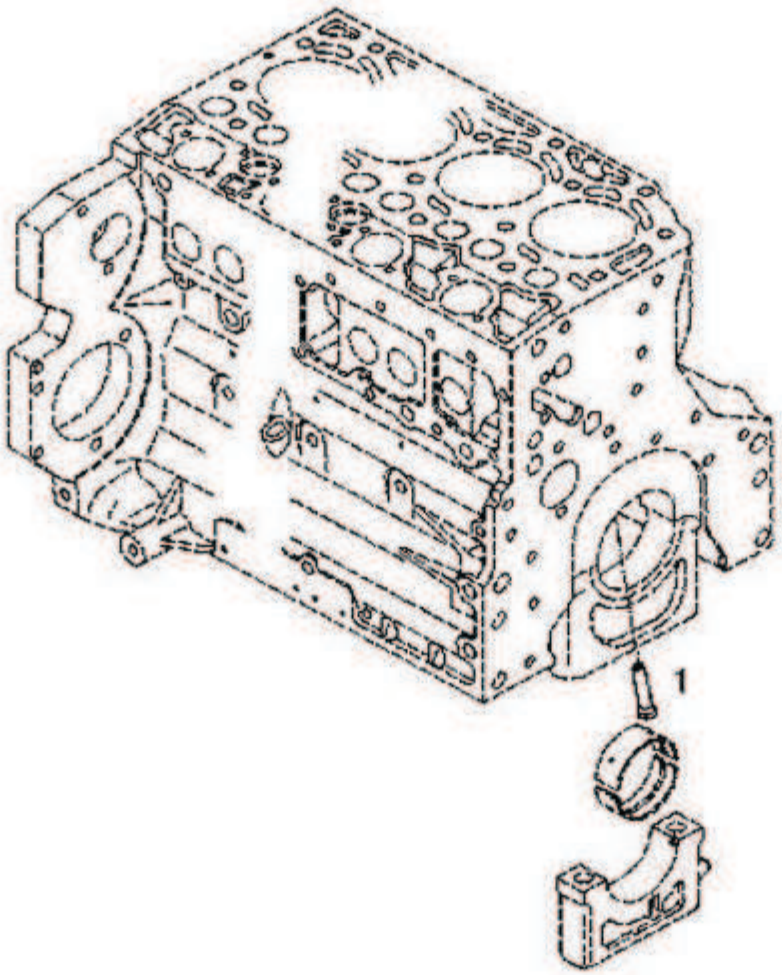

A21-6150E

Fig.	Part No.编码	Quantity件数 1	2	3	PS	KIT	Description 说明	Notes
1	**4110000727106**	1					Piston cool. nozzle 活塞冷却喷嘴D04207521	

1	**11213481**	活塞冷却喷嘴 **Piston cool.nozzle**	Catalogue id **111201**	Group **209**
2			Illustr. No **A21-6150E**	Section **400**
3				
4			Issue **2638000345**	Page **61**
5				

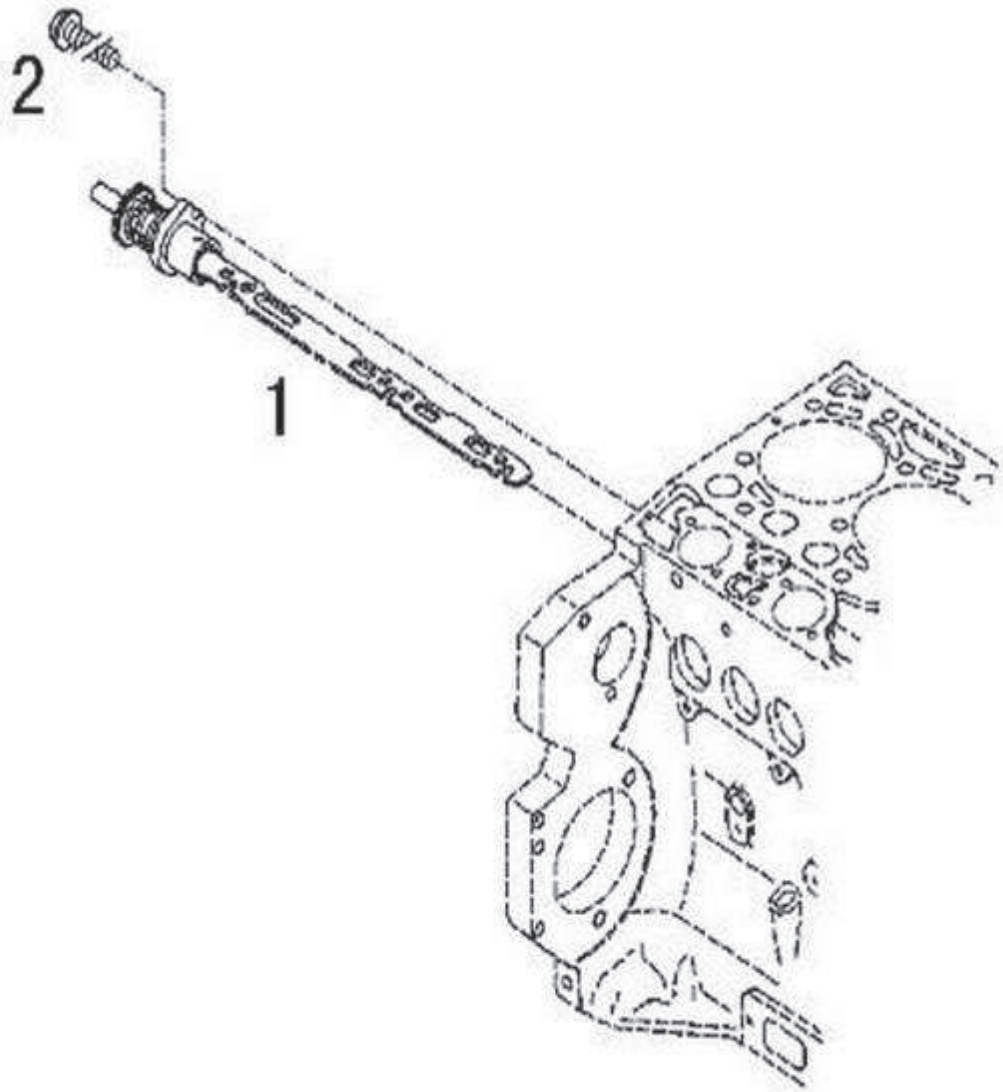

A22-6150E

Fig.	Part No.编码	Quantity件数 1	2	3	PS	KIT	Description 说明	Notes
1	**4110000727029**	1					Hexagon bolt..... .... 六角头凸缘螺栓M8×20 1110658-52D	
2	**4110000988037**	1					Control rod..... .... 喷油泵尺条总成D02112509	

1	**11213481**	喷油泵尺条 **Control rod**	Catalogue id **111201**	Group **209**
2			Illustr. No **A22-6150E**	Section **500**
3				
4			Issue **2638000345**	Page **63**
5				

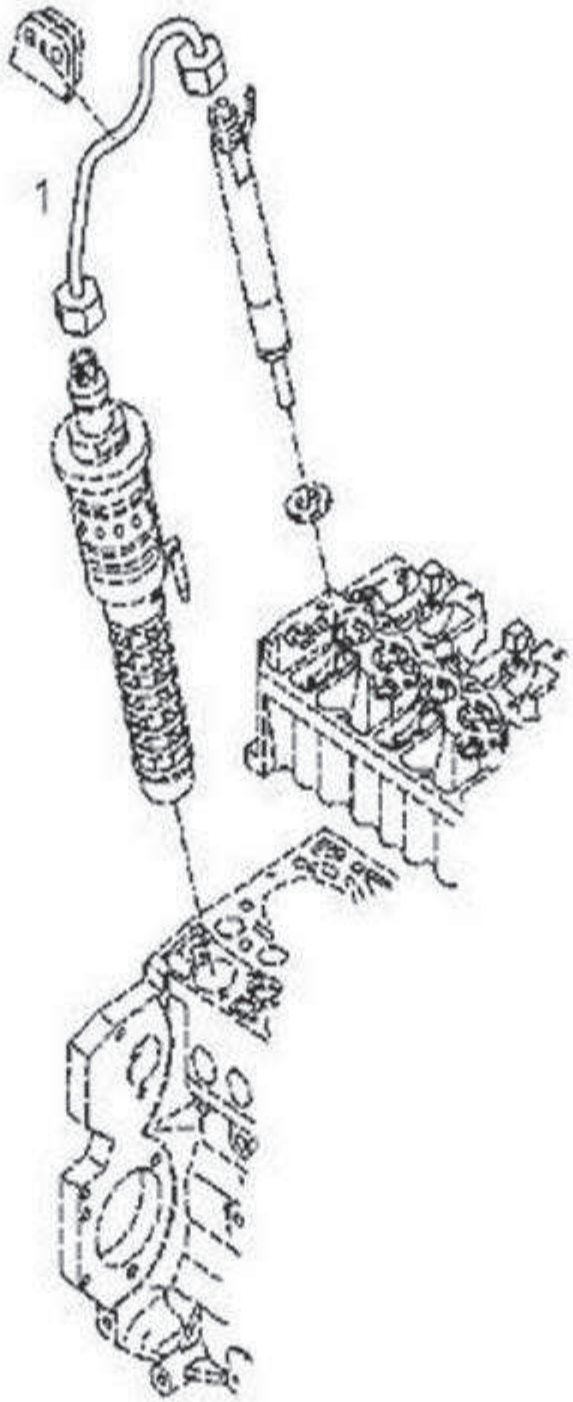

A23-6150E

Fig.	Part No.编码	Quantity件数 1	2	3	PS	KIT	Description 说明	Notes
1	**4110000727090**	4					High pressure fuel line 高压油管D02112063	

1	**11213481**	高压油管总成 **High pressure pipe**	Catalogue id **111201**	Group **209**
2			Illustr. No **A23-6150E**	Section **600**
3				
4			Issue **2638000345**	Page **65**
5				

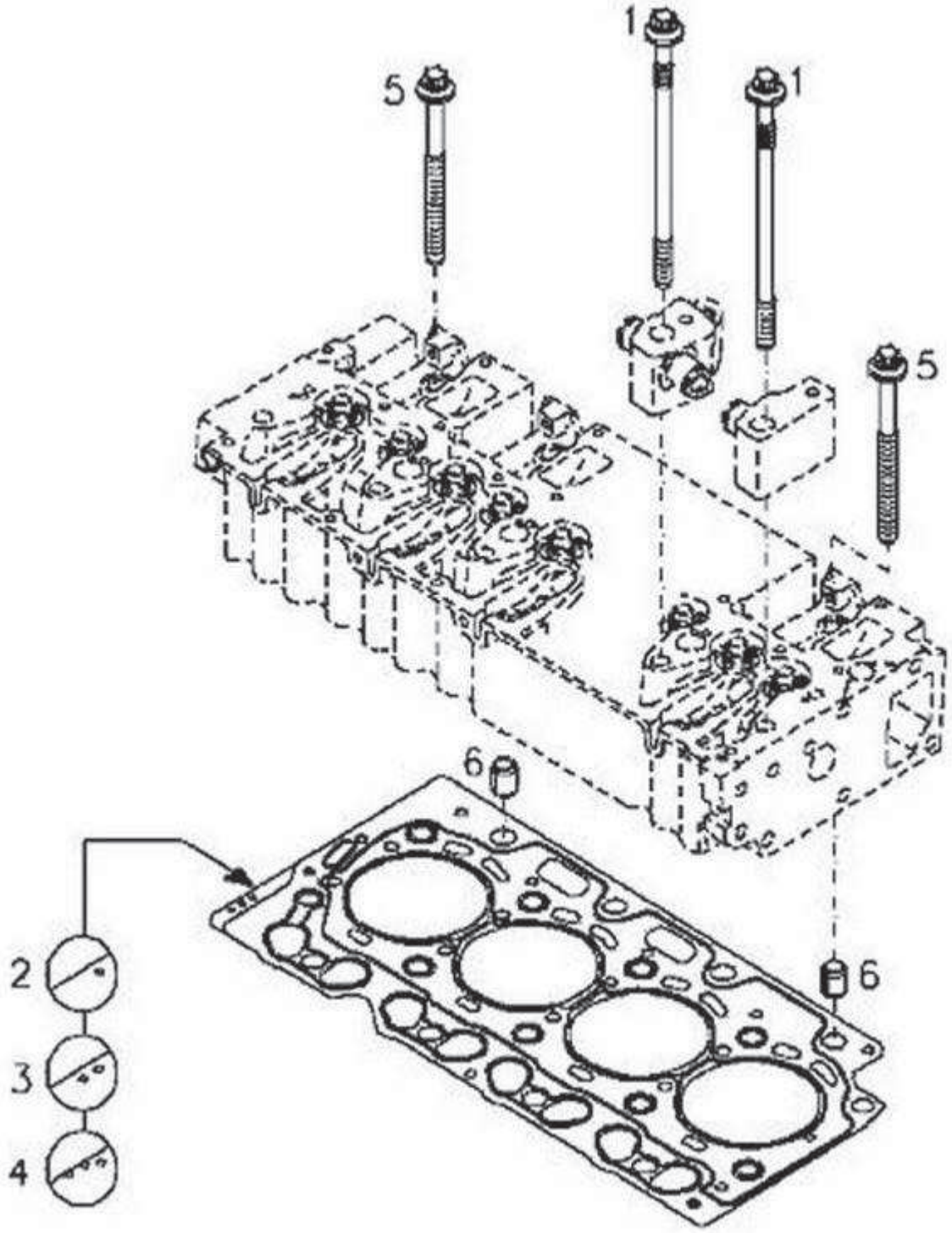

A24-615

Fig.	Part No.编码	Quantity件数 1	2	3	PS	KIT	Description 说明	Notes
1	**4110000509045**	5					Cylinder head bolt .... 气缸盖螺栓1003046-56D(4251250)	
2	**4110000988059**	1					Cylind.head gasket .... 气缸垫总成 (1孔) D04289408	
3	**4110000988058**	1					Cylind.head gasket .... 气缸垫总成 (2孔) D04289407	
4	**4110000988057**	1					Cylind.head gasket .... 气缸垫总成 (3孔) D04289406	
5	**4110000509057**	13					Cylinder head bolt .... 气缸盖螺栓1003047-56D(4251251)	
6	**4110000727079**	2					Clamping bush..... .... 弹性圆柱销H 2341-B15X18-FE/ZN12C D01181405	

1	**11213481**	紧固件-气缸盖 **Fastenings**	Catalogue id **111201**	Group **209**
2			Illustr. No **A24-6150E**	Section **700**
3				
4			Issue **2638000345**	Page **67**
5				

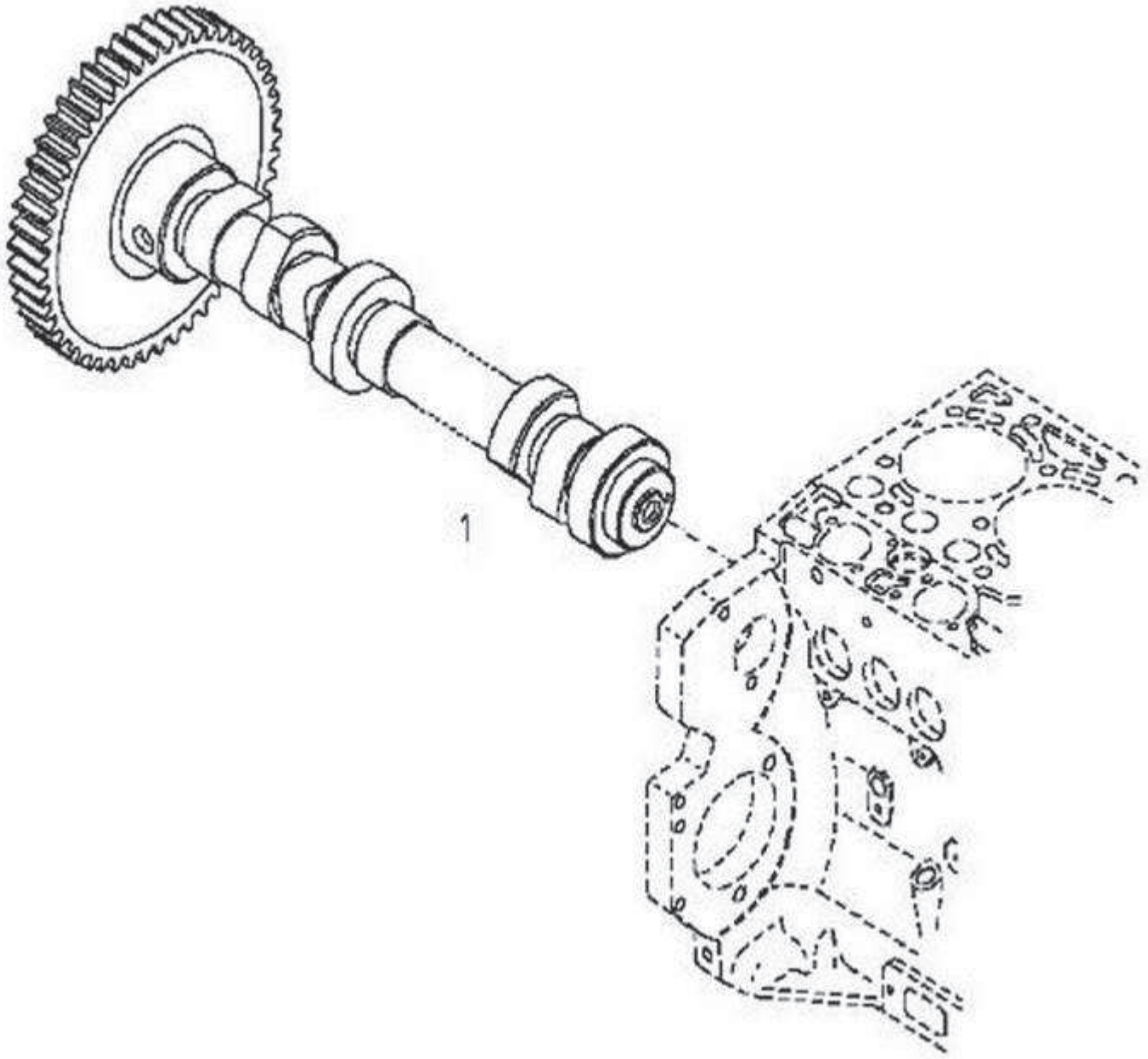

A25-6150E

Fig.	Part No.编码	Quantity件数 1	2	3	PS	KIT	Description 说明	Notes
1	**4110000988087**	1					Camshaft 凸轮轴总成F04292902	

1	**11213481**	凸轮轴总成 **Camshaft**	Catalogue id **111201**	Group **210**
2			Illustr. No **A25-6150E**	Section **100**
3				
4			Issue **2638000345**	Page **69**
5				

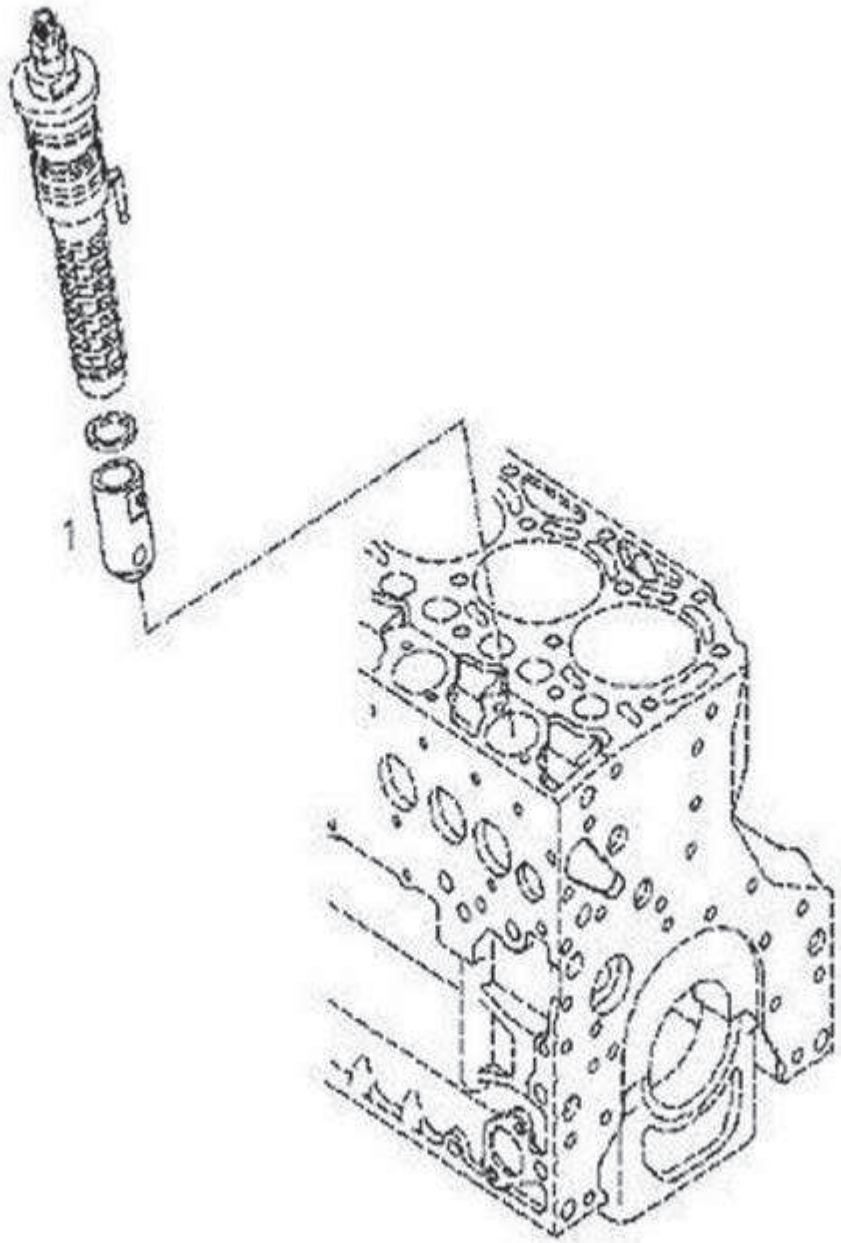

A26-6150E

Fig.	Part No.编码	Quantity件数 1	2	3	PS	KIT	Description 说明	Notes
1	**4110000988068**	4					Roller tappet..... 单体泵挺柱总成D04298064	

1	**11213481**	单体泵挺柱总成 **Roller tappet**	Catalogue id **111201**	Group **210**
2			Illustr. No **A26-6150E**	Section **200**
3				
4			Issue **2638000345**	Page **71**
5				

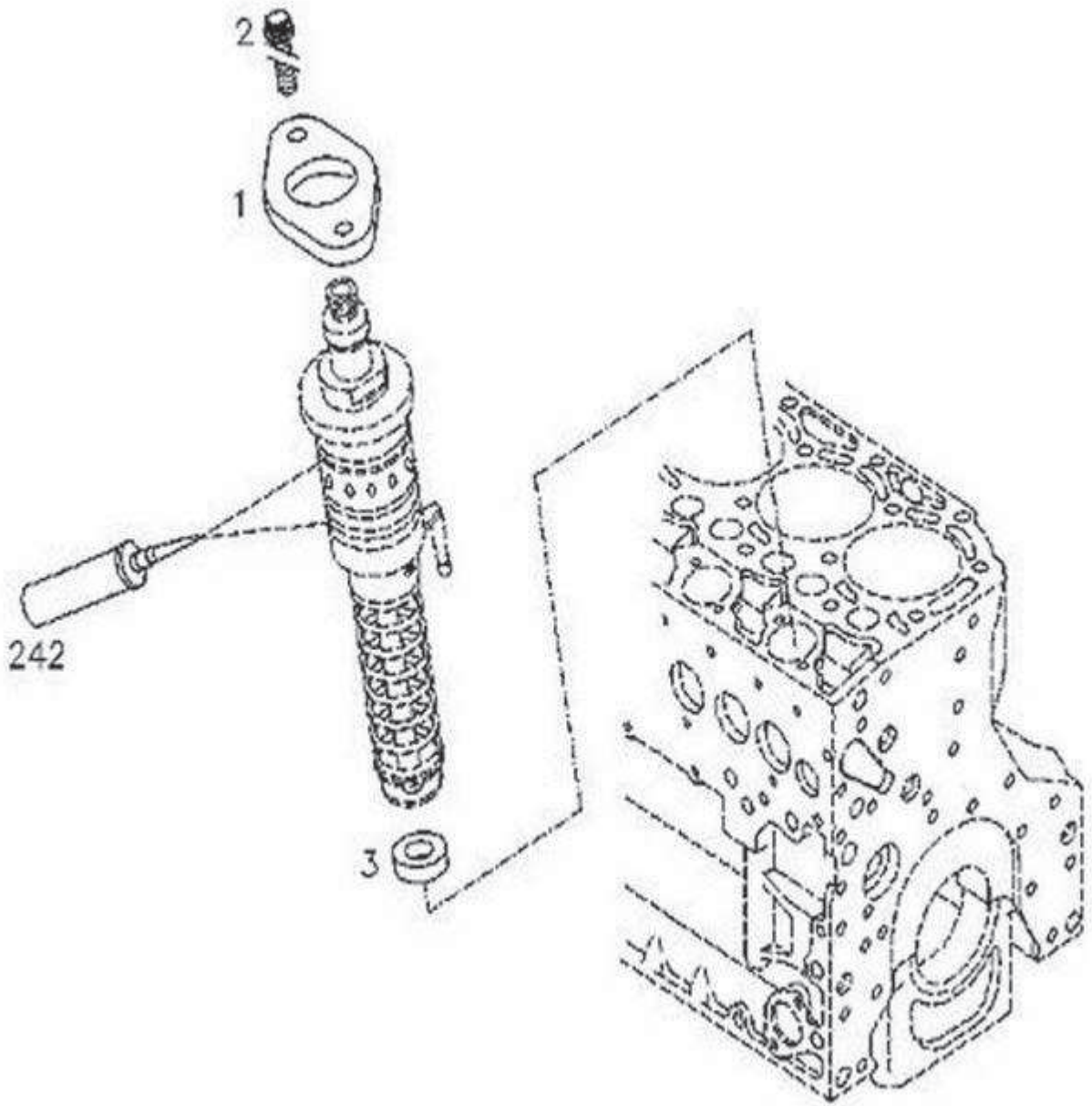

A27-6150E

Fig.	Part No.编码	Quantity件数 1	2	3	PS	KIT	Description 说明	Notes
1	**4110000727030**	4					Flange.. .... 喷油泵固定法兰1111012A52D体	
2	**4110000727082**	8					Collar screw 喷油泵固定螺栓D01181763	
3	**4110000988075**	4					Shim..... ... . 调整垫-喷油泵F02113022	

1	**11213481**	紧固装置-喷油泵 **Fastenings**	Catalogue id **111201**	Group **210**
2				
3			Illustr. No **A27-6150E**	Section **300**
4				
5			Issue **2638000345**	Page **73**

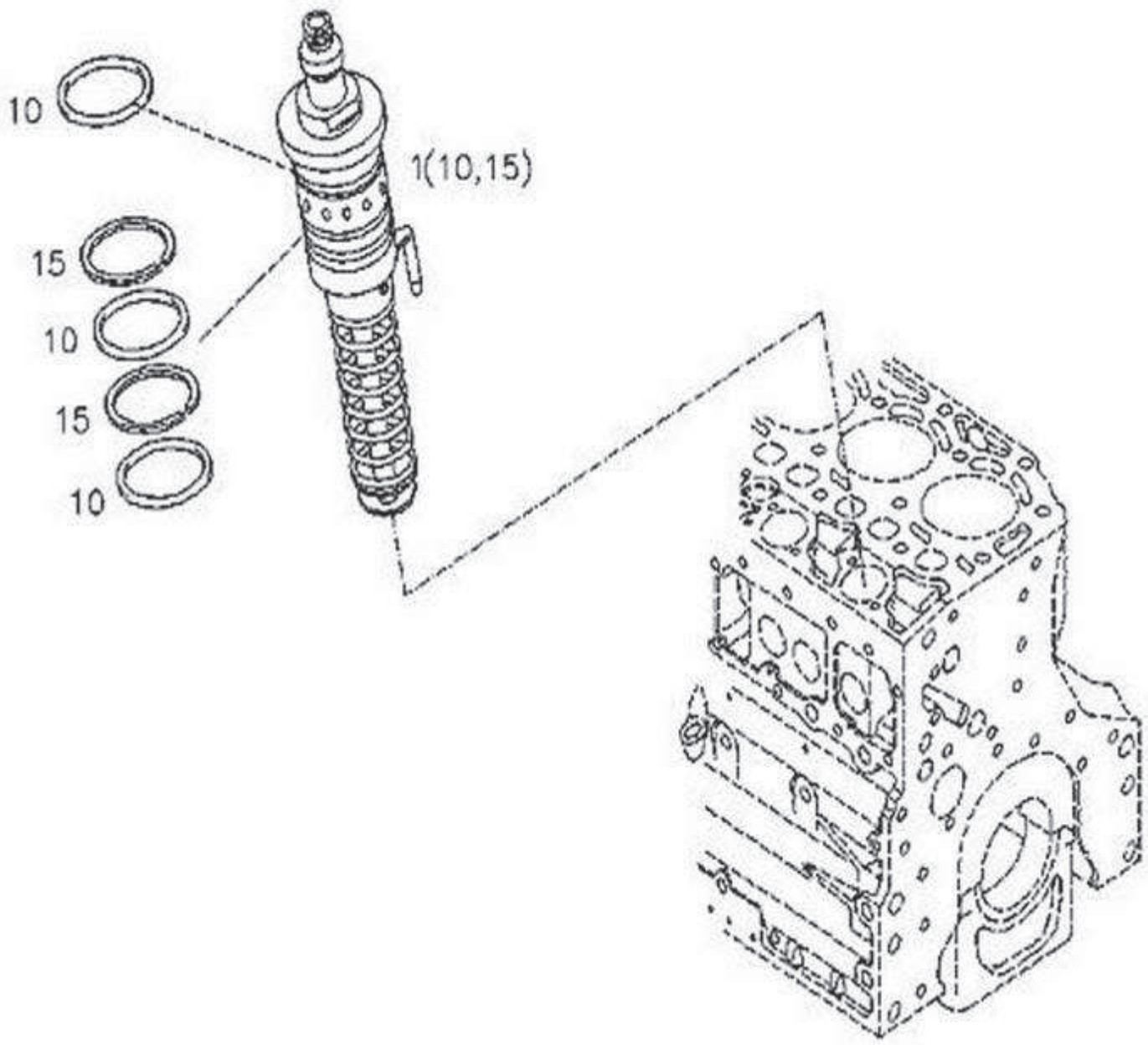

A28-6150E

Fig.	Part No.编码	Quantity件数 1	2	3	PS	KIT	Description 说明	Notes
1	**4110000988038**	4					Fuel inject. pump..... ..... 单体泵总成D02113002	

1	**11213481**	单体泵总成 **Fuel inject. pump**	Catalogue id **111201**	Group **210**
2			Illustr. No **A28-6150E**	Section **400**
3			Issue **2638000345**	Page **75**
4				

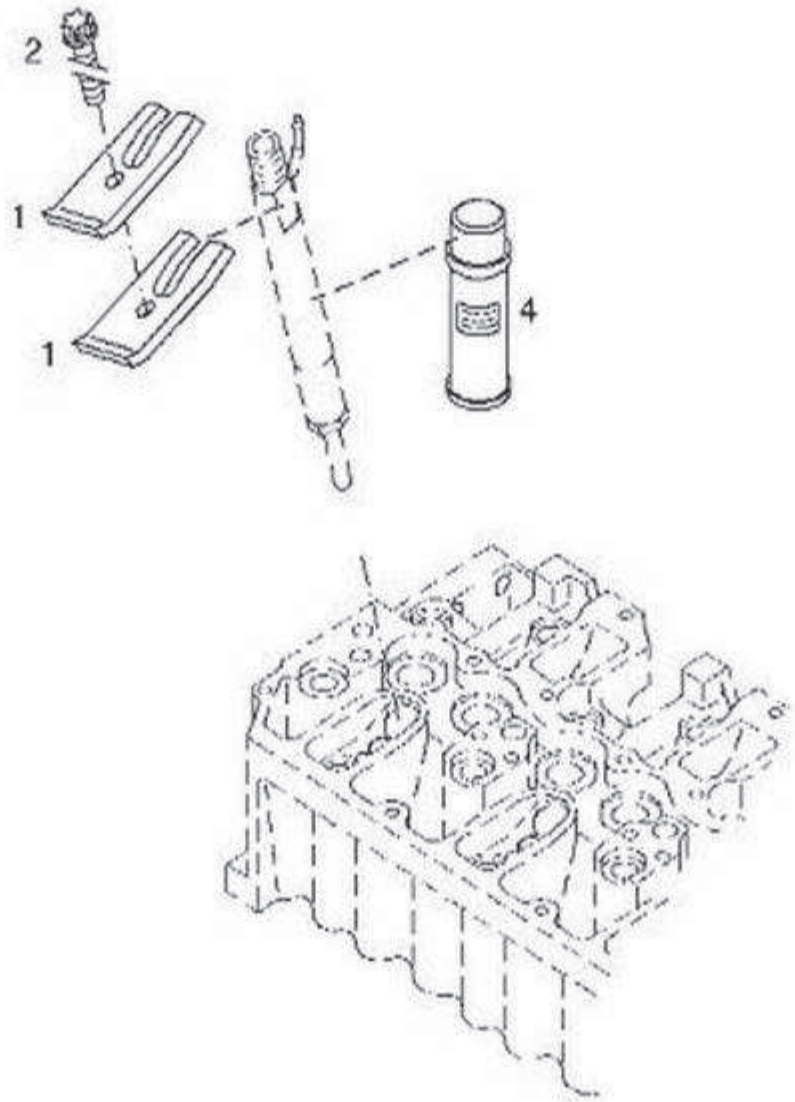

A29-6150E

Fig.	Part No.编码	Quantity件数 1	2	3	PS	KIT	Description 说明	Notes
1	**4110000509204**	8					Claw..... .... 喷油器压板1112014-52D	
2	**4110000509205**	4					Torx-head bolt..... .... 六角梅花凸缘螺栓H 2032-HBM8X50-10.9-ZNAL-A 1112619-52D	

1	**11213481**	喷油器紧固装置 **Fastenings**	Catalogue id **111201**	Group **210**
2			Illustr. No **A29-6150E**	Section **500**
3				
4			Issue **2638000345**	Page **77**
5				

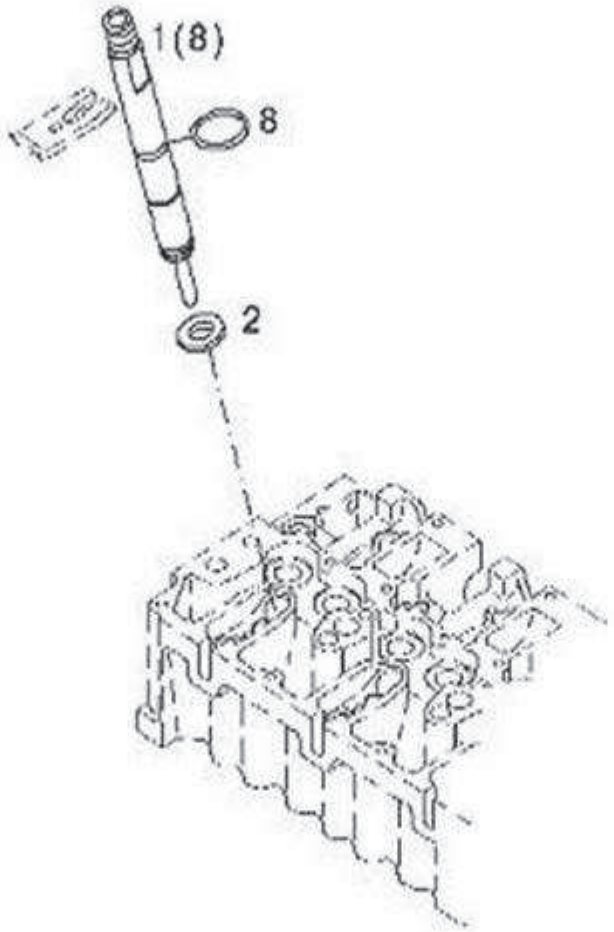

A30-6150E

Fig.	Part No.编码	Quantity件数 1	2	3	PS	KIT	Description 说明	Notes
1	**4110000988039**	4					Fuel injector..... ..... 喷油器总成D02113133	
2	**4110000988061**	4					Sealing ring..... ..... 垫D04291400	

1	**11213481**	喷油器总成 **Fuel injector**	Catalogue id **111201**	Group **210**
2				
3			Illustr. No **A30-6150E**	Section **600**
4				
5			Issue **2638000345**	Page **79**

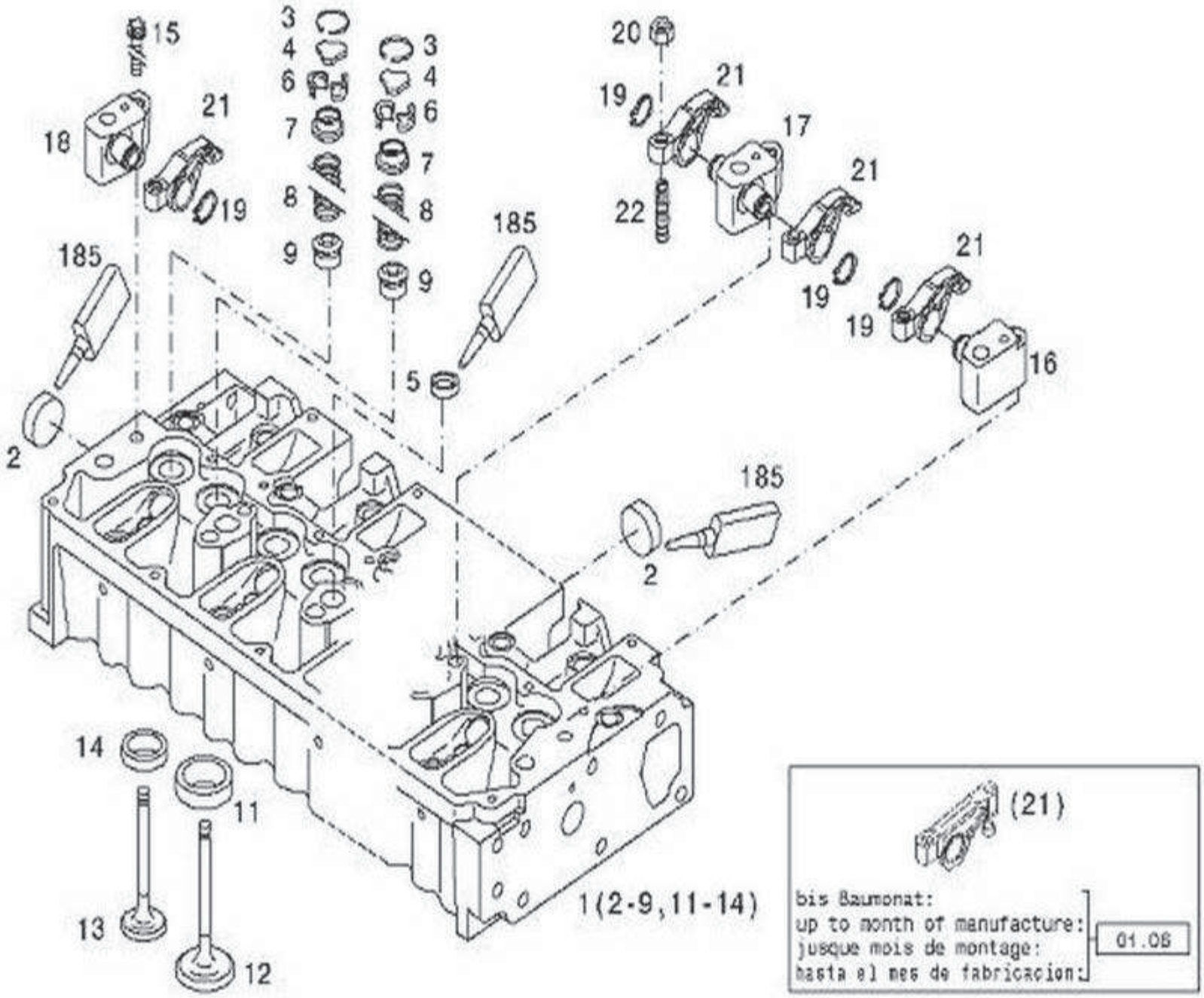
15
3
4
6
7
8
9
3
4
6
7
8
9
20
21
19
17
21
22
21
19
19
16
18
21
19
185
185
185
5
2
2
14
11
13
12
1(2-9,11-14)
(21)
bis Baumonat:
up to month of manufacture:
jusque mois de montage:
hasta el mes de fabricacion:
01.06

A31-6150E

Fig.	Part No.编码	Quantity件数 1	2	3	PS	KIT	Description 说明	Notes
1	**4110000988003**	1					Cylinder head ..... 气缸盖分总成－带进排气门1003015-65D	
2	**4110000727002**	3					Core hole plug ..... 碗形塞片H 2860-A36-ST-FE/ZNPHR 1002620-52D	
3	**4110000509093**	8					Snap ring..... 弹簧卡环F04292209	
4	**4110000509092**	8					Thrust washer..... 旋转垫F04290034	
5	**4110000727004**	3					Core hole plug..... 碗形塞片 H 711-B20 1003621-52D	
6	**4110000727089**	16					Valve collet..... 气门锁块D02108102	
7	**4110000509103**	8					Spring cap..... 气门弹簧座F04290033	
8	**4110000509099**	8					Compression spring 气门弹簧1007021-56D	
9	**4110000509104**	8					Valve guide oil seal..... 气门导管油封1007034-56D-4153728	
11	**4110000509105**	4					Inlet valve seat insert..... 进气门座1007081-56D-4192397	
12	**4110000509101**	4					Inlet valve 进气门F04284042	
13	**4110000509102**	4					Outlet valve..... 排气门F04284043	
14	**4110000509106**	4					Outlet valve seat insert..... 排气门座1007082-56D-4192396	
	4110000509090	1					Rocker arm bracket assembly ..... 摇臂及摇臂支座(前)总成F04285532(04285532)	
	4110000509097	3					Rocker arm bracket assembly..... 摇臂及摇臂支座(中)总成F04285533	
	4110000509098	1					Rocker arm bracket assembly..... 摇臂及摇臂支座(后)总成F04285534	
15	**4110000509089**	10					Hexagon bolt ..... 六角头凸缘螺栓 H 2032-HBM8X45-8.8-ZNAL-A 1007601-56D	
16	**4110000509091**	1					Rocker arm bracket..... 气门摇臂支座(前)F04195928	
17	**4110000988077**	3					Rocker arm bracket..... 气门摇臂支座(中) F04195922	
18	**4110000988078**	1					Rocker arm bracket..... 气门摇臂支座(后) F04195924	
19	**4110000988073**	8					Circlip ..... 轴用弹性挡圈DIN 471-21X1,2 F01107731	
20	**4110000988074**	8					Hexagon nut 六角螺母F02109637	
21	**4110000509107**	8					Rocker arm 气门摇臂F04289278	
22	**4110000970078**	8					Adjusting screw..... 调整螺栓1007142-52D	

1	**11213481**	气缸盖总成装置 **Cylinder head**	Catalogue id **111201**	Group **211**
2			Illustr. No **A31-6150E**	Section **100**
3				
4			Issue **2638000345**	Page **81**
5				

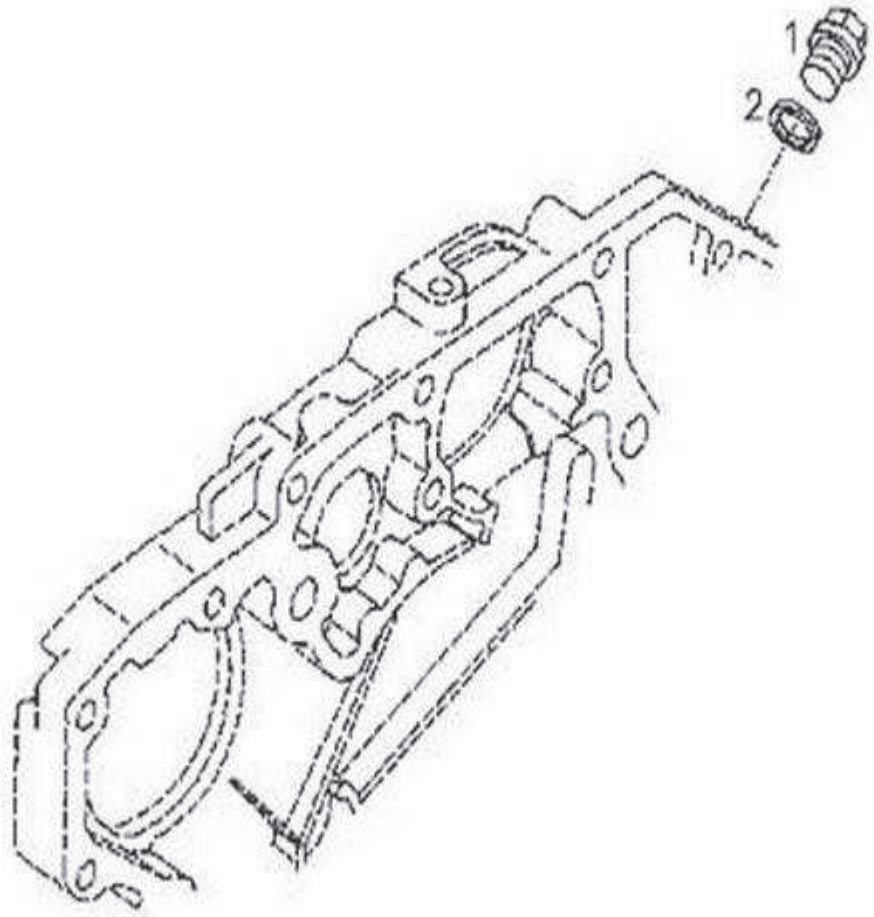

A32-6150E

Fig.	Part No.编码	Quantity件数 1	2	3	PS	KIT	Description 说明	Notes
1	**4110000509249**	1					Screw plug.... .... 螺塞DIN910-M14X1,5-ST-ZNAL-A 1118641-52D	
2	**4110000509019**	1					Sealing ring.. .... 密封垫 DIN 7603-A14X20-CU 1104617-52D	

1	**11213481**	后置增压器进油堵 **Blanking parts**	Catalogue id **111201**	Group **212**
2			Illustr. No **A32-6150E**	Section **100**
3				
4			Issue **2638000345**	Page **83**
5				

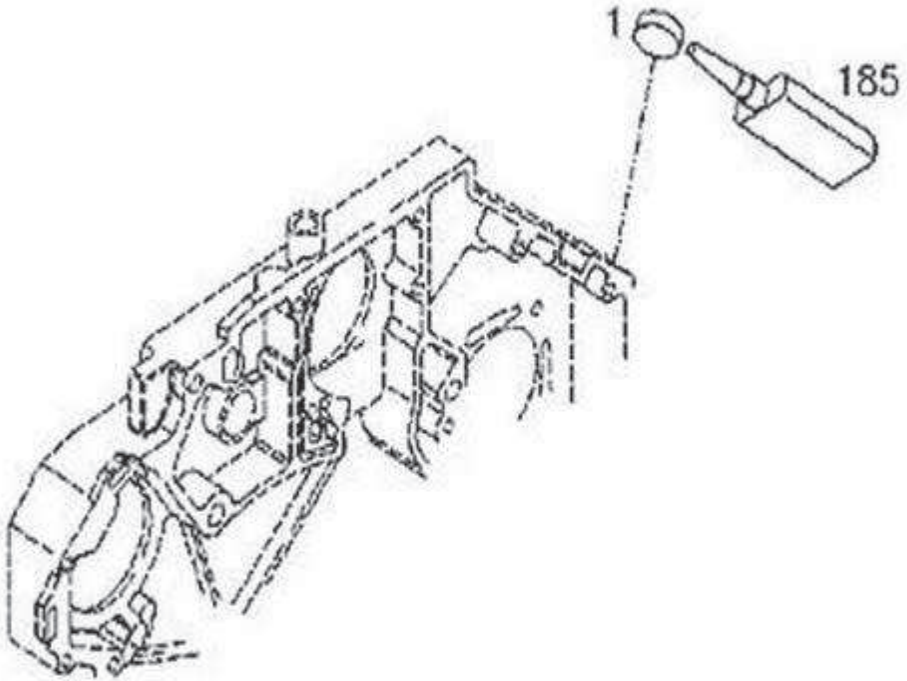

A33-6150E

Fig.	Part No.编码	Quantity件数 1	2	3	PS	KIT	Description 说明	Notes
1	**4110000509248**	1					Core hole plug.... ..... 碗形塞片H2860-A28-ST-FE/ZNPHR 1118605-52D	

1	**11213481**	后置增压器回油堵 **Blanking parts**	Catalogue id **111201**	Group **212**
2				
3			Illustr. No **A33-6150E**	Section **200**
4				
5			Issue **2638000345**	Page **85**

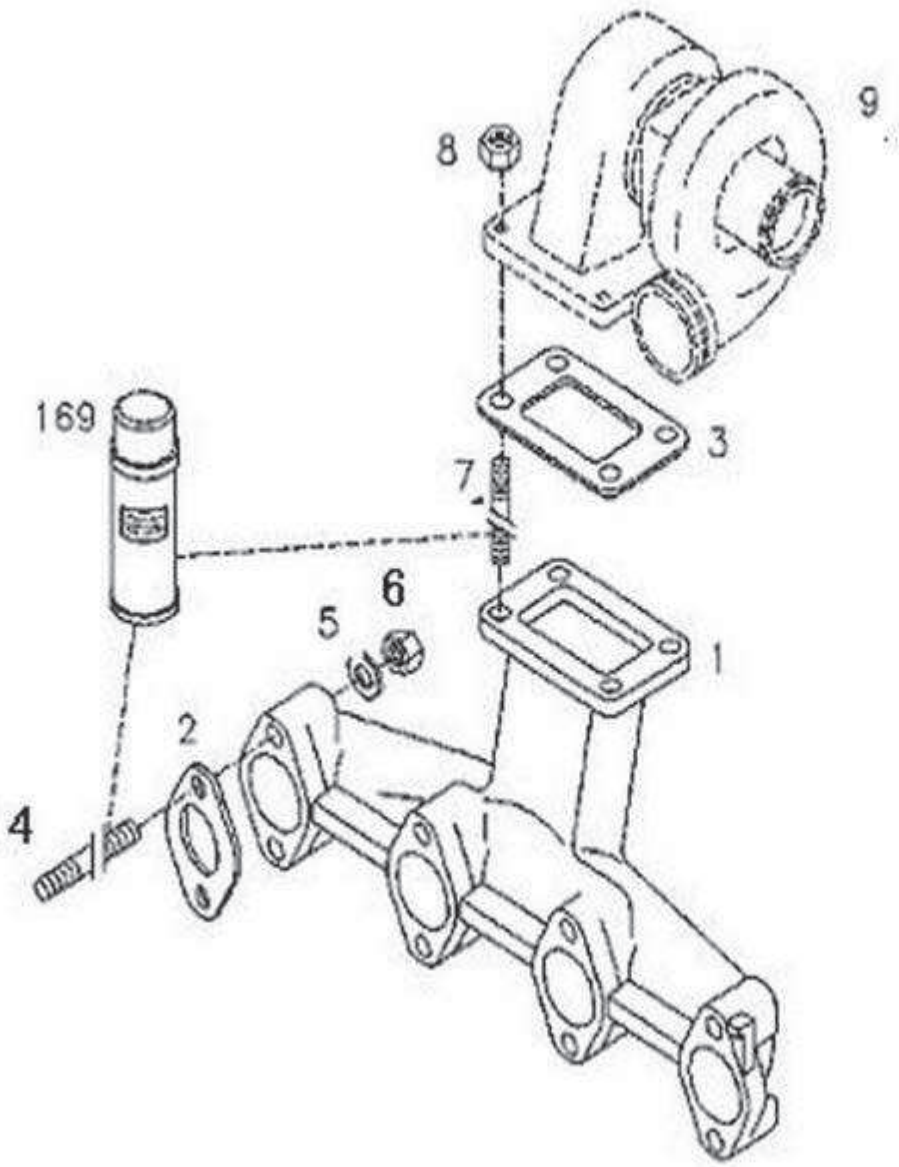

A34-6150E

Fig.	Part No.编码	Quantity件数 1	2	3	PS	KIT	Description 说明	Notes
1	**4110000988050**	1					Exhaust pipe..... ..... 排气歧管D04254518	
2	**4110000727008**	4					Exhaust pipe gasket..... ..... 密封垫－排气歧管1008044A52D	
3	**4110000988011**	1					Gasket..... .... 增压器密封垫1118013-30D	
4	**4110000727100**	8					Stud..... .... 双头螺柱D02143324	
5	**4110000509139**	8					Plain washer..... 平垫－排气歧管1008063A52D	
6	**4110000509140**	8					Hexagon nut..... .... 六角螺母-排气歧管1008046-52D	
7	**4110000988031**	4					Stud..... .... 双头螺柱DIN 000939 -M8X22-21CRMOV5 D01148097	
8	**4110000988024**	4					Hexagon nut..... .... 六角螺母ISO 4032 -M8-24CRMO5V D01138774	
9	**4110000988052**	1					Turbocharger..... ..... 增压器总成D04258199	

1	**11213481**	排气歧管装置 **Exhaust pipe**	Catalogue id **111201**	Group **212**
2			Illustr. No **A34-6150E**	Section **300**
3				
4			Issue **2638000345**	Page **87**
5				

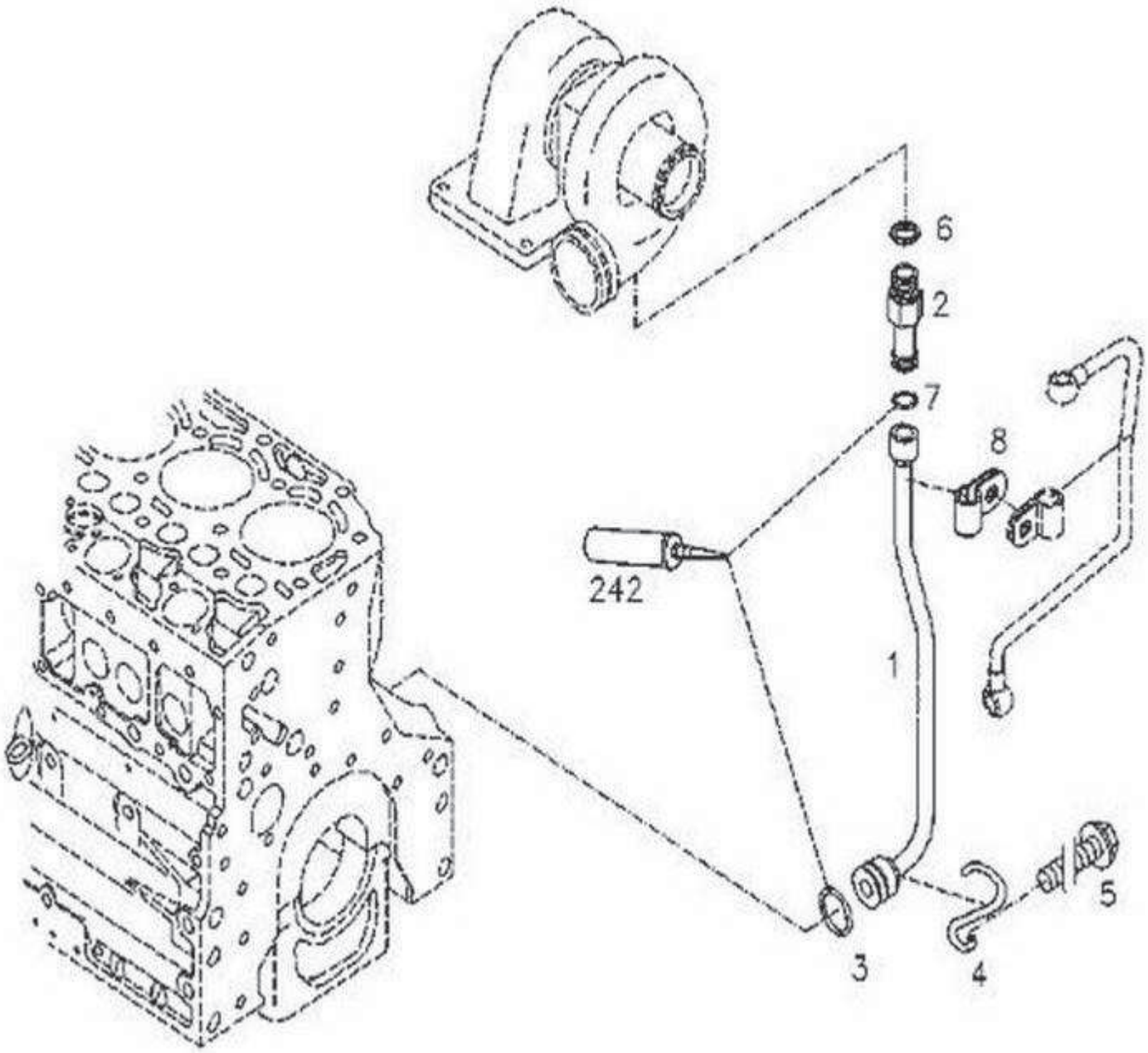

A35-6150E

Fig.	Part No.编码	Quantity件数 1	2	3	PS	KIT	Description 说明	Notes
1	**4110000988082**	1					Return line..... 增压器回油管总成（下）F04254670	
2	**4110000988012**	1					Screw-in nipple..... 增压器回油管（上）1118077-65D	
3	**4110000727034**	1					O-ring..... 密封圈 21.8×3.51 118684-52D	
4	**4110000509247**	1					Retainer..... 增压器回油管定位钩1118051-30D	
5	**4110000509246**	1					Hexagon bolt..... 六角头凸缘螺栓 EN1662-F-M8X16-10.9 3509646-52D	
6	**4110000509256**	1					Sealing ring..... 密封垫DIN 7603-A16X20-CU 1307639-52D	
7	**4110000988013**	1					O-seal..... 密封圈H 2927-12X3-FPM-1-70 1118078-65D	
8	**4110000988018**	1					Pipe Clamp..... 管夹H 3223-C12X15-ST/MVQ-1-70 B01174999	

1	**11213481**	增压器回油装置 **Return line**	Catalogue id **111201**	Group **212**
2				
3			Illustr. No **A35-6150E**	Section **400**
4			Issue **2638000345**	Page **89**
5				

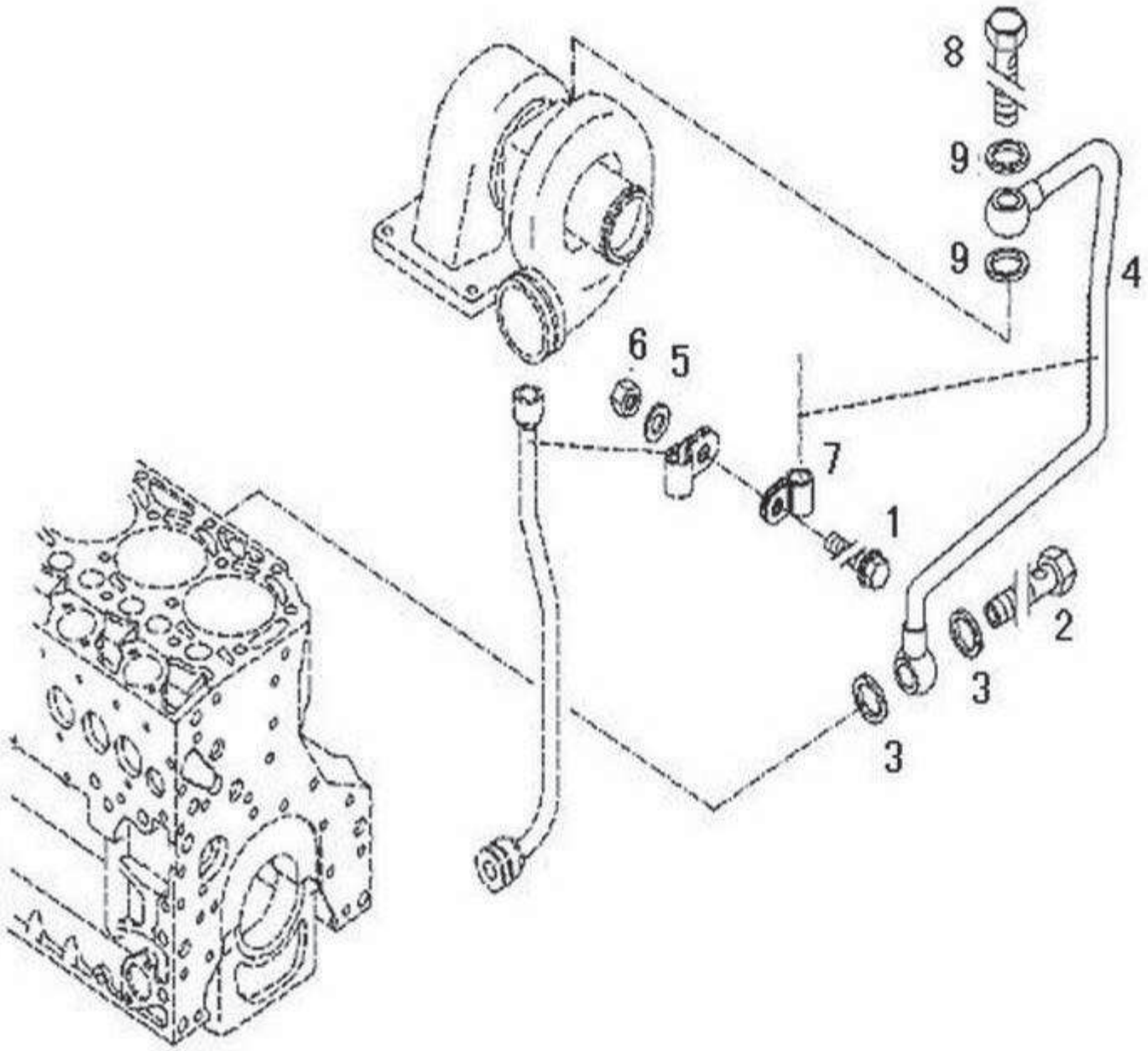

A36-6150E

Fig.	Part No.编码	Quantity件数 1	2	3	PS	KIT	Description 说明	Notes
1	**4110000727045**	1					Bolt..... .... 螺栓-涂密封材料EN1662-F-M6*20-10.9-ZNA1 3602666-30D	
2	**4110000509241**	1					Hollow screw..... ..... 空心螺栓H 3102-D10M-ST-ZNAL-A 3509642-52D	
3	**4110000509230**	2					Sealing ring..... ..... 密封垫 DIN7603-A14X18-Cu 3509644-52D	
4	**4110000988081**	1					Feed line..... .... 增压器进油管总成F04254669	
5	**4110000560296**	1					Washer..... .... 垫圈6 Q40106	
6	**4110000988023**	1					Hexagon nut..... ..... 六角头螺母ISO 4032-M 6 -10-A4C D01127079	
7	**4110000727167**	1					Pipe clamp..... ..... 管夹B01175535	
8	**4110000509262**	1					Hollow screw..... ..... 空心螺栓DIN 7643-8 1303614-56D	
9	**4110000509263**	2					Sealing ring..... ..... 密封垫 DIN 7603-A12X15,5-CU 1104694-30D	

1	**11213481**	增压器进油装置 **Lubricat. oil line**	Catalogue id **111201**	Group **212**
2			Illustr. No **A36-6150E**	Section **500**
3				
4			Issue **2638000345**	Page **91**
5				

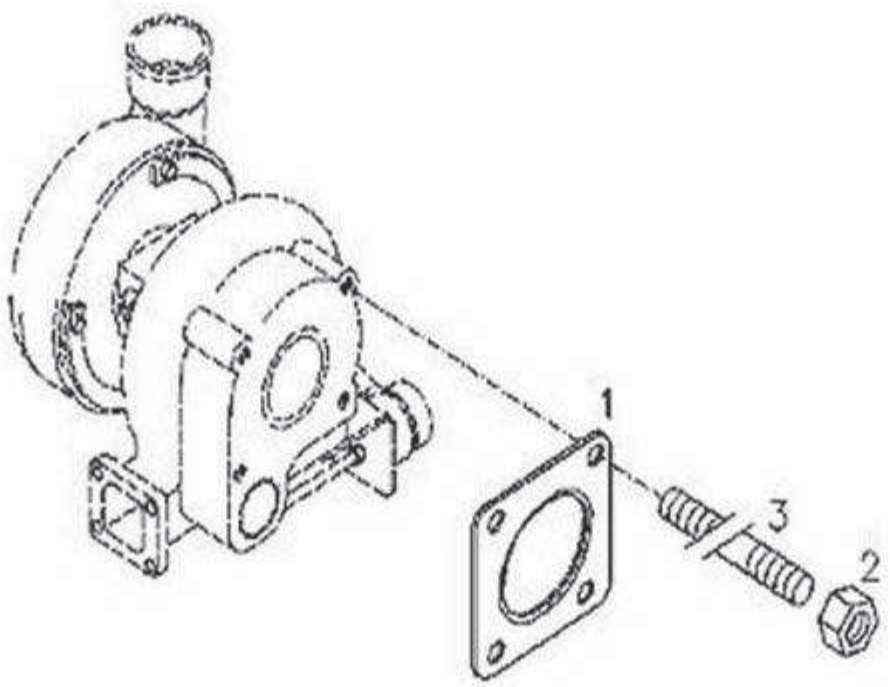

A37-6150E

Fig.	Part No.编码	Quantity件数 1	2	3	PS	KIT	Description 说明	Notes
1	**4110000988083**	1					Gasket..... 密封垫F04255669	
2	**4110000988024**	4					Hexagon nut..... 六角螺母ISO 4032-M8-24CRMO5V D01138774	
3	**4110000988025**	4					Stud ..... 双头螺柱DIN 939-M8X25-21CRMOV 57 D01138776	

1	**11213481**	紧固件总成 **Fastenings**	Catalogue id **111201**	Group **212**
2				
3			Illustr. No **A37-6150E**	Section **600**
4				
5			Issue **2638000345**	Page **93**

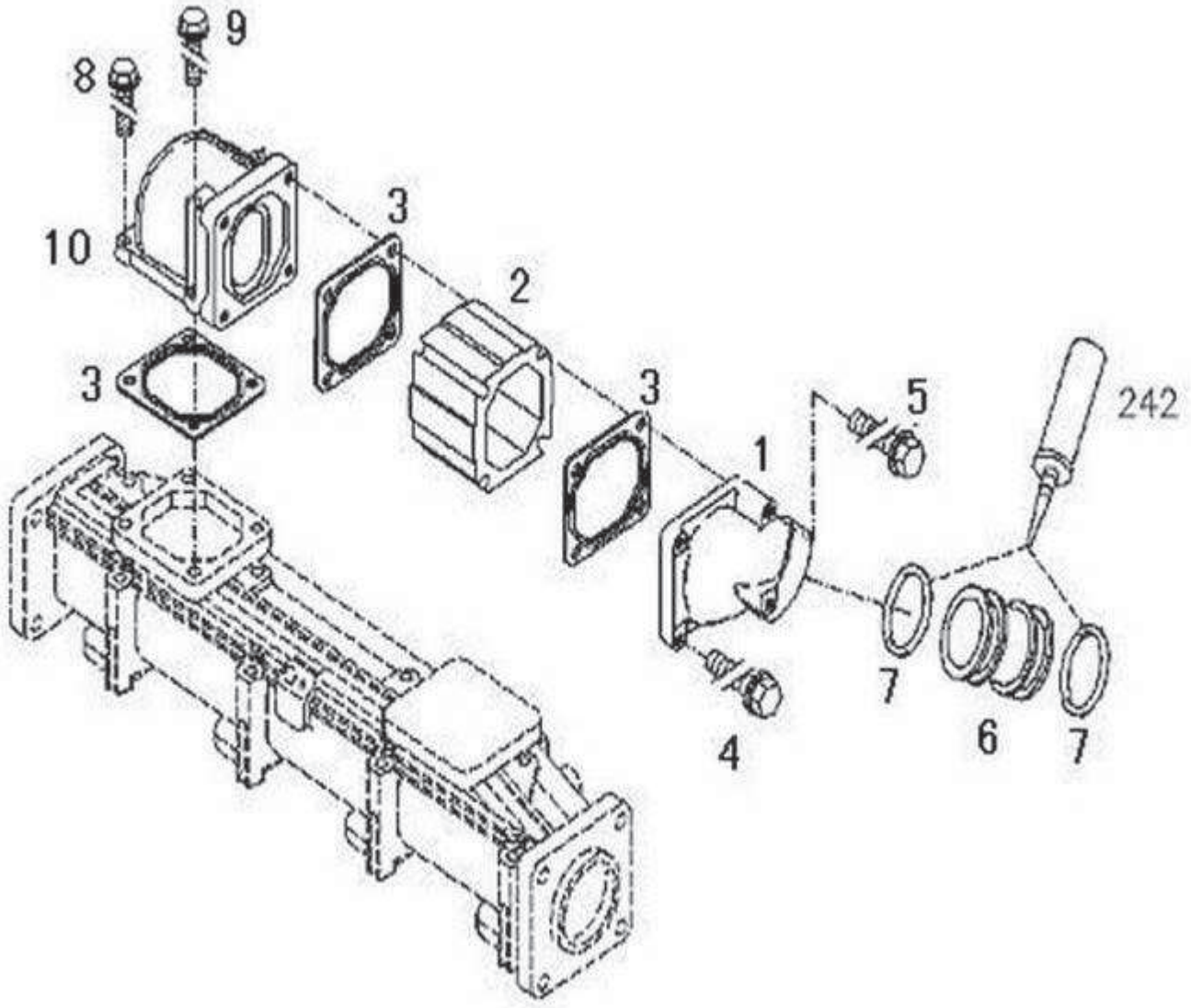

A38-6150E

Fig.	Part No.编码	Quantity件数 1	2	3	PS	KIT	Description 说明	Notes
1	**4110000988053**	1					Charge air elbow.... .... 进气接头D04282321	
2	**4110000509317**	1					Heating flange 预热器总成3750115A56D	
3	**4110000509318**	3					Gasket. 预热器密封垫3750131-56D	
4	**4110000509319**	4					Hexagon bolt..... .... 六角头凸缘螺栓 EN 1662-F-M8X100-10.9-ZNAL-A 3750611-56D	
5	**4110000988026**	2					Hexagon bolt .... 六角头凸缘螺栓EN 1662-F-M8X140-10.9-A4C D01143370	
6	**4110000988079**	1					Plug..... .... 连接管F04197209	
7	**4110000988019**	2					O-seal..... .... 密封圈B01180347	
8	**4110000509127**	2					Hexagon bolt .... 六角头凸缘螺栓EN 1662-F-M8X30-10.9-ZNAL-A 3509639-52D	
9	**4110000727009**	2					Bolt..... .... 螺栓1008601-56D	
10	**4110000988089**	1					Charge air elbow..... .... 进气接管1008023-84D	

1	**11213481**	进气预热总成 **Heating flange**	Catalogue id **111201**	Group **213**
2			Illustr. No **A38-6150E**	Section **100**
3				
4			Issue **2638000345**	Page **95**
5				

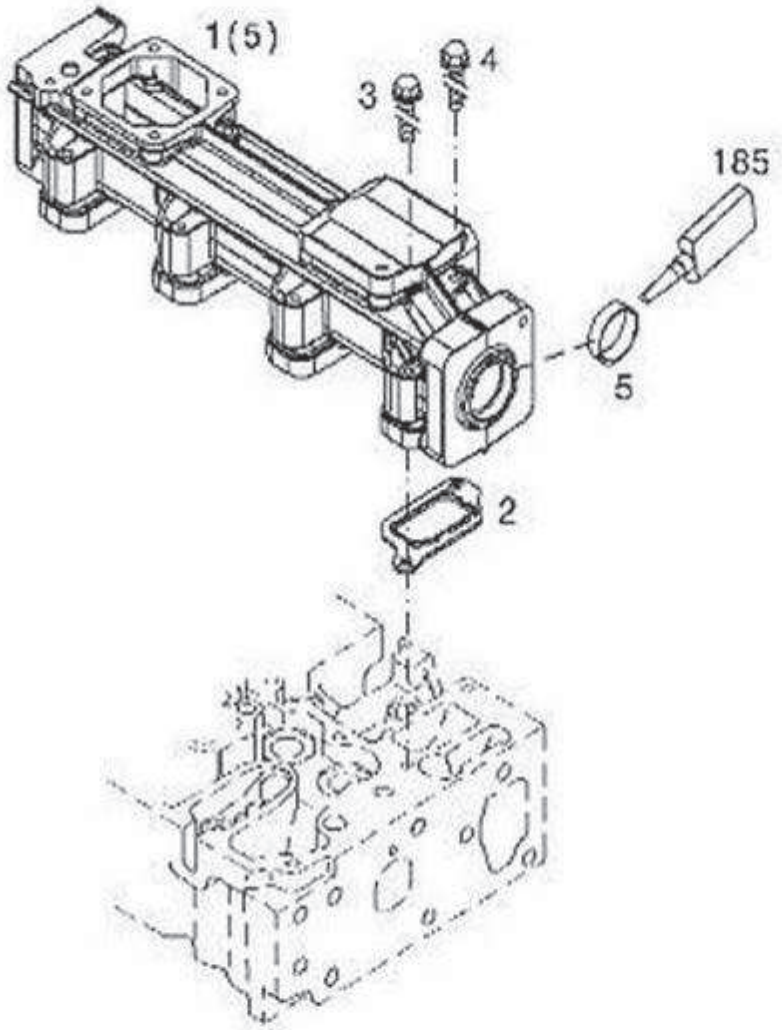
1(5)
3
4
185
5
2

Fig.	Part No.编码	Quantity件数 1	2	3	PS	KIT	Description 说明	Notes
1	**4110000988069**	1					Charge air pipe 进气歧管总成D04501128	
2	**4110000509132**	4					Charge air pipe gasket..... 垫密片－进气歧管1008017-56D	
3	**4110000509048**	4					Hexagon bolt..... 六角头凸缘螺栓 EN 1662-F-M6X75-10.9-ZNAL-A 1008602-56D	
4	**4110000970053**	4					Hexagon bolt..... 六角头凸缘螺栓EN 1662-F-M6X95-109-ZNAL 1003631-52D	
5	**4110000988030**	2					Cover..... 碗形塞片DIN 443-A45-ZNPHR D01148032	

1	**11213481**	进气歧管装置 **Charge air pipe**	Catalogue id **111201**	Group **213**
2			Illustr. No **A39-6150E**	Section **200**
3				
4			Issue **2638000345**	Page **97**
5				

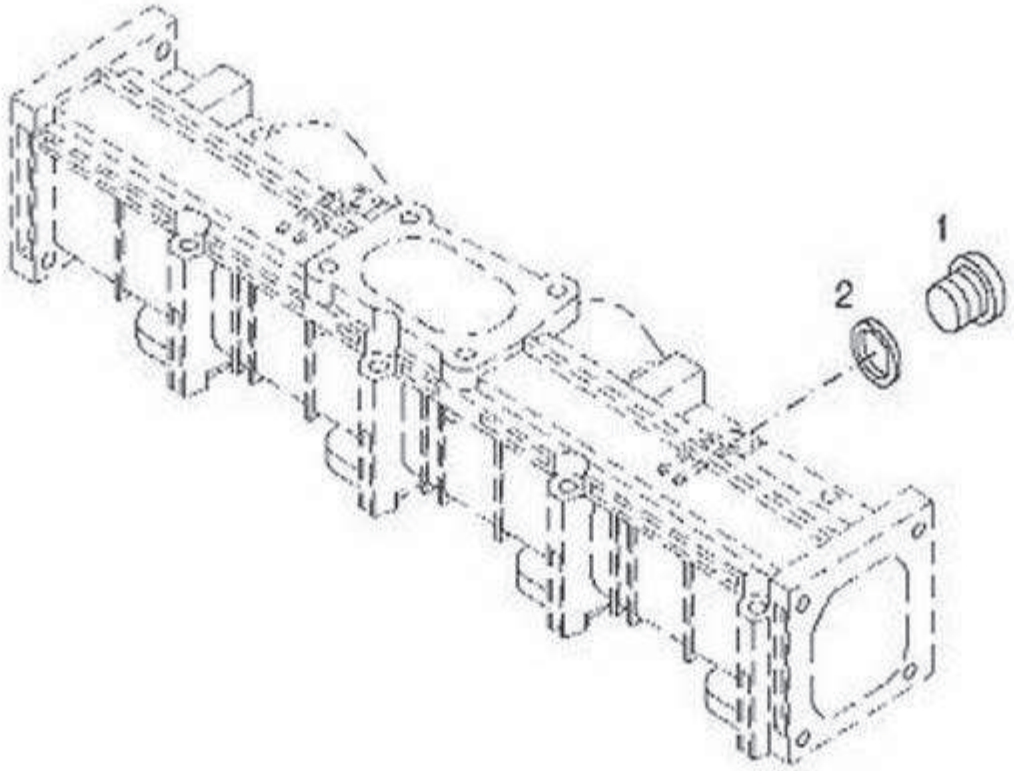

A40-6150E

Fig.	Part No.编码	Quantity件数 1	2	3	PS	KIT	Description 说明	Notes
1	**4110000509020**	1					Screw plug..... .... 螺塞 DIN 908-M14X1,5-ST-ZNPHRF 1002626-52D	
2	**4110000509230**	1					Sealing ring..... .... 密封垫 DIN7603-A14X18-Cu 3509644-52D	

1	**11213481**	堵总成 **Blanking parts**	Catalogue id **111201**	Group **213**
2				
3			Illustr. No **A40-6150E**	Section **300**
4				
5			Issue **2638000345**	Page **99**

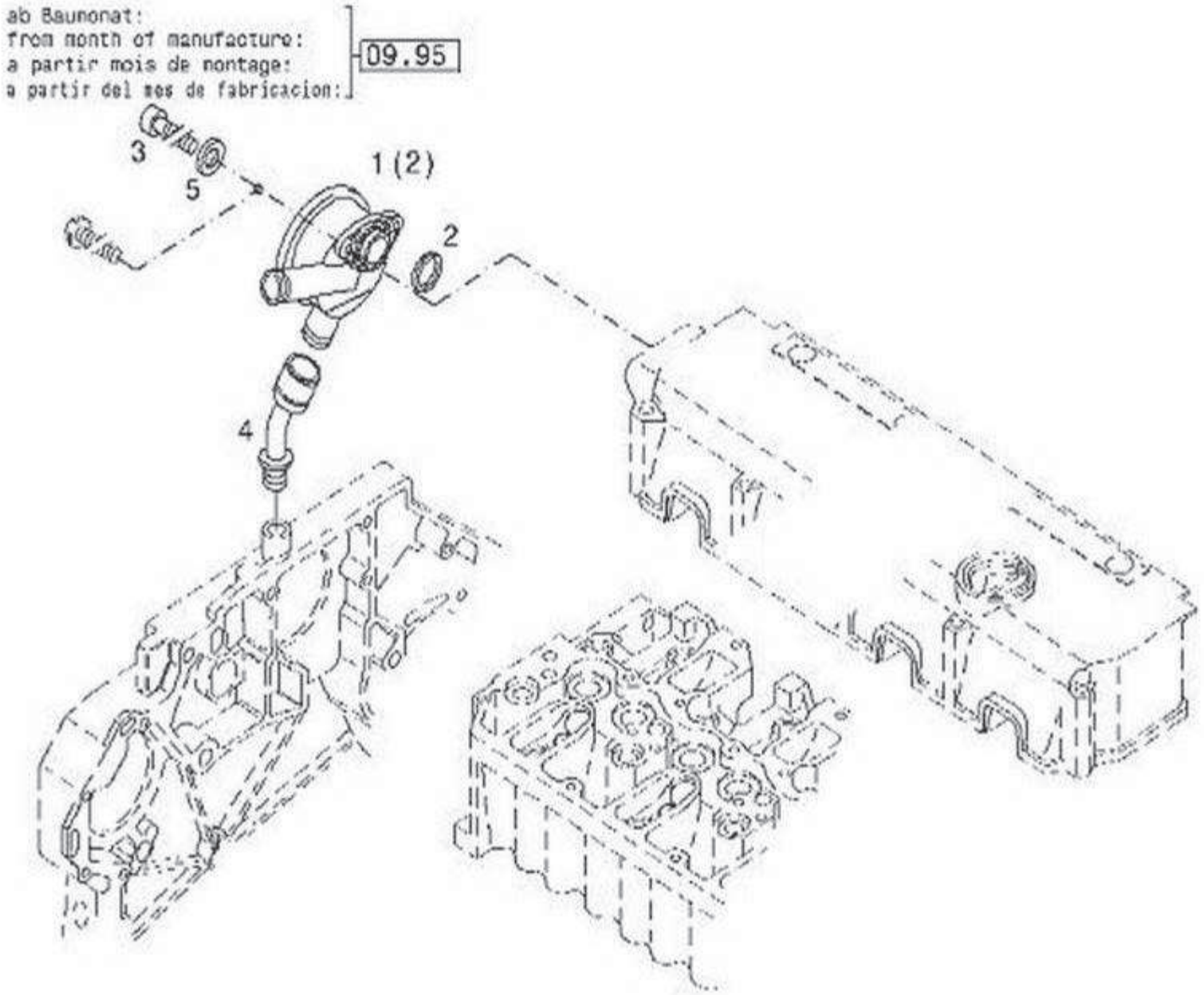
ab Baumonat:
from month of manufacture:
a partir mois de montage:
a partir del mes de fabricacion:
09.95
3
5
1(2)
2
4

A41-6150E

Fig.	Part No.编码	Quantity件数 1	2	3	PS	KIT	Description 说明	Notes
1	**4110000509167**	1					Pressure regulator..... .... 油气分离器总成4255053(1014015-30D)	
2	**4110000988044**	1					Gasket..... .... 橡胶密封环D04206233	
3	**4110000727172**	2					Cheese head screw... .. .. 内六角圆柱头螺钉CQ2180620TF32	
4	**4110000509168**	1					Rubber sleeve..... .... 橡胶套管－回油1014016-52D	
5	**4110000509166**	2					Plain washer..... .... 垫圈ISO 7092-6-140HV-A4C 1014621-52D	

1	**11213481**	曲轴箱通风装置图 **Crankcase breather**	Catalogue id **111201**	Group **214**
2				
3			Illustr. No **A41-6150E**	Section **100**
4				
5			Issue **2638000345**	Page **101**

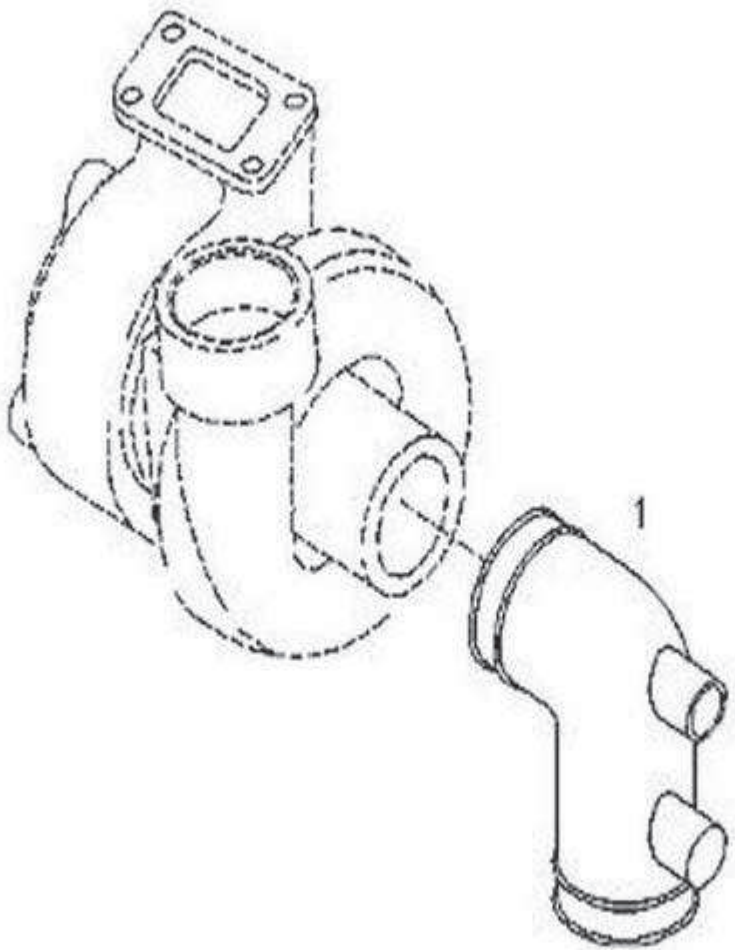

A42-6150E

Fig.	Part No.编码	Quantity件数 1	2	3	PS	KIT	Description 说明	Notes
1	**4110000988009**	1					Manifold..... 连接胶管-接增压器1109351-30D	

1	**11213481**	连接胶管-接增压器 **Manifold**	Catalogue id **111201**	Group **215**
2				
3			Illustr. No **A42-6150E**	Section **100**
4				
5			Issue **2638000345**	Page **103**

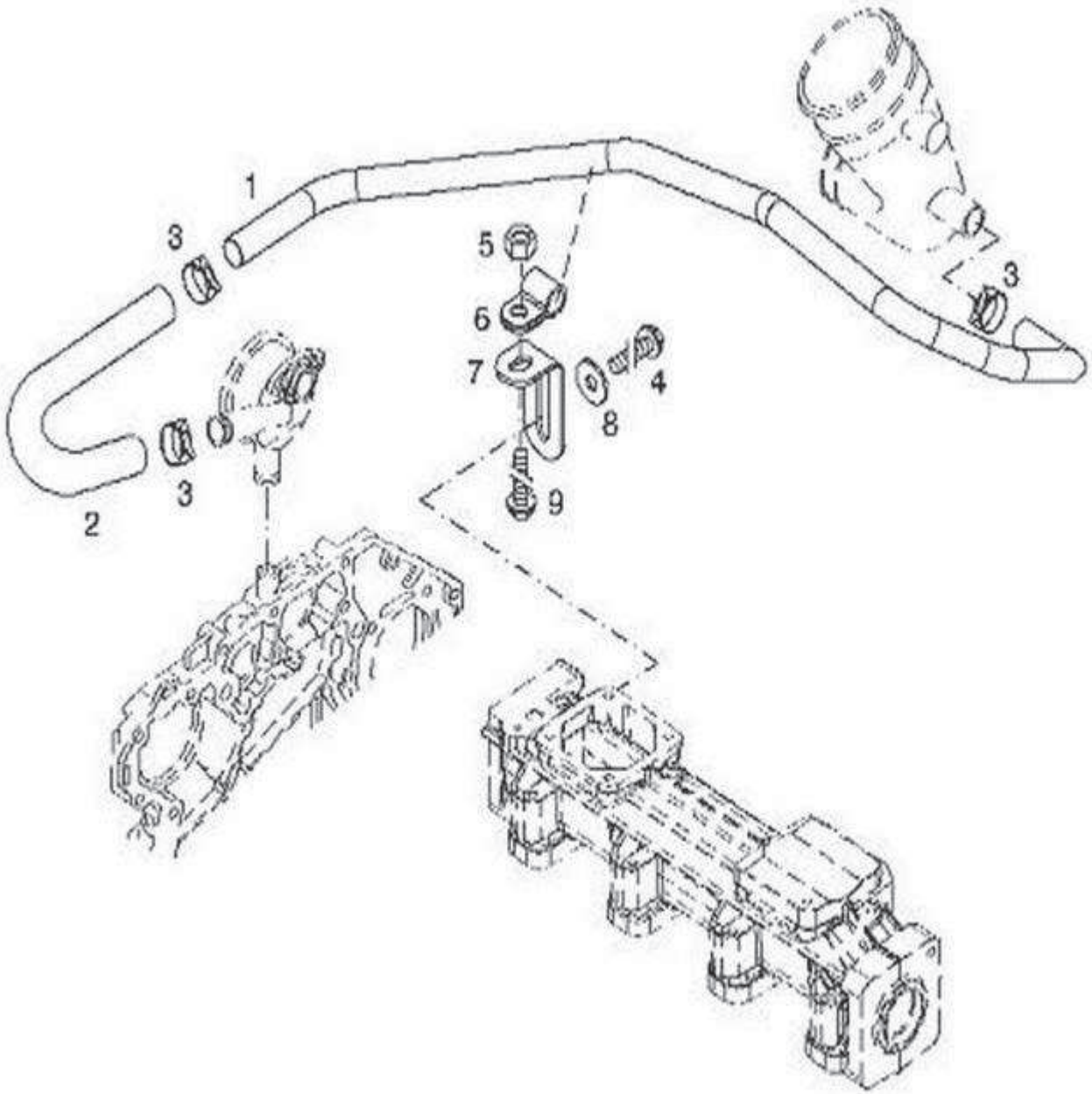

A43-6150E

Fig.	Part No.编码	Quantity件数 1	2	3	PS	KIT	Description 说明	Notes
1	**4110000988071**	1					Breather pipe..... .... 通气管总成D04505425	
2	**4110000727149**	1					Vent-pipe..... .... 通风软管F04258132	
3	**4110000509169**	3					Spring clip..... .... 弹簧箍DIN 3021-A-29X15 CQ67635B	
4	**4110000727045**	1					Bolt..... .... 螺栓-涂密封材料EN1662-F-M6*20-10.9-ZNAI 3602666-30D	
5	**4110000509282**	1					Hexagon nut..... .... 六角螺母ISO 4032-M8-10-ZNAL-A CQ34008TF36	
6	**4110000727022**	1					Clamp..... .... 管夹1014622-30D	
7	**4110000970165**	1					Bracket..... .... 支架F04204250	
8	**4110000988015**	2					Plain washer..... .... 平垫圈DIN 7349-6,4-ST-A4C B00810311	
9	**4110000509173**	1					Hexagon bolt..... .... 六角头凸缘螺栓EN1662-F-M8X20-LG2,5-10.9-ZNAL-A 1009619-52D	

1	**11213481**	通气管装置 **Breather line**	Catalogue id **111201**	Group **215**
2				
3			Illustr. No **A43-**	Section **200**
4				
5			Issue **2638000345**	Page **105**

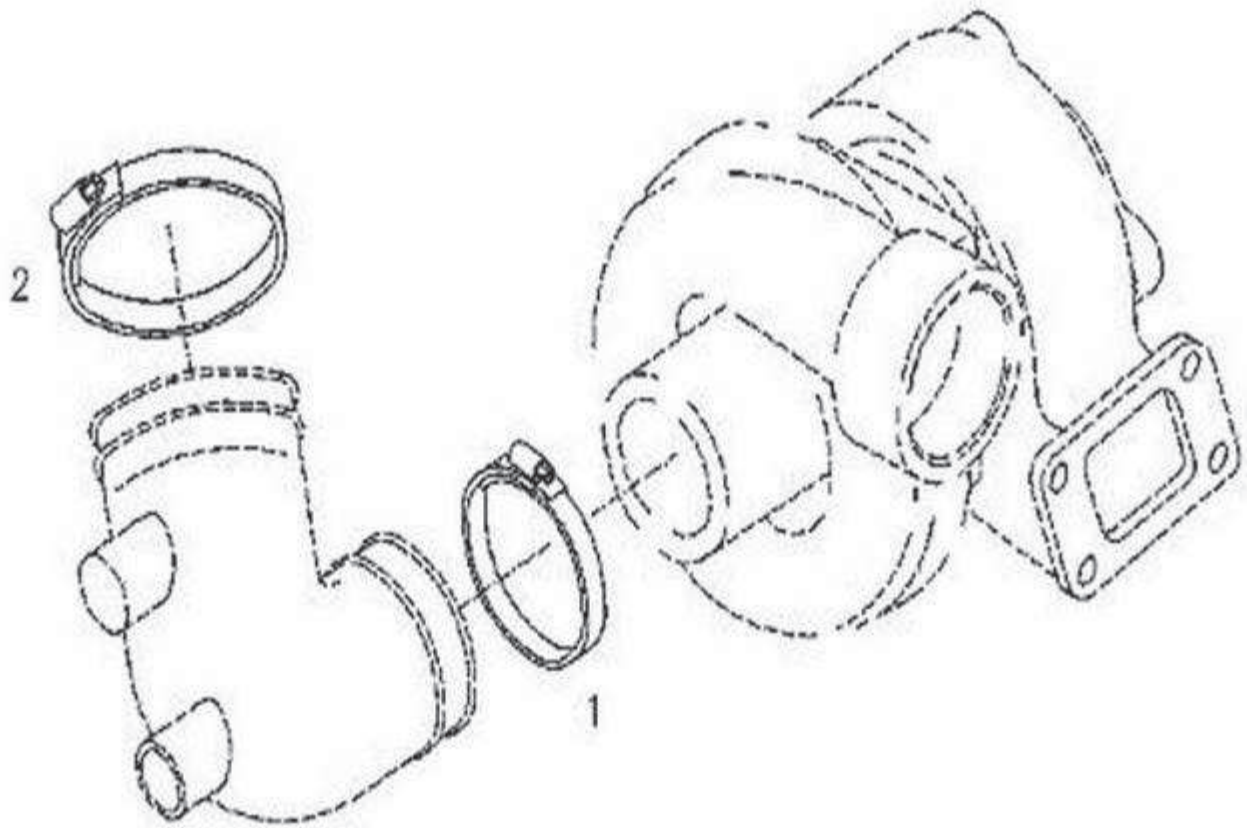

A44-6150E

Fig.	Part No.编码	Quantity件数 1	2	3	PS	KIT	Description 说明	Notes
1	**4110000988021**	1					Hose clip..... ..... 软管管箍DIN 3017-A-70-90X13-W3-WF CQ67690B	
2	**4110000988032**	1					Hose clip..... .... 软管夹箍DIN 3017-A-80-100X13-W3-WF D01148606	

1	**11213481**	管箍装置 **Hose clip**	Catalogue id **111201**	Group **215**
2				
3			Illustr. No **A44-**	Section **300**
4				
5			Issue **2638000345**	Page **107**

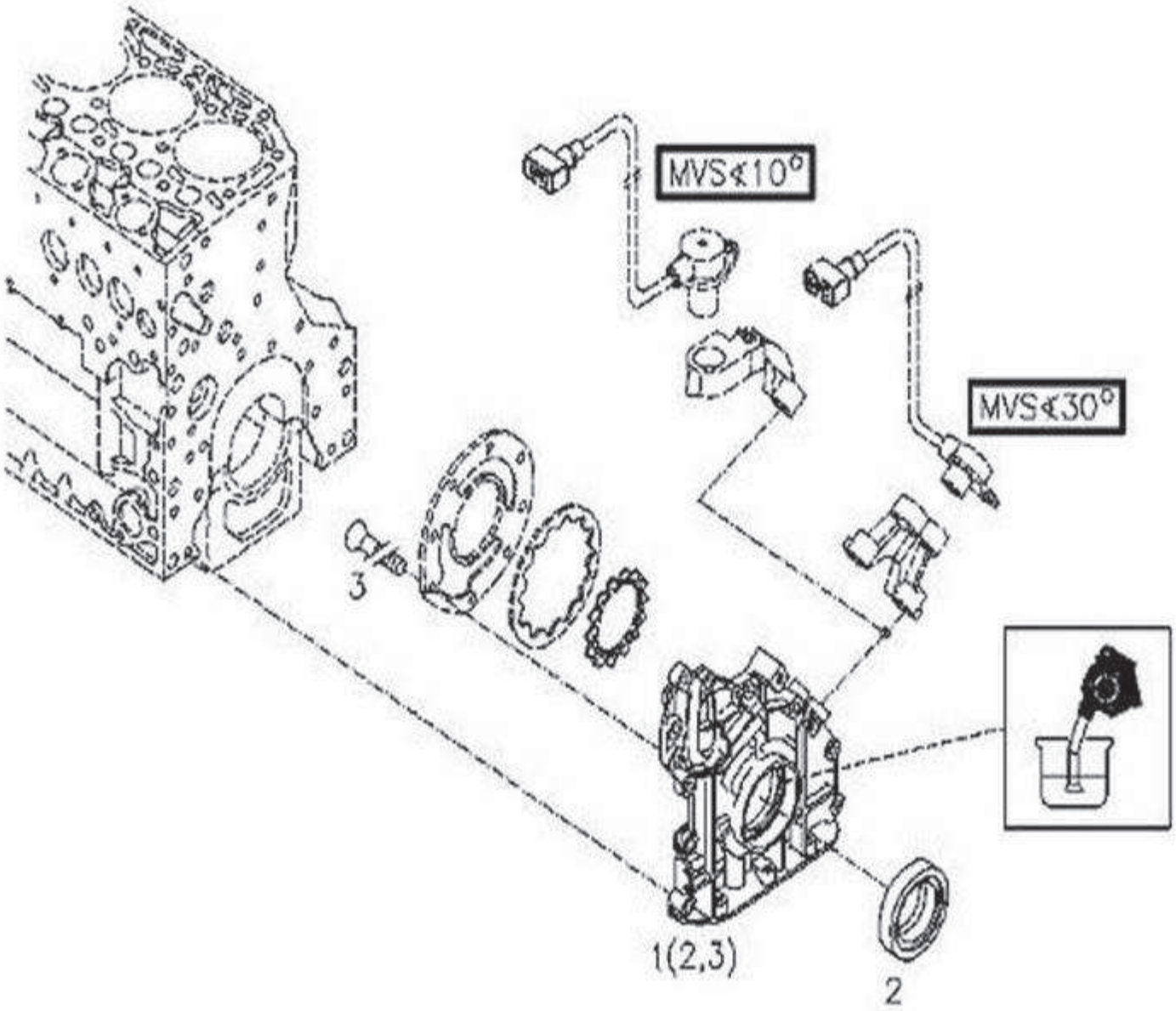

A45-6150E

Fig.	Part No.编码	Quantity件数 1	2	3	PS	KIT	Description 说明	Notes
1	**4110000988007**	1					Lubricat. oil pump..... .... 前盖总成1011015-65D	
2	**4110000727164**	1					Rot.shaft lip seal..... ..... 曲轴前油封总成1005090B56D	

1	**11213481**	前盖总成 **Lubricat. oil pump**	Catalogue id **111201**	Group **216**
2				
3			Illustr. No **A45-**	Section **100**
4				
5			Issue **2638000345**	Page **109**

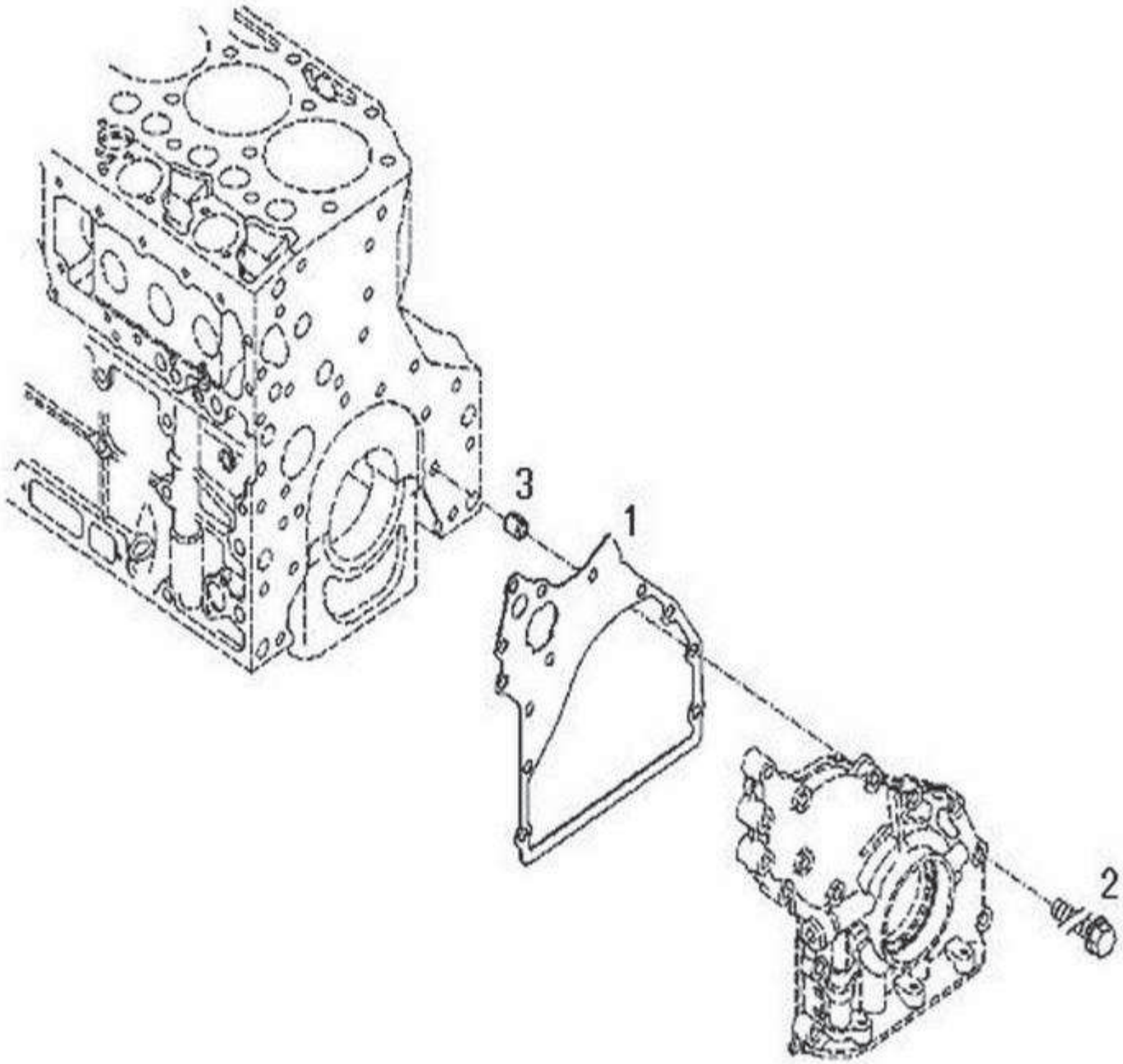
3
1
2
A46-615DE

Fig.	Part No.编码	Quantity件数 1	2	3	PS	KIT	Description 说明	Notes
1	**4110000509162**	1					Gasket..... .... 密封垫1011011-56D	
2	**4110000509039**	12					Hexagon bolt..... .... 六角头凸缘螺栓 EN 1662-F-M8X35-10.9-ZNAL-AC 1009626-52D	
3	**4110000727080**	1					Clamping bush..... .... 弹性圆柱销H 02341-B11X8-FE/ZN12C D01181406	

1	**11213481**	紧固件总成-前端盖 **Fastenings**	Catalogue id **111201**	Group **216**
2				
3			Illustr. No **A46-**	Section **200**
4				
5			Issue **2638000345**	Page **111**

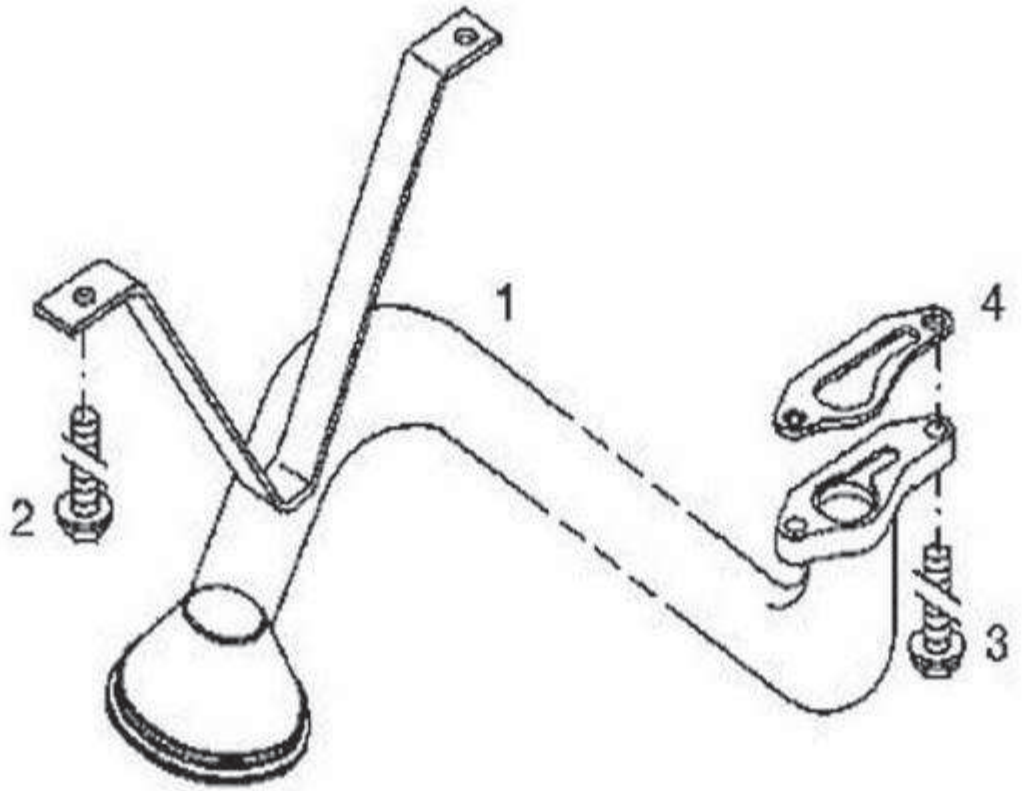

A47-6150E

Fig.	Part No.编码	Quantity件数 1	2	3	PS	KIT	Description 说明	Notes
1	**4110000988065**	1					Suction pipe..... 机油收集器总成D04296622	
2	**4110000509246**	2					Hexagon bolt..... 六角头凸缘螺栓 EN1662-F-M8X16-10.9 3509646-52D	
3	**4110000509208**	2					Hexagon bolt..... 六角头凸缘螺栓EN 1662-F-M8X25-10.9-ZNAL-A 3754627-52D	
4	**4110000509159**	1					Gasket..... 密封垫-机油收集器1010018-52D	

1	**11213481**	机油收集装置 **Suction pipe**	Catalogue id **111201**	Group **217**
2				
3			Illustr. No **A47-6150E**	Section **100**
4				
5			Issue **2638000345**	Page **113**

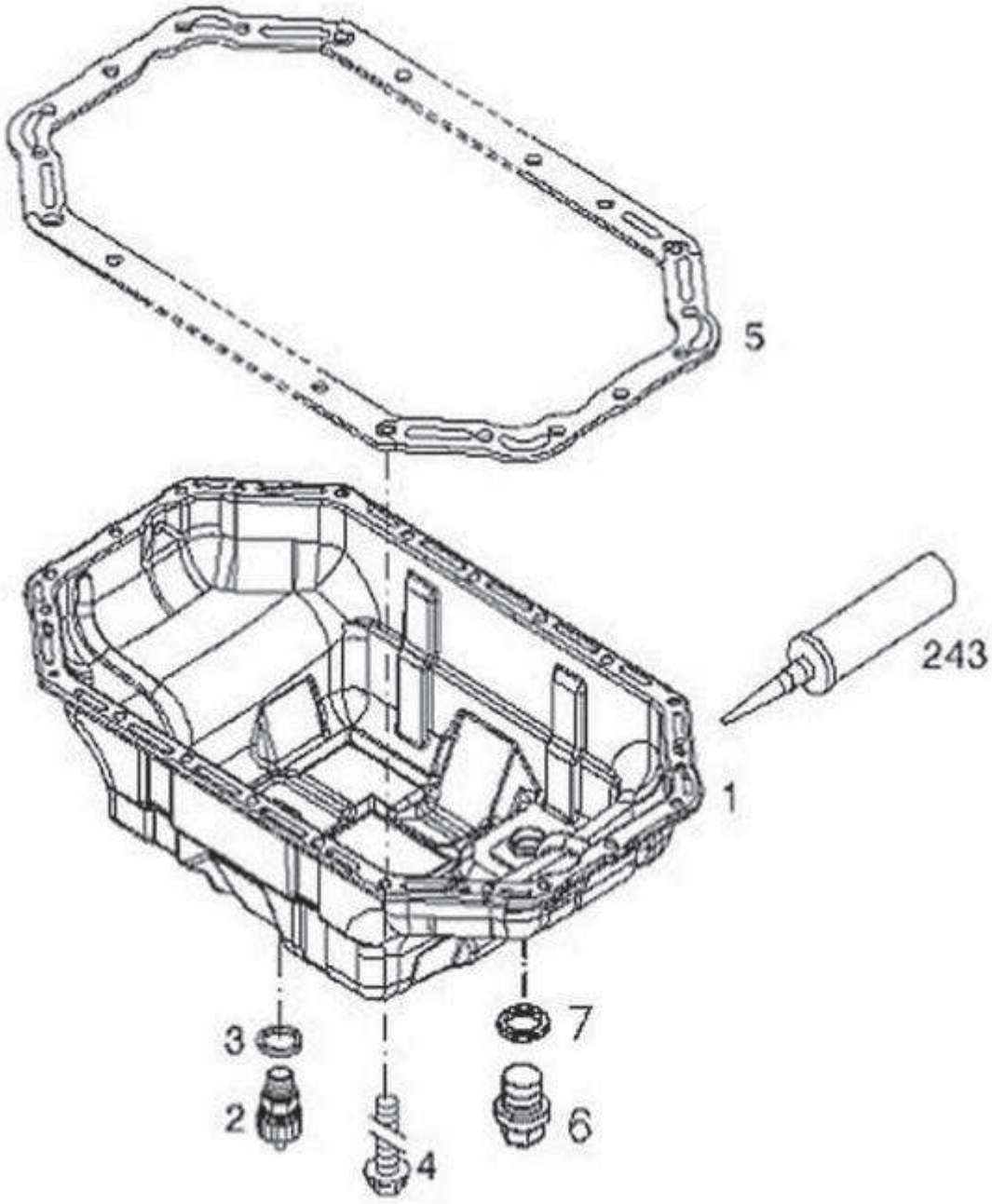

A48-6150E

Fig.	Part No.编码	Quantity件数 1	2	3	PS	KIT	Description 说明	Notes
1	**4110000988066**	1					Oil pan..... 油底壳总成D04296962	
2	**4110000970141**	1					Drain valve..... 排泄阀D01180062	
3	**4110000727012**	1					Sealing ring..... 密封垫DIN 7603-A18X24-CU 1009612-30D	
4	**4110000509246**	22					Hexagon bolt..... 六角头凸缘螺栓 EN1662-F-M8X16-10.9 3509646-52D	
5	**4110000988041**	1					Gasket. 油底壳垫D04204452	
6	**4110000970124**	1					Sealing ring..... 密封垫DIN 7603-A24X32-CU B01118754	
7	**4110000970123**	1					Screw plug..... 螺塞DIN 910-M24X1,5-ST-ZNPHR B01110441	

1	**11213481**	油底壳装置 **Oil pan**	Catalogue id **111201**	Group **217**
2			Illustr. No **A48-6150E**	Section **200**
3			Issue **2638000345**	Page **115**
4				
5				

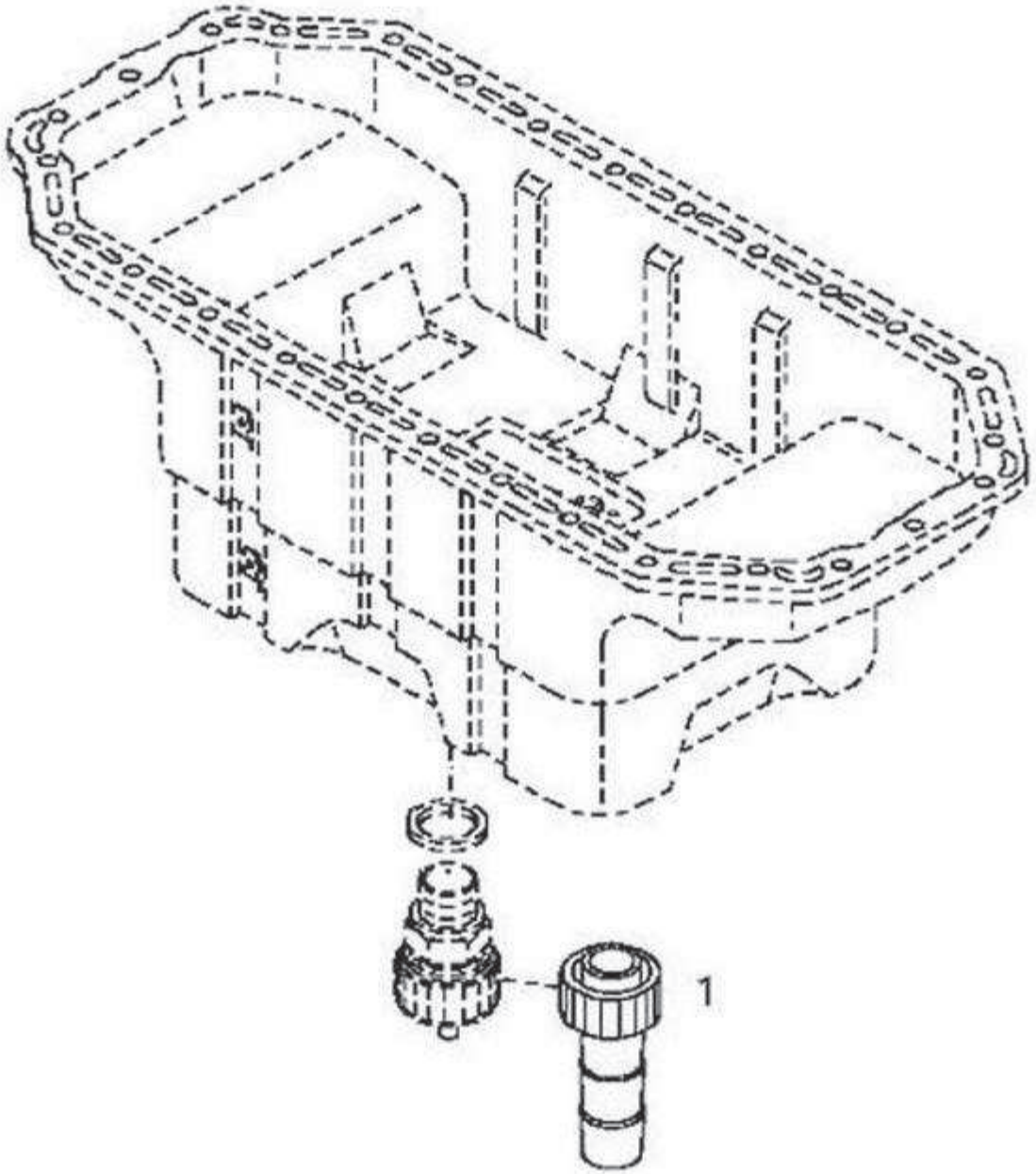

A49-6150B

Fig.	Part No.编码	Quantity件数 1	2	3	PS	KIT	Description 说明	Notes
1	**4110000970142**	1					Hose connector..... ..... 接头D01180063	

1	**11213481**	直向软管连接接头 **Hose connector**	Catalogue id **111201**	Group **217**
2				
3			Illustr. No **A49-**	Section **300**
4				
5			Issue **2638000345**	Page **117**

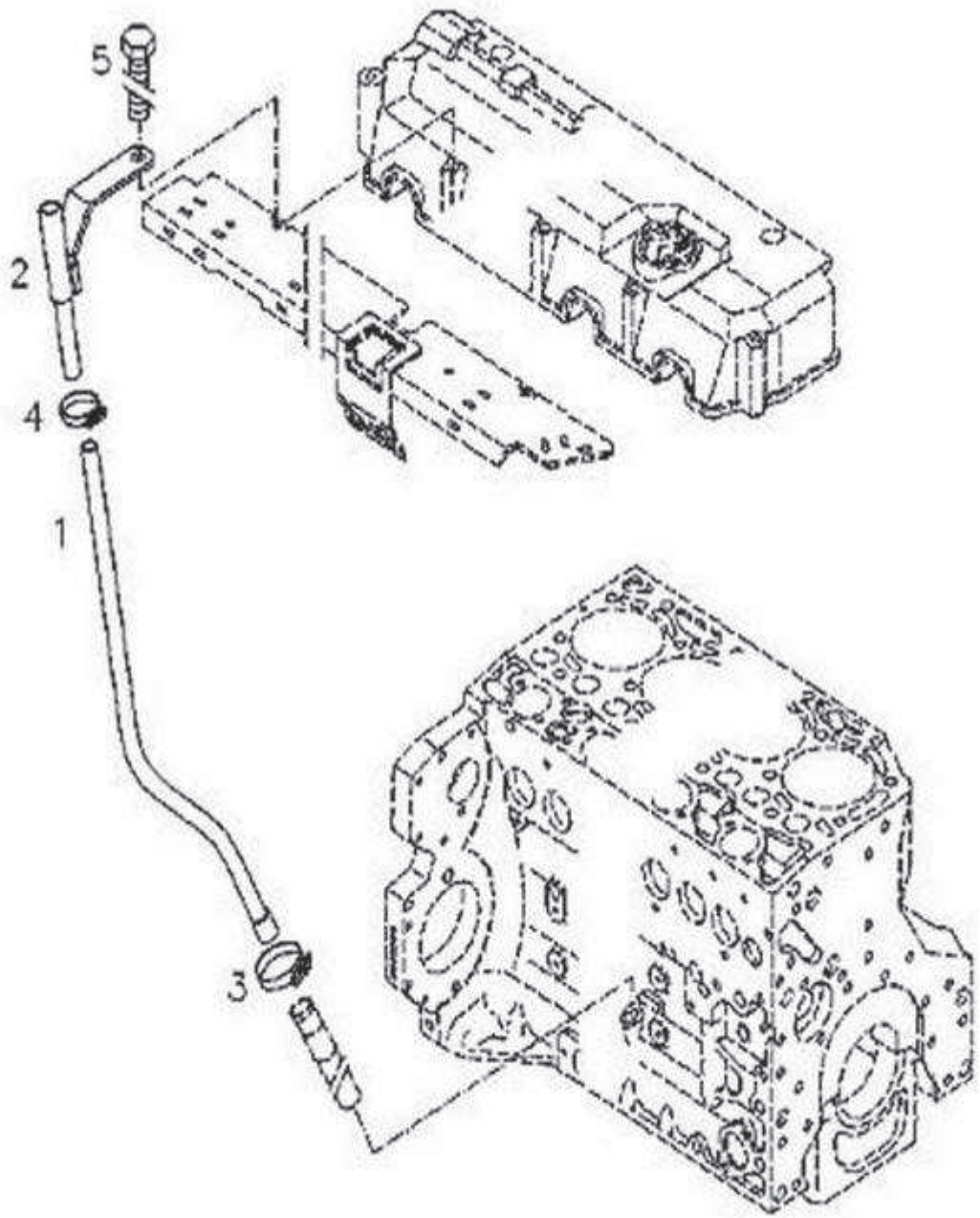

A50-61508

Fig.	Part No.编码	Quantity件数 1	2	3	PS	KIT	Description 说明	Notes
1	**4110000727154**	1					Pipe..... 标尺管F04284591	
2	**4110000727151**	1					Bracket..... 支架F04259307	
3	**4110000509155**	1					Clam p.. 管箍DIN 3017-B1-15X9-W1-2 CQ67616	
4	**4110000509153**	1					Clam p..... 管箍DIN 3017-B1-12X9-W1-2 CQ67612	
5	**4110000509049**	1					Hexagon bolt..... 六角头螺栓 ISO 4017-M6X80-8.8-A4C 1009611-56D	

1	**11213481**	机油标尺管逻辑总成 **Oil gauge**	Catalogue id **111201**	Group **218**
2			Illustr. No **A50-**	Section **100**
3				
4			Issue **2638000345**	Page **119**
5				



A51-6150E

Fig.	Part No.编码	Quantity件数 1	2	3	PS	KIT	Description 说明	Notes
1	**4110000988090**	1					Dipstick..... ..... 机油标尺B01182017	

1	**11213481**	机油标尺 **Dipstick**	Catalogue id **111201**	Group **218**
2				
3			Illustr. No **A51-**	Section **200**
4				
5			Issue **2638000345**	Page **121**

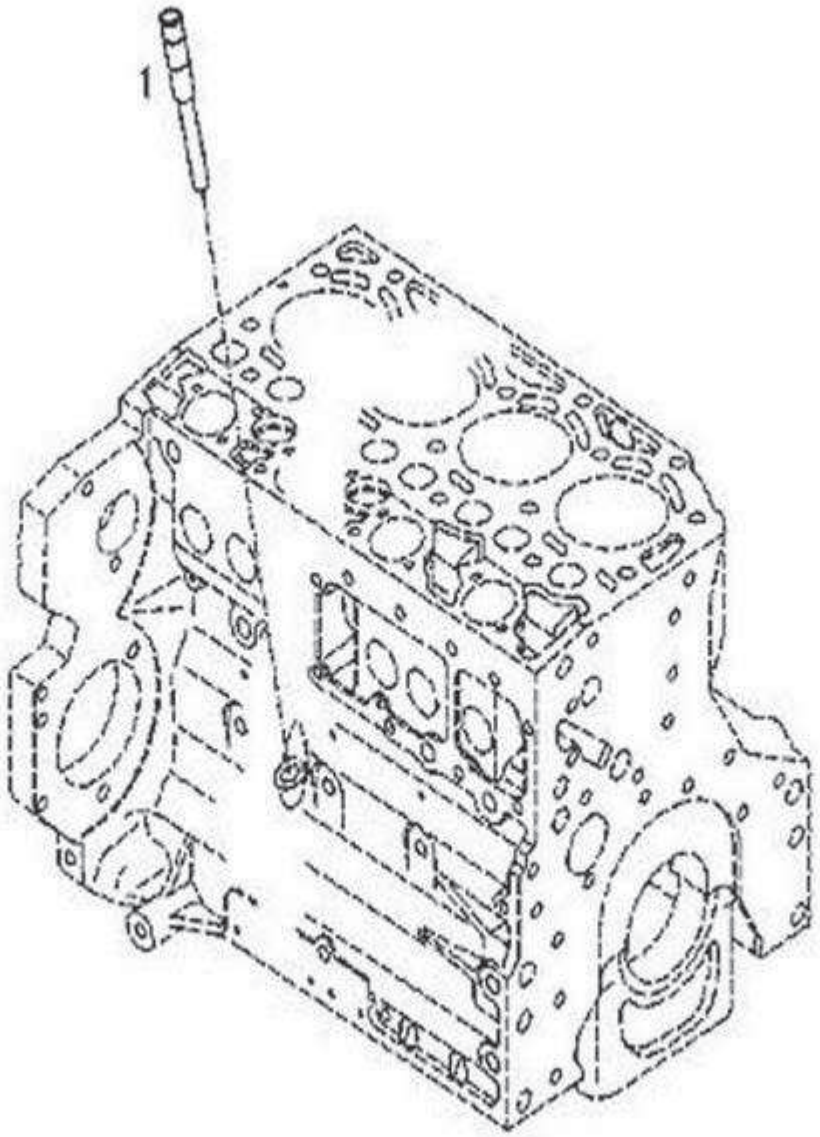

A52-6150E

Fig.	Part No.编码	Quantity件数 1	2	3	PS	KIT	Description 说明	Notes
1	**4110000509156**	1					Guide..... .... 导管1009061-56D	

1	**11213481**	导管 **Guide tube**	Catalogue id **111201**	Group **218**
2				
3			Illustr. No **A52-6150E**	Section **300**
4				
5			Issue **2638000345**	Page **123**

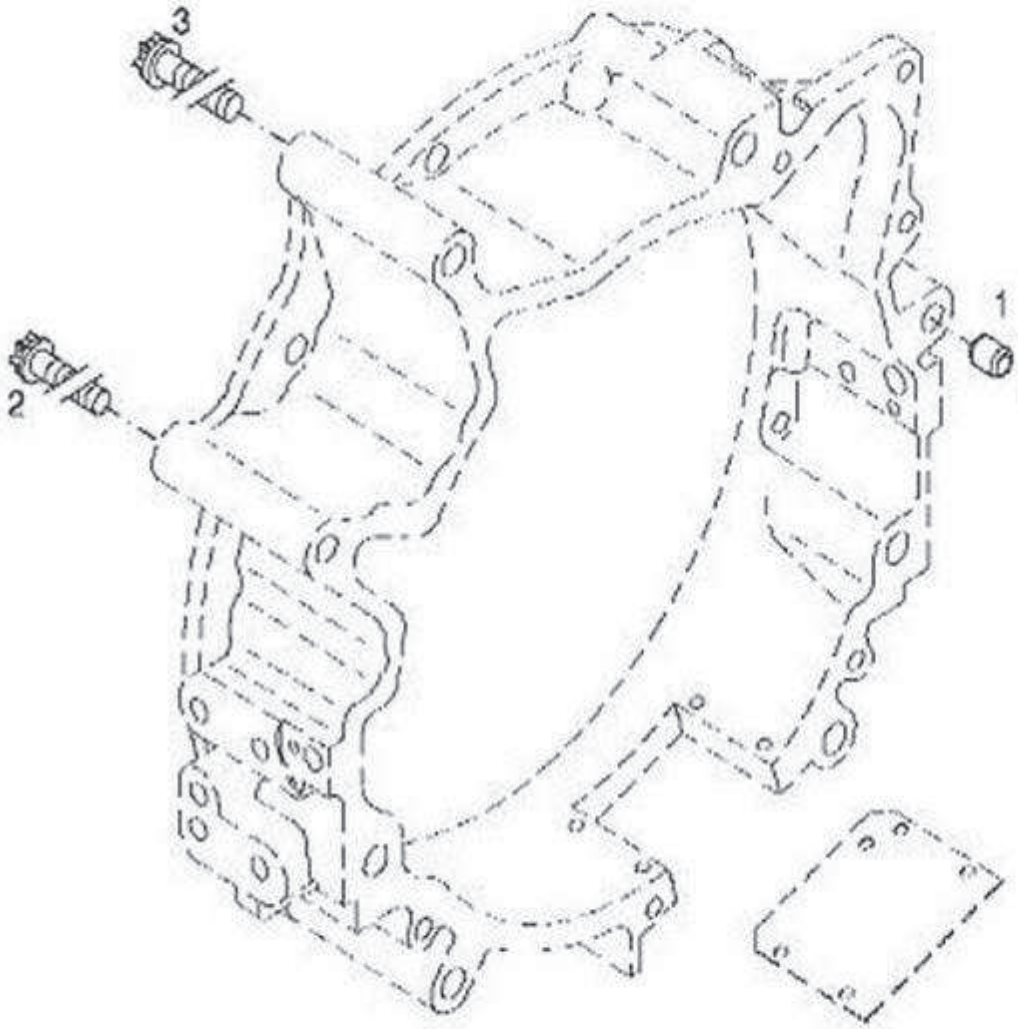
3
2
1
bis Baumonat:
up to month of manufacture:
jusque mois de montage:
hasta el mes de fabricacion:
08.99

A53-6150E

Fig.	Part No.编码	Quantity件数 1	2	3	PS	KIT	Description 说明	Notes
1	**4110000727077**	2					Clamping bush.. .... 弹性圆柱销H 2341-B18X18-FE/ZN12C D01181403	
2	**4110000509029**	2					Torx-head bolt .... 六角梅花凸缘螺栓 H2032-HBM12X150-10.9-ZNAL-A 1002667-56D	
3	**4110000509030**	4					Torx-head bolt..... ..... 六角梅花凸缘螺栓 H2032-HBM16X140-10.9-ZNAL-A 1002668-56D	

1	**11213481**	飞轮壳紧固件总成 **Fastenings**	Catalogue id **111201**	Group **219**
2				
3			Illustr. No **A53-**	Section **100**
4				
5			Issue **2638000345**	Page **125**

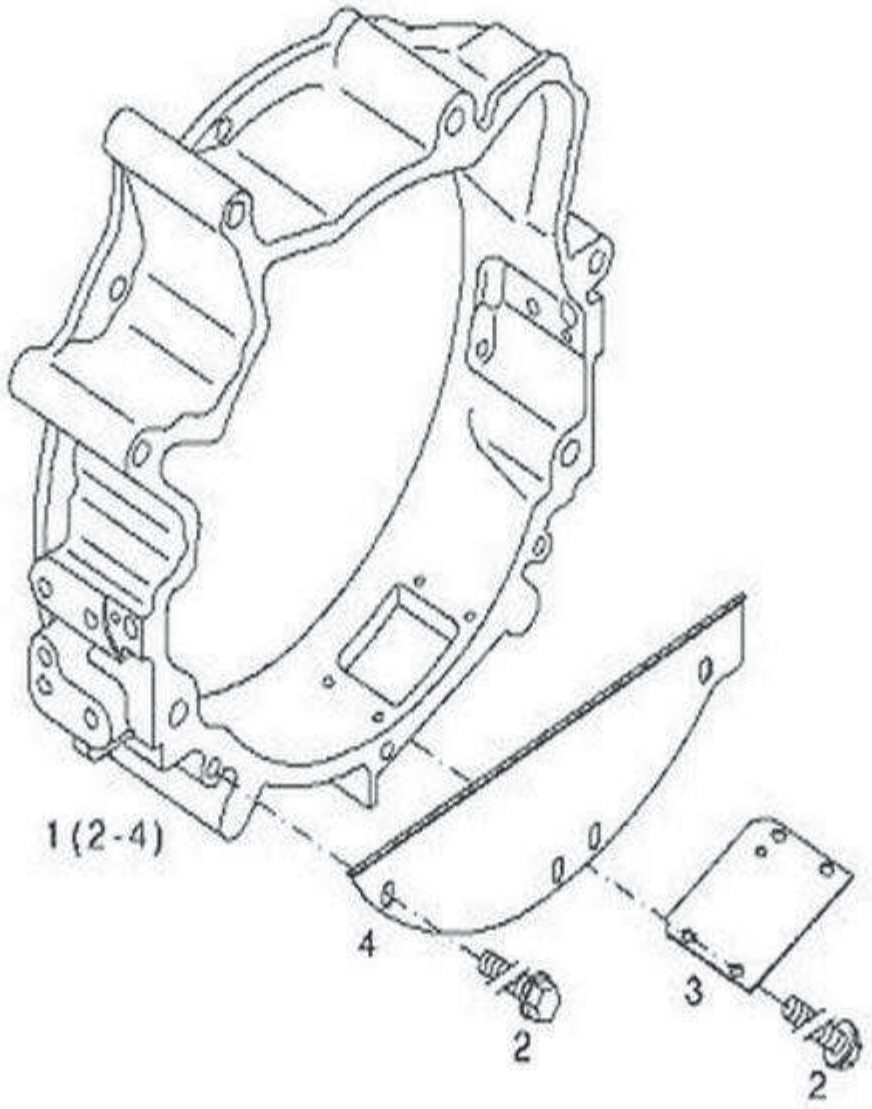

A54-6150E

Fig.	Part No.编码	Quantity件数 1	2	3	PS	KIT	Description 说明	Notes
1	**4110000727191**	1					Connection housing..... ..... 飞轮壳F04297793	
2	**4110000727192**	4					Hexagon bolt..... .... ? ? 头? 缘? ? Q1840612TF36	
3	**4110000509033**	1					Cover plate..... .... 飞轮壳盖板1002063-52D	
4	**4110000509036**	1					Cover plate..... .... 飞轮壳防尘盖板1002071-56D	

1	**11213481**	飞轮壳及防尘盖板紧固件总成 **Connection housing**	Catalogue id **111201**	Group **219**
2			Illustr. No **A54-**	Section **200**
3				
4			Issue **2638000345**	Page **127**
5				

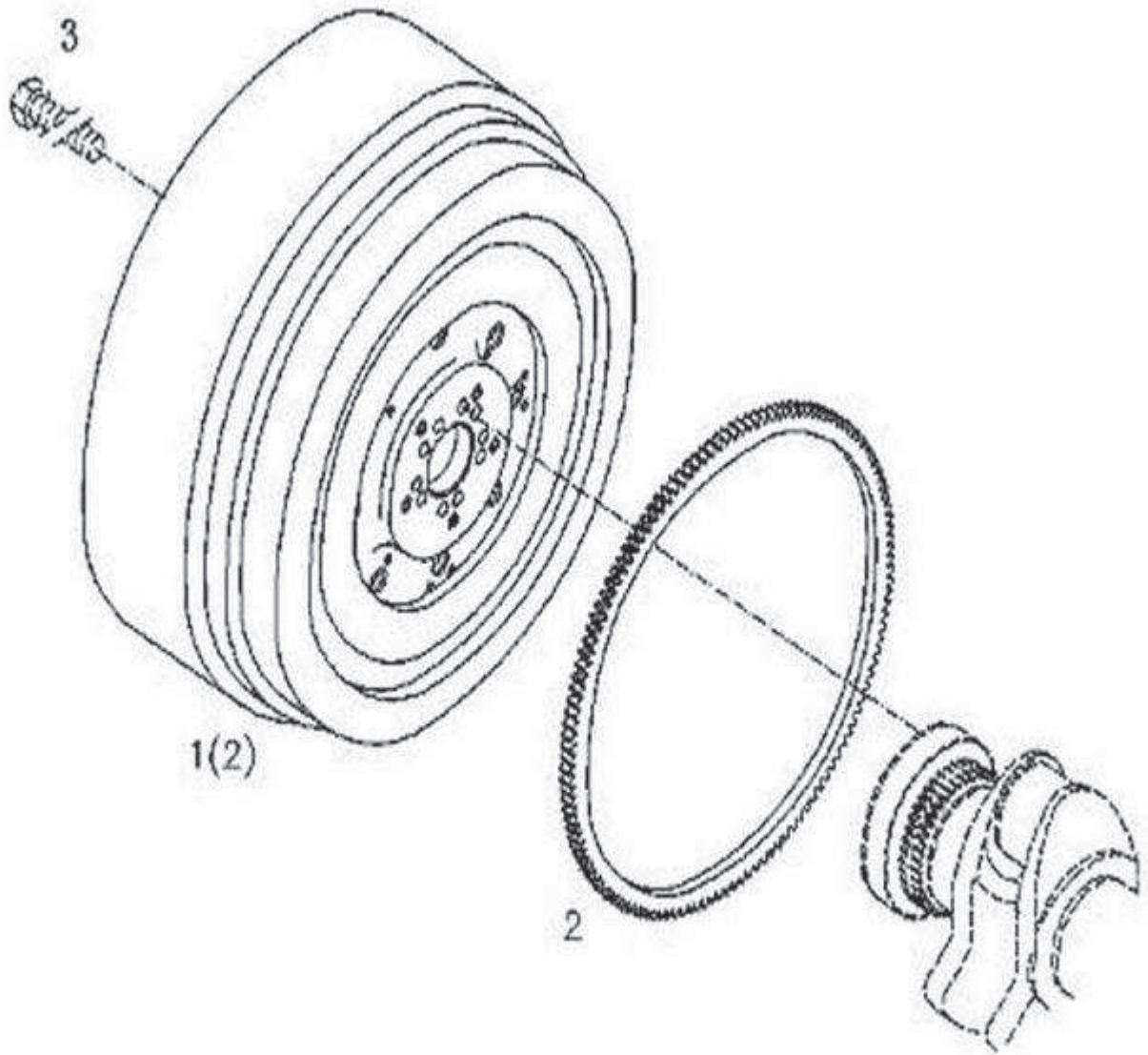

A55-6150E

Fig.	Part No.编码	Quantity件数 1	2	3	PS	KIT	Description 说明	Notes
1	**4110000727123**	1					Flywheel..... .... 飞轮齿环总成D04282542	
2	**4110000988072**	1					Gear rim..... .. .. 飞轮齿圈D04905390	
3	**4110000509078**	10					Hexagon bolt..... .... 飞轮螺栓1005121-30D(04255865)	

1	**11213481**	飞轮齿环总成 **Flywheel**	Catalogue id **111201**	Group **219**
2				
3			Illustr. No **A55-**	Section **300**
4				
5			Issue **2638000345**	Page **129**

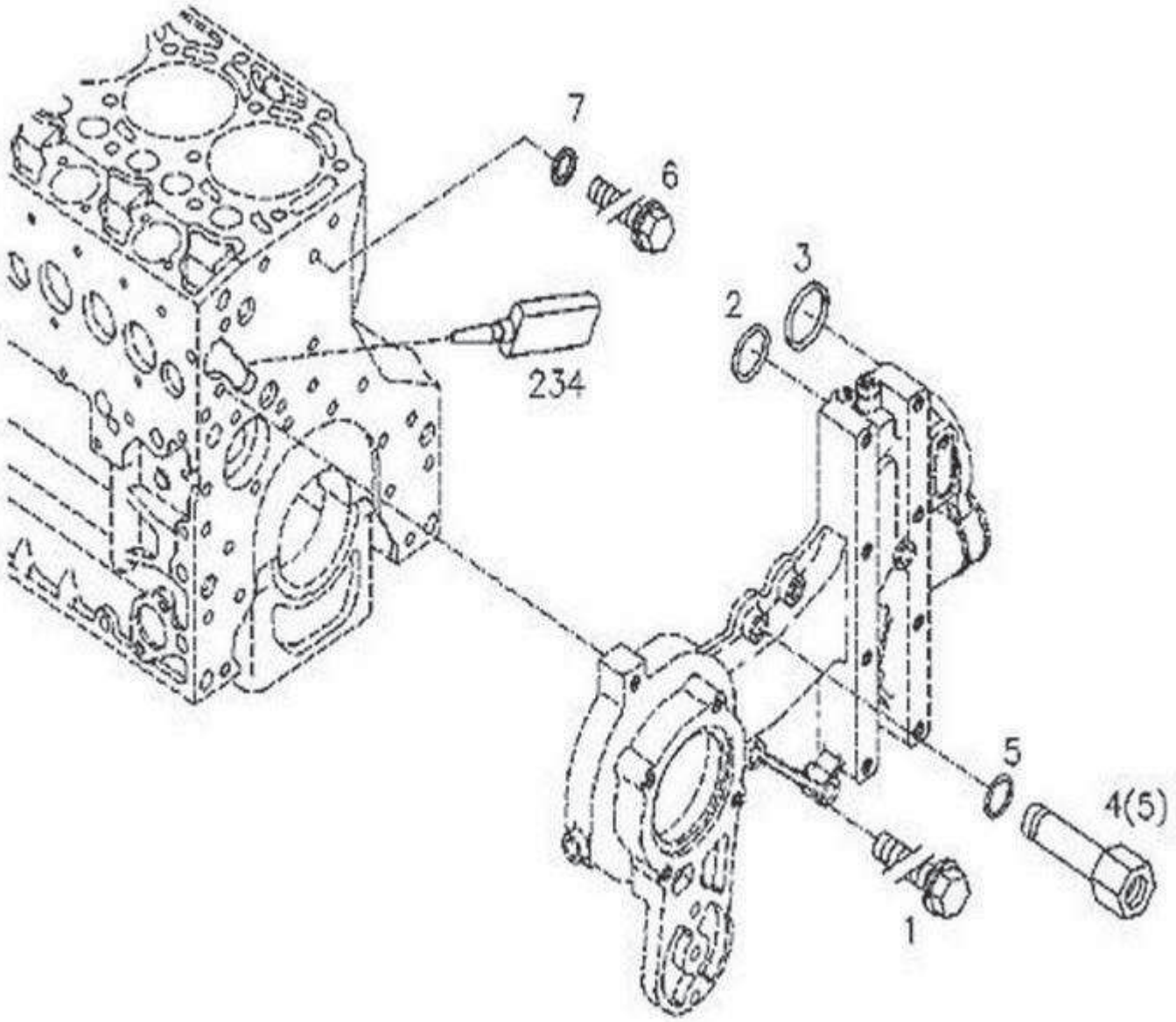

A56-6150E

Fig.	Part No.编码	Quantity件数 1	2	3	PS	KIT	Description 说明	Notes
1	**4110000727035**	5					Hexagon bolt..... .... 六角凸缘螺栓EN 1662-F-M8X75-10.9-ZNAL-A 1307629-52D	
2	**4110000727053**	1					O-ring..... .... 密封圈H 2927- 26,34X5,33-EPDM-6-70 B01182556	
3	**4110000727052**	1					O-ring..... .... O型密封环B01181609	
4	**4110000727105**	1					Connect..... .... 缸体燃油入口连接体总成D04205594	
5	**4110000988043**	1					Sealing ring..... .... 密封垫D04205595	
6	**4110000509269**	1					Hexagon bolt..... .... 六角螺栓EN 1662-F-M8X12-LG 2,5-10.9-A4C 3724612-30D	
7	**4110000727007**	1					Plain washer..... .... 垫片1005659-65D	

1	**11213481**	紧固件-风扇支架 **Fastenings**	Catalogue id **111201**	Group **220**
2			Illustr. No **A56-**	Section **100**
3				
4			Issue **2638000345**	Page **131**
5				

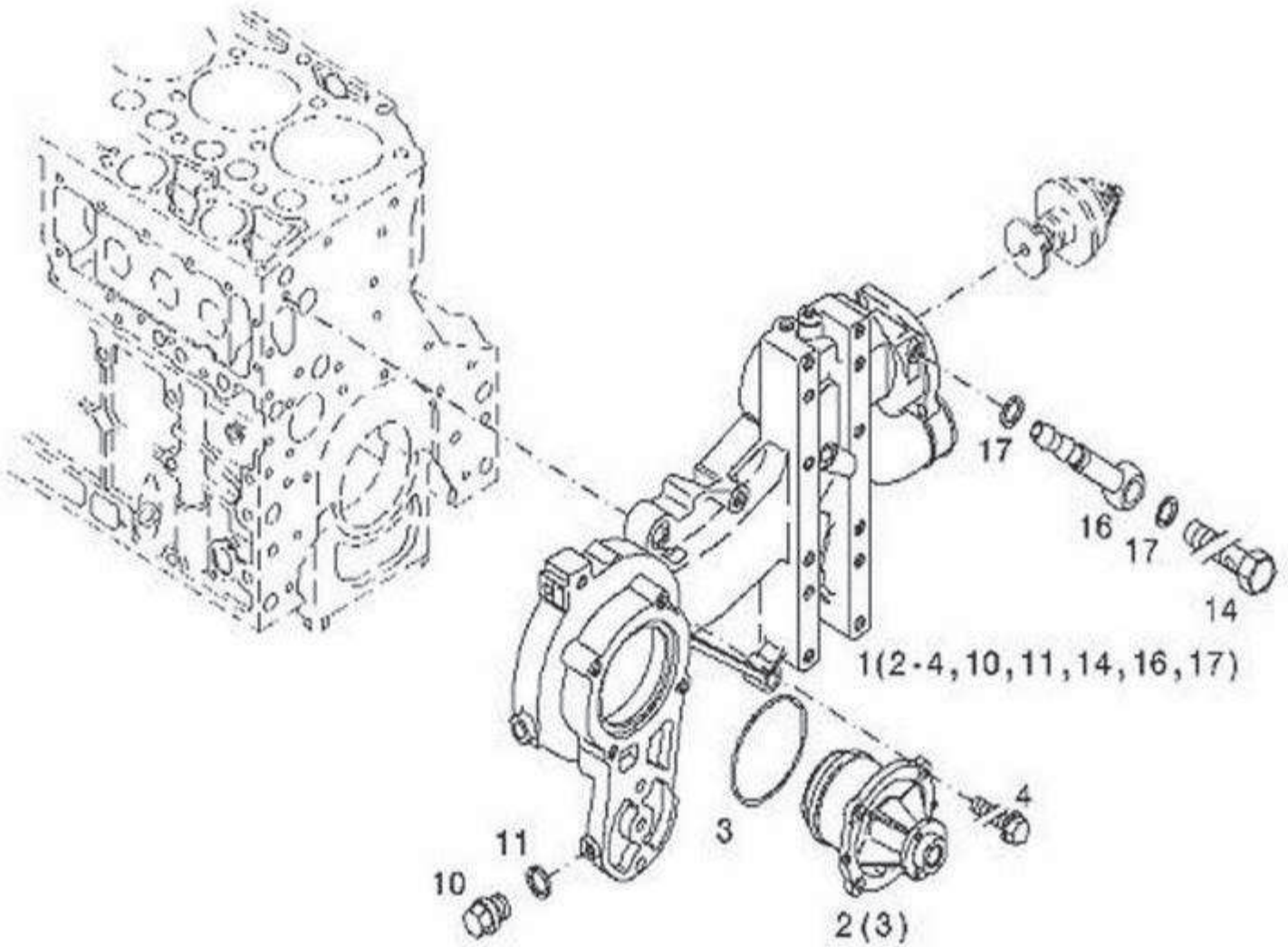

A57-6150E

Fig.	Part No.编码	Quantity件数 1	2	3	PS	KIT	Description 说明	Notes
1	**4110000727142**	1					Bracket..... 水泵及风扇支架总成D04500926	
2	**4110000970108**	1					Thermostat..... 调温器总成1306010-D600	
3	**4110000509268**	1					O-ring..... 密封圈1306051-52D	
4	**4110000509173**	4					Hexagon bolt..... 六角头凸缘螺栓EN1662-F-M8X20-LG2,5-10.9-ZNAL-A 1009619-52D	
10	**4110000727032**	1					Screw plug..... 螺塞DIN 910-M10X1-ST-A4C 1118611-52D	
11	**4110000509191**	1					Sealing ring..... 密封垫DIN 7603-A10X13,5-CU 3509643-52D	
14	**4110000509262**	1					Hollow screw..... 空心螺栓DIN 7643-8 1303614-56D	
16	**4110000509264**	1					Joints..... 除气管接头1303031-56D	
17	**4110000509263**	2					Sealing ring..... 密封垫 DIN 7603-A12X15,5-CU 1104694-30D	

1	**11213481**	水泵及风扇支架总成 **Fan bracket**	Catalogue id **111201**	Group **220**
2			Illustr. No **A57-6150E**	Section **200**
3			Issue **2638000345**	Page **133**
4				
5				

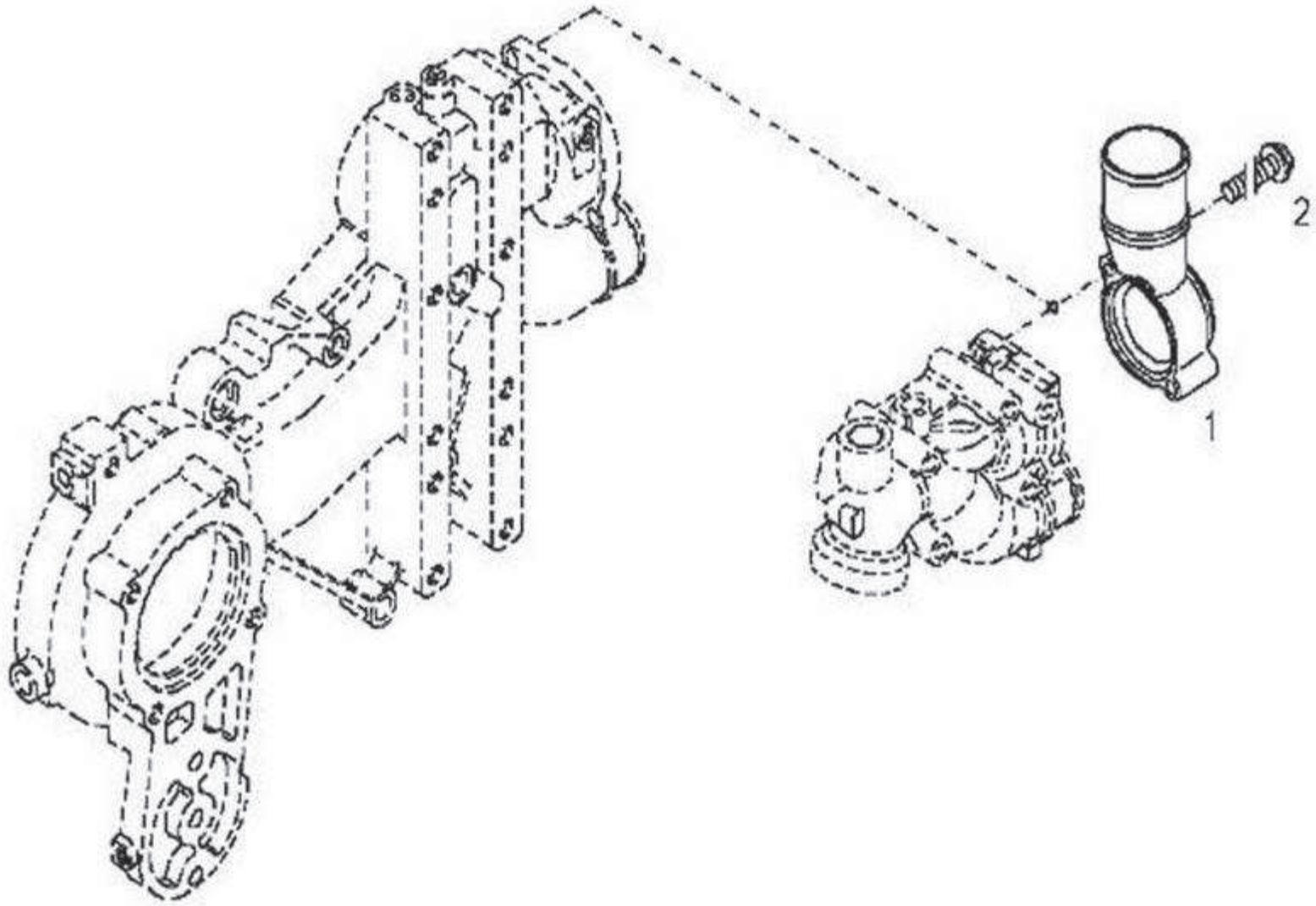

A58-6150E

Fig.	Part No.编码	Quantity件数 1	2	3	PS	KIT	Description 说明	Notes
1	**4110000970104**	1					Outlet/exhbranch..... .... 调温器盖1303023-52D	
2	**4110000509187**	2					Hexagon bolt..... .... 六角头凸缘螺栓EN 1662-F-M8X50-10.9-ZNAL-A 1013616-52D（1181431）	

1	**11213481**	调温器盖 **Outlet/exh.branch**	Catalogue id **111201**	Group **221**
2			Illustr. No **A58-6150E**	Section **100**
3				
4			Issue **2638000345**	Page **135**
5				

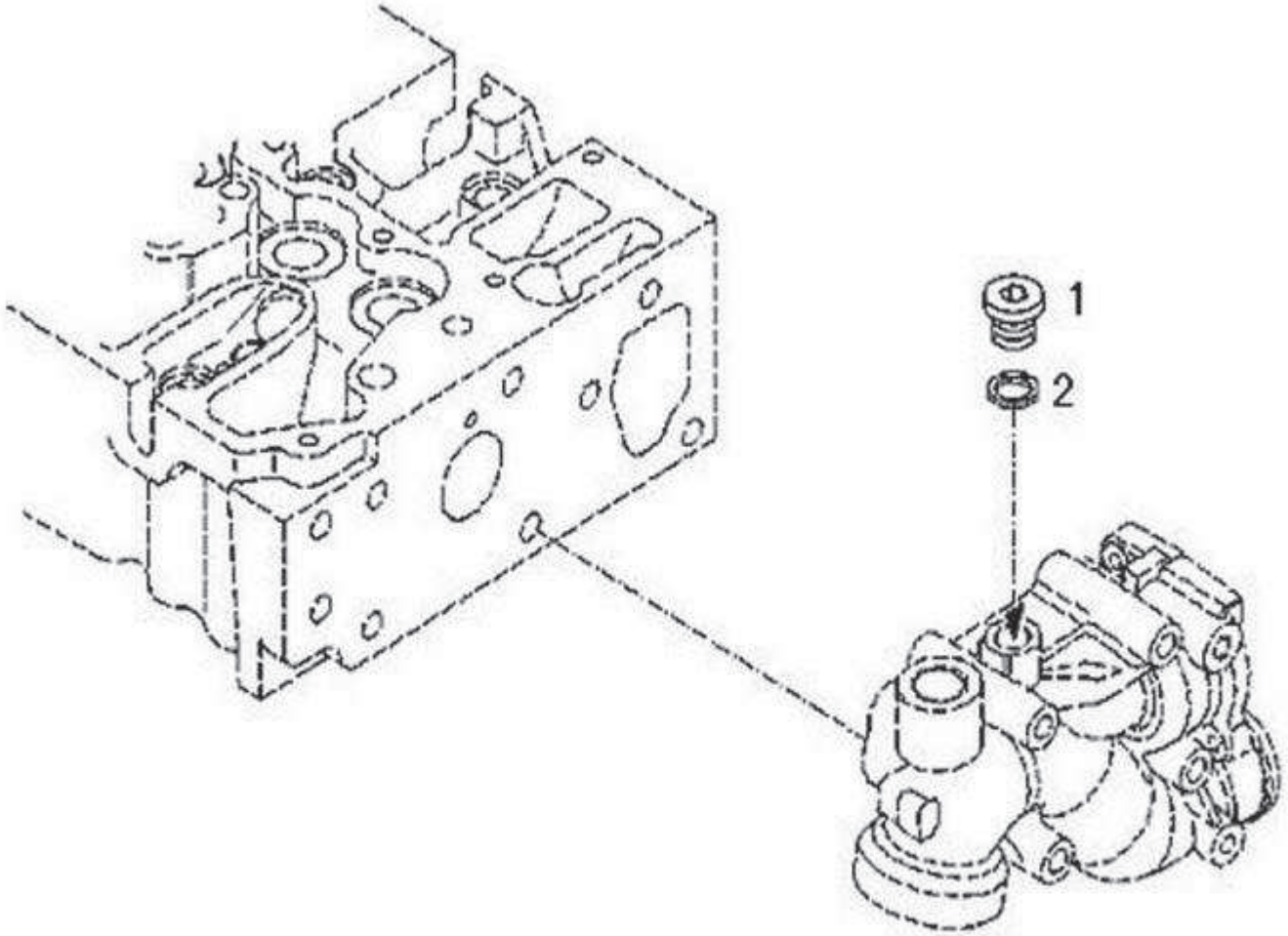

A59-6150E

Fig.	Part No.编码	Quantity件数 1	2	3	PS	KIT	Description 说明	Notes
1	**4110000509274**	1					Screw plug..... .... 螺塞DIN 908-M16X1,5-ST-A4C 1307611-56D	
2	**4110000509256**	1					Sealing ring..... .... 密封垫DIN 7603-A16X20-CU 1307639-52D	

1	**11213481**	堵盖总成 **Blanking parts**	Catalogue id **111201**	Group **221**
2			Illustr. No **A59-**	Section **200**
3				
4			Issue **2638000345**	Page **137**
5				

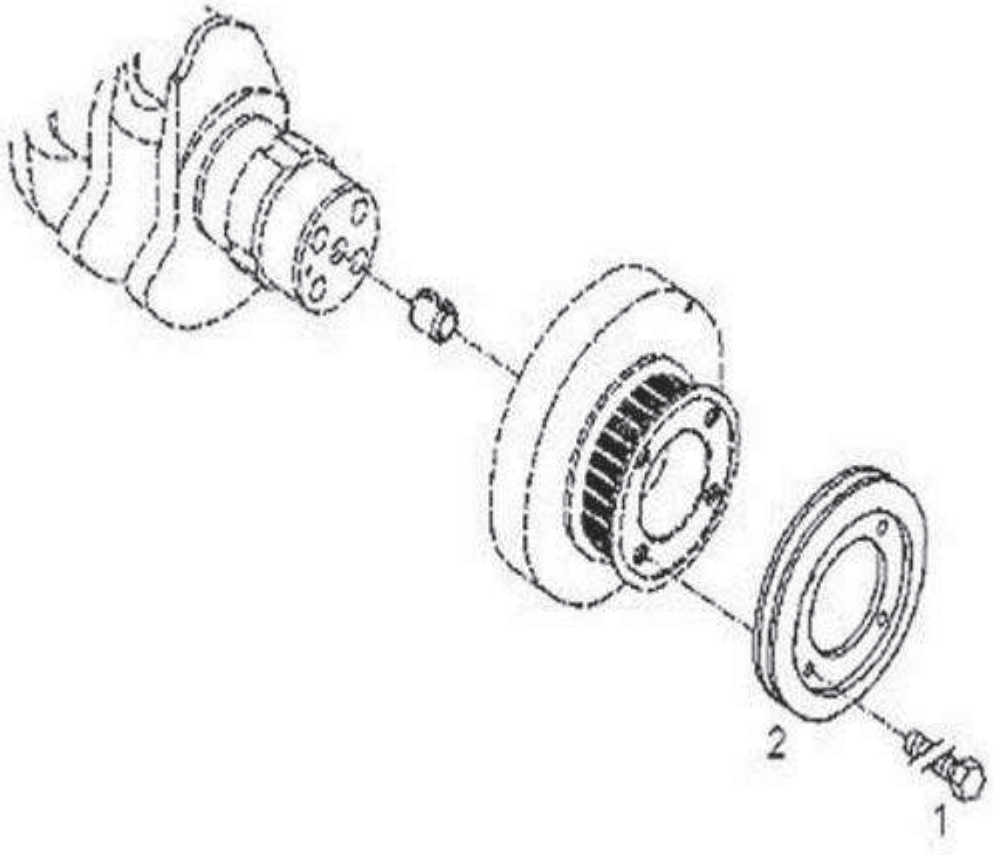

A60-6150E

Fig.	Part No.编码	Quantity件数 1	2	3	PS	KIT	Description 说明	Notes
1	**4110000727170**	4					Hexagon bolt..... ... . 六角头螺栓CQ1501225TF36	
2	**4110000727148**	1					Pulley.... ..... 皮带轮F04256766	

1	**11213481**	曲轴V带轮装置 **V-grooved pulley**	Catalogue id **111201**	Group **222**
2				
3			Illustr. No **A60-**	Section **100**
4				
5			Issue **2638000345**	Page **139**

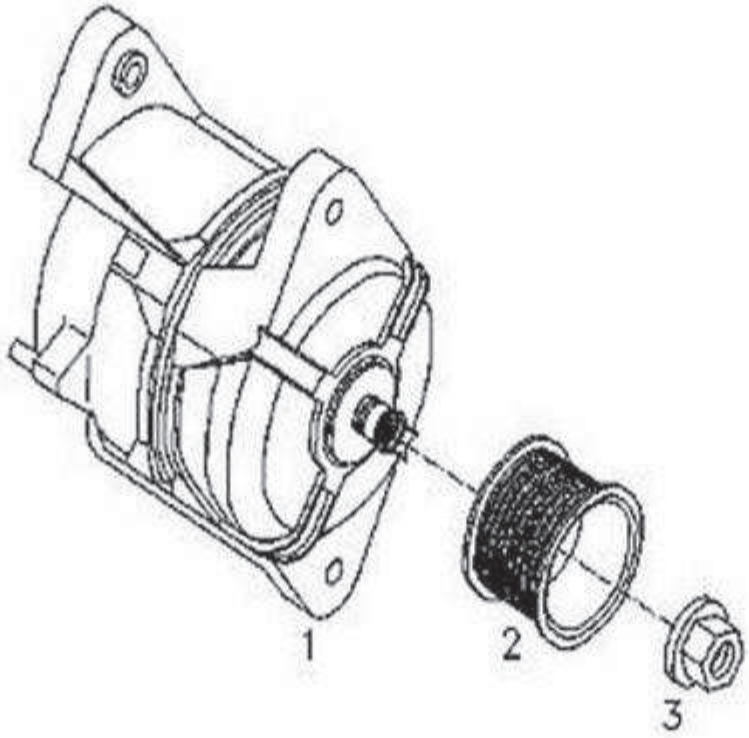

A61-6150E

Fig.	Part No.编码	Quantity件数 1	2	3	PS	KIT	Description 说明	Notes
1	**4110000727088**	1					Generator..... .... 发电机总成H821170-CIR28X56 VBWST-TR D01183437	
2	**4110000727134**	1					V-belt..... .... 发电机皮带轮-多楔带D04293183	
3	**4110000988034**	1					Shoulder nut..... ..... 锁紧螺母D01180856	

1	**11213481**	发电机总成 **Generator**	Catalogue id **111201**	Group **222**
2				
3			Illustr. No **A61-**	Section **200**
4				
5			Issue **2638000345**	Page **141**

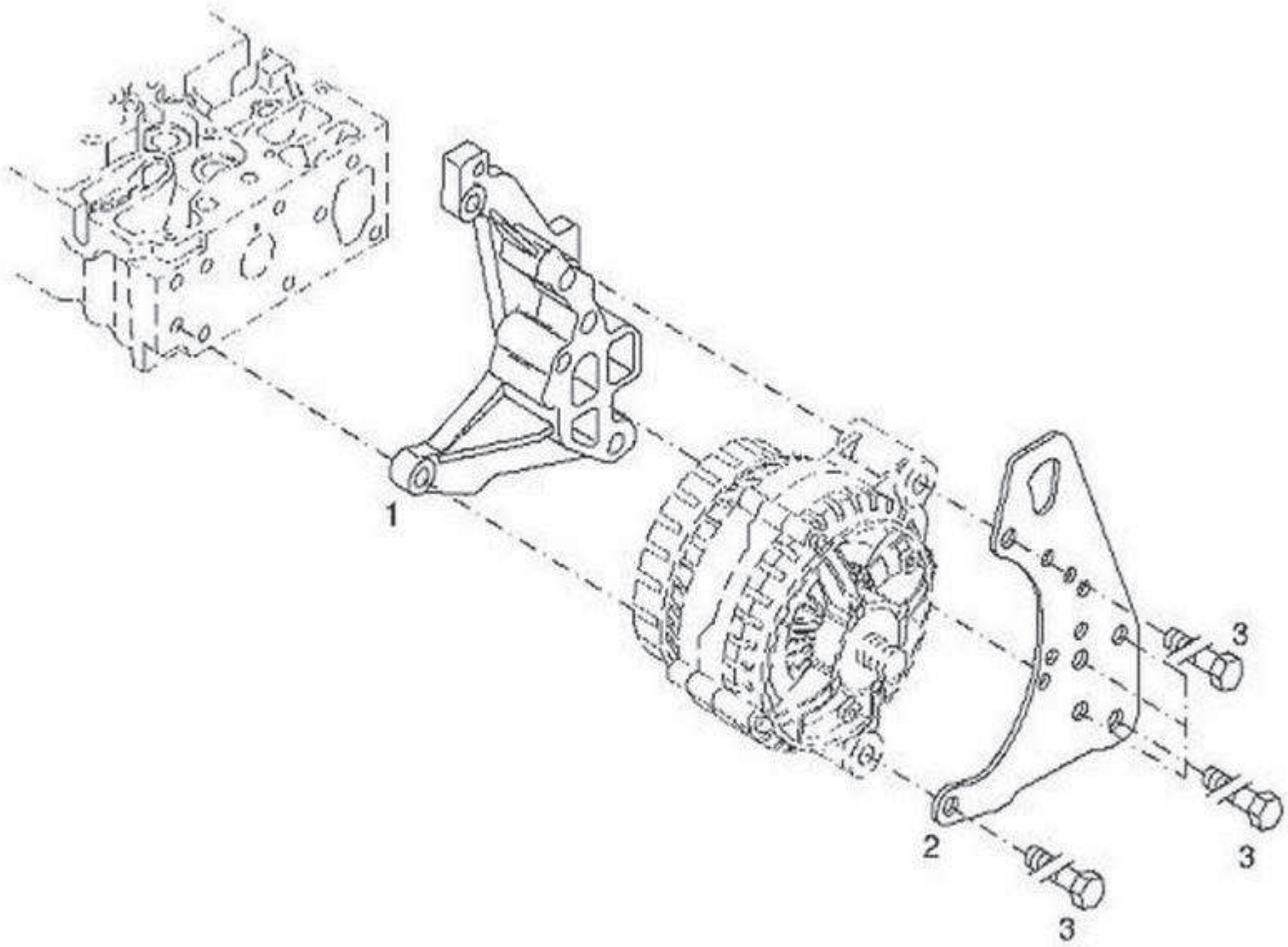
1
2
3
3
3
A62-6150E

Fig.	Part No.编码	Quantity件数 1	2	3	PS	KIT	Description 说明	Notes
1	**4110000988091**	1					Bracket..... .... 发电机支架F04503161	
2	**4110000727152**	1					Suspense plate..... .... 发电机支撑板F04283327	
3	**4110000727168**	4					Hexagon bolt..... .... 六角螺栓DIN 931- M10 X100 - 10.9-ZNAL- A CQ15010100TF36	

1	**11213481**	紧固件–发电机 **Accessories**	Catalogue id **111201**	Group **222**
2			Illustr. No **A62-**	Section **300**
3			Issue **2638000345**	Page **143**
4				
5				

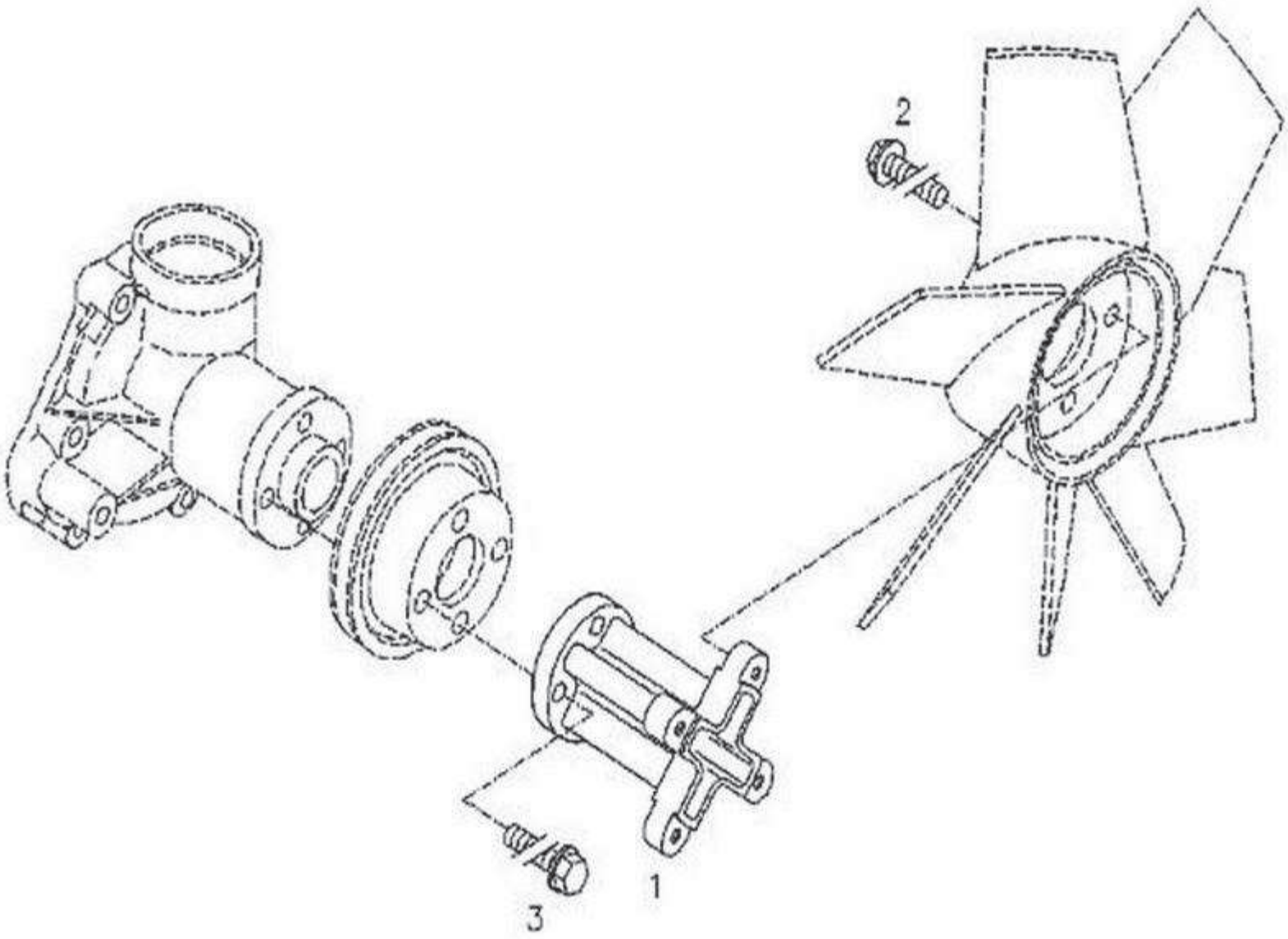

A63-6150E

Fig.	Part No.编码	Quantity件数 1	2	3	PS	KIT	Description 说明	Notes
1	**4110000727037**	1					Land.. ..... 连接盘－风扇1308012-D301	
2	**4110000509127**	4					Hexagon bolt.. ..... 六角头凸缘螺栓EN 1662-F-M8X30-10.9-ZNAL-A 3509639-52D	
3	**4110000509127**	4					V Hexagon bolt. ..... 六角头凸缘螺栓EN 1662-F-M8X30-10.9-ZNAL-A 3509639-52D	

1	**11213481**	风扇过渡法兰逻辑总成 **Fastenings**	Catalogue id **111201**	Group **222**
2				
3			Illustr. No **A63-**	Section **400**
4				
5			Issue **2638000345**	Page **145**

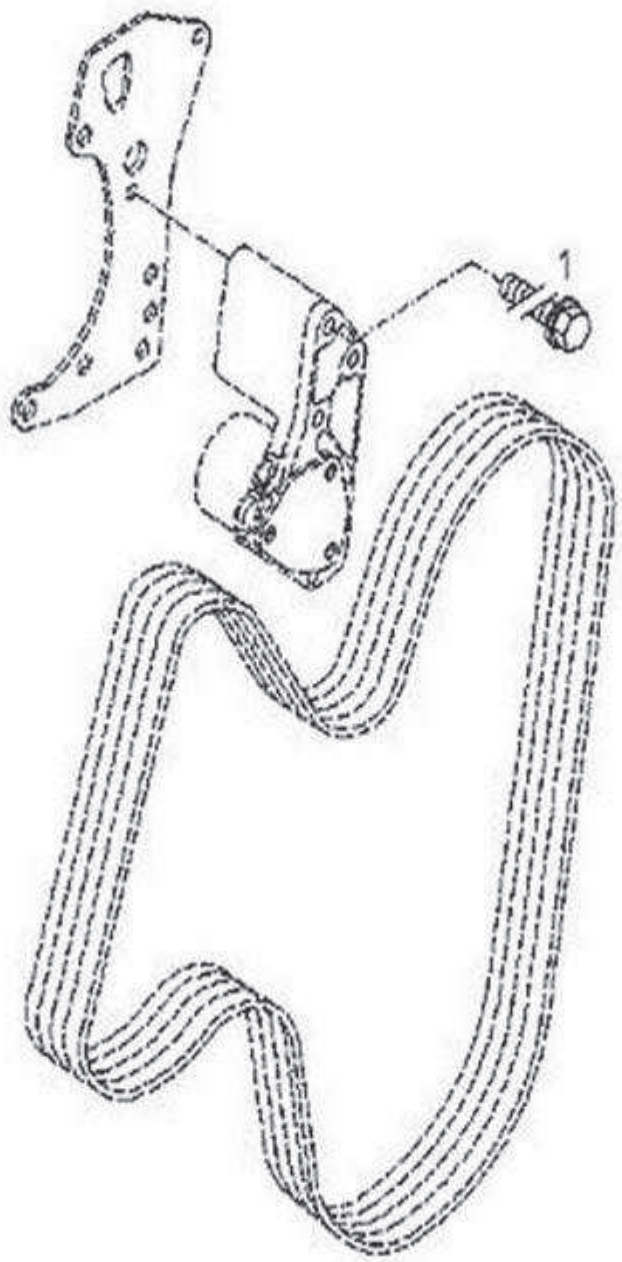

A64-6150E

Fig.	Part No.编码	Quantity件数 1	2	3	PS	KIT	Description 说明	Notes
1	**4110000727194**	3					Hexagon bolt..... .... 六角头凸缘螺栓EN 1662-F-M 8 X105- 10.9-ZNAL-A Q18408105TF36	

1	**11213481**	紧固件-输油泵 **Fastenings**	Catalogue id **111201**	Group **223**
2			Illustr. No **A64-6150E**	Section **100**
3				
4			Issue **2638000345**	Page **147**
5				

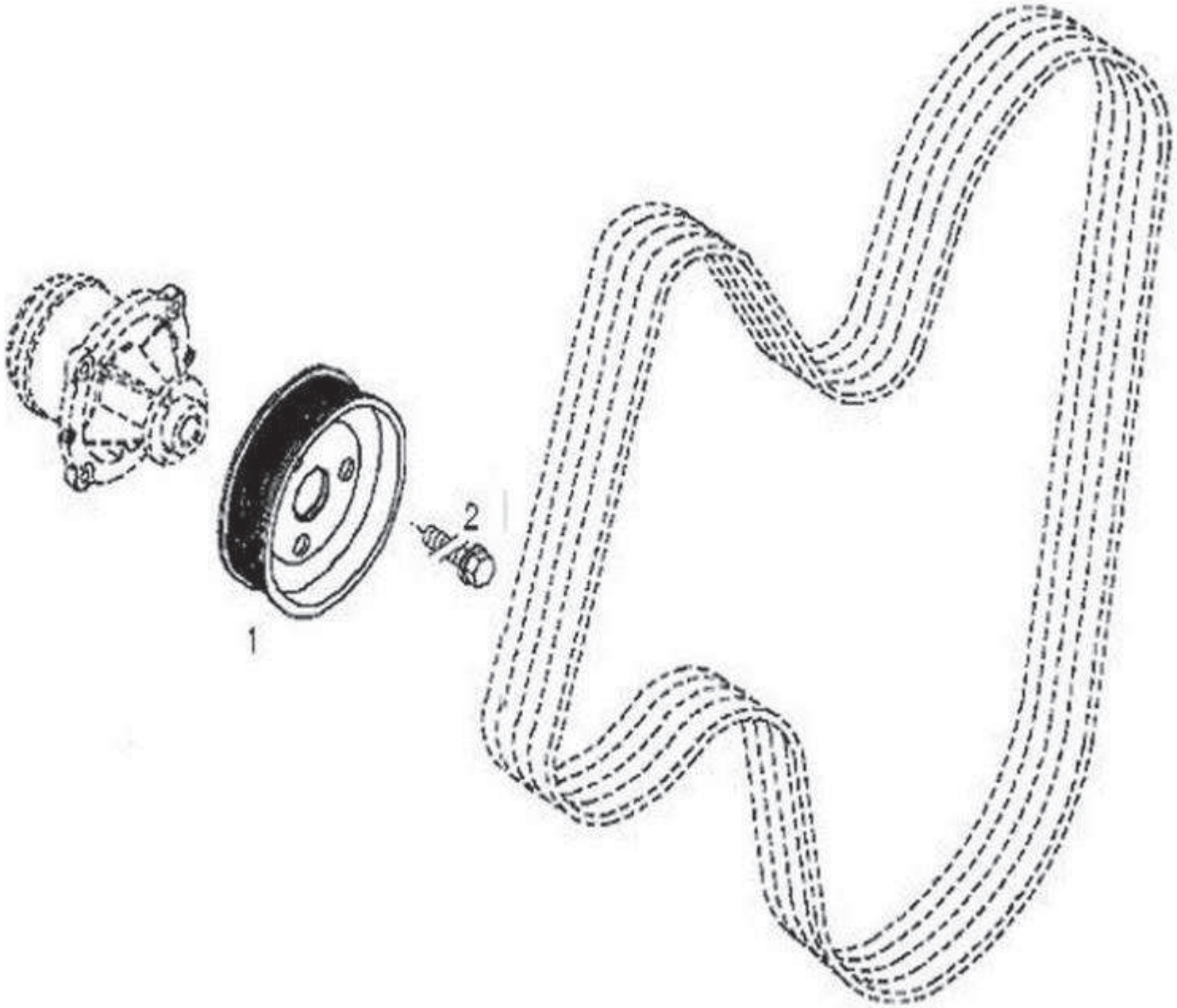

A65-6150E

Fig.	Part No.编码	Quantity件数 1	2	3	PS	KIT	Description 说明	Notes
1	**4110000988092**	1					V-rib.belt pulley..... 多楔带轮-水泵F04254513	
2	**4110000509246**	3					Hexagon bolt..... 六角头凸缘螺栓 EN1662-F-M8X16-10.9 3509646-52D	

1	**11213481**	多楔带轮-水泵 **V-rib.belt pulley**	Catalogue id **111201**	Group **223**
2				
3			Illustr. No **A65-6150E**	Section **200**
4				
5			Issue **2638000345**	Page **149**

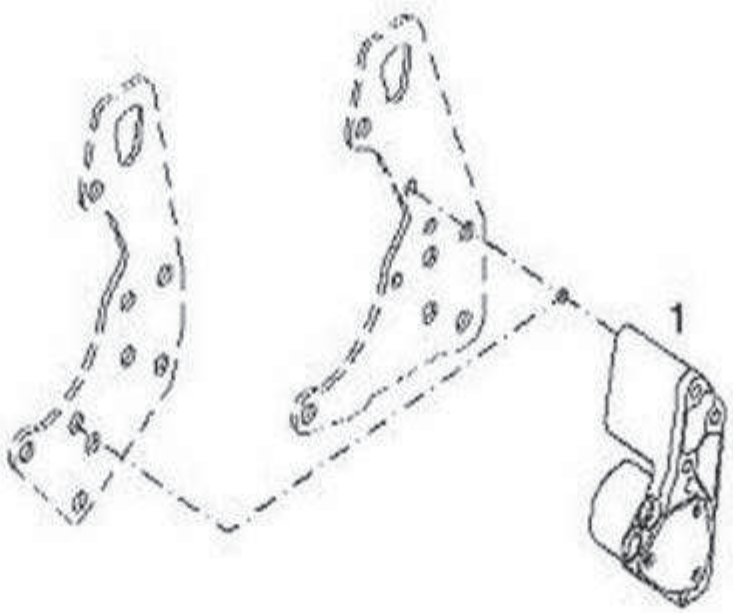

A66-6150E

Fig.	Part No.编码	Quantity件数 1	2	3	PS	KIT	Description 说明	Notes
1	**4110000727098**	1					Fuel supply pump..... 燃油输油泵总成D02113803	

1	**11213481**	燃油输油泵总成 **Fuel supply pump**	Catalogue id **111201**	Group **224**
2				
3			Illustr. No **A66-6150E**	Section **100**
4				
5			Issue **2638000345**	Page **151**

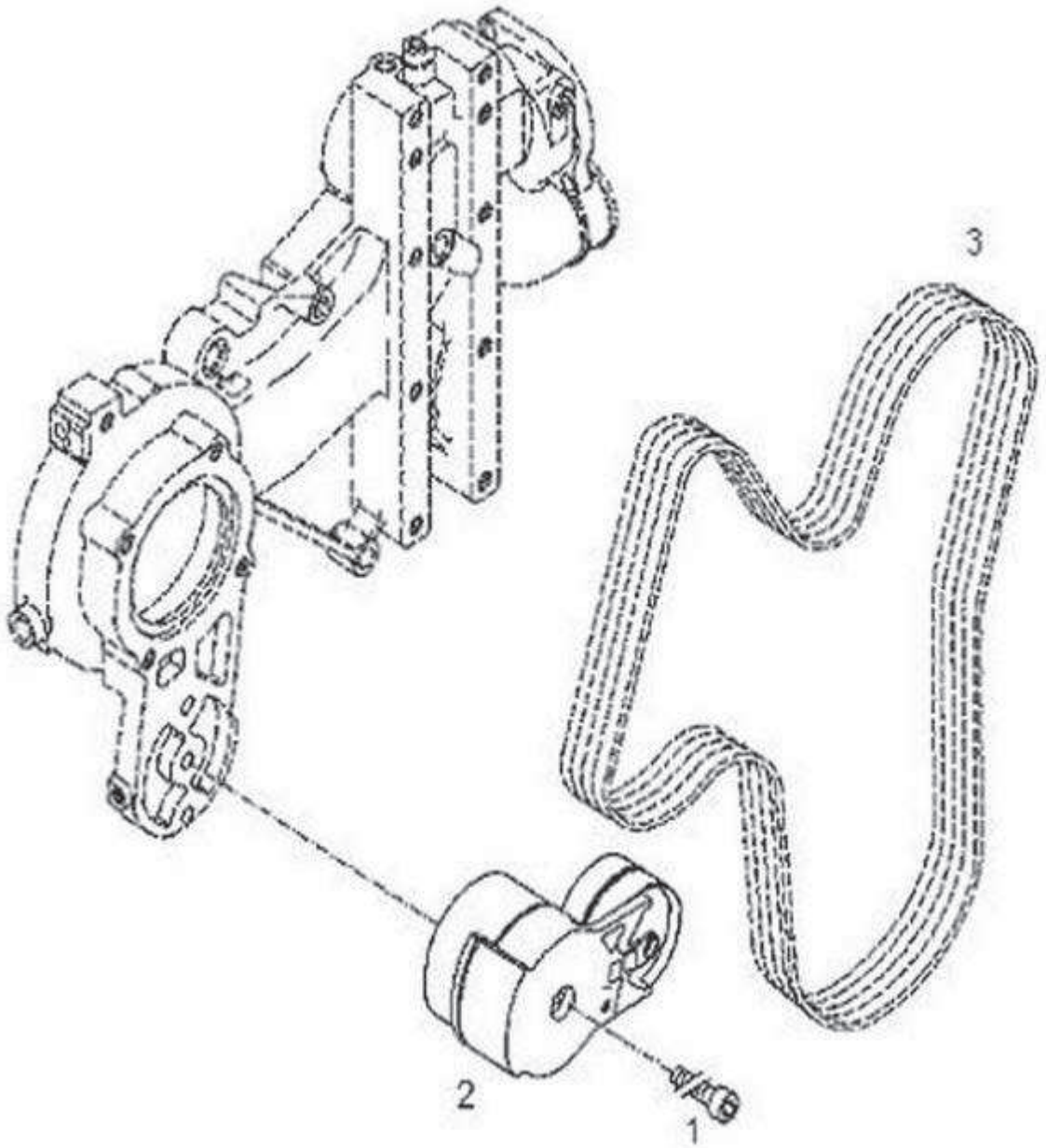

A67-6150E

Fig.	Part No.编码	Quantity件数 1	2	3	PS	KIT	Description 说明	Notes
1	**4110000727176**	1					Cheese head screw..... .... 内六角圆柱头螺钉CQ2181290TF36	
2	**4110000727136**	1					Belting tighener..... .... 多楔带胀紧轮总成D04294490	
3	**4110000988035**	1					V-ribbed belt..... ... . 多楔式三角带H 3709-PK10X1507LB+5-5-02AG D01181768	

1	**11213481**	张紧轮装置 **Belt tensioner**	Catalogue id **111201**	Group **225**
2				
3			Illustr. No **A67-6150E**	Section **100**
4				
5			Issue **2638000345**	Page **153**

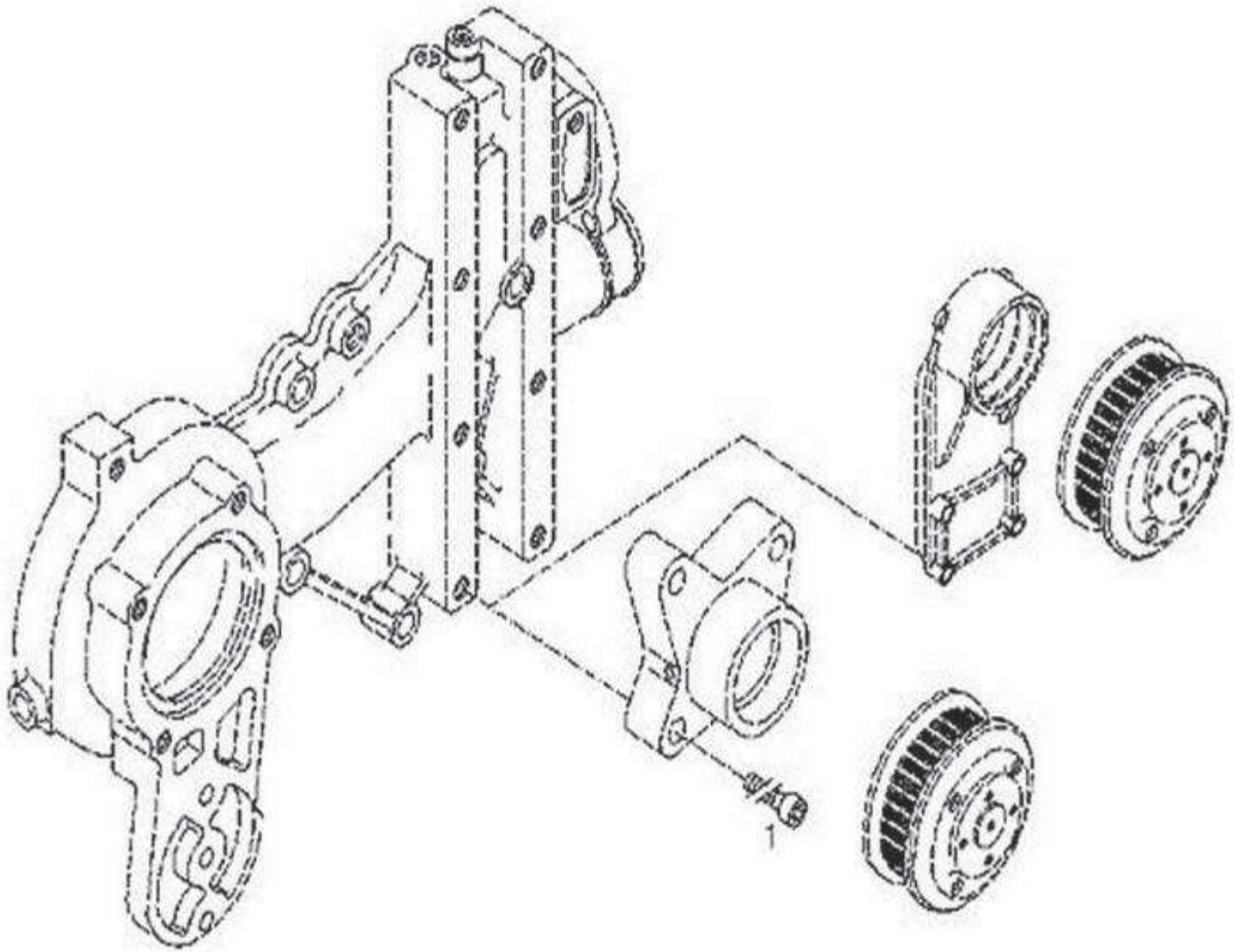

A68-6150E

Fig.	Part No.编码	Quantity件数 1	2	3	PS	KIT	Description 说明	Notes
1	**4110000727175**	4					Cheese head screw..... .... 内六角圆柱头螺钉CQ2181045TF32	

1	**11213481**	紧固件–风扇皮带轮 **Fastenings**	Catalogue id **111201**	Group **225**
2			Illustr. No **A68-6150E**	Section **200**
3				
4			Issue **2638000345**	Page **155**
5				

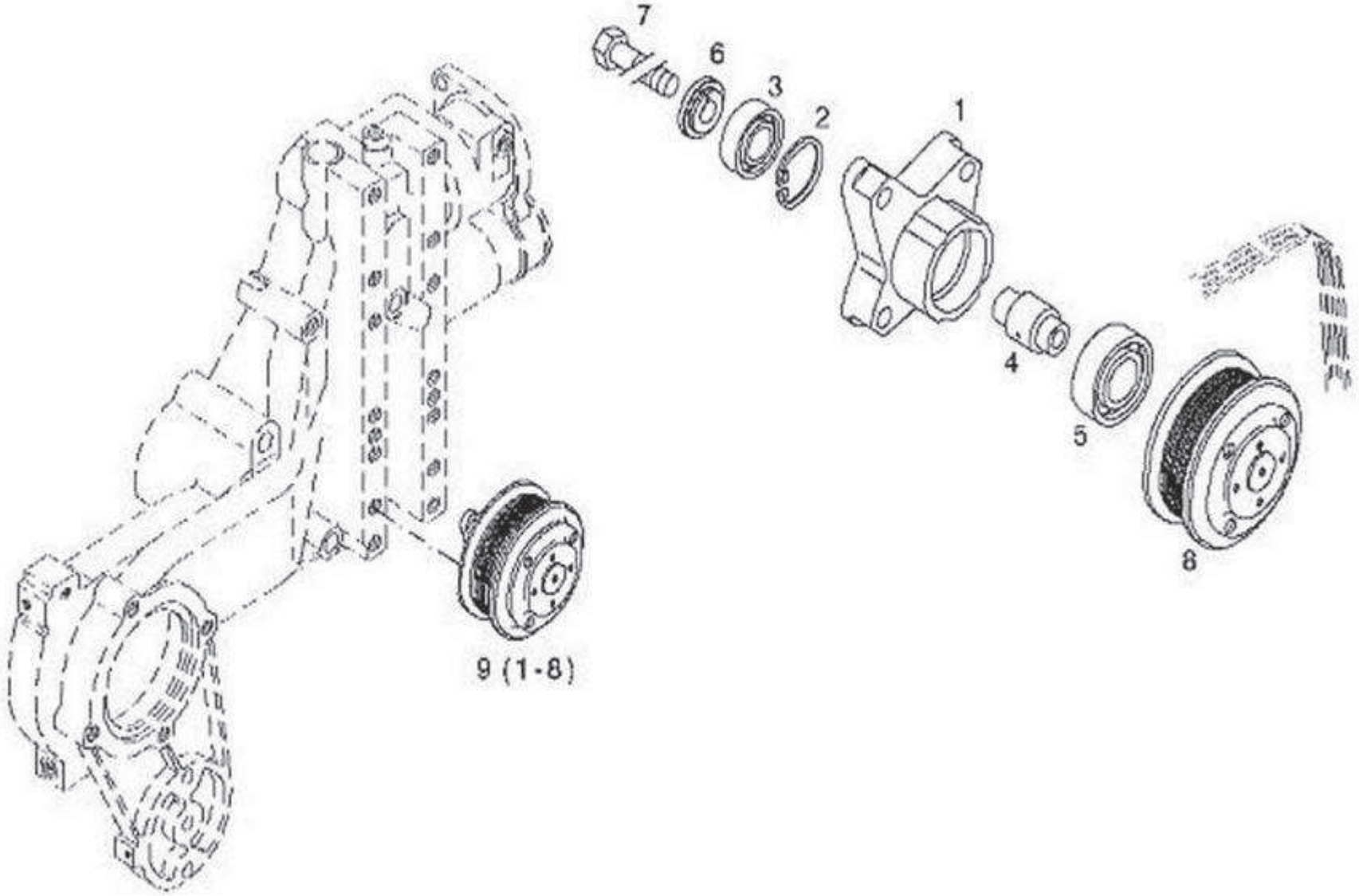

A69-6150E

Fig.	Part No.编码	Quantity件数 1	2	3	PS	KIT	Description 说明	Notes
1	**4110000988067**	1					Fan support 风扇支架多楔带轮总成D04297409	

1	**11213481**	风扇支架多楔带轮总成 **Fan support**	Catalogue id **111201**	Group **225**
2			Illustr. No **A69-6150E**	Section **300**
3			Issue **2638000345**	Page **157**
4				
5				

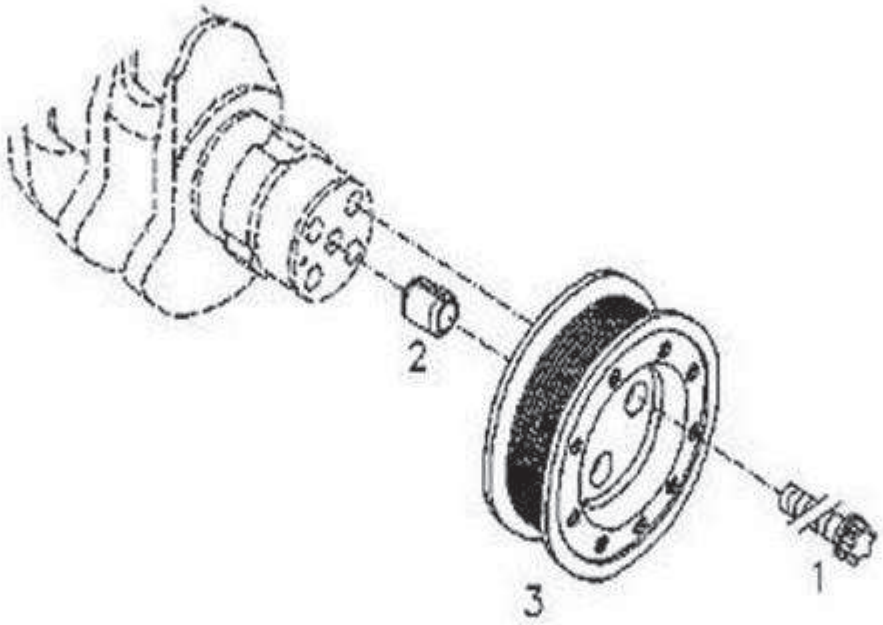

A70-6150E

Fig.	Part No.编码	Quantity件数 1	2	3	PS	KIT	Description 说明	Notes
1	**4110000509080**	4					Torx-head bolt..... ..... 螺栓-皮带轮过渡法兰1005037-52D(04253406)	
2	**4110000727078**	1					Clamping bush.... ..... 弹性圆柱销H 2341-B18X24-FE/ZN12C D01181404	
3	**4110000988080**	1					V-rib.belt pulley..... ..... 多楔带轮-曲轴F04252958	

1	**11213481**	曲轴多楔带轮装置 **Fastenings**	Catalogue id **111201**	Group **225**
2				
3			Illustr. No **A70-6150E**	Section **400**
4				
5			Issue **2638000345**	Page **159**

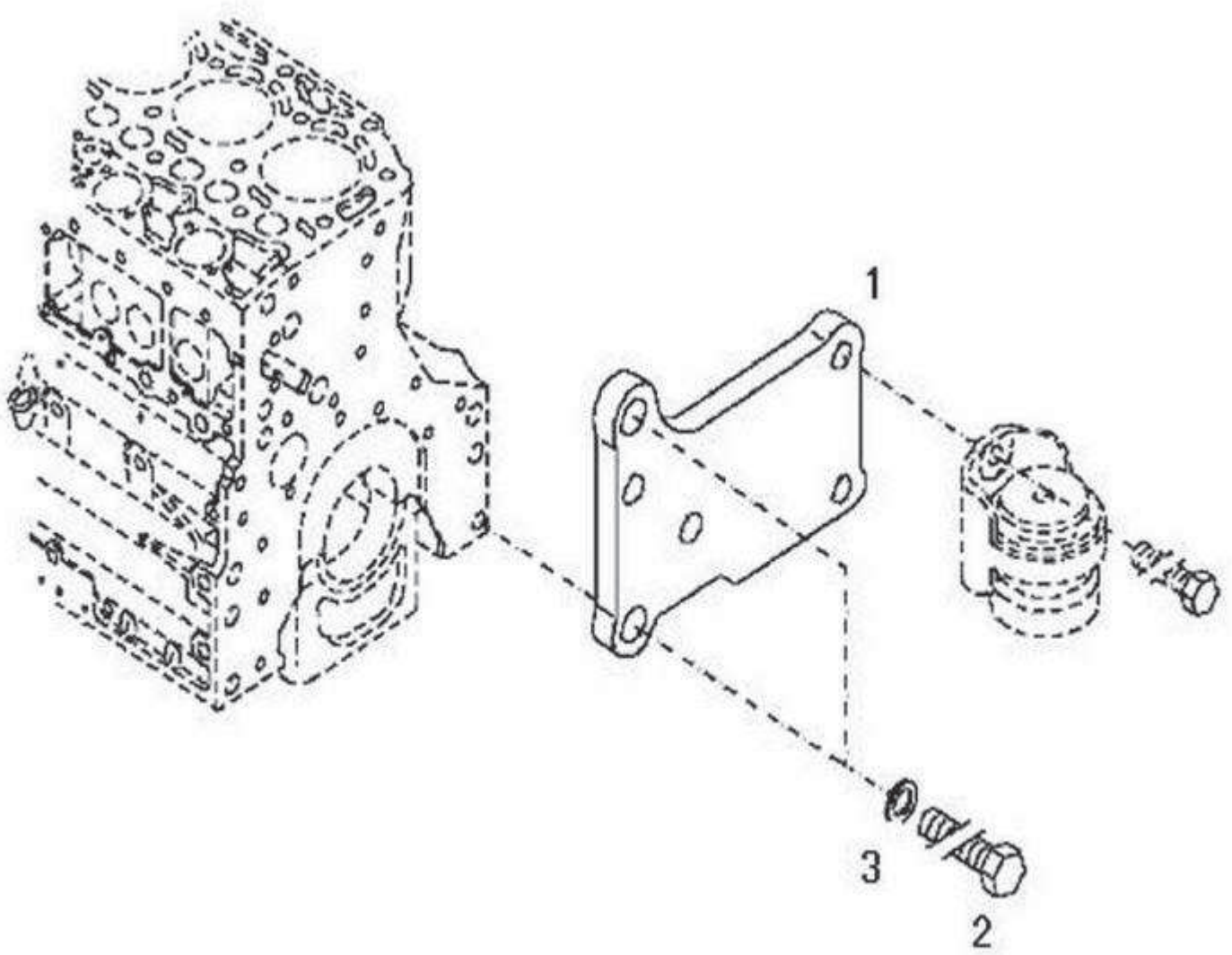

A71-6150E

Fig.	Part No.编码	Quantity件数 1	2	3	PS	KIT	Description 说明	Notes
1	**4110000727155**	1					Engine front support bracket..... ..... 前悬左支架F04288659	
2	**4110000727171**	2					Hexagon bolt..... .. .. 六角头螺栓CQ1501640TF36	
3	**4110000727046**	2					Plain washer.. .... 平垫圈3701623-30D	

1	**11213481**	前悬运输左支架装置 **Accessories**	Catalogue id **111201**	Group **226**
2				
3			Illustr. No **A71-6150E**	Section **100**
4				
5			Issue **2638000345**	Page **161**

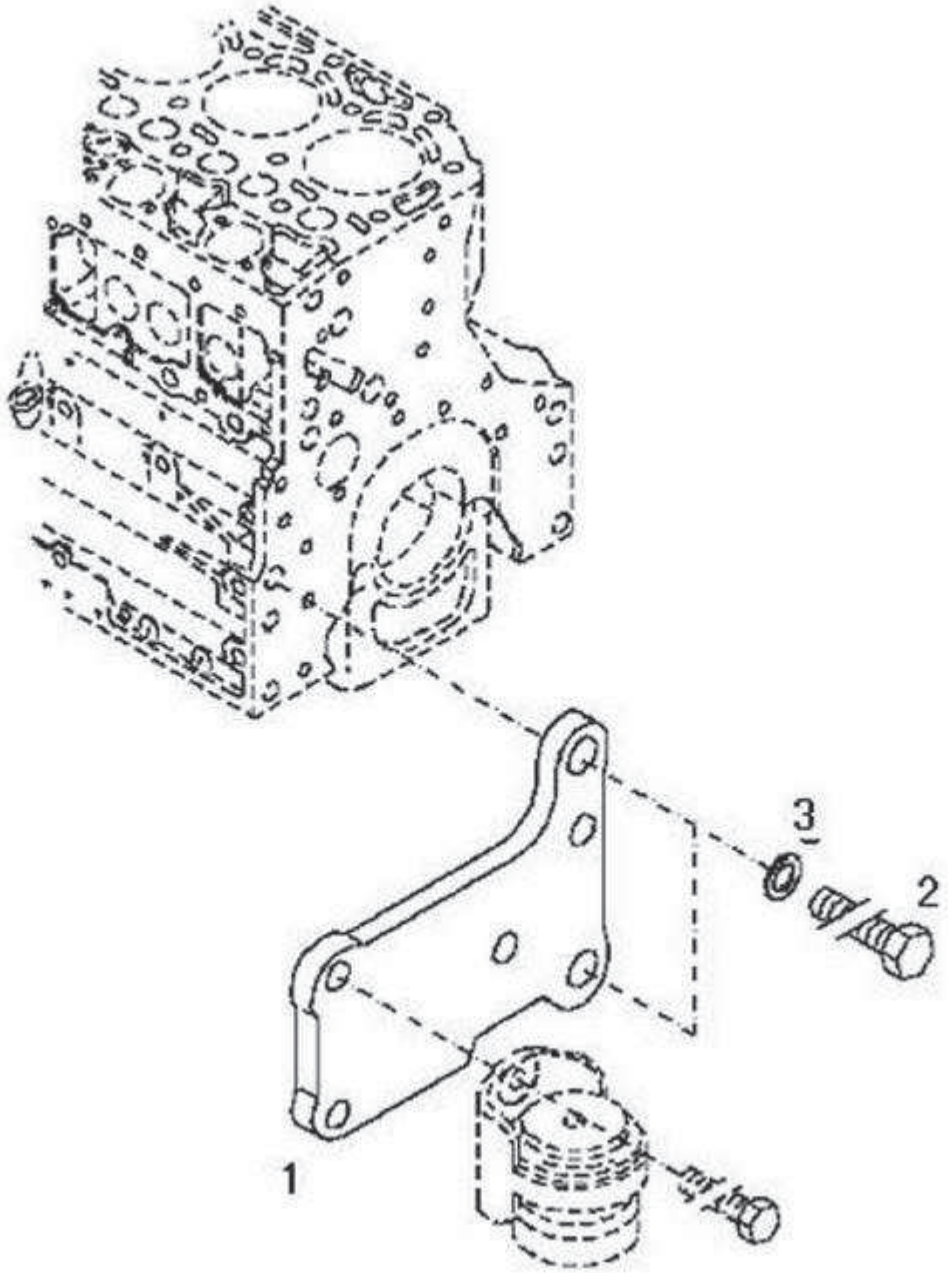

A72-6150E

Fig.	Part No.编码	Quantity件数 1	2	3	PS	KIT	Description 说明	Notes
1	**4110000727156**	1					Engine front support bracket..... 前悬右支架F04288660	
2	**4110000727171**	2					Hexagon bolt..... ..... 六角头螺栓CQ1501640TF36	
3	**4110000727046**	2					Plain washer..... ..... 平垫圈3701623-30D	

1	**11213481**	前悬运输右支架装置 **Accessories**	Catalogue id **111201**	Group **226**
2			Illustr. No **A72-6150E**	Section **200**
3				
4			Issue **2638000345**	Page **163**
5				

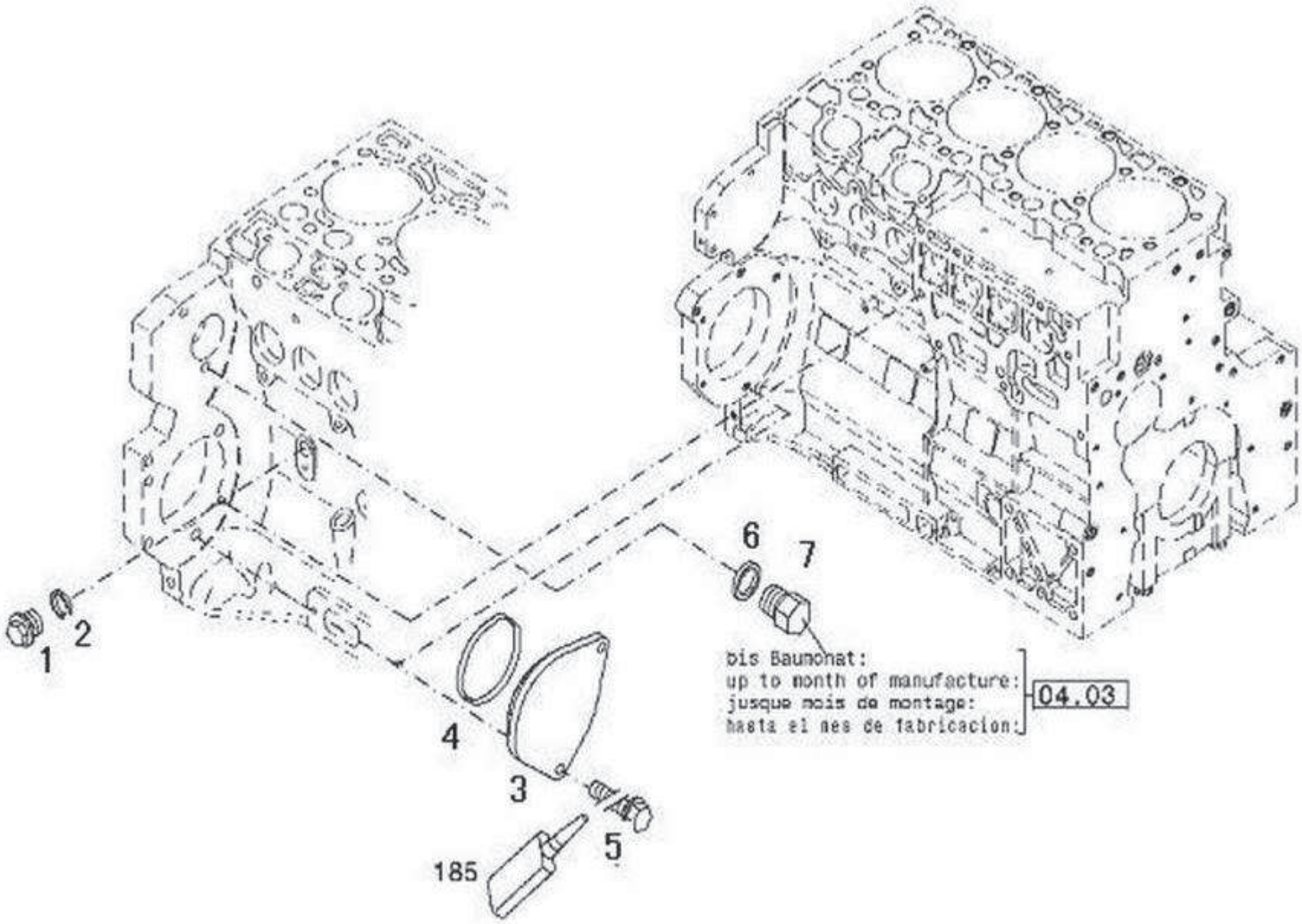
1
2
4
3
5
185
6
7
bis Baumonat:
up to month of manufacture:
jusque mois de montage:
hasta el mes de fabricacion:
04.03

A73-61508

Fig.	Part No.编码	Quantity件数 1	2	3	PS	KIT	Description 说明	Notes
1	**4110000509018**	1					Screw plug..... 螺塞 DIN 7604-AM14X1,5-ST-A4C 1002622-52D	
2	**4110000509230**	1					Sealing ring..... .... 密封垫 DIN7603-A14X18-Cu 3509644-52D	
3	**4110000727124**	1					Cap..... .... 堵盖D04283180	
4	**4110000727040**	1					O-ring..... ..... O型密封圈H 2927-96X4-NBR-1-70 3509648-D007	
5	**4110000509086**	2					Hexagon bolt..... 六角头凸缘螺栓EN 1662-F-M10X20-10.9-A4C 1005639-30D	
6	**4110000509191**	2					Sealing ring..... .... 密封垫DIN 7603-A10X13,5-CU 3509643-52D	
7	**4110000509286**	2					Screw plug..... .... 螺堵3407021-52D	

1	**11213481**	PTO-A/B逻辑总成 **Blanking parts**	Catalogue id **111201**	Group **227**
2				
3			Illustr. No **A73-6150E**	Section **100**
4				
5			Issue **2638000345**	Page **165**

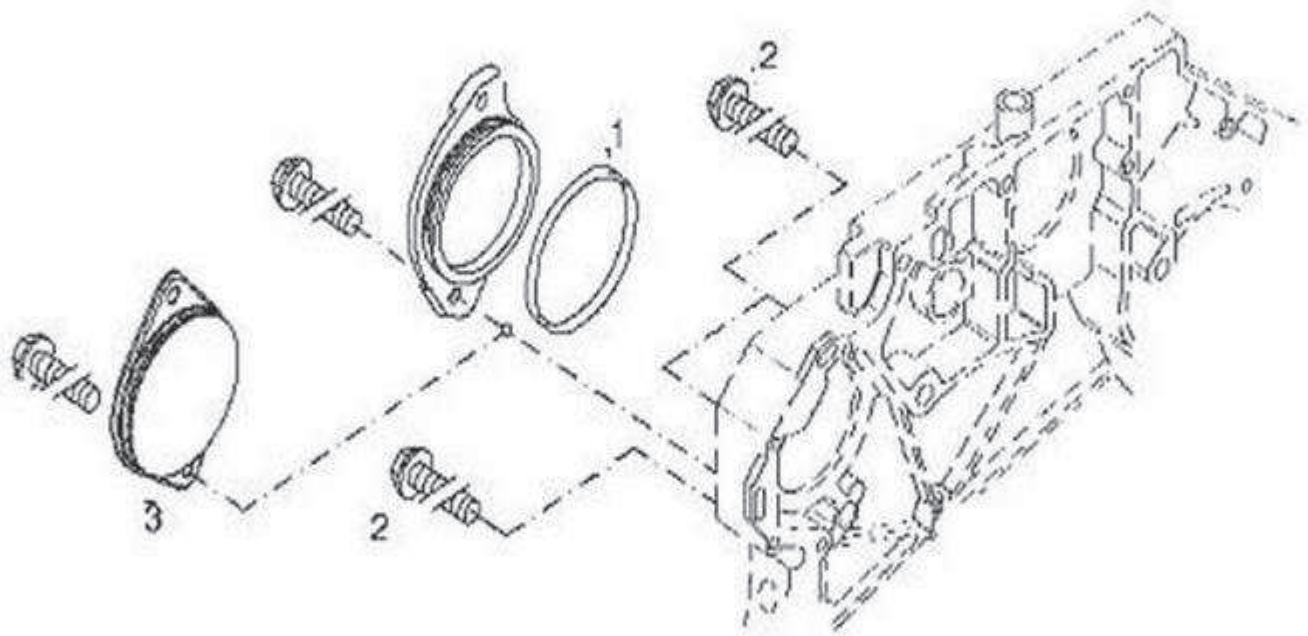

A74-6150E

Fig.	Part No.编码	Quantity件数 1	2	3	PS	KIT	Description 说明	Notes
1	**4110000509284**	1					O-seal..... 密封圈H 2927-82X4-NBR-1-70 3407602-52D	
2	**4110000509041**	4					Hexagon bolt..... 六角头凸缘螺栓 EN 1662-F-M8X45-10.9-ZNAL-A 1002614-56D	
3	**4110000727137**	1					Plate..... 盖板D04296824	

1	**11213481**	PTO-C逻辑总成 **Blanking parts**	Catalogue id **111201**	Group **227**
2			Illustr. No **A74-6150E**	Section **200**
3			Issue **2638000345**	Page **167**
4				

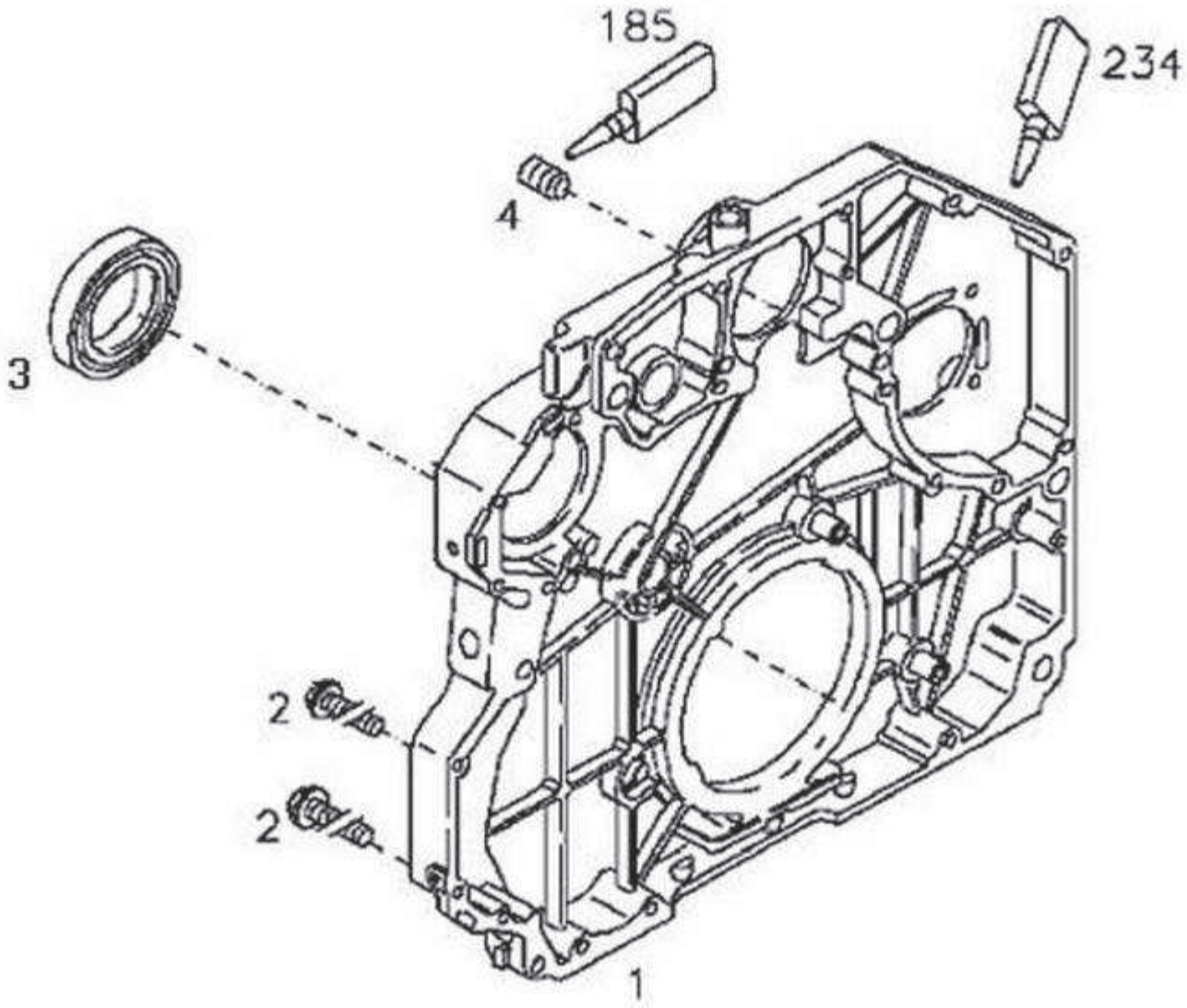

A75-6150E

Fig.	Part No.编码	Quantity件数 1	2	3	PS	KIT	Description 说明	Notes
1	**4110000727130**	1					Gear housing and lip seal..... ..... 齿轮室罩盖及后油封总成D04291765	
2	**4110000509039**	12					Hexagon bolt..... ..... 六角头凸缘螺栓 EN 1662-F-M8X35-10.9-ZNAL-AC 1009626-52D	
3	**4110000509038**	1					Rot.shaft lip seal..... ..... 曲轴后油封总成1005105B56D(4253332)	
4	**4110000988051**	1					Screwed bush..... .... 螺纹套D04256836	

1	**11213481**	齿轮室罩盖装置 **Gearcase**	Catalogue id **111201**	Group **228**
2				
3			Illustr. No **A75-6150E**	Section **100**
4				
5			Issue **2638000345**	Page **169**

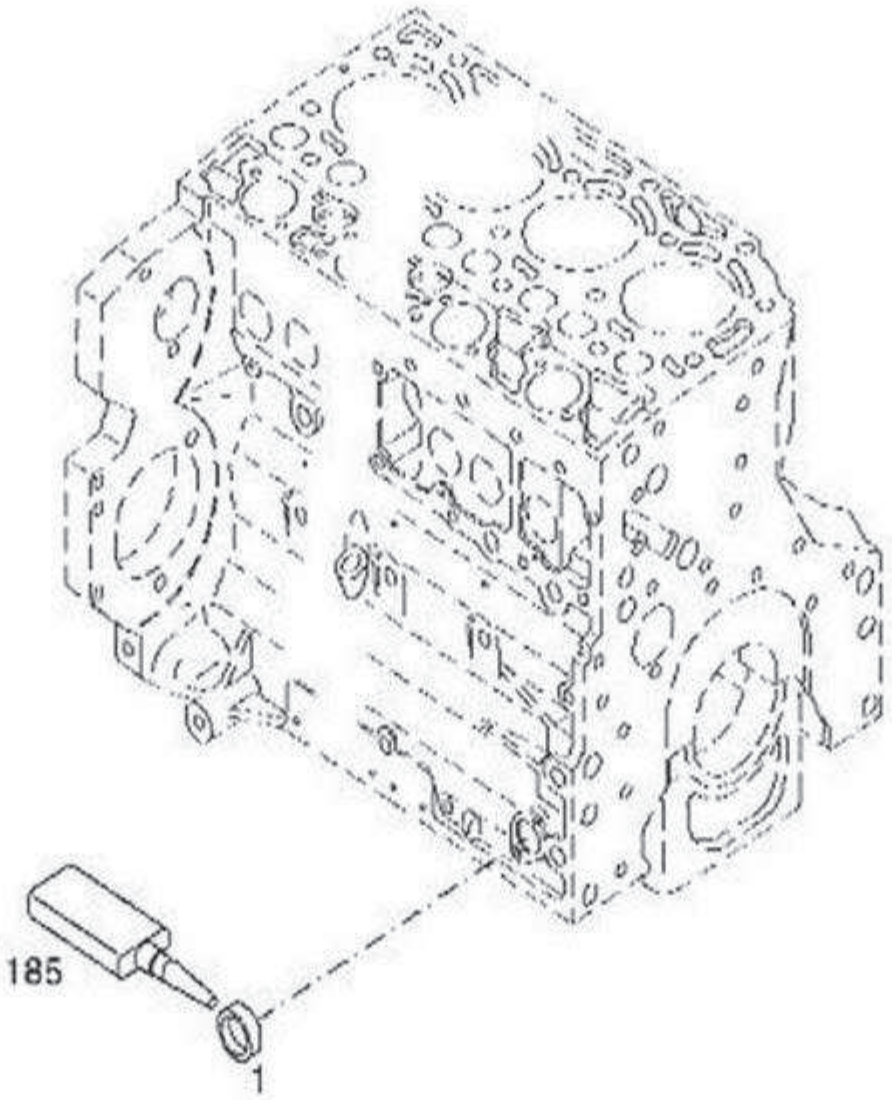
185
1

Fig.	Part No.编码	Quantity件数 1	2	3	PS	KIT	Description 说明	Notes
1	**4110000727002**	1					Core hole plug..... 碗形塞片H 2860-A36-ST-FE/ZNPHR 1002620-52D	

1	**11213481**	加机油口塞片总成 **Plug**	Catalogue id **111201**	Group **228**
2				
3			Illustr. No **A76-6150E**	Section **200**
4				
5			Issue **2638000345**	Page **171**

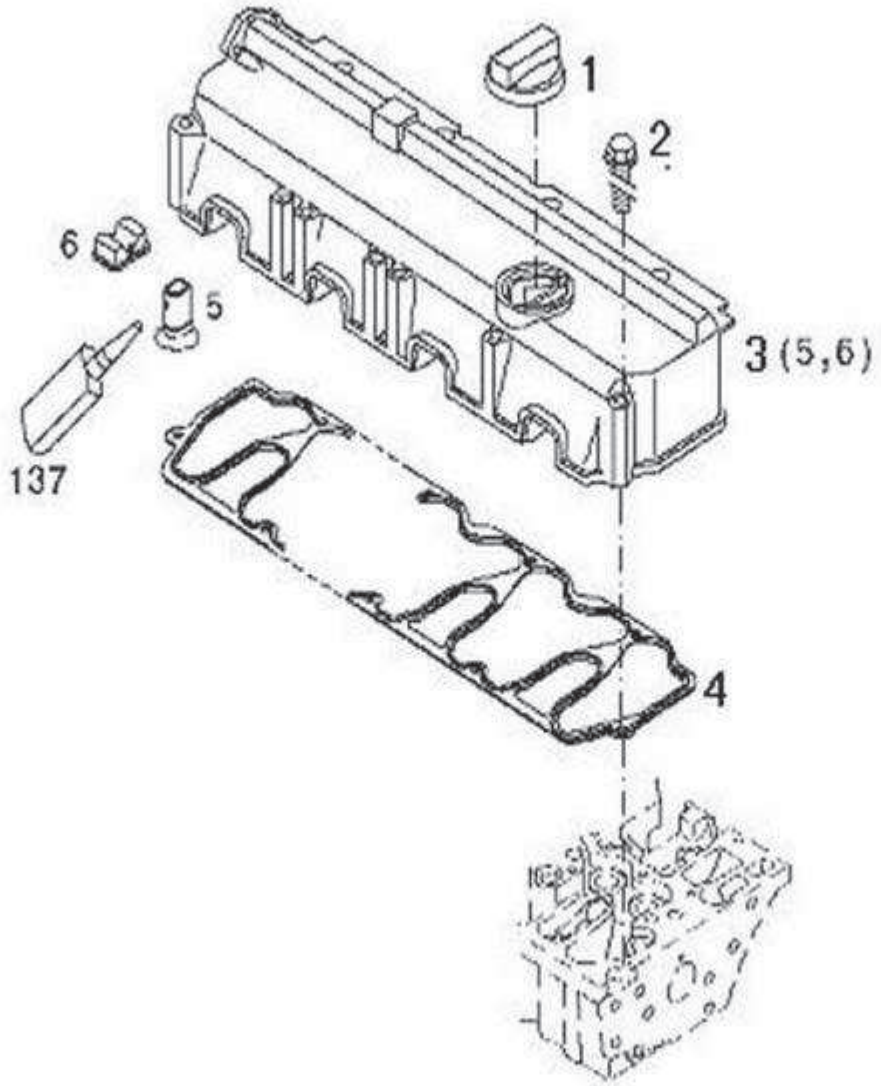

A77-6150E

Fig.	Part No.编码	Quantity件数 1	2	3	PS	KIT	Description 说明	Notes
1	**4110000509047**	1					Oil filler cap..... .... 加机油口盖总成1003050-52D	
2	**4110000509048**	9					Hexagon bolt .... 六角头凸缘螺栓 EN 1662-F-M6X75-10.9-ZNAL-A 1008602-56D	
3	**4110000988004**	1					Valve mechan.cover..... ..... 气缸盖罩盖总成1003040-65D	
4	**4110000988005**	1					Gasket 密封垫-气缸盖罩盖1003042B65D	

1	**11213481**	气缸盖罩盖 **Valve mechan.cover**	Catalogue id **111201**	Group **229**
2				
3			Illustr. No **A77-6150E**	Section **100**
4				
5			Issue **2638000345**	Page **173**

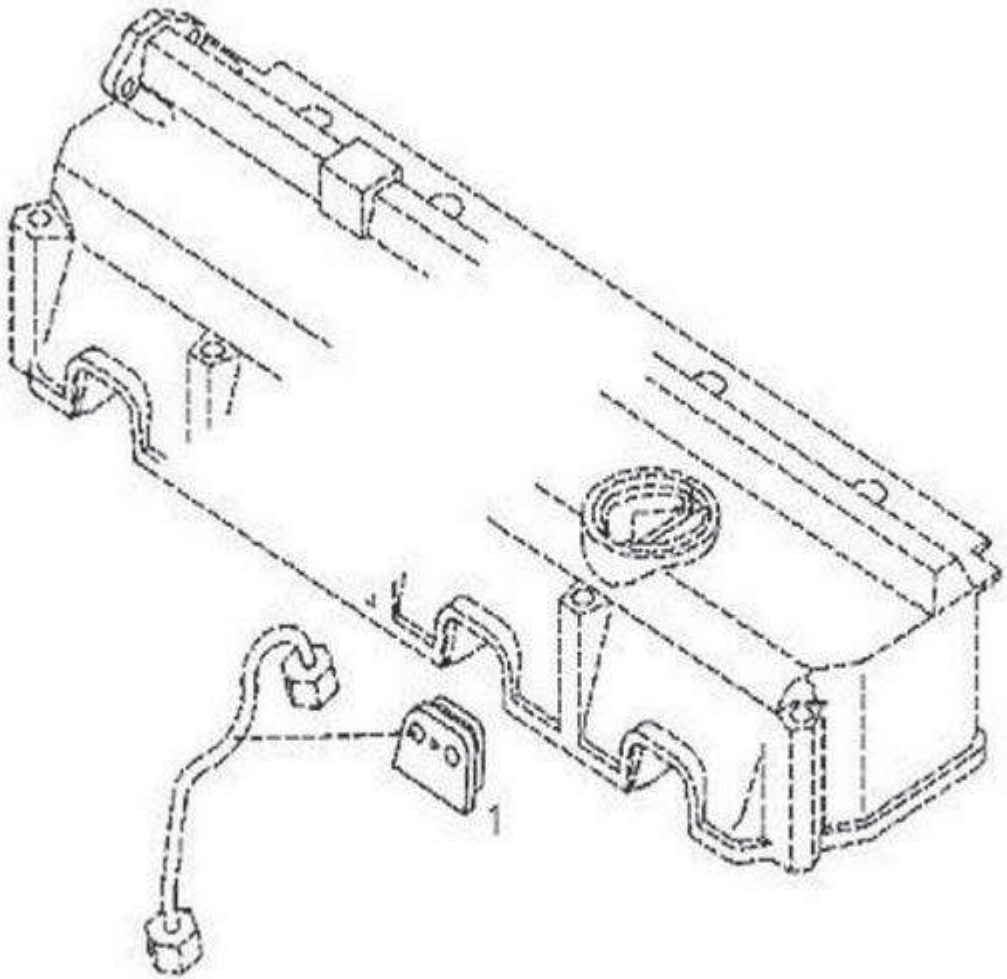

A78-6150E

Fig.	Part No.编码	Quantity件数 1	2	3	PS	KIT	Description 说明	Notes
1	**4110000509229**	1					Rubber seal..... .... 密封橡胶套1129016-52D	

1	**11213481**	密封套装置 **Rubber seal**	Catalogue id **111201**	Group **229**
2			Illustr. No **A78-6150E**	Section **200**
3				
4			Issue **2638000345**	Page **175**
5				

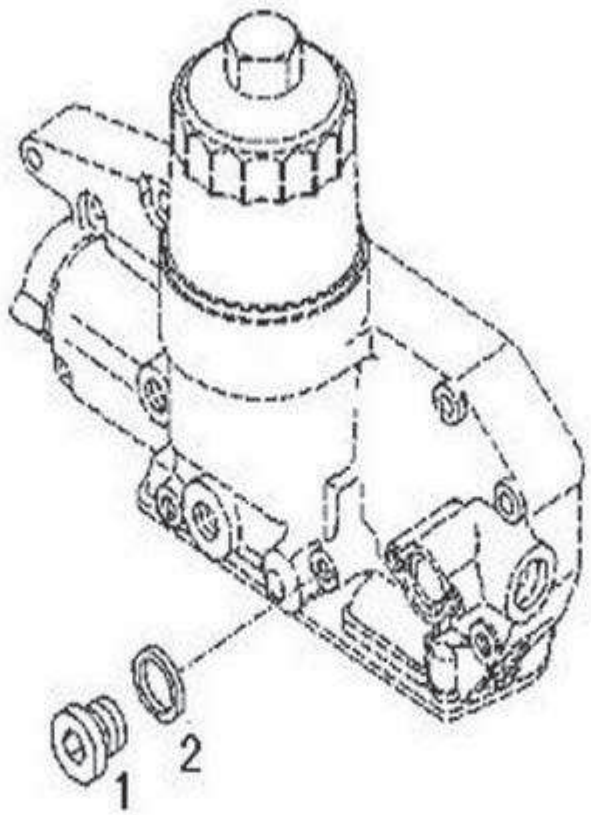

A79-6150E

Fig.	Part No.编码	Quantity件数 1	2	3	PS	KIT	Description 说明	Notes
1	**4110000509176**	1					Screw plug... .... 螺塞H2812-908-M18X1,5-ST-A4C-PRE801013617-52D	
2	**4110000509177**	1					Sealing ring. .... 密封垫DIN 7603-A18X22-CU 1013621-52D	

1	**11213481**	堵-机油冷却器 **Blanking parts**	Catalogue id **111201**	Group **230**
2			Illustr. No **A79-6150E**	Section **100**
3				
4			Issue **2638000345**	Page **177**
5				

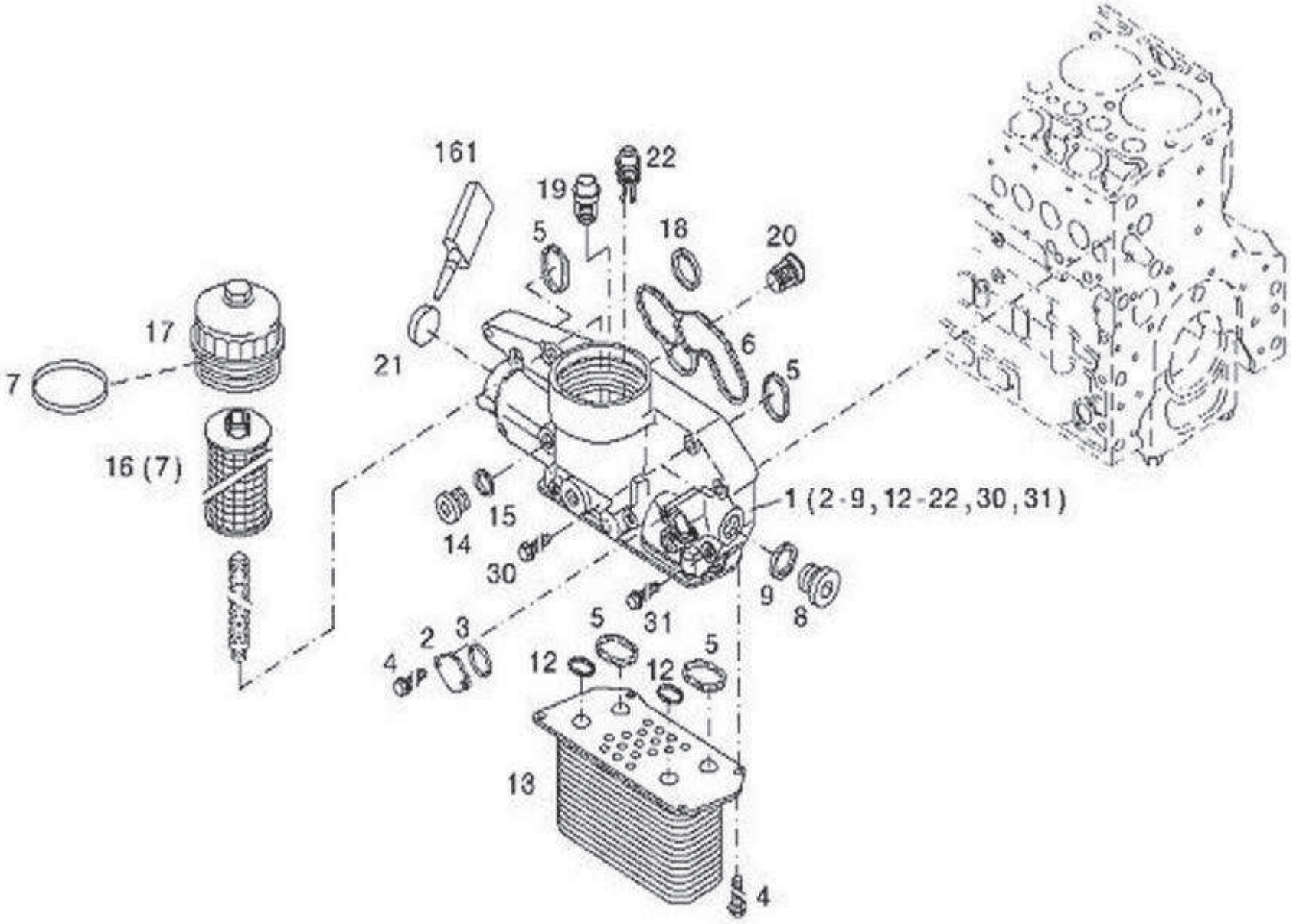
161
22
19
5
18
20
17
21
6
5
7
16 (7)
1 (2-9, 12-22, 30, 31)
15
14
30
9
8
31
5
2
3
5
4
12
12
13
4

A80-6150E

Fig.	Part No.编码	Quantity件数 1	2	3	PS	KIT	Description 说明	Notes
1	**4110000988063**	1					Oil cooler box... .... 机油冷却器总成D04292128	
7	**4110000988045**	1					O-seal... .... O型密封圈D04207184	
16	**4110000988048**	1					Filter element... .... 机油滤芯D04252239	

1	**11213481**	机油冷却器总成 **Oil cooler box**	Catalogue id **111201**	Group **230**
2				
3			Illustr. No **A80-6150E**	Section **200**
4				
5			Issue **2638000345**	Page **179**

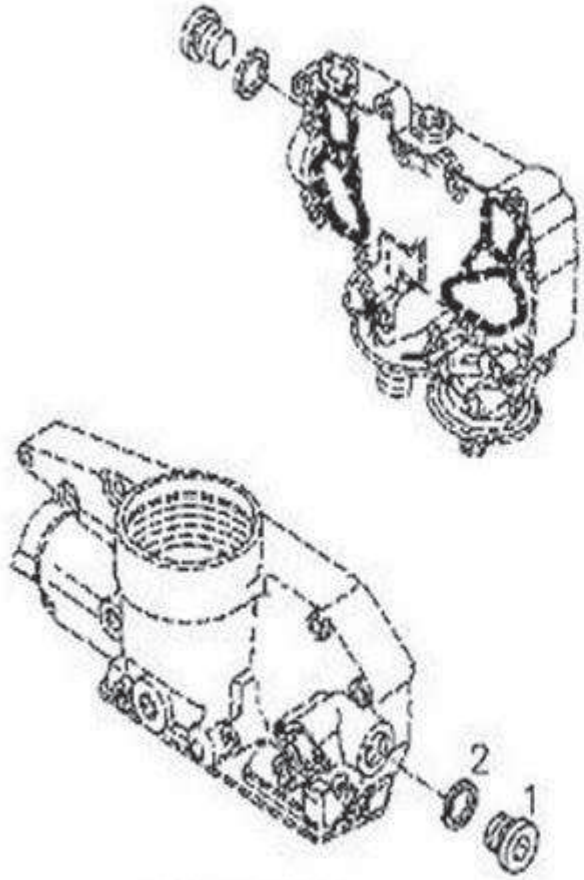

(BFM2012)

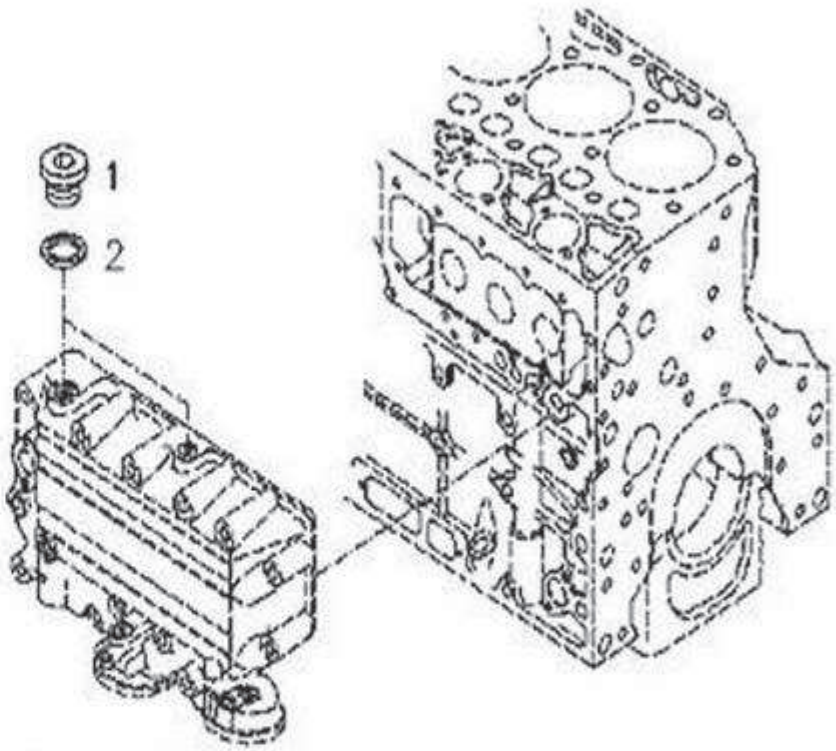

(BFM1013)

A81-6150E

Fig.	Part No.编码	Quantity件数 1	2	3	PS	KIT	Description 说明	Notes
1	**4110000727018**	1					Screw plug..... ..... 螺塞DIN 908-M26X1.5-ST-A4C 1013632-52D	
2	**4110000509307**	1					Sealing ring..... ..... 密封垫7603-A26X31-CU 1013633-52D	

1	**11213481**	堵 **Blanking parts**	Catalogue id **111201**	Group **231**
2				
3			Illustr. No **A81-6150E**	Section **100**
4				
5			Issue **2638000345**	Page **181**

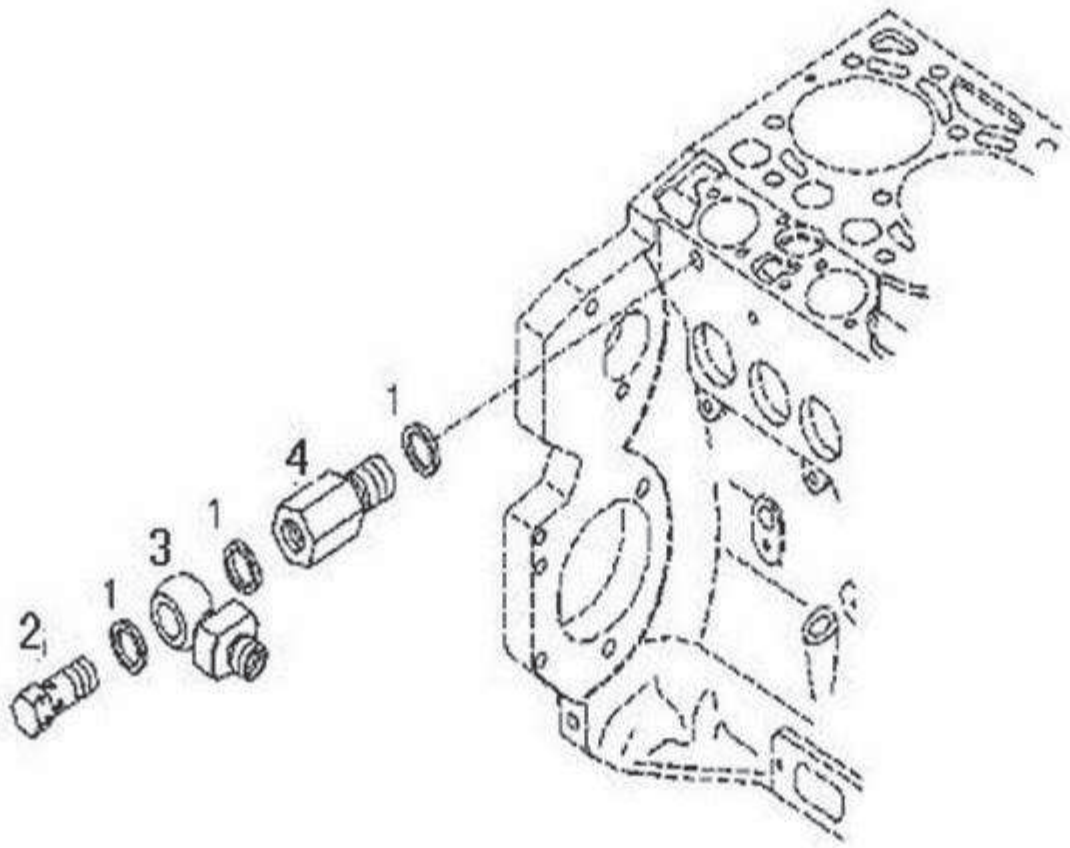

A82-6150E

Fig.	Part No.编码	Quantity件数 1	2	3	PS	KIT	Description 说明	Notes
1	**4110000509019**	3					Sealing ring..... 密封垫DIN 7603-A14X20-CU 1104617-52D	
2	**4110000509217**	1					Pressurestat..... ..... 回油阀1104065-52D	
3	**4110000727024**	1					Pipe round piece... .... B14Q+软管环行件1104656-30D	
4	**4110000509216**	1					Transition adapter..... 过渡接头-接缸体1104086-30D	

1	**11213481**	回油阀装置 **Connecting parts**	Catalogue id **111201**	Group **232**
2			Illustr. No **A82-6150E**	Section **100**
3				
4			Issue **2638000345**	Page **183**
5				

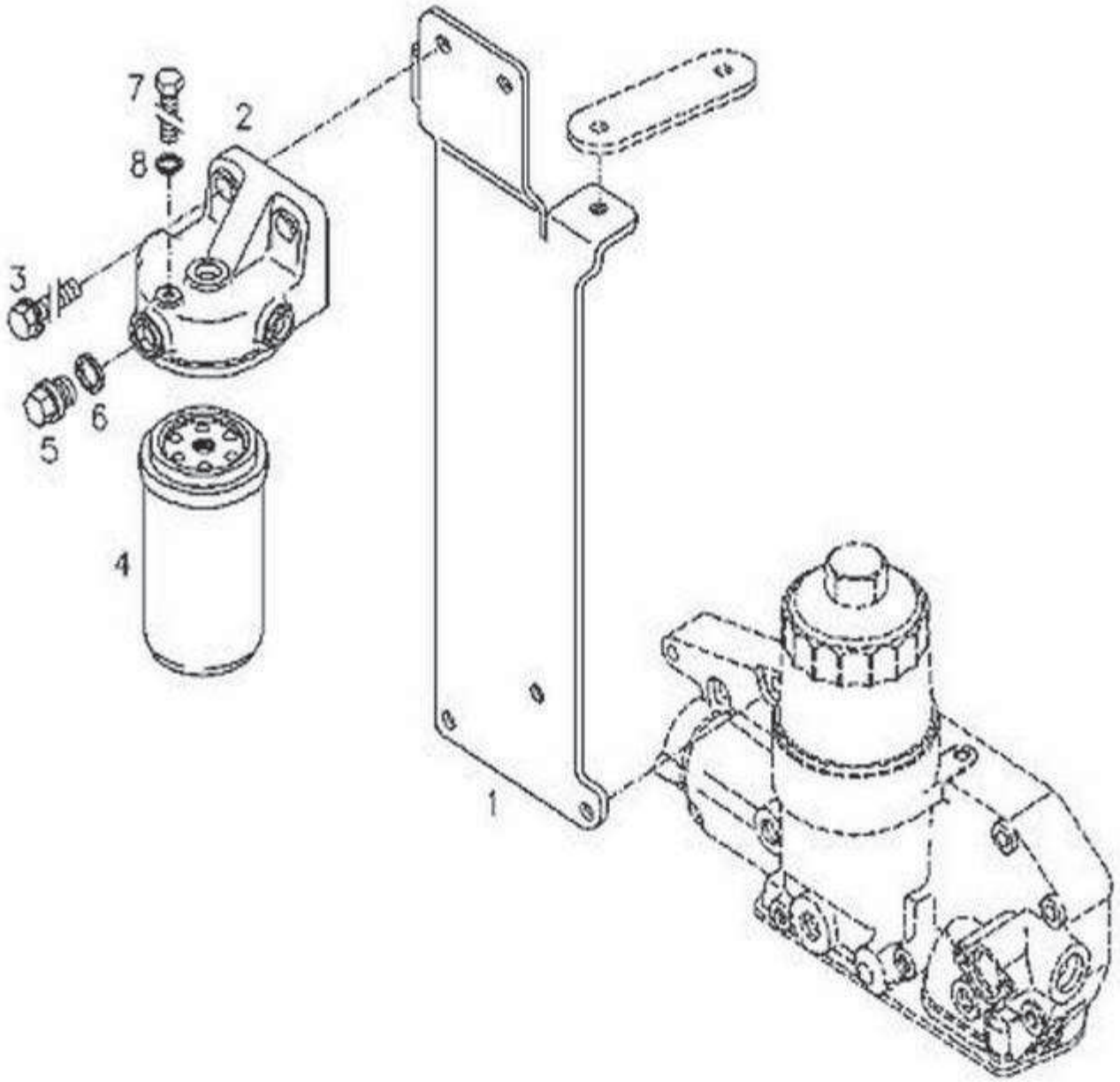

A83-6150E

Fig.	Part No.编码	Quantity件数 1	2	3	PS	KIT	Description 说明	Notes
1	**4110000988060**	1					Bracket..... 滤座支架D04290008	
2	**4110000988033**	1					Bracket..... 燃油滤座D01174821	
3	**4110000970176**	2					Hexagon bolt..... 六角凸缘螺栓Q1841030TF36	
4	**4110000509335**	1					Secondary fuel oil filter..... 燃油精滤D01182551	
5	**4110000988020**	1					Screw plug..... 螺塞H 2812-908-M14X1,5-ST-A4C-PRE 5 B01182886	
6	**4110000509230**	1					Sealing ring..... 密封垫 DIN7603-A14X18-Cu 3509644-52D	
7	**4110000988076**	1					Vent plug..... 放气螺栓F02135103	
8	**4110000988010**	1					Sealing ring..... 密封垫DIN 7603-A6X10-CU 1117633-52D	

1	**11213481**	燃油滤装置 **Fuel filter assy**	Catalogue id **111201**	Group **233**
2				
3			Illustr. No **A83-6150E**	Section **100**
4				
5			Issue **2638000345**	Page **185**

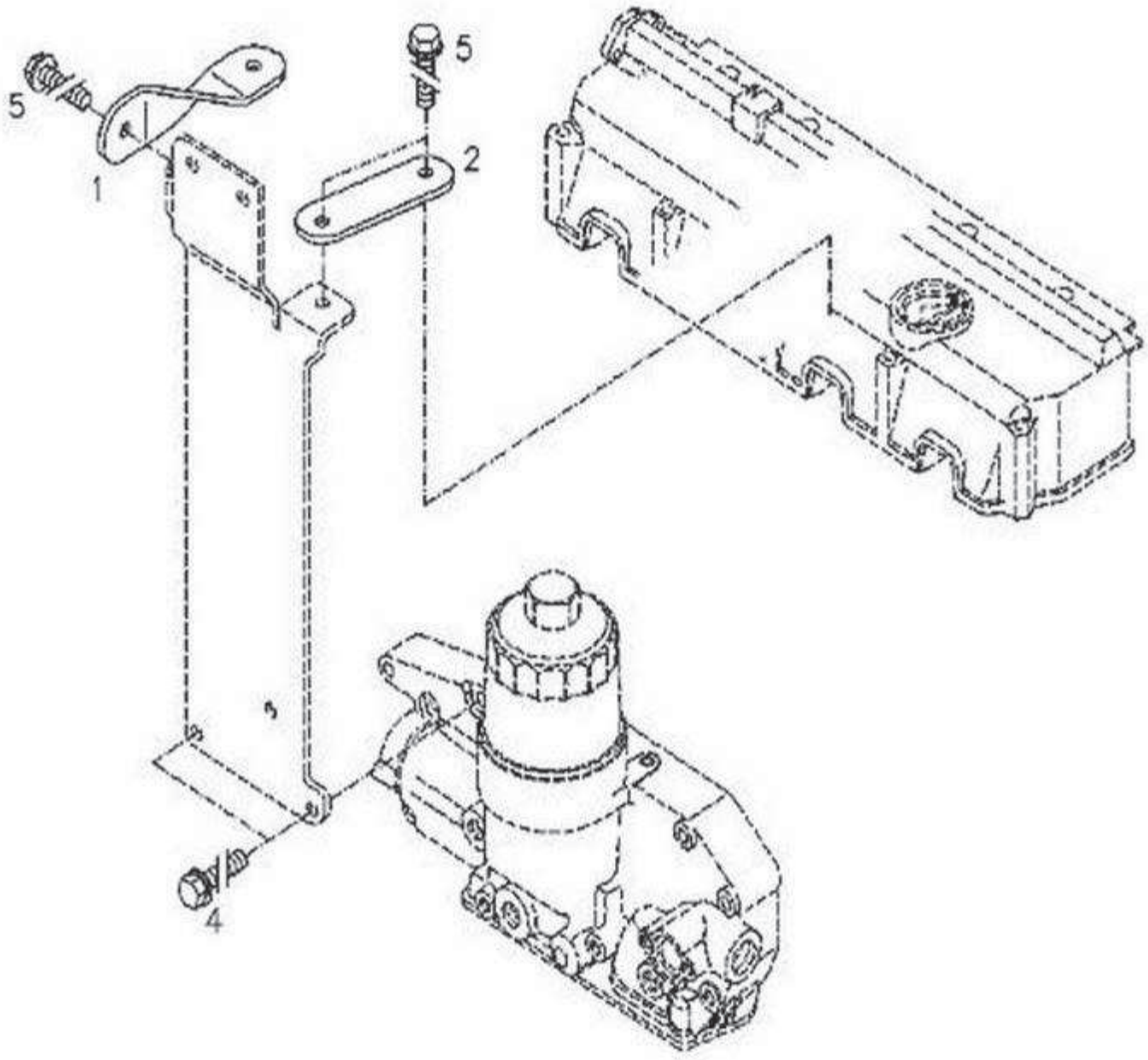

A84-6150E

Fig.	Part No.编码	Quantity件数 1	2	3	PS	KIT	Description 说明	Notes
1	**4110000988085**	1					Support.... ..... 燃油滤左支架（上）F04288581	
2	**4110000988084**	1					Support..... .... 燃油滤右支架（上）F04288396	
3	**4110000509150**	2					Hexagon bolt.. .... 六角头凸缘螺栓Q1840840TF36	
4	**4110000509246**	4					Hexagon bolt..... ..... 六角头凸缘螺栓 EN1662-F-M8X16-10.9 3509646-52D	

1	**11213481**	滤座支撑装置 **Support**	Catalogue id **111201**	Group **233**
2				
3			Illustr. No **A84-6150E**	Section **200**
4			Issue **2638000345**	Page **187**
5				

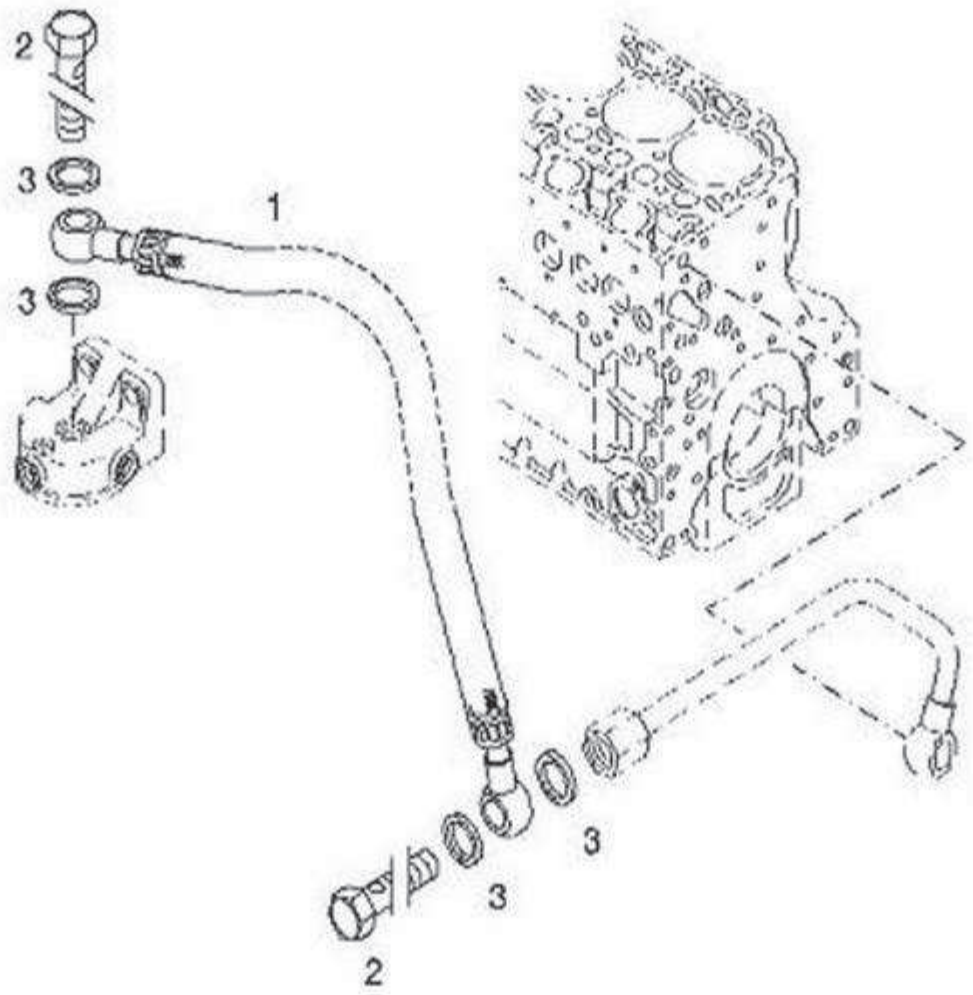

A85-6150E

Fig.	Part No.编码	Quantity件数 1	2	3	PS	KIT	Description 说明	Notes
1	**4110000988049**	1					Hose assembly..... .... 油管D04253883	
2	**4110000509241**	2					Hollow screw..... .... 空心螺栓H 3102-D10M-ST-ZNAL-A 3509642-52D	
3	**4110000509019**	4					Sealing ring .... 密封垫 DIN 7603-A14X20-CU 1104617-52D	

1	**11213481**	燃油管路逻辑总成 **Fuel line**	Catalogue id **111201**	Group **233**
2				
3			Illustr. No **A85-6150E**	Section **300**
4				
5			Issue **2638000345**	Page **189**

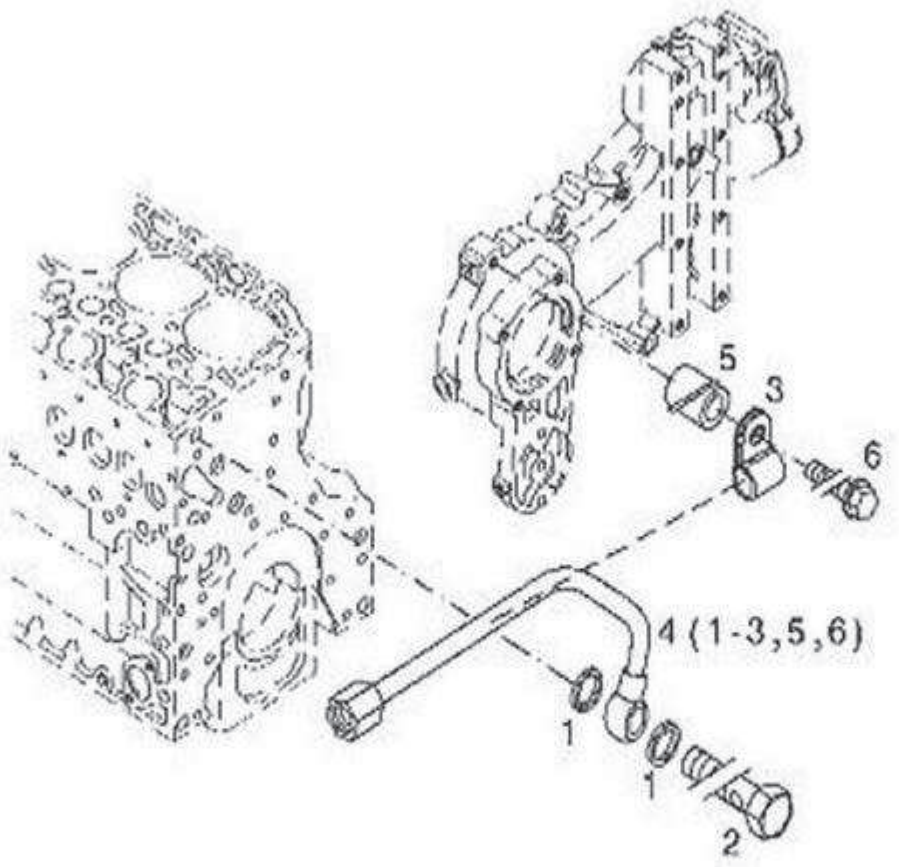

A86-61508

Fig.	Part No.编码	Quantity件数 1	2	3	PS	KIT	Description 说明	Notes
1	**4110000988017**	2					Sealing ring ..... 密封垫DIN 7603-D14X20-CU-VERZINNT B01148836	
2	**4110000509241**	1					Hollow screw ..... 空心螺栓H 3102-D10M-ST-ZNAL-A 3509642-52D	
3	**4110000727022**	1					Clamp 管夹1014622-30D	
4	**4110000988054**	1					Fuel line 滤到缸体过渡油管装置D04285725	
5	**4110000988042**	1					Bush 隔套D04204516	
6	**4110000509175**	1					Hexagon bolt ..... 六角头凸缘螺栓EN 1662-F-M8X80-10.9-ZNAL-A 1013619-52D（1143364）	

1	**11213481**	滤到缸体过渡油管装置 **Fuel line**	Catalogue id **111201**	Group **233**
2			Illustr. No **A86-6150E**	Section **400**
3			Issue **2638000345**	Page **191**
4				
5				

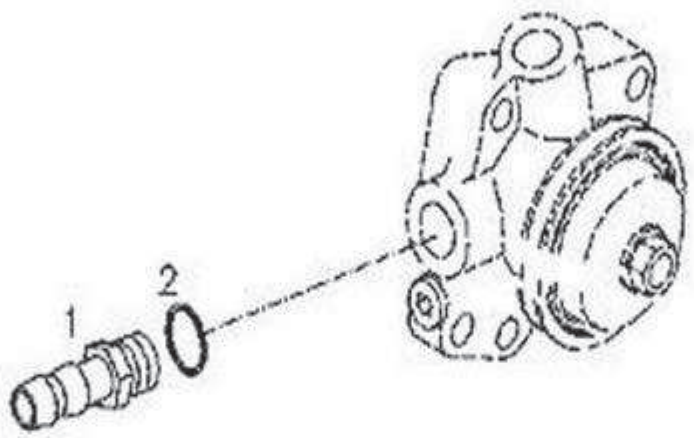

A87-6150E

Fig.	Part No.编码	Quantity件数 1	2	3	PS	KIT	Description 说明	Notes
1	**4110000727051**	1					Joint..... .... 输油泵进油接头H 3452-E12/M16X1,5 B01180329	
2	**4110000509256**	1					Sealing ring..... .... 密封垫DIN 7603-A16X20-CU 1307639-52D	

1	**11213481**	接头总成 **Mating part**	Catalogue id **111201**	Group **234**
2				
3			Illustr. No **A87-6150E**	Section **100**
4				
5			Issue **2638000345**	Page **193**

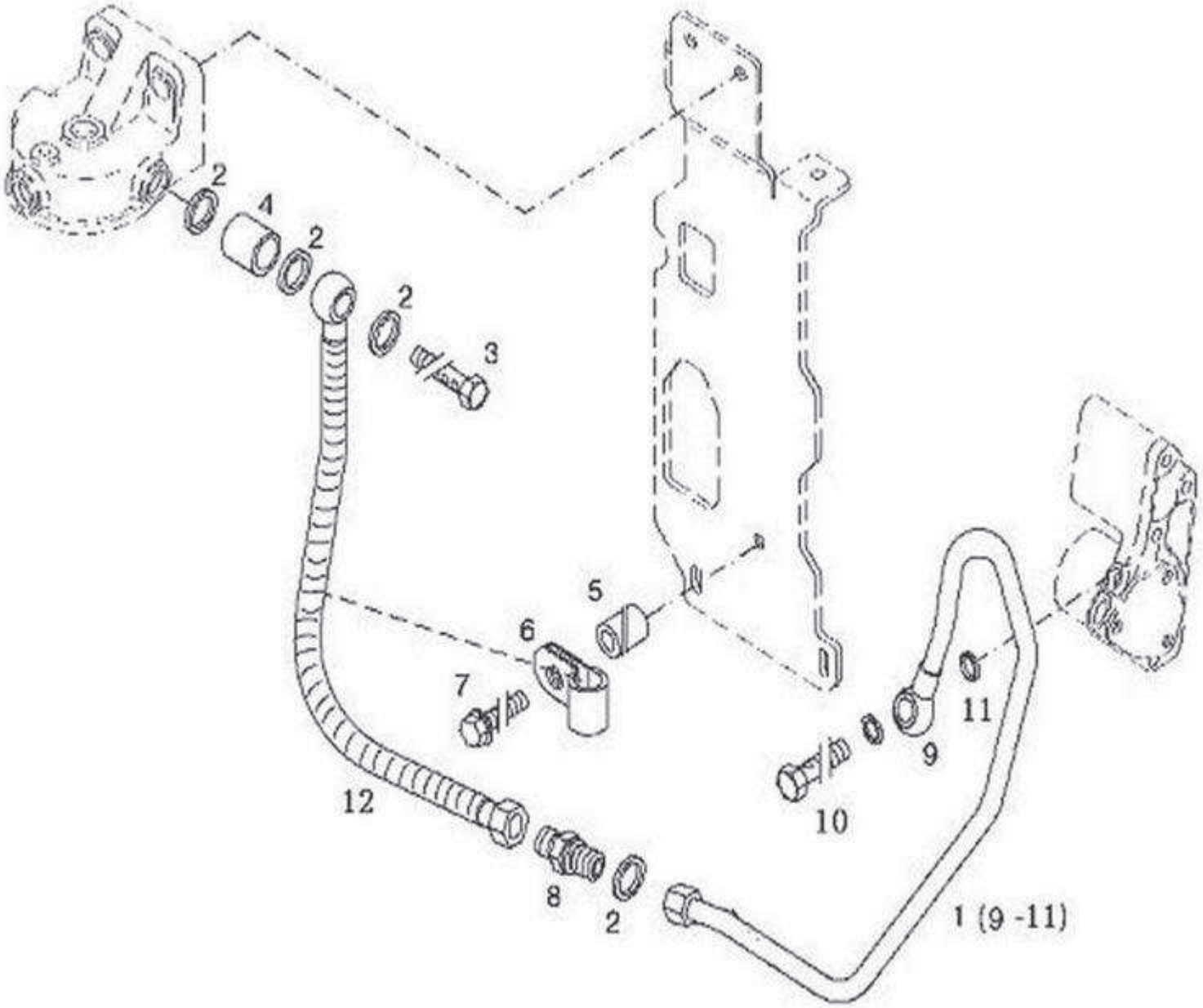

A88-6150E

Fig.	Part No.编码	Quantity件数 1	2	3	PS	KIT	Description 说明	Notes
1	**4110000988064**	1					Fuel line..... 油泵到滤油管装置D04293514	
2	**4110000509019**	3					Sealing ring..... 密封垫 DIN 7603-A14X20-CU 1104617-52D	
3	**4110000988008**	1					Banjo bolt..... 空心螺栓1104619-52D	
4	**4110000988070**	1					Ring..... 衬套D04501589	
5	**4110000988042**	1					Bush..... 隔套D04204516	
6	**4110000727022**	1					Clamp..... 管夹1014622-30D	
7	**4110000509175**	1					Hexagon bolt..... 六角头凸缘螺栓EN 1662-F-M8X80-10.9-ZNAL-A 1013619-52D（1143364）	
8	**4110000988027**	1					Socket/adapte..... 接头D01143476	
9	**4110000988055**	1					Fuel line..... 燃油管-油泵到滤D04288316	
10	**4110000509241**	1					Hollow screw..... 空心螺栓H 3102-D10M-ST-ZNAL-A 3509642-52D	
11	**4110000988017**	2					Sealing ring..... 密封垫DIN 7603-D14X20-CU-VERZINNT B01148836	
12	**4110000988036**	1					Hose assembly..... 燃油管-接滤D01182376	

1	**11213481**	油泵到滤油管装置 **Fuel line**	Catalogue id **111201**	Group **234**
2			Illustr. No **A88-6150E**	Section **200**
3				
4			Issue **2638000345**	Page **195**
5				

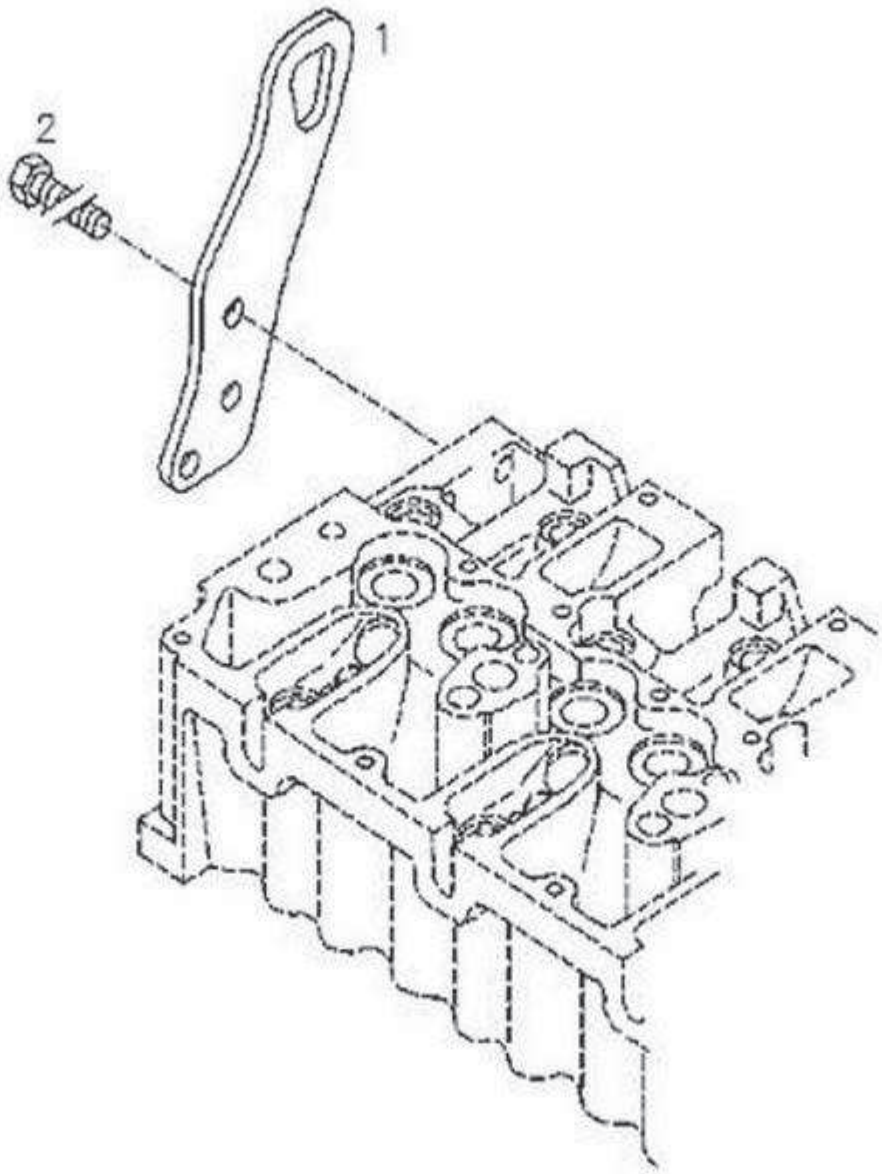

A89-6150E

Fig.	Part No.编码	Quantity件数 1	2	3	PS	KIT	Description 说明	Notes
1	**4110000727003**	1					Suspension plate..... ..... 后吊耳－气缸盖1003061-52D	
2	**4110000509052**	3					Hexagon bolt..... .... 六角头凸缘螺栓EN 1662-F-M10X25-10.9-ZNAL-A 1023614-52D	

1	**11213481**	后吊耳装置 **Engine mounting**	Catalogue id **111201**	Group **235**
2			Illustr. No **A89-6150E**	Section **100**
3				
4			Issue **2638000345**	Page **197**
5				

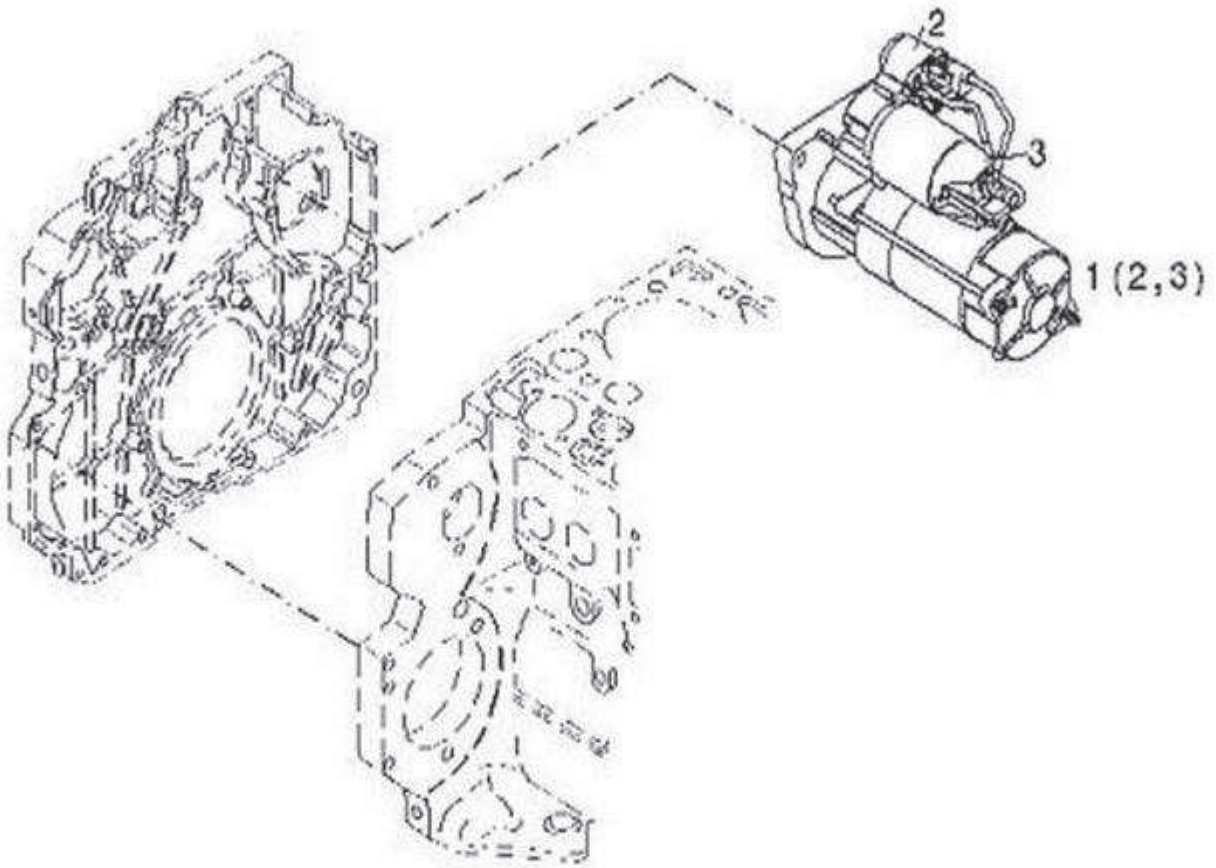

A90-6150E

Fig.	Part No. 编码	Quantity 件数 1	2	3	PS	KIT	Description 名称	Notes
1	**4110000727087**	1					Starter..... ..... 起动机H 821970-VM 9R24VX5,5KW IMR MELKO D01183067	

1	**11213481**	起动机 **Starter**	Catalogue id **111201**	Group **236**
2				
3			Illustr. No **A90-6150E**	Section **100**
4				
5			Issue **2638000345**	Page **199**

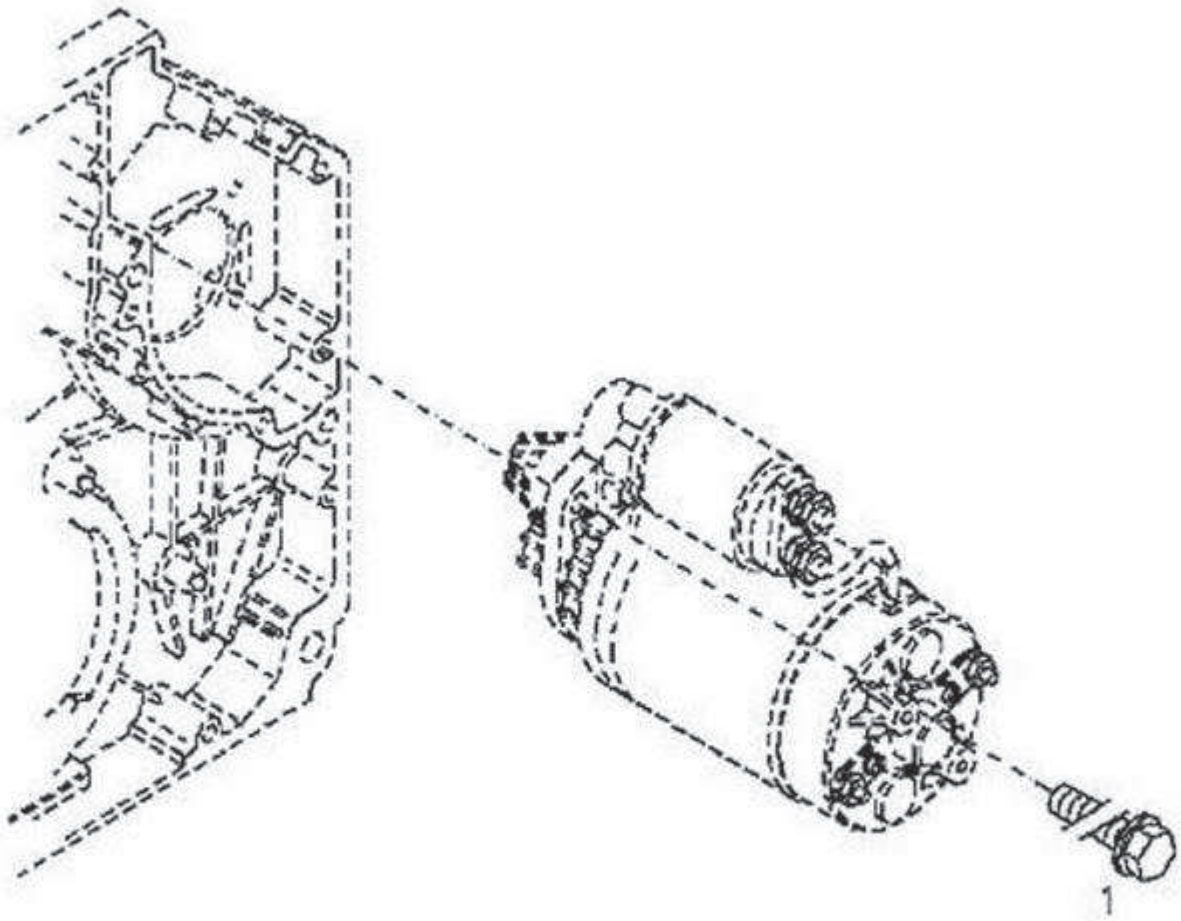

A91-6150E

Fig.	Part No. 编码	Quantity 件数 1	2	3	PS	KIT	Description 名称	Notes
1	**4110000509315**	3					Hexagon bolt..... .... 六角头凸缘螺栓EN 1662-F-M10X38-10.9-ZNAL-A 1308626-52D	

1	**11213481**	起动机紧固件装置 **Fastenings**	Catalogue id **111201**	Group **236**
2			Illustr. No **A91-6150E**	Section **200**
3				
4			Issue **2638000345**	Page **201**
5				

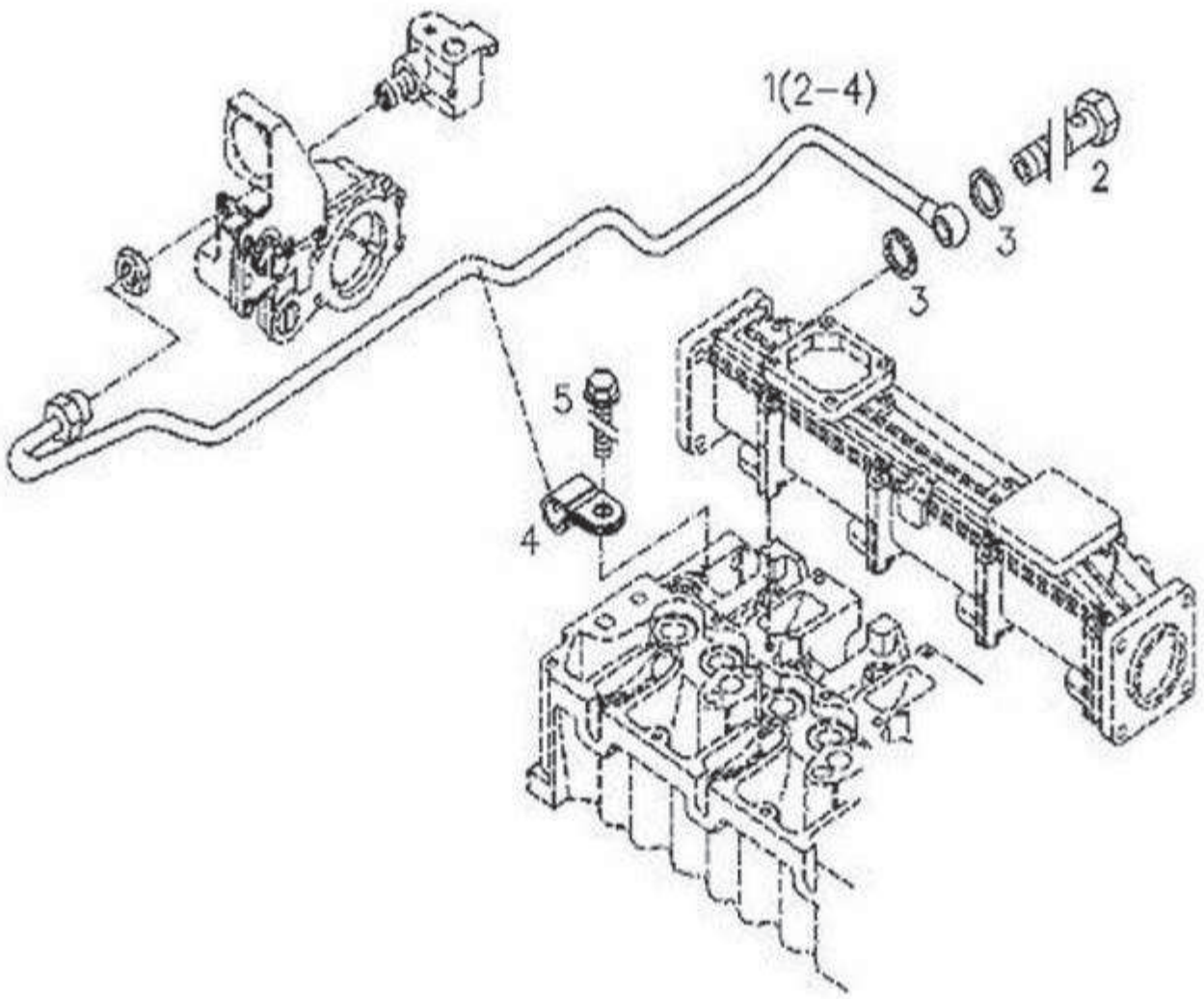

A92-6150E

Fig.	Part No. 编码	Quantity 件数 1	2	3	PS	KIT	Description 名称	Notes
1	**4110000988056**	1					Pilot line..... .. .. 增压补偿器管装配总成D04289355	
2	**4110000509292**	1					Hollow screw..... .. .. 空心螺栓DIN 7643-6-4-A3L 3509641-52D	
3	**4110000509191**	2					Sealing ring..... .. .. 密封垫DIN 7603-A10X13,5-CU 3509643-52D	
4	**4110000970107**	1					Pipe clamp..... .. .. 管夹H 3223-C 6X15-ST/MVQ-1-70 1303631-30D	
5	**4110000727192**	1					Hexagon bolt..... .. .. 六角头凸缘螺栓Q1840612TF36	

1	**11213481**	增压补偿器管装置 **Pilot line**	Catalogue id **111201**	Group **237**
2				
3			Illustr. No **A92-**	Section **100**
4				
5			Issue **2638000345**	Page **203**

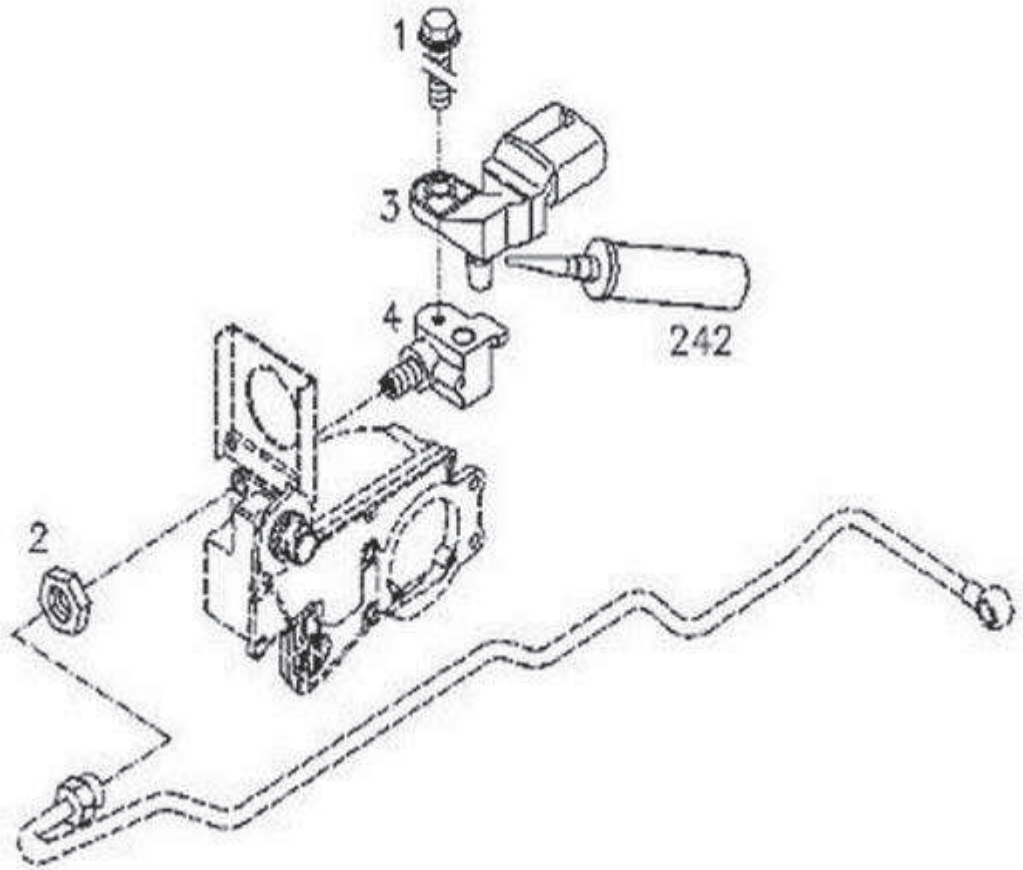

A93-6150E

Fig.	Part No. 编码	Quantity 件数 1	2	3	PS	KIT	Description	名称	Notes
1	**4110000727045**	1					Bolt.	螺栓-涂密封材料EN1662-F-M6*20-10.9-ZNA1 3602666-30D	
2	**4110000988028**	1					Nut.	扁螺母DIN 80705-M 14X1,5-FE/ZNPHRF D01144661	
3	**4110000727110**	1					Sensor...	进气压力温度传感器总成D04213838	
4	**4110000988062**	1					Connector	接头总成D04291741	

1	**11213481**	紧固件-进气传感 **Accessories**	Catalogue id **111201**	Group **237**
2				
3			Illustr. No **A93-6150E**	Section **200**
4				
5			Issue **2638000345**	Page **205**

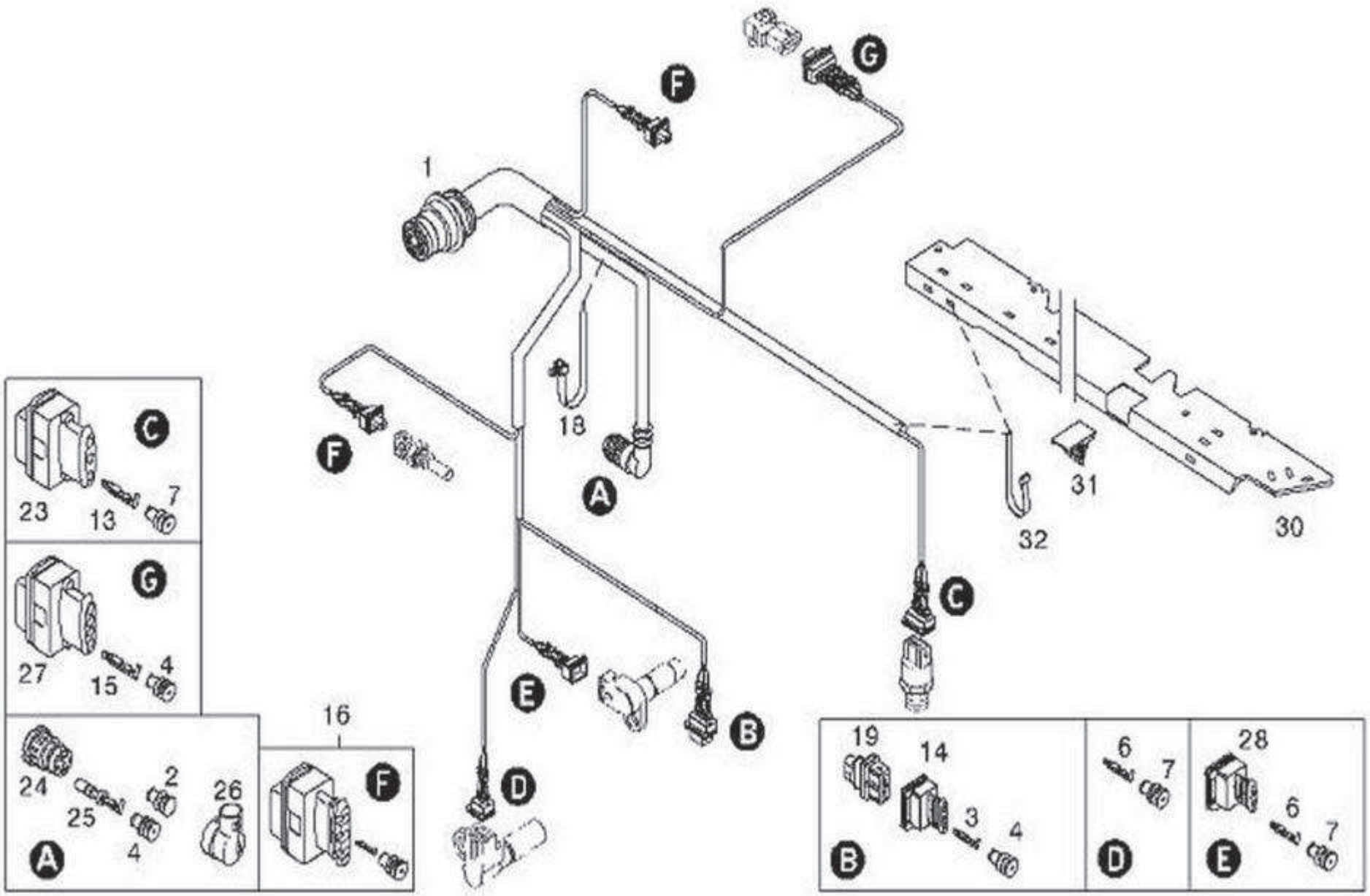

A94-6150E

Fig.	Part No. 编码	Quantity 件数 1	2	3	PS	KIT	Description 名称	Notes
	4110000988046	1					Cable harness..... .... 线束及线束支架总成D04213755	
1	**4110000988047**	1					Cable harness..... 发动机线束总成D04214707	
30	**4110000988014**	1					Cover plate..... 发动机线束固定板3724816-65D	
31	**4110000988040**	1					Cable clamp..... 夹D04194944	
32	**4110000727159**	4					Clamp..... .... B14Q+固定带-线束H 7672-G172X4,6 黑色T67417246	

1	**11213481**	线束及线束支架总成 **Cable harness**	Catalogue id **111201**	Group **238**
2				
3			Illustr. No **A94-6150E**	Section **100**
4				
5			Issue **2638000345**	Page **207**

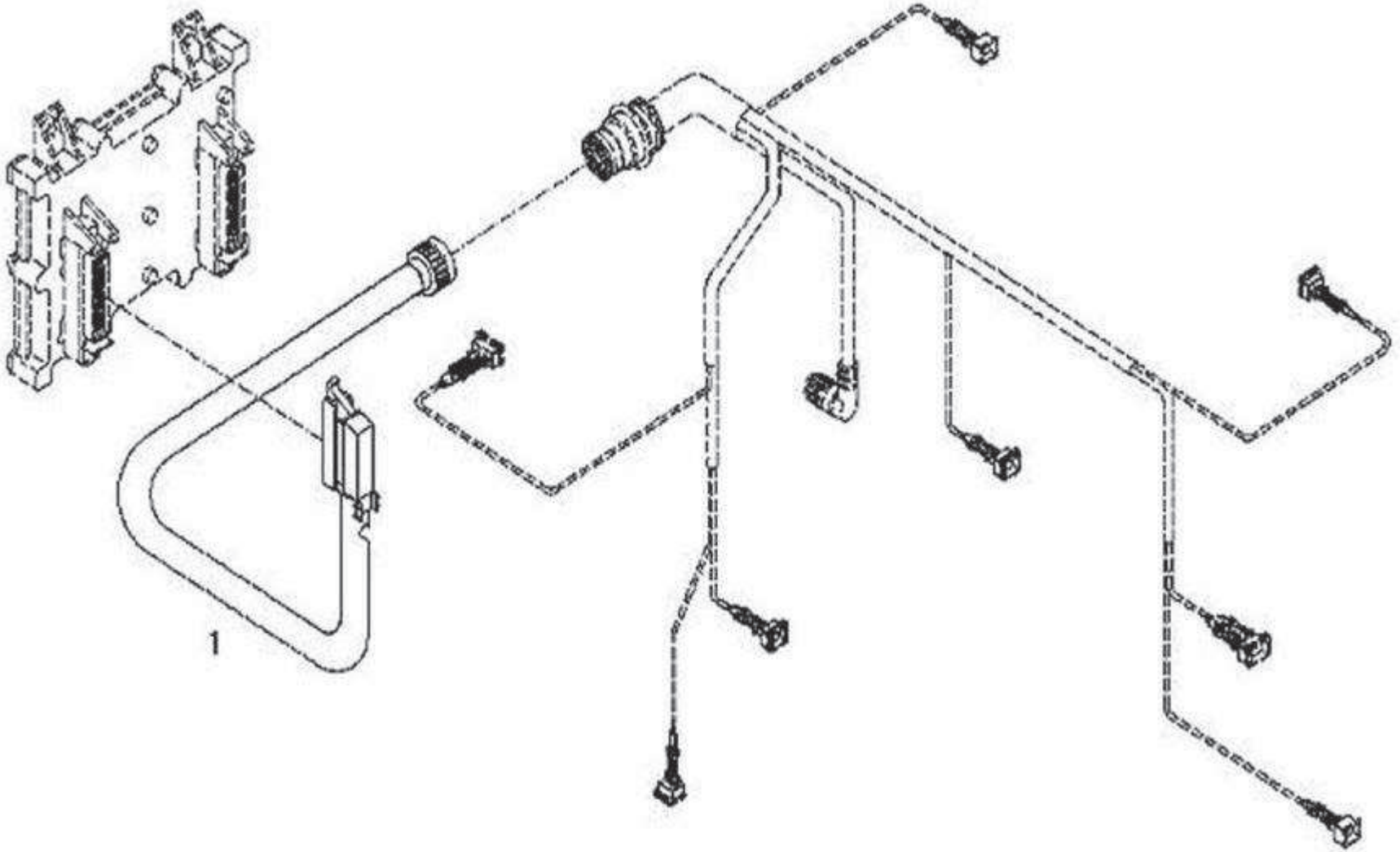

A95-6150E

Fig.	Part No. 编码	Quantity 件数 1	2	3	PS	KIT	Description 名称	Notes
1	**26370003931**	1					EMR wire harness..... ..... EMR线束	

1	**11213481**	过渡线束 **Interconnect.cable**	Catalogue id **111201**	Group **238**
2				
3			Illustr. No **A95-6150E**	Section **200**
4				
5			Issue **2638000345**	Page **209**

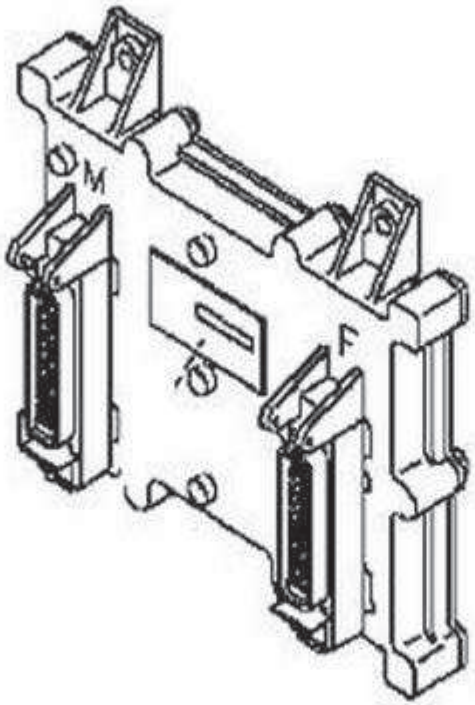

1

A96-6150E

Fig.	Part No. 编码	Quantity 件数 1	2	3	PS	KIT	Description 名称	Notes
1	**4110000988093**	1					ECU…..... ECU D04218015-BF4M2012-10T2-0767	

1	**11213481**	ECU总成 **Control unit**	Catalogue id **111201**	Group **239**
2				
3			Illustr. No **A96-6150E**	Section **100**
4				
5			Issue **2638000345**	Page **211**

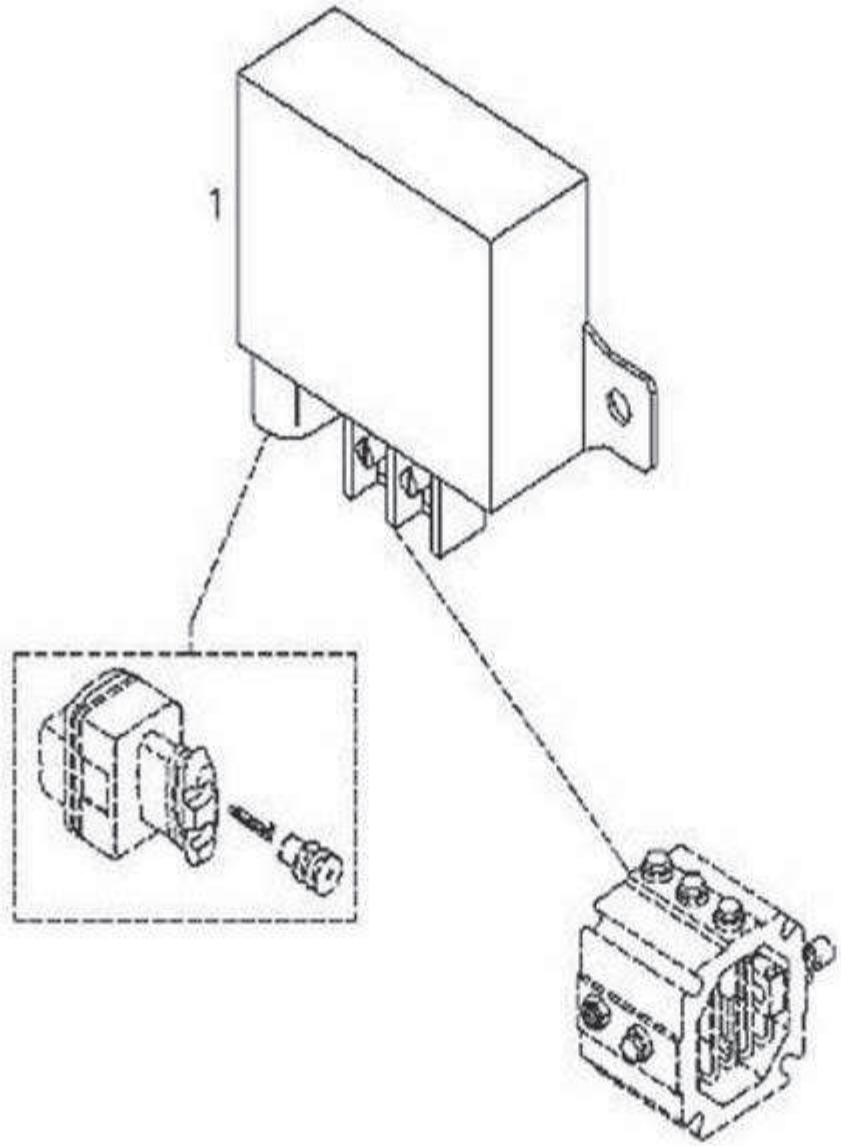

A97-6150E

Fig.	Part No. 编码	Quantity 件数 1	2	3	PS	KIT	Description 名称	Notes
1	**4110000727108**	1					Control..... .... 控制盒D04213436	

1	**11213481**	控制盒–预热器 **Relay**	Catalogue id **111201**	Group **240**
2				
3			Illustr. No **A97-6150E**	Section **100**
4			Issue **2638000345**	Page **213**
5				

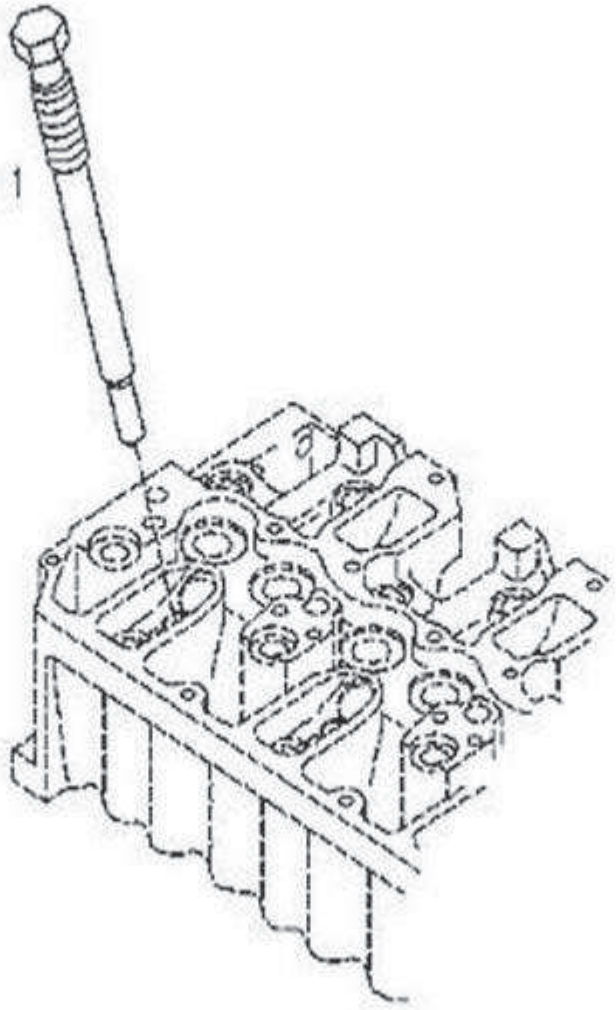

A98-6150E

Fig.	Part No. 编码	Quantity 件数 1	2	3	PS	KIT	Description 名称	Notes
1	**4110000727047**	4					Plug 预热器孔堵塞3750211-56D	

1	**11213481**	预热器孔堵塞 **Blanking parts**	Catalogue id **111201**	Group **241**
2				
3			Illustr. No **A98-6150E**	Section **100**
4				
5			Issue **2638000345**	Page **215**

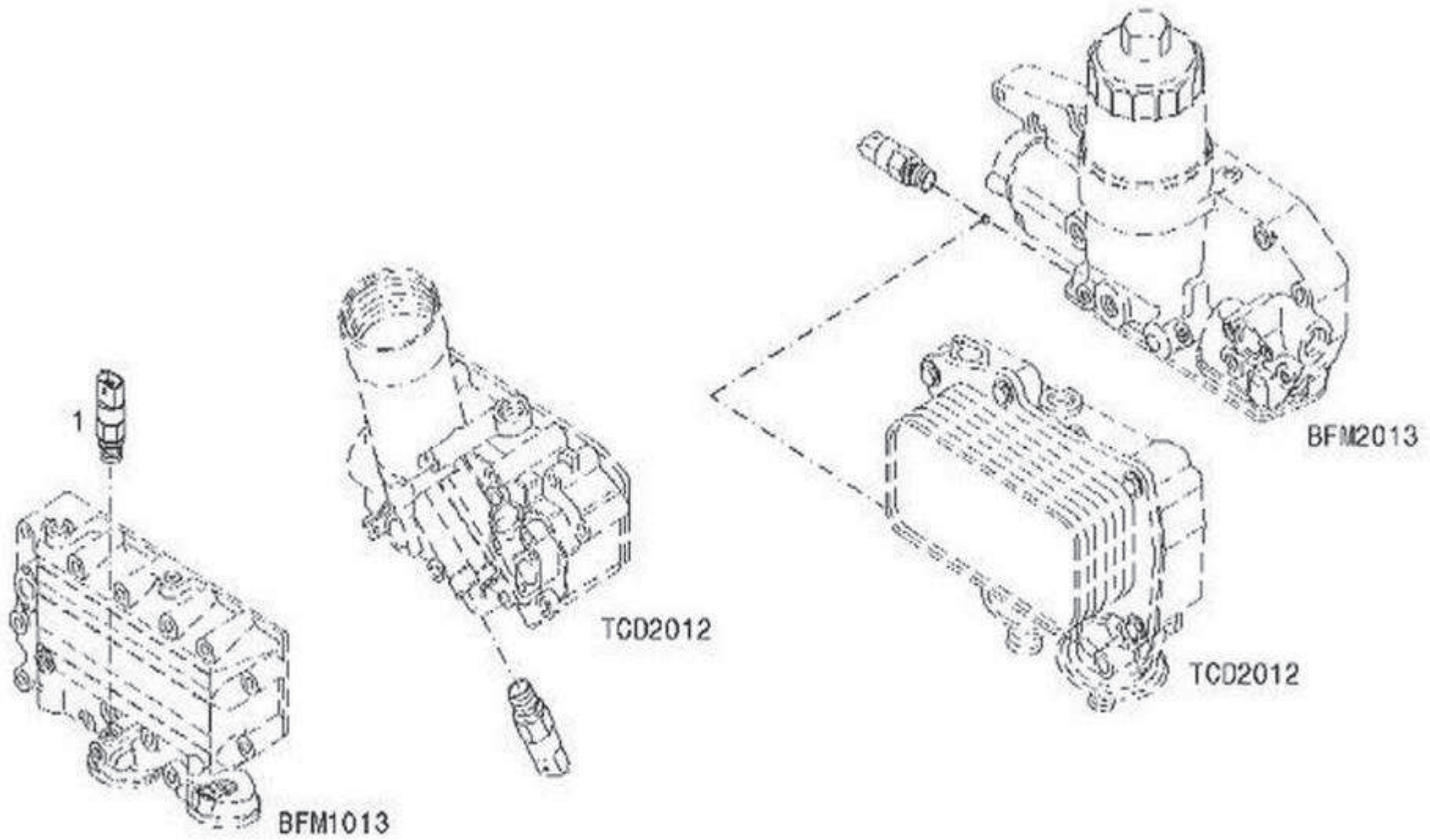

A99-6150E

Fig.	Part No. 编码	Quantity 件数 1	2	3	PS	KIT	Description 名称	Notes
1	**4110000727107**	1					Oil pressure sensor..... 油压传感器D04215774	

1	**11213481**	油压传感器逻辑总成 **Oil press.monitor**	Catalogue id **111201**	Group **242**
2				
3			Illustr. No **A99-6150E**	Section **100**
4				
5			Issue **2638000345**	Page **217**

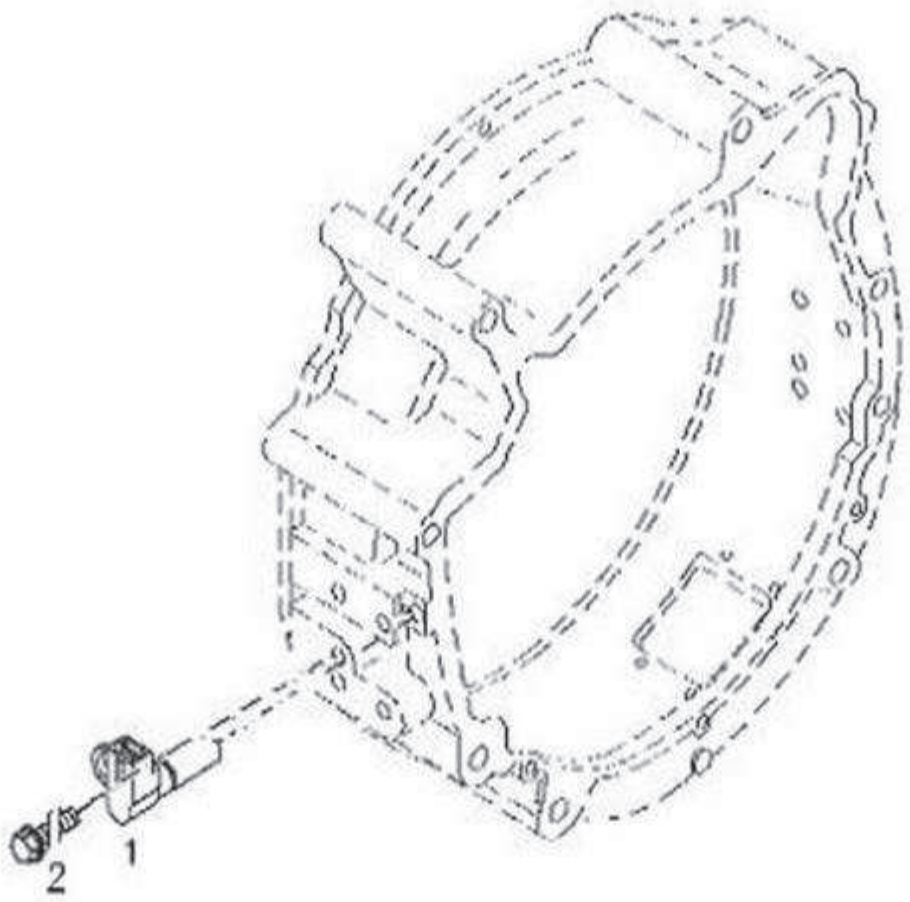

A100-6150E

Fig.	Part No.编码	Quantity件数 1	2	3	PS	KIT	Description 说明	Notes
1	**4110000727141**	1					Rotate speed sensor..... ..... 转速传感器D04364426	
2	**4110000727192**	1					Hexagon bolt..... ..... 六角头凸缘螺栓Q1840612TF36	

1	**11213481**	转速传感器逻辑总成 **Speed monit.system**	Catalogue id **111201**	Group **242**
2			Illustr. No **A100-6150E**	Section **200**
3				
4			Issue **2638000345**	Page **219**
5				

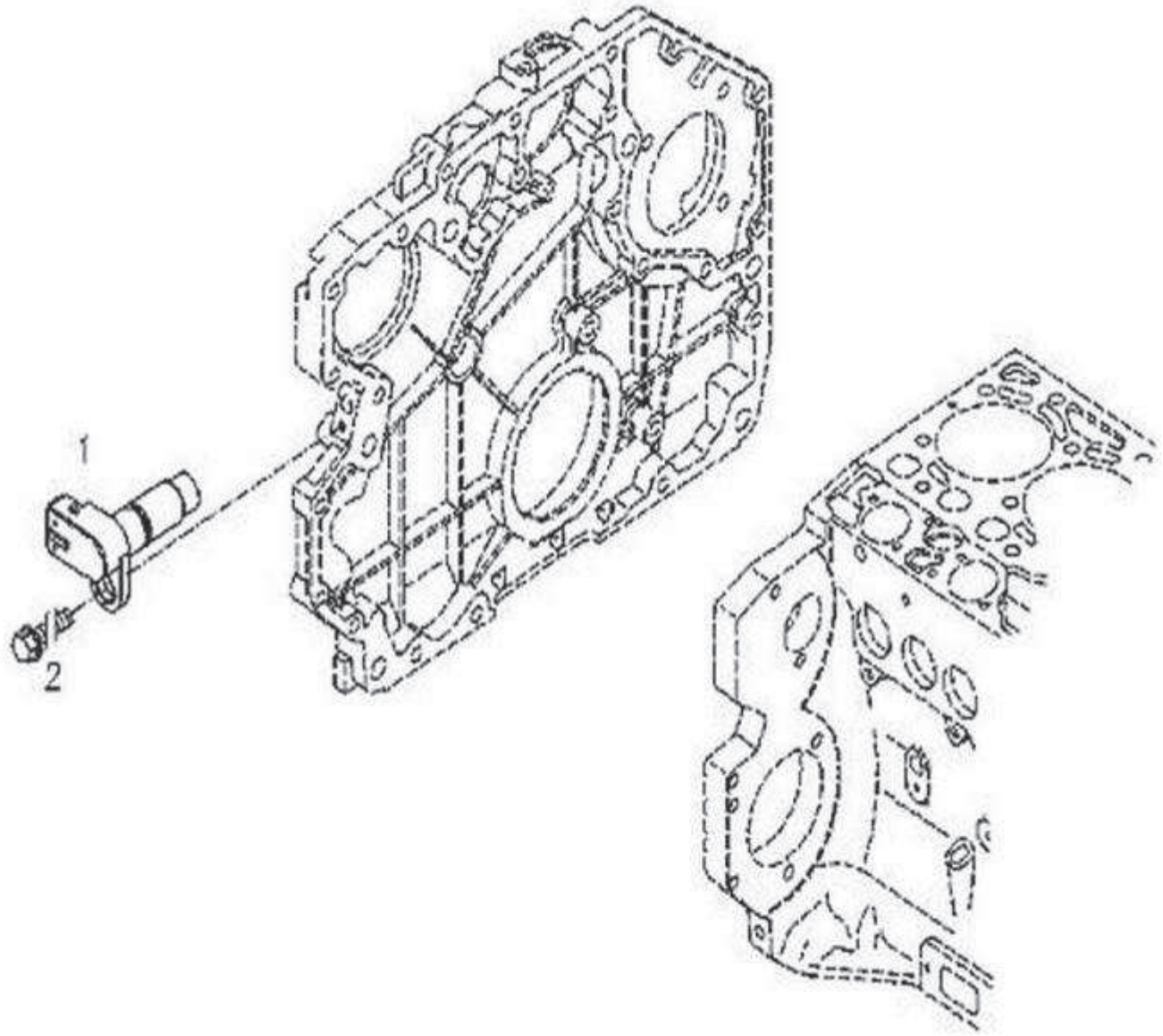

A101-6150E

Fig.	Part No.编码	Quantity件数 1	2	3	PS	KIT	Description 说明	Notes
1	**4110000727104**	1					Speed sensor..... 凸轮轴转速传感器D04199792	
2	**4110000727193**	1					Hexagon bolt..... .... 六角头凸缘螺栓Q1840616TF36	

1	**11213481**	脉冲信号发生器 **Impulsetransmitter**	Catalogue id **111201**	Group **242**
2				
3			Illustr. No **A101-6150E**	Section **300**
4				
5			Issue **2638000345**	Page **221**

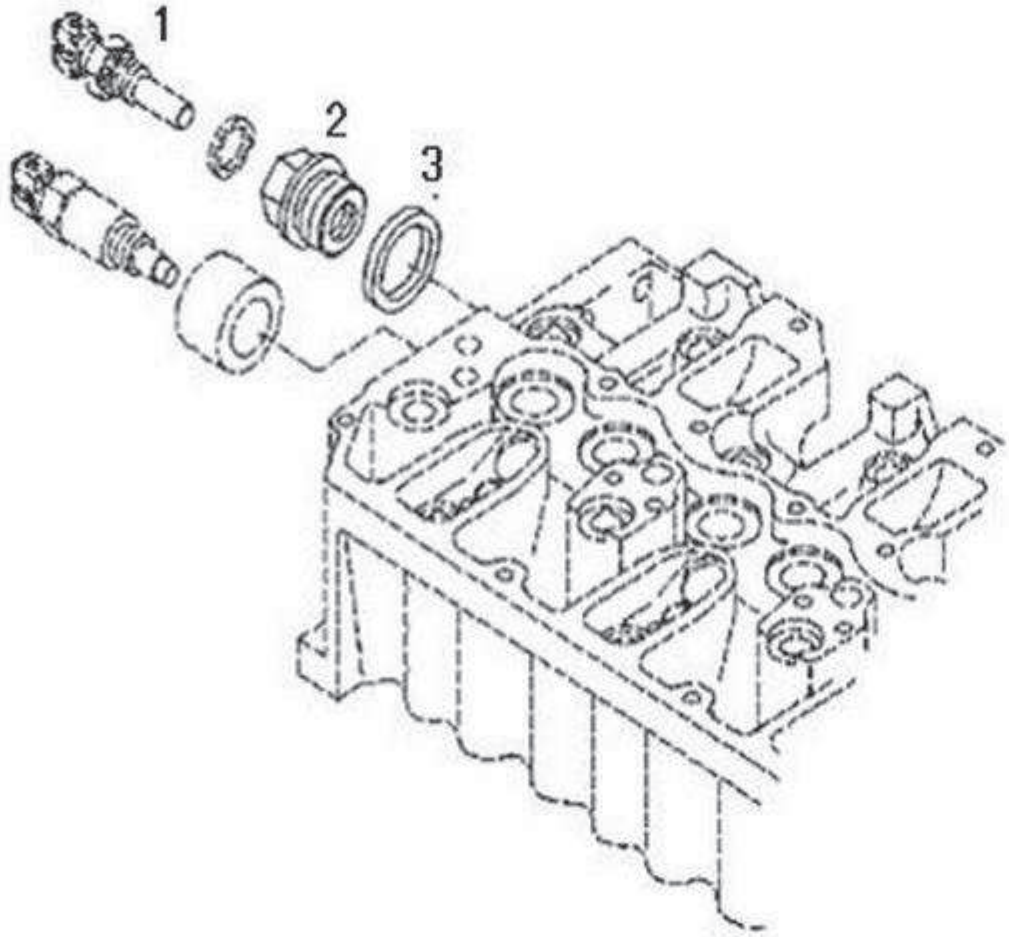

A102-6150E

Fig.	Part No.编码	Quantity件数 1	2	3	PS	KIT	Description 说明	Notes
1	**4110000727111**	1					Temperature sensor..... .. .. 温度传感器D04213839	
2	**4110000727044**	1					Hexagon plug..... .... 六角头丝堵-冷却液温度传感器总成3602116-30D	
3	**4110000509307**	1					Sealing ring..... .... 密封垫7603-A26X31-CU 1013633-52D	

1	**11213481**	冷却液温度传感器 **Temper.transmitter**	Catalogue id **111201**	Group **242**
2				
3			Illustr. No **A102-6150E**	Section **400**
4				
5			Issue **2638000345**	Page **223**



www.sdlg.cn

GROUP		Section	Page
301	Battery with assembling details	100	229
302	Key system	100	231
303	Lighting, front	100	233
303	Working lamp on boom	200	235
304	Horn	100	237
305	Windshield washer	100	239
306	Electrical relay	100	241
306	Switch	200	243
307	Electronic unit.	100	247
308	Cables, battery	100	249
308	Cable and wire harness, main	200	251
308	Cable harness, engine	300	255
308	Cable and wire harness, instrument panel	400	257
308	Cable harnesses, cab	500	259
309	Electrical relay	100	263
310	Electrical sensor	100	265
311	Instrument panel, warning unit and information unit	100	267
312	Cassette radio recorder with mounting details	100	269
313	Telematics	100	271



www.sdlg.cn

部类		部分	页
301	蓄电池及附件	100	229
302	钥匙系统	100	231
303	前灯	100	233
303	大臂工作灯	200	235
304	喇叭	100	237
305	挡风玻璃洗涤器	100	239
306	继电器	100	241
306	开关	200	243
307	电子装置	100	247
308	蓄电池电缆	100	249
308	主要电缆和线束	200	251
308	发动机电缆线束	300	255
308	仪表盘电缆和线束	400	257
308	驾驶室电缆线束	500	259
309	继电器	100	263
310	电子传感器	100	265
311	警告装置和信息装置仪表盘	100	267
312	盒式磁带收音机录音机及附件	100	269
313	远程信息处理	100	271

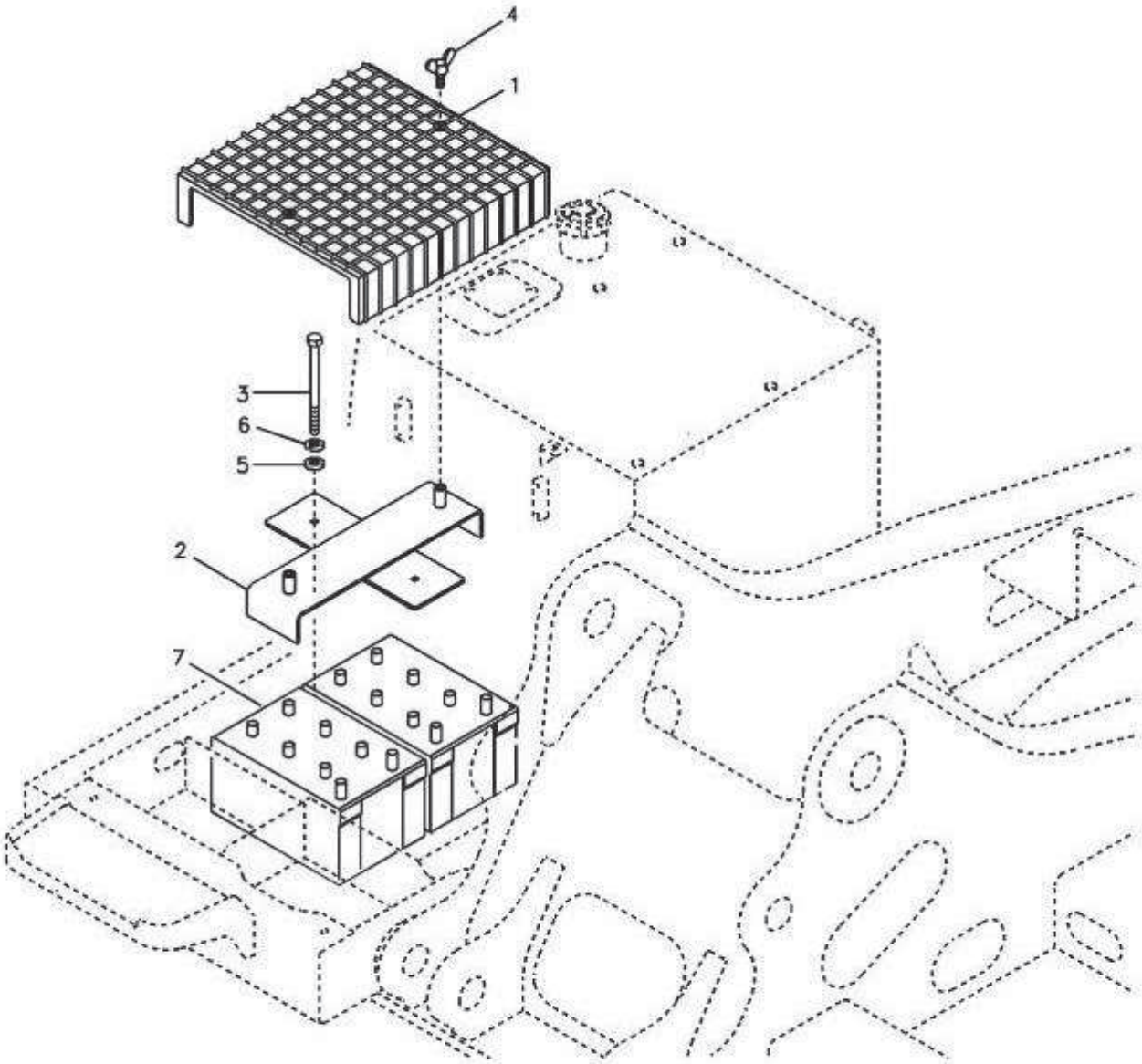

B1-6150E

Fig.	Part No.编码	Quantity件数 1	2	3	PS	KIT	Description 说明	Notes
1	**11213260**	1					Cover .....罩盖.....	
2	**11213259**	1					Bracket.....支架.....	
3	**11214623**	2					Hexagon screw .....六角螺丝.....	
4	**11213245**	2					Wing screw .....翼型螺丝.....	
5	**11210068**	2					Washer.....垫圈.....	
6	**11210064**	2					Spring washer .....弹簧垫圈.....	
7	**11212135**	2					Battery.....电池.....	

1	**11212924**	蓄电池及附件 **Battery with assembling details**	Catalogue id **111201**	Group **301**
2			Illustr. No **B1-6150E**	Section **100**
3			Issue **2638000345**	Page **229**
4				
5				

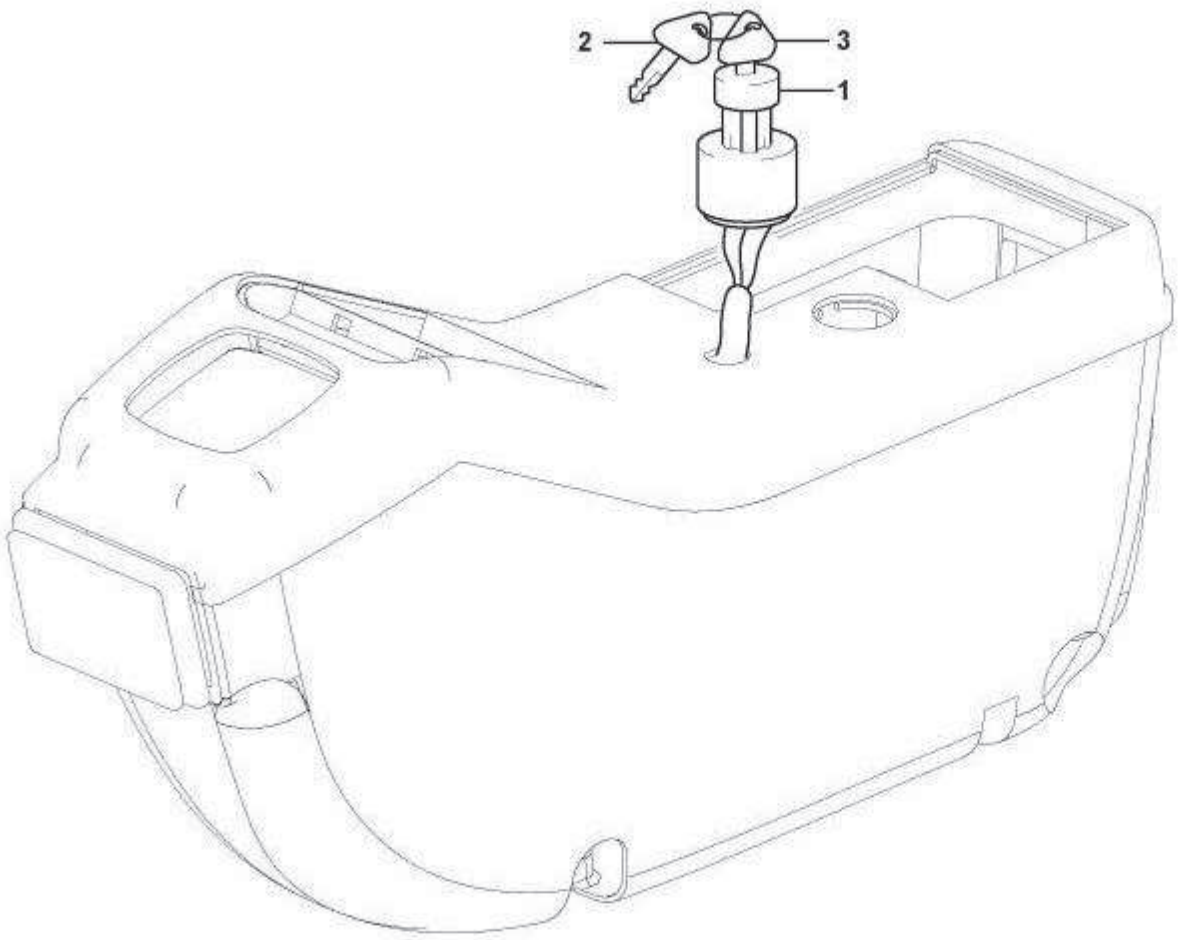

B2-6150E

Fig.	Part No.编码	Quantity件数 1	2	3	PS	KIT	Description 说明	Notes
1	**11211219**	1					Starter switch .....起动开关.....	
2		2			NS		•Key .... • 锁销.....	
3		1			NS		•Key ....• 锁销.....	

1	**11211826**	钥匙系统 **Key system**	Catalogue id **111201**	Group **302**
2				
3			Illustr. No **B2-6150E**	Section **100**
4				
5			Issue **2638000345**	Page **231**

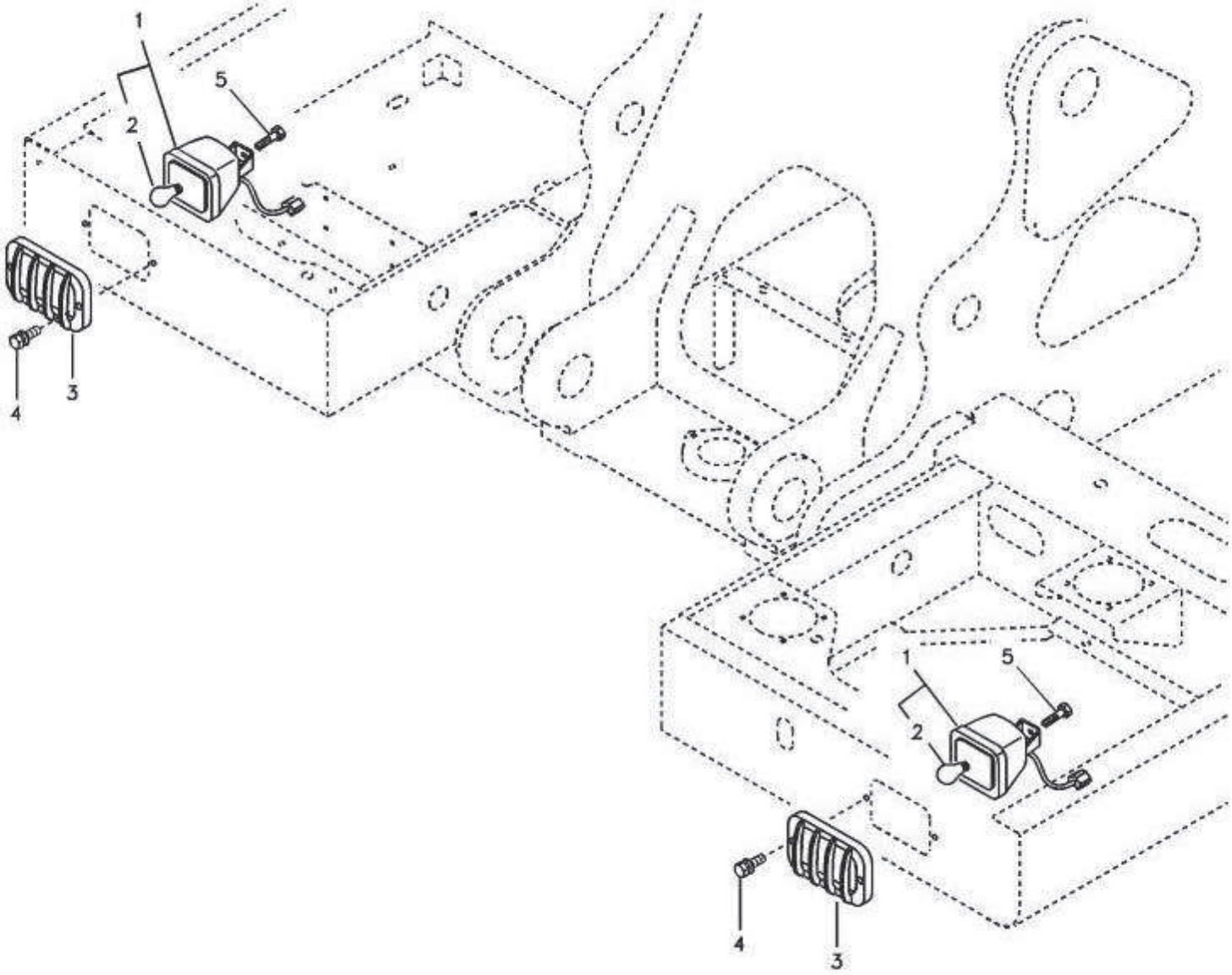

B3-6150E

Fig.	Part No.编码	Quantity件数 1	2	3	PS	KIT	Description 说明	Notes
1	**11211148**	2					Work lamp.....聚光灯.....	
2	**11210028**	1					•Bulb ..... • 灯泡.....	24V,70W
3	**11210606**	2					Guard .....护罩焊件.....	
4	**11210034**	4					Flange screw.....法兰螺钉.....	
5	**11210036**	2					Flange screw.....法兰螺钉.....	

1	**11212924**	前灯 **Lighting, front**	Catalogue id **111201**	Group **303**
2			Illustr. No **B3-6150E**	Section **100**
3				
4			Issue **2638000345**	Page **233**
5				

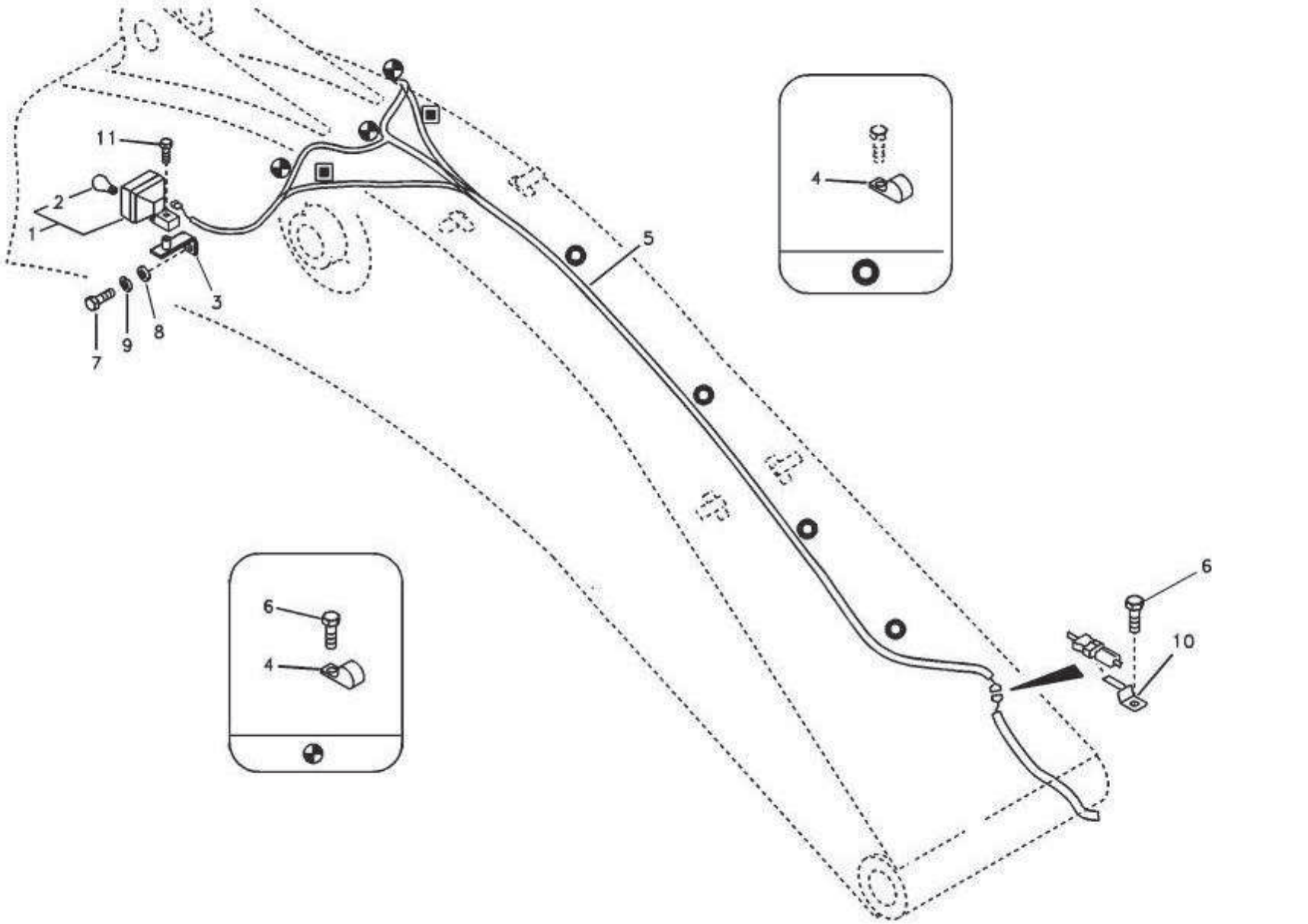
11
2
1
3
7
9
8
5
4
6
4
6
10
B4-6150B

Fig.	Part No.编码	Quantity件数 1	2	3	PS	KIT	Description 说明	Notes
1	**11211148**	1					Work lamp.....聚光灯.....	
2	**11210028**	1					•Bulb .....• 灯泡.....	24V,70W
3	**11210458**	1					Bracket.....支架.....	
4	**11210257**	6					Clip.....夹.....	
5	**11213262**	1					Cable harness.....导线系统.....	
6	**11210042**	3					Flange screw.....法兰螺钉.....	
7	**11210101**	1					Hexagon screw .....六角螺丝.....	
8	**11210060**	1					Washer.....垫圈.....	
9	**11210067**	1					Spring washer .....弹簧垫圈.....	
10	**11213263**	1					Clip.....卡簧.....	
11	**11210036**	1					Flange screw.....法兰螺钉.....	

1	**11213370**	大臂工作灯 **Working lamp on boom**	Catalogue id **111201**	Group **303**
2				
3			Illustr. No **B4-6150E**	Section **200**
4				
5			Issue **2638000345**	Page **235**

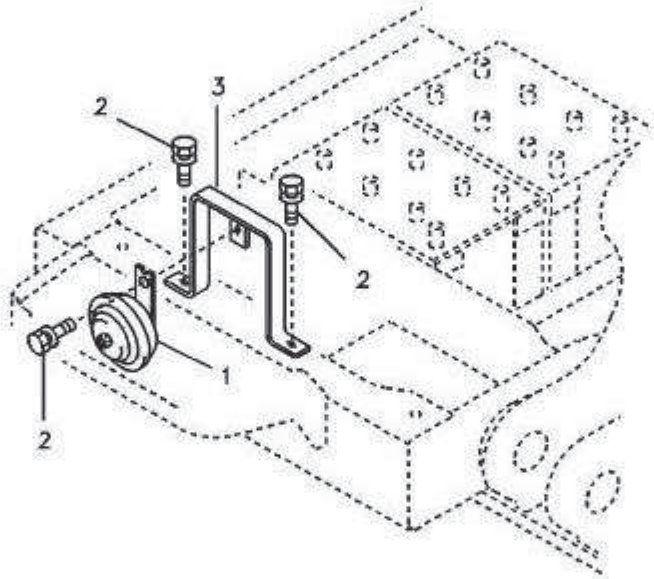

B5-6150E

Fig.	Part No.编码	Quantity件数 1	2	3	PS	KIT	Description 说明	Notes
1	**11211269**	1					Horn .....喇叭.....	
2	**11210036**	3					Flange screw.....法兰螺钉.....	
3	**11213264**	1					Bracket.....支架.....	

1	**11212924**	喇叭 **Horn**	Catalogue id **111201**	Group **304**
2			Illustr. No **B5-6150E**	Section **100**
3				
4			Issue **2638000345**	Page **237**
5				

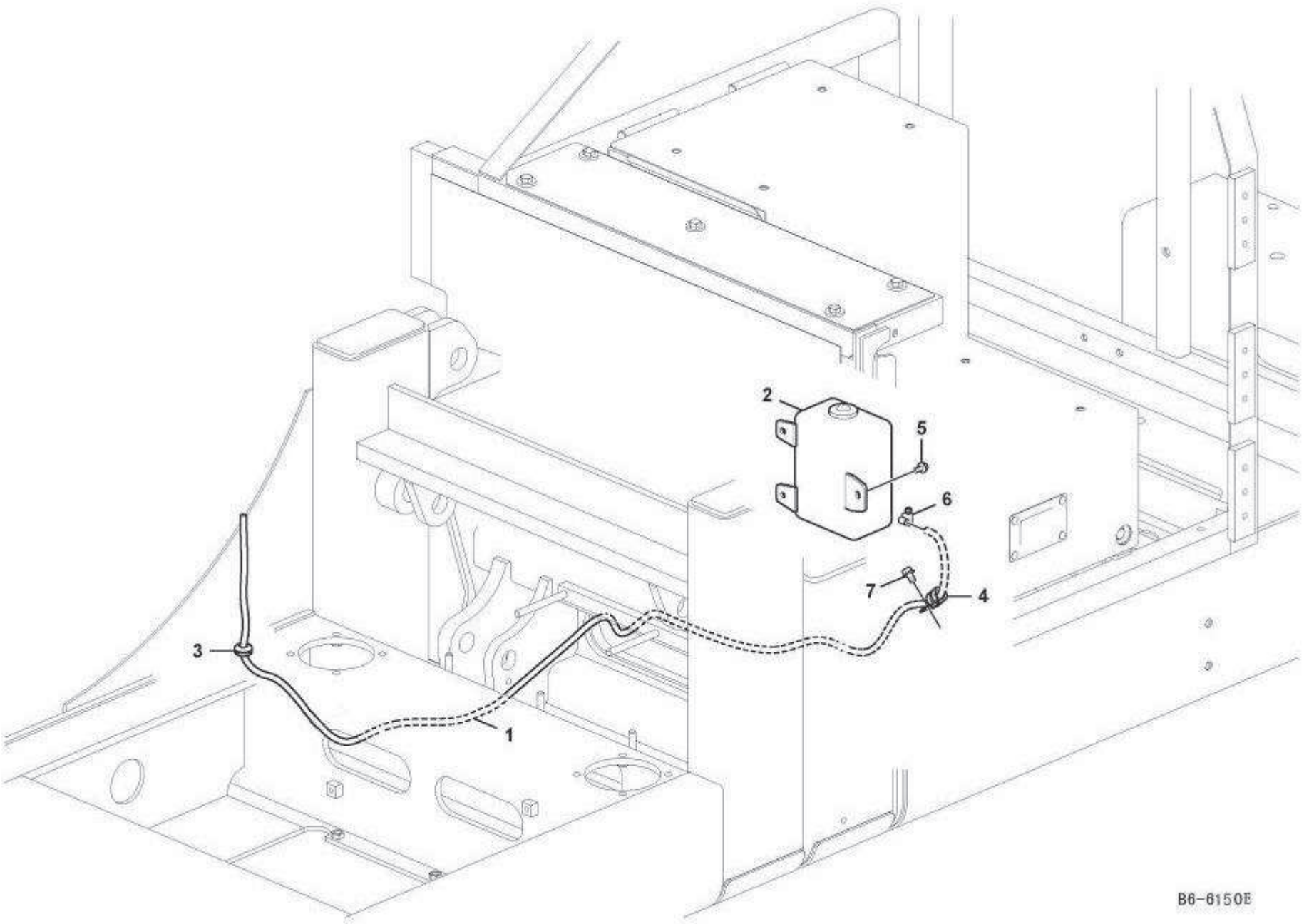
2
5
6
7
4
3
1
B6-6150E

Fig.	Part No.编码	Quantity件数 1	2	3	PS	KIT	Description 说明	Notes
1	**11211126**	1					Hose.....软管.....	
2	**11210609**	1					Washer pump.....洗涤泵.....	
3	**11210620**	1					Grommet .....套环.....	
4	**11214361**	1					Clip.....夹.....	
5	**11210031**	3					Flange screw.....法兰螺钉.....	
6	**11211642**	1					Clamp.....管夹.....	
7	**11210032**	1					Flange screw.....法兰螺钉.....	

1	**11212924**	挡风玻璃洗涤器 **Windshield washer**	Catalogue id **111201**	Group **305**
2			Illustr. No **B6-6150E**	Section **100**
3				
4			Issue **2638000345**	Page **239**
5				

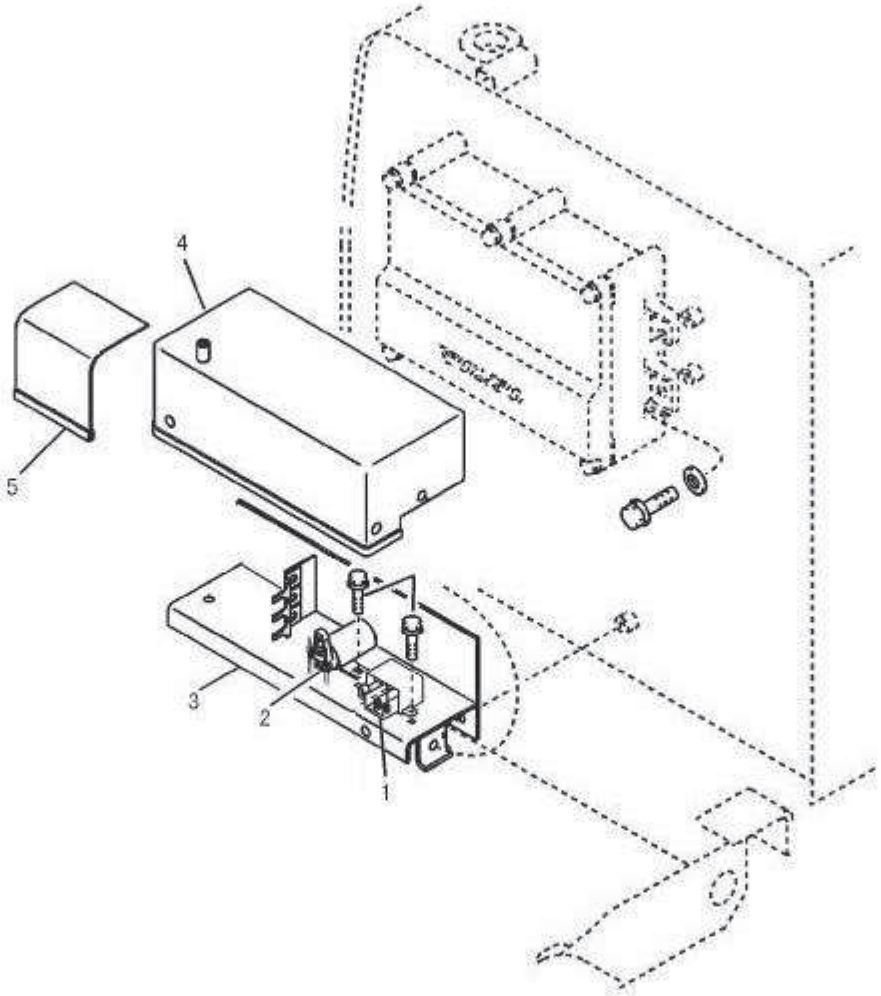

B7-6150E

Fig.	Part No.编码	Quantity件数 1	2	3	4	5	PS	KIT	Description 说明	Notes
1	**11210030**	2							Flange screw.....法兰螺钉.....	
2	**11210036**	5							Flange screw.....法兰螺钉.....	
3	**11210041**	4							Flange screw.....法兰螺钉.....	
4	**11210057**	2							Washer.....垫圈.....	
5	**11210062**	2							Spring washer .....弹簧垫圈.....	
6	**11210219**	2							Hexagon nut.....六角螺母.....	
7	**11211901**	1							Relay.....继电器.....	
8	**11213276**	1							Relay.....继电器.....	PreHeater
9	**11213280**	1							Relay.....继电器.....	fety
10	**11213277**	1							Bracket.....支架.....	
11	**11213279**	1							Cover .....罩.....	
12	**11213278**	1							Cover .....罩盖.....	

1	**11212924**	继电器 **Electrical relay**	Catalogue id **111201**	Group **306**
2			Illustr. No **B7-6150E**	Section **100**
3				
4			Issue **2638000345**	Page **241**
5				

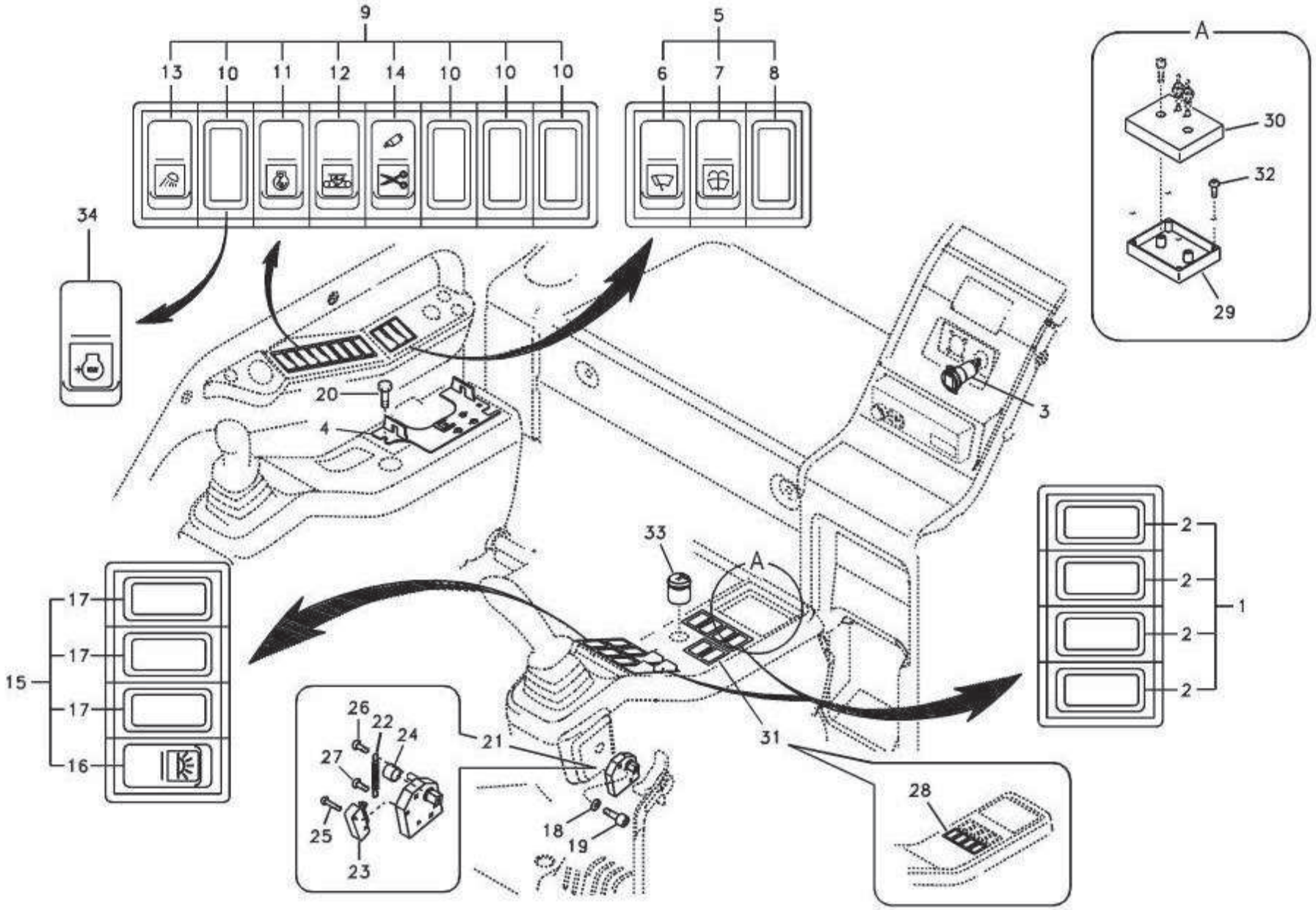
9
13
10
11
12
14
10
10
10
5
6
7
8
A
30
32
29
34
20
4
3
33
A
2
2
2
2
1
17
17
17
16
15
26
22
24
27
25
23
21
18
19
31
28
B8-6150E

Fig.	Part No.	Quantity 1	2	3	4	5	PS	KIT	Description 说明	Notes
1	**11210270**	2							Switch .....开关.....	BLANK
2	**11212304**	4							•Cover .....• 罩盖.....	
3	**11210347**	1							Socket.....插座.....	
4	**11210883**	1							Bracket.....支架.....	
	11212369	1							•Weatherstrip .....• 密封条.....	
5	**11210756**	1							Switch .....开关.....	
6	**11212292**	1							•Switch .....• 开关.....	UPPER WIPER
7	**11212312**	1							•Switch .....• 开关.....	
8	**11212304**	1							•Cover .....• 罩盖.....	
9	**11210784**	1							Switch .....开关.....	ROCKER 8
10	**11212304**	4							•Cover .....• 罩盖.....	
11	**11212306**	1							•Switch .....• 开关.....	
12	**11212315**	1							•Switch .....• 开关.....	
13	**11212307**	1							•Switch .....• 开关.....	
14	**11212293**	1							•Rocker switch .....• 开关.	BOOSTER
15	**11210323**	1							Rocker switch .....开关…….....	ROCRER 4
16	**11212305**	1							•Switch .....• 开关.....	
17	**11212304**	3							•Cover .....• 罩盖.....	
18	**11210024**	3							Washer .....垫圈.....	
19	**11211608**	3							Bolt.....螺栓.....	
20	**11210042**	2							Flange screw .....法兰螺钉.....	
21	**11210271**	1							Lock lever .....锁杆.....	
22	**11212291**	1							•Spring .....• 弹簧.....	
23	**11210272**	1							•Switch .....• 开关.....	
24	**11210275**	1							•Bushing .....• 轴衬.....	
25	**11211615**	2							•Screw .....• 六角螺钉.....	
26	**11211616**	1							•Screw .....• 六角螺钉.....	
27	**11211618**	1							•Screw .....• 六角螺钉.....	
28		1							Switch .....开关.....	
29	**11210552**	1							Bracket.....支架.....	

1	**11212924**	开关 **Switch**	Catalogue id **111201** / Group **306**
2	**11213477**		
3			Illustr. No **B8-6150E** / Section **200**
4			
5			Issue **2638000345** / Page **243**

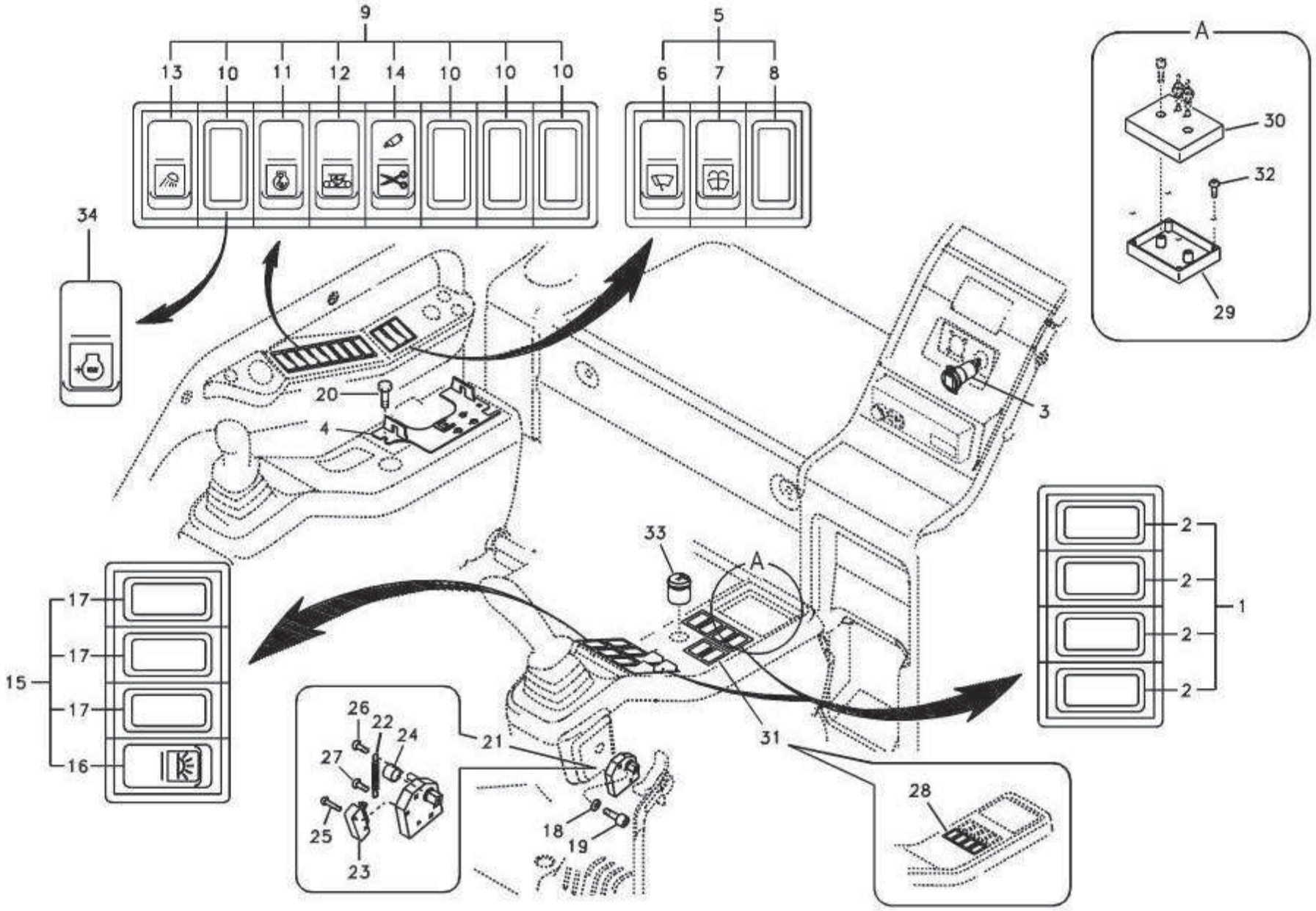
9
13
10
11
12
14
10
10
10
5
6
7
8
A
30
32
29
34
20
4
3
33
A
2
2
2
2
1
17
17
17
16
15
26
22
24
27
25
23
21
18
19
31
28

B8-6150E

Fig.	Part No.	Quantity 1	2	3	4	5	PS	KIT	Description 说明	Notes
30	**11210553**	1							Cover .....罩盖.....	
31	**11211314**	1							Cover .....罩盖.....	
32	**11211617**	4							Screw .....六角螺钉.....	
33	**11214322**	1							Hour counter .....小时表.....	
34	**11212290**		1						Rocker switch ....开关.....	POWER MAX MODE

1	**11212924**	开关 **Switch**	Catalogue id **111201**	Group **306**
2	**11213477**			
3			Illustr. No **B8-**	Section **200**
4				
5			Issue **2638000345**	Page **245**

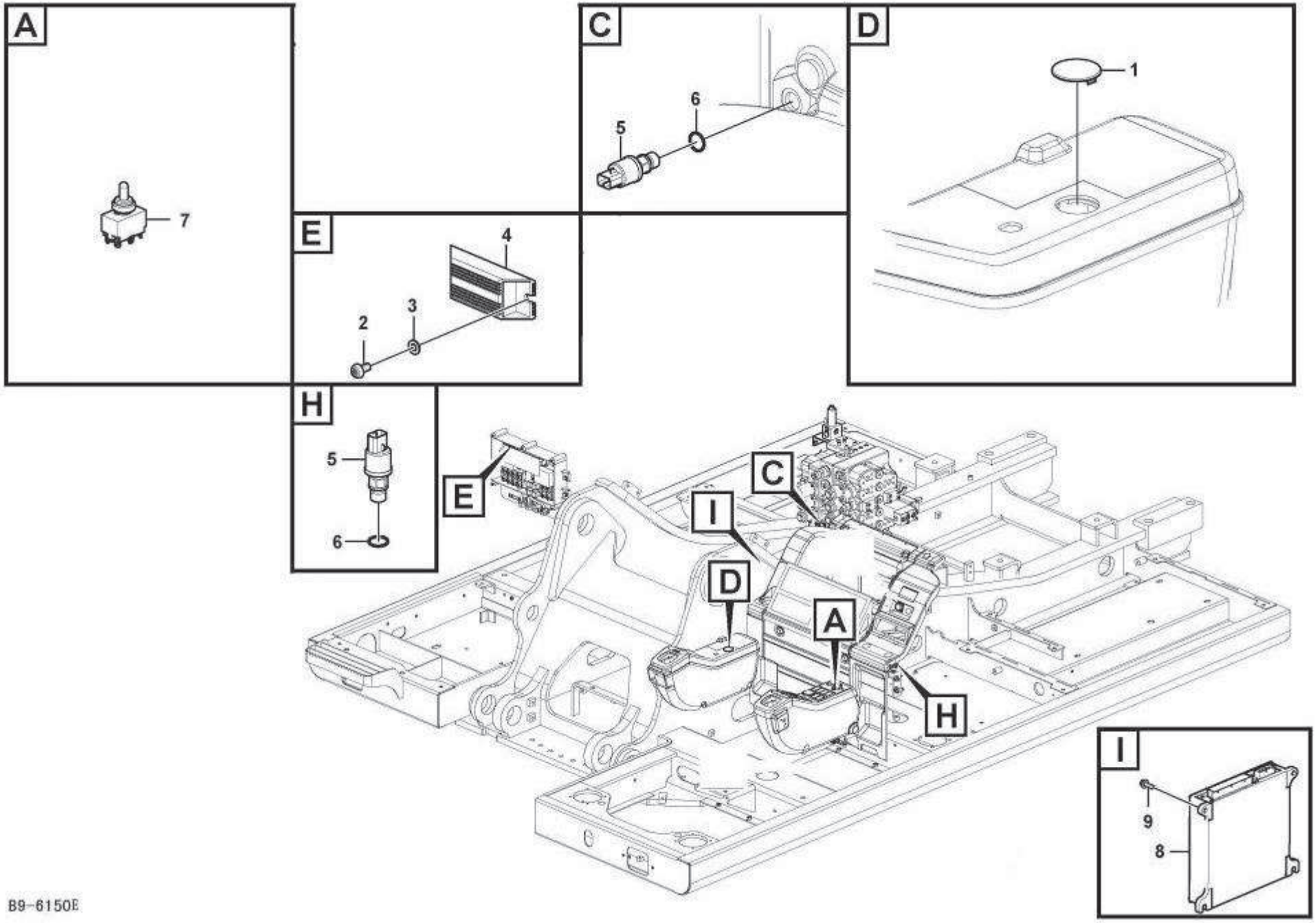

B9-6150E

Fig.	Part No.编码	Quantity件数 1	2	3	4	5	PS	KIT	Description 说明	Notes
1	**11210263**	1							Rubber cover .....橡皮护罩.....	
2	**11210087**	2							Six point socket scr.六点螺口插座.....	
3	**11210057**	2							Washer .....垫圈.....	
4	**11211878**	1							Resistor.....电阻.....	
5	**11210614**	2							Switch .....开关.....	
6	**11210133**	2							O-ring.....O 型圈.....	
7	**11211899**	1							Toggle switch.....跳动式开关.....	
8	**11211822**	1							VECU ..... VECU....	
9	**11210030**	4							Flange screw .....法兰螺钉.....	

1	**11212924**	电子装置 **Electronic unit.**	Catalogue id **111201**	Group **307**
2			Illustr. No **B9-6150E**	Section **100**
3				
4			Issue **2638000345**	Page **247**
5				

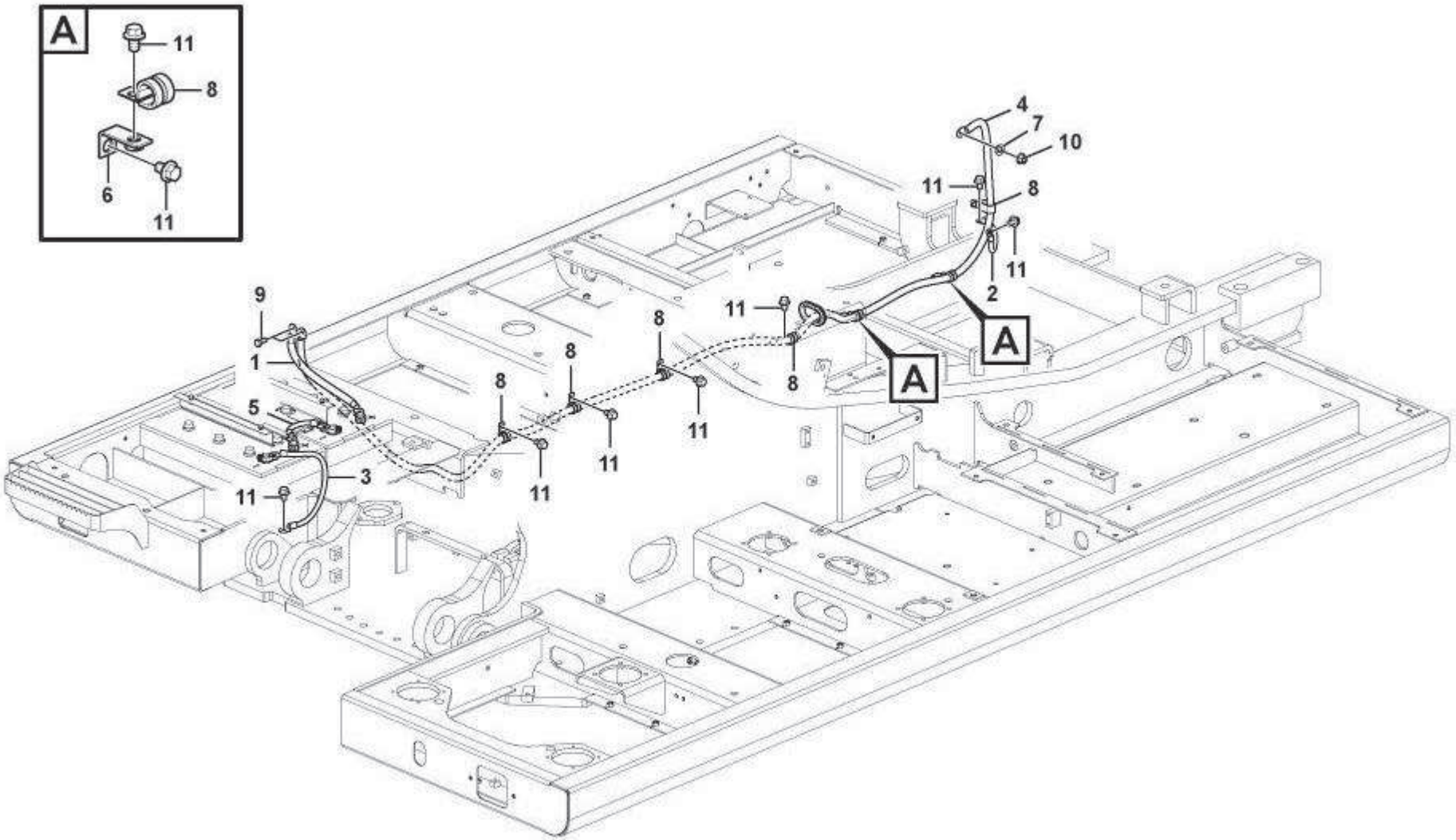

B10-6150E

Fig.	Part No.编码	Quantity件数 1	2	3	PS	KIT	Description 说明	Notes
1	**11213301**	1					Battery cable.....电池电缆.....	Positive
2	**11213298**	1					Battery cable.....电池电缆..... ..	Eng ground
3	**11213299**	1					Battery cable.....电池电缆..... ...	Negative
4	**11213300**	1					Battery cable.....电池电缆..... ...	Positive
5	**11213302**	1					Battery cable.....电池电缆..... ...	Extension
6	**11210623**	2					Bracket.....支架.....	
7	**11210064**	1					Spring washer.....弹簧垫圈.....	
8	**11210325**	6					Clip.....夹.....	
9	**11210118**	2					Hexagon screw.....六角螺丝.....	
10	**11210130**	1					Flange nut.....法兰螺母.....	
11	**11210036**	10					Flange screw.....法兰螺钉.....	

1	**11212924**	蓄电池电缆 **Cables, battery**	Catalogue id **111201**	Group **308**
2				
3			Illustr. No **B10-**	Section **100**
4				
5			Issue **2638000345**	Page **249**

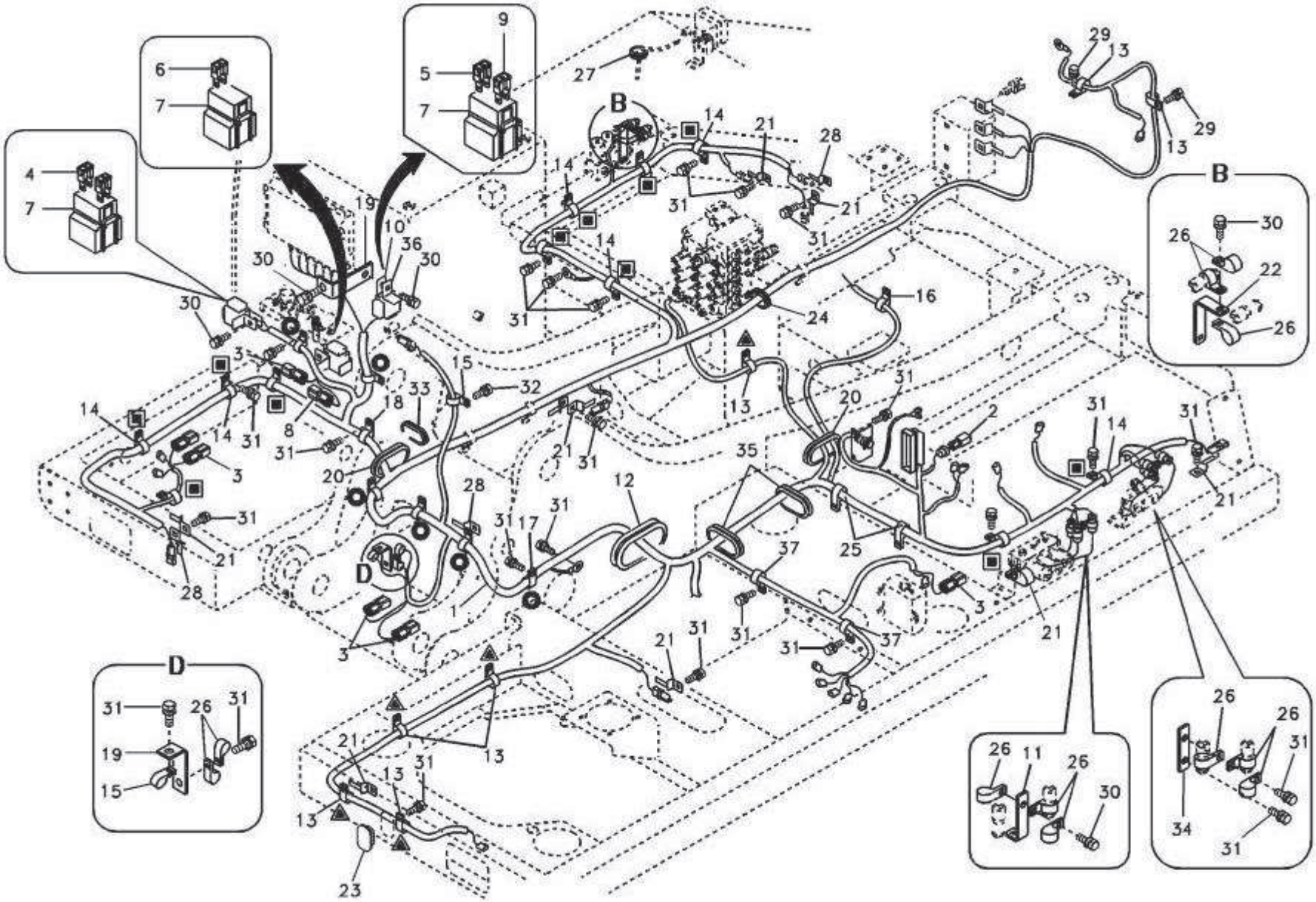
B11-6150E

Fig.	Part No.编码	Quantity件数 1	2	3	PS	KIT	Description 说明	Notes
1	**11214618**	1					Cable harness.....导线系统.....	
2	**11213714**	1					•Resistor ..... • 电阻器.....	
3	**11213713**	5					•Diode .....• 二极管.....	
4	**11212133**	2					•Fuse..... • 保险丝.....	40A
5	**11213717**	1					•Fuse.....• 保险丝.....	80A
6	**11213715**	1					•Fuse..... • 保险丝.....	140A
7	**11213712**	2					•Fuse holder.....• 保险丝座.....	
8		1					•Diode .....• 二极管.....	
9		1					•Fuse..... • 保险丝.....	
10	**11210605**	2					Bracket.....支架.....	
11	**11213304**	1					Bracket.....支架.....	
12	**11213305**	1					Grommet .....索环.....	
13	**11210255**	7					Clip.....夹.....	
14	**11210256**	11					Clip.....夹.....	
15	**11210257**	2					Clip.....夹.....	
16	**11210258**	1					Clip.....夹.....	
17	**11210260**	6					Clip.....夹.....	
18		1					Clip.....卡簧.....	
19	**11213130**	1					Bracket.....支架.....	
20	**11210398**	2					Grommet .....套环.....	
21	**11210400**	6					Clip.....夹.....	
22	**11213303**	1					Bracket.....支架.....	
23	**11210414**	1					Grommet .....索环.....	
24	**11210618**	1					Grommet .....索环.....	
25	**11210325**	2					Clip.....夹.....	
26	**11210619**	11					Clip.....卡簧.....	
27	**11212308**	1					Grommet .....索环.....	
28	**11211133**	3					Clip.....卡簧.....	
29	**11210033**	3					Flange screw.....法兰螺钉.....	
30	**11210034**	4					Flange screw.....法兰螺钉.....	
31	**11210036**	42					Flange screw.....法兰螺钉.....	
32	**11210042**	1					Flange screw.....法兰螺钉.....	
33	**11211808**	1					Grommet .....套环.....	

1	**11212924**	主要电缆和线束 **Cable and wire harness, main**	Catalogue id **111201**	Group **308**
2			Illustr. No **B11-**	Section **200**
3				
4			Issue **2638000345**	Page **251**
5				

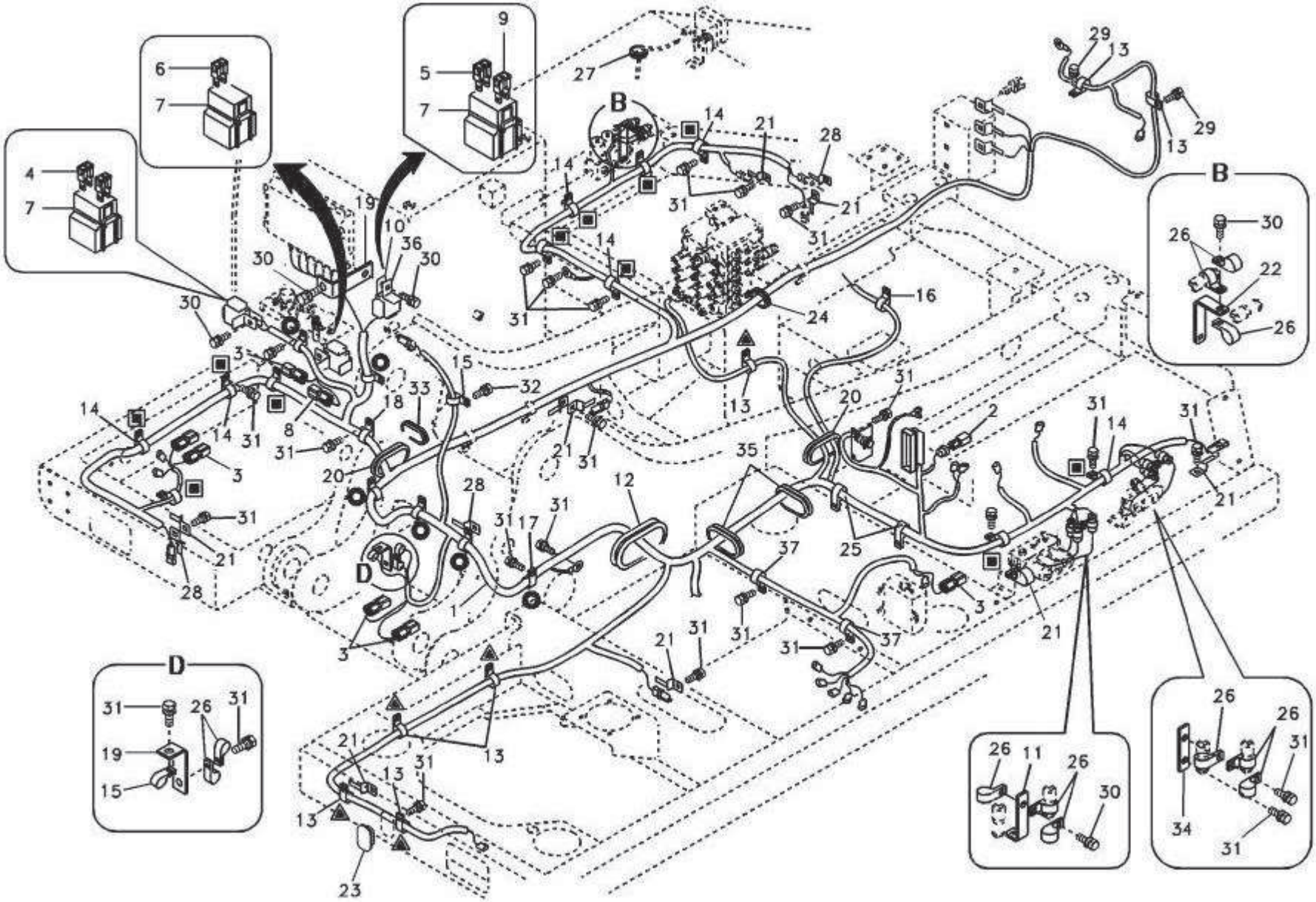
B11-6150E

Fig.	Part No.	Quantity 1	2	3	PS	KIT	Description 说明	Notes
34	**11213306**	1					Bracket... .....支架.....	
35	**11210603**	2					Grommet .....索环.....	
36	**11210604**	3					Bracket... .....支架.....	
37	**11210259**	2					Clip..... .....夹.....	

1	**11212924**	主要电缆和线束 **Cable and wire harness, main**	Catalogue id **111201**	Group **308**
2			Illustr. No **B11-**	Section **200**
3				
4			Issue **2638000345**	Page **253**
5				

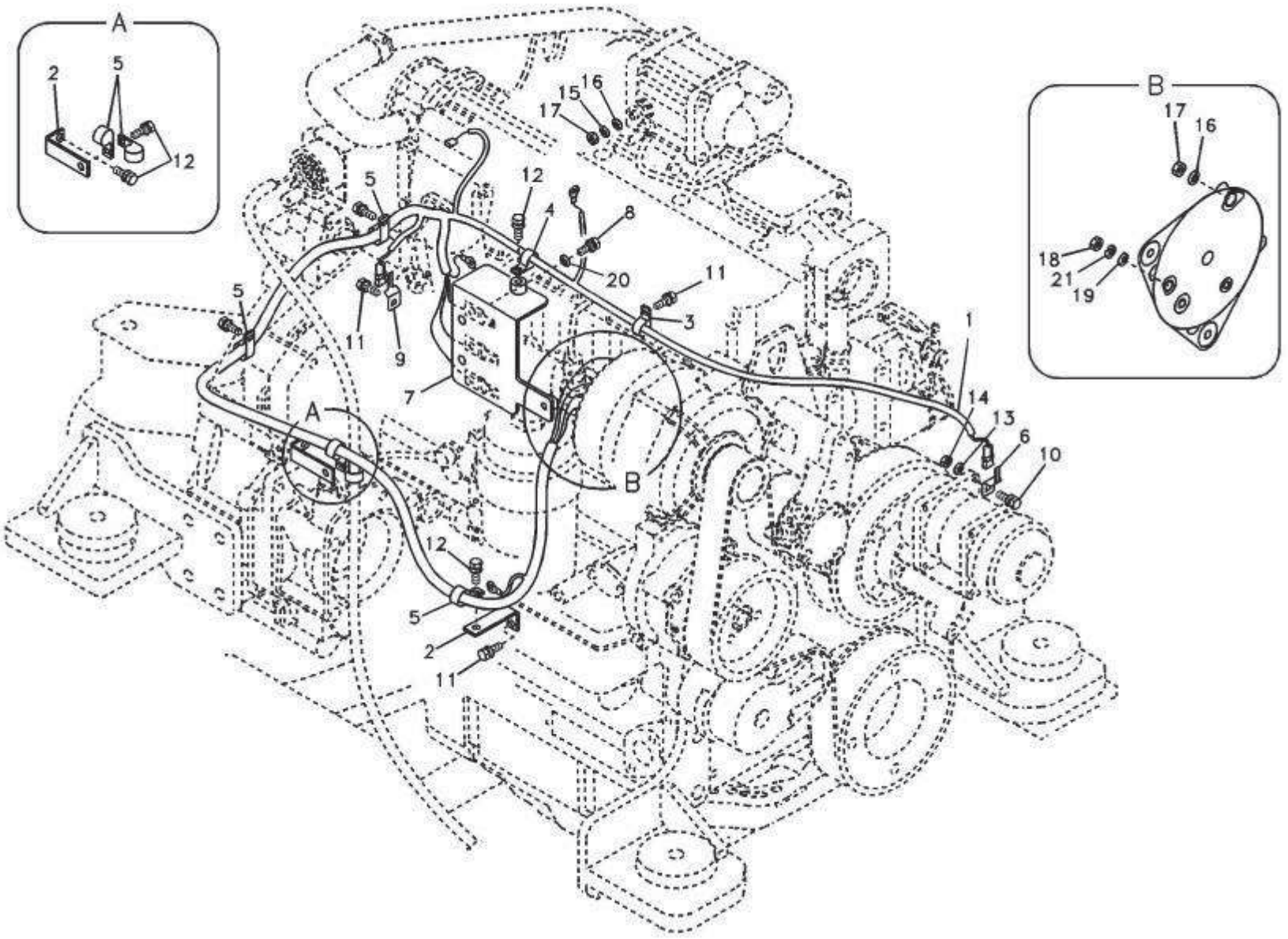
A
2
5
12
B
17
16
18
21
19
15
16
17
12
5
4
8
20
11
5
11
9
3
1
7
A
B
14
13
6
10
12
5
2
11

B12-6150E

Fig.	Part No.编码	Quantity件数 1	2	3	PS	KIT	Description 说明	Notes
1	**11213309**	1					Cable harness.....导线系统.....	
2	**11210613**	2					Bracket.....支架.....	
3	**11210255**	1					Clip.....夹.....	
4	**11213308**	5					Clip.....卡簧.....	
5	**11210258**	1					Clip.....夹.....	
6	**11210537**	1					Clip.....夹.....	
7	**11213307**	1					Bracket.....支架.....	
8	**11213310**	2					Bolt.....螺栓.....	
9	**11211133**	1					Clip.....卡簧.....	
10	**11210032**	1					Flange screw.....法兰螺钉.....	
11	**11210033**	3					Flange screw.....法兰螺钉.....	
12	**11210036**	5					Flange screw.....法兰螺钉.....	
13	**11210064**	1					Spring washer.....弹簧垫圈.....	
14	**11210130**	1					Hexagon nut.....六角螺母.....	
15	**11210063**	1					Spring washer.....弹簧垫圈.....	
16	**11210058**	2					Washer.....垫圈.....	
17	**11210129**	2					Hexagon nut.....六角螺母.....	
18	**11210219**	1					Hexagon nut.....六角螺母.....	
19	**11210057**	1					Washer.....垫圈.....	
20	**11210059**	2					Washer.....垫圈.....	
21	**11210062**	1					Spring washer.....弹簧垫圈.....	

1	**11212924**	发动机电缆线束 **Cable harness, engine**	Catalogue id **111201**	Group **308**
2			Illustr. No **B12-**	Section **300**
3				
4			Issue **2638000345**	Page **255**
5				

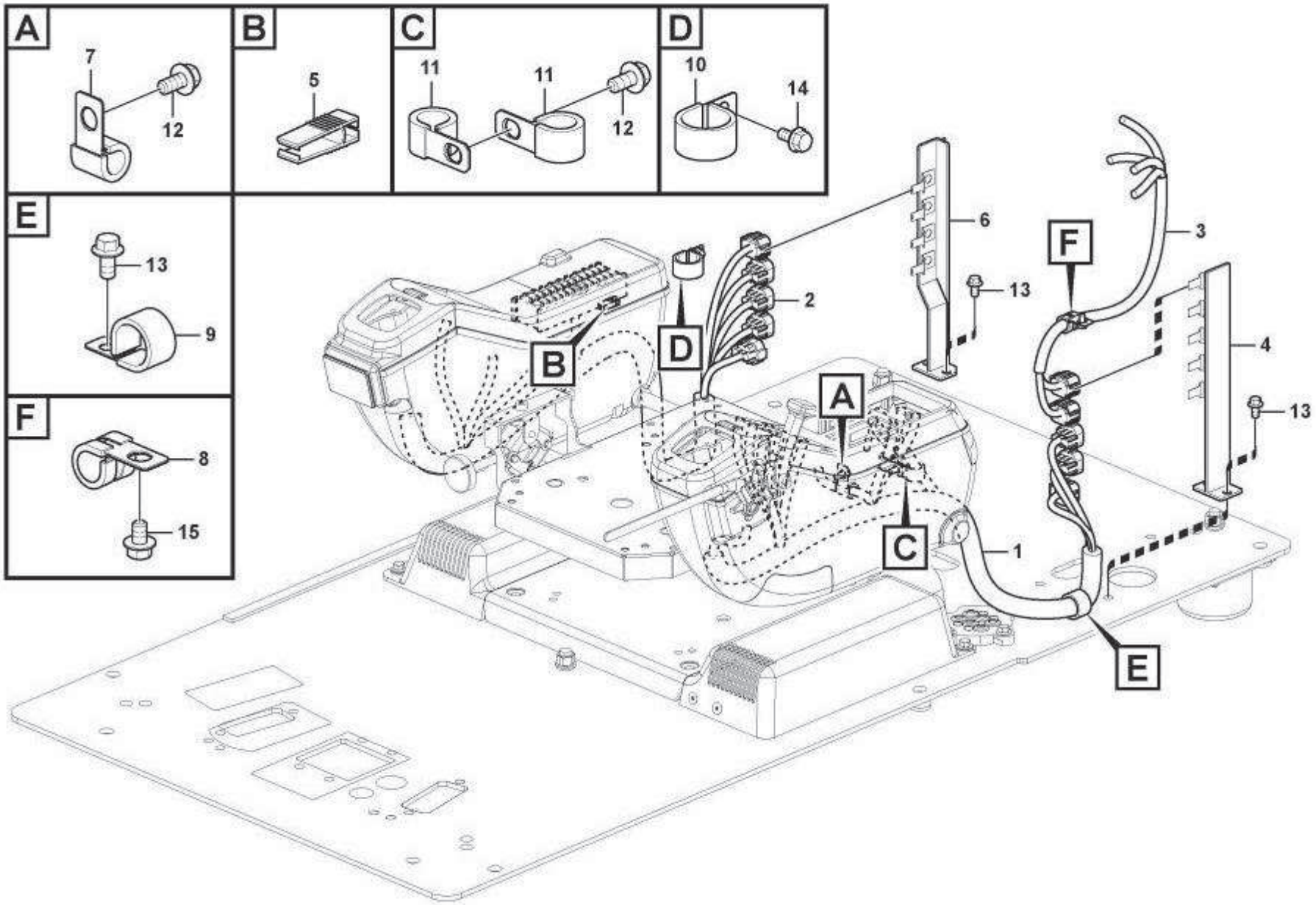

B13-6150E

Fig.	Part No.编码	Quantity件数 1	2	3	PS	KIT	Description 说明	Notes
1	**11213313**	1					Cable harness.....导线系统.....	
2	**11213312**	1					Cable harness.....导线系统.....	
3	**11213311**	1					Wire harness.....线束.....	
4	**11214604**	1					Bracket... .....支架.....	
5	**11210476**	1			OP		Puller.....拉动器.....	
6	**11214603**	1					Bracket... .....支架.....	
7	**11210257**	1					Clip..... .....夹.....	
8	**11211893**	1					Clip..... .....夹.....	
9	**11210259**	1					Clip..... .....夹.....	
10	**11210260**	1					Clip..... .....夹.....	
11	**11210619**	2					Clip..... .....卡簧.....	
12	**11210033**	2					Flange screw.....法兰螺钉.....	
13	**11210034**	5					Flange screw.....法兰螺钉.....	
14	**11210036**	1					Flange screw.....法兰螺钉.....	
15	**11210042**	1					Flange screw.....法兰螺钉.....	

1	**11212924**	仪表盘电缆和线束 **Cable and wire harness, instrument panel**	Catalogue id **111201**	Group **308**
2			Illustr. No **B13-**	Section **400**
3				
4			Issue **2638000345**	Page **257**
5				

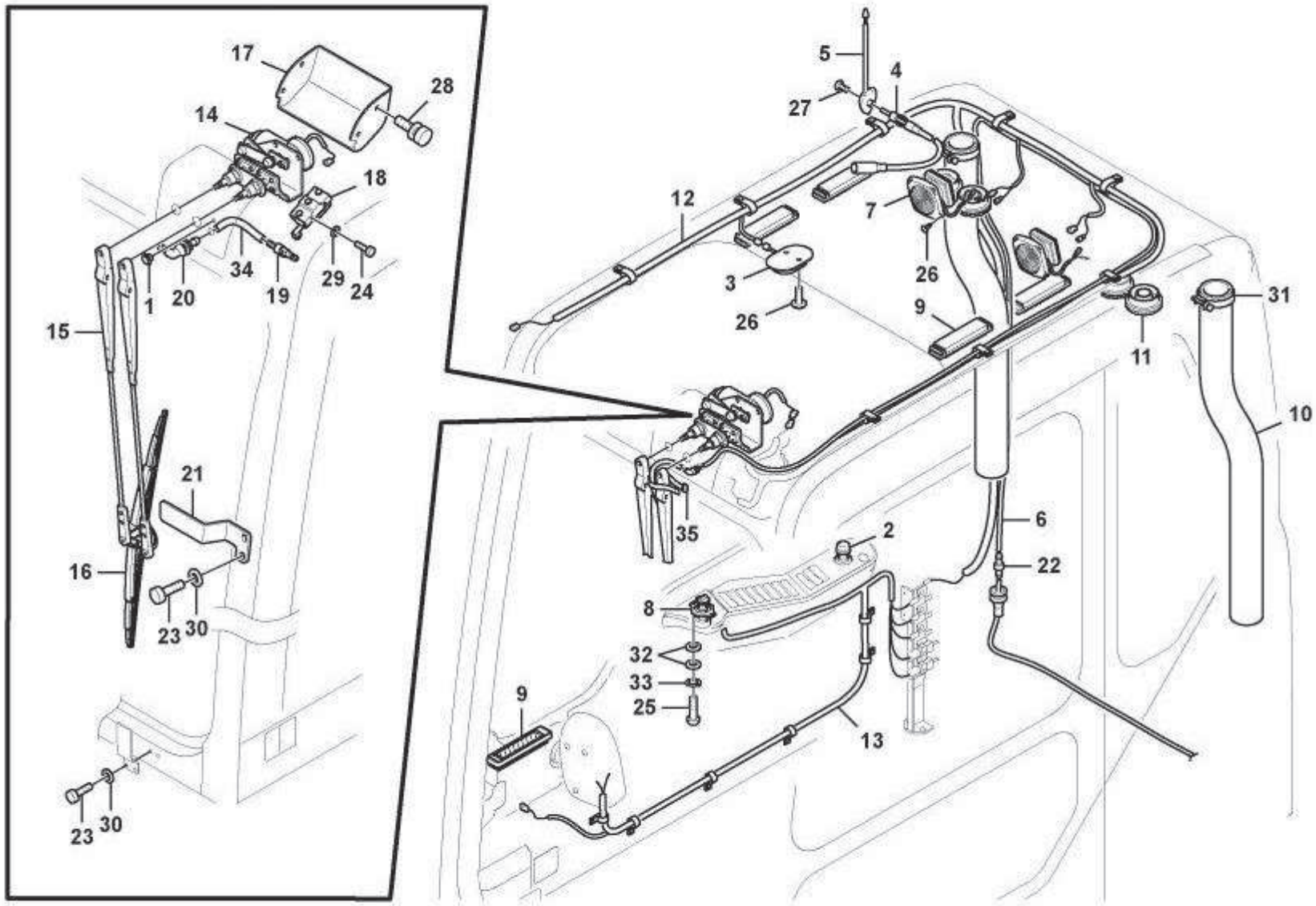
17
28
14
18
34
19
29
24
1
20
15
21
16
23
30
23
30
5
4
27
12
7
26
3
26
9
11
31
10
35
2
6
22
8
32
33
25
9
13

B14-6150E

Fig.	Part No.编码	Quantity件数 1	2	3	PS	KIT	Description 说明	Notes
1	**11210540**	1					Cap .....帽.....	
2	**11210599**	1					Cig Lighter.....点烟器.....	
3	**11211226**	1					Lamp .....灯.....	
	11211322	2					•Bulb ..... • 灯泡.....	24V
4	**11210477**	1					Cable.....电缆.....	
5	**11210728**	1					Antenna.....天线.....	
6	**11211050**	1					Hose.....软管.....	
7	**11211227**	2					Speaker.....扬声器.....	
8	**11212351**	1					Selector..... 选择器.....	
9	**11210496**	5					Grille.....格窗.....	
10	**11210288**	2					Hose.....软管.....	
11	**11210289**	4					Air outlet.....排气口.....	
12	**11210957**	1					Wire harness.....电缆线束.....	
13	**11211249**	1					Wire harness.....线束.....	
14	**11210645**	1					Wiper motor .....雨刷马达.....	
15	**11210535**	1					Wiper arm .....雨刷摇臂.....	
16	**11210351**	1					Wiper blade.....雨刷片..... . ..	UPPER
17	**11211187**	1					Cover .....罩.....	
18	**11210352**	1					Switch .....开关.....	UPPER LIMIT
19	**11210353**	1					Non-return valve .....止回阀.....	
20	**11210354**	1					Elbow .....弯管.....	
21	**11210415**	1					Bracket.....支架.....	
22	**11210622**	1					Connector .....接头.....	
23	**11210074**	4					Screw .....螺丝.....	
24	**11211619**	2					Cross recessed scre ..十字凹口螺丝.....	
25	**11210083**	2					Six point socket scre ..六点螺口插座.....	
26	**11210085**	11					Six point socket scre ..六点螺口插座.....	
27	**11211620**	3					Screw .....六角螺钉.....	
28	**11211057**	4					Bolt.....螺栓.....	

1	**11211823**	驾驶室电缆线束 **Cable harnesses, cab**	Catalogue id **111201**	Group **308**
2				
3			Illustr. No **B14-**	Section **500**
4				
5			Issue **2638000345**	Page **259**

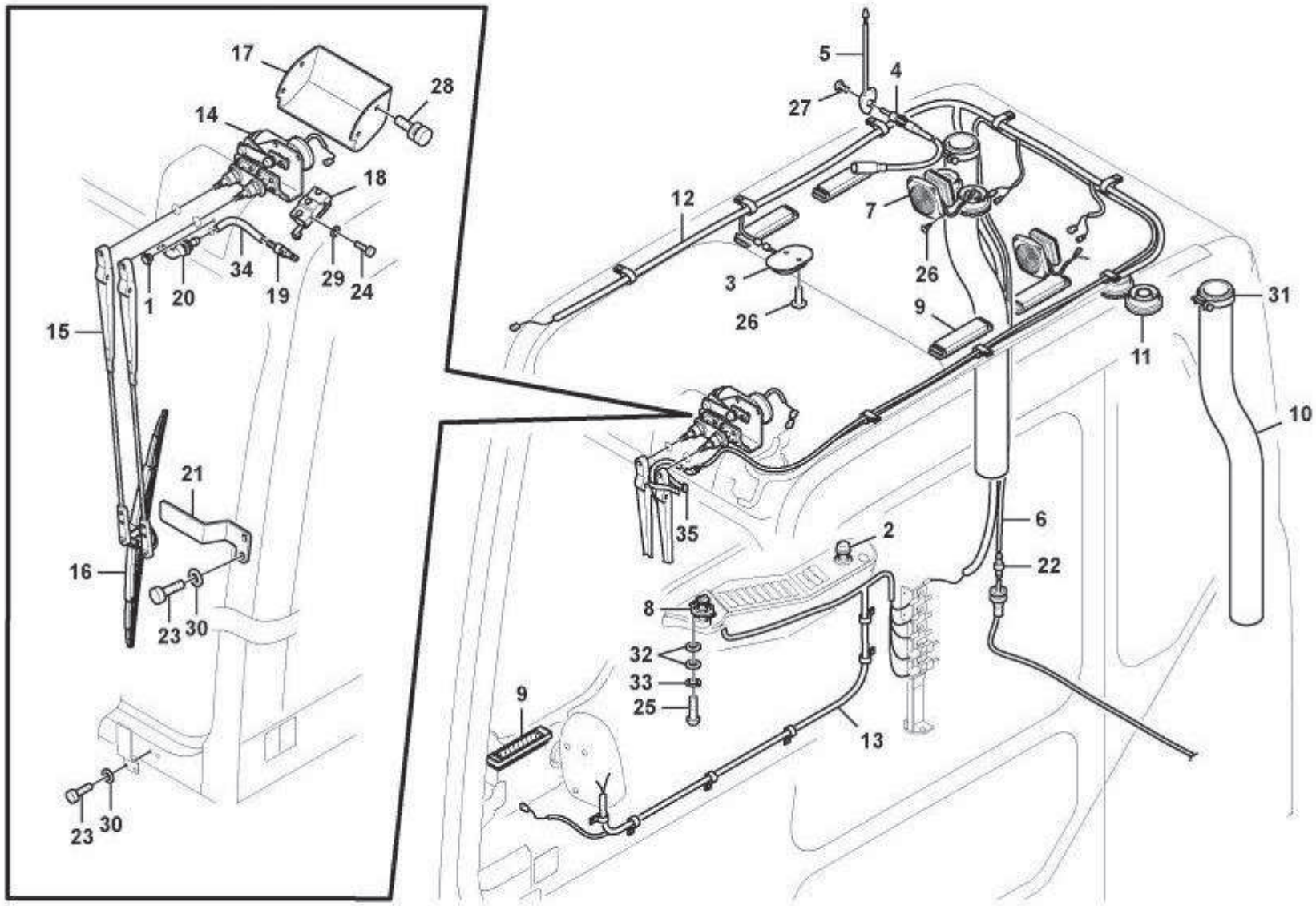
17
28
14
18
34
19
29
24
1
20
15
21
16
23
30
23
30
5
4
27
12
7
26
3
26
9
11
31
10
35
2
6
22
8
32
33
25
9
13

B14-6150E

Fig.	Part No.编码	Quantity件数 1	2	3	PS	KIT	Description 说明	Notes
29	**11211040**	2					Washer.....垫圈.....	
30	**11210057**	4					Washer.....垫圈.....	
31	**11211644**	2					Clamp.....夹.....	
32	**11210024**	4					Washer.....垫圈.....	
33	**11210061**	2					Spring washer .....弹簧垫圈.....	
34	**11211127**	1					Hose.....软管.....	
35	**11211652**	1					Strip clamp .....带夹.....	

1	**11211823**	驾驶室电缆线束 **Cable harnesses, cab**	Catalogue id **111201**	Group **308**
2			Illustr. No **B14-**	Section **500**
3				
4			Issue **2638000345**	Page **261**
5				

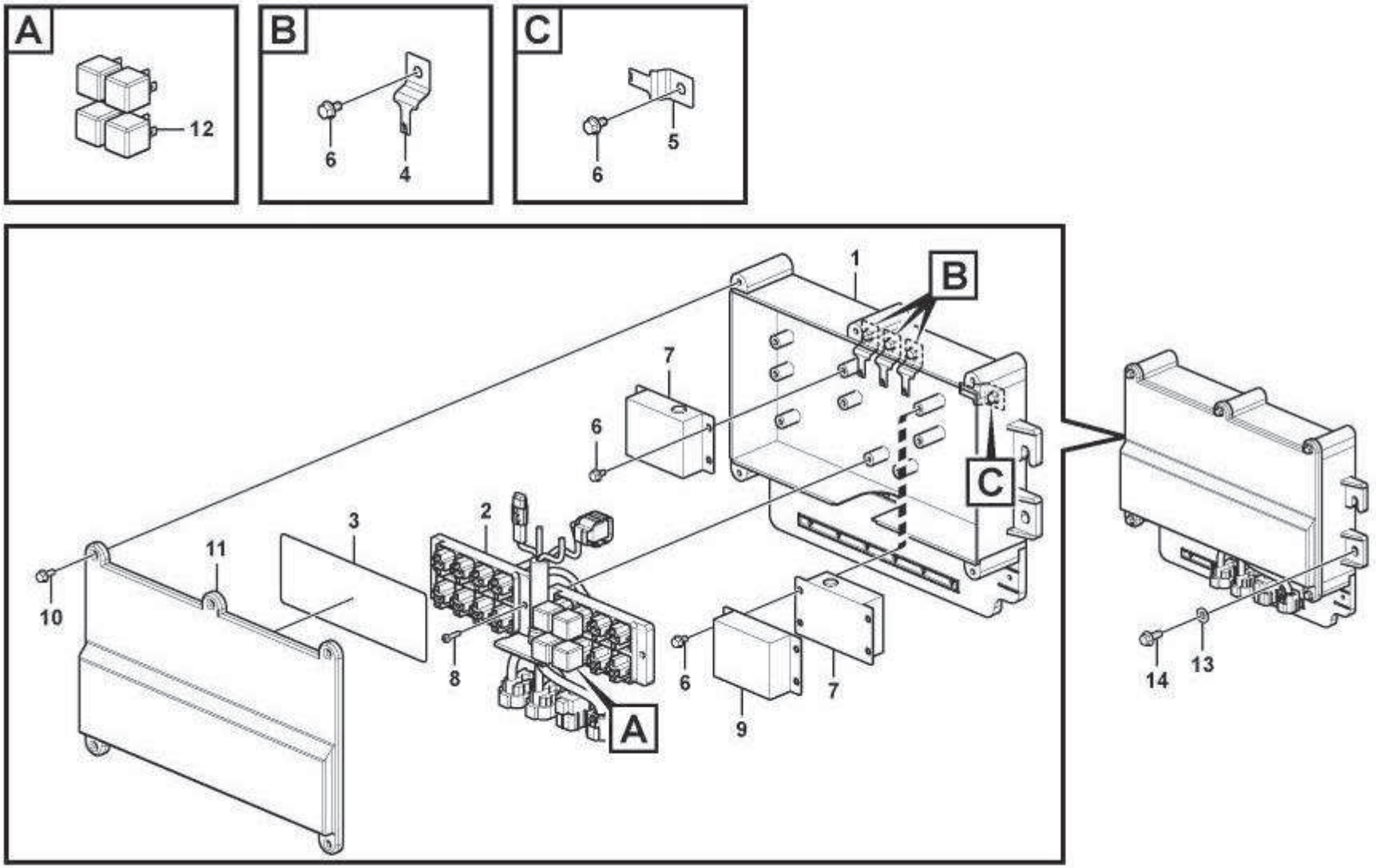

B15-6150E

Fig.	Part No.编码	Quantity件数 1	2	3	PS	KIT	Description 说明	Notes
	11213317	1					Box.....盒.....	
1	**11211198**	1					•Box .....• 盒.....	
2	**11213315**	1					•Cable harness .....• 电缆线束.....	
3	**11213316**	1					•Decal .....• 印花.....	
4	**11211132**	3					•Clip .....• 卡簧.....	
5	**11210524**	1					•Clip .....• 卡簧.....	
6	**11210074**	12					•Flange screw .....• 法兰螺钉.....	
7	**11214347**	2					•Converter .....• 变频器.....	
8	**11210086**	4					•Six point socket scre..• 六点螺口插座.....	
9	**11213314**	1					•Control .....• 控制.....	
10	**11210038**	5					•Flange screw .....• 法兰螺钉.....	
11	**11211199**	1					•Cover .....• 罩盖.....	
12	**11211299**	7					•Relay .....• 继电器.....	
13	**11210068**	4					Washer.....垫圈.....	
14	**11210032**	4					Flange screw.....法兰螺钉.....	

1	**11212924**	继电器 **Electrical relay**	Catalogue id **111201**	Group **309**
2			Illustr. No **B15-6150E**	Section **100**
3				
4			Issue **2638000345**	Page **263**
5				

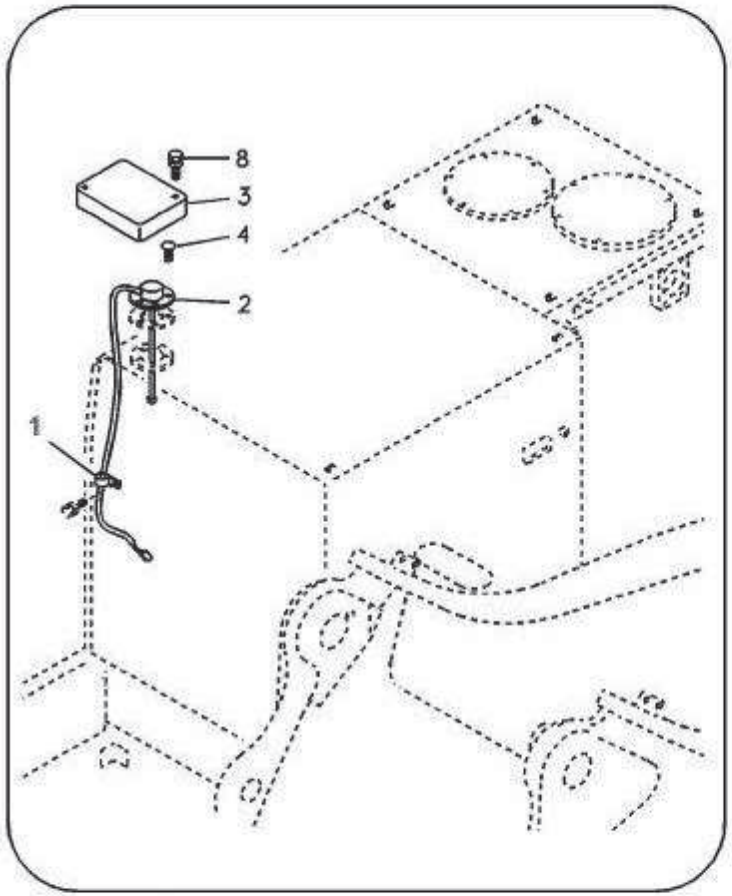

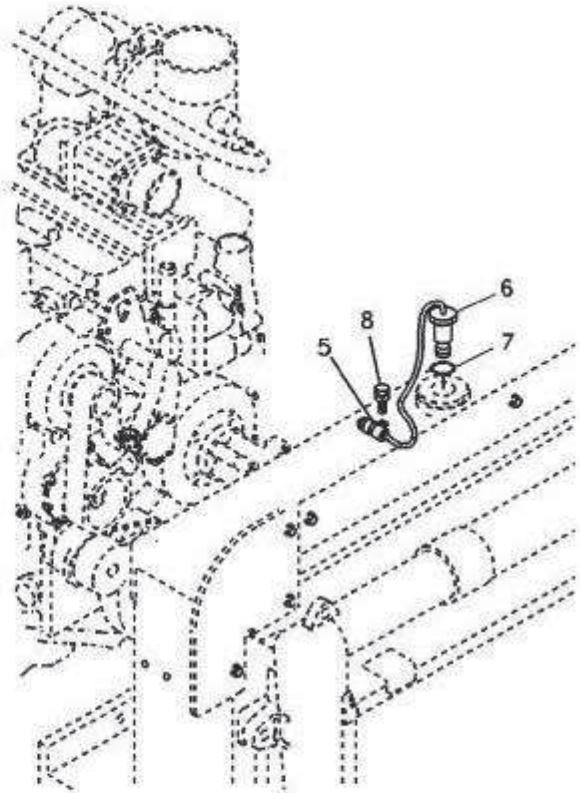

B16-6150E

Fig.	Part No.编码	Quantity件数 1	2	3	PS	KIT	Description 说明	Notes
1	**11211893**	1					Clip.....夹.....	
2	**11210867**	1					Sender .....发送器.....	
3	**11210366**	1					Cover .....罩盖.....	
4	**11210084**	5					Six point socket scre..六点螺口插座.....	
5	**11210619**	1					Clip.....卡簧.....	
6	**11213318**	1					Sensor.....传感器.....	
7	**11210048**	1					O-ring .....O 型圈.....	
8	**11210036**	3					Flange screw.....法兰螺钉.....	

1	**11212924**	电子传感器 **Electrical sensor**	Catalogue id **111201**	Group **310**
2			Illustr. No **B16-6150E**	Section **100**
3			Issue **2638000345**	Page **265**
4				
5				

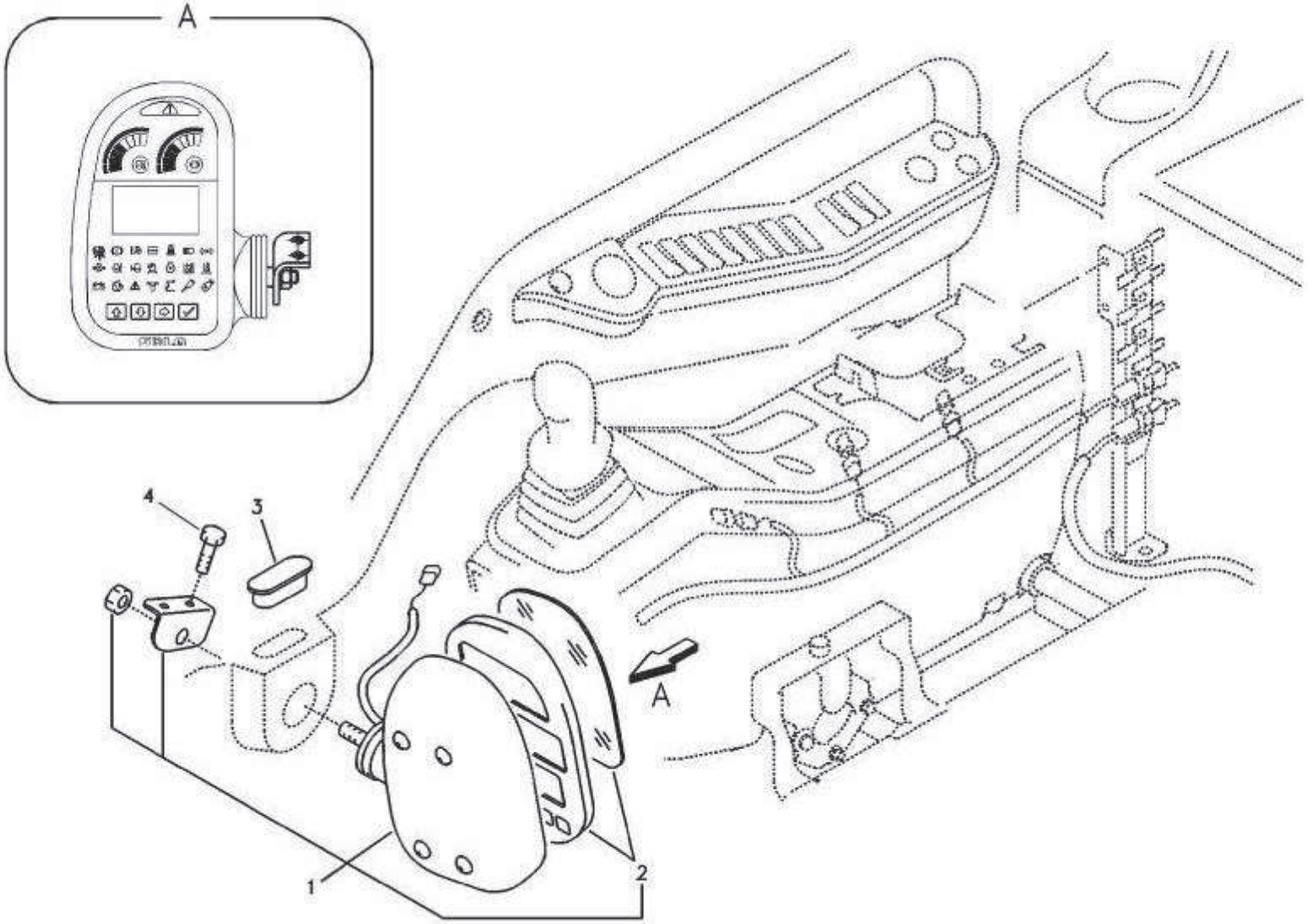

B17-6150E

Fig.	Part No.编码	Quantity件数 1	2	3	PS	KIT	Description 说明	Notes
1	**11213794**	1					IECU ..... IECU	
2	**11210778**	1					•Housing ..... • 支座.....	
3	**11212916**	1					Cap .....罩壳.....	
4	**11210033**	2					Flange screw.....法兰螺钉.....	

1	**11212924**	警告装置和信息装置仪表盘 **Instrument panel, warning unit and information unit**	Catalogue id **111201**	Group **311**
2				
3			Illustr. No **B17-6150E**	Section **100**
4				
5			Issue **2638000345**	Page **267**

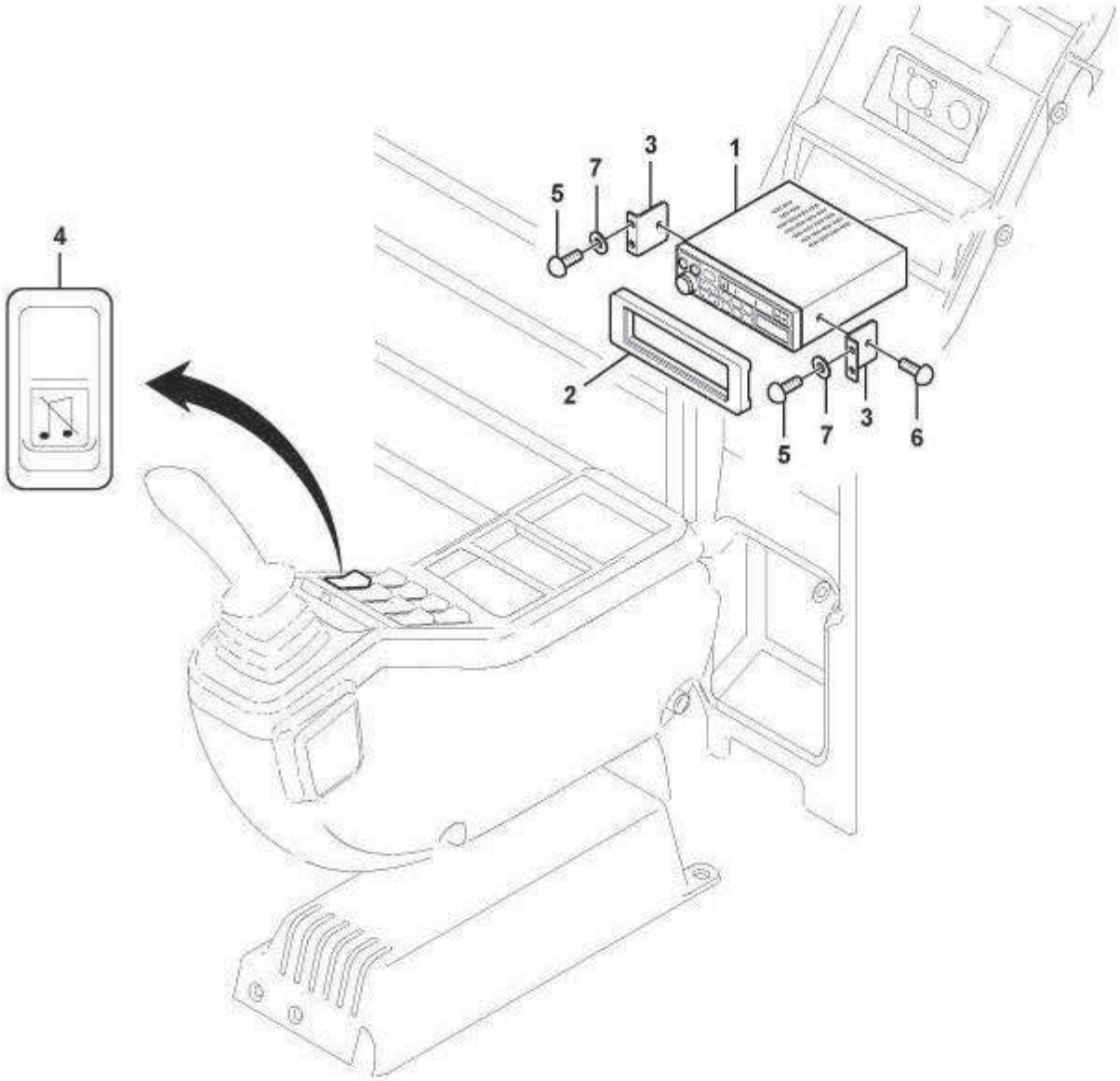

B18-6150E

Fig.	Part No.	Quantity 1	2	3	4	5	PS	KIT	Description 说明	Notes
1	**11211279**	1							Radio cassette ..... 磁带收音机.....	
2	**11210563**	1							Cover ..... 罩盖.....	
3	**11210564**	2							Bracket... ..... 支架.....	
4	**11210612**	1							Switch ..... 开	
5	**11211617**	4							Screw ..... 六角螺钉.....	
6	**11211622**	2							Screw ..... 六角螺钉.....	
7	**11214626**	4							Washer... ..... 垫圈.....	

1	**11213483**	盒式磁带收音机录音机及附件 **Cassette radio recorder with mounting details**	Catalogue id **111201**	Group **312**
2				
3			Illustr. No **B18-6150E**	Section **100**
4				
5			Issue **2638000345**	Page **269**

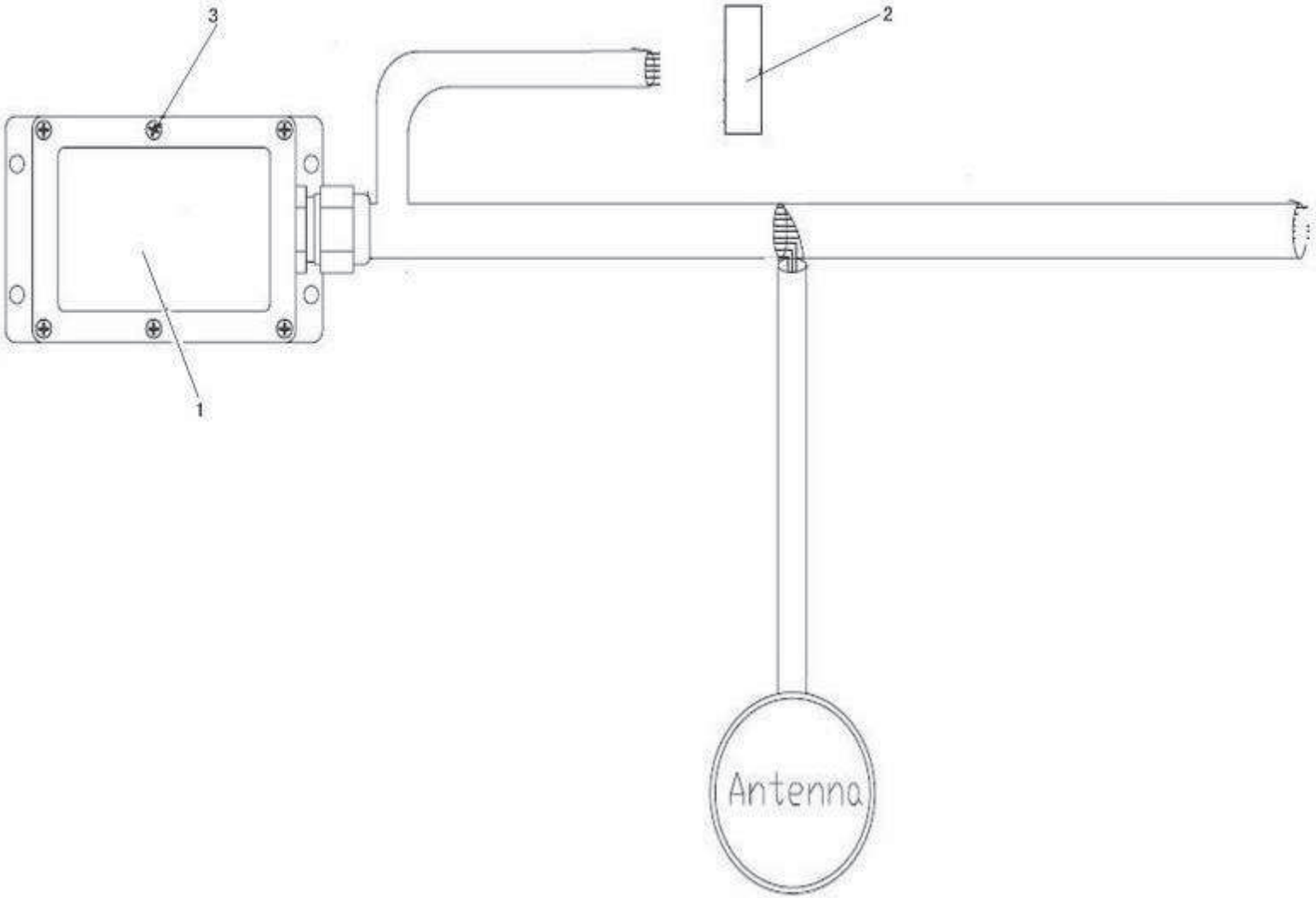

B19-6150E

Fig.	Part No.编码.	Quantity件数 1	2	3	4	5	PS	KIT	Description 说明	Notes
1	**11212858**	1							Control unit..... .....控制单元.....	
2	**11212854**	1							Keypad ....密码键盘.....	
3	**11212859**	4							Attachment..... ....附件.....	

1	**11213483**	远程信息处理 **Telematics**	Catalogue id **111201**	Group **313**
2				
3			Illustr. No **B19-6150E**	Section **100**
4				
5			Issue **2638000345**	Page **271**



www.sdlg.cn

GROUP		Section	Page
401	Travel gearbox	100	277
401	Swing gearbox	200	281
401	Pump gearbox with assembling parts	300	285
402	Travel motor with mounting parts	100	287
402	Travel motor	200	289
402	Control valve, travel motor	300	291
402	Swing motor with mounting parts	400	295
402	Swing motor	500	297
403	Turning joint, mounting	100	301
403	Turning joint	200	303
404	Swing system	100	305

部类		部分	页
401	行走齿轮箱	100	277
401	回转齿轮箱	200	281
401	泵齿轮箱及附件	300	285
402	行走马达及附件	100	287
402	行走马达	200	289
402	行走马达控制阀	300	291
402	回转马达及附件	400	295
402	回转马达	500	297
403	安装回转接头总成	100	301
403	回转接头总成	200	303
404	回转系统	100	305



www.sdlg.cn

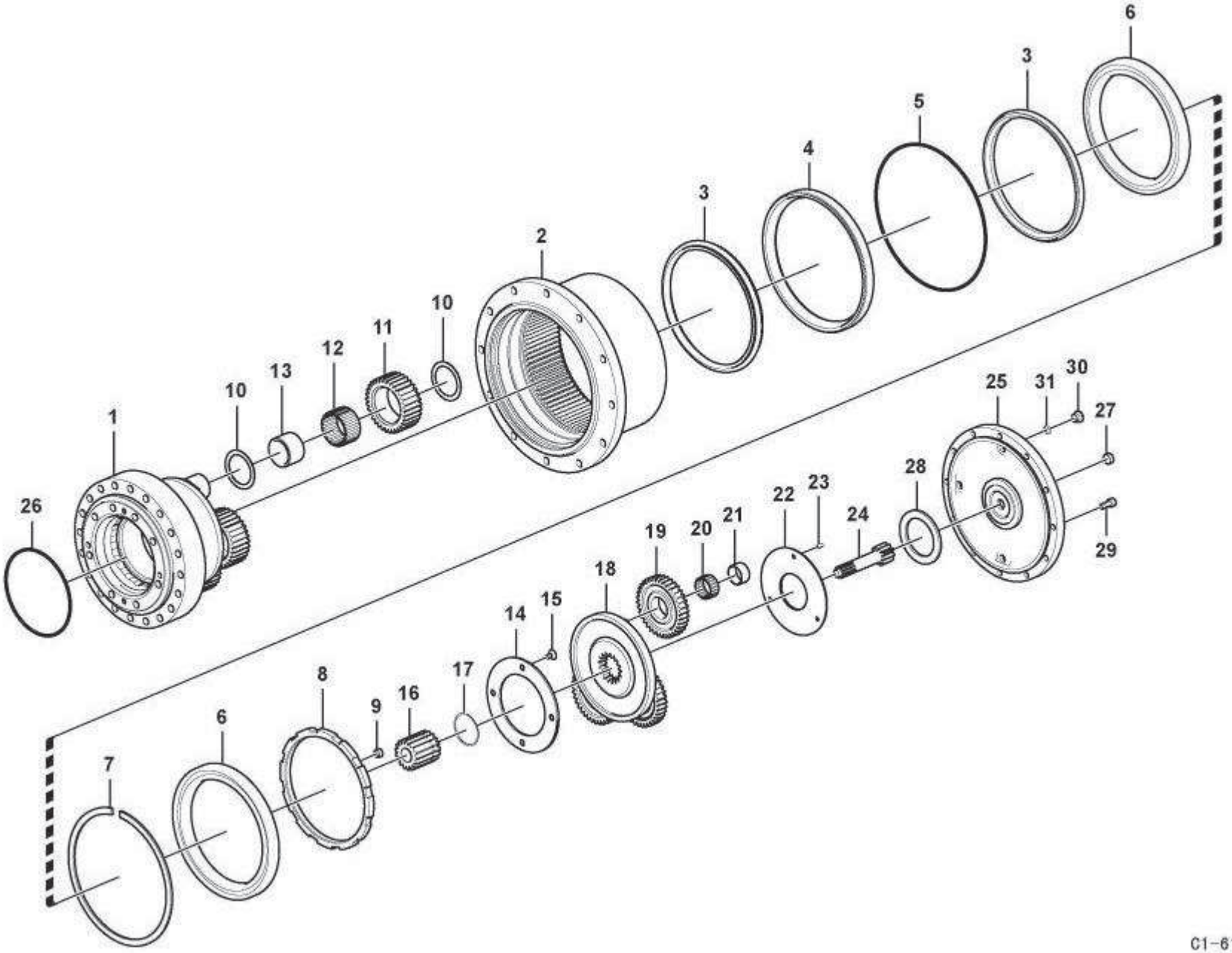
1
2
3
3
4
5
6
6
7
8
9
10
10
11
12
13
14
15
16
17
18
19
20
21
22
23
24
25
26
27
28
29
30
31
C1-6150E

Fig.	Part No编码.	Quantity件数 1	2	3	PS	KIT	Description 名称	Notes
	11211875	2					Travel motor.....行走马达.....	
		1			NS		Reduction.....减速器.....	
1	**11213612**	1					•Spindle.....•.轴.....	
	11213589	1					•Travel motor .....•行走马达.....	
		1			NS		•Reduction .....• 减速器.....	
2	**11213613**	1					•Hub .....• 轴心.....	
3	**11213621**	2				K	•Sealing kit .....• 密封套件.....	
			1		NS		•Control .....• 控制.....	
	11213604	1					•Relief valve .....• 泄流阀.....	
4	**11213555**	1					•Sealing.....• 密封.....	
5	**11213556**	1					•O-ring.....•0 型圈.....	
6	**11213557**	2					•Bearing .....• 轴承.....	
7	**11213558**	1					•Ring .....• 环.....	
8	**11213559**	1					•Ring .....• 环.....	
9	**11213560**	4					•Plug .....• 塞.....	
10	**11213614**	8					•Washer .....• 垫圈.....	
11	**11213561**	4					•Planetary gear .....• 行星齿轮.....	
12	**11213562**	4					•Needle bearing .....• 滚针轴承.....	
13	**11213563**	4					•Collar .....• 圈.....	
14	**11213615**	1					•Plate .....• 皮带盘.....	
15	**11213564**	4					•Screw.....• 螺丝.....	
16	**11213565**	1					•Gear.....• 齿轮.....	
17	**11213566**	1					•Ring .....• 环.....	
18	**11213567**	1					•Retainer .....• 固位器.....	
19	**11213568**	3					•Planetary gear .....• 行星齿轮.....	
20	**11213569**	3					•Needle bearing .....• 滚针轴承.....	
21	**11213570**	3					•Bearing race .....• 轴承座圈.....	
22	**11213616**	1					•Plate .....• 皮带盘.....	
23	**11213571**	3					•Pin .....• 销.....	
24	**11213572**	1					•Gear.....• 齿轮.....	

1	**11212937**	行走齿轮箱 **Travel gearbox**	Catalogue id **111201** / Group **401**
2			
3			Illustr. No **C1-6150E** / Section **100**
4			
5			Issue **2638000345** / Page **277**

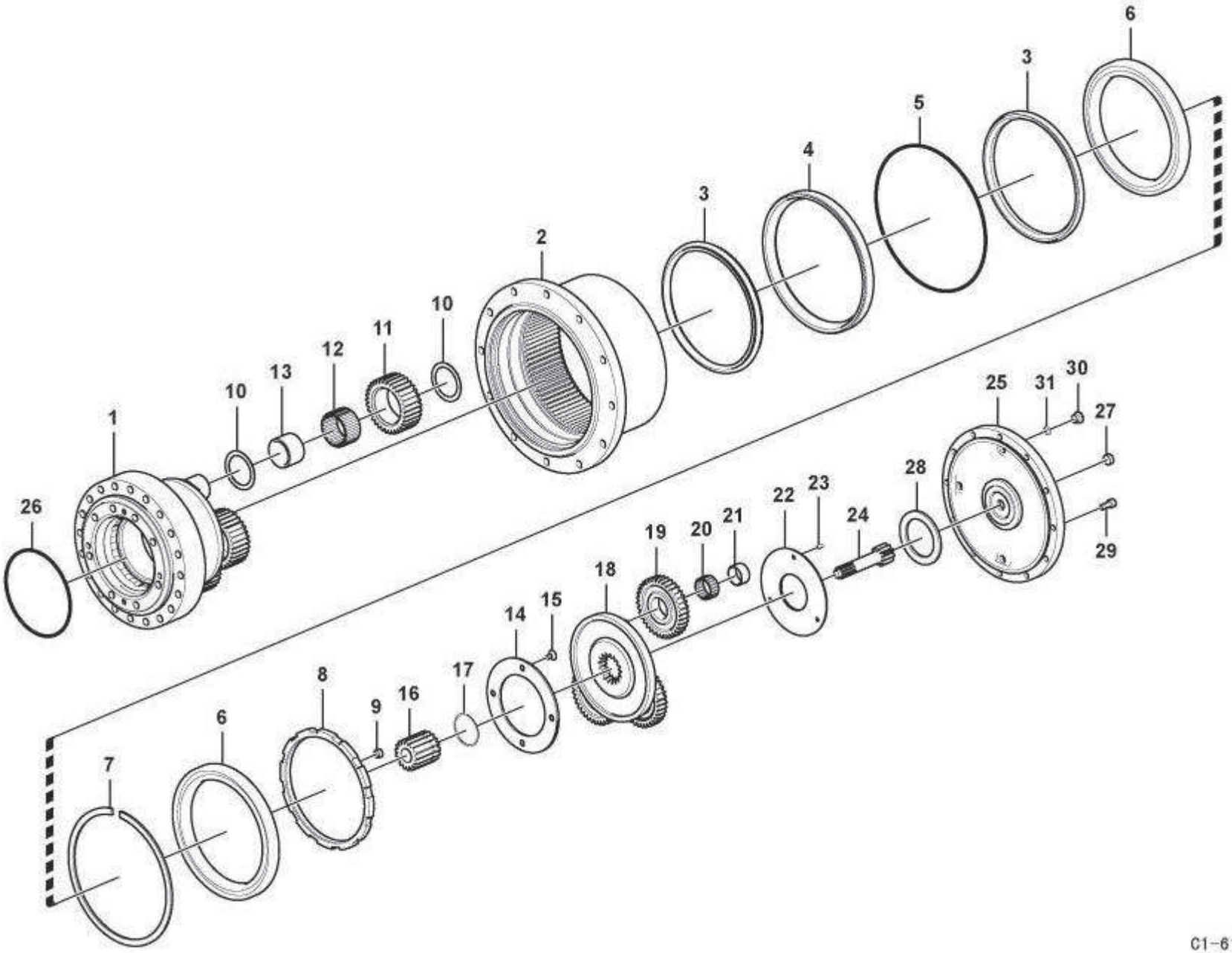
6
3
5
4
3
2
10
11
12
13
10
1
26
25
31
30
27
28
22
23
24
19
20
21
18
14
15
17
16
9
8
6
7
29
C1-6150E

Fig.	Part No.编码.	Quantity件数 1	2	3	PS	KIT	Description 名称	Notes
25	**11213617**	1					•Cover .....• 盖板.....	
26	**11213573**	1				K	•O-ring.....•0 型圈.....	
27	**11213574**	1				K	•Washer .....• 垫圈.....	
28	**11213653**	1					•Bearing_thrust .....• 轴承 _ 推力.....	
29	**11210150**	12					•Hex. socket screw ....• 六角凹头螺丝.....	
30	**11213575**	3					•Plug .....• 塞.....	
31	**11210135**	3					•O-ring.....•0 型圈.....	
100	**11213606**	1					Sealing .....密封.....	

1	**11212937**	行走齿轮箱 **Travel gearbox**	Catalogue id **111201**	Group **401**
2				
3			Illustr. No **C1-**	Section **100**
4				
5			Issue **2638000345**	Page **279**

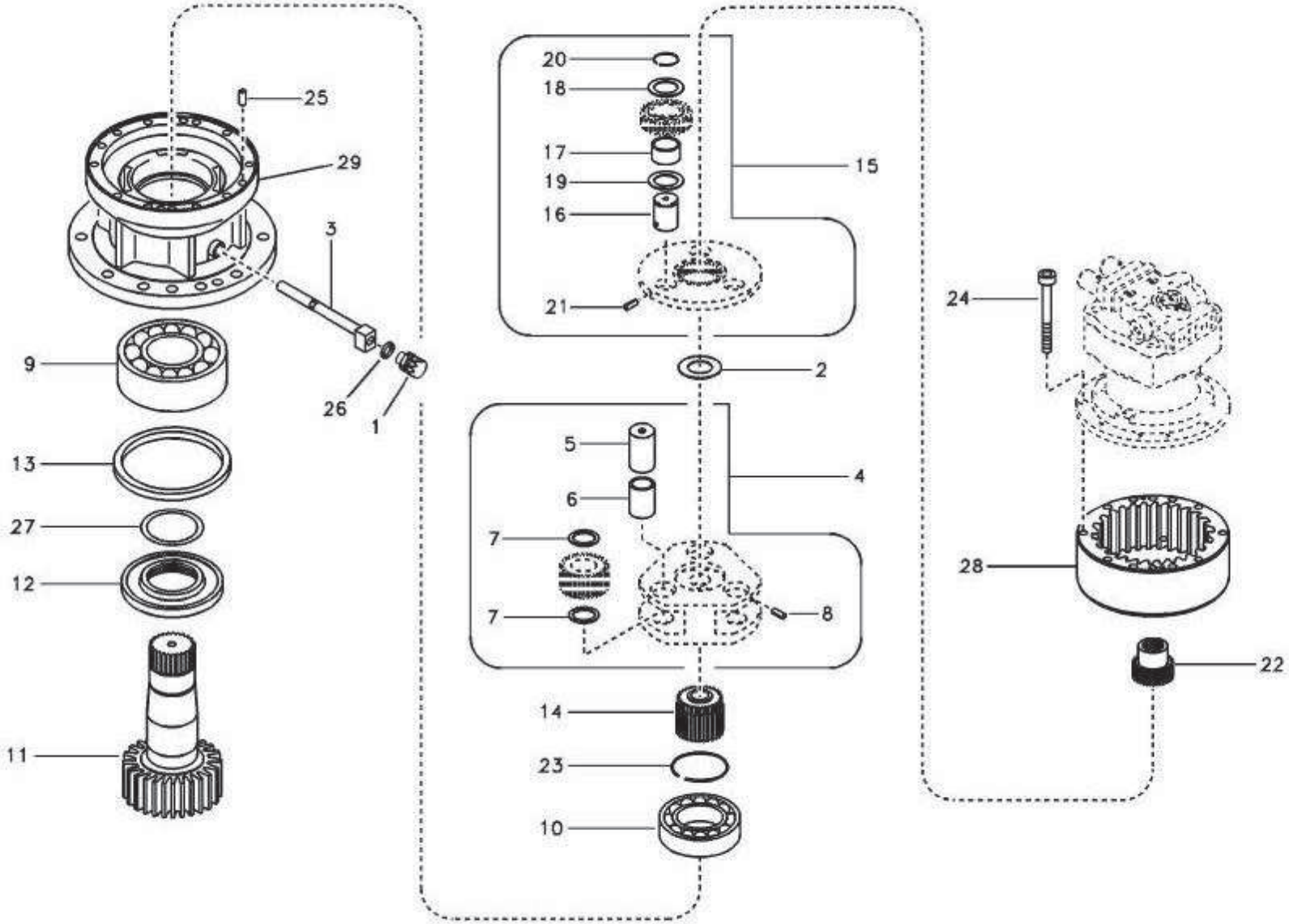
25
29
3
9
26
1
13
27
12
11
20
18
17
19
16
21
15
2
5
6
4
7
7
8
14
23
10
24
28
22

C2-6150E

Fig.	Part No.编码.	Quantity件数 1	2	3	PS	KIT	Description 名称	Notes
	11213535	1					Gearbox assy_swing ...回转齿轮箱总成.....	
1	**11210523**	1					•Valve.....• 阀.....	
2	**11213487**	1				K	•Thrust washer.....•• 推进垫圈.....	
3	**11213534**	1					•Pipe .....• 硬管总成.....	
4	**11213632**	1					•Housing .....• 支座.....	
5	**11213633**	3					••Pin .....•• 定位销.....	
6	**11213634**	3				K	••Bushing .....•• 轴衬.....	
7	**11213651**	6					••Thrust washer.....•• 推进垫圈.....	
8	**11211660**	3					••Spring pin .....•• 弹簧销.....	
9	**11213635**	1					•Roller bearing .....• 滚轴轴承.....	
10	**11213636**	1					•Roller bearing .....• 滚轴轴承.....	
11	**11213512**	1					•Shaft .....• 转轴.....	
12	**11213637**	1					•Collar .....• 圈.....	
13	**11213638**	1				K	•Radial seal.....• 密封.....	
14	**11213639**	1					•Sun gear .....• 恒星齿轮.....	
15	**11213640**	1					•Differential carrier .....• 差动车架.....	
16	**11213641**	3					••Pin .....•• 定位销.....	
17	**11213642**	3				K	••Needle bearing .....•• 滚针轴承.....	
18	**11213643**	3				K	••Washer .....•• 垫圈.....	
19	**11213651**	3				K	••Thrust washer.....•• 推进垫圈.....	
20	**11211660**	3				K	••Spring pin .....•• 弹簧销.....	
21	**11213702**	3				K	••Ring .....•• 密封环.....	
22	**11213644**	1					•Gear.....• 齿轮.....	
23	**11213645**	2					•Collar .....• 圈.....	THICK=5.8
	11213646	2					•Shim .....• 垫片.....	THICK=5.9
	11213647	2					•Shim .....• 垫片.....	THICK=6.0
	11213648	2					•Shim .....• 垫片.....	THICK=6.1
	11213649	2					•Shim .....• 垫片.....	THICK=6.2
	11213650	2					•Shim .....• 垫片.....	THICK=6.3
24	**11213708**	10					•Hex. socket screw ...• 六角凹头螺丝.....	

1	**11212924**	回转齿轮箱 **Swing gearbox**	Catalogue id **111201**	Group **401**
2				
3			Illustr. No **C2-6150E**	Section **200**
4				
5			Issue **2638000345**	Page **281**

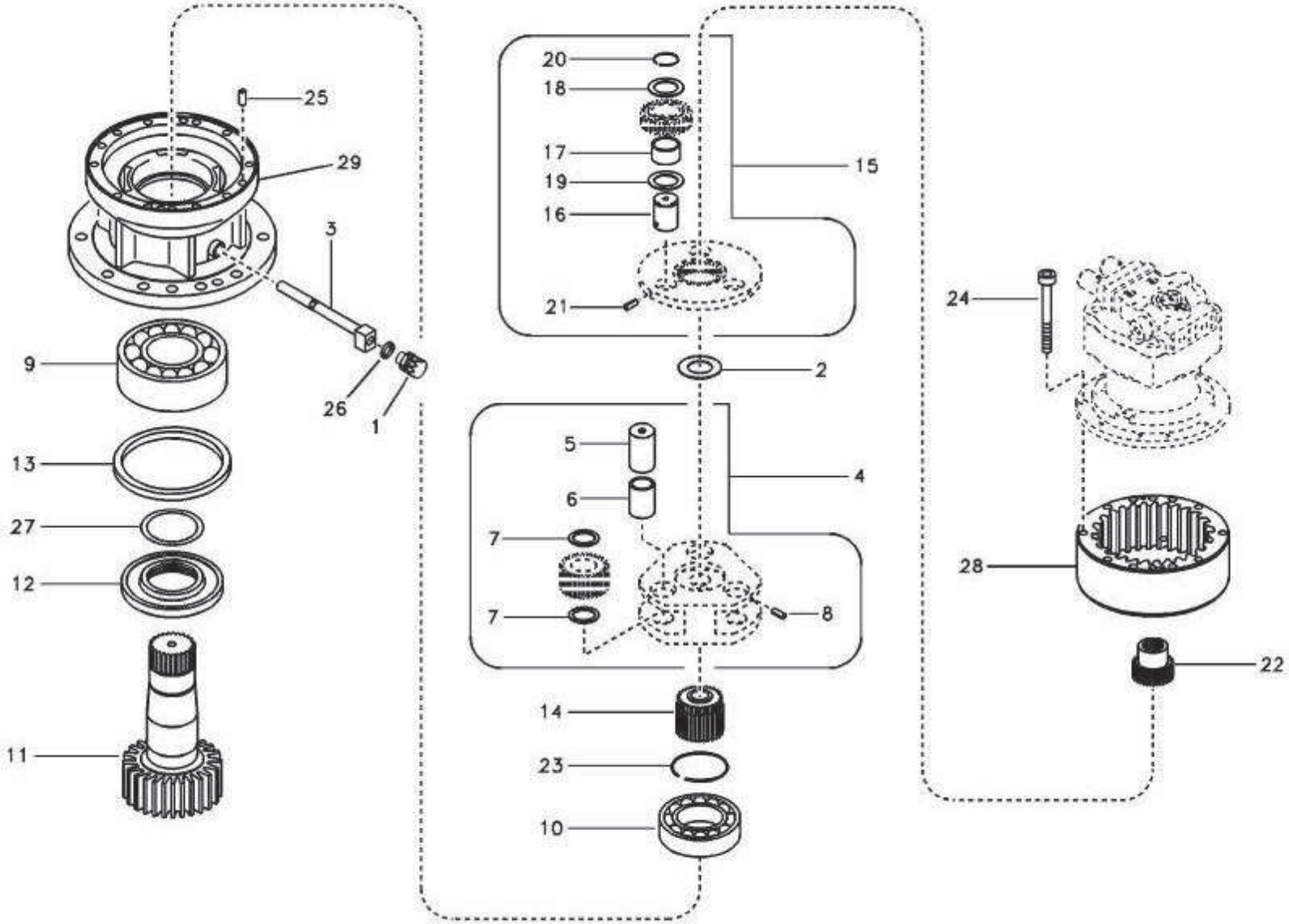
25
29
3
9
26
1
13
27
12
11
20
18
17
19
16
21
15
2
5
6
4
7
7
8
14
23
10
24
28
22

C2-6150E

Fig.	Part No.编码.	Quantity件数 1	2	3	PS	KIT	Description 名称	Notes
25	**11213696**	2					•Pin .....• 定位销.....	
26	**11211712**	1					•Gasket .....• 密封垫.....	
27	**11213710**	1					•O-ring.....• o 型圈.....	
28	**11213611**	1					•Gear.....• 齿轮.....	
29	**11213502**	1			OP		•Case .....• 壳体.....	
100	**11213509**	1					Overhaul kit.....检修工具包.....	

1	**11212924**	回转齿轮箱 **Swing gearbox**	Catalogue id **111201**	Group **401**
2				
3			Illustr. No **C2-6150E**	Section **200**
4				
5			Issue **2638000345**	Page **283**

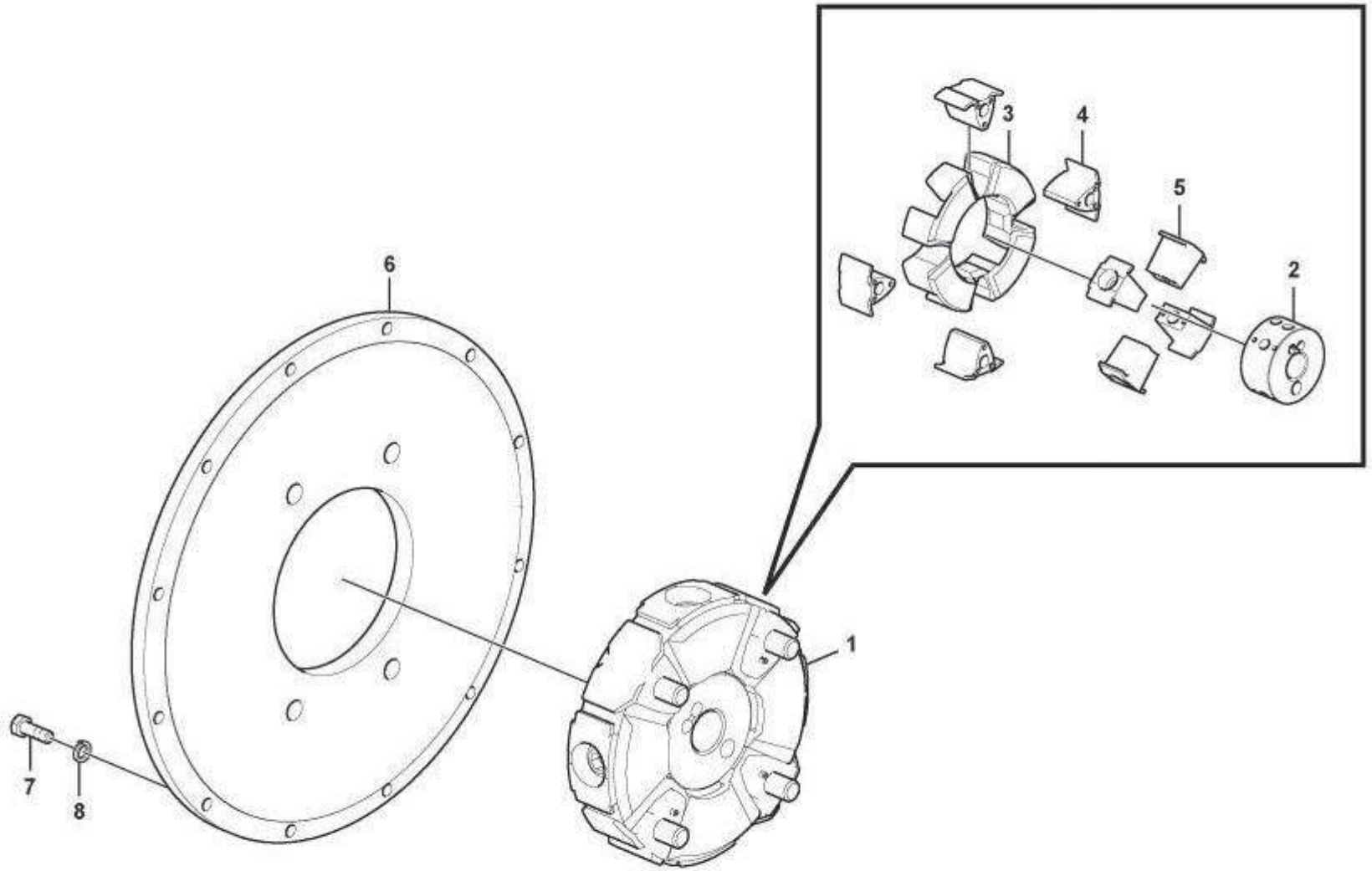

C3-6150B

Fig.	Part No编码.	Quantity件数 1	2	3	PS	KIT	Description 名称	Notes
1	**11213507**	1					Coupling housing .....接合箱.....	
2	**11213508**	1					•Hub .....• 轮毂.....	
3	**11213504**	1					•Element .....• 滤芯.....	
4	**11213505**	4					•Insert.....• 插头.....	
5	**11213506**	4					•Insert.....• 插头.....	
6	**11213488**	1					Flange ..... 法兰.....	
7	**11210124**	8					Hexagon screw ..... 六角螺丝.....	
8	**11210064**	8					Spring washer ..... 弹簧垫圈.....	

1	**11212924**	泵齿轮箱及附件 **Pump gearbox with assembling parts**	Catalogue id **111201**	Group **401**
2			Illustr. No **C3-6150E**	Section **300**
3				
4			Issue **2638000345**	Page **285**
5				

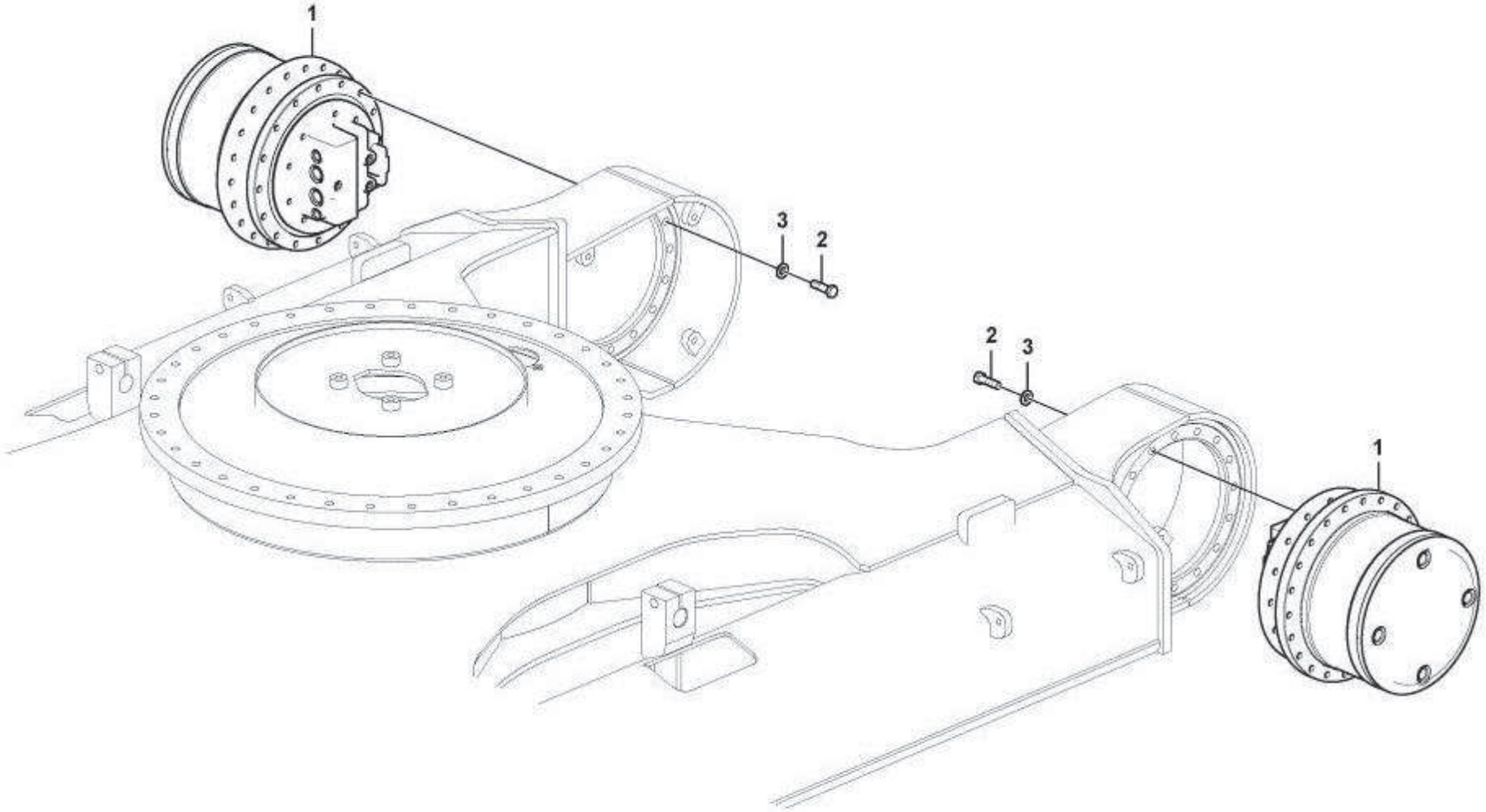

C4-6150E

Fig.	Part No编码.	Quantity件数 1	2	3	PS	KIT	Description 名称	Notes
1	**11211875**	2					Travel motor.....行走马达.....	
	11213589	1					•Travel motor .....• 行走马达.....	
		1			NS		•Reduction .....• 减速器.....	
		1			NS		•Control.....• 控制.....	
	11213604	1					•Relief valve .....• 泄流阀.....	
2	**11210103**	40					Hexagon screw .....六角螺丝.....	
3	**11210199**	40					Washer.....垫圈.....	

1	**11212937**	行走马达及附件 **Travel motor with mounting parts**	Catalogue id **111201**	Group **402**
2			Illustr. No **C4-6150E**	Section **100**
3			Issue **2638000345**	Page **287**
4				
5				

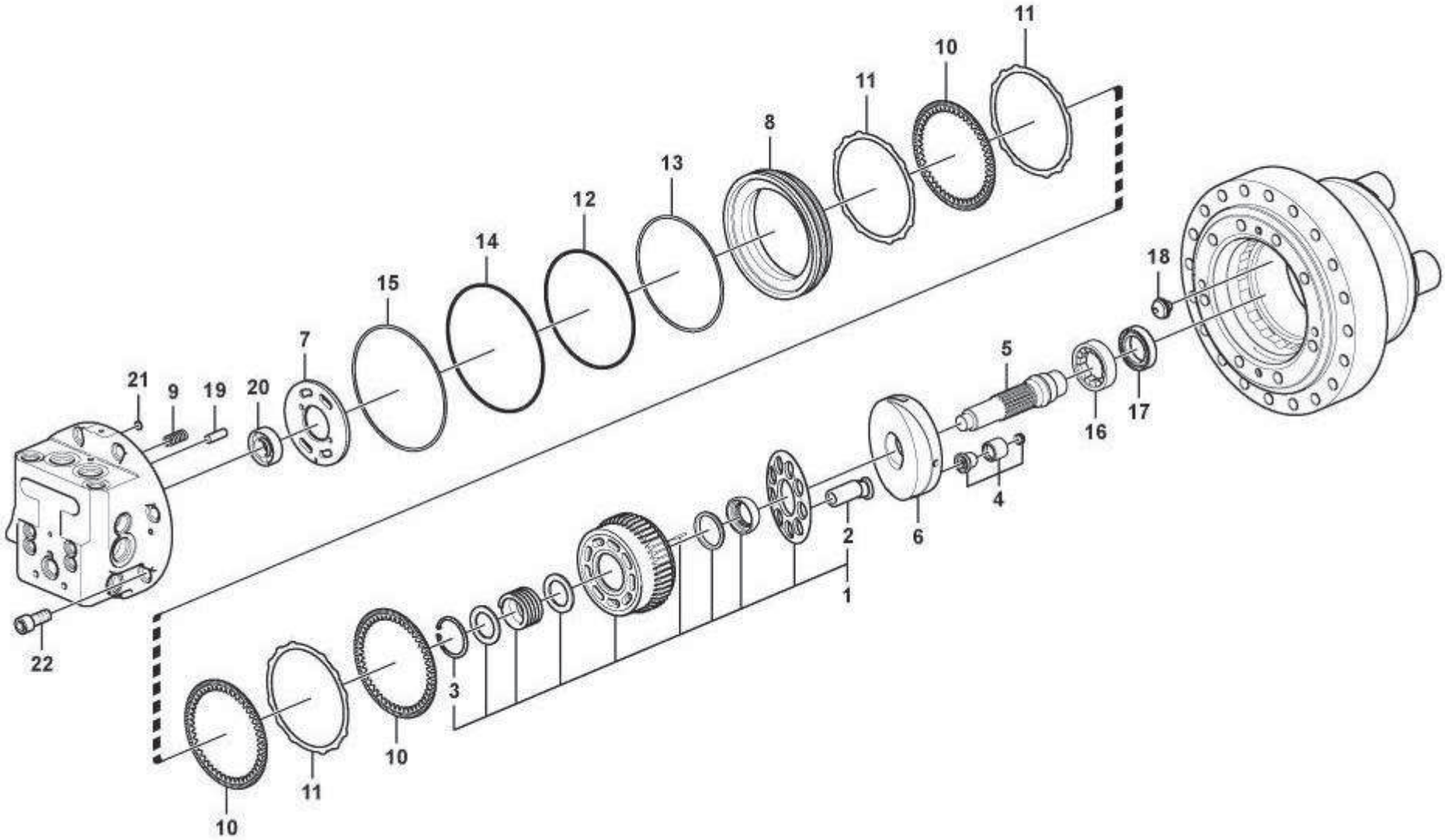

C5-6150E

Fig.	Part No编码.	Quantity件数 1	2	3	P S	K I T	Description 名称	Notes
	11213589	1					Travel motor.....行走马达.....	
1	**11213590**	1					•Piston.....• 活塞.....	
2	**11213591**	9					••Piston .....•• 活塞.....	
3	**11213592**	1					••Ring .....•• 环.....	
4	**11213593**	1					••Piston .....•• 活塞.....	
5	**11213618**	1					•Shaft .....• 轴.....	
6	**11213594**	1					•Plate .....• 板.....	
7	**11213619**	1					•Plate .....• 皮带盘.....	
8	**11213595**	1					•Piston.....• 活塞.....	
9	**11213494**	10					•Spring .....• 弹簧.....	
10	**11213596**	3					•Plate .....• 板.....	
11	**11213597**	3					•Plate .....• 板.....	
12	**11213598**	1				K	•O-ring.....•o 型圈.....	
13	**11213600**	1				K	•Ring .....• 环.....	
14	**11213599**	1				K	•O-ring.....•o 型圈.....	
15	**11213601**	1				K	•Ring .....• 环.....	
16	**11213602**	1					•Roller bearing .....• 滚轴轴承.....	
17	**11213683**	1				K	•Seal .....• 密封.....	
18	**11213620**	2					•Pivot.....• 枢轴.....	
19	**11213588**	2					•Pin .....• 销.....	
20	**11213603**	1					•Ball bearing.....• 滚珠轴承.....	
21	**11213706**	2				K	•O-ring.....•o 型圈.....	
22	**11213707**	8					•Screw.....• 六角螺钉.....	
100	**11213606**	1					Sealing .....密封.....	

1	**11212937**	行走马达 **Travel motor**	Catalogue id **111201**	Group **402**
2			Illustr. No **C5-6150E**	Section **200**
3				
4			Issue **2638000345**	Page **289**
5				

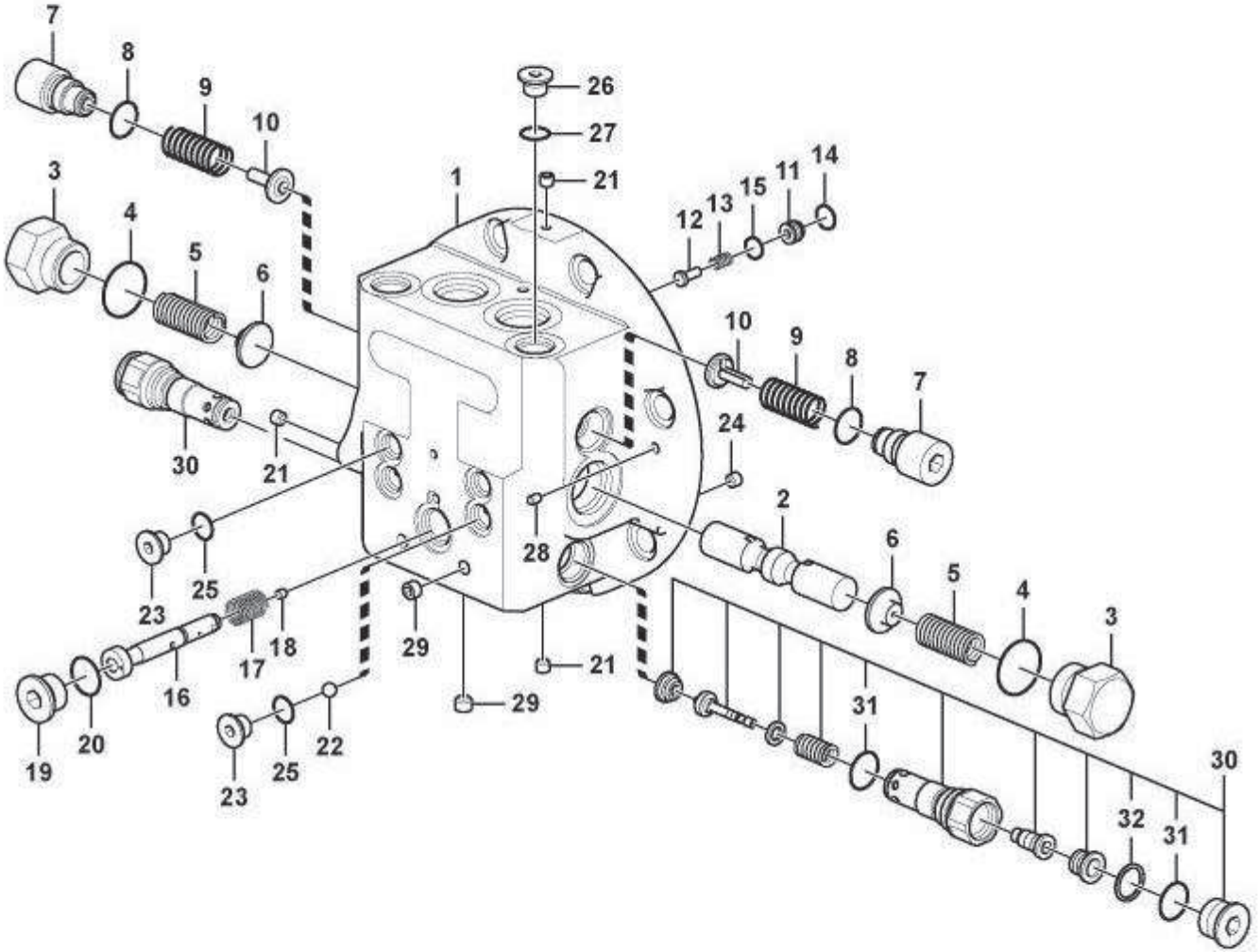
7
8
9
10
3
4
5
6
30
21
23
25
17
18
16
20
19
23
25
22
29
29
21
26
27
21
1
12
13
15
11
14
10
9
8
7
24
28
2
6
5
4
3
31
30
32
31

C6-6150E

Fig.	Part No编码.	Quantity件数 1	2	3	PS	KIT	Description 名称	Notes
		1			NS		Control ..... 控制.....	
	11213576	1					•Flange.....• 法兰.....	
1	**11213577**	1					••Flange .....•• 法兰.....	
2		1			NS		••• Spool.....••• 株塞.....	
3	**11213672**	2					•Plug .....• 堵头.....	
4	**11210142**	2				K	•O-ring.....•o 型圈.....	
5	**11213674**	2					•Spring .....• 弹簧.....	
6	**11213578**	2					•Retainer .....• 固位器.....	
7	**11213579**	2					•Plug .....• 塞.....	
8	**11210166**	2				K	•O-ring.....•o 型圈.....	
9	**11213673**	2					•Spring .....• 弹簧.....	
10	**11213580**	2					•Non-return valve .....• 止回阀.....	
11	**11213496**	1					•Seat .....• 座圈.....	
12	**11213510**	1					•Valve.....• 阀.....	
13	**11213495**	1					•Spring .....• 弹簧.....	
14	**11213652**	1					•Ring .....• 环.....	
15	**11213063**	1				K	•O-ring.....•o 型圈.....	
16	**11213581**	1					•Control plunger .....• 控制塞.....	
17	**11213582**	1					•Spring .....• 弹簧.....	
18	**11213583**	1					•Set screw .....• 定位螺丝.....	
19	**11213584**	1					•Plug .....• 塞.....	
20	**11210136**	1					•O-ring.....•o 型圈.....	
21	**11213687**	7					•Plug .....• 堵头.....	
22	**11213585**	2					•Ball.....• 球.....	
23	**11213586**	4					•Plug .....• 塞.....	
24	**11213511**	1					•Orifice .....• 节流孔.....	
25	**11210133**	4				K	•O-ring.....•o 型圈.....	
26	**11211519**	1					•Plug .....• 堵头.....	
27	**11210166**	1				K	•O-ring.....•o 型圈.....	
28	**11213587**	1					•Pin .....• 销.....	

1	**11212937**	行走马达控制阀 **Control valve, travel motor**	Catalogue id **111201**	Group **402**
2				
3			Illustr. No **C6-6150E**	Section **300**
4				
5			Issue **2638000345**	Page **291**

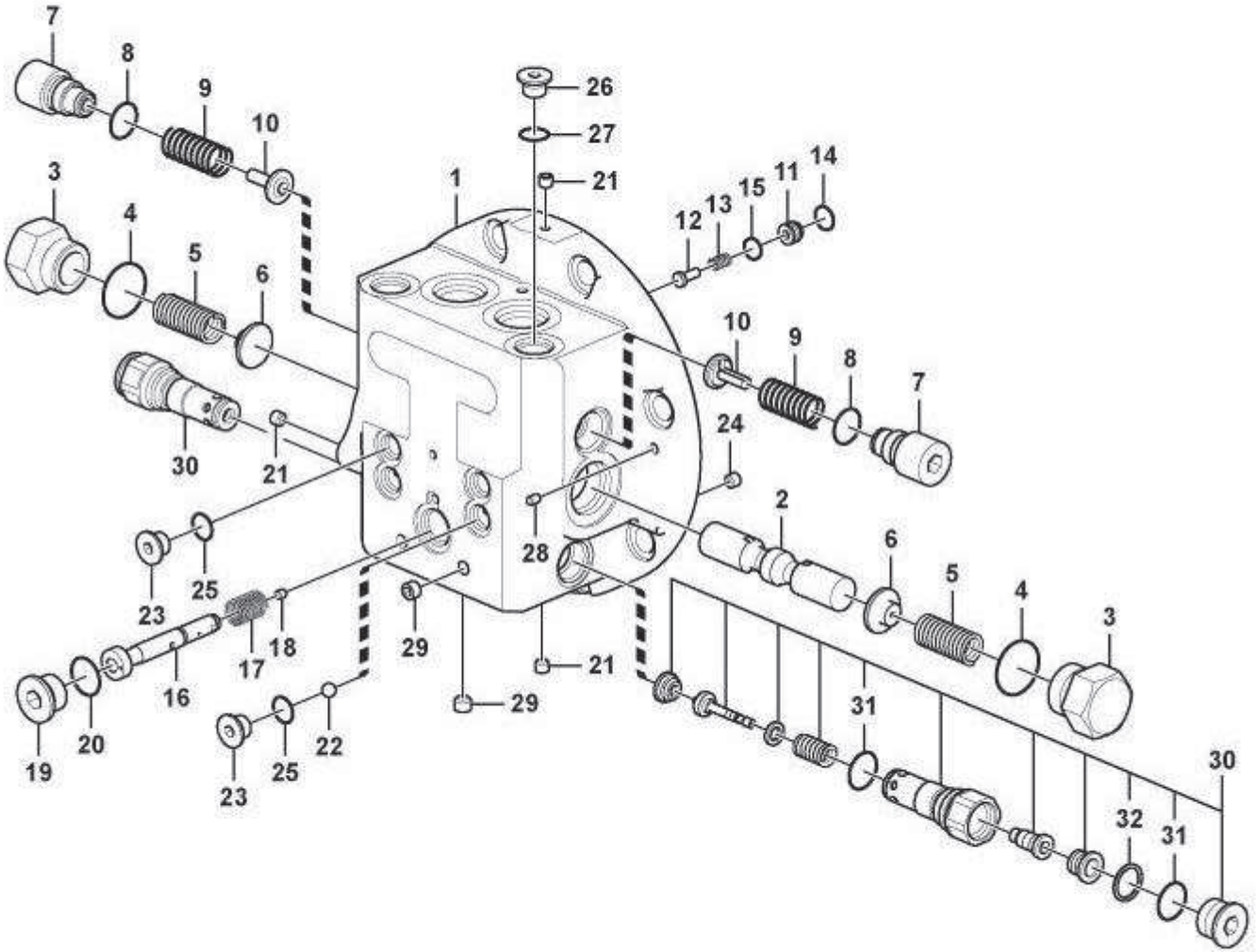
7
8
9
10
3
4
5
6
30
21
23
25
17
18
16
20
19
23
25
22
29
29
21
1
26
27
21
12
13
15
11
14
10
9
8
7
24
28
2
6
5
4
3
31
30
32
31

C6-6150E

Fig.	Part No.编码.	Quantity件数 1	2	3	PS	KIT	Description 名称	Notes
29	**11213688**	4					•Plug ..... • 堵头.....	
30	**11213604**	2					Relief valve ..... 泄流阀.....	
31	**11210166**	2				K	•O-ring.....•O 型圈.....	
32	**11213605**	1				K	•Ring ..... • 环.....	
100	**11213606**	1					Sealing ..... 密封.....	

1	**11212937**	行走马达控制阀 **Control valve, travel motor**	Catalogue id **111201**	Group **402**
2			Illustr. No **C6-6150E**	Section **300**
3				
4			Issue **2638000345**	Page **293**
5				

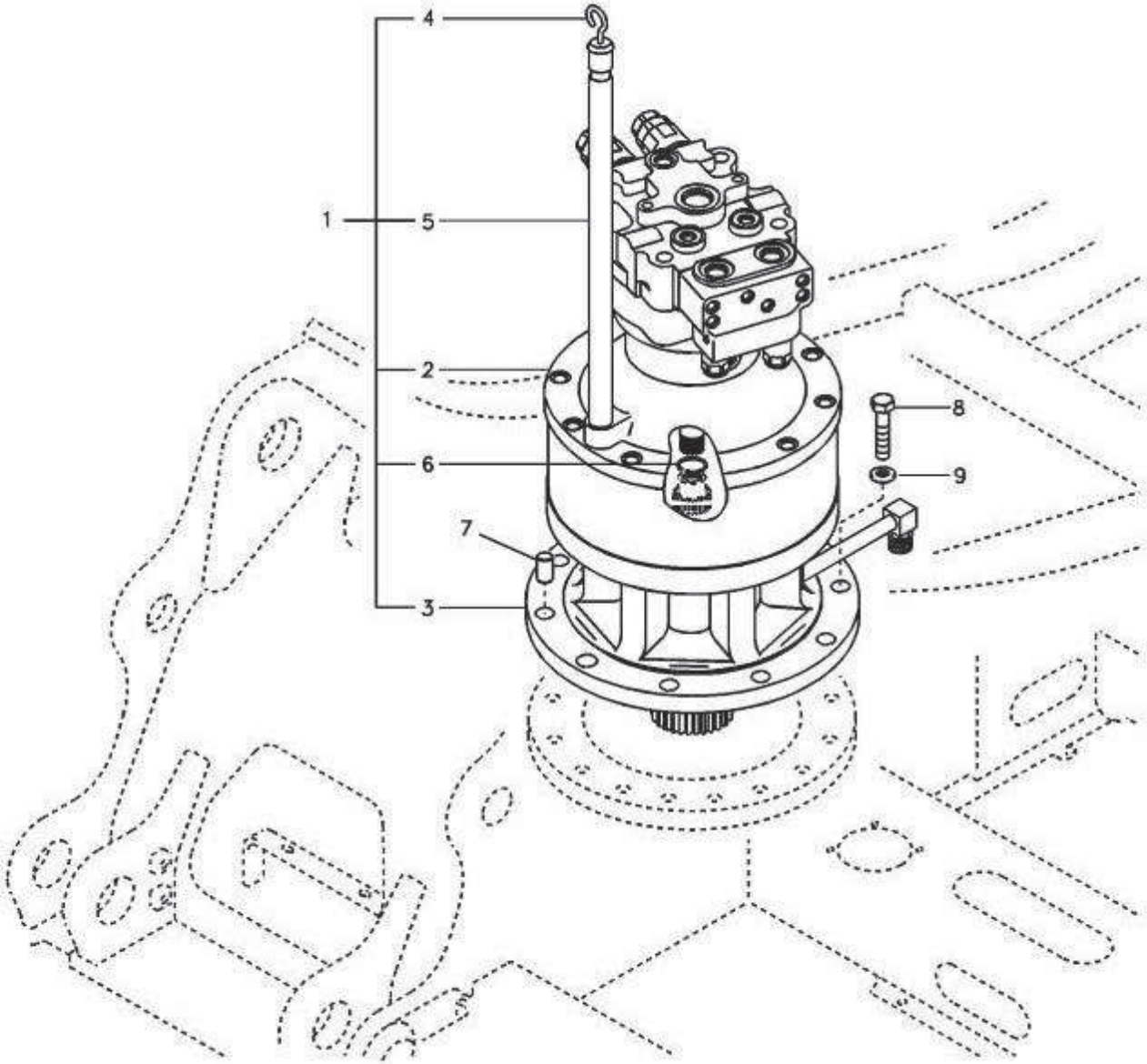

C7-6150E

Fig.	Part No编码.	Quantity件数 1	2	3	PS	KIT	Description 名称	Notes
1	**11213626**	1			OP		Drive unit..... 驱动单元.....	
2	**11212112**	1					•Hydraulic motor .....• 液压电机.....	
3	**11213535**	1					• Gearbox assy_swing ...回转齿轮箱总成.....	
4	**11213609**	1					•Gauge .....• 计量器.....	
5	**11213610**	1					•Pipe .....• 管.....	
6	**11213702**	1					•Ring .....• 密封环.....	
7	**11213490**	1					Pin..... 定位销.....	
8	**11210223**	9					Hexagon screw ..... 六角螺丝.....	
9	**11210199**	9					Washer..... 垫圈.....	

1	**11212924**	回转马达及附件 **Swing motor with mounting parts**	Catalogue id **111201**	Group **402**
2			Illustr. No **C7-6150E**	Section **400**
3			Issue **2638000345**	Page **295**
4				
5				

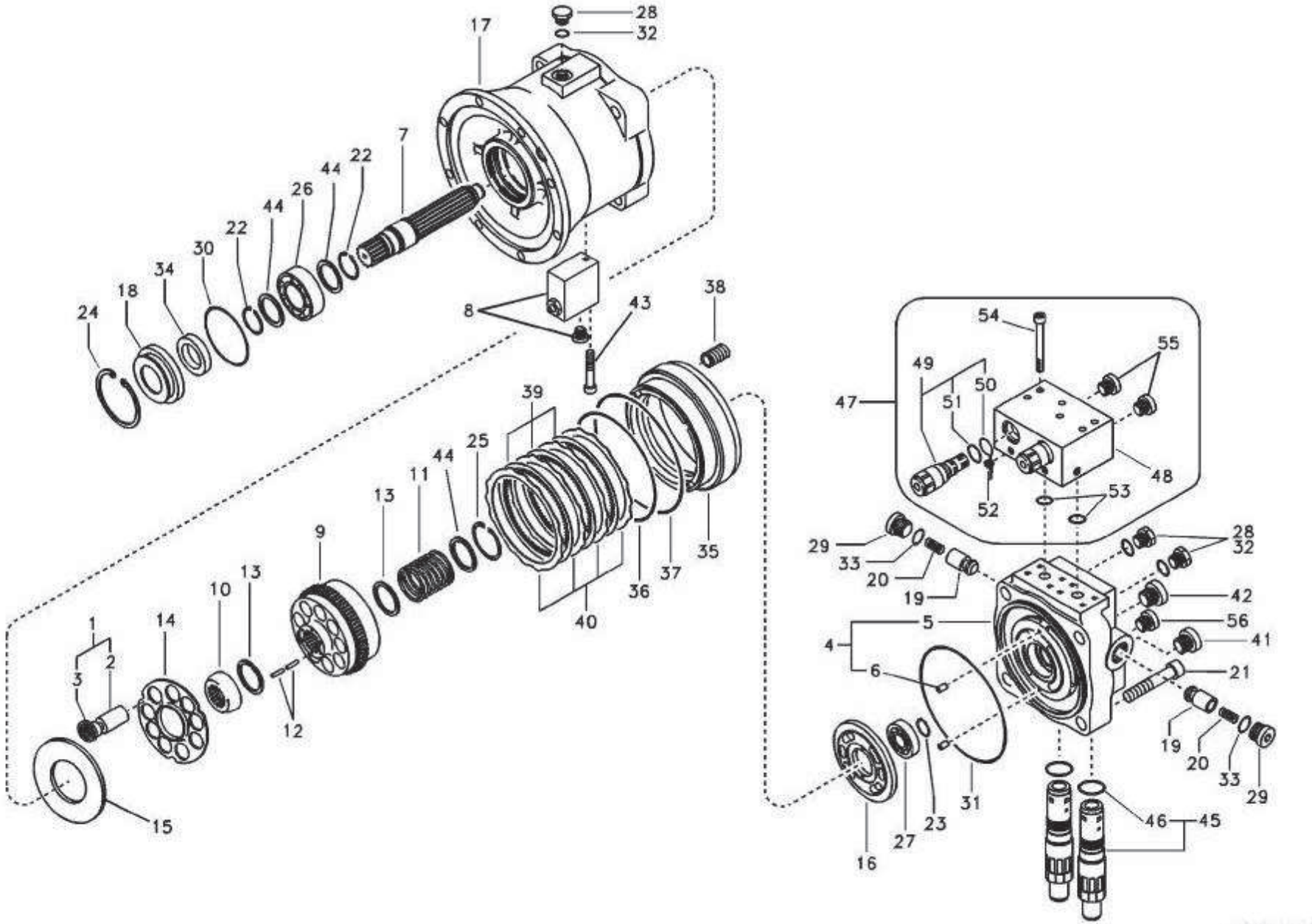
C8-6150E

Fig.	Part No编码.	Quantity件数 1	2	3	PS	KIT	Description 名称	Notes
	11212112	1					Hydraulic motor..... 液压电机.....	
1	**11213493**	9					•Piston..... • 活塞.....	
2		1			NS		••Piston ..... •• 活塞.....	
3		1			NS		••Seat ..... •• 座圈.....	
4	**11213686**	1					•Casing ..... • 壳体.....	
5		1			NS		••Casing ..... •• 壳体.....	
6		2			NS		••Pin ..... •• 定位销.....	
7	**11213655**	1					•Shaft ..... • 轴.....	
8	**11213498**	1					•Valve..... • 阀.....	
	11213552	2					••Plug ..... •• 堵头.....	
	11213705	2					••O-ring ..... ••O 型圈.....	
	11210134	1					••O-ring ..... ••O 型圈.....	
9	**11213656**	1					•Cylinder ..... • 工作缸.....	
10	**11213664**	1					•Retainer ..... • 固位器.....	
11	**11213667**	1					•Spring ..... • 弹簧.....	
12	**11213681**	12					•Rod ..... • 手柄.....	
13	**11213666**	2					•Spacer ..... • 垫片.....	
14	**11213660**	1					•Plate ..... • 板.....	
15	**11213662**	1					•Plate ..... • 安装板.....	
16	**11213661**	1					•Valve plate ..... •阀板.....	
17	**11213654**	1					•Casing ..... • 壳体.....	
18	**11213663**	1					•Cover..... • 罩盖.....	
19	**11213669**	2					•Plunger ..... • 柱塞.....	
20	**11213670**	2					•Spring ..... • 弹簧.....	
21	**11213691**	4					•Bolt ..... • 螺栓.....	
22	**11213680**	2					•Ring ..... • 密封环.....	
23	**11213139**	1					•Ring ..... • 密封环.....	
24	**11213704**	1					•Ring ..... • 密封环.....	
25	**11213679**	1					•Ring ..... • 密封环.....	
26	**11213682**	1					•Roller bearing ..... • 滚轴轴承.....	

1	**11212924**	回转马达 **Swing motor**	Catalogue id **111201** / Group **402**
2			
3			Illustr. No **C8-6150E** / Section **500**
4			
5			Issue **2638000345** / Page **297**

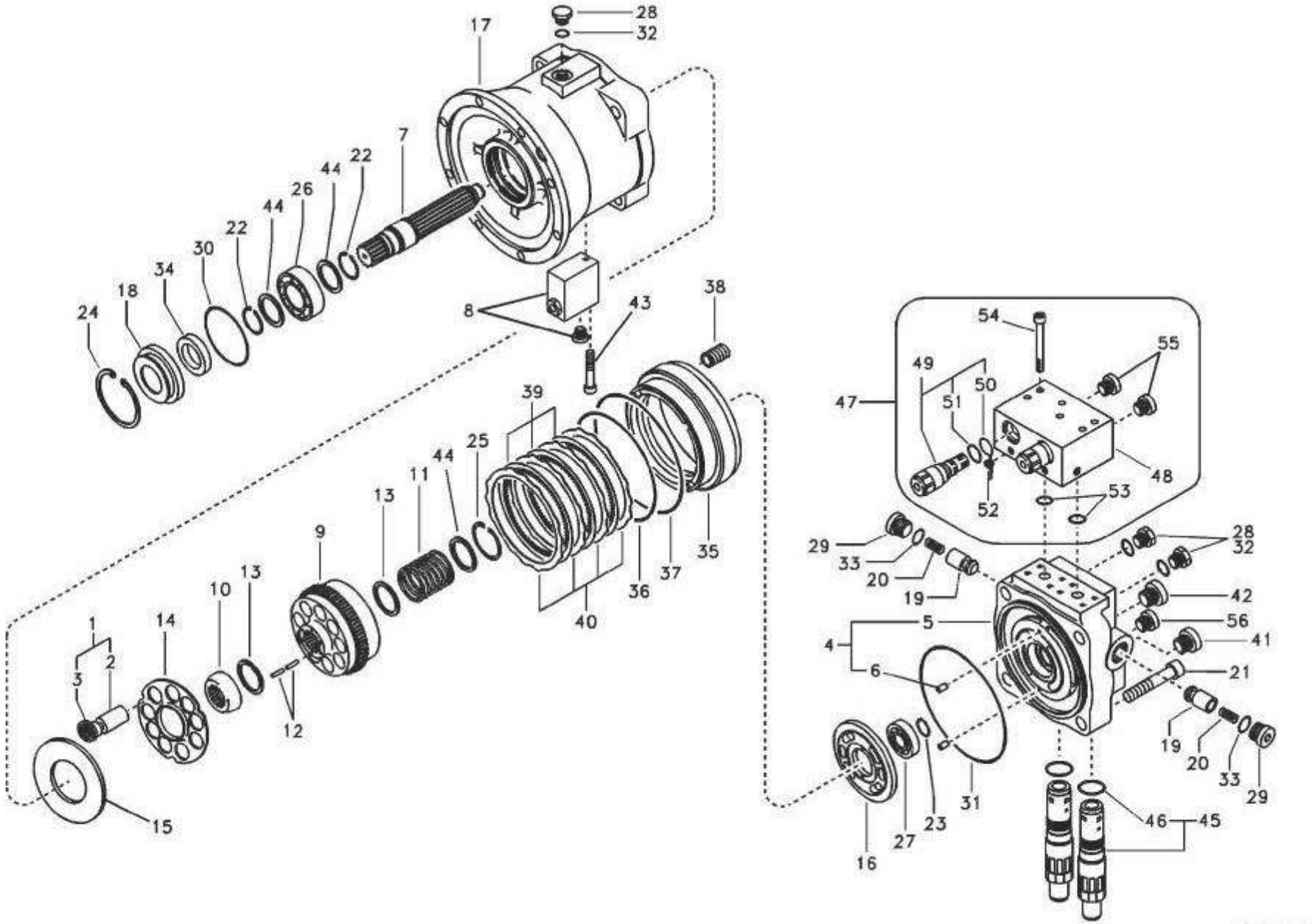
C8-6150E

Fig.	Part No.编码.	Quantity件数 1	2	3	P S	K I T	Description 名称	Notes
27	**11213497**	1					•Roller Bearing .....• 滚柱轴承.....	
28	**11213677**	3					•Plug .....• 堵头.....	
29	**11213678**	2					•Plug .....• 堵头.....	
30	**11213701**	1				K	•O-ring.....•⬯ 形圈.....	
31	**11213690**	1				K	•O-ring.....•○ 型圈.....	
32	**11213697**	3				K	•O-ring.....•⬯ 形圈.....	
33	**11213698**	2				K	•O-ring.....•○ 型圈.....	
34	**11213683**	1				K	•Seal .....• 密封.....	
35	**11213659**	1					•Piston.....• 活塞.....	
36	**11213675**	1				K	•O-ring.....•○ 型圈.....	
37	**11213676**	1				K	•O-ring.....•○ 型圈.....	
38	**11213668**	16					•Spring .....• 弹簧.....	
39	**11213658**	3					•Friction plate .....• 摩擦板.....	
40	**11213657**	4					•Separating plate .....• 板.....	
41	**11213685**	1					•Plug .....• 堵头.....	
42	**11213684**	1					•Plastic plug .....• 塑料塞.....	
43	**11210416**	3					•Screw.....• 六角螺钉.....	
44	**11213665**	3					•Spacer .....• 垫片.....	
45	**11213689**	2					•Relief valve .....• 泄流阀.....	
46	**11213700**	1					••O-ring .....••⬯ 形圈.....	
47	**11213499**	1					•Block.....• 阻挡块.....	
48	**11213500**	1			OP		••Casing .....•• 壳体.....	
49	**11212397**	2					••Valve .....•• 阀.....	
50	**11213698**	1					•••O-ring .....•••○ 型圈.....	
51	**11211788**	1					•••Ring..... ••• 密封环.....	
52	**11211417**	4					••Plug .....•• 塞.....	
53	**11213699**	2					••O-ring .....••⬯ 形圈.....	
54	**11211552**	6					••Bolt .....•• 螺栓.....	
55		2					••Plug .....•• 堵头.....	
56	**11210625**	1					•Plug .....• 堵头.....	
100	**11213671**	1					Sealing ..... 密封.....	

1	**11212924**	回转马达 **Swing motor**	Catalogue id **111201**	Group **402**
2			Illustr. No **C8-6150E**	Section **500**
3				
4			Issue **2638000345**	Page **299**
5				

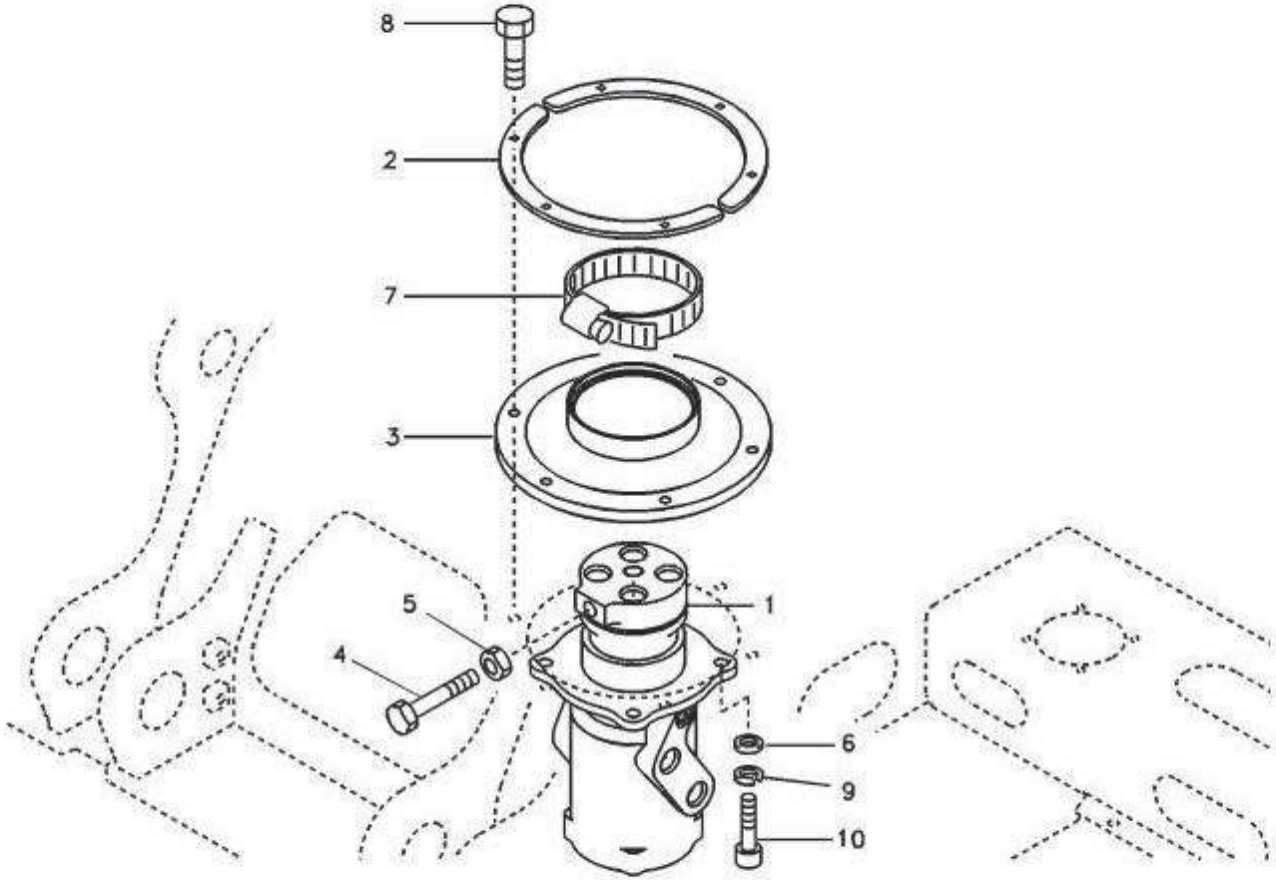

C9-6150E

Fig.	Part No.编码.	Quantity 件数 1	2	3	4	5	PS	KIT	Description 名称	Notes
1	**11211815**	1							Turning joint .....回转接头.....	
2	**11210673**	2							Plate.....板.....	
3	**11210674**	1							Seal.....密封.....	
4	**11210210**	1							Hexagon screw .....六角螺丝.....	
5	**11210196**	1							Hexagon nut .....六角螺母.....	
6	**11210199**	4							Washer .....垫圈.....	
7	**11211646**	1							Screw clamp .....螺丝夹.....	
8	**11210031**	6							Flange screw .....法兰螺丝.....	
9	**11210067**	4							Spring washer .....弹簧垫圈.....	
10	**11210103**	4							Hexagon screw .....六角螺丝.....	

1	**11212937**	安装回转接头总成 **Turning joint, mounting**	Catalogue id **111201**	Group **403**
2			Illustr. No **C9-6150E**	Section **100**
3				
4			Issue **2638000345**	Page **301**
5				

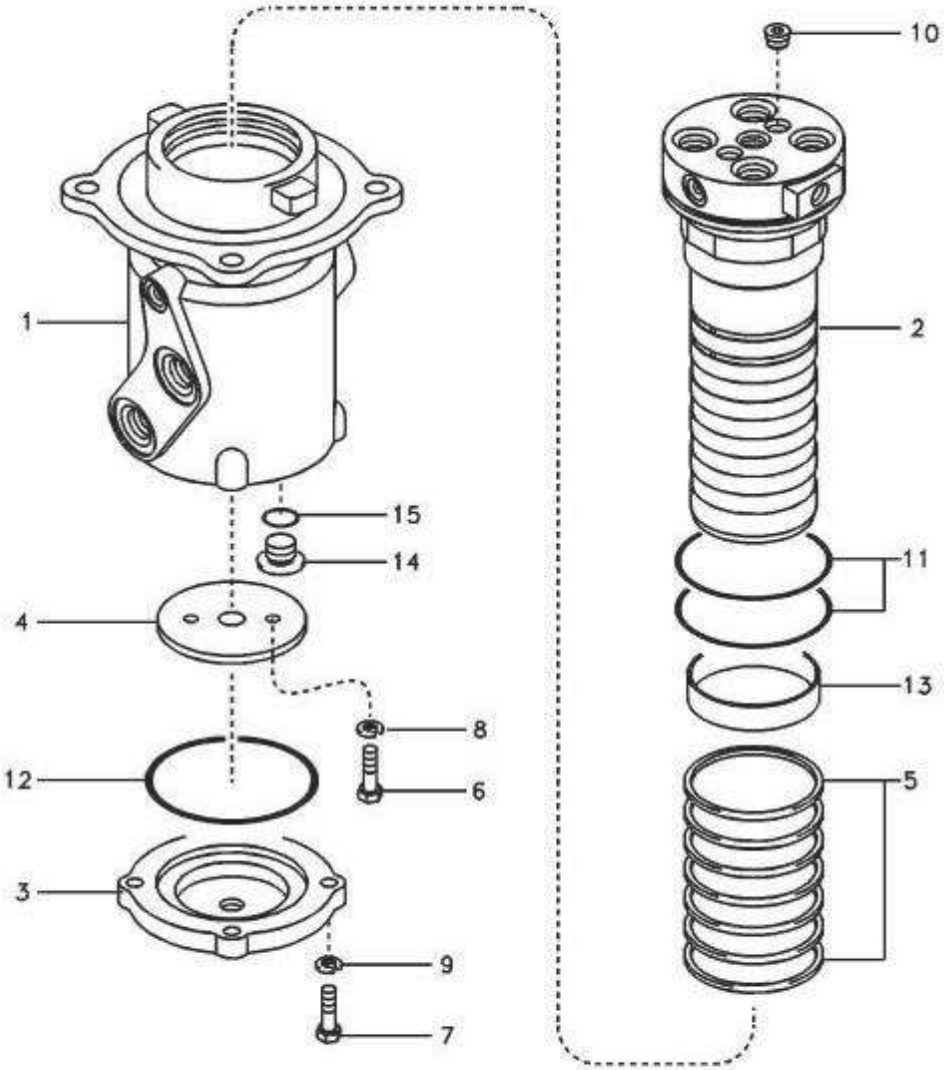

C10-6150E

Fig.	Part No.编码.	Quantity件数 1	2	3	PS	KIT	Description 名称	Notes
	11211815	1					Turning joint ..... 回转接头.....	
1	**11211331**	1			OP		•Hub .....• 轮毂.....	
2		1					•Shaft .....• 轴.....	
3	**11211332**	1					•Cover .....• 罩盖.....	
4	**11211333**	1					•Spacer .....• 定位器.....	
5	**11210327**	7				K	•Seal .....• 密封.....	
6	**11210123**	2					•Hexagon screw .....• 六角螺丝.....	
7	**11210099**	4					•Hexagon screw .....• 六角螺丝.....	
8	**11210064**	2					•Spring washer.....• 弹簧垫圈.....	
9	**11210065**	4					•Spring washer.....• 弹簧垫圈.....	
10	**11211705**	2					•Plug .....• 堵头.....	
11	**11212441**	2				K	•O-ring.....•O 形圈.....	
12	**11212442**	1				K	•O-ring.....•O 形圈.....	
13	**11211802**	1					•Bushing.....• 轴衬.....	
14	**11211337**	4					•Plug .....• 堵头.....	
15	**11212440**	4				K	•O-ring.....•O 形圈.....	
100	**11210467**	1					Sealing .....密封.....	

1	**11212937**	回转接头总成 **Turning joint**	Catalogue id **111201**	Group **403**
2			Illustr. No **C10-6150E**	Section **200**
3				
4			Issue **2638000345**	Page **303**
5				

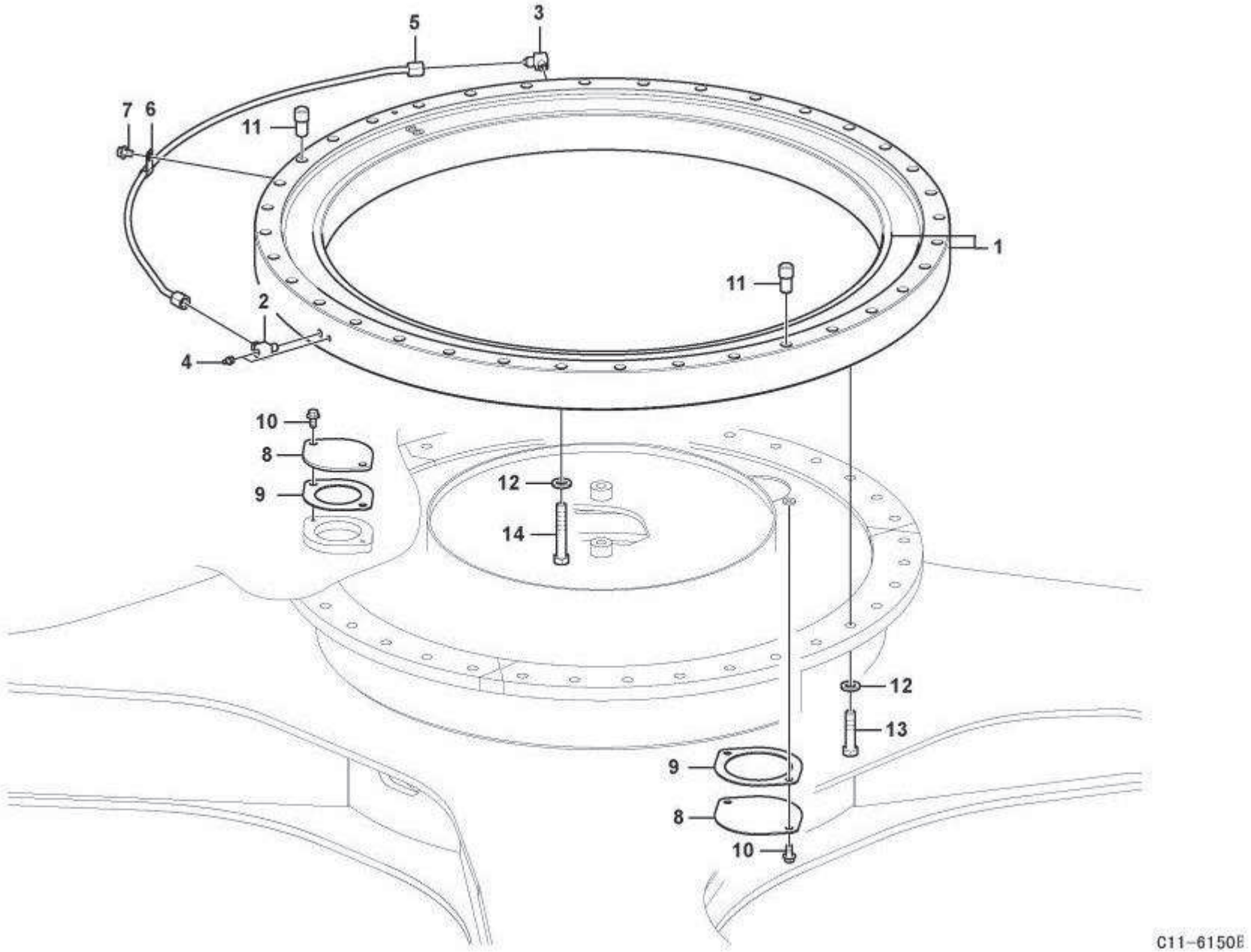
5
3
7
6
11
1
11
2
4
10
8
9
12
14
12
13
9
8
10
C11-6150E

Fig.	Part No.编码.	Quantity件数 1	2	3	P S	K I T	Description 名称	Notes
1	**11213607**	1					Swing gear ..... 回转齿轮	
	11210884	2					•Seal ..... • 密封	
2	**11210847**	1					Elbow ..... 弯管	
3	**11210846**	1					Elbow ..... 弯管	
4	**11210001**	2					Lubricating nipple ..... 润滑管嘴	
5	**11213608**	1					Pipe ..... 管	
6	**11211654**	1					Insulating clip ..... 绝缘夹	
7	**11210036**	1					Flange screw ..... 法兰螺丝	
8	**11210667**	2					Cover ..... 盖板	
9	**11210668**	2					Packing ..... 填充物	
10	**11210034**	4					Flange screw ..... 法兰螺丝	
11	**11213489**	2					Pin ..... 定位销	
12	**11210199**	69					Plain washer ..... 平垫圈	
13	**11214625**	36					Hexagon screw ..... 六角螺丝	
14	**11213733**	33					Hexagon screw ..... 六角螺丝	

1	**11212924**	回转系统 **Swing system**	Catalogue id **111201**	Group **404**
2			Illustr. No **C11-6150E**	Section **100**
3			Issue **2638000345**	Page **305**
4				
5				



www.sdlg.cn

GROUP		Section	Page
701	Protecting plate	100	311
701	Protective plate for travel motor	200	313
702	Counterweights	100	315
703	Foot step	100	317
703	Track chain	200	319
703	Undercarriage, track guards	300	321
703	Undercarriage, spring package	400	323
703	Front idler	500	325
703	Top roller	600	327
703	Bottom roller	700	329
703	Sprocket	800	331

部类		部分	页
701	护板	100	311
701	行走马达保护板	200	313
702	配重	100	315
703	脚动踏板	100	317
703	履带链条	200	319
703	底盘，履带导件	300	321
703	底盘，弹簧套件	400	323
703	前引导轮	500	325
703	顶部支重轮	600	327
703	底部支重轮	700	329
703	链轮	800	331



www.sdlg.cn

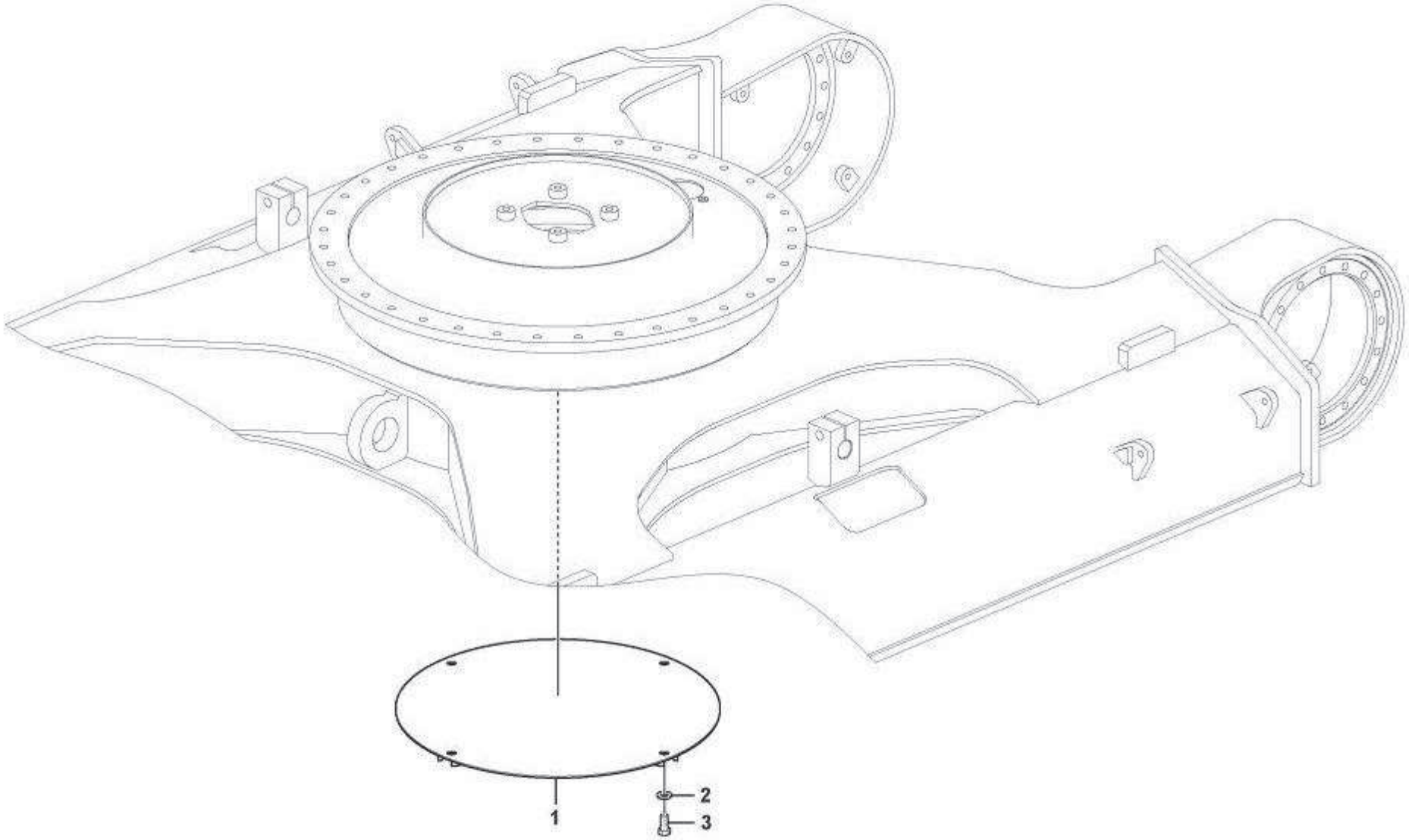

F1-6150E

Fig.	Part No.编码.	Quantity件数 1	2	3	PS	KIT	Description 名称	Notes
1	**11214629**	1					Cover ..... 罩盖.....	
2	**11210199**	4					Washer..... 垫圈.....	
3	**11210101**	4					Hexagon screw ..... 六角螺丝.....	

1	**8277923**	护板 **Protecting plate**	Catalogue id **111201**	Group **701**
2				
3			Illustr. No **F1-6150E**	Section **100**
4				
5			Issue **2638000345**	Page **311**

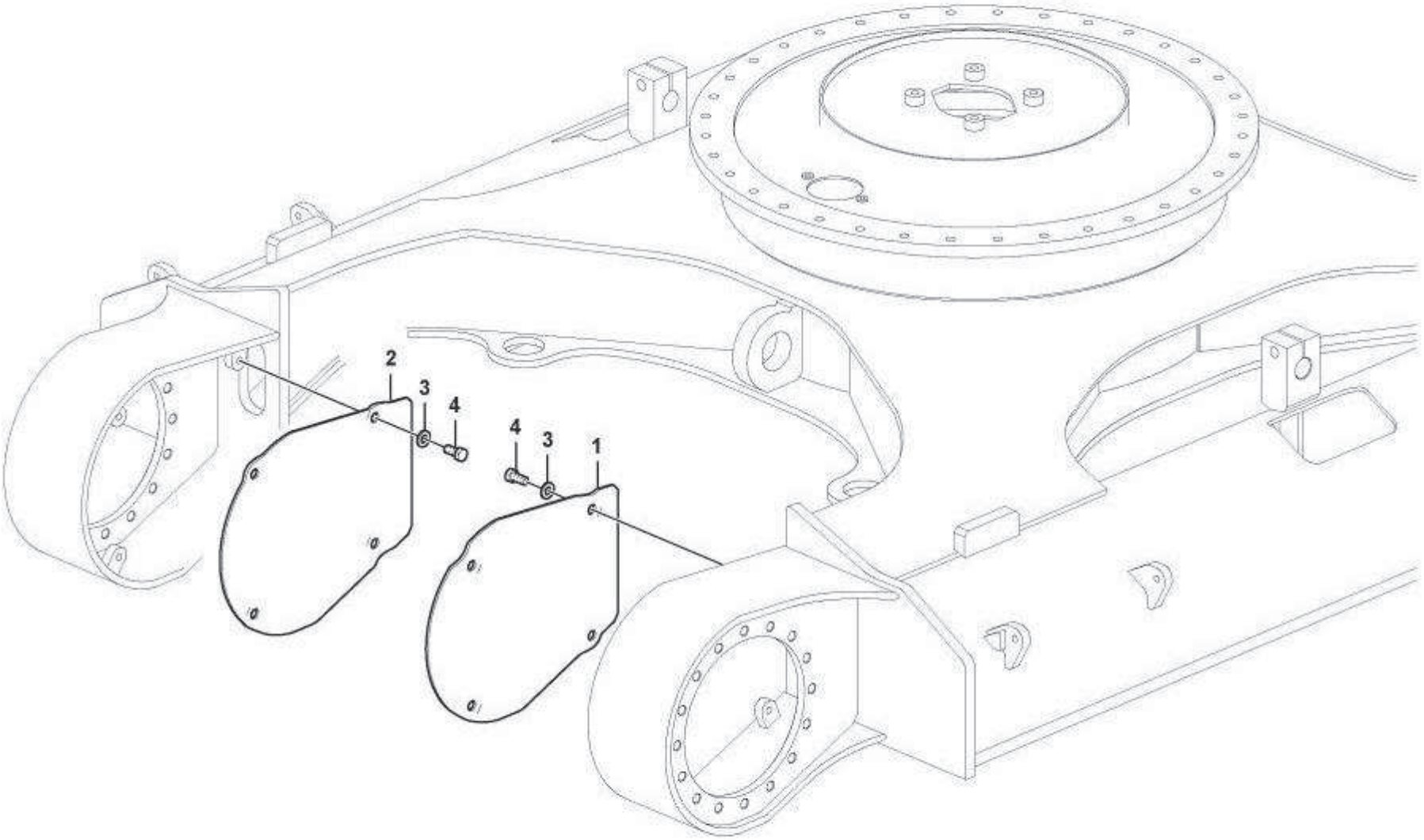

F2-6150E

Fig.	Part No.编码.	Quantity 件数 1	2	3	4	5	PS	KIT	Description 名称	Notes
1	**11214633**	1							Cover .....罩盖.....	
2	11214634	1							Cover .....罩盖.....	
3	**11210199**	8							Plain washer .....平垫圈.....	
4	**11210101**	8							Hexagon screw .....六角螺丝.....	

1	**8277950**	行走马达保护板 **Protective plate for travel motor**	Catalogue id **111201**	Group **701**
2				
3			Illustr. No **F2-6150E**	Section **200**
4				
5			Issue **2638000345**	Page **313**

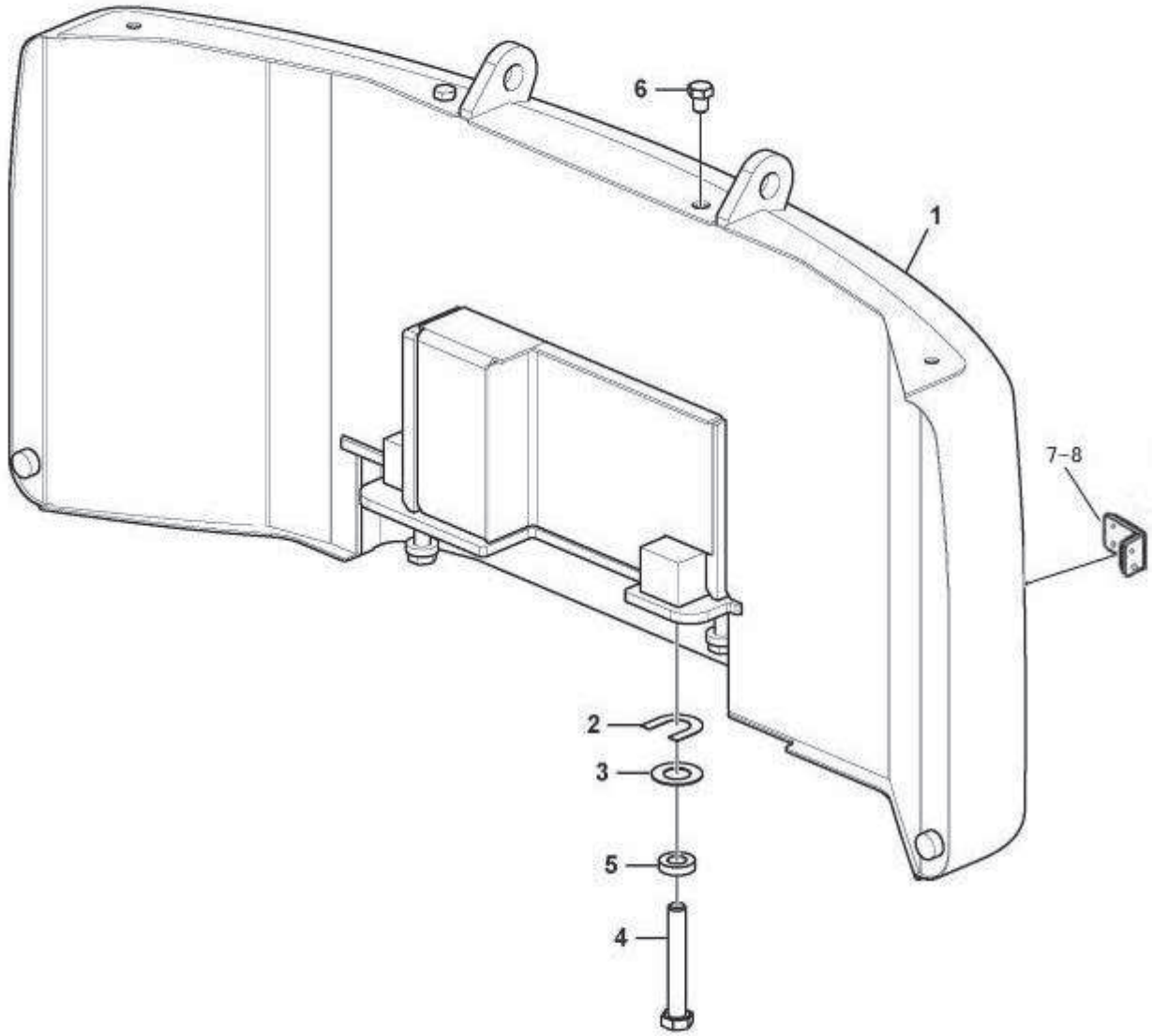

F3-6150E

Fig.	Part No.编码.	Quantity件数 1	2	3	PS	KIT	Description 名称	Notes
1	**2628000256**	1					Counterweight.....配重.....	
2	**11212407**	4					Shim.....垫片.....	
3	**11212408**	4					Shim.....垫片.....	
4	**11210212**	4					Screw .....螺丝.....	
5	**11213513**	4					Washer.....垫圈.....	
6	**11212447**	2					Hexagon screw .....六角螺丝.....	
7	**2636000309**	1					REFLECTOR LH.....左反光警示器.....	
8	**2636000311**	1					REFLECTOR RH.....右反光警示器.....	

1	**8288668**	配重 **Counterweights**	Catalogue id **111201**	Group **702**
2			Illustr. No **F3-6150E**	Section **100**
3				
4			Issue **2638000345**	Page **315**
5				

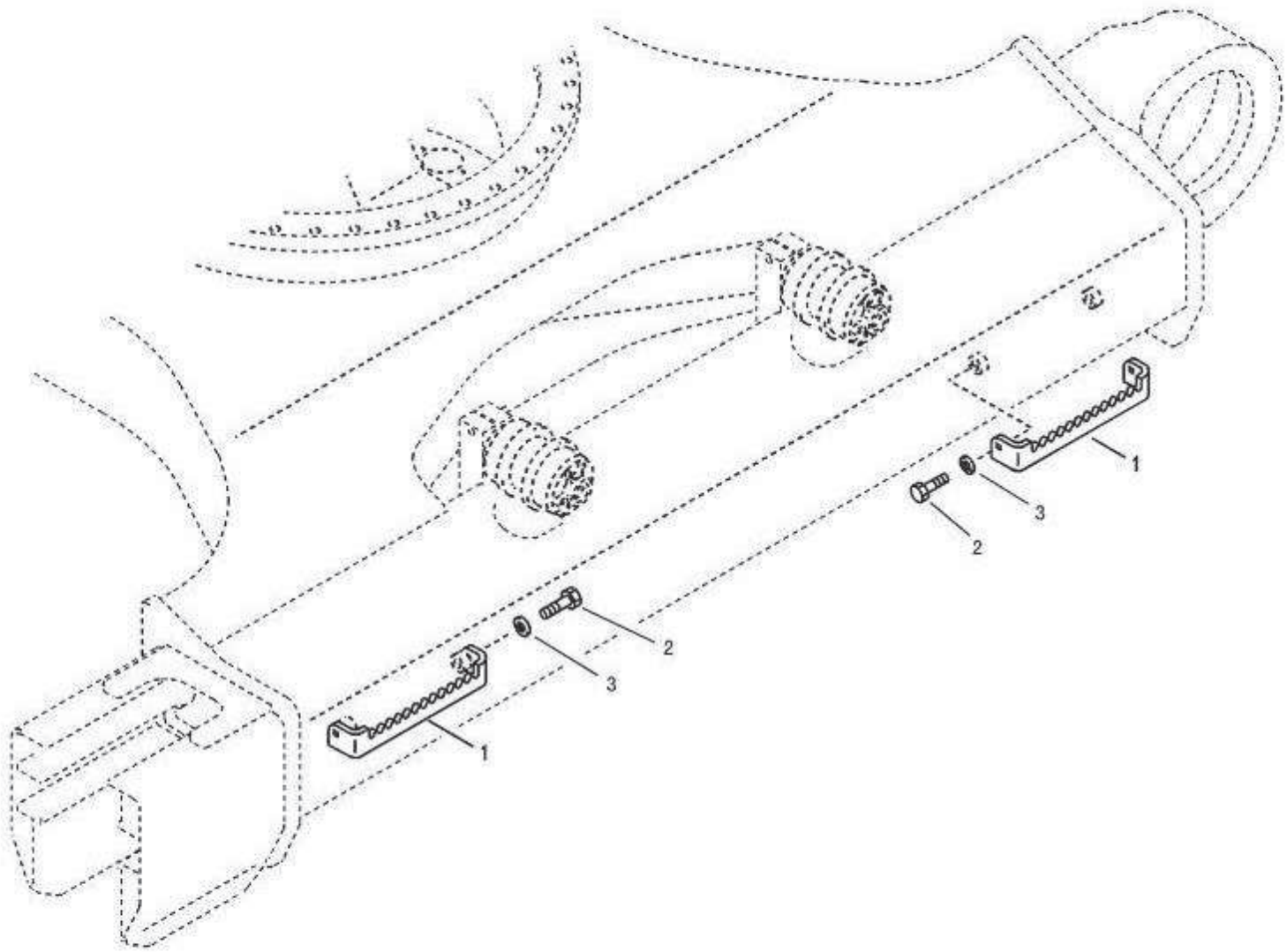

F4-6150E

Fig.	Part No.编码.	Quantity 件数 1	2	3	4	5	PS	KIT	Description 名称	Notes
1	**11213503**	4							Step .....踏梯.....	500MM,600MM
2	**11210103**	8							Hexagon screw .....六角螺丝.....	
3	**11210199**	8							Washer .....垫圈.....	

1	**8277935**	脚动踏板 **Foot step**	Catalogue id **111201**	Group **703**
2				
3			Illustr. No **F4-6150E**	Section **100**
4				
5			Issue **2638000345**	Page **317**

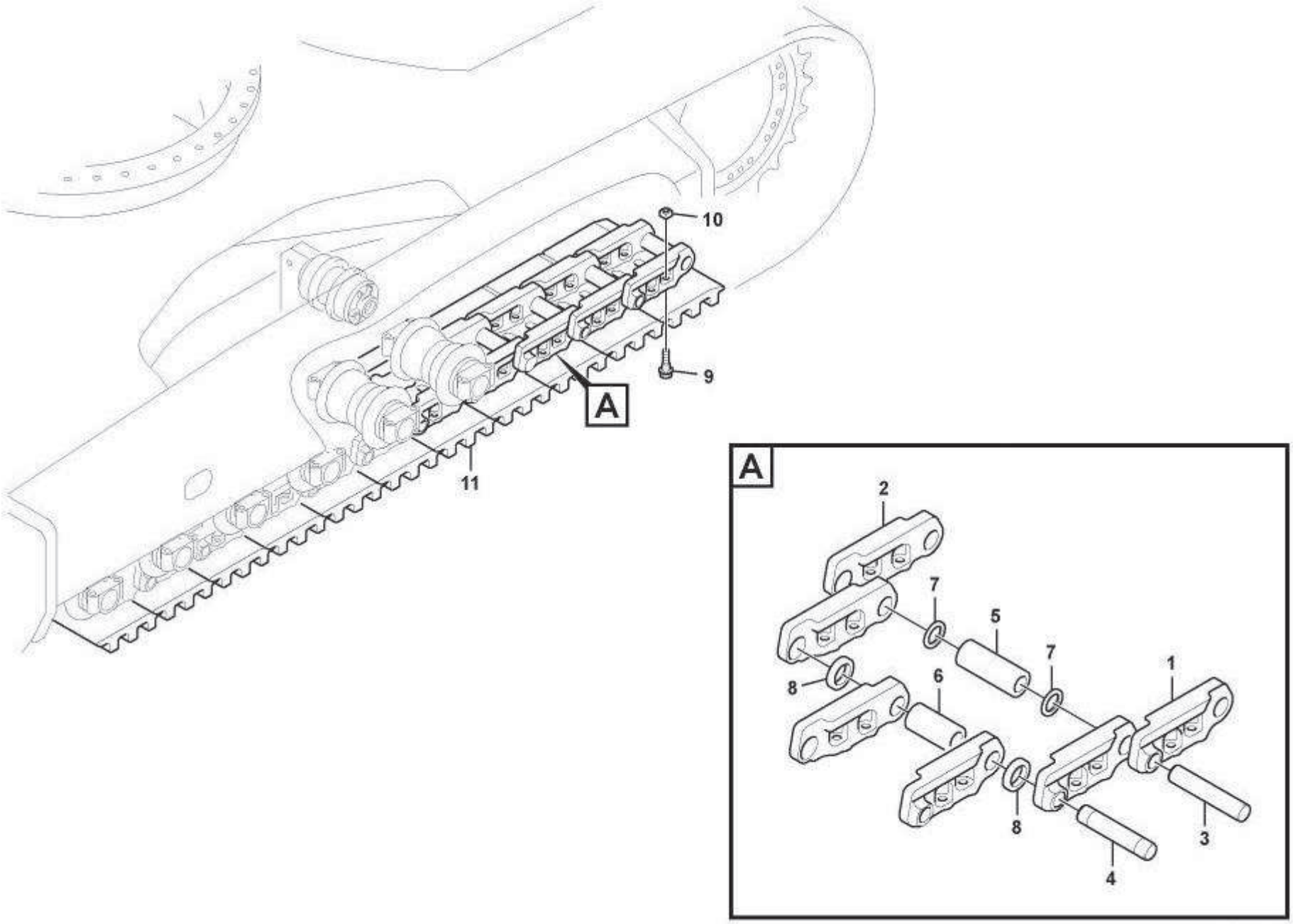

F5-6150E

Fig.	Part No.编码.	Quantity件数 1	2	3	PS	KIT	Description 名称	Notes
	11214444	2					Link ..... 连接.....	
1	**11214445**	46					•Link ..... • 连接.....	LH
2	**11214446**	46					•Link ..... • 连接.....	RH
3	**11213526**	45					•Pin ..... • 销.....	Regular
4	**11213525**	1					•Pin ..... • 定位销.....	Master
5	**11213528**	45					•Bushing..... • 轴衬.....	Regular
6	**11213527**	1					•Bushing..... • 轴衬.....	Master
7	**11213530**	90					•Seal ..... • 密封.....	
8	**11213529**	2					•Spacer ..... • 定位器.....	
9	**11213554**	368					Bolt..... ..... 螺栓.....	
10	**11213622**	368					Nut ....螺母.....	
11	**11214632**	92					Track shoe ..... 履带板.....	600mm,Triple

1	**8282963**	履带链条 **Track chain**	Catalogue id **111201**	Group **703**
2				
3			Illustr. No **F5-6150E**	Section **200**
4				
5			Issue **2638000345**	Page **319**

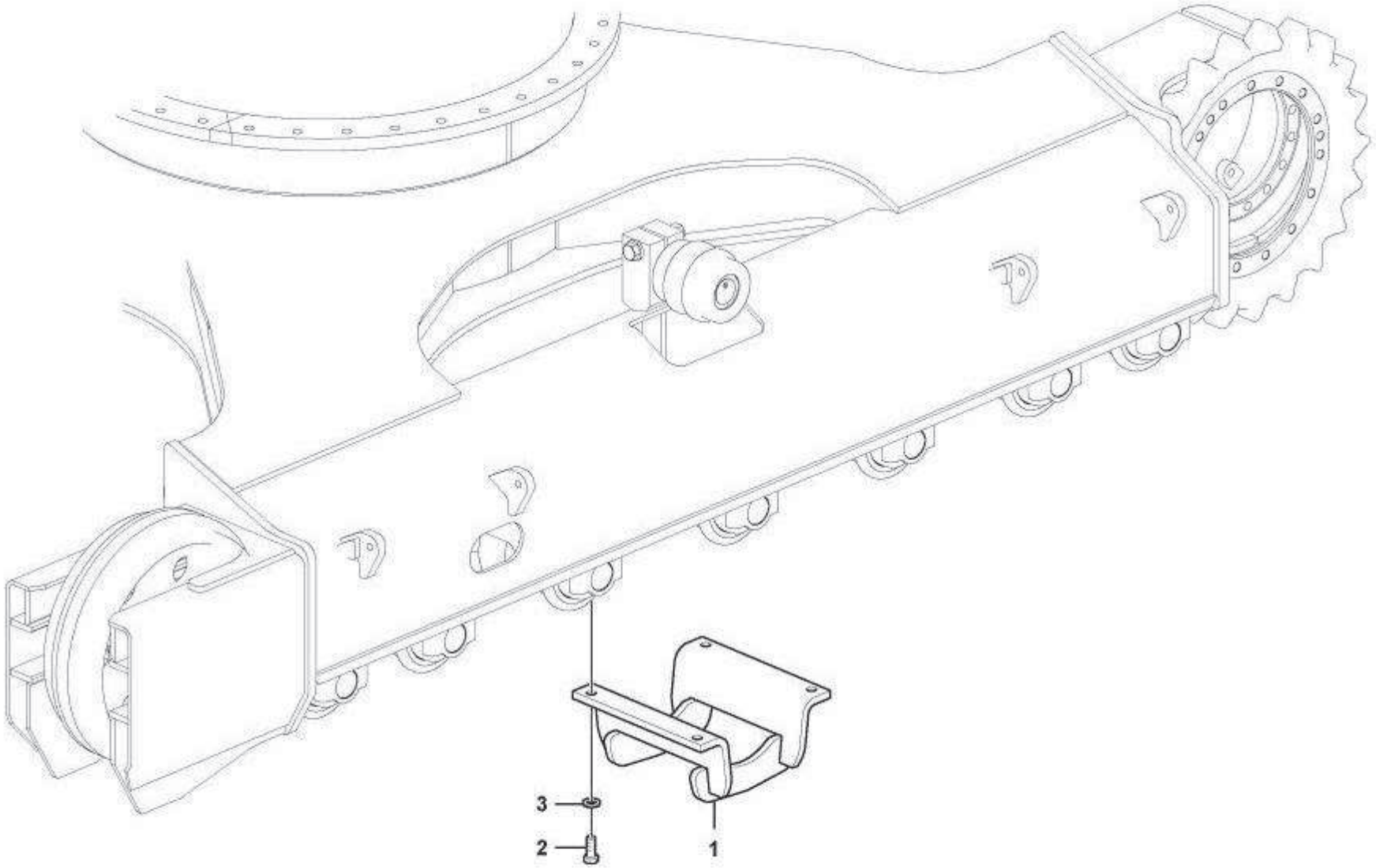

F6-6150E

Fig.	Part No.编码.	Quantity件数 1	2	3	PS	KIT	Description 名称	Notes
1	**11213492**	2					Guard .....防护装置.....	
2	**11210101**	8					Hexagon screw .....六角螺丝.....	
3	**11210199**	8					Washer.....垫圈.....	

1	**8277950**	底盘,履带导件 **Undercarriage, track guards**	Catalogue id **111201**	Group **703**
2				
3			Illustr. No **F6-6150E**	Section **300**
4				
5			Issue **2638000345**	Page **321**

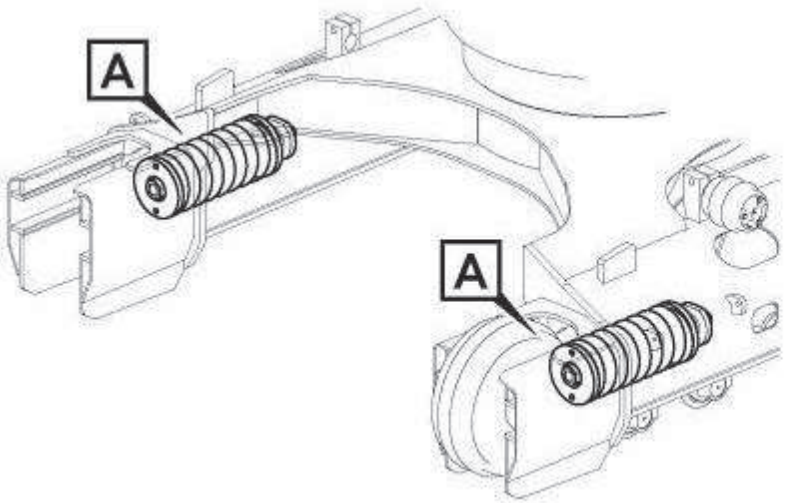

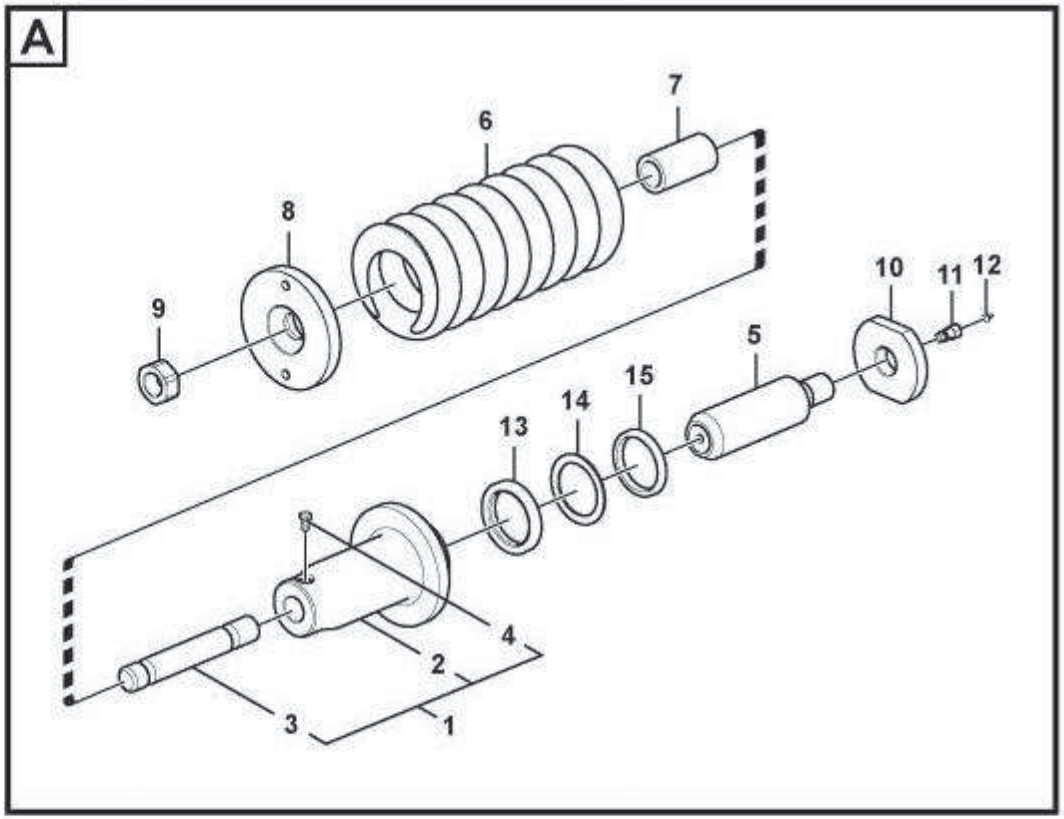

F7-6150E

Fig.	Part No.编码.	Quantity件数 1	2	3	PS	KIT	Description 名称	Notes
	11213553	2					Coil spring ..... 线圈弹簧.....	
1		1			NS		•Body .....• 箱体.....	
2	**11213532**	1					••Body .....•• 车体.....	
3	**11213522**	1					••Rod .....•• 棒.....	
4	**11210122**	1					••Hexagon screw.....•• 六角螺丝.....	
5	**11213531**	1					•Piston.....• 活塞.....	
6	**11213516**	1					•Spring .....• 弹簧.....	
7	**11213523**	1					•Stopper .....• 行程限位装置.....	
8	**11213533**	1					•Plate .....• 板.....	
9	**11213524**	1					•Nut .....• 螺母.....	
10	**11213515**	1					•Plate .....• 板.....	
11	**11213551**	1					•Valve.....• 阀.....	
12	**11210001**	1					•Lubricating nipple .....• 润滑管嘴.....	
13	**11211813**	1					•Packing .....• 填充物.....	
14	**11211814**	1					•Ring .....• 密封环.....	
15	**11211812**	1					•Seal .....• 密封.....	
100	**11211470**	1					Sealing .....密封.....	

1	**8277950**	底盘,弹簧套件 **Undercarriage, spring package**	Catalogue id **111201**	Group **703**
2			Illustr. No **F7-6150E**	Section **400**
3				
4			Issue **2638000345**	Page **323**
5				

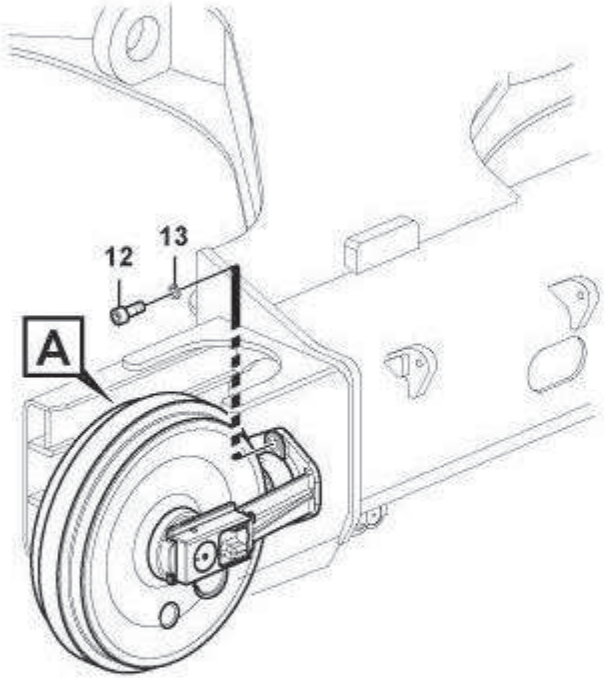

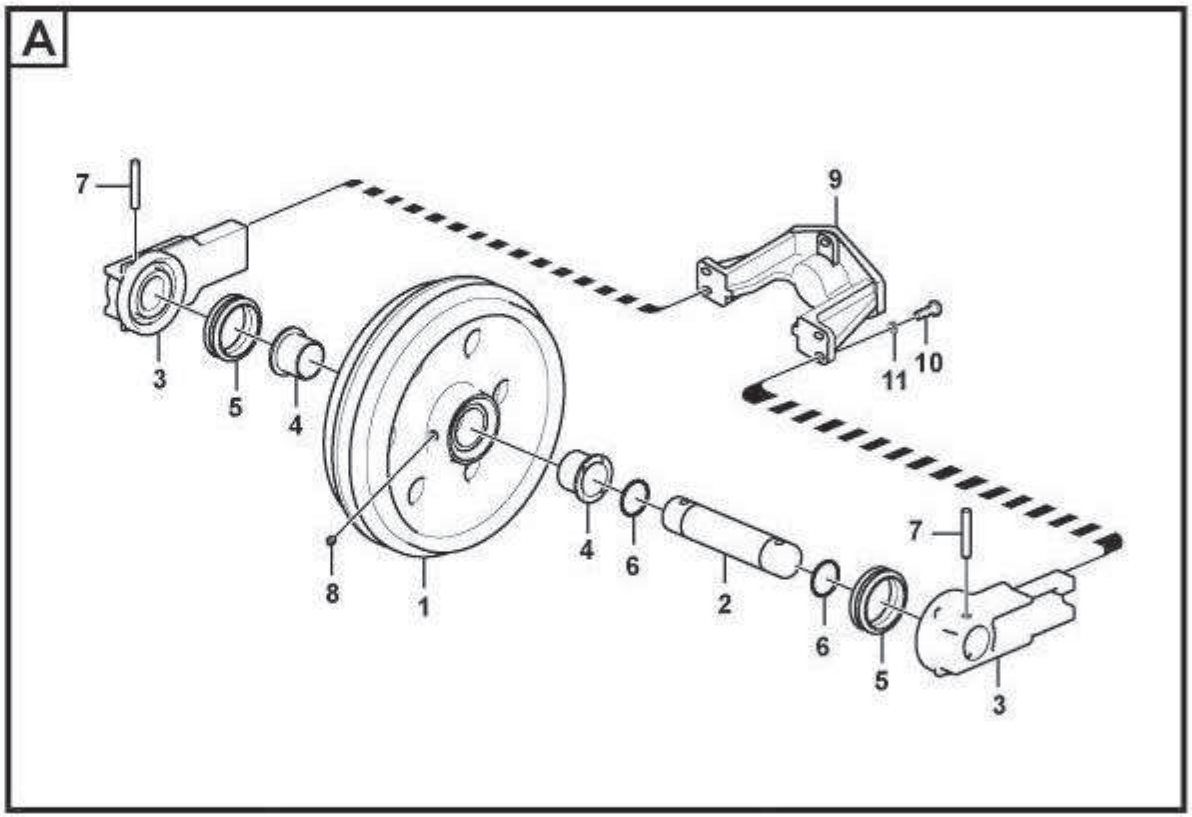

F8-6150E

Fig.	Part No编码.	Quantity件数 1	2	3	PS	KIT	Description 名称	Notes
	11213627	2					Idler ..... 引导轮.....	
1	**11213628**	1					•Bearing shell .....• 轴承壳.....	
2	**11213538**	1					•Shaft .....• 转轴.....	
3	**11213536**	2					•Support .....• 支座.....	
4	**11213537**	2					•Bushing.....• 轴衬.....	
5	**11213546**	2					•Sealing.....• 密封.....	
6	**11213734**	2					•O-ring.....•o 型圈.....	
7	**11213544**	2					•Pin .....• 定位销.....	
8	**11210679**	1					•Plug .....• 堵头.....	
9	**11213491**	1					•Bracket .....• 支架.....	
10	**11212963**	4					•Bolt .....• 螺栓.....	
11	**11210065**	4					•Spring washer.....• 弹簧垫圈.....	
12	**11214624**	8					Hexagon screw ..... 六角螺丝.....	
13	**11211961**	8					Spring washer ..... 弹簧垫圈.....	

1	**8277950**	前引导轮 **Front idler**	Catalogue id **20490**	Group **703**
2			Illustr. No **F8-6150E**	Section **500**
3				
4			Issue **2638000345**	Page **325**
5				

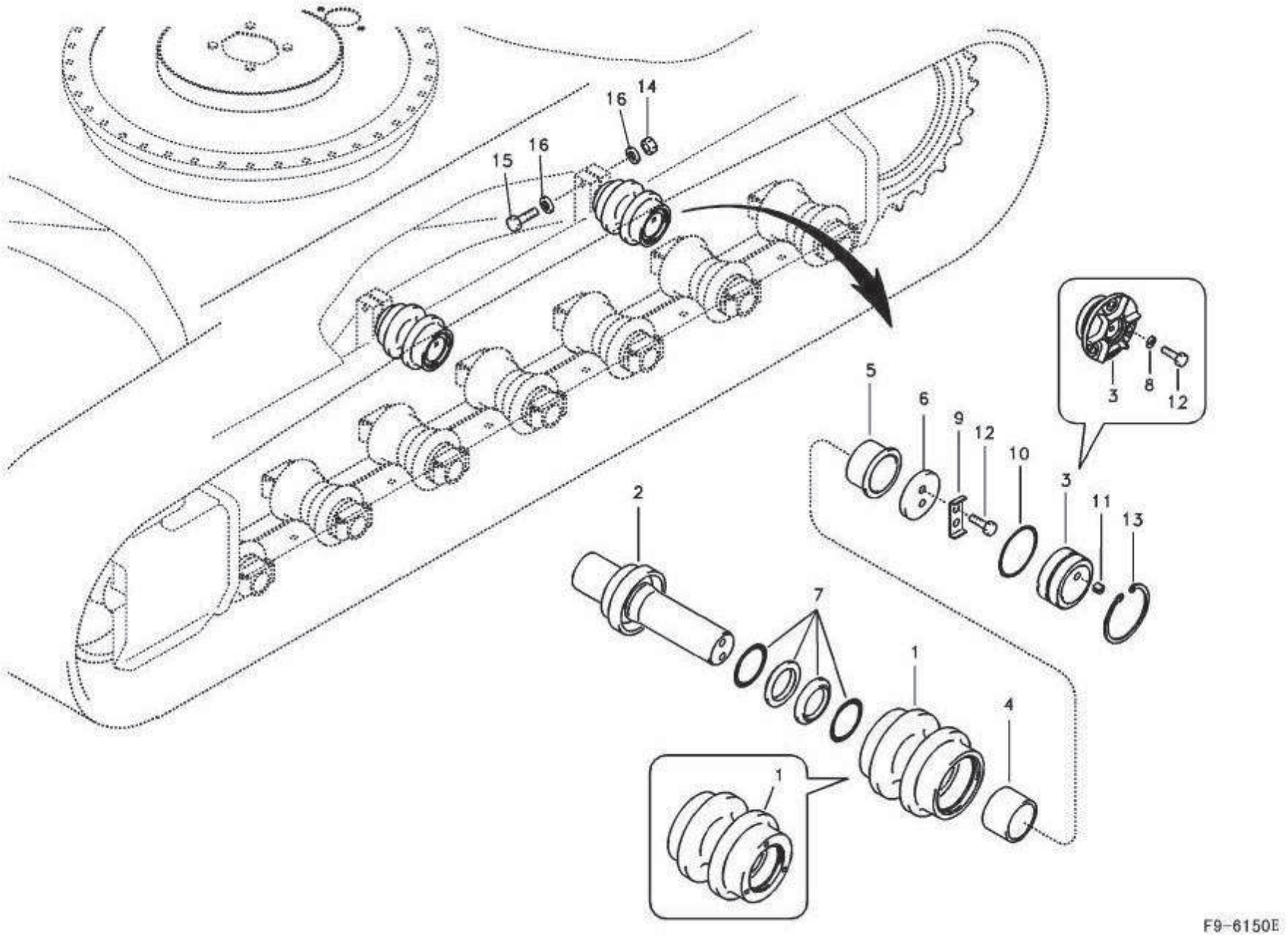

F9-6150E

Fig.	Part No.编码.	Quantity件数 1	2	3	P S	K I T	Description 名称	Notes
	11213630	2					Roller..... 滚轴.....	
1		1			NS		•Shell..... • 壳体.....	
2	**11213549**	1					•Shaft ..... • 转轴.....	
	11213550	1					••Shaft ..... •• 转轴.....	
	11213521	1					••Collar ..... •• 轴环.....	
3	**11213517**	1					•Cover ..... • 罩盖.....	
4	**11213518**	1					•Bushing..... • 轴衬.....	
5	**11213519**	1					•Bushing..... • 轴衬.....	
6	**11213520**	1					•Plate ..... • 板.....	
7	**11213514**	1					•Seal ..... • 密封.....	
9	**11210680**	1					•Button ..... • 按钮.....	
10	**11213709**	1					•O-ring..... •0 型圈.....	
11	**11210679**	1					•Plug ..... • 堵头.....	
12	**11210123**	2					•Hexagon screw ..... • 六角螺丝.....	
13	**11213703**	1					•Retaining ring ..... • 固位环.....	
14	**11210110**	2					Hexagon nut..... 六角螺母.....	
15	**11210163**	2					Hexagon screw ..... 六角螺丝.....	
16	**11210200**	4					Plain washer ..... 平垫圈.....	

1	**8277950**	顶部支重轮 **Top roller**	Catalogue id **111201**	Group **703**
2				
3			Illustr. No **F9-6150E**	Section **600**
4				
5			Issue **2638000345**	Page **327**

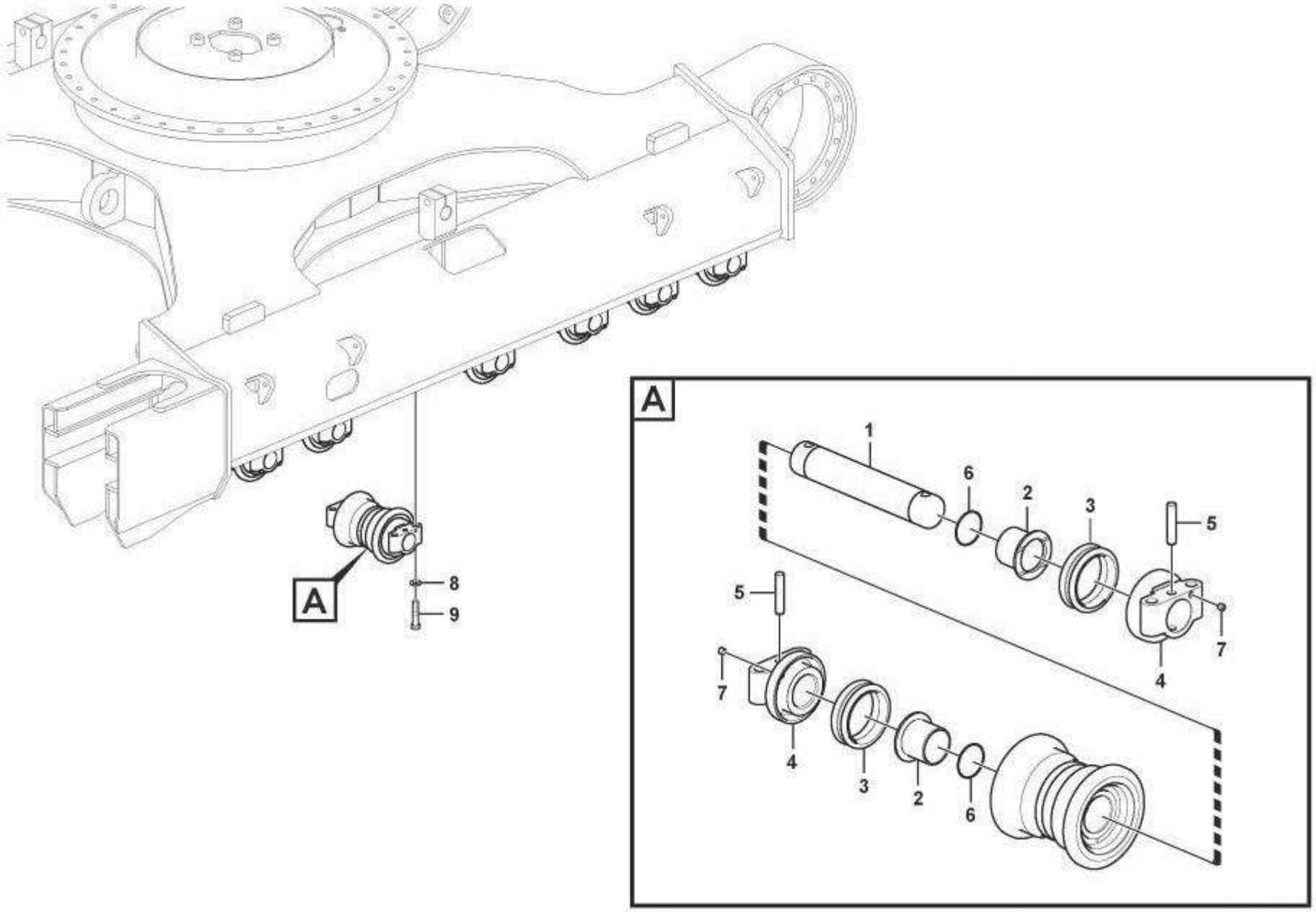

F10-6150E

Fig.	Part No.编码.	Quantity件数 1	2	3	PS	KIT	Description 名称	Notes
	11213629	14					Roller.....滚轴.....	
1	**11213539**	1					•Shaft .....• 转轴.....	
2	**11213540**	2					•Bushing.....• 轴衬.....	
3	**11213545**	2					•Sealing.....• 密封.....	
4	**11213541**	2					•Support .....• 支座.....	
5	**11213542**	2					•Pin .....• 定位销.....	
6		2			NS		•O-ring.....•◊ 形圈.....	
7	**11212199**	2					•Plug .....• 堵头.....	
8	**11210199**	56					Plain washer .....平垫圈.....	
9	**11210105**	56					Hexagon screw .....六角螺丝.....	

1	**8277950**	底部支重轮 **Bottom roller**	Catalogue id **111201**	Group **703**
2			Illustr. No **F10-6150E**	Section **700**
3				
4			Issue **2638000345**	Page **329**
5				

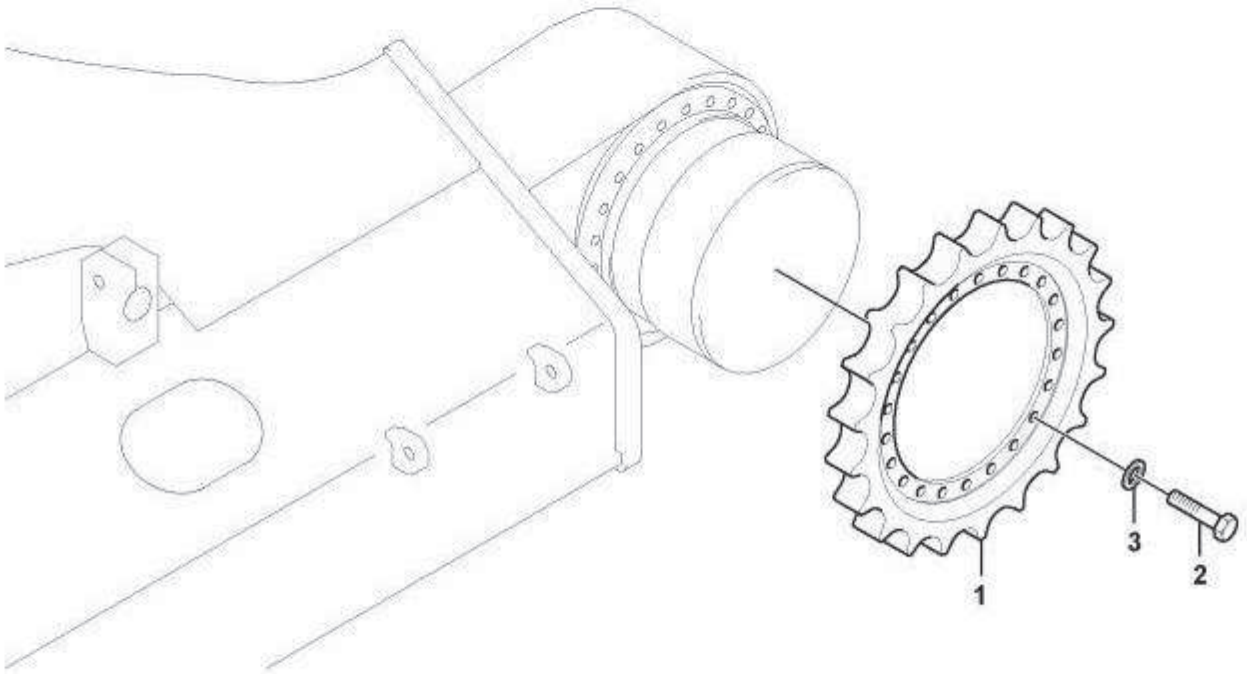

F11-6150E

	Part No.编码.	Quantity件数 1	2	3	PS	KIT	Description 名称	Notes
1	**11213631**	2					Sprocket..... 链轮.....	
2	**11210102**	36					Hexagon screw ..... 六角螺丝.....	
3	**11210199**	36					Washer..... 垫圈.....	

1	**8277950**	链轮 **Sprocket**	Catalogue id **111201**	Group **703**
2			Illustr. No **F11-6150E**	Section **800**
3				
4			Issue **2638000345**	Page **331**
5				



www.sdlg.cn

GROUP		Section	Page
801	Cab mount	100	337
801	Operator's cab	200	339
801	Operator's cab	300	341
801	Operator's cab	400	345
801	Operator's cab	500	349
802	Cowl frame	100	351
802	Cowl frame, cover and hood	200	353
803	Door, side	100	357
803	Cover, control valve	200	359
803	Cover, main pump	300	361
804	Handrail	100	363
804	Tool box, cowl	200	365
805	Door, operator's cab	100	367
806	Cabin floor	100	371
806	Hatches under engine, hydr.pumps, cooler, m.valve and fuel tank	200	373
807	Rear view mirror	100	375
807	Rear view mirror	200	377
808	Windows	100	379
808	Windshield	200	381
809	Operator seat with fitting parts	100	385
810	Sun visor interior	100	389
810	Sun visor	200	391
811	Air conditioning line, cooling and heater	100	393
811	Air duct in cabin and cabin floor	200	397
811	Air conditioning unit, cooling and heater	300	399
812	Instrument panel, radio panel	100	403
812	Instrument panel, radio panel	200	407
813	Anti slip	100	409
814	Tools	100	411
815	Decals	100	415

GROUP		Section	Page
815	Decals, cab	200	417

LG6150E

部类		部分	页
801	驾驶室及附件	100	337
801	驾驶室	200	339
801	驾驶室	300	341
801	驾驶室	400	345
801	驾驶室	500	349
802	机罩框架	100	351
802	机罩框架、盖板和发动机罩	200	353
803	侧门	100	357
803	控制阀盖板	200	359
803	主泵盖板	300	361
804	扶栏	100	363
804	机罩工具箱	200	365
805	操作人员驾驶室门	100	367
806	驾驶室地板	100	371
806	发动机下的盖板、液压泵、冷却器，主阀和燃油箱。	200	373
807	后视镜	100	375
807	后视镜	200	377
808	车窗	100	379
808	挡风玻璃	200	381
809	带安装零件的驾驶座	100	385
810	内部遮阳板	100	389
810	遮阳板	200	391
811	空调管线，冷却和加热器	100	393
811	驾驶室内和驾驶室地板导风口	200	397
811	空调装置冷却和加热器	300	399
812	仪表盘控制板	100	403
812	仪表盘，收音机控制板	200	407
813	防滑板	100	409
814	工具	100	411
815	标签	100	415
815	贴纸，驾驶室	200	417



www.sdlg.cn

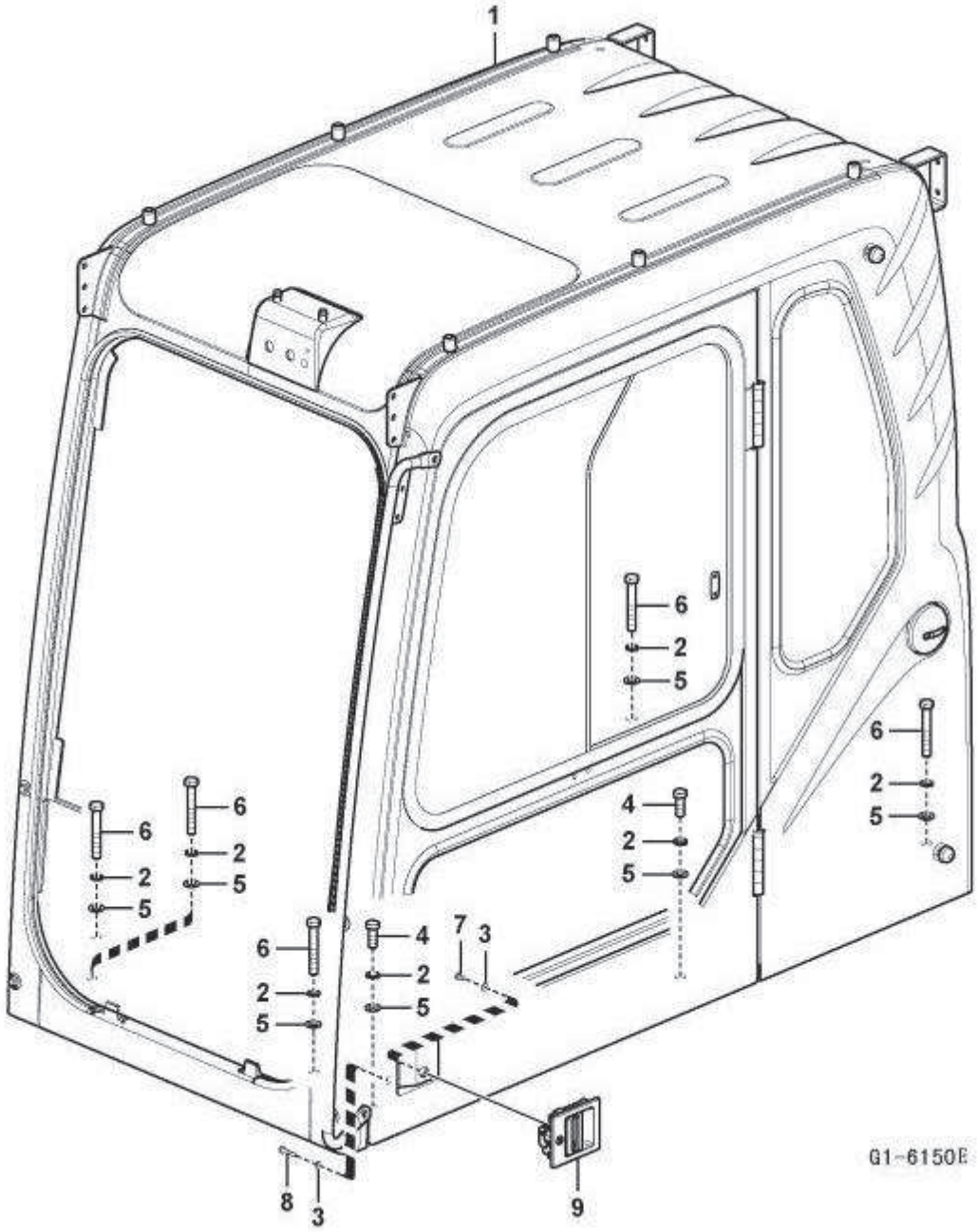
1
6
2
5
6
2
5
6
2
5
6
2
5
4
2
5
6
2
5
4
2
5
7
3
8
3
9
G1-6150E

Fig.	Part No.编码.	Quantity 件数 1	2	3	4	5	PS	KIT	Description 说明	Notes
1	**11214643**	1							Cab .....驾驶室.....	
2	**11210067**	7							Spring washer .....弹簧垫圈.....	
3	**11210057**	4							Washer .....垫圈.....	
4	**11211604**	2							Bolt.....螺栓.....	
5	**11210060**	7							Washer .....垫圈.....	
6	**11210112**	5							Hexagon screw .....六角螺丝.....	
7	**11210088**	2							Six point socket scr. 六点螺口插座.....	
8	**11210090**	2							Six point socket scr. 六点螺口插座.....	
9	**11210556**	1							Handle .....把手.....	Master key

1	**11211823**	驾驶室及附件 **Cab mount**	Catalogue id **111201**	Group **801**
2				
3			Illustr. No **G1-6150E**	Section **100**
4				
5			Issue **2638000345**	Page **337**

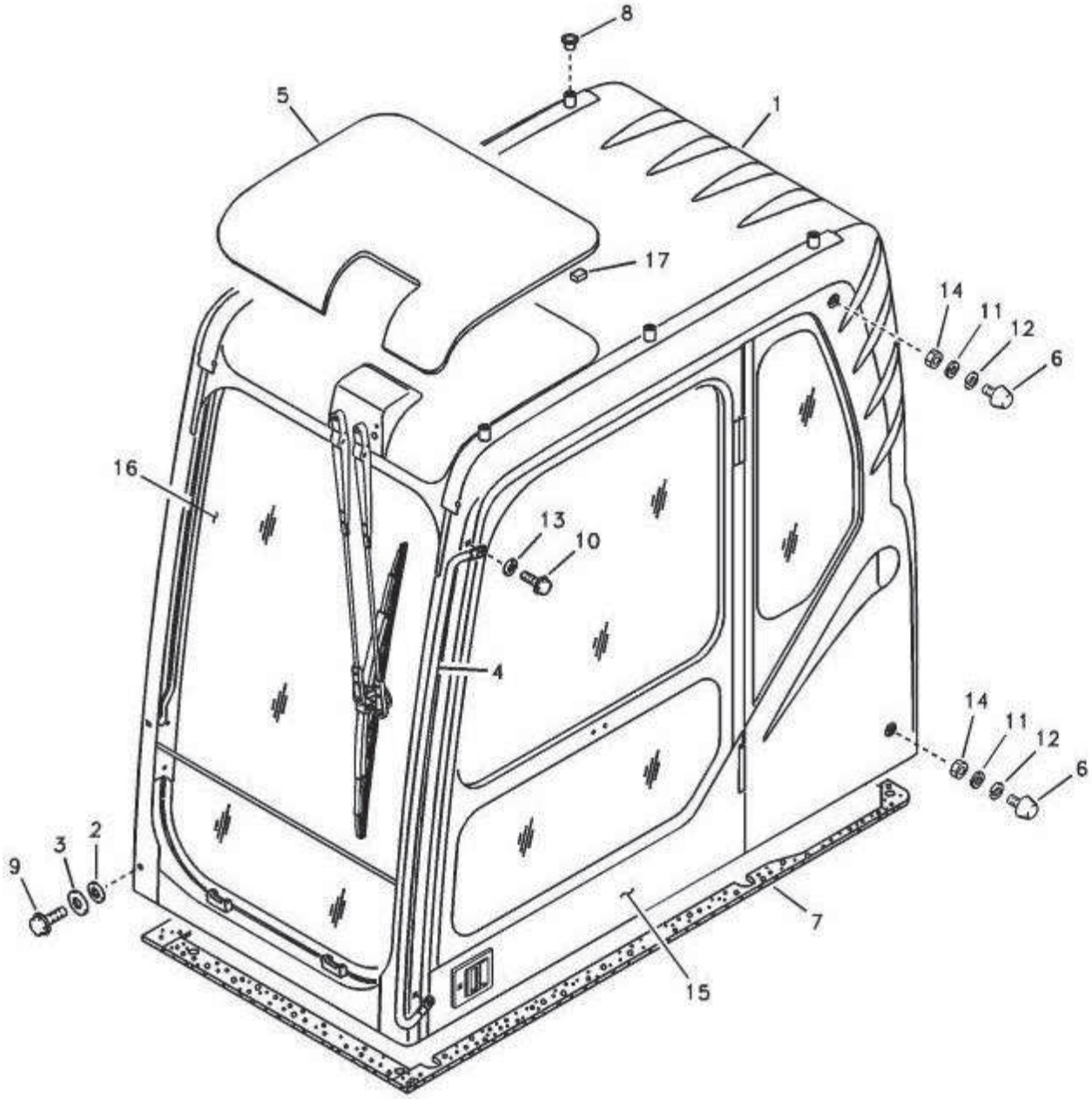

G2-6150E

Fig.	Part No.编码.	Quantity 件数 1	2	3	4	5	PS	KIT	Description 说明	Notes
1		1					NS		Cab .....驾驶室.....	
2	**11210574**	4							Washer .....垫圈.....	
3	**11210575**	4							Washer .....垫圈.....	
4	**11210641**	1							Handle .....手柄.....	
5	**11211169**	1							Glass.....玻璃.....	
6	**11210331**	2							Bumper .....防冲器.....	
7	**11210581**	1							Sponge .....海绵.....	
8	**11210464**	6							Plug.....塞.....	
9	**11210032**	4							Flange screw .....法兰螺丝.....	
10	**11210032**	2							Flange screw .....法兰螺丝.....	
11	**11210058**	2					SS		Washer .....垫圈.....	
12	**11210063**	2							Spring washer .....弹簧垫圈.....	
13	**11210068**	2							Washer .....垫圈.....	
14	**11210129**	2							Hexagon nut .....六角螺母.....	
15	**11214645**	1							Door .....车门.....	
16	**11214644**	1							Shield.....遮板.....	
17	**11210557**	14							Pad .....底座.....	

1	**11211823**	驾驶室 **Operator's cab**	Catalogue id **111201**	Group **801**
2			Illustr. No **G2-6150E**	Section **200**
3			Issue **2638000345**	Page **339**
4				
5				

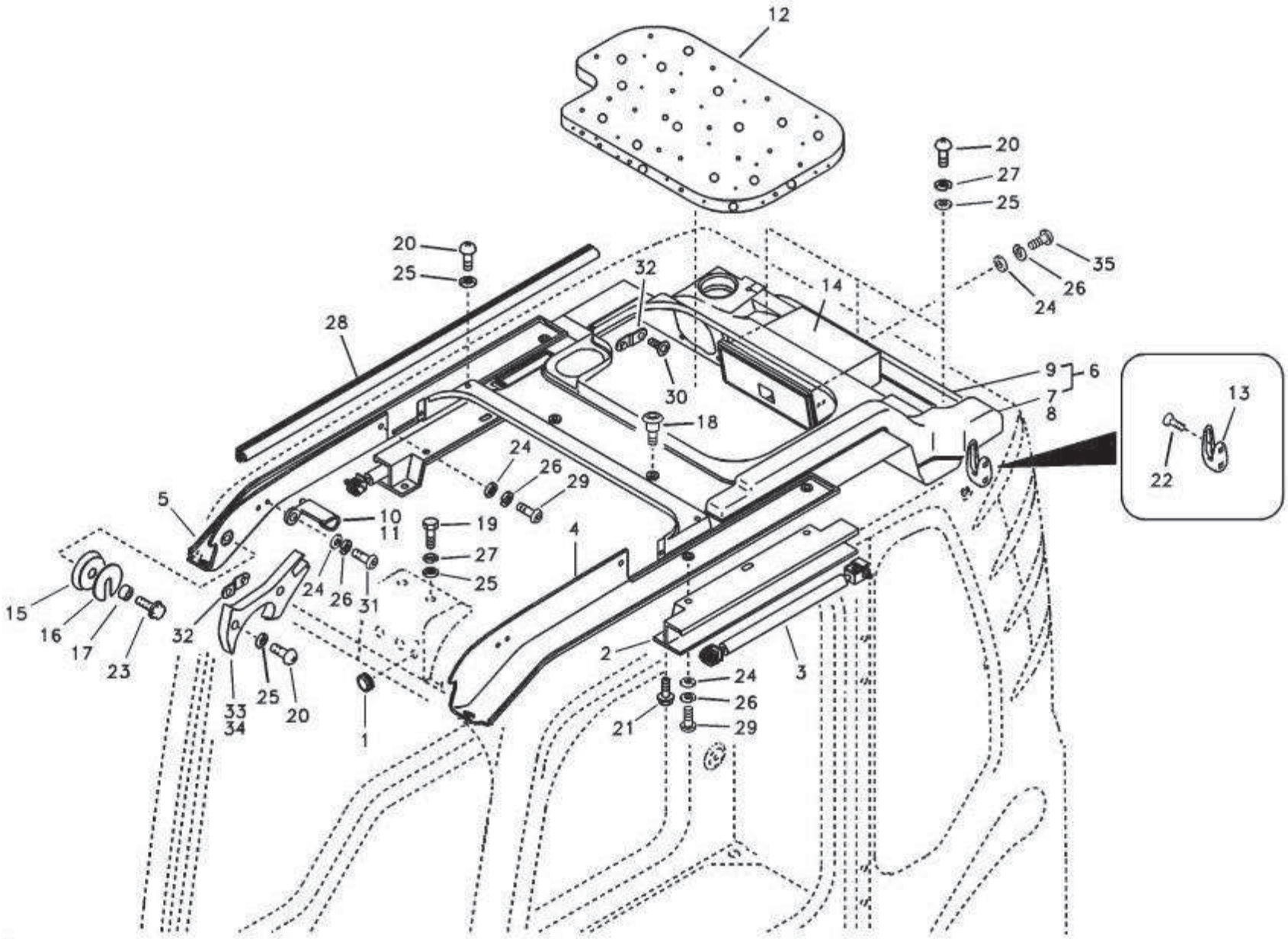
12
20
27
25
35
26
24
20
25
32
14
28
30
9
6
7
8
18
13
22
24
26
29
5
10
11
19
27
25
4
15
16
17
23
24
26
31
32
33
34
25
20
1
2
3
24
26
29
21

G3-6150E

Fig.	Part No编码.	Quantity件数 1	2	3	PS	KIT	Description 说明	Notes
1	**11210540**	1					Cap .....帽.....	
2	**11210568**	2					Guide .....导轨.....	
3	**11210858**	2					Gas spring.....气体弹簧.....	
	11210859	1					•Cable .....• 缆索.....	
4	**11211200**	1					Cover .....罩.....	
5	**11211201**	1					Cover .....罩.....	
6	**11214646**	1					Trim .....装饰板.....	
7	**11210268**	1					•Duct .....• 导管.....	
8	**11210273**	1					•Duct .....• 导管.....	
9	**11214647**	1					•Trim .....• 装饰板.....	
10	**11211166**	1					Hook.....钩.....	
11	**11211167**	1					Hook.....钩.....	
12	**11210317**	1					Sponge.....海绵.....	
13	**11210233**	2					Clothes hook .....衣钩.....	
14	**11214597**	1					Box.....盒.....	
15	**11210579**	2					Roller.....滚轴.....	
16	**11210320**	2					Guide .....导轨.....	
17	**11210321**	2					Boss .....轮毂.....	
18	**11210412**	3					Fastener.....固定器.....	
19	**11210187**	2					Hexagon screw .....六角螺丝.....	
20	**11211051**	9					Screw .....螺丝.....	
21	**11210041**	4					Flange screw.....法兰螺丝.....	
22	**11211623**	4					Screw .....六角螺钉.....	
23	**11210043**	2			SS		Flange screw.....法兰螺丝.....	
24	**11210057**	12					Washer.....垫圈.....	
25	**11210058**	11			SS		Washer.....垫圈.....	
26	**11210062**	12					Spring washer .....弹簧垫圈.....	
27	**11210063**	5					Spring washer .....弹簧垫圈.....	
28	**11211049**	1					Weatherstrip.....挡风带.....	
29	**11210088**	8					Six point socket scre..六点螺口插座.....	

1	**11211823**	驾驶室 **Operator's cab**	Catalogue id **111201**	Group **801**
2			Illustr. No **G3-6150E**	Section **300**
3			Issue **2638000345**	Page **341**
4				
5				

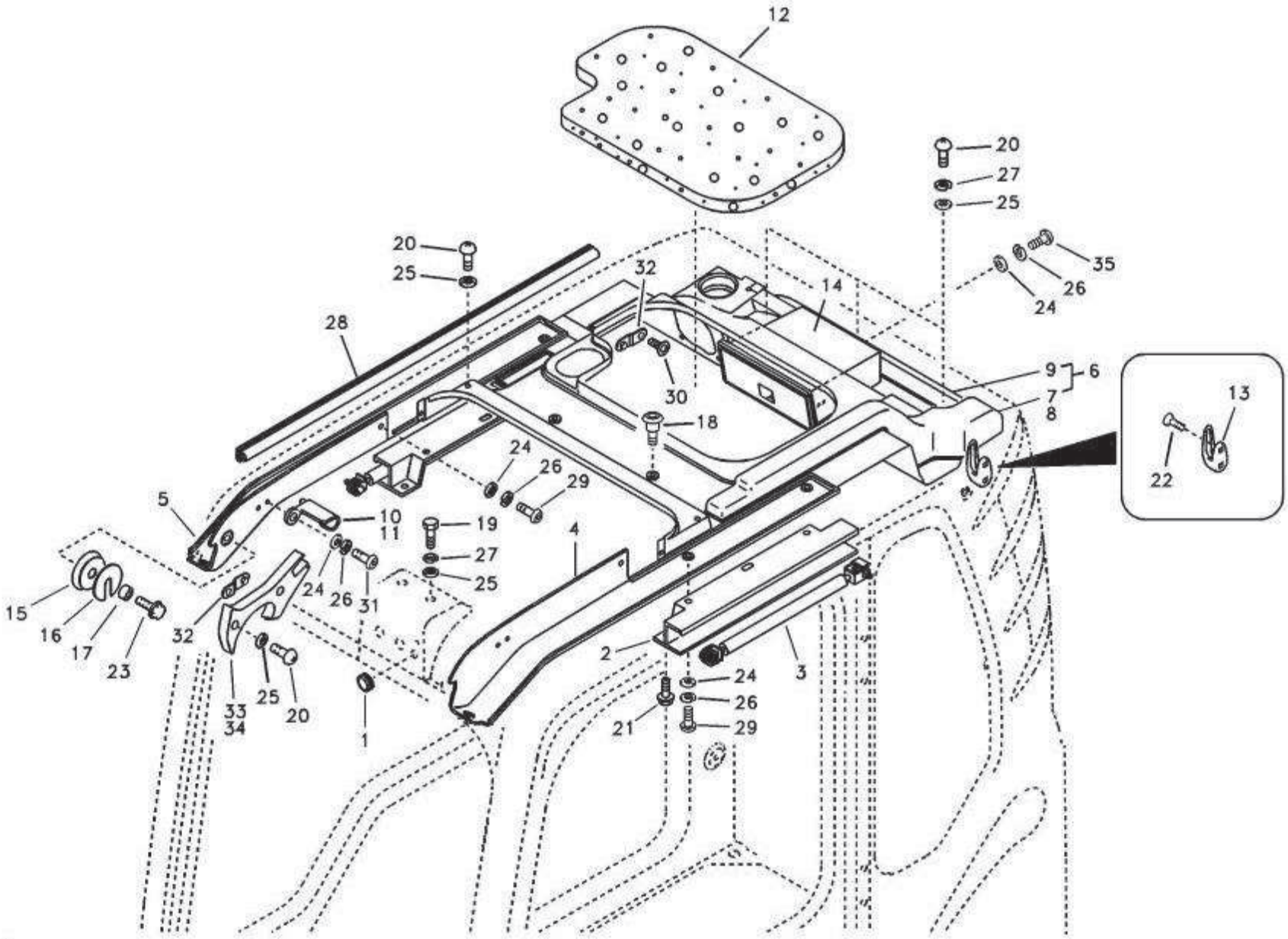
12
20
27
25
35
26
24
20
25
32
14
28
30
9
6
7
8
18
13
22
24
26
29
5
10
11
19
27
25
4
15
16
17
23
24
26
31
32
33
34
25
20
1
2
3
24
26
29
21

G3-6150E

Fig.	Part No.编码.	Quantity件数 1	2	3	PS	KIT	Description 说明	Notes
30	**11210092**	8					Screw .....螺丝.....	
31	**11210082**	2					Six point socket scre ..六点螺口插座.....	
32	**11210305**	4					Striker.....撞针.....	
33	**11210864**	1					Bumper .....防冲器.....	
34	**11210865**	1					Bumper .....防冲器.....	
35	11214658	2					Six point socket scre ..六点螺口插座.....	

1	**11211823**	驾驶室 **Operator's cab**	Catalogue id **111201**	Group **801**
2			Illustr. No **G3-6150E**	Section **300**
3				
4			Issue **2638000345**	Page **343**
5				

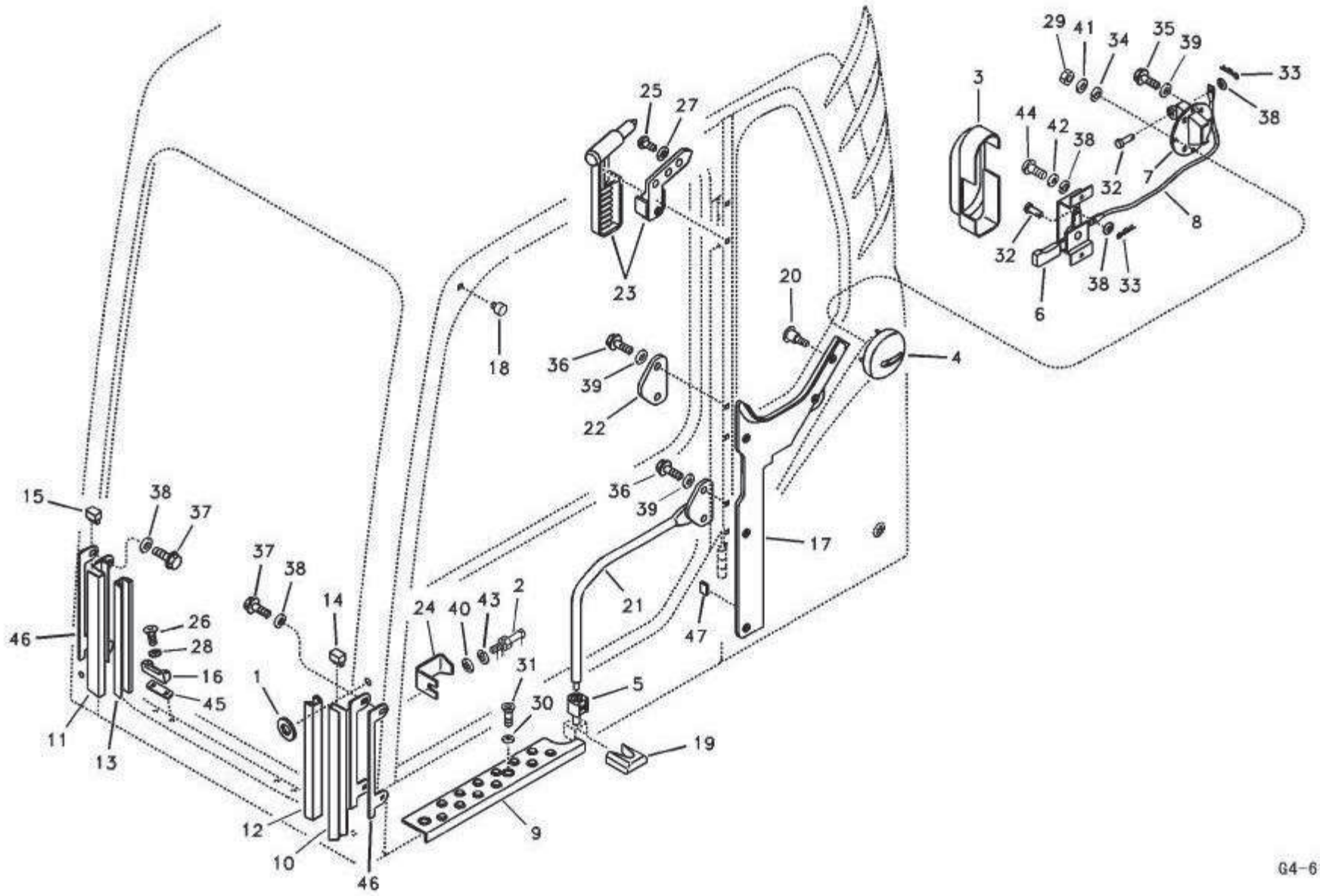
29
41
34
35
39
33
38
3
44
42
38
32
7
8
32
38
33
6
25
27
23
18
36
39
22
20
4
36
39
17
21
47
15
38
37
37
38
14
24
40
43
2
31
30
5
19
1
26
28
16
45
46
11
13
12
10
46
9

G4-6150E

Fig.	Part No编码.	Quantity件数 1	2	3	PS	KIT	Description 说明	Notes
1	**11210538**	1					Washer.....垫圈.....	
2	**11214648**	1					Striker Plate .....撞板.....	
3	**11211211**	1			SS		Cover .....罩.....	
4	**11210303**	1					Cover .....罩.....	
5	**11210547**	1					Stop.....挡块.....	
6	**11211347**	1					Lever .....操纵杆.....	
7	**11210302**	1					Catch.....钩.....	
8	**11210304**	1					Cable.....电缆.....	
9	**11214598**	1					Slip protection .....防滑.....	
10	**11211164**	1					Guide .....导轨.....	
11	**11211165**	1					Guide .....导轨.....	
12	**11210511**	1					Weatherstrip.....挡风带.....	
13	**11210512**	1					Weatherstrip.....挡风带.....	
14	**11210513**	1					Plug.....塞.....	
15	**11210514**	1					Plug.....塞.....	
16	**11210642**	2					Stop.....挡块.....	
17	**11214649**	1					Trim.....装饰板.....	
18	**11210326**	1					Bumper .....防冲器.....	
19	**11210548**	1					Bumper .....防冲器.....	
20	**11210412**	5					Fastener.....固定器.....	
21	**11211192**	1					Handle.....把手.....	
22	**11211193**	1					Plate.....安装板.....	
23	**11210534**	1					Hammer .....锤.....	
24	**11211222**	1					Striker.....撞针.....	
25	**11214650**	3					Screw .....六角螺钉.....	
26	**11211624**	4					Screw .....六角螺钉.....	
27	**11211040**	3					Washer.....垫圈.....	
28	**11211041**	4					Washer.....垫圈.....	
29	**11211038**	4					Cap nut .....螺帽.....	
30	**11211042**	2					Washer.....垫圈.....	

1	**11211823**	驾驶室 **Operator's cab**	Catalogue id **111201** / Group **801**
2			
3			Illustr. No **G4-6150E** / Section **400**
4			
5			Issue **2638000345** / Page **345**

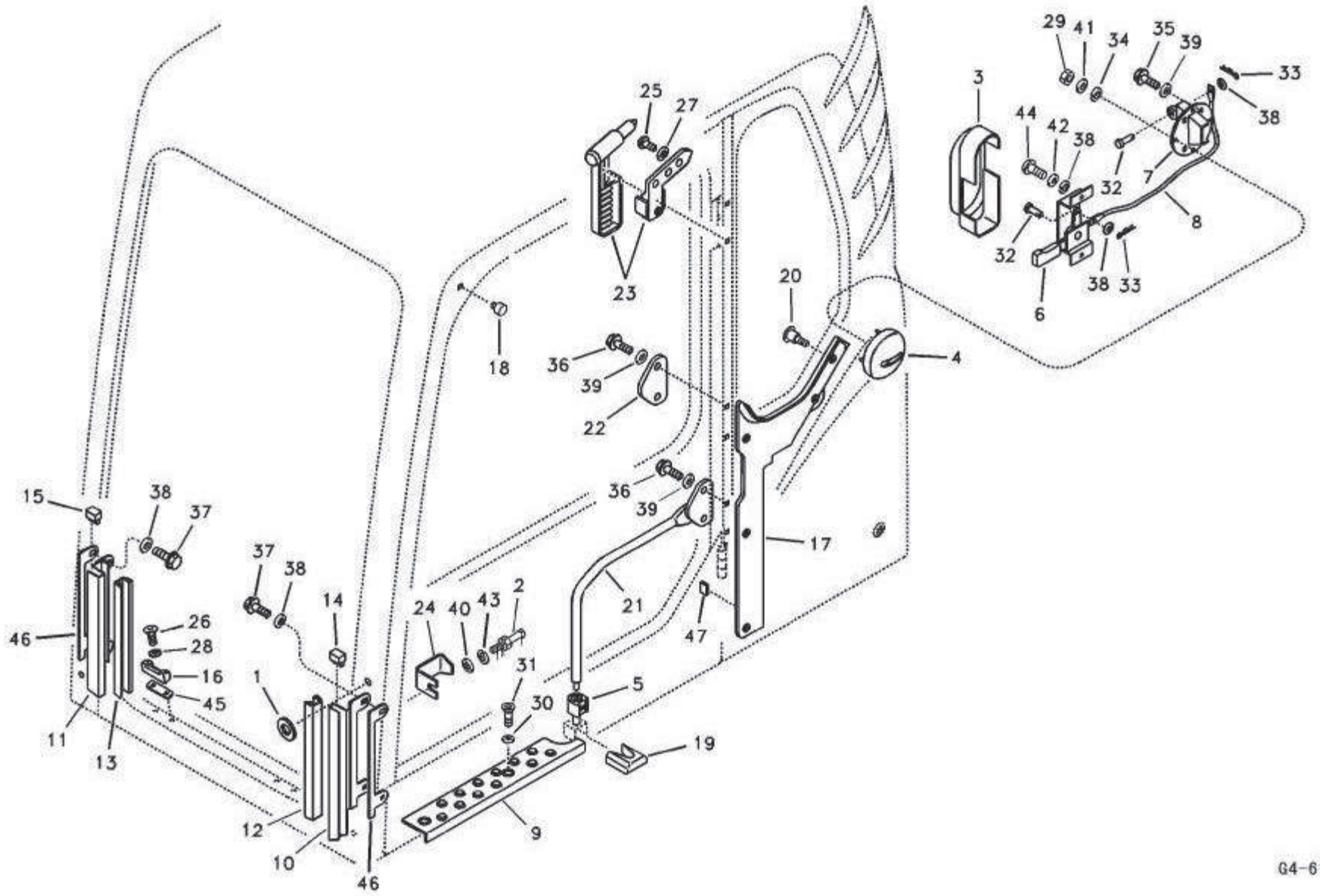
29
41
34
35
39
33
38
3
44
42
38
32
7
8
32
38
33
6
25
27
23
18
36
39
22
20
4
36
39
17
21
47
15
38
37
37
38
14
24
40
43
2
31
30
5
19
1
26
28
16
45
46
11
13
12
10
46
9

G4-6150E

Fig.	Part No.编码.	Quantity件数 1	2	3	PS	KIT	Description 说明	Notes
31	**11210094**	2					Screw .....螺丝.....	
32	**11211044**	2					Pin.....定位销.....	
33	**11211054**	2					Split pin .....开口销.....	
34	**11210024**	4			SS		Washer.....垫圈.....	
35	**11210118**	4					Flange screw.....法兰螺丝.....	
36	**11210037**	4					Flange screw.....法兰螺丝.....	
37	**11210082**	4			SS		Flange screw.....法兰螺丝.....	
38	**11210057**	9					Washer.....垫圈.....	
39	**11210058**	8			SS		Washer.....垫圈.....	
40	**11210059**	1					Washer.....垫圈.....	
41	**11210061**	4					Spring washer .....弹簧垫圈.....	
42	**11210062**	3					Spring washer .....弹簧垫圈.....	
43	**11210065**	1					Spring washer .....弹簧垫圈.....	
44	**11210088**	3					Six point socket scre..六点螺口插座.....	
45	**11210492**	2					Shim .....垫片.....	
46	**11210491**	2					Pad.....底座.....	
47	**11210660**	1					Sponge.....海绵.....	

1	**11211823**	驾驶室 **Operator's cab**	Catalogue id **111201**	Group **801**
2			Illustr. No **G4-6150E**	Section **400**
3				
4			Issue **2638000345**	Page **347**
5				

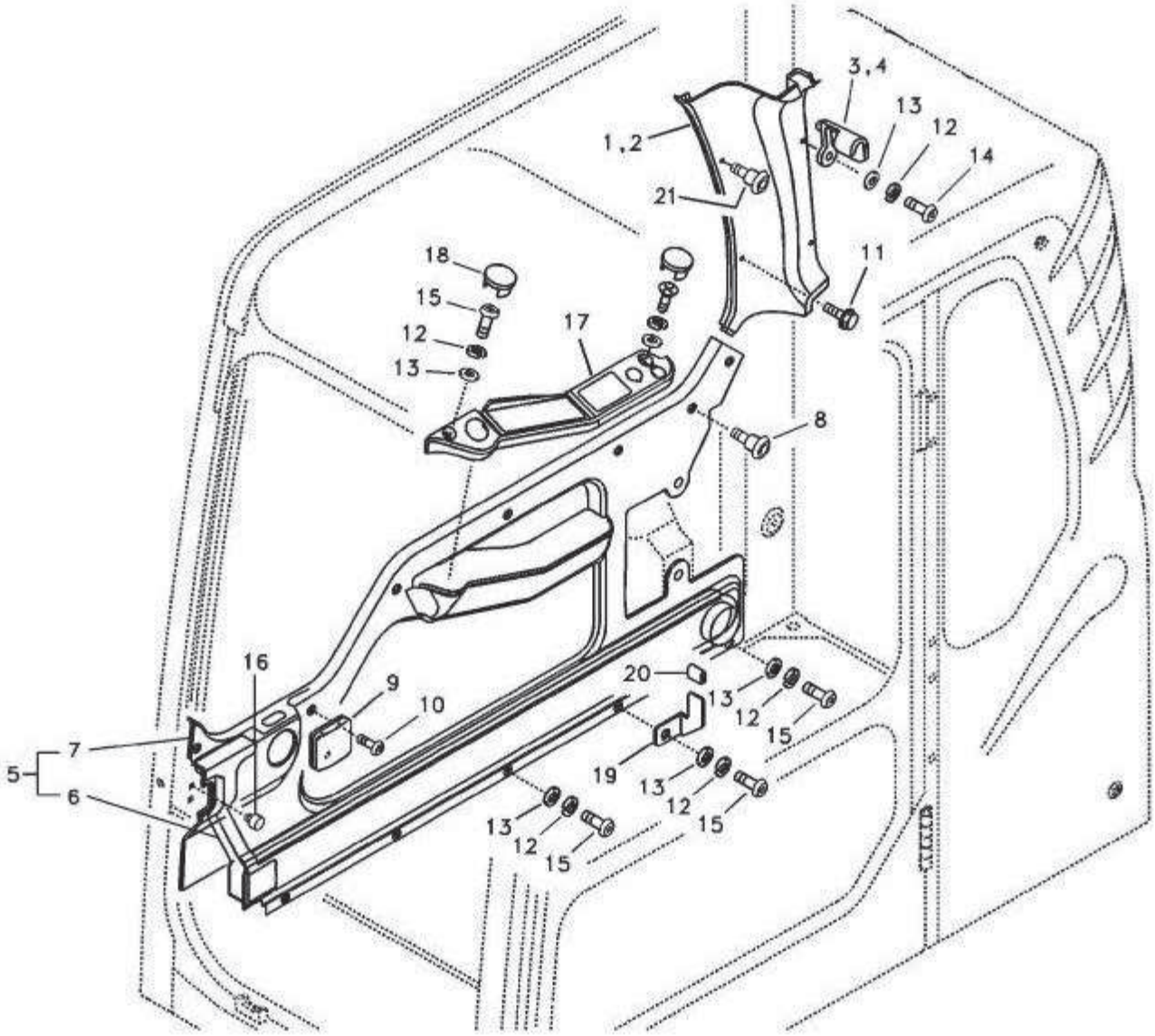

G5-6150E

Fig.	Part No编码.	Quantity件数 1	2	3	PS	KIT	Description 说明	Notes
1	**11211228**	1					Cover .....罩.....	
2	**11211229**	1					Cover .....罩.....	
3	**11211166**	2					Hook.....钩.....	LH
4	**11211167**	2					Hook.....钩.....	RH
5	**11214652**	1					Trim.....装饰板.....	
6	**11210269**	1					•Duct .....• 导管.....	
7	**11214651**	1					•Trim .....• 装饰板.....	
8	**11210412**	7					Fastener.....固定器.....	
9	**11210490**	1					Cup holder .....杯架.....	
10	**11210085**	5					Six point socket scre..六点螺口插座.....	
11	**11210034**	2					Flange screw.....法兰螺丝.....	
12	**11210062**	12					Spring washer .....弹簧垫圈.....	
13	**11210057**	12					Washer.....垫圈.....	
14	**11210085**	4					Six point socket scre..六点螺口插座.....	
15	**11210088**	8					Six point socket scre..六点螺口插座.....	
16	**11210326**	2					Bumper .....防冲器.....	
17	**11212908**	1					Panel.....面板.....	
18	**11210357**	3					Clip.....夹.....	
19	**11211241**	1					Bracket.....支架.....	
20	**11210660**	1					Sponge.....海绵.....	
21	11211623	1					Fastener.....固定器.....	

1	**11211823**	驾驶室 **Operator's cab**	Catalogue id **111201**	Group **801**
2			Illustr. No **G5-6150E**	Section **500**
3				
4			Issue **2638000345**	Page **349**
5				

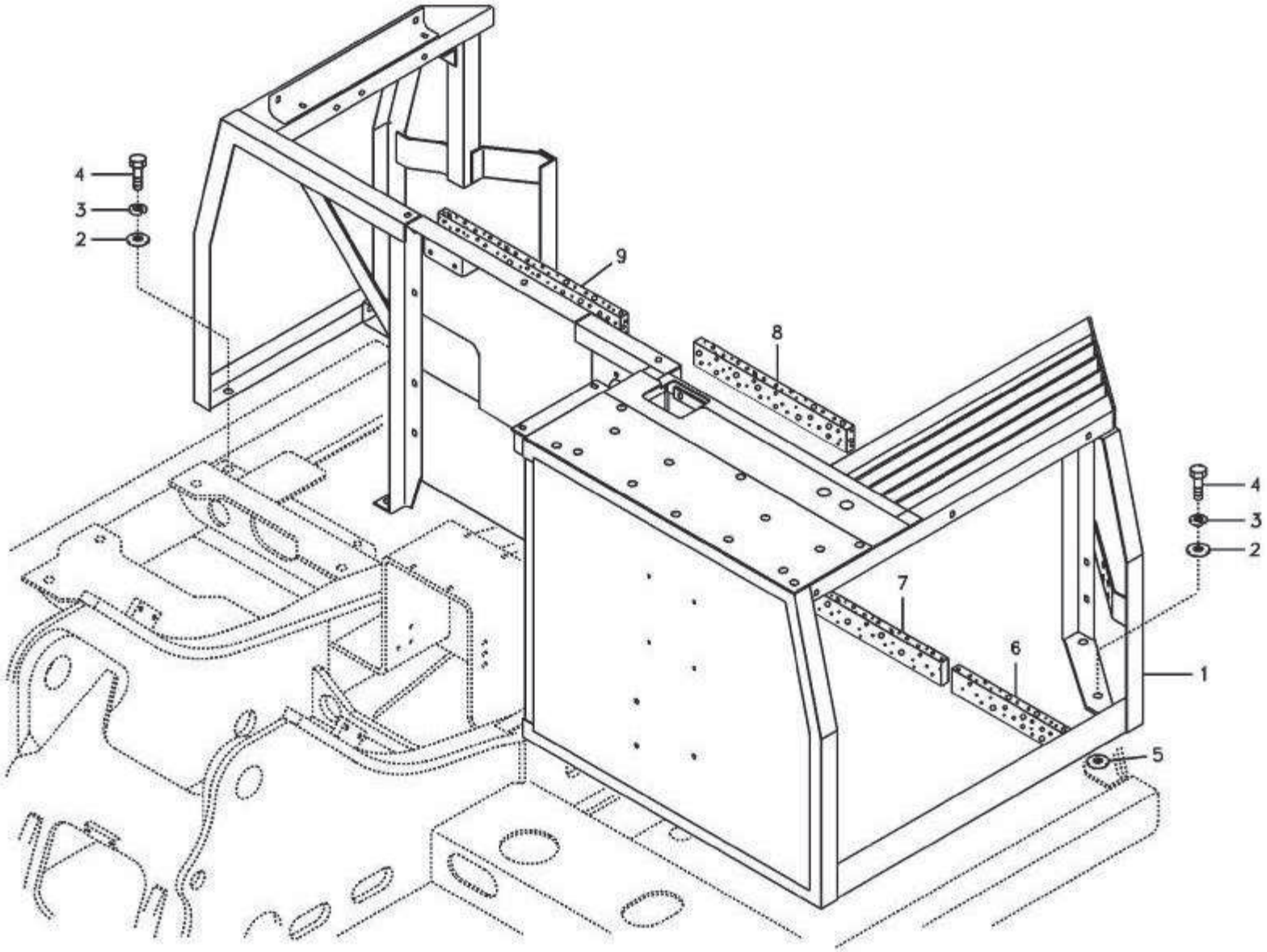

G6-6150E

Fig.	Part No编码.	Quantity件数 1	2	3	PS	KIT	Description 说明	Notes
1	**11213718**	1					Frame.....构架.....	
2	**11210538**	9					Washer.....垫圈.....	
3	**11210065**	9					Spring washer .....弹簧垫圈.....	
4	**11210099**	9					Hexagon screw .....六角螺丝.....	
5	**11211123**	3					Shim.....垫片.....	
6	**11213719**	1					Sponge.....海绵.....	
7	**11213720**	1					Sponge.....海绵.....	
8	**11213721**	1					Sponge.....海绵.....	
9	**11213722**	1					Sponge.....海绵.....	

1	**11212924**	机罩框架 **Cowl frame**	Catalogue id **111201**	Group **802**
2			Illustr. No **G6-6150E**	Section **100**
3				
4			Issue **2638000345**	Page **351**
5				

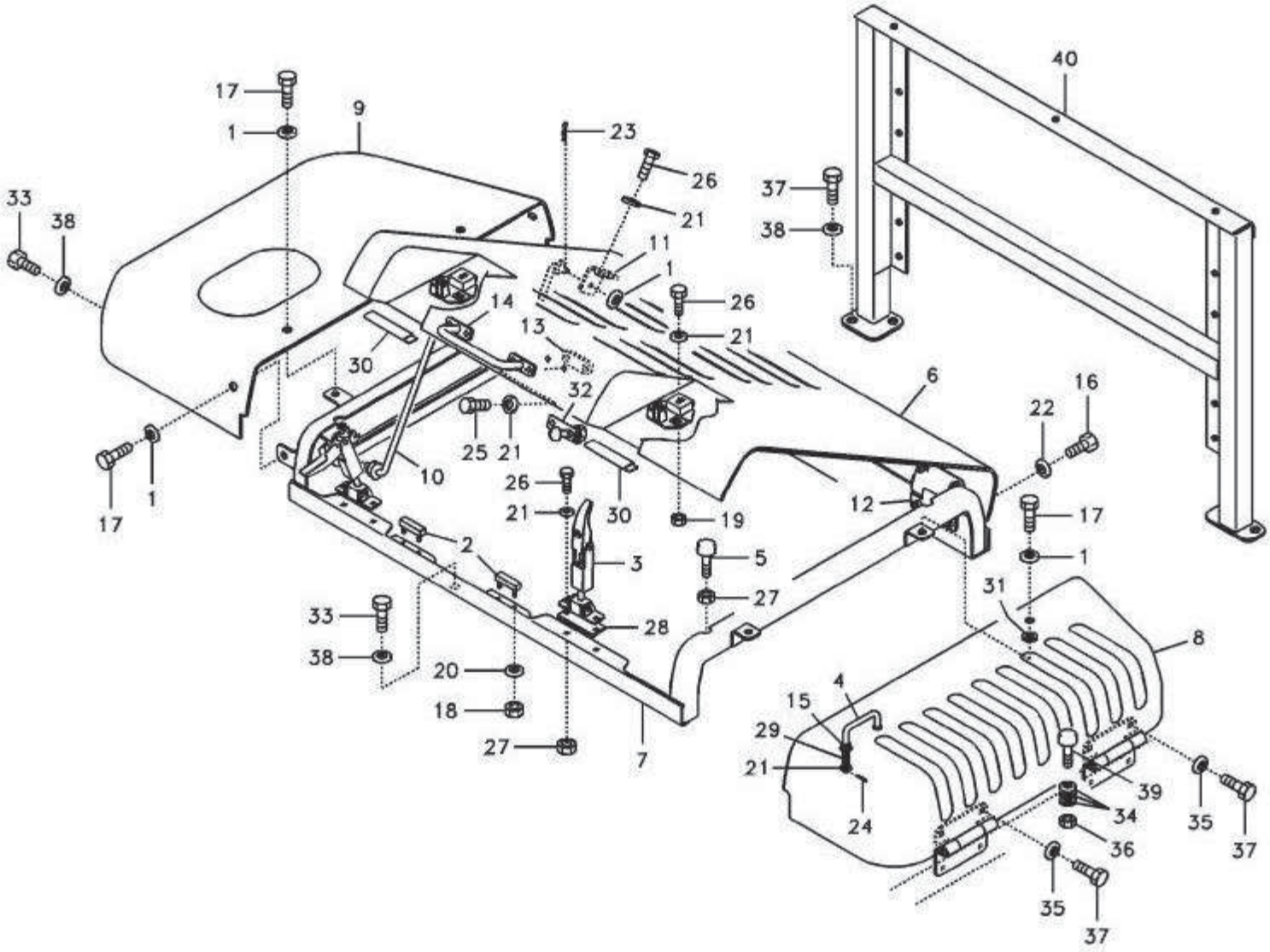
40
17
1
9
23
26
21
37
38
33
38
11
1
26
14
13
21
30
32
6
16
22
25
21
10
26
21
30
19
12
17
1
17
1
2
3
5
27
31
8
33
38
28
20
18
27
7
4
15
29
21
24
39
34
36
35
37
35
37

G7-6150E

Fig.	Part No编码.	Quantity件数 1	2	3	PS	KIT	Description 说明	Notes
	11213729	1					Bonnet.....罩.....	
1	**11210538**	11					•Washer .....• 垫圈.....	
2	**11210578**	2					•Cushion .....• 坐垫.....	
3	**11210526**	2					•Catch .....• 钩.....	
4	**11213728**	1					•Grip .....• 手柄.....	
5	**11210361**	4					•Bumper .....• 防冲器.....	
6	**11213730**	1					•Door .....• 车门.....	
7		1			NS		•Frame .....• 车架.....	
8	**11213723**	1					•Cover .....• 罩盖.....	LH
9	**11213726**	1					•Cover .....• 罩盖.....	RH
10	**11210403**	1					•Rod .....• 活杆.....	
11		1			NS		•Plate .....• 安装板.....	
12	**11210429**	2					•Hinge .....• 铰链.....	
13		2			NS		•Seat .....• 座位.....	
14	**11213724**	1					•Grip .....• 手柄.....	
15	**11213725**	2					•Grommet.....• 套环.....	
16	**11210099**	4					•Hexagon screw .....• 六角螺丝.....	
17	**11210098**	10					•Hexagon screw .....• 六角螺丝.....	
18	**11211629**	4					•Jam nut .....• 螺母.....	
19	**11211053**	4					•Nut .....• 螺母.....	
20	**11211632**	4					•Washer .....• 垫圈.....	
21	**11210218**	18					•Washer .....• 垫圈.....	
22	**11210198**	4					•Washer .....• 垫圈.....	
23	**11211657**	1					•Split Pin .....• 开口销.....	
24	**11211662**	2					•Pin .....• 定位销.....	
25	**11210120**	4					•Hexagon screw .....• 六角螺丝.....	
26	**11210120**	10					•Hexagon screw .....• 六角螺丝.....	
27	**11210129**	8					•Hexagon nut .....• 六角螺母.....	
28		2			NS		•Plate .....• 安装板.....	
29		2			NS		•Spring .....• 弹簧.....	

1	**11212924**	机罩框架、盖板和发动机罩 **Cowl frame, cover and hood**	Catalogue id **111201**	Group **802**
2				
3			Illustr. No **G7-6150E**	Section **200**
4				
5			Issue **2638000345**	Page **353**

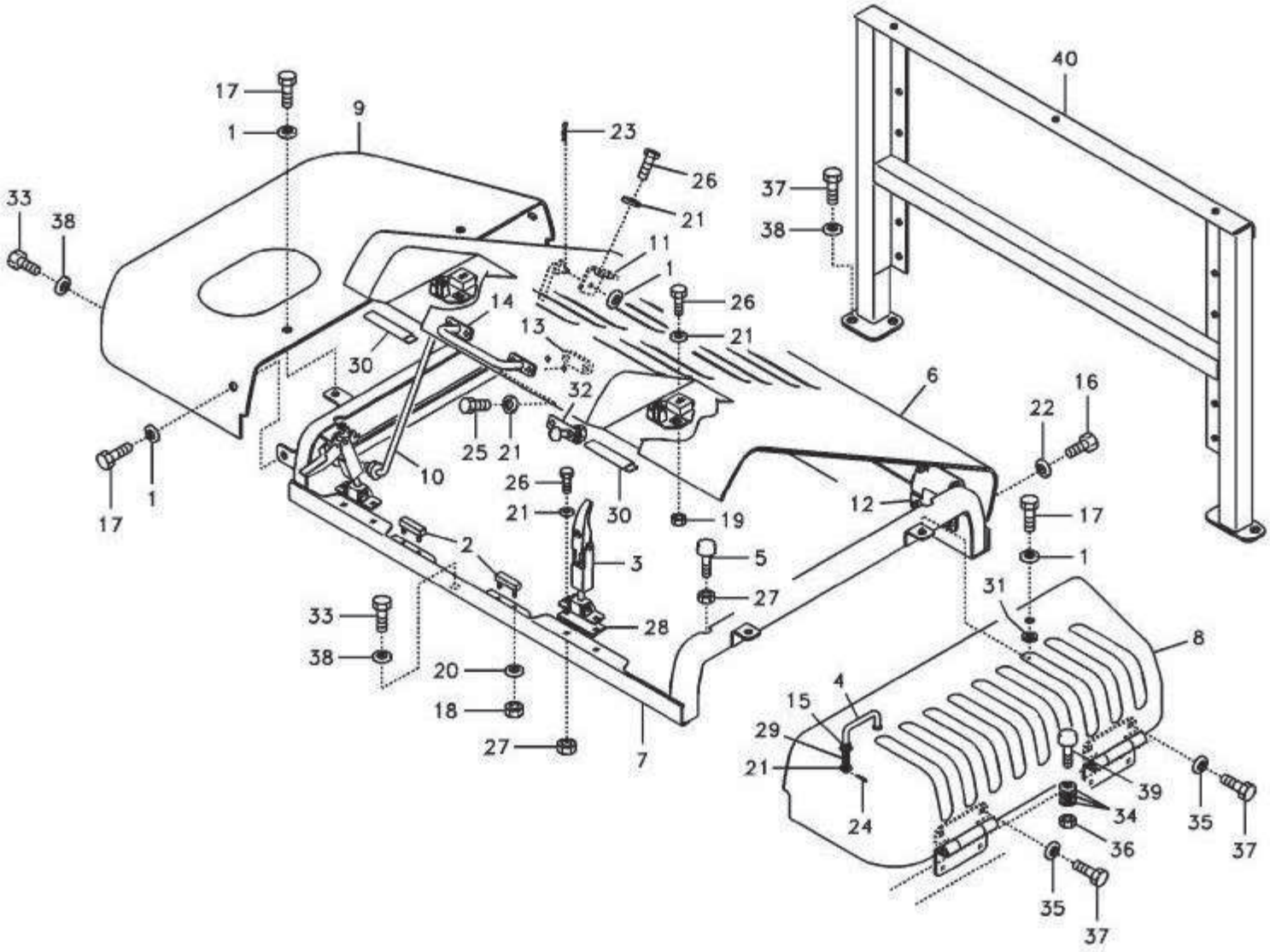
40
17
1
9
23
26
21
37
38
33
38
11
1
26
14
13
21
30
32
6
16
22
25
21
10
26
21
30
19
12
17
1
17
1
2
3
5
27
31
8
33
38
28
20
18
27
7
4
15
29
21
24
39
34
36
35
37
35
37

G7-6150E

Fig.	Part No编码.	Quantity件数 1	2	3	PS	KIT	Description 说明	Notes
30	**11213731**	2					•Weatherstrip .....• 挡风带.....	
31	**11213732**	2					•Shim .....• 垫片.....	
32	**11210588**	2					•Bracket .....• 支架.....	
33	**11210098**	8					Hexagon screw .....六角螺丝.....	
34	**11210218**	3					Washer.....垫圈.....	
35	**11210198**	4					Washer.....垫圈.....	
36	**11210129**	1					Hexagon nut.....六角螺母.....	
37	**11210099**	8					Hexagon screw .....六角螺丝.....	
38	**11210538**	12					Washer.....垫圈.....	
39	**11210361**	1					Bumper .....防冲器.....	
40	**11213727**	1					Support .....支座.....	

1	**11212924**	机罩框架、盖板和发动机罩 **Cowl frame, cover and hood**	Catalogue id **111201**	Group **802**
2				
3			Illustr. No **G7-6150E**	Section **200**
4				
5			Issue **2638000345**	Page **355**

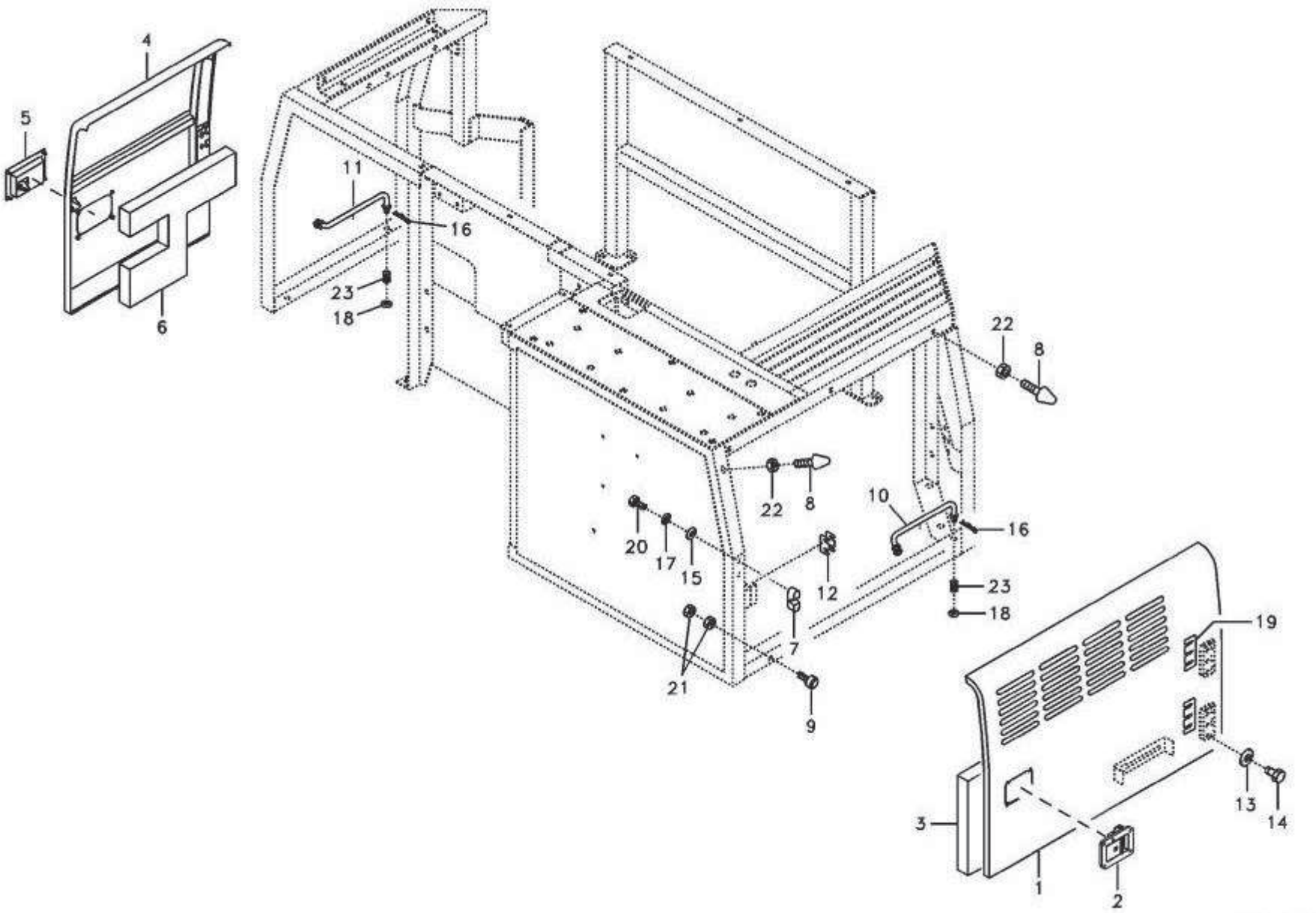
4
5
6
11
16
23
18
22
8
22
8
10
16
20
17
15
12
23
18
7
21
9
19
3
13
14
1
2
G8-6150B

Fig.	Part No.编码.	Quantity件数 1	2	3	PS	KIT	Description 说明	Notes
1	**2633001487**	1					Door .....车门.....	LH
2	**11210363**	1					•Latch.....• 门插销.....	
3					NS		•Sponge .....• 海绵.....	
4	**2633001492**	1					SIDE DOOR_RH .....车门.....	RH
5	**11210362**	1					•Latch.....• 插销.....	
6					NS		•Sponge .....• 海绵.....	
7	**11211010**		2				Door stop .....车门挡块.....	
8	**11210576**		3				Bolt.....螺栓.....	
9	**11210361**		2				Bumper .....防冲器.....	
10	**11210418**		1				Rod .....棒.....	LH
11	**11210419**		1				Rod .....活杆.....	RH
12	**11212649**		2				Plate.....板.....	
13	**11210580**		8				Collar.....圈.....	
14	**11210189**		8				Bolt.....螺栓.....	
15	**11210218**		4				Washer.....垫圈.....	
16	**11211662**		2				Pin.....定位销.....	
17	**11210063**		4				Spring washer .....弹簧垫圈.....	
18	**11210068**		2				Washer.....垫圈.....	
19	**11213732**		4				Shim.....垫片.....	
20	**11210119**		4				Hexagon screw .....六角螺丝.....	
21	**11210129**		2				Hexagon nut.....六角螺母.....	
22	**11210130**		3				Hexagon nut.....六角螺母.....	
23	**11210493**		2				Spring.....弹簧.....	

1	**11213485**	侧门 **Door, side**	Catalogue id **111201**	Group **803**
2	**11212924**			
3			Illustr. No **G8-6150E**	Section **100**
4				
5			Issue **2638000345**	Page **357**

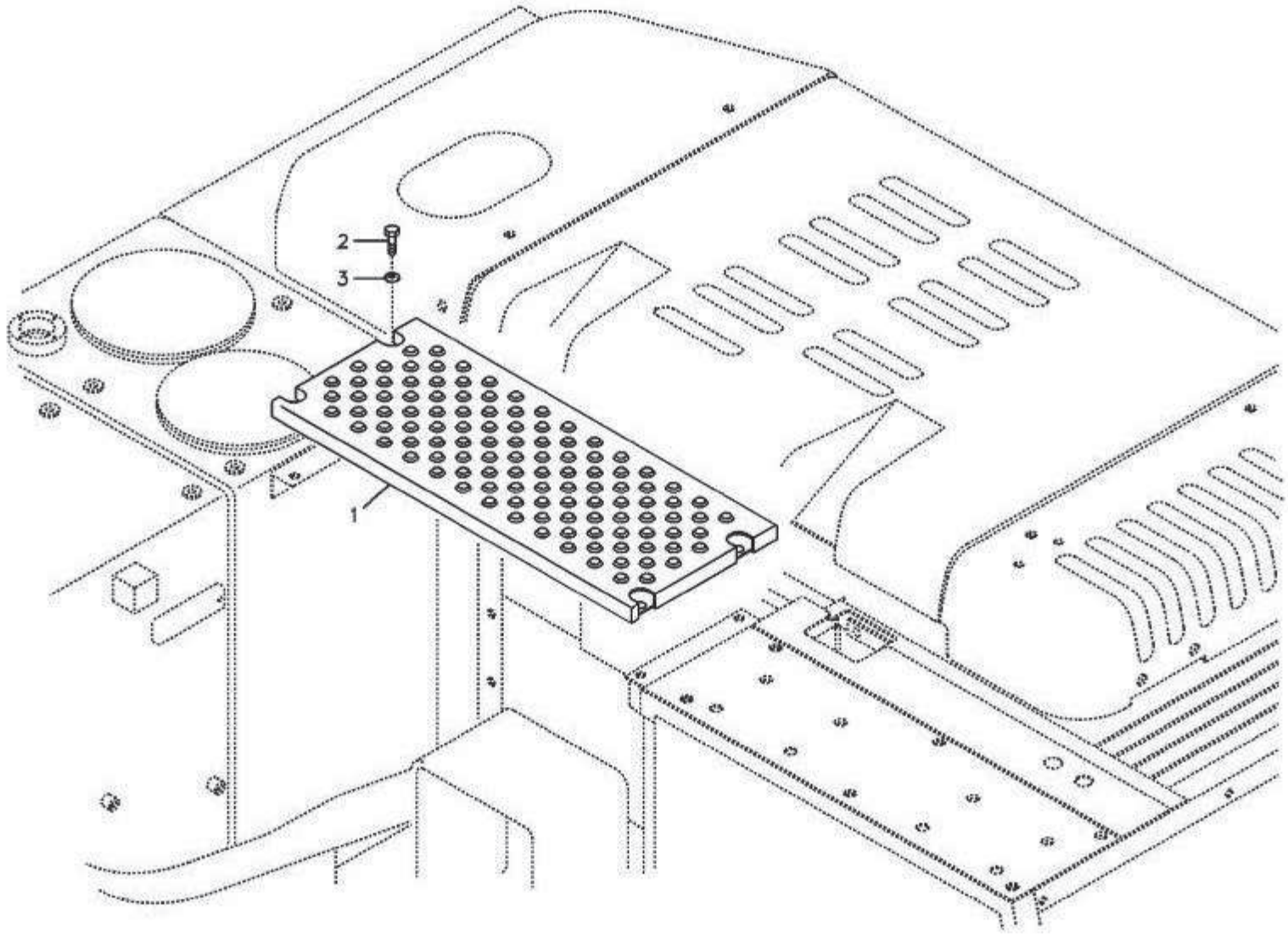

G9-6150E

Fig.	Part No.编码.	Quantity件数 1	2	3	PS	KIT	Description 说明	Notes
1	**11213738**	1					Cover .....罩盖.....	
2	**11210098**	4					Hexagon screw .....六角螺丝.....	
3	**11210284**	4					Washer.....垫圈.....	

1	**11212924**	控制阀盖板 **Cover, control valve**	Catalogue id **111201**	Group **803**
2			Illustr. No **G9-6150E**	Section **200**
3				
4			Issue **2638000345**	Page **359**
5				

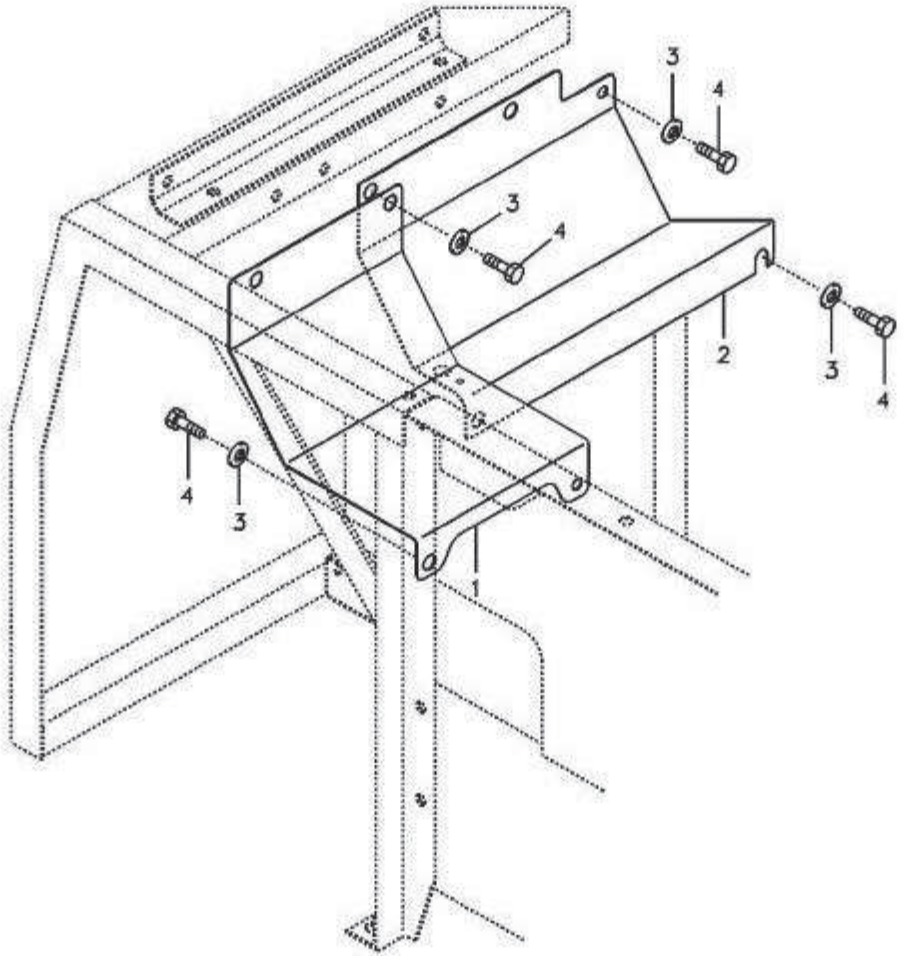

Q10-6150E

Fig.	Part No.编码.	Quantity件数 1	2	3	PS	KIT	Description 说明	Notes
1	**11213740**	1					Cover .....罩盖.....	
2	**11213739**	1					Cover .....罩盖.....	
3	**11210538**	8					Washer.....垫圈.....	
4	**11213741**	8					Bolt.....螺栓.....	

1	**11212924**	主泵盖板 **Cover, main pump**	Catalogue id **111201**	Group **803**
2			Illustr. No **G10-6150E**	Section **300**
3				
4			Issue **2638000345**	Page **361**
5				

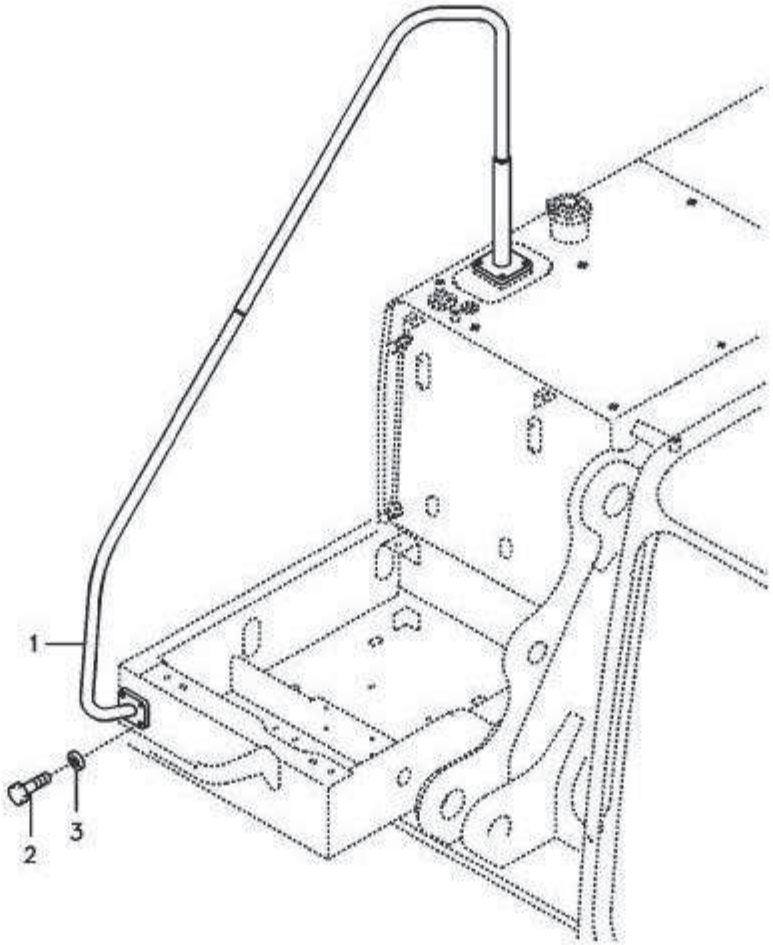

G11-6150E

Fig.	Part No.编码.	Quantity件数 1	2	3	PS	KIT	Description 说明	Notes
1	**11213742**	1					Handrail.....扶栏.....	
2	**11210125**	4					Hexagon screw .....六角螺丝.....	
3	**11210197**	4					Washer.....垫圈.....	

1	**11212924**	扶栏 **Handrail**	Catalogue id **111201**	Group **804**
2			Illustr. No **G11-6150E**	Section **100**
3				
4			Issue **2638000345**	Page **363**
5				

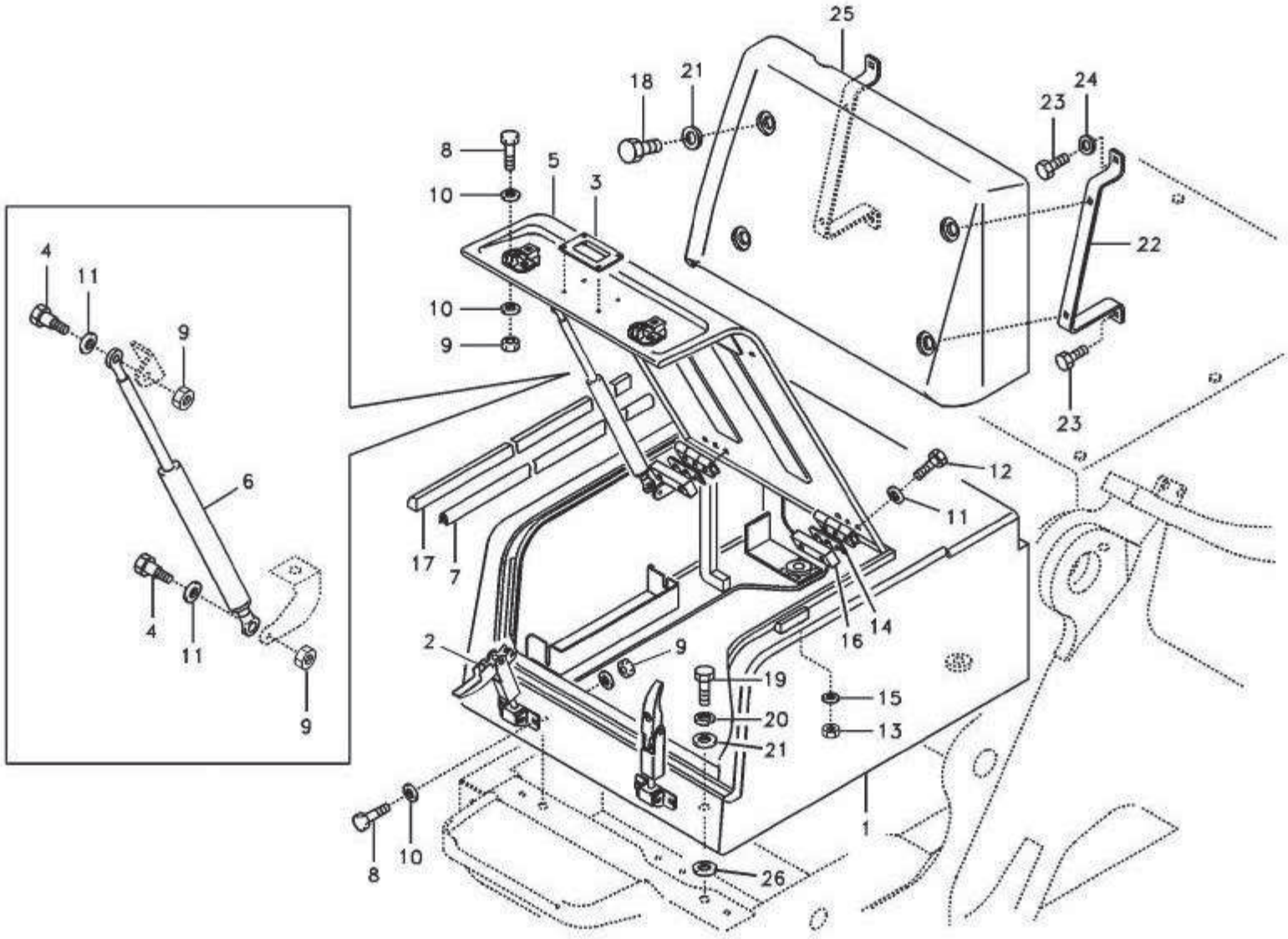
25
18
21
24
23
8
5
3
10
22
10
9
23
12
11
17
7
16
14
2
9
19
15
20
13
21
1
8
10
26
4
11
9
6
4
11
9

G12-6150E

Fig.	Part No编码.	Quantity件数 1	2	3	PS	KIT	Description 说明	Notes
	11213745	1					Tool box .....工具盒.....	
1		1			NS		•Body .....• 箱体.....	
2	**11210526**	2					•Catch .....• 钩.....	
3	**11210359**	1					•Handle .....• 把手.....	
4	**11210577**	2					•Bolt .....• 螺栓.....	
5	**11213746**	1					•Door .....• 车门.....	
6	**11213743**	1					•Gas Spring.....• 气体弹簧.....	
7		1			NS		•Weatherstrip .....• 挡风带.....	
8	**11210120**	8					•Hexagon screw .....• 六角螺丝.....	
9	**11211053**	10					•Nut .....• 螺母.....	
10	**11210218**	16					•Washer .....• 垫圈.....	
11	**11211634**	8					•Washer .....• 垫圈.....	
12	**11210124**	6					•Hexagon screw .....• 六角螺丝.....	
13	**11211629**	4					•Jam nut .....• 螺母.....	
14		2			NS		•Shim .....• 垫片.....	
15	**11211632**	4					•Washer .....• 垫圈.....	
16	**11213747**	2					•Plate .....• 板.....	
17	**11210525**	1					•Cushion .....• 坐垫.....	
18	**11210098**	4					Hexagon screw .....六角螺丝.....	
19	**11210100**	4					Hexagon screw .....六角螺丝.....	
20	**11210065**	4					Spring washer .....弹簧垫圈.....	
21	**11210538**	8					Washer.....垫圈.....	
22	**11210438**	2					Support .....支座.....	
23	**11210032**	4					Flange screw.....法兰螺丝.....	
24	**11210068**	2					Washer.....垫圈.....	
25	**11213744**	1					Cover .....罩盖.....	
26	**11211123**	4					Shim .....垫片.....	

1	**11212924**	机罩工具箱 **Tool box, cowl**	Catalogue id **111201**	Group **804**
2			Illustr. No **G12-6150E**	Section **200**
3				
4			Issue **2638000345**	Page **365**
5				

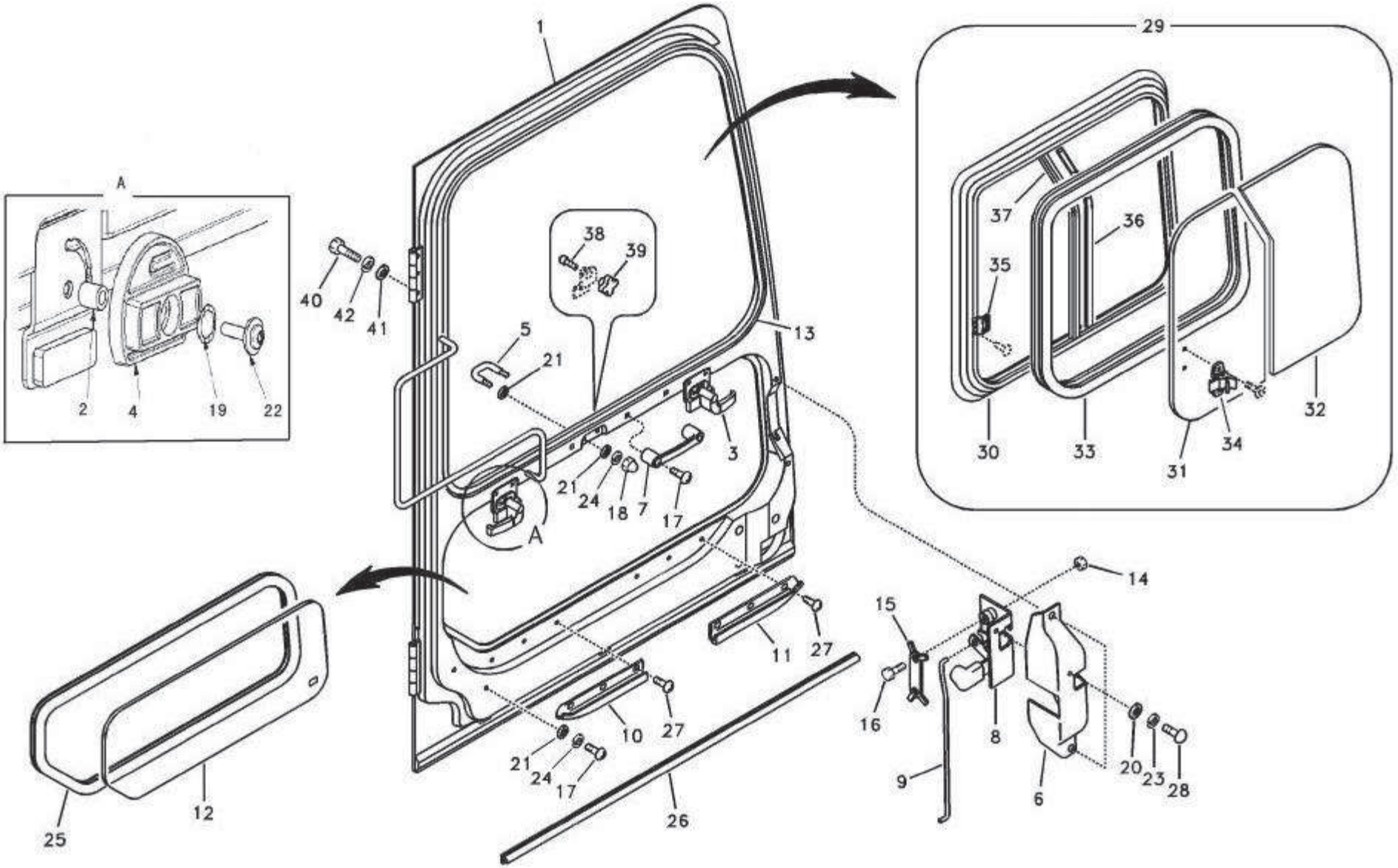
A
2
4
19
22
1
40
42
41
38
39
5
21
13
3
21
24
18
7
17
A
29
37
36
35
30
33
31
34
32
14
15
16
8
9
6
20
23
28
11
27
10
27
21
24
17
26
25
12

G13-6150E

Fig.	Part No.编码.	Quantity 件数 1	2	3	4	5	PS	KIT	Description 说明	Notes
	11214645	1							Door .....车门.....	
1		1					NS		•Door..... • 车门.....	
2	**11214655**	2							• Ring..... • 铃	
3	**11214657**	1							•Latch..... • 门插销.....	
4	**11214654**	1							•.Washer..... . •垫圈.....	
5	**11210298**	1							•Striker ..... • 撞针.....	
6	**11211253**	1							•Cover ..... • 罩盖.....	
7	**11210299**	1							•Handle ..... • 把手.....	
8	**11210300**	1							•Lock ..... • 锁.....	
9	**11210301**	1							•Rod ..... • 棒.....	
10	**11210318**	1							•Stop ..... • 挡块.....	
11	**11210319**	1							•Stop ..... • 挡块.....	
12	**11211183**	1							•Glass ..... • 玻璃.....	
13	**11210356**	1							•Weatherstrip ..... • 密封条.....	
14	**11210219**	2							•Hexagon nut..... • 六角螺母.....	
15	**11210452**	1							•Plate ..... • 安装板.....	
16	**11210093**	2							•Screw ..... • 螺丝.....	
17	**11211051**	4							•Screw ..... • 螺丝.....	
18	**11211039**	2							•Nut..... • 螺母.....	
19	**11214653**	8							•Knob ..... • 环.....	
20	**11210057**	3							•Washer ..... . • 垫圈.....	
21	**11210058**	6							•Washer ..... . • 垫圈.....	
22	**11214656**	8							•Screw ..... • 螺钉.....	
23	**11210062**	3							•Spring washer ..... • 弹簧垫圈.....	
24	**11210063**	4							•Spring washer ..... • 弹簧垫圈.....	
25	**11211046**	1							•Weatherstrip ..... • 挡风带.....	
26	**11210472**	1							•Weatherstrip ..... • 挡风带.....	
27										
28	**11210087**	3							•Six point socket sc. • 六点螺口插座.....	

1	**11211823**	操作人员驾驶室门 **Door, operator's cab**	Catalogue id **111201**	Group **805**
2			Illustr. No **G13-6150E**	Section **100**
3				
4			Issue **2638000345**	Page **367**
5				

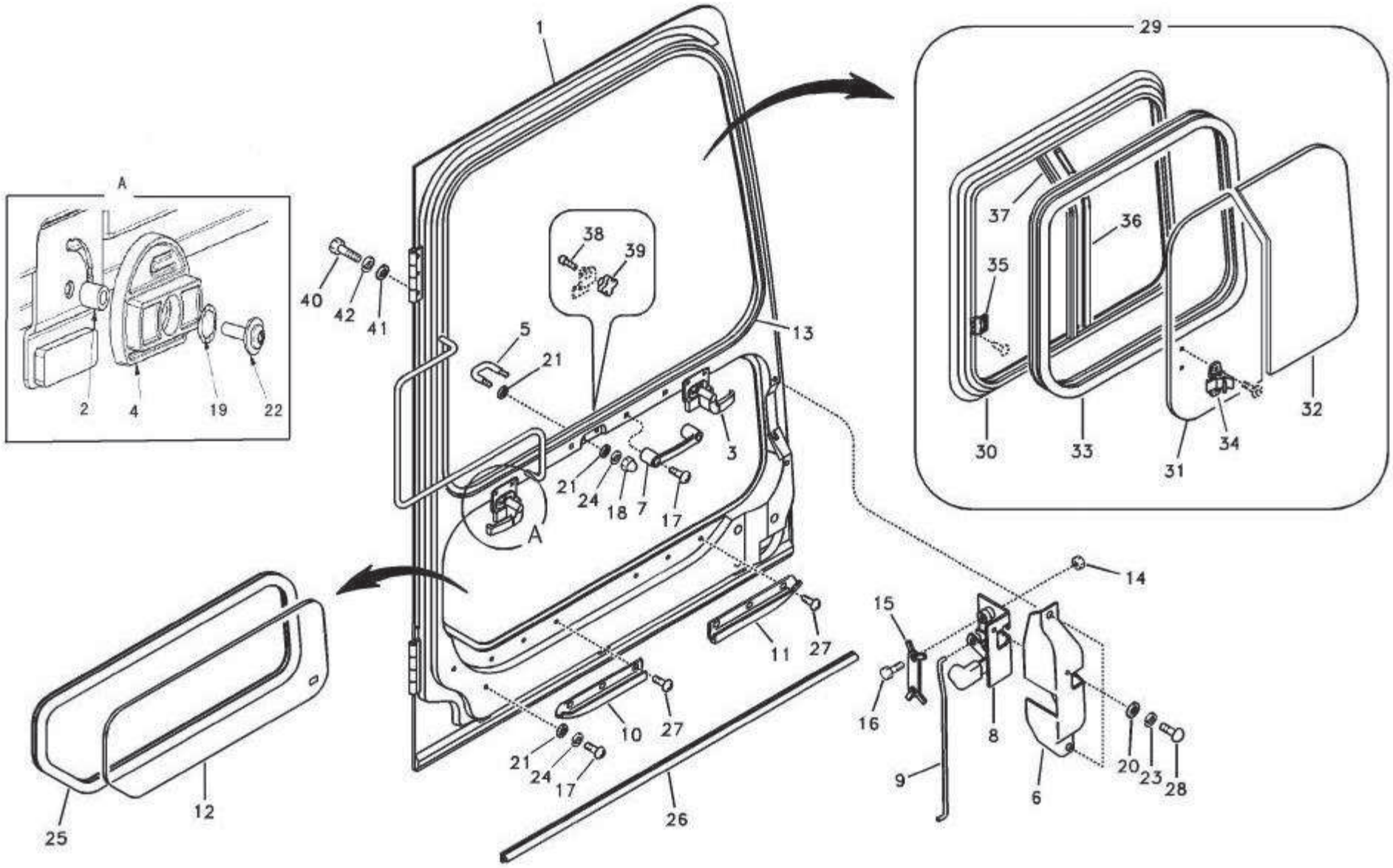
A
2
4
19
22
1
40
42
41
38
39
5
21
13
3
21
24
18
7
17
A
29
37
36
35
30
33
31
34
32
14
15
16
8
9
6
20
23
28
11
27
10
27
21
24
17
26
25
12

G13-6150E

Fig.	Part No编码.	Quantity 件数 1	2	3	4	5	PS	KIT	Description 说明	Notes
29	**11211231**	1							•Window..... • 窗.....	
30	**11210653**	1							••Frame ..... •• 构架.....	
31	**11211239**	1							••Glass ..... •• 玻璃.....	
32	**11211240**	1							••Glass ..... •• 玻璃.....	
33	**11210518**	1							••Weatherstrip ..... •• 挡风带.....	
34	**11210658**	1							••Lock..... •• 门锁.....	
35	**11210655**	1							••Catch ..... •• 锁.....	
36	**11210470**	1							••Seal ..... •• 密封.....	
37	**11210654**	1							••Frame ..... •• 构架.....	
38	**11210656**	1							•Rubber stop ..... • 橡胶挡块.....	
39	**11210657**	1							•Knob ..... • 旋钮.....	
40	**11210123**	6							Hexagon screw .....六角螺丝.....	
41	**11210068**	6							Washer .....垫圈.....	
42	**11210064**	6							Spring washer .....弹簧垫圈.....	

1	**11211823**	操作人员驾驶室门 **Door, operator's cab**	Catalogue id **111201**	Group **805**
2			Illustr. No **G13-6150E**	Section **100**
3				
4			Issue **2638000345**	Page **369**
5				

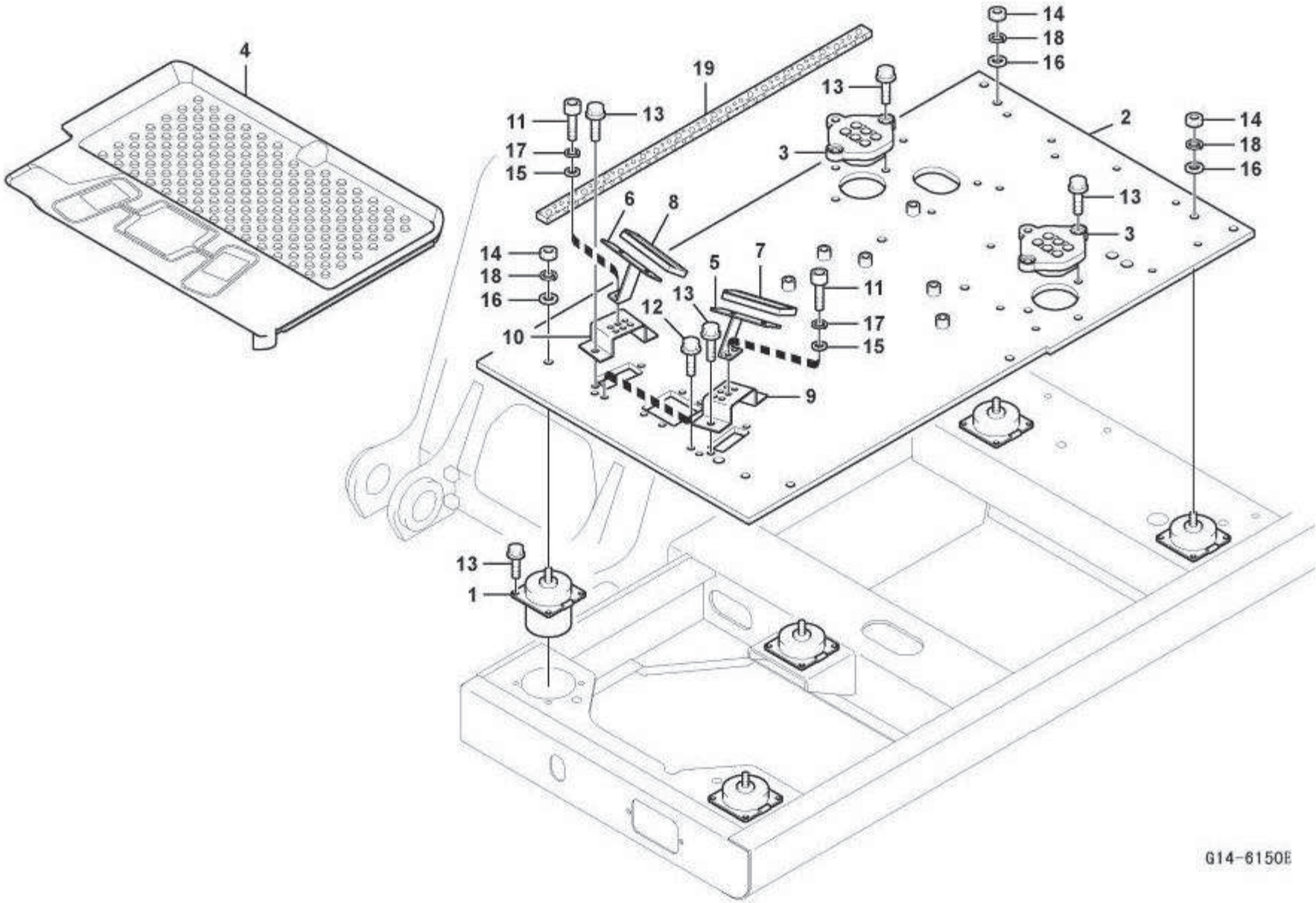
4
19
11
13
17
15
14
18
16
13
3
2
14
18
16
6
8
13
3
14
18
16
5
7
11
10
12
13
17
15
9
13
1
G14-6150E

Fig.	Part No.编码.	Quantity件数 1	2	3	PS	KIT	Description 说明	Notes
1	**11211220**	5					Bracket.....支架.....	
2	**11213749**	1					Plate.....板.....	
3	**11213748**	2					Seal.....密封.....	
4	**11212912**	1					Floor.....地板.....	
5	**11210528**	1					Plate.....板.....	LH
6	**11212678**	1					Plate.....板.....	RH
7	**11211207**	1					Cover .....罩盖.....	LH
8	**11211208**	1					Cover .....罩盖.....	RH
9	**11210350**	1					Bracket.....支架.....	
10	**11212677**	1					Bracket.....支架.....	
11	**11210148**	4					Hex. socket screw.....六角凹头螺丝.....	
12	**11210036**	4					Flange screw.....法兰螺丝.....	
13	**11210037**	30					Flange screw.....法兰螺丝.....	
14	**11210109**	5					Hexagon nut.....六角螺母.....	
15	**11210058**	4					Washer.....垫圈.....	
16	**11210060**	5					Washer.....垫圈.....	
17	**11210063**	4					Spring washer .....弹簧垫圈.....	
18	**11210067**	5					Spring washer .....弹簧垫圈.....	
19	**11210475**	1					Sponge.....海绵.....	

1	**11212924**	驾驶室地板 **Cabin floor**	Catalogue id **111201**	Group **806**
2			Illustr. No **G14-6150E**	Section **100**
3				
4			Issue **2638000345**	Page **371**
5				

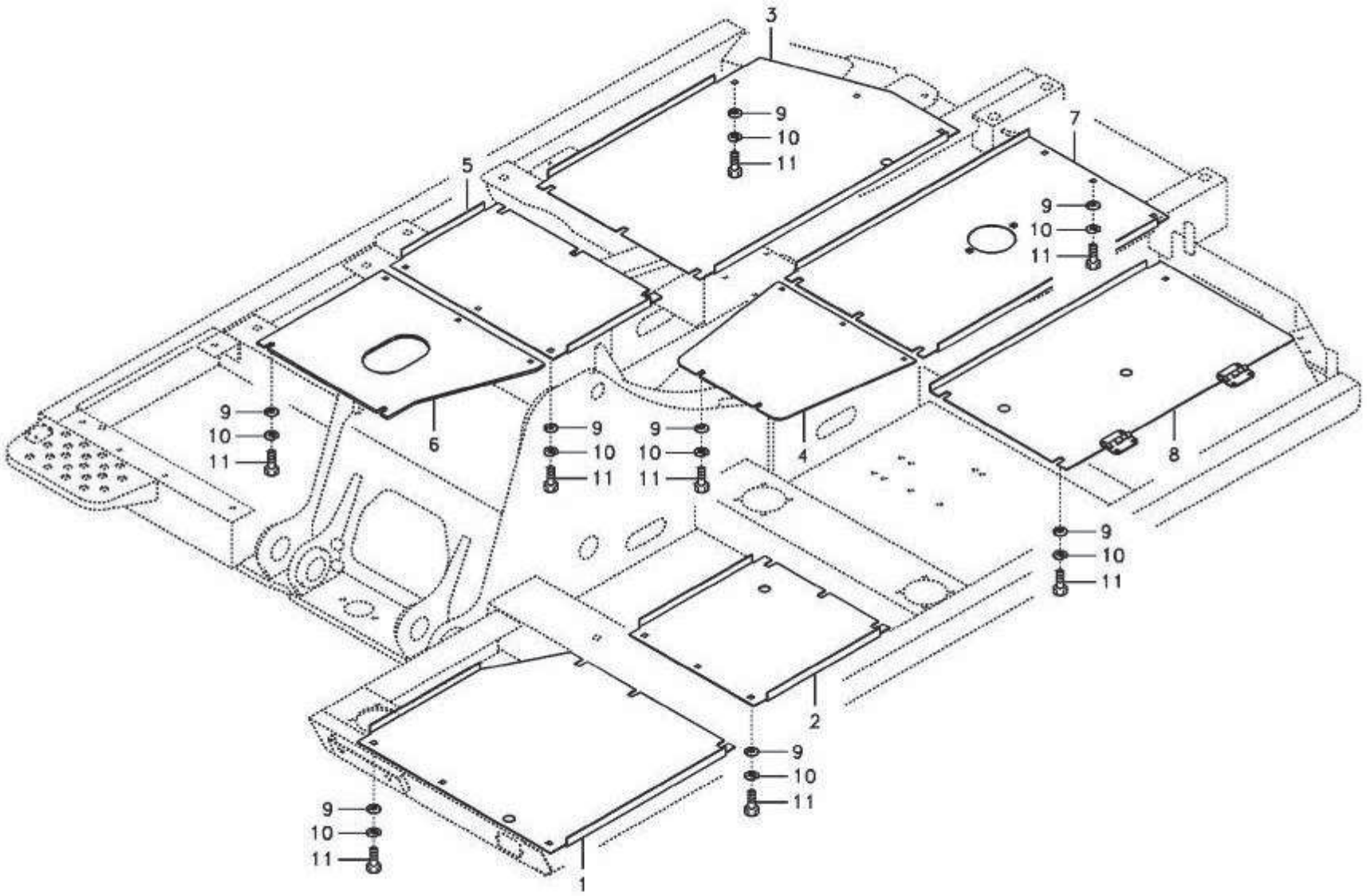

G15-6150E

Fig.	Part No编码.	Quantity件数 1	2	3	PS	KIT	Description 说明	Notes
1	**11214635**	1					Plate.....安装板.....	
2	**11214636**	1					Plate.....安装板.....	
3	**11214639**	1					Cover .....罩盖.....	
4					NS		Cover .....罩盖.....	
5	**11214640**	1					Cover .....罩盖.....	
6					NS		Cover .....罩盖.....	
7	**11214638**	1					Cover .....罩盖.....	
8	**11214637**	1					Cover .....罩盖.....	
9	**11210695**	40					Washer.....垫圈.....	
10	**11210065**	40					Spring washer .....弹簧垫圈.....	
11	**11210098**	40					Hexagon screw .....六角螺丝.....	

1	**11213472**	发动机下的盖板、液压泵、冷却器,主阀和燃油箱。 **Hatches under engine, hydr.pumps, cooler, m.valve and fuel tank.**	Catalogue id **111201**	Group **806**
2			Illustr. No **G15-6150E**	Section **200**
3			Issue **2638000345**	Page **373**
4				
5				

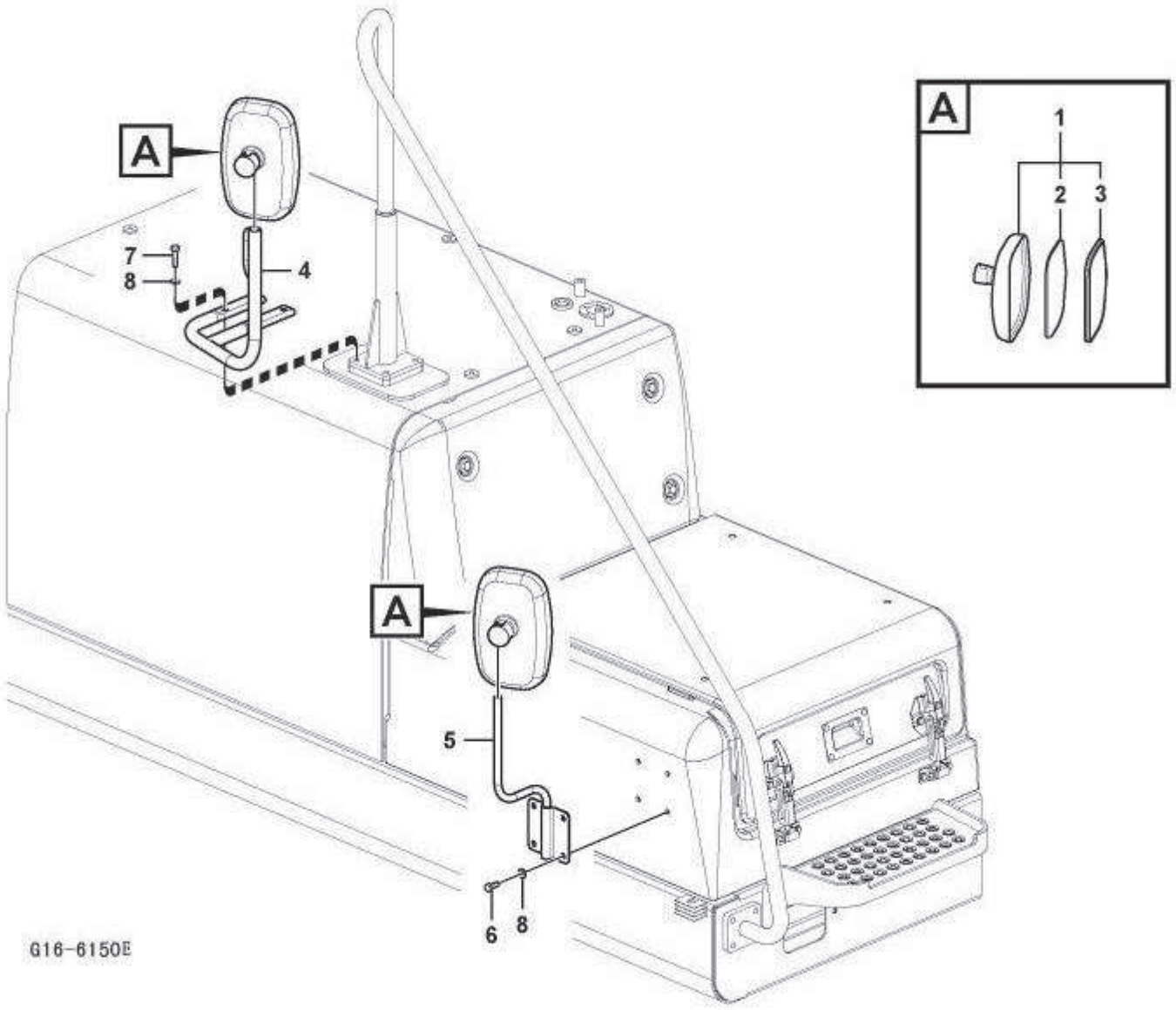
A
7
8
4
A
5
6
8
G16-6150E
A
1
2
3

Fig.	Part No编码.	Quantity件数 1	2	3	PS	KIT	Description 说明	Notes
1	**4190001744**	2					Mirror.....镜.....	
2	**4190001779**	1					•Mirror .....• 视镜.....	
3					NS		•Rubber.....• 橡胶.....	
4	**11213756**	1					Stay.....支柱.....	
5	**11210763**	1					Stay.....支柱.....	
6	**11210123**	4					Hexagon screw .....六角螺丝.....	
7	**11210124**	4					Hexagon screw .....六角螺丝.....	
8	**11210197**	8					Washer.....垫圈.....	

1	**11212924**	后视镜 **Rear view mirror**	Catalogue id **111201**	Group **807**
2			Illustr. No **G16-6150E**	Section **100**
3				
4			Issue **2638000345**	Page **375**
5				

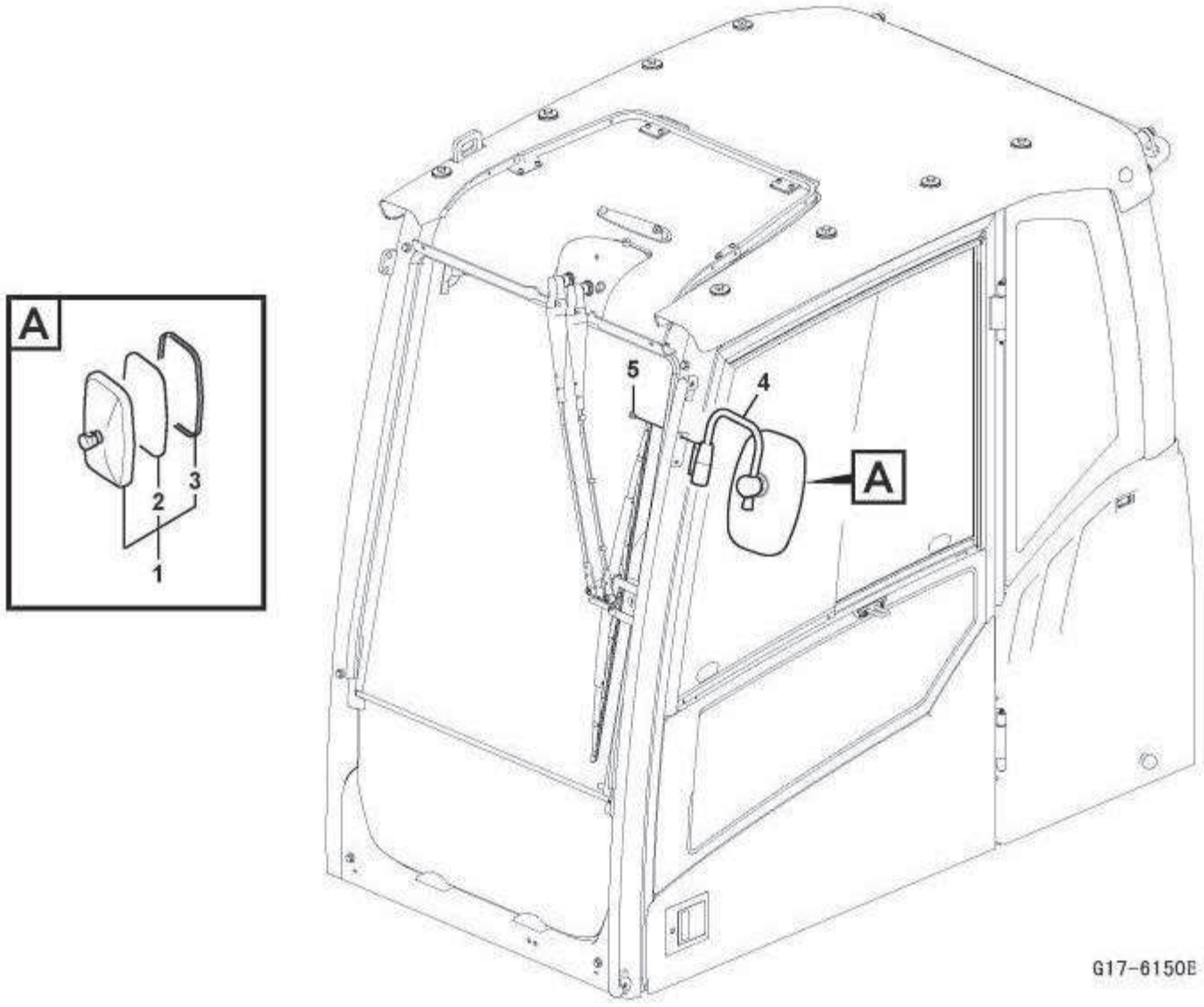
A
1
2
3
5
4
A
G17-6150E

Fig.	Part No编码.	Quantity件数 1	2	3	PS	KIT	Description 说明	Notes
1	**4190001744**	1					Mirror.....镜.....	
2	**4190001779**	1					•Mirror .....• 视镜.....	
3					NS		•Rubber..... • 橡胶.....	
4	**11210643**	1					Support .....支撑.....	
5	**11210033**	2					Flange screw.....法兰螺丝.....	

1	**11212924**	后视镜 **Rear view mirror**	Catalogue id **111201**	Group **807**
2			Illustr. No **G17-6150E**	Section **200**
3				
4			Issue **2638000345**	Page **377**
5				

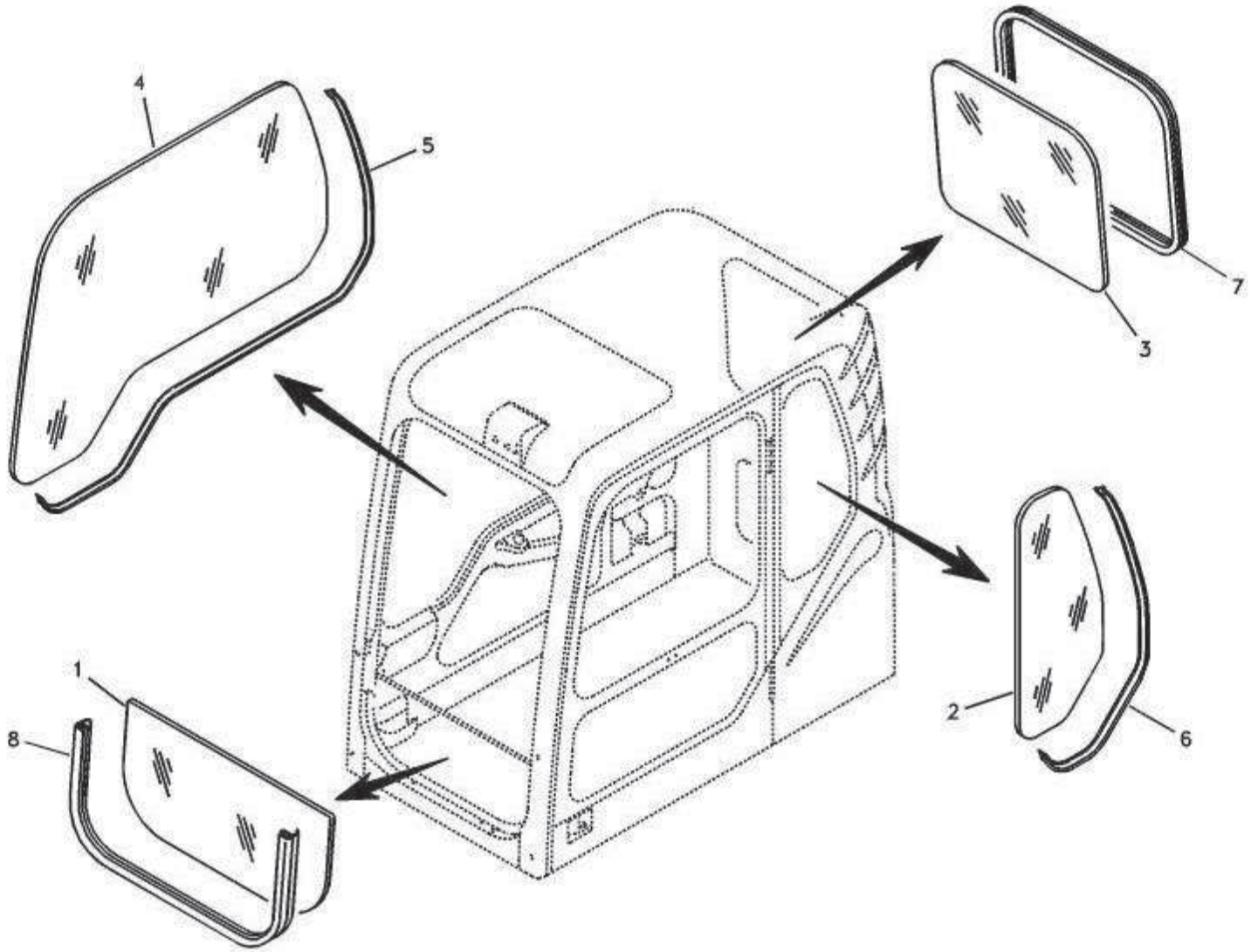

G18-6150E

Fig.	Part No.编码.	Quantity件数 1	2	3	PS	KIT	Description 说明	Notes
1	**11211168**	1					Glass.....玻璃.....	
2	**11211184**	1					Glass.....玻璃.....	
3	**11211185**	1					Glass.....玻璃.....	
4	**11211186**	1					Glass.....玻璃.....	
5	**11211048**	1					Weatherstrip.....挡风带.....	
6	**11211045**	1					Weatherstrip.....挡风带.....	
7	**11211047**	1					Weatherstrip.....挡风带.....	
8	**11210517**	1					Weatherstrip.....挡风带.....	

1	**11211823**	车窗 **Windows**	Catalogue id **111201**	Group **808**
2			Illustr. No **G18-6150E**	Section **100**
3				
4			Issue **2638000345**	Page **379**
5				

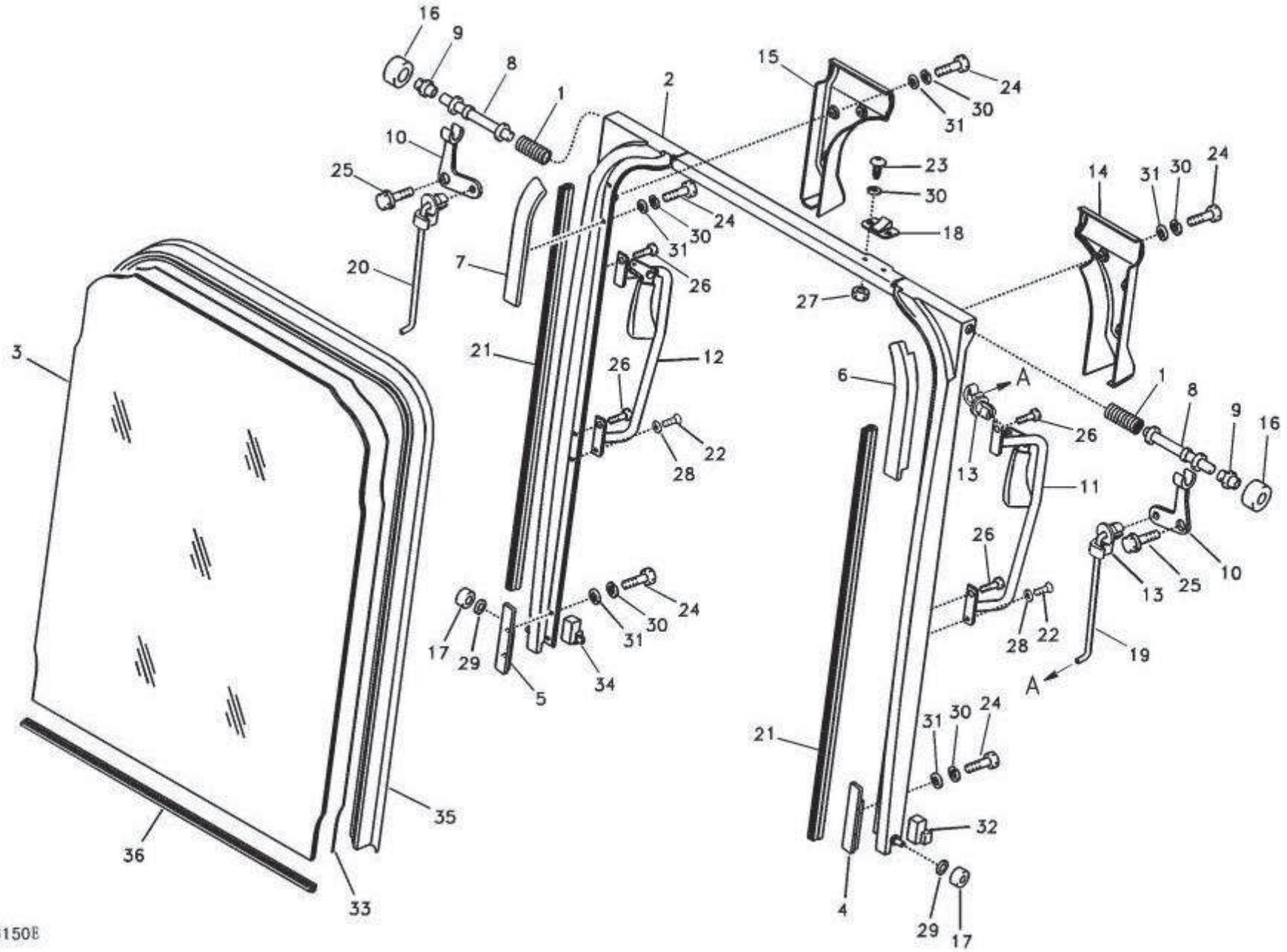
16
9
8
1
2
15
24
30
31
10
25
20
7
23
18
14
3
21
12
26
22
28
6
A
13
11
17
29
5
34
4
32
19
35
36
33
G19-6150B

Fig.	Part No.编码.	Quantity件数 1	2	3	PS	KIT	Description 说明	Notes
	11211162	1					Shield .....遮板.....	
1	**11210572**	2					•Spring .....• 弹簧.....	
2	**11210306**	1					•Shiel d.....• 遮板.....	
3	**11211163**	1					•Glass .....• 玻璃.....	
4	**11210307**	1					•Block.....• 阻挡块.....	
5	**11210308**	1					•Block.....• 阻挡块.....	
6	**11210309**	1					•Block.....• 阻挡块.....	
7	**11210310**	1					•Block.....• 阻挡块.....	
8	**11210755**	2					•Pin .....• 定位销.....	
9	**11210311**	2					•Bushing.....• 轴衬.....	
10	**11210312**	2					•Connecting lever.....• 连接杠杆.....	LH
11	**11211214**	1					•Handle .....• 手柄.....	
12	**11211215**	1					•Handle .....• 手柄.....	
13	**11210313**	4					•Connector .....• 连接器.....	
14	**11210314**	1					•Cover .....• 罩盖.....	
15	**11210315**	1					•Cover .....• 罩盖.....	
16	**11210582**	2					•Roller .....• 滚轮.....	
17	**11210583**	2					•Roller .....• 滚轮.....	
18	**11210316**	1					•Stop sleeve .....• 制动套筒.....	
19	**11210332**	1					•Rod .....• 活杆.....	
20	**11210333**	1					•Rod .....• 活杆.....	
21	**11210343**	2					•Weatherstrip .....• 挡风带.....	
22	**11210089**	2					•Six point socket scre..• 六点螺口插座.....	
23	**11210084**	2					•Six point socket scre..• 六点螺口插座.....	
24	**11210085**	14					•Six point socket scre..• 六点螺口插座.....	
25	**11210074**	2					•Flange screw .....• 法兰螺丝.....	
26	**11210095**	4					•Screw.....• 螺丝.....	
27	**11211038**	2					•Cap nut .....• 螺帽.....	
28	**11211040**	2					•Washer .....• 垫圈.....	
29	**11210058**	2					•Washer .....• 垫圈.....	

1	**11211823**	挡风玻璃 **Windshield**	Catalogue id **111201**	Group **808**
2				
3			Illustr. No **G19-6150E**	Section **200**
4				
5			Issue **2638000345**	Page **381**

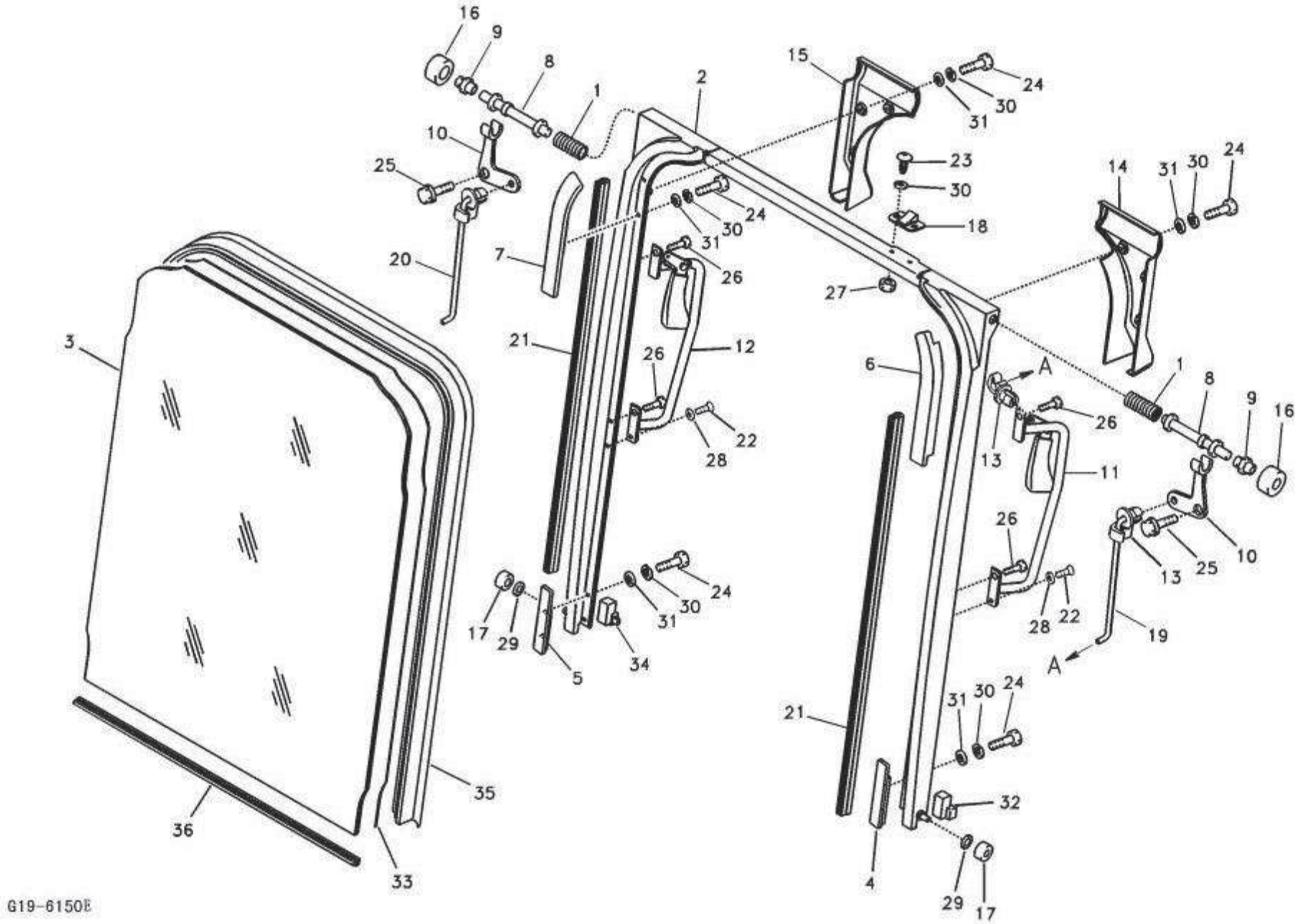
G19-6150E

Fig.	Part No.编码.	Quantity件数 1	2	3	P S	K I T	Description 说明	Notes
30	**11210061**	16					•Spring washer.....• 弹簧垫圈.....	
31	**11210024**	14					•Washer .....• 垫圈.....	
32	**11210515**	1					•Plug .....• 塞.....	
33	**11210500**	1					•Rubber moulding .....• 橡胶模.....	
34	**11210516**	1					•Plug .....• 堵头.....	
35	**11210346**	1					Weatherstrip.....挡风带.....	
36	**11210406**	1					Channel.....滑槽.....	

1	**11211823**	挡风玻璃 **Windshield**	Catalogue id **111201**	Group **808**
2			Illustr. No **G19-6150E**	Section **200**
3				
4			Issue **2638000345**	Page **383**
5				

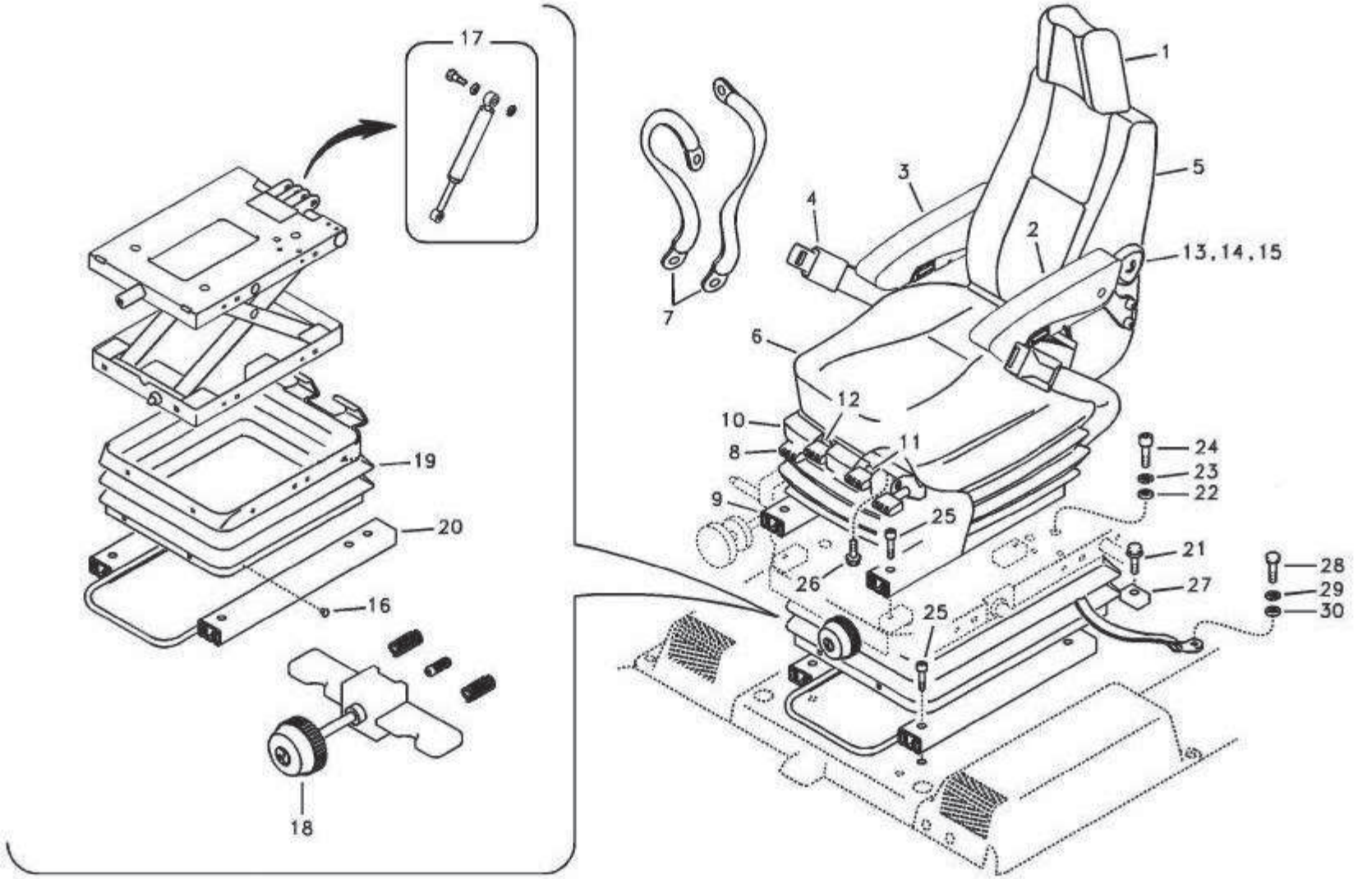
17
19
20
16
18
1
5
3
4
2
13,14,15
7
6
12
10
8
11
9
24
23
22
25
26
21
27
28
29
30
25

G20-6150E

Fig.	Part No.编码.	Quantity 件数 1	2	3	4	5	PS	KIT	Description 说明	Notes
	11211271	1							Operator seat.....驾驶座.....	
1	**11211359**	1							•Head Restraint .....• 头枕.....	
2	**11210833**	1							•Arm Rest .....• 抚手.....	
3	**11210834**	1							•Arm Rest .....• 抚手.....	
4	**11210843**	1							•Seat Belt.....• 驾驶座安全带.....	
5	**11210521**	1							•Cushion .....• 缓冲.....	
	11210443	1							•Cover .....• 罩盖.....	
6	**11210522**	1							•Cushion .....• 缓冲.....	
	11210444	1							•Cover .....• 罩盖.....	
7	**11210441**	1							•Belt .....• 安全带.....	
8	**11210754**	1							•Slide .....• 滑槽.....	
9	**11210445**	1							•Slide .....• 滑槽.....	
10	**11210446**	1							•Bellows .....• 护套.....	
11	**11210502**	1							•Lever .....• 操纵杆.....	UP SLIDE
12	**11210503**	1							•Lever .....• 操纵杆.....	LO SLIDE
13	**11210757**	1							•Support .....• 支座.....	
14	**11210262**	1							•Cable .....• 缆索.....	
15	**11210571**	1							•Knob .....• 垫片.....	
16	**11210509**	1							•Clip Kit.....• 管夹.	
	11210533	1							Seat Support.....座椅支撑.....	
17	**11210585**	1							•Damper.....• 阻尼.....	
18	**11210451**	1							•Adj Device .....• 调节器.....	
19	**11210745**	1							•Bellows .....• 护套.....	
20	**11210448**	1							•Slide .....• 滑槽.....	
21	**11210039**	2							Flange screw .....法兰螺钉.....	
22	**11210058**	4							Washer .....垫圈.....	
23	**11210063**	4							Spring Washer .....弹簧垫圈.....	
24	**11210149**	4							Allen Hd Screw .....内六角螺钉.....	
25	**11210147**	8							Allen Hd Screw .....内六角螺钉.....	
26	**11210038**	2							Flange screw .....法兰螺钉.....	

1	**11211824**	带安装零件的驾驶座 **Operator seat with fitting parts**	Catalogue id **111201**	Group **809**
2				
3			Illustr. No **G20-6150E**	Section **100**
4				
5			Issue **2638000345**	Page **385**

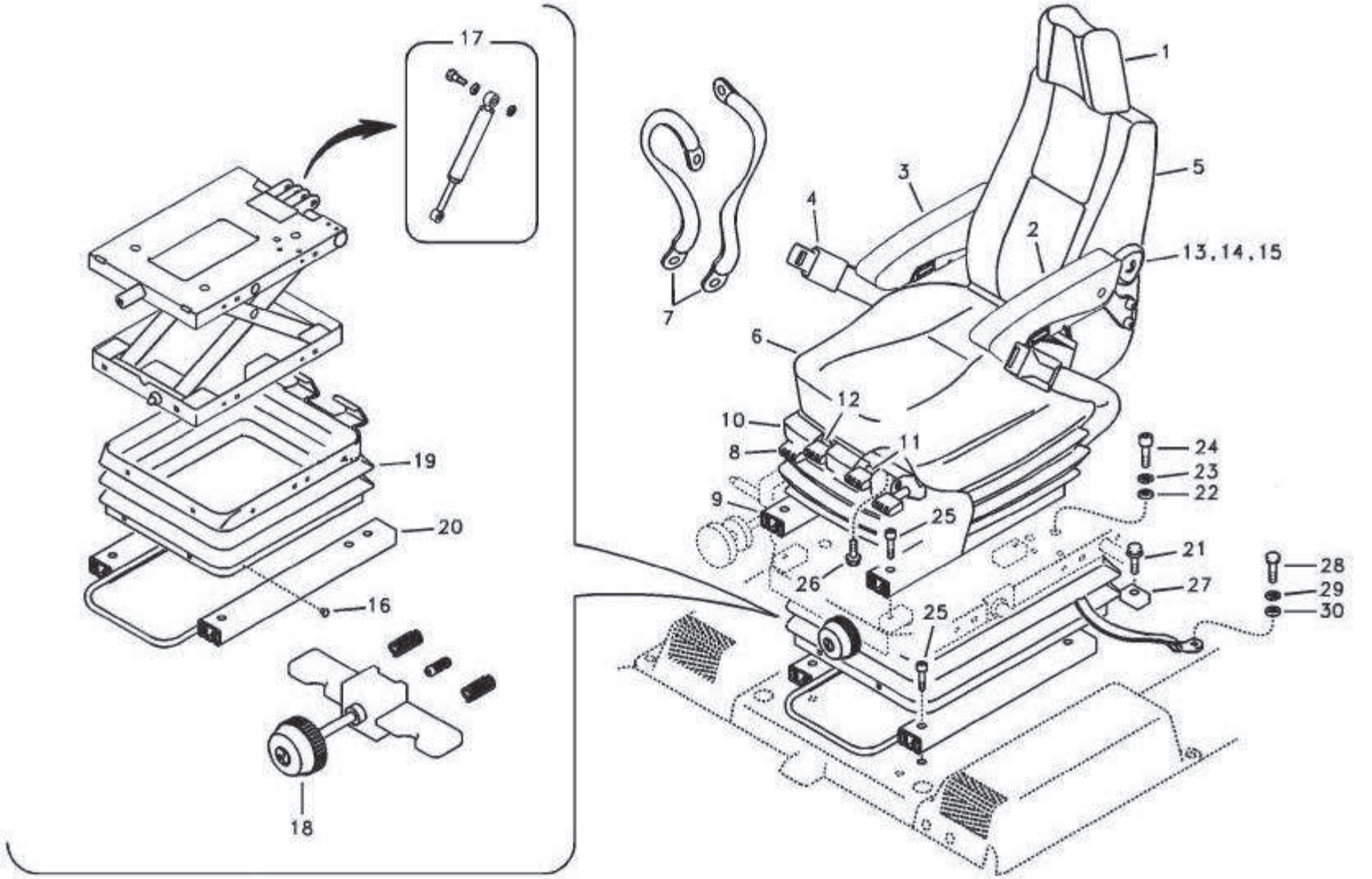
17
19
20
16
18
1
5
3
4
2
13,14,15
7
6
12
10
8
11
9
24
23
22
25
26
21
27
28
29
30
25

G20-6150E

Fig.	Part No.编码.	Quantity 件数 1	2	3	4	5	PS	KIT	Description 说明	Notes
27	**11210280**	1							Bracket.....支架.....	
28	**11210126**	2							Hexagon screw .....六角螺钉.....	
29	**11210064**	2							Spring Washer .....弹簧垫圈.....	
30	**11210068**	2							Washer .....垫圈.....	

1	**11211824**	带安装零件的驾驶座 **Operator seat with fitting parts**	Catalogue id **111201**	Group **809**
2			Illustr. No **G20-6150E**	Section **100**
3				
4			Issue **2638000345**	Page **387**
5				

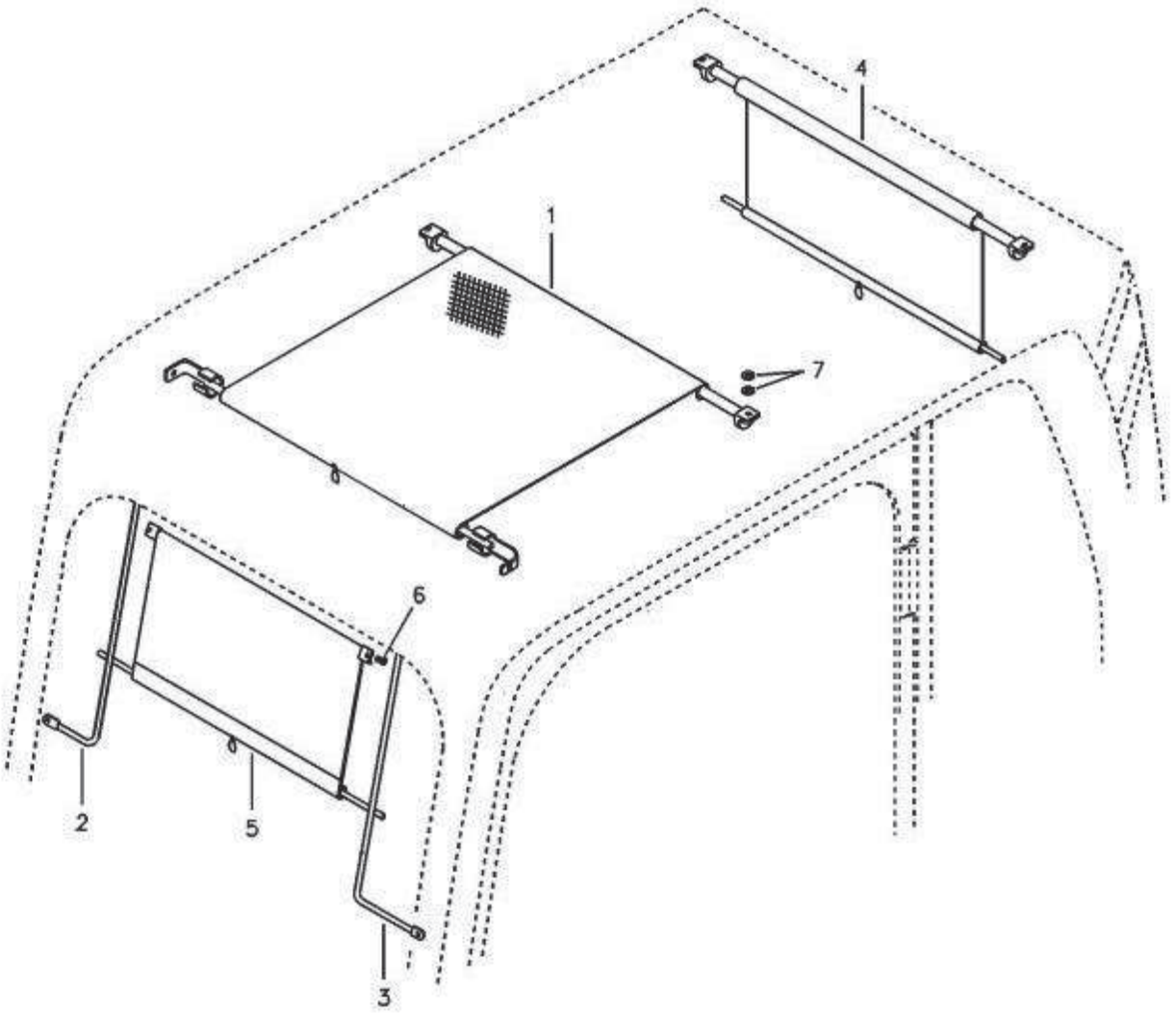

G21-6150E

Fig.	Part No.编码.	Quantity件数 1	2	3	PS	KIT	Description 说明	Notes
1	**11210662**	1					Sun visor.....遮阳板.....	
2	**11210348**	1					Guide .....导轨.....	
3	**11210349**	1					Guide .....导轨.....	
4	**11210661**	1					Sun visor.....遮阳板.....	
5	**11210454**	1					Blind .....百叶窗.....	
6	**11211616**	2					Screw .....六角螺钉.....	
7	**11210058**	4					Washer.....垫圈.....	

1	**11211827**	内部遮阳板 **Sun visor interior**	Catalogue id **111201**	Group **810**
2			Illustr. No **G21-6150E**	Section **100**
3				
4			Issue **2638000345**	Page **389**
5				

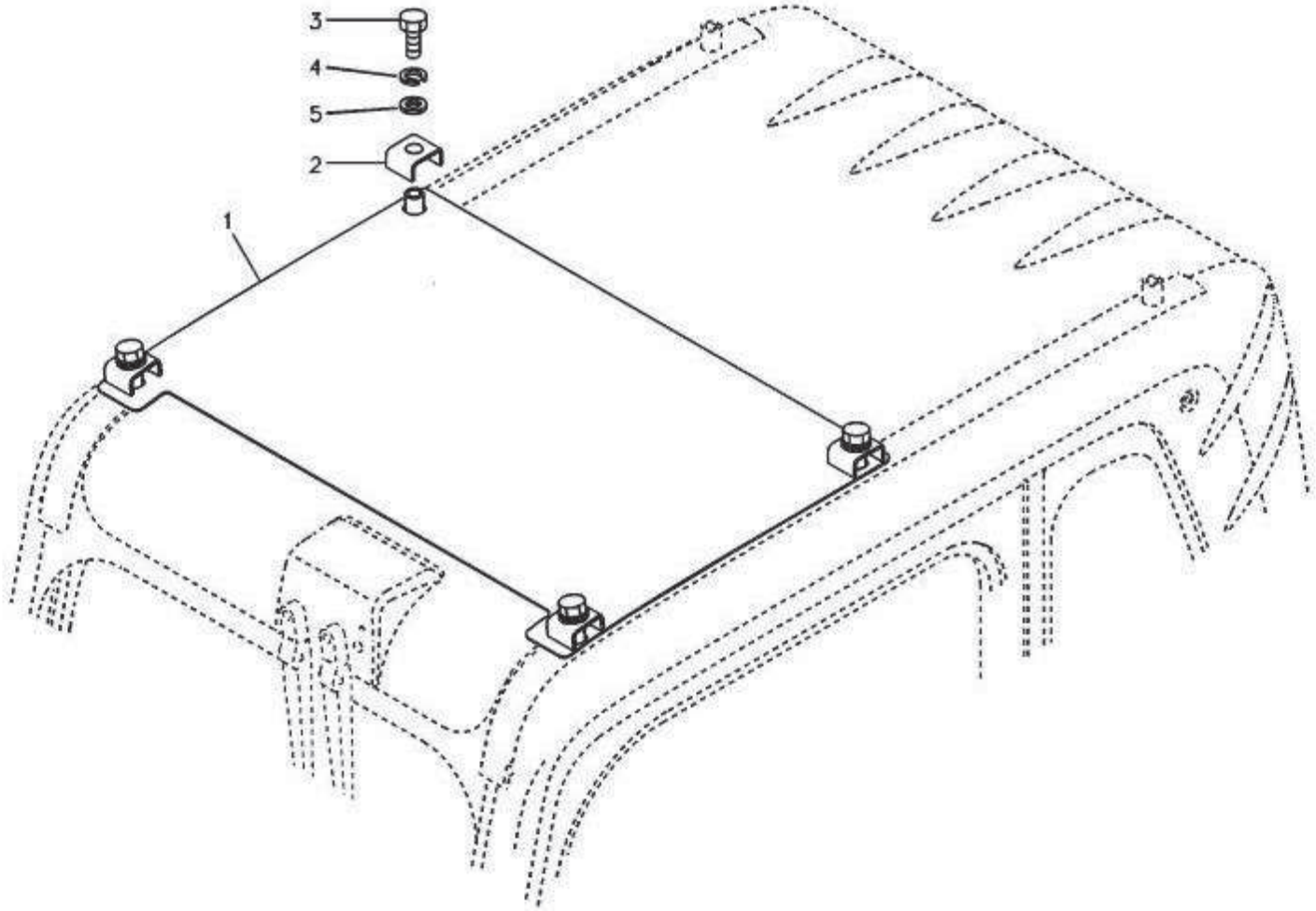

G22-6150E

Fig.	Part No.编码.	Quantity件数 1	2	3	PS	KIT	Description 说明	Notes
1	**11210461**	1					Cover .....罩.....	
2	**11210462**	4					Channel.....滑槽.....	
3	**11210099**	4					Hexagon screw .....六角螺丝.....	
4	**11210065**	4					Spring washer .....弹簧垫圈.....	
5	**11210538**	4					Washer.....垫圈.....	

1	**11211838**	遮阳板 **Sun visor**	Catalogue id **111201**	Group **810**
2			Illustr. No **G22-6150E**	Section **200**
3			Issue **2638000345**	Page **391**
4				
5				

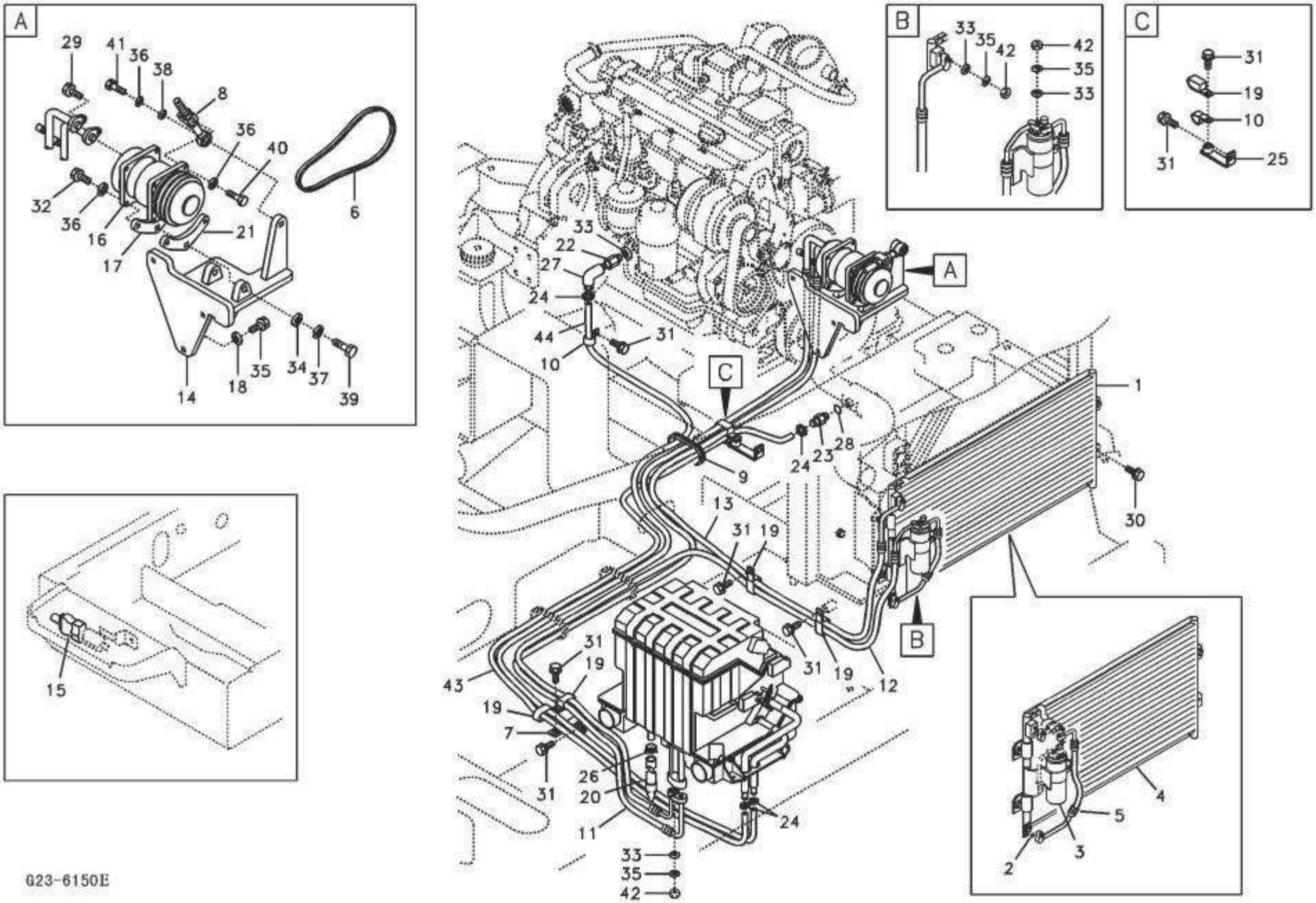
A
29
41
36
38
8
36
40
6
32
36
16
17
21
14
18
35
34
37
39
B
33
35
42
42
35
33
C
31
19
10
31
25
33
22
27
24
44
10
31
A
C
1
24
23
28
9
30
13
31
19
B
31
19
31
19
12
43
31
19
19
7
31
26
20
11
24
33
35
42
15
4
5
3
2
G23-6150E

Fig.	Part No.编码.	Quantity 件数 1	2	3	P S	K I T	Description 说明	Notes
1	**11211905**	1					Condenser .....冷凝器.....	
2	**11210601**	2					•O-ring.....•o 型圈.....	
3	**11210396**	1					•Receiver drier .....• 接收器干燥机.....	
	11212708	1					••Switch.....•• 开关.....	
4	**11213758**	1					•Condenser .....• 冷凝器.....	
5	**11213759**	1					•Hose .....• 软管.....	
6	**11211134**	1					V-belt.....V 形带.....	
7	**11210613**	1					Bracket.....支架.....	
8	**11213766**	1					Adj Device.....调节器.....	
9	**11210617**	1					Grommet .....索环.....	
10	**11210258**	2					Clip.....夹.....	
11	**11213760**	1					Hose.....软管.....	
12	**11213761**	1					Hose.....软管.....	
13	**11213762**	1					Hose.....软管.....	
14	**11213765**	1					Bracket.....支架.....	
15	**11210286**	1					Sensor.....传感器.....	
16	**11211152**	1					Compressor .....压缩机.....	
17	**11213763**	1					Bracket.....支架.....	
18	**11213764**	4					Washer.....垫圈.....	
19	**11210324**	5					Clip.....夹.....	
20	**11210410**	1					Drain hose.....排水软管.....	
21	**11213757**	1					Compressor bracket...压缩机支架.....	
22	**11213769**	1					Connector .....连接器.....	
23	**11213768**	1					Connector .....接头.....	
24	**11210413**	4					Clamp.....夹.....	
25	**11213767**	1					Bracket.....支架.....	
26	**11211060**	1					Clip.....卡簧.....	
27	**11210896**	1					Elbow .....弯管.....	
28	**11213773**	1					Gasket.....密封垫.....	

1	**11213471**	空调管线,冷却和加热器 **Air conditioning line, cooling and heater**	Catalogue id **111201**	Group **811**
2			Illustr. No **G23-6150E**	Section **100**
3				
4			Issue **2638000345**	Page **393**
5				

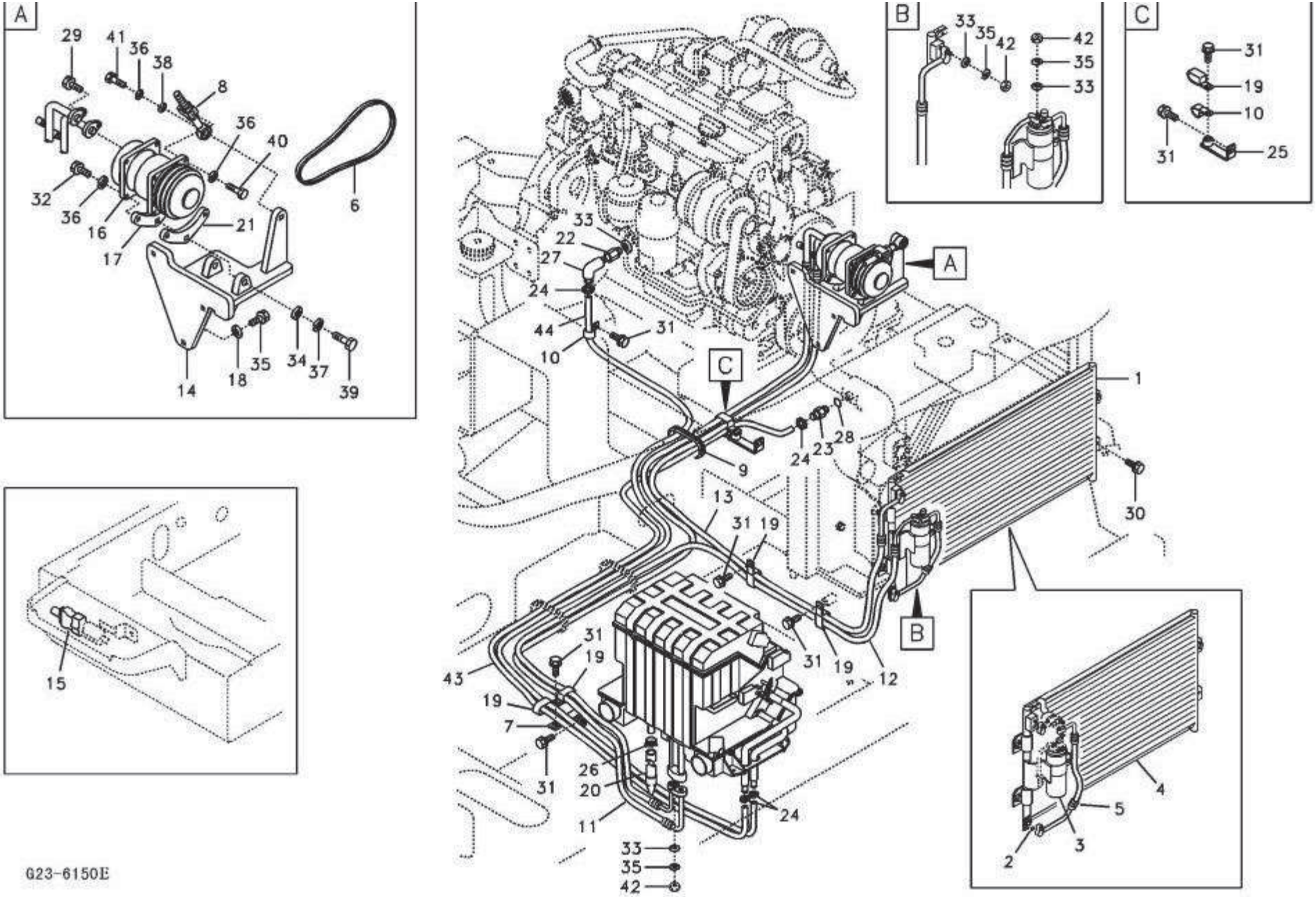
A
29
41
36
38
8
36
40
6
32
36
16
17
21
14
18
35
34
37
39
B
33
35
42
42
35
33
C
31
19
10
31
25
33
22
27
24
44
10
31
A
C
1
24
23
28
9
30
13
31
19
B
31
19
31
19
12
43
19
7
31
26
20
11
24
33
35
42
15
4
5
3
2
G23-6150E

Fig.	Part No.编码.	Quantity件数 1	2	3	PS	KIT	Description 说明	Notes
29	**11210031**	2					Flange screw.....法兰螺丝.....	
30	**11210034**	4					Flange screw.....法兰螺丝.....	
31	**11210036**	7					Flange screw.....法兰螺丝.....	
32	**11210151**	4					Allen Hd Screw .....内六角螺钉.....	
33	**11213772**	1					Gasket.....密封垫.....	
34	**11210059**	2					Washer.....垫圈.....	
35	**11210119**	4					Hexagon screw .....六角螺丝.....	
36	**11210064**	6					Spring washer .....弹簧垫圈.....	
37	**11210065**	2					Spring washer .....弹簧垫圈.....	
38	**11210068**	1					Washer.....垫圈.....	
39	**11210099**	2					Hexagon screw .....六角螺丝.....	
40	**11210123**	1					Hexagon screw .....六角螺丝.....	
41	**11210124**	1					Hexagon screw .....六角螺丝.....	
42	**11210029**	4					Flange nut .....法兰螺母.....	
43	**11213770**	1					Hose.....软管.....	
44	**11213771**	1					Hose.....软管.....	

1	**11213471**	空调管线,冷却和加热器 **Air conditioning line, cooling and heater**	Catalogue id **111201**	Group **811**
2			Illustr. No **G23-6150E**	Section **100**
3				
4			Issue **2638000345**	Page **395**
5				

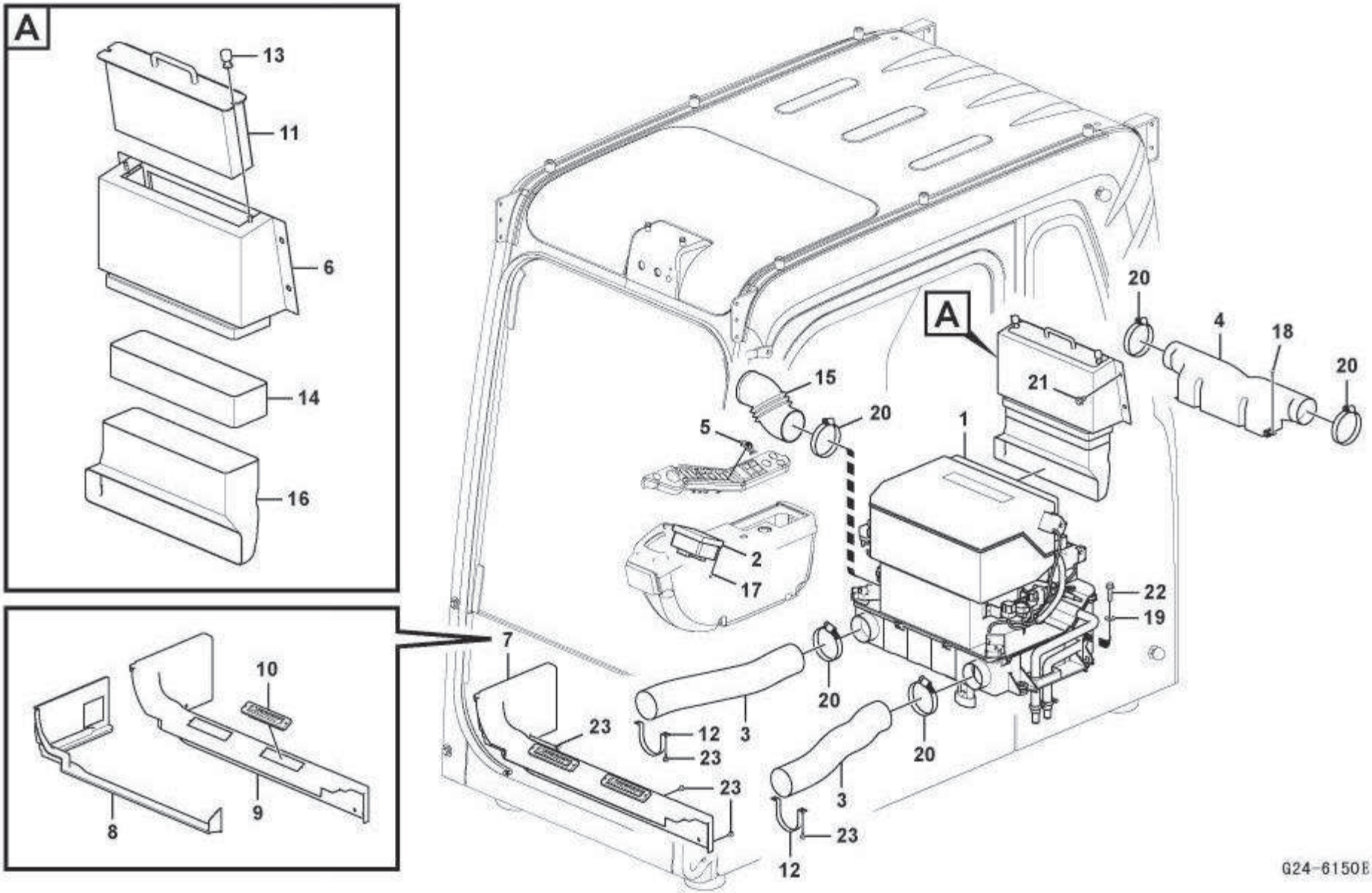
A
13
11
6
14
16
A
20
4
18
20
15
20
21
5
1
2
17
22
19
7
10
23
12
3
20
23
20
23
3
23
12
8
9
G24-6150E

Fig.	Part No.编码.	Quantity件数 1	2	3	PS	KIT	Description 说明	Notes
1	**11211246**	1					Air Cond .....空调.....	
2	**11214504**	1					Control panel.....控制面板.....	
3	**11210266**	2					Hose.....软管.....	
4	**11210267**	1					Duct.....输送管.....	
5	**11210456**	1					Sensor.....传感器.....	
6	**11210276**	1					Case.....箱.....	
7	**11211197**	1					Cover .....罩.....	
8	**11212914**	1					•Defroster duct .....• 除霜器排泄管.....	
9	**11211196**	1					•Duct .....• 导管.....	
10	**11210496**	2					•Grille .....• 格窗.....	
11	**11211156**	1					Filter .....过滤器.....	
12	**11210282**	2					Bracket.....支架.....	
13	**11210283**	2					Knob.....旋钮.....	
14	**11210285**	1					Grommet .....索环.....	
15	**11210287**	1					Hose.....软管.....	
16	**11210277**	1					Duct.....输送管.....	
17	**11211620**	4					Screw .....六角螺钉.....	
18	**11211621**	4					Screw .....螺丝.....	
19	**11211641**	4					Washer.....垫圈.....	
20	**11211644**	5					Clamp.....夹.....	
21	**11210036**	4					Flange screw.....法兰螺丝.....	
22	**11210077**	4					Flange screw.....法兰螺丝.....	
23	**11210074**	8					Flange screw.....法兰螺丝.....	

1	**11213471**	驾驶室内和驾驶室地板导风口 **Air duct in cabin and cabin floor**	Catalogue id **111201**	Group **811**
2			Illustr. No **G24-6150E**	Section **200**
3			Issue **2638000345**	Page **397**
4				
5				

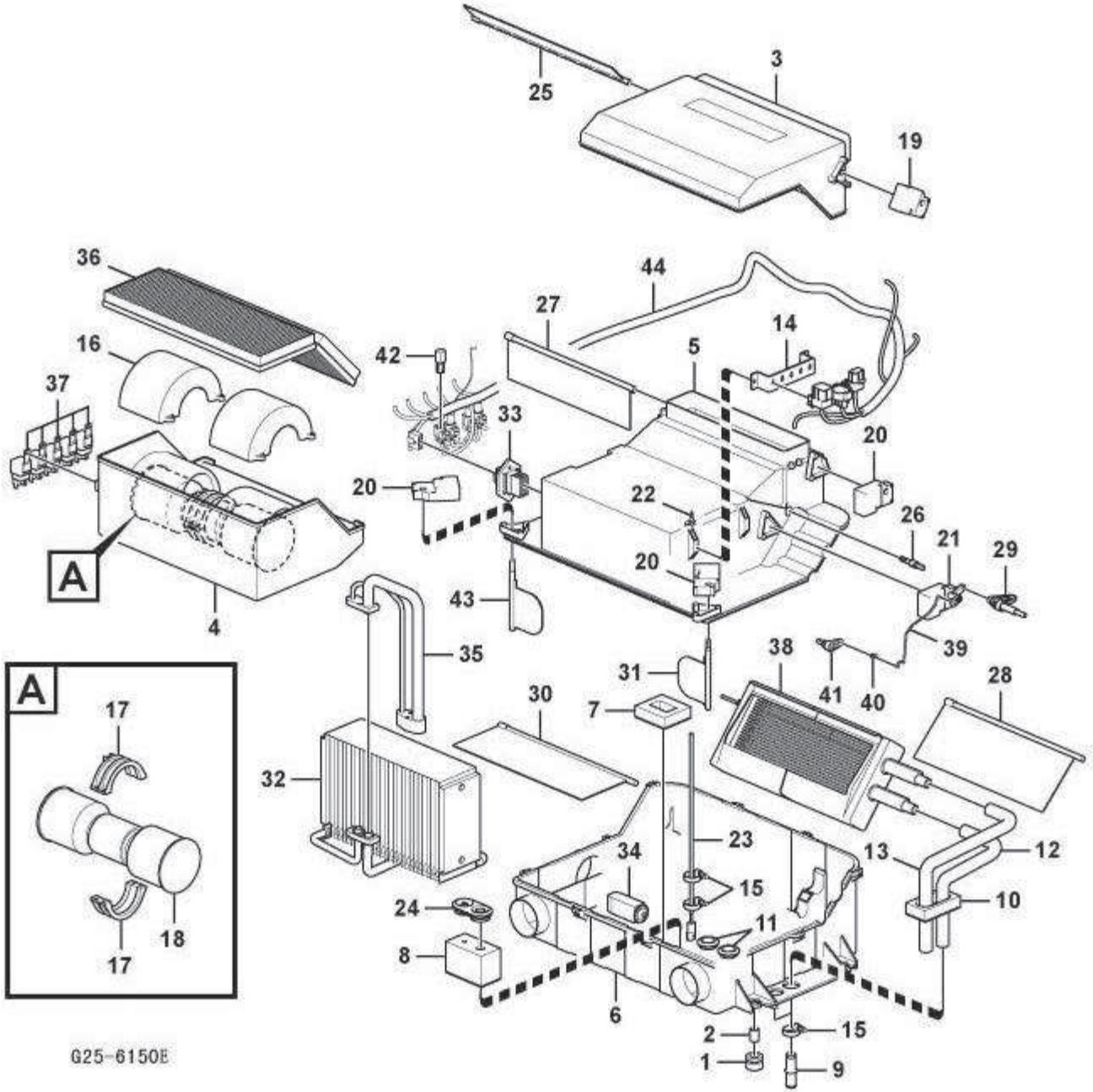
25
3
19
36
16
37
A
4
42
27
44
14
5
33
20
20
22
26
21
29
20
43
35
31
38
41
40
39
28
30
7
32
23
34
13
12
15
10
24
11
8
6
2
15
1
9
A
17
18
17
G25-6150E

Fig.	Part No编码.	Quantity件数 1	2	3	PS	KIT	Description 说明	Notes
	11211246	1					Air Cond ..... 空调.....	
1	**11210466**	4					•Bushing.....• 轴衬.....	
2		4			NS		•Pipe .....• 管.....	
3	**11210369**	1					•Cover .....• 罩.....	
4	**11210368**	1					•Case .....• 箱.....	
5	**11210367**	1					•Case .....• 箱.....	
6	**11212718**	1					•Case .....• 箱.....	
7	**11210393**	1					•Gasket .....• 填料.....	
8	**11210392**	1					•Packing .....• 填充物.....	
9	**11210390**	2					•Connector .....• 接口.....	
10	**11210391**	1					•Gasket .....• 填料.....	
11	**11210387**	2					•Grommet.....• 索环.....	
12	**11210388**	1					•Hose .....• 软管.....	
13	**11210389**	1					•Hose .....• 软管.....	
14		2			NS		•Support .....• 支座.....	
15	**11210413**	4					•Clamp .....• 夹.....	
16		2			NS		•Case .....• 壳体.....	
17	**11210383**	2					•Guide .....• 导轨.....	
18	**11210457**	1					•Blower motor .....• 鼓风机马达.....	
19	**11210382**	1					•Actuator .....• 致动器.....	
20	**11210380**	3					•Actuator .....• 致动器.....	
21		1					•Actuator .....• 致动器.....	
	11210543	1					••Actuator .....•• 致动器.....	
	11210544	1					••Lever .....•• 操纵杆.....	
22		1			NS		•Clip .....• 卡簧.....	
23	**11210379**	1					•Sensor .....• 传感器.....	
24	**11210378**	1					•Grommet.....• 索环.....	
25	**11210377**	1					•Door .....• 车门.....	
26	**11210376**	1					•Lever.....• 操纵杆.....	
27	**11210375**	1					•Door .....• 车门.....	

1	**11213471**	空调装置冷却和加热器 **Air conditioning unit, cooling and heater**	Catalogue id **111201**	Group **811**
2			Illustr. No **G25-6150E**	Section **300**
3				
4			Issue **2638000345**	Page **399**
5				

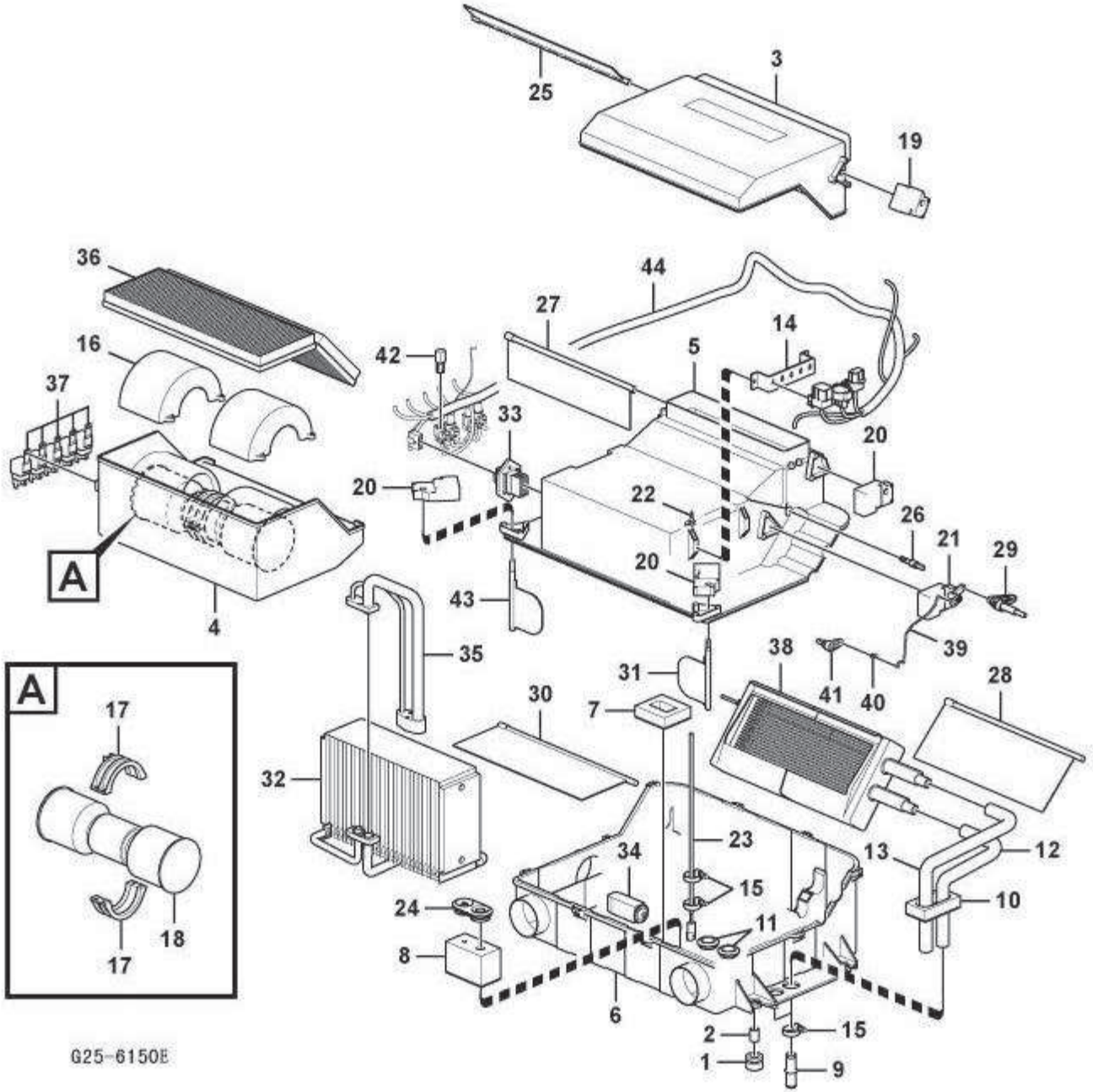
25
3
19
36
16
37
A
4
42
27
44
14
5
33
20
20
22
26
21
29
20
43
35
31
38
41
40
39
28
30
7
32
23
34
13
12
15
10
24
11
8
6
2
15
1
9
A
17
18
17
G25-6150E

Fig.	Part No.编码.	Quantity件数 1	2	3	PS	KIT	Description 说明	Notes
28	**11210372**	1					•Door .....• 车门.....	
29	**11210373**	1					•Lever.....• 操纵杆.....	
30	**11210394**	1					•Door .....• 车门.....	
31	**11210395**	1					•Door .....• 车门.....	
32	**11210941**	1					•Air Cond Unit .....• 蒸发器.....	
33	**11210455**	1					•Resistor .....• 电阻器.....	
34	**11210370**	1					•Expansion valve .....• 扩张阀.....	
35	**11210940**	1					•Pipe .....• 管.....	
36	**11211170**	1					•Filter.....• 过滤器.....	
37	**11210610**	5					•Relay .....• 继电器.....	
38	**11210698**	1					•Radiator .....• 散热器.....	
	11210697	1					••Radiator .....•• 散热器.....	
39	**11210384**	1					•Rod .....• 棒.....	
40	**11210385**	1					•Rod .....• 棒.....	
41	**11210374**	1					•Lever.....• 操纵杆.....	
42	**11210608**	1					•Diode .....• 二极管.....	
43	**11210371**	1					•Door .....• 车门.....	
44	**11210386**	1					•Cable harness .....• 导线系统.....	

1	**11213471**	空调装置冷却和加热器 **Air conditioning unit, cooling and heater**	Catalogue id **111201**	Group **811**
2			Illustr. No **G25-6150E**	Section **300**
3				
4			Issue **2638000345**	Page **401**
5				

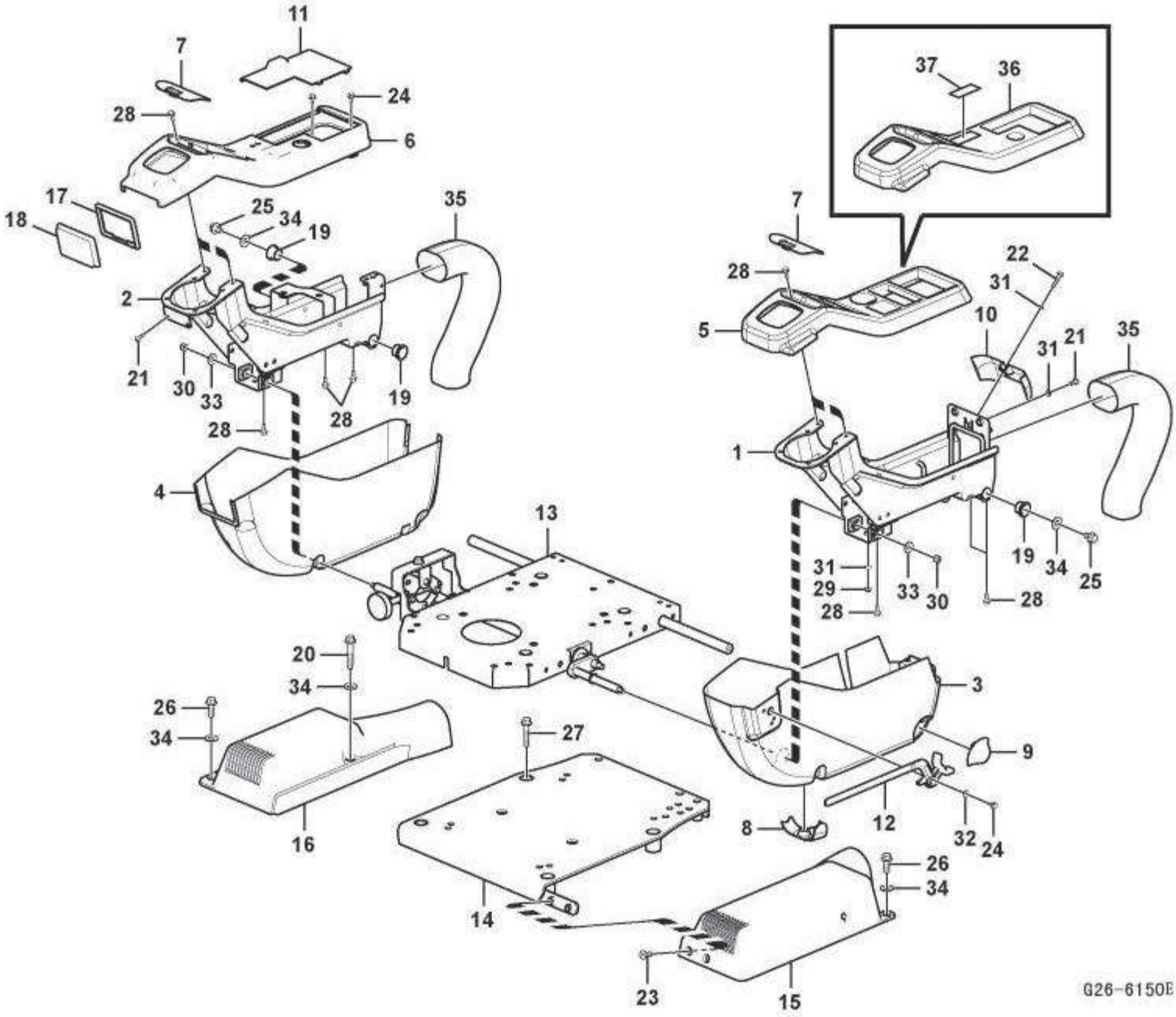
11
7
24
28
6
17
18
25
34
19
35
2
21
30
33
28
19
28
4
13
20
34
26
34
16
27
14
23
15
26
34
37
36
7
28
22
31
10
31
21
35
5
1
19
34
25
31
29
28
33
30
28
3
9
8
12
32
24
G26-6150E

Fig.	Part No编码.	Quantity件数 1	2	3	P S	K I T	Description 说明	Notes
1	**11214476**	1					Support .....支座.....	
2	**11210885**	1					Support .....支撑.....	
3	**11211174**	1					Cover .....罩盖.....	
4	**11211175**	1					Cover .....罩.....	
5	**11212911**	1					Cover .....罩盖.....	
6	**11212913**	1					Cover .....罩.....	
7	**11212906**	2					Clip.....夹.....	
8	**11211177**	1					Clip.....夹.....	
9	**11211178**	1					Clip.....夹.....	
10	**11211179**	1					Clip.....夹.....	
11	**11212907**	1					Cover .....盖.....	
12	**11210341**	1					Lever .....操纵杆.....	
13	**11210342**	1					Support .....支撑.....	
14	**11210344**	1					Support .....支撑.....	
15	**11211181**	1					Cover .....罩.....	
16	**11211182**	1					Cover .....罩.....	
17	**11210345**	1					Seal.....密封.....	
18	**11211218**	1					Ashtray.....烟灰盘.....	
19	**11210546**	4					Bushing .....轴衬.....	
20	**11210079**	1					Flange screw.....法兰螺丝.....	
21	**11210088**	4					Six point socket scre ..六点螺口插座.....	
22	**11210090**	1					Six point socket scre ..六点螺口插座.....	
23	**11210096**	2					Screw .....螺丝.....	
24	**11210074**	3					Flange screw.....法兰螺丝.....	
25	**11210036**	2					Flange screw.....法兰螺丝.....	
26	**11210037**	3					Flange screw.....法兰螺丝.....	
27	**11210078**	4					Flange screw.....法兰螺丝.....	
28	**11210038**	10					Flange screw.....法兰螺丝.....	
29	**11211052**	1					Lock nut .....锁紧螺母.....	
30	**11211053**	2					Nut .....螺母.....	

1	**11212924**	仪表盘控制板 **Instrument panel, control panel**	Catalogue id **111201** / Group **812**
2			
3			Illustr. No **G26-6150E** / Section **100**
4			
5			Issue **2638000345** / Page **403**

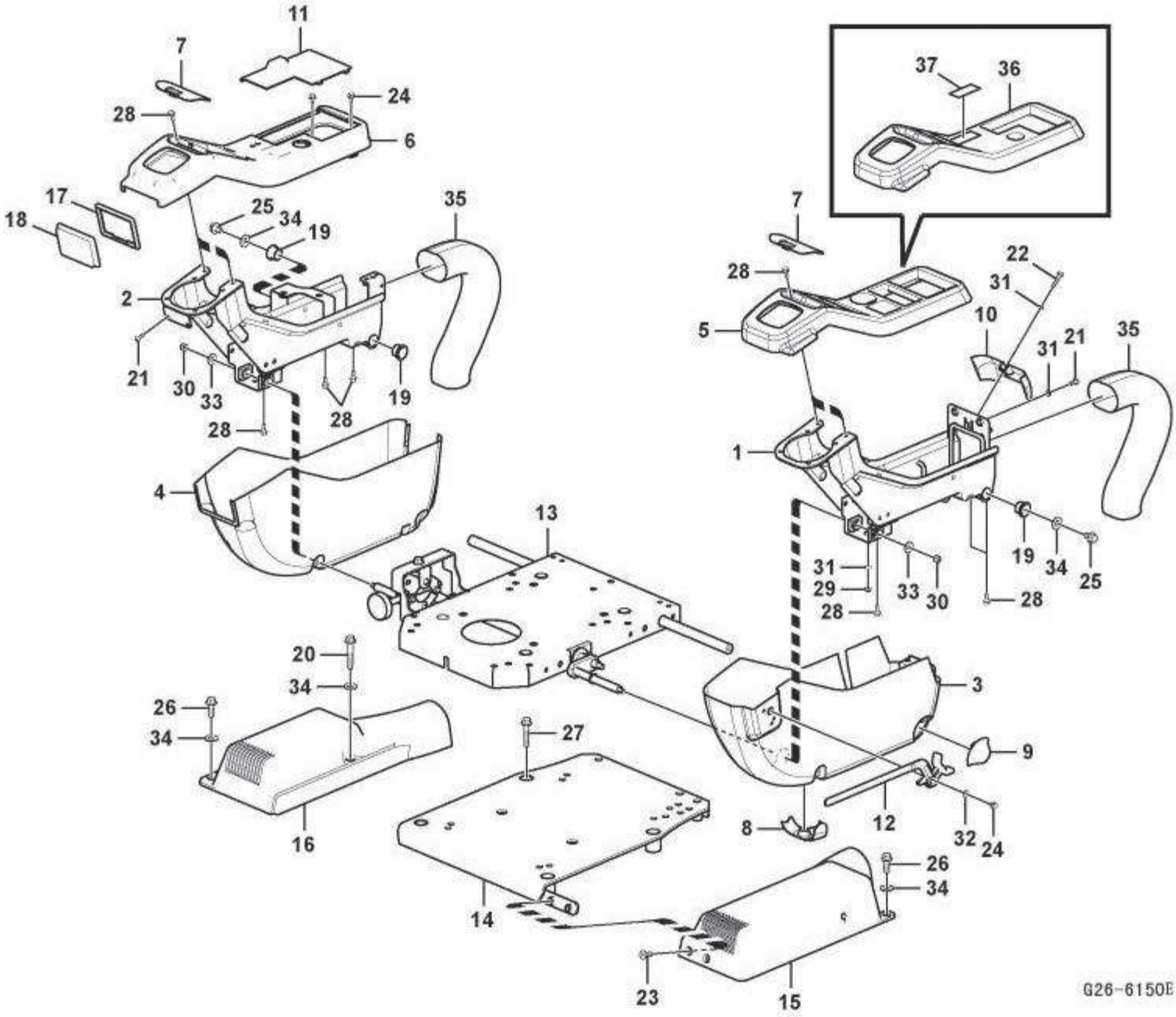
11
7
24
28
6
17
18
25
34
19
35
2
21
30
33
28
19
28
4
13
20
34
26
34
16
27
14
23
15
26
34
37
36
7
28
22
31
10
31
21
35
5
1
19
34
25
31
29
28
33
30
28
3
9
8
12
32
24
G26-6150E

Fig.	Part No.编码.	Quantity件数 1	2	3	PS	KIT	Description 说明	Notes
31	**11210057**	4					Washer.....垫圈.....	
32	**11211640**	1					Washer.....垫圈.....	
33	**11211043**	2					Washer.....垫圈.....	
34	**11211641**	6					Washer.....垫圈.....	
35	**11210474**	2					Cover .....罩.....	

1	**11212924**	仪表盘控制板 **Instrument panel, control panel**	Catalogue id **111201**	Group **812**
2			Illustr. No **G26-6150E**	Section **100**
3				
4			Issue **2638000345**	Page **405**
5				

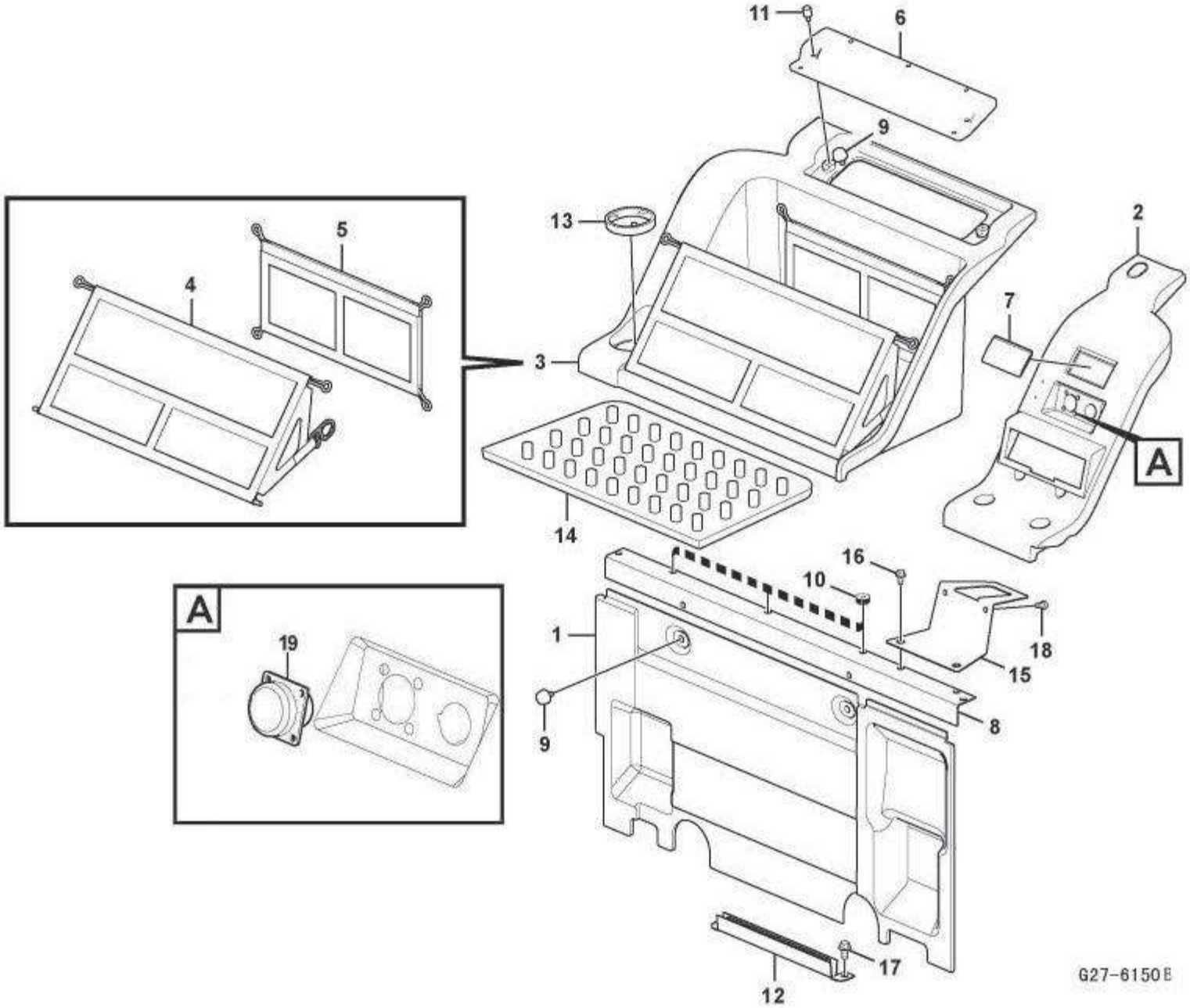
11
6
9
13
2
5
4
7
3
A
14
16
10
1
18
15
A
19
9
8
17
12
G27-6150E

Fig.	Part No.编码.	Quantity件数 1	2	3	PS	KIT	Description 说明	Notes
1	**11211171**	1					Cover .....罩.....	
2	**11211236**	1					Cover .....罩.....	
3	**11211237**	1					Cover .....罩.....	
4	**11213774**	1					•Net .....• 网.....	
5	**11210650**	1					•Net .....• 网.....	
6	**11211173**	1					Cover .....罩.....	
7	**11211172**	1					Cover .....罩.....	
8	**11210334**	1					Support .....支撑.....	
9	**11210335**	4					Knob.....旋钮.....	
10	**11210336**	3					Knob.....旋钮.....	
11	**11210337**	2					Knob.....旋钮.....	
12	**11210338**	1					Channel.....滑槽.....	
13	**11210339**	1					Cup holder .....杯架.....	
14	**11212910**	1					Floor mat.....地板垫.....	
15	**11210545**	1					Support .....支座.....	
16	**11210033**	5					Flange screw.....法兰螺丝.....	
17	**11210034**	2					Flange screw.....法兰螺丝.....	
18	**11210117**	2					Hexagon screw .....六角螺丝.....	

1	**11212924**	仪表盘,收音机控制板 **Instrument panel, radio panel**	Catalogue id **111201**	Group **812**
2			Illustr. No **G27-6150E**	Section **200**
3				
4			Issue **2638000345**	Page **407**
5				

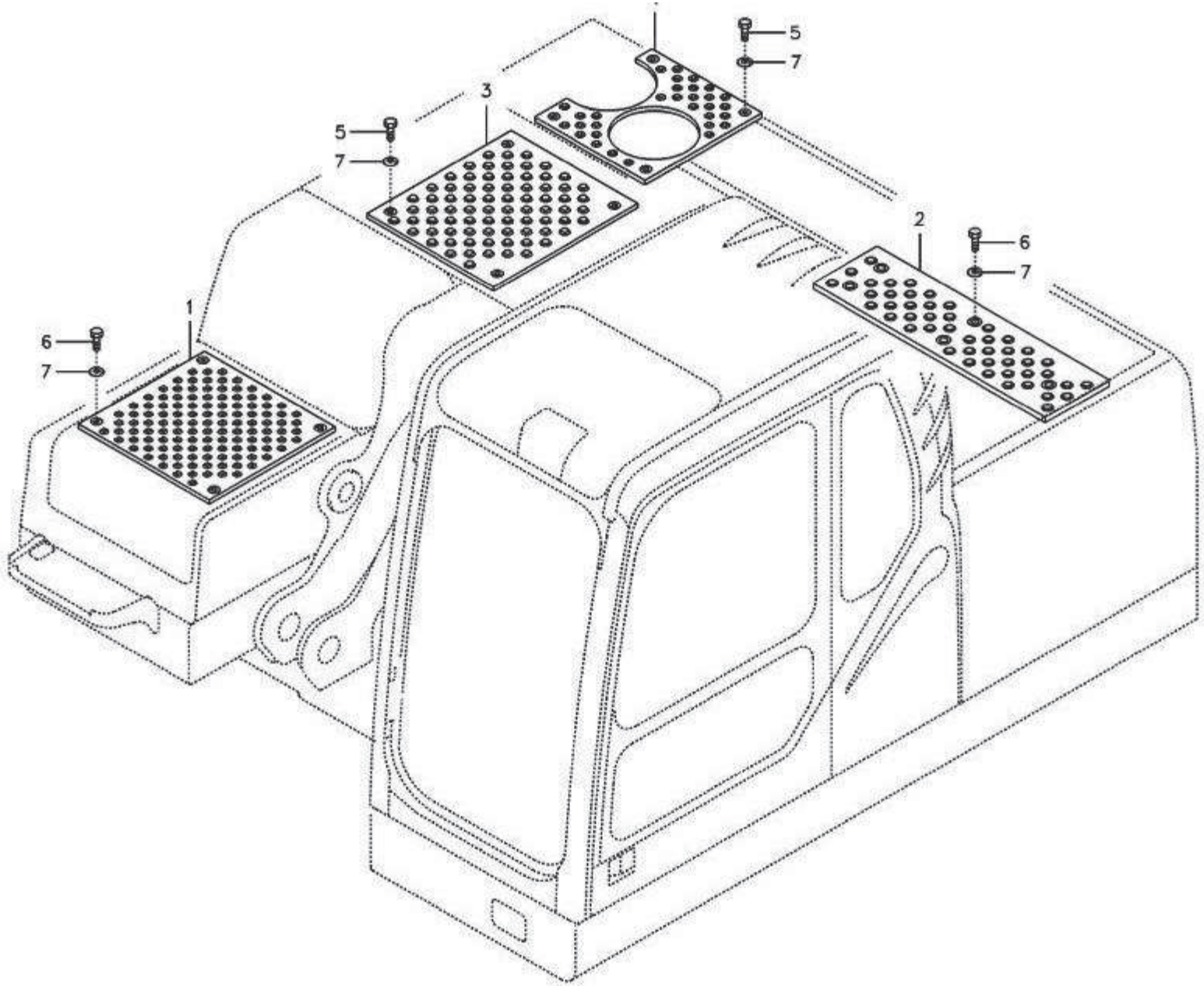

G28-6150E

Fig.	Part No.编码.	Quantity件数 1	2	3	PS	KIT	Description 说明	Notes
1	**11213775**	1					Slip protection .....防滑板.....	
2	**11213778**	1					Slip protection .....防滑板.....	
3	**11213777**	1					Slip protection .....防滑板.....	
4	**11213776**	1					Slip protection .....防滑板.....	
5	**11210188**	8					Hexagon screw .....六角螺丝.....	
6	**11210098**	9					Hexagon screw .....六角螺丝.....	
7	**11210198**	17					Washer.....垫圈.....	

1	**11212924**	防滑板 **Anti slip**	Catalogue id **111201**	Group **813**
2			Illustr. No **G28-6150E**	Section **100**
3			Issue **2638000345**	Page **409**
4				
5				

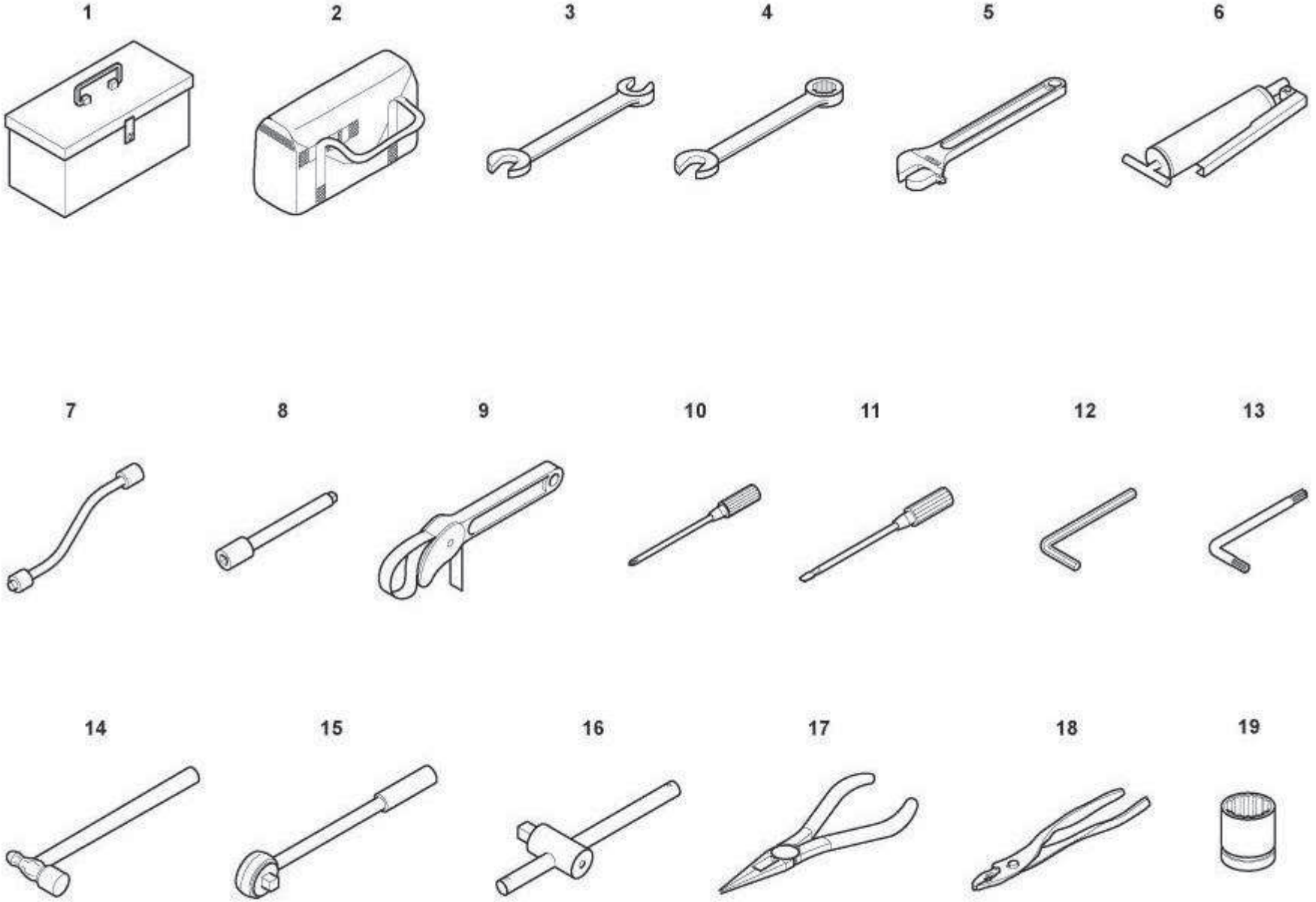
1
2
3
4
5
6
7
8
9
10
11
12
13
14
15
16
17
18
19
G29-6150E

Fig.	Part No编码.	Quantity件数 1	2	3	PS	KIT	Description 说明	Notes
	11213779	1					Tool	Full scale
1	**11211311**	1					•Tool box .....• 工具盒.....	
2					NS		•Tool Bag .....• 工具包.....	
3		1			NS		•Wrench .....• 扳手.....	10mm x 12mm
		1			NS		•Wrench .....• 扳手.....	13mm x 17mm
		1			NS		•Wrench .....• 扳手.....	19mm x 22mm
		1			NS		•Wrench .....• 扳手.....	24mm x 27mm
		1			NS		•Wrench .....• 扳手.....	30mm x 32mm
		1			NS		•Wrench .....• 扳手.....	36mm x 41mm
		1			NS		•Wrench .....• 扳手.....	12mm x 14mm
4		1			NS		•Wrench .....• 扳手.....	12mm
		1			NS		•Wrench .....• 扳手.....	16mm
		1			NS		•Wrench .....• 扳手.....	18mm
		1			NS		•Wrench .....• 扳手.....	21mm
5		1			NS		•Wrench .....• 扳手.....	200mm
6	**11211092**	1					•Grease gun .....• 注油枪.....	400cc
7		1			NS		•Hose .....• 软管.....	12”
8		1			NS		•Bar .....• 杆.....	5”
9	**11211118**	1					•Wrench .....• 扳手.....	750mm
10		1			NS		•Screwdriver.....• 螺丝起子.....	6 x 100 Plus
11		1			NS		•Screwdriver.....• 螺丝起子.....	6 x 100 Minus
12		1			NS		•Wrench .....• 扳手.....	4mm
		1			NS		•Wrench .....• 扳手.....	6mm
		1			NS		•Wrench .....• 扳手.....	8mm
		1			NS		•Wrench .....• 扳手.....	10mm
		1			NS		•Wrench .....• 扳手.....	12mm
		1			NS		•Wrench .....• 扳手.....	17mm
13		1			NS		•Wrench .....• 扳手.....	T20
		1			NS		•Wrench .....• 扳手.....	T25

1	**11213476**	工具 **Tools**	Catalogue id **111201** / Group **814**
2			
3			Illustr. No **G29-6150E** / Section **100**
4			
5			Issue **2638000345** / Page **411**

1

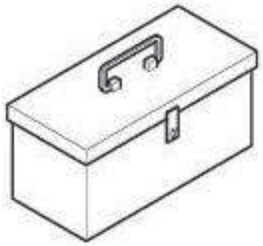

2

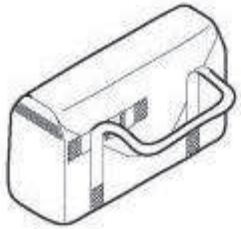

3

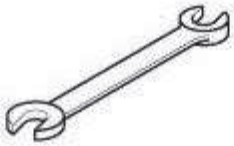

4

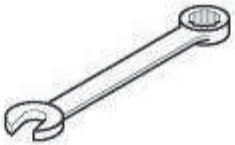

5

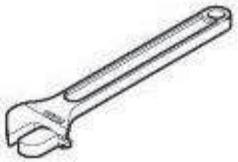

6

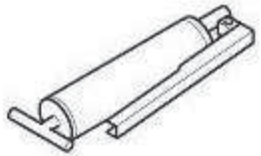

7



8



9

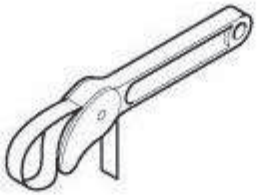

10



11



12



13



14

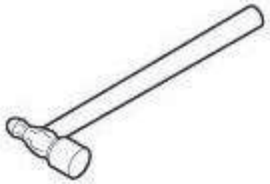

15

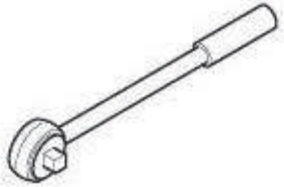

16

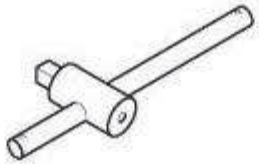

17

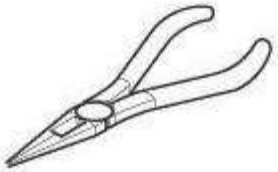

18



19



G29-6150E

Fig.	Part No.编码.	Quantity件数 1	2	3	PS	KIT	Description 说明	Notes
		1			NS		•Wrench .....• 扳手.....	T30
		1			NS		•Wrench .....• 扳手.....	T40
14		1			NS		•Hammer .....• 锤.....	5”
15		1			NS		•Ratchet Handle .....• 棘轮手柄.....	10”
16		1			NS		•Handle .....• 把手.....	20”
17		1			NS		•Pliers.....• 钳子.....	6”
18		1			NS		•Pliers.....• 钳子.....	6”
19		1			NS		•Socket.....• 套筒.....	8mm, 1/2 SQ
		1			NS		•Socket.....• 套筒.....	10mm, 1/2 SQ
		1			NS		•Socket.....• 套筒.....	12mm, 1/2 SQ
		1			NS		•Socket.....• 套筒.....	13mm, 1/2 SQ
		1			NS		•Socket.....• 套筒.....	14mm, 1/2 SQ
		1			NS		•Socket.....• 套筒.....	16mm, 1/2 SQ
		1			NS		•Socket.....• 套筒.....	17mm, 1/2 SQ
		1			NS		•Socket.....• 套筒.....	18mm, 1/2 SQ
		1			NS		•Socket.....• 套筒.....	19mm, 1/2 SQ
		1			NS		•Socket.....• 套筒.....	21mm, 1/2 SQ
		1			NS		•Socket.....• 套筒.....	22mm, 1/2 SQ
		1			NS		•Socket.....• 套筒.....	24mm, 1/2 SQ
		1			NS		•Socket.....• 套筒.....	26mm, 1/2 SQ
		1			NS		•Socket.....• 套筒.....	30mm, 3/4 SQ
		1			NS		•Socket.....• 套筒.....	32mm, 3/4 SQ
		1			NS		•Socket.....• 套筒.....	36mm, 3/4 SQ

1	11213476	工具 **Tools**	Catalogue id **111201**	Group **814**
2			Illustr. No **G29-6150E**	Section **100**
3				
4			Issue **2638000345**	Page **413**
5				

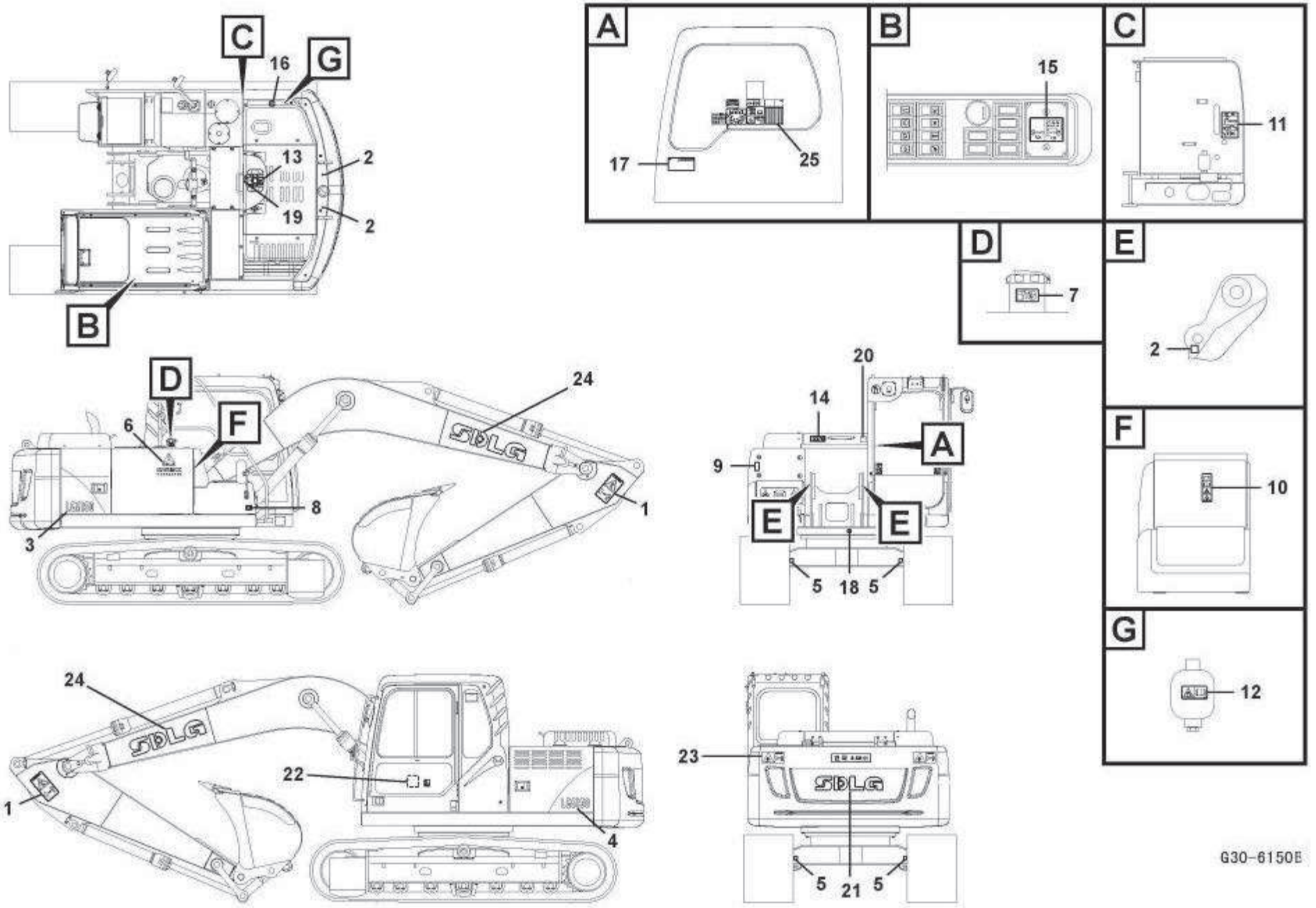
A
B
C
D
E
F
G
16
13
19
2
2
17
25
15
11
7
2
10
12
24
6
8
3
1
20
14
9
18
5
5
22
4
23
21

G30-6150E

Fig.	Part No.编码.	Quantity件数 1	2	3	PS	KIT	Description 说明	Notes
	11213780	1					Decal.....印花.....	
1	**11210942**	2					•Decal .....• 印花.....	
2	**11210229**	4			SS		•Decal .....• 印花.....	
3	**26360002111**	1					•Decal .....• 印花.....	RH
4	**26360002121**	1					•Decal .....• 标签.....	LH
5	**11210231**	4					•Decal .....• 印花.....	
6	**26360001541**	1					•Decal .....• 印花.....	
7	**11210952**	1					•Decal .....• 印花.....	
8	**11210247**	1					•Sign .....• 信号牌.....	
9	**11210949**	1					•Decal .....• 印花.....	
10	**11210916**	1					•Decal .....• 印花.....	
11	**11210399**	1					•Decal .....• 印花.....	
12	**11210956**	1					•Decal .....• 印花.....	
13	**11210569**	1					•Decal .....• 印花.....	
14	**11210953**	1					•Decal .....• 印花.....	
15	**11213781**	1					•Decal .....• 标签.....	
16	**11210813**	1					•Decal .....• 印花.....	
17	**11213782**	1					•Decal .....• 印花.....	
18	**11210584**	1					•Decal .....• 印花.....	
19	**11211153**	1					•Decal .....• 印花.....	
20	**11214342**	1					•Decal .....• 印花.....	
21	**26360002001**	1					•Decal .....• 印花.....	
22	**11213784**	1					Decal.....标签.....	
23	**11214337**	2					Decal.....标签.....	
24	**28310002271**	2					Decal.....标签.....	
25	**11213783**	1					Decal.....标签.....	

1	**11213479**	标签 **Decals**	Catalogue id **111201**	Group **815**
2			Illustr. No **G30-6150E**	Section **100**
3				
4			Issue **2638000345**	Page **415**
5				

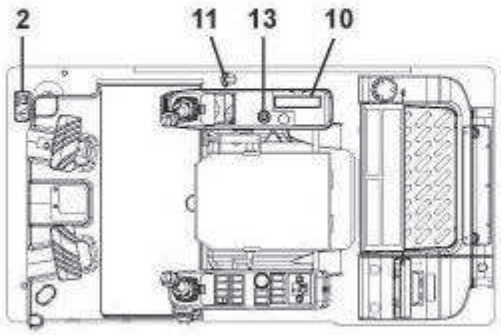

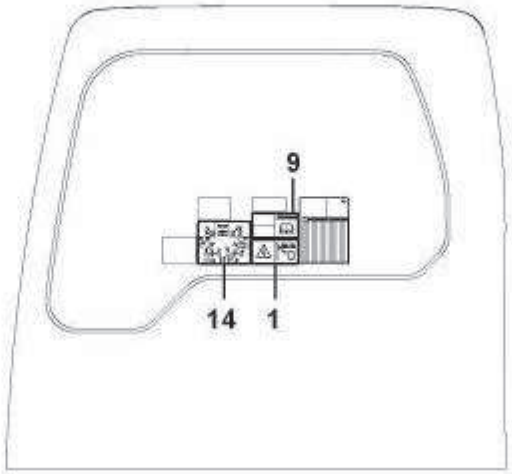

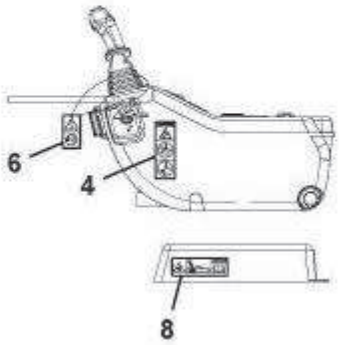

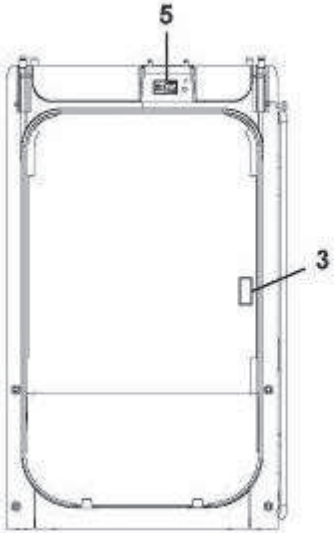

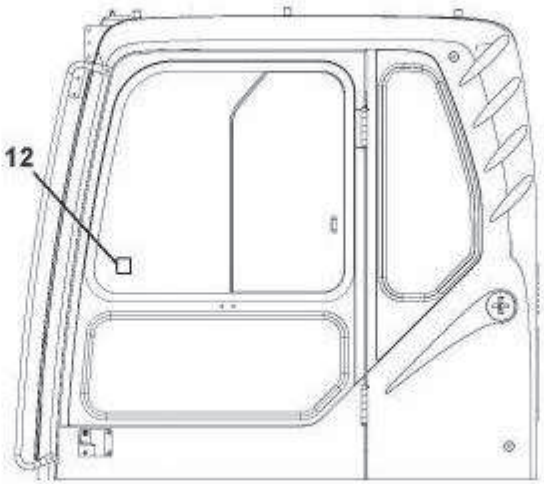

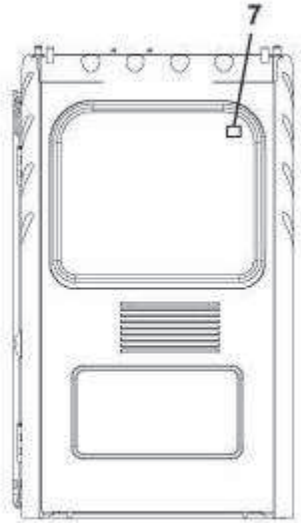

G31-6150E

Fig.	Part No.编码.	Quantity 件数 1	2	3	PS	KIT	Description 说明	Notes
	11214346	1					Decal.....印花.....	
1	**11214331**	1					•Decal .....• 印花.....	
2	**11214334**	1					•Decal .....• 印花.....	
3	**11214336**	1					•Decal .....• 印花.....	
4	**11214335**	1					•Decal .....• 印花.....	
5	**11214340**	1					•Decal .....• 印花.....	
6	**11214339**	1					•Decal .....• 印花.....	
7	**11210239**	1					•Decal .....• 印花.....	
8	**11210948**	1					•Decal .....• 印花.....	
9	**11214333**	1					•Decal .....• 印花.....	
10	**11213786**	1					•Decal .....• 印花.....	
11	**11210264**	1					•Decal .....• 印花.....	
12	**11210675**	1					•Decal .....• 印花.....	
13	**11210744**	1					•Decal .....• 印花.....	
14	**11210798**	1					•Decal .....• 印花.....	

1	**11213484**	贴纸, 驾驶室 **Decals, cab**	Catalogue id **20490**	Group **815**
2				
3			Illustr. No **G31-6150E**	Section **200**
4				
5			Issue **2638000345**	Page **417**



www.sdlg.cn

GROUP		Section	Page
901	Hydraulic oil tank	100	423
901	Turning joint line, control valve to turning joint	200	427
901	Turning joint line, turning joint to travel motor	300	429
901	Hydraulic system, control valve to boom and swing	400	431
901	Hydraulic system, hydraulic tank to hydraulic oil cooler	500	435
901	Hydraulic system, hydraulic tank to hydraulic pump	600	437
902	Control valve with fitting parts.	100	439
902	Main control valve, relife valve and boom holding	200	441
902	Main control valve, boom and bucket and travel Rh	300	447
902	Main control valve, swing and option and dipper arm and travel Lh	400	451
902	Main control valve, relief valve and dipper arm holding	500	457
903	Pump installation	100	461
903	Hydraulic pump	200	463
903	Regulator, hydraulic pump	300	467
903	Hydraulic gear pump	400	473
904	Servo system, control valve to remote control valve	100	475
904	Servo system, control valve to remote control valve pedal	200	477
904	Servo system, control valve to solenoid valve	300	479
904	Servo system, control valve piping.	400	481
904	Servo system, pump piping and filter mount.	500	485
904	Remote control valve pedal with fitting parts	600	489
904	Remote control valve pedal, travel motor	700	493
904	Servo system, remote control valve	800	495
905	Working hydraulic, dipper arm cylinder on boom.	100	499
905	Working hydraulic, boom cylinder	200	503
905	Working hydraulic, bucket cylinder on dipper arm	300	505
906	Bucket	100	507
906	Links to bucket	200	509
907	Links to boom	100	511
907	Boom and grease piping	200	513
907	Boom cylinder	300	515
908	Links to dipper arm	100	517
908	Dipper arm and grease piping with piping seat	200	519
908	Dipper arm cylinder	300	521
909	Links to connecting rod	100	525
909	Bucket cylinder	200	527

目录索引

Catalogue id 101011 | Group 9 | Issue 2638000291 | Page 420

部类		部分	页
901	液压油箱	100	423
901	控制阀到回转接头总成的管线	200	427
901	回转接头总成到行走马达的管线	300	429
901	液压系统，控制阀到大臂与回转系统	400	431
901	液压系统，液压油箱到液压油冷却器	500	435
901	液压系统，液压油箱到液压泵	600	437
902	带安装零件的控制阀	100	439
902	主控阀、释放阀和大臂支撑阀	200	441
902	主控阀，大臂和铲斗及右行	300	447
902	主控阀，回转和选择及小臂和左行	400	451
902	主控阀，减压阀和小臂支撑	500	457
903	油泵安装	100	461
903	液压泵	200	463
903	液压泵稳压器	300	467
903	液压齿轮泵	400	473
904	伺服系统，控制阀到遥控阀	100	475
904	伺服系统，控制阀到遥控阀踏板	200	477
904	伺服系统，控制阀到电磁阀	300	479
904	伺服系统，控制阀管线	400	483
904	伺服系统，泵管线和过滤器安装件	500	487
904	带安装零件的遥控阀踏板	600	491
904	行走马达遥控阀踏板	700	493
904	伺服系统，遥控阀	800	497
905	工作液压，大臂上的小臂油缸	100	499
905	工作液压，大臂油缸	200	503
905	工作液压，小臂上的铲斗油缸	300	505
906	铲斗	100	507
906	到铲斗的连接	200	509
907	大臂连杆	100	511
907	大臂与润滑脂配管	200	513
907	大臂油缸	300	515
908	小臂连杆	100	517
908	小臂和带配管座的润滑脂配管	200	519
908	小臂油缸	300	521
909	活塞杆连杆	100	525
909	铲斗油缸	200	527



www.sdlg.cn

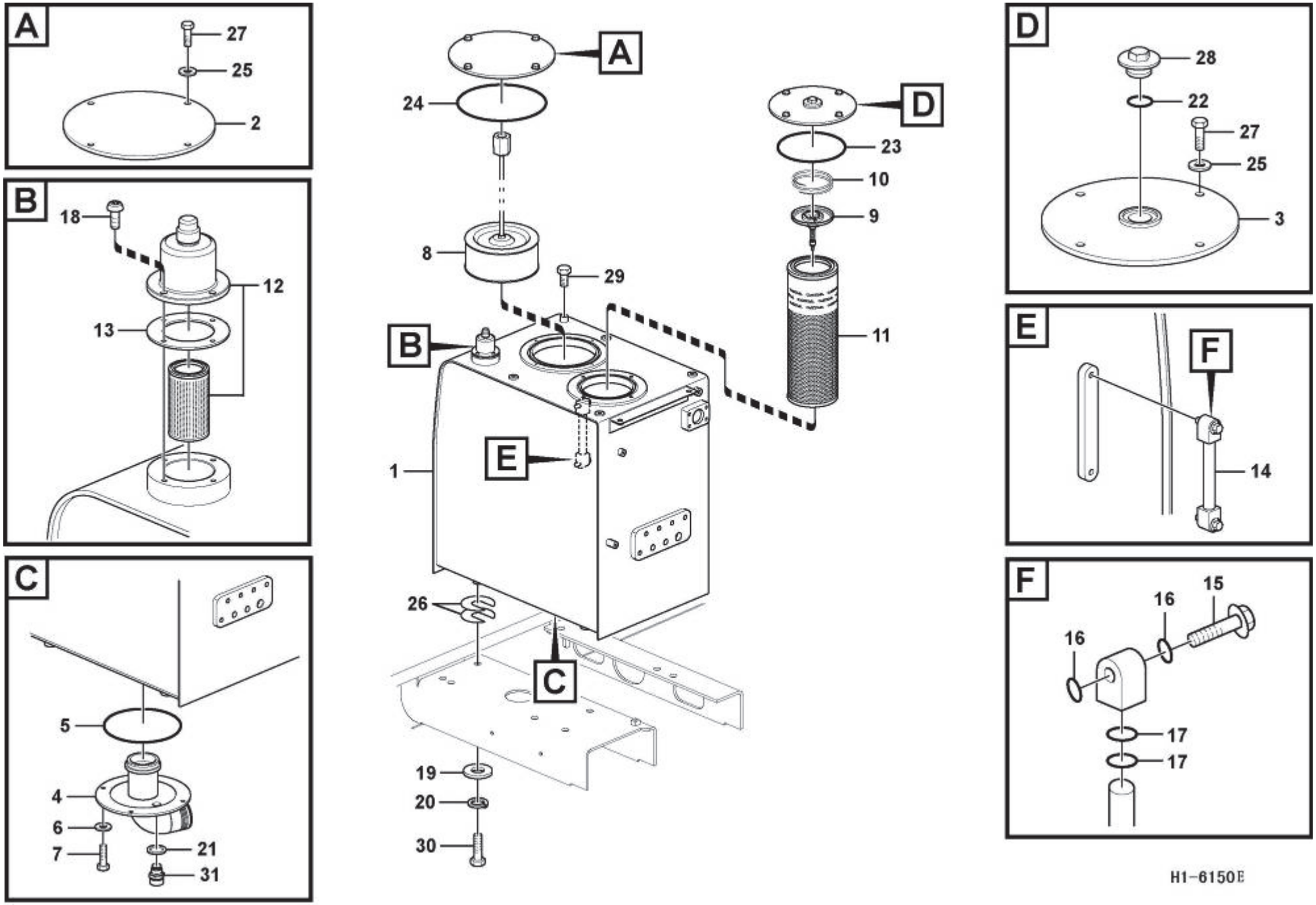
A
27
25
2
B
18
12
13
C
5
4
6
7
21
31
A
24
8
29
B
1
E
26
C
19
20
30
D
23
10
9
11
D
28
22
27
25
3
E
F
14
F
15
16
16
17
17

H1-6150E

Fig.	Part No编码.	Quantity件数 1	2	3	PS	KIT	Description 说明	Notes
1	**11212917**	1					Hydraulic tank.....液压油箱.....	
2	**11212918**	1					•Cover .....• 盖板.....	
3	**11210687**	1					•Cover .....• 盖板.....	
4	**11212919**	1					•Cover .....• 盖板.....	
5	**11210070**	1					•O-ring.....•o 型圈.....	
6	**11210197**	4					•Washer .....• 垫圈.....	
7	**11210123**	4					•Hexagon screw .....• 六角螺丝.....	
8	**11211244**	1					Strainer .....滤网.....	
	11211325	1					•Strainer .....• 滤网.....	
9	**11210663**	1					Valve .....阀.....	
10	**11210664**	1					Spring.....弹簧.....	
11	**11211189**	1					Element.....滤芯.....	
12	**11211280**	1					Venting.....通风.....	
	11210987	1					•Filter.....• 过滤器.....	
13	**11210558**	1					•Seal .....• 密封.....	
14	**11210686**	1					Gauge .....计量器.....	
15	**11210495**	2					•Bolt .....• 螺栓.....	
16	**11210132**	4					•O-ring.....•o 型圈.....	
17	**11210166**	4					•O-ring.....•o 型圈.....	
18	**11210088**	4					Six point socket scre..六点螺口插座.....	
19	**11210200**	4					Washer.....垫圈.....	
20	**11211638**	4					Spring Washer .....弹簧垫圈.....	
21	**11210052**	1					Gasket.....密封垫.....	
22	**11210176**	1					O-ring .....o 型圈.....	
23	**11210069**	1					O-ring .....o 型圈.....	
24	**11210070**	1					O-ring .....o 型圈.....	
25	**11210197**	8					Washer.....垫圈.....	
26	**11211124**	5					Shim.....垫片.....	
27	**11210123**	8					Hexagon screw .....六角螺丝.....	
28	**11212921**	1					Plug.....堵头.....	

1	**11212924**	液压油箱 **Hydraulic oil tank**	Catalogue id **111201**	Group **901**
2				
3			Illustr. No **H1-6150E**	Section **100**
4				
5			Issue **2638000345**	Page **423**

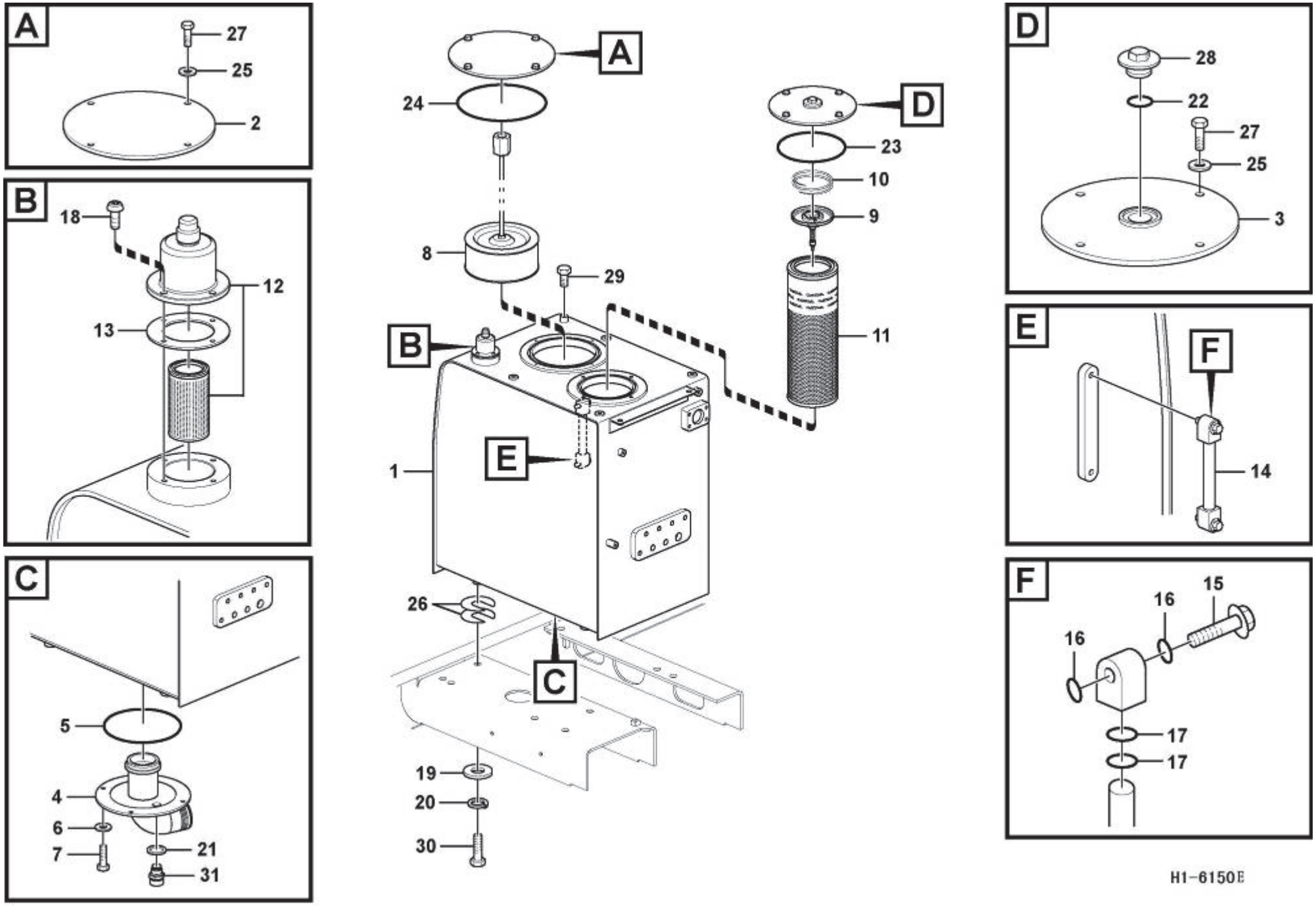
A
27
25
2
B
18
12
13
C
5
4
6
7
21
31
A
24
8
29
B
E
1
26
C
19
20
30
D
23
10
9
11
D
28
22
27
25
3
E
F
14
F
16
15
16
17
17
H1-6150E

Fig.	Part No.编码.	Quantity件数 1	2	3	PS	KIT	Description 说明	Notes
29	**11210188**	1					Bolt.....螺栓.....	
30	**11210195**	4					Bolt.....螺栓.....	
31	**11210523**	1					Valve.....阀.....	

1	**11212924**	液压油箱 **Hydraulic oil tank**	Catalogue id **111201**	Group **901**
2				
3			Illustr. No **H1-6150E**	Section **100**
4				
5			Issue **2638000345**	Page **425**

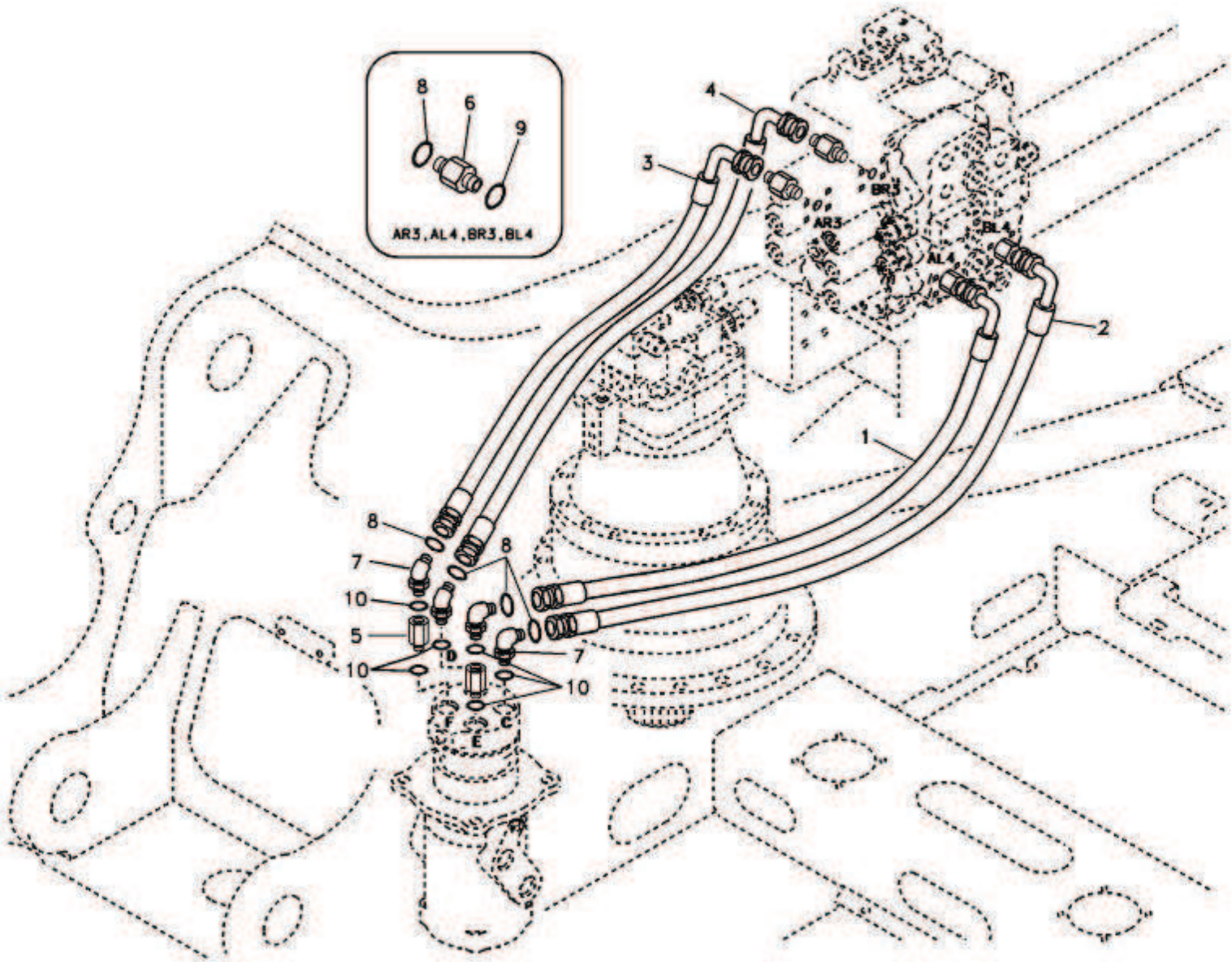

H2-6150E

Fig.	Part No编码.	Quantity件数 1	2	3	PS	KIT	Description 说明	Notes
1	**11212925**	1					Hose_assy .....软管 _ 总成.....	
2	**11212926**	1					Hose_assy .....软管 _ 总成.....	
3	**11212927**	1					Hose.....软管.....	
4	**11212928**	1					Hose.....软管.....	
5	**11212929**	2					Connector .....接头.....	
6	**11212930**	4					Connector .....接头.....	
7	**11211709**	4					Elbow .....弯管接头.....	
8	**11210113**	8					O-ring .....O 型圈.....	
9	**11210141**	4					O-ring .....O 型圈.....	
10	**11210144**	6					O-ring .....O 型圈.....	

1	**11212924**	控制阀到回转接头总成的管线 **Turning joint line, control valve to turning joint**	Catalogue id **111201**	Group **901**
2			Illustr. No **H2-6150E**	Section **200**
3				
4			Issue **2638000345**	Page **427**
5				

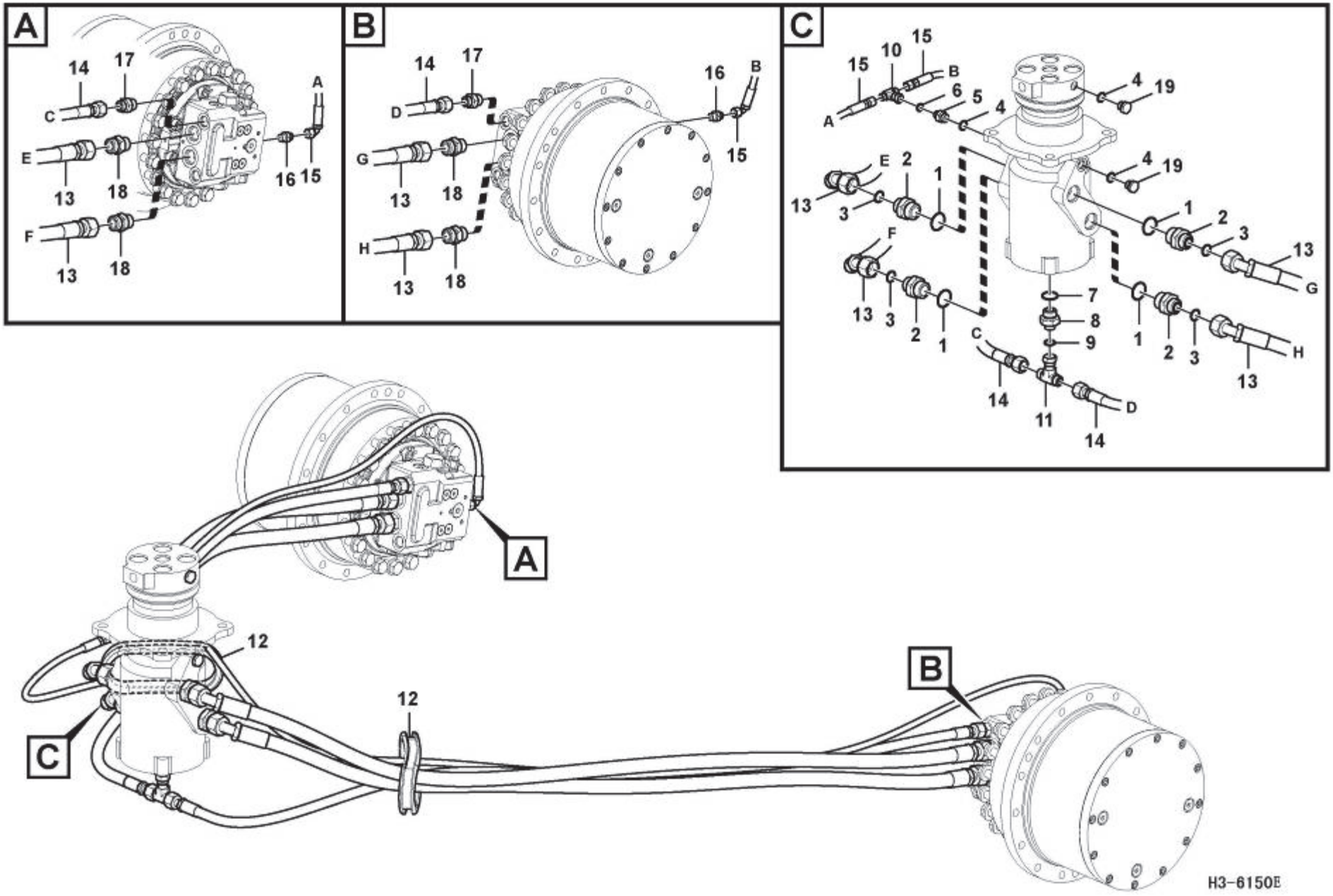
A
14
17
C
E
13
18
F
13
18
16
15
A
B
14
17
D
G
13
18
H
13
18
16
B
15
C
15
10
15
B
A
6
5
4
4
19
4
19
E
2
1
13
3
1
2
3
13
G
F
13
3
2
1
7
8
9
C
1
2
3
H
13
14
11
D
14
A
12
12
B
C
H3-6150E

Fig.	Part No.编码.	Quantity件数 1	2	3	PS	KIT	Description 说明	Notes
1	**11210144**	4					O-ring .....O 型圈.....	
2	**11211707**	4					Connector .....接头.....	
3	**11210113**	4					O-ring .....O 型圈.....	
4	**11210135**	3					O-ring .....O 型圈.....	
5	**11212931**	1					Connector .....接头.....	
6	**11211987**	1					O-ring .....O 型圈.....	
7	**11210141**	1					O-ring .....O 型圈.....	
8	**11212932**	1					Connector .....接头.....	
9	**11212010**	1					O-ring .....O 型圈.....	
10	**11212764**	1					T-nipple .....T形接头.....	
11	**11212777**	1					T-nipple .....T形接头.....	
12	**11212933**	2					Grommet .....套环.....	
13	**11212936**	4					Hose assembly .....软管装置.....	
14	**11212935**	2					Hose assembly .....软管装置.....	
15	**11212934**	2					Hose assembly .....软管装置.....	
16	**11212485**	2					Nipple.....螺纹接套.....	
17	**11212391**	2					Nipple.....螺纹接套.....	
18	**11212486**	4					Nipple.....螺纹接套.....	
19	**11211698**	2					Plug.....堵头.....	

1	**11212937**	回转接头总成到行走马达的管线 **Turning joint line, turning joint to travel motor**	Catalogue id **111201**	Group **901**
2			Illustr. No **H3-6150E**	Section **300**
3				
4			Issue **2638000345**	Page **429**
5				

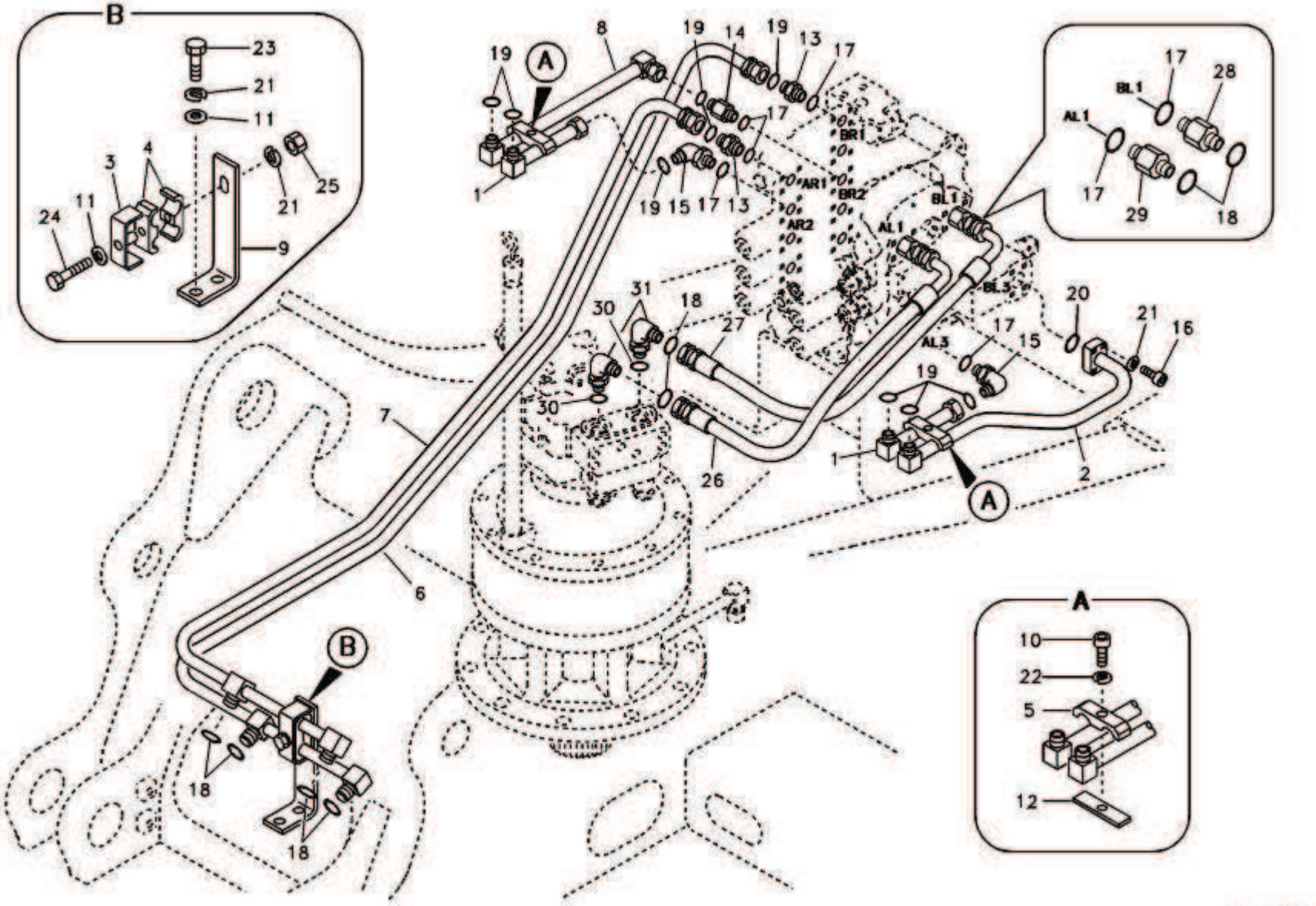
B
23
21
11
3
4
24
11
21
25
9
A
19
8
19
14
19
13
17
1
17
19
15
17
13
AR1
BR1
BR2
AR2
BL1
AL1
17
28
BL1
AL1
17
29
18
BL3
20
21
16
31
30
18
27
30
AL3
17
15
19
7
1
2
26
A
6
B
18
18
A
10
22
5
12

H4-6150E

Fig.	Part No.编码.	Quantity件数 1	2	3	PS	KIT	Description 说明	Notes
1	**11212941**	2					Pipe.....硬管总成.....	
2	**11212942**	1					Pipe.....硬管总成.....	
3	**11212938**	1					Clamp.....管夹.....	
4	**11212939**	2					Clamp.....管夹.....	
5	**11212940**	2					Clamp.....管夹.....	
6	**11212945**	1					Pipe.....硬管总成.....	
7	**11212946**	1					Pipe.....硬管总成.....	
8	**11212947**	1					Pipe.....硬管总成.....	
9	**11212944**	1					Plate.....安装板.....	
10	**11210223**	2					Hexagon screw .....六角螺丝.....	
11	**11211634**	3					Washer.....垫圈.....	
12	**11212950**	2					Clamp.....管夹.....	
13	**11212951**	2					Connector .....接头.....	
14	**11212930**	1					Connector .....接头.....	
15	**11212952**	2					Elbow .....弯管接头.....	
16	**11210151**	4					Allen Hd Screw .....内六角螺钉.....	
17	**11210141**	7					O-ring .....O 型圈.....	
18	**11212010**	8					O-ring ..... O 型圈.....	
19	**11210113**	9					O-ring .....O 型圈.....	
20	**11210048**	1					O-ring .....O 型圈.....	
21	**11210064**	7					Spring washer .....弹簧垫圈.....	
22	**11210067**	2					Spring washer .....弹簧垫圈.....	
23	**11210124**	2					Hexagon screw .....六角螺丝.....	
24	**11210127**	1					Hexagon screw .....六角螺丝.....	
25	**11210130**	1					Hexagon nut.....六角螺母.....	
26	**11212953**	1					Hose assembly .....软管装置.....	
27	**11212954**	1					Hose assembly .....软管装置.....	
28	**11212932**	1					Connector .....接头.....	
29	**11212955**	1					Connector .....接头.....	
30	**11210166**	2					O-ring .....O 型圈.....	

1	**11212924**	液压系统,控制阀到大臂与回转系统 **Hydraulic system, control valve to boom and swing**	Catalogue id **111201**	Group **901**
2			Illustr. No **H4-6150E**	Section **400**
3				
4			Issue **2638000345**	Page **431**
5				

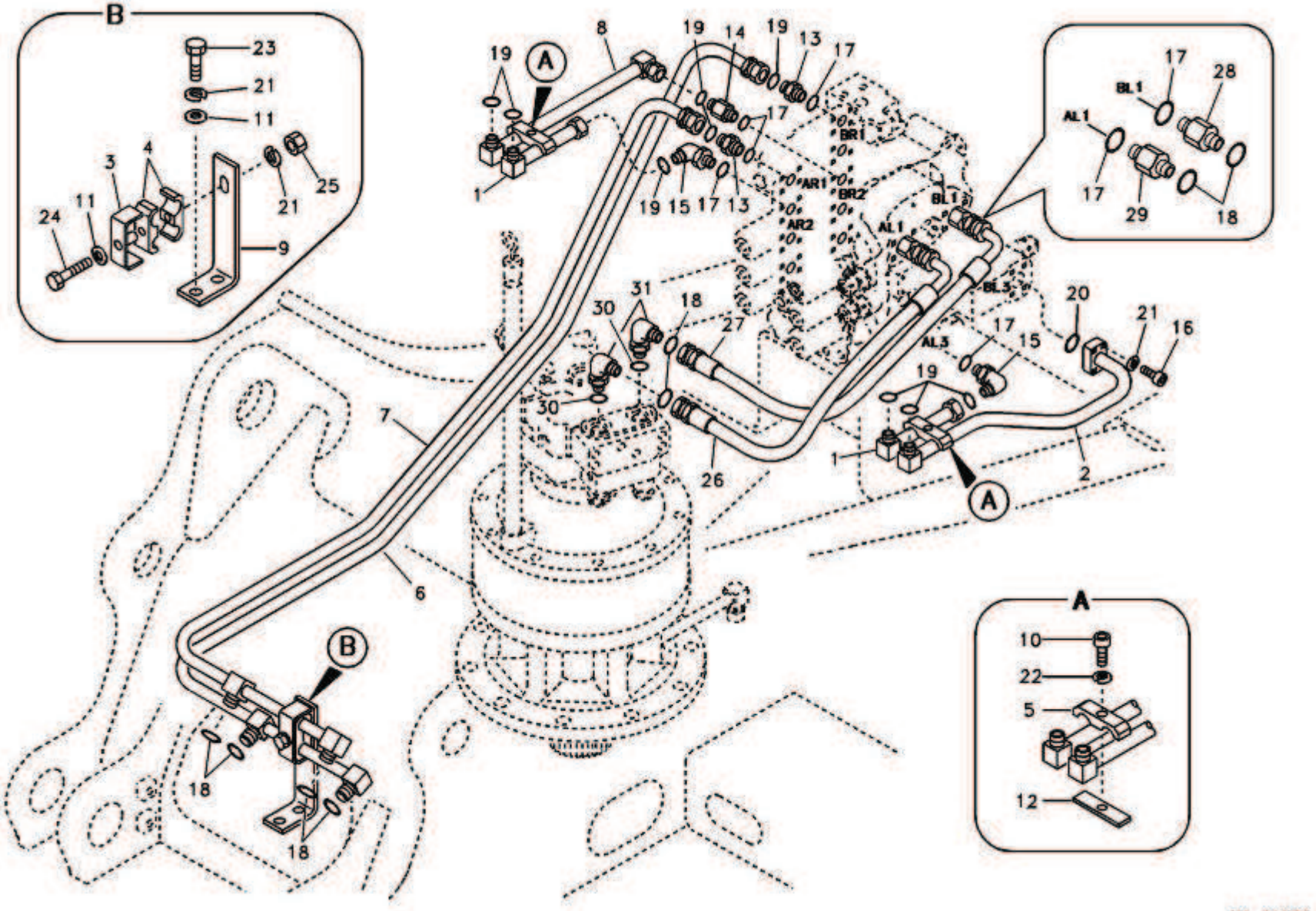
B
23
21
11
3
4
24
11
21
25
9
A
19
8
19
14
19
13
17
1
17
BR1
19
15
17
13
AR1
BR2
AR2
BL1
AL1
17
28
BL1
AL1
17
29
18
31
30
18
27
30
26
BL3
20
21
16
17
15
AL3
19
1
2
A
7
6
B
18
18
A
10
22
5
12

H4-6150E

Fig.	Part No.编码.	Quantity件数 1	2	3	PS	KIT	Description 说明	Notes
31	**11212956**	2					Elbow .....弯管接头.....	

1	**11212924**	液压系统,控制阀到大臂与回转系统 **Hydraulic system, control valve to boom and swing**	Catalogue id **111201**	Group **901**
2				
3			Illustr. No **H4-6150E**	Section **400**
4				
5			Issue **2638000345**	Page **433**

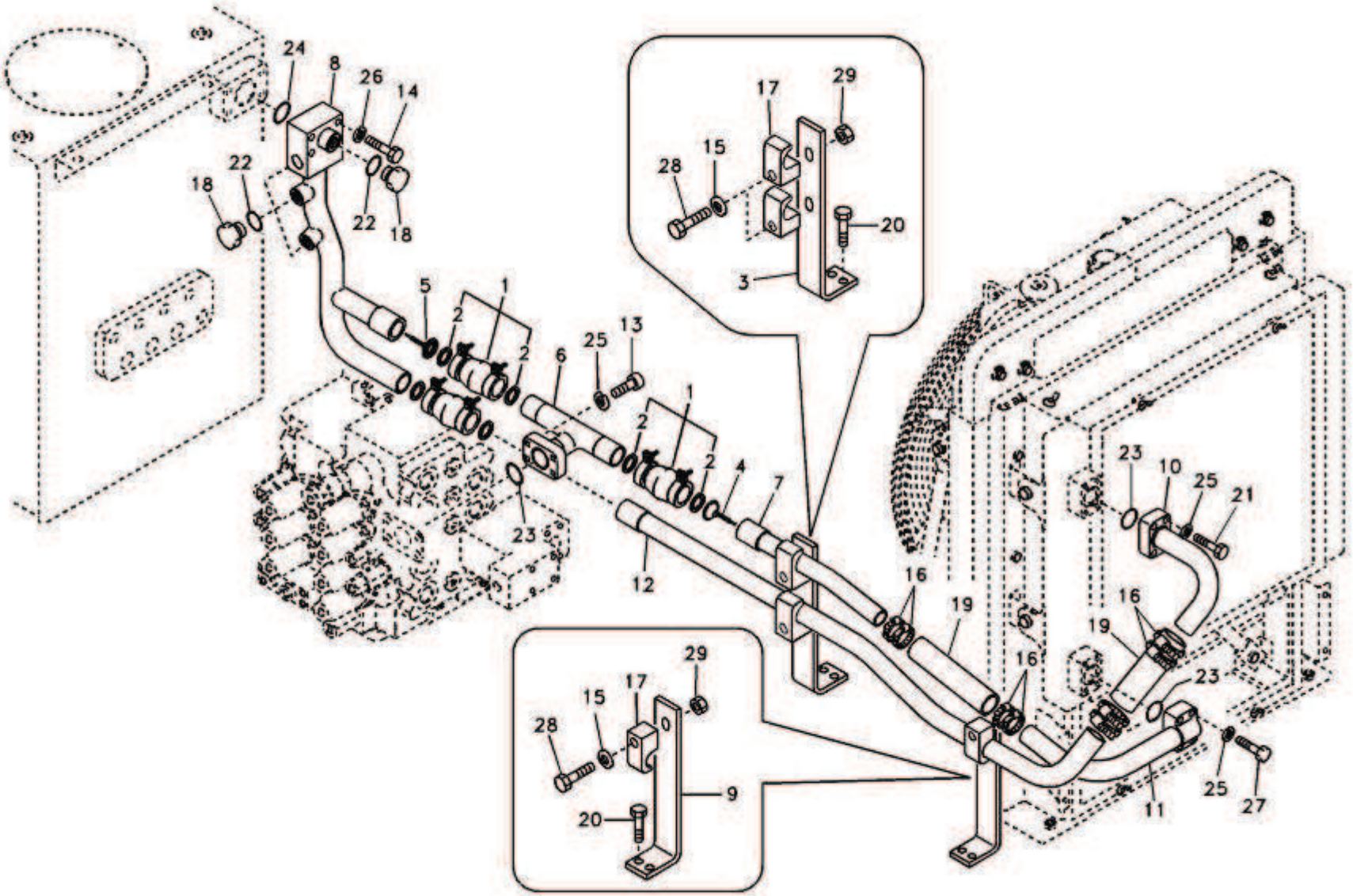
24
8
26
14
22
18
22
18
17
29
28
15
20
3
5
1
2
2
6
25
13
1
2
2
4
7
23
12
23
10
25
21
16
19
16
19
16
23
25
27
11
29
17
15
28
20
9
H5-6150E

Fig.	Part No.编码.	Quantity件数 1	2	3	PS	KIT	Description 说明	Notes
1	**11210670**	3					Coupling.....连接盘.....	
2	**11210554**	2					•Gasket Kit .....• 垫圈套件.....	
3	**11212966**	1					Bracket.....支架.....	
4	**11211922**	1					Valve .....阀.....	
5	**11210671**	1					Valve .....阀.....	
6	**11212967**	1					Pipe.....硬管总成.....	
7	**11212969**	1					Pipe.....硬管总成.....	
8	**11212970**	1					Pipe.....硬管总成.....	
9	**11212968**	1					Bracket.....支架.....	
10	**11212971**	1					Pipe.....硬管总成.....	
11	**11212972**	1					Pipe.....硬管总成.....	
12	**11212973**	1					Pipe.....硬管总成.....	
13	**11212974**	4					Allen Hd Screw .....内六角螺钉.....	
14	**11210190**	4					Hexagon screw .....六角螺丝.....	
15	**11210199**	3					Washer.....垫圈.....	
16	**11212976**	8					Clamp.....管夹.....	
17	**11211926**	3					Clamp.....夹.....	
18	**11212977**	4					Plug.....堵头.....	
19	**11212978**	2					Rubber hose .....橡胶软管.....	
20	**11210037**	4					Flange screw.....法兰螺丝.....	
21	**11210151**	4					Allen Hd Screw .....内六角螺钉.....	
22	**11210144**	4					O-ring .....O 型圈.....	
23	**11210049**	3					O-ring .....O 型圈.....	
24	**11210050**	1					O-ring .....O 型圈.....	
25	**11210064**	12					Spring washer .....弹簧垫圈.....	
26	**11210065**	4					Spring washer .....弹簧垫圈.....	
27	**11210126**	4					Hexagon screw .....六角螺丝.....	
28	**11211930**	3					Hexagon screw .....六角螺丝.....	
29	**11210109**	3					Hexagon nut.....六角螺母.....	

1	**11212924**	液压系统,液压油箱到液压油冷却器 **Hydraulic system, hydraulic tank to hydraulic oil cooler**	Catalogue id **111201**	Group **901**
2				
3			Illustr. No **H5-6150E**	Section **500**
4				
5			Issue **2638000345**	Page **435**

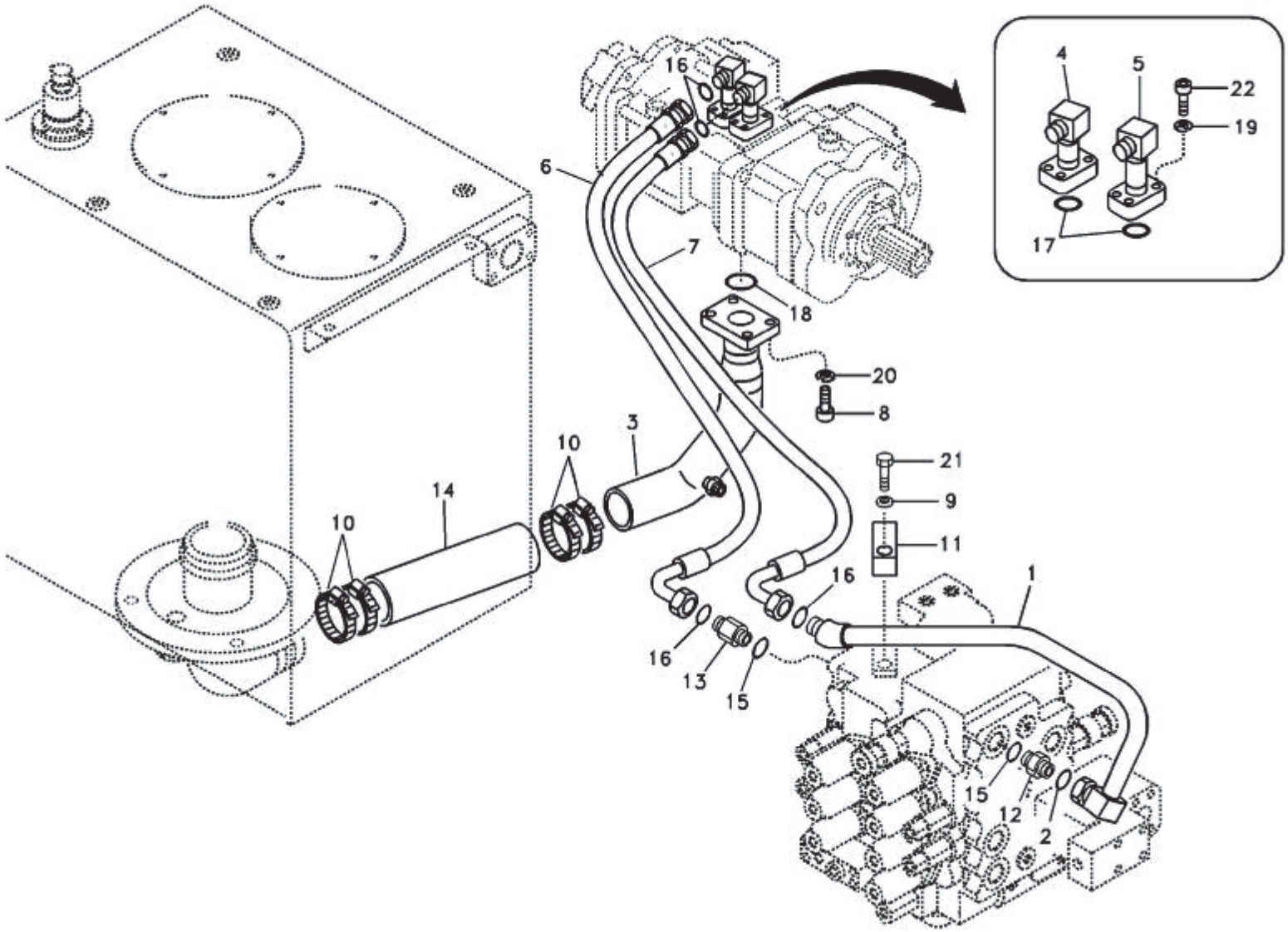

H6-6150E

Fig.	Part No.编码.	Quantity件数 1	2	3	PS	KIT	Description 说明	Notes
1	**11212981**	1					Pipe.....硬管总成.....	
2	**11210114**	1					O-ring .....O 型圈.....	
3	**11212979**	1					Pipe.....硬管总成.....	
4	**11212982**	1					Pipe.....硬管总成.....	
5	**11212980**	1					Pipe.....硬管总成.....	
6	**11212983**	1					Hose.....软管.....	
7	**11212984**	1					Hose.....软管.....	
8	**11210154**	4					Allen Hd Screw .....内六角螺钉.....	
9	**11210198**	1					Washer.....垫圈.....	
10	**11212985**	4					Screw clamp .....螺丝夹.....	
11	**11211129**	1					Clamp.....夹.....	
12	**11212987**	1					Connector .....接头.....	
13	**11212930**	1					Connector .....接头.....	
14	**11212986**	1					Rubber hose .....橡胶软管.....	
15	**11210141**	2					O-ring .....O 型圈.....	
16	**11210113**	4					O-ring .....O 型圈.....	
17	**11210047**	2					O-ring .....O 型圈.....	
18	**11210111**	1					O-ring .....O 型圈.....	
19	**11210064**	8					Spring washer .....弹簧垫圈.....	
20	**11210065**	4					Spring washer .....弹簧垫圈.....	
21	**11212988**	1					Hexagon screw .....六角螺丝.....	
22	**11210125**	8					Hexagon screw .....六角螺丝.....	

1	**11212924**	液压系统,液压油箱到液压泵 **Hydraulic system, hydraulic tank to hydraulic pump**	Catalogue id **111201**	Group **901**
2			Illustr. No **H6-6150E**	Section **600**
3				
4			Issue **2638000345**	Page **437**
5				

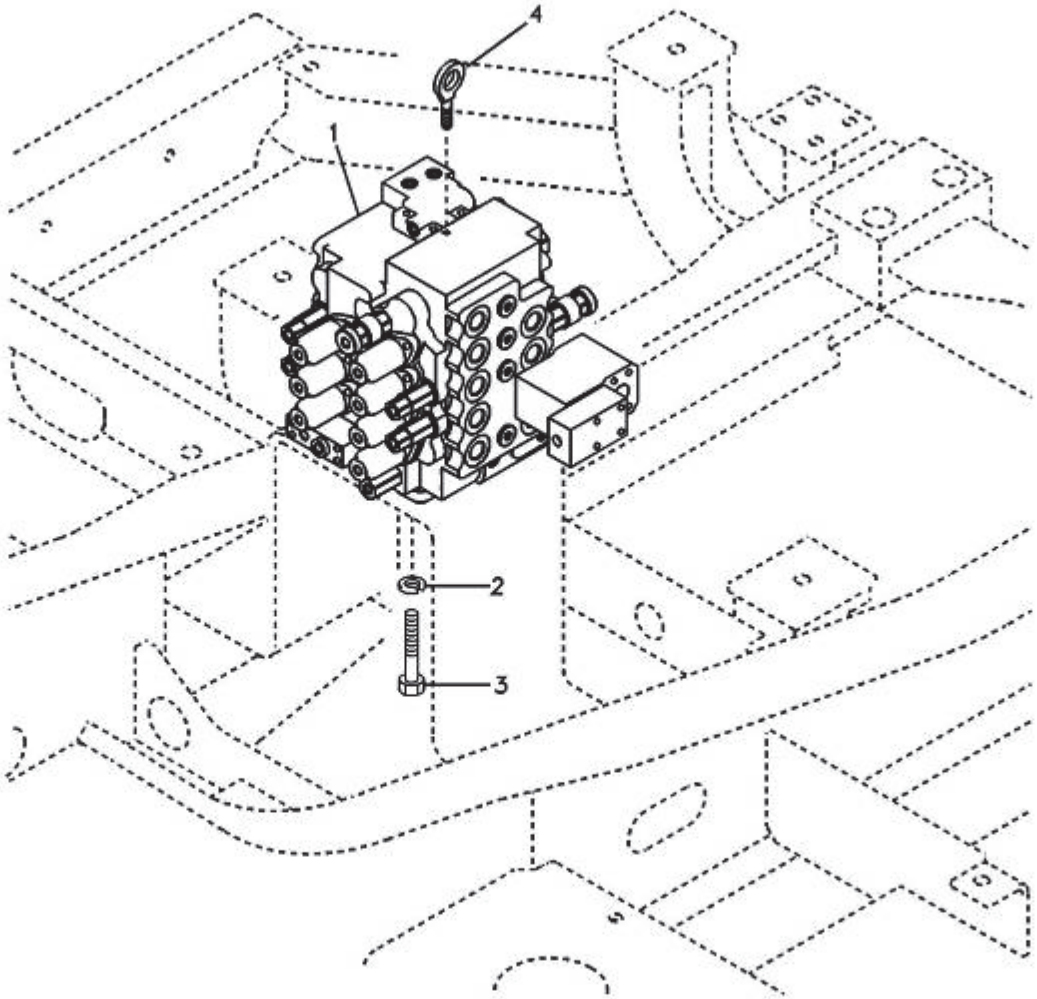

H7-6150E

Fig.	Part No.编码.	Quantity件数 1	2	3	PS	KIT	Description 说明	Notes
1	**11212115**	1					Control valve .....控制阀.....	
2	**11210065**	4					Spring washer .....弹簧垫圈.....	
3	**11210098**	4					Hexagon screw .....六角螺丝.....	
4	**11212004**	1					Eye bolt.....有眼螺栓.....	

1	**11212989**	带安装零件的控制阀 **Control valve with fitting parts.**	Catalogue id **111201**	Group **902**
2			Illustr. No **H7-6150E**	Section **100**
3				
4			Issue **2638000345**	Page **439**
5				

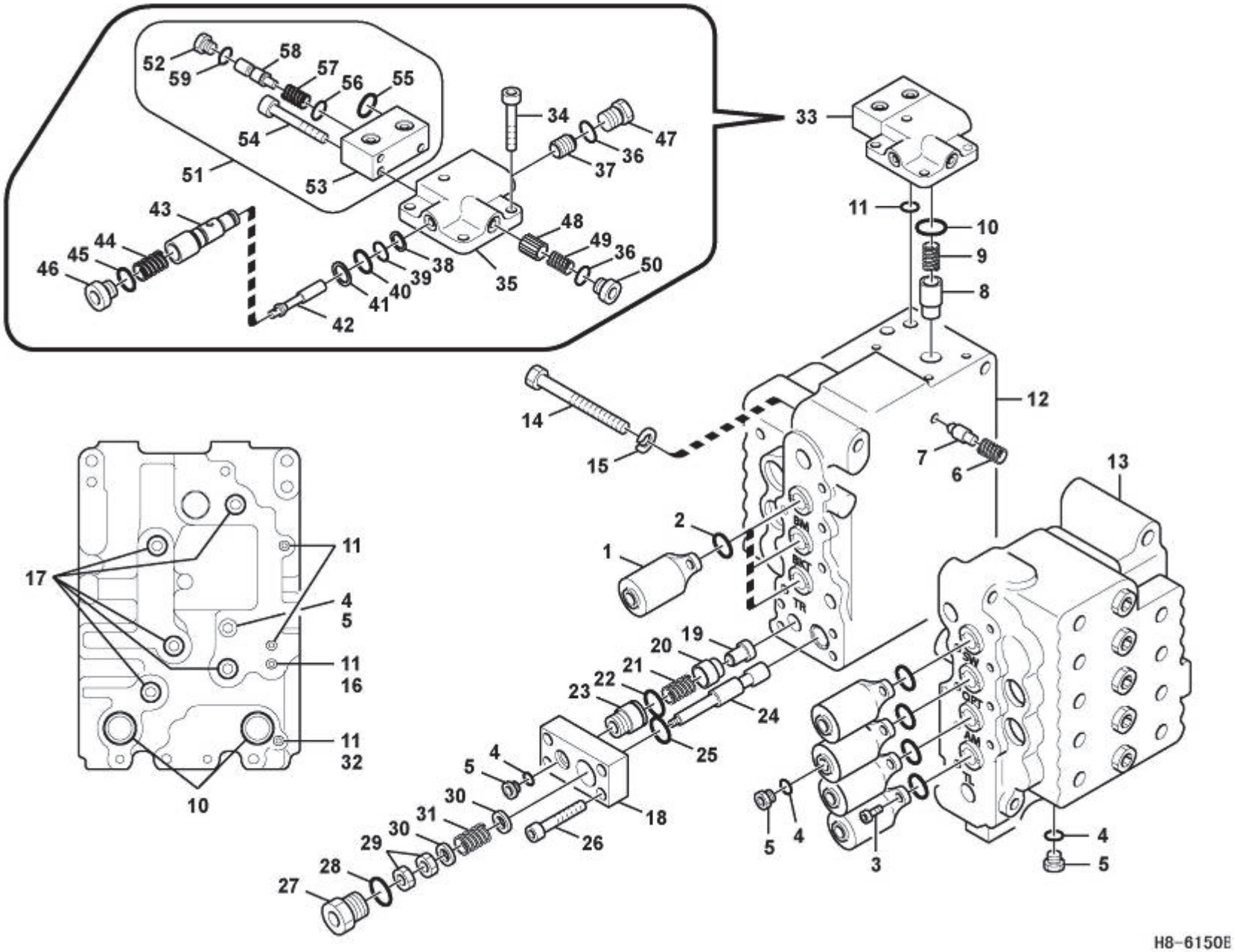
52
59
58
57
56
55
54
51
53
34
47
36
37
33
43
44
45
46
48
49
36
50
39
38
41
40
35
42
11
10
9
8
12
14
15
7
6
13
2
1
17
11
4
5
11
16
11
32
10
20
19
21
22
23
24
25
4
5
18
30
31
30
29
28
27
26
5
4
3
4
5

H8-6150E

Fig.	Part No.编码.	Quantity件数 1	2	3	PS	KIT	Description 说明	Notes
	11212115	1					Control valve .....控制阀.....	
1	**11212990**	7					•Cover .....• 罩盖.....	
2	**11210167**	7				K	•O-ring.....•0 型圈.....	
3	**11212991**	14					•Hex. socket screw ....• 六角凹头螺丝.....	
4	**11210133**	4				K	•O-ring.....•0 型圈.....	
5	**11211467**	4					•Cap .....• 帽.....	
6	**11211458**	1					•Spring .....• 弹簧.....	
7	**11211435**	1					•Poppet .....• 塞座.....	
8	**11212992**	1					•Poppet .....• 塞座.....	
9	**11212993**	1					•Spring .....• 弹簧.....	
10	**11210144**	3				K	•O-ring.....•0 型圈.....	
11	**11210132**	5				K	•O-ring.....•0 型圈.....	
12		1			NS		•Housing .....• 水泵壳体.....	
13		1			NS		•Housing .....• 水泵壳体.....	
14	**11212994**	7					•Bolt .....• 螺栓.....	
15	**11210065**	7					•Spring washer.....• 弹簧垫圈.....	
16	**11212995**	1					•Bushing.....• 衬套.....	
17	**11212996**	5				K	•O-ring.....•0 型圈.....	
18	**11212997**	1					•Cover .....• 罩盖.....	
19	**11213000**	1					•Poppet .....• 塞座.....	
20	**11212998**	1					•Sleeve.....• 内套.....	
21	**11212999**	1					•Spring .....• 弹簧.....	
22	**11213003**	1				K	•O-ring.....•0 型圈.....	
23	**11213002**	1					•Guide ..... • 导向机构.....	
24	**11213001**	1					•Spool .....• 株塞.....	
25	**11210169**	1				K	•O-ring.....•0 型圈.....	
26	**11213006**	4					•Bolt .....• 螺栓.....	
27	**11213005**	1			OP		•Cap .....• 帽.....	
28	**11210138**	1				K	•O-ring.....•0 型圈.....	
29	**11213004**	2					•Nut .....• 螺母.....	

1	**11212989**	主控阀、释放阀和大臂支撑阀 **Main control valve, relife valve and boom holding**	Catalogue id **111201** / Group **902**
2			
3			Illustr. No **H8-6150E** / Section **200**
4			
5			Issue **2638000345** / Page **441**

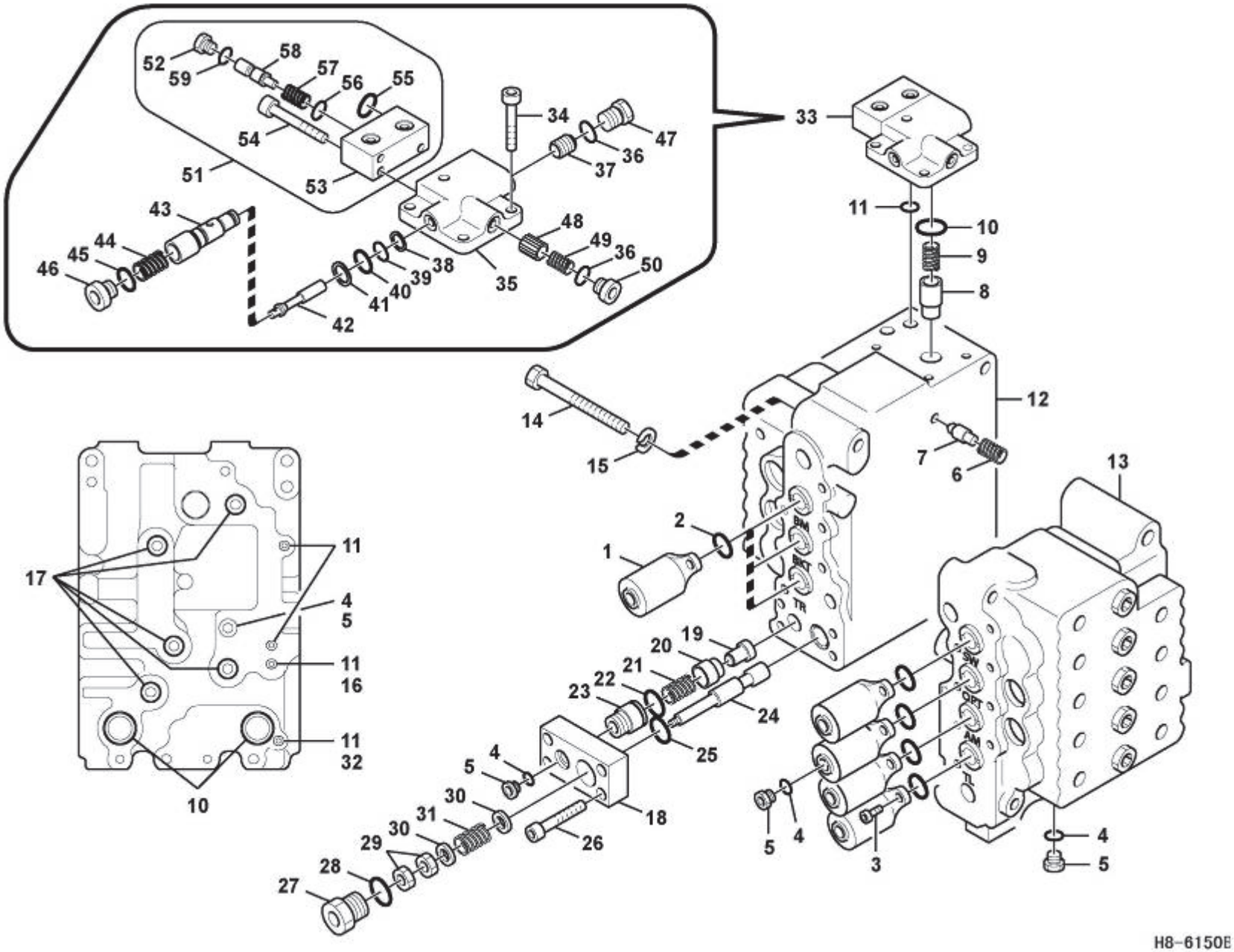
52
59
58
57
56
55
54
51
53
34
47
36
37
33
43
44
45
46
48
49
36
50
39
38
41
40
35
42
11
10
9
8
12
14
15
7
6
13
2
1
17
11
4
5
11
16
11
32
10
20
19
21
22
23
24
25
4
5
18
30
31
30
29
28
27
26
5
4
3
4
5

H8-6150E

Fig.	Part No.编码.	Quantity件数 1	2	3	P S	K I T	Description 说明	Notes
30	**11213008**	2					•Guide .....• 导向机构.....	
31	**11213009**	1					•Spring .....• 弹簧.....	
32	**11213007**	1					•Orifice .....• 节流孔.....	
33	**11210676**	1					•Valve .....• 阀.....	
34	**11213012**	4					••Bolt .....•• 螺栓.....	
35	**11213011**	1					••Cover .....•• 罩盖.....	
36	**11210135**	2			K		••O-ring .....••0 型圈.....	
37	**11213010**	1					••Piston .....•• 活塞.....	
38	**11211963**	1					••Ring .....•• 环.....	
39	**11210131**	1			K		••O-ring .....••0 型圈.....	
40	**11210132**	1			K		••O-ring .....••0 型圈.....	
41	**11211964**	1					••Ring .....•• 环.....	
42	**11213013**	1					••Poppet .....•• 塞座.....	
43	**11213014**	1					••Sleeve .....•• 内套.....	
44	**11213015**	1					••Spring .....•• 弹簧.....	
45	**11212996**	1			K		••O-ring .....••0 型圈.....	
46	**11213018**	1					••Cap .....•• 罩壳.....	
47	**11213017**	1					••Cap .....•• 罩壳.....	
48	**11213016**	1					••Non-return valve .....•• 止回阀.....	
49	**11211971**	1					••Spring .....•• 弹簧.....	
50	**11213019**	1					••Cap .....•• 罩壳.....	
51	**11213021**	1					••Selector valve.....•• 选择器阀.....	
52	**11211467**	1					•••Cap.....••• 帽.....	
53	**11213020**	1					•••Cover.....••• 罩盖.....	
54	**11213023**	3					•••Bolt .....••• 螺栓.....	
55	**11210137**	1			K		•••O-ring .....•••0 型圈.....	
56	**11213022**	1			K		•••O-ring .....•••0 型圈.....	
57	**11213025**	1					•••Spring.....••• 弹簧.....	
58	**11213024**	1					•••Piston .....••• 活塞.....	
59	**11210133**	1			K		•••O-ring .....•••0 型圈.....	

1	**11212989**	主控阀、释放阀和大臂支撑阀 **Main control valve, relife valve and boom holding**	Catalogue id **111201**	Group **902**
2				
3			Illustr. No **H8-6150E**	Section **200**
4				
5			Issue **2638000345**	Page **443**

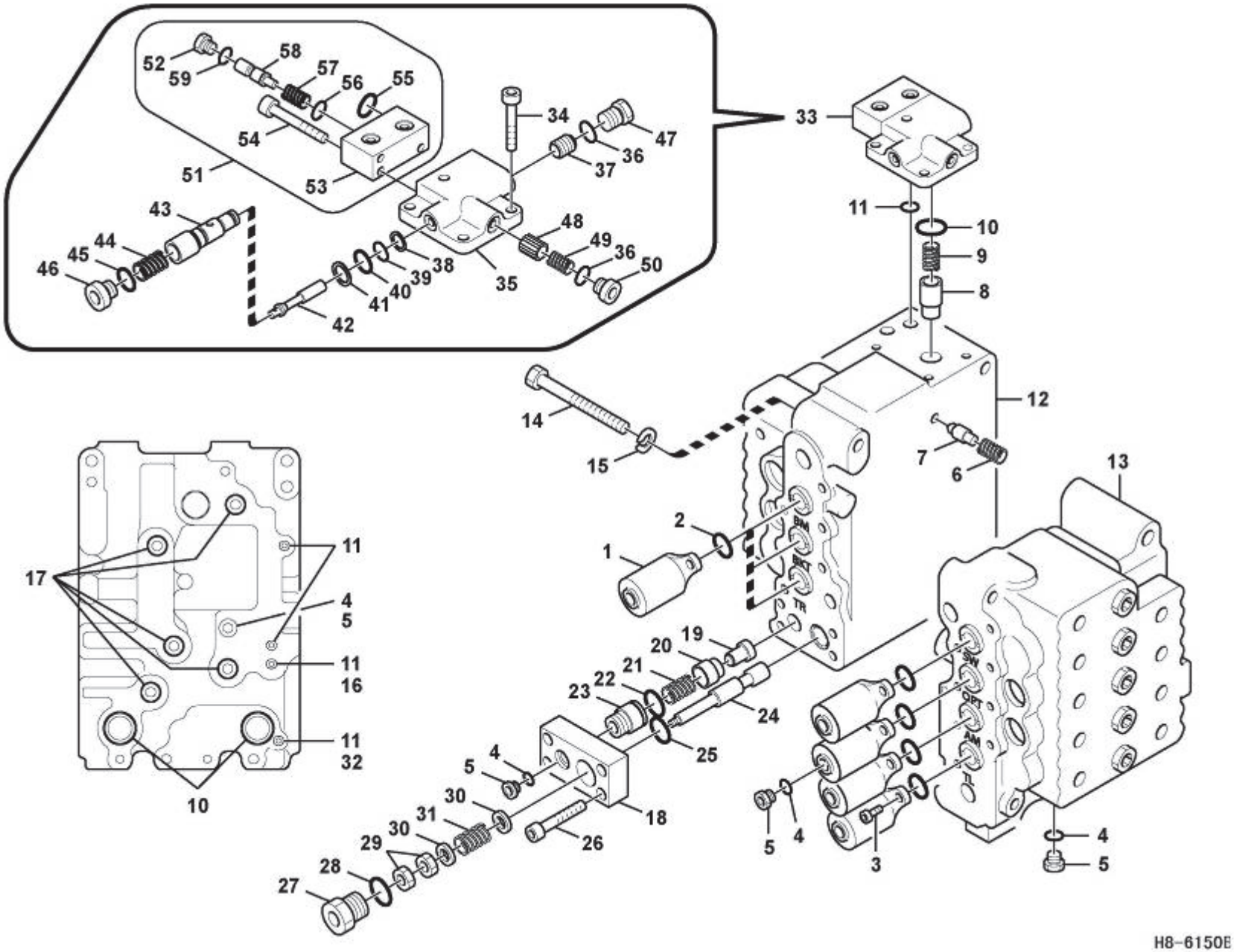
52
59
58
57
56
55
54
51
53
34
47
36
37
33
43
44
45
46
48
49
36
50
39
38
41
40
35
42
11
10
9
8
12
14
15
7
6
13
2
1
17
11
4
5
11
16
11
32
10
20
19
21
22
23
24
25
4
5
18
30
31
30
29
28
27
26
5
4
3
4
5

H8-6150E

Fig.	Part No.编码.	Quantity件数 1	2	3	PS	KIT	Description 说明	Notes
100	**11213026**	1					Sealing Kit.....密封包.....	

1	**11212989**	主控阀、释放阀和大臂支撑阀 **Main control valve, relife valve and boom holding**	Catalogue id **111201**	Group **902**
2				
3			Illustr. No **H8-6150E**	Section **200**
4				
5			Issue **2638000345**	Page **445**

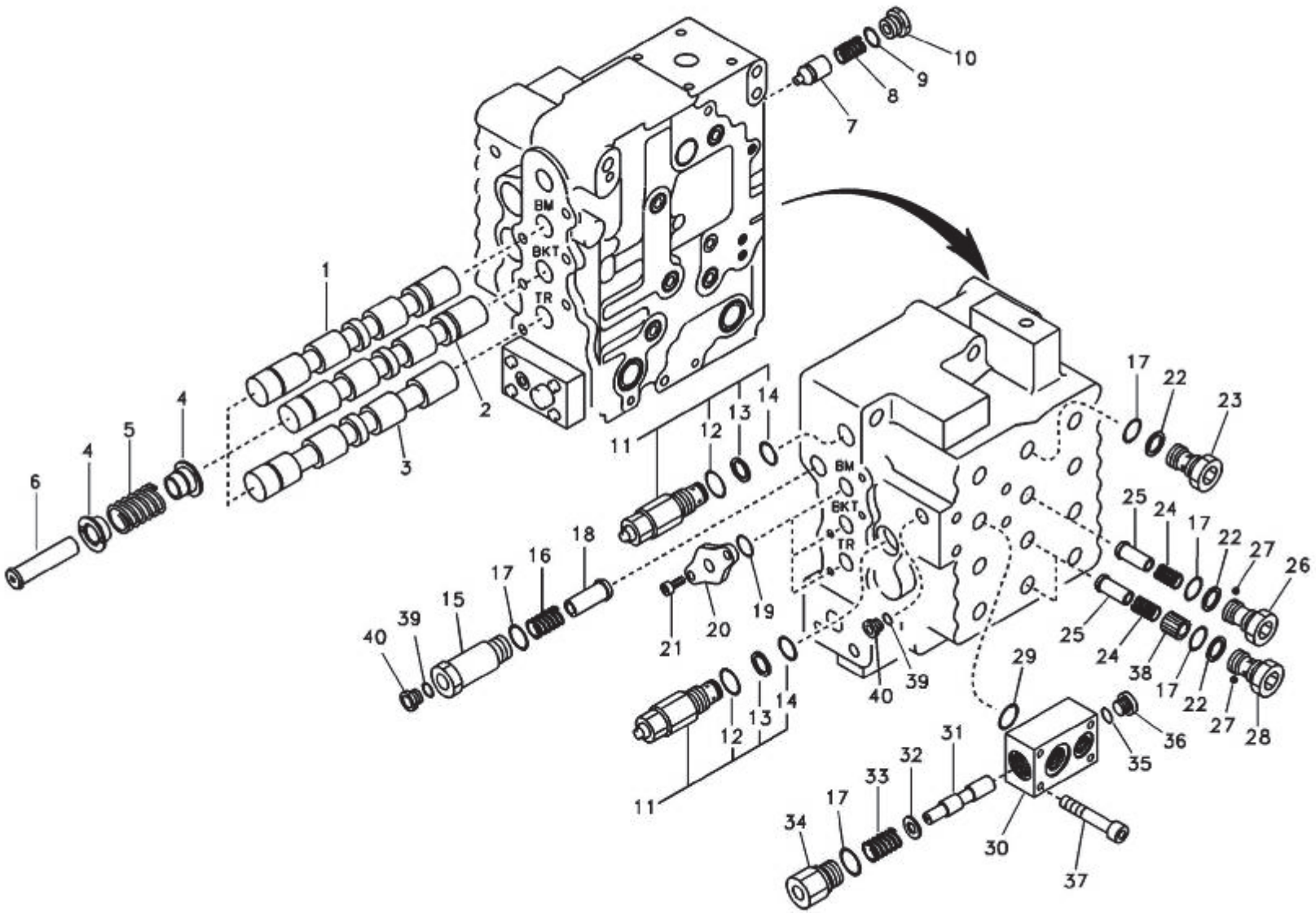
BM
BKT
TR
1
2
3
4
5
6
7
8
9
10
11
12
13
14
15
16
17
18
19
20
21
22
23
24
25
26
27
28
29
30
31
32
33
34
35
36
37
38
39
40

H9-6150E

Fig.	Part No.编码.	Quantity件数 1	2	3	PS	KIT	Description 说明	Notes
	11212115	1					Control valve .....控制阀.....	
1		1			NS		•Plunger .....• 柱塞.....	
2		1			NS		•Plunger .....• 柱塞.....	
3		1			NS		•Plunger .....• 柱塞.....	
4	**11213029**	6					•Guide .....• 导向机构.....	
5	**11213030**	3					•Spring .....• 弹簧.....	
6	**11213028**	3					•Cap .....• 罩壳.....	
7	**11213027**	1					•Check valve .....• 止回阀.....	
8	**11213034**	1					•Spring .....• 弹簧.....	
9	**11213032**	1				K	•O-ring.....•⎔ 形圈.....	
10	**11213033**	1					•Cap .....• 罩壳.....	
11	**11213031**	2					•Relief valve .....• 减压阀.....	
12	**11212996**	1				K	••O-ring .....••⎔ 型圈.....	
13	**11213035**	1					••Ring .....•• 环.....	
14	**11210707**	1					••O-ring .....••⎔ 型圈.....	
15	**11211441**	1					•Cap .....• 罩壳.....	
16	**11211463**	1					•Spring .....• 弹簧.....	
17	**11210138**	6				K	•O-ring.....•⎔ 型圈.....	
18	**11211437**	1					•Poppet .....• 塞座.....	
19	**11213037**	3				K	•O-ring.....•⎔ 型圈.....	
20	**11213036**	3					•Retainer .....• 固定器.....	
21	**11212991**	6					•Hex. socket screw ....• 六角凹头螺丝.....	
22	**11211069**	4				K	•Ring .....• 环.....	
23	**11213039**	1					•Cap .....• 罩壳.....	
24	**11211454**	3					•Spring .....• 弹簧.....	
25	**11211431**	3					•Check valve .....• 止回阀.....	
26	**11213038**	1					•Cap .....• 罩壳.....	
27	**11211468**	3					•Ball.....• 球.....	
28	**11213040**	2					•Cap .....• 罩壳.....	
29	**11212996**	1				K	•O-ring.....•⎔ 型圈.....	

1	**11212989**	主控阀,大臂和铲斗及右行 **Main control valve, boom and bucket and travel Rh**	Catalogue id **111201**	Group **902**
2				
3			Illustr. No **H9-6150E**	Section **300**
4				
5			Issue **2638000345**	Page **447**

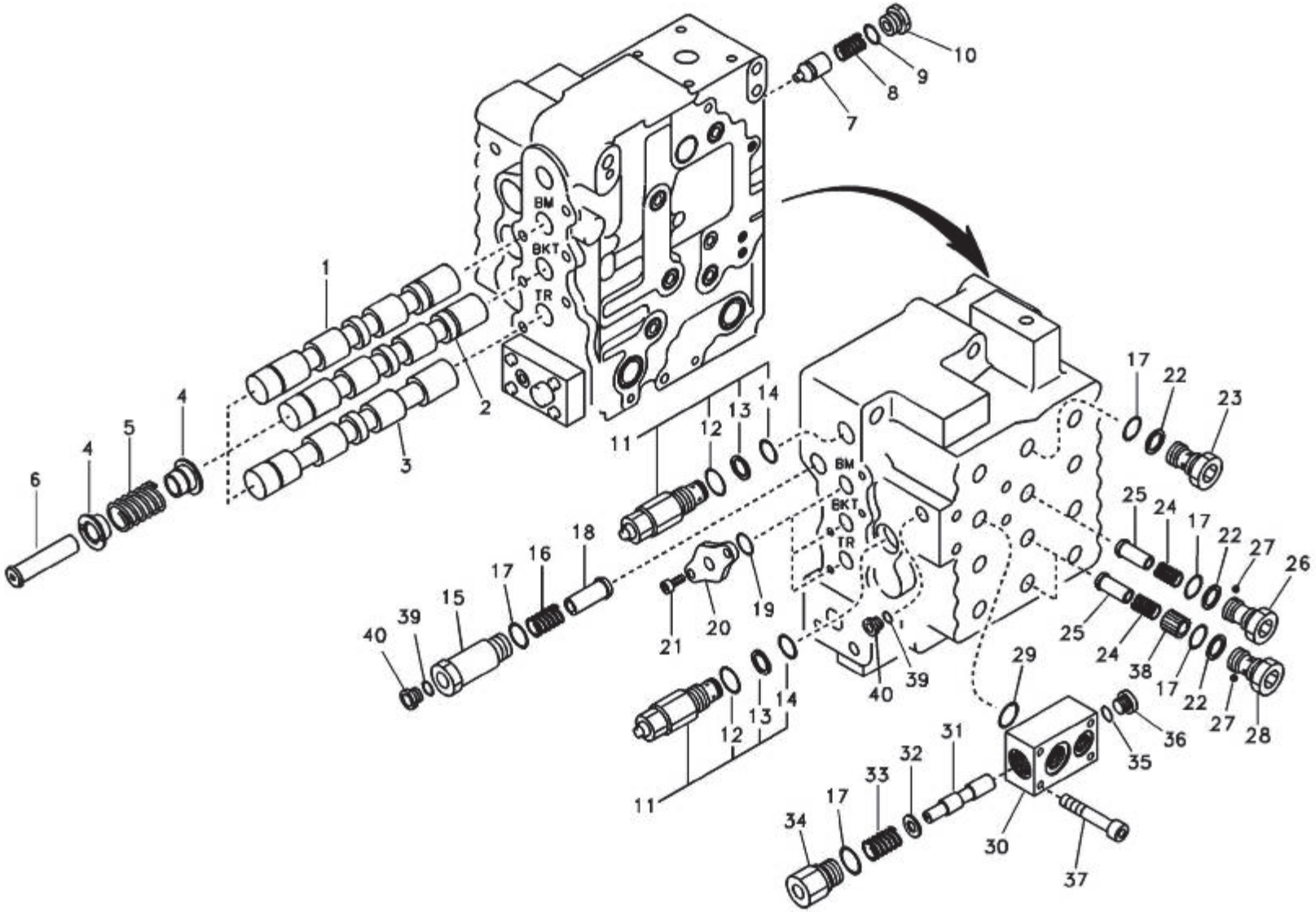
BM
BKT
TR
1
2
3
4
5
6
7
8
9
10
11
12
13
14
15
16
17
18
19
20
21
22
23
24
25
26
27
28
29
30
31
32
33
34
35
36
37
38
39
40

H9-6150E

Fig.	Part No.编码.	Quantity件数 1	2	3	PS	KIT	Description 说明	Notes
30	**11213044**	1					•Manifold ..... • 歧管.....	
31	**11213041**	1					•Slide..... • 滑槽.....	
32	**11211465**	1					•Shim ..... • 垫片.....	
33	**11212000**	1					•Spring ..... • 弹簧.....	
34	**11213043**	1					•Cap ..... • 罩壳.....	
35	**11210135**	1				K	•O-ring..... •O 型圈.....	
36	**11213019**	1					•Cap ..... • 罩壳.....	
37	**11211613**	4					•Hex. socket screw .... • 六角凹头螺丝.....	
38	**11213042**	2					•Non-return valve ..... • 止回阀.....	
39	**11210133**	2				K	•O-ring..... •O 型圈.....	
40	**11211467**	2					•Cap ..... • 帽.....	
100	**11213026**	1					Sealing Kit.....密封包.....	

1	**11212989**	主控阀,大臂和铲斗及右行 **Main control valve, boom and bucket and travel Rh**	Catalogue id **111201**	Group **902**
2				
3			Illustr. No **H9-6150E**	Section **300**
4				
5			Issue **2638000345**	Page **449**

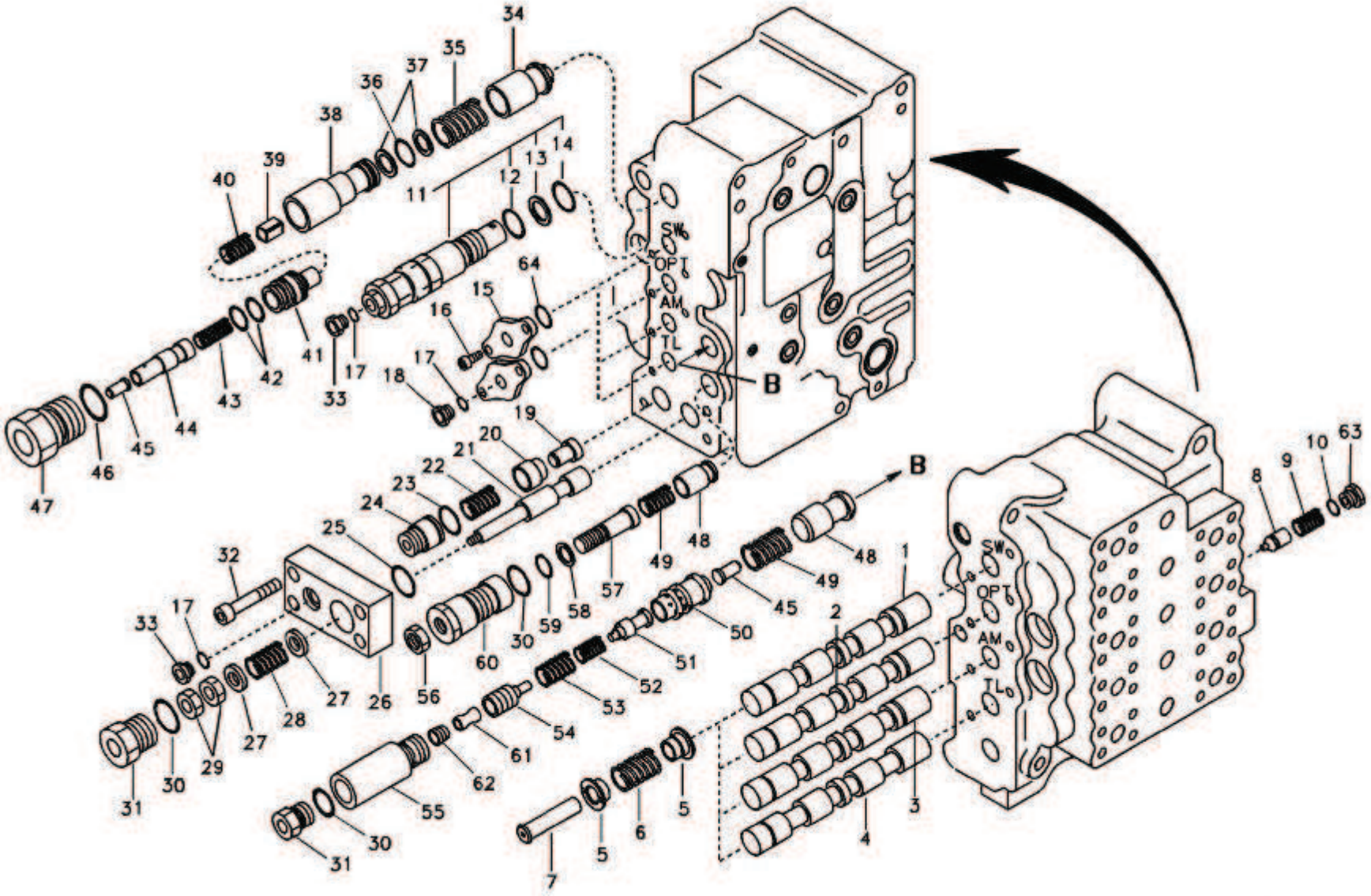
SW
OPT
AM
TL
B
H10-6150E

Fig.	Part No.编码.	Quantity件数 1	2	3	PS	KIT	Description 说明	Notes
	11212115	1					Control valve .....控制阀.....	
1		1			NS		•Plunger .....• 柱塞.....	
2	**11213045**	1			OP		•Plunger .....• 柱塞.....	
3		1			NS		•Plunger .....• 柱塞.....	
4		1			NS		•Plunger .....• 柱塞.....	
5	**11213029**	8					•Guide .....• 导向机构.....	
6	**11213030**	4					•Spring .....• 弹簧.....	
7	**11213028**	4					•Cap .....• 罩壳.....	
8	**11213027**	1					•Check valve .....• 止回阀.....	
9	**11213034**	1					•Spring .....• 弹簧.....	
10	**11213032**	1				K	•O-ring.....•0 形圈.....	
11	**11213046**	1					•Relief valve .....• 减压阀.....	
12	**11212996**	1				K	••O-ring .....••0 型圈.....	
13	**11213035**	1					••Ring .....•• 环.....	
14	**11210707**	1					••O-ring ..... ••0 型圈.....	
15	**11213036**	4					•Retainer .....• 固定器.....	
16	**11212991**	8					•Hex. socket screw ....• 六角凹头螺丝.....	
17	**11210133**	3				K	•O-ring.....•0 型圈.....	
18	**11213047**	1					•Cap .....• 罩壳.....	
19	**11213000**	1					•Poppet .....• 塞座.....	
20	**11212998**	1					•Sleeve.....• 内套.....	
21	**11213048**	1					•Spool .....• 株塞.....	
22	**11212999**	1					•Spring .....• 弹簧.....	
23	**11213003**	1				K	•O-ring.....•0 型圈.....	
24	**11213002**	1					•Guide .....• 导向机构.....	
25	**11210169**	1				K	•O-ring.....•0 型圈.....	
26	**11212997**	1					•Cover .....• 罩盖.....	
27	**11213008**	2					•Guide .....• 导向机构.....	
28	**11213009**	1					•Spring .....• 弹簧.....	
29	**11213004**	2					•Nut .....• 螺母.....	

1	**11212989**	主控阀,回转和选择及小臂和左行 **Main control valve, swing and option and dipper arm and travel Lh**	Catalogue id **111201**	Group **902**
2				
3			Illustr. No **H10-6150E**	Section **400**
4				
5			Issue **2638000345**	Page **451**

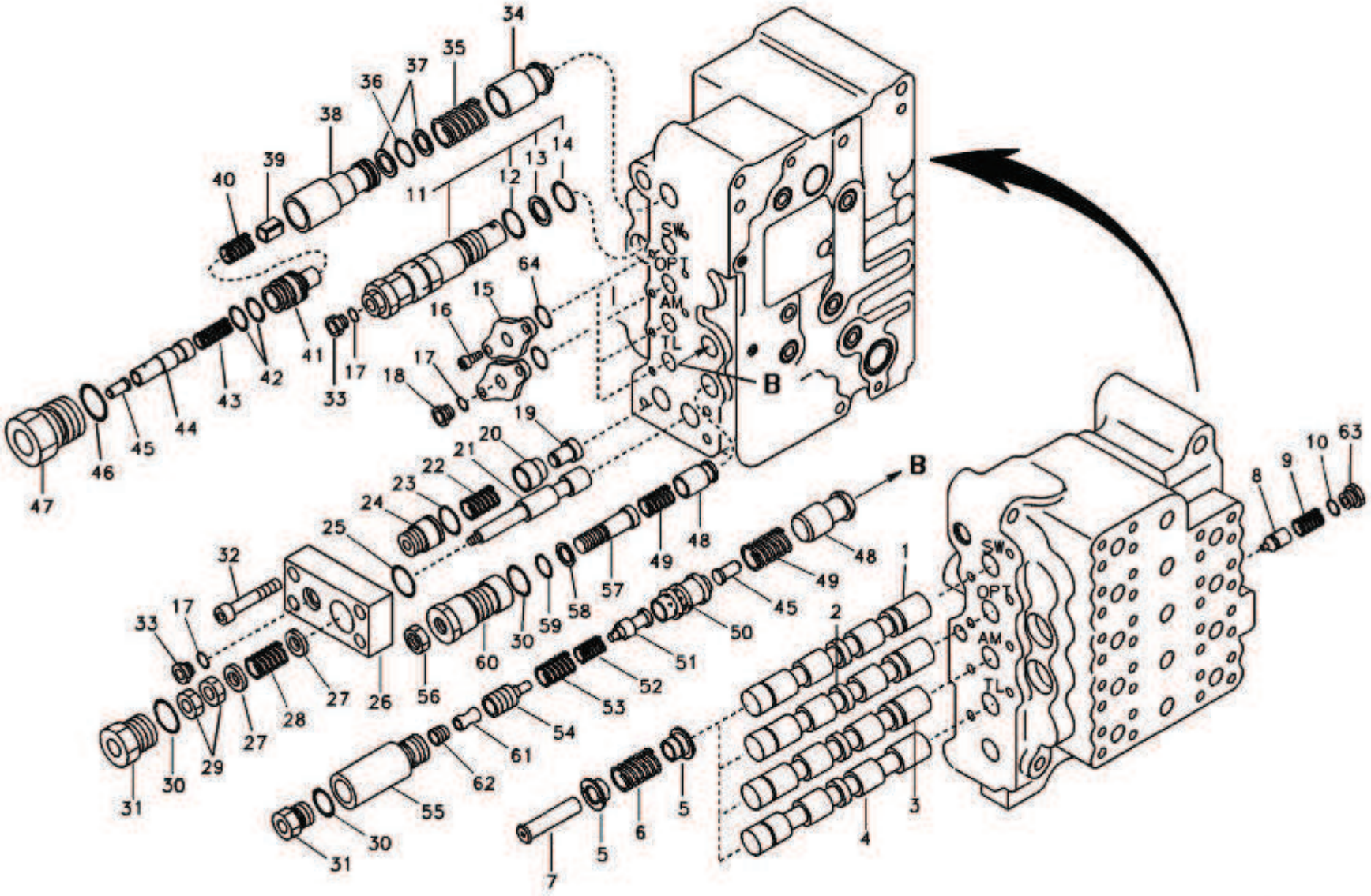
SW
OPT
AM
TL
B
H10-6150E

Fig.	Part No编码.	Quantity件数 1	2	3	PS	KIT	Description 说明	Notes
30	**11210138**	3				K	•O-ring.....•o 型圈.....	
31	**11213005**	2			OP		•Cap .....• 帽.....	
32	**11213006**	4					•Bolt .....• 螺栓.....	
33	**11211467**	2					•Cap .....• 帽.....	
34	**11213050**	1					•Poppet .....• 塞座.....	
35	**11211997**	1					•Spring .....• 弹簧.....	
36	**11213051**	1				K	•O-ring.....•o 型圈.....	
37	**11212002**	2				K	•Ring .....• 环.....	
38	**11211991**	1					•Sleeve.....• 内套.....	
39	**11213016**	1					•Non-return valve .....• 止回阀.....	
40	**11211971**	1					•Spring .....• 弹簧.....	
41	**11211992**	1					•Sleeve.....• 内套.....	
42	**11212996**	2				K	•O-ring.....•o 型圈.....	
43	**11211999**	1					•Spring .....• 弹簧.....	
44	**11213049**	1					•Piston.....• 活塞.....	
45	**11211989**	2					•Control plunger .....• 控制塞.....	
46	**11210142**	1				K	•O-ring.....•o 型圈.....	
47	**11213055**	1					•Cap .....• 罩壳.....	
48	**11213053**	2					•Poppet .....• 塞座.....	
49	**11213054**	2			OP		•Spring .....• 弹簧.....	
50	**11213052**	1			OP		•Sleeve.....• 内套.....	
51		1			NS		•Spool .....• 株塞.....	
52	**11213059**	1			OP		•Spring .....• 弹簧.....	
53	**11213057**	1			OP		•Spring .....• 弹簧.....	
54	**11213056**	1			OP		•Piston.....• 活塞.....	
55	**11213058**	1			OP		•Cap .....• 罩壳.....	
56	**11213060**	1					•Nut .....• 螺母.....	
57	**11213062**	1					•Bolt .....• 螺栓.....	
58	**11213061**	1				K	•Ring .....• 环.....	
59	**11213063**	1				K	•O-ring.....•o 型圈.....	

1	**11212989**	主控阀,回转和选择及小臂和左行 **Main control valve, swing and option and dipper arm and travel Lh**	Catalogue id **111201** / Group **902**
2			
3			Illustr. No **H10-6150E** / Section **400**
4			
5			Issue **2638000345** / Page **453**

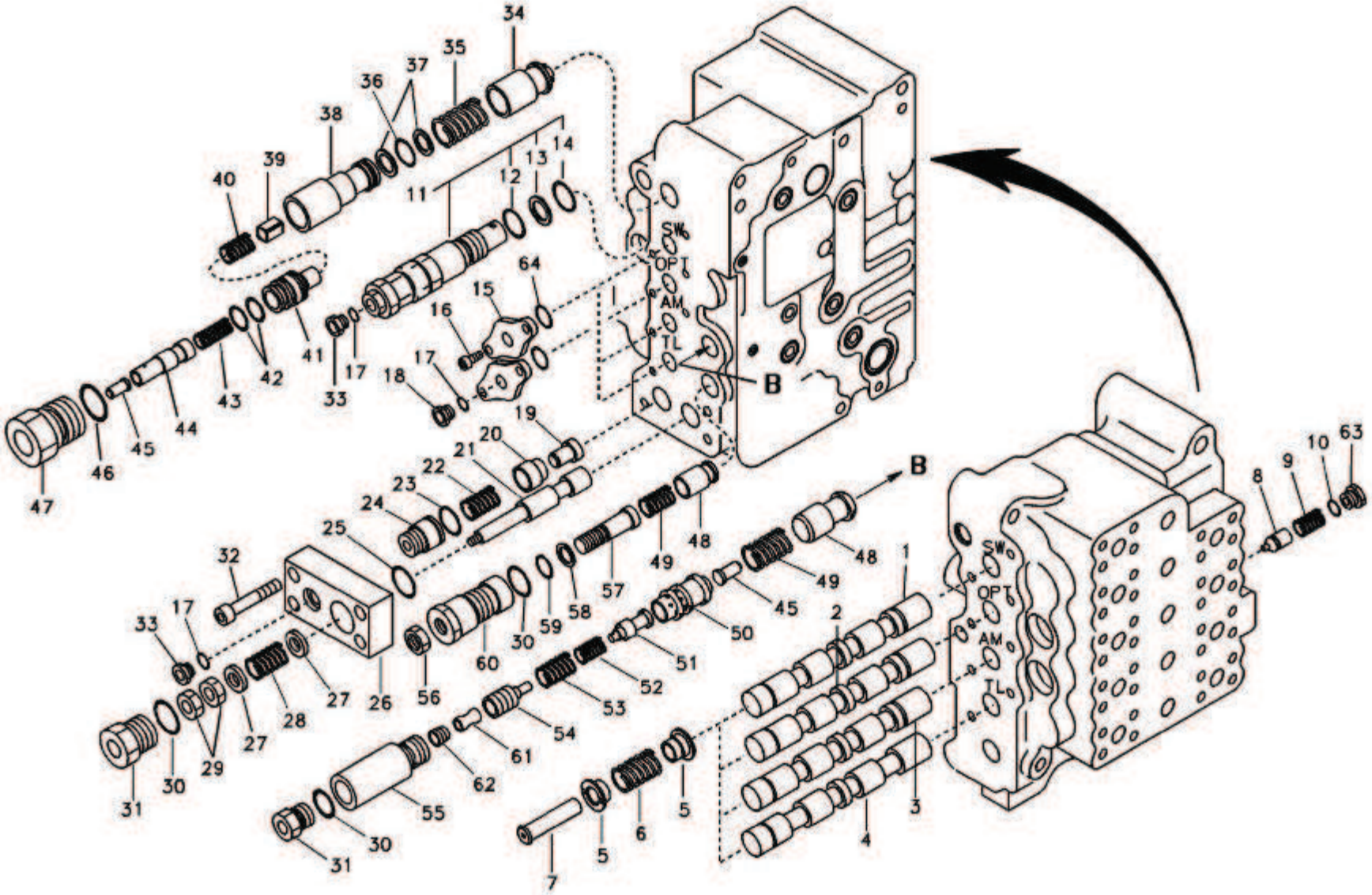
SW
OPT
AM
TL
B
B
H10-6150E

Fig.	Part No.编码.	Quantity件数 1	2	3	PS	KIT	Description 说明	Notes
60	**11213065**	1					•Cap .....• 罩壳.....	
61		1			NS		•Check valve .....• 止回阀.....	
62	**11213064**	1			OP		•Plug .....• 堵头.....	
63	**11213033**	1					•Cap .....• 罩壳.....	
64	**11213037**	4				K	•O-ring.....•o 型圈.....	
100	**11213026**	1					Sealing Kit.....密封包.....	

1	**11212989**	主控阀,回转和选择及小臂和左行 **Main control valve, swing and option and dipper arm and travel Lh**	Catalogue id **111201**	Group **902**
2				
3			Illustr. No **H10-6150E**	Section **400**
4			Issue **2638000345**	Page **455**
5				

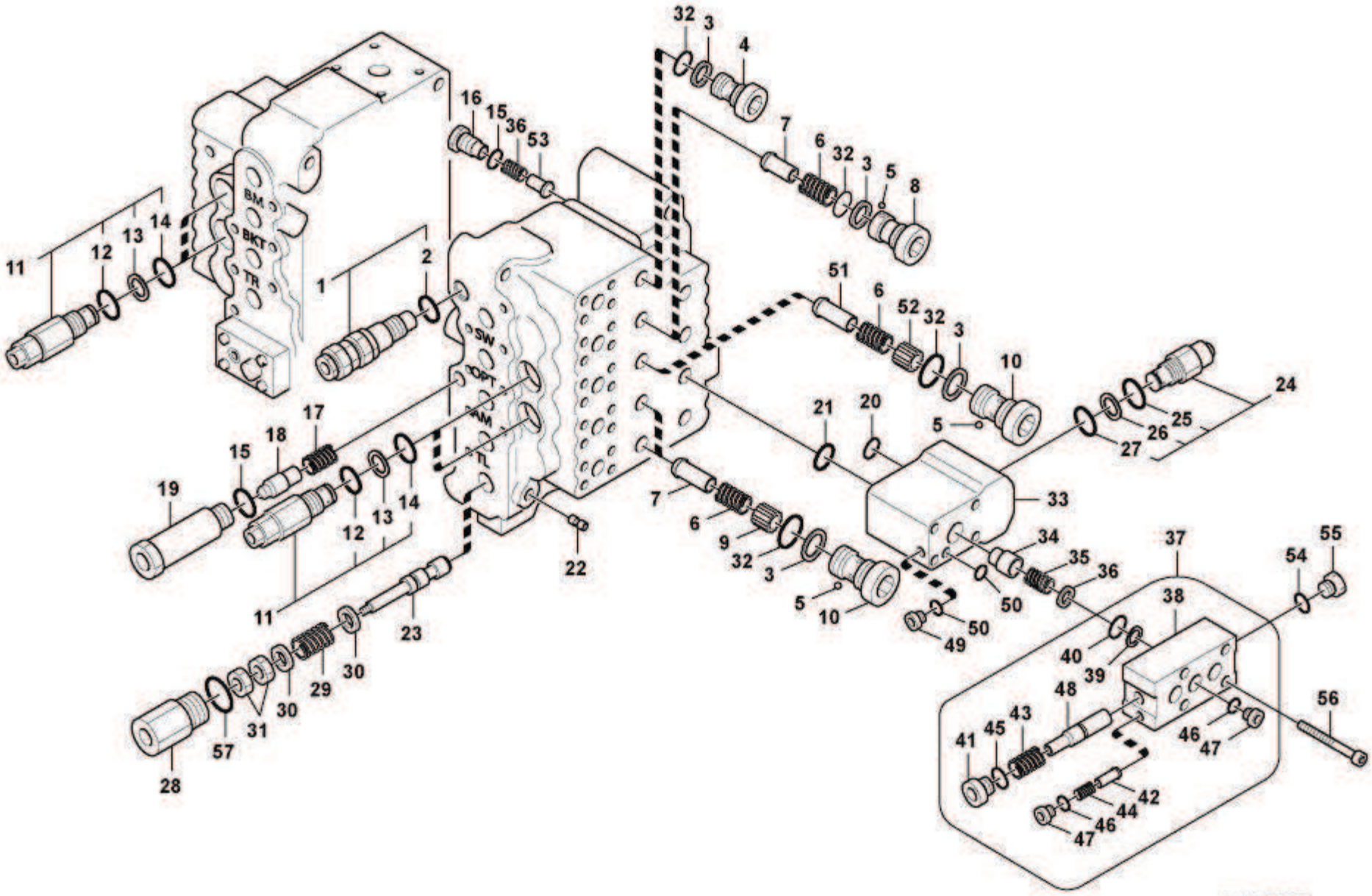
BM
BKT
TR
SW
OPT
AM
TL
H11-6150E

Fig.	Part No编码.	Quantity件数 1	2	3	PS	KIT	Description 说明	Notes
	11212115	1					Control valve .....控制阀.....	
1	**11210439**	1					•Relief valve .....• 泄流阀.....	
2	**11210138**	1				K	••O-ring .....••0 型圈.....	
3	**11211069**	5				K	•Ring .....• 环.....	
4	**11213039**	1					•Cap .....• 罩壳.....	
5	**11211468**	4					•Ball.....• 球.....	
6	**11211454**	4					•Spring .....• 弹簧.....	
7	**11211431**	3					•Check valve .....• 止回阀.....	
8	**11213038**	1					•Cap .....• 罩壳.....	
9	**11213042**	2					•Non-return valve .....• 止回阀.....	
10	**11213067**	3					•Cap .....• 罩壳.....	
11	**11213031**	4					•Relief valve .....• 减压阀.....	
12	**11212996**	1				K	••O-ring .....••0 型圈.....	
13	**11213035**	1					••Ring .....•• 环.....	
14	**11210707**	1					••O-ring .....••0 型圈.....	
15	**11210135**	2				K	•O-ring.....•0 型圈.....	
16	**11213066**	1					•Cap .....• 罩壳.....	
17	**11211458**	1					•Spring .....• 弹簧.....	
18	**11211435**	1					•Poppet .....• 塞座.....	
19	**11213068**	1					•Cap .....• 罩壳.....	
20	**11212996**	1				K	•O-ring.....•0 型圈.....	
21	**11210144**	1				K	•O-ring.....•0 型圈.....	
22	**11210409**	1					•Orifice .....• 节流孔.....	
23	**11213071**	1					•Spool .....• 株塞.....	
24	**11213069**	1					•Relief valve .....• 减压阀.....	
25	**11210008**	1				K	••O-ring .....••0 型圈.....	
26	**11211068**	1				K	••Ring .....•• 环.....	
27	**11210136**	1				K	••O-ring .....••0 型圈.....	
28	**11213070**	1					•Cap .....• 罩壳.....	
29	**11213072**	1					•Spring .....• 弹簧.....	

1	**11212989**	主控阀,减压阀和小臂支撑 **Main control valve, relief valve and dipper arm holding**	Catalogue id **111201** / Group **902**
2			
3			Illustr. No **H11-6150E** / Section **500**
4			
5			Issue **2638000345** / Page **457**

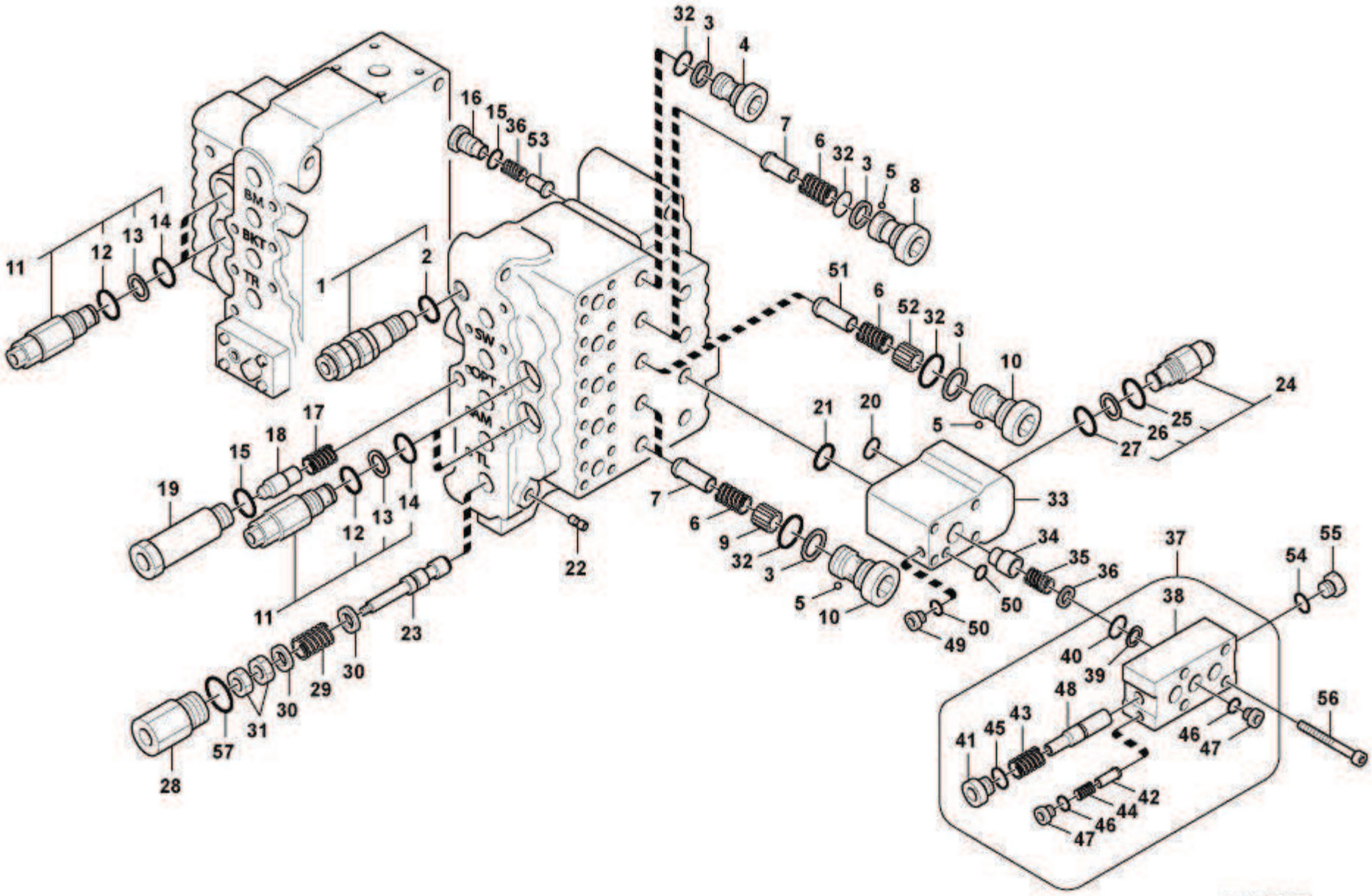
BM
BKT
TR
SW
OPT
AM
TL
H11-6150E

Fig.	Part No.编码.	Quantity件数 1	2	3	PS	KIT	Description 说明	Notes
30	**11213008**	2					•Guide .....• 导向机构.....	
31	**11213004**	2					•Nut .....• 螺母.....	
32	**11210138**	5					•O-ring.....•o 型圈.....	
33	**11213073**	1					•Manifold .....• 集流腔.....	
34	**11211990**	1					•Sleeve .....• 套筒.....	
35	**11211998**	1					•Spring .....• 弹簧.....	
36	**11211971**	1					•Spring .....• 弹簧.....	
37	**11213074**	1					•Cover .....• 罩.....	
38	**11213075**	1					••Cover .....•• 罩盖.....	
39	**11211070**	1					••Ring .....•• 环.....	
40	**11210142**	1				K	••O-ring .....••o 型圈.....	
41	**11211467**	1					••Cap .....•• 帽.....	
42	**11213077**	1					••Check valve .....•• 止回阀.....	
43	**11213078**	1					••Spring .....•• 弹簧.....	
44	**11213076**	1					••Spring .....•• 弹簧.....	
45	**11210133**	1				K	••O-ring .....••o 型圈.....	
46	**11210131**	2				K	••O-ring .....••o 型圈.....	
47	**11213081**	2					••Cap .....•• 罩壳.....	
48	**11213079**	1					••Control plunger .....•• 控制塞.....	
49	**11213080**	1					•Cap .....• 帽.....	
50	**11210131**	2				K	•O-ring.....•o 型圈.....	
51	**11213082**	1					•Non-return valve .....• 止回阀.....	
52	**11213083**	1					•Non-return valve .....• 止回阀.....	
53	**11213085**	1					•Check valve .....• 止回阀.....	
54	**11210133**	1				K	•O-ring.....•o 型圈.....	
55	**11211467**	1					•Cap .....• 帽.....	
56	**11213084**	4					•Bolt .....• 螺栓.....	
57	**11213086**	1				K	•O-ring.....•o 型圈.....	
100	**11213026**	1					Sealing Kit.....密封包.....	

1	**11212989**	主控阀,减压阀和小臂支撑 **Main control valve, relief valve and dipper arm holding**	Catalogue id **111201**	Group **902**
2			Illustr. No **H11-6150E**	Section **500**
3				
4			Issue **2638000345**	Page **459**
5				

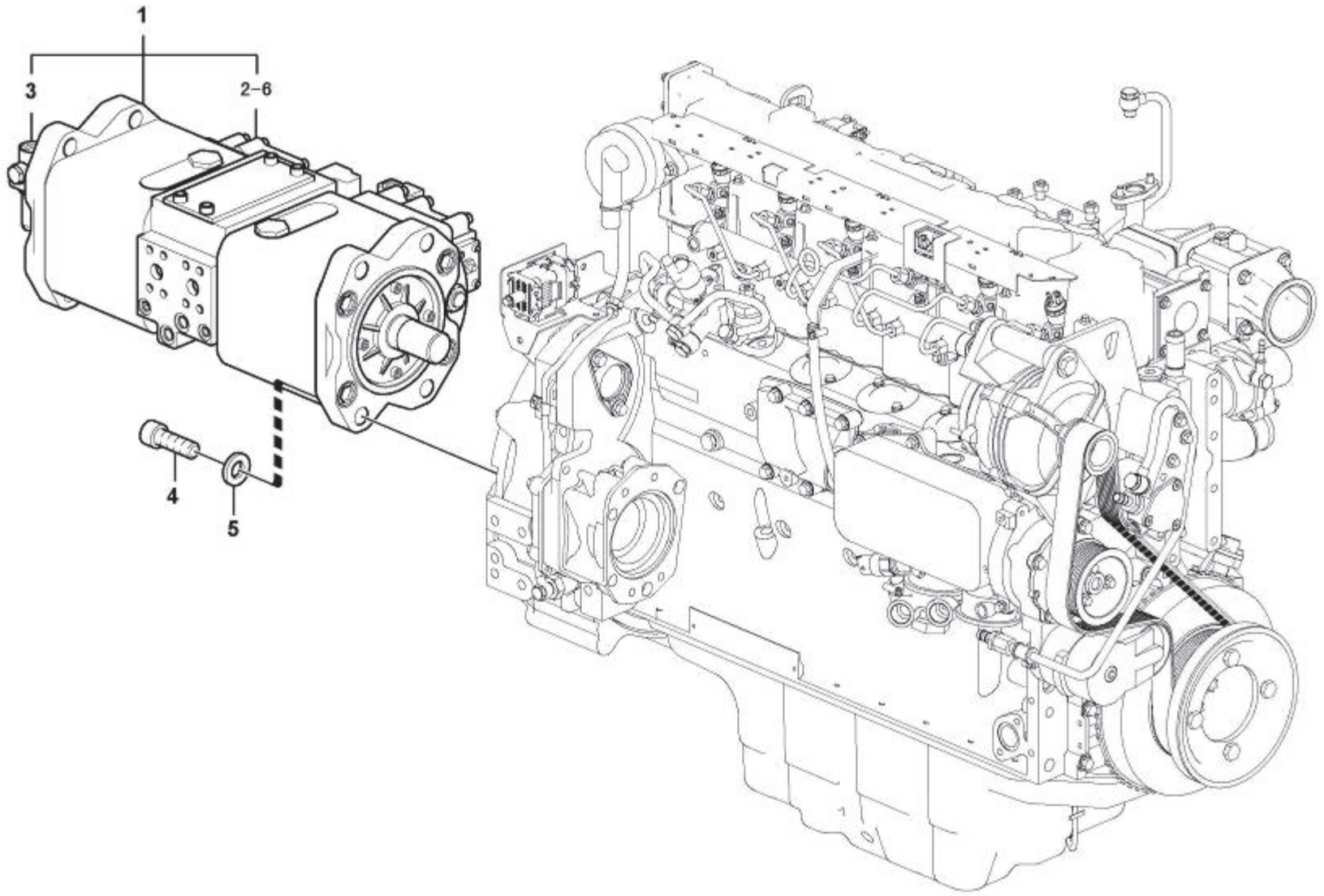

H12-6150E

Fig.	Part No.编码.	Quantity件数 1	2	3	PS	KIT	Description 说明	Notes
1	**11212821**	1					Pump.....泵.....	
2	**11213088**	1					•Regulator control .....• 调节器控制.....	REAR
	11213089	1					•Regulator control .....• 调节器控制.....	FRONT
3	**11213087**	1					•Gear pump.....• 齿轮泵.....	
4	**11213090**	4					Allen Hd Screw .....内六角螺钉.....	
5	**11210199**	4					Washer.....垫圈.....	

1	**11212924**	油泵安装 **Pump installation**	Catalogue id **111201**	Group **903**
2			Illustr. No **H12-6150E**	Section **100**
3				
4			Issue **2638000345**	Page **461**
5				

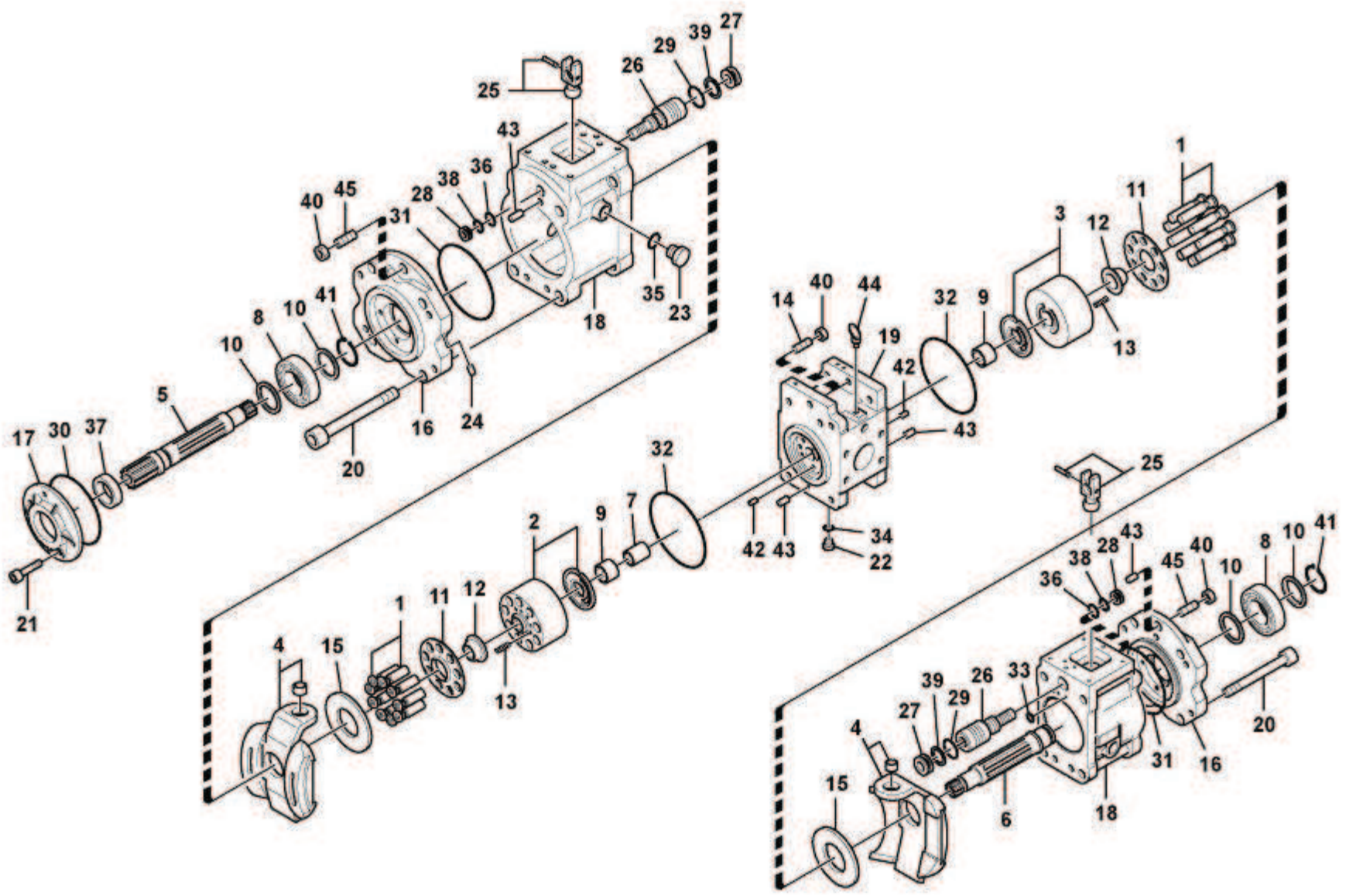
H13-6150E

Fig.	Part No编码.	Quantity件数 1	2	3	PS	KIT	Description 说明	Notes
	11212821	1					Pump.....泵.....	
1	**11213093**	2					•Piston.....• 活塞.....	
2	**11213091**	1					•Cylinder .....• 工作缸.....	RH
3	**11213092**	1					•Cylinder .....• 工作缸.....	LH
4	**11213098**	2					•Plate .....• 安装板.....	
5	**11213094**	1					•Shaft .....• 轴.....	
6	**11213096**	1					•Shaft .....• 轴.....	
7	**11213097**	1					•Splined Sleeve.....• 花键轴套.....	
8	**11213095**	2					•Roller bearing .....• 滚轴轴承.....	
9	**11213099**	2					•Needle bearing .....• 滚针轴承.....	
10	**11213102**	4					•Spacer .....• 垫片.....	
11	**11213100**	2					•Bushing.....• 衬套.....	
12	**11213103**	2					•Bushing.....• 轴衬.....	
13	**11213101**	18					•Spring .....• 弹簧.....	
14	**11213112**	2					•Bolt .....• 螺栓.....	
15	**11213113**	2					•Plate .....• 安装板.....	
16	**11213117**	2					•Support .....• 支撑.....	
17	**11213109**	1					•Cover .....• 罩盖.....	
18	**11213107**	2					•Case .....• 箱.....	
19	**11213108**	1					•Body .....• 箱体.....	
20	**11213110**	8					•Bolt .....• 螺栓.....	
21	**11213110**	4					•Bolt .....• 螺栓.....	
22	**11211697**	2					•Plug .....• 堵头.....	
23	**11213116**	4					•Plug .....• 堵头.....	
24	**11211417**	15					•Plug .....• 塞.....	
25	**11213114**	2					•Pin .....• 定位销.....	
26	**11213104**	2					•Piston.....• 活塞.....	
27	**11213105**	2					•Stop .....• 挡块.....	
28	**11213111**	2					•Stop .....• 挡块.....	
29	**11213106**	2				K	•O-ring.....•o 型圈.....	

1	**11212924**	液压泵 **Hydraulic pump**	Catalogue id **111201**	Group **903**
2				
3			Illustr. No **H13-6150E**	Section **200**
4				
5			Issue **2638000345**	Page **463**

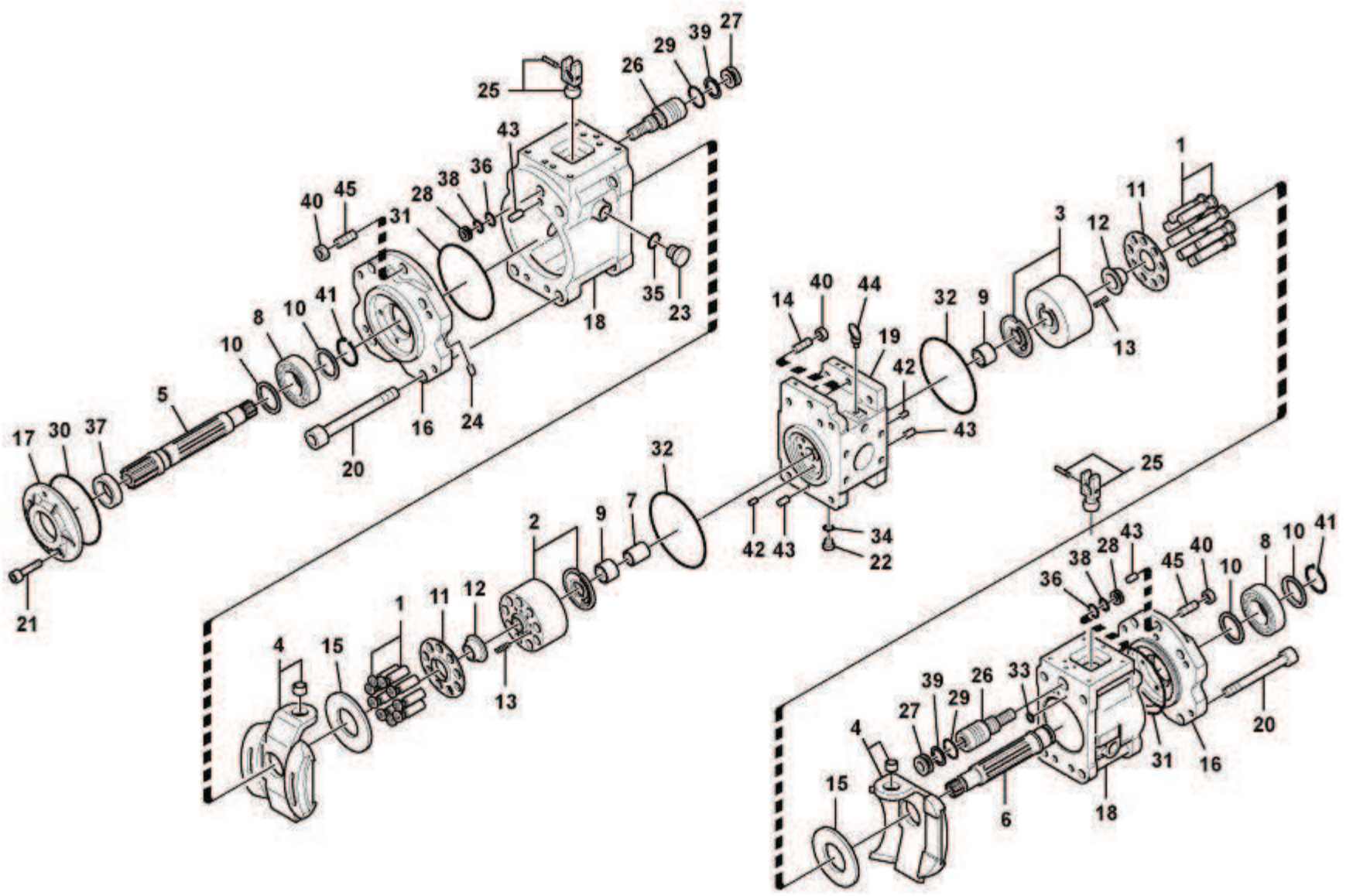
H13-6150E

Fig.	Part No.编码.	Quantity件数 1	2	3	PS	KIT	Description 说明	Notes
30	**11213126**	1				K	•O-ring..... •O 型圈.....	
31	**11213125**	2				K	•O-ring..... •O 型圈.....	
32	**11213124**	2				K	•O-ring..... •O 型圈.....	
33	**11210704**	18				K	•O-ring..... •O 型圈.....	
34	**11213123**	2				K	•O-ring..... •O 型圈.....	
35	**11213122**	4				K	•O-ring..... •O 型圈.....	
36	**11213121**	2				K	•O-ring..... •O 型圈.....	
37	**11213120**	1				K	•Sealing..... • 密封.....	
38	**11211068**	2				K	•Ring ..... • 环.....	
39	**11213129**	2				K	•Ring ..... • 密封环.....	
40	**11211544**	4					•Nut ..... • 螺母.....	
41	**11211771**	2					•Ring ..... • 密封环.....	
42	**11213128**	2					•Pin ..... • 定位销.....	
43	**11211415**	4					•Spring Pin ..... • 弹簧销.....	
44	**11211541**	2					•Eye Bolt ..... • 吊环螺栓.....	
45	**11211559**	2					•Bolt ..... • 螺栓.....	
100	**11213127**	1					Sealing Kit..... 密封包.....	

1	**11212924**	液压泵 **Hydraulic pump**	Catalogue id **111201**	Group **903**
2			Illustr. No **H13-6150E**	Section **200**
3			Issue **2638000345**	Page **465**
4				
5				

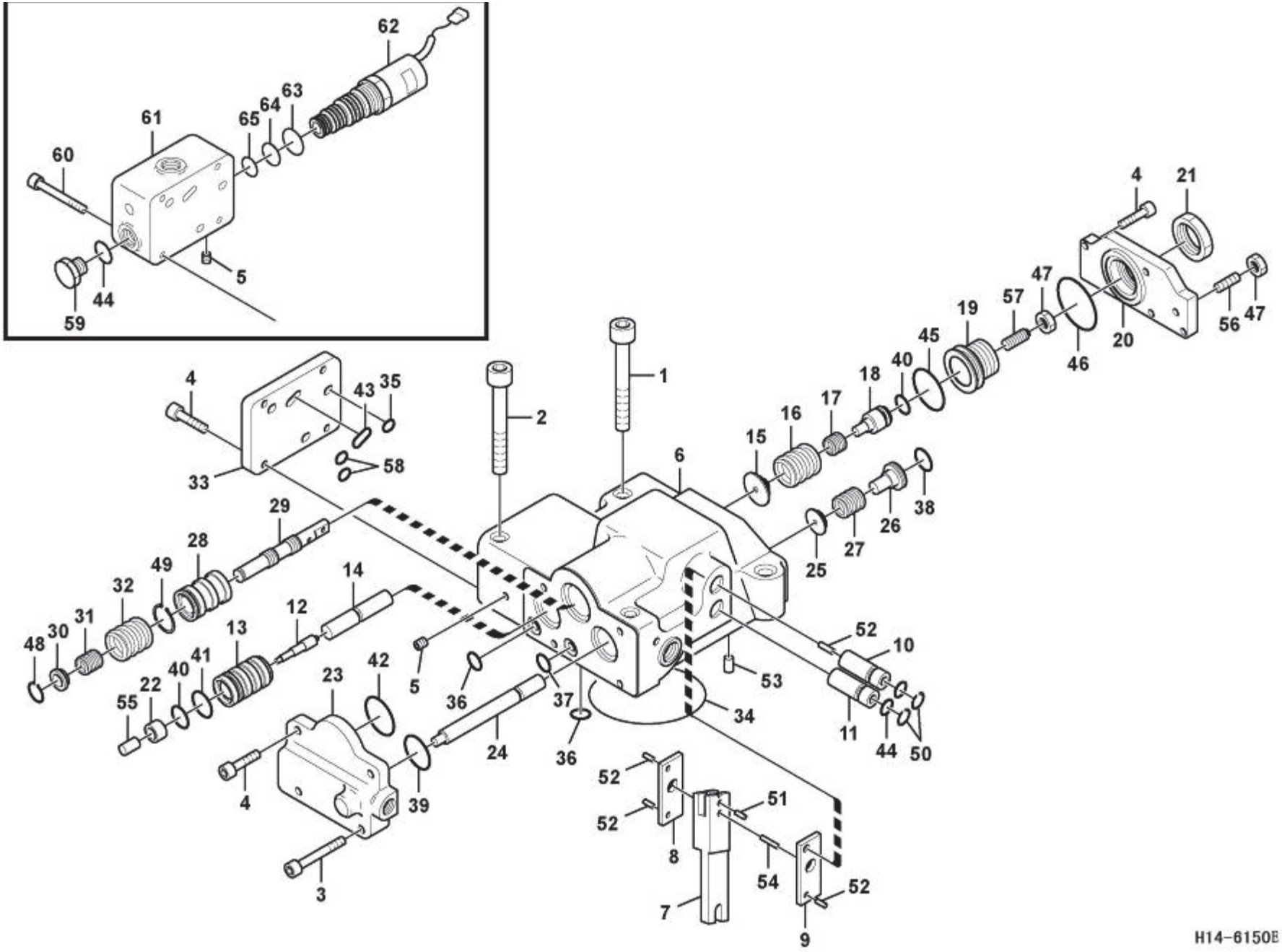
62
61
60
65
64
63
5
44
59
4
21
47
57
19
45
40
18
17
16
15
6
1
2
4
43
35
58
33
29
28
49
32
31
30
48
14
12
13
41
40
22
55
23
42
5
36
37
24
36
39
4
3
34
53
52
10
11
44
50
25
27
26
38
46
20
56
47
52
52
8
51
54
7
52
9
H14-6150E

Fig.	Part No.编码.	Quantity件数 1	2	3	PS	KIT	Description 说明	Notes
	11213088	1					Regulator control.....调节器控制.....	REAR
	11213089		1				Regulator control.....调节器控制.....	FRONT
1	**11211551**	2	2				•Hex. socket screw ....• 六角凹头螺丝.....	
2	**11211552**	2	2				•Bolt .....• 螺栓.....	
3	**11211549**	2	2				•Bolt .....• 螺栓.....	
4	**11211548**	6	10				•Bolt .....• 螺栓.....	
5	**11211417**	6	5				•Plug .....• 塞.....	
6		1	1		NS		•Casing .....• 壳体.....	
7		1	1		NS		•Lever.....• 操纵杆.....	
8		1	1		NS		•Lever.....• 操纵杆.....	
9		1	1		NS		•Lever.....• 操纵杆.....	
10		1	1		NS		•Plug .....• 堵头.....	
11		1	1		NS		•Plug .....• 堵头.....	
12		1	1		NS		•Piston.....• 活塞.....	
13		1	1		NS		•Sleeve.....• 内套.....	
14		1	1		NS		•Rod .....• 活杆.....	
15		1	1		NS		•Seat .....• 座圈.....	
16		1	1		NS		•Spring .....• 弹簧.....	
17		1	1		NS		•Spring .....• 弹簧.....	
18		1	1		NS		•Stem .....• 阀杆.....	
19		1	1		NS		•Screw.....• 六角螺钉.....	
20		1	1		NS		•Cover .....• 罩盖.....	
21		1	1		NS		•Lock nut .....• 锁紧螺母.....	
22		1	1		NS		•Sleeve.....• 内套.....	
23		1	1		NS		•Cover .....• 罩盖.....	
24		1	1		NS		•Piston.....• 活塞.....	
25		1	1		NS		•Seat .....• 座圈.....	
26		1	1		NS		•Stem .....• 阀杆.....	
27		1	1		NS		•Spring .....• 弹簧.....	
28		1	1		NS		•Sleeve.....• 内套.....	

1	**11212924**	液压泵稳压器 **Regulator, hydraulic pump**	Catalogue id **111201**	Group **903**
2	**11212924**			
3			Illustr. No **H14-6150E**	Section **300**
4				
5			Issue **2638000345**	Page **467**

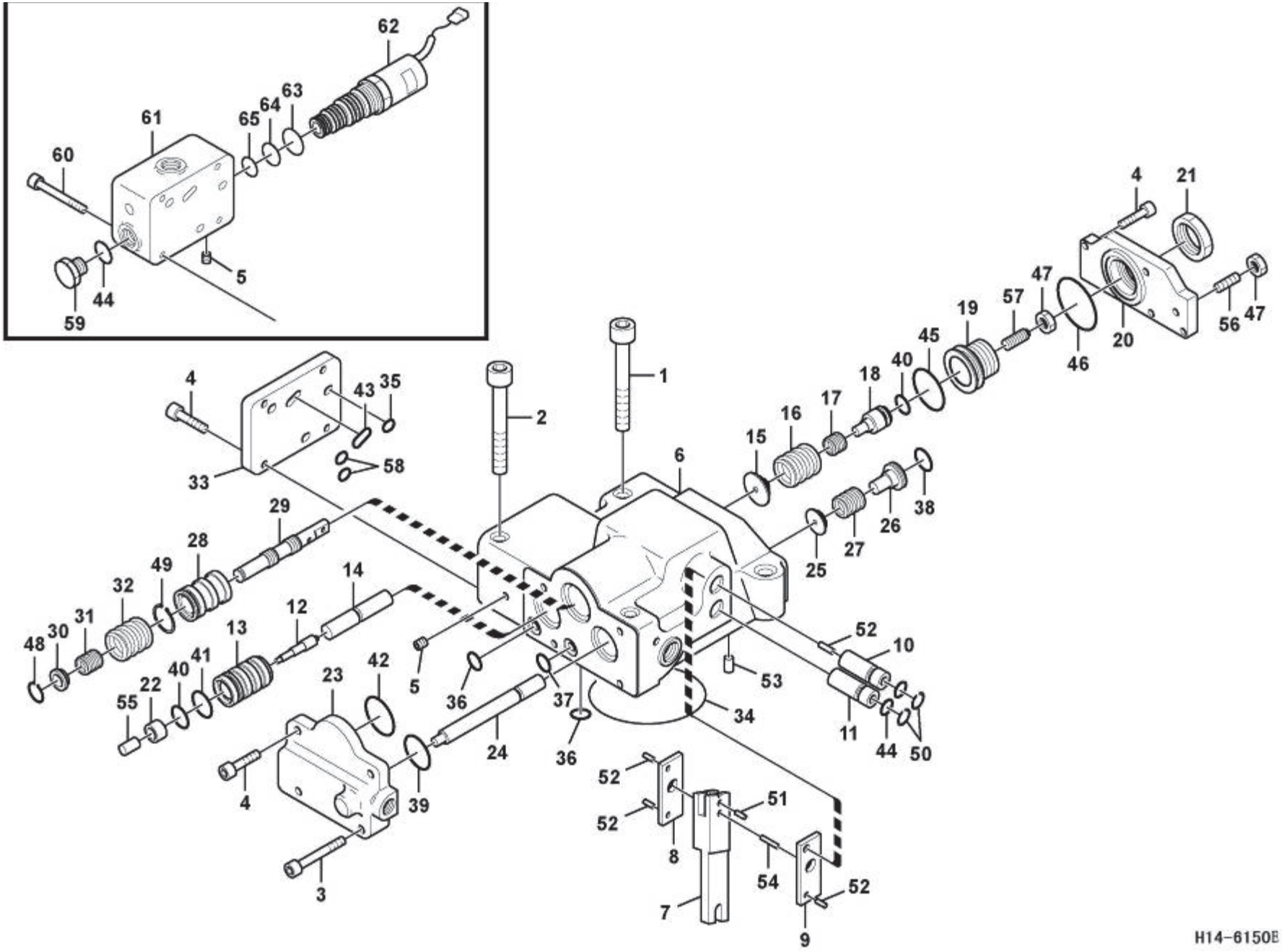
62
61
60
65
64
63
5
44
59
4
21
47
57
19
45
40
18
17
16
15
6
1
2
4
43
35
58
33
29
28
49
32
31
30
48
14
12
13
41
40
22
55
23
42
5
36
37
24
36
39
4
3
34
53
52
10
11
44
50
25
27
26
38
46
20
56
47
52
52
8
51
54
7
52
9
H14-6150E

Fig.	Part No编码.	Quantity件数 1	2	3	PS	KIT	Description 说明	Notes
29		1	1		NS		•Spool .....• 株塞.....	
30		1	1		NS		•Seat .....• 座圈.....	
31		1	1		NS		•Spring .....• 弹簧.....	
32		1	1		NS		•Spring .....• 弹簧.....	
33			1		NS		•Cover .....• 罩盖.....	FRONT
34	**11213132**	1	1			K	•O-ring.....•o 型圈.....	
35	**11210703**	1	1			K	•O-ring.....•o 型圈.....	
36	**11210704**	9	9			K	•O-ring.....•o 型圈.....	
37	**11213136**	1	1			K	•O-ring.....•o 型圈.....	
38	**11213122**	1	1			K	•O-ring.....•o 型圈.....	
39	**11213135**	1	1			K	•O-ring.....•o 型圈.....	
40	**11213121**	2	2			K	•O-ring.....•o 型圈.....	
41	**11213134**	1	1			K	•O-ring.....•o 型圈.....	
42	**11213133**	1	1			K	•O-ring.....•o 型圈.....	
43	**11210707**	1	1			K	•O-ring.....•o 型圈.....	
44	**11213123**	3	2			K	•O-ring.....•o 型圈.....	
45	**11213138**	1	1			K	•O-ring.....•o 型圈.....	
46	**11213137**	1	1			K	•O-ring.....•o 型圈.....	
47	**11211627**	2	2				•Nut .....• 螺母.....	
48	**11211600**	1	1			K	•Ring .....• 密封环.....	
49	**11213139**	1	1			K	•Ring .....• 密封环.....	
50	**11213141**	2	2			K	•Ring .....• 密封环.....	
51		1	1		NS		•Cover .....• 罩盖.....	
52		4	4		NS		•Pin .....• 定位销.....	
53		1	1		NS		•Pin .....• 定位销.....	
54		1	1		NS		•Pin .....• 定位销.....	
55		1	1		NS		•Pin .....• 定位销.....	
56	**11213140**	1	1				•Screw.....• 六角螺钉.....	
57		1	1		NS		•Screw.....• 六角螺钉.....	
58	**11210723**	2	2			K	•O-ring.....•o 型圈.....	

1	**11212924**
2	**11212924**
3	
4	
5	

液压泵稳压器
Regulator, hydraulic pump

Catalogue id **111201**	Group **903**
Illustr. No **H14-6150E**	Section **300**
Issue **2638000345**	Page **469**

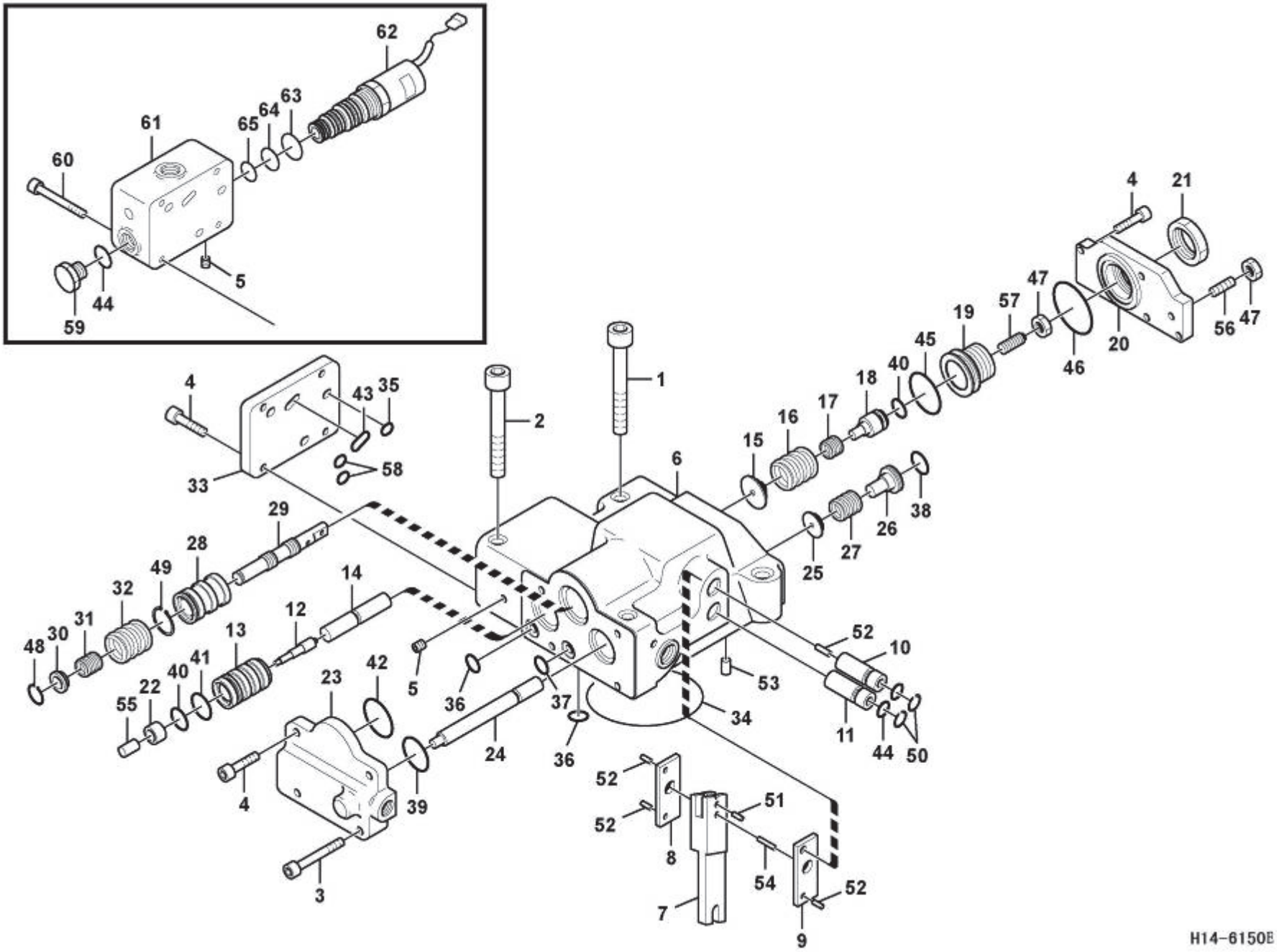
62
61
65
64
63
60
5
44
59
4
21
47
57
19
45
40
18
17
16
15
6
1
2
4
43
35
58
33
29
28
49
32
31
30
48
14
12
13
41
40
22
55
42
23
4
3
39
24
36
37
36
5
25
27
26
38
52
10
53
34
11
44
50
52
52
8
51
54
7
52
9
46
20
56
47
H14-6150E

Fig.	Part No.编码.	Quantity件数 1	2	3	PS	KIT	Description 说明	Notes
59	**11211697**	1					•Plug .....• 堵头.....	
60	**11213160**	4					•Bolt .....• 螺栓.....	
61		1			NS		•Casing .....• 壳体.....	REAR
62	**11213161**	1					•Valve.....• 阀.....	
63	**11210164**	1					••O-ring .....••○ 型圈.....	
64	**11210734**	1			SS		••O-ring .....••▯ 形圈.....	
65	**11210735**	1			SS		••O-ring .....••▯ 形圈.....	
100	**11213159**	1	1				Sealing Kit.....密封包.....	

1	**11212924**	液压泵稳压器 **Regulator, hydraulic pump**	Catalogue id **111201**	Group **903**
2	**11212924**			
3			Illustr. No **H14-6150E**	Section **300**
4				
5			Issue **2638000345**	Page **471**

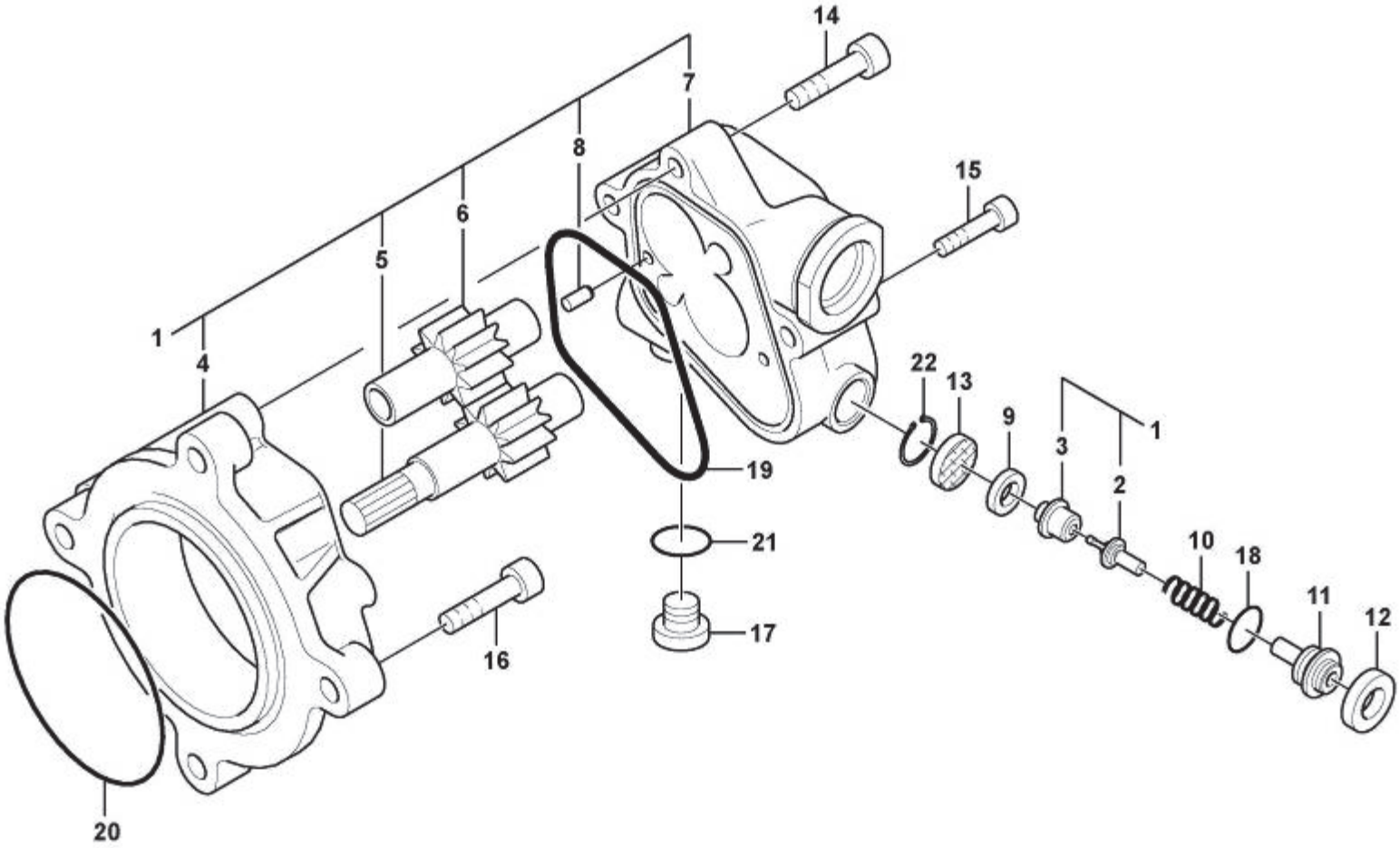

H15-6150E

Fig.	Part No编码.	Quantity件数 1	2	3	PS	KIT	Description 说明	Notes
	11213087	1					Gear pump .....齿轮泵.....	
1	**11213162**	1					•Case .....• 箱.....	
2		1			NS		••Poppet .....•• 塞座.....	
3		1			NS		••Seat .....•• 滑靴.....	
4		1			NS		••Case .....•• 壳体.....	
5		1			NS		••Gear .....•• 齿轮.....	
6		1			NS		••Gear .....•• 齿轮.....	
7		1			NS		••Case .....•• 壳体.....	
8		2			NS		••Pin .....•• 定位销.....	
9	**11213163**	1					•Ring .....• 环.....	
10	**11210722**	1					•Spring .....• 弹簧.....	
11	**11210721**	1					•Screw.....• 螺丝.....	
12	**11211412**	1					•Lock nut .....• 锁紧螺母.....	
13	**11211482**	1					•Filter.....• 过滤器.....	
14	**11211555**	2					•Screw.....• 螺丝.....	
15	**11211556**	2					•Screw.....• 螺丝.....	
16	**11213164**	4					•Socket.....• 套筒.....	
17	**11211697**	1					•Plug .....• 堵头.....	
18	**11210136**	1				K	•O-ring.....•o 型圈.....	
19	**11211416**	1				K	•Ring .....• 密封环.....	
20	**11213126**	1				K	•O-ring.....•o 型圈.....	
21	**11210133**	1				K	•O-ring.....•o 型圈.....	
22	**11213166**	1					•Retaining ring .....• 固位环.....	
100	**11213165**	1					Sealing Kit.....密封包.....	

1	**11212924**	液压齿轮泵 **Hydraulic gear pump**	Catalogue id **111201**	Group **903**
2				
3			Illustr. No **H15-6150E**	Section **400**
4				
5			Issue **2638000345**	Page **473**

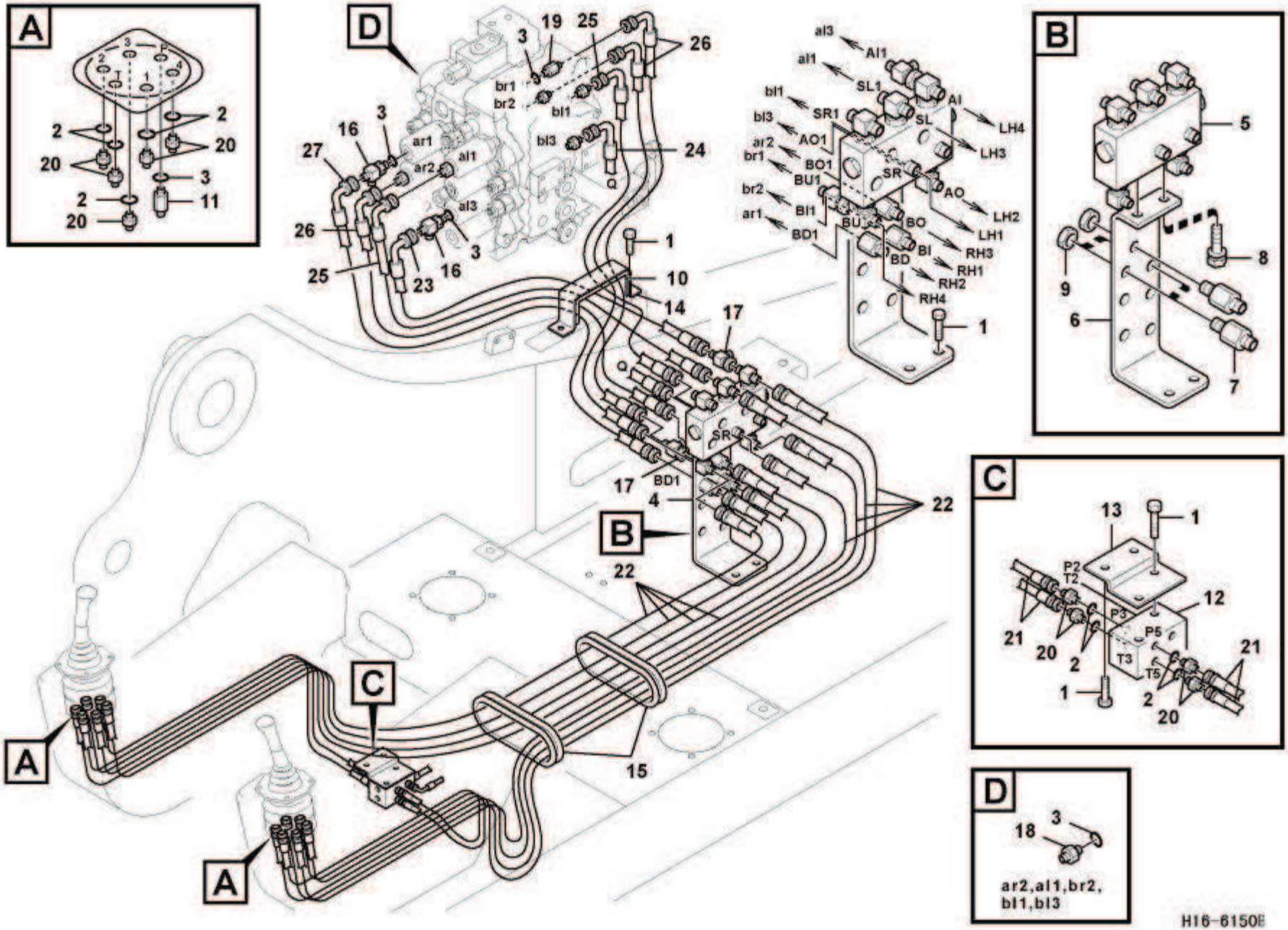
A
2
20
3
11
D
19
25
26
br1
br2
bl1
bl3
24
16
27
ar1
ar2
al1
al3
23
1
10
14
17
BD1
4
22
15
B
al3
Al1
al1
SL1
bl1
SR1
Al
LH4
bl3
AO1
SL
LH3
ar2
br1
BO1
BU1
SR
AO
LH2
br2
Bl1
BU
BO
LH1
ar1
BD1
Bl
RH3
BD
RH1
RH2
RH4
5
8
9
6
7
C
13
P2
T2
12
P3
P5
21
T3
T5
D
18
ar2,al1,br2,
bl1,bl3
H16-6150E

Fig.	Part No编码.	Quantity件数 1	2	3	PS	KIT	Description 说明	Notes
1	**11210034**	8					Flange screw.....法兰螺丝.....	
2	**11210135**	14					O-ring .....o 型圈.....	
3	**11210133**	10					O-ring .....o 型圈.....	
4	**11213169**	1					Shuttle valve .....往复阀.....	
5	**11213170**	1					•Valve.....• 阀.....	
6	**11213167**	1					•Bracket .....• 支架.....	
7	**11213168**	3					•Connector .....• 接头.....	
8	**11210036**	2					•Flange screw .....• 法兰螺丝.....	
9	**11213171**	3					•Nut.....• 螺母.....	
10	**11213173**	1					Sponge.....海绵.....	
11	**11211316**	2					Connector .....接头.....	
12	**11213174**	1					Block .....阻挡块.....	
13	**11213175**	1					Bracket.....支架.....	
14	**11213172**	1					Clamp.....管夹.....	
15	**11213176**	2					Grommet .....套环.....	
16	**11211667**	2					Tee.....三通.....	
17	**11211670**	2					Tee.....三通.....	
18	**11211672**	5					Connector .....接头.....	
19	**11211677**	1					Connector .....接头.....	
20	**11211679**	14					Connector .....接头.....	
21	**11213177**	4					Hose assembly .....软管装置.....	
22	**11213178**	8					Hose assembly .....软管装置.....	
23	**11212031**	1					Hose assembly .....软管装置.....	
24	**11211741**	1					Hose assembly .....软管总成.....	
25	**11212032**	2					Hose assembly .....软管总成.....	
26	**11212033**	3					Hose assembly .....软管总成.....	
27	**11213179**	1					Hose assembly .....软管总成.....	

1	**11212924**	伺服系统,控制阀到遥控阀 **Servo system, control valve to remote control valve**	Catalogue id **111201**	Group **904**
2			Illustr. No **H16-6150E**	Section **100**
3				
4			Issue **2638000345**	Page **475**
5				

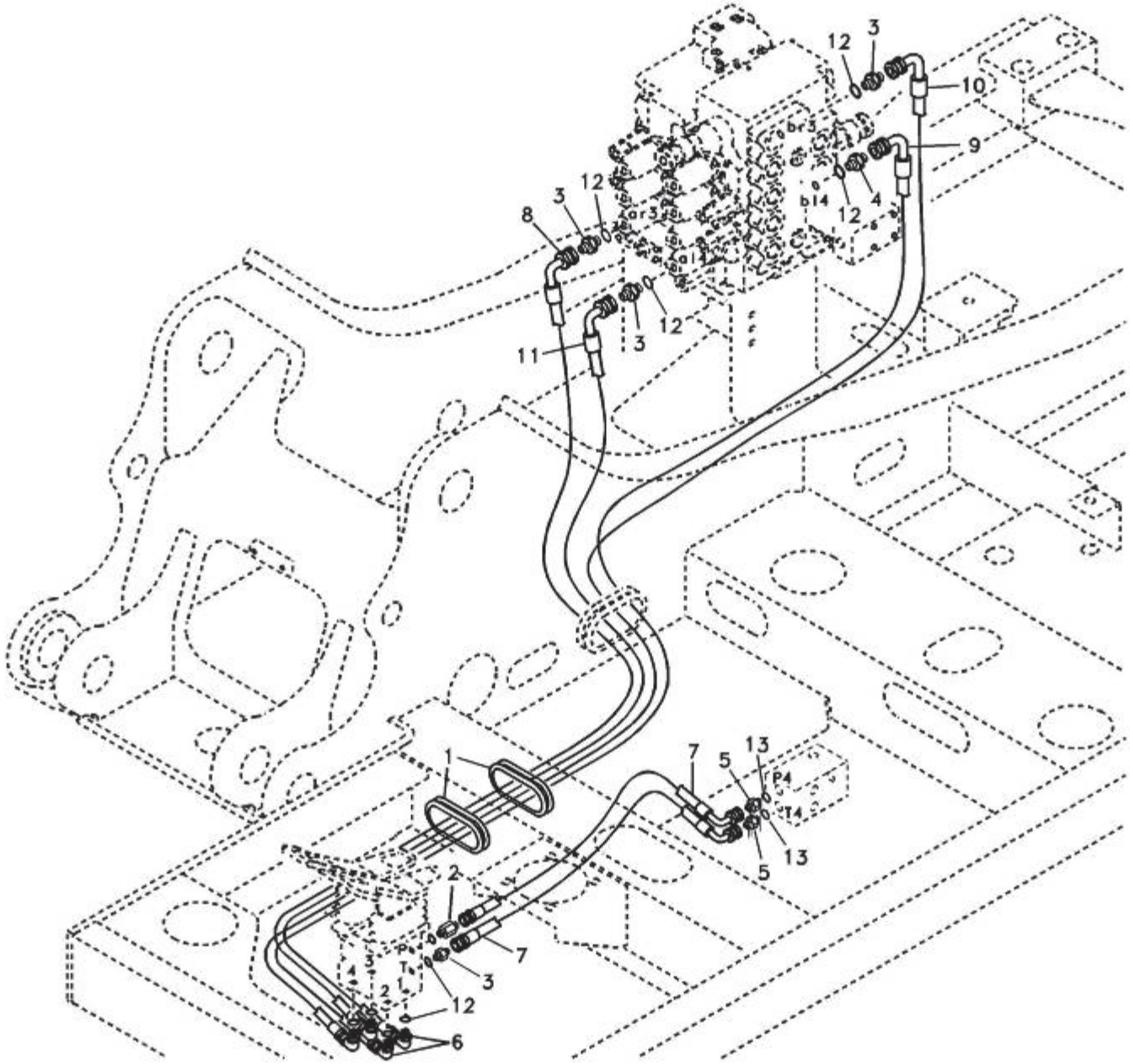

H17-6150E

Fig.	Part No.编码.	Quantity件数 1	2	3	PS	KIT	Description 说明	Notes
1	**11210603**	2					Grommet .....索环.....	
2	**11211316**	1					Connector .....接头.....	
3	**11211672**	4					Connector .....接头.....	
4	**11211677**	1					Connector .....接头.....	
5	**11211679**	2					Connector .....接头.....	
6	**11211689**	4					Elbow .....弯管接头.....	
7	**11213184**	2					Hose assembly .....软管装置.....	
8	**11213186**	1					Hose.....软管.....	
9	**11213187**	1					Hose assembly .....软管装置.....	
10	**11213188**	1					Hose assembly .....软管装置.....	
11	**11213185**	1					Hose assembly .....软管总成.....	
12	**11210133**	10					O-ring .....O 型圈.....	
13	**11210135**	2					O-ring .....O 型圈.....	

1	**11212924**	伺服系统,控制阀到遥控阀踏板 **Servo system, control valve to remote control valve pedal**	Catalogue id **111201**	Group **904**
2			Illustr. No **H17-6150E**	Section **200**
3				
4			Issue **2638000345**	Page **477**
5				

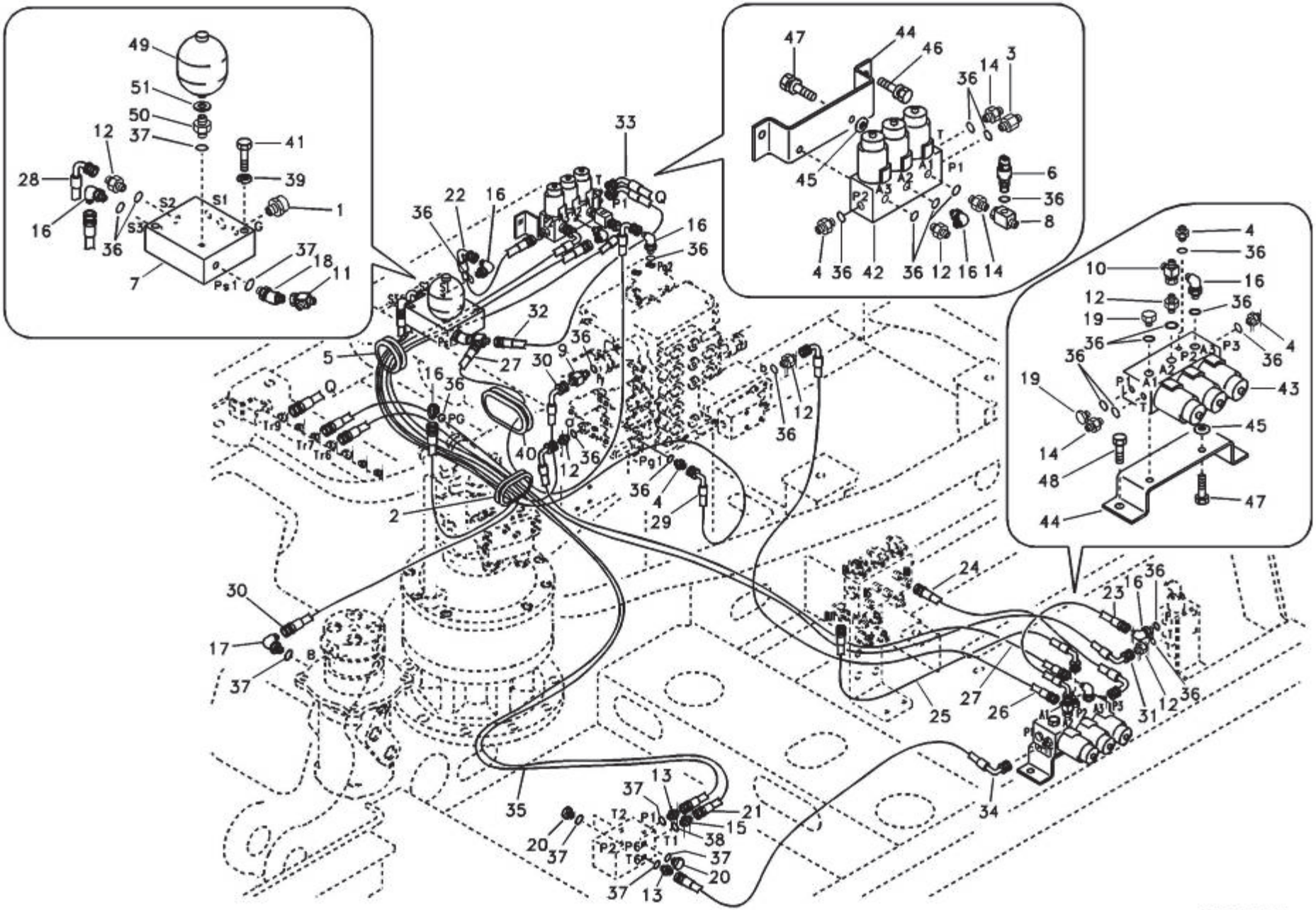
H18-6150E

Fig.	Part No编码.	Quantity件数 1	2	3	PS	KIT	Description 说明	Notes
1	**11211013**	1					Nipple.....螺纹接套.....	
2	**11213201**	1					Grommet .....索环.....	
3	**11211315**	1					Connector .....连接器.....	
4	**11211316**	4					Connector .....接头.....	
5	**11213200**	1					Grommet .....索环.....	
6	**11210614**	1					Switch .....开关.....	
7	**11210672**	1					Block .....阻挡块.....	
8	**11213202**	1					Tee.....三通.....	
9	**11211667**	1					Tee.....三通.....	
10	**11211670**	1					Tee.....三通.....	
11	**11213203**	1					Tee.....三通.....	
12	**11211672**	6					Connector .....接头.....	
13	**11211673**	2					Connector .....接头.....	
14	**11211678**	3					Connector .....接头.....	
15	**11213204**	1					Connector .....接头.....	
16	**11211689**	7					Elbow .....弯管接头.....	
17	**11213205**	1					Elbow .....弯管接头.....	
18	**11213206**	1					Elbow .....弯管接头.....	
19	**11211697**	2					Plug.....堵头.....	
20	**11211698**	3					Plug.....堵头.....	
21	**11213207**	1					Hose assembly .....软管总成.....	
22	**11213208**	1					Hose assembly .....软管装置.....	
23	**11211733**	1					Hose assembly .....软管装置.....	
24	**11211735**	1					Hose.....软管.....	
25	**11211736**	1					Hose assembly .....软管总成.....	
26	**11211742**	1					Hose assembly .....软管总成.....	
27	**11211744**	2					Hose assembly .....软管总成.....	
28	**11212034**	1					Hose assembly .....软管总成.....	
29	**11213209**	1					Hose.....软管.....	
30	**11211748**	2					Hose assembly .....软管总成.....	

1	**11212924**	伺服系统,控制阀到电磁阀 **Servo system, control valve to solenoid valve**	Catalogue id **111201**	Group **904**
2				
3			Illustr. No **H18-6150E**	Section **300**
4				
5			Issue **2638000345**	Page **479**

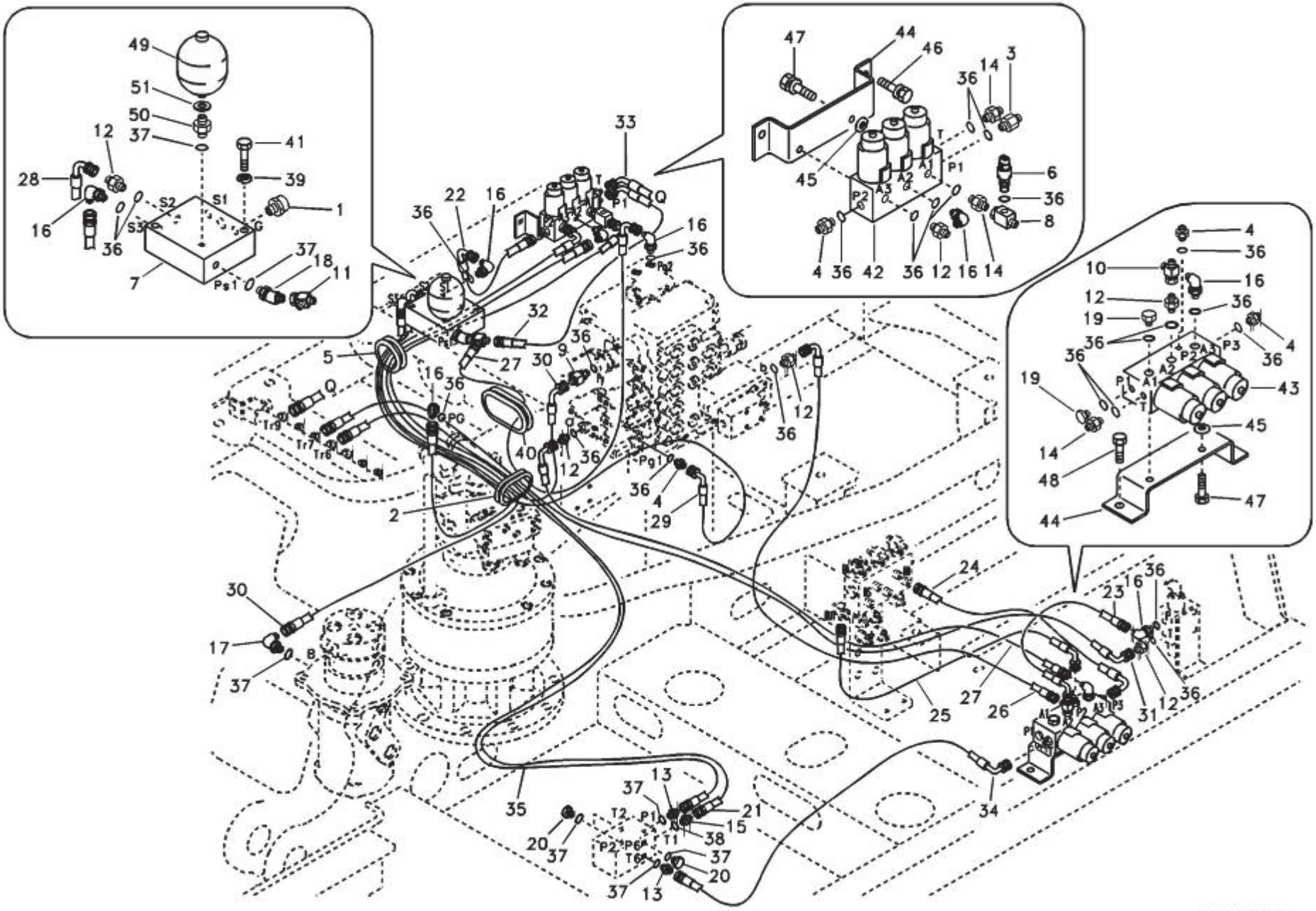
H18-6150E

Fig.	Part No.编码.	Quantity件数 1	2	3	PS	KIT	Description 说明	Notes
31	**11213221**	1					Hose assembly .....软管装置.....	
32	**11213222**	1					Hose assembly .....软管总成.....	
33	**11213223**	1					Hose.....软管.....	
34	**11213224**	1					Hose assembly .....软管装置.....	
35	**11213225**	1					Hose.....软管.....	
36	**11210133**	23					O-ring .....O 型圈.....	
37	**11210135**	9					O-ring .....O 型圈.....	
38	**11210166**	1					O-ring .....O 型圈.....	
39	**11210063**	2					Spring washer .....弹簧垫圈.....	
40	**11211808**	1					Grommet .....套环.....	
41	**11210121**	2					Hexagon screw .....六角螺丝.....	
42	**11213229**	1					Solenoid valve.....线圈阀.....	
	11213226	3					•Set .....• 组件.....	
43	**11213791**		1				Solenoid valve.....线圈阀.....	
	11213226		2				•Set .....• 组件.....	
	11213792		1				Connector .....连接器.....	
44	**11213227**	1	1				Bracket.....支架.....	
45	**11210218**	2	2				Washer.....垫圈.....	
46	**11210036**		2				Flange screw.....法兰螺丝.....	
47	**11210033**	2	2				Flange screw.....法兰螺丝.....	
48	**11210034**	2					Flange screw.....法兰螺丝.....	
49	**11213228**	1					Accumulator .....蓄能器.....	
50	**11211683**	1					Connector .....接头.....	
51	**11211710**	1					Gasket.....密封垫.....	

1	**11212924**	伺服系统,控制阀到电磁阀 **Servo system, control valve to solenoid valve**	Catalogue id **111201**	Group **904**
2	**11213793**			
3			Illustr. No **H18-6150E**	Section **300**
4				
5			Issue **2638000345**	Page **481**

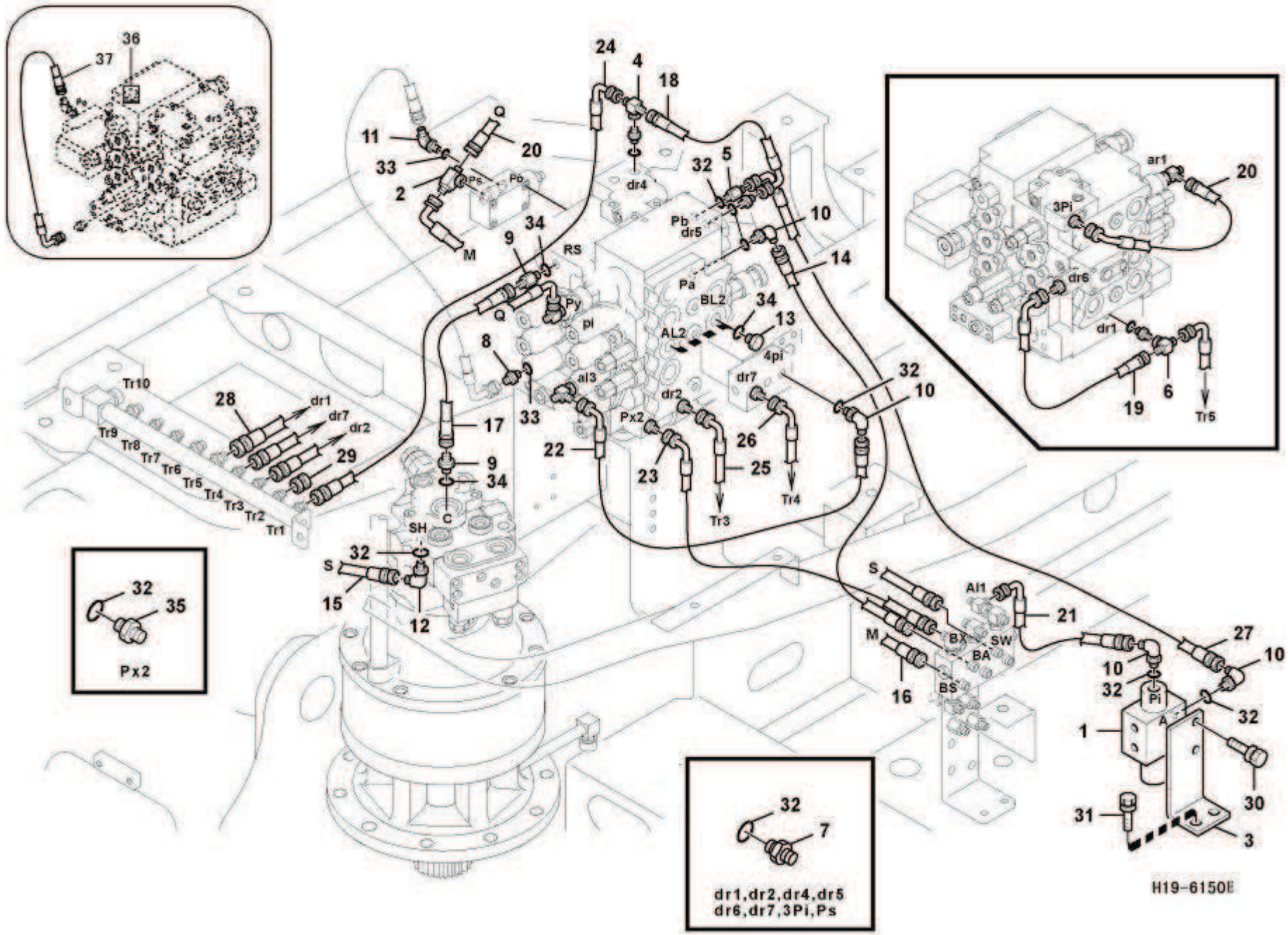
36
37
Ps
dr5
24
4
18
Q
11
20
33
2
Ps
Pb
M
dr4
32
5
Pb
dr5
10
14
9
34
RS
Q
Py
pi
Pa
BL2
34
13
AL2
4pi
8
33
al3
dr7
dr2
Px2
22
23
26
25
Tr3
Tr4
17
9
34
C
SH
32
S
15
12
Tr10
Tr9
Tr8
Tr7
Tr6
Tr5
Tr4
Tr3
Tr2
Tr1
28
dr1
dr7
dr2
29
ar1
20
3Pi
dr6
dr1
19
6
Tr5
32
10
S
M
16
Al1
21
BX
SW
BA
BS
27
10
10
32
Pi
A
1
32
30
31
3
32
35
Px2
32
7
dr1,dr2,dr4,dr5
dr6,dr7,3Pi,Ps
H19-6150E

Fig.	Part No编码.	Quantity件数 1	2	3	PS	KIT	Description 说明	Notes
1	**11211293**	1					Valve .....阀.....	
2	**11213247**	1					T-nipple .....T-接头.....	
3	**11213248**	1					Bracket .....支架.....	
4	**11211664**	1					Tee .....三通.....	
5	**11211666**	1					Connector .....连接器.....	
6	**11211668**	1					T-nipple .....T-接头.....	
7	**11211672**	8					Connector .....接头.....	
8	**11211673**	1					Connector .....接头.....	
9	**11211675**	2					Connector .....接头.....	
10	**11211689**	4					Elbow .....弯管接头.....	
11	**11211690**	1					Elbow .....弯管接头.....	
12	**11213249**	1					Elbow .....弯管接头.....	
13	**11211701**	2					Plug.....塞.....	
14	**11211717**	1					Hose assembly .....软管装置.....	
15	**11213250**	1					Hose assembly .....软管总成.....	
16	**11213251**	1					Hose .....软管.....	
17	**11213252**	1					Hose assembly .....软管装置.....	
18	**11213208**	1					Hose assembly .....软管装置.....	
19	**11213253**	1					Hose assembly .....软管总成.....	
20	**11211733**	2					Hose assembly .....软管装置.....	
21	**11211736**	1					Hose assembly .....软管总成.....	
22	**11211737**	1					Hose assembly .....软管装置.....	
23	**11212030**	1					Hose assembly .....软管总成.....	
24	**11213254**	1					Hose assembly .....软管总成.....	
25	**11211742**	1					Hose assembly .....软管总成.....	
26	**11211744**	1					Hose assembly .....软管总成.....	
27	**11213255**	1					Hose assembly .....软管总成.....	
28	**11213256**	1					Hose .....软管.....	
29	**11212069**	1					Plug.....堵头.....	
30	**11210033**	2					Flange screw.....法兰螺丝.....	

1	**11212924**	伺服系统,控制阀管线 **Servo system , control valve piping.**	Catalogue id **111201**	Group **904**
2				
3			Illustr. No **H19-6150E**	Section **400**
4				
5			Issue **2638000345**	Page **483**

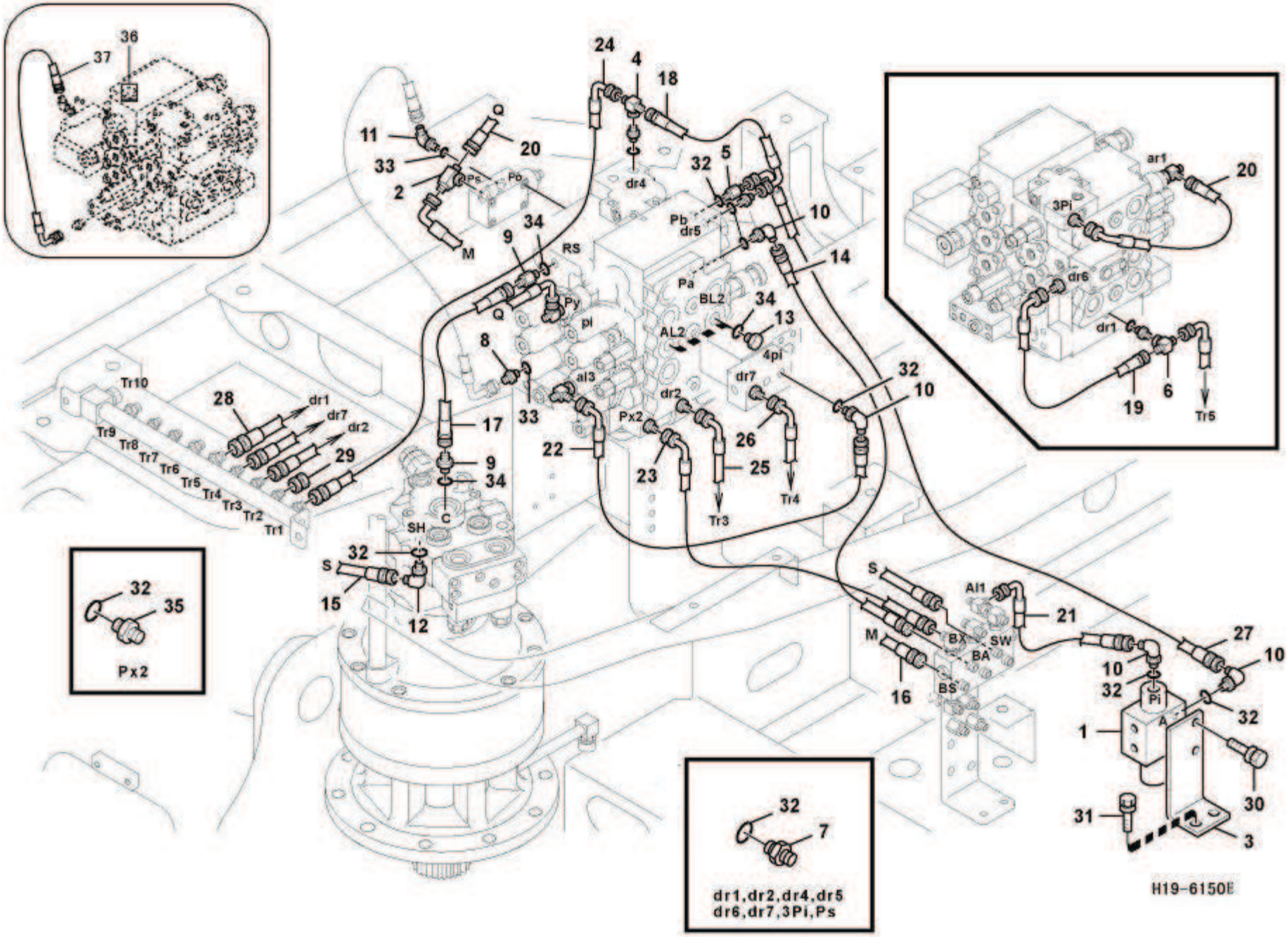
36
37
dr3
Ps
24
4
18
Q
11
20
33
2
Ps
Pb
M
dr4
32
5
Pb
dr5
10
14
9
34
RS
Pa
BL2
34
13
Q
Py
pi
AL2
4pi
8
al3
dr7
32
10
Tr10
28
dr1
dr7
dr2
Tr9
Tr8
Tr7
Tr6
Tr5
Tr4
Tr3
Tr2
Tr1
29
17
33
dr2
Px2
26
22
23
25
Tr3
Tr4
9
34
C
SH
32
S
15
12
Px2
32
35
ar1
20
3Pi
dr6
dr1
19
6
Tr5
S
Al1
21
M
BX
SW
BA
BS
16
27
10
10
32
Pi
32
A
1
30
31
3
32
7
dr1,dr2,dr4,dr5
dr6,dr7,3Pi,Ps
H19-6150E

Fig.	Part No.编码.	Quantity件数 1	2	3	PS	KIT	Description 说明	Notes
31	**11210034**	2					Flange screw.....法兰螺丝.....	
32	**11210133**	15					O-ring .....o 型圈.....	
33	**11210135**	2					O-ring .....o 型圈.....	
34	**11210141**	4					O-ring .....o 型圈.....	
35	**11211677**	1					Connector .....接头.....	
36	**11213444**		1				Plate.....板.....	
37	**11213446**		1				Hose.....软管.....	

1	**11212924**	伺服系统,控制阀管线 **Servo system , control valve piping.**	Catalogue id **111201**	Group **904**
2	**11213445**		Illustr. No **H19-6150E**	Section **400**
3			Issue **2638000345**	Page **485**
4				
5				

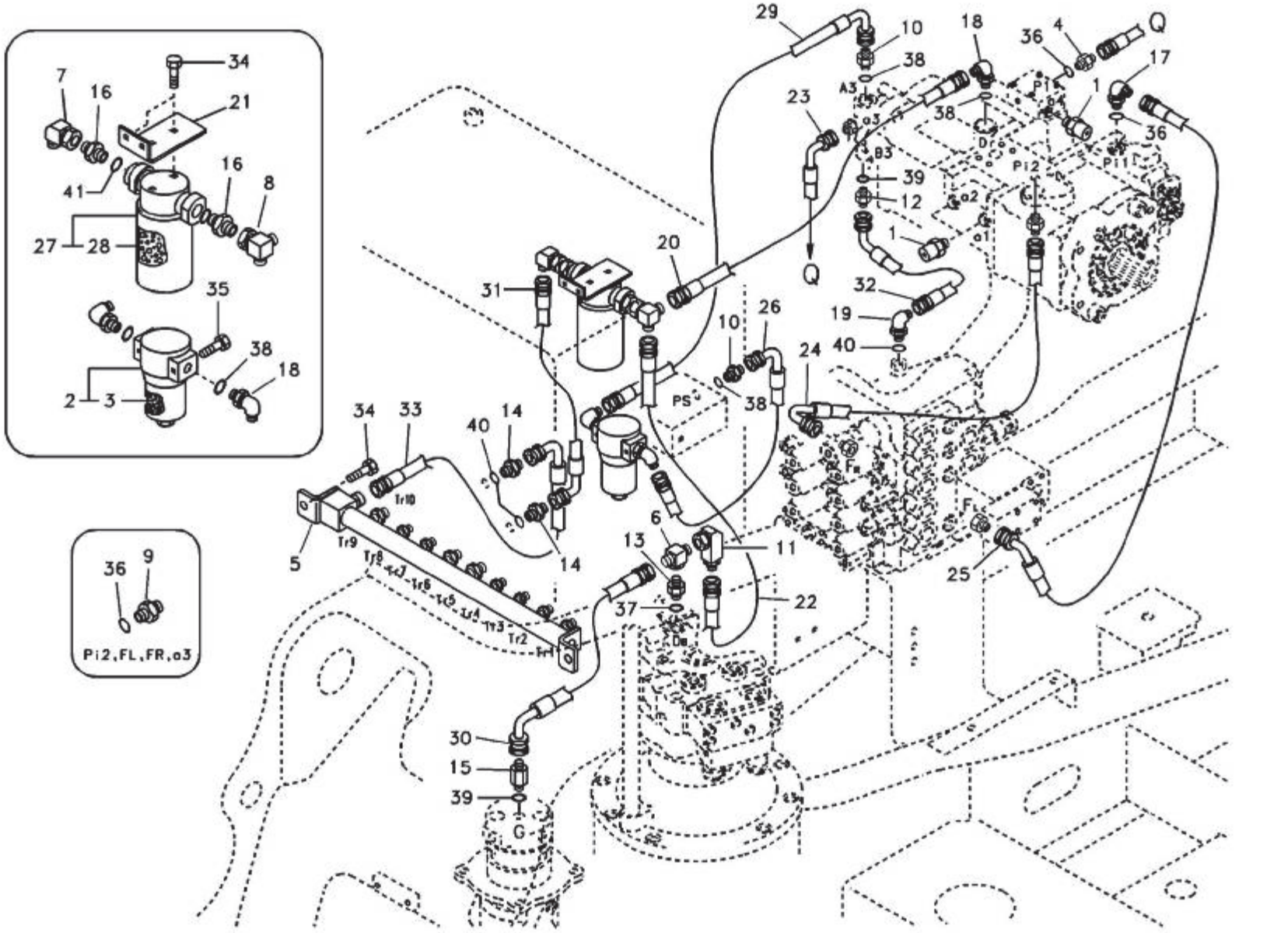
34
7
16
21
16
41
8
27
28
35
38
18
2
3
36
9
Pi2,FL,FR,a3
29
10
38
A3
a3
23
B3
39
12
1
20
31
32
19
40
10
26
38
24
PS
34
33
40
14
Tr10
Tr9
Tr8
Tr7
Tr6
Tr5
Tr4
Tr3
Tr2
Tr1
5
14
6
13
11
37
22
25
30
15
39
G
18
36
4
Q
17
1
36
38
Pi1
Pi2
a2
a1
Fa
F
Da
Db
H20-6150E

Fig.	Part No.编码.	Quantity件数 1	2	3	PS	KIT	Description 说明	Notes
1	**11211013**	3					Nipple.....螺纹接套.....	
2	**11211212**	1					Filter .....过滤器.....	
3	**11211360**	1					•Element .....• 滤芯.....	
	11210411	1					•O-ring.....•0 型圈.....	
4	**11211317**	1					Connector .....连接器.....	
	11210133	1					•O-ring.....•0 型圈.....	
5	**11213265**	1					Pipe.....硬管总成.....	
6	**11211665**	1					Tee.....三通.....	
7	**11213267**	1					Elbow .....弯管接头.....	
8	**11213268**	1					Elbow .....弯管接头.....	
9	**11211672**	4					Connector .....接头.....	
10	**11211674**	2					Connector .....接头.....	
11	**11213266**	1					Elbow .....弯管接头.....	
12	**11211675**	1					Connector .....接头.....	
13	**11213269**	1					Connector .....接头.....	
14	**11211681**	2					Connector .....连接器.....	
15	**11211682**	1					Connector .....连接器.....	
16	**11211688**	2					Connector .....接头.....	
17	**11211689**	1					Elbow .....弯管接头.....	
18	**11211691**	3					Elbow .....弯管接头.....	
19	**11213270**	1					Elbow .....弯管接头.....	
20	**11213272**	1					Hose.....软管.....	
21	**11210261**	1					Bracket.....支架.....	
22	**11213271**	1					Hose assembly .....软管装置.....	
23	**11211736**	1					Hose assembly .....软管总成.....	
24	**11213273**	1					Hose assembly .....软管装置.....	
25	**11213274**	1					Hose.....软管.....	
26	**11213275**	1					Hose.....软管.....	
27	**11211250**	1					Filter .....过滤器.....	
28	**11211213**	1					•Cartridge .....• 滤芯.....	

1	**11212924**	伺服系统,泵管线和过滤器安装件 **Servo system , pump piping and filter mount.**	Catalogue id **111201**	Group **904**
2				
3			Illustr. No **H20-6150E**	Section **500**
4				
5			Issue **2638000345**	Page **487**

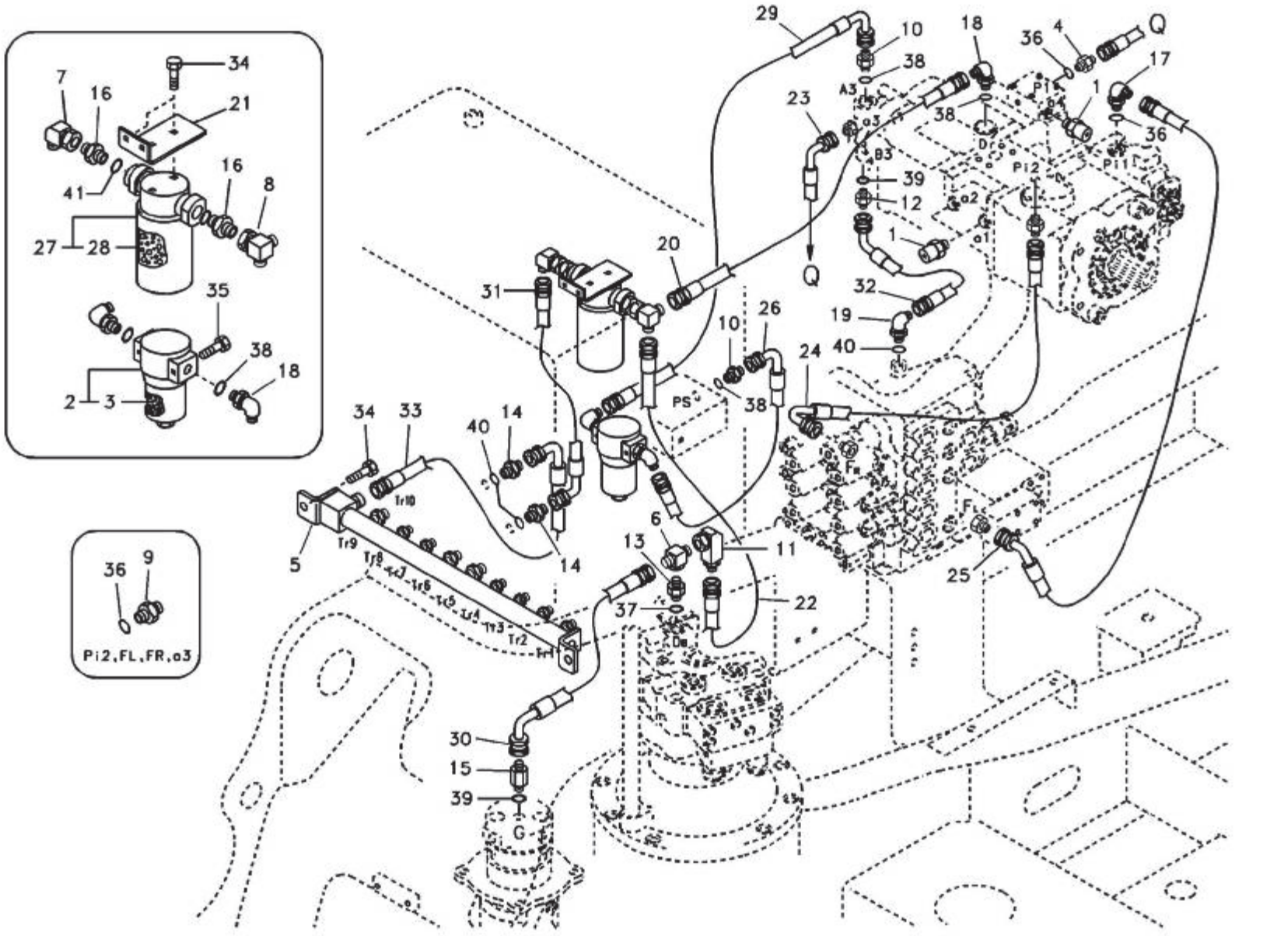
Pi2,FL,FR,a3
H20-6150E

Fig.	Part No.编码.	Quantity件数 1	2	3	PS	KIT	Description 说明	Notes
29	**11213282**	1					Hose assembly .....软管装置.....	
30	**11213283**	1					Hose.....软管.....	
31	**11212038**	1					Hose assembly .....软管装置.....	
32	**11213284**	1					Hose assembly .....软管总成.....	
33	**11213285**	1					Hose assembly .....软管装置.....	
34	**11210034**	6					Flange screw.....法兰螺丝.....	
35	**11210075**	2					Flange screw.....法兰螺丝.....	
36	**11210133**	6					O-ring .....O 型圈.....	
37	**11210135**	1					O-ring .....O 型圈.....	
38	**11210166**	5					O-ring .....O 型圈.....	
39	**11210141**	2					O-ring .....O 型圈.....	
40	**11210144**	3					O-ring .....O 型圈.....	
41	**11210009**	2					O-ring .....O 型圈.....	

1	**11212924**	伺服系统,泵管线和过滤器安装件 **Servo system , pump piping and filter mount.**	Catalogue id **111201**	Group **904**
2				
3			Illustr. No **H20-6150E**	Section **500**
4				
5			Issue **2638000345**	Page **489**

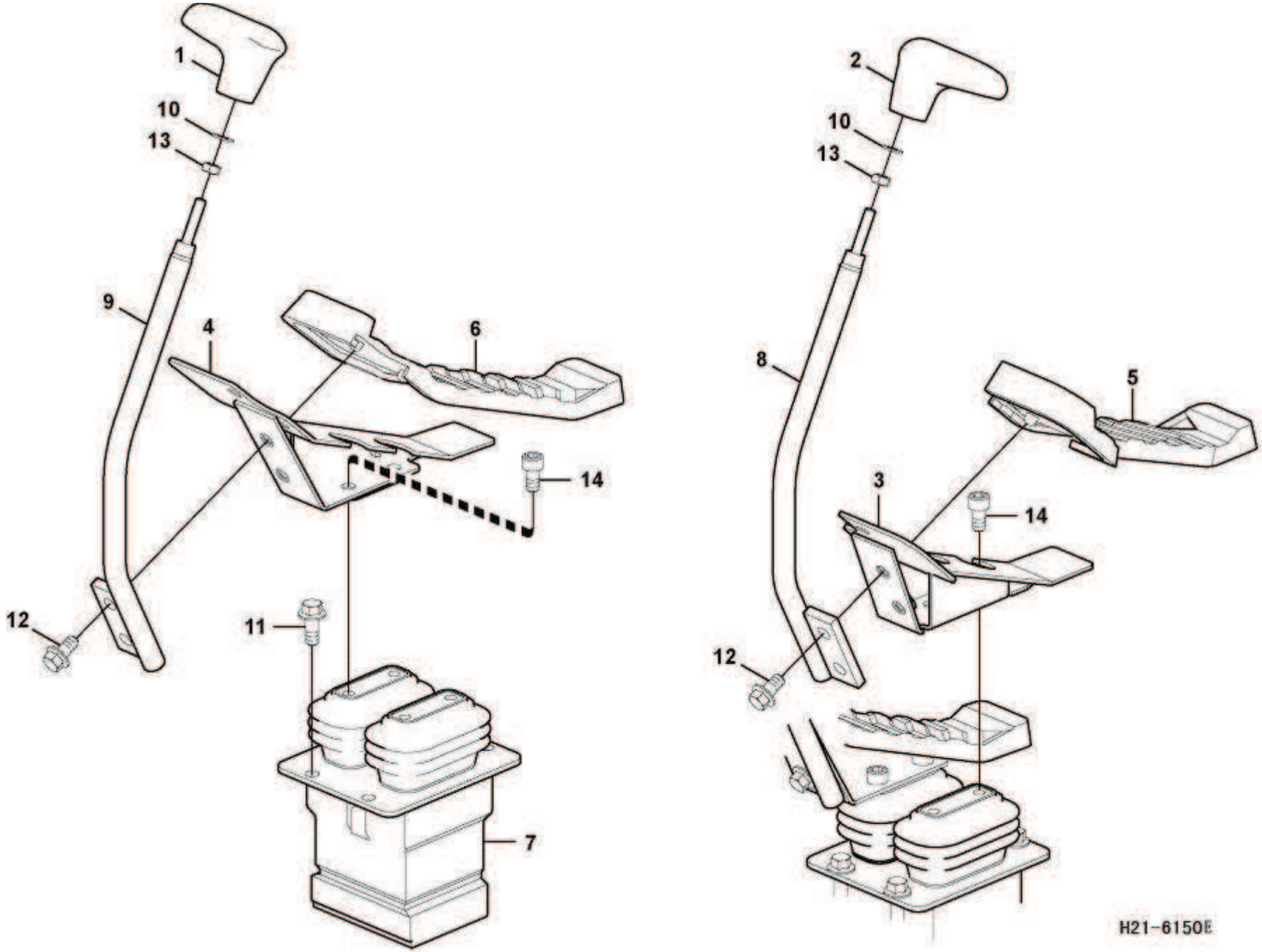
1
10
13
9
4
6
14
12
11
7
2
10
13
8
5
3
14
12
H21-6150E

Fig.	Part No.编码.	Quantity件数 1	2	3	P S	K I T	Description 说明	Notes
1	**11210541**	1					Knob.....按钮.....	LH
2	**11210542**	1					Knob.....按钮.....	RH
3	**11210529**	1					Pedal.....踏板.....	LH
4	**11210530**	1					Pedal.....踏板.....	RH
5	**11211209**	1					Cover .....罩盖.....	
6	**11211210**	1					Cover .....罩盖.....	
7	**11214283**	1					Remote control valve .远程控制阀.....	
8	**11210531**	1					Lever .....操纵杆.....	LH
9	**11210532**	1					Lever .....操纵杆.....	RH
10	**11210218**	2					Washer.....垫圈.....	
11	**11210037**	4					Flange screw.....法兰螺丝.....	
12	**11210032**	4					Flange screw.....法兰螺丝.....	
13	**11210129**	2					Hexagon nut.....六角螺母.....	
14	**11210158**	4					Hex. socket screw.....六角凹头螺丝.....	

1	**11212924**	带安装零件的遥控阀踏板 **Remote control valve pedal with fitting parts**	Catalogue id **111201**	Group **904**
2			Illustr. No **H21-6150E**	Section **600**
3				
4			Issue **2638000345**	Page **491**
5				

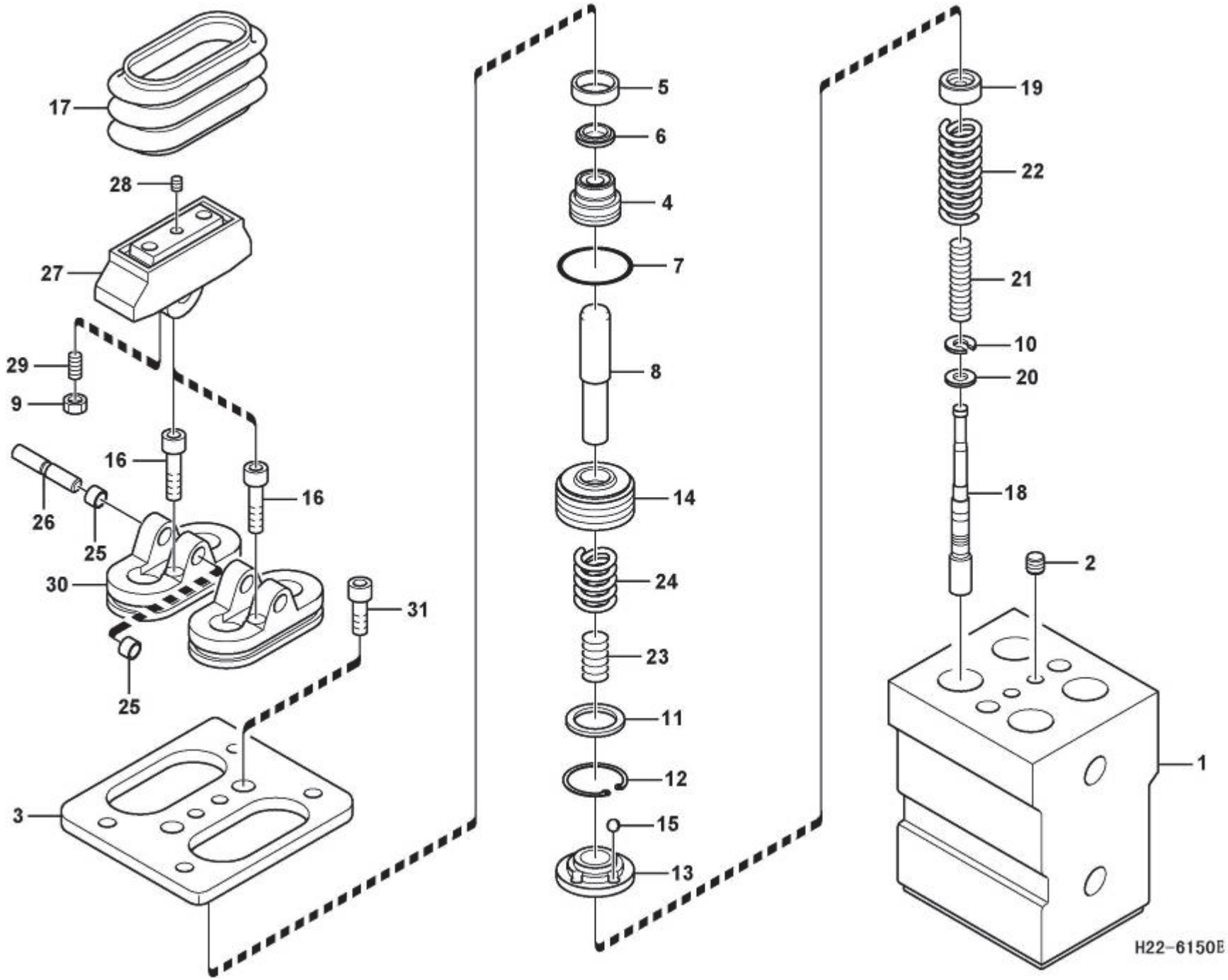
17
28
27
29
9
16
16
26
25
30
31
25
3
5
6
4
7
8
14
24
23
11
12
15
13
19
22
21
10
20
18
2
1
H22-6150E

Fig.	Part No.编码.	Quantity件数 1	2	3	PS	KIT	Description 说明	Notes
	11214283	1					Remote control valve .远程控制阀.....	
1		1			NS		•Housing .....• 水泵壳体.....	
2	**11211417**	2					•Plug .....• 塞.....	
3	**11210487**	1					•Cover .....• 罩盖.....	
4	**11210488**	4					•Plug .....• 堵头.....	
5	**11211561**	4					•Grease cup .....• 润滑油杯.....	
6	**11211577**	4				K	•Packing .....• 填充物.....	
7	**11211575**	4				K	•O-ring.....•◊ 形圈.....	
8	**11210486**	4					•Rod .....• 手柄.....	
9	**11211503**	4					•Lock nut .....• 锁紧螺母.....	
10	**11211509**	4					•Washer .....• 垫圈.....	
11	**11211562**	4					•Seat .....• 座圈.....	
12	**11211563**	4					•Ring .....• 密封环.....	
13	**11211570**	4					•Bushing.....• 衬套.....	
14	**11211569**	4					•Piston.....• 活塞.....	
15	**11211540**	12					•Ball.....• 滚珠.....	
16	**11211567**	2					•Screw.....• 六角螺钉.....	
17	**11211506**	2					•Bellows .....• 护套.....	
18	**11210485**	4			OP		•Spool .....• 株塞.....	
19	**11210484**	4					•Seat .....• 座圈.....	
20	**11211501**	4					•Washer .....• 垫圈.....	
21	**11211508**	4					•Spring .....• 弹簧.....	
22	**11211507**	4					•Spring .....• 弹簧.....	
23	**11211564**	4					•Spring .....• 弹簧.....	
24	**11211565**	4					•Spring .....• 弹簧.....	
25	**11211599**	4					•Bushing.....• 衬套.....	
26	**11211502**	2					•Camshaft .....• 凸轮轴.....	
27	**11211504**	2					•Cam .....• 凸轮.....	
28	**11211601**	2					•Screw.....• 螺丝.....	
29	**11211505**	4					•Screw.....• 六角螺钉.....	

1	**11212924**	行走马达遥控阀踏板 **Remote control valve pedal, travel motor**	Catalogue id **111201**	Group **904**
2			Illustr. No **H22-6150E**	Section **700**
3				
4			Issue **2638000345**	Page **493**
5				

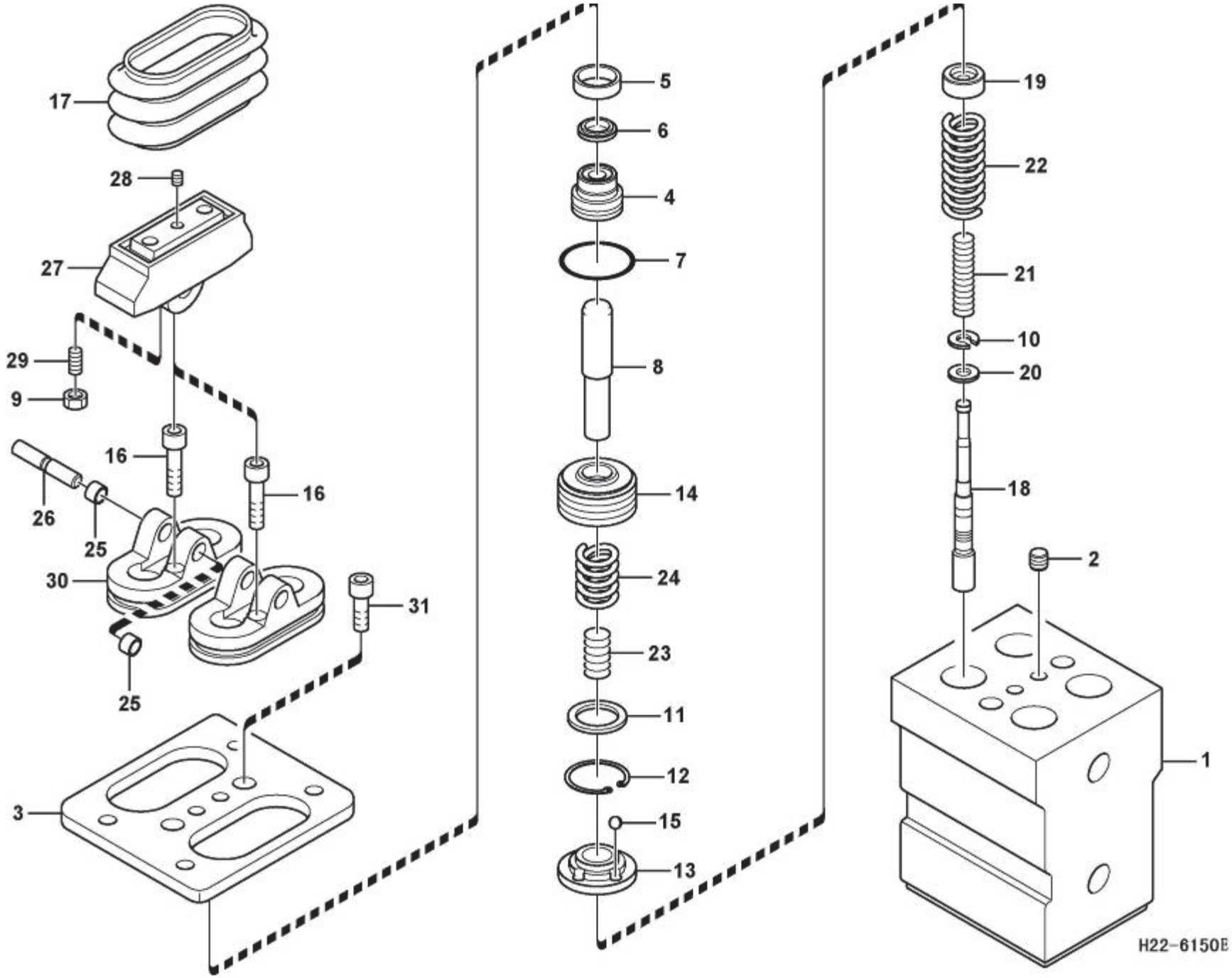
17
28
27
29
9
16
16
26
25
30
31
25
3
5
6
4
7
8
14
24
23
11
12
15
13
19
22
21
10
20
18
2
1
H22-6150E

Fig.	Part No.编码.	Quantity件数 1	2	3	PS	KIT	Description 说明	Notes
30	**11210489**	2					•Cover .....• 罩盖.....	
31	**11211609**	2					•Bolt .....• 螺栓.....	
100	**11211566**	1					Sealing kit .....密封套件.....	

1	**11212924**	行走马达遥控阀踏板 **Remote control valve pedal, travel motor**	Catalogue id **111201**	Group **904**
2			Illustr. No **H22-6150E**	Section **700**
3			Issue **2638000345**	Page **495**
4				
5				

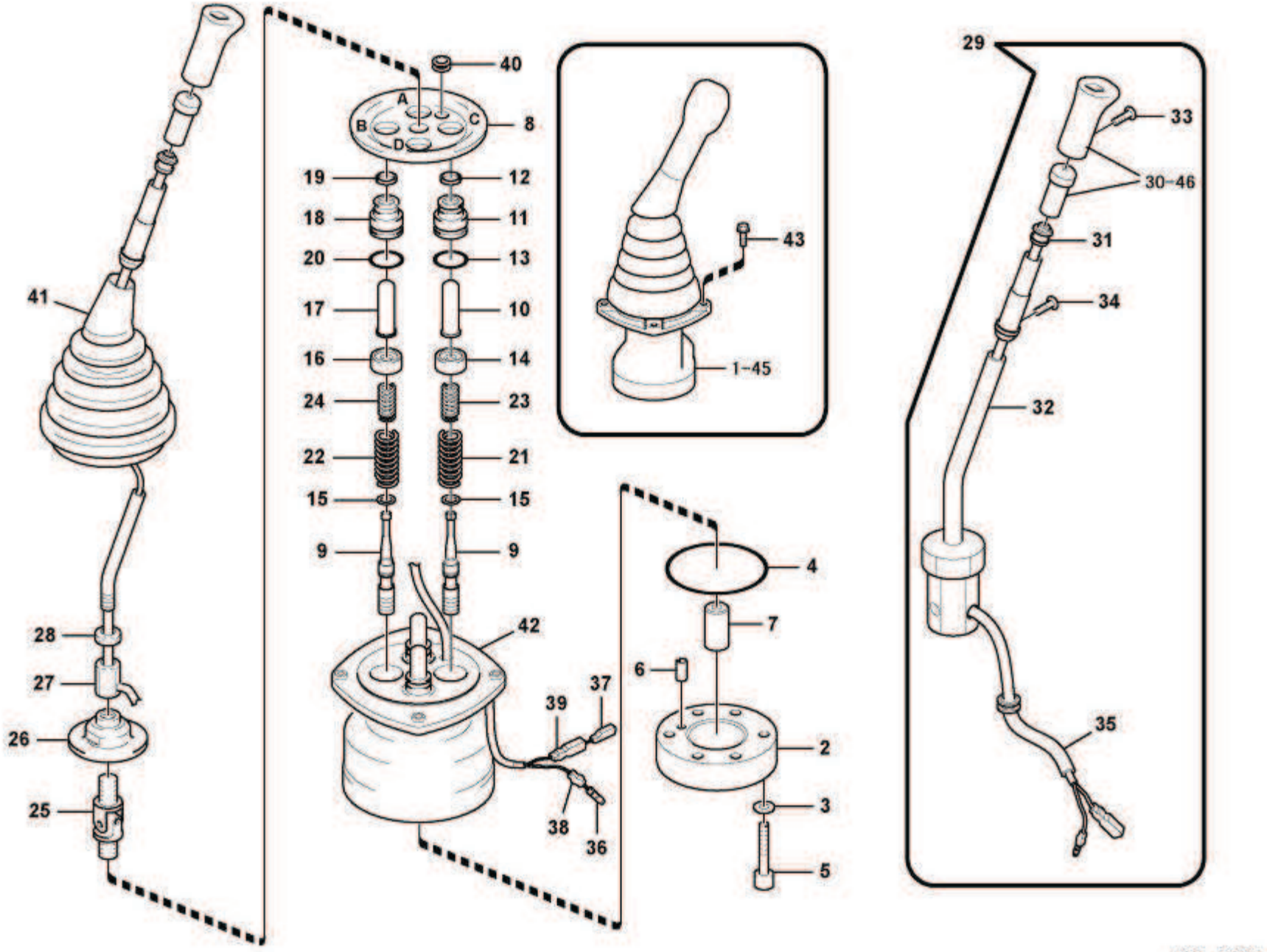
40
A
B
C
D
8
19
12
18
11
20
13
17
10
16
14
24
23
22
21
15
15
9
9
42
41
28
27
26
25
39
37
38
36
43
1-45
4
7
6
2
3
5
29
33
30-46
31
34
32
35
H23-6150E

Fig.	Part No.编码.	Quantity件数 1	2	3	PS	KIT	Description 说明	Notes
1	**11210856**	1					Rmt Cont Valve.....先导控制阀.....	LH,SEMI-LONG
	11210857	1					Remote control valve .远程控制阀.....	RH,SEMI-LONG
2	**11211597**	1					•Plate .....• 安装板.....	
3	**11211510**	2				K	•Washer .....• 垫圈.....	
4	**11211590**	1				K	•O-ring.....•⎔ 形圈.....	
5	**11210244**	2					•Screw.....• 螺丝.....	
6	**11211553**	1					•Spring Pin .....• 弹簧销.....	
7	**11211593**	1					•Bushing.....• 衬套.....	
8	**11211596**	1					•Plate .....• 安装板.....	
9	**11210252**	4			OP		•Spool .....• 株塞.....	
10	**11211511**	2					•Rod .....• 棒.....	
11	**11211572**	2					•Plug .....• 堵头.....	
12	**11211515**	2				K	•Seal .....• 密封.....	
13	**11210137**	2				K	•O-ring.....•⎔ 型圈.....	
14	**11211584**	2					•Seat .....• 座圈.....	
15	**11211509**	4					•Washer .....• 垫圈.....	
16	**11211583**	2					•Seat .....• 座圈.....	
17	**11211512**	2					•Rod .....• 棒.....	
18	**11211572**	2					•Plug .....• 堵头.....	
19	**11211515**	2				K	•Seal .....• 密封.....	
20	**11210137**	2				K	•O-ring.....•⎔ 型圈.....	
21	**11210774**	2					•Spring .....• 弹簧.....	
22	**11210432**	2					•Spring .....• 弹簧.....	
23	**11211585**	2					•Spring .....• 弹簧.....	
24	**11211586**	2					•Spring .....• 弹簧.....	
25	**11211514**	1					•Joint .....• 联轴节.....	
26	**11211595**	1					•Plate .....• 安装板.....	
27	**11211516**	1					•Nut .....• 螺母.....	
28	**11211513**	1					•Lock nut .....• 锁紧螺母.....	
29	**11211591**	1					•Handle .....• 手柄.....	

1	**11211825**	伺服系统,遥控阀 **Servo system , remote control valve**	Catalogue id **111201**	Group **904**
2				
3			Illustr. No **H23-6150E**	Section **800**
4				
5			Issue **2638000345**	Page **497**

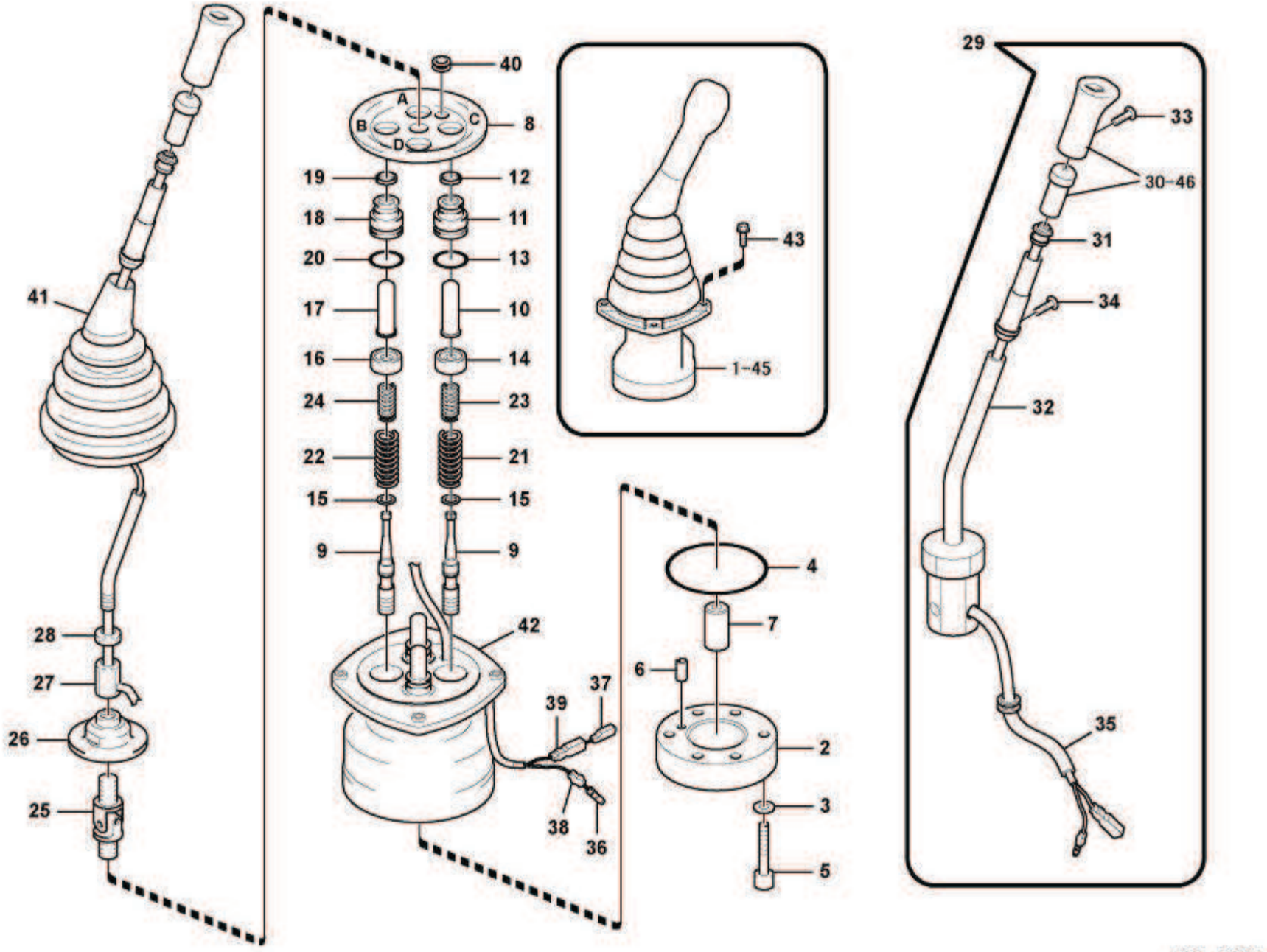
40
A
B
C
D
8
19
12
18
11
20
13
17
10
16
14
24
23
22
21
15
15
9
9
42
41
28
27
26
25
39
37
38
36
43
1-45
4
7
6
2
3
5
29
33
30-46
31
34
32
35
H23-6150E

Fig.	Part No.编码.	Quantity件数 1	2	3	PS	KIT	Description 说明	Notes
30	**11211592**	1					••Knob .....•• 旋钮.....	LH
	11210253	1					••Knob .....•• 旋钮.....	RH
31	**11211588**	1					••Switch.....•• 开关.....	
32	**11211582**	1					••Bar .....•• 杆.....	
33	**11211579**	1					••Screw .....•• 六角螺钉.....	
34	**11211571**	2					••Screw .....•• 六角螺钉.....	
35	**11211580**	1					••Pipe .....•• 硬管总成.....	
36	**11211517**	1					•Terminal.....• 接线端.....	
37	**11211518**	1					•Terminal.....• 接线端.....	
38	**11210770**	1					•Sleeve.....• 内套.....	
39	**11210771**	1					•Sleeve.....• 内套.....	
40	**11211594**	1					•Bushing.....• 衬套.....	
41	**11211568**	1					•Bellows .....• 护套.....	
42	**11211589**	1			OP		•Casing .....• 壳体.....	
43	**11210041**	8					Screw .....螺丝.....	
100	**11211587**	1					Sealing kit .....密封套件.....	

1	**11211825**	伺服系统,遥控阀 **Servo system , remote control valve**	Catalogue id **111201**	Group **904**
2			Illustr. No **H23-6150E**	Section **800**
3				
4			Issue **2638000345**	Page **499**
5				

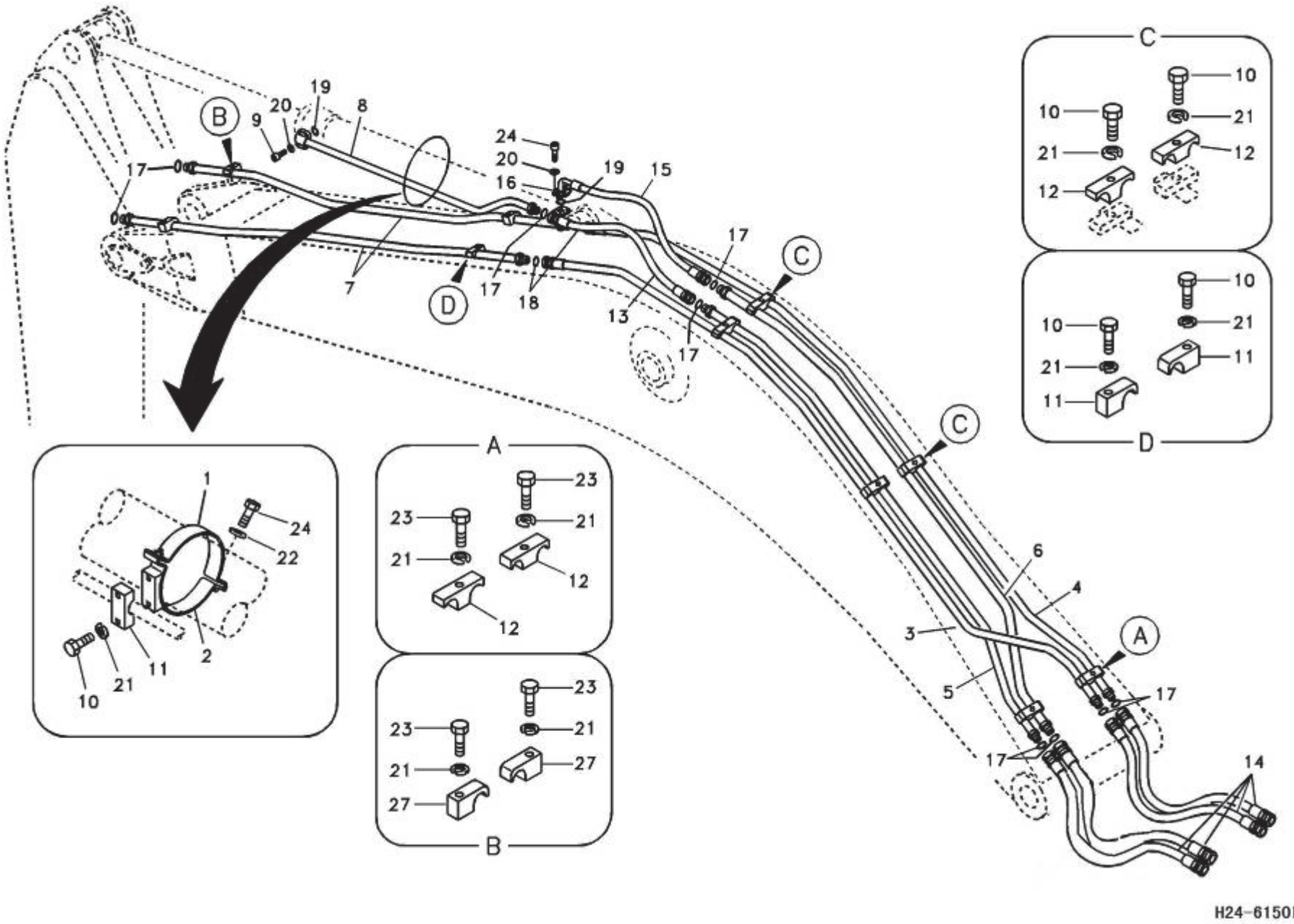
B
C
D
A
1
24
22
2
11
10
21
23
27
12
6
4
3
5
14
17
18
13
7
8
9
15
16
H24-6150E

Fig.	Part No编码.	Quantity件数 1	2	3	4	5	PS	KIT	Description 说明	Notes
1	**11210290**	1							Clamp .....夹.....	
2	**11210328**	1							Clamp .....夹.....	
3	**11213286**	1							Pipe.....硬管总成.....	
4	**11213287**	1							Pipe.....硬管总成.....	
5	**11213289**	1							Pipe.....硬管总成.....	
6	**11213290**	1							Pipe.....硬管总成.....	
7	**11213291**	2							Pipe.....硬管总成.....	
8	**11213288**	1							Pipe.....硬管总成.....	
9	**11213296**	4							Allen Hd Screw .....内六角螺钉.....	
10	**11210223**	7							Hexagon screw .....六角螺丝.....	
11	**11211129**	3							Clamp .....夹.....	
12	**11211130**	6							Clamp .....夹.....	
13	**11210011**	1							Hose assembly .....软管装置.....	
14	**11213293**	4							Hose assembly .....软管装置.....	
15	**11213295**	1							Hose_assy .....软管 _ 总成.....	
16	**11213294**	2							Flange half.....半截法兰.....	
17	**11210113**	9							O-ring..... 0 型圈.....	
18	**11210114**	2							O-ring..... 0 型圈.....	
19	**11210047**	2							O-ring..... 0 型圈.....	
20	**11210064**	8							Spring washer.....弹簧垫圈.....	
21	**11210067**	11							Spring washer.....弹簧垫圈.....	
22	**11210197**	2							Washer .....垫圈.....	
23	**11210104**	4							Bolt.....螺栓.....	
24	**11210124**	6							Hexagon screw .....六角螺丝.....	

1	**11213320**	工作液压,大臂上的小臂油缸 **Working hydraulic, dipper arm cylinder on boom.**	Catalogue id **111201**	Group **905**
2			Illustr. No **H24-6150E**	Section **100**
3				
4			Issue **2638000345**	Page **501**
5				

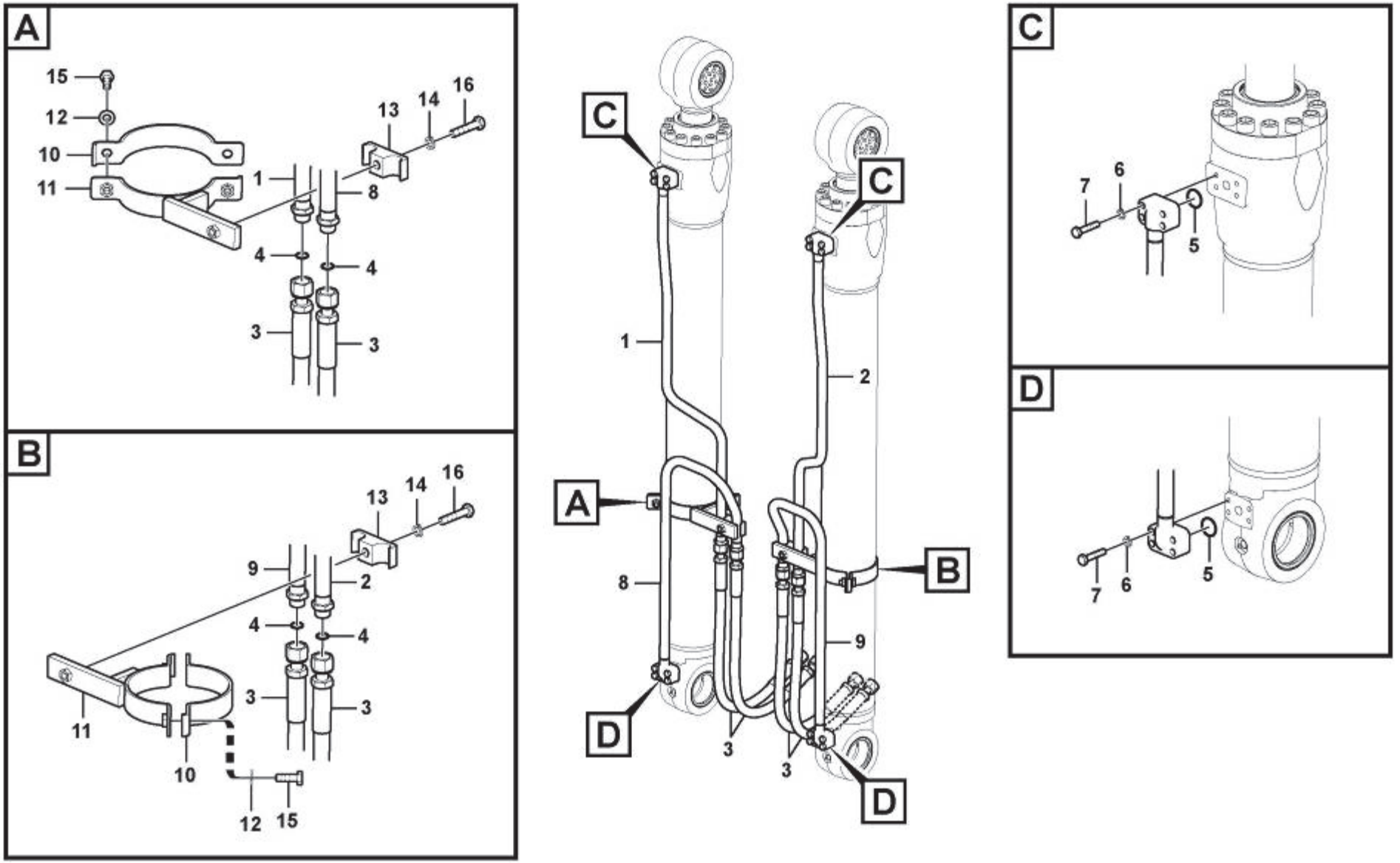
A
15
12
10
11
13
14
16
1
8
4
4
3
3
B
13
14
16
9
2
4
4
3
3
11
10
12
15
C
C
1
2
A
8
B
9
D
3
3
D
C
7
6
5
D
7
6
5
H25-6150E

Fig.	Part No编码.	Quantity件数 1	2	3	4	5	PS	KIT	Description 说明	Notes
1	**11213323**	1							Pipe.....硬管总成.....	
2	**11213322**	1							Pipe.....硬管总成.....	
3	**11213321**	4							Hose .....软管.....	
4	**11212010**	2	2						O-ring..... . 0 型圈.....	
5	**11213324**	2	2						O-ring..... ..0 型圈.....	
6	**11210063**	8	8						Spring washer .....弹簧垫圈.....	
7	**11212647**	8	8						Hexagon screw .....六角螺丝.....	
8	**11213328**		1						Pipe.....硬管总成.....	
9	**11213329**		1						Pipe.....硬管总成.....	
10	**11214426**		2						Clamp .....管夹.....	
11	**11214427**		2						Clamp .....管夹.....	
12	**11211634**		4						Washer .....垫圈.....	
13	**11213327**		2						Clamp .....夹.....	
14	**11210064**		2						Spring washer .....弹簧垫圈.....	
15	**11210124**		4						Hexagon screw .....六角螺丝.....	
16	**11213330**		2						Hexagon screw .....六角螺丝.....	

1	**11213331**	工作液压,大臂油缸 **Working hydraulic, boom cylinder**	Catalogue id **111201**	Group **905**
2	**11213332**		Illustr. No **H25-6150E**	Section **200**
3			Issue **2638000345**	Page **503**
4				
5				

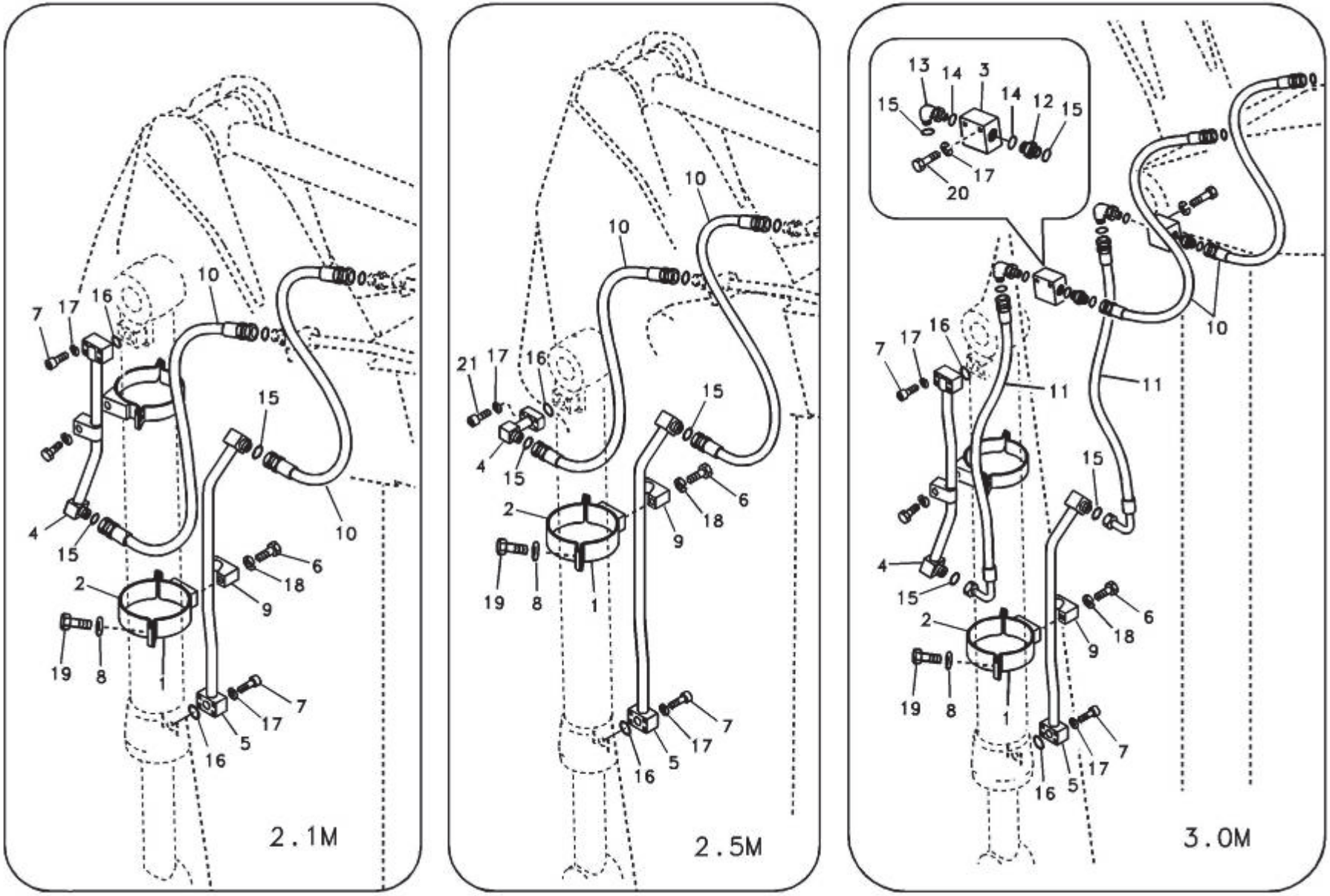

H26-6150E

Fig.	Part No.编码.	Quantity件数 1	2	3	PS	KIT	Description 说明	Notes
1	**11214429**	1					Clamp.....夹.....	
2	**11214428**	1					Clamp.....夹.....	
4	**11213335**	1					Pipe.....硬管总成.....	
5	**11213336**	1					Pipe.....硬管总成.....	
6	**11210223**	1					Hexagon screw .....六角螺丝.....	
7	**11213296**	4					Allen Hd Screw .....内六角螺钉.....	
8	**11210197**	2					Washer.....垫圈.....	
9	**11211129**	1					Clamp.....夹.....	
10	**11213337**	2					Hose assembly .....软管装置.....	
15	**11210113**	2					O-ring ..... O 型圈.....	
16	**11210047**	2					O-ring ..... O 型圈.....	
17	**11210064**	8					Spring washer .....弹簧垫圈.....	
18	**11210067**	1					Spring washer .....弹簧垫圈.....	
19	**11210124**	2					Hexagon screw .....六角螺丝.....	
21	**11210151**	4					Allen Hd Screw .....内六角螺钉.....	

1	**11213338**	工作液压,小臂上的铲斗油缸 **Working hydraulic, bucket cylinder on dipper arm**	Catalogue id **111201**	Group **905**
2			Illustr. No **H26-6150E**	Section **300**
3				
4			Issue **2638000345**	Page **505**
5				

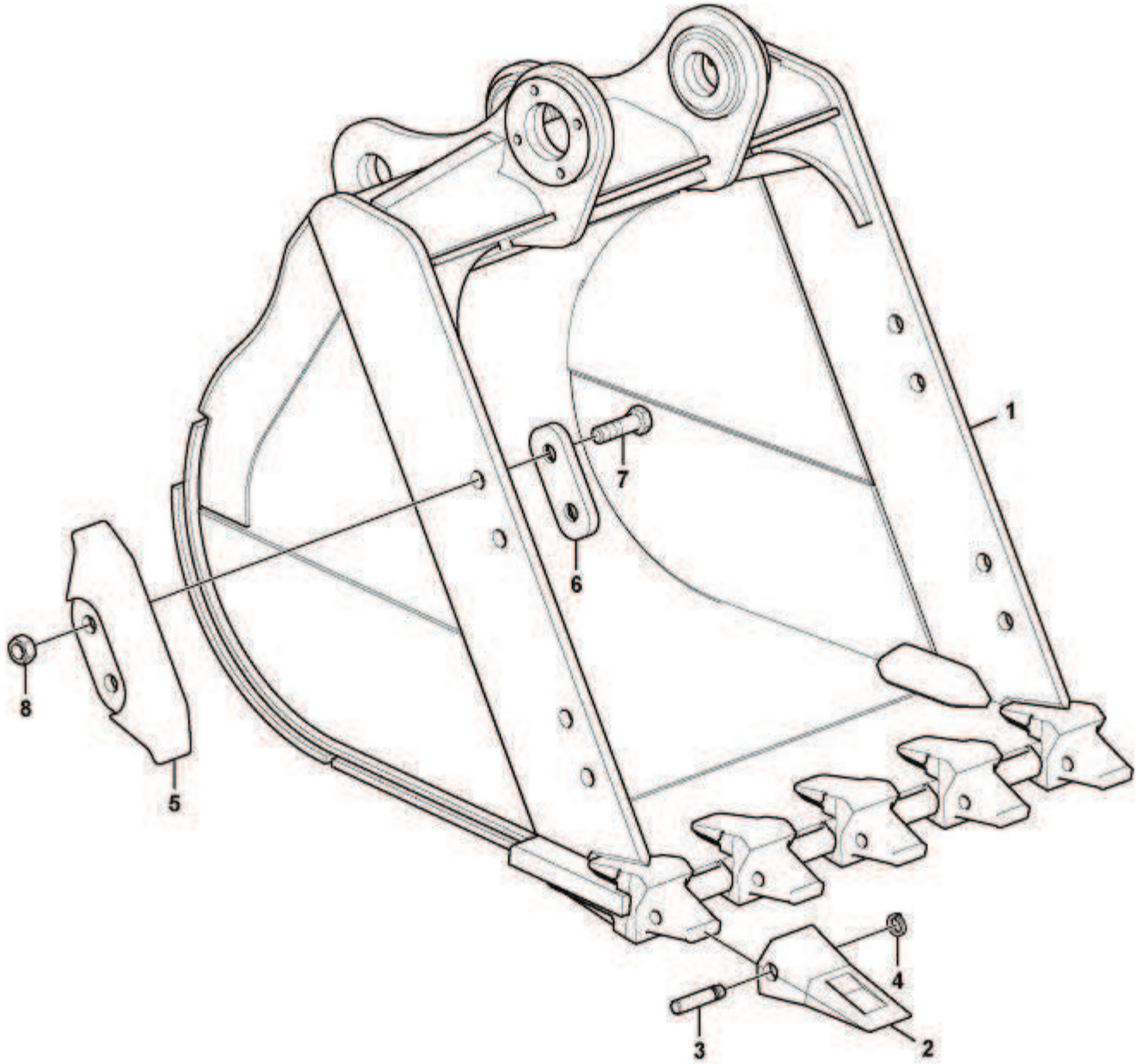

H27-6150E

Fig.	Part No.编码.	Quantity件数 1	2	3	P S	K I T	Description 说明	Notes
1	**11214278**	1					Bucket.....铲斗.....	
	11211886	5					•Adapter .....• 转换接头.....	
2	**11213342**	5					•Tooth .....• 斗齿.....	
3	**11213340**	5					•Pin .....• 销.....	
4	**11213345**	5					•Washer .....• 垫圈.....	
5	**11213341**	4					•Protector .....• 保护装置.....	
6	**11213339**	4					•Plate .....• 板.....	
7	**11214078**	8					•Hexagon screw .....• 六角螺丝.....	
8	**11214279**	8					•Nut .....• 螺母.....	

1	**11213346**	铲斗 **Bucket**	Catalogue id **111201**	Group **906**
2			Illustr. No **H27-6150E**	Section **100**
3			Issue **2638000345**	Page **507**
4				
5				

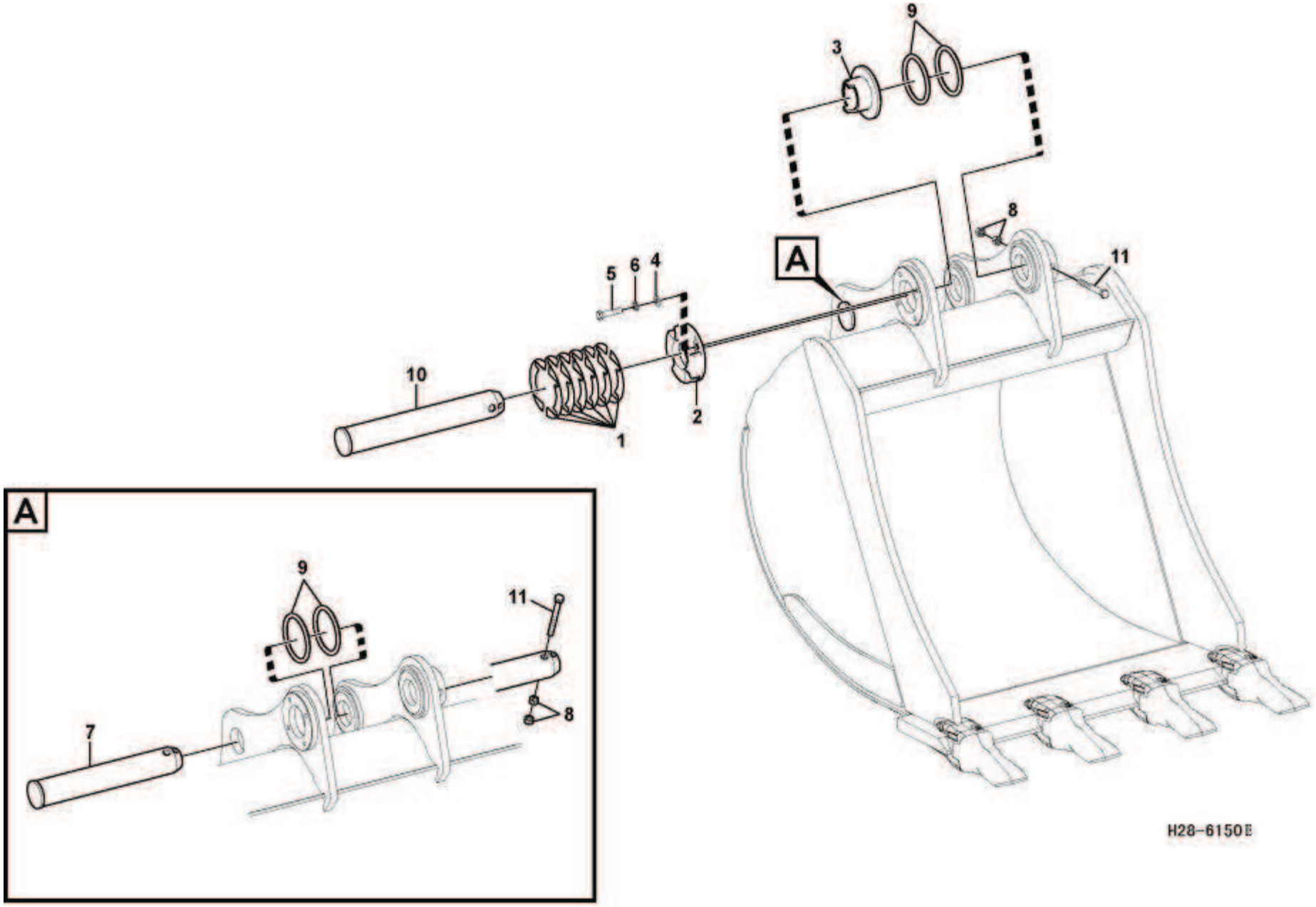
9
3
8
A
11
5
6
4
10
1
2
A
9
11
7
8
H28-6150E

Fig.	Part No.编码.	Quantity件数 1	2	3	PS	KIT	Description 说明	Notes
1	**11213349**	12					Shim.....垫片.....	
2	**11213347**	1					Cover .....罩盖.....	
3	**11213348**	1					Bushing .....轴衬.....	
4	**11210199**	4					Washer.....垫圈.....	
5	**11210223**	4					Hexagon screw .....六角螺丝.....	
6	**11210067**	4					Spring washer .....弹簧垫圈.....	
7	**11213350**	1					Pin.....销.....	
8	**11210109**	4					Hexagon nut.....六角螺母.....	
9	**11213351**	4					Ring.....环.....	
10	**11214631**	1					Pin.....销.....	
11	**11210106**	2					Hexagon screw .....六角螺丝.....	

1	**11213354**	到铲斗的连接 **Links to bucket**	Catalogue id **111201**	Group **906**
2				
3			Illustr. No **H28-6150E**	Section **200**
4				
5			Issue **2638000345**	Page **509**

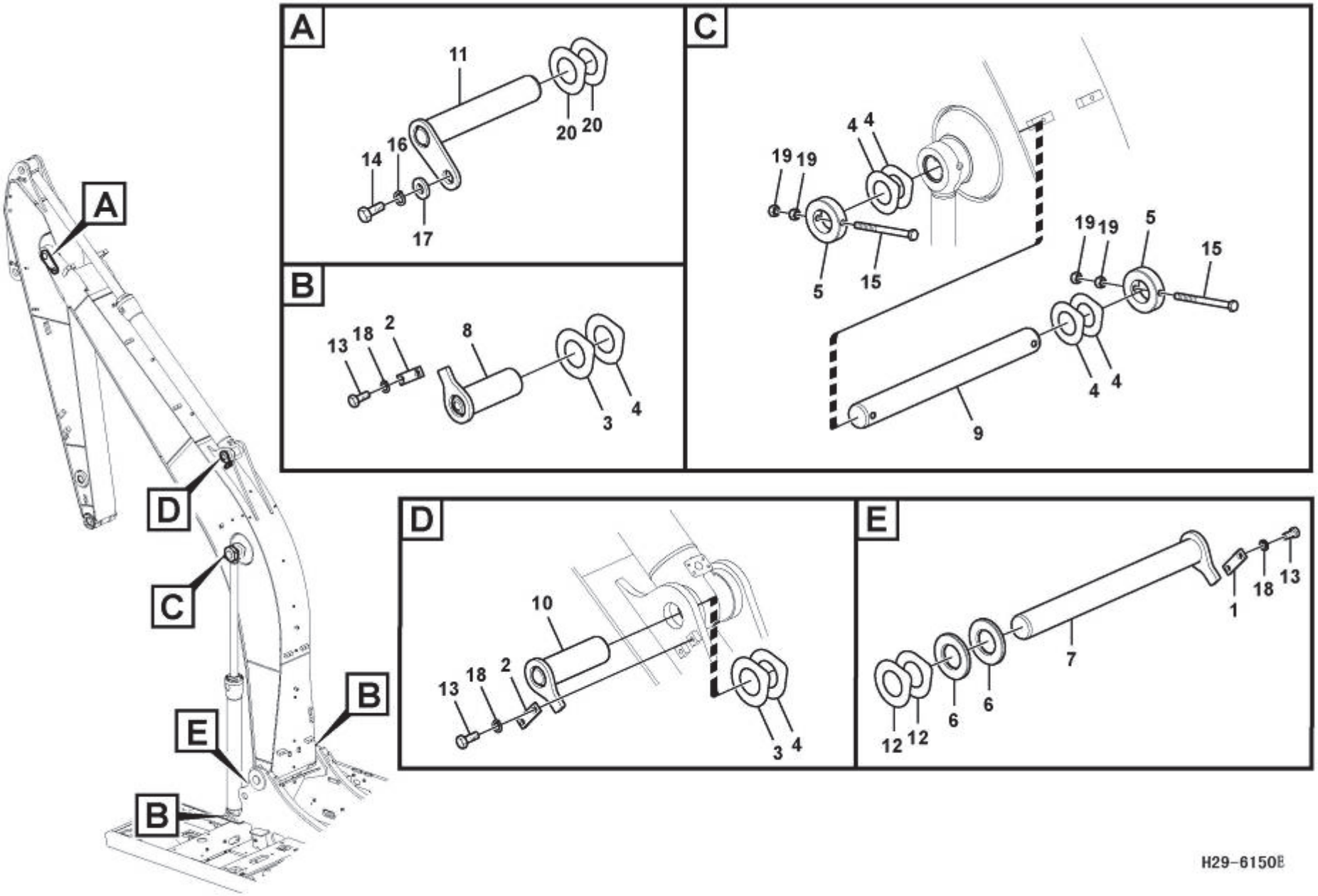
A
11
20
20
14
16
17
B
13
18
2
8
3
4
C
19
19
4
4
5
15
19
19
5
15
4
4
9
D
10
13
18
2
3
4
E
1
18
13
7
6
6
12
12
A
D
C
B
E
B

H29-6150E

Fig.	Part No编码.	Quantity件数 1	2	3	P S	K I T	Description 说明	Notes
1	**11213932**	1					Plate.....安装板.....	
2	**11210779**	3					Plate.....安装板.....	
3	**11213355**	3					Shim.....垫片.....	
4	**11213356**	7					Shim.....垫片.....	
5	**11214443**	2					Lock .....锁.....	
6	**11210870**	2					Seal.....密封.....	
7	**11214628**	1					Pin.....销.....	
8	**11214627**	2					Pin.....销.....	
9	**11213364**	1					Pin.....销.....	
10	**11213362**	1					Pin.....销.....	
11	**11213363**	1					Pin.....销.....	
12	**11213365**	3					Shim.....垫片.....	
13	**11210192**	8					Hexagon screw .....六角螺丝.....	
14	**11213933**	1					Hexagon screw .....六角螺丝.....	
15	**11210107**	2					Hexagon screw .....六角螺丝.....	
16	**11211638**	1					Spring Washer .....弹簧垫圈.....	
17	**11210806**	1					Washer.....垫圈.....	
18	**11210067**	8					Spring washer .....弹簧垫圈.....	
19	**11210109**	4					Hexagon nut.....六角螺母.....	
20	**11213366**	2					Shim.....垫片.....	

1	**11213370**	大臂连杆 **Links to boom**	Catalogue id **111201**	Group **907**
2			Illustr. No **H29-6150E**	Section **100**
3				
4			Issue **2638000345**	Page **511**
5				

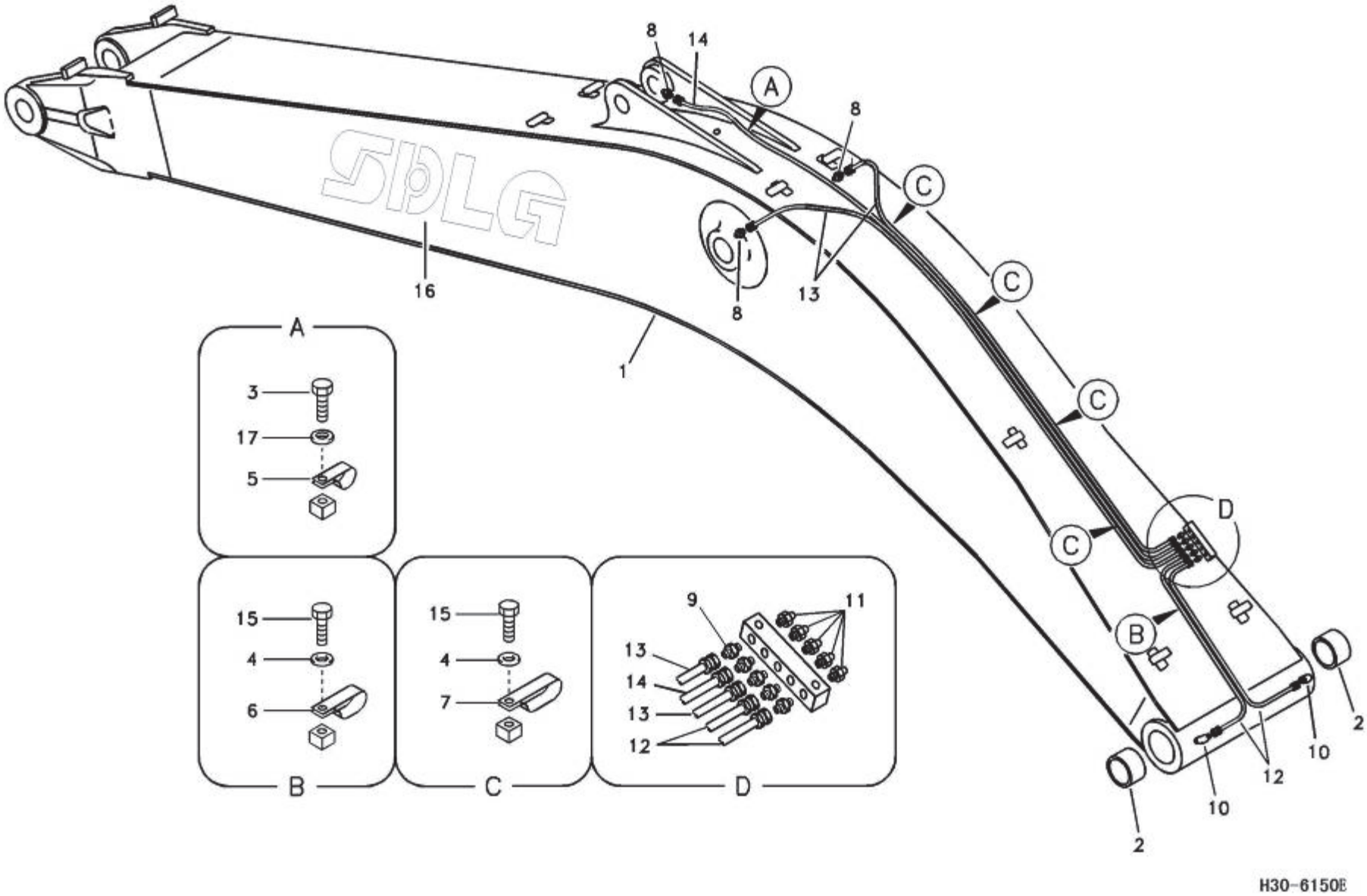
A
3
17
5
B
15
4
6
C
15
4
7
D
9
11
13
14
13
12
8
14
A
8
C
C
C
C
D
B
16
1
8
13
2
10
12
10
2
H30-6150E

Fig.	Part No编码.	Quantity件数 1	2	3	PS	KIT	Description 说明	Notes
1	**11213372**	1					Excavator Boom.....挖掘机大臂.....	
2	**11213371**	2					•Bushing.....• 轴衬.....	
3	**11213373**	1					Hexagon screw .....六角螺丝.....	
4	**11210218**	5					Washer.....垫圈.....	
5	**11211654**	1					Insulating clip .....绝缘夹.....	
6	**11211656**	1					Insulating clip .....绝缘夹.....	
7	**11211663**	4					Clip.....夹.....	
8	**11210802**	3					Nipple.....螺纹接套.....	
9	**11210802**	5					Nipple.....螺纹接套.....	
10	**11210803**	2					Nipple.....螺纹接套.....	
11	**11210001**	5					Lubricating nipple.....润滑管嘴.....	
12	**11212098**	2					Hose.....软管.....	
13	**11213374**	2					Hose.....软管.....	
14	**11213375**	1					Hose.....软管.....	
15	**11210117**	5					Hexagon screw .....六角螺丝.....	
16	**2636000199**	2					Decal.....标签.....	
17	**11210218**	1					Washer.....垫圈.....	

1	**11213370**	大臂与润滑脂配管 **Boom and grease piping**	Catalogue id **111201**	Group **907**
2			Illustr. No **H30-6150E**	Section **200**
3				
4			Issue **2638000345**	Page **513**
5				

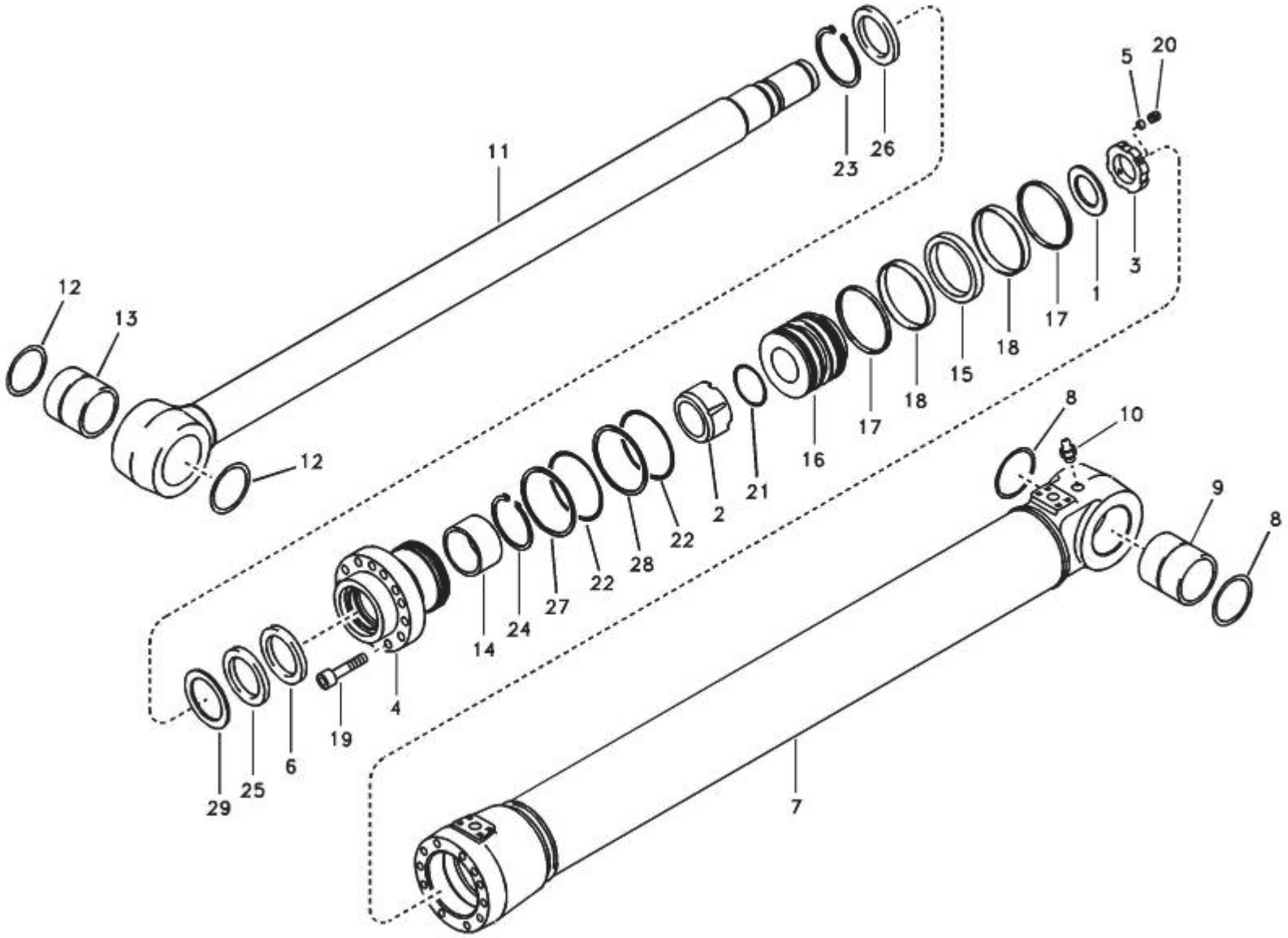
11
23
26
5
20
3
1
17
18
15
18
17
16
21
2
22
28
22
27
24
14
4
19
6
25
29
12
13
12
8
10
9
8
7

H31-6150E

Fig.	Part No编码.	Quantity件数 1	2	3	4	5	PS	KIT	Description 说明	Notes
	11213380	2							Cylinder.....油缸.....	
1	**11213381**	1							•Washer .....• 垫圈.....	
2	**11213378**	1							•Cushion .....• 坐垫.....	
3	**11213376**	1							•Lock nut.....• 锁紧螺母.....	
4		1					NS		•Head .....• 活塞盖.....	
5	**11211340**	1							•Pad .....• 底座.....	
6	**11213377**	1						K	•Ring .....• 密封环.....	
7		1					NS		•Tube .....• 缸筒.....	
8	**11213379**	2							••Seal .....•• 密封.....	
9	**11213383**	1							••Bushing .....•• 轴衬.....	
10	**11211769**	1							••Nipple .....•• 螺纹接头.....	
11	**11213385**	1							•Rod .....• 活塞柄.....	
12	**11213379**	2							••Seal .....•• 密封.....	
13	**11213384**	1							••Bushing .....•• 衬套.....	
14	**11213388**	1						K	•Bushing .....• 轴衬.....	
15	**11213382**	1						K	•Seal .....• 密封.....	
16		1					NS		•Piston .....• 活塞.....	
17	**11213387**	2						K	•Sealing .....• 密封.....	
18	**11213386**	2						K	•Ring .....• 密封环.....	
19	**11210053**	12							•Hex. socket screw .• 六角凹头螺丝.....	
20	**11210072**	1					SS		•Set screw.....• 定位螺丝.....	
21	**11213397**	1						K	•O-ring .....•O 型圈.....	
22	**11213398**	2						K	•O-ring .....•O 型圈.....	
23	**11213391**	1							•Retaining ring .....• 固位环.....	
24	**11213392**	1							•Retaining ring .....• 固位环.....	
25	**11213393**	1						K	•Seal .....• 密封.....	
26	**11213394**	1						K	•Sealing .....• 密封.....	
27	**11213390**	1						K	•Ring .....• 环.....	
28	**11213395**	1						K	•Ring .....• 密封环.....	
29	**11213396**	1						K	•Ring .....• 环.....	
100	**11213389**	1							Sealing kit.....密封套件.....	

1	**11213399**	大臂油缸 **Boom cylinder**	Catalogue id **111201**	Group **907**
2				
3			Illustr. No **H31-6150E**	Section **300**
4				
5			Issue **2638000345**	Page **515**

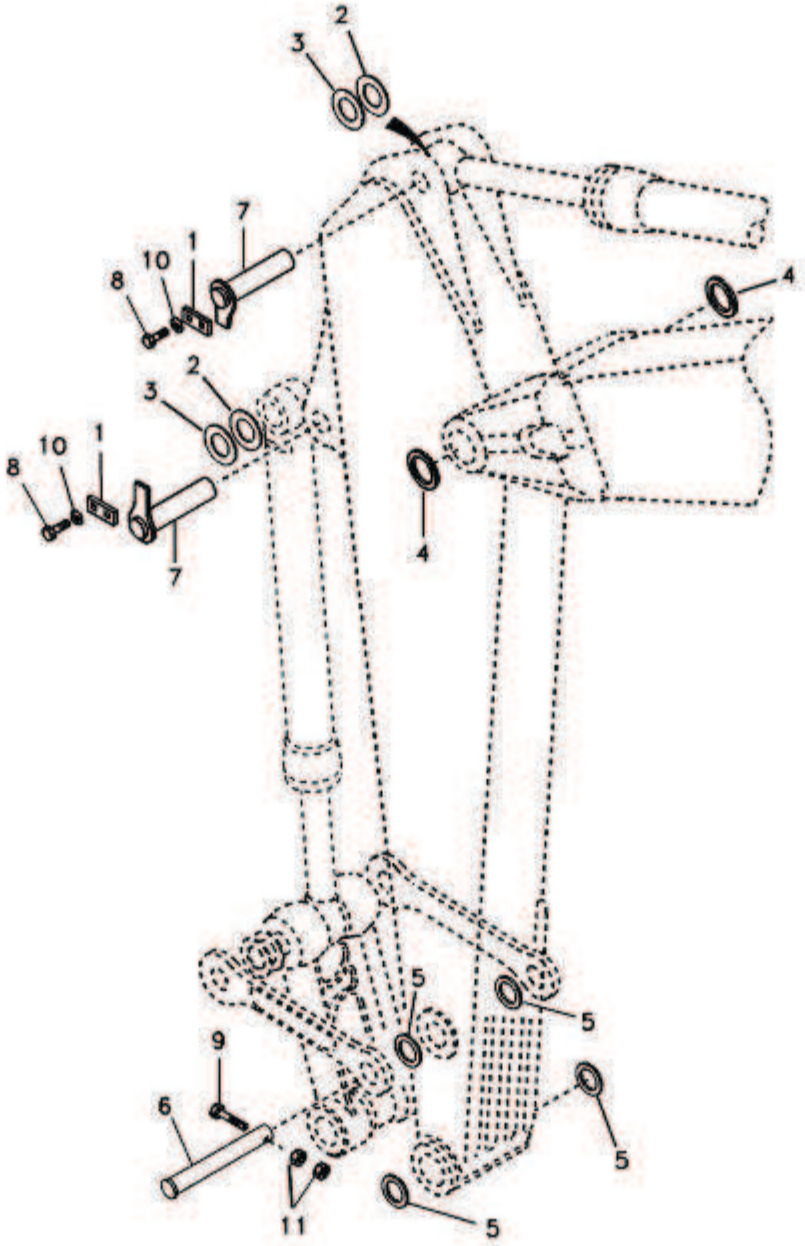

H32-6150E

Fig.	Part No.编码.	Quantity件数 1	2	3	PS	KIT	Description 说明	Notes
1	**11210779**	2					Plate.....安装板.....	
2	**11213355**	3					Shim.....垫片.....	
3	**11213356**	4					Shim.....垫片.....	
4	**11210869**	2					Seal.....密封.....	
5	**11213400**	4					Seal.....密封.....	
6	**11213401**	1					Pin.....定位销.....	
7	**11213790**	2					Pin.....定位销.....	
8	**11210192**	4					Hexagon screw .....六角螺丝.....	
9	**11213403**	1					Hexagon screw .....六角螺丝.....	
10	**11210067**	4					Spring washer .....弹簧垫圈.....	
11	**11210109**	2					Hexagon nut.....六角螺母.....	

1	**11213404**	小臂连杆 **Links to dipper arm**	Catalogue id **111201**	Group **908**
2			Illustr. No **H32-6150E**	Section **100**
3				
4			Issue **2638000345**	Page **517**
5				

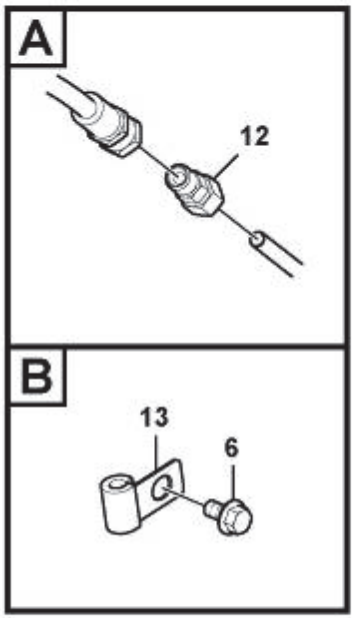

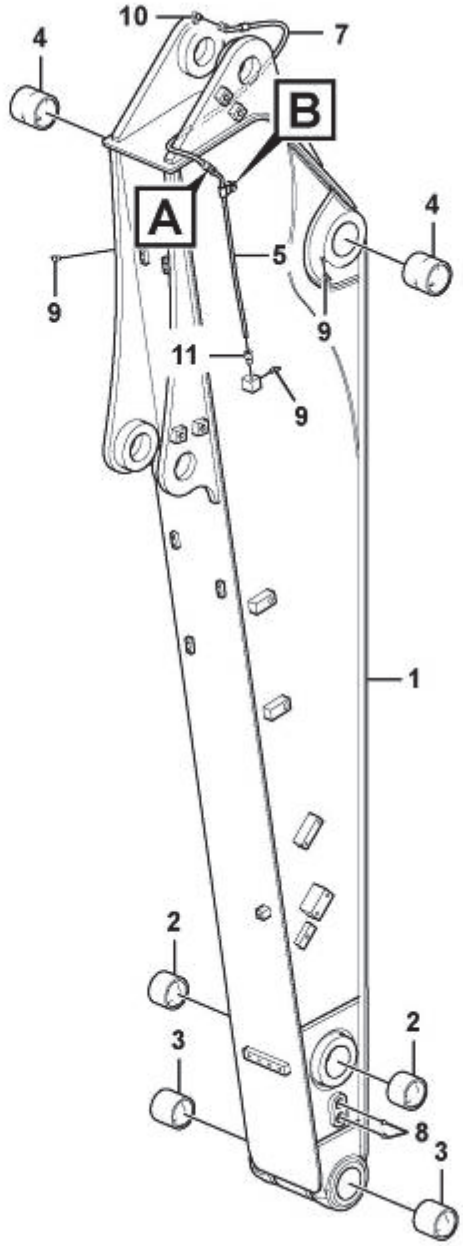

H33-6150E

Fig.	Part No编码.	Quantity件数 1	2	3	P S	K I T	Description 说明	Notes
1	**11213408**	1					Arm .....小臂.....	
2	**11213405**	2					•Bushing.....• 轴衬.....	
3	**11213406**	2					•Bushing.....• 轴衬.....	
4	**11213407**	2					•Bushing.....• 轴衬.....	
5	**11213409**	1					Pipe.....硬管总成.....	
6	**11210033**	1					Flange screw.....法兰螺丝.....	
7	**11213410**	1					Hose.....软管.....	
8	**11210001**	2					Lubricating nipple.....润滑管嘴.....	
9	**11210002**	3					Lubricating nipple.....润滑管嘴.....	
10	**11210803**	1					Nipple.....螺纹接套.....	
11	**11212096**	1					Nipple.....螺纹接套.....	
12	**11213411**	1					Connector .....连接器.....	
13	**11210254**	1					Clip.....夹.....	

1	**11213404**	小臂和带配管座的润滑脂配管 **Dipper arm and grease piping with piping seat**	Catalogue id **111201**	Group **908**
2			Illustr. No **H33-6150E**	Section **200**
3				
4			Issue **2638000345**	Page **519**
5				

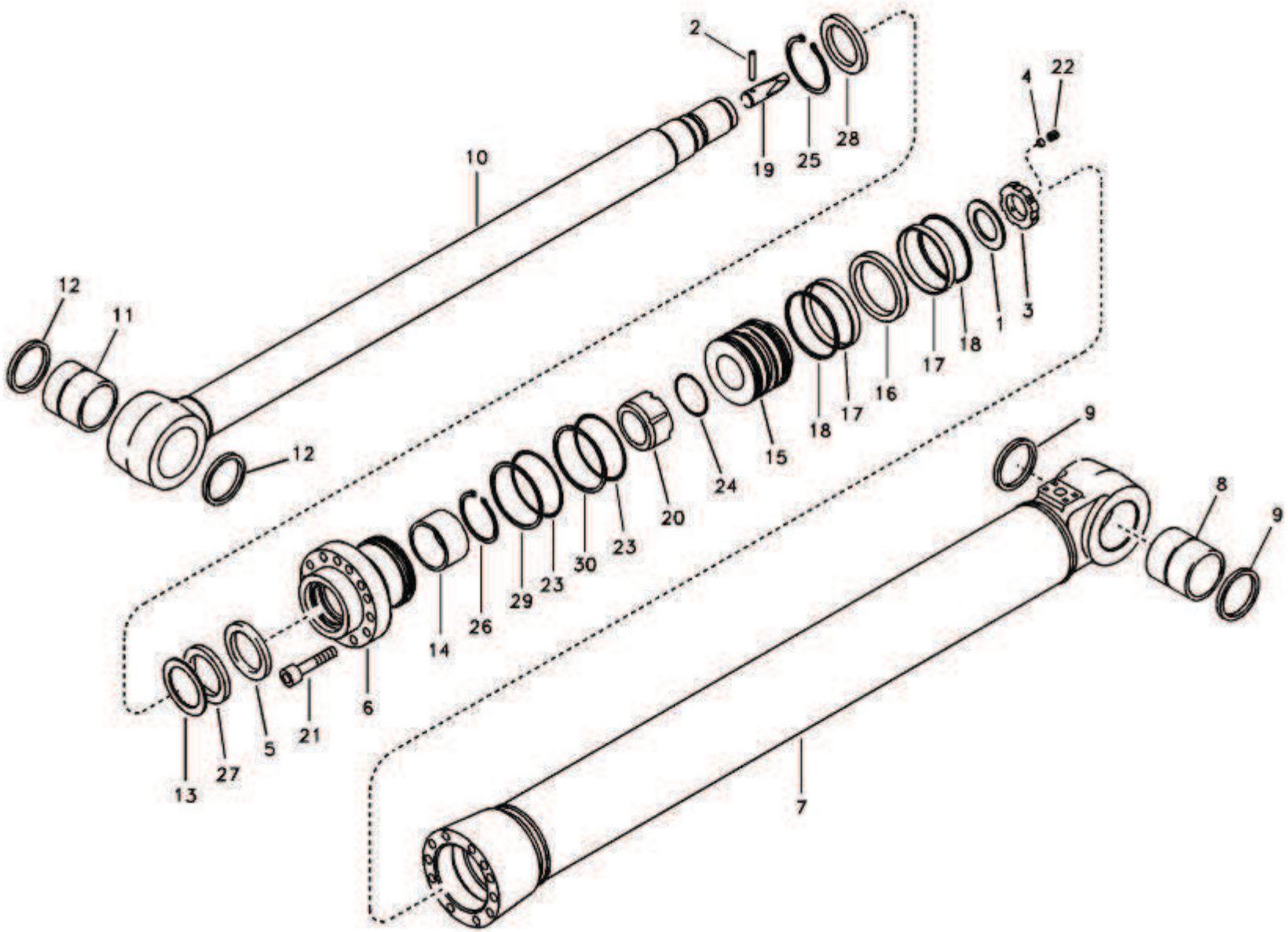
2
19
25
28
4
22
10
12
11
12
1
3
18
17
16
15
24
20
23
30
29
26
14
6
21
5
27
13
9
8
9
7
H34-6150E

Fig.	Part No.编码.	Quantity件数 1	2	3	PS	KIT	Description 说明	Notes
	11213412	1					Hydraulic cylinder.....液压油缸.....	
1	**11213413**	1					•Washer .....• 垫圈.....	
2	**11213414**	1					•Pin .....• 定位销.....	
3	**11213419**	1					•Lock nut .....• 锁紧螺母.....	
4	**11211340**	1					•Pad .....• 底座.....	
5	**11211343**	1				K	•Sealing.....• 密封.....	
6		1			NS		•Head .....• 活塞盖.....	
7		1			NS		•Tube .....• 缸筒.....	
8	**11213417**	1					••Bushing .....•• 衬套.....	
9	**11213379**	2					••Seal .....•• 密封.....	
10	**11213420**	1					•Rod .....• 活塞杆.....	
11	**11213417**	1					••Bushing .....•• 衬套.....	
12	**11213379**	2					••Seal .....•• 密封.....	
13	**11211797**	1				K	•Ring .....• 环.....	
14	**11211803**	1				K	•Bushing.....• 轴衬.....	
15		1			NS		•Piston.....• 活塞.....	
16	**11210420**	1				K	•Piston seal .....• 活塞密封圈.....	
17	**11211782**	2				K	•Wear ring .....• 磨损环.....	
18	**11211799**	2				K	•Sealing.....• 密封.....	
19	**11213415**	1					•Control plunger .....• 控制塞.....	
20	**11213418**	1					•Cushion .....• 坐垫.....	
21	**11210053**	12					•Hex. socket screw ....• 六角凹头螺丝.....	
22	**11210743**	1					•Set Screw .....• 紧固螺钉.....	
23	**11210180**	2				K	•O-ring.....•O 型圈.....	
24	**11210177**	1				K	•O-ring.....•O 型圈.....	
25	**11211774**	1					•Retaining ring .....• 固位环.....	
26	**11211776**	1					•Retaining ring .....• 固位环.....	
27	**11211778**	1				K	•Sealing.....• 密封.....	
28	**11211780**	1				K	•Seal .....• 密封.....	

1	**11213421**	小臂油缸 **Dipper arm cylinder**	Catalogue id **111201**	Group **908**
2			Illustr. No **H34-6150E**	Section **300**
3				
4			Issue **2638000345**	Page **521**
5				

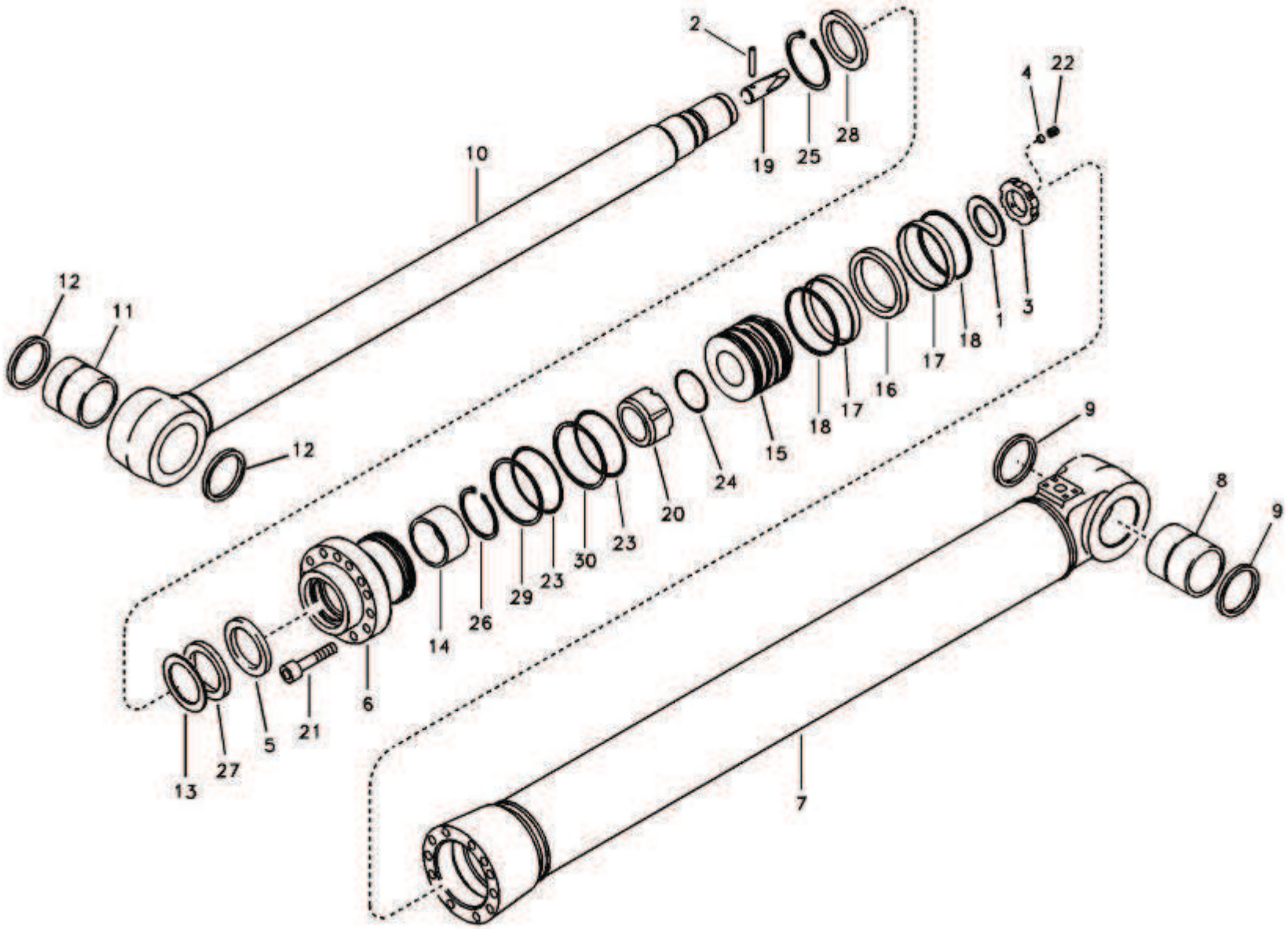
2
19
25
28
4
22
10
12
11
12
1
3
18
17
16
15
18
17
24
20
9
8
9
14
26
29
23
30
23
6
21
5
27
13
7
H34-6150E

Fig.	Part No.编码.	Quantity件数 1	2	3	PS	KIT	Description 说明	Notes
29	**11211790**	1				K	•Ring .....•••••••••••••••••••••• • 环.....	
30	**11211794**	1				K	•Ring .....•••••••••••••••••••••• • 环.....	
100	**11210966**	1					Sealing kit .....密封套件.....	

1	**11213421**	小臂油缸 **Dipper arm cylinder**	Catalogue id **111201**	Group **908**
2				
3			Illustr. No **H34-6150E**	Section **300**
4			Issue **2638000345**	Page **523**
5				

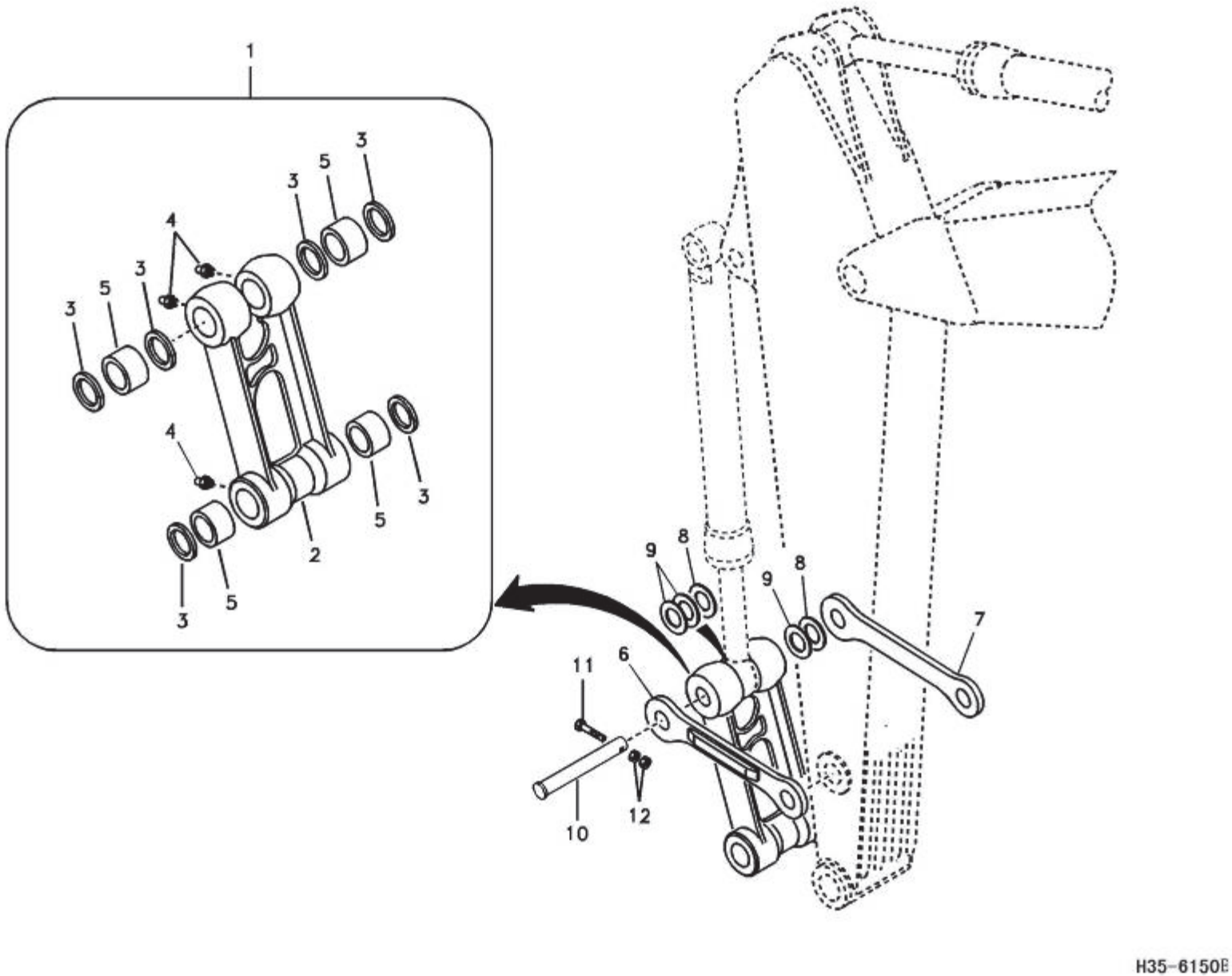

H35-6150E

Fig.	Part No.编码.	Quantity件数 1	2	3	PS	KIT	Description 说明	Notes
1	**11213427**	1					Connecting rod.....连接棒.....	
2		1			NS		•Connecting Rod.....• 连杆.....	
3	**11213400**	6					•Seal .....• 密封.....	
4	**11210001**	4					•Lubricating nipple .....• 润滑管嘴.....	
5	**11213424**	4					•Bushing.....• 轴衬.....	
6	**11213425**	1					Yoke.....轭.....	
7	**11213426**	1					Yoke.....轭.....	
8	**11213422**	2					Shim .....垫片.....	
9	**11213423**	3					Shim .....垫片.....	
10	**11213401**	1					Pin.....定位销.....	
11	**11213403**	1					Hexagon screw .....六角螺丝.....	
12	**11210109**	2					Hexagon nut.....六角螺母.....	

1	**11213428**	活塞杆连杆 **Links to connecting rod**	Catalogue id **111201**	Group **909**
2			Illustr. No **H35-6150E**	Section **100**
3				
4			Issue **2638000345**	Page **525**
5				

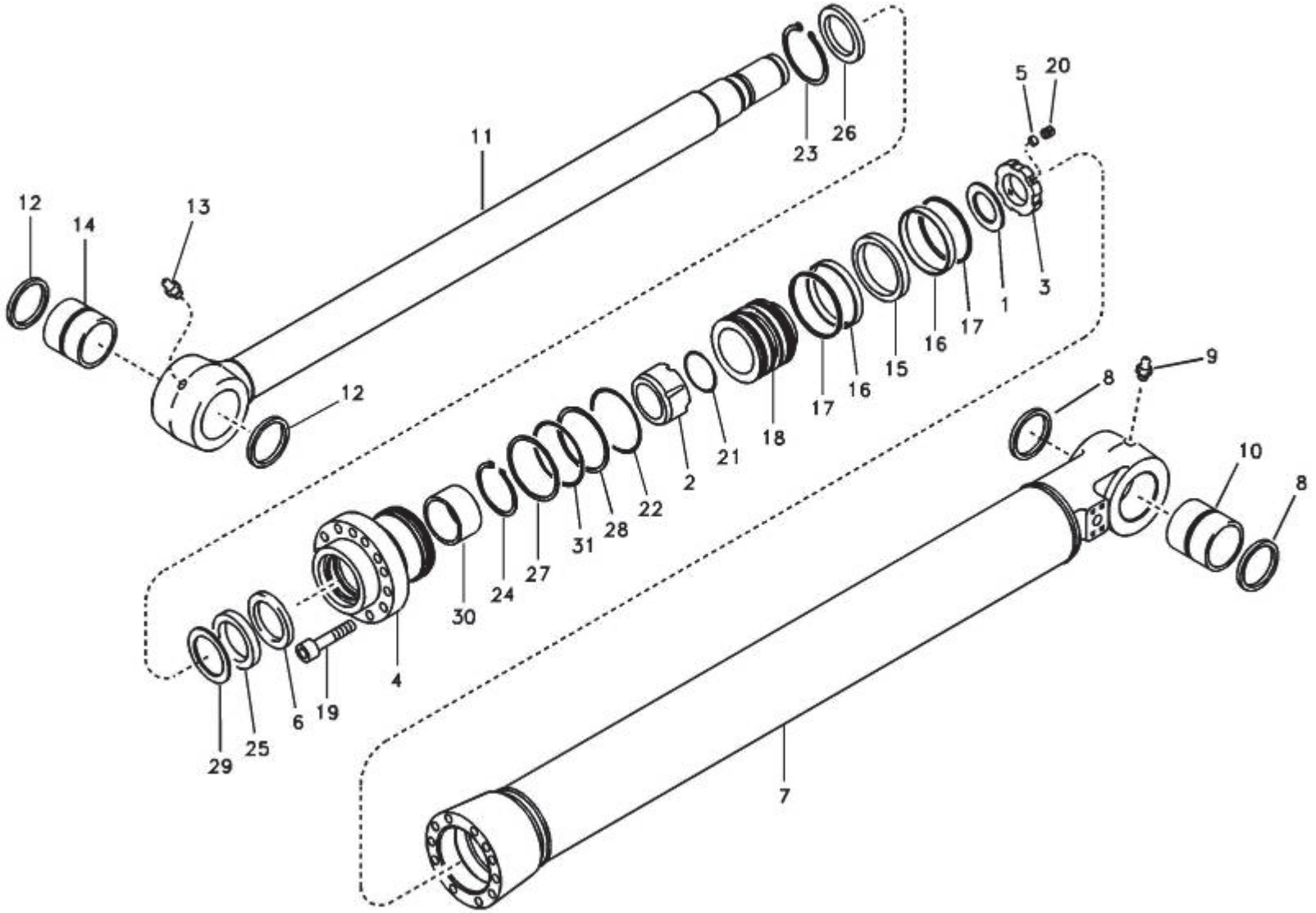
12
14
13
11
23
26
5
20
12
1
3
16
17
15
16
17
18
2
21
22
31
28
27
24
30
4
29
25
6
19
8
9
10
8
7

H36-6150E

Fig.	Part No.编码.	Quantity件数 1	2	3	PS	KIT	Description 说明	Notes
	11213434	1					Bucket cylinder.....铲斗油缸.....	
1	**11213381**	1					•Washer .....• 垫圈.....	
2	**11213432**	1					•Cushion .....• 坐垫.....	
3	**11213376**	1					•Lock nut.....• 锁紧螺母.....	
4		1			NS		•Head .....• 活塞盖.....	
5	**11211340**	1					•Pad .....• 底座.....	
6	**11213377**	1				K	•Ring .....• 密封环.....	
7		1			NS		•Tube .....• 缸筒.....	
8	**11213379**	2					••Seal .....•• 密封.....	
9	**11211769**	1					••Nipple .....•• 螺纹接头.....	
10	**11213417**	1					••Bushing .....•• 衬套.....	
11	**11213433**	1					•Rod .....• 活塞杆.....	
12	**11213429**	2					••Sealing .....•• 密封.....	
13	**11211769**	1					••Nipple .....•• 螺纹接头.....	
14	**11213431**	1					••Bushing .....•• 轴衬.....	
15	**11213430**	1				K	•Piston seal .....• 活塞密封圈.....	
16	**11213435**	2				K	•Wear ring .....• 磨损环.....	
17	**11213436**	2				K	•Seal .....• 密封.....	
18		1			NS		•Piston.....• 活塞.....	
19	**11210053**	11					•Hex. socket screw ....• 六角凹头螺丝.....	
20	**11213437**	1					•Set screw .....• 定位螺丝.....	
21	**11213397**	1				K	•O-ring.....•O 型圈.....	
22	**11213440**	1				K	•O-ring.....•O 型圈.....	
23	**11213391**	1					•Retaining ring .....• 固位环.....	
24	**11213392**	1					•Retaining ring .....• 固位环.....	
25	**11213393**	1				K	•Seal .....• 密封.....	
26	**11213394**	1				K	•Sealing.....• 密封.....	
27	**11213438**	1				K	•Ring .....• 环.....	

1	**11213443**	铲斗油缸 **Bucket cylinder**	Catalogue id **111201**	Group **909**
2			Illustr. No **H36-6150E**	Section **200**
3				
4			Issue **2638000345**	Page **527**
5				

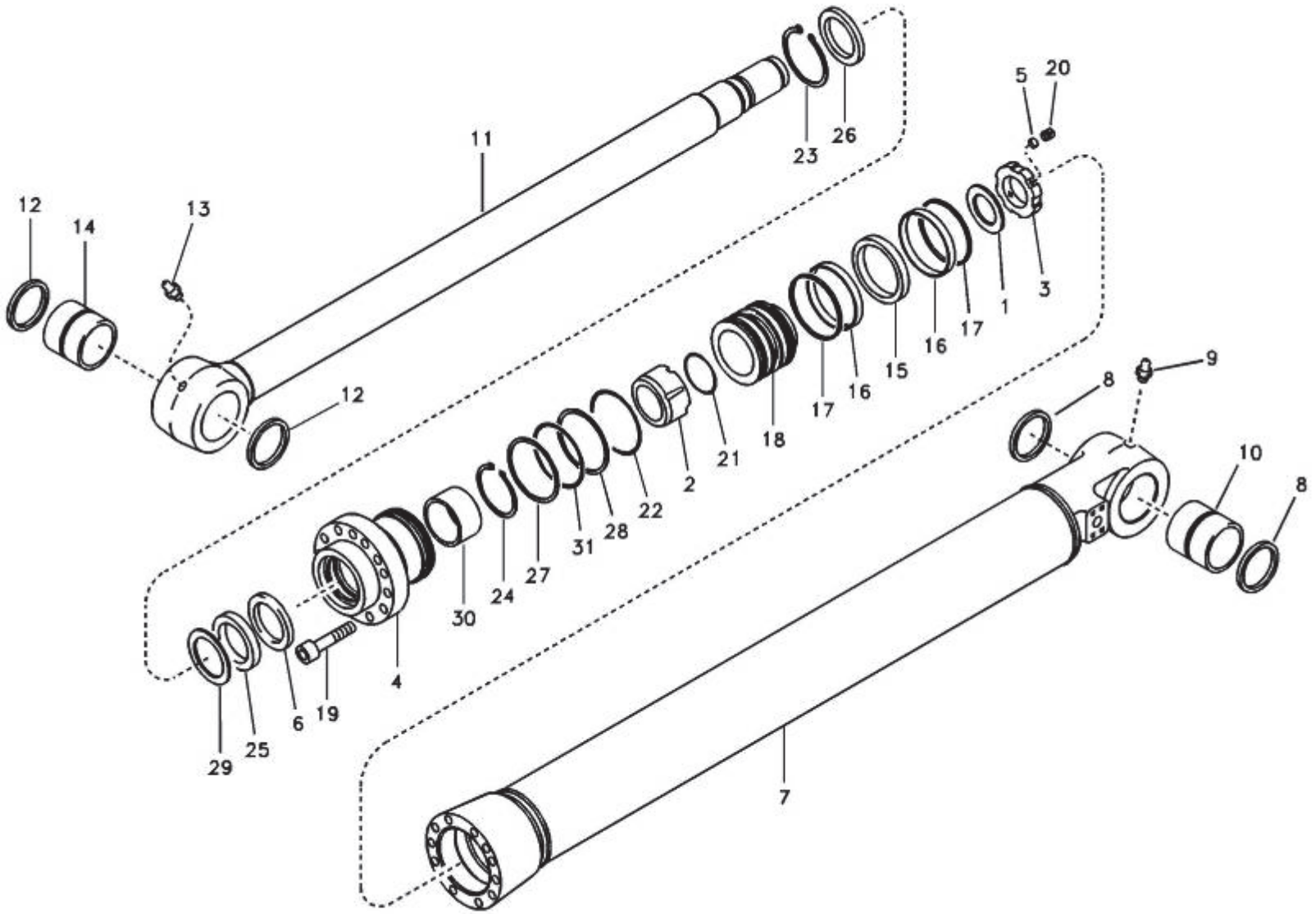
12
14
13
11
23
26
5
20
12
1
3
17
16
15
16
17
18
21
2
22
28
31
27
24
30
4
19
6
25
29
7
8
9
10
8

H36-6150E

Fig.	Part No.编码.	Quantity 件数 1	2	3	PS	KIT	Description 说明	Notes
28	**11213439**	1				K	•Ring .....• 环.....	
29	**11213396**	1				K	•Ring .....• 环.....	
30	**11213388**	1				K	•Bushing.....• 轴衬.....	
31	**11213441**	1				K	•O-ring.....•O 型圈.....	
100	**11213442**	1					Sealing kit .....密封套件.....	

1	**11213443**	铲斗油缸 **Bucket cylinder**	Catalogue id **111201**	Group **909**
2			Illustr. No **H36-6150E**	Section **200**
3				
4			Issue **2638000345**	Page **529**
5				