Website:http://www.wheelloaderscn.com Tel:0086-186 5080 9011 Skype: Lee.yun027
Email:sales@wheelloaderscn.com Fax:0086-592-6035 287

SDLG LINGONG

| 序号 | 编码 | 名称 | 英文名称 |
|---|---|---|---|
| 0 | 1609214A29 | LG916轮式装载机 | TUCE-1609214A29 |
| 1 | A1-2901001668 | 发动机总成 | DIESEL ENGINE ASSEMBLY |

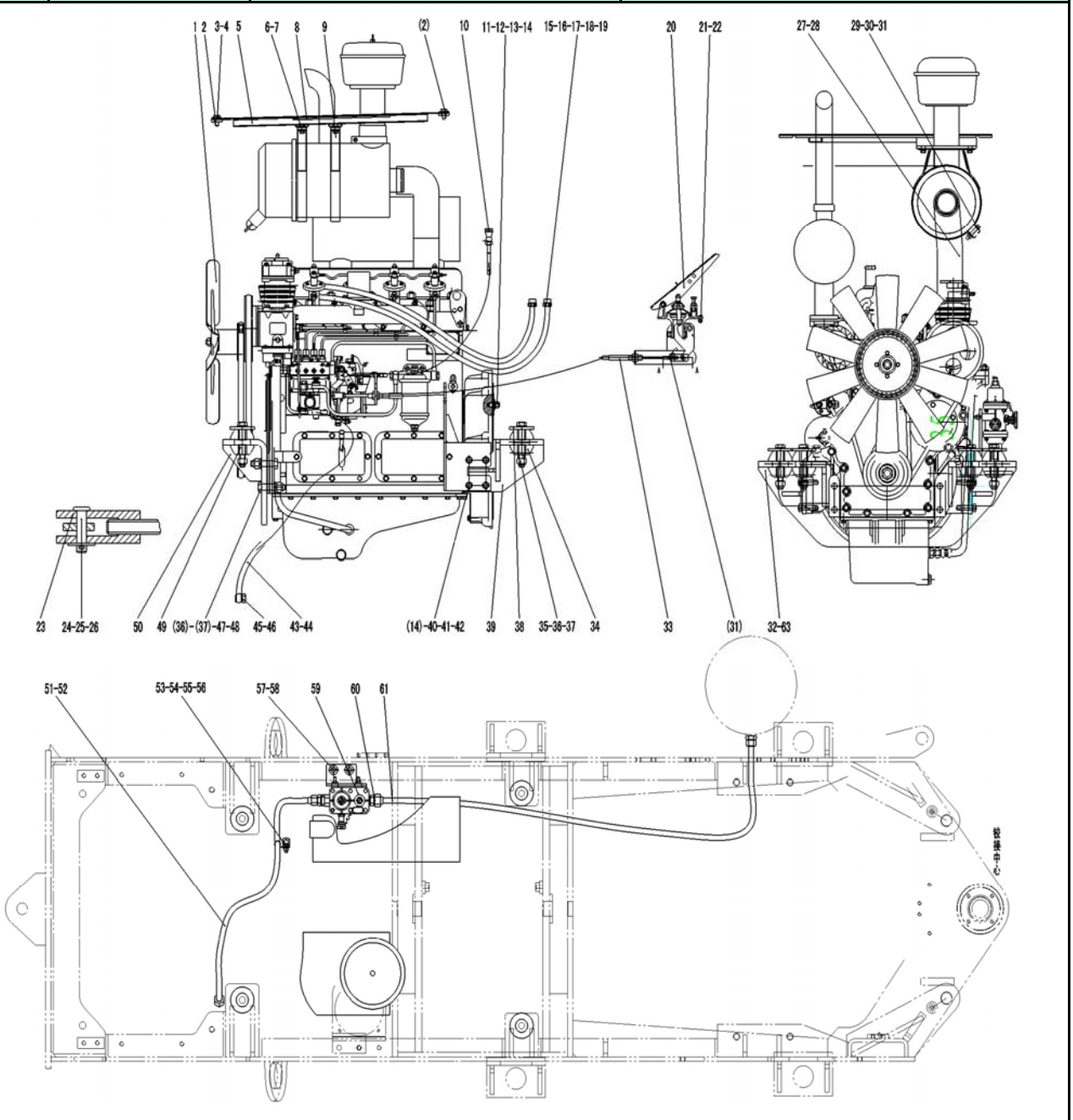


| | | | |
|---|---|---|---|
| 1.1 | 4110001006 | 发动机ZHBG44 | ENGINE ZHBG44 |
| 1.2 | 29010017301 | 橡胶垫 | RUBBER GASKET |
| 1.3 | 4015000197 | 垫圈GB96.1-10EpZn-300HV | WASHER GB96.1-10EpZn-300HV |
| 1.4 | 4011000082 | 螺栓GB5783-M10*25EpZn-8.8 | BOLT GB5783-M10*25EpZn-8.8 |
| 1.5 | 29010017591 | 上盖板（LG916华丰） | PLATE |
| 1.6 | 4011000474 | 螺栓GB16674-M10*25EpZn-8.8 | BOLT GB16674-M10*25EpZn-8.8 |
| 1.7 | 29010017331 | 橡胶垫 | RUBBER GASKET |
| 1.8 | 29010017381 | 橡胶垫 | RUBBER GASKET |
| 1.9 | 29010017261 | 空滤环箍 | CLAMP |
| 1.10 | 29010017491 | 停车操纵软轴 | PARKING CONTROL SYSTEM |

| | | | |
|---|---|---|---|
| 1.11 | 29010006591 | 双头螺栓 | DOUBLE BOLT |
| 1.12 | 4013000011 | 螺母GB6170-M12EpZn-8 | NUT GB6170-M12 EpZn-8 |
| 1.13 | 4015000168 | 垫圈GB97.1-12EpZn-300HV | WASHER GB97.1-12EpZn-300HV |
| 1.14 | 4015000026 | 垫圈GB93-12-65Mn | WASHER GB93-12-65Mn |
| 1.15 | 4120000048 | 胶管JB8406-B16*1400 | HOSE JB8406-B16*1400 |
| 1.16 | 4120000067 | 暖风机水阀LG12-NFJSF | VALVE-HEATER |
| 1.17 | 4017000024 | 环箍QC390-D26 | CLAMP QC390-D26 |
| 1.18 | 29010017361 | 水(油)温表接头 | FITTING |
| 1.19 | 4030000754 | 胶管JB8406-B16*1700 | HOSE JB8406-B16*1700 |
| 1.20 | 4120000096 | 油门踏板ZY75-00 | ACCELERATOR PEDAL ZY75-00 |
| 1.21 | 4015000035 | 垫圈GB93-6-65Mn | WASHER GB93-6-65Mn |
| 1.22 | 4011000101 | 螺栓GB5783-M6*20EpZn-8.8 | BOLT GB5783-M6*20EpZn-8.8 |
| 1.23 | 29010006681 | 连接叉 | JOINT FORK |
| 1.24 | 4016000138 | 销轴GB882-B6*22EpZn-35 | PIN GB882-B6*22EpZn-35 |
| 1.25 | 4016000100 | 开口销GB91-2*20EpZn-Q235A | SPLINT PIN GB91-2*20EpZn-Q235A |
| 1.26 | 4015000207 | 垫圈GB97.1-6EpZn-300HV | WASHER GB97.1-6EpZn-300HV |
| 1.27 | 4017000014 | 喉箍JB8870-d80 | CLAMP |
| 1.28 | 29010017581 | 进气胶管 | INLET GAS HOSE |
| 1.29 | 4011000527 | 螺栓GB16674-M8*45EpZn-8.8 | BOLT GB16674-M8*45EpZn-8.8 |
| 1.30 | 4015000072 | 垫圈GB97.1-8EpZn-300HV | WASHER GB97.1-8EpZn-300HV |
| 1.31 | 4013000033 | 螺母GB6170-M8EpZn-8 | NUT GB6170-M8EpZn-8 |
| 1.32 | 29010016781 | 左前支腿 | LEFT LEG |
| 1.33 | 29010016921 | 操纵软轴 | CABLE SHAFT |
| 1.34 | 29010017391 | 减震垫 | RUBBER SPACER |
| 1.35 | 4011000656 | 螺栓GB5785-M16*1.5*110EpZn-8.8 | BOLT GB5782-M16*100EpZn-8.8 |
| 1.36 | 4013000129 | 螺母GB889.2-M16*1.5EpZn-8 | NUT GB6170-M16EpZn-8 |
| 1.37 | 4015000181 | 垫圈GB97.1-16EpZn-300HV | WASHER GB97.1-16EpZn-300HV |
| 1.38 | 29010006601 | 垫圈 | WASHER |
| 1.39 | 29010016791 | 右前支腿 | RIGHT LEG |
| 1.40 | 4011000092 | 螺栓GB5783-M12*50EpZn-8.8 | BOLT GB5783-M12*50EpZn-8.8 |
| 1.41 | 29010017521 | 油门支架 | BRACKET |
| 1.42 | 4011000284 | 螺栓GB5783-M12*60EpZn-8.8 | BOLT GB5783-M12*60EpZn-8.8 |
| 1.43 | 29010016931 | 燃油管 | FUEL HOSE |
| 1.44 | 4190000343 | 喉箍JB8870-d16 | CLAMP JB8870-d16 |
| 1.45 | 4011000641 | 螺栓JB6013-M14*1.5EpZn-45 | BOLT JB6013-M14*1.5EpZn-45 |
| 1.46 | 4015000231 | 垫圈JB6013-14-T2 | WASHER JB6013-14-T2 |
| 1.47 | 4011000865 | 螺栓GB5785-M16*1.5*65EpZn-10.9 | BOLT GB5785-M16*1.5*65EpZn-10.9 |
| 1.48 | 4015000098 | 垫圈GB93-16-65Mn | WASHER GB93-16-65Mn |
| 1.49 | 29010017401 | 减震垫 | RUBBER SPACER |
| 1.50 | 29010016861 | 后支腿 | REAR LEG |
| 1.51 | 4120000750 | 金属软管 | METAL TUBE |
| 1.52 | 29220000171 | 垫圈 | WASHER |
| 1.53 | 4011000488 | 螺栓GB16674-M10*16EpZn-8.8 | BOLT GB16674-M10*16EpZn-8.8 |
| 1.54 | 29010017341 | 支架 | BRACKET |
| 1.55 | 4011000461 | 螺栓GB16674-M8*16EpZn-8.8 | BOLT GB16674-M8*16EpZn-8.8 |
| 1.56 | 29010017571 | 管夹 | CLAMP |
| 1.57 | 29010016911 | 油水分离器支架 | BRACKET |
| 1.58 | 4011000137 | 螺栓GB16674-M12*20EpZn-8.8 | BOLT GB16674-M12*20EpZn-8.8 |
| 1.59 | 4120000084 | 油水分离器组合阀ST-50G | AIR DYER ST-50G |
| 1.60 | 29220001191 | 直接头 | CONNECTOR |
| 1.61 | 4041001410 | 软管LGB144-105150 | TUBE LGB144-105150 |
| 1.62 | 4011000254 | 螺栓GB5783-M12*55EpZn-8.8 | BOLT GB5783-M12*55EpZn-8.8 |

| | | | |
|---|---|---|---|
| 2 | A2-2902000895 | 燃油箱总成 | FUEL TANK ASSEMBLY |

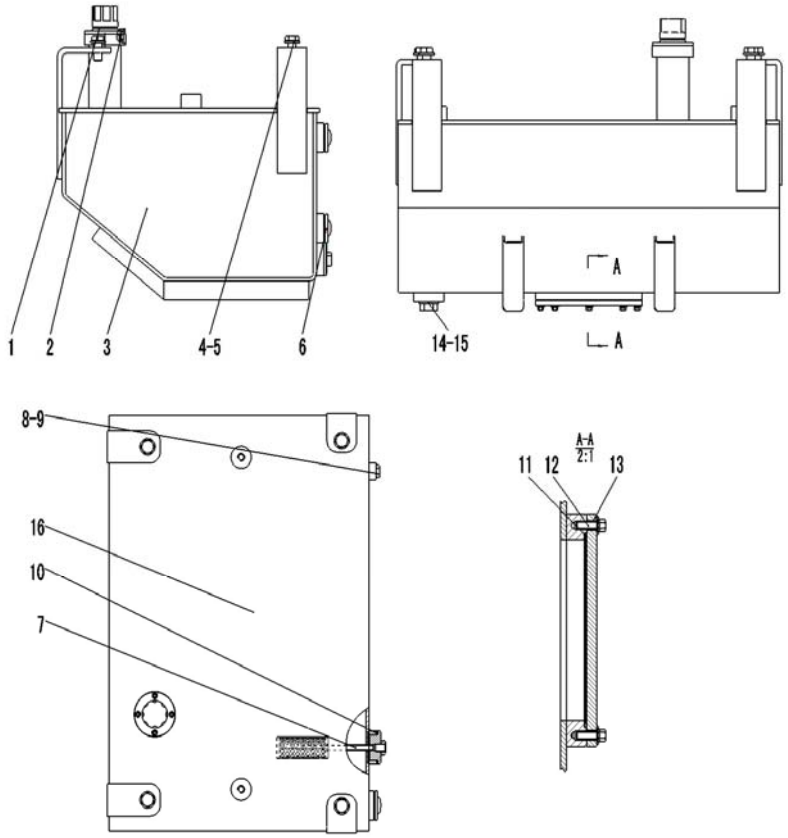


| | | | |
|---|---|---|---|
| 2.1 | 4110000612 | 加油滤清器QL8 | GASOLINE FILTER QL8 |
| 2.2 | 4011000461 | 螺栓GB16674-M8*16EpZn-8.8 | BOLT GB16674-M8*16EpZn-8.8 |
| 2.3 | 29020008961 | 燃油箱体 | FUEL TANK |
| 2.4 | 4011000095 | 螺栓GB5783-M16*35EpZn-8.8 | BOLT GB5783-M16*35EpZn-8.8 |
| 2.5 | 4015000181 | 垫圈GB97.1-16EpZn-300HV | WASHER GB97.1-16EpZn-300HV |
| 2.6 | 4110000807 | 圆形油标YB-M42*1.5 | OIL GAUGE YB-M42*1.5 |
| 2.7 | 29020006581 | 滤油器总成 | STRAINER ASS'Y |
| 2.8 | 4030000400 | 螺塞JB1000-M14*1.5EpZn-45 | PLUG SCREW JB1000-M14*1.5EpZn-45 |
| 2.9 | 4015000121 | 垫圈JB982-14 | WASHER JB982-14 |
| 2.10 | 29020000062 | 垫圈 | WASHER |
| 2.11 | 4030000232 | O形圈GB3452.1-170*3.55G | O-RING GB3452.1-170*3.55G |
| 2.12 | 4011000458 | 螺栓GB16674-M8*20EpZn-8.8 | BOLT GB16674-M8*20Ep.Zn-8.8 |
| 2.13 | 29100000361 | 法兰盖 | FLANGE CAP |
| 2.14 | 4030000143 | 螺塞JB1000-M27*2EpZn-35 | PLUG JB1000-M27*2-35 |
| 2.15 | 4015000091 | 垫圈JB982-27 | SEALING WASHER JB982-27 |

| | | | |
|---|---|---|---|
| 2.16 | 29020008951 | 燃油箱总成 | FUEL TANK ASSEMBLY |
| 3 | A3-2903001046 | 散热器总成 | RADIATOR ASSEMBLY |

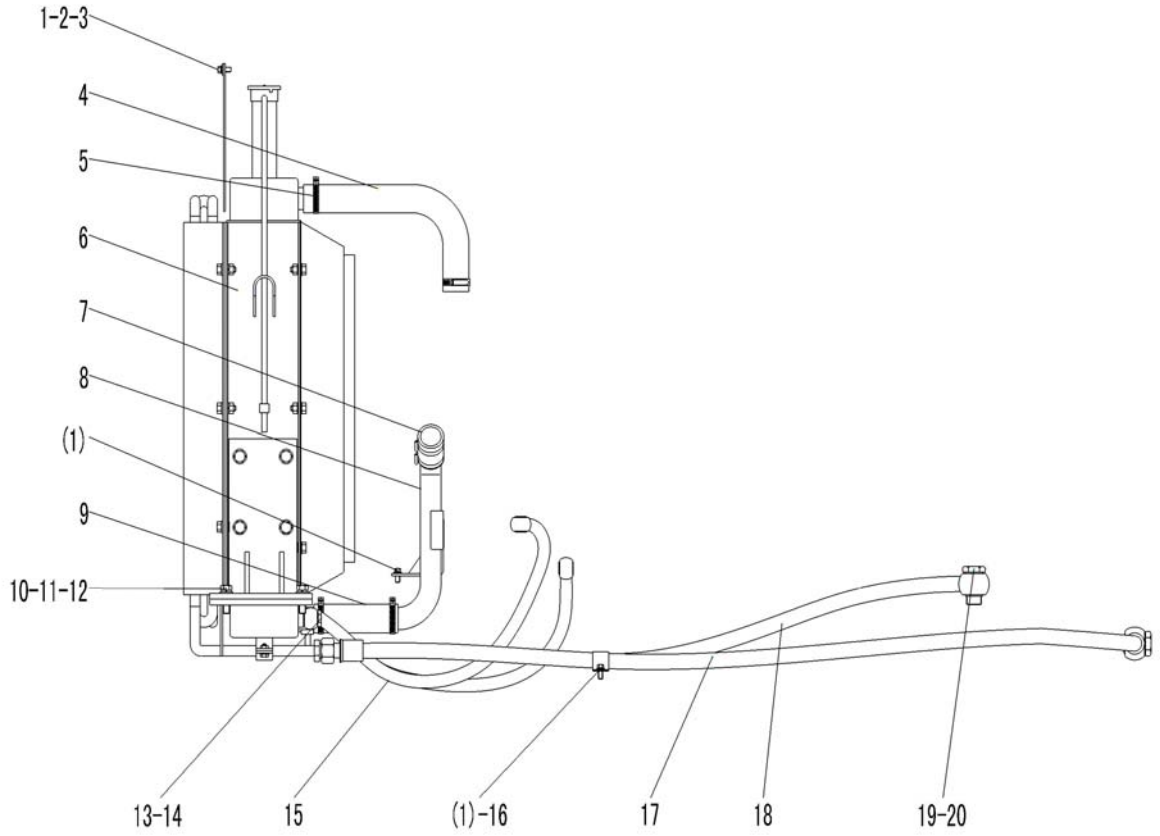


| | | | |
|---|---|---|---|
| 3.1 | 4011000461 | 螺栓GB16674-M8*16EpZn-8.8 | BOLT GB16674-M8*16EpZn-8.8 |
| 3.2 | 29030010511 | 压板 | PRESS PLATE |
| 3.3 | 29030010521 | 橡胶板 | RUBBER GASKET |
| 3.4 | 29030010471 | 散热器进水管 | RADIA TOR INLET PIPE |
| 3.5 | 4017000007 | 喉箍JB8870-d60 | CLAMP JB8870-d60 |
| 3.6 | 4110000797 | 散热器总成LG916 | RADIATOR ASSEMBLY LG916 |
| 3.7 | 29030010711 | 胶管 | HOSE |
| 3.8 | 29030010731 | 散热器出水钢管 | STEEL PIPE |
| 3.9 | 29030010721 | 胶管 | HOSE |
| 3.10 | 4011000091 | 螺栓GB5783-M12*40EpZn-8.8 | BOLT GB5783-M12*40EpZn-8.8 |
| 3.11 | 4015000168 | 垫圈GB97.1-12EpZn-300HV | WASHER GB97.1-12EpZn-300HV |
| 3.12 | 4015000026 | 垫圈GB93-12-65Mn | WASHER GB93-12-65Mn |
| 3.13 | 4011000274 | 螺栓JB999-M22*1.5*48EpZn-35 | BOLT |
| 3.14 | 4030000060 | 垫圈JB1002-22-T2 | WASHER JB1002-22-T2 |
| 3.15 | 29030010501 | 机油冷却器胶管 | HOSE |
| 3.16 | 26370001941 | 管夹 | CLAMP |
| 3.17 | 29030010491 | 散热器至变速箱胶管 | HOSE |
| 3.18 | 29030008121 | 变矩器至散热器胶管 | TO RADATOR PIPE |
| 3.19 | 4011000147 | 螺栓JB999-M27*2*55EpZn-35 | BOLT JB999-M27*2*55-35 |
| 3.20 | 4030000062 | 垫圈JB1002-27-T2 | SEALING WASHER JB1002-27-T2 |

| 4 | B1-2904000826 | 变矩器总成 | TORQUE CONVERTER ASSEMBLY |
|---|---|---|---|

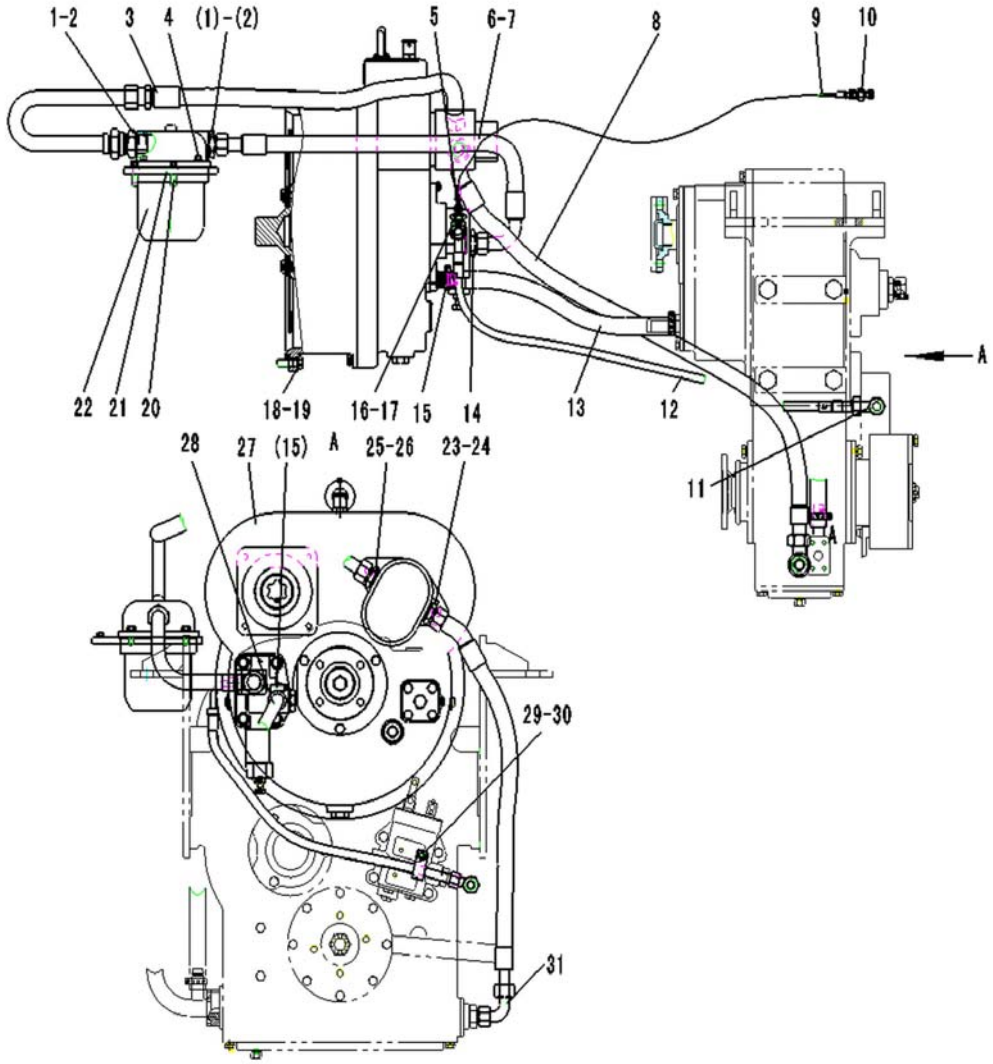


| | | | |
|---|---|---|---|
| 4.1 | 29040008271 | 接头体 | CONNECTOR |
| 4.2 | 4030000013 | O形圈GB1235-32*3.1 | O-RING GB1235-32*3.1 |
| 4.3 | 29040008281 | 变矩器至滤清器油管 | HOSE |
| 4.4 | 4011000481 | 螺栓GB16674-M8*30EpZn-8.8 | BOLT GB16674-M8*30Ep.Zn-8.8 |
| 4.5 | 29040006561 | 接头体 | CONNECTOR |
| 4.6 | 29040008871 | 滤清器至变矩器油管 | OIL PIPE |
| 4.7 | 4041001262 | 组合接头LGB143-03019 | JOINT LGB143-03019 |
| 4.8 | 4041001407 | 软管LGB126-014085 | PIPE |
| 4.9 | 29040008821 | 变速压力油表管 | PIPE |
| 4.10 | 29010001111 | 接头 | JOINT |
| 4.11 | 4041001063 | 组合接头LGB143-01810 | CONNECTOR LGB143-01810 |
| 4.12 | 4041001420 | 软管LGB125-005144 | PIPE |
| 4.13 | 4120002507 | 胶管JB8406-B19*320 | HOSE JB8406-B19*320 |

| | | | |
|---|---|---|---|
| 4.14 | 29040008781 | 接头体 | CONNECTOR |
| 4.15 | 4017000011 | 喉箍JB8870-d32 | CLAMP JB8870-d32 |
| 4.16 | 29040008791 | 接头体 | CONNECTOR |
| 4.17 | 29040008311 | 三通接头 | T-CONNECTER |
| 4.18 | 4011000089 | 螺栓GB5783-M12*30EpZn-8.8 | BOLT GB5783-M12*30EpZn-8.8 |
| 4.19 | 4015000026 | 垫圈GB93-12-65Mn | WASHER GB93-12-65Mn |
| 4.20 | 4011000560 | 螺栓GB16674-M12*25EpZn-8.8 | BOLT GB16674-M12*25EpZn-8.8 |
| 4.21 | 29040008771 | 滤清器固定支架 | BRACKET |
| 4.22 | 4110000507 | 滤清器QF60M33G-1 | FILTER QF60M33G-1 |
| 4.23 | 29040008831 | 直接头 | JOINT |
| 4.24 | 4030000063 | 垫圈JB1002-33-T2 | WASHER JB1002-33-T2 |
| 4.25 | 29040008841 | 直接头 | JOINT |
| 4.26 | 4030000062 | 垫圈JB1002-27-T2 | SEALING WASHER JB1002-27-T2 |
| 4.27 | 4110000790 | 液力变矩器YJ280-1DL | TORQUE CONVERTER YJ280-1DL |
| 4.28 | 4120002508 | 胶管JB8406-B19*760 | HOSE JB8406-B19*760 |
| 4.29 | 4011000461 | 螺栓GB16674-M8*16EpZn-8.8 | BOLT GB16674-M8*16EpZn-8.8 |
| 4.30 | 29350000021 | 管夹 | PIPE NIP |
| 4.31 | 4041001211 | 组合接头LGB143-03625 | CONNECTOR LGB143-03625 |

| | | | |
|---|---|---|---|
| 5 | B2-4110000790 | 液力变矩器YJ280-1DL(370804) | TORQUE CONCERVER YJ280-1DL(370804) |

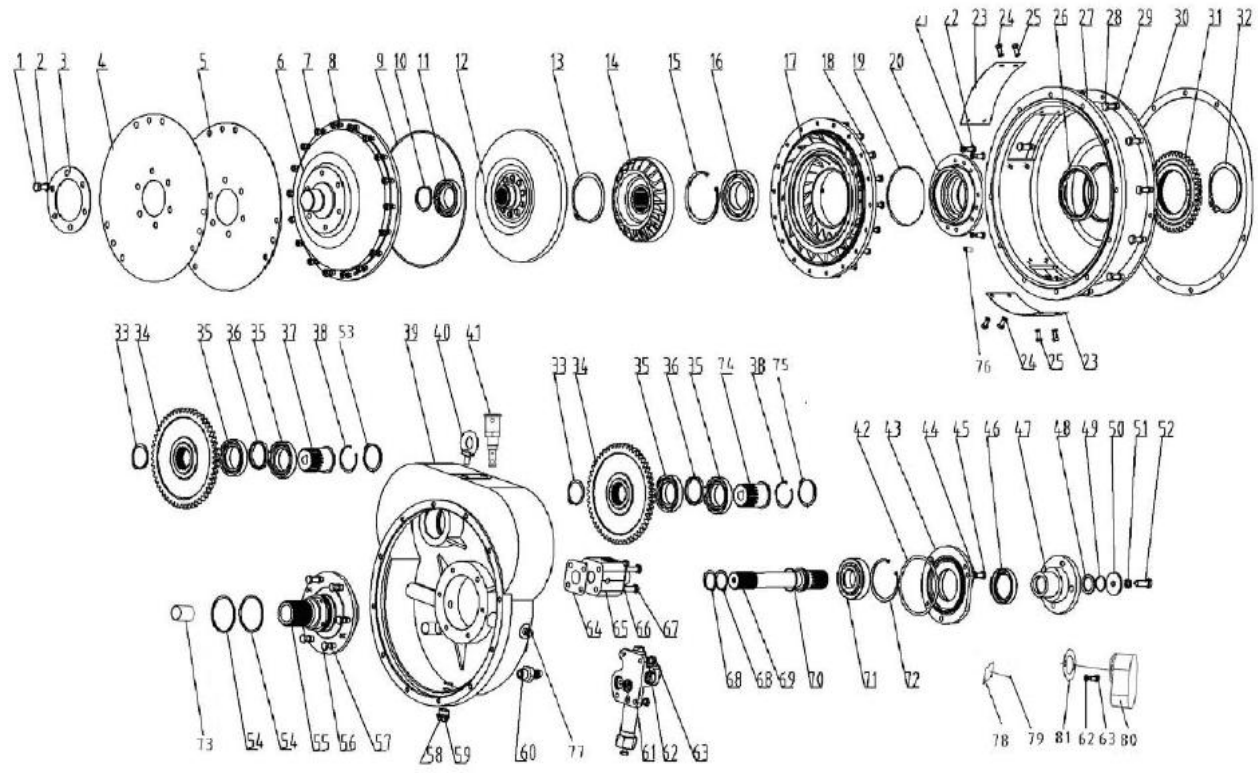

| | | | |
|---|---|---|---|
| 5.1 | 4110000217083 | 螺栓01010-51225 M12*25 | BOLT01010-51225 M1*25 |

| | | | |
|---|---|---|---|
| 5.2 | 4110000011108 | 垫圈12 01602-11236 | WASHER 01602-11236 12 |
| 5.3 | 4110000011116 | 圆垫板YB315Z5-04 | RING PALLET YB315Z5-04 |
| 5.4 | 4110000217071 | 弹性板YJ265-00002 | ELASTIC PLATE YJ265-00002 |
| 5.5 | 4110000217072 | 弹性板总成YJ265-10000 | ELASTIC PLATE ASSEMBLY YJ265-10000 |
| 5.6 | 4110000217039 | 罩轮1YJ280-1C-00005 | COVER WHEEL 1YJ280-1C-00005 |
| 5.7 | 4110000518002 | 螺母01580-00806 M8 | NUT 01580-00806 M8 |
| 5.8 | 4110000011087 | 垫圈801602-10825 | WASHER 801602-10825 |
| 5.9 | 4030000616 | PO形圈GB3452.1-300*3.55G | O-RING GB3452.1-290*3.55G |
| 5.10 | 4110000217073 | 挡圈04064-05020 50 | SNAP RING 04064-05020 50 |
| 5.11 | 4021000011 | 滚动轴承GB276-6010 | BALL BEARIN GB276-6010 |
| 5.12 | 4110000790001 | 涡轮组件YJ280-1A-10000 | TURBINE UNIT YJ280-1A-10000 |
| 5.13 | 4110000217074 | 挡圈04064-05520 55 | WASHER 04064-05520 55 |
| 5.14 | 4110000217007 | 导轮YJ2801A00002 | IDLER PULLEY |
| 5.15 | 4015000241 | 挡圈GB893.1-110-65Mn | SNAPP RING GB893.1-110-65Mn |
| 5.16 | 4021000113 | 滚动轴承GB276-6212 | BALL BEARIN GB276-6212 |
| 5.17 | 4110000217030 | 泵轮YJ280-1A-00001 | PUMP WHEEL |
| 5.18 | 4110000790002 | 螺栓01010-60832 M8*32 | BOLT 01010-60832 M8*32 |
| 5.19 | 4030000010 | O形圈GB1235-130*3.1 | O-RING GB1235-130*3.1 |
| 5.20 | 4110000217022 | 泵轮座YJ2804A00015 | PUMP PULLEY SEAT YJ280-4A-00015 |
| 5.21 | 4110000011087 | 垫圈801602-10825 | WASHER 801602-10825 |
| 5.22 | 4110000790003 | 螺栓01010-60822 M8*22 | BOLT 01010-60822 M8*22 |
| 5.23 | 4110000217054 | 盖板1YJ280-4A-00007 | COVER PLATE 1YJ280-4A-00007 |
| 5.24 | 4110000011086 | 螺栓M8*16 01010-50816 | BOLT M8*16 01010-50816 |
| 5.25 | 4110000011087 | 垫圈801602-10825 | WASHER 801602-10825 |
| 5.26 | 4110000217052 | 骨架油封ZL30D-11-54 100*120*13 | FRAMEWORK OIL SEAL 0ZL30D-11-54 |
| 5.27 | 4110000217040 | 中节1YJ280-4A-00001 | MEDIUM KNOT 1YJ280-4A-00001 |
| 5.28 | 4011000794 | 螺栓GB21-M10*30EpZn-10.9 | BOLT GB21-M10*30EpZn-10.9 |
| 5.29 | 4110000011097 | 垫圈10 01602-11030 | WASHER 10 01602-11030 |
| 5.30 | 4110000217084 | 密封垫YJ280-4A-00016 | SEALING PLATE YJ280-4A-00016 |
| 5.31 | 4110000217045 | 齿轮1YJ280-4DL-00001 | DRIVE GEAR WHEEL 1YJ280-4DL-00001 |
| 5.32 | 4110000217061 | 挡圈04064-01030 100 | WASHER 04064-01030 100 |
| 5.33 | 4110000217063 | 挡圈04064-05020 50 | WASHER 04064-05020 50 |
| 5.34 | 4110000217046 | 齿轮1YJ280-4DL-00002 | GEAR 1YJ280-4DL-00002 |
| 5.35 | 4021000011 | 滚动轴承GB276-6010 | BALL BEARIN GB276-6010 |
| 5.36 | 4110000217085 | 轴套YJ2804A00009 | BOSS YJ2804A00009 |
| 5.37 | 4110000217024 | 油泵轴YJ2804A00017 | OIL PUMP SHAFT YJ2804A00017 |
| 5.38 | 4110000217065 | 挡圈04064-08025 80 | WASHER 04064-08025 80 |
| 5.39 | 4110000217019 | 齿轮箱YJ2801C00001 | GEAR CASE YJ2801C00001 |
| 5.40 | 4110000217067 | 吊环螺钉04530-11222 M12×22 | HANDLING SCREW 04530-11222 M12*22 |
| 5.41 | 4110000217049 | 呼吸器1YJ320-20000① | BREATHING IMPLEMENT 1YJ320-20000① |
| 5.42 | 4030000010 | O形圈GB1235-130*3.1 | O-RING GB1235-130*3.1 |
| 5.43 | 4110000217028 | 油封座YJ2801C00003 | OIL SEAL SEAT YJ2801C00003 |
| 5.44 | 4110000011097 | 垫圈10 01602-11030 | WASHER 10 01602-11030 |
| 5.45 | 4011000794 | 螺栓GB21-M10*30EpZn-10.9 | BOLT GB21-M10*30EpZn-10.9 |
| 5.46 | 4110000217027 | 骨架油封0701220055 | FRAMEWORK OIL SEAL 0701220055 |
| 5.47 | 4110000217047 | 输出法兰1YJ315D-00020B | OUTPUT FLANGE 1YJ315D-00020B |
| 5.48 | 4110000217048 | 垫片1YJ315D-00021B | SHIM 1YJ315D-00021B |
| 5.49 | 4110000217036 | O形圈0YJ315D-00022B | O-RING 0YJ315D-00022B |
| 5.50 | 4110000217038 | 垫片1YJ280-1C-00004 | SHIM 1YJ280-1C-00004 |
| 5.51 | 4110000011108 | 垫圈12 01602-11236 | WASHER 01602-11236 12 |
| 5.52 | 4110000217058 | 螺栓01010-51235 M12×35 | BOLT 01010-51235 M12*35 |
| 5.53 | 7200000830 | 挡圈2004065-02010 | SNAP RING |
| 5.54 | 4110000217051 | 密封环0ZL30D-11-19 | PACKING RING 0ZL30D-11-19 |
| 5.55 | 4110000217020 | 导轮座YJ2804A00014 | GUIDE PULLEY YJ2804A00014 |
| 5.56 | 4011000794 | 螺栓GB21-M10*30EpZn-10.9 | BOLT GB21-M10*30EpZn-10.9 |
| 5.57 | 4110000011097 | 垫圈10 01602-11030 | WASHER 10 01602-11030 |
| 5.58 | 4015000122 | 垫圈JB982-24 | WASHER JB982-24 |
| 5.59 | 4110000217034 | 螺塞07044-12412A | PLUG SCREW 07044-12412A |
| 5.60 | 4110000217018 | 接头YJ2804C00007 | JOINT YJ2804C00007 |
| 5.61 | 4110000217001 | 减压阀YJ320-10000 | REDUCING VALVE YJ320-10000 |
| 5.62 | 4110000011097 | 垫圈10 01602-11030 | WASHER 10 01602-11030 |
| 5.63 | 4110000217056 | 螺栓01010-51025 M10*25 | BOLT 01010-51025 M10*25 |

| | | | |
|---|---|---|---|
| 5.64 | 4110000217037 | 纸垫1YJ265-00012 | PAPER WASHER 1YJ265-00012 |
| 5.65 | 4110000217023 | 回油阀YJ26540000 | OIL RETURN VALVE YJ26540000 |
| 5.66 | 4110000217057 | 螺栓01010-51095 M10*95 | BOLT 01010-51095 M10*95 |
| 5.67 | 4110000011097 | 垫圈10 01602-11030 | WASHER 10 01602-11030 |
| 5.68 | 4110000217062 | 挡圈04064-03818 38 | WASHER 04064-03818 38 |
| 5.69 | 4110000217006 | 涡轮轴YJ2801C00002 | TURBOSHAFT YJ2801C00002 |
| 5.70 | 4110000217069 | 密封环YJ265-00014 | PACKING RING YJ265-00014 |
| 5.71 | 4021000021 | 滚动轴承GB276-6308 | ROLLING BEARING GB276-6308 |
| 5.72 | 4110000217066 | 挡圈04065-09030 90 | SNAP RING 04065-09030 90 |
| 5.73 | 7200000842 | 分油套YJ280-4A-00011 | OIL-SEPARATING BARGE COWL YJ280-4A-00011 |
| 5.74 | 4110000004008 | 油泵轴1YJ280-4A-00010 | AXES,OIL PUMP 1YJ280-4A-00010 |
| 5.75 | 7200000836 | 挡圈3004065-03012 | SNAP RING |
| 5.76 | 4110000084064 | 定位销1ZL30D-11-22 | SET PIN |
| 5.77 | 4110000217033 | 螺塞07043-00312 | PLUP SCREW 07043-00312 |
| 5.78 | 4110000217086 | 标牌YJ280-1DL-BP | BRAND |
| 5.79 | 7200000846 | 铆钉3*6 04418-03060 | RIVET 3*6 04418-03060 |
| 5.80 | 4110000217087 | 变速泵CB-FA25-FL-X | SHIFT PUMP CB-FA25-FL-X |
| 5.81 | 4110000217050 | 垫1YJ380Q-00021 | CUSHION 1YJ380Q-00021 |

| | | | |
|---|---|---|---|
| 6 | B4-4110000507 | 滤清器QF60M33G-1（410708） | CLEANER QF60M33G-1（410708） |

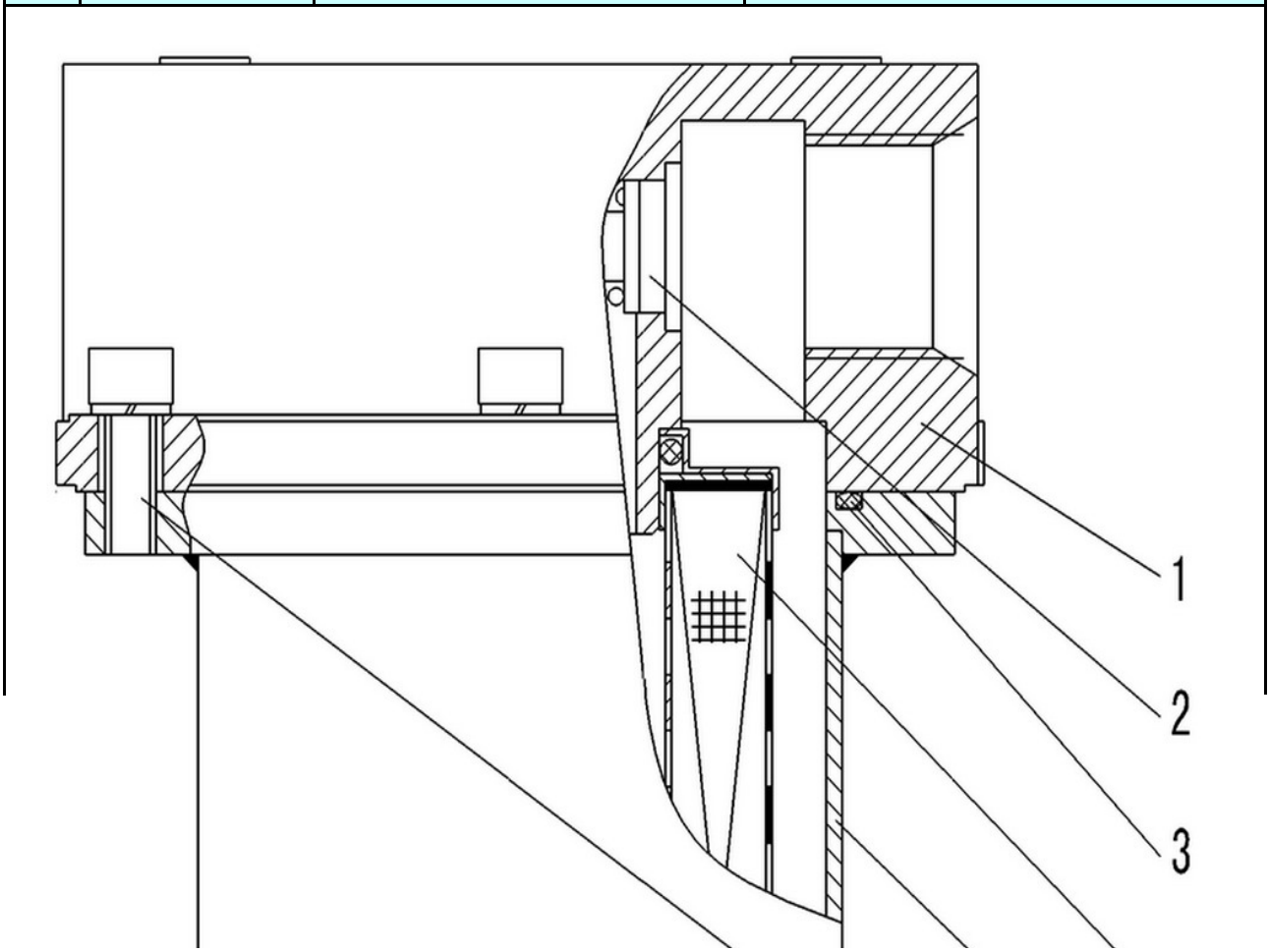

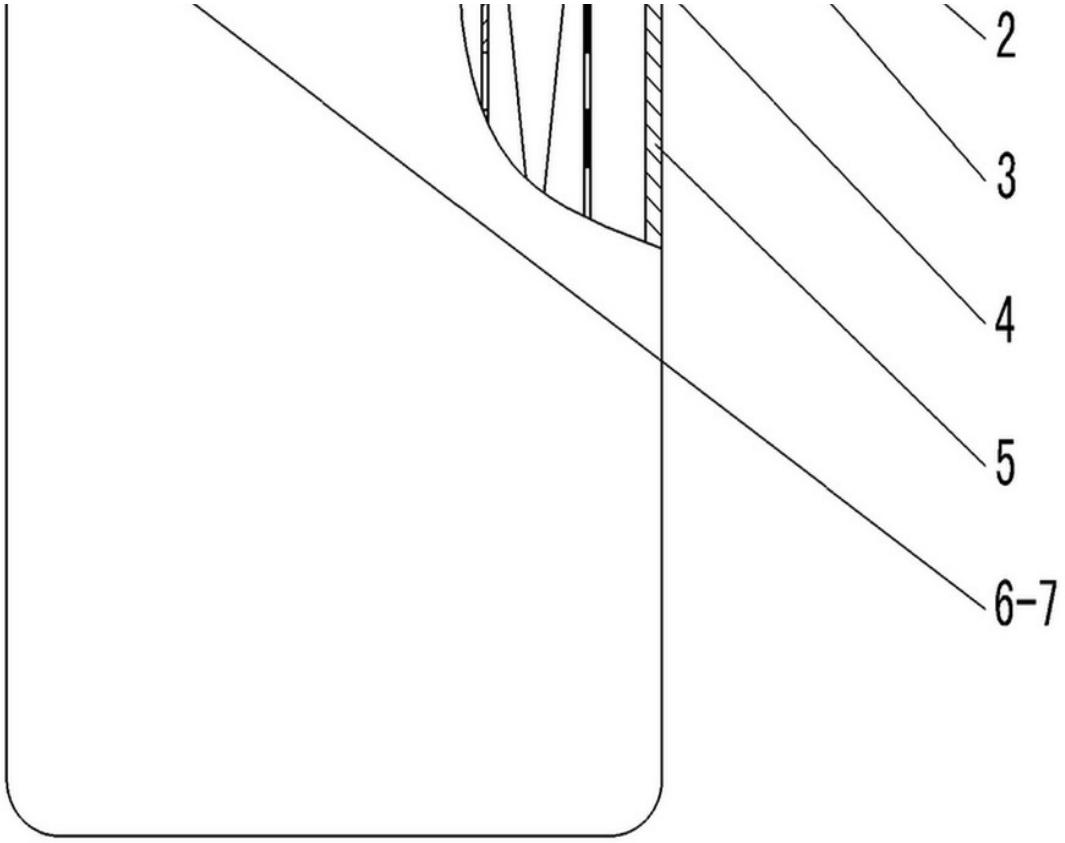


| | | | |
|---|---|---|---|
| 6.1 | 4110000507002 | 上壳体PYQ120A-001 | UPPER SHELL PYQ120A-001 |
| 6.2 | 4110000507003 | 旁通阀SFM360-300 | VALVE SFM360-300 |
| 6.3 | 4110000507004 | 胶圈PYQ120A-002W | CUSHION RUBBER PYQ120A-002W |
| 6.4 | 4110000508 | 滤清器滤芯 | FILTER CORE |
| 6.5 | 4110000507005 | 下壳体PYQ120A-200 | LOWER SHELL PYQ120A-200 |
| 6.6 | 4014000128 | 螺钉GB70-M8*25EpZn-8.8 | SCREW GB70-M8*25EpZn-8.8 |
| 6.7 | 4015000036 | 垫圈GB93-8-65Mn | WASHER GB93-8-65Mn |
| 7 | B5-4110000507 | 滤清器QF60M33G-1(371328) | CLEANER QF60M33G-1(371328) |

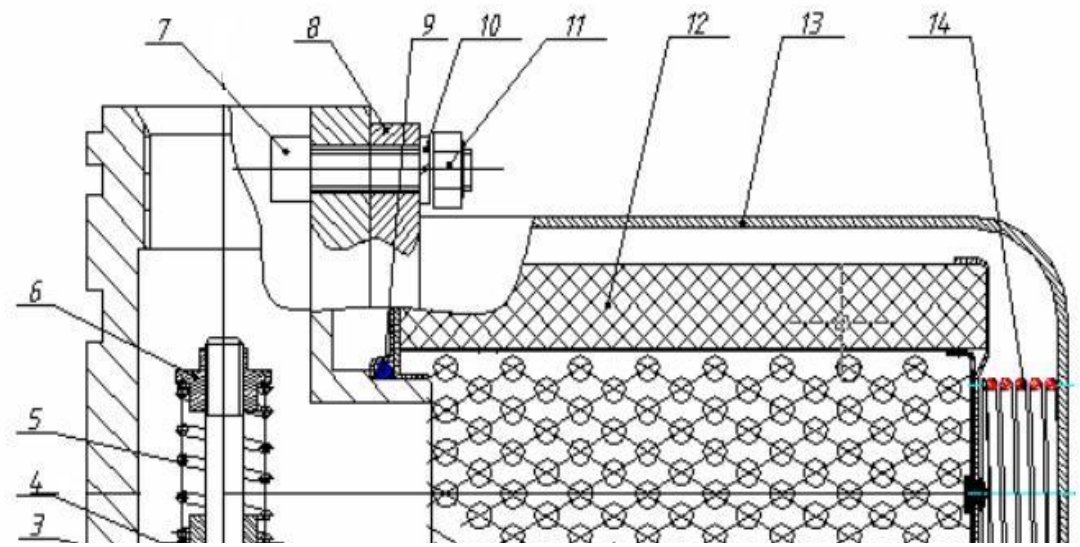

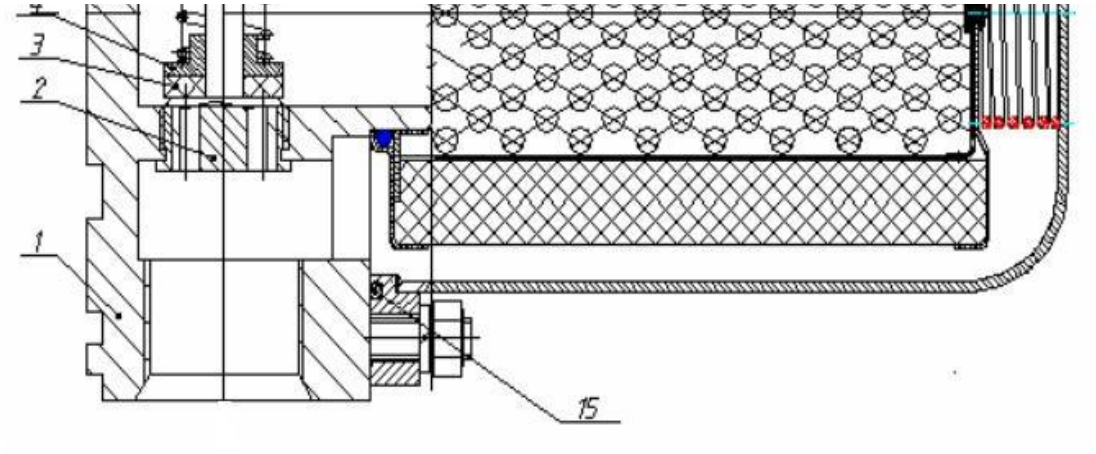


| | | | |
|---|---|---|---|
| 7.1 | 4110000507020 | 底座JS-LQQX-01 | BED JS-LQQX-01 |
| 7.2 | 4110000507021 | 阀体JS-LQQ-05-05 | VALVE BODY JS-LQQ-05-05 |
| 7.3 | 4110000507023 | 密封垫JS-LQQ-05-04 | GASKET JS-LQQ-05-04 |
| 7.4 | 4110000507024 | 弹簧支撑JS-LQQ-05-03 | SPRING-SUPPORTED JS-LQQ-05-03 |
| 7.5 | 4110000507025 | 弹簧JS-LQQ-05-02 | SPRING JS-LQQ-05-02 |
| 7.6 | 4110000507026 | 压紧螺母JS-LQQ-05-01 | GLAND NUT JS-LQQ-05-01 |
| 7.7 | 4014000235 | 螺钉GB2671.2-M8*40EpZn-8.8 | SCREW GB2671.2-M8*40EpZn-8.8 |
| 7.8 | 4110000507027 | 滤清器压板JS-LQQX-04 | PRESS PLATE JS-LQQX-04 |
| 7.9 | 4110000507028 | O型密封圈44*3.1 JS-LQQ-06 | O-RONG 44*3.1 JS-LQQ-06 |
| 7.10 | 4015000036 | 垫圈GB93-8-65Mn | WASHER GB93-8-65Mn |
| 7.11 | 4013000033 | 螺母GB6170-M8EpZn-8 | NUT GB6170-M8EpZn-8 |
| 7.12 | 4110000508 | 滤清器滤芯 | FILTER CORE |
| 7.13 | 4110000507029 | 外罩JS-LQQX-03 | ENCLOSER JS-LQQX-03 |
| 7.14 | 4110000507030 | 支撑簧JS-LQQX-08 | SPRING JS-LQQX-08 |
| 7.15 | 4110000507031 | 密封圈106*3.1 JS-LQQX-07 | SEALING RING 106*3.1 JS-LQQX-07 |
| 8 | C1-2905001697 | 变速箱总成 | TRANSMISSION ASSEMBLY |

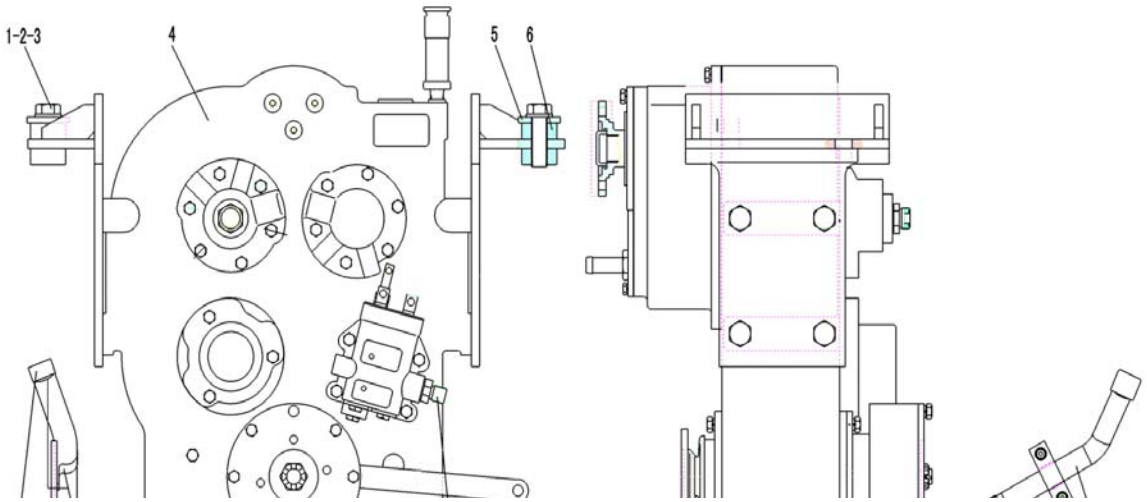

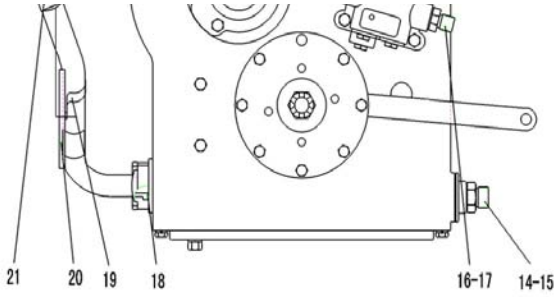


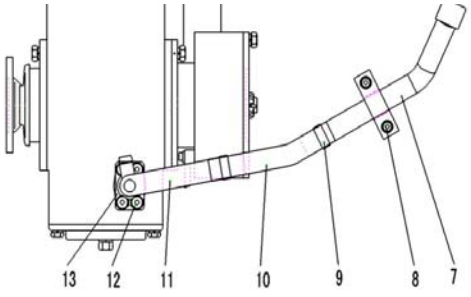


| | | | |
|---|---|---|---|
| 8.1 | 4011000878 | 螺栓GB5785-M20*1.5*105EpZn-8.8 | BOLT GB5785-M20*1.5*105EpZn-8.8 |
| 8.2 | 4013000160 | 螺母GB889.2-M20*1.5EpZn-8 | NUT GB889.2-M20*1.5 EpZn-8 |
| 8.3 | 4015000176 | 垫圈GB97.1-20EpZn-300HV | WASHER GB97.1-20EpZn-300HV |
| 8.4 | 4110000789 | 变速箱总成BD05N1A | TRANSMISSION ASSEMBLY BD05N1A |
| 8.5 | 29050016981 | 垫板 | PLATE |
| 8.6 | 29050016991 | 橡胶垫 | RUBBER CUSHION |
| 8.7 | 29050017001 | 上加油管 | PIPE |
| 8.8 | 4011000447 | 螺栓GB16674-M10*20EpZn-8.8 | BOLT GB16674-M10*20EpZn-8.8 |
| 8.9 | 4017000008 | 喉箍JB8870-d40 | CLAMP JB8870-d40 |
| 8.10 | 4120002506 | 胶管JB8406-B25*160 | HOSE JB8406-B25*160 |
| 8.11 | 29050017061 | 加油弯管 | PIPE |
| 8.12 | 4011000481 | 螺栓GB16674-M8*30EpZn-8.8 | BOLT GB16674-M8*30Ep.Zn-8.8 |
| 8.13 | 29050006571 | 压盖 | COVER |
| 8.14 | 29040008851 | 直接头 | JOINT |
| 8.15 | 4030000062 | 垫圈JB1002-27-T2 | SEALING WASHER JB1002-27-T2 |
| 8.16 | 4030000058 | 垫圈JB1002-18-T2 | WASHER JB1002-18-T2 |
| 8.17 | 29040008861 | 直接头 | JOINT |
| 8.18 | 4030000152 | O形圈GB3452.1-25.0*2.65G | O-RING GB3452.1-25*2.65G |
| 8.19 | 4041001396 | 管夹LGB122-3065 | CLAMP |
| 8.20 | 29050017011 | 垫板 | PLATE |
| 8.21 | 29050006611 | 油盖 | COVER |
| 9 | C2-4110000789 | 前进低档离合器(370804) | GO FORWARD LOW-END CLUTCH(370804) |

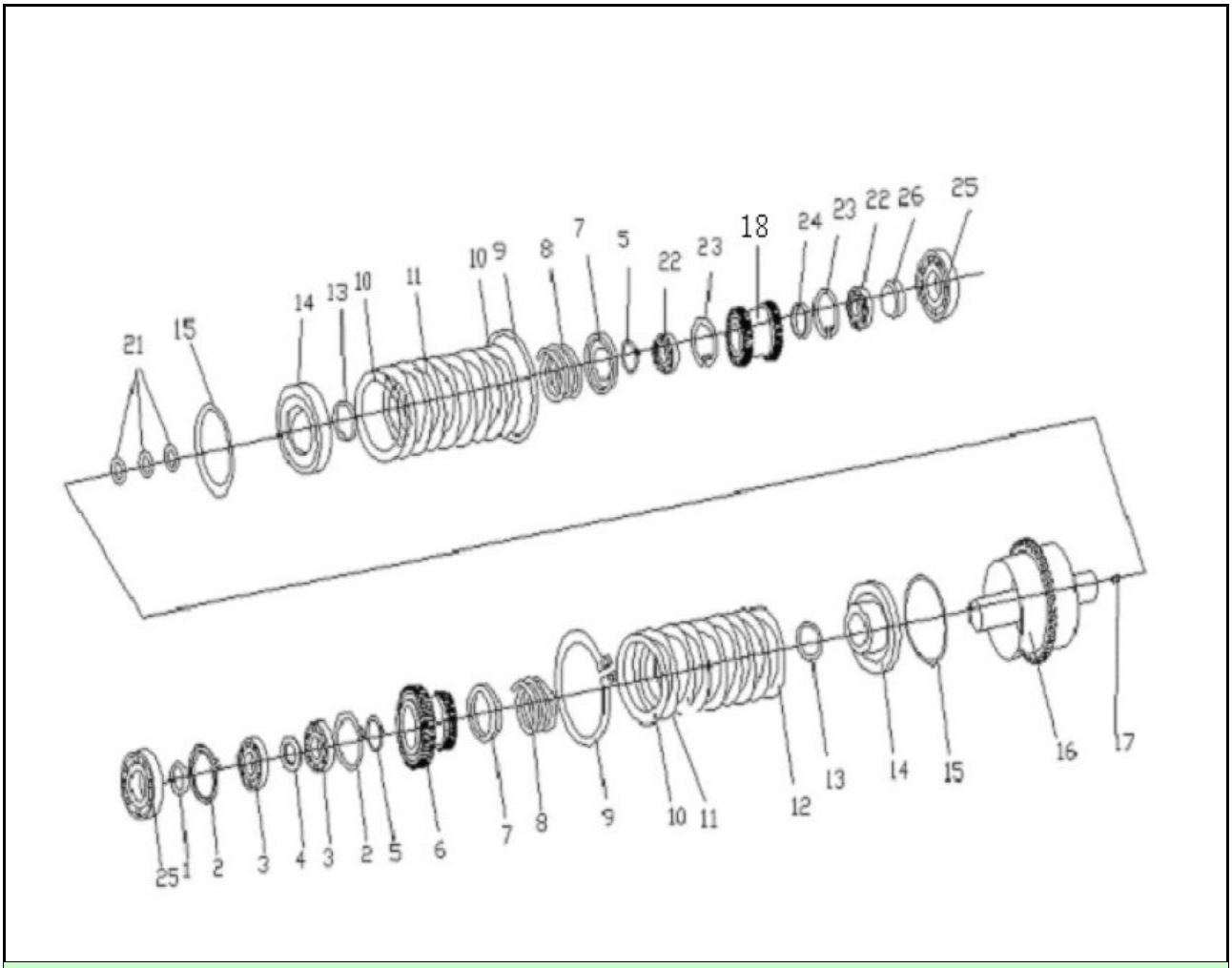


| | | | |
|---|---|---|---|
| 9.1 | 4110000218029 | 挡圈BD05-01012 | SNAP RING BD05-01012 |
| 9.2 | 4021000190 | 止动环GB305-80/86.6 | SNAP RING GB305-80/86.6 |
| 9.3 | 4021000170 | P轴承GB276-6208N | BEARING GB276-6208N |
| 9.4 | 4110000218028 | 挡圈BD05-01001 | SNAP RING BD05-01001 |
| 9.5 | 4110000217063 | 挡圈04064-05020 50 | WASHER 04064-05020 50 |
| 9.6 | 4110000218016 | 齿轮BD05-01002 | GEAR BD05-01002 |
| 9.7 | 4110000218023 | 弹簧支承座BD05-01010 | SPRING SEAT BD05-01010 |
| 9.8 | 4110000218077 | 离合器弹簧BD05-01005 | CLUTCH SPRING BD05-01005 |
| 9.9 | 4015000300 | 挡圈GB893.1-150-65Mn | SNAP RING GB893.1-150-65Mn |
| 9.10 | 4110000218078 | 离合器活塞压板BD05-01003 | CLUTCH PISTONG PLATE BD05-01003 |
| 9.11 | 4110000218036 | 垫板BD05-01004 | FILLER BD05-01004 |
| 9.12 | 4110000218095 | 磨擦片BD05-01300 | WEARING PLATE BD05-01300 |
| 9.13 | 4030000035 | O形圈GB3452.1-53.0*5.30G | O-RING GB3452.1-53.0*5.30G |
| 9.14 | 4110000218068 | 活塞BD05-01101 | PISTONG BD05-01101 |
| 9.15 | 4110000218094 | 密封环BD05-01103 | SEAL RING BD05-01103 |
| 9.16 | 4110000218096 | 前进低档离合器壳体BD05-01200 | GO FORWARD LOW-END CLUTCH SHELL BD05-01200 |
| 9.17 | 4110000218082 | 螺塞07043-00108 | PLUG SCREW 07043-00108 |
| 9.18 | 4110000218017 | 齿轮BD05-01006 | GEAR BD05-01006 |
| 9.19 | | kongbai | kongbai |
| 9.20 | | kongbai | kongbai |
| 9.21 | 4110000789007 | 密封环BD05-01108 | SEAL RING BD05-01108 |
| 9.22 | 4021000009 | 滚动轴承GB276-6008 | BEARING GB276-6008 |
| 9.23 | 4110000084127 | 挡圈68 04065-06825 | RETAINER RING 68 04065-06825 |
| 9.24 | 4110000218024 | 挡环BD05-01007 | BAFFLE RING BD05-01007 |
| 9.25 | 4021000021 | 滚动轴承GB276-6308 | ROLLING BEARING GB276-6308 |
| 9.26 | 4110000218025 | 挡环BD05-01009 | BAFFLE RING BD05-01009 |
| 10 | C3-4110000789 | 倒退高档离合器(370804) | BACKWARD HIGH-END CLUTCH(370804) |

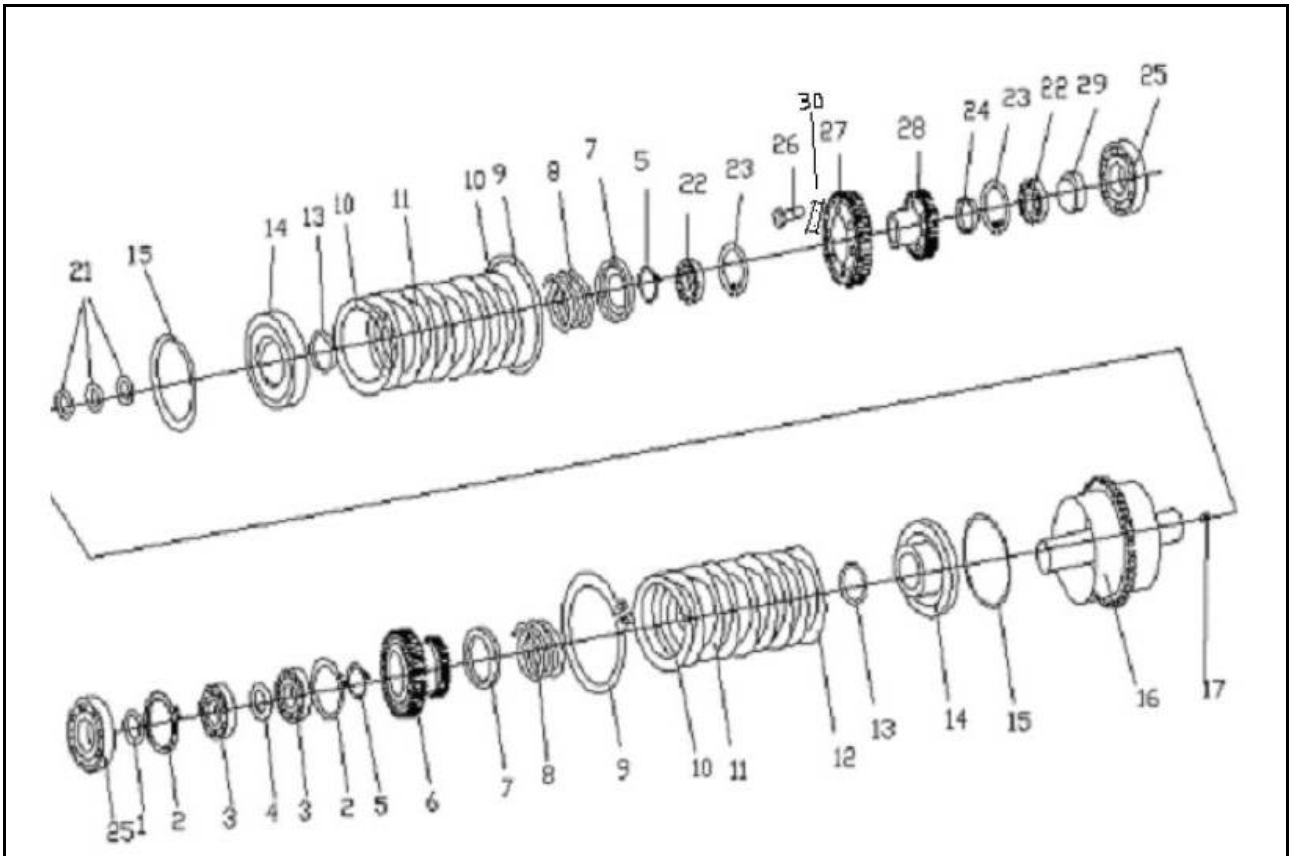


| | | | |
|---|---|---|---|
| 10.1 | 4110000218029 | 挡圈BD05-01012 | SNAP RING BD05-01012 |
| 10.2 | 4021000190 | 止动环GB305-80/86.6 | SNAP RING GB305-80/86.6 |
| 10.3 | 4021000170 | P轴承GB276-6208N | BEARING GB276-6208N |
| 10.4 | 4110000218028 | 挡圈BD05-01001 | SNAP RING BD05-01001 |
| 10.5 | 4110000217063 | 挡圈04064-05020 50 | WASHER 04064-05020 50 |
| 10.6 | 4110000218016 | 齿轮BD05-01002 | GEAR BD05-01002 |
| 10.7 | 4110000218023 | 弹簧支承座BD05-01010 | SPRING SEAT BD05-01010 |
| 10.8 | 4110000218077 | 离合器弹簧BD05-01005 | CLUTCH SPRING BD05-01005 |
| 10.9 | 4015000300 | 挡圈GB893.1-150-65Mn | SNAP RING GB893.1-150-65Mn |
| 10.10 | 4110000218078 | 离合器活塞压板BD05-01003 | CLUTCH PISTONG PLATE BD05-01003 |
| 10.11 | 4110000218036 | 垫板BD05-01004 | FILLER BD05-01004 |
| 10.12 | 4110000218095 | 磨擦片BD05-01300 | WEARING PLATE BD05-01300 |
| 10.13 | 4030000035 | O形圈GB3452.1-53.0*5.30G | O-RING GB3452.1-53.0*5.30G |
| 10.14 | 4110000218068 | 活塞BD05-01101 | PISTONG BD05-01101 |
| 10.15 | 4110000218094 | 密封环BD05-01103 | SEAL RING BD05-01103 |
| 10.16 | 4110000218030 | 倒退高档离合器壳体BD05-02100 | BACKWARD HIGH-END CLUTCH SHELL BD05-02100 |
| 10.17 | 4110000218082 | 螺塞07043-00108 | PLUG SCREW 07043-00108 |
| 10.18 | | kongbai | kongbai |
| 10.19 | | kongbai | kongbai |
| 10.20 | | kongbai | kongbai |
| 10.21 | 4110000789007 | 密封环BD05-01108 | SEAL RING BD05-01108 |
| 10.22 | 4021000214 | 轴承GB276-6208 | BEARING GB276-6208 |
| 10.23 | 4110000084127 | 挡圈68 04065-06825 | RETAINER RING 68 04065-06825 |
| 10.24 | 4110000218026 | 挡环BD05-02001 | BAFFLE RING BD05-02001 |
| 10.25 | 4021000021 | 滚动轴承GB276-6308 | ROLLING BEARING GB276-6308 |
| 10.26 | 4110000218090 | 螺栓01010-31225 M12*25 | BOLT 01010-31235 M12*25 |
| 10.27 | 4110000218018 | 齿轮BD05-02201 | GEAR BD05-02201 |
| 10.28 | 4110000218019 | 齿轮BD05-02202 | GEAR BD05-02202 |
| 10.29 | 4110000218027 | 挡环BD05-02002 | BAFFLE RING BD05-02002 |
| 10.30 | 4110000218104 | 止动垫BD05-02203 | STOP WASHER BD05-02203 |
| 11 | C4-4110000789 | 中间轴部件 I(370804) | DUMMY SHAFT PARTS I(370804) |

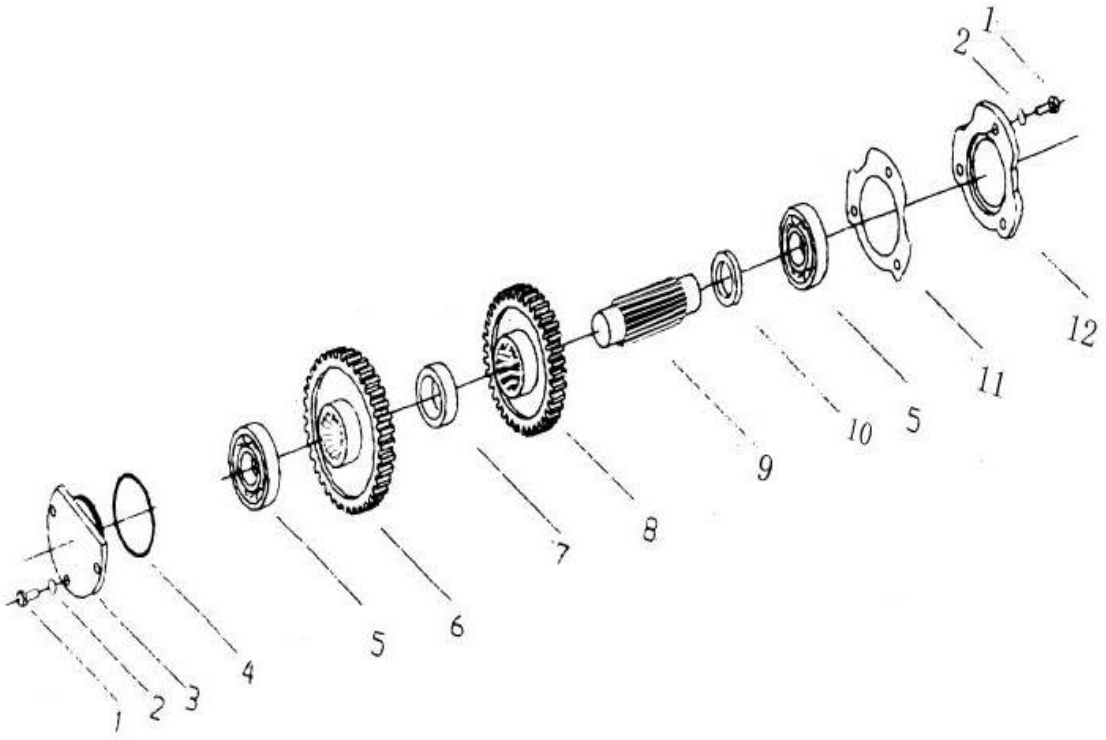


| | | | |
|---|---|---|---|
| 11.1 | 4110000217056 | 螺栓01010-51025 M10*25 | BOLT 01010-51025 M10*25 |
| 11.2 | 4110000004001 | 弹性垫圈01602-21030 | SPRING WASHER 01602-21030 |
| 11.3 | 4110000218048 | 端盖BD05-00018 | SHELL COVER BD05-00018 |
| 11.4 | 4110000218003 | O 形圈07000-02085 85*2.5 | O一RING 07000-02085 85*2.5 |
| 11.5 | 4021000021 | 滚动轴承GB276-6308 | ROLLING BEARING GB276-6308 |
| 11.6 | 7200000254 | 齿轮BD05-00017 | GEAR |
| 11.7 | 4110000218055 | 隔套BD05-00019 | EVERY SET BD05-00019 |
| 11.8 | 4110000218013 | 齿轮BD05-00002 | GEAR BD05-00002 |
| 11.9 | 4110000218107 | 中间轴BD05-00003 | DUMMY SHAFT BD05-00003 |
| 11.10 | 4110000218054 | 隔套BD05-00005 | EVERY SET BD05-00005 |
| 11.11 | 4110000218032 | 垫BD05-00006 | PAD BD05-00006 |
| 11.12 | 4110000218047 | 端盖BD05-00004 | SHELL COVER BD05-00004 |

| 12 | C5-4110000789 | 输出轴部分(370804) | OUTPUT SHAFT PART(370804) |
|---|---|---|---|

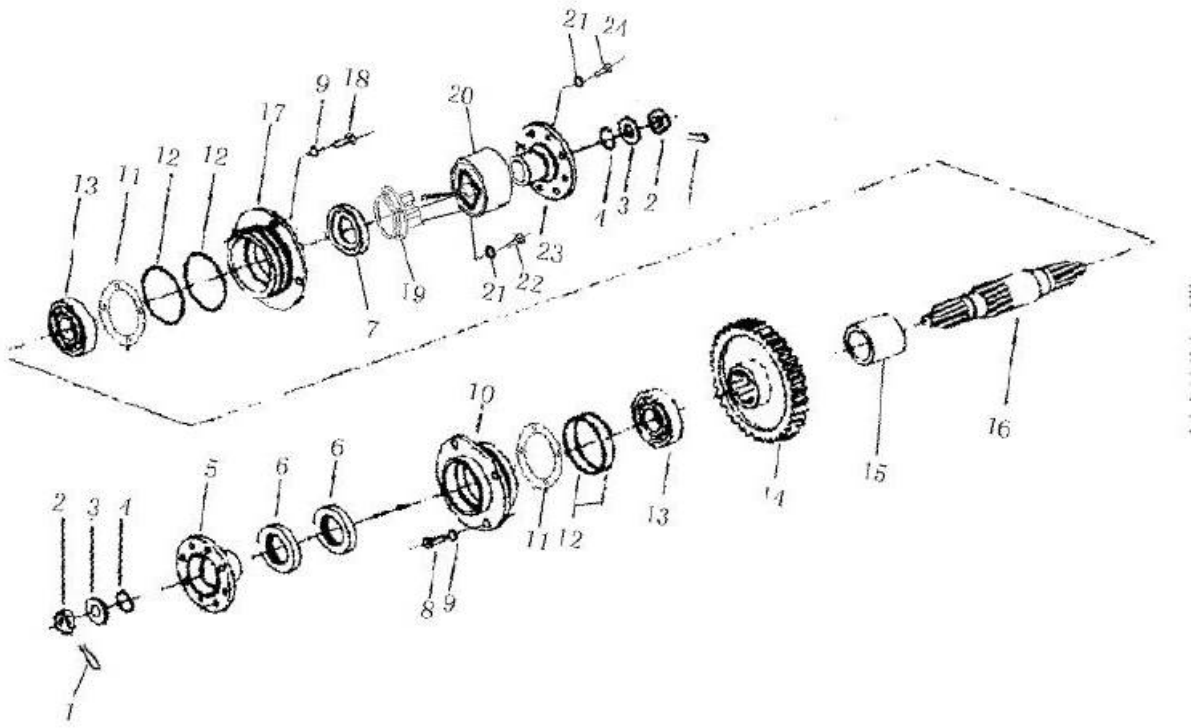


| | | | |
|---|---|---|---|
| 12.1 | 4110000218075 | 开口销04050-04030 | SPLINT PIN |
| 12.2 | 4110000218080 | 螺母BD05-00010 | NUT BD05-00010 |
| 12.3 | 4110000218022 | 大垫圈01643-32260 | GREAT WASHER 01643-32260 |
| 12.4 | 4110000218008 | O 形圈07000-03032 | O-RING 07000-03032 |
| 12.5 | 4110000218050 | 法兰盘BD05K-03000 | RING FLANGE BD05K-03000 |
| 12.6 | 4110000223003 | 骨架油封07012-00048JK | SKELETON OIL SEAL 07012-00048JK |
| 12.7 | 4110000223037 | 油封07012-00050JK | OIL SEAL 07012-00050JK |
| 12.8 | 4110000217083 | 螺栓01010-51225 M12*25 | BOLT01010-51225 M1*25 |
| 12.9 | 4110000218044 | 停用-垫圈01602-11236 12 | WASHER 01602-11236 12 |
| 12.10 | 4110000218110 | 轴承座BD05-00008 | BEARING BLOCK BD05-00008 |
| 12.11 | 4110000218046 | 调整垫BD05-00014 | ADJUSTING SHIM BD05-00014 |
| 12.12 | 4110000218007 | O 形圈07000-02105 105*3.1 | O-RING 07000-02105 105*3.1 |
| 12.13 | 4021000171 | P轴承GB297-30308 | BEARING GB297-30308 |
| 12.14 | 4110000218099 | 输出齿轮BDS05-00016 | OUTPUT GEAR BDS05-00016 |
| 12.15 | 4110000218056 | 隔套BD05-00007 | EVERY SET BD05-00007 |
| 12.16 | 4110000218100 | 输出轴BD05L-00003 | OUTPUT SHAFT BD05L-00003 |
| 12.17 | 4110000218111 | 轴承座BD05L-00002 | BEARING BLOCK BD05L-00002 |
| 12.18 | 4110000218091 | 螺栓01010-51235 M12*35 | BOLT 01010-51235 M12*35 |
| 12.19 | 4110000218105 | 制动器支座ZL15E-00002 | BRAKE SUPPORT ZL15E-00002 |
| 12.20 | 4110000223005 | 制动器ODFX.2-15C | BRAKE ODFX.2-15C |
| 12.21 | 4110000004001 | 弹性垫圈01602-21030 | SPRING WASHER 01602-21030 |
| 12.22 | 4110000499014 | 内六角螺栓01252-31030 | BOLT 01252-31030 |
| 12.23 | 4110000218049 | 法兰BD05K-00001 | FLANGE BD05K-00001 |
| 12.24 | 4110000217056 | 螺栓01010-51025 M10*25 | BOLT 01010-51025 M10*25 |
| 13 | C6-4110000789 | 输入部分(370804) | INPUT PART(370804) |

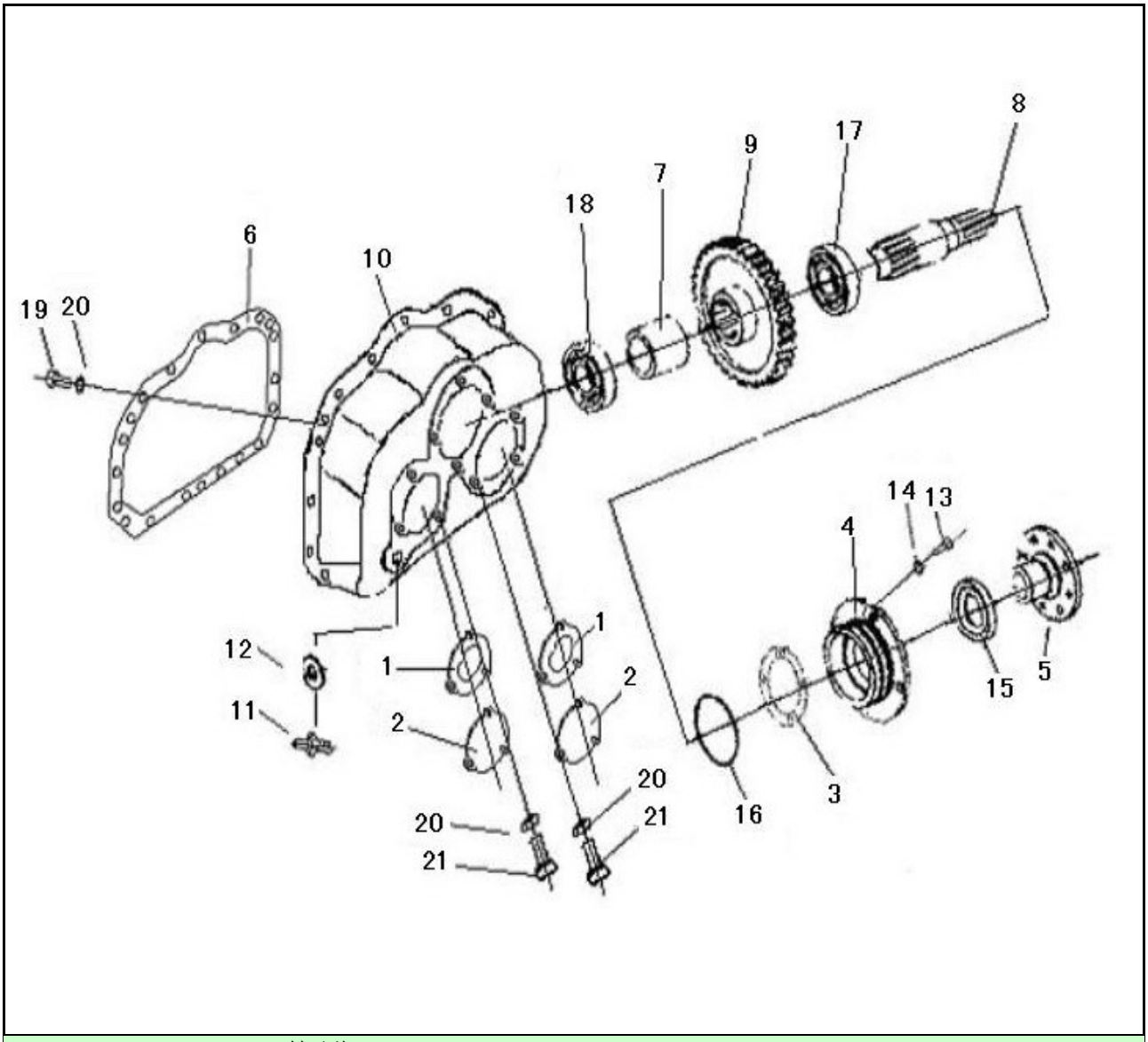


| | | | |
|---|---|---|---|
| 13.1 | 4110000218108 | 轴承盖BDX05-00001 | BEARING CAP BDX05-00001 |
| 13.2 | 4110000218038 | 垫片BDX05-00002 | GASKET BDX05-00002 |
| 13.3 | 4110000218039 | 垫片BDX05-00003 | GASKET BDX05-00003 |
| 13.4 | 4110000218109 | 轴承座BDX05-00004 | BEARING BLOCK BDX05-00004 |
| 13.5 | 4110000218101 | 输入法兰盘BDX05-01000 | INPUT RING FLANGE BDX05-01000 |
| 13.6 | 4110000218092 | 密封垫BDX05-00006 | SEALING PLATE BDX05-00006 |
| 13.7 | 4110000218045 | 调整垫BDX05-00008 | ADJUSTING SHIM BDX05-00008 |
| 13.8 | 4110000218102 | 输入轴BDX05-00009 | INPUT SHAFT BDX05-00009 |
| 13.9 | 4110000218015 | 齿轮BDX05-00010 | GEAR BDX05-00010 |
| 13.10 | 4110000218021 | 传动箱壳体BDX05-00011 | WHEEL BOX SHELL BDX05-00011 |
| 13.11 | 4110000789004 | 接头BD05L1-00003 | JOINT BD05L1-00003 |
| 13.12 | 4015000090 | 垫圈JB982-20 | WASHER JB982-20 |
| 13.13 | 4110000218088 | 螺栓01010-31230 M12*30 | BOLT 01010-31230 M12*30 |
| 13.14 | 4110000218041 | 停用-垫圈01602-11236 12 | WASHER 01602-11236 12 |
| 13.15 | 4110000218057 | 骨架油封 BAU48-70-10 | SKELETON OIL SEAL BAU48-70-10 |
| 13.16 | 4110000218004 | O 形圈07000-02105 105*2.5 | O-RING 07000-02105 105*2.5 |
| 13.17 | 4021000021 | 滚动轴承GB276-6308 | ROLLING BEARING GB276-6308 |
| 13.18 | 4021000169 | P轴承GB276-6006 | BEARING GB276-6006 |
| 13.19 | 4110000218087 | 螺栓01010-31030 M10*30 | BOLT 01010-31030 M10*30 |
| 13.20 | 4110000218040 | 停用-垫圈01602-11030 10 | WASHER 01602-11030 10 |
| 13.21 | 4110000218086 | 螺栓01010-31025 M10*25 | BOLT 01010-31025 M10*25 |
| 14 | C7-4110000789 | 箱体及管路附件(370804) | CASE AND PIPELINE ACCESSORIES(370804) |

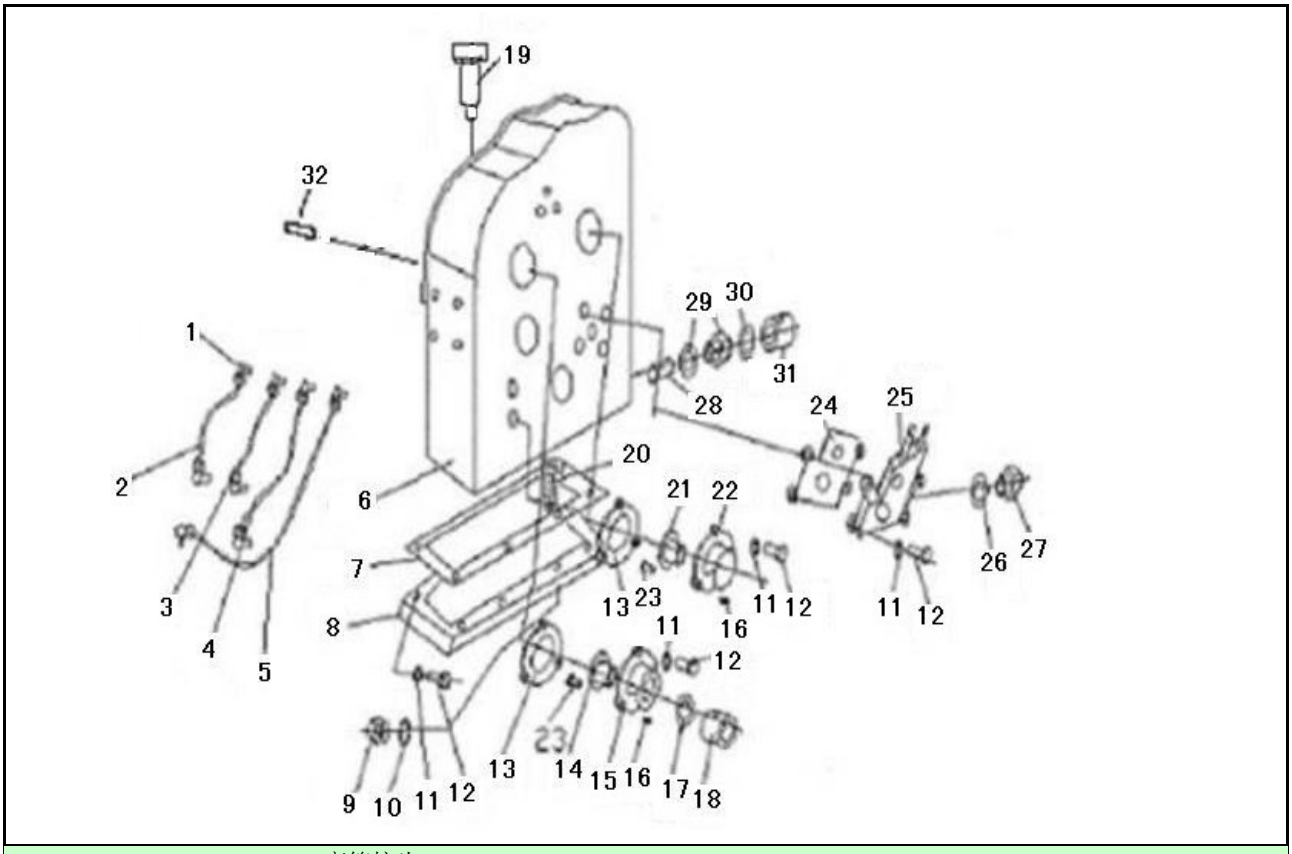


| | | | |
|---|---|---|---|
| 14.1 | 4110000218103 | 弯管接头BD05-00024 | BEND PIECE BD05-00024 |
| 14.2 | 4110000218059 | 管BD05-08000 | PIPE BD05-08000 |
| 14.3 | 4110000218060 | 管BD05-09000 | PIPE BD05-09000 |
| 14.4 | 4110000218061 | 管BD05-10000 | PIPE BD05-10000 |
| 14.5 | 4110000218062 | 管BD05-11000 | PIPE BD05-11000 |
| 14.6 | 4110000218076 | 壳体BD05-00001 | SHELL BD05-00001 |
| 14.7 | 4110000218033 | 垫BD05-00013 | PAD BD05-00013 |
| 14.8 | 4110000218031 | 底板BD05-00012 | PLATE BD05-00012 |
| 14.9 | 4110000218083 | 螺塞07044-12412 | PLUG SCREW 07044-12412 |
| 14.10 | 4110000218006 | O 形圈07002-02434 | O-RING 07002-02434 |
| 14.11 | 4110000004001 | 弹性垫圈01602-21030 | SPRING WASHER 01602-21030 |
| 14.12 | 4110000217056 | 螺栓01010-51025 M10*25 | BOLT 01010-51025 M10*25 |
| 14.13 | 4110000218037 | 垫片BD05-03004 | GASKET BD05-03004 |
| 14.14 | 4110000218011 | 衬套BD05-03001 | BUSH BD05-03001 |
| 14.15 | 4110000218052 | 盖BD05-03002 | COVER BD05-03002 |
| 14.16 | 4110000218082 | 螺塞07043-00108 | PLUG SCREW 07043-00108 |
| 14.17 | 4015000091 | 垫圈JB982-27 | SEALING WASHER JB982-27 |
| 14.18 | 4110000789003 | 接头BD05L1-00002 | JOINT BD05L1-00002 |
| 14.19 | 4110000223018 | 呼吸器1BD05N1-05000 | INSPIRATOR 1BD05N1-05000 |
| 14.20 | 4110000789002 | 检油塞1305C-010 | CHECK PLUG 1305C-010 |
| 14.21 | 4110000218012 | 衬套BD05-04002 | BUSH BD05-04002 |
| 14.22 | 4110000218053 | 盖BD05-04001 | COVER BD05-04001 |
| 14.23 | 4110000218079 | 螺钉BD05-03003 | SCREW BD05-03003 |
| 14.24 | 4110000218034 | 垫BD05-00025 | PAD BD05-00025 |
| 14.25 | 4110000789001 | 变速箱操纵阀ZL15G | TRANSMISSION CONTRL VALVE ZL15G |
| 14.26 | 4015000298 | 垫圈JB982-18 | SEALING WASHER JB982-18 |
| 14.27 | 4110000789006 | 接头BD05L1-00005 | JOINT BD05L1-00005 |
| 14.28 | 4110000218001 | 滤油器 BD05-13000 | OIL-FILTER BD05-13000 |
| 14.29 | 4015000299 | 垫圈JB982-48 | SEALING WASHER JB982-48 |
| 14.30 | 4110000218084 | 螺塞BD05-00027 | PLUG SCREW BD05-00027 |
| 14.31 | 4110000789005 | 接头BD05L1-00004 | JOINT BD05L1-00004 |
| 14.32 | 4110000789008 | 销10*25 04020-01025 | PIN 10*25 04020-01025 |
| 15 | D1-2906000898 | 变速操纵机构 | TRANSMISSION CONTROL SYSTEM |

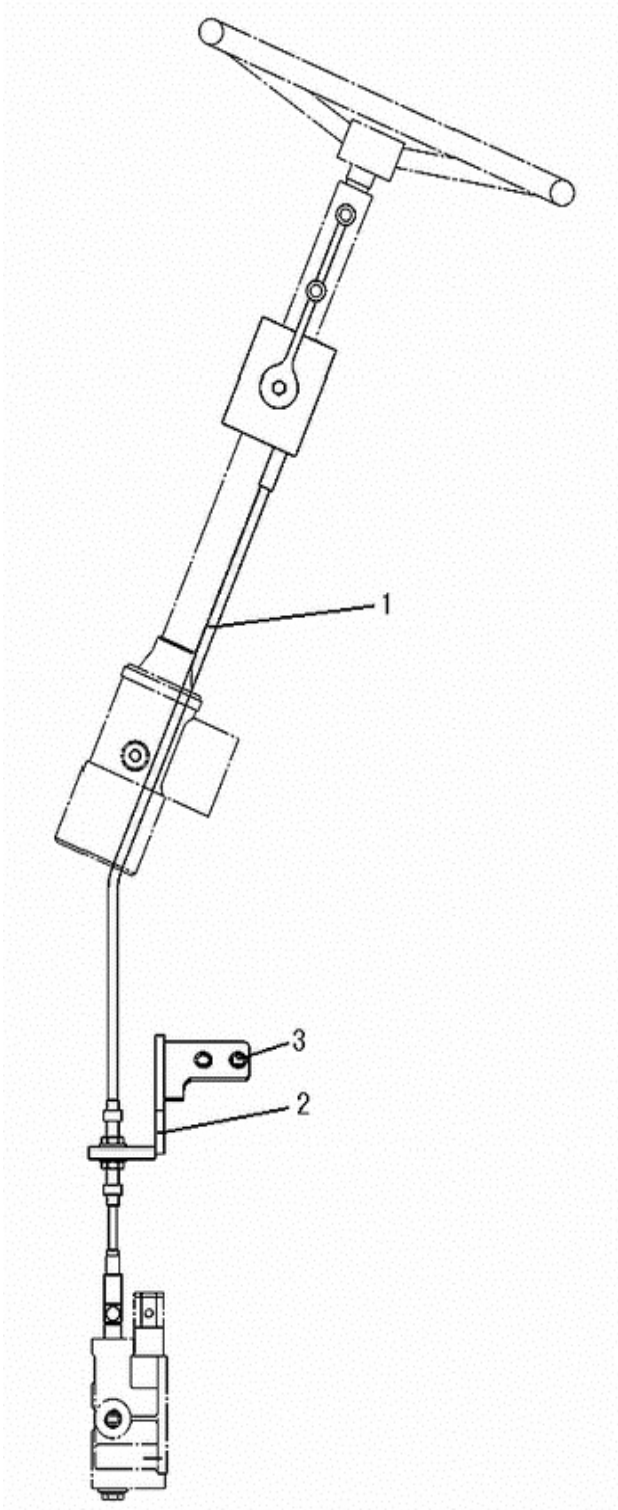


| | | | |
|---|---|---|---|
| 15.1 | 4190000915 | 变速操纵软轴LG06-BSCZ-918 | TRANSMISSION CONTROL SHAFT |
| 15.2 | 29060008191 | 软轴固定支架 | FIXED BRACKET OF SOFT SHAFT |
| 15.3 | 4011000474 | 螺栓GB16674-M10*25EpZn-8.8 | BOLT GB16674-M10*25EpZn-8.8 |
| 16 | D2-4190000915 | 变速操纵软轴LG06-BSCZ-918 | TRANSMISSION CONTROL SHAFT LG06-BSCZ-918 |

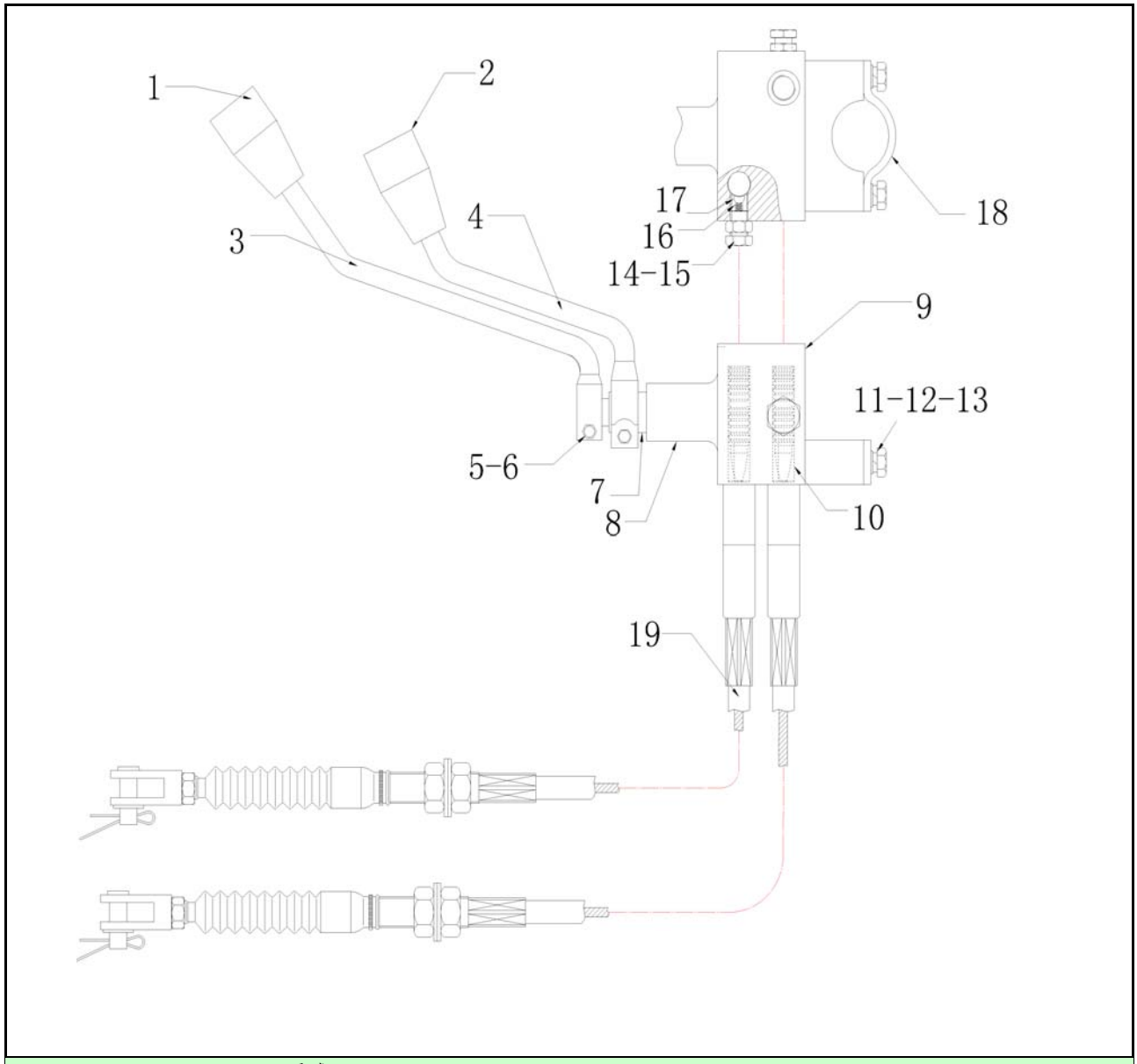


| | | | |
|---|---|---|---|
| 16.1 | 4190000915001 | 手球1LGHD9180001 | HANDLE BALL 1 LGHD9180001 |
| 16.2 | 4190000915002 | 手球2LGHD9180002 | HANDLE BALL 2 LGHD9180002 |
| 16.3 | 4190000915003 | 手柄1LGHD9180003 | HANDLE 1 LGHD9180003 |
| 16.4 | 4190000915004 | 手柄2LGHD9180004 | HANDLE 2 LGHD9180004 |
| 16.5 | 4190000915005 | 螺栓LGHD9180005 M6 | BOLT LGHD9180005 M6 |
| 16.6 | 4190000915006 | 螺母LGHD9180006 M6 | NUT LGHD9180006 M6 |
| 16.7 | 4190000915007 | 齿轮轴组件LGHD9180007 | GEAR SHAFT GROUP LGHD9180007 |
| 16.8 | 4190000915008 | 连接颈LGHD9180008 | LINK NECK LGHD9180008 |
| 16.9 | 4190000915009 | 换挡盒焊合件LGHD9180009 | WELDING PARTS LGHD9180009 |
| 16.10 | 4190000915010 | 齿条LGHD9180010 | RACK LGHD9180010 |
| 16.11 | 4190000915011 | 平垫LGHD9180011 Φ8 | PLAIN CUSHION LGHD9180011 Φ8 |
| 16.12 | 4190000915012 | 弹垫LGHD9180012 Φ8 | SPRING WASHER LGHD9180012 Φ8 |
| 16.13 | 4190000915013 | 螺栓LGHD9180013 M8 | BOLT LGHD9180013 M8 |
| 16.14 | 4190000915014 | 螺栓LGHD9180014 M12 | BOLT LGHD9180014 M12 |
| 16.15 | 4190000915015 | 螺母LGHD9180015 M12 | NUT LGHD9180015 M12 |
| 16.16 | 4190000915016 | 弹簧LGHD9180016 | SPRING LGHD9180016 |
| 16.17 | 4190000915017 | 钢珠LGHD9180017 | STEEL BALL LGHD9180017 |
| 16.18 | 4110000172009 | 固定板LG953HD0009 | MOUNTED PLATE |
| 16.19 | 4190000915018 | 软轴总成LGHD9180018 | FLEXIBLE ASSEMBLY LGHD9180018 |
| 17 | E11-4110000785 | 驱动桥总成(前桥) | DRIVE AXLE ASSEMBLY (FRONT AXLE) |

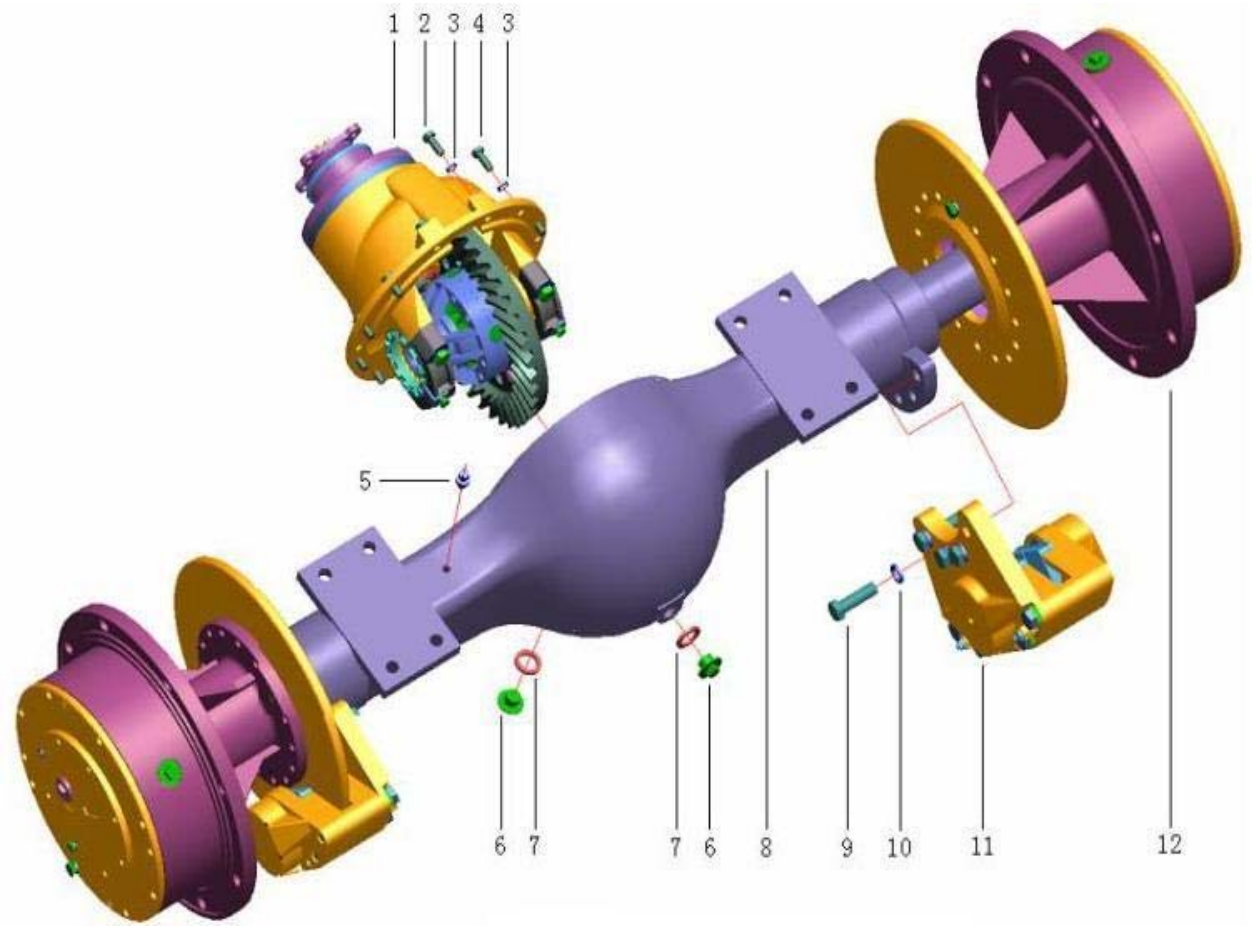


| | | | |
|---|---|---|---|
| 17.1 | 2880902856007 | 前主减速器总成 ZL15F.2.5A | FRONT FINAL DRIVE ASSEMBLY ZL15F.2.5A |
| 17.2 | 4011000845 | 螺栓GB5782-M10*45EpZn-10.9 | BOLT GB5782-M10*45EpZn-10.9 |
| 17.3 | 4015000025 | 垫圈GB93-10-65Mn | WASHER GB93-10-65Mn |
| 17.4 | 4012000022 | 螺栓GB5783-M10*25-10.9 | BOLT GB5783-M10*25-10.9 |
| 17.5 | 2880902856008 | 通气塞总成 ZL15F.2.3-4 | EXHAUST PLUG ASSEMBLY ZL15F.2.3-4 |
| 17.6 | 2880902856009 | 螺塞 ZL15F.2-10A | PLUG SCREW ZL15F.2-10A |
| 17.7 | 4015000090 | 垫圈JB982-20 | WASHER JB982-20 |
| 17.8 | 4110000785001 | 前桥焊合ZL15F.2.3A | FRONT AXLE WELD ZL15F.2.3A |
| 17.9 | 4011000842 | 螺栓GB5786-M16*1.5*55EpZn-10.9 | BOLT GB5786-M16*1.5*55EpZn-10.9 |
| 17.10 | 4015000098 | 垫圈GB93-16-65Mn | WASHER GB93-16-65Mn |
| 17.11 | 2880902856011 | 钳盘制动器 ZL15.5.0 | DISC BRAKE ASSEMBLY ZL15.5.0 |
| 17.12 | 4110000785002 | 轮边总成 | WHEEL-END ASSEMBLY |
| 18 | E12-4110000786 | 驱动桥总成(后桥) | DRIVE AXLE ASSEMBLY（REAR AXLE） |

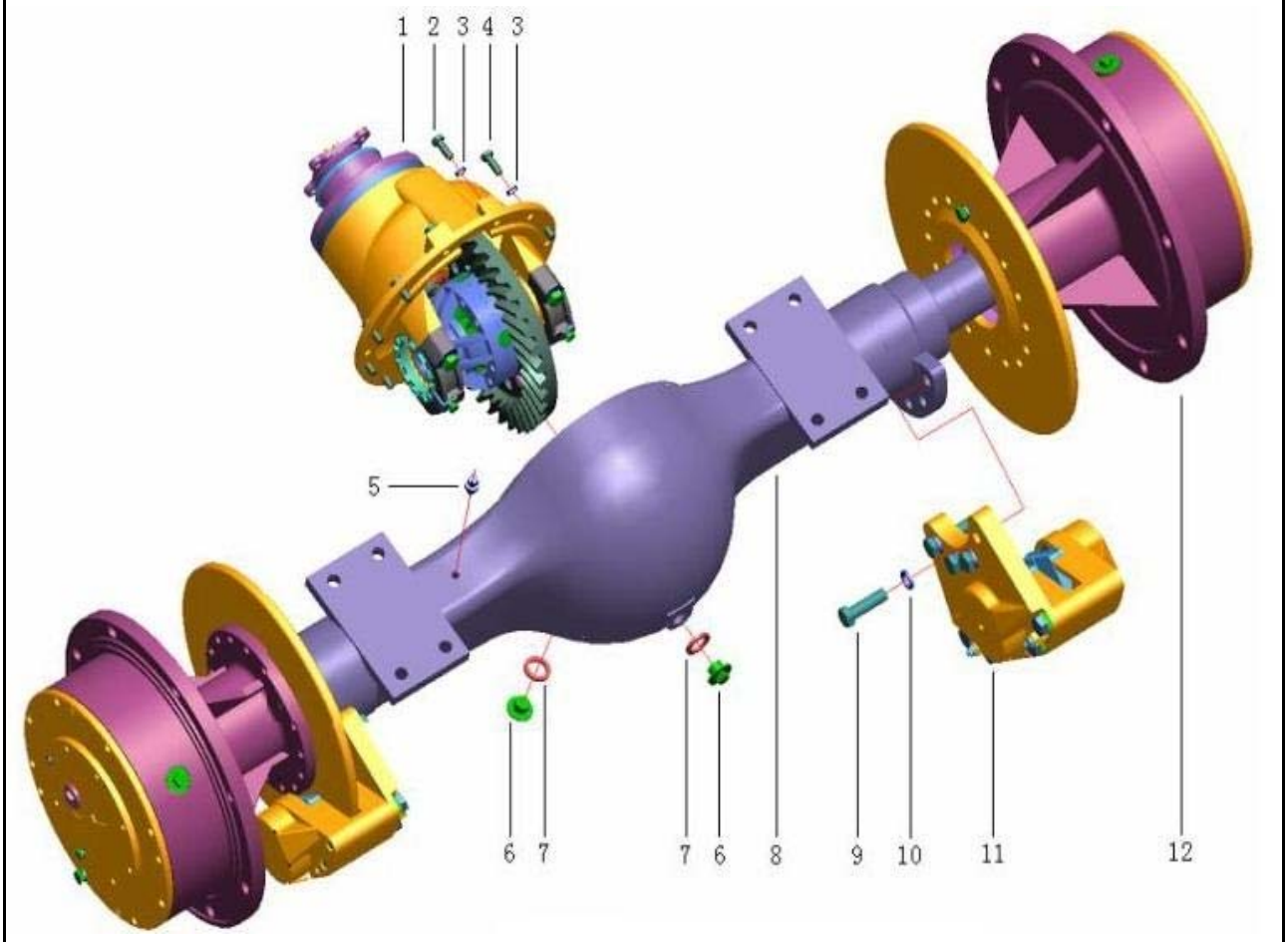


| | | | |
|---|---|---|---|
| 18.1 | 2880902856030 | 后主减速器总成 ZL15F.2.5B | REAR FINAL DRIVE ASSEMBLY ZL15F.2.5B |
| 18.2 | 4011000845 | 螺栓GB5782-M10*45EpZn-10.9 | BOLT GB5782-M10*45EpZn-10.9 |
| 18.3 | 4015000025 | 垫圈GB93-10-65Mn | WASHER GB93-10-65Mn |
| 18.4 | 4012000022 | 螺栓GB5783-M10*25-10.9 | BOLT GB5783-M10*25-10.9 |
| 18.5 | 2880902856008 | 通气塞总成 ZL15F.2.3-4 | EXHAUST PLUG ASSEMBLY ZL15F.2.3-4 |
| 18.6 | 2880902856009 | 螺塞 ZL15F.2-10A | PLUG SCREW ZL15F.2-10A |
| 18.7 | 4015000090 | 垫圈JB982-20 | WASHER JB982-20 |
| 18.8 | 2880902856029 | 后桥焊合 ZL15F.2.3B | REAR AXLE WELD ZL15F.2.3B |
| 18.9 | 4011000842 | 螺栓GB5786-M16*1.5*55EpZn-10.9 | BOLT GB5786-M16*1.5*55EpZn-10.9 |
| 18.10 | 4015000098 | 垫圈GB93-16-65Mn | WASHER GB93-16-65Mn |
| 18.11 | 2880902856011 | 钳盘制动器 ZL15.5.0 | DISC BRAKE ASSEMBLY ZL15.5.0 |
| 18.12 | 4110000785002 | 轮边总成 | WHEEL-END ASSEMBLY |
| 19 | E1-2907001246 | 前桥总成 | FRONT AXLE ASSEMBLY |

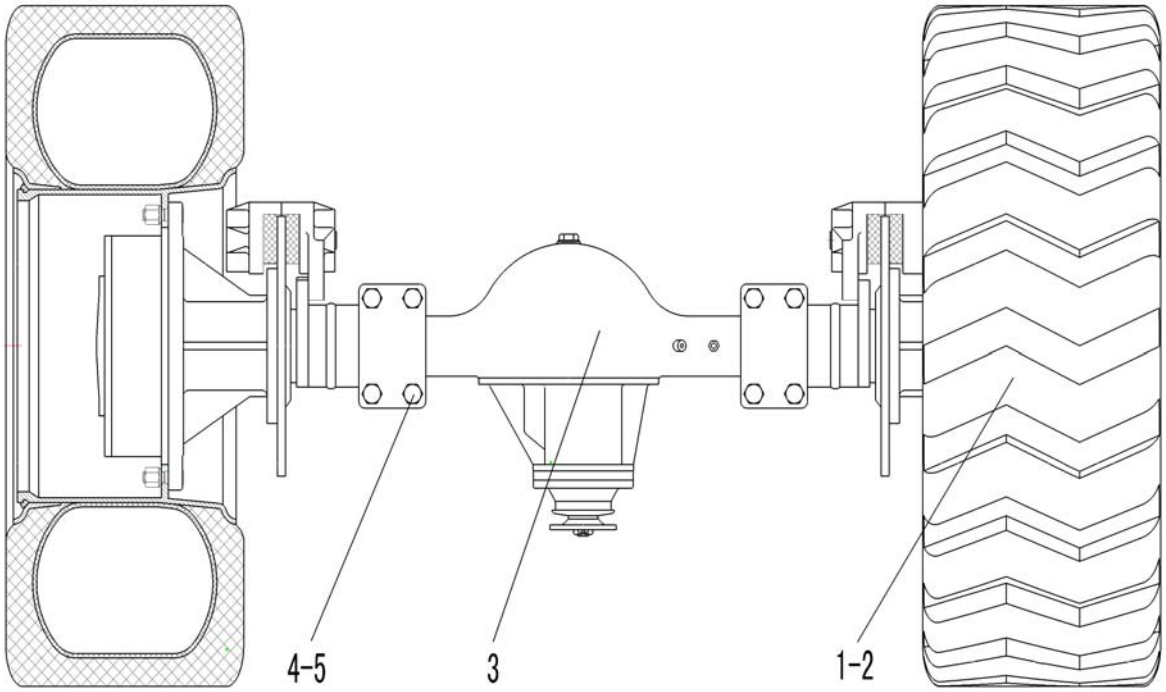


| | | | |
|---|---|---|---|
| 19.1 | 4110000016 | 轮胎GB2980-16/70-20 | TIRE GB2980-16/70-20 |
| 19.2 | 4110000791 | 轮辋LG13-20.00A | RIM LG13-20.00A |
| 19.3 | 4110000785 | 前桥总成ZL15F(A)-A | FRONT BRIDGE ASSEMBLKY |
| 19.4 | 4011000859 | 螺栓GB5785-M20*1.5*75EpZn-8.8 | BOLT GB5785-M20*1.5*75EpZn-8.8 |
| 19.5 | 4013000160 | 螺母GB889.2-M20*1.5EpZn-8 | NUT GB889.2-M20*1.5 EpZn-8 |
| 20 | E13-4110000785 | 钳盘制动器总成 | DISC BRAKE ASSEMBLY |

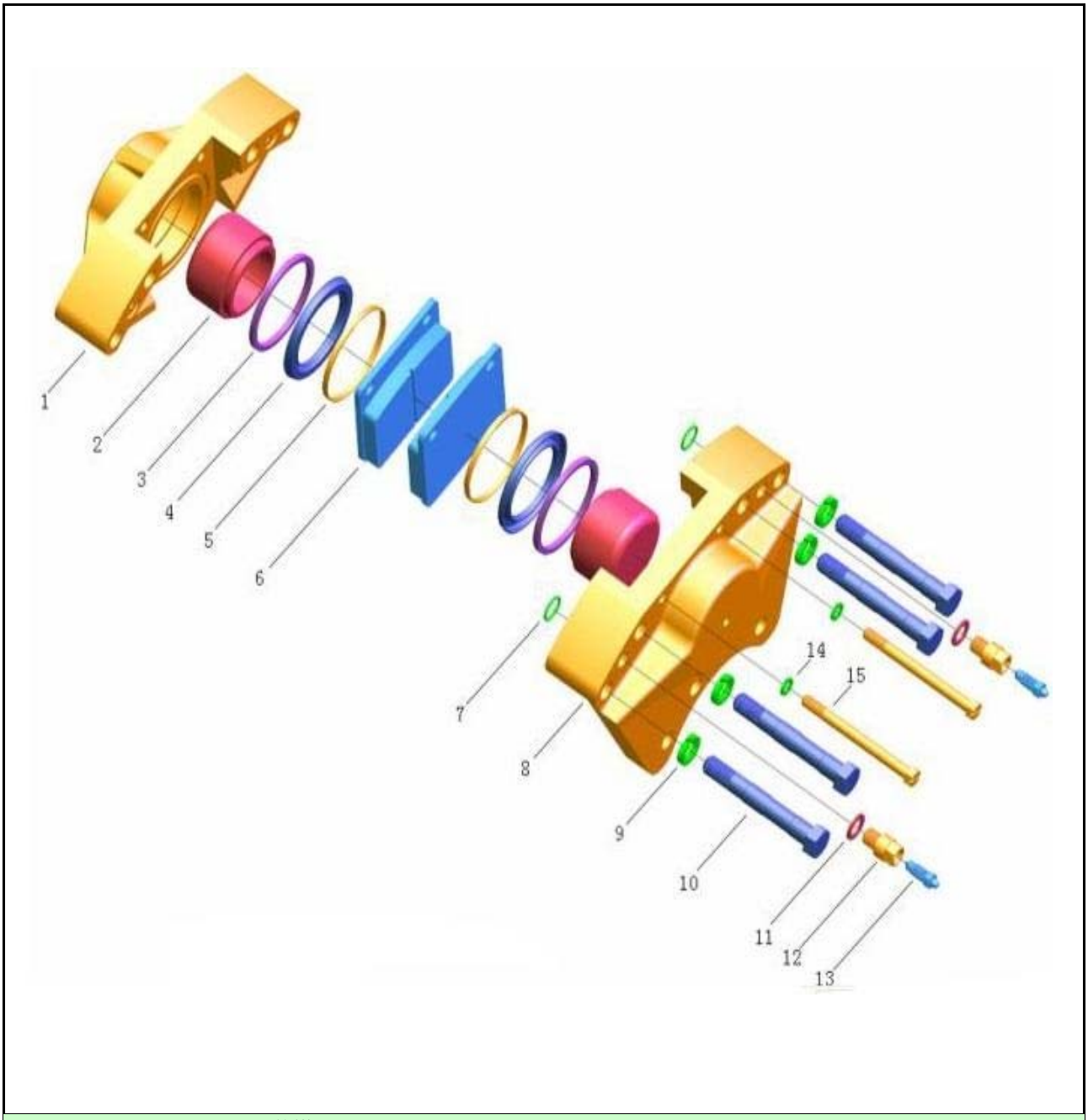


| | | | |
|---|---|---|---|
| 20.1 | 7200000198 | 外钳ZL15.5-1 | EXTERNAL PLIERS ZL15.5-1 |
| 20.2 | 7200000182 | 活塞408113A | PISTON 408113A |
| 20.3 | 7200000184 | 矩形密封圈408112 | SEALING RING 408112 |
| 20.4 | 7200000176 | 防尘罩408110 | COVER ASSY, DUST 408110 |
| 20.5 | 7200000185 | 卡圈408111 | CLOSING RING 408111 |
| 20.6 | 7200000208 | 制动片ZL15.5.1 | BRAKE SHOE ZL15.5.1 |
| 20.7 | 4030000011 | O形圈GB1235-20*2.4 | O-RING GB1235-20*2.4 |
| 20.8 | 7200000192 | 内钳ZL15.5-2 | INTERNAL PLIERS ZL15.5-2 |
| 20.9 | 4015000029 | 垫圈GB93-18-65Mn | WASHER GB93-18-65Mn |
| 20.10 | 7200000187 | 螺栓ZL15.5-3 | BOLT ZL15.5-3 |
| 20.11 | 7200000171 | 垫圈408124 | WASHER 408124 |
| 20.12 | 7200000183 | 接头408104 | JOINT 408104 |
| 20.13 | 7200000179 | 放气嘴408103 | VENT NOZZLE SEAT 408103 |
| 20.14 | 4015000025 | 垫圈GB93-10-65Mn | WASHER GB93-10-65Mn |
| 20.15 | 7200000189 | 螺栓销408114 | BOLT PIN 408114 |
| 21 | E14-4110000785 | 轮边总成（前桥） | WHEEL-END REDUCTOR ASSEMBLY（FRONT AXLE） |

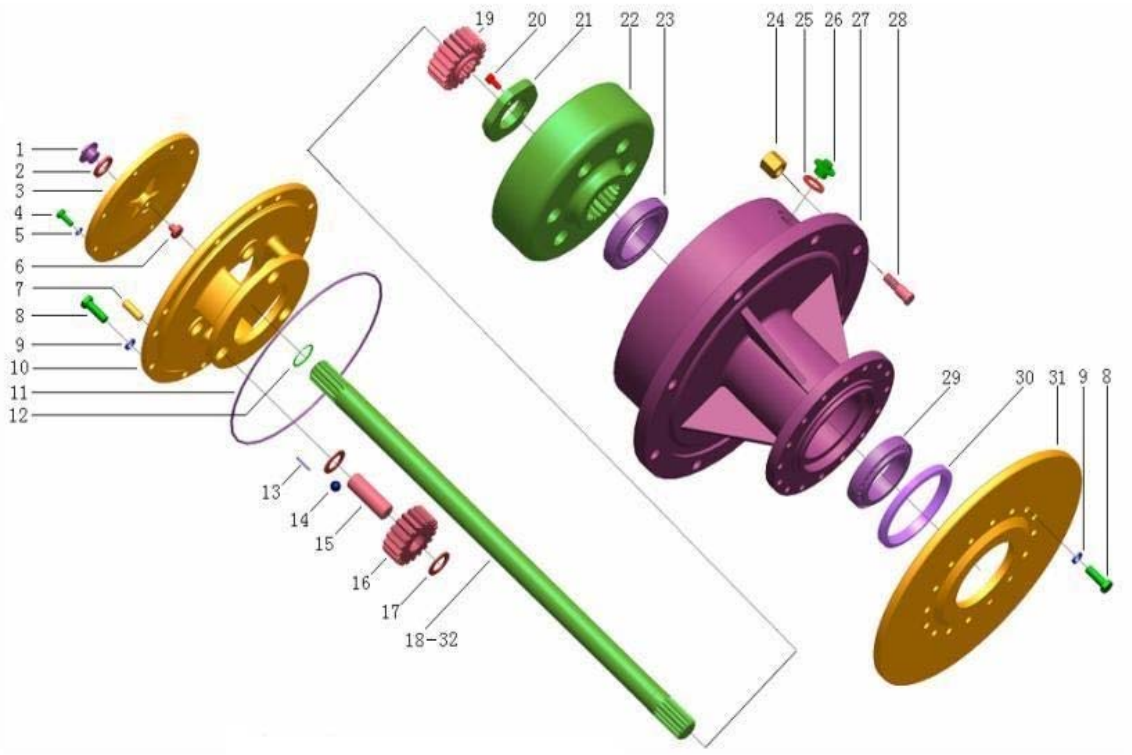


| | | | |
|---|---|---|---|
| 21.1 | 2880902856035 | 螺塞M16*1.5 ZL10.4AB-69 | PLUG SCREW M16*1.5 ZL10.4AB-69 |
| 21.2 | 4015000141 | 垫圈JB982-16 | WASHER JB982-16 |
| 21.3 | 4110000785003 | 端盖ZL15F（A）.2-6 | COVER ZL15F（A）.2-6 |
| 21.4 | 4011000082 | 螺栓GB5783-M10*25EpZn-8.8 | BOLT GB5783-M10*25EpZn-8.8 |
| 21.5 | 4015000025 | 垫圈GB93-10-65Mn | WASHER GB93-10-65Mn |
| 21.6 | 2880902856024 | 挡销ZL15F.2-4 | PIN ZL15F.2-4 |
| 21.7 | 4016000262 | 销GB119.2-12*32 | PIN GB119.2-12*32 |
| 21.8 | 4011000124 | 螺栓GB5786-M12*1.25*35EpZn-10.9 | BOLT GB5786-M12*1.25*35EpZn-10.9 |
| 21.9 | 4015000026 | 垫圈GB93-12-65Mn | WASHER GB93-12-65Mn |

| | | | |
|---|---|---|---|
| 21.10 | 4110000785004 | 行星架ZL15F（A）.2.2-4 | PLANET CARRIER ZL15F（A）.2.2-4 |
| 21.11 | 7200000159 | O形圈305*3.5 ZL15F.2-7 | O-RING 305*3.5 ZL15F.2-7 |
| 21.12 | 4015000020 | 挡圈GB894.1-35-65Mn | RETAINER RING GB894.1-35-65Mn |
| 21.13 | 4090000002 | 滚针GB309-3*29.8-GCr15 | ROLLING NEEDLE GB309-3*29.8-GCr15 |
| 21.14 | 4090000097 | 钢球GB308-6-GCr15 | STEEL BALL GB308-6-GCr15 |
| 21.15 | 4110000785005 | 行星轮轴ZL15F(A).2.2-2 | PLANET GEAR SHAFT ZL15F(A).2.2-2 |
| 21.16 | 4110000785006 | 行星轮ZL10.6.3-7 | PLANET GEAR ZL10.6.3-7 |
| 21.17 | 4110000785007 | 行星轮挡圈ZL10.6.3-5 | PLANET GEAR CIRCLIP ZL10.6.3-5 |
| 21.18 | 2880902856019 | 长半轴Φ35*813.8 ZL15F.2-3A | LONG AXLE SHAFT Φ35*813.8 ZL15F.2-3A |
| 21.19 | 4110000785008 | 太阳轮ZL15F（A）.2-5 | SUN GEAR ZL15F（A）.2-5 |
| 21.20 | 4014000033 | 螺钉GB70.1-M8*16EpZn-8.8 | BOLT GB70.1-M8*16EpZn-8.8 |
| 21.21 | 2880902856050 | 锁紧螺母M56*2 ZL15F.2-20 | LOCKNUT M56*2 ZL15F.2-20 |
| 21.22 | 4110000785009 | 齿圈ZL15F（A）.2.1-1B | RING GEAR ZL15F（A）.2.1-1B |
| 21.23 | 4021000208 | 滚动轴承GB297-32014 | BEARING GB297-32014 |
| 21.24 | 2880902856037 | 球螺母（右）M18*1.5 ZL15F.2-17A | BALL NUT (RIGHT) M18*1.5 ZL15F.2-17A |
| 21.25 | 4015000122 | 垫圈JB982-24 | WASHER JB982-24 |
| 21.26 | 2880902856036 | 螺塞M24*1.5 ZL15F.2-14A | PLUG SCREW M24*1.5 ZL15F.2-14A |
| 21.27 | 2880902856032 | 轮毂ZL15F.2-8D | HUB ZL15F.2-8D |
| 21.28 | 2880902856034 | 轮辋螺栓（右）M18*1.5 ZL15F.2-16DA | RIM BOLT (RIGHT)M18*1.5 ZL15F.2-16DA |
| 21.29 | 4021000209 | 滚动轴承GB297-32015 | BERAING GB297-32015 |
| 21.30 | 7200000205 | 停用-油封HG4-692-PG115*140*14 | SEAL HG4-692-PG115*140*14 |
| 21.31 | 7200000207 | 制动盘ZL15Ⅱ.03.04.017 | BRAKE DISC ZL15Ⅱ.03.04.017 |
| 21.32 | 2880902856026 | 短半轴 Φ35*763.8 ZL15F.2-3B | SHORT AXLE SHAFT Φ35*763.8 ZL15F.2-3B |

| 22 | E15-4110000786 | 轮边总成（后桥） | WHEEL-END REDUCTOR ASSEMBLY（REAR AXLE） |
|---|---|---|---|

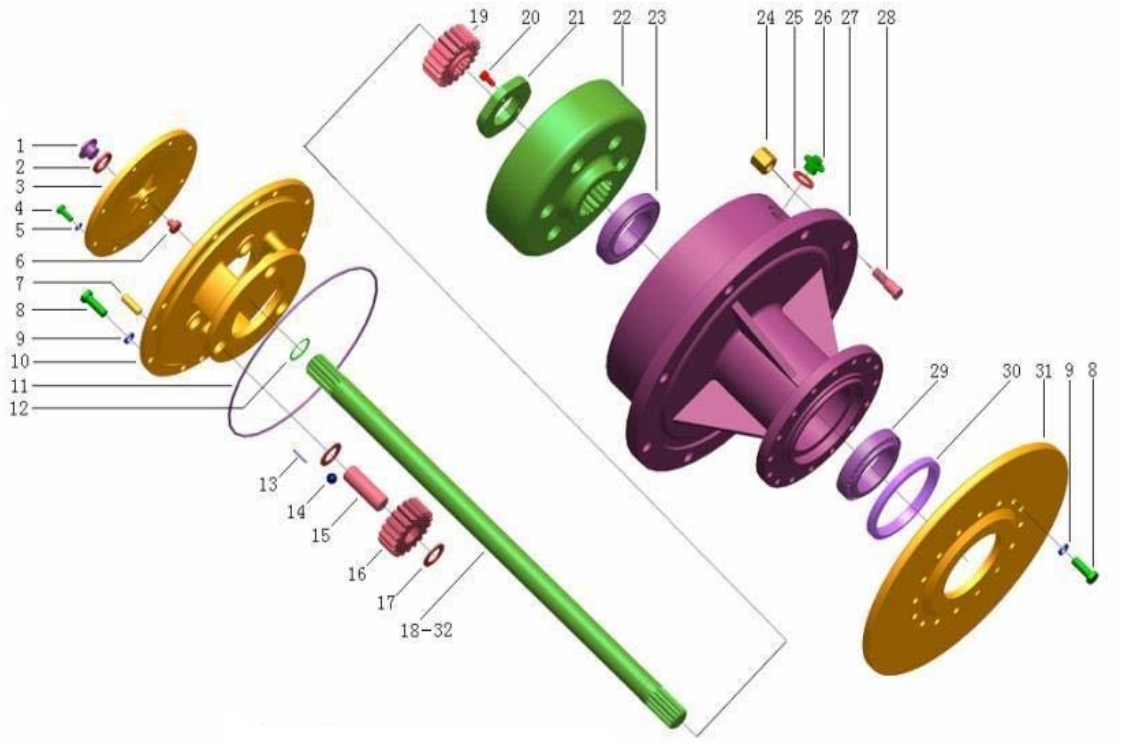


| | | | |
|---|---|---|---|
| 22.1 | 2880902856035 | 螺塞M16*1.5 ZL10.4AB-69 | PLUG SCREW M16*1.5 ZL10.4AB-69 |
| 22.2 | 4015000141 | 垫圈JB982-16 | WASHER JB982-16 |
| 22.3 | 4110000785003 | 端盖ZL15F（A）.2-6 | COVER ZL15F（A）.2-6 |
| 22.4 | 4011000082 | 螺栓GB5783-M10*25EpZn-8.8 | BOLT GB5783-M10*25EpZn-8.8 |
| 22.5 | 4015000025 | 垫圈GB93-10-65Mn | WASHER GB93-10-65Mn |
| 22.6 | 2880902856024 | 挡销ZL15F.2-4 | PIN ZL15F.2-4 |
| 22.7 | 4016000262 | 销GB119.2-12*32 | PIN GB119.2-12*32 |
| 22.8 | 4011000124 | 螺栓GB5786-M12*1.25*35EpZn-10.9 | BOLT GB5786-M12*1.25*35EpZn-10.9 |
| 22.9 | 4015000026 | 垫圈GB93-12-65Mn | WASHER GB93-12-65Mn |
| 22.10 | 4110000785004 | 行星架ZL15F（A）.2.2-4 | PLANET CARRIER ZL15F（A）.2.2-4 |
| 22.11 | 7200000159 | O形圈305*3.5 ZL15F.2-7 | O-RING 305*3.5 ZL15F.2-7 |
| 22.12 | 4015000020 | 挡圈GB894.1-35-65Mn | RETAINER RING GB894.1-35-65Mn |
| 22.13 | 4090000002 | 滚针GB309-3*29.8-GCr15 | ROLLING NEEDLE GB309-3*29.8-GCr15 |

| | | | |
|---|---|---|---|
| 22.14 | 4090000097 | 钢球GB308-6-GCr15 | STEEL BALL GB308-6-GCr15 |
| 22.15 | 4110000785005 | 行星轮轴ZL15F(A).2.2-2 | PLANET GEAR SHAFT ZL15F(A).2.2-2 |
| 22.16 | 4110000785006 | 行星轮ZL10.6.3-7 | PLANET GEAR ZL10.6.3-7 |
| 22.17 | 4110000785007 | 行星轮挡圈ZL10.6.3-5 | PLANET GEAR CIRCLIP ZL10.6.3-5 |
| 22.18 | 2880902856019 | 长半轴Φ35*813.8 ZL15F.2-3A | LONG AXLE SHAFT Φ35*813.8 ZL15F.2-3A |
| 22.19 | 4110000785008 | 太阳轮ZL15F（A）.2-5 | SUN GEAR ZL15F（A）.2-5 |
| 22.20 | 4014000033 | 螺钉GB70.1-M8*16EpZn-8.8 | BOLT GB70.1-M8*16EpZn-8.8 |
| 22.21 | 2880902856050 | 锁紧螺母M56*2 ZL15F.2-20 | LOCKNUT M56*2 ZL15F.2-20 |
| 22.22 | 4110000785009 | 齿圈ZL15F（A）.2.1-1B | RING GEAR ZL15F（A）.2.1-1B |
| 22.23 | 4021000208 | 滚动轴承GB297-32014 | BEARING GB297-32014 |
| 22.24 | 2880902856037 | 球螺母（右）M18*1.5 ZL15F.2-17A | BALL NUT (RIGHT) M18*1.5 ZL15F.2-17A |
| 22.25 | 4015000122 | 垫圈JB982-24 | WASHER JB982-24 |
| 22.26 | 2880902856036 | 螺塞M24*1.5 ZL15F.2-14A | PLUG SCREW M24*1.5 ZL15F.2-14A |
| 22.27 | 2880902856032 | 轮毂ZL15F.2-8D | HUB ZL15F.2-8D |
| 22.28 | 2880902856034 | 轮辋螺栓（右）M18*1.5 ZL15F.2-16DA | RIM BOLT (RIGHT)M18*1.5 ZL15F.2-16DA |
| 22.29 | 4021000209 | 滚动轴承GB297-32015 | BERAING GB297-32015 |
| 22.30 | 7200000205 | 停用-油封HG4-692-PG115*140*14 | SEAL HG4-692-PG115*140*14 |
| 22.31 | 7200000207 | 制动盘ZL15Ⅱ.03.04.017 | BRAKE DISC ZL15Ⅱ.03.04.017 |
| 22.32 | 2880902856026 | 短半轴 Φ35*763.8 ZL15F.2-3B | SHORT AXLE SHAFT Φ35*763.8 ZL15F.2-3B |

| | | | |
|---|---|---|---|
| 23 | E16-4110000785 | 主减速器总成（前桥） | FINAL DRIVE ASSEMBLY（FRONT AXLE） |

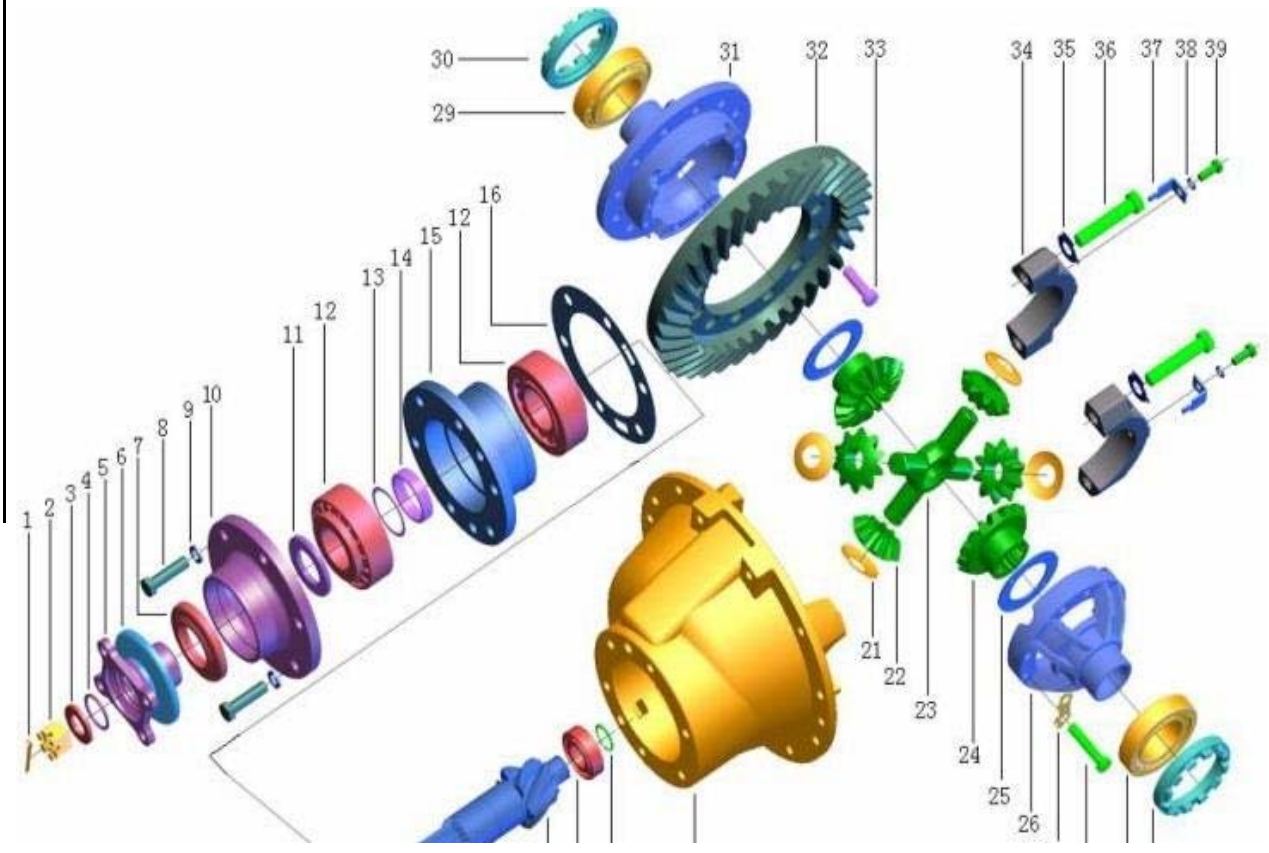

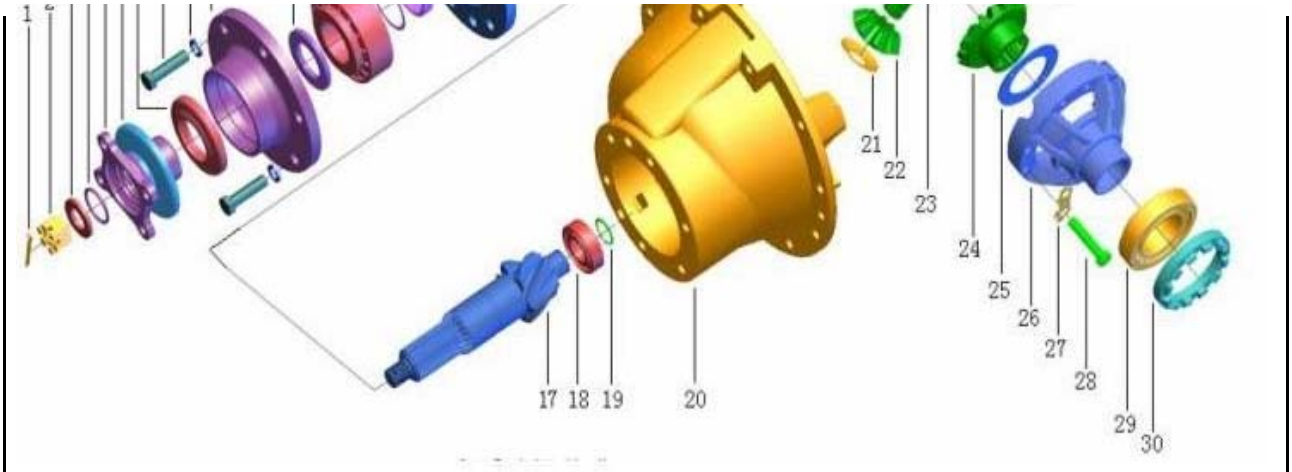


| | | | |
|---|---|---|---|
| 23.1 | 4016000261 | 销GB91-3.2*40EpZn-Q235A | PIN GB91-3.2*40EpZn-Q235A |
| 23.2 | 2880902856031 | 开槽螺母M20*1.5 ZL15F.2.5.1-14 | NOTCH NUT M20*1.5 ZL15F.2.5.1-14 |
| 23.3 | 7200000172 | 垫圈ZL15F.2.5.1-12 | WASHER ZL15F.2.5.1-12 |
| 23.4 | 2880902856013 | O形圈36*4.5 ZL15F.2.5.1-13 | O-RING 36*4.5 ZL15F.2.5.1-13 |
| 23.5 | 2880902856038 | 输入法兰ZL15F.2.5.1-8Q | INPUT FLANGE ZL15F.2.5.1-8Q |
| 23.6 | 2880902856027 | 防尘罩ZL15F.2.5.1-11 | DUST SHROUD ZL15F.2.5.1-11 |
| 23.7 | 2880902856044 | 油封FB 47*84*12.5 ZL15F.2.5.1-10 | TAPER DRIVE GEAR SEAL FB 47*84*12.5 ZL15F.2.5.1-10 |
| 23.8 | 4011000843 | 螺栓GB5786-M12*1.25*45EpZn-10.9 | BOLT GB5786-M12*1.25*45EpZn-10.9 |
| 23.9 | 4015000026 | 垫圈GB93-12-65Mn | WASHER GB93-12-65Mn |
| 23.10 | 2880902856046 | 轴承盖ZL15F.2.5.1-7D | BEARING COVER ZL15F.2.5.1-7D |
| 23.11 | 2880902856045 | 止推垫圈Φ65*Φ37*6 ZL15F.2.5.1-6 | THRUST WASHER Φ65*Φ37*6 ZL15F.2.5.1-6 |
| 23.12 | 7200000138 | 轴承GB297-32309 | BEARING GB297-32309 |
| 23.13 | 7200000209 | 轴承调整垫片ZL15F.2.5.1-4 | WASHER ZL15F.2.5.1-4 |
| 23.14 | 7200000211 | 轴承隔套ZL15F.2.5.1-3 | BEARING ISOLATED BUSHING 轴承隔套 |
| 23.15 | 2880902856047 | 轴承套ZL15F.2.5.1-2D | BEARING SEAT ZL15F.2.5.1-2D |
| 23.16 | 7200000173 | 调整垫片ZL15F.2.5-1 | WAHSER ZL15F.2.5-1 |
| 23.17 | 2880902856051 | 主动锥齿轮（左）Z=6 ZL15F.2.5.1-1A | DRIVE BEVEL GEAR (LEFT) Z=6 ZL15F.2.5.1-1A |
| 23.18 | 4021000206 | 滚动轴承GB283-NF205 | BEARING GB283-NF205 |
| 23.19 | 4015000130 | 挡圈GB894.1-25-65Mn | RING SNAP GB894.1-25-65Mn |
| 23.20 | 2880902856049 | 主减壳ZL15F.2.5-8A | FINAL DRIVE HOUSING ZL15F.2.5-8A |
| 23.21 | 2880902856042 | 行星齿轮垫ZL15F.2.5-12 | PLANET GEAR WASHER ZL15F.2.5-12 |
| 23.22 | 2880902856041 | 行星齿轮Z=10 ZL15F.2.5-13 | PLANET GEAR Z=10 ZL15F.2.5-13 |
| 23.23 | 2880902856043 | 行星齿轮轴ZL15F.2.5-11A | PLANET GEAR SHAFT ZL15F.2.5-11A |
| 23.24 | 2880902856014 | 半轴齿轮Z=16 ZL15F.2.5-14 | AXLE SHAFT GEAR Z=16 ZL15F.2.5-14 |
| 23.25 | 2880902856015 | 半轴齿轮垫ZL15F.2.5-15 | AXLE SHAFT GEAR WASHER ZL15F.2.5-15 |
| 23.26 | 2880902856017 | 差速器右壳ZL15F.2.5-10 | DIFF. RIGHT CASE ZL15F.2.5-10 |
| 23.27 | 2880902856028 | 防松垫片ZL15F.2.5-17 | LOCK PLATE ZL15F.2.5-17 |
| 23.28 | 2880902856016 | 差速器壳螺栓M10*50 ZL15F.2.5-16 | DIFF. CASE BOLT M10*50 ZL15F.2.5-16 |
| 23.29 | 4021000240 | 滚动轴承GB297-32210 | Bearing GB297-32210 |
| 23.30 | 7200000174 | 调整螺母ZL15F.2.5-9 | AJUSTING NUT ZL15F.2.5-9 |
| 23.31 | 2880902856018 | 差速器左壳ZL15F.2.5-3 | DIFF. LEFT CASE ZL15F.2.5-3 |
| 23.32 | 2880902856022 | 从动锥齿轮（右）Z=35 ZL15F.2.5-7A | DRIVEN BEVEL GEAR (RIGHT)Z=35 ZL15F.2.5-7A |
| 23.33 | 7200000190 | 铆钉ZL15F.2.5-4 | RIVET ZL15F.2.5-4 |
| 23.34 | 7200000166 | 差速器轴承盖ZL15F.2.5-2 | DIFFERENTIAL MECHANISM BEARING CAP |
| 23.35 | 2880902856040 | 锁片ZL80-06.5.2-7 | LOCK PLATE ZL80-06.5.2-7 |
| 23.36 | 4011000844 | 螺栓GB5785-M14*1.5*70-10.9 | BOLT GB5785-M14*1.5*70-10.9 |
| 23.37 | 2880902856025 | 调整螺母锁片ZL15F.2.5-18 | ADJUST NUT LOCK PLATE ZL15F.2.5-18 |

| | | | |
|---|---|---|---|
| 23.38 | 4015000036 | 垫圈GB93-8-65Mn | WASHER GB93-8-65Mn |
| 23.39 | 4011000841 | 螺栓GB5783-M8*16-10.9 | BOLT GB5783-M8*16-10.9 |

| | | | |
|---|---|---|---|
| 24 | E17-4110000786 | 主减速器总成（后桥） | FINAL DRIVE ASSEMBLY（REAR AXLE） |

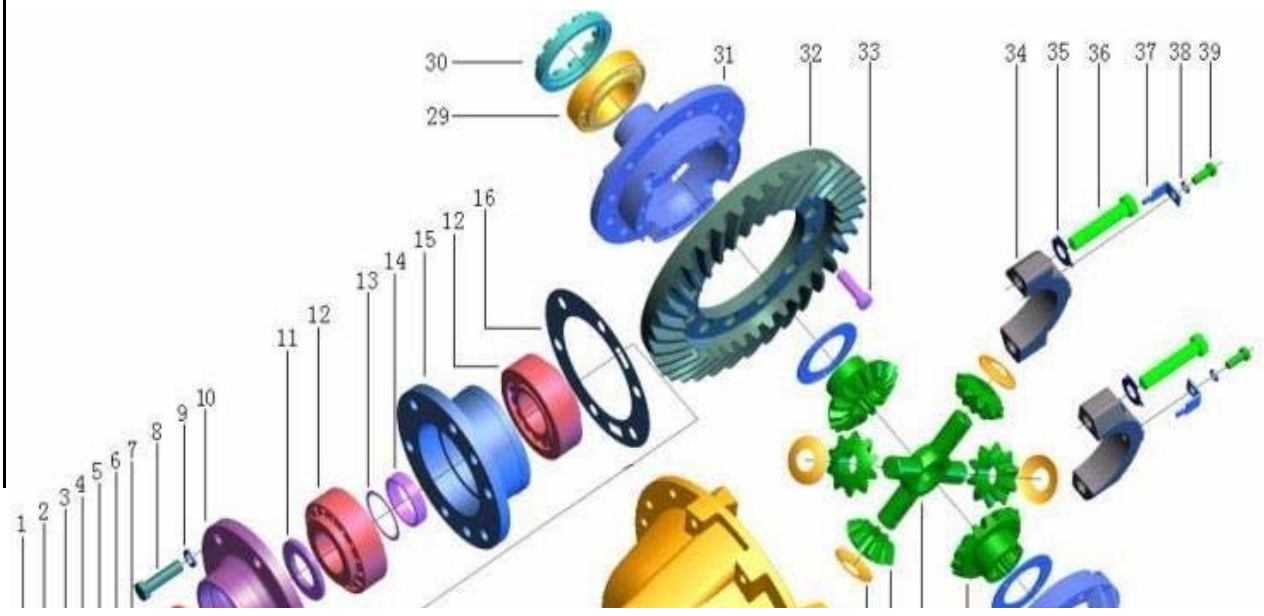

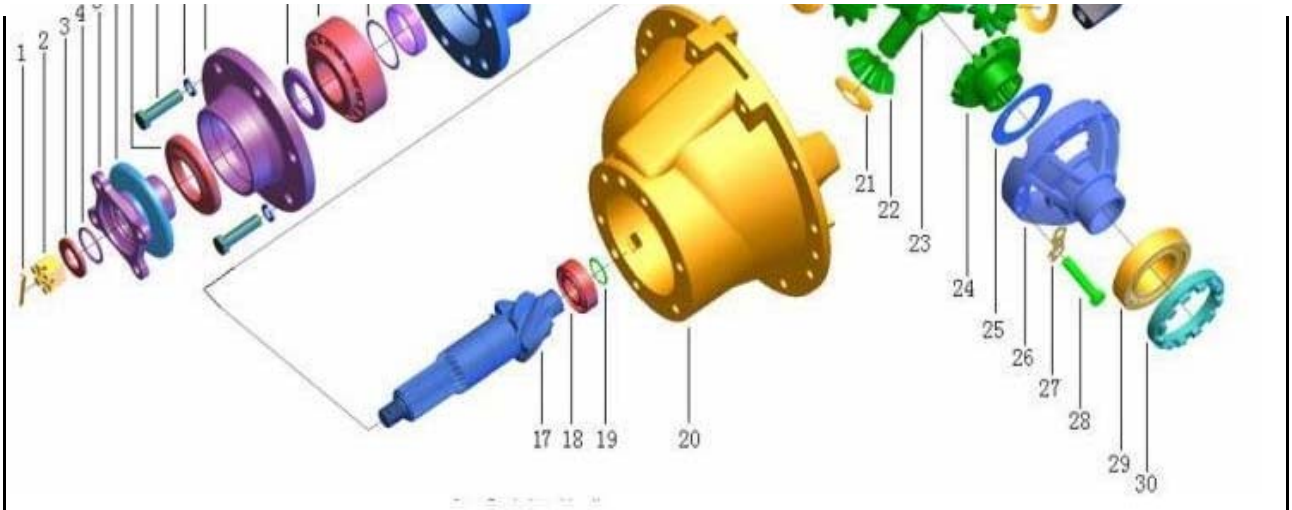


| | | | |
|---|---|---|---|
| 24.1 | 4016000261 | 销GB91-3.2*40EpZn-Q235A | PIN GB91-3.2*40EpZn-Q235A |
| 24.2 | 2880902856031 | 开槽螺母M20*1.5 ZL15F.2.5.1-14 | NOTCH NUT M20*1.5 ZL15F.2.5.1-14 |
| 24.3 | 7200000172 | 垫圈ZL15F.2.5.1-12 | WASHER ZL15F.2.5.1-12 |
| 24.4 | 2880902856013 | O形圈36*4.5 ZL15F.2.5.1-13 | O-RING 36*4.5 ZL15F.2.5.1-13 |
| 24.5 | 2880902856038 | 输入法兰ZL15F.2.5.1-8Q | INPUT FLANGE ZL15F.2.5.1-8Q |
| 24.6 | 2880902856027 | 防尘罩ZL15F.2.5.1-11 | DUST SHROUD ZL15F.2.5.1-11 |
| 24.7 | 2880902856044 | 油封FB 47*84*12.5 ZL15F.2.5.1-10 | TAPER DRIVE GEAR SEAL FB 47*84*12.5 ZL15F.2.5.1-10 |
| 24.8 | 4011000843 | 螺栓GB5786-M12*1.25*45EpZn-10.9 | BOLT GB5786-M12*1.25*45EpZn-10.9 |
| 24.9 | 4015000026 | 垫圈GB93-12-65Mn | WASHER GB93-12-65Mn |
| 24.10 | 2880902856046 | 轴承盖ZL15F.2.5.1-7D | BEARING COVER ZL15F.2.5.1-7D |
| 24.11 | 2880902856045 | 止推垫圈Φ65*Φ37*6 ZL15F.2.5.1-6 | THRUST WASHER Φ65*Φ37*6 ZL15F.2.5.1-6 |
| 24.12 | 7200000138 | 轴承GB297-32309 | BEARING GB297-32309 |
| 24.13 | 7200000209 | 轴承调整垫片ZL15F.2.5.1-4 | WASHER ZL15F.2.5.1-4 |
| 24.14 | 7200000211 | 轴承隔套ZL15F.2.5.1-3 | BEARING ISOLATED BUSHING 轴承隔套 |
| 24.15 | 2880902856047 | 轴承套ZL15F.2.5.1-2D | BEARING SEAT ZL15F.2.5.1-2D |
| 24.16 | 7200000173 | 调整垫片ZL15F.2.5-1 | WAHSER ZL15F.2.5-1 |
| 24.17 | 2880902856048 | 主动锥齿轮（右）Z=6 ZL15F.2.5.1-1B | DRIVE BEVEL GEAR (RIGHT) Z=6 ZL15F.2.5.1-1B |
| 24.18 | 4021000206 | 滚动轴承GB283-NF205 | BEARING GB283-NF205 |
| 24.19 | 4015000130 | 挡圈GB894.1-25-65Mn | RING SNAP GB894.1-25-65Mn |
| 24.20 | 2880902856049 | 主减壳ZL15F.2.5-8A | FINAL DRIVE HOUSING ZL15F.2.5-8A |
| 24.21 | 2880902856042 | 行星齿轮垫ZL15F.2.5-12 | PLANET GEAR WASHER ZL15F.2.5-12 |
| 24.22 | 2880902856041 | 行星齿轮Z=10 ZL15F.2.5-13 | PLANET GEAR Z=10 ZL15F.2.5-13 |
| 24.23 | 2880902856043 | 行星齿轮轴ZL15F.2.5-11A | PLANET GEAR SHAFT ZL15F.2.5-11A |
| 24.24 | 2880902856014 | 半轴齿轮Z=16 ZL15F.2.5-14 | AXLE SHAFT GEAR Z=16 ZL15F.2.5-14 |
| 24.25 | 2880902856015 | 半轴齿轮垫ZL15F.2.5-15 | AXLE SHAFT GEAR WASHER ZL15F.2.5-15 |
| 24.26 | 2880902856017 | 差速器右壳ZL15F.2.5-10 | DIFF. RIGHT CASE ZL15F.2.5-10 |
| 24.27 | 2880902856028 | 防松垫片ZL15F.2.5-17 | LOCK PLATE ZL15F.2.5-17 |
| 24.28 | 2880902856016 | 差速器壳螺栓M10*50 ZL15F.2.5-16 | DIFF. CASE BOLT M10*50 ZL15F.2.5-16 |
| 24.29 | 4021000240 | 滚动轴承GB297-32210 | Bearing GB297-32210 |
| 24.30 | 7200000174 | 调整螺母ZL15F.2.5-9 | AJUSTING NUT ZL15F.2.5-9 |
| 24.31 | 2880902856018 | 差速器左壳ZL15F.2.5-3 | DIFF. LEFT CASE ZL15F.2.5-3 |
| 24.32 | 2880902856023 | 从动锥齿轮（左）Z=35 ZL15F.2.5-7B | DRIVEN BEVEL GEAR (LEFT)Z=35 ZL15F.2.5-7B |
| 24.33 | 7200000190 | 铆钉ZL15F.2.5-4 | RIVET ZL15F.2.5-4 |
| 24.34 | 7200000166 | 差速器轴承盖ZL15F.2.5-2 | DIFFERENTIAL MECHANISM BEARING CAP |
| 24.35 | 2880902856040 | 锁片ZL80-06.5.2-7 | LOCK PLATE ZL80-06.5.2-7 |
| 24.36 | 4011000844 | 螺栓GB5785-M14*1.5*70-10.9 | BOLT GB5785-M14*1.5*70-10.9 |
| 24.37 | 2880902856025 | 调整螺母锁片ZL15F.2.5-18 | ADJUST NUT LOCK PLATE ZL15F.2.5-18 |
| 24.38 | 4015000036 | 垫圈GB93-8-65Mn | WASHER GB93-8-65Mn |
| 24.39 | 4011000841 | 螺栓GB5783-M8*16-10.9 | BOLT GB5783-M8*16-10.9 |

| | | | |
|---|---|---|---|
| 25 | E4-2908000799 | 传动轴总成 | DRIVE SHAFT ASSEMBLY |

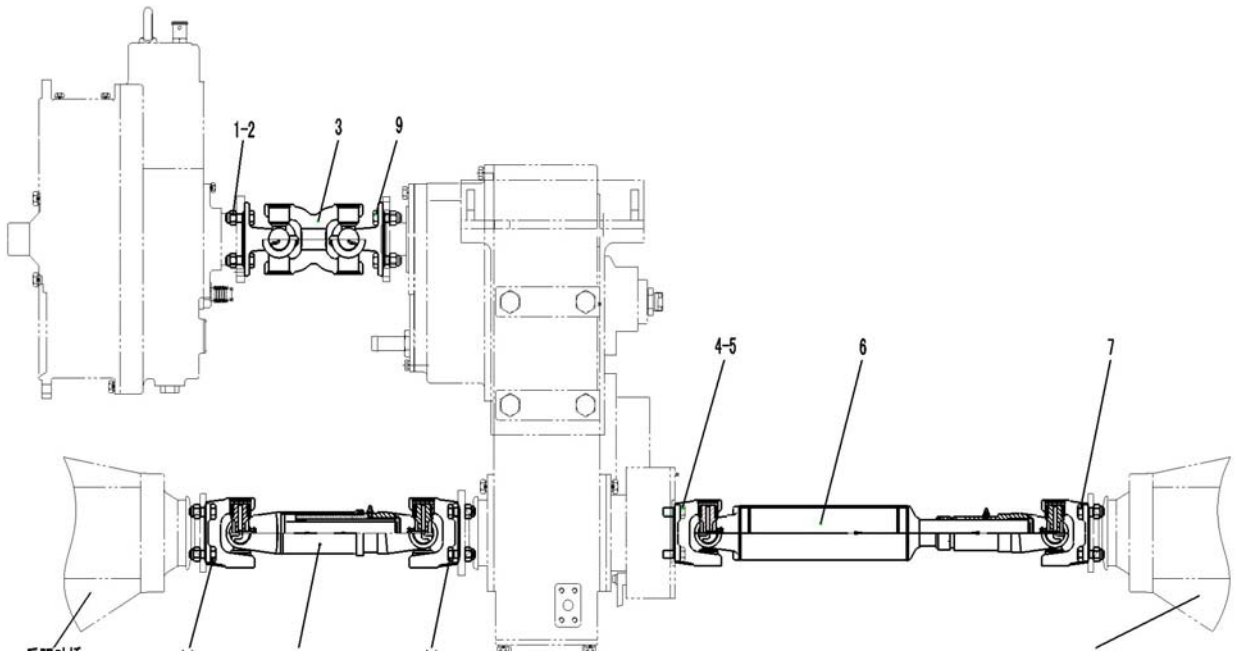

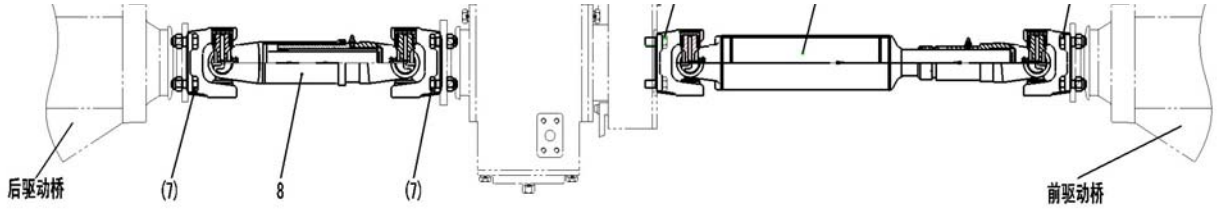


| | | | |
|---|---|---|---|
| 25.1 | 4011000568 | 螺栓GB5786-M12*1.25*40EpZn-10.9 | BOLT GB5786-M12*1.25*40EpZn-10.9 |
| 25.2 | 4013000072 | 螺母GB889.2-M12*1.25EpZn-10 | NUT GB889.2-M12*1.25EpZn-10 |
| 25.3 | 4110000802 | 主传动轴CDZP-220 | MAIN TRANSMISSION SHAFT |
| 25.4 | 4011000599 | 螺栓GB5786-M12*1.25*30EpZn-10.9 | BOLT GB5786-M12*1.25*30EpZn-10.9 |
| 25.5 | 29080008031 | 止动垫圈 | WASHER |
| 25.6 | 4110000803 | 前传动轴CDZP-910 | FRONT TRANSMISSION SHAFT CDZP-910 |
| 25.7 | 29050006541 | 螺栓 | BOLT |
| 25.8 | 4110000804 | 后传动轴CDZP-400.25 | REAR TRANSMISSION SHAFT CDZP-400.25 |
| 25.9 | 29050006521 | 螺栓 | BOLT |

| | | | |
|---|---|---|---|
| 26 | E5-2909000845 | 后桥总成 | REAR AXLE ASSEMBLY |

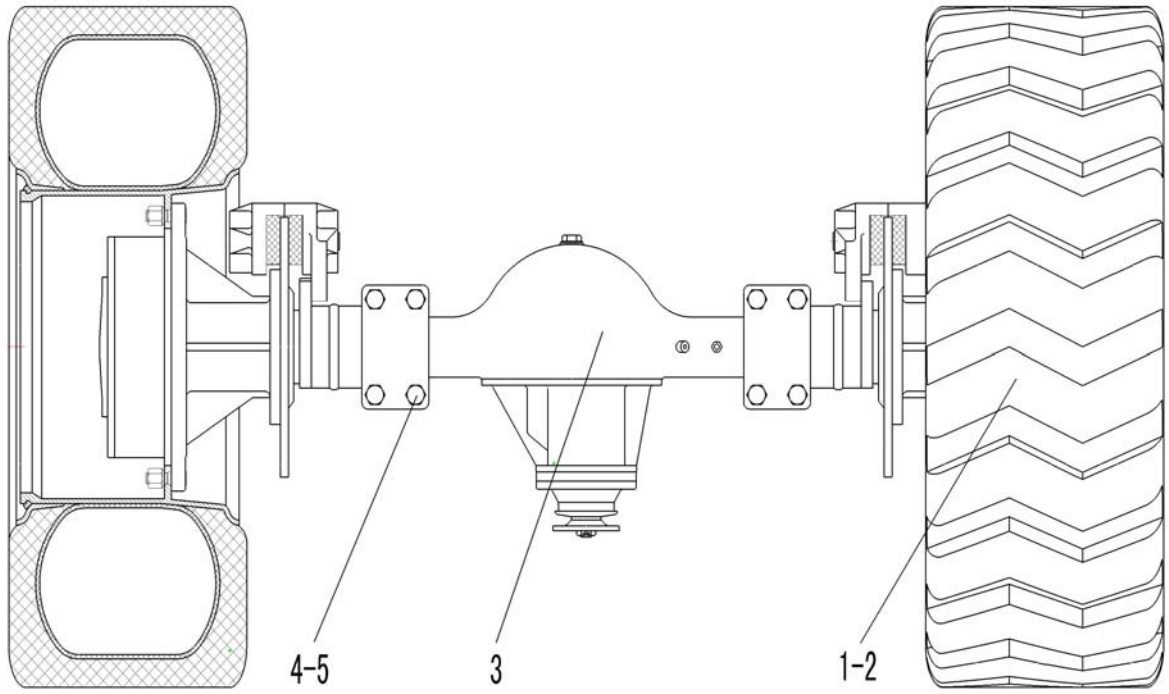


| | | | |
|---|---|---|---|
| 26.1 | 4110000016 | 轮胎GB2980-16/70-20 | TIRE GB2980-16/70-20 |
| 26.2 | 4110000791 | 轮辋LG13-20.00A | RIM LG13-20.00A |
| 26.3 | 4110000786 | 后桥总成ZL15F(A)-B | REAR BRIDGE ASSEMBLY ZL15F(A)-B |
| 26.4 | 4011000858 | 螺栓GB5785-M20*1.5*65EpZn-8.8 | BOLT GB5785-M20*1.5*65EpZn-8.8 |
| 26.5 | 4013000160 | 螺母GB889.2-M20*1.5EpZn-8 | NUT GB889.2-M20*1.5 EpZn-8 |

| | | | |
|---|---|---|---|
| 27 | F1-2912001747 | 液压操纵总成 | HYDRAULIC CONTROL ASSEMBLY |

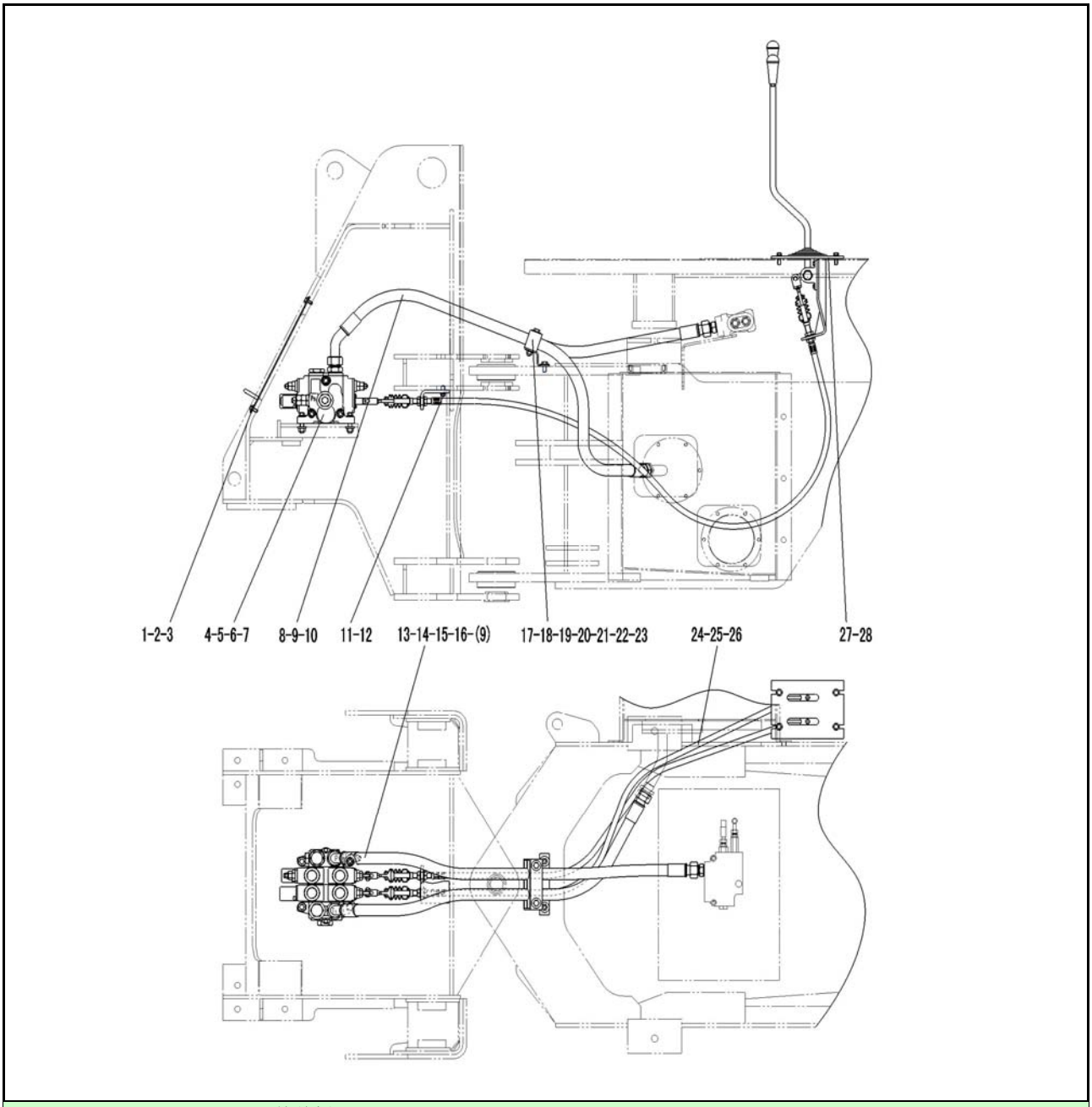


| | | | |
|---|---|---|---|
| 27.1 | 29120017521 | 前盖板 | FRONT END PLATE |
| 27.2 | 4011000105 | 螺栓GB5783-M8*20EpZn-8.8 | BOLT GB5783-M8*20EpZn-8.8 |
| 27.3 | 4015000256 | 垫圈GB96.1-8EpZn-300HV | WASHER GB96.1-8EpZn-300HV |
| 27.4 | 4120002459 | 多路阀ZL20DL1-02-1 | CONTROL VALVE ZL20DL1-02-1 |
| 27.5 | 4011000467 | 螺栓GB16674-M12*45EpZn-8.8 | BOLT GB16674-M12*45EpZn-8.8 |
| 27.6 | 4013000011 | 螺母GB6170-M12EpZn-8 | NUT GB6170-M12 EpZn-8 |
| 27.7 | 4015000168 | 垫圈GB97.1-12EpZn-300HV | WASHER GB97.1-12EpZn-300HV |
| 27.8 | 4041000676 | 直接头LGB120-03630 | CONNECTOR LGB120-03630 |
| 27.9 | 4041000685 | O形圈LGB168-12631 | O-RING LGB168-12631 |
| 27.10 | 4041001427 | 软管LGB126-014155 | HOSE LGB126-014155 |
| 27.11 | 29120017482 | 软轴支架 | Bracket |
| 27.12 | 4011000447 | 螺栓GB16674-M10*20EpZn-8.8 | BOLT GB16674-M10*20EpZn-8.8 |
| 27.13 | 4041000106 | 直接头LGB120-03030 | JOINT LGB120-03030 |
| 27.14 | 4041001398 | 软管LGB129-012130 | TUBE LGB129-012130 |
| 27.15 | 4041000188 | 直接头LGB120-03028 | JOINT LGB120-03028 |
| 27.16 | 4041000779 | O形圈LGB168-12331 | O-RING LGB168-12331 |
| 27.17 | 29120017491 | 支架 | BRACKET |
| 27.18 | 4011000081 | 螺栓GB5783-M10*20EpZn-8.8 | BOLT GB5783-M10*20EpZn-8.8 |

| | | | |
|---|---|---|---|
| 27.19 | 4015000197 | 垫圈GB96.1-10EpZn-300HV | WASHER GB96.1-10EpZn-300HV |
| 27.20 | 29120011171 | 橡胶板 | RUBBER PLATE |
| 27.21 | 29120017501 | 压板 | PLATE |
| 27.22 | 4011000052 | 螺栓GB5782-M10*75EpZn-8.8 | BOLT GB5782-M10*75EpZn-8.8 |
| 27.23 | 4013000007 | 螺母GB6170-M10EpZn-8 | NUT GB6170-M10EpZn-8 |
| 27.24 | 29120017512 | 操纵软轴 | CABLE SHAFT |
| 27.25 | 4016000195 | 销轴GB882-8*26EpZn-35 | PIN ROLL GB882-B8*26EpZn-35 |
| 27.26 | 4019000184 | 开口销GB91-3.2*18EpZn-Q235A | SPLINT PIN |
| 27.27 | 4120002492 | 操纵机构LG12-916CZJG02 | CONTROL SYSTEM LG12-916CZJG02 |
| 27.28 | 4011000474 | 螺栓GB16674-M10*25EpZn-8.8 | BOLT GB16674-M10*25EpZn-8.8 |

| | | | |
|---|---|---|---|
| 28 | F3-2913001247 | 举升缸总成 | LIFTING CYLINDER ASSEMBLY |
| 28.1 | 4120002273 | 动臂油缸HSGL-90*50*577-920 | BOOM CYLINDER HSGL-90*50*577-920 |
| 28.2 | 29130012511 | 举升缸小腔钢管 | STEEL TUBE |
| 28.3 | 4030000242 | O形圈GB3452.1-12.5*1.80G | O-RING GB3452.1-12.5*1.80G |
| 28.4 | 4041001418 | 软管LGB127-010115 | TUBE LGB127-010115 |
| 28.5 | 4041000582 | 直接头LGB120-02630 | CONNECTOR LGB120-02630 |
| 28.6 | 4041000685 | O形圈LGB168-12631 | O-RING LGB168-12631 |
| 28.7 | 29130012351 | 举升联大腔钢管 | STEEL TUBE |
| 28.8 | 29130012391 | 举升联小腔钢管 | STEEL TUBE |
| 28.9 | 29130012481 | 举升缸大腔钢管 | STEEL TUBE |
| 28.10 | 29130012601 | 压板 | PLATE |
| 28.11 | 4011000163 | 螺栓GB16674-M10*40EpZn-8.8 | BOLT GB16674-M10*40EpZn-8.8 |
| 28.12 | 29130009681 | 管夹 | PIPE CLIP |
| 28.13 | 4011000102 | 螺栓GB5783-M8*16EpZn-8.8 | BOLT GB5783-M8*16EpZn-8.8 |
| 28.14 | 4015000072 | 垫圈GB97.1-8EpZn-300HV | WASHER GB97.1-8EpZn-300HV |
| 28.15 | 4015000256 | 垫圈GB96.1-8EpZn-300HV | WASHER GB96.1-8EpZn-300HV |
| 28.16 | 4041001428 | 软管LGB127-406105 | TUBE LGB127-406105 |
| 29 | F4-2914001097 | 转斗缸总成 | TILT CYLINDER ASSEMBLY |

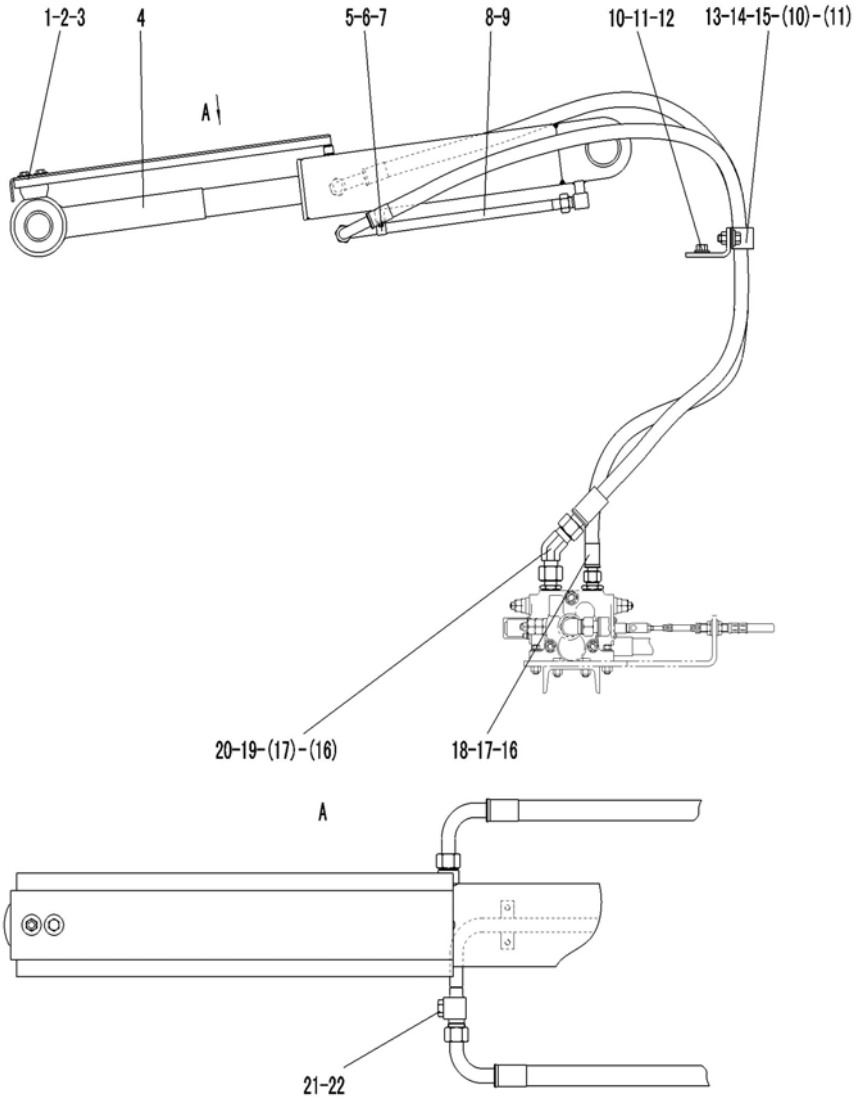

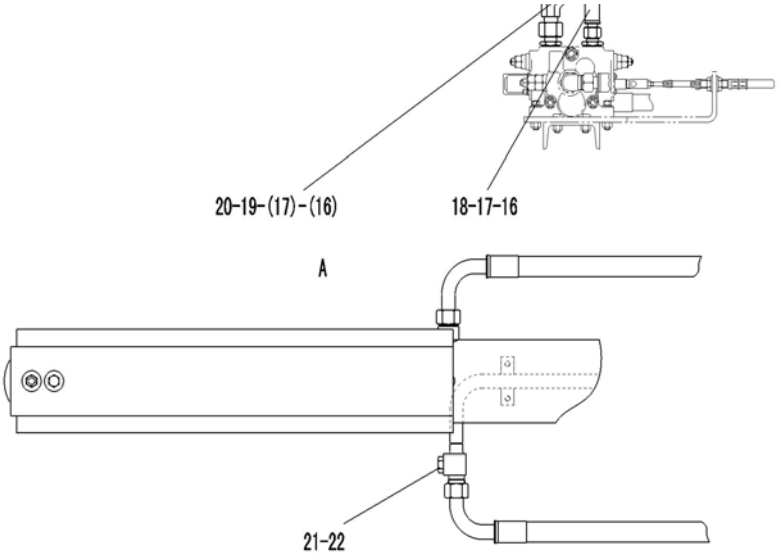


| | | | |
|---|---|---|---|
| 29.1 | 29140011211 | 放平护板 | SET LEVEL GUARD SHEET |
| 29.2 | 4011000081 | 螺栓GB5783-M10*20EpZn-8.8 | BOLT GB5783-M10*20EpZn-8.8 |
| 29.3 | 4015000197 | 垫圈GB96.1-10EpZn-300HV | WASHER GB96.1-10EpZn-300HV |
| 29.4 | 4120002464 | 转斗油缸HSGL-100*55*413-918 | TILT CYLINDER HSGL-100*55*413-918 |
| 29.5 | 29140011071 | 管夹 | CLIP |
| 29.6 | 4011000102 | 螺栓GB5783-M8*16EpZn-8.8 | BOLT GB5783-M8*16EpZn-8.8 |
| 29.7 | 4015000072 | 垫圈GB97.1-8EpZn-300HV | WASHER GB97.1-8EpZn-300HV |
| 29.8 | 29140010301 | 转斗缸大腔钢管 | STEEL PIPE |
| 29.9 | 4030000501 | O形圈GB3452.1-15.0*1.80G | O-RINGGB3452.1-15.0*1.80G |
| 29.10 | 4011000082 | 螺栓GB5783-M10*25EpZn-8.8 | BOLT GB5783-M10*25EpZn-8.8 |
| 29.11 | 4015000162 | 垫圈GB97.1-10EpZn-300HV | WASHER GB97.1-10EpZn-300HV |
| 29.12 | 29140010981 | 软管固定架 | BRACKET |
| 29.13 | 4013000007 | 螺母GB6170-M10EpZn-8 | NUT GB6170-M10EpZn-8 |
| 29.14 | 29140010991 | 管夹 | CLIP |
| 29.15 | 4041001392 | 缓冲套LGB123-0530 | CUSHION LGB123-0530 |
| 29.16 | 4041000582 | 直接头LGB120-02630 | CONNECTOR LGB120-02630 |
| 29.17 | 4041000685 | O形圈LGB168-12631 | O-RING LGB168-12631 |
| 29.18 | 4041001421 | 软管LGB128-010150 | TUBE LGB128-010150 |
| 29.19 | 4041001417 | 组合接头LGB143-12616 | JOINT LGB143-12616 |
| 29.20 | 4030000501 | O形圈GB3452.1-15.0*1.80G | O-RINGGB3452.1-15.0*1.80G |
| 29.21 | 4041000774 | 螺塞LGB135-01422 | PLUG LGB13501421 |
| 29.22 | 4041000767 | O形圈LGB168-11124 | O-RING LGB168-11124 |

| | | | |
|---|---|---|---|
| 30 | F5-2910001176 | 液压油箱总成 | HYDRAULIC TANK ASSEMBLY |

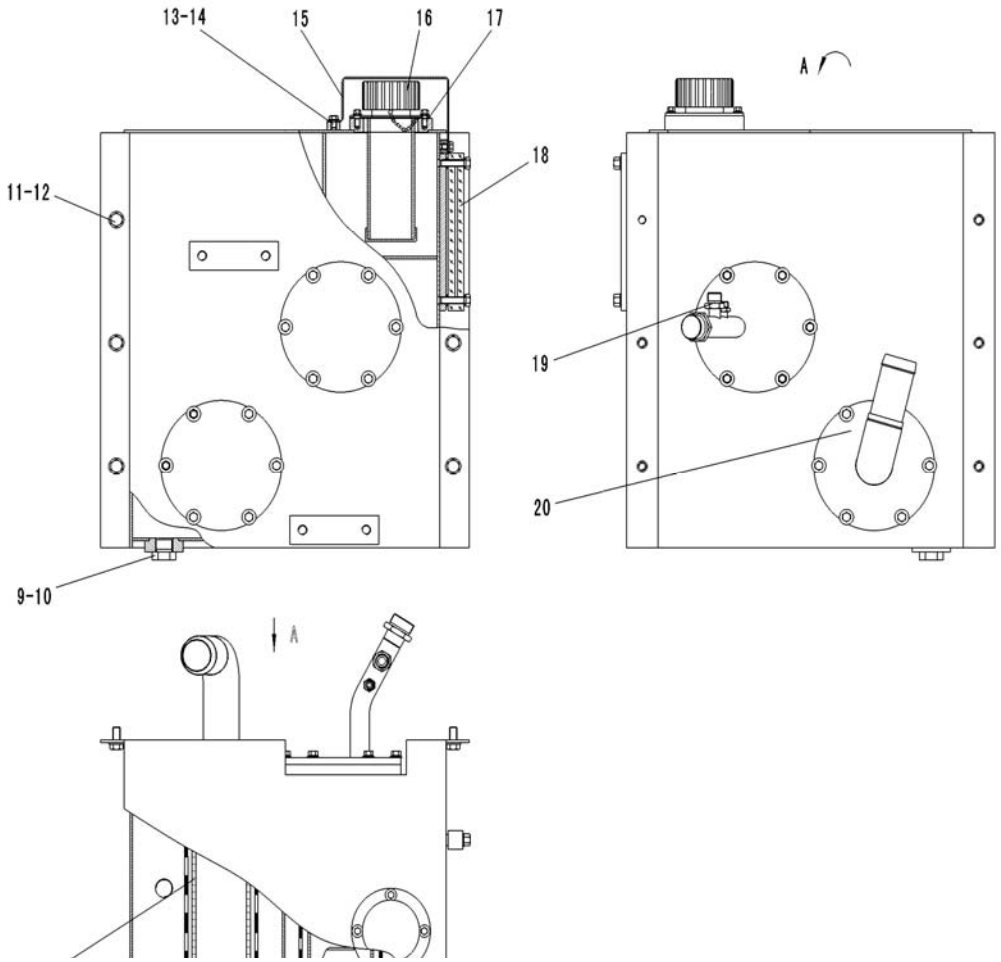

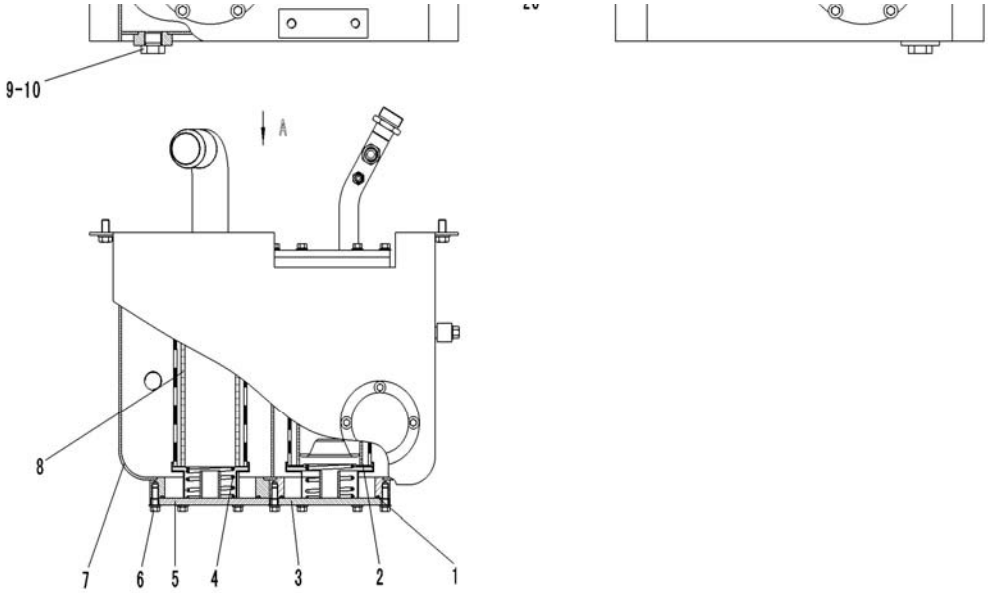


| | | | |
|---|---|---|---|
| 30.1 | 4030000732 | O形圈GB3452.1-150*3.55G | O-RING GB3452.1-150*3.55G |
| 30.2 | 29100011941 | 回油滤芯 | RETURN FILTER |
| 30.3 | 29100011921 | 前回油法兰盘 | FLANGE |
| 30.4 | 29100011901 | 弹簧 | SPRING |
| 30.5 | 29100011911 | 前吸油法兰盘 | FLANGE |
| 30.6 | 4011000474 | 螺栓GB16674-M10*25EpZn-8.8 | BOLT GB16674-M10*25EpZn-8.8 |
| 30.7 | 29100011771 | 液压油箱体 | HYDRAULIC TANK BODY |
| 30.8 | 29100011931 | 吸油滤芯 | INTAKE OIL FILTER |
| 30.9 | 4041001057 | 螺塞LGB135-02732 | PLUG LGB135-02732 |
| 30.10 | 4041001264 | O形圈LGB168-22331 | O-RING LGB168-22331 |
| 30.11 | 4011000197 | 螺栓GB5783-M12*25EpZn-8.8 | BOLT GB5783-M12*30EpZn-8.8 |
| 30.12 | 4015000168 | 垫圈GB97.1-12EpZn-300HV | WASHER GB97.1-12EpZn-300HV |
| 30.13 | 4011000180 | 螺栓GB5783-M8*12EpZn-8.8 | BOLT GB5783-M8*12EpZn-8.8 |
| 30.14 | 4015000072 | 垫圈GB97.1-8EpZn-300HV | WASHER GB97.1-8EpZn-300HV |
| 30.15 | 29100012831 | 防护板 | PROTECTOR PLATE |
| 30.16 | 4120000081 | 液压空气过滤器QUQ2.5b | STRAINER QUQ2.5b |
| 30.17 | 4011000461 | 螺栓GB16674-M8*16EpZn-8.8 | BOLT GB16674-M8*16EpZn-8.8 |
| 30.18 | 4120000093 | 液位计YWZ-200 | GAUGE LEVEL YWZ-200 |
| 30.19 | 29100012591 | 回油法兰总成 | RETURN OIL FLANGE ASSMEBLY |
| 30.20 | 29100012701 | 吸油法兰总成 | INTAKE OIL FLANGE ASSEMBLY |
| 31 | F6-4120002464 | 转斗油缸(371401) | TILT CYLINDER(371401) |

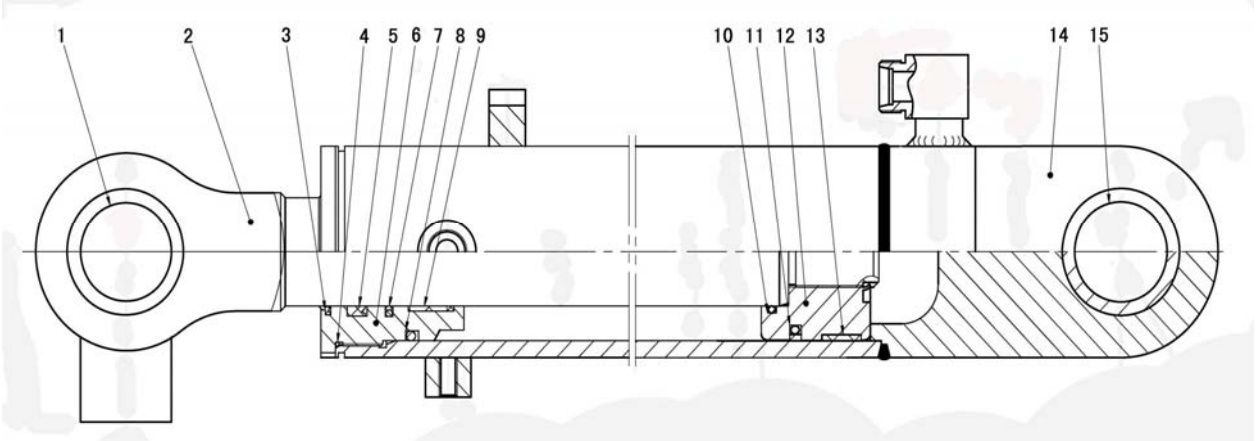

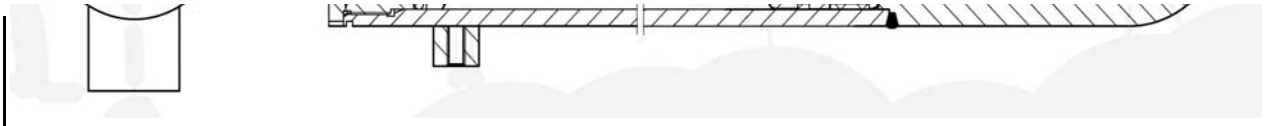

| | | | |
|---|---|---|---|
| 31.1 | 4120002464003 | 衬套Ⅰ | BUSHING Ⅰ |
| 31.2 | 4120002464002 | 活塞杆 | PISTON ROD |
| 31.3 | 4120002464001 | 密封件包 | SEAL KIT |
| 31.4 | 4120002464001 | 密封件包 | SEAL KIT |
| 31.5 | 4120002464001 | 密封件包 | SEAL KIT |
| 31.6 | 4120002464004 | 缸盖 | CYLINDER COVER |
| 31.7 | 4120002464001 | 密封件包 | SEAL KIT |
| 31.8 | 4120002464001 | 密封件包 | SEAL KIT |
| 31.9 | 4120002464001 | 密封件包 | SEAL KIT |
| 31.10 | 4120002464001 | 密封件包 | SEAL KIT |
| 31.11 | 4120002464001 | 密封件包 | SEAL KIT |
| 31.12 | 4120002464005 | 活塞 | PISTON |
| 31.13 | 4120002464001 | 密封件包 | SEAL KIT |
| 31.14 | 4120002464006 | 缸体 | CYLINDER BODY |
| 31.15 | 4120002464007 | 衬套Ⅱ | BUSHING Ⅱ |

| | | | |
|---|---|---|---|
| 32 | F8-4120002273 | 动臂油缸(371401) | LIFT ARM CYLINDER(371401) |

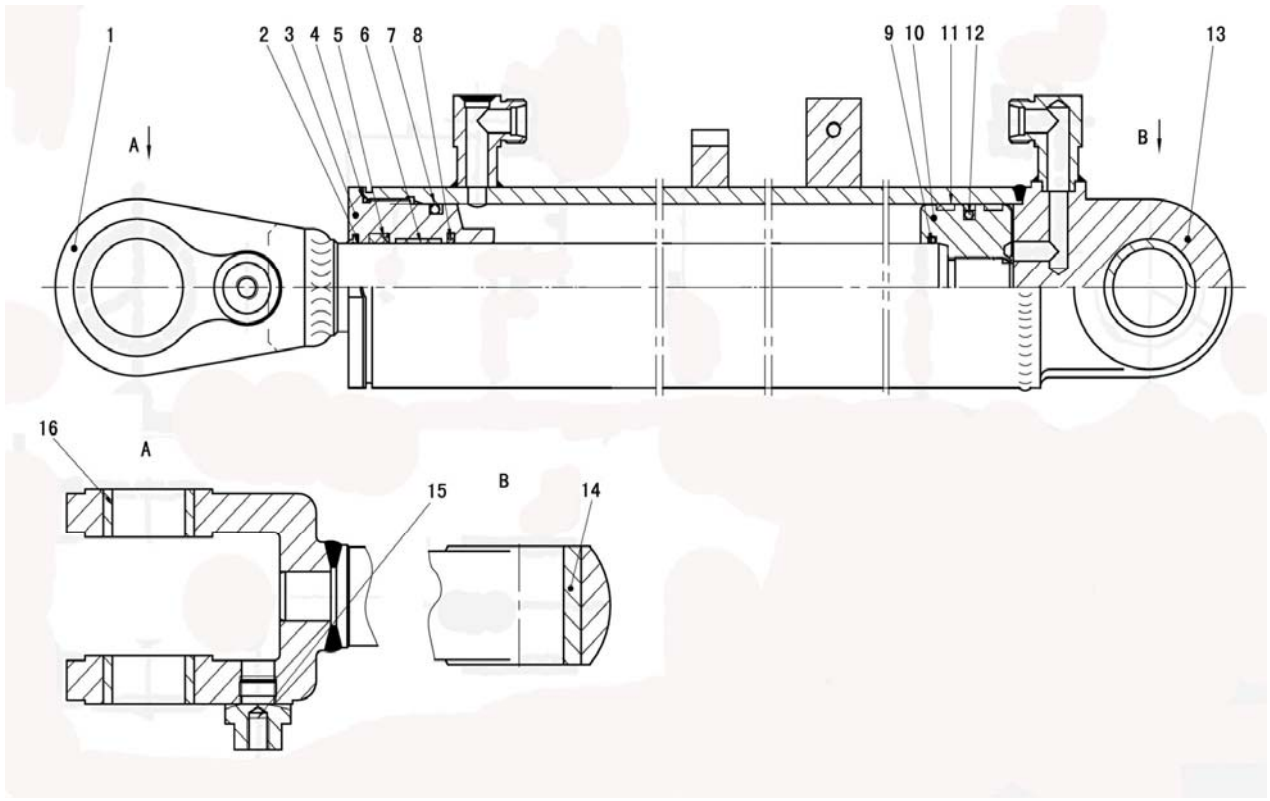


| | | | |
|---|---|---|---|
| 32.1 | 4120002273002 | 活塞杆 | PISTON ROD |
| 32.2 | 4120002273001 | 密封件包 | SEAL KIT |
| 32.3 | 4120002273003 | 缸盖 | CYLINDER COVER |
| 32.4 | 4120002273001 | 密封件包 | SEAL KIT |
| 32.5 | 4120002273001 | 密封件包 | SEAL KIT |
| 32.6 | 4120002273001 | 密封件包 | SEAL KIT |
| 32.7 | 4120002273001 | 密封件包 | SEAL KIT |
| 32.8 | 4120002273001 | 密封件包 | SEAL KIT |
| 32.9 | 4120002273001 | 密封件包 | SEAL KIT |
| 32.10 | 4120002273004 | 活塞 | PISTON |
| 32.11 | 4120002273001 | 密封件包 | SEAL KIT |
| 32.12 | 4120002273001 | 密封件包 | SEAL KIT |
| 32.13 | 4120002273005 | 缸体 | CYLINDER BODY |
| 32.14 | 4120002273006 | 衬套 | BUSHING |
| 32.15 | 4120002273007 | 座 | SEAT |
| 32.16 | 4120002273008 | 套 | BUSHING |
| 33 | H1-2916000811 | 工作装置 | WORKING EQUIPMENT |

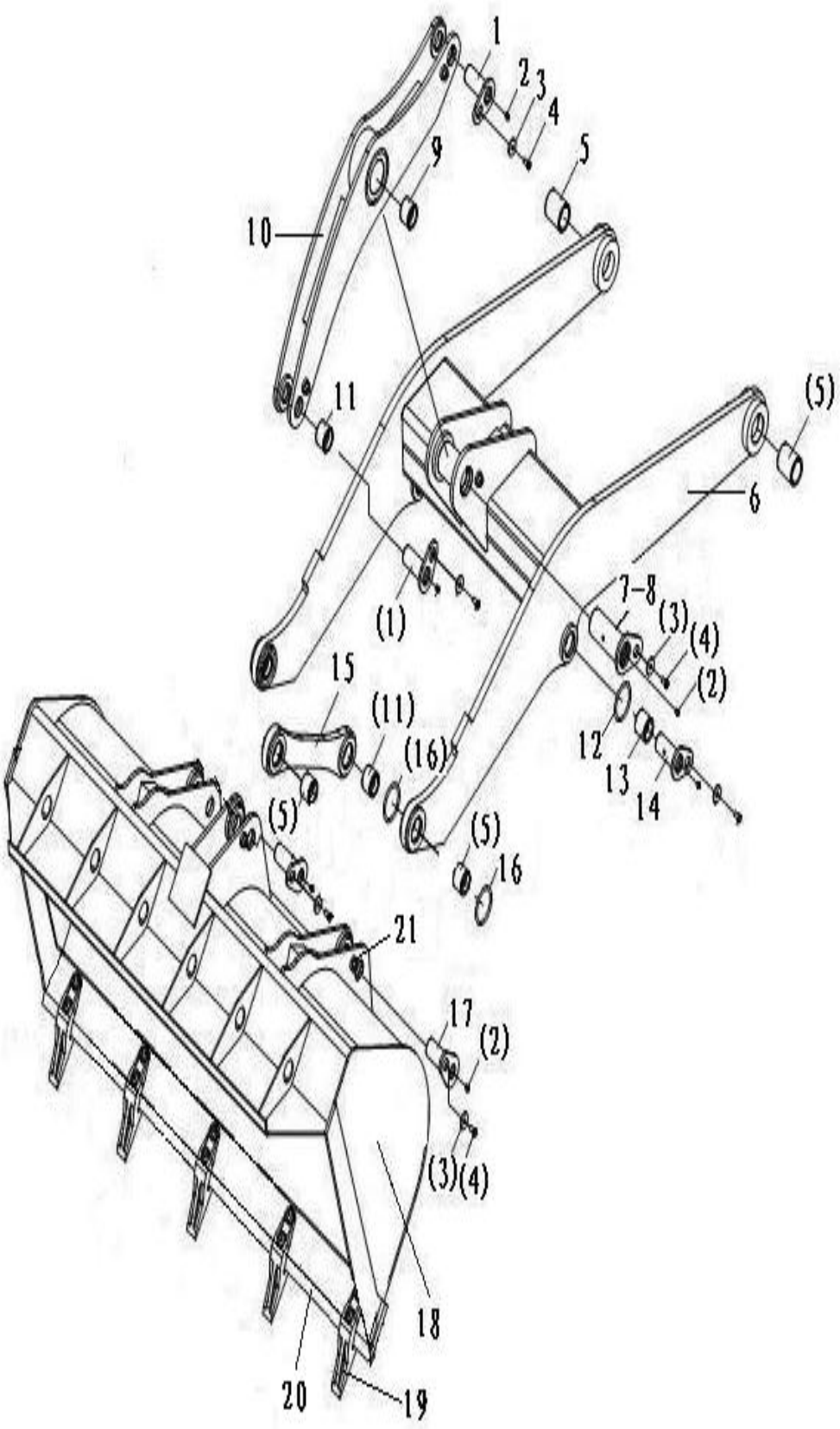


| | | | |
|---|---|---|---|
| 33.1 | 4043000398 | 销轴LGB301-50*88*155-40Cr | PIN LGB301-50*88*155-40Cr |

| | | | |
|---|---|---|---|
| 33.2 | 4030000065 | 油杯JB7940.1-M10*1 | GREASE NIPPLE JB7940.1-M10*1 |
| 33.3 | 4040000001 | 垫圈LGB001-12 | WASHER LGB001-12*45*6 |
| 33.4 | 4011000197 | 螺栓GB5783-M12*25EpZn-8.8 | BOLT GB5783-M12*30EpZn-8.8 |
| 33.5 | 4043000401 | 轴套LGB302-50*82A2 | SHAFT SLEEVE LGB302-50*82A2 |
| 33.6 | 29150011151 | 动臂 | ARM |
| 33.7 | 4043000399 | 销轴LGB301-60*145*275/2-40Cr | PIN LGB301-60*145*275/2-40Cr |
| 33.8 | 4043000151 | 垫片LGB303-60*120*1 | SPACER LGB303-60*120*1 |
| 33.9 | 4043000403 | 轴套LGB302-60*159A2 | SHAFT SLEEVE LGB302-60*159A2 |
| 33.10 | 29150011161 | 摇臂 | ROCKER |
| 33.11 | 4043000402 | 轴套LGB302-50*64A2 | SHAFT SLEEVE LGB302-50*64A2 |
| 33.12 | 4043000293 | 垫片LGB303-40*95*1 | WASHER LGB303-40*95*1 |
| 33.13 | 4043000404 | 轴套LGB302-40*58A2 | SHAFT SLEEVE LGB302-40*58A2 |
| 33.14 | 4043000400 | 销轴LGB301-40*75*135/2-40Cr | PIN LGB301-40*75*135/2-40Cr |
| 33.15 | 29150011171 | 连杆 | ROD |
| 33.16 | 4043000067 | 垫片LGB303-50*100*1 | SPACER LGB303-50*100*1 |
| 33.17 | 4043000397 | 销轴LGB301-50*100*185-40Cr | PIN LGB301-50*100*185-40Cr |
| 33.18 | 29170049331 | 铲斗总成 | BUCKET |
| 33.19 | 4043000047 | 斗齿LGB304-B1-1 | TOOTH |
| 33.20 | 29170049381 | 主刀板 | PLATE |
| 33.21 | 4043000048 | 固定座LGB305-M12*22 | PERMANENT SEAT |

| 34 | I1-2919000930 | 转向泵总成 | STEERING PUMP ASSEMBLY |
|---|---|---|---|

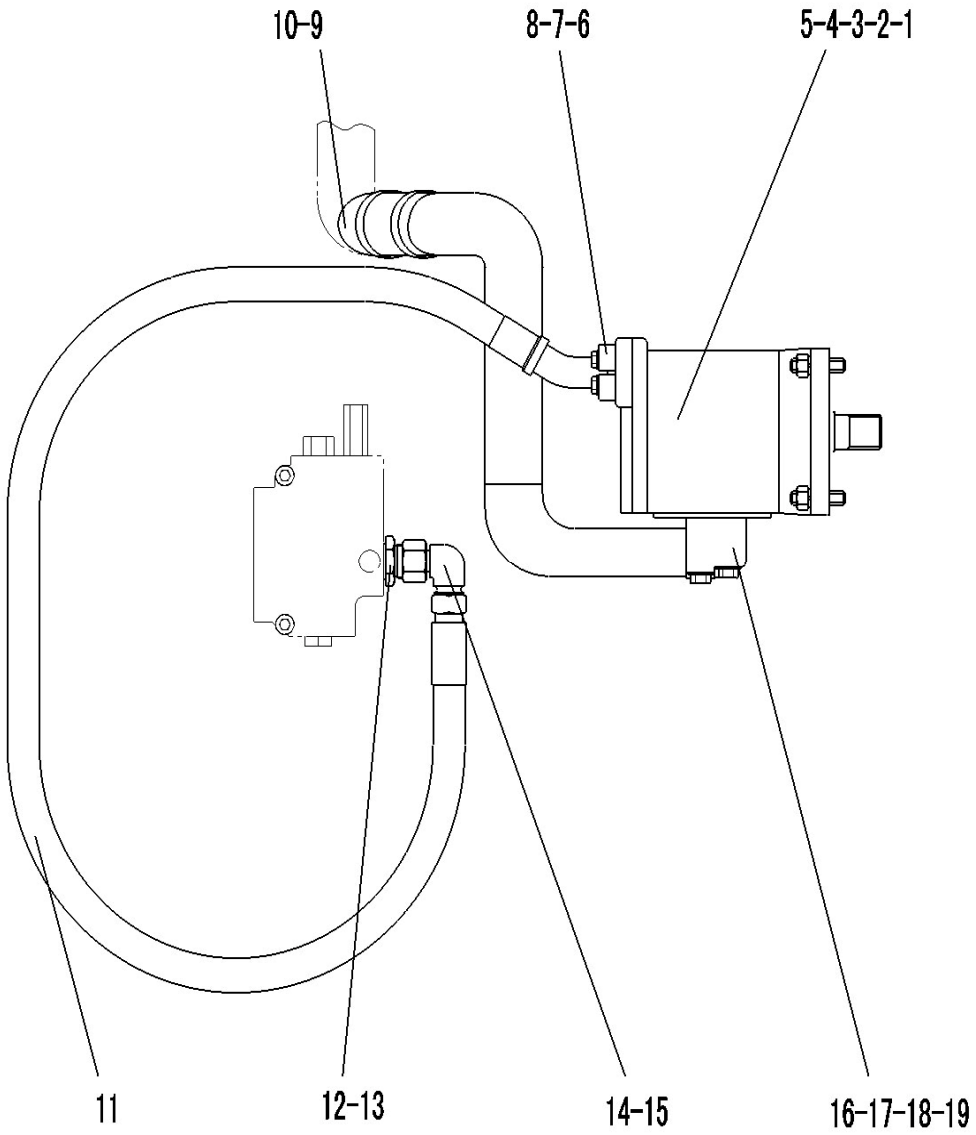


| | | | |
|---|---|---|---|
| 34.1 | 4120000371 | 齿轮泵CBGjA2050 | GEAR PUMP CBGjA2050 |
| 34.2 | 29110000041 | 泵用密封垫 | SEALING WASHER |
| 34.3 | 4012000003 | 螺柱GB898-M12*35EpZn-8.8 | DOUBLE-SCREW BOLT GB898-M12*35EpZn-8.8 |
| 34.4 | 4013000011 | 螺母GB6170-M12EpZn-8 | NUT GB6170-M12 EpZn-8 |
| 34.5 | 4015000168 | 垫圈GB97.1-12EpZn-300HV | WASHER GB97.1-12EpZn-300HV |
| 34.6 | 4011000481 | 螺栓GB16674-M8*30EpZn-8.8 | BOLT GB16674-M8*30Ep.Zn-8.8 |
| 34.7 | 29190008061 | 压盖 | GLAND |
| 34.8 | 4030000279 | O形圈GB3452.1-25.0*3.55G | O-RING GB3452.1-25*3.55G |
| 34.9 | 4017000018 | 喉箍JB8870-d70 | CLAMP JB8870-d70 |
| 34.10 | 29190009371 | 泵吸油胶管 | STEEL TUBE |
| 34.11 | 29190009311 | 转向泵出油胶管 | HOSE |
| 34.12 | 4041000188 | 直接头LGB120-03028 | JOINT LGB120-03028 |
| 34.13 | 4041000779 | O形圈LGB168-12331 | O-RING LGB168-12331 |
| 34.14 | 4041001262 | 组合接头LGB143-03019 | JOINT LGB143-03019 |
| 34.15 | 4030000241 | O形圈GB3452.1-20.0*1.80G | O-RING GB3452.1-20.0*1.80G |
| 34.16 | 29190009321 | 转向泵吸油钢管 | STEEL PIPE |
| 34.17 | 4030000178 | O形圈GB3452.1-30.0*3.55G | O-RING GB3452.1-30.0*3.55G |
| 34.18 | 4011000279 | 螺栓GB16674-M10*60EpZn-8.8 | BOLT GB16674-M10*60EpZn-8.8 |
| 34.19 | 4011000473 | 螺栓GB16674-M10*55EpZn-8.8 | BOLT GB16674-M10*55EpZn-8.8 |

| 35 | I2-2920000870 | 转向器总成 | STEERING UNIT ASSEMBLY |
|---|---|---|---|

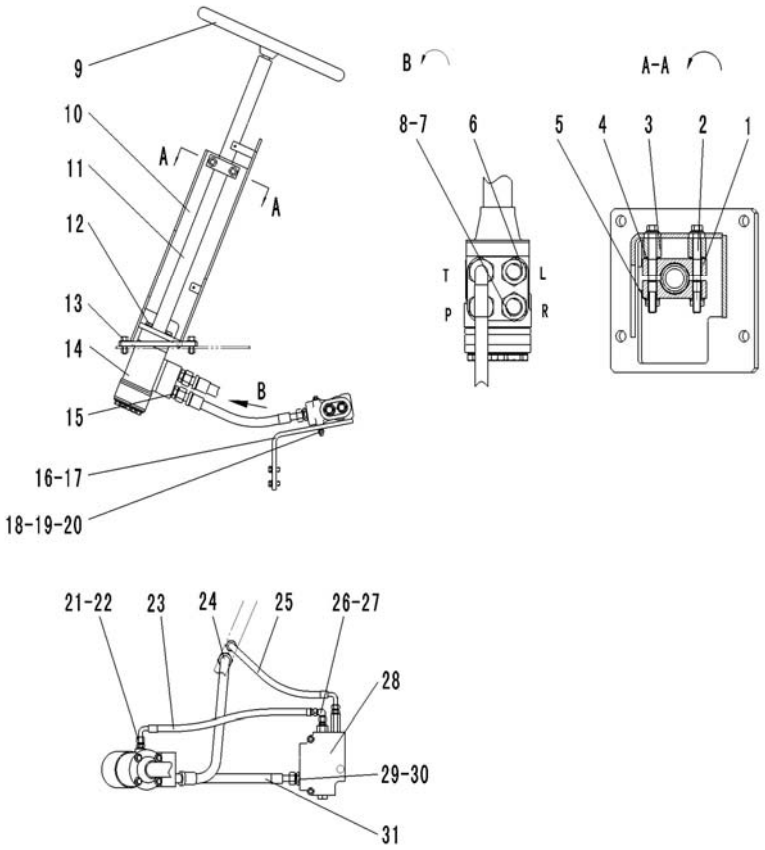


| | | | |
|---|---|---|---|
| 35.1 | 29310011251 | 固定板 | FIX PLATE |
| 35.2 | 4011000528 | 螺栓GB16674-M10*100EpZn-8.8 | BOLT GB16674-M10*100EpZn-8.8 |
| 35.3 | 29310011301 | 调整座 | ADJUSTING SEAT |
| 35.4 | 4015000162 | 垫圈GB97.1-10EpZn-300HV | WASHER GB97.1-10EpZn-300HV |
| 35.5 | 4013000007 | 螺母GB6170-M10EpZn-8 | NUT GB6170-M10EpZn-8 |
| 35.6 | 29200007901 | 直接头 | CONNECTER |
| 35.7 | 4041000132 | 直接头LGB120-02220 | CONNECTER LGB120-02220 |
| 35.8 | 4041000783 | O形圈LGB168-11724 | O-RING LGB168-11724 |
| 35.9 | 4120000018 | 方向盘FXP-50F | STEERING WHEEL |
| 35.10 | 29310011191 | 固定架 | FIX FRAME |
| 35.11 | 4120001855 | 转向柱LG20-ZXZ-09 | STEERING COLUMN LG20-Z*Z-09 |
| 35.12 | 4011000473 | 螺栓GB16674-M10*55EpZn-8.8 | BOLT GB16674-M10*55EpZn-8.8 |
| 35.13 | 4011000479 | 螺栓GB16674-M12*30EpZn-8.8 | BOLT GB16674-M12*30EpZn-8.8 |
| 35.14 | 4120001147 | 转向器BZZ5-320 | STEERING DEVICE BZZ5-320 |
| 35.15 | 4041000564 | 直接头LGB120-02620 | JOINT LGB120-02620 |
| 35.16 | 29200008711 | 固定板 | MOUNTED PLATE |
| 35.17 | 4011000447 | 螺栓GB16674-M10*20EpZn-8.8 | BOLT GB16674-M10*20EpZn-8.8 |
| 35.18 | 4011000493 | 螺栓GB16674-M8*90EpZn-8.8 | BOLT GB16674-M8*90EpZn-8.8 |
| 35.19 | 4013000033 | 螺母GB6170-M8EpZn-8 | NUT GB6170-M8EpZn-8 |
| 35.20 | 4015000072 | 垫圈GB97.1-8EpZn-300HV | WASHER GB97.1-8EpZn-300HV |
| 35.21 | 4041000131 | 直接头LGB120-01412 | JOINT LGB120-01412 |
| 35.22 | 4041000784 | O形圈LGB168-10924 | O-RING LGB168-10924 |
| 35.23 | 4041001425 | 软管LGB128-003055 | TUBE LGB128-003055 |
| 35.24 | 4041001424 | 软管LGB164-410079 | TUBE LGB164-410079 |
| 35.25 | 4041001423 | 软管LGB165-003065 | TUBE LGB165-003065 |
| 35.26 | 4041001047 | 组合接头LGB143-01406 | CONNECTOR LGB143-01406 |
| 35.27 | 4030000530 | O形圈GB3452.1-6.00*1.80G | O-RING GB3452.1-6.00*1.80G |
| 35.28 | 4120000709 | 优先阀VLE-150 | PRIORITY VALVE VLE-150 |
| 35.29 | 4041000187 | 直接头LGB120-02622 | JOINT LGB120-02622 |
| 35.30 | 4041000771 | O形圈LGB168-11924 | O-RING LGB168-11924 |

| | | | |
|---|---|---|---|
| 35.31 | 4041001422 | 软管LGB127-010033 | TUBE LGB127-010033 |
| 36 | I3-2921000870 | 转向缸总成 | STEERING CYLINDER ASSEMBLY |

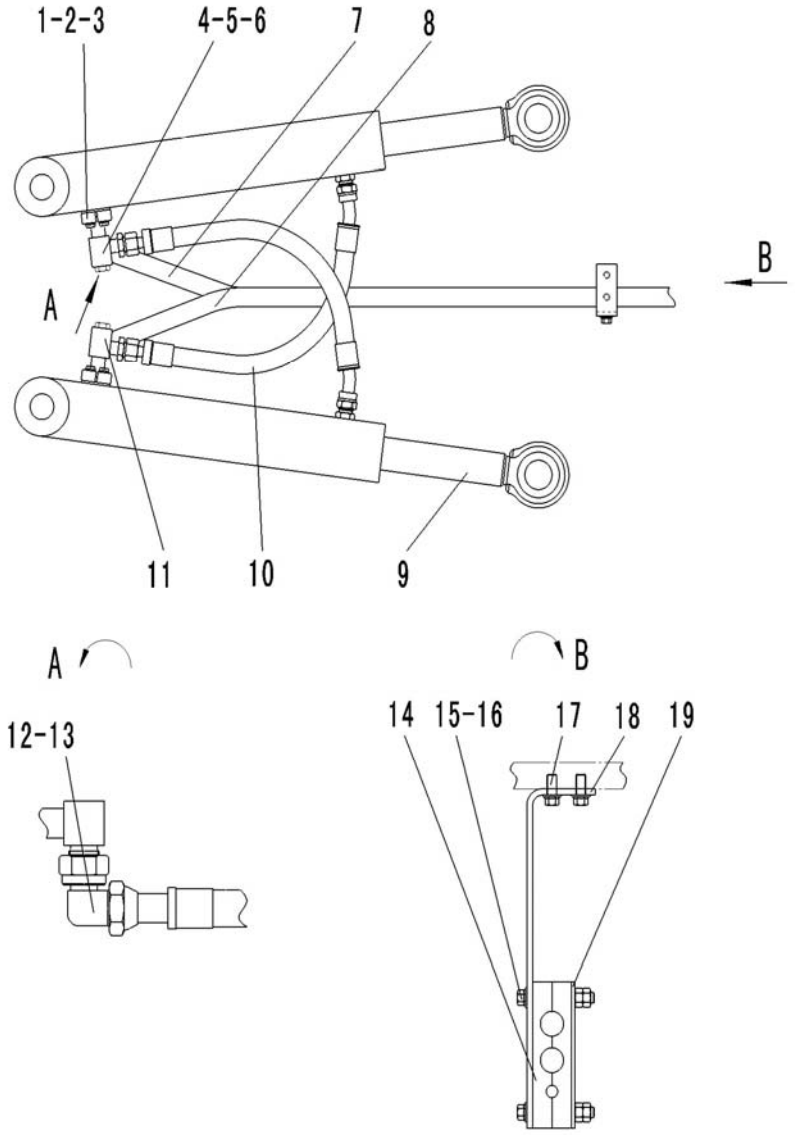


| | | | |
|---|---|---|---|
| 36.1 | 4041000846 | 分体法兰LGB117-305000 | FLANGE |
| 36.2 | 4030000275 | O形圈GB3452.1-22.4*3.55G | O-RING GB3452.1-22.4*3.55G |
| 36.3 | 4011000455 | 螺栓GB16674-M8*25EpZn-8.8 | BOLT GB16674-M8*25EpZn-8.8 |
| 36.4 | 29210008711 | 三通接头 | T-CONNECTER |
| 36.5 | 4041000774 | 螺塞LGB135-01422 | PLUG LGB13501421 |
| 36.6 | 4041000767 | O形圈LGB168-11124 | O-RING LGB168-11124 |
| 36.7 | 4041001426 | 软管LGB128-006139 | TUBE LGB128-006139 |
| 36.8 | 4041001046 | 软管LGB128-006130 | TUBE LGB128006130 |
| 36.9 | 4120002463 | 转向油缸HSGL-60*35*295-590 | STEERING CYLINDER HSGL-60*35*295-590 |
| 36.10 | 29210008751 | 转向缸胶管 | HOSE |
| 36.11 | 29210008731 | 三通接头 | T-CONNECTER |
| 36.12 | 4041001156 | 组合接头LGB143-02213 | CONNECTOR LGB143-02213 |
| 36.13 | 4030000242 | O形圈GB3452.1-12.5*1.80G | O-RING GB3452.1-12.5*1.80G |
| 36.14 | 29210008761 | 橡胶板 | RUBBER PLATE |
| 36.15 | 4011000476 | 螺栓GB16674-M10*70EpZn-8.8 | BOLT GB16674-M10*70EpZn-8.8 |
| 36.16 | 4013000007 | 螺母GB6170-M10EpZn-8 | NUT GB6170-M10EpZn-8 |
| 36.17 | 4011000447 | 螺栓GB16674-M10*20EpZn-8.8 | BOLT GB16674-M10*20EpZn-8.8 |
| 36.18 | 29210008771 | 连接板 | CONNECTION BOARD |

| | | | |
|---|---|---|---|
| 36.19 | 29210008781 | 压板 | PLATE |
| 37 | I4-4120002463 | 转向油缸(371401) | STEERING CYLINDER(371401) |

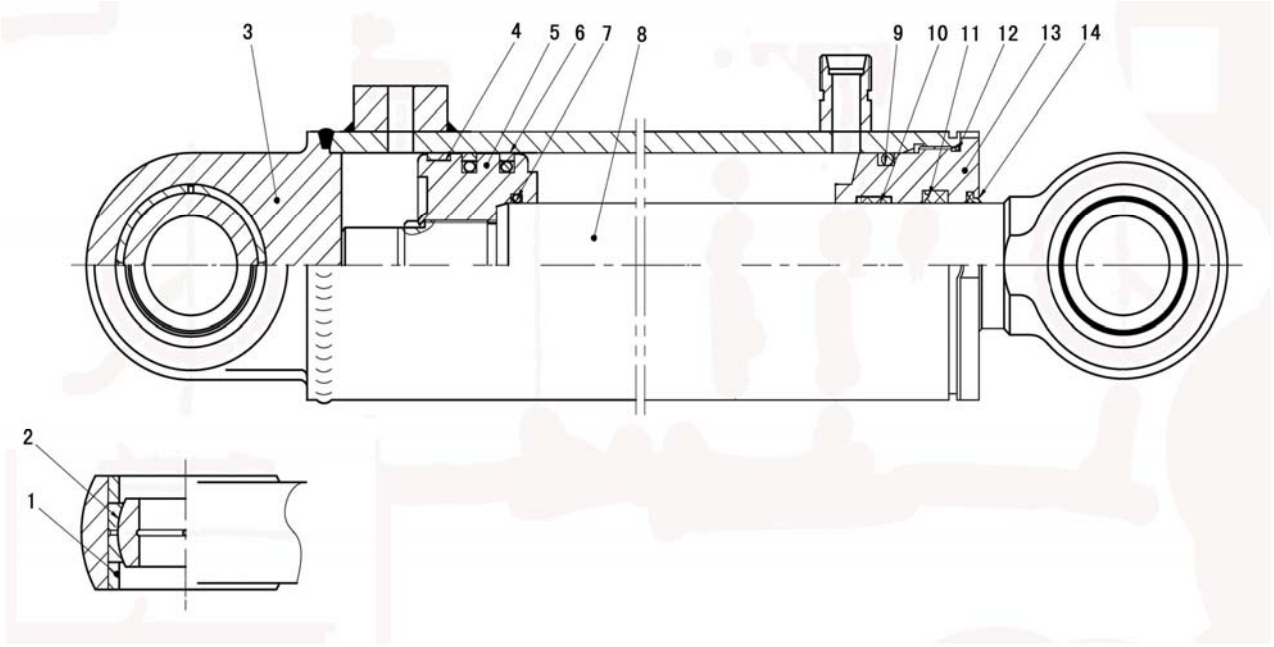


| | | | |
|---|---|---|---|
| 37.1 | 4120002463003 | 挡块 | STOPPER |
| 37.2 | 4120002463004 | 关节轴承GE30ES | BEARING GE30ES |
| 37.3 | 4120002463005 | 缸体 | CYLINDER BODY |
| 37.4 | 4120002463001 | 密封件包 | SEAL KIT |
| 37.5 | 4120002463006 | 活塞 | PISTON |
| 37.6 | 4120002463001 | 密封件包 | SEAL KIT |
| 37.7 | 4120002463001 | 密封件包 | SEAL KIT |
| 37.8 | 4120002463002 | 活塞杆 | PISTON ROD |
| 37.9 | 4120002463001 | 密封件包 | SEAL KIT |
| 37.10 | 4120002463001 | 密封件包 | SEAL KIT |
| 37.11 | 4120002463001 | 密封件包 | SEAL KIT |
| 37.12 | 4120002463001 | 密封件包 | SEAL KIT |
| 37.13 | 4120002463007 | 缸盖 | CYLINDER COVER |
| 37.14 | 4120002463001 | 密封件包 | SEAL KIT |

| | | | |
|---|---|---|---|
| 38 | J1-2922000949 | 行车制动总成 | SERVICE BRAKE ASSEMBLY |

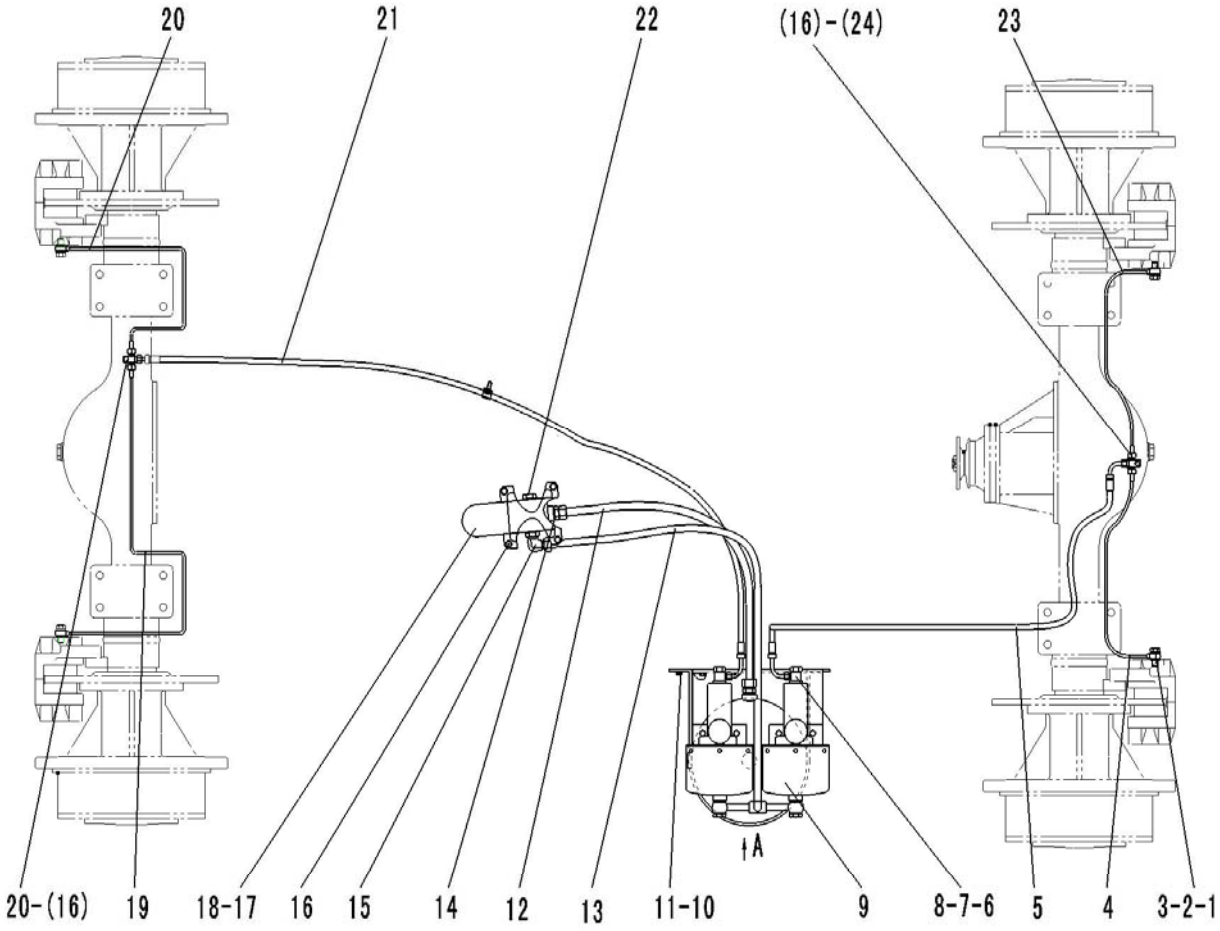


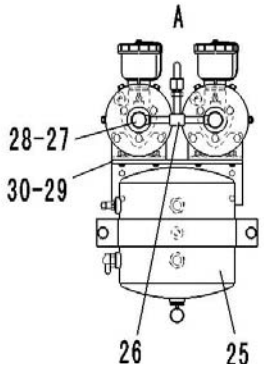

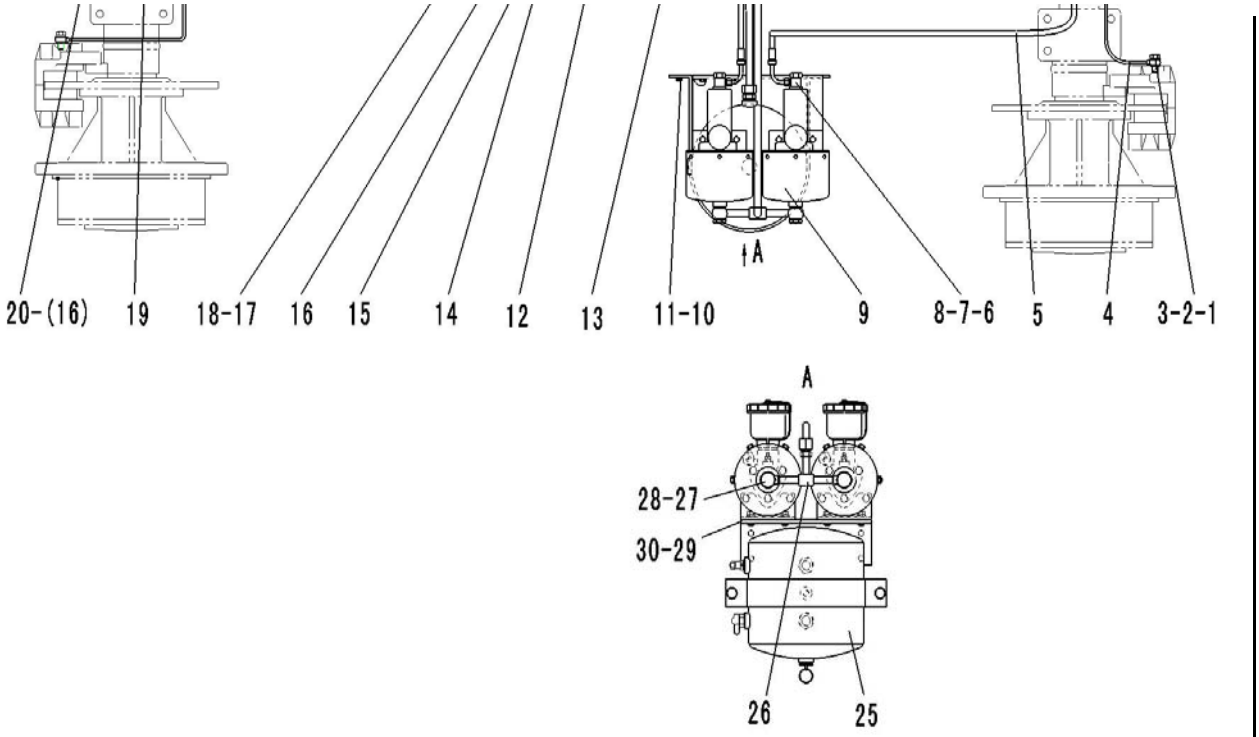


| | | | |
|---|---|---|---|
| 38.1 | 29220001251 | 制动器管接头 | CONNECTOR |
| 38.2 | 4030000552 | O形圈 | O-RING |
| 38.3 | 29220001261 | 制动器接头块 | ARRESTER CONNECTOR |
| 38.4 | 29220009401 | 桥油管 | OIL PIPE |
| 38.5 | 29220006891 | 制动油管 | OIL TUBE OF BARKE |
| 38.6 | 29220001231 | 加力泵管接头 | CONNECTOR |
| 38.7 | 4030000551 | O形圈 | O-RING |
| 38.8 | 29220001241 | 加力泵接头块 | JOINT BLOCK |
| 38.9 | 4120001985 | 空气加力泵SL20 | AIR BOOSTER SL20 |
| 38.10 | 4011000197 | 螺栓GB5783-M12*25EpZn-8.8 | BOLT GB5783-M12*30EpZn-8.8 |
| 38.11 | 4015000168 | 垫圈GB97.1-12EpZn-300HV | WASHER GB97.1-12EpZn-300HV |
| 38.12 | 4041001205 | 软管LGB144-105110 | HOSE LGB144-105110 |
| 38.13 | 4041001194 | 软管LGB145-205096 | PIPE LGB145-205096 |
| 38.14 | 29220001191 | 直接头 | CONNECTOR |
| 38.15 | 29220001201 | 弯接头总成 | JOINT |
| 38.16 | 4011000455 | 螺栓GB16674-M8*25EpZn-8.8 | BOLT GB16674-M8*25EpZn-8.8 |
| 38.17 | 4120001795 | 气制动阀LY60F | BRAKE CONTROL VALVE LY60F |
| 38.18 | 4130000521 | 制动灯开关YK209K | SWITCH OF BRAKE LIGHT |
| 38.19 | 29220009511 | 桥油管 | OIL PIPE |
| 38.20 | 29220009521 | 桥油管 | OIL PIPE |
| 38.21 | 4041000964 | 软管LGB153-202170 | TUBE LGB153-2021170 |
| 38.22 | 4030000055 | 螺塞JB1000-M22*1.5EpZn-35 | PLUG JB1000-M22*1.5-35 |
| 38.23 | 29220009391 | 桥油管 | OIL PIPE |
| 38.24 | 29220000131 | 三通接头 | CONNECTOR |
| 38.25 | 29220009441 | 储气罐 | AIR RESERVOIR |
| 38.26 | 29220006871 | 三通管 | TEE OF THE PIPE |
| 38.27 | 29010000041 | 螺栓 | BOLT |
| 38.28 | 29220000811 | 垫圈 | WASHER |
| 38.29 | 29220009431 | 加力泵支撑板 | PLATE |
| 38.30 | 4011000488 | 螺栓GB16674-M10*16EpZn-8.8 | BOLT GB16674-M10*16EpZn-8.8 |

| | | | |
|---|---|---|---|
| 39 | J2-2922000944 | 储气罐 | AIR RESERVOIR |

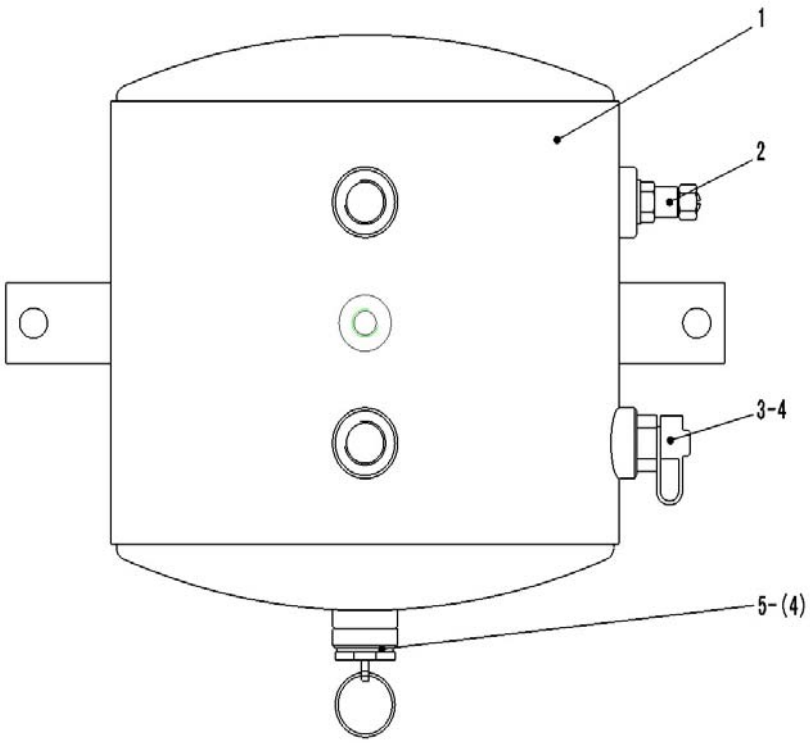


| | | | |
|---|---|---|---|
| 39.1 | 29220009461 | 罐体 | BODY |
| 39.2 | 4120000065 | 安全阀LG09-AQF | SAFETY VALVE |
| 39.3 | 4120000742 | 轮胎充气阀LG09-CQF | CHARGE VALVE FOR TIRE |
| 39.4 | 29220000811 | 垫圈 | WASHER |
| 39.5 | 4120000066 | 791手动放水阀LG09-FSF | 791-WATER DRAIN VALVE |

| | | | |
|---|---|---|---|
| 40 | J3-4120001985 | 加力泵(340201) | BRAKE BOOSTER |

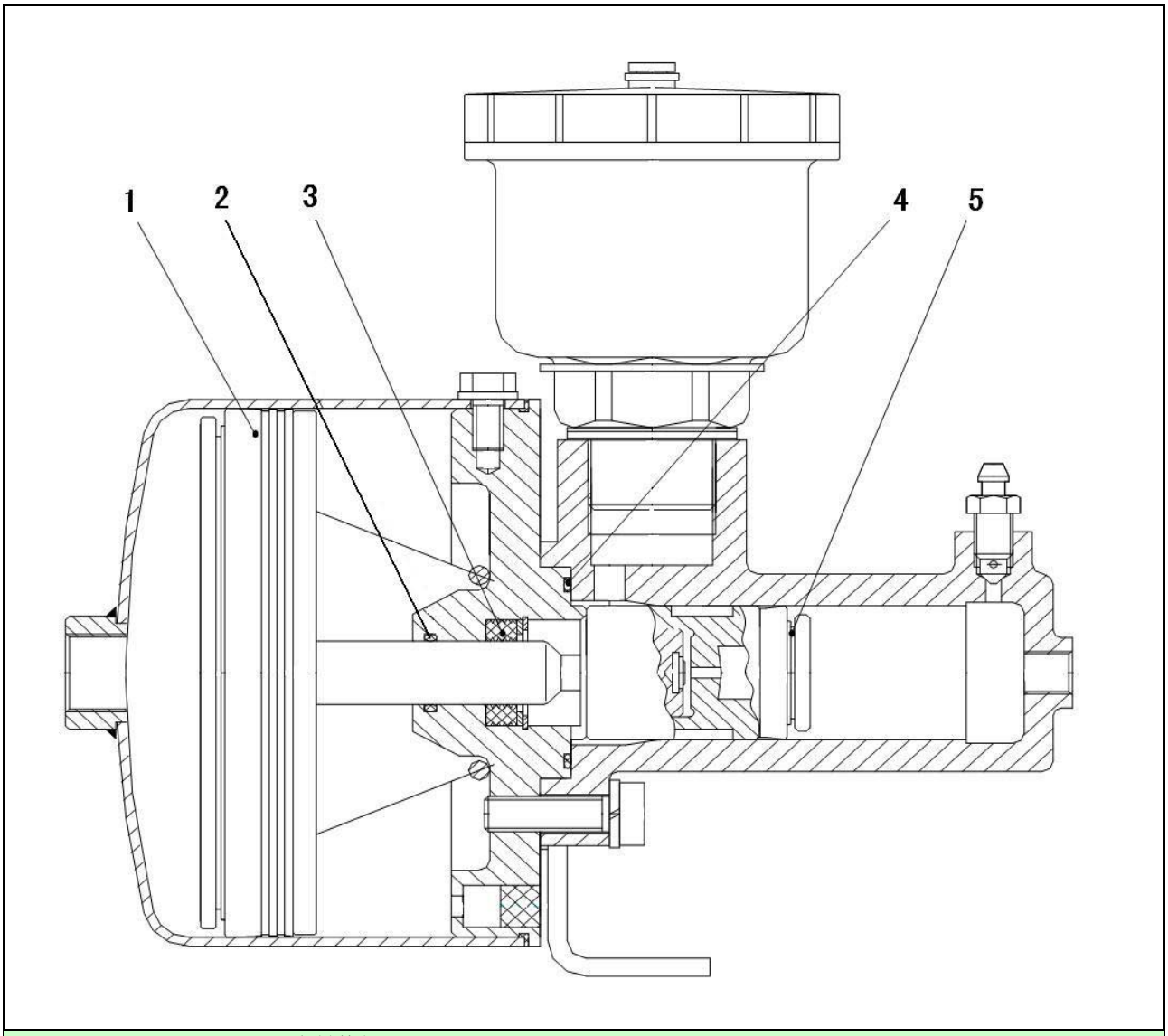


| | | | |
|---|---|---|---|
| 40.1 | 4120001985005 | 密封件包 | SEALING MEMBER AGGREGATE |
| 40.2 | 4120001985005 | 密封件包 | SEALING MEMBER AGGREGATE |
| 40.3 | 4120001985005 | 密封件包 | SEALING MEMBER AGGREGATE |
| 40.4 | 4120001985005 | 密封件包 | SEALING MEMBER AGGREGATE |
| 40.5 | 4120001985005 | 密封件包 | SEALING MEMBER AGGREGATE |

| | | | |
|---|---|---|---|
| 41 | J4-2923000806 | 驻车制动总成 | PARKING BRAKE ASSEMBLY |

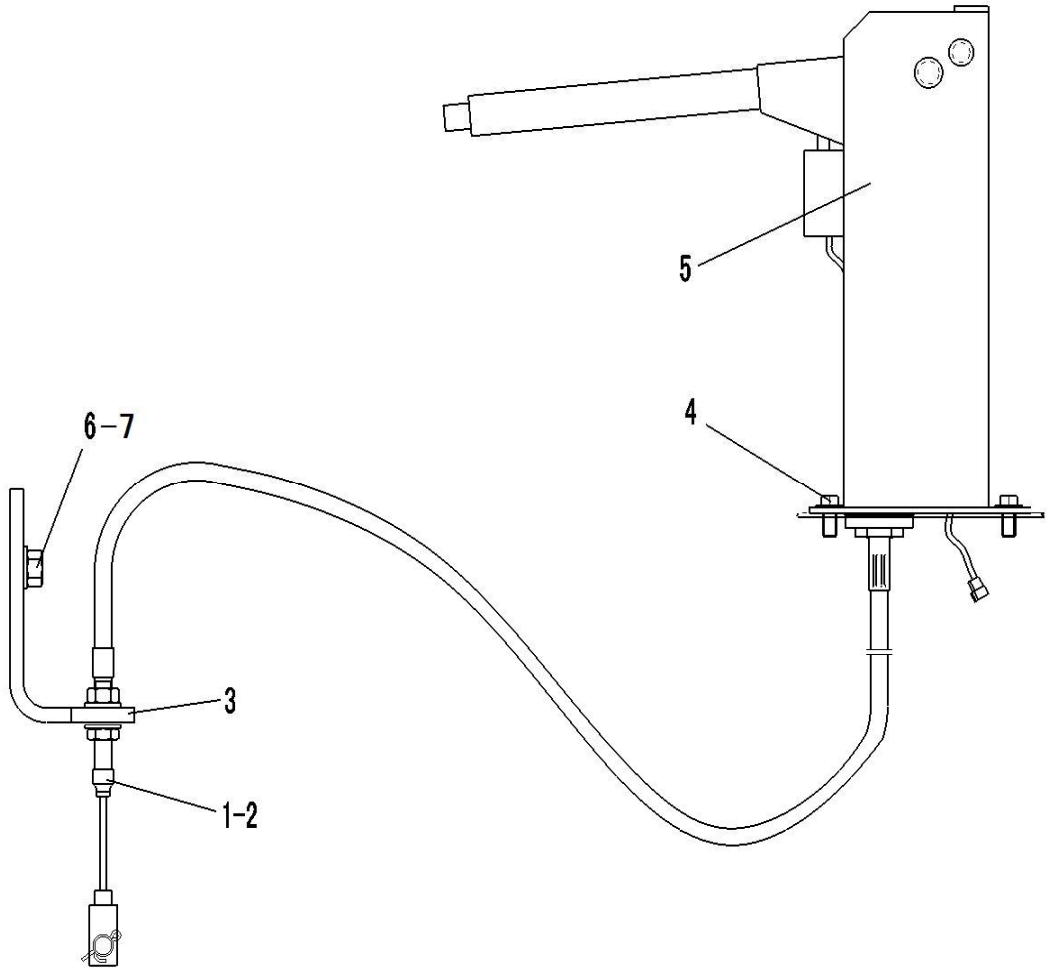


| | | | |
|---|---|---|---|
| 41.1 | 4016000145 | 销轴GB882-B10*28EpZn-35 | PIN GB882-B10*28EpZn-35 |
| 41.2 | 4016000183 | 开口销GB91-3.2*22EpZn-Q235A | PIN GB91-3.2*22EpZn-Q235A |
| 41.3 | 29230008051 | 软轴支撑板 | PLATE |
| 41.4 | 4011000455 | 螺栓GB16674-M8*25EpZn-8.8 | BOLT GB16674-M8*25EpZn-8.8 |
| 41.5 | 4120000988 | 操纵机构总成LG23-CZJG-918 | OPERATING GEAR LG23-CZJG-918 |
| 41.6 | 4011000273 | 螺栓GB5783-M20*50EpZn-8.8 | BOLT GB5783-M20*50EpZn－8.8 |
| 41.7 | 4015000176 | 垫圈GB97.1-20EpZn-300HV | WASHER GB97.1-20EpZn-300HV |

| | | | |
|---|---|---|---|
| 42 | K1-2925000873 | 前车架总成 | FRONT FRAME |

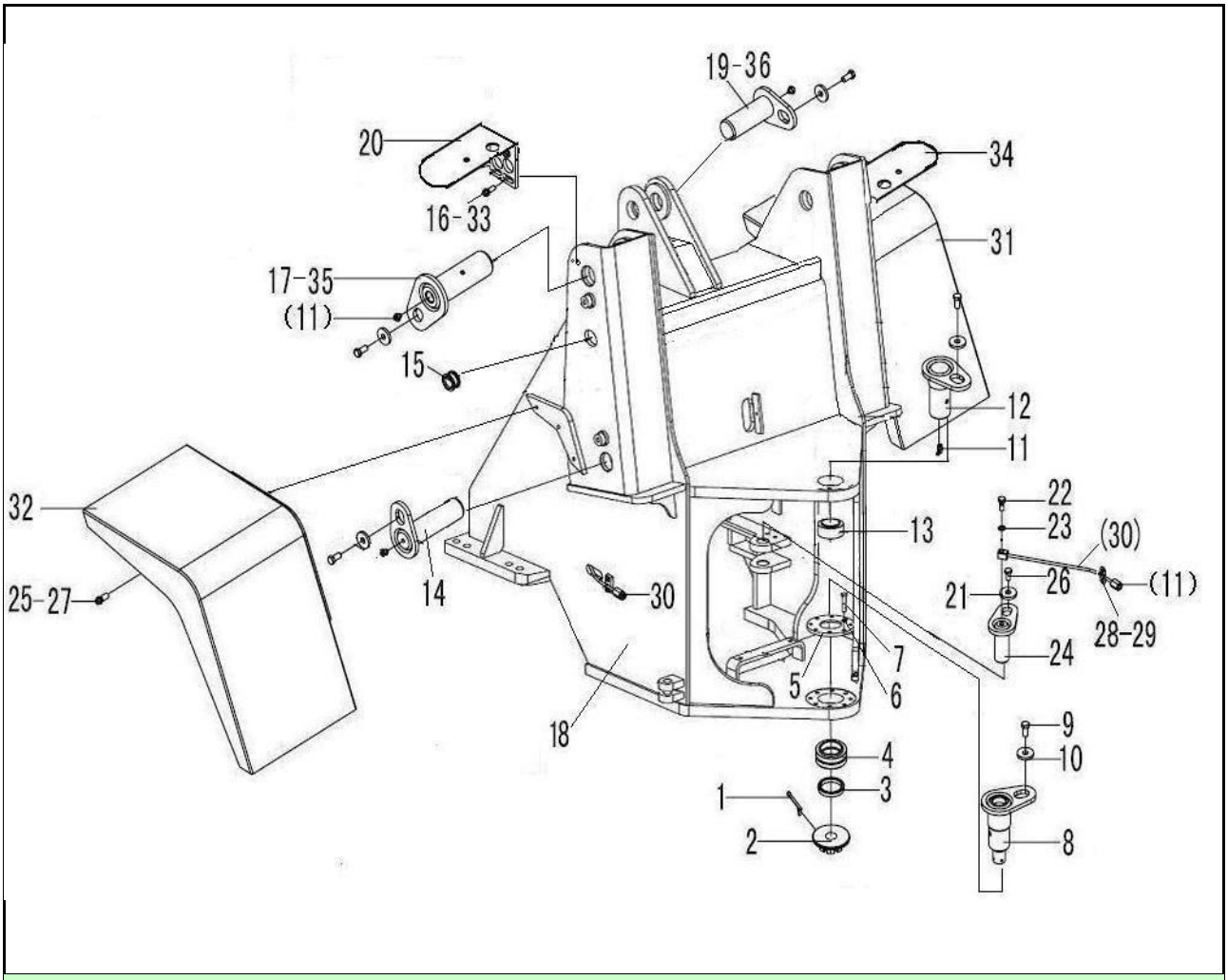


| | | | |
|---|---|---|---|
| 42.1 | 4016000113 | 开口销GB91-6.3*63EpZn-Q235A | SPLIT PIN GB91-6.3*63EpZn-Q235A |
| 42.2 | 29250001061 | 开槽螺母 | SLOTTED NUT |
| 42.3 | 29250008951 | 套 | EMPTY |
| 42.4 | 4021000050 | 关节轴承GB9163-GE50ES-2RS | BEARING GB9163-GE50ES-2RS |
| 42.5 | 29250008941 | 压盘 | EMPTY |
| 42.6 | 4015000025 | 垫圈GB93-10-65Mn | WASHER GB93-10-65Mn |
| 42.7 | 4011000084 | 螺栓GB5783-M10*30EpZn-8.8 | BOLT GB5783-M10*30EpZn-8.8 |
| 42.8 | 29250008911 | 下铰接销轴 | EMPTY |
| 42.9 | 4040000001 | 垫圈LGB001-12 | WASHER LGB001-12*45*6 |
| 42.10 | 4011000197 | 螺栓GB5783-M12*25EpZn-8.8 | BOLT GB5783-M12*30EpZn-8.8 |
| 42.11 | 4030000065 | 油杯JB7940.1-M10*1 | GREASE NIPPLE JB7940.1-M10*1 |
| 42.12 | 4043000408 | 销轴LGB301-50f8*75*130/2G-40Cr | PIN |
| 42.13 | 4043000409 | 轴套LGB302-50*42A2 | BUSHING |
| 42.14 | 4043000407 | 销轴LGB301-40*108*200G-40Cr | PIN |
| 42.15 | 29250001351 | 走线胶套 | RUBBER SLEEVE |
| 42.16 | 4011000080 | 螺栓GB5783-M10*16EpZn-8.8 | BOLT GB5783-M10*16EpZn-8.8 |
| 42.17 | 4043000406 | 销轴LGB301-50*108*200G-40Cr | PIN |
| 42.18 | 29240012241 | 前车架 | EMPTY |
| 42.19 | 4043000405 | 销轴LGB301-50*88*160G-40Cr | PIN |
| 42.20 | 29250008741 | 左前灯架 | EMPTY |
| 42.21 | 4040000008 | 垫圈LGB001-10 | WASHER LGB001-10 |
| 42.22 | 29250000291 | 通油螺栓 | BOLT |
| 42.23 | 29250000301 | 垫片 | SPACER |
| 42.24 | 29250008881 | 前转向销轴 | EMPTY |
| 42.25 | 4011000082 | 螺栓GB5783-M10*25EpZn-8.8 | BOLT GB5783-M10*25EpZn-8.8 |
| 42.26 | 4011000081 | 螺栓GB5783-M10*20EpZn-8.8 | BOLT GB5783-M10*20EpZn-8.8 |
| 42.27 | 4015000197 | 垫圈GB96.1-10EpZn-300HV | WASHER GB96.1-10EpZn-300HV |
| 42.28 | 29250000311 | 管夹 | CLIP |

| | | | |
|---|---|---|---|
| 42.29 | 4014000024 | 螺钉GB818-M6*10EpZn-4.8 | SCREW GB818-M6*10EpZn-4.8 |
| 42.30 | 29250008861 | 前转向销油管 | EMPTY |
| 42.31 | 29250008801 | 右前挡泥瓦 | EMPTY |
| 42.32 | 29250008791 | 左前挡泥瓦 | EMPTY |
| 42.33 | 4015000162 | 垫圈GB97.1-10EpZn-300HV | WASHER GB97.1-10EpZn-300HV |
| 42.34 | 29250008751 | 右前灯架 | EMPTY |
| 42.35 | 4043000032 | 垫片LGB303-50*90*1 | SPACER LGB303-50*90*1 |
| 42.36 | 4043000067 | 垫片LGB303-50*100*1 | SPACER LGB303-50*100*1 |

| 43 | K2-2927000902 | 后车架及附件 | REAR FRAME AND ACCESSORIES |
|---|---|---|---|

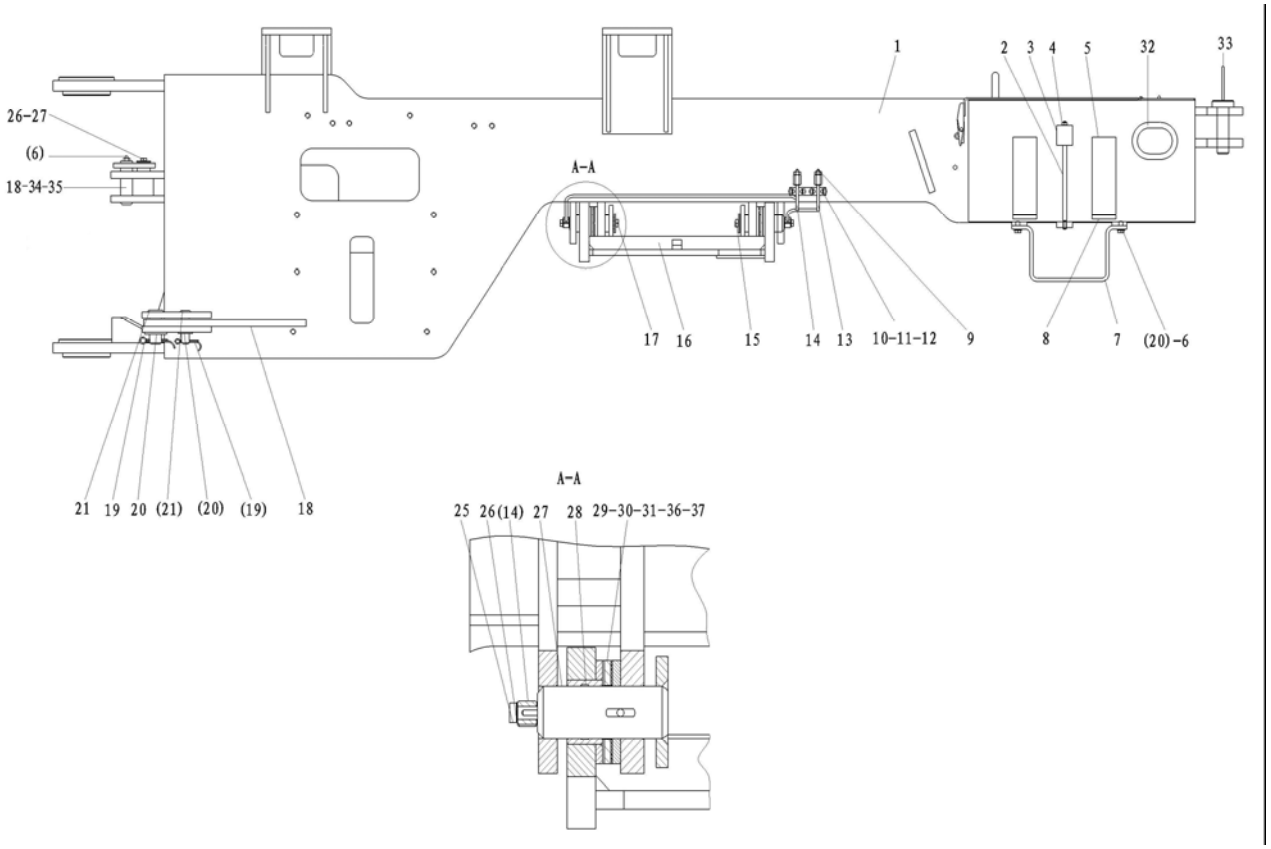


| | | | |
|---|---|---|---|
| 43.1 | 29260014471 | 后车架 | EMPTY |
| 43.2 | 28230002961 | 丝杆 | LEAD SCREW |
| 43.3 | 29270009191 | 压板 | PLATE |
| 43.4 | 4013000033 | 螺母GB6170-M8EpZn-8 | NUT GB6170-M8EpZn-8 |
| 43.5 | 28290000041 | 胶垫 | CUSHION |
| 43.6 | 4015000162 | 垫圈GB97.1-10EpZn-300HV | WASHER GB97.1-10EpZn-300HV |
| 43.7 | 29270009201 | 踏脚支架 | PLATE |
| 43.8 | 29340006821 | 下胶垫 | MAT OF PASTERN |
| 43.9 | 4030000065 | 油杯JB7940.1-M10*1 | GREASE NIPPLE JB7940.1-M10*1 |
| 43.10 | 29250000311 | 管夹 | CLIP |
| 43.11 | 4015000035 | 垫圈GB93-6-65Mn | WASHER GB93-6-65Mn |
| 43.12 | 4014000024 | 螺钉GB818-M6*10EpZn-4.8 | SCREW GB818-M6*10EpZn-4.8 |
| 43.13 | 29270009161 | 副车架后油管 | OSCILLATING FRAME BACK OIL PIPE |
| 43.14 | 29270009151 | 副车架前油管 | OSCILLATING FRAME FRONT OIL PIPE |
| 43.15 | 4011000087 | 螺栓GB5783-M12*20EpZn-8.8 | BOLT GB5783-M12*20EpZn-8.8 |
| 43.16 | 29270009031 | 副车架 | OSCILLATING FRAME |
| 43.17 | 4040000001 | 垫圈LGB001-12 | WASHER LGB001-12*45*6 |
| 43.18 | 29270009111 | 锁定杆 | STAY ROD |
| 43.19 | 4016000040 | 开口销GB91-6.3*50EpZn-Q235A | SPLINT PIN GB91-6.3*50EpZn-Q235A |
| 43.20 | 4015000119 | 垫圈GB97.1-30EpZn-300HV | WASHER GB97.1-30EpZn-300HV |
| 43.21 | 4016000136 | 销轴GB882-B30*75EpZn-35 | PIN GB882-B30*75EpZn-35 |
| 43.22 | 29270009121 | 转向销轴 | PIN |
| 43.23 | 4040000008 | 垫圈LGB001-10 | WASHER LGB001-10 |
| 43.24 | 4011000081 | 螺栓GB5783-M10*20EpZn-8.8 | BOLT GB5783-M10*20EpZn-8.8 |

| | | | |
|---|---|---|---|
| 43.25 | 29250000291 | 通油螺栓 | BOLT |
| 43.26 | 29250000301 | 垫片 | SPACER |
| 43.27 | 4043000143 | 销轴LGB301-40*70R*110-40Cr | PIN LGB301-40*70R*110-40Cr |
| 43.28 | 29270006741 | 套 | BUSH |
| 43.29 | 29270006751 | 调整垫片 | ADJUST SPACER |
| 43.30 | 29270006761 | 调整垫片 | ADJUST SPACER |
| 43.31 | 29270006771 | 调整垫片 | ADJUST SPACER |
| 43.32 | 29270009101 | 走线胶套 | RUBBER SLOEVE |
| 43.33 | 29270009211 | 牵引销 | TRACTIVE PIN |
| 43.34 | 4043000413 | 垫片LGB303-30*70*1 | WASHER LGB303-30*70*1 |
| 43.35 | 4043000414 | 垫片LGB303-30*70*2 | WASHER LGB303-30*70*2 |
| 43.36 | 29270009281 | 调整垫片 | ADJUSTING SHIM |
| 43.37 | 29270009291 | 调整垫片 | ADJUSTING SHIM |

| | | | |
|---|---|---|---|
| 44 | L1-2929000988 | 驾驶室总成 | CAB ASSEMBLY |

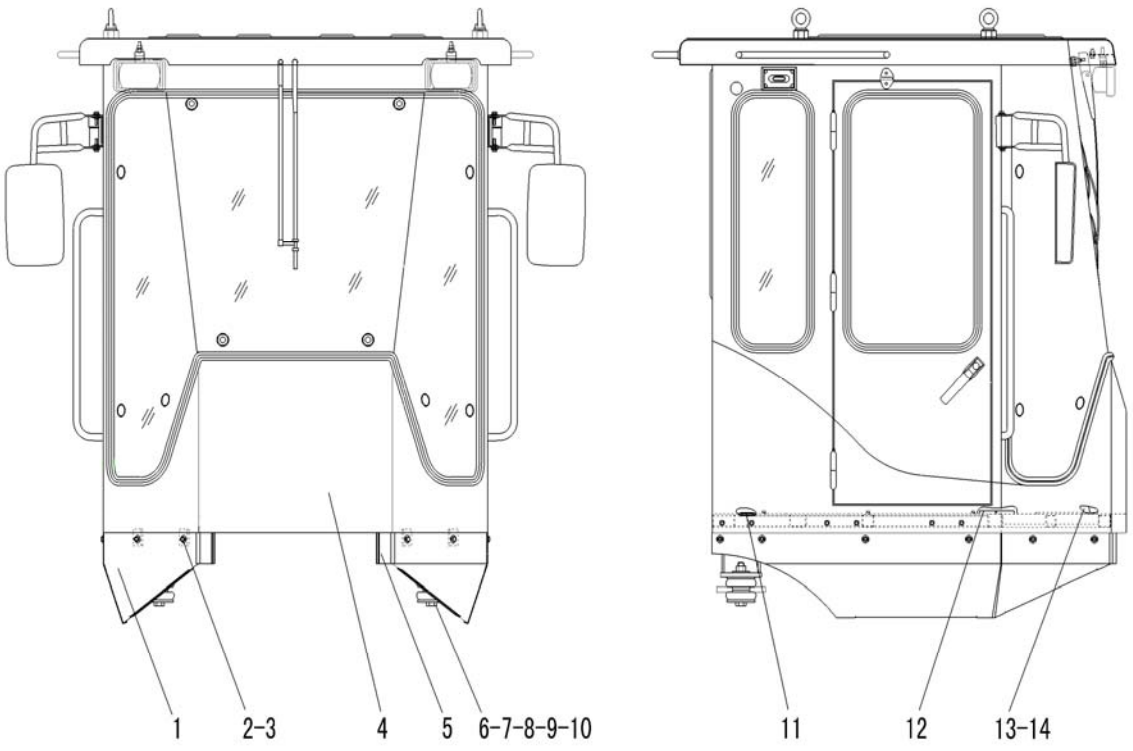

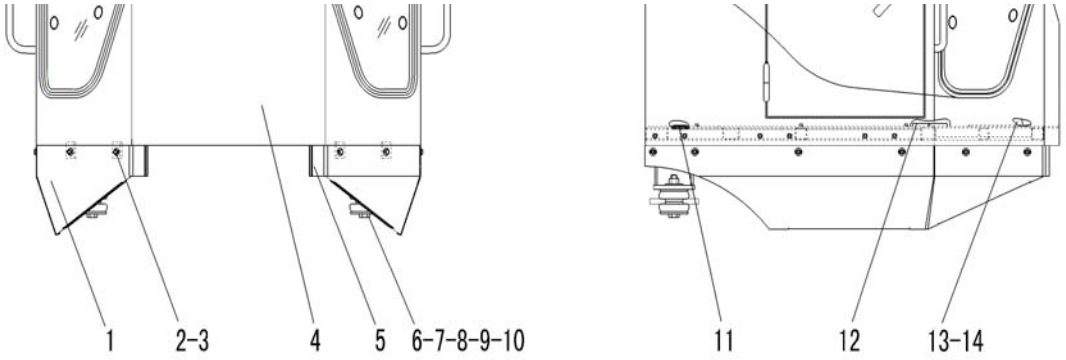


| | | | |
|---|---|---|---|
| 44.1 | 29290009911 | 右护板 | PLATE |
| 44.2 | 4015000256 | 垫圈GB96.1-8EpZn-300HV | WASHER GB96.1-8EpZn-300HV |
| 44.3 | 4011000102 | 螺栓GB5783-M8*16EpZn-8.8 | BOLT GB5783-M8*16EpZn-8.8 |
| 44.4 | 29290009891 | 驾驶室-LG916 | CAB |
| 44.5 | 29290009921 | 左护板 | PLATE |
| 44.6 | 4011000648 | 螺栓GB5782-M20*120EpZn-8.8 | BOLT GB5782-M20*120EpZn-8.8 |
| 44.7 | 4013000132 | 螺母GB889.1-M20EpZn-8 | NUT GB889.1-M20EpZn-8 |
| 44.8 | 4015000176 | 垫圈GB97.1-20EpZn-300HV | WASHER GB97.1-20EpZn-300HV |
| 44.9 | 4110000459 | 减震器CBB95-1 | SHOCK ABSORBER CBB95-1 |
| 44.10 | 29050000121 | 垫圈 | WASHER |
| 44.11 | 29310000091 | 橡胶套 | RUBBER |
| 44.12 | 29290009941 | 垫皮 | CUSHION |
| 44.13 | 4190000872 | 方向机罩 | DIRECTION HOOD |
| 44.14 | 29310011421 | 密封垫 | SEALING PLATE |
| 45 | L2-2929000989 | 驾驶室 | CAB |

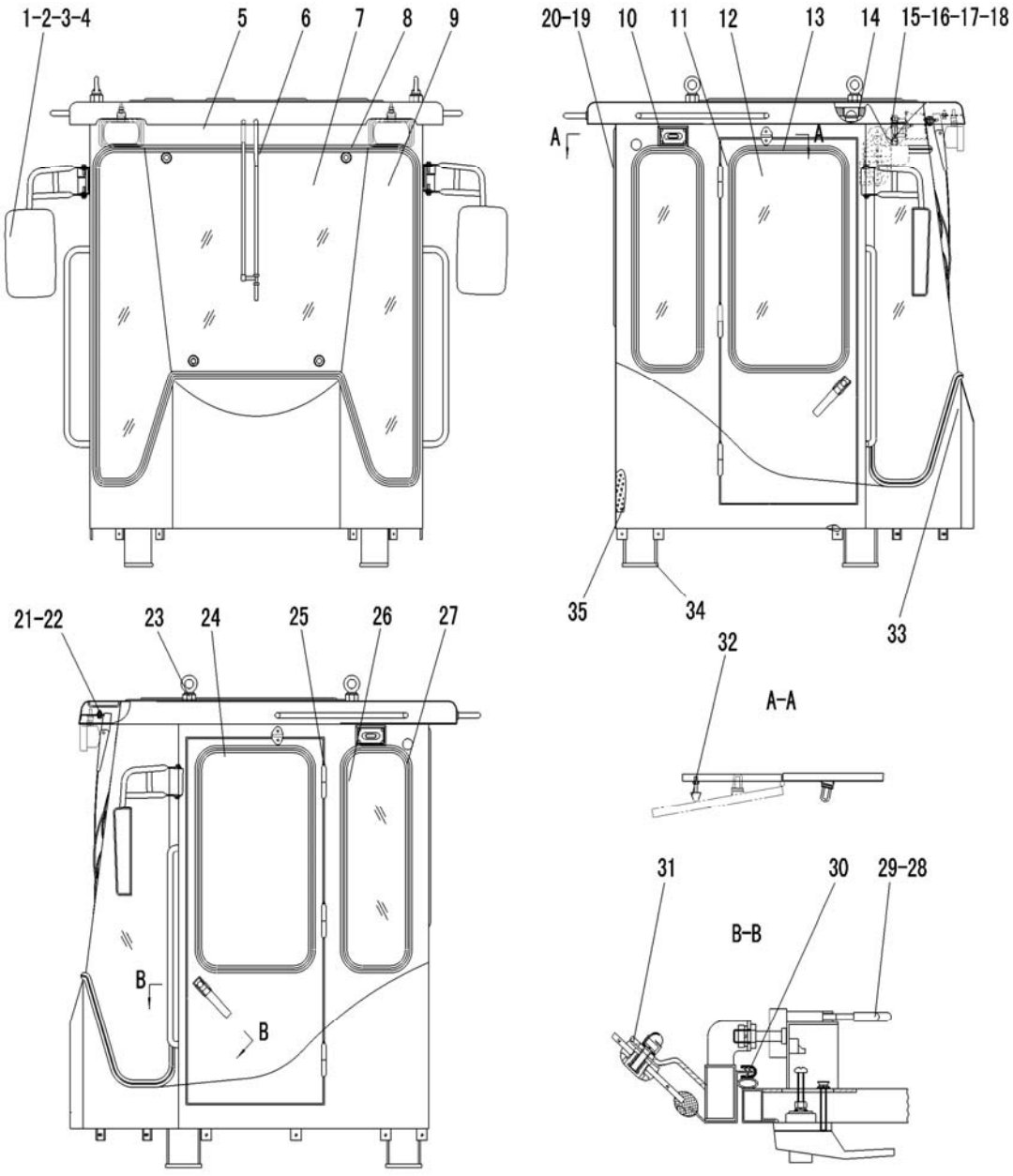


| | | | |
|---|---|---|---|
| 45.1 | 4190000575 | 倒车镜总成 | BACK UP GLASS GROUP |
| 45.2 | 4011000105 | 螺栓GB5783-M8*20EpZn-8.8 | BOLT GB5783-M8*20EpZn-8.8 |
| 45.3 | 4015000036 | 垫圈GB93-8-65Mn | WASHER GB93-8-65Mn |
| 45.4 | 4015000072 | 垫圈GB97.1-8EpZn-300HV | WASHER GB97.1-8EpZn-300HV |
| 45.5 | 4190001641 | 驾驶室框架LG916 | CAB GROUP LG916 |
| 45.6 | 4190000748 | LG933雨刮器总成 | LG933 WIPER BUTTON ASS'Y |
| 45.7 | 4190000726 | 前玻璃 | FRONT GLASS |
| 45.8 | 4190000727 | 前玻璃密封条 | FRONT GLASS SEAL |
| 45.9 | 4190000728 | 前侧玻璃 | FRONT SIDE GLASS |
| 45.10 | 4190000595 | 反锁NBS510 | COUNTER LOCK NBS510 |
| 45.11 | 4190001642 | 右门总成 | RIGHT DOOR ASSEMBLY |
| 45.12 | 4190000733 | 门玻璃 | DOOR GLASS |

| | | | |
|---|---|---|---|
| 45.13 | 4190000734 | 门玻璃密封条 | DOOR GLASS SEAL |
| 45.14 | 4190000578 | 顶灯 | DOME LAMP |
| 45.15 | 4190000608 | 电风扇 | ELECTRIC FAN |
| 45.16 | 4014000063 | 螺钉GB818-M6*25EpZn-4.8 | SCREW GB818-M6*25EpZn-4.8 |
| 45.17 | 4015000207 | 垫圈GB97.1-6EpZn-300HV | WASHER GB97.1-6EpZn-300HV |
| 45.18 | 4015000035 | 垫圈GB93-6-65Mn | WASHER GB93-6-65Mn |
| 45.19 | 4190000735 | 后玻璃 | REAR GLASS |
| 45.20 | 4190000736 | 后玻璃密封条 | REAR GLASS SEAL |
| 45.21 | 4190000968 | 灯过渡板 | TRANSTION PLATE OF LIGHT |
| 45.22 | 4011000474 | 螺栓GB16674-M10*25EpZn-8.8 | BOLT GB16674-M10*25EpZn-8.8 |
| 45.23 | 4014000028 | 螺钉GB825-M16EpZn-25 | SCREW GB825-M16EpZn-25 |
| 45.24 | 4190001667 | 左门总成 | LEFT DOOR ASSEMBLY |
| 45.25 | 4030000535 | 油杯JB7940.1-M6 | OIL CUP JB7940.1-M6 |
| 45.26 | 4190000738 | 后侧玻璃 | REAR SIDE GLASS |
| 45.27 | 4190000739 | 后侧玻璃密封条 | REAR SIDE GLASS SEAL |
| 45.28 | 4190000605 | 左开门锁 | LEFT LOCK |
| 45.29 | 4190000604 | 右开门锁 | RIGHT LOCK |
| 45.30 | 4190000742 | 933车门胶条 | RUBBER |
| 45.31 | 4190000952 | 玻璃吊点固定总成 | GLASS SUSPENSION CENTER FIXED GROUP |
| 45.32 | 4190000596 | 上门缓冲碰头 | CHECK OF UPPER GATE |
| 45.33 | 4190001639 | LG916驾驶室布线 | CAB WIRING LG916 |
| 45.34 | 29290009961 | 台架总成-LG916 | BENCH GROUP LG916 |
| 45.35 | 4190001643 | LG916内饰总成 | TRIM GROUP LG916 |

| | | | |
|---|---|---|---|
| 46 | L3-2930000762 | 座椅支架总成 | SEAT ASSEMBLY |

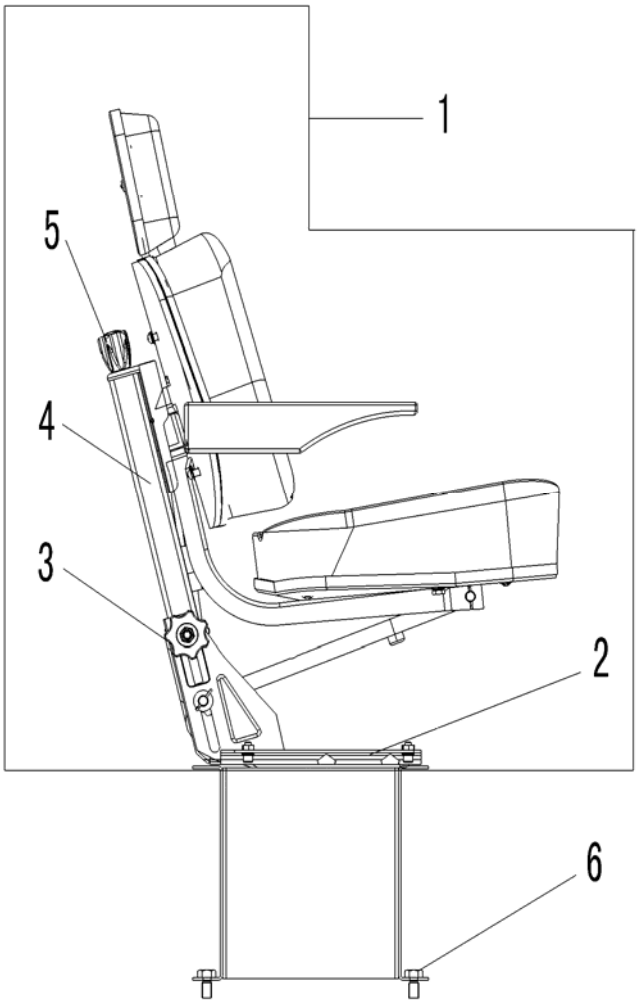


| | | | |
|---|---|---|---|
| 46.1 | 4190001054 | 座椅SN6000-1 | SEAT SN6000-1 |
| 46.2 | 4190001054002 | 滑轨部件XFZY-2-02 | SLIDE ASSEMBLY |
| 46.3 | 4190001054003 | 高度旋柄XGZY-1-3 | HEIGHT ROTARY HANDLE |
| 46.4 | 4190001054004 | 弹簧XGZY-1-1.0-1 | SPRING |
| 46.5 | 4190001054001 | 旋柄XGZY-1-1.0.2.1-1 | ROTARY HANDLE |
| 46.6 | 4011000458 | 螺栓GB16674-M8*20EpZn-8.8 | BOLT GB16674-M8*20Ep.Zn-8.8 |

| 47 | M1-2933002321 | 发动机罩总成 | ENGINE HOOD ASSEMBLY |
|---|---|---|---|

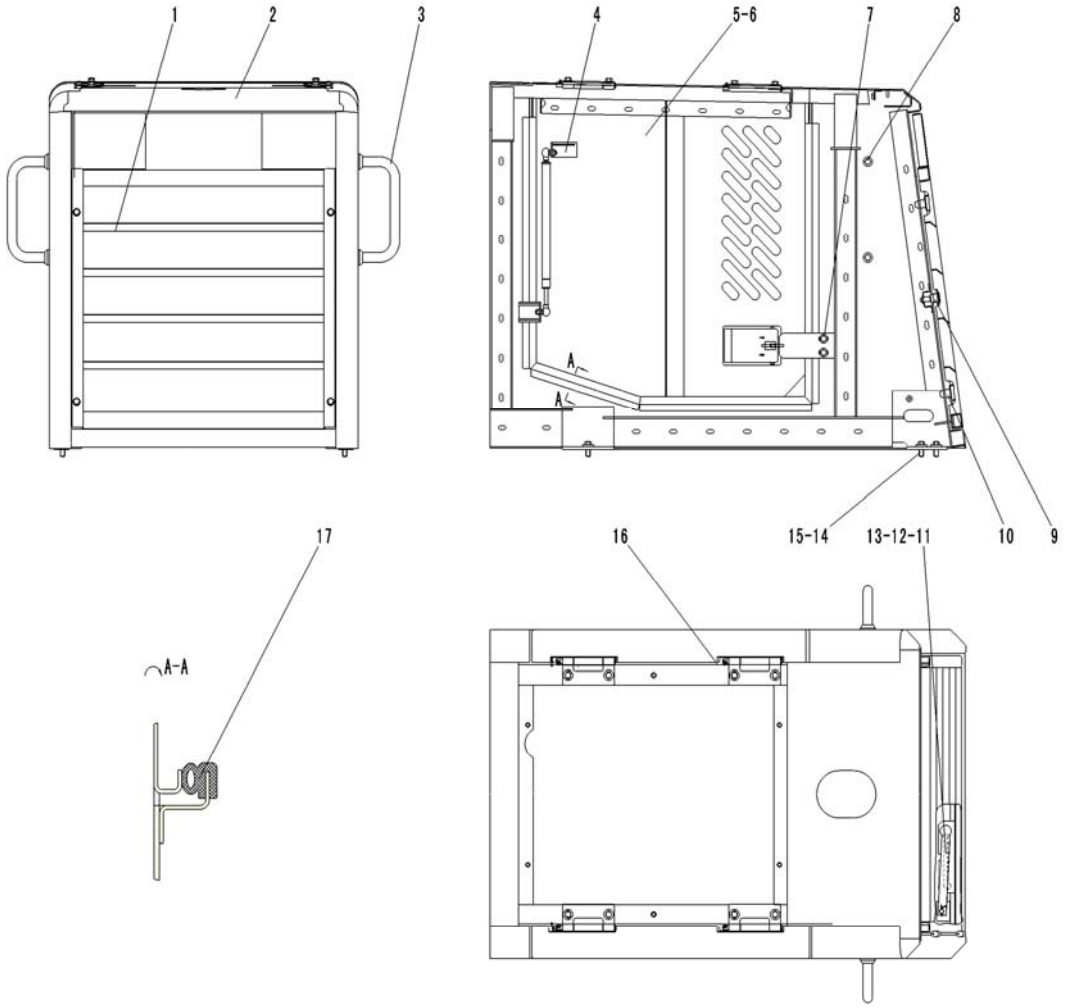


| | | | |
|---|---|---|---|
| 47.1 | 29330024261 | 窗棂 | EMPTY |
| 47.2 | 29330023232 | 发动机罩 | ENGINE HOOD |
| 47.3 | 29330011961 | 扶手 | ARM |
| 47.4 | 29330006541 | 气弹簧 | AIR SPRING |
| 47.5 | 29330019201 | 左侧门 | LEFT SIDE DOOR ASS’Y |
| 47.6 | 29330019211 | 右侧门 | RIGHT SIDE DOOR ASS’Y |
| 47.7 | 29330019391 | 后卡板 | REAR LOCK PLATE |
| 47.8 | 4011000560 | 螺栓GB16674-M12*25EpZn-8.8 | BOLT GB16674-M12*25EpZn-8.8 |
| 47.9 | 4190000916 | 门锁NBS5013A | LOCK NBS5013A |
| 47.10 | 29330022651 | 橡胶垫 | RUBBER SPACER |
| 47.11 | 4015000168 | 垫圈GB97.1-12EpZn-300HV | WASHER GB97.1-12EpZn-300HV |
| 47.12 | 4016000035 | 开口销GB91-4*20EpZn-Q235A | SPLIT PIN 4*20 |
| 47.13 | 29340009091 | 拉杆 | LINK ASSEM |
| 47.14 | 4011000089 | 螺栓GB5783-M12*30EpZn-8.8 | BOLT GB5783-M12*30EpZn-8.8 |
| 47.15 | 29330023151 | 垫圈12 | WASHER 12 |
| 47.16 | 4030000535 | 油杯JB7940.1-M6 | OIL CUP JB7940.1-M6 |
| 47.17 | 4030000748 | 卡子胶条GB7526-730 | CHIP BAR GB7526-730 |
| 47.18 | 29330023211 | 发动机罩 | ENGINE HOOD |

| 48 | M2-2934001731 | 覆盖件附件 | COVER SYSTEM |
|---|---|---|---|

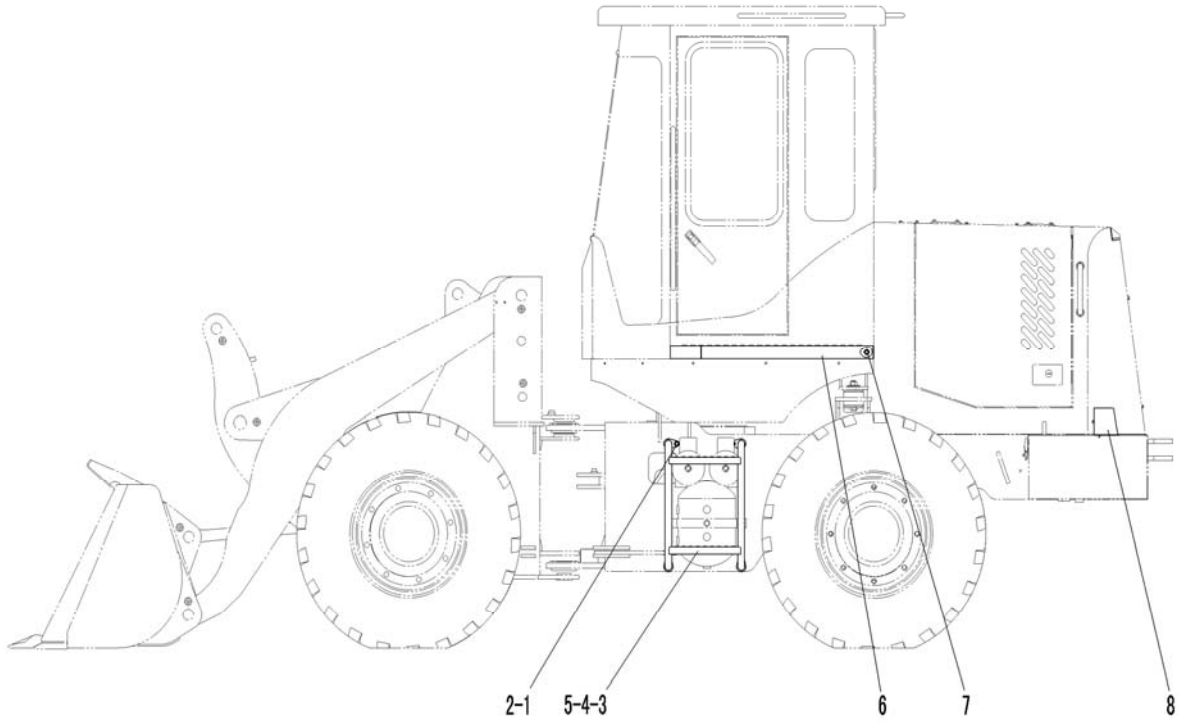


| | | | |
|---|---|---|---|
| 48.1 | 4015000168 | 垫圈GB97.1-12EpZn-300HV | WASHER GB97.1-12EpZn-300HV |
| 48.2 | 4011000756 | 螺栓GB5783-M12*25EpZn-10.9 | BOLT GB5783-M12*25EpZn-10.9 |
| 48.3 | 29340017321 | 左扶梯 | LEFT LADDER |
| 48.4 | 29340017361 | 右踏梯 | RIGHT LADDER |
| 48.5 | 29340017391 | 右台架 | RIGHT BENCH |
| 48.6 | 29340017451 | 左台架 | LEFT BENCH |
| 48.7 | 4011000479 | 螺栓GB16674-M12*30EpZn-8.8 | BOLT GB16674-M12*30EpZn-8.8 |
| 48.8 | 29340006952 | 后转向灯罩 | REAR STEERING LAMP HOOD |

| 49 | M4-2934000695 | 后灯罩 | REAR LAMP HOOD |
|---|---|---|---|

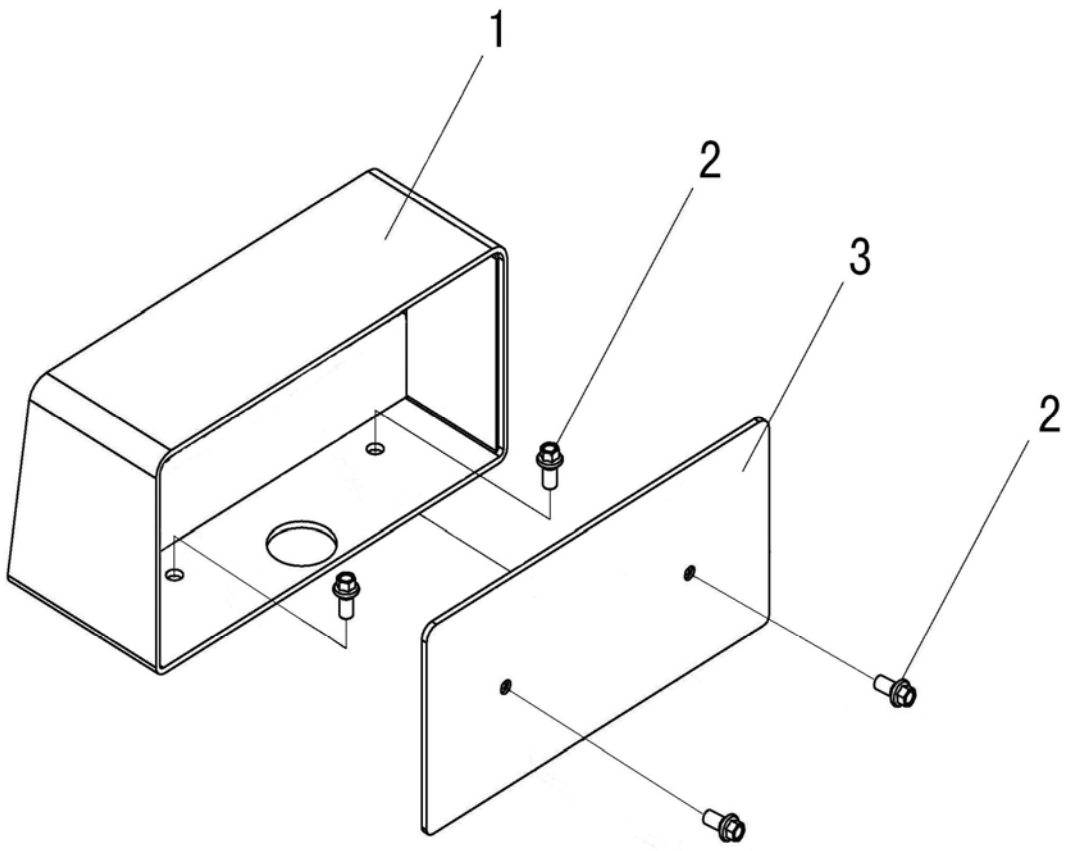


| | | | |
|---|---|---|---|
| 49.1 | 29340006972 | 灯架 | LAMP FRAME |
| 49.2 | 4011000461 | 螺栓GB16674-M8*16EpZn-8.8 | BOLT GB16674-M8*16EpZn-8.8 |
| 49.3 | 29340006961 | 后板 | REAR PLATE |

| 50 | M5-2936001169 | 标志与标识 | SIGN AND LOGO |
|---|---|---|---|

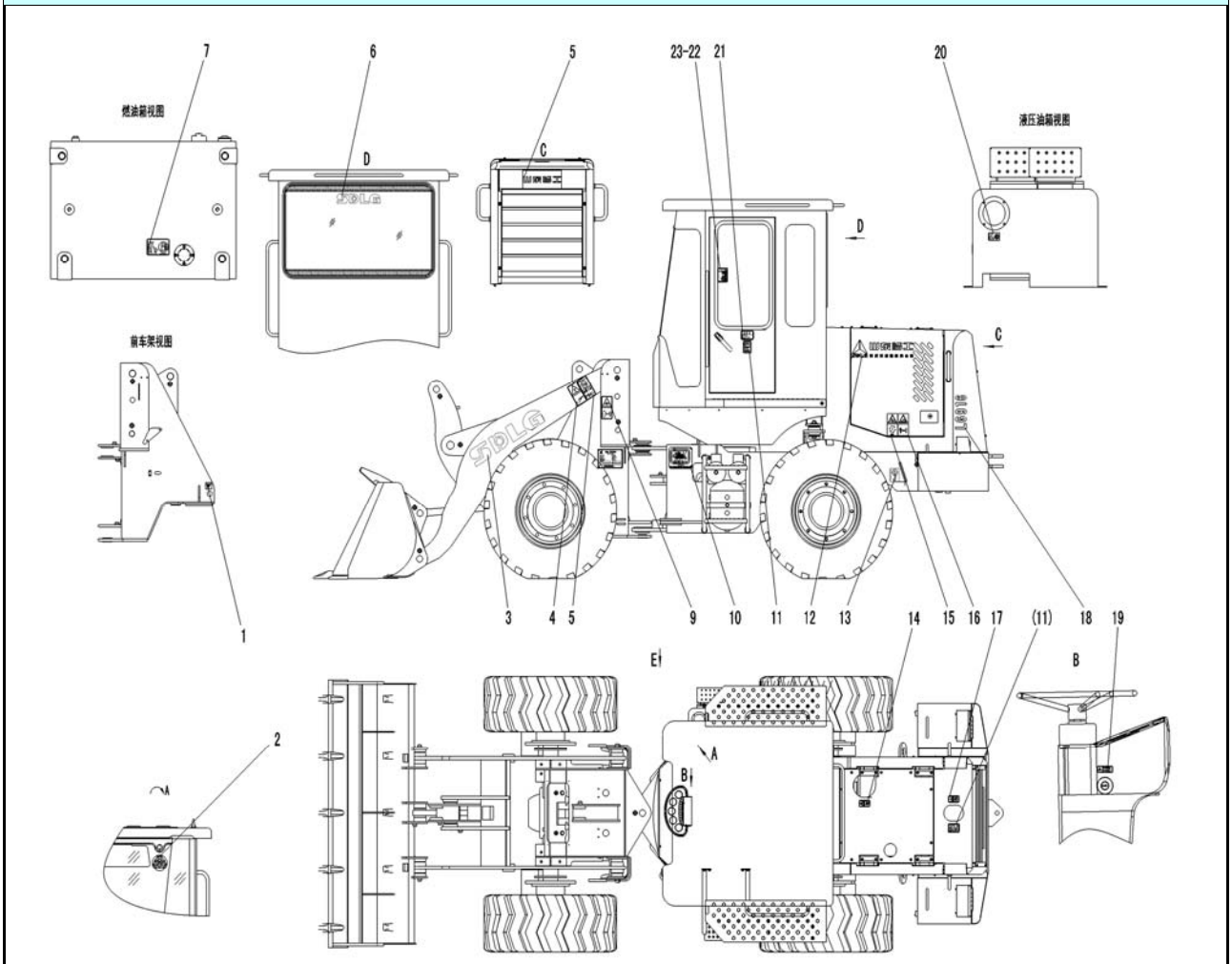


| | | | |
|---|---|---|---|
| 50.1 | 26360000911 | 吊耳标志 | MARK-LIFTING LUG |
| 50.2 | 29360010061 | 中国名牌标志 | CHINA FAMOUS BRAND LOGO |
| 50.3 | 29360011721 | SDLG-650 | SDLG-650 |
| 50.4 | 29360008741 | 提升臂位置安全标志 | ARM POSITION TO ENHANCE SAFETY SIGNS |
| 50.5 | 29360010171 | 动臂危险标志 | DANGEROUS SIGNS BOOM |
| 50.6 | 29360012071 | 山东临工字体 | SDLG FONTS |
| 50.7 | 29360011841 | SGLG-350（网孔） | SGLG-350（LOOP） |
| 50.8 | 29360009201 | 燃油箱标志 | FUEL TANK MARKING |
| 50.9 | 29360008781 | 铰接转向图形标志 | GRAPHIC SIGNS ARTICULATED STEERING |
| 50.10 | 29360009511 | 润滑示意图 | LUBRICATION DIAGRAM |
| 50.11 | 4044000021 | 防冻液标志LGB401-F04 | MARK-ANTIFREEZE-LGB401-F04 |
| 50.12 | 29360012051 | 山东临工图形文字标志 | LINGONG GRAPHIC TEXT LOGO |
| 50.13 | 4044000018 | 起吊标志LGB401-F01 | MARK-SLINGING-LGB401-F01 |
| 50.14 | 28310002241 | 高温警告标志 | HIGH TEMPERATURE WARNING SIGNS |
| 50.15 | 4044000015 | 接触机器警示标志LGB401-D03 | MARK-LGB401-D03 |
| 50.16 | 4044000014 | 安全距离警示标志LGB401-D02 | SAFETY DISTANCE SIGNS |
| 50.17 | 26360000121 | 高温油和水的注意标志 | SAFETY LOGO |
| 50.18 | 29360011781 | LG916机型标识 | MODEL LG916 |
| 50.19 | 4044000016 | 启动开关警示标志LGB401-D04 | MARK-STARTING SWITCH-LGB401-D04 |
| 50.20 | 29360009171 | 液压油箱标志 | HYDRAULIC TANK LOGO |
| 50.21 | 4044000010 | 驾驶室门注意标志LGB401-C01 | MARK-LGB401-C01 |
| 50.22 | 29360010751 | 操作注意标志 | OPERATION OF ATTENTION TO SIGNS |
| 50.23 | 29360010761 | 行驶注意标志 | MOVING ATTENTION TO SIGNS |
| 50.24 | 29360011691 | 标志与标识 | SIGN AND LOGO |
| 50.25 | 2936001169001 | 安全标识包 | SAFETY LOGO PACKAGE |

| 51 | N3-4190000160 | 暖风机 | WARMING MACHING |
|---|---|---|---|

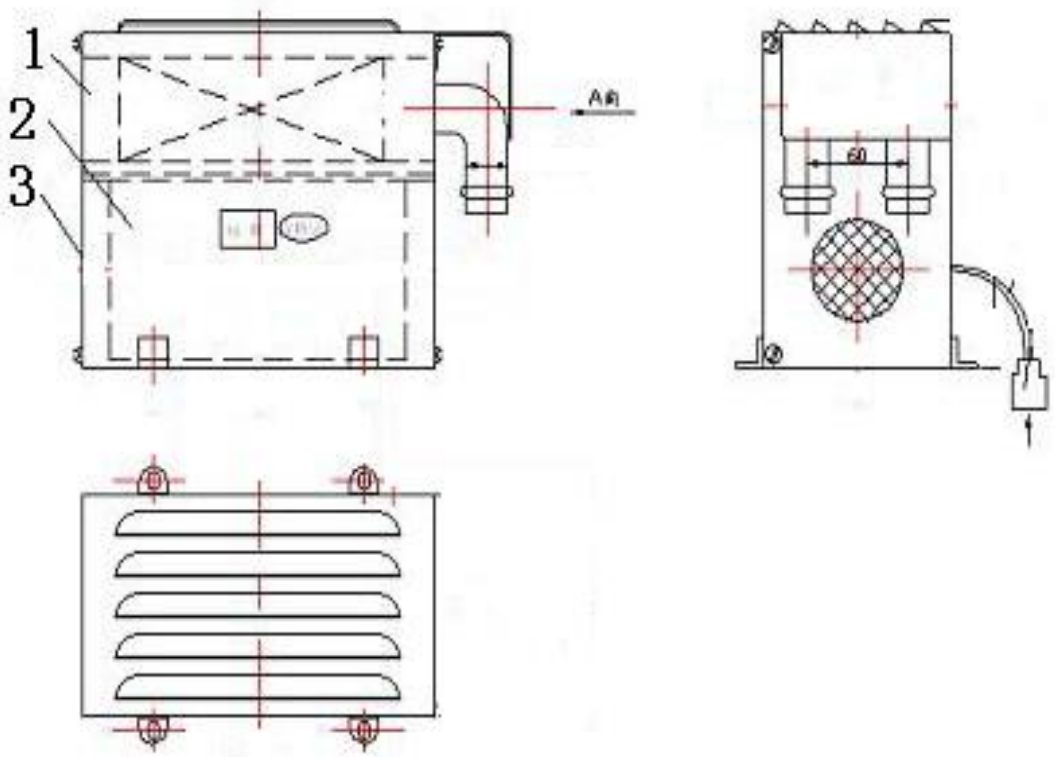


| | | | |
|---|---|---|---|
| 51.1 | 4190000160001 | 电机风道总成8101030 | MOTOR DUCT ASSEMBLY 8101030 |
| 51.2 | 4190000160002 | 散热器总成1302010 | RADIATOR ASSEMBLY 1302010 |
| 51.3 | 4190000160003 | 壳体总成8101010 | SHELL ASSEMBLY 8101010 |

| 52 | 01-2937001476 | 电气系统 | ELECTRIC SYSTEM |
|---|---|---|---|

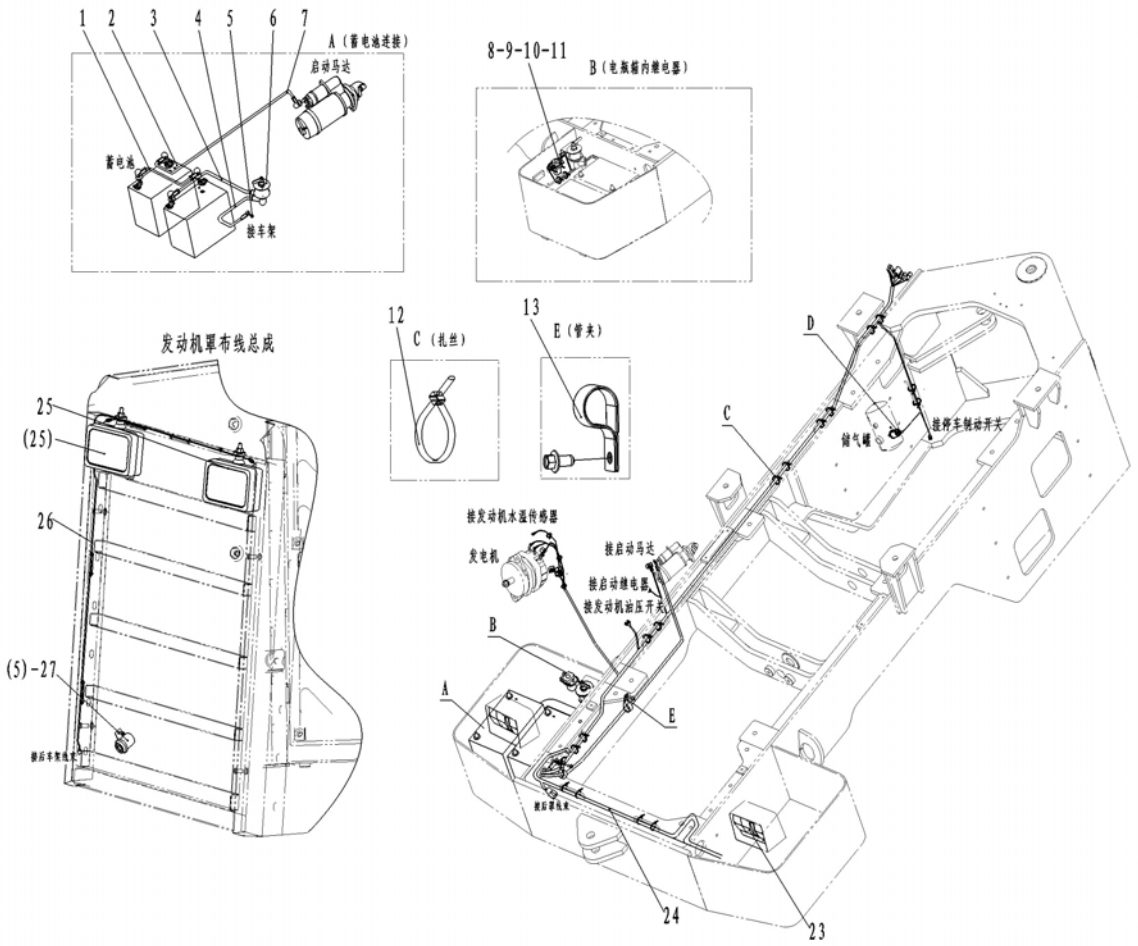


| | | | |
|---|---|---|---|
| 52.1 | 29370013101 | 蓄电池串联线 | BATTERY CABLE |
| 52.2 | 4130000045 | 蓄电池6-QW-70 | BATTERY 6-QW-70 |
| 52.3 | 29370009341 | 蓄电池接地线 | EARTH WIRE |
| 52.4 | 29370014391 | 电瓶线P50*600 | BATTERY WIRE P50*600 |
| 52.5 | 4011000461 | 螺栓GB16674-M8*16EpZn-8.8 | BOLT GB16674-M8*16EpZn-8.8 |
| 52.6 | 4130000427 | 电源开关K01K18-A | POWER SWITCH K01K18-A |
| 52.7 | 29370004061 | 蓄电池串联线 | STORAGE BATTERY WIRE |
| 52.8 | 4130000962 | 接触器JCC100/1C24・48 | CONTACTER JCC100/1C24・48 |
| 52.9 | 4014000021 | 螺钉GB818-M4*12EpZn-4.8 | SCREW GB818-M4*12EpZn-4.8 |
| 52.10 | 4015000135 | 垫圈GB97.1-4EpZn-300HV | WASHER GB97.1-4EpZn-300HV |
| 52.11 | 4015000033 | 垫圈GB93-4-65Mn | WASHER GB93-4-65Mn |
| 52.12 | 4190000020 | 扎丝LG13-ZS4*250 | CLIP LG13-ZS4*250 |
| 52.13 | 26370001921 | 管夹 | CLAMP |
| 52.14 | 4130000009 | 双音盆形喇叭DL125-24V | ELECTRIC HORN DL125-24V |
| 52.15 | 4011000152 | 螺栓GB16674-M6*10EpZn-8.8 | BOLT GB16674-M6*10EpZn-8.8 |
| 52.16 | 4130000293 | 前左组合灯SP-003L | LEFT FRONT HEAD LAMP |
| 52.17 | 29370014791 | 前车架线束 | FRONT FRAME HARNESS |
| 52.18 | 4130000294 | 前右组合灯SP-003R | RIGHT FRONT HEAD LAMP |

| | | | |
|---|---|---|---|
| 52.19 | 4130000850 | 启动继电器JD23A-1 | STARTUP RELAY JD23A-1 |
| 52.20 | 29370014821 | 继电器安装板 | RELAY MOUNTING CARD |
| 52.21 | 4130000412 | 压力开关PS31-FS0.8BARR | PRESSURE SWITCH PS31-FS0.8BARR |
| 52.22 | 4130000278 | 隔膜式压力开关310-LGK | DISSEPIMENT PRESSURE SWITCH310-LGK |
| 52.23 | 4130000574 | 后尾灯XH8-124V | REAR LAMP XH8-124V |
| 52.24 | 29370014781 | 后车架线束 | REAR BODY WIRING HARNESS |
| 52.25 | 4130000270 | 后大灯SP-1031 | REAR LARGE LAMP SP-1031 |
| 52.26 | 29370014801 | 后罩线束 | REAR HOOD HARNESS |
| 52.27 | 4130000031 | 倒车蜂鸣器FM211 | ANNUNCIATOR FM211 |
| 52.28 | 4130000797 | 前照灯QZD-2 | FORWARD LIGHTING QZD-2 |
| 52.29 | 29370012842 | 仪表盘ZL2-235A5 | PANEL ZL2-235A5 |
| 52.30 | 29050012271 | 变速压力油管 | OIL TUBE OF TRASMISSION PRESSURE |
| 52.31 | 4130000290 | 转向开关JK802A | TURNING SWITCH |
| 52.32 | 29370013541 | 支承板 | SUPPORTING PLATE |
| 52.33 | 29370013551 | 管夹 | PIPE NIP |
| 52.34 | 29370013561 | U型螺栓 | U-BOLT |
| 52.35 | 4013000028 | 螺母GB6170-M6EpZn-8 | NUT GB6170-M6EpZn-8 |
| 52.36 | 4015000207 | 垫圈GB97.1-6EpZn-300HV | WASHER GB97.1-6EpZn-300HV |
| 52.37 | 4015000035 | 垫圈GB93-6-65Mn | WASHER GB93-6-65Mn |
| 52.38 | 29370014771 | 仪表台线束 | PANEL HARNESS |

| 53 | 02-2937001284 | 仪表盘 | PANEL ASSEMBLY |
|---|---|---|---|

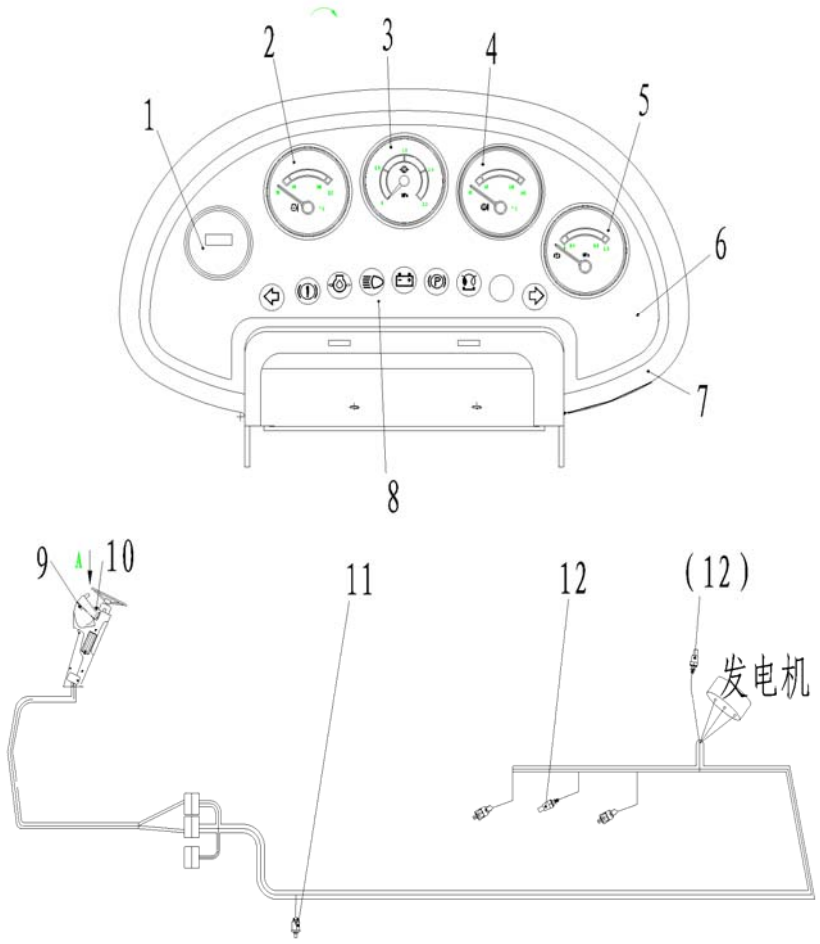


| | | | |
|---|---|---|---|
| 53.1 | 4130000956 | 计时表R8865A-3 | WORKING HOUR METER R8865A-3 |
| 53.2 | 4130000215 | 水温表SW242－2A | ENGINE WATER TEMPERATURE GAUGE SW242-2A |
| 53.3 | 4130000216 | 变速箱压力表YY04-04 | GEARBOX OIL PRESSURE GAUGE YY04-04 |
| 53.4 | 4130000217 | 变矩器油温表YW242-2B | TORQUE CONVERTER OIL TEMPERATURE GAUGE |
| 53.5 | 4130000218 | 制动气压表YY242-2L | BRAKE AIR PRESSURE GAUGE YY242-2L |
| 53.6 | 4130000467 | 仪表盘面板ZL2-235H2-1 | PANEL ZL2-235H2-1 |
| 53.7 | 4130000466 | 仪表盘壳体ZL2-220-101 | PANEL SHELL ZL2-220-101 |
| 53.8 | 4130000537 | 指示灯组件ZL2-235A-008 | INDICATOR LAMP ASSEMBLY ZL2-235A-008 |
| 53.9 | 4130000022 | 闪光器SG252 | FLASH RELAY SG252 |
| 53.10 | 4130000208 | 电锁08086－10000 | STARTING SWITCH 08086-10000 |
| 53.11 | 4130000308 | 制动气压传感器YG901C3 | BRAKE AIR PRESSURE SENSOR YG901C3 |
| 53.12 | 4130000202 | 温度传感器WDG1371 | ENGINE WATER TEMPERATURE SENSOR WDG1371 |