RUTHZIL TRATOR COMERCIAL DE PEÇAS LTDA 11 97083-6812 ROLANDO

LG918 - MOTOR

YC4D80-T20（D7QGF-T1）ENGINE PARTS CATALOG

2017

SHANDONG LINGONG CONSTRUCTION MACHINERY CO.,LTD.

Spare parts and services

For the owner of the machines of SDLG,only the spare parts and services of SDLG can make your machine to better maintain the original features.

Only SDLG is able to provide you with the perfect match of pure quality spare parts for your machine and knowledge of professional maintenance staff.Only in this way it can ensure sustainable high productivity and longer service life.

YC4D80-T20（D7QGF-T1） ENGINE PARTS CATALOG

BOM RELEASE DATE:2016-11-22 10:16:35 FILE CREATION DATE:2017-12-19 14:15:58

SHANDONG LINGONG CONSTRUCTION MACHINERY CO.,LTD.

Add：Lingong Industry Park,Economic &Technological Development Area,Linyi,Shandong 276023,P.R.China

Tel：86-0539-8785624/86-0531-66590955

Fax：86-0539-8785618/86-0531-66590959

Web：www.sdlg.cn www.lcm.cn

FOREWORD

This parts catalog of YC4D80-T20（D7QGF-T1） engine is made for the convenience of users to use, repair and maintain the machine, which can be refered in the process of using. It can also help the users to be familiar with the structure and assembly relation of the machine. Parts of the engine are showed in details in its structure handbook, which are no longer contained in the catalog.

The catalog identifies drawings and assembly relations of different parts according to the system.Components which can not be taken apart, such as welding parts or riveted assemblies,are marked only by their code without the list of their consisting parts .The list in the catalog is arranged in Chinese and English.

This catalog is based on the YC4D80-T20（D7QGF-T1） standard product, which can be a reference for the other nonstandard products, for more information, please consult SDLG, the local dealer or LinGong website. With the advancement of technology, we will keep on improving the product, so some content in the catalog may be inconsistent with the future products, which will not notice the users. When ordering the spare parts, please be kindly inform us the manufacturing date and serial number of the machine.

THE COMPILER
2017.12

CONTENTS

A. Diesel engine system

Engine bracket
A5-4110000560 10

Cylinder block assembly
A6-4110001549 12

Timing gear casing assembly
A7-4110001549 16

Cylinder head assembly
A8-4110001549 20

Cylinder piston assembly
A9-4110000560 22

Vibration damper
A10-4110001549 24

Camshaft
A11-4110001549 26

Tappet
A12-4110001549 28

Air inlet pipe assembly
A13-4110001549 30

Exhaust pipe
A14-4110000560 32

Oil pan
A15-4110000560 34

Oil strainer assembly
A16-4110001549 36

Oil pump assembly
A17-4110000560 38

Oil filter assembly

A18-4110001549	40
Oil cooler assembly	
A19-4110000560	42
Oil dipstick	
A20-4110000560	44
Fuel supply system	
A21-4110001549	46
Fuel filter	
A22-4110001549	48
Fuel pump assembly	
A24-4110001549	50
Fuel injection nozzle	
A25-4110000560	52
Fuel pump assembly	
A26-4110001549	54
Muffler	
A27-4110001549	56
Water pipe assembly	
A28-4110000560	58
Drain valve	
A29-4110001549	60
Thermostat kit	
A30-4110001549	62
Water pump assembly	
A31-4110001549	64
Radiator fan assembly	
A32-4110001549	66
Power take-off	
A33-4110000560	68
Air compressor	

A34-4110001549 70
Alternator assembly
A35-4110001549 72
Starter motor
A36-4110001549 74
Plug assembly
A37-4110001549 76
Name plate
A38-4110001549 78
Engine service kit
A100-4110001571 80
Cylinder head kit
A12-4110001027014 82
Rocker arm kit
A13-4110001027015 84
Cylinder liner kit
A14-4110001027016 86
Piston kit
A101-4110001571067 88
Camshaft bearing kit
A16-4110001027018 90
Connecting rod kit
A102-4110001571068 92
Main bearing kit
A18-4110001027020 94
Nozzle
A20-4110001027022 96
Sealing kit
A21-4110001027023 98

A
DIESEL ENGINE SYSTEM



SHANDONG LINGONG CONSTRUCTION MACHINERY CO.,LTD.

Engine bracket

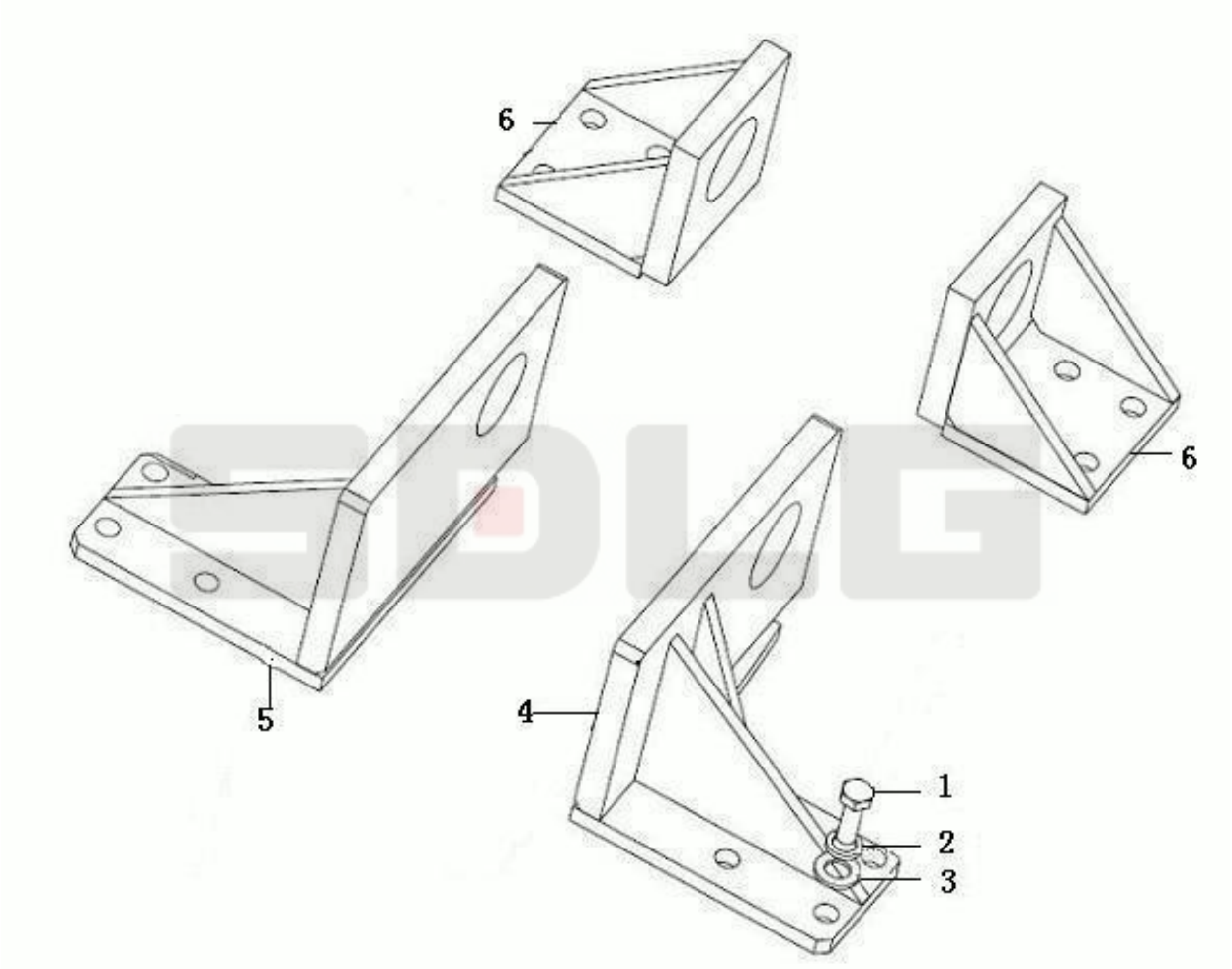

Key	Part No.	Description	Spare parts Y/N	Qty	Remarks
1	4110000560009	Screw	Y	16	
2	4110000560320	Washer	Y	16	
3	4110000560299	Washer	Y	16	
4	4110000560351	Bracket	Y	1	
5	4110000560350	Bracket	Y	1	
6	4110000560349	Bracket	Y	2	

Cylinder block assembly

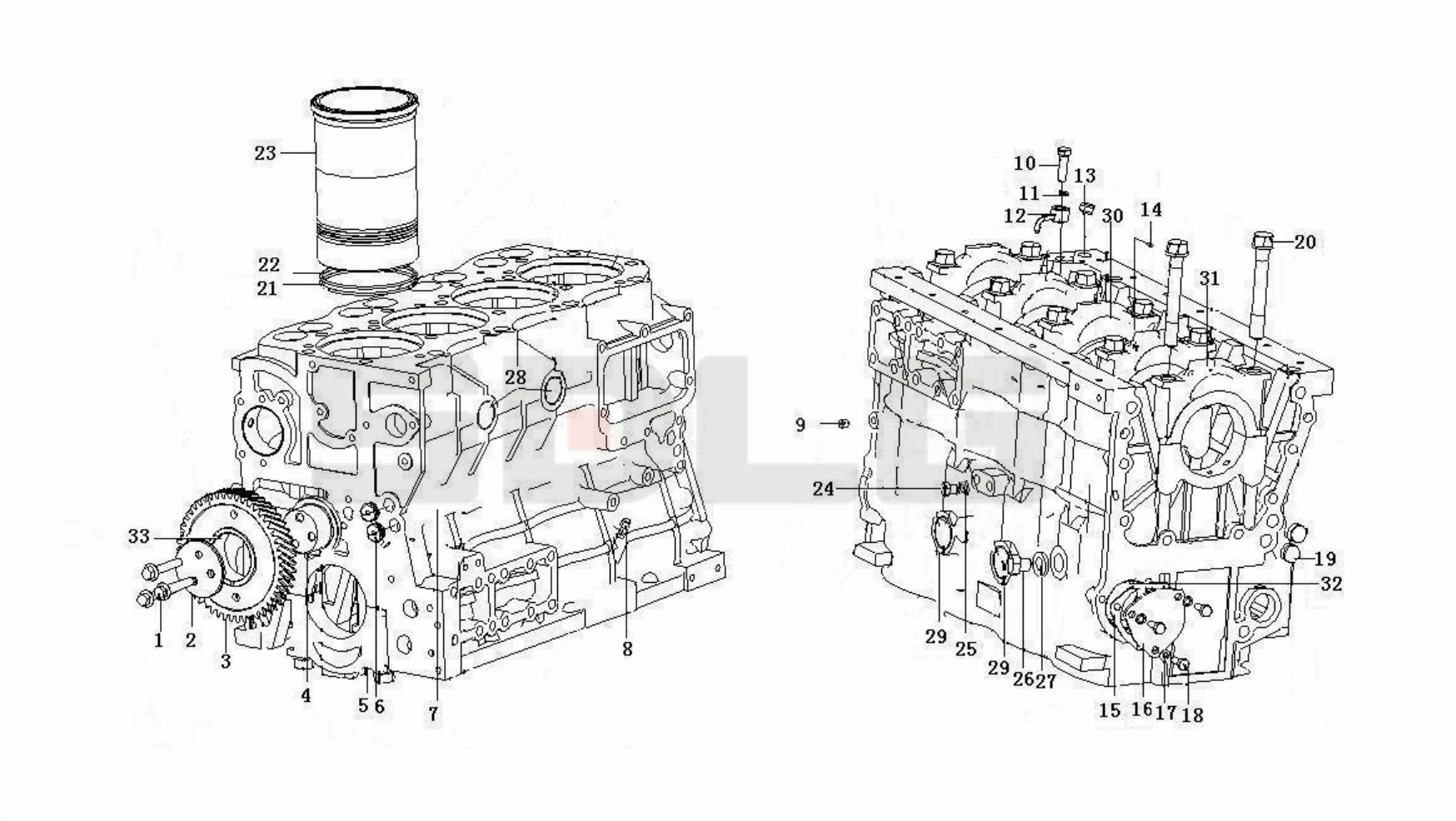

Key	Part No.	Description	Spare parts Y/N	Qty	Remarks
1	4110001026004	Bolt	Y	3	
2	4110000560128	Baffle plate	Y	1	
3	4110000560126	Idler gear	Y	1	
4	4110000560127	Shaft	Y	1	
5	4110001026011	Bearing cap	N	1	
6	4110000560055	Plug	Y	2	
7	4110000560134	Cylinder block	Y	1	
8	4110000560053	Plug	Y	1	
9	4110000560328	Plug	Y	1	
10	4110000560027	Eye bolt	Y	4	
11	4110000560028	Washer	Y	4	
12	4110001571021	Fuel injection nozzle	Y	4	
13	4110000560132	Plug	Y	1	
14	4110000561286	Pin	Y	2	
15	4110000560130	Gasket	N	1	
16	4110000560129	Cover	Y	1	
17	4110000560304	Washer	Y	3	
18	4110000561241	Screw	Y	3	
19	4110000560055	Plug	Y	2	
20	4110000561024	Screw	Y	10	
21	4110000561183	Sealing ring	Y	4	
22	4110000561182	Sealing ring	Y	4	
23	4110000560131	Cylinder liner	Y	4	
24	4110000560133	Plug	Y	1	
25	4110000560299	Washer	Y	1	
26	4110001571034	Plug	Y	1	
27	4110000560230	Sealing ring	Y	1	
28	4110000561305	Plug	Y	3	
29	4110000561296	Plug	Y	4	
30	4110000561294	Main bearing cap	N	1	

Cylinder block assembly

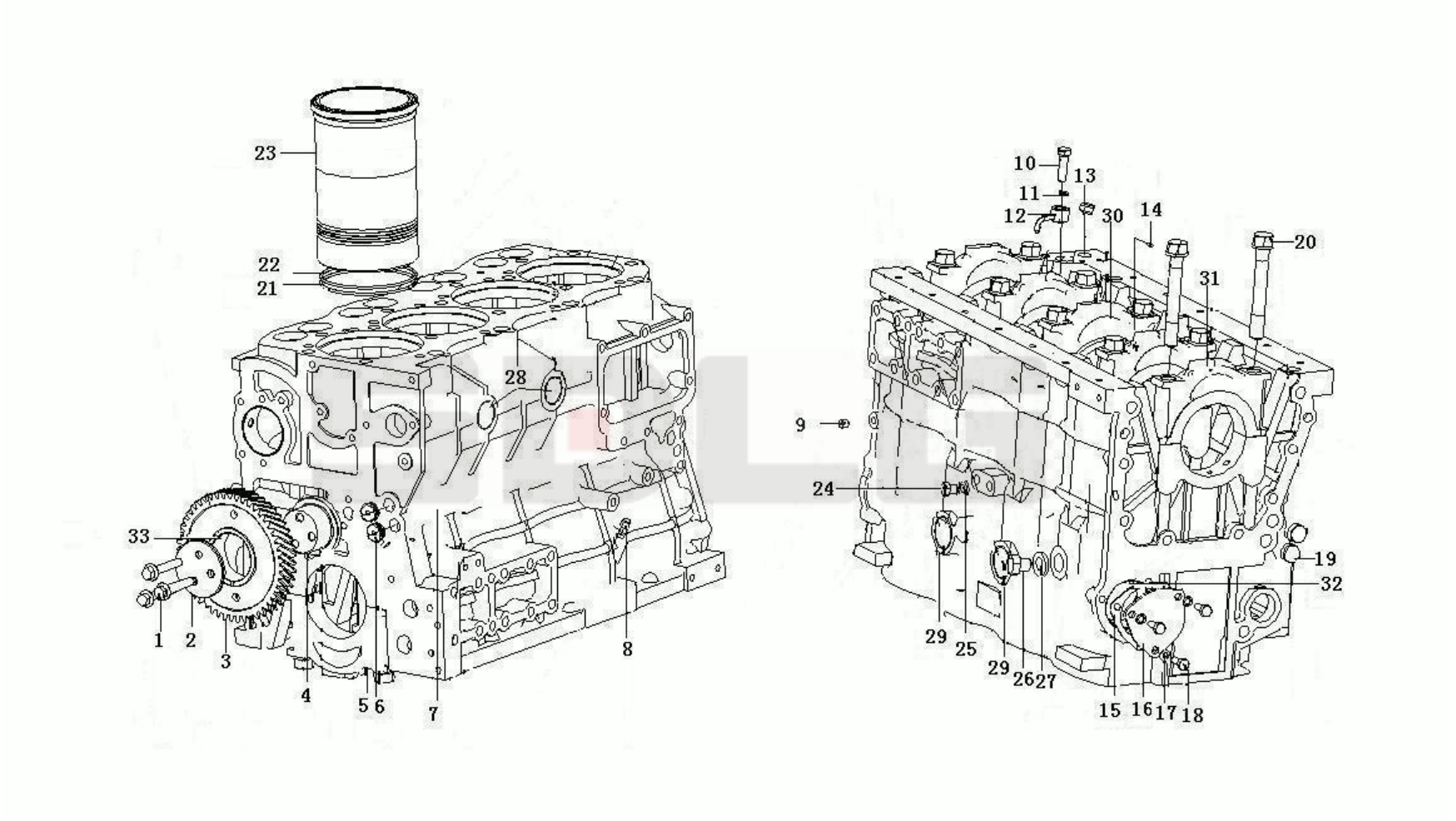

Key	Part No.	Description	Spare parts Y/N	Qty	Remarks
31	4110000561293	Main bearing cap	N	3	
32	4110001026002	Camshaft bushing	Y	5	
33	4110000561291	Bearing bushing	Y	1	

Timing gear casing assembly

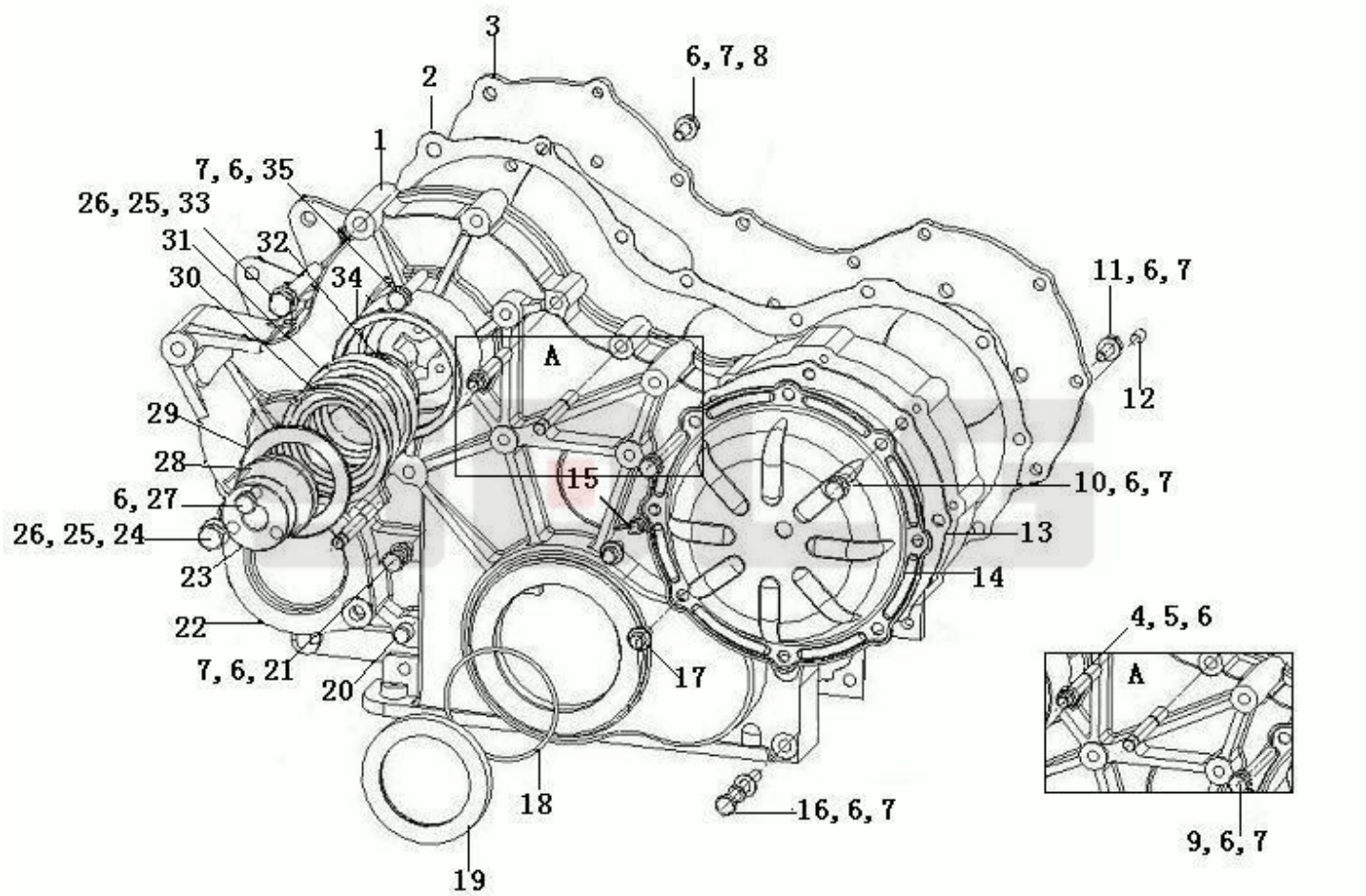

Key	Part No.	Description	Spare parts Y/N	Qty	Remarks
1	4110000560120	Timing gear casing	Y	1	
2	4110000560122	Gasket	Y	1	
3	4110000560121	Cover	Y	1	
4	4110000560248	Stud	Y	3	
5	4110000560291	Nut	Y	3	
6	4110000560304	Washer	Y	30	
7	4110000560297	Washer	Y	24	
8	4110000560254	Screw	Y	5	
9	4110001058090	Screw	Y	1	
10	4110000560256	Screw	Y	8	
11	4110000560257	Screw	Y	5	
12	4110001571038	Pin	Y	1	
13	4110000560123	Gasket	Y	1	
14	4110000560015	Cover	Y	1	
15	4110000560124	Position indicator	Y	1	
16	4110000560264	Screw	Y	2	
17	4110000560282	Screw	Y	2	
18	4110000560339	O-ring	Y	1	
19	4110001026024	Sealing ring	Y	1	
20	4110000560077	Pin	Y	1	
21	4110000560261	Screw	Y	2	
22	4110000560125	Cover	Y	1	
23	4110001571018	Shaft	Y	1	
24	4110000560271	Screw	Y	2	
25	4110000560298	Washer	Y	3	
26	4110000560319	Washer	Y	3	
27	4110000560265	Screw	Y	3	
28	4110001571017	Spacer sleeve	Y	1	
29	4110001571019	Cover	N	2	
30	4110000560323	Retaining ring	Y	2	

Timing gear casing assembly

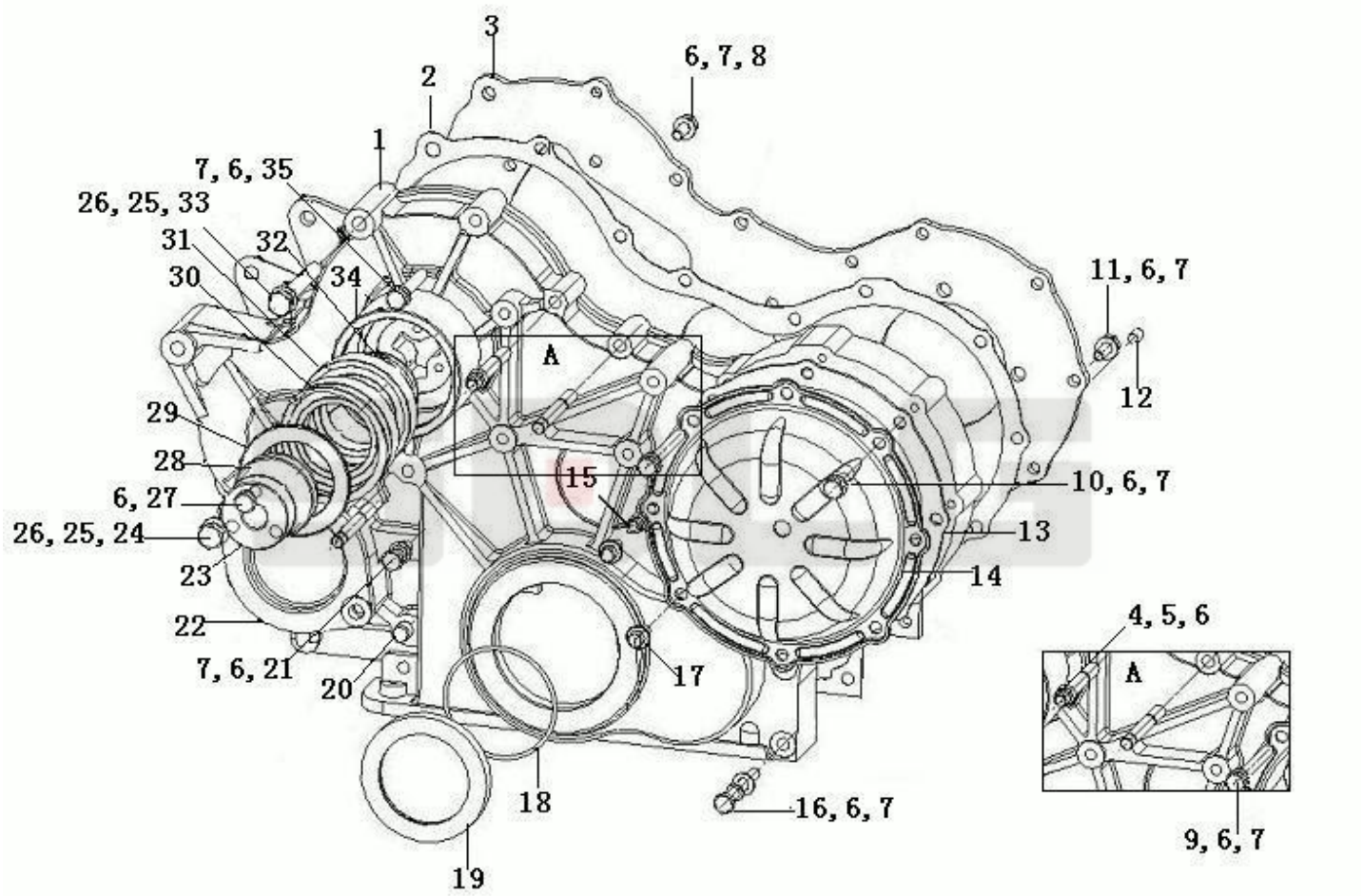

Key	Part No.	Description	Spare parts Y/N	Qty	Remarks
31	4021000011	Ball bearing	Y	2	
32	4110001571020	Spacer	N	1	
33	4110001571037	Screw	Y	1	
34	4110001571016	Idler gear	Y	1	
35	4110000560263	Screw	Y	1	

Cylinder head assembly

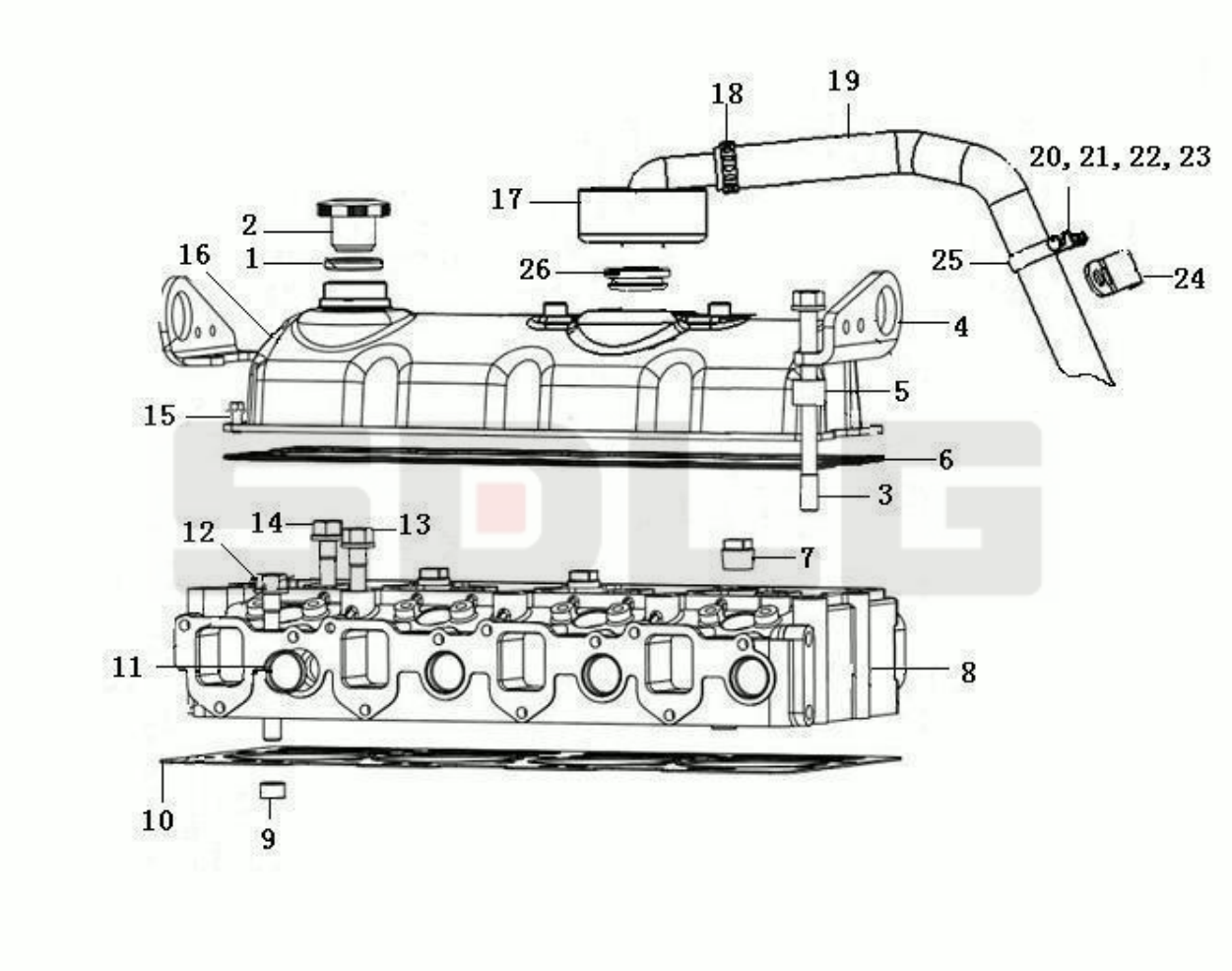

Key	Part No.	Description	Spare parts Y/N	Qty	Remarks
1	4110001571002	Sealing ring	Y	1	
2	4110001571001	Oil filler cap	Y	4	
3	4110000560018	Screw	Y	2	
4	4110000560057	Lifting eye	Y	4	
5	4110000560141	Washer	Y	1	
6	4110001026027	Cylinder head gasket	Y	3	
7	4110000560329	Plug	Y	1	
8	4110000560140	Cylinder head	Y	2	
9	4110000560079	Sleeve	Y	1	
10	4110001571015	Gasket	Y	8	
11	4110000560056	Plug	Y	4	
12	4110000560020	Screw	Y	6	
13	4110000560019	Screw	Y	4	
14	4110000560142	Screw	Y	10	
15	4110001026026	Bolt	Y	1	
16	4110000560114	Cylinder head	Y	1	
17	4110000560111	Breather	Y	1	
18	4110000560334	Clamp	Y	1	
19	4110000560109	Hose	Y	1	
20	4110000560252	Screw	Y	1	
21	4110000560296	Washer	Y	1	
22	4110000560303	Washer	Y	1	
23	4110000560290	Nut	Y	1	
24	4110000560014	Bracket	Y	1	
25	4110000560013	Clamp	Y	1	
26	4110000561039	Sealing ring	Y	1	

Cylinder piston assembly

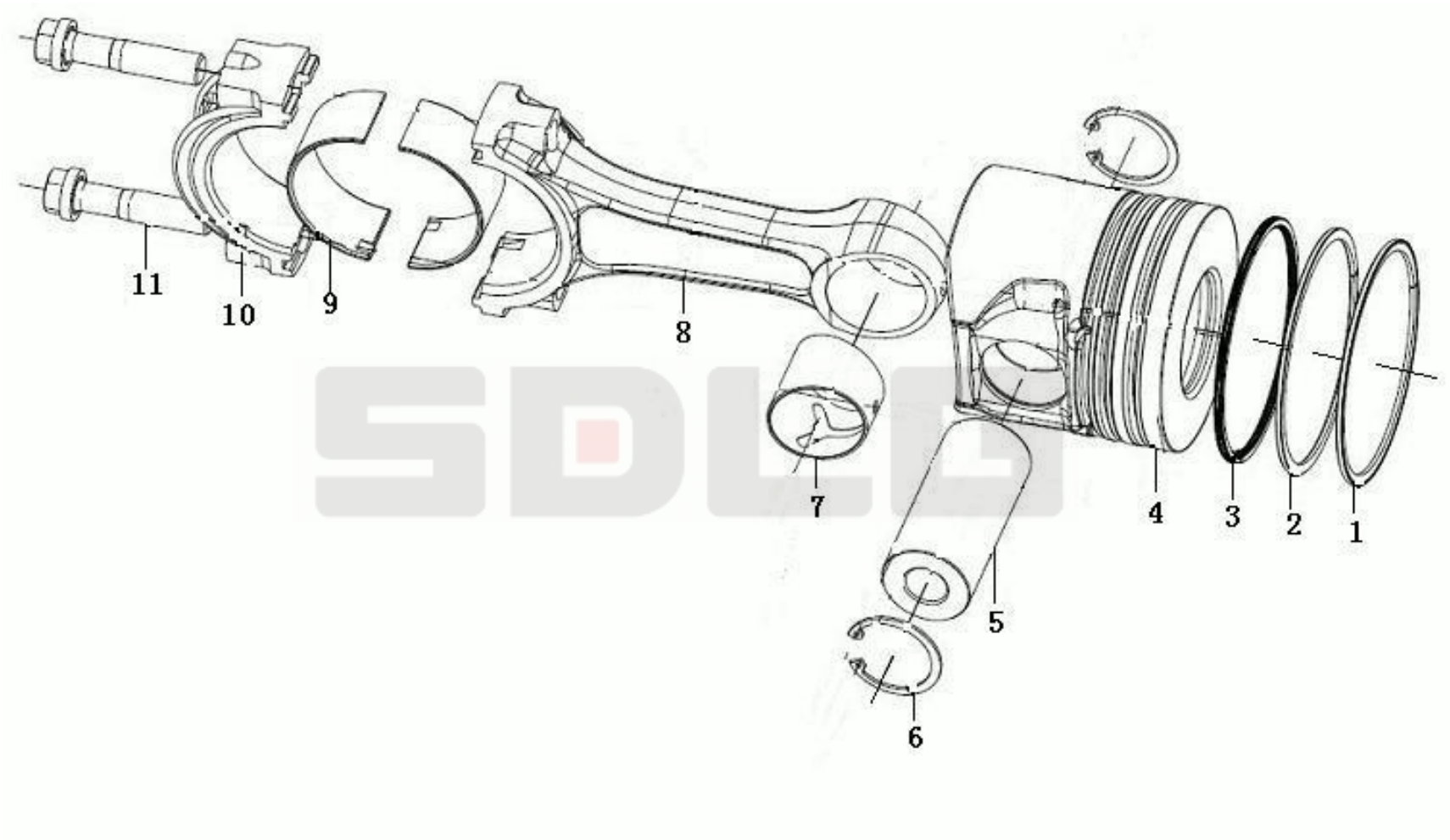

Key	Part No.	Description	Spare parts Y/N	Qty	Remarks
1	4110000108019	Piston ring	Y	4	
2	4110000108020	Piston ring	Y	4	
3	4110000108021	Piston ring	Y	4	
4	4110000560147	Cylinder piston	Y	4	
5	4110000560058	Piston pin	Y	4	
6	4110000560322	Retaining ring	Y	8	
7	4110000560039	Bushing	Y	4	
8	4110000560038	Connecting rod	Y	4	
9	4110000560037	Bearing shell	Y	8	
10	4110000560040	Attaching link	N	4	
11	4110000560041	Screw	Y	8	

Vibration damper

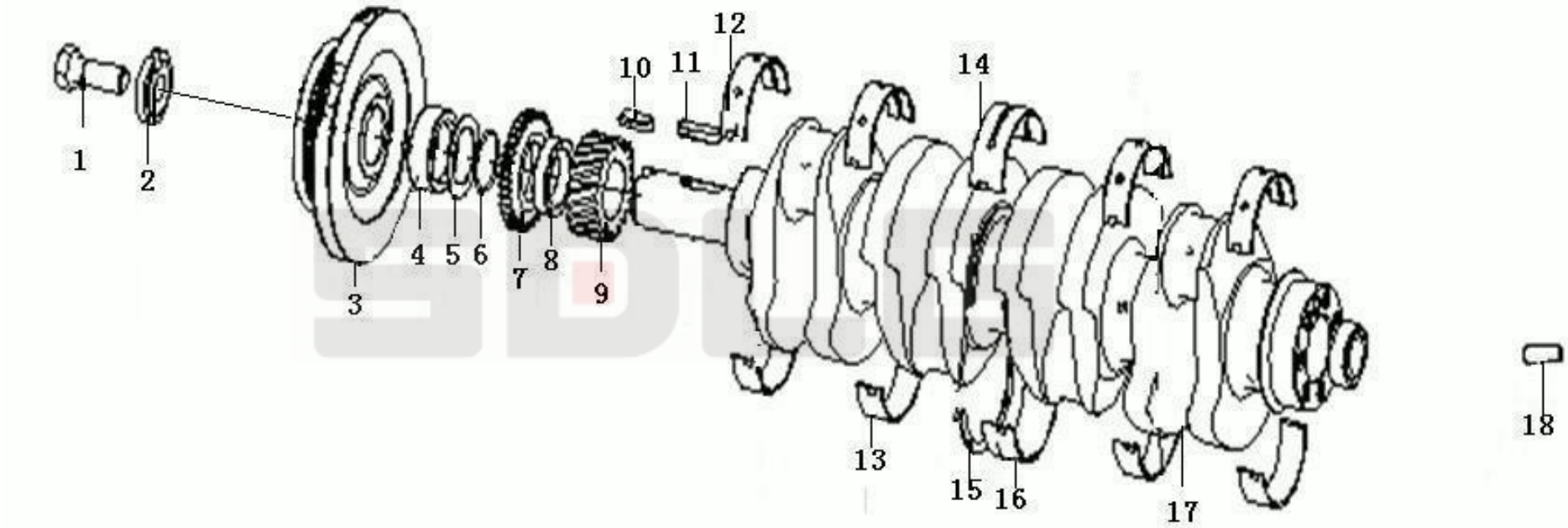

Key	Part No.	Description	Spare parts Y/N	Qty	Remarks
1	4110000560029	Screw	Y	1	
2	4110000560043	Gasket	Y	1	
3	4110001571022	Vibration damper	Y	1	
4	4110000560042	Spacer sleeve	Y	1	
5	4110000560044	Washer	Y	1	
6	4110000560338	O-ring	Y	1	
7	4110000560149	Gear	Y	1	
8	4110000560150	Spacer sleeve	Y	1	
9	4110000560059	Gear	Y	1	
10	4110001571011	Key	Y	1	
11	4110000560327	Key	Y	1	
12	4110000108012	Bearing shell	Y	4	
13	4110000108013	Bearing shell	Y	4	
14	4110000108014	Bearing shell	Y	1	
15	4110000560060	Thrust washer	Y	4	
16	4110000108015	Bearing shell	Y	1	
17	4110000560148	Crankshaft	Y	1	
18	4110000560346	Pin	Y	1	

Camshaft

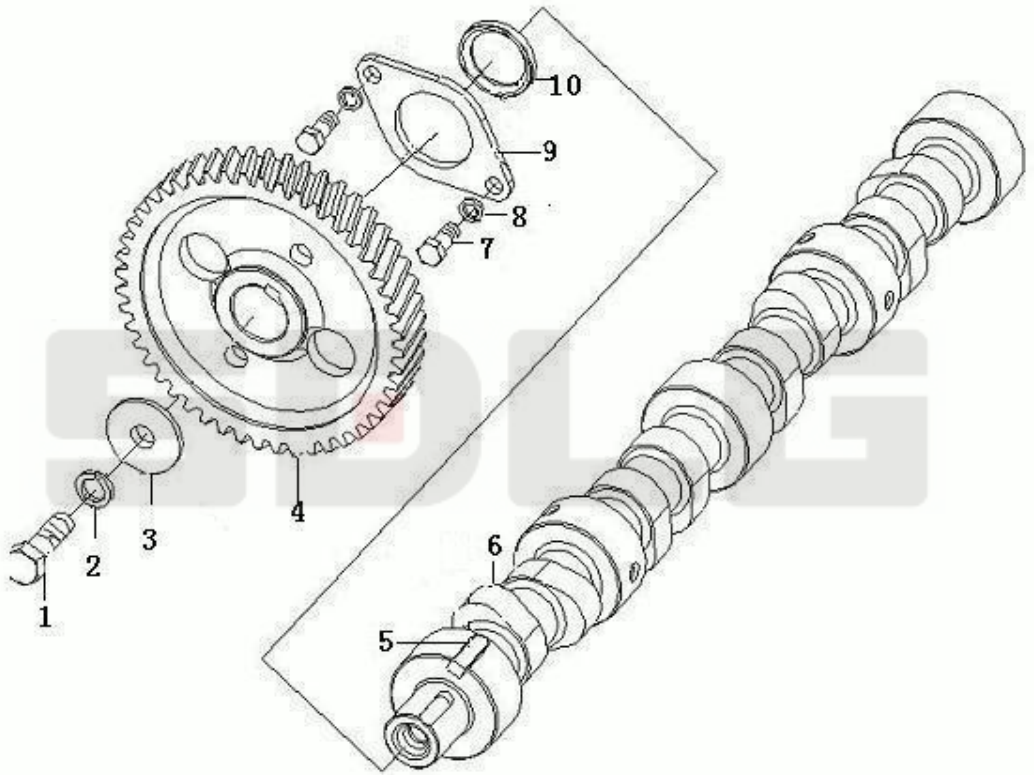

Key	Part No.	Description	Spare parts Y/N	Qty	Remarks
1	4110000560280	Screw	Y	1	
2	4110000560320	Washer	Y	1	
3	4110000560085	Washer	Y	1	
4	4110000560154	Gear	Y	1	
5	4110000560221	Key	Y	1	
6	4110000560152	Camshaft	Y	1	
7	4110000560233	Screw	Y	1	
8	4110000560304	Washer	Y	2	
9	4110000560153	Thrust washer	Y	1	
10	4110000561085	Spacer	Y	1	

Tappet

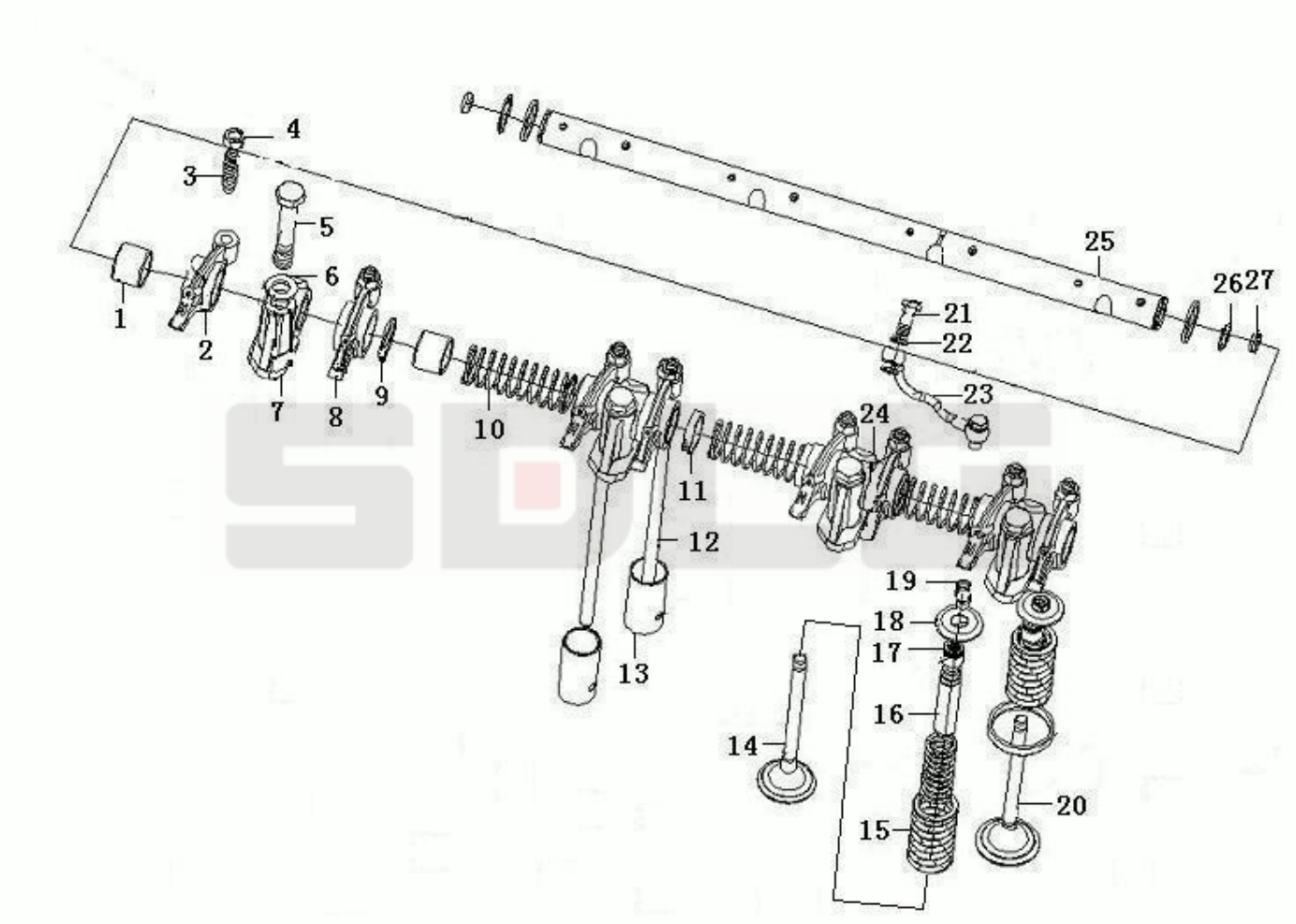

Key	Part No.	Description	Spare parts Y/N	Qty	Remarks
1	4110001060071	Sleeve	N	8	
2	4110001060072	Rocker arm	N	4	
3	4110000560083	Adjusting screw	Y	8	
4	4110000560063	Nut	Y	8	
5	4110000560158	Screw	Y	4	
6	4110000560101	Washer	Y	4	
7	4110000560156	Seat	N	3	
8	4110001060075	Rocker arm	N	4	
9	4110000560080	Washer	Y	6	
10	4110000560081	Valve spring	Y	3	
11	4110000560155	Washer	Y	2	
12	4110000560161	Push rod	Y	8	
13	4110001571023	Tappet	Y	8	
14	4110000560145	Inlet valve	Y	4	
15	4110001026028	Valve spring	Y	8	
16	4110000560062	Valve spring	Y	8	
17	4110000560030	Sealing ring	Y	8	
18	4110000560146	Seat	Y	8	
19	4110000560012	Collet	Y	16	
20	4110000560144	Exhaust valve	Y	4	
21	4110000560064	Eye bolt	Y	2	
22	4110000560232	Sealing ring	Y	4	
23	4110000560159	Hose assembly	Y	1	
24	4110000560157	Seat	N	1	
25	4110000560162	Rocker arm shaft	N	1	
26	4110000560324	Retaining ring	Y	2	
27	4110000560082	Plug	Y	2	

Air inlet pipe assembly

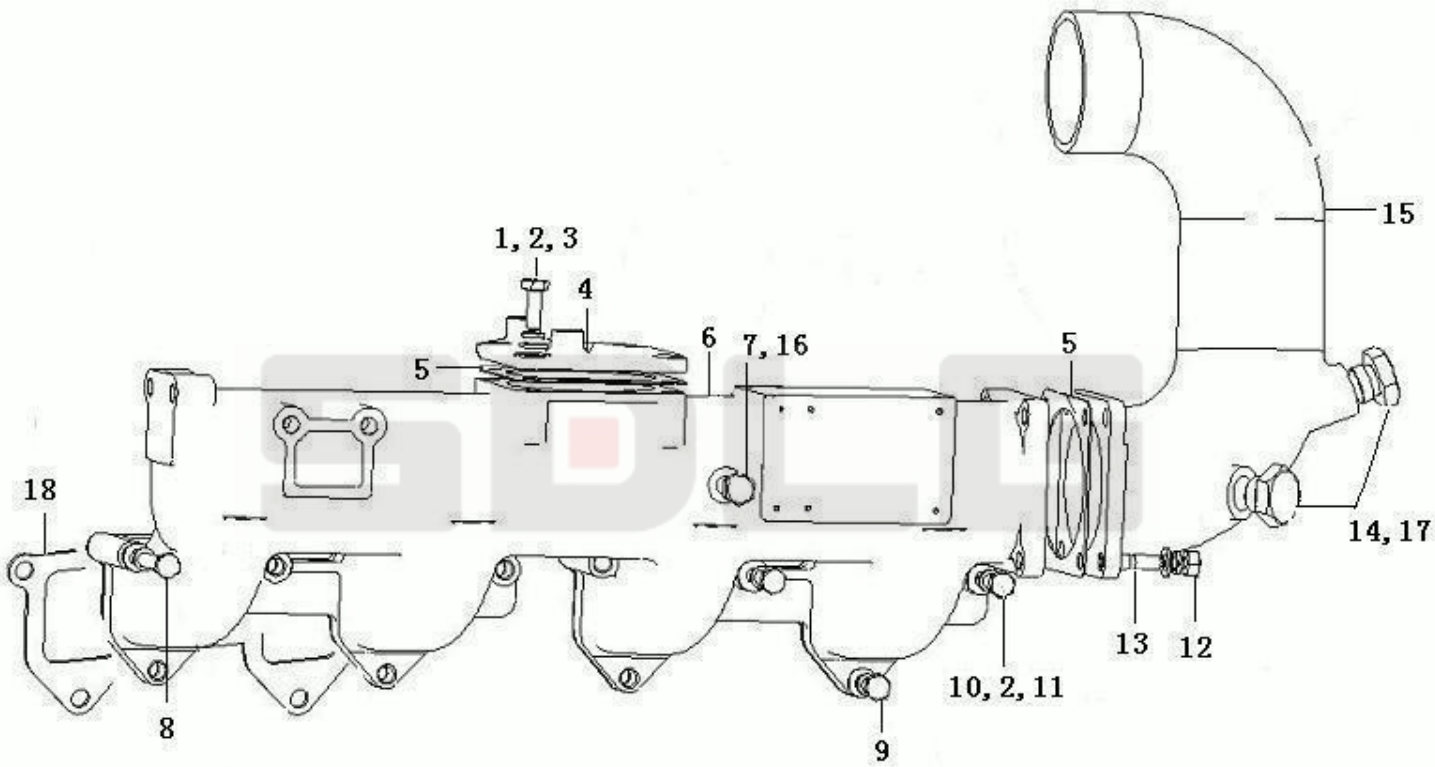

Key	Part No.	Description	Spare parts Y/N	Qty	Remarks
1	4110000560256	Screw	Y	4	
2	4110000560304	Washer	Y	18	
3	4110000560297	Washer	Y	14	
4	4110000560200	Cover	N	1	
5	4110000560045	Gasket	Y	2	
6	4110000560163	Inlet manifold	Y	1	
7	4110000560236	Plug	Y	1	
8	4110000560267	Screw	Y	2	
9	4110000560259	Screw	Y	4	
10	4110000560256	Screw	Y	4	
11	4110000560078	Washer	Y	4	
12	4110000560291	Nut	Y	4	
13	4110000560245	Stud	Y	4	
14	4110000560239	Plug	Y	2	
15	4110000560199	Intermediate pipe	Y	1	
16	4110000561223	Sealing ring	Y	1	
17	4110001060133	Washer	Y	2	
18	4110001026052	Gasket	Y	2	

Exhaust pipe

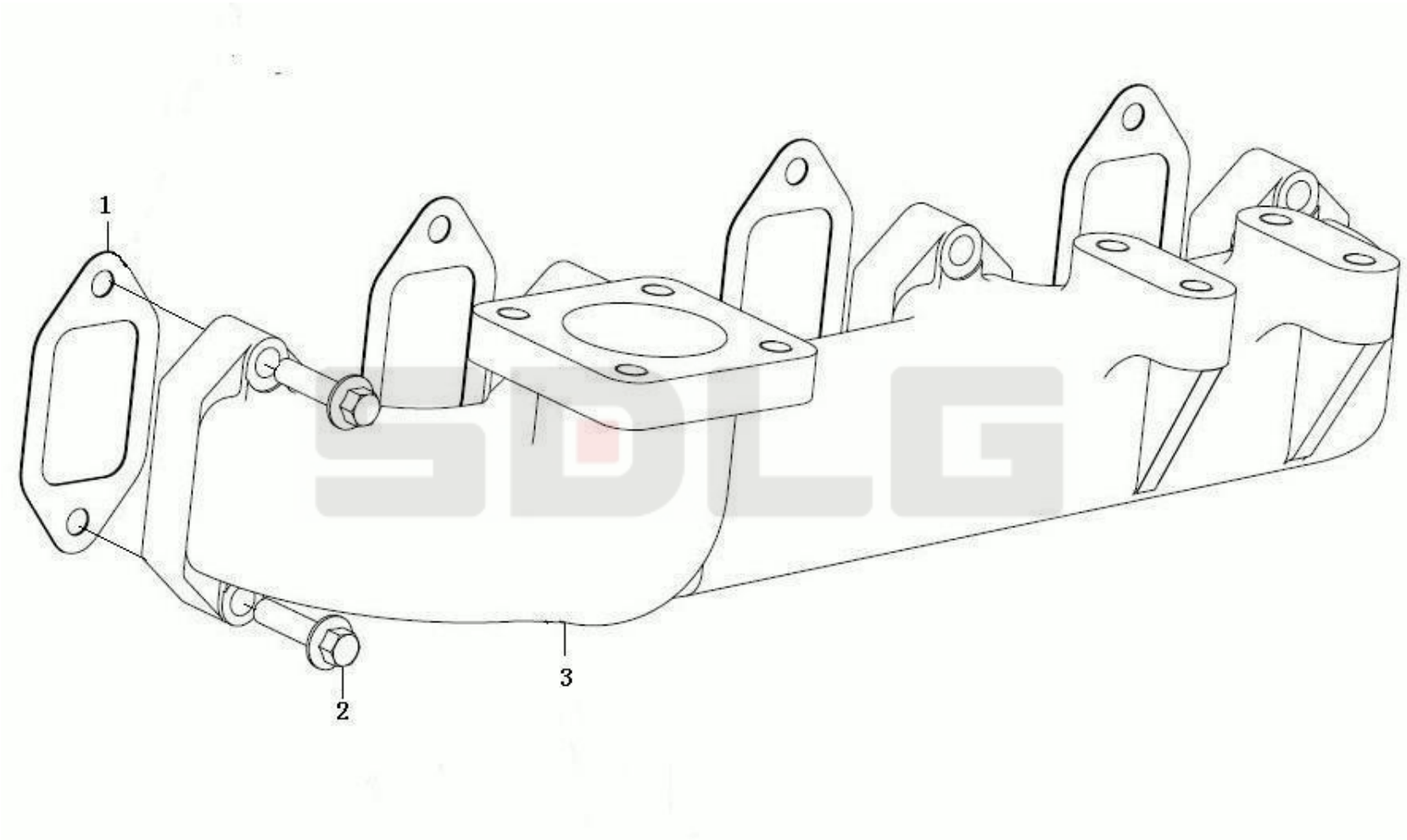

Key	Part No.	Description	Spare parts Y/N	Qty	Remarks
1	4110000560118	Gasket	Y	4	
2	4110000560086	Screw	Y	8	
3	4110000560210	Exhaust pipe	Y	1	

Oil pan

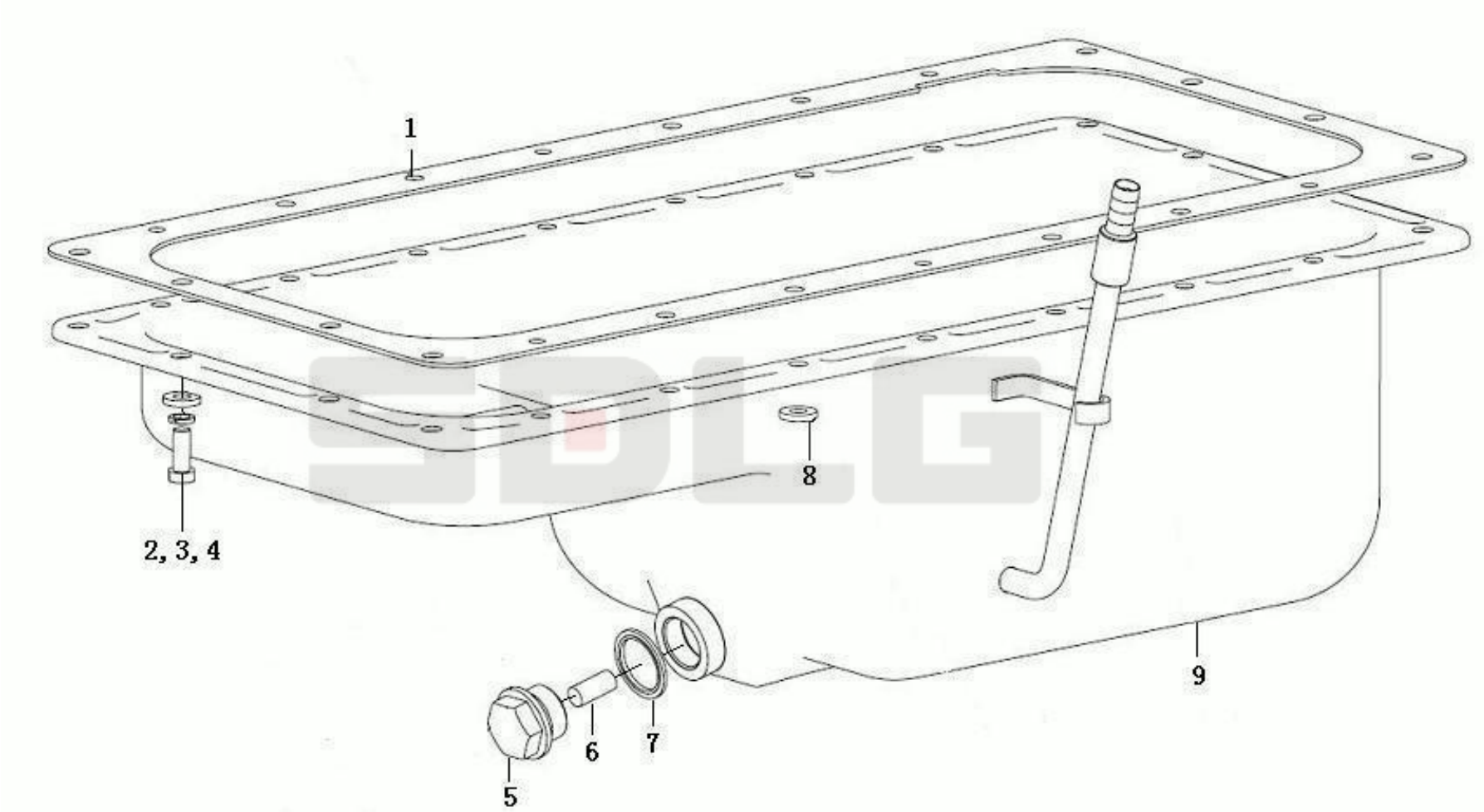

Key	Part No.	Description	Spare parts Y/N	Qty	Remarks
1	4110000560164	Gasket	Y	1	
2	4110000560233	Screw	Y	22	
3	4110000560304	Washer	Y	22	
4	4110000560165	Washer	Y	7	
5	4110000560066	Plug	Y	1	
6	4110000560067	Magnet	Y	1	
7	4110000561225	Washer	Y	1	
8	4110000560078	Washer	Y	18	
9	4110000560201	Oil sump	Y	1	

Oil strainer assembly

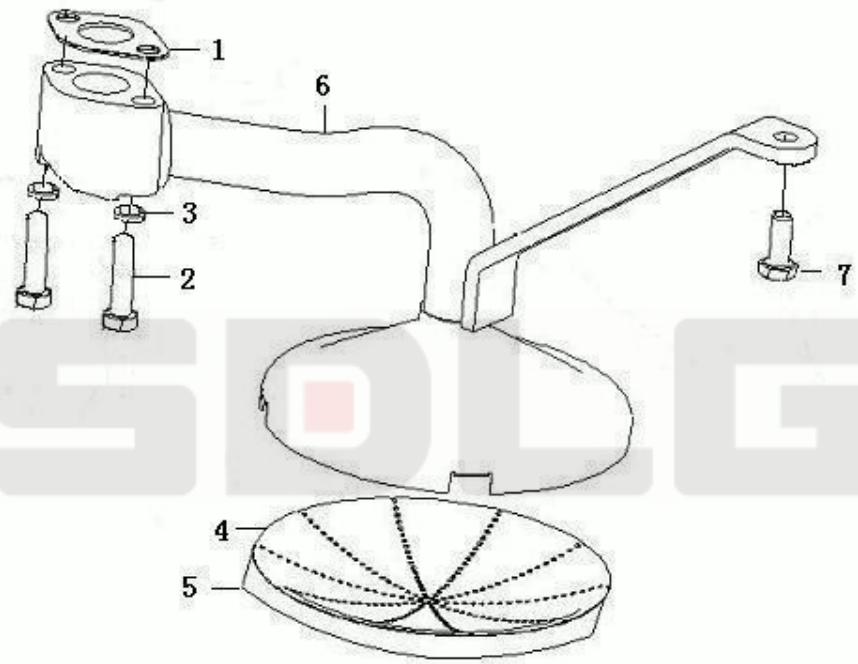

Key	Part No.	Description	Spare parts Y/N	Qty	Remarks
1	4110000560166	Gasket	Y	1	
2	4110000560262	Screw	Y	2	
3	4110000560304	Washer	Y	3	
4	4110000561119	Filter netting	Y	2	
5	4110001029015	Bracket	Y	1	
6	4110000560112	Pipe	Y	1	
7	4110000560255	Screw	Y	1	

Oil pump assembly

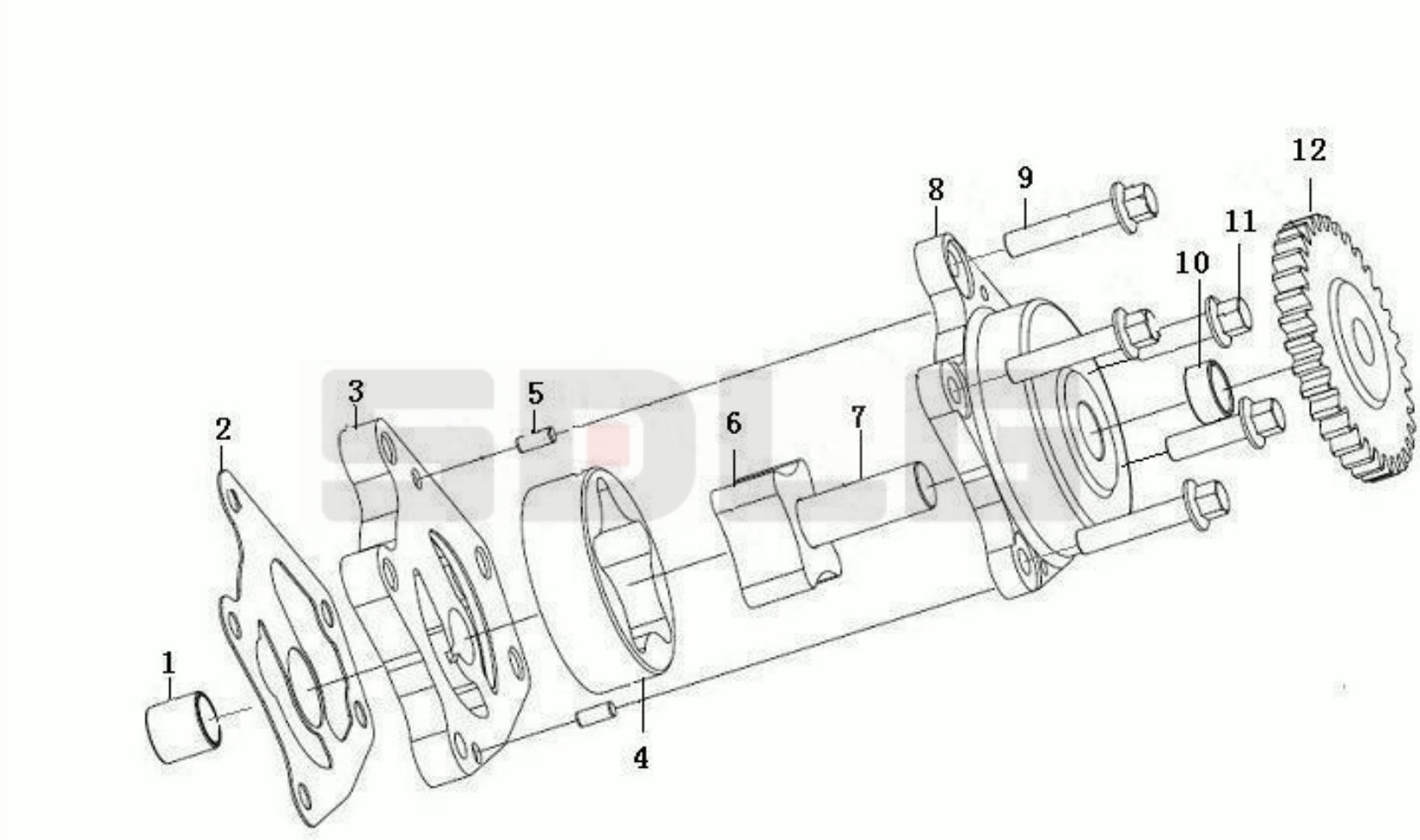

Key	Part No.	Description	Spare parts Y/N	Qty	Remarks
1	4110000560048	Camshaft bushing	N	1	
2	4110000560170	Gasket	Y	1	
3	4110000560168	Cover	N	1	
4	4110000560172	Rotor	N	1	
5	4110000560343	Pin	Y	2	
6	4110000560173	Rotor unit, core	N	1	
7	4110000560171	Pump shaft	N	1	
8	4110000560169	Pump body	N	1	
9	4110000560241	Screw	Y	3	
10	4110000560047	Bushing kit	N	1	
11	4110000560240	Screw	Y	2	
12	4110000560167	Gear	Y	1	

Oil filter assembly

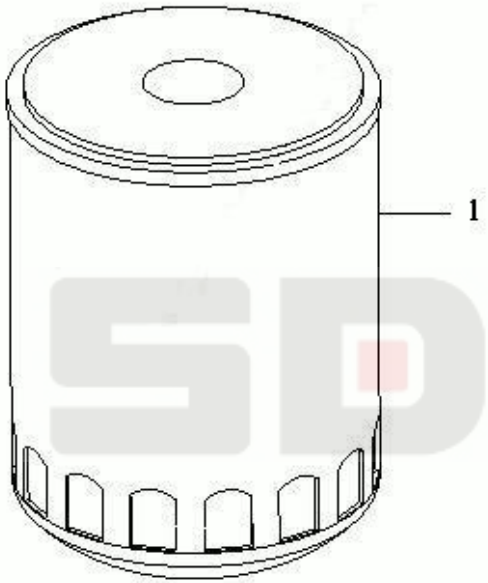

Key	Part No.	Description	Spare parts Y/N	Qty	Remarks
1	4110001026063	Oil filter	Y	1	

Oil cooler assembly

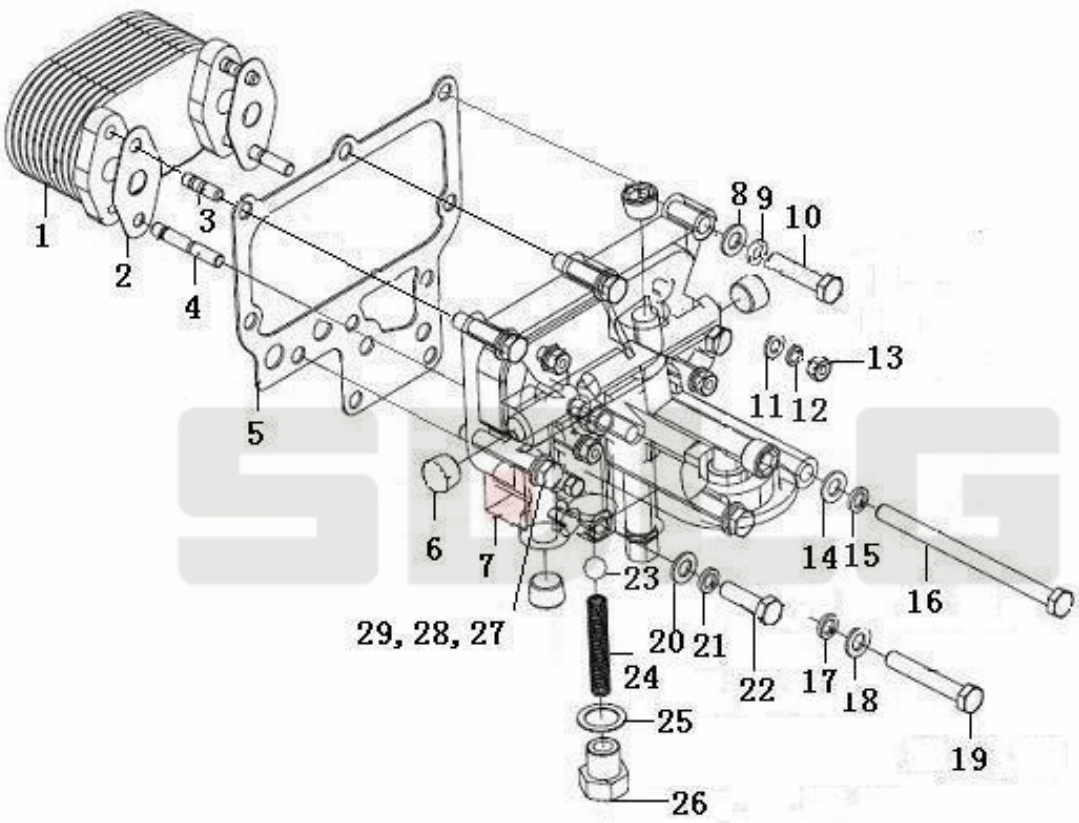

Key	Part No.	Description	Spare parts Y/N	Qty	Remarks
1	4110000560176	Oil cooler	Y	1	
2	4110000560177	Gasket	N	2	
3	4110000560243	Stud	Y	2	
4	4110000560247	Stud	Y	2	
5	4110000560175	Gasket	Y	1	
6	4110000560332	Plug	Y	5	
7	4110000560174	Cover	N	1	
8	4110000560298	Washer	Y	4	
9	4110000560319	Washer	Y	4	
10	4110000560275	Screw	Y	4	
11	4110000560297	Washer	Y	4	
12	4110000560304	Washer	Y	4	
13	4110000560291	Nut	Y	4	
14	4110000560298	Washer	Y	2	
15	4110000560319	Washer	Y	2	
16	4110000560269	Screw	Y	2	
17	4110000560298	Washer	Y	1	
18	4110000560319	Washer	Y	1	
19	4110000560277	Screw	Y	1	
20	4110000560298	Washer	Y	2	
21	4110000560319	Washer	Y	2	
22	4110000560273	Screw	Y	2	
23	4110000560224	Ball	N	1	
24	4110000560049	Spring	N	1	
25	4110000560178	Washer	N	1	
26	4110000560050	Plug	N	1	
27	4110000560298	Washer	Y	1	
28	4110000560319	Washer	Y	1	
29	4110000560277	Screw	Y	1	

Oil dipstick



Key	Part No.	Description	Spare parts Y/N	Qty	Remarks
1	4110000560218	Rubber bushing	N	1	
2	4110000560103	Dipstick	Y	1	

Fuel supply system

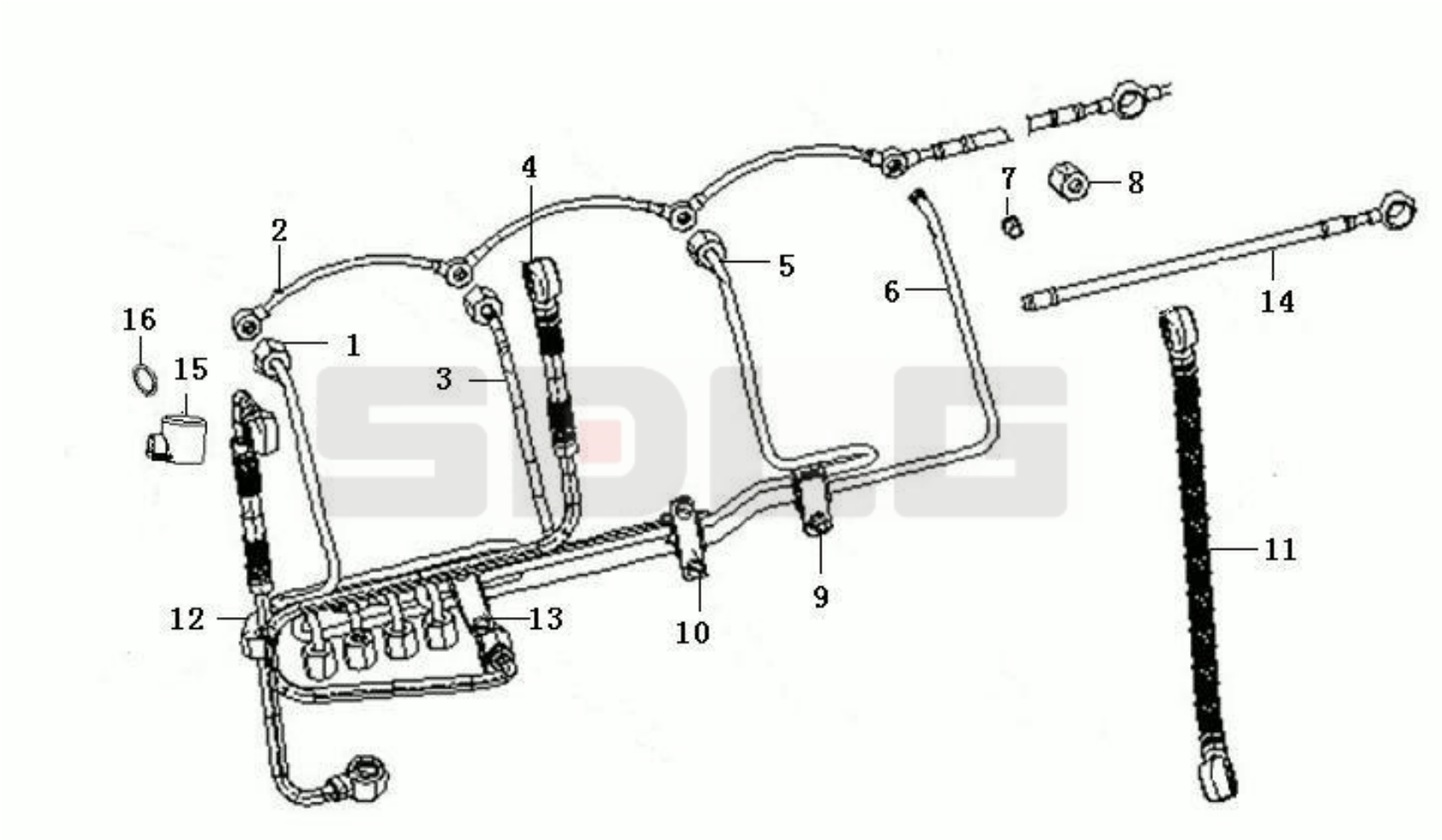

Key	Part No.	Description	Spare parts Y/N	Qty	Remarks
1	4110000560180	Fuel pipe	Y	1	
2	4110000560196	Hose assembly	Y	1	
3	4110000560181	Fuel pipe	Y	1	
4	4110000560070	Hose assembly	Y	1	
5	4110000560182	Fuel pipe	Y	1	
6	4110000560183	Fuel pipe	Y	1	
7	4110000560069	Bushing	Y	8	
8	4110000560068	Nut	Y	8	
9	4110000560021	Clamp	Y	1	
10	4110001571026	Clamp	N	4	
11	4110000560092	Hose assembly	Y	1	
12	4110000560217	Clamp	Y	1	
13	4110000560022	Clamp	Y	1	
14	4110000560197	Fuel pipe	Y	1	
15	4110001026081	Rubber sleeve	Y	4	
16	4110000560228	Sealing ring	Y	1	

Fuel filter

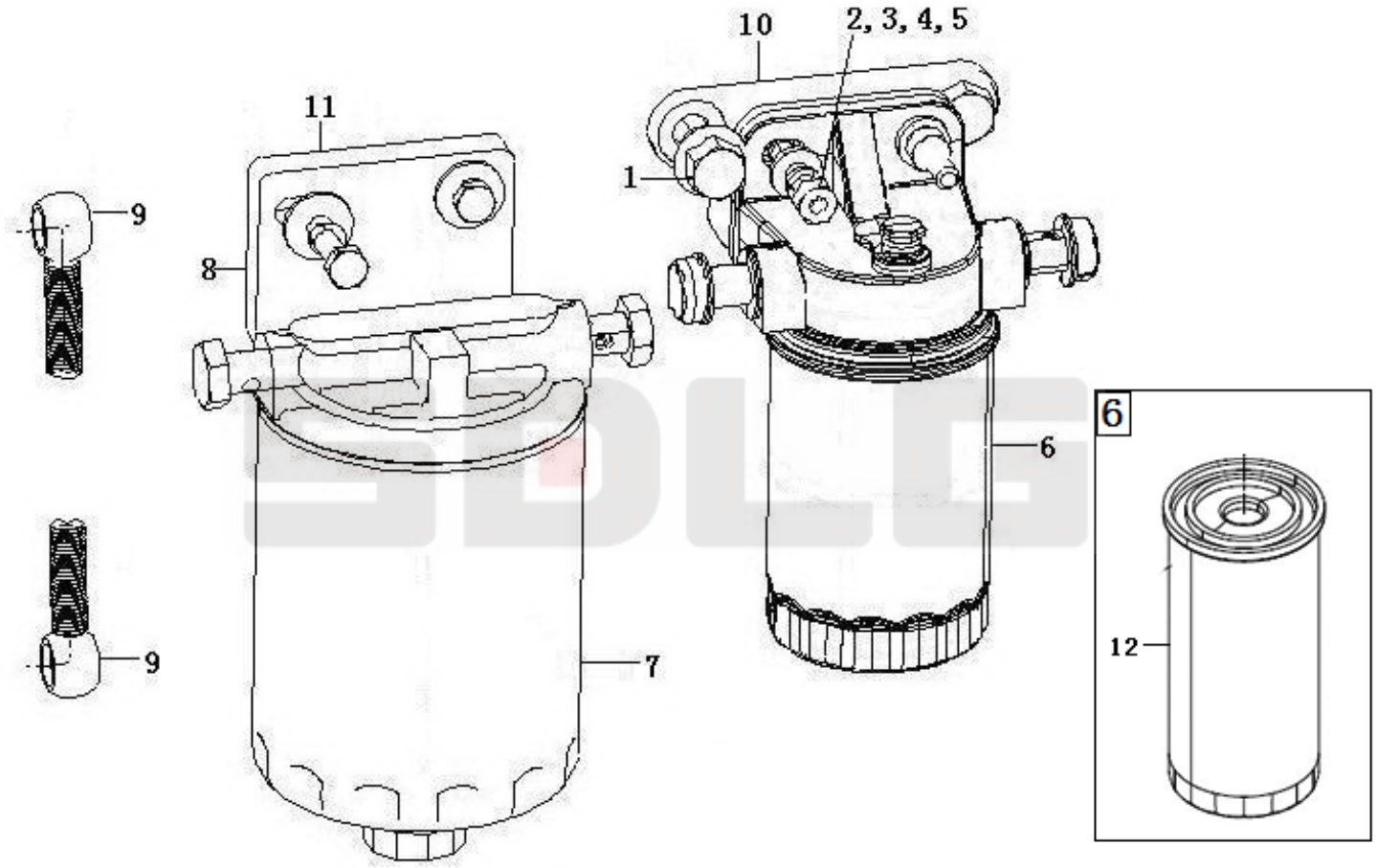

Key	Part No.	Description	Spare parts Y/N	Qty	Remarks
1	4110000560287	Screw	Y	2	
2	4110000560291	Nut	Y	2	
3	4110000560304	Washer	Y	4	
4	4110000560078	Washer	Y	2	
5	4110000560246	Stud	Y	2	
6	4110000560007	Fuel filter	Y	1	
7	4110000563007	Fuel filter insert	Y	1	
8	4110000560258	Screw	Y	2	
9	4110000560001	Fuel pipe	Y	1	
10	4110000560202	Bracket	Y	1	
11	4110000560302	Washer	Y	2	
12	4110000563002	Fuel filter insert	Y	1	

Fuel pump assembly

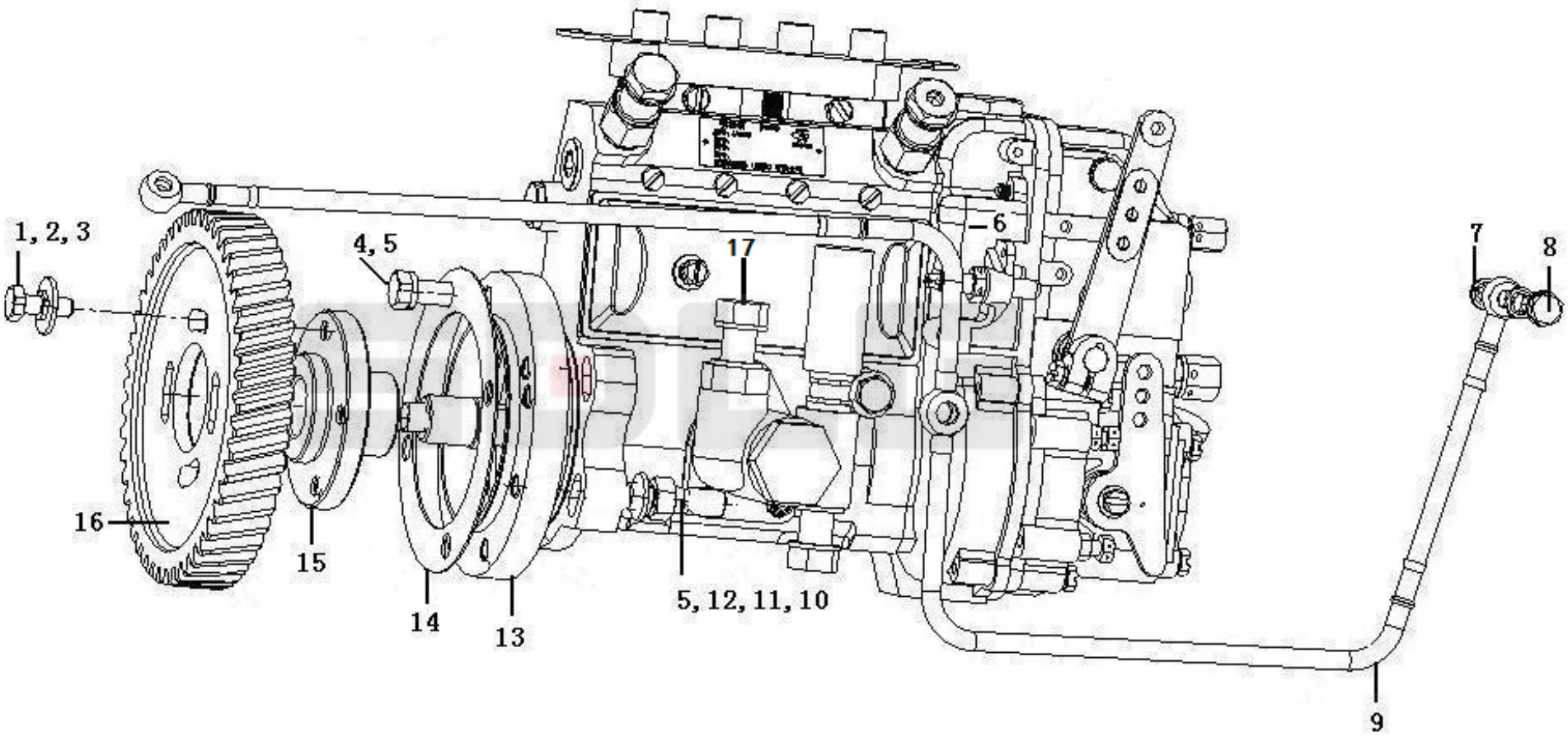

Key	Part No.	Description	Spare parts Y/N	Qty	Remarks
1	4110000560257	Screw	Y	4	
2	4110000560302	Washer	Y	4	
3	4110000560304	Washer	Y	4	
4	4110000560235	Screw	Y	4	
5	4110000560319	Washer	Y	8	
6	4110001161021	Injection pump	Y	1	
7	4110000560232	Sealing ring	Y	4	
8	4110001026094	Bolt	Y	2	
9	4110000560184	Oil pipe	Y	1	
10	4110000560249	Stud	Y	4	
11	4110000560292	Nut	Y	4	
12	4110000560298	Washer	Y	4	
13	4110000560185	Flange	Y	1	
14	4110000560186	Gasket	Y	1	
15	4110000560212	Flange	Y	1	
16	4110000560211	Gear	Y	1	
17	4110001161027	Hand pump	Y	1	

Fuel injection nozzle

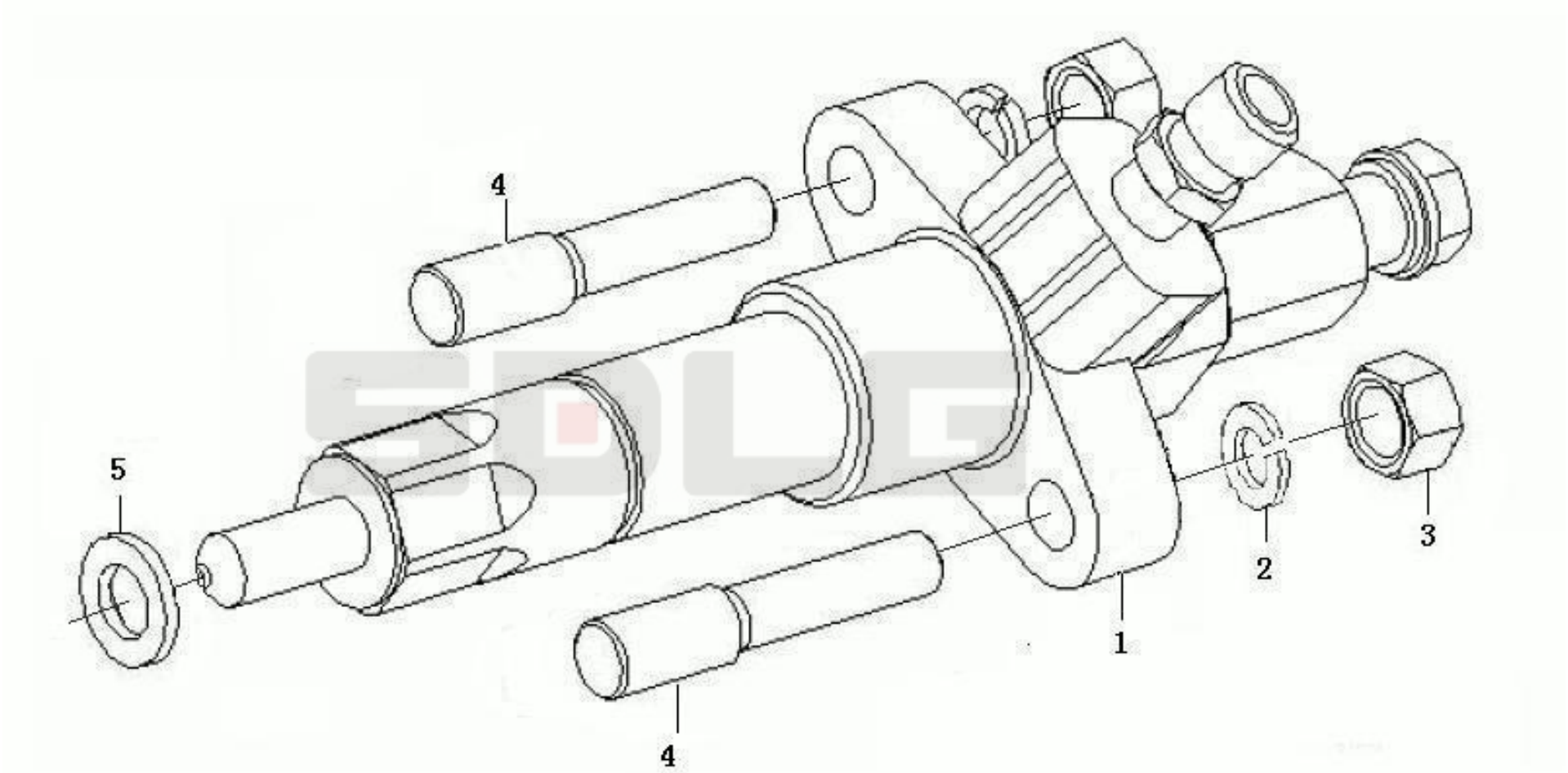

Key	Part No.	Description	Spare parts Y/N	Qty	Remarks
1	4110000560023	Injector	Y	4	
2	4110000560304	Washer	Y	8	
3	4110000560291	Nut	Y	8	
4	4110000560024	Stud	Y	8	
5	4110000560089	Gasket	Y	1000	

Fuel pump assembly

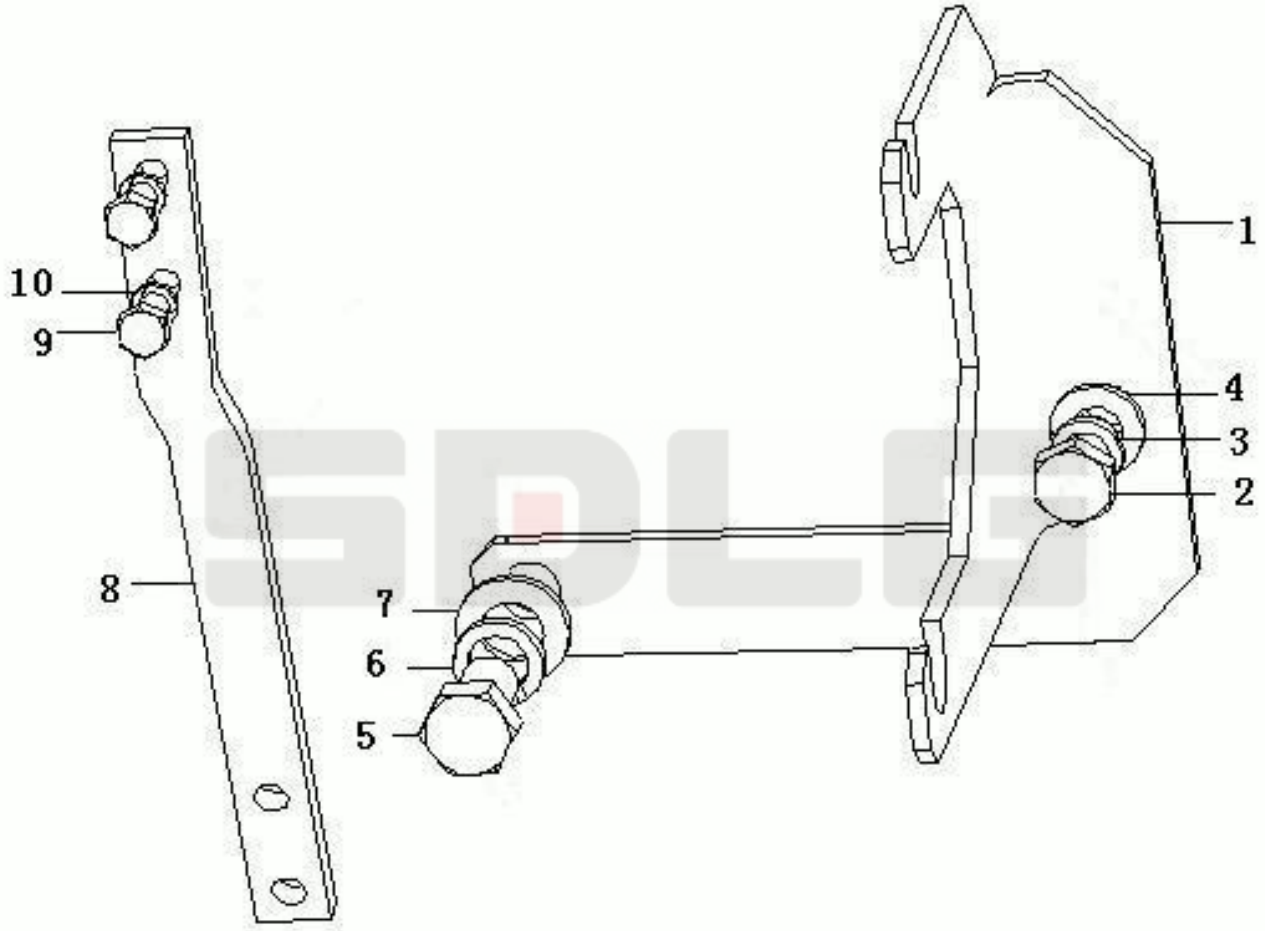

Key	Part No.	Description	Spare parts Y/N	Qty	Remarks
1	4110000560205	Bracket	Y	1	
2	4110000560270	Screw	Y	1	
3	4110000560319	Washer	Y	1	
4	4110000560298	Washer	Y	1	
5	4110000560278	Screw	Y	1	
6	4110000560320	Washer	Y	1	
7	4110000560299	Washer	Y	1	
8	4110000560095	Bracket	Y	1	
9	4110000560251	Screw	Y	2	
10	4110000560303	Washer	Y	2	

Muffler

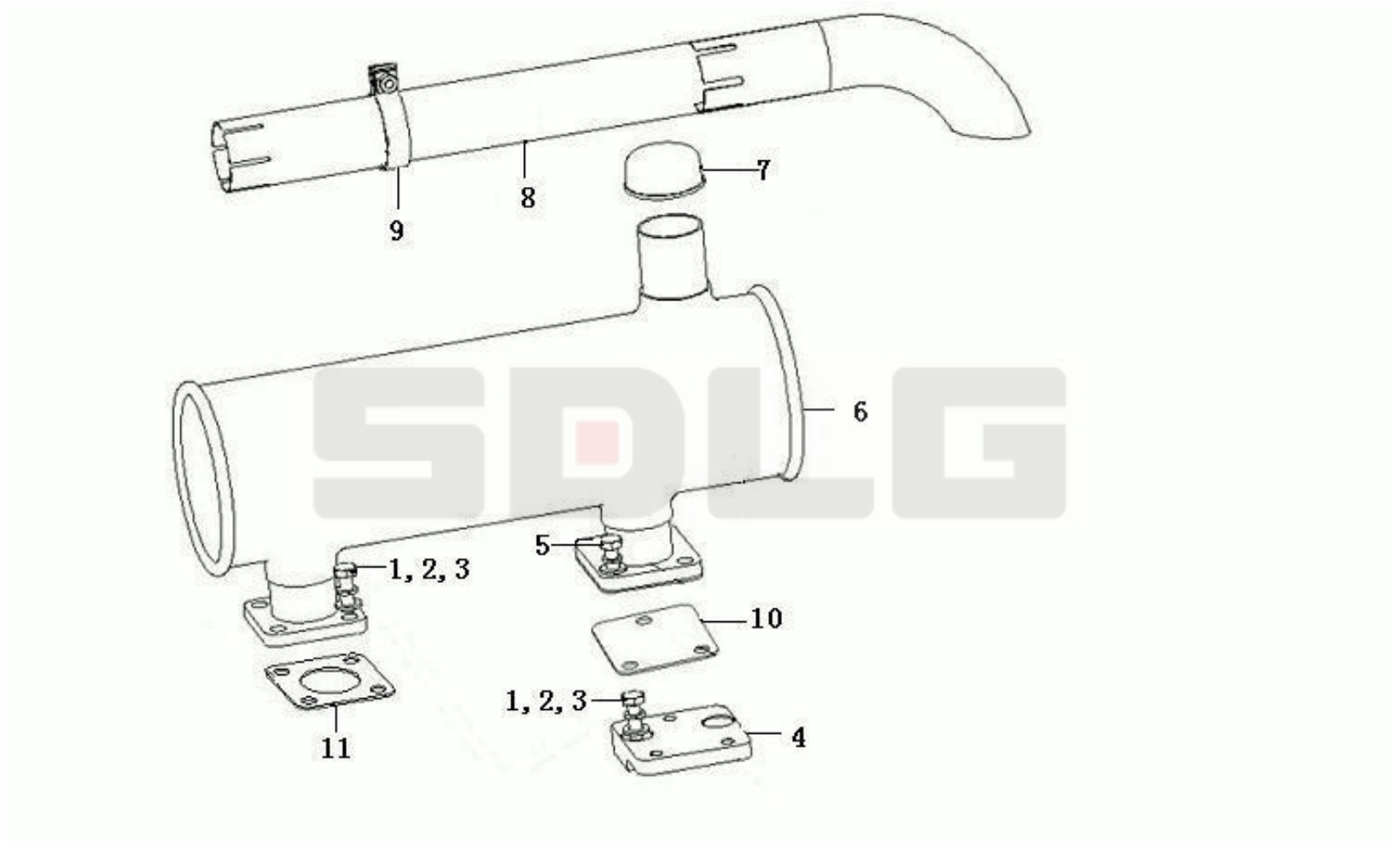

Key	Part No.	Description	Spare parts Y/N	Qty	Remarks
1	4110000561230	Screw	Y	7	
2	4110000560319	Washer	Y	9	
3	4110000560298	Washer	Y	9	
4	4110000560213	Block	Y	1	
5	4110000560271	Screw	Y	2	
6	4110000560214	Muffler	Y	1	
7	4110000560096	Cover	N	1	
8	4110001571028	Exhaust pipe	Y	1	
9	4110001571010	Clamp	Y	1	
10	4110001571029	Gasket	Y	1	
11	4110001571030	Gasket	Y	1	

Water pipe assembly

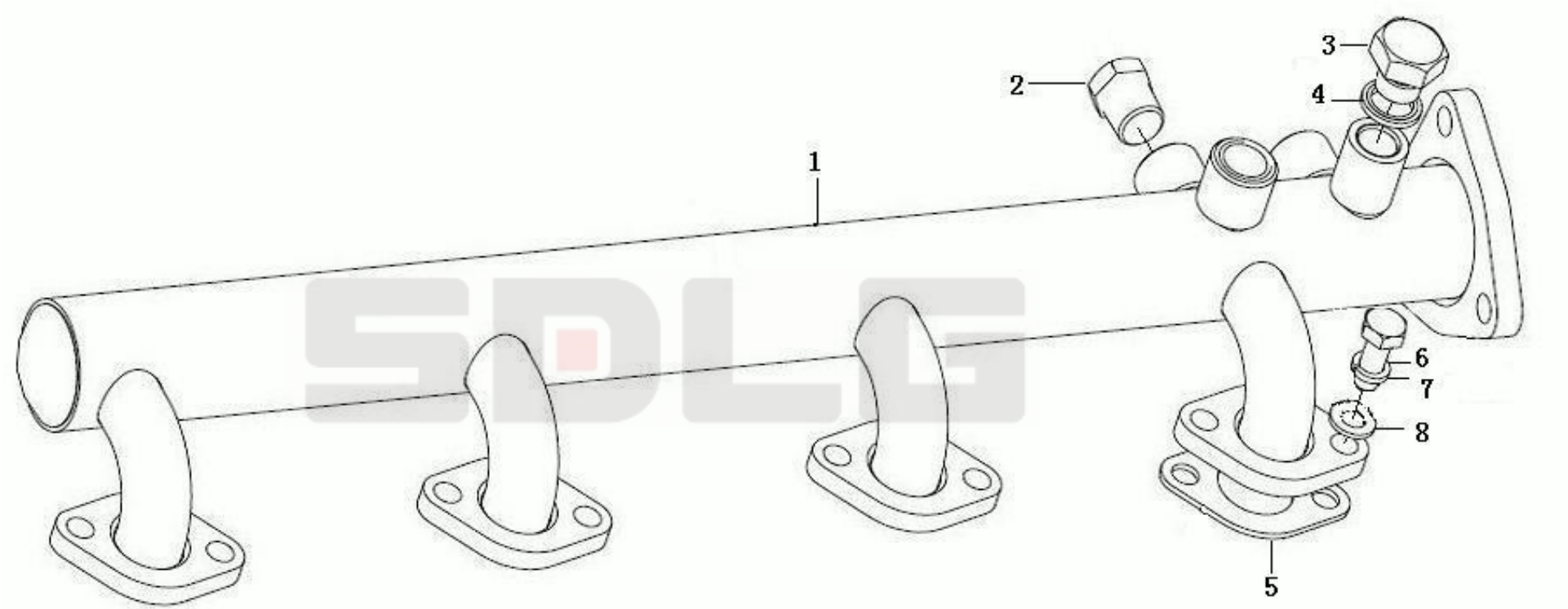

Key	Part No.	Description	Spare parts Y/N	Qty	Remarks
1	4110000560115	Pipe	Y	1	
2	4110000560331	Plug	Y	1	
3	4110000560237	Plug	Y	1	
4	4110000560228	Sealing ring	Y	1	
5	4110000560072	Gasket	Y	1	
6	4110000560254	Screw	Y	8	
7	4110000560304	Washer	Y	8	
8	4110000560295	Washer	Y	8	

Drain valve

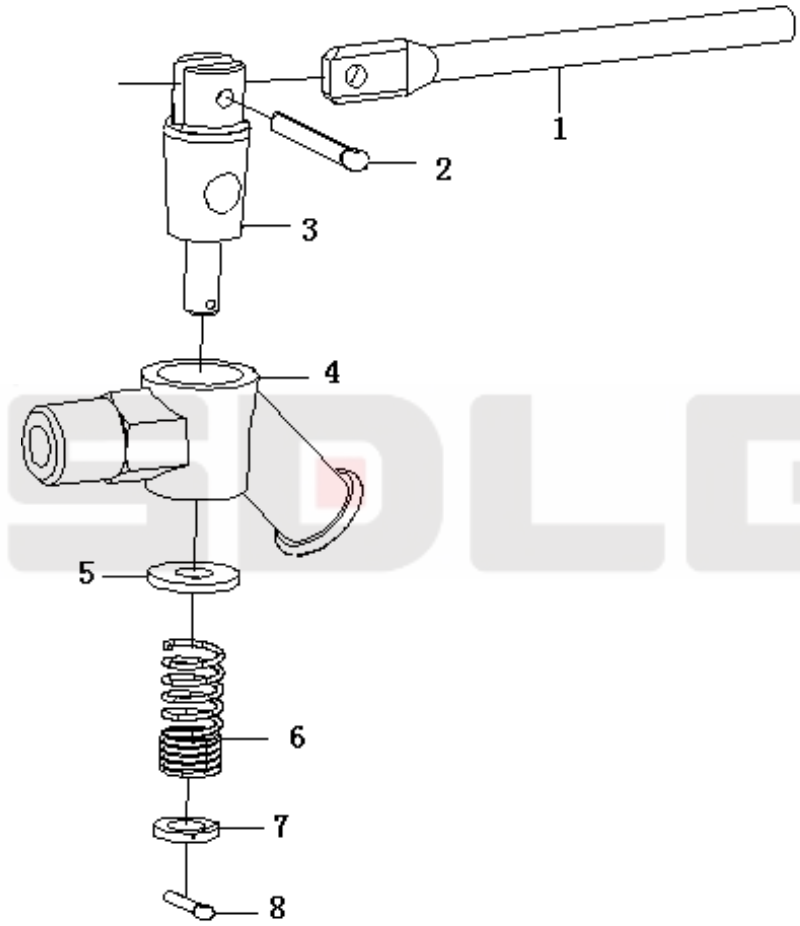

Key	Part No.	Description	Spare parts Y/N	Qty	Remarks
1	4110000560091	Link rod	Y	1	
2	4110000560326	Pin	Y	1	
3	4110000560076	Valve rod	N	1	
4	4110000560075	Valve body	N	1	
5	4110000560074	Washer	N	1	
6	4110000560073	Spring	N	1	
7	4110000560294	Washer	Y	1	
8	4110000560325	Pin	Y	1	

Thermostat kit

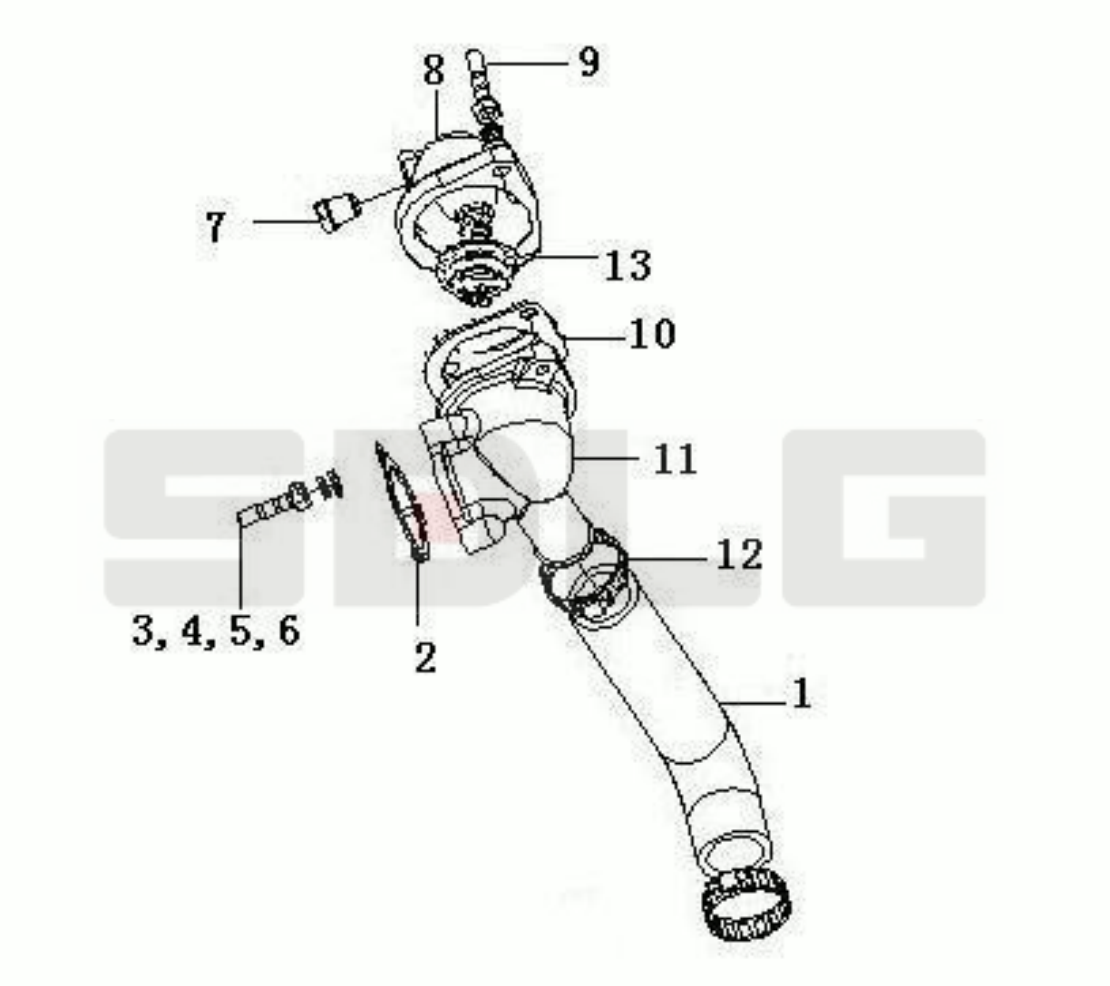

Key	Part No.	Description	Spare parts Y/N	Qty	Remarks
1	4110000560188	Hose	Y	1	
2	4110000560071	Gasket	Y	1	
3	4110000560304	Washer	Y	5	
4	4110000560295	Washer	Y	2	
5	4110000560244	Stud	Y	3	
6	4110000560291	Nut	Y	5	
7	4110000560330	Plug	Y	1	
8	4110000560187	Cover	Y	1	
9	4110000560245	Stud	Y	2	
10	4110000560100	Gasket	Y	1	
11	4110000560090	Seat	Y	1	
12	4110000560335	Clamp	Y	2	
13	4110001571005	Thermostat	Y	1	

Water pump assembly

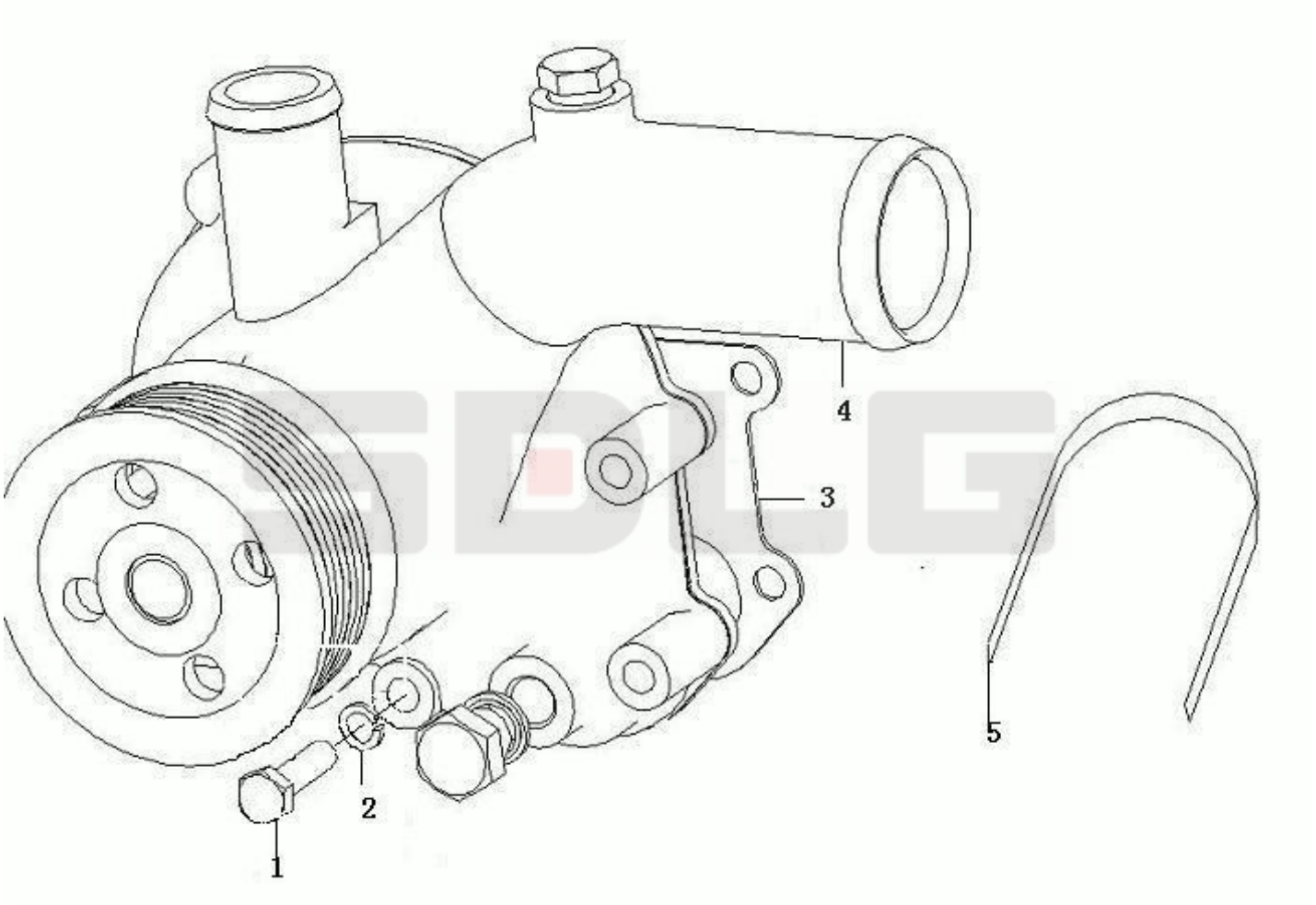

Key	Part No.	Description	Spare parts Y/N	Qty	Remarks
1	4110000560262	Screw	Y	4	
2	4110000560304	Washer	Y	4	
3	4110000560189	Gasket	Y	1	
4	4110001571013	Water pump	Y	1	
5	4110001161001	V-belt	Y	1	

Radiator fan assembly

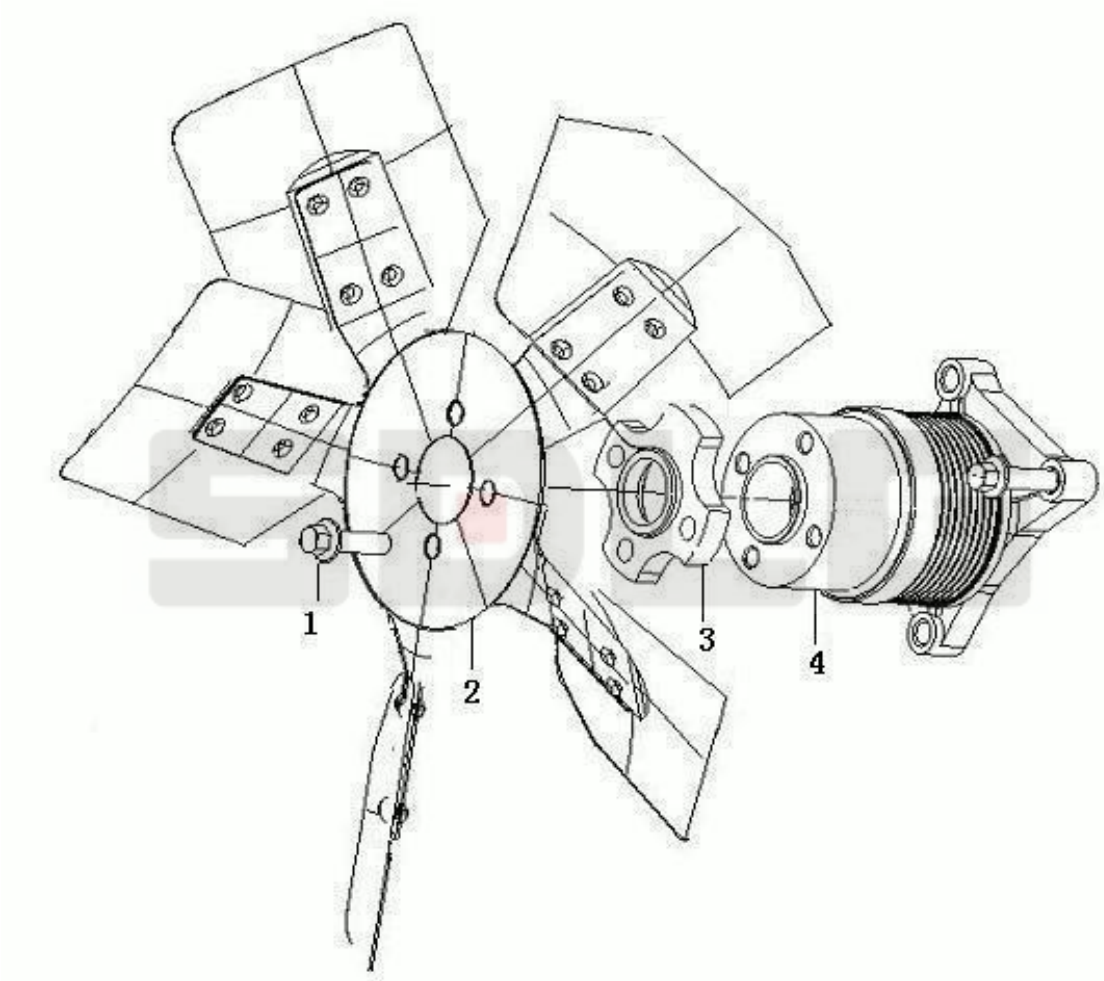

Key	Part No.	Description	Spare parts Y/N	Qty	Remarks
1	4110000560286	Screw	Y	8	
2	4110001571031	Fan	Y	1	
3	4110001571033	Block	Y	1	
4	4110001571014	Shaft	Y	4	

Power take-off

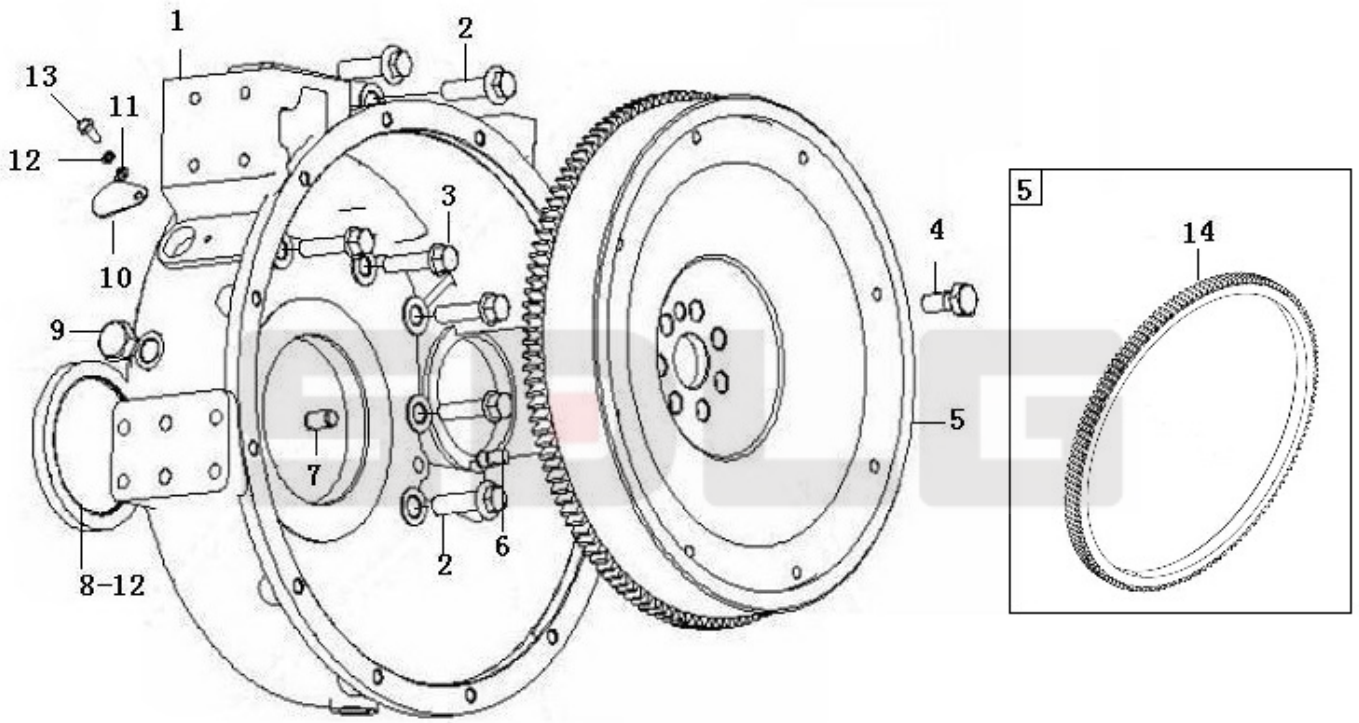

Key	Part No.	Description	Spare parts Y/N	Qty	Remarks
1	4110000560194	Flywheel housing	Y	1	
2	4110000560289	Screw	Y	4	
3	4110000560288	Screw	Y	6	
4	4110000560104	Screw	Y	7	
5	4110000560198	Flywheel	Y	1	
6	4110000560077	Pin	Y	1	
7	4110000560345	Pin	Y	1	
8	4110000560340	Sealing ring	Y	1	
9	4110000560250	Screw	Y	1	
10	4110000561178	Cover plate	N	1	
11	4110000560296	Washer	Y	1	
12	4110000560303	Washer	Y	1	
13	4110000560341	Sealing ring	Y	1	
14	4110000560377	Gear ring	Y	1	

Air compressor

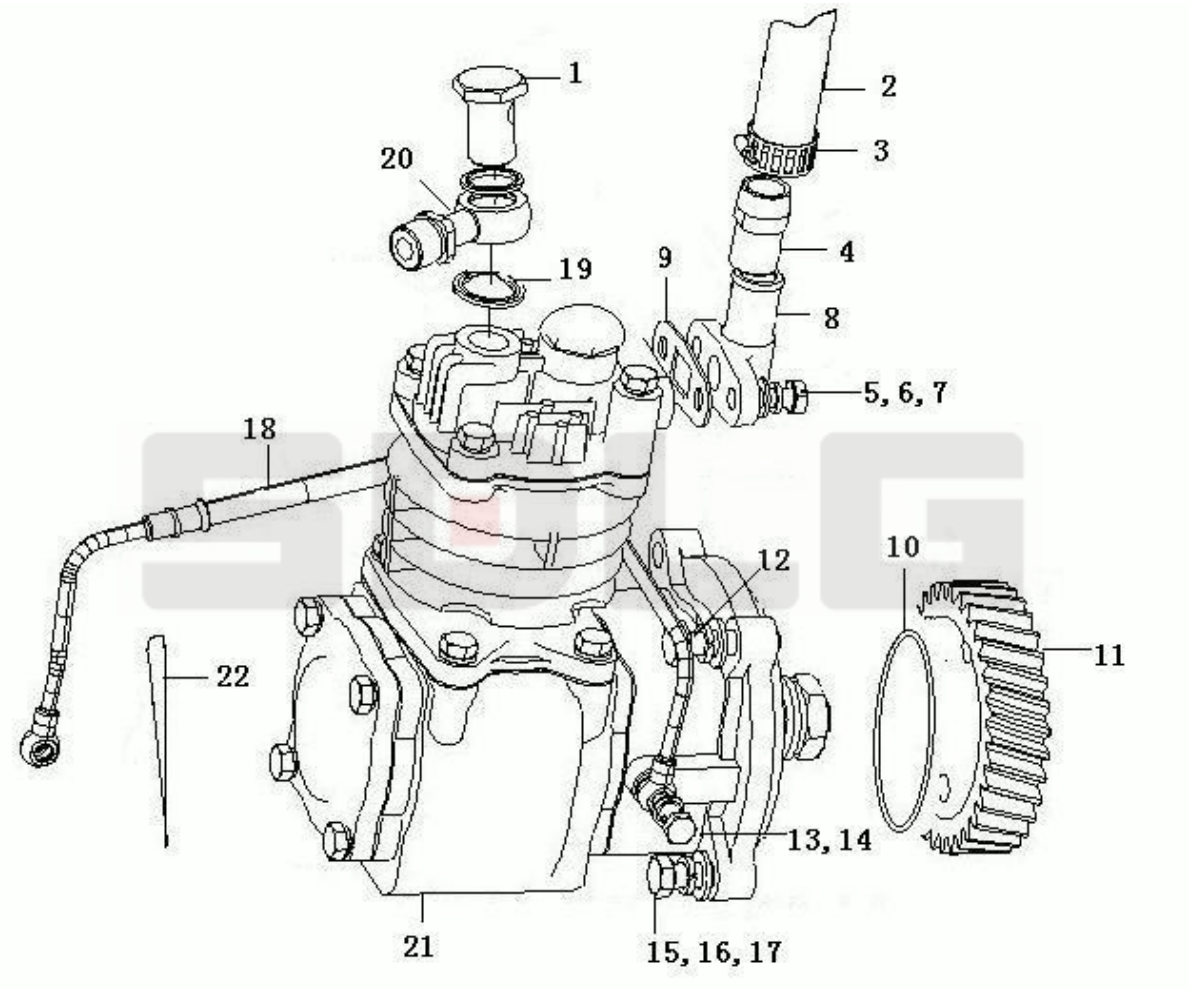

Key	Part No.	Description	Spare parts Y/N	Qty	Remarks
1	4110001026121	Bolt	Y	1	
2	4110001571006	Hose	Y	1	
3	4110000560333	Clamp	Y	2	
4	4110001026115	Nipple	Y	1	
5	4110000560254	Screw	Y	2	
6	4110000560304	Washer	Y	2	
7	4110000560297	Washer	Y	2	
8	4110000560107	Nipple	Y	1	
9	4110000560219	Gasket	Y	1	
10	4110001026116	O-ring	Y	1	
11	4110000560192	Gear	Y	1	
12	4110000054178	Screw	Y	3	
13	4110000560064	Eye bolt	Y	2	
14	4110000560232	Sealing ring	Y	4	
15	4110000560281	Screw	Y	1	
16	4110000560319	Washer	Y	4	
17	4110000560298	Washer	Y	4	
18	4110000560191	Tube	Y	1	
19	4110000560230	Sealing ring	Y	2	
20	4110001571032	Nipple	Y	1	
21	4110001571027	Air compressor	Y	1	
22	4110001571025	Cable tie	N	1	

Alternator assembly

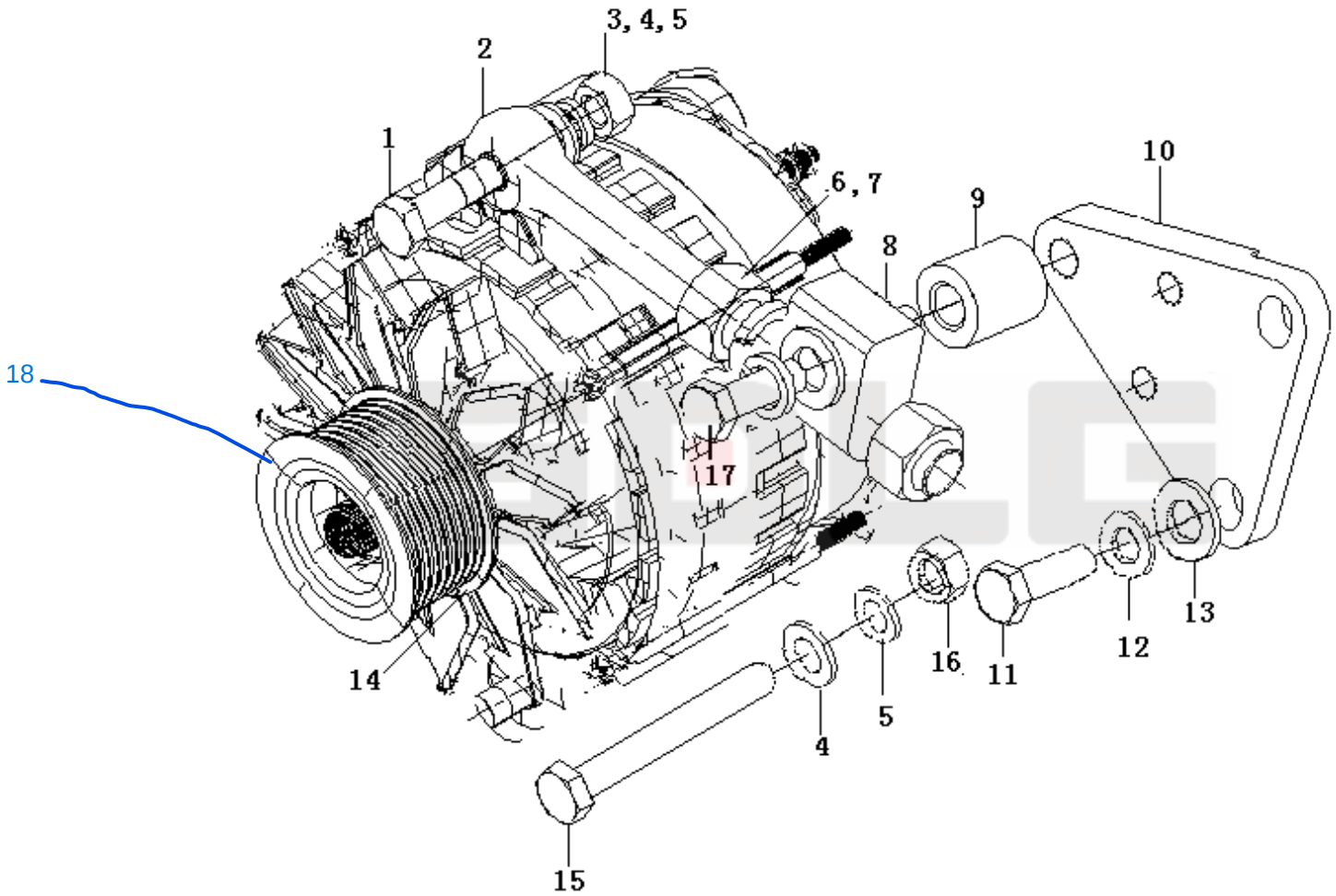

Key	Part No.	Description	Spare parts Y/N	Qty	Remarks
1	4110000560276	Screw	Y	1	
2	4110000560016	Screw	Y	1	
3	4110000560292	Nut	Y	1	
4	4110000560319	Washer	Y	2	
5	4110000560298	Washer	Y	2	
6	4110000560293	Nut	Y	2	
7	4110000560321	Washer	Y	1	
8	4110000560035	Block	Y	1	
9	4110000560116	Block	Y	1	
10	4110000560106	Plate	Y	1	
11	4110000560279	Screw	Y	2	
12	4110000560320	Washer	Y	3	
13	4110000560299	Washer	Y	3	
14	4110000560208	Alternator	Y	1	
15	4110000560268	Screw	Y	1	
16	4110000560292	Nut	Y	1	
17	4110001571036	Screw	Y	1	
18	NVT527	CORREIA DO ALTERNADOR			

Starter motor

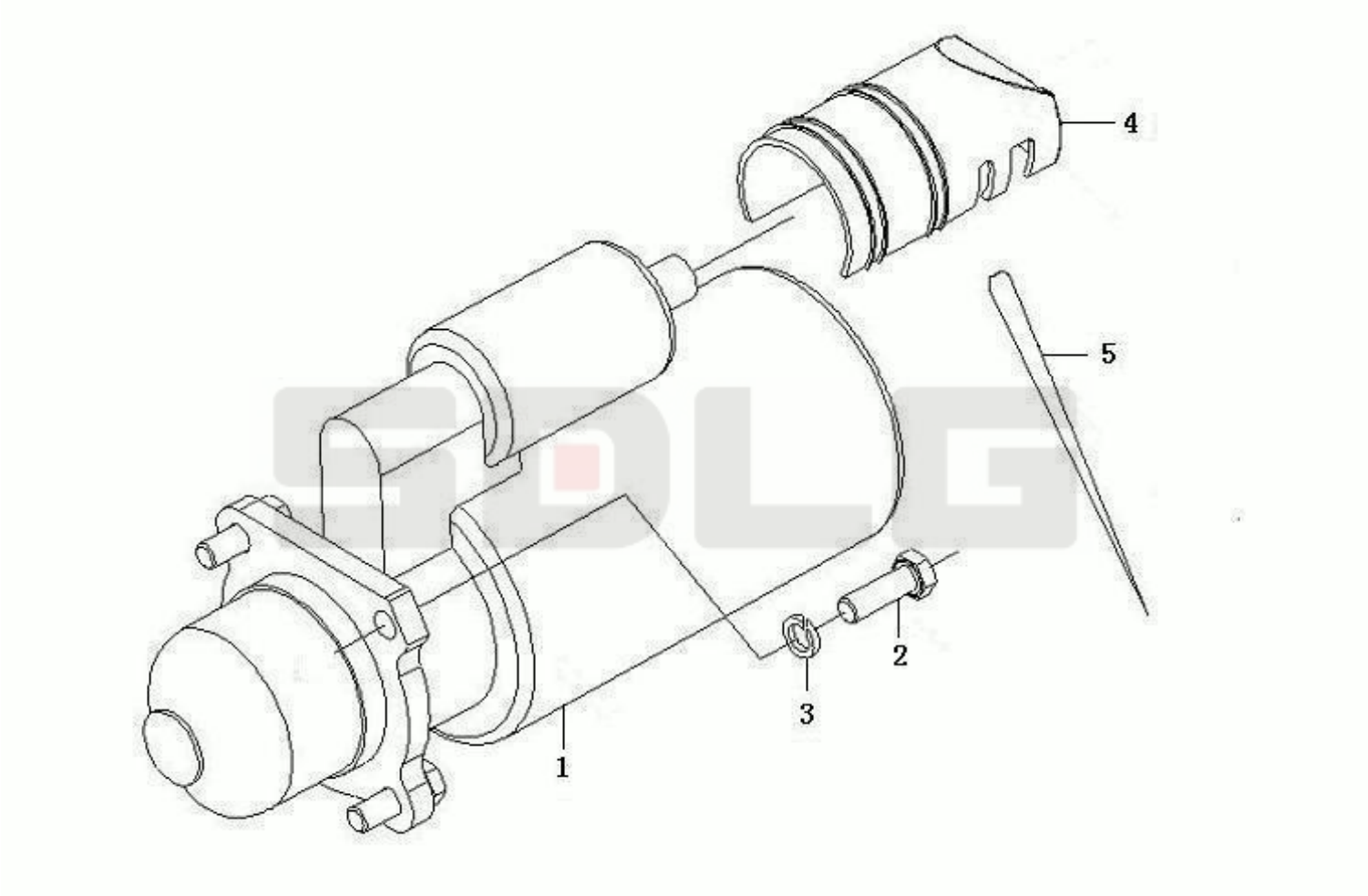

Key	Part No.	Description	Spare parts Y/N	Qty	Remarks
1	4110000560193	Starter motor	Y	1	
2	4110000560272	Screw	Y	3	
3	4110000560319	Washer	Y	3	
4	4110000560102	Shield	Y	1	
5	4110001571025	Cable tie	N	2	

Plug assembly

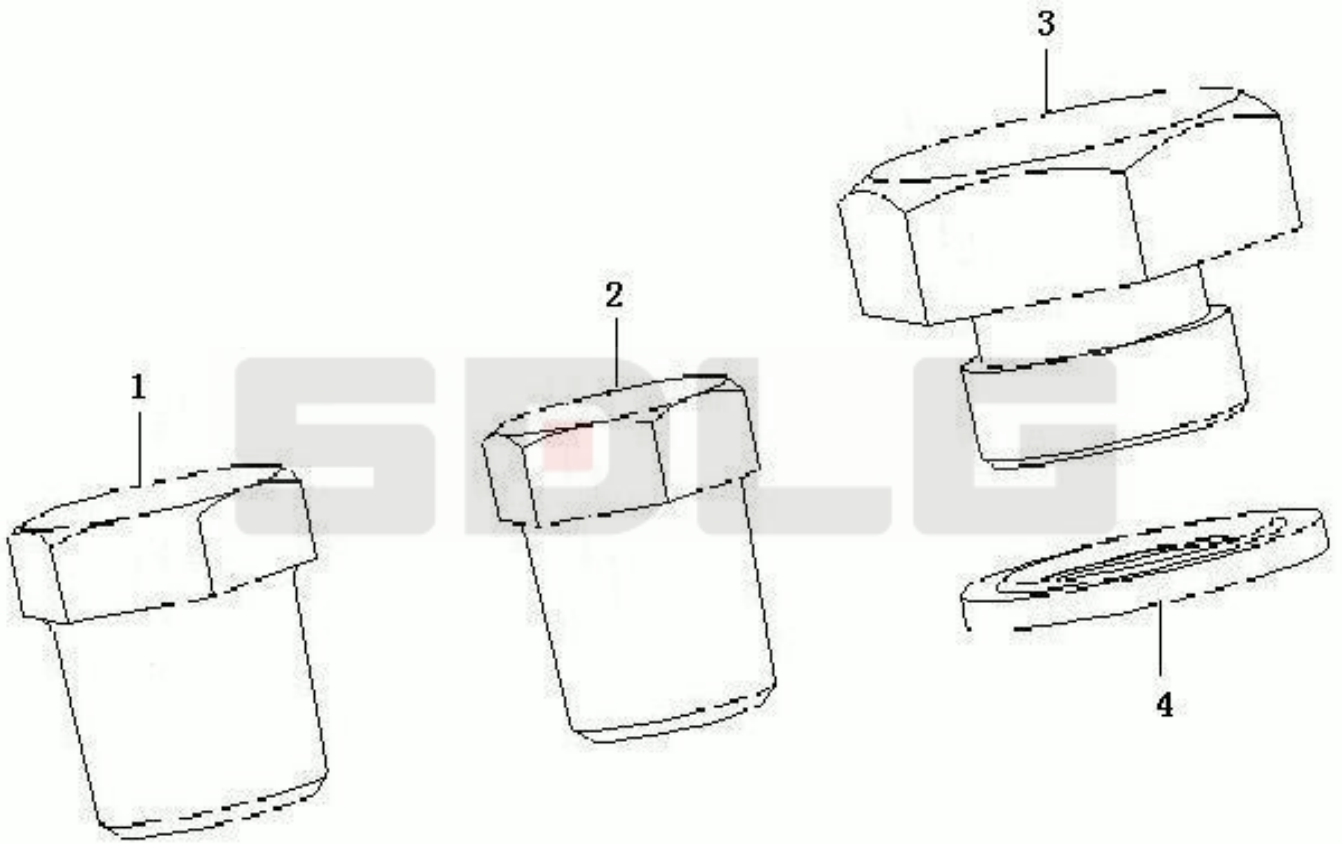

Key	Part No.	Description	Spare parts Y/N	Qty	Remarks
1	4110000560331	Plug	Y	2	
2	4110000560330	Plug	Y	1	
3	4110000560238	Plug	Y	1	
4	4110000560229	Sealing ring	Y	1	

Name plate

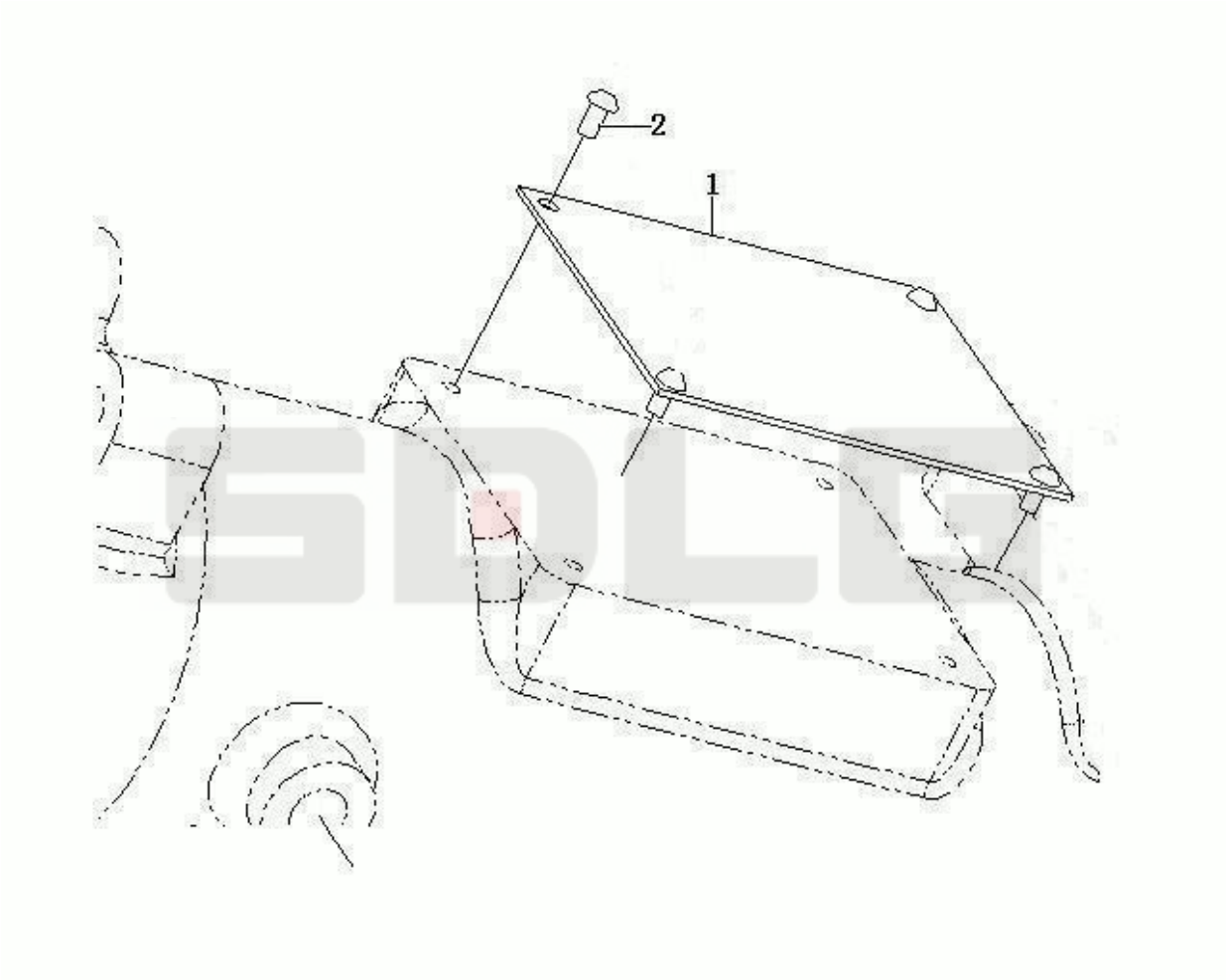

Key	Part No.	Description	Spare parts Y/N	Qty	Remarks
1	4110001571039	Decal	N	1	
2	4110000560348	Rivet	Y	4	

Engine service kit

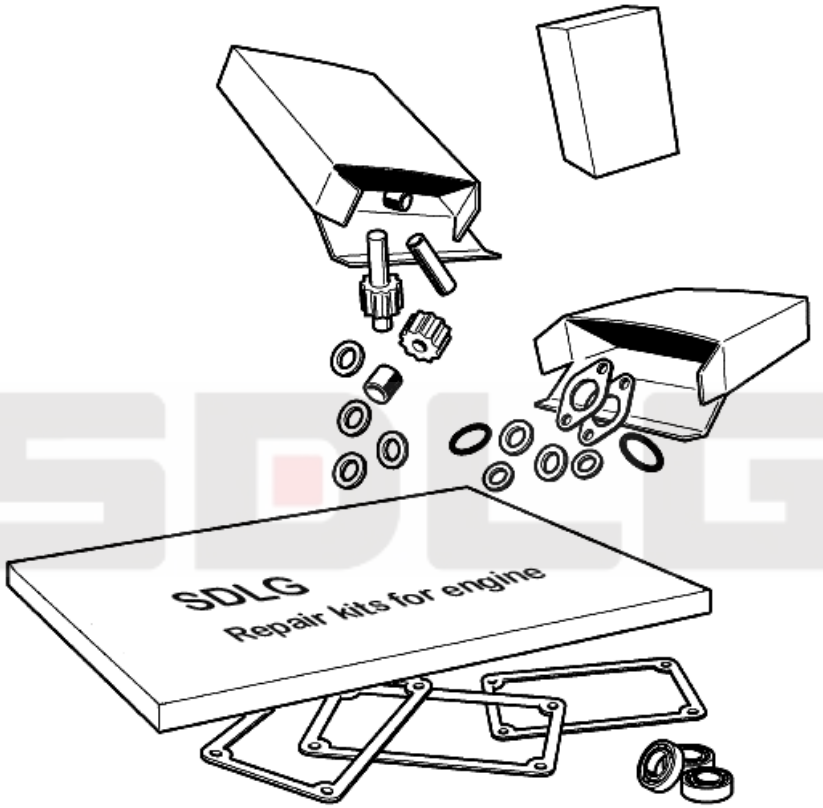

Key	Part No.	Description	Spare parts Y/N	Qty	Remarks
1	4110001571066	Service kit	Y	1	
2	4110001027014	Cylinder head kit	Y	1	
3	4110001027015	Rocker arm kit	N	1	
4	4110001027016	Cylinder liner kit	Y	1	
5	4110001571067	Piston kit	Y	4	
6	4110001027018	Camshaft bearing kit	Y	1	
7	4110001571068	Connecting rod kit	Y	4	
8	4110001027020	Main bearing kit	Y	1	
9	4110000560164	Gasket	Y	1	
10	4110001027022	Nozzle	Y	1	
11	4110001027023	Sealing kit	Y	1	

Cylinder head kit

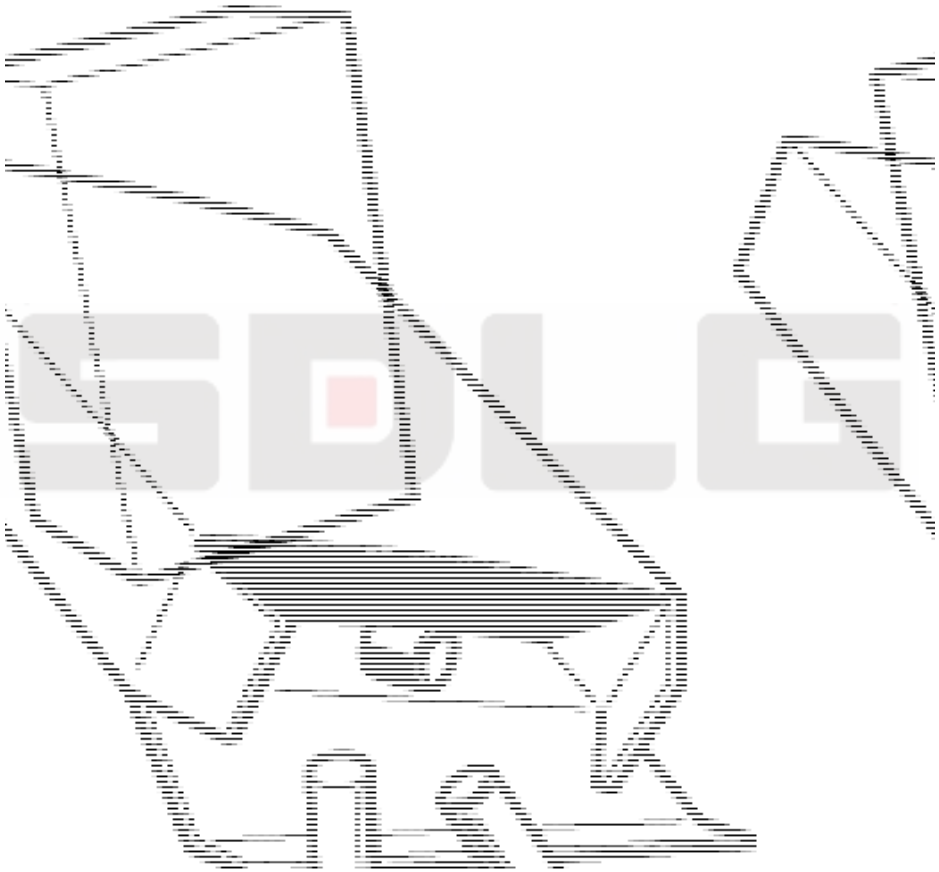

Key	Part No.	Description	Spare parts Y/N	Qty	Remarks
1	4110001026027	Cylinder head gasket	Y	3	
2	4110001571015	Gasket	Y	1	
3	4110000560030	Sealing ring	Y	8	

Rocker arm kit

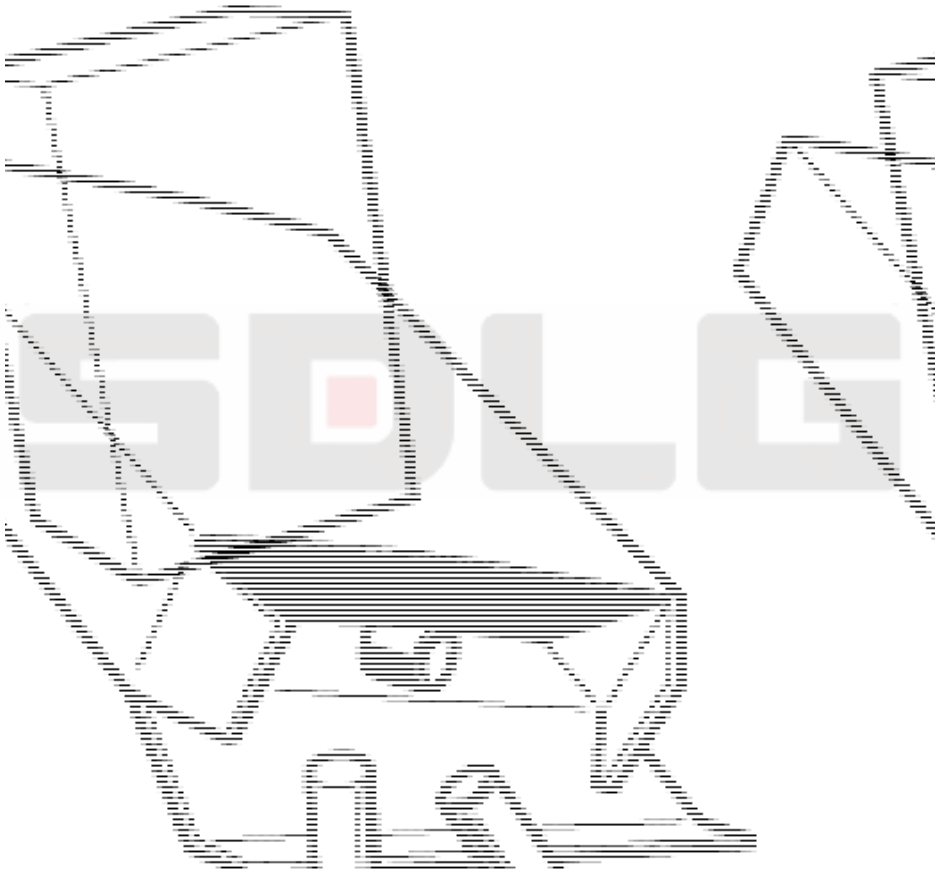

Key	Part No.	Description	Spare parts Y/N	Qty	Remarks
1	4110001782013	Rocker arm	Y	1	

Cylinder liner kit

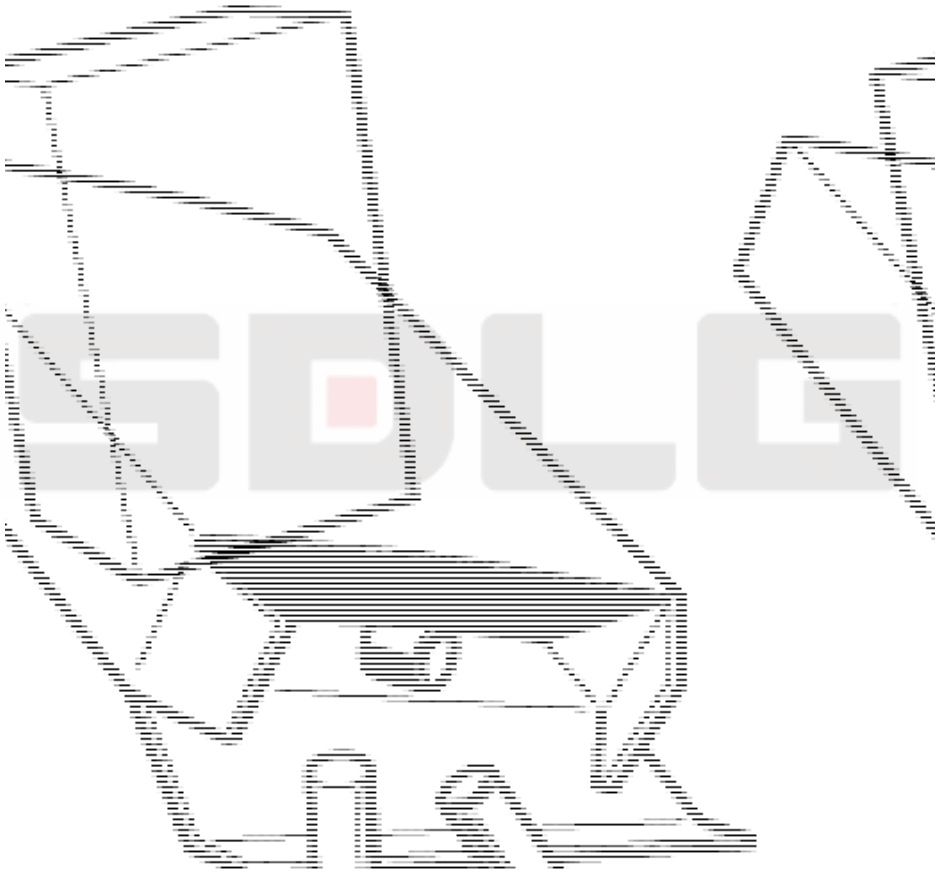

Key	Part No.	Description	Spare parts Y/N	Qty	Remarks
1	4110000560131	Cylinder liner	Y	1	
2	4110000560358	Sealing ring	Y	2	

Piston kit

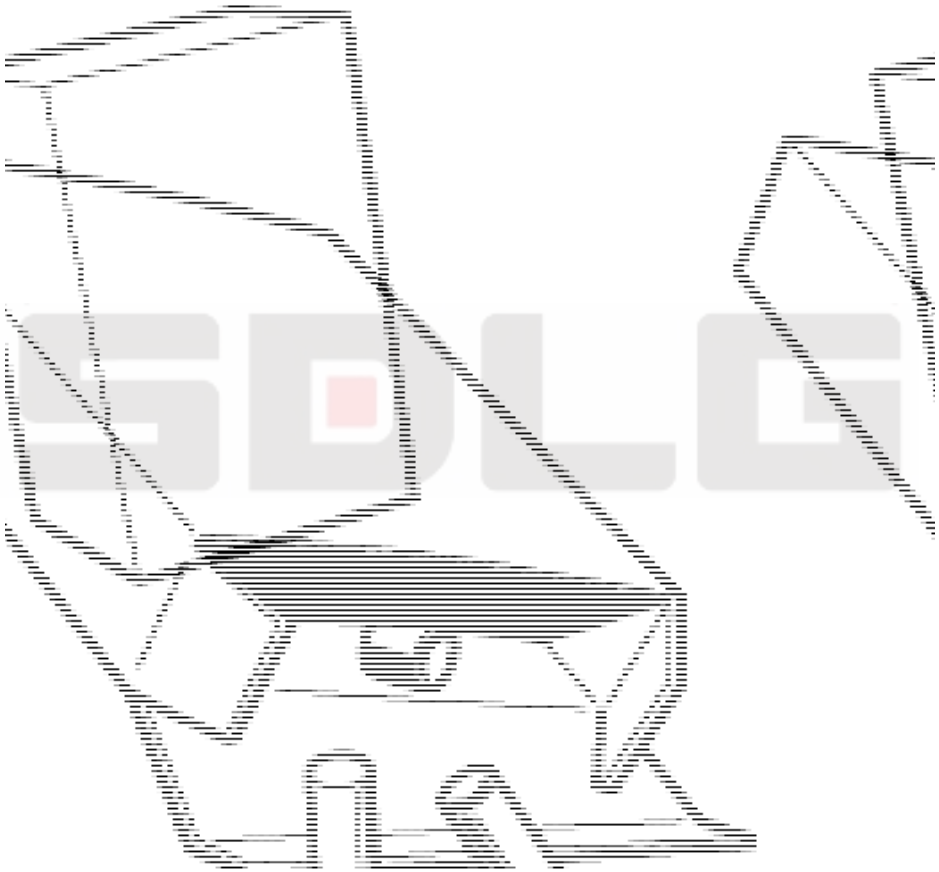

Key	Part No.	Description	Spare parts Y/N	Qty	Remarks
1	4110001161012	Piston ring kit	Y	1	
2	4110000560147	Cylinder piston	Y	1	
3	4110000560058	Piston pin	Y	1	
4	4110000560322	Retaining ring	Y	2	

Camshaft bearing kit

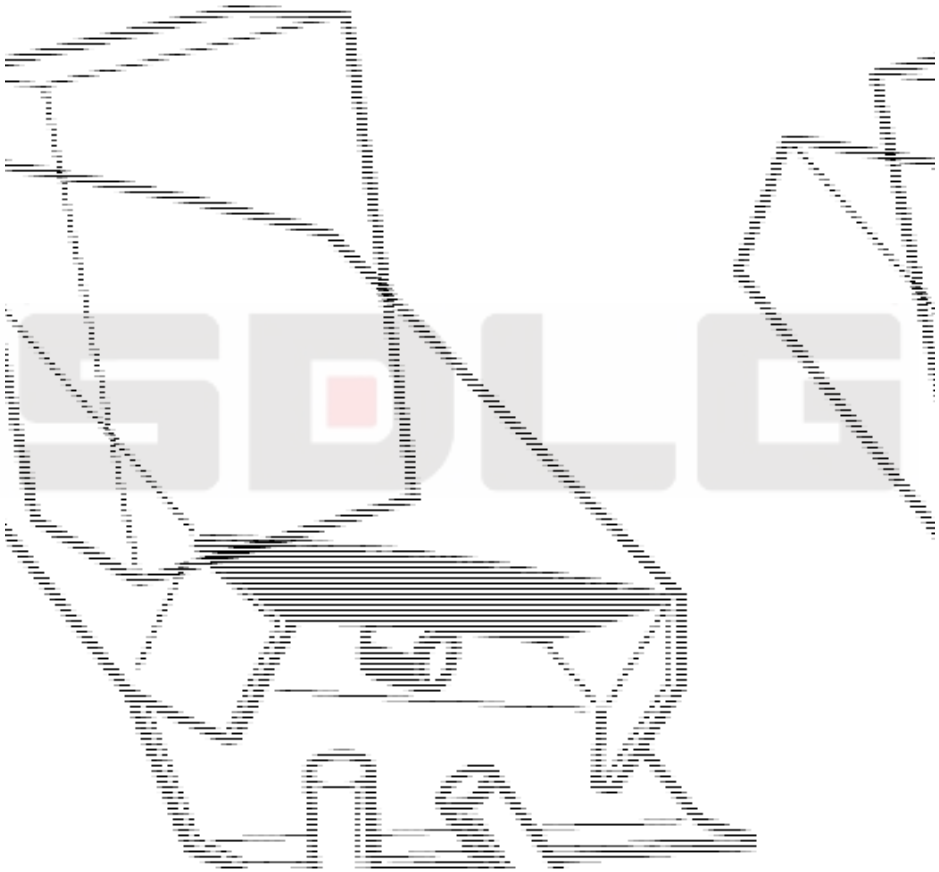

Key	Part No.	Description	Spare parts Y/N	Qty	Remarks
1	4110001026002	Camshaft bushing	Y	5	
2	4110000561291	Bearing bushing	Y	1	

Connecting rod kit

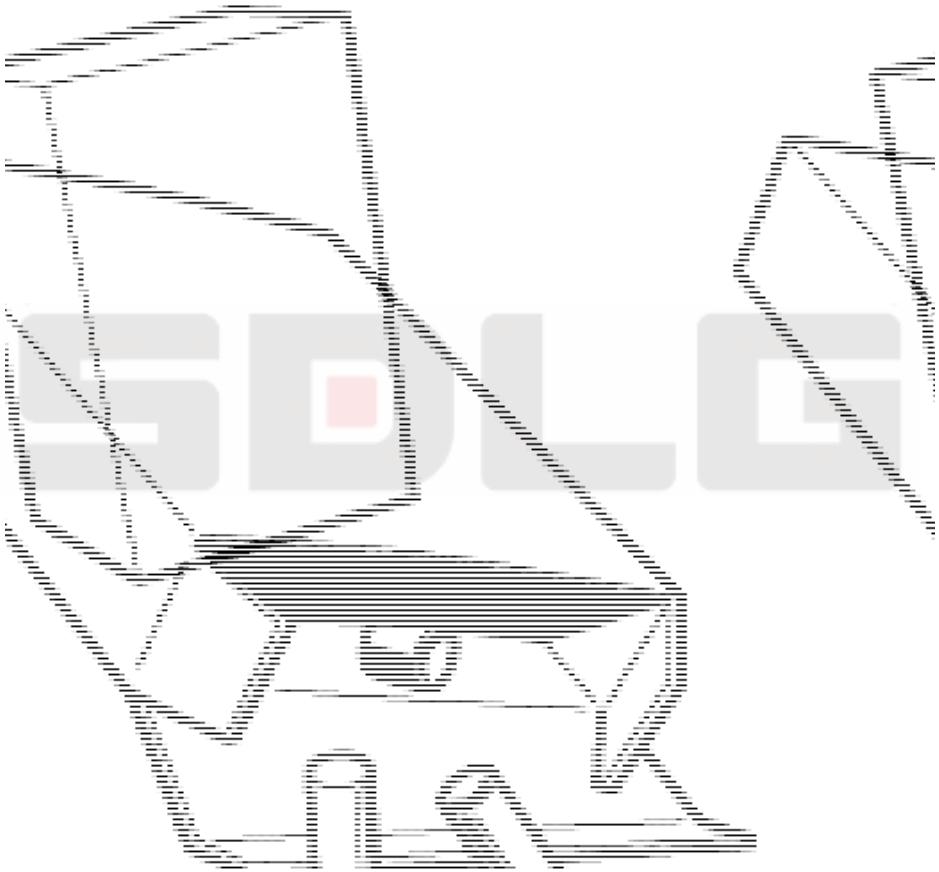

Key	Part No.	Description	Spare parts Y/N	Qty	Remarks
1	4110000560039	Bushing	Y	1	
2	4110000560037	Bearing shell	Y	2	
3	4110000560041	Screw	Y	2	

Main bearing kit

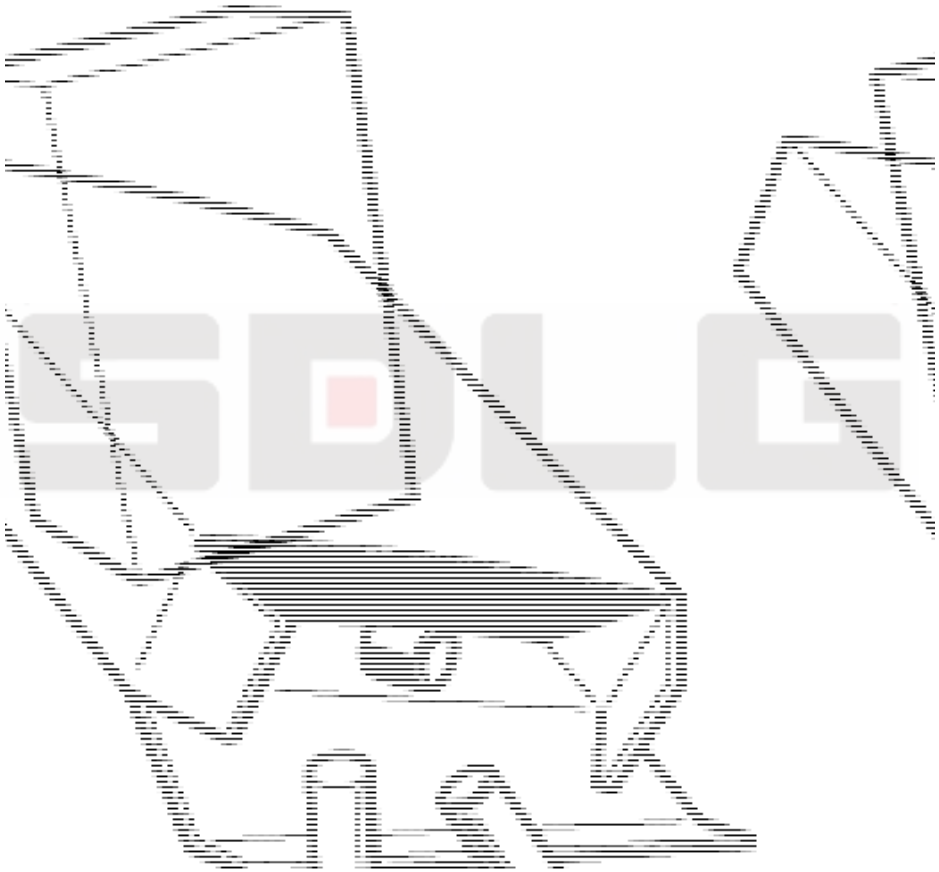

Key	Part No.	Description	Spare parts Y/N	Qty	Remarks
1	4110001027028	Bearing shell	Y	1	
2	4110000560060	Thrust washer	Y	4	

Nozzle

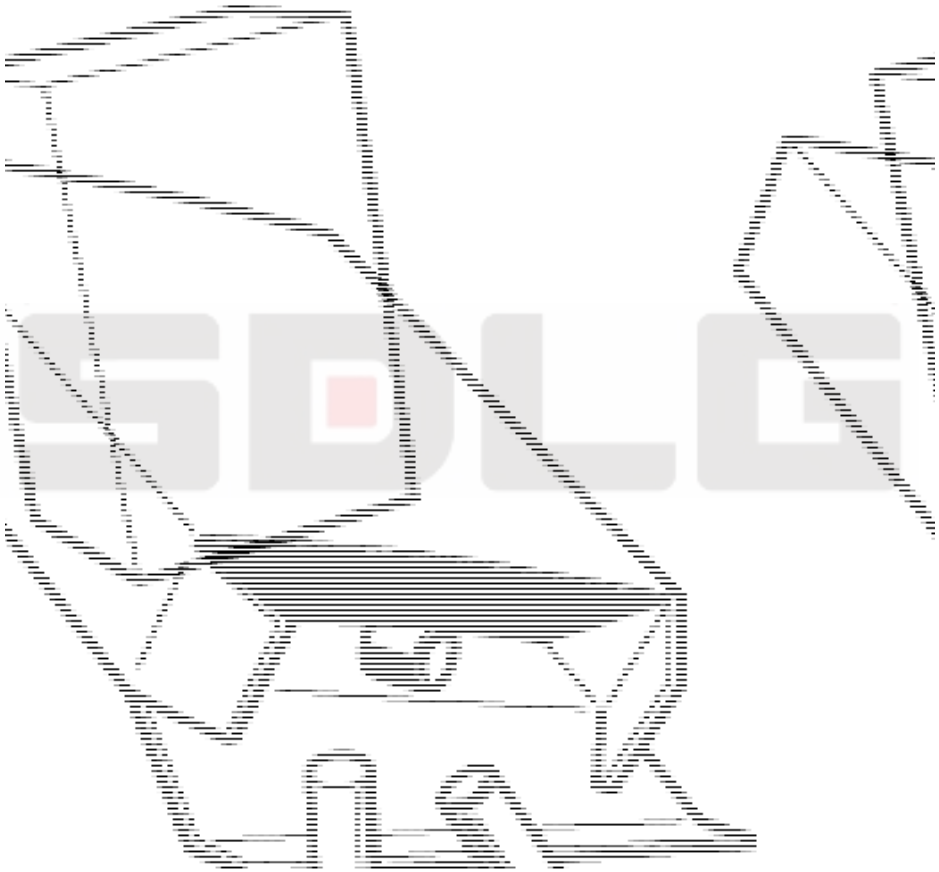

Key	Part No.	Description	Spare parts Y/N	Qty	Remarks
1	4110000560023	Injector	Y	1	
2	4110001571021	Fuel injection nozzle	Y	1	

Sealing kit

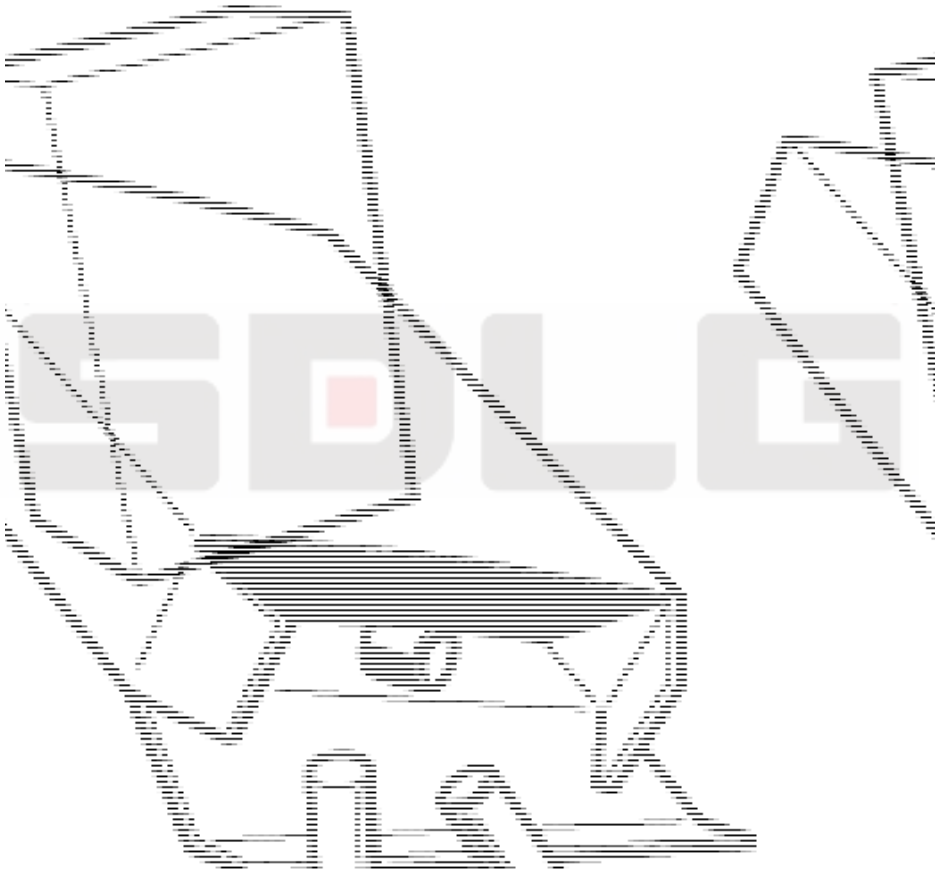

Key	Part No.	Description	Spare parts Y/N	Qty	Remarks
1	4110000560230	Sealing ring	Y	1	
2	4110000561305	Plug	Y	3	
3	4110000561296	Plug	Y	4	
4	4110001027006	Cushion	Y	1	
5	4110000560123	Gasket	Y	1	
6	4110000560339	O-ring	Y	1	
7	4110001026024	Sealing ring	Y	1	
8	4110001571002	Sealing ring	Y	1	
9	4110000561039	Sealing ring	Y	1	
10	4110000560228	Sealing ring	Y	1	
11	4110000560189	Gasket	Y	1	
12	4110000560338	O-ring	Y	1	
13	4110000560170	Gasket	Y	1	
14	4110000560175	Gasket	Y	1	
15	4110000560340	Sealing ring	Y	1	