RUTHZIL TRATOR COMERCIAL DE PEÇAS LTDA 11 97083-6812 ROLANDO

LG958N WHEEL LOADER
PARTS CATALOG



SHANDONG LINGONG CONSTRUCTION MACHINERY CO.,LTD.

Spare parts and services

For the owner of the machines of SDLG,only the spare parts and services of SDLG can make your machine to better maintain the original features.

Only SDLG is able to provide you with the perfect match of pure quality spare parts for your machine and knowledge of professional maintenance staff.Only in this way it can ensure sustainable high productivity and longer service life.

LG958N WHEEL LOADER PARTS CATALOG

2010-12 Version 1 Printed 1

SHANDONG LINGONG CONSTRUCTION MACHINERY CO.,LTD.

Add：Lingong Industry Park,Linyi Economic &Technological Development Area,Shandong,China
Tel：86-0539-8785624/86-0531-66590955
Fax：86-0539-8785618/86-0531-66590959
Web：www.sdlg.cn

FOREWORD

This parts catalog of LG958N wheel loader is made for the convenience of users to use, repair and maintain the machine, which can be refered in the process of using. It can also help the users to be familiarwith the structure and assembly relation of the machine. Parts of the engine are showed in details in its structure handbook, which are no longer contained in the catalog.

The catalog identifies drawings and assembly relations of different parts according to the system.Components which can not be taken apart, such as welding parts or riveted assemblies,are marked only by their code without the list of their consisting parts .The list in the catalog is arranged in Chinese and English.

This catalog is based on the LG958N standard product, which can be a reference for the other nonstandard products, for more information, please consult ShanDongLinGong, the local dealer or LinGong website. With the advancement of technology, we will keep on improving the product, so some content in the catalog may be inconsistent with the future products, which will not notice the users. When ordering the spare parts, please be kindly inform us the manufacturing date and serial number of the machine.

THE COMPILER
2013.6

CONTENTS

A. Diesel engine system	BoM Reference	Page
Engine system	A1-2901004004	8
Fuel tank system	A2-2902001280	12
Cooling system	A3-2903002255	16
Expansion tank	A3-2903002256	18
Water hose	A3-2903002257	20
Cooling pipe	A3-2903002258	22
Oil hose	A3-2903002259	24
Cooling accessory	A3-2903002260	26
Cooling assembly	A3-4110002035	30
Inlet system	A11-2901004030	34
Exhaust system	A12-2901004028	36
Fuel supply system	A13-2901004005	38
Valve	A15-4120005302	40

C. Transmission system	BoM Reference	Page
Transmission system	C1-2905002155	44
Engine connect assembly	C2-4110000042	46
Torque converter	C3-4110000042	48
Transmission input section	C4-4110000042	50
Gearbox housing	C5-4110000042	56
Reverse gear assembly	C6-4110000042	58

First gear assembly	C7-4110000042	60
Clutch	C8-4110000042	66
Clutch	C9-4110000042	72
Transmission output section	C10-4110000042	78
Parking brake assembly	C11-4110000042	82
Parking brake shoe assembly	C12-4110000042	84
Power take-off 1	C13-4110000042	86
Power take-off 2	C14-4110000042	88
Gearshift hydraulic control section 1	C15-4110000042	90
Gearshift hydraulic control section 2	C16-4110000042	92
Transmission pressure control valve	C17-4110000042	100
Transmission oil filter	C18-4110000042	102
Emergency.steer.pump	C19-4110000042	104
Transmission speed sensor	C20-4110000042	106
Transmission dipstick	C21-4110000042	108
Transmission oil pipes	C22-4110000042	110
Transmission - miscellaneous items	C23-4110000042	112

E. Axle system	**BoM Reference**	**Page**
Front axle assemblky	E1-2907001894	116
Propeller shaft	E4-2908000843	118
Front main drive	E2-2907001639	120

Rear axle assembly	E3-2909001091	126
Hub reduction	E4-2907001896	130
Hub reduction	E5-2909001094	134
Rear final drive	E6-2909001025	138
Tire	E9-4110000006	144
Tyre	E8-4110000582	146

F. Implement hydraulic system	**BoM Reference**	**Page**
Hydraulic control assembly	F1-2912002295	150
Working pump system	F2-2911001065	160
Hydraulic tank assembly	F3-2910002040	162
Lifting cylinder system	F7-2913001704	166
Lifting cylinder	F6-4120004336	172
Tilt cylinder system	F5-2914001601	176
Tilt cylinder	F6-4120003685	180
The 3rd function control	F12-2912002303	184

G. Quick-change system	**BoM Reference**	**Page**
Quick-change equipment	G1-2918001236	190
Quickly equipment hydraulic system	G2-2918001169	192
Quickly change bracket	G2-2918001170	198
Quick-change electrical system	G3-2941000033	200

H. Working equipment	BoM Reference	Page
Working equipment attachment	H1-2915001615/2916000848	204
Bucket assembly	H2-2917009034	208

I. Steering system	BoM Reference	Page
Steering pump system	I1-2919001205	212
Steering gear system	I2-2920001023	216
Steering cylinder system	I3-2921000950	222
Right steering cylinder (3713ch)	I4-4120005068	224
Left steering cylinder (3713ch)	I4-4120005067	226

J. Brake system	BoM Reference	Page
Service brake system	J1-2922001537	230
Parking brake assembly	J4-2923000937	238

K. Frame	BoM Reference	Page
Front frame and accessory	K1-2924002315/2925000991	244
Rear frame and accessory	K2-2926002716/2927001296	248
Counter weight	K3-2928001040	254

L. Cab group	BoM Reference	Page

Cab assembly	L1-2929002418-1	258
Cab assembly	L1-2929002418-2	262
Cab assembly	L1-2929002418-3	264
Seat accessory	L2-2930000816	266
Door assembly	L2-2929001800	268
Interior	L3-2929002298	272
Operator box assembly	L5-2932000973	276
Air conditioner cover assembly	L6-2929001630	278
Washer system	L7-2929002157	280
Cab accessory	L9-2931001987	282

M. Conver system	**BoM Reference**	**Page**
Engine hood	M1-2933004933	288
Right bench assembly	M3-2934003006	294
Left bench assembiy	M4-2934003007	296
Rear steering lamp hood	M5-2934002645	298
Sign and logo	M6-2936001784	300

N. Air conditioner system	**BoM Reference**	**Page**
Air condition unit	N1-2935001098	304
Air conditioner system	N3-2935001110	308
Evaporator assembly	N4-4190002757	310

Evaporator assembly	N5-4190002757	312
Condenser	N6-4190002759	314
Condenser assembly	N7-4190002759	316

O. Electric system	**BoM Reference**	**Page**
Power electric assembly	O1-2937002512	320
Front frame electric assembly	O2-2941000026	322
Rear frame electric assembly	O3-2942000031	324
Cab electric assembly	O4-2943000037	326
Engine electric assembly	O5-2944000015	332
Engine hood electric assembly	O6-2945000011	336

A
DIESEL ENGINE SYSTEM



SHANDONG LINGONG CONSTRUCTION MACHINERY CO.,LTD.

Engine system

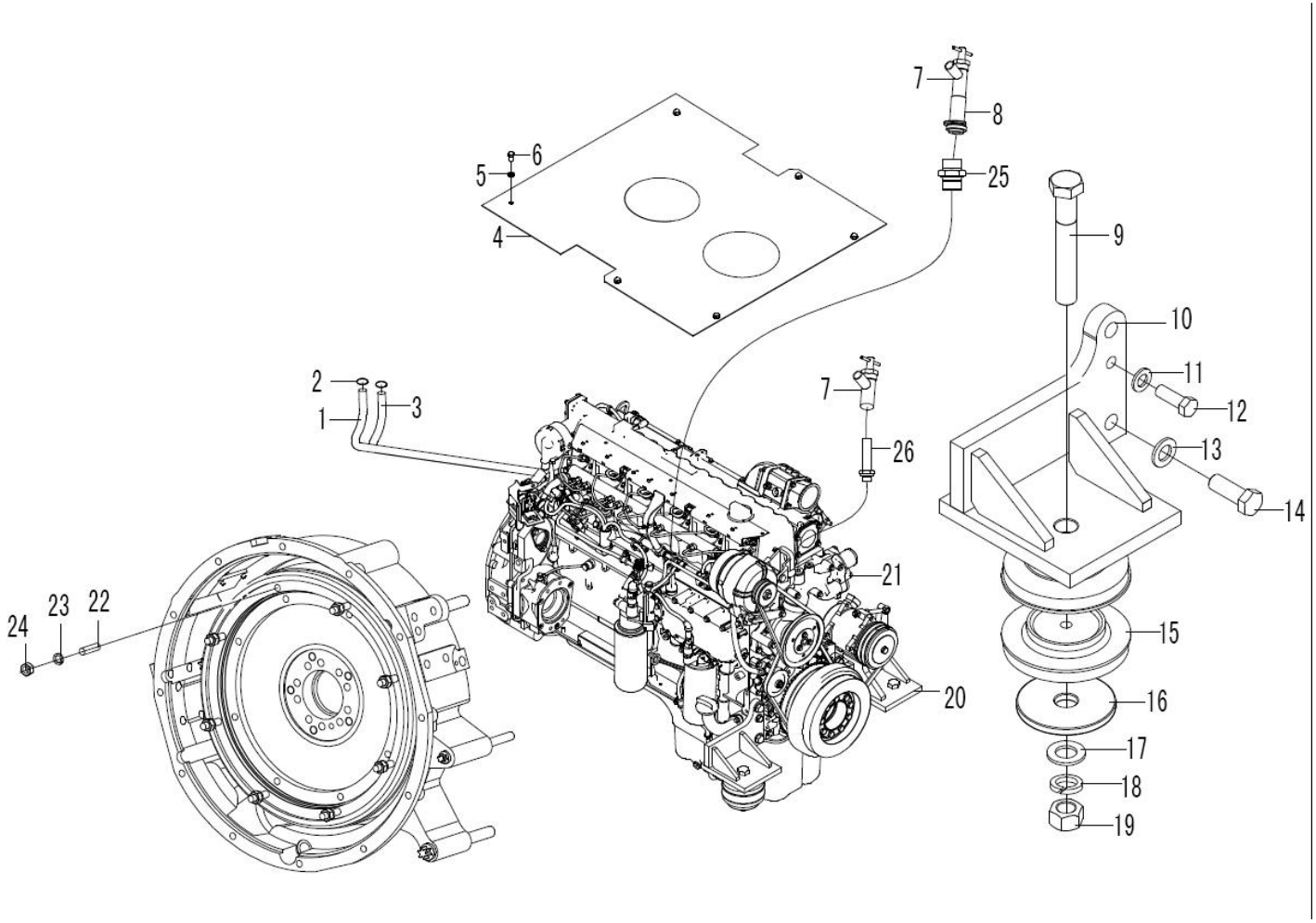

Key	Part No.	Description	Spare parts Y/N	Qty	Remarks
1	29010027211	Hose	Y	1	
2	4017000024	Clamp	Y	4	
3	29010027221	Hose	Y	1	
4	29010036821	Cover	Y	1	
5	4015000197	Washer	Y	6	
6	4011000081	Bolt	Y	6	
7	4120000067	Valve	Y	2	
8	29010031381	Nipple	Y	1	
9	4011000695	Bolt	Y	2	
10	29010031611	Engine bracket	Y	1	
11	4015000168	Washer	Y	2	
12	4011000596	Bolt	Y	2	
13	4015000181	Washer	Y	4	
14	4011000564	Screw	Y	4	
15	4110001528	Absorber	Y	4	
16	29010024431	Washer	Y	2	
17	4015000176	Washer	Y	2	
18	4015000030	Spring washer	Y	2	
19	4013000160	Lock nut	Y	2	
20	29010040361	Engine bracket	Y	1	
21	4110002126	Engine	Y	1	
22	29010023401	Stud	Y	8	

Engine system

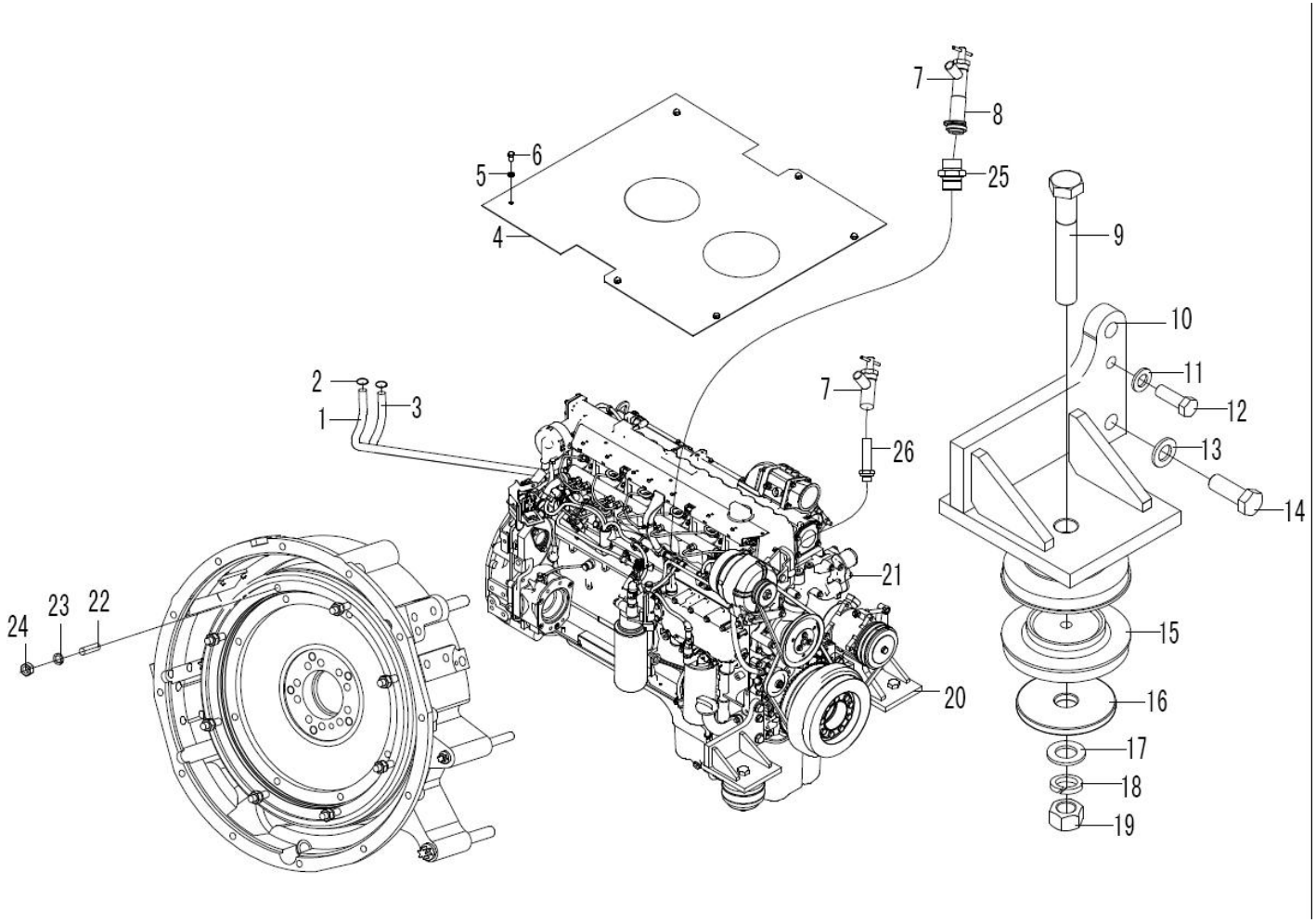

Key	Part No.	Description	Spare parts Y/N	Qty	Remarks
23	4015000025	Spring washer	Y	8	
24	4013000007	Nut	Y	8	
25	29010040741	Nipple	Y	1	
26	29010038161	Nipple	Y	1	

Fuel tank system

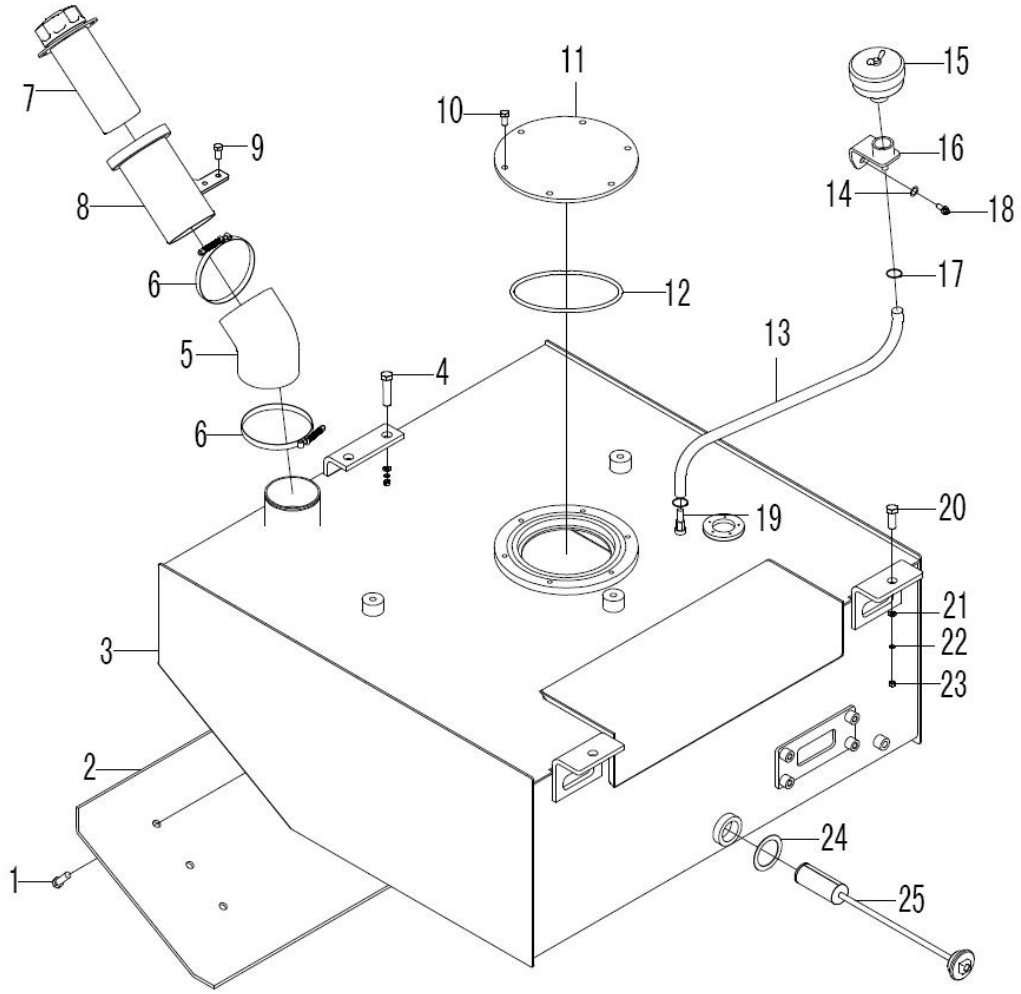

Key	Part No.	Description	Spare parts Y/N	Qty	Remarks
1	4011000137	Bolt	Y	6	
2	29020010471	Protecting plate	Y	1	
3	29020012821	Fuel tank	Y	1	
4	4011000564	Screw	Y	2	
5	29020010241	Hose	Y	1	
6	4017000005	Clamp	Y	2	
7	29020010221	Fuel pipe	Y	1	
8	4110000613	Fuel filter	Y	1	
9	4011000461	Bolt	Y	2	
10	4011000474	Bolt	Y	6	
11	29020000041	Cover plate	Y	1	
12	4030000022	O-ring	Y	1	
13	29020010251	Hose	Y	1	
14	4015000091	Washer	Y	1	
15	4110000852	Air cleaner	Y	1	
16	29020009491	Bracket	Y	1	
17	4017000015	Clamp	Y	2	
18	4011000447	Bolt	Y	1	
19	29020006561	Tube	Y	1	
20	4011000665	Screw	Y	2	
21	4015000181	Washer	Y	4	
22	4015000098	Spring washer	Y	4	

Fuel tank system

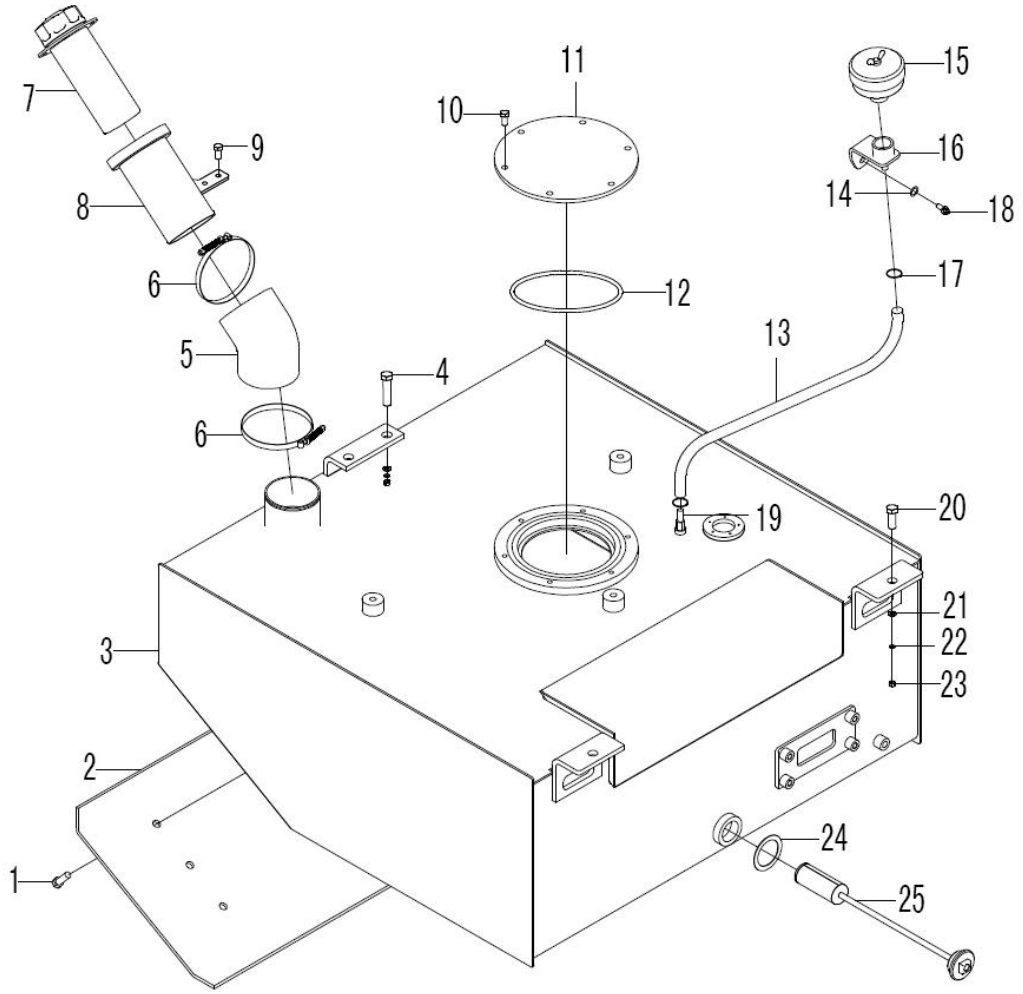

Key	Part No.	Description	Spare parts Y/N	Qty	Remarks
23	4013000205	Nut	Y	2	
24	29020007931	Washer	Y	1	
25	29020010561	Fuel filter	Y	1	

Cooling system

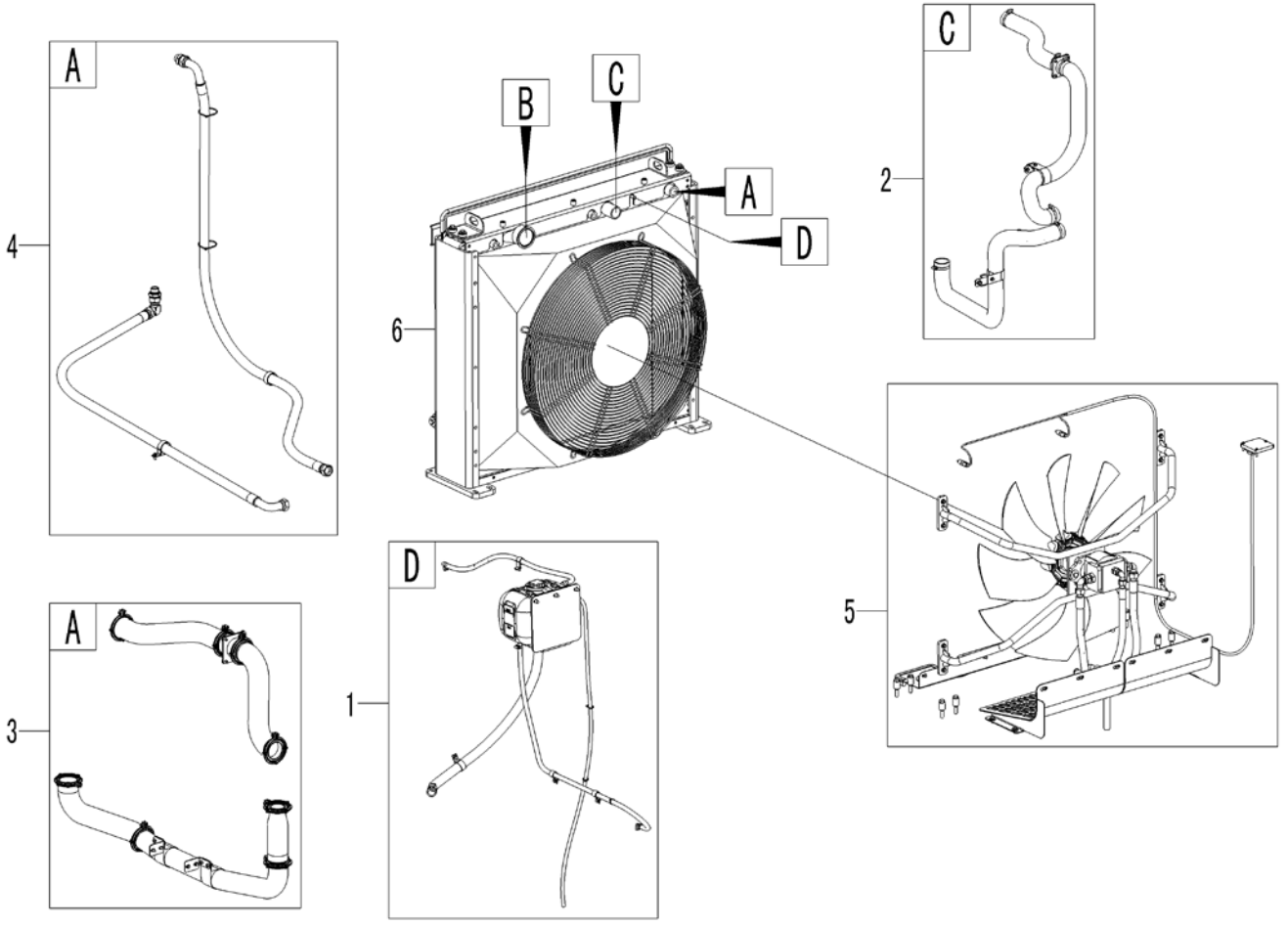

Key	Part No.	Description	Spare parts Y/N	Qty	Remarks
1	29030022561	Assembly compound	N	1	
2	29030022571	Assembly compound	N	1	
3	29030022581	Assembly compound	N	1	
4	29030022591	Assembly compound	N	1	
5	29030022601	Assembly compound	N	1	
6	4110002035	Radiator	Y	1	

Expansion tank

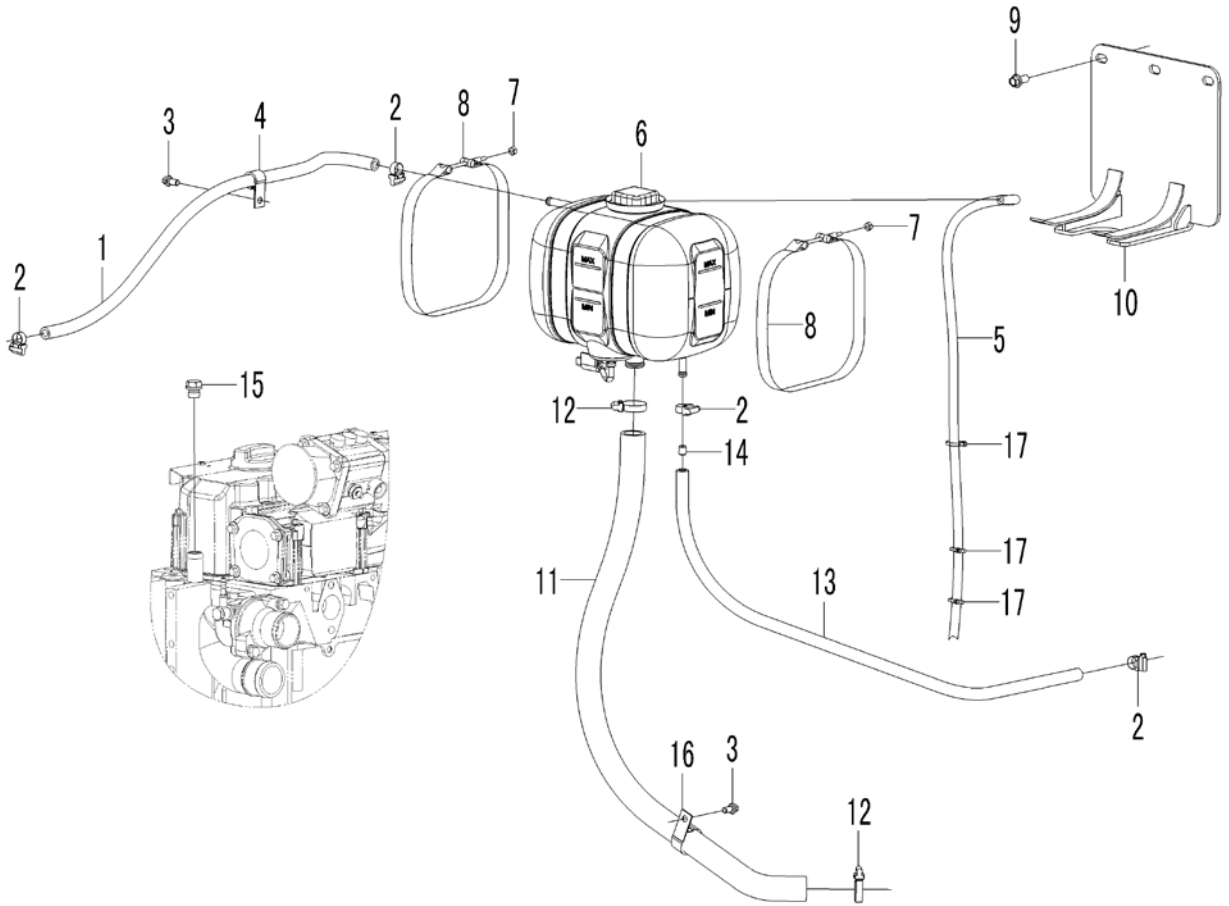

Key	Part No.	Description	Spare parts Y/N	Qty	Remarks
1	4090000303	Hose	Y	1	
2	4017000010	Clamp	Y	4	
3	4011000461	Bolt	Y	2	
4	29010000031	Clamp	Y	1	
5	11210116	Hose	N	1	
6	11211142	Expansion tank	Y	1	
7	11210055	Flange lock nut	Y	2	
8	11210227	Tensioning band	Y	2	
9	4011000447	Bolt	Y	3	
10	29030021281	Bracket	Y	1	
11	29030022471	Hose	Y	1	
12	4017000008	Clamp	Y	2	
13	4090000307	Hose	Y	1	
14	29030022061	Nipple	Y	1	
15	4030000545	Plug	Y	1	
16	29030009851	Clamp	Y	1	
17	4190001839	Cable tie	Y	3	

Water hose

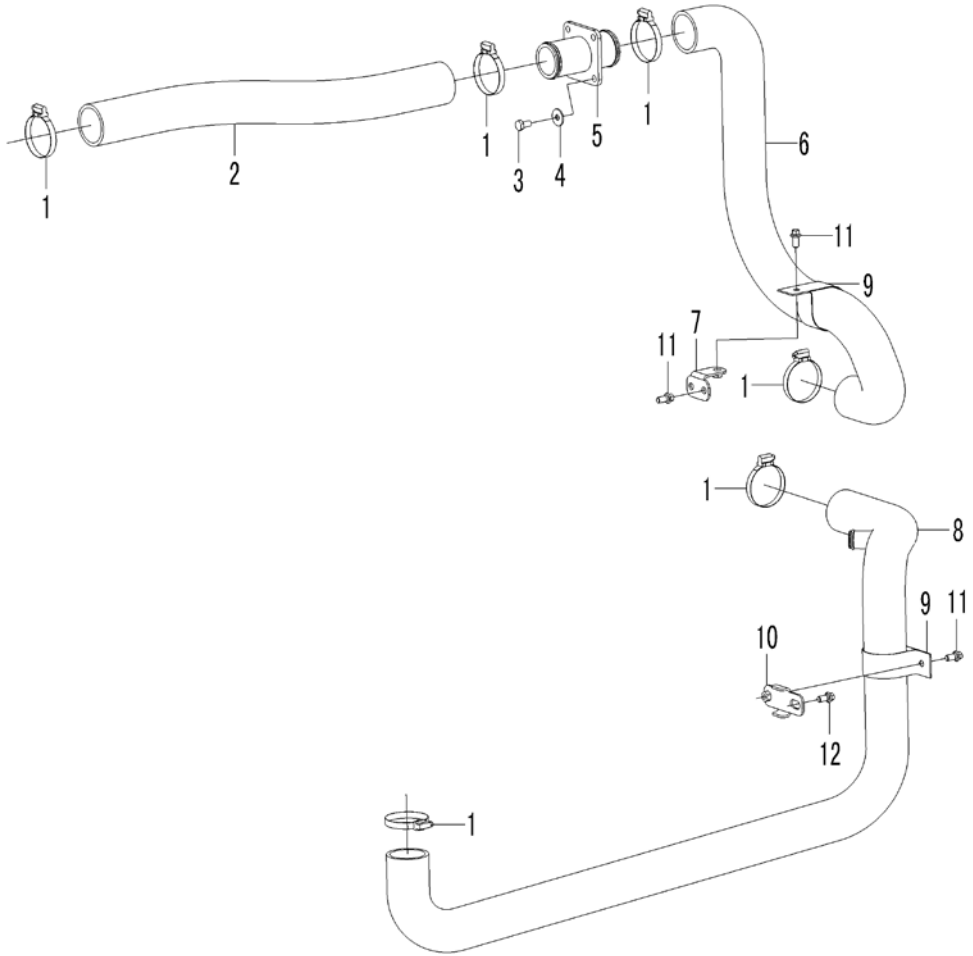

Key	Part No.	Description	Spare parts Y/N	Qty	Remarks
1	4017000018	Clamp	Y	6	
2	29030021321	Hose	Y	1	
3	4011000105	Bolt	Y	4	
4	4015000256	Washer	Y	4	
5	4110002013	Hose connection	Y	1	
6	29030022011	Hose	Y	1	
7	29030022531	Bracket	Y	1	
8	29030022461	Hose	Y	1	
9	29030012901	Clamp	Y	2	
10	29030022611	Bracket	Y	1	
11	4011000461	Bolt	Y	4	
12	4011000488	Bolt	Y	1	

Cooling pipe

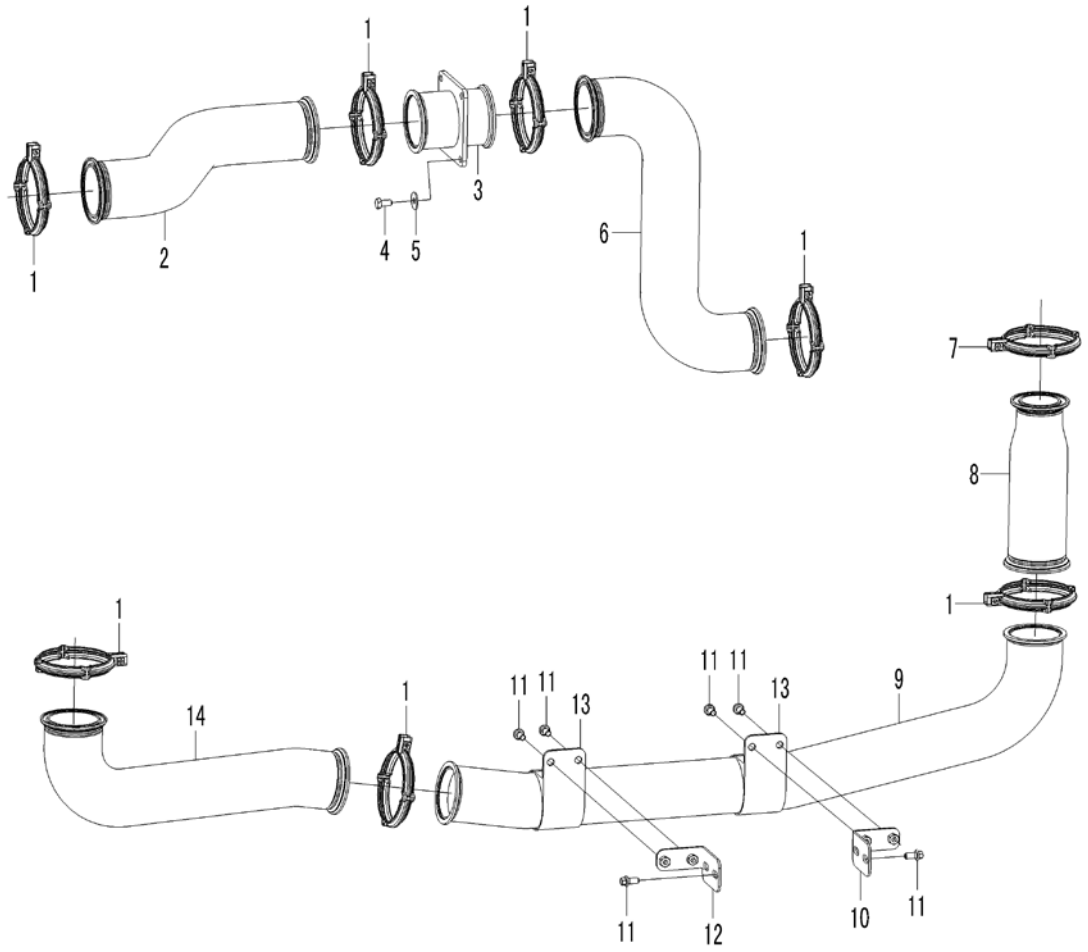

Key	Part No.	Description	Spare parts Y/N	Qty	Remarks
1	4110002209	Clamp	Y	7	
2	29030021361	Hose	Y	1	
3	4110002014	Hose connection	Y	1	
4	4011000105	Bolt	Y	4	
5	4015000256	Washer	Y	4	
6	29030022001	Hose	Y	1	
7	4110002208	Clamp	Y	1	
8	29030021981	Hose	Y	1	
9	29030021991	Pipe	Y	1	
10	29030022031	Bracket	Y	1	
11	4011000461	Bolt	Y	8	
12	29030021401	Bracket	Y	1	
13	29030012121	Clamp	Y	2	
14	29030021411	Hose	Y	1	

Oil hose

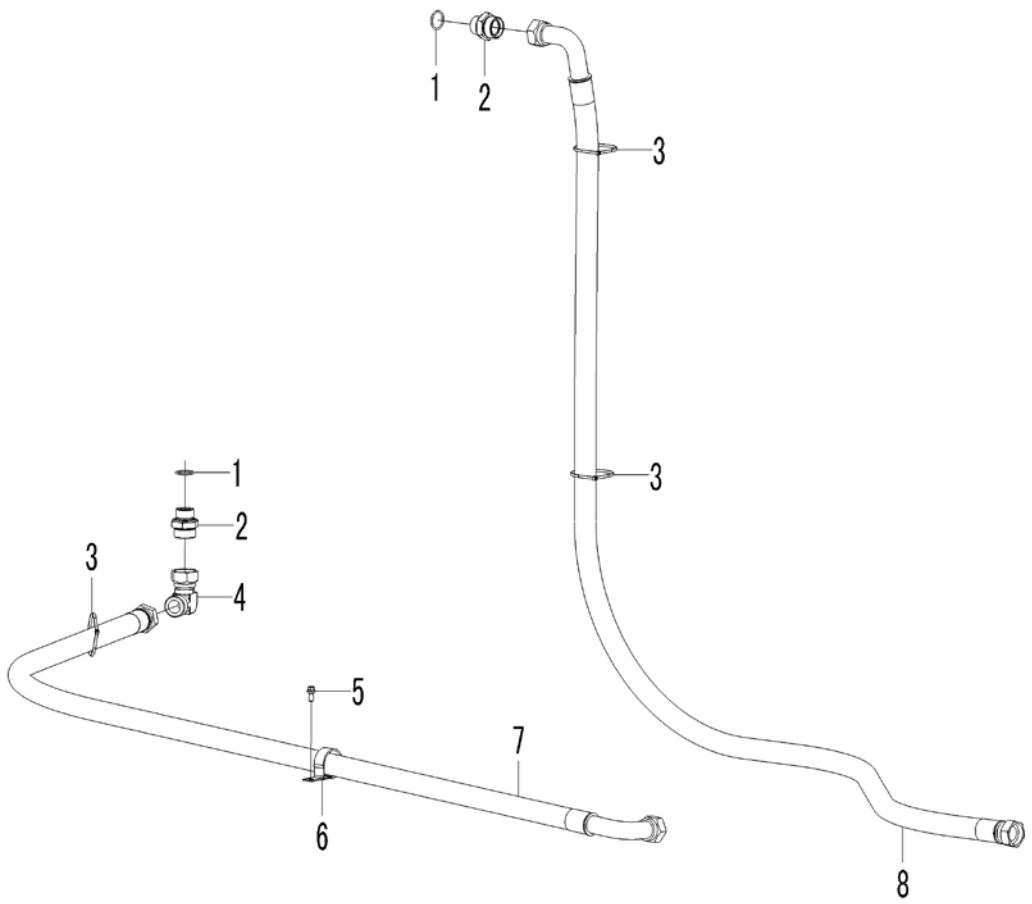

Key	Part No.	Description	Spare parts Y/N	Qty	Remarks
1	4030000211	O-ring	Y	2	
2	4041001486	Nipple	Y	2	
3	4190001834	Cable tie	Y	3	
4	4041001211	Nipple	Y	1	
5	4011000461	Bolt	Y	1	
6	29030010811	Clamp	Y	1	
7	29030023111	Hose assembly	Y	1	
8	29030023121	Hose assembly	Y	1	

Cooling accessory

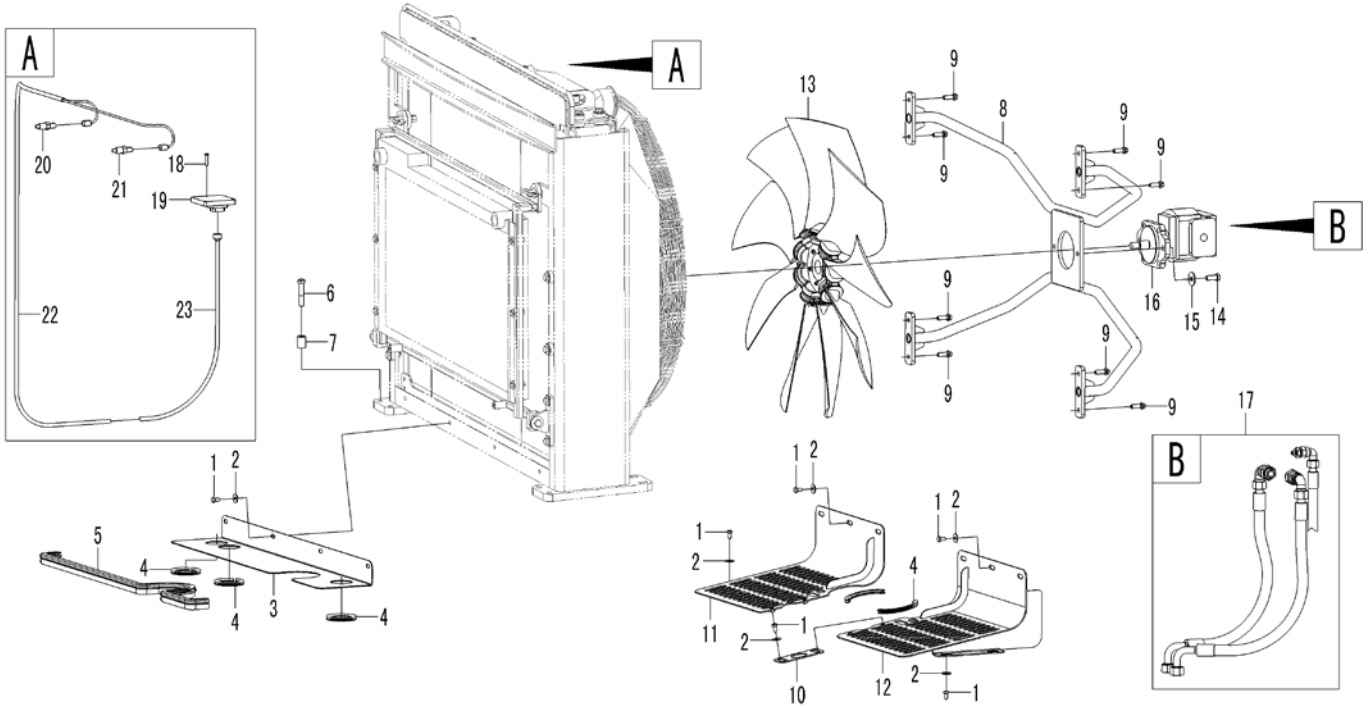

Key	Part No.	Description	Spare parts Y/N	Qty	Remarks
1	4011000102	Bolt	Y	18	
2	4015000256	Washer	Y	18	
3	29030021421	Cover	Y	1	
4	29030021431	Sealing strip	Y	5	
5	29030021441	Sealing strip	Y	1	
6	4011000595	Bolt	Y	8	
7	29030011391	Spacer bushing	Y	8	
8	29030021451	Bracket	Y	1	
9	4011000475	Bolt	Y	8	
10	29030022701	Plate	Y	1	
11	29030022631	Plate	Y	1	
12	29030022671	Plate	Y	1	
13	4110000944	Fan	Y	1	
14	4011000747	Screw	Y	2	
15	4015000168	Washer	Y	2	
16	4120003294	Hydraulic motor	Y	1	
17	29030021211	Hydraulic motor tube assembly	N	1	
18	4014000022	Screw	Y	3	
19	4120002635	Control unit	Y	1	
20	4120002637	Temperature sensor	Y	1	
21	4120002638	Temperature sensor	Y	1	
22	29370024722	Cable harness	Y	1	

Cooling accessory

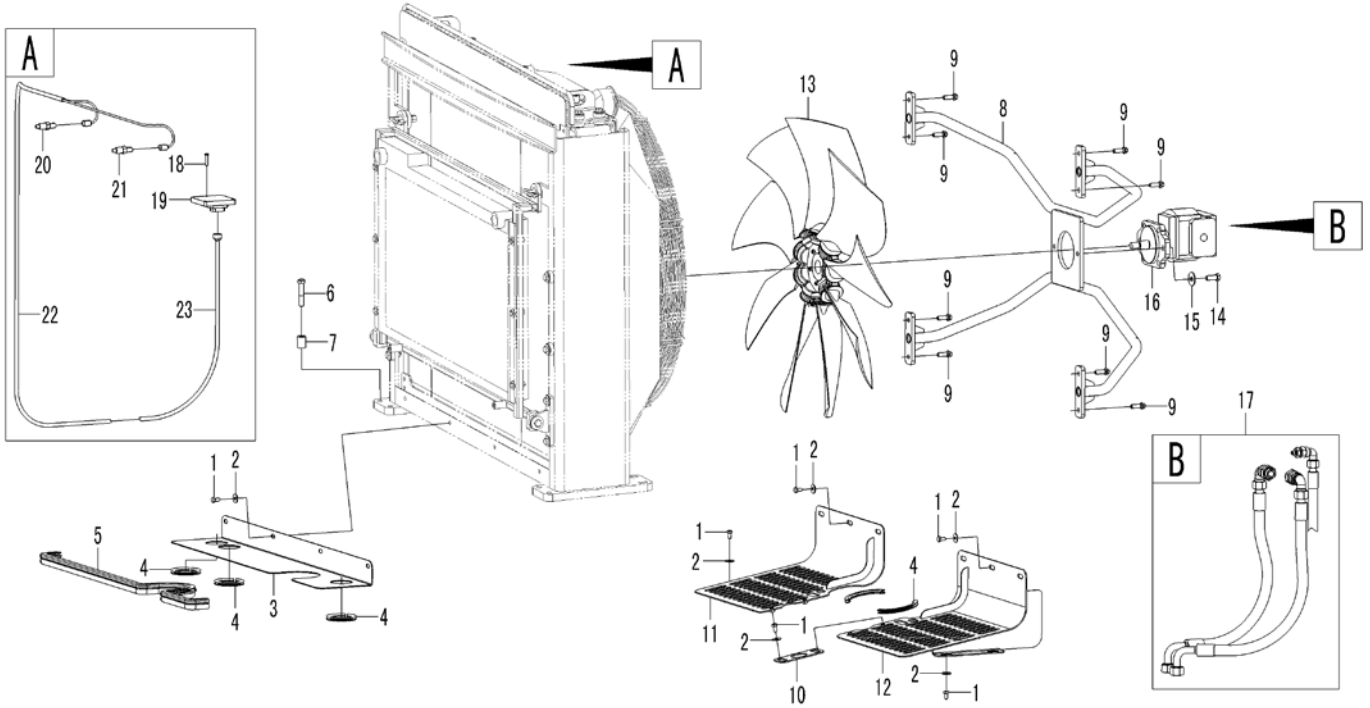

Key	Part No.	Description	Spare parts Y/N	Qty	Remarks
23	29370024602	Cable harness	Y	1	

Cooling assembly

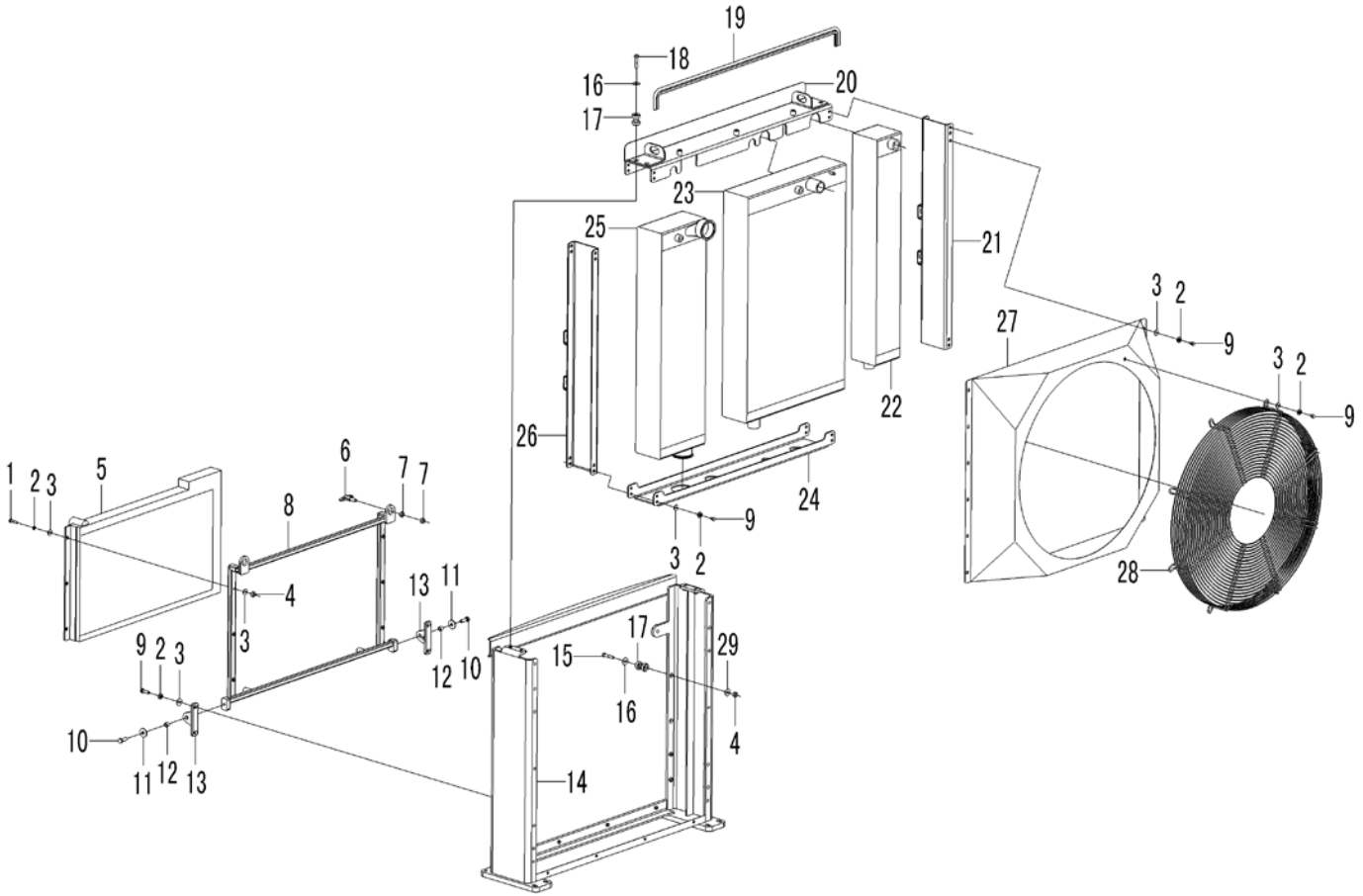

Key	Part No.	Description	Spare parts Y/N	Qty	Remarks
1	4011000184	Bolt	Y	6	
2	4015000025	Spring washer	Y	46	
3	4015000162	Washer	Y	52	
4	4013000007	Nut	Y	10	
5	4110002035001	Hydraulic oil cooler	Y	1	
6	4110002035002	Lock	Y	2	
7	4013000011	Nut	Y	4	
8	4110002035003	Bracket	Y	1	
9	4011000082	Bolt	Y	40	
10	4011000090	Bolt	Y	2	
11	4015000186	Washer	Y	2	
12	4110002035004	Spacer bushing	Y	2	
13	4110002035005	Bracket	Y	2	
14	4110002035006	Bracket	Y	1	
15	4011000489	Bolt	Y	4	
16	4015000197	Washer	Y	8	
17	4110002057	Absorber	Y	8	
18	4011001066	Screw	Y	4	
19	29030022251	Sealing strip	Y	1	
20	4110002035007	Plate	Y	1	
21	4110002035008	Plate	Y	1	
22	4110002035009	Oil cooler	Y	1	

Cooling assembly

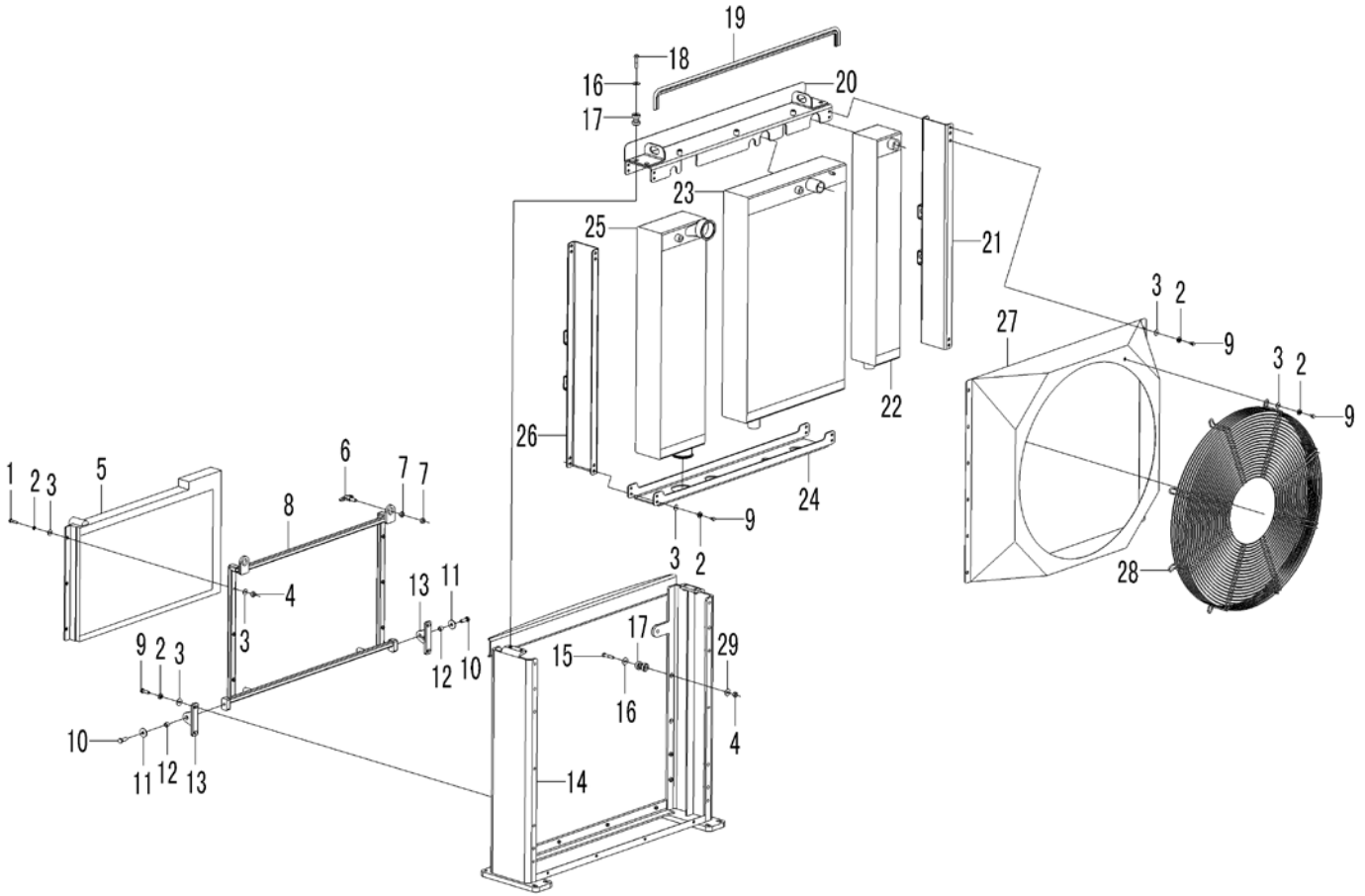

Key	Part No.	Description	Spare parts Y/N	Qty	Remarks
23	4110002035010	Radiator	Y	1	
24	4110002035011	Plate	Y	1	
25	4110002035012	Charge air cooler	Y	1	
26	4110002035013	Plate	Y	1	
27	4110002035014	Fan shroud	Y	1	
28	4110002035015	Fan guard	Y	1	
29	4110002035016	Washer	Y	4	

Inlet system

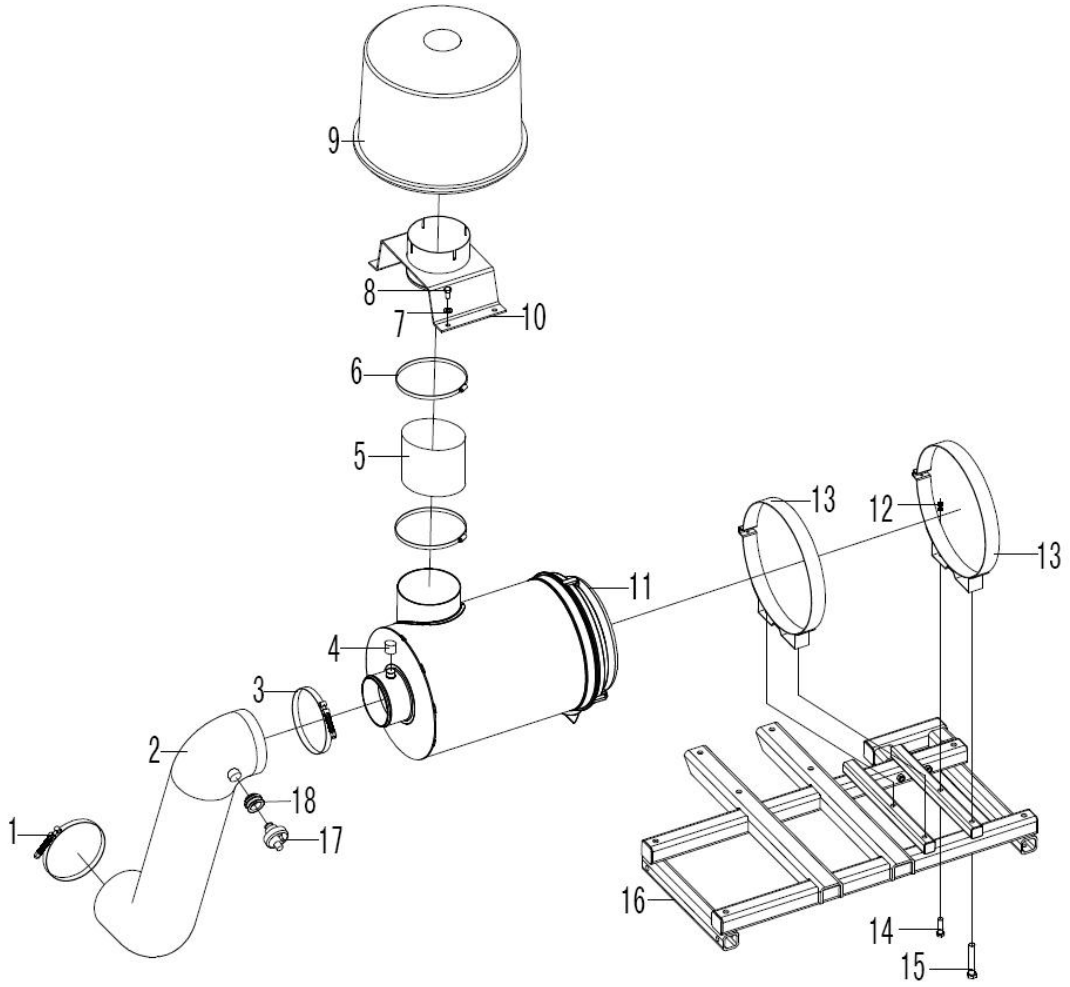

Key	Part No.	Description	Spare parts Y/N	Qty	Remarks
1	4110000906	Clamp	Y	1	
2	29010040111	Hose	Y	1	
3	4110000769	Clamp	Y	1	
4	4110000682	Indicator	Y	1	
5	29010016321	Hose	Y	1	
6	4017000003	Clamp	Y	2	
7	4015000162	Washer	Y	8	
8	4011000081	Bolt	Y	4	
9	4110000764	Primary filter	Y	1	
10	29010020101	Intermediate pipe	Y	1	
11	4110000763	Air cleaner	Y	1	
12	4013000189	Lock nut	Y	4	
13	4110000765	Clamp	Y	2	
14	4011000048	Bolt	Y	2	
15	4011000817	Screw	Y	2	
16	29010040061	Bracket	Y	1	
17	11211144	Vacuum switch	Y	1	
18	11210293	Connector	Y	1	

Exhaust system

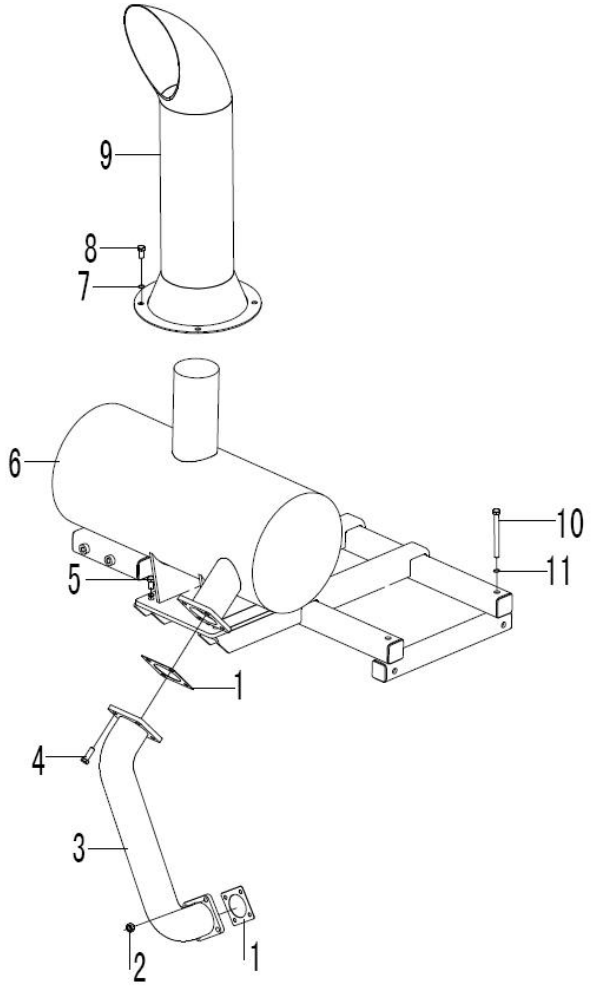

Key	Part No.	Description	Spare parts Y/N	Qty	Remarks
1	4110000888	Gasket	Y	1	
2	4013000189	Lock nut	Y	8	
3	29010040291	Exhaust pipe	Y	1	
4	4011000164	Bolt	Y	4	
5	4011000084	Bolt	Y	4	
6	4110001848	Air silencer	Y	1	
7	4011000081	Bolt	Y	4	
8	4015000162	Washer	Y	8	
9	4110001754	Pipe	Y	1	
10	4011000057	Bolt	Y	4	
11	4015000168	Washer	Y	4	

Fuel supply system

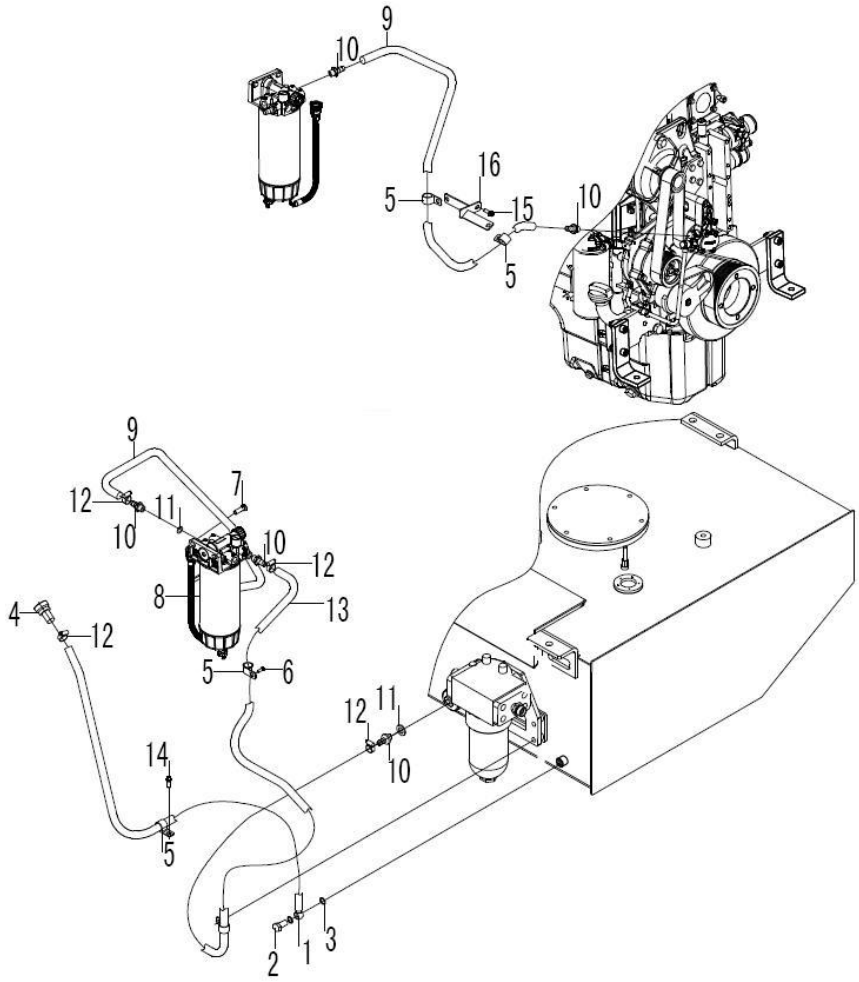

Key	Part No.	Description	Spare parts Y/N	Qty	Remarks
1	29010040091	Fuel hose	Y	1	
2	4011000641	Bolt	Y	1	
3	4015000121	Washer	Y	2	
4	29010031431	Nipple	Y	1	
5	26370001941	Clamp	Y	6	
6	4011000488	Bolt	Y	1	
7	4011000474	Bolt	Y	2	
8	4110002144	Water separator	Y	1	
9	29010040401	Fuel hose	Y	1	
10	29010031371	Nipple	Y	4	
11	4015000141	Washer	Y	4	
12	4017000010	Clamp	Y	5	
13	29010041161	Fuel hose	Y	1	
14	4011000461	Bolt	Y	2	
15	4011000153	Bolt	Y	2	
16	29010040321	Bracket	Y	1	

Valve

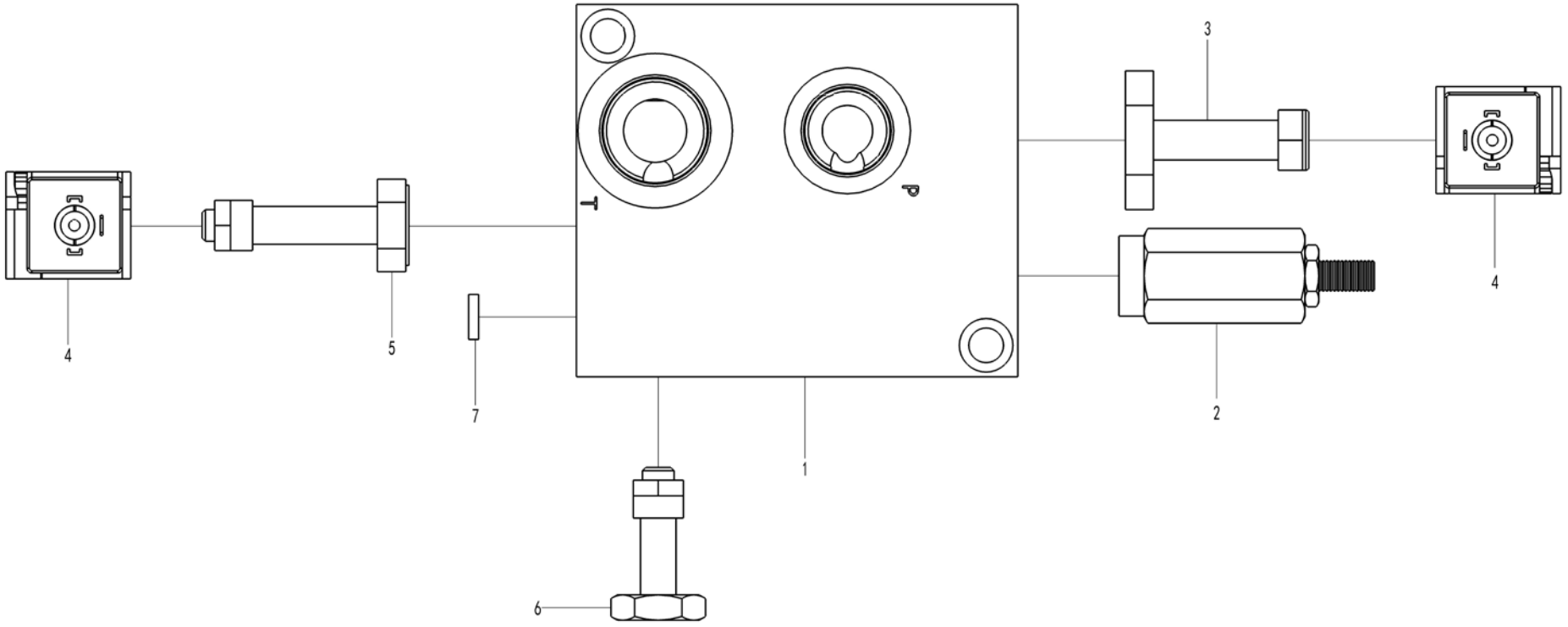

Key	Part No.	Description	Spare parts Y/N	Qty	Remarks
1	4120005302001	Valve body	Y	1	
2	4120005302002	Overflow valve	Y	1	
3	4120005302003	Solenoid valve	Y	1	
4	4120005302004	Solenoid	Y	2	
5	4120005302005	Overflow valve	Y	1	
6	4120005302006	Direction valve	Y	1	
7	4120005302007	Plug	Y	1	

C
TRANSMISSION SYSTEM



SHANDONG LINGONG CONSTRUCTION MACHINERY CO.,LTD.

Transmission system

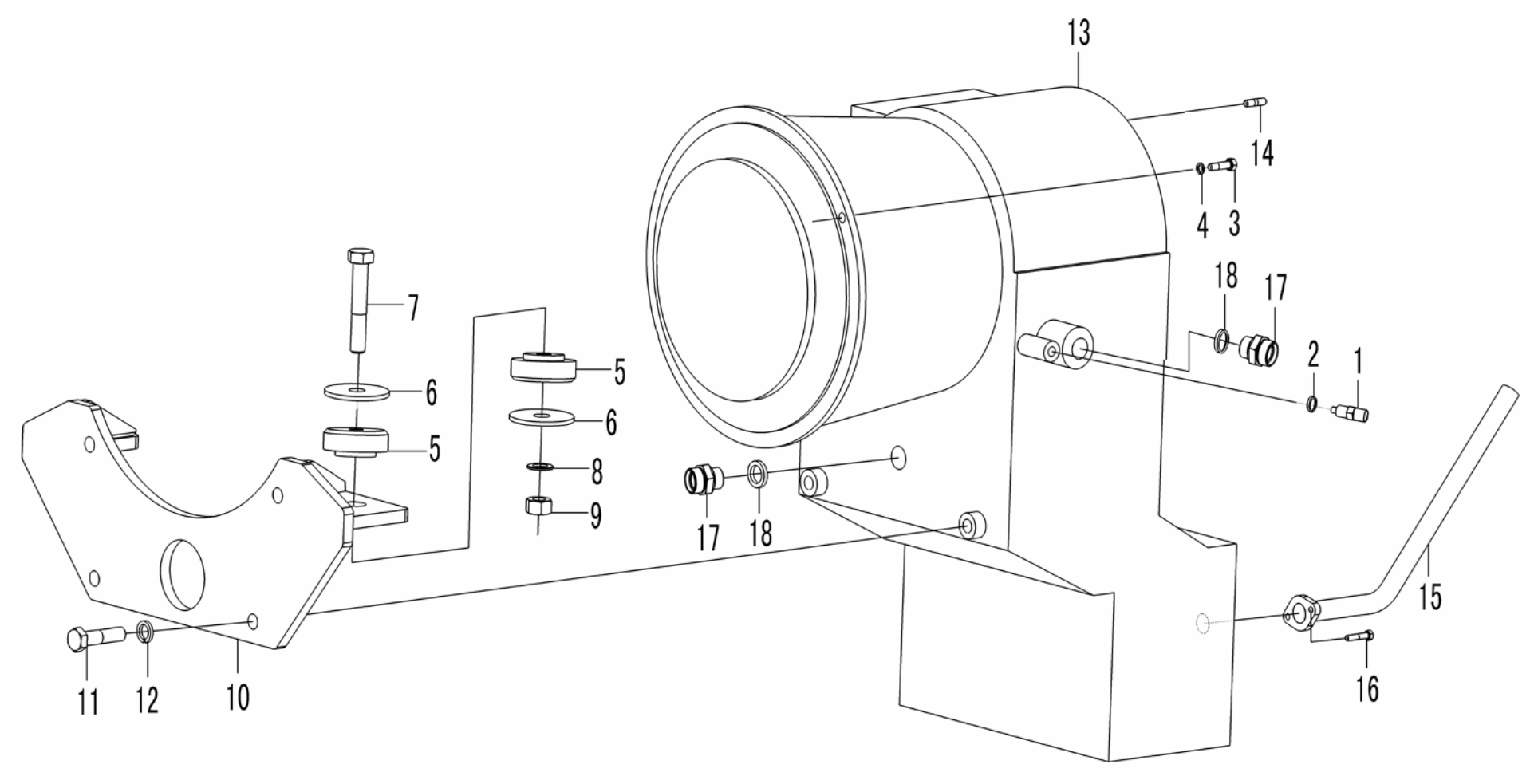

Key	Part No.	Description	Spare parts Y/N	Qty	Remarks
1	29050007601	Nipple	Y	1	
2	4015000231	Washer	Y	1	
3	4011000084	Bolt	Y	12	
4	4015000025	Spring washer	Y	12	
5	4110000460	Absorber	Y	4	
6	29050000121	Washer	Y	4	
7	4011000695	Bolt	Y	2	
8	4015000176	Washer	Y	2	
9	4013000160	Lock nut	Y	2	
10	29050021572	Bracket	Y	1	
11	4011000273	Bolt	Y	4	
12	4015000030	Spring washer	Y	4	
13	4110000042	Gearbox	Y	1	
14	4012000003	Stud	Y	8	
15	29050018111	Hose assembly	Y	1	
16	4011000105	Bolt	Y	2	
17	29030008271	Nipple	Y	2	
18	4015000073	Washer	Y	2	

Engine connect assembly

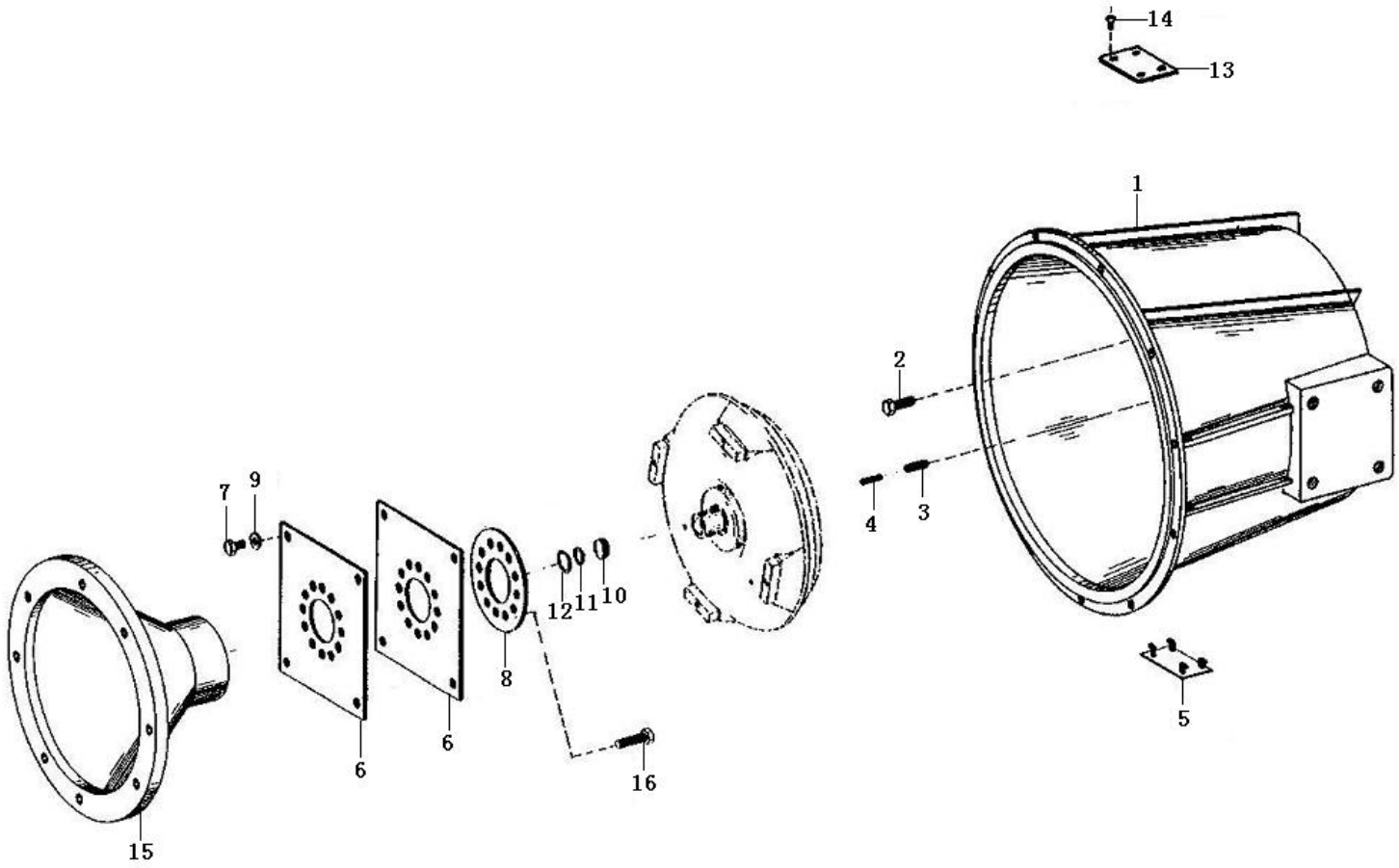

Key	Part No.	Description	Spare parts Y/N	Qty	Remarks
1	4110000042107	Intermediate housing	Y	1	
2	7200001454	Screw	Y	14	
3	4110000042124	Pin	Y	2	
4	7200001456	Pin	Y	2	
5	7200001457	Cover	Y	1	
6	7200001458	Diaphragm	Y	2	
7	4110000042109	Screw	Y	4	
8	7200001460	Washer	Y	1	
9	7200001461	Washer	Y	4	
10	7200001462	Washer	Y	1	
11	7200001463	O-ring	Y	1	
12	7200001464	Lock ring	Y	1	
13	7200001465	Cover	Y	1	
14	7200001466	Screw	Y	4	
15	4110000042125	Flange	Y	1	
16	7200001468	Screw	Y	12	

Torque converter

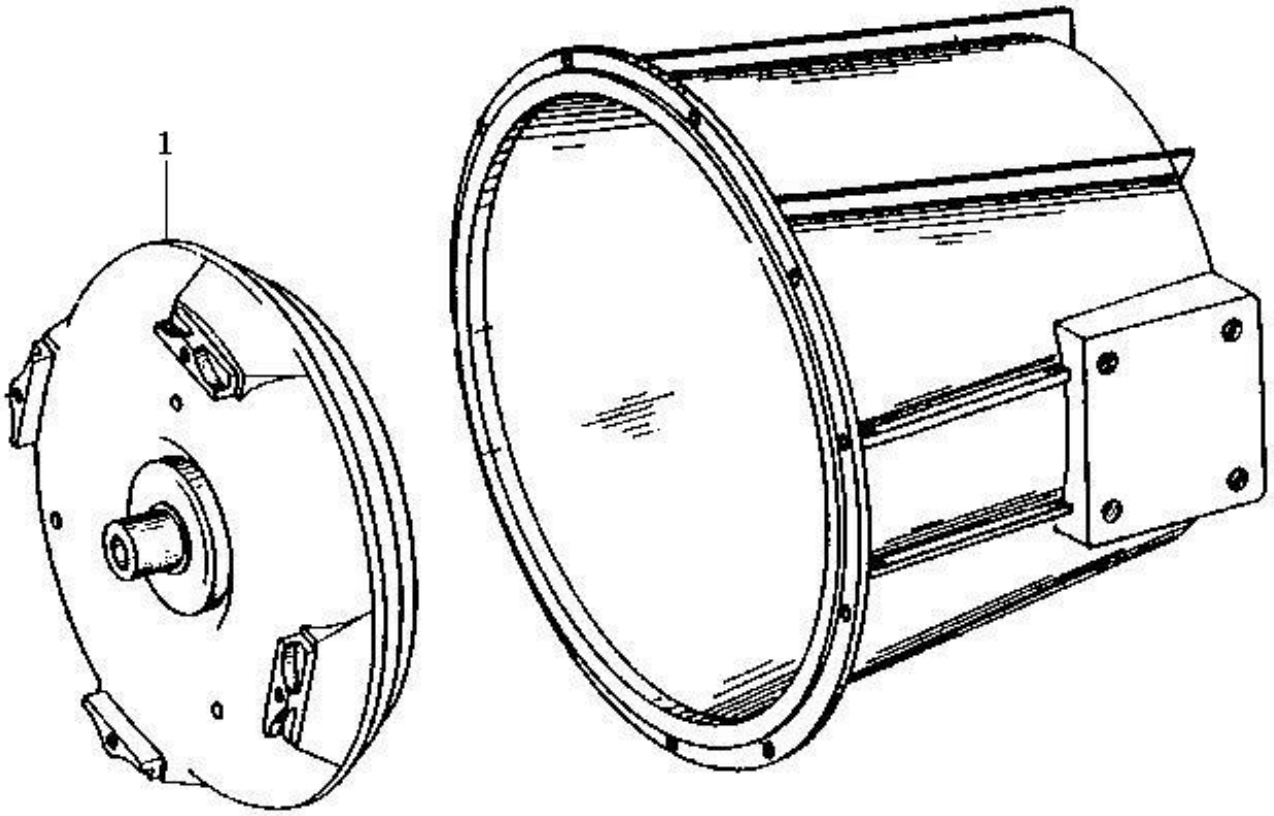

Key	Part No.	Description	Spare parts Y/N	Qty	Remarks
1	4110000042002	Torque converter	Y	1	

Transmission input section

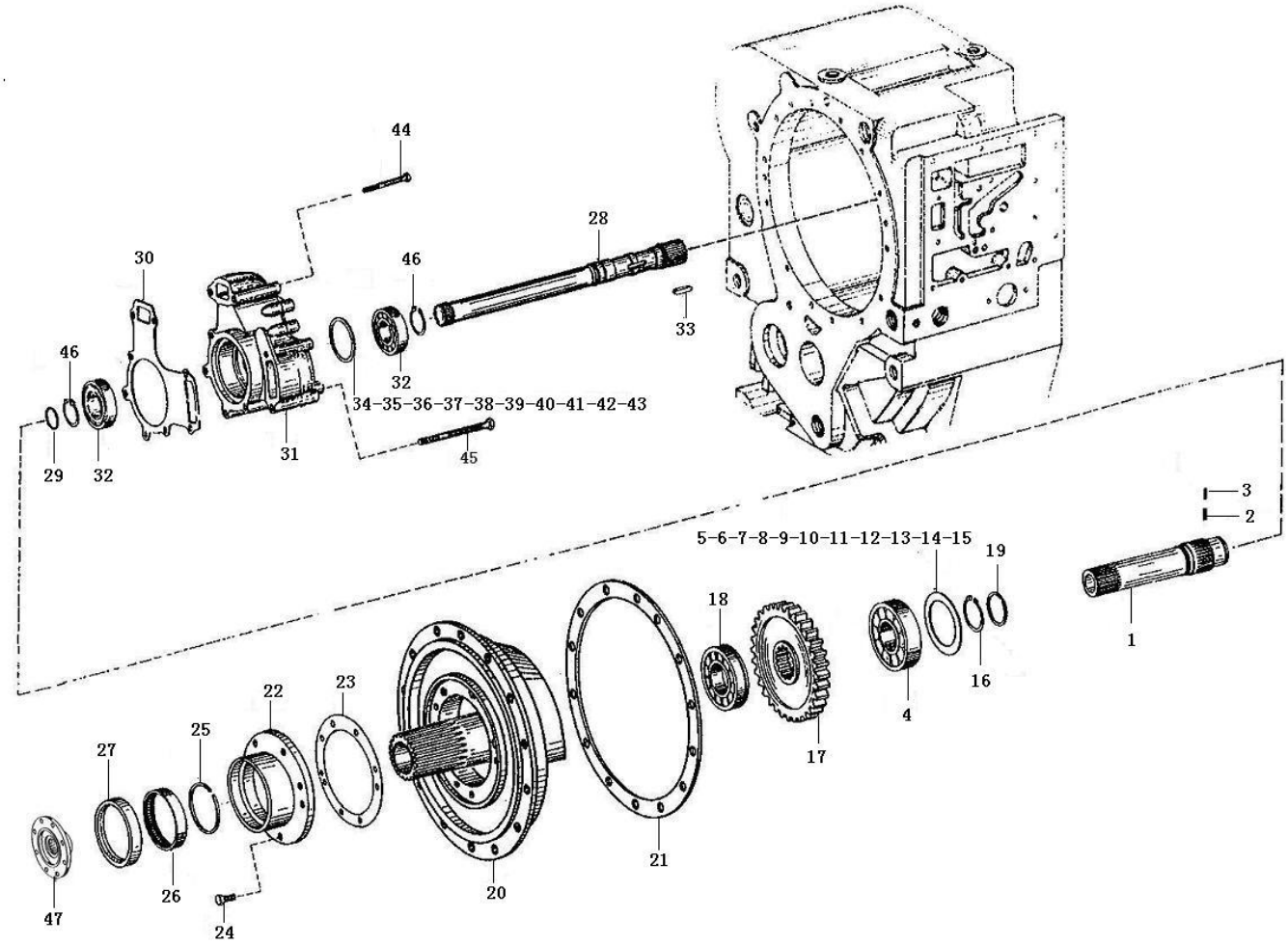

Key	Part No.	Description	Spare parts Y/N	Qty	Remarks
1	7200001470	Shaft	N	1	
2	7200001471	Pin	Y	1	
3	7200001472	Pin	Y	1	
4	7200001473	Ball bearing	Y	1	
5	7200001474	Shim	N	1	
6	4110000042066	Washer	N	1	
7	4110000042067	Washer	Y	1	
8	4110000042068	Washer	Y	1	
9	4110000042069	Washer	Y	1	
10	4110000042070	Washer	Y	1	
11	4110000042072	Washer	Y	1	
12	4110000042075	Washer	Y	1	
13	4110000042078	Washer	Y	1	
14	4110000042081	Washer	Y	1	
15	4110000042084	Washer	Y	1	
16	7200001475	Lock ring	Y	1	
17	7200001476	Gear	Y	1	
18	7200001477	Needle bearing	Y	1	
19	7200001478	Spacer ring	Y	1	
20	7200001479	Flange	Y	1	
21	7200001480	Gasket	Y	1	
22	7200001481	Cover plate	Y	1	

Transmission input section

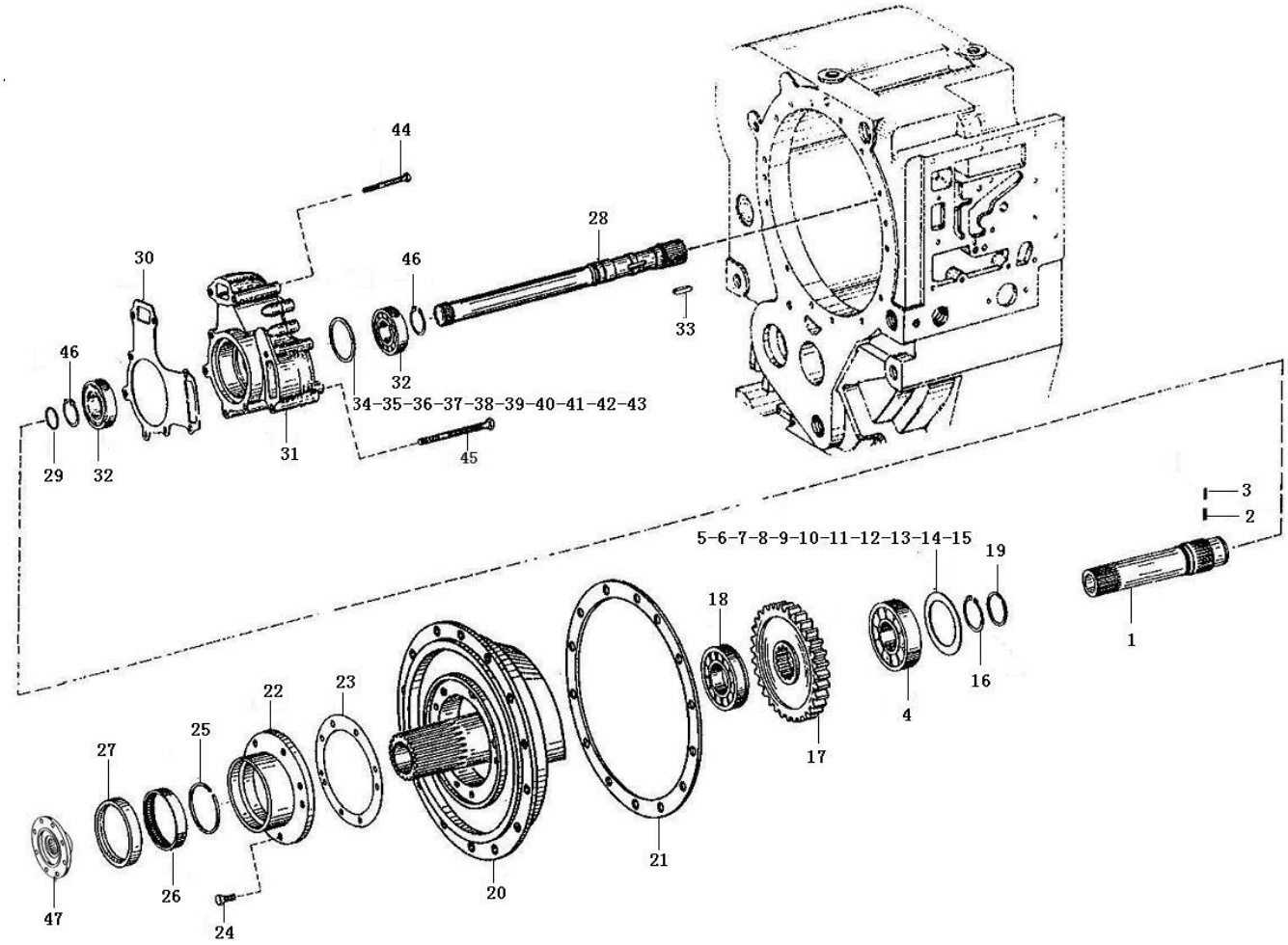

Key	Part No.	Description	Spare parts Y/N	Qty	Remarks
23	7200001482	Gasket	Y	1	
24	7200001483	Screw	Y	8	
25	7200001484	Spacer ring	Y	1	
26	7200001485	Needle bearing	Y	1	
27	7200001486	Sealing ring	Y	1	
28	7200001487	Output shaft	Y	1	
29	7200001488	Piston ring	Y	1	
30	7200001489	Gasket	Y	1	
31	4110000042013	Gear pump	Y	1	
32	7200001491	Ball bearing	Y	1	
33	7200001492	Key	Y	1	
34	7200001494	Washer	Y	1	
35	4110000042035	Washer	Y	1	
36	4110000042034	Washer	Y	1	
37	4110000042033	Washer	Y	1	
38	4110000042032	Washer	Y	1	
39	4110000042031	Washer	Y	1	
40	4110000042030	Washer	Y	1	
41	4110000042029	Washer	Y	1	
42	4110000042028	Washer	Y	1	
43	4110000042027	Washer	Y	1	
44	7200001495	Screw	Y	4	

Transmission input section

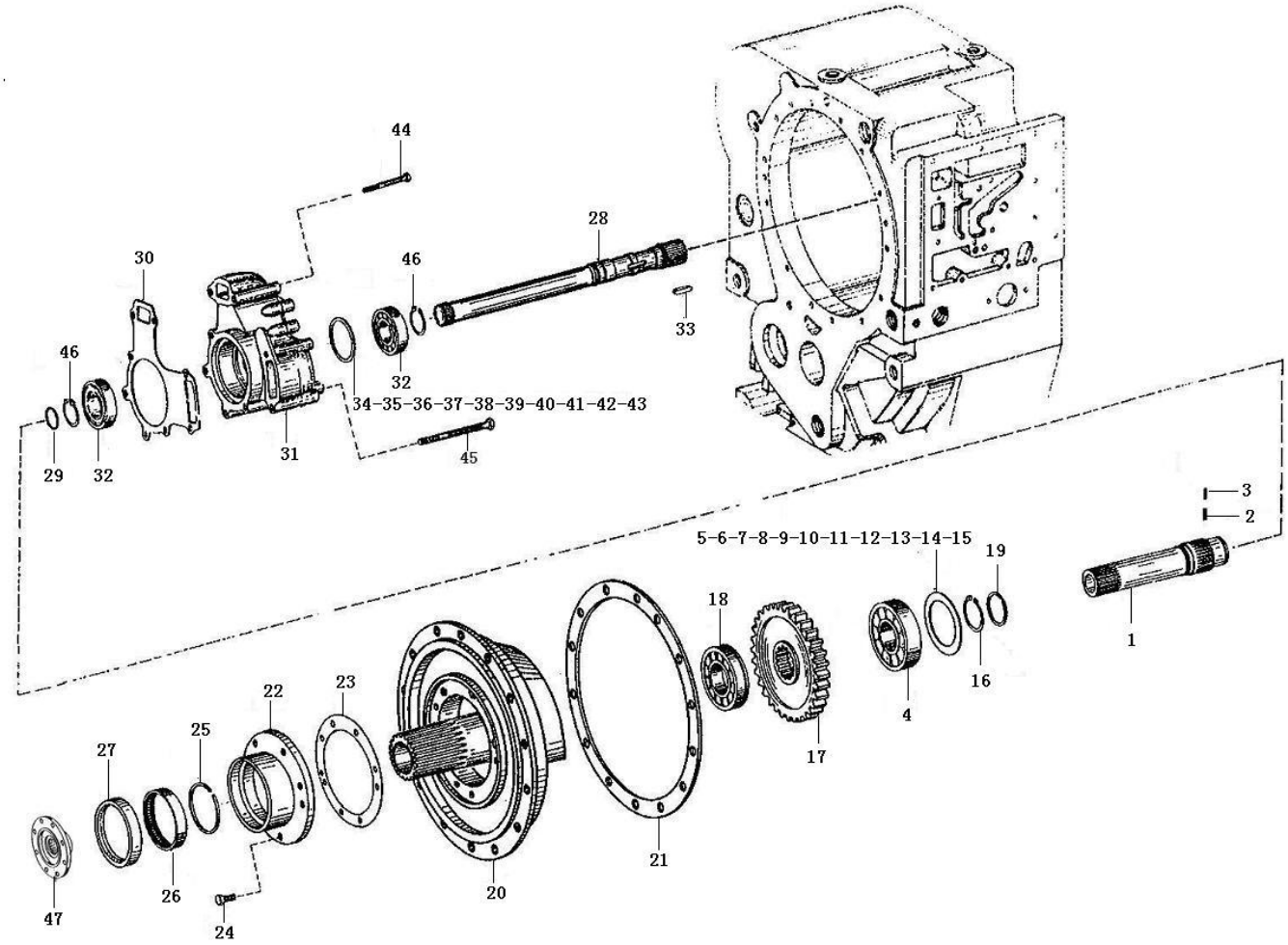

Key	Part No.		Description	Spare parts Y/N	Qty	Remarks
45	7200001496	Screw		Y	4	
46	7200001497	Lock ring		Y	2	
47	4110000042127	Flange		Y	1	

Gearbox housing

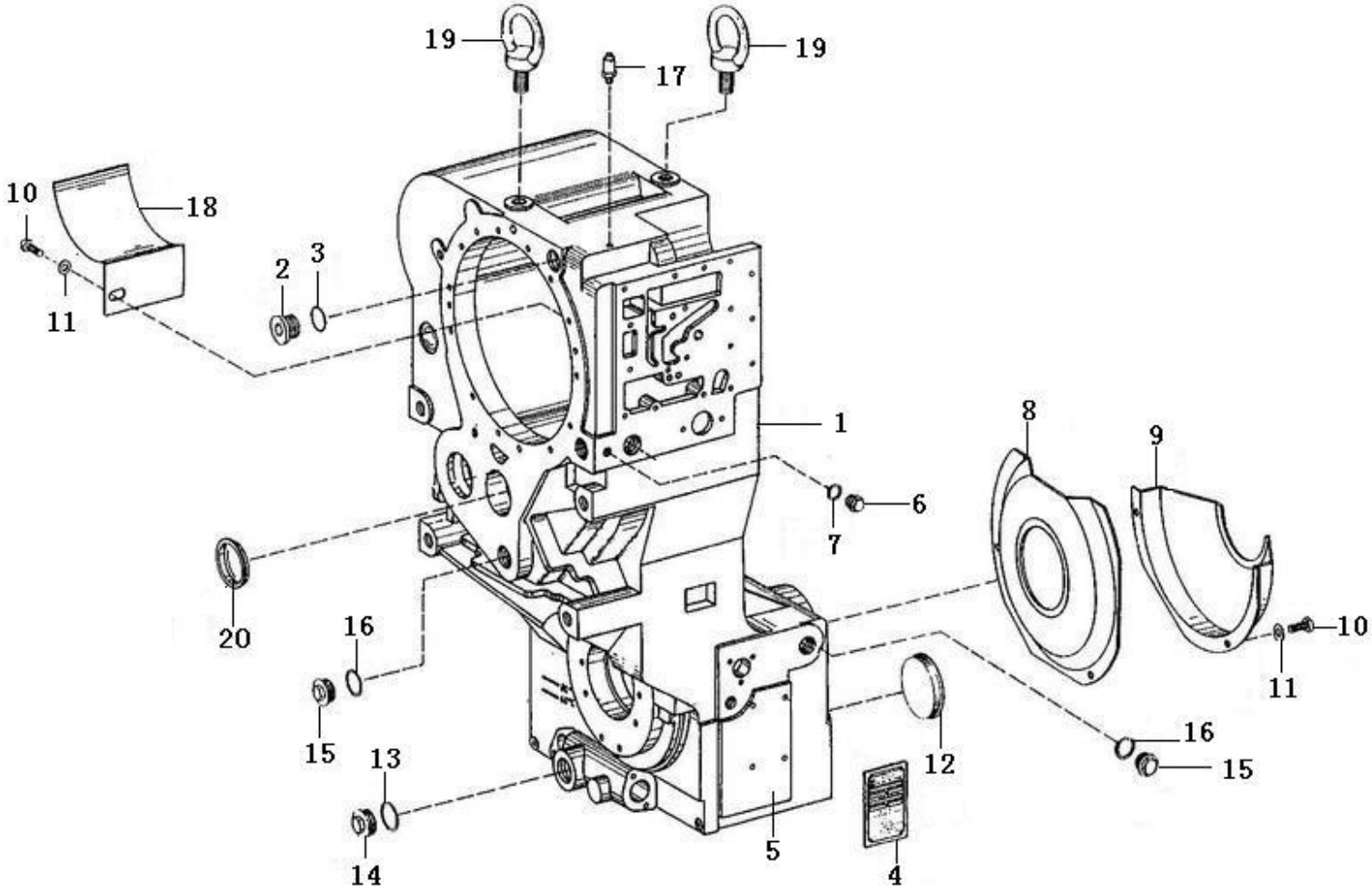

Key	Part No.	Description	Spare parts Y/N	Qty	Remarks
1	4110000042116	Housing	Y	1	
2	7200001432	Plug	Y	1	
3	7200001433	O-ring	Y	1	
4	4110000042111	Type plate	Y	1	
5	7200001435	Rivet	Y	4	
6	7200001436	Plug	Y	1	
7	4110000042007	O-ring	Y	1	
8	7200001438	Cover plate	Y	1	
9	7200001439	Cover plate	Y	1	
10	7200001686	Screw	Y	3	
11	4110000042026	Washer	Y	3	
12	7200001442	Cover	Y	2	
13	7200001443	O-ring	Y	1	
14	7200001444	Plug	Y	1	
15	7200001445	Plug	Y	1	
16	7200001446	O-ring	Y	1	
17	7200001448	Breather cap	Y	1	
18	7200001449	Spacer plate	Y	1	
19	7200001450	Screw	Y	2	
20	7200001451	Cover	Y	1	

Reverse gear assembly

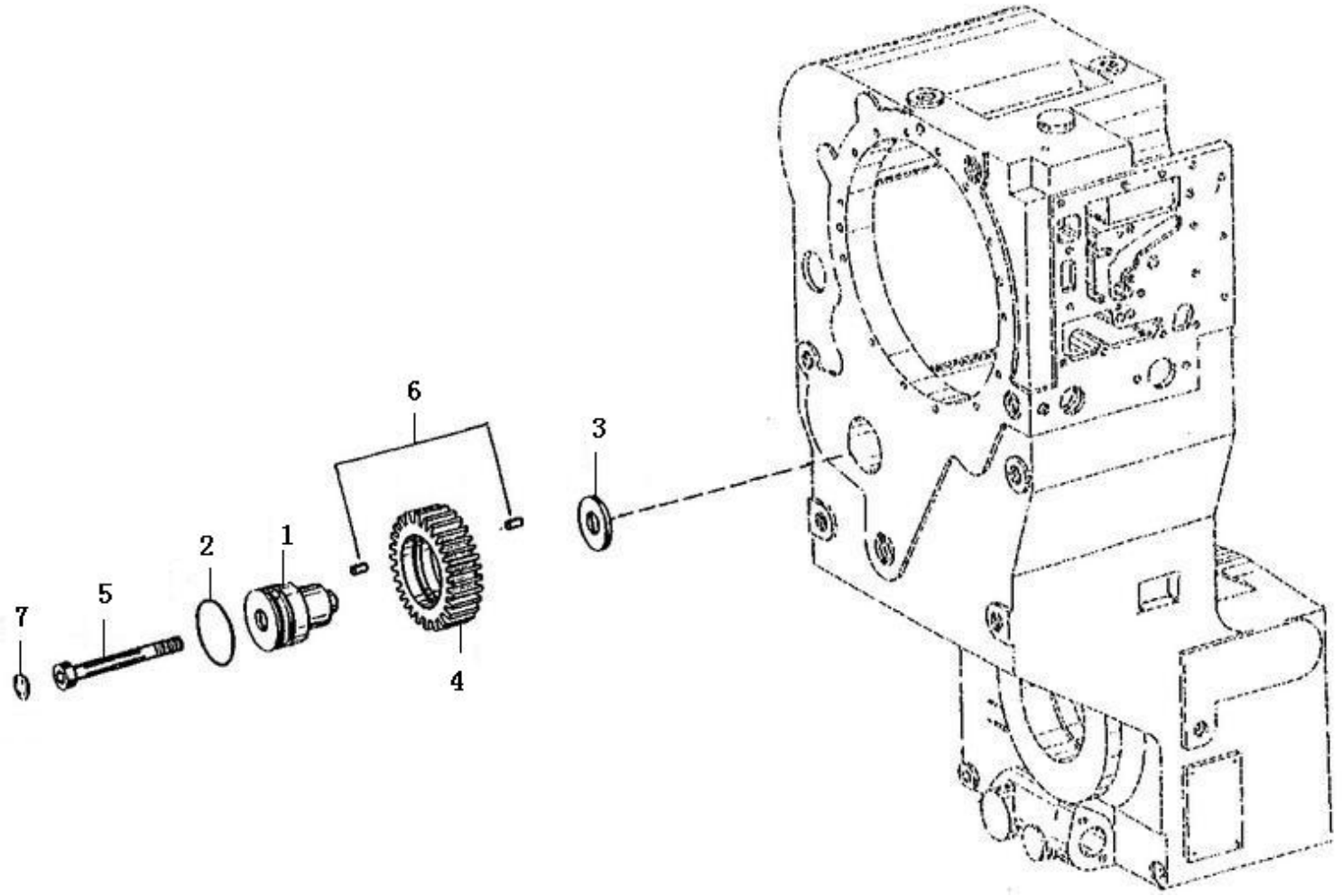

Key	Part No.	Description	Spare parts Y/N	Qty	Remarks
1	7200001515	Shaft	Y	1	
2	7200001516	O-ring	Y	1	
3	7200001517	Thrust washer	Y	1	
4	7200001518	Gear	Y	1	
5	4110000042120	Screw	Y	1	
6	7200001520	Bearing	Y	1	
7	7200001521	Washer	Y	1	

First gear assembly

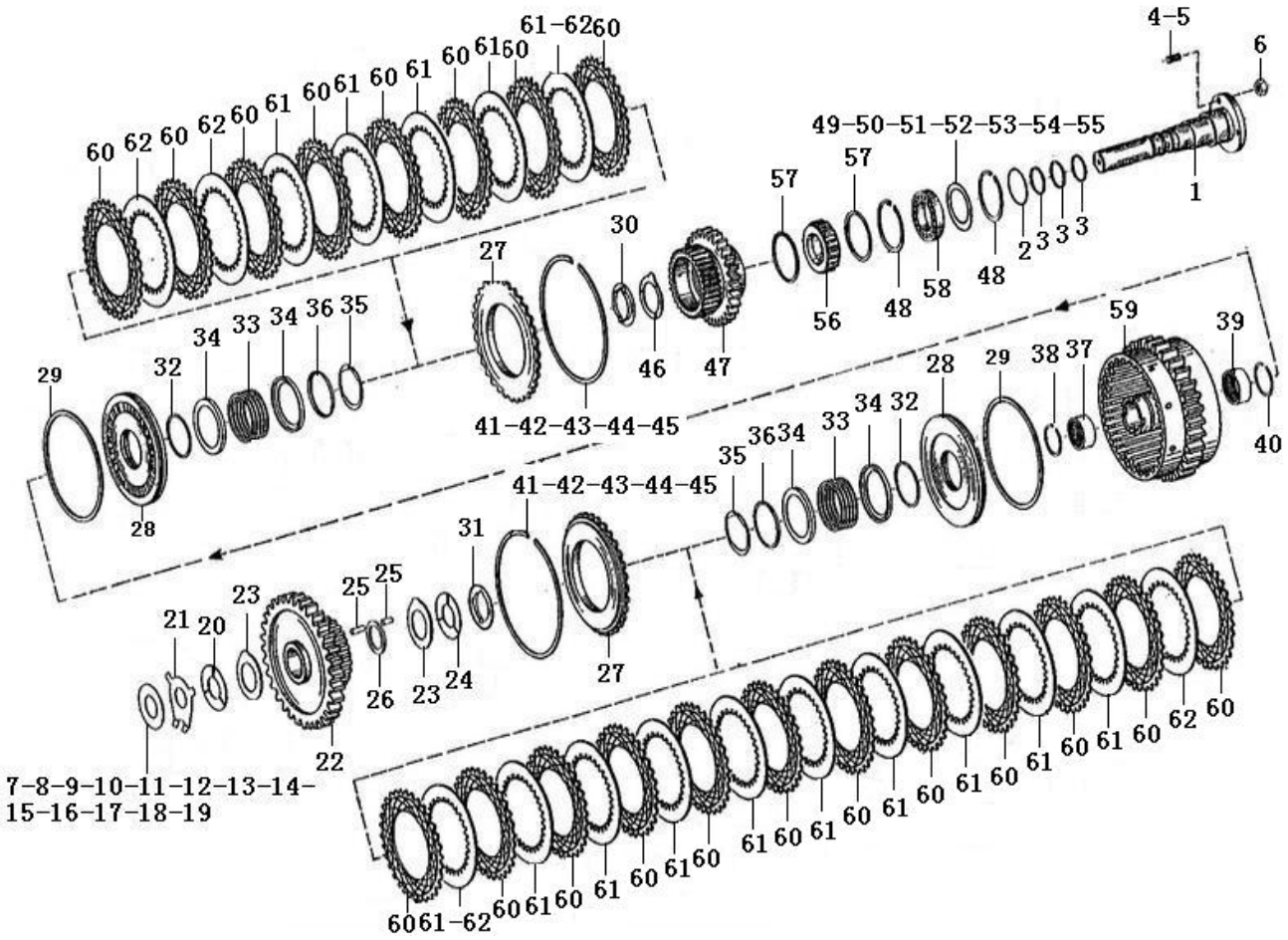

Key	Part No.	Description	Spare parts Y/N	Qty	Remarks
1	7200001532	Shaft	N	1	
2	7200001533	O-ring	Y	1	
3	7200001534	Piston ring	Y	3	
4	7200001535	Stud	Y	1	
5	7200001674	Stud	Y	1	
6	7200001675	Nut	Y	2	
7	7200001621	Shim	Y	1	
8	4110000042052	Washer	Y	1	
9	4110000042053	Washer	Y	1	
10	4110000042054	Washer	Y	1	
11	4110000042055	Washer	Y	1	
12	4110000042056	Washer	Y	1	
13	4110000042057	Washer	Y	1	
14	4110000042058	Washer	Y	1	
15	4110000042059	Washer	Y	1	
16	4110000042060	Washer	Y	1	
17	4110000042061	Washer	Y	1	
18	4110000042062	Washer	Y	1	
19	4110000042063	Washer	Y	1	
20	7200001539	Thrust washer	Y	1	
21	7200001540	Thrust washer	Y	1	
22	7200001583	Gear	Y	1	

First gear assembly

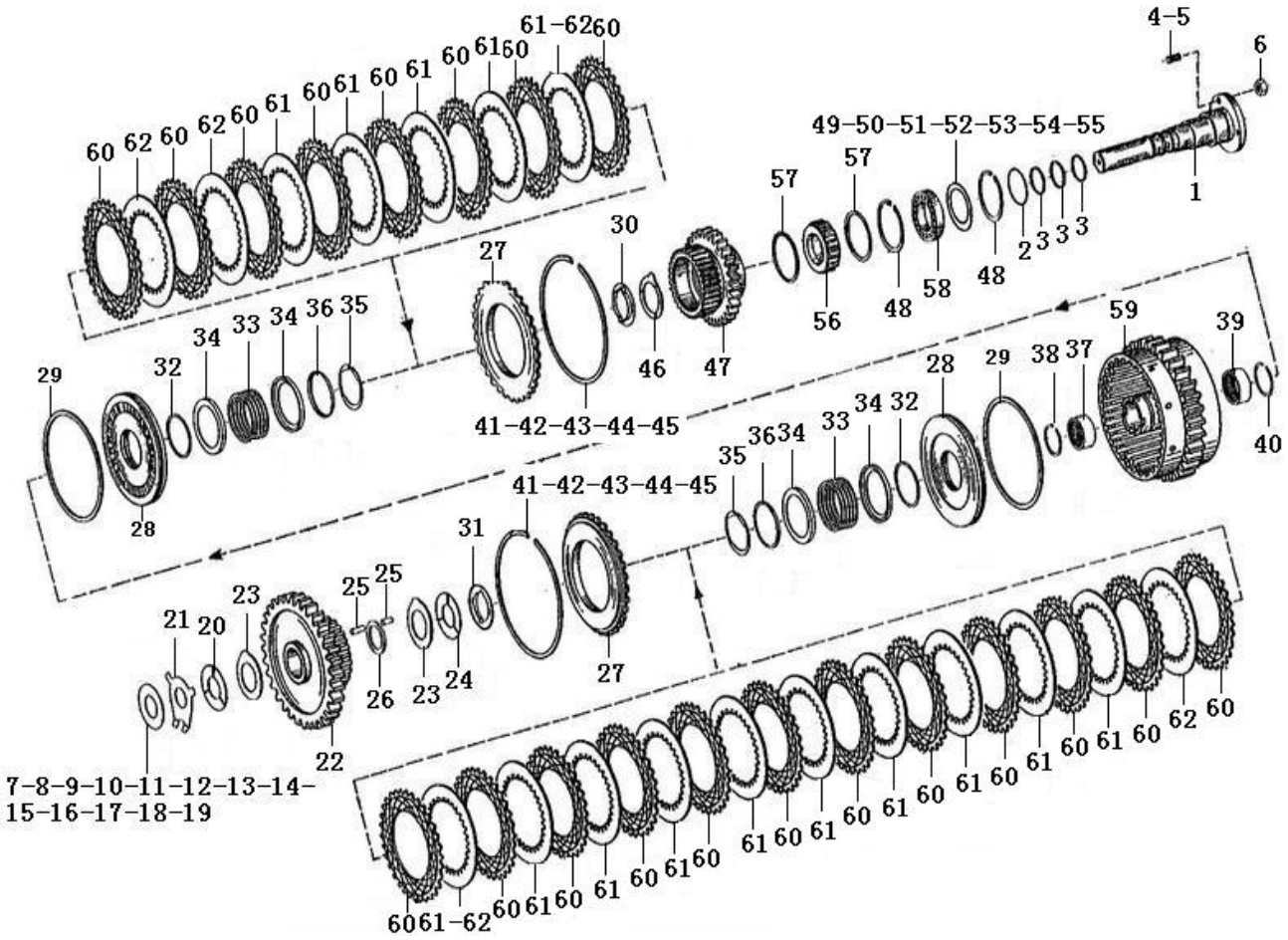

Key	Part No.	Description	Spare parts Y/N	Qty	Remarks
23	7200001542	Thrust washer	N	2	
24	7200001543	Thrust washer	N	1	
25	7200001544	Bearing	N	1	
26	7200001545	Washer	N	1	
27	7200001546	Washer	Y	2	
28	7200001547	Piston	Y	2	
29	7200001590	Sealing ring	Y	2	
30	7200001549	Thrust washer	Y	1	
31	7200001550	Thrust washer	Y	1	
32	7200001551	Sealing ring	Y	2	
33	4110000076251	Tension spring	Y	2	
34	7200001553	Guide ring	Y	4	
35	7200001554	Cup	Y	2	
36	7200001555	Guide ring	Y	2	
37	7200001556	Needle bearing	Y	1	
38	7200001557	Retaining ring	Y	1	
39	7200001558	Needle bearing	Y	1	
40	7200001559	Retaining ring	Y	1	
41	7200001560	Retaining ring	Y	2	
42	4110000042020	Retaining ring	Y	2	
43	4110000042023	Retaining ring	Y	2	
44	4110000042018	Retaining ring	Y	2	

First gear assembly

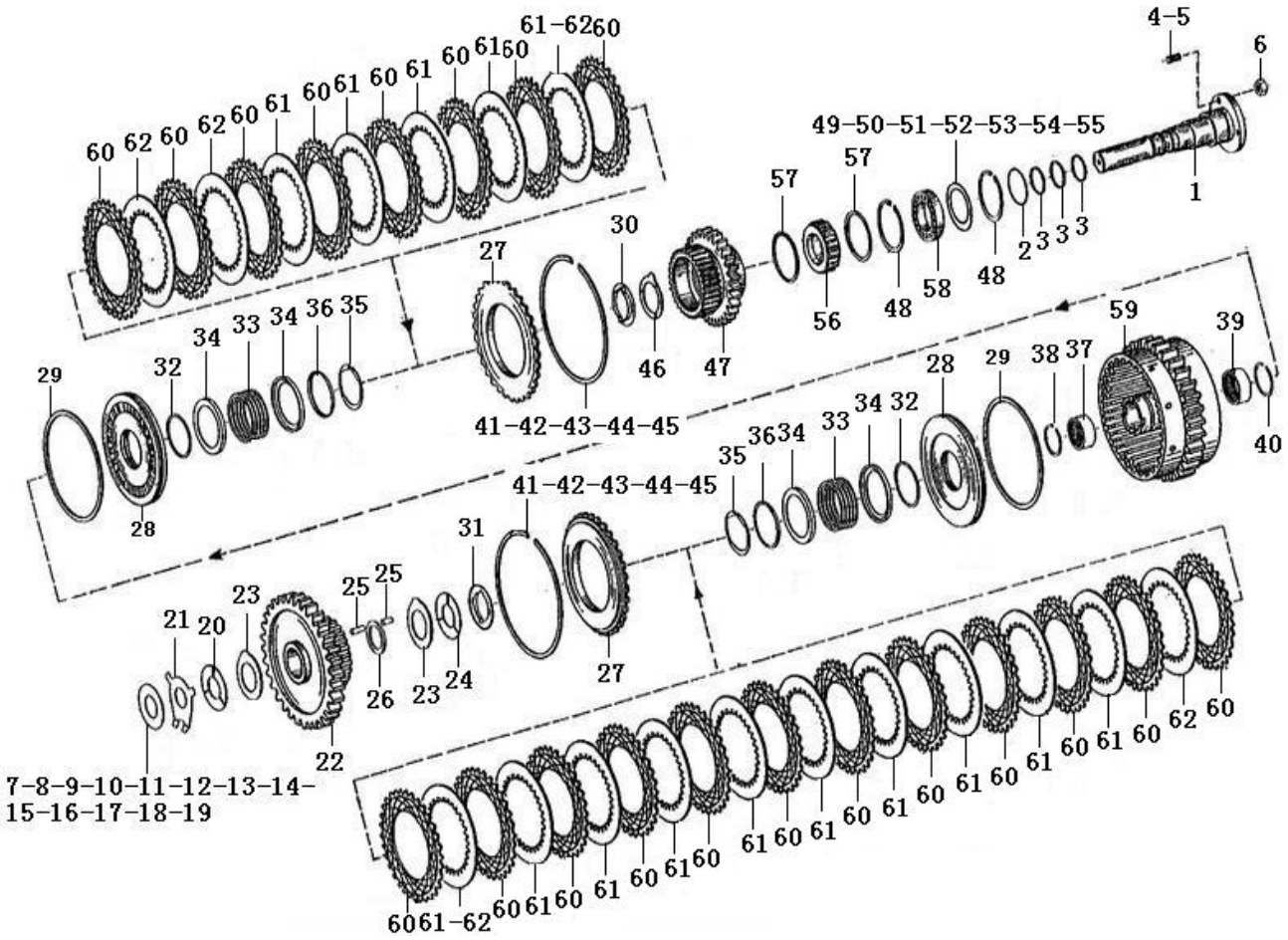

Key	Part No.	Description	Spare parts Y/N	Qty	Remarks
45	4110000042015	Retaining ring	Y	2	
46	7200001561	Thrust washer	Y	1	
47	7200001562	Gear	Y	1	
48	7200001563	Lock ring	Y	1	
49	7200001564	Shim	Y	1	
50	4110000042037	Washer	Y	1	
51	4110000042036	Washer	Y	1	
52	4110000042040	Washer	Y	1	
53	4110000042038	Washer	Y	1	
54	4110000042039	Washer	Y	1	
55	4110000042041	Washer	Y	1	
56	7200001565	Needle bearing	N	1	
57	7200001566	Spacer	Y	2	
58	7200001568	Ball bearing	Y	1	
59	4110000042112	Bracket	Y	1	
60	7200001570	Friction disc	N	12	
61	7200001571	Friction disc	Y	9	
62	7200001572	Friction disc	Y	1	

Clutch

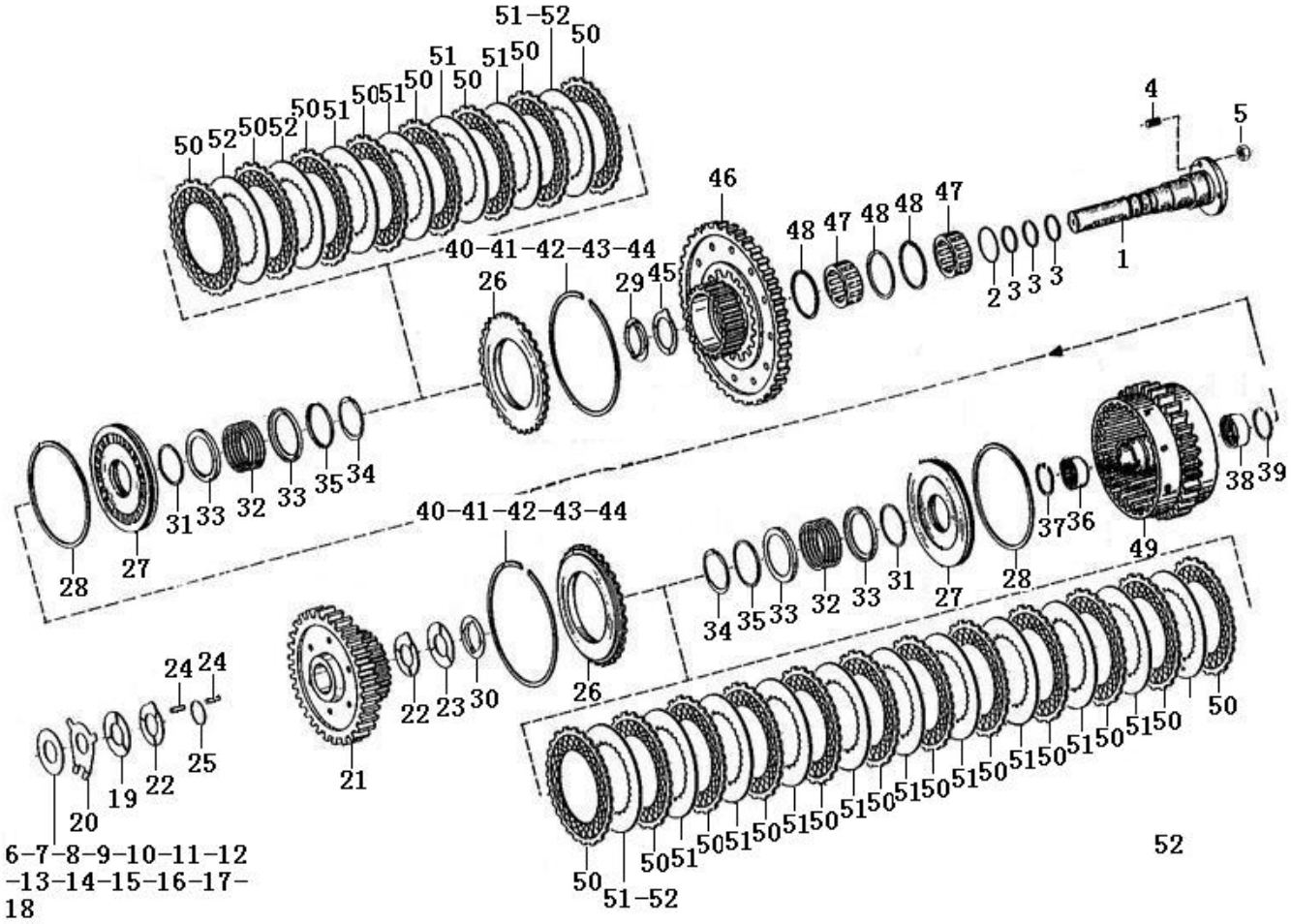
51-52
50
51
51
50
50
51
50
51
50
52
50
52
50
4
5
46
48
47
48
48
47
2
3
3
3
1
40-41-42-43-44
26
29
45
28
27
31
33
32
33
35
34
40-41-42-43-44
34
35
33
32
33
31
27
28
37
36
49
38
39
26
22
23
30
21
24
24
25
19
22
20
6-7-8-9-10-11-12
-13-14-15-16-17-
18
50
51-52
50
51
50
51
50
51
50
51
50
51
50
51
50
51
50
50
52

Key	Part No.	Description	Spare parts Y/N	Qty	Remarks
1	7200001575	Shaft	Y	1	
2	7200001533	O-ring	Y	1	
3	7200001534	Piston ring	Y	3	
4	7200001674	Stud	Y	2	
5	7200001675	Nut	Y	2	
6	7200001621	Shim	Y	1	
7	4110000042052	Washer	Y	1	
8	4110000042053	Washer	Y	1	
9	4110000042054	Washer	Y	1	
10	4110000042055	Washer	Y	1	
11	4110000042056	Washer	Y	1	
12	4110000042057	Washer	Y	1	
13	4110000042058	Washer	Y	1	
14	4110000042059	Washer	Y	1	
15	4110000042060	Washer	Y	1	
16	4110000042061	Washer	Y	1	
17	4110000042062	Washer	Y	1	
18	4110000042063	Washer	Y	1	
19	7200001539	Thrust washer	Y	1	
20	7200001540	Thrust washer	Y	1	
21	7200001583	Gear	Y	1	
22	7200001542	Thrust washer	N	2	

Clutch

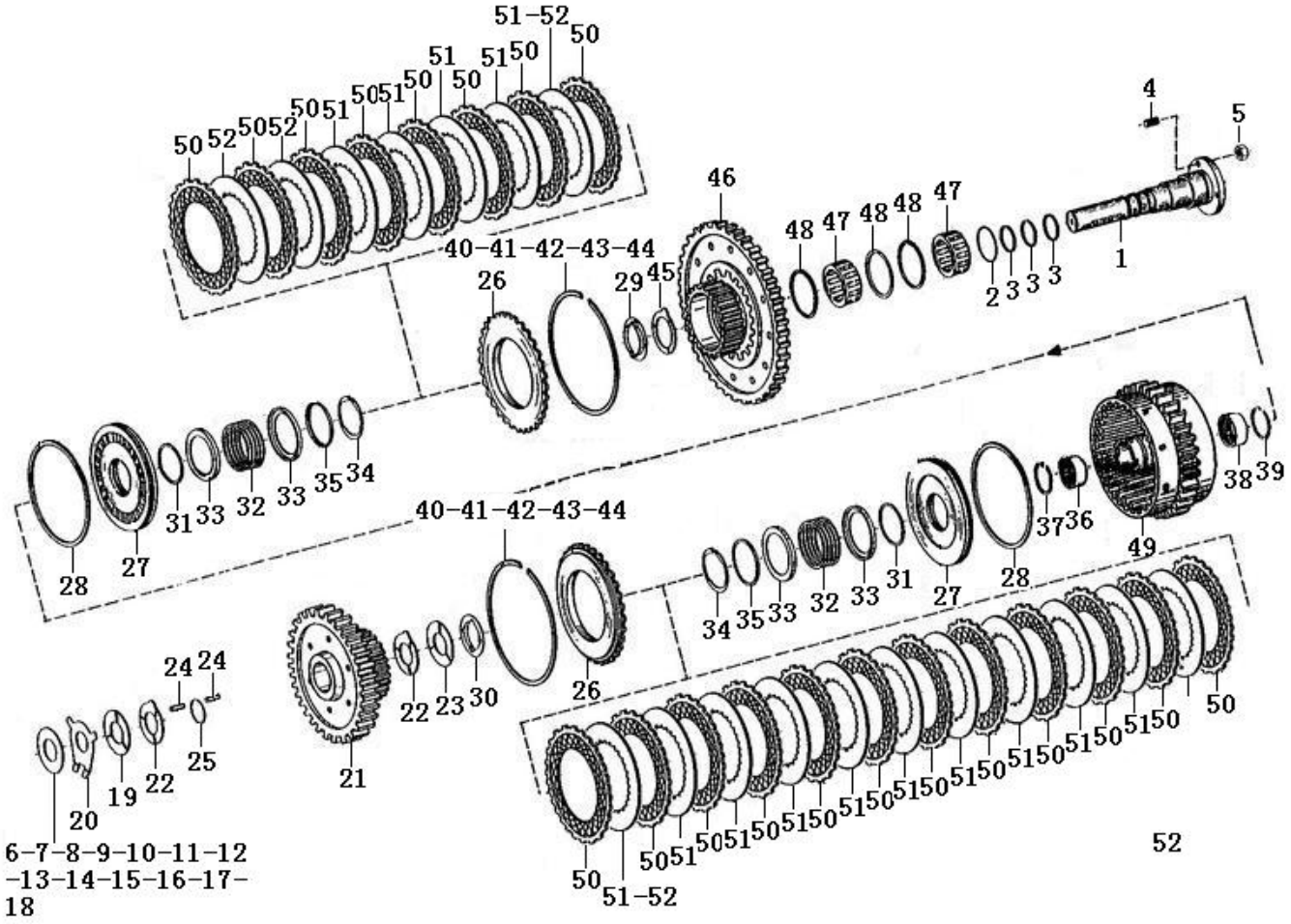
51-52
50
51
51
50
50
51
50
51
50
52
50
52
50
51
50
51
50
4
5
46
48
47
48
48
47
2
3
3
3
1
40-41-42-43-44
26
29
45
31
33
32
33
35
34
28
27
40-41-42-43-44
34
35
33
32
33
31
27
28
37
36
49
38
39
24
24
25
19
22
20
6-7-8-9-10-11-12
-13-14-15-16-17-
18
21
22
23
30
26
50
51-52
50
51
50
51
50
51
50
51
50
51
50
51
50
51
50
51
50
52

Key	Part No.	Description	Spare parts Y/N	Qty	Remarks
23	7200001543	Thrust washer	N	1	
24	7200001544	Bearing	N	1	
25	7200001545	Washer	N	1	
26	7200001546	Washer	Y	2	
27	7200001547	Piston	Y	2	
28	7200001590	Sealing ring	Y	2	
29	7200001549	Thrust washer	Y	1	
30	7200001550	Thrust washer	Y	1	
31	7200001551	Sealing ring	Y	2	
32	4110000076251	Tension spring	Y	2	
33	7200001553	Guide ring	Y	4	
34	7200001554	Cup	Y	2	
35	7200001555	Guide ring	Y	2	
36	7200001556	Needle bearing	Y	1	
37	7200001557	Retaining ring	Y	1	
38	7200001558	Needle bearing	Y	1	
39	7200001559	Retaining ring	Y	1	
40	7200001560	Retaining ring	Y	2	
41	4110000042020	Retaining ring	Y	2	
42	4110000042023	Retaining ring	Y	2	
43	4110000042018	Retaining ring	Y	2	
44	4110000042015	Retaining ring	Y	2	

Clutch

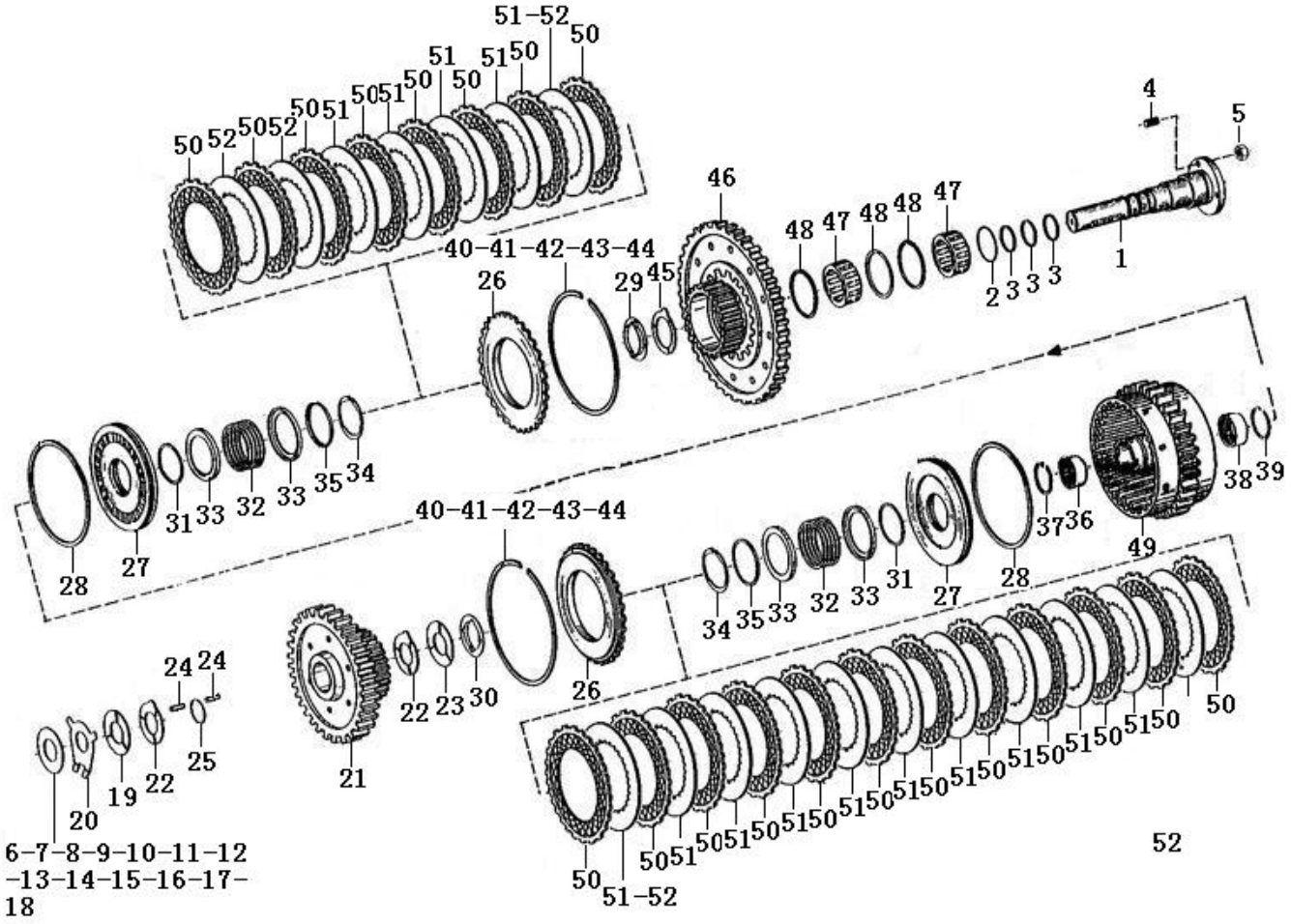
51-52
50
51
51
50
50
51
50
51
50
52
50
52
50
51
50
51
50
51
50
46
4
5
48
47
48
48
47
2
3
3
3
1
40-41-42-43-44
26
29
45
31
33
32
33
35
34
28
27
40-41-42-43-44
34
35
33
32
33
31
27
28
37
36
49
38
39
24
24
25
19
22
20
6-7-8-9-10-11-12
-13-14-15-16-17-
18
21
22
23
30
26
50
51-52
50
51
50
51
50
51
50
51
50
51
50
51
50
51
50
51
50
51
50
52

Key	Part No.	Description	Spare parts Y/N	Qty	Remarks
45	7200001561	Thrust washer	Y	1	
46	4110000042011	Gear	Y	1	
47	7200001606	Ball bearing	Y	1	
48	7200001566	Spacer	Y	3	
49	4110000042113	Bracket	Y	1	
50	7200001570	Friction disc	N	12	
51	7200001571	Friction disc	Y	9	
52	7200001572	Friction disc	Y	1	

Clutch

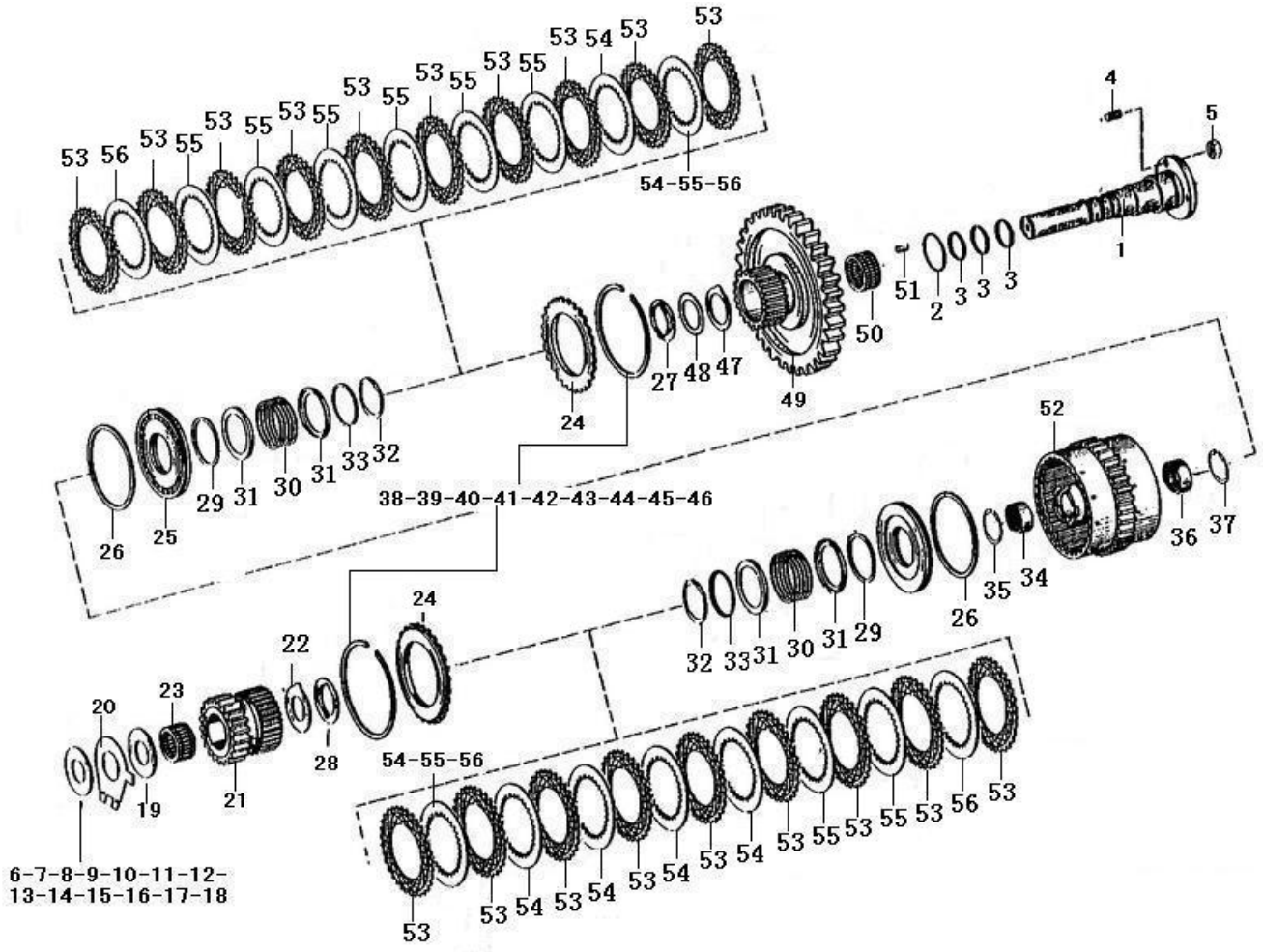
53 56 53 55 53 55 53 55 53 55 53 55 53 54 53 53
54-55-56
4
5
1
51
2 3 3 3
50
49
27 48 47
24
26 25 29 31 30 31 33 32
38-39-40-41-42-43-44-45-46
52
36 37
35 34
26
32 33 31 30 31 29
24
22
28
54-55-56
20 23
19 21
6-7-8-9-10-11-12-
13-14-15-16-17-18
53 53 54 53 54 53 54 53 54 53 55 53 55 53 56 53

Key	Part No.	Description	Spare parts Y/N	Qty	Remarks
1	7200001615	Shaft	Y	1	
2	7200001533	O-ring	Y	1	
3	7200001534	Piston ring	Y	3	
4	7200001674	Stud	Y	2	
5	7200001675	Nut	Y	2	
6	7200001621	Shim	Y	1	
7	4110000042052	Washer	Y	1	
8	4110000042053	Washer	Y	1	
9	4110000042054	Washer	Y	1	
10	4110000042055	Washer	Y	1	
11	4110000042056	Washer	Y	1	
12	4110000042057	Washer	Y	1	
13	4110000042058	Washer	Y	1	
14	4110000042059	Washer	Y	1	
15	4110000042060	Washer	Y	1	
16	4110000042061	Washer	Y	1	
17	4110000042062	Washer	Y	1	
18	4110000042063	Washer	Y	1	
19	7200001539	Thrust washer	Y	1	
20	7200001623	Thrust washer	N	1	
21	7200001624	Gear	Y	1	
22	7200001626	Thrust washer	Y	1	

Clutch

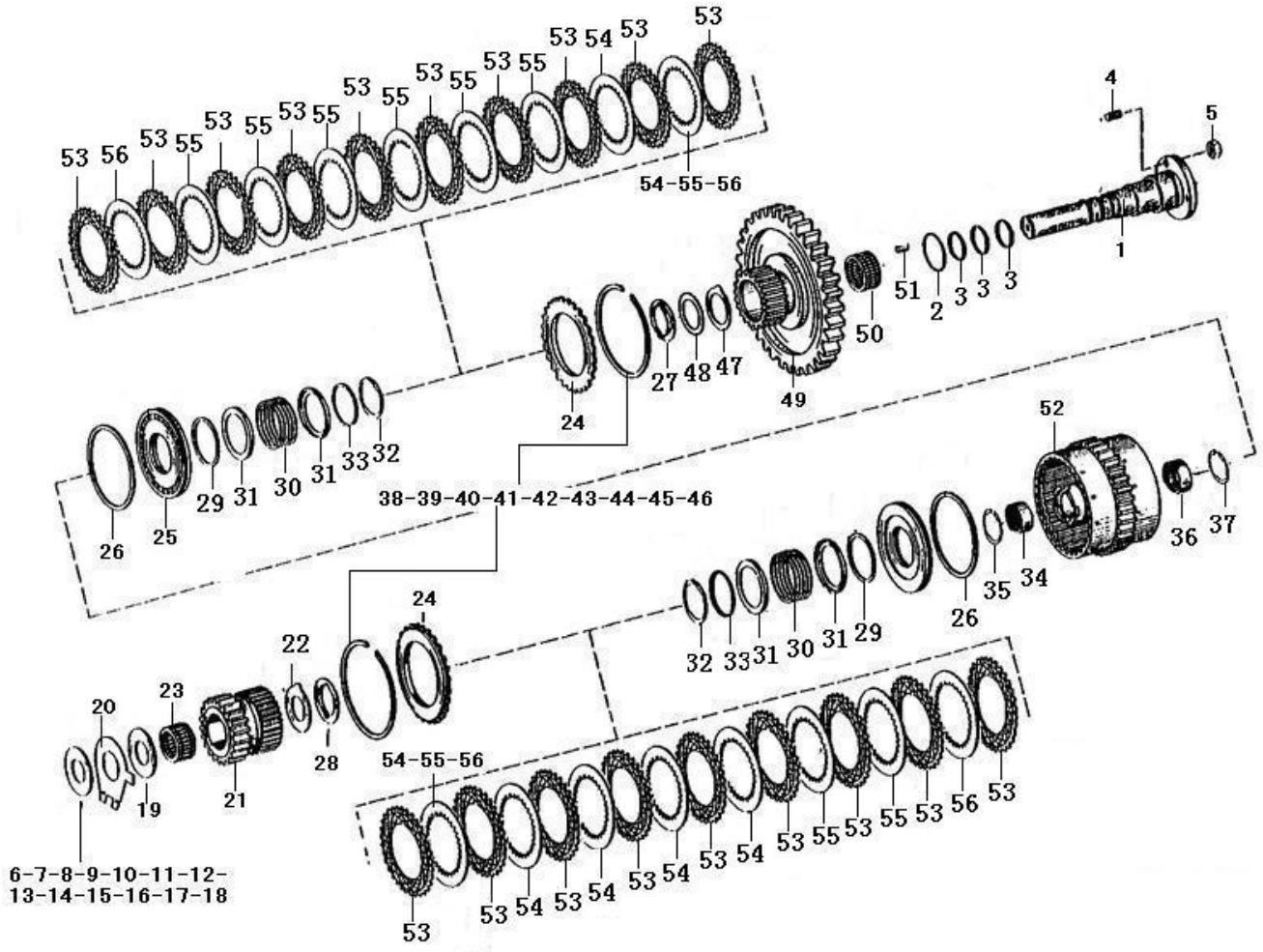
53 56 53 55 53 55 53 55 53 55 53 55 53 54 53 53
54-55-56
4
5
1
51
2 3 3 3
50
49
27 48 47
24
26 25 29 31 30 31 33 32
38-39-40-41-42-43-44-45-46
52
36 37
35 34
26
32 33 31 30 31 29
24
22
20 23
19 21
28
6-7-8-9-10-11-12-
13-14-15-16-17-18
54-55-56
53 53 54 53 54 53 54 53 54 53 55 53 55 53 56 53

Key	Part No.	Description	Spare parts Y/N	Qty	Remarks
23	7200001625	Needle bearing	N	1	
24	7200001627	Washer	Y	2	
25	7200001628	Cylinder piston	Y	2	
26	7200001629	Sealing ring	Y	2	
27	7200001549	Thrust washer	Y	1	
28	7200001550	Thrust washer	Y	1	
29	7200001551	Sealing ring	Y	2	
30	4110000076251	Tension spring	Y	2	
31	7200001553	Guide ring	Y	4	
32	7200001554	Cup	Y	2	
33	7200001555	Guide ring	Y	2	
34	7200001637	Needle bearing	Y	1	
35	7200001557	Retaining ring	Y	1	
36	7200001639	Needle bearing	Y	1	
37	7200001559	Retaining ring	Y	1	
38	7200001641	Retaining ring	Y	2	
39	4110000042019	Retaining ring	Y	2	
40	4110000042021	Retaining ring	Y	2	
41	4110000042022	Retaining ring	Y	2	
42	4110000042024	Retaining ring	Y	2	
43	4110000042025	Retaining ring	Y	2	
44	4110000042017	Retaining ring	Y	2	

Clutch

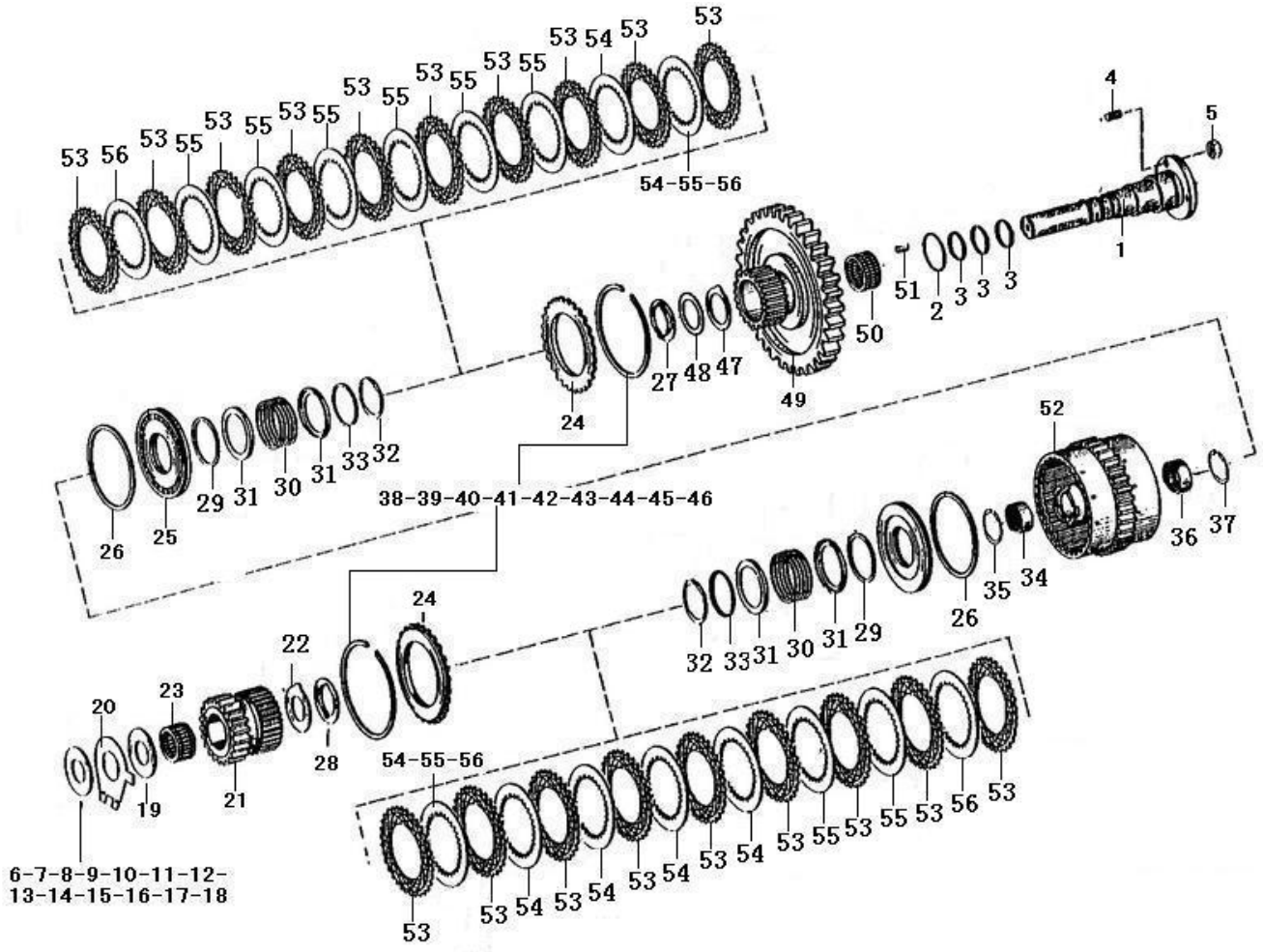
53 56 53 55 53 55 53 55 53 55 53 55 53 54 53 53
54-55-56
4
5
1
51
2 3 3 3
50
49
27 48 47
24
26 25 29 31 30 31 33 32
38-39-40-41-42-43-44-45-46
52
36 37
35 34
26
32 33 31 30 31 29
24
22
20 23
19 21
28
6-7-8-9-10-11-12-
13-14-15-16-17-18
54-55-56
53 53 54 53 54 53 54 53 54 53 55 53 55 53 56 53

Key	Part No.	Description	Spare parts Y/N	Qty	Remarks
45	4110000042016	Retaining ring	Y	2	
46	4110000042014	Retaining ring	Y	2	
47	7200001561	Thrust washer	Y	1	
48	7200001643	Washer	Y	1	
49	4110000042012	Gear	Y	1	
50	7200001646	Sealing ring	Y	1	
51	7200001647	Roller	Y	12	
52	7200001648	Support	Y	1	
53	7200001649	Friction disc	Y	10	
54	7200001650	Friction disc	Y	1	
55	7200001651	Friction disc	Y	6	
56	7200001652	Friction disc	Y	1	

Transmission output section

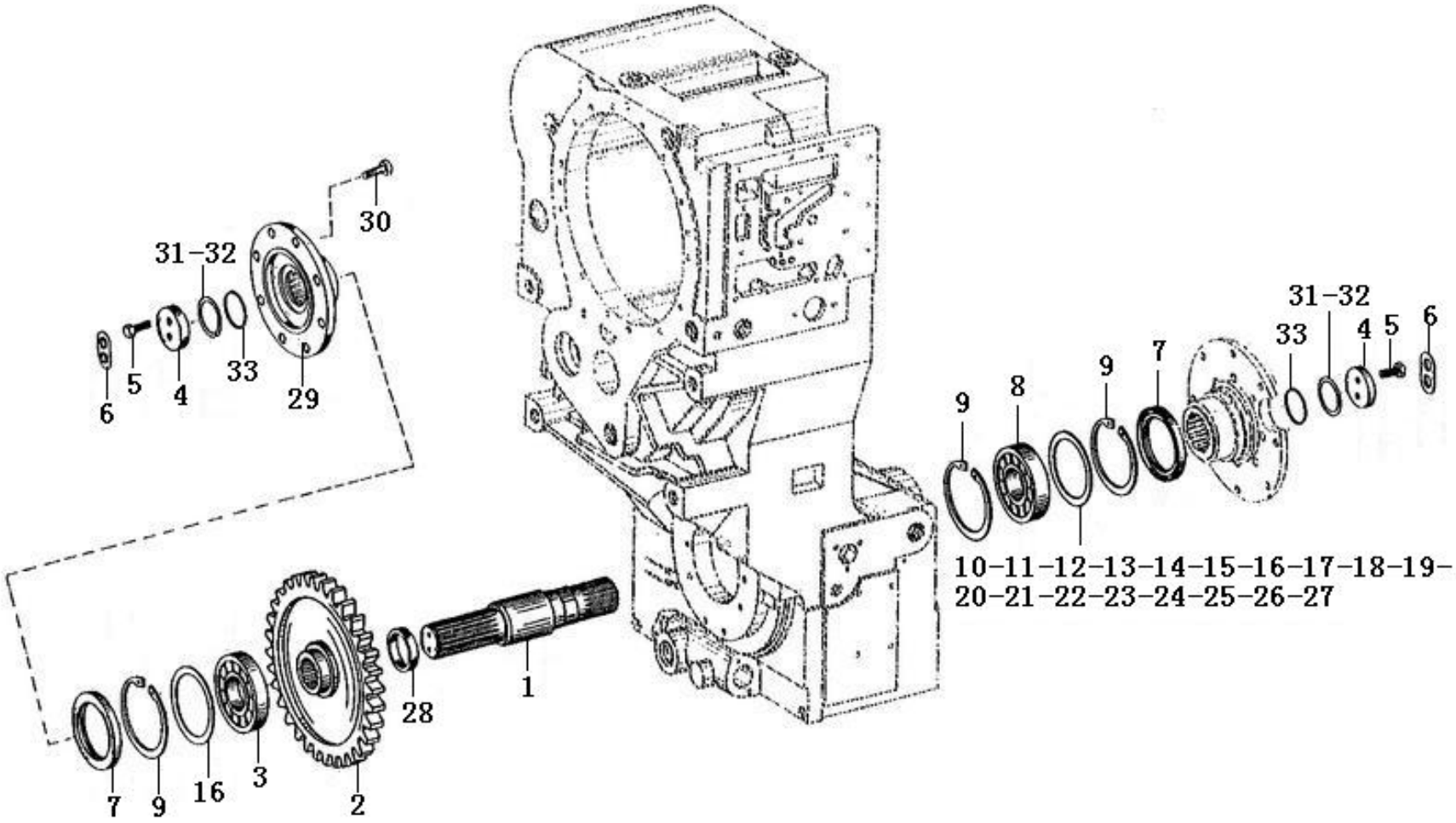

Key	Part No.	Description	Spare parts Y/N	Qty	Remarks
1	7200001499	Output shaft	N	1	
2	7200002248	Gear	Y	1	
3	7200001501	Bearing	Y	1	
4	7200001503	Washer	Y	2	
5	7200001504	Screw	Y	4	
6	7200001505	Thrust washer	Y	2	
7	7200001506	Sealing ring	Y	2	
8	7200001507	Ball bearing	Y	1	
9	7200001508	Lock ring	Y	3	
10	7200001509	Shim	Y	1	
11	4110000042086	Washer	Y	1	
12	4110000042088	Washer	Y	1	
13	4110000042089	Washer	Y	1	
14	4110000042064	Washer	Y	1	
15	4110000042065	Washer	Y	1	
16	7200001502	Shim	Y	1	
17	4110000042074	Washer	Y	1	
18	4110000042080	Washer	Y	1	
19	4110000042077	Washer	Y	1	
20	4110000042083	Washer	Y	1	
21	4110000042071	Washer	Y	1	
22	4110000042076	Washer	Y	1	

Transmission output section

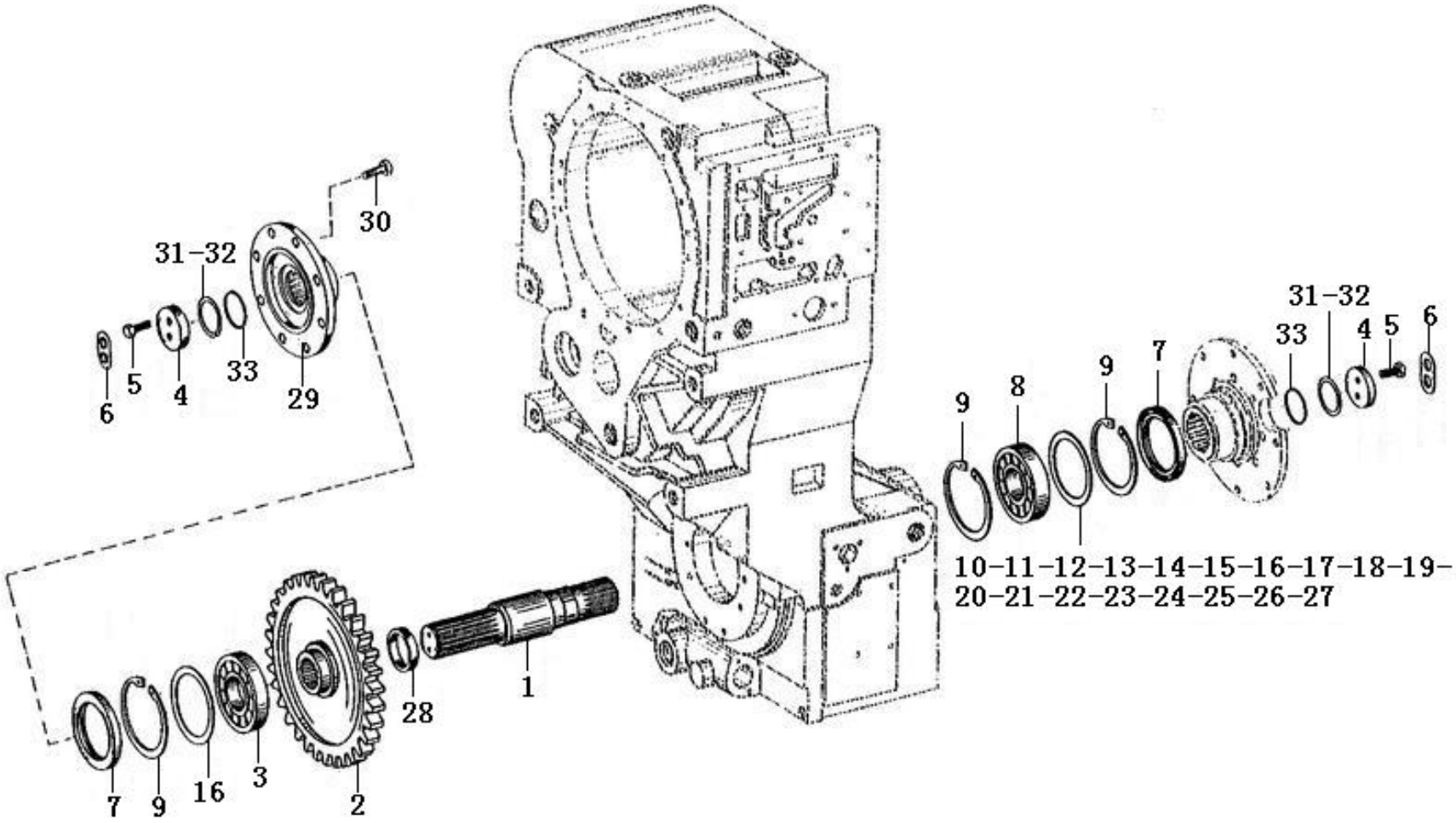

Key	Part No.	Description	Spare parts Y/N	Qty	Remarks
23	4110000042085	Washer	Y	1	
24	4110000042087	Washer	Y	1	
25	4110000042073	Washer	Y	1	
26	4110000042079	Washer	Y	1	
27	4110000042082	Washer	Y	1	
28	7200001510	Hose	N	1	
29	7200001511	Flange	Y	1	
30	7200001512	Screw	Y	8	
31	7200001513	Washer	Y	1	
32	4110000042097	Spacer ring	Y	1	
33	7200001514	O-ring	Y	2	

Parking brake assembly

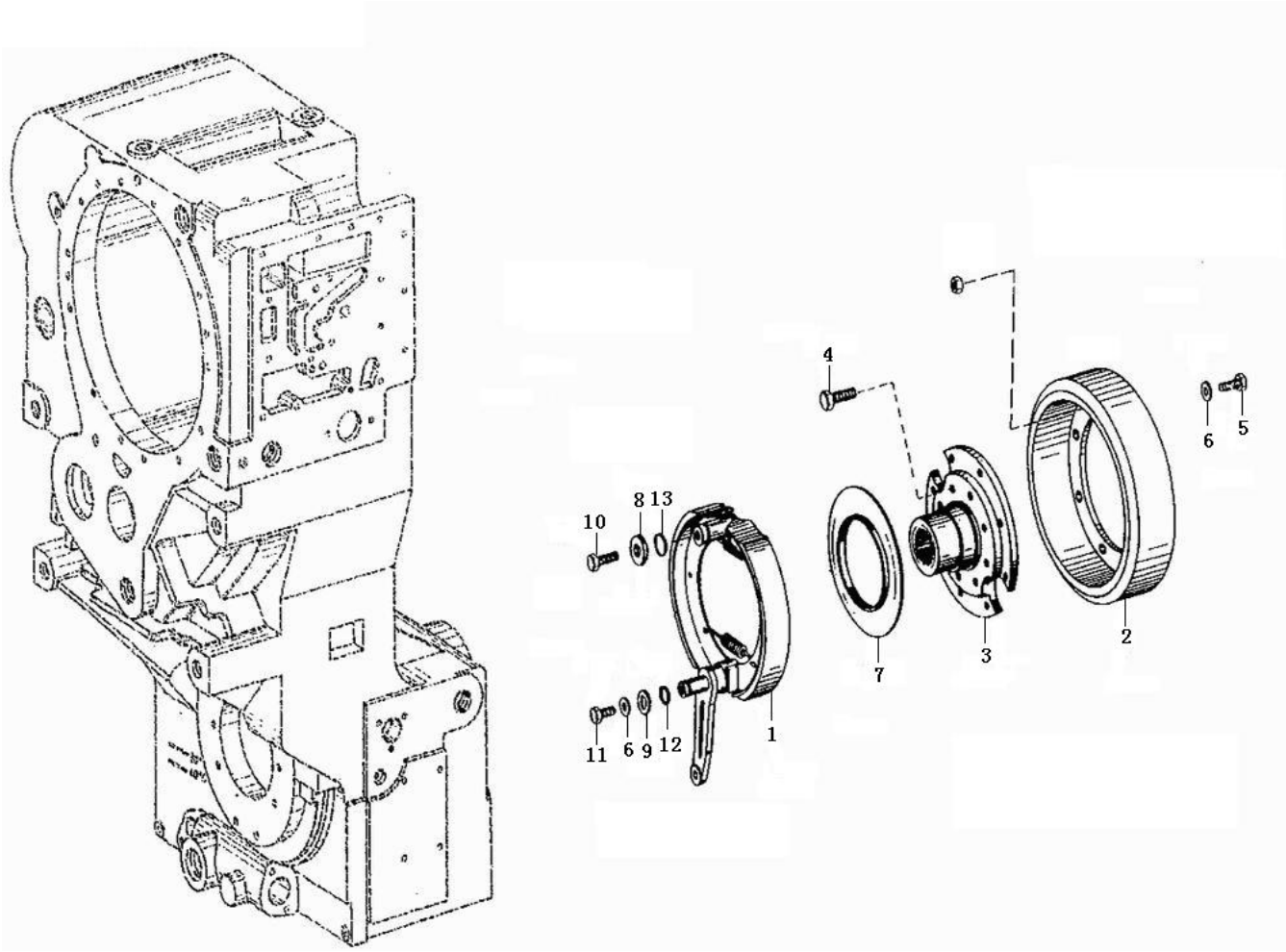

Key	Part No.	Description	Spare parts Y/N	Qty	Remarks
1	7200002198	Brake system	Y	1	
2	7200002199	Brake system	N	1	
3	7200002308	Flange	Y	1	
4	7200002200	Screw	Y	8	
5	7200002201	Screw	Y	8	
6	7200002202	Washer	Y	8	
7	7200002203	Anchor plate	N	1	
8	7200002204	Washer	N	1	
9	7200002205	Washer	N	1	
10	7200002206	Screw	Y	1	
11	7200002207	Screw	Y	1	
12	7200002208	O-ring	Y	1	
13	7200002209	O-ring	Y	1	

Parking brake shoe assembly

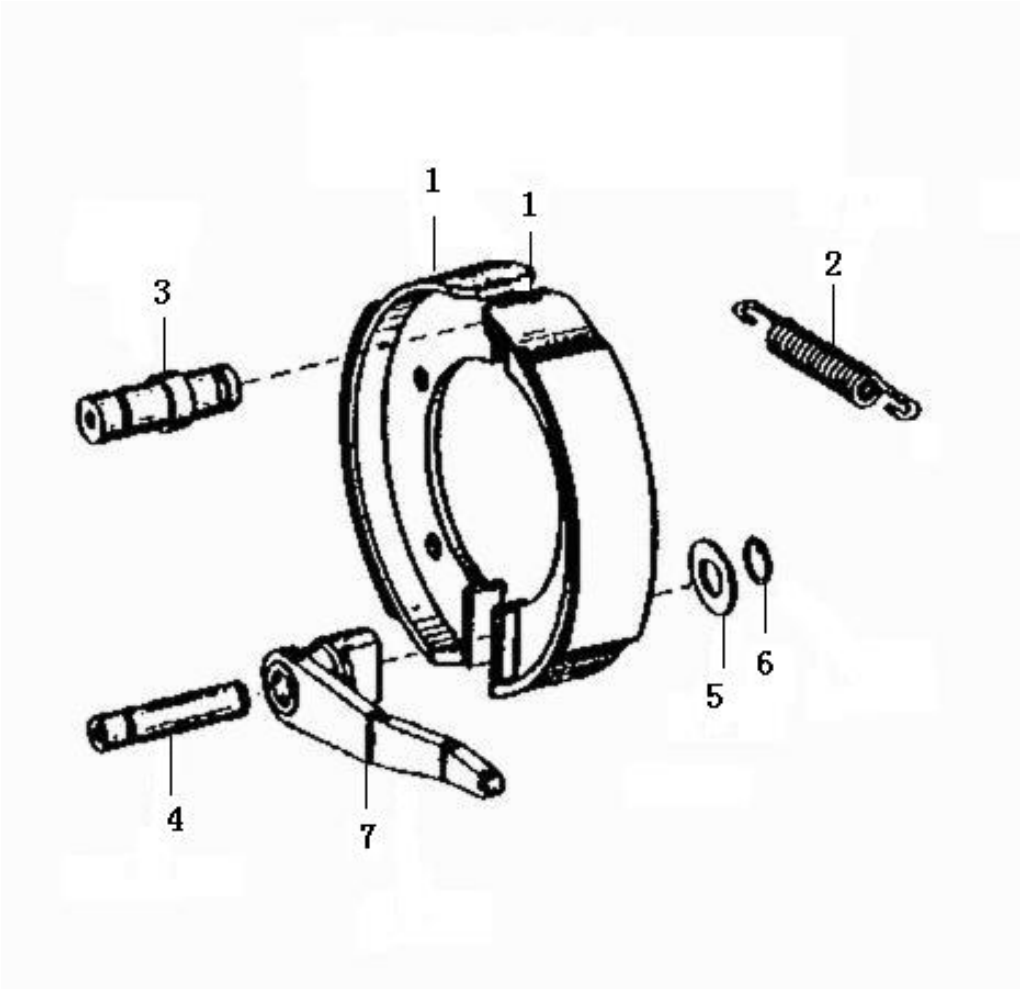

Key	Part No.	Description	Spare parts Y/N	Qty	Remarks
1	7200002210	Brake shoe	Y	2	
2	7200002211	Spring	Y	2	
3	7200002212	Screw	Y	1	
4	7200002213	Screw	Y	1	
5	7200002214	Washer	Y	1	
6	7200002215	Lock ring	Y	1	
7	7200002217	Brake cam	Y	1	

Power take-off 1

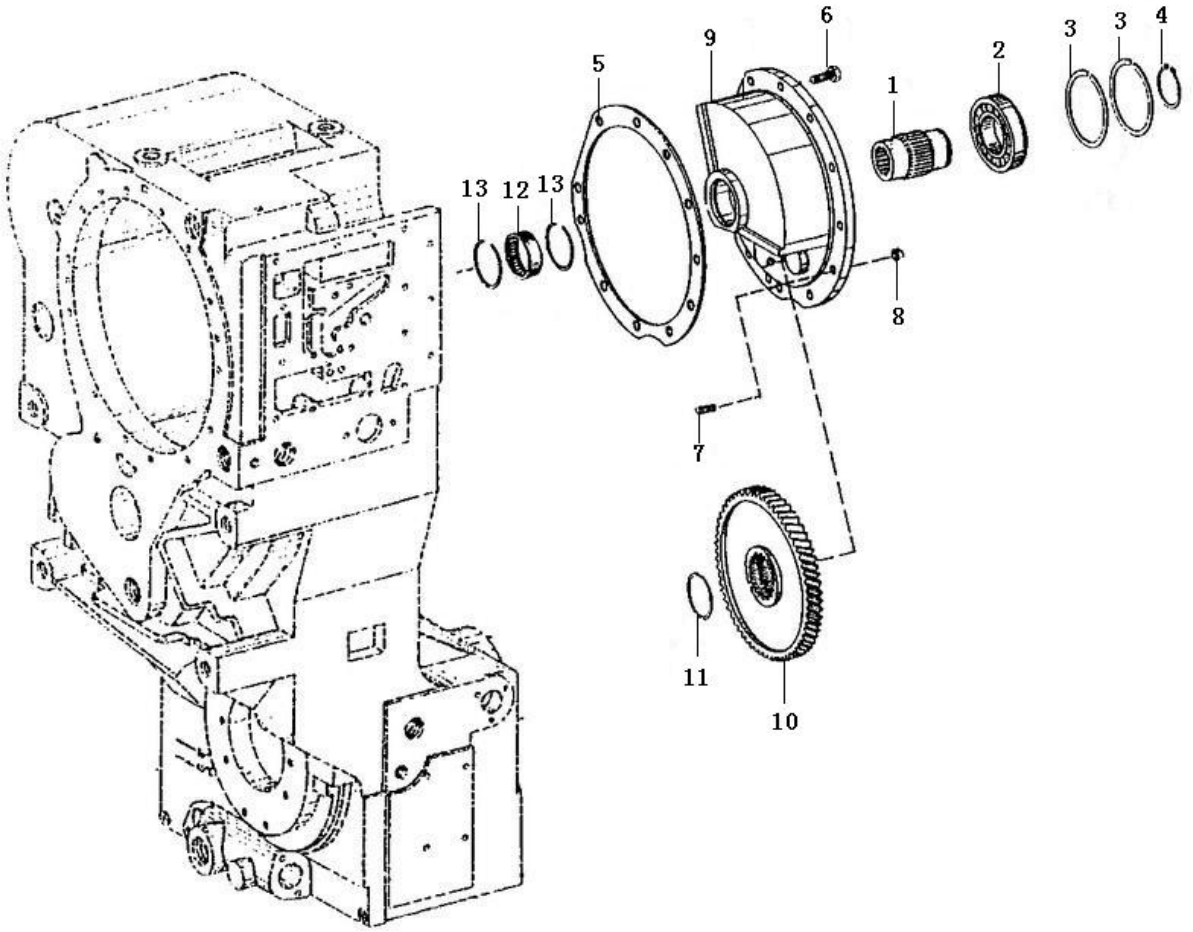

Key	Part No.	Description	Spare parts Y/N	Qty	Remarks
1	7200001668	Shaft	Y	1	
2	7200001669	Ball bearing	N	1	
3	7200001670	Retaining ring	Y	2	
4	7200001671	Lock ring	Y	1	
5	7200001672	Sealing ring	Y	1	
6	4110000042108	Screw	Y	10	
7	7200001674	Stud	Y	1	
8	7200001675	Nut	Y	1	
9	7200001676	Housing	Y	1	
10	7200001677	Gear	Y	1	
11	7200001678	Retaining ring	Y	1	
12	7200001679	Needle bearing	Y	1	
13	7200001680	Retaining ring	Y	2	

Power take-off 2

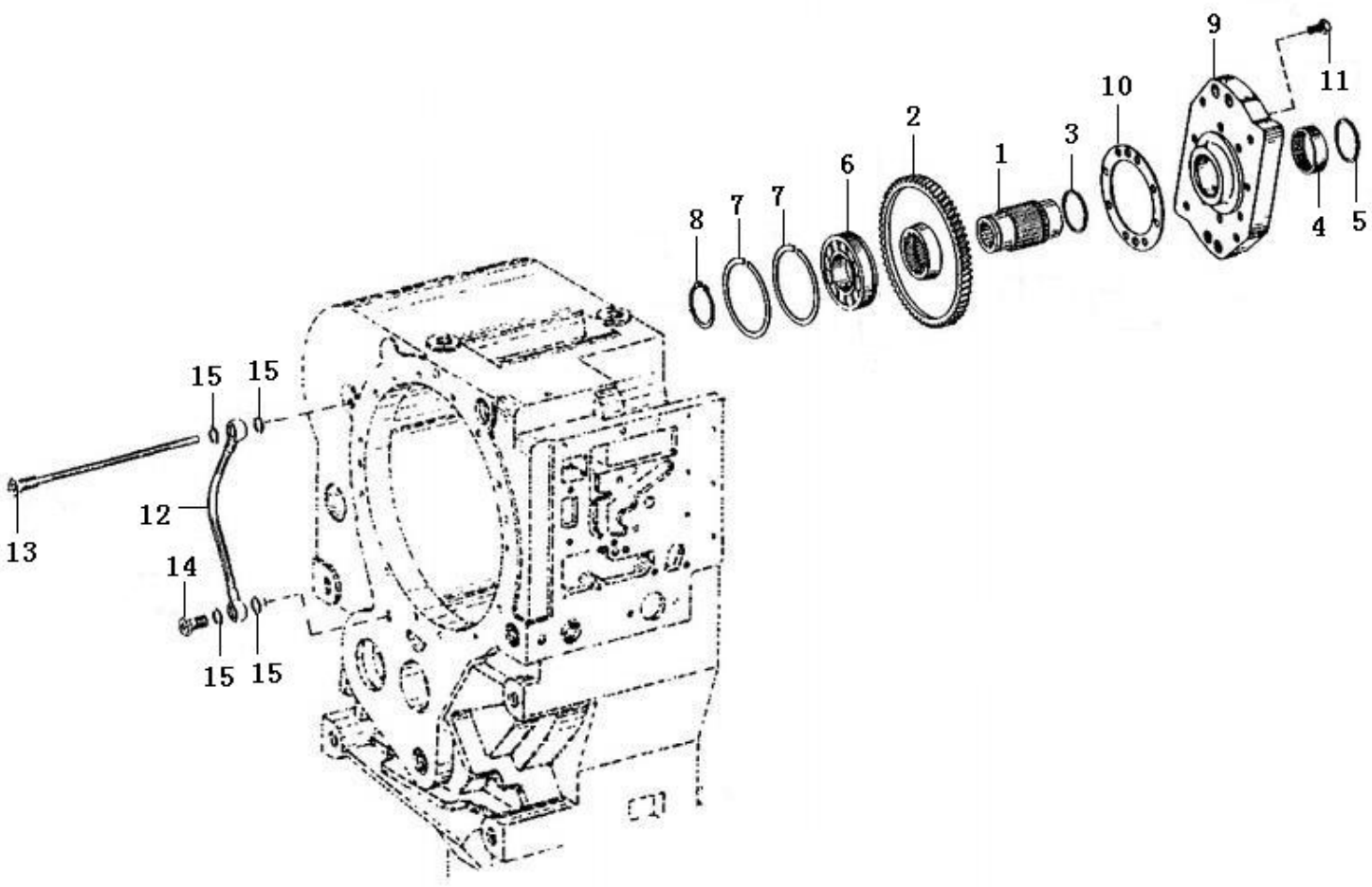

Key	Part No.	Description	Spare parts Y/N	Qty	Remarks
1	7200001668	Shaft	Y	1	
2	7200001682	Gear	Y	1	
3	7200001678	Retaining ring	Y	1	
4	7200001679	Needle bearing	Y	1	
5	7200001680	Retaining ring	Y	1	
6	7200001669	Ball bearing	N	1	
7	7200001670	Retaining ring	Y	2	
8	7200001671	Lock ring	Y	1	
9	7200001684	Cover	N	1	
10	7200001685	Sealing ring	Y	1	
11	7200001686	Screw	Y	8	
12	7200001687	Tube	Y	1	
13	7200001688	Nozzle	Y	1	
14	7200001689	Screw	Y	1	
15	7200001690	Sealing ring	Y	4	

Gearshift hydraulic control section 1

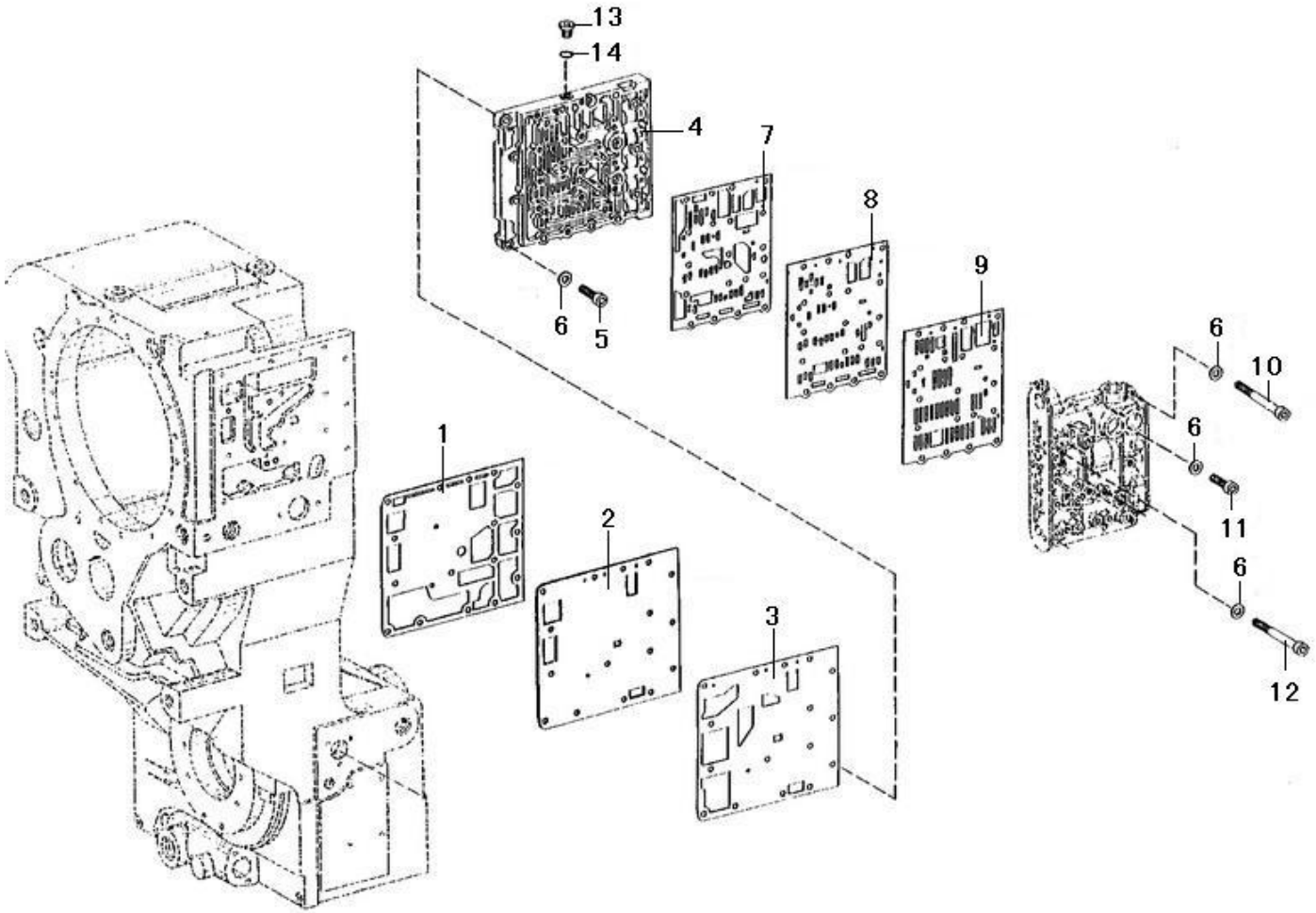

Key	Part No.	Description	Spare parts Y/N	Qty	Remarks
1	7200001692	Gasket	Y	1	
2	7200001693	Cover plate	Y	1	
3	7200001694	Gasket	Y	1	
4	7200001695	Oil distributor plate	Y	1	
5	4110000042119	Screw	Y	11	
6	7200001697	Washer	Y	11	
7	7200001698	Gasket	Y	1	
8	7200001699	Cover plate	Y	1	
9	4110000042110	Washer	Y	1	
10	4110000042123	Screw	Y	5	
11	4110000042121	Screw	Y	11	
12	4110000042122	Screw	Y	1	
13	7200001750	Plug	Y	1	
14	7200001705	O-ring	Y	1	

Gearshift hydraulic control section 2

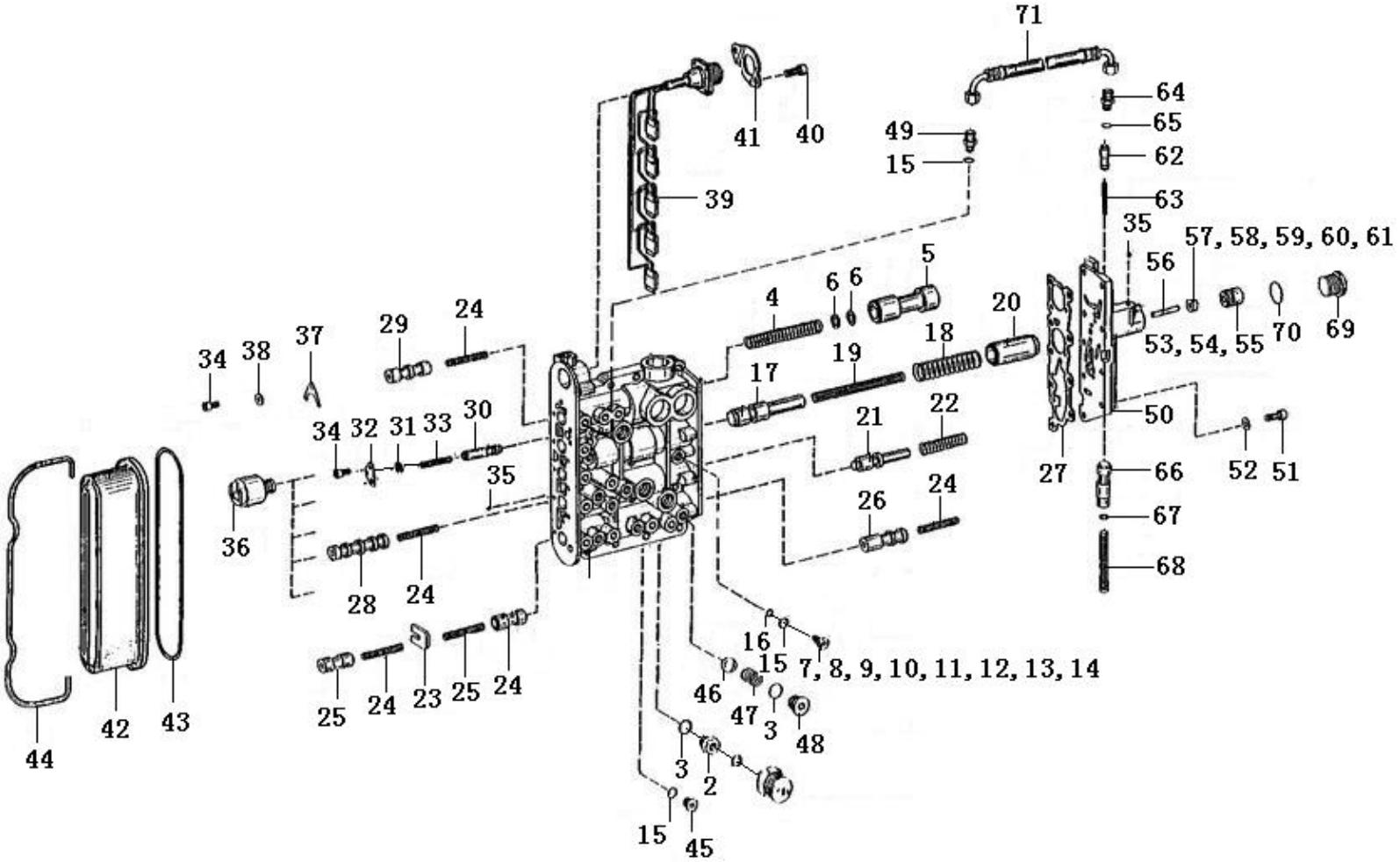

Key	Part No.	Description	Spare parts Y/N	Qty	Remarks
1	7200001707	Valve	Y	1	
2	4110000042117	Nipple	Y	1	
3	7200001709	O-ring	Y	1	
4	7200001710	Spring	Y	1	
5	7200001711	Valve rod	Y	1	
6	7200001712	Shim	Y	2	
7	7200001713	Plug	Y	1	
8	4110000042100	Plug	Y	1	
9	4110000042102	Plug	Y	1	
10	4110000042099	Plug	Y	1	
11	4110000042101	Plug	Y	1	
12	4110000042103	Plug	Y	1	
13	4110000042104	Plug	Y	1	
14	4110000042105	Plug	Y	1	
15	7200001705	O-ring	Y	1	
16	7200001715	O-ring	Y	1	
17	7200001716	Valve rod	Y	1	
18	7200001717	Spring	Y	1	
19	7200001718	Spring	Y	1	
20	7200001719	Valve rod	Y	1	
21	7200001720	Valve rod	Y	1	
22	7200001721	Spring	Y	1	

Gearshift hydraulic control section 2

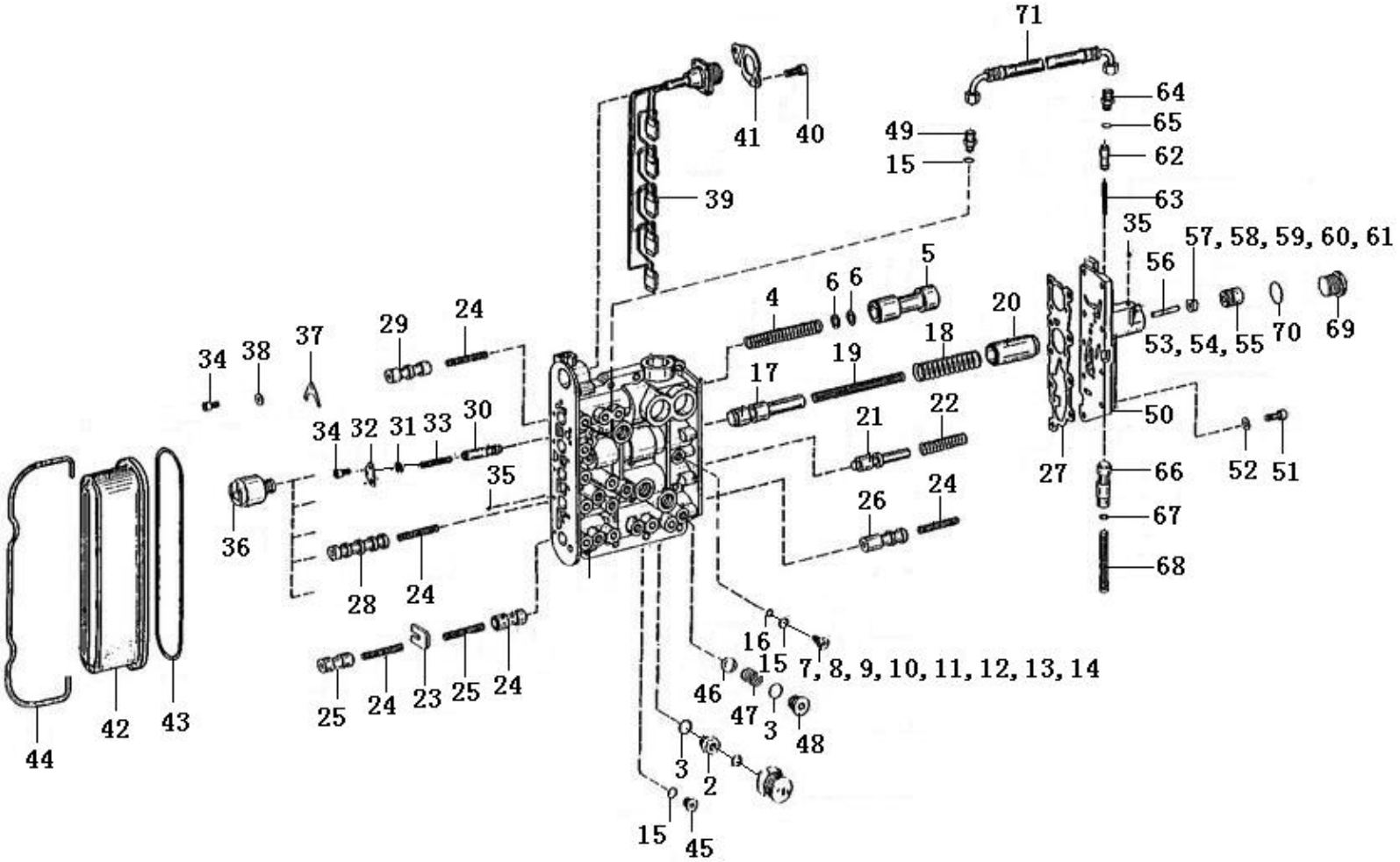

Key	Part No.	Description	Spare parts Y/N	Qty	Remarks
23	7200001722	Lock plate	Y	1	
24	7200001723	Spring	Y	1	
25	7200001725	Valve rod	Y	1	
26	7200001726	Valve rod	Y	1	
27	7200001727	Gasket	Y	1	
28	7200001731	Valve rod	Y	1	
29	7200001733	Valve rod	Y	1	
30	4110000042098	Pressure reducing valve	Y	1	
31	7200001735	Spacer ring	Y	1	
32	7200001736	Lock plate	Y	1	
33	7200001737	Spring	Y	1	
34	7200001743	Screw	Y	2	
35	7200001739	Ball	Y	10	
36	7200001740	Solenoid valve	Y	5	
37	7200001741	Lock plate	Y	5	
38	7200001742	Washer	Y	5	
39	7200001744	Pillar	Y	1	
40	7200001745	Screw	Y	2	
41	7200001746	Lock plate	Y	1	
42	7200001747	Cover plate	Y	1	
43	4110000042006	O-ring	Y	1	
44	7200001749	Clamp	Y	1	

Gearshift hydraulic control section 2

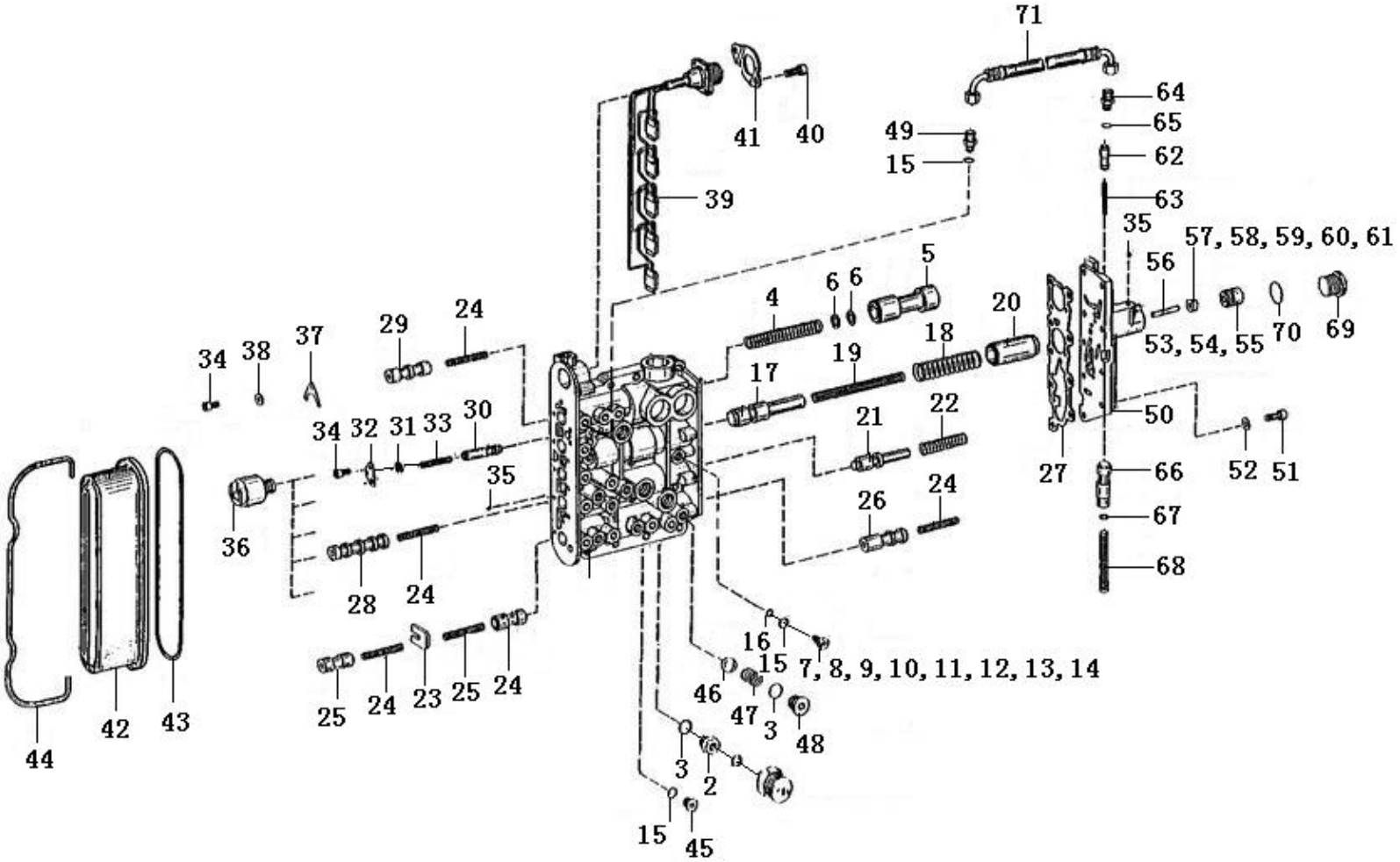

Key	Part No.	Description	Spare parts Y/N	Qty	Remarks
45	7200001750	Plug	Y	8	
46	7200001752	Ball	Y	2	
47	4110000042118	Spring	N	2	
48	7200001664	Plug	Y	3	
49	7200001757	Nut	Y	1	
50	7200001759	Cover	Y	1	
51	7200001760	Screw	Y	9	
52	7200001761	Washer	Y	9	
53	7200001763	Valve rod	Y	1	
54	4110000042096	Cylinder piston	Y	1	
55	4110000042095	Cylinder piston	Y	1	
56	7200001724	Rod	Y	1	
57	7200001728	Spacer ring	Y	1	
58	4110000042091	Gasket	Y	1	
59	4110000042092	Gasket	Y	1	
60	4110000042093	Gasket	Y	1	
61	4110000042094	Gasket	Y	1	
62	7200001729	Valve rod	Y	1	
63	7200001730	Spring	Y	1	
64	7200001732	Nut	Y	1	
65	7200001756	O-ring	Y	1	
66	7200001758	Valve rod	Y	1	

Gearshift hydraulic control section 2

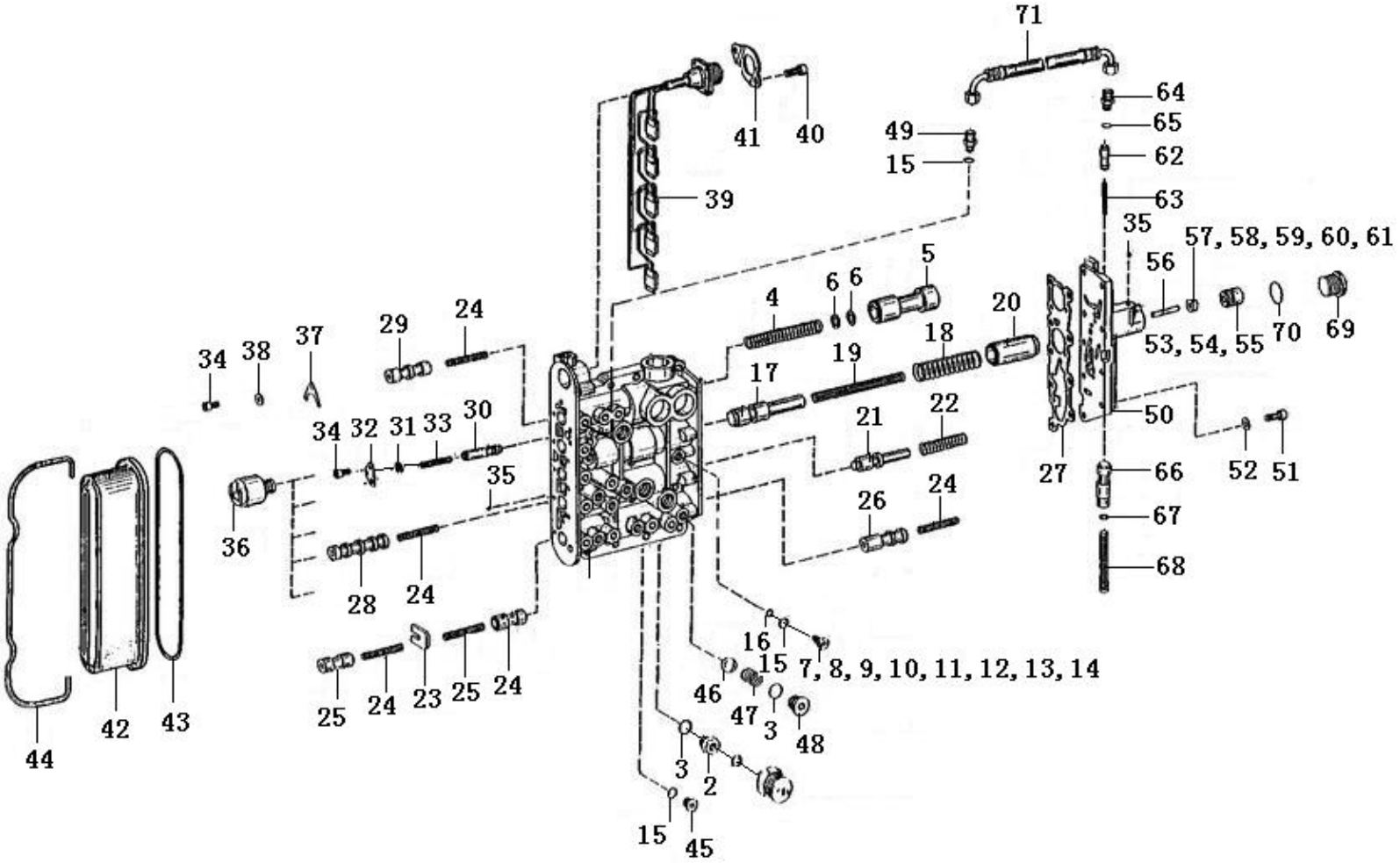

Key	Part No.		Description	Spare parts Y/N	Qty	Remarks
67	4110000042042	Washer		Y	10	
68	7200001764	Spring		Y	1	
69	7200001767	Plug		Y	1	
70	7200001768	O-ring		Y	1	
71	7200001769	Hose		Y	1	

Transmission pressure control valve

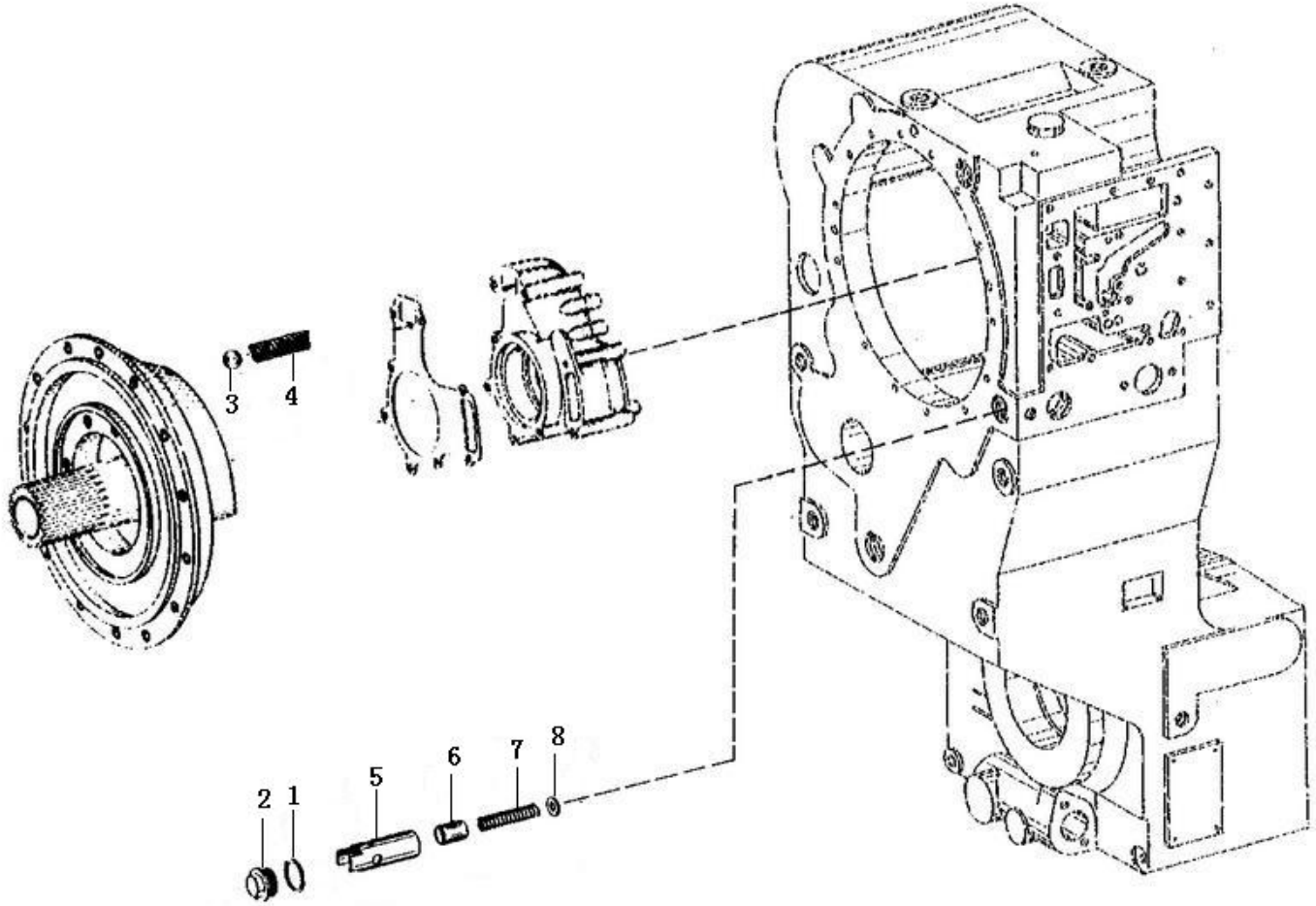

Key	Part No.	Description	Spare parts Y/N	Qty	Remarks
1	7200001433	O-ring	Y	1	
2	7200001524	Three-way nipple	Y	1	
3	7200001525	Ball	Y	1	
4	7200001526	Spring	Y	1	
5	7200001527	Sleeve	Y	1	
6	7200001528	Valve rod	Y	1	
7	7200001529	Spring	Y	1	
8	7200001530	Washer	Y	1	

Transmission oil filter

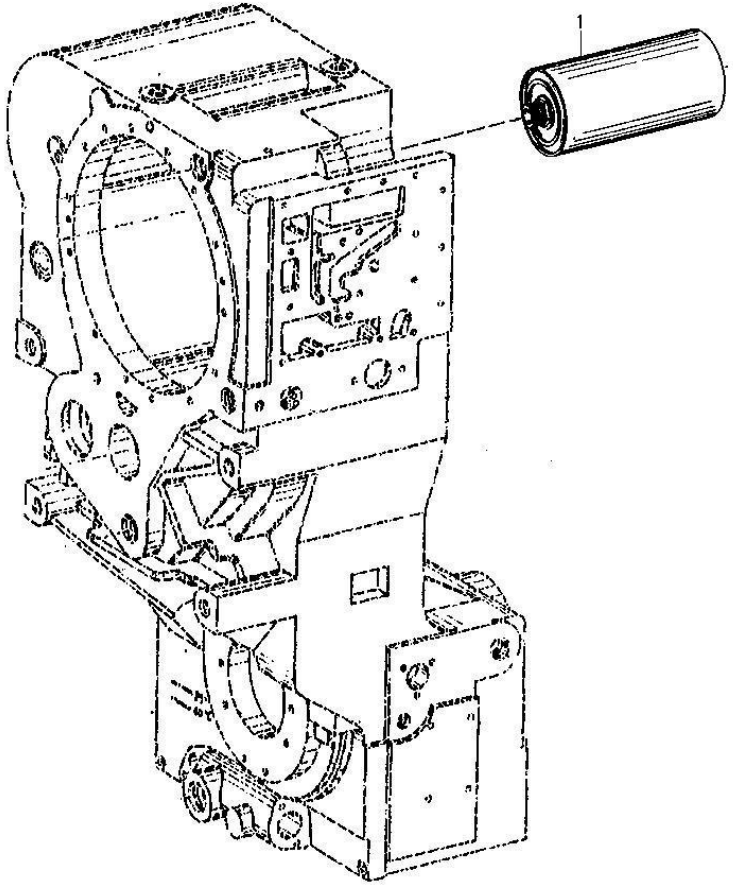

Key	Part No.	Description	Spare parts Y/N	Qty	Remarks
1	3901000014	Oil filter	Y	1	

Emergency.steer.pump

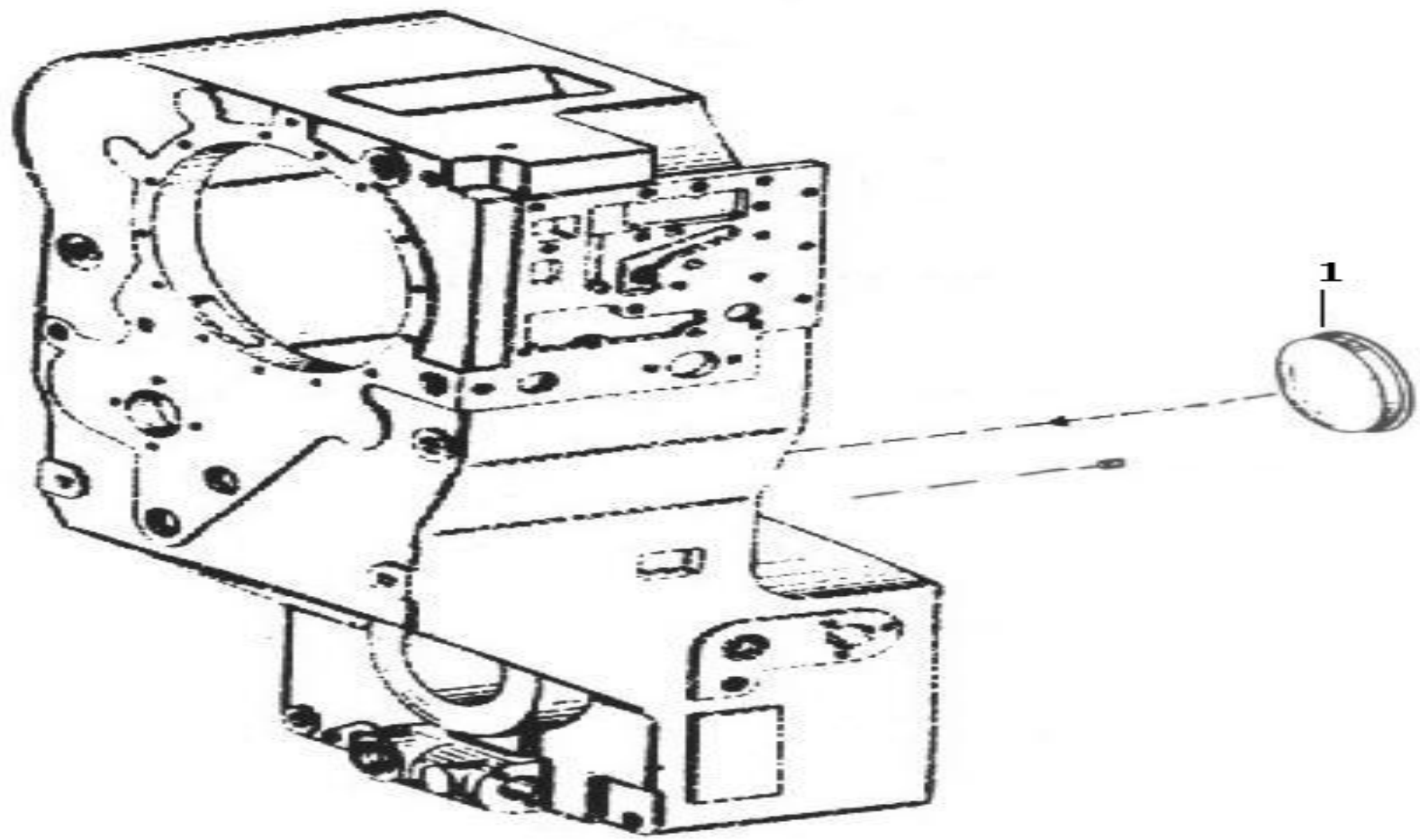

Key	Part No.	Description	Spare parts Y/N	Qty	Remarks
1	7200001663	Cover	Y	1	

Transmission speed sensor

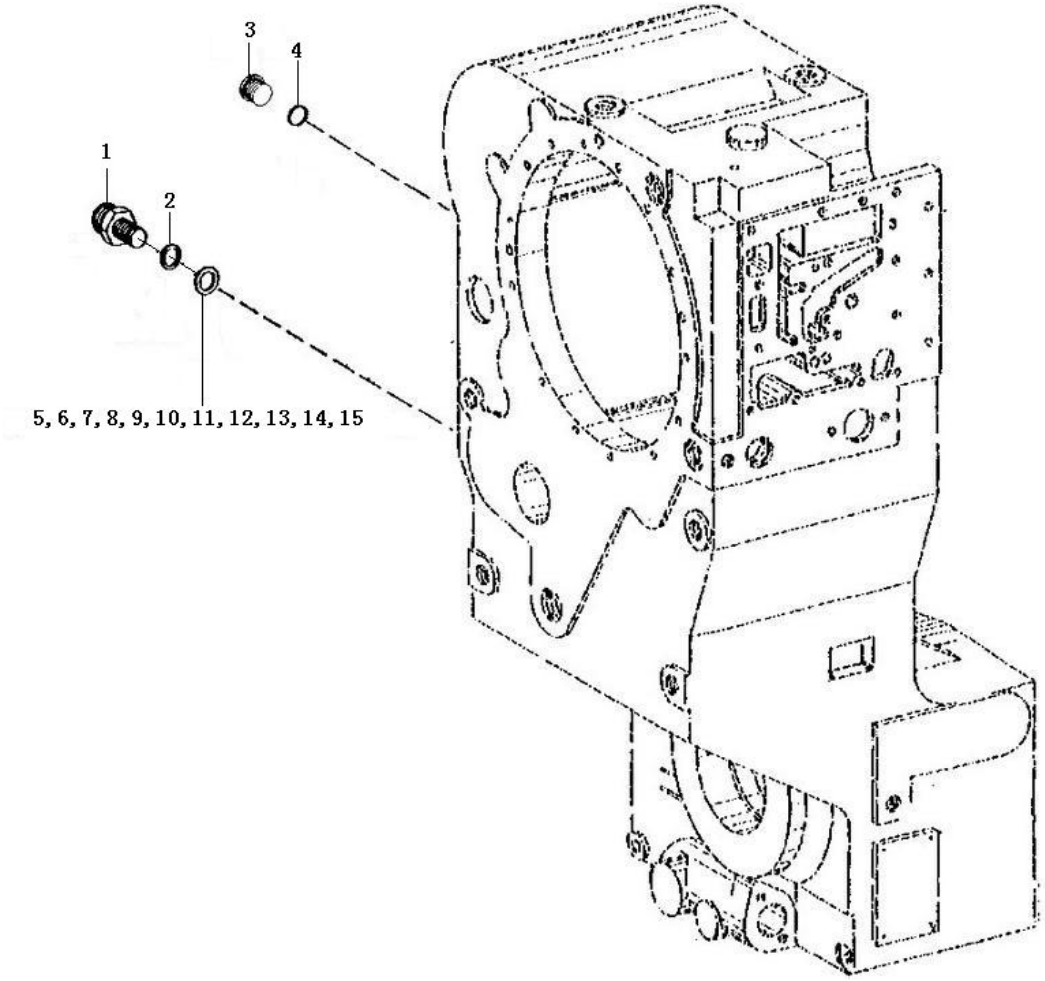

Key	Part No.	Description	Spare parts Y/N	Qty	Remarks
1	4110000042090	Sensor	Y	1	
2	7200001771	Sealing ring	Y	1	
3	7200001664	Plug	Y	1	
4	7200001709	O-ring	Y	1	
5	7200001774	Ajusting shim	Y	1	
6	7200002251	Shim	Y	1	
7	4110000042047	Washer	Y	1	
8	4110000042048	Washer	Y	1	
9	4110000042046	Washer	Y	1	
10	4110000042051	Washer	Y	1	
11	4110000042045	Washer	Y	1	
12	4110000042044	Washer	Y	1	
13	4110000042043	Washer	Y	1	
14	4110000042049	Washer	Y	1	
15	4110000042050	Washer	Y	1	

Transmission dipstick

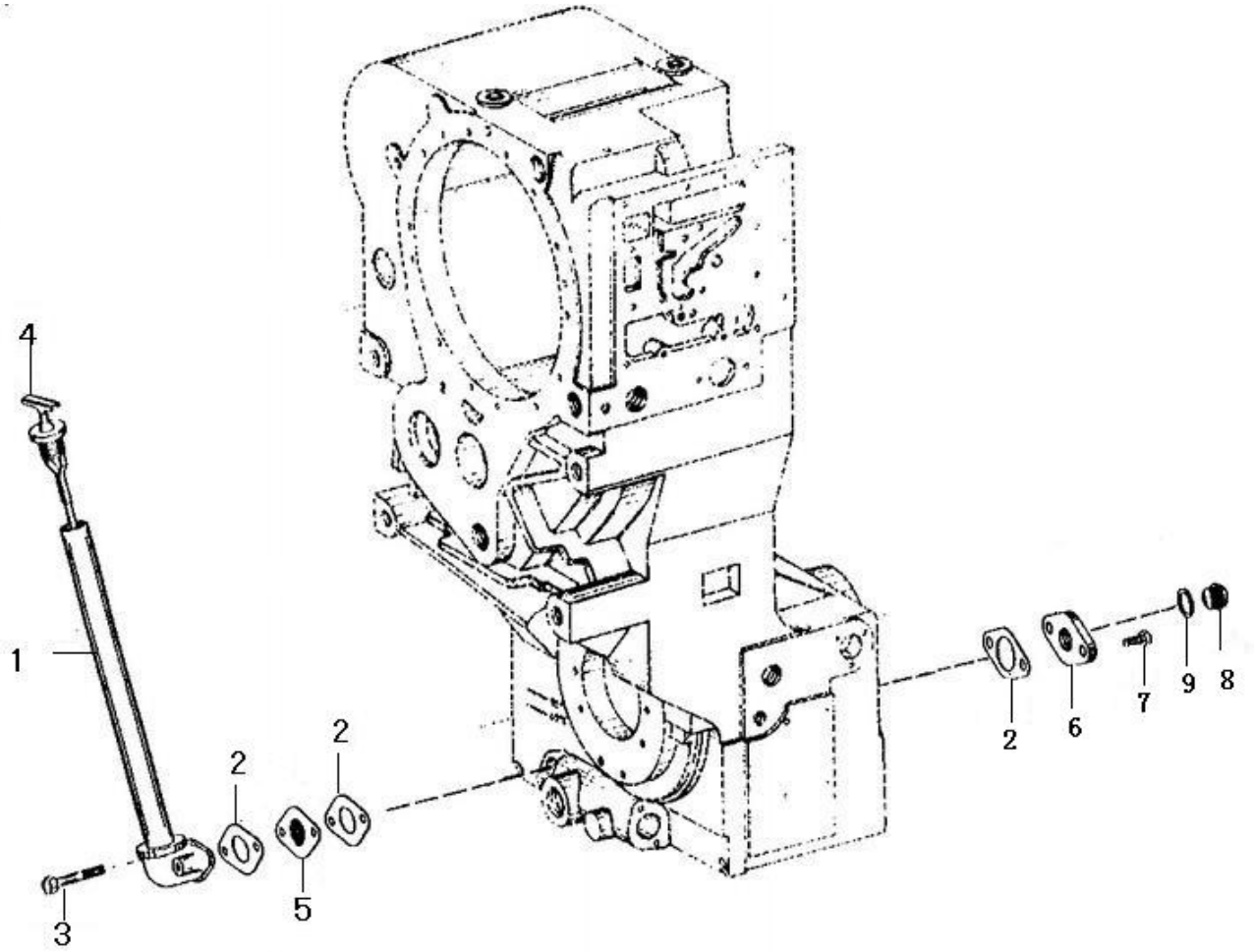

Key	Part No.	Description	Spare parts Y/N	Qty	Remarks
1	7200001654	Tube	Y	1	
2	7200002241	Washer	Y	3	
3	7200002232	Screw	Y	2	
4	7200001657	Dipstick	Y	1	
5	7200001658	Plate	N	1	
6	7200001659	Cover plate	N	1	
7	7200001660	Screw	Y	2	
8	7200001661	Plug	Y	1	
9	7200001662	Sealing ring	Y	1	

Transmission oil pipes

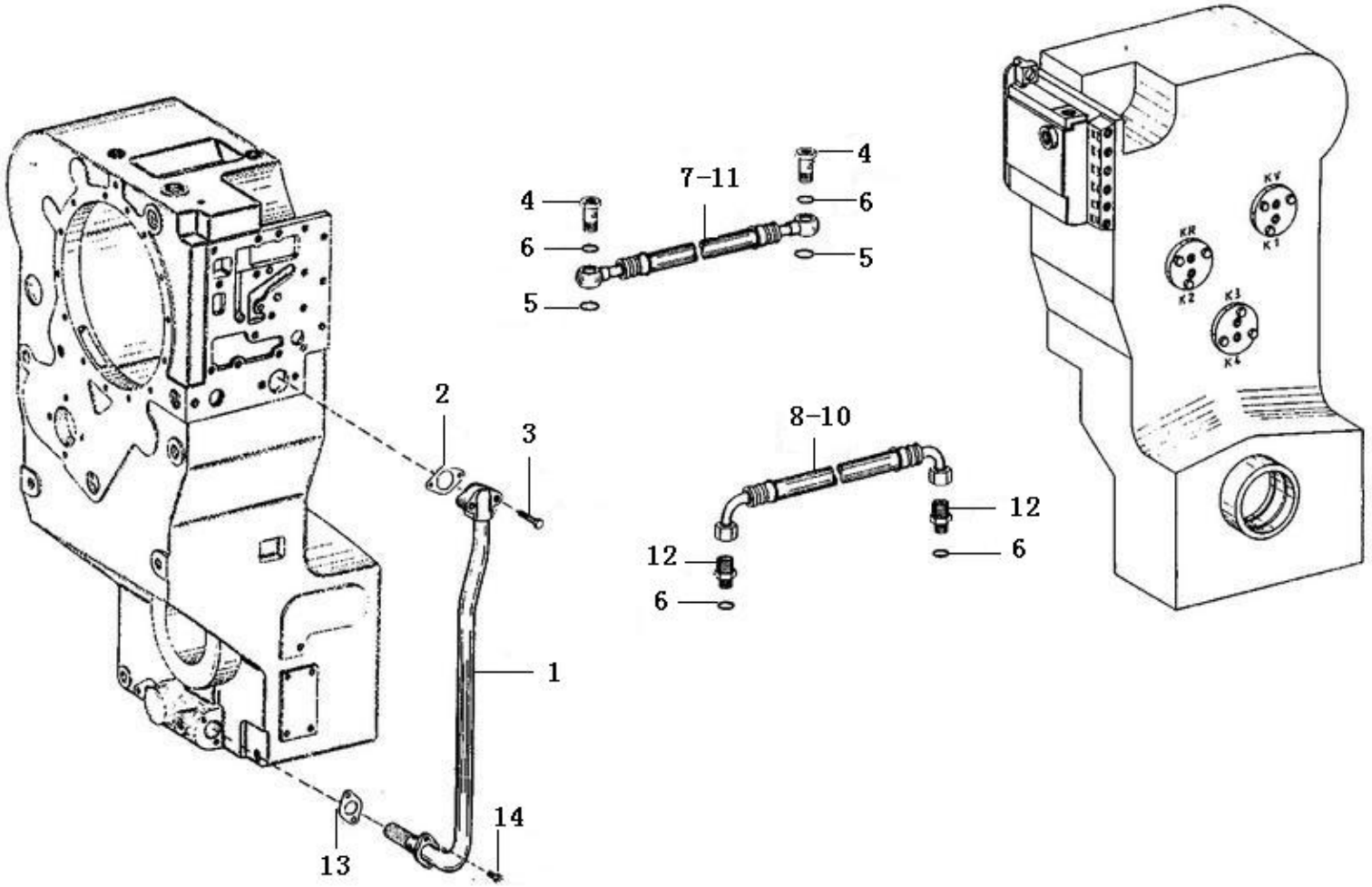

Key	Part No.	Description	Spare parts Y/N	Qty	Remarks
1	7200002230	Tube	Y	1	
2	7200002231	Washer	Y	1	
3	7200002232	Screw	Y	2	
4	7200002233	Screw	Y	8	
5	7200002234	O-ring	Y	8	
6	7200001864	O-ring	Y	8	
7	7200002236	Hose	Y	1	
8	7200002237	Hose	Y	1	
9	4110000042114	Hose assembly	Y	1	
10	7200002238	Hose	Y	1	
11	7200002239	Hose	Y	1	
12	7200002240	Plug	Y	2	
13	7200002241	Washer	Y	1	
14	7200002242	Screw	Y	2	

Transmission - miscellaneous items

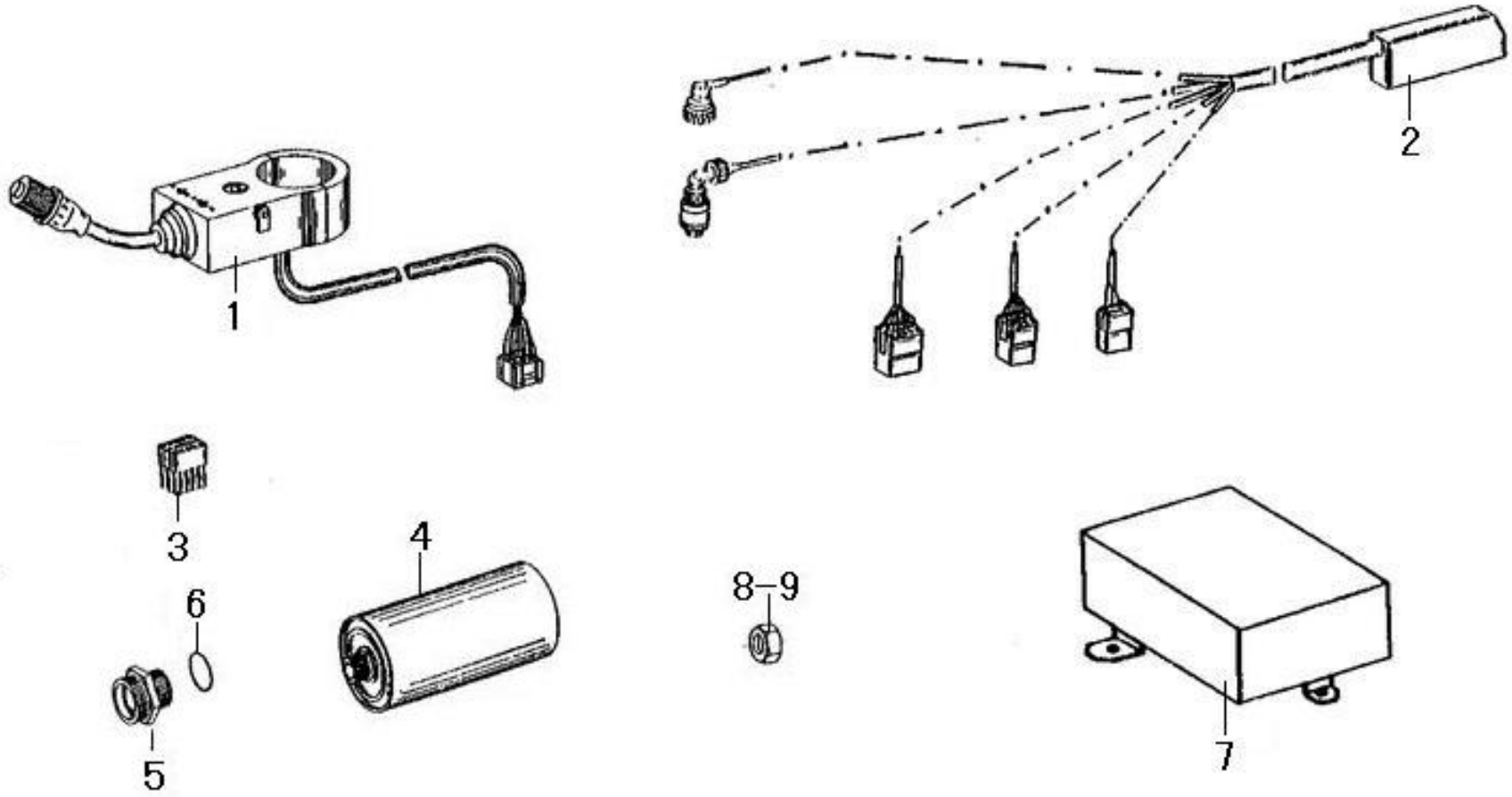

Key	Part No.	Description	Spare parts Y/N	Qty	Remarks
1	7200001775	Gear selector	Y	1	
2	7200001776	Wire	Y	1	
3	4110000042010	Receptacle housing	Y	1	
4	4110000076368	Oil filter	Y	2	
5	7200001779	Nut	Y	2	
6	4110000042003	O-ring	Y	2	
7	4110000042005	Control unit	Y	1	
8	7200001929	Nut	Y	8	
9	4110000042115	Nut	Y	8	

E
AXLE SYSTEM



SHANDONG LINGONG CONSTRUCTION MACHINERY CO.,LTD.

Front axle assemblky

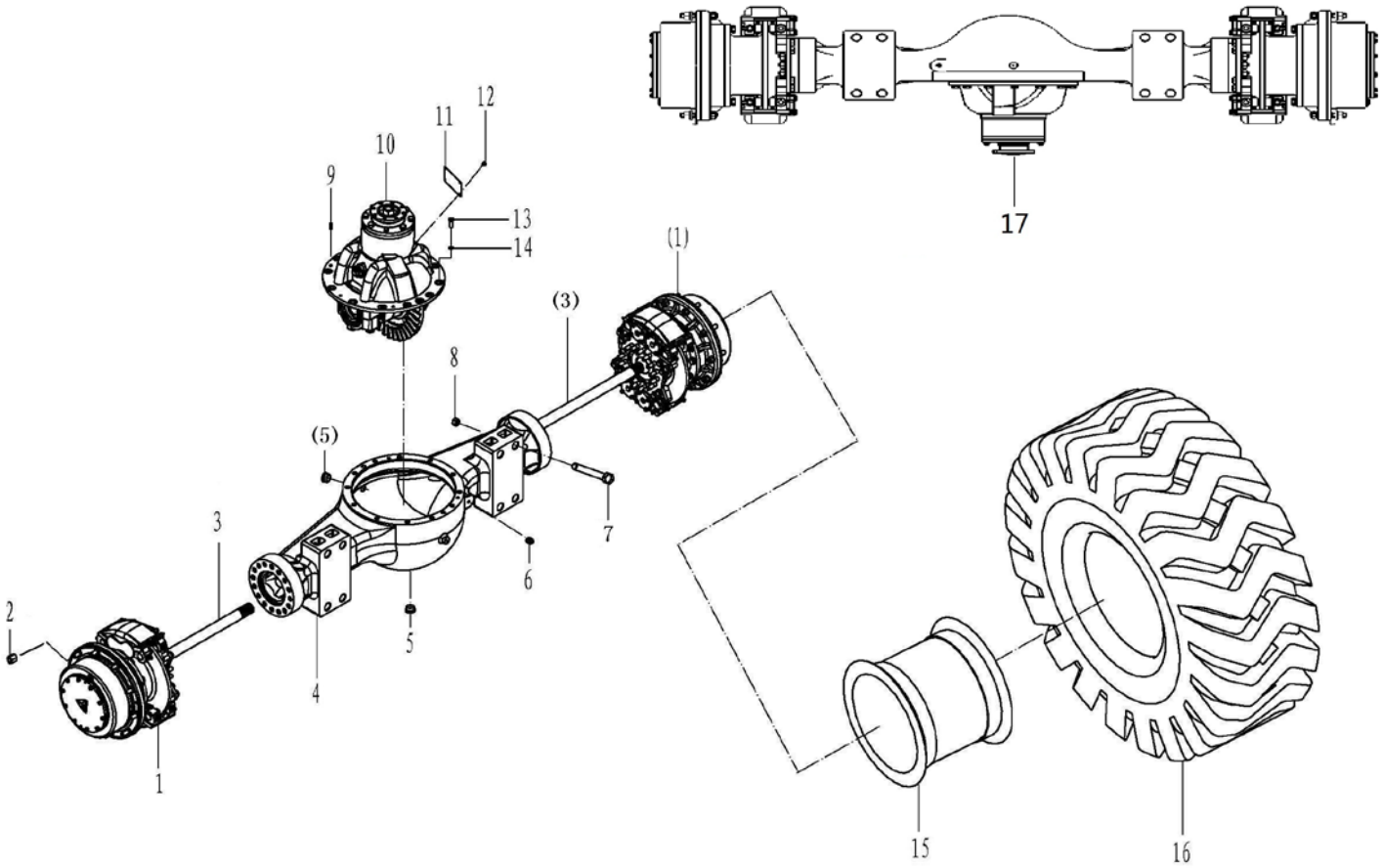

Key	Part No.	Description	Spare parts Y/N	Qty	Remarks
1	29070018961	Hub reduction	Y	2	
2	29070015891	Rim nut m20	N	20	
3	29070012581	Shaft half	Y	2	
4	29070015781	Front axle casing	Y	1	
5	29070012481	Plug	Y	2	
6	4110000818	Nozzle	Y	1	
7	29070000112	Bolt	N	8	
8	4013000193	Nut	Y	8	
9	4016000124	Pin	Y	2	
10	29070016391	Front final drive	Y	1	
11	29070018971	Name plate	N	1	
12	4019000012	Rivet	Y	4	
13	4011000494	Bolt	Y	14	
14	4015000098	Spring washer	Y	14	
15	4110000582	Tyre	Y	2	
16	4110001502	Rim	N	2	
17	29070018951	Front axle	N	1	

Propeller shaft

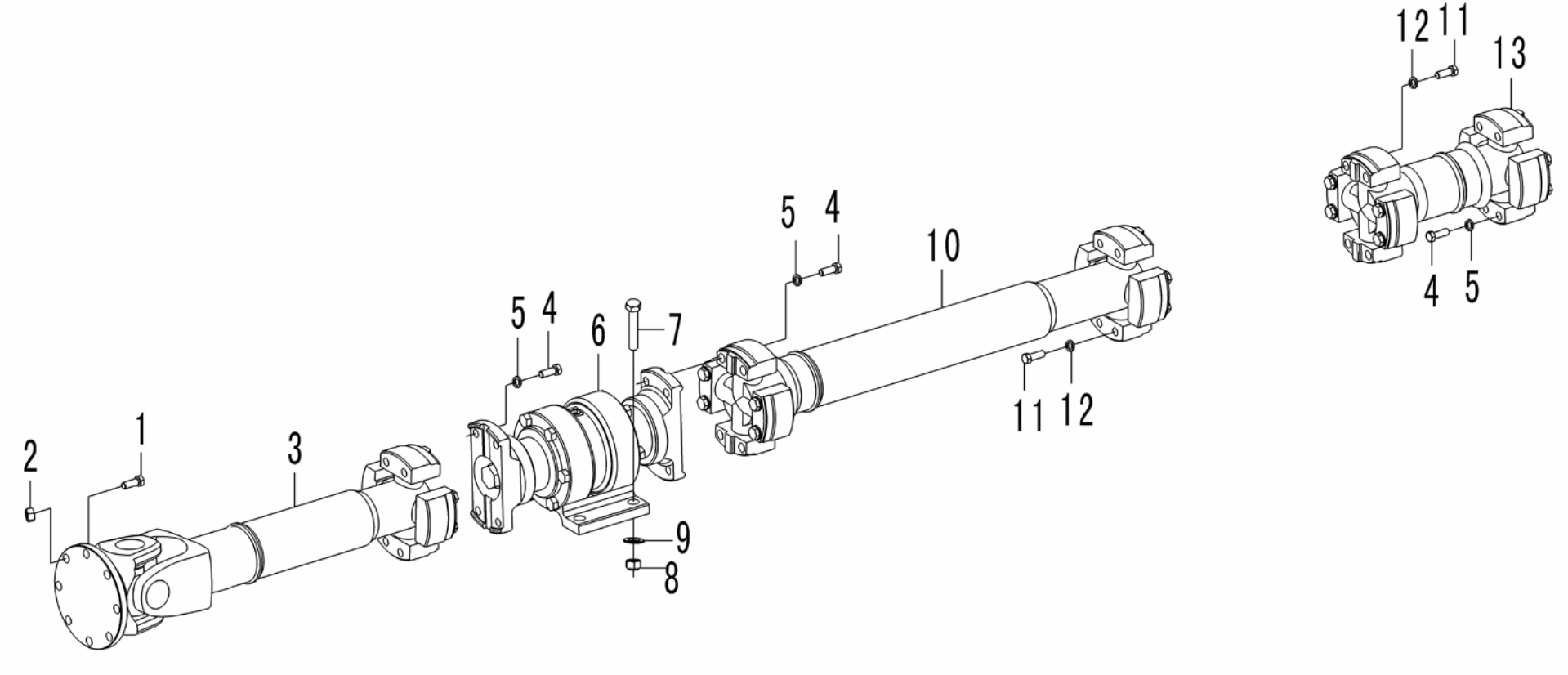

Key	Part No.	Description	Spare parts Y/N	Qty	Remarks
1	4011000568	Bolt	Y	8	
2	4013000072	Lock nut	Y	8	
3	4110002224	Propeller shaft	Y	1	
4	4011000431	Bolt	Y	12	
5	4015000026	Spring washer	Y	12	
6	29080000032	Support bearing	Y	1	
7	4011000241	Bolt	Y	4	
8	4013000073	Lock nut	Y	4	
9	4015000177	Washer	Y	4	
10	4110002034	Propeller shaft	Y	1	
11	4190000337	Screw	Y	8	
12	4190000336	Washer	Y	8	
13	4110000570	Propeller shaft	Y	1	

Front main drive

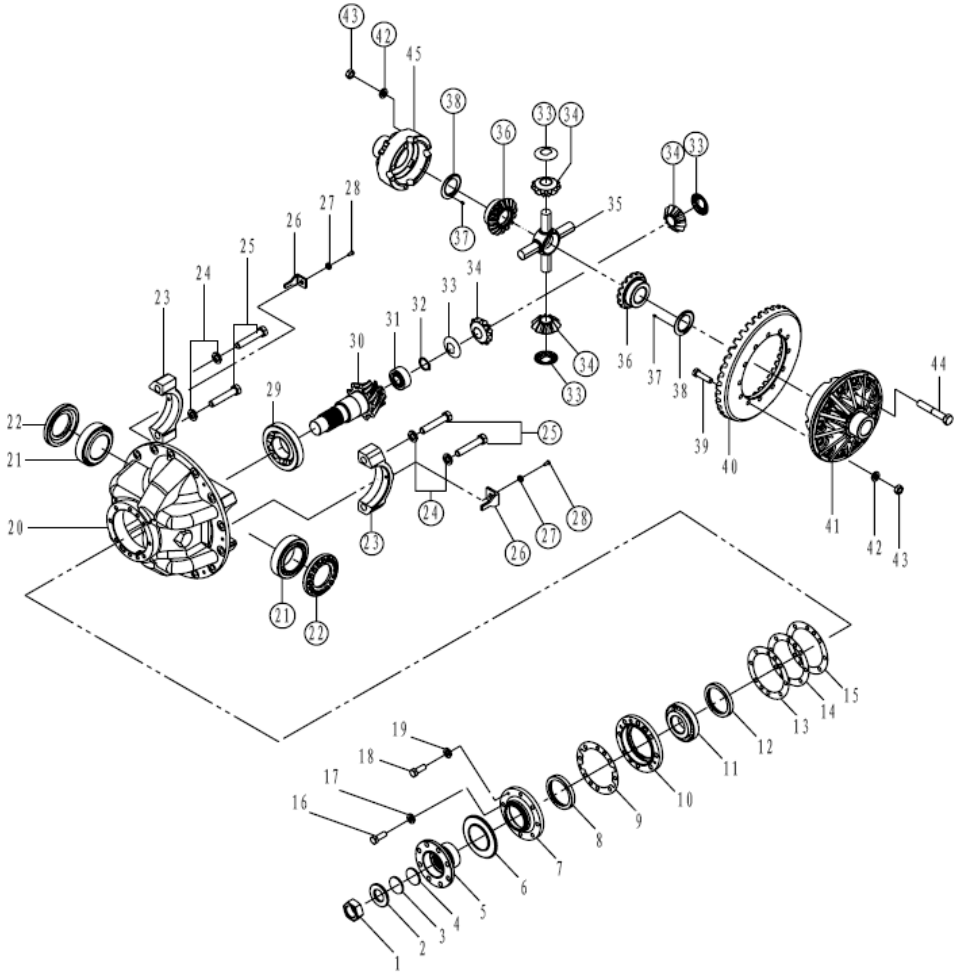

Key	Part No.	Description	Spare parts Y/N	Qty	Remarks
1	4013000066	Lock nut	Y	1	
2	29070000221	Washer	Y	1	
3	4030000035	O-ring	Y	1	
4	29070000241	Retaining ring	Y	1	
5	29070011101	Connecting flange	Y	1	
6	29070000641	Cover	Y	1	
7	29070000251	Sealing cover	Y	1	
8	4030000789	Sealing ring	Y	1	
9	29070000261	Gasket	Y	1	
10	29070000271	Bearing seat	Y	1	
11	4021000030	Roller bearing	Y	1	
12	29070000281	Sleeve	Y	1	
13	29070000151	Shim	Y	3	
14	29070000161	Shim	Y	4	
15	29070000171	Shim	Y	5	
16	4011000067	Bolt	Y	7	
17	4015000027	Spring washer	Y	7	
18	4011000186	Bolt	Y	1	
19	4015000026	Spring washer	Y	1	
20	29070015761	Center hosing	Y	1	
21	4021000036	Roller bearing	Y	1	
22	29070000351	Nut	Y	2	

Front main drive

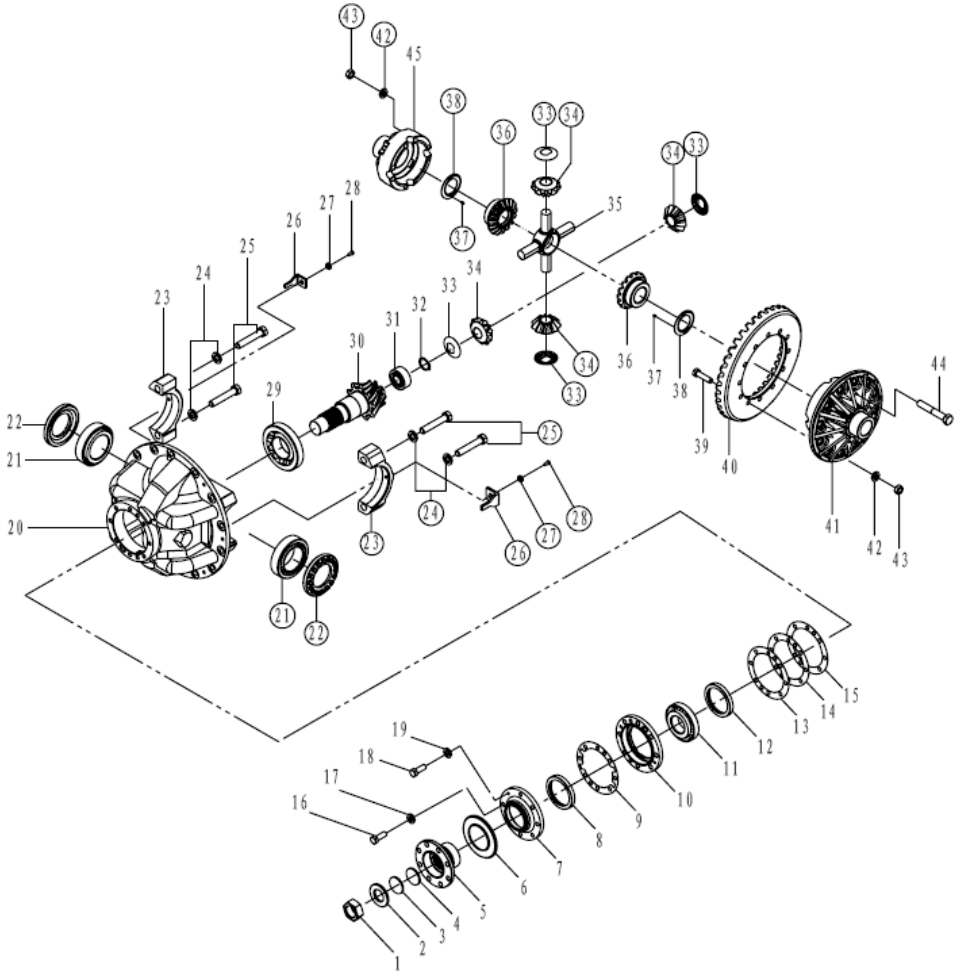

Key	Part No.	Description	Spare parts Y/N	Qty	Remarks
23	29070000391	Cage	N	2	
24	29070001301	Washer	Y	4	
25	29070009521	Bolt	Y	4	
26	29070000401	Lock washer	Y	2	
27	4015000025	Spring washer	Y	2	
28	4011000597	Bolt	Y	2	
29	4021000032	Roller bearing	Y	1	
30	29070012601	Crown wheel	Y	1	
31	4021000036	Roller bearing	Y	1	
32	4015000020	Retaining ring	Y	1	
33	29070000331	Thrust washer	Y	4	
34	29070000341	Differential pinion	Y	4	
35	29070000411	Spider	Y	1	
36	29070013221	Differential side gear	Y	2	
37	29070000461	Pin	Y	4	
38	29070000381	Shim	Y	2	
39	29070009501	Bolt	Y	12	
40	29070012611	Crown wheel	N	1	
41	29070000361	Differential housing	Y	1	
42	29070009511	Washer	Y	20	
43	4013000198	Nut	Y	20	
44	29070009491	Bolt	Y	8	

Front main drive

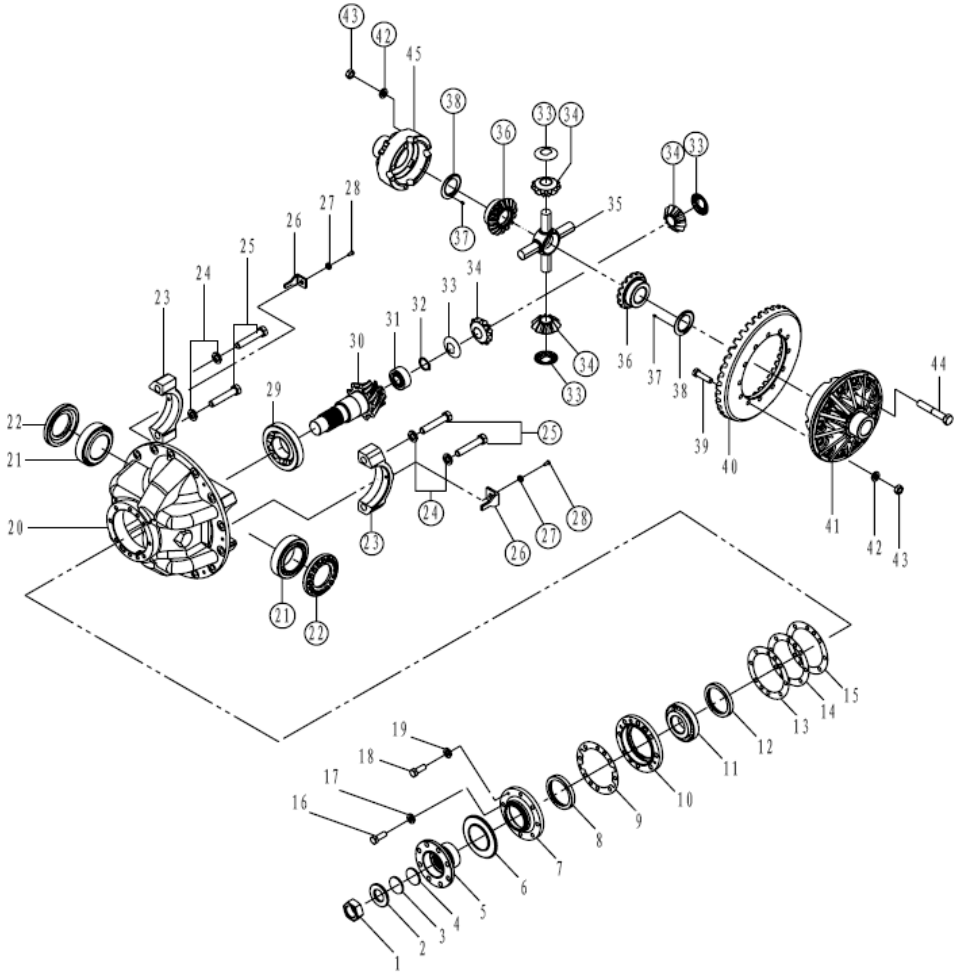

Key	Part No.	Description	Spare parts Y/N	Qty	Remarks
45	29070000431	Differential housing	Y	1	

Rear axle assembly

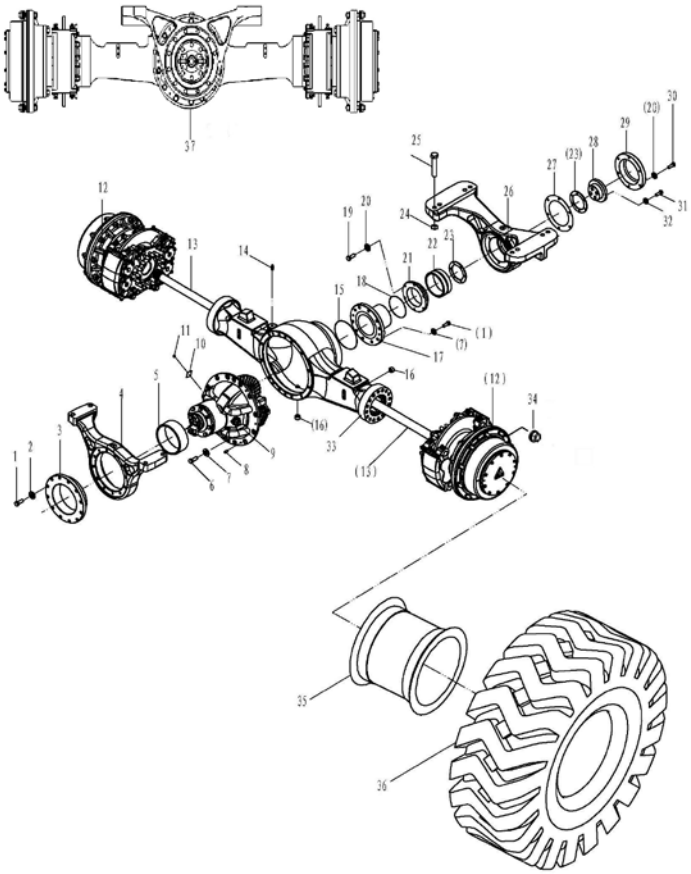

Key	Part No.	Description	Spare parts Y/N	Qty	Remarks
1	4011000512	Bolt	Y	24	
2	29070009511	Washer	Y	12	
3	29090000062	Sleeve	Y	1	
4	29090100051	Bracket	Y	1	
5	29090000051	Sleeve	Y	1	
6	4011000494	Bolt	Y	14	
7	4015000098	Spring washer	Y	14	
8	4016000124	Pin	Y	2	
9	29090010251	Rear final drive	Y	1	
10	29090010951	Name plate	N	1	
11	4019000012	Rivet	Y	4	
12	29090010941	Hub reduction	N	2	
13	29090008481	Shaft half	Y	2	
14	4110000818	Nozzle	Y	1	
15	4041000021	O-ring	Y	1	
16	29070012481	Plug	Y	2	
17	29090009551	Support shaft	Y	1	
18	4030000021	O-ring	Y	1	
19	4011000090	Bolt	Y	6	
20	29070010131	Washer	Y	12	
21	29090000101	Sealing cover	Y	1	
22	29090000112	Sleeve	Y	1	

Rear axle assembly

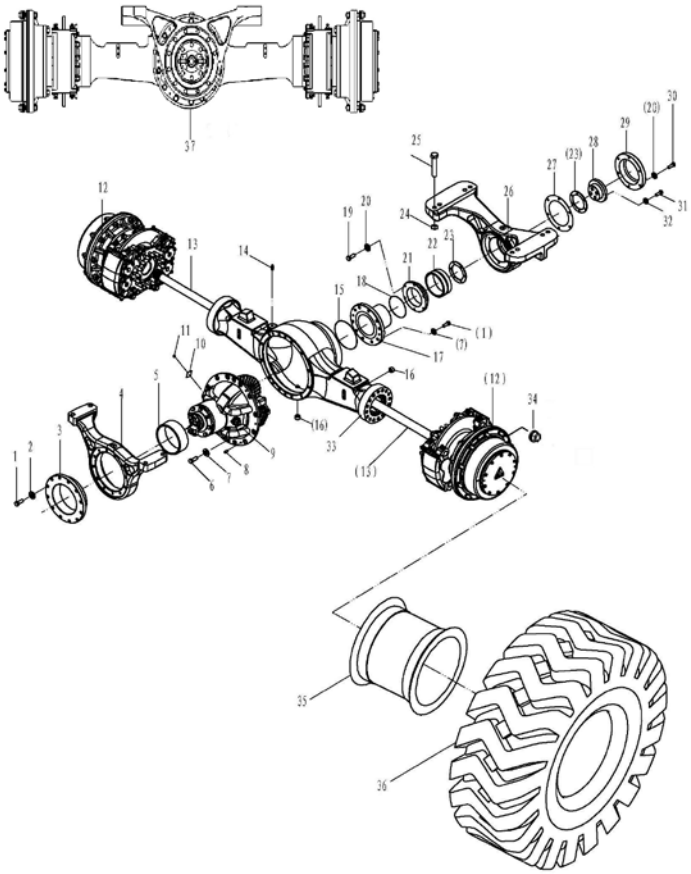

Key	Part No.	Description	Spare parts Y/N	Qty	Remarks
23	29090000121	Shim	Y	2	
24	4011000583	Screw	Y	12	
25	4013000263	Nut	Y	12	
26	29090100061	Bracket	Y	1	
27	29090000161	Shim	Y	1	
28	29090000131	Block	Y	1	
29	29090000141	End plate	N	1	
30	4011000064	Bolt	Y	6	
31	4011000113	Bolt	Y	4	
32	4015000030	Spring washer	Y	4	
33	29090009811	Rear axle casing	Y	1	
34	29070015891	Rim nut m20	N	20	
35	4110001502	Rim	N	2	
36	4110000006	Tyre	N	2	
37	29090010921	Rear axle	N	1	

Hub reduction

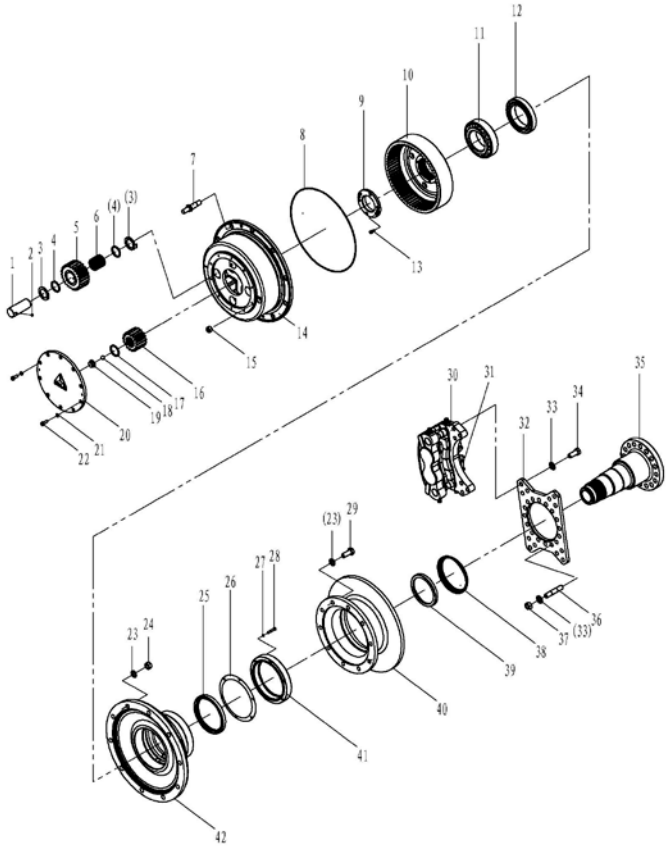

Key	Part No.	Description	Spare parts Y/N	Qty	Remarks
1	29070012691	Planet gear shaft	Y	4	
2	4090000008	Ball	Y	4	
3	29070012681	Shim	Y	8	
4	29070012701	Retaining ring	Y	8	
5	29070012711	Planet gear	Y	4	
6	4090000158	Needle roller	Y	108	
7	29070015132	Stud	Y	10	
8	4041000020	O-ring	Y	1	
9	29070015591	Round nut	Y	1	
10	29070012891	Gear ring	Y	1	
11	4021000038	Roller bearing	Y	1	
12	4021000034	Roller bearing	Y	1	
13	4014000033	Screw	Y	2	
14	29070012661	Planet carrier	Y	1	
15	29070012481	Plug	Y	1	
16	29070012671	Sun gear	Y	1	
17	4015000022	Retaining ring	Y	1	
18	4090000006	Ball	Y	1	
19	29070009161	Block	Y	1	
20	29070007621	Cover	Y	1	
21	4015000025	Spring washer	Y	10	
22	4011000084	Bolt	Y	10	

Hub reduction

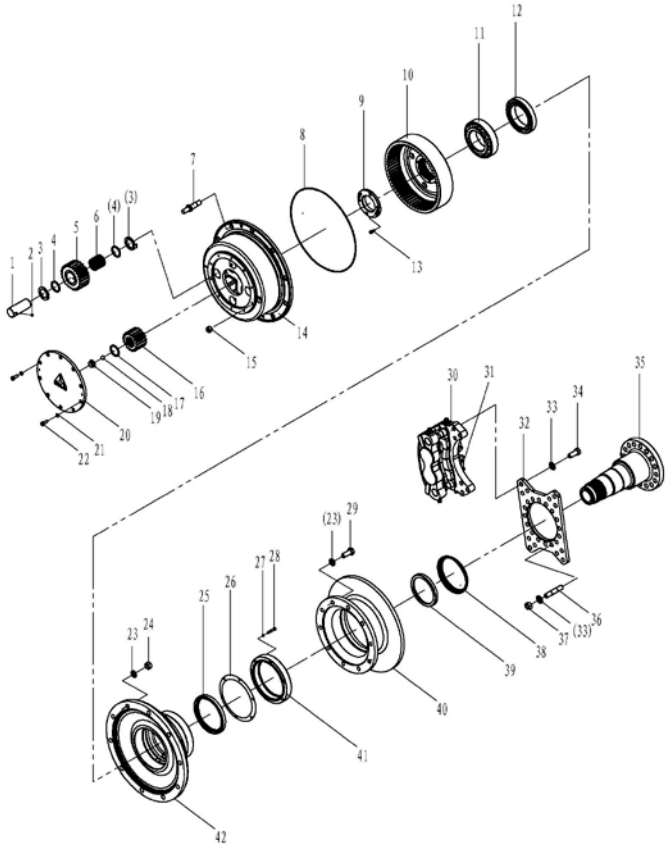

Key	Part No.	Description	Spare parts Y/N	Qty	Remarks
23	4015000030	Spring washer	Y	20	
24	4013000203	Nut	Y	10	
25	4030000146	Sealing ring	Y	1	
26	29070000591	Gasket	Y	1	
27	4015000036	Spring washer	Y	6	
28	4011000298	Bolt	Y	6	
29	4011000130	Bolt	Y	10	
30	4120003852	Disc brake	Y	2	
31	4120001740	Nipple	Y	4	
32	29070016021	Bracket	Y	1	
33	29070011121	Washer	Y	28	
34	4011000565	Bolt	Y	12	
35	29070015071	Spindle	Y	1	
36	29070011391	Stud	Y	16	
37	4013000204	Nut	Y	16	
38	29070015111	Dust cover	Y	1	
39	29070000581	Spacer sleeve	Y	1	
40	29070015091	Brake disc	Y	1	
41	29070015101	Sealing cover	Y	1	
42	29070010931	Front wheel hub	Y	1	

Hub reduction

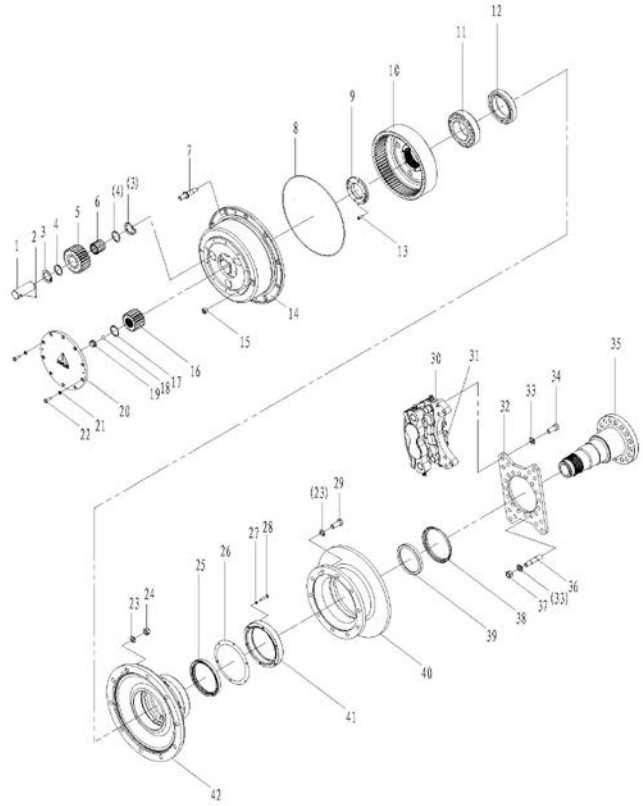

Key	Part No.	Description	Spare parts Y/N	Qty	Remarks
1	29070012691	Planet gear shaft	Y	3	
2	4090000008	Ball	Y	3	
3	29070012681	Shim	Y	6	
4	29070012701	Retaining ring	Y	6	
5	29070012711	Planet gear	Y	3	
6	4090000158	Needle roller	Y	81	
7	29070015132	Stud	Y	10	
8	4041000020	O-ring	Y	1	
9	29070015581	Round nut	Y	1	
10	29090009561	Gear ring	N	1	
11	4021000037	Roller bearing	Y	1	
12	4021000033	Roller bearing	Y	1	
13	4014000016	Screw	Y	2	
14	29090008771	Planet carrier	Y	1	
15	29070012481	Plug	Y	1	
16	29070012671	Sun gear	Y	1	
17	4015000022	Retaining ring	Y	1	
18	4090000006	Ball	Y	1	
19	29070009161	Block	Y	1	
20	29070007621	Cover	Y	1	
21	4015000025	Spring washer	Y	10	
22	4011000084	Bolt	Y	10	

Hub reduction

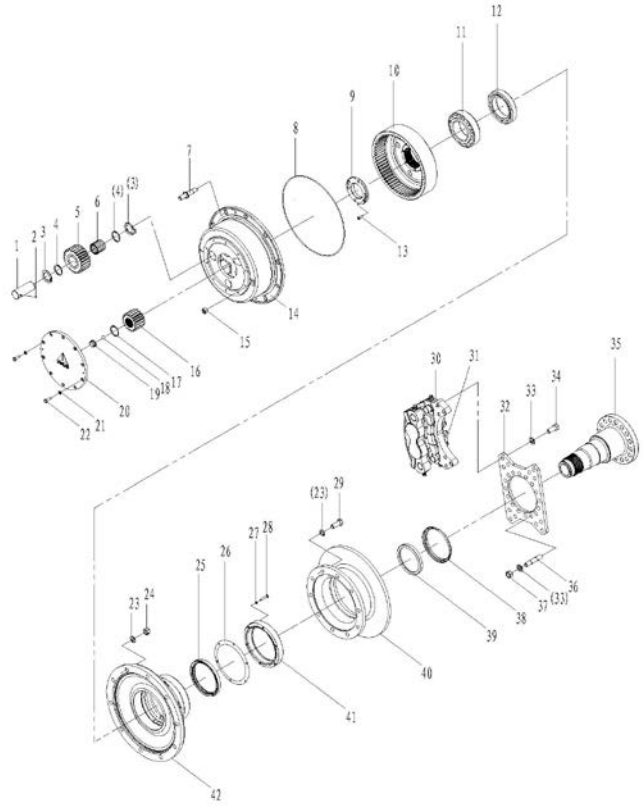

Key	Part No.	Description	Spare parts Y/N	Qty	Remarks
23	4015000030	Spring washer	Y	20	
24	4013000203	Nut	Y	10	
25	4030000047	Sealing ring	Y	1	
26	29070001271	Shim	Y	1	
27	4015000036	Spring washer	Y	6	
28	4011000298	Bolt	Y	6	
29	4011000130	Bolt	Y	10	
30	4120003852	Disc brake	Y	2	
31	4120001740	Nipple	Y	4	
32	29070016021	Bracket	Y	1	
33	29070011121	Washer	Y	28	
34	4011000565	Bolt	Y	12	
35	29090009501	Spindle	Y	1	
36	29070011391	Stud	Y	16	
37	4013000204	Nut	Y	16	
38	29090009531	Dust cover	Y	1	
39	29070001261	Spacer sleeve	Y	1	
40	29090009511	Brake disc	Y	1	
41	29090009521	Sealing cover	Y	1	
42	29070001241	Front wheel hub	Y	1	

Rear final drive

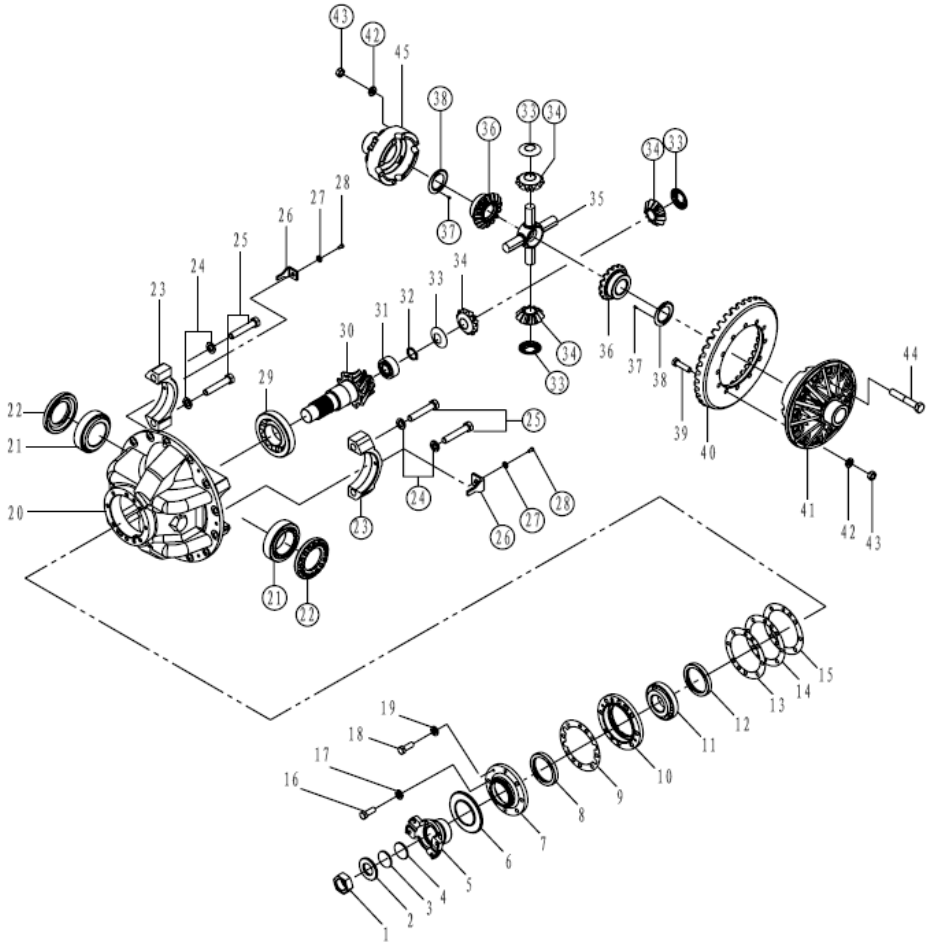

Key	Part No.	Description	Spare parts Y/N	Qty	Remarks
1	4013000066	Lock nut	Y	1	
2	29070000221	Washer	Y	1	
3	4030000035	O-ring	Y	1	
4	29070000241	Retaining ring	Y	1	
5	29070000631	Connecting flange	Y	1	
6	29070000641	Cover	Y	1	
7	29070000251	Sealing cover	Y	1	
8	4030000789	Sealing ring	Y	1	
9	29070000261	Gasket	Y	1	
10	29070000271	Bearing seat	Y	1	
11	4021000030	Roller bearing	Y	1	
12	29070000281	Sleeve	Y	3	
13	29070000151	Shim	Y	3	
14	29070000161	Shim	Y	4	
15	29070000171	Shim	Y	5	
16	4011000067	Bolt	Y	7	
17	4015000027	Spring washer	Y	7	
18	4011000186	Bolt	Y	1	
19	4015000026	Spring washer	Y	1	
20	29070015761	Center hosing	Y	1	
21	4021000036	Roller bearing	Y	1	
22	29070000351	Nut	Y	2	

Rear final drive

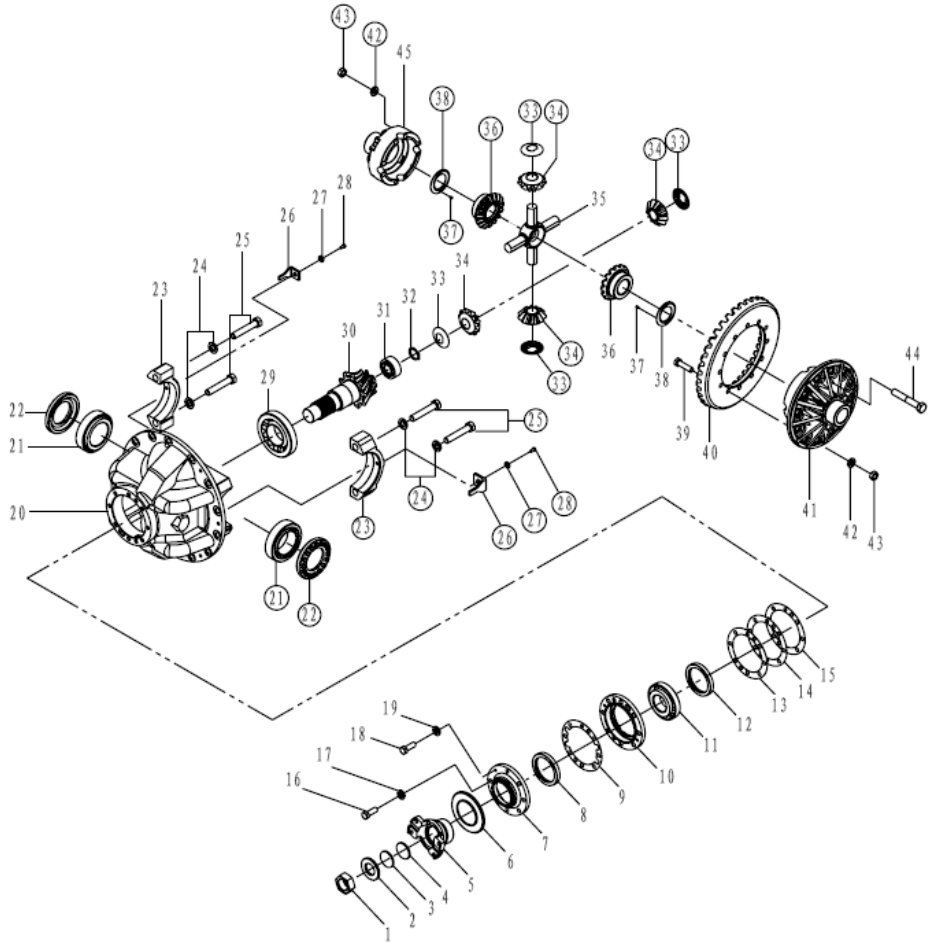

Key	Part No.	Description	Spare parts Y/N	Qty	Remarks
23	29070000391	Cage	N	2	
24	29070001301	Washer	Y	4	
25	29070009521	Bolt	Y	4	
26	29070000401	Lock washer	Y	2	
27	4015000025	Spring washer	Y	2	
28	4011000597	Bolt	Y	2	
29	4021000032	Roller bearing	Y	1	
30	29090008841	Crown wheel	Y	1	
31	4021000027	Roller bearing	Y	1	
32	4015000020	Retaining ring	Y	1	
33	29070000331	Thrust washer	Y	4	
34	29070000341	Differential pinion	Y	4	
35	29070000411	Spider	Y	1	
36	29070013221	Differential side gear	Y	2	
37	29070000461	Pin	Y	4	
38	29070000381	Shim	Y	2	
39	29070009501	Bolt	Y	12	
40	29090008511	Crown wheel	N	1	
41	29070000361	Differential housing	Y	1	
42	29070009511	Washer	Y	20	
43	4013000198	Nut	Y	20	
44	29070009491	Bolt	Y	8	

Rear final drive

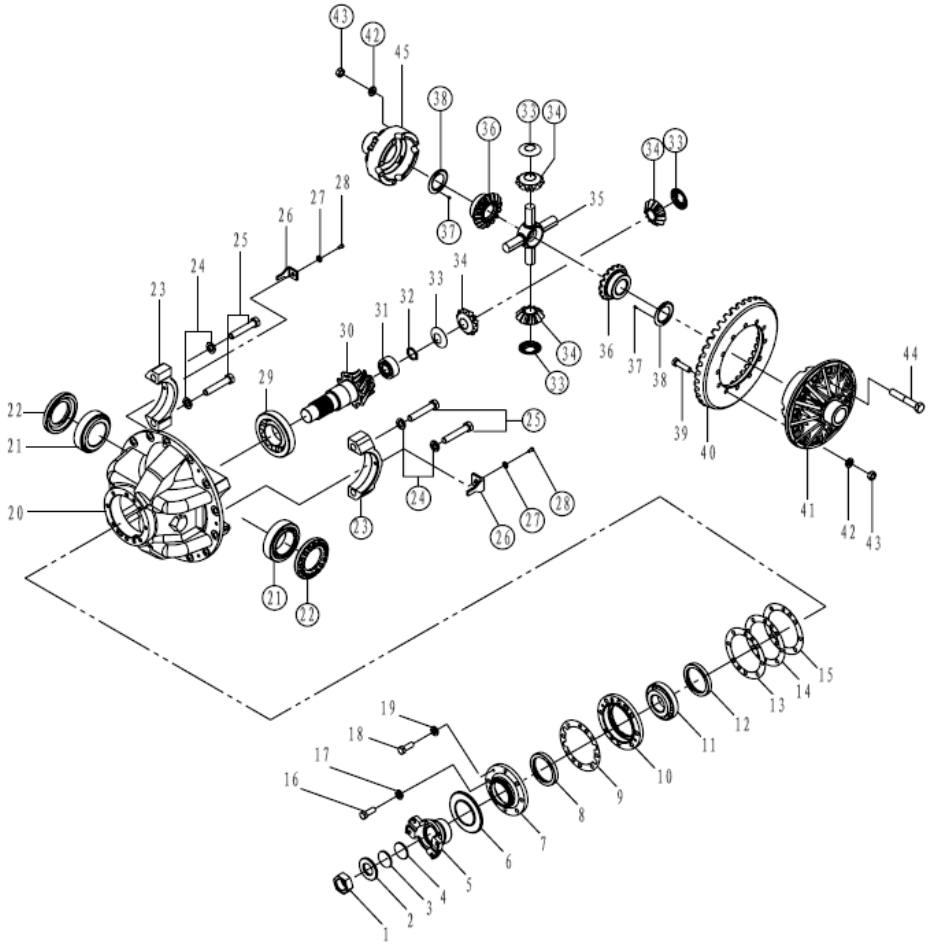

Key	Part No.	Description	Spare parts Y/N	Qty	Remarks
45	29070000431	Differential housing	Y	1	

Tire

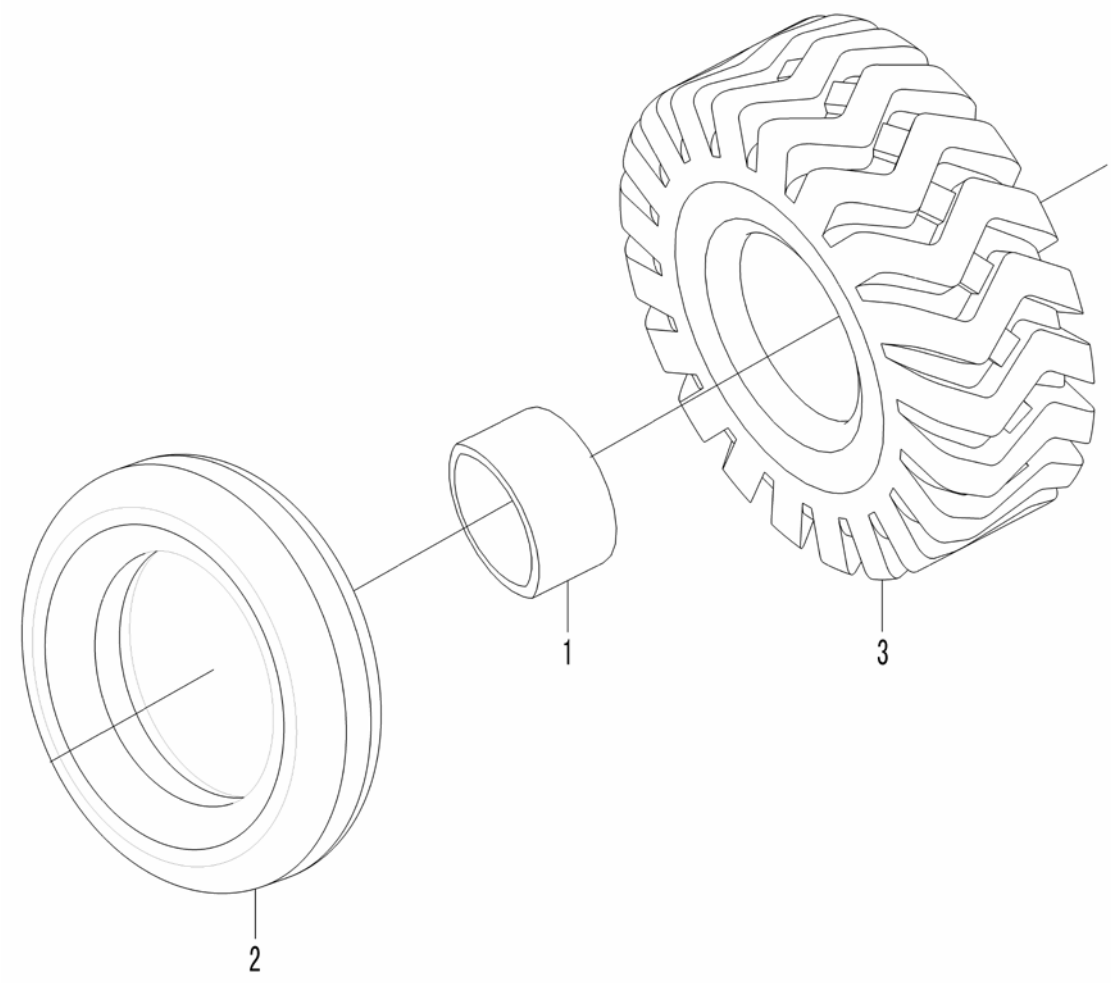

Key	Part No.	Description	Spare parts Y/N	Qty	Remarks
1	4110000006001	Inner tube	Y	1	
2	4110000006002	Inner tube	Y	1	
3	4110000006003	Tyre	Y	1	

Tyre

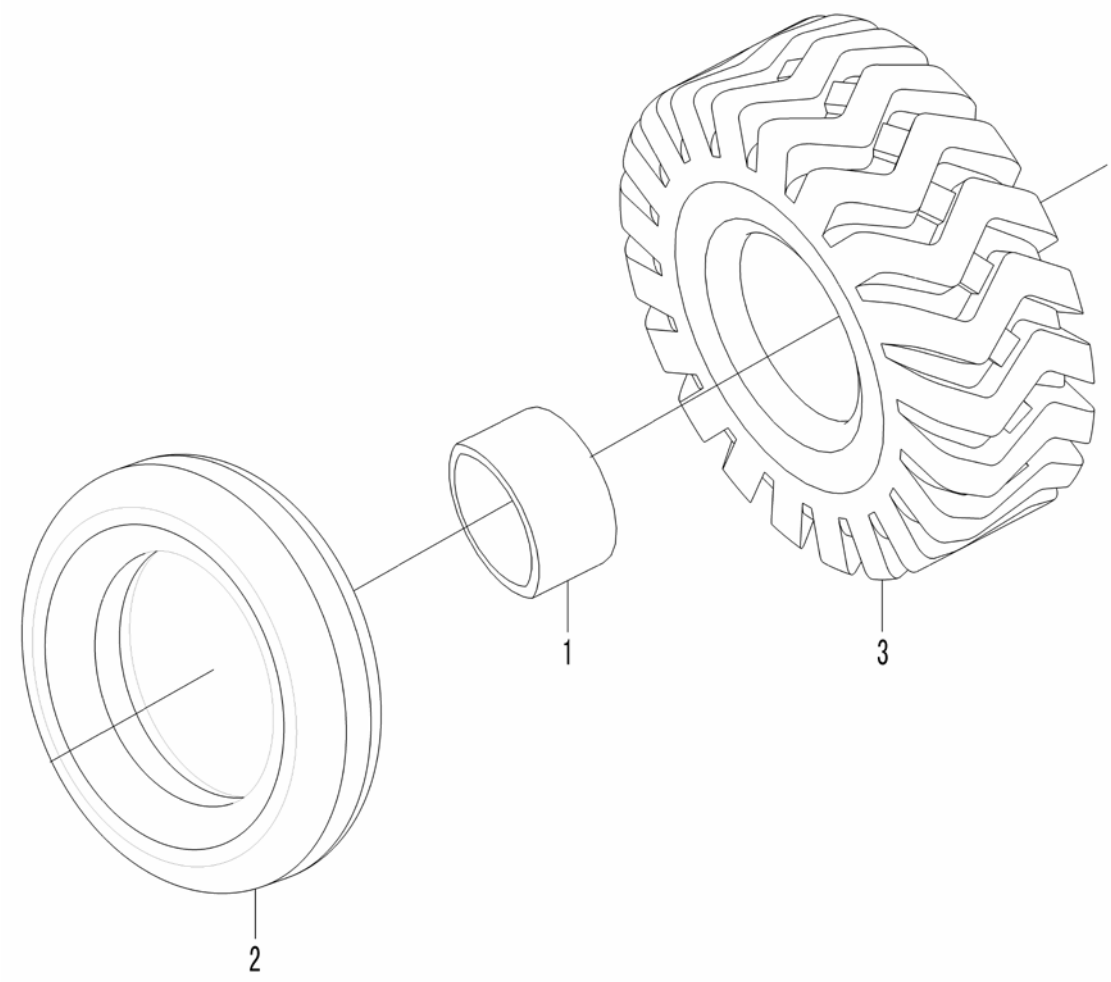

Key	Part No.	Description	Spare parts Y/N	Qty	Remarks
1	4110000582001	Rubber mat	Y	1	
2	4110000582002	Inner tube	Y	1	
3	4110000582003	Tyre	N	1	

F
IMPLEMENT HYDRAULIC SYSTEM



SHANDONG LINGONG CONSTRUCTION MACHINERY CO.,LTD.

Hydraulic control assembly

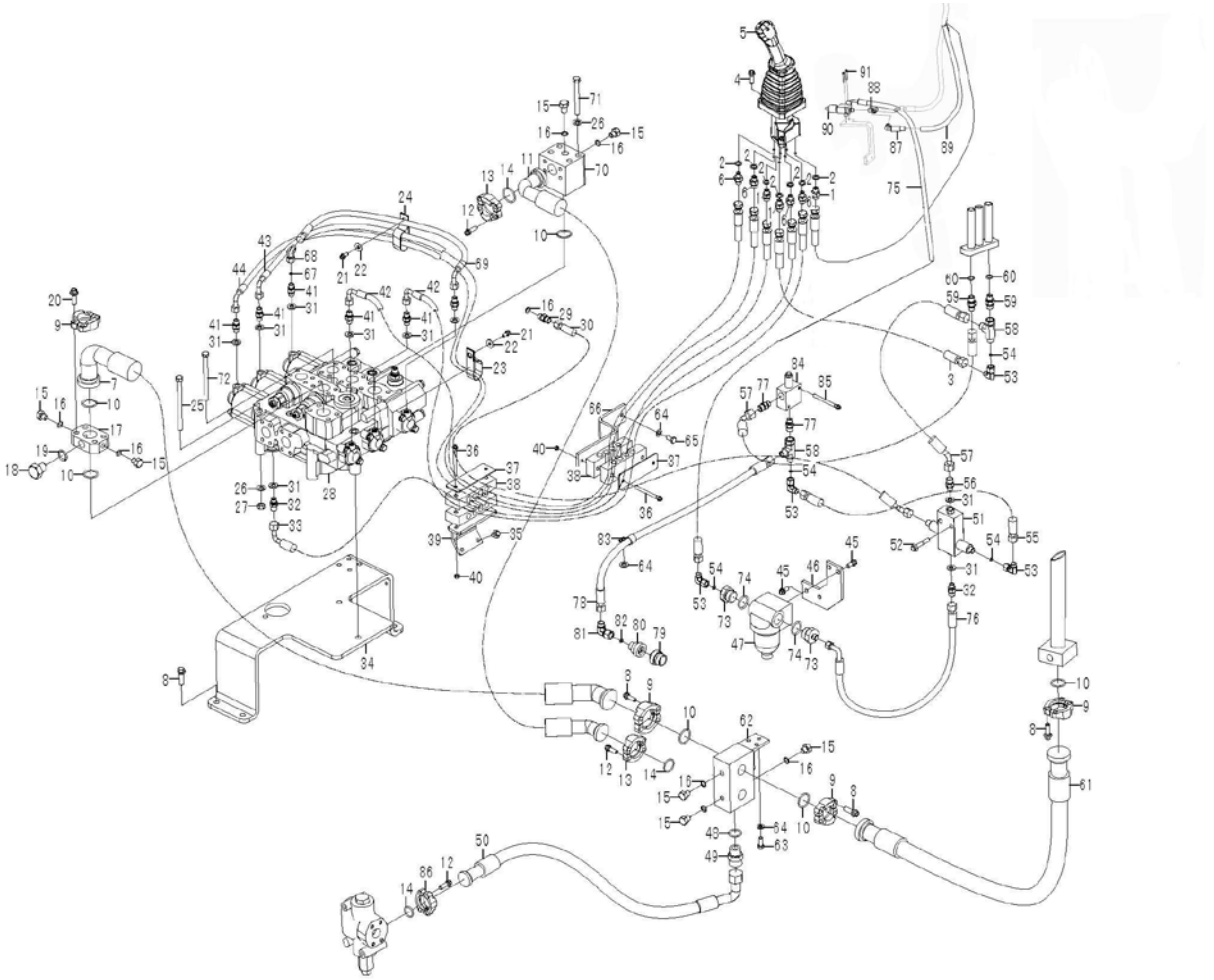

Key	Part No.	Description	Spare parts Y/N	Qty	Remarks
1	29120010341	Nipple	Y	3	
2	29120013381	Washer	Y	7	
3	4041001998	Hose	Y	1	
4	4011000153	Bolt	Y	4	
5	4120002935	Control valve	Y	1	
6	29120021751	Nipple	Y	4	
7	29120022921	Hose assembly	Y	1	
8	4011000477	Bolt	Y	16	
9	4041000011	Flange half	Y	4	
10	4030000130	O-ring	Y	6	
11	29120022961	Hose	Y	1	
12	4011000475	Bolt	Y	12	
13	4041000056	Flange half	Y	2	
14	4030000029	O-ring	Y	3	
15	4041000774	Plug	Y	7	
16	4041000767	O-ring	Y	8	
17	29120024131	Block	Y	1	
18	4041000777	Plug	Y	1	
19	4041000771	O-ring	Y	1	
20	4011000793	Screw	Y	4	
21	4011000461	Bolt	Y	2	
22	4015000256	Washer	Y	2	

Hydraulic control assembly

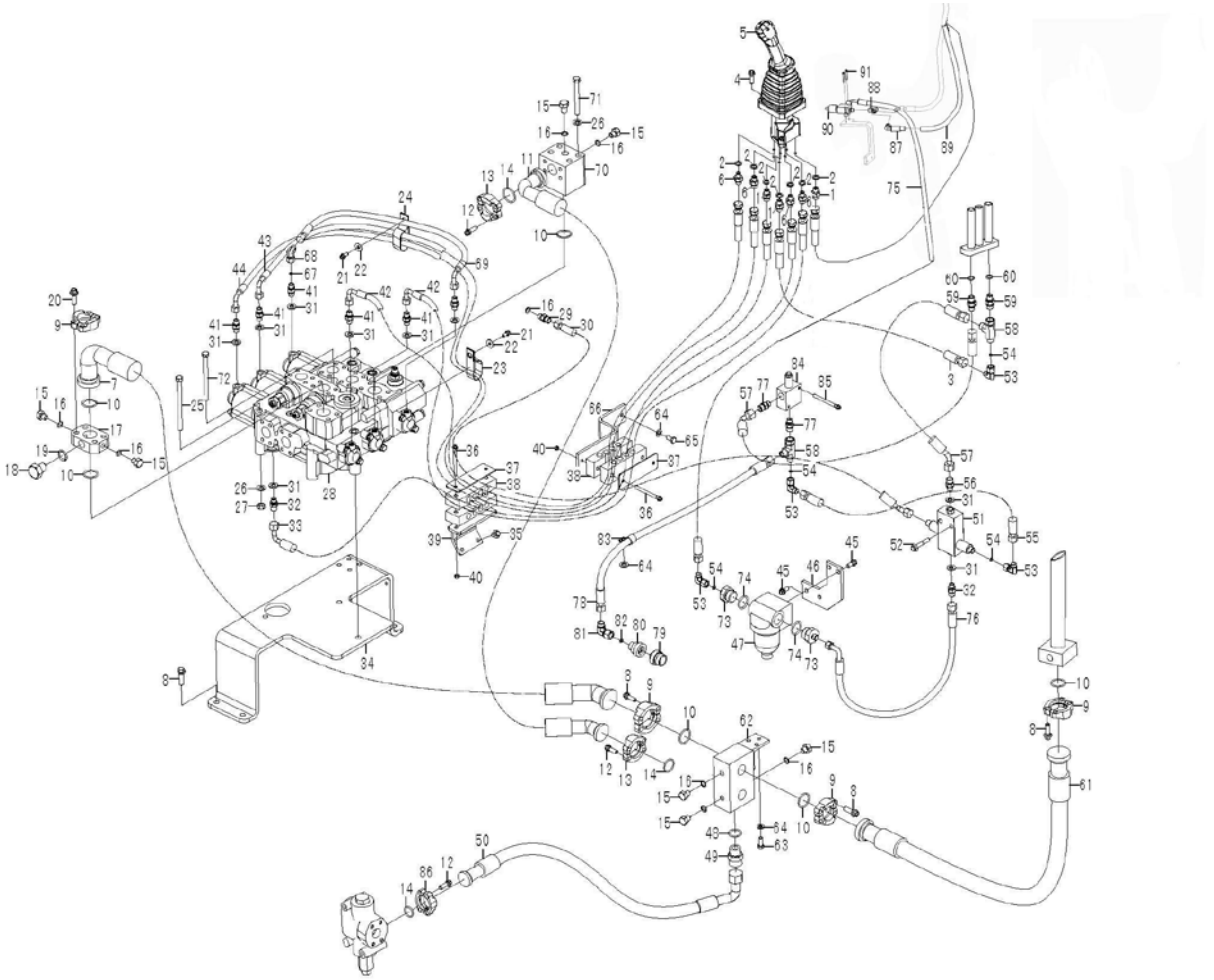

Key	Part No.	Description	Spare parts Y/N	Qty	Remarks
23	29030008221	Clamp	Y	1	
24	26370003831	Clamp	Y	1	
25	4011000057	Bolt	Y	2	
26	4015000168	Washer	Y	7	
27	4013000011	Nut	Y	3	
28	4030000182	Control valve	Y	1	
29	4041000604	Nipple	Y	1	
30	4041001999	Hose	Y	1	
31	29120014931	Washer	Y	9	
32	29120007651	Nipple	Y	2	
33	4041001061	Hose assembly	Y	1	
34	29120022881	Bracket	Y	1	
35	4011000488	Bolt	Y	2	
36	4011000493	Bolt	Y	4	
37	29120016351	Anchor plate	Y	2	
38	29120021551	Clamp	Y	4	
39	29120019621	Bracket	Y	1	
40	4013000033	Nut	Y	4	
41	29120015401	Nipple	Y	6	
42	4041001455	Hose assembly	Y	2	
43	4041001927	Hose assembly	Y	1	
44	4041001938	Hose assembly	Y	1	

Hydraulic control assembly

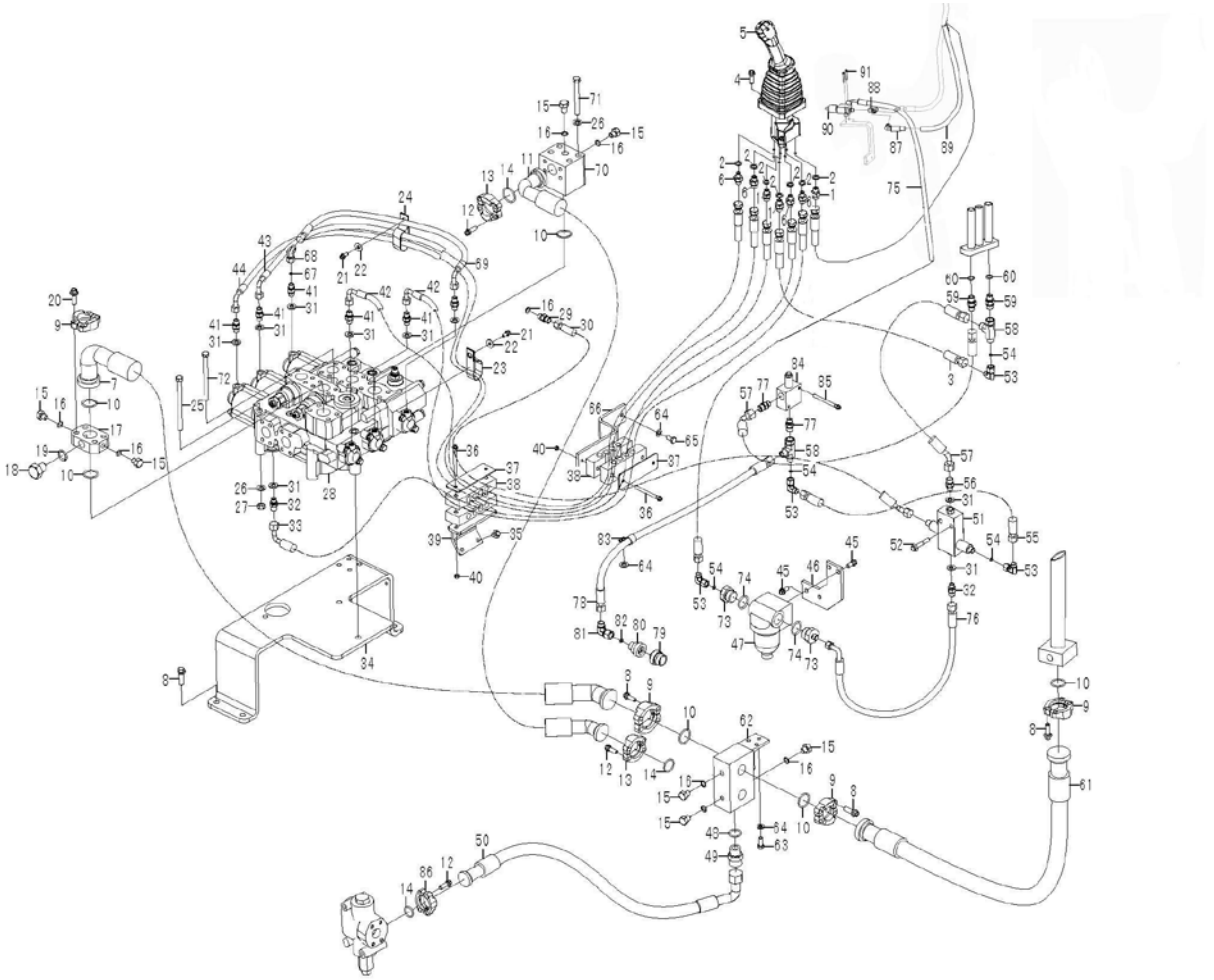

Key	Part No.	Description	Spare parts Y/N	Qty	Remarks
45	4011000447	Bolt	Y	4	
46	29120016021	Anchor plate	Y	1	
47	4120001954	Hydraulic fluid filter	Y	1	
48	4041000779	O-ring	Y	1	
49	29120021921	Nipple	Y	1	
50	29120023021	Hose	Y	1	
51	4120005063	Valve	Y	1	
52	4011000473	Bolt	Y	2	
53	4041001023	Nipple	Y	4	
54	4030000240	O-ring	Y	4	
55	4041002000	Hose	Y	1	
56	29120007661	Nipple	Y	1	
57	4041001861	Hose	Y	2	
58	29120016521	Three-way nipple	Y	2	
59	4041000766	Nipple	Y	2	
60	4041000768	O-ring	Y	2	
61	4041002098	Hose	Y	1	
62	29120023011	Block	Y	1	
63	4011000082	Bolt	Y	3	
64	4015000162	Washer	Y	6	
65	4011000081	Bolt	Y	2	
66	29120020071	Plate	Y	1	

Hydraulic control assembly

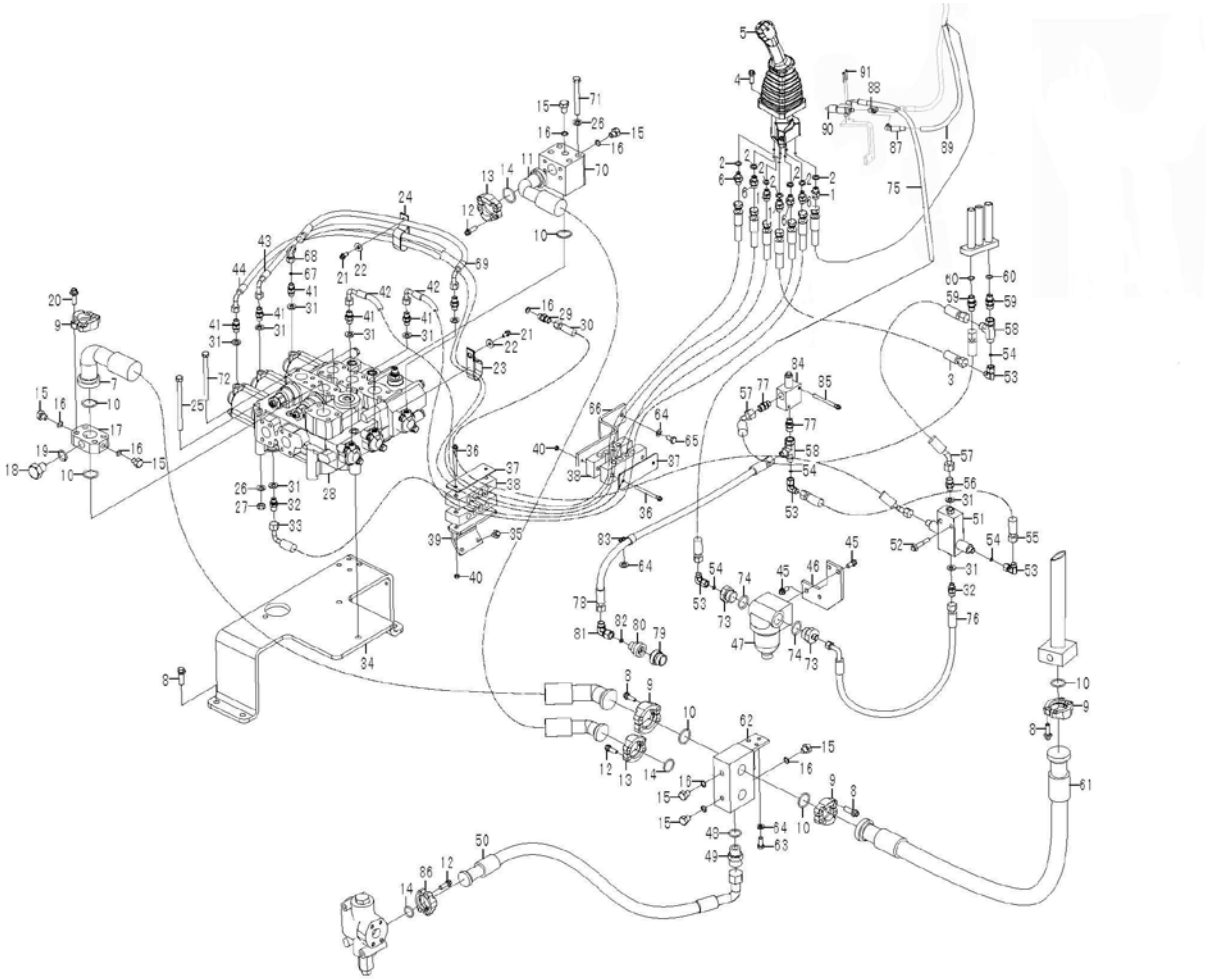

Key	Part No.	Description	Spare parts Y/N	Qty	Remarks
67	4030000530	O-ring	Y	1	
68	4041001047	Nipple	Y	1	
69	4041001223	Hose assembly	Y	1	
70	29120022981	Block	Y	1	
71	4011000262	Bolt	Y	4	
72	4011000056	Bolt	Y	1	
73	29120015081	Nipple	Y	2	
74	4030000276	O-ring	Y	2	
75	4041002153	Hose assembly	Y	1	
76	4041000580	Hose assembly	Y	1	
77	4120001901	Nipple	Y	2	
78	4041000650	Hose assembly	Y	1	
79	4120001773	Nipple	Y	1	
80	4120002702	Nipple	Y	1	
81	4041001063	Nipple	Y	1	
82	4030000490	O-ring	Y	1	
83	26370001921	Clamp	Y	1	
84	4120002679	Relief valve	Y	1	
85	4011000944	Screw	Y	2	
86	4041000027	Flange half	Y	1	
87	4120001693	Joint	Y	1	
88	4120001400	Tee pipe coupling	Y	1	

Hydraulic control assembly

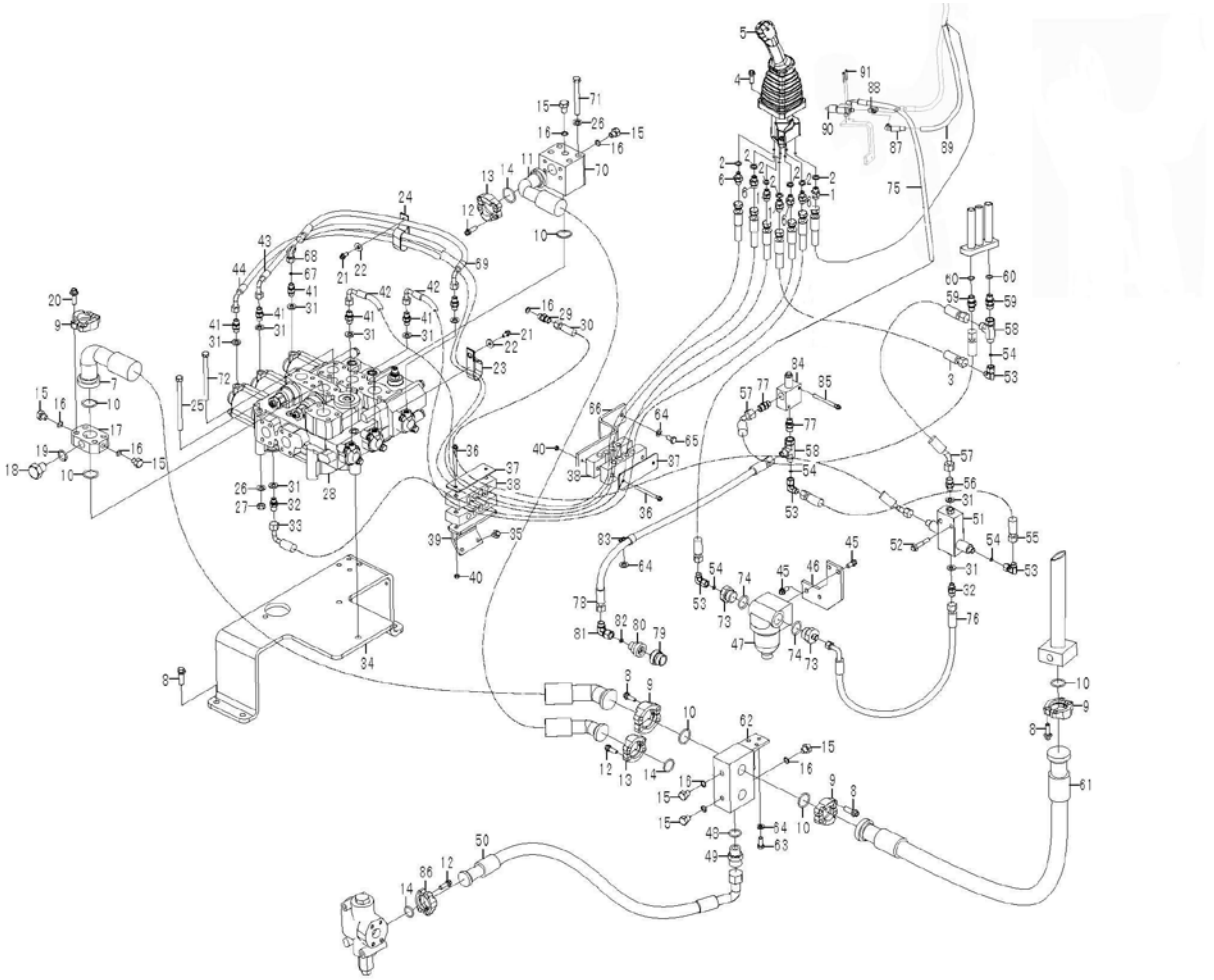

Key	Part No.	Description	Spare parts Y/N	Qty	Remarks
89	4041000632	Hose assembly	Y	1	
90	4120005540	Control valve	Y	1	
91	4011000281	Bolt	Y	1	

Working pump system

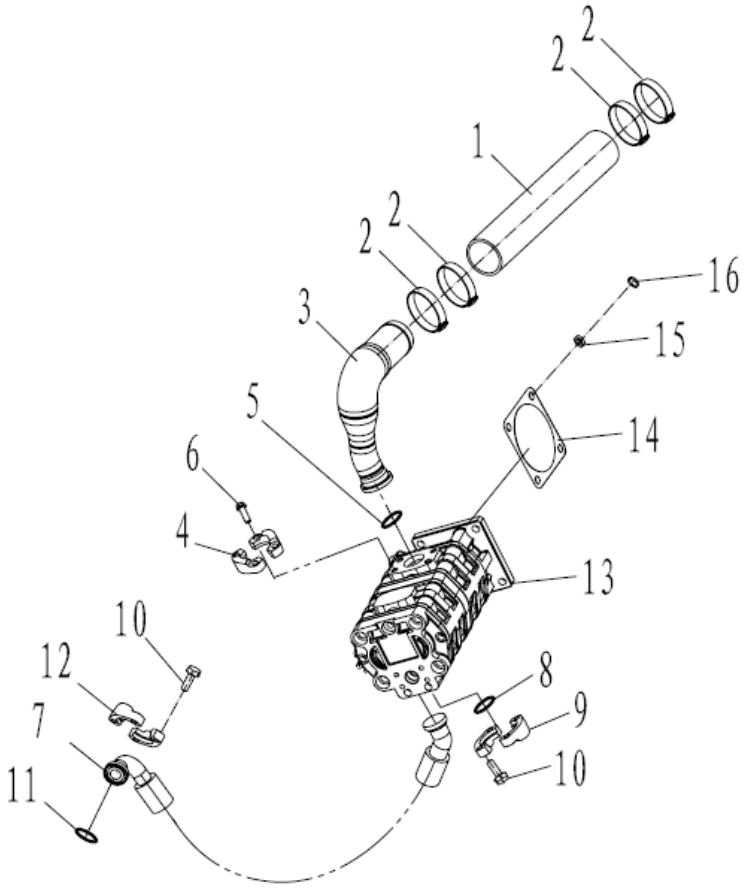

Key	Part No.	Description	Spare parts Y/N	Qty	Remarks
1	4120005114	Hose	Y	1	
2	4017000013	Clamp	Y	4	
3	29110010721	Pipe	Y	1	
4	4041000011	Flange half	Y	1	
5	4030000235	O-ring	Y	1	
6	4011000477	Bolt	Y	4	
7	29110010741	Hose	Y	1	
8	4030000026	O-ring	Y	1	
9	4041000043	Flange half	Y	1	
10	4011000475	Bolt	Y	8	
11	4030000029	O-ring	Y	1	
12	4041000056	Flange half	Y	1	
13	4120005082	Gear pump	Y	1	
14	29110007541	Gasket	Y	1	
15	4013000011	Nut	Y	4	
16	4015000168	Washer	Y	4	

Hydraulic tank assembly

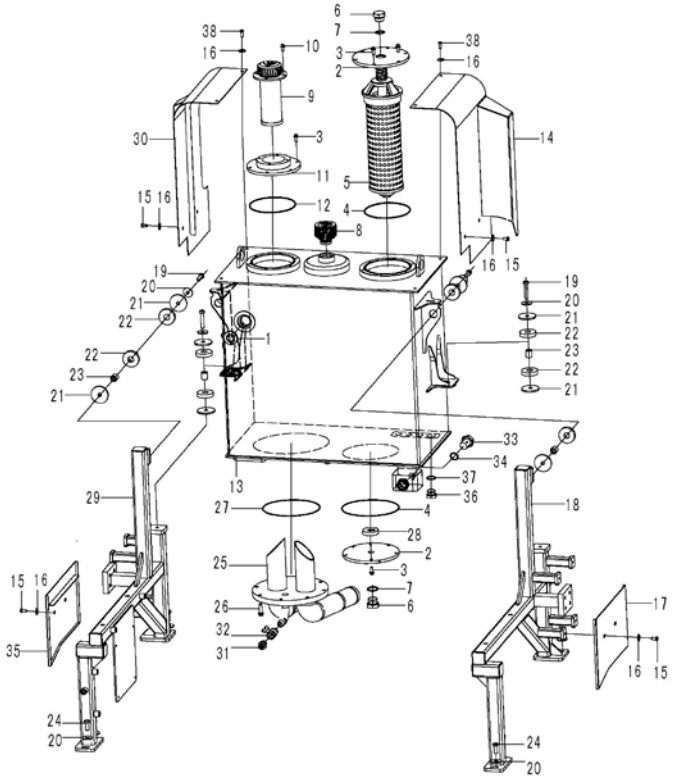

Key	Part No.	Description	Spare parts Y/N	Qty	Remarks
1	4110000807	Level gauge	Y	1	
2	29100019821	Flange	Y	2	
3	4011000458	Bolt	Y	16	
4	4030000232	O-ring	Y	2	
5	4120003296	Filter insert	Y	1	
6	4041000192	Plug	Y	2	
7	4041000765	O-ring	Y	2	
8	4120001088	Hydraulic fluid filter	Y	1	
9	4120002671	Filter insert	Y	1	
10	4011000461	Bolt	Y	4	
11	29100008361	Flange	Y	1	
12	4030000452	O-ring	Y	1	
13	29100020792	Hydraulic tank body	Y	1	
14	29100019592	Protecting plate	Y	1	
15	4011000102	Bolt	Y	8	
16	4015000256	Washer	Y	12	
17	29100017921	Protecting plate	Y	1	
18	29100020452	Support frame	Y	1	
19	4011001040	Screw	Y	4	
20	4015000186	Washer	Y	12	
21	29100020541	Washer	Y	8	
22	29100020531	Rubber mat	Y	8	

Hydraulic tank assembly

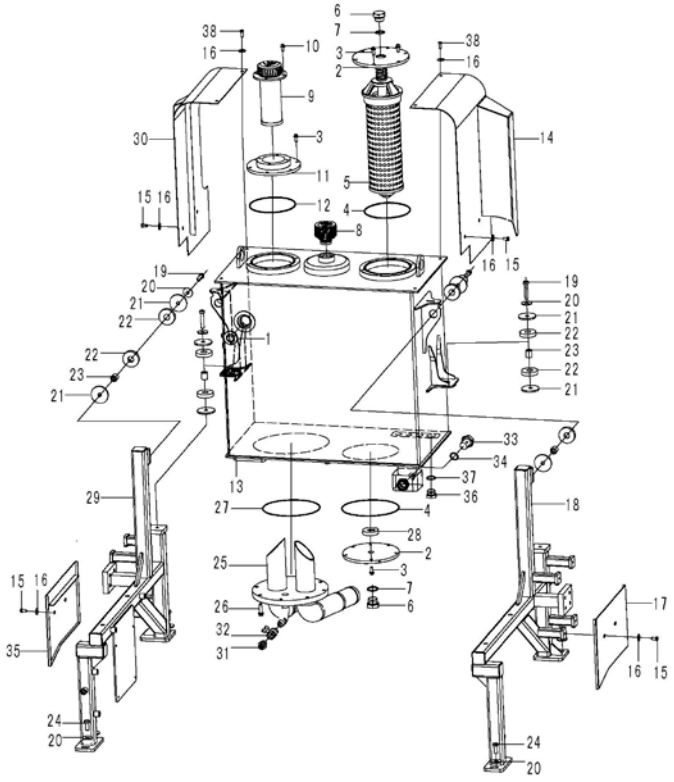

Key	Part No.	Description	Spare parts Y/N	Qty	Remarks
23	29100100541	Sleeve	Y	4	
24	4011000747	Screw	Y	8	
25	29100020821	Intaking oil flange assembly	Y	1	
26	4030000598	O-ring	Y	1	
27	4011000164	Bolt	Y	8	
28	4190000008	Magnet	Y	1	
29	29100020832	Support frame	Y	1	
30	29100019562	Protecting plate	Y	1	
31	29100009061	Nipple	Y	1	
32	4120000099	Valve	Y	1	
33	4041000777	Plug	Y	1	
34	4041000771	O-ring	Y	1	
35	29100017931	Protecting plate	Y	1	
36	4041001057	Plug	Y	1	
37	4041000779	O-ring	Y	1	
38	4011000106	Bolt	Y	4	

Lifting cylinder system

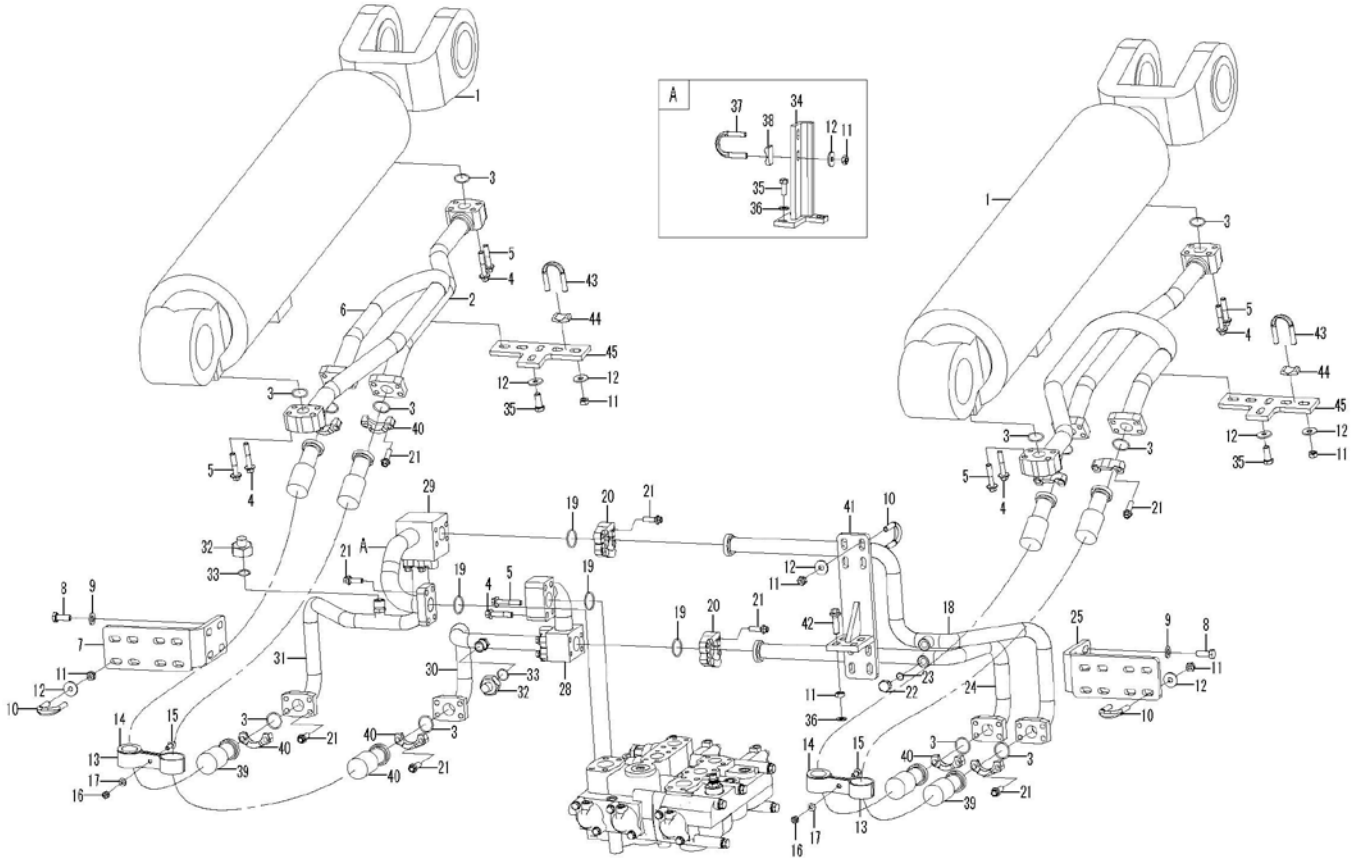

Key	Part No.	Description	Spare parts Y/N	Qty	Remarks
1	4120004336	Lifting cylinder	Y	2	
2	29130013651	Pipe	Y	1	
3	4030000026	O-ring	Y	12	
4	4011000473	Bolt	Y	10	
5	4011000309	Bolt	Y	10	
6	29130013671	Pipe	Y	1	
7	29130016191	Bracket	Y	1	
8	4011000089	Bolt	Y	8	
9	4015000168	Washer	Y	8	
10	4041000958	U-bolt	Y	12	
11	4013000007	Nut	Y	38	
12	4015000197	Washer	Y	38	
13	29130010821	Clamp	Y	4	
14	4041000869	Rubber sleeve	Y	4	
15	4011000458	Bolt	Y	2	
16	4013000033	Nut	Y	2	
17	4015000072	Washer	Y	2	
18	29130016961	Pipe	Y	1	
19	4030000029	O-ring	Y	6	
20	4041000056	Flange half	Y	4	
21	4011000475	Bolt	Y	52	
22	4041000774	Plug	Y	1	

Lifting cylinder system

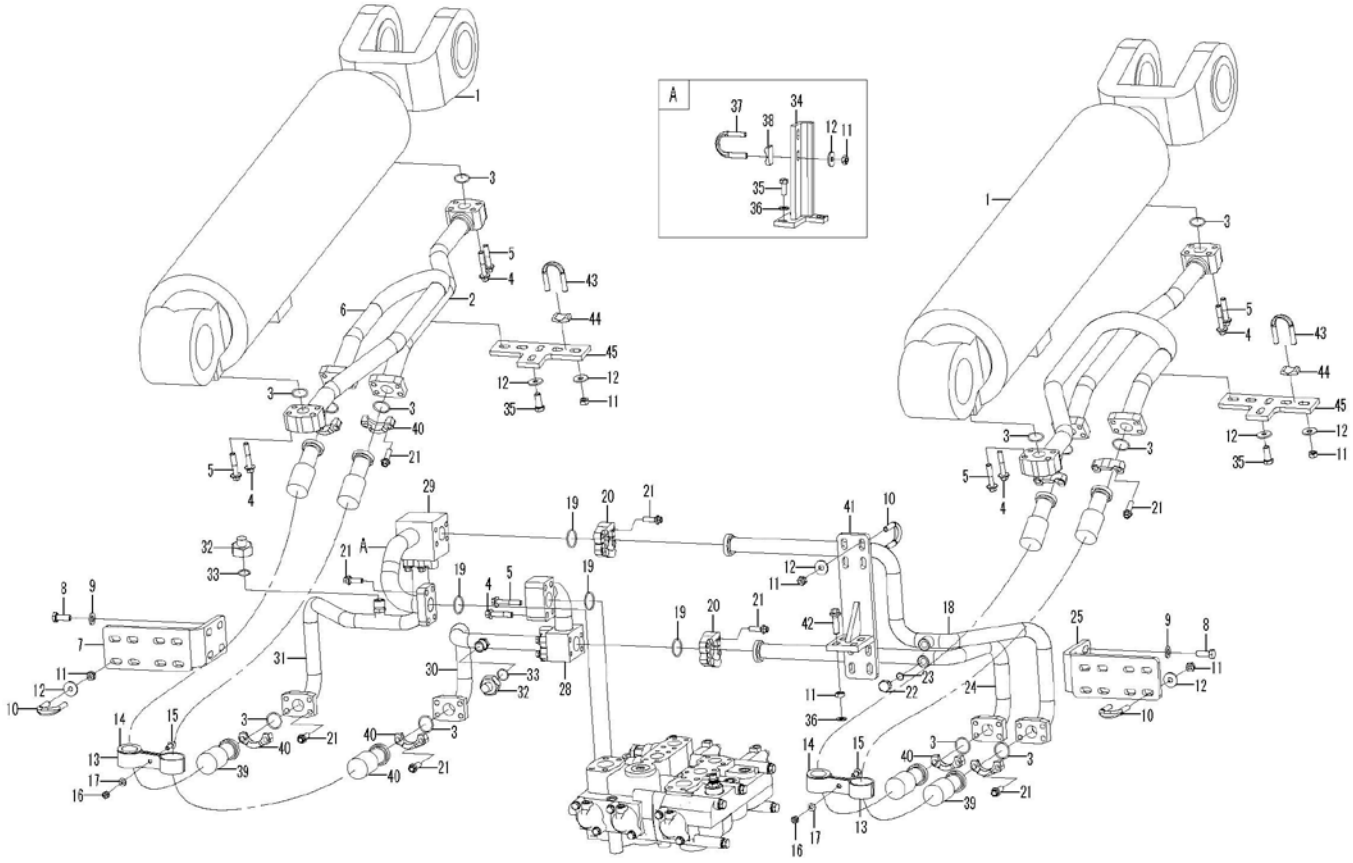

Key	Part No.	Description	Spare parts Y/N	Qty	Remarks
23	4041000767	O-ring	Y	1	
24	29130016981	Pipe	Y	1	
25	29130016211	Bracket	Y	1	
26	29130013731	Pipe	Y	1	
27	29130013751	Pipe	Y	1	
28	29130016061	Pipe	Y	1	
29	29130016031	Pipe	Y	1	
30	29130016941	Pipe	Y	1	
31	29130016921	Pipe	Y	1	
32	4041000680	Plug	Y	2	
33	4030000241	O-ring	Y	2	
34	29130016091	Bracket	Y	1	
35	4011000082	Bolt	Y	7	
36	4015000162	Washer	Y	7	
37	4041001141	U-bolt	Y	1	
38	4041001142	Bracket	Y	1	
39	29130014321	Hose	Y	4	
40	4041000026	Flange half	Y	8	
41	29130016251	Bracket	Y	1	
42	4011000163	Bolt	Y	4	
43	4041001017	U-bolt	Y	4	
44	4041001018	Bracket	Y	4	

Lifting cylinder system

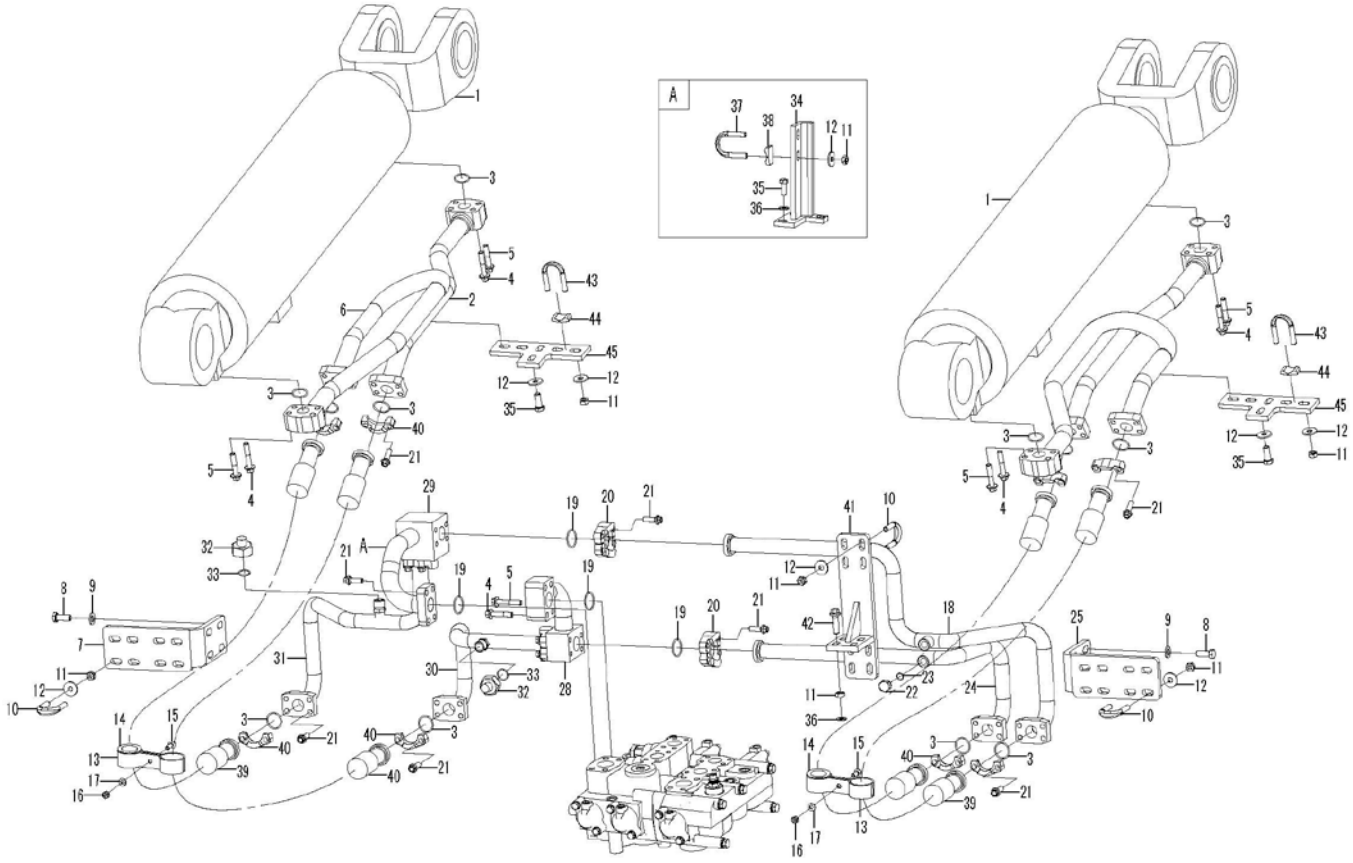

Key	Part No.	Description	Spare parts Y/N	Qty	Remarks
45	29130013141	Anchor plate	Y	2	

Lifting cylinder

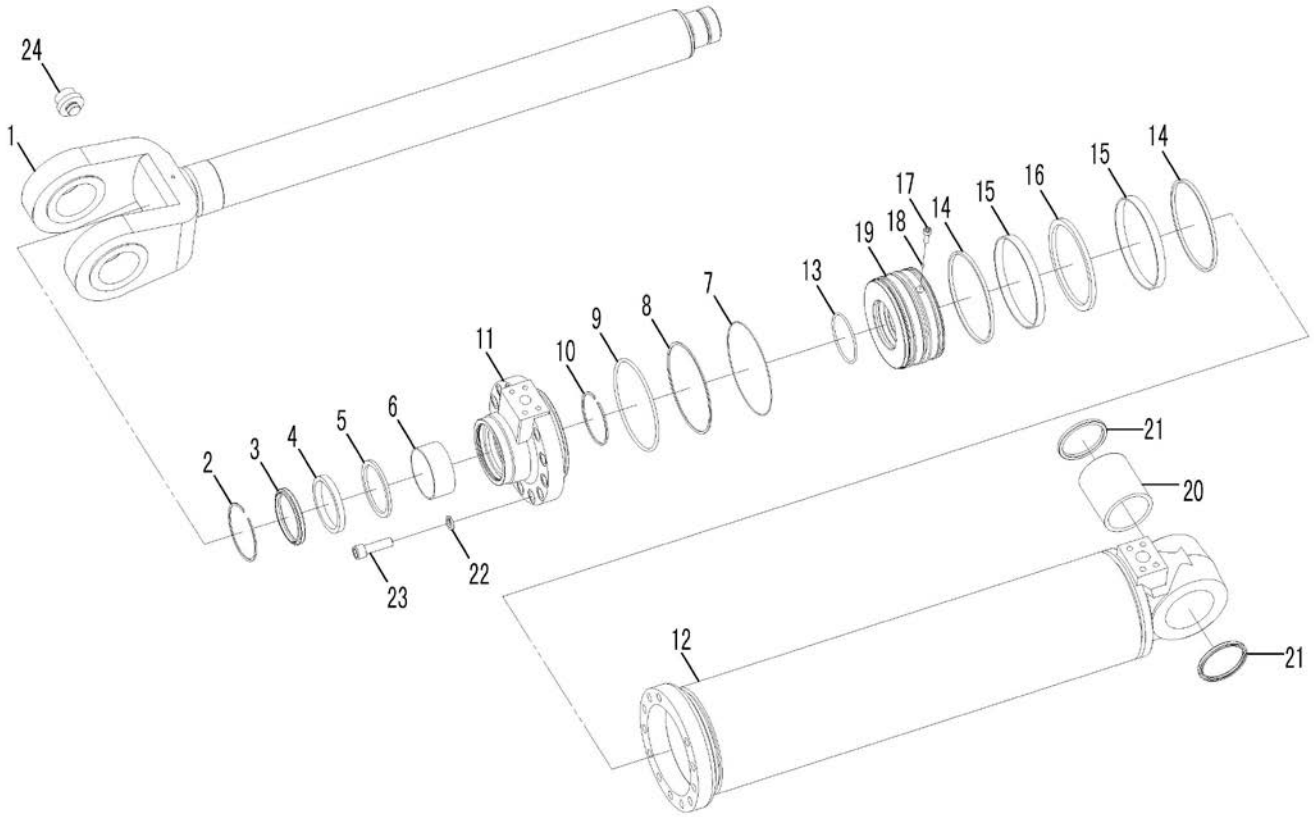

Key	Part No.	Description	Spare parts Y/N	Qty	Remarks
1	4120004336002	Piston rod	N	1	
2	4120004336003	Sealing kit	N	1	
3	4120004336001	Sealing ring kit	Y	1	
4	4120004336001	Sealing ring kit	Y	1	
5	4120004336001	Sealing ring kit	Y	1	
6	4120004336001	Sealing ring kit	Y	1	
7	4120004336001	Sealing ring kit	Y	1	
8	4120004336001	Sealing ring kit	Y	1	
9	4120004336001	Sealing ring kit	Y	1	
10	4120004336004	Retaining ring	Y	1	
11	4120004336005	Cylinder head	N	1	
12	4120004336006	Cylinder body	N	1	
13	4120004336001	Sealing ring kit	Y	1	
14	4120004336001	Sealing ring kit	Y	2	
15	4120004336001	Sealing ring kit	Y	2	
16	4120004336001	Sealing ring kit	Y	1	
17	4014000171	Screw	Y	1	
18	4090000168	Ball	Y	1	
19	4120004336007	Piston	N	1	
20	4120004336008	Bushing	Y	1	
21	4120004336001	Sealing ring kit	Y	2	
22	4015000098	Spring washer	Y	12	

Lifting cylinder

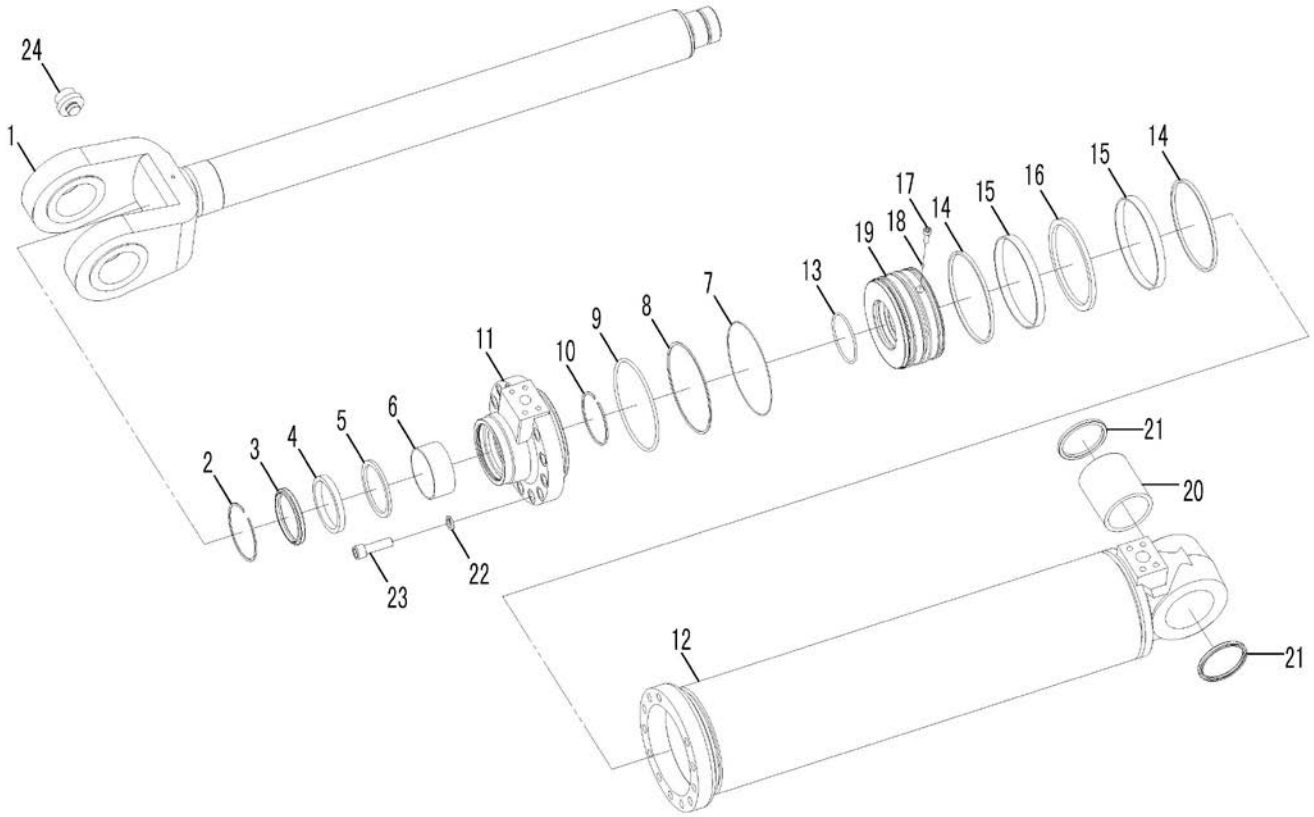

Key	Part No.		Description	Spare parts Y/N	Qty	Remarks
23	4014000315	Screw		Y	12	
24	4120004336009	Seat		N	1	

Tilt cylinder system

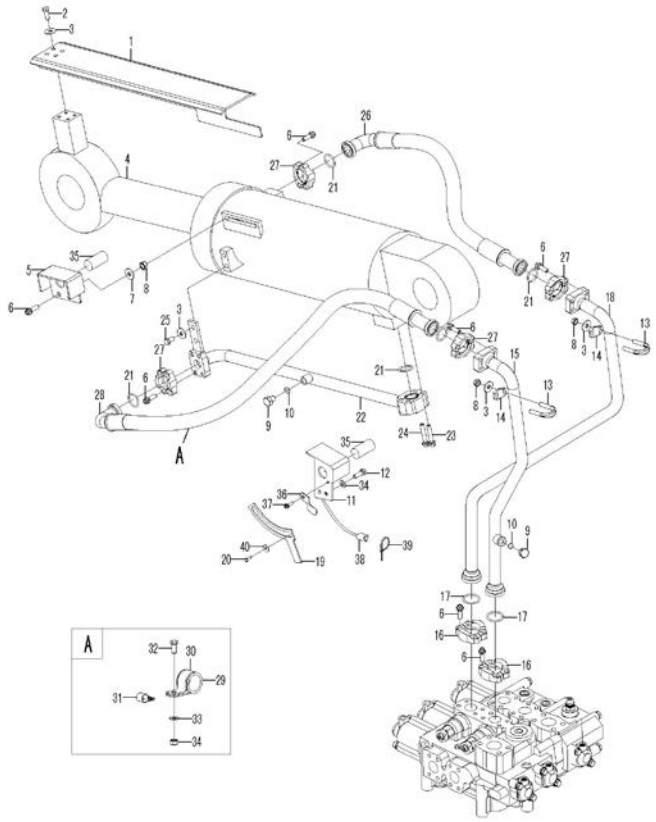

Key	Part No.	Description	Spare parts Y/N	Qty	Remarks
1	29140012861	Indicator plate	Y	1	
2	4011000082	Bolt	Y	4	
3	4015000197	Washer	Y	14	
4	4120003685	Tilt cylinder	Y	1	
5	29140012881	Bracket	Y	1	
6	4011000475	Bolt	Y	24	
7	4015000162	Washer	Y	6	
8	4013000007	Nut	Y	10	
9	4041000774	Plug	Y	2	
10	4041000767	O-ring	Y	2	
11	29140016461	Bracket	Y	1	
12	4011000197	Bolt	Y	2	
13	29140012931	U-bolt	Y	4	
14	4041001018	Bracket	Y	4	
15	29140015791	Pipe	Y	1	
16	4041000027	Flange half	Y	2	
17	4030000029	O-ring	Y	2	
18	29140015811	Pipe	Y	1	
19	29140016451	Indicator plate	Y	1	
20	4011000102	Bolt	Y	2	
21	4030000026	O-ring	Y	5	
22	29140013771	Pipe	Y	1	

Tilt cylinder system

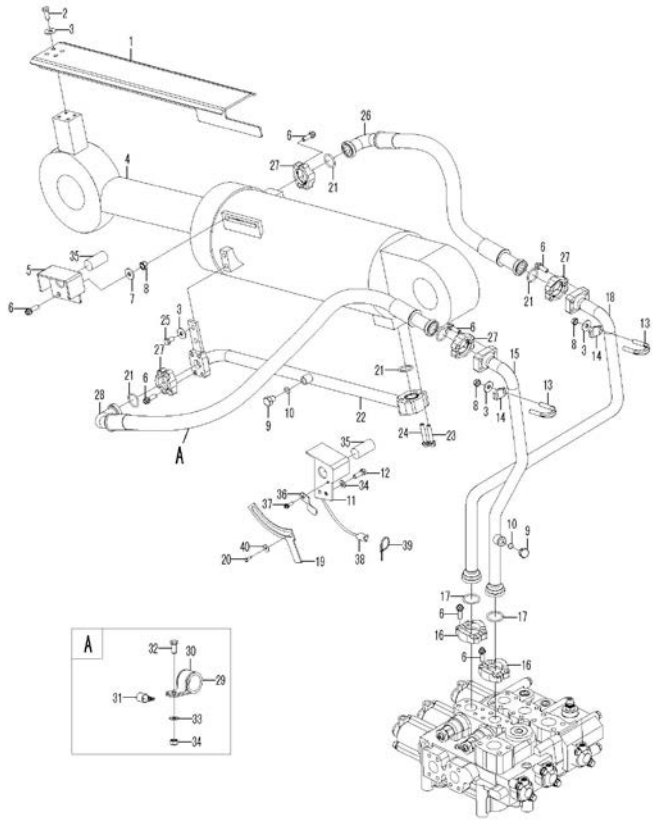

Key	Part No.	Description	Spare parts Y/N	Qty	Remarks
23	4011000309	Bolt	Y	2	
24	4011000473	Bolt	Y	2	
25	4011000085	Bolt	Y	2	
26	29140012981	Hose	Y	1	
27	4041000026	Flange half	Y	4	
28	29140012991	Hose	Y	1	
29	4041000869	Rubber sleeve	Y	3	
30	4041000868	Clamp	Y	3	
31	26370001212	Clamp	Y	3	
32	4011000197	Bolt	Y	3	
33	4013000011	Nut	Y	3	
34	4015000168	Washer	Y	5	
35	4130001061	Position switch	Y	2	
36	4130001006	Clip	Y	2	
37	4011000458	Bolt	Y	2	
38	29410000151	Cable harness	Y	1	
39	4190000020	Cable tie	Y	6	
40	4015000256	Washer	Y	2	

Tilt cylinder

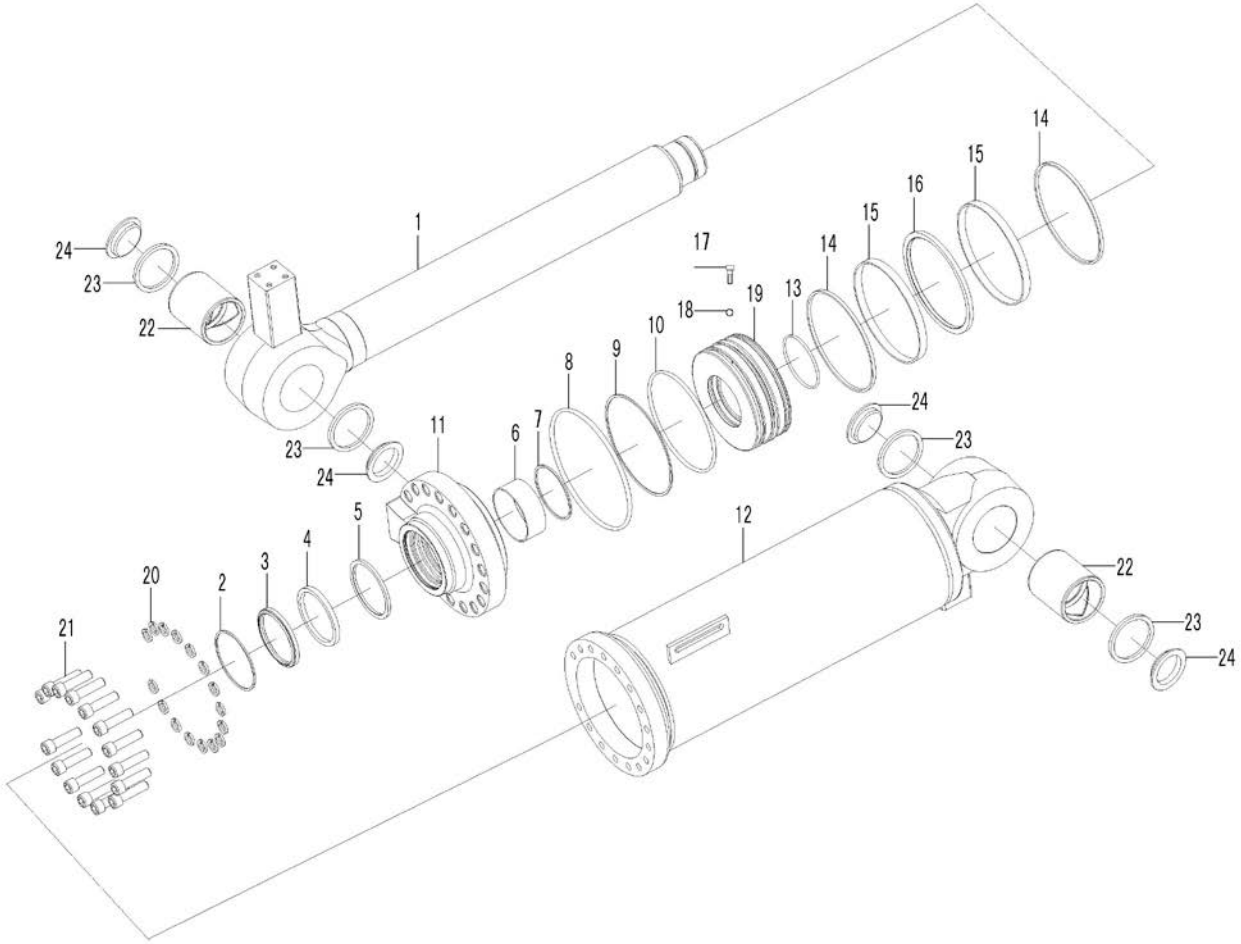

Key	Part No.	Description	Spare parts Y/N	Qty	Remarks
1	4120003685001	Piston rod	N	1	
2	4120003685002	Wired cirllip	N	1	
3	4120003685003	Sealing ring kit	Y	1	
4	4120003685003	Sealing ring kit	Y	1	
5	4120003685003	Sealing ring kit	Y	1	
6	4120003685003	Sealing ring kit	Y	1	
7	4120003685004	Retaining ring	Y	1	
8	4120003685003	Sealing ring kit	Y	1	
9	4120003685003	Sealing ring kit	Y	1	
10	4120003685003	Sealing ring kit	Y	1	
11	4120003685005	Cylinder head	N	1	
12	4120003685006	Cylinder body	N	1	
13	4120003685003	Sealing ring kit	Y	1	
14	4120003685003	Sealing ring kit	Y	2	
15	4120003685003	Sealing ring kit	Y	2	
16	4120003685003	Sealing ring kit	Y	1	
17	4014000113	Screw	Y	1	
18	4090000168	Ball	Y	1	
19	4120003685007	Piston	N	1	
20	4015000098	Spring washer	Y	16	
21	4014000319	Screw	Y	16	
22	4120003685008	Bushing	N	2	

Tilt cylinder

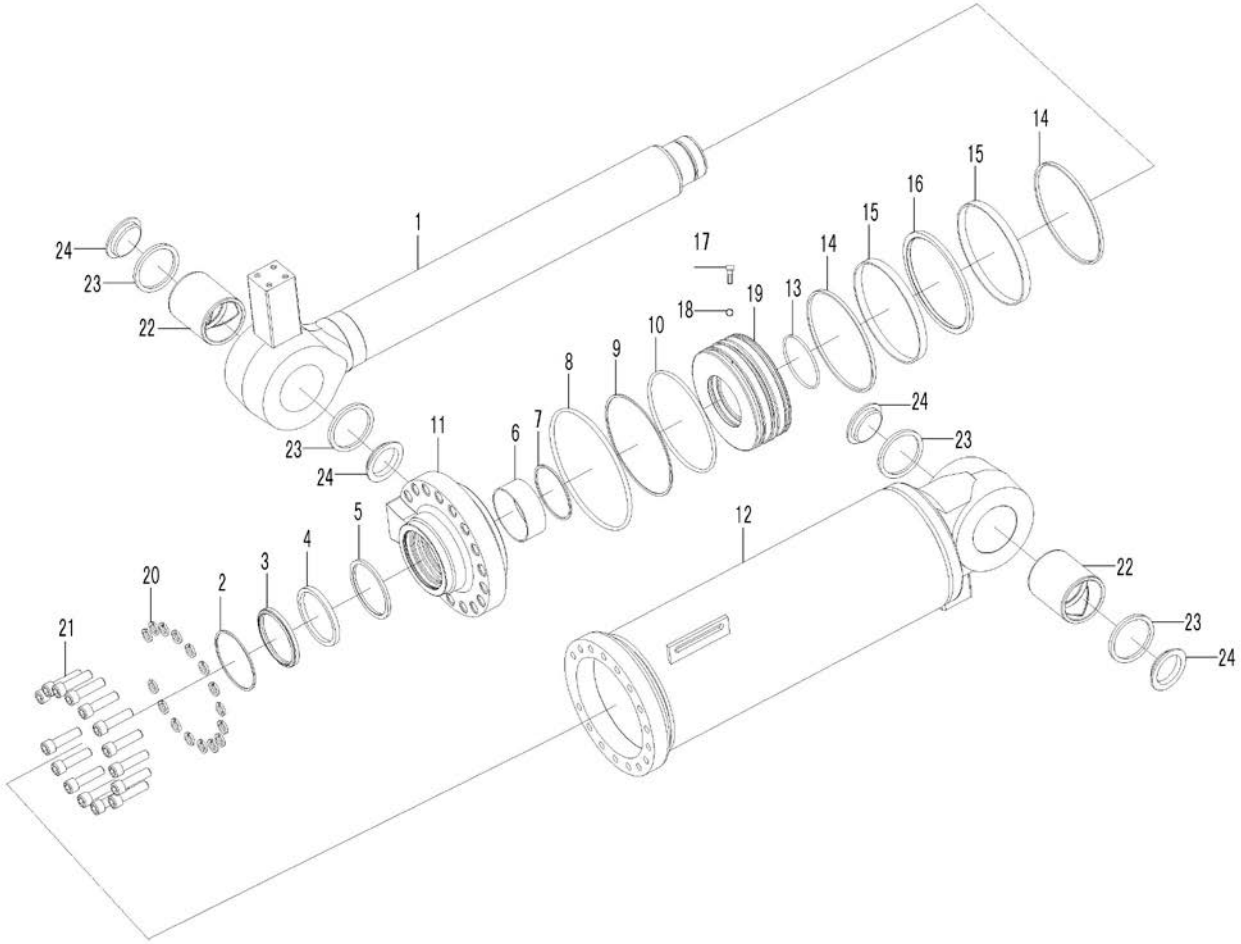

Key	Part No.	Description	Spare parts Y/N	Qty	Remarks
23	4120003685003	Sealing ring kit	Y	4	
24	4120003685009	Cover	N	4	

The 3rd function control

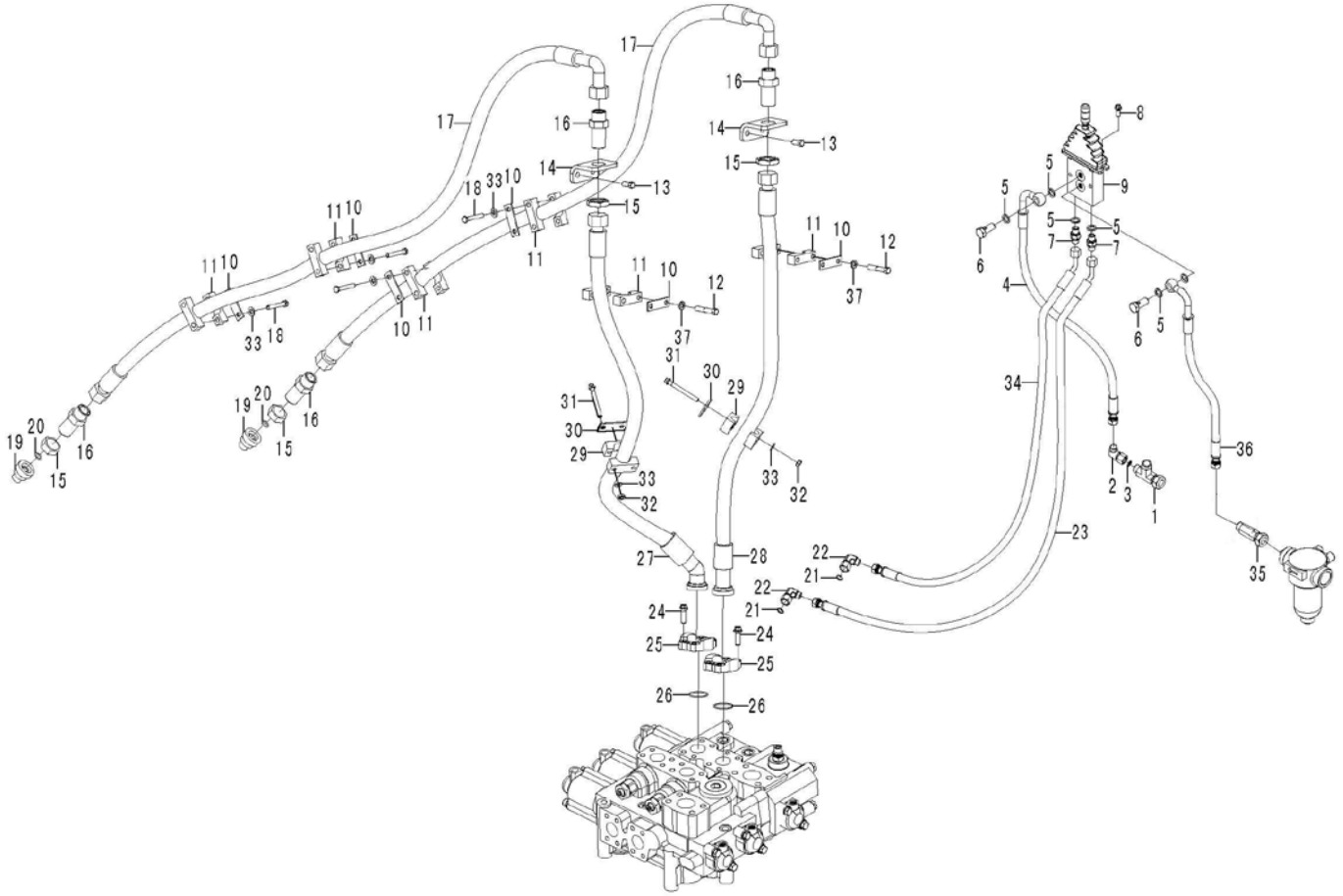

Key	Part No.	Description	Spare parts Y/N	Qty	Remarks
1	29120016521	Three-way nipple	Y	1	
2	4041001023	Nipple	Y	1	
3	4030000240	O-ring	Y	1	
4	29120023101	Hose	Y	1	
5	29120014931	Washer	Y	4	
6	4011000344	Bolt	Y	2	
7	29120015401	Nipple	Y	2	
8	4011000153	Bolt	Y	2	
9	4120001966	Control lever	Y	1	
10	29120009351	Plate	Y	6	
11	29120009361	Rubber plate	Y	12	
12	4011000049	Screw	Y	4	
13	4011000081	Bolt	Y	4	
14	29120023051	Plate	Y	2	
15	4013000182	Nut	Y	4	
16	29120023141	Nipple	Y	4	
17	29120022651	Hose	Y	2	
18	4011000415	Screw	Y	8	
19	4041000680	Plug	Y	2	
20	4030000241	O-ring	Y	2	
21	4030000530	O-ring	Y	2	
22	4041001047	Nipple	Y	2	

The 3rd function control

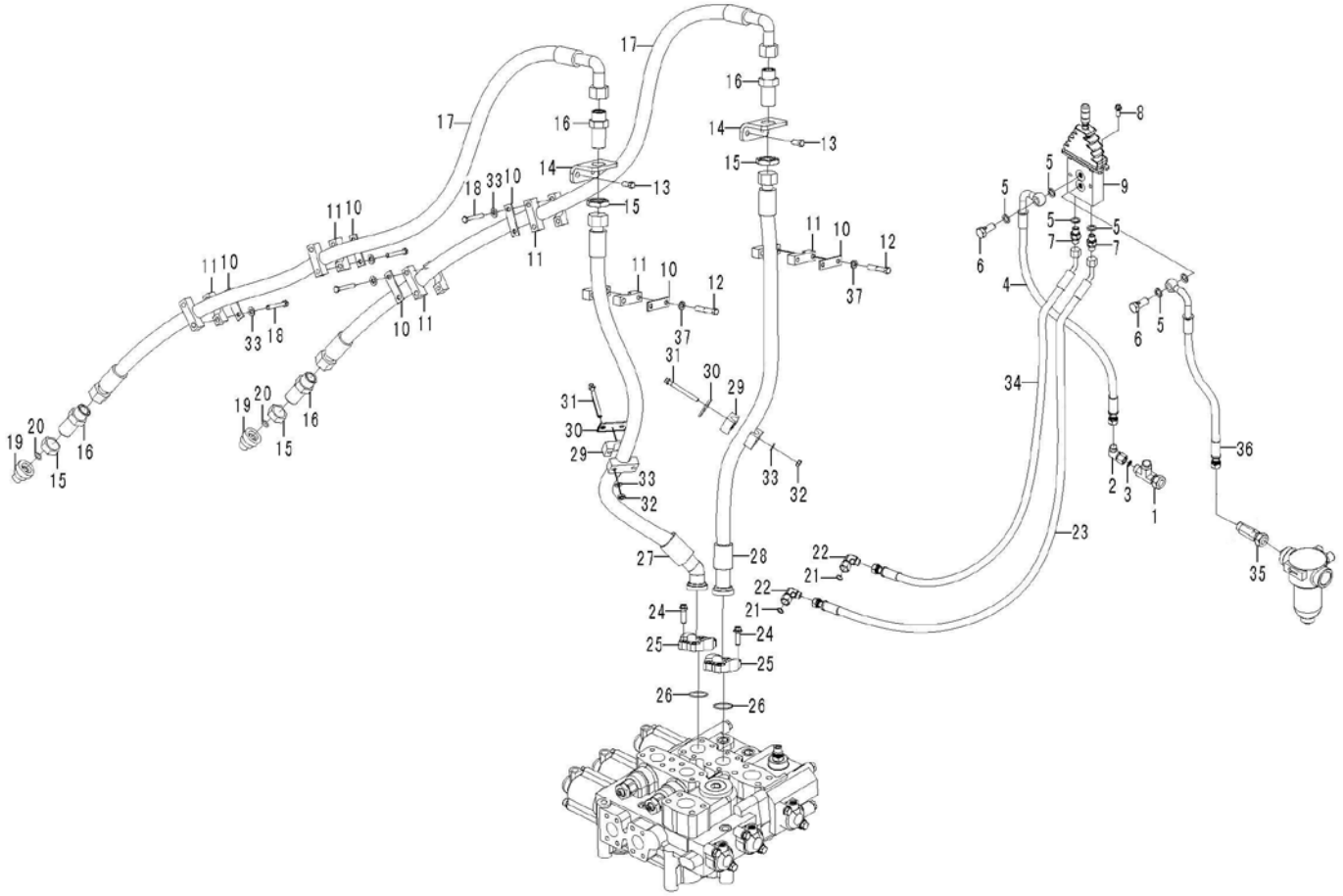

Key	Part No.	Description	Spare parts Y/N	Qty	Remarks
23	4041002096	Hose	Y	1	
24	4011000475	Bolt	Y	8	
25	4041000027	Flange half	Y	2	
26	4030000029	O-ring	Y	2	
27	29120023071	Hose	Y	1	
28	29120023061	Hose	Y	1	
29	29120011601	Clamp	Y	4	
30	29120011591	Plate	Y	2	
31	4011000301	Screw	Y	4	
32	4013000033	Nut	Y	4	
33	4015000072	Washer	Y	12	
34	4041002043	Hose	Y	1	
35	4120002001	Nipple	Y	1	
36	29120023091	Hose	Y	1	
37	4015000162	Washer	Y	8	

G
QUICK-CHANGE SYSTEM



SHANDONG LINGONG CONSTRUCTION MACHINERY CO.,LTD.

Quick-change equipment

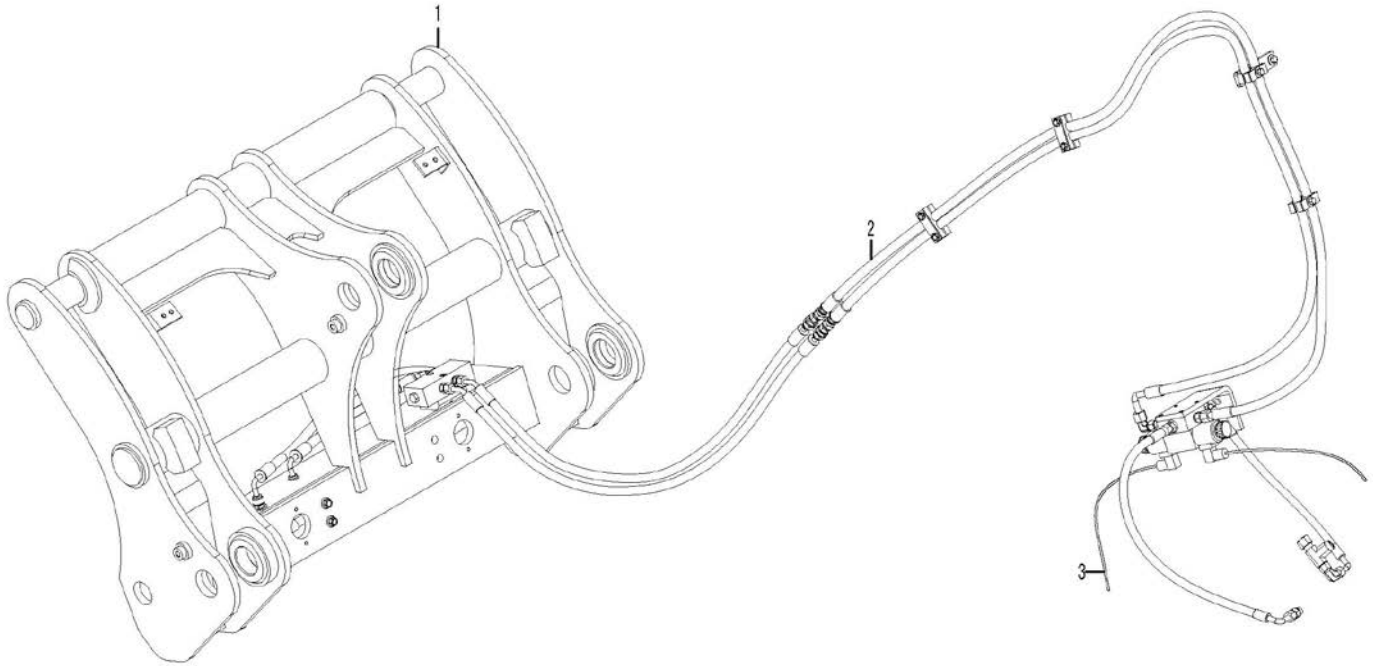

Key	Part No.	Description	Spare parts Y/N	Qty	Remarks
1	29180011702	Quick-coupler equipment	N	1	
2	29180011691	Quick-change equipment hydraulic system	N	1	
3	29410000331	Quick-change electrical system	N	1	

Quickly equipment hydraulic system

Key	Part No.	Description	Spare parts Y/N	Qty	Remarks
1	4120002171	Three-way nipple	Y	1	
2	4041001063	Nipple	Y	1	
3	4041002136	Hose	Y	1	
4	4041000150	Nipple	Y	1	
5	4041000767	O-ring	Y	9	
6	4041000604	Nipple	Y	6	
7	4041000646	Hose assembly	Y	1	
8	29180012371	Plate	Y	1	
9	29180010621	Rubber plate	Y	4	
10	29180010631	Anchor plate	Y	2	
11	4011000085	Bolt	Y	2	
12	4015000162	Washer	Y	4	
13	4041002033	Hose	Y	1	
14	4041001023	Nipple	Y	1	
15	4041001689	Hose	Y	1	
16	29180012381	Clamp	Y	4	
17	29180012411	Plate	Y	2	
18	4011000303	Bolt	Y	4	
19	4015000072	Washer	Y	4	
20	29180012401	Nipple	Y	2	
21	4013000123	Nut	Y	2	
22	4041002102	Hose	Y	2	

Quickly equipment hydraulic system

Key	Part No.	Description	Spare parts Y/N	Qty	Remarks
23	4120001741	Non-return valve	Y	1	
24	4014000190	Screw	Y	2	
25	4015000036	Spring washer	Y	2	
26	4041000133	Nipple	Y	2	
27	29180012391	Nipple	Y	1	
28	29180012921	Nipple	Y	1	
29	4013000190	Nut	Y	2	
30	4015000177	Washer	Y	2	
31	4120004913	Hydraulic cylinder	Y	1	
32	4011000320	Bolt	Y	4	
33	29180012441	Shim	Y	4	
34	29180012451	Shim	Y	4	
35	4011000447	Bolt	Y	3	
36	29180009381	Plate	Y	1	
37	4120000368	Solenoid valve	Y	1	
38	29180007862	Valve seat	Y	1	
39	4011000448	Screw	Y	4	
40	4011000082	Bolt	Y	2	
41	29180012331	Hose assembly	Y	1	
42	29180012341	Hose assembly	Y	1	
43	4041001971	Hose assembly	Y	1	
44	4041001972	Hose assembly	Y	1	

Quickly equipment hydraulic system

Key	Part No.		Description	Spare parts Y/N	Qty	Remarks
45	29180010721	Decal		Y	1	

Quickly change bracket

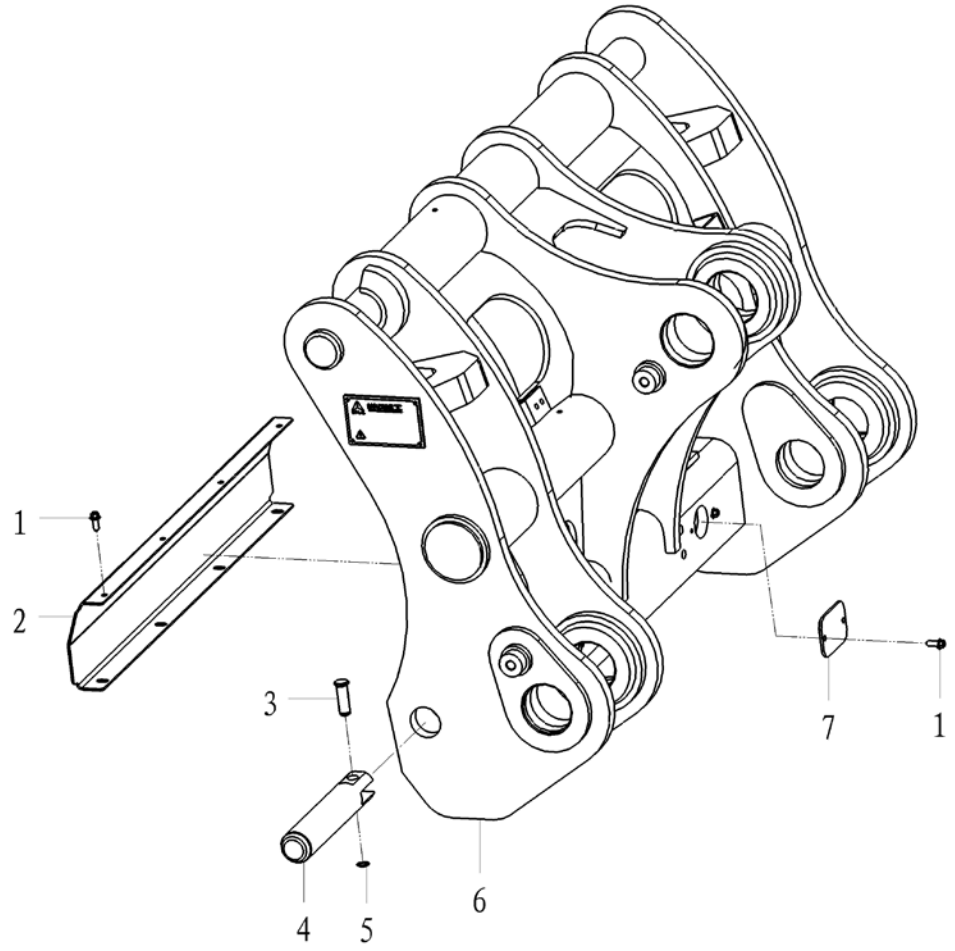

Key	Part No.	Description	Spare parts Y/N	Qty	Remarks
1	4011000458	Bolt	Y	12	
2	29180011722	Plate	Y	1	
3	29180011741	Pin	Y	2	
4	29180011731	Shaft	Y	2	
5	4015000128	Retaining ring	Y	2	
6	29180012461	Attachment bracket	Y	1	
7	29180009311	Plate	Y	2	

Quick-change electrical system

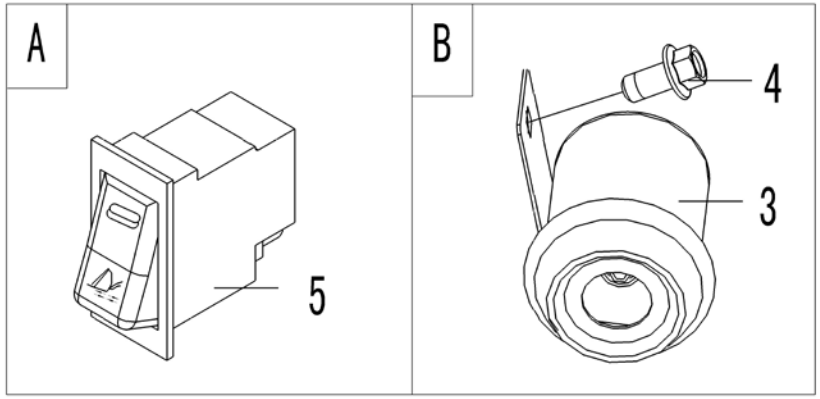

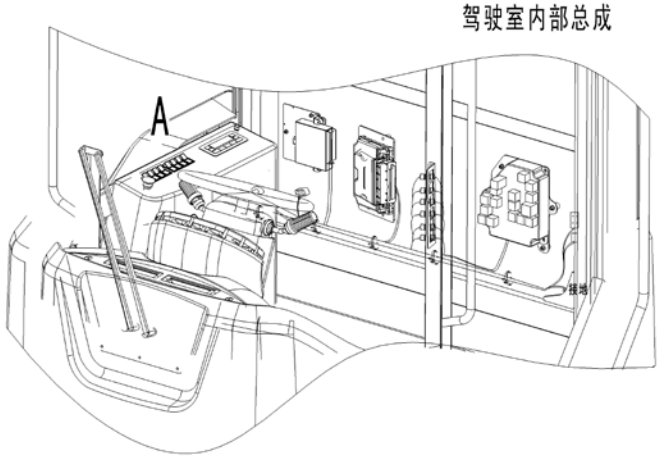

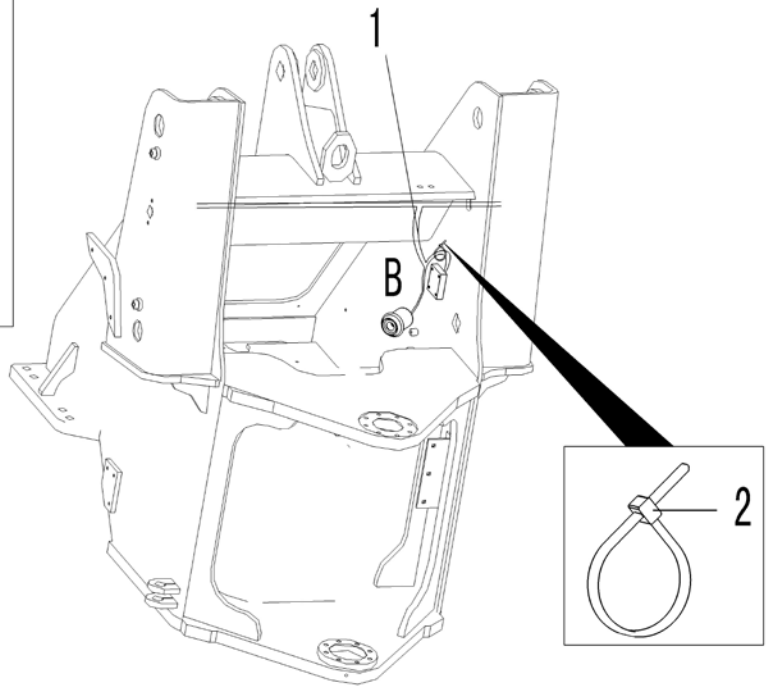

Key	Part No.	Description	Spare parts Y/N	Qty	Remarks
1	29420000161	Cable harness	Y	1	
2	4190001839	Cable tie	Y	6	
3	4130000031	Buzzer	Y	1	
4	4011000461	Bolt	Y	1	
5	4130001833	Rocker switch	Y	1	

H
WORKING EQUIPMENT



SHANDONG LINGONG CONSTRUCTION MACHINERY CO.,LTD.

Working equipment attachment

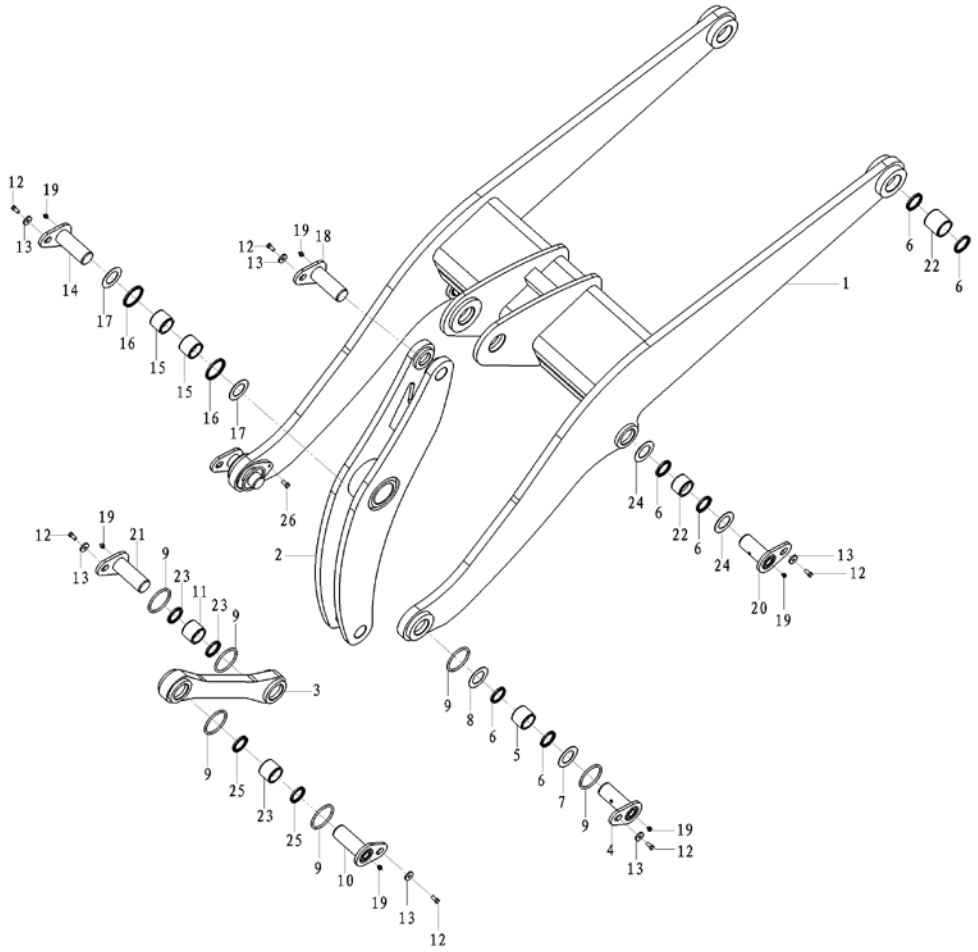

Key	Part No.	Description	Spare parts Y/N	Qty	Remarks
1	29150016163	Lifting arm	Y	1	
2	29150014371	Rocker arm	Y	1	
3	29150016851	Connecting rod	Y	1	
4	4043000173	Weld pin	Y	2	
5	29160000021	Bushing	Y	2	
6	4043000055	Sealing ring	Y	12	
7	4043000034	Shim	Y	4	
8	4043000033	Shim	Y	4	
9	4043000059	O-ring	Y	8	
10	4043000060	Weld pin	Y	1	
11	4043000027	Bushing	Y	1	
12	4011000094	Bolt	Y	8	
13	4040000002	Washer	Y	8	
14	4043000338	Weld pin	Y	1	
15	4043000031	Bushing	Y	2	
16	4043000058	Sealing ring	Y	2	
17	4043000043	Shim	Y	4	
18	4043000557	Pin	Y	1	
19	4030000065	Lubricating nipple	Y	8	
20	4043000511	Pin	Y	2	
21	4043000015	Weld pin	Y	1	
22	4043000503	Bushing	Y	4	

Working equipment attachment

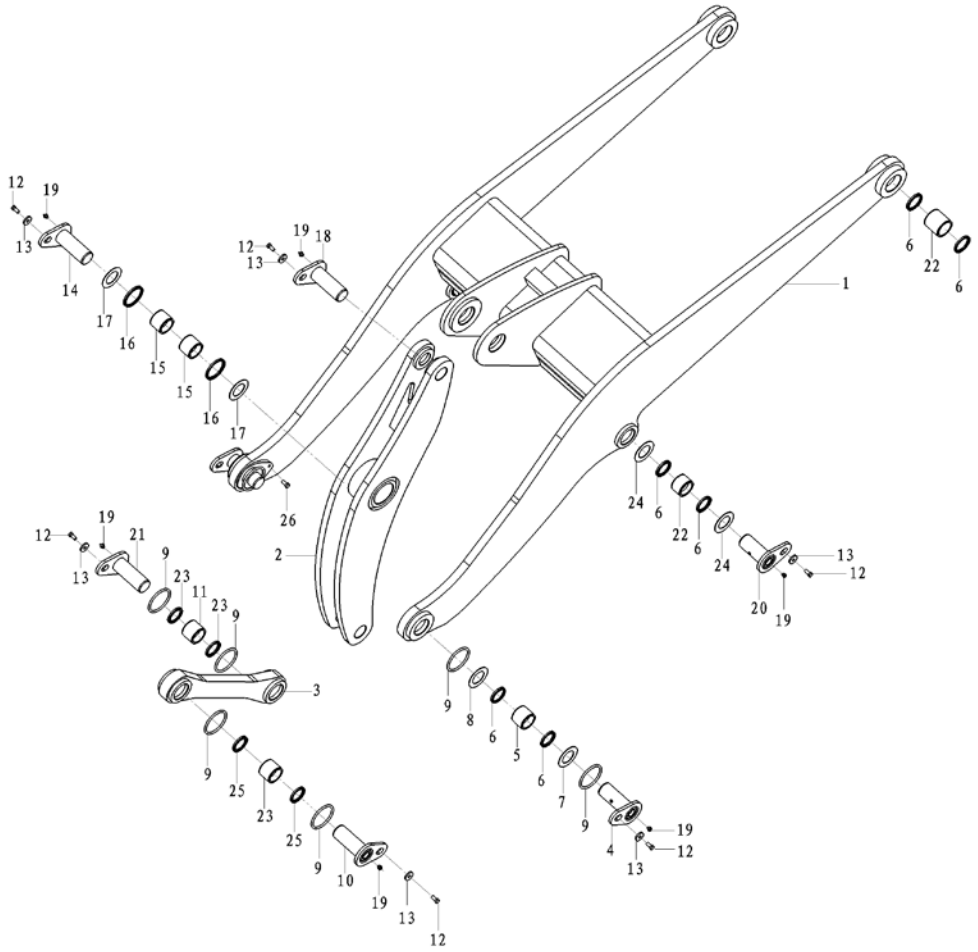

Key	Part No.	Description	Spare parts Y/N	Qty	Remarks
23	4043000056	Sealing ring	Y	4	
24	4043000519	Shim	Y	8	
25	29160008781	Bushing	Y	1	
26	4011000597	Bolt	Y	3	

Bucket assembly

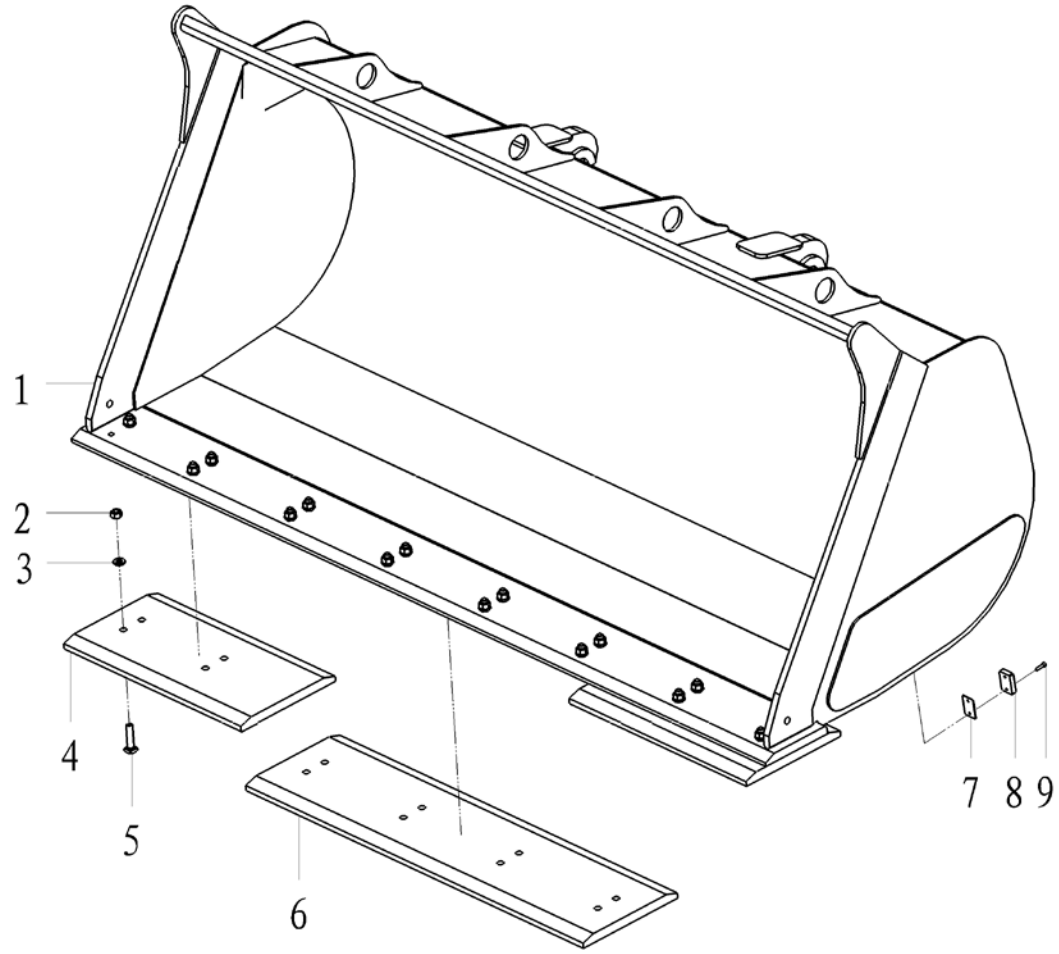

Key	Part No.	Description	Spare parts Y/N	Qty	Remarks
1	29170085611	Bucket	Y	1	
2	4013000020	Nut	Y	16	
3	4015000176	Washer	Y	16	
4	29170042171	Wear plate	Y	2	
5	29170019711	Bolt	Y	16	
6	29170042161	Wear plate	Y	1	
7	29170031751	Shim	Y	6	
8	29170031761	Retaining plate	Y	2	
9	4011000448	Screw	Y	4	

I
STEERING SYSTEM



SHANDONG LINGONG CONSTRUCTION MACHINERY CO.,LTD.

Steering pump system

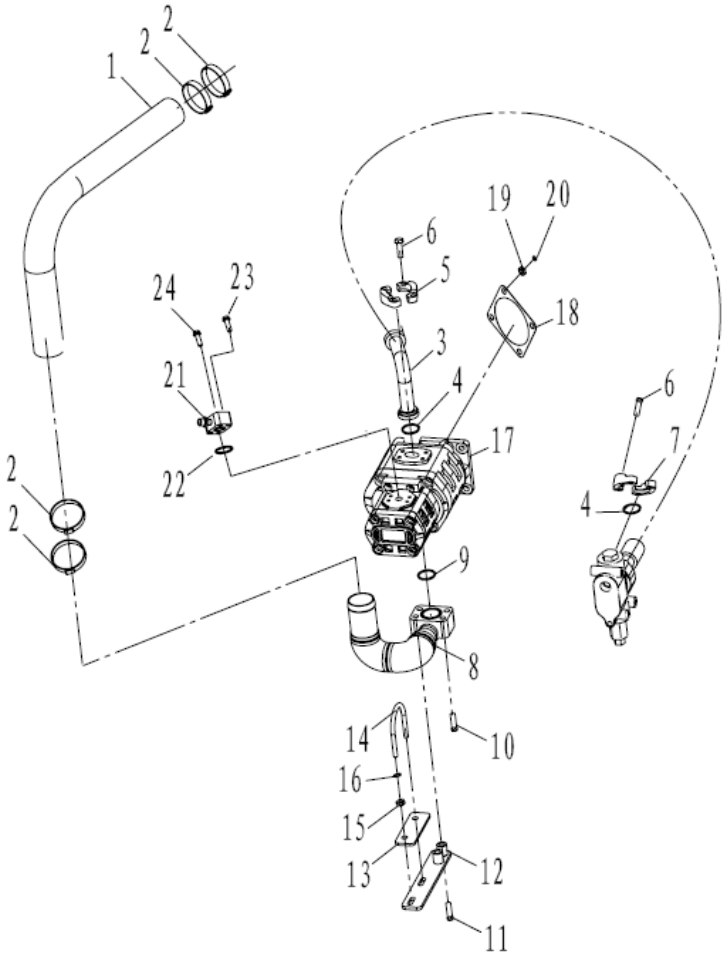

Key	Part No.	Description	Spare parts Y/N	Qty	Remarks
1	29190012251	Hose	Y	1	
2	4017000013	Clamp	Y	4	
3	29190012221	Hose	Y	1	
4	4030000029	O-ring	Y	2	
5	4041000056	Flange half	Y	1	
6	4011000475	Bolt	Y	8	
7	4041000027	Flange half	Y	1	
8	29190012171	Pipe	Y	1	
9	4030000235	O-ring	Y	1	
10	4011000793	Screw	Y	2	
11	4011000705	Screw	Y	2	
12	29190012181	Bracket	Y	1	
13	29190012211	Rubber plate	Y	1	
14	29120022551	U-bolt	Y	1	
15	4013000007	Nut	Y	2	
16	4015000197	Washer	Y	2	
17	4120005081	Gear pump	Y	1	
18	29110007541	Gasket	Y	1	
19	4013000011	Nut	Y	4	
20	4015000168	Washer	Y	4	
21	29190012151	Nipple	Y	1	
22	4030000279	O-ring	Y	1	

Steering pump system

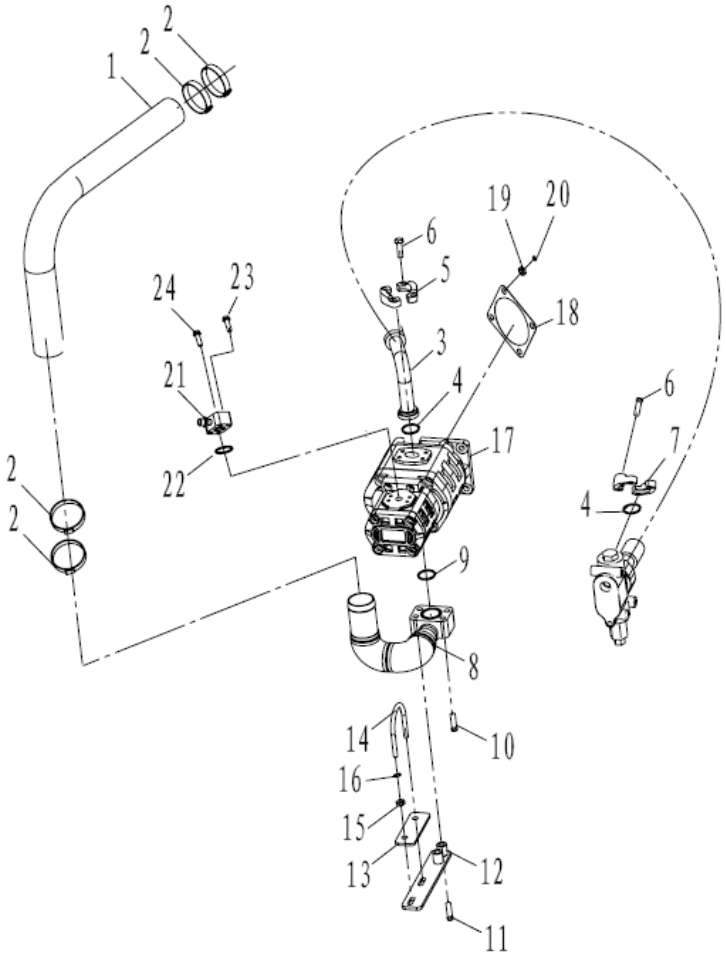

Key	Part No.		Description	Spare parts Y/N	Qty	Remarks
23	4011000161	Bolt		Y	2	
24	4011000172	Bolt		Y	2	

Steering gear system

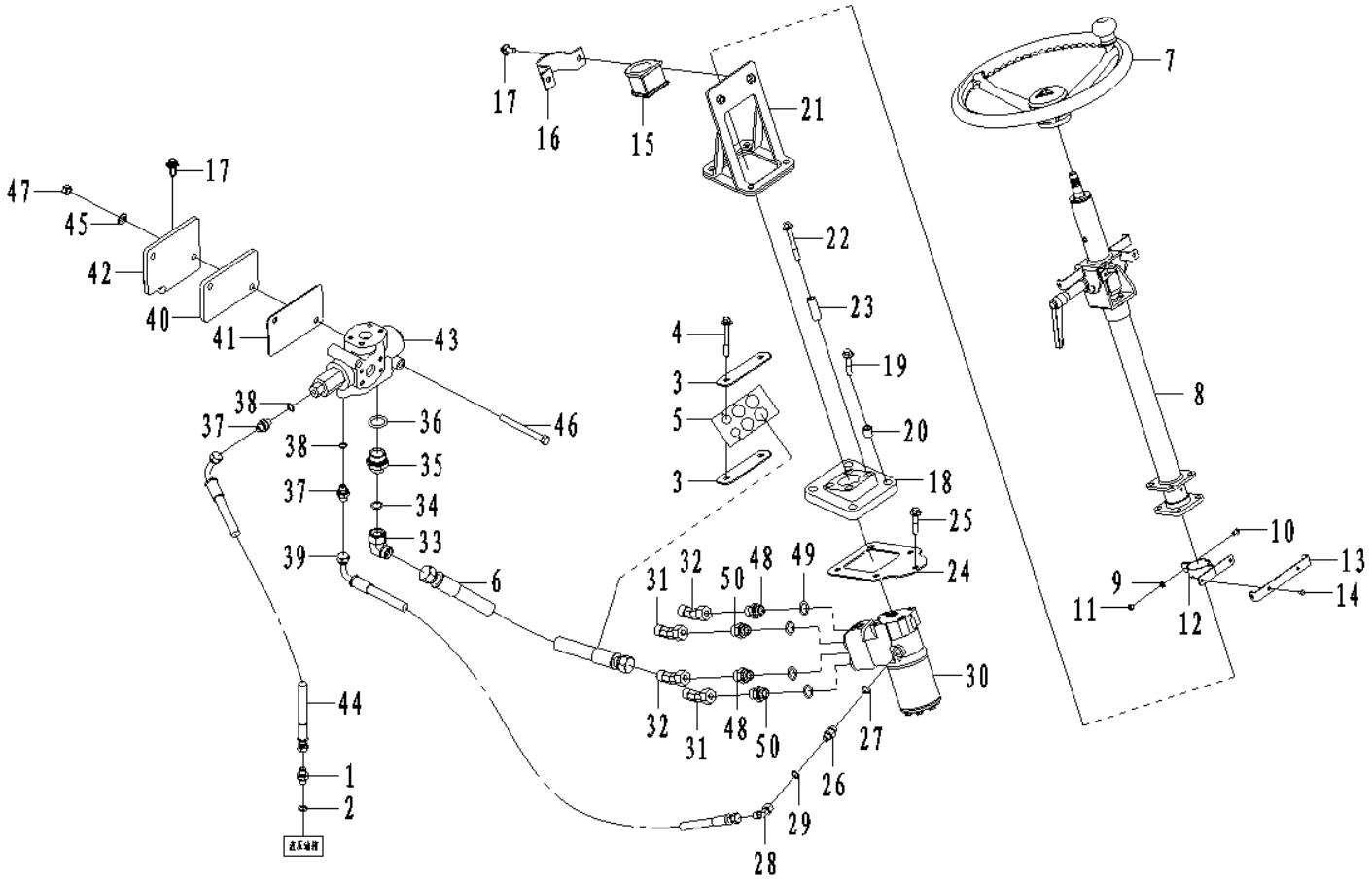

Key	Part No.	Description	Spare parts Y/N	Qty	Remarks
1	4041000133	Nipple	Y	1	
2	4041000767	O-ring	Y	1	
3	29200009591	Plate	Y	2	
4	4011000493	Bolt	Y	2	
5	29200010161	Rubber block	Y	1	
6	4041000590	Hose assembly	Y	1	
7	4120003680	Steering wheel	Y	1	
8	4120004343	Steering column	Y	1	
9	4015000207	Washer	Y	4	
10	4011000194	Screw	Y	4	
11	4013000028	Nut	Y	4	
12	29200009431	Clamp	Y	4	
13	29200009421	Clamp	Y	1	
14	4014000048	Screw	Y	2	
15	29200009081	Rubber sleeve	Y	1	
16	29200009091	Clamp	Y	1	
17	4011000474	Bolt	Y	4	
18	29200009361	Rubber mat	Y	1	
19	4011000309	Bolt	Y	4	
20	29200009321	Pipe	Y	4	
21	29200009371	Bracket	Y	1	
22	4011000282	Screw	Y	4	

Steering gear system

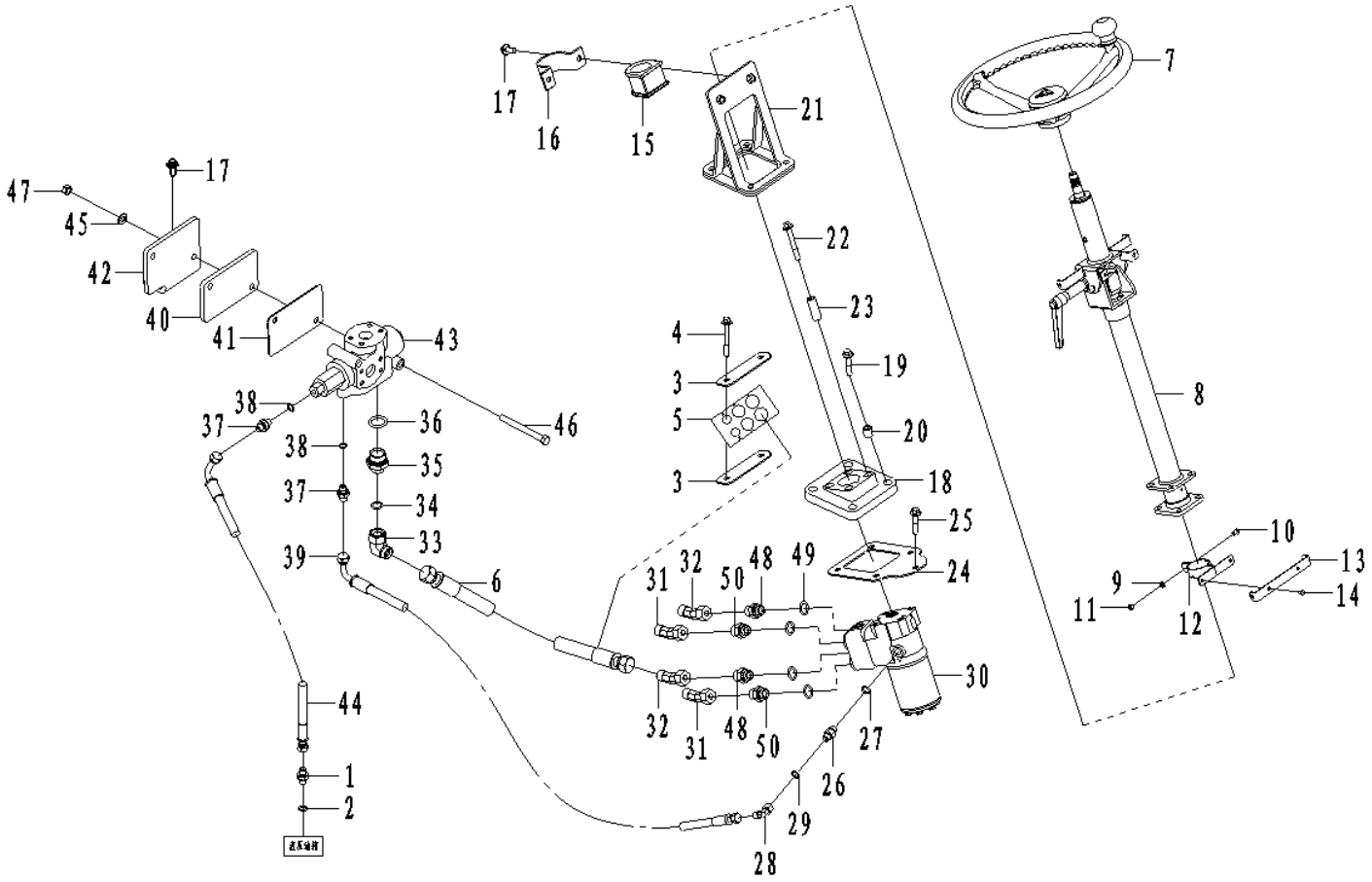

Key	Part No.	Description	Spare parts Y/N	Qty	Remarks
23	29200009311	Pipe	Y	4	
24	29200009561	Cover plate	Y	1	
25	4011000164	Bolt	Y	1	
26	4041000131	Nipple	Y	1	
27	4041000784	O-ring	Y	1	
28	4041001047	Nipple	Y	1	
29	4030000530	O-ring	Y	1	
30	4120005052	Control valve	Y	1	
31	29200010181	Elbow nipple	Y	2	
32	29200010171	Elbow nipple	Y	2	
33	4041001006	Nipple	Y	1	
34	4030000501	O-ring	Y	1	
35	4041000088	Nipple	Y	1	
36	4030000276	O-ring	Y	1	
37	4041000084	Nipple	Y	2	
38	4030000285	O-ring	Y	2	
39	4041001949	Hose assembly	Y	1	
40	29200009871	Rubber plate	Y	1	
41	29200009981	Plate	Y	1	
42	29200010241	Plate	Y	1	
43	4120005054	Priority valve	Y	1	
44	4041001983	Hose assembly	Y	1	

Steering gear system

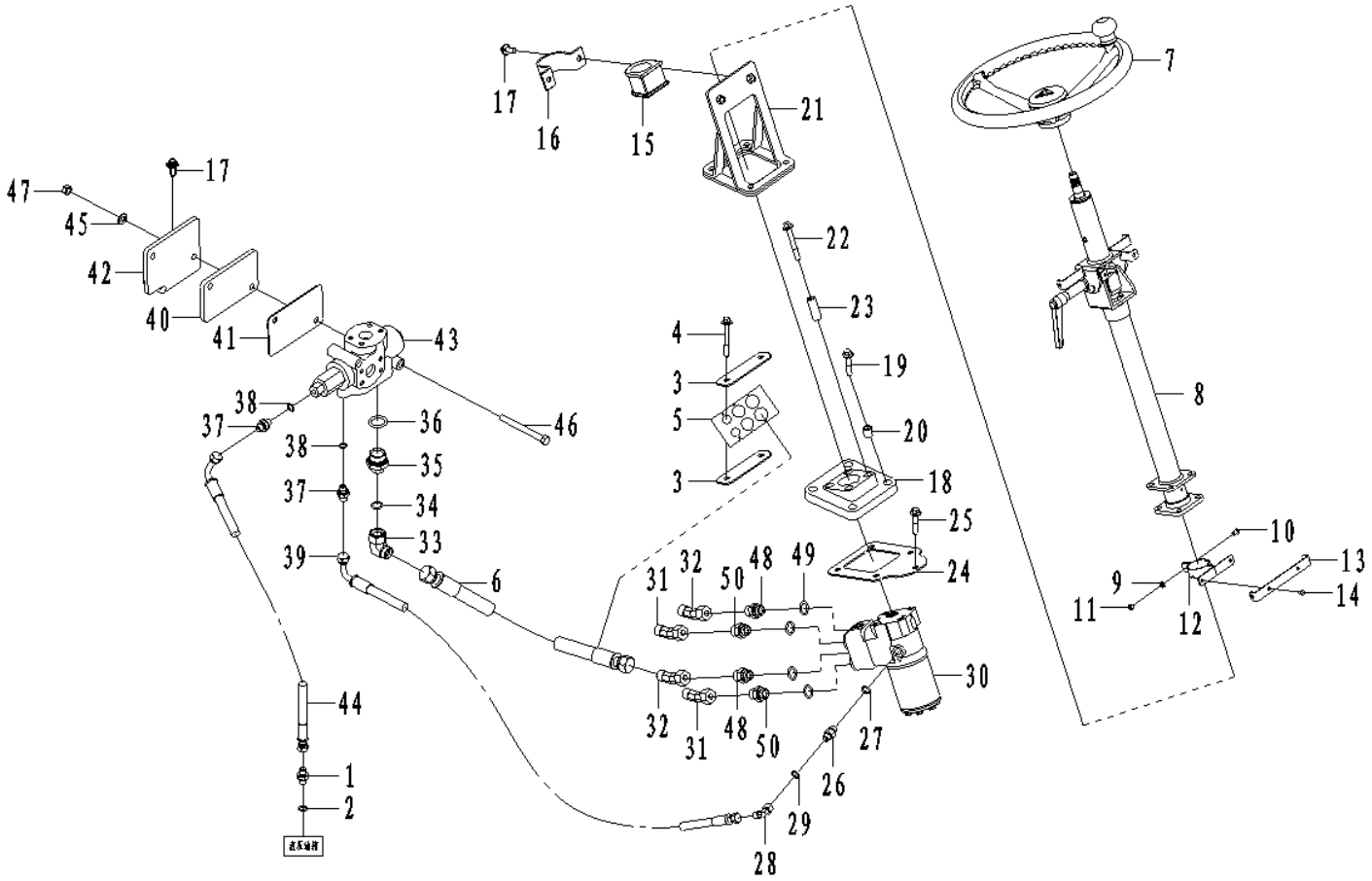

Key	Part No.	Description	Spare parts Y/N	Qty	Remarks
45	4015000168	Washer	Y	2	
46	4011000054	Bolt	Y	2	
47	4013000011	Nut	Y	2	
48	4041000564	Nipple	Y	2	
49	4041000783	O-ring	Y	4	
50	4041000132	Nipple	Y	2	

Steering cylinder system

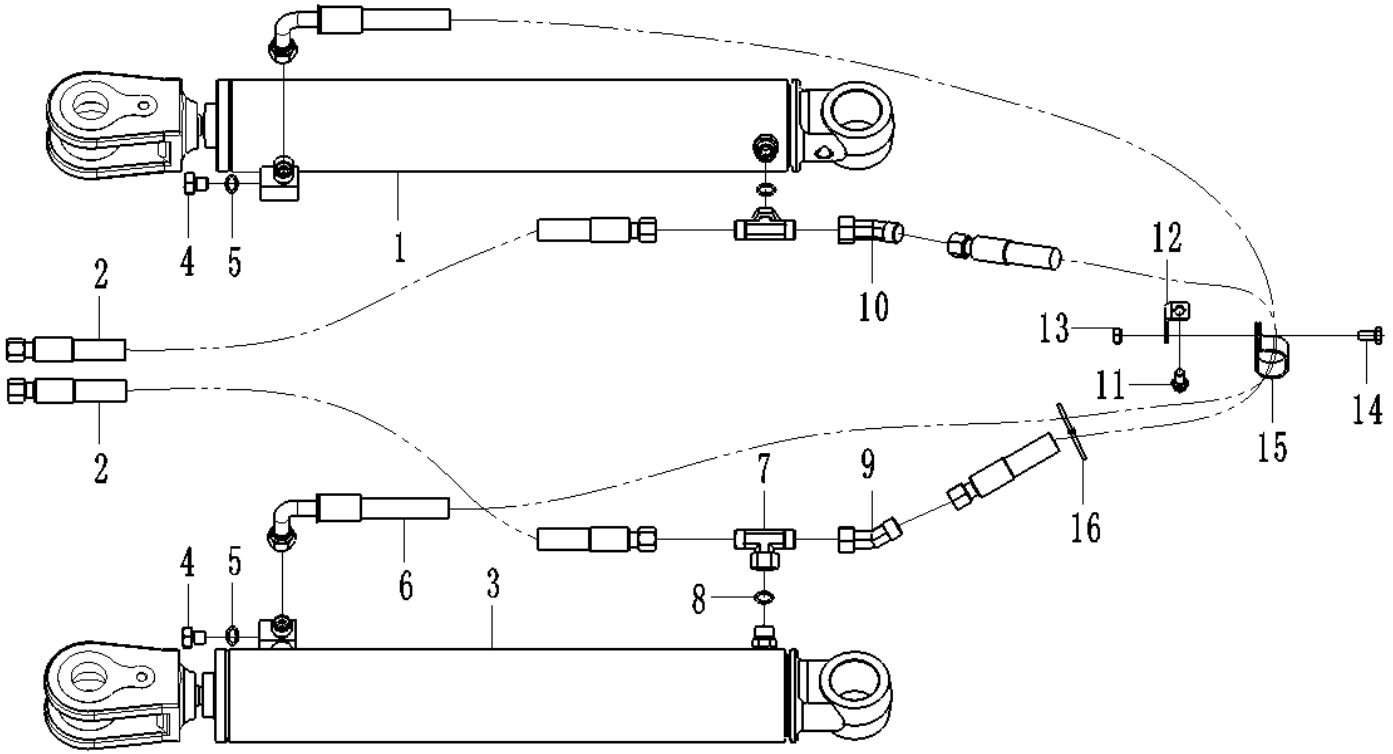

Key	Part No.	Description	Spare parts Y/N	Qty	Remarks
1	4120005068	Steering cylinder	Y	1	
2	29210009401	Hose	Y	2	
3	4120005067	Steering cylinder	Y	1	
4	4041000774	Plug	Y	2	
5	4041000767	O-ring	Y	2	
6	4041001739	Hose	Y	2	
7	29210007811	Nipple	Y	2	
8	4030000242	O-ring	Y	3	
9	29200010101	Nipple	Y	1	
10	4041001218	Elbow nipple	Y	1	
11	4011000461	Bolt	Y	1	
12	29210100031	Bracket	Y	1	
13	4013000007	Nut	Y	1	
14	4011000488	Bolt	Y	1	
15	26370001981	Clamp	Y	1	
16	4190001834	Cable tie	Y	4	

Right steering cylinder (3713ch)

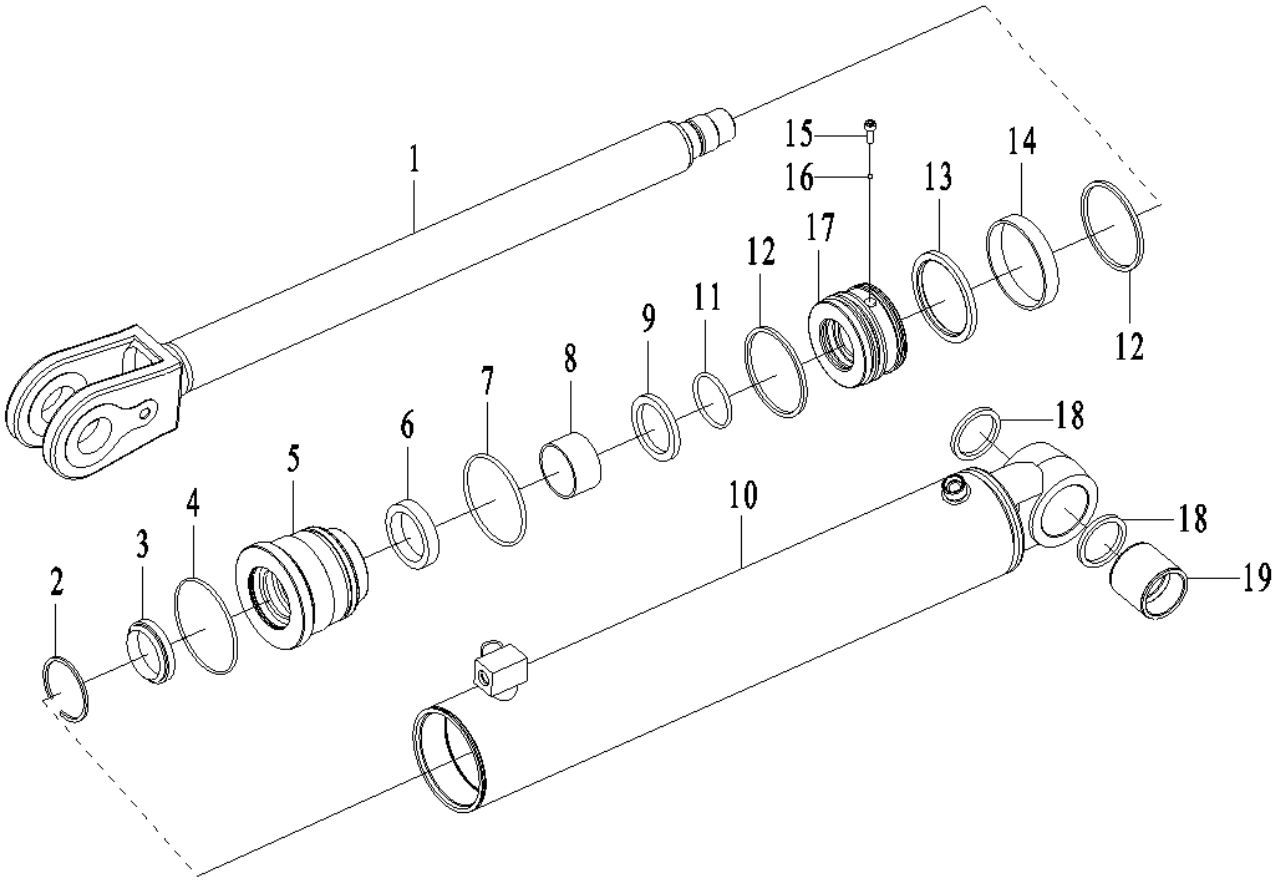

Key	Part No.	Description	Spare parts Y/N	Qty	Remarks
1	4120005067002	Piston rod	N	1	
2	4120004770003	Retaining ring	Y	1	
3	4120005068101	Sealing kit	Y	1	
4	4120005068101	Sealing kit	Y	1	
5	4120005067004	Cylinder cover	N	1	
6	4120005068101	Sealing kit	Y	1	
7	4120005068101	Sealing kit	Y	1	
8	4120005068101	Sealing kit	Y	1	
9	4120005068101	Sealing kit	Y	1	
10	4120005068105	Cylinder body	N	1	
11	4120005068101	Sealing kit	Y	1	
12	4120005068101	Sealing kit	Y	2	
13	4120005068101	Sealing kit	Y	1	
14	4120005068101	Sealing kit	Y	1	
15	4014000205	Screw	Y	1	
16	4090000063	Steel ball	Y	1	
17	4120005067006	Piston	N	1	
18	4120005068101	Sealing kit	Y	2	
19	4120005067007	Bushing	N	1	

Left steering cylinder (3713ch)

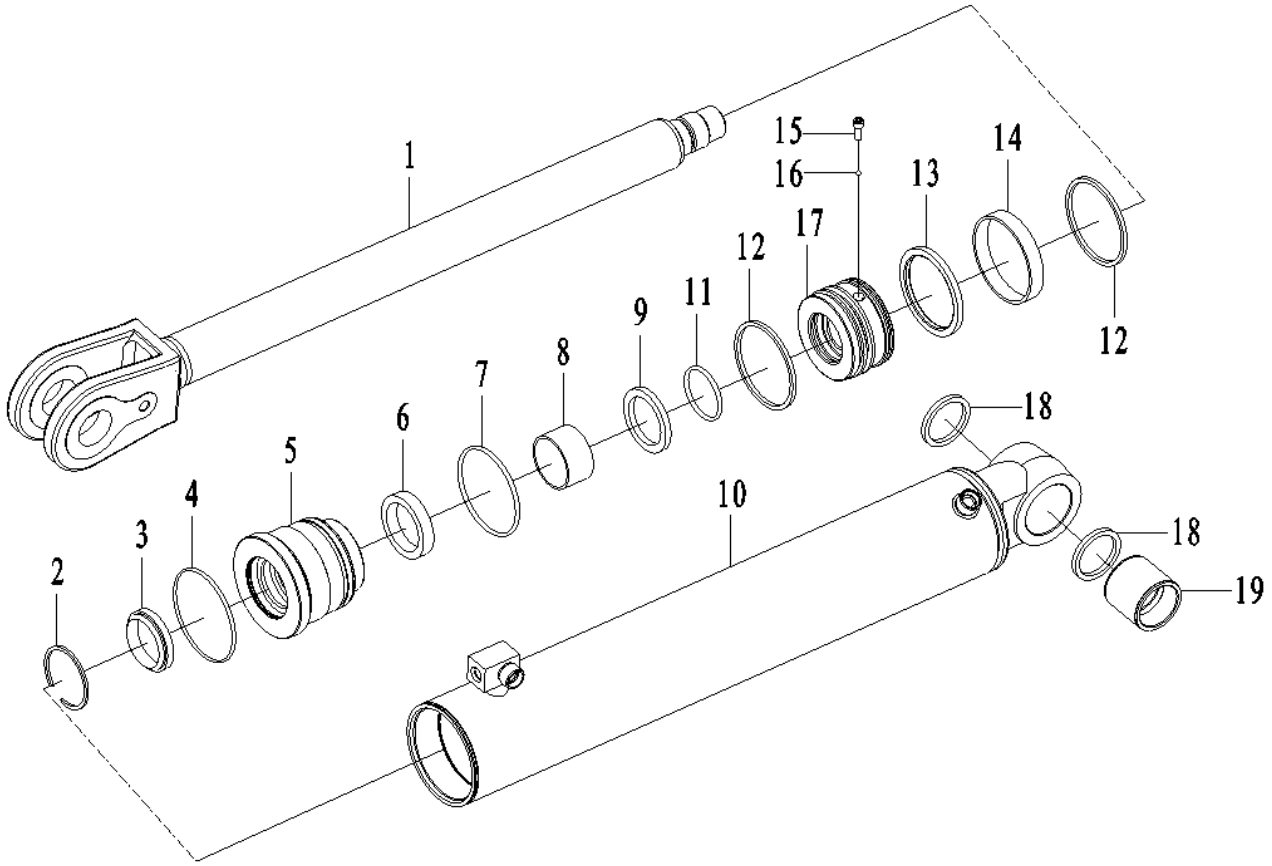

Key	Part No.	Description	Spare parts Y/N	Qty	Remarks
1	4120005067002	Piston rod	N	1	
2	4120004770003	Retaining ring	Y	1	
3	4120005067001	Sealing kit	Y	1	
4	4120005067001	Sealing kit	Y	1	
5	4120005067004	Cylinder cover	N	1	
6	4120005067001	Sealing kit	Y	1	
7	4120005067001	Sealing kit	Y	1	
8	4120005067001	Sealing kit	Y	1	
9	4120005067001	Sealing kit	Y	1	
10	4120005067005	Cylinder body	N	1	
11	4120005067001	Sealing kit	Y	1	
12	4120005067001	Sealing kit	Y	2	
13	4120005067001	Sealing kit	Y	1	
14	4120005067001	Sealing kit	Y	1	
15	4014000205	Screw	Y	1	
16	4090000063	Steel ball	Y	1	
17	4120005067006	Piston	N	1	
18	4120005067001	Sealing kit	Y	2	
19	4120005067007	Bushing	N	1	

J
BRAKE SYSTEM



SHANDONG LINGONG CONSTRUCTION MACHINERY CO.,LTD.

Service brake system

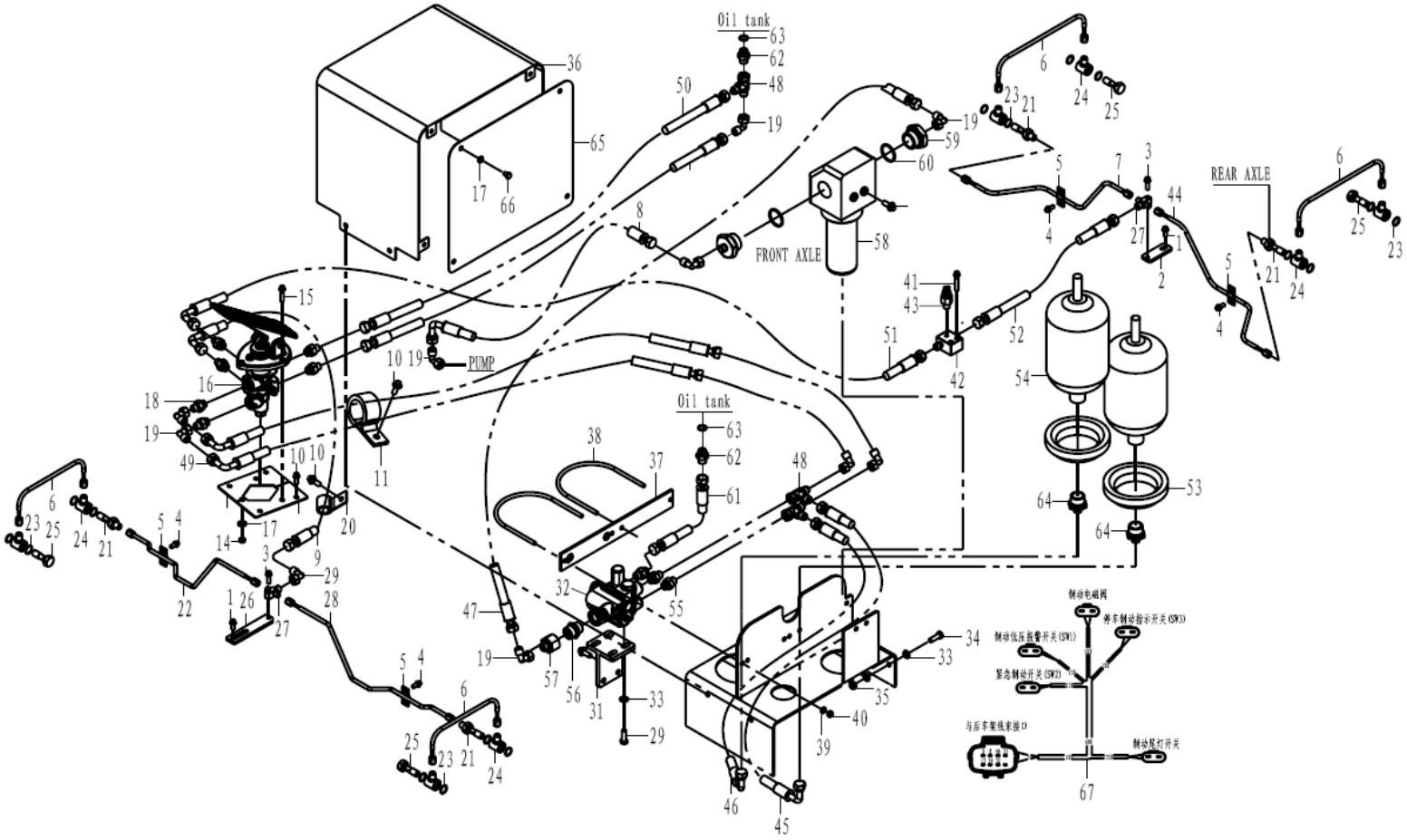

Key	Part No.	Description	Spare parts Y/N	Qty	Remarks
1	4011000458	Bolt	Y	2	
2	29220011811	Anchor plate	Y	1	
3	4011000455	Bolt	Y	6	
4	4011000807	Bolt	Y	8	
5	29220008981	Plate	Y	4	
6	29220009991	Brake pipe	Y	4	
7	29220014501	Brake pipe	Y	1	
8	4041001565	Hose assembly	Y	1	
9	29220013951	Hose assembly	Y	1	
10	4011000461	Bolt	Y	7	
11	29030000041	Clamp	Y	1	
12	29220015341	Plate	Y	1	
13	29220015331	Plate	Y	1	
14	4013000033	Nut	Y	1	
15	4011000161	Bolt	Y	3	
16	4120005158	Control valve	Y	1	
17	4015000256	Washer	Y	5	
18	4190000147	Nipple	Y	6	
19	4190000141	Nipple	Y	10	
20	26370001921	Clamp	Y	2	
21	29220009011	Nipple	Y	4	
22	29220014461	Brake pipe	Y	1	

Service brake system

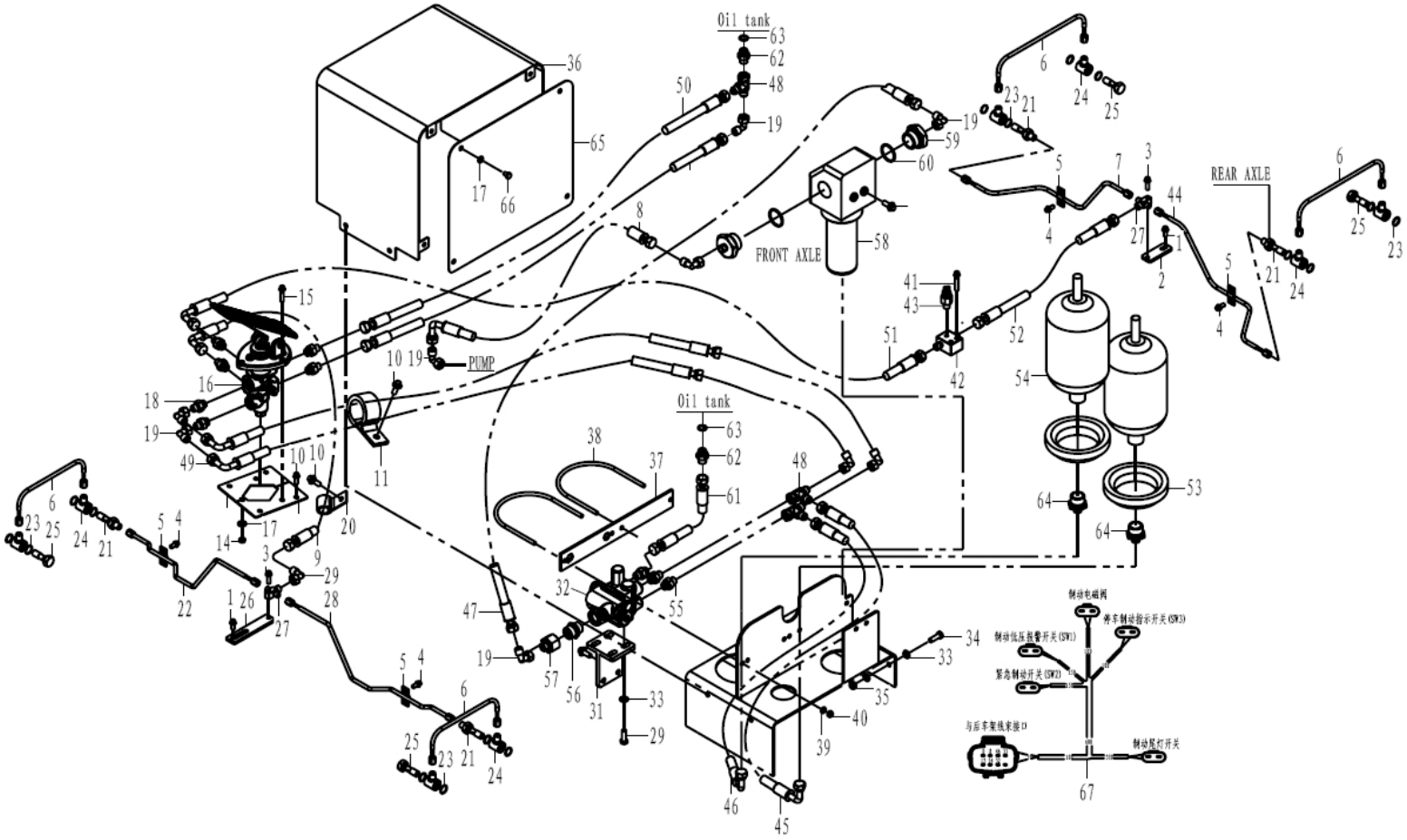

Key	Part No.	Description	Spare parts Y/N	Qty	Remarks
23	4030000552	O-ring	Y	16	
24	29220009021	Block	Y	8	
25	29220001251	Nipple	Y	4	
26	29220011131	Anchor plate	Y	1	
27	29220015381	Three-way nipple	Y	2	
28	29220014441	Brake pipe	Y	1	
29	4190000176	Nipple	Y	1	
30	29220009261	Bolt	Y	2	
31	29220013971	Bracket	Y	1	
32	4120002767	Non-return valve	Y	1	
33	4015000162	Washer	Y	10	
34	4011000082	Bolt	Y	4	
35	4013000007	Nut	Y	8	
36	29220013191	Protecting cover	Y	1	
37	29220011461	Rubber mat	Y	1	
38	29220010301	U-bolt	Y	2	
39	4015000072	Washer	Y	4	
40	4013000210	Nut	Y	4	
41	4011000527	Bolt	Y	2	
42	29220009221	Block	Y	1	
43	4120004340	Switch	Y	1	
44	29220014481	Brake pipe	Y	1	

Service brake system

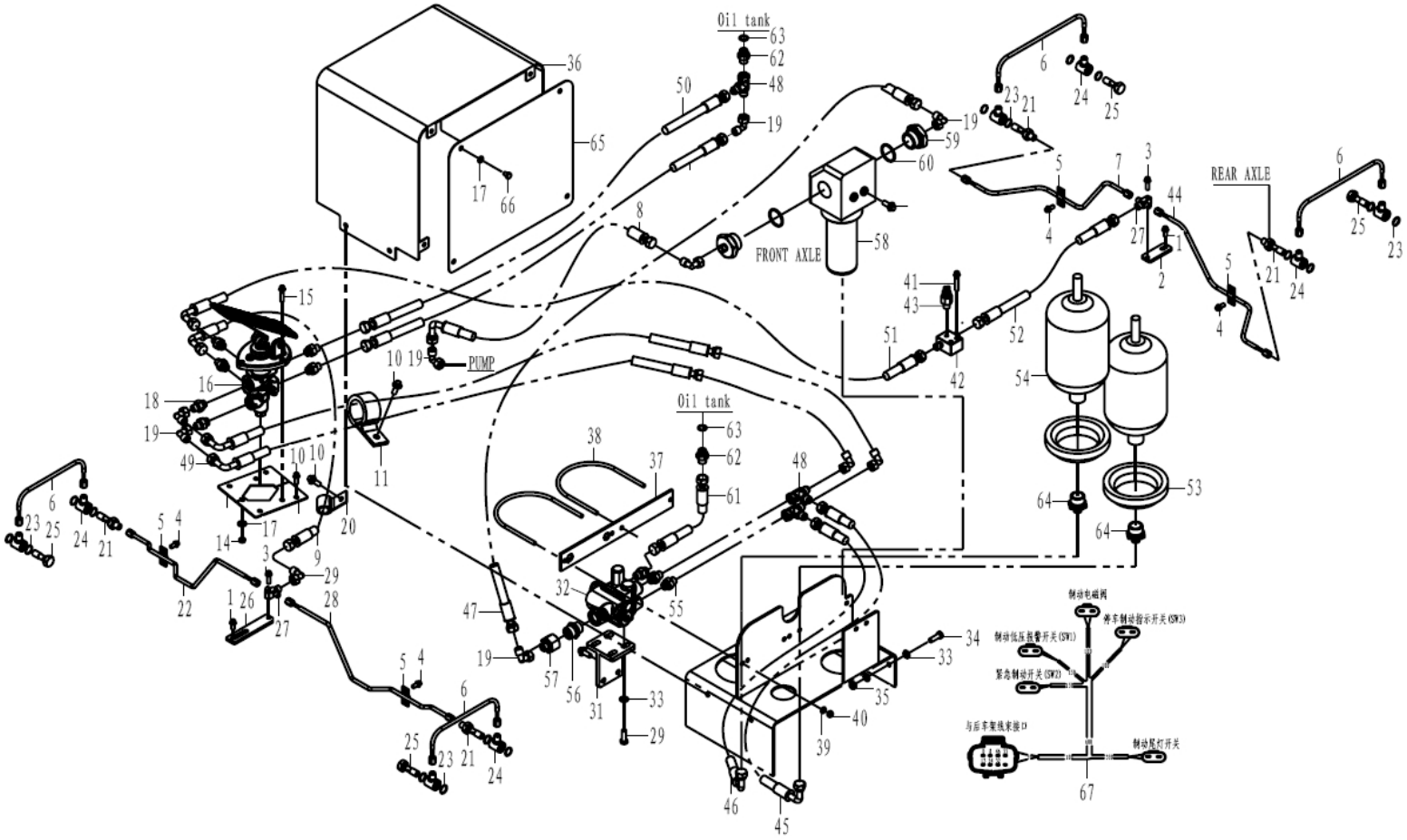

Key	Part No.	Description	Spare parts Y/N	Qty	Remarks
45	4041001765	Hose assembly	Y	1	
46	4041001989	Hose	Y	1	
47	4041001990	Hose	Y	1	
48	4190000143	Three-way nipple	Y	3	
49	29220015361	Hose assembly	Y	2	
50	4041001626	Hose	Y	2	
51	29220013961	Hose assembly	Y	1	
52	4041000884	Hose	Y	1	
53	29220010311	Rubber sleeve	Y	2	
54	4120002729	Accumulator	Y	2	
55	4190000149	Nipple	Y	3	
56	4120001773	Nipple	Y	1	
57	4120002702	Nipple	Y	1	
58	4120004417	Hydraulic fluid filter	Y	1	
59	29220012581	Nipple	Y	2	
60	4030000894	O-ring	Y	2	
61	4041001992	Hose assembly	Y	1	
62	4041000766	Nipple	Y	2	
63	4041000768	O-ring	Y	2	
64	29220010271	Nipple	Y	2	
65	29220013211	Plate	Y	1	
66	4011000934	Screw	Y	4	

Service brake system

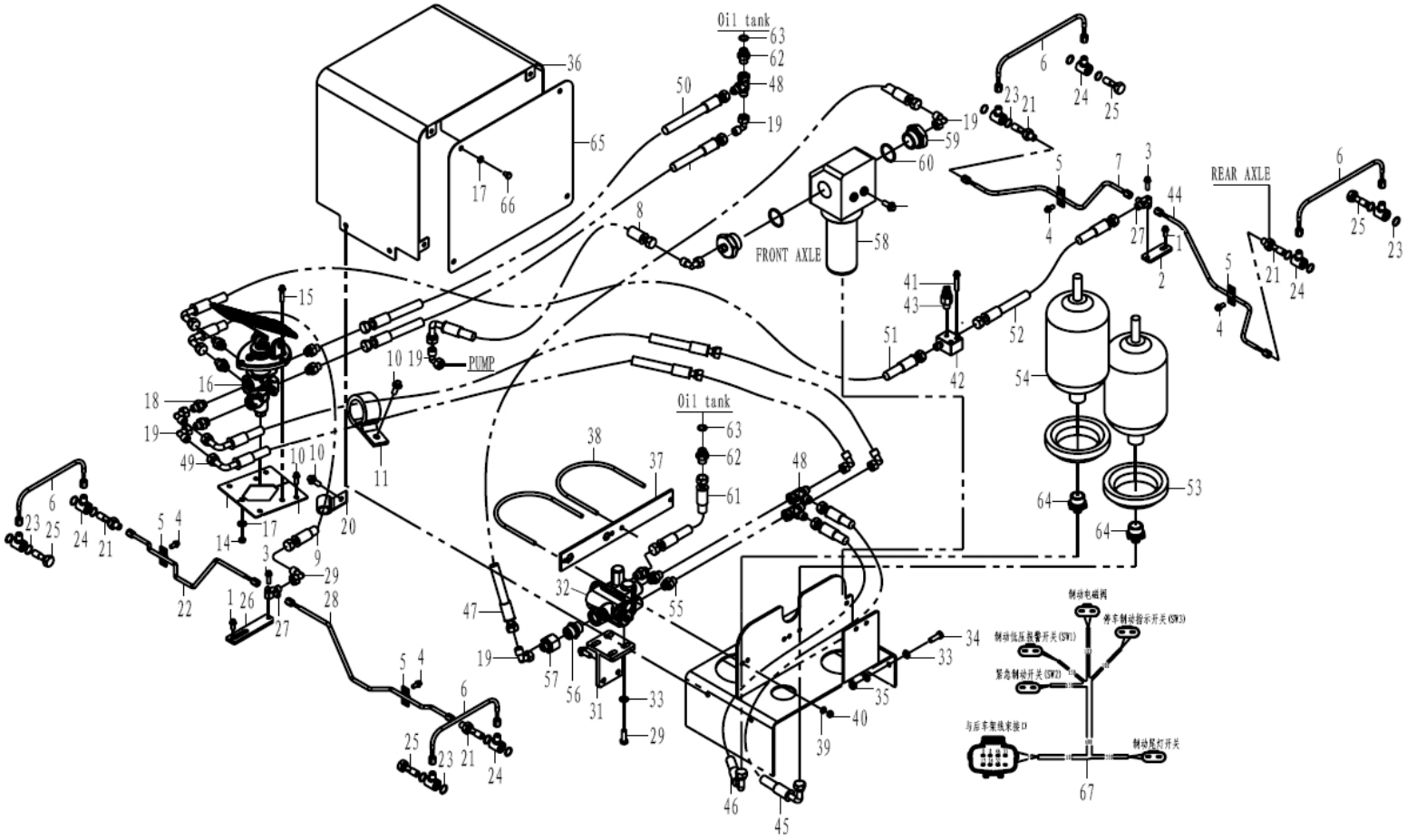

Key	Part No.	Description	Spare parts Y/N	Qty	Remarks
67	29370025451	Brake harness	Y	1	

Parking brake assembly

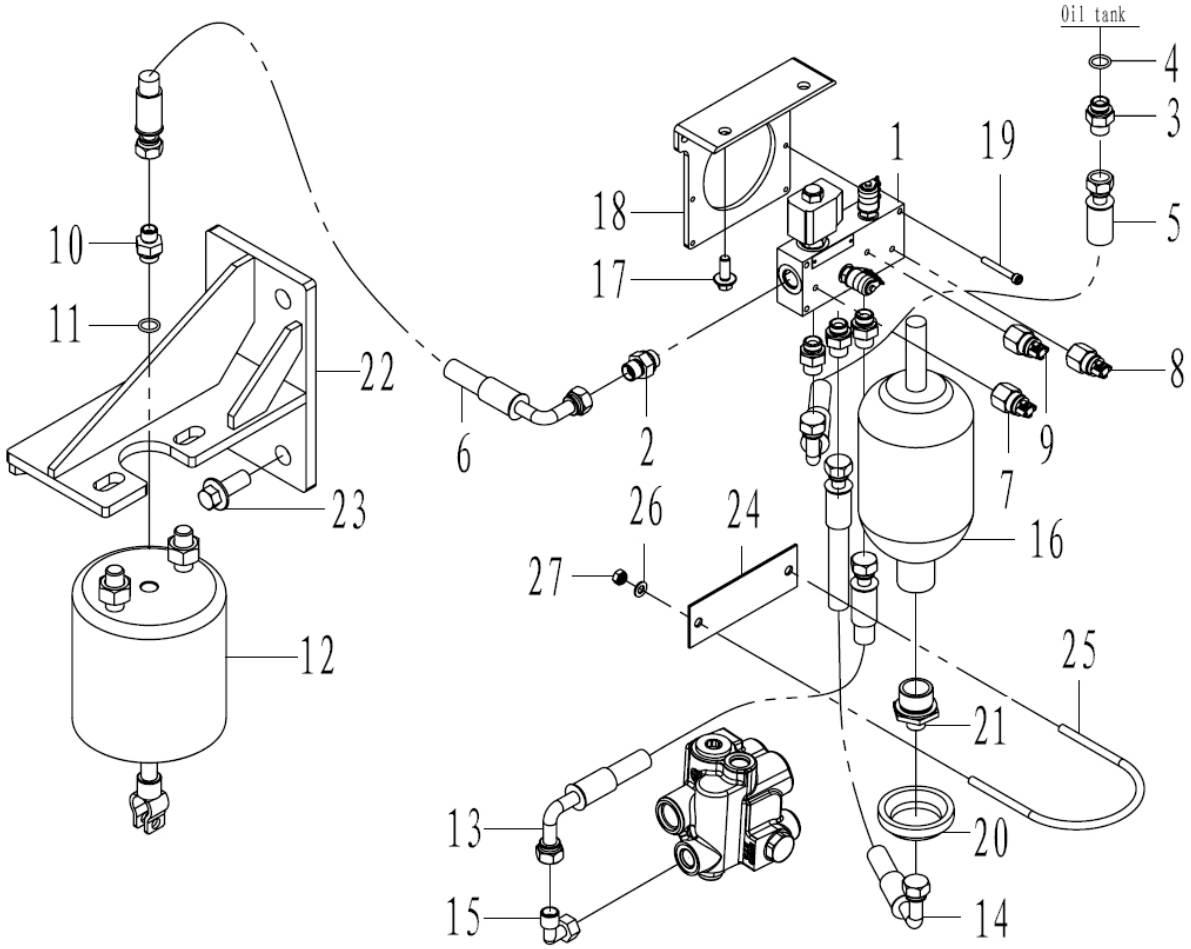

Key	Part No.	Description	Spare parts Y/N	Qty	Remarks
1	4120004342	Brake valve	Y	1	
2	4190000149	Nipple	Y	5	
3	4041000766	Nipple	Y	1	
4	4041000768	O-ring	Y	1	
5	4041000152	Hose assembly	Y	1	
6	4041001986	Hose assembly	Y	1	
7	4120004312	Pressure switch	Y	1	
8	4120004314	Pressure switch	Y	1	
9	4120004313	Pressure switch	Y	1	
10	4041000824	Nipple	Y	1	
11	4030000511	O-ring	Y	1	
12	4120002712	Cylinder	Y	1	
13	4041001987	Hose	Y	1	
14	4041001988	Hose	Y	1	
15	4190000141	Nipple	Y	2	
16	4120005112	Accumulator	Y	1	
17	4011000474	Bolt	Y	2	
18	29230008961	Plate	Y	1	
19	4014000244	Screw	Y	4	
20	29120017111	Rubber sleeve	Y	1	
21	4120002703	Nipple	Y	1	
22	29230009141	Bracket	Y	1	

Parking brake assembly

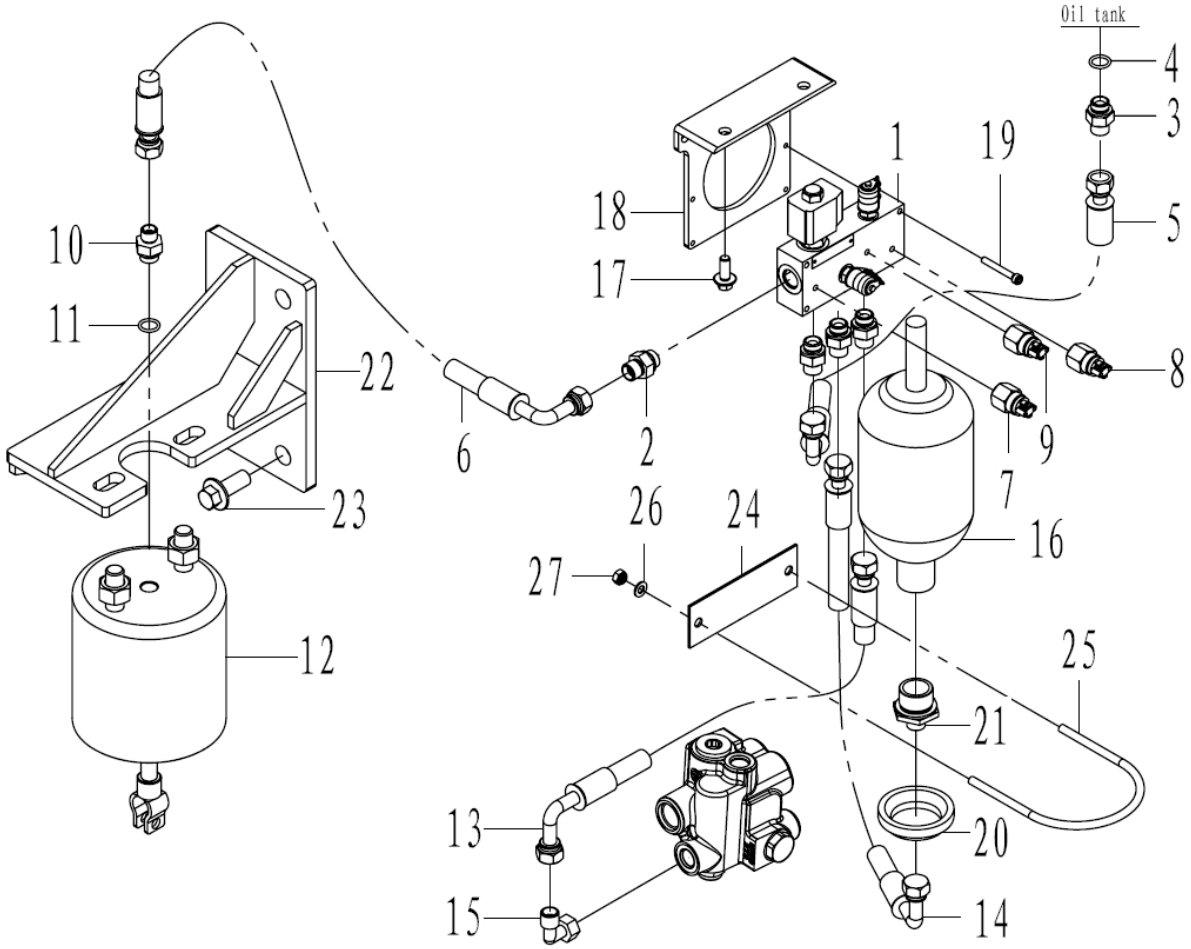

Key	Part No.	Description	Spare parts Y/N	Qty	Remarks
23	4011000168	Screw	Y	2	
24	4015000176	Washer	Y	2	
25	29230008271	Rubber mat	Y	1	
26	29120017101	U-bolt	Y	1	
27	4015000072	Washer	Y	2	
28	4013000210	Nut	Y	2	

K
FRAME



SHANDONG LINGONG CONSTRUCTION MACHINERY CO.,LTD.

Front frame and accessory

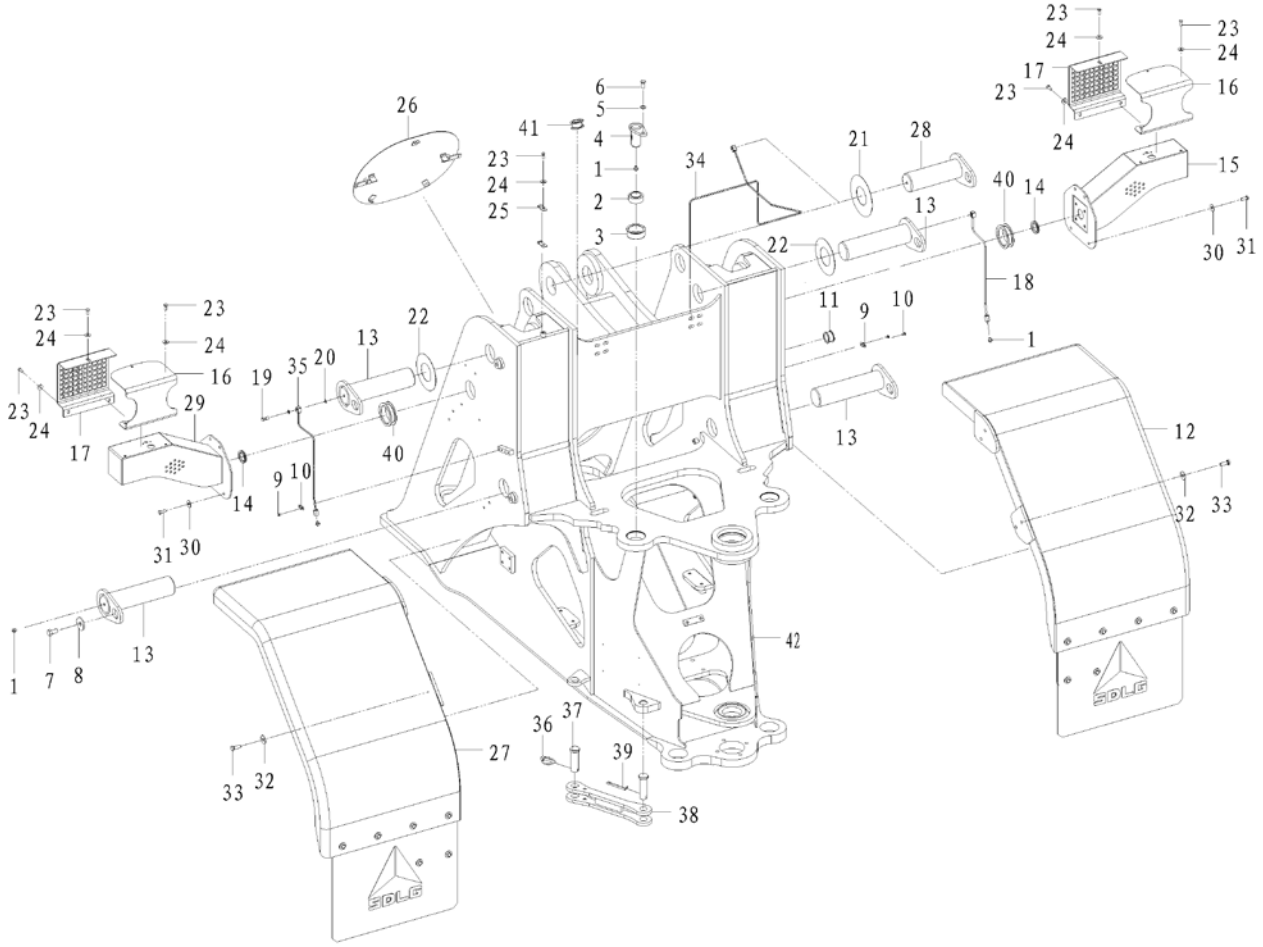

Key	Part No.	Description	Spare parts Y/N	Qty	Remarks
1	4030000065	Lubricating nipple	Y	7	
2	4021000199	Spherical plain bearing	Y	2	
3	29250010191	Sleeve	Y	2	
4	29250010171	Pin	Y	2	
5	4015000168	Washer	Y	2	
6	4011000197	Bolt	Y	2	
7	4011000094	Bolt	Y	5	
8	4040000002	Washer	Y	5	
9	29250000311	Clamp	Y	3	
10	4014000024	Screw	Y	6	
11	29250007841	Rubber sleeve	Y	2	
12	29250010061	Front mudguard	Y	1	
13	29250010152	Pin	Y	4	
14	29250012911	Rubber sleeve	Y	2	
15	29250012881	Lantern bracket	Y	1	
16	29250012661	Protecting plate	Y	2	
17	29250011021	Protecting plate	Y	2	
18	29250010241	Lubricating pipe	Y	1	
19	29250000291	Bolt	Y	3	
20	29250000301	Shim	Y	6	
21	4043000533	Shim	Y	2	
22	4043000516	Shim	Y	4	

Front frame and accessory

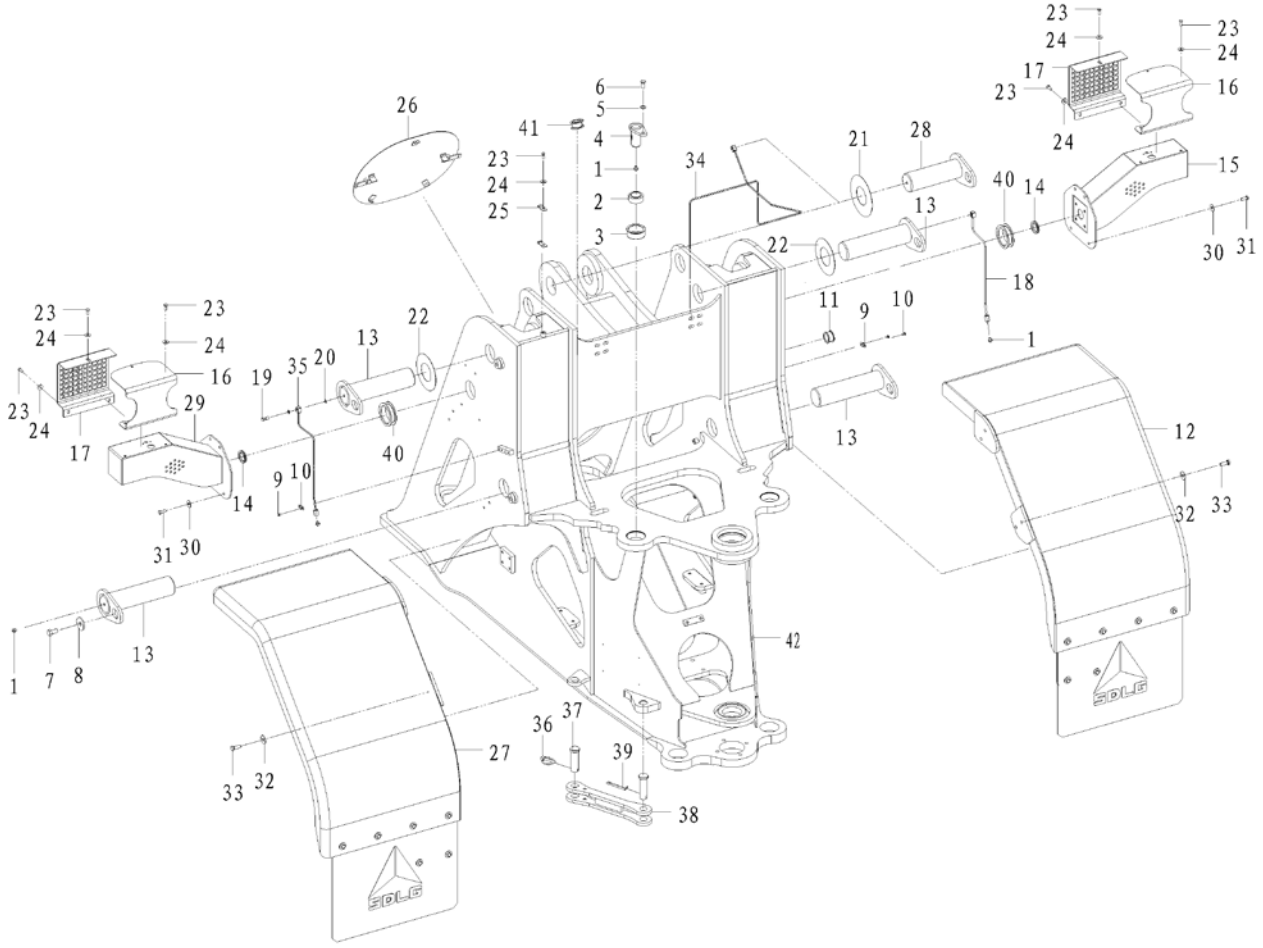

Key	Part No.	Description	Spare parts Y/N	Qty	Remarks
23	4011000105	Bolt	Y	11	
24	4015000256	Washer	Y	11	
25	29250010261	Plate	Y	2	
26	29250010281	Cover plate	Y	1	
27	29250009971	Front mudguard	Y	1	
28	29250010132	Pin	Y	1	
29	29250012861	Lantern bracket	Y	1	
30	4015000197	Washer	Y	8	
31	4011000082	Bolt	Y	8	
32	4015000186	Washer	Y	8	
33	4011000090	Bolt	Y	8	
34	29250010201	Lubricating pipe	Y	1	
35	29250010221	Lubricating pipe	Y	1	
36	29270000081	Lock ring	Y	1	
37	29250010121	Pin	Y	2	
38	29250010091	Rod	Y	1	
39	4016000043	Split pin	Y	1	
40	29250013211	Rubber sleeve	Y	2	
41	29250013711	Rubber sleeve	Y	1	
42	29240023152	Front frame	Y	1	

Rear frame and accessory

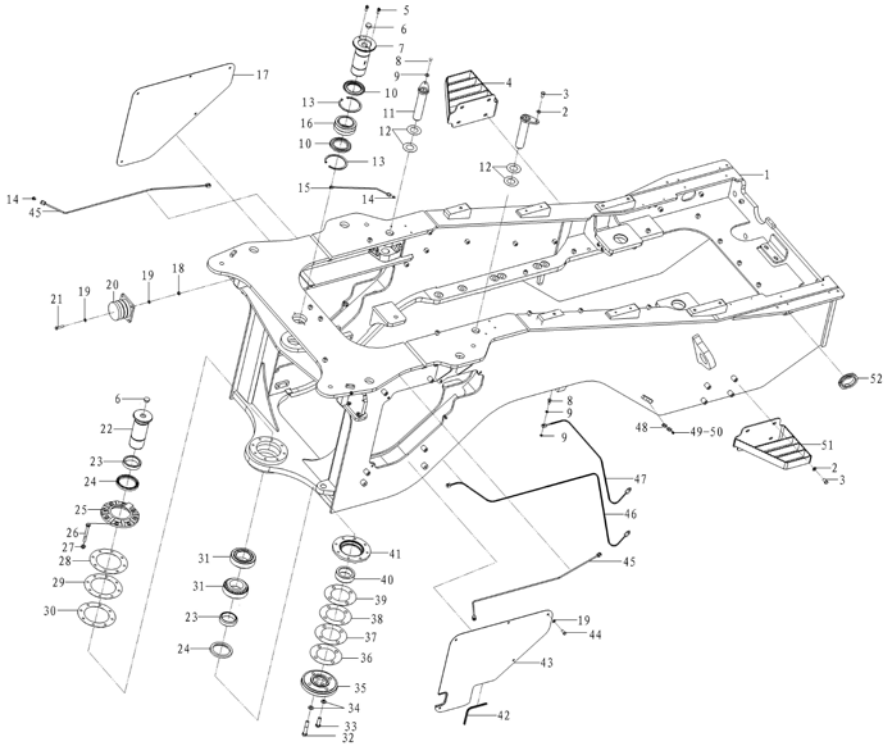

Key	Part No.	Description	Spare parts Y/N	Qty	Remarks
1	29260027161	Rear frame	Y	1	
2	4015000168	Washer	Y	10	
3	4011000197	Bolt	Y	10	
4	29270010821	Foot step	N	1	
5	4011000474	Bolt	Y	2	
6	29270009421	Plastic plug	Y	2	
7	29270010071	Pin	Y	1	
8	29250000291	Bolt	Y	5	
9	29250000301	Shim	Y	10	
10	29270010081	Sealing ring	Y	2	
11	29270010271	Pin	Y	2	
12	4043000374	Shim	Y	4	
13	4015000270	Retaining ring	Y	2	
14	4030000065	Lubricating nipple	Y	6	
15	29250001251	Lubricating pipe	Y	1	
16	4021000243	Spherical plain bearing	Y	1	
17	29270010771	Cover plate	Y	1	
18	4013000007	Nut	Y	8	
19	4015000162	Washer	Y	26	
20	4190001829	Absorber	Y	2	
21	4011000514	Bolt	Y	8	
22	29270010881	Pin	Y	1	

Rear frame and accessory

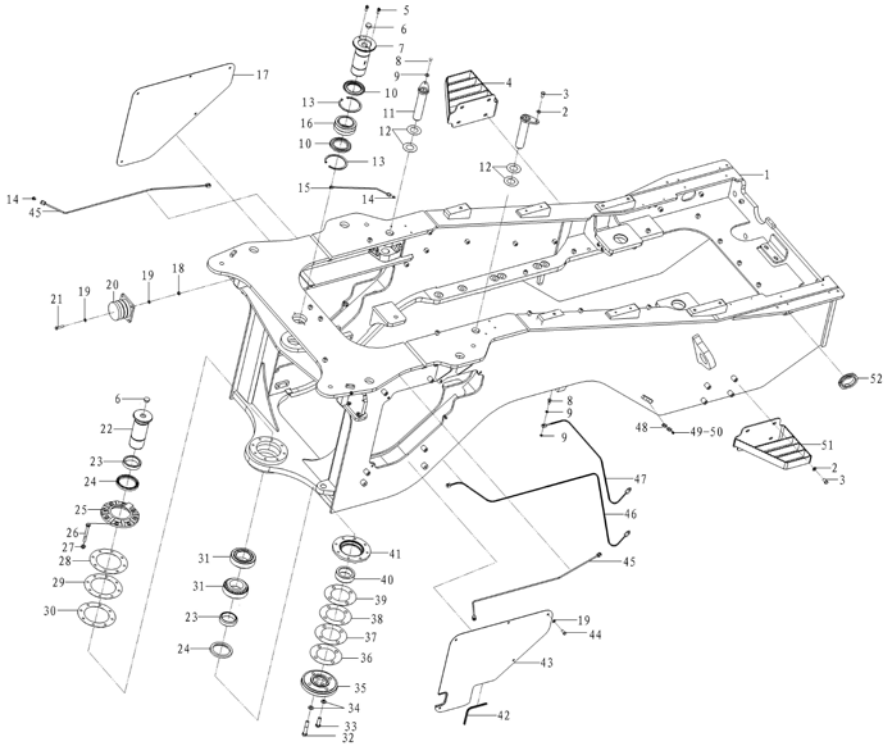

Key	Part No.	Description	Spare parts Y/N	Qty	Remarks
23	29270010131	Bushing	Y	2	
24	4030000260	Sealing ring	Y	2	
25	29270010181	Flange	Y	1	
26	4011000983	Screw	Y	8	
27	4013000214	Nut	Y	8	
28	29270010161	Shim	Y	1	
29	29270010151	Shim	Y	2	
30	29270010171	Shim	Y	1	
31	4021000244	Roller bearing	Y	2	
32	4011000069	Bolt	Y	4	
33	4011000269	Screw	Y	4	
34	4015000181	Washer	Y	8	
35	29270010261	Flange	Y	1	
36	29270010241	Shim	Y	1	
37	29270010251	Shim	Y	1	
38	29270010231	Shim	Y	1	
39	29270010221	Shim	Y	1	
40	29270010891	Grommet	Y	1	
41	29270010141	Flange	Y	1	
42	29330016821	Moulding	Y	1	
43	29270012242	Cover plate	Y	1	
44	4011000082	Bolt	Y	10	

Rear frame and accessory

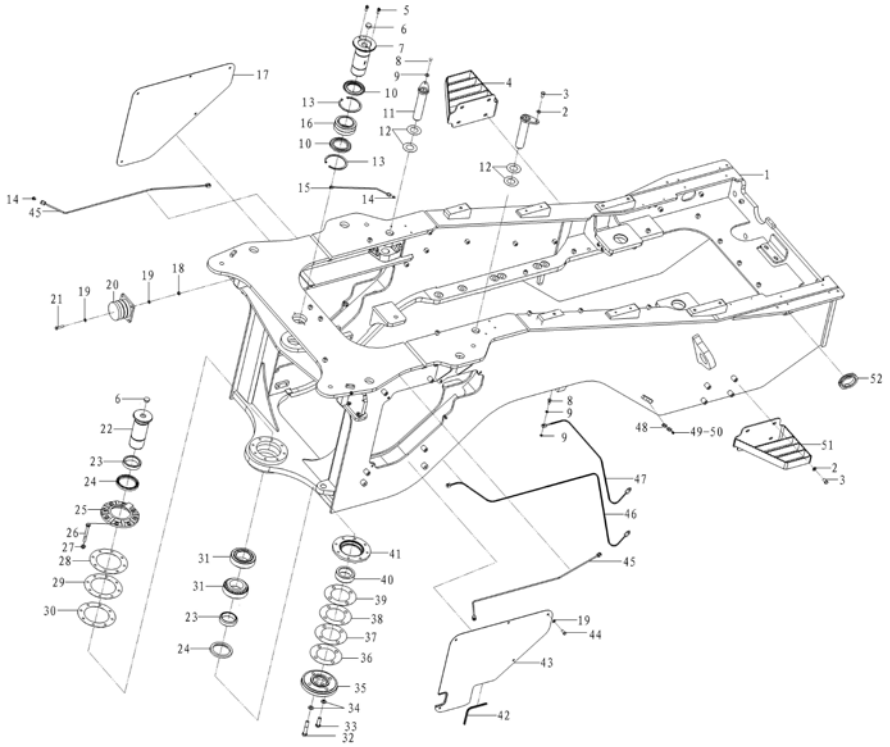

Key	Part No.	Description	Spare parts Y/N	Qty	Remarks
45	29270011621	Lubricating pipe	Y	2	
46	29270010841	Lubricating pipe	Y	1	
47	29270010861	Lubricating pipe	Y	1	
48	29250000311	Clamp	Y	5	
49	4015000035	Spring washer	Y	10	
50	4014000024	Screw	Y	10	
51	29270010781	Foot step	N	1	
52	29270009101	Rubber sleeve	Y	1	

Counter weight

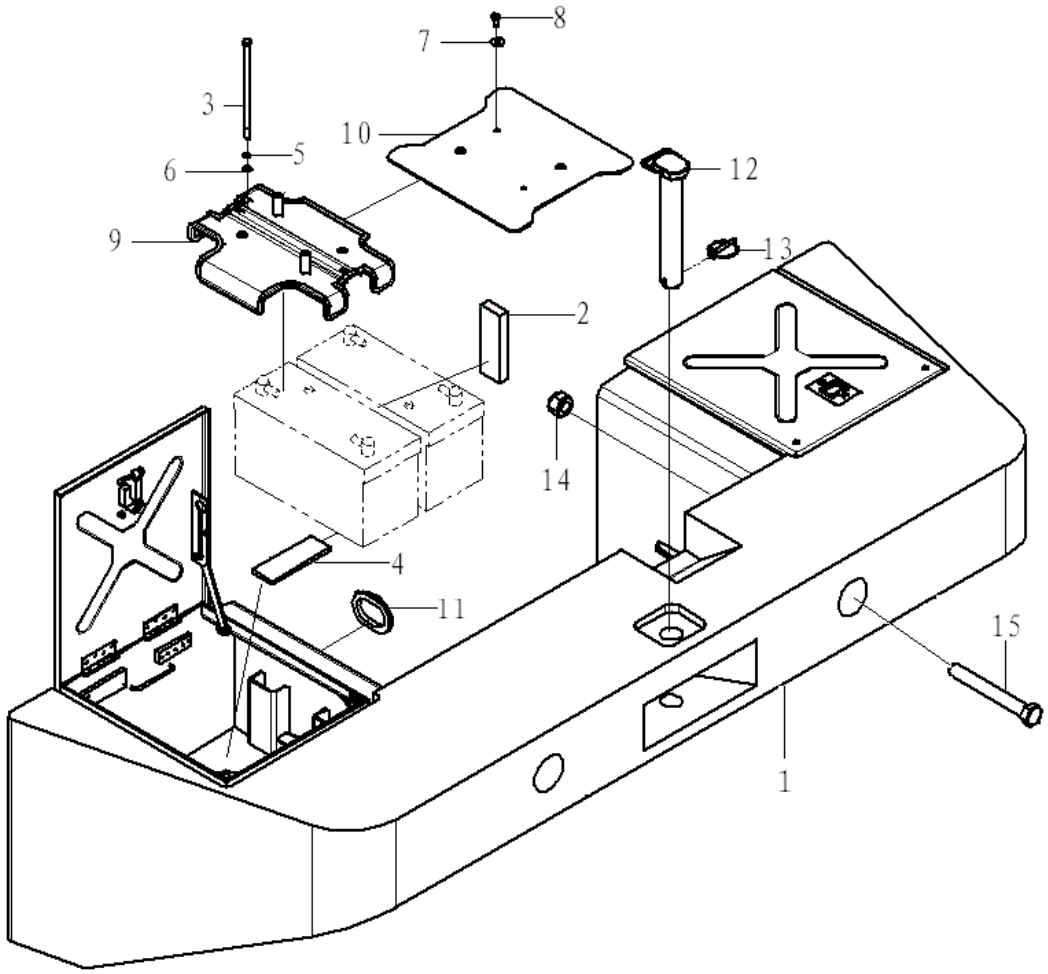

Key	Part No.	Description	Spare parts Y/N	Qty	Remarks
1	29280010421	Counterweight	Y	1	
2	29280000051	Rubber cushion	Y	4	
3	4011001008	Screw	Y	2	
4	29280000061	Rubber cushion	Y	4	
5	4015000025	Spring washer	Y	2	
6	4015000162	Washer	Y	2	
7	4015000197	Washer	Y	2	
8	4011000081	Bolt	Y	2	
9	29280008931	Battery retainer	Y	1	
10	29280010331	Protecting plate	Y	1	
11	29340011901	Rubber sleeve	Y	1	
12	29280009861	Clevis pin	Y	1	
13	29280000031	Lock ring	Y	1	
14	4013000064	Lock nut	Y	4	
15	4011000122	Screw	Y	4	

L
CAB GROUP



SHANDONG LINGONG CONSTRUCTION MACHINERY CO.,LTD.

Cab assembly

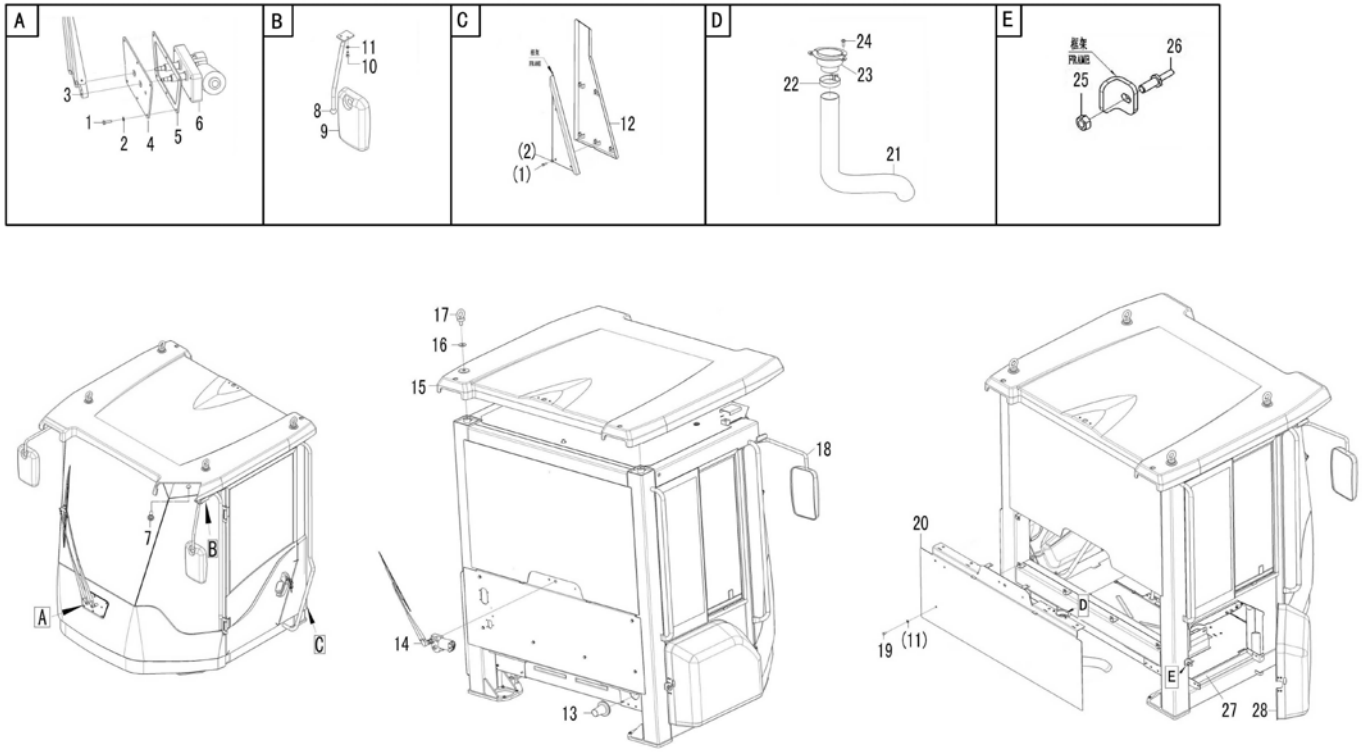

Key	Part No.	Description	Spare parts Y/N	Qty	Remarks
1	4011000101	Bolt	Y	9	
2	4015000207	Washer	Y	9	
3	29290016081	Wiper arm	Y	1	
4	29290013531	Cover plate	Y	1	
5	29290013621	Washer	Y	1	
6	29290018901	Wiper motor	Y	1	
7	28250005601	Rubber cover	Y	2	
8	29290017201	Bracket	Y	1	
9	29290013761	Rear view mirror	Y	2	
10	4014000211	Screw	Y	4	
11	4015000072	Washer	Y	10	
12	29290023351	Cab bracket	Y	1	
13	26310001871	Rubber sleeve	Y	1	
14	29290018911	Windscreen wiper	Y	1	
15	29290021211	Cab roof	Y	1	
16	4190000956	Sealing ring	Y	4	
17	4014000028	Screw	Y	4	
18	29290017241	Bracket	Y	1	
19	4011000105	Bolt	Y	6	
20	29290021151	Plate	N	1	
21	29290021611	Air duct	Y	1	
22	4017000007	Clamp	Y	1	

Cab assembly

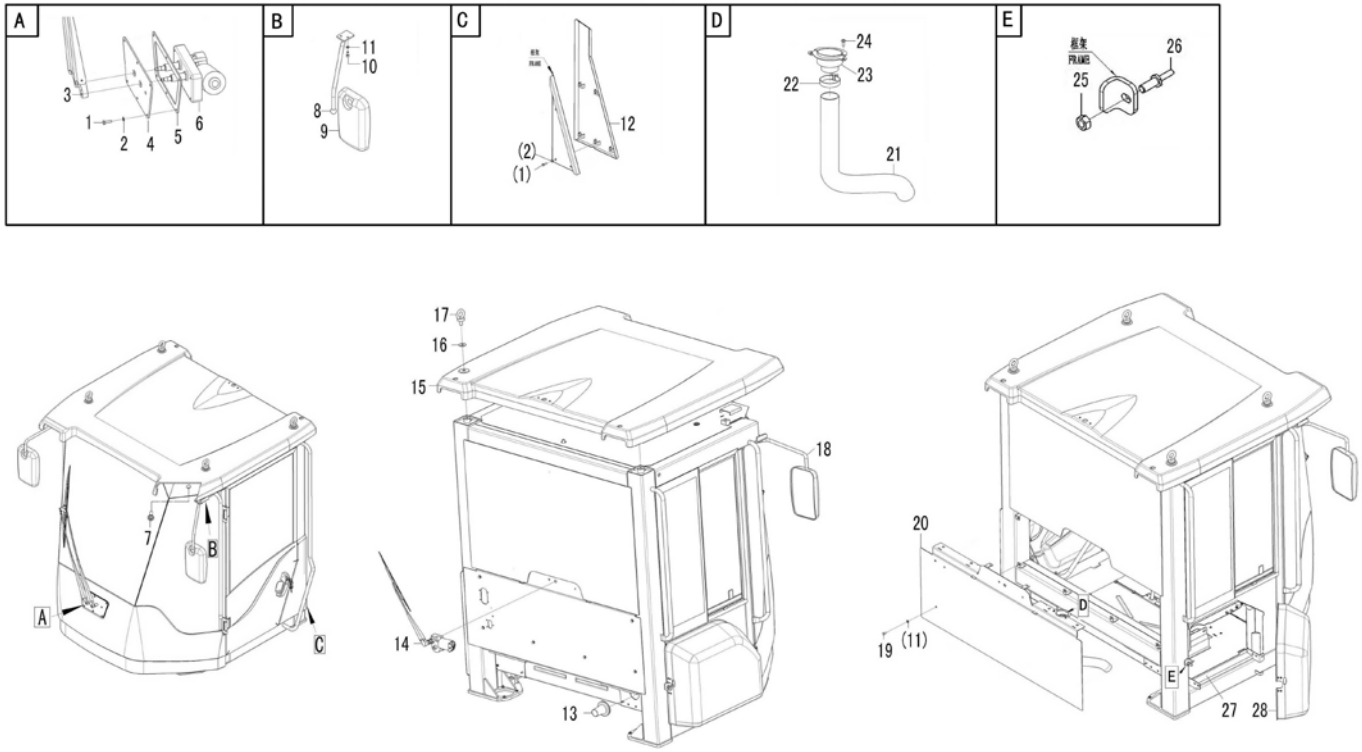

Key	Part No.	Description	Spare parts Y/N	Qty	Remarks
23	29290021601	Air duct	Y	1	
24	4014000131	Screw	Y	2	
25	4013000007	Nut	Y	1	
26	29290021221	Pin	Y	1	
27	29290023031	Sponge	N	1	
28	29290016301	Cover	Y	1	

Cab assembly

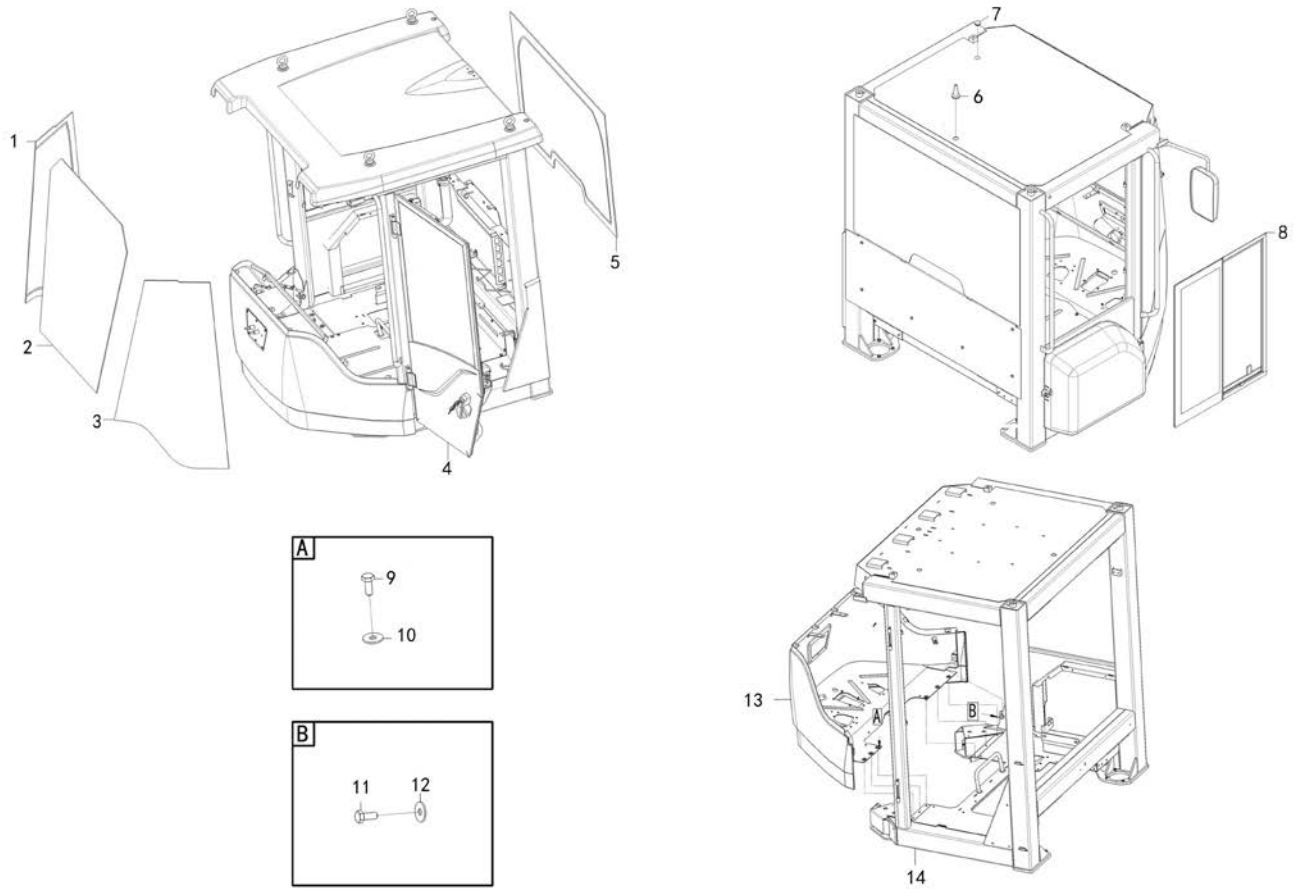

Key	Part No.	Description	Spare parts Y/N	Qty	Remarks
1	29290021511	Glass	Y	1	
2	29290021491	Glass	Y	1	
3	29290021501	Glass	Y	1	
4	29290018001	Door	Y	1	
5	29290018431	Glass	Y	1	
6	28250005601	Rubber cover	Y	1	
7	29330000201	Rubber plug	Y	3	
8	29290017991	Sliding window	Y	1	
9	4011000105	Bolt	Y	6	
10	4015000256	Washer	Y	6	
11	4011000084	Bolt	Y	2	
12	4015000197	Washer	Y	2	
13	29290015901	Cover	N	1	
14	29290021311	Cab frame	Y	1	

Cab assembly

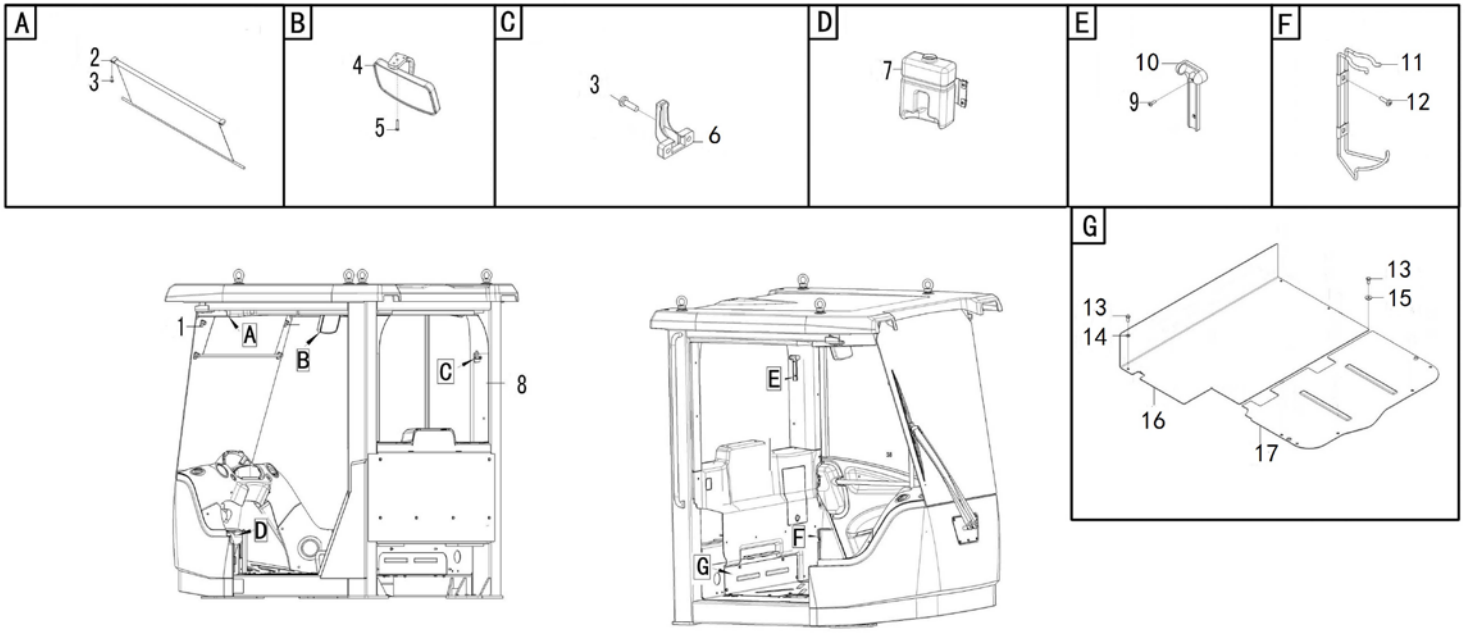

Key	Part No.	Description	Spare parts Y/N	Qty	Remarks
1	29290013711	Clothes hook	Y	4	
2	29290014581	Sun visor	Y	1	
3	4014000088	Screw	Y	4	
4	4190001841	Rear view mirror	Y	1	
5	4014000046	Screw	Y	1	
6	29290013471	Clothes hook	Y	1	
7	29290021571	Washer system	N	1	
8	29290022981	Upholstery	Y	1	
9	4014000068	Screw	Y	2	
10	4190000501	Hammer	Y	1	
11	29290013451	Bracket	Y	1	
12	4014000040	Screw	Y	2	
13	4011000105	Bolt	Y	15	
14	4015000072	Washer	Y	9	
15	4015000256	Washer	Y	6	
16	29290015981	Plate	Y	1	
17	29290015971	Plate	Y	1	

Seat accessory

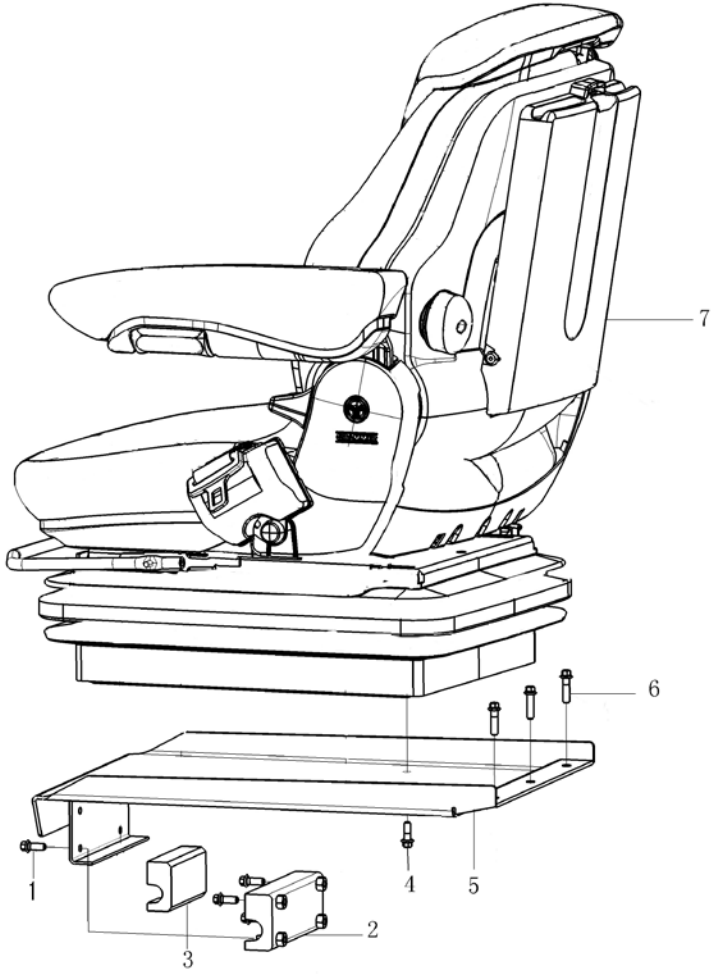

Key	Part No.	Description	Spare parts Y/N	Qty	Remarks
1	4011000300	Bolt	Y	4	
2	29300008051	Block	Y	1	
3	29300008081	Rubber block	Y	1	
4	4011000455	Bolt	Y	4	
5	29300008011	Seat support	Y	1	
6	4011000474	Bolt	Y	3	
7	4190002421	Driver seat	Y	1	

Door assembly

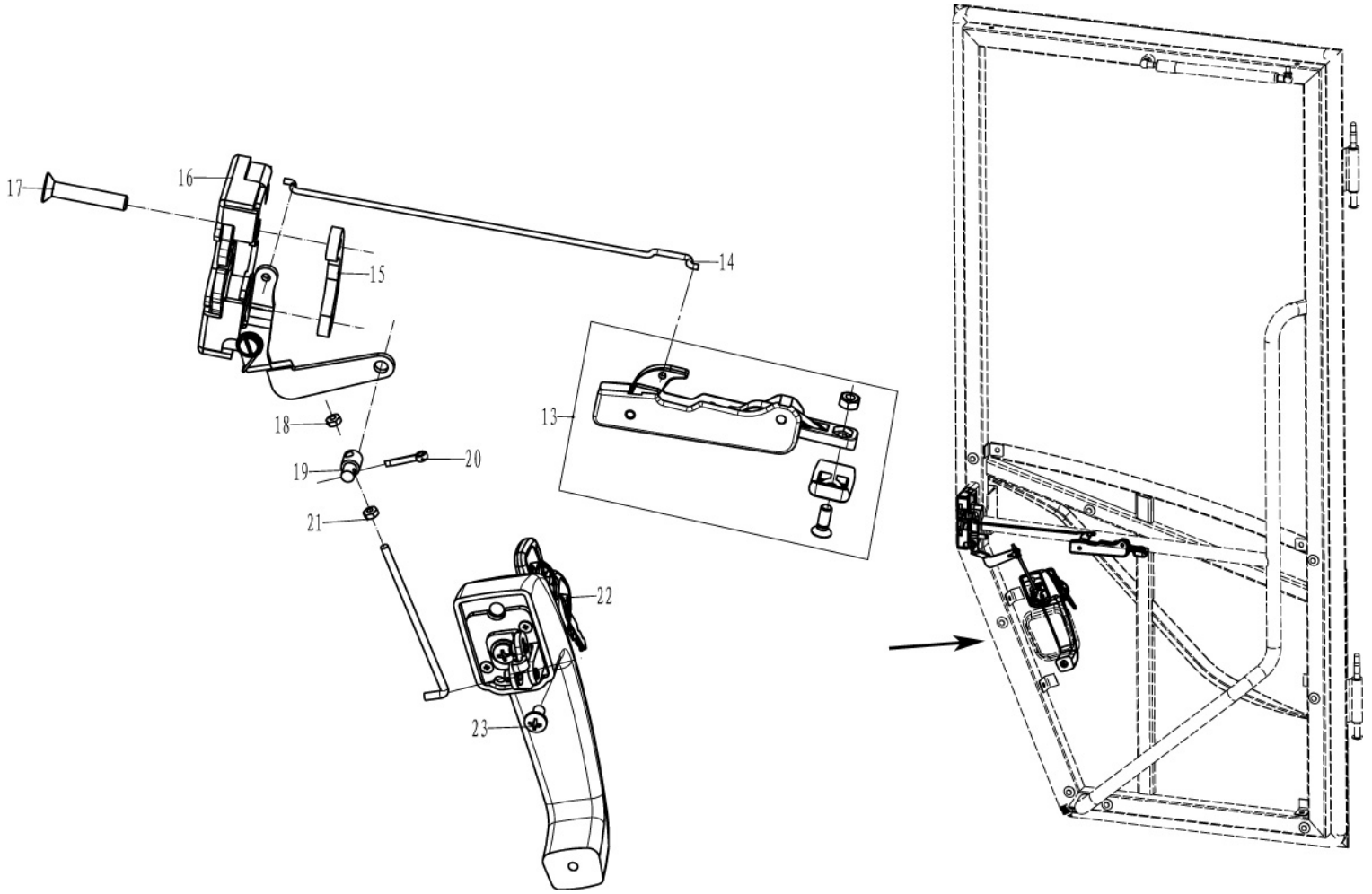

Key	Part No.	Description	Spare parts Y/N	Qty	Remarks
1	29290018331	Door frame wa	N	1	
2	29290017821	Sealing strip	Y	1	
3	29290018281	Glass	Y	1	
4	29290017811	Air spring	Y	1	
5	29290022161	Cover	Y	1	
6	29290018381	Cab roof	Y	1	
7	29290014041	Grommet	Y	9	
8	4015000354	Retaining ring	Y	2	
9	29290018301	Pin	Y	2	
10	4015000162	Washer	Y	4	
11	4030000535	Lubricating nipple	Y	2	
12	4030000107	Cap	Y	2	
13	29290017921	Door handle	Y	1	
14	29290017931	Rod	Y	1	
15	29290018351	Bracket	Y	1	
16	29290017961	Lock	Y	1	
17	4014000418	Screw	Y	2	
18	4013000025	Nut	Y	2	
19	29290018821	Adjusting pin	Y	1	
20	4019000184	Split pin	Y	1	
21	29290017951	Rod	Y	1	
22	29290019001	Door handle	Y	1	

Door assembly

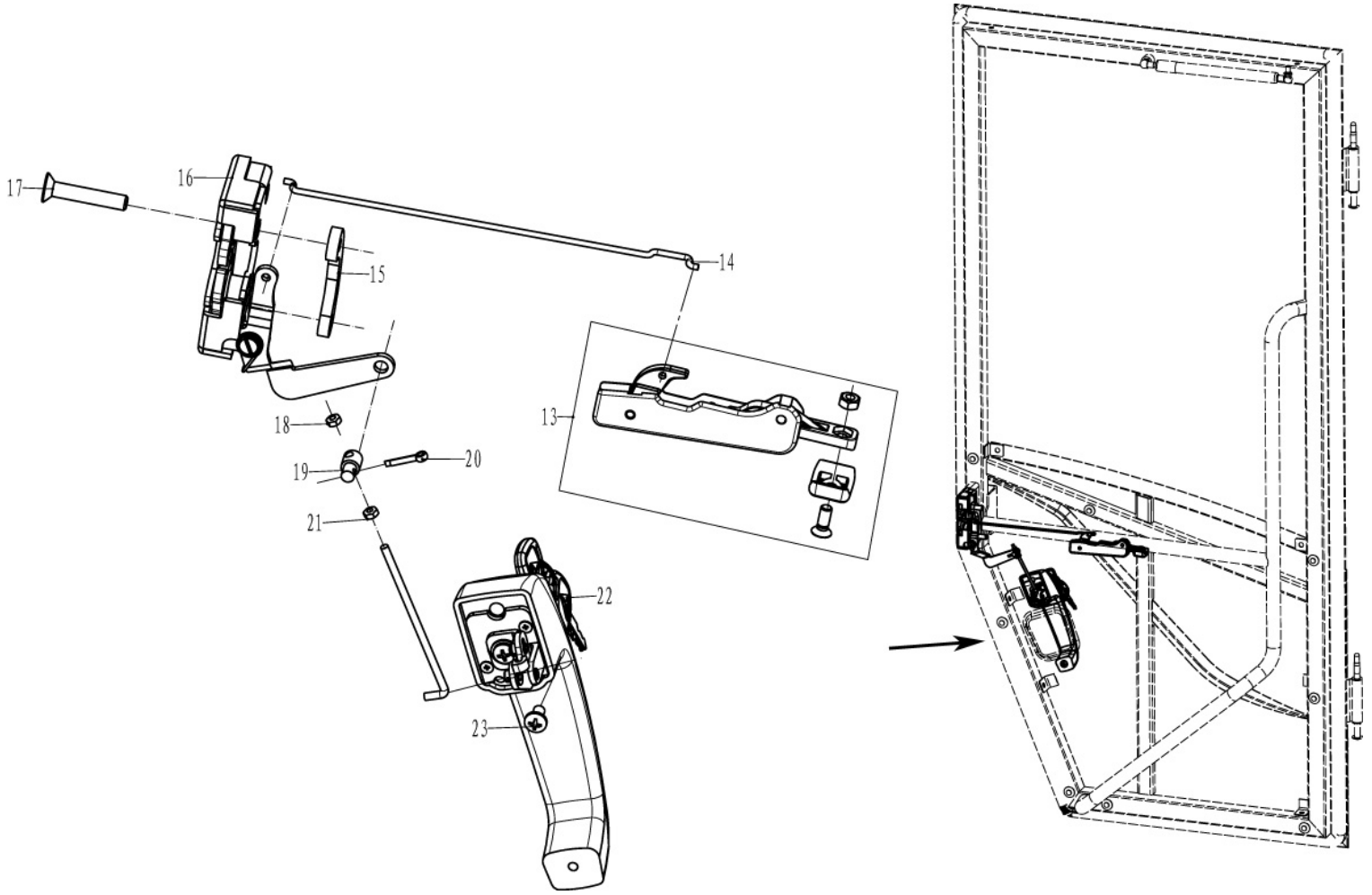

Key	Part No.		Description	Spare parts Y/N	Qty	Remarks
23	4011000194	Screw		Y	3	

Interior

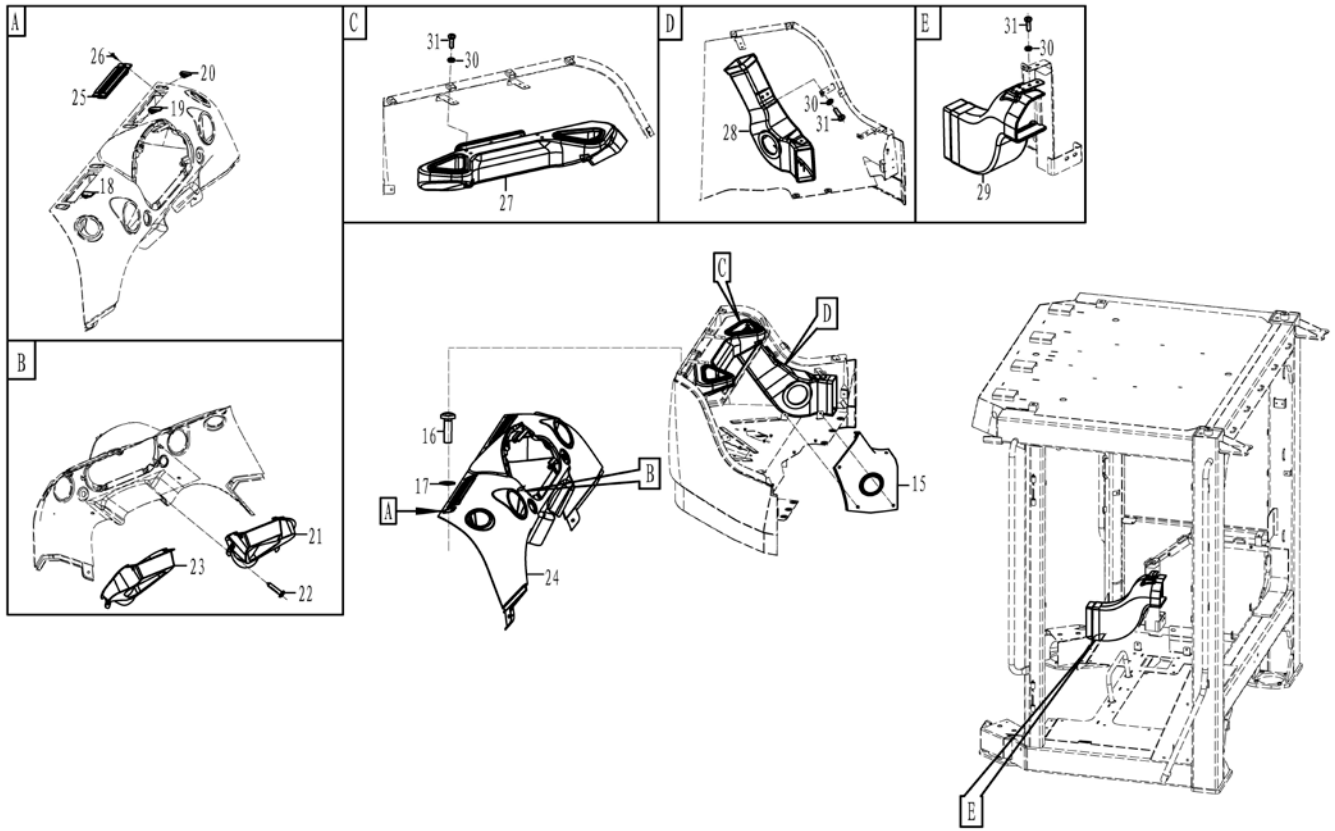
A
26
25
20
19
18
B
21
23
22
C
31
30
27
D
28
30
31
E
31
30
29
16
17
A
B
24
C
D
15
E

Key	Part No.	Description	Spare parts Y/N	Qty	Remarks
1	29290022101	Pillar	Y	1	
2	29290022121	Cab trim	Y	1	
3	29290022131	Cab roof	Y	1	
4	26290004591	Nut	Y	8	
5	29290014041	Grommet	Y	70	
6	29290022111	Cab trim	Y	1	
7	29290022221	Cab trim	Y	1	
8	26290004341	Lock	Y	1	
9	29290022991	Plate	Y	1	
10	29290022091	Pillar	Y	1	
11	29290022071	Plate	Y	1	
12	29290022171	Cover	Y	1	
13	29290022061	Plate	Y	1	
14	26290004251	Cup holder	Y	1	
15	29290022081	Plate	Y	1	
16	4014000088	Screw	Y	4	
17	4015000110	Washer	Y	4	
18	29290022181	Cap	Y	1	
19	29290022201	Cap	Y	2	
20	29290022191	Cap	Y	1	
21	29290022231	Air duct	Y	1	
22	4014000197	Screw	Y	4	

Interior

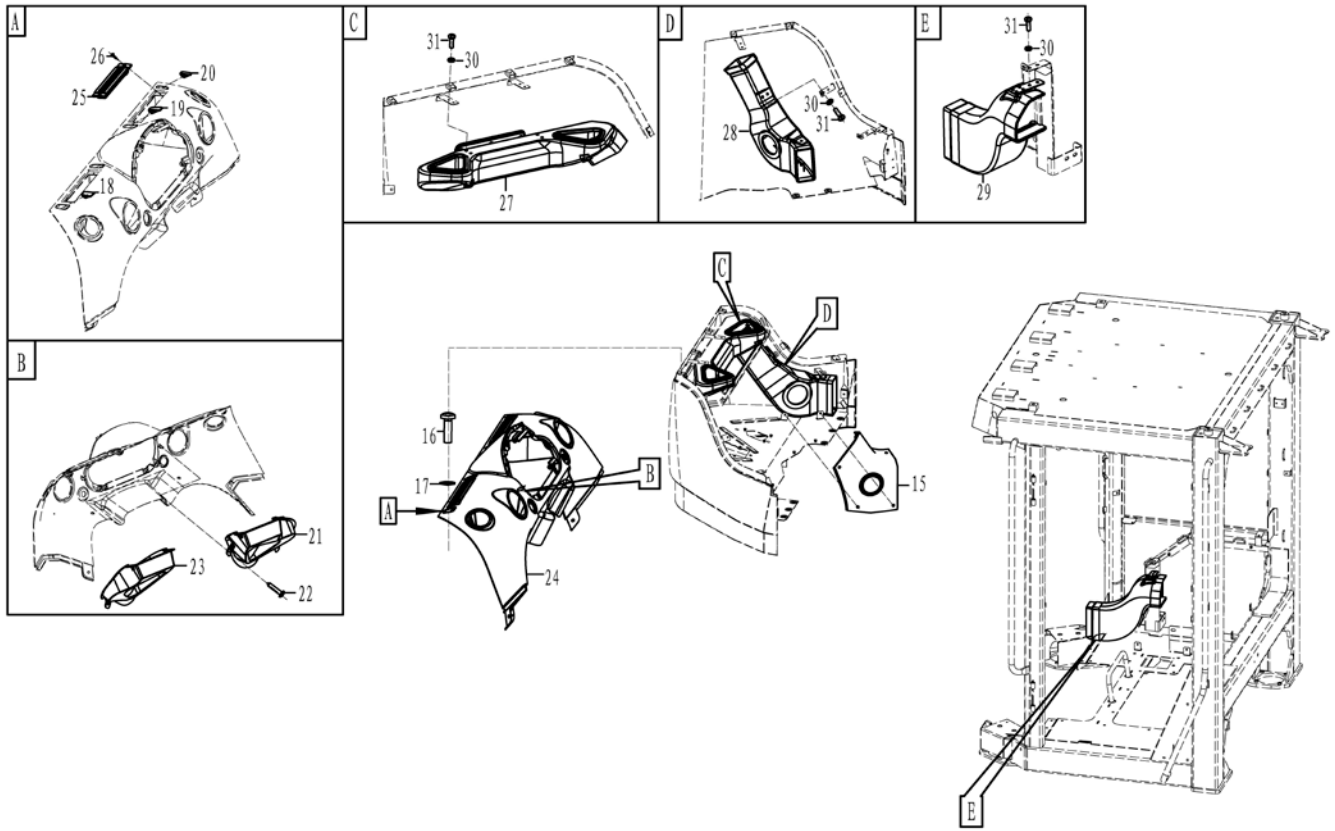
A
26
25
20
19
18
B
21
23
22
C
31
30
27
D
28
30
31
E
31
30
29
16
17
A
B
24
C
D
15
E

Key	Part No.	Description	Spare parts Y/N	Qty	Remarks
23	29290022241	Air duct	Y	1	
24	29290022051	Instrument panel	Y	1	
25	29290009091	Air outlet	Y	2	
26	4014000387	Screw	Y	4	
27	29290022251	Air duct	Y	1	
28	29290022261	Air duct	Y	1	
29	29290022271	Air duct	Y	1	
30	4015000207	Washer	Y	9	
31	4014000040	Screw	Y	9	

Operator box assembly

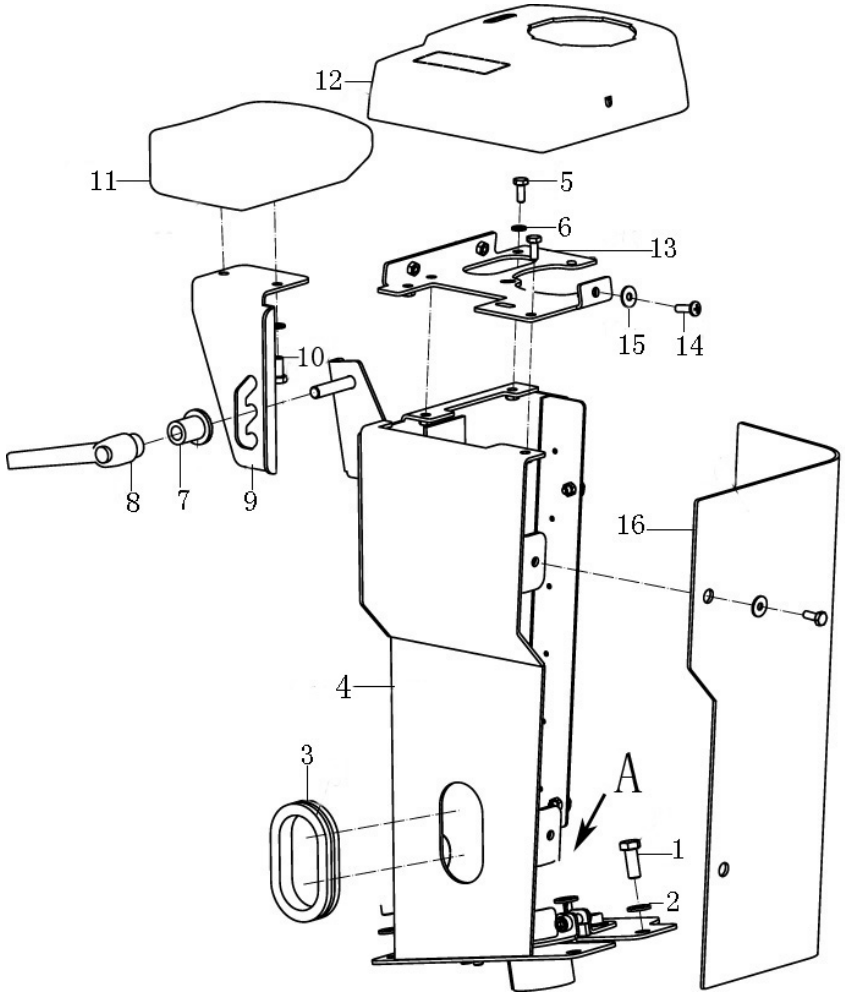

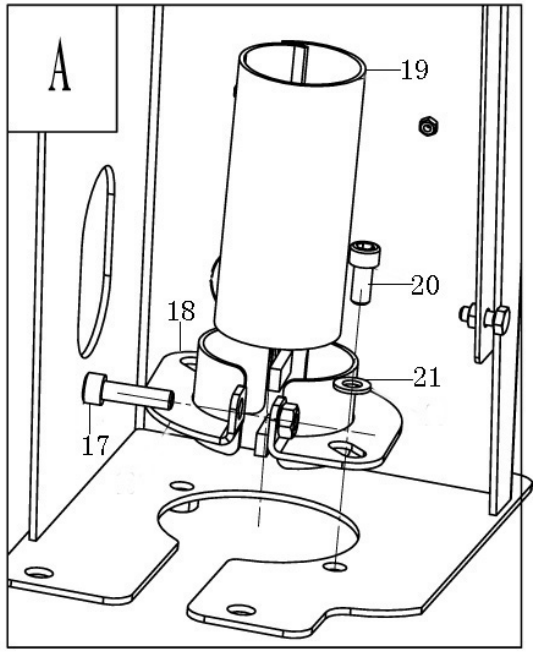

Key	Part No.	Description	Spare parts Y/N	Qty	Remarks
1	4011000082	Bolt	Y	1	
2	4015000162	Washer	Y	1	
3	26240004831	Rubber sleeve	Y	1	
4	29320009741	Box frame	Y	1	
5	4011000289	Bolt	Y	1	
6	4015000207	Washer	Y	1	
7	29320009921	Lock washer	Y	1	
8	4019000080	Control handle	Y	1	
9	29320009861	Plate	Y	1	
10	4011000423	Screw	Y	1	
11	29320009851	Arm rest	Y	1	
12	29320009891	Cover	Y	1	
13	29320009821	Plate	Y	1	
14	4014000040	Screw	Y	1	
15	4015000198	Washer	Y	1	
16	29320009811	Plate	Y	1	
17	4011000448	Screw	Y	1	
18	26310002091	Clamp	Y	1	
19	26310001891	Rubber sleeve	Y	1	
20	4014000268	Screw	Y	1	
21	4015000072	Washer	Y	1	

Air conditioner cover assembly

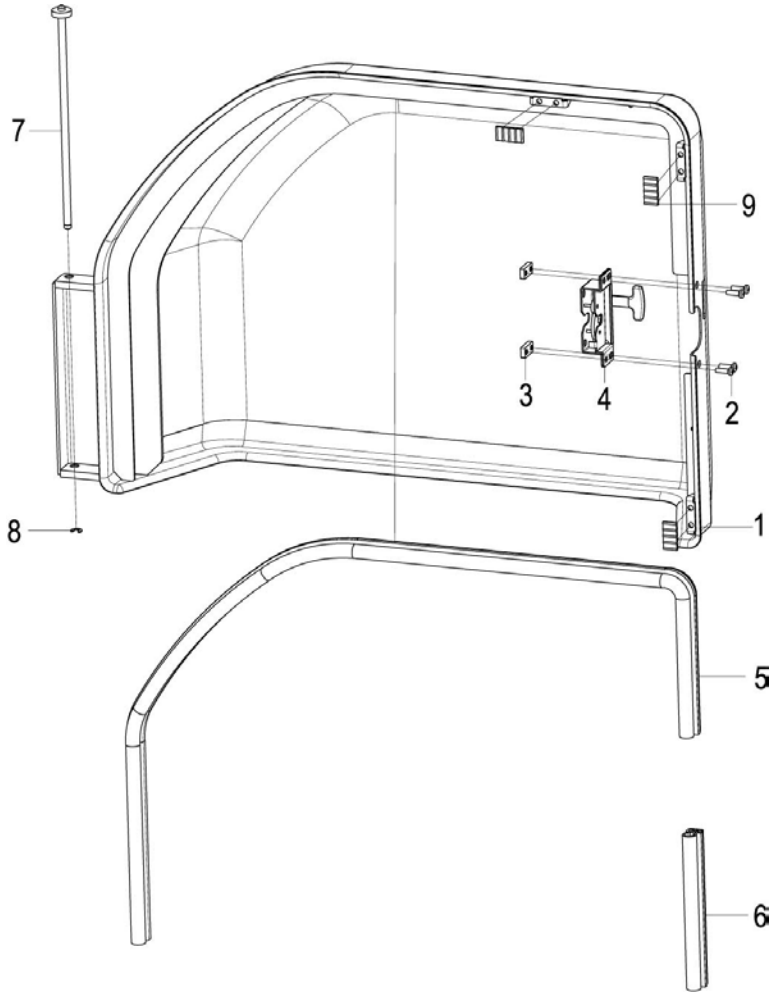

Key	Part No.	Description	Spare parts Y/N	Qty	Remarks
1	29290016311	Cover	Y	1	
2	4014000131	Screw	Y	4	
3	29290025311	Plate	N	2	
4	29290021751	Body	Y	1	
5	29290021761	Sealing strip	Y	1	
6	29290025141	Sealing strip	Y	1	
7	29290017611	Pin	Y	1	
8	4015000355	Retaining ring	Y	1	
9	29290024471	Rubber buffer	Y	3	

Washer system

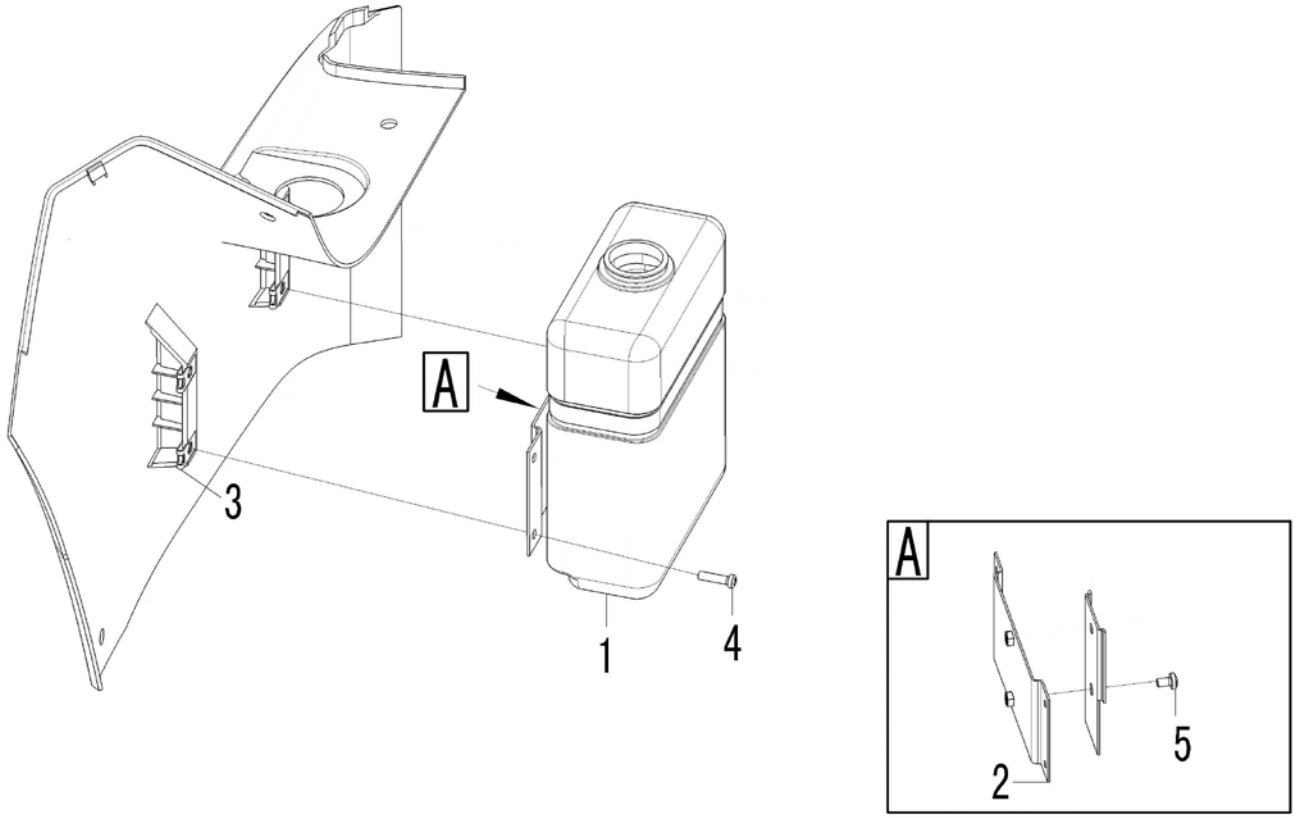

Key	Part No.	Description	Spare parts Y/N	Qty	Remarks
1	29290021561	Washer pump	Y	1	
2	29290016181	Bracket	Y	1	
3	26290004591	Nut	Y	4	
4	4014000037	Screw	Y	4	
5	4014000024	Screw	Y	2	

Cab accessory

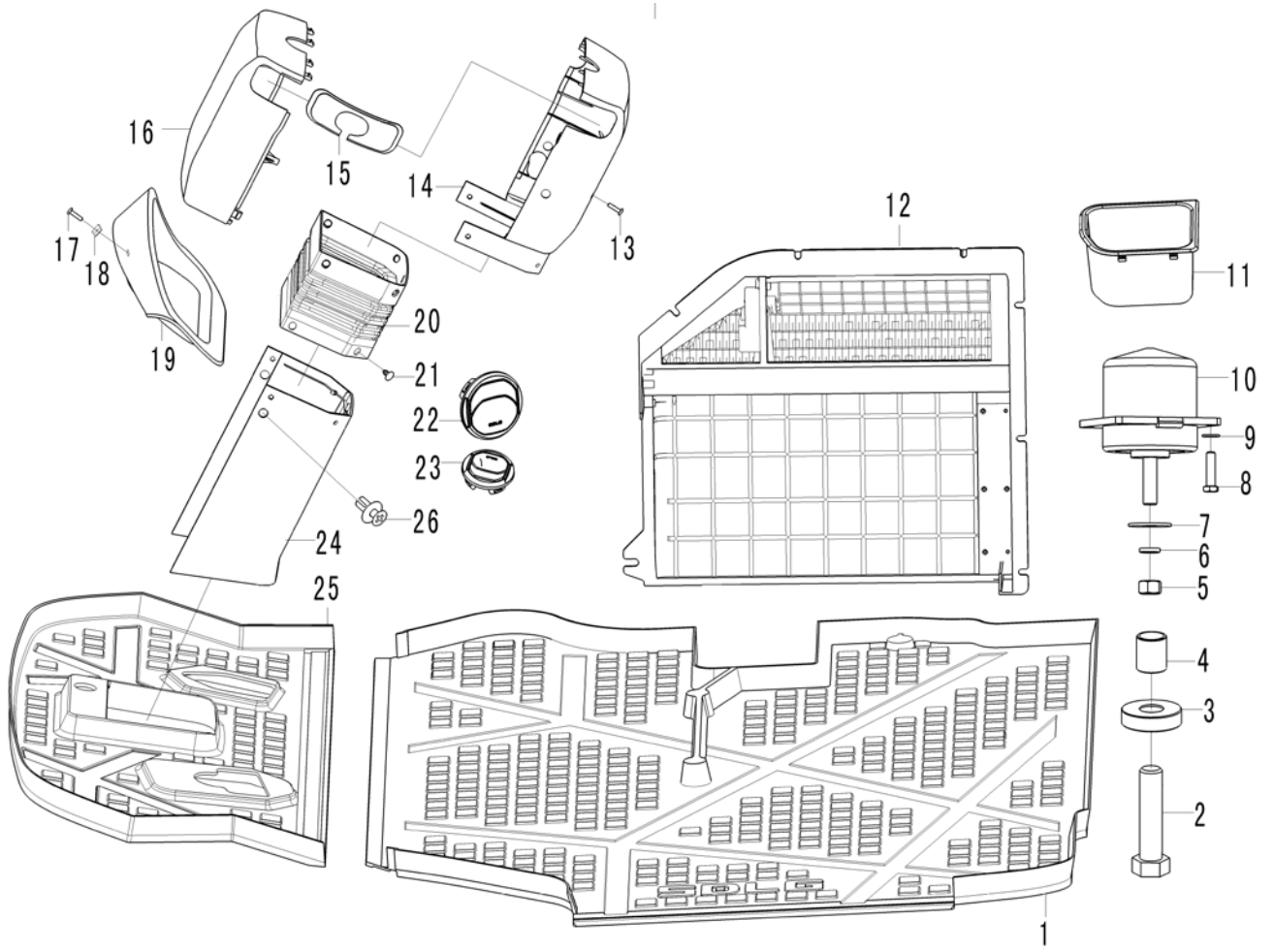

Key	Part No.	Description	Spare parts Y/N	Qty	Remarks
1	29310019321	Floor mat	Y	1	
2	29090007982	Screw	Y	4	
3	29310016531	Shim	Y	4	
4	29310016541	Bushing	Y	4	
5	4013000016	Nut	Y	4	
6	4015000098	Spring washer	Y	4	
7	4015000305	Retaining ring	Y	4	
8	4011000184	Bolt	Y	16	
9	4015000197	Washer	Y	16	
10	29310020291	Shock absorber	Y	4	
11	29290012711	Box	Y	1	
12	29350010471	Ventilation unit	Y	1	
13	4014000048	Screw	Y	8	
14	29310018981	Protecting cover	Y	1	
15	29310019361	Protecting cover	Y	1	
16	29310016411	Protecting cover	Y	1	
17	4014000068	Screw	Y	2	
18	26290004591	Nut	Y	2	
19	29290012561	Protecting cover	Y	1	
20	29310018991	Rubber sleeve	Y	1	
21	29310020381	Plastic rivet	Y	10	
22	29290012861	Air outlet	Y	3	

Cab accessory

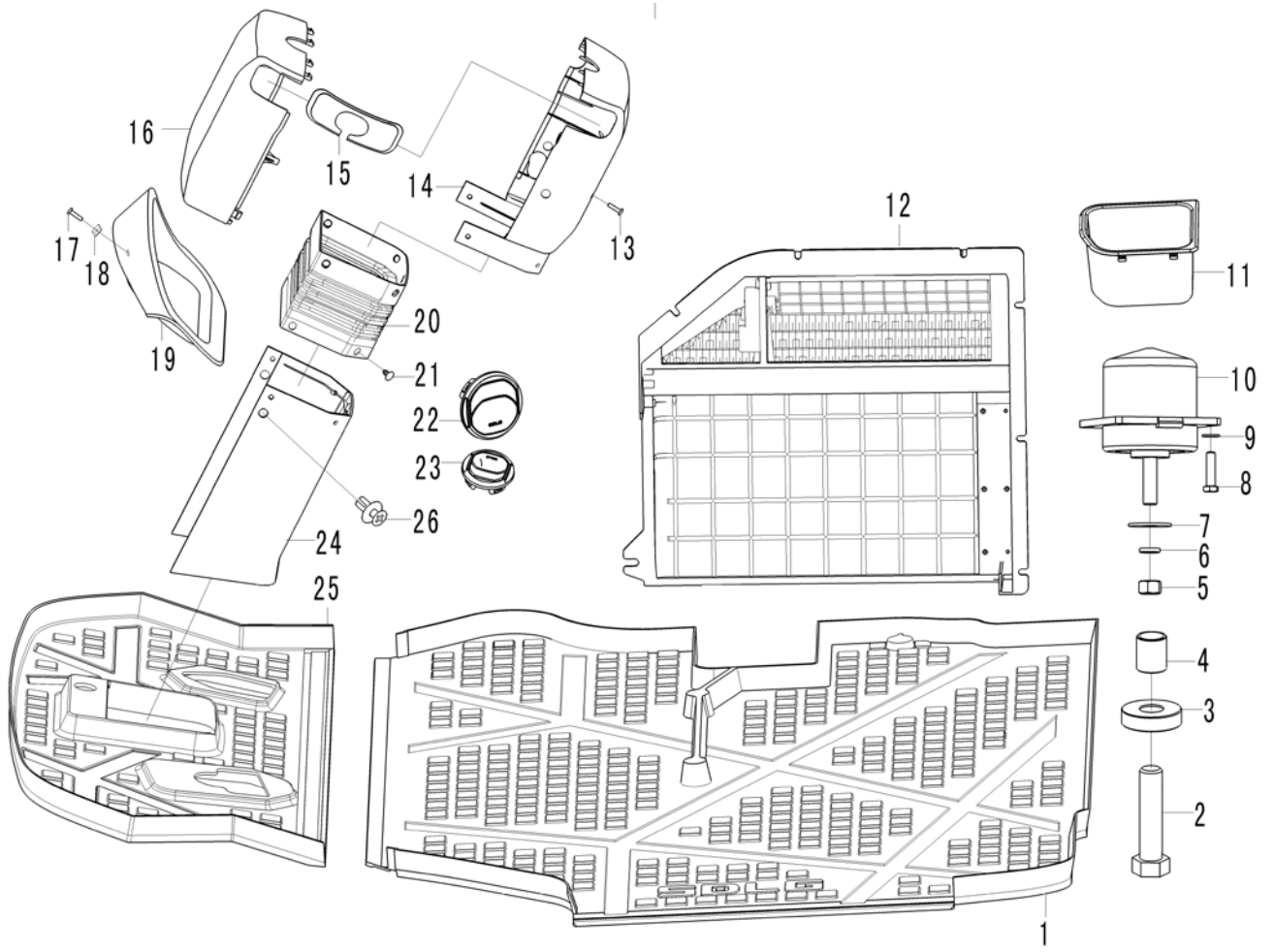

Key	Part No.	Description	Spare parts Y/N	Qty	Remarks
23	29290012851	Air outlet	Y	3	
24	29310019001	Protecting cover	Y	1	
25	29310019311	Floor mat	Y	1	
26	29290014041	Grommet	Y	3	

M
CONVER SYSTEM



SHANDONG LINGONG CONSTRUCTION MACHINERY CO.,LTD.

Engine hood

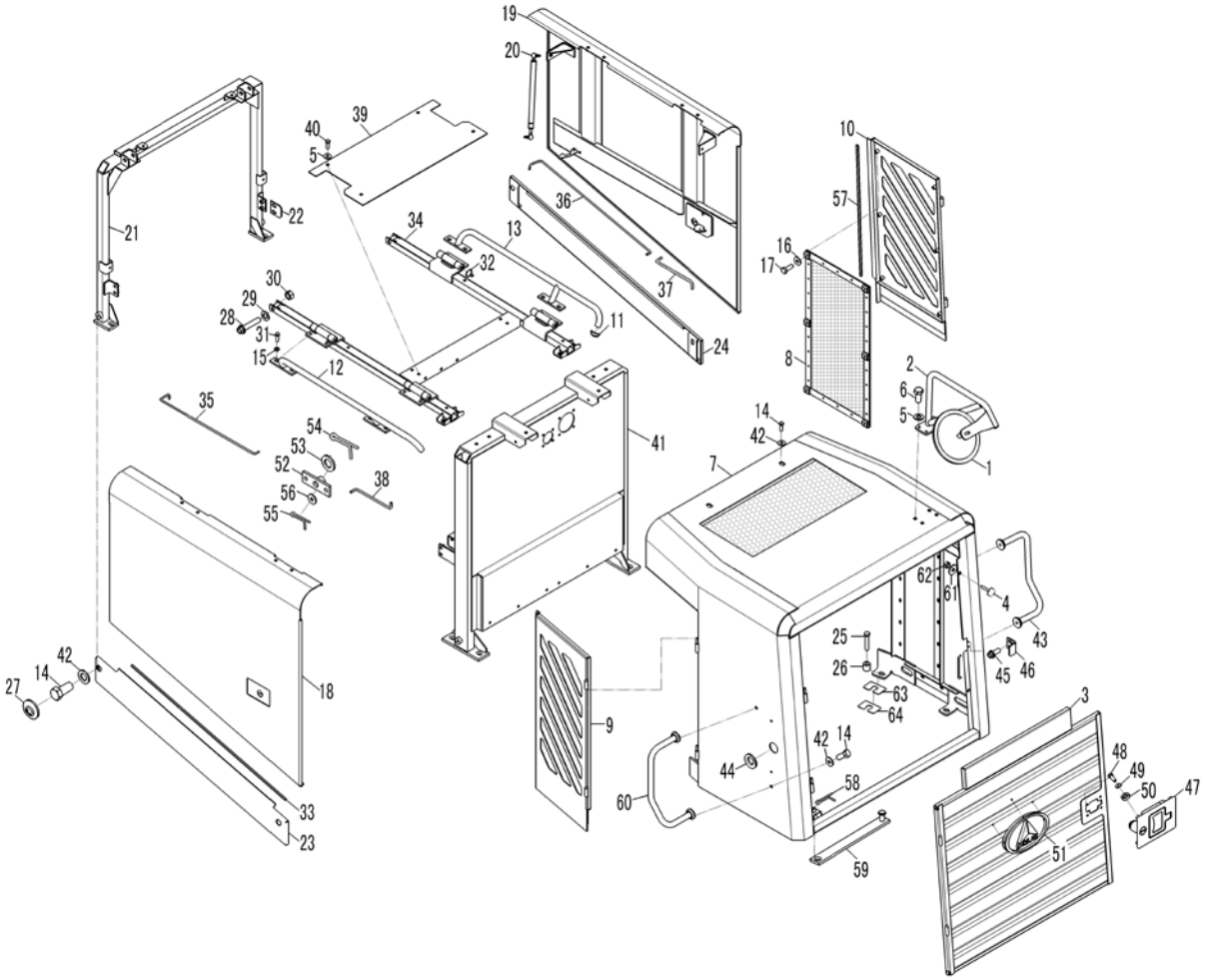
19
20
40
39
5
10
57
21
22
34
13
36
16
17
32
37
30
29
28
31
15
12
11
24
8
2
6
5
1
35
14
42
7
54
53
52
56
55
38
41
62
61
4
43
25
26
63
64
45
46
3
9
42
14
44
48
49
50
47
60
58
59
51
27
14
42
18
33
23

Key	Part No.	Description	Spare parts Y/N	Qty	Remarks
1	11211277	Rear view mirror	Y	1	
2	29330043011	Bracket	Y	1	
3	29330050391	Grille	Y	1	
4	26330006531	Rubber block	Y	2	
5	4015000197	Washer	Y	8	
6	4011000082	Bolt	Y	4	
7	29330046231	Bonnet	Y	1	
8	29330046241	Protecting grating	Y	2	
9	29330046251	Cover	Y	1	
10	29330046261	Cover	Y	1	
11	29330011232	Rubber plug	Y	2	
12	29330050471	Hand rail	Y	1	
13	29330050491	Hand rail	Y	1	
14	4011000197	Bolt	Y	22	
15	4015000168	Washer	Y	21	
16	4015000198	Washer	Y	12	
17	4011000101	Bolt	Y	12	
18	29330046311	Cover	Y	1	
19	29330046321	Cover	Y	1	
20	29330014621	Gas spring	Y	4	
21	29330046351	Support	Y	1	
22	29330000092	Lock plate	Y	4	

Engine hood

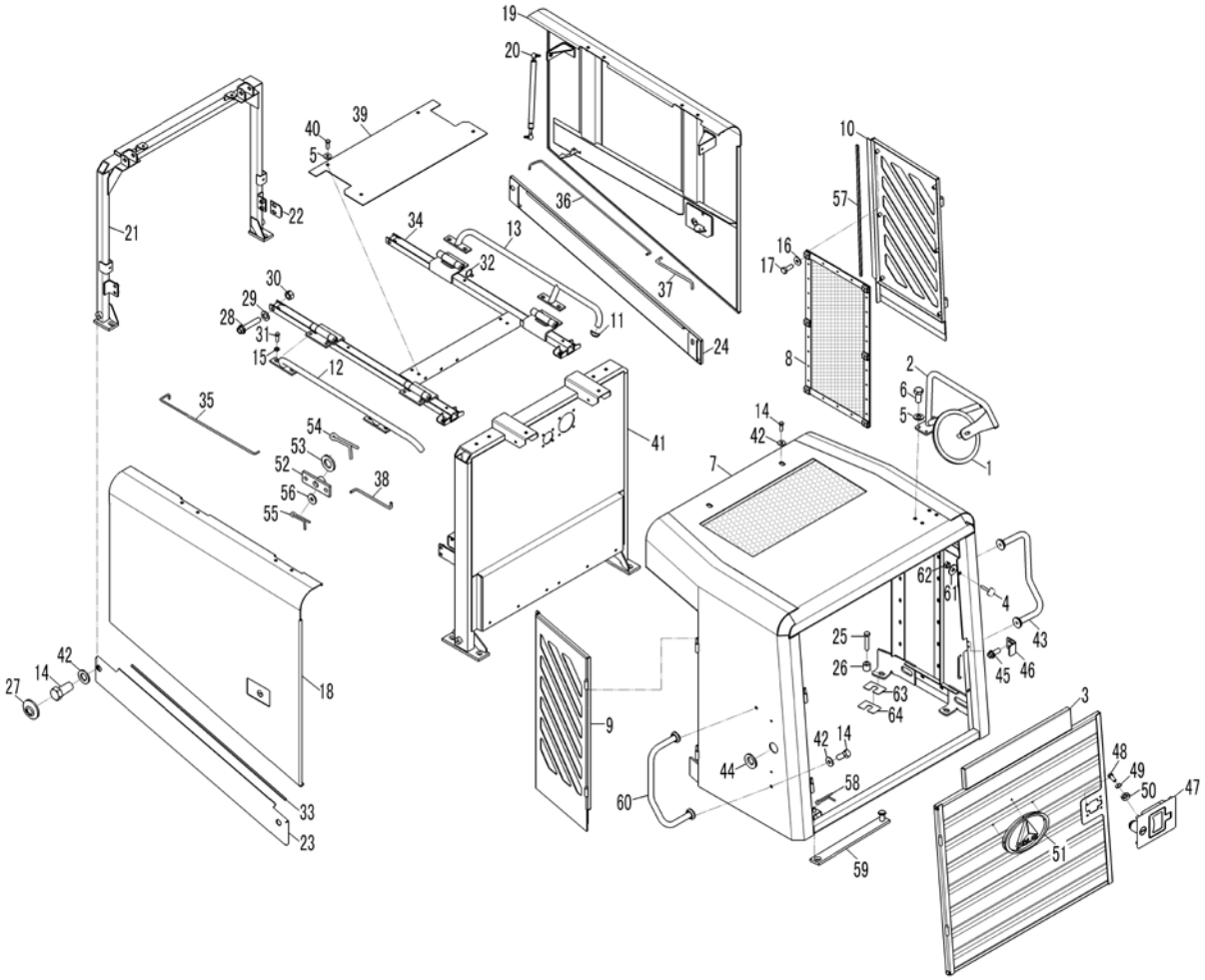
19
20
40
39
5
10
57
21
22
34
13
36
16
17
32
37
30
29
28
31
15
12
11
24
8
2
6
5
1
35
14
42
7
41
54
53
52
56
55
38
62
61
4
43
25
26
63
64
45
46
3
42
14
44
58
48
49
50
47
60
59
51
9
27
14
42
18
33
23

Key	Part No.	Description	Spare parts Y/N	Qty	Remarks
23	29330046391	Cover	Y	1	
24	29330046401	Cover	Y	1	
25	4011000594	Screw	Y	10	
26	29330028191	Attaching sleeve	Y	10	
27	29330000201	Rubber plug	Y	4	
28	4011000151	Bolt	Y	2	
29	4015000181	Washer	Y	2	
30	4013000016	Nut	Y	2	
31	4011000090	Bolt	Y	8	
32	4030000535	Lubricating nipple	Y	10	
33	4030000750	Moulding	Y	2	
34	29330046431	Support	Y	1	
35	29330046441	Pull rod	Y	1	
36	29330046451	Pull rod	Y	1	
37	29330000171	Pull rod	Y	1	
38	29330000181	Pull rod	Y	1	
39	29330046461	Cover plate	Y	1	
40	4011000081	Bolt	Y	4	
41	29330050081	Support	Y	1	
42	4015000186	Washer	Y	10	
43	29330041871	Hand rail	Y	1	
44	29330031081	Rubber sleeve	Y	2	

Engine hood

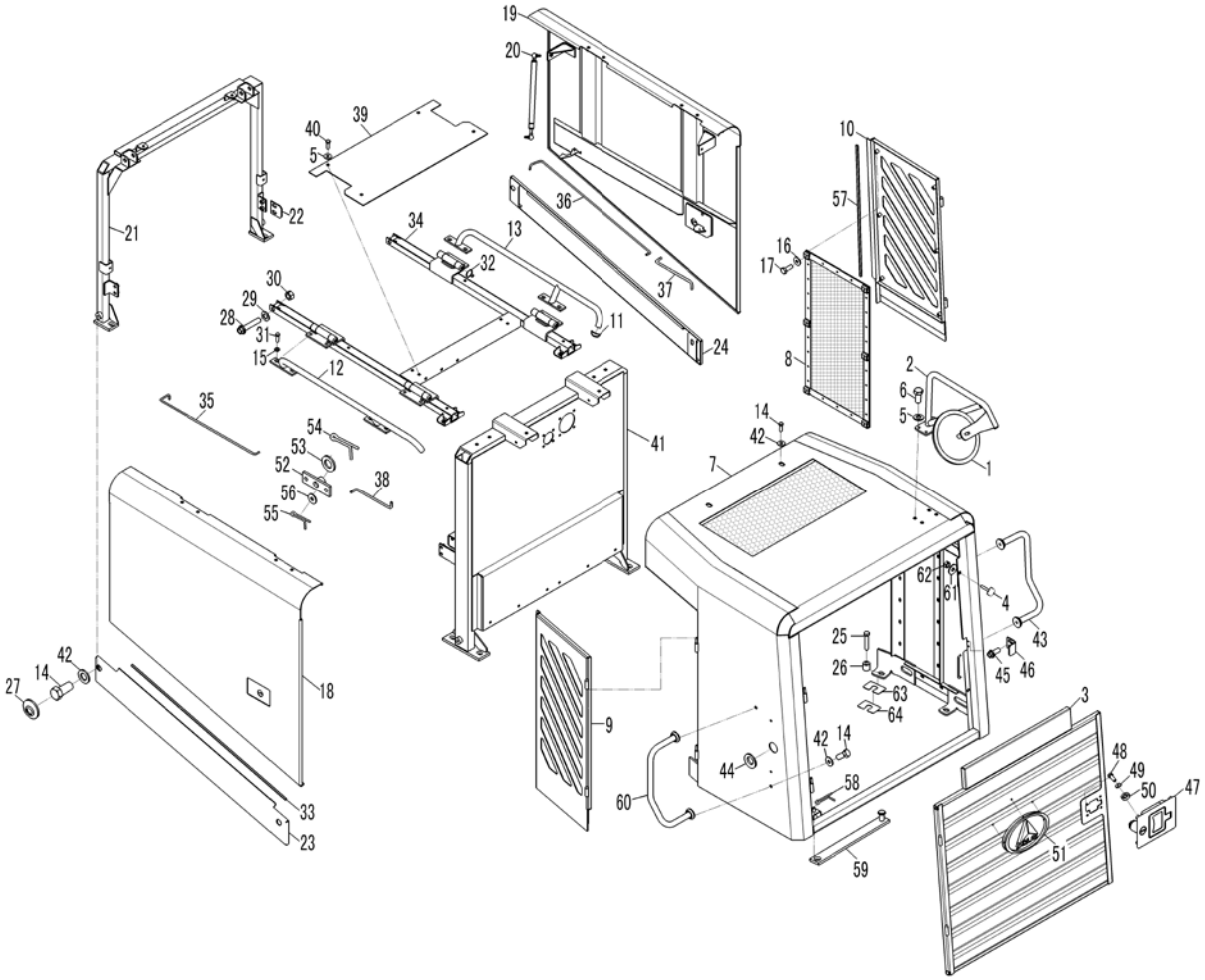
19
20
40
5
39
10
57
21
22
34
13
36
16
17
32
37
30
29
28
31
15
12
11
24
8
2
6
5
1
35
14
42
7
54
53
52
56
55
38
41
62
61
4
43
25
26
63
64
45
46
3
9
42
14
44
58
60
59
48
49
50
47
51
27
14
42
18
33
23

Key	Part No.	Description	Spare parts Y/N	Qty	Remarks
45	4130000075	Screw	Y	2	
46	4190002434	Catch	Y	1	
47	4190002281	Door lock	Y	1	
48	4011000099	Screw	Y	4	
49	4015000205	Washer	Y	4	
50	4190002284	Washer	Y	4	
51	29360015191	Emblem	Y	1	
52	29330000241	Attaching plate	Y	2	
53	4015000162	Washer	Y	2	
54	4016000119	Split pin	Y	2	
55	4016000114	Split pin	Y	16	
56	4015000207	Washer	Y	16	
57	4090000052	Sealing strip	Y	2	
58	4016000035	Split pin	Y	1	
59	29340009091	Pull rod	Y	1	
60	29330041891	Hand rail	Y	1	
61	4015000256	Washer	Y	2	
62	4013000033	Nut	Y	4	
63	29330020211	Spacer	Y	4	
64	29330020221	Spacer	Y	4	

Right bench assembly

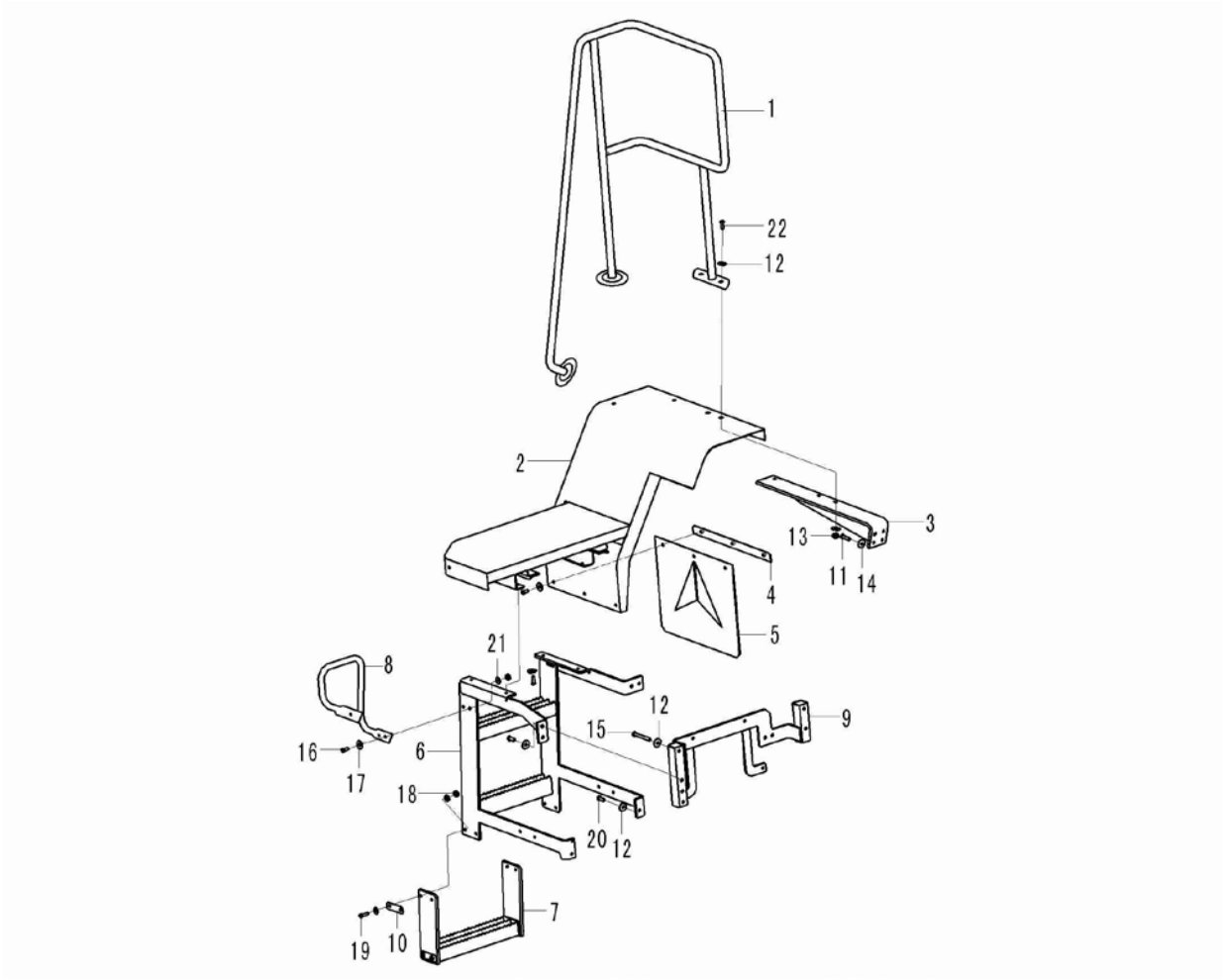

Key	Part No.	Description	Spare parts Y/N	Qty	Remarks
1	29340024591	Hand rail	Y	1	
2	29340024531	Platform	Y	1	
3	29340022941	Support	Y	1	
4	29340024971	Plate	Y	1	
5	29340024991	Rubber plate	Y	1	
6	29340029791	Ladder	Y	1	
7	29340022611	Ladder	Y	1	
8	29340027852	Hand rail	Y	1	
9	29340029741	Bracket	Y	1	
10	29340022631	Plate	Y	2	
11	4011000089	Bolt	Y	6	
12	4011000197	Bolt	Y	8	
13	4015000186	Washer	Y	10	
14	4013000011	Nut	Y	2	
15	4015000168	Washer	Y	7	
16	4011000333	Screw	Y	4	
17	4011000084	Bolt	Y	10	
18	4013000007	Nut	Y	6	
19	4011000184	Bolt	Y	4	
20	4011000090	Bolt	Y	2	
21	4015000162	Washer	Y	2	
22	4011000091	Bolt	Y	2	

Left bench assembiy

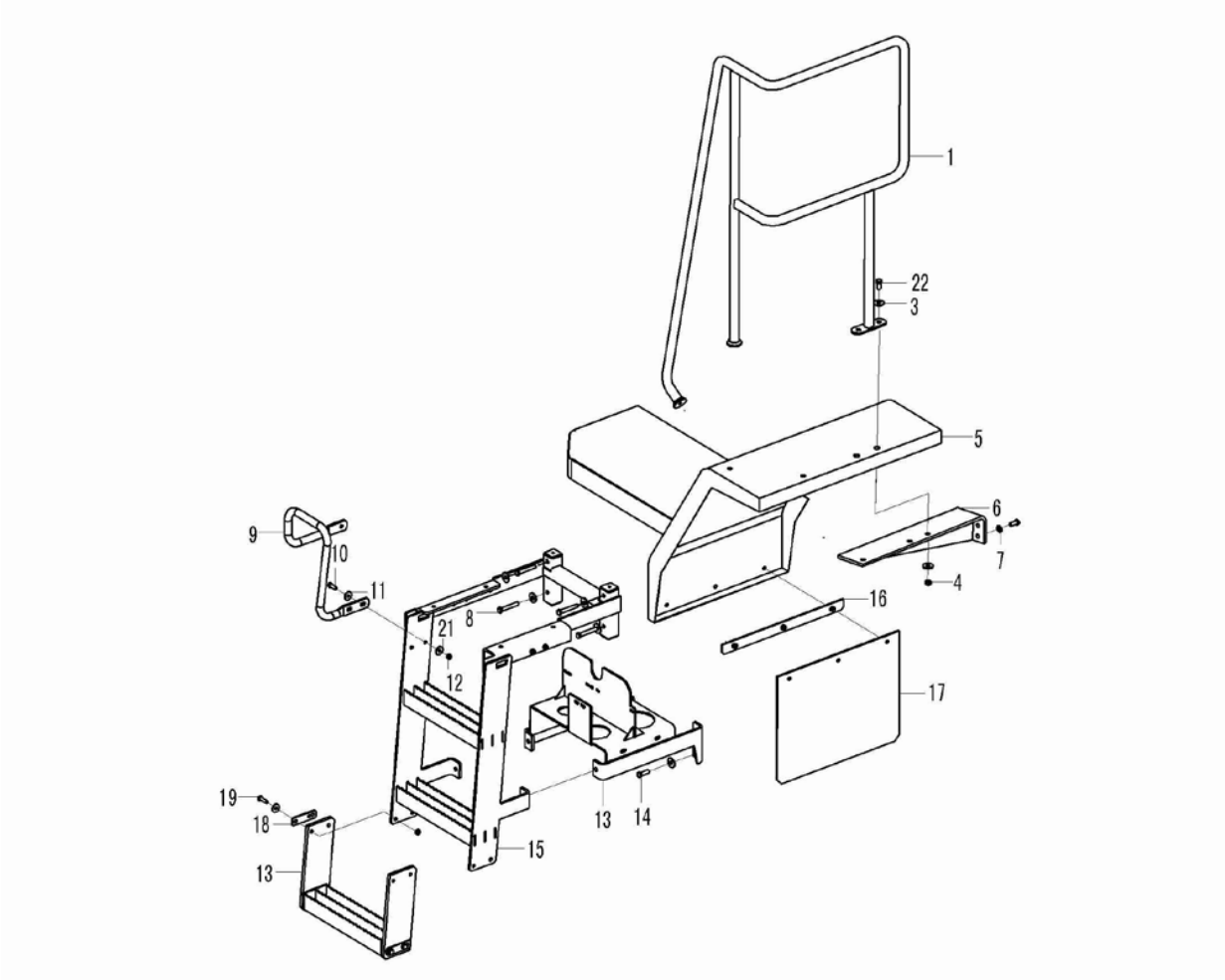

Key	Part No.	Description	Spare parts Y/N	Qty	Remarks
1	29340024641	Hand rail	Y	1	
2	4011000089	Bolt	Y	6	
3	4015000186	Washer	Y	13	
4	4013000011	Nut	Y	2	
5	29340024571	Platform	N	1	
6	29340022931	Support	Y	1	
7	4015000168	Washer	Y	7	
8	4011000333	Screw	Y	4	
9	29340027842	Hand rail	Y	1	
10	4011000084	Bolt	Y	10	
11	4015000197	Washer	Y	20	
12	4013000007	Nut	Y	6	
13	29340029851	Platform	Y	1	
14	4011000090	Bolt	Y	5	
15	29340029901	Ladder	Y	1	
16	29340024971	Plate	Y	1	
17	29340024991	Rubber plate	Y	1	
18	29340022631	Plate	Y	2	
19	4011000184	Bolt	Y	4	
20	29340022611	Ladder	Y	1	
21	4011000091	Bolt	Y	2	
22	4015000162	Washer	Y	2	

Rear steering lamp hood

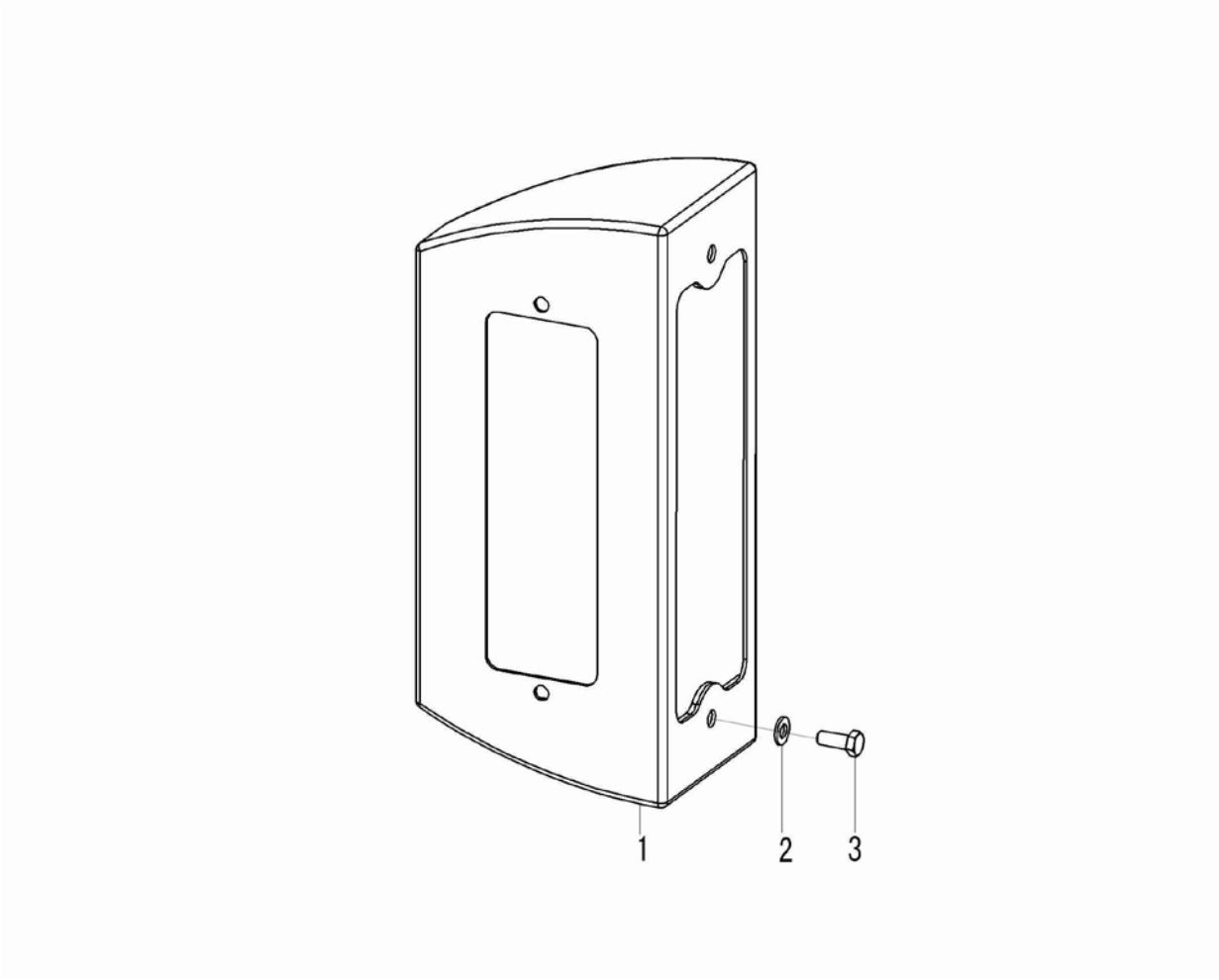

Key	Part No.	Description	Spare parts Y/N	Qty	Remarks
1	29340026461	Lamp shroud	Y	1	
2	4015000256	Washer	Y	2	
3	4011000102	Bolt	Y	2	

Sign and logo

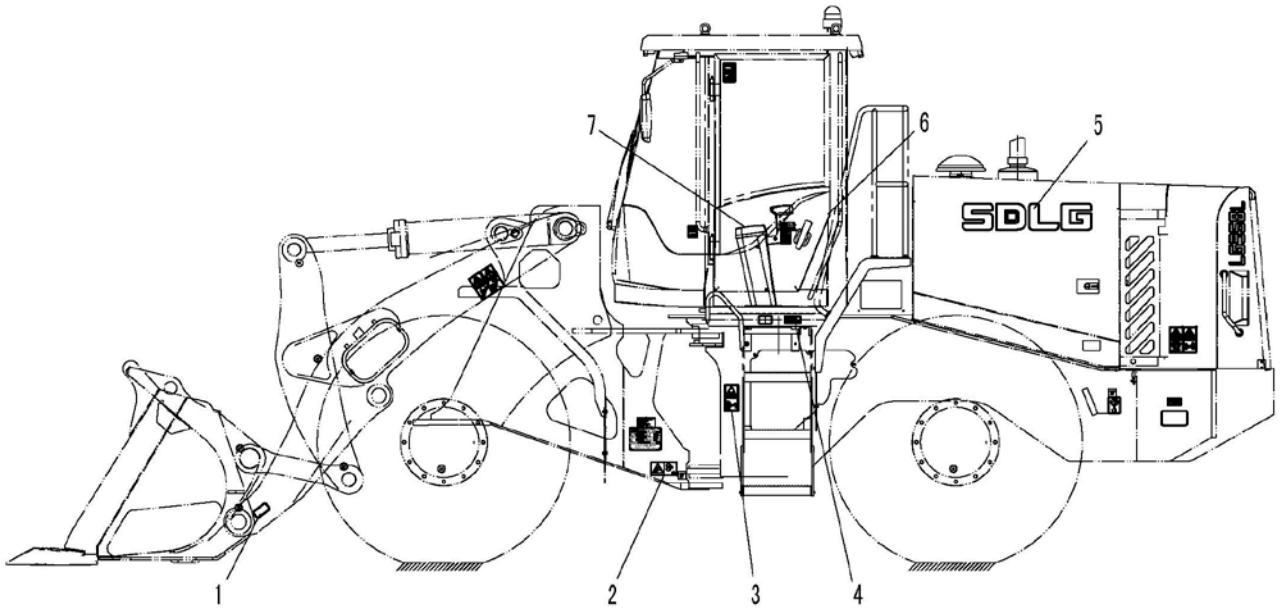

Key	Part No.	Description	Spare parts Y/N	Qty	Remarks
1	29360017791	Decal set	Y	1	
2	29360017801	Decal set	Y	1	
3	29360017471	Decal set	Y	1	
4	29360017811	Decal set	Y	1	
5	29360017851	Decal set	Y	1	
6	29360017831	Decal set	Y	1	
7	29360018351	Decal set	Y	1	

N
AIR CONDITIONER SYSTEM



SHANDONG LINGONG CONSTRUCTION MACHINERY CO.,LTD.

Air condition unit

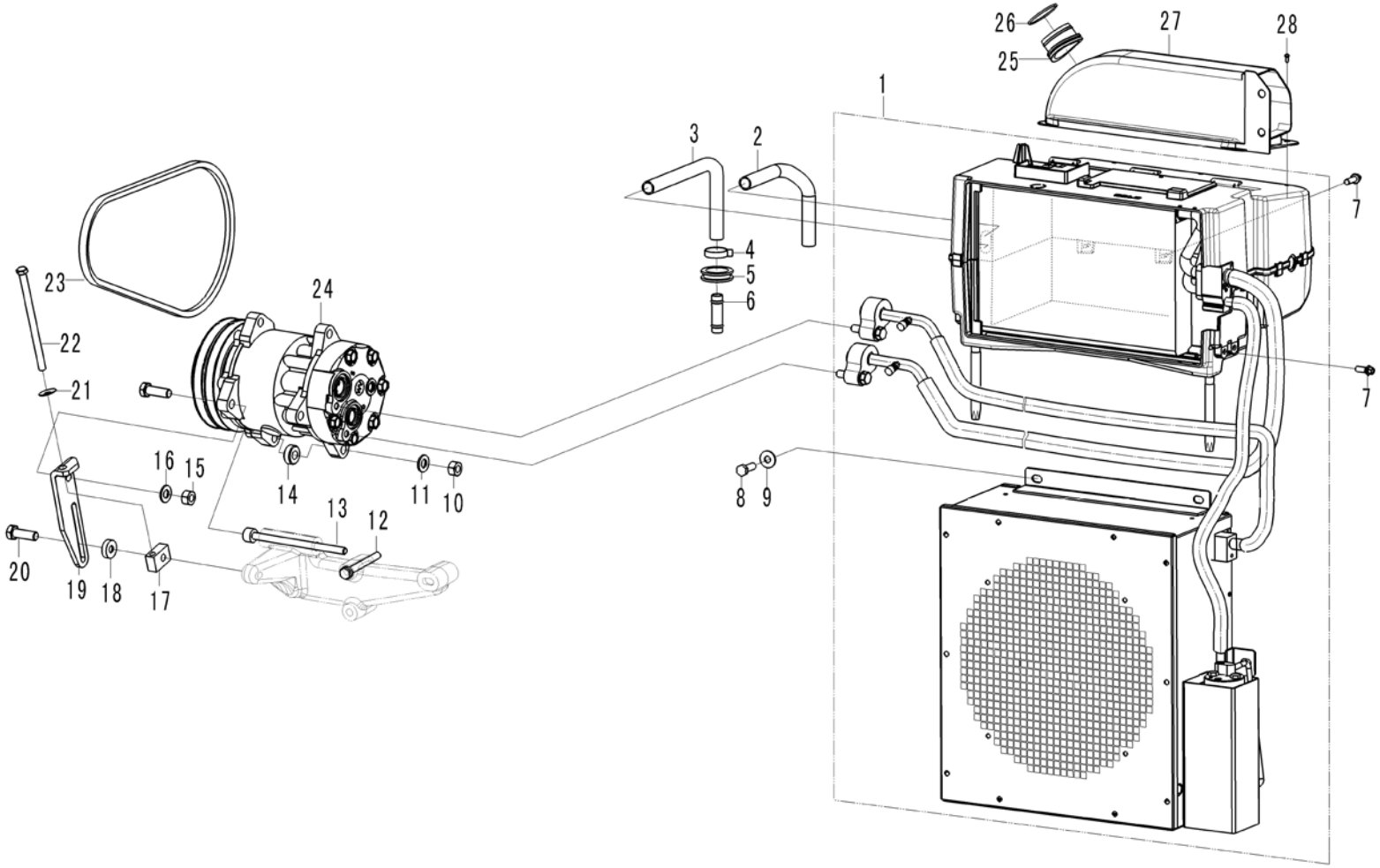

Key	Part No.	Description	Spare parts Y/N	Qty	Remarks
1	29350011101	Air conditioning unit	Y	1	
2	29350010321	Pipe	Y	1	
3	4017000024	Clamp	Y	4	
4	29350010311	Pipe	Y	1	
5	29310000091	Rubber sleeve	Y	2	
6	29350010291	Copper tube	Y	2	
7	4011000458	Bolt	Y	3	
8	4011000082	Bolt	Y	4	
9	4015000197	Washer	Y	4	
10	4013000189	Lock nut	Y	1	
11	4015000162	Washer	Y	6	
12	4011000799	Screw	Y	3	
13	4014000148	Screw	Y	1	
14	29350011061	Shim	Y	1	
15	4013000210	Nut	Y	1	
16	4015000072	Washer	Y	3	
17	29350011051	Block	Y	1	
18	29350011121	Shim	Y	1	
19	29350011041	Bracket	Y	1	
20	4011000861	Bolt	Y	2	
21	4015000388	Washer	Y	1	
22	4011001125	Bolt	Y	1	

Air condition unit

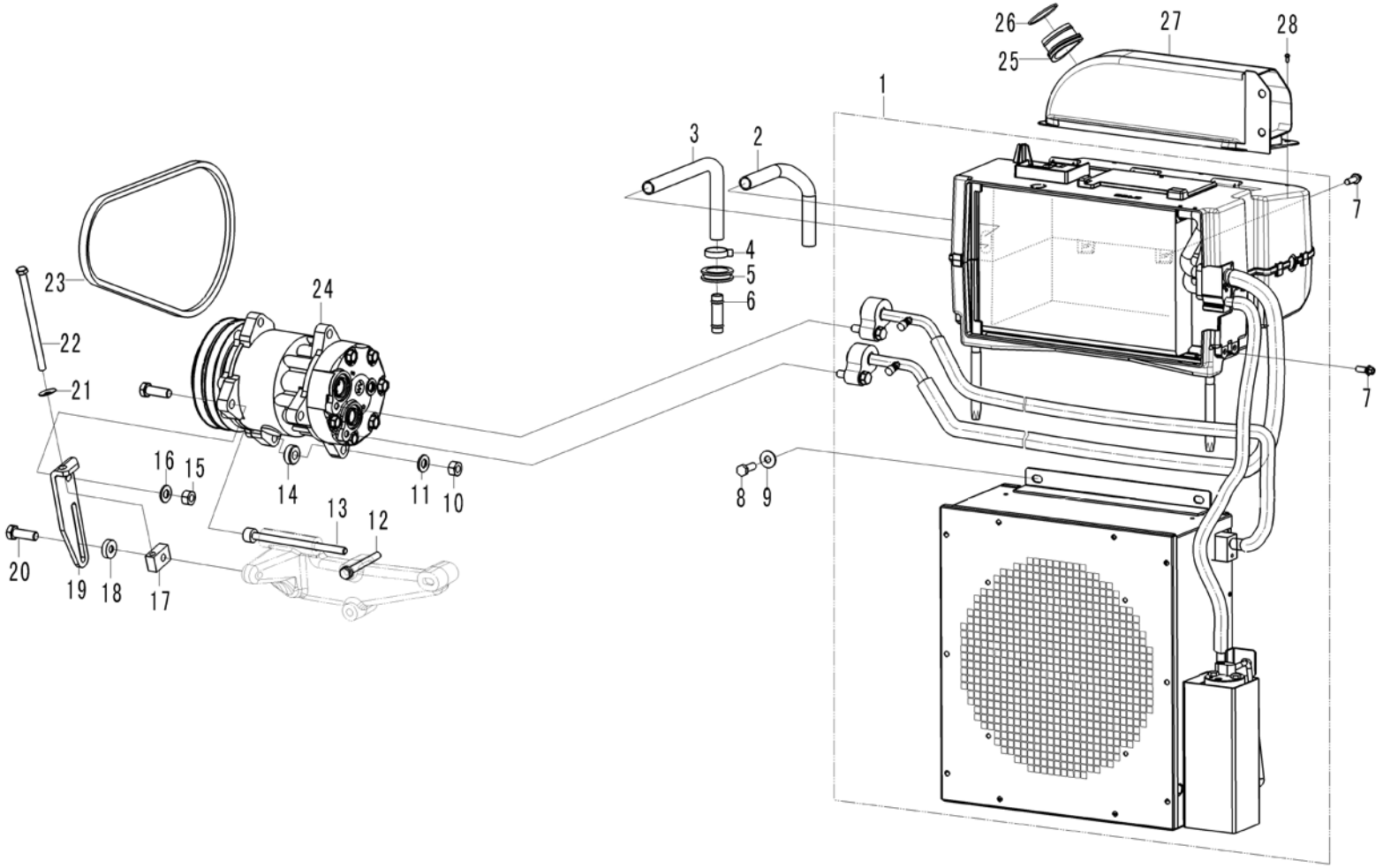

Key	Part No.	Description	Spare parts Y/N	Qty	Remarks
23	4110000347	Belt	Y	1	
24	11212853	Compressor	Y	1	
25	29350010631	Rubber sleeve	Y	1	
26	29350010621	Retaining ring	Y	1	
27	29350010601	Air duct	Y	1	
28	4130000075	Screw	Y	3	

Air conditioner system

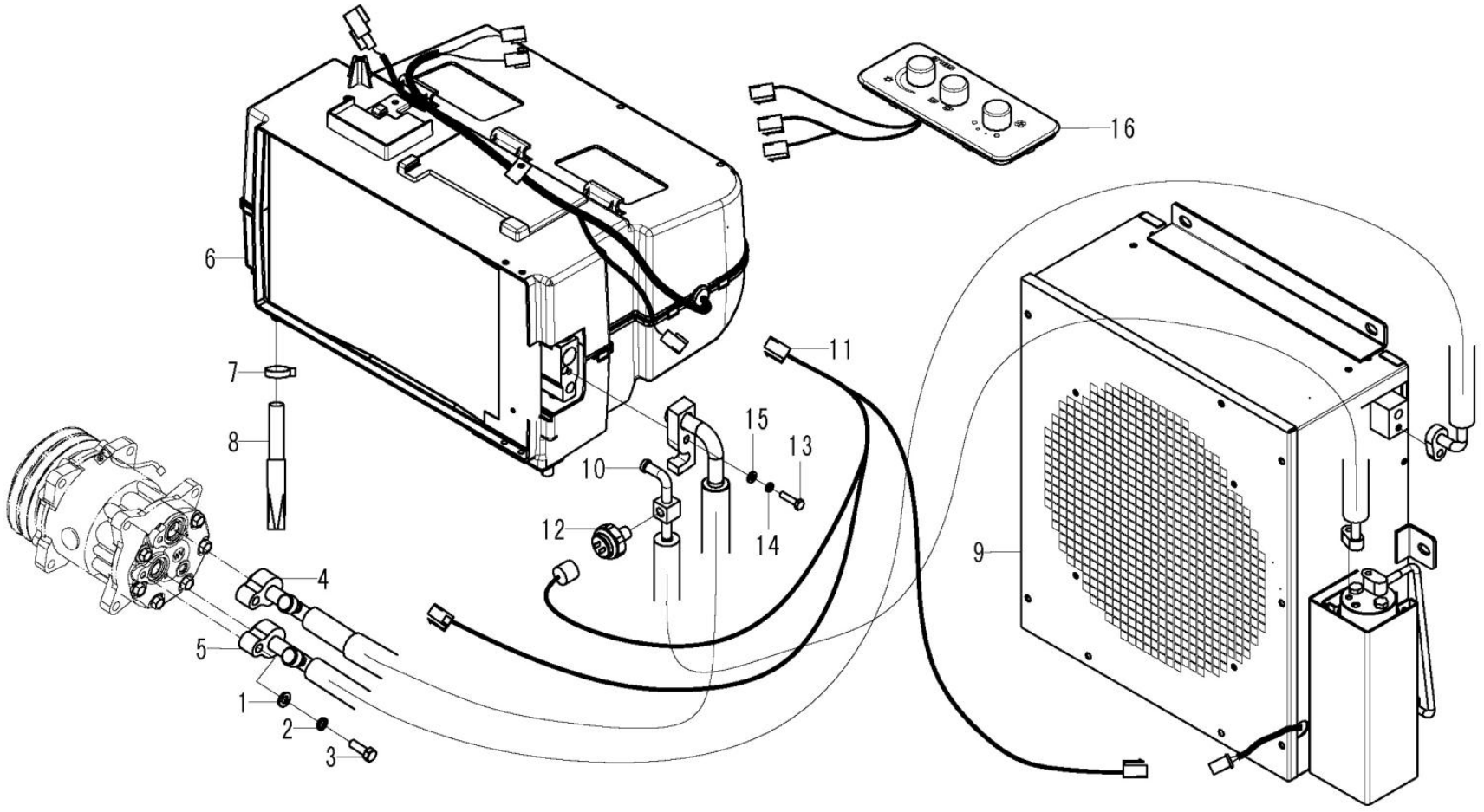

Key	Part No.	Description	Spare parts Y/N	Qty	Remarks
1	4015000072	Washer	Y	2	
2	4015000036	Spring washer	Y	2	
3	4011000107	Bolt	Y	2	
4	4190003109	Hose	Y	1	
5	4190003108	Hose	Y	1	
6	4190002757	Evaporator	Y	1	
7	4019000023	Cable tie	Y	2	
8	4190002766	Water pipe	Y	2	
9	4190002759	Condenser	Y	1	
10	4190003088	Hose	Y	1	
11	4190003047	Cable harness	Y	1	
12	4190002765	Switch	Y	1	
13	4011000276	Bolt	Y	3	
14	4015000035	Spring washer	Y	3	
15	4015000207	Washer	Y	3	
16	4190002760	Panel	Y	1	

Evaporator assembly

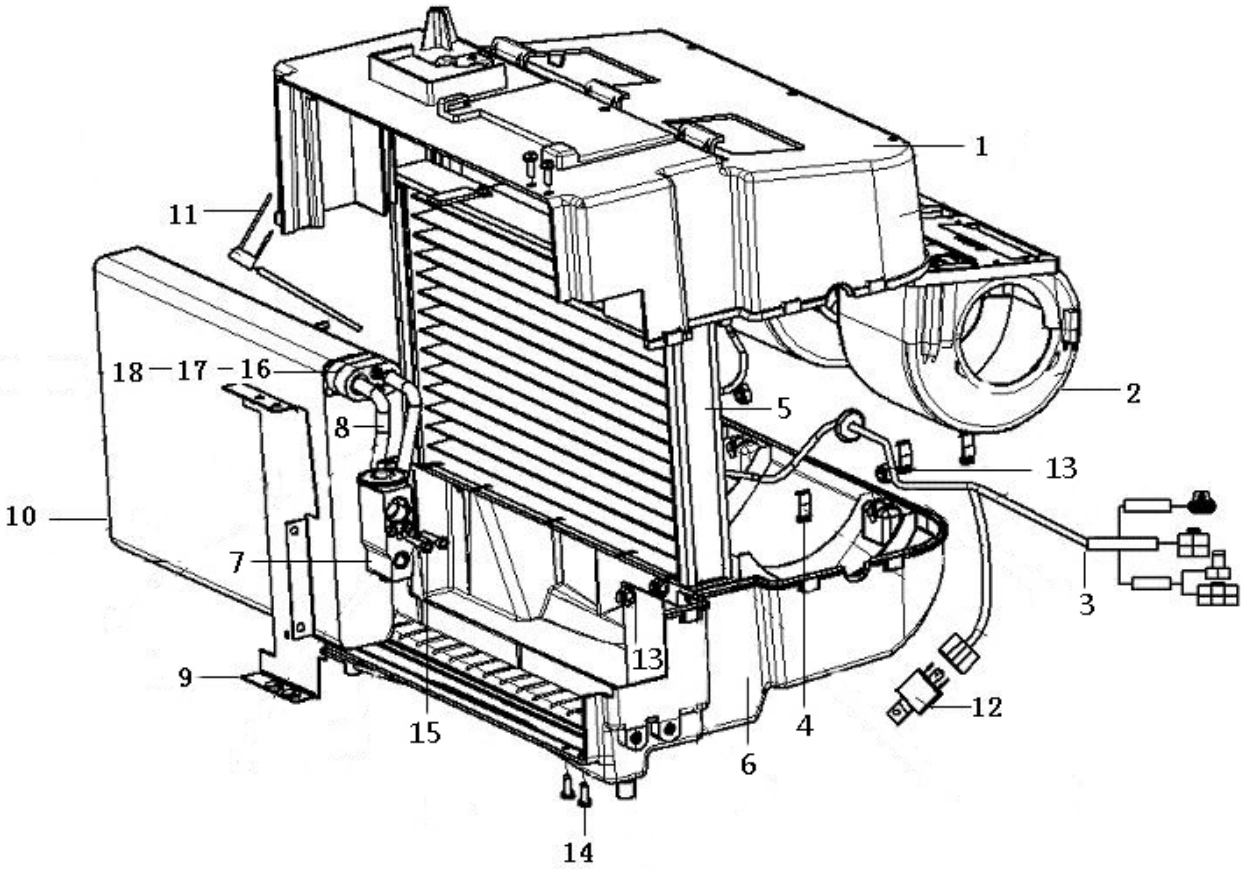

Key	Part No.	Description	Spare parts Y/N	Qty	Remarks
1	29350010161	Closure	Y	1	
2	4190002843	Fan	Y	1	
3	4190002844	Cable harness	Y	1	
4	4190002845	Clamp	Y	9	
5	4190002846	Heat exchanger core	Y	1	
6	29350010181	Closure	Y	1	
7	4190002847	Expansion valve	Y	1	
8	4190002848	Hose	Y	1	
9	4190002849	Bracket	Y	1	
10	4190002850	Heat exchanger core	Y	1	
11	4190002851	Sensor	Y	1	
12	4190002852	Relay	Y	1	
13	4013000210	Nut	Y	6	
14	4014000302	Screw	Y	4	
15	4014000397	Screw	Y	2	
16	4014000398	Screw	Y	2	
17	4015000034	Spring washer	Y	2	
18	4015000110	Washer	Y	2	

Evaporator assembly

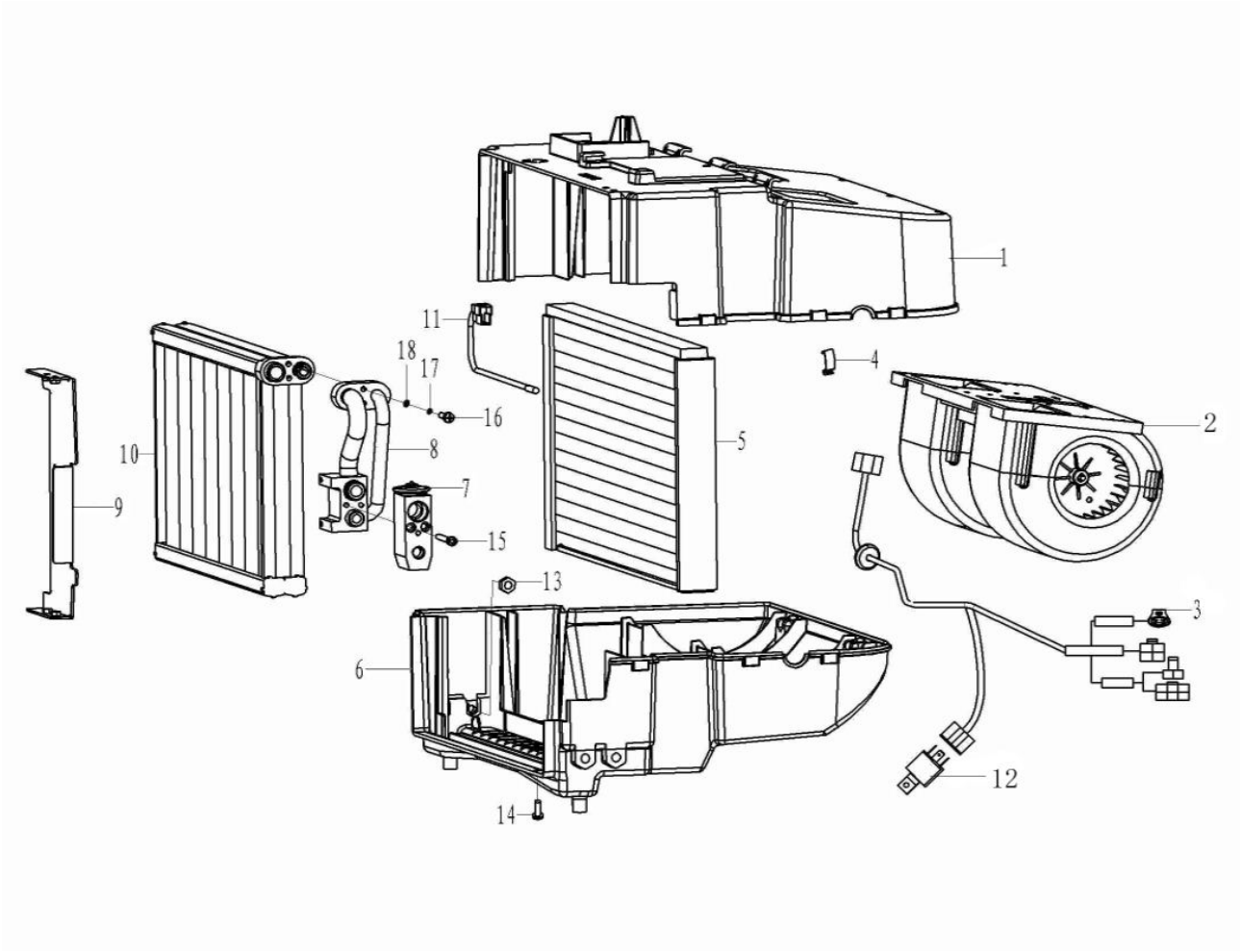

Key	Part No.	Description	Spare parts Y/N	Qty	Remarks
1	29350010161	Closure	Y	1	
2	4190002843	Fan	Y	1	
3	4190002824	Cable harness	Y	1	
4	4190002845	Clamp	Y	9	
5	4190002826	Heat exchanger core	Y	1	
6	29350010181	Closure	Y	1	
7	4190002822	Expansion valve	Y	1	
8	4190002848	Hose	Y	1	
9	4190002830	Bracket	Y	1	
10	4190002827	Heat exchanger core	Y	1	
11	4190002825	Sensor	Y	1	
12	4190002852	Relay	Y	1	
13	4013000210	Nut	Y	6	
14	4014000302	Screw	Y	4	
15	4014000397	Screw	Y	2	
16	4014000398	Screw	Y	2	
17	4015000034	Spring washer	Y	2	
18	4015000110	Washer	Y	2	

Condenser

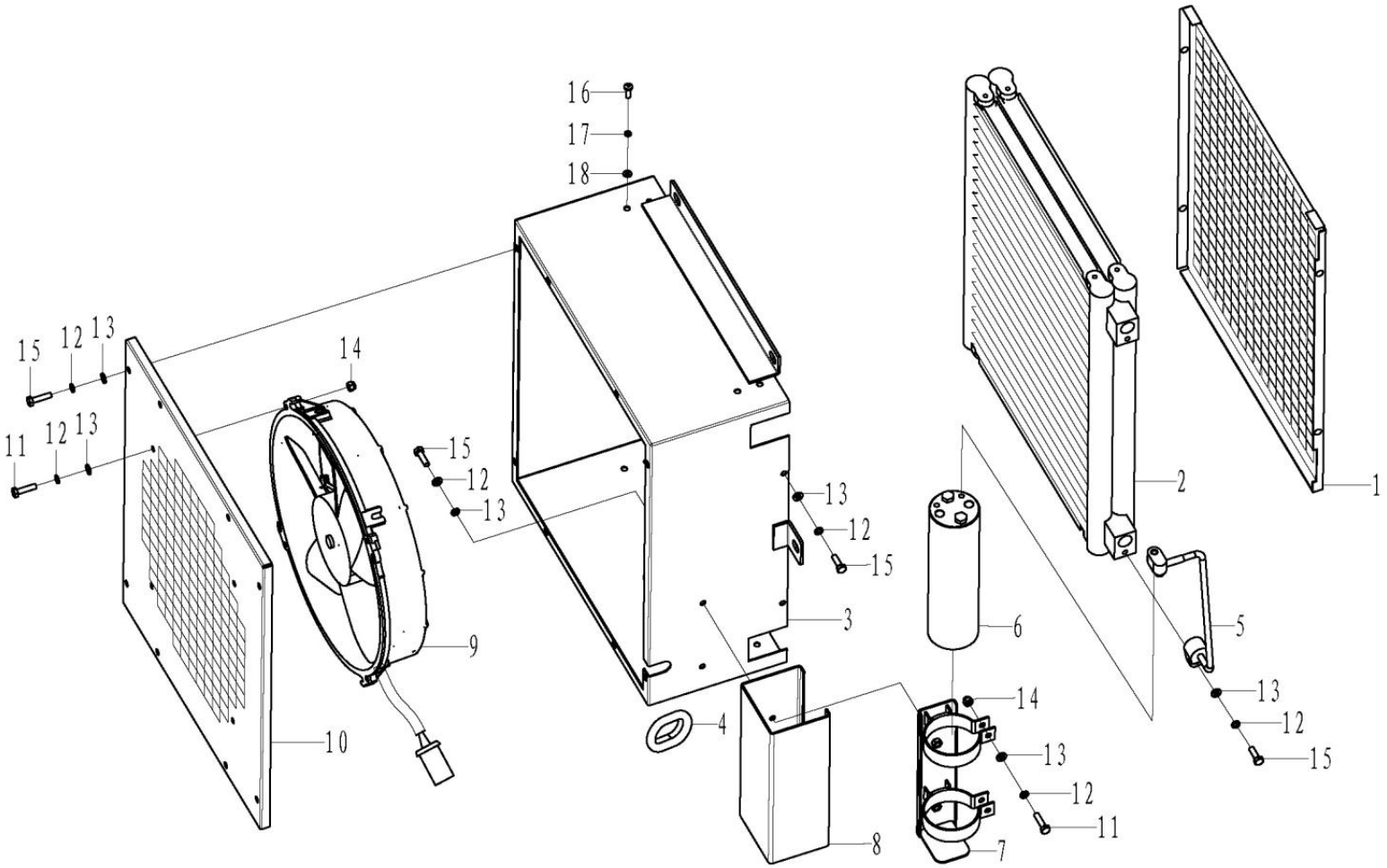
16
17
18
15
12
13
14
11
12
13
15
12
13
13
12
15
3
9
10
4
6
14
13
12
11
8
7
2
1
5
13
12
15

Key	Part No.	Description	Spare parts Y/N	Qty	Remarks
1	4190002859	Filter	Y	1	
2	4190002853	Condenser	Y	1	
3	4190002860	Case	Y	1	
4	4190002861	Rubber sleeve	Y	1	
5	4130002110	Hose	Y	1	
6	4190002863	Reservoir	Y	1	
7	4190002864	Bracket	Y	1	
8	4190002867	Rubber sleeve	Y	1	
9	4190002865	Fan	Y	1	
10	4190002866	Plate	Y	1	
11	4011000276	Bolt	Y	7	
12	4015000213	Washer	Y	22	
13	4015000207	Washer	Y	22	
14	4013000211	Nut	Y	6	
15	4011000101	Bolt	Y	15	
16	4014000088	Screw	Y	8	
17	4015000034	Spring washer	Y	8	
18	4015000110	Washer	Y	8	

Condenser assembly

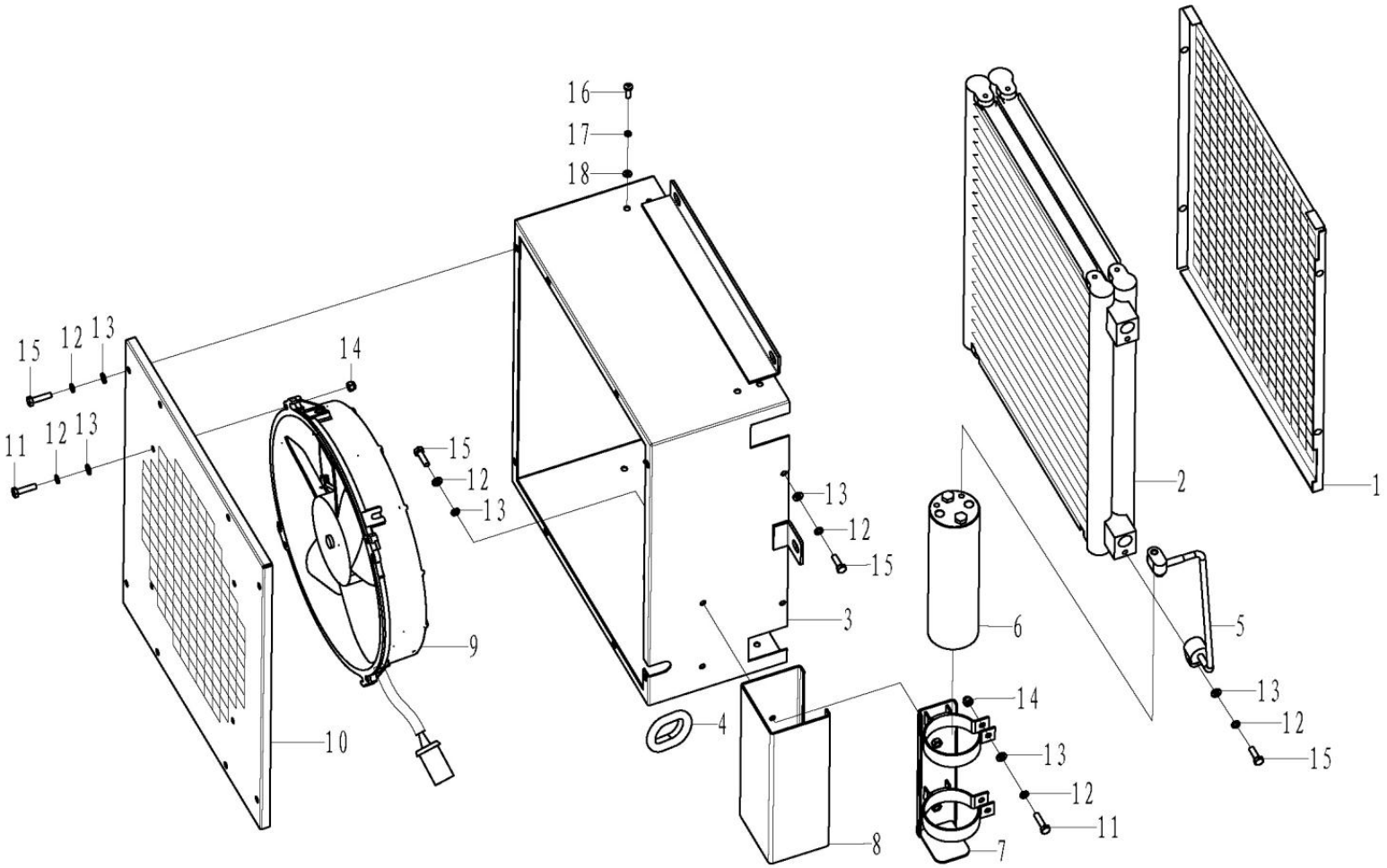

Key	Part No.	Description	Spare parts Y/N	Qty	Remarks
1	4190002828	Return strainer	Y	1	
2	4190002823	Condenser	Y	1	
3	4190002829	Case	Y	1	
4	4190002944	Rubber sleeve	Y	1	
5	4190002958	Hose	Y	1	
6	4190002863	Reservoir	Y	1	
7	4190002864	Bracket	Y	1	
8	4190002867	Rubber sleeve	Y	1	
9	4190002865	Fan	Y	1	
10	4190002866	Plate	Y	1	
11	4011000276	Bolt	Y	7	
12	4015000213	Washer	Y	22	
13	4015000207	Washer	Y	22	
14	4013000211	Nut	Y	6	
15	4011000101	Bolt	Y	15	
16	4014000088	Screw	Y	8	
17	4015000034	Spring washer	Y	8	
18	4015000110	Washer	Y	8	

O
ELECTRIC SYSTEM



SHANDONG LINGONG CONSTRUCTION MACHINERY CO.,LTD.

Power electric assembly

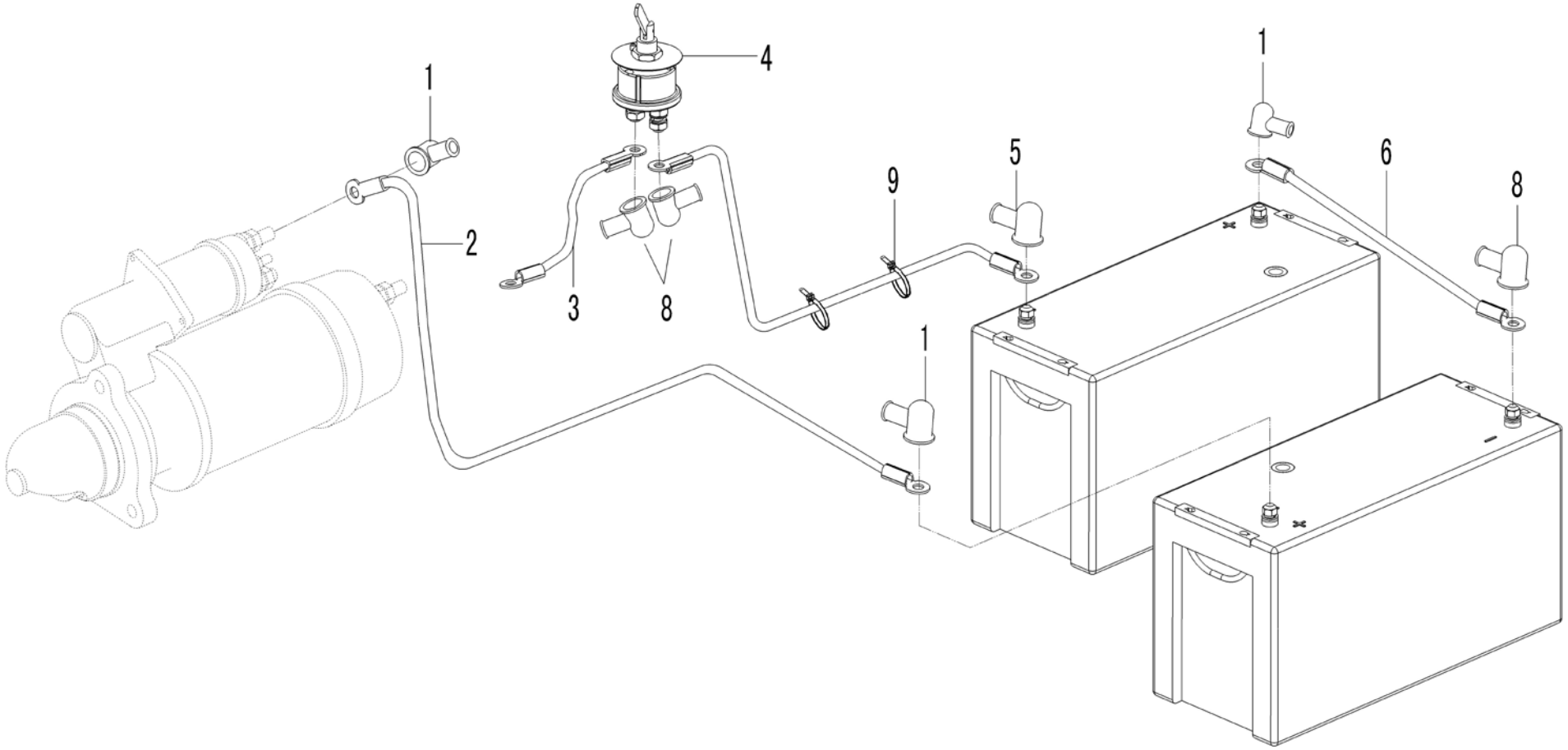

Key	Part No.	Description	Spare parts Y/N	Qty	Remarks
1	26370002451	Cable sleeve	Y	3	
2	29370025131	Battery cable	Y	1	
3	29370024591	Battery cable	Y	1	
4	4130000427	Battery switch	Y	1	
5	29370014261	Battery cable	Y	1	
6	26370006261	Battery cable	Y	1	
7	4130000057	Wet battery	Y	2	
8	26370002441	Cable sleeve	Y	4	
9	4190001839	Cable tie	Y	6	

Front frame electric assembly

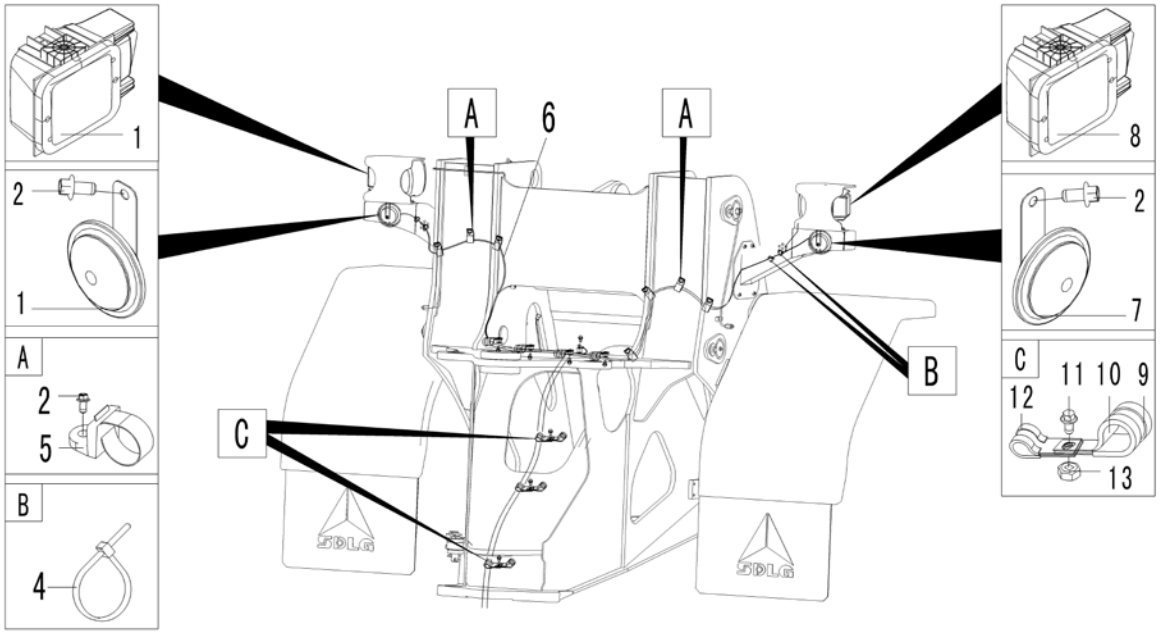

Key	Part No.	Description	Spare parts Y/N	Qty	Remarks
1	4130001047	Lamp	Y	1	
2	4011000461	Bolt	Y	14	
3	11211268	Horn	Y	1	
4	4190001839	Cable tie	Y	6	
5	11214361	Strip clamp	Y	11	
6	29410000141	Cable harness	Y	1	
7	11211269	Horn	Y	1	
8	4130001048	Lamp	Y	1	
9	4041000800	Clamp	Y	3	
10	4041001774	Rubber sleeve	Y	6	
11	4011000560	Bolt	Y	3	
12	26370001921	Clamp	Y	3	
13	4013000150	Nut	Y	3	

Rear frame electric assembly

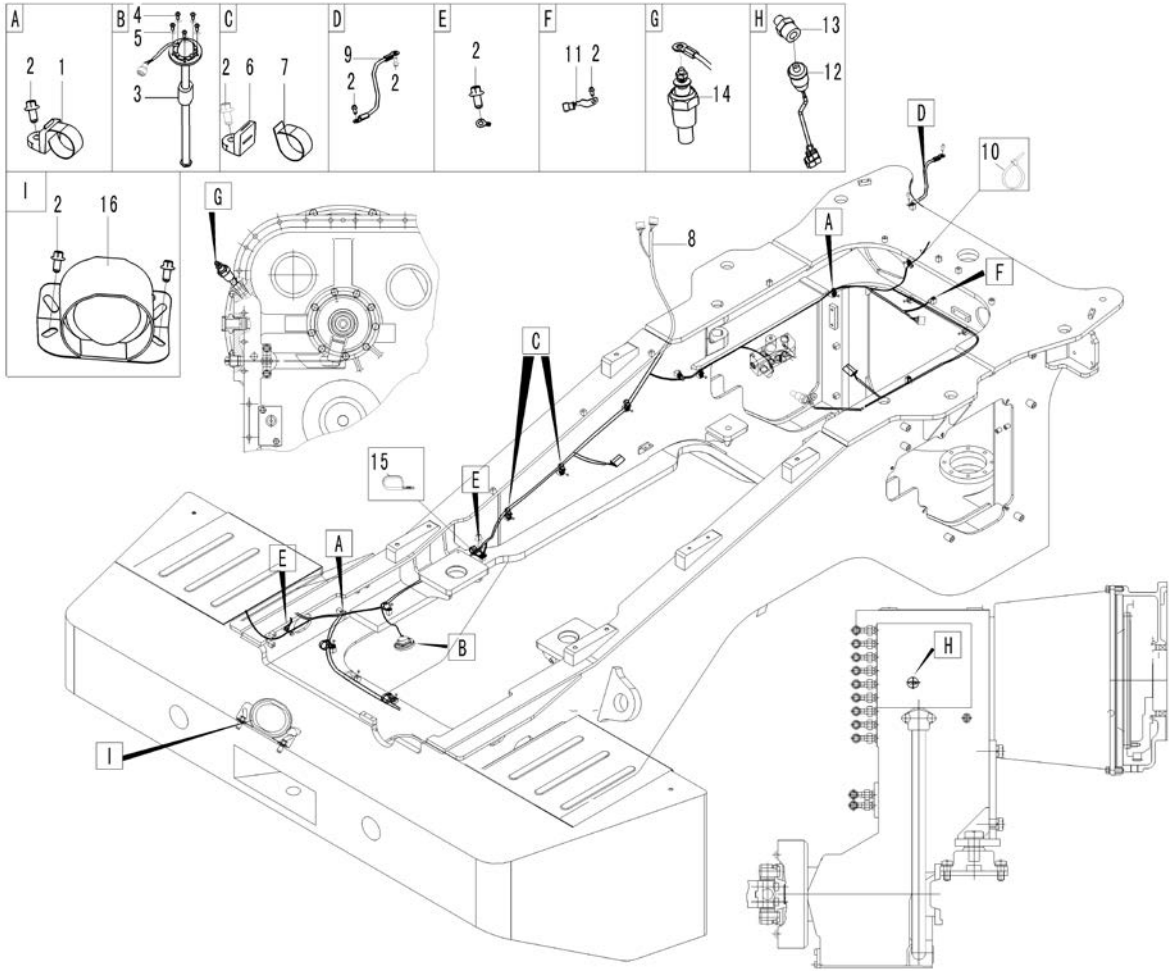

Key	Part No.	Description	Spare parts Y/N	Qty	Remarks
1	11214361	Strip clamp	Y	24	
2	4011000461	Bolt	Y	41	
3	4130001309	Fuel level sensor	Y	1	
4	4014000088	Screw	Y	5	
5	4015000110	Washer	Y	5	
6	11214363	Strip clamp	Y	6	
7	11214362	Strip clamp	Y	6	
8	29420000102	Cable harness	Y	1	
9	29370023221	Battery cable	Y	1	
10	4190001839	Cable tie	Y	10	
11	4130001006	Clip	Y	3	
12	4130001300	Pressure switch	Y	1	
13	29010008841	Nipple	Y	1	
14	4130000202	Temperature sensor	Y	1	
15	26370001971	Clamp	Y	1	
16	4130000121	Buzzer	Y	1	

Cab electric assembly

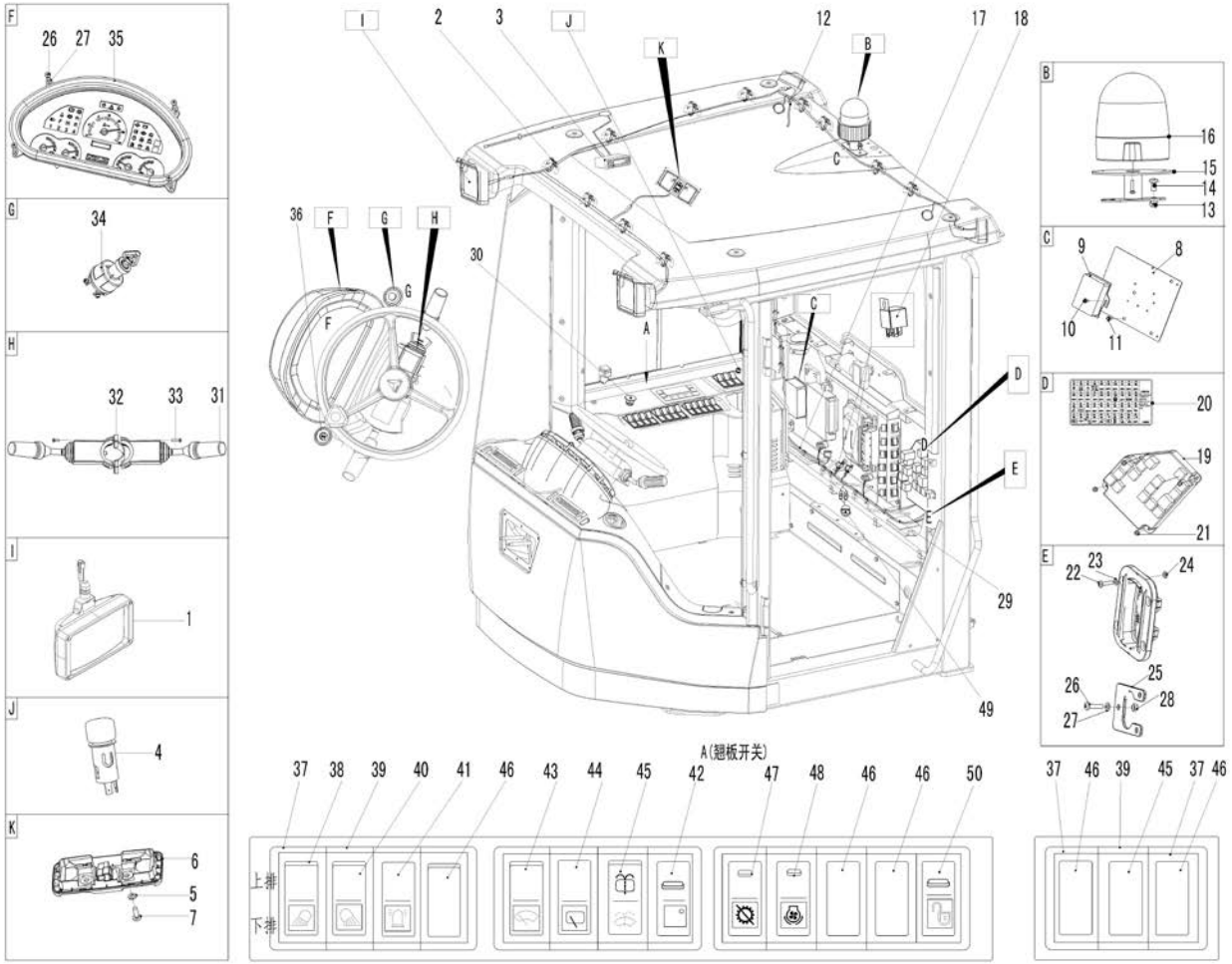

Key	Part No.	Description	Spare parts Y/N	Qty	Remarks
1	4130001685	Lamp	Y	4	
2	4190001839	Cable tie	Y	30	
3	29430000381	Radio	Y	1	
4	4130000700	Cigarette lighter	Y	1	
5	4015000207	Washer	Y	9	
6	4130001413	Lamp	Y	1	
7	4014000042	Screw	Y	1	
8	29370024712	Plate	Y	1	
9	11215636	Voltage converter	Y	1	
10	4011000154	Bolt	Y	2	
11	4011000461	Bolt	Y	11	
12	29430000051	Cable harness	Y	1	
13	4013000033	Nut	Y	2	
14	4011000481	Bolt	Y	2	
15	29370023121	Bracket	Y	1	
16	11215524	Rotating beacon	Y	1	
17	29370024571	Cable harness	Y	1	
18	4130000869	Relay	Y	2	
19	4130001854	Fuse and relay unit	Y	1	
20	4130001855	Fuse	Y	1	
21	4013000028	Nut	Y	4	
22	4014000183	Screw	Y	4	

Cab electric assembly

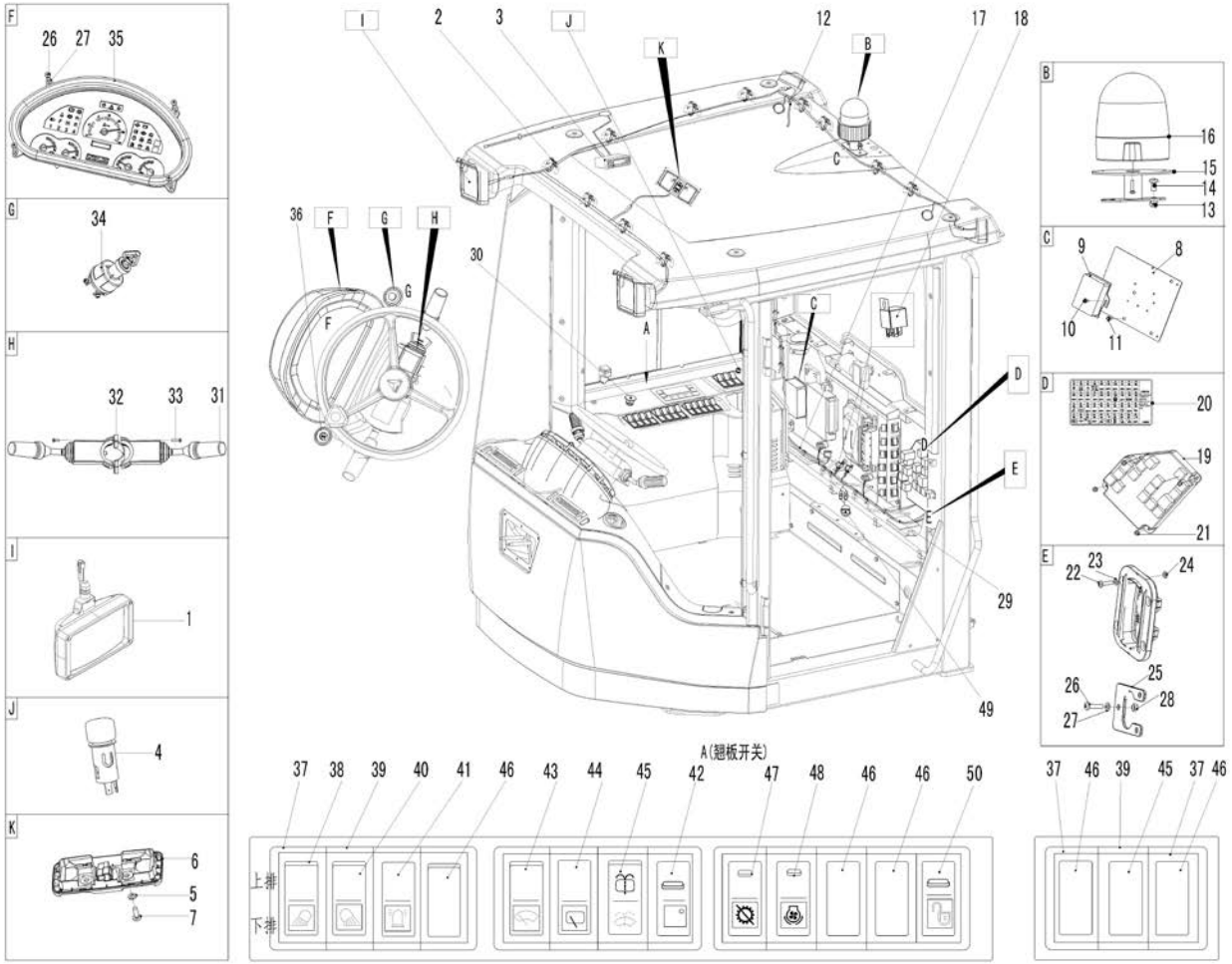

Key	Part No.	Description	Spare parts Y/N	Qty	Remarks
23	4015000200	Washer	Y	4	
24	4013000159	Nut	Y	4	
25	29370024041	Plate	Y	1	
26	4014000088	Screw	Y	7	
27	4015000110	Washer	Y	7	
28	4013000118	Nut	Y	3	
29	29430000072	Cable harness	Y	1	
30	4130002132	Button	Y	1	
31	4130001043	Light switch	Y	1	
32	29370022871	Bracket	Y	1	
33	4014000249	Screw	Y	1	
34	11215151	Starter switch	N	1	
35	29370019421	Display panel	Y	1	
36	4130000426	Button	Y	1	
37	4130000498	Switch panel	Y	8	
38	4130000490	Rocker switch	Y	1	
39	4130000497	Switch panel	Y	8	
40	4130000491	Rocker switch	Y	1	
41	4130000593	Rocker switch	Y	1	
42	4130002133	Rocker switch	Y	1	
43	4130000493	Rocker switch	Y	1	
44	4130001836	Rocker switch	Y	1	

Cab electric assembly

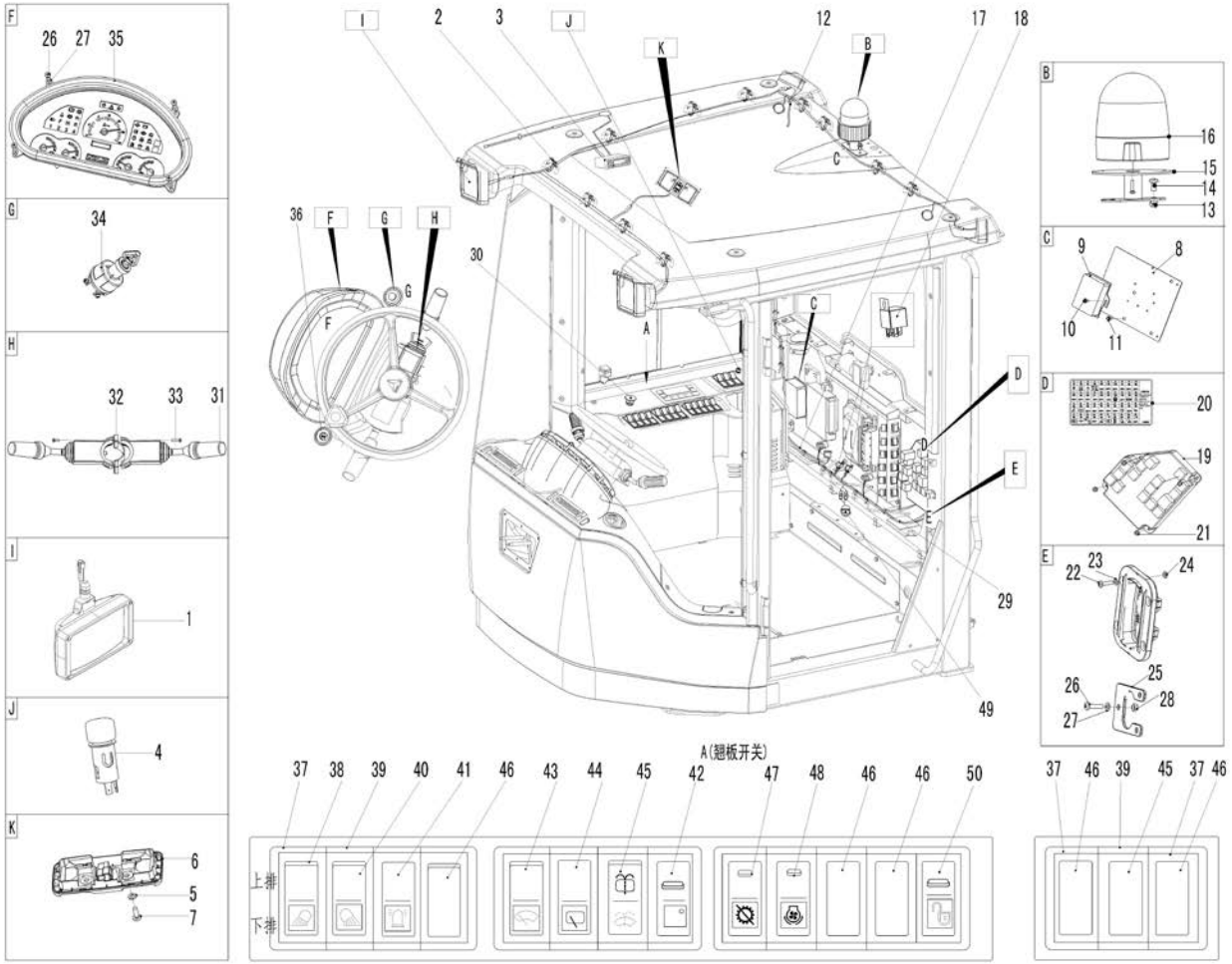

Key	Part No.	Description	Spare parts Y/N	Qty	Remarks
45	4130001835	Rocker switch	Y	1	
46	4130000496	Cover plate	Y	9	
47	4130000504	Rocker switch	Y	1	
48	4130002056	Switch	Y	1	
49	11210355	Socket	Y	1	
50	4130000505	Rocker switch	Y	1	

Engine electric assembly

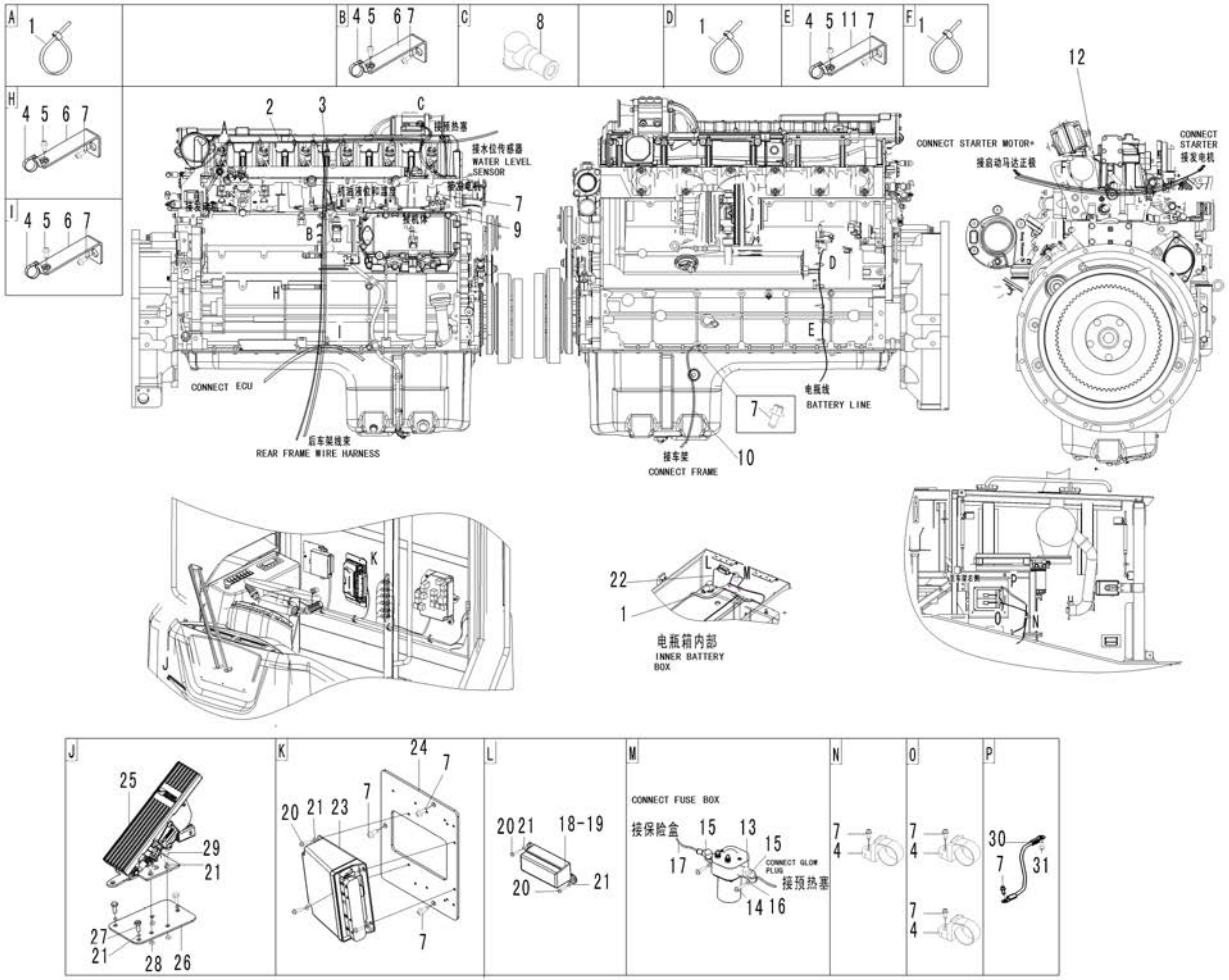

Key	Part No.	Description	Spare parts Y/N	Qty	Remarks
1	4190001839	Cable tie	Y	20	
2	29440000041	Cable harness	Y	1	
3	29370024011	Battery cable	Y	1	
4	3214558810	Strip clamp	Y	8	
5	4011000447	Bolt	Y	4	
6	26370001072	Bracket	Y	3	
7	4011000461	Bolt	Y	14	
8	26370002431	Cable sleeve	Y	1	
9	11210840	Cable	Y	1	
10	29370023201	Ground cable	Y	1	
11	26370001172	Bracket	Y	1	
12	11215803	Cable harness	Y	1	
13	4130001988	Relay	Y	1	
14	4014000023	Screw	Y	2	
15	26370002441	Cable sleeve	Y	4	
16	4015000110	Washer	Y	2	
17	29370024931	Battery cable	Y	1	
18	4130001969	Fuse	Y	2	
19	4130001977	Fuse	Y	1	
20	4011000194	Screw	Y	6	
21	4015000207	Washer	Y	12	
22	29370025271	Battery cable	Y	1	

Engine electric assembly

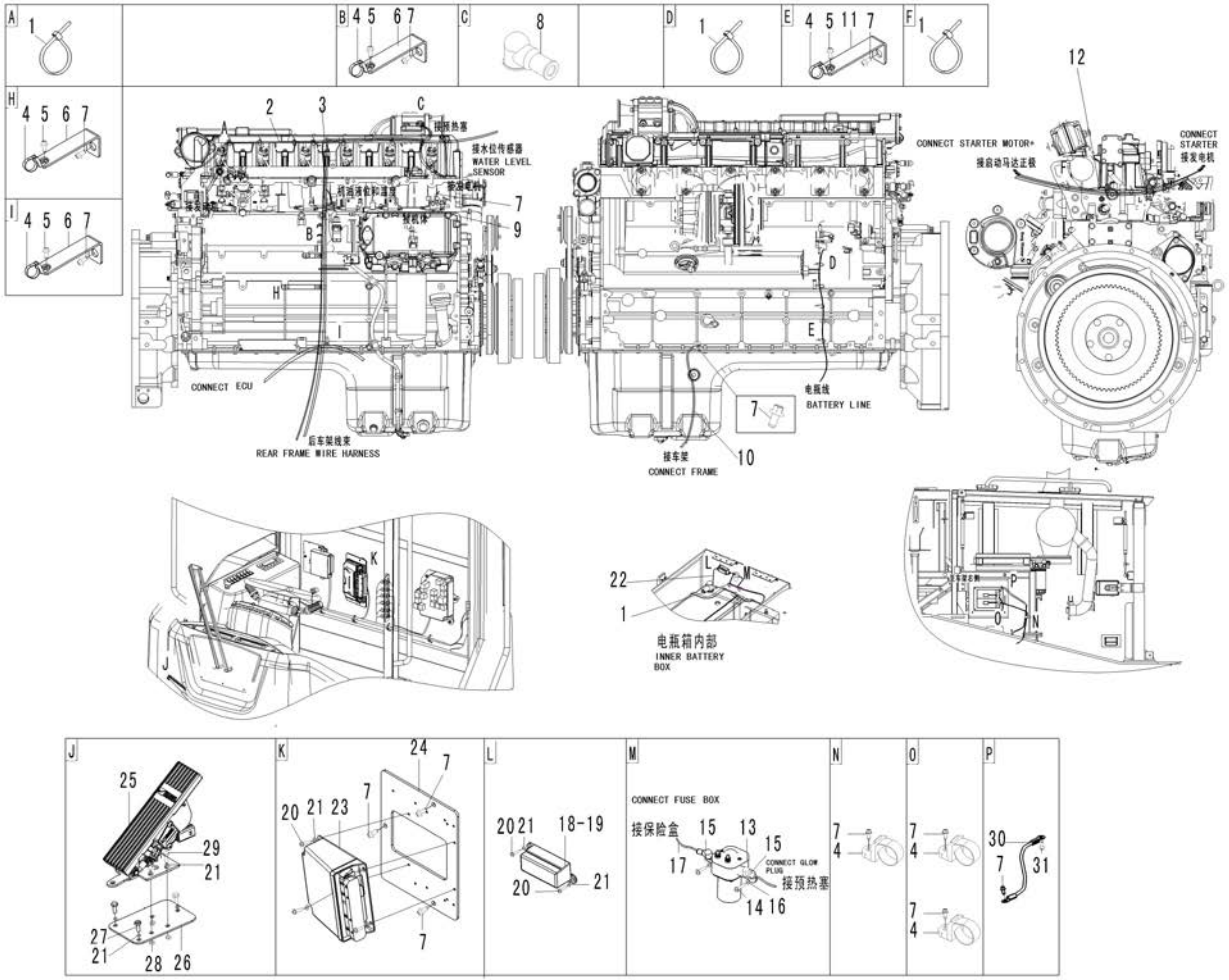

Key	Part No.	Description	Spare parts Y/N	Qty	Remarks
23	4130002003	Connector	Y	1	
24	29370024701	Plate	Y	1	
25	4130002013	Accelerator pedal	Y	1	
26	29440000161	Plate	Y	1	
27	4011000289	Bolt	Y	3	
28	4013000028	Nut	Y	3	
29	4011000154	Bolt	Y	3	
30	29370015791	Battery cable	Y	1	
31	4011000161	Bolt	Y	4	

Engine hood electric assembly

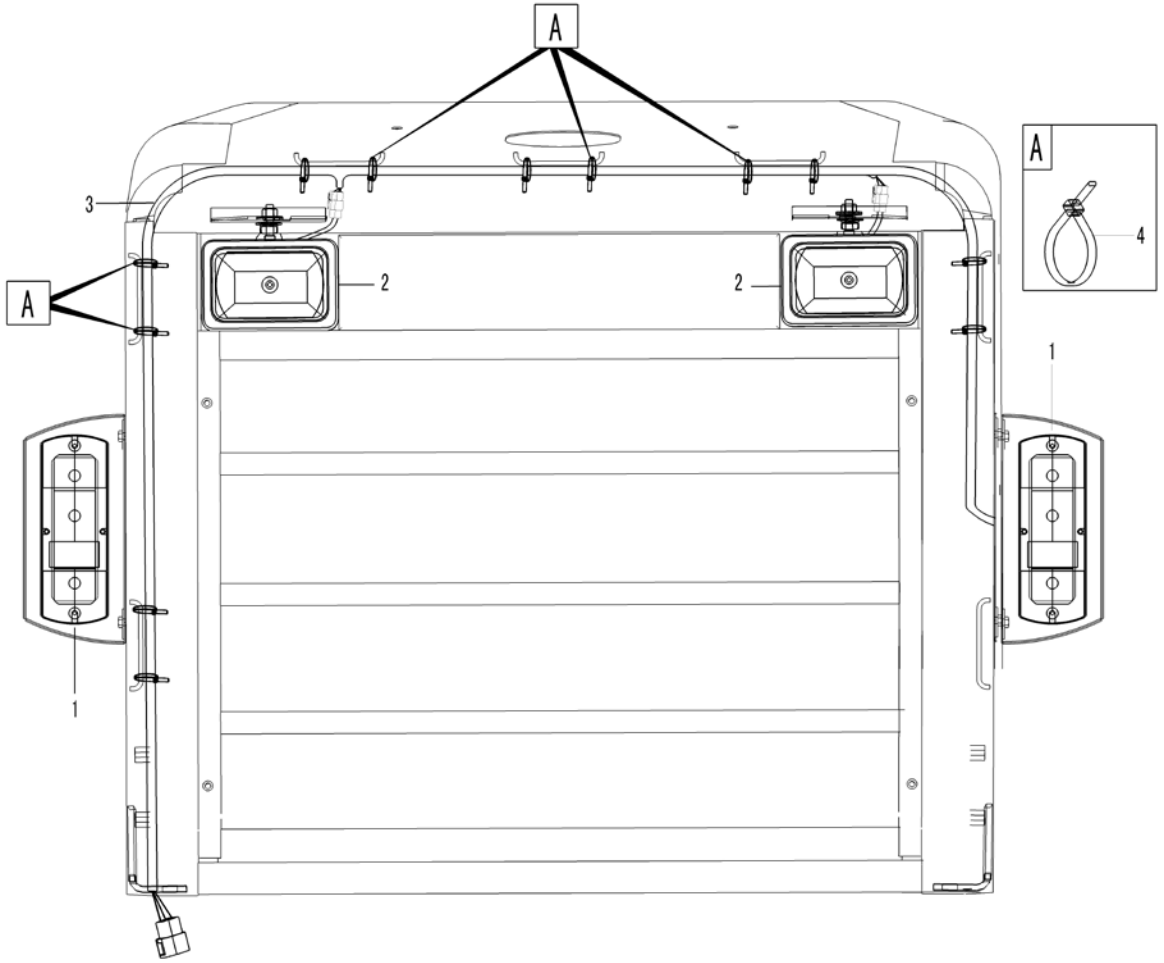

Key	Part No.	Description	Spare parts Y/N	Qty	Remarks
1	4130001909	Tail lamp	Y	2	
2	4130001685	Lamp	Y	2	
3	29370024691	Cable harness	Y	1	
4	4190001839	Cable tie	Y	16	