徐工集团

XCMG

RUTHZIL TRATOR COMERCIAL DE PEÇAS LTDA 11 97083-6812 ROLANDO CITRANGULO

# LW541F 轮式装载机

# 零件手册

XUGONG

# WHEEL LOADER PARTS MANUAL

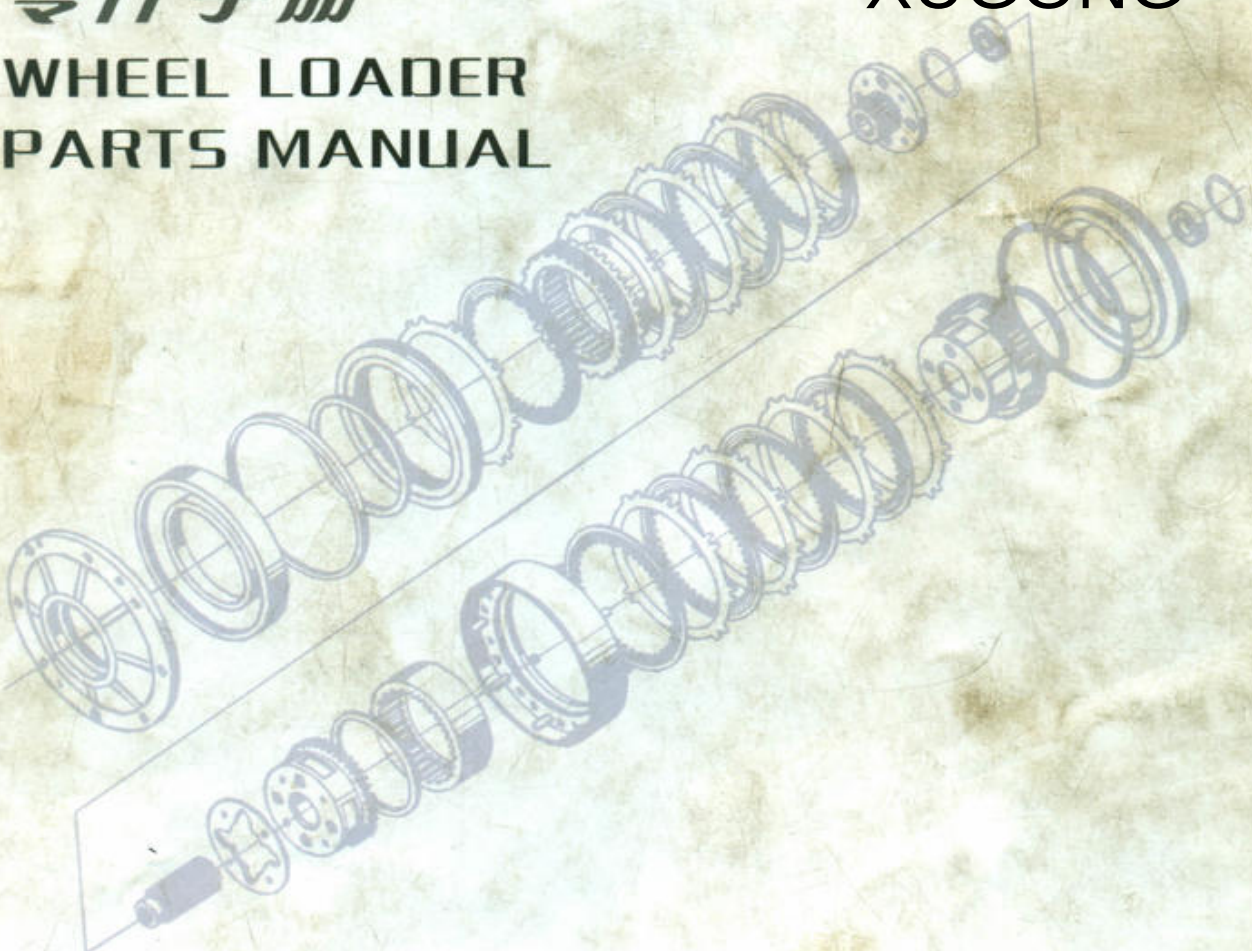

徐工集团工程机械股份有限公司
XCMG Construction Machinery Co., Ltd.

# 前　言

本零件手册仅供选购我公司 LW541F 型轮式装载机零部件时参考。

本零件手册主要介绍了 LW541F 型轮式装载机零部件及各部分的结构和装配关系，供广大用户、销售、及技术人员了解选购、维修和保养时使用。

在本手册零件中，凡是不可拆卸的部件(焊接件、铆接件)一般只标出部件代号，不再另列其组成零件的代号。

订购零部件时，为避免订购和我公司发货失误，请务必注明以下各项详细资料：

轮式装载机的出厂日期和编号

所订购的零部件的代号和名称

所需数量

如果你需要邮购，需详细注明邮往地点、单位和邮政编码。

LW541F 型轮式装载机将根据技术发展和用户的要求不断改进，因此本零件手册也将定期补充修订；如有更改，恕不另行通知。

# FOREWORD

This manual can provide you reference when you purchasing the XCMG LW541F Wh Loader.

This manual mainly introduces the parts,component structures and assemblies of ev system of the loader,which can help users,sellers and technicians purchase and service loader.

In this manual,those parts (including welded parts or riveted parts) which can't dismantled furthermore have been numbered, so no separate number is given to th composite parts.

When you need to purchase some parts from us, please inform us of the followi information clearly to ensure we can deliver you the right staffs you just need.

ex-work date and serial number of the Wheel Loader.

Part No. and Part Description of the parts that you need.

Quantity of the parts that you wish to buy..

Please advise us of your mailing address,company name and post code if you wish us send parts to you by mail.

The LW541F Wheel Loader will be updated technically,so we reserve the right to mak changes to this manual at any time without giving prior notice.

# 目 录


1. 动力与传动系统 Engine and Transmission System

1.1 发动机系统 Engine System ····· 1-01

1.2 驱动桥总成 Driving Axle Ass. ····· 1-13

1.3 主减速器总成 Main Reduction Parts ····· 1-15

1.4 差速器总成 Diff. Assembly ····· 1-19

1.5 轮连减速器总成 Rim Reduction Gear Ass. ····· 1-21

1.6 双钳盘式制动器总成 Double Clamp Disk Brake Ass. ····· 1-23

1.7 桥壳总成 Axle Housing Ass. ····· 1-25

1.8 轮胎、轮辋总成 Tyre and Rim Ass. ····· 1-27

1.9 变速箱、变矩器系统 Transmission & Torque Converter Ass. ····· 1-29

1.10 变矩器 Torque Converter ····· 1-31

1.11 滤清器 Fuel Filter ····· 1-35

1.12 前传动轴 Front Transmitting Shaft ····· 1-37

1.13 后传动轴 Rear Transmitting Shaft ····· 1-39

1.14 ZL40/ZL50 型变速器总成 9010430 Transmission Assembly ····· 1-41

1.15 液力变矩器 9325900 Torque Converter ····· 1-43

1.16 壳体安装 Transmission Housing Fixing ····· 1-47

1.17 驱动齿轮安装 Drive Gear Fixing ····· 1-51

1.18 三轴总成 9310485 Three Shafts Assembly ····· 1-53

1.19 超越离合器 9355380 Overrun Clutch ····· 1-55

1.20 四轴总成 9355329 Four Shafts Assembly ····· 1-57

1.21 二档总成 9355361 2st Forward Assembly ····· 1-59

1.22 五轴总成 9358819 Five Shafts Assembly ····· 1-61

1.23 变速泵 9355353 Gearshift Pump ····· 1-63

1.24 变速操纵阀 5000640 Gearshift Control Valve ····· 1-65

1.25 油底壳安装 9310075 Oil Sump Fixing ····· 1-67

1.26 油门操纵阀 Accelerator Control Valve ····· 1-69

1.27 燃油箱 Fuel Tank ····· 1-71

2. 车架与附件 Chassis and Accessories

2.1 前车架总成 Front Chassis Group ····· 2-01

2.2 后车架总成 Rear Chassis Group ····· 2-05

2.3 左/右台架 Left/Right Platform ····· 2-09

2.4 爬梯 Ladder ····· 2-11

2.5 机罩 Engine Hood ……
2.6 电瓶箱部分 Battery Box ……
3. 工作装置 Working Device
3.1 工作装置 Working Device ……
4. 操纵与驾驶室 Controls and Cad
4.1 变速操纵系统 Shift Control System ……
4.2 操纵杆系 Control System ……
4.3 驾驶室总成 Cab Assembly ……
4.4 暖风系统 Heat Blower System ……
4.5 空调系统 Conditioner System ……
5. 制动系统 Brake System
5.1 制动系统 Brake System ……
5.2 空气加力泵组 Sir Master Unit ……
5.3 制动器 Parking Brake ……
5.4 切断气缸 Break Air Cylinder 制动气缸 Brake Air Cylinder ……
6. 液压系统 Hydraulic System
6.1 工作液压系统 Working Hydraulic System ……
6.2 齿轮泵 Gear Pump ……
6.3 分配阀 Distributing Valve ……
6.4 转向液压系统 Steering Hydraulic System ……
6.5 全液压转向器 Hydraulic Steering Control Units ……
6.6 左/右转向油缸 Left/Right Steering Cylinder ……
6.7 单稳阀 Constant-Flow Valve ……
6.8 机油箱总成 Hydraulic Oil Tank ……
6.9 转斗油缸 Tilt Cylinder ……
6.10 左/右动臂油缸 Left/Right Lift Cylinder ……
7. 电器系统 Electrical System
7.1 电器系统 Electrical System ……

# 动力与传动系统

# Engine and Transmission System



## 1.1 发动机系统(WD615G.220) Engine System

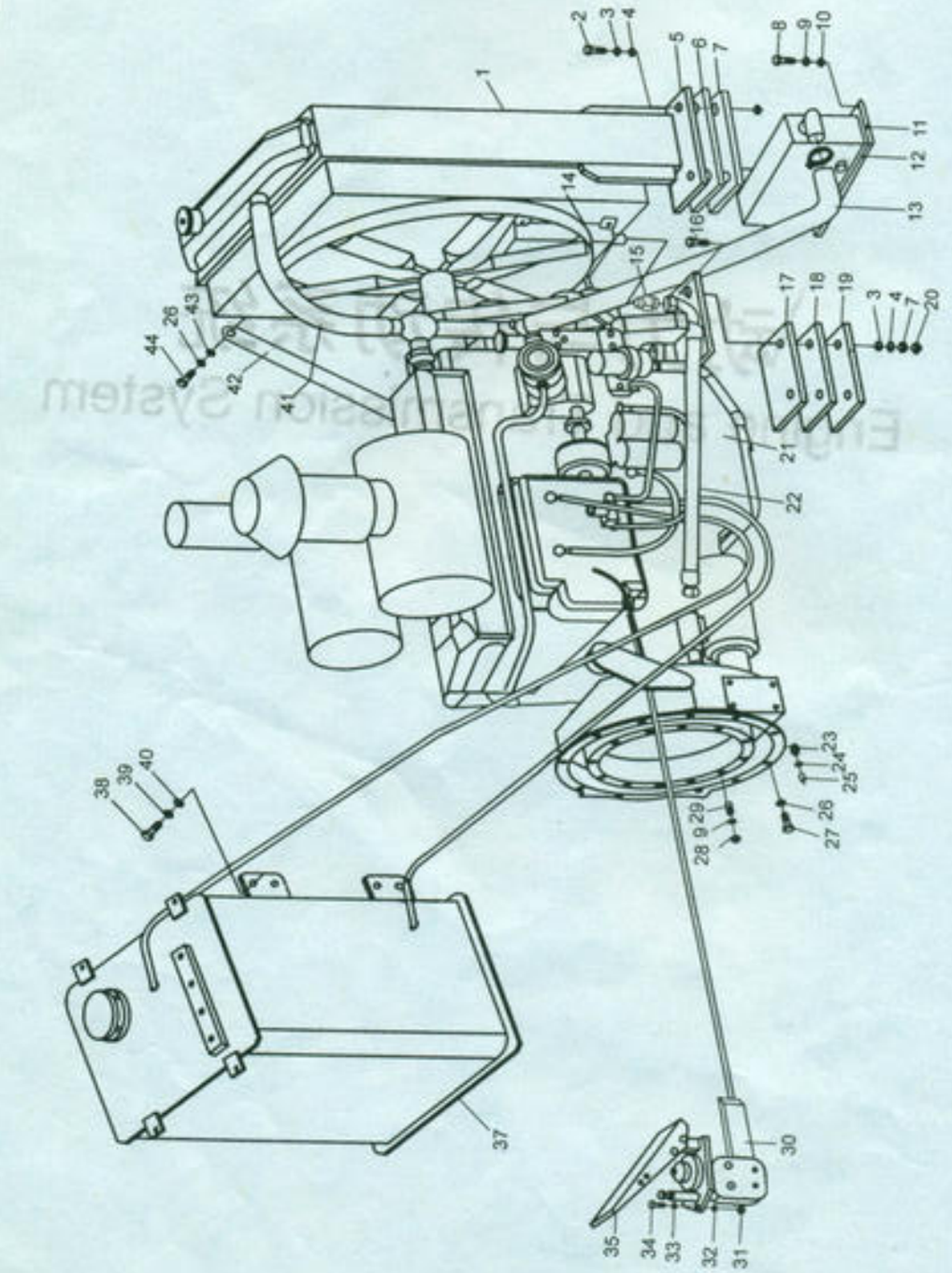

## 1.1 发动机系统(WD615G.220) Engine System

| 序号 Sr.No | 零件代号 Part No. | 名称 Part Description | | 数量 Q'ty |
|---|---|---|---|---|
| 1 | XGSX01-46 | 水箱总成 | Water Tank | 1 |
| 2 | GB5783-86 | 螺栓 M14×70 | Bolt | 4 |
| 3 | GB93-87 | 垫圈 14 | Washer | 8 |
| 4 | GB97.1-85 | 垫圈 14 | Washer | 8 |
| 5 | LW560F.01A.1-3 | 减振垫 | Absorber | 4 |
| 6 | LW560F.01A.1-4 | 垫板 | Gasket | 2 |
| 7 | GB6170-86 | 螺母 M14 | Nut | 8 |
| 8 | GB5783-86 | 螺栓 M10×30 | Bolt | 4 |
| 9 | GB93-87 | 垫圈 10 | Washer | 16 |
| 10 | GB97.1-85 | 垫圈 10 | Washer | 4 |
| 11 | XGYS01-13 | 水冷器总成 | Radiator | 1 |
| 12 | JB/T8870-1999 | 喉箍 D70 | Clump | 6 |
| 13 | LW560F.01A.1A-1 | 下水管 | Hose | 1 |
| 14 | XGYS01-14 | 液压油散 | Hydraulic Oil Radiator | 1 |
| 15 | LW560F.7.2.5 | 接头 | Tie-In | 2 |
| 16 | GB5782-86 | 螺栓 M10×30 | Bolt | 4 |
| 17 | ZL40.1-6 | 橡胶垫 | Rubber Washer | 2 |
| 18 | ZL40A.01-11 | 减振垫 | Absorber | 2 |
| 19 | ZL40A.1-12 | 垫板 | Washer | 2 |
| 20 | GB6172-86 | 螺母 M14 | Nut | 4 |
| 21 | WD61567G3-36 | 发动机 | Engine | 1 |
| 22 | LW560F.7.2.8 | 胶管 | Hose | 2 |
| 23 | ZL50E.1.3 | 直角接头 | Tie-In | 1 |
| 24 | JB/T8870-1999 | 喉箍 D32 | Clump | 2 |
| 25 | ZL50E.1-1 | 软管 | Hose | 1 |
| 26 | GB93-87 | 垫圈 12 | Washer | 20 |
| 27 | GB5783-86 | 螺栓 M12×45 | Bolt | 12 |
| 28 | GB6171-86 | 螺母 M10×1 | Nut | 12 |
| 29 | GB899-88 | 螺柱 AM10×1×20 | Bolt | 12 |

## 1.1 发动机系统(WD615G.220) Engine System

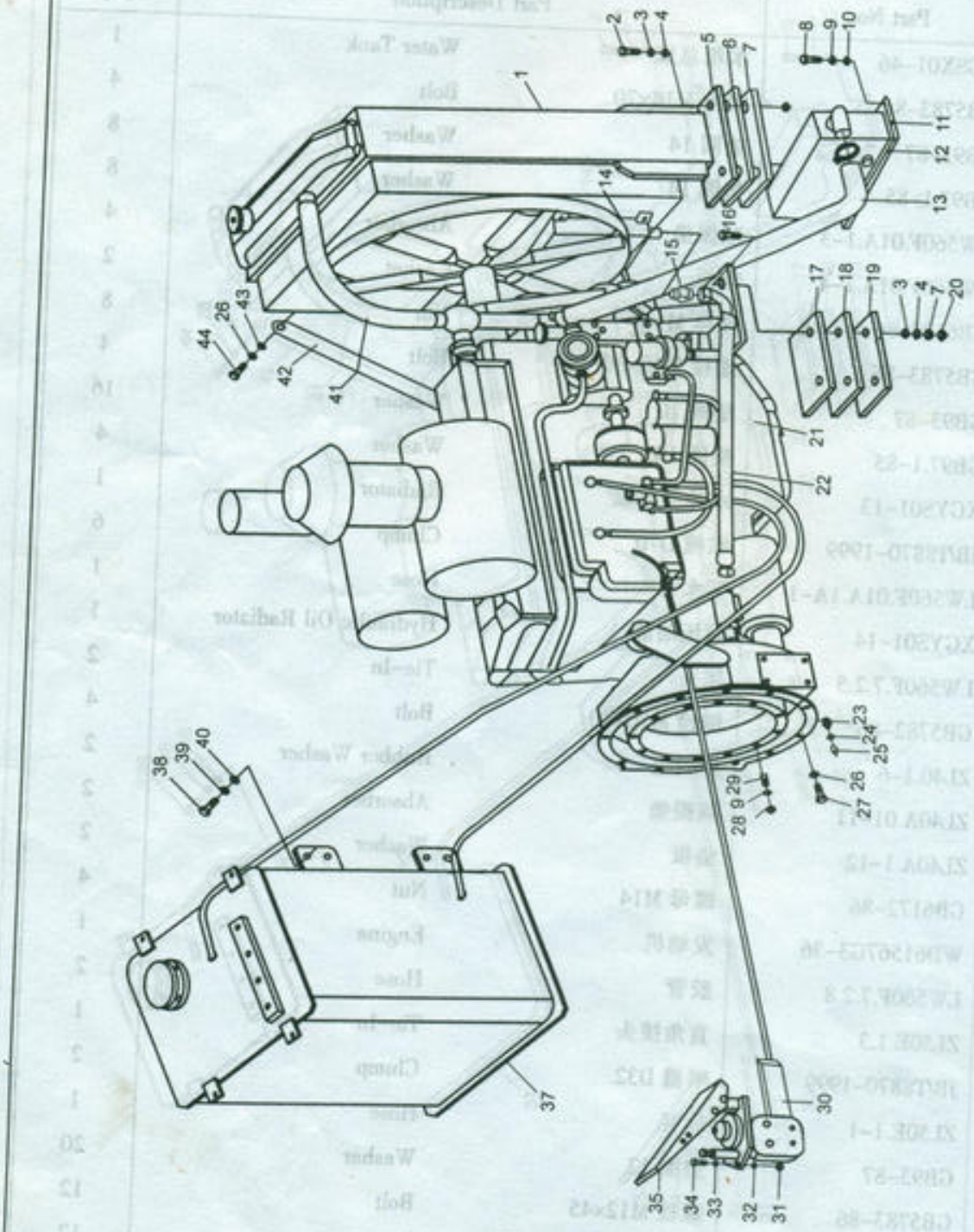

## 1.1 发动机系统(WD615G.220) Engine System

| 序号 Sr.No | 零件代号 Part No. | 名称 Part Description | 数量 Q'ty |
|---|---|---|---|
| 30 | Z5G.1.1.7A-1 | 支架 Bracket | 1 |
| 31 | GB6170-86 | 螺母 M6 Nut | 2 |
| 32 | GB93-87 | 垫圈 6 Washer | 5 |
| 33 | GB97.1-85 | 垫圈 6 Washer | 7 |
| 34 | GB5783-86 | 螺栓 M6×25 Bolt | 5 |
| 35 | XZ1129001 | 油门操纵阀 Accelerator Control Value | 1 |
| 37 | LW560F.1.1.1 | 燃油箱 Fuel Tank | 1 |
| 38 | GB5783-86 | 螺栓 M20×40 Bolt | 8 |
| 39 | GB93-87 | 垫圈 20 Washer | 8 |
| 40 | GB97.1-85 | 垫圈 20 Washer | 8 |
| 41 | LW560F.01A.1-1 | 上水管 Hose | 1 |
| 42 | LW560F.01AII.1A-1 | 水箱支撑杆 Bracket | 2 |
| 43 | GB97.1-85 | 垫圈 12 Washer | 8 |
| 44 | GB5783-86 | 螺栓 M12×30 Bolt | 4 |

## 1.1 发动机系统(D9-220) Engine System

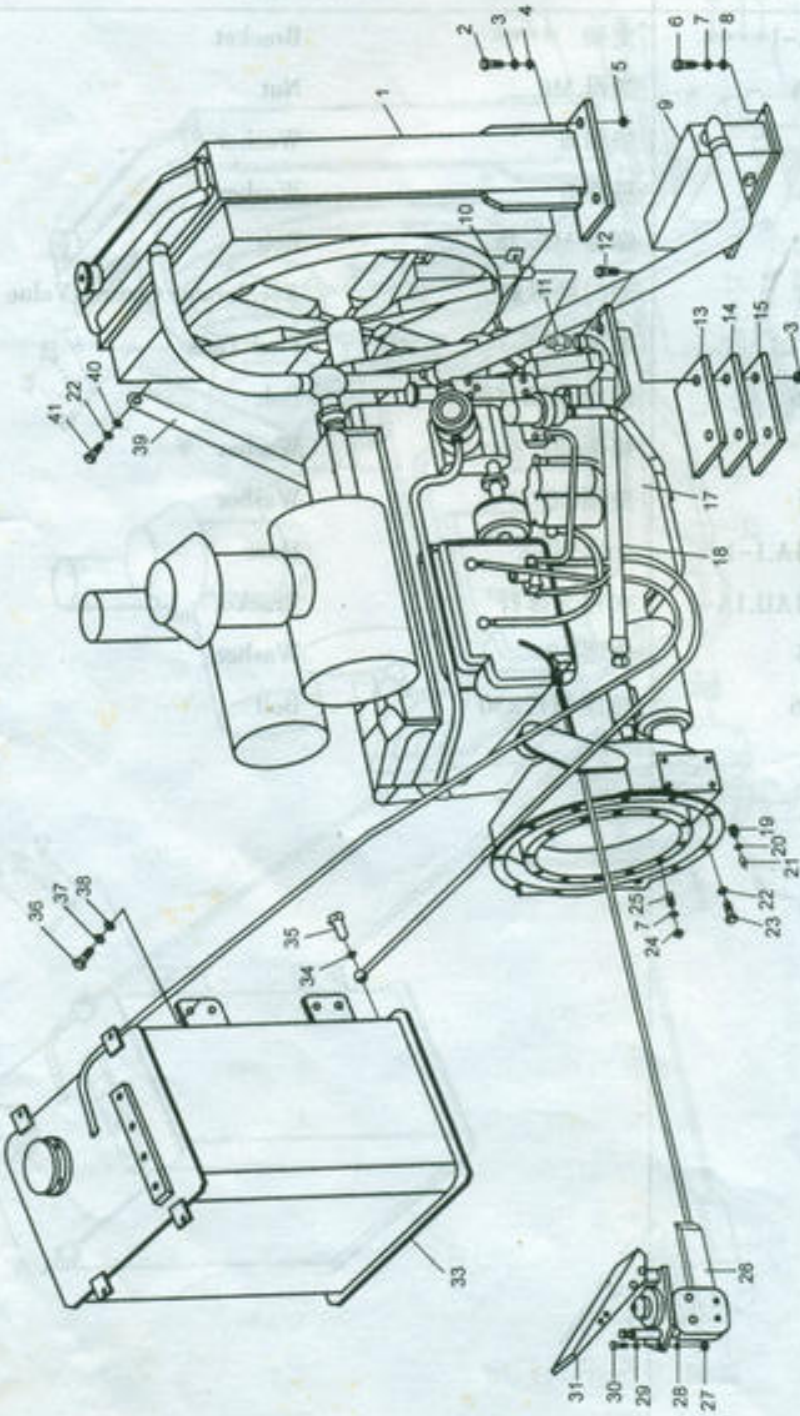

## 1.1 发动机系统(D9-220) Engine System

| 序号 Sr.No | 零件代号 Part No. | 名称 Part Description | | 数量 Q'ty |
|---|---|---|---|---|
| 1 | XGSX01-41 | 水箱总成 | Radiator | 1 |
| 2 | GB5783-86 | 螺栓 M14×70 | Bolt | 4 |
| 3 | GB93-87 | 垫圈 14 | Washer | 8 |
| 4 | GB97.1-85 | 垫圈 14 | Washer | 12 |
| 5 | GB6170-86 | 螺母 M14 | Nut | 8 |
| 6 | GB5783-86 | 螺栓 M10×30 | Bolt | 5 |
| 7 | GB93-87 | 垫圈 10 | Washer | 17 |
| 8 | GB97.1-85 | 垫圈 10 | Washer | 5 |
| 9 | XGYS01-13 | 水冷器总成 | Radiator | 1 |
| 10 | XGYS01-14 | 液压油散 | Hydraulic Oil Radiator | 1 |
| 11 | LW560F.7.2.5 | 接头 | Tie-In | 2 |
| 12 | GB5783-86 | 螺栓 M14×100 | Bolt | 4 |
| 13 | ZL40.1-6 | 橡胶垫 | Washer | 2 |
| 14 | ZL40A.01-11 | 减振垫 | Absorber | 2 |
| 15 | ZL40A.1-12 | 垫板 | Washer | 2 |
| 16 | GB6172-86 | 螺母 M14 | Nut | 4 |
| 17 | D9-220(DBL0423) | 发动机 | Engine | 1 |
| 18 | LW560F.7.2.8 | 胶管 | Hose | 2 |
| 19 | ZL50E.1.3 | 接头 | Tie-In | 1 |
| 20 | JB/T8870-1999 | 喉箍 D32 | Clump | 2 |
| 21 | ZL50E.1-1 | 软管 | Hose | 1 |
| 22 | GB93-87 | 垫圈 12 | Washer | 16 |
| 23 | GB5783-86 | 螺栓 M12×45 | Bolt | 12 |
| 24 | GB6171-86 | 螺母 M10×1 | Nut | 12 |
| 25 | GB899-88 | 螺柱 AM10×1×20 | Bolt | 12 |
| 26 | Z5G.1.1.7A-1 | 支架 | Bracket | 1 |
| 27 | GB6170-86 | 螺母 M6 | Nut | 2 |
| 28 | GB93-87 | 垫圈 6 | Washer | 5 |
| 29 | GB97.1-85 | 垫圈 6 | Washer | 7 |

## 1.1 发动机系统(D9-220) Engine System

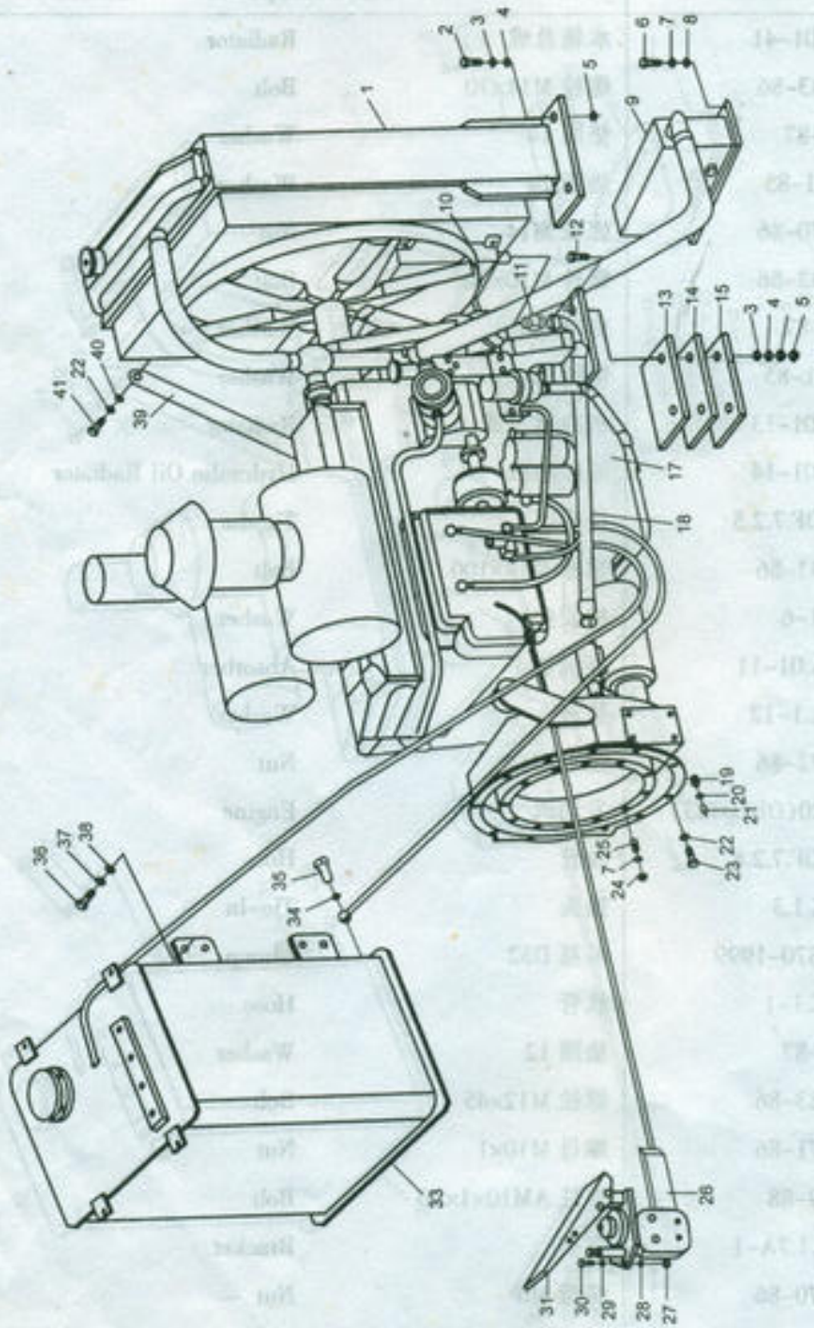

## 1.1 发动机系统(D9-220) Engine System

| 序号 Sr.No | 零件代号 Part No. | 名称 Part Description | | 数量 Q'ty |
|---|---|---|---|---|
| 30 | GB5783-86 | 螺栓 M6×25 | Bolt | 5 |
| 31 | XZ1129001 | 油门操纵阀 | Accelerator Control Value | 1 |
| 33 | LW560F.1.1.1 | 燃油箱 | Fuel Tank | 1 |
| 34 | Q/SC1294-2000 | 垫圈 14 | Washer | 4 |
| 35 | ZL50.1.4-1S | 空心螺栓 | Bolt | 2 |
| 36 | GB5783-86 | 螺栓 M20×40 | Bolt | 8 |
| 37 | GB93-87 | 垫圈 20 | Washer | 8 |
| 38 | GB97.1-85 | 垫圈 20 | Washer | 8 |
| 39 | LW560F.01AII.1A-1 | 水箱支撑杆 | Supporting Rod | 2 |
| 40 | GB97.1-85 | 垫圈 12 | Washer | 4 |
| 41 | GB5783-86 | 螺栓 M12×30 | Bolt | 4 |

## 1.1 发动机系统 (YC6M220G(M3010)) Engine System

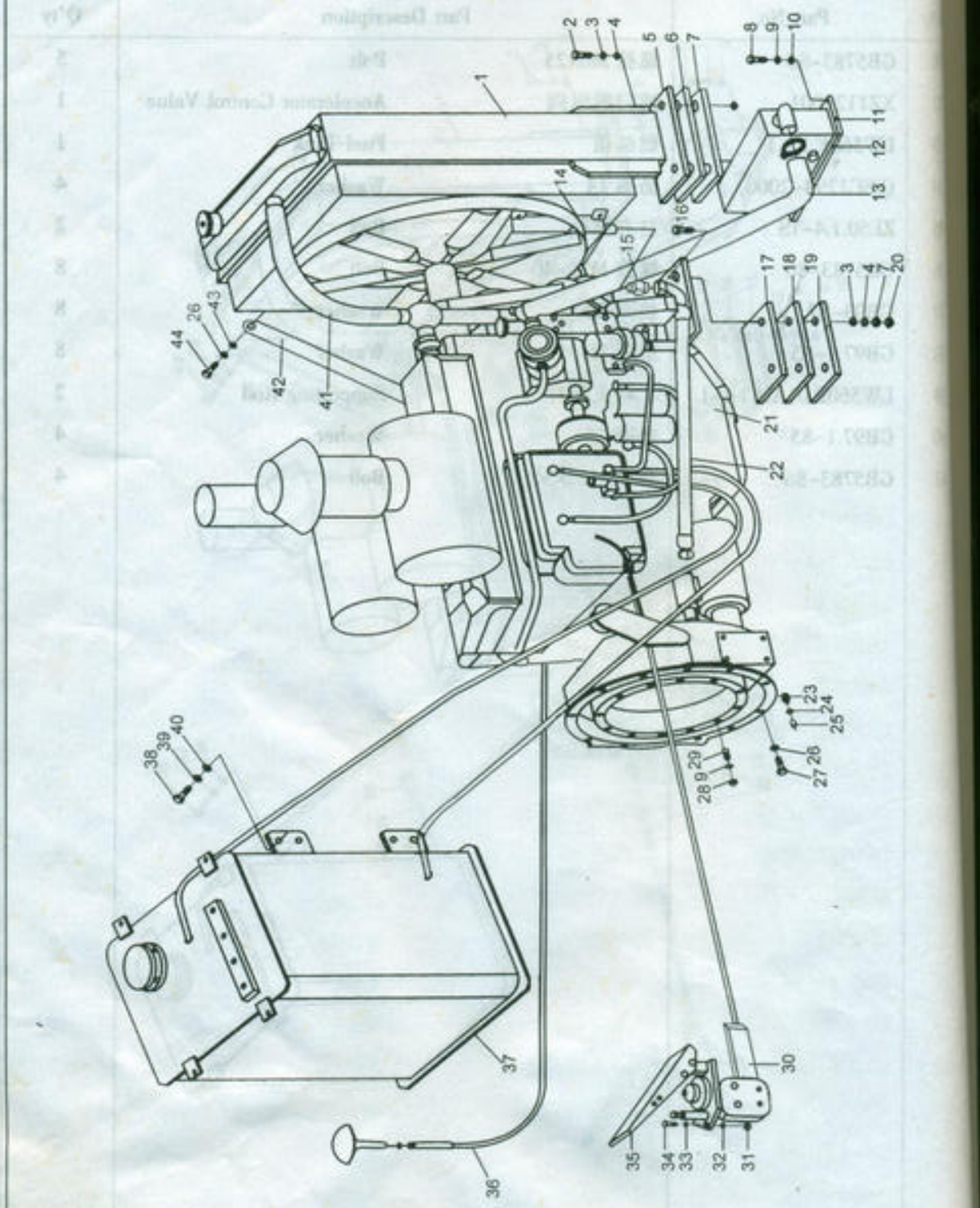

## 1.1 发动机系统 (YC6M220G(M3010)) Engine System

| 序号 Sr.No | 零件代号 Part No. | 名称 Part Description | | 数量 Q'ty |
|---|---|---|---|---|
| 1 | XGSX01-46 | 水箱总成 | Radiator | 1 |
| 2 | GB5783-86 | 螺栓 M14×70 | Bolt | 4 |
| 3 | GB93-87 | 垫圈 14 | Washer | 8 |
| 4 | GB97.1-85 | 垫圈 14 | Washer | 8 |
| 5 | LW560F.01A.1-3 | 减振垫 | Absorber | 4 |
| 6 | LW560F.01A.1-4 | 垫板 | Gasket | 2 |
| 7 | GB6170-86 | 螺母 M14 | Nut | 8 |
| 8 | GB5783-86 | 螺栓 M10×30 | Bolt | 4 |
| 9 | GB93-87 | 垫圈 10 | Washer | 16 |
| 10 | GB97.1-85 | 垫圈 10 | Washer | 4 |
| 11 | XGYS01-13 | 水冷器总成 | Radiator | 1 |
| 12 | JB/T8870-1999 | 喉箍 D70 | Clump | 6 |
| 13 | LW560F.01A.1AIII-2 | 下水管 | Hose | 1 |
| 14 | XGYS01-14 | 液压油散 | Radiator | 1 |
| 15 | LW560F.7.2.5 | 接头 | Tie-In | 2 |
| 16 | GB5782-86 | 螺栓 M10×30 | Bolt | 4 |
| 17 | ZL40.1-6 | 橡胶垫 | Washer | 2 |
| 18 | ZL40A.01-11 | 减振垫 | Absorber | 2 |
| 19 | ZL40A.1-12 | 垫板 | Washer | 2 |
| 20 | GB6172-86 | 螺母 M14 | Nut | 4 |
| 21 | YC6M220G(M3010) | 发动机 | Engine | 1 |
| 22 | LW560F.7.2.8 | 胶管 | Hose | 2 |
| 23 | ZL50E.1.3 | 直角接头 | Tie-In | 1 |
| 24 | JB/T8870-1999 | 喉箍 D32 | Clump | 2 |
| 25 | ZL50E.1-1 | 软管 | Hose | 1 |
| 26 | GB93-87 | 垫圈 12 | Washer | 20 |
| 27 | GB5783-86 | 螺栓 M12×45 | Bolt | 12 |
| 28 | GB6171-86 | 螺母 M10×1 | Nut | 1 |
| 29 | GB899-88 | 螺柱 AM10×1×20 | Bolt | |

## 1.1 发动机系统 (YC6M220G(M3010)) Engine System

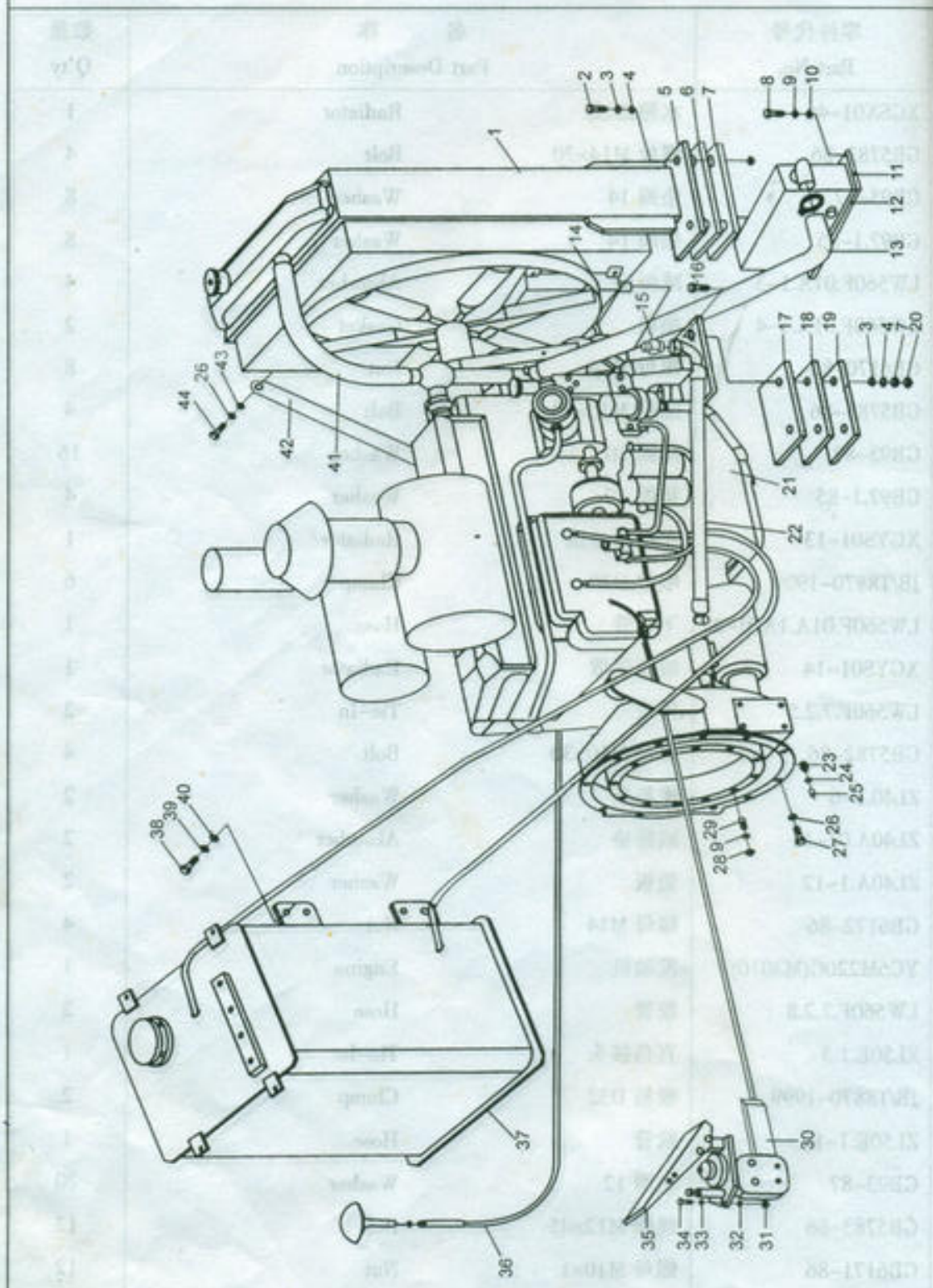

## 1.1 发动机系统 (YC6M220G(M3010)) Engine System

| 序号 Sr.No | 零件代号 Part No. | 名称 Part Description | 数量 Q'ty |
|---|---|---|---|
| 30 | Z5G.1.1.7A-1 | 支架 Bracket | 1 |
| 31 | GB6170-86 | 螺母 M6 Nut | 2 |
| 32 | GB93-87 | 垫圈 6 Washer | 5 |
| 33 | GB97.1-85 | 垫圈 6 Washer | 7 |
| 34 | GB5783-86 | 螺栓 M6×25 Bolt | 5 |
| 35 | XZ1129001 | 油门操纵阀 Accelerator Control Value | 1 |
| 36 | 540F(VI).01.2 | 熄火操纵 Flameout Control | 1 |
| 37 | LW560F.1.1.1 | 燃油箱 Fuel Tank | 1 |
| 38 | GB5783-86 | 螺栓 M20×40 Bolt | 8 |
| 39 | GB93-87 | 垫圈 20 Washer | 8 |
| 40 | GB96-85 | 垫圈 20 Washer | 8 |
| 41 | LW560F.01A.1AIII-1 | 上水管 Hose | 1 |
| 42 | LW560F.01AII.1A-1 | 水箱支撑杆 Bracket | 2 |
| 43 | GB97.1-85 | 垫圈 12 Washer | 8 |
| 44 | GB5783-86 | 螺栓 M12×30 Bolt | 4 |

## 1.2 驱动桥总成 Driving Axle Ass.

20/18-C216NZS-1 前桥总成

DIANTEIRO

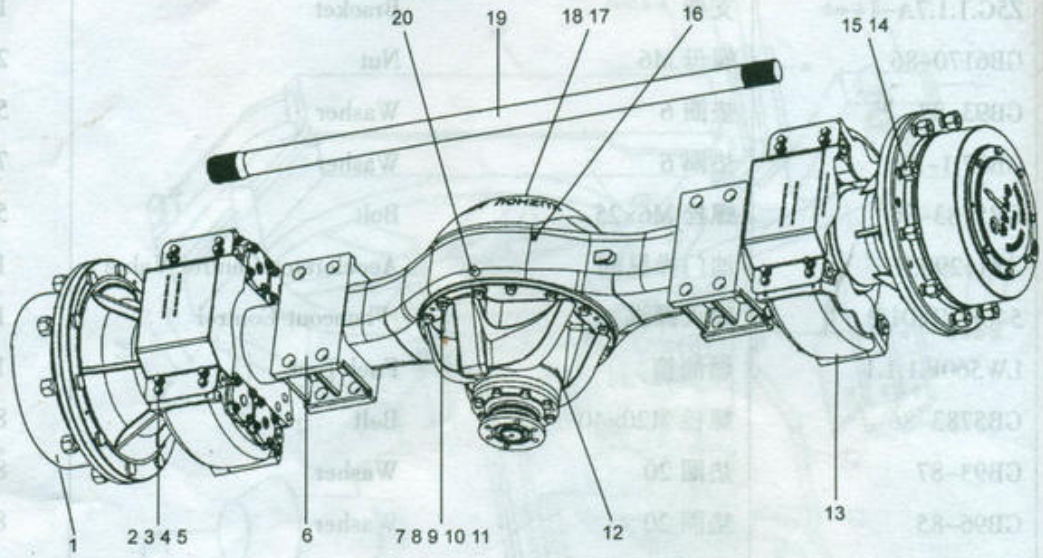


~~TAS~~

20/18-C216NZT-1 后桥总成

TRASEIRO

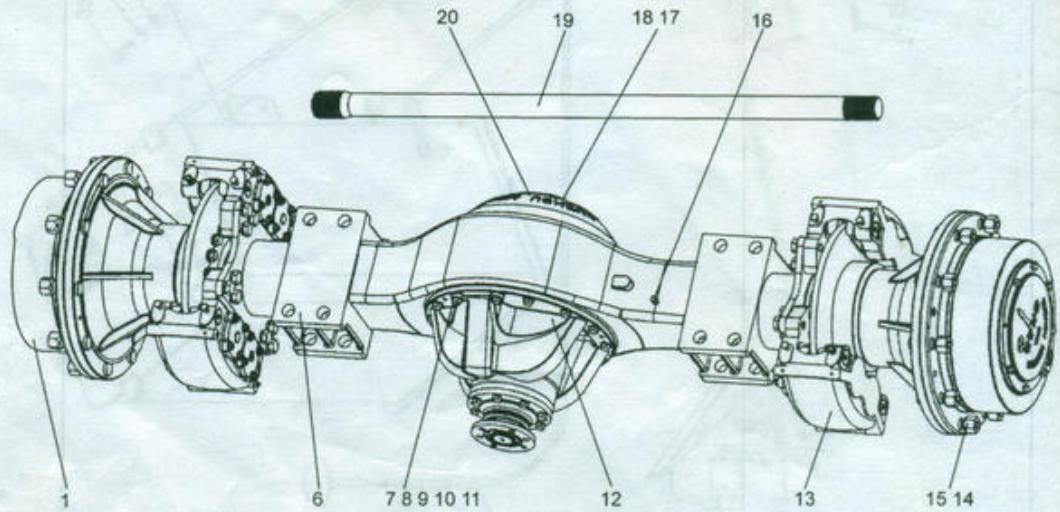

## 1.2 驱动桥总成 Driving Axle Ass.

| 序号 Sr.No | 零件代号 Part No. | 名称 Part Description | | 数量 Q'ty |
|---|---|---|---|---|
| 1 | 83741300 | 轮边减速器总成 | Rim Reduction Gear Ass. | 4 |
| 2 | 80303002 | 防尘罩 | Cover | 2 |
| 3 | 52000002 | 垫圈 10 | Washer | 8 |
| 4 | 52000003 | 垫圈 10 | Washer | 8 |
| 5 | 50009011 | 螺栓 M10×20 | Bolt | 8 |
| 6 | 81741100 | 桥壳总成(前桥) | Axle Housing Ass. | 1 |
| | 81742100 | 桥壳总成(后桥) | Axle Housing Ass. | 1 |
| 7 | 50012019 | 螺栓 M14×1.5×40 | Bolt | 4 |
| 8 | 50012017 | 螺栓 M14×1.5×35 | Bolt | 20 |
| 9 | 50011012 | 螺栓 M14×1.5×60 | Bolt | 4 |
| 10 | 51270005 | 销 A12×20 | Pin | 6 |
| 11 | 52020005 | 垫圈 14 | Washer | 28 |
| 12 | 82290500 | 主减速器总成(前桥) | Main Reduction Gear Ass.(Front Axle) | 1 |
| | 82290600 | 主减速器总成(后桥) | Main Reduction Gear Ass.(Rear Axle) | 1 |
| 13 | 72006036 | 双钳盘式制动器总成 | Double Clamp Disk Baker Ass. | 4 |
| 14 | 80649002 | 轮辋螺栓 M20×1.5×90 | Rim Bolt | 40 |
| 15 | 79600119 | 轮辋螺母 M20×1.5 | Rim Nut | 40 |
| 16 | 56010001 | 通气塞 | Breathing Plug | 2 |
| 17 | 75500197 | 螺塞 M24×1.5 | Plug | 4 |
| 18 | 53200005 | 组合垫圈 24 | Compound Seat | 4 |
| 19 | 79000142 | 半轴 | Side Shaft | 4 |
| 20 | 80494001 | 油管固定块 | Fixing Block Of Oil Pipe | 2 |

## 1.3 主减速器总成 Main Reduction Gear Ass.

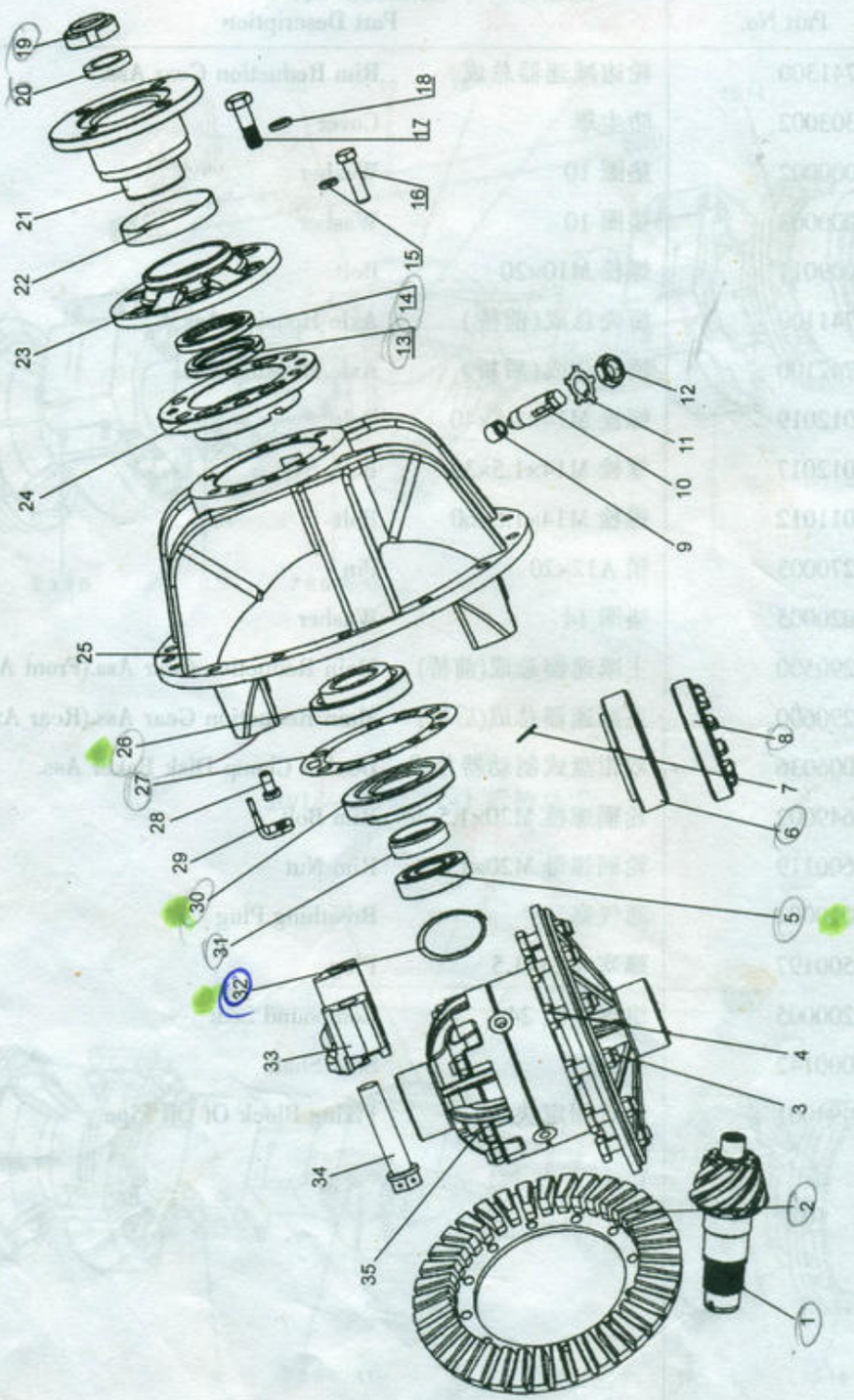

## 1.3 主减速器总成 Main Reduction Gear Ass.

| 序号 Sr.No | 零件代号 Part No. | 名称 Part Description | | 数量 Q'ty |
|---|---|---|---|---|
| 1 | 75201868 | 主传动齿轮 (前桥) | Main Transmission Gear | 1 |
| | 75202363 | 主传动齿轮 (后桥) | Main Transmission Gear | 1 |
| 2 | 75200509 | 被动齿轮 (前桥) | Gear | 1 |
| | 75200431 | 被动齿轮(后桥) | Gear | 1 |
| 3 | 75501992 | 螺母 M14×1.5 | Nut | 12 |
| 4 | 75500003 | 螺栓 M14×1.5×50 | Bolt | 12 |
| 5 | 54500006 | 轴承 142807Y | Bearing | 1 |
| 6 | 54500003 | 轴承 47686 | Bearing | 2 |
| 7 | 56000004 | 铁丝 Φ1.6×600 | Thread of Iron | 2 |
| 8 | 75200118 | 调整螺母 | Adjusting Nut | 2 |
| 9 | 79600095 | 螺栓 | Bolt | 1 |
| 10 | 79600096 | 铜套 | Copper Copy | 1 |
| 11 | 79600097 | 锁紧片 | Lock Plate | 1 |
| 12 | 51070004 | 螺母 M27×2 | Nut | 1 |
| 13 | 53100003 | 油封 FB80×100×10 | Oil Seal | 1 |
| 14 | 53100010 | 油封 B80×100×10 | Oil Seal | 1 |
| 15 | 52020004 | 垫圈 12 | Washer | 1 |
| 16 | 50011008 | 螺栓 M12×1.5×55 | Bolt | 1 |
| 17 | 50011011 | 螺栓 M14×1.5×45 | Bolt | 7 |
| 18 | 52020005 | 垫圈 14 | Washer | 7 |
| 19 | 75500269 | 锁紧螺母 | Lock Nut | 1 |
| 20 | 75500231 | 垫圈 | Washer | 1 |
| 21 | 79900162 | 连接法兰 | Flange | 1 |
| 22 | 75201753 | 防尘罩 | Deflector | 1 |
| 23 | 75201770 | 盖 | Cover | 1 |
| 24 | 75201767 | 轴承座 | Bearing Cage | 1 |
| 25 | 75201307 | 主减速器壳体 | Carrier Case | 1 |
| 26 | 54100015 | 轴承 | Bearing | 1 |
| 27 | 79605013 | 调整垫片组 | Adjusting Washers | 1 组 |

## 1.3 主减速器总成 Main Reduction Gear Ass.

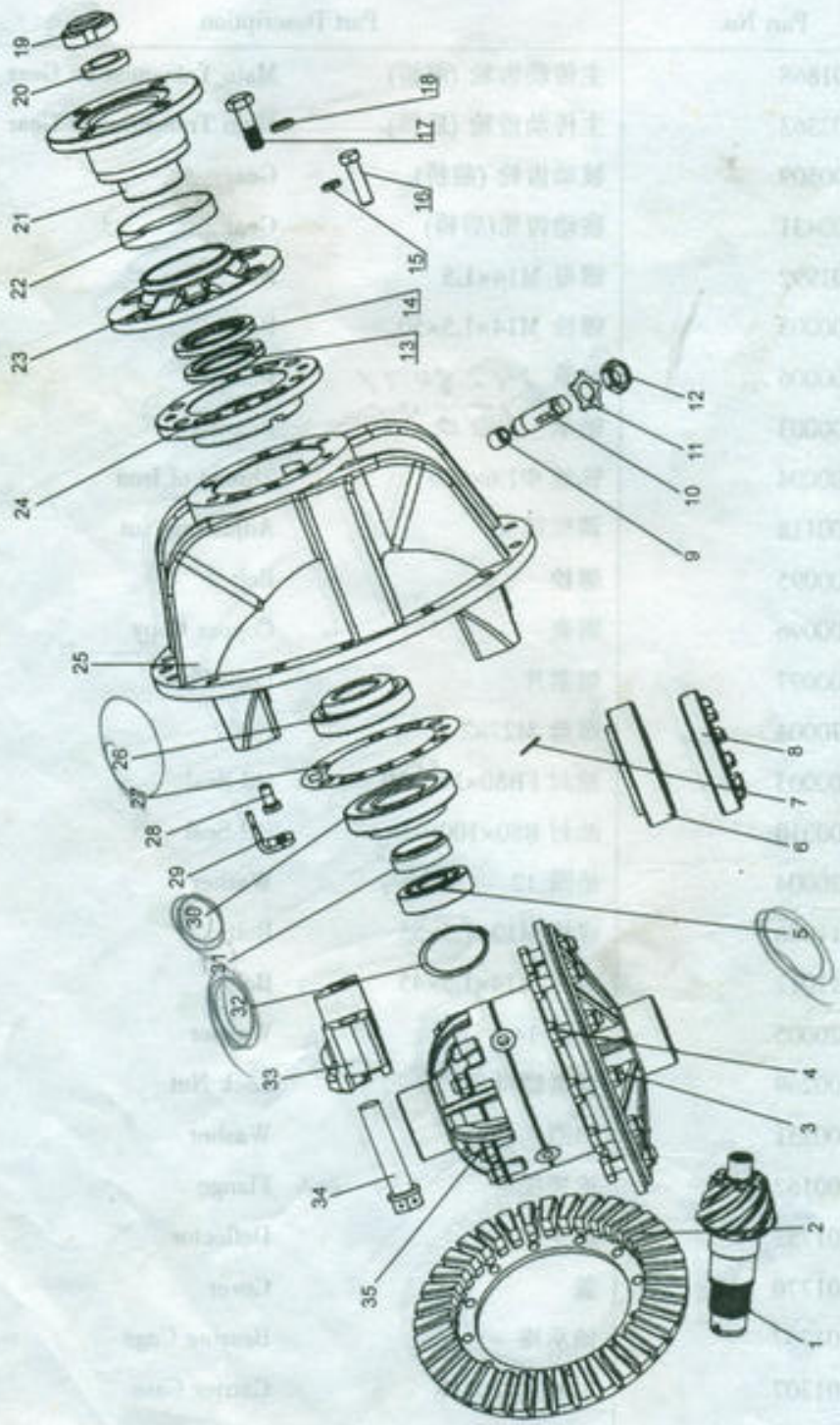

## 1.3 主减速器总成 Main Reduction Gear Ass.

| 序号 Sr.No | 零件代号 Part No. | 名称 Part Description | | 数量 Q'ty |
|---|---|---|---|---|
| 28 | 50004003 | 螺栓 M10×20 | Bolt | 2 |
| 29 | 75200054 | 锁紧片 | Lock Plate | 2 |
| 30 | 54100014 | 轴承 | Bearing | 1 |
| 31 | 79605010 | 调整隔套组 | Adjusting Sleeves | 1 组 |
| 32 | 52100012 | 挡圈 90 | Ring | 1 |
| 33 | 75200117 | 盖 | Cover | 1 |
| 34 | 75502601 | 螺栓 M22×2.5 | Bolt | 4 |
| 35 | 82030502 | 差速器总成 | Diff. Assembly | 1 |

## 1.4 差速器总成 Diff. Assembly

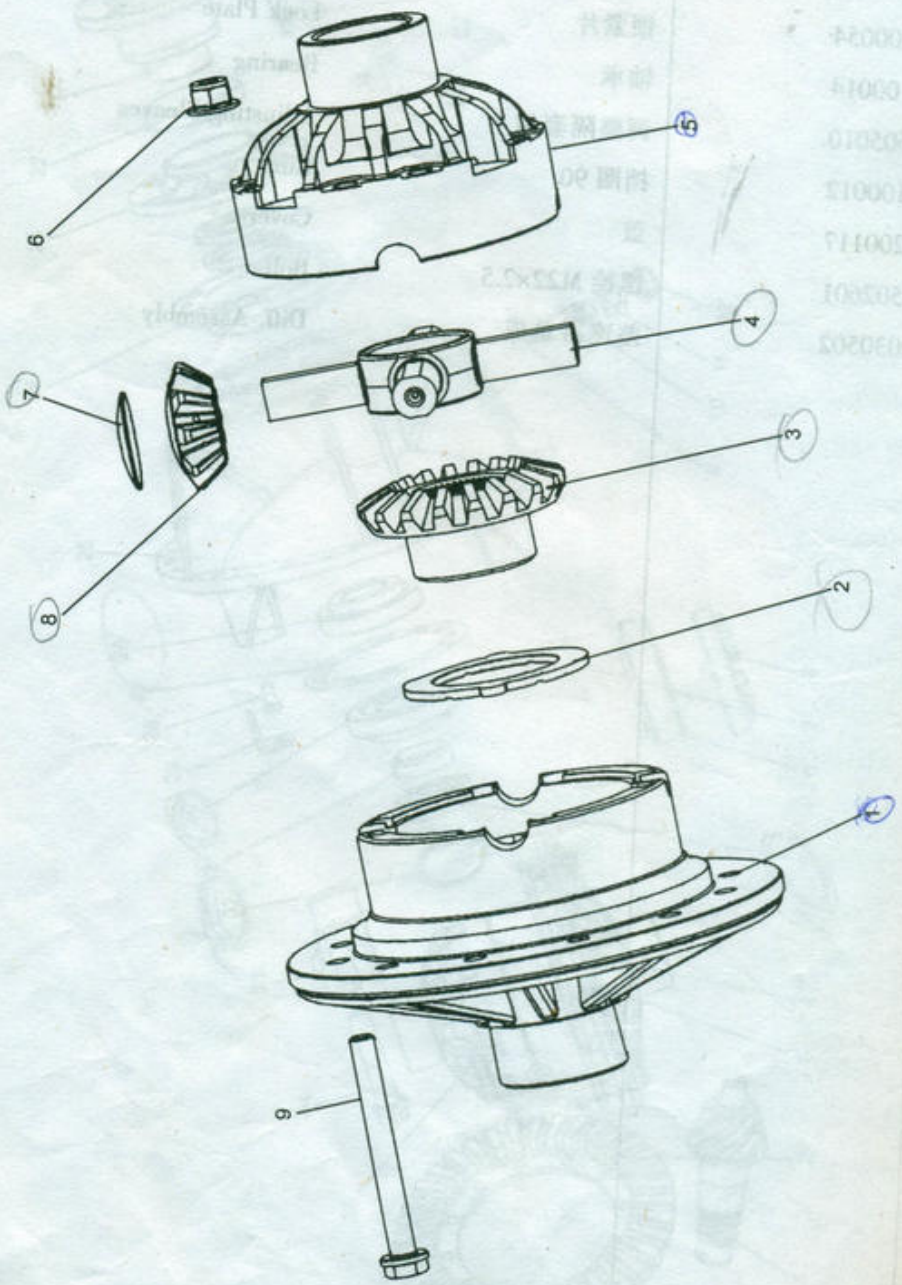

## 1.4 差速器总成 Diff. Assembly

| 序号 Sr.No | 零件代号 Part No. | 名称 Part Description | | 数量 Q'ty |
|---|---|---|---|---|
| 1 | 82030506 | 差速器壳 | Diff. Case | 1 |
| 2 | 82030504 | 半轴齿轮垫 | Thrust Washer | 2 |
| 3 | 75201275 | 半轴齿轮 | Side Shaft Gear | 2 |
| 4 | 82030505 | 十字轴 | Cross Shaft | 1 |
| 5 | 82030503 | 差速器壳 | Diff. Case | 1 |
| 6 | 75501991 | 螺母 M16×1.5 | Nut | 8 |
| 7 | 82030507 | 行星轮垫 | Planetary Wheel Washer | 4 |
| 8 | 75201274 | 行星齿轮 | Planetary Gear | 4 |
| 9 | 75501981 | 凸缘螺栓 | Bolt | 8 |

## 1.5 轮边减速器总成 Planetary Reduction Gear Ass.

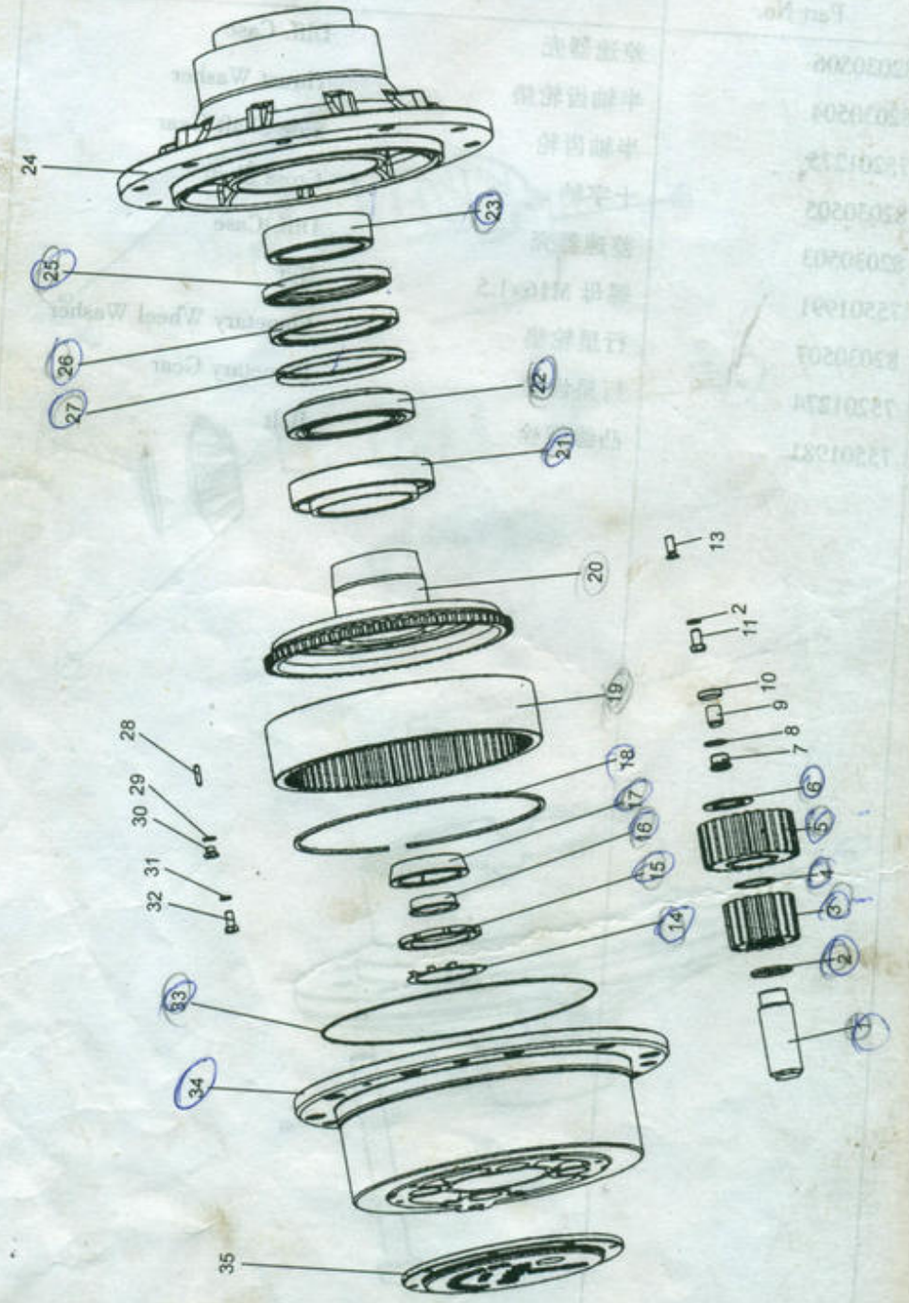

## 1.5 轮边减速器总成 Planetary Reduction Gear Ass.

| 序号 Sr.No | 零件代号 Part No. | 名称 Part Description | | 数量 Q'ty |
|---|---|---|---|---|
| 1 | 79001545 | 行星轮轴 | Planetary Wheel Shaft | 4 |
| 2 | 75600334 | 隔套 | Spacing Sleeve | 4 |
| 3 | 83666203 | 太阳轮 | Sun Gear | 1 |
| 4 | 52100009 | 挡圈 50 | Ring | 1 |
| 5 | 83000801 | 行星轮 | Planetary Gear | 4 |
| 6 | 75600457 | 行星轮垫 | Washer | 8 |
| 7 | 75500197 | 螺塞 M24×1.5 | Plug | 1 |
| 8 | 53200005 | 组合密封垫 24 | Compound Seal | 1 |
| 9 | 79605020 | 调整支柱 | Adjusting Supporter | 1 组 |
| 10 | 73520042 | 限位块 | Limit Block | 1 |
| 11 | 50012010 | 螺栓 M12×1.25×23 | Bolt | 7 |
| 12 | 52020004 | 垫圈 12 | Washer | 7 |
| 13 | 50140003 | 螺钉 M10×30 | Screw | 3 |
| 14 | 52060005 | 垫圈 85 | Washer | 1 |
| 15 | 75501646 | 螺母 | Nut | 2 |
| 16 | 77000021 | 隔套 | Sleeve | 1 |
| 17 | 76101041 | 锥套 | Taper Sleeve | 1 |
| 18 | 83000805 | 卡环 | Lock Ring | 1 |
| 19 | 83000804 | 齿圈 | Ring Gear | 1 |
| 20 | 83000806 | 齿圈支承 | Ring Hub | 1 |
| 21 | 54100007 | 轴承 32026 | Bearing | 1 |
| 22 | 54100006 | 轴承 32024 | Bearing | 1 |
| 23 | 83649303 | 油封座 | Oil Seal Seat | 1 |
| 24 | 83741301 | 轮毂 | Hub | 1 |
| 25 | 53500009 | 油封 BA150×180×15 | Oil Seal | 1 |
| 26 | 53100006 | 油封 FB150×180×15 | Oil Seal | 1 |
| 27 | 79500823 | 挡油板 | Oil Fending Ring | 1 |
| 28 | 75600330 | 滚针 | Rolling Needle | 216 |
| 29 | 53200002 | 组合密封垫 12 | Compound Seal | 1 |
| 30 | 75500842 | 螺塞 M12×1.25×9 | Plug | 216 |
| 31 | 52020003 | 垫圈 10 | Washer | 1 |
| 32 | 50012005 | 螺栓 M10×1.25×23 | Bolt | 1 |
| 33 | 83000810 | 密封圈 | Seal Ring | 1 |
| 34 | 83649302 | 行星轮架 | Bracket of Planetary Wheel | 1 |
| 35 | 83000808 | 端盖 | Side Cover | 1 |

## 1.6 双钳盘式制动器总成 Double Clamp Disk Brake Ass.

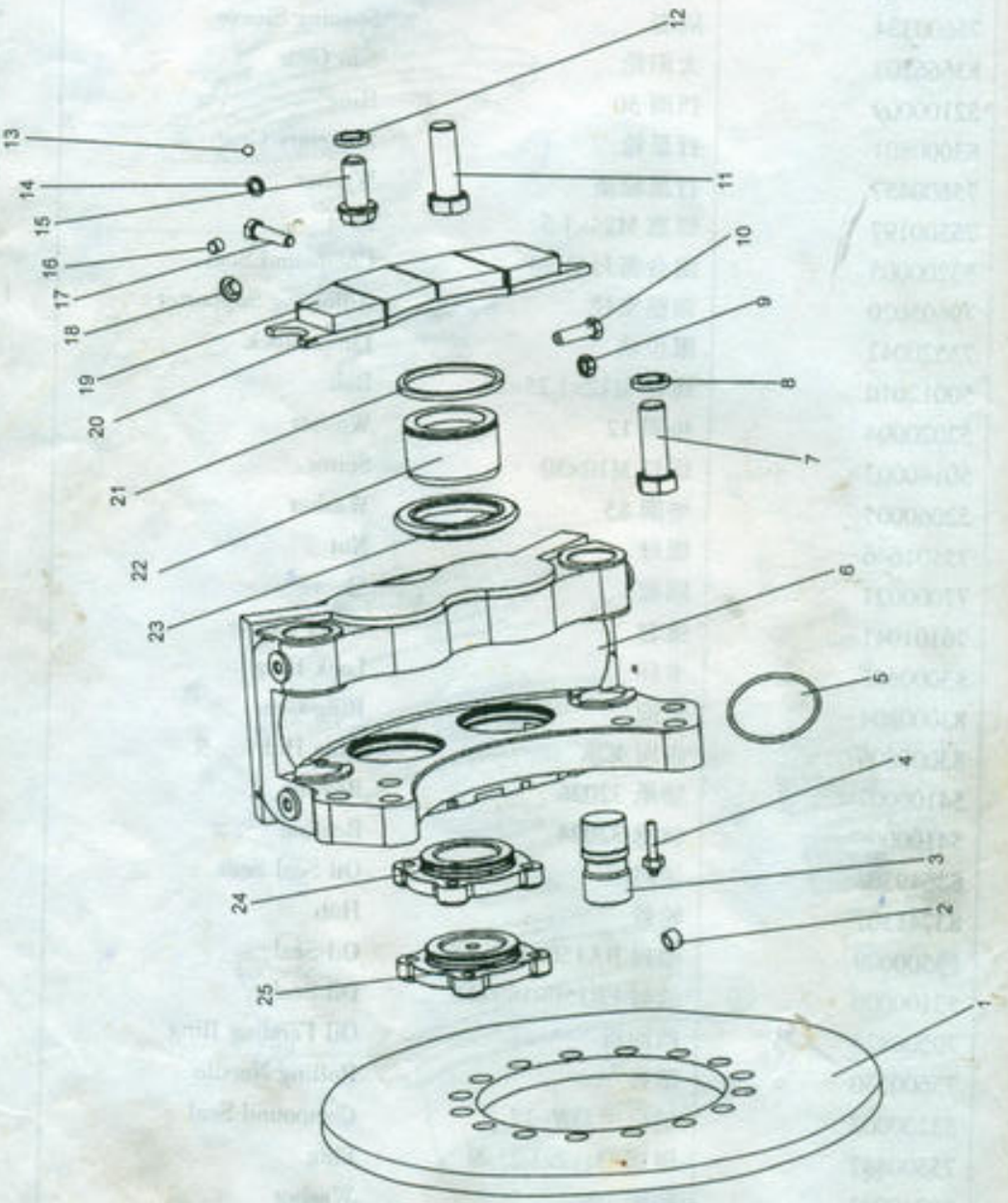

## 1.6 双钳盘式制动器总成 Double Clamp Disk Brake Ass.

| 序号 Sr.No | 零件代号 Part No. | 名称 Part Description | | 数量 Q'ty |
|---|---|---|---|---|
| 1 | 72006561 | 制动盘 | Brake Disc | 1 |
| 2 | 55400001 | 放气嘴保护罩 | Cap of Discharging Nozzle | 4 |
| 3 | 75700437 | 销轴 | Pin Shaft | 8 |
| 4 | 75700442 | 放气嘴 | Air Injecting Nozzle | 4 |
| 5 | 53000010 | O 形密封圈 75×3.1 | O-Ring | 4 |
| 6 | 75700436 | 夹钳体 | Clamp | 2 |
| 7 | 75502139 | 螺栓 M20×60 | Bolt | 4 |
| 8 | 52020008 | 垫圈 | Washer | 12 |
| 9 | 51014003 | 螺母 M10 | Nut | 8 |
| 10 | 75700462 | 螺栓 M10×35 | Bolt | 8 |
| 11 | 50009039 | 螺栓 M20×60 | Bolt | 8 |
| 12 | 52020007 | 垫圈 18 | Washer | 16 |
| 13 | 54800005 | 钢球 | Steel Ball | 4 |
| 14 | 52020003 | 垫圈 10 | Washer | 16 |
| 15 | 75502011 | 螺栓 M18×40 | Bolt | 16 |
| 16 | 79900278 | 圆柱销 | Column Pin | 8 |
| 17 | 50009015 | 螺栓 M10×35 | Bolt | 16 |
| 18 | 75700459 | 孔塞 | Plug | 2 |
| 19 | 75700463 | 摩擦片 | Friction Pad | 4 |
| 20 | 75700435 | 摩擦垫块底板 | Backing Plate | 4 |
| 21 | 75700439 | 矩形密封圈 | Rectangular Seal | 8 |
| 22 | 75700440 | 活塞 | Piston | 8 |
| 23 | 75700438 | 防尘圈 | Dust Proof Ring | 8 |
| 24 | 75700458 | 进油分泵盖 | Cover | 2 |
| 25 | 75700443 | 封油分泵盖 | Cover | 2 |

## 1.7 桥壳总成 Axle Housing Ass.

81741100 前桥壳总成

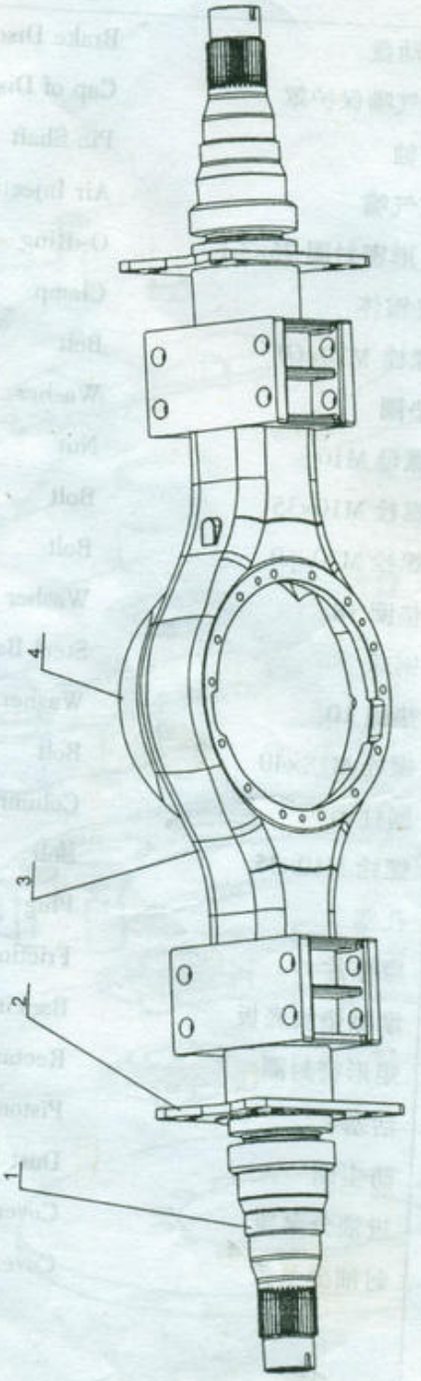

## 1.7 桥壳总成 Axle Housing Ass.
## 81741100 前桥壳总成

| 序号 Sr.No | 零件代号 Part No. | 名称 Part Description | | 数量 Q'ty |
|---|---|---|---|---|
| 1 | 81063102 | 支承轴 | Supporting Shaft | 4 |
| 2 | 81639101 | 制动钳支架 | Bracket | 4 |
| 3 | 81041101 | 前桥壳 | Front Axle Housing | 1 |
| | 81064102 | 后桥壳 | Rear Axle Housing | 1 |
| 4 | 70700556 | 挡油板 (前桥) | Oil Fending Plank | 1 |

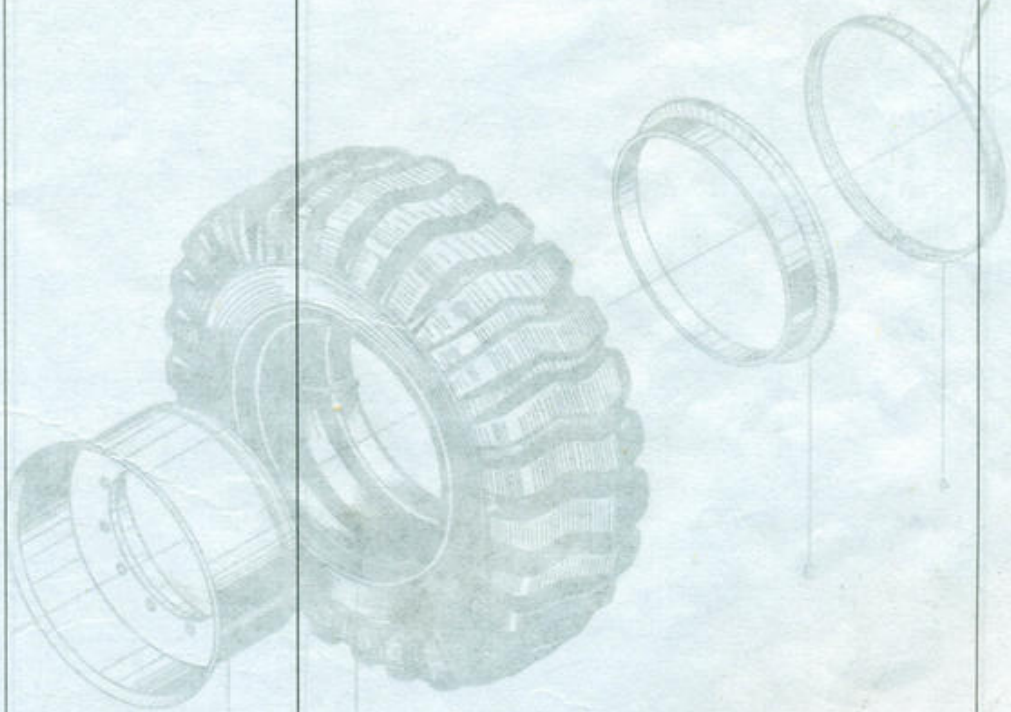

## 1.8 轮胎、轮辋总成 Tyre and Rim Ass.

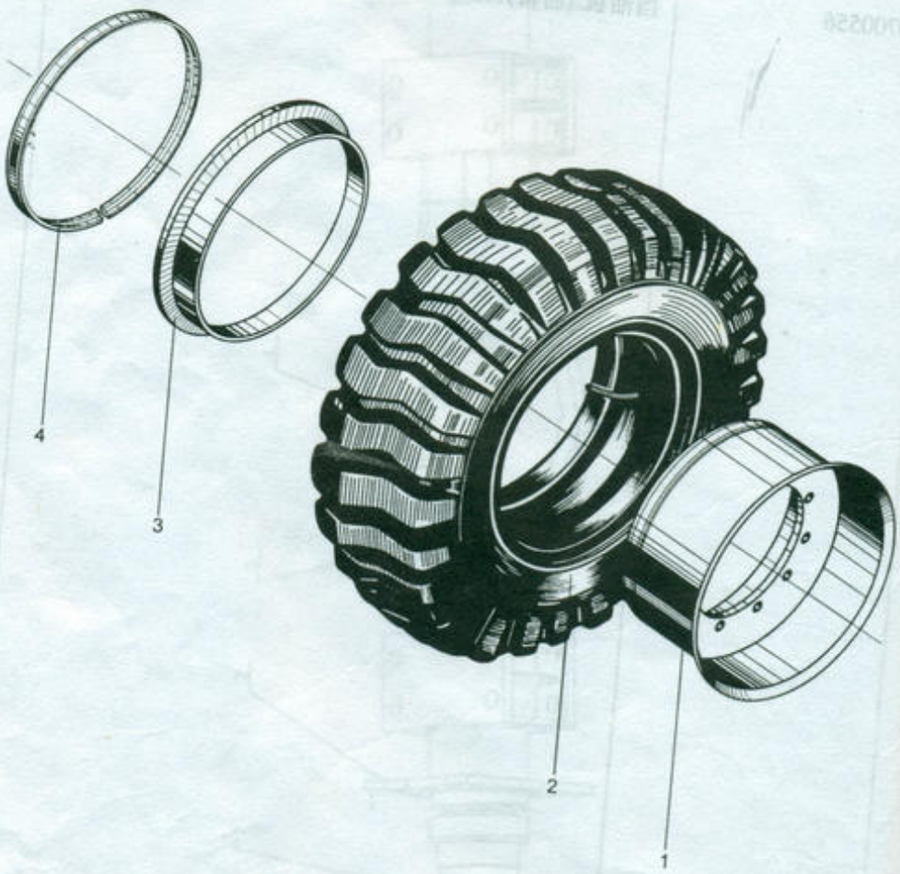

## 1.8 轮胎、轮辋总成 Tyre and Rim Ass.

| 序号 Sr.No | 零件代号 Part No. | 名称 Part Description | 数量 Q'ty |
|---|---|---|---|
| 1 | ZL50E.5.1.1 | 轮辋总成 Rim Ass. | |
| 2 | 23.5-25PR | 轮胎 Tyre | |
| 3 | ZL50E.5.1-2 | 外轮缘 Rim Flange | |
| 4， | ZL50E.5.1-1 | 锁圈 Lock Ring | |

## 1.9 变速箱、变矩器系统 Transmission & Torque Converter Ass.

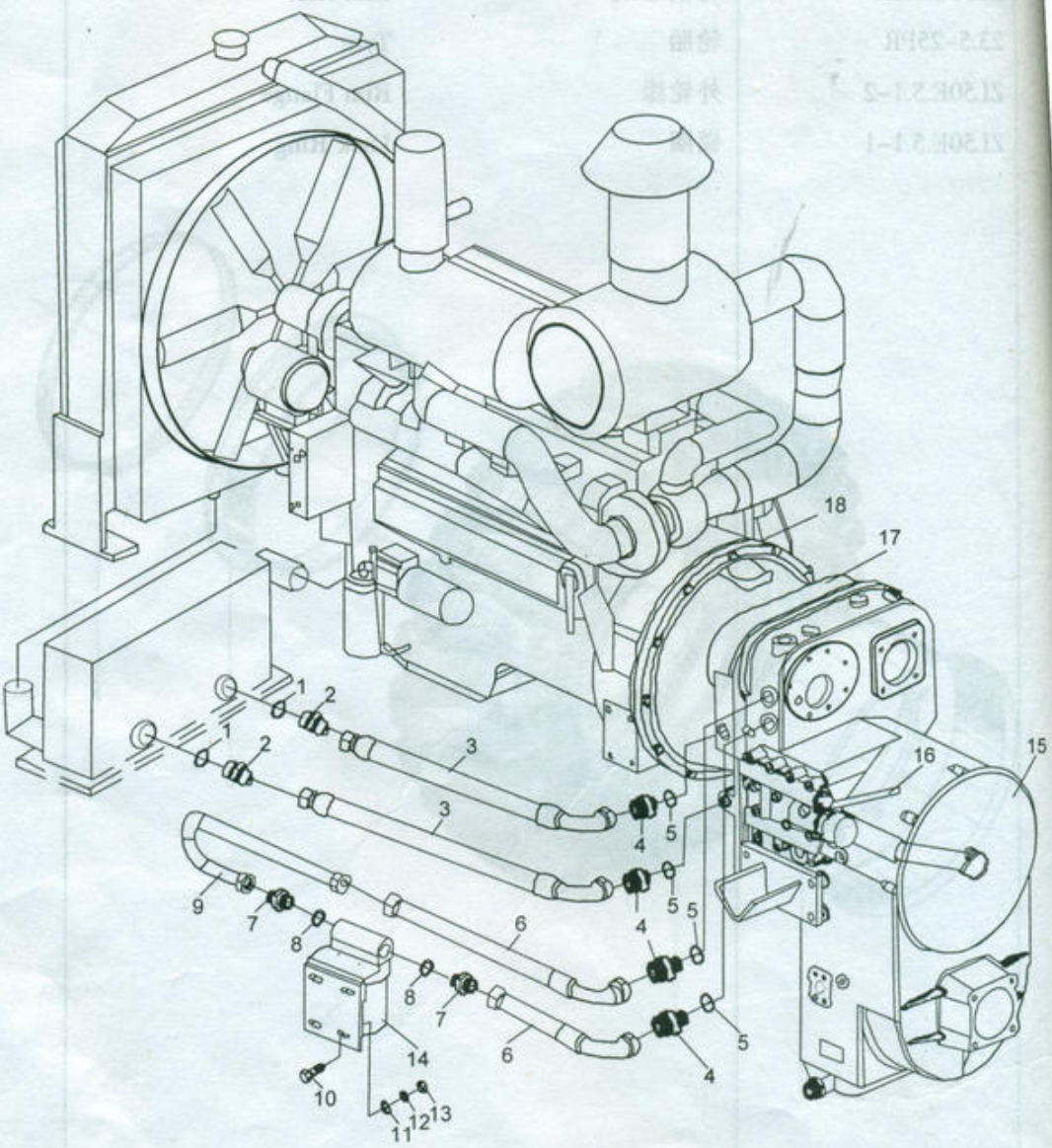

## 1.9 变速箱、变矩器系统 Transmission & Torque Converter Ass.

| 序号 Sr.No | 零件代号 Part No. | 名称 Part Description | | 数量 Q'ty |
|---|---|---|---|---|
| 1 | Q/SC1294-2000 | 密封圈 27 | Washer | 2 |
| 2 | LW560F.1.2-1 | 接头 | Joint | 2 |
| 3 | LW560F.1.2.1 | 胶管总成 | Hose | 2 |
| 4 | LW560F.1.2-3 | 接头 | Joint | 4 |
| 5 | Q/SC1294-2000 | 密封圈 30 | Washer | 4 |
| 6 | LW560F.1.2.3 | 胶管总成 | Tube | 2 |
| 7 | LW560F.1.2-2 | 接头 | Joint | 2 |
| 8 | Q/SC1294-2000 | 密封圈 33 | Washer | 2 |
| 9 | LW560F.1.2.2 | 弯管 | Hose | 1 |
| 10 | GB5783-86 | 螺栓 M12×40 | Bolt | 2 |
| 11 | GB97.1-85 | 垫圈 12 | Washer | 2 |
| 12 | GB93-87 | 垫圈 12 | Washer | 2 |
| 13 | GB6170-86 | 螺母 M12 | Nut | 2 |
| 14 | ZL40.3.2A | 滤清器 | Filter | 1 |
| 15 | ZL40A.30 | 变速箱 | Transmission | 1 |
| 16 | LW541F.03.1 | 变速箱油压管 | Hose | 1 |
| 17 | ZL40A.3.9 | 变矩器 | Torque Converter | 1 |
| 18 | ZL40.3-3 | 垫 | Washer | 1 |

## 1.10 变矩器(YJSW315) Torque Coverter

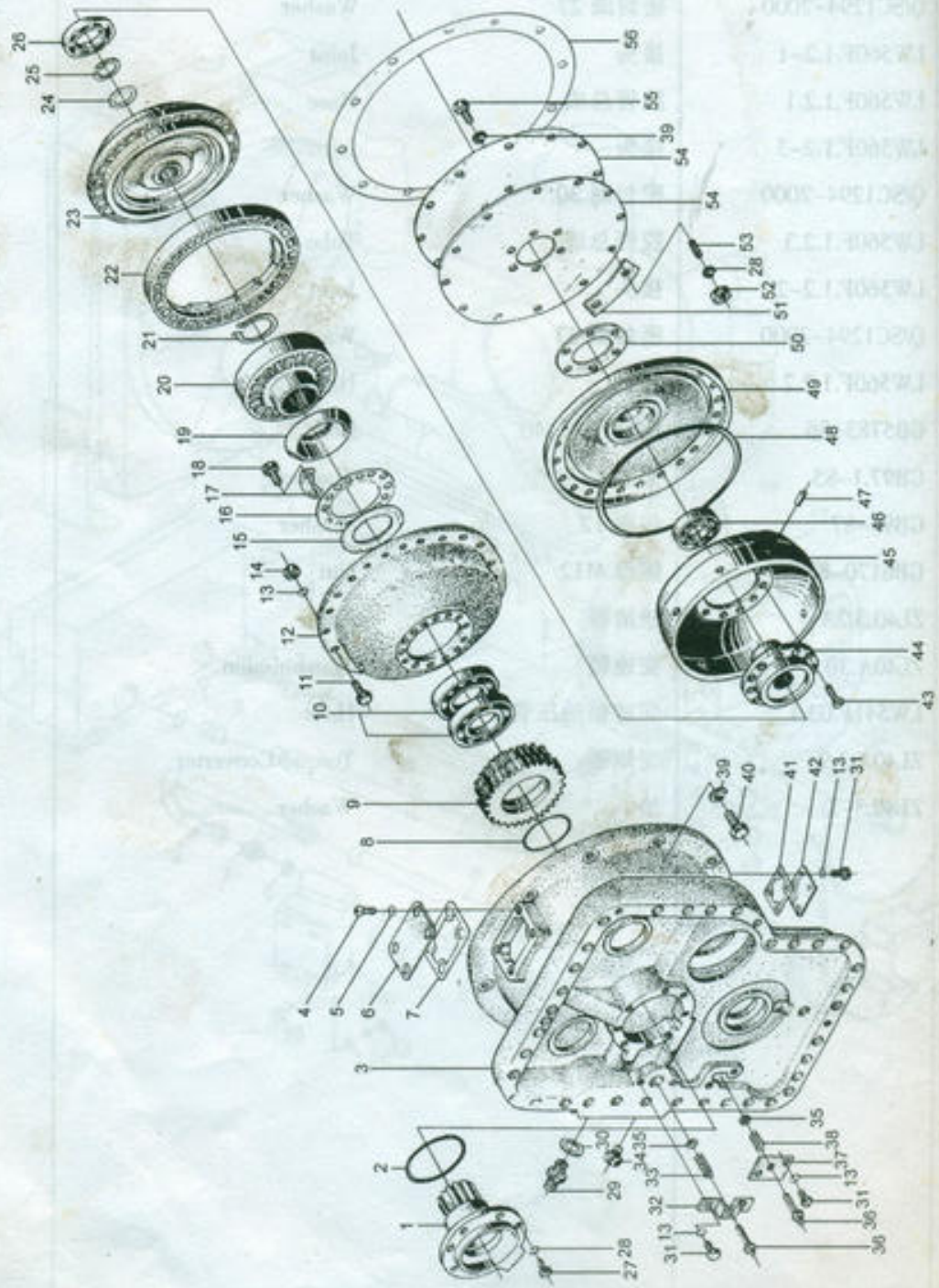

## 1.10 变矩器(YJSW315) Torque Coverter

| 序号<br>Sr.No | 零件代号<br>Part No. | 名　　称<br>Part Description | | 数量<br>Q'ty |
|---|---|---|---|---|
| 1 | 402222 | 导轮座 | Stator Guide Sleeve | 1 |
| 2 | GB3452.1-82 | O 形密封圈 Φ128×3.55 | O-Ring | 1 |
| 3 | 402216 | 壳体 | Converter Housing | 1 |
| 4 | GB67-85 | 半圆头螺钉 M6×16 | Screw | 4 |
| 5 | GB93-87 | 垫圈 6 | Lock Washer | 4 |
| 6 | 402214 | 垫板 | Plate | 1 |
| 7 | 402215 | 纸垫 | Paper Pad | 1 |
| 8 | 402221 | 密封环 | Seal Ring | 1 |
| 9 | 402220 | 齿轮 | Gear | 1 |
| 10 | GB276-89 | 轴承 117(130×85×88) | Bearing | 2 |
| 11 | GB5782-86 | 螺栓 M8×35 | Bolt | 24 |
| 12 | 402227 | 泵轮 | Pump Wheel | 1 |
| 13 | GB93-87 | 垫圈 8 | Washer | 36 |
| 14 | GB6170-86 | 螺母 M8 | Nut | 24 |
| 15 | 402224 | 调整垫片 | Adjusting Washer | 1 组 |
| 16 | 402226 | 压板 | Pressing Plate | 1 |
| 17 | 402218 | 防松垫片 | Lock Washer | 6 |
| 18 | GB5783-86 | 螺栓 M8×30 | Bolt | 14 |
| 19 | 402225 | 导油环 | Leading Oil Ring | 1 |
| 20 | 402217 | 导轮 | Stator | 1 |
| 21 | GB894.1-86 | 挡圈 80 | Snap Ring | 1 |
| 22 | 402209 | 一级涡轮 | I Turbine | 1 |
| 23 | 402212-213 | 二级涡轮 | II Turbine | 1 |
| 24 | 402238 | 花键垫片 | Washer | 1 组 |
| 25 | GB893.1-86 | 挡圈 50 | Snap Ring | 1 |
| 26 | GB276-89 | 轴承 113(100×65×18) | Bearing | 1 |
| 27 | GB5783-86 | 螺栓 M10×28 | Bolt | 8 |
| 28 | GB93-87 | 垫圈 10 | Washer | 20 |
| 29 | 402111 | 管接头 | Joint | 2 |

## 1.10 变矩器(YJSW315) Torque Coverter

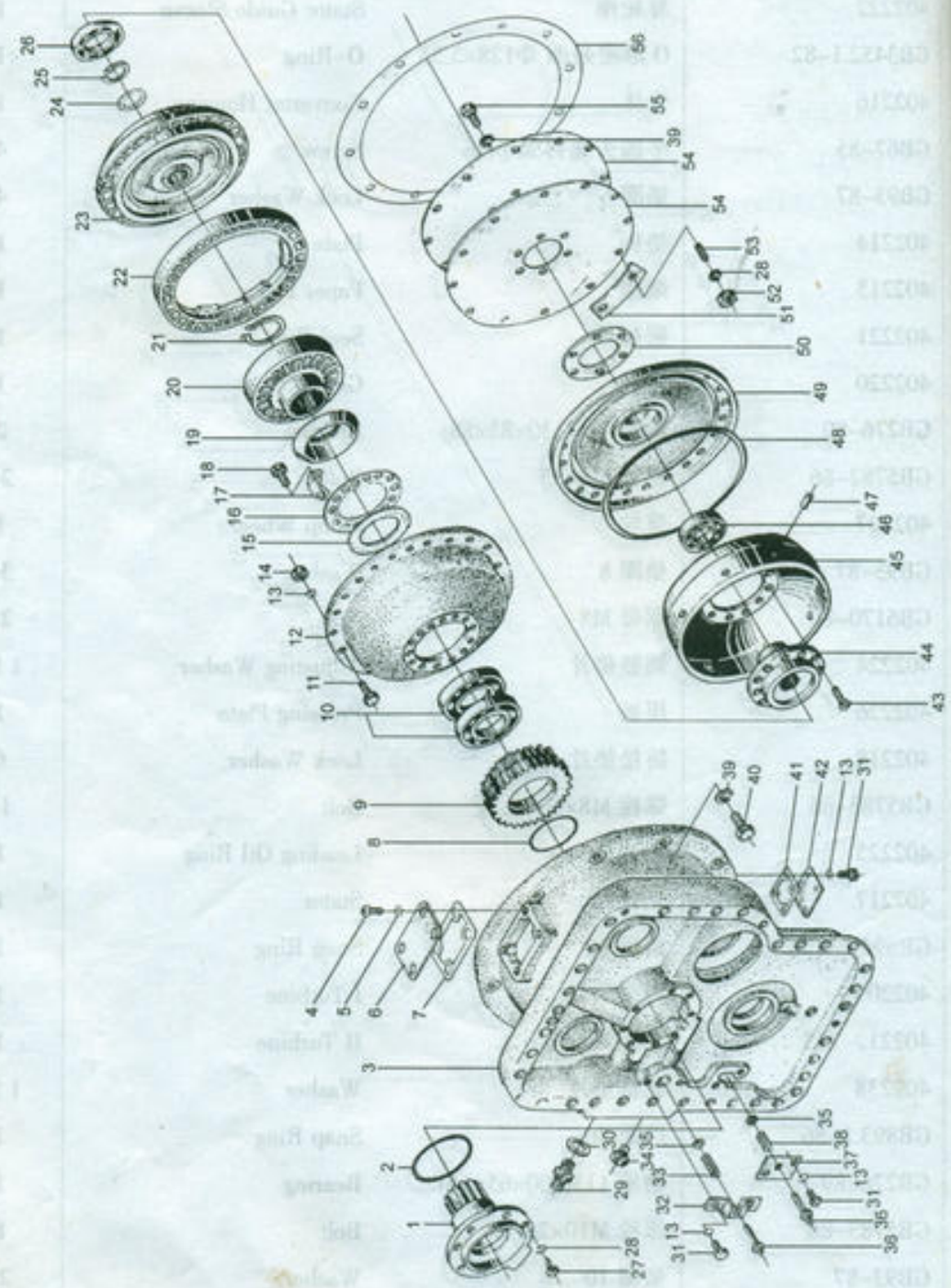

## 1.10 变矩器(YJSW315) Torque Coverter

| 序号 Sr.No | 零件代号 Part No. | 名称 Part Description | | 数量 Q'ty |
|---|---|---|---|---|
| 29 | 402111 | 管接头 | Joint | 2 |
| 30 | 402106 | 垫圈 | Washer | 2 |
| 31 | GB5783-86 | 螺栓 M8×16 | Bolt | 8 |
| 32 | 402228 | 阀盖 | Valve Cover | 1 |
| 33 | 402229 | 弹簧 | Spring | 1 |
| 34 | 402223 | 螺塞 | Plug | 1 |
| 35 | 402232 | 垫片 | Washer | 2 |
| 36 | 402233 | 阀杆 | Valve Stem | 2 |
| 37 | 402230 | 垫板 | Plate | 1 |
| 38 | 402231 | 弹簧 | Spring | 1 |
| 39 | GB93-87 | 垫圈 12 | Washer | 36 |
| 40 | GB5782-86 | 螺栓 M12×45 | Bolt | 12 |
| 41 | 402235 | 纸垫 | Paper Pad | 1 |
| 42 | 402234 | 垫板 | Plate | 1 |
| 43 | GB869-86 | 沉头铆钉 8×16 | Screw | 12 |
| 44 | 402206 | 一级涡轮壳 | I Turbine Converter Housing | 1 |
| 45 | 402207 | 一级涡轮罩 | I Turbine Guide Sleeve | 1 |
| 46 | GB276-89 | 轴承 210(90×50×20) | Bearing | 1 |
| 47 | 402208 | 弹性销 | Pin | 9 |
| 48 | 402236 | O 形密封圈 | O-Ring | 1 |
| 49 | 402203 | 罩轮 | Cover | 1 |
| 50 | 402210 | 圆垫板 | Round Plate | 1 |
| 51 | 402201 | 垫片 | Washer | 6 |
| 52 | GB6171-86 | 螺母 M10×1 | Nut | 12 |
| 53 | 402237 | 双头螺栓 | Bolt | 12 |
| 54 | 402202 | 弹性板 S=1.0 | Plate | 2 |
| 55 | GB5782-86 | 螺栓 M12×30 | Bolt | 6 |
| 56 | 402211 | 纸垫 | Paper Pad | 1 组 |

## 1.11 滤清器 Fuel Filter

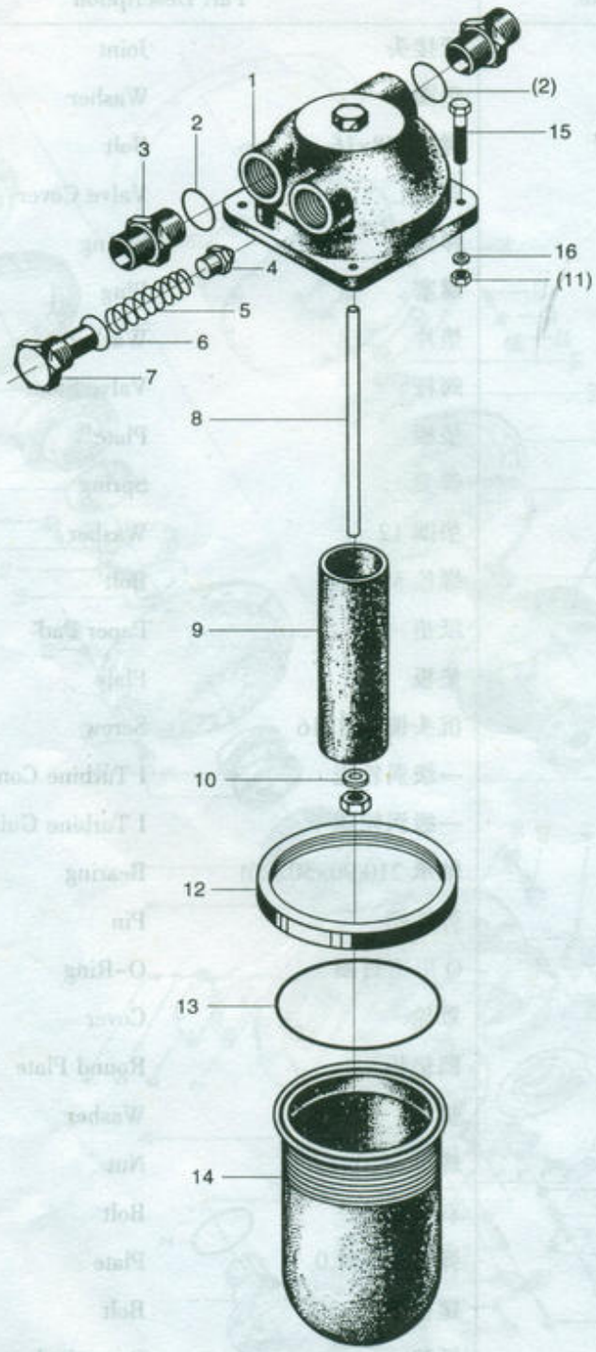

## 1.11 滤清器 Fuel Filter

| 序号 Sr.No | 零件代号 Part No. | 名称 Part Description | | 数量 Q'ty |
|---|---|---|---|---|
| 1 | ZL40.3.2-1A | 上盖 | Upper Cover | 1 |
| 2 | Q/SC1294-2000 | 密封圈 33 | Washer | 2 |
| 3 | LW560F.1.2-2 | 接头体 | Joint | 1 |
| 4 | ZL40.3.2-6 | 活塞 | Piston | 1 |
| 5 | ZL40.3.2-7 | 弹簧 | Spring | 1 |
| 6 | GB1235-76 | O 形圈 30×3.1 | O-Ring | 1 |
| 7 | ZL40.3.2-8 | 螺塞 | Plug | 1 |
| 8 | ZL40.3.2-3 | 螺栓 | Bolt | 1 |
| 9 | ZL40.3.2-2 | 滤芯 | Filter Element | 1 |
| 10 | ZL40.3.2-5 | 垫片 | Washer | 1 |
| 11 | GB6170-86 | 螺母 M8 | Nut | 4 |
| 12 | ZL40.3.2-9 | 固定螺母 | Lock Nut | 1 |
| 13 | GB1235-76 | O 形圈 115×3.1 | O-Ring | 1 |
| 14 | ZL40.3.2.4A | 壳体 | Shell | 1 |
| 15 | GB5780-86 | 螺栓 M8×35 | Bolt | 4 |
| 16 | GB93-87 | 垫圈 8 | Lock Washer | 4 |

## 1.12 前传动轴 Front Transmitting Shaft

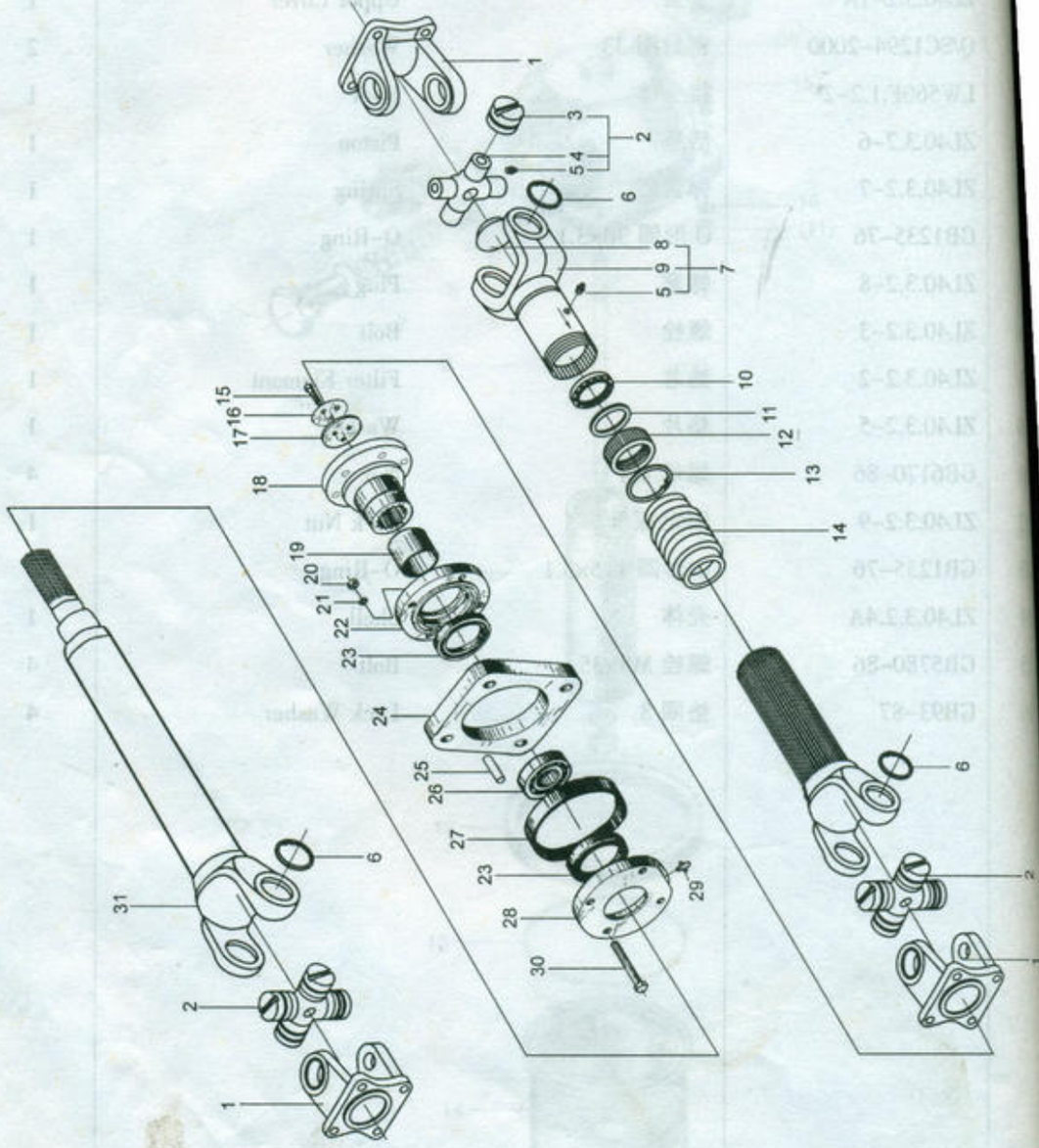

## 1.12 前传动轴 Front Transmitting Shaft

| 序号 Sr.No | 零件代号 Part No. | 名称 Part Description | | 数量 Q'ty |
|---|---|---|---|---|
| 1 | 2201C-023 | 突缘叉 | Flange Yoke | 3 |
| 2 | 2201C-030 | 万向节总成 | Universal Joint Ass. | 3 |
| 3 | 804705K2 | 十字轴滚针轴承总成 | Rolling Needle Bearing Ass. | 12 |
| 4 | 2201C-031 | 十字轴 | Cross Shaft | 3 |
| 5 | Q70001 | 直通滑油嘴 | Grease Fitting | 4 |
| 6 | 2201C-026 | 孔用弹性挡圈 | Snap Ring | 6 |
| 7 | 2201D-050 | 套管叉总成 | Sleeve Yoke Ass. | 1 |
| 8 | 2201D-052 | 套管叉堵盖 | Sleeve Yoke Cap | 1 |
| 9 | 2201D-051 | 套管叉 | Sleeve Yoke | 1 |
| 10 | 2201D-061 | 油封 | Oil Seal | 1 |
| 11 | 2201D-062 | 油封垫片 | Oil Seal Washer | 1 |
| 12 | 2202C-011 | 油封盖 | Oil Seal Cap | 1 |
| 13 | 2201D-016 | 大卡环 | Big Retaining Ring | 1 |
| 14 | 404202B | 防尘套 | Dust Proof Sleeve | 1 |
| 15 | GB5783-86 | 螺栓 M10×35 | Bolt | 2 |
| 16 | 85Z.1.3-5 | 锁板 | Lock Washer | 1 |
| 17 | 85Z.1.3-6 | 垫板 | Plate | 1 |
| 18 | 85Z.1.3-7 | 花键叉 | Spline Yoke | 1 |
| 19 | Z5G.1.2-3 | 轴套 | Shaft Sleeve | 1 |
| 20 | GB6170-86 | 螺母 | Nut | 4 |
| 21 | GB93-87 | 垫圈 | Washer | 4 |
| 22 | ZL40E.4-10 | 前轴承座 | Front Bearing Seat | 1 |
| 23 | Z5G.1.2-2 | 轴承座 | Bearing Seat | 1 |
| 24 | ZL40E.4-11 | 定位销 | Position Pin | 1 |
| 25 | GB286-64 | 调心轴承 3511 | Bearing | 1 |
| 26 | ZL50.4-6 | 密封圈 | Seal Ring | 1 |
| 27 | HG4-692-67 | 骨架式橡胶油封 | Rubber Oil Seal | 2 |
| 28 | ZL40E.4-8 | 后轴承座 | Rear Bearing Seat | 1 |
| 29 | GB1152-79 | 油杯 | Grease Cup | 1 |
| 30 | GB5782-86 | 螺栓 | Bolt | 4 |
| 31 | ZL50.4.00-20 | 花键轴叉 | Spline Shaft Yoke | 1 |

## 1.13 后传动轴 Rear Transmitting Shaft

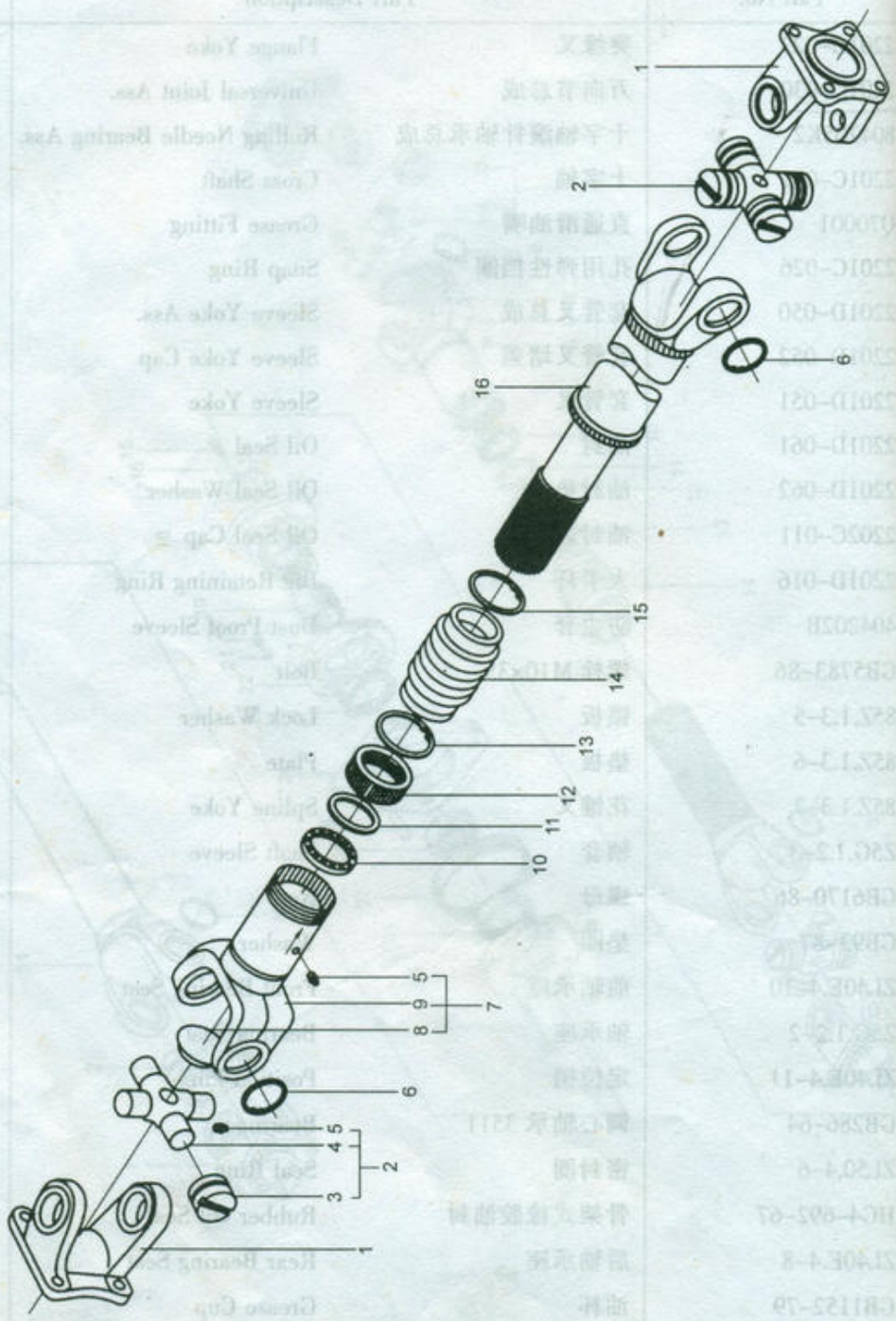

## 1.13 后传动轴 Rear Transmitting Shaft

| 序号 Sr.No | 零件代号 Part No. | 名称 Part Description | | 数量 Q'ty |
|---|---|---|---|---|
| 1 | 2201C-023 | 突缘叉 | Flange Yoke | 2 |
| 2 | 2201C-030 | 万向节总成 | Universal Joint Ass. | 2 |
| 3 | 804705K2 | 十字轴滚针轴承总成 | Needle Rolling Bearing Ass. | 8 |
| 4 | 2201C-031 | 十字轴 | Cross Shaft | 2 |
| 5 | Q70001 | 直通滑油嘴 | Grease Fitting | 3 |
| 6 | 2201C-026 | 孔用弹性挡圈 | Snap Ring | 8 |
| 7 | 2201D-050 | 套管叉总成 | Spline Yoke Ass. | 1 |
| 8 | 2201D-052 | 套管叉堵盖 | Spline Yoke Cap | 1 |
| 9 | 2201D-051 | 套管叉 | Spline Yoke | 1 |
| 10 | 2201D-061 | 油封 | Oil Seal | 1 |
| 11 | 2201D-062 | 油封垫片 | Oil Seal Washer | 1 |
| 12 | 2202C-011 | 油封盖 | Oil Seal Cap | 1 |
| 13 | 2201D-016 | 大卡环 | Big Retaining Ring | 1 |
| 14 | 2201D-066 | 花键护套 | Spline Housing | 1 |
| 15 | 2201D-017 | 小卡环 | Small Retaining Ring | 1 |
| 16 | ZL50.5.00-01 | 传动轴万向节叉及花键轴总成 | Universal Joint Sliding Yoke & Spline Shaft Ass. | 1 |

## 1.14 ZL40/ZL50 型变速器总成 9010430 Transmission Asse

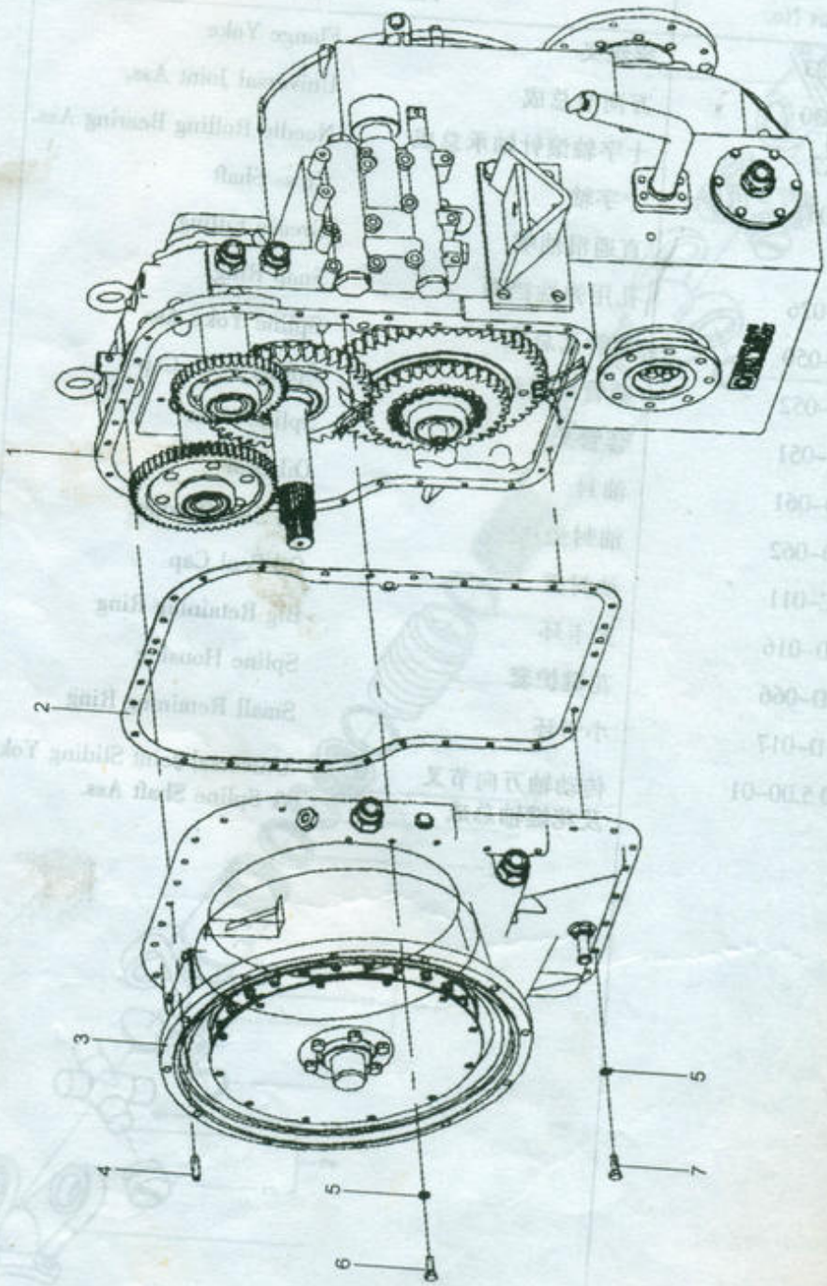

## 1.14 ZL40/ZL50 型变速器总成 9010430 Transmission Assembly

| 序号 Sr.No | 零件代号 Part No. | 名称 Part Description | | 数量 Q'ty |
|---|---|---|---|---|
| 1 | 9103226 | 变速箱 | Transmission | 1 |
| 2 | 9302638 | 密封垫 | Seal Washer | 1 |
| 3 | 9325900 | 变矩器 | Torque-Converter | 1 |
| 4 | 4502530 | 销 D10×30 | Pin | 2 |
| 5 | 4401008 | 垫圈 10 | Lock Washer | 31 |
| 6 | 4004231 | 螺栓 M10×75 | Bolt | 5 |
| 7 | 4005054 | 螺栓 M10×30 | Bolt | 26 |

## 1.15 液力变矩器 9325900 Torque Converter

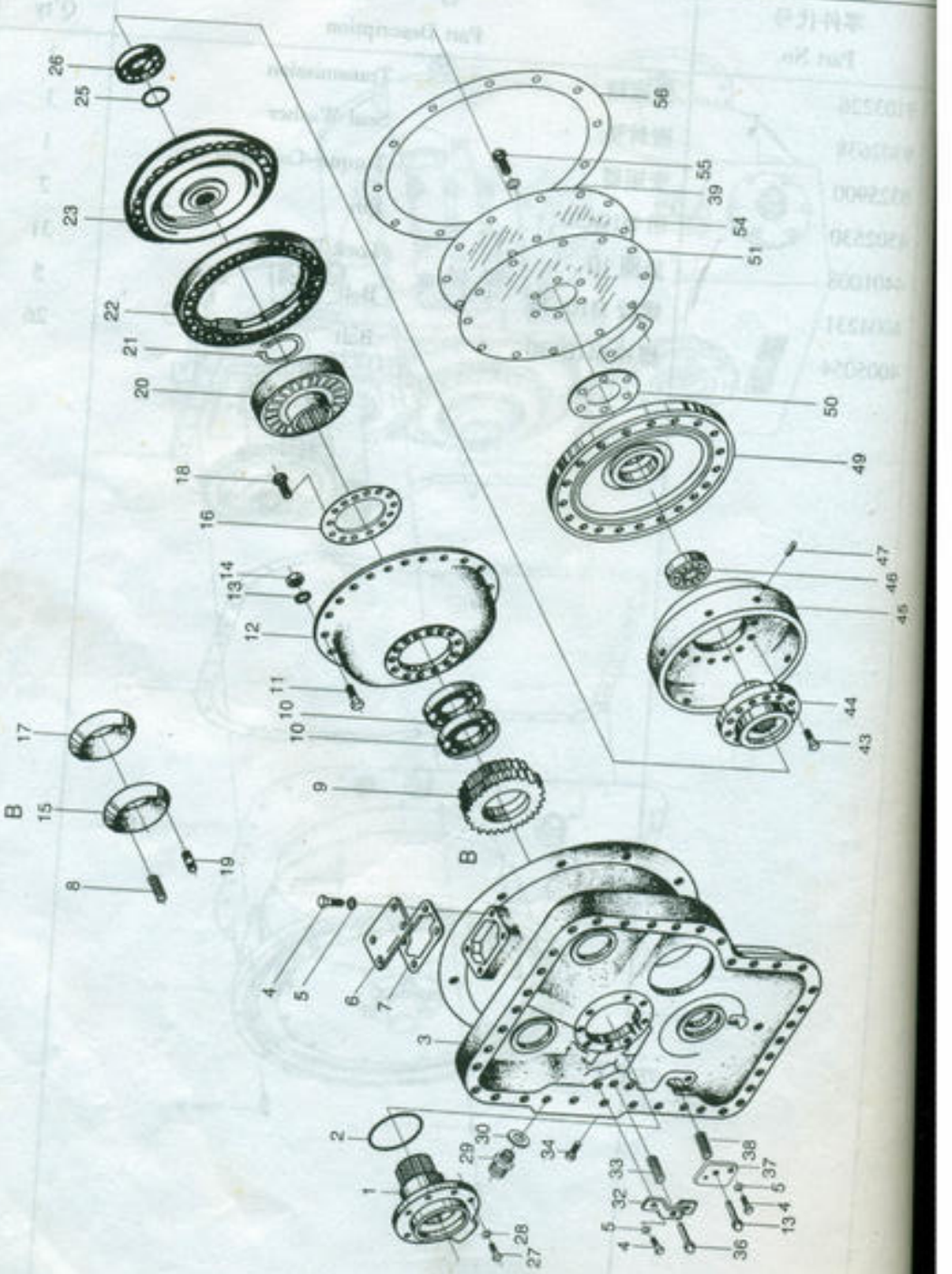

## 1.15 液力变矩器 9325900 Torque Converter

| 序号 Sr.No | 零件代号 Part No. | 名称 Part Description | | 数量 Q'ty |
|---|---|---|---|---|
| 1 | 9326121 | 导轮座 | Stator Guide Sleeve | 1 |
| 2 | 4801051 | O 形圈 F105×3.1 | O-Ring | 1 |
| 3 | 9330803 | 壳体 | Converter Housing | 1 |
| 4 | 4005039 | 螺栓 M8×16 | Bolt | 8 |
| 5 | 4401007 | 垫圈 8 | Lock Washer | 44 |
| 6 | 9326082 | 垫板 | Plate | 1 |
| 7 | 9326083 | 垫 | Pad | 1 |
| 8 | 9326100 | 弹簧 | Spring | 18 |
| 9 | 9325901 | 齿轮 | Gear | 1 |
| 10 | 4745017 | 轴承 6017 | Bearing | 2 |
| 11 | 4005043 | 螺栓 M8×35 | Bolt | 24 |
| 12 | 9326120 | 泵轮 | Imperller | 1 |
| 13 | 9326090 | 阀杆 | Valve Stem | 1 |
| 14 | 4301008 | 螺母 M8 | Nut | 24 |
| 15 | 9325904 | 静环 | Static Ring | 1 |
| 16 | 9326085 | 压紧垫片 | Impaction Washer | 1 |
| 17 | 9325902 | 动环 | Dynamic Ring | 1 |
| 18 | 4005042 | 螺栓 M8×30 | Bolt | 12 |
| 19 | 9325903 | 止动销 | Pin | 1 |
| 20 | 9326099 | 导轮 | Stator | 1 |
| 21 | 4412053 | 挡圈 85 | Snap Ring | 1 |
| 22 | 9326098 | 一级涡轮 | I Turbine | 1 |
| 23 | 9326084 | 二级涡轮 | II Turbine | 1 |
| 25 | 4410033 | 挡圈 50 | Snap Ring | 1 |
| 26 | 4745015 | 轴承 6013 | Bearing | 1 |
| 27 | 4005053 | 螺栓 M10×25 | Bolt | 9 |
| 28 | 4401008 | 垫圈 10 | Lock Washer | 9 |
| 30 | 9345266 | 接头 | Joint | 2 |
| 31 | 4808011 | 组合垫圈 30 | Washer | 2 |

## 1.15 液力变矩器 9325900 Torque Converter

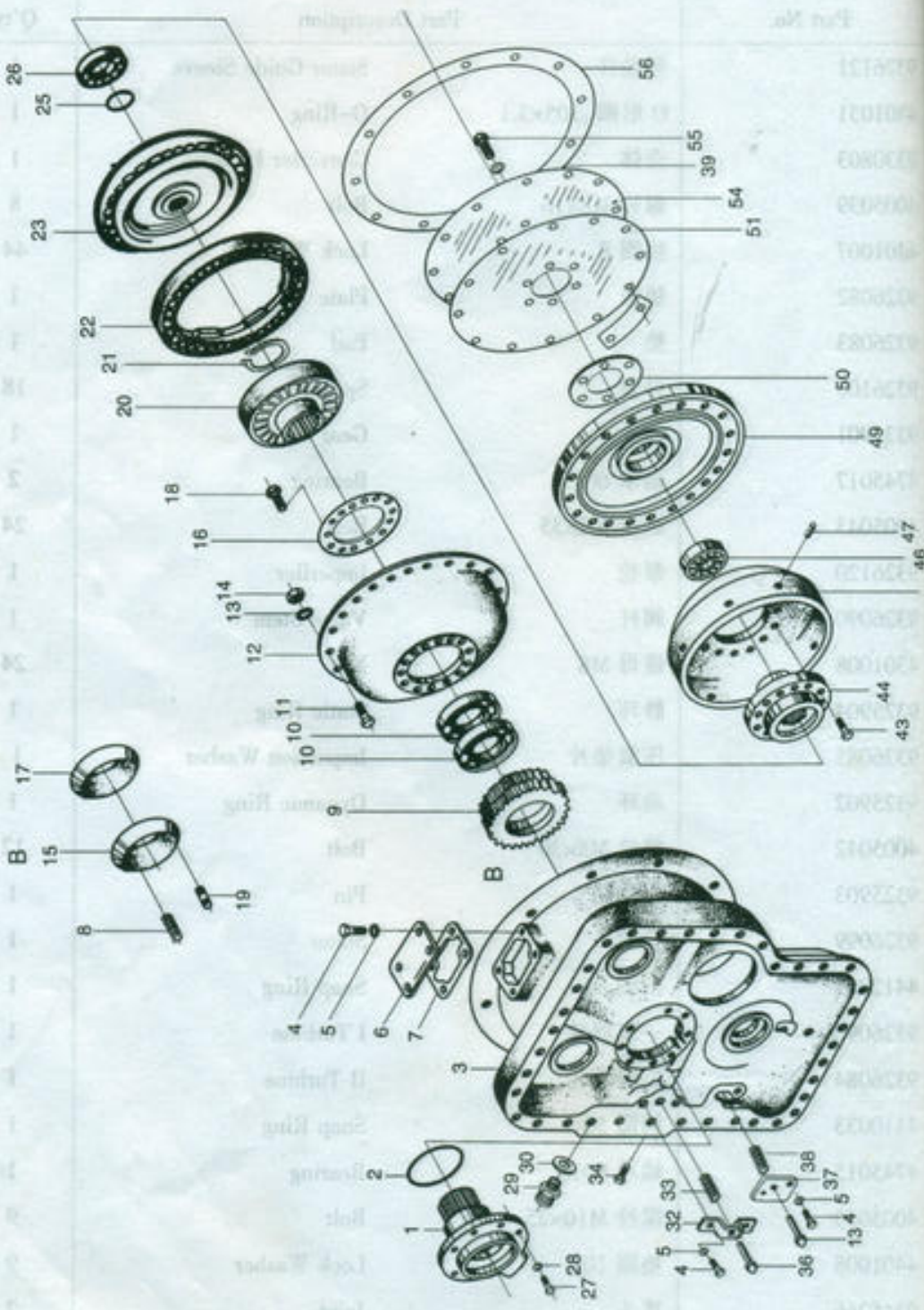

## 1.15 液力变矩器 9325900 Torque Converter

| 序号 Sr.No | 零件代号 Part No. | 名称 Part Description | 数量 Q'ty |
|---|---|---|---|
| 32 | 9326087 | 阀盖 Valve Cover | 1 |
| 33 | 9326092 | 弹簧 Spring | 1 |
| 34 | 4636010 | 螺塞 AR3/4 Plug | 1 |
| 36 | 9326091 | 锥阀杆 Valve Stem | 1 |
| 37 | 9326088 | 垫板 Plate | 1 |
| 38 | 9326089 | 弹簧 Spring | 1 |
| 39 | 4401009 | 垫圈 12 Lock Washer | 6 |
| 43 | 4529001 | 铆钉 5×14 Screw | 12 |
| 44 | 9326095 | 一级涡轮壳 I Turbine Coverter Housing | 1 |
| 45 | 9326096 | 一级涡轮罩 I Turbine Guide Sleeve | 1 |
| 46 | 4745016 | 轴承 6210/P0 Bearing | 1 |
| 47 | 9326097 | 弹性销 Pin | 9 |
| 49 | 9326080 | 罩轮 Cover | 1 |
| 50 | 9326081 | 圆垫板 Plate | 1 |
| 51 | 9330805 | 联接弹性板 Linking Plate | 1 |
| 54 | 9330804 | 弹性板 S=1.0 Plate | 2 |
| 55 | 4005066 | 螺栓 M12×25 Bolt | 6 |
| 56 | 9300515 | 垫 Pad | 1 |

## 1.16 壳体安装 Transmission Housing Fixing

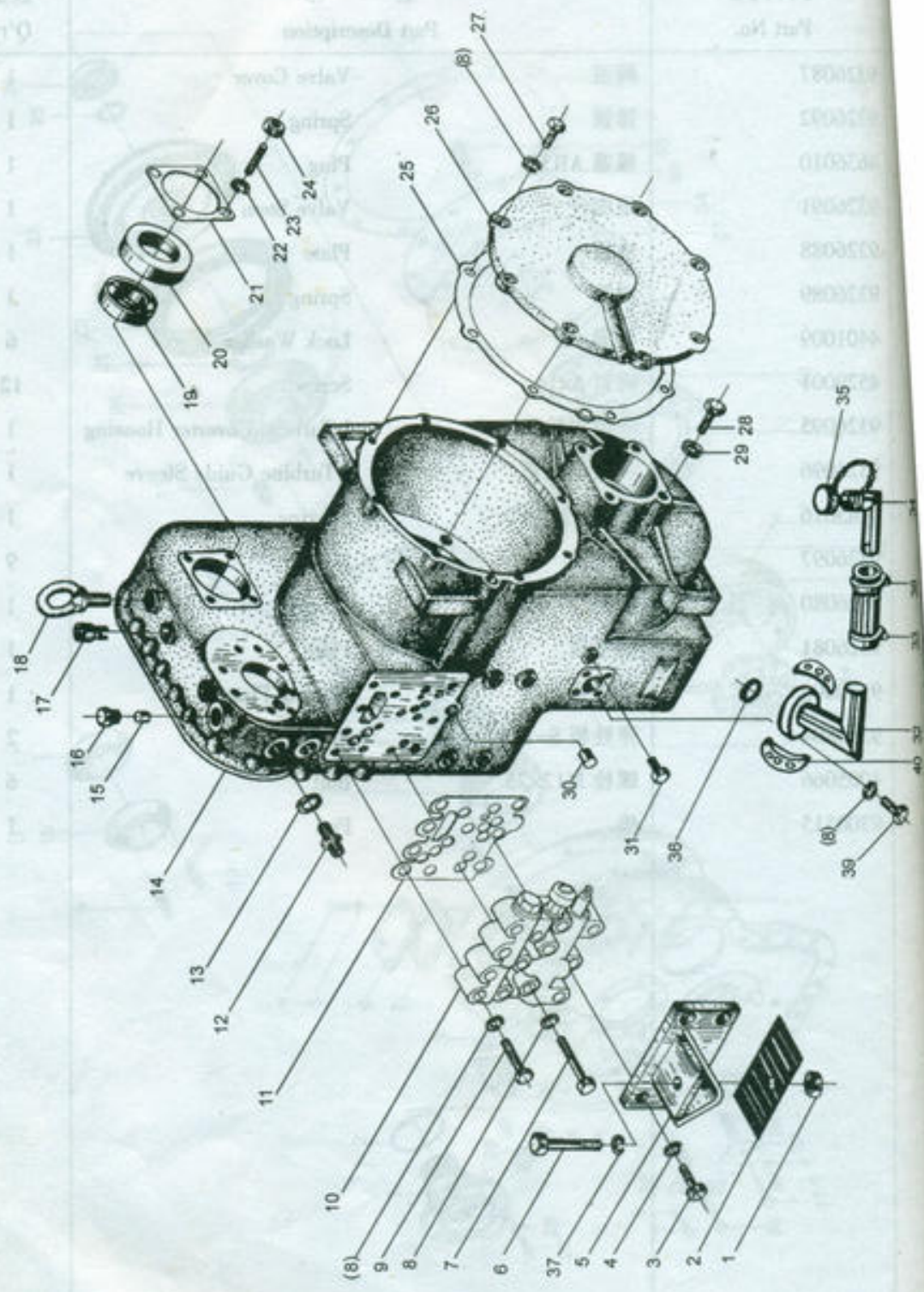

## 1.16 壳体安装 Transmission Housing Fixing

| 序号 Sr.No | 零件代号 Part No. | 名称 Part Description | | 数量 Q'ty |
|---|---|---|---|---|
| 1 | 4303014 | 螺母 M20 | Nut | 2 |
| 2 | 9302636 | 胶垫 | Rubber Pad | 2 |
| 3 | 4005108 | 螺栓 M18×40 | Bolt | 8 |
| 4 | 4401012 | 垫圈 18 | Lock Washer | 8 |
| 5 | 9302635 | 连接座 | Bracket | 2 |
| 6 | 4004098 | 螺栓 M20×150 | Bolt | 2 |
| 7 | 4004036 | 螺栓 M10×70 | Bolt | 15 |
| 8 | 4401008 | 挚圈 10 | Lock Washer | 49 |
| 9 | 4016039 | 螺栓 M10×55 | Bolt | 12 |
| 10 | 5000640 | 变速操纵阀 | Transmission Control Valve Assy | 1 |
| 11 | 9308942 | 密封垫 | Seal Gasket | 1 |
| 12 | 9345266 | 接头 | Joint | 2 |
| 13 | 4808011 | 密封圈 30 | Washer | 3 |
| 14 | 9358820 | 箱体 | Transmission Housing | 1 |
| 15 | 9309509 | 圆柱塞 | Taper Plug | 1 |
| 16 | 9310836 | 螺塞 Z3/4" | Plug | 1 |
| 17 | 9309470 | 透气管 | Breather Tube | 1 |
| 18 | 4213005 | 吊环螺钉 M20 | Eye Screw | 2 |
| 19 | 4745024 | 轴承 6211 | Ball Bearing | 1 |
| 20 | 9358817 | 轴承套 | Bearing Gasket | 1 |
| 21 | 9358815 | 密封垫 | Seal Gasket | 2 |
| 22 | 4401009 | 垫圈 12 | Lock Washer | 8 |
| 23 | 4102467 | 双头螺柱 M12×36 | Stud | 8 |
| 24 | 4301010 | 螺母 M12 | Nut | 8 |
| 25 | 9309738 | 密封垫 | Seal Gasket | 1 |
| 26 | 9309737 | 端盖 | End Cover | 1 |
| 27 | 4005054 | 螺栓 M10×30 | Bolt | 28 |
| 28 | 4005081 | 螺栓 M14×40 | Bolt | 4 |
| 29 | 4401010 | 垫圈 14 | Lock Washer | 12 |
| 30 | 9309512 | 圆柱销 | Seal Gasket | 1 |

## 1.16 壳体安装 Transmission Housing Fixing

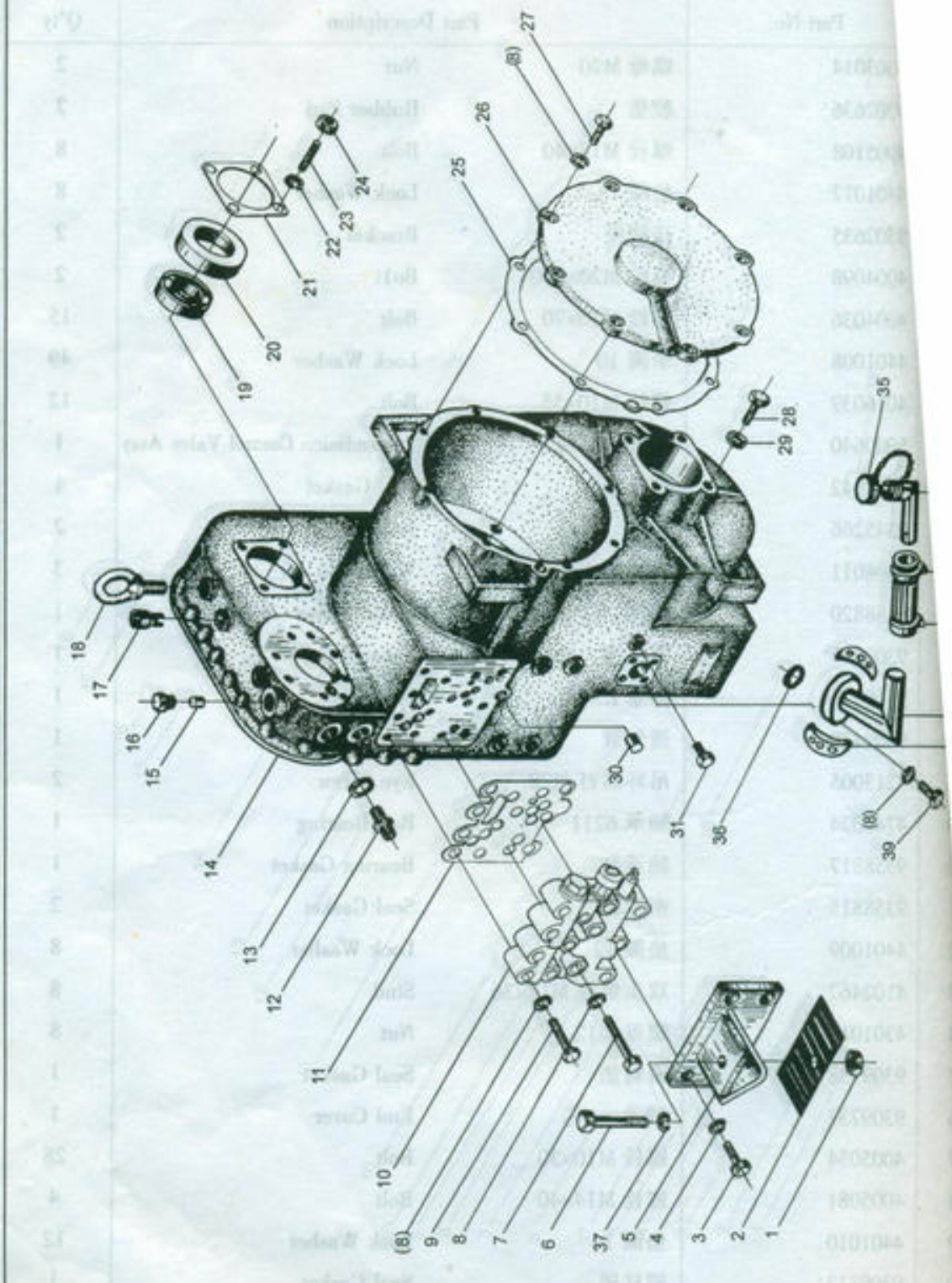

## 1.16 壳体安装 Transmission Housing Fixing

| 序号 Sr.No | 零件代号 Part No. | 名称 Part Description | | 数量 Q'ty |
|---|---|---|---|---|
| 31 | 5004112 | 放水阀 | Water Drain Valve | 1 |
| 32 | 9309733 | 角接管 | Elbow | 1 |
| 33 | 9317045 | 胶管 | Hose | 1 |
| 34 | 9337707 | 角接管 | Elbow | 1 |
| 35 | 9329994 | 加油盖 | Filter Tube Cover | 1 |
| 36 | 4801076 | O 形密封圈 45×3.5 | O-Ring | 1 |
| 37 | 9317447 | 减震块 | Block | 2 |
| 38 | 5000518 | 喉箍 51-70 | Clamp | 2 |
| 39 | 4016032 | 螺栓 M10×30 | Bolt | 4 |
| 40 | 9301428 | 压板 | Pressure Plate | 2 |

## 1.17 驱动齿轮安装 Drive Gear Fixing

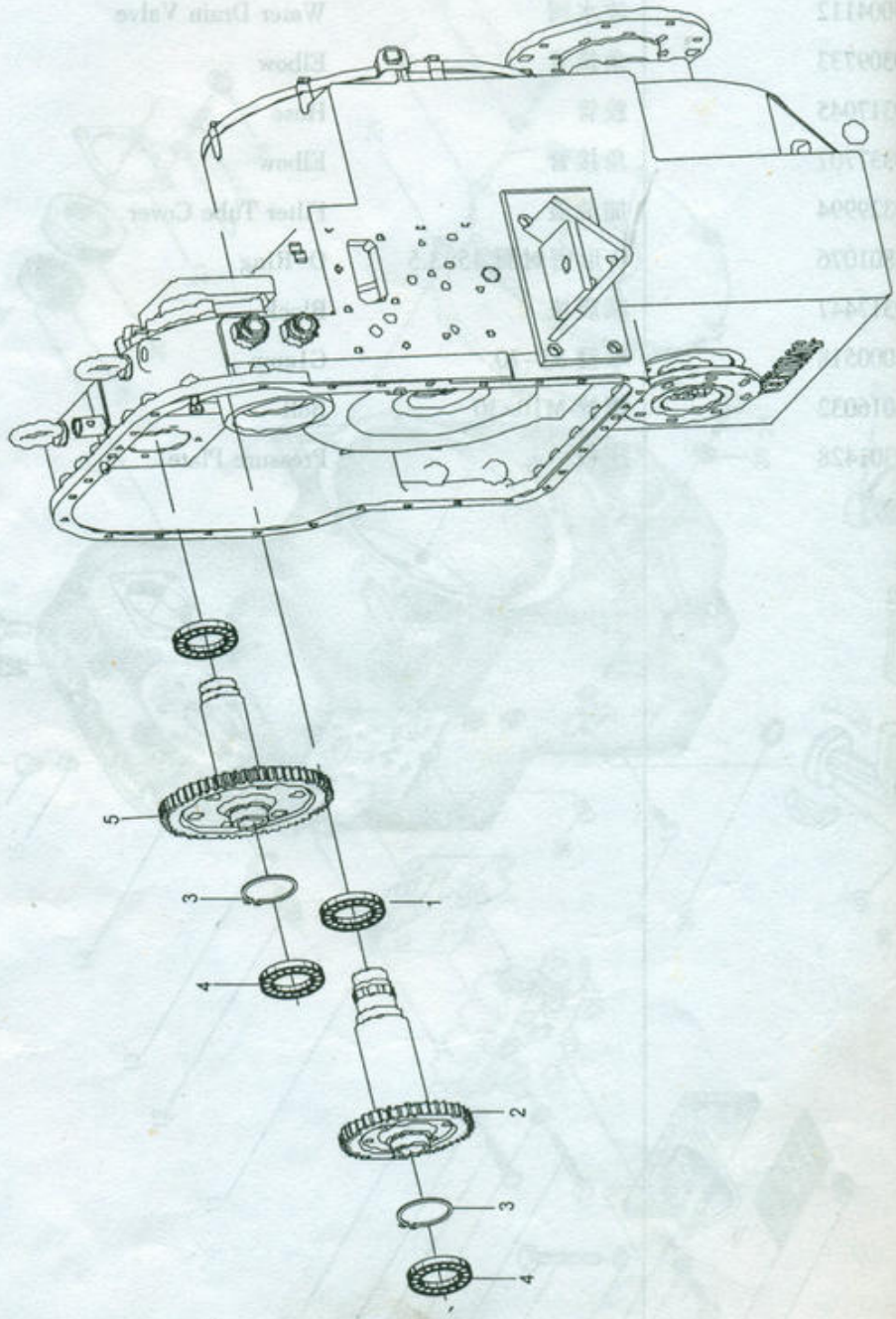

## 1.17 驱动齿轮安装 Drive Gear Fixing

| 序号 Sr.No | 零件代号 Part No. | 名称 Part Description | | 数量 Q'ty |
|---|---|---|---|---|
| 1 | 4735025 | 轴承 6012 | Ball Bearing | 1 |
| 2 | 9355317 | 工作泵轴齿轮 | Working Pump Shaft Gear | 1 |
| 3 | 4412055 | 挡圈 90 | Snap Ring | 2 |
| 4 | 4735026 | 轴承 6210N | Ball Bearing | 2 |
| 5 | 9358816 | 转向泵轴齿轮 | Steering Pump Shaft Gear | 1 |

## 1.18 三轴总成 9310485 Three Shafts Assembly

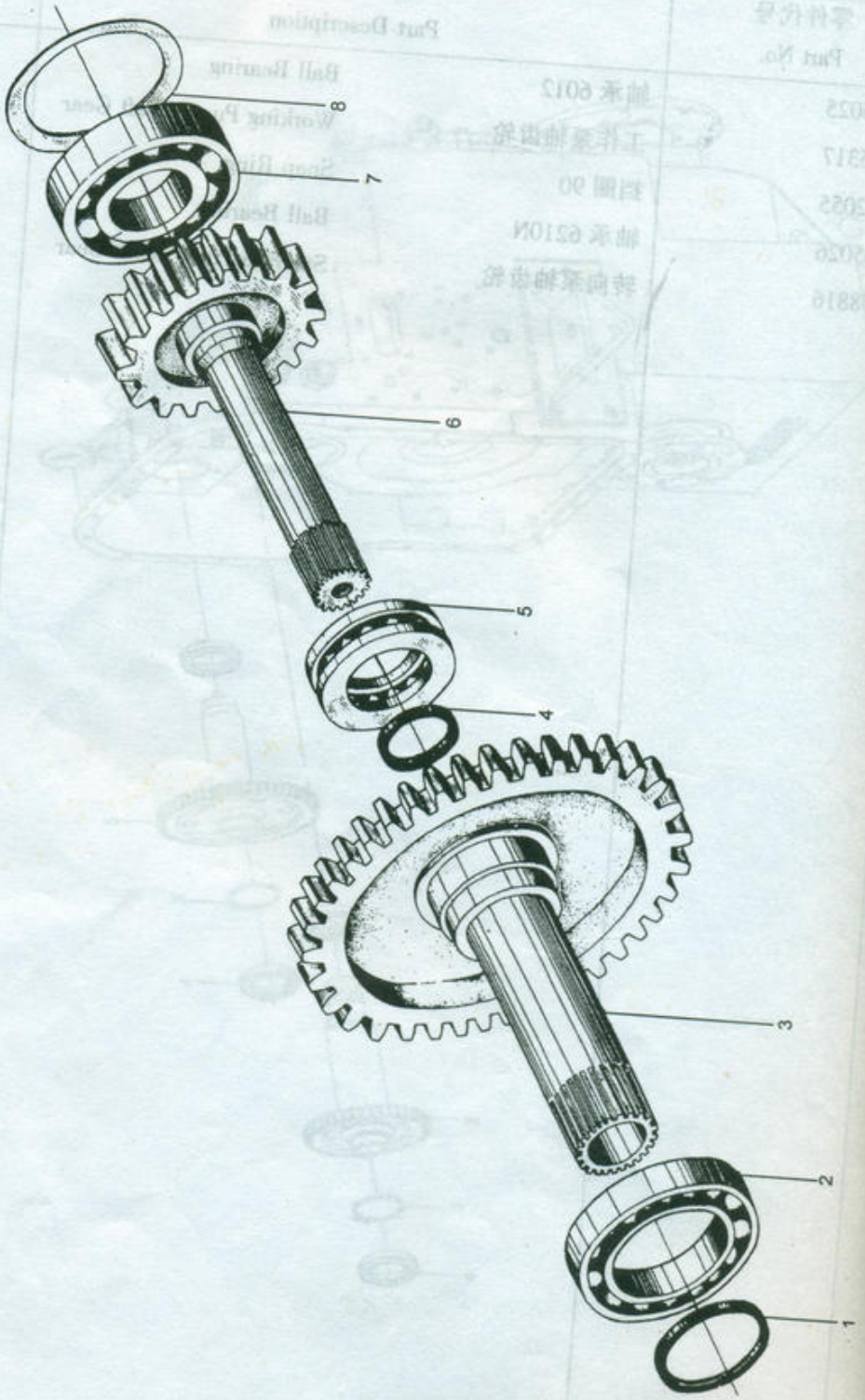

## 1.18 三轴总成 9310485 Three Shafts Assembly

| 序号 Sr.No | 零件代号 Part No. | 名称 Part Description | | 数量 Q'ty |
|---|---|---|---|---|
| 1 | 9310465 | 旋转油封 | Seal Ring | 1 |
| 2 | 4745022 | 球轴承 6016(80×125×22) | Ball Bearing | 1 |
| 3 | 9309732 | 输入二级齿轮 | Secondary Stage Input Gear | 1 |
| 4 | 9310466 | 旋转油封 | Seal Ring | 1 |
| 5 | 4746002 | 推力球轴承 5111 | Thrust Ball Bearing | 1 |
| 6 | 9309731 | 输入一级齿轮 | Primary Stage Input Gear | 1 |
| 7 | 4745023 | 球轴承 6311(55×120×29) | Ball Bearing | 1 |
| 8 | 9310486 | 调整垫片 | Adjusting Washer | 1 组 |

## 1.19 超越离合器 9355380 Overrun Clutch

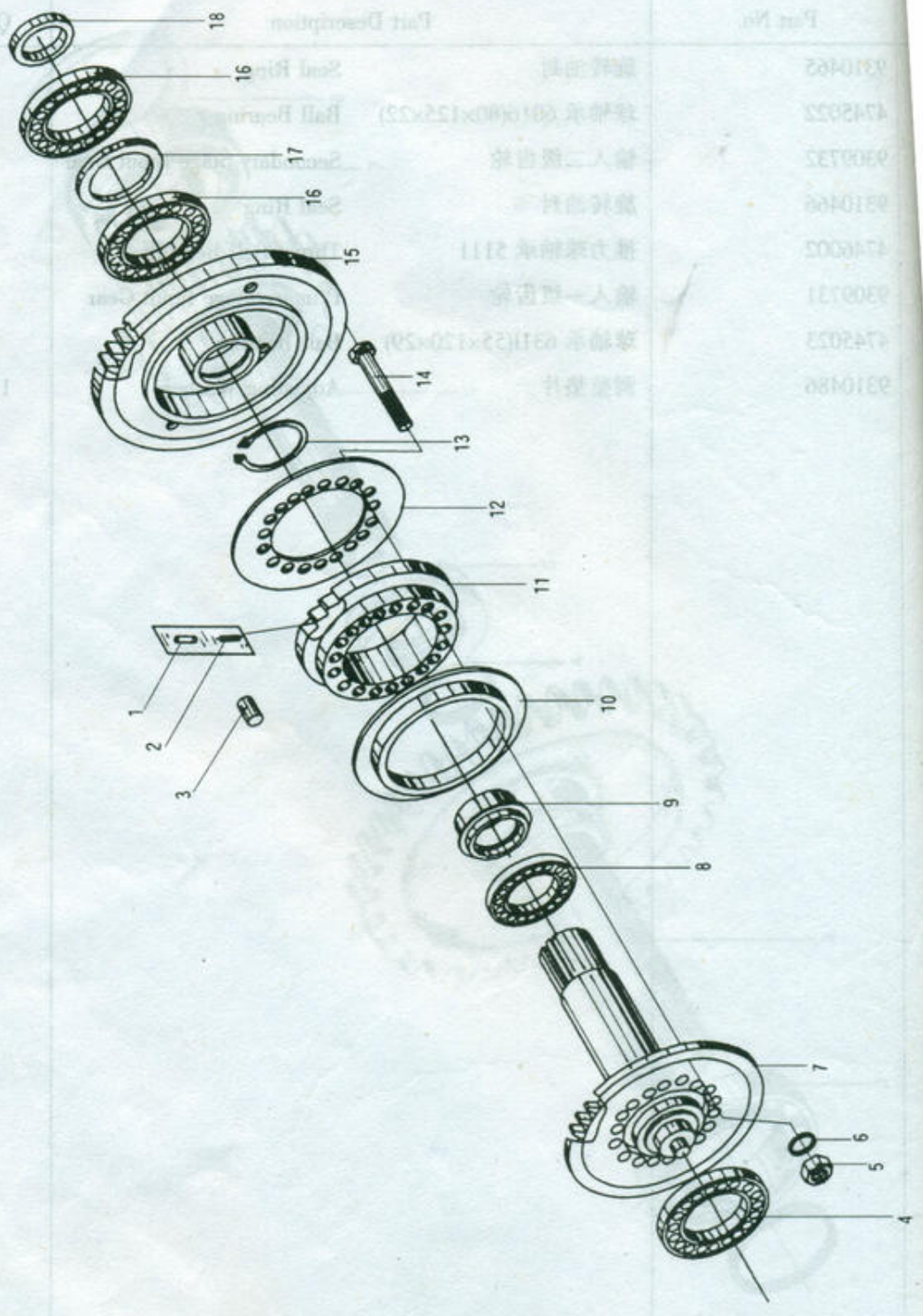

## 1.19 超越离合器 9355380 Overrun Clutch

| 序号 Sr.No | 零件代号 Part No. | 名称 Part Description | | 数量 Q'ty |
|---|---|---|---|---|
| 1 | 5004905 | 弹簧座 | Spring Cover | 40 |
| 2 | 5004904 | 弹簧 | Spring | 40 |
| 3 | 5004899 | 滚柱 Φ15×32 | Cylinder Roller | 20 |
| 4 | 4735012 | 球轴承 6211(55×100×21) | Ball Bearing | 1 |
| 5 | 4302002 | 螺母 M10×1 | Nut | 20 |
| 6 | 4409006 | 垫圈 10 | Lock Washer | 20 |
| 7 | 9355414 | 中间输入轴 | Medium Input Shaft | 1 |
| 8 | 4735027 | 球轴承 6010E(50×80×16) | Ball Bearing | 1 |
| 9 | 5004902 | 隔离套 | Space Bushing | 1 |
| 10 | 5004898 | 滚柱左挡圈 | Left End Cover | 1 |
| 11 | 5004906 | 内环凸轮 | Inner Ring Cam | 1 |
| 12 | 5004900 | 滚柱右挡圈 | Right End Cover | 1 |
| 13 | 4410047 | 挡圈 80 | Snap Ring | 1 |
| 14 | 5004897 | 螺栓 | Bolt | 20 |
| 15 | 5004901 | 外环齿轮 | Outer Ring Gear | 1 |
| 16 | 4745004 | 球轴承 6210(50×90×20) | Ball Bearing | 2 |
| 17 | 5004903 | 隔离环 | Bearing Cage | 1 |
| 18 | 9309494 | 间隔套 | Space Bushing | 1 |

## 1.20 四轴总成 9355329 Four Shafts Assembly

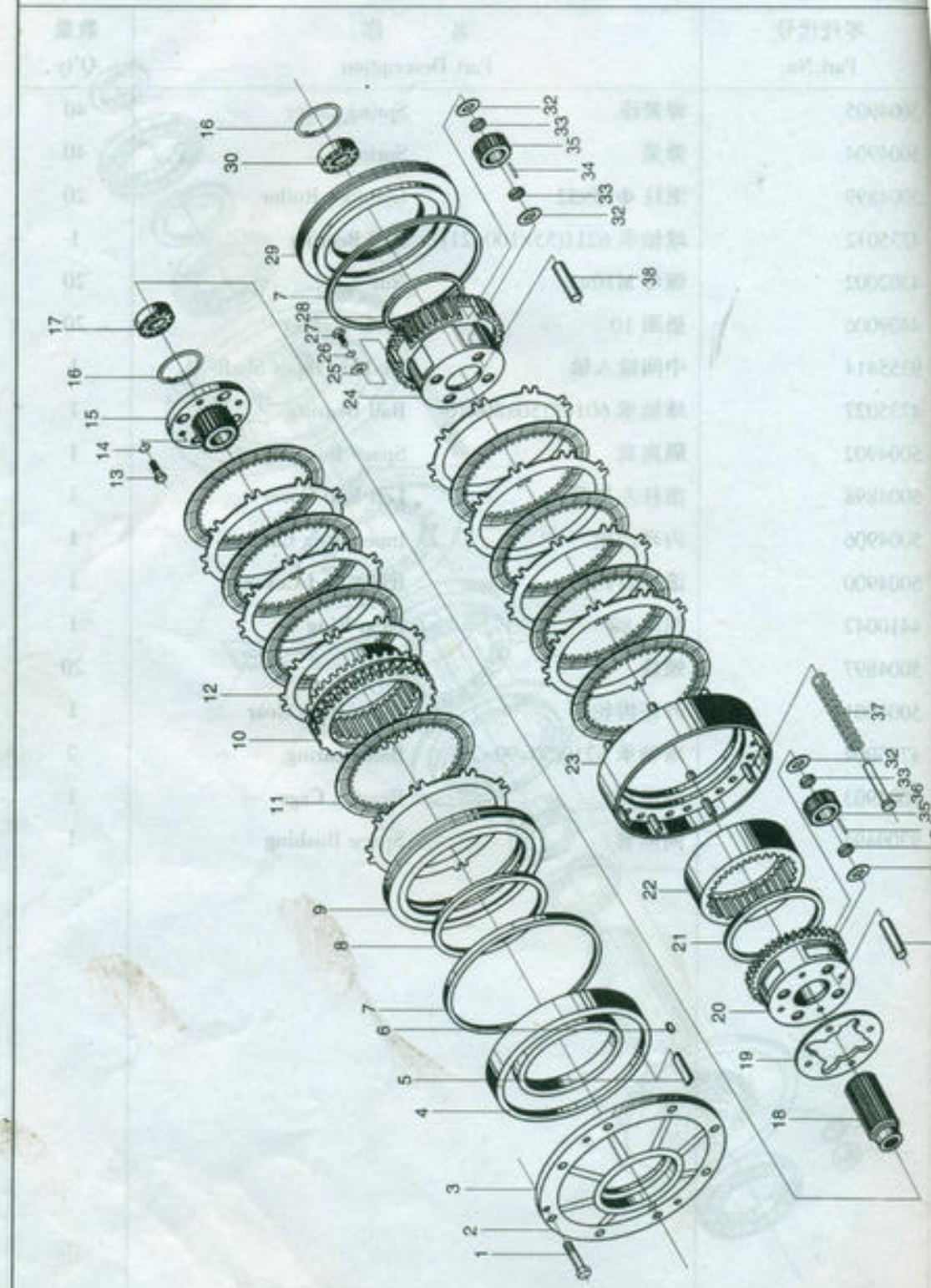

## 1.20 四轴总成 9355329 Four Shafts Assembly

| 序号 Sr.No | 零件代号 Part No. | 名称 Part Description | | 数量 Q'ty |
|---|---|---|---|---|
| 1 | 4005082 | 螺栓 M14×45 | Bolt | 8 |
| 2 | 4401010 | 弹簧垫圈 14 | Lock Washer | 8 |
| 3 | 9309500 | 中盖 | Medium Cover | 1 |
| 4 | 9355333 | 一档油缸 | 1st Forward Cylinder | 1 |
| 5 | 9309511 | 固定板 | Anchor Plate | 1 |
| 6 | 9310472 | 矩形密封圈 | Seal Ring | 1 |
| 7 | 9310069 | 外密封环 | Outer Seal Ring | 2 |
| 8 | 9310078 | 内密封环 | Inner Seal Ring | 1 |
| 9 | 9355332 | 一档活塞 | 1st Forward Piston | 1 |
| 10 | 9355334 | 一档内齿圈 | Inner Gear Ring | 1 |
| 11 | 9310469 | 倒档一档主动 | Reverse-1st Driving Plate | 8 |
| 12 | 9310475 | 倒档一档从动片 | Reverse-1st Friction Plate | 8 |
| 13 | 4005067 | 螺栓 M12×30 | Bolt | 4 |
| 14 | 4401009 | 垫圈 12 | Lock Washer | 4 |
| 15 | 9309727 | 直接档连接盘 | Direct Forward Connecting Flange | 1 |
| 16 | 4412055 | 挡圈 90 | Snap Ring | 2 |
| 17 | 4745012 | 滚动轴承 6210N | Ball Bearing | 1 |
| 18 | 9355340 | 太阳轮 | Sun Gear | 1 |
| 19 | 9355337 | 止动盘 | Lock Plate | 1 |
| 20 | 9355338 | 一档行星架 | 1st Forward Planetary Carrier | 1 |
| 21 | 9309505 | 挡圈 | Snap Ring | 1 |
| 22 | 9355341 | 倒档内齿圈 | Reverse Inner Gear Ring | 1 |
| 23 | 9355342 | 摩擦片隔离架总成 | Clutch Anchor Assy | 1 |
| 24 | 9355331 | 倒档行星架 | Reverse Planetary Carrier | 1 |
| 25 | 9309507 | 止动垫片 | Lock Washer | 4 |
| 26 | 4401007 | 垫圈 8 | Lock Washer | 4 |
| 27 | 4005305 | 螺栓 M8×12 | Bolt | 4 |
| 28 | 9310070 | 内密封环 | Inner Seal Ring | 1 |
| 29 | 9355330 | 倒档活塞 | Reverse Piston | 1 |
| 30 | 4735027 | 轴承 6010E | Bearing | 1 |
| 31 | 9355336 | 一档行星轴 | 1st Forward Planetary Shaft | 4 |
| 32 | 9355335 | 垫片 | Washer | 16 |
| 33 | 9309513 | 隔离套 | Spacer | 16 |
| 34 | 4724001 | 滚针 Φ4×35 | Needle Roller | 176 |
| 35 | 9339393 | 行星轮 | Planetary Gear | 8 |
| 36 | 9309508 | 弹簧销轴 | Guide Pin | 15 |
| 37 | 9310080 | 弹簧 | Spring | 15 |
| 38 | 9355345 | 倒档行星轴 | Reverse Planet Spindle | 4 |

## 1.21 二档总成 9355361 2st Forward Assembly

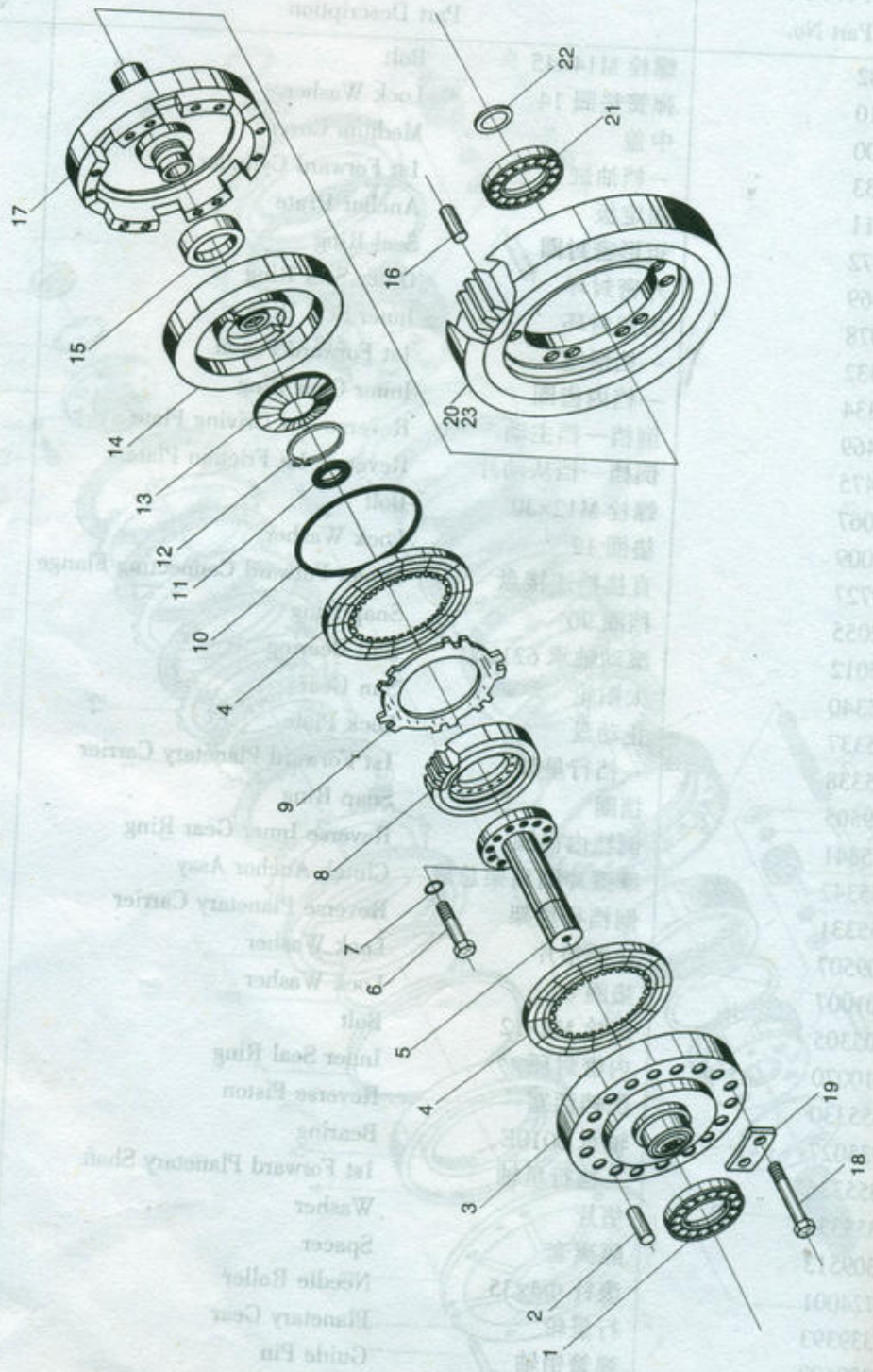

## 1.21 二档总成 9355361 2st Forward Assembly

| 序号 Sr.No | 零件代号 Part No. | 名称 Part Description | | 数量 Q'ty |
|---|---|---|---|---|
| 1 | 4745020 | 轴承 6022 | Ball Bearing | 1 |
| 2 | 9355365 | 导向销 | Leading Pin | 6 |
| 3 | 9355362 | 直接档受压盘 | Direct Forward Gear Reaction Disc | 1 |
| 4 | 9310459 | 二档主动片 | 2st Forward Driving Plate | 2 |
| 5 | 9355363 | 直接档轴 | Direct Forward Gear Dive Shaft | 1 |
| 6 | 4005052 | 螺栓 M10×20 | Bolt | 12 |
| 7 | 4401008 | 垫圈 10 | Lock Washer | 12 |
| 8 | 9355364 | 二档齿圈 | 2st Forward Gear Ring | 1 |
| 9 | 9310462 | 二档从动片 | 2st Forward Friction Plate | 1 |
| 10 | 9310078 | 内密封环 | Inner Seal Ring | 1 |
| 11 | 4745003 | 轴承 6204 | Ball Bearing | 1 |
| 12 | 4412045 | 挡圈 65 | Snap Ring | 1 |
| 13 | 9309501 | 盘形弹簧 | Belleville Spring | 1 |
| 14 | 9355366 | 直接档活塞 | Direct Forward Piston | 1 |
| 15 | 9310465 | 旋转油封 | Seal Ring | 1 |
| 16 | 9328825 | 销 | Pin | 2 |
| 17 | 9355367 | 直接档油缸 | Direct Forward Cylinder | 1 |
| 18 | 4006049 | 螺栓 M12×1.25×100 | Bolt | 12 |
| 19 | 9309514 | 止动垫片 | Lock Nut Washer | 6 |
| 20 | 9357799 | 直接档输出齿轮 | Direct Forward Gear | 1 |
| 21 | 4735014 | 滚动轴承 6312 | Ball Bearing | 1 |
| 22 | 9310466 | 旋转油封 | Seal Ringearing | 1 |
| 23 | 9348541 | 调整垫片 | Adjust Washer | 1 组 |

## 1.22 五轴总成 9358819 Five Shafts Assembly



## 1.22 五轴总成 9358819 Five Shafts Assembly

| 序号 Sr.No | 零件代号 Part No. | 名称 Part Description | | 数量 Q'ty |
|---|---|---|---|---|
| 1 | 4005054 | 螺栓 M10×30(10.9 级) | Bolt | 6 |
| 2 | 9355355 | 锁片 | Tab Washer | 2 |
| 3 | 9355354 | 盖板 | Cover | 2 |
| 4 | 9349403 | 法兰 | Flange | 1 |
| 5 | 9349398 | 法兰 | Flange | 1 |
| 6 | 9355352 | 防尘环 | Dustproof Ring | 1 |
| 7 | 9349401 | 轴套 | spacer | 1 |
| 8 | 4801106 | O 形圈 130×5.7 | O-Ring | 4 |
| 9 | 9355348 | 油封座 | Oil Seal Seat | 2 |
| 10 | 4806434 | 油封 70×95×10 | Oil Seal | 2 |
| 11 | 4806313 | 油封 B70×95×10B | Oil Seal | 2 |
| 12 | 4410064 | 挡圈 130 | Snap Ring | 2 |
| 13 | 4745021 | 轴承 6312 | Ball Bearing | 2 |
| 14 | 9309722 | 输出轴齿轮 | Output Shaft Gear | 1 |
| 15 | 9355350 | 输出轴 | Output Shaft | 1 |
| 16 | 4745008 | 轴承 6410 | Ball Bearing | 1 |
| 17 | 9349622 | 法兰 | Flange | 0 |
| 18 | 9349399 | O 形圈 | O-Ring | 1 |

## 1.23 变速泵 9355353 Gearshift Pump

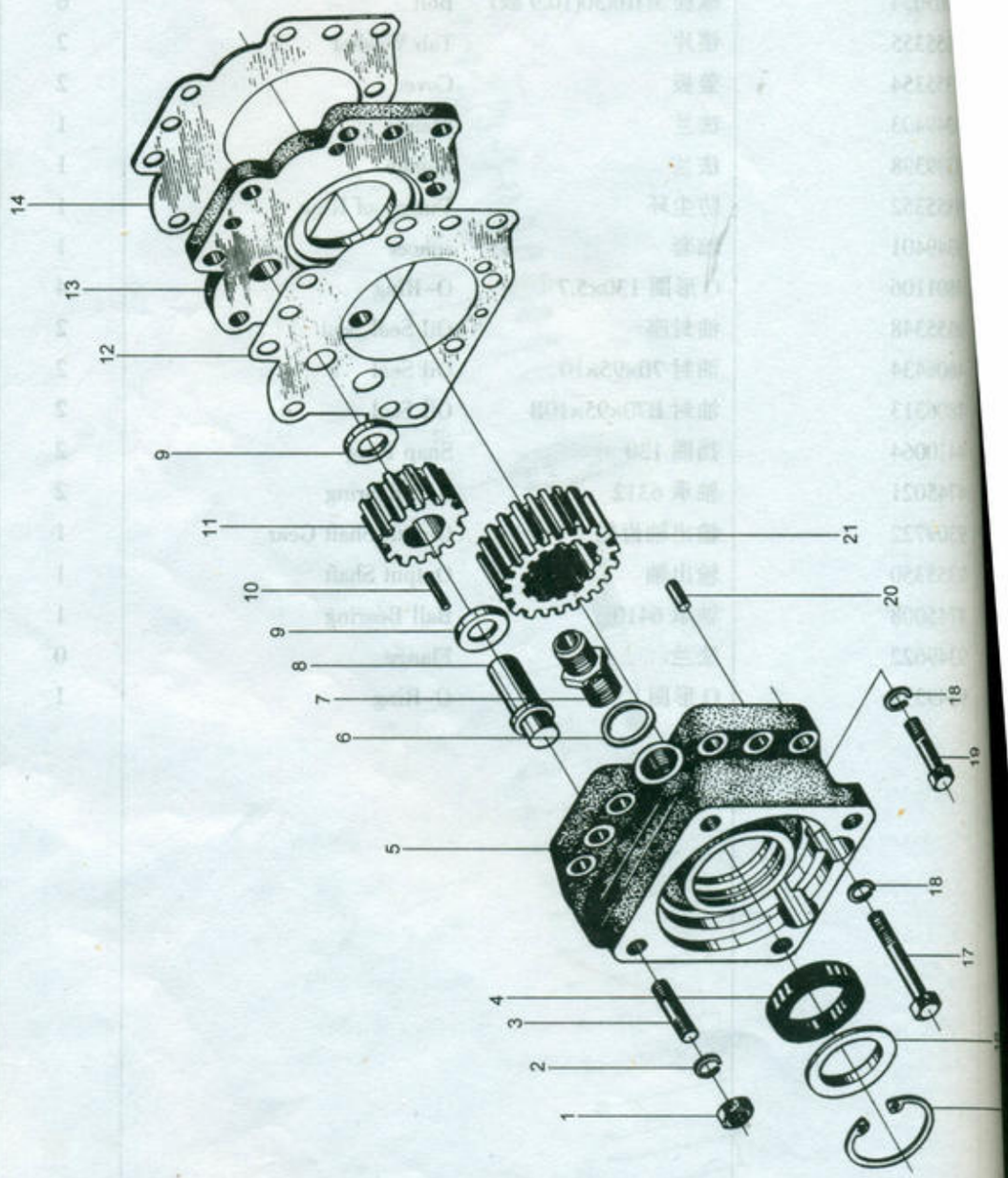

## 1.23 变速泵 9355353 Gearshift Pump

| 序号 Sr.No | 零件代号 Part No. | 名称 Part Description | | 数量 Q'ty |
|---|---|---|---|---|
| 1 | 4301010 | 螺母 M12 | Nut | 4 |
| 2 | 4401009 | 垫片 12 | Washer | 4 |
| 3 | | 双头螺栓 AMl2×35 | Stud | 4 |
| 4 | 4818007 | 骨架油封 PG45×62×12 | Skeleton Oil Seal | 1 |
| 5 | 403601 | 泵体(止口 Φ127) | Pump Body | 1 |
| 6 | 402106 | 垫圈 | Washer | 1 |
| 7 | 402111 | 管接头 | Joint | 1 |
| 8 | 403603 | 轴 | Shaft | 1 |
| 9 | 403611 | 隔离套 | Spacer | 2 |
| 10 | | 滚针 Φ4×30 | Needle Roller | 18 |
| 11 | 403602 | 小齿轮 | Driving Gear | 1 |
| 12 | 403606 | 密封垫 | Seal Gasket | 1 |
| 13 | 403608 | 泵盖 | Pump Cover | 1 |
| 14 | 403609 | 密封垫 | Seal Gasket | 1 |
| 15 | | 挡圈 | Snap Ring | 1 |
| 16 | 403604 | 挡环 | Snap Ring | 1 |
| 17 | 4004231 | 大头螺栓 M10×75 | Bolt | 2 |
| 18 | 4401008 | 垫圈 10 | Washer | 8 |
| 19 | 4004033 | 小头螺栓 M10×55 | Bolt | 6 |
| 20 | 4502135 | 销 A10×30 | Pin | 2 |
| 21 | 403605 | 大齿轮 | Driven Gear | 1 |

XCMG

## 1.24 变速操纵阀 5000640 Gearshift Control Valve

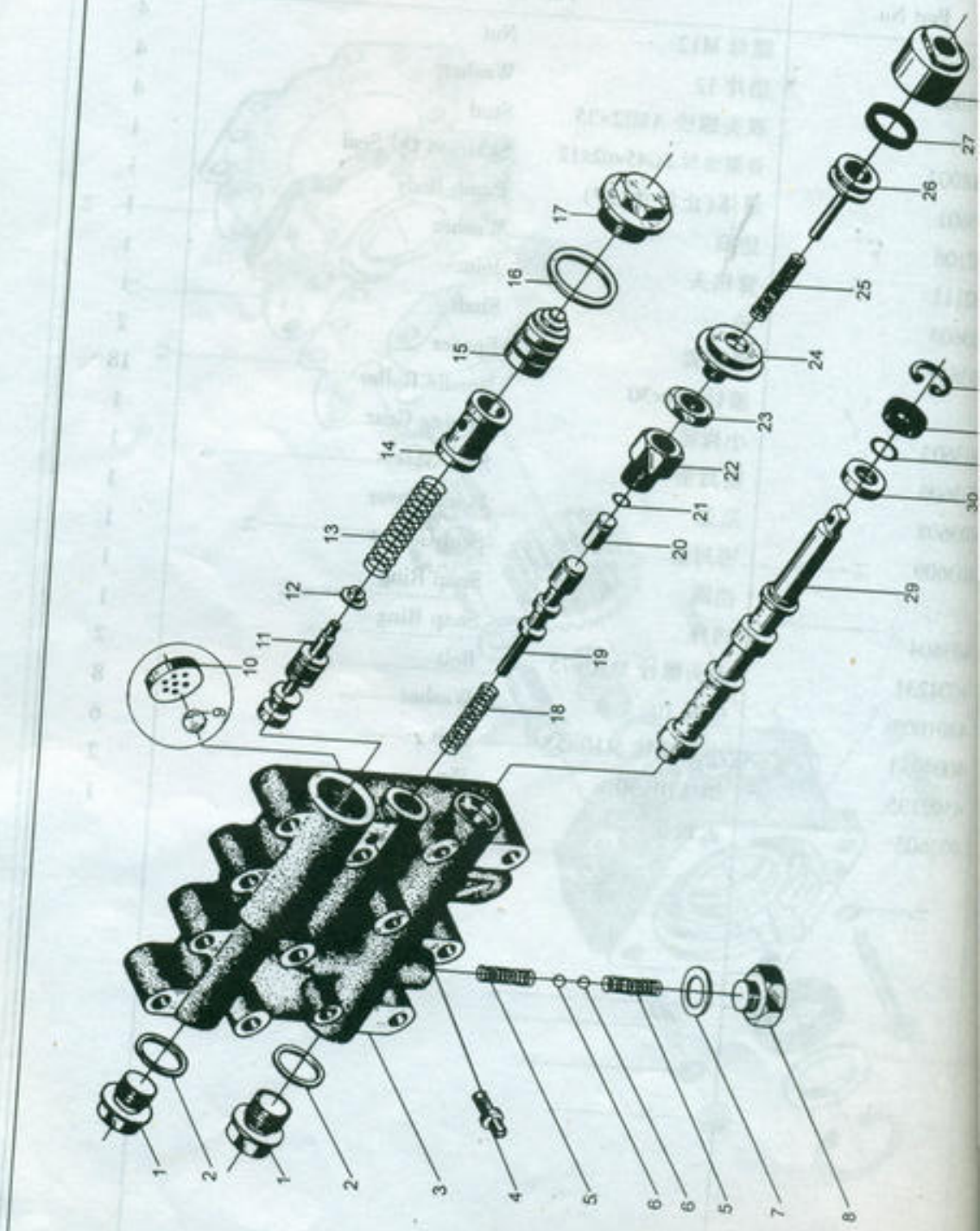

## 1.24 变速操纵阀 5000640 Gearshift Control Valve

| 序号 Sr.No | 零件代号 Part No. | 名称 Part Description | | 数量 Q'ty |
|---|---|---|---|---|
| 1 | 403702 | 螺栓 | Bolt | 2 |
| 2 | 402106 | 垫圈 | Washer | 2 |
| 3 | 403701A | 阀体 | Valve Body | 1 |
| 4 | 403727 | 压力表接头 | Oil Monometer | 1 |
| 5 | 403707 | 弹簧 | Spring | 2 |
| 6 | | 钢球 12.7 | Steel Ball | 2 |
| 7 | 402001 | 垫片 | Washer | 1 |
| 8 | 403710 | 螺栓 | Bolt | 1 |
| 9 | | 塑料球 3/16" | Plastic Ball | 1 |
| 10 | 403726 | 圆板 | Orifice Plate | 1 |
| 11 | 403704 | 减压阀杆 | Regulator Valve Stem | 1 |
| 12 | 403725 | 弹簧座 | Spring Seat | 1 |
| 13 | 403724 | 弹簧 | Spring | 1 |
| 14 | 403723 | 固定套 | Fixed Sleeve | 1 |
| 15 | 403722 | 滑块 | Sliding Block | 1 |
| 16 | 403721 | 垫圈 | Washer | 1 |
| 17 | 403720 | 螺栓 | Bolt | 1 |
| 18 | 403706 | 弹簧 | Spring | 1 |
| 19 | 403705 | 刹车阀杆 | Brake Valve Stem | 1 |
| 20 | 403718 | 圆柱塞 | Cylindrical Plug | 1 |
| 21 | | O 形圈 13×1.9 | O-Ring | 1 |
| 22 | 403719 | 螺栓 | Bolt | 1 |
| 23 | 403717 | 螺母 | Nut | 1 |
| 24 | 403712 | 气阀座 | Air Valve Stem | 1 |
| 25 | 403714 | 弹簧 | Spring | 1 |
| 26 | 403713、 | 气阀杆 | Air Valve Stem | 1 |
| 27 | 403715 | Y 形密封圈 32×40 | "Y"Seal Ring | 1 |
| 28 | 403716 | 气阀体 | Air Valve Boby | 1 |
| 29 | 403708 | 分配阀杆 | Distribution Valve Stem | 1 |
| 30 | 403711 | 挡套 | Collar | 1 |
| 31 | 4801015 | O 形圈 22×2.4 | "O"Ring | 1 |
| 32 | | 骨架油封 PD18×30×10 | Oil Seal | 1 |
| 33 | 4410020 | 挡圈 30 | Snap Ring | 1 |

## 1.25 油底壳安装 9310075 Oil Sump Fixing

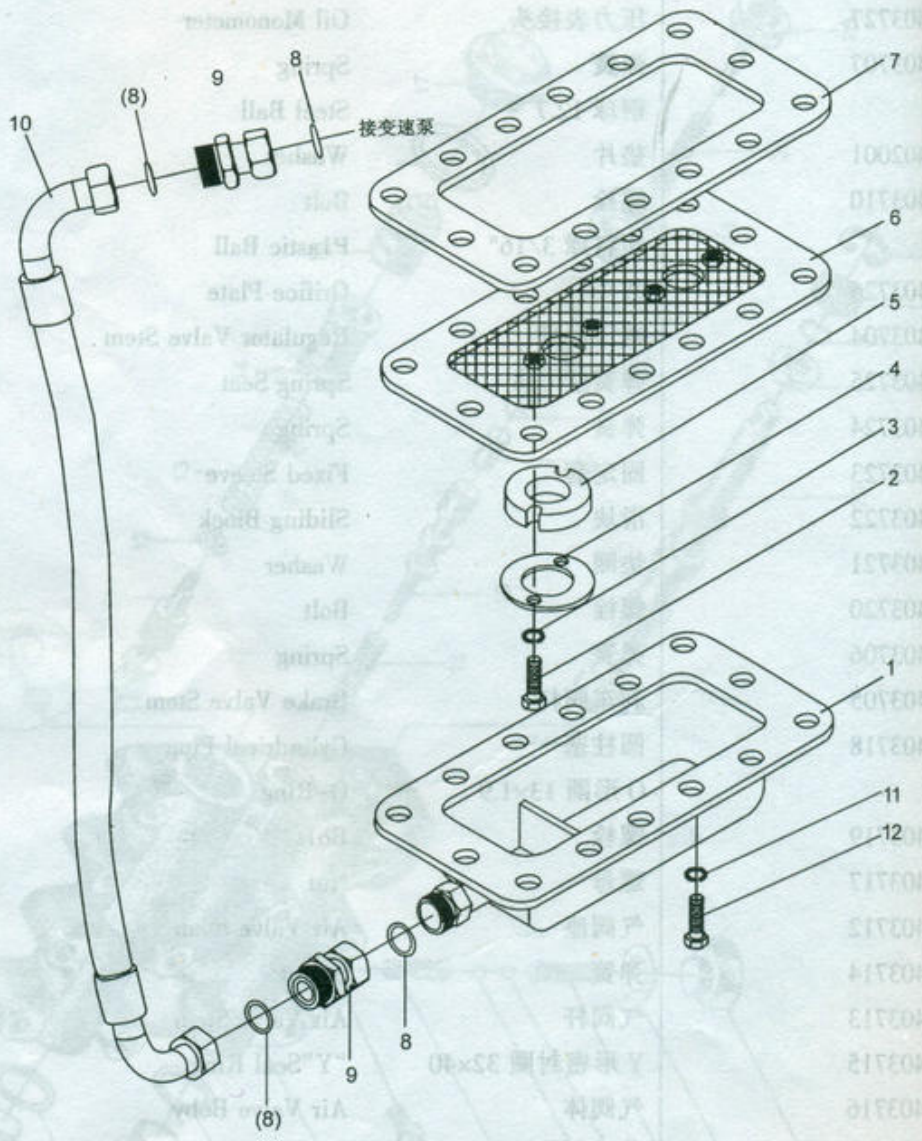

## 1.25 油底壳安装 9310075 Oil Sump Fixing

| 序号 Sr.No | 零件代号 Part No. | 名称 Part Description | | 数量 Q'ty |
|---|---|---|---|---|
| 1 | 9309487 | 油底壳 | Oil Sump | 1 |
| 2 | 4005031 | 螺栓 M6×25 | Bolt | 4 |
| 3 | 4401006 | 垫圈 6 | Lock Washer | 4 |
| 4 | 9310898 | 垫板 | Pad | 2 |
| 5 | 5000547 | 磁铁 | Permanent Magnet | 2 |
| 6 | 9309489 | 滤网支架 | Serainer Bracket | 1 |
| 7 | | 密封垫 | Seal Gasket | 1 |
| 8 | 4801065 | O 形圈 30×3.5 | O-Ring | 4 |
| 9 | 9322140 | 接头 | Joint | 2 |
| 10 | 9327163 | 胶管 | Hose | 1 |
| 11 | 4401008 | 弹簧垫圈 10 | Lock Washer | 14 |
| 12 | 4005054 | 螺栓 M10×30 | Bolt | 14 |



## 1.26 油门操纵阀 Accelerator Control Valve

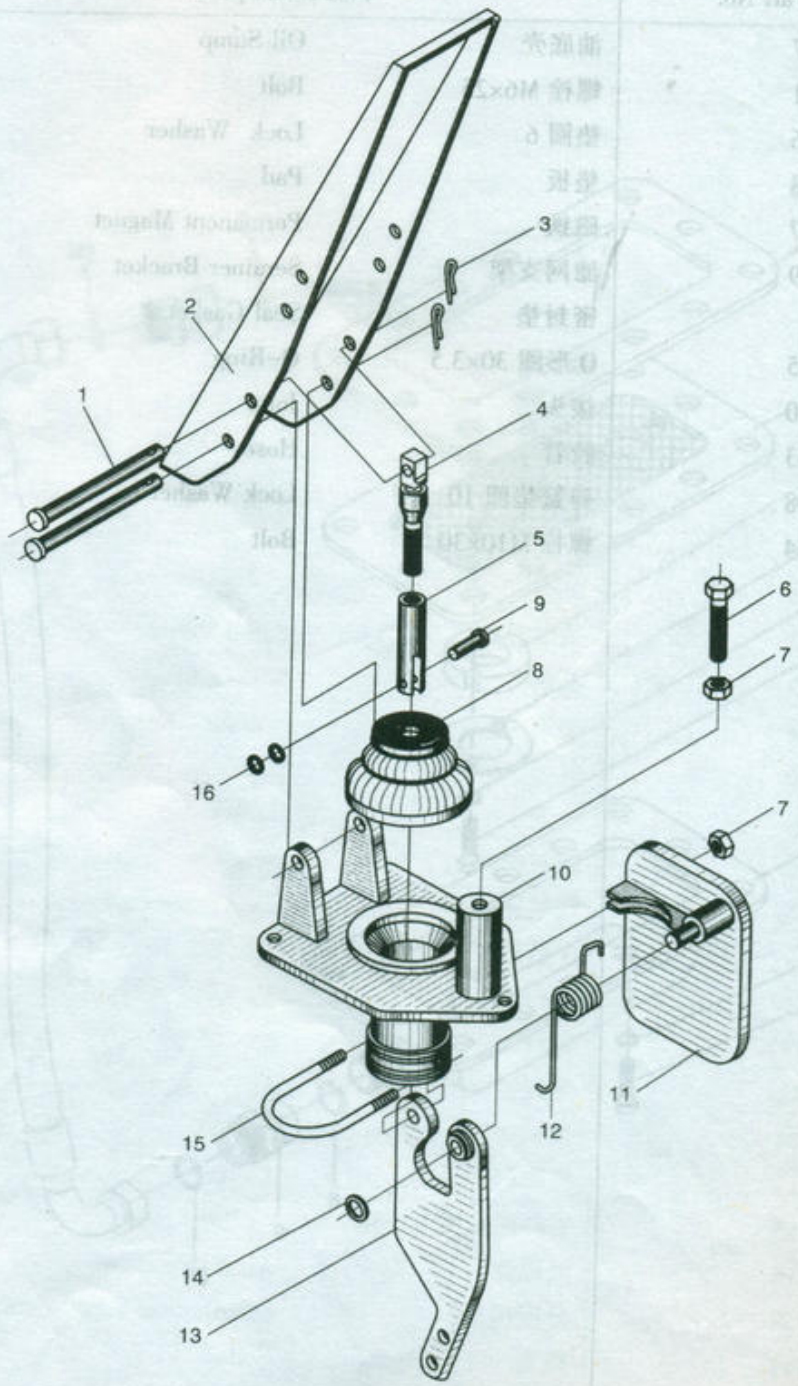

## 1.26 油门操纵阀 Accelerator Control Valve

| 序号 Sr.No | 零件代号 Part No. | 名称 Part Description | | 数量 Q'ty |
|---|---|---|---|---|
| 1 | XZ1129051 | 销轴 | Shift Pin | 2 |
| 2 | XZ1129040 | 脚踏板总成 | Pedal | 1 |
| 3 | GB91-86 | 开口销 2×16 | Pin | 2 |
| 4 | XZ1129053 | 调节螺栓 | Adjusting Bolt | 1 |
| 5 | XZ1129054 | 调节螺母 | Adjusting Nut | 1 |
| 6 | GB5783-86 | 螺栓 M8×30 | Bolt | 1 |
| 7 | GB6170-86 | 螺母 M8 | Nut | 3 |
| 8 | XZ1129052 | 防尘罩 | Dust Proof Cover | 1 |
| 9 | XZ1129055 | 销轴 | Pin Shaft | 1 |
| 10 | XZ1129031 | 支架 | Supporting Bracket | 1 |
| 11 | XZ1129020 | 侧板总成 | Side Plate | 1 |
| 12 | XZ1129056 | 扭转弹簧 | Twisting Spring | 1 |
| 13 | XZ1129010 | 扭转板总成 | Twisting Plate | 1 |
| 14 | GB986-86 | 开口挡圈 8 | Snap Ring | 1 |
| 15 | XZ1129057 | U 型螺栓 | U-Bolt | 1 |
| 16 | GB986-86 | 开口挡圈 4 | Snap Ring | 1 |

## 1.27 燃油箱 Fuel Tank

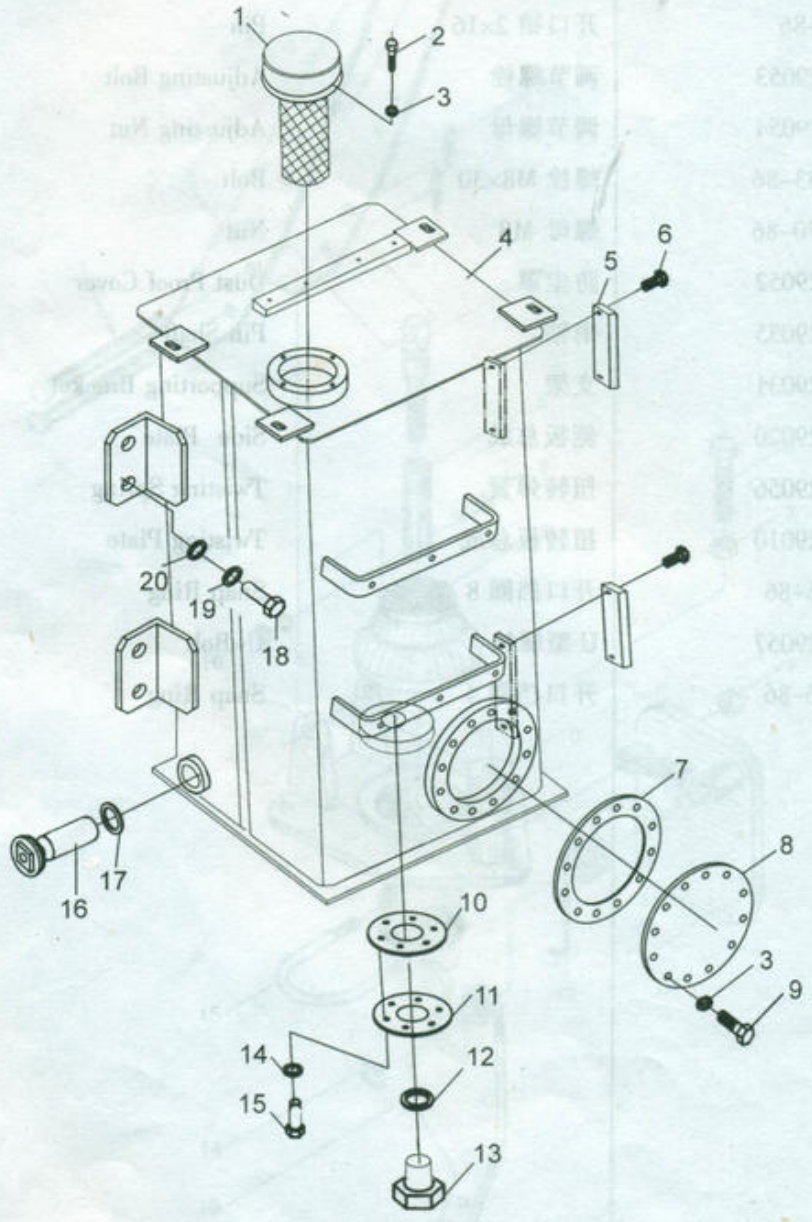

## 1.27 燃油箱 Fuel Tank

| 序号 Sr.No | 零件代号 Part No. | 名称 Part Description | | 数量 Q'ty |
|---|---|---|---|---|
| 1 | XGKL2-10×0.63 | 加油滤清器(QL-8) | Oil Filter | 1 |
| 2 | GB70-85 | 螺钉 M8×16 | Screw | 4 |
| 3 | GB93-87 | 垫圈 8 | Lock Washer | 16 |
| 4 | LW560F.1.1.1.1 | 燃油箱体 | Fuel Tank | 1 |
| 5 | YWZ-127 | 液位计 | Level Gauge | 2 |
| 6 | GB70-85 | 螺钉 M10×50 | Screw | 4 |
| 7 | ZL50E.1.2-2 | 垫片 | Thim | 1 |
| 8 | ZL50E.1.2-1 | 盖板 | Cover | 1 |
| 9 | GB5783-86 | 螺栓 M8×25 | Bolt | 12 |
| 10 | ZL40.1.3-8 | 垫片 | Thim | 1 |
| 11 | ZL50E.1A.2.2 | 法兰盖总成 | Flange | 1 |
| 12 | GB3452.1-1992 | 口型密封圈 18×2.65 | "口"Ring | 1 |
| 13 | 510D.1.3A-1 | 螺塞 | Plug | 1 |
| 14 | GB5783-86 | 螺栓 M10×25 | Bolt | 6 |
| 15 | GB93-87 | 垫圈 10 | Lock Washer | 6 |
| 16 | XGKL5-10×100 | 滤油器总成 | Oil Filter | 1 |
| 17 | JB982-77 | 垫圈 45 | Washer | 1 |
| 18 | GB5783-86 | 螺栓 M20×40 | Bolt | 4 |
| 19 | GB93-87 | 垫圈 20 | Lock Washer | 4 |
| 20 | GB97.1-85 | 垫圈 20 | Washer | 4 |

# 车架与附件

# Chassis and Accessories



## 2.1 前车架总成 Front Chassis Group

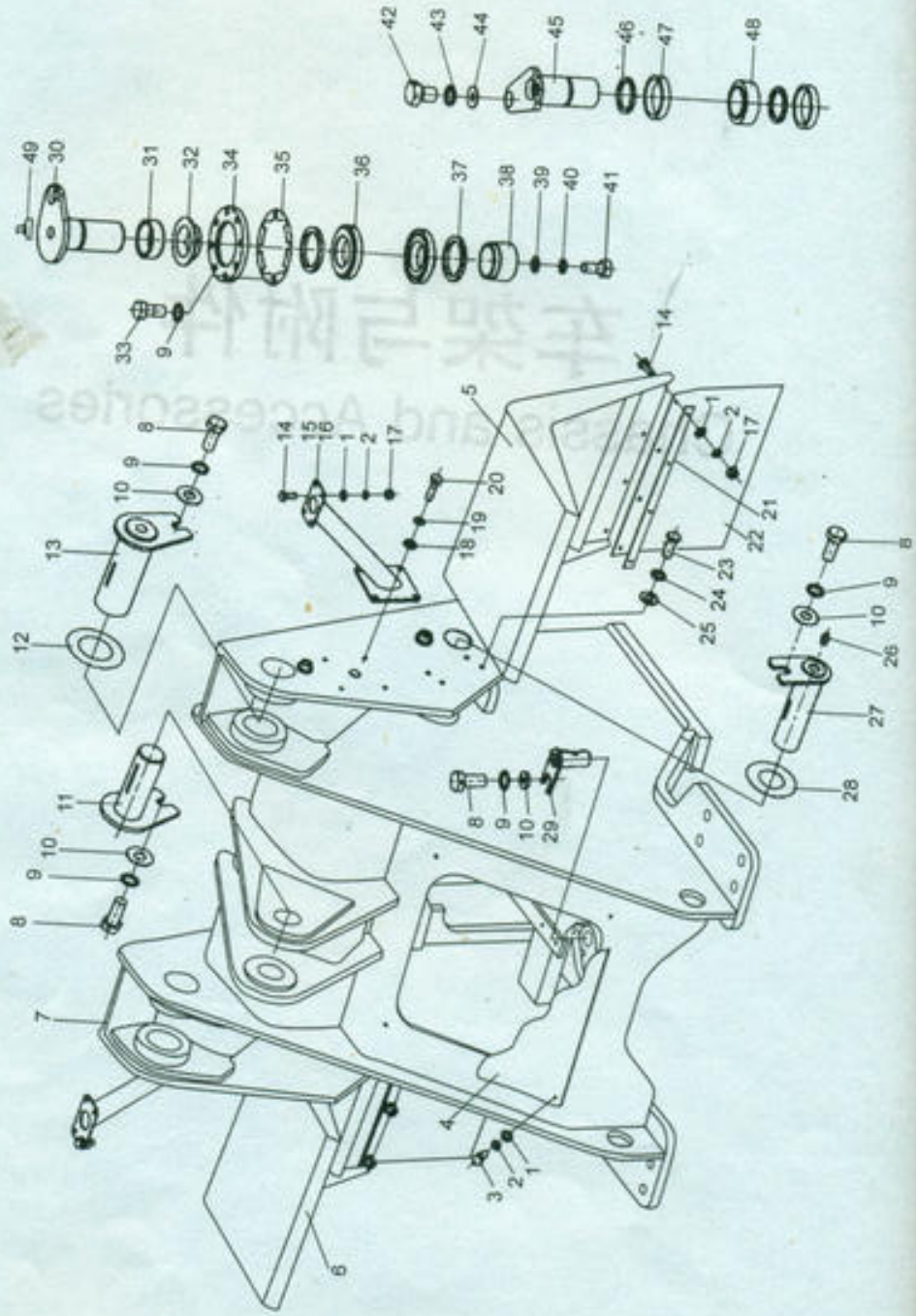

## 2.1 前车架总成 Front Chassis Group

| 序号 Sr.No | 零件代号 Part No. | 名称 Part Description | | 数量 Q'ty |
|---|---|---|---|---|
| 1 | GB97.1-85 | 垫圈 8 | Washer | 20 |
| 2 | GB93-87 | 垫圈 8 | Washer | 20 |
| 3 | GB5783-86 | 螺栓 M8×16 | Bolt | 4 |
| 4 | ZL50E.6-10 | 盖板 | Covering Plate | 1 |
| 5 | Z5G.6.18A | 左挡泥板 | Left Splash Fender | 1 |
| 6 | Z5G.6.19A | 右挡泥板 | Right Splash Fender | 1 |
| 7 | LW560F.06.1 | 前车架 | Front Frame | 1 |
| | LW541F.05II.1 | 前车架 | Front Frame | 1 |
| 8 | GB5783-86 | 螺栓 M16×25 | Bolt | 7 |
| 9 | GB93-87 | 垫圈 16 | Washer | 15 |
| 10 | GB96-85 | 垫圈 16 | Washer | 7 |
| 11 | ZL50E.6.14 | 转斗缸-车架销 | Tilt Cylinder-Frame Pin | 1 |
| 12 | TL002007 | 调整垫片 | Adjusting Gasket | 4 |
| 13 | LW541F.05.3 | 动臂-车架销 | Lifting Arm-Frame Pin | 2 |
| 14 | GB5783-86 | 螺栓 M8×20 | Bolt | 16 |
| 15 | Z5G.6.16A | 左灯架 | Left Lamp Bracket | 1 |
| 16 | Z5G.6.17A | 右灯架 | Right Lamp Bracket | 1 |
| 17 | GB6170-86 | 螺母 M8 | Nut | 16 |
| 18 | GB97.1-86 | 垫圈 10 | Washer | 8 |
| 19 | GB93-87 | 垫圈 10 | Washer | 8 |
| 20 | GB5783-86 | 螺栓 M10×35 | Bolt | 8 |
| 21 | Z5G.6.18-1 | 安装板 | Carrying Plate | 2 |
| 22 | Z5G.6.18-2 | 胶垫 | Rubber Pad | 2 |
| 23 | GB5783-86 | 螺栓 M12×30 | Bolt | 8 |
| 24 | GB93-87 | 垫圈 12 | Washer | 8 |
| 25 | GB97.1-86 | 垫圈 12 | Washer | 8 |
| 26 | JB/T7940.1-1995 | 油杯 M10×1 | Oil Cup | 7 |
| 27 | LW541F.05.6 | 动臂缸-车架销 | Lifting Arm Cylinder-Frame Pin | 2 |
| 28 | TL002005 | 调整垫片 | Adjusting Gasket | 2 |

## 2.1 前车架总成 Front Chassis Group

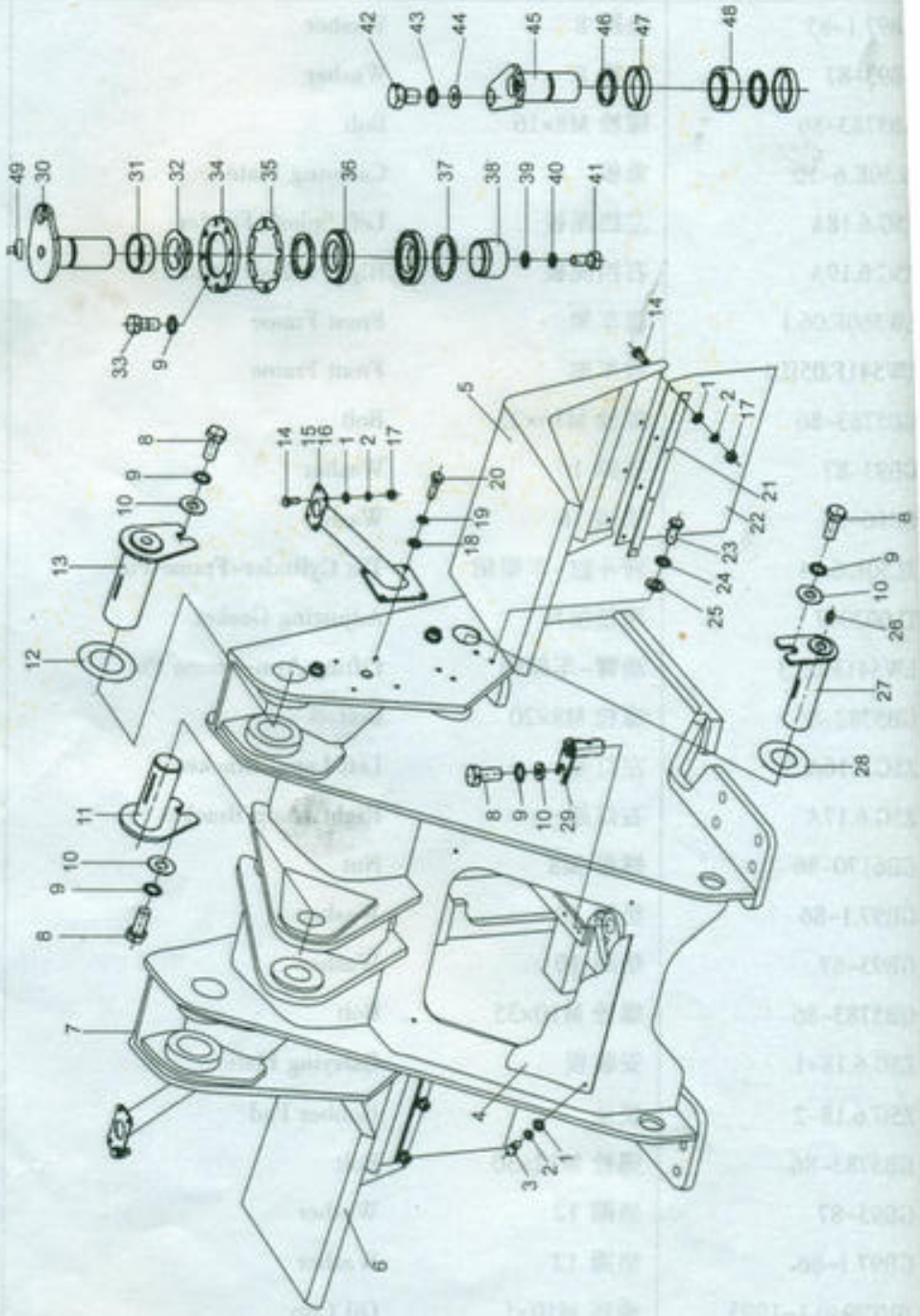

## 2.1 前车架总成 Front Chassis Group

| 序号 Sr.No | 零件代号 Part No. | 名称 Part Description | | 数量 Q'ty |
|---|---|---|---|---|
| 29 | LW541F.06.1 | 转向销 | Steering Pin | 2 |
| 30 | LW541F.05.5 | 上铰接销 | Upper Articulating Pin | 1 |
| 31 | LW541F.05-1 | 轴套 | Shaft sleeve | 1 |
| 32 | LW541F.05-2 | 隔套 | Spacing Sleeve | 1 |
| 33 | GB5782-86 | 螺栓 M16×55 | Bolt | 8 |
| 34 | ZL50E.6-3 | 轴承盖 | Bearing Cap | 1 |
| 35 | LW541F.05-4,-5,-6 | 调整垫片 | Adjusting Gasket | 2 |
| 36 | GB297-84 | 轴承 7517E | Bearing | 2 |
| 37 | GB9877.1-88 | 密封圈 B100×125×12d | Skeleton Oil Seal | 2 |
| 38 | ZL50E.6-2 | 下盖 | Lower Cover | 1 |
| 39 | GB97.1-85 | 垫圈 18 | Washer | 4 |
| 40 | GB93-87 | 垫圈 18 | Washer | 4 |
| 41 | GB5785-86 | 螺栓 M18×1.5×65 | Bolt | 4 |
| 42 | GB5783-86 | 螺栓 M20×30 | Bolt | 1 |
| 43 | GB93-87 | 垫圈 20 | Washer | 1 |
| 44 | GB97.1-85 | 垫圈 20 | Washer | 1 |
| 45 | LW541F.05.4 | 下铰接销 | Lower Articulating Pin | 1 |
| 46 | GB9877.1-88 | 密封圈 B80×100×10 | Seal Ring | 2 |
| 47 | ZL50E.6-6 | 轴承保护架 | Protecting Bracket of Bearing | 2 |
| 48 | GB304.5-81 | 关节轴承 GE80ES | Bearing | 1 |
| 49 | JB/T7940.1-1995 | 油杯 M10×1 | Oil Cup | 1 |

备注：1、LW560F.6.1 前车架用来配装二联阀
2、LW541F.05II.1 前车架用来配装三联阀

## 2.2 后车架总成 Rear Chassis Group

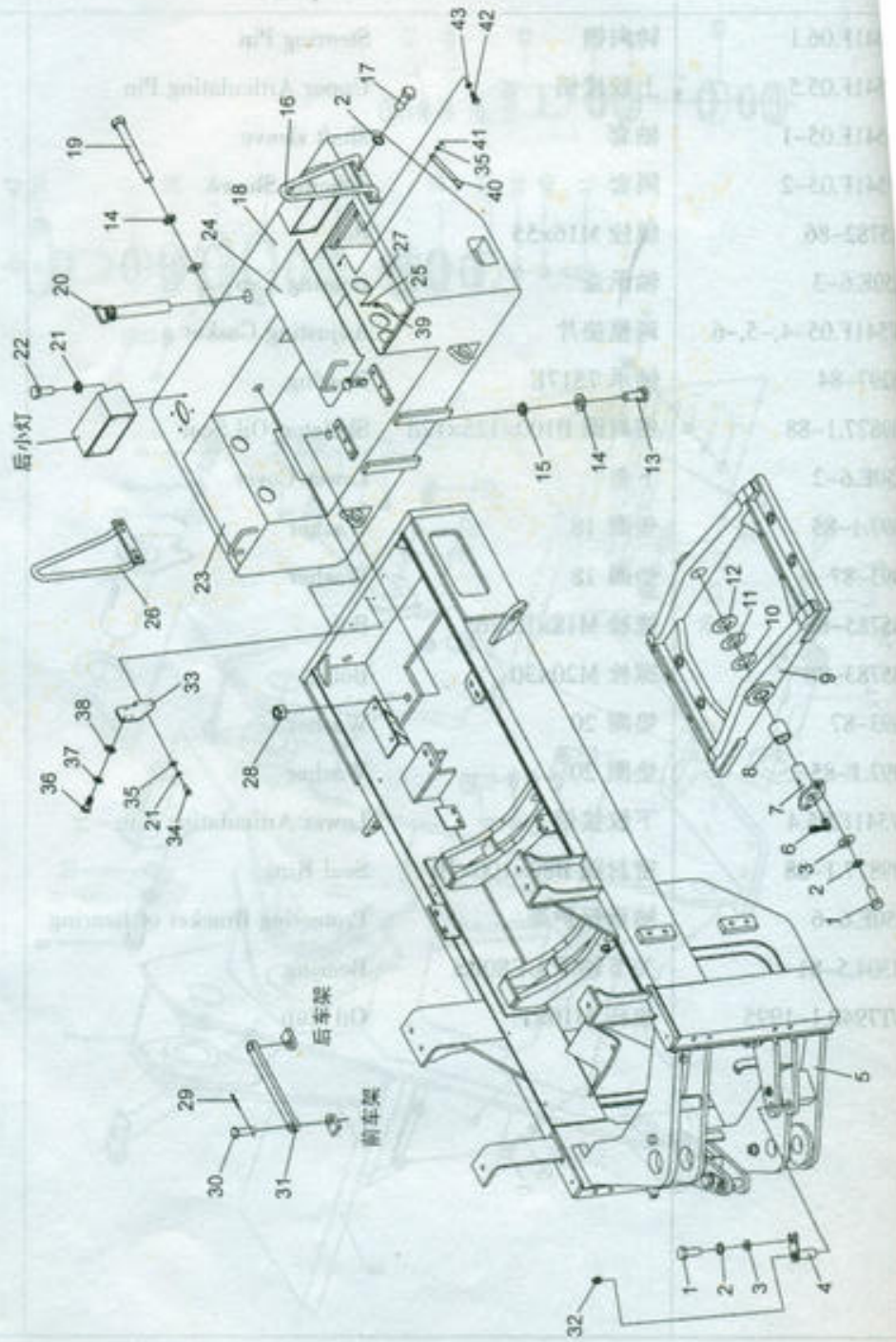

## 2.2 后车架总成 Rear Chassis Group

| 序号 Sr.No | 零件代号 Part No. | 名称 Part Description | | 数量 Q'ty |
|---|---|---|---|---|
| 1 | GB5783-86 | 螺栓 M16×25 | Bolt | 6 |
| 2 | GB93-87 | 垫圈 16 | Washer | 6 |
| 3 | GB96-85 | 垫圈 16 | Washer | 6 |
| 4 | LW541F.06.1 | 转向销 | Steering Pin | 2 |
| 5 | LW541F.06.2A | 后车架 | Rear Chassis | 1 |
| | LW541F.06II.2A | 后车架 | Rear Chassis | 1 |
| 6 | LW560F.6A.9 | 黄油管系 | Grease Tube | 1 |
| 7 | LW541F.06.3 | 摆动架销 | Sway Frame Pin | 2 |
| 8 | LW541F.06-1 | 套 | Sleeve | 2 |
| 9 | LW541F.06.4 | 摆动架 | Sway Frame | 1 |
| 10 | TL002002 | 调整垫片 | Adjusting Cushion | 2 |
| 11 | ZL50E.6-14 | 调整垫片 | Adjusting Cushion | 2 |
| 12 | ZL50E.6-15 | 调整垫片 | Adjusting Cushion | 2 |
| 13 | GB5785-86 | 螺栓 M36×3×280 | Bolt | 2 |
| 14 | GB93-87 | 垫圈 36 | Washer | 4 |
| 15 | GB97.1-85 | 垫圈 36 | Washer | 4 |
| 16 | 530D.8.5 | 左后扶手 | Armrest | 1 |
| 17 | GB5783-86 | 螺栓 M16×40 | Bolt | 4 |
| 18 | LW560F.6.5A | 配重 | Counterweight | 1 |
| 19 | GB5785-86 | 螺栓 M36×3×240 | Bolt | 2 |
| 20 | Z5G(VII).6.3 | 牵引销 | Towing Pin | 1 |
| 21 | GB93-87 | 垫圈 8 | Washer | 10 |
| 22 | GB5783-86 | 螺栓 M8×16 | Bolt | 8 |
| 23 | LW560F.6.5A.2 | 工具箱盖 | Tool Box Cover | 2 |
| 24 | LW560F.6.5A.3 | 电瓶箱盖 | Battery Cover | 2 |
| 25 | GB97.1-85 | 垫圈 5 | Washer | 4 |
| 26 | 530D.8.6 | 右后扶手 | Armrest | 1 |
| 27 | GB70-85 | 螺钉 M5×20 | Screw | 4 |
| 28 | GB6171-86 | 螺母 M36×3 | Nut | 2 |

## 2.2 后车架总成 Rear Chassis Group

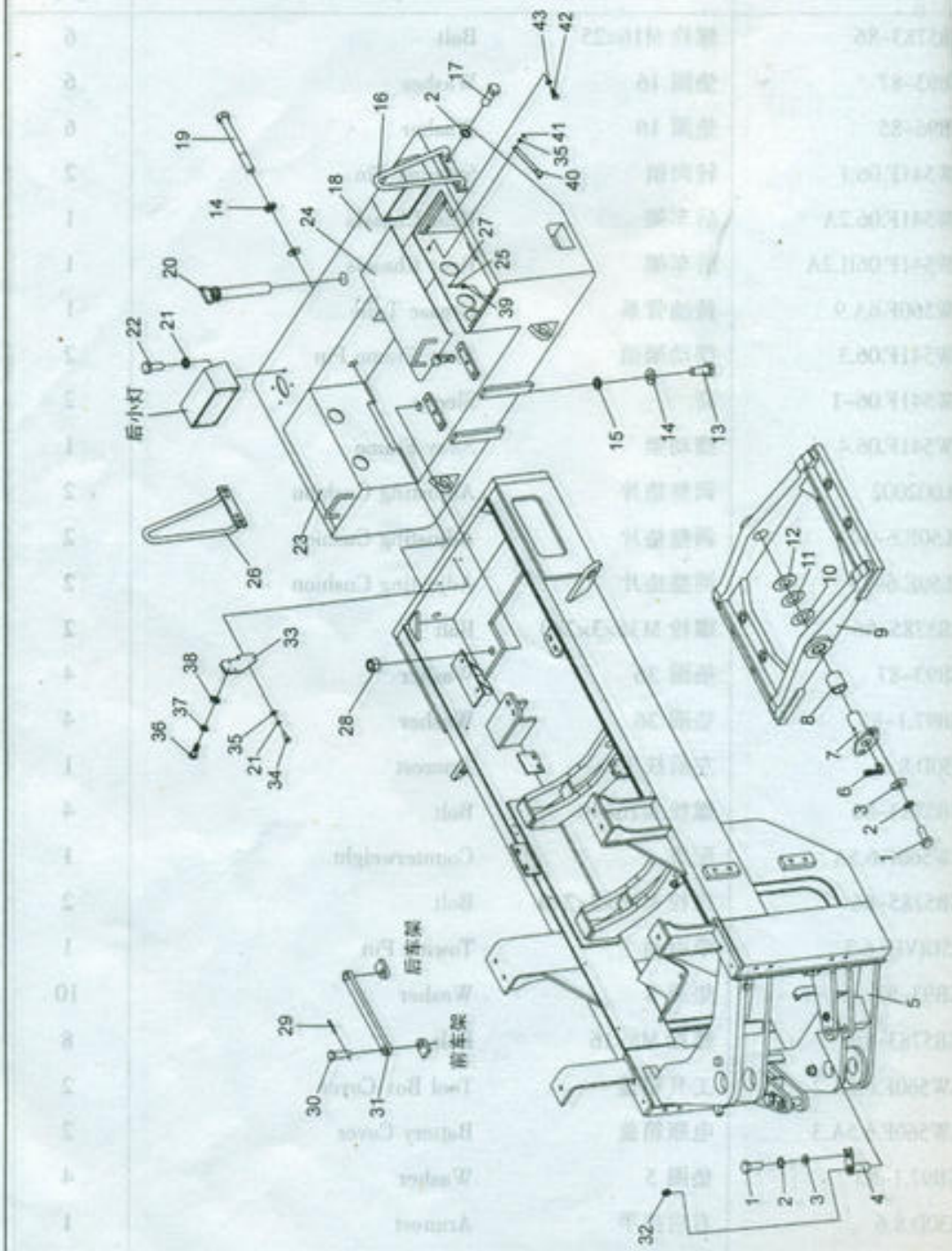

## 2.2 后车架总成 Rear Chassis Group

| 序号 Sr.No | 零件代号 Part No. | 名称 Part Description | | 数量 Q'ty |
|---|---|---|---|---|
| 29 | LW321F.05-2 | 弹簧销 | Spring Pin | 2 |
| 30 | GB882-86 | 销轴 B32×65 | Pin Shaft | 2 |
| 31 | ZL50E.6-11 | 连杆 | Connecting Link | 1 |
| 32 | JB/T7940.1-1995 | 油杯 M10×1 | Oil Cup | 2 |
| 33 | LW560F.11A.6-1 | 报警器安装支架 | Back Buzzer Carrier | 1 |
| 34 | GB5783-86 | 螺栓 M8×30 | Bolt | 2 |
| 35 | GB97.1-85 | 垫圈 8 | Washer | 4 |
| 36 | GB67-85 | 螺钉 M6×12 | Screw | 3 |
| 37 | GB93-87 | 垫圈 6 | Washer | 3 |
| 38 | GB97.1-85 | 垫圈 6 | Washer | 3 |
| 39 | LW330F(Ⅱ).08.10-6 | 橡胶垫 | Gasket | 4 |
| 40 | Z5G.06.9.6 | 撑杆 | Rod | 2 |
| 41 | GB91-86 | 开口销 2×20 | Pin | 2 |
| 42 | GB5783-86 | 螺栓 M6×16 | Bolt | 8 |
| 43 | GB93-87 | 垫圈 6 | Washer | 8 |

备注：LW541F.06.2 后车架配装潍柴 WD615G.220 和玉柴 YC6M220GM3010 发动机
LW541F.06II.2 后车架配装上柴 D9-220(DBL0423)发动机

## 2.3 左台架 Left Platform
## 右台架 Right Platform

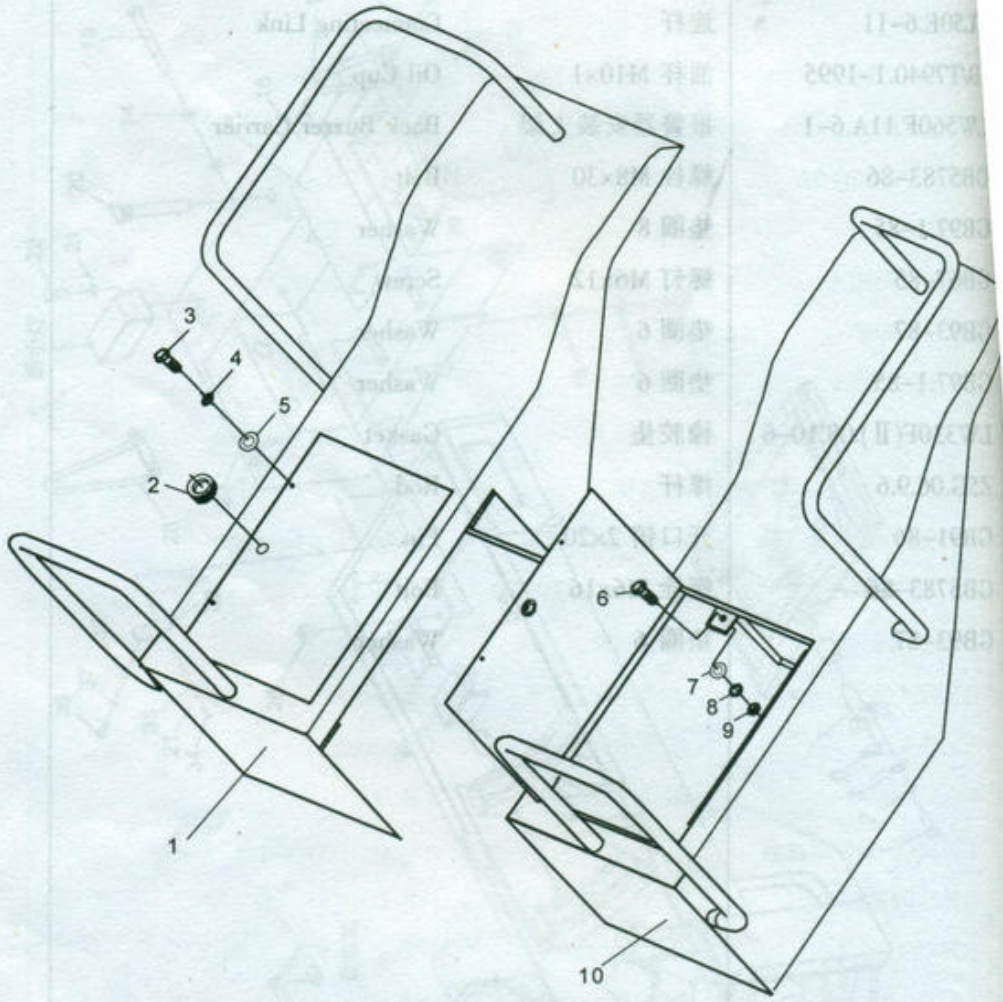

## 2.3 左台架 Left Platform
## 右台架 Right Platform

| 序号 Sr.No | 零件代号 Part No. | 名称 Part Description | | 数量 Q'ty |
|---|---|---|---|---|
| 1 | LW560F.6.3.1 | 右台架 | Right Platform | 1 |
| 2 | ZL50E.6.3-1 | 胶套 | Rubber Cover | 2 |
| 3 | GB5781-86 | 螺栓 M5×12 | Bolt | 4 |
| 4 | GB93-87 | 垫圈 5 | Lock Washer | 4 |
| 5 | GB97.1-85 | 垫圈 5 | Washer | 4 |
| 6 | GB5781-86 | 螺栓 M12×35 | Bolt | 8 |
| 7 | GB97.1-85 | 垫圈 12 | Washer | 8 |
| 8 | GB93-87 | 垫圈 12 | Lock Washer | 8 |
| 9 | GB6170-86 | 螺母 12 | Nut | 8 |
| 10 | LW560F.6.4.1 | 左台架 | Left Platform | 1 |

## 2.4 爬梯 Ladder

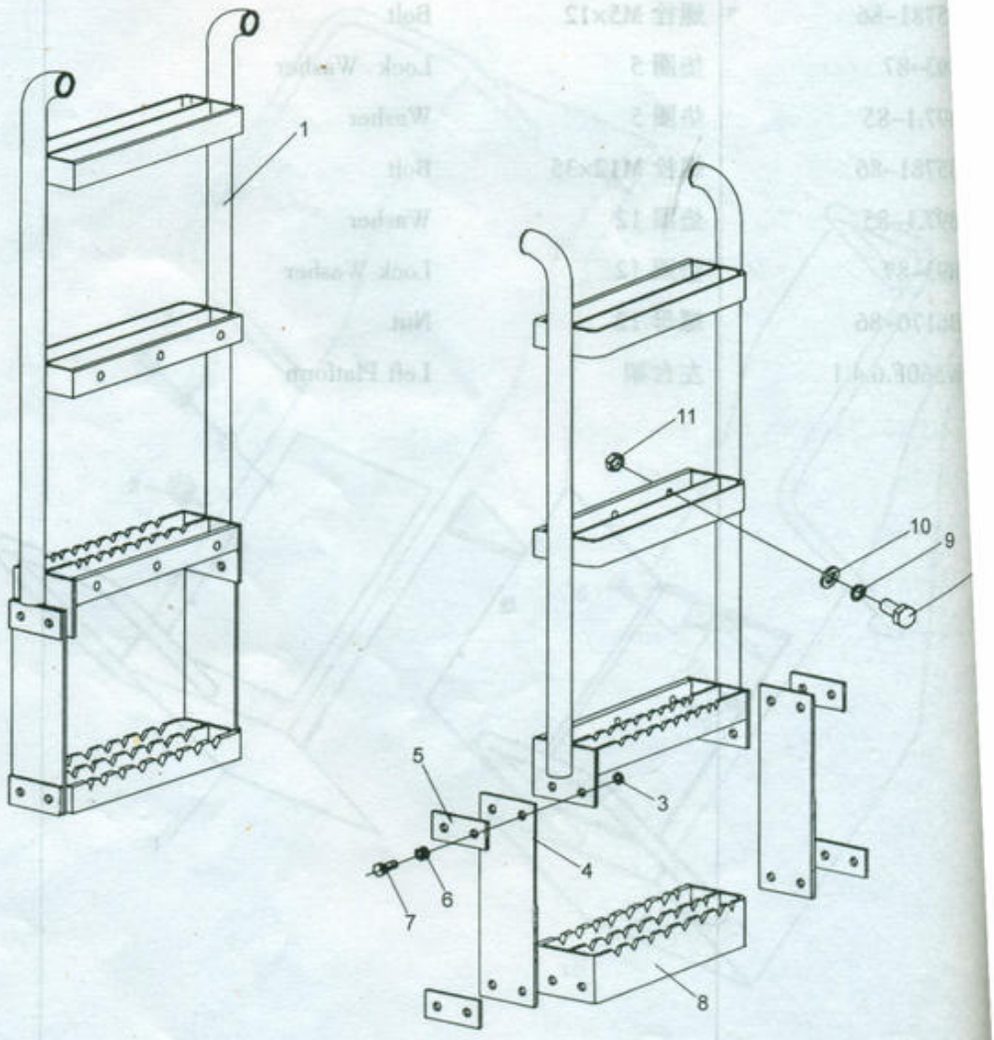

## 2.4 爬梯 Ladder

| 序号<br>Sr.No | 零件代号<br>Part No. | 名　　称<br>Part Description | | 数量<br>Q'ty |
|---|---|---|---|---|
| 1 | 520E.6.12.1 | 爬梯 | Ladder | 2 |
| 2 | GB5782-86 | 螺栓 M12×35 | Bolt | 12 |
| 3 | GB6170-86 | 螺母 M10 | Nut | 16 |
| 4 | 520E.6.12-1 | 平带 | Plate | 2 |
| 5 | Z5G.6.5B-1 | 压板 | Pressing Plate | 8 |
| 6 | GB93-87 | 垫圈 10 | Washer | 16 |
| 7 | GB5783-86 | 螺栓 M10×30 | Bolt | 16 |
| 8 | Z5G.6.5B.2 | 踏板 | Ladder Footrest | 2 |
| 9 | GB93-87 | 垫圈 12 | Washer | 12 |
| 10 | GB97.1-85 | 垫圈 12 | Washer | 12 |
| 11 | GB6170-86 | 螺母 M12 | Nut | 12 |

## 2.5 机罩 Engine Hood

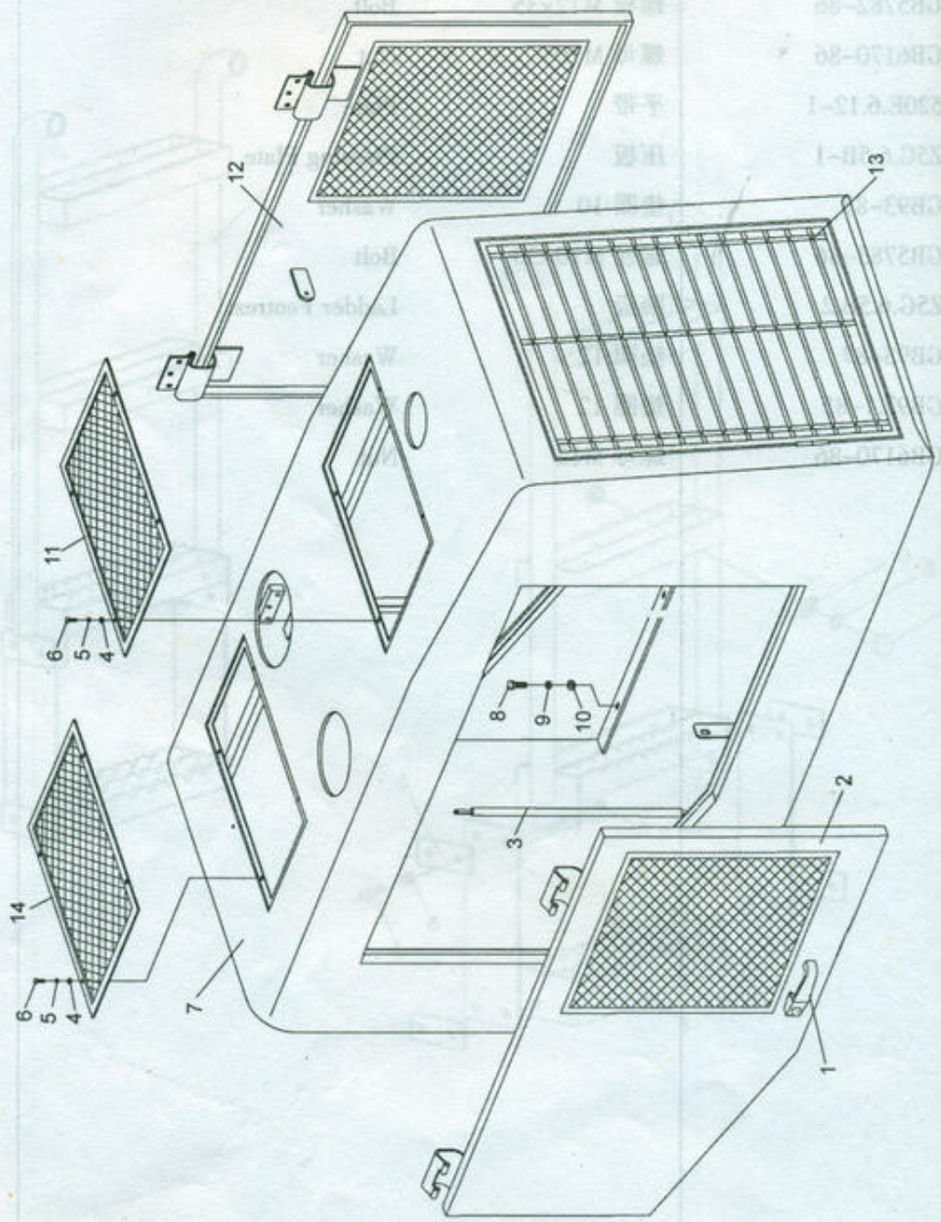

## 2.5 机罩 Engine Hood

| 序号 Sr.No | 零件代号 Part No. | 名称 Part Description | | 数量 Q'ty |
|---|---|---|---|---|
| 1 | | 门锁合件 | Door Lock | 2 |
| 2 | | 左侧门 | Left Side Door | 1 |
| 3 | | 气弹簧 | Pneumatic Spring | 2 |
| 4 | GB97.1-85 | 垫圈 6 | Washer | 12 |
| 5 | GB93-87 | 垫圈 6 | Washer | 12 |
| 6 | GB5783-86 | 螺栓 M6×20 | Bolt | 12 |
| 7 | LW541F.12.2① | 机罩体 | Hood Body | 1 |
| | LW541F.12Ⅱ.3② | 机罩体 | Hood Body | 1 |
| | LW541F.12Ⅲ.1③ | 机罩体 | Hood Body | 1 |
| 8 | GB97.1-85 | 垫圈 12 | Washer | 8 |
| 9 | GB93-87 | 垫圈 12 | Washer | 8 |
| 10 | GB5783-86 | 螺栓 M12×30 | Bolt | 8 |
| 11 | | 上网Ⅰ | Net | 1 |
| 12 | | 右侧门 | Right Side Door | 1 |
| 13 | | 后罩 | Back Hood | 1 |
| 14 | | 上网罩Ⅱ | Net | 1 |

注：①配装潍柴 WD615G.220 发动机
②配上柴 D9-220(DBL0423)发动机
③配装玉柴 YC6M220GM3010 发动机

## 2.6 电瓶箱部分 Battery Box

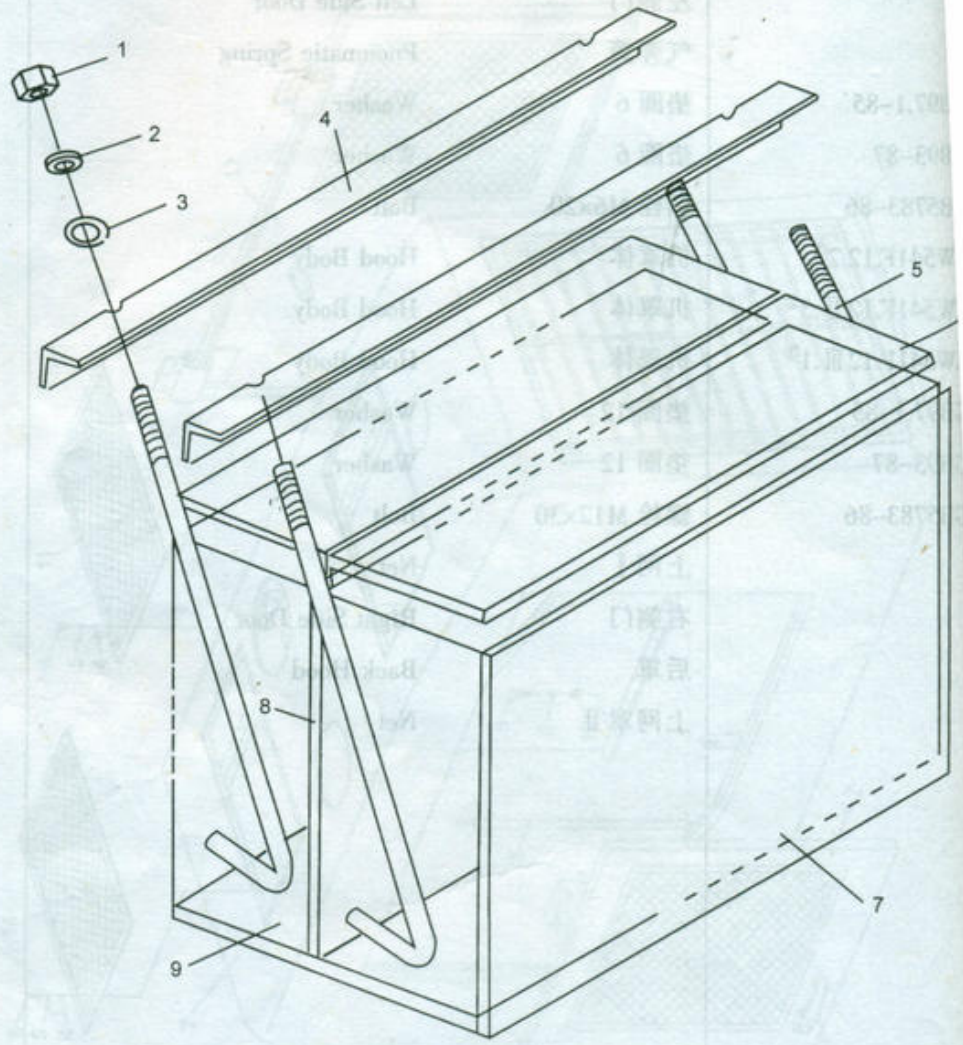

## 2.6 电瓶箱部分 Battery Box

| 序号 Sr,No. | 零件代号 Part No. | 名称 Part Description | | 数量 Q'ty | 备注 Remark |
|---|---|---|---|---|---|
| 1 | 4301008 | 螺母 M8 | Nut | 4 | GB6170-86 |
| 2 | 4401007 | 垫圈 8 | Washer | 4 | GB93-87 |
| 3 | 4404008 | 垫圈 8 | Washer | 4 | GB97.1-85 |
| 4 | 9348613 | 锁紧角钢 | Angled Steel | 2 | |
| 5 | 9348614 | 紧固螺栓 | Lock Bolt | 4 | |
| 6 | 9340213 | 橡胶板 550×330×1 | Rubber Plate | 2 | |
| 7 | 9348615 | 隔板 I | Rubber Plate | 2 | |
| 8 | 9348616 | 隔板 II | Rubber Plate | 2 | |
| 9 | 9348617 | 垫板 | Rubber Plate | 1 | |

# 工作装置
# Working Device



## 3.1 工作装置 Working Device

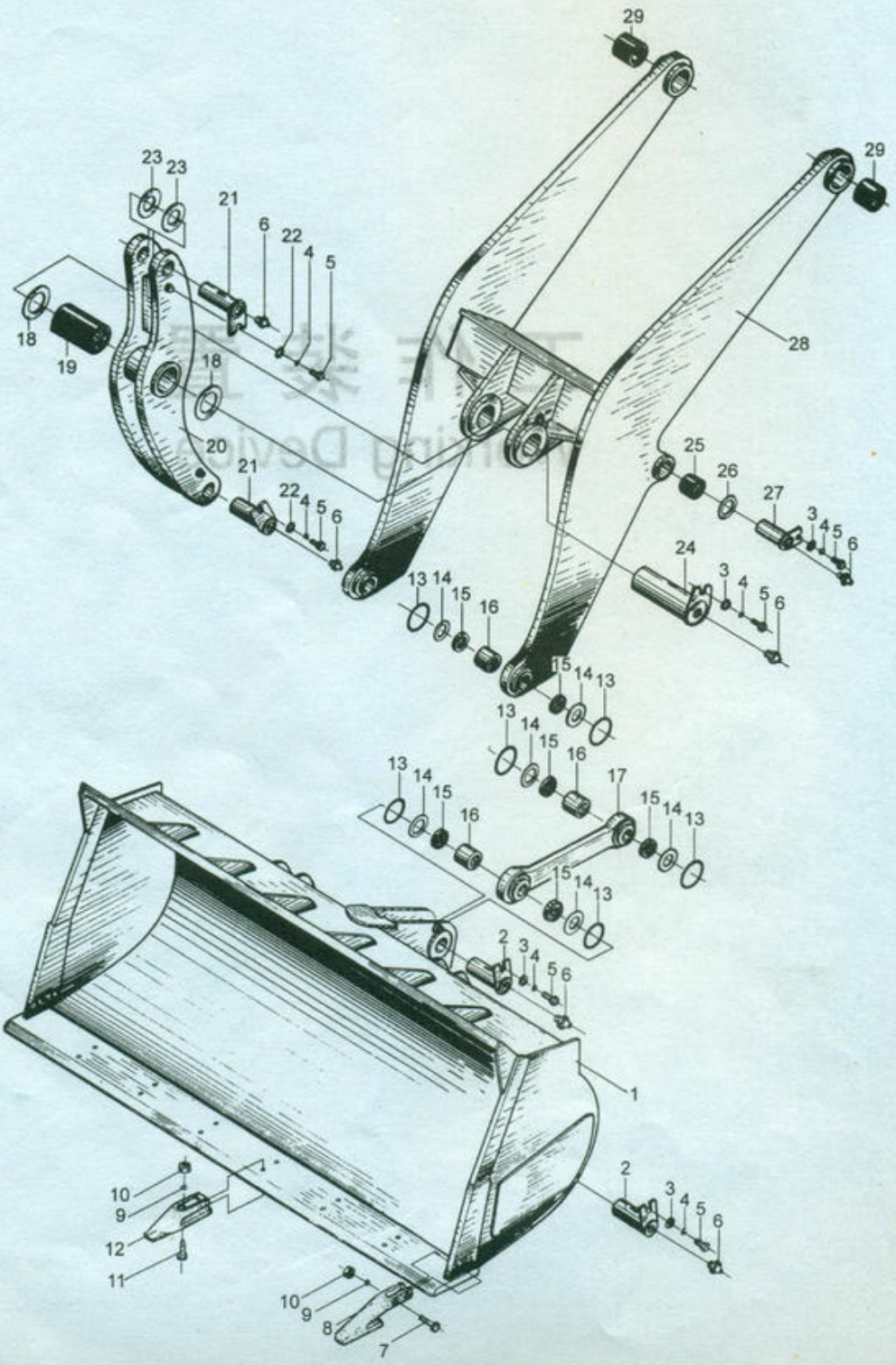

## 3.1 工作装置 Working Device

| 序号 Sr.No | 零件代号 Part No. | 名称 Part Description | | 数量 Q'ty |
|---|---|---|---|---|
| 1 | Z5G.8.1E | 铲斗总成 | Bucket | 1 |
| 2 | Z5G.8.7 | 铲斗销 | Bucket Pin | 3 |
| 3 | 85Z.06-5 | 垫圈 | Washer | 6 |
| 4 | GB93-87 | 垫圈 16 | Washer | 8 |
| 5 | GB5783-86 | 螺栓 M16×25 | Bolt | 8 |
| 6 | GB1152-89 | 油杯 M10×1 | Grease Nipple | 8 |
| 7 | GB5782-86 | 螺栓 M20×100 | Bolt | 4 |
| 8 | Z5G.8.1-1 | 边齿 | Bucket Tooth | 2 |
| 9 | GB93-87 | 垫圈 20 | Washer | 16 |
| 10 | ZL40A.11.1-19 | 螺母 | Nut | 16 |
| 11 | Z5G.8.1-2 | 螺栓 | Bolt | 12 |
| 12 | ZL40A.11.1-1 | 铲斗齿 | Bucket Tooth | 6 |
| 13 | Z5G.8-5 | O 形圈 | O-Ring | 8 |
| 14 | ZL50E.6-19 | 调整垫片 | Adjusting Gasket | 15 |
| 15 | GB9877.1-88 | 骨架油封 b80×100×10 | Skeleton Oil Seal | 8 |
| 16 | Z5G.8-6A | 轴套 | Shaft Bushing | 4 |
| 17 | Z5G.8.3 | 拉杆 | Link | 1 |
| 18 | ZL50E.8-12 | 调整垫片 | Adjusting Gasket | 4 |
| 19 | Z5G.8-2 | 轴套 | Shaft Bushing | 1 |
| 20 | Z5G.8.4 | 摇臂 | Rocker | 1 |
| 21 | Z5G.8.6 | 摇臂油缸销 | Rocker Cylinder Pin | 2 |
| 22 | ZL50E.8-4 | 垫块 | Block | 2 |
| 23 | ZL50E.6-19 | 调整垫片 | Adjusting Gasket | 15 |
| 24 | Z5G.8.5 | 摇臂梁销 | Rocker Beam Pin | 1 |
| 25 | Z5G.8-1 | 轴套 | Shaft Bushing | 2 |
| 26 | ZL50E.8-16 | 垫片 | Washer | 8 |
| 27 | ZL50E.8.7 | 动臂油缸销 | Lifting Arm Cylinder Pin | 2 |
| 28 | Z5G.8.2 | 动臂 | Lifting Arm | 1 |
| 29 | Z5G.8-3 | 轴套 | Shaft Bushing | 2 |

# 操纵与驾驶室

# Controls and Cab

## 4.1 变速操纵系统 Shift Control System

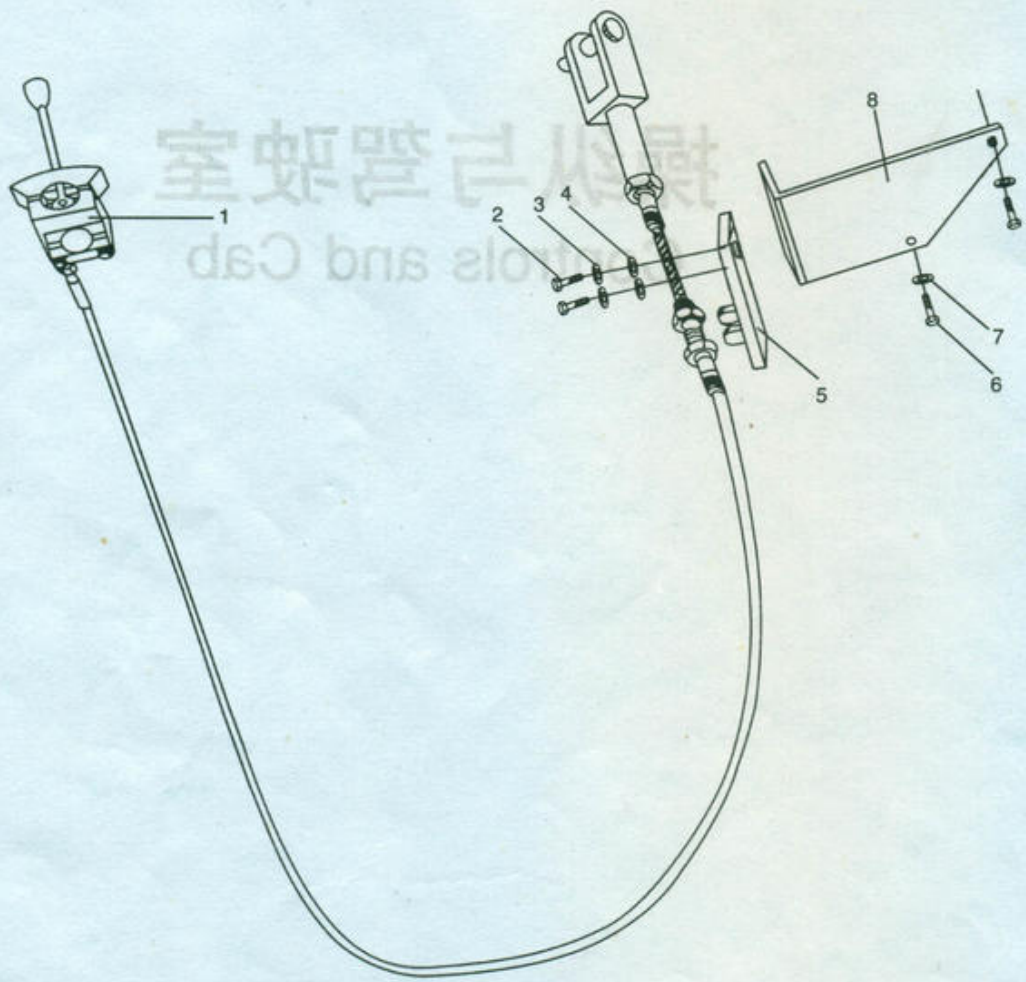

## 4.1 变速操纵系统 Shift Control System

| 序号 Sr.No | 零件代号 Part No. | 名称 Part Description | | 数量 Q'ty |
|---|---|---|---|---|
| 1 | LW560F.2.1A | 变速控制器 | Shift Control | 1 |
| 2 | GB5783-86 | 螺栓 M8×25 | Bolt | 2 |
| 3 | GB93-87 | 垫圈 8 | Washer | 2 |
| 4 | GB97.1-85 | 垫圈 8 | Washer | 2 |
| 5 | ZL50E.15B-2A | 支架 | Supporting Bracket | 1 |
| 6 | GB5783-86 | 螺栓 M10×25 | Bolt | 2 |
| 7 | GB93-87 | 垫圈 10 | Washer | 2 |
| 8 | ZL50E.15B-1 | 安装板 | Fixed Plate | 1 |

## 4.2 操纵杆系 Control System

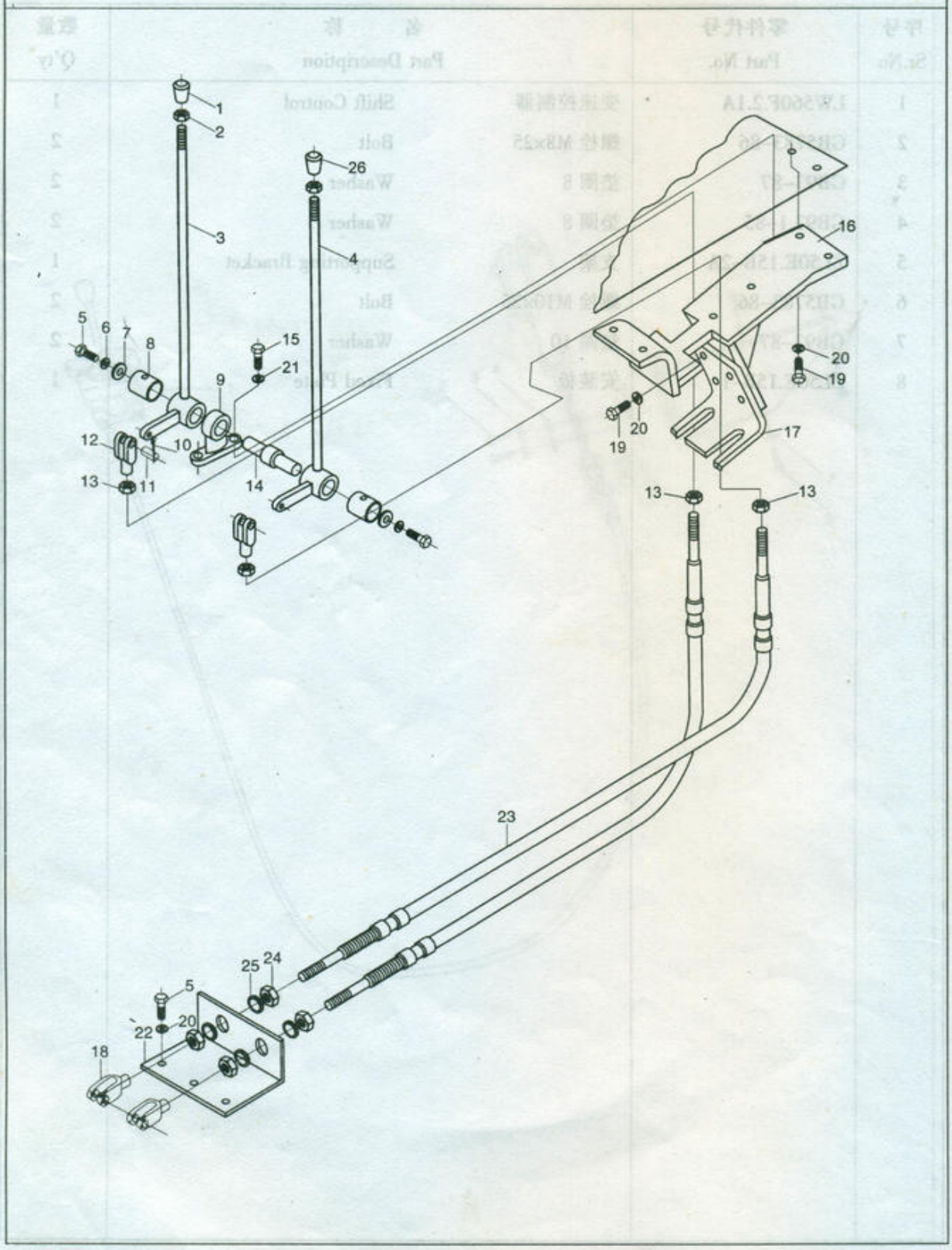

## 4.2 操纵杆系 Control System

| 序号 Sr.No | 零件代号 Part No. | 名称 Part Description | | 数量 Q'ty |
|---|---|---|---|---|
| 1 | SBQ-01 | 手柄球 | Handle Ball | 1 |
| 2 | GB6172-86 | 扁螺母 M12 | Nut | 2 |
| 3 | LW560F.7.1.14.2 | 动臂操纵杆 | Control Lever of lifting Arm | 1 |
| 4 | LW560F.7.1.14.3 | 转斗操纵杆 | Tilting Control Lever | 1 |
| 5 | GB5783-86 | 螺栓 M6×20 | Bolt | 2 |
| 6 | ZL50(II).10.7-3 | 挡圈 | Washer | 2 |
| 7 | GB/T276-94 | 深沟球轴承 | Ball Bearing With Deep Slot | 4 |
| 8 | ZL50(II).10.7-1 | 轴套 | Shaft Sleeve | 2 |
| 9 | ZL50.10.7-1 | 固定座 | Fixing Seat | 1 |
| 10 | GB91-86 | 开口销 2.5×16 | Pin | 2 |
| 11 | GB882-86 | 销轴 B10×35 | Pin Shaft | 2 |
| 12 | ZL40.7.5-2 | 叉接头 | York Joint | 2 |
| 13 | GB6173-86 | 扁螺母 M10×1 | Flat Nut | 4 |
| 14 | ZL50(II).10.7-2 | 轴 | Shaft | 1 |
| 15 | GB5783-86 | 螺栓 M10×25 | Bolt | 5 |
| 16 | LW560F.7.1.14.1 | 支架 | Supporting Carrier | 1 |
| 17 | LW541F.7.3.1-1 | 安装板 | Fixing Plate | 1 |
| 18 | ZL40.10.7-7 | 叉接头 | York Joint | 2 |
| 19 | GB5783-86 | 螺栓 M10×30 | Bolt | 11 |
| 20 | GB97.1-85 | 垫圈 10 | Washer | 8 |
| 21 | GB93-87 | 垫圈 10 | Washer | 9 |
| 22 | ZL50.10.7-5A | 固定支板 | Fixing Plate | 1 |
| 23 | ZL50E.7.1.17.2 | 软轴 | Soft Shaft | 2 |
| 24 | GB808-88 | 螺母 M18×1.5 | Nut | 8 |
| 25 | GB97.1-85 | 垫圈 18 | Washer | 4 |
| 26 | SBQ-02 | 手柄球 | Handle Ball | 1 |

## 4.3 驾驶室总成 Cab Assembly

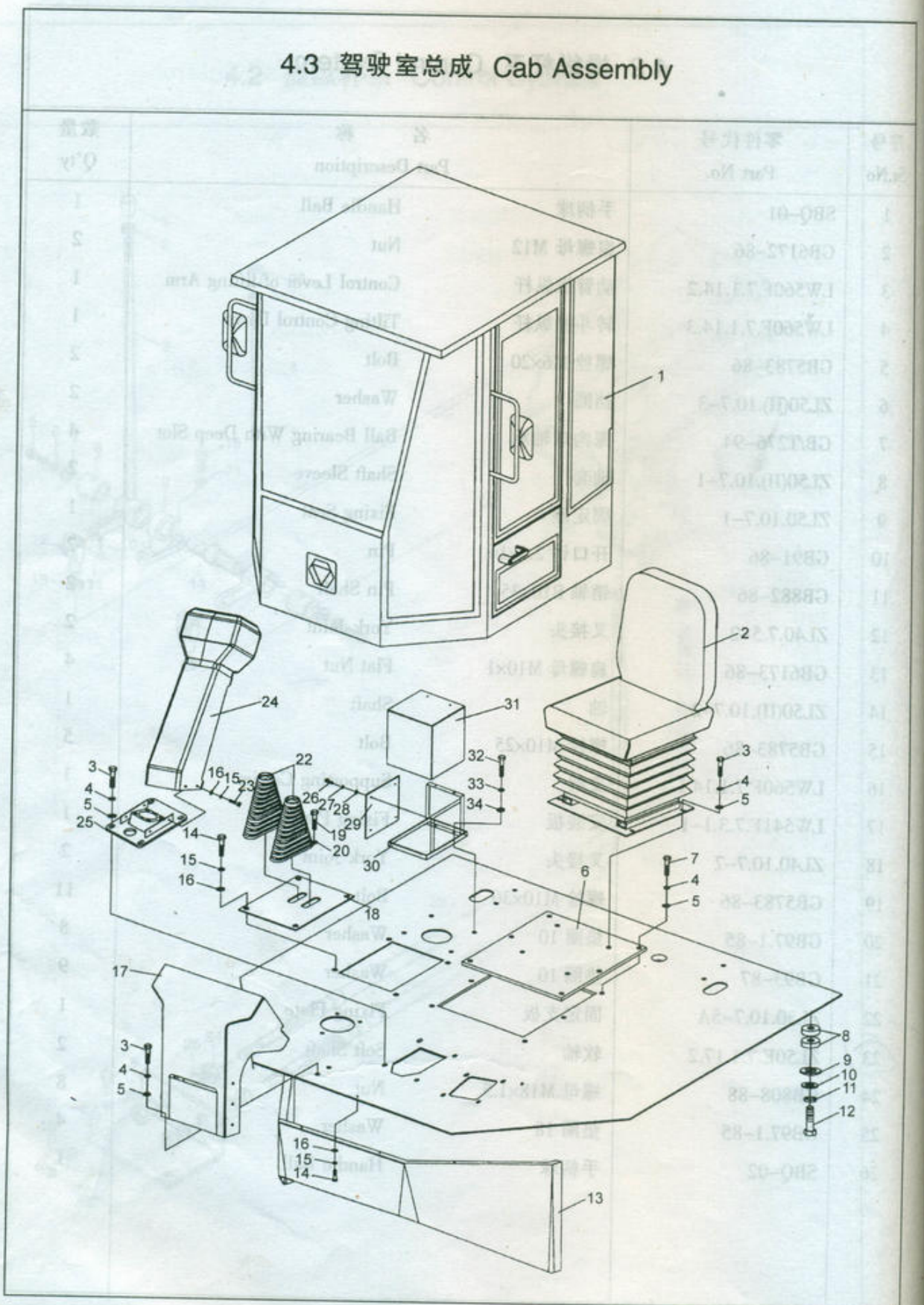

## 4.3 驾驶室总成 Cab Assembly

| 序号 Sr.No | 零件代号 Part No. | 名称 Part Description | | 数量 Q'ty |
|---|---|---|---|---|
| 1 | LW560F.10A.1 | 驾驶室总成 | Cab Assembly | 1 |
| 2 | XGZY03 | 坐椅总成 | Chair Assembly | 1 |
| 3 | GB5783-86 | 螺栓 M10×20 | Bolt | 12 |
| 4 | GB93-87 | 垫圈 10 | Washer | 28 |
| 5 | GB97.1-85 | 垫圈 10 | Washer | 28 |
| 6 | LW520G.10.1.1-4 | 中板 | Plate | 1 |
| 7 | GB5783-86 | 螺栓 M10×16 | Bolt | 6 |
| 8 | LW560F.10A-3 | 减震垫 | Gasket | 12 |
| 9 | Z5G(V).10-2 | 压板 | Plate | 6 |
| 10 | GB97.1-85 | 垫圈 16 | Washer | 6 |
| 11 | GB93-87 | 垫圈 16 | Washer | 6 |
| 12 | GB5783-86 | 螺栓 M16×90 | Bolt | 6 |
| 13 | LW560F.10-1 | 前围板 | Front Board | 1 |
| 14 | GB5783-86 | 螺栓 M8×25 | Bolt | 10 |
| 15 | GB93-87 | 垫圈 8 | Washer | 14 |
| 16 | GB97.1-85 | 垫圈 8 | Washer | 14 |
| 17 | 520E.6.5.2 | 仪表箱 | Instrument Box | 1 |
| 18 | LW560F.10A-5① | 盖板 | Cover | 1 |
| | LW560F.10A-6② | 盖板(三联) | Cover | 1 |
| 19 | GB67-85 | 螺钉 M5×12 | Screw | 8 |
| 20 | GB96-85 | 垫圈 5 | Washer | 8 |
| 22 | 500F.10-2 | 橡胶套 | Rubber sleeve | 2 |
| 23 | GB5783-86 | 螺栓 M8×20 | Bolt | 4 |
| 24 | LW520G.10.2.2-1 | 转向器护罩 | Cover of Steering Valve | 1 |
| 25 | LW520G.10.2.1 | 转向器底座 | Seat of Steering Valve | 1 |
| 26 | GB5783-86 | 螺栓 M6×12 | Bolt | 10 |
| 27 | GB93-87 | 垫圈 6 | Washer | 10 |
| 28 | GB97.1-85 | 垫圈 6 | Washer | 10 |
| 29 | 590G.11B-1 | 保险丝盒安装板 | Carrying Plate of Fuse Box | 1 |
| 30 | LW520G.10.3.2 | 操纵箱座 | Control Box Stand | 1 |
| 31 | LW560F.10.2.1 | 操纵箱 | Control Box | 1 |
| 32 | GB5783-86 | 螺栓 M12×20 | Bolt | 4 |
| 33 | GB93-87 | 垫圈 12 | Washer | 4 |
| 34 | GB97.1-85 | 垫圈 12 | Washer | 4 |
| 35 | GB6170-86 | 螺母 M16 | Nut | 6 |

备注:1、LW560F.10A.5 盖板用来配装二联阀。

2、LW560F.10A.6 盖板用来配装三联阀。

## 4.4 暖风系统 Heat Blower System

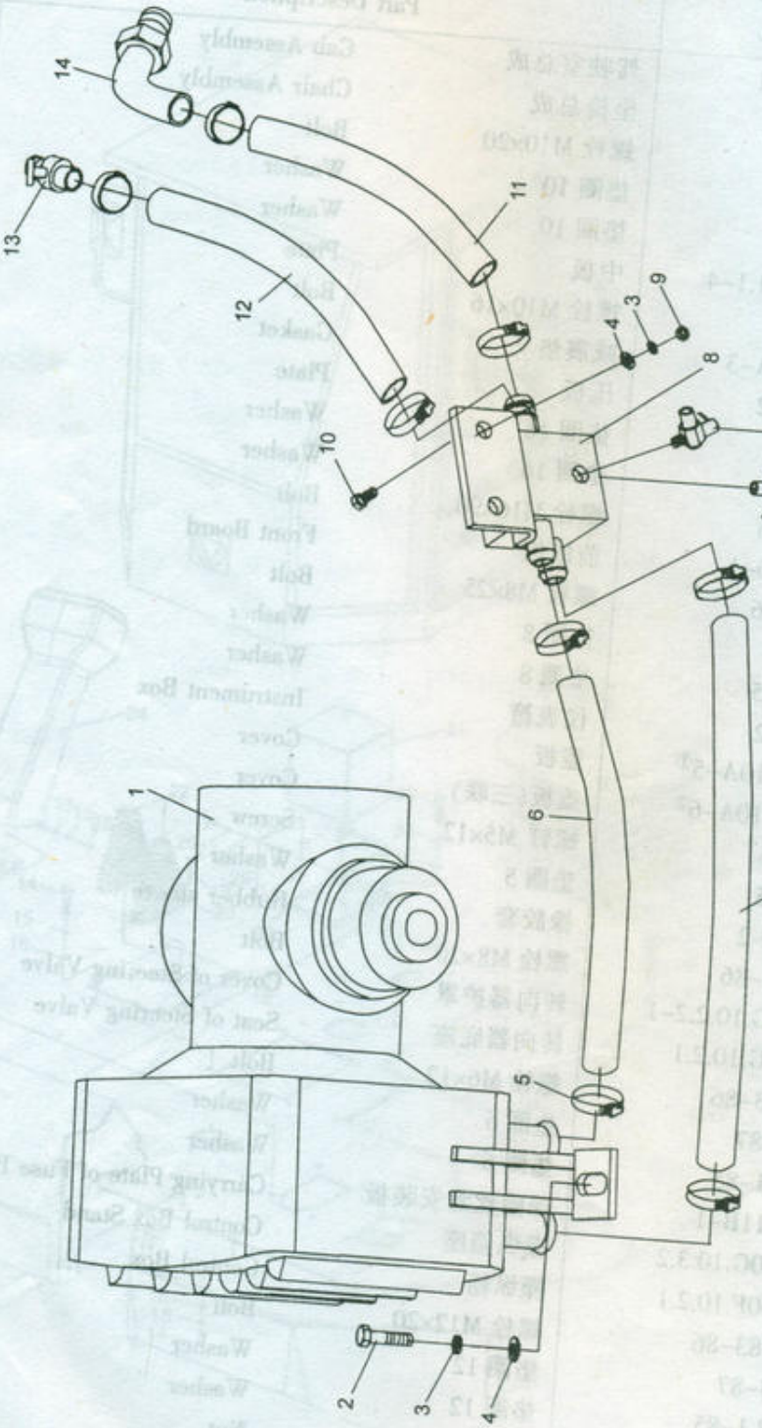

## 4.4 暖风系统 Heat Blower System

| 序号 Sr.No | 零件代号 Part No. | 名称 Part Description | | 数量 Q'ty |
|---|---|---|---|---|
| 1 | XZ13024 | 水暖式暖风机 | Heat Blower | 1 |
| 2 | GB5783-86 | 螺栓 M8×20 | Bolt | 4 |
| 3 | GB93-87 | 垫圈 8 | Washer | 6 |
| 4 | GB95-85 | 垫圈 8 | Washer | 6 |
| 5 | JB3616.1-1984 | 双钢丝喉箍 22-26 | Clamp | 4 |
| 6 | LW541F.24-1 | 进回水管 | Hose | 2 |
| 7 | ZL40A.12.4-1 | 放水阀 | Drain Valve | 2 |
| 8 | LW541F.24.1 | 暖风接头 | Joint | 1 |
| 9 | GB6170-86 | 螺母 M8 | Nut | 2 |
| 10 | GB5783-86 | 螺栓 M8×30 | Bolt | 2 |
| 11 | LW541F.24-2 | 回水管 | Hose | 1 |
| 12 | LW541F.24-4 | 进水管 | Hose | 1 |
| 13 | ZL50.26.5 | 暖风热水开关(NPT3/8) | Drain Valve | 1 |
| 14 | ZL40A.15.3-5 | 接头 | Joint | 1 |

## 4.5 空调系统 Conditioner System

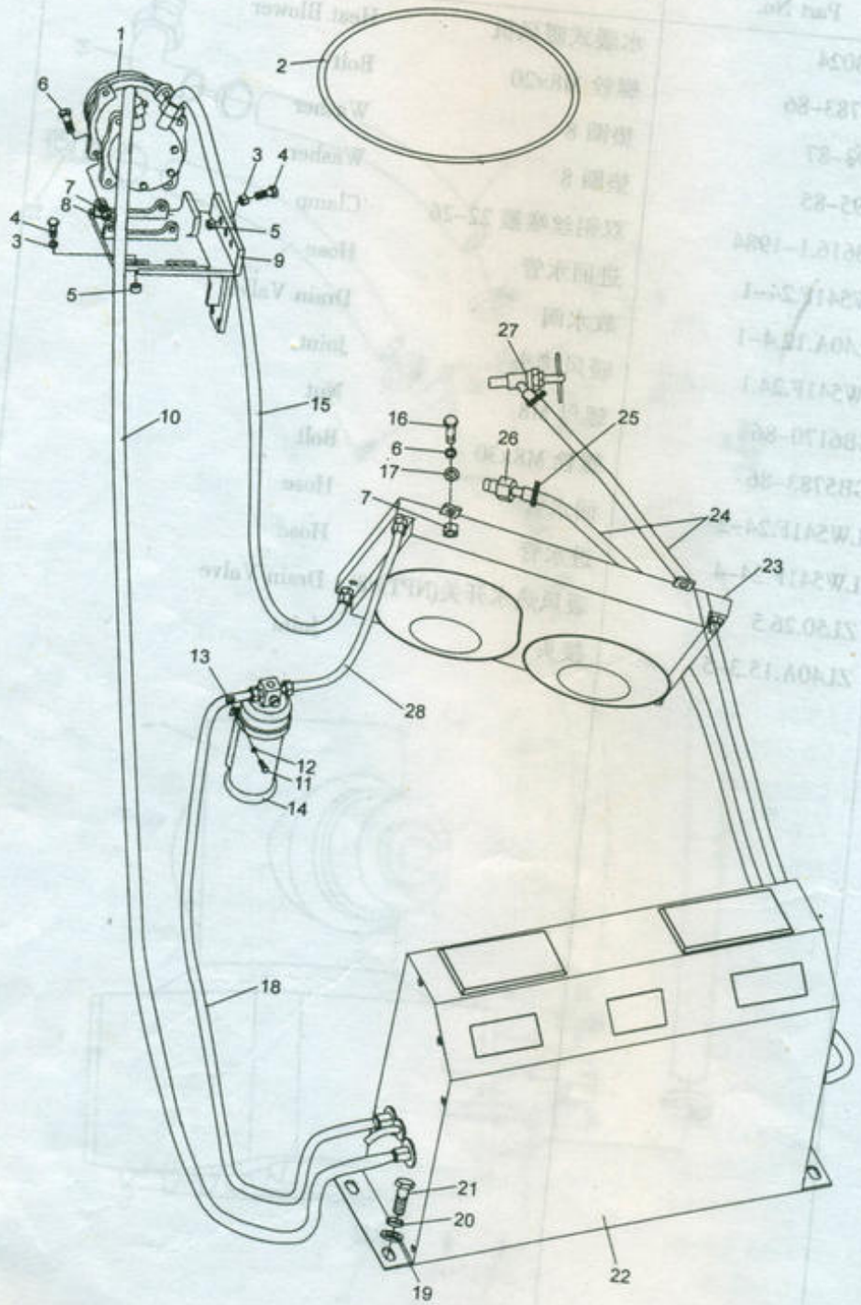

## 4.5 空调系统 Conditioner System

| 序号 Sr.No | 零件代号 Part No. | 名称 Part Description | | 数量 Q'ty |
|---|---|---|---|---|
| 1 | | 压缩机 | Compressor | 1 |
| 2 | A17-570 ① | 压缩机皮带 | Compressor strap | 1 |
| | A17-470 ② | 压缩机皮带 | Compressor strap | 1 |
| | A17-450 ③ | 压缩机皮带 | Compressor strap | 1 |
| 3 | GB93-87 | 垫圈 10 | Washer | 11 |
| 4 | GB5783-86 | 螺栓 M10×35 | Bolt | 7 |
| 5 | GB6170-86 | 螺母 M10 | Nut | 11 |
| 6 | GB5783-86 | 螺栓 M14×70 | Bolt | 1 |
| 7 | GB93-87 | 垫圈 14 | Washer | 1 |
| 8 | GB6170-86 | 螺母 M14 | Nut | 1 |
| 9 | LW560F.14.2 ① | 压缩机支架 | Compressor Bracket | 1 |
| | 522F.21III.1 ② | 压缩机支架 | Compressor Bracket | 1 |
| | Z4G(II).11.1 ③ | 压缩机支架 | Compressor Bracket | 1 |
| 10 | 153-2200 | 蒸发器至压缩机胶管 | Hose | 1 |
| 11 | GB5783-86 | 螺栓 M6×20 | Bolt | 2 |
| 12 | GB93-87 | 垫圈 6 | Washer | 2 |
| 13 | GB6170-86 | 螺母 M6 | Nut | 2 |
| 14 | | 储液罐 | Tank | 1 |
| 15 | 243-2600 | 压缩机至冷凝器胶管 | Hose | 1 |
| 16 | GB5783-86 | 螺栓 M10×45 | Bolt | 4 |
| 17 | GB97.1-85 | 垫圈 10 | Washer | 4 |
| 18 | 236-1400 | 贮液罐至蒸发器胶管 | Hose | 1 |
| 19 | GB97.1-85 | 垫圈 10 | Washer | 4 |
| 20 | GB93-87 | 垫圈 10 | Washer | 4 |
| 21 | GB5783-86 | 螺栓 M12×30 | Bolt | 4 |
| 22 | | 蒸发器 | Evaporator | 1 |
| 23 | | 冷凝器 | Condensator | 1 |
| 24 | 520F.24-1 | 暖水水管 | Hose | 2 |
| 25 | JB3616.1-1984 | 双钢丝环箍 20-24 | Double Steel Clam | 4 |

注：①配装潍柴 WD615G.220 发动机

②配装玉柴 YC6M220GM3010 发动机

③配装上柴 D9-220(DBL0423)发动机

## 4.5 空调系统 Conditioner System

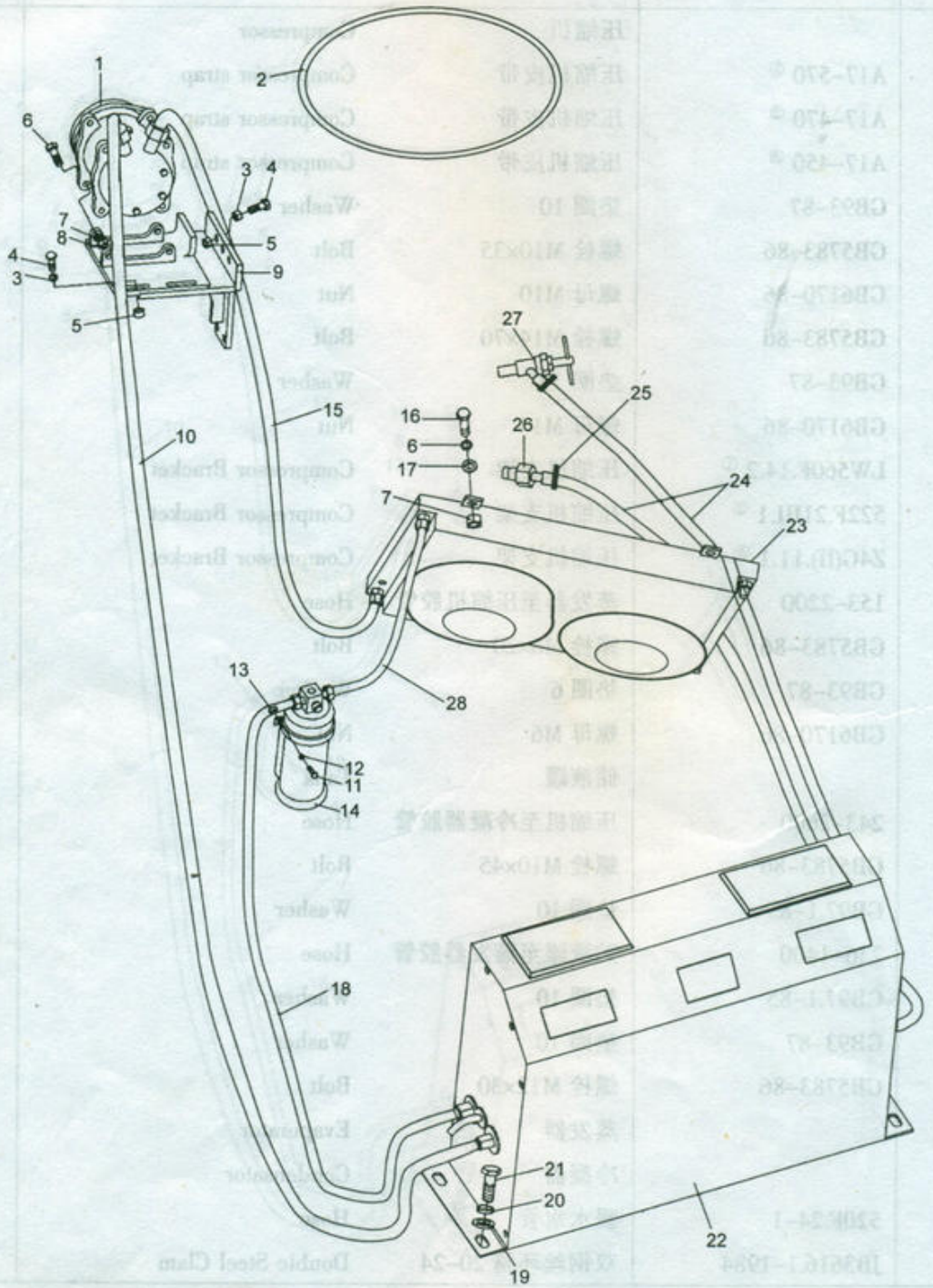

## 4.5 空调系统 Conditioner System

| 序号 Sr.No | 零件代号 Part No. | 名称 Part Description | | 数量 Q'ty |
|---|---|---|---|---|
| 26 | ZL40A.15.3-5 ① | 接头 | Joint | 1 |
| | ZL50E.14.2 ② | 接头 | Joint | 1 |
| | ZL50E.14.2 ③ | 接头 | Joint | 1 |
| 27 | ZL50.26.5 | 暖风热水开关(NPT3/8) | Switch | 1 |
| 28 | 231-2200 | 冷凝器至贮液罐胶管 | Hose | 1 |

# 制 动 系 统

# Brake System

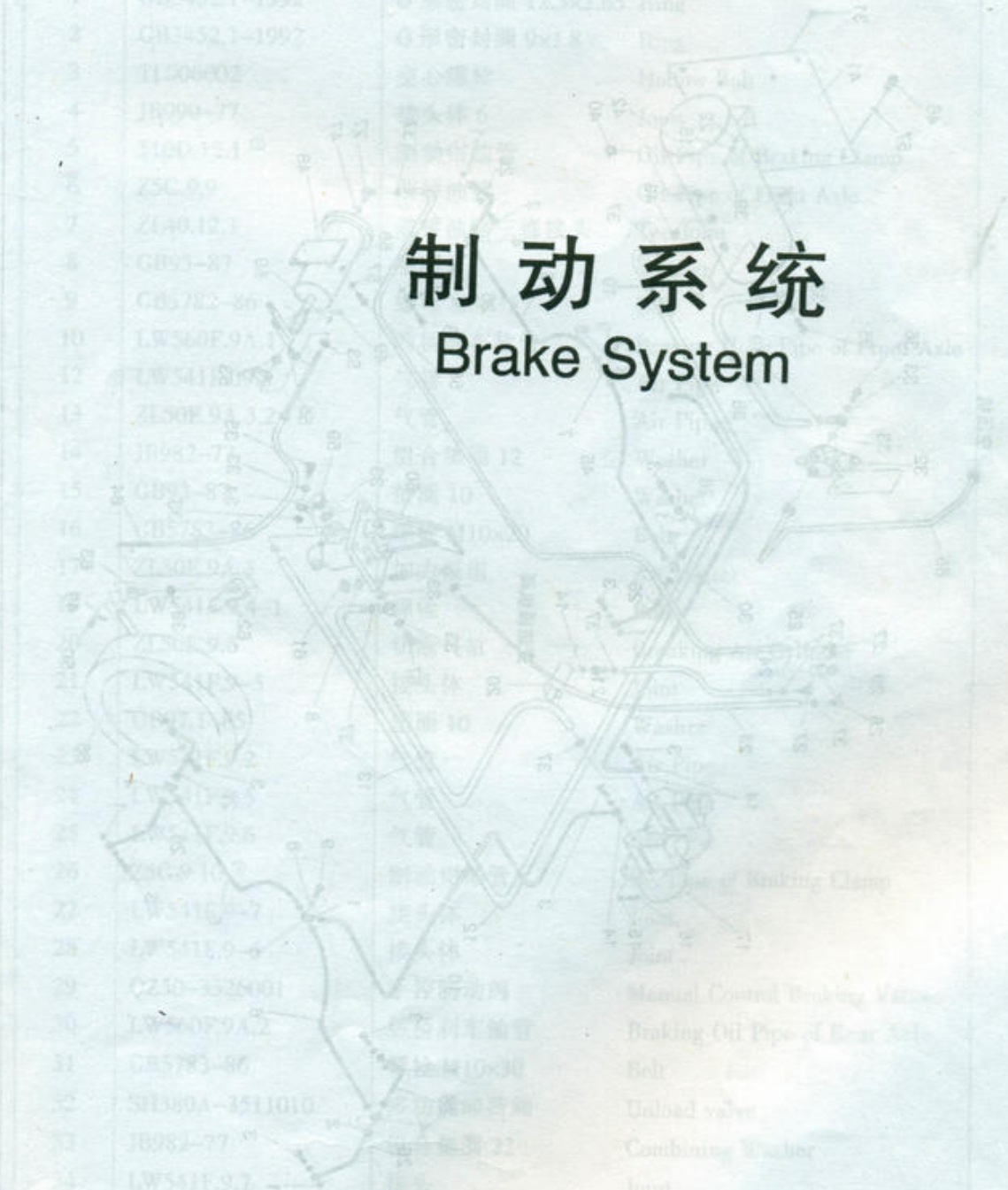

## 5.1 制动系统 Brake System

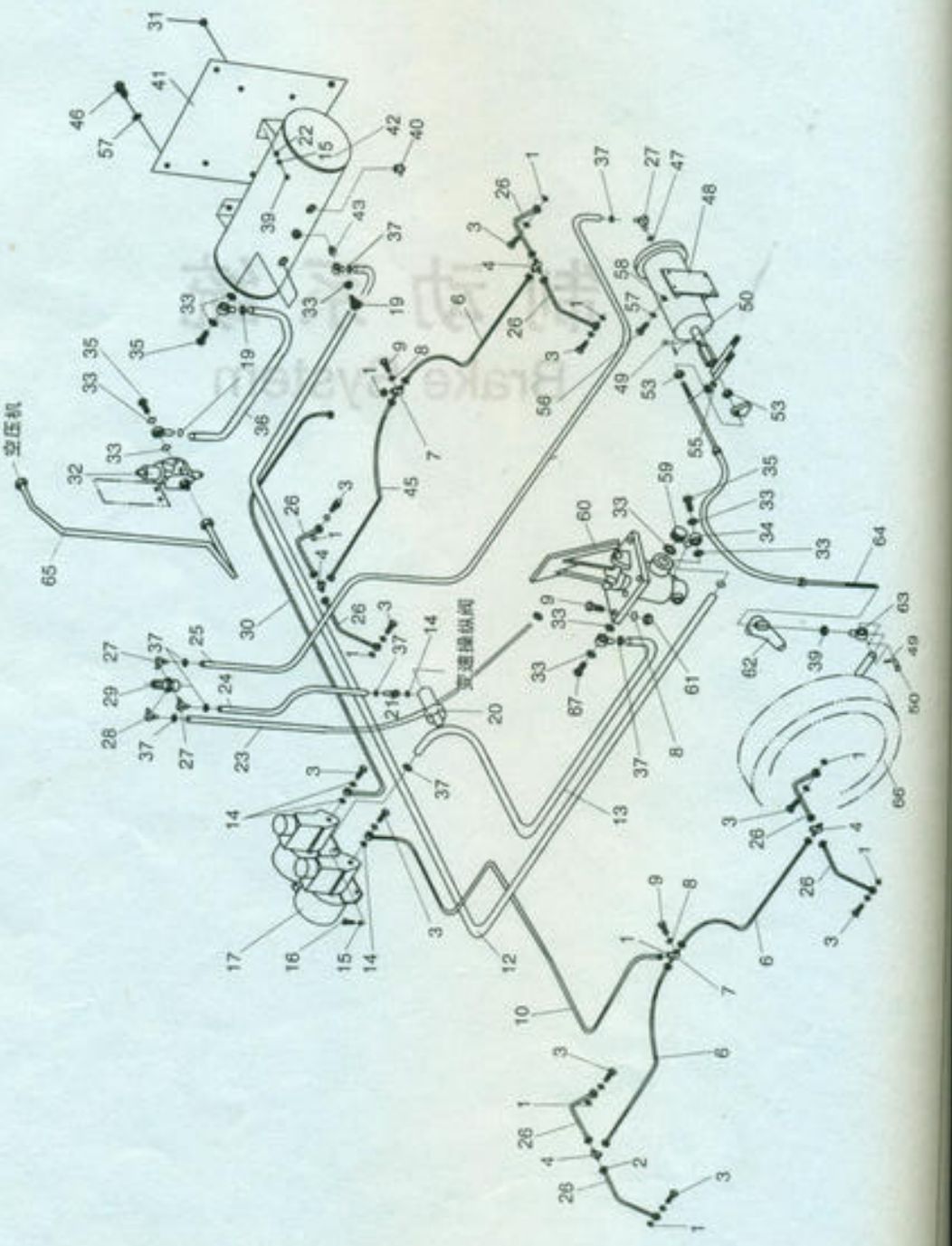

## 5.1 制动系统 Brake System

| 序号 Sr.No. | 零件代号 Part No. | 名称 Part Description | 数量 Q'ty |
|---|---|---|---|
| 1 | GB3452.1-1992 | O形密封圈 12.5×2.65 Ring | 20 |
| 2 | GB3452.1-1992 | O形密封圈 9×1.8 Ring | 17 |
| 3 | TL006002 | 空心螺栓 Hollow Bolt | 8 |
| 4 | JB990-77 | 接头体 6 Joint | 4 |
| 5 | 510D.12.1 ① | 制动钳油管 Oil Pipe of Braking Clamp | 8 |
| 6 | Z5G.9.9 | 前桥油管 Oil Pipe of Front Axle | 4 |
| 7 | ZL40.12.1 | 前桥油路三通接头 Tee Joint | 2 |
| 8 | GB93-87 | 垫圈 8 Washer | 6 |
| 9 | GB5782-86 | 螺栓 M8×35 Bolt | 6 |
| 10 | LW560F.9A.1 | 前桥刹车软管 Braking Hose Pipe of Front Axle | 1 |
| 12 | LW541F.09.3 | 气管 Air Pipe | 1 |
| 13 | ZL50E.9A.3.2 | 气管 Air Pipe | 1 |
| 14 | JB982-77 | 组合垫圈 12 Washer | 5 |
| 15 | GB93-87 | 垫圈 10 Washer | 18 |
| 16 | GB5783-86 | 螺栓 M10×20 Bolt | 8 |
| 17 | ZL50E.9A.3 | 加力泵组 Air Master | 1 |
| 19 | LW541F.9.4-1 | 螺栓 Bolt | 1 |
| 20 | ZL50E.9.6 | 切断气缸 Breaking Air Cylinder | 1 |
| 21 | LW541F.9-5 | 接头体 Joint | 1 |
| 22 | GB97.1-85 | 垫圈 10 Washer | 10 |
| 23 | LW541F.9.2 | 气管 Air Pipe | 1 |
| 24 | LW541F.9.5 | 气管 Air Pipe | 1 |
| 25 | LW541F.9.6 | 气管 Air Pipe | 1 |
| 26 | Z5G.9.10 ② | 制动钳油管 Oil Pipe of Braking Clamp | 8 |
| 27 | LW541F.9-7 | 接头体 Joint | 3 |
| 28 | LW541F.9-6 | 接头体 Joint | 1 |
| 29 | QZ50-3526001 | 手控制动阀 Manual Control Braking Valve | 1 |
| 30 | LW560F.9A.2 | 后桥刹车油管 Braking Oil Pipe of Rear Axle | 1 |
| 31 | GB5783-86 | 螺栓 M10×30 Bolt | 4 |
| 32 | SH380A-3511010 | 多功能卸荷阀 Unload valve | 1 |
| 33 | JB982-77 | 组合垫圈 22 Combining Washer | 10 |
| 34 | LW541F.9.7 | 接头 Joint | 1 |
| 35 | TL006003 | 空心螺栓 Hollow Bolt | 2 |
| 36 | LW541F.9.1 | 气管 Air Pipe | 1 |

注：① 配肥城桥，② 配美驰桥

# 5.1 制动系统 Brake System

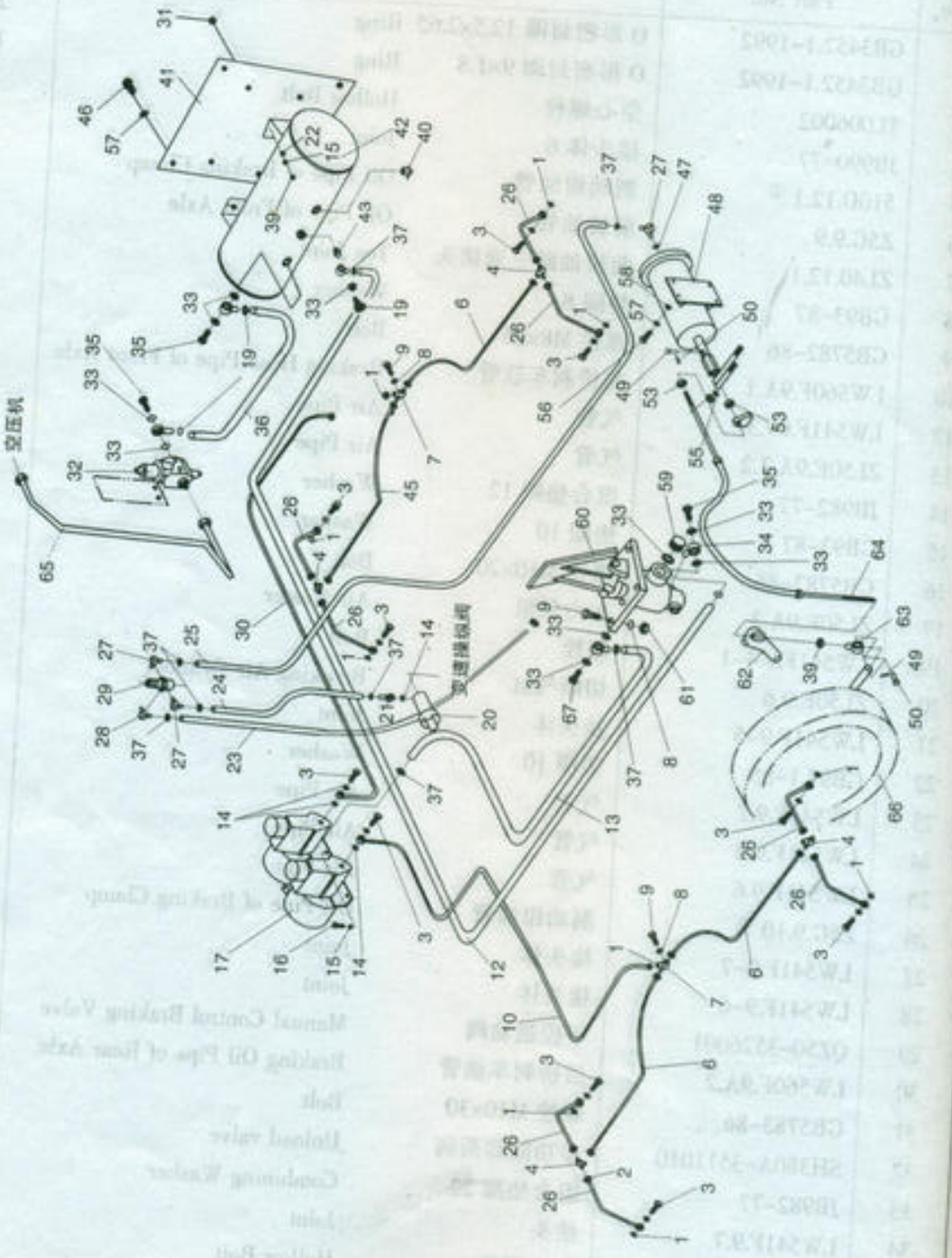

## 5.1 制动系统 Brake System

| 序号 Sr.No | 零件代号 Part No. | 名称 Part Description | | 数量 Q'ty |
|---|---|---|---|---|
| 37 | GB3452.1-1992 | O 形圈 10.6×18 | Ring | 8 |
| 39 | GB6170-86 | 螺母 M10 | Nut | 10 |
| 40 | PY20-1305001 | 自动放水阀 | Draining Valve | 1 |
| 41 | LW541F.09-4 | 安装板 | Fixing Plate | 1 |
| 42 | ZL40A.12.4.1B | 储气缸 | Air Tank | 1 |
| 43 | HF150 | 安全阀 | Safe Valve | 1 |
| 46 | GB5783-86 | 螺栓 M12×35 | Bolt | 4 |
| 47 | JB982-77 | 组合垫圈 14 | Washer | 2 |
| 48 | ZL50E.9.7 | 制动气缸 | Break Air Cylinder | 1 |
| 49 | GB882-86 | 销轴 B10×35 | Pin Shaft | 2 |
| 50 | GB91-86 | 销 3.2×16 | Pin | 2 |
| 53 | GB6170-86 | 螺母 M16 | Nut | 2 |
| 55 | GB93-87 | 垫圈 6 | Washer | 4 |
| 56 | GB5783-86 | 螺栓 M12×25 | Bolt | 4 |
| 57 | GB93-87 | 垫圈 12 | Washer | 8 |
| 58 | GB97.1-85 | 垫圈 12 | Washer | 4 |
| 59 | ZL50.12.9A-1 | 直通接头 | Joint | 1 |
| 60 | XM-60C-3154010 | 气制动阀总成 | Air Braking Valve | 1 |
| 61 | GB6170-86 | 螺母 M8 | Nut | 4 |
| 62 | ZL40A.13.4 | 固定支座 | Fixing Seat | 1 |
| 63 | ZL40.7.5-2 | 接头 M10 | Joint | 2 |
| 64 | ZL50E.9.12A | 操纵软轴 | Operation Cable | 1 |
| 65 | 521F(II).01.1(II).1 | 空压机至油水分器气管 | Air Tube | 1 |
| | LW541F.01II.1 | 空压机至油水分器气管 | Air Tube | 1 |
| | 540F(VI).09.1A | 空压机至油水分器气管 | Air Tube | 1 |
| 66 | ZL40A.13A.1 | 制动器 | Parking Braker | 1 |
| 67 | Z5G.9.4-3 | 螺栓 | Bolt | 1 |

备注：1、潍柴 WD615G.220 发动机配 521F(II).01.1(II).1 气管
2、上柴 D9-220 发动机配 LW541F.01II.1 气管
3、玉柴 YC6M220GM3010 发动机配 540F(VI).09.1A 气管

## 5.2 空气加力泵组 Air Master Unit

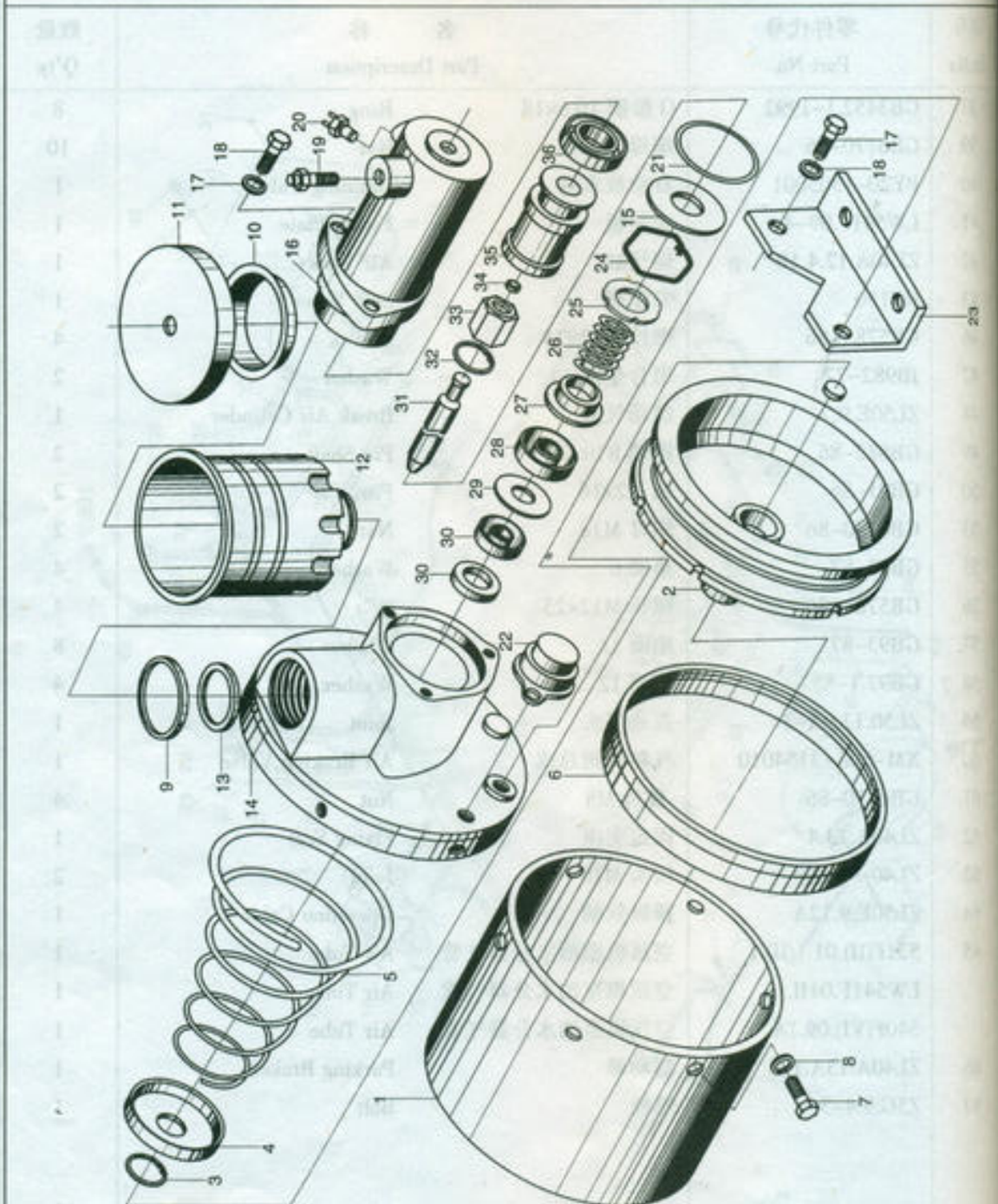

## 5.2 空气加力泵组 Air Master Unit

| 序号 Sr.No | 零件代号 Part No. | 名称 Part Description | | 数量 Q'ty |
|---|---|---|---|---|
| 1 | XM-60-3510001 | 加力泵体总成 | Air Master Body | 1 |
| 2 | XM-60-3510301 | 气活塞 | Air Piston | 1 |
| 3 | GB894.1-86 | 轴用挡圈 18 | Snap | 1 |
| 4 | TD72LC-3510005 | 限位垫圈 | Lock Washer | 1 |
| 5 | SH361-3519154 | 回位弹簧 | Spring | 1 |
| 6 | XM-60-3510302 | 活塞皮圈 | Piston Rubber Bowel | 1 |
| 7 | GB5781-86 | 螺栓 M8×20 | Bolt | 6 |
| 8 | GB859-87 | 弹簧垫圈 8 | Lock Washer | 6 |
| 9 | W50-3505006 | O 形密封圈 | O+Ring | 1 |
| 10 | TD50A-D-3505012 | 浮子 | Float | 1 |
| 11 | TD50A-D-3505011 | 油缸盖罩 | Cylinder Head | 1 |
| 12 | TD50A-D-3505013 | 贮油缸 | Oil Cup Body | 1 |
| 13 | XM60-3510014 | 密封垫片 | Seal Pad | 1 |
| 14 | XM-60-3510008 | 端盖 | Cover | 1 |
| 15 | XM-60-3510007 | 垫板 | Plate | 1 |
| 16 | XM60-3510010 | 液压缸体 | Cylinder Body | 1 |
| 17 | GB859-87 | 弹簧垫圈 10 | Lock Washer | 1 |
| 18 | GB5781-86 | 螺栓 M10×30 | Bolt | 5 |
| 19 | TD50A-D-3517037 | 放气螺钉 | Bolt | 5 |
| 20 | TK6138 | 制动灯开关总成 | Brake Switch | 1 |
| 21 | CA141-3514032-01 | 活塞密封圈 | Piston Seal Ring | 1 |
| 22 | TD50A-D-3510100 | 排气盖总成 | Cover | 1 |
| 23 | XM-60-3510011 | 安装支架 | Support | 1 |
| 24 | TD50A-D-3510018 | 锁环 | Lock Ring | 1 |
| 25 | TD72LC-3510013 | 活塞限位圈 | Piston Ring | 1 |
| 26 | TD72LC-3510012 | 弹簧 | Spring | 1 |
| 27 | TD72LC-3510011 | 密封圈护圈 | Ring | 1 |
| 28 | TD72LC3510010 | 皮圈 | Rubber Bowel | 1 |
| 29 | XM-60-3510012 | 平垫 | Washer | 1 |
| 30 | SD18×30×10 | 骨架橡胶油封 | Skeleton Oil Seal | 2 |
| 31 | XM-60-3510003 | 推杆 | Push Rod | 1 |
| 32 | GB893.1-86 | 孔用挡圈 25 | Snap | 1 |
| 33 | XM-60-3510106B | 推杆座 | Push Rod Seat | 1 |
| 34 | XM-60-3510101B | 液压活塞 | Hydraulic Piston | 1 |
| 35 | 980S-3510116 | 进油阀门 | Inlet Oil Valve | 1 |
| 36 | XM-60-3510102B | 皮圈 | Rubber Bowels | 1 |

## 5.3 制动器 Parking Braker

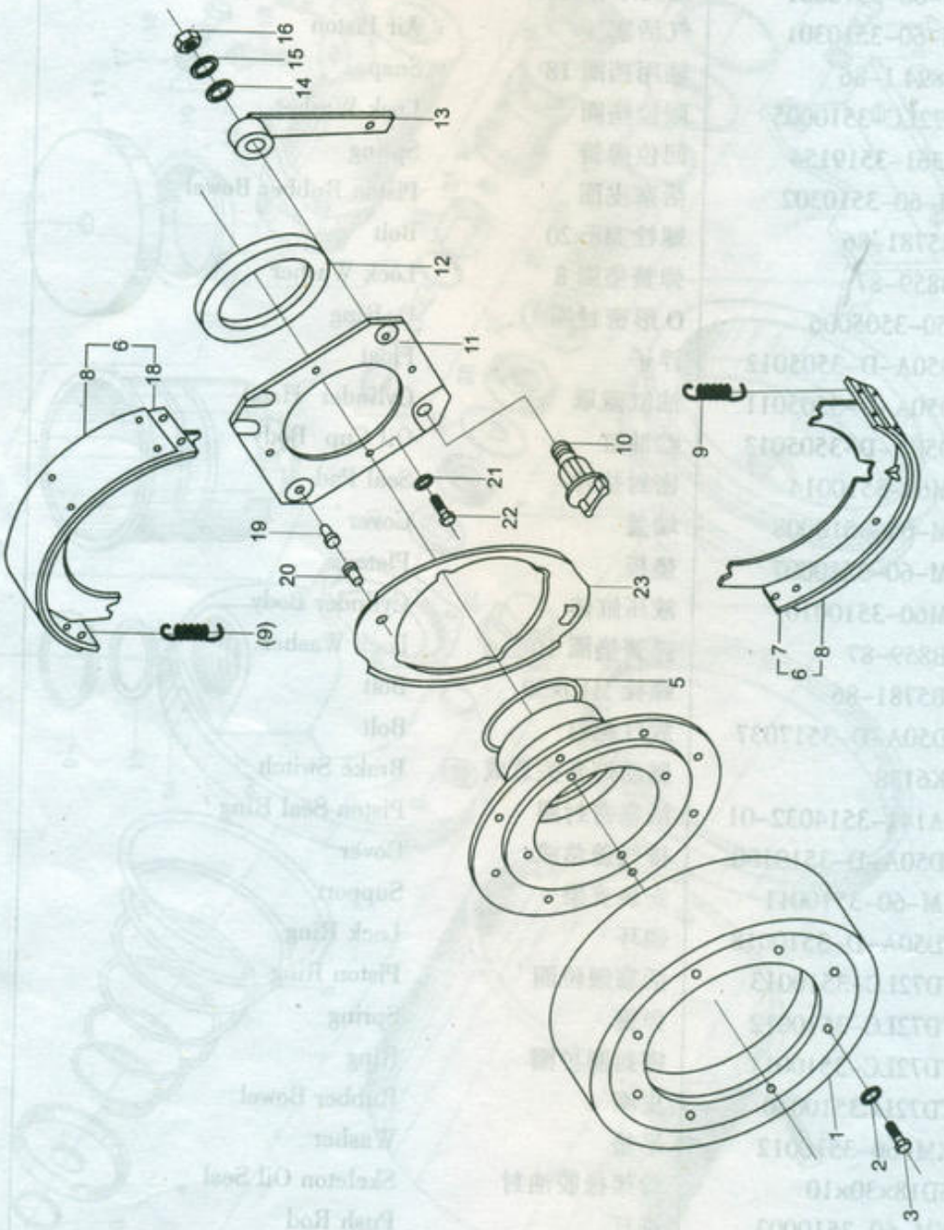

## 5.3 制动器 Parking Braker

| 序号 Sr.No | 零件代号 Part No. | 名称 Part Description | | 数量 Q'ty | |
|---|---|---|---|---|---|
| 1 | 9320615 | 制动鼓 | Brake Drum | 1 | |
| 2 | 4401009 | 垫圈 12 | Washer | 8 | GB93-87 |
| 3 | 4007058 | 螺栓 M12×1.25×30 | Bolt | 8 | GB5786-86 |
| 5 | 4801083 | O 形圈 56×3.5 | O-Ring | 1 | GB1235-76 |
| 6 | 9320621 | 制动衬片 | Brake Lining | 2 | |
| 7 | 9320630 | 筋板焊合(II) | Welding Of Plate (II) | 1 | |
| 8 | 4512133 | 铆钉 5×12 | Rivet | 12 | GB872-86 |
| 9 | 9320614 | 弹簧 | Spring | 4 | |
| 10 | 9320612 | 拉杆轴 | Camshaft | 1 | |
| 11 | 9320617 | 铆接座板 | Anchor Plate | 1 | |
| 12 | 9320619 | 座圈 | Washer | 1 | |
| 13 | 9320613 | 拉杆 | Lever | 1 | |
| 14 | 4402007 | 垫圈 16 | Washer | 1 | GB95-85 |
| 15 | 4401011 | 垫圈 16 | Washer | 1 | GB93-87 |
| 16 | 4301012 | 螺母 M16 | Nut | 1 | GB6170-86 |
| 18 | 9320622 | 筋板焊合(I) | Welding Of Plate (I) | 1 | |
| 19 | 9320618 | 铆钉 | Rivet | 2 | |
| 20 | 9320628 | 铆钉 | Rivet | 1 | |
| 21 | 4401010 | 垫圈 14 | Washer | 6 | GB93-87 |
| 22 | 9320135 | 联接螺钉 | Bolt | 6 | |
| 23 | 9320627 | 板 | Plate | 1 | |

## 5.4 切断气缸 Break Air Cylinder
## 制动气缸 Break Air Cylinder

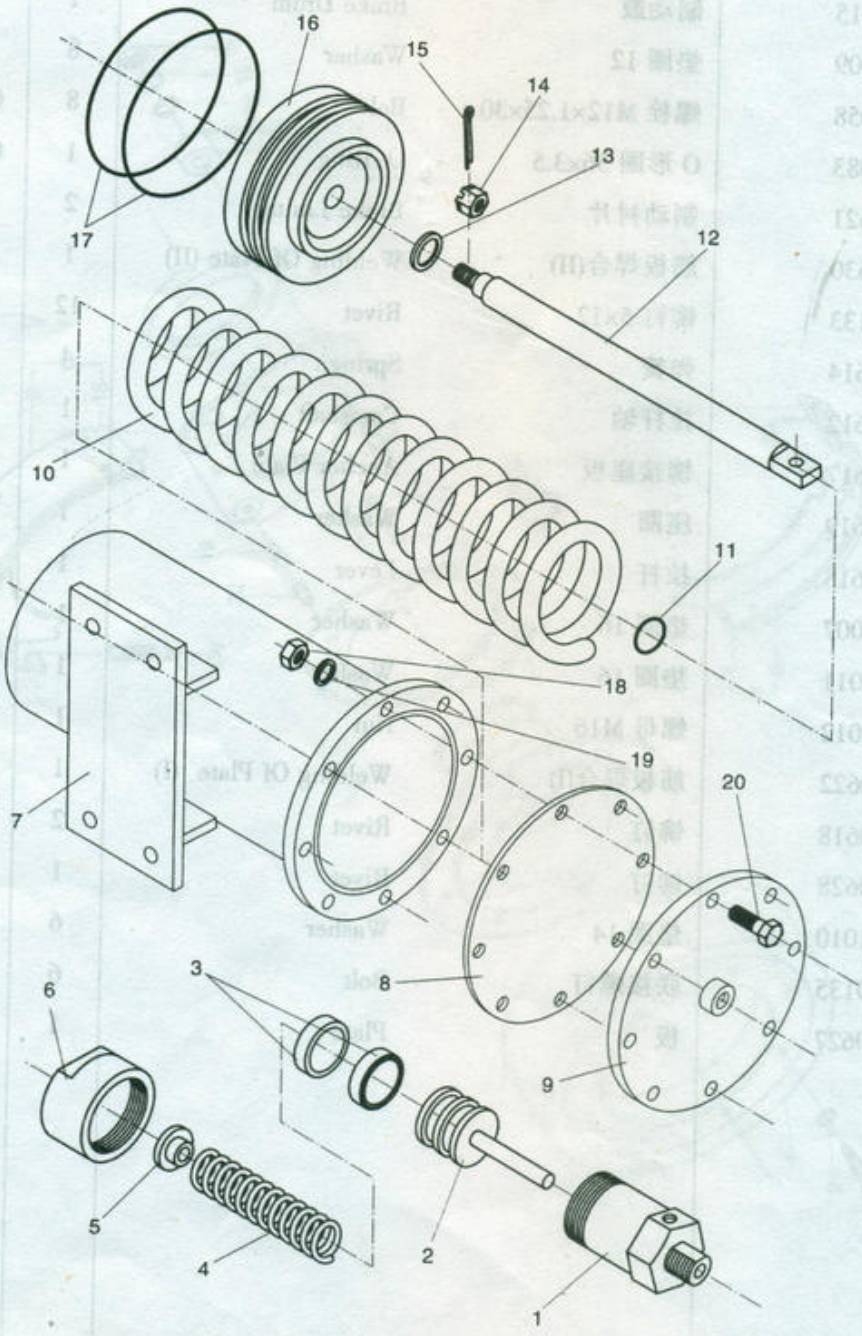

## 5.4 切断气缸 Break Air Cylinder
## 制动气缸 Break Air Cylinder

| 序号 Sr.No | 零件代号 Part No. | 名称 Part Description | | 数量 Q'ty |
|---|---|---|---|---|
| 1 | ZL50E.9.6-5 | 缸体 | Cylinder | 1 |
| 2 | ZL50E.9.6-1 | 活塞 | Piston | 1 |
| 3 | JB/ZQ4264-86 | 孔用 Yx 密封圈 D40 | Yx Seal Ring | 2 |
| 4 | ZL50E.9-6-2 | 弹簧 | Spring | 1 |
| 5 | ZL50E.9.6-4 | 弹簧座 | Spring Seat | 1 |
| 6 | ZL50E.9.6-3 | 缸盖 | Cylinder Cover | 1 |
| 7 | ZL50E.9.7.1 | 气缸体 | Air Cylinder | 1 |
| 8 | ZL50E.9.7-3 | 垫圈 | Washer | 1 |
| 9 | ZL50E.9.7.2 | 气缸盖 | Cylinder Cover | 1 |
| 10 | ZL50E.9.7-2 | 弹簧 | Spring | 1 |
| 11 | GB3452.1-92 | O 形圈 20×2.65 | O Seal Ring | 1 |
| 12 | ZL50E.9.7-5 | 活塞杆 | Piston Rod | 1 |
| 13 | ZL50E.9.7-4 | 垫圈 | Washer | 1 |
| 14 | GB6181-86 | 开槽螺母 M12 | Nut | 1 |
| 15 | GB91-86 | 销 3.2×22 | Cotter Pin | 1 |
| 16 | ZL50E.9.7-1 | 活塞 | Piston | 1 |
| 17 | GB3452.1-82 | O 形圈 | O Seal Ring | 2 |
| 18 | GB41-86 | 螺母 M8 | Nut | 8 |
| 19 | GB93-87 | 弹簧垫圈 8 | Lock Washer | 8 |
| 20 | GB5781-86 | 螺栓 M8×30 | Bolt | 8 |

# 液压系统
# Hydraulic System



## 6.1 工作液压系统 Working Hydraulic System

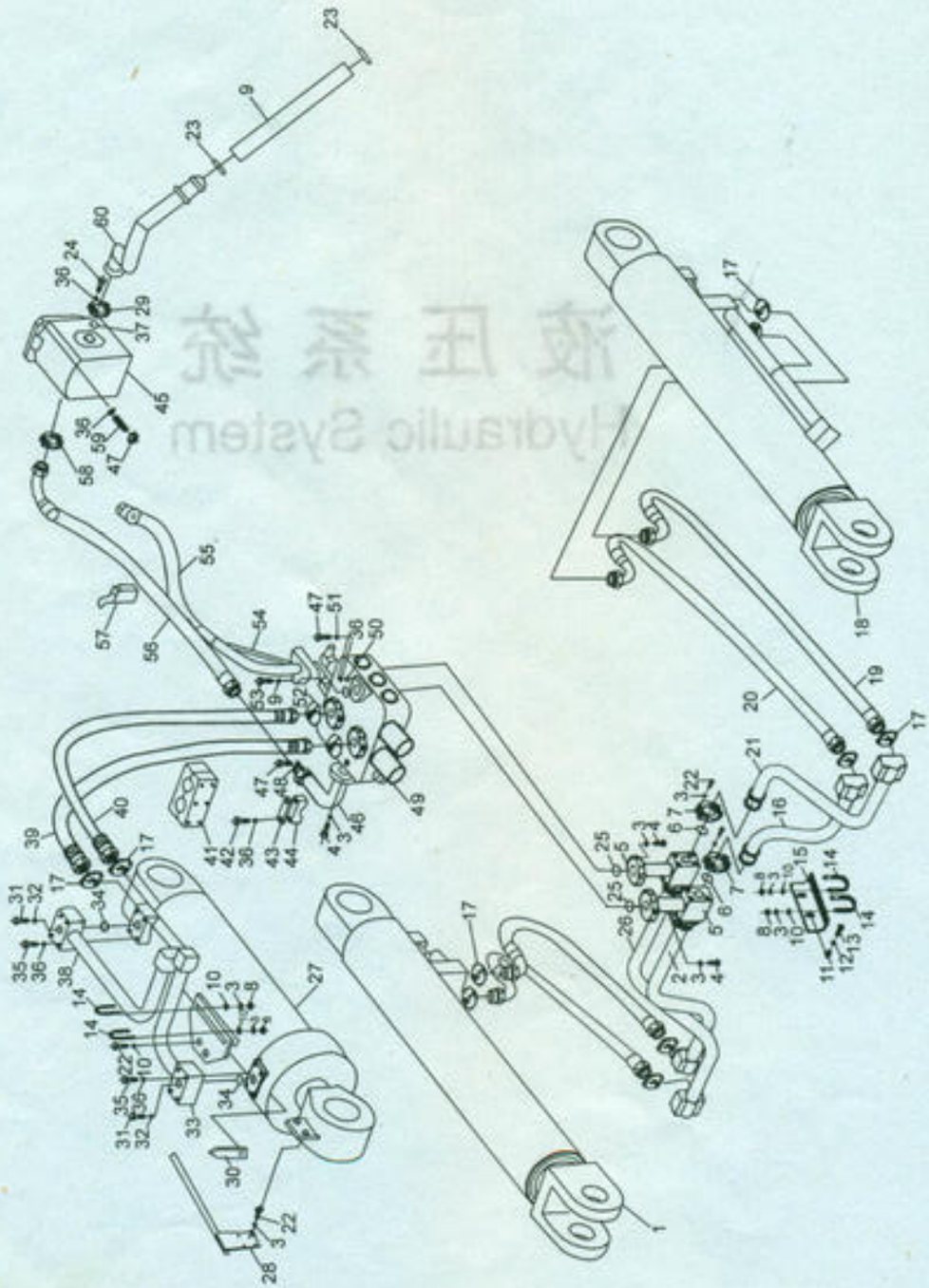

## 6.1 工作液压系统 Working Hydraulic System

| 序号 Sr.No | 零件代号 Part No. | 名称 Part Description | | 数量 Q'ty |
|---|---|---|---|---|
| 1 | XGYG01-050 | 右动臂油缸 | Right Lifting Arm Cylinder | 1 |
| 2 | 540F.7.1.4.1 | 弯管 | Bend Tube | 1 |
| 3 | GB93-87 | 垫圈 10 | Lock Washer | 52 |
| 4 | GB5783-86 | 螺栓 M10×35 | Bolt | 12 |
| 5 | 540F.7.1.2.1 | 三通管 | Tee Pipe | 2 |
| 6 | GB3452.1-1992 | O 形密封圈 34.5×3.55 | O-Ring | 6 |
| 7 | 85Z.10.1-2 | 分离式法兰 | Separating Flange | 8 |
| 8 | GB6170-86 | 螺母 M10 | Nut | 16 |
| 9 | ZL50E.7.1-5 | 胶管 | Hose | 1 |
| 10 | GB97.1-85 | 垫圈 10 | Washer | 18 |
| 11 | GB97.1-85 | 垫圈 8 | Washer | 4 |
| 12 | GB93-87 | 垫圈 8 | Washer | 4 |
| 13 | GB5783-86 | 螺栓 M8×25 | Bolt | 4 |
| 14 | 85Z.10.1.1-2 | U 型螺栓 | U-Bolt | 8 |
| 15 | Z5G.7.1-2 | 支板 | Supporting Plank | 2 |
| 16 | 540F.7.1.5.1 | 钢管 | Steel Tube | 1 |
| 17 | FPS 1 | 法兰组件 | Flange | 10 |
| 18 | XGYG01-051 | 左动臂油缸 | Left Lifting Arm Cylinder | 1 |
| 19 | Z5G.7.1A.6 | F 型胶管 | F Hose | 2 |
| 20 | Z5G.7.1A.7 | F 型胶管 | F Hose | 2 |
| 21 | 540F.7.1.6.1 | 钢管 | Steel Tube | 1 |
| 22 | GB5783-86 | 螺栓 M10×30 | Bolt | 36 |
| 23 | JB3616.1-1984 | 双钢丝环箍 75-85 | Hoop | 2 |
| 24 | GB5783-86 | 螺栓 M12×35 | Bolt | 8 |
| 25 | GB3452.1-1992 | O 形密封圈 40×3.55 | O-Ring | 2 |
| 26 | 540F.7.1.3.1 | 弯管 | Bend Tube | 1 |
| 27 | XGYG01-49 | 转斗油缸 | Tilt Cylinder | 1 |
| 28 | 540F.7.1.1 | 标尺合件 | Indicating Ruler | 1 |
| 29 | LW560F.7.1.6-1 | 分离式法兰 | Separating Flange | 1 |

## 6.1 工作液压系统 Working Hydraulic System

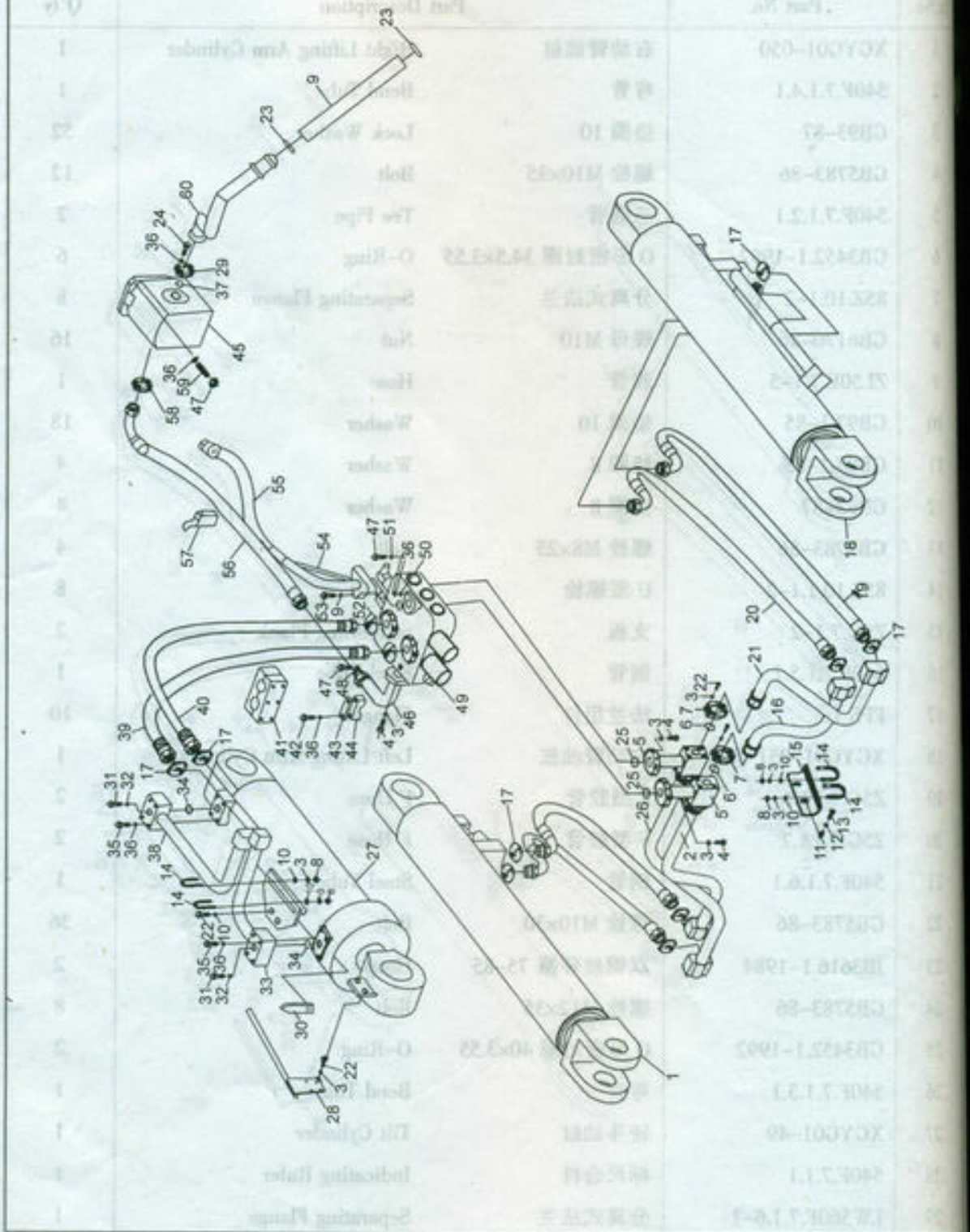

## 6.1 工作液压系统 Working Hydraulic System

| 序号 Sr.No | 零件代号 Part No. | 名称 Part Description | | 数量 Q'ty |
|---|---|---|---|---|
| 30 | ZL50E.7.1.1-3 | 指针 | Indicator | 1 |
| 31 | JB1000-77 | 螺塞 M14×1.5 | Plug | 2 |
| 32 | Q/SC1294-2000 | 垫圈 14 | Washer | 2 |
| 33 | LW560F.7B.1.1.1 | 转斗缸前腔油管 | Oil Pipe | 1 |
| 34 | GB3452.1-1992 | O 形密封圈 42.5×3.55 | O-Ring | 2 |
| 35 | GB5782-86 | 螺栓 M12×70 | Bolt | 8 |
| 36 | GB93-87 | 垫圈 12 | Lock Washer | 8 |
| 37 | GB3452.1-1992 | O 形密封圈 54×3.55 | O-Ring | 1 |
| 38 | LW560F.7B.1.4.1 | 转斗缸后腔油管 | Oil Pipe | 1 |
| 39 | LW560F.7B.1.2 | 胶管总成 | Hose | 1 |
| 40 | LW560F.7B.1.3 | 胶管总成 | Hose | 1 |
| 41 | Z5G.7.1.10 | 管夹 | Hose Clamp | 1 |
| 42 | GB5782-86 | 螺栓 M12×100 | Bolt | 2 |
| 43 | 530F.10-2 | 压板 | Pressing Plate | 1 |
| 44 | 530F.10-1 | 橡胶板 | Rubber Plate | 1 |
| 45 | P7200-F160H | 齿轮泵 | Gear Pump | 1 |
| 46 | LW560F.7A.1.1.1 | 分配阀进油管 | Oil Pipe Of Distributing Valve | 1 |
| 47 | GB6170-86 | 螺母 M12 | Nut | 8 |
| 48 | GB5782-86 | 螺栓 M12×120 | Bolt | 2 |
| 49 | DF32.2C | 分配阀 | Distributing Valve | 1 |
| 50 | GB1235-76 | O 形密封圈 50×3.1 | O-Ring | 1 |
| 51 | GB899-88 | 螺柱 M12×140 | Stud | 2 |
| 52 | FPS1 1/4 | 法兰组件 | Flange | 2 |
| 53 | GB5783-86 | 螺栓 M10×45 | Bolt | 1 |
| 54 | LW541F.7.1.1 | 回油管 | Oil Returning Pipe | 1 |
| 55 | LW541F.7.1.2 | 胶管总成 | Hose | 1 |
| 56 | LW560F.7A.1.2A | 胶管总成 | Hose | 1 |
| 57 | LW560F.7.1.15 | 管夹总成 | Hose Clamp | 1 |
| 58 | FPS1 1/2 | 法兰组件 | Flange | 1 |
| 59 | GB899-88 | 螺柱 M12×35 | Stud | 4 |
| 60 | LW560F.07.1.6.1A | 工作泵吸油管 | Inlet Oil Tube | 1 |

## 6.2 齿轮泵 Gear Pump

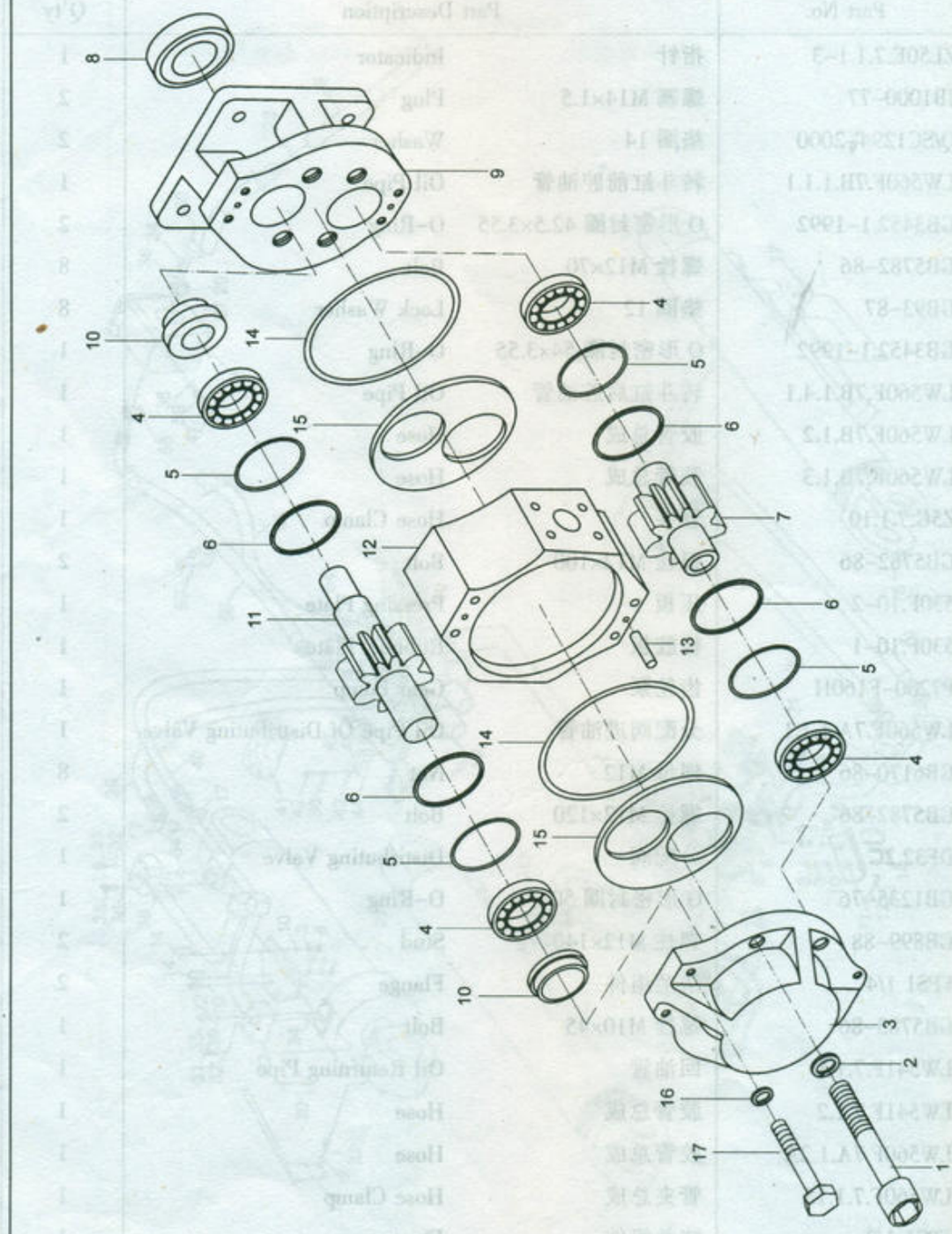

## 6.2 齿轮泵 Gear Pump

| 序号 Sr.No | 零件代号 Part No. | 名称 Part Description | | 数量 Q'ty |
|---|---|---|---|---|
| 1 | | 螺栓 | Bolt | 4 |
| 2 | | 垫圈 | Washer | 4 |
| 3 | | 后盖 | Rear Cap | 1 |
| 4 | | 轴承 | Bearing | 4 |
| 5 | | O 形密封圈 | O-Ring | 4 |
| 6 | | 垫片 | Washer | 4 |
| 7 | | 从动齿轮 | Driven Gear | 1 |
| 8 | | 油封 | Oil Seal | 1 |
| 9 | | 泵盖 | Pump Cap | 1 |
| 10 | | 密封环 | Seal Ring | 2 |
| 11 | | 主动齿轮 | Driving Gear | 1 |
| 12 | | 泵体 | Pump Body | 1 |
| 13 | | 定位销 | Position Pin | 2 |
| 14 | | O 形密封圈 | O-Ring | 2 |
| 15 | | 侧板 | Side Plate | 2 |
| 16 | | 垫圈 | Washer | 4 |
| 17 | | 螺栓 | Bolt | 4 |

## 6.3 分配阀 Distributing Valve

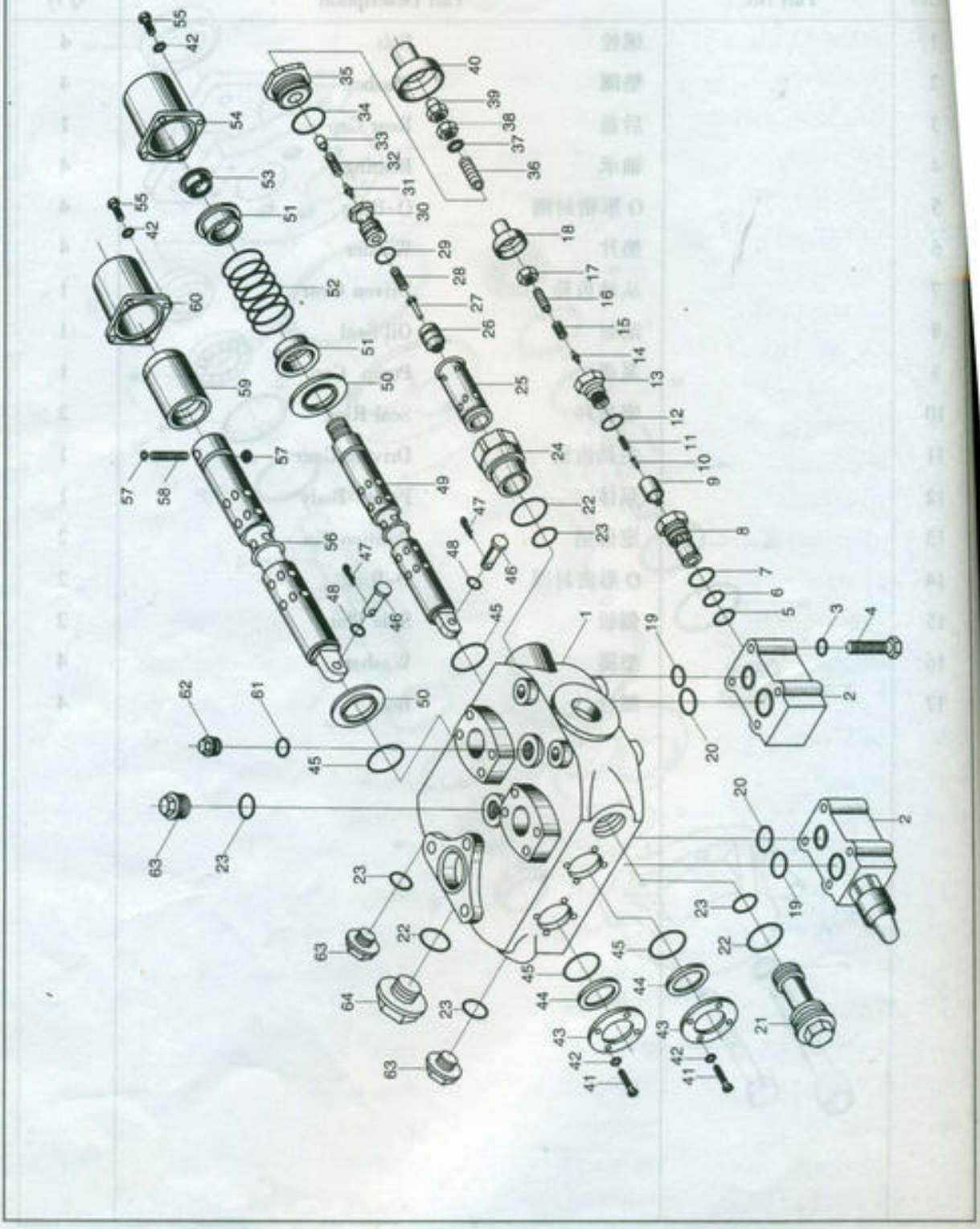

## 6.3 分配阀 Distributing Valve

| 序号 Sr.No | 零件代号 Part No. | 名称 Part Description | | 数量 Q'ty |
|---|---|---|---|---|
| 1 | DF32 | 整体式多路阀体 | Valve Body | 1 |
| 2 | | 过载阀 | Overload Valve | 2 |
| 3 | GB93-87 | 垫圈 10 | Lock Washer | 8 |
| 4 | GB93-86 | 螺栓 M10×68 | Bolt | 8 |
| 5 | GB3452.1-82 | O 形密封圈 19×1.8 | O-Ring | 2 |
| 6 | | 挡圈 | Snap | 1 |
| 7 | GB3452.1-82 | O 形密封圈 25×1.8 | O-Ring | 1 |
| 8 | | 阀套 | Vlave Sleeve | 1 |
| 9 | | 锥阀 | Bevel Valve | 1 |
| 10 | | 滑阀 | Arm Plunger | 1 |
| 11 | | 弹簧 | Spring | 1 |
| 12 | GB3452.1-82 | O 形密封圈 19 ×1.8 | O-Ring | 1 |
| 13 | | 提动阀座 | Pilot Valve Seat | 1 |
| 14 | | 提动阀 | Pilot Valve | 1 |
| 15 | | 弹簧 | Spring | 1 |
| 16 | | 调压螺钉 | Adjusting Screw | 1 |
| 17 | | 螺母 M10 | Nut | 1 |
| 18 | | 防护罩 | Protective | 1 |
| 19 | | O 形密封圈 | O-Ring | 1 |
| 20 | | O 形密封圈 | O-Ring | 2 |
| 21 | | 堵头 | Plug | 2 |
| 22 | | O 形密封圈 35×3.1 | O-Ring | 1 |
| 23 | | O 形密封圈 25×3.1 | O-Ring | 3 |
| 24 | | 安全阀阀座 | Safty Valve Seat | 5 |
| 25 | | 安全阀阀套 | Safty Valve Seat | 1 |
| 26 | | 锥阀 | Bevel Valve | 1 |
| 27 | | 滑阀 | Arm Plunger | 1 |
| 28 | | 弹簧 | Spring | 1 |
| 29 | GB1235-76 | O 形密封圈 20×3.1 | O-Ring | 1 |
| 30 | | 提动阀座 | Pilot Valve Seat | 1 |
| 31 | | 提动阀 | Pilot Valve | 1 |
| 32 | | 弹簧 | Spring | 1 |

## 6.3 分配阀 Distributing Valve

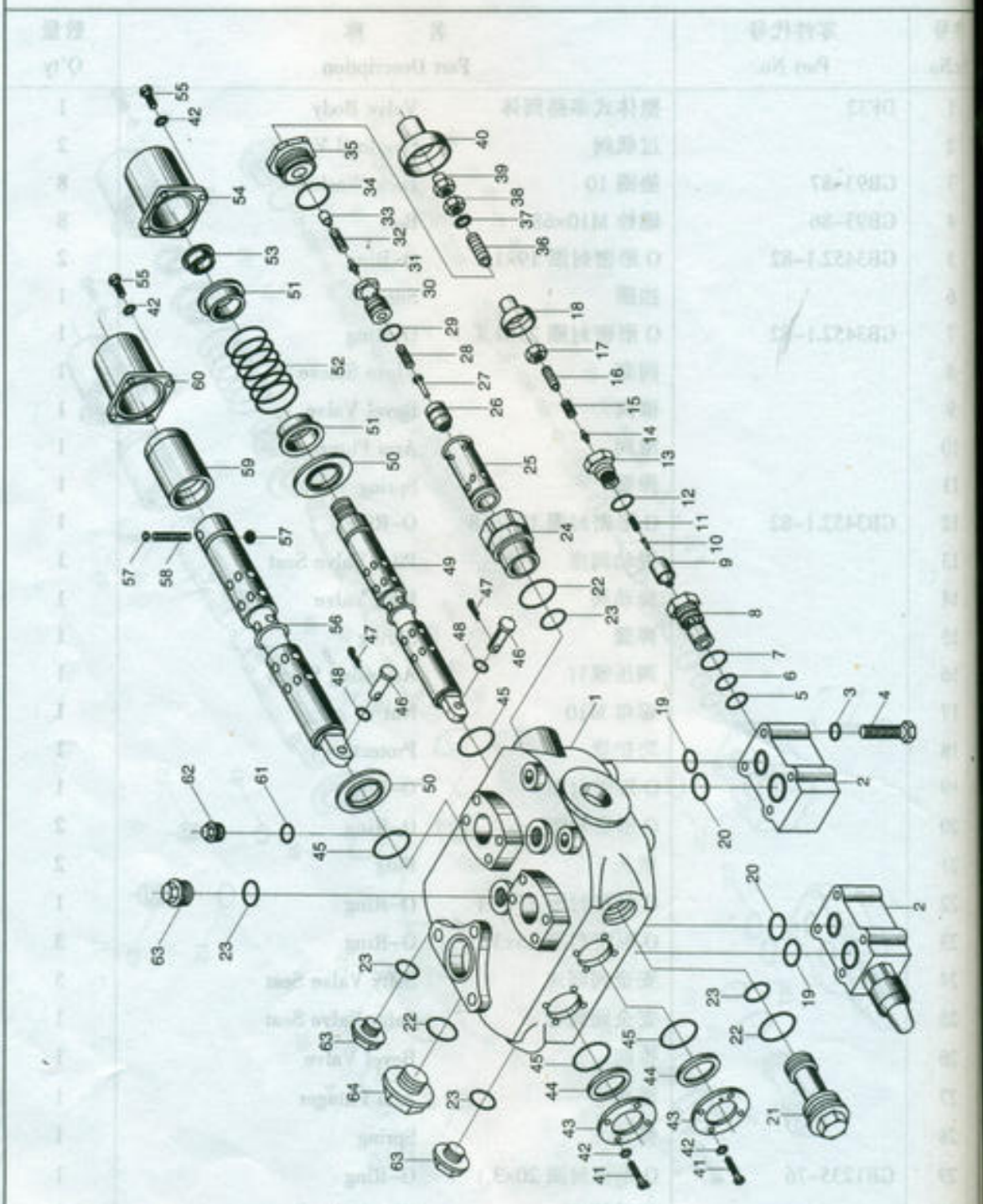

## 6.3 分配阀 Distributing Valve

| 序号 Sr.No | 零件代号 Part No. | 名称 Part Description | | 数量 Q'ty |
|---|---|---|---|---|
| 33 | | 弹簧座 | Spring Seat | 1 |
| 34 | GB1235-76 | O 形密封圈 32×3.1 | O-Ring | 1 |
| 35 | | 定位螺母 | Positioning Nut | 1 |
| 36 | | 弹簧 | Spring | 1 |
| 37 | GB97.1-85 | 垫圈 12 | Washer | 2 |
| 38 | GB6170-86 | 螺母 M12×1 | Nut | 1 |
| 39 | GB923-88 | 螺母 M12×1 | Nut | 1 |
| 40 | | 防护罩 | Protective | 1 |
| 41 | GB65-85 | 开槽螺钉 | Screw | 8 |
| 42 | GB93-87 | 垫圈 8 | Lock Washer | 16 |
| 43 | | 挡圈 | Snap | 2 |
| 44 | GB895.1-86 | 挡圈 | Snap Ring | 2 |
| 45 | | O 形密封圈 35×3.5 | O-Ring | 4 |
| 46 | | 销轴 | Pin | 2 |
| 47 | GB91-86 | 开口销 4×20 | Cotter Pin | 2 |
| 48 | GB97.1-85 | 垫圈 10 | Washer | 2 |
| 49 | | 转斗滑阀 | Tilt Plunger | 1 |
| 50 | | 挡圈 | Snap | 2 |
| 51 | | 弹簧座 | Spring Seat | 2 |
| 52 | | 复位弹簧 | Return Spring | 1 |
| 53 | | 压紧螺母 | Lock Nut | 1 |
| 54 | | 端盖 | End Cover | 1 |
| 55 | | 螺栓 M8×16 | Bolt | 8 |
| 56 | | 动臂阀杆 | Lift Arm Plunger | 1 |
| 57 | | 定位钢球 | Positioning Boll | 2 |
| 58 | | 弹簧 | Spring | 1 |
| 59 | | 定位套 | Positioning Sleeve | 1 |
| 60 | | 端盖 | End Cover | 1 |
| 61 | GB1235-76 | O 形密封圈 18×2.4 | ORing | 1 |
| 62 | | 螺堵 M14 | Plug | 1 |
| 63 | | 螺堵 M20 | Plug | 3 |
| 64 | | 螺堵 M30 | Plug | 1 |

## 6.4 转向液压系统 Steering Hydraulic System

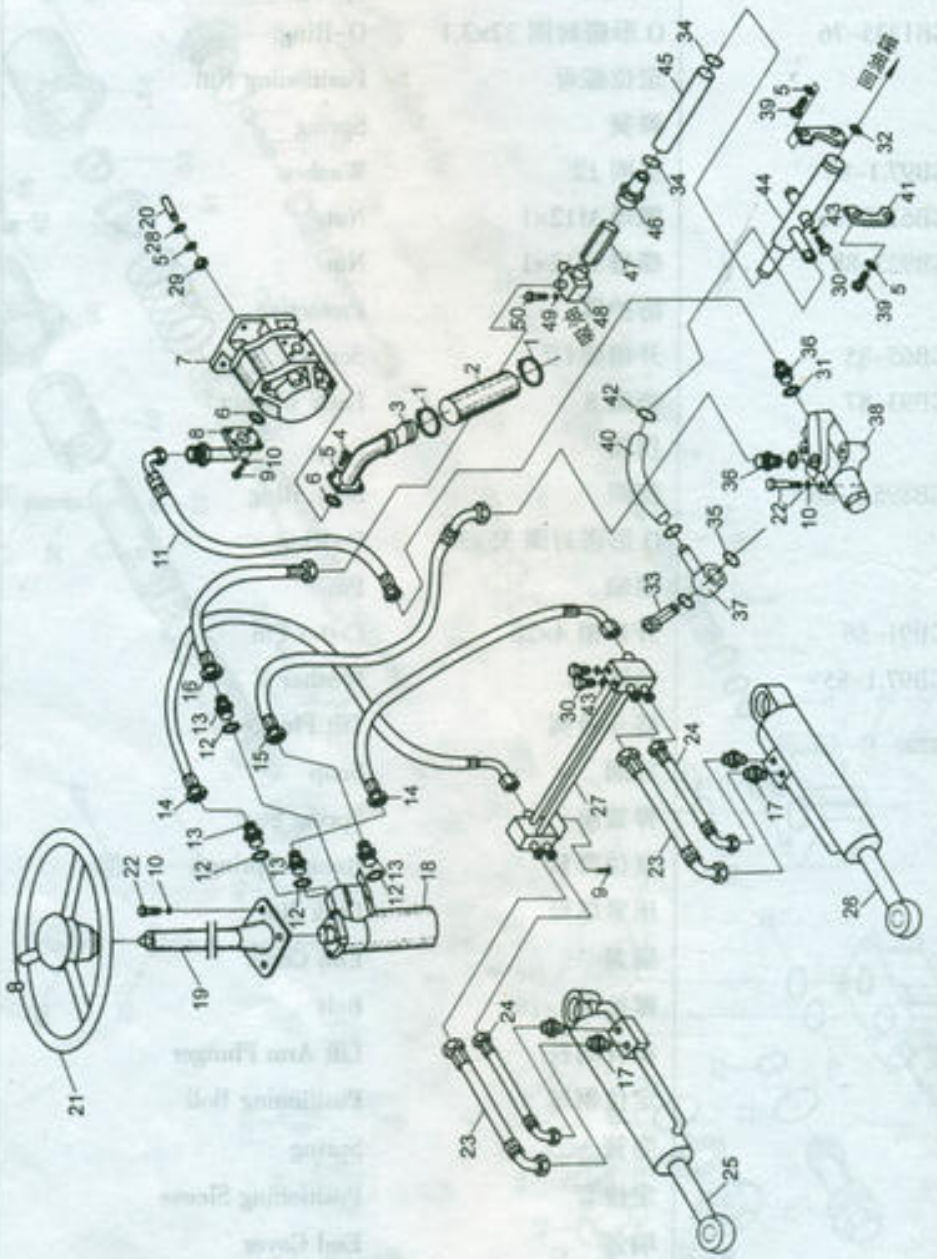

## 6.4 转向液压系统 Steering Hydraulic System

| 序号 Sr.No | 零件代号 Part No. | 名称 Part Description | | 数量 Q'ty |
|---|---|---|---|---|
| 1 | JB3616.1-1984 | 双钢丝环箍 75-80 | Clamp | 2 |
| 2 | ZL50E.7.2-1 | 夹布胶管φ64 | Hose | 1 |
| 3 | ZL50E.7.2.1 | 转向泵吸油管 | Inlet Oil Tube | 1 |
| 4 | GB5783-86 | 螺栓 M12×35 | Bolt | 4 |
| 5 | GB93-87 | 垫圈 12 | Lock Washer | 8 |
| 6 | GB3452.1-1992 | O 形密封圈 40×3.55 | O-Ring | 2 |
| 7 | CBGj2080H | 转向泵 | Steering Pump | 1 |
| 8 | 430F.9.8 | 转向泵出油管 | Outlet Oil Tube | 1 |
| 9 | GB5783-86 | 螺栓 M10×35 | Bolt | 4 |
| 10 | GB93-87 | 垫圈 10 | Lock Washer | 15 |
| 11 | LW560F.7.2.7 | 胶管 | Hose | 1 |
| 12 | ED20X1.5 | 垫圈 | Washer | 4 |
| 13 | LW560F.7.2.11 | 接头 | Joint | 4 |
| 14 | LW560F.7.2.9 | 胶管 | Hose | 2 |
| 15 | LW560F.7.2.3 | 胶管 | Hose | 1 |
| 16 | LW560F.7.2.10 | 胶管 | Hose | 1 |
| 17 | I15LM18X1.5ED | 直通接头 | Joint | 4 |
| 18 | BZZ1-E800C | 转向器 | Steering Valve | 1 |
| 19 | FZ2-750-HEAF | 转向柱 | Steering Valve | 1 |
| 20 | GB901-88 | 螺柱 M12×35 | Stud | 4 |
| 21 | XGZP370 | 方向盘 | Steering Wheel | 1 |
| 22 | GB5782-86 | 螺栓 M10×60 | Bolt | 7 |
| 23 | LW560F.7.2.1 | 胶管 | Hose | 2 |
| 24 | LW560F.7.2.2 | 胶管 | Hose | 2 |
| 25 | XGYG01-055 | 右转向缸 | Right Steering Cylinder | 1 |
| 26 | XGYG01-056 | 左转向缸 | Left Steering Cylinder | 1 |
| 27 | LW560F.7.2.4 | 连接块总成 | Joint Block | 1 |
| 28 | GB97.1-85 | 垫圈 12 | Washer | 4 |
| 29 | GB6170-86 | 螺母 M12 | Nut | 4 |

## 6.4 转向液压系统 Steering Hydraulic System

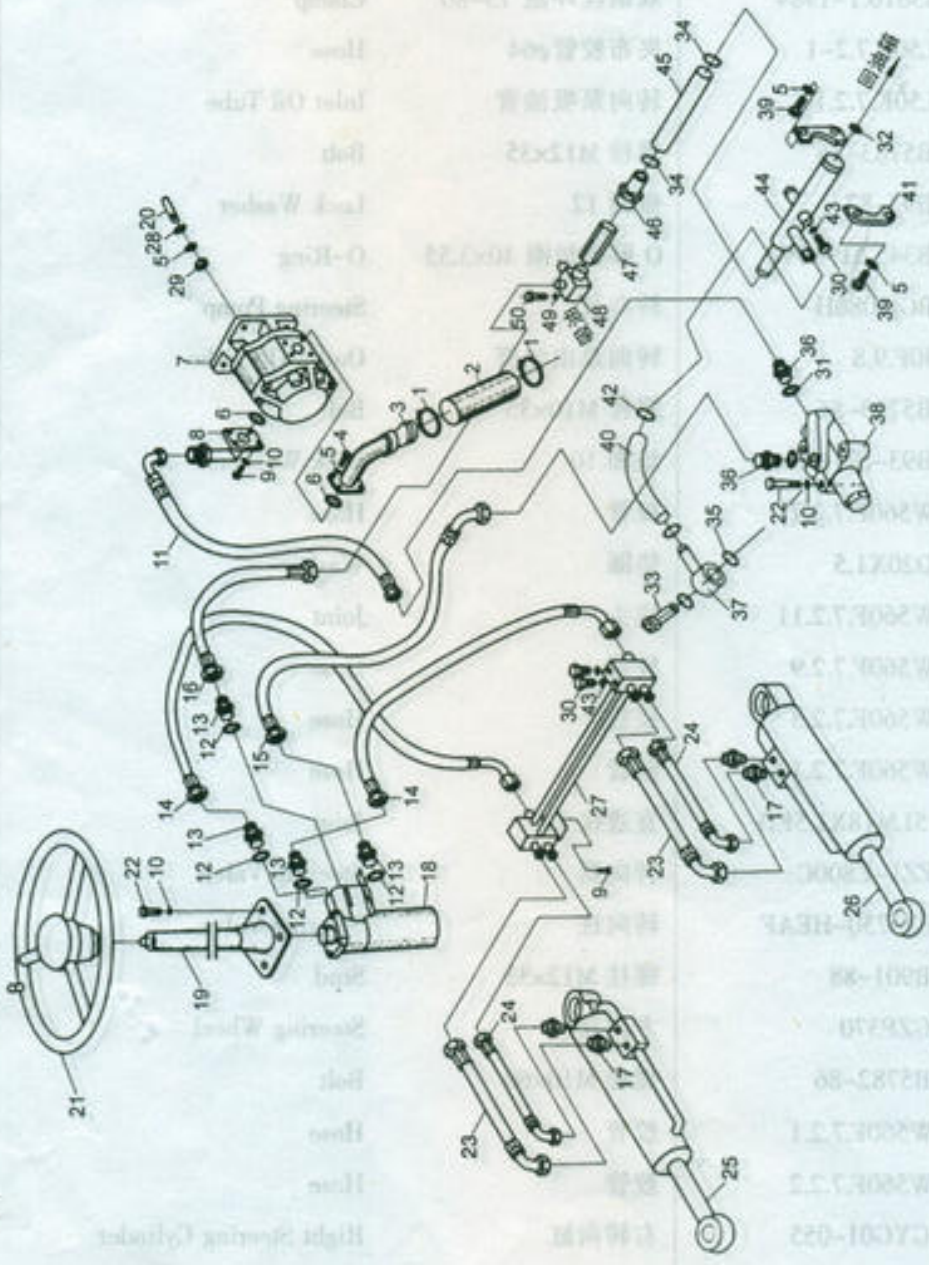

## 6.4 转向液压系统 Steering Hydraulic System

| 序号 Sr.No | 零件代号 Part No. | 名称 Part Description | | 数量 Q'ty |
|---|---|---|---|---|
| 30 | JB1000-77 | 螺栓 M14×1.5 | Plug | 2 |
| 32 | GB3452.1-1992 | O 形密封圈 61.5×3.55 | O-Ring | 1 |
| 33 | ZL50E.7.2-12 | 空心螺栓 | Hollow Bolt | 1 |
| 34 | JB3616.1-1984 | 双钢丝环箍 35-40 | Hoop | 2 |
| 35 | GB1235-76 | O 形密封圈 35×3.1 | O-Ring | 2 |
| 36 | LW560F.7.2.5 | 接头 | Connector | 2 |
| 37 | ZL50E.7.2.12 | 接管 | Joint Pipe | 1 |
| 38 | FLD-F60H | 单稳阀 | Constant-Flow Valve | 1 |
| 39 | GB5783-86 | 螺栓 M12×30 | Bolt | 4 |
| 40 | JB3616.1-1984 | 双钢丝环箍 28-32 | Hoop | 2 |
| 41 | ZL50E.7.1.24-1 | 分离式法兰 | Separating Flange | 1 |
| 42 | ZL50E.7.2-7 | 夹布胶管¢19 | Hose | 1 |
| 43 | Q/SC1294-2000 | 垫圈 14 | Washer | 1 |
| 44 | LW560F.7.2.6A | 回油钢管 | Oil Returning Pipe | 1 |
| 45 | ZL50E.7.2D-3 | 夹布胶管 | Hose | 1 |
| 46 | ZL50E.7.2D-4 | 接头 | Connector | 1 |
| 47 | CIT06-50-50 | 单向阀 | Single Direction Valve | 1 |
| 48 | LW560F.7.2.12 | 三通接头 | Joint | 1 |
| 49 | GB93-87 | 垫圈 8 | Lock Washer | 4 |
| 50 | GB5782-86 | 螺栓 M8×55 | Bolt | 4 |

## 6.5 全液压转向器 Hydraulic Steering Control Units

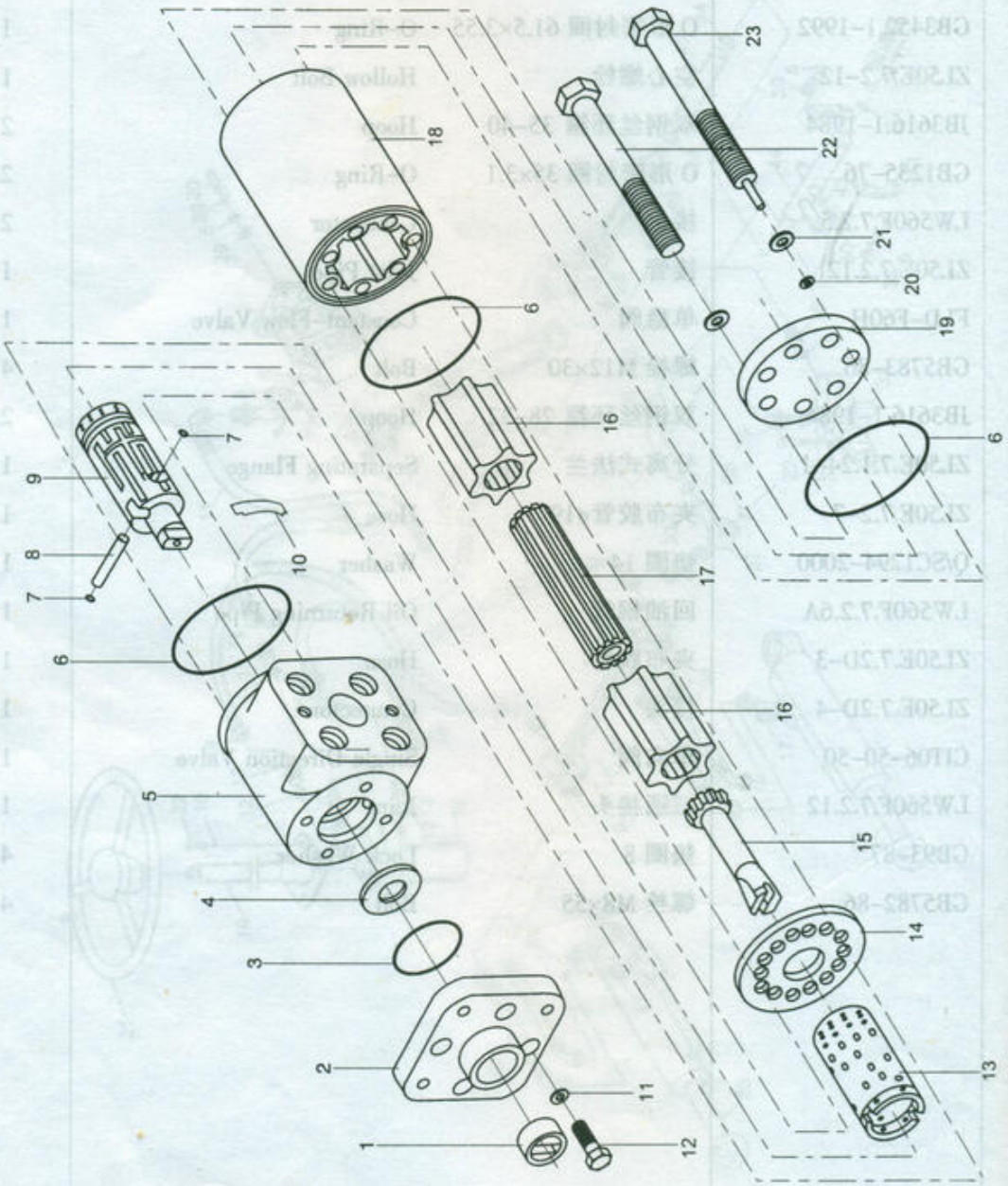

## 6.5 全液压转向器 Hydraulic Steering Control Units

| 序号 Sr.No | 零件代号 Part No. | 名称 Part Description | | 数量 Q'ty |
|---|---|---|---|---|
| 1 | | 连接头 | Join Block | 1 |
| 2 | | 前盖 | Front Cap | 1 |
| 3 | | O 形密封圈 | O-Ring | 1 |
| 4 | | 垫片 | Washer | 1 |
| 5 | | 阀体 | Valve Body | 1 |
| 6 | | O 形密封圈 | O-Ring | 3 |
| 7 | | 挡片 | Snap | 2 |
| 8 | | 销 | Pin | 1 |
| 9 | | 阀芯 | Spool | 1 |
| 10 | | 弹簧片 | Spring Plate | 6 |
| 11 | GB93-87 | 垫圈 6 | Lock Washer | 4 |
| 12 | GB70-85 | 螺钉 | Screw | 4 |
| 13 | | 阀套 | Valve Sleeve | 1 |
| 14 | | 隔盘 | Spacer | 1 |
| 15 | | 联动轴 | Universal Driving Shaft | 1 |
| 16 | | 转子 | Rotator | 2 |
| 17 | | 联动器 | Cupling Shaft | 1 |
| 18 | | 定子 | Stator | 1 |
| 19 | | 后盖 | Rear Cap | 1 |
| 20 | | 钢球 | Boll | 7 |
| 21 | GB93-87 | 垫圈 10 | Lock Washer | 6 |
| 22 | GB5782-86 | 螺栓 M10×160 | Bolt | 1 |
| 23 | | 螺栓 M10 | Bolt | |

## 6.6 左/右转向油缸 Left/Right Steering Cylinder

XGYG01-056 左转向油缸

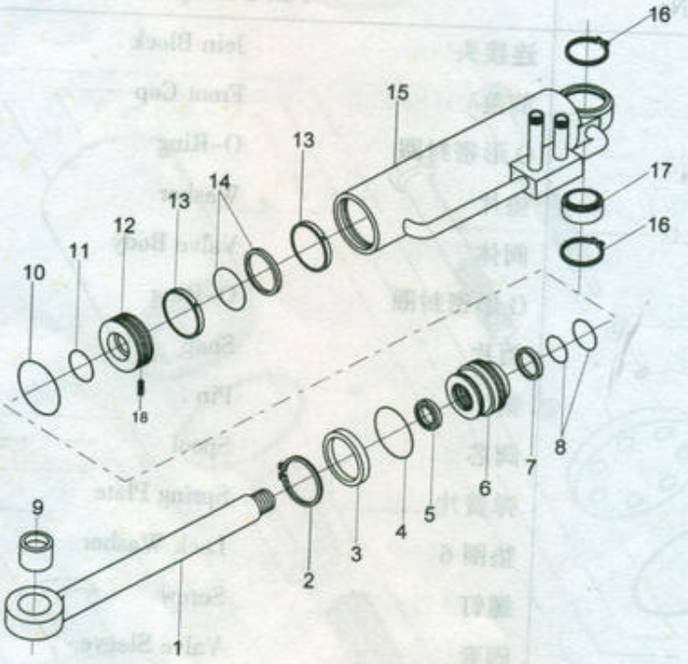


XGYG01-055 右转向油缸

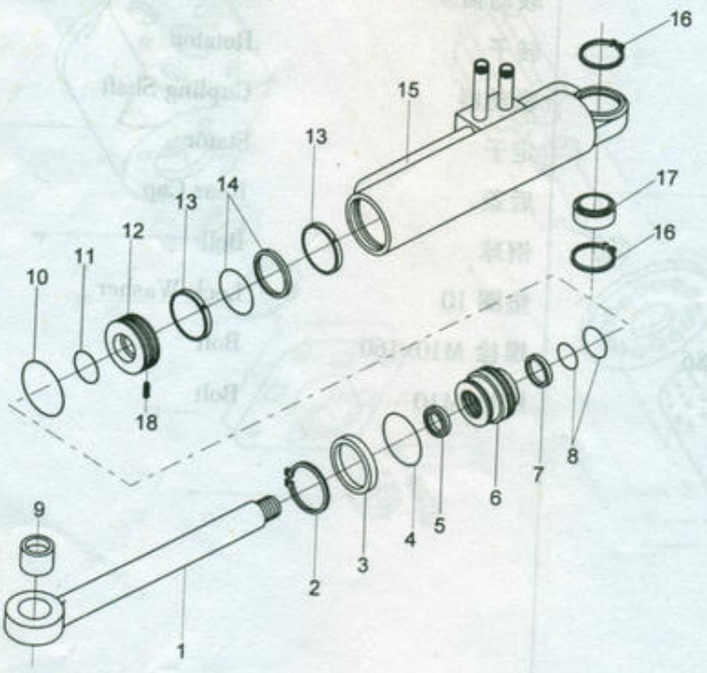

## 6.6 左/右转向油缸 Left/Right Steering Cylinder

| 序号 Sr.No | 零件代号 Part No. | 名称 Part Description | | 数量 Q'ty |
|---|---|---|---|---|
| 1 | | 活塞杆 | Piston Rod | 1 |
| 2 | GB894.1-86 | 轴用弹性挡圈 70 | Snap Ring Cover | 1 |
| 3 | | 挡环 | Snap Ring | 1 |
| 4 | | 钢丝挡圈 | Snap Ring Cover | 1 |
| 5 | GB10708.3-89 | Fe 防尘圈 d45 | Seal Ring | 1 |
| 6 | | 导向套 | Guide Sleeve | 1 |
| 7 | JB/JQ22101-87 | Kyc 密封圈 45×60×11.5 | Kyc Ring | 1 |
| 8 | S-55013 | 斯特封 d45 | Slyd Ring | 1 |
| 9 | | 衬套 | Lining Bushing | 1 |
| 10 | GB1235-76 | O 形密封圈 90×5.7 | O Ring | 1 |
| 11 | GB1235-76 | O 形密封圈 50×3.1 | O Ring | 1 |
| 12 | | 活塞 | Piston | 1 |
| 13 | | 孔用支承环 | Supporting Ring | 2 |
| 14 | S-55044 | 格平圈 D90 | Glyd Ring | 1 |
| 15 | | 缸体 | Tube,Cylinder | 1 |
| 16 | GB893.1-86 | 挡圈 62 | Snap Ring Cover | 2 |
| 17 | GB304.5-81 | 关节轴承 GE40ES | Spherical | 1 |
| 18 | GB79-85 | 螺钉 M6×25 | Screw | 1 |

## 6.7 单稳阀 Constant-Flow Valve

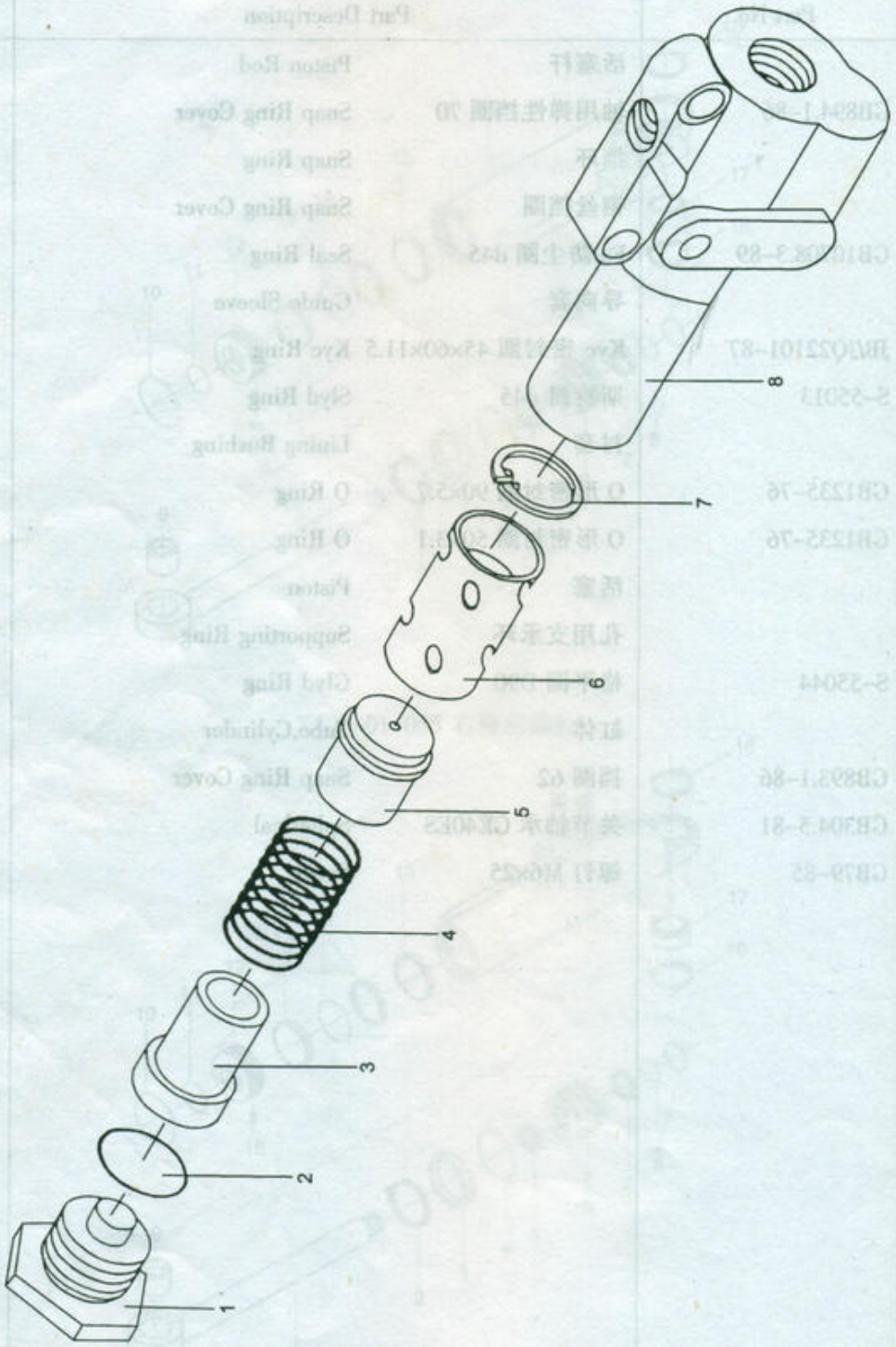

## 6.7 单稳阀 Constant-Flow Valve

| 序号 Sr.No | 零件代号 Part No. | 名称 Part Description | 数量 Q'ty |
|---|---|---|---|
| 1 | | 螺堵 Plug | 1 |
| 2 | | O 形密封圈 O-Ring | 1 |
| 3 | | 弹簧座 Spring Seat | 1 |
| 4 | | 弹簧 Spring | 1 |
| 5 | | 阻尼塞 Damping Plug | 1 |
| 6 | | 阀芯 Valve Core | 1 |
| 7 | | 挡圈 Snap Ring | 1 |
| 8 | | 阀体 Valve Body | 1 |

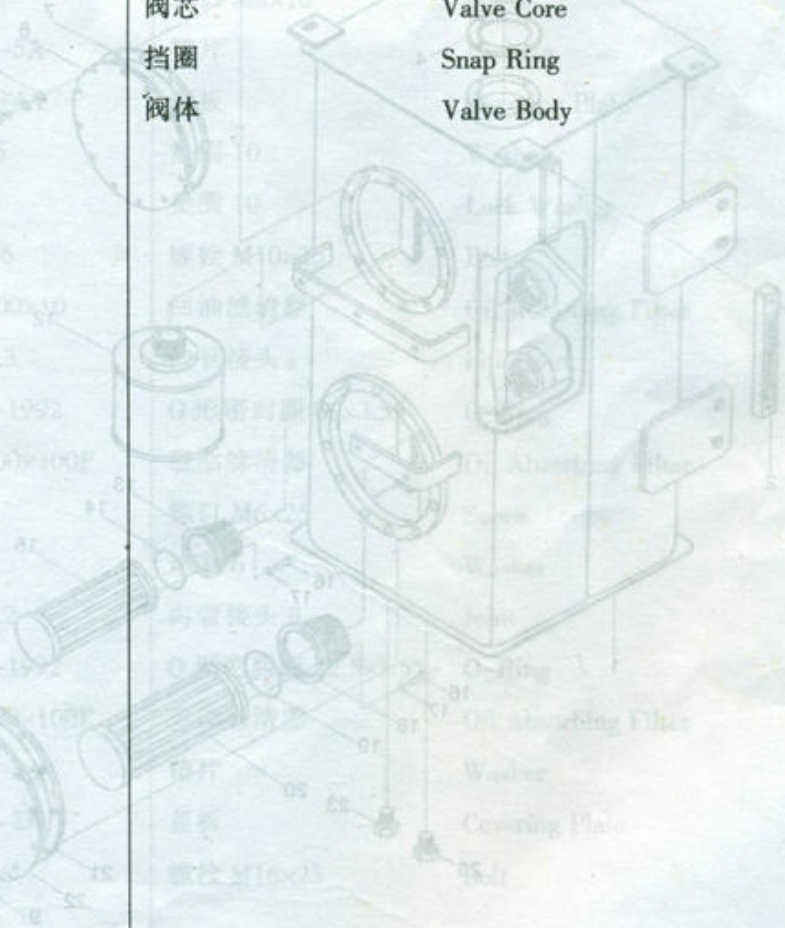

## 6.8 机油箱总成 Hydraulic Oil Tank

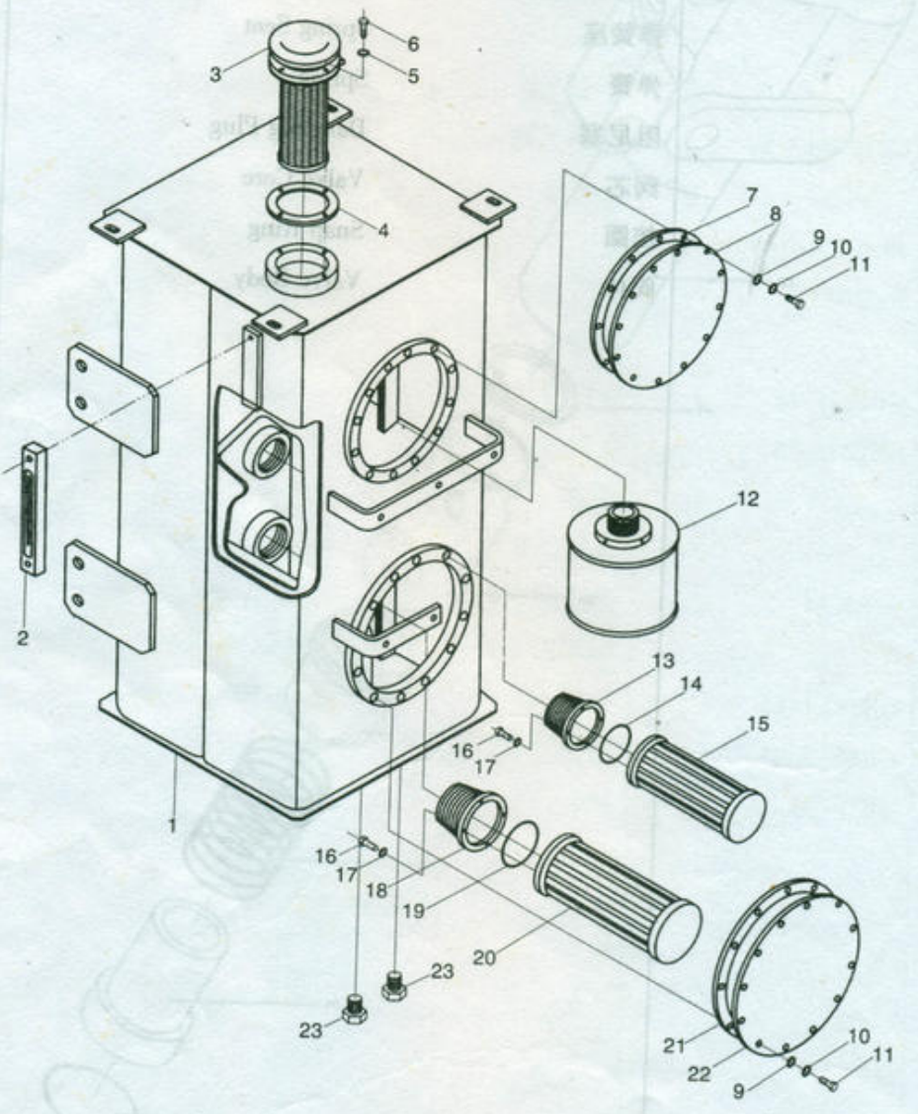

## 6.8 机油箱总成 Hydraulic Oil Tank

| 序号 Sr.No | 零件代号 Part No. | 名称 Part Description | | 数量 Q'ty |
|---|---|---|---|---|
| 1 | LW560F.7.1.13.1 | 机油箱体 | Oil Tank Body | 1 |
| 2 | YWZ-250 | 液位计 | Liquid level Gauge | 1 |
| 3 | XGKL2-10×0.63 | 加油滤清器(Ql-8) | Oil Filter | 1 |
| 4 | ZL40.1.3-8 | 垫片 | Washer | 1 |
| 5 | GB93-87 | 垫圈 8 | Lock Washer | 4 |
| 6 | GB65-85 | 螺钉 M8×16 | Screw | 4 |
| 7 | ZL50E.7.3-5A | 垫片 | Packing | 1 |
| 8 | ZL50E.7.3-4A | 盖板 | Covering Plate | 1 |
| 9 | GB97.1-85 | 垫圈 10 | Washer | 24 |
| 10 | GB93-87 | 垫圈 10 | Lock Washer | 24 |
| 11 | GB5783-86 | 螺栓 M10×25 | Bolt | 24 |
| 12 | XGHL6-700×10 | 回油滤清器 | Oil Returning Filter | 1 |
| 13 | ZL50E.7.3.3 | 内管接头 i | Pipe Joint | 1 |
| 14 | GB3452.1-1992 | O 形密封圈 69×3.55 | O-Ring | 1 |
| 15 | XGXL1-400×100F | 吸油滤清器 | Oil Absorbing Filter | 1 |
| 16 | GB65-85 | 螺钉 M6×25 | Screw | 8 |
| 17 | GB93-87 | 垫圈 6 | Washer | 8 |
| 18 | ZL50E.7.3.2 | 内管接头 ii | Joint | 1 |
| 19 | GB3452.1-1992 | O 形密封圈 82.5×3.55 | O-Ring | 1 |
| 20 | XGXL1-630×100F | 吸油滤清器 | Oil Absorbing Filter | 1 |
| 21 | ZL50E.7.3-3A | 垫片 | Washer | 1 |
| 22 | ZL50E.7.3-2A | 盖板 | Covering Plate | 1 |
| 23 | GB5783-86 | 螺栓 M16×25 | Bolt | 2 |

## 6.9 转斗油缸 Tilt Cylinder

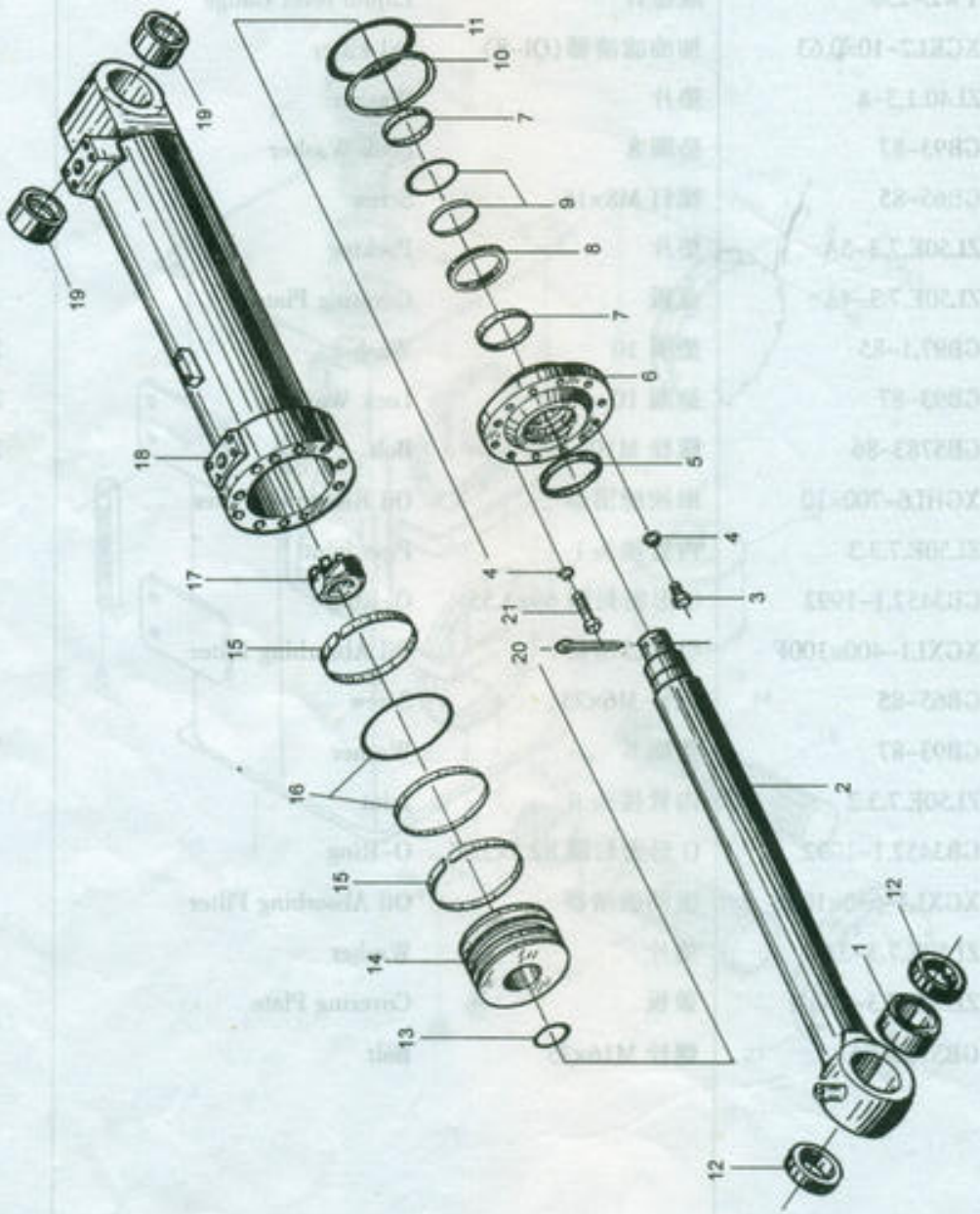

## 6.9 转斗油缸 Tilt Cylinder

| 序号 Sr.No | 零件代号 Part No. | 名称 Part Description | | 数量 Q'ty |
|---|---|---|---|---|
| 1 | GB304.5-81 | 关节轴承 GE80ES | Bearing | 1 |
| 2 | Z5G.7.1.1.2 | 活塞杆 | Piston Rod | 1 |
| 3 | GB5785-86 | 螺栓 M20×2×30 | Bolt | 2 |
| 4 | GB93-87 | 垫圈 20 | Washer | 12 |
| 5 | CK-100 | 防尘圈 d100 | Dust Proof Ring | 1 |
| 6 | ZL50E.7.1.1-6 | 缸盖 | End Cover | 1 |
| 7 | ZL50E.7.1.1-1 | 支承环 | Supporting Ring | 2 |
| 8 | JB/JQ22101-87 | KYC 密封圈 100×120×15 | KYC Ring | 1 |
| 9 | S-55013 | 斯特封 d100 | Seal Ring | 1 |
| 10 | GB1235-76 | 挡圈 A180×2 | Snap Ring | 1 |
| 11 | GB1235-76 | O 形密封圈 180×5.7 | O-Ring | 1 |
| 12 | Z5G.7.1.1-2 | 防尘挡圈 | Snap Ring Cover | 2 |
| 13 | GB3452.1-82 | O 形密封圈 69×5.3 | O-Ring | 1 |
| 14 | ZL50E.7.1.1-2 | 活塞 | Piston | 1 |
| 15 | ZL50E.7.1.1-3 | 支承环 | Supporting Ring | 2 |
| 16 | S-55044 | 格来圈 D180 | Glyd Ring | 1 |
| 17 | ZL50E.7.1.1-4 | 开槽螺母 | Slot Nut | 1 |
| 18 | Z5G.7.1.1.1 | 缸体 | Cylinder Body | 1 |
| 19 | Z5G.7.1.1-5 | 衬套 | Lining Bushing | 2 |
| 20 | GB91-86 | 开口销 10×100 | Pin | 1 |
| 21 | GB5785-86 | 螺栓 M20×2×80 | Bolt | 10 |

## 6.10 左/右动臂油缸 Left/Right Lift Cylinder

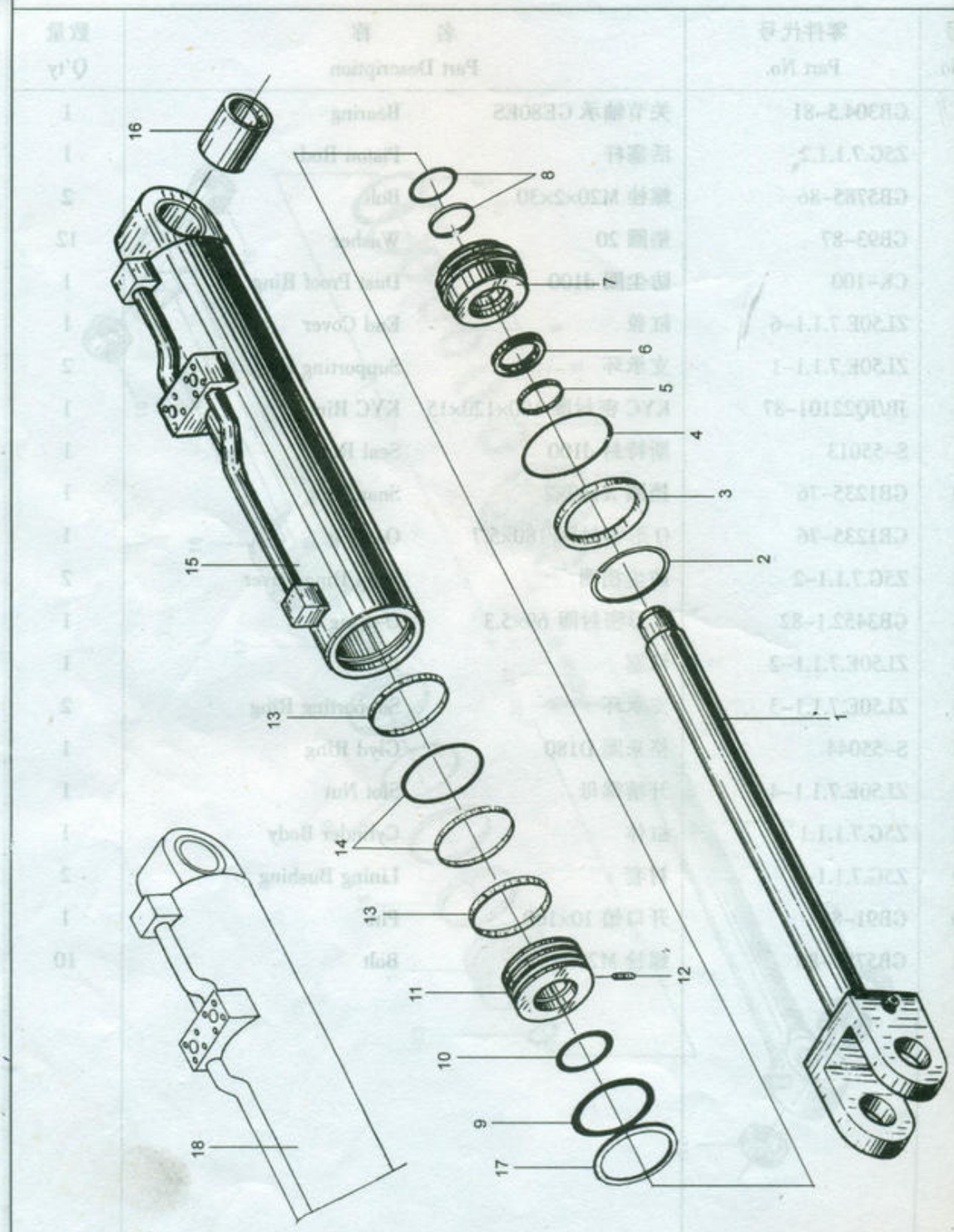

## 6.10 左/右动臂油缸 Left/Right Lift Cylinder

| 序号 Sr.No | 零件代号 Part No. | 名称 Part Description | | 数量 Q'ty |
|---|---|---|---|---|
| 1 | ZL50E.7.1.3.1 | 活塞杆 | Piston Rod | 1 |
| 2 | GB894.1-86 | 挡圈 140 | Snap Ring Cover | 1 |
| 3 | ZL50E.7.1.3-1 | 挡环 | Snap Ring | 1 |
| 4 | ZL50E.7.1.3-2 | 挡圈 165 | Snap Ring Cover | 1 |
| 5 | GB10708.3-89 | FC 防尘圈 80 | Seal Ring | 1 |
| 6 | JB/JQ22101-87 | KYC 密封圈 80×95×11.5 | KYC Ring | 1 |
| 7 | ZL50E.7.1.3-3 | 导向套 | Guide Sleeve | 1 |
| 8 | S-55013 | 斯特封 d80 | Seal Ring | 1 |
| 9 | GB1235-76 | O 形密封圈 160×5.7 | O-Ring | 1 |
| 10 | GB1235-76 | O 形密封圈 85×3.1 | O-Ring | 1 |
| 11 | ZL50.10.2.6 | 活塞 | Piston | 1 |
| 12 | GB79-85 | 螺钉 m12×45 | Screw | 1 |
| 13 | ZL50.10.2-7 | 支承环 | Supporting Ring | 2 |
| 14 | S-55044 | 格来圈 d160 | Glyd Ring | 1 |
| 15 | Z5G.7.1.3.1A | 缸体 (右) | Cylinder Body (Right) | 1 |
| 16 | ZL50E.7.1.3-7 | 衬套 | Lining Bushing | 1 |
| 17 | GB1235-76 | 挡圈 a160×2 | Snap Ring Cover | 1 |
| 18 | Z5G.7.1.24.1A | 缸体 (左) | Cylinder Body (Left) | 1 |

# 电 器 系 统
# Electrical System



## 7.1 电器系统 Electrical System

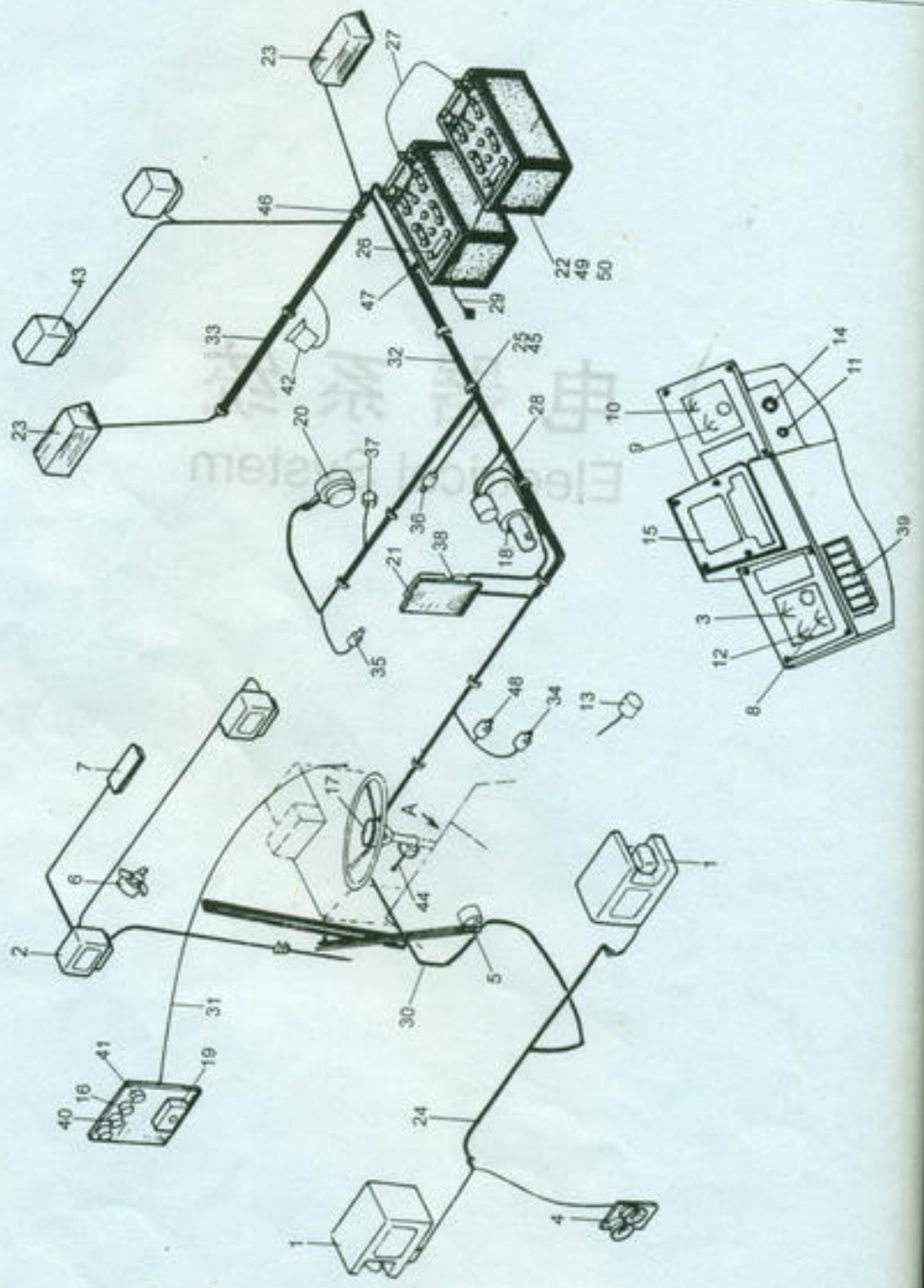

## 7.1 电器系统 Electrical System

| 序号 Sr.No | 零件代号 Part No. | 名称 Part Description | | 数量 Q'ty |
|---|---|---|---|---|
| 1 | XGGD03 | 工作灯 | Working Lamp | 2 |
| 2 | XGGD04 | 工作灯 | Working Lamp | 2 |
| 3 | SW2401 | 水温表 | Water Temperature Meter | 1 |
| 4 | DL50BD/G-24V | 喇叭 | Horn | 1 |
| 5 | ZD2312 | 雨刮器 | Rain Wiper | 1 |
| 6 | SGF-03 | 电风扇 | Fan | 1 |
| 7 | CS130 | 顶灯 | Head Lamp | 1 |
| 8 | DY2401 | 电压表 | Voltage Meter | 1 |
| 9 | YW2401 | T/M 油温表 | T/M Oil Temperature Meter | 1 |
| 10 | QY2401 | 气压表 | Air Pressure Meter | 1 |
| 11 | JK114 | 雨刮开关 | Rain Wiper Switch | 1 |
| 12 | YY2401 | 发动机油压表 | Engine Oil Pressure Meter | 1 |
| 13 | JN150 | 刹车开关 | Brake Switch | 1 |
| 14 | XGHK02 | 点火开关(JK406c-2) | Igniting Switch | 1 |
| 15 | XL5.001.006 | 中仪表盘 | Medium Instrument Board | 1 |
| 16 | JL2B | 喇叭继电器 | Horn Relay | 1 |
| 17 | LAN | 喇叭按钮 | Horn Button | 1 |
| 18 | QD2827DE | 起动马达 | Start Motor | 1 |
| 19 | XGBX508-2 | 保险丝盒(BX508) | Fuse Box | 1 |
| 20 | JFZ2405 | 整体式发电机 | Alternator | 1 |
| 21 | DK2312A | 电源总开关 | Switch Of Electrical Resource | 1 |
| 22 | 6-QW-120B | 蓄电池 | Battery | 2 |
| 23 | XH8-2L2 | 后小灯 | Rear Lamp | 2 |
| 24 | LW560F.11.1 | 前车架线束 | Wires | 1 |
| 25 | 3700930 | 线卡 | Wires Support | 5 |
| 26 | XGXD2500-10 | 电瓶线 | Battery Wire | 1 |
| 27 | XGXD450-10 | 电瓶线 | Battery Wire | 1 |
| 28 | XGXD700-10 | 电瓶线 | Battery Wire | 1 |
| 29 | XGXD850-10 | 电瓶线 | Battery Wire | 1 |

## 7.1 电器系统 Electrical System

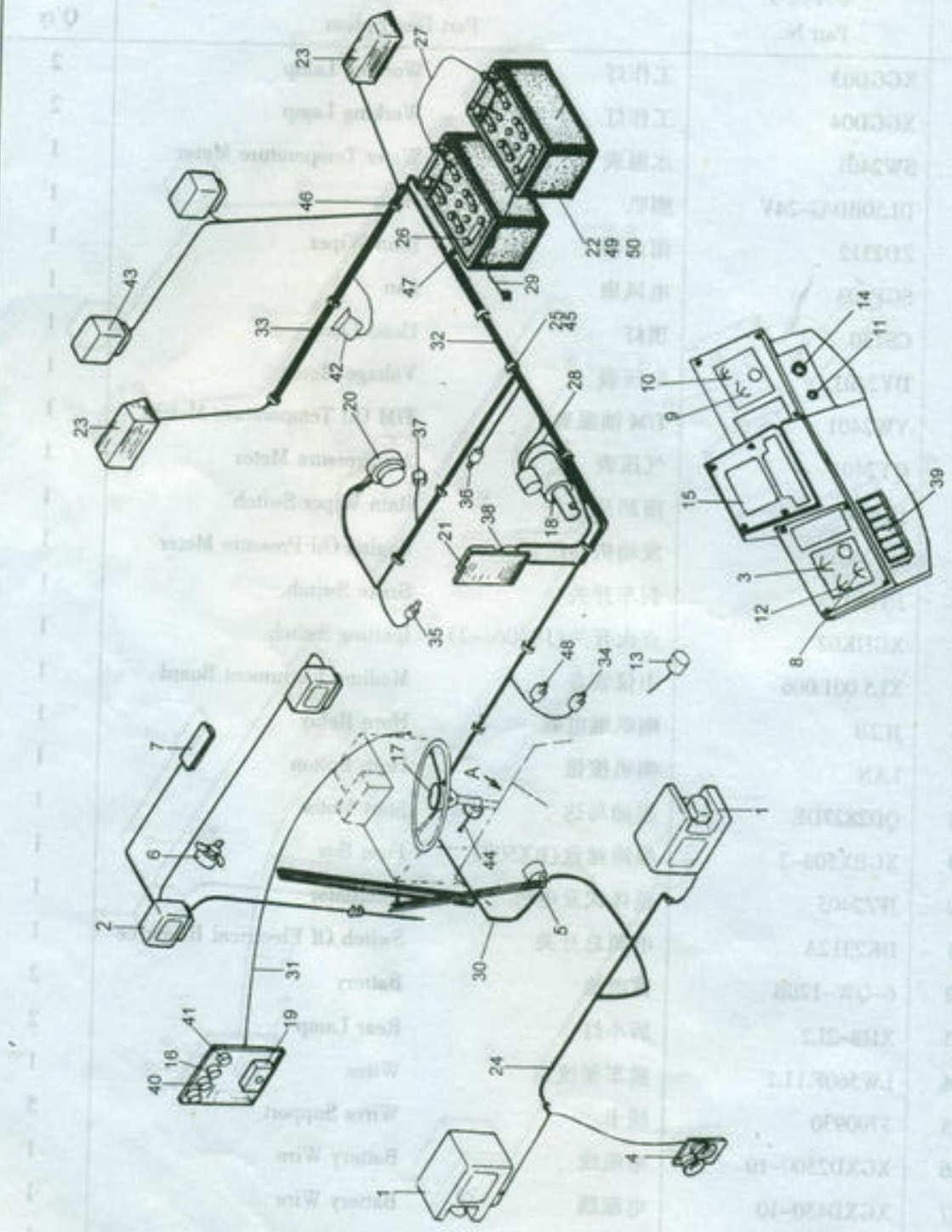

## 7.1 电器系统 Electrical System

| 序号 Sr.No | 零件代号 Part No. | 名称 Part Description | | 数量 Q'ty |
|---|---|---|---|---|
| 30 | LW560F.11A.2 | 仪表盘线束 | Meter Wires | 1 |
| 31 | LW560F.11.3 | 控制箱线束 | Control Box Wires | 1 |
| 32 | LW560F.11A.4 | 后车架线束 | Wires Of Rear Chassis | 1 |
| 33 | LW560F.11A.5 | 后灯线束 | Tail Lamp Wire | 1 |
| 34 | 18WGM001 | T/M 油温传感器 | T/M Oil Temperature Sensor | 1 |
| 35 | YG6221C | 发动机油压传感器 | Engine Oil Pressure Sensor | 1 |
| 36 | 18WGZ001 | 水温传感器 | Water Temperature Sensor | 1 |
| 37 | YG6221E1 | 制动气压传感器 | Brake Air Pressure Sensor | 1 |
| 38 | XGJD01 | 继电器(JN3A) | Relay | 1 |
| 39 | JK932-50G | 翘板开关 | Switches | 1 |
| 40 | SG252 | 闪光器 | Flasher | 1 |
| 41 | XGFM24 | 蜂鸣器(FM211) | Warning Buzzer | 1 |
| 42 | XGDB01 | 倒车报警器(DCQ-1) | Back Buzzer | 1 |
| 43 | XGZ-1 灯 | 后大灯 | Rear Working Lamp | 2 |
| 44 | JK802A | 转向开关 | Steering Lamp Switch | 1 |
| 45 | 3700913E0 | 线卡 | Wires Support | 2 |
| 46 | 3700912E0 | 线卡 | Wires Support | 6 |
| 47 | HT-32 | 橡胶护套 | Rubber Sleeve | 8 |
| 48 | PS31-40-2MRB-A-SP-FS9BARR | 倒车报警器开关 | Reverse Alarm Switch | 1 |
| 49 | OPHTB | 蓄电池负极护套 | Protection Sleeve | 2 |
| 50 | OPHTR | 蓄电池正极护套 | Protection Sleeve | 3 |