CATERPILLAR®

SEBP3185-11
August 2004

RUTHZIL TRATOR COMERCIAL DE PEÇAS LTDA 11 97083-6812 ROLANDO CITRANGULO

Parts Manual

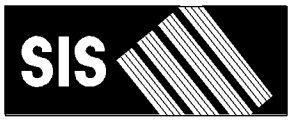

See "General Information" for New Parts Manual Features.

M318C Excavator

BCZ1-2000 (Machine)
CPT1-Up (Engine)

Powered By 3056 Engine
This Parts Manual is also Available in .PDF Format on Compact Disc(CD-ROM)-Caterpillar Form No. SERP3185

Product and Dealer Information

Note: For product identification plate locations, see the section “Product Identification Information” in the Operation and Maintenance Manual.

Delivery Date: _____

Product Information

Model: _____

Product Identification Number: _____

Engine Serial Number: _____

Transmission Serial Number: _____

Generator Serial Number: _____

Attachment Serial Numbers: _____

Attachment Information: _____

Customer Equipment Number: _____

Dealer Equipment Number: _____

Dealer Information

Name: _____ Branch: _____

Address: _____

_____

_____

	Dealer Contact	Phone Number	Hours
Sales:	_____	_____	_____
Parts:	_____	_____	_____
Service:	_____	_____	_____

Informations produit et concessionnaire

Nota: Voir l'emplacement de la plaque signalétique du produit au chapitre "Informations produit" du guide d'utilisation et d'entretien.

Date de livraison: _____

Informations produit

Modèle: _____

Numéro d'identification produit: _____

Numéro de série du moteur: _____

Numéro de série de la boîte de vitesses: _____

Numéro de série de l'alternateur: _____

Numéros de série d'équipement: _____

Informations sur l'équipement: _____

Numéro matériel client: _____

Numéro matériel concessionnaire: _____

Informations concessionnaire

Nom: _____ Agence: _____

Adresse: _____

_____

_____

	Contact concessionnaire	Numéro de téléphone	Heures
Ventes:			
Pièces:			
Service:			

Información del Producto/Distribuidor

Nota: Para saber la ubicación de las placas de identificación del producto, ver la sección “Información sobre identificación del producto” en el Manual de Operación y Mantenimiento.

Fecha de entrega: _____

Información del producto

Modelo: _____

Número de identificación del producto: _____

Número de serie del motor: _____

Número de serie de la transmisión: _____

Número de serie del generador: _____

Números de serie de los accesorios: _____

Información sobre los accesorios: _____

Número del equipo del cliente: _____

Número del equipo del distribuidor: _____

Información del distribuidor

Nombre: _____ Sucursal: _____

Dirección: _____

_____

_____

Comunicación con el distribuidor	Número de teléfono	Horas
Ventas: _____	_____	_____
Piezas: _____	_____	_____
Servicio: _____	_____	_____

Informações Sobre Produto e Revendedor

Nota: Para localizações da placa de identificação do produto, consulte a seção, “Informações Sobre Identificação do Produto” no Manual de Operação e Manutenção.

Data de Entrega: _____

Informações Sobre o Produto

Modelo: _____

Número de Identificação do Produto: _____

Número de Série do Motor: _____

Número de Série da Transmissão: _____

Número de Série do Gerador: _____

Números de Série de Acessórios: _____

Informações Sobre Acessórios: _____

Número do Equipamento do Cliente: _____

Número do Equipamento do Revendedor: _____

Informações Sobre o Revendedor

Nome: _____ Filial: _____

Endereço: _____

_____

_____

	Contato do Revendedor	Telefone	Horas
Vendas:	_____	_____	_____
Peças:	_____	_____	_____
Serviço:	_____	_____	_____

Produkt- und Händlerinformation

Anmerkung: Für die Lage der Produkt-Identnummer und Seriennummern siehe Abschnitt “Produkt-Identinformation” im Betriebs- und Wartungshandbuch.

Lieferdatum: _____

Produkt-Identinformation

Modell: _____

Produkt-Identnummer: _____

Seriennummer des Motors: _____

Seriennummer des Getriebes: _____

Seriennummer des Generators: _____

Seriennummern der Arbeitsgeräte: _____

Arbeitsgeräteinformation: _____

Kundennummer: _____

Händlernummer: _____

Händlerinformation

Name: _____ Niederlassung: _____

Adresse: _____

_____

_____

	Kontaktperson beim Händler	Telefon	Dienststunden
Verkauf:	_____	_____	_____
Ersatzteile:	_____	_____	_____
Service:	_____	_____	_____

MEMORANDA

TABLE OF CONTENTS

Name	Page
GENERAL INFORMATION	A23
REPAIR ALTERNATIVES	A42
MAINTENANCE PARTS	A47
INDEX	A67
MACHINE ARRANGEMENT	1
CHASSIS AR	1
CONVERSION AR-MACHINE	1
GENERAL AR	2
ROADING AR	3
ENGINE ARRANGEMENT	9
ENGINE AR-PRIMARY	9
INSTALLATION AR-ENGINE	10
BASIC ENGINE	11
CAMSHAFT GP	11
COVER GP-VALVE MECHANISM	12
CRANKSHAFT GP	14
CYLINDER BLOCK GP	18
CYLINDER HEAD GP	21
DRAIN GP-OIL	23
DRIVE GP-ACCESSORY	24
DRIVE GP-FAN	26
FASTENER GP-CYLINDER HEAD	27
FLYWHEEL GP	28
GEAR GP-FRONT	29
GUARD GP-BELT	30
HOUSING GP-FLYWHEEL	31
HOUSING GP-FRONT	32
LIFTING GP-ENGINE	36
MOUNTING GP-ENGINE FLEXIBLE	37
MOUNTING GP-FAN	39
PAN GP-OIL	40
PISTON & ROD GP	42
PLATE GP-SOUND SUPPRESSION	44
PLUG GP-CYLINDER BLOCK	46
PLUG GP-ENGINE	47
PLUG GP-FLYWHEEL HOUSING	48
PULLEY GP-AUXILIARY DRIVE	49
PULLEY GP-CRANKSHAFT	50
ROCKER ARM GP	51
VALVE MECHANISM GP	53
LUBRICATION SYSTEM	54
FILTER GP-ENGINE OIL	54
PUMP GP-ENGINE OIL	55
COOLING SYSTEM	57
CONNECTION GP-WATER	57
COOLER GP-FLTR BASE & ENG OIL	58
FAN GP-SUCTION	60
GUARD GP-FAN	62
LINES GP-RADIATOR	71
PUMP GP-WATER	77
RADIATOR GP	81
TANK GP-COOLANT	83
AIR INLET AND EXHAUST SYSTEM	84
AFTERCOOLER GP-AIR	84
AIR CLEANER GP	86
ELBOW GP-AIR INLET	88
LINES GP-AIR	89
MUFFLER GP	91
SHIELD GP-EXHAUST	93
TURBOCHARGER GP	95
FUEL SYSTEM	97
FILTER GP-FUEL	97
HOSE GP-REFUELING	98
LINES GP-FUEL	99
LINES GP-FUEL FILTER	102
PUMP GP-FUEL INJECTION	103
PUMP GP-FUEL TRANSFER	106
SEPARATOR GP-WATER	116
TANK & MTG GP-FUEL	117
TANK GP-FUEL	119
VALVE GP-FUEL SHUTOFF	121
ELECTRICAL AND STARTING SYSTEM	122
ALARM GP	122
ALARM GP-TRAVEL	124
ALTERNATOR GP-CHARGING	126
BATTERY & WIRING GP	130
BATTERY GP	138
BOX GP-JUNCTION	139
CONTROL & MTG GP-MACHINE	143
CONTROL GP-UNPROGRAMMED	144
ELECTRONICS GP-MACHINE	145
ELECTRONICS GP-MONITOR	147
INSTALLATION GP-COMMUNICATION	148
LAMP GP-FLOOD	150
LAMP GP-HEAD	151
LAMP GP-REAR	152
LAMP GP-SIGNAL	155
LAMP GP-WARNING BEACON	158
LIGHTING AR-FLOOD	159
LIGHTING GP-FLOOD	160
LIGHTING GP-ROADING	165
LIGHTING GP-WARNING BEACON	168
REFLECTOR GP	169
SENSOR GP-POSITION	171
STARTING AID GP	172
STARTING MOTOR GP-ELECTRIC	174
SWITCH GP-DISCONNECT	176
SWITCH GP-LIQUID LEVEL	177

TABLE OF CONTENTS

Name	Page
SWITCH GP-START	178
WIRING GP-CAB	179
WIRING GP-CHASSIS	186
WIRING GP-CONSOLE	202
WIRING GP-ENGINE	204
WIRING GP-FAN	206
WIRING GP-HAMMER	207
WIRING GP-MACHINE	208
WIRING GP-PLATFORM	211
WIRING GP-UNDERCARRIAGE/ SWIVEL	214
WIRING GP-WORK TOOL	215
POWER TRAIN	216
AXLE & TRANSMISSION AR	216
AXLE AR-FRONT	219
AXLE AR-REAR	220
AXLE AR-WIDE	229
AXLE GP-REAR	231
AXLE GP-STEERING	242
BRAKE GP-DRUM	286
POWER TRAIN AR	287
RING GP-TIRE	288
SHAFT GP-MIDBEARING DRIVE	290
SHAFT GP-DRIVE	294
TIRE & RIM AR	295
TIRE & RIM GP	307
TRANSMISSION GP	319
UNIVERSAL JOINT GP	347
WEDGE GP-WHEEL	350
FRAME AND BODY	351
COUNTERWEIGHT GP	351
COVER AS	352
COVER GP-ACCESS	353
DOOR GP-ACCESS	354
ENCLOSURE GP-ENGINE	364
ENCLOSURE GP-RADIATOR	375
FRAME GP-CAB RISER	383
FRAME GP-UPPER	385
GEAR & BEARING GP-SWING	388
GUARD GP-BOTTOM	390
HOOD & GUARD AR	391
INSULATION GP-HEAT	392
INSULATION GP-SOUND SUPPR	393
MOUNTING GP-CAB	394
STEP GP	396
STEP GP-TOOL BOX	400
SUPPRESSION GP-SOUND	402
WALKWAY GP	403
UNDERCARRIAGE	407
FRAME AR-UNDERCARRIAGE	407
FRAME GP-UNDERCARRIAGE	408
LOCK GP-TRANSPORT	410

Name	Page
HYDRAULIC SYSTEM	411
ACCUMULATOR AS-HYDRAULIC	411
ACCUMULATOR GP-HYDRAULIC	413
ACTUATOR GP	418
ACTUATOR GP-PUMP	420
BARREL GP-PUMP	422
CONTROL GP-BRAKE	426
CONTROL GP-HYDRAULIC HAND	430
CONTROL GP-HYDRAULIC PEDAL	431
CONTROL GP-JOYSTICK	435
CONTROL GP-PILOT OPERATED HYD	437
COUPLING GP-FLEXIBLE	438
CYLINDER & MTG GP-AXLE LOCK	442
CYLINDER & SEAL GP-BOOM	444
CYLINDER & SEAL GP-BUCKET	447
CYLINDER & SEAL GP-STICK	448
CYLINDER GP-AXLE OSC LOCK	449
CYLINDER GP-BLADE	453
CYLINDER GP-BOOM	457
CYLINDER GP-BUCKET	463
CYLINDER GP-STABILIZER	466
CYLINDER GP-STICK	468
DRIVE GP-PUMP	470
DRIVE GP-SWING	471
FILTER GP-OIL	475
FITTING GP	479
FITTING GP-HYD LINES	482
HEAD GP-MOTOR	485
HEAD GP-PUMP	487
HYDRAULIC AR	490
LINES GP-AUXILIARY HYDRAULIC	491
LINES GP-BLADE CYL & VALVE	500
LINES GP-BLADE CYLINDER	502
LINES GP-BOOM	504
LINES GP-BOOM CYLINDER	509
LINES GP-BUCKET TILT CYLINDER	511
LINES GP-CHECK VALVE	513
LINES GP-CONNECTING	515
LINES GP-DIVERTER VALVE	516
LINES GP-FRONT	518
LINES GP-HYDRAULIC	519
LINES GP-HYDRAULIC FAN	535
LINES GP-LOAD CONTROL	538
LINES GP-PILOT	544
LINES GP-PRESSURE TEST	574
LINES GP-PUMP	576
LINES GP-RETURN	580
LINES GP-STABILIZER	583
LINES GP-STEERING	585
LINES GP-STICK	589
LINES GP-SWING DRIVE	610
MANIFOLD GP-CONTROL	612
MOTOR & MTG GP-HYDRAULIC FAN	614
MOTOR & MTG GP-TRAVEL	615

TABLE OF CONTENTS

Name	Page
MOTOR GP-GEAR	616
MOTOR GP-SWING	618
MOTOR GP-TRAVEL	619
PLUG GP-CONTROL VALVE	621
PUMP & MTG GP-HYDRAULIC FAN	622
PUMP & MTG GP-MAIN HYDRAULIC	623
PUMP & MTG GP-PILOT	624
PUMP GP-GEAR	625
PUMP GP-MAIN HYDRAULIC	627
PUMP GP-PISTON	628
ROTATING GP-MOTOR	632
ROTATING GP-PUMP	636
SHAFT GP-HYDRAULIC MOTOR	637
STABILIZER AR	639
STEERING COLUMN GP	640
SWIVEL & MOUNTING GP	646
SWIVEL GP	648
TANK & MTG GP-HYDRAULIC	660
TANK GP-HYDRAULIC	662
VALVE & LINES GP-AUXILIARY	664
VALVE & LINES GP-LOAD CONTROL	669
VALVE & MTG GP-CONTROL	679
VALVE & MTG GP-MAIN CONTROL	680
VALVE GP-BALL	682
VALVE GP-BRAKE CONTROL	685
VALVE GP-CHECK	691
VALVE GP-COMBINATION	696
VALVE GP-CONTROL	699
VALVE GP-DIVERTER	704
VALVE GP-FLOW CONTROL	707
VALVE GP-LOAD CONTROL	709
VALVE GP-MAIN CONTROL	719
VALVE GP-MOTOR CONTROL	723
VALVE GP-PRESS & FLOW CMPNSTR	725
VALVE GP-PILOT RELIEF	726
VALVE GP-PRESSURE REDUCING	727
VALVE GP-PUMP CONTROL	729
VALVE GP-RELIEF	735
VALVE GP-SOLENOID	744
IMPLEMENTS	754
BOOM AR	754
BOOM GP	755
BOOM GP-FORE	757
BOOM GP-STUB	759
LINES GP-GREASE	761
LINKAGE AR-BUCKET	771
LINKAGE GP-BUCKET	773
PIN GP-EXCAVATOR	775
RESTRAINT GP-TRAVEL	778
STABILIZER GP	780
STICK AR	782
STICK AR-MATERIAL HANDLING	783
STICK GP-HOE	784
VALVE GP-LUBE DISTRIBUTION	792
WORK TOOLS	794
ADJUSTER GP-WORK TOOL	794
BLADE & MOUNTING GP	795
BLADE AR	799
BUCKET & ADJUSTER AR	799
BUCKET & BEARING AS	802
BUCKET AS-DITCH CLEANING	805
BUCKET AS-EXCAVATION	813
TIP GP-LONG	818
TIP GP-PENETRATION	820
TIP GP-SHORT	821
OPERATOR STATION	822
AIR CONDITIONER & MOUNTING GP	822
AIR CONDITIONER GP	823
ARMREST GP	826
CAB AR-RISER	829
CAB GP	829
COMPRESSOR GP-REFRIGERANT	839
CONDENSER & MTG GP-REFRIGERANT	842
CONDENSER GP-REFRIGERANT	844
CONNECTOR GP-CAB HEATER LINES	846
CONSOLE GP-LH	847
CONSOLE GP-OPERATOR	852
CONSOLE GP-RH	853
COVER GP-CAB RISER	855
COVER GP-CONSOLE	856
DOOR GP-CAB	858
DUCT GP-AIR	864
GUARD AR-FOG LIGHTS	865
GUARD GP-OVERHEAD	866
GUARD GP-VANDALISM	867
GUARD GP-WINDOW	869
HEADREST AS	873
HORN GP-ELECTRIC	874
INSTALLATION GP-RADIO	876
LINES GP-AIR CONDITIONER	877
LINES GP-HEATER	881
LITERATURE GP	883
MIRROR GP-REAR VIEW	884
MONITOR & MTG GP-OPERATOR	888
OPERATOR AR	889
PEDAL GP	890
PEDAL GP-BRAKE	892
PIN GP-PEDAL	894
PLATFORM GP-OPERATOR	896
RADIO GP	900
SCREEN GP-SUN	901
SEAT BELT GP	902
SEAT GP	904
SEAT GP-SUSPENSION	907

TABLE OF CONTENTS

Name	Page	Name	Page
SUPPORT GP-SEAT	910		
SUSPENSION GP-SEAT	911		
VISOR GP-CAB	915		
WINDOW GP-CAB	916		
WINDOW GP-DOOR	926		
WIPER GP-WINDOW	929		
SERVICE EQUIPMENT AND SUPPLIES	934		
PLATE & FILM GP	934		
PART NUMBER INDEX	B1		

TABLE DES MATIÈRES

Désignation	Page
GÉNÉRALITÉS	A26
OPTIONS DE RÉPARATION	A43
PIÈCES DE RECHANGE	A51
INDEX	A79
VERSION DE MACHINE	1
VERSION DE CHASSIS	1
VERSION DE TRANSFORMATION MACHINE	1
VUE DU MODÈLE	2
ÉQUIPEMENT POUR DÉPLACEMENT ROUTIER (VERSION)	3
MOTEUR (VERSION)	9
MOTEUR (VERSION PRINCIPALE)	9
MONTAGE DE MOTEUR (VERSION)	10
MOTEUR STANDARD	11
ARBRE A CAMES (ASS)	11
CACHE-SOUPAPES (ASS)	12
VILEBREQUIN (ASS)	14
BLOC-CYLINDRES (ASS)	18
CULASSE (ASS)	21
VIDANGE D'HUILE (ASS)	23
ENTRAÎNEMENT AUXILIAIRE (ASS)	24
ENTRAÎNEMENT DE VENTILATEUR (ASS)	26
BOULONNERIE DE LA CULASSE (ASS)	27
VOLANT MOTEUR (ASS)	28
PIGNONNERIE AV (ASS)	29
PROTEGE-COURROIE (ASS)	30
CARTER DE VOLANT (ASS)	31
CARTER AV (ASS)	32
OEILLETONS DE LEVAGE MOTEUR (ASS)	36
MONTAGE SOUPLE DU MOTEUR (ASS)	37
MONTAGE DE VENTILATEUR (ASS)	39
HUILE MOTEUR - CARTER (ASS)	40
PISTON ET BIELLE (ASS)	42
PLAQUE D'INSONORISATION (ASS)	44
BOUCHON DE BLOC-CYLINDRES (ASS)	46
BOUCHON DE MOTEUR (ASS)	47
BOUCHON DU CARTER DE VOLANT (ASS)	48
ENTRAÎNEMENT AUXILIAIRE - POULIE (ASS)	49
VILEBREQUIN - POULIE (ASS)	50
AXE DE CULBUTEUR (ASS)	51
CULBUTERIE (ASS)	53
CIRCUIT DE GRAISSAGE	54
FILTRE À HUILE MOTEUR (ASS)	54
*PUMP GP-ENGINE OIL	55
CIRCUIT DE REFROIDISSEMENT	57
RACCORD D'EAU (ASS)	57
SUPPORT DE FILTRE ET REFROIDISSEUR D'HUILE MOTEUR	58
VENTILATEUR ASPIRANT (ASS)	60
PROTECTION DE VENTILATEUR (ASS)	62
CANALISATIONS DE RADIATEUR (ASS)	71
POMPE A EAU (ASS)	77
RADIATEUR (ASS)	81
RÉSERVOIR DU LIQUIDE DE REFROIDISSEMENT (ASS)	83
CIRCUIT D'ADMISSION D'AIR ET D'ÉCHAPPEMENT	84
REFROIDISSEUR D'ADMISSION D'AIR (ASS)	84
FILTRE A AIR (ASS)	86
COUDE D'ADMISSION D'AIR (ASS)	88
CANALISATIONS D'AIR (ASS)	89
SILENCIEUX (ASS)	91
DEFLECTEUR D'ECHAPPEMENT (ASS)	93
TURBOCOMPRESSEUR (ASS)	95
CIRCUIT DE CARBURANT	97
FILTRE A CARBURANT (ASS)	97
FLEXIBLE DE REMPLISSAGE DE CARBURANT (ASS)	98
CANALISATIONS DE CARBURANT (ASS)	99
CANALISATIONS DU FILTRE A CARBURANT (ASS)	102
POMPE D'INJECTION DE CARBURANT (ASS)	103
POMPE D'ALIMENTATION EN CARBURANT (ASS)	106
SÉPARATEUR D'EAU (ASS)	116
RÉSERVOIR DE CARBURANT ET MONTAGE (ASS)	117
RÉSERVOIR DE CARBURANT (ASS)	119
SOUPAPE D'ARRÊT D'ALIMENTATION (ASS)	121

* TRADUCTION NON DISPONIBLE AU MOMENT DE LA PUBLICATION

TABLE DES MATIÈRES

Désignation	Page
CIRCUIT ÉLECTRIQUE ET DE DÉMARRAGE	122
AVERTISSEUR (ASS)	122
AVERTISSEUR DE TRANSLATION (ASS)	124
ALTERNATEUR DE CHARGE (ASS)	126
BATTERIE ET CÂBLAGE	130
BATTERIE (ASS)	138
COFFRE DE BRANCHEMENT	139
COMMANDE ET MONTAGE (ASS)-MACHINE	143
COMMANDE NON PROGRAMMEE (ASS)	144
ÉLECTRONIQUE - MACHINE (ENS)	145
ÉLECTRONIQUE-MONITEUR (ASS)	147
MONTAGE-COMMUNICATION (ASS)	148
LAMPE - PHARE (ASS)	150
PHARE AV (ASS)	151
LAMPE AR (ASS)	152
LAMPE - CLIGNOTANT DE DIRECTION (ASS)	155
LAMPE - GYROPHARE (ASS)	158
ÉCLAIRAGE-PROJECTEURS (VERSION)	159
ÉCLAIRAGE - PROJECTEURS (ASS)	160
ÉCLAIRAGE - FEUX DE ROUTE (ASS)	165
ÉCLAIRAGE - GYROPHARE (ASS)	168
RÉFLECTEUR (ASS)	169
SONDE - CIRCUIT DE CARBURANT	171
AUXILIAIRE DE DÉMARRAGE (ASS)	172
DÉMARREUR ÉLECTRIQUE (ASS)	174
ROBINET DE BATTERIE (ASS)	176
CONTACTEUR - NIVEAU DE LIQUIDE (ASS)	177
INTERRUPTEUR DE DÉMARRAGE (ASS)	178
CABLAGE DE CABINE (ASS)	179
CABLAGE DE CHASSIS (ASS)	186
CABLAGE DE CONSOLE (ASS)	202
CABLAGE DE MOTEUR (ASS)	204
CÂBLAGE DE VENTILATEUR	206
CABLAGE DE MARTEAU (ASS)	207
CABLAGE DE LA MACHINE (ASS)	208
CABLAGE - PLATE-FORME (ASS)	211
CABLAGE DE TRAIN DE ROULEMENT/ PIVOT	214
CÂBLAGE - OUTIL DE TRAVAIL (ASS)	215
TRANSMISSION	216
ESSIEU ET TRANSMISSION (VERSION)	216
ESSIEU AV (VERSION)	219
ESSIEU AR (VERSION)	220
ESSIEU - LARGE (VERSION)	229
ESSIEU AR (ASS)	231
ESSIEU DE DIRECTION (ASS)	242
TAMBOUR DE FREIN (ASS)	286
TRANSMISSION (VERSION)	287
ANNEAU DE ROUE (ASS)	288
JAMBE (ASS)-ENTRAÎNEMENT DE ROULEMENT INTERMÉDIAIRE	290
ARBRE D'ENTRAÎNEMENT (ASS)	294
PNEU ET JANTE (VERSION)	295
PNEU ET JANTE (ASS)	307
BOITE DE VITESSES (TRANSMISSION) (ASS)	319
JOINT UNIVERSEL (ASS)	347
SEGMENT DE ROUE (ASS)	350
CHÂSSIS ET BENNE	351
CONTREPOIDS (ASS)	351
COUVERCLE (ENS)	352
COUVERCLE DE VISITE (ASS)	353
PORTE DE VISITE (ASS)	354
CARENAGE DE MOTEUR (ASS)	364
CARENAGE DE RADIATEUR (ASS)	375
BÂTI DE REHAUSSE DE CABINE (ASS)	383
CHASSIS DE TOURELLE (ASS)	385
ENGRENAGE ET PALIER D'ORIENTATION	388
BLINDAGE INFÉRIEUR (ASS)	390
CAPOT ET PROTECTION (VERSION)	391
GROUPE D'ISOLATION DE CHALEUR	392
ISOLATION-SUPPRESSION DU BRUIT (ASS)	393
MONTAGE DE CABINE (ASS)	394
MARCHEPIED (ASS)	396
MARCHEPIED - BOÎTE À OUTILS (ASS)	400
INSONORISATION (ASS)	402
PASSERELLE (ASS)	403
TRAIN DE ROULEMENT	407
CHÂSSIS PORTEUR (VERSION)	407
CHÂSSIS PORTEUR (ASS)	408
VERROUILLAGE POUR L'EXPÉDITION (ASS)	410
CIRCUIT HYDRAULIQUE	411
ACCUMULATEUR HYDRAULIQUE (ENS)	411
ACCUMULATEUR HYDRAULIQUE (ASS)	413
*ACCUMULATOR GP-HYDRAULIC	415

* TRADUCTION NON DISPONIBLE AU MOMENT DE LA PUBLICATION

TABLE DES MATIÈRES

Désignation	Page
ACCUMULATEUR HYDRAULIQUE (ASS)	416
MECANISME DE COMMANDE (ASS)	418
*ACTUATOR GP-PUMP	420
CORPS DE POMPE (ASS)	422
FREIN - COMMANDE (ASS)	426
COMMANDE HYDRAULIQUE MANUELLE (ASS)	430
COMMANDE HYDRAULIQUE DE PÉDALE (ASS)	431
PALONNIER - GROUPE DE COMMANDE (ASS)	435
COMMANDE HYDRAULIQUE PILOTE (ASS)	437
ACCOUPLEMENT FLEXIBLE (ASS)	438
VÉRIN ET MONTAGE - VERROUILLAGE D'ESSIEU (ASS)	442
VERIN DE FLECHE ET JOINT (ASS)	444
VÉRIN DE GODET ET JOINT (ASS)	447
VERIN DE BRAS ET JOINT (ASS)	448
VÉRIN - VERROUILLAGE D'OSCILLATION D'ESSIEU (ASS)	449
VÉRIN DE LAME (ASS)	453
VERIN DE FLECHE (ASS)	457
VERIN DE GODET (ASS)	463
VERIN DE STABILISATEUR (ASS)	466
VERIN DE BRAS (ASS)	468
ENTRAÎNEMENT DE POMPE (ASS)	470
ENTRAINEMENT D'ORIENTATION (ASS)	471
FILTRE A HUILE (ASS)	475
RACCORD (ASS)	479
RACCORD - CANALISATIONS HYDRAULIQUES (ASS)	482
TÊTE DE MOTEUR À PISTONS (ASS)	485
TÊTE DE POMPE (ASS)	487
*HEAD GP-PUMP	488
VERSION HYDRAULIQUE	490
CANALISATIONS HYDRAULIQUES AUXILIAIRES (ASS)	491
CANALISATIONS - VÉRIN DE LAME ET SOUPAPE (ASS)	500
CANALISATIONS - VÉRIN DE LAME (ASS)	502
FLECHE - CANALISATIONS	504
CANALISATIONS DE VERIN DE FLECHE (ASS)	509
CANALISATIONS DE VÉRIN D'INCLINAISON DE GODET	511
CANALISATIONS DE CLAPET DE RETENUE (ASS)	513
CANALISATIONS - BRANCHEMENT (ASS)	515
CANALISATIONS DE DÉRIVATION (ASS)	516
CANALISATIONS AV	518
CANALISATIONS HYDRAULIQUES (ASS)	519
CANALISATIONS HYDRAULIQUES DE VENTILATEUR (ASS)	535
CANALISATIONS DE COMMANDE DE CHARGE (ASS)	538
CANALISATIONS A COMMANDE PILOTE (ASS)	544
CANALISATIONS - CONTRÔLE DE PRESSION (ASS)	574
CANALISATIONS DE POMPE (ASS)	576
CANALISATIONS DE RETOUR (ASS)	580
CANALISATIONS DE STABILISATEUR (ASS)	583
CANALISATIONS DE DIRECTION (ASS)	585
CANALISATIONS DE BRAS (ASS)	589
CANALISATIONS D'ENTRAÎNEMENT DE TOURELLE (ASS)	610
COLLECTEUR - COMMANDE (ASS)	612
MOTEUR ET MONTAGE DE VENTILATEUR HYDRAULIQUE (ASS)	614
MOTEUR DE TRANSLATION ET MONTAGE (ASS)	615
MOTEUR À ENGRENAGES (ASS)	616
MOTEUR DE JOINT TOURNANT (ASS)	618
MOTEUR - TRANSLATION (ASS)	619
BOUCHON-DISTRIBUTEUR (ASS)	621
POMPE ET MONTAGE-VENTILATEUR HYDRAULIQUE	622
POMPE ET MONTAGE - HYDRAULIQUE PRINCIPAL	623
POMPE PILOTE ET MONTAGE (ASS)	624
POMPE A ENGRENAGES (ASS)	625
POMPE HYDRAULIQUE PRINCIPALE (ASS)	627
POMPE A PISTONS (ASS)	628
GROUPE DE ROTATION DE MOTEUR	632
GROUPE DE ROTATION DE POMPE	636
ARBRE - MOTEUR HYDRAULIQUE (ASS)	637
STABILISATEUR (VERSION)	639
COLONNE DE DIRECTION (ASS)	640
PIVOT ET MONTAGE (ASS)	646
GROUPE D'ORIENTATION	648
RÉSERVOIR HYDRAULIQUE ET MONTAGE (ASS)	660
RÉSERVOIR HYDRAULIQUE (ASS)	662

* TRADUCTION NON DISPONIBLE AU MOMENT DE LA PUBLICATION

TABLE DES MATIÈRES

Désignation	Page
SOUPAPE ET CANALISATIONS - AUXILIAIRE (ASS)	664
CLAPET ET CANALISATIONS DE CHARGE DE LEVAGE (ASS)	669
DISTRIBUTEUR ET MONTAGE (ASS)	679
COMMANDE PRINCIPALE DE SOUPAPE ET MONTAGE (ASS)	680
SOUPAPE SPHÉRIQUE (ASS)	682
DISTRIBUTEUR DE FREIN (ASS)	685
CLAPET DE RETENUE (ENS)	691
SOUPAPE DE COMBINAISON (ASS)	696
*VALVE GP-COMBINATION	698
DISTRIBUTEUR (ASS)	699
SOUPAPE DE DERIVATION (ASS)	704
DISTRIBUTEUR DE DÉBIT (ASS)	707
DISTRIBUTEUR DE CHARGE (ASS)	709
SOUPAPE DE COMMANDE PRINCIPALE (ASS)	719
*VALVE GP-MOTOR CONTROL	723
SOUPAPE RÉGULATRICE DE PRESSION ET DÉBIT	725
CLAPET DE DÉCHARGE PILOTE (ASS)	726
SOUPAPE RÉDUCTRICE DE PRESSION (ASS)	727
*VALVE GP-PUMP CONTROL	729
CLAPET DE DECHARGE (ASS)	735
SOUPAPE - SOLÉNOÏDE (ASS)	744
ÉQUIPEMENTS	754
FLÈCHE (VERSION)	754
FLECHE (ASS)	755
AVANT DE FLECHE (ASS)	757
PIED DE FLECHE (ASS)	759
CANALISATIONS DE GRAISSAGE (ASS)	761
TIMONERIE DU GODET (VERSION)	771
TRINGLERIE DE GODET (ASS)	773
BROCHES D'EQUIPEMENT DE LA PELLE	775
FIXATION DE TRANSPORT (ASS)	778
STABILISATEUR (ASS)	780
BRAS (VERSION)	782
BRAS-MANUTENTION (ASS	783
BRAS DE PELLE RETRO (ASS)	784
SOUPAPE DE DISTRIBUTION DE GRAISSAGE (ASS)	792
OUTILS DE TRAVAIL	794
RÉGLAGE DE GODET (ASS)	794
LAME - MONTAGE (ASS)	795
LAME (VERSION)	799
GODET ET DISPOSITIF DE RÉGLAGE	799
GODET ET COUSSINET (CONJ)	802
GODET POUR NETTOYAGE DE TRANCHÉE (ENS)	805
GODET POUR CREUSAGE (ENS)	813
POINTE LONGUE (ASS)	818
POINTE PENETRATION	820
POINTE COURTE (ASS)	821
POSTE DE CONDUITE	822
CLIMATISEUR ET MONTAGE (ASS)	822
CLIMATISEUR (ASS)	823
ACCOUDOIR (ASS)	826
VERSION DE REHAUSSE DE CABINE	829
CABINE (ASS)	829
COMPRESSEUR DE REFRIGERANT (ASS)	839
CONDENSATEUR ET MONTAGE (RÉFRIGÉRANT)	842
CONDENSEUR DE RÉFRIGÉRANT	844
CONNEXION DE CANALISAT. DE CHAUF. DE LA CAB. (ASS)	846
CONSOLE GAUCHE (ASS)	847
CONSOLE DE CONDUITE (ASS)	852
CONSOLE DROITE (ASS)	853
COUVERCLE DE SURÉLEVEUR DE CABINE FIXE (ASS)	855
COUVERCLE DE LA CONSOLE (ASS)	856
PORTIÈRE DE CABINE (ASS)	858
GAINE D'AIR (ASS)	864
VERSION DE PROTECTION ANTIBROUILLARD	865
PROTEGE-CONDUCTEUR	866
PROTECTION ANTIVANDALISME (ASS)	867
PROTECTION DE GLACE (ASS)	869
APPUIE-TETE (ENS)	873
KLAXON ÉLECTRIQUE (ASS)	874
MONTAGE DE RADIO (ASS)	876
CANALISATIONS DE CLIMATISEUR (ASS)	877
CANALISATIONS DE CHAUFFAGE (ASS)	881
LITTÉRATURE (ASS)	883
RÉTROVISEUR (ASS)	884
MONITEUR ET MONTAGE - POSTE DE CONDUITE (ASS)	888
POSTE DE CONDUITE (VERSION)	889
PÉDALE (ASS)	890
PEDALE DE FREIN (ASS)	892
AXE - PÉDALE (ASS)	894
PLATE-FORME DE CABINE	896
RADIO (ASS)	900
PARE-SOLEIL (ASS)	901

* TRADUCTION NON DISPONIBLE AU MOMENT DE LA PUBLICATION

TABLE DES MATIÈRES

Désignation	Page	Désignation	Page
CEINTURE DE SECURITE (ASS)	902		
SIÈGE (ASS)	904		
SIÈGE AVEC SUSPENSION (ASS)	907		
SUPPORT DE SIÈGE (ASS)	910		
SIÈGE AVEC SUSPENSION (ASS)	911		
RETROVISEUR - CABINE (ASS)	915		
VITRE DE CABINE (ASS)	916		
GLACE DE PORTIÈRE (ASS)	926		
ESSUIE-GLACE (ASS)	929		
MATÉRIEL ET FOURNITURES D'ENTRETIEN	934		
PLAQUES SIGNALETIQUES ET AUTOCOLLANTS (ASS)	934		
INDEX DE NUMÉROS DE PIÈCES	B1		

* TRADUCTION NON DISPONIBLE AU MOMENT DE LA PUBLICATION

CONTENIDO

Nombre	Página
INFORMACIÓN GENERAL	A30
ALTERNATIVAS DE REPARACIÓN	A44
PIEZAS DE MANTENIMIENTO	A55
INDICE	A93
CONFIGURACIÓN DE MÁQUINA	1
CHASIS (CONFIG)	1
MÁQUINA DE CONVERSIÓN (CONFIG)	1
CONFIGURACIÓN GENERAL	2
CONFIGURACIÓN PARA CARRETERA	3
CONFIGURACIÓN DE MOTOR	9
MOTOR PRIMARIO (CONFIG)	9
CONFIGURACIÓN DE INSTALACIÓN DEL MOTOR	10
MOTOR BÁSICO	11
ÁRBOL DE LEVAS (GR)	11
TAPA DEL MECANISMO DE VÁLVULAS (GR)	12
CIGÜEÑAL (GR)	14
BLOQUE MOTOR (GR)	18
CULATA DE CILINDROS (GR)	21
DRENAJE DE ACEITE (GR)	23
ACCESORIOS - IMPULSOR DE (GR)	24
IMPULSOR DE VENTILADOR (GR)	26
CULATA DE CILINDROS - TORNILLERÍA DE LA (GR)	27
VOLANTE (GR)	28
ENGRANAJE DELANTERO (GR)	29
PROTECTOR DE CORREA (GR)	30
VOLANTE - CAJA DE (GR)	31
CAJA DELANTERA (GR)	32
CÁNCAMOS DE LEVANTAMIENTO DEL MOTOR (GR)	36
MONTAJE FLEXIBLE DEL MOTOR (GR)	37
MONTAJE DEL VENTILADOR (GR)	39
CÁRTER - COLECTOR DEL (GR)	40
PISTÓN Y BIELA (GR)	42
PLACA DE INSONORIZACIÓN (GR)	44
TAPÓN DEL BLOQUE MOTOR (GR)	46
TAPÓN DEL MOTOR (GR)	47
TAPÓN DE LA CAJA DEL VOLANTE (GR)	48
POLEA DE MANDO AUXILIAR (GR)	49
CIGÜEÑAL - POLEA DE (GR)	50
BALANCÍN (GR)	51
MECANISMO DE VÁLVULAS (GR)	53
SISTEMA DE LUBRICACIÓN	54
FILTRO DE ACEITE DEL MOTOR (GR)	54
*PUMP GP-ENGINE OIL	55
SISTEMA DE ENFRIAMIENTO	57
AGUA - CONEXIÓN DE (GR)	57
ENFRIADOR DE ACEITE DEL MOTOR Y BASE DEL FILTRO	58
SUCCIÓN - VENTILADOR DE (GR)	60
PROTECTOR DEL VENTILADOR (GR)	62
TUBERÍAS DEL RADIADOR (GR)	71
BOMBA DE AGUA (GR)	77
RADIADOR (GR)	81
TANQUE DE REFRIGERANTE (GR)	83
SISTEMA DE ADMISION Y ESCAPE DE AIRE	84
POSENFRIADOR DE AIRE (GR)	84
FILTRO DE AIRE (GR)	86
CODO DE ADMISIÓN DE AIRE (GR)	88
AIRE - TUBERÍAS DE (GR)	89
SILENCIADOR (GR)	91
PROTECTOR DEL ESCAPE (GR)	93
TURBOCOMPRESOR (GR)	95
SISTEMA DE COMBUSTIBLE	97
FILTRO DE COMBUSTIBLE (GR)	97
MANGUERA DE REABASTECIMIENTO (GR)	98
TUBERÍAS DE COMBUSTIBLE (GR)	99
TUBERÍAS DEL FILTRO DE COMBUSTIBLE	102
BOMBA DE INYECCIÓN DE COMBUSTIBLE (GR)	103
BOMBA DE TRANSFERENCIA DE COMBUSTIBLE (GR)	106
SEPARADOR DE AGUA (GR)	116
TANQUE DE COMBUSTIBLE Y GRUPO DE MONTAJE	117
COMBUSTIBLE - TANQUE DE (GR)	119
VÁLVULA DE CORTE DE COMBUSTIBLE (GR)	121
SISTEMA ELÉCTRICO Y DE ARRANQUE	122
ALARMA (GR)	122
ALARMA DE DESPLAZAMIENTO (GR)	124
CARGA - ALTERNADOR DE (GR)	126
BATERÍA Y CABLES (GR)	130
BATERÍA (GR)	138
CAJA DE EMPALMES (GR)	139

* NO HAY TRADUCCION DISPONIBLE EN EL MOMENTO DE LA IMPRESION

CONTENIDO

Nombre	Página
CONTROL DE MAQUINA Y MONTAJE (GR)	143
CONTROL NO PROGRAMADO (GR)	144
ELECTRONICA DE MAQUINA (GR)	145
ELECTRONICA DE MONITOR (GR)	147
INSTALACION DE COMUNICACION (GR)	148
REFLECTOR (GR)	150
LÁMPARA DE FARO DELANTERO (GR)	151
LÁMPARA DE FARO TRASERO(GR)	152
LUZ DE SEÑAL DE GIRO (GR)	155
LÁMPARA DE BALIZA DE ADVERTENCIA (GR)	158
REFLECTORES (CONFIG)	159
LUCES DE REFLECTOR (GR)	160
LUCES DE DESPLAZAMIENTO (GR)	165
LUZ DE BALIZA (GR)	168
REFLECTOR (GR)	169
DETECTOR DE POSICIÓN (SISTEMA DE COMBUST.) (GR)	171
AUXILIAR DE ARRANQUE (GR)	172
MOTOR DE ARRANQUE ELÉCTRICO (GR)	174
DISYUNTOR (GR)	176
INTERRUPTOR DE NIVEL DE LIQUIDO (GR)	177
ARRANQUE - INTERRUPTOR DE (GR)	178
CABLES DE LA CABINA (GR)	179
CABLES DEL CHASIS (GR)	186
CABLES DE LA CONSOLA (GR)	202
CABLES DEL MOTOR (GR)	204
GRUPO DE CABLES, VENTILADOR	206
CABLES DEL MARTILLO (GR)	207
CABLES DE LA MÁQUINA (GR)	208
CABLES DE LA PLATAFORMA (GR)	211
CABLES DEL TREN DE RODAJE/ROTACIÓN (GR)	214
CABLES DE LA HERRAMIENTA DE TRABAJO (GR)	215
TREN DE FUERZA	216
EJE Y TRANSMISIÓN (CONFIG)	216
EJE DE DIRECCION (CONFIG)	219
EJE TRASERO	220
EJE ANCHO (CONFIG)	229
EJE TRASERO (GR)	231
EJE DE DIRECCION (GR)	242
TAMBOR DE FRENO (GR)	286
TREN DE FUERZA (CONFIG)	287
ANILLO DE LA RUEDA (GR)	288
EJE DE MANDO DE COJINETE MEDIO (GR)	290
EJE DE MANDO (GR)	294
ARO Y RUEDA	295
ARO Y LLANTA (GR)	307
TRANSMISIÓN (GR)	319
JUNTA UNIVERSAL (GR)	347
CUÑA DE RUEDA (GR)	350
BASTIDOR Y CARROCERIA	351
CONTRAPESO (GR)	351
TAPA (CONJ)	352
GRUPO DE TAPA, ACCESO	353
PUERTA DE ACCESO (GR)	354
COMPARTIMIENTO DEL MOTOR (GR)	364
COMPARTIMIENTO DEL RADIADOR (GR)	375
GRUPO DE BASTIDOR, ELEVADOR DE CABINA	383
BASTIDOR SUPERIOR (GR)	385
ENGRANAJE DE ROTACIÓN Y COJINETE (GR)	388
PROTECTOR INFERIOR (GR)	390
CAPÓ Y PROTECTOR (CONFIG)	391
AISLACIÓN DE CALOR (GR)	392
AISLACION DE INSONORIZACION (GR)	393
GRUPO DE MONTAJE DE LA CABINA	394
ESTRIBO DEL OPERADOR (GR)	396
ESCALÓN DE LA CAJA DE HERRAMIENTAS (GR)	400
INSONORIZADOR (GR)	402
PASARELA (GR)	403
TREN DE RODAJE	407
BASTIDOR DEL TREN DE RODAJE (CONFIG)	407
BASTIDOR DEL TREN DE RODAJE (GR)	408
TRABA DE TRANSPORTE DE LA MÁQUINA (GR)	410
SISTEMA HIDRÁULICO	411
ACUMULADOR CONJ-HIDRÁULICO	411
ACUMULADOR HIDRAULICO (GR)	413
*ACCUMULATOR GP-HYDRAULIC	415
ACUMULADOR HIDRAULICO (GR)	416
ACCIONADOR (GR)	418
*ACTUATOR GP-PUMP	420
CAÑÓN DE LA BOMBA (GR)	422
CONTROL DEL FRENO (GR)	426

* NO HAY TRADUCCION DISPONIBLE EN EL MOMENTO DE LA IMPRESION

CONTENIDO

Nombre	Página
CONTROL HIDRÁULICO MANUAL (GR)	430
GRUPO DE CONTROL DE PEDAL HIDRÁULICO	431
PALANCA UNIVERSAL DE CONTROL (GR)	435
CONTROL HIDRÁULICO DE OPERACIÓN PILOTO (GR)	437
ACOPLAMIENTO FLEXIBLE (GR)	438
CILINDRO DE TRABA DEL EJE Y MONTAJE (GR)	442
CILINDRO DE LA PLUMA Y SELLO (GR)	444
CILINDRO DEL CUCHARÓN Y SELLO (GR)	447
CILINDRO DEL BRAZO Y SELLO (GR)	448
CILINDRO DE TRABA DEL EJE OSCILANTE (GR)	449
CILINDRO DE LA HOJA (GR)	453
CILINDRO DE LA PLUMA (GR)	457
CILINDRO DE CUCHARÓN (GR)	463
CILINDRO ESTABILIZADOR (GR)	466
CILINDRO DEL BRAZO (GR)	468
MANDO DE BOMBA (GR)	470
MANDO DE ROTACIÓN (GR)	471
FILTRO DE ACEITE (GR)	475
CONEXIÓN (GR)	479
CONEXIÓN DE LAS TUBERÍAS HIDRÁULICAS (GR)	482
CABEZA DE MOTOR DE PISTONES (GR)	485
CABEZA DE BOMBA (GR)	487
*HEAD GP-PUMP	488
HIDRÁULICA (CONFIG)	490
TUBERÍAS HIDRÁULICAS AUXILIARES (GR)	491
TUBERÍAS CILIND-VÁLV DE LA HOJA (GR)	500
TUBERÍAS DEL CILINDRO DE LA HOJA	502
TUBERÍAS DE LA PLUMA (GR)	504
CILINDRO DE LA PLUMA - TUBERÍAS DEL	509
TUBERÍAS DE CILINDRO DE INCLINACIÓN DEL CUCHARÓN (GR)	511
TUBERÍAS DE LA VÁLVULA DE RETENCIÓN (GR)	513
TUBERIAS DE CONEXION (GR)	515
TUBERÍAS DE LA VÁLVULA DE DERIVACIÓN (GR)	516
TUBERÍAS DELANTERAS (GR)	518
TUBERÍAS HIDRÁULICAS (GR)	519
TUBERÍAS HIDRÁULICAS DEL VENTILADOR (GR)	535
TUBERIAS DE CONTROL DE CARGA (GR)	538
TUBERÍAS CON SERVOMANDO (GR)	544
TUBERÍAS DE PRUEBA DE PRESIÓN (GR)	574
BOMBA - TUBERÍAS DE (GR)	576
TUBERÍAS DE RETORNO (GR)	580
TUBERÍAS DEL ESTABILIZADOR (GR)	583
TUBERÍAS DE DIRECCIÓN (GR)	585
TUBERÍAS DEL BRAZO (GR)	589
GRUPO DE TUBERIAS, MANDO DE ROTACIÓN	610
CONTROL DEL MULTIPLE (GR)	612
MOTOR Y MONTAJE DE VENTILADOR HIDRAULICO (GR)	614
MOTOR DE DESPLAZAMIENTO Y MONTAJE (GR)	615
MOTOR DE ENGRANAJES (GR)	616
MOTOR DE LA ROTACIÓN (GR)	618
MOTOR DE DESPLAZAMIENTO (GR)	619
TAPON DE VALVULA DE CONTROL (GR)	621
BOMBA Y MONTAJE DE VENTILADOR HIDRAULICO (GR)	622
BOMBA HIDRÁULICA PRINCIPAL Y MONTAJE (GR)	623
BOMBA PILOTO Y MONTAJE (GR)	624
BOMBA DE ENGRANAJES (GR)	625
BOMBA HIDRÁULICA PRINCIPAL (GR)	627
BOMBA DE PISTONES (GR)	628
GRUPO DE ROTACIÓN DEL MOTOR (GR)	632
GRUPO GIRATORIO DE BOMBA	636
EJE DE MOTOR HIDRÁULICO (GR)	637
ESTABILIZADOR (CONFIG)	639
COLUMNA DE DIRECCIÓN (GR)	640
GRUPO DE MONTAJE Y ROTACIÓN	646
UNIÓN GIRATORIA (GR)	648
TANQUE HIDRÁULICO Y MONTAJE (GR)	660
TANQUE HIDRÁULICO (GR)	662
VÁLVULA AUXILIAR Y TUBERÍAS (GR)	664
VÁLVULA Y TUBERÍAS DEL CONTROL DE CARGA (GR)	669
VÁLVULA DE CONTROL Y MONTAJE (GR)	679
MONTAJE Y VALVULA DEL CONTROL PRINCIPAL (GR)	680

* NO HAY TRADUCCION DISPONIBLE EN EL MOMENTO DE LA IMPRESION

CONTENIDO

Nombre	Página
BOLA DE VÁLVULA (GR)	682
VÁLVULA DE CONTROL DEL FRENO (GR)	685
VÁLVULA DE RETENCIÓN (GR)	691
VÁLVULA DE COMBINACIÓN (GR)	696
*VALVE GP-COMBINATION	698
VÁLVULA DE CONTROL (GR)	699
VÁLVULA DE DERIVACIÓN (GR)	704
VÁLVULA DE CONTROL DE FLUJO (GR)	707
VÁLVULA DE CONTROL DE CARGA (GR)	709
VÁLVULA DEL CONTROL PRINCIPAL (GR)	719
*VALVE GP-MOTOR CONTROL	723
VÁLVULA COMPENSADORA DE FLUJO Y PRESIÓN (GR)	725
VÁLVULA PILOTO DE ALIVIO (GR)	726
VÁLVULA REDUCTORA DE PRESIÓN (GR)	727
*VALVE GP-PUMP CONTROL	729
VÁLVULA DE ALIVIO (GR)	735
VÁLVULA DE SOLENOIDE (GR)	744
IMPLEMENTOS	754
PLUMA (CONFIG)	754
PLUMA (GR)	755
ANTEPLUMA (GR)	757
PLUMA CORTA (GR)	759
TUBERÍAS DE ENGRASE (GR)	761
VARILLAJE DEL CUCHARÓN (CONFIG)	771
VARILLAJE DEL CUCHARÓN (GR)	773
PASADORES DE LA EXCAVADORA (GR)	775
SUJETADOR DE DESPLAZAMIENTO (GR)	778
ESTABILIZADOR (GR)	780
BRAZO (CONFIG)	782
BRAZO DE MANEJO DE MATERIAL (CONFIG)	783
BRAZO DE RETROEXCAVADOR (GR)	784
VÁLVULA DE DISTRIBUCIÓN DE LUBRICACIÓN (GR)	792
HERRAMIENTAS	794
AJUSTADOR DEL CUCHARÓN (GR)	794
HOJA Y MONTAJE (GR)	795
HOJA (CONFIG)	799
CUCHARÓN Y AJUSTADOR (CONFIG)	799
CUCHARÓN Y COJINETE (CONJ)	802
CUCHARÓN PARA LIMPIEZA DE ZANJAS (CONJ)	805
CUCHARÓN PARA EXCAVACIÓN (CONJ)	813
PUNTA LARGA (GR)	818
PUNTA PARA PENETRACIÓN (GR)	820
PUNTA CORTA (GR)	821
COMPARTIMIENTO DEL OPERADOR	822
ACONDICIONADOR DE AIRE Y MONTAJE (GR)	822
ACONDICIONADOR DE AIRE (GR)	823
POSABRAZOS (GR)	826
CONJUNTO DE CABINA, ELEVADOR	829
CABINA (GR)	829
COMPRESOR DE REFRIGERANTE (GR)	839
CONDENSADOR DEL REFRIGERANTE Y MONTAJE (GR)	842
CONDENSADOR DE REFRIGERANTE (GR)	844
CONECTOR DE TUBERÍAS DE CALEFACCIÓN DE LA CABINA (GR)	846
CONSOLA DEL LADO IZQUIERDO (GR)	847
CONSOLA DEL OPERADOR (GR)	852
CONSOLA DEL LADO DERECHO (GR)	853
CUBIERTA DEL ELEVADOR DE CABINA (GR)	855
TAPA DE LA CONSOLA (GR)	856
PUERTA DE CABINA	858
CONDUCTO DE AIRE (GR)	864
PROTECTOR DE LUCES PARA NEBLINA (CONFIG)	865
PROTECTOR SUPERIOR (GR)	866
PROTECTOR CONTRA EL VANDALISMO (GR)	867
PROTECTOR DE LA VENTANA	869
APOYACABEZA (CONJ)	873
BOCINA ELÉCTRICA (GR)	874
INSTALACIÓN DE RADIO (GR)	876
TUBERÍAS DE ACONDICIONADOR DE AIRE (GR)	877
TUBERÍAS DE LA CALEFACCIÓN (GR)	881
PUBLICACIONES (GR)	883
RETROVISOR (GR)	884
MONITOR Y MONTAJE DEL OPERADOR (GR)	888
COMPARTIMIENTO DEL OPERADOR (CONFIG)	889
PEDAL)GR=	890

* NO HAY TRADUCCION DISPONIBLE EN EL MOMENTO DE LA IMPRESION

CONTENIDO

Nombre	Página	Nombre	Página
PEDAL DE FRENO (GR)	892		
PASADOR PARA PEDAL (GR)	894		
PLATAFORMA DE LA CABINA	896		
RADIO (GR)	900		
PERSIANA PARA EL SOL (GR)	901		
CINTURÓN DE SEGURIDAD (GR)	902		
ASIENTO (GR)	904		
SUSPENSIÓN - ASIENTO CON (GR)	907		
SOPORTE DEL ASIENTO (GR)	910		
ASIENTO CON SUSPENSIÓN (GR)	911		
VISERA (GR)	915		
VENTANA DE LA CABINA (GR)	916		
VENTANA DE LA PUERTA (GR)	926		
LIMPIAPARABRISAS DE LA VENTANA (GR)	929		
HERRAMIENTAS Y EQUIPO DE SERVICIO	934		
CALCOMANÍAS Y PLACAS DE IDENTIFICACIÓN (GR)	934		
INDICE DE NUMEROS DE PIEZA	B1		

* NO HAY TRADUCCION DISPONIBLE EN EL MOMENTO DE LA IMPRESION

ÍNDICE

Designação	Página
INFORMAÇÃO GERAL	A34
ALTERNATIVAS DE REPARO	A45
PEÇAS DE MANUTENÇÃO	A59
ÍNDICE	A107
MÁQUINA - ARRANJO	1
CHASSI	1
MÁQUINA - CONVERSÃO	1
ARRANJO GERAL	2
ARRANJO RODOVIÁRIO	3
MOTOR - ARRANJO	9
MOTOR PRIMÁRIO	9
GRUPO DE INSTALAÇÃO - MOTOR	10
MOTOR BÁSICO	11
EIXO-COMANDO DE VÁLVULA	11
TAMPA - MECANISMO DAS VÁLVULAS	12
VIRABREQUIM	14
BLOCO DO MOTOR	18
CABEÇOTE DO MOTOR	21
DRENO - ÓLEO	23
COMANDO DE ACESSÓRIOS	24
COMANDO DO VENTILADOR	26
FIXADORES - CABEÇOTE DO MOTOR	27
VOLANTE DO MOTOR	28
ENGRENAGENS DE DISTRIBUIÇÃO	29
PROTETOR - CORREIAS	30
CAIXA DO VOLANTE DO MOTOR	31
CAIXA DIANTEIRA	32
LEVANTAMENTO DO MOTOR	36
MONTAGEM FLEXÍVEL DO MOTOR	37
MONTAGEM - VENTILADOR	39
CÁRTER DO ÓLEO DO MOTOR	40
PISTÃO E BIELA	42
PLACA - REDUÇÃO DE RUÍDO	44
BUJÃO DO BLOCO DO CILINDRO	46
BUJÃO DO MOTOR	47
BUJÃO - CAIXA DO VOLANTE DO MOTOR	48
POLIA DO COMANDO AUXILIAR	49
POLIA DO VIRABREQUIM	50
BALANCIM	51
MECANISMO DAS VÁLVULAS	53
SISTEMA DE LUBRIFICAÇÃO	54
FILTRO - ÓLEO DO MOTOR	54
*PUMP GP-ENGINE OIL	55
SISTEMA DE ARREFECIMENTO	57
CONEXÃO - TUBO D'ÁGUA	57
ARREFECEDOR DE ÓLEO DO MOTOR E BASE DO FILTRO	58
VENTILADOR DE SUCÇÃO	60
PROTETOR DO VENTILADOR	62
TUBOS - RADIADOR	71
BOMBA DE ÁGUA	77
RADIADOR	81
TANQUE - LÍQUIDO ARREFECEDOR	83
SISTEMA DA ADMISSÃO DE AR E DE ESCAPE	84
PÓS-ARREFECEDOR DA ADMISSÃO DE AR	84
PURIFICADOR DE AR	86
COTOVELO DE ADMISSÃO DE AR	88
TUBOS - AR	89
SILENCIADOR	91
BLINDAGEM DO COLETOR DE ESCAPE	93
TURBOALIMENTADOR	95
SISTEMA DE COMBUSTÍVEL	97
FILTRO - COMBUSTÍVEL	97
MANGUEIRA - REABASTECIMENTO DE COMBUSTÍVEL	98
TUBOS - COMBUSTÍVEL	99
TUBOS - FILTRO DO COMBUSTÍVEL	102
BOMBA DE INJEÇÃO DO COMBUSTÍVEL	103
BOMBA DE TRANSFERÊNCIA DO COMBUSTÍVEL	106
SEPARADOR DE ÁGUA	116
TANQUE DE COMBUSTÍVEL E MONTAGEM	117
TANQUE DE COMBUSTÍVEL	119
VÁLVULA DE PARADA DE COMBUSTÍVEL	121
SISTEMA ELÉTRICO E DE PARTIDA	122
ALARME	122
ALARME DE PERCURSO	124
ALTERNADOR DE CORRENTE	126
BATERIA E CABOS / FIOS ELÉTRICOS	130
BATERIA	138
CAIXA DE JUNÇÃO	139
CONTROLE & MONTAGEM-MÁQUINA	143
CONTROLE - NÃO PROGRAMADO	144
SISTEMA ELETRÔNICO - MÁQUINA	145
SISTEMA ELETRÔNICO - MONITOR	147
INSTALAÇÃO-COMUNICAÇÃO	148

* TRADUÇÃO NÃO DISPONÍVEL NO MOMENTO DA IMPRESSÃO

ÍNDICE

Designação	Página
LÂMPADA - FAROL	150
FAROL DIANTEIRO	151
LUZ TRASEIRA	152
LÂMPADA - SINALIZAÇÃO	155
LUZ GIRATÓRIA DE ALARME	158
SISTEMA DE ILUMINAÇÃO - FARÓIS	159
ILUMINAÇÃO - RODOVIÁRIA	165
SIST. DE ILUMINAÇÃO - PISCA-PISCA GIRATÓRIO DE ADVERTÊNCIA	168
REFLETOR	169
EMISSOR - POSIÇÃO	171
AUXILIAR DE PARTIDA	172
MOTOR ELÉTRICO DE PARTIDA	174
CHAVE GERAL	176
INTERRUPTOR - NÍVEL DO LÍQUIDO	177
INTERRUPTOR - PARTIDA	178
CABOS/FIOS ELÉTRICOS - CABINE	179
CABOS/FIOS ELÉTRICOS - CHASSI	186
CABOS/FIOS ELÉTRICOS DO CONSOLE	202
CABOS/FIOS ELÉTRICOS - MOTOR	204
CABOS/FIOS ELÉTRICOS - VENTILADOR	206
CABOS/FIOS ELÉTRICOS - APLICAÇÕES PESADAS DE LEVANTAMENTO	207
CABOS/FIOS ELÉTRICOS - MÁQUINA	208
CABOS/FIOS ELÉTRICOS - PLATAFORMA	211
CABOS/FIOS ELÉTRICOS - MATERIAL RODANTE/GIRO	214
CABOS/FIOS ELÉTRICOS - FERRAMENTAS DE TRABALHO	215
TREM DE FORÇA	216
EIXO E TRANSMISSÃO	216
EIXO DIANTEIRO	219
EIXO TRASEIRO	220
EIXO LARGO	229
SEMI-EIXO TRASEIRO	231
EIXO - DIREÇÃO	242
TAMBOR DO FREIO	286
TREM DE FORÇA	287
ANEL DO PNEU	288
EIXO - COMANDO DO MANCAL CENTRAL	290
EIXO DE TRANSMISSÃO	294
PNEU E ARO	295
TRANSMISSÃO	319
JUNTA UNIVERSAL	347
CALÇO - RODA	350
CHASSI E CARROCERIA	351
CONTRAPESO	351
TAMPA	352
TAMPA - ACESSO	353
PORTA DE ACESSO	354
COBERTURA DO MOTOR	364
COBERTURA DO RADIADOR	375
ARMAÇÃO - ELEVADOR DA CABINE	383
CHASSI SUPERIOR	385
ENGRENAGEM E MANCAL DE GIRO	388
PROTETOR INFERIOR	390
CAPÔ E PROTETOR	391
ISOLAMENTO CONTRA CALOR	392
ISOLAMENTO - SUPRESSÃO DE RUÍDO	393
MONTAGEM - CABINE	394
DEGRAU	396
DEGRAU - CAIXA DE FERRAMENTAS	400
REDUÇÃO DE RUÍDO	402
PASSADIÇO	403
MATERIAL RODANTE	407
CHASSI - MATERIAL RODANTE	407
CHASSI INFERIOR	408
TRAVA - TRANSPORTE	410
SISTEMA HIDRÁULICO	411
ACUMULADOR-HIDRÁULICO	411
ACUMULADOR HIDRÁULICO	413
*ACCUMULATOR GP-HYDRAULIC	415
ACUMULADOR HIDRÁULICO	416
CONJUNTO ACIONADOR	418
*ACTUATOR GP-PUMP	420
CILINDRO DA BOMBA	422
CONTROLE DO FREIO	426
CONTROLE HIDRÁULICO MANUAL	430
CONTROLE - PEDAL HIDRÁULICO	431
CONTROLE - ALAVANCA	435
CONTROLE HIDRÁULICO DE OPERAÇÃO PILOTO	437
ACOPLAMENTO FLEXÍVEL	438
CILINDRO DE TRAVA DO EIXO E MONTAGEM	442
CILINDRO E RETENTOR - LANÇA	444
CILINDRO E RETENTOR - CAÇAMBA	447
CILINDRO E RETENTOR - BRAÇO	448
CILINDRO - TRAVA DE OSCILAÇÃO DO EIXO	449
CILINDRO DA LÂMINA	453
CILINDRO DA LANÇA	457
CILINDRO DA CAÇAMBA	463
CILINDRO DO ESTABILIZADOR	466
CILINDRO DO BRAÇO	468
COMANDO DA BOMBA	470
COMANDO DE GIRO	471

* TRADUÇÃO NÃO DISPONÍVEL NO MOMENTO DA IMPRESSÃO

ÍNDICE

Designação	Página
FILTRO - ÓLEO	475
CONEXÃO	479
CONEXÃO - TUBOS HIDRÁULICOS	482
CABEÇOTE DO MOTOR	485
CABEÇA DA BOMBA	487
*HEAD GP-PUMP	488
COMANDO HIDRÁULICO	490
TUBOS HIDRÁULICOS AUXILIARES	491
TUBOS - VÁLVULA E CILINDRO DA LÂMINA	500
TUBOS - CILINDRO DA LÂMINA	502
TUBOS - LANÇA	504
TUBOS - CILINDRO DA LANÇA	509
TUBOS - CILINDRO DE INCLINAÇÃO DA CAÇAMBA	511
TUBOS - VÁLVULA DE RETENÇÃO	513
TUBOS DE CONEXÃO	515
TUBOS - VÁLVULA DIRETORA	516
TUBOS - DIANTEIROS	518
TUBOS - ÓLEO HIDRÁULICO	519
TUBOS - VENTILADOR HIDRÁULICOS	535
TUBOS - CONTROLE DE CARGA	538
TUBOS - CIRCUITO PILOTO	544
TUBOS - TESTE DE PRESSÃO	574
TUBOS - BOMBA	576
TUBOS - RETORNO	580
TUBOS - ESTABILIZADOR	583
TUBOS - DIREÇÃO	585
TUBOS - BRAÇO	589
TUBULAÇÕES - COMANDO DE GIRO	610
COLETOR - CONTROLE	612
MOTOR E MONTAGEM - VENTILADOR HIDRÁULICO	614
MOTOR DE PERCURSO E MONTAGEM	615
MOTOR - ENGRENAGENS	616
MOTOR - GIRO	618
MOTOR DAS ESTEIRAS	619
BUJÃO - VÁLVULA DE CONTROLE	621
BOMBA DO VENTILADOR HIDRÁULICO E MONTAGEM	622
BOMBA HIDRÁULICA PRINCIPAL E MONTAGEM	623
BOMBA PILOTO E MONTAGEM	624
BOMBA DE ENGRENAGENS	625
BOMBA HIDRÁULICA PRINCIPAL	627
BOMBA DE PISTÃO	628
MOTOR DO GRUPO ROTATIVO	632
GRUPO ROTATIVO DA BOMBA	636
EIXO DO MOTOR HIDRÁULICO	637
ESTABILIZADOR	639
COLUNA DA DIREÇÃO	640
ARTICULAÇÃO GIRATÓRIA E MONTAGEM	646
ARTICULAÇÃO GIRATÓRIA	648
TANQUE DE ÓLEO HIDRÁULICO E MONTAGEM	660
TANQUE HIDRÁULICO	662
VÁLVULA AUXILIAR E TUBOS	664
VÁLVULA E TUBULAÇÕES - CONTROLE DE CARGA	669
VÁLVULA DE CONTROLE E MONTAGEM	679
VÁLVULA DO CONTROLE PRINCIPAL E MONTAGEM	680
VÁLVULA ESFÉRICA	682
VÁLVULA DE CONTROLE DOS FREIOS	685
VÁLVULA DE RETENÇÃO	691
VÁLVULA COMBINADA	696
*VALVE GP-COMBINATION	698
VÁLVULA DE CONTROLE	699
VÁLVULA DESVIADORA	704
VÁLVULA DE CONTROLE - FLUXO	707
VÁLVULA - CONTROLE DE CARGA	709
VÁLVULA - CONTROLE PRINCIPAL	719
*VALVE GP-MOTOR CONTROL	723
VÁLVULA DE CONTROLE - PRESSÃO E COMPENSAÇÃO DE FLUXO	725
VÁLVULA PILOTO DE ALÍVIO	726
VÁLVULA DE REDUÇÃO DE PRESSÃO	727
*VALVE GP-PUMP CONTROL	729
VÁLVULA DE ALÍVIO	735
VÁLVULA SOLENÓIDE	744
ACESSÓRIOS	754
LANÇA	754
LANÇA - PARTE SUPERIOR DA LANCA DE 2 PEÇAS	757
LANÇA - PARTE INFERIOR DA LANÇA DE 2 PECAS	759
TUBOS - GRAXA	761
ELOS DE ARTICULAÇÃO DA CAÇAMBA	771
PINO DA ESCAVADEIRA	775
DISPOSITIVO DE RESTRIÇÃO PARA EMBARQUE	778
ESTABILIZADOR	780
BRAÇO	782
BRAÇO - MANIPULAÇÃO DE MATERIAL	783
BRAÇO - CAÇAMBA RETRO-ESCAVADORA	784

* TRADUÇÃO NÃO DISPONÍVEL NO MOMENTO DA IMPRESSÃO

ÍNDICE

Designação	Página
VÁLVULA DE LUBRIFICAÇÃO - DISTRIBUIÇÃO	792
FERRAMENTAS DE TRABALHO	794
AJUSTADOR DA CAÇAMBA	794
LÂMINA E MONTAGEM	795
LÂMINA	799
CAÇAMBA E AJUSTADOR	799
CAÇAMBA E MANCAL	802
CAÇAMBA - LIMPEZA DE VALETA	805
CAÇAMBA PARA EXCAVAÇÃO	813
PONTA LONGA	818
PONTA - PENETRAÇÃO	820
PONTA CURTA	821
POSTO DO OPERADOR	822
CONDICIONADOR DE AR E MONTAGEM	822
CONDICIONADOR DE AR	823
BRAÇO DO ASSENTO	826
CABINE - ELEVADOR	829
CABINE	829
COMPRESSOR DE REFRIGERANTE	839
CONDENSADOR DO REFRIGERANTE E MONTAGEM	842
CONDENSADOR DE REFRIGERANTE	844
CONECTOR - TUBOS DO AQUECEDOR DA CABINE	846
CONSOLE - LADO ESQUERDO	847
CONSOLE DO OPERADOR	852
CONSOLE - LADO DIREITO	853
TAMPA - ELEVADOR DA CABINE	855
TAMPA - CONSOLO	856
PORTA DA CABINE	858
DUCTO DE AR	864
PROTETOR - LUZES DE NEBLINA	865
PROTETOR SUPERIOR	866
PROTETOR CONTRA VANDALISMO	867
PROTETOR - JANELA	869
ENCOSTO PARA CABEÇA	873
BUZINA ELÉTRICA	874
INSTALAÇÃO DO RÁDIO	876
TUBOS - AR CONDICIONADO	877
TUBOS - AQUECEDOR	881
PUBLICAÇÃO	883
ESPELHO RETROVISOR	884
MONITOR DO OPERADOR E MONTAGEM	888
CABINE	889
PEDAL	890
PEDAL DO FREIO	892
PINO DO PEDAL	894
PLATAFORMA DO OPERADOR	896
RÁDIO	900
TELA PÁRA-SOL	901
CINTO DE SEGURANÇA	902
ASSENTO	904
ASSENTO COM SUSPENSÃO	907
SUPORTE - ASSENTO	910
SUSPENSÃO - ASSENTO	911
PÁRA-SOL DA CABINE	915
JANELA DA CABINE	916
VIDRO DA PORTA	926
LIMPADOR DO VIDRO	929
EQUIPAMENTOS DE SERVIÇO E SUPRIMENTOS	934
PLACA E DECALQUE	934
ÍNDICE DE NÚMERO DE PEÇA	B1

* TRADUÇÃO NÃO DISPONÍVEL NO MOMENTO DA IMPRESSÃO

INHALTSVERZEICHNIS

Bezeichnung	Seite
ALLGEMEINE HINWEISE	A38
REPARATURALTERNATIVEN	A46
WARTUNGSTEILE	A63
STICHWORTVERZEICHNIS	A120
MASCHINE	1
FAHRWERK	1
MASCHINEN-UMBAUSATZ	1
GRUNDAUSFÜHRUNG	2
AUSRÜSTUNG FÜR STRASSEN-FAHRT	3
MOTORAUSFÜHRUNG	9
MOTORAUSFÜHRUNG	9
MOTOR-EINBAUSATZ	10
MOTOR (GRUNDAUSFÜHRUNG)	11
NOCKENWELLE	11
VENTILDECKEL	12
KURBELWELLE	14
MOTORBLOCK	18
ZYLINDERKOPF	21
ÖLABLASS	23
NEBENANTRIEB	24
LÜFTERANTRIEB	26
ZYLINDERKOPF-HALTETEILE	27
SCHWUNGRAD	28
STIRNRAD	29
RIEMENSCHUTZ	30
SCHWUNGRADGEHÄUSE	31
STIRNRADGEHÄUSE	32
MOTORHUBÖSE	36
MOTORAUFHÄNGUNG, ELASTISCH	37
LÜFTERBEFESTIGUNG	39
ÖLWANNE	40
PLEUELSTANGE UND KOLBEN	42
SCHALLDÄMPFENDE VERKLEIDUNG	44
ZYLINDERBLOCKSCHRAUBE	46
MOTORSTOPFEN	47
SCHWUNGRADGEHÄUSESTOPFEN	48
NEBENANTRIEBS-RIEMENSCHEIBE	49
KURBELWELLEN-RIEMENSCHEIBE	50
VENTILKIPPHEBEL	51
VENTILSTEUERUNG	53
SCHMIERSYSTEM	54
ÖLFILTER	54
*PUMP GP-ENGINE OIL	55
KÜHLSYSTEM	57
KÜHLWASSERANSCHLUSS	57
MOTORÖLKÜHLER UND FILTER-SOCKEL	58
SAUGLÜFTER	60
LÜFTERVERKLEIDUNG	62
KÜHLERLEITUNGEN	71
KÜHLWASSERPUMPE	77
KÜHLER	81
KÜHLMITTELBEHÄLTER	83
LUFTANSAUG - U. ABGASSYSTEM	84
LADELUFTKÜHLER	84
LUFTREINIGER	86
LUFTEINLASSBOGEN	88
DRUCKLUFTLEITUNGEN	89
SCHALLDÄMPFER	91
AUSPUFFABSCHIRMUNG	93
TURBOLADER	95
KRAFTSTOFFSYSTEM	97
KRAFTSTOFFILTER	97
AUFTANKSCHLAUCH	98
KRAFTSTOFFLEITUNGEN	99
KRAFTSTOFFILTERLEITUNGEN	102
KRAFTSTOFFEINSPRITZPUMPE	103
KRAFTSTOFFÖRDERPUMPE	106
WASSERABSCHEIDER	116
KRAFTSTOFFTANK U. BEFESTIGUNG	117
KRAFTSTOFFTANK	119
KRAFTSTOFFABSTELLVENTIL	121
ELEKTRISCHE ANLAGE U. STARTSYSTEM	122
WARNVORRICHTUNG	122
FAHRALARM	124
DREHSTROMGENERATOR	126
BATTERIE UND VERDRAHTUNG	130
BATTERIE	138
ABZWEIGKASTEN	139
MASCHINENSTEUERUNG U. BEFESTIGUNG	143
STEUERUNG - NICHT PROGRAMMIERT	144
ELEKTRONIK - MASCHINE	145
ELEKTRONIK - MONITOR	147
KOMMUNIKATIONSEINBAUSATZ	148
ARBEITSLEUCHTEN	150
FRONTSCHEINWERFER	151
LEUCHTE, HINTEN	152
BLINKLEUCHTE	155
RUNDUM-KENNLEUCHTE	158

* ÜBERSETZUNG ZUM ZEITPUNKT DER DRUCKLEGUNG NICHT VORHANDEN

INHALTSVERZEICHNIS

Bezeichnung	Seite
ARBEITSLEUCHTEN	159
BELEUCHTUNGSANLAGE (STRASSENAUSRÜSTUNG)	165
RUNDUM-KENNLEUCHTE	168
REFLEKTOR	169
STELLUNGSSENSOR	171
STARTHILFE	172
STARTERMOTOR	174
TRENNSCHALTER	176
FLÜSSIGKEITSSCHALTER	177
STARTSCHALTER	178
FAHRERHAUSVERDRAHTUNG	179
FAHRGESTELLVERDRAHTUNG	186
KONSOLENVERDRAHTUNG	202
MOTORVERDRAHTUNG	204
LÜFTERVERDRAHTUNG	206
HYDRAULIKHAMMERVERDRAHTUNG	207
MASCHINENVERDRAHTUNG	208
FAHRERPLATTFORMVERDRAHTUNG	211
FAHRWERKS-/DREHWERKSVERDRAHTUNG	214
ARBEITSGERÄT - VERDRAHTUNG	215
KRAFTÜBERTRAGUNG	216
ACHSE UND GETRIEBE	216
VORDERACHSE	219
HINTERACHSE	220
ACHSE, BREITE SPURWEITE	229
HINTERACHSE	231
LENKACHSE	242
TROMMELBREMSE	286
KRAFTÜBERTRAGUNG	287
REIFENKRANZ	288
MITTELLAGERANTRIEBSWELLE	290
ANTRIEBSWELLE	294
REIFEN UND FELGE	295
GETRIEBE	319
KREUZGELENK	347
RADBEFESTIGUNGSKEIL	350
FAHRGESTELL U. OBERWAGEN	351
GEGENGEWICHT	351
DECKELSATZ	352
ZUGANGSKLAPPE	353
MOTORVERKLEIDUNG	364
KÜHLERVERKLEIDUNG	375
RAHMEN - FAHRERHAUSERHÖHUNG	383
OBERWAGENRAHMEN	385
SCHWENKGETRIEBELAGER	388
PANZERWANNE	390
MOTORHAUBE U. VERKLEIDUNG	391
WÄRMEISOLIERUNG	392
ISOLIERUNG - SCHALLDÄMPFUNG	393
FAHRERHAUSANBAUSATZ	394
STEIGLEITER	396
WERKZEUGKASTENSTUFE	400
SCHALLDÄMPFUNG	402
LAUFSTEG	403
UNTERWAGEN	407
LAUFWERKSRAHMEN	407
TRANSPORTSPERRE	410
HYDRAULIKSYSTEM	411
DRUCKSPEICHER, HYDRAULISCH	411
HYDRAULIKDRUCKSPEICHER	413
*ACCUMULATOR GP-HYDRAULIC	415
HYDRAULIKDRUCKSPEICHER	416
AUSLÖSER	418
*ACTUATOR GP-PUMP	420
PUMPENZYLINDER	422
BREMSGESTÄNGE	426
HYDRAULIKHANDSTEUERUNG	430
HYDRAULIKPEDALSTEUERUNG	431
JOYSTICK -STEUERUNG	435
HYDRAULIKBEDIENUNG (MIT VORSTEUERUNG)	437
ANSCHLUSS, ELAST.	438
ACHSZYLINDERSPERRE U. BEFESTIGUNGSTEILE	442
AUSLEGERZYLINDER UND DICHTUNG	444
LÖFFELZYLINDER UND DICHTUNG	447
STIELZYLINDER UND DICHTUNG	448
PENDELACHSENSPERRENZYLINDER	449
SCHILDZYLINDER	453
AUSLEGERZYLINDER	457
LÖFFELZYLINDER	463
SEITENSTÜTZENZYLINDER	466
LÖFFELSTIELZYLINDER	468
PUMPENANTRIEB	470
SCHWENKANTRIEB	471
ÖLFILTER	475
ANSCHLUSSSTÜCK	479
HYDRAULIKLEITUNGSARMATUR	482
MOTORDECKEL	485
PUMPENKOPF	487
*HEAD GP-PUMP	488
HYDRAULIKSYSTEM	490
ZUSATZHYDRAULIKLEITUNGEN	491
ABSTÜTZ-PLANIERSCHILD - ZYLINDER- U. VENTILLEITUNGEN	500

* ÜBERSETZUNG ZUM ZEITPUNKT DER DRUCKLEGUNG NICHT VORHANDEN

INHALTSVERZEICHNIS

Bezeichnung	Seite
SCHILDZYLINDERLEITUNGEN	502
AUSLEGERLEITUNGEN	504
AUSLEGERZYLINDERLEITUNGEN	509
LÖFFELKIPPZYLINDERLEITUNGEN	511
SPERRVENTILLEITUNGEN	513
ANSCHLUSSLEITUNGEN	515
UMLEITVENTILLEITUNGEN	516
LEITUNGEN, VORNE	518
HYDRAULIKLEITUNGEN	519
HYDRAULIKLÜFTERLEITUNGEN	535
LASTSTEUERLEITUNGEN	538
VORSTEUERLEITUNGEN	544
DRUCKTESTLEITUNGEN	574
HYDRAULIKPUMPE UND LEITUNGEN	576
RÜCKLAUFLEITUNG	580
SEITENSTÜTZENLEITUNGEN	583
LENKÖLLEITUNGEN	585
STIELZYLINDERLEITUNGEN	589
DREHWERKLEITUNGEN	610
STEUERKRÜMMER	612
HYDRAULIKKÜHLERMOTOR U. BEFESTIGUNG	614
FAHRMOTOR U. BEFESTIGUNGSTEILE	615
MOTORANTRIEB	616
DREHWERKMOTOR	618
FAHRMOTOR	619
STEUERVENTILSTOPFEN	621
HYDRAULIKLÜFTERPUMPE U. BEFESTIGUNG	622
HAUPTHYDRAULIKPUMPE U. BEFESTIGUNGSTEILE	623
VORSTEUERPUMPE U. BEFESTIGUNGSTEILE	624
ZAHNRADPUMPE	625
HAUPTHYDRAULIKPUMPE	627
KOLBENPUMPE	628
MOTORDREHVORRICHTUNG	632
KOLBENPUMPENUMLAUFSATZ	636
HYDRAULIKMOTORWELLE	637
STÜTZEN	639
LENKSÄULE	640
DERHVORICHTUNG U.BEFESTIGUNG	646
SCHWENKBLOCK	648
HYDRAULIKTANK UND BEFESTIGUNGSTEILE	660
HYDRAULIKTANK	662
ZUSATZHYDRAULIKVENTIL U. LEITUNGEN	664
LASTSTEUERVENTIL U. LEITUNGEN	669
STEUERVENTIL UND BEFESTIGUNGSTEILE	679
VENTIL UND BEFESTIGUNGSTEILE - HAUPTSTEUERUNG	680
KUGELVENTIL	682
BREMSSTEUERVENTIL	685
SPERRVENTIL	691
SAMMELVENTIL	696
*VALVE GP-COMBINATION	698
STEUERVENTIL	699
UMLEITVENTIL	704
ZUFLUSSREGULIERVENTIL	707
LASTSTEUERVENTIL	709
HAUPTSTEUERVENTIL	719
*VALVE GP-MOTOR CONTROL	723
DRUCK- U. STROMAUSGLEICHSVENTIL	725
VORSTEUERÜBERDRUCKVENTIL	726
DRUCKREDUZIERVENTIL	727
*VALVE GP-PUMP CONTROL	729
ÜBERDRUCKVENTIL	735
MAGNETVENTIL	744
ARBEITSGERÄTE	754
AUSLEGER	754
HAUPTAUSLEGER	757
VORAUSLEGER	759
SCHMIERLEITUNGEN	761
LÖFFELGESTÄNGE	771
HYDRAULIKBAGGER-BOLZEN	775
TRANSPORTSPERRE	778
SEITENSTÜTZEN	780
STIEL	782
MATERIALUMSCHLAGSTIEL	783
LÖFFELSTIEL	784
SCHMIERÖLVERTEILERVENTIL	792
ARBEITSGERÄTE	794
ARBEITSGERÄTEEINSTELLER	794
ABSTÜTZ-PLANIERSCHILD U. BEFESTIGUNG	795
ABSTÜTZ-PLANIERSCHILD	799
LÖFFEL UND EINSTELLER	799
LÖFFEL UND LAGERSATZ	802
GRABENRÄUMLÖFFEL	805
AUSHUBLÖFFEL	813
ZAHNSPITZE, LANG	818
ZAHNSPITZE, SCHARF	820
ZAHNSPITZE, KURZ	821
FAHRERHAUS	822
KLIMAANLAGE UND AUFHÄNGUNG	822
KLIMAANLAGE	823

* ÜBERSETZUNG ZUM ZEITPUNKT DER DRUCKLEGUNG NICHT VORHANDEN

INHALTSVERZEICHNIS

Bezeichnung	Seite
ARMLEHNE	826
FAHRERHAUSERHÖHUNG	829
FAHRERHAUS	829
KÄLTEMITTELKOMPRESSOR	839
KÄLTEMITTELKONDENSATOR U. BEFESTIGUNGSTEILE	842
KÄLTEMITTELKONDENSATOR	844
VERBINDUNGSSTÜCK FÜR FAHRERHAUS-HEIZUNGSLEITUNGEN	846
KONSOLE, LINKS	847
STEUERKONSOLE	852
KONSOLE, RECHTS	853
FAHRERHAUSERHÖHUNG - ABDECKUNG	855
STEUERKONSOLENABDECKUNG	856
FAHRERHAUSTÜR	858
LUFTKANAL	864
NEBELLEUCHTENSCHUTZ	865
SCHUTZDACH	866
SCHUTZVERKLEIDUNG	867
SCHEIBENSCHUTZ	869
KOPFSTÜTZE	873
WARNHORN, ELEKTR.	874
RADIOEINBAUSATZ	876
KLIMAANLAGENLEITUNGEN	877
HEIZUNGSLEITUNGEN	881
DOKUMENTATION	883
RÜCKSPIEGEL	884
BETRIEBSMONITOR U. BEFESTIGUNG	888
FAHRERHAUSAUSRÜSTUNG	889
PEDALE	890
BREMSPEDAL	892
PEDALBOLZEN	894
FAHRERPLATTFORM	896
RADIO	900
SONNENBLENDE	901
SICHERHEITSGURT	902
FAHRERSITZ	904
SCHWINGSITZ	907
SITZUNTERBAU	910
FAHRERSITZFEDERUNG	911
FAHRERHAUS, SONNENBLENDE	915
FAHRERHAUSFENSTER	916
TÜRFENSTER	926
SCHEIBENWISCHER	929
WARTUNGSAUSRÜSTUNG	934
SCHILD UND AUFKLEBER	934
ERSATZTEILNUMMERNINDEX	B1

* ÜBERSETZUNG ZUM ZEITPUNKT DER DRUCKLEGUNG NICHT VORHANDEN

GENERAL INFORMATION

1. MACHINE IDENTIFICATION

Caterpillar machines are identified by Product Identification Numbers (PIN). Some components included in a machine may be identified by Serial Numbers (S/N). Typical components that will be serialized include engines, transmissions, bulldozers, and rippers. The machine and engine are further identified by arrangement numbers and in some cases modification numbers. These numbers are shown on the product identification plate(s) and on the master plate in the operator's compartment.

Caterpillar dealers need all of these numbers to determine accurate parts identification.

SIS *New Feature*

Effective First Quarter 2001 the Caterpillar Product Identification Number (PIN) changed from 8 to 17 characters. In an effort to provide uniform equipment identification, Caterpillar and other construction equipment manufacturers are moving to comply with the latest version of the product identification numbering standard. Non-road machine PINs are defined by ISO 10261. The new PIN format will apply to all Caterpillar machines and generator sets. The PIN plates and frame marking will display the 17 character PIN. The new format will look like the following:

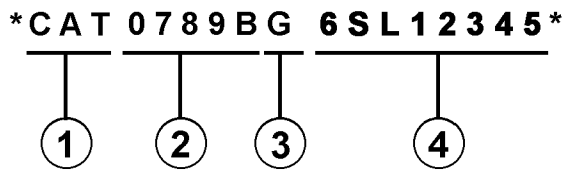

Where:

1. Caterpillar's World Manufacturing Code (characters 1-3)

2. Machine Descriptor (characters 4-8)

3. Check Character (character 9)

4. Machine Indicator Section (MIS) or Product Sequence Number (characters 10-17). These were previously referred to as the Serial Number.

Machines and generator sets produced before First Quarter 2001 will maintain their 8 character PIN format.

Components such as engines, transmissions, axles, etc. and work tools will continue to use an 8 character Serial Number (S/N).

2. ORDERING PARTS

WARNING

When replacement parts are required for this product Caterpillar recommends using Caterpillar replacement parts or parts with equivalent specifications including, but not limited to, physical dimensions, type, strength and material.

Failure to heed this warning can lead to premature failures, product damage, personal injury or death.

Quality Caterpillar replacement parts are available from Caterpillar dealers throughout the world. Their parts inventories are up to date and include all parts normally required to protect your investment in Caterpillar machines. Dealers may offer repair kits or remanufactured parts to allow selection of the most effective repair alternative for a particular situation. When ordering parts, your order should specify the quantity, part number, part name, and the serial number/product identification number of the machine for which the parts are needed.

3. PARTS MANUAL ORGANIZATION

Product information in this manual is presented as "information elements" that represent all of the components for the specific model. Engine Arrangement and Seat Group are examples of information elements. The information elements are organized alphabetically by part name and secondarily by part number within each major section of the manual.

4. TABLE OF CONTENTS

A table of contents (TOC) is found at the beginning of the manual. The TOC lists each section of the manual with a complete list of all information elements organized as they appear in the manual. Page numbers are provided for quick reference to detailed parts identification illustrations and serviceable consist lists.

5. MAINTENANCE PARTS INDEX

The Maintenance Parts Index, located near the beginning of the manual, references most frequently used maintenance part numbers, providing description, quantity, usage and page number. This information is organized alphabetically by part description.

6. INDEX

The index located near the front of the manual is an alphabetical listing of all information elements included in the manual. Page numbers are provided for quick reference to detailed parts identification illustrations and serviceable consist lists.

7. PART NUMBER INDEX

A numerical index listing all part numbers and the corresponding page number(s) appears at the back of the manual.

8. CAPTIONS

Captions located at the beginning of each information element identify the part number and part name along with additional descriptive information. PIN and S/N information found in each caption should be used to select correct information for a specific machine. Field replacement options, identification of optional attachment components, and where used ("part of") information is also provided.

The first line of a caption is shown in larger type font to indicate the beginning of an information element. Captions for additional pages that may be required to illustrate an information element will be shown in standard type font and will include the term *(contd.)* .

9. NON-SERVICED PARTS

In some instances it is necessary to display non-serviced parts that are a link to a lower level serviceable consist lists. These non-serviced part numbers are shown in *italic* type indicating that they are not available.

10. PARTS LIST REFERENCE NUMBERS

Numbers shown in the Ref No column correspond to numbers used in the associated graphic(s). An alphabetic suffix may be added to a reference number to identify lower level consist items. Numbers shown in the Graphic Ref column refer to the graphic number identifier displayed in the lower left corner of each illustration. The Graphic Ref number may be used in combination with the item Ref No to determine the correct part number. There may be intentional omission of a Ref No in a consist list as information is updated to reflect the latest serviceable part numbers.

11. INDENTED PART NAMES

When a part name is indented in a parts list, it is part of (included in) the group or assembly under which it is indented.

12. ILLUSTRATION REFERENCE LETTERS

When necessary, illustrations contain reference letters (A, B, C etc.) that are intended to track lines and harnesses from one point to another. They are also used to show where to reconnect illustrations that have been separated.

13. ABBREVIATIONS AND SYMBOLS

O.D. – Outside Diameter
I.D. – Inside Diameter
A – Not Part Of This Group
B – Use As Required
C – Change From Previous Type
D – Order By The Meter
E – Order By The Centimeter
F – Not Shown
G – Order By The Inch
I – Refer To Hydraulic Information System
M – Metric Part
R – Remfg Part May Be Available
Y – Separate Illustration
Z – Not Serviced Separately

SIS *New Feature*

14.<END>

This symbol indicates the end of an information element.

NOTE:

Continuing improvement and advancement of product design may cause changes to your machine which may not be included in this publication. Whenever a question arises regarding your caterpillar product or this publication, please consult your caterpillar dealer for the latest available information.

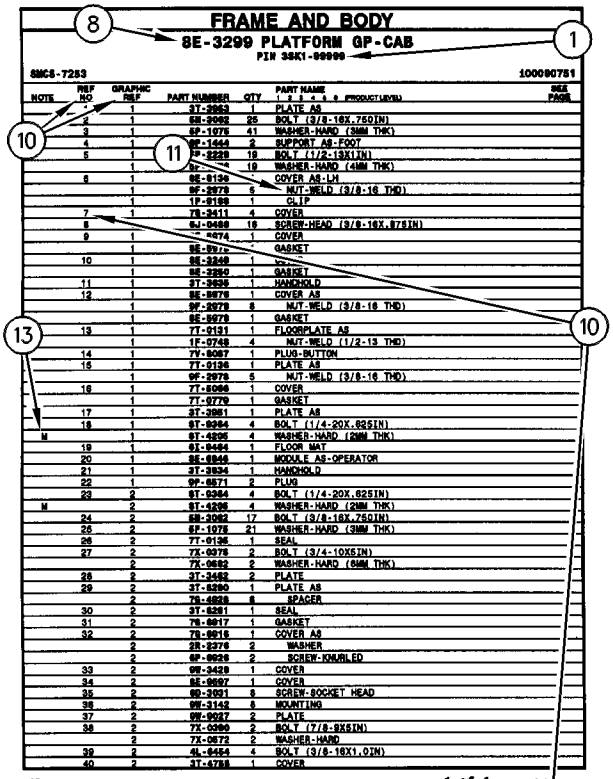
FRAME AND BODY
8E-3299 PLATFORM GP-CAB
PIN 3SK1-99999
SMCS-7253
100090751
NOTE | REF NO | GRAPHIC REF | PART NUMBER | QTY | PART NAME | SEE PAGE
1 | 1 | 3T-2953 | PLATE AS
2 | 1 | 5B-2062 | 25 | BOLT (3/8-16X.750IN)
3 | 1 | 9P-1075 | 41 | WASHER-HARD (38MM THK)
4 | 1 | 9W-1444 | 2 | SUPPORT AS-FOOT
5 | 1 | 5P-2229 | 19 | BOLT (1/2-13X1IN)
1 | 19 | WASHER-HARD (41MM THK)
6 | 1 | 8E-6136 | COVER AS-LH
1 | 9F-2978 | 5 | NUT-WELD (3/8-16 THD)
1 | 1P-0189 | 1 | CLIP
7 | 1 | 7B-3411 | 4 | COVER
8 | 9J-0498 | 18 | SCREW-HEAD (3/8-16X.875IN)
9 | 1 | 4474 | 1 | COVER
1 | 8E-8976 | GASKET
10 | 1 | 8E-3248 | 1
1 | 8E-3250 | 1 | GASKET
11 | 1 | 3T-2936 | 1 | HANDHOLD
12 | 1 | 8E-8978 | 1 | COVER AS
1 | 9F-2978 | 8 | NUT-WELD (3/8-16 THD)
1 | 8E-8979 | 1 | GASKET
13 | 1 | 7T-0131 | 1 | FLOORPLATE AS
1 | 1F-0748 | 4 | NUT-WELD (1/2-13 THD)
14 | 1 | 7V-8087 | 1 | PLUG-BUTTON
15 | 1 | 7T-0136 | 1 | PLATE AS
1 | 9F-2978 | 5 | NUT-WELD (3/8-16 THD)
16 | 1 | 7T-8066 | 1 | COVER
1 | 7T-8779 | 1 | GASKET
17 | 1 | 3T-3951 | 1 | PLATE AS
18 | 1 | 6T-8364 | 4 | BOLT (1/4-20X.625IN)
M | 1 | 9T-4205 | 4 | WASHER-HARD (20MM THK)
19 | 1 | 6L-8494 | 1 | FLOOR MAT
20 | 1 | 8E-8846 | 1 | MODULE AS-OPERATOR
21 | 1 | 3T-3934 | 1 | HANDHOLD
22 | 1 | 9P-8571 | 2 | PLUG
23 | 2 | 6T-8364 | 4 | BOLT (1/4-20X.625IN)
M | 2 | 9T-4205 | 4 | WASHER-HARD (20MM THK)
24 | 2 | 5B-2062 | 17 | BOLT (3/8-16X.750IN)
25 | 2 | 5P-1075 | 21 | WASHER-HARD (38MM THK)
26 | 2 | 7T-0135 | 1 | SEAL
27 | 2 | 7X-0075 | 2 | BOLT (3/4-10X5IN)
2 | 7X-0652 | 2 | WASHER-HARD (64MM THK)
28 | 2 | 3T-3452 | 2 | PLATE
29 | 2 | 3T-8290 | 1 | PLATE AS
2 | 7B-4828 | 8 | SPACER
30 | 2 | 3T-8281 | 1 | SEAL
31 | 2 | 7B-8817 | 1 | GASKET
32 | 2 | 7B-8815 | 1 | COVER AS
2 | 2P-2276 | 2 | WASHER
2 | 9P-8926 | 2 | SCREW-KNURLED
33 | 2 | 9W-3429 | 1 | COVER
34 | 2 | 8E-8897 | 1 | COVER
35 | 2 | 9D-3931 | 8 | SCREW-SOCKET HEAD
36 | 2 | 9W-3142 | 8 | MOUNTING
37 | 2 | 9W-8927 | 2 | PLATE
38 | 2 | 7X-0990 | 2 | BOLT (7/8-9X8IN)
2 | 7X-0672 | 2 | WASHER-HARD
39 | 2 | 4L-8454 | 4 | BOLT (3/8-16X1.0IN)
40 | 2 | 3T-4788 | 1 | COVER
12 FRAME AND BODY
1 of 4
SELP4570-01

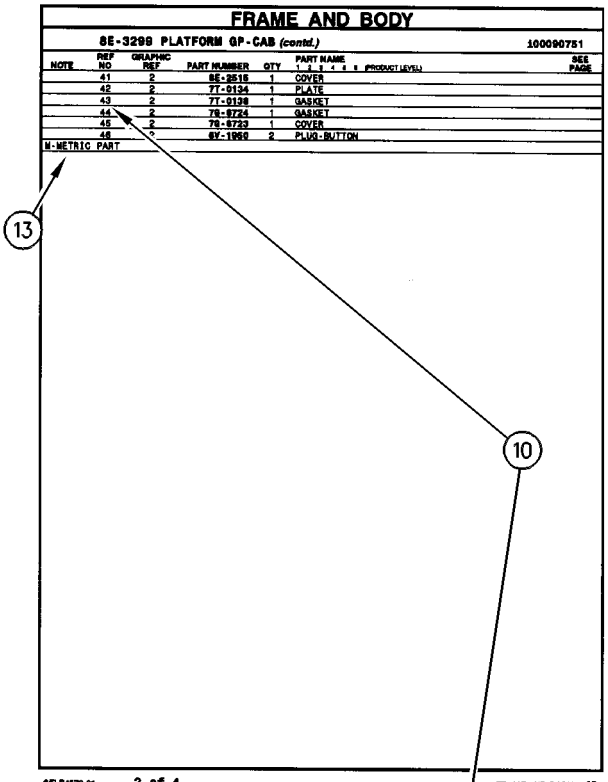
FRAME AND BODY
8E-3299 PLATFORM GP-CAB (contd.)
100090751
NOTE | REF NO | GRAPHIC REF | PART NUMBER | QTY | PART NAME | SEE PAGE
41 | 2 | 8E-2516 | 1 | COVER
42 | 2 | 7T-0134 | 1 | PLATE
43 | 2 | 7T-0138 | 1 | GASKET
44 | 2 | 7B-8724 | 1 | GASKET
45 | 2 | 7B-8723 | 1 | COVER
46 | 2 | 6V-1950 | 2 | PLUG-BUTTON
M-METRIC PART
SELP4570-01
2 of 4
FRAME AND BODY 13

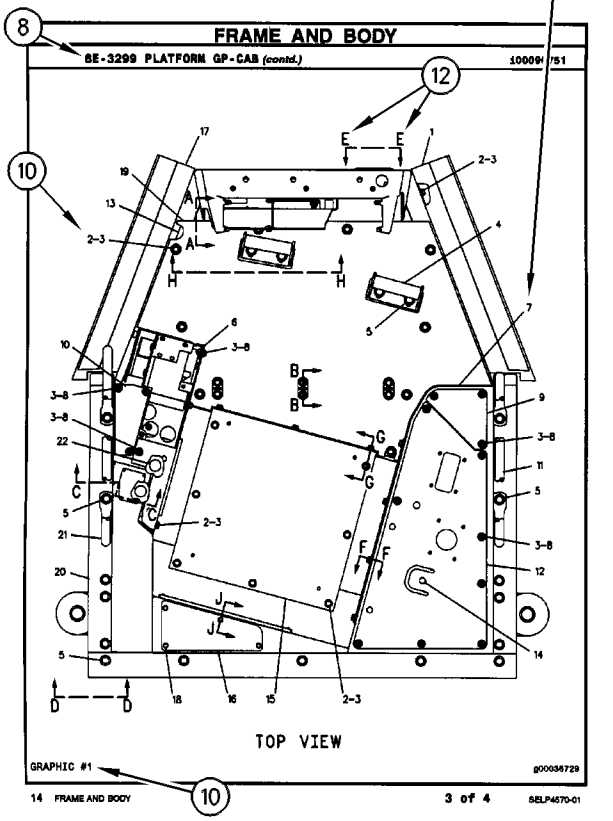
FRAME AND BODY
8E-3299 PLATFORM GP-CAB (contd.)
100090751
TOP VIEW
GRAPHIC #1
g00036729
14 FRAME AND BODY
3 of 4
SELP4570-01

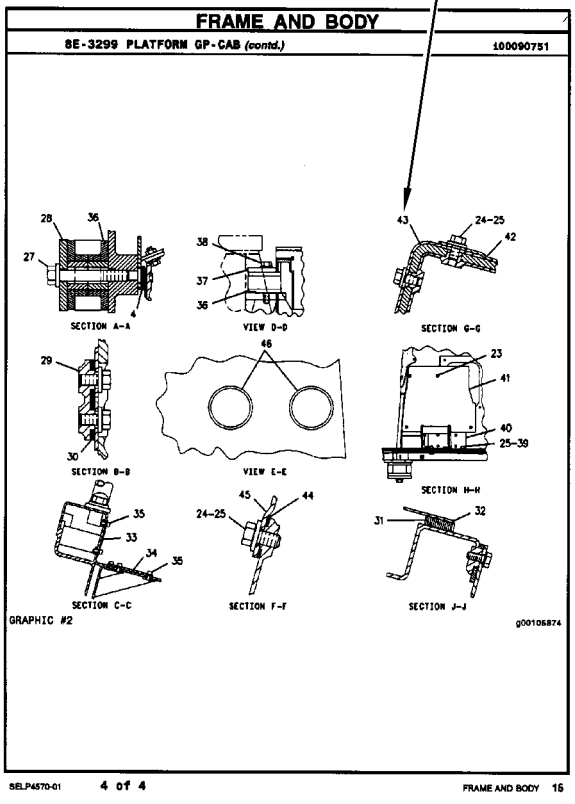
FRAME AND BODY
8E-3299 PLATFORM GP-CAB (contd.)
100090751
SECTION A-A
VIEW D-D
SECTION G-G
SECTION B-B
VIEW E-E
SECTION H-H
SECTION C-C
SECTION F-F
SECTION J-J
GRAPHIC #2
g00105874
SELP4570-01
4 of 4
FRAME AND BODY 15

GÉNÉRALITÉS

1. IDENTIFICATION DE LA MACHINE

Toutes les machines Caterpillar portent un numéro d'identification (PIN). Certains composants des machines peuvent porter des numéros de série (S/N). En général, parmi les composants qui portent des numéros de série il y a les moteurs, les transmissions, les bulldozers et les rippers. En plus, la machine et le moteur peuvent recevoir des numéros de version, et dans certains cas, de modification. Ces numéros figurent sur les plaques de numéro de série et sur la plaque signalétique principale qui se trouve dans le poste de conduite.

Les concessionnaires Caterpillar doivent connaître tous ces numéros pour identifier correctement les pièces.

SIS *Nouvelle Caractéristique*

À partir du premier trimestre 2001, le numéro d'identification produit (PIN) Caterpillar passe de 8 à 17 caractères. Afin de permettre une identification uniforme des matériels, Caterpillar et d'autres constructeurs de machines de travaux publics s'efforcent de se conformer à la norme la plus récente portant sur les numéros d'identification des produits. Les numéros d'identification (PIN) de machines de chantier sont définis par la norme ISO 10261. Le nouveau format du numéro d'identification est valable pour toutes les machines et tous les groupes électrogènes Caterpillar. Le numéro d'identification produit (PIN) figurant sur la plaque et sur le châssis se composera de 17 caractères. Le nouveau format ressemblera à ceci:

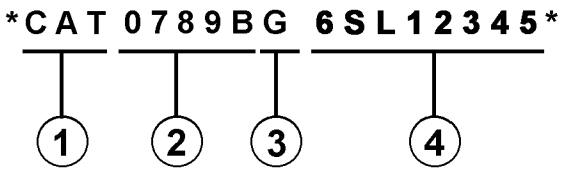

Il se décomposera de la façon suivante:

1. Code international de fabrication de Caterpillar (caractères 1 à 3)

2. Descriptif de la machine (caractères 4 à 8)

3. Contrôle (caractère 9)

4. Indicateur machine (MIS) ou numéro de séquence produit (caractères 10 à 17). Ceux-ci étaient auparavant désignés sous le terme de numéro de série.

Les machines et les groupes électrogènes construits avant le premier trimestre 2001 garderont le format à 8 caractères du numéro d'identification produit (PIN).

Les organes tels que les moteurs, les boîtes de vitesses, les essieux, etc., continueront d'être désignés par un numéro de série (S/N) à 8 caractères.

2. COMMANDE DE PIÈCES

⚠ DANGER

Lorsqu'il faut remplacer des pièces de rechange pour ce produit Caterpillar recommande d'utiliser les pièces de rechange Caterpillar ou les pièces qui ont des spécifications équivalentes dont les dimensions physiques, le type, la force et le matériau. Ces équivalences ne se limitent pas à l'énoncé précédent.

L'inobservation de cette mise en garde peut entraîner des défaillances prématurées, des dommages au produit, des blessures ou même la mort.

Les concessionnaires Caterpillar fournissent dans le monde entier des pièces de rechange de qualité Caterpillar. Leurs stocks de pièces sont constamment réapprovisionnés et comptent toutes les pièces nécessaires pour assurer la bonne marche de vos machines Caterpillar. Certains concessionnaires proposent également des kits de réparation ou des pièces rénovées, ce qui permet de choisir la solution la plus économique dans une situation donnée. Lors des commandes de pièces, mentionner la quantité, le numéro et la désignation des pièces ainsi que le numéro de série ou le numéro d'identification (PIN) de la machine pour laquelle ces pièces sont requises.

3. ORGANISATION DU CATALOGUE DE PIÈCES

Les renseignements sur les produits sont présentés sous forme de "Information element" (élément d'information) représentant tous les composants d'un modèle donné. "Engine Arrangement" (version de moteur) et "Seat Group" (assemblage de siège)" sont des exemples d'éléments d'information. Les éléments d'information sont classés par ordre alphabétique par la désignation standard des pièces et par numéros de pièces dans chaque partie importante du manuel.

4. TABLE DES MATIÈRES

SIS *Nouvelle Caractéristique*

La table des matières se trouve au début du manuel. La table des matières fournit la liste de tous les chapitres du manuel avec une liste complète de tous les éléments d'information classés par ordre d'apparition dans le manuel. Les numéros de page sont fournis afin que l'utilisateur puisse trouver rapidement les illustrations détaillées concernant l'identification des pièces et les listes des pièces d'entretien.

5. INDEX DES PIÈCES D'ENTRETIEN

La rubrique "Index des pièces d'entretien" qui se trouve au début du manuel renvoie aux pièces d'entretien les plus fréquemment utilisées en précisant la désignation, la quantité, là où la pièce est utilisée et le numéro de page. Ces pièces sont classés par ordre alphabétique.

6. INDEX

L'index qui se trouve vers le début du manuel est une liste alphabétique de tous les éléments d'information du manuel. Les numéros de page sont fournis afin que l'utilisateur puisse trouver rapidement les illustrations détaillées concernant l'identification des pièces et les listes des pièces d'entretien.

7. INDEX DES NUMÉROS DE PIÈCES

Une liste numérique de tous les numéros de pièces et des pages correspondantes se trouve à la fin du manuel.

8. LÉGENDES

Les légendes qui se trouvent en haut de chaque page de chaque élément d'information fournissent le numéro de pièce, la désignation ainsi que des renseignements supplémentaires sur les pièces. Les renseignements concernant les numéros de série (S/N) qui se trouvent dans chaque légende doivent être utilisés pour sélectionner les informations correctes pour un moteur donné. Les informations concernant les options de remplacement sur le chantier, l'identification des composants des équipements offerts en option et les lieux d'application sont aussi fournies.

SIS *Nouvelle Caractéristique*

Les lettres de la première ligne d'une légende sont présentées en police plus grande afin d'indiquer le début d'une unité d'information. Les légendes qui pourraient être requises pour des pages supplémentaires afin d'illustrer une unité d'information seront présentées en police standard et comprendront le terme (à suivre).

9. PIÈCES NON FOURNIES

SIS *Nouvelle Caractéristique*

Dans certains cas, il est nécessaire d'indiquer les pièces non fournies qui sont en aval de la liste des pièces d'entretien. Les numéros des pièces non fournies dans la liste des pièces et les légendes seront en italique pour signaler qu'ils ne sont pas disponibles.

10. NUMÉROS DE RÉFÉRENCE DE LA LISTE DES PIÈCES

SIS *Nouvelle Caractéristique*

Les numéros indiqués dans la colonne des numéros de références correspondent aux numéros utilisés dans les illustrations auxquelles ils sont associés. Un suffixe alphabétique peut être ajouté à un numéro de référence pour identifier la liste des articles en aval. Les numéros indiqués dans la colonne de référence de l'illustration renvoient à l'identification du numéro affiché dans le coin inférieur gauche de chaque illustration. Le numéro de référence de l'illustration pourrait être utilisé avec le numéro de référence de l'article pour déterminer le numéro de pièce correct. Il peut y avoir une omission intentionnelle d'un numéro de référence dans une liste de pièces suite à la mise à jour des informations en vue de refléter les numéros de pièces les plus récentes.

11. DÉSIGNATIONS DE PIÈCES EN RETRAIT

Lorsqu'une désignation de pièce est en retrait, cela veut dire que l'article en regard fait partie de l'ensemble sous lequel il figure.

12. LETTRES DE RÉFÉRENCE DES ILLUSTRATIONS

Quand cela est nécessaire, les illustrations comportent des lettres de référence (A, B, C, etc.) pour montrer le trajet des canalisations et faisceaux de câbles d'un point à l'autre. Elles sont utilisées également pour indiquer où relier les illustrations séparées auparavant.

13. ABRÉVIATIONS ET SYMBOLES

O.D. – Diamètre extérieur
I.D. – Diamètre intérieur
A – Ne fait pas partie de ce groupe
B – Utiliser selon besoin
C – Modification
D – Commander par mètre
E – Commander par centimètre
F – Non représenté
G – Commander par pouce
I – Voir "Hydraulic Information System"
M – Pièce métrique
R – Pièce rénovée éventuellement disponible
Y – Illustration séparée
Z – Non fourni séparément

NOTA:

En raison du progrès technique et des améliorations continuelles apportées au matériel, votre machine comporte peut-être des modifications qui n'apparaissent pas dans la présente publication. En cas de doute sur un détail de votre machine Caterpillar ou sur le texte de la présente publication, adressez-vous à votre concessionnaire Caterpillar.

FRAME AND BODY

8E-3299 PLATFORM GP-CAB

PIN 3SK1-99999

8MC8-7253 100090751

NOTE	REF NO	GRAPHIC REF	PART NUMBER	QTY	PART NAME (1 2 3 4 5 6 PRODUCT LEVEL)	SEE PAGE
	*	1	3T-2863	1	PLATE AS	
	2	1	5B-2062	25	BOLT (3/8-16X.750IN)	
	3	1	6P-1076	41	WASHER-HARD (3MM THK)	
	4	1	9W-1444	2	SUPPORT AS-FOOT	
	5	1	7P-2229	18	BOLT (1/2-13X1IN)	
		1	9F-	18	WASHER-HARD (4MM THK)	
	6	1	8E-6136	*	COVER AS-LH	
		1	9F-2978	6	NUT-WELD (3/8-16 THD)	
		1	1P-0169	1	CLIP	
	7	1	7B-2411	4	COVER	
	8	1	9J-0498	18	SCREW-HEAD (3/8-16X.875IN)	
	9	1	-4474	1	COVER	
		1	8E-897	*	GASKET	
	10	1	8E-3248	1		
		1	8E-3250	1	GASKET	
	11	1	3T-2836	1	HANDHOLD	
	12	1	8E-8878	1	COVER AS	
		1	9F-2978	6	NUT-WELD (3/8-16 THD)	
		1	8E-8878	1	GASKET	
	13	1	7T-0131	1	FLOORPLATE AS	
		1	1F-0748	4	NUT-WELD (1/2-13 THD)	
	14	1	7V-8087	1	PLUG-BUTTON	
	15	1	7T-0136	1	PLATE AS	
		1	9F-2978	5	NUT-WELD (3/8-16 THD)	
	16	1	7T-8066	1	COVER	
		1	7T-8779	1	GASKET	
	17	1	3T-3861	1	PLATE AS	
	18	1	6T-8364	4	BOLT (1/4-20X.625IN)	
M		1	9T-4205	4	WASHER-HARD (2MM THK)	
	19	1	6L-8494	1	FLOOR MAT	
	20	1	8E-8846	1	MODULE AS-OPERATOR	
	21	1	3T-3834	1	HANDHOLD	
	22	1	9P-8671	2	PLUG	
	23	2	6T-8364	4	BOLT (1/4-20X.625IN)	
M		2	9T-4205	4	WASHER-HARD (2MM THK)	
	24	2	5B-2062	17	BOLT (3/8-16X.750IN)	
	25	2	6P-1076	21	WASHER-HARD (3MM THK)	
	26	2	7T-0135	1	SEAL	
	27	2	7X-0078	2	BOLT (3/4-10X5IN)	
		2	7X-0682	2	WASHER-HARD (6MM THK)	
	28	2	3T-3452	2	PLATE	
	29	2	3T-8290	1	PLATE AS	
		2	7B-4828	8	SPACER	
	30	2	3T-8281	1	SEAL	
	31	2	7B-8817	1	GASKET	
	32	2	7B-8815	1	COVER AS	
		2	2R-3276	2	WASHER	
		2	6P-8926	2	SCREW-KNURLED	
	33	2	9W-3429	1	COVER	
	34	2	8E-8897	1	COVER	
	35	2	6D-3031	8	SCREW-SOCKET HEAD	
	36	2	9W-3142	8	MOUNTING	
	37	2	9W-8027	2	PLATE	
	38	2	7X-0990	2	BOLT (7/8-9X8IN)	
		2	7X-0672	2	WASHER-HARD	
	39	2	4L-8454	4	BOLT (3/8-16X1.0IN)	
	40	2	3T-4788	1	COVER	

12 FRAME AND BODY 1 of 4 SELP4570-01

FRAME AND BODY

8E-3299 PLATFORM GP-CAB (contd.)

100090751

NOTE	REF NO	GRAPHIC REF	PART NUMBER	QTY	PART NAME (1 2 3 4 5 6 PRODUCT LEVEL)	SEE PAGE
	41	2	8E-2516	1	COVER	
	42	2	7T-0134	1	PLATE	
	43	2	7T-0138	1	GASKET	
	44	2	7B-8724	1	GASKET	
	45	2	7B-8723	1	COVER	
	46	2	6V-1950	2	PLUG-BUTTON	

M-METRIC PART

SELP4570-01 2 of 4 FRAME AND BODY 13

FRAME AND BODY

8E-3299 PLATFORM GP-CAB (contd.)

100090751

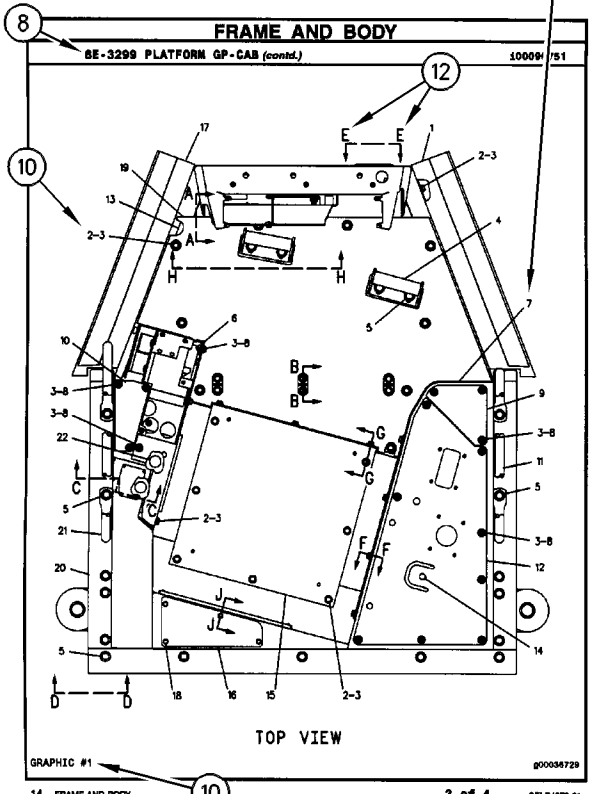

14 FRAME AND BODY 3 of 4 SELP4570-01

FRAME AND BODY

8E-3299 PLATFORM GP-CAB (contd.)

100090751

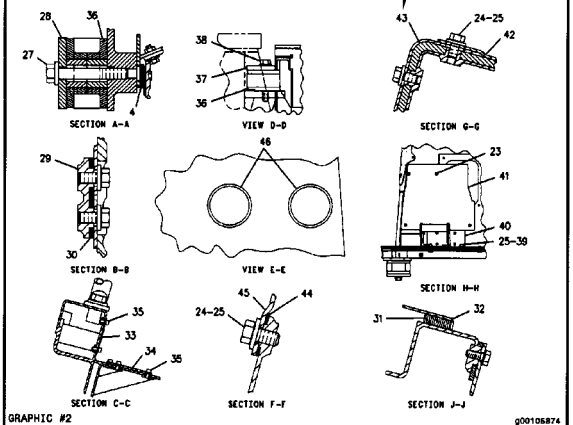

SELP4570-01 4 of 4 FRAME AND BODY 15

INFORMACIÓN GENERAL

1. MÁQUINAS

Las máquinas Caterpillar se identifican con Números de Identificación del Producto (PIN). Algunos componentes incluídos en la máquina pueden estar identificados con Números de Serie (N/S). Los componentes que tienen típicamente esta identificación incluyen motores, transmisiones, hojas topadoras y desgarradores. La máquina y el motor se identifican además con Números de Configuración y en algunos casos, Números de Modificación. Estos números están en las placas de identificación del producto o en la placa principal en la cabina del operador.

Los distribuidores Caterpillar necesitan estos números para identificar con exactitud los números de piezas de repuesto.

SIS *Nueva Característica*

A partir del primer trimestre del 2001, el Número de Identificación de Producto (PIN) de Caterpillar cambió de 8 a 17 caracteres. Para hacer más uniforme el método de identificación de equipos, Caterpillar y otros fabricantes de equipo de construcción han tomado medidas para cumplir con la versión más reciente de la norma de numeración de identificación de productos. Los Números de Identificación de Producto para máquinas que no se operan en carreteras son definidos por la norma ISO 10261. El nuevo formato PIN corresponderá a todas las máquinas y grupos electrógenos Caterpillar. Las placas y los caracteres PIN estampados en el bastidor mostrarán el PIN de 17 caracteres. El nuevo formato tendrá la apariencia siguiente:

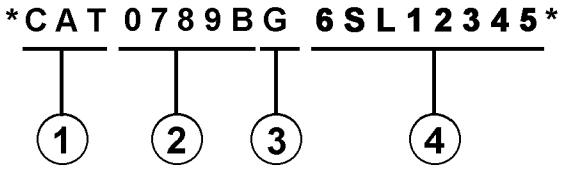

Significado de los caracteres:

1. Código de Fabricación Mundial de Caterpillar (caracteres 1-3)

2. Sección Descriptor de la Máquina (caracteres 4-8)

3. Carácter de Verificación (carácter 9)

4. Sección Indicador de la Máquina (MIS) o Número de Secuencia de Producto (caracteres 10-17). Anteriormente, estos caracteres constituían el Número de Serie.

Las máquinas y grupos electrógenos producidos antes del primer semestre del 2001 mantendrán su formato PIN de 8 caracteres.

Los componentes como motores, transmisiones, ejes, herramientas de trabajo, etc., continuarán usando un Número de Serie (S/N) de 8 caracteres.

2. COMO PEDIR REPUESTOS

⚠ ADVERTENCIA

Cuando se necesiten piezas de repuesto para este producto, Caterpillar recomienda usar piezas de repuesto Caterpillar o piezas que tengan especificaciones equivalentes incluyendo, pero sin estar limitadas a, dimensiones físicas, tipo, fortaleza y material.

El no hacer caso de esta advertencia puede llevar a fallas prematuras, daños al producto y lesiones graves o mortales.

Las piezas de repuesto Caterpillar de calidad están a la disposición de los distribuidores Caterpillar en todo el mundo. Sus existencias actualizadas incluyen todas las piezas normalmente requeridas para proteger su inversión en máquinas Caterpillar. Los distribuidores pueden tener juegos de reparación o piezas remanufacturadas para permitir la selección de la mejor alternativa de reparación en un caso en particular. Al pedir piezas de repuesto, especifique en su pedido la cantidad, el número de pieza, el nombre de la pieza y el número de serie/número de identificación del producto, de la máquina para la cual se necesitan estas piezas.

3. ORGANIZACION DEL MANUAL DE PIEZAS

La información sobre el producto, se presenta en este manual, como "elementos de información" que representan todos los componentes de un modelo específico. Las configuraciones de motores y los grupos de asientos son ejemplos de elementos de información. Los elementos de información están organizados primeramente por nombres de piezas en orden alfabético y en segundo lugar, por el número de pieza dentro de cada sección principal del manual.

4. CONTENIDO

La página de Contenido se encuentra al principio del manual. El Contenido indica cada sección del manual con una lista completa de todos los elementos de información organizados en el orden que aparecen en el manual. Los números de página proporcionan una referencia rápida a las ilustraciones detalladas de identificación de piezas y a las listas de componentes de repuesto de dichas piezas.

5. ÍNDICE DE PIEZAS DE MANTENIMIENTO

Al principio de este catálogo se encuentra un índice de los números de piezas utilizadas más frecuentemente para el mantenimiento, que incluye descripción, cantidad necesaria, lugar de utilización y número de página. Esta información está organizada alfabéticamente, por descripción de la pieza.

6. ÍNDICE

El Índice, ubicado cerca del principio del manual, es una lista en orden alfabético de todos los elementos de información incluídos en el manual. Los números de página proporcionan una referencia rápida a las ilustraciones detalladas de identificación de piezas y a las listas de componentes de repuesto de dichas piezas.

7. INDICE NUMÉRICO DE PIEZAS

Un índice numérico de piezas con el correspondiente número de página aparece al final de este catálogo.

8. TÍTULOS

Los títulos ubicados al principio de cada elemento de información identifican el número y el nombre de la pieza junto con información descriptiva. Se debe usar información sobre los Números de Identificación de Pieza (PIN) y los números de serie (S/N) para seleccionar la información que corresponda a una máquina en particular. También se suministra información sobre las opciones de reparación en el campo, la identificación de componentes de accesorios optativos y el lugar de ubicación de la pieza ("es parte de").

La primera línea del título se muestra con un tipo de letra más grande para indicar el comienzo de un elemento de información. Si se requieren páginas adicionales para ilustrar un elemento de información, los títulos se muestran con un tipo de letra normal y la continuación se indica entre paréntesis.

9. PIEZAS QUE NO SE SUMINISTRAN COMO REPUESTO

En algunos casos es necesario indicar piezas que no se suministran como repuesto pero que pueden estar conectadas a listas de componentes de otras piezas de repuesto. En tal caso, dichas piezas se muestran en cursiva para indicar que no son piezas disponibles.

10. NÚMEROS DE REFERENCIA

Los números en la columna de No. de Referencia corresponden a los números indicados en la ilustración que pertenece a ese número de pieza. Los números que tienen un sufijo alfabético identifican artículos de las listas de componentes de piezas. Los números en la columna de Referencia de la ilustración se identifican en la esquina inferior izquierda de cada ilustración. Para determinar el número de pieza correcto se puede utilizar tanto el No. de Referencia de la ilustración como el No. de Referencia del artículo. A medida que se actualiza la información para indicar los más recientes números de piezas de repuesto, puede omitirse intencionalmente un No. de Referencia en una lista de componentes de piezas.

11. NOMBRES DE PIEZA SANGRADOS

Cuando el nombre de una pieza está sangrado en una lista, significa que esta pieza forma parte del grupo o conjunto del renglón inmediatamente superior.

12. LETRAS DE REFERENCIA DE ILUSTRACIONES

Las ilustraciones contienen algunas veces letras de referencia (A, B, C etc.) cuyo propósito es seguir el trayecto de líneas y mazos de cables de un punto a otro. También se utilizan para mostrar dónde volver a unir ilustraciones que se habían separado.

13. ABREVIATURAS Y SIMBOLOS

O.D. – Diámetro exterior
I.D. – Diámetro interior
A – No es pieza de este grupo
B – Utilizado según la demanda
C – Indica cambio
D – Se pide por metro
E – Se pide por centímetro
F – No se muestra
G – Se pide por pulgada
I – Consulte el sistema de información hidráulica
M – Pieza métrica
R – Puede estar disponible como pieza remanufacturada
Y – Ilustración separada
Z – No se suministra por separado

SIS *Nueva Característica*

14.<END>

Este símbolo indica el final de un elemento de información.

NOTA:

Las contínuas mejoras y adelantos en diseño podrían originar cambios a su máquina que no se incluyen en esta publicación. Cuando tenga alguna pregunta acerca de su producto Caterpillar o de esta publicación, consulte al distribuidor Caterpillar para obtener la información más reciente.

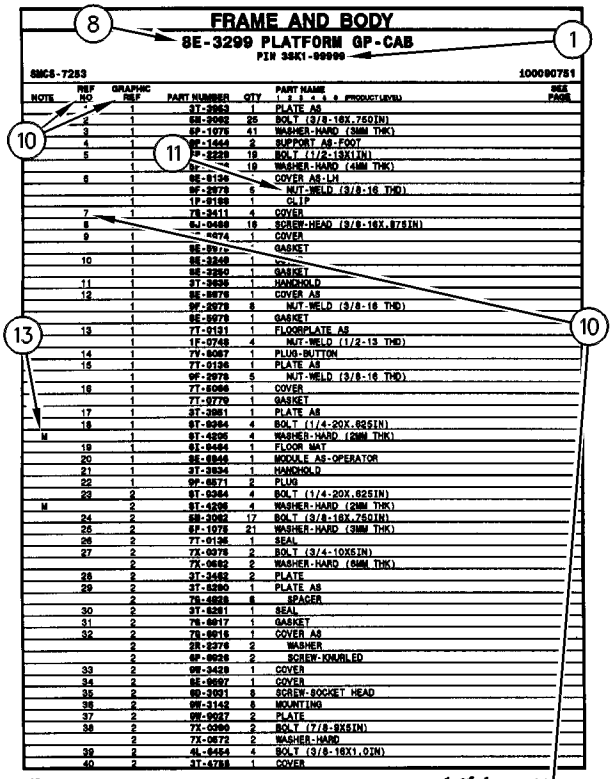
FRAME AND BODY
8E-3299 PLATFORM GP-CAB
PIN 35K1-99999
SMCS-7253
100090751
NOTE | REF NO | GRAPHIC REF | PART NUMBER | QTY | PART NAME | SEE PAGE
1 | 1 | 3T-2953 | PLATE AS
2 | 1 | 5E-2062 | BOLT (3/8-16X.750IN)
3 | 1 | 9F-1075 | WASHER-HARD (38MM THK)
4 | 1 | 9F-1444 | SUPPORT AS-FOOT
5 | 1 | 7P-2229 | BOLT (1/2-13X1IN)
 | 1 | 9F- | WASHER-HARD (41MM THK)
6 | 1 | 8E-6136 | COVER AS-LH
 | 1 | 9F-2978 | 6 | NUT-WELD (3/8-16 THD)
 | 1 | 1P-0189 | 1 | CLIP
7 | 1 | 7S-2411 | 4 | COVER
8 | 1 | 9J-0498 | 18 | SCREW-HEAD (3/8-16X.875IN)
9 | 1 | -4474 | 1 | COVER
 | 1 | 8E-897 | GASKET
10 | 1 | 8E-3248 | 1 |
 | 1 | 8E-3250 | 1 | GASKET
11 | 1 | 3T-2636 | 1 | HANDHOLD
12 | 1 | 8E-8678 | 1 | COVER AS
 | 1 | 9F-2978 | 8 | NUT-WELD (3/8-16 THD)
 | 1 | 8E-8679 | 1 | GASKET
13 | 1 | 7T-0131 | 1 | FLOORPLATE AS
 | 1 | 1F-0748 | 4 | NUT-WELD (1/2-13 THD)
14 | 1 | 7V-8087 | 1 | PLUG-BUTTON
15 | 1 | 7T-0136 | 1 | PLATE AS
 | 1 | 9F-2978 | 5 | NUT-WELD (3/8-16 THD)
16 | 1 | 7T-8066 | 1 | COVER
 | 1 | 7T-8779 | 1 | GASKET
17 | 1 | 3T-3951 | 1 | PLATE AS
18 | 1 | 6T-8364 | 4 | BOLT (1/4-20X.625IN)
M | 1 | 9T-4205 | 4 | WASHER-HARD (20MM THK)
19 | 1 | 6L-8494 | 1 | FLOOR MAT
20 | 1 | 8E-8846 | 1 | MODULE AS-OPERATOR
21 | 1 | 3T-3834 | 1 | HANDHOLD
22 | 1 | 9P-8671 | 2 | PLUG
23 | 2 | 6T-8364 | 4 | BOLT (1/4-20X.625IN)
M | 2 | 9T-4205 | 4 | WASHER-HARD (20MM THK)
24 | 2 | 5E-2062 | 17 | BOLT (3/8-16X.750IN)
25 | 2 | 9F-1075 | 21 | WASHER-HARD (38MM THK)
26 | 2 | 7T-0135 | 1 | SEAL
27 | 2 | 7X-0075 | 2 | BOLT (3/4-10X5IN)
 | 2 | 7X-0682 | 2 | WASHER-HARD (64MM THK)
28 | 2 | 3T-3452 | 2 | PLATE
29 | 2 | 3T-8290 | 1 | PLATE AS
 | 2 | 7S-4828 | 8 | SPACER
30 | 2 | 3T-8281 | 1 | SEAL
31 | 2 | 7S-8817 | 1 | GASKET
32 | 2 | 7S-8815 | 1 | COVER AS
 | 2 | 2R-2276 | 2 | WASHER
 | 2 | 9F-8926 | 2 | SCREW-KNURLED
33 | 2 | 9W-3429 | 1 | COVER
34 | 2 | 8E-8697 | 1 | COVER
35 | 2 | 9D-3031 | 8 | SCREW-SOCKET HEAD
36 | 2 | 9W-3142 | 8 | MOUNTING
37 | 2 | 9W-8027 | 2 | PLATE
38 | 2 | 7X-0990 | 2 | BOLT (7/8-9X8IN)
 | 2 | 7X-0672 | 2 | WASHER-HARD
39 | 2 | 4L-8454 | 4 | BOLT (3/8-16X1.0IN)
40 | 2 | 3T-4788 | 1 | COVER
8
1
10
11
13
10
12 FRAME AND BODY
1 of 4
SELP4570-01

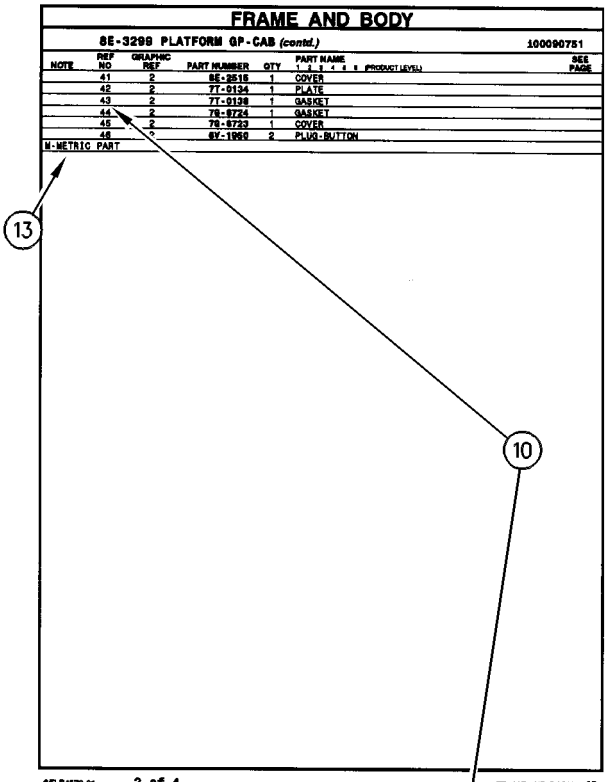
FRAME AND BODY
8E-3299 PLATFORM GP-CAB (contd.)
100090751
NOTE | REF NO | GRAPHIC REF | PART NUMBER | QTY | PART NAME | SEE PAGE
 | 41 | 2 | 8E-2516 | 1 | COVER
 | 42 | 2 | 7T-0134 | 1 | PLATE
 | 43 | 2 | 7T-0138 | 1 | GASKET
 | 44 | 2 | 7S-8724 | 1 | GASKET
 | 45 | 2 | 7S-8723 | 1 | COVER
 | 46 | 2 | 6V-1950 | 2 | PLUG-BUTTON
M-METRIC PART
13
10
SELP4570-01
2 of 4
FRAME AND BODY 13

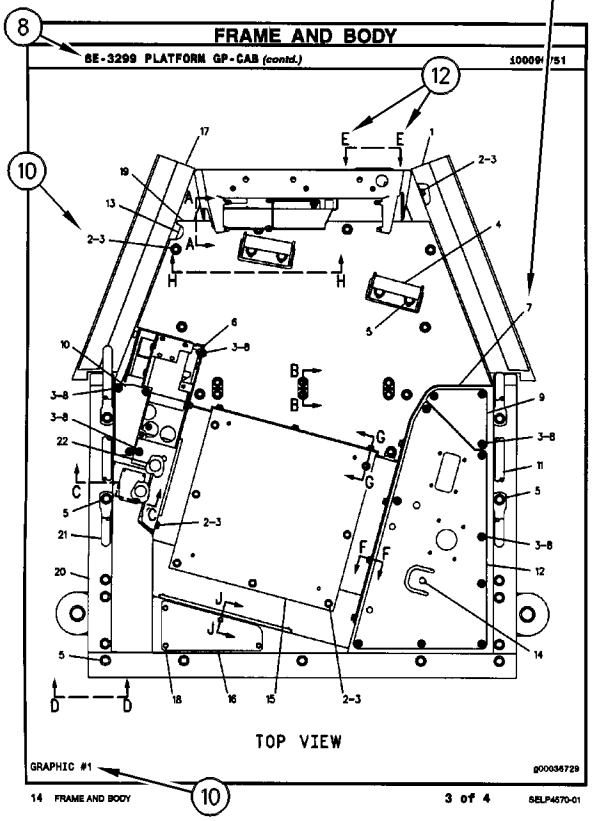
FRAME AND BODY
8E-3299 PLATFORM GP-CAB (contd.)
100090751
8
12
10
TOP VIEW
GRAPHIC #1
g00036729
10
14 FRAME AND BODY
3 of 4
SELP4570-01

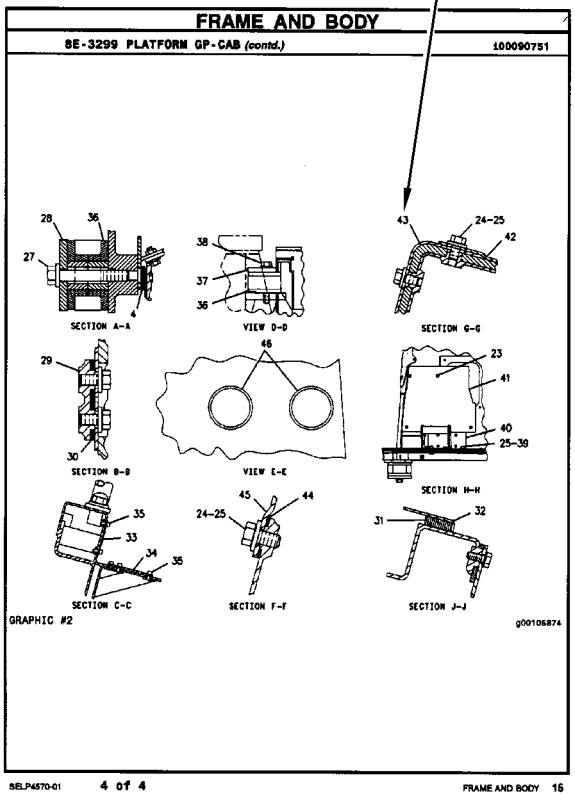
FRAME AND BODY
8E-3299 PLATFORM GP-CAB (contd.)
100090751
SECTION A-A
VIEW D-D
SECTION G-G
SECTION B-B
VIEW E-E
SECTION H-H
SECTION C-C
SECTION F-F
SECTION J-J
GRAPHIC #2
g00105874
SELP4570-01
4 of 4
FRAME AND BODY 16

INFORMAÇÃO GERAL

1. IDENTIFICAÇÃO DA MÁQUINA

As máquinas Caterpillar são identificadas pelos Números de Informação do Produto (PIN). Alguns componentes incluídos numa máquina podem ser identificados por Números de Série (S/N). Componentes típicos que serão enumerados com números de série incluem motores, transmissões, lâminas e ríperes. Além do número de série, a máquina e o motor são ainda identificados por números de arranjo e, em alguns casos, números de modificações. Tais números encontram-se na(s) placa(s) de identificação do produto e na placa mestre no compartimento do operador.

SIS *Novidades*

A partir do primeiro trimestre de 2001 o Número de Identificação de Produto da Caterpillar (PIN) precisa ser mudado de 8 para 17 caracteres. Esforçando-se para fornecer uma identificação uniforme de equipamentos, a Caterpillar e outros fabricantes de equipamento de construção estão mudando para atender a versão mais atualizada do padrão de identificação de produtos. Os números de PIN para produtos de aplicações não rodoviárias são definidos pela ISO 10261. O novo formato de número PIN será adotado em todas as máquinas e grupos geradores Caterpillar. As placas e as marcações do chassi mostrarão os 17 dígitos de PIN. O novo formato terá a seguinte disposição:

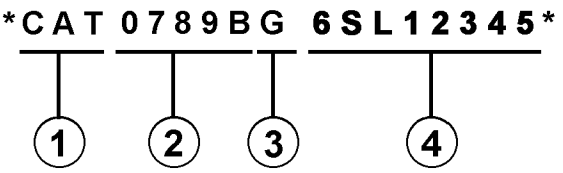

Onde:

1. Código de Fabricação Mundial da Caterpillar (dígitos 1-3)

2. Descrição da Máquina (dígitos 4-8)

3. Dígito de Verificação (dígito 9)

4. Seção de Indicador da Máquina (MIS) ou Número de Seqüência de Produto (dígitos 10-17). Estes eram anteriormente chamados de Número de Série.

Máquinas e grupos geradores produzidos antes do primeiro trimestre de 2001 manterão o formato de 8 caracteres de PIN.

Componentes como motores, transmissões, eixos, ferramentas de trabalho, etc. continuarão a usar Número de Série (S/N) com oito caracteres.

2. COMO OBTER PEÇAS

⚠ CUIDADO

Quando peças de substituição são exigidas para este produto, a Caterpillar recomenda a utilização de peças de substituição Caterpillar ou peças com as especificações equivalentes incluindo, mas não limitadas, à dimensões físicas, tipos, resistência e materiais.

A inobservância desta advertência poderá resultar em falhas prematuras, danos ao produto, ferimentos ou morte.

As Peças de Reposição de Qualidade Caterpillar encontram-se disponíveis nos revendedores Caterpillar no mundo inteiro. Seus estoques de peças são atualizados e incluem todas as peças normalmente necessárias para proteger seu investimento em máquinas Caterpillar. Alguns revendedores podem oferecer jogos de reparo ou peças de troca/remanufaturadas disponíveis como uma opção da alternativa de reparo mais eficaz para uma situação específica. Ao encomendar peças, seu pedido deve especificar a quantidade, o número e o nome da peça e o número de série/número de identificação do produto referentes à máquina para a qual as peças se destinam.

3. ORGANIZAÇÃO DO MANUAL DE PEÇAS

A informação do produto neste manual é apresentada em forma de "elementos de informação" que representam todos os componentes para o modelo específico. Arranjo de Motor e Grupo de Assento são exemplos de elementos de informação. Os elementos de informação são organizados em ordem alfabética por nome de peça ou secundariamente, por número de peça incluído em cada seção principal do manual.

4. LISTA DE CONTEÚDOS

A Lista de Conteúdos (TOC) se encontra no princípio do manual. A Lista de Conteúdos (TOC) relaciona em cada seção do manual uma lista completa com todos os elementos de informação organizados conforme aparecem no manual. Números de página são fornecidos para que se tenha referência rápida de ilustrações de peças detalhadas e listas de conteúdos que podem receber serviço de manutenção.

5. ÍNDICE DE PEÇAS DE MANUTENÇÃO

O Índice de Peças de Manutenção, localizado perto do princípio do manual, faz referência aos números de peça de manutenção usados com maior frequência, fornecendo uma descrição, a quantidade, o uso e o número de página. Esta informação é organizada com a descrição da peça em ordem alfabética.

6. ÍNDICE

O Índice localizado perto do princípio do manual, consiste de uma lista em ordem alfabética de todos os elementos de informação incluídos no manual. Números de página são fornecidos para que se tenha referência rápida de ilustrações de peças detalhadas e listas de conteúdos que podem receber serviço de manutenção.

7. ÍNDICE DE NÚMERO DE PEÇA

Um índice numérico relacionando todos os números de peça e a(s) página(s) correspondentes, aparece no final do manual.

8. LEGENDAS

As legendas localizadas no início de cada elemento de informação identificam o número e o nome de peça, juntamente com informação descritiva adicional. Informações sobre o Número de Informação do Produto (PIN) e o Número de Série (S/N) encontradas em cada legenda devem ser usadas para selecionar a informação correta sobre uma máquina específica. Opções de substituição no campo, identificação de componentes de acessórios opcionais e informações sobre onde são utilizados ("parte de") são também fornecidas.

A primeira linha de uma legenda é indicada em tipo maior para indicar o princípio de um elemento de informação. Legendas para páginas adicionais que podem ser necessárias para ilustrar um elemento de informação serão apresentadas em tipo padrão e incluirão o termo *(continua)* .

9. NÃO DISPONÍVEL SEPARADAMENTE

Em alguns casos, é necessário mostrar peças não disponíveis separadamente que têm uma ligação com listas de conteúdos de nível inferior que podem receber serviço de manutenção. Os números de peça destes componentes não disponíveis aparecerão em *itálico* , a fim de indicar que não estão disponíveis.

10. NÙMEROS DE REFERÊNCIA À LISTA DE PEÇAS

Os números indicados na coluna Ref No (No. de Referência) correspondem-se aos números usados no(s) gráfico(s) correspondente(s). Um sufixo com letras pode ser acrescentado a um número de referência para identificar itens de conteúdo de nível inferior. Os números indicados na coluna Graphic Ref (Referência de Gráfico) referem-se ao identificador de número de gráfico presente no canto esquerdo inferior de cada ilustração. O número de Referência de Gráfico pode ser usado em combinação com o item Ref No para determinar-se o número de peça correto. Poderá haver omissão intencional de um número de referência (Ref No) de uma lista de conteúdos uma vez que as informações são atualizadas para refletir os números de peça mais recentes que podem receber serviço de manutenção.

11. NOMES DE PEÇAS DESALINHADOS

Quando um nome de peça encontra-se desalinhado numa lista de peças, significa que tal item faz parte do (está incluído no) grupo ou conjunto sob o qual está relacionado.

12. LETRAS DE REFERÊNCIA NAS ILUSTRAÇÕES

Quando necessário, as ilustrações contêm letras de referência (A, B, C, etc.) que são utilizadas para seguir tubulações e cabos elétricos de um ponto a outro. Também foram utilizadas para indicar onde se pode reconectar as ilustrações que foram separadas.

13. ABREVIAÇÕES E SÍMBOLOS

O.D. – "Outside Diameter" (Diâmetro Externo)
I.D. – "Inside Diameter" (Diâmetro Interno)
A – Não faz parte deste grupo
B – Use conforme necessário
C – Indica modificação
D – Vendido por metro
E – Vendido por centímetro
F – Não ilustrado
G – Vendido por polegada
I – Consultar o Sistema de Informações Hidráulicas
M – Peça métrica
R – Peça remanufaturada pode estar disponível; consulte o seu revendedor Cat
Y – Ilustração separada
Z – Não disponível separadamente

SIS *Novidades*

14. <END>

Este símbolo indica o final de um elemento de informação.

NOTA:

Os contínuos aperfeiçoamentos e avanços no projeto do produto podem ocasionar modificações em sua máquina que talvez ainda não estejam incluídas nesta publicação. Sempre que surgirem dúvidas quanto a um produto Caterpillar ou quanto à presente publicação, consulte o seu revendedor Caterpillar para obter as informações mais recentes disponíveis.

FRAME AND BODY

8E-3299 PLATFORM GP-CAB

PIN 3SK1-99999

SMCS-7253 — 100090751

NOTE	REF NO	GRAPHIC REF	PART NUMBER	QTY	PART NAME (1 2 3 4 5 6 PRODUCT LEVEL)	SEE PAGE
	*	1	3T-2953	1	PLATE AS	
	2	1	6E-2062	25	BOLT (3/8-16X.750IN)	
	3	1	6P-1076	41	WASHER-HARD (38MM THK)	
	4	1	9P-1444	2	SUPPORT AS-FOOT	
	5	1	7P-2229	18	BOLT (1/2-13X1IN)	
		1	9P-[illegible]	18	WASHER-HARD (41MM THK)	
	6	1	8E-6136	*	COVER AS-LH	
		1	9F-2978	6	NUT-WELD (3/8-16 THD)	
		1	1P-0169	1	CLIP	
	7	1	7S-2411	4	COVER	
	8	1	9J-0498	18	SCREW-HEAD (3/8-16X.875IN)	
	9	1	[illegible]-4474	1	COVER	
		1	8E-[illegible]	*	GASKET	
	10	1	8E-3249	1	[illegible]	
		1	8E-3250	1	GASKET	
	11	1	3T-2636	1	HANDHOLD	
	12	1	8E-6078	1	COVER AS	
		1	9F-2978	8	NUT-WELD (3/8-16 THD)	
		1	8E-6079	1	GASKET	
	13	1	7T-0131	1	FLOORPLATE AS	
		1	1F-0748	4	NUT-WELD (1/2-13 THD)	
	14	1	7V-8087	1	PLUG-BUTTON	
	15	1	7T-0136	1	PLATE AS	
		1	9F-2978	5	NUT-WELD (3/8-16 THD)	
	16	1	7T-8066	1	COVER	
		1	7T-0779	1	GASKET	
	17	1	3T-3951	1	PLATE AS	
	18	1	6T-0364	4	BOLT (1/4-20X.625IN)	
M		1	9T-4205	4	WASHER-HARD (28MM THK)	
	19	1	6L-8494	1	FLOOR MAT	
	20	1	8E-6846	1	MODULE AS-OPERATOR	
	21	1	3T-3834	1	HANDHOLD	
	22	1	9P-8571	2	PLUG	
	23	2	6T-0364	4	BOLT (1/4-20X.625IN)	
M		2	9T-4205	4	WASHER-HARD (28MM THK)	
	24	2	6E-2062	17	BOLT (3/8-16X.750IN)	
	25	2	6P-1076	21	WASHER-HARD (38MM THK)	
	26	2	7T-0135	1	SEAL	
	27	2	7X-0078	2	BOLT (3/4-10X5IN)	
		2	7X-0682	2	WASHER-HARD (64MM THK)	
	28	2	3T-3452	2	PLATE	
	29	2	3T-8290	1	PLATE AS	
		2	7S-4828	8	SPACER	
	30	2	3T-8281	1	SEAL	
	31	2	7S-8817	1	GASKET	
	32	2	7S-8815	1	COVER AS	
		2	2R-2276	2	WASHER	
		2	9F-8926	2	SCREW-KNURLED	
	33	2	9W-3429	1	COVER	
	34	2	8E-8697	1	COVER	
	35	2	9D-3031	8	SCREW-SOCKET HEAD	
	36	2	9W-3142	8	MOUNTING	
	37	2	9W-9027	2	PLATE	
	38	2	7X-0390	2	BOLT (7/8-9X8IN)	
		2	7X-0672	2	WASHER-HARD	
	39	2	4L-6454	4	BOLT (3/8-16X1.0IN)	
	40	2	3T-4788	1	COVER	

12 FRAME AND BODY — 1 of 4 — SELP4570-01

FRAME AND BODY

8E-3299 PLATFORM GP-CAB *(contd.)* — 100090751

NOTE	REF NO	GRAPHIC REF	PART NUMBER	QTY	PART NAME (1 2 3 4 5 6 PRODUCT LEVEL)	SEE PAGE
	41	2	8E-2516	1	COVER	
	42	2	7T-0134	1	PLATE	
	43	2	7T-0138	1	GASKET	
	44	2	7S-8724	1	GASKET	
	45	2	7S-8723	1	COVER	
	46	2	6V-1950	2	PLUG-BUTTON	

M-METRIC PART

SELP4570-01 — 2 of 4 — FRAME AND BODY 13

FRAME AND BODY

8E-3299 PLATFORM GP-CAB *(contd.)* — 100090751

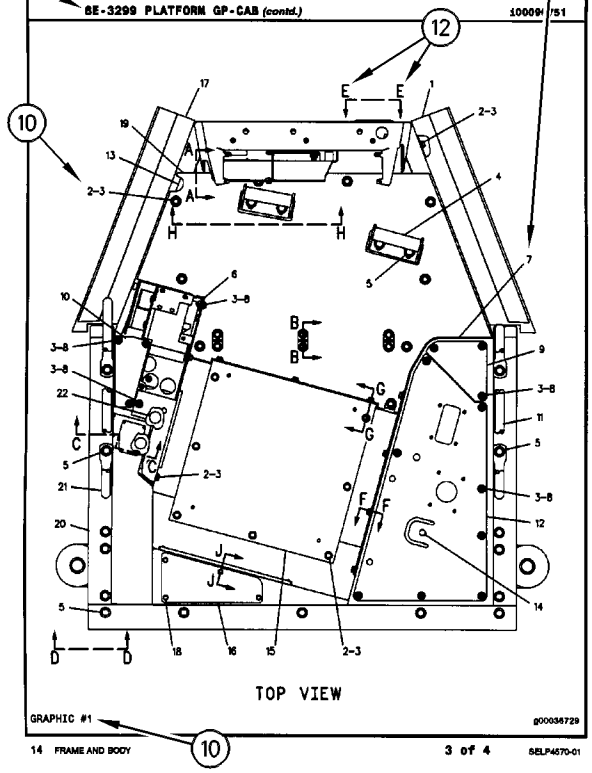

GRAPHIC #1 — g00036729

14 FRAME AND BODY — 3 of 4 — SELP4570-01

FRAME AND BODY

8E-3299 PLATFORM GP-CAB *(contd.)* — 100090751

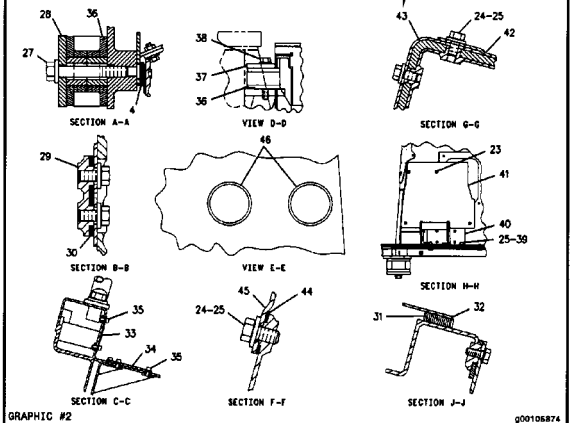

GRAPHIC #2 — g00105874

SELP4570-01 — 4 of 4 — FRAME AND BODY 15

ALLGEMEINE HINWEISE

1. MASCHINENKENNZEICHNUNG

Caterpillar-Maschinen sind mit PRODUCT IDENTIFICATION NUMBERS (PIN) (Produkt-Identnummern) gekennzeichnet. Einige Baugruppen, z.B. Motoren, Getriebe, Planierschilde und Aufreißer, sind mit SERIAL NUMBERS (S/N) (Seriennummern) gekennzeichnet. An der Maschine und am Motor befinden sich außerdem ARRANGEMENT NUMBERS (Ausrüstungsnummern) sowie in einigen Fällen MODIFICATION NUMBERS (Änderungsnummern). Sie befinden sich auf den PIN-Schildern und auf dem Typenschild im Fahrerhaus.

Bei Ersatzteilbestellungen müssen dem Händler alle diese Nummern zur Verfügung gestellt werden.

SIS *Neu im Parts Manual*

Vom ersten Quartal 2001 ab wurde die Caterpillar Produkt-Identnummer (PIN) von 8 auf 17 Zeichen geändert. Um zur Standardisierung der Produkt-Identnummer beizutragen, sind Caterpillar und andere Baumaschinenhersteller bestrebt, die aktuellste Norm zur Produkt-Identnummerierung einzuführen. Produkt-Identnummern für Baumaschinen sind durch ISO 10261 definiert. Das neue Format der Produkt-Identnummern gilt für alle Caterpillar-Maschinen und -Stromaggregate. Die Produkt-Identschilder und -Identrahmenmarkierung enthalten die aus 17 Zeichen bestehende Identnummer. Das neue Format hat folgende Abschnitte:

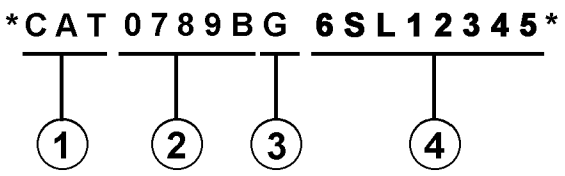

Abschnitte:

1. Caterpillars weltweiter Herstellungscode (Zeichen 1-3)

2. Modell (Zeichen 4-8)

3. Kontrollzeichen (Zeichen 9)

4. Maschinenspezifische Kennung (MIS) oder Produktsequenznummer (Zeichen 10-17). Diese wurde früher als Seriennummer bezeichnet.

Für vor dem ersten Quartal 2001 hergestellte Maschinen und Stromaggregate wird das aus 8 Zeichen bestehende PIN-Format beibehalten.

Bauteile wie z.B. Motoren, Getriebe, Achsen sowie Arbeitsgeräte werden weiterhin eine aus 8 Zeichen bestehende Seriennummer (S/N) aufweisen.

2. BESTELLEN VON ERSATZTEILEN

⚠ WARNUNG

Wenn für diese Maschine Ersatzteile benötigt werden, empfiehlt Caterpillar, ausschließlich Caterpillar-Ersatzteile oder solche zu verwenden, die die gleichen technischen Merkmale hinsichtlich Typ, Festigkeit, Werkzeugeigenschaften und die gleichen Maße aufweisen.

Bei Nichtbeachtung dieser Warnung besteht Verletzungs- oder sogar Lebensgefahr! Ferner kann Nichtbeachtung vorzeitige Ausfälle der Teile und Beschädigung der Maschine zur Folge haben.

Original Caterpillar-Ersatzteile können weltweit bei jedem Caterpillar-Händlern bestellt werden. Die umfangreichen Händlerlager enthalten normalerweise alle Teile, die Sie für Ihre Caterpillar-Maschine benötigen. Einige Händler bieten Reparatursätze, Austausch- oder werküberholte Teile an, so daß Sie eine Auswahl unter verschiedenen Reparaturmöglichkeiten treffen können. Ihre Bestellung muß folgende Angaben enthalten: Anzahl der benötigten Teile, Bestellnummer, Bezeichnung des Teils, Serien-Nr./Produkt-Ident-Nr., Ausrüstungs-Nr. und Änderungs-Nr. der Maschine, für die diese Teile benötigt werden.

3. AUFBAU DES PARTS MANUAL

Die Produktinformationen für alle Komponenten eines bestimmten Modells sind in INFORMATION ELEMENTS (Informationseinheiten) gegliedert. ENGINE ARRANGEMENT (Motorausführung) und SEAT GROUP (Fahrersitz) sind Beispiele für solche Informationseinheiten. Sie sind innerhalb jeder Gruppe alphabetisch, entsprechend der Ersatzteilbezeichnung, und zusätzlich numerisch, entsprechend der Ersatzteilnummer, geordnet.

4. INHALTSVERZEICHNIS

Das Inhaltsverzeichnis befindet sich am Anfang des Buches. Im Inhaltsverzeichnis werden die einzelnen Abschnitte des Buches aufgeführt. Die Abschnitte enthalten eine vollständige Aufstellung aller Informationseinheiten. Diese sind entsprechend ihrem Erscheinen im Buch geordnet. Das Inhaltsverzeichnis enthält Seitenangaben für Schnellverweise auf detaillierte Abbildungen und Teillisten.

ALLGEMEINE HINWEISE

5. INDEX FÜR WARTUNGSTEILE

Der Index für Wartungsteile vorn im Buch enthält die Bestellnummern, Seitenangaben, Mengenangaben und Informationen über den Einsatzbereich für die am häufigsten benötigten Ersatzteile. Die Angaben sind alphabetisch entsprechend der Teilebezeichnung geordnet.

6. INDEX

Der Index vorn im Buch enthält eine alphabetische Liste aller Informationseinheiten. Er enthält Seitenangaben für Schnellverweise auf detaillierte Abbildungen und Teillisten.

7. INDEX FÜR BESTELLNUMMERN

Hinten im Buch befindet sich ein numerischer Index, mit allen Bestellnummern und dem Hinweis auf die Seite, auf der sich die betreffende Abbildung befindet.

8. ÜBERSCHRIFTEN

Die Überschriften, die sich am Anfang jeder der Informationseinheiten befinden, enthalten Bestellnummern, Ersatzteilbezeichnungen und zusätzliche beschreibende Informationen. Produkt-Ident- und Seriennummern in den Überschriften sollten zur Auswahl der richtigen Informationen für die betreffende Maschine verwendet werden. Die Überschriften enthalten außerdem Informationen über möglichen Außendienstersatz, mögliche Baugerätekomponenten und die Baugruppe, zu der das Teil gehört.

Die erste Zeile einer Überschrift erscheint in einer größeren Schriftart, um den Anfang einer Informationseinheit zu kennzeichnen. Überschriften für zusätzliche Seiten, die zur Erläuterung einer Informationseinheit notwendig sind, erscheinen in normaler Schriftart und enthalten den Begriff "(contd.)".

9. NICHT EINZELN LIEFERBARE TEILE

In einigen Fällen ist es notwendig nicht lieferbare Teile, die selbst mit einer eigenen Teilliste im Buch vertreten sind, aufzuführen. Die Bestellnummern dieser nicht einzeln lieferbaren Teile erscheinen kursiv, wodurch angezeigt wird, daß sie nur in Verbindung mit anderen Teilen lieferbar sind.

10. REFERENZNUMMER FÜR ERSATZTEILE

Die Zahlen, die in der Spalte "Ref No" aufgeführt sind, stimmen mit den Zahlen in den beigefügten Abbildungen überein. Ein Buchstaben-Suffix kann zu einer Referenznummer hinzugefügt werden, um zu kennzeichnen, daß das Teil mit einer eigenen Teilliste im Buch aufgeführt ist. Die in der Spalte "Graphic Ref" angeführten Zahlen verweisen auf die Identifikationsnummer der Abbildung, die sich in der linken unteren Ecke der Abbildung befindet. Diese Nummer kann zusammen mit der Referenznummer des Teils angegeben werden, um die richtige Ersatzteilnummer zu ermitteln. Referenznummern können absichtlich weggelassen werden, da die Nummern der lieferbaren Ersatzteile ständig aktualisiert werden.

11. EINGERÜCKTE BEZEICHNUNGEN

Wenn eine Bezeichnung eingerückt ist, wird dadurch angezeigt, daß das Teil zu einer Baugruppe gehört, unter deren Bezeichnung es eingerückt ist.

12. REFERENZBUCHSTABEN

Falls erforderlich sind in den Abbildungen Referenzbuchstaben enthalten (z.B. A, B, C, usw.), die Leitungen und Kabelbäume von einem Punkt zum anderen verfolgen. Außerdem geben sie die Stelle an, an der getrennte Abbildungen fortgesetzt werden.

13. ABKÜRZUNGEN UND SYMBOLE

O.D. – Außendurchmesser
I.D. – Innendurchmesser
A – kein Teil dieser Gruppe
B – nach Bedarf verwenden
C – Hinweis auf eine Änderung
D – in Meter-Länge bestellen
E – in Zentimeter-Länge bestellen
F – nicht gezeigt
G – in Zoll-Länge bestellen
I – siehe Hydraulikinformationssystem
M – metrisches Teil
R – werküberholtes Teil unter Umständen lieferbar
Y – separate Abbildung
Z – nicht einzeln lieferbar

SIS *Neu im Parts Manual*

14. <END>

Dieses Symbol zeigt das Ende eines Informationselements an.

ALLGEMEINE HINWEISE

ANMERKUNG:

Ständig vorgenommene Verbesserungen und Weiterentwicklungen an Ihrer Maschine können Änderungen verursachen, die in der vorliegenden Ausgabe noch nicht berücksichtigt sind. Fragen zu Ihrer Caterpillar-Maschine oder diesem Ersatzteilbuch beantwortet Ihr Caterpillar-Händler.

ALLGEMEINE HINWEISE

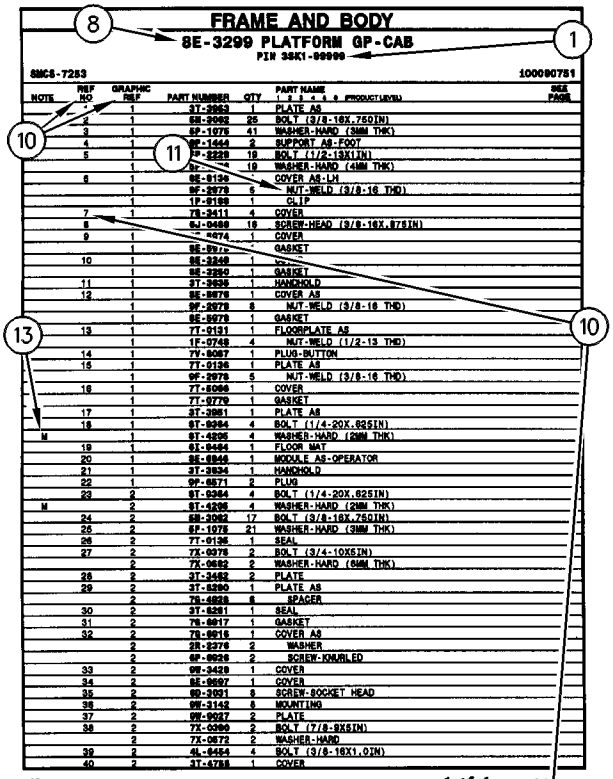

FRAME AND BODY

8E-3299 PLATFORM GP-CAB

PIN 35K1-99999

SMCS-7253 100090751

NOTE	REF NO	GRAPHIC REF	PART NUMBER	QTY	PART NAME 1 2 3 4 5 6 (PRODUCT LEVEL)	SEE PAGE
	*	1	3T-2953	1	PLATE AS	
	2	1	6B-2062	25	BOLT (3/8-16X.750IN)	
	3	1	6P-1076	41	WASHER-HARD (38MM THK)	
	4	1	9F-1444	2	SUPPORT AS-FOOT	
	5	1	7P-2229	19	BOLT (1/2-13X1IN)	
		1	9F-	19	WASHER-HARD (41MM THK)	
	6	1	8E-6136	*	COVER AS-LH	
		1	9F-2978	5	NUT-WELD (3/8-16 THD)	
		1	1P-0189	1	CLIP	
	7	1	7S-2411	4	COVER	
	8	1	9J-0498	18	SCREW-HEAD (3/8-16X.875IN)	
	9	1	-4474	1	COVER	
		1	8E-897	*	GASKET	
	10	1	8E-3248	1	*	
		1	8E-3250	1	GASKET	
	11	1	3T-2636	1	HANDHOLD	
	12	1	8E-8678	1	COVER AS	
		1	9F-2978	8	NUT-WELD (3/8-16 THD)	
		1	8E-8678	1	GASKET	
	13	1	7T-0131	1	FLOORPLATE AS	
		1	1F-0748	4	NUT-WELD (1/2-13 THD)	
	14	1	7V-8087	1	PLUG-BUTTON	
	15	1	7T-0136	1	PLATE AS	
		1	9F-2978	5	NUT-WELD (3/8-16 THD)	
	16	1	7T-8066	1	COVER	
		1	7T-8779	1	GASKET	
	17	1	3T-3951	1	PLATE AS	
	18	1	6T-8364	4	BOLT (1/4-20X.625IN)	
M		1	9T-4205	4	WASHER-HARD (20MM THK)	
	19	1	6L-8494	1	FLOOR MAT	
	20	1	8E-8846	1	MODULE AS-OPERATOR	
	21	1	3T-3834	1	HANDHOLD	
	22	1	9P-8671	2	PLUG	
	23	2	6T-8364	4	BOLT (1/4-20X.625IN)	
M		2	9T-4205	4	WASHER-HARD (20MM THK)	
	24	2	6B-2062	17	BOLT (3/8-16X.750IN)	
	25	2	6P-1076	21	WASHER-HARD (38MM THK)	
	26	2	7T-0135	1	SEAL	
	27	2	7X-0078	2	BOLT (3/4-10X5IN)	
		2	7X-0662	2	WASHER-HARD (64MM THK)	
	28	2	3T-3452	2	PLATE	
	29	2	3T-8290	1	PLATE AS	
		2	7S-4828	8	SPACER	
	30	2	3T-8281	1	SEAL	
	31	2	7S-8817	1	GASKET	
	32	2	7S-8815	1	COVER AS	
		2	2R-2276	2	WASHER	
		2	6P-8926	2	SCREW-KNURLED	
	33	2	9W-3429	1	COVER	
	34	2	8E-8697	1	COVER	
	35	2	6D-3031	8	SCREW-SOCKET HEAD	
	36	2	9W-3142	8	MOUNTING	
	37	2	9W-8027	2	PLATE	
	38	2	7X-0090	2	BOLT (7/8-9X8IN)	
		2	7X-0672	2	WASHER-HARD	
	39	2	4L-8454	4	BOLT (3/8-16X1.0IN)	
	40	2	3T-4788	1	COVER	

12 FRAME AND BODY 1 of 4 SELP4570-01

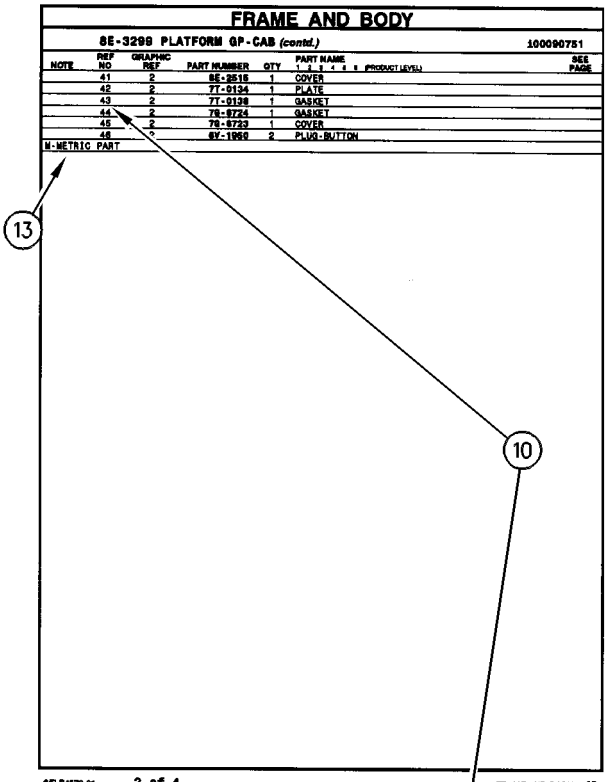

FRAME AND BODY

8E-3299 PLATFORM GP-CAB (contd.) 100090751

NOTE	REF NO	GRAPHIC REF	PART NUMBER	QTY	PART NAME 1 2 3 4 5 6 (PRODUCT LEVEL)	SEE PAGE
	41	2	8E-2516	1	COVER	
	42	2	7T-0134	1	PLATE	
	43	2	7T-0138	1	GASKET	
	44	2	7S-8724	1	GASKET	
	45	2	7S-8723	1	COVER	
	46	2	6V-1950	2	PLUG-BUTTON	

M-METRIC PART

SELP4570-01 2 of 4 FRAME AND BODY 13

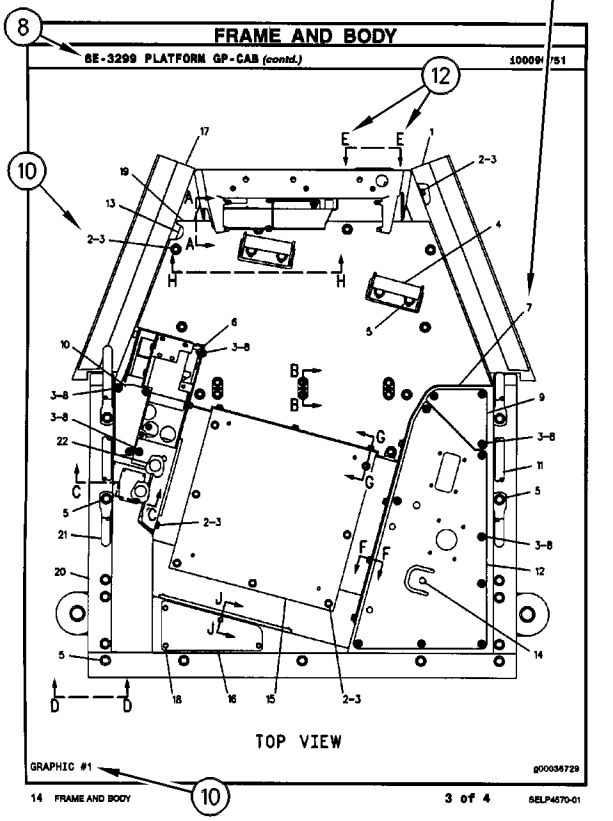

FRAME AND BODY

8E-3299 PLATFORM GP-CAB (contd.) 100090751

GRAPHIC #1 g00036729

TOP VIEW

14 FRAME AND BODY 3 of 4 SELP4570-01

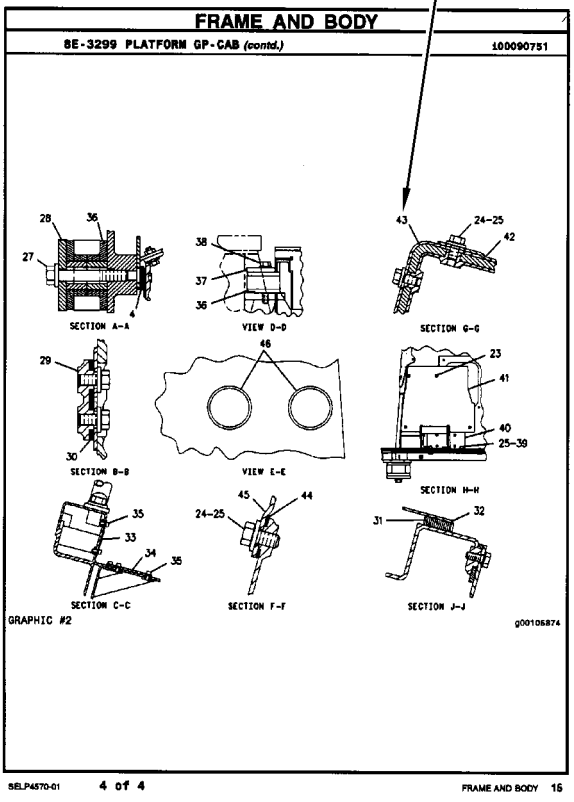

FRAME AND BODY

8E-3299 PLATFORM GP-CAB (contd.) 100090751

SECTION A-A

VIEW D-D

SECTION G-G

SECTION B-B

VIEW E-E

SECTION H-H

SECTION C-C

SECTION F-F

SECTION J-J

GRAPHIC #2 g00105874

SELP4570-01 4 of 4 FRAME AND BODY 16

REPAIR ALTERNATIVES

REMANUFACTURED COMPONENTS

As an option when making repairs consider Caterpillar Remanufactured Components. Components that are available through the Caterpillar Remanufactured Program are identified three ways in the parts book:

- with the letter R in the note field of the parts list
- with an R* at the beginning of the first line of the caption
- with an *R at the end of the first line of the caption

Typical components included in the Remanufacturing Program include:

ALTERNATORS
CONNECTING RODS
CRANKSHAFTS - UNDERSIZE
CRANKSHAFTS - UPGRADE TO NEW
CYLINDER HEADS
ELECTRONIC CONTROL MODULES (ECM)
ELECTRONIC SENSORS
FUEL INJECTORS
FUEL NOZZLES
FUEL PUMPS
GOVERNORS
OIL PUMPS
PISTONS
SHORT BLOCKS
STARTERS
TURBOCHARGERS - COMPLETE
TURBOCHARGER CARTRIDGES
WATER PUMPS

Caterpillar Remanufactured engines for many engine arrangements are also available.

COMPOSANTS RÉNOVÉS

Comme option de réparation, considérer les composants rénovés Caterpillar. Les composants disponibles dans le cadre du programme Caterpillar de composants rénovés sont identifiés de trois façons dans le catalogue de pièces:

- avec la lettre "R" dans l'espace note de la liste des pièces
- avec R* au début de la première ligne des légendes
- avec *R à la fin de la première ligne des légendes

Les composants suivants figurent parmi les composants typiques du programme de rénovation:

ALTERNATEURS
BIELLES
VILEBREQUINS - SOUS-DIMENSIONNÉS
VILEBREQUINS - REMIS À NEUF
CULASSES
MODULES DE COMMANDE ÉLECTRONIQUE (ECM)
CAPTEURS ÉLECTRONIQUES
INJECTEURS
TÊTES D'INJECTEURS
POMPES À CARBURANT
RÉGULATEURS
POMPES À HUILE
PISTONS
BLOCS EMBIELLÉS
DÉMARREURS
TURBOCOMPRESSEURS - COMPLETS
CARTOUCHES DE TURBOCOMPRESSEUR
POMPES À EAU

Des moteurs rénovés sont aussi disponibles pour plusieurs versions de moteur.

ALTERNATIVAS DE REPARACIÓN

COMPONENTES REMANUFACTURADOS

Al hacer reparaciones, tenga en cuenta la opción de Componentes Remanufacturados Caterpillar. Los componentes que están disponibles por medio del programa de Productos Remanufacturados Caterpillar se identifican de tres maneras en el manual de piezas:

- con la letra R en el espacio de Nota de la lista de piezas
- con una R* al comienzo de la primera línea de la leyenda
- con una *R al final de la primera línea de la leyenda

Los componentes que se incluyen típicamente en el Programa de Productos Remanufacturados son:

ALTERNADORES
BIELAS
CIGÜEÑALES - BAJOMEDIDA
CIGÜEÑALES - REMANUFACTURADOS A NUEVO
CULATAS
MÓDULOS DE CONTROL ELECTRÓNICO (ECM)
SENSORES ELECTRONICOS
INYECTORES
BOQUILLAS
BOMBAS DE COMBUSTIBLE
REGULADORES
BOMBAS DE ACEITE
PISTONES
MONOBLOQUES
MOTORES DE ARRANQUE
TURBOCOMPRESORES - COMPLETOS
NÚCLEOS DE TURBOCOMPRESOR
BOMBAS DE AGUA

También hay disponibles motores Remanufacturados Caterpillar para muchas de las configuraciones de motores.

ALTERNATIVAS DE REPARO

COMPONENTES REMANUFATURADOS

Considere o uso de Componentes Remanufaturados Caterpillar ao efetuar reparos. Os componentes disponíveis através do Programa de Remanufatura Caterpillar são identificados de três formas no manual de peças:

- com um R na área da nota da lista de peças
- com um R* no princípio da primeira linha da legenda
- com um *R no final da primeira linha da legenda

Os componentes típicos que constam no Programa de Remanufatura incluem:

ALTERNADORES
BIELAS
VIRABREQUINS - SUBMEDIDAS
VIRABREQUINS - ATUALIZAÇÃO
CABEÇOTES
MÓDULOS DE CONTROLE ELETRÔNICO (ECM)
SENSORES ELETRÔNICOS
INJETORES DE COMBUSTÍVEL
BICOS DE ABASTECIMENTO DE COMBUSTÍVEL
BOMBAS DE COMBUSTÍVEL
GOVERNADORES
BOMBAS DE ÓLEO
PISTÕES
BLOCOS BÁSICOS DO MOTOR
MOTORES DE PARTIDA
TURBOALIMENTADORES - COMPLETOS
CARTUCHOS DE TURBOALIMENTADORES
BOMBAS D'ÁGUA

Motores Remanufaturados Caterpillar também encontram-se disponíveis para diversos arranjos de motor.

REPARATURALTERNATIVEN

WERKÜBERHOLTE AT-PRODUKTE

Bei Reparaturen sollten werküberholte AT-Produkte von Caterpillar in Betracht gezogen werden. Die durch das AT-Programm von Caterpillar erhältlichen Teile sind im Parts Book auf drei verschiedene Arten gekennzeichnet:

- mit dem Buchstaben R in der Spalte NOTE der Ersatzteilliste
- mit einem R* am Anfang der ersten Zeile der Überschrift
- mit einem *R am Ende der ersten Zeile der Überschrift

Das AT-Programm umfaßt u.a. folgende Produkte:

DREHSTROMGENERATOREN
PLEUELSTANGEN
KURBELWELLEN - MIT UNTERMASS
KURBELWELLEN - MIT ORIGINALMASS
ZYLINDERKÖPFE
ELEKTRONISCHE STEUEREINHEITEN (EMC)
ELEKTRONISCHE SENSOREN
PUMPENDÜSEN
EINSPRITZDÜSEN
KRAFTSTOFFPUMPEN
DREHZAHLREGLER
ÖLPUMPEN
KOLBEN
TEILMOTOREN
ANLASSER
TURBOLADER - KOMPLETT
TURBOLADERLAUFZEUGE
KÜHLWASSERPUMPEN

Viele Motoren können durch werküberholte AT-Motoren von Caterpillar ersetzt werden.

MAINTENANCE PARTS

DESCRIPTION	PART NUMBER	QTY	WHERE USED	PAGE
AIR INLET AND EXHAUST SYSTEM				
FILTER ELEMENT AS-AIR (PRIMARY)	222-9020	1	AIR CLEANER GP	86
FILTER ELEMENT AS-AIR (SECONDARY)	222-9021	1	AIR CLEANER GP	86
BASIC ENGINE				
CAP AS (ENGINE OIL FILLER)	130-9888	1	COVER GP-VALVE MECHANISM	12
FILTER-BREATHER (CRANKCASE)	229-3555	1	COVER GP-VALVE MECHANISM	12
GASKET (VALVE COVER)	216-9604	1	COVER GP-VALVE MECHANISM	12
HOSE (LOWER FUMES DISPOSAL)	216-9617	1	COVER GP-VALVE MECHANISM	12
HOSE (UPPER FUMES DISPOSAL)	216-9614	1	COVER GP-VALVE MECHANISM	12
PLUG-SUMP DRAIN (ENGINE OIL)	7C-0351	2	PAN GP-OIL	40
SEAL-O-RING	229-3556	1	COVER GP-VALVE MECHANISM	12
V-BELT SET (INCLUDES 2-BELTS) (FAN DRIVE)	2S-2756	1	DRIVE GP-FAN	26
COOLING SYSTEM				
CAP AS-RADIATOR	031-1119	1	TANK GP-COOLANT	83
HOSE-RADIATOR INLET	199-5926	1	LINES GP-RADIATOR	71
		1	LINES GP-RADIATOR	74
HOSE-RADIATOR (INLET)	205-5135	1	LINES GP-RADIATOR	71
		1	LINES GP-RADIATOR	74
HOSE-RADIATOR OUTLET	199-5927	1	LINES GP-RADIATOR	71
		1	LINES GP-RADIATOR	74
HOSE-RADIATOR (OUTLET)	205-5134	1	LINES GP-RADIATOR	71
		1	LINES GP-RADIATOR	74
REGULATOR-WATER TEMPERATURE	216-9737	1	CONNECTION GP-WATER	57
SEAL-O-RING (REGULATOR)	140-7515	1	CONNECTION GP-WATER	57
SEAL (REGULATOR HOUSING)	141-6188	1	CONNECTION GP-WATER	57

MAINTENANCE PARTS

DESCRIPTION	PART NUMBER	QTY	WHERE USED	PAGE
ELECTRICAL AND STARTING SYSTEM				
BATTERY-MAINTENANCE FREE (12V)(900 AMP)	9X-3404	2	BATTERY GP	138
BATTERY (12-VOLT, 750-AMPERE)	3T-5760	2	BATTERY & WIRING GP	130
		2	BATTERY & WIRING GP	134
CAP-VENTED (WINDOW WASHER)	8E-8292	1	WIRING GP-PLATFORM	211
		1	WIRING GP-CHASSIS	186
FUSE (10-AMPERE)	113-8490	4	BOX GP-JUNCTION	139
		4	BOX GP-JUNCTION	141
FUSE (15-AMPERE)	113-8491	8	BOX GP-JUNCTION	139
		8	BOX GP-JUNCTION	141
FUSE (20-AMPERE)	113-8492	2	BOX GP-JUNCTION	139
		2	BOX GP-JUNCTION	141
	207-1219	1	BATTERY & WIRING GP	130
		1	BATTERY & WIRING GP	134
FUSE (25-AMPERE)	113-8493	2	BOX GP-JUNCTION	139
		2	BOX GP-JUNCTION	141
FUSE (5-AMPERE)	141-2759	14	BOX GP-JUNCTION	139
		13	BOX GP-JUNCTION	141
FUSE (70-AMPERE)	124-2913	3	BATTERY & WIRING GP	130
FUSE (80-AMPERE)	232-6315	3	BATTERY & WIRING GP	135
GLASS AS (FRONT SIGNAL LAMP)	117-9418	1	LAMP GP-SIGNAL	156
GLASS AS (REAR LAMP)	117-9420	1	LAMP GP-REAR	152
GLASS AS (REAR SIGNAL LAMP)	117-9419	1	LAMP GP-SIGNAL	155
GLASS (WARNING BEACON)	117-9421	1	LAMP GP-WARNING BEACON	158
HEATER AS (AIR INLET)	252-4460	1	STARTING AID GP	173
KEY	8H-5306	1	SWITCH GP-DISCONNECT	176
KEY AS-ELECTRONIC (SECURITY, YELLOW)	206-5162	2	WIRING GP-MACHINE	208
LAMP AS (HEADLIGHT)	116-9619	2	LAMP GP-HEAD	151
LAMP AS (RED, GREEN, LED, 12-VOLT)	165-5655	1	WIRING GP-MACHINE	208
LAMP AS (24-VOLT, 70-WATT) (FLOOD)	5W-2039	1	LAMP GP-FLOOD	150
LAMP AS (24-VOLT, 70-WATT) (FRONT FLOOD)	5W-2039	1	LIGHTING GP-FLOOD	163
LAMP AS (24-VOLT, 70-WATT) (REAR FLOODLIGHT)	5W-2039	1	LIGHTING GP-FLOOD	162
LAMP-HALOGEN (24-VOLT, 70-WATT) (WARNING BEACON)	8U-9417	1	LAMP GP-WARNING BEACON	158
LAMP (24-VOLT, 21-WATT) (SIGNAL LAMP)	8U-2622	4	LAMP GP-REAR	153
		2	LAMP GP-SIGNAL	157
LAMP (24-VOLT, 4-WATT) (HEADLIGHT)	209-4853	2	LAMP GP-HEAD	151
LAMP (24-VOLT, 5-WATT) (MARKER LIGHTS)	202-7201	1	LIGHTING GP-ROADING	165
LAMP (24-VOLT, 5-WATT) (REAR LAMP)	5W-2040	2	LAMP GP-REAR	153
LAMP (24-VOLT, 75/70-WATT) (HEADLIGHT)	211-7560	2	LAMP GP-HEAD	151
REFLECTOR AS (RED)	201-3975	2	LAMP GP-REAR	153

MAINTENANCE PARTS

DESCRIPTION	PART NUMBER	QTY	WHERE USED	PAGE
FUEL SYSTEM				
CAP AS-FILLER (FUEL, LOCKING, VENTED)	7X-7700	1	TANK GP-FUEL	119
ELEMENT-WATER SEPARATOR	138-3100	1	SEPARATOR GP-WATER	116
FILTER ELEMENT AS-FUEL	145-4501	1	FILTER GP-FUEL	97
FUSE (15-AMPERE) (FUEL TRANSFER PUMP)	113-8491	1	PUMP GP-FUEL TRANSFER	106
		1	PUMP GP-FUEL TRANSFER	108
PADLOCK GP	246-2641	1	TANK GP-FUEL	119
SCREEN AS (REFUELING)	5W-8656	1	HOSE GP-REFUELING	98
SEAL (WATER SEPARATOR BASE)	101-3953	1	SEPARATOR GP-WATER	116
SEAL (WATER SEPARATOR CONNECTION)	101-3955	1	SEPARATOR GP-WATER	116
STRAINER-FUEL	9P-7121	1	TANK GP-FUEL	119
HYDRAULIC SYSTEM				
CAP-BREATHER (HYDRAULIC OIL TANK)	194-7849	1	TANK GP-HYDRAULIC	662
FILTER ELEMENT AS-OIL (HYDRAULIC) (HIGH PRESSURE)	229-2800	1	LINES GP-HYDRAULIC FAN	535
FILTER ELEMENT AS-OIL (HYDRAULIC) (PILOT)	109-7289	1	FILTER GP-OIL	477
FILTER ELEMENT AS-OIL (HYDRAULIC) (SWING CIRCUIT)	109-7289	1	FILTER GP-OIL	476
FILTER ELEMENT-HYDRAULIC (RETURN OIL)	137-7249	1	FILTER GP-OIL	478
FILTER (HYDRAULIC OIL RETURN)	8U-0723	1	FILTER GP-OIL	475
IMPLEMENTS				
FILTER-GREASE (BOOM)	168-3158	1	LINES GP-GREASE	761
		1	LINES GP-GREASE	763
LUBRICATION SYSTEM				
FILTER AS-ENGINE OIL	7W-2327	2	FILTER GP-ENGINE OIL	54
MACHINE ARRANGEMENT				
LAMP AS (REAR)	207-4699	2	ROADING AR	3
OPERATOR STATION				
BLADE AS-WIPER	196-9059	2	WIPER GP-WINDOW	932
BLADE AS-WIPER (LOWER)	196-9058	1	WIPER GP-WINDOW	929
BLADE AS-WIPER (UPPER)	196-9059	1	WIPER GP-WINDOW	929
FILTER-CAB AIR (FRESH)	4I-1278	1	DUCT GP-AIR	864
FILTER-RECIRCULATION (AIR CONDITIONER)	185-8154	1	AIR CONDITIONER GP	824
LAMP AS (CAB)	6C-9121	1	CAB GP	831
		1	CAB GP	834
LAMP (CAB)	6C-9122	2	CAB GP	831
		2	CAB GP	834
SEAT BELT GP	8Y-4030	1	SEAT BELT GP	903
	205-6210	1	SEAT GP	906
V-BELT (1250-MM LG) (REFRIGERANT COMPRESSOR)	145-7211	1	COMPRESSOR GP-REFRIGERANT	840

MAINTENANCE PARTS

DESCRIPTION	PART NUMBER	QTY	WHERE USED	PAGE
POWER TRAIN				
FILTER (TRANSMISSION)	147-5044	1	TRANSMISSION GP	321
		1	TRANSMISSION GP	335
VALVE-BREATHER (AXLE)	5W-5682	2	AXLE GP-REAR	231
		2	AXLE GP-STEERING	244
		2	AXLE GP-STEERING	255
		2	AXLE GP-STEERING	266
		2	AXLE GP-STEERING	277

PIÈCES DE RECHANGE

DESCRIPTION	NUMÉRO DE PIECÈS	QTÉ	DOMAINE D'APPLICATION	PAGE
CIRCUIT D'ADMISSION D'AIR ET D'ÉCHAPPEMENT				
ÉLÉMENT DE FILTRE À AIR (ENS) (PRINCIPAL)	222-9020	1	FILTRE A AIR (ASS)	86
ÉLÉMENT DE FILTRE À AIR (ENS) (SECONDAIRE)	222-9021	1	FILTRE A AIR (ASS)	86
CIRCUIT DE CARBURANT				
BOUCHON DE GOULOTTE DE REMPLISSAGE (ENS) (CARBURANT, VERROUILLAGE, AÉRÉ)	7X-7700	1	RÉSERVOIR DE CARBURANT (ASS)	119
BOURRELET D'ÉTANCHÉITÉ (CONNEXION DE SÉPARATEUR D'EAU)	101-3955	1	SÉPARATEUR D'EAU (ASS)	116
BOURRELET D'ÉTANCHÉITÉ (SUPPORT DE SÉPARATEUR D'EAU)	101-3953	1	SÉPARATEUR D'EAU (ASS)	116
CADENAS (ASS)	246-2641	1	RÉSERVOIR DE CARBURANT (ASS)	119
ÉCRAN (ENS) (REMPLISSAGE DE CARBURANT)	5W-8656	1	FLEXIBLE DE REMPLISSAGE DE CARBURANT (ASS)	98
ÉLÉMENT DE FILTRE (ENS)-CARBURANT	145-4501	1	FILTRE A CARBURANT (ASS)	97
ÉLÉMENT DE SÉPARATEUR D'EAU	138-3100	1	SÉPARATEUR D'EAU (ASS)	116
FILTRE À CARBURANT	9P-7121	1	RÉSERVOIR DE CARBURANT (ASS)	119
FUSIBLE (15A) (POMPE D'ALIMENTATION EN CARBURANT)	113-8491	1	POMPE D'ALIMENTATION EN CARBURANT (ASS)	106
		1	POMPE D'ALIMENTATION EN CARBURANT (ASS)	108
CIRCUIT DE GRAISSAGE				
FILTRE A HUILE MOTEUR (ENS)	7W-2327	2	FILTRE À HUILE MOTEUR (ASS)	54

* TRADUCTION NON DISPONIBLE AU MOMENT DE LA PUBLICATION

PIÈCES DE RECHANGE

DESCRIPTION	NUMÉRO DE PIECÈS	QTÉ	DOMAINE D'APPLICATION	PAGE
CIRCUIT DE REFROIDISSEMENT				
BOUCHON DE RADIATEUR (ENS)	031-1119	1	RÉSERVOIR DU LIQUIDE DE REFROIDISSEMENT (ASS)	83
BOURRELET D'ÉTANCHÉITÉ (CARTER DE RÉGULATEUR)	141-6188	1	RACCORD D'EAU (ASS)	57
FLEXIBLE D'ADMISSION DU RADIATEUR	199-5926	1	CANALISATIONS DE RADIATEUR (ASS)	71
		1	CANALISATIONS DE RADIATEUR (ASS)	74
FLEXIBLE DE RADIATEUR (*INLET)	205-5135	1	CANALISATIONS DE RADIATEUR (ASS)	71
		1	CANALISATIONS DE RADIATEUR (ASS)	74
FLEXIBLE DE RADIATEUR (SORTIE)	205-5134	1	CANALISATIONS DE RADIATEUR (ASS)	71
		1	CANALISATIONS DE RADIATEUR (ASS)	74
FLEXIBLE DE SORTIE DE RADIATEUR	199-5927	1	CANALISATIONS DE RADIATEUR (ASS)	71
		1	CANALISATIONS DE RADIATEUR (ASS)	74
JOINT TORIQUE (RÉGULATEUR)	140-7515	1	RACCORD D'EAU (ASS)	57
THERMOSTAT-TEMPÉRATURE D'EAU	216-9737	1	RACCORD D'EAU (ASS)	57
CIRCUIT ÉLECTRIQUE ET DE DÉMARRAGE				
AMPOULE (24V, 21W) (CLIGNOTANT)	8U-2622	2	LAMPE - CLIGNOTANT DE DIRECTION (ASS)	157
		4	LAMPE AR (ASS)	153
AMPOULE (24V, 4W) (PHARES)	209-4853	2	PHARE AV (ASS)	151
AMPOULE (24V, 5W) (FEU ARRIÈRE)	5W-2040	2	LAMPE AR (ASS)	153
AMPOULE (24V, 5W) (FEUX DE GABARIT)	202-7201	1	ÉCLAIRAGE - FEUX DE ROUTE (ASS)	165
AMPOULE (24V, 75/70W) (PHARES)	211-7560	2	PHARE AV (ASS)	151
BATTERIE SANS ENTRETIEN (12 V)(900 A)	9X-3404	2	BATTERIE (ASS)	138
BATTERIE (12V, 750A)	3T-5760	2	BATTERIE ET CÂBLAGE	130
		2	BATTERIE ET CÂBLAGE	134
BOUCHON À ÉVENT (LAVE-GLACE)	8E-8292	1	CABLAGE - PLATE-FORME (ASS)	211
		1	CABLAGE DE CHASSIS (ASS)	186
CLÉ	8H-5306	1	ROBINET DE BATTERIE (ASS)	176
CLÉ ÉLECTRONIQUE (ENS) (SÉCURITÉ, JAUNE)	206-5162	2	CABLAGE DE LA MACHINE (ASS)	208
FUSIBLE (10A)	113-8490	4	COFFRE DE BRANCHEMENT	139
		4	COFFRE DE BRANCHEMENT	141
FUSIBLE (15A)	113-8491	8	COFFRE DE BRANCHEMENT	139
		8	COFFRE DE BRANCHEMENT	141
FUSIBLE (20A)	113-8492	2	COFFRE DE BRANCHEMENT	139
		2	COFFRE DE BRANCHEMENT	141
	207-1219	1	BATTERIE ET CÂBLAGE	130
		1	BATTERIE ET CÂBLAGE	134
FUSIBLE (25A)	113-8493	2	COFFRE DE BRANCHEMENT	139
		2	COFFRE DE BRANCHEMENT	141

* TRADUCTION NON DISPONIBLE AU MOMENT DE LA PUBLICATION

PIÈCES DE RECHANGE

DESCRIPTION	NUMÉRO DE PIECÈS	QTÉ	DOMAINE D'APPLICATION	PAGE
FUSIBLE (5A)	141-2759	14	COFFRE DE BRANCHEMENT	139
		13	COFFRE DE BRANCHEMENT	141
FUSIBLE (70 AMPÈRES)	124-2913	3	BATTERIE ET CÂBLAGE	130
FUSIBLE (80A)	232-6315	3	BATTERIE ET CÂBLAGE	135
LAMPE (ENS) (PHARES)	116-9619	2	PHARE AV (ASS)	151
LAMPE (ENS) (ROUGE, VERT, TÉMOIN LUMINEUX, 12V)	165-5655	1	CABLAGE DE LA MACHINE (ASS)	208
LAMPE (ENS) (24V, 70W) (PROJECTEUR)	5W-2039	1	LAMPE - PHARE (ASS)	150
LAMPE (ENS) (24V, 70W) (PROJECTEUR ARRIÈRE)	5W-2039	1	ÉCLAIRAGE - PROJECTEURS (ASS)	162
LAMPE (ENS) (24V, 70W) (PROJECTEUR AV)	5W-2039	1	ÉCLAIRAGE - PROJECTEURS (ASS)	163
LAMPE HALOGÈNE (24V, 70W) (GYROPHARE)	8U-9417	1	LAMPE - GYROPHARE (ASS)	158
RECHAUFFEUR (ENS) (ADMISSION D'AIR)	252-4460	1	AUXILIAIRE DE DÉMARRAGE (ASS)	173
RÉFLECTEUR (ENS) (ROUGE)	201-3975	2	LAMPE AR (ASS)	153
VITRE (ENS) (FEU ARRIÈRE)	117-9420	1	LAMPE AR (ASS)	152
VITRE (ENS) (TÉMOIN DE SIGNAL ARRIÈRE)	117-9419	1	LAMPE - CLIGNOTANT DE DIRECTION (ASS)	155
VITRE (ENS) (TÉMOIN DE SIGNAL AVANT)	117-9418	1	LAMPE - CLIGNOTANT DE DIRECTION (ASS)	156
VITRE (GYROPHARE)	117-9421	1	LAMPE - GYROPHARE (ASS)	158
CIRCUIT HYDRAULIQUE				
COUVERCLE DE RENIFLARD (RÉSERVOIR D'HUILE HYDRAULIQUE)	194-7849	1	RÉSERVOIR HYDRAULIQUE (ASS)	662
ÉLÉMENT DE FILTRE À HUILE (ENS) (HYDRAULIQUE) (HAUTE PRESSION)	229-2800	1	CANALISATIONS HYDRAULIQUES DE VENTILATEUR (ASS)	535
ÉLÉMENT DE FILTRE À HUILE (ENS) (HYDRAULIQUE) (PILOTE)	109-7289	1	FILTRE A HUILE (ASS)	477
ÉLÉMENT DE FILTRE-HYDRAULIQUE (HUILE DE RETOUR)	137-7249	1	FILTRE A HUILE (ASS)	478
*FILTER ELEMENT AS-OIL (*HYDRAULIC) (CIRCUIT DE TOURELLE)	109-7289	1	FILTRE A HUILE (ASS)	476
FILTRE (RETOUR D'HUILE HYDRAULIQUE)	8U-0723	1	FILTRE A HUILE (ASS)	475
ÉQUIPEMENTS				
FILTRE À GRAISSE (FLÈCHE)	168-3158	1	CANALISATIONS DE GRAISSAGE (ASS)	761
		1	CANALISATIONS DE GRAISSAGE (ASS)	763

* TRADUCTION NON DISPONIBLE AU MOMENT DE LA PUBLICATION

PIÈCES DE RECHANGE

DESCRIPTION	NUMÉRO DE PIECÈS	QTÉ	DOMAINE D'APPLICATION	PAGE
MOTEUR STANDARD				
BOUCHON-VIDANGE DU CARTER (HUILE MOTEUR)	7C-0351	2	HUILE MOTEUR - CARTER (ASS)	40
CHAPEAU (ENS) (GOULOTTE D'HUILE MOTEUR)	130-9888	1	CACHE-SOUPAPES (ASS)	12
FILTRE - RENIFLARD (VILEBREQUIN)	229-3555	1	CACHE-SOUPAPES (ASS)	12
FLEXIBLE (ÉVACUATION DES GAZ DE CARTER INFÉRIEUR)	216-9617	1	CACHE-SOUPAPES (ASS)	12
FLEXIBLE (ÉVACUATION DES GAZ DE CARTER SUPÉRIEUR)	216-9614	1	CACHE-SOUPAPES (ASS)	12
JEU DE COURROIES TRAPEZOIDALES (COMPREND 2 COURROIES) (ENTRAÎNEMENT DE VENTILATEUR)	2S-2756	1	ENTRAÎNEMENT DE VENTILATEUR (ASS)	26
JOINT PLAT (CACHE-SOUPAPES)	216-9604	1	CACHE-SOUPAPES (ASS)	12
*SEAL-O-RING	229-3556	1	CACHE-SOUPAPES (ASS)	12
POSTE DE CONDUITE				
AMPOULE (CABINE)	6C-9122	2	CABINE (ASS)	831
		2	CABINE (ASS)	834
BALAI D'ESSUIE-GLACE (ENS)	196-9059	2	ESSUIE-GLACE (ASS)	932
BALAI D'ESSUIE-GLACE (ENS) (INFÉRIEUR)	196-9058	1	ESSUIE-GLACE (ASS)	929
BALAI D'ESSUIE-GLACE (ENS) (SUPERIEUR)	196-9059	1	ESSUIE-GLACE (ASS)	929
CEINTURE DE SECURITE (ASS)	8Y-4030	1	CEINTURE DE SECURITE (ASS)	903
	205-6210	1	SIÈGE (ASS)	906
COURROIE TRAPEZOIDALE (1250-MM LONG) (COMPRESSEUR DE RÉFRIGÉRANT)	145-7211	1	COMPRESSEUR DE REFRIGERANT (ASS)	840
FILTRE À AIR DE CABINE (FRAIS)	4I-1278	1	GAINE D'AIR (ASS)	864
FILTRE DE RECIRCULATION (CLIMATISEUR)	185-8154	1	CLIMATISEUR (ASS)	824
LAMPE (ENS) (CABINE)	6C-9121	1	CABINE (ASS)	831
		1	CABINE (ASS)	834
TRANSMISSION				
FILTRE (BOITE DE VITESSE)	147-5044	1	BOITE DE VITESSES (TRANSMISSION) (ASS)	321
		1	BOITE DE VITESSES (TRANSMISSION) (ASS)	335
SOUPAPE - RENIFLARD (ESSIEU)	5W-5682	2	ESSIEU AR (ASS)	231
		2	ESSIEU DE DIRECTION (ASS)	244
		2	ESSIEU DE DIRECTION (ASS)	255
		2	ESSIEU DE DIRECTION (ASS)	266
		2	ESSIEU DE DIRECTION (ASS)	277
VERSION DE MACHINE				
LAMPE (ENS) (ARRIÈRE)	207-4699	2	ÉQUIPEMENT POUR DÉPLACEMENT ROUTIER (VERSION)	3

* TRADUCTION NON DISPONIBLE AU MOMENT DE LA PUBLICATION

PIEZAS DE MANTENIMIENTO

DESCRIPCION	NUMERO DE PIEZA	CANT	SE UTILIZA EN	PAGINA
COMPARTIMIENTO DEL OPERADOR				
CINTURÓN DE SEGURIDAD (GR)	8Y-4030	1	CINTURÓN DE SEGURIDAD (GR)	903
	205-6210	1	ASIENTO (GR)	906
CORREA TRAPEZOIDAL (*1250-MM LG) (COMPRESOR DEL REFRIGERANTE)	145-7211	1	COMPRESOR DE REFRIGERANTE (GR)	840
FILTRO DE AIRE DE CABINA (*FRESH)	4I-1278	1	CONDUCTO DE AIRE (GR)	864
FILTRO DE RECIRCULACIÓN (AIRE ACONDICIONADO)	185-8154	1	ACONDICIONADOR DE AIRE (GR)	824
HOJA DE LIMPIAPARABRISAS (CONJ)	196-9059	2	LIMPIAPARABRISAS DE LA VENTANA (GR)	932
HOJA DE LIMPIAPARABRISAS (CONJ) (INFERIOR)	196-9058	1	LIMPIAPARABRISAS DE LA VENTANA (GR)	929
HOJA DE LIMPIAPARABRISAS (CONJ) (SUPERIOR)	196-9059	1	LIMPIAPARABRISAS DE LA VENTANA (GR)	929
LÁMPARA (CABINA)	6C-9122	2	CABINA (GR)	831
		2	CABINA (GR)	834
LÁMPARA (CONJ) (CABINA)	6C-9121	1	CABINA (GR)	831
		1	CABINA (GR)	834
CONFIGURACIÓN DE MÁQUINA				
LÁMPARA (CONJ) (PARTE TRASERA)	207-4699	2	CONFIGURACIÓN PARA CARRETERA	3
IMPLEMENTOS				
FILTRO, GRASA (PLUMA)	168-3158	1	TUBERÍAS DE ENGRASE (GR)	761
		1	TUBERÍAS DE ENGRASE (GR)	763
MOTOR BÁSICO				
EMPAQUETADURA (TAPA DE VÁLVULA)	216-9604	1	TAPA DEL MECANISMO DE VÁLVULAS (GR)	12
FILTRO - RESPIRADERO (CÁRTER DEL MOTOR)	229-3555	1	TAPA DEL MECANISMO DE VÁLVULAS (GR)	12
JUEGO DE CORREAS TRAPEZOIDALES (INCLUYE 2-CORREAS) (MANDO DE VENTILADOR)	2S-2756	1	IMPULSOR DE VENTILADOR (GR)	26
MANGUERA (ELIMINADOR DE GASES INFERIOR)	216-9617	1	TAPA DEL MECANISMO DE VÁLVULAS (GR)	12
MANGUERA (ELIMINADOR DE GASES SUPERIOR)	216-9614	1	TAPA DEL MECANISMO DE VÁLVULAS (GR)	12
*SEAL-O-RING	229-3556	1	TAPA DEL MECANISMO DE VÁLVULAS (GR)	12
TAPÓN (CONJ) (LLENADO DE ACEITE DEL MOTOR)	130-9888	1	TAPA DEL MECANISMO DE VÁLVULAS (GR)	12
TAPON DE DRENAJE DE SUMIDERO (ACEITE DE MOTOR)	7C-0351	2	CÁRTER - COLECTOR DEL (GR)	40
SISTEMA DE ADMISION Y ESCAPE DE AIRE				
ELEMENTO DEL FILTRO DE AIRE (CONJ) (PRIMARIO)	222-9020	1	FILTRO DE AIRE (GR)	86
ELEMENTO DEL FILTRO DE AIRE (CONJ) (SECUNDARIO)	222-9021	1	FILTRO DE AIRE (GR)	86

* NO HAY TRADUCCION DISPONIBLE EN EL MOMENTO DE LA IMPRESION

PIEZAS DE MANTENIMIENTO

DESCRIPCION	NUMERO DE PIEZA	CANT	SE UTILIZA EN	PAGINA
SISTEMA DE COMBUSTIBLE				
CANDADO (GR)	246-2641	1	COMBUSTIBLE - TANQUE DE (GR)	119
COLADOR DE COMBUSTIBLE	9P-7121	1	COMBUSTIBLE - TANQUE DE (GR)	119
ELEMENTO DE FILTRO DE COMBUSTIBLE (CONJ)	145-4501	1	FILTRO DE COMBUSTIBLE (GR)	97
ELEMENTO DEL SEPARADOR DE AGUA	138-3100	1	SEPARADOR DE AGUA (GR)	116
FUSIBLE (15 AMPERIOS) (BOMBA DE TRANSFERENCIA DE COMBUSTIBLE)	113-8491	1	BOMBA DE TRANSFERENCIA DE COMBUSTIBLE (GR)	106
		1	BOMBA DE TRANSFERENCIA DE COMBUSTIBLE (GR)	108
PANTALLA (CONJ) (REABASTECEMIENTO)	5W-8656	1	MANGUERA DE REABASTECIMIENTO (GR)	98
SELLO (BASE DE FILTRO DE AGUA)	101-3953	1	SEPARADOR DE AGUA (GR)	116
SELLO (CONEXIÓN DE SEPARADOR DE AGUA)	101-3955	1	SEPARADOR DE AGUA (GR)	116
TAPA DE LLENADO (CONJ) (COMBUSTIBLE, TRABA, VENTILACIÓN)	7X-7700	1	COMBUSTIBLE - TANQUE DE (GR)	119
SISTEMA DE ENFRIAMIENTO				
MANGUERA DE RADIADOR (*INLET)	205-5135	1	TUBERÍAS DEL RADIADOR (GR)	71
		1	TUBERÍAS DEL RADIADOR (GR)	74
MANGUERA DE RADIADOR (*OUTLET)	205-5134	1	TUBERÍAS DEL RADIADOR (GR)	71
		1	TUBERÍAS DEL RADIADOR (GR)	74
MANGUERA, ENTRADA DEL RADIADOR	199-5926	1	TUBERÍAS DEL RADIADOR (GR)	71
		1	TUBERÍAS DEL RADIADOR (GR)	74
REGULADOR DE TEMPERATURA DEL AGUA	216-9737	1	AGUA - CONEXIÓN DE (GR)	57
SALIDA DEL RADIADOR, MANGUERA	199-5927	1	TUBERÍAS DEL RADIADOR (GR)	71
		1	TUBERÍAS DEL RADIADOR (GR)	74
SELLO ANULAR (REGULADOR)	140-7515	1	AGUA - CONEXIÓN DE (GR)	57
SELLO (CAJA DE REGULADOR)	141-6188	1	AGUA - CONEXIÓN DE (GR)	57
TAPA DE RADIADOR (CONJ)	031-1119	1	TANQUE DE REFRIGERANTE (GR)	83
SISTEMA DE LUBRICACIÓN				
FILTRO DE ACEITE DEL MOTOR (CONJ)	7W-2327	2	FILTRO DE ACEITE DEL MOTOR (GR)	54
SISTEMA ELÉCTRICO Y DE ARRANQUE				
BATERÍA LIBRE DE MANTENIMIENTO (12V) (900 AMP)	9X-3404	2	BATERÍA (GR)	138
BATERÍA (12-VOLTIOS, 750-AMPERIOS)	3T-5760	2	BATERÍA Y CABLES (GR)	130
		2	BATERÍA Y CABLES (GR)	134
CALENTADOR (CONJ) (ADMISION DE AIRE)	252-4460	1	AUXILIAR DE ARRANQUE (GR)	173
CONJUNTO DE LLAVE, ELECTRONICA (SEGURIDAD, AMARILLO)	206-5162	2	CABLES DE LA MÁQUINA (GR)	208
CONJUNTO DE REFLECTOR (ROJO)	201-3975	2	LÁMPARA DE FARO TRASERO(GR)	153
CONJUNTO DE VIDRIO (*FRONT SIGNAL LAMP)	117-9418	1	LUZ DE SEÑAL DE GIRO (GR)	156

* NO HAY TRADUCCION DISPONIBLE EN EL MOMENTO DE LA IMPRESION

PIEZAS DE MANTENIMIENTO

DESCRIPCION	NUMERO DE PIEZA	CANT	SE UTILIZA EN	PAGINA
CONJUNTO DE VIDRIO (LAMPARA TRASERA)	117-9420	1	LÁMPARA DE FARO TRASERO(GR)	152
CONJUNTO DE VIDRIO (*REAR SIGNAL LAMP)	117-9419	1	LUZ DE SEÑAL DE GIRO (GR)	155
FUSIBLE (10-AMPERIOS)	113-8490	4	CAJA DE EMPALMES (GR)	139
		4	CAJA DE EMPALMES (GR)	141
FUSIBLE (15 AMPERIOS)	113-8491	8	CAJA DE EMPALMES (GR)	139
		8	CAJA DE EMPALMES (GR)	141
FUSIBLE (20-AMPERIOS)	113-8492	2	CAJA DE EMPALMES (GR)	139
		2	CAJA DE EMPALMES (GR)	141
	207-1219	1	BATERÍA Y CABLES (GR)	130
		1	BATERÍA Y CABLES (GR)	134
FUSIBLE (25 AMPERIOS)	113-8493	2	CAJA DE EMPALMES (GR)	139
		2	CAJA DE EMPALMES (GR)	141
FUSIBLE (5-AMPERIOS)	141-2759	14	CAJA DE EMPALMES (GR)	139
		13	CAJA DE EMPALMES (GR)	141
FUSIBLE (70-AMPERIOS)	124-2913	3	BATERÍA Y CABLES (GR)	130
FUSIBLE (80 AMPERIOS)	232-6315	3	BATERÍA Y CABLES (GR)	135
LÁMPARA (CONJ) (FARO DELANTERO)	116-9619	2	LÁMPARA DE FARO DELANTERO (GR)	151
LÁMPARA (CONJ) (ROJO, VERDE, DIODO, 12 VOLTIOS)	165-5655	1	CABLES DE LA MÁQUINA (GR)	208
LÁMPARA (CONJ) (24-VOLTIOS, 70-VATIOS) (REFLECTOR)	5W-2039	1	REFLECTOR (GR)	150
LÁMPARA (CONJ) (24-VOLTIOS, 70-VATIOS) (REFLECTOR DELANTERO)	5W-2039	1	LUCES DE REFLECTOR (GR)	163
LÁMPARA (CONJ) (24-VOLTIOS, 70-VATIOS) (REFLECTOR TRASERO)	5W-2039	1	LUCES DE REFLECTOR (GR)	162
LÁMPARA (*24-VOLT, 4-WATT) (FARO DELANTERO)	209-4853	2	LÁMPARA DE FARO DELANTERO (GR)	151
LÁMPARA (*24-VOLT, 75/70-WATT) (FARO DELANTERO)	211-7560	2	LÁMPARA DE FARO DELANTERO (GR)	151
LÁMPARA (24-VOLTIOS, 21 VATIOS) (LUZ DE SEÑAL DE GIRO)	8U-2622	4	LÁMPARA DE FARO TRASERO(GR)	153
		2	LUZ DE SEÑAL DE GIRO (GR)	157
LÁMPARA (24 VOLTIOS, 5 VATIOS) (LAMPARA TRASERA)	5W-2040	2	LÁMPARA DE FARO TRASERO(GR)	153
LÁMPARA (24 VOLTIOS, 5 VATIOS) (*MARKER LIGHTS)	202-7201	1	LUCES DE DESPLAZAMIENTO (GR)	165
LLAVE	8H-5306	1	DISYUNTOR (GR)	176
LUCES DE ALÓGENO (24-VOLTIOS, 70-VATIOS) (BALIZA GIRATORIA DE ADVERTENCIA)	8U-9417	1	LÁMPARA DE BALIZA DE ADVERTENCIA (GR)	158
TAPA CON RESPIRADERO (LIMPIAPARABRISAS)	8E-8292	1	CABLES DE LA PLATAFORMA (GR)	211
		1	CABLES DEL CHASIS (GR)	186
VIDRIO (BALIZA GIRATORIA DE ADVERTENCIA)	117-9421	1	LÁMPARA DE BALIZA DE ADVERTENCIA (GR)	158

* NO HAY TRADUCCION DISPONIBLE EN EL MOMENTO DE LA IMPRESION

PIEZAS DE MANTENIMIENTO

DESCRIPCION	NUMERO DE PIEZA	CANT	SE UTILIZA EN	PAGINA
SISTEMA HIDRÁULICO				
ELEMENTO DE FILTRO DE ACEITE (CONJ) (HIDRAULICO) (PILOTO)	109-7289	1	FILTRO DE ACEITE (GR)	477
ELEMENTO DE FILTRO DE ACEITE (CONJ) (HIDRAULICO) (PRESION ALTA)	229-2800	1	TUBERÍAS HIDRÁULICAS DEL VENTILADOR (GR)	535
ELEMENTO DE FILTRO HIDRÁULICO (ACEITE DE RETORNO)	137-7249	1	FILTRO DE ACEITE (GR)	478
*FILTER ELEMENT AS-OIL (*HYDRAULIC) (CIRCUITO DE ROTACIÓN)	109-7289	1	FILTRO DE ACEITE (GR)	476
FILTRO (RETORNO DEL ACEITE HIDRÁULICO)	8U-0723	1	FILTRO DE ACEITE (GR)	475
RESPIRADERO DEL TAPÓN (TANQUE DE ACEITE HIDRÁULICO)	194-7849	1	TANQUE HIDRÁULICO (GR)	662
TREN DE FUERZA				
FILTRO (TRANSMISION)	147-5044	1	TRANSMISIÓN (GR)	321
		1	TRANSMISIÓN (GR)	335
VÁLVULA-RESPIRADERO (EJE)	5W-5682	2	EJE DE DIRECCION (GR)	244
		2	EJE DE DIRECCION (GR)	255
		2	EJE DE DIRECCION (GR)	266
		2	EJE DE DIRECCION (GR)	277
		2	EJE TRASERO (GR)	231

* NO HAY TRADUCCION DISPONIBLE EN EL MOMENTO DE LA IMPRESION

PEÇAS DE MANUTENÇÃO

DESCRIÇÃO	NÚMERO DE PEÇA	QUANT	UTILIZADA EM	PÁGINA
ACESSÓRIOS				
FILTRO - CRAXA (LANÇA)	168-3158	1	TUBOS - GRAXA	761
		1	TUBOS - GRAXA	763
MÁQUINA - ARRANJO				
LÂMPADA (TRASEIRO)	207-4699	2	ARRANJO RODOVIÁRIO	3
MOTOR BÁSICO				
BUJÃO - DRENAGEM DO RESERVATÓRIO (ÓLEO DO MOTOR)	7C-0351	2	CÁRTER DO ÓLEO DO MOTOR	40
FILTRO - RESPIRO (CÁRTER)	229-3555	1	TAMPA - MECANISMO DAS VÁLVULAS	12
JOGO DE CORREIAS EM V (INCLUI 2 CORREIAS) (COMANDO DO VENTILADOR)	2S-2756	1	COMANDO DO VENTILADOR	26
JUNTA (TAMPA DA VÁLVULA)	216-9604	1	TAMPA - MECANISMO DAS VÁLVULAS	12
MANGUEIRA (DESCARTE DE VAPORES - INFERIOR)	216-9617	1	TAMPA - MECANISMO DAS VÁLVULAS	12
MANGUEIRA (DESCARTE DE VAPORES - SUPERIOR)	216-9614	1	TAMPA - MECANISMO DAS VÁLVULAS	12
*SEAL-O-RING	229-3556	1	TAMPA - MECANISMO DAS VÁLVULAS	12
TAMPA (BOCAL DE ENCHIMENTO DO ÓLEO DO MOTOR)	130-9888	1	TAMPA - MECANISMO DAS VÁLVULAS	12
POSTO DO OPERADOR				
CINTO DE SEGURANÇA	8Y-4030	1	CINTO DE SEGURANÇA	903
	205-6210	1	ASSENTO	906
CORREIA EM V (1,250 MM GRANDE) (COMPRESSOR DO REFRIGERANTE)	145-7211	1	COMPRESSOR DE REFRIGERANTE	840
FILTRO DE AR DE CABINA (FRESCO)	4I-1278	1	DUCTO DE AR	864
FILTRO DE CIRCULAÇÃO (AR CONDICIONADO)	185-8154	1	CONDICIONADOR DE AR	824
LÂMINA DO LIMPADOR DE PÁRA-BRISA	196-9059	2	LIMPADOR DO VIDRO	932
LÂMINA DO LIMPADOR DE PÁRA-BRISA (INFERIOR)	196-9058	1	LIMPADOR DO VIDRO	929
LÂMINA DO LIMPADOR DE PÁRA-BRISA (SUPERIOR)	196-9059	1	LIMPADOR DO VIDRO	929
LÂMPADA (CABINE)	6C-9121	1	CABINE	831
		1	CABINE	834
	6C-9122	2	CABINE	831
		2	CABINE	834
SISTEMA DA ADMISSÃO DE AR E DE ESCAPE				
ELEMENTO DO FILTRO DE AR (PRIMÁRIO)	222-9020	1	PURIFICADOR DE AR	86
ELEMENTO DO FILTRO DE AR (SECUNDÁRIO)	222-9021	1	PURIFICADOR DE AR	86

* TRADUÇÃO NÃO DISPONÍVEL NO MOMENTO DA IMPRESSÃO

PEÇAS DE MANUTENÇÃO

DESCRIÇÃO	NÚMERO DE PEÇA	QUANT	UTILIZADA EM	PÁGINA
SISTEMA DE ARREFECIMENTO				
MANGUEIRA - ADMISSÃO DO RADIADOR	199-5926	1	TUBOS - RADIADOR	71
		1	TUBOS - RADIADOR	74
MANGUEIRA - RADIADOR (*INLET)	205-5135	1	TUBOS - RADIADOR	71
		1	TUBOS - RADIADOR	74
MANGUEIRA - RADIADOR (SAÍDA)	205-5134	1	TUBOS - RADIADOR	71
		1	TUBOS - RADIADOR	74
MANGUEIRA - SAÍDA DO RADIADOR	199-5927	1	TUBOS - RADIADOR	71
		1	TUBOS - RADIADOR	74
REGULADOR DE TEMPERATURA DA ÁGUA	216-9737	1	CONEXÃO - TUBO D'ÁGUA	57
RETENTOR (ALOJAMENTO DO REGULADOR)	141-6188	1	CONEXÃO - TUBO D'ÁGUA	57
RETENTOR DE ANEL-O (REGULADOR)	140-7515	1	CONEXÃO - TUBO D'ÁGUA	57
TAMPA - RADIADOR	031-1119	1	TANQUE - LÍQUIDO ARREFECEDOR	83
SISTEMA DE COMBUSTÍVEL				
CADEADO	246-2641	1	TANQUE DE COMBUSTÍVEL	119
ELEMENTO - FILTRO DE COMBUSTÍVEL	145-4501	1	FILTRO - COMBUSTÍVEL	97
ELEMENTO - SEPARADOR DE ÁGUA	138-3100	1	SEPARADOR DE ÁGUA	116
FILTRO - COMBUSTÍVEL	9P-7121	1	TANQUE DE COMBUSTÍVEL	119
FUSÍVEL (15 AMPERES) (BOMBA DE TRANSFERÊNCIA DE COMBUSTÍVEL)	113-8491	1	BOMBA DE TRANSFERÊNCIA DO COMBUSTÍVEL	106
		1	BOMBA DE TRANSFERÊNCIA DO COMBUSTÍVEL	108
RETENTOR (BASE DO SEPARADOR DE ÁGUA)	101-3953	1	SEPARADOR DE ÁGUA	116
RETENTOR (CONEXÃO DO SEPARADOR DE ÁGUA)	101-3955	1	SEPARADOR DE ÁGUA	116
TAMPA - BOCAL DE ENCHIMENTO (COMBUSTÍVEL, TRAVA, COM RESPIRO)	7X-7700	1	TANQUE DE COMBUSTÍVEL	119
TELA FILTRANTE (REABASTECIMENTO)	5W-8656	1	MANGUEIRA - REABASTECIMENTO DE COMBUSTÍVEL	98
SISTEMA DE LUBRIFICAÇÃO				
FILTRO - ÓLEO DO MOTOR	7W-2327	2	FILTRO - ÓLEO DO MOTOR	54
SISTEMA ELÉTRICO E DE PARTIDA				
AQUECEDOR (ADMISSÃO DE AR)	252-4460	1	AUXILIAR DE PARTIDA	173
BATERIA - ISENTA DE MANUTENÇÃO (12 V)(900 A)	9X-3404	2	BATERIA	138
BATERIA (12 VOLTS, 750 AMPERES)	3T-5760	2	BATERIA E CABOS / FIOS ELÉTRICOS	130
		2	BATERIA E CABOS / FIOS ELÉTRICOS	134
CHAVE	8H-5306	1	CHAVE GERAL	176
CHAVE - ELETRÔNICO (SEGURANÇA, AMARELO)	206-5162	2	CABOS/FIOS ELÉTRICOS - MÁQUINA	208
FUSÍVEL (10 AMPERES)	113-8490	4	CAIXA DE JUNÇÃO	139
		4	CAIXA DE JUNÇÃO	141
FUSÍVEL (15 AMPERES)	113-8491	8	CAIXA DE JUNÇÃO	139

* TRADUÇÃO NÃO DISPONÍVEL NO MOMENTO DA IMPRESSÃO

PEÇAS DE MANUTENÇÃO

DESCRIÇÃO	NÚMERO DE PEÇA	QUANT	UTILIZADA EM	PÁGINA
		8	CAIXA DE JUNÇÃO	141
FUSÍVEL (20-AMPERES)	113-8492	2	CAIXA DE JUNÇÃO	139
		2	CAIXA DE JUNÇÃO	141
	207-1219	1	BATERIA E CABOS / FIOS ELÉTRICOS	130
		1	BATERIA E CABOS / FIOS ELÉTRICOS	134
FUSÍVEL (25 AMPÈRES)	113-8493	2	CAIXA DE JUNÇÃO	139
		2	CAIXA DE JUNÇÃO	141
FUSÍVEL (5 AMPÈRES)	141-2759	14	CAIXA DE JUNÇÃO	139
		13	CAIXA DE JUNÇÃO	141
FUSÍVEL (70 AMPÈRES)	124-2913	3	BATERIA E CABOS / FIOS ELÉTRICOS	130
FUSÍVEL (80 AMPERES)	232-6315	3	BATERIA E CABOS / FIOS ELÉTRICOS	135
LÂMPADA - HALOGÊNEO (24 VOLTS, 70 WATTS) (PISCA-PISCA DE ADVERTÊNCIA)	8U-9417	1	LUZ GIRATÓRIA DE ALARME	158
LÂMPADA (FAROL DIANTEIRO)	116-9619	2	FAROL DIANTEIRO	151
LÂMPADA (VERMELHA, VERDE, LED, 12 VOLTS)	165-5655	1	CABOS/FIOS ELÉTRICOS - MÁQUINA	208
LÂMPADA (24 VOLTS, 21 WATTS) (LUZ DE SINALIZAÇÃO)	8U-2622	2	LÂMPADA - SINALIZAÇÃO	157
		4	LUZ TRASEIRA	153
LÂMPADA (24 VOLTS, 4 WATTS) (FAROL DIANTEIRO)	209-4853	2	FAROL DIANTEIRO	151
LÂMPADA (24 VOLTS, 5 WATTS) (LÂMPADA TRASEIRA)	5W-2040	2	LUZ TRASEIRA	153
LÂMPADA (24 VOLTS, 5 WATTS) (LUZES INDICADORAS)	202-7201	1	ILUMINAÇÃO - RODOVIÁRIA	165
LÂMPADA (24 VOLTS, 70 WATTS) (FAROL)	5W-2039	1	LÂMPADA - FAROL	150
LÂMPADA (24 VOLTS, 70 WATTS) (FAROL DIANTEIRO)	5W-2039	1	SISTEMA DE ILUMINAÇÃO - FARÓIS	163
LÂMPADA (24 VOLTS, 70 WATTS) (FAROL TRASEIRO)	5W-2039	1	SISTEMA DE ILUMINAÇÃO - FARÓIS	162
LÂMPADA (24 VOLTS, 75-70 WATTS) (FAROL DIANTEIRO)	211-7560	2	FAROL DIANTEIRO	151
REFLETOR (VERMELHO)	201-3975	2	LUZ TRASEIRA	153
TAMPA COM RESPIRO (LAVADOR DO VIDRO)	8E-8292	1	CABOS/FIOS ELÉTRICOS - CHASSI	186
		1	CABOS/FIOS ELÉTRICOS - PLATAFORMA	211
VIDRO (LÂMPADA DE SINALIZAÇÃO TRASEIRA)	117-9419	1	LÂMPADA - SINALIZAÇÃO	155
VIDRO (LÂMPADA SINALIZADORA DIANTEIRA)	117-9418	1	LÂMPADA - SINALIZAÇÃO	156
VIDRO (LÂMPADA TRASEIRA)	117-9420	1	LUZ TRASEIRA	152
VIDRO (PISCA-PISCA DE ADVERTÊNCIA)	117-9421	1	LUZ GIRATÓRIA DE ALARME	158

* TRADUÇÃO NÃO DISPONÍVEL NO MOMENTO DA IMPRESSÃO

PEÇAS DE MANUTENÇÃO

DESCRIÇÃO	NÚMERO DE PEÇA	QUANT	UTILIZADA EM	PÁGINA
SISTEMA HIDRÁULICO				
ELEMENTO FILTRANTE - ÓLEO (HIDRÁULICO) (PILOTO)	109-7289	1	FILTRO - ÓLEO	477
ELEMENTO FILTRANTE - ÓLEO (HIDRÁULICO) (PRESSÃO ALTA)	229-2800	1	TUBOS - VENTILADOR HIDRÁULICOS	535
*FILTER ELEMENT AS-OIL (*HYDRAULIC) (CIRCUITO DE GIRO)	109-7289	1	FILTRO - ÓLEO	476
FILTRO - ELEMENTO HIDRÁULICO (ÓLEO DE RETORNO)	137-7249	1	FILTRO - ÓLEO	478
FILTRO (RETORNO DE ÓLEO HIDRÁULICO)	8U-0723	1	FILTRO - ÓLEO	475
TAMPA - RESPIRO (TANQUE DE ÓLEO HIDRÁULICO)	194-7849	1	TANQUE HIDRÁULICO	662
TREM DE FORÇA				
FILTRO (TRANSMISSÃO)	147-5044	1	TRANSMISSÃO	321
		1	TRANSMISSÃO	335
VÁLVULA DO RESPIRO (EIXO)	5W-5682	2	EIXO - DIREÇÃO	244
		2	EIXO - DIREÇÃO	255
		2	EIXO - DIREÇÃO	266
		2	EIXO - DIREÇÃO	277
		2	SEMI-EIXO TRASEIRO	231

* TRADUÇÃO NÃO DISPONÍVEL NO MOMENTO DA IMPRESSÃO

WARTUNGSTEILE

BESCHREIBUNG	ERSATZTEIL-NUMMER	MENGE	VERWENDET IN	SEITE
ARBEITSGERÄTE				
SCHMIERFILTER (FÜR AUSLEGER)	168-3158	1	SCHMIERLEITUNGEN	761
		1	SCHMIERLEITUNGEN	763
ELEKTRISCHE ANLAGE U. STARTSYSTEM				
BATTERIE - WARTUNGSFREI (12 V, 900 A)	9X-3404	2	BATTERIE	138
BATTERIE (12V, 750 A)	3T-5760	2	BATTERIE UND VERDRAHTUNG	130
		2	BATTERIE UND VERDRAHTUNG	134
BELEUCHTUNGSANLAGE (FRONTSCHEINWERFER)	116-9619	2	FRONTSCHEINWERFER	151
BELEUCHTUNGSANLAGE (ROT, GRÜN, LED, 12 V)	165-5655	1	MASCHINENVERDRAHTUNG	208
BELEUCHTUNGSANLAGE (24 V, 70 W) (ARBEITSSCHEINWERFER)	5W-2039	1	ARBEITSLEUCHTEN	150
BELEUCHTUNGSANLAGE (24 V, 70 W) (HINTERER ARBEITSSCHEINWERFER)	5W-2039	1	ARBEITSLEUCHTEN	162
BELEUCHTUNGSANLAGE (24 V, 70 W) (VORDERE ARBEITSLEUCHTE)	5W-2039	1	ARBEITSLEUCHTEN	163
ELEKTRONISCHER SCHLÜSSEL (SICHERHEIT, GELB)	206-5162	2	MASCHINENVERDRAHTUNG	208
GLAS (RUNDUM-KENNLEUCHTE)	117-9421	1	RUNDUM-KENNLEUCHTE	158
GLASSATZ (HINTERE LEUCHTE)	117-9420	1	LEUCHTE, HINTEN	152
GLASSATZ (HINTERE SIGNALLEUCHTE)	117-9419	1	BLINKLEUCHTE	155
GLASSATZ (VORDERE SIGNALLEUCHTE)	117-9418	1	BLINKLEUCHTE	156
HALOGENSCHINWERFER (24 V, 70 W) (RUNDUM-KENNLEUCHTE)	8U-9417	1	RUNDUM-KENNLEUCHTE	158
HEIZUNG (LUFTEINLASS)	252-4460	1	STARTHILFE	173
KAPPE MIT ENTLÜFTER (SCHEIBENWASCHER)	8E-8292	1	FAHRERPLATTFORMVERDRAHTUNG	211
		1	FAHRGESTELLVERDRAHTUNG	186
LEUCHTE (24 V, 4 W) (FRONTSCHEINWERFER)	209-4853	2	FRONTSCHEINWERFER	151
LEUCHTE (24 V, 5 W) (HINTERE LEUCHTE)	5W-2040	2	LEUCHTE, HINTEN	153
LEUCHTE (24 V, 5 W) (MARKIERUNGSLEUCHTEN)	202-7201	1	BELEUCHTUNGSANLAGE (STRASSENAUSRÜSTUNG)	165
LEUCHTE (24 V, 75/70 W) (FRONTSCHEINWERFER)	211-7560	2	FRONTSCHEINWERFER	151
LEUCHTE (24V, 21W) (SIGNALLEUCHTE)	8U-2622	2	BLINKLEUCHTE	157
		4	LEUCHTE, HINTEN	153
REFLEKTOR (ROT)	201-3975	2	LEUCHTE, HINTEN	153
SCHLÜSSEL	8H-5306	1	TRENNSCHALTER	176
SICHERUNG (10 A)	113-8490	4	ABZWEIGKASTEN	139
		4	ABZWEIGKASTEN	141
SICHERUNG (15 A)	113-8491	8	ABZWEIGKASTEN	139
		8	ABZWEIGKASTEN	141
	113-8493	2	ABZWEIGKASTEN	139

* ÜBERSETZUNG ZUM ZEITPUNKT DER DRUCKLEGUNG NICHT VORHANDEN

WARTUNGSTEILE

BESCHREIBUNG	ERSATZTEIL-NUMMER	MENGE	VERWENDET IN	SEITE
		2	ABZWEIGKASTEN	141
SICHERUNG (20 A)	113-8492	2	ABZWEIGKASTEN	139
		2	ABZWEIGKASTEN	141
	207-1219	1	BATTERIE UND VERDRAHTUNG	130
		1	BATTERIE UND VERDRAHTUNG	134
SICHERUNG (5 A)	141-2759	14	ABZWEIGKASTEN	139
		13	ABZWEIGKASTEN	141
SICHERUNG (70 A)	124-2913	3	BATTERIE UND VERDRAHTUNG	130
SICHERUNG (80 A)	232-6315	3	BATTERIE UND VERDRAHTUNG	135
FAHRERHAUS				
BELEUCHTUNGSANLAGE (FAHRERHAUS)	6C-9121	1	FAHRERHAUS	831
		1	FAHRERHAUS	834
FAHRERHAUSLUFTFILTER (FRISCH)	4I-1278	1	LUFTKANAL	864
KEILRIEMEN (1250 MM LÄNGE) (KÄLTEMITTELKOMPRESSOR)	145-7211	1	KÄLTEMITTELKOMPRESSOR	840
LEUCHTE (FAHRERHAUS)	6C-9122	2	FAHRERHAUS	831
		2	FAHRERHAUS	834
SCHEIBENWISCHERBLATT	196-9059	2	SCHEIBENWISCHER	932
SCHEIBENWISCHERBLATT (OBEN)	196-9059	1	SCHEIBENWISCHER	929
SCHEIBENWISCHERBLATT (UNTEN)	196-9058	1	SCHEIBENWISCHER	929
SICHERHEITSGURT	8Y-4030	1	SICHERHEITSGURT	903
	205-6210	1	FAHRERSITZ	906
UMLAUFLUFT-FILTER (KLIMAANLAGE)	185-8154	1	KLIMAANLAGE	824
HYDRAULIKSYSTEM				
ENTLÜFTERKAPPE (HYDRAULIKÖLTANK)	194-7849	1	HYDRAULIKTANK	662
*FILTER ELEMENT AS-OIL (*HYDRAULIC) (DREHWERKKREIS)	109-7289	1	ÖLFILTER	476
FILTER (HYDRAULIKÖLRÜCKFLUSS)	8U-0723	1	ÖLFILTER	475
FILTERELEMENT - HYDRAULIK (RÜCKLAUFÖL)	137-7249	1	ÖLFILTER	478
ÖLFILTERELEMENT (HYDRAULISCH) (ÜBERDRUCK)	229-2800	1	HYDRAULIKLÜFTERLEITUNGEN	535
ÖLFILTERELEMENT (HYDRAULISCH) (VORSTEUERUNG)	109-7289	1	ÖLFILTER	477

* ÜBERSETZUNG ZUM ZEITPUNKT DER DRUCKLEGUNG NICHT VORHANDEN

WARTUNGSTEILE

BESCHREIBUNG	ERSATZTEIL-NUMMER	MENGE	VERWENDET IN	SEITE
KRAFTSTOFFSYSTEM				
DICHTUNG (WASSERABSCHEIDER-SOCKEL)	101-3953	1	WASSERABSCHEIDER	116
DICHTUNG (WASSERABSCHEIDER-VERBINDER)	101-3955	1	WASSERABSCHEIDER	116
EINFÜLLKAPPE (KRAFTSTOFF, SPERRUNG, LÜFTUNG)	7X-7700	1	KRAFTSTOFFTANK	119
KRAFTSTOFFFILTEREINSATZ	145-4501	1	KRAFTSTOFFILTER	97
KRAFTSTOFFSIEB	9P-7121	1	KRAFTSTOFFTANK	119
SICHERUNG (15 A) (KRAFTSTOFFFÖRDERPUMPE)	113-8491	1	KRAFTSTOFFÖRDERPUMPE	106
		1	KRAFTSTOFFÖRDERPUMPE	108
SIEB (AUFTANKEN)	5W-8656	1	AUFTANKSCHLAUCH	98
VORHÄNGESCHLOSS	246-2641	1	KRAFTSTOFFTANK	119
WASSERABSCHEIDERELEMENT	138-3100	1	WASSERABSCHEIDER	116
KRAFTÜBERTRAGUNG				
ENTLÜFTERVENTIL (ACHSE)	5W-5682	2	HINTERACHSE	231
		2	LENKACHSE	244
		2	LENKACHSE	255
		2	LENKACHSE	266
		2	LENKACHSE	277
FILTER (GETRIEBE)	147-5044	1	GETRIEBE	321
		1	GETRIEBE	335
KÜHLSYSTEM				
DICHTUNG (REGULATORGEHÄUSE)	141-6188	1	KÜHLWASSERANSCHLUSS	57
KÜHLERAUSLADSS	199-5927	1	KÜHLERLEITUNGEN	71
		1	KÜHLERLEITUNGEN	74
KÜHLEREINLASSSCHLAUCH	199-5926	1	KÜHLERLEITUNGEN	71
		1	KÜHLERLEITUNGEN	74
KÜHLERKAPPE	031-1119	1	KÜHLMITTELBEHÄLTER	83
KÜHLERSCHLAUCH (AUSLASS)	205-5134	1	KÜHLERLEITUNGEN	71
		1	KÜHLERLEITUNGEN	74
KÜHLERSCHLAUCH (*INLET)	205-5135	1	KÜHLERLEITUNGEN	71
		1	KÜHLERLEITUNGEN	74
O-RING-DICHTUNG (REGULATOR)	140-7515	1	KÜHLWASSERANSCHLUSS	57
WASSERTEMPERATURREGLER	216-9737	1	KÜHLWASSERANSCHLUSS	57
LUFTANSAUG - U. ABGASSYSTEM				
LUFTFILTER (HAUPTELEMENT)	222-9020	1	LUFTREINIGER	86
LUFTFILTER (HILFSELEMENT)	222-9021	1	LUFTREINIGER	86
MASCHINE				
BELEUCHTUNGSANLAGE (HINTEN)	207-4699	2	AUSRÜSTUNG FÜR STRASSENFAHRT	3

* ÜBERSETZUNG ZUM ZEITPUNKT DER DRUCKLEGUNG NICHT VORHANDEN

WARTUNGSTEILE

BESCHREIBUNG	ERSATZTEIL-NUMMER	MENGE	VERWENDET IN	SEITE
MOTOR (GRUNDAUSFÜHRUNG)				
DICHTUNG (VENTILDECKEL)	216-9604	1	VENTILDECKEL	12
ENTLÜFTERFILTER (KURBELGEHÄUSE)	229-3555	1	VENTILDECKEL	12
KAPPE (MOTORÖLFÜLLUNG)	130-9888	1	VENTILDECKEL	12
KEILRIEMENSATZ (EINSCHL. 2 RIEMEN) (LÜFTERANTRIEB)	2S-2756	1	LÜFTERANTRIEB	26
ÖLWANNEN-ABLASSCHRAUBE (MOTORÖL)	7C-0351	2	ÖLWANNE	40
SCHLAUCHLEITUNG (OBERER ENTDUNSTER)	216-9614	1	VENTILDECKEL	12
SCHLAUCHLEITUNG (UNTERER ENTDUNSTER)	216-9617	1	VENTILDECKEL	12
*SEAL-O-RING	229-3556	1	VENTILDECKEL	12
SCHMIERSYSTEM				
ÖLFILTER	7W-2327	2	ÖLFILTER	54

* ÜBERSETZUNG ZUM ZEITPUNKT DER DRUCKLEGUNG NICHT VORHANDEN

INDEX

Name	Page

A

ACCUMULATOR AS-HYDRAULIC–CHARGED	411
	412
ACCUMULATOR AS (REFRIGERANT)	845
ACCUMULATOR GP-HYDRAULIC–CHARGED	413
	414
ACCUMULATOR GP-HYDRAULIC–UNCHARGED	415
	416
	417
ACTUATOR GP	418
	419
	701
	719
ACTUATOR GP-PUMP	420
	421
	628
ADJUSTER GP-WORK TOOL	794
AFTERCOOLER GP-AIR	84
AIR CLEANER GP	86
	87
AIR CONDITIONER & MOUNTING GP	822
AIR CONDITIONER GP	823
	824
ALARM AS-BACKUP	125
ALARM GP–OVERLOAD CHECK VALVE	122
ALARM GP-TRAVEL	124
	125
ALTERNATOR GP-CHARGING	126
	128
ANTENNA AS (MAGNETIC MOUNT, PRODUCT LINK)	148
ARMREST GP–LH	827
ARMREST GP–RH	826
AXLE & TRANSMISSION AR–REAR	216
	217
	218
AXLE AR-FRONT	219
AXLE AR-REAR	220
	227
AXLE AR-REAR–DISC BRAKE	226
AXLE AR-REAR–WIDE	228
AXLE AR-WIDE	229
	230
AXLE GP-REAR	231
	236
AXLE GP-STEERING	242
	253
AXLE GP-STEERING–WIDE	264
	275

B

BARREL GP-PUMP	422
	424
BATTERY & WIRING GP	130
	134
BATTERY GP–HEAVY DUTY	138
BATTERY-MAINTENANCE FREE (12V)(900 AMP)	138
BATTERY (12-VOLT, 750-AMPERE)	130
	134
BEARING GP-SELF-ALIGNING	616
BLADE & MOUNTING GP	795
	797
BLADE AR	799
BLADE AS-WIPER	932
BLADE AS-WIPER (LOWER)	929
BLADE AS-WIPER (UPPER)	929
BOOM AR	754
BOOM AR–VARIABLE ADJUSTABLE	754
BOOM GP	755
BOOM GP-FORE	757
BOOM GP-STUB	759
BOX GP-JUNCTION	139
	141
BOX GP-STORAGE	394
BRAKE GP-DRUM	286
BUCKET & ADJUSTER AR	799
	800
	801
BUCKET & BEARING AS–DITCH CLEANING	802
	803
	804
BUCKET AS-DITCH CLEANING	805
	806
	807
	808
	809
	810
	811
	812
BUCKET AS-EXCAVATION	813
	814
	815
	816
	817

C

CAB AR-RISER–FIXED	829
CAB GP	829
	831
	834
	838
CAB GP–LEXAN	830

INDEX

Name	Page
CAMSHAFT GP	11
CAP AS (ENGINE OIL FILLER)	12
CAP AS-FILLER (FUEL, LOCKING, VENTED)	119
CAP AS-RADIATOR	83
CAP-BREATHER (HYDRAULIC OIL TANK)	662
CAP-VENTED (WINDOW WASHER)	186
	211
CHASSIS AR	1
CLAMP GP-HYDRAULIC LINES	506
COCK-DRAIN (HYDRAULIC TANK)	662
COMPRESSOR GP-REFRIGERANT	839
	840
CONDENSER & MTG GP-REFRIGERANT	842
CONDENSER GP-REFRIGERANT	844
	845
CONNECTION GP-WATER	57
CONNECTOR GP-CAB HEATER LINES	846
CONSOLE GP-LH	847
	849
CONSOLE GP-OPERATOR	852
CONSOLE GP-RH	853
CONTROL & MTG GP-MACHINE	143
CONTROL GP-BRAKE	426
	428
CONTROL GP-COMMUNICATION (PRODUCT LINK)	148
CONTROL GP-ENGINE ELECTRONIC	103
CONTROL GP-HYDRAULIC HAND–BLADE, STABILIZER	430
CONTROL GP-HYDRAULIC PEDAL	431
	433
	434
CONTROL GP-JOYSTICK	435
CONTROL GP-PILOT OPERATED HYD	437
CONTROL GP-UNPROGRAMMED	144
CONTROL GP-UNPROGRAMMED (ENGINE & HYDRAULIC)	145
CONTROL GP-VOLTAGE (24-VOLT) (LOAD PROTECTION)	103
CONVERSION AR-MACHINE	1
COOLANT HEATER LINES	881
	882
COOLER GP-FLTR BASE & ENG OIL	58
COUNTERWEIGHT GP	351
COUPLING GP-FLEXIBLE	438
	439
	440
	441
COVER AS–CAB STORAGE	352
COVER GP-ACCESS–GENERATOR	353
COVER GP-CAB RISER	855
COVER GP-CONSOLE	856
COVER GP-VALVE MECHANISM	12
CRANKSHAFT GP	14
	16
CYLINDER & MTG GP-AXLE LOCK	442
	443
CYLINDER & SEAL GP-BOOM	445
CYLINDER & SEAL GP-BOOM–FORE	446
CYLINDER & SEAL GP-BOOM–STUB	444
CYLINDER & SEAL GP-BUCKET	447
CYLINDER & SEAL GP-STICK–VARIABLE ADJUSTABLE BOOM	448
CYLINDER BLOCK GP	18
	19
CYLINDER GP-AXLE OSC LOCK	449
	451
CYLINDER GP-BLADE	453
	455
CYLINDER GP-BOOM	457
	459
	461
CYLINDER GP-BUCKET	463
	465
CYLINDER GP-STABILIZER	466
CYLINDER GP-STICK	468
CYLINDER HEAD GP	21
	22
CYLINDER (STEERING)	246
	257
	268
	279

D

DOOR GP-ACCESS	354
DOOR GP-ACCESS–CAB RISER	360
DOOR GP-ACCESS–ENGINE, SIDE	356
DOOR GP-ACCESS–ENGINE, UPPER	357
	363
DOOR GP-ACCESS–LH SIDE	362
DOOR GP-ACCESS–TOOL BOX	359
DOOR GP-CAB	858
	860
	861
	862
DRAIN GP-OIL–ENGINE	23
DRIVE GP-ACCESSORY	24
DRIVE GP-FAN	26
DRIVE GP-PUMP	470
DRIVE GP-SWING	471
	472
DUCT GP-AIR	864

E

ELBOW GP-AIR INLET	88
ELECTRONICS GP-MACHINE	145
	146
ELECTRONICS GP-MACHINE (SECURITY)	208

INDEX

Name	Page
ELECTRONICS GP-MONITOR	147
ELEMENT-WATER SEPARATOR	116
ENCLOSURE GP-ENGINE	364
	368
	372
ENCLOSURE GP-RADIATOR	375
	380
ENGINE AR-PRIMARY	9

F

FAN GP-SUCTION	60
	61
FASTENER GP-CYLINDER HEAD	27
FILM (ALTERNATE EXIT)	922
FILM-CAT (LH)	757
FILM-CAT (RH)	757
FILM (CATERPILLAR)	831
	834
FILM-CONTROL PATTERN	572
FILM (EXTERIOR SOUND, 102-DB)	935
FILM (FRONT GUARD)	869
	871
FILM-IDENTIFICATION (LABEL)	144
FILM-IDENTIFICATION (ROADING HEIGHT)	5
	6
FILM-INSTRUCTION (ALTERNATE CONTROL PATTERN)	572
FILM-INSTRUCTION (ALTERNATE EXIT, REMOVE WINDOW)	921
FILM-INSTRUCTION (HYDRAULIC HAMMER)	554
	569
FILM-INSTRUCTION (REFUELING)	106
	108
FILM-INSTRUCTION (TIE-DOWN)	934
FILM-INSTRUCTION (VARIABLE ADJUSTABLE BOOM)	557
FILM (SECURITY)	208
FILM-WARNING (AVOID BUMPING HEAD ON DOOR)	383
FILM-WARNING (ENGINE SPEED CONTROL)	938
FILM-WARNING (HIGH PRESSURE CYLINDER)	415
	416
	417
FILM-WARNING (NO WELD, NO DRILL)	869
	871
FILM-WARNING (PRODUCT LINK RADIO, EAME)	148
FILM-WARNING (UNIVERSAL-READ MANUAL)	938
FILTER AS-ENGINE OIL	54
FILTER BASE & ENG OIL COOLER	58
FILTER-BREATHER (CRANKCASE)	12
FILTER-CAB AIR (FRESH)	864
FILTER ELEMENT AS-AIR (PRIMARY)	86
FILTER ELEMENT AS-AIR (SECONDARY)	86
FILTER ELEMENT AS-FUEL	97
FILTER ELEMENT AS-OIL (HYDRAULIC) (HIGH PRESSURE)	535
FILTER ELEMENT AS-OIL (HYDRAULIC) (PILOT)	477
FILTER ELEMENT AS-OIL (HYDRAULIC) (SWING CIRCUIT)	476
FILTER ELEMENT-HYDRAULIC (RETURN OIL)	478
FILTER GP-ENGINE OIL	54
FILTER GP-FUEL	97
FILTER GP-GREASE (BOOM)	761
	763
FILTER GP-OIL–HYDRAULIC	478
FILTER GP-OIL–HYDRAULIC, PILOT	477
FILTER GP-OIL–HYDRAULIC, RETURN	475
FILTER GP-OIL– HYDRAULIC, SWING CIRCUIT	476
FILTER GP-OIL (HYDRAULIC) (HIGH PRESSURE)	535
FILTER-GREASE (BOOM)	761
	763
FILTER (HYDRAULIC OIL RETURN)	475
FILTER-RECIRCULATION (AIR CONDITIONER)	824
FILTER (TRANSMISSION)	321
	335
FITTING GP	479
	480
	481
FITTING GP-HYD LINES	482
	483
	484
FLOOR MAT	896
	898
FLYWHEEL GP	28
FRAME AR-UNDERCARRIAGE	407
FRAME GP-CAB RISER	383
FRAME GP-UNDERCARRIAGE	408
	409
FRAME GP-UPPER	385
FUSE (10-AMPERE)	139
	141
FUSE (15-AMPERE)	139
	141
FUSE (15-AMPERE) (FUEL TRANSFER PUMP)	106
	108
FUSE (20-AMPERE)	130
	134
	139

INDEX

Name	Page
	141
FUSE (25-AMPERE)	139
	141
FUSE (5-AMPERE)	139
	141
FUSE (70-AMPERE)	130
FUSE (80-AMPERE)	135

G

GASKET (VALVE COVER)	12
GAUGE AS-OIL LEVEL (DIPSTICK)	40
GAUGE (COOLANT TANK)	83
GAUGE GP-SIGHT (HYDRAULIC OIL)	662
GEAR & BEARING GP-SWING	388
GEAR GP-FRONT	29
GENERAL AR	2
GLASS AS (FRONT SIGNAL LAMP)	156
GLASS AS (REAR LAMP)	152
GLASS AS (REAR SIGNAL LAMP)	155
GLASS (WARNING BEACON)	158
GUARD AR-FOG LIGHTS	865
GUARD GP-BELT	30
GUARD GP-BOTTOM	390
GUARD GP-FAN	62
	64
	66
	67
	70
GUARD GP-OVERHEAD	866
GUARD GP-VANDALISM	867
GUARD GP-WINDOW	869
	871

H

HARNESS AS (AIR CONDITIONER, HEATER)	824
HARNESS AS-CAB	179
	182
HARNESS AS-CAB (SERVICE CONNECTOR)	182
HARNESS AS-CAB (SERVICE CONNECTOR)	179
HARNESS AS-CHASSIS	186
	195
	211
HARNESS AS-CHASSIS (ELECTRONIC)	198
	200
HARNESS AS-CHASSIS (ELECTRONIC, SWITCHES, SENSORS)	190
	193
HARNESS AS-CONSOLE (LH)	202
HARNESS AS-CONSOLE (RH)	202
HARNESS AS-CONTROL	208
HARNESS AS-CONTROL (COMMUNICATION)	148
HARNESS AS-CONTROL (SECURITY)	208
HARNESS AS-ENGINE	130
	134
HARNESS AS (ENGINE ECM)	204
HARNESS AS-JUNCTION BOX	139
	141
HARNESS AS-LIGHTING	160
HARNESS AS-LIGHTING (FLOODLIGHTS, FRONT)	164
HARNESS AS-LIGHTING (LICENSE PLATE)	3
HARNESS AS-LIGHTING (REAR, RH)	153
HARNESS AS-LIGHTING (REAR,LH)	153
HARNESS AS-LIGHTING (ROADING)	165
HARNESS AS-RADIO	900
HARNESS AS-SENSOR (PUMP SWASHPLATE ANGLE)	190
	193
	195
	198
	200
HARNESS AS-SOLENOID (STABILIZER)	214
HARNESS AS-SWITCH (SEAT HEATER)	908
HARNESS AS-SWITCH (TRAVEL LOCK)	6
HARNESS AS-WIRING (FAN)	206
HARNESS AS-WIRING (SEAT)	913
HARNESS AS (WORK TOOL)	215
HARNESS AS-WORK TOOL (HAMMER)	207
HEAD GP-MOTOR	485
HEAD GP-PUMP	487
	488
HEADREST AS	873
HEATER AS (AIR INLET)	173
HOOD & GUARD AR	391
HORN AS (24-VOLT, LOW TONE)	874
HORN GP-ELECTRIC	874
	875
HOSE GP-REFUELING	98
HOSE (LOWER FUMES DISPOSAL)	12
HOSE-RADIATOR INLET	71
	74
HOSE-RADIATOR (INLET)	71
	74
HOSE-RADIATOR OUTLET	71
	74
HOSE-RADIATOR (OUTLET)	71
	74
HOSE (UPPER FUMES DISPOSAL)	12
HOUSING GP-FLYWHEEL	31
HOUSING GP-FRONT	32
	34
HYDRAULIC AR–LOWER	490
HYDRAULIC AR–UPPER	490

INDEX

Name	Page
I	
INSTALLATION AR-ENGINE	10
INSTALLATION GP-COMMUNICATION	148
INSTALLATION GP-RADIO	876
INSULATION GP-HEAT	392
INSULATION GP-SOUND SUPPR	393
K	
KEY	176
KEY AS-ELECTRONIC (SECURITY, YELLOW)	208
KIT-ADJUSTER (SEAT SUSPENSION)	908
	911
	913
KIT-ADJUSTER (SUSPENSION SEAT)	904
KIT-AIR COMPRESSOR (SEAT SUSPENSION)	913
KIT-BACKREST (SEAT SUSPENSION)	908
KIT-BACKREST (SUSPENSION SEAT)	904
KIT-BEARING (HYDRAULIC MOTOR)	637
	638
KIT-BEARING (SEAT SUSPENSION)	908
	911
KIT-BEARING (SUSPENSION SEAT)	904
KIT-BOOT (SEAT SUSPENSION)	913
KIT-BOWL (WATER SEPARATOR)	116
KIT-BRACKET (SEAT SUSPENSION)	911
KIT-BUMPER (SEAT SUSPENSION)	911
KIT-CAP FILTER (FUEL TANK)	119
KIT-CATCH (CAB DOOR WINDOW)	928
KIT-CONTROL (SEAT SUSPENSION)	913
KIT-COVER (SEAT SUSPENSION)	913
KIT-DISC SPRING (TRANSMISSION)	320
	334
KIT-FASTENER (SEAT & MOUNTING)	906
KIT-GAS SPRING (SEAT SUSPENSION)	913
KIT-HANDLE (SEAT SUSPENSION)	908
KIT-HANDLE (SEAT SUSPENSION)	908
KIT-HANDLE (SUSPENSION SEAT)	904
KIT-HANDLE (SUSPENSION SEAT)	904
KIT-HOSE (SEAT SUSPENSION)	913
KIT-HOSE (WATER) (REGULATOR HOUSING)	77
	79
KIT-LATCH (SEAT SUSPENSION)	913
KIT-LEVER (HAND CONTROL)	430
KIT-LEVER (JOYSTICK CONTROL)	435
KIT-LEVER (SEAT SUSPENSION)	908
KIT-LEVER (SUSPENSION SEAT)	904
KIT-LINKAGE (SEAT SUSPENSION)	913
KIT-LINKAGE (SEAT SUSPENSION)	911
KIT-PARTS (SEAT SUSPENSION)	913
KIT-PEDAL	890
KIT-PEDAL (PEDAL CONTROL)	431
KIT-PILOT VALVE (CONNECTOR JOINT) (JOYSTICK CONTROL)	435
KIT-PLATE (PEDAL)	890
KIT-PLATE (PEDAL CONTROL)	431
KIT-PLATE (SEAT SUSPENSION)	908
KIT-PLATE (SEAT SUSPENSION)	911
KIT-PLATE (SUSPENSION SEAT)	904
KIT-PLUNGER (HAND CONTROL)	430
KIT-PLUNGER (JOYSTICK CONTROL)	435
KIT-PLUNGER (PEDAL)	890
KIT-PUMP SEAL (BRAKE, STEERING)	625
KIT-PUMP SEAL (HYDRAULIC FAN PUMP)	626
KIT-RAIL (CAB DOOR WINDOW)	928
KIT-REGULATOR (HAND CONTROL)	430
KIT-REGULATOR (PEDAL)	890
KIT-REPAIR (AXLE OSC LOCK CYLINDER)	449
KIT-REPAIR (BUCKET CYLINDER)	465
KIT-REPAIR (FRONT COVER, TIMING GEAR)	32
	34
KIT-REPAIR (SEAT SUSPENSION)	913
KIT-REPAIR (SEAT SUSPENSION)	908
	911
KIT-REPAIR (SUSPENSION SEAT)	904
KIT-REPAIR (SWIVEL)	648
KIT-REPAIR (TRANSMISSION)	323
	337
KIT-SEAL (AXLE OSC LOCK CYLINDER)	451
KIT-SEAL (BLADE CYLINDER)	453
	455
KIT-SEAL (BOOM CYLINDER)	457
	459
	461
KIT-SEAL (BRAKE CONTROL VALVE)	685
KIT-SEAL (BRAKE CONTROL VALVE)	689
KIT-SEAL (BUCKET CYLINDER)	463
KIT-SEAL (CAB DOOR WINDOW)	928
KIT-SEAL (COMBINATION VALVE)	696
KIT-SEAL (CONTROL VALVE)	701
KIT-SEAL (FLOW CONTROL VALVE)	708
	719
KIT-SEAL (HAMMER CONTROL VALVE)	699
KIT-SEAL (HYDRAULIC FAN MOTOR)	616
KIT-SEAL (JOYSTICK CONTROL)	435
KIT-SEAL (LOAD CONTROL VALVE)	709
	711
KIT-SEAL (MAIN CONTROL VALVE)	621
KIT-SEAL (MAKEUP VALVE)	696
KIT-SEAL (METERING PUMP)	642
	644
KIT-SEAL (PRESSURE REDUCING VALVE)	728
KIT-SEAL (PUMP HEAD)	487
KIT-SEAL (REGULATOR CONTROL VALVE)	729
KIT-SEAL (RELIEF VALVE)	485
	699

INDEX

Name	Page
	719
	735
	736
	742
KIT-SEAL REPAIR (SWIVEL)	651
KIT-SEAL (SEAT SUSPENSION)	908
KIT-SEAL (SOLENOID VALVE)	744
	747
	750
	753
KIT-SEAL (SOLENOID VALVE) (BLADE)	746
KIT-SEAL (SOLENOID VALVE) (FLOW CONTROL)	752
KIT-SEAL (SOLENOID VALVE) (STABILIZER)	745
KIT-SEAL (SPOOL)	720
KIT-SEAL (STABILIZER CYLINDER)	466
KIT-SEAL (STICK CYLINDER)	468
KIT-SEAL (SUSPENSION SEAT)	904
KIT-SEAL (SWIVEL)	654
	659
KIT-SEAL (THROTTLE VALVE)	701
	720
KIT-SEAL (TRANSMISSION SHIFT VALVE)	612
KIT-SEAL (VALVE)	696
	701
KIT-SEAL (VALVE RELIEF)	738
KIT-SEAT COVER	904
KIT-SEAT COVER (SEAT SUSPENSION)	908
KIT-SENSOR (SWASHPLATE POSITION)	171
KIT-SHIM (RELIEF VALVE)	740
KIT-SHOCK ABSORBER (SEAT SUSPENSION)	911
	913
KIT-SPINDLE (SEAT SUSPENSION)	911
KIT-SPRING (HAND CONTROL)	430
KIT-SPRING (SEAT SUSPENSION)	913
KIT-STOP (SEAT SUSPENSION)	913
KIT-STRAP (SEAT SUSPENSION)	911
KIT-SUPPORT (SEAT SUSPENSION)	908
KIT-SUPPORT (SUSPENSION SEAT)	904
KIT-WATER PUMP	77
	79
KIT-WINDOW (POLYCARBONATE) (CAB DOOR, FRONT)	928
KIT-WINDOW (POLYCARBONATE) (CAB DOOR, REAR)	928

L

Name	Page
LAMP AS (CAB)	831
	834
LAMP AS (HEADLIGHT)	151
LAMP AS (MARKER)	165
LAMP AS (REAR)	3
LAMP AS (REAR FLOODLIGHT)	162
LAMP AS (RED, GREEN, LED, 12-VOLT)	208
LAMP AS (24-VOLT, 70-WATT) (FLOOD)	150
LAMP AS (24-VOLT, 70-WATT) (FRONT FLOOD)	163
LAMP AS (24-VOLT, 70-WATT) (REAR FLOODLIGHT)	162
LAMP (CAB)	831
	834
LAMP GP-FLOOD	164
LAMP GP-FLOOD–BOOM	150
LAMP GP-FLOOD (BOOM)	160
LAMP GP-HEAD	151
LAMP GP-REAR	152
	153
LAMP GP-SIGNAL	155
	156
LAMP GP-SIGNAL–FRONT	157
LAMP GP-WARNING BEACON	158
LAMP-HALOGEN (24-VOLT, 70-WATT) (WARNING BEACON)	158
LAMP (24-VOLT, 21-WATT) (SIGNAL LAMP)	153
LAMP (24-VOLT, 21-WATT) (SIGNAL LAMP)	157
LAMP (24-VOLT, 4-WATT) (HEADLIGHT)	151
LAMP (24-VOLT, 5-WATT) (MARKER LIGHTS)	165
LAMP (24-VOLT, 5-WATT) (REAR LAMP)	153
LAMP (24-VOLT, 75/70-WATT) (HEADLIGHT)	151
LIFTING GP-ENGINE	36
LIGHTER AS (CIGAR, 24-VOLT)	179
	182
LIGHTING AR-FLOOD–FRONT, REAR	159
LIGHTING GP-FLOOD–BOOM	160
LIGHTING GP-FLOOD–FRONT	163
LIGHTING GP-FLOOD–GUARD, FRONT	164
LIGHTING GP-FLOOD–REAR	162
LIGHTING GP-ROADING	165
	167
LIGHTING GP-WARNING BEACON	168
LINES GP-AIR	89
LINES GP-AIR CONDITIONER	878
LINES GP-AIR CONDITIONER–EXTENSION	877
LINES GP-AUXILIARY HYDRAULIC	491
	492
	498
LINES GP-AUXILIARY HYDRAULIC–MEDIUM PRESSURE	494
	496
LINES GP-BLADE CYL & VALVE	500
LINES GP-BLADE CYLINDER	502
LINES GP-BOOM	504
	506
	508
LINES GP-BOOM CYLINDER	509
LINES GP-BUCKET TILT CYLINDER	511
LINES GP-CHECK VALVE–BOOM CYLINDER	513
LINES GP-CONNECTING	515

INDEX

Name	Page
LINES GP-DIVERTER VALVE	516
LINES GP-FRONT	518
LINES GP-FUEL	99
LINES GP-FUEL FILTER	102
LINES GP-GREASE–BOOM	761
LINES GP-GREASE–BOOM, VARIABLE ADJUSTABLE	763
LINES GP-GREASE–OSCILLATING AXLE	770
LINES GP-GREASE–SWING GEAR	766
	768
LINES GP-HEATER	881
LINES GP-HEATER–EXTENSION	882
LINES GP-HYDRAULIC	519
	521
	525
	527
	528
	531
LINES GP-HYDRAULIC–DOZER, STABILIZER, FRONT	534
LINES GP-HYDRAULIC FAN	535
LINES GP-LOAD CONTROL–BOOM CYLINDER	542
LINES GP-LOAD CONTROL–STICK CYLINDER	538
LINES GP-LOAD CONTROL–STICK CYLINDER, VAR ADJ BOOM	540
LINES GP-PILOT	553
	572
LINES GP-PILOT–BRAKE, EXTENSION	562
LINES GP-PILOT–HAMMER	569
LINES GP-PILOT–HAMMER, EXTENSION	565
LINES GP-PILOT–OPERATOR	544
LINES GP-PILOT–OPERATOR, EXTENSION	559
LINES GP-PILOT–PLATFORM, BRAKE	566
LINES GP-PILOT–PLATFORM TRAVEL	551
LINES GP-PILOT–TRAVEL, EXTENSION	571
LINES GP-PILOT–UPPER	547
LINES GP-PILOT–UPPER, EXTENSION	561
LINES GP-PILOT–VARIABLE ADJUSTABLE BOOM	557
LINES GP-PILOT–VARIABLE ADJUSTABLE EXTENSION	564
LINES GP-PRESSURE TEST	574
LINES GP-PUMP	576
LINES GP-RADIATOR	71
	74
LINES GP-RETURN	580
LINES GP-STABILIZER	583
LINES GP-STEERING	587
LINES GP-STEERING–EXTENSION	585
LINES GP-STICK	589
	590
	591
	592
	593
	594
LINES GP-STICK–AUXILIARY HYD, QUICK COUPLER	601
	603
LINES GP-STICK–AUXILIARY HYDRAULIC, QUICK COUPLER	605
LINES GP-STICK–HIGH PRESSURE	608
LINES GP-STICK–MEDIUM PRESSURE	595
	597
	599
	607
LINES GP-SWING DRIVE	610
LINKAGE AR-BUCKET–ADJUSTER	771
LINKAGE AR-BUCKET–TILTING	771
LINKAGE AR-BUCKET–WITH DIVERTER	771
LINKAGE AR-BUCKET–WITHOUT DIVERTER	772
LINKAGE GP-BUCKET	773
LITERATURE GP	883
LOCK GP-TRANSPORT	410

M

MANIFOLD GP-CONTROL	612
METER GP-SERVICE	179
	182
MIRROR GP-REAR VIEW–FRONT, RIGHT	884
MIRROR GP-REAR VIEW–TOP, RH	886
MONITOR & MTG GP-OPERATOR	888
MOTOR & MTG GP-HYDRAULIC FAN	614
MOTOR & MTG GP-TRAVEL	615
MOTOR GP-GEAR–HYDRAULIC FAN	616
MOTOR GP-SWING	618
MOTOR GP-TRAVEL	619
MOUNTING GP-CAB	394
MOUNTING GP-ENGINE FLEXIBLE	37
MOUNTING GP-FAN	39
MUFFLER GP	91

O

OPERATOR AR	889

P

PADLOCK GP	119
PAN GP-OIL	40
PEDAL GP–TRAVEL	890
PEDAL GP-BRAKE	892
PIN GP-EXCAVATOR	775
	776
	777
PIN GP-PEDAL	894
	895

INDEX

Name	Page
PISTON & ROD GP	42, 43
PLATE & FILM GP	934
PLATE & FILM GP–DANISH	938
PLATE & FILM GP–DUTCH	938
PLATE & FILM GP–ENGLISH	937
PLATE & FILM GP–FINNISH	937
PLATE & FILM GP–FRENCH	939
PLATE & FILM GP–GERMAN	940
PLATE & FILM GP–GREEK	941
PLATE & FILM GP–ITALIAN	941
PLATE & FILM GP–NORWEGIAN	942
PLATE & FILM GP–PORTUGUESE	942
PLATE & FILM GP–RUSSIAN	944
PLATE & FILM GP–SPANISH	943
PLATE & FILM GP–SWEDISH	943
PLATE & FILM GP–TURKISH	944
PLATE GP-SOUND SUPPRESSION	44, 45
PLATE-IDENTIFICATION (CAB)	831, 834
PLATE-INSTRUCTION (DISCONNECT SWITCH)	934
PLATE-WARNING (STRUCTURE MODIFICATION)	866
PLATFORM GP-OPERATOR	896, 898
PLUG GP-CONTROL VALVE	621
PLUG GP-CYLINDER BLOCK	46
PLUG GP-ENGINE	47
PLUG GP-FLYWHEEL HOUSING	48
PLUG-SUMP DRAIN (ENGINE OIL)	40
PLUNGER GP (PEDAL) (PEDAL CONTROL)	431
PLUNGER GP (WITH SPRING) (PEDAL CONTROL)	431
POWER TRAIN AR	287
PULLEY GP-AUXILIARY DRIVE	49
PULLEY GP-CRANKSHAFT	50
PUMP & MOTOR GP-FUEL TRANSFER	106, 108
PUMP & MTG GP-HYDRAULIC FAN	622
PUMP & MTG GP-MAIN HYDRAULIC	623
PUMP & MTG GP-PILOT–BRAKE, STEERING	624
PUMP GP-ENGINE OIL	55
PUMP GP-FUEL INJECTION	103
PUMP GP-FUEL TRANSFER	106, 108, 110, 113
PUMP GP-GEAR–AUX, BRAKE, PILOT, STEERING	625
PUMP GP-GEAR–HYDRAULIC FAN	626
PUMP GP-GEROTOR (CHARGE)	630
PUMP GP-MAIN HYDRAULIC	627
PUMP GP-METERING	644
PUMP GP-PISTON–IMPLEMENT, TRAVEL, WORK TOOL	628
PUMP GP-PISTON–SWING, CHARGE	630
PUMP GP-WATER	77, 79

R

Name	Page
RADIATOR & OIL COOLER GP	81
RADIATOR GP	81
RADIO GP	900
REFLECTOR AS (RED)	153
REFLECTOR GP	169
REGULATOR-WATER TEMPERATURE	57
RELAY AS (AIR CONDITIONER COMPRESSOR)	824
RELAY AS (HORN)	139, 141
RELAY AS (HYDRAULIC LOCKOUT)	139, 141
RELAY AS (INTERVAL WIPER)	139, 141
RELAY AS (WIPER CUT-OUT)	141
RELAY AS (WIPER CUT-OUT)	139
RELAY AS (24-VOLT) (STARTING AID)	130
RELAY AS (24-VOLT) (STARTING AID)	134
RESISTOR (STARTING AID)	130, 134
RESTRAINT GP-TRAVEL	778, 779
RING GP-TIRE	288, 289
ROADING AR–GERMAN	3, 8
ROADING AR–UNITED KINGDOM	5, 6
ROCKER ARM GP	51
ROTATING GP-MOTOR	632, 633, 634
ROTATING GP-PUMP	636

S

Name	Page
SCREEN AS (REFUELING)	98
SCREEN GP-SUN	901
SEAL-O-RING	12
SEAL-O-RING (REGULATOR)	57
SEAL (REGULATOR HOUSING)	57
SEAL (WATER SEPARATOR BASE)	116
SEAL (WATER SEPARATOR CONNECTION)	116
SEAT BELT GP	902, 903, 906
SEAT GP	904

INDEX

Name	Page
	906
SEAT GP-SUSPENSION	907
	908
SENSOR AS-POSITION (SWASHPLATE ANGLE)	171
SENSOR AS-TEMPERATURE (AIR CONDITIONER CONDENSER)	844
SENSOR AS-TEMPERATURE (CAB)	822
SENSOR GP-POSITION–SWASHPLATE	171
SENSOR GP-PRESSURE (BOOST)	103
SENSOR GP-PRESSURE (ENGINE OIL)	103
SENSOR GP-PRESSURE (TRANSMISSION CLUTCH)	547
SENSOR GP-SPEED (TIMING)	103
SENSOR GP-TEMPERATURE (AIR INLET)	103
SENSOR GP-TEMPERATURE (ENGINE COOLANT)	103
SENSOR GP-TEMPERATURE (HYDRAULIC OIL)	662
SENSOR-TEMPERATURE (AIR CONDITIONING)	824
SEPARATOR GP-WATER	116
SERVICE GP-MACHINE (COMMUNICATION)	146
SERVICE GP-MACHINE (ENGINE & HYDRAULIC)	145
SHAFT GP-DRIVE	294
SHAFT GP-HYDRAULIC MOTOR	637
	638
SHAFT GP-MIDBEARING DRIVE	290
	292
SHIELD GP-EXHAUST	93
SLEEVE-CABLE SPLICE	883
SLEEVE GP	685
SLEEVE GP (BRAKE CONTROL VALVE)	689
SOFTWARE GP-MACHINE (COMMUNICATION)	146
SOFTWARE GP-MACHINE (ENGINE & HYDRAULIC)	145
SOFTWARE GP-MACHINE (SECURITY)	208
STABILIZER AR	639
STABILIZER GP	780
STARTING AID GP	172
	173
STARTING MOTOR GP-ELECTRIC	174
	175
STEERING COLUMN GP	640
	642
	644
STEP GP	396
	398
	399
STEP GP-TOOL BOX	400
	401
STICK AR	782
STICK AR-MATERIAL HANDLING	783
STICK GP-HOE–LONG	788
STICK GP-HOE–MATERIAL HANDLER	790
STICK GP-HOE–MEDIUM	786
STICK GP-HOE–SHORT	784
STRAINER-FUEL	119
SUN VISOR	915
SUPPORT GP-SEAT	910
SUPPRESSION GP-SOUND	402
SUSPENSION GP-SEAT	911
	913
SWITCH AS (CONTROLLER BACKUP)	202
SWITCH AS-FOOT (HORN)	186
	211
SWITCH AS (HORN, LIGHTS, WIPER)	211
SWITCH AS (HORN, LIGHTS, WIPER)	186
SWITCH AS-MAGNETIC (FLASHER RELAY)	139
	141
SWITCH AS-MAGNETIC (FUEL PUMP RELAY)	106
SWITCH AS-MAGNETIC (FUEL PUMP RELAY)	139
	141
SWITCH AS-MAGNETIC (MAIN POWER RELAY)	139
	141
SWITCH AS-MAGNETIC (REFUELING PUMP RELAY)	108
SWITCH AS (OVERLOAD WARNING)	122
SWITCH AS-POSITION (ARMREST)	847
	849
SWITCH AS-POSITION (OSCILLATING AXLE LOCK)	426
	428
SWITCH AS-POSITION (TRAVEL LOCK)	5
	433
	434
SWITCH AS-POSITION (TRAVEL LOCK)	6
SWITCH AS-PRESSURE (AIR RESTRICTION)	87
SWITCH AS-PRESSURE (BRAKE OIL ACCUMULATOR)	426
	428
SWITCH AS-PRESSURE (HYDRAULIC OIL TANK)	660
SWITCH AS-PRESSURE (REFRIGERANT HIGH, LOW)	840
SWITCH AS-PRESSURE (SERVICE BRAKE)	426
	428
SWITCH AS (RADIO ON, OFF)	876
SWITCH AS (REAR FLOODLIGHT)	162
SWITCH AS (REFUELING PUMP)	106
	108
SWITCH AS-ROCKER (BLADE/LEFT STABILIZER)	500
	583

INDEX

Name	Page
SWITCH AS-ROCKER (FLOOD LAMP, FRONT)	182
SWITCH AS-ROCKER (FRONT FLOOD LAMP)	179
SWITCH AS-ROCKER (HAZARD WARNING LIGHTS)	179 182
SWITCH AS-ROCKER (HEADLIGHT)	179 182
SWITCH AS-ROCKER (RIGHT STABILIZER)	583
SWITCH AS-ROCKER (WARNING BEACON)	168 179
SWITCH AS (SEAT HEATER)	908
SWITCH AS (WIPER LOCKOUT)	918
SWITCH GP-DISCONNECT–BATTERY	176
SWITCH GP-LIMIT (WINDOW LOWER LIMIT)	179 182
SWITCH GP-LIQUID LEVEL–HYDRAULIC OIL	177
SWITCH GP-LIQUID LEVEL (ENGINE OIL)	23
SWITCH GP-LIQUID LEVEL (HYDRAULIC OIL)	662
SWITCH GP-MAGNETIC (24-VOLT) (START RELAY)	130 134
SWITCH GP-PRESSURE (AUTO. ENG. CONTROL-DEACTUATION)	551
SWITCH GP-PRESSURE (AUTO. ENGINE CONTROL-ACTUATION)	551
SWITCH GP-PRESSURE (AUXILIARY WORK TOOL SIGNAL OIL)	553
SWITCH GP-PRESSURE (OVERLOAD WARNING)	122
SWITCH GP-PRESSURE (SWING PUMP SIGNAL OIL)	547
SWITCH GP-ROTARY (THROTTLE POSITION)	202
SWITCH GP-START	178
SWIVEL & MOUNTING GP	646 647
SWIVEL GP	648 650 651 653 654 658 659
SWIVEL GP–ELECTRIC	656

T

Name	Page
TANK & MTG GP-FUEL	117
TANK & MTG GP-HYDRAULIC	660
TANK GP-COOLANT	83
TANK GP-FUEL	119
TANK GP-HYDRAULIC	662
TIE ROD GP (LH)	266 277
TIE ROD GP (RH)	266 277
TIP GP-LONG	818 819
TIP GP-PENETRATION	820
TIP GP-SHORT	821
TIRE & RIM AR	295 296 297 298 299 300 301 302 303 304 305
TIRE & RIM GP	307 308 309 310 311 312 313 314 315 316 317 318
TRANSMISSION GP	319 333
TURBOCHARGER GP	95

U

Name	Page
UNIVERSAL JOINT GP	347 348 349

V

Name	Page
V-BELT SET (INCLUDES 2-BELTS) (FAN DRIVE)	26
V-BELT (1250-MM LG) (REFRIGERANT COMPRESSOR)	840
VALVE & LINES GP-AUXILIARY–HAMMER, EXTENSION	668
VALVE & LINES GP-AUXILIARY–MEDIUM PRESSURE	664
VALVE & LINES GP-AUXILIARY–QUICK COUPLER	666

INDEX

Name	Page
VALVE & LINES GP-LOAD CONTROL–BOOM CYLINDER	677
VALVE & LINES GP-LOAD CONTROL–BUCKET	671
VALVE & LINES GP-LOAD CONTROL–STICK	669, 673
VALVE & LINES GP-LOAD CONTROL–VARIABLE ADJUSTABLE BOOM	675
VALVE & MTG GP-CONTROL–MEDIUM PRESSURE	679
VALVE & MTG GP-MAIN CONTROL	680
VALVE AS (AIR CONDITIONER, HIGH SIDE)	840
VALVE AS-CHECK	696, 699
VALVE AS-CHECK (DOWNSHIFT INHIBITOR)	321, 335
VALVE AS-DRAIN (FUEL TANK)	119
VALVE AS-FLUID SAMPLING (ENGINE OIL)	58
VALVE AS-RELIEF (DOWNSHIFT INHIBITOR)	321, 335
VALVE-BREATHER (AXLE)	231, 244, 255, 266, 277
VALVE-CHECK	12
VALVE-CHECK (FUEL TRANSFER PUMP)	108
VALVE-CHECK (FUEL TRANSFER PUMP)	106
VALVE GP-BALL–HIGH PRESSURE, AUXILIARY	682, 683, 684
VALVE GP-BRAKE CONTROL	685, 687, 689
VALVE GP-CHECK–BOOM CYLINDER	692, 693
VALVE GP-CHECK–LOAD CONTROL	691
VALVE GP-CHECK (AXLE OSC LOCK CYLINDER)	451
VALVE GP-CHECK (HIGH SPEED CLUTCH, ORIFICE)	319, 333
VALVE GP-CHECK (LOW SPEED CLUTCH, ORIFICE)	319, 333
VALVE GP-COMBINATION–COMBINED FUNCTION	696
VALVE GP-COMBINATION–MEDIUM PRESSURE	698
VALVE GP-CONTROL–HYDRAULIC HAMMER	699
VALVE GP-CONTROL–MEDIUM PRESSURE	703
VALVE GP-CONTROL–VARIABLE ADJUSTABLE	701
VALVE GP-DIVERTER	706
VALVE GP-DIVERTER–HYDRAULIC LINES	704
VALVE GP-FLOW CONTROL	719
VALVE GP-FLOW CONTROL–BOOM CYLINDER	707
VALVE GP-FLOW CONTROL–FUEL SHUTOFF	708
VALVE GP-FUEL SHUTOFF	121
VALVE GP-LOAD CONTROL	709, 711
VALVE GP-LOAD CONTROL–BOOM CYLINDER	716
VALVE GP-LOAD CONTROL–STICK CYLINDER	713
VALVE GP-LUBE DISTRIBUTION	792, 793
VALVE GP-MAIN CONTROL	719
VALVE GP-MAKEUP	696
VALVE GP-MOTOR CONTROL	723
VALVE GP-PILOT RELIEF	726
VALVE GP-PRESS & FLOW CMPNSTR	725
VALVE GP-PRESSURE REDUCING	727, 728
VALVE GP-PRIORITY (STEERING)	587
VALVE GP-PUMP CONTROL	729, 731, 732, 734
VALVE GP-PUMP CONTROL–SWING	730
VALVE GP-RELIEF	719
VALVE GP-RELIEF–CHARGE	740
VALVE GP-RELIEF–CROSSOVER	737
VALVE GP-RELIEF–LINE	735, 736, 743
VALVE GP-RELIEF–LINE, MAKEUP	742
VALVE GP-RELIEF–LINE, MEDIUM PRESSURE	739
VALVE GP-RELIEF–STEERING HIGH PRESSURE CUTOFF	738
VALVE GP-RELIEF–TRAVEL BRAKE	741
VALVE GP-RELIEF (CROSSOVER, MAKEUP)	485
VALVE GP-RELIEF (LINE)	699
VALVE GP-RELIEF (LINE, VARIABLE ADJUSTABLE BOOM)	701
VALVE GP-SHUTOFF (ENGINE COOLANT)	74
VALVE GP-SOLENOID	745, 747
VALVE GP-SOLENOID–BLADE	746
VALVE GP-SOLENOID–CREEPER SPEED	744
VALVE GP-SOLENOID–FLOW CONTROL	752
VALVE GP-SOLENOID–HAMMER ENABLE	753
VALVE GP-SOLENOID–MEDIUM PRESSURE	750
VALVE GP-SOLENOID–OSCILLATING AXLE LOCK	749

INDEX

Name	Page
VALVE GP-SOLENOID–PRESSURE CONTROL	751
VALVE GP-SOLENOID & RELIEF (HYDRAULIC FAN MOTOR)	616
VALVE GP-SOLENOID (TRANSMISSION SHIFT)	612
VALVE GP-THROTTLE	720
VALVE GP-THROTTLE (PILOT OIL)	701
VALVE MECHANISM GP	53
VALVE-SHUTOFF (ENGINE COOLANT)	71
	74
VALVE-SHUTOFF (ENGINE OIL DRAIN)	23
VISOR GP-CAB	915

W

Name	Page
WALKWAY GP	403
	405
WEDGE GP-WHEEL	350
WINDOW GP-CAB	918
	919
	921
	924
WINDOW GP-CAB–FRONT	916
WINDOW GP-CAB–LEXAN	922
WINDOW GP-DOOR–GLASS	926
WINDOW GP-DOOR–LEXAN	928
WIPER GP-WINDOW	929
	932
WIRING GP-CAB	179
	182
	185
WIRING GP-CHASSIS	186
	190
	193
	195
	198
	200
WIRING GP-CONSOLE	202
WIRING GP-ENGINE	204
WIRING GP-FAN	206
WIRING GP-HAMMER	207
WIRING GP-MACHINE	208
WIRING GP-PLATFORM	211
WIRING GP-UNDERCARRIAGE/SWIVEL	214
WIRING GP-WORK TOOL	215

INDEX

Désignation	Page

A

ACCOUDOIR (ASS)	826, 827
ACCOUPLEMENT FLEXIBLE (ASS)	438, 439, 440, 441
ACCUMULATEUR (ENS) (RÉFRIGÉRANT)	845
ACCUMULATEUR HYDRAULIQUE (ASS)	413, 414, 416, 417
ACCUMULATEUR HYDRAULIQUE (ENS)	411, 412
*ACCUMULATOR GP-HYDRAULIC	415
*ACTUATOR GP	719
*ACTUATOR GP-PUMP	420, 421
ALLUME-CIGARE (ENS) (CIGARE, 24V)	179, 182
ALTERNATEUR DE CHARGE (ASS)	126, 128
AMPOULE (CABINE)	831, 834
AMPOULE (24V, 21W) (CLIGNOTANT)	157
AMPOULE (24V, 21W) (CLIGNOTANT)	153
AMPOULE (24V, 4W) (PHARES)	151
AMPOULE (24V, 5W) (FEU ARRIÈRE)	153
AMPOULE (24V, 5W) (FEUX DE GABARIT)	165
AMPOULE (24V, 75/70W) (PHARES)	151
ANNEAU DE ROUE (ASS)	288, 289
ANTENNE (ASS) (*MAGNETIC MOUNT, PRODUCT LINK)	148
APPUIE-TETE (ENS)	873
ARBRE - MOTEUR HYDRAULIQUE (ASS)	637, 638
ARBRE A CAMES (ASS)	11
ARBRE D'ENTRAÎNEMENT (ASS)	294
AUTOCOLLANT-CAT (DROITE)	757
AUTOCOLLANT-CAT (GAUCHE)	757
AUTOCOLLANT (CATERPILLAR)	831, 834
AUTOCOLLANT DE GRILLE DE COMMANDE	572
AUTOCOLLANT DE MISE EN GARDE (COMMANDE DE RÉGIME MOTEUR)	938
AUTOCOLLANT DE MISE EN GARDE (PAS DE SOUDAGE, PAS DE PERÇAGE)	869
AUTOCOLLANT DE MISE EN GARDE (PAS DE SOUDAGE, PAS DE PERÇAGE)	871
AUTOCOLLANT DE MISE EN GARDE (*PRODUCT LINK RADIO, EAME)	148
AUTOCOLLANT DE MISE EN GARDE (RISQUE DE SE FRAPPER LA TÊTE SUR LA PORTE)	383
AUTOCOLLANT DE MISE EN GARDE (UNIVERSEL-LIRE LE MANUEL)	938
AUTOCOLLANT DE MISE EN GARDE (VÉRIN HAUTE PRESSION)	415, 416, 417
AUTOCOLLANT D'IDENTIFICATION (ÉTIQUETTE)	144
AUTOCOLLANT D'IDENTIFICATION (HAUTEUR POUR DÉPLACEMENTS SUR ROUTE)	6
AUTOCOLLANT D'IDENTIFICATION (HAUTEUR POUR DÉPLACEMENTS SUR ROUTE)	5
AUTOCOLLANT (ISSUE DE SECOURS)	922
AUTOCOLLANT (PROTECTION AVANT)	869, 871
AUTOCOLLANT (PUISSANCE ACOUSTIQUE, 102DB)	935
AUTOCOLLANT (SÉCURITÉ)	208
AUXILIAIRE DE DÉMARRAGE (ASS)	172, 173
AVANT DE FLECHE (ASS)	757
AVERTISSEUR (ASS)	122
AVERTISSEUR DE RECUL (ENS)	125
AVERTISSEUR DE TRANSLATION (ASS)	124, 125
AXE - PÉDALE (ASS)	894, 895
AXE DE CULBUTEUR (ASS)	51

B

BALAI D'ESSUIE-GLACE (ENS)	932
BALAI D'ESSUIE-GLACE (ENS) (INFÉRIEUR)	929
BALAI D'ESSUIE-GLACE (ENS) (SUPERIEUR)	929
BARRE D'ACCOUPLEMENT (ASS) (DROITE)	266, 277
BARRE D'ACCOUPLEMENT (ASS) (GAUCHE)	266, 277
BÂTI DE REHAUSSE DE CABINE (ASS)	383
BATTERIE (ASS)	138
BATTERIE ET CÂBLAGE	130, 134
BATTERIE SANS ENTRETIEN (12 V)(900 A)	138
BATTERIE (12V, 750A)	130, 134
BLINDAGE INFÉRIEUR (ASS)	390
BLOC-CYLINDRES (ASS)	18, 19

* TRADUCTION NON DISPONIBLE AU MOMENT DE LA PUBLICATION

INDEX

Désignation	Page
BOITE DE VITESSES (TRANSMISSION) (ASS)	333
BOITE DE VITESSES (TRANSMISSION) (ASS)	319
BOUCHON À ÉVENT (LAVE-GLACE)	186
BOUCHON À ÉVENT (LAVE-GLACE)	211
BOUCHON DE BLOC-CYLINDRES (ASS)	46
BOUCHON DE GOULOTTE DE REMPLISSAGE (ENS) (CARBURANT, VERROUILLAGE, AÉRÉ)	119
BOUCHON DE MOTEUR (ASS)	47
BOUCHON DE RADIATEUR (ENS)	83
BOUCHON-DISTRIBUTEUR (ASS)	621
BOUCHON DU CARTER DE VOLANT (ASS)	48
BOUCHON-VIDANGE DU CARTER (HUILE MOTEUR)	40
BOULONNERIE DE LA CULASSE (ASS)	27
BOURRELET D'ÉTANCHÉITÉ (CARTER DE RÉGULATEUR)	57
BOURRELET D'ÉTANCHÉITÉ (CONNEXION DE SÉPARATEUR D'EAU)	116
BOURRELET D'ÉTANCHÉITÉ (SUPPORT DE SÉPARATEUR D'EAU)	116
BRAS DE PELLE RETRO (ASS)	784
	786
	788
	790
BRAS-MANUTENTION (ASS	783
BRAS (VERSION)	782
BROCHES D'EQUIPEMENT DE LA PELLE	775
	776
	777

C

Désignation	Page
CABINE (ASS)	829
	830
	831
	834
	838
CABINE-FAISCEAU DE CÂBLES (ENS)	179
	182
CABINE-FAISCEAU DE CÂBLES (ENS) (RACCORD D'ENTRETIEN)	179
	182
CÂBLAGE - OUTIL DE TRAVAIL (ASS)	215
CABLAGE - PLATE-FORME (ASS)	211
CABLAGE DE CABINE (ASS)	179
CABLAGE DE CABINE (ASS)	182
	185
CABLAGE DE CHASSIS (ASS)	186
	193
	195
	198
CABLAGE DE CHASSIS (ASS)	190
	200
CABLAGE DE CONSOLE (ASS)	202
CABLAGE DE LA MACHINE (ASS)	208
CABLAGE DE MARTEAU (ASS)	207
CABLAGE DE MOTEUR (ASS)	204
CABLAGE DE TRAIN DE ROULEMENT/ PIVOT	214
CÂBLAGE DE VENTILATEUR	206
CABLAGE MOTEUR (ENS)	130
	134
CACHE-SOUPAPES (ASS)	12
CADENAS (ASS)	119
CANALISATIONS - BRANCHEMENT (ASS)	515
CANALISATIONS - CONTRÔLE DE PRESSION (ASS)	574
CANALISATIONS - VÉRIN DE LAME (ASS)	502
CANALISATIONS - VÉRIN DE LAME ET SOUPAPE (ASS)	500
CANALISATIONS A COMMANDE PILOTE (ASS)	544
	547
	551
	553
	557
	559
	561
	562
	564
	565
	566
	569
	571
	572
CANALISATIONS AV	518
CANALISATIONS D'AIR (ASS)	89
CANALISATIONS DE BRAS (ASS)	589
	590
	591
	592
	593
	594
	595
	597
	599
	601
	603
	605
	607
	608
CANALISATIONS DE CARBURANT (ASS)	99
CANALISATIONS DE CHAUFFAGE (ASS)	881

* TRADUCTION NON DISPONIBLE AU MOMENT DE LA PUBLICATION

INDEX

Désignation	Page
	882
CANALISATIONS DE CLAPET DE RETENUE (ASS)	513
CANALISATIONS DE CLIMATISEUR (ASS)	877
	878
CANALISATIONS DE COMMANDE DE CHARGE (ASS)	538
	540
	542
CANALISATIONS DE DÉRIVATION (ASS)	516
CANALISATIONS DE DIRECTION (ASS)	585
	587
CANALISATIONS DE GRAISSAGE (ASS)	763
	766
	768
	770
CANALISATIONS DE GRAISSAGE (ASS)	761
CANALISATIONS DE POMPE (ASS)	576
CANALISATIONS DE RADIATEUR (ASS)	71
	74
CANALISATIONS DE RÉCHAUFFEUR DE LIQUIDE DE REFROIDISSEMENT	882
CANALISATIONS DE RETOUR (ASS)	580
CANALISATIONS DE STABILISATEUR (ASS)	583
CANALISATIONS DE VERIN DE FLECHE (ASS)	509
CANALISATIONS DE VÉRIN D'INCLINAISON DE GODET	511
CANALISATIONS D'ENTRAÎNEMENT DE TOURELLE (ASS)	610
CANALISATIONS DU FILTRE A CARBURANT (ASS)	102
CANALISATIONS HYDRAULIQUES (ASS)	519
	521
	525
	527
	528
	531
	534
CANALISATIONS HYDRAULIQUES AUXILIAIRES (ASS)	491
	492
	494
	496
	498
CANALISATIONS HYDRAULIQUES DE VENTILATEUR (ASS)	535
CAPOT ET PROTECTION (VERSION)	391
CAPTEUR DE POSITION (ENS) (ANGLE DE PLATEAU OSCILLANT)	171
CAPTEUR DE PRESSION (ASS) (EMBRAYAGE DE BOÎTE)	547
CAPTEUR DE PRESSION (ASS) (HUILE MOTEUR)	103
CAPTEUR DE PRESSION (ASS) (SURALIMENTATION)	103
CAPTEUR DE TEMPERATURE (ASS) (ADMISSION D'AIR)	103
CAPTEUR DE TEMPERATURE (ASS) (HUILE HYDRAULIQUE)	662
CAPTEUR DE TEMPERATURE (ASS) (LIQUIDE DE REFROIDISSEMENT DU MOTEUR)	103
CAPTEUR DE TEMPÉRATURE (CLIMATISATION)	824
CAPTEUR DE TEMPÉRATURE (ENS) (CONDENSEUR DE CLIMATISEUR)	844
CAPTEUR DE VITESSE (ASS) (CALAGE)	103
CARENAGE DE MOTEUR (ASS)	364
	368
	372
CARENAGE DE RADIATEUR (ASS)	375
	380
CARTER AV (ASS)	32
	34
CARTER DE VOLANT (ASS)	31
CEINTURE DE SECURITE (ASS)	902
	903
	906
CHAPEAU (ENS) (GOULOTTE D'HUILE MOTEUR)	12
CHASSIS DE TOURELLE (ASS)	385
CHÂSSIS PORTEUR (ASS)	408
	409
CHÂSSIS PORTEUR (VERSION)	407
*CLAMP GP-HYDRAULIC LINES	506
CLAPET ANTI-RETOUR (POMPE D'ALIMENTATION EN CARBURANT)	106
	108
CLAPET DE COMPENSATION (ASS)	696
CLAPET DE DECHARGE (ASS)	735
	736
	737
	738
	739
	740
	741
	742
	743
CLAPET DE DECHARGE (ASS) (CANALISATION)	699
CLAPET DE DECHARGE (ASS) (CANALISATION DE FLÈCHE À GÉOMÉTRIE VARIABLE)	701
CLAPET DE DECHARGE (ASS) (DÉCHARGE, COMPENSATION)	485

* TRADUCTION NON DISPONIBLE AU MOMENT DE LA PUBLICATION

INDEX

Désignation	Page
CLAPET DE DECHARGE (INHIBITEUR DE RÉTROGRADATION)	321, 335
CLAPET DE DÉCHARGE PILOTE (ASS)	726
CLAPET DE RETENUE (ENS)	691, 692, 693, 696, 699
CLAPET DE RETENUE (ENS) (EMBRAYAGE BASSE VITESSE, ORIFICE)	333
CLAPET DE RETENUE (ENS) (EMBRAYAGE BASSE VITESSE, ORIFICE)	319
CLAPET DE RETENUE (ENS) (EMBRAYAGE GRANDE VITESSE, ORIFICE)	333
CLAPET DE RETENUE (ENS) (EMBRAYAGE GRANDE VITESSE, ORIFICE)	319
CLAPET DE RETENUE (ENS) (INHIBITEUR DE RÉTROGRADATION)	321, 335
CLAPET DE RETENUE (ENS) (VÉRIN DE VERROUILLAGE D'OSCILLATION D'ESSIEU)	451
CLAPET ET CANALISATIONS DE CHARGE DE LEVAGE (ASS)	669, 671, 673, 675, 677
CLÉ	176
CLÉ ÉLECTRONIQUE (ENS) (SÉCURITÉ, JAUNE)	208
CLIMATISEUR (ASS)	823, 824
CLIMATISEUR ET MONTAGE (ASS)	822
COFFRE DE BRANCHEMENT	139, 141
COFFRE DE RANGEMENT (ASS)	394
COLLECTEUR - COMMANDE (ASS)	612
COLONNE DE DIRECTION (ASS)	640, 642, 644
COMMANDE DE COMMUNICATION (ASS) (LIAISON DE PRODUIT)	148
COMMANDE DE FAISCEAU (ENS)	208
COMMANDE DE FAISCEAU (ENS) (COMMUNICATION)	148
COMMANDE DE FAISCEAU (ENS) (SÉCURITÉ)	208
COMMANDE DE LA TENSION (ASS) (24 VOLTS) (PROTECTION DE CHARGE)	103
COMMANDE ELECTRONIQUE DE MOTEUR (ASS)	103
COMMANDE ET MONTAGE (ASS)-MACHINE	143
COMMANDE HYDRAULIQUE DE PÉDALE (ASS)	431, 433, 434
COMMANDE HYDRAULIQUE MANUELLE (ASS)	430
COMMANDE HYDRAULIQUE PILOTE (ASS)	437
COMMANDE NON PROGRAMMEE (ASS)	144
COMMANDE NON PROGRAMMEE (ASS) (MOTEUR ET HYDRAULIQUE)	145
COMMANDE PRINCIPALE DE SOUPAPE ET MONTAGE (ASS)	680
COMPRESSEUR DE REFRIGERANT (ASS)	839, 840
COMPTEUR D'ENTRETIEN (ASS)	179, 182
CONDENSATEUR ET MONTAGE (RÉFRIGÉRANT)	842
CONDENSEUR DE RÉFRIGÉRANT	844, 845
CONNEXION DE CANALISAT. DE CHAUF. DE LA CAB. (ASS)	846
CONSOLE DE CONDUITE (ASS)	852
CONSOLE DE FAISCEAU (ENS) (DROITE)	202
CONSOLE DE FAISCEAU (ENS) (GAUCHE)	202
CONSOLE DROITE (ASS)	853
CONSOLE GAUCHE (ASS)	847, 849
CONTACTEUR - NIVEAU DE LIQUIDE (ASS)	177
CONTACTEUR - NIVEAU DE LIQUIDE (ASS) (HUILE HYDRAULIQUE)	662
CONTACTEUR - NIVEAU DE LIQUIDE (ASS) (HUILE MOTEUR)	23
CONTACTEUR DE LIMITE (ASS) (LIMITE D'ABAISSEMENT DE VITRE)	179
CONTACTEUR DE LIMITE (ASS) (LIMITE D'ABAISSEMENT DE VITRE)	182
CONTACTEUR DE POSITION (ENS) (ACCOUDOIR)	847, 849
CONTACTEUR DE POSITION (ENS) (VERROUILLAGE DE TRANSLATION)	5
CONTACTEUR DE POSITION (ENS) (VERROUILLAGE DE TRANSLATION)	6, 434
CONTACTEUR DE POSITION (ENS) (VERROUILLAGE D'ESSIEU OSCILLANT)	426, 428
CONTACTEUR (ENS) (AUXILIAIRE DE MODULE DE COMMANDE)	202

* TRADUCTION NON DISPONIBLE AU MOMENT DE LA PUBLICATION

INDEX

Désignation	Page
CONTACTEUR (ENS) (DISPOSITIF D'AVERTISSEMENT EN CAS DE SURCHARGE)	122
CONTACTEUR (ENS) (KLAXON, ÉCLAIRAGE, ESSUIE-GLACE)	186 211
CONTACTEUR (ENS) (MARCHE, ARRÊT DE LA RADIO)	876
CONTACTEUR (ENS) (POMPE DE REMPLISSAGE)	106 108
CONTACTEUR (ENS) (PROJECTEUR ARRIÈRE)	162
CONTACTEUR (ENS) (RÉCHAUFFEUR DE SIÈGE)	908
CONTACTEUR (ENS) (VERROUILLAGE D'ESSUIE-GLACE)	918
CONTACTEUR MAGNETIQUE (ASS) (24 VOLTS) (RELAIS DE DÉMARRAGE)	130 134
CONTACTEUR MAGNETIQUE (ENS) (RELAIS DE CLIGNOTANTS)	139 141
CONTACTEUR MAGNETIQUE (ENS) (RELAIS DE POMPE D'ALIMENTATION)	106
CONTACTEUR MAGNETIQUE (ENS) (RELAIS DE POMPE D'ALIMENTATION)	139 141
CONTACTEUR MAGNETIQUE (ENS) (RELAIS DE POMPE DE RAVITAILLEMENT)	108
CONTACTEUR MAGNETIQUE (ENS) (RELAIS DE PUISSANCE PRINCIPAL)	139 141
CONTREPOIDS (ASS)	351
*COOLANT HEATER LINES	881
CORPS DE POMPE (ASS)	422 424
COUDE D'ADMISSION D'AIR (ASS)	88
COURROIE TRAPEZOIDALE (1250-MM LONG) (COMPRESSEUR DE RÉFRIGÉRANT)	840
COUSSINET D'AUTOALIGNEMENT	616
COUVERCLE DE LA CONSOLE (ASS)	856
COUVERCLE DE RENIFLARD (RÉSERVOIR D'HUILE HYDRAULIQUE)	662
COUVERCLE DE SURÉLEVEUR DE CABINE FIXE (ASS)	855
COUVERCLE DE VISITE (ASS)	353
COUVERCLE (ENS)	352
CULASSE (ASS)	21 22
CULBUTERIE (ASS)	53
*CYLINDER (*STEERING)	246

D

Désignation	Page
DEFLECTEUR D'ECHAPPEMENT (ASS)	93
DÉMARREUR ÉLECTRIQUE (ASS)	174 175
DISTRIBUTEUR (ASS)	699
DISTRIBUTEUR (ASS)	701 703
DISTRIBUTEUR DE CHARGE (ASS)	709 711 713 716
DISTRIBUTEUR DE DÉBIT (ASS)	707 708
DISTRIBUTEUR DE FREIN (ASS)	687 689
DISTRIBUTEUR DE FREIN (ASS)	685
DISTRIBUTEUR ET MONTAGE (ASS)	679

E

Désignation	Page
ÉCLAIRAGE - FEUX DE ROUTE (ASS)	167
ÉCLAIRAGE - FEUX DE ROUTE (ASS)	165
ÉCLAIRAGE - GYROPHARE (ASS)	168
ÉCLAIRAGE - PROJECTEURS (ASS)	160 163
ÉCLAIRAGE - PROJECTEURS (ASS)	162
ÉCLAIRAGE - PROJECTEURS (ASS)	164
ÉCLAIRAGE-PROJECTEURS (VERSION)	159
ÉCRAN (ENS) (REMPLISSAGE DE CARBURANT)	98
ÉLECTRONIQUE - MACHINE (ENS)	145
ÉLECTRONIQUE - MACHINE (ENS)	146
ÉLECTRONIQUE - MACHINE (ENS) (SÉCURITÉ)	208
ÉLECTRONIQUE-MONITEUR (ASS)	147
ÉLÉMENT DE FILTRE À AIR (ENS) (PRINCIPAL)	86
ÉLÉMENT DE FILTRE À AIR (ENS) (SECONDAIRE)	86
ÉLÉMENT DE FILTRE À HUILE (ENS) (HYDRAULIQUE) (HAUTE PRESSION)	535
ÉLÉMENT DE FILTRE À HUILE (ENS) (HYDRAULIQUE) (PILOTE)	477
ÉLÉMENT DE FILTRE (ENS)-CARBURANT	97
ÉLÉMENT DE FILTRE-HYDRAULIQUE (HUILE DE RETOUR)	478
ÉLÉMENT DE SÉPARATEUR D'EAU	116
ENGRENAGE ET PALIER D'ORIENTATION	388
ENTRAÎNEMENT AUXILIAIRE - POULIE (ASS)	49
ENTRAÎNEMENT AUXILIAIRE (ASS)	24
ENTRAÎNEMENT DE POMPE (ASS)	470
ENTRAÎNEMENT DE VENTILATEUR (ASS)	26

* TRADUCTION NON DISPONIBLE AU MOMENT DE LA PUBLICATION

INDEX

Désignation	Page
ENTRAINEMENT D'ORIENTATION (ASS)	471, 472
ENTRETIEN DE LA MACHINE (ASS) (COMMUNICATION)	146
ENTRETIEN DE LA MACHINE (ASS) (MOTEUR ET HYDRAULIQUE)	145
ÉQUIPEMENT POUR DÉPLACEMENT ROUTIER (VERSION)	5, 6, 8
ÉQUIPEMENT POUR DÉPLACEMENT ROUTIER (VERSION)	3
ESSIEU - LARGE (VERSION)	229, 230
ESSIEU AR (ASS)	231, 236
ESSIEU AR (VERSION)	220, 226, 227, 228
ESSIEU AV (VERSION)	219
ESSIEU DE DIRECTION (ASS)	242, 253, 264, 275
ESSIEU ET TRANSMISSION (VERSION)	216, 217, 218
ESSUIE-GLACE (ASS)	929, 932

F

Désignation	Page
FAISCEAU DE BOÎTE DE DÉRIVATION (ENS)	139, 141
FAISCEAU DE CABLES - CAPTEUR (ENS) (ANGLE DE PLATEAU OSCILLANT DE POMPE)	193, 195, 198, 200
FAISCEAU DE CABLES - CAPTEUR (ENS) (*PUMP SWASHPLATE ANGLE)	190
FAISCEAU DE CABLES (ENS) (CLIMATISATION, CHAUFFAGE)	824
FAISCEAU DE CABLES (ENS) (MODULE DE COMMANDE MOTEUR)	204
FAISCEAU DE CABLES (ENS) (OUTIL DE TRAVAIL)	215
FAISCEAU DE CABLES (ENS) (SIÈGE)	913
FAISCEAU DE CABLES (ENS) (VENTILATEUR)	206
FAISCEAU DE CHÂSSIS (ENS)	186, 195, 211
FAISCEAU DE CHÂSSIS (ENS) (ÉLECTRONIQUE)	198, 200
FAISCEAU DE CHÂSSIS (ENS) (ÉLECTRONIQUE, CONTACTEURS, CAPTEURS)	190
FAISCEAU DE CHÂSSIS (ENS) (ÉLECTRONIQUE, CONTACTEURS, CAPTEURS)	193
FAISCEAU DE CONTACTEUR (ENS) (RÉCHAUFFEUR DE SIÈGE)	908
FAISCEAU DE CONTACTEUR (ENS) (VERROUILLAGE POUR TRANSPORT)	6
FAISCEAU DE RADIO (ENS)	900
FAISCEAU DE SOLÉNOÏDE (ENS) (STABILISATEUR)	214
FAISCEAU D'ÉCLAIRAGE (ENS)	160
FAISCEAU D'ÉCLAIRAGE (ENS) (ARRIÈRE, CÔTÉ DROIT)	153
FAISCEAU D'ÉCLAIRAGE (ENS) (ARRIÈRE, CÔTÉ GAUCHE)	153
FAISCEAU D'ÉCLAIRAGE (ENS) (DÉPLACEMENT ROUTIER)	165
FAISCEAU D'ÉCLAIRAGE (ENS) (PLAQUE D'IMMATRICULATION)	3
FAISCEAU D'ÉCLAIRAGE (ENS) (PROJECTEURS AVANT)	164
FAISCEAU D'OUTIL DE TRAVAIL (ENS) (MARTEAU)	207
*FILTER ELEMENT AS-OIL (*HYDRAULIC) (CIRCUIT DE TOURELLE)	476
FILTRE - RENIFLARD (VILEBREQUIN)	12
FILTRE A AIR (ASS)	86, 87
FILTRE À AIR DE CABINE (FRAIS)	864
FILTRE À CARBURANT	119
FILTRE A CARBURANT (ASS)	97
FILTRE À GRAISSE (ASS) (FLÈCHE)	761, 763
FILTRE À GRAISSE (FLÈCHE)	761, 763
FILTRE A HUILE (ASS)	475, 476, 477, 478
FILTRE A HUILE (ASS) (HYDRAULIQUE) (HAUTE PRESSION)	535
FILTRE À HUILE MOTEUR (ASS)	54
FILTRE A HUILE MOTEUR (ENS)	54
FILTRE (BOITE DE VITESSE)	321, 335

* TRADUCTION NON DISPONIBLE AU MOMENT DE LA PUBLICATION

INDEX

Désignation	Page
FILTRE DE RECIRCULATION (CLIMATISEUR)	824
FILTRE (RETOUR D'HUILE HYDRAULIQUE)	475
FIXATION DE TRANSPORT (ASS)	778
	779
FLECHE - CANALISATIONS	504
	506
	508
FLECHE (ASS)	755
FLÈCHE (VERSION)	754
FLEXIBLE D'ADMISSION DU RADIATEUR	71
	74
FLEXIBLE DE RADIATEUR (*INLET)	71
	74
FLEXIBLE DE RADIATEUR (SORTIE)	71
	74
FLEXIBLE DE REMPLISSAGE DE CARBURANT (ASS)	98
FLEXIBLE DE SORTIE DE RADIATEUR	71
	74
FLEXIBLE (ÉVACUATION DES GAZ DE CARTER INFÉRIEUR)	12
FLEXIBLE (ÉVACUATION DES GAZ DE CARTER SUPÉRIEUR)	12
*FLOOR MAT	896
FREIN - COMMANDE (ASS)	426
FREIN - COMMANDE (ASS)	428
FUSIBLE (10A)	139
	141
FUSIBLE (15A)	139
	141
FUSIBLE (15A) (POMPE D'ALIMENTATION EN CARBURANT)	106
	108
FUSIBLE (20A)	130
	134
	139
	141
FUSIBLE (25A)	139
	141
FUSIBLE (5A)	139
	141
FUSIBLE (70 AMPÈRES)	130
FUSIBLE (80A)	135

G

GAINE D'AIR (ASS)	864
GEROTOR - POMPE (CHARGE)	630
GLACE DE PORTIÈRE (ASS)	926
	928
GODET ET COUSSINET (CONJ)	802
	803
	804
GODET ET DISPOSITIF DE RÉGLAGE	799
	800
	801
GODET POUR CREUSAGE (ENS)	813
	814
	815
	816
	817
GODET POUR NETTOYAGE DE TRANCHÉE (ENS)	805
	806
	807
	808
	809
	810
	811
	812
GROUPE DE ROTATION DE MOTEUR	632
	633
	634
GROUPE DE ROTATION DE POMPE	636
GROUPE D'ISOLATION DE CHALEUR	392
GROUPE D'ORIENTATION	648
	650
	651
	653
	654
	656
	658
	659

H

*HEAD GP-PUMP	488
HUILE MOTEUR - CARTER (ASS)	40

I

INDICATEUR (RÉSERVOIR DE LIQUIDE DE REFROIDISSEMENT)	83
INSONORISATION (ASS)	402
INTERRUPTEUR A PEDALE (ENS) (KLAXON)	211
INTERRUPTEUR A PEDALE (ENS) (KLAXON)	186
INTERRUPTEUR BALANCIER (ENS) (*BLADE/LEFT STABILIZER)	583
INTERRUPTEUR BALANCIER (ENS) (FEUX DE DÉTRESSE)	179
	182
INTERRUPTEUR BALANCIER (ENS) (GYROPHARE)	168

* TRADUCTION NON DISPONIBLE AU MOMENT DE LA PUBLICATION

INDEX

Désignation	Page
	179
INTERRUPTEUR BALANCIER (ENS) (PHARE AVANT)	179 182
INTERRUPTEUR BALANCIER (ENS) (PROJECTEUR AVANT)	179
INTERRUPTEUR BALANCIER (ENS) (PROJECTEUR, AVANT)	182
INTERRUPTEUR BALANCIER (ENS) (STABILISATEUR DE GAUCHE/ LAME)	500
INTERRUPTEUR BALANCIER (ENS) (STABILISATEUR DROIT)	583
INTERRUPTEUR DE DÉMARRAGE (ASS)	178
ISOLATION-SUPPRESSION DU BRUIT (ASS)	393

J

JAMBE (ASS)-ENTRAÎNEMENT DE ROULEMENT INTERMÉDIAIRE	290 292
JAUGE D'HUILE MOTEUR (BAÏONNETTE) (ENS)	40
JEU DE COURROIES TRAPEZOIDALES (COMPREND 2 COURROIES) (ENTRAÎNEMENT DE VENTILATEUR)	26
JOINT PLAT (CACHE-SOUPAPES)	12
JOINT TORIQUE (RÉGULATEUR)	57
JOINT UNIVERSEL (ASS)	347 348 349

K

KIT D'AMORTISSEUR (SUSPENSION DU SIÈGE)	911 913
KIT DE BEC (VITRE DE PORTE DE CABINE)	928
KIT DE BOULONNERIE (SIÈGE ET MONTAGE)	906
KIT DE BUTÉE (SUSPENSION DU SIÈGE)	913
KIT DE CALES (CLAPET DE DÉCHARGE)	740
KIT DE CAPTEUR (POSITION DE PLATEAU OSCILLANT)	171
KIT DE CHAPEAU DE FILTRE (RÉSERVOIR DE CARBURANT)	119
KIT DE COMPRESSEUR D'AIR (SUSPENSION DU SIÈGE)	913
KIT DE COURROIE (SUSPENSION DU SIÈGE)	911
KIT DE COUSSINET (MOTEUR HYDRAULIQUE)	637 638
KIT DE COUSSINET (SIEGE A SUSPENSION)	904
KIT DE COUSSINET (SUSPENSION DU SIÈGE)	908
KIT DE COUSSINET (SUSPENSION DU SIÈGE)	911
KIT DE COUVERCLES (SUSPENSION DU SIÈGE)	913
KIT DE COUVERCLES (SUSPENSION DU SIÈGE)	913
KIT DE CUVE (SÉPARATEUR D'EAU)	116
KIT DE DOSSIER (SIEGE A SUSPENSION)	904
KIT DE DOSSIER (SUSPENSION DU SIÈGE)	908
KIT DE FLEXIBLE (EAU) (CARTER DE RÉGULATEUR)	77 79
KIT DE FLEXIBLE (SUSPENSION DU SIÈGE)	913
KIT DE FUSÉE (SUSPENSION DU SIÈGE)	911
KIT DE GAINE (SUSPENSION DU SIÈGE)	913
KIT DE JOINTS (CLAPET DE DÉCHARGE)	485 699 735 736 738 742
KIT DE JOINTS (COMMANDE PAR MANIPULATEUR)	435
KIT DE JOINTS (DISTRIBUTEUR)	701
KIT DE JOINTS (DISTRIBUTEUR DE DÉBIT)	708
KIT DE JOINTS (DISTRIBUTEUR DE FREIN)	685 689
KIT DE JOINTS (DISTRIBUTEUR DE MARTEAU)	699
KIT DE JOINTS (DISTRIBUTEUR DE RÉGULATEUR)	729
KIT DE JOINTS (DISTRIBUTEUR PRINCIPAL)	621
KIT DE JOINTS (ÉLECTROVANNE)	744 747 750 753
KIT DE JOINTS (ÉLECTROVANNE) (COMMANDE DE DÉBIT)	752
KIT DE JOINTS (ÉLECTROVANNE) (LAME)	746
KIT DE JOINTS (ÉLECTROVANNE) (STABILISATEUR)	745
KIT DE JOINTS (MOTEUR DE VENTILATEUR HYDRAULIQUE)	616
KIT DE JOINTS (PAPILLON DES GAZ)	701
KIT DE JOINTS (PIVOT)	654 659
KIT DE JOINTS (POMPE DOSEUSE)	642 644

* TRADUCTION NON DISPONIBLE AU MOMENT DE LA PUBLICATION

INDEX

Désignation	Page
KIT DE JOINTS (RÉDUCTEUR DE PRESSION)	728
KIT DE JOINTS (SIEGE A SUSPENSION)	904
KIT DE JOINTS (SOUPAPE)	696
KIT DE JOINTS (SOUPAPE DE CHANGEMENT DE VITESSES)	612
KIT DE JOINTS (SOUPAPE DE COMBINAISON)	696
KIT DE JOINTS (SOUPAPE DE COMMANDE DE CHARGE)	709 711
KIT DE JOINTS (SOUPAPE DE COMPENSATION)	696
KIT DE JOINTS (SUSPENSION DU SIÈGE)	908
KIT DE JOINTS (TÉTE DE POMPE)	487
KIT DE JOINTS (*VALVE)	701
KIT DE JOINTS (VÉRIN DE BRAS)	468
KIT DE JOINTS (VÉRIN DE FLÈCHE)	457 459 461
KIT DE JOINTS (VÉRIN DE GODET)	463
KIT DE JOINTS (VÉRIN DE LAME)	453 455
KIT DE JOINTS (VÉRIN DE STABILISATEUR)	466
KIT DE JOINTS (VÉRIN DE VERROUILLAGE D'OSCILLATION D'ESSIEU)	451
KIT DE JOINTS (VITRE DE PORTE DE CABINE)	928
KIT DE LEVIER (COMMANDE MANUELLE)	430
KIT DE LEVIER (COMMANDE PAR MANIPULATEUR)	435
KIT DE LEVIER (SIEGE A SUSPENSION)	904
KIT DE LEVIER (SUSPENSION DU SIÈGE)	908
KIT DE LOQUET (SUSPENSION DU SIÈGE)	913
KIT DE PARE-CHOCS (SUSPENSION DU SIÈGE)	911
KIT DE PEDALE	890
KIT DE PEDALE (COMMANDE DE PÉDALE)	431
KIT DE PIECES (SUSPENSION DU SIÈGE)	913
KIT DE PISTON PLONGEUR (COMMANDE MANUELLE)	430
KIT DE PISTON PLONGEUR (COMMANDE PAR MANIPULATEUR)	435
KIT DE PISTON PLONGEUR (PÉDALE)	890
KIT DE PLAQUE (COMMANDE DE PÉDALE)	431
KIT DE PLAQUE (PÉDALE)	890
KIT DE PLAQUE (SIEGE A SUSPENSION)	904
KIT DE PLAQUE (SIEGE A SUSPENSION)	904
KIT DE PLAQUE (SUSPENSION DU SIÈGE)	908 911
KIT DE PLAQUE (SUSPENSION DU SIÈGE)	908
KIT DE POIGNÉE (SIEGE A SUSPENSION)	904
KIT DE POIGNÉE (SUSPENSION DU SIÈGE)	908
KIT DE POMPE À EAU	77 79
KIT DE RAIL (VITRE DE PORTE DE CABINE)	928
KIT DE REGLAGE (SIEGE A SUSPENSION)	904
KIT DE REGLAGE (SUSPENSION DU SIÈGE)	911 913
KIT DE REGLAGE (SUSPENSION DU SIÈGE)	908
KIT DE RÉGULATEUR (COMMANDE MANUELLE)	430
KIT DE RÉGULATEUR (PÉDALE)	890
KIT DE RÉPARATION (BOITE DE VITESSE)	323 337
KIT DE RÉPARATION (COUVERCLE AVANT, PIGNON DE DISTRIBUTION)	32 34
KIT DE RÉPARATION DE JOINT (PIVOT)	651
KIT DE RÉPARATION (PIVOT)	648
KIT DE RÉPARATION (SIEGE A SUSPENSION)	904
KIT DE RÉPARATION (SUSPENSION DU SIÈGE)	908 913
KIT DE RÉPARATION (SUSPENSION DU SIÈGE)	911
KIT DE RÉPARATION (VÉRIN DE GODET)	465
KIT DE RÉPARATION (VÉRIN DE VERROUILLAGE D'OSCILLATION D'ESSIEU)	449
KIT DE RESSORT DE DISQUE (BOITE DE VITESSE)	320 334
KIT DE RESSORTS (COMMANDE MANUELLE)	430
KIT DE RESSORTS (SUSPENSION DU SIÈGE)	913
KIT DE REVÊTEMENT DE SIÈGE	904
KIT DE REVÊTEMENT DE SIÈGE (SUSPENSION DU SIÈGE)	908
KIT DE SOUPAPE PILOTE (JOINT DE CONNECTEUR) (COMMANDE PAR MANIPULATEUR)	435
KIT DE SUPPORT (SIEGE A SUSPENSION)	904
KIT DE SUPPORT (SUSPENSION DU SIÈGE)	908 911
KIT DE TIMONERIE (SUSPENSION DU SIÈGE)	913
KIT DE TIMONERIE (SUSPENSION DU SIÈGE)	911
KIT DE VÉRIN À GAZ (SUSPENSION DU SIÈGE)	913
KIT DISPOSITIF DE COMMANDE (SUSPENSION DU SIÈGE)	913

* TRADUCTION NON DISPONIBLE AU MOMENT DE LA PUBLICATION

INDEX

Désignation	Page
KIT-FENETRE (POLYCARBONE) (PORTE DE CABINE, ARRIÈRE)	928
KIT-FENETRE (POLYCARBONE) (PORTE DE CABINE, AVANT)	928
KIT (JOINTS DE POMPE) (FREIN DE DIRECTION)	625
KIT (JOINTS DE POMPE) (POMPE DE VENTILATEUR HYDRAULIQUE)	626
*KIT-SEAL (*FLOW CONTROL VALVE)	719
*KIT-SEAL (*RELIEF VALVE)	719
*KIT-SEAL (*SPOOL)	720
*KIT-SEAL (*THROTTLE VALVE)	720
KLAXON ÉLECTRIQUE (ASS)	874
KLAXON ÉLECTRIQUE (ASS)	875
KLAXON (ENS) (*24-VOLT, LOW TONE)	874

L

LAME - MONTAGE (ASS)	795 797
LAME (VERSION)	799
LAMPE - CLIGNOTANT DE DIRECTION (ASS)	155 156
LAMPE - CLIGNOTANT DE DIRECTION (ASS)	157
LAMPE - GYROPHARE (ASS)	158
LAMPE - PHARE (ASS)	150 164
LAMPE - PHARE (ASS) (FLÈCHE)	160
LAMPE AR (ASS)	152 153
LAMPE (ENS) (ARRIÈRE)	3
LAMPE (ENS) (CABINE)	831 834
LAMPE (ENS) (PHARES)	151
LAMPE (ENS) (PROJECTEUR ARRIÈRE)	162
LAMPE (ENS) (REPÈRE)	165
LAMPE (ENS) (ROUGE, VERT, TÉMOIN LUMINEUX, 12V)	208
LAMPE (ENS) (24V, 70W) (PROJECTEUR)	150
LAMPE (ENS) (24V, 70W) (PROJECTEUR ARRIÈRE)	162
LAMPE (ENS) (24V, 70W) (PROJECTEUR AV)	163
LAMPE HALOGÈNE (24V, 70W) (GYROPHARE)	158
LITTÉRATURE (ASS)	883
LOGICIEL - MACHINE (ENS) (COMMUNICATION)	146
LOGICIEL - MACHINE (ENS) (MOTEUR ET HYDRAULIQUE)	145
LOGICIEL - MACHINE (ENS) (SÉCURITÉ)	208

M

MANCHON (ASS)	685
MANCHON (ASS) (DISTRIBUTEUR DE FREIN)	689
MANCHON DE JONCTION DE CABLES	883
MANOCONTACT (ACTIVATION AUTOMATIQUE DU MOTEUR)	551
MANOCONTACT (DÉSACTIVATION AUTOMATIQUE DU MOTEUR)	551
MANOCONTACT (DISPOSITIF D'AVERTISSEMENT EN CAS DE SURCHARGE)	122
MANOCONTACT (ENS) (ACCUMULATEUR D'HUILE DE FREIN)	426 428
MANOCONTACT (ENS) (FREIN DE MANOEUVRE)	426 428
MANOCONTACT (ENS) (*REFRIGERANT HIGH, LOW)	840
MANOCONTACT (ENS) (RÉSERVOIR D'HUILE HYDRAULIQUE)	660
MANOCONTACT (ENS) (RESTRICTION D'AIR)	87
MANOCONTACT (HUILE DE SIGNAL DE POMPE D'ORIENTATION)	547
MANOCONTACT (HUILE DE SIGNAL D'OUTIL DE TRAVAIL AUXILIAIRE)	553
MARCHEPIED - BOÎTE À OUTILS (ASS)	400 401
MARCHEPIED (ASS)	396 398 399
MECANISME DE COMMANDE (ASS)	418 419 701
MECANISME DE COMMANDE DE POMPE (ASS)	628
MONITEUR ET MONTAGE - POSTE DE CONDUITE (ASS)	888
MONTAGE-COMMUNICATION (ASS)	148
MONTAGE DE CABINE (ASS)	394
MONTAGE DE MOTEUR (VERSION)	10
MONTAGE DE RADIO (ASS)	876
MONTAGE DE VENTILATEUR (ASS)	39
MONTAGE SOUPLE DU MOTEUR (ASS)	37
MOTEUR - TRANSLATION (ASS)	619
MOTEUR À ENGRENAGES (ASS)	616
MOTEUR DE JOINT TOURNANT (ASS)	618
MOTEUR DE TRANSLATION ET MONTAGE (ASS)	615
MOTEUR ET MONTAGE DE VENTILATEUR HYDRAULIQUE (ASS)	614

* TRADUCTION NON DISPONIBLE AU MOMENT DE LA PUBLICATION

INDEX

Désignation	Page
MOTEUR (VERSION PRINCIPALE)	9
O	
OEILLETONS DE LEVAGE MOTEUR (ASS)	36
P	
PALONNIER - GROUPE DE COMMANDE (ASS)	435
PARE-SOLEIL	915
PARE-SOLEIL (ASS)	901
PASSERELLE (ASS)	403
	405
PÉDALE (ASS)	890
PEDALE DE FREIN (ASS)	892
PHARE AV (ASS)	151
PIED DE FLECHE (ASS)	759
PIGNONNERIE AV (ASS)	29
PISTON ET BIELLE (ASS)	42
	43
PIVOT ET MONTAGE (ASS)	646
	647
PLAQUE - AVERTISSEMENT (MODIFICATION DU CADRE)	866
PLAQUE D'INSONORISATION (ASS)	44
	45
PLAQUE D'INSTRUCTIONS (COUPE-BATTERIE)	934
PLAQUE (IDENTIFICATION) (CABINE)	831
	834
PLAQUES SIGNALETIQUES ET AUTOCOLLANTS (ASS)	934
	937
	938
	939
	940
	941
	942
	943
	944
PLATE-FORME DE CABINE	896
	898
PLONGEUR (ASS) (AVEC RESSORT) (COMMANDE DE PÉDALE)	431
PLONGEUR (ASS) (PÉDALE) (COMMANDE DE PÉDALE)	431
PNEU ET JANTE (ASS)	307
	308
	309
	310
	311
	312
	313
	314
	315
	316
	317
	318
PNEU ET JANTE (VERSION)	295
	296
	297
	298
	299
	300
	301
	302
	303
	304
	305
POINTE COURTE (ASS)	821
POINTE LONGUE (ASS)	818
	819
POINTE PENETRATION	820
POMPE A EAU (ASS)	77
	79
POMPE A ENGRENAGES (ASS)	625
	626
POMPE A PISTONS (ASS)	628
	630
POMPE D'ALIMENTATION EN CARBURANT (ASS)	106
	108
	110
	113
POMPE DE REGULARISATION DE DEBIT (ASS)	644
POMPE DE TRANSFERT DE CARBURANT ET MOTEUR	106
	108
POMPE D'INJECTION DE CARBURANT (ASS)	103
POMPE ET MONTAGE - HYDRAULIQUE PRINCIPAL	623
POMPE ET MONTAGE-VENTILATEUR HYDRAULIQUE	622
POMPE HYDRAULIQUE PRINCIPALE (ASS)	627
POMPE PILOTE ET MONTAGE (ASS)	624
PORTE DE VISITE (ASS)	354
	356
	357
	359
	360
	362
	363
PORTIÈRE DE CABINE (ASS)	858

* TRADUCTION NON DISPONIBLE AU MOMENT DE LA PUBLICATION

INDEX

Désignation	Page
	860
	861
	862
POSTE DE CONDUITE (VERSION)	889
PROTECTION ANTIVANDALISME (ASS)	867
PROTECTION DE GLACE (ASS)	871
PROTECTION DE GLACE (ASS)	869
PROTECTION DE VENTILATEUR (ASS)	62
	64
	66
	67
	70
PROTEGE-CONDUCTEUR	866
PROTEGE-COURROIE (ASS)	30
*PUMP GP-ENGINE OIL	55

R

RACCORD - CANALISATIONS HYDRAULIQUES (ASS)	482
	483
	484
RACCORD (ASS)	479
	480
	481
RACCORD D'EAU (ASS)	57
RADIATEUR (ASS)	81
RADIATEUR ET REFROIDISSEUR D'HUILE (ASS)	81
RADIO (ASS)	900
RECHAUFFEUR (ENS) (ADMISSION D'AIR)	173
RÉFLECTEUR (ASS)	169
RÉFLECTEUR (ENS) (ROUGE)	153
REFROIDISSEUR D'ADMISSION D'AIR (ASS)	84
REFROIDISSEUR HUILE MOTEUR ET SUPPORT DE FILTRE	58
REGARD DE NIVEAU (ASS) (HUILE HYDRAULIQUE)	662
RÉGLAGE DE GODET (ASS)	794
RELAIS (ENS) (ARRÊT D'ESSUIE-GLACE)	141
RELAIS (ENS) (ARRÊT D'ESSUIE-GLACE)	139
RELAIS (ENS) (BLOCAGE HYDRAULIQUE)	139
	141
RELAIS (ENS) (COMPRESSEUR DE CLIMATISEUR)	824
RELAIS (ENS) (INTERVALLE DE L'ESSUIE-GLACE)	141
RELAIS (ENS) (INTERVALLE DES ESSUIE-GLACES)	139
RELAIS (ENS) (KLAXON)	139
	141
RELAIS (ENS) (24 VOLTS) (AUXILIAIRE DE DÉMARRAGE)	130
	134
RÉSERVOIR DE CARBURANT (ASS)	119
RÉSERVOIR DE CARBURANT ET MONTAGE (ASS)	117
RÉSERVOIR DU LIQUIDE DE REFROIDISSEMENT (ASS)	83
RÉSERVOIR HYDRAULIQUE (ASS)	662
RÉSERVOIR HYDRAULIQUE ET MONTAGE (ASS)	660
RESISTANCE (AUXILIAIRE DE DÉMARRAGE)	130
	134
RETROVISEUR - CABINE (ASS)	915
RÉTROVISEUR (ASS)	884
	886
ROBINET DE BATTERIE (ASS)	176
ROBINET DE VIDANGE (ENS) (RESERVOIR DE CARBURANT)	119
ROBINET DE VIDANGE (RÉSERVOIR HYDRAULIQUE)	662
ROBINET-ÉCHANTILLON DE LIQUIDE (ENS) (HUILE MOTEUR)	58
ROTATION DE LA ROUE DU VENTILATEUR SOUFFLANT (AUTRE GRILLE DE COMMANDE)	572
ROTATION DE LA ROUE DU VENTILATEUR SOUFFLANT (FLÈCHE À GÉOMÉTRIE VARIABLE)	557
ROTATION DE LA ROUE DU VENTILATEUR SOUFFLANT (ISSUE DE SECOURS, DÉPOSER LA VITRE)	921
ROTATION DE LA ROUE DU VENTILATEUR SOUFFLANT (MARTEAU HYDRAULIQUE)	554
	569
ROTATION DE LA ROUE DU VENTILATEUR SOUFFLANT (RAVITAILLEMENT)	106
	108
ROTATION DE LA ROUE DU VENTILATEUR SOUFFLANT (*TIE-DOWN)	934

S

*SEAL-O-RING	12
SEGMENT DE ROUE (ASS)	350
*SENSOR AS-TEMPERATURE (*CAB)	822
SÉPARATEUR D'EAU (ASS)	116
SIÈGE (ASS)	904
	906
SIÈGE AVEC SUSPENSION (ASS)	907
	908
	911

* TRADUCTION NON DISPONIBLE AU MOMENT DE LA PUBLICATION

INDEX

Désignation	Page
	913
SILENCIEUX (ASS)	91
SONDE - CIRCUIT DE CARBURANT	171
SOUPAPE - RENIFLARD (ESSIEU)	231
	244
	255
	266
	277
SOUPAPE - SOLÉNOÏDE (ASS)	744
	745
	746
	747
	749
	750
	751
	752
	753
SOUPAPE - SOLÉNOÏDE (ASS) (CHANGEMENT DE VITESSES)	612
SOUPAPE D'ACCÉLÉRATEUR (ASS) (HUILE TÉMOIN)	701
SOUPAPE D'ARRÊT (ASS) (LIQUIDE DE REFROIDISSEMENT DU MOTEUR)	74
SOUPAPE D'ARRÊT D'ALIMENTATION (ASS)	121
SOUPAPE D'ARRÊT (LIQUIDE DE REFROIDISSEMENT DU MOTEUR)	71
	74
SOUPAPE D'ARRÊT (VIDANGE D'HUILE MOTEUR)	23
SOUPAPE DE COMBINAISON (ASS)	696
SOUPAPE DE COMMANDE PRINCIPALE (ASS)	719
SOUPAPE DE DERIVATION (ASS)	704
	706
SOUPAPE DE DISTRIBUTION DE GRAISSAGE (ASS)	792
	793
SOUPAPE DE PRIORITE (ASS) (DIRECTION)	587
SOUPAPE ET CANALISATIONS - AUXILIAIRE (ASS)	664
	666
	668
SOUPAPE RÉDUCTRICE DE PRESSION (ASS)	727
	728
SOUPAPE RÉGULATRICE DE PRESSION ET DÉBIT	725
SOUPAPE SOLENOIDE ET DE DECHARGE (MOTEUR DE VENTILATEUR HYDRAULIQUE)	616
SOUPAPE SPHÉRIQUE (ASS)	682
	683
	684
STABILISATEUR (ASS)	780
STABILISATEUR (VERSION)	639
SUPPORT DE FILTRE ET REFROIDISSEUR D'HUILE MOTEUR	58
SUPPORT DE SIÈGE (ASS)	910
*SWITCH AS-POSITION (VERROUILLAGE DE TRANSLATION)	433
*SWITCH GP-ROTARY (POSITION D'ACCÉLÉRATION)	202

T

TAMBOUR DE FREIN (ASS)	286
TAPIS DE PLANCHER	898
TÊTE DE MOTEUR À PISTONS (ASS)	485
TÊTE DE POMPE (ASS)	487
THERMOSTAT-TEMPÉRATURE D'EAU	57
TIMONERIE DU GODET (VERSION)	771
	772
TRANSMISSION (VERSION)	287
TRINGLERIE DE GODET (ASS)	773
TURBOCOMPRESSEUR (ASS)	95

V

*VALVE AS (*AIR CONDITIONER, HIGH SIDE)	840
*VALVE-CHECK	12
*VALVE GP-COMBINATION	698
*VALVE GP-FLOW CONTROL	719
*VALVE GP-MOTOR CONTROL	723
*VALVE GP-PUMP CONTROL	729
	730
	731
	732
	734
*VALVE GP-RELIEF	719
*VALVE GP-THROTTLE	720
VENTILATEUR ASPIRANT (ASS)	60
	61
VÉRIN - VERROUILLAGE D'OSCILLATION D'ESSIEU (ASS)	451
VÉRIN - VERROUILLAGE D'OSCILLATION D'ESSIEU (ASS)	449
VERIN DE BRAS (ASS)	468
VERIN DE BRAS ET JOINT (ASS)	448
VERIN DE FLECHE (ASS)	457
	459
	461
VERIN DE FLECHE ET JOINT (ASS)	444
	445
	446

* TRADUCTION NON DISPONIBLE AU MOMENT DE LA PUBLICATION

INDEX

Désignation	Page	Désignation	Page
VERIN DE GODET (ASS)	463 465		
VÉRIN DE GODET ET JOINT (ASS)	447		
VÉRIN DE LAME (ASS)	453 455		
VERIN DE STABILISATEUR (ASS)	466		
VÉRIN (DIRECTION)	257 268 279		
VÉRIN ET MONTAGE - VERROUILLAGE D'ESSIEU (ASS)	442 443		
VERROUILLAGE POUR L'EXPÉDITION (ASS)	410		
VERSION DE CHASSIS	1		
VERSION DE PROTECTION ANTIBROUILLARD	865		
VERSION DE REHAUSSE DE CABINE	829		
VERSION DE TRANSFORMATION MACHINE	1		
VERSION HYDRAULIQUE	490		
VIDANGE D'HUILE (ASS)	23		
VILEBREQUIN - POULIE (ASS)	50		
VILEBREQUIN (ASS)	14 16		
VITRE DE CABINE (ASS)	916 918 919 921 922 924		
VITRE (ENS) (FEU ARRIÈRE)	152		
VITRE (ENS) (TÉMOIN DE SIGNAL ARRIÈRE)	155		
VITRE (ENS) (TÉMOIN DE SIGNAL AVANT)	156		
VITRE (GYROPHARE)	158		
VOLANT MOTEUR (ASS)	28		
VUE DU MODÈLE	2		

* TRADUCTION NON DISPONIBLE AU MOMENT DE LA PUBLICATION

INDICE

Nombre	Página
A	
ACCESORIOS - IMPULSOR DE (GR)	24
ACCIONADOR (GR)	418
	419
	701
*ACCUMULATOR GP-HYDRAULIC	415
ACONDICIONADOR DE AIRE (GR)	823
	824
ACONDICIONADOR DE AIRE Y MONTAJE (GR)	822
ACOPLAMIENTO FLEXIBLE (GR)	438
	439
	440
	441
ACTIVADOR DE LA BOMBA (GR)	628
*ACTUATOR GP	719
*ACTUATOR GP-PUMP	420
	421
ACUMULADOR CONJ-HIDRÁULICO	411
	412
ACUMULADOR (CONJ) (REFRIGERANTE)	845
ACUMULADOR HIDRAULICO (GR)	413
	414
	416
	417
AGUA - CONEXIÓN DE (GR)	57
AIRE - TUBERÍAS DE (GR)	89
AISLACIÓN DE CALOR (GR)	392
AISLACION DE INSONORIZACION (GR)	393
AJUSTADOR DEL CUCHARÓN (GR)	794
ALARMA DE DESPLAZAMIENTO (GR)	124
	125
ALARMA DE RETROCESO (CONJ)	125
ALARMA (GR)	122
ALFOMBRILLA DEL PISO	898
ANILLO DE LA RUEDA (GR)	288
	289
ANTENA (CONJ) (*MAGNETIC MOUNT, PRODUCT LINK)	148
ANTEPLUMA (GR)	757
APOYACABEZA (CONJ)	873
ÁRBOL DE LEVAS (GR)	11
ARO Y LLANTA (GR)	307
	308
	309
	310
	311
	312
	313
	314
	315
	316
	317
	318
ARO Y RUEDA	295
	296
	297
	298
	299
	300
	301
	302
	303
	304
	305
ARRANQUE - INTERRUPTOR DE (GR)	178
ASIENTO CON SUSPENSIÓN (GR)	913
ASIENTO CON SUSPENSIÓN (GR)	911
ASIENTO (GR)	904
	906
AUXILIAR DE ARRANQUE (GR)	172
	173
B	
BALANCÍN (GR)	51
BASE DEL FILTRO Y ACEITE REFRIGERANTE DE MOTOR	58
BASTIDOR DEL TREN DE RODAJE (CONFIG)	407
BASTIDOR DEL TREN DE RODAJE (GR)	408
	409
BASTIDOR SUPERIOR (GR)	385
BATERÍA (GR)	138
BATERÍA LIBRE DE MANTENIMIENTO (12V) (900 AMP)	138
BATERÍA Y CABLES (GR)	134
BATERÍA Y CABLES (GR)	130
BATERÍA (12-VOLTIOS, 750-AMPERIOS)	130
	134
BLOQUE MOTOR (GR)	18
	19
BOCINA (CONJ) (*24-VOLT, LOW TONE)	874
BOCINA ELÉCTRICA (GR)	875
BOCINA ELÉCTRICA (GR)	874
BOLA DE VÁLVULA (GR)	682
	683
	684
BOMBA - TUBERÍAS DE (GR)	576
BOMBA DE AGUA (GR)	77
	79
BOMBA DE ENGRANAJES (GR)	625
	626
BOMBA DE INYECCIÓN DE COMBUSTIBLE (GR)	103
BOMBA DE LUBRICACIÓN (GR) (CARGA)	630

* NO HAY TRADUCCION DISPONIBLE EN EL MOMENTO DE LA IMPRESION

INDICE

Nombre	Página
BOMBA DE PISTONES (GR)	628, 630
BOMBA DE TRANSFERENCIA DE COMBUSTIBLE (GR)	108, 110, 113
BOMBA DE TRANSFERENCIA DE COMBUSTIBLE (GR)	106
BOMBA HIDRÁULICA PRINCIPAL (GR)	627
BOMBA HIDRÁULICA PRINCIPAL Y MONTAJE (GR)	623
BOMBA PILOTO Y MONTAJE (GR)	624
BOMBA Y MONTAJE DE VENTILADOR HIDRAULICO (GR)	622
BOMBA Y MOTOR DE TRANSFERENCIA DE COMBUSTIBLE (GR)	106, 108
BRAZO (CONFIG)	782
BRAZO DE MANEJO DE MATERIAL (CONFIG)	783
BRAZO DE RETROEXCAVADOR (GR)	784, 786, 788, 790

C

Nombre	Página
CABEZA DE BOMBA (GR)	487
CABEZA DE MOTOR DE PISTONES (GR)	485
CABINA - MAZO DE CABLES DE LA	179, 182
CABINA - MAZO DE CABLES DE LA (CONECTOR DE SERVICIO)	179
CABINA - MAZO DE CABLES DE LA (CONECTOR DE SERVICIO)	182
CABINA (GR)	829, 830, 831, 834, 838
CABLES DE LA CABINA (GR)	179, 182, 185
CABLES DE LA CONSOLA (GR)	202
CABLES DE LA HERRAMIENTA DE TRABAJO (GR)	215
CABLES DE LA MÁQUINA (GR)	208
CABLES DE LA PLATAFORMA (GR)	211
CABLES DEL CHASIS (GR)	186, 190, 193, 195, 198, 200
CABLES DEL MARTILLO (GR)	207
CABLES DEL MOTOR (GR)	204
CABLES DEL TREN DE RODAJE/ROTACIÓN (GR)	214
CAJA DE ALMACENAMIENTO	394
CAJA DE EMPALMES (GR)	139
CAJA DE EMPALMES (GR)	141
CAJA DELANTERA (GR)	32
CAJA DELANTERA (GR)	34
CALCOMANÍA (CATERPILLAR)	831, 834
CALCOMANÍA DE ADVERTENCIA (*ALTERNATE EXIT, REMOVE WINDOW)	921
CALCOMANÍA DE ADVERTENCIA (*AVOID BUMPING HEAD ON DOOR)	383
CALCOMANÍA DE ADVERTENCIA (CILINDRO PARA ALTA PRESION)	415, 416, 417
CALCOMANÍA DE ADVERTENCIA (CONFIGURACIÓN DE CONTROL ALTERNA)	572
CALCOMANÍA DE ADVERTENCIA (CONTROL DE VELOCIDAD DEL MOTOR)	938
CALCOMANÍA DE ADVERTENCIA (MARTILLO HIDRÁULICO)	569
CALCOMANÍA DE ADVERTENCIA (MARTILLO HIDRÁULICO)	554
CALCOMANÍA DE ADVERTENCIA (NO SOLDAR, NO BARRENAR)	869, 871
CALCOMANÍA DE ADVERTENCIA (*PRODUCT LINK RADIO, EAME)	148
CALCOMANÍA DE ADVERTENCIA (RELLENO)	106, 108
CALCOMANÍA DE ADVERTENCIA (*TIE-DOWN)	934
CALCOMANÍA DE ADVERTENCIA (UNIVERSAL - LEA EL MANUAL)	938
CALCOMANÍA DE ADVERTENCIA (*VARIABLE ADJUSTABLE BOOM)	557
CALCOMANÍA DE IDENTIFICACIÓN (ALTURA DE DESPLAZAMIENTO)	5, 6
CALCOMANÍA DE IDENTIFICACIÓN (ETIQUETA)	144
CALCOMANÍA (*EXTERIOR SOUND, 102-DB)	935
CALCOMANÍA (PROTECTOR DELANTERO)	869, 871
CALCOMANÍA (SALIDA ALTERNATIVA)	922

* NO HAY TRADUCCION DISPONIBLE EN EL MOMENTO DE LA IMPRESION

INDICE

Nombre	Página
CALCOMANÍA (SEGURIDAD)	208
CALCOMANÍAS Y PLACAS DE IDENTIFICACIÓN (GR)	938
	939
	940
	941
	942
	943
	944
CALCOMANÍAS Y PLACAS DE IDENTIFICACIÓN (GR)	934
	937
	938
CALENTADOR (CONJ) (ADMISION DE AIRE)	173
CÁNCAMOS DE LEVANTAMIENTO DEL MOTOR (GR)	36
CANDADO (GR)	119
CAÑÓN DE LA BOMBA (GR)	422
	424
CAPÓ Y PROTECTOR (CONFIG)	391
CARGA - ALTERNADOR DE (GR)	126
	128
CÁRTER - COLECTOR DEL (GR)	40
CHASIS (CONFIG)	1
CIGÜEÑAL - POLEA DE (GR)	50
CIGÜEÑAL (GR)	14
	16
CILINDRO DE CUCHARÓN (GR)	463
CILINDRO DE CUCHARÓN (GR)	465
CILINDRO DE LA HOJA (GR)	453
	455
CILINDRO DE LA PLUMA - TUBERÍAS DEL	509
CILINDRO DE LA PLUMA (GR)	457
	459
	461
CILINDRO DE LA PLUMA Y SELLO (GR)	444
	445
	446
CILINDRO DE TRABA DEL EJE OSCILANTE (GR)	449
	451
CILINDRO DE TRABA DEL EJE Y MONTAJE (GR)	442
	443
CILINDRO DEL BRAZO (GR)	468
CILINDRO DEL BRAZO Y SELLO (GR)	448
CILINDRO DEL CUCHARÓN Y SELLO (GR)	447
CILINDRO (DIRECCIÓN)	268
	279
CILINDRO (DIRECCIÓN)	257
CILINDRO ESTABILIZADOR (GR)	466
CINTURÓN DE SEGURIDAD (GR)	902
	903
	906
*CLAMP GP-HYDRAULIC LINES	506
CODO DE ADMISIÓN DE AIRE (GR)	88
COJINETES AUTOALINEADOS (GR)	616
COLADOR DE COMBUSTIBLE	119
COLUMNA DE DIRECCIÓN (GR)	644
COLUMNA DE DIRECCIÓN (GR)	640
	642
COMBUSTIBLE - TANQUE DE (GR)	119
COMPARTIMIENTO DEL MOTOR (GR)	364
	368
	372
COMPARTIMIENTO DEL OPERADOR (CONFIG)	889
COMPARTIMIENTO DEL RADIADOR (GR)	375
	380
COMPRESOR DE REFRIGERANTE (GR)	839
	840
CONDENSADOR DE REFRIGERANTE (GR)	844
	845
CONDENSADOR DEL REFRIGERANTE Y MONTAJE (GR)	842
CONDUCTO DE AIRE (GR)	864
CONECTOR DE TUBERÍAS DE CALEFACCIÓN DE LA CABINA (GR)	846
CONEXIÓN DE LAS TUBERÍAS HIDRÁULICAS (GR)	482
	483
	484
CONEXIÓN (GR)	479
	480
	481
CONFIGURACIÓN DE INSTALACIÓN DEL MOTOR	10
CONFIGURACIÓN GENERAL	2
CONFIGURACIÓN PARA CARRETERA	3
	5
	6
	8
CONJUNTO DE CABINA, ELEVADOR	829
CONJUNTO DE CABLERIA, RADIO	900
CONJUNTO DE CABLES-CAJA DE EMPALME	139
	141
CONJUNTO DE LLAVE, ELECTRONICA (SEGURIDAD, AMARILLO)	208
CONJUNTO DE MAZO DE CABLES DE LA CONSOLA (IZQUIERDO)	202
CONJUNTO DE MAZO DE CABLES DE LA CONSOLA (LADO DERECHO)	202
CONJUNTO DE MAZO DE CABLES DE SOLENOIDE (ESTABILIZADOR)	214
CONJUNTO DE REFLECTOR (ROJO)	153

* NO HAY TRADUCCION DISPONIBLE EN EL MOMENTO DE LA IMPRESION

INDICE

Nombre	Página
CONJUNTO DE VIDRIO (*FRONT SIGNAL LAMP)	156
CONJUNTO DE VIDRIO (LAMPARA TRASERA)	152
CONJUNTO DE VIDRIO (*REAR SIGNAL LAMP)	155
CONSOLA DEL LADO DERECHO (GR)	853
CONSOLA DEL LADO IZQUIERDO (GR)	847 849
CONSOLA DEL OPERADOR (GR)	852
CONTRAPESO (GR)	351
CONTROL DE COMUNICACION (GR) (ESLABON DE PRODUCTO)	148
CONTROL DE MAQUINA Y MONTAJE (GR)	143
CONTROL DE VOLTAJE (GR) (24 VOLTIOS) (PROTECCIÓN DE CARGA)	103
CONTROL DEL FRENO (GR)	426 428
CONTROL DEL MULTIPLE (GR)	612
CONTROL ELECTRÓNICO DEL MOTOR (GR)	103
CONTROL HIDRÁULICO DE OPERACIÓN PILOTO (GR)	437
CONTROL HIDRÁULICO MANUAL (GR)	430
CONTROL NO PROGRAMADO (GR)	144
CONTROL NO PROGRAMADO (GR) (MOTOR E HIDRÁULICO)	145
*COOLANT HEATER LINES	881
CORREA TRAPEZOIDAL (*1250-MM LG) (COMPRESOR DEL REFRIGERANTE)	840
CUBIERTA DEL ELEVADOR DE CABINA (GR)	855
CUCHARÓN PARA EXCAVACIÓN (CONJ)	813 814 815 816 817
CUCHARÓN PARA LIMPIEZA DE ZANJAS (CONJ)	805 806 807 808 809 810 811 812
CUCHARÓN Y AJUSTADOR (CONFIG)	799 800 801
CUCHARÓN Y COJINETE (CONJ)	802 803 804
CULATA DE CILINDROS - TORNILLERÍA DE LA (GR)	27
CULATA DE CILINDROS (GR)	21 22
CUÑA DE RUEDA (GR)	350
*CYLINDER (*STEERING)	246

D

DETECTOR DE POSICIÓN (SISTEMA DE COMBUST.) (GR)	171
DISYUNTOR (GR)	176
DOSIFICACIÓN - BOMBA DE (GR)	644
DRENAJE DE ACEITE (GR)	23

E

EJE ANCHO (CONFIG)	229 230
EJE DE DIRECCION (CONFIG)	219
EJE DE DIRECCION (GR)	242 253 264 275
EJE DE MANDO DE COJINETE MEDIO (GR)	290 292
EJE DE MANDO (GR)	294
EJE DE MOTOR HIDRÁULICO (GR)	637 638
EJE TRASERO	220 226 227 228
EJE TRASERO (GR)	231 236
EJE Y TRANSMISIÓN (CONFIG)	216 217 218
ELECTRONICA DE MAQUINA (GR)	145
ELECTRONICA DE MAQUINA (GR)	146
ELECTRONICA DE MAQUINA (GR) (SEGURIDAD)	208
ELECTRONICA DE MONITOR (GR)	147
ELEMENTO DE FILTRO DE ACEITE (CONJ) (HIDRAULICO) (PILOTO)	477
ELEMENTO DE FILTRO DE ACEITE (CONJ) (HIDRAULICO) (PRESION ALTA)	535
ELEMENTO DE FILTRO DE COMBUSTIBLE (CONJ)	97
ELEMENTO DE FILTRO HIDRÁULICO (ACEITE DE RETORNO)	478
ELEMENTO DEL FILTRO DE AIRE (CONJ) (PRIMARIO)	86

* NO HAY TRADUCCION DISPONIBLE EN EL MOMENTO DE LA IMPRESION

INDICE

Nombre	Página
ELEMENTO DEL FILTRO DE AIRE (CONJ) (SECUNDARIO)	86
ELEMENTO DEL SEPARADOR DE AGUA	116
EMPAQUETADURA (TAPA DE VÁLVULA)	12
ENCENDEDOR (CONJ) (ENCENDEDOR, 24 VOLTIOS)	179 182
ENFRIADOR DE ACEITE DEL MOTOR Y BASE DEL FILTRO	58
ENGRANAJE DE ROTACIÓN Y COJINETE (GR)	388
ENGRANAJE DELANTERO (GR)	29
ESCALÓN DE LA CAJA DE HERRAMIENTAS (GR)	400 401
ESTABILIZADOR (CONFIG)	639
ESTABILIZADOR (GR)	780
ESTRIBO DEL OPERADOR (GR)	396 398 399
ETIQUETA DE CONFIGURACIÓN DE CONTROL	572

F

*FILTER ELEMENT AS-OIL (*HYDRAULIC) (CIRCUITO DE ROTACIÓN)	476
FILTRO - RESPIRADERO (CÁRTER DEL MOTOR)	12
FILTRO DE ACEITE DEL MOTOR (CONJ)	54
FILTRO DE ACEITE DEL MOTOR (GR)	54
FILTRO DE ACEITE (GR)	476 478
FILTRO DE ACEITE (GR)	477
FILTRO DE ACEITE (GR)	475
FILTRO DE ACEITE (GR) (HIDRAULICO) (PRESION ALTA)	535
FILTRO DE AIRE DE CABINA (*FRESH)	864
FILTRO DE AIRE (GR)	86 87
FILTRO DE COMBUSTIBLE (GR)	97
FILTRO DE RECIRCULACIÓN (AIRE ACONDICIONADO)	824
FILTRO, GRASA (PLUMA)	761 763
FILTRO (RETORNO DEL ACEITE HIDRÁULICO)	475
FILTRO (TRANSMISION)	321 335
*FLOOR MAT	896
FUSIBLE (10-AMPERIOS)	139
FUSIBLE (10-AMPERIOS)	141
FUSIBLE (15 AMPERIOS)	139
FUSIBLE (15 AMPERIOS)	141
FUSIBLE (15 AMPERIOS) (BOMBA DE TRANSFERENCIA DE COMBUSTIBLE)	106
FUSIBLE (15 AMPERIOS) (BOMBA DE TRANSFERENCIA DE COMBUSTIBLE)	108
FUSIBLE (20-AMPERIOS)	130 139
FUSIBLE (20-AMPERIOS)	134 141
FUSIBLE (25 AMPERIOS)	139
FUSIBLE (25 AMPERIOS)	141
FUSIBLE (5-AMPERIOS)	139 141
FUSIBLE (70-AMPERIOS)	130
FUSIBLE (80 AMPERIOS)	135

G

GRIFO DE DRENAJE (TANQUE HIDRÁULICO)	662
GRUPO DE BASTIDOR, ELEVADOR DE CABINA	383
GRUPO DE CABLES, VENTILADOR	206
GRUPO DE CONTROL DE PEDAL HIDRÁULICO	431 433 434
GRUPO DE FILTRO, GRASA (PLUMA)	761 763
GRUPO DE MONTAJE DE LA CABINA	394
GRUPO DE MONTAJE Y ROTACIÓN	646 647
GRUPO DE ROTACIÓN DEL MOTOR (GR)	632 633 634
GRUPO DE TAPA, ACCESO	353
GRUPO DE TUBERIAS, MANDO DE ROTACIÓN	610
GRUPO GIRATORIO DE BOMBA	636

H

*HEAD GP-PUMP	488
HIDRÁULICA (CONFIG)	490
HOJA (CONFIG)	799
HOJA DE LIMPIAPARABRISAS (CONJ)	932
HOJA DE LIMPIAPARABRISAS (CONJ) (INFERIOR)	929
HOJA DE LIMPIAPARABRISAS (CONJ) (SUPERIOR)	929
HOJA Y MONTAJE (GR)	795 797

* NO HAY TRADUCCION DISPONIBLE EN EL MOMENTO DE LA IMPRESION

INDICE

Nombre	Página
I	
IMPULSOR DE VENTILADOR (GR)	26
INDICADOR DEL NIVEL DEL ACEITE (VARILLA) (CONJ)	40
INSONORIZADOR (GR)	402
INSTALACION DE COMUNICACION (GR)	148
INSTALACIÓN DE RADIO (GR)	876
INTERRUPTOR (CONJ) (ADVERTENCIA DE SOBRECARGA)	122
INTERRUPTOR (CONJ) (BOCINA, LUCES, LIMPIAPARABRISA)	211
INTERRUPTOR (CONJ) (BOCINA, LUCES, LIMPIAPARABRISA)	186
INTERRUPTOR (CONJ) (BOMBA DE REABASTECIMIENTO)	106 108
INTERRUPTOR (CONJ) (*CONTROLLER BACKUP)	202
INTERRUPTOR (CONJ) (DESCONEXIÓN DE LIMPIAPARABRISAS)	918
INTERRUPTOR CONJ-POSICIÓN (POSABRAZO)	847 849
INTERRUPTOR CONJ-POSICIÓN (TRABA DE DESPLAZAMIENTO)	5 6 434
INTERRUPTOR CONJ-POSICIÓN (TRABA DE EJE OSCILANTE)	426 428
INTERRUPTOR (CONJ) (*RADIO ON, OFF)	876
INTERRUPTOR (CONJ) (REFLECTOR TRASERO)	162
INTERRUPTOR (CONJ) (*SEAT HEATER)	908
INTERRUPTOR DE NIVEL DE LIQUIDO (GR)	177
INTERRUPTOR DE NIVEL DE LIQUIDO (GR) (ACEITE DEL MOTOR)	23
INTERRUPTOR DE NIVEL DE LIQUIDO (GR) (ACEITE HIDRÁULICO)	662
INTERRUPTOR DE PEDAL (CONFIG) (BOCINA)	211
INTERRUPTOR DE PEDAL (CONFIG) (BOCINA)	186
INTERRUPTOR DE PRESIÓN (CONJ) (ACUMULADOR DE ACEITE DE FRENO)	426 428
INTERRUPTOR DE PRESIÓN (CONJ) (FRENO DE SERVICIO)	426 428
INTERRUPTOR DE PRESIÓN (CONJ) (*REFRIGERANT HIGH, LOW)	840
INTERRUPTOR DE PRESIÓN (CONJ) (RESTRICCIÓN DE AIRE)	87
INTERRUPTOR DE PRESIÓN (CONJ) (TANQUE DE ACEITE HIDRÁULICO)	660
INTERRUPTOR DE PRESIÓN (GR) (ADVERTENCIA DE SOBRECARGA)	122
INTERRUPTOR DE PRESIÓN (GR) (*AUXILIARY WORK TOOL SIGNAL OIL)	553
INTERRUPTOR DE PRESIÓN (GR) (CONTROL AUTOMATICO DE MOTOR, ACCIONADOR)	551
INTERRUPTOR DE PRESIÓN (GR) (CONTROL AUTOMÁTICO DE MOTOR, DESACTIVADOR)	551
INTERRUPTOR DE PRESIÓN (GR) (*SWING PUMP SIGNAL OIL)	547
INTERRUPTOR DE VOLQUETE (CONJ) (BALIZA GIRATORIA DE ADVERTENCIA)	179
INTERRUPTOR DE VOLQUETE (CONJ) (BALIZA GIRATORIA DE ADVERTENCIA)	168
INTERRUPTOR DE VOLQUETE (CONJ) (*BLADE/LEFT STABILIZER)	500
INTERRUPTOR DE VOLQUETE (CONJ) (*BLADE/LEFT STABILIZER)	583
INTERRUPTOR DE VOLQUETE (CONJ) (ESTABILIZADOR DERECHO)	583
INTERRUPTOR DE VOLQUETE (CONJ) (FARO DELANTERO)	179 182
INTERRUPTOR DE VOLQUETE (CONJ) (*FLOOD LAMP, FRONT)	182
INTERRUPTOR DE VOLQUETE (CONJ) (LUCES DE ADVERTENCIA DE PELIGRO)	179 182
INTERRUPTOR DE VOLQUETE (CONJ) (REFLECTOR DELANTERO)	179
INTERRUPTOR LÍMITE (GR) (*WINDOW LOWER LIMIT)	182
INTERRUPTOR LÍMITE (GR) (*WINDOW LOWER LIMIT)	179
INTERRUPTOR MAGNÉTICO (CONJ) (*FLASHER RELAY)	139 141
INTERRUPTOR MAGNÉTICO (CONJ) (*REFUELING PUMP RELAY)	108
INTERRUPTOR MAGNÉTICO (CONJ) (RELÉ DE FUERZA PRINCIPAL)	139 141
INTERRUPTOR MAGNÉTICO (CONJ) (RELE DE LA BOMBA DE COMBUSTIBLE)	106 139 141
INTERRUPTOR MAGNÉTICO (GR) (24 VOLTIOS) (RELÉ DE ARRANQUE)	130 134

* NO HAY TRADUCCION DISPONIBLE EN EL MOMENTO DE LA IMPRESION

INDICE

Nombre	Página
J	
JUEGO DE AJUSTE DEL ASIENTO (ASIENTO DE SUSPENSION)	904
JUEGO DE AJUSTE DEL ASIENTO (SUSPENSION DEL ASIENTO)	908, 911, 913
JUEGO DE ALDABA (VENTANA DE PUERTA, CABINA)	928
JUEGO DE AMORTIGUADOR (SUSPENSION DEL ASIENTO)	911, 913
JUEGO DE BOMBA DE AGUA	77, 79
JUEGO DE CALCES (VALVULA DE ALIVIO)	740
JUEGO DE CERRADURA (SUSPENSION DEL ASIENTO)	913
JUEGO DE COJINETES (ASIENTO DE SUSPENSION)	904
JUEGO DE COJINETES (*HYDRAULIC MOTOR)	637, 638
JUEGO DE COJINETES (SUSPENSION DEL ASIENTO)	908, 911
JUEGO DE CONTROL (SUSPENSION DEL ASIENTO)	913
JUEGO DE CORREA (SUSPENSION DEL ASIENTO)	911
JUEGO DE CORREAS TRAPEZOIDALES (INCLUYE 2-CORREAS) (MANDO DE VENTILADOR)	26
JUEGO DE EMBOLO (*HAND CONTROL)	430
JUEGO DE EMBOLO (PALANCA, CONTROL)	435
JUEGO DE EMBOLO (*PEDAL)	890
JUEGO DE ESPALDAR (ASIENTO DE SUSPENSION)	904
JUEGO DE ESPALDAR (SUSPENSION DEL ASIENTO)	908
JUEGO DE FILTRO DE TAPA (TANQUE DE COMBUSTIBLE)	119
JUEGO DE FUNDA (SUSPENSION DEL ASIENTO)	913
JUEGO DE MANGUERA (AGUA) (CAJA DE REGULADOR)	77, 79
JUEGO DE MANGUERA (SUSPENSION DEL ASIENTO)	913
JUEGO DE MANIJA (ASIENTO DE SUSPENSION)	904
JUEGO DE MANIJA (ASIENTO DE SUSPENSION)	904
JUEGO DE MANIJA (SUSPENSION DEL ASIENTO)	908
JUEGO DE MANIJA (SUSPENSION DEL ASIENTO)	908
JUEGO DE PALANCA (ASIENTO DE SUSPENSION)	904
JUEGO DE PALANCA (*HAND CONTROL)	430
JUEGO DE PALANCA (PALANCA, CONTROL)	435
JUEGO DE PALANCA (SUSPENSION DEL ASIENTO)	908
JUEGO DE PARAGOLPES (SUSPENSION DEL ASIENTO)	911
JUEGO DE PIEZAS (SUSPENSION DEL ASIENTO)	913
JUEGO DE PLACA (ASIENTO DE SUSPENSION)	904
JUEGO DE PLACA (*PEDAL)	890
JUEGO DE PLACA (*PEDAL CONTROL)	431
JUEGO DE PLACA (SUSPENSION DEL ASIENTO)	908
JUEGO DE PLACA (SUSPENSION DEL ASIENTO)	911
JUEGO DE REGULADOR (*HAND CONTROL)	430
JUEGO DE REGULADOR (*PEDAL)	890
JUEGO DE REPARACIÓN (TUBERÍAS DEL FRENO) (ASIENTO DE SUSPENSION)	904
JUEGO DE REPARACIÓN (TUBERÍAS DEL FRENO) (*AXLE OSC LOCK CYLINDER)	449
JUEGO DE REPARACIÓN (TUBERÍAS DEL FRENO) (CILINDRO, CUCHARON)	465
JUEGO DE REPARACIÓN (TUBERÍAS DEL FRENO) (SUSPENSION DEL ASIENTO)	908, 913
JUEGO DE REPARACIÓN (TUBERÍAS DEL FRENO) (SUSPENSION DEL ASIENTO)	911
JUEGO DE REPARACIÓN (TUBERÍAS DEL FRENO) (*SWIVEL)	648
JUEGO DE REPARACIÓN (TUBERÍAS DEL FRENO) (TAPA DELANTERA, ENGRANAJE DE SINCRONIZACIÓN)	32, 34
JUEGO DE REPARACIÓN (TUBERÍAS DEL FRENO) (TRANSMISION)	323, 337
JUEGO DE RESORTE DE GAS (SUSPENSION DEL ASIENTO)	913
JUEGO DE RESORTES (*HAND CONTROL)	430
JUEGO DE RESORTES (SUSPENSION DEL ASIENTO)	913
JUEGO DE RETÉN (SUSPENSION DEL ASIENTO)	913

* NO HAY TRADUCCION DISPONIBLE EN EL MOMENTO DE LA IMPRESION

INDICE

Nombre	Página
JUEGO DE RIEL (VENTANA DE PUERTA, CABINA)	928
JUEGO DE SELLO DE BOMBA (*BRAKE, STEERING)	625
JUEGO DE SELLO DE BOMBA (*HYDRAULIC FAN PUMP)	626
JUEGO DE SELLOS (ASIENTO DE SUSPENSION)	904
JUEGO DE SELLOS (*AXLE OSC LOCK CYLINDER)	451
JUEGO DE SELLOS (BOMBA DOSIFICADORA)	642
	644
JUEGO DE SELLOS (*BRAKE CONTROL VALVE)	685
	689
JUEGO DE SELLOS (BRAZO, CILINDRO)	468
JUEGO DE SELLOS (CABEZAL DE LA BOMBA)	487
JUEGO DE SELLOS (CILINDRO, CUCHARON)	463
JUEGO DE SELLOS (CILINDRO DE LA HOJA)	453
	455
JUEGO DE SELLOS (*COMBINATION VALVE)	696
JUEGO DE SELLOS (*CONTROL VALVE)	701
JUEGO DE SELLOS (*FLOW CONTROL VALVE)	708
JUEGO DE SELLOS (*HAMMER CONTROL VALVE)	699
JUEGO DE SELLOS (*LOAD CONTROL VALVE)	709
	711
JUEGO DE SELLOS (*MAKEUP VALVE)	696
JUEGO DE SELLOS (MOTOR DEL VENTILADOR HIDRÁULICO)	616
JUEGO DE SELLOS (PALANCA, CONTROL)	435
JUEGO DE SELLOS (PLUMA, CILINDRO)	457
	459
	461
JUEGO DE SELLOS (*REGULATOR CONTROL VALVE)	729
JUEGO DE SELLOS (*STABILIZER CYLINDER)	466
JUEGO DE SELLOS (SUSPENSION DEL ASIENTO)	908
JUEGO DE SELLOS (*SWIVEL)	654
	659
JUEGO DE SELLOS (*TRANSMISSION SHIFT VALVE)	612
JUEGO DE SELLOS (*VALVE)	701
JUEGO DE SELLOS (VÁLVULA)	696
JUEGO DE SELLOS (VÁLVULA DE ACELERACIÓN)	701
JUEGO DE SELLOS (VALVULA DE ALIVIO)	699
	735
	736
	742
JUEGO DE SELLOS (VALVULA DE ALIVIO)	485
JUEGO DE SELLOS (VÁLVULA DE ALIVIO)	738
JUEGO DE SELLOS (VALVULA DE CONTROL PRINCIPAL)	621
JUEGO DE SELLOS (VALVULA DE SOLENOIDE)	744
	747
	750
	753
JUEGO DE SELLOS (VALVULA DE SOLENOIDE) (CONTROL DE FLUIDO)	752
JUEGO DE SELLOS (VALVULA DE SOLENOIDE) (ESTABILIZADOR)	745
JUEGO DE SELLOS (VALVULA DE SOLENOIDE) (HOJA)	746
JUEGO DE SELLOS (VÁLVULA REDUCTORA DE PRESIÓN)	728
JUEGO DE SELLOS (VENTANA DE PUERTA, CABINA)	928
JUEGO DE SENSOR (*SWASHPLATE POSITION)	171
JUEGO DE SOPORTE (ASIENTO DE SUSPENSION)	904
JUEGO DE SOPORTE (SUSPENSION DEL ASIENTO)	911
JUEGO DE SOPORTE (SUSPENSION DEL ASIENTO)	908
JUEGO DE TAPA (SUSPENSION DEL ASIENTO)	913
JUEGO DE TAZA (SEPARADOR DE AGUA)	116
JUEGO DE TORNILLERÍA (*SEAT & MOUNTING)	906
JUEGO DE VÁLVULA PILOTO (UNIÓN DE CONECTOR) (PALANCA, CONTROL)	435
JUEGO DE VENTANAS (*POLYCARBONATE) (*CAB DOOR, FRONT)	928
JUEGO DE VENTANAS (*POLYCARBONATE) (*CAB DOOR, REAR)	928
JUEGO DEL COMPRESOR DE AIRE (SUSPENSION DEL ASIENTO)	913
JUEGO DEL FORRO DEL ASIENTO	904
JUEGO DEL FORRO DEL ASIENTO (SUSPENSION DEL ASIENTO)	908
JUEGO-PUNTA DE EJE (SUSPENSION DEL ASIENTO)	911

* NO HAY TRADUCCION DISPONIBLE EN EL MOMENTO DE LA IMPRESION

INDICE

Nombre	Página
JUEGO-RESORTE DE DISCO (TRANSMISION)	320, 334
JUEGO-VARILLAJE (SUSPENSION DEL ASIENTO)	911, 913
JUNTA UNIVERSAL (GR)	347, 348, 349

K

*KIT-PEDAL	890
*KIT-PEDAL (*PEDAL CONTROL)	431
*KIT-SEAL (*FLOW CONTROL VALVE)	719
*KIT-SEAL (*RELIEF VALVE)	719
*KIT-SEAL REPAIR (*SWIVEL)	651
*KIT-SEAL (*SPOOL)	720
*KIT-SEAL (*THROTTLE VALVE)	720

L

LÁMPARA (CABINA)	831, 834
LÁMPARA (CONJ) (CABINA)	834
LÁMPARA (CONJ) (CABINA)	831
LÁMPARA (CONJ) (FARO DELANTERO)	151
LÁMPARA (CONJ) (MARCADORA)	165
LÁMPARA (CONJ) (PARTE TRASERA)	3
LÁMPARA (CONJ) (REFLECTOR TRASERO)	162
LÁMPARA (CONJ) (ROJO, VERDE, DIODO, 12 VOLTIOS)	208
LÁMPARA (CONJ) (24-VOLTIOS, 70-VATIOS) (REFLECTOR)	150
LÁMPARA (CONJ) (24-VOLTIOS, 70-VATIOS) (REFLECTOR DELANTERO)	163
LÁMPARA (CONJ) (24-VOLTIOS, 70-VATIOS) (REFLECTOR TRASERO)	162
LÁMPARA DE BALIZA DE ADVERTENCIA (GR)	158
LÁMPARA DE FARO DELANTERO (GR)	151
LÁMPARA DE FARO TRASERO(GR)	152, 153
LÁMPARA (*24-VOLT, 4-WATT) (FARO DELANTERO)	151
LÁMPARA (*24-VOLT, 75/70-WATT) (FARO DELANTERO)	151
LÁMPARA (24-VOLTIOS, 21 VATIOS) (LUZ DE SEÑAL DE GIRO)	153
LÁMPARA (24-VOLTIOS, 21 VATIOS) (LUZ DE SEÑAL DE GIRO)	157
LÁMPARA (24 VOLTIOS, 5 VATIOS) (LAMPARA TRASERA)	153
LÁMPARA (24 VOLTIOS, 5 VATIOS) (*MARKER LIGHTS)	165
LIMPIAPARABRISAS DE LA VENTANA (GR)	929, 932
LLAVE	176
LUCES DE ALÓGENO (24-VOLTIOS, 70-VATIOS) (BALIZA GIRATORIA DE ADVERTENCIA)	158
LUCES DE DESPLAZAMIENTO (GR)	165, 167
LUCES DE REFLECTOR (GR)	163, 164
LUCES DE REFLECTOR (GR)	162
LUCES DE REFLECTOR (GR)	160
LUZ DE BALIZA (GR)	168
LUZ DE SEÑAL DE GIRO (GR)	156, 157
LUZ DE SEÑAL DE GIRO (GR)	155

M

MANDO DE BOMBA (GR)	470
MANDO DE ROTACIÓN (GR)	471, 472
MANGUERA DE RADIADOR (*INLET)	71, 74
MANGUERA DE RADIADOR (*OUTLET)	71, 74
MANGUERA DE REABASTECIMIENTO (GR)	98
MANGUERA (ELIMINADOR DE GASES INFERIOR)	12
MANGUERA (ELIMINADOR DE GASES SUPERIOR)	12
MANGUERA, ENTRADA DEL RADIADOR	71, 74
MANGUITO DE EMPALME DE CABLE	883
MANGUITO (GR)	685
MANGUITO (GR) (VÁLVULA DE CONTROL DE FRENO)	689
MÁQUINA DE CONVERSIÓN (CONFIG)	1
MAZO DE CABLES (*AIR CONDITIONER, HEATER)	824
MAZO DE CABLES (CONJ) (ASIENTO)	913
MAZO DE CABLES (CONJ) (*FAN)	206
MAZO DE CABLES DE CONTROL (CONJ)	208
MAZO DE CABLES DE CONTROL (CONJ) (COMUNICACIÓN)	148
MAZO DE CABLES DE CONTROL (CONJ) (SEGURIDAD)	208
MAZO DE CABLES DE LA HERRAMIENTA (MARTILLO)	207
MAZO DE CABLES DE SENSOR (CONJ) (BOMBA DE ANGULO DE PLATO OSCILANTE)	193

* NO HAY TRADUCCION DISPONIBLE EN EL MOMENTO DE LA IMPRESION

INDICE

Nombre	Página
	195
	198
	200
MAZO DE CABLES DE SENSOR (CONJ) (*PUMP SWASHPLATE ANGLE)	190
MAZO DE CABLES DEL CHASIS (CONJ)	186
	195
	211
MAZO DE CABLES DEL CHASIS (CONJ) (ELECTRÓNICA)	198
	200
MAZO DE CABLES DEL CHASIS (CONJ) (ELECTRÓNICA, INTERRUPTORES, SENSORES)	190
	193
MAZO DE CABLES DEL INTERRUPTOR (CONFIG) (CALENTADOR DEL ASIENTO)	908
MAZO DE CABLES DEL INTERRUPTOR (CONFIG) (*TRAVEL LOCK)	6
MAZO DE CABLES DEL MOTOR (CONJ)	130
	134
MAZO DE CABLES (ECM (MÓDULO DE CONTROL ELECTRÓNICO) DEL MOTOR)	204
MAZO DE CABLES (HERRAMIENTA)	215
MAZO DE CABLES, LUCES	160
MAZO DE CABLES, LUCES (DESPLAZAMIENTO POR CARRETERA)	165
MAZO DE CABLES, LUCES (*FLOODLIGHTS, FRONT)	164
MAZO DE CABLES, LUCES (*LICENSE PLATE)	3
MAZO DE CABLES, LUCES (*REAR, RH)	153
MAZO DE CABLES, LUCES (*REAR,LH)	153
MECANISMO DE VÁLVULAS (GR)	53
MEDIDOR DE SERVICIO (GR)	179
	182
MEDIDOR (TANQUE DE REFRIGERANTE)	83
MIRILLA DE MEDIDOR (GR) (ACEITE HIDRÁULICO)	662
MONITOR Y MONTAJE DEL OPERADOR (GR)	888
MONTAJE DEL VENTILADOR (GR)	39
MONTAJE FLEXIBLE DEL MOTOR (GR)	37
MONTAJE Y VALVULA DEL CONTROL PRINCIPAL (GR)	680
MOTOR DE ARRANQUE ELÉCTRICO (GR)	174
	175
MOTOR DE DESPLAZAMIENTO (GR)	619
MOTOR DE DESPLAZAMIENTO Y MONTAJE (GR)	615
MOTOR DE ENGRANAJES (GR)	616
MOTOR DE LA ROTACIÓN (GR)	618
MOTOR PRIMARIO (CONFIG)	9
MOTOR Y MONTAJE DE VENTILADOR HIDRAULICO (GR)	614

P

PALANCA UNIVERSAL DE CONTROL (GR)	435
PANTALLA (CONJ) (REABASTECEMIENTO)	98
PASADOR PARA PEDAL (GR)	894
	895
PASADORES DE LA EXCAVADORA (GR)	775
	776
	777
PASARELA (GR)	403
	405
PEDAL DE FRENO (GR)	892
PEDAL)GR=	890
PERSIANA PARA EL SOL (GR)	901
PISTÓN CPL (*PEDAL) (*PEDAL CONTROL)	431
PISTÓN CPL (*WITH SPRING) (*PEDAL CONTROL)	431
PISTÓN Y BIELA (GR)	42
	43
PLACA-CAT (IZQUIERDO)	757
PLACA-CAT (LADO DERECHO)	757
PLACA DE ADVERTENCIA (MODIFICACIÓN DE ESTRUCTURA)	866
PLACA DE IDENTIFICACION (CABINA)	831
	834
PLACA DE INSONORIZACIÓN (GR)	44
	45
PLACA DE INSTRUCCIONES (DISYUNTOR)	934
PLATAFORMA DE LA CABINA	896
	898
PLUMA (CONFIG)	754
PLUMA CORTA (GR)	759
PLUMA (GR)	755
POLEA DE MANDO AUXILIAR (GR)	49
POSABRAZOS (GR)	826
	827
POSENFRIADOR DE AIRE (GR)	84
POSICIÓN DEL SENSOR (CONJ) (*SWASHPLATE ANGLE)	171
PRIORIDAD - VÁLVULA DE (GR) (DIRECCIÓN)	587
PROTECTOR CONTRA EL VANDALISMO (GR)	867
PROTECTOR DE CORREA (GR)	30
PROTECTOR DE LA VENTANA	869
	871
PROTECTOR DE LUCES PARA NEBLINA (CONFIG)	865
PROTECTOR DEL ESCAPE (GR)	93
PROTECTOR DEL VENTILADOR (GR)	62

* NO HAY TRADUCCION DISPONIBLE EN EL MOMENTO DE LA IMPRESION

INDICE

Nombre	Página
	64
	66
	67
	70
PROTECTOR INFERIOR (GR)	390
PROTECTOR SUPERIOR (GR)	866
PUBLICACIONES (GR)	883
PUERTA DE ACCESO (GR)	354
	356
	357
	359
	360
	362
	363
PUERTA DE CABINA	858
	860
	861
	862
*PUMP GP-ENGINE OIL	55
PUNTA CORTA (GR)	821
PUNTA LARGA (GR)	818
	819
PUNTA PARA PENETRACIÓN (GR)	820

R

RADIADOR (GR)	81
RADIADOR Y ENFRIADOR DE ACEITE (GR)	81
RADIO (GR)	900
REFLECTOR (GR)	150
	164
	169
REFLECTOR (GR) (PLUMA)	160
REFLECTORES (CONFIG)	159
REGULADOR DE TEMPERATURA DEL AGUA	57
RELÉ (CONJ) (BOCINA)	139
	141
RELÉ (CONJ) (COMPRESOR DE AIRE ACONDICIONADO)	824
RELÉ (CONJ) (DESCONEXIÓN HIDRÁULICA)	141
RELÉ (CONJ) (DESCONEXIÓN HIDRÁULICA)	139
RELÉ (CONJ) (*INTERVAL WIPER)	139
	141
RELÉ (CONJ) (*WIPER CUT-OUT)	139
	141
RELÉ (CONJ) (24 VOLTIOS) (AUXILIAR DE ARRANQUE)	130
	134
RESISTENCIA (AUXILIAR DE ARRANQUE)	130
	134
RESPIRADERO DEL TAPÓN (TANQUE DE ACEITE HIDRÁULICO)	662
RETROVISOR (GR)	884
	886

S

SALIDA DEL RADIADOR, MANGUERA	71
	74
*SEAL-O-RING	12
SELLO ANULAR (REGULADOR)	57
SELLO (BASE DE FILTRO DE AGUA)	116
SELLO (CAJA DE REGULADOR)	57
SELLO (CONEXIÓN DE SEPARADOR DE AGUA)	116
*SENSOR AS-TEMPERATURE (*CAB)	822
SENSOR DE LA TEMPERATURA (ACONDICIONADOR DE AIRE)	824
SENSOR DE PRESIÓN (GR) (ACEITE DEL MOTOR)	103
SENSOR DE PRESIÓN (GR) (EMBRAGUE DE TRANSMISION)	547
SENSOR DE PRESIÓN (GR) (REFUERZO)	103
SENSOR DE TEMPERATURA (CONJ) (*AIR CONDITIONER CONDENSER)	844
SENSOR DE TEMPERATURA (GR) (ACEITE HIDRÁULICO)	662
SENSOR DE TEMPERATURA (GR) (ADMISIÓN DE AIRE)	103
SENSOR DE TEMPERATURA (GR) (REFRIGERANTE DEL MOTOR)	103
SENSOR DE VELOCIDAD (GR) (SINCRONIZACIÓN)	103
SEPARADOR DE AGUA (GR)	116
SERVICIO DE MAQUINA (GR) (COMUNICACIÓN)	146
SERVICIO DE MAQUINA (GR) (MOTOR E HIDRÁULICO)	145
SILENCIADOR (GR)	91
SOFTWARE PARA LA MAQUINA (GR) (COMUNICACIÓN)	146
SOFTWARE PARA LA MAQUINA (GR) (MOTOR E HIDRÁULICO)	145
SOFTWARE PARA LA MAQUINA (GR) (SEGURIDAD)	208
SOPORTE DEL ASIENTO (GR)	910
SUCCIÓN - VENTILADOR DE (GR)	60
	61
SUJETADOR DE DESPLAZAMIENTO (GR)	778
	779
SUSPENSIÓN - ASIENTO CON (GR)	907
	908

* NO HAY TRADUCCION DISPONIBLE EN EL MOMENTO DE LA IMPRESION

INDICE

Nombre	Página
*SWITCH AS-POSITION (TRABA DE DESPLAZAMIENTO)	433
*SWITCH GP-ROTARY (POSICION DE ACELERADOR)	202

T

TAMBOR DE FRENO (GR)	286
TANQUE DE COMBUSTIBLE Y GRUPO DE MONTAJE	117
TANQUE DE REFRIGERANTE (GR)	83
TANQUE HIDRÁULICO (GR)	662
TANQUE HIDRÁULICO Y MONTAJE (GR)	660
TAPA CON RESPIRADERO (LIMPIAPARABRISAS)	211
TAPA CON RESPIRADERO (LIMPIAPARABRISAS)	186
TAPA (CONJ)	352
TAPA DE LA CONSOLA (GR)	856
TAPA DE LLENADO (CONJ) (COMBUSTIBLE, TRABA, VENTILACIÓN)	119
TAPA DE RADIADOR (CONJ)	83
TAPA DEL MECANISMO DE VÁLVULAS (GR)	12
TAPÓN (CONJ) (LLENADO DE ACEITE DEL MOTOR)	12
TAPON DE DRENAJE DE SUMIDERO (ACEITE DE MOTOR)	40
TAPÓN DE LA CAJA DEL VOLANTE (GR)	48
TAPON DE VALVULA DE CONTROL (GR)	621
TAPÓN DEL BLOQUE MOTOR (GR)	46
TAPÓN DEL MOTOR (GR)	47
TIRANTE (GR) (LADO DERECHO)	266
	277
TIRANTE (GR) (LADO IZQUIERDO)	266
	277
TRABA DE TRANSPORTE DE LA MÁQUINA (GR)	410
TRANSMISIÓN (GR)	333
TRANSMISIÓN (GR)	319
TREN DE FUERZA (CONFIG)	287
TUBERÍAS CILIND-VÁLV DE LA HOJA (GR)	500
TUBERÍAS CON SERVOMANDO (GR)	553
	557
	559
	561
	562
	564
	565
	566
	569
	571
	572
TUBERÍAS CON SERVOMANDO (GR)	544
	547
TUBERÍAS CON SERVOMANDO (GR)	551
TUBERÍAS DE ACONDICIONADOR DE AIRE (GR)	877
	878
TUBERIAS DE CALEFACCION	882
TUBERÍAS DE CILINDRO DE INCLINACIÓN DEL CUCHARÓN (GR)	511
TUBERÍAS DE COMBUSTIBLE (GR)	99
TUBERIAS DE CONEXION (GR)	515
TUBERIAS DE CONTROL DE CARGA (GR)	538
	540
	542
TUBERÍAS DE DIRECCIÓN (GR)	585
	587
TUBERÍAS DE ENGRASE (GR)	763
	766
	768
	770
TUBERÍAS DE ENGRASE (GR)	761
TUBERÍAS DE LA CALEFACCIÓN (GR)	881
	882
TUBERÍAS DE LA PLUMA (GR)	504
	506
	508
TUBERÍAS DE LA VÁLVULA DE DERIVACIÓN (GR)	516
TUBERÍAS DE LA VÁLVULA DE RETENCIÓN (GR)	513
TUBERÍAS DE PRUEBA DE PRESIÓN (GR)	574
TUBERÍAS DE RETORNO (GR)	580
TUBERÍAS DEL BRAZO (GR)	589
	590
	591
	592
	593
	594
	595
	597
	599
	601
	603
	605
	607
	608
TUBERÍAS DEL CILINDRO DE LA HOJA	502
TUBERÍAS DEL ESTABILIZADOR (GR)	583
TUBERÍAS DEL FILTRO DE COMBUSTIBLE	102
TUBERÍAS DEL RADIADOR (GR)	71
	74
TUBERÍAS DELANTERAS (GR)	518
TUBERÍAS HIDRÁULICAS AUXILIARES (GR)	491
	492

* NO HAY TRADUCCION DISPONIBLE EN EL MOMENTO DE LA IMPRESION

INDICE

Nombre	Página
	494
	496
	498
TUBERÍAS HIDRÁULICAS DEL VENTILADOR (GR)	535
TUBERÍAS HIDRÁULICAS (GR)	519
	521
	525
	527
	528
	531
	534
TURBOCOMPRESOR (GR)	95

U

UNIÓN GIRATORIA (GR)	648
	650
	651
	653
	654
	656
	658
	659

V

*VALVE AS (*AIR CONDITIONER, HIGH SIDE)	840
*VALVE-CHECK	12
*VALVE GP-COMBINATION	698
*VALVE GP-FLOW CONTROL	719
*VALVE GP-MOTOR CONTROL	723
*VALVE GP-PUMP CONTROL	729
	730
	731
	732
	734
*VALVE GP-RELIEF	719
*VALVE GP-THROTTLE	720
VÁLVULA AUXILIAR Y TUBERÍAS (GR)	664
	666
	668
VALVULA (BOMBA DE TRANSFERENCIA DE COMBUSTIBLE)	106
	108
VÁLVULA COMPENSADORA DE FLUJO Y PRESIÓN (GR)	725
VÁLVULA DE ALIVIO (GR)	735
	736
	737
	738
	739
	740
	741
	742
	743
VÁLVULA DE ALIVIO (GR) (*CROSSOVER, MAKEUP)	485
VÁLVULA DE ALIVIO (GR) (*LINE, VARIABLE ADJUSTABLE BOOM)	701
VÁLVULA DE ALIVIO (GR) (TUBERIA)	699
VÁLVULA DE ALIVIO Y SOLENOIDE (GR) (MOTOR DEL VENTILADOR HIDRÁULICO)	616
VÁLVULA DE COMBINACIÓN (GR)	696
VÁLVULA DE COMPENSACION (GR)	696
VÁLVULA DE CONTROL DE CARGA (GR)	709
	711
	713
	716
VÁLVULA DE CONTROL DE FLUJO (GR)	707
	708
VÁLVULA DE CONTROL DEL FRENO (GR)	685
	687
	689
VÁLVULA DE CONTROL (GR)	699
	701
	703
VÁLVULA DE CONTROL Y MONTAJE (GR)	679
VÁLVULA DE CORTE DE COMBUSTIBLE (GR)	121
VÁLVULA DE CORTE (DRENAJE DE ACEITE DE MOTOR)	23
VÁLVULA DE CORTE (GR) (REFRIGERANTE DEL MOTOR)	74
VÁLVULA DE CORTE (REFRIGERANTE DEL MOTOR)	71
	74
VÁLVULA DE DERIVACIÓN (GR)	704
	706
VÁLVULA DE DISTRIBUCIÓN DE LUBRICACIÓN (GR)	792
	793
VALVULA DE DRENAJE (CONJ) (TANQUE DE COMBUSTIBLE)	119
VALVULA DE MUESTRA DE FLUIDO (CONJ) (ACEITE DEL MOTOR)	58
VÁLVULA DE RETENCIÓN (CONJ)	696
	699
VÁLVULA DE RETENCIÓN (CONJ) (*DOWNSHIFT INHIBITOR)	321
	335
VÁLVULA DE RETENCIÓN (GR)	691
	692
	693

* NO HAY TRADUCCION DISPONIBLE EN EL MOMENTO DE LA IMPRESION

INDICE

Nombre	Página
VÁLVULA DE RETENCIÓN (GR) (*AXLE OSC LOCK CYLINDER)	451
VÁLVULA DE RETENCIÓN (GR) (*HIGH SPEED CLUTCH, ORIFICE)	319 333
VÁLVULA DE RETENCIÓN (GR) (*LOW SPEED CLUTCH, ORIFICE)	319 333
VÁLVULA DE SOLENOIDE (GR)	745 746 747 749 750 751 752 753
VÁLVULA DE SOLENOIDE (GR)	744
VÁLVULA DE SOLENOIDE (GR) (*TRANSMISSION SHIFT)	612
VÁLVULA DEL CONTROL PRINCIPAL (GR)	719
VALVULA (*DOWNSHIFT INHIBITOR)	321 335
VÁLVULA PILOTO DE ALIVIO (GR)	726
VÁLVULA REDUCTORA DE PRESIÓN (GR)	727 728
VÁLVULA-RESPIRADERO (EJE)	266 277
VÁLVULA-RESPIRADERO (EJE)	231
VÁLVULA-RESPIRADERO (EJE)	244 255
VÁLVULA Y TUBERÍAS DEL CONTROL DE CARGA (GR)	669 671 673 675 677
VÁLVULAS DE ACELERACIÓN (GR) (ACEITE PILOTO)	701
VARILLAJE DEL CUCHARÓN (CONFIG)	771 772
VARILLAJE DEL CUCHARÓN (GR)	773
VENTANA DE LA CABINA (GR)	916 918 919 921 924
VENTANA DE LA CABINA (GR)	922
VENTANA DE LA PUERTA (GR)	926 928
VIDRIO (BALIZA GIRATORIA DE ADVERTENCIA)	158
VISERA	915
VISERA (GR)	915
VOLANTE - CAJA DE (GR)	31
VOLANTE (GR)	28

* NO HAY TRADUCCION DISPONIBLE EN EL MOMENTO DE LA IMPRESION

ÍNDICE

Designação	Página
A	
*ACCUMULATOR GP-HYDRAULIC	415
ACENDEDOR (CIGARROS, 24 VOLTS)	179
	182
ACIONADOR DA BOMBA	628
ACOPLAMENTO FLEXÍVEL	438
	439
	440
	441
*ACTUATOR GP	719
*ACTUATOR GP-PUMP	420
	421
ACUMULADOR HIDRÁULICO	413
	414
	416
	417
ACUMULADOR-HIDRÁULICO	411
	412
ACUMULADOR (REFRIGERANTE)	845
ADESIVO-PADRÃO DE CONTROLE	572
AJUSTADOR DA CAÇAMBA	794
ALARME	122
ALARME DE MARCHA À RÉ	125
ALARME DE PERCURSO	124
	125
ALTERNADOR DE CORRENTE	126
	128
ANEL DO PNEU	288
	289
ANTENA (MONTAGEM MAGNÉTICA, PRODUCT LINK)	148
AQUECEDOR (ADMISSÃO DE AR)	173
ARMAÇÃO - ELEVADOR DA CABINE	383
ARRANJO GERAL	2
ARRANJO RODOVIÁRIO	3
	5
	6
	8
ARREFECEDOR DE ÓLEO DO MOTOR E BASE DO FILTRO	58
ARTICULAÇÃO GIRATÓRIA	648
	650
	651
	653
	654
	656
	658
	659
ARTICULAÇÃO GIRATÓRIA E MONTAGEM	646
	647
ASSENTO	904
	906
ASSENTO COM SUSPENSÃO	907
	908
AUXILIAR DE PARTIDA	172
	173
B	
BALANCIM	51
BARRA DE DIREÇÃO (DIREITO)	266
	277
BARRA DE DIREÇÃO (ESQUERDO)	266
	277
BATERIA	138
BATERIA - ISENTA DE MANUTENÇÃO (12 V)(900 A)	138
BATERIA E CABOS / FIOS ELÉTRICOS	130
	134
BATERIA (12 VOLTS, 750 AMPERES)	130
	134
BLINDAGEM DO COLETOR DE ESCAPE	93
BLOCO DO MOTOR	18
	19
BOMBA - GEROTOR (CARGA)	630
BOMBA DE ÁGUA	77
	79
BOMBA DE ENGRENAGENS	625
	626
BOMBA DE INJEÇÃO DO COMBUSTÍVEL	103
BOMBA DE PISTÃO	628
	630
BOMBA DE TRANSFERÊNCIA DE COMBUSTÍVEL E MOTOR	106
	108
BOMBA DE TRANSFERÊNCIA DO COMBUSTÍVEL	106
	108
	110
	113
BOMBA DO VENTILADOR HIDRÁULICO E MONTAGEM	622
BOMBA HIDRÁULICA PRINCIPAL	627
BOMBA HIDRÁULICA PRINCIPAL E MONTAGEM	623
BOMBA PILOTO E MONTAGEM	624
BOMBA REGULADORA	644
BRAÇO	782
BRAÇO - CAÇAMBA RETRO-ESCAVADORA	784
	786
	788
	790
BRAÇO - MANIPULAÇÃO DE MATERIAL	783
BRAÇO DO ASSENTO	826
	827
BUJÃO - CAIXA DO VOLANTE DO MOTOR	48

* TRADUÇÃO NÃO DISPONÍVEL NO MOMENTO DA IMPRESSÃO

ÍNDICE

Designação	Página
BUJÃO - DRENAGEM DO RESERVATÓRIO (ÓLEO DO MOTOR)	40
BUJÃO - VÁLVULA DE CONTROLE	621
BUJÃO DO BLOCO DO CILINDRO	46
BUJÃO DO MOTOR	47
BUZINA ELÉTRICA	874
	875
BUZINA (*24-VOLT, LOW TONE)	874

C

CABEÇA DA BOMBA	487
CABEÇOTE DO MOTOR	21
	22
	485
CABINE	829
	830
	831
	834
	838
	889
CABINE - ELEVADOR	829
CABOS/FIOS ELÉTRICOS - APLICAÇÕES PESADAS DE LEVANTAMENTO	207
CABOS/FIOS ELÉTRICOS - CABINE	179
	182
	185
CABOS/FIOS ELÉTRICOS - CHASSI	186
	190
	193
	195
	198
	200
CABOS/FIOS ELÉTRICOS - FERRAMENTAS DE TRABALHO	215
CABOS/FIOS ELÉTRICOS - MÁQUINA	208
CABOS/FIOS ELÉTRICOS - MATERIAL RODANTE/GIRO	214
CABOS/FIOS ELÉTRICOS - MOTOR	204
CABOS/FIOS ELÉTRICOS - PLATAFORMA	211
CABOS/FIOS ELÉTRICOS - VENTILADOR	206
CABOS/FIOS ELÉTRICOS DO CONSOLE	202
CAÇAMBA - LIMPEZA DE VALETA	805
	806
	807
	808
	809
	810
	811
	812
CAÇAMBA E AJUSTADOR	799
	800
	801
CAÇAMBA E MANCAL	802
	803
	804
CAÇAMBA PARA EXCAVAÇÃO	813
	814
	815
	816
	817
CADEADO	119
CAIXA DE ARMAZENAMENTO	394
CAIXA DE JUNÇÃO	139
	141
CAIXA DIANTEIRA	32
	34
CAIXA DO VOLANTE DO MOTOR	31
CALÇO - RODA	350
CAPÔ E PROTETOR	391
CÁRTER DO ÓLEO DO MOTOR	40
CHASSI	1
CHASSI - MATERIAL RODANTE	407
CHASSI INFERIOR	408
	409
CHASSI SUPERIOR	385
CHAVE	176
CHAVE - ELETRÔNICO (SEGURANÇA, AMARELO)	208
CHAVE GERAL	176
CHICOTE - CABINE	179
	182
CHICOTE - CABINE (CONECTOR DE SERVIÇO)	179
	182
CHICOTE - CABOS ELÉTRICOS (ASSENTO)	913
CHICOTE - CABOS ELÉTRICOS (VENTILADOR)	206
CHICOTE - CHASSI	186
	195
	211
CHICOTE - CHASSI (ELETRÔNICO)	198
	200
CHICOTE - CHASSI (ELETRÔNICO, INTERRUPTORE, SENSORES)	190
	193
CHICOTE - CONSOLO (LADO DIREITO)	202
CHICOTE - CONSOLO (LADO ESQUERDO)	202
CHICOTE - ILUMINAÇÃO	160
CHICOTE - ILUMINAÇÃO (FARÓIS, DIANTEIROS)	164
CHICOTE - ILUMINAÇÃO (PLACA DA LICENÇA)	3
CHICOTE - ILUMINAÇÃO (RODAGEM)	165
CHICOTE - ILUMINAÇÃO (TRASEIRA, DIREITA)	153

* TRADUÇÃO NÃO DISPONÍVEL NO MOMENTO DA IMPRESSÃO

ÍNDICE

Designação	Página
CHICOTE - ILUMINAÇÃO (TRASEIRA, ESQUERDA)	153
CHICOTE - MOTOR	130
	134
CHICOTE - SENSOR (ÂNGULO DA PLACA BASCULANTE DA BOMBA)	193
	195
	198
	200
CHICOTE - SENSOR (*PUMP SWASHPLATE ANGLE)	190
CHICOTE - SOLENÓIDE (ESTABILIZADOR)	214
CHICOTE (CONDICIONADOR DE AR, AQUECEDOR)	824
CHICOTE (ECM DO MOTOR)	204
CHICOTE (FERRAMENTA DE TRABALHO)	215
CILINDRO - TRAVA DE OSCILAÇÃO DO EIXO	449
	451
CILINDRO DA BOMBA	422
	424
CILINDRO DA CAÇAMBA	463
	465
CILINDRO DA LÂMINA	453
	455
CILINDRO DA LANÇA	457
	459
	461
CILINDRO DE TRAVA DO EIXO E MONTAGEM	442
	443
CILINDRO (DIREÇÃO)	257
	268
	279
CILINDRO DO BRAÇO	468
CILINDRO DO ESTABILIZADOR	466
CILINDRO E RETENTOR - BRAÇO	448
CILINDRO E RETENTOR - CAÇAMBA	447
CILINDRO E RETENTOR - LANÇA	444
	445
	446
CINTO DE SEGURANÇA	902
	903
	906
*CLAMP GP-HYDRAULIC LINES	506
COBERTURA DO MOTOR	364
	368
	372
COBERTURA DO RADIADOR	375
	380
COLETOR - CONTROLE	612
COLUNA DA DIREÇÃO	640
	642
	644
COMANDO DA BOMBA	470
COMANDO DE ACESSÓRIOS	24
COMANDO DE GIRO	471
	472
COMANDO DO VENTILADOR	26
COMANDO HIDRÁULICO	490
COMPRESSOR DE REFRIGERANTE	839
	840
CONDENSADOR DE REFRIGERANTE	844
	845
CONDENSADOR DO REFRIGERANTE E MONTAGEM	842
CONDICIONADOR DE AR	823
	824
CONDICIONADOR DE AR E MONTAGEM	822
CONECTOR - TUBOS DO AQUECEDOR DA CABINE	846
CONEXÃO	479
	480
	481
CONEXÃO - TUBO D'ÁGUA	57
CONEXÃO - TUBOS HIDRÁULICOS	482
	483
	484
CONJUNTO ACIONADOR	418
	419
	701
CONSOLE - LADO DIREITO	853
CONSOLE - LADO ESQUERDO	847
	849
CONSOLE DO OPERADOR	852
CONTRAPESO	351
CONTROLE - ALAVANCA	435
CONTROLE - NÃO PROGRAMADO	144
CONTROLE - NÃO PROGRAMADO (MOTOR E SISTEMA HIDRÁULICO)	145
CONTROLE - PEDAL HIDRÁULICO	431
	433
	434
CONTROLE & MONTAGEM-MÁQUINA	143
CONTROLE-COMUNICAÇÃO (PRODUCT LINK)	148
CONTROLE DE VOLTAGEM (24 VOLTS) (PROTEÇÃO DA CARGA)	103
CONTROLE DO FREIO	426
	428
CONTROLE ELETRÔNICO - MOTOR	103
CONTROLE HIDRÁULICO DE OPERAÇÃO PILOTO	437
CONTROLE HIDRÁULICO MANUAL	430
*COOLANT HEATER LINES	881

* TRADUÇÃO NÃO DISPONÍVEL NO MOMENTO DA IMPRESSÃO

ÍNDICE

Designação	Página
CORREIA EM V (1,250 MM GRANDE) (COMPRESSOR DO REFRIGERANTE)	840
COTOVELO DE ADMISSÃO DE AR	88
*CYLINDER (*STEERING)	246

D

DECALQUE - ADVERTÊNCIA (CILINDRO DE ALTA PRESSÃO)	415
	416
	417
DECALQUE - ADVERTÊNCIA (CONTROLE DA ROTAÇÃO DO MOTOR)	938
DECALQUE - ADVERTÊNCIA (CUIDADO PARA NÃO BATER A CABEÇA NA PORTA)	383
DECALQUE - ADVERTÊNCIA (NÃO SOLDAR. NÃO PERFURAR)	869
	871
DECALQUE - ADVERTÊNCIA (RÁDIO DO PRODUCT LINK, EAME)	148
DECALQUE - ADVERTÊNCIA (UNIVERSAL-LEIA O MANUAL)	938
DECALQUE - CAT (LADO DIREITO)	757
DECALQUE - CAT (LADO ESQUERDO)	757
DECALQUE - IDENTIFICAÇÃO (ALTURA DE RODAGEM)	5
	6
DECALQUE - IDENTIFICAÇÃO (ETIQUETA)	144
DECALQUE - INSTRUÇÃO (LANÇA AJUSTÁVEL VARIÁVEL)	557
DECALQUE - INSTRUÇÃO (MARTELO HIDRÁULICO)	569
DECALQUE - INSTRUÇÃO (MARTELO HIDRÁULICO)	554
DECALQUE - INSTRUÇÃO (PADRÃO DE CONTROLE ALTERNATIVO)	572
DECALQUE - INSTRUÇÃO (REABASTECIMENTO)	106
	108
DECALQUE - INSTRUÇÃO (SAÍDA ALTERNATIVA, REMOVER VIDRO)	921
DECALQUE - INSTRUÇÃO (*TIE-DOWN)	934
DECALQUE (CATERPILLAR)	831
	834
DECALQUE (PROTETOR DIANTEIRO)	869
	871
DECALQUE (RUÍDOS EXTERNOS, 102-DB)	935
DECALQUE (SAÍDA DE EMERGÊNCIA)	922
DECALQUE (SEGURANÇA)	208
DEGRAU	396
	398
	399
DEGRAU - CAIXA DE FERRAMENTAS	400
	401
DISPOSITIVO DE RESTRIÇÃO PARA EMBARQUE	778
	779
DRENO - ÓLEO	23
DUCTO DE AR	864

E

EIXO - COMANDO DO MANCAL CENTRAL	290
	292
EIXO - DIREÇÃO	242
	253
	264
	275
EIXO-COMANDO DE VÁLVULA	11
EIXO DE TRANSMISSÃO	294
EIXO DIANTEIRO	219
EIXO DO MOTOR HIDRÁULICO	637
	638
EIXO E TRANSMISSÃO	216
	217
	218
EIXO LARGO	229
	230
EIXO TRASEIRO	220
	226
	227
	228
ELEMENTO - FILTRO DE COMBUSTÍVEL	97
ELEMENTO - SEPARADOR DE ÁGUA	116
ELEMENTO DO FILTRO DE AR (PRIMÁRIO)	86
ELEMENTO DO FILTRO DE AR (SECUNDÁRIO)	86
ELEMENTO FILTRANTE - ÓLEO (HIDRÁULICO) (PILOTO)	477
ELEMENTO FILTRANTE - ÓLEO (HIDRÁULICO) (PRESSÃO ALTA)	535
ELOS DE ARTICULAÇÃO DA CAÇAMBA	771
	772
	773
ÊMBOLO (COM MOLA) (CONTROLE DO PEDAL)	431
ÊMBOLO (PEDAL) (CONTROLE DO PEDAL)	431
EMISSOR - POSIÇÃO	171
ENCOSTO PARA CABEÇA	873
ENGRENAGEM E MANCAL DE GIRO	388
ENGRENAGENS DE DISTRIBUIÇÃO	29
ESPELHO RETROVISOR	884
	886
ESTABILIZADOR	639
	780

* TRADUÇÃO NÃO DISPONÍVEL NO MOMENTO DA IMPRESSÃO

ÍNDICE

Designação	Página
F	
FAROL DIANTEIRO	151
FIAÇÃO - CAIXA DE JUNÇÃO	139, 141
FIAÇÃO - CONTROLE	208
FIAÇÃO - CONTROLE (COMUNICAÇÃO)	148
FIAÇÃO - CONTROLE (SEGURANÇA)	208
FIAÇÃO - FERRAMENTA DE TRABALHO (MARTELO)	207
FIAÇÃO - INTERRUPTOR (AQUECEDOR DO ASSENTO)	908
FIAÇÃO - INTERRUPTOR (TRAVA DE PERCURSO)	6
FIAÇÃO-RÁDIO	900
*FILTER ELEMENT AS-OIL (*HYDRAULIC) (CIRCUITO DE GIRO)	476
FILTRO - COMBUSTÍVEL	97, 119
FILTRO - CRAXA (LANÇA)	761, 763
FILTRO - ELEMENTO HIDRÁULICO (ÓLEO DE RETORNO)	478
FILTRO - GRAXA (LANÇA)	761, 763
FILTRO - ÓLEO	475, 476, 477, 478
FILTRO - ÓLEO DO MOTOR	54
FILTRO - ÓLEO (HIDRÁULICO) (PRESSÃO ALTA)	535
FILTRO - RESPIRO (CÁRTER)	12
FILTRO DE AR DE CABINA (FRESCO)	864
FILTRO DE CIRCULAÇÃO (AR CONDICIONADO)	824
FILTRO (RETORNO DE ÓLEO HIDRÁULICO)	475
FILTRO (TRANSMISSÃO)	321, 335
FIXADORES - CABEÇOTE DO MOTOR	27
*FLOOR MAT	896
FUSÍVEL (10 AMPERES)	139, 141
FUSÍVEL (15 AMPERES)	139, 141
FUSÍVEL (15 AMPERES) (BOMBA DE TRANSFERÊNCIA DE COMBUSTÍVEL)	106, 108
FUSÍVEL (20-AMPERES)	130, 134, 139, 141
FUSÍVEL (25 AMPÈRES)	139, 141
FUSÍVEL (5 AMPÈRES)	139, 141
FUSÍVEL (70 AMPÈRES)	130
FUSÍVEL (80 AMPERES)	135
G	
GR. DE SERVIÇO - MÁQUINA (COMUNICAÇÃO)	146
GR. DE SERVIÇO - MÁQUINA (MOTOR E SISTEMA HIDRÁULICO)	145
GRUPO DE INSTALAÇÃO - MOTOR	10
GRUPO ROTATIVO DA BOMBA	636
H	
*HEAD GP-PUMP	488
I	
ILUMINAÇÃO - RODOVIÁRIA	165, 167
INDICADOR - VARETA DO NÍVEL DE ÓLEO	40
INSTALAÇÃO-COMUNICAÇÃO	148
INSTALAÇÃO DO RÁDIO	876
INTERRUPTOR - BALANCIM (*BLADE/LEFT STABILIZER)	583
INTERRUPTOR - BALANCIM (ESTABILIZADOR DIREITO)	583
INTERRUPTOR - BALANCIM (FAROL DIANTEIRO)	179
INTERRUPTOR - BALANCIM (HOLOFOTE, DIANTEIRO)	182
INTERRUPTOR - BALANCIM (LÂMINA - ESTABILIZADOR ESQUERDO)	500
INTERRUPTOR - BALANCIM (LUZES DE ADVERTÊNCIA - PISCA-PISCA)	179, 182
INTERRUPTOR - BALANCIM (LUZES DIANTEIRAS)	179, 182
INTERRUPTOR - BALANCIM (PISCA-PISCA DE ADVERTÊNCIA)	168, 179
INTERRUPTOR - LIMITE (LIMITE DE ABAIXAMENTO DO VIDRO)	179, 182
INTERRUPTOR - MAGNÉTICO (RELÉ DA BOMBA DE COMBUSTÍVEL)	106, 139, 141
INTERRUPTOR - MAGNÉTICO (RELÉ DA BOMBA DE REABASTECIMENTO)	108

* TRADUÇÃO NÃO DISPONÍVEL NO MOMENTO DA IMPRESSÃO

ÍNDICE

Designação	Página
INTERRUPTOR - MAGNÉTICO (RELÉ DA LUZ INTERMITENTE)	139, 141
INTERRUPTOR - MAGNÉTICO (RELÉ PRINCIPAL DE POTÊNCIA)	139, 141
INTERRUPTOR - MAGNÉTICO (24 VOLTS) (RELÉ DE PARTIDA)	130, 134
INTERRUPTOR - NÍVEL DO LÍQUIDO	177
INTERRUPTOR - NÍVEL DO LÍQUIDO (ÓLEO DO MOTOR)	23
INTERRUPTOR - NÍVEL DO LÍQUIDO (ÓLEO HIDRÁULICO)	662
INTERRUPTOR - PARTIDA	178
INTERRUPTOR - PEDAL (BUZINA)	186, 211
INTERRUPTOR - PRESSÃO (ACUMULADOR DO FREIO)	428
INTERRUPTOR - PRESSÃO (ACUMULADOR DO FREIO)	426
INTERRUPTOR - PRESSÃO (AVISO DE SOBRECARGA)	122
INTERRUPTOR - PRESSÃO (CONTROLE AUTOMÁTICO DO MOTOR - ACIONAMENTO)	551
INTERRUPTOR - PRESSÃO (CONTROLE AUTOMÁTICO DO MOTOR - DESATIVAÇÃO)	551
INTERRUPTOR - PRESSÃO (FREIO DE SERVIÇO)	428
INTERRUPTOR - PRESSÃO (FREIO DE SERVIÇO)	426
INTERRUPTOR - PRESSÃO (OBSTRUÇÃO DO AR)	87
INTERRUPTOR - PRESSÃO (ÓLEO DO SINAL AUXILIAR DA FERRAMENTA DE TRABALHO)	553
INTERRUPTOR - PRESSÃO (ÓLEO DO SINAL DA BOMBA DO MOTOR DE GIRO)	547
INTERRUPTOR - PRESSÃO (*REFRIGERANT HIGH, LOW)	840
INTERRUPTOR - PRESSÃO (TANQUE DE ÓLEO HIDRÁULICO)	660
INTERRUPTOR (AQUECEDOR DO ASSENTO)	908
INTERRUPTOR (AUXILIAR DO CONTROLADOR)	202
INTERRUPTOR (AVISO DE SOBRECARGA)	122
INTERRUPTOR (BOMBA DE REABASTECIMENTO)	106, 108
INTERRUPTOR (BUZINA, LUZES, LIMPADOR)	186
INTERRUPTOR (BUZINA, LUZES, LIMPADOR)	211
INTERRUPTOR (FAROL TRASEIRO)	162
INTERRUPTOR-POSIÇÃO (ENCOSTO DO BRAÇO)	847, 849
INTERRUPTOR-POSIÇÃO (TRAVA DE PERCURSO)	6, 434
INTERRUPTOR-POSIÇÃO (TRAVA DE PERCURSO)	5
INTERRUPTOR-POSIÇÃO (TRAVA DO EIXO OSCILANTE)	426, 428
INTERRUPTOR (RÁDIO, LIGAR, DESLIGAR)	876
INTERRUPTOR (TRAVA DO LIMPADOR)	918
ISOLAMENTO - SUPRESSÃO DE RUÍDO	393
ISOLAMENTO CONTRA CALOR	392

J

JANELA DA CABINE	916, 918, 919, 921, 922, 924
JOGO - LIMITADOR (SUSPENSÃO DO ASSENTO)	913
JOGO - MOLA DO GÁS (SUSPENSÃO DO ASSENTO)	913
JOGO - PONTA DE EIXO (SUSPENSÃO DO ASSENTO)	911
JOGO - SENSOR (POSIÇÃO DA PLACA BASCULANTE)	171
JOGO - SUPORTE (SUSPENSÃO DO ASSENTO)	911
JOGO - TRILHO (VIDRO DA PORTA DA CABINE)	928
JOGO - VÁLVULA PILOTO (JUNTA DO CONECTOR) (CONTROLE DE ALAVANCA)	435
JOGO-ARTICULAÇÃO (SUSPENSÃO DO ASSENTO)	913
JOGO-ARTICULAÇÃO (SUSPENSÃO DO ASSENTO)	911
JOGO-CORREIA (SUSPENSÃO DO ASSENTO)	911
JOGO DE ACOLCHOAMENTO DO ASSENTO	904
JOGO DE ACOLCHOAMENTO DO ASSENTO (SUSPENSÃO DO ASSENTO)	908

* TRADUÇÃO NÃO DISPONÍVEL NO MOMENTO DA IMPRESSÃO

ÍNDICE

Designação	Página
JOGO DE AJUSTADOR (ASSENTO DA SUSPENSÃO)	904
JOGO DE AJUSTADOR (SUSPENSÃO DO ASSENTO)	908, 911, 913
JOGO DE ALAVANCA (ASSENTO DA SUSPENSÃO)	904
JOGO DE ALAVANCA (ASSENTO DA SUSPENSÃO)	904
JOGO DE ALAVANCA (CONTROLE DE ALAVANCA)	435
JOGO DE ALAVANCA (CONTROLE MANUAL)	430
JOGO DE ALAVANCA (SUSPENSÃO DO ASSENTO)	908
JOGO DE AMORTECEDOR DE CHOQUES (SUSPENSÃO DO ASSENTO)	911, 913
JOGO DE BOMBA D'ÁGUA	77, 79
JOGO DE CALÇOS (VÁLVULA DE ALÍVIO)	740
JOGO DE COIFA (SUSPENSÃO DO ASSENTO)	913
JOGO DE COMPRESSOR DE AR (SUSPENSÃO DO ASSENTO)	913
JOGO DE CONTROLE (SUSPENSÃO DO ASSENTO)	913
JOGO DE CORREIAS EM V (INCLUI 2 CORREIAS) (COMANDO DO VENTILADOR)	26
JOGO DE CUBA (SEPARADOR DE ÁGUA)	116
JOGO DE ÊMBOLO (CONTROLE DE ALAVANCA)	435
JOGO DE ÊMBOLO (CONTROLE MANUAL)	430
JOGO DE ÊMBOLO (PEDAL)	890
JOGO DE FILTRO DA TAMPA (TANQUE DE COMBUSTÍVEL)	119
JOGO DE FIXADORES (ASSENTO E MONTAGEM)	906
JOGO DE MANCAL (ASSENTO DA SUSPENSÃO)	904
JOGO DE MANCAL (MOTOR HIDRÁULICO)	637, 638
JOGO DE MANCAL (SUSPENSÃO DO ASSENTO)	908, 911
JOGO DE MANGUEIRA (ÁGUA) (ALOJAMENTO DO REGULADOR)	77, 79
JOGO DE MANGUEIRA (SUSPENSÃO DO ASSENTO)	913
JOGO DE MOLA (CONTROLE MANUAL)	430
JOGO DE MOLA (SUSPENSÃO DO ASSENTO)	913
JOGO DE PÁRA-CHOQUE (SUSPENSÃO DO ASSENTO)	911
JOGO DE PEÇAS (SUSPENSÃO DO ASSENTO)	913
JOGO DE PEDAL	890
JOGO DE PEDAL (CONTROLE DO PEDAL)	431
JOGO DE PLACA (ASSENTO DA SUSPENSÃO)	904
JOGO DE PLACA (CONTROLE DO PEDAL)	431
JOGO DE PLACA (PEDAL)	890
JOGO DE PLACA (SUSPENSÃO DO ASSENTO)	908
JOGO DE PLACA (SUSPENSÃO DO ASSENTO)	911
JOGO DE REGULADOR (CONTROLE MANUAL)	430
JOGO DE REGULADOR (PEDAL)	890
JOGO DE REPARO (ARTICULAÇÃO GIRATÓRIA)	648
JOGO DE REPARO (ASSENTO DA SUSPENSÃO)	904
JOGO DE REPARO (CILINDRO DA CAÇAMBA)	465
JOGO DE REPARO (CILINDRO DA TRAVA DA OSCILAÇÃO DO EIXO)	449
JOGO DE REPARO (SUSPENSÃO DO ASSENTO)	908, 911, 913
JOGO DE REPARO (TAMPA DIANTEIRA, ENGRENAGEM DE DISTRIBUIÇÃO)	32, 34
JOGO DE REPARO (TRANSMISSÃO)	323, 337
JOGO DE RETENTOR (ALÍVIO DA VÁLVULA)	738
JOGO DE RETENTOR (ARTICULAÇÃO GIRATÓRIA)	654
JOGO DE RETENTOR (ASSENTO DA SUSPENSÃO)	904
JOGO DE RETENTOR (BOMBA DOSADORA)	642, 644
JOGO DE RETENTOR (CABEÇOTE DA BOMBA)	487
JOGO DE RETENTOR (CILINDRO DA CAÇAMBA)	463
JOGO DE RETENTOR (CILINDRO DA LÂMINA)	453, 455
JOGO DE RETENTOR (CILINDRO DA LANÇA)	457, 459

* TRADUÇÃO NÃO DISPONÍVEL NO MOMENTO DA IMPRESSÃO

ÍNDICE

Designação	Página
	461
JOGO DE RETENTOR (CILINDRO DA TRAVA DA OSCILAÇÃO DO EIXO)	451
JOGO DE RETENTOR (CILINDRO DO BRAÇO)	468
JOGO DE RETENTOR (CILINDRO DO ESTABILIZADOR)	466
JOGO DE RETENTOR (CONTROLE DE ALAVANCA)	435
JOGO DE RETENTOR DA BOMBA (BOMBA DO VENTILADOR HIDRÁULICO)	626
JOGO DE RETENTOR DA BOMBA (FREIO, DIREÇÃO)	625
JOGO DE RETENTOR (MECANISMO GIRATÓRIO)	659
JOGO DE RETENTOR (MOTOR DO VENTILADOR HIDRÁULICO)	616
JOGO DE RETENTOR (SUSPENSÃO DO ASSENTO)	908
JOGO DE RETENTOR (*VALVE)	701
JOGO DE RETENTOR (VÁLVULA)	696
JOGO DE RETENTOR (VÁLVULA DA TROCA DE TRANSMISSÃO)	612
JOGO DE RETENTOR (VALVULA DE ALIVIO)	735
	736
JOGO DE RETENTOR (VALVULA DE ALIVIO)	485
JOGO DE RETENTOR (VÁLVULA DE ALÍVIO)	742
JOGO DE RETENTOR (VÁLVULA DE ALÍVIO)	699
JOGO DE RETENTOR (VÁLVULA DE COMBINAÇÃO)	696
JOGO DE RETENTOR (VÁLVULA DE COMPENSAÇÃO)	696
JOGO DE RETENTOR (VÁLVULA DE CONTROLE)	701
JOGO DE RETENTOR (VÁLVULA DE CONTROLE DA CARGA)	709
	711
JOGO DE RETENTOR (VÁLVULA DE CONTROLE DO FLUXO)	708
JOGO DE RETENTOR (VÁLVULA DE CONTROLE DO FREIO)	685
	689
JOGO DE RETENTOR (VÁLVULA DE CONTROLE DO MARTELO)	699
JOGO DE RETENTOR (VÁLVULA DE CONTROLE DO REGULADOR)	729
JOGO DE RETENTOR (VÁLVULA DE CONTROLE PRINCIPAL)	621
JOGO DE RETENTOR (VÁLVULA DE REDUÇÃO DA PRESSÃO)	728
JOGO DE RETENTOR (VÁLVULA DO ACELERADOR)	701
JOGO DE RETENTOR (VÁLVULA SOLENÓIDE)	744
	747
	750
	753
JOGO DE RETENTOR (VÁLVULA SOLENÓIDE) (CONTROLE DE FLUXO)	752
JOGO DE RETENTOR (VÁLVULA SOLENÓIDE) (ESTABILIZADOR)	745
JOGO DE RETENTOR (VÁLVULA SOLENÓIDE) (LÂMINA)	746
JOGO DE RETENTOR (VIDRO DA PORTA DA CABINE)	928
JOGO DE SUPORTE (ASSENTO DA SUSPENSÃO)	904
JOGO DE SUPORTE (SUSPENSÃO DO ASSENTO)	908
JOGO DE TAMPA (SUSPENSÃO DO ASSENTO)	913
JOGO DE TRAVAMENTO (SUSPENSÃO DO ASSENTO)	913
JOGO DE TRINCO (VIDRO DA PORTA DA CABINE)	928
JOGO-ENCOSTO DO ASSENTO (ASSENTO DA SUSPENSÃO)	904
JOGO-ENCOSTO DO ASSENTO (SUSPENSÃO DO ASSENTO)	908
JOGO-JANELA (POLICARBONATO) (PORTA DA CABINE, DIANTEIRA)	928
JOGO-JANELA (POLICARBONATO) (PORTA DA CABINE, TRASEIRA)	928
JOGO-MOLA DO DISCO (TRANSMISSÃO)	320
	334
JOGO-REPARO DO VEDADOR (ARTICULAÇÃO GIRATÓRIA)	651
JUNTA (TAMPA DA VÁLVULA)	12
JUNTA UNIVERSAL	347
	348
	349

K

*KIT-SEAL (*FLOW CONTROL VALVE)	719
*KIT-SEAL (*RELIEF VALVE)	719
*KIT-SEAL (*SPOOL)	720
*KIT-SEAL (*THROTTLE VALVE)	720

L

LÂMINA	799
LÂMINA DO LIMPADOR DE PÁRA-BRISA	932
LÂMINA DO LIMPADOR DE PÁRA-BRISA (INFERIOR)	929

* TRADUÇÃO NÃO DISPONÍVEL NO MOMENTO DA IMPRESSÃO

ÍNDICE

Designação	Página
LÂMINA DO LIMPADOR DE PÁRA-BRISA (SUPERIOR)	929
LÂMINA E MONTAGEM	795, 797
LÂMPADA - FAROL	150, 164
LÂMPADA - FAROL (LANÇA)	160
LÂMPADA - HALOGÊNEO (24 VOLTS, 70 WATTS) (PISCA-PISCA DE ADVERTÊNCIA)	158
LÂMPADA - SINALIZAÇÃO	155, 156, 157
LÂMPADA (CABINE)	831
LÂMPADA (CABINE)	834
LÂMPADA (FAROL DIANTEIRO)	151
LÂMPADA (FAROL TRASEIRO)	162
LÂMPADA (MARCADOR)	165
LÂMPADA (TRASEIRO)	3
LÂMPADA (VERMELHA, VERDE, LED, 12 VOLTS)	208
LÂMPADA (24 VOLTS, 21 WATTS) (LUZ DE SINALIZAÇÃO)	153, 157
LÂMPADA (24 VOLTS, 4 WATTS) (FAROL DIANTEIRO)	151
LÂMPADA (24 VOLTS, 5 WATTS) (LÂMPADA TRASEIRA)	153
LÂMPADA (24 VOLTS, 5 WATTS) (LUZES INDICADORAS)	165
LÂMPADA (24 VOLTS, 70 WATTS) (FAROL)	150
LÂMPADA (24 VOLTS, 70 WATTS) (FAROL DIANTEIRO)	163
LÂMPADA (24 VOLTS, 70 WATTS) (FAROL TRASEIRO)	162
LÂMPADA (24 VOLTS, 75-70 WATTS) (FAROL DIANTEIRO)	151
LANÇA	754, 755
LANÇA - PARTE INFERIOR DA LANÇA DE 2 PECAS	759
LANÇA - PARTE SUPERIOR DA LANCA DE 2 PEÇAS	757
LEVANTAMENTO DO MOTOR	36
LIMPADOR DO VIDRO	929, 932
LUVA	685
LUVA DE JUNÇÃO DE CABO	883
LUVA (VÁLVULA DE CONTROLE DO FREIO)	689
LUZ GIRATÓRIA DE ALARME	158
LUZ TRASEIRA	152, 153

M

MANCAL AUTO-ALINHADOR	616
MANGUEIRA - ADMISSÃO DO RADIADOR	71, 74
MANGUEIRA - RADIADOR (*INLET)	71, 74
MANGUEIRA - RADIADOR (SAÍDA)	71, 74
MANGUEIRA - REABASTECIMENTO DE COMBUSTÍVEL	98
MANGUEIRA - SAÍDA DO RADIADOR	71, 74
MANGUEIRA (DESCARTE DE VAPORES - INFERIOR)	12
MANGUEIRA (DESCARTE DE VAPORES - SUPERIOR)	12
MÁQUINA - CONVERSÃO	1
MARCADOR DE HORAS DE SERVIÇO	179, 182
MECANISMO DAS VÁLVULAS	53
MEDIDOR (TANQUE DE LÍQUIDO ARREFECEDOR)	83
MONITOR DO OPERADOR E MONTAGEM	888
MONTAGEM - CABINE	394
MONTAGEM - VENTILADOR	39
MONTAGEM FLEXÍVEL DO MOTOR	37
MOTOR - ENGRENAGENS	616
MOTOR - GIRO	618
MOTOR DAS ESTEIRAS	619
MOTOR DE PERCURSO E MONTAGEM	615
MOTOR DO GRUPO ROTATIVO	632, 633, 634
MOTOR E MONTAGEM - VENTILADOR HIDRÁULICO	614
MOTOR ELÉTRICO DE PARTIDA	174, 175
MOTOR PRIMÁRIO	9

P

PÁRA-SOL	915
PÁRA-SOL DA CABINE	915
PASSADIÇO	403, 405
PEDAL	890
PEDAL DO FREIO	892
PINO DA ESCAVADEIRA	775, 776, 777
PINO DO PEDAL	894, 895
PISTÃO E BIELA	42

* TRADUÇÃO NÃO DISPONÍVEL NO MOMENTO DA IMPRESSÃO

ÍNDICE

Designação	Página
	43
PLACA - REDUÇÃO DE RUÍDO	44
	45
PLACA DE ADVERTÊNCIA (MODIFICAÇÃO DA ESTRUTURA)	866
PLACA DE IDENTIFICAÇÃO (CABINE)	831
	834
PLACA DE INSTRUÇÃO (CHAVE GERAL)	934
PLACA E DECALQUE	934
	937
	938
	939
	940
	941
	942
	943
	944
PLATAFORMA DO OPERADOR	896
	898
PNEU E ARO	295
	296
	297
	298
	299
	300
	301
	302
	303
	304
	305
	307
	308
	309
	310
	311
	312
	313
	314
	315
	316
	317
	318
POLIA DO COMANDO AUXILIAR	49
POLIA DO VIRABREQUIM	50
PONTA - PENETRAÇÃO	820
PONTA CURTA	821
PONTA LONGA	818
	819
PORTA DA CABINE	858
	860
	861
	862
PORTA DE ACESSO	354
	356
	357
	359
	360
	362
	363
PÓS-ARREFECEDOR DA ADMISSÃO DE AR	84
POSIÇÃO DO SENSOR (ÂNGULO DA PLACA BASCULANTE)	171
PROTETOR - CORREIAS	30
PROTETOR - JANELA	869
	871
PROTETOR - LUZES DE NEBLINA	865
PROTETOR CONTRA VANDALISMO	867
PROTETOR DO VENTILADOR	62
	64
	66
	67
	70
PROTETOR INFERIOR	390
PROTETOR SUPERIOR	866
PUBLICAÇÃO	883
*PUMP GP-ENGINE OIL	55
PURIFICADOR DE AR	86
	87

R

RADIADOR	81
RADIADOR E ARREFECEDOR DE ÓLEO	81
RÁDIO	900
REDUÇÃO DE RUÍDO	402
REFLETOR	169
REFLETOR (VERMELHO)	153
REGULADOR DE TEMPERATURA DA ÁGUA	57
RELÉ (CONJ) (BUZINA)	139
	141
RELÉ (CONJ) (COMPRESSOR DO AR CONDICIONADO)	824
RELÉ (CONJ) (DESLIGAMENTO DO LIMPADOR)	139
	141
RELÉ (CONJ) (LIMPADOR DE INTERVALOS)	139
	141
RELÉ (CONJ) (TRAVA HIDRÁULICA)	139
	141
RELÉ (CONJ) (24 VOLTS) (AUXILIAR DE PARTIDA)	134
RELÉ (CONJ) (24 VOLTS) (AUXILIAR DE PARTIDA)	130
RESISTOR (AUXILIAR DE PARTIDA)	130
	134

* TRADUÇÃO NÃO DISPONÍVEL NO MOMENTO DA IMPRESSÃO

ÍNDICE

Designação	Página
RETENTOR (ALOJAMENTO DO REGULADOR)	57
RETENTOR (BASE DO SEPARADOR DE ÁGUA)	116
RETENTOR (CONEXÃO DO SEPARADOR DE ÁGUA)	116
RETENTOR DE ANEL-O (REGULADOR)	57

S

*SEAL-O-RING	12
SEMI-EIXO TRASEIRO	231
	236
SENSOR - PRESSÃO (EMBREAGEM DA TRANSMISSÃO)	547
SENSOR - PRESSÃO (ÓLEO DO MOTOR)	103
SENSOR - PRESSÃO (REFORÇAR)	103
SENSOR - TEMPERATURA (ADMISSÃO DE AR)	103
SENSOR - TEMPERATURA (LÍQUIDO ARREFECEDOR DO MOTOR)	103
SENSOR - TEMPERATURA (ÓLEO HIDRÁULICO)	662
*SENSOR AS-TEMPERATURE (*CAB)	822
SENSOR DE TEMPERATURA (AR CONDICIONADO)	824
SENSOR DE TEMPERATURA (CONDENSADOR DO CONDICIONADOR DE AR)	844
SENSOR DE VELOCIDADE (REGULAGEM DE INJEÇÃO OU IGNIÇÃO)	103
SEPARADOR DE ÁGUA	116
SILENCIADOR	91
SIST. DE ILUMINAÇÃO - PISCA-PISCA GIRATÓRIO DE ADVERTÊNCIA	168
SISTEMA DE ILUMINAÇÃO - FARÓIS	159
	160
	162
	163
	164
SISTEMA ELETRÔNICO - MÁQUINA	145
	146
SISTEMA ELETRÔNICO - MÁQUINA (SEGURANÇA)	208
SISTEMA ELETRÔNICO - MONITOR	147
SOFTWARE - MÁQUINA (COMUNICAÇÃO)	146
SOFTWARE - MÁQUINA (MOTOR E SISTEMA HIDRÁULICO)	145
SOFTWARE - MÁQUINA (SEGURANÇA)	208
SUPORTE - ASSENTO	910
SUSPENSÃO - ASSENTO	911
	913
*SWITCH AS-POSITION (TRAVA DE PERCURSO)	433
*SWITCH GP-ROTARY (POSIÇÃO DO ACELERADOR)	202

T

TAMBOR DO FREIO	286
TAMPA	352
TAMPA - ACESSO	353
TAMPA - BOCAL DE ENCHIMENTO (COMBUSTÍVEL, TRAVA, COM RESPIRO)	119
TAMPA - CONSOLO	856
TAMPA - ELEVADOR DA CABINE	855
TAMPA - MECANISMO DAS VÁLVULAS	12
TAMPA - RADIADOR	83
TAMPA - RESPIRO (TANQUE DE ÓLEO HIDRÁULICO)	662
TAMPA (BOCAL DE ENCHIMENTO DO ÓLEO DO MOTOR)	12
TAMPA COM RESPIRO (LAVADOR DO VIDRO)	186
	211
TANQUE - LÍQUIDO ARREFECEDOR	83
TANQUE DE COMBUSTÍVEL	119
TANQUE DE COMBUSTÍVEL E MONTAGEM	117
TANQUE DE ÓLEO HIDRÁULICO E MONTAGEM	660
TANQUE HIDRÁULICO	662
TAPETE	898
TELA FILTRANTE (REABASTECIMENTO)	98
TELA PÁRA-SOL	901
TORNEIRA-DRENAGEM (TANQUE HIDRÁULICO)	662
TRANSMISSÃO	319
	333
TRAVA - TRANSPORTE	410
TREM DE FORÇA	287
TUBOS - AQUECEDOR	881
	882
TUBOS - AR	89
TUBOS - AR CONDICIONADO	877
	878
TUBOS - BOMBA	576
TUBOS - BRAÇO	589
	590
	591
	592
	593
	594
	595
	597
	599
	601
	603

* TRADUÇÃO NÃO DISPONÍVEL NO MOMENTO DA IMPRESSÃO

ÍNDICE

Designação	Página
	605
	607
	608
TUBOS - CILINDRO DA LÂMINA	502
TUBOS - CILINDRO DA LANÇA	509
TUBOS - CILINDRO DE INCLINAÇÃO DA CAÇAMBA	511
TUBOS - CIRCUITO PILOTO	544
	547
	551
	553
	557
	559
	561
	562
	564
	565
	566
	569
	571
	572
TUBOS - COMBUSTÍVEL	99
TUBOS - CONTROLE DE CARGA	538
	540
	542
TUBOS - DIANTEIROS	518
TUBOS - DIREÇÃO	585
	587
TUBOS - ESTABILIZADOR	583
TUBOS - FILTRO DO COMBUSTÍVEL	102
TUBOS - GRAXA	761
	763
	766
	768
	770
TUBOS - LANÇA	504
	506
	508
TUBOS - ÓLEO HIDRÁULICO	519
	521
	525
	527
	528
	531
	534
TUBOS - RADIADOR	71
	74
TUBOS - RETORNO	580
TUBOS - TESTE DE PRESSÃO	574
TUBOS - VÁLVULA DE RETENÇÃO	513
TUBOS - VÁLVULA DIRETORA	516
TUBOS - VÁLVULA E CILINDRO DA LÂMINA	500
TUBOS - VENTILADOR HIDRÁULICOS	535
TUBOS DE CONEXÃO	515
TUBOS DO AQUECEDOR	882
TUBOS HIDRÁULICOS AUXILIARES	491
	492
	494
	496
	498
TUBULAÇÕES - COMANDO DE GIRO	610
TURBOALIMENTADOR	95

V

*VALVE AS (*AIR CONDITIONER, HIGH SIDE)	840
*VALVE-CHECK	12
*VALVE GP-COMBINATION	698
*VALVE GP-FLOW CONTROL	719
*VALVE GP-MOTOR CONTROL	723
*VALVE GP-PUMP CONTROL	729
	730
	731
	732
	734
*VALVE GP-RELIEF	719
*VALVE GP-THROTTLE	720
VÁLVULA - AMOSTRA DE FLUIDOS (ÓLEO DO MOTOR)	58
VÁLVULA - CONTROLE DE CARGA	709
	711
	713
	716
VÁLVULA - CONTROLE PRINCIPAL	719
VÁLVULA AUXILIAR E TUBOS	664
	666
	668
VÁLVULA COMBINADA	696
VÁLVULA COMPENSADORA	696
VÁLVULA DE ALÍVIO	735
	736
	737
	738
	739
	740
	741
	742
	743
VÁLVULA DE ALÍVIO (DE DUAS DIREÇÕES, COMPENSAÇÃO)	485
VÁLVULA DE ALÍVIO (INIBIDOR DE REDUÇÃO DE MARCHA)	321
	335
VÁLVULA DE ALÍVIO (TUBULAÇÃO)	699

* TRADUÇÃO NÃO DISPONÍVEL NO MOMENTO DA IMPRESSÃO

ÍNDICE

Designação	Página
VÁLVULA DE ALÍVIO (TUBULAÇÃO, LANÇA AJUSTÁVEL VARIÁVEL)	701
VÁLVULA DE CONTROLE	699 701 703
VÁLVULA DE CONTROLE - FLUXO	707 708
VÁLVULA DE CONTROLE - PRESSÃO E COMPENSAÇÃO DE FLUXO	725
VÁLVULA DE CONTROLE DOS FREIOS	685 687 689
VÁLVULA DE CONTROLE E MONTAGEM	679
VÁLVULA DE DRENAGEM (TANQUE DE COMBUSTÍVEL)	119
VÁLVULA DE LUBRIFICAÇÃO - DISTRIBUIÇÃO	792 793
VÁLVULA DE PARADA DE COMBUSTÍVEL	121
VÁLVULA DE PARADA (DRENO DO ÓLEO DO MOTOR)	23
VÁLVULA DE PARADA (LÍQUIDO ARREFECEDOR DO MOTOR)	71 74
VÁLVULA DE PRIORIDADE (DIREÇÃO)	587
VÁLVULA DE REDUÇÃO DE PRESSÃO	727 728
VÁLVULA DE RETENÇÃO	691 692 693 696 699
VÁLVULA DE RETENÇÃO (BOMBA DE TRANSFERÊNCIA DE COMBUSTÍVEL)	106 108
VÁLVULA DE RETENÇÃO (CILINDRO DA TRAVA DA OSCILAÇÃO DO EIXO)	451
VÁLVULA DE RETENÇÃO (EMBREAGEM DE ALTA VELOCIDADE, ORIFÍCIO)	319
VÁLVULA DE RETENÇÃO (EMBREAGEM DE ALTA VELOCIDADE, ORIFÍCIO)	333
VÁLVULA DE RETENÇÃO (EMBREAGEM DE BAIXA VELOCIDADE, ORIFÍCIO)	319 333
VÁLVULA DE RETENÇÃO (INIBIDOR DE REDUÇÃO DE MARCHA)	321 335
VÁLVULA DESVIADORA	704 706
VÁLVULA DO ACELERADOR (ÓLEO PILOTO)	701
VÁLVULA DO CONTROLE PRINCIPAL E MONTAGEM	680
VÁLVULA DO RESPIRO (EIXO)	231 244 255
VÁLVULA DO RESPIRO (EIXO)	266 277
VÁLVULA E TUBULAÇÕES - CONTROLE DE CARGA	669 671 673 675 677
VÁLVULA ESFÉRICA	682 683 684
VÁLVULA PILOTO DE ALÍVIO	726
VÁLVULA SOLENÓIDE	744 745 746 747 749 750 751 752 753
VÁLVULA SOLENÓIDE DE ALÍVIO (MOTOR DO VENTILADOR HIDRÁULICO)	616
VÁLVULA SOLENÓIDE (TROCA DE TRANSMISSÃO)	612
VENTILADOR DE SUCÇÃO	60 61
VIDRO DA PORTA	926 928
VIDRO (LÂMPADA DE SINALIZAÇÃO TRASEIRA)	155
VIDRO (LÂMPADA SINALIZADORA DIANTEIRA)	156
VIDRO (LÂMPADA TRASEIRA)	152
VIDRO (PISCA-PISCA DE ADVERTÊNCIA)	158
VIRABREQUIM	14 16
VISOR DE NÍVEL (ÓLEO HIDRÁULICO)	662
VOLANTE DO MOTOR	28

* TRADUÇÃO NÃO DISPONÍVEL NO MOMENTO DA IMPRESSÃO

STICHWORTVERZEICHNIS

Bezeichnung	Seite
A	
ABLASSHAHN (HYDRAULIKTANK)	662
ABLASSVENTIL (KRAFTSTOFFTANK)	119
ABSPERRVENTIL (MOTORKÜHLMITTEL)	71
ABSPERRVENTIL (MOTORKÜHLMITTEL)	74
ABSPERRVENTIL (MOTORÖLABLASS)	23
ABSTÜTZ-PLANIERSCHILD	799
ABSTÜTZ-PLANIERSCHILD - ZYLINDER- U. VENTILLEITUNGEN	500
ABSTÜTZ-PLANIERSCHILD U. BEFESTIGUNG	795 797
ABZWEIGKASTEN	139 141
*ACCUMULATOR GP-HYDRAULIC	415
ACHSE, BREITE SPURWEITE	229 230
ACHSE UND GETRIEBE	216 217 218
ACHSZYLINDERSPERRE U. BEFESTIGUNGSTEILE	442 443
*ACTUATOR GP	719
*ACTUATOR GP-PUMP	420 421
ANSCHLAG-EINBAUSATZ (SITZFEDERUNG)	913
ANSCHLUSS, ELAST.	438 439 440 441
ANSCHLUSSLEITUNGEN	515
ANSCHLUSSSTÜCK	479 480 481
ANTENNE (*MAGNETIC MOUNT, PRODUCT LINK)	148
ANTRIEBSWELLE	294
ANZEIGE (KÜHLMITTELTANK)	83
ARBEITSGERÄT - VERDRAHTUNG	215
ARBEITSGERÄTEEINSTELLER	794
ARBEITSLEUCHTEN	150 159 160 162 163 164
ARBEITSLEUCHTEN (FÜR AUSLEGER)	160
ARMLEHNE	826 827
ARRETIERUNGSEINBAUSATZ (FAHRERHAUSTÜRFENSTER)	928
AUFKLEBER - CAT (LINKS)	757
AUFKLEBER - CAT (RECHTS)	757
AUFKLEBER - STEUERMUSTER	572
AUFKLEBER (AUSSENSCHALLPEGEL)	935
AUFKLEBER (CATERPILLAR)	831 834
AUFKLEBER (NOTAUSGANG)	922
AUFKLEBER (SCHUTZ, VORN)	869 871
AUFKLEBER (SICHERHEIT)	208
AUFTANKSCHLAUCH	98
AUSGLEICHSVENTIL	696
AUSHUBLÖFFEL	813 814 815 816 817
AUSLEGER	754 755
AUSLEGERLEITUNGEN	504 506 508
AUSLEGERZYLINDER	457 459 461
AUSLEGERZYLINDER UND DICHTUNG	444 445 446
AUSLEGERZYLINDERLEITUNGEN	509
AUSLÖSER	418 419 701
AUSPUFFABSCHIRMUNG	93
AUSRÜSTUNG FÜR STRASSENFAHRT	3 5 6 8
B	
BATTERIE	138
BATTERIE - WARTUNGSFREI (12 V, 900 A)	138
BATTERIE UND VERDRAHTUNG	130 134
BATTERIE (12V, 750 A)	130 134
BEFESTIGUNGSSATZ (SCHWINGSITZ)	904
BEFESTIGUNGSSATZ (SITZFEDERUNG)	908
BEGRENZUNGSSCHALTER (FENSTER UNTERE GRENZE)	182
BEGRENZUNGSSCHALTER (FENSTER UNTERE GRENZE)	179
BELEUCHTUNGSANLAGE (FAHRERHAUS)	831

* ÜBERSETZUNG ZUM ZEITPUNKT DER DRUCKLEGUNG NICHT VORHANDEN

STICHWORTVERZEICHNIS

Bezeichnung	Seite
	834
BELEUCHTUNGSANLAGE (FRONTSCHEINWERFER)	151
BELEUCHTUNGSANLAGE (HINTEN)	3
BELEUCHTUNGSANLAGE (HINTERER ARBEITSSCHEINWERFER)	162
BELEUCHTUNGSANLAGE (MARKIERUNG)	165
BELEUCHTUNGSANLAGE (ROT, GRÜN, LED, 12 V)	208
BELEUCHTUNGSANLAGE (STRASSENAUSRÜSTUNG)	165
BELEUCHTUNGSANLAGE (STRASSENAUSRÜSTUNG)	167
BELEUCHTUNGSANLAGE (24 V, 70 W) (ARBEITSSCHEINWERFER)	150
BELEUCHTUNGSANLAGE (24 V, 70 W) (HINTERER ARBEITSSCHEINWERFER)	162
BELEUCHTUNGSANLAGE (24 V, 70 W) (VORDERE ARBEITSLEUCHTE)	163
BELEUCHTUNGSKABELSTRANG	160
BELEUCHTUNGSKABELSTRANG (ARBEITSSCHEINWERFER, VORN)	164
BELEUCHTUNGSKABELSTRANG (HINTEN, LINKS)	153
BELEUCHTUNGSKABELSTRANG (HINTEN, RECHTS)	153
BELEUCHTUNGSKABELSTRANG (NUMMERNSCHILD)	3
BELEUCHTUNGSKABELSTRANG (STRASSENFAHRT)	165
BETRIEBSMONITOR U. BEFESTIGUNG	888
BETRIEBSSTUNDENZÄHLER	179
	182
BLINKLEUCHTE	155
	156
	157
BREMSGESTÄNGE	426
	428
BREMSPEDAL	892
BREMSSTEUERVENTIL	685
	687
	689
BUCHSE - KABELSPLEISSUNG	883

C

*CLAMP GP-HYDRAULIC LINES	506
*COOLANT HEATER LINES	881
*CYLINDER (*STEERING)	246

D

DECKELSATZ	352
DECKELSATZ (SITZFEDERUNG)	913
DERHVORICHTUNG U.BEFESTIGUNG	646
	647
DICHTUNG (REGULATORGEHÄUSE)	57
DICHTUNG (VENTILDECKEL)	12
DICHTUNG (WASSERABSCHEIDER-SOCKEL)	116
DICHTUNG (WASSERABSCHEIDERVERBINDER)	116
DICHTUNGSREPARATURSATZ (DREHDURCHFÜHRUNG)	651
DICHTUNGSSATZ (ABSTÜTZUNGSZYLINDER)	466
DICHTUNGSSATZ (AUSGELEICHSVENTIL)	485
	735
	736
DICHTUNGSSATZ (AUSLEGERZYLINDER)	457
	459
	461
DICHTUNGSSATZ (BREMSSTEUERVENTIL)	685
	689
DICHTUNGSSATZ (DREHDURCHFÜHRUNG)	654
DICHTUNGSSATZ (DREHZAPFEN)	659
DICHTUNGSSATZ (DRUCKBEGRENZUNGSVENTIL)	699
	742
DICHTUNGSSATZ (DRUCKMINDERVENTIL)	728
DICHTUNGSSATZ (EINSPEISEVENTIL)	696
DICHTUNGSSATZ (FAHRERHAUSTÜRFENSTER)	928
DICHTUNGSSATZ (FLUSSSTEUERSYSTEM)	708
DICHTUNGSSATZ (GASREGELVENTIL)	701
DICHTUNGSSATZ (GETRIEBESCHALTVENTIL)	612
DICHTUNGSSATZ (HAMMERSTEUERVENTIL)	699
DICHTUNGSSATZ (HAUPTSTEUERVENTIL)	621
DICHTUNGSSATZ (HYDRAULISCHER LÜFTERMOTOR)	616
DICHTUNGSSATZ (KOMBINATIONSVENTIL)	696
DICHTUNGSSATZ (LASTSTEUERVENTIL)	709
	711
DICHTUNGSSATZ (LÖFFELZYLINDER)	463
DICHTUNGSSATZ (PENDELACHSSPERRZYLINDER)	451
DICHTUNGSSATZ (PUMPENKOPF)	487
DICHTUNGSSATZ (REGELSTEUERSYSTEMVENTIL)	729
DICHTUNGSSATZ (SCHILDZYLINDER)	453
	455
DICHTUNGSSATZ (SCHWINGSITZ)	904

* ÜBERSETZUNG ZUM ZEITPUNKT DER DRUCKLEGUNG NICHT VORHANDEN

STICHWORTVERZEICHNIS

Bezeichnung	Seite
DICHTUNGSSATZ (SITZFEDERUNG)	908
DICHTUNGSSATZ (SOLENOIDVENTIL)	744
	747
	750
	753
DICHTUNGSSATZ (SOLENOIDVENTIL) (ABSTÜTZUNG)	745
DICHTUNGSSATZ (SOLENOIDVENTIL) (FLUSSREGELUNG)	752
DICHTUNGSSATZ (SOLENOIDVENTIL) (SCHILD)	746
DICHTUNGSSATZ (STEUERHEBEL)	435
DICHTUNGSSATZ (STEUERVENTIL)	701
DICHTUNGSSATZ (STIELZYLINDER)	468
DICHTUNGSSATZ (ÜBERDRUCKVENTIL)	738
DICHTUNGSSATZ (*VALVE)	701
DICHTUNGSSATZ (VENTIL)	696
DICHTUNGSSATZ (ZUMESSPUMPE)	642
	644
DOKUMENTATION	883
DREHSTROMGENERATOR	126
	128
DREHWERKLEITUNGEN	610
DREHWERKMOTOR	618
DREHZAHLSENSOR (ZÜNDEINSTELLUNG)	103
DRUCK- U. STROMAUSGLEICHSVENTIL	725
DRUCKBEGRENZUNGSVENTIL (HERUNTERSCHALTSPERRE)	321
	335
DRUCKLUFTLEITUNGEN	89
DRUCKREDUZIERVENTIL	727
	728
DRUCKSCHALTER (AUTOM. MOTORSTEUERUNG - BETÄTIGUNG)	551
DRUCKSCHALTER (AUTOM. MOTORSTEUERUNG - DEAKTIVIERUNG)	551
DRUCKSCHALTER (BETRIEBSBREMSE)	426
	428
DRUCKSCHALTER (BREMSÖLDRUCKSPEICHER)	426
	428
DRUCKSCHALTER (HYDRAULIKÖLTANK)	660
DRUCKSCHALTER (LUFTEINENGUNG)	87
DRUCKSCHALTER (*REFRIGERANT HIGH, LOW)	840
DRUCKSCHALTER (SCHWENKPUMPENSIGNALÖL)	547
DRUCKSCHALTER (SIGNALÖL FÜR ZUSATZARBEITSGERÄT)	553
DRUCKSCHALTER (ÜBERLASTWARNUNG)	122
DRUCKSENSOR (GETRIEBEKUPPLUNG)	547
DRUCKSENSOR (LADUNG)	103
DRUCKSENSOR (MOTORÖL)	103
DRUCKSPEICHER, HYDRAULISCH	411
	412
DRUCKSPEICHER (KÜHLMITTEL)	845
DRUCKTESTLEITUNGEN	574

E

Bezeichnung	Seite
EINFÜLLKAPPE (KRAFTSTOFF, SPERRUNG, LÜFTUNG)	119
EINSTELLER-EINBAUSATZ (SCHWINGSITZ)	904
EINSTELLER-EINBAUSATZ (SITZFEDERUNG)	913
EINSTELLER-EINBAUSATZ (SITZFEDERUNG)	908
	911
ELEKTRONIK - MASCHINE	145
	146
ELEKTRONIK - MASCHINE (SICHERHEIT)	208
ELEKTRONIK - MONITOR	147
ELEKTRONISCHER SCHLÜSSEL (SICHERHEIT, GELB)	208
ENTLÜFTERFILTER (KURBELGEHÄUSE)	12
ENTLÜFTERKAPPE (HYDRAULIKÖLTANK)	662
ENTLÜFTERVENTIL (ACHSE)	231
	244
	255
	266
	277

F

Bezeichnung	Seite
FAHRALARM	124
	125
FAHRERHAUS	829
	830
	831
	834
	838
FAHRERHAUS-KABELBAUM	179
	182
FAHRERHAUS-KABELBAUM (SERVICEVERBINDER)	179
	182
FAHRERHAUS, SONNENBLENDE	915
FAHRERHAUSANBAUSATZ	394
FAHRERHAUSAUSRÜSTUNG	889
FAHRERHAUSERHÖHUNG	829
FAHRERHAUSERHÖHUNG - ABDECKUNG	855
FAHRERHAUSFENSTER	916
	918
	919
	921
	922

* ÜBERSETZUNG ZUM ZEITPUNKT DER DRUCKLEGUNG NICHT VORHANDEN

STICHWORTVERZEICHNIS

Bezeichnung	Seite
	924
FAHRERHAUSLUFTFILTER (FRISCH)	864
FAHRERHAUSTÜR	858
	860
	861
	862
FAHRERHAUSVERDRAHTUNG	179
	182
	185
FAHRERPLATTFORM	896
	898
FAHRERPLATTFORMVERDRAHTUNG	211
FAHRERSITZ	904
	906
FAHRERSITZFEDERUNG	911
	913
FAHRGESTELLVERDRAHTUNG	186
	190
	193
	195
	198
	200
FAHRMOTOR	619
FAHRMOTOR U. BEFESTIGUNGSTEILE	615
FAHRWERK	1
FAHRWERK-KABELBAUM	186
	195
	211
FAHRWERK-KABELBAUM (ELEKTRON.)	198
	200
FAHRWERK-KABELBAUM (ELEKTRON., SCHALTER, SENSOREN)	193
FAHRWERK-KABELBAUM (ELEKTRON., SCHALTER, SENSOREN)	190
FAHRWERKS-/DREHWERKSVERDRAHTUNG	214
FEDER-EINBAUSATZ (HEBEL)	430
FEDER-EINBAUSATZ (SITZFEDERUNG)	913
FENSTERSATZ (POLYCARBONAT) (FAHRERHAUSTÜR, HINTEN)	928
FENSTERSATZ (POLYCARBONAT) (FAHRERHAUSTÜR, VORN)	928
*FILTER ELEMENT AS-OIL (*HYDRAULIC) (DREHWERKKREIS)	476
FILTER (GETRIEBE)	321
	335
FILTER (HYDRAULIKÖLRÜCKFLUSS)	475
FILTERELEMENT - HYDRAULIK (RÜCKLAUFÖL)	478
FILTERSOCKEL U. MOTORÖLKÜHLER	58
*FLOOR MAT	896
FLÜSSIGKEITSSCHALTER	177
FLÜSSIGKEITSSCHALTER (HYDRAULIKÖL)	662
FLÜSSIGKEITSSCHALTER (MOTORÖL)	23
FRONTSCHEINWERFER	151
FUSSMATTE	898

G

GASFEDERUNGSSATZ (SITZFEDERUNG)	913
GASREGELUNGSVENTIL (VORSTEUERÖL)	701
GEGENGEWICHT	351
GESTÄNGE (SITZFEDERUNG)	913
GESTÄNGE (SITZFEDERUNG)	911
GETRIEBE	319
	333
GLAS (RUNDUM-KENNLEUCHTE)	158
GLASSATZ (HINTERE LEUCHTE)	152
GLASSATZ (HINTERE SIGNALLEUCHTE)	155
GLASSATZ (VORDERE SIGNALLEUCHTE)	156
GRABENRÄUMLÖFFEL	805
	806
	807
	808
	809
	810
	811
	812
GRUNDAUSFÜHRUNG	2
GURTSATZ (SITZFEDERUNG)	911

H

HALOGENSCHINWERFER (24 V, 70 W) (RUNDUM-KENNLEUCHTE)	158
HALTERUNGSSATZ (SITZFEDERUNG)	911
HALTETEILESATZ (SITZ U. BEFESTIGUNG)	906
HANDGRIFF-EINBAUSATZ (SCHWINGSITZ)	904
HANDGRIFF-EINBAUSATZ (SITZFEDERUNG)	908
HAUPTAUSLEGER	757
HAUPTHYDRAULIKPUMPE	627
HAUPTHYDRAULIKPUMPE U. BEFESTIGUNGSTEILE	623
HAUPTSTEUERVENTIL	719
*HEAD GP-PUMP	488
HEBEL-EINBAUSATZ (HEBEL)	430
HEBEL-EINBAUSATZ (SCHWINGSITZ)	904
HEBEL-EINBAUSATZ (SITZFEDERUNG)	908
HEBEL-EINBAUSATZ (STEUERHEBEL)	435
HEIZUNG (LUFTEINLASS)	173
HEIZUNGSLEITUNGEN	881
	882
HINTERACHSE	220
	226
	227

* ÜBERSETZUNG ZUM ZEITPUNKT DER DRUCKLEGUNG NICHT VORHANDEN

STICHWORTVERZEICHNIS

Bezeichnung	Seite
	228
	231
	236
HYDRAULIKBAGGER-BOLZEN	775
	776
	777
HYDRAULIKBEDIENUNG (MIT VORSTEUERUNG)	437
HYDRAULIKDRUCKSPEICHER	413
	414
	416
	417
HYDRAULIKHAMMERVERDRAHTUNG	207
HYDRAULIKHANDSTEUERUNG	430
HYDRAULIKKÜHLERMOTOR U. BEFESTIGUNG	614
HYDRAULIKLEITUNGEN	519
	521
	525
	527
	528
	531
	534
HYDRAULIKLEITUNGSARMATUR	482
	483
	484
HYDRAULIKLÜFTERLEITUNGEN	535
HYDRAULIKLÜFTERPUMPE U. BEFESTIGUNG	622
HYDRAULIKMOTORWELLE	637
	638
HYDRAULIKPEDALSTEUERUNG	431
	433
	434
HYDRAULIKPUMPE UND LEITUNGEN	576
HYDRAULIKSYSTEM	490
HYDRAULIKTANK	662
HYDRAULIKTANK UND BEFESTIGUNGSTEILE	660

I

IDENTIFIKATIONSSCHILD (FAHRERHAUS)	831
	834
IDENTIFIZIERUNGS-AUFKLEBER (AUFKLEBER)	144
IDENTIFIZIERUNGS-AUFKLEBER (HÖHE BEI STRASSENFAHRT)	5
	6
INSTRUKTIONS-AUFKLEBER (ALTERNATIVES STEUERMUSTER)	572
INSTRUKTIONS-AUFKLEBER (BETANKUNG)	106
	108
INSTRUKTIONS-AUFKLEBER (HYDRAULIKHAMMER)	554
INSTRUKTIONS-AUFKLEBER (HYDRAULIKHAMMER)	569
INSTRUKTIONS-AUFKLEBER (NOTAUSGANG, FENSTER ENTFERNEN)	921
INSTRUKTIONS-AUFKLEBER (*TIE-DOWN)	934
INSTRUKTIONS-AUFKLEBER (VERSTELLAUSLEGER)	557
INSTRUKTONSSCHILD (UNTERBRECHERSCHALTER)	934
ISOLIERUNG - SCHALLDÄMPFUNG	393

J

JOYSTICK -STEUERUNG	435

K

KABELSTRANG - ARBEITSGERÄT (HYDRAULIKHAMMER)	207
KABELSTRANG - VERTEILERKASTEN	139
	141
KABELSTRANG (ARBEITSGERÄT)	215
KABELSTRANG (ELEKTRON. STEUERMODUL DES MOTORS)	204
KABELSTRANG (KLIMAANLAGE, HEIZUNG)	824
KÄLTEMITTELKOMPRESSOR	839
	840
KÄLTEMITTELKONDENSATOR	844
	845
KÄLTEMITTELKONDENSATOR U. BEFESTIGUNGSTEILE	842
KAPPE MIT ENTLÜFTER (SCHEIBENWASCHER)	211
KAPPE MIT ENTLÜFTER (SCHEIBENWASCHER)	186
KAPPE (MOTORÖLFÜLLUNG)	12
KAPPENFILTERSATZ (KRAFTSTOFFTANK)	119
KEILRIEMEN (1250 MM LÄNGE) (KÄLTEMITTELKOMPRESSOR)	840
KEILRIEMENSATZ (EINSCHL. 2 RIEMEN) (LÜFTERANTRIEB)	26
KIPPSCHALTER (ABSTÜTZ-PLANIERSCHILD/ LINKE ABSTÜTZUNG)	500
KIPPSCHALTER (*BLADE/LEFT STABILIZER)	583
KIPPSCHALTER (FRONTSCHEINWERFER)	179
	182
KIPPSCHALTER (RECHTE ABSTÜTZUNG)	583
KIPPSCHALTER (RUNDUM-KENNLEUCHTE)	168

* ÜBERSETZUNG ZUM ZEITPUNKT DER DRUCKLEGUNG NICHT VORHANDEN

STICHWORTVERZEICHNIS

Bezeichnung	Seite
	179
KIPPSCHALTER (VORDERER ARBEITSCHEIN-WERFER)	182
KIPPSCHALTER (VORDERER ARBEITS-SCHEINWERFER)	179
KIPPSCHALTER (WARNBLINKANLAGE)	179
	182
*KIT-SEAL (*FLOW CONTROL VALVE)	719
*KIT-SEAL (*RELIEF VALVE)	719
*KIT-SEAL (*SPOOL)	720
*KIT-SEAL (*THROTTLE VALVE)	720
KLIMAANLAGE	823
	824
KLIMAANLAGE UND AUFHÄNGUNG	822
KLIMAANLAGENLEITUNGEN	877
	878
KLINKEN-EINBAUSATZ (SITZFEDERUNG)	913
KOLBENPUMPE	628
	630
KOLBENPUMPENUMLAUFSATZ	636
KOMMUNIKATIONSEINBAUSATZ	148
KONSOLE, LINKS	847
	849
KONSOLE, RECHTS	853
KONSOLEN-VERDRAHTUNG (LINKS)	202
KONSOLEN-VERDRAHTUNG (RECHTS)	202
KONSOLENVERDRAHTUNG	202
KOPFSTÜTZE	873
KRAFTSTOFFABSTELLVENTIL	121
KRAFTSTOFFEINSPRITZPUMPE	103
KRAFTSTOFFFILTEREINSATZ	97
KRAFTSTOFFILTER	97
KRAFTSTOFFILTERLEITUNGEN	102
KRAFTSTOFFLEITUNGEN	99
KRAFTSTOFFÖRDERPUMPE	106
	108
	110
	113
KRAFTSTOFFSIEB	119
KRAFTSTOFFTANK	119
KRAFTSTOFFTANK U. BEFESTIGUNG	117
KRAFTÜBERTRAGUNG	287
KREUZGELENK	347
	348
	349
KUGELVENTIL	682
	683
	684
KÜHLER	81
KÜHLERAUSLADSS	71
	74
KÜHLEREINLASSSCHLAUCH	71
	74
KÜHLERKAPPE	83
KÜHLERLEITUNGEN	71
	74
KÜHLERNETZ UND ÖLKÜHLER	81
KÜHLERSCHLAUCH (AUSLASS)	71
	74
KÜHLERSCHLAUCH (*INLET)	71
	74
KÜHLERVERKLEIDUNG	375
	380
KÜHLMITTELBEHÄLTER	83
KÜHLWASSERANSCHLUSS	57
KÜHLWASSERPUMPE	77
	79
KURBELWELLE	14
	16
KURBELWELLEN-RIEMENSCHEIBE	50

L

Bezeichnung	Seite
LADELUFTKÜHLER	84
LAGERSATZ (HYDRAULIKMOTOR)	637
	638
LAGERSATZ (SCHWINGSITZ)	904
LAGERSATZ (SITZFEDERUNG)	908
	911
LASTSTEUERLEITUNGEN	538
	540
	542
LASTSTEUERVENTIL	709
	711
	713
	716
LASTSTEUERVENTIL U. LEITUNGEN	669
	671
	673
	675
	677
LAUFSTEG	403
	405
LAUFWERKSRAHMEN	407
	408
	409
LEITUNGEN, VORNE	518
LENKACHSE	242
	253
	264
	275
LENKÖLLEITUNGEN	585
	587
LENKSÄULE	640
	642
	644

* ÜBERSETZUNG ZUM ZEITPUNKT DER DRUCKLEGUNG NICHT VORHANDEN

STICHWORTVERZEICHNIS

Bezeichnung	Seite
LEUCHTE (FAHRERHAUS)	831, 834
LEUCHTE, HINTEN	152, 153
LEUCHTE (24 V, 4 W) (FRONTSCHEINWERFER)	151
LEUCHTE (24 V, 5 W) (HINTERE LEUCHTE)	153
LEUCHTE (24 V, 5 W) (MARKIERUNGSLEUCHTEN)	165
LEUCHTE (24 V, 75/70 W) (FRONTSCHEINWERFER)	151
LEUCHTE (24V, 21W) (SIGNALLEUCHTE)	157
LEUCHTE (24V, 21W) (SIGNALLEUCHTE)	153
LÖFFEL UND EINSTELLER	799, 800, 801
LÖFFEL UND LAGERSATZ	802, 803, 804
LÖFFELGESTÄNGE	771, 772, 773
LÖFFELKIPPZYLINDERLEITUNGEN	511
LÖFFELSTIEL	784, 786, 788, 790
LÖFFELSTIELZYLINDER	468
LÖFFELZYLINDER	463, 465
LÖFFELZYLINDER UND DICHTUNG	447
LUFTEINLASSBOGEN	88
LÜFTERANTRIEB	26
LÜFTERBEFESTIGUNG	39
LÜFTERVERDRAHTUNG	206
LÜFTERVERKLEIDUNG	62, 64, 66, 67, 70
LUFTFILTER (HAUPTELEMENT)	86
LUFTFILTER (HILFSELEMENT)	86
LUFTKANAL	864
LUFTKOMPRESSOR-EINBAUSATZ (SITZFEDERUNG)	913
LUFTREINIGER	86, 87

M

Bezeichnung	Seite
MAGNET- UND ÜBERDRUCKVENTIL (HYDRAULISCHER LÜFTERMOTOR)	616
MAGNETSCHALTER (BETANKUNGSPUMPEN-RELAIS)	108
MAGNETSCHALTER (BLINKRELAIS)	139, 141
MAGNETSCHALTER (HAUPTSCHALTER)	139, 141
MAGNETSCHALTER (KRAFTSTOFFÖRDER-PUMPENRELAIS)	106, 139, 141
MAGNETSCHALTER (24 V) (STARTRELAIS)	130, 134
MAGNETVENTIL	744, 745, 746, 747, 749, 750, 751, 752, 753
MAGNETVENTIL (GETRIEBESCHALTUNG)	612
MANSCHETTEN-EINBAUSATZ (SITZFEDERUNG)	913
MASCHINEN-UMBAUSATZ	1
MASCHINENSTEUERUNG U. BEFESTIGUNG	143
MASCHINENVERDRAHTUNG	208
MATERIALUMSCHLAGSTIEL	783
MITTELLAGERANTRIEBSWELLE	290, 292
MOTOR-EINBAUSATZ	10
MOTORANTRIEB	616
MOTORAUFHÄNGUNG, ELASTISCH	37
MOTORAUSFÜHRUNG	9
MOTORBLOCK	18, 19
MOTORDECKEL	485
MOTORDREHVORRICHTUNG	632, 633, 634
MOTORHAUBE U. VERKLEIDUNG	391
MOTORHUBÖSE	36
MOTORKABELSTRANG	130, 134
MOTORÖLKÜHLER UND FILTERSOCKEL	58
MOTORSTEUERUNG, ELEKTRON.	103
MOTORSTOPFEN	47
MOTORVERDRAHTUNG	204
MOTORVERKLEIDUNG	364, 368, 372
MUFFE	685

* ÜBERSETZUNG ZUM ZEITPUNKT DER DRUCKLEGUNG NICHT VORHANDEN

STICHWORTVERZEICHNIS

Bezeichnung	Seite
MUFFE (BREMSSTEUERVENTIL)	689

N

NEBELLEUCHTENSCHUTZ	865
NEBENANTRIEB	24
NEBENANTRIEBS-RIEMENSCHEIBE	49
NOCKENWELLE	11

O

O-RING-DICHTUNG (REGULATOR)	57
OBERWAGENRAHMEN	385
ÖLABLASS	23
ÖLFILTER	54
	475
	476
	477
	478
ÖLFILTER (HYDRAULISCH) (ÜBERDRUCK)	535
ÖLFILTERELEMENT (HYDRAULISCH) (ÜBERDRUCK)	535
ÖLFILTERELEMENT (HYDRAULISCH) (VORSTEUERUNG)	477
ÖLMESSSTAB	40
ÖLWANNE	40
ÖLWANNEN-ABLASSSCHRAUBE (MOTORÖL)	40

P

PANZERWANNE	390
PEDALBOLZEN	894
	895
PEDALE	890
PEDALEINBAUSATZ	890
PEDALEINBAUSATZ (PEDALSTEUERUNG)	431
PENDELACHSENSPERRENZYLINDER	449
	451
PENDELLAGER	616
PLATTENSATZ (PEDAL)	890
PLATTENSATZ (PEDALSTEUERUNG)	431
PLATTENSATZ (SCHWINGSITZ)	904
PLATTENSATZ (SITZFEDERUNG)	908
	911
PLEUELSTANGE UND KOLBEN	42
	43
PROBEENTNAHMEVENTIL F. WARTUNGSFL. (MOTORÖL)	58
*PUMP GP-ENGINE OIL	55
PUMPE U. MOTOR - KRAFTSTOFFÖRDER-PUMPE	106
	108
PUMPENANTRIEB	470
PUMPENDICHTUNGSSATZ (BREMSE, LENKUNG)	625
PUMPENDICHTUNGSSATZ (HYDRAULIKLÜFTERPUMPE)	626
PUMPENKOPF	487
PUMPENSTELLGLIED	628
PUMPENZYLINDER	422
	424

R

RADBEFESTIGUNGSKEIL	350
RADIO	900
RADIO - KABELSTRANG	900
RADIOEINBAUSATZ	876
RAHMEN - FAHRERHAUSERHÖHUNG	383
REFLEKTOR	169
REFLEKTOR (ROT)	153
REGLER-EINBAUSATZ (HEBEL)	430
REGLER-EINBAUSATZ (PEDAL)	890
REIFEN UND FELGE	295
	296
	297
	298
	299
	300
	301
	302
	303
	304
	305
	307
	308
	309
	310
	311
	312
	313
	314
	315
	316
	317
	318
REIFENKRANZ	288
	289
RELAIS (HUPE)	139
	141
RELAIS (HYDRAULIKSPERRE)	139
	141
RELAIS (INTERVALLWISCHER)	139
	141
RELAIS (KLIMAANLAGENKOMRESSOR)	824

* ÜBERSETZUNG ZUM ZEITPUNKT DER DRUCKLEGUNG NICHT VORHANDEN

STICHWORTVERZEICHNIS

Bezeichnung	Seite
RELAIS (WISCHER-ABSTELLUNG)	139
RELAIS (WISCHER-ABSTELLUNG)	141
RELAIS (24 V) (STARTHILFE)	130
	134
REPARATURSATZ (DREHDURCHFÜHRUNG)	648
REPARATURSATZ (GETRIEBE)	323
	337
REPARATURSATZ (LÖFFELZYLINDER)	465
REPARATURSATZ (PENDELACHSSPERRZYLINDER)	449
REPARATURSATZ (SCHWINGSITZ)	904
REPARATURSATZ (SITZFEDERUNG)	908
	913
REPARATURSATZ (SITZFEDERUNG)	911
REPARATURSATZ (VORDERE ABDECKUNG, STIRNRAD)	32
	34
RIEMENSCHUTZ	30
ROTORPUMPE (LADEN)	630
RÜCKENSTÜTZE (SCHWINGSITZ)	904
RÜCKENSTÜTZE (SITZFEDERUNG)	908
RÜCKFAHRWARNHORN	125
RÜCKLAUFLEITUNG	580
RÜCKSPIEGEL	884
	886
RUNDUM-KENNLEUCHTE	158
	168

S

SAMMELVENTIL	696
SAUGLÜFTER	60
	61
SCHALENEINBAUSATZ (WASSERABSCHEIDER)	116
SCHALLDÄMPFENDE VERKLEIDUNG	44
	45
SCHALLDÄMPFER	91
SCHALLDÄMPFUNG	402
SCHALTER (AUFTANKPUMPENSCHALTER)	106
	108
SCHALTER (AUSFALLSCHUTZSTEUERUNG)	202
SCHALTER, FUSSBETÄTIGT (HUPE)	186
	211
SCHALTER (HINTERER ARBEITSSCHEINWERFER)	162
SCHALTER (RADIO EIN/AUS)	876
SCHALTER (SITZHEIZUNG)	908
SCHALTER (ÜBERLASTWARNUNG)	122
SCHALTER (WARNHORN, LECUHTEN, WISCHER)	186
	211
SCHALTER (WISCHER-SPERRVORRICHTUNG)	918
SCHALTERKABELSTRANG (FAHRSPERRE)	6
SCHALTERKABELSTRANG (SITZHEIZUNG)	908
SCHAUGLAS (HYDRAULIKÖL)	662
SCHEIBENFEDERSATZ (GETRIEBE)	320
	334
SCHEIBENSCHUTZ	869
	871
SCHEIBENWISCHER	929
	932
SCHEIBENWISCHERBLATT	932
SCHEIBENWISCHERBLATT (OBEN)	929
SCHEIBENWISCHERBLATT (UNTEN)	929
SCHIENENSATZ (FAHRERHAUSTÜRFENSTER)	928
SCHILD UND AUFKLEBER	934
	937
	938
	939
	940
	941
	942
	943
	944
SCHILDZYLINDER	453
	455
SCHILDZYLINDERLEITUNGEN	502
SCHLAUCHLEITUNG (OBERER ENTDUNSTER)	12
SCHLAUCHLEITUNG (UNTERER ENTDUNSTER)	12
SCHLAUCHLEITUNGS-EINBAUSATZ (SITZFEDERUNG)	913
SCHLAUCHLEITUNGS-EINBAUSATZ (WASSER) (REGULATORGEHÄUSE)	77
	79
SCHLÜSSEL	176
SCHMIERFILTER (FÜR AUSLEGER)	761
	763
SCHMIERLEITUNGEN	761
	763
	766
	768
	770
SCHMIERÖLVERTEILERVENTIL	792
	793
SCHUTZDACH	866
SCHUTZVERKLEIDUNG	867
SCHWENKANTRIEB	471
	472
SCHWENKBLOCK	648

* ÜBERSETZUNG ZUM ZEITPUNKT DER DRUCKLEGUNG NICHT VORHANDEN

STICHWORTVERZEICHNIS

Bezeichnung	Seite
	650
	651
	653
	654
	656
	658
	659
SCHWENKGETRIEBELAGER	388
SCHWINGSITZ	907
	908
SCHWUNGRAD	28
SCHWUNGRADGEHÄUSE	31
SCHWUNGRADGEHÄUSESTOPFEN	48
*SEAL-O-RING	12
SEITENSTÜTZEN	780
SEITENSTÜTZENLEITUNGEN	583
SEITENSTÜTZENZYLINDER	466
*SENSOR AS-TEMPERATURE (*CAB)	822
SENSOR-EINBAUSATZ (SCHWENKSCHEIBEN-STELLUNG)	171
SENSOR, KABELSTRANG (*PUMP SWASHPLATE ANGLE)	190
SENSOR, KABELSTRANG (PUMPE SCHENKSCHEIBENWINKEL)	193
	195
	198
	200
SERVICE MASCHINE (KOMMUNIKATION)	146
SERVICE MASCHINE (MOTOR U. HYDRAULIK)	145
SICHERHEITSGURT	902
	903
	906
SICHERUNG (10 A)	139
	141
SICHERUNG (15 A)	139
	141
SICHERUNG (15 A) (KRAFTSTOFFFÖRDER-PUMPE)	106
	108
SICHERUNG (20 A)	130
	134
	139
	141
SICHERUNG (5 A)	139
	141
SICHERUNG (70 A)	130
SICHERUNG (80 A)	135
SIEB (AUFTANKEN)	98
SITZÜBERZUG-EINBAUSATZ	904
SITZÜBERZUG-EINBAUSATZ (SITZFEDE-RUNG)	908
SITZUNTERBAU	910
SOFTWARE - MASCHINE (KOMMUNIKATI-ON)	146
SOFTWARE - MASCHINE (MOTOR U. HYDRAULIK)	145
SOFTWARE - MASCHINE (SICHERHEIT)	208
SONNENBLENDE	901
	915
SPANNUNGSREGLER (24 V) (LAST-SCHUTZ)	103
SPERRVENTIL	691
	692
	693
	696
	699
SPERRVENTIL (HERUNTERSCHALTSPER-RE)	321
	335
SPERRVENTIL (HOCHE DREHZAHL KUPPLUNG, BLENDE)	333
SPERRVENTIL (HOCHE DREHZAHL KUPPLUNG, BLENDE)	319
SPERRVENTIL (KRAFTSTOFFFÖRDERPUM-PE)	106
	108
SPERRVENTIL (NIEDRIGE DREHZAHL KUPPLUNG, BLENDE)	319
	333
SPERRVENTIL (PENDELACHSSPERRZYLIN-DER)	451
SPERRVENTILLEITUNGEN	513
SPINDELSATZ (SITZFEDERUNG)	911
SPURSTANGE (LINKS)	266
	277
SPURSTANGE (RECHTS)	266
	277
STARTERMOTOR	174
	175
STARTHILFE	172
	173
STARTSCHALTER	178
STEIGLEITER	396
	398
	399
STELLUNGSSCHALTER (ARMLEHNE)	847
	849
STELLUNGSSCHALTER (FAHRSPERRE)	5
	6
STELLUNGSSCHALTER (FAHRSPERRE)	434
STELLUNGSSCHALTER (PENDELACHSVER-RIEGELUNG)	426
	428
STELLUNGSSENSOR	171

* ÜBERSETZUNG ZUM ZEITPUNKT DER DRUCKLEGUNG NICHT VORHANDEN

STICHWORTVERZEICHNIS

Bezeichnung	Seite
STELLUNGSSENSOR (SCHENKSCHEIBEN-WINKEL)	171
STEUERKONSOLE	852
STEUERKONSOLENABDECKUNG	856
STEUERKRÜMMER	612
STEUERUNG - EINBAUSATZ (SITZFEDERUNG)	913
STEUERUNG - NICHT PROGRAMMIERT	144
STEUERUNG - NICHT PROGRAMMIERT (MOTOR U. HYDRAULIK)	145
STEUERUNGS-KABELSTRANG	208
STEUERUNGS-KABELSTRANG (KOMMUNIKATION)	148
STEUERUNGS-KABELSTRANG (SICHERHEIT)	208
STEUERVENTIL	699
	701
	703
STEUERVENTIL UND BEFESTIGUNGSTEILE	679
STEUERVENTILSTOPFEN	621
STIEL	782
STIELZYLINDER UND DICHTUNG	448
STIELZYLINDERLEITUNGEN	589
	590
	591
	592
	593
	594
	595
	597
	599
	601
	603
	605
	607
	608
STIRNRAD	29
STIRNRADGEHÄUSE	32
	34
STOSSDÄMPFER-REPARATURSATZ (SITZFEDERUNG)	911
	913
STOSSDÄMPFER-REPARATURSATZ (SITZFEDERUNG)	913
STÖSSEL (MIT FEDER) (PEDALSTEUERUNG)	431
STÖSSEL (PEDAL) (PEDALSTEUERUNG)	431
STÖSSELSATZ (HEBEL)	430
STÖSSELSATZ (PEDAL)	890
STÖSSELSATZ (STEUERHEBEL)	435
STOSSSTANGEN-EINBAUSATZ (SITZFEDERUNG)	911
STÜTZEN	639
*SWITCH AS-POSITION (FAHRSPERRE)	433
*SWITCH GP-ROTARY (GASSTELLUNG)	202

T

TEILE-EINBAUSATZ (SITZFEDERUNG)	913
TEMPERATURSENSOR (HYDRAULIKÖL)	662
TEMPERATURSENSOR (KLIMAANLAGE)	824
TEMPERATURSENSOR (KLIMAANLAGENKONDENSATOR)	844
TEMPERATURSENSOR (LUFTEINLASS)	103
TEMPERATURSENSOR (MOTORKÜHLMITTEL)	103
TRANSPORTSPERRE	410
	778
	779
TRENNSCHALTER	176
TROMMELBREMSE	286
TURBOLADER	95
TÜRFENSTER	926
	928

U

ÜBERDRUCKVENTIL	735
	736
	737
	738
	739
	740
	741
	742
	743
ÜBERDRUCKVENTIL (KURZSCHLUSS, NACHSPEISEVENTIL)	485
ÜBERDRUCKVENTIL (LEITUNG)	699
ÜBERDRUCKVENTIL (LEITUNG, VERSTELLAUSLEGER)	701
ÜBERTRAGUNGSSTEURUNG (PRODUCT LINK RADIO)	148
UMLAUFLUFT-FILTER (KLIMAANLAGE)	824
UMLEITVENTIL	704
	706
UMLEITVENTILLEITUNGEN	516
UNTERLEGSCHEIBE (DRUCKBEGRENZUNGSVENTIL)	740

V

*VALVE AS (*AIR CONDITIONER, HIGH SIDE)	840
*VALVE-CHECK	12

* ÜBERSETZUNG ZUM ZEITPUNKT DER DRUCKLEGUNG NICHT VORHANDEN

STICHWORTVERZEICHNIS

Bezeichnung	Seite
*VALVE GP-COMBINATION	698
*VALVE GP-FLOW CONTROL	719
*VALVE GP-MOTOR CONTROL	723
*VALVE GP-PUMP CONTROL	729
	730
	731
	732
	734
*VALVE GP-RELIEF	719
*VALVE GP-THROTTLE	720
VEDRAHTUNG - SOLENOID (ABSTÜTZUNG)	214
VENTIL UND BEFESTIGUNGSTEILE - HAUPTSTEUERUNG	680
VENTILDECKEL	12
VENTILKIPPHEBEL	51
VENTILSTEUERUNG	53
VERBINDUNGSSTÜCK FÜR FAHRERHAUSHEIZUNGSLEITUNGEN	846
VERDRAHTUNGSKABELBAUM (GEBLÄSE)	206
VERDRAHTUNGSKABELBAUM (SITZ)	913
VERSTAUKASTEN	394
VORAUSLEGER	759
VORDERACHSE	219
VORHÄNGESCHLOSS	119
VORRANGVENTIL (LENKUNG)	587
VORSTEUERLEITUNGEN	544
	547
	551
	553
	557
	559
	561
	562
	564
	565
	566
	569
	571
	572
VORSTEUERPUMPE U. BEFESTIGUNGSTEILE	624
VORSTEUERÜBERDRUCKVENTIL	726
VORSTEUERVENTILSATZ (VERBINDUNGSSTÜCK) (STEUERHEBEL)	435

W

WÄRMEISOLIERUNG	392
WARNAUFKLEBER (DREHZAHLPOTENTIOMETER)	938
WARNAUFKLEBER (HOCHDRUCKZYLINDER)	415
	416
	417
WARNAUFKLEBER (NICHT MIT DEM KOPF AN DIE TÜR SCHLAGEN)	383
WARNAUFKLEBER (NICHT SCHWEISSEN, NICHT BOHREN)	869
	871
WARNAUFKLEBER (*PRODUCT LINK RADIO, EAME)	148
WARNAUFKLEBER (UNIVERSAL - HANDBUCH LESEN)	938
WARNHORN, ELEKTR.	874
WARNHORN, ELEKTR.	875
WARNHORN (*24-VOLT, LOW TONE)	874
WARNSCHILD (STRUKTURMODIFIKATION)	866
WARNVORRICHTUNG	122
WASSERABSCHEIDER	116
WASSERABSCHEIDERELEMENT	116
WASSERPUMPEN-REPARATURSATZ	77
	79
WASSERTEMPERATURREGLER	57
WERKZEUGKASTENSTUFE	400
	401
WIDERSTAND (STARTHILFE)	130
	134

Z

ZAHNRADPUMPE	625
	626
ZAHNSPITZE, KURZ	821
ZAHNSPITZE, LANG	818
	819
ZAHNSPITZE, SCHARF	820
ZIGARETTENANZÜNDER (ZIGARETENANZÜNDER, 24 V)	179
	182
ZUFLUSSREGULIERVENTIL	707
	708
ZUGANGSKLAPPE	353
	354
	356
	357
	359
	360
	362
	363
ZUMESSPUMPE	644
ZUSATZHYDRAULIKLEITUNGEN	491
	492
	494
	496
	498
ZUSATZHYDRAULIKVENTIL U. LEITUNGEN	664

* ÜBERSETZUNG ZUM ZEITPUNKT DER DRUCKLEGUNG NICHT VORHANDEN

STICHWORTVERZEICHNIS

Bezeichnung	Seite	Bezeichnung	Seite
	666		
	668		
ZYLINDER (LENKUNG)	257		
	268		
	279		
ZYLINDERBLOCKSCHRAUBE	46		
ZYLINDERKOPF	21		
	22		
ZYLINDERKOPF-HALTETEILE	27		

* ÜBERSETZUNG ZUM ZEITPUNKT DER DRUCKLEGUNG NICHT VORHANDEN

MACHINE ARRANGEMENT

186-0468 CHASSIS AR

S/N: BCZ1-2000

PART OF 186-0518 GENERAL AR

SMCS-7000 **i01812368**

NOTE	PART NUMBER	QTY	PART NAME 1 2 3 4 5 6 (PRODUCT LEVEL)	SEE PAGE
Y	*186-0483*	1	BATTERY & WIRING GP	130
Y	*186-0485*	1	BOX GP-JUNCTION	139
Y	*204-7008*	1	CONTROL & MTG GP-MACHINE	143
Y	*186-0487*	1	COUNTERWEIGHT GP	351
Y	*111-1858*	1	DRIVE GP-SWING	471
Y	*186-0500*	1	FRAME GP-UPPER	385
Y	*190-8206*	1	GEAR & BEARING GP-SWING	388
Y	*186-0503*	1	GUARD GP-BOTTOM	390
Y	*186-0488*	1	HOOD & GUARD AR	391
Y	*186-0484*	1	HORN GP-ELECTRIC	874
Y	*190-0286*	1	LIGHTING GP-ROADING	167
Y	*186-0502*	1	LINES GP-FUEL	99
Y	*214-8993*	1	LINES GP-GREASE	766
Y	*111-1857*	1	LITERATURE GP	883
Y	*198-4680*	1	OPERATOR AR	889
Y	*186-0520*	1	PLATE & FILM GP	934
Y	*186-0501*	1	TANK & MTG GP-FUEL	117
Y	*209-8865*	1	WIRING GP-CHASSIS	195
Y	*186-0486*	1	WIRING GP-PLATFORM	211

Y-SEPARATE ILLUSTRATION

<END>

198-4697 CONVERSION AR-MACHINE

S/N: BCZ1-2000

PART OF 235-1827 STABILIZER AR

AN ATTACHMENT

SMCS-7000 **i02033264**

NOTE	PART NUMBER	QTY	PART NAME 1 2 3 4 5 6 (PRODUCT LEVEL)	SEE PAGE
Y	*188-7627*	1	LINES GP-HYDRAULIC	527
			S/N: BCZ1-495	
Y	*233-8261*	1	LINES GP-HYDRAULIC	534
			S/N: BCZ496-2000	
Y	*188-4954*	1	WIRING GP-UNDERCARRIAGE/SWIVEL	214

Y-SEPARATE ILLUSTRATION

<END>

MACHINE ARRANGEMENT

186-0518 GENERAL AR

S/N: BCZ1-2000

SMCS-7000 **i01782495**

NOTE	PART NUMBER	QTY	PART NAME 1 2 3 4 5 6 (PRODUCT LEVEL)	SEE PAGE
Y	*186-0468*	1	CHASSIS AR	1
Y	*188-5096*	1	ENGINE AR-PRIMARY	9
Y	*186-0469*	1	FRAME AR-UNDERCARRIAGE	407
Y	*186-0471*	1	HYDRAULIC AR	490
Y	*186-0473*	1	HYDRAULIC AR	490
Y	*186-0472*	1	INSTALLATION AR-ENGINE	10
Y	*186-0470*	1	POWER TRAIN AR	287

Y-SEPARATE ILLUSTRATION

<END>

MACHINE ARRANGEMENT

190-0283 ROADING AR–GERMAN

S/N: BCZ1-2000
30 KM/H
AN ATTACHMENT

SMCS-7000 **i02159882**

NOTE	REF NO	GRAPHIC REF	PART NUMBER	QTY	PART NAME 1 2 3 4 5 6 (PRODUCT LEVEL)	SEE PAGE
	1	1	**5W-1119**	2	WASHER (9.8X18.5X1.5-MM THK)	
	2	1	**114-8907**	2	CLAMP	
	3	1	**123-3605**	4	SCREW	
	4	1	**126-3831**	1	PLATE AS	
	5	1	**127-9580**	7	ROD	
	6	1	**128-8537**	2	LATCH-LOCK	
	7	1	**202-7202**	2	LAMP (24-VOLT)	
	8	1	**205-6308**	1	BRACKET	
	9	1	**207-4105**	1	BRACKET AS	
	10	1	**207-4699**	2	LAMP AS (REAR)	
	11	1	**207-5466**	1	HARNESS AS-LIGHTING (LICENSE PLATE)	
		1	**102-8802**		KIT-RECEPTACLE (2-PIN)	
					(INCLUDES RECEPTACLE AS & WEDGE)	
B	12	1	**096-0061**	10	STRAP-CABLE	
	13	1	**096-6166**	4	WASHER-HARD (4.5X9X1-MM THK)	
M	14	1	**5C-8312**	4	NUT (M4X0.7-THD)	
	15	1	**7X-7729**	2	WASHER (11X25X3-MM THK)	
M	16	1	**8T-3998**	4	BOLT (M4X0.7X12-MM)	
M	17	1	**8T-4137**	2	BOLT (M10X1.5X20-MM)	
M	18	1	**9X-6032**	2	BOLT-SOCKET HEAD (M10X1.5X30-MM)	

B-USE AS REQUIRED
M-METRIC PART

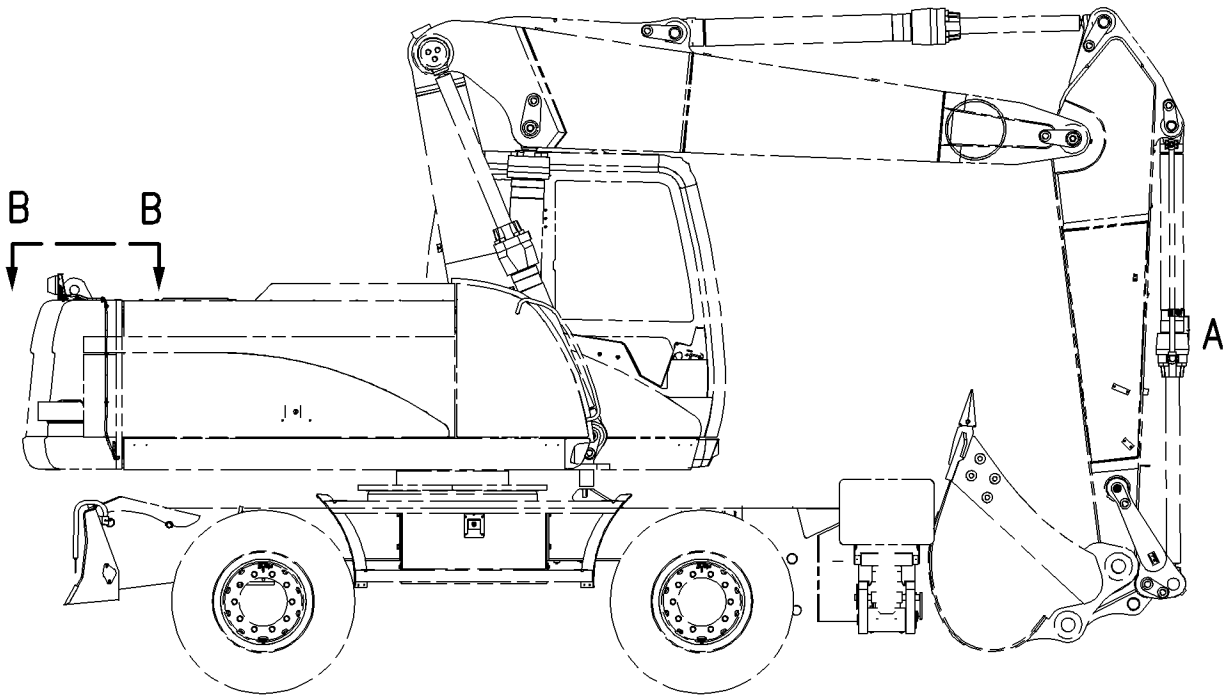

RIGHT SIDE VIEW

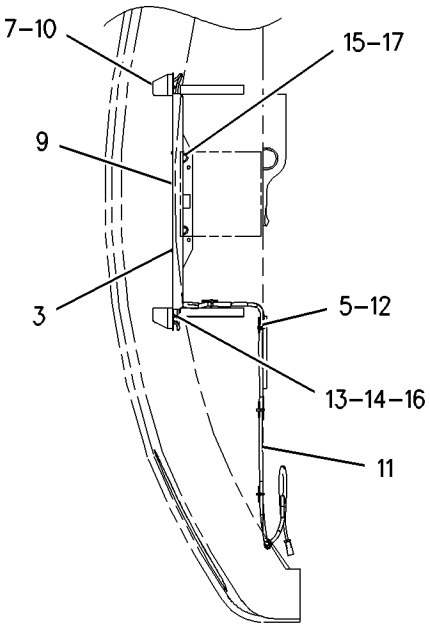

VIEW B-B

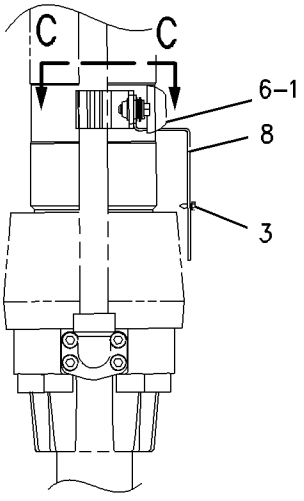

VIEW OF AREA A

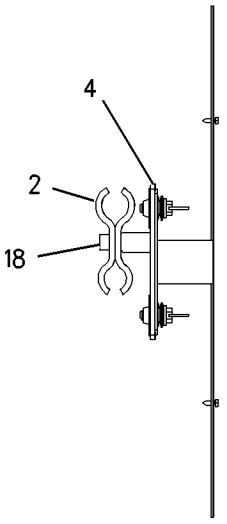

SECTION C-C

GRAPHIC #1 **<END>** g00902682

MACHINE ARRANGEMENT

223-5781 ROADING AR–UNITED KINGDOM

S/N: BCZ1-2000

FOR USE WITH 1 PIECE BOOM. CANNOT BE USED WITH VARIABLE ADJUSTABLE OR MATERIAL HANDLING BOOM, FIXED CAB RISER AN ATTACHMENT

SMCS-7000 **i02150879**

NOTE	REF NO	GRAPHIC REF	PART NUMBER	QTY	PART NAME 1 2 3 4 5 6 (PRODUCT LEVEL)	SEE PAGE
M	1	1	**8T-4189**	2	BOLT (M8X1.25X20-MM)	
	2	1	**240-1366**	1	SWITCH AS-POSITION (TRAVEL LOCK)	
	3	1	**194-7843**	2	MAGNET	
	4	1	**209-0208**	1	PLATE	
	5	1	**209-0209**	1	PLATE	
M	6	1	**095-0723**	2	SCREW (M3X0.5X10-MM)	
	7	1	**096-5962**	2	WASHER-HARD (3.4X7X0.8-MM THK)	
	8	1	**5P-4116**	2	WASHER-HARD (8.8X20.5X2-MM THK)	
F			**154-9095**	1	FILM-IDENTIFICATION (ROADING HEIGHT)	
					(LOCATE ON RH CAB WINDOW)	
F			**096-0061**	1	STRAP-CABLE	

F-NOT SHOWN
M-METRIC PART

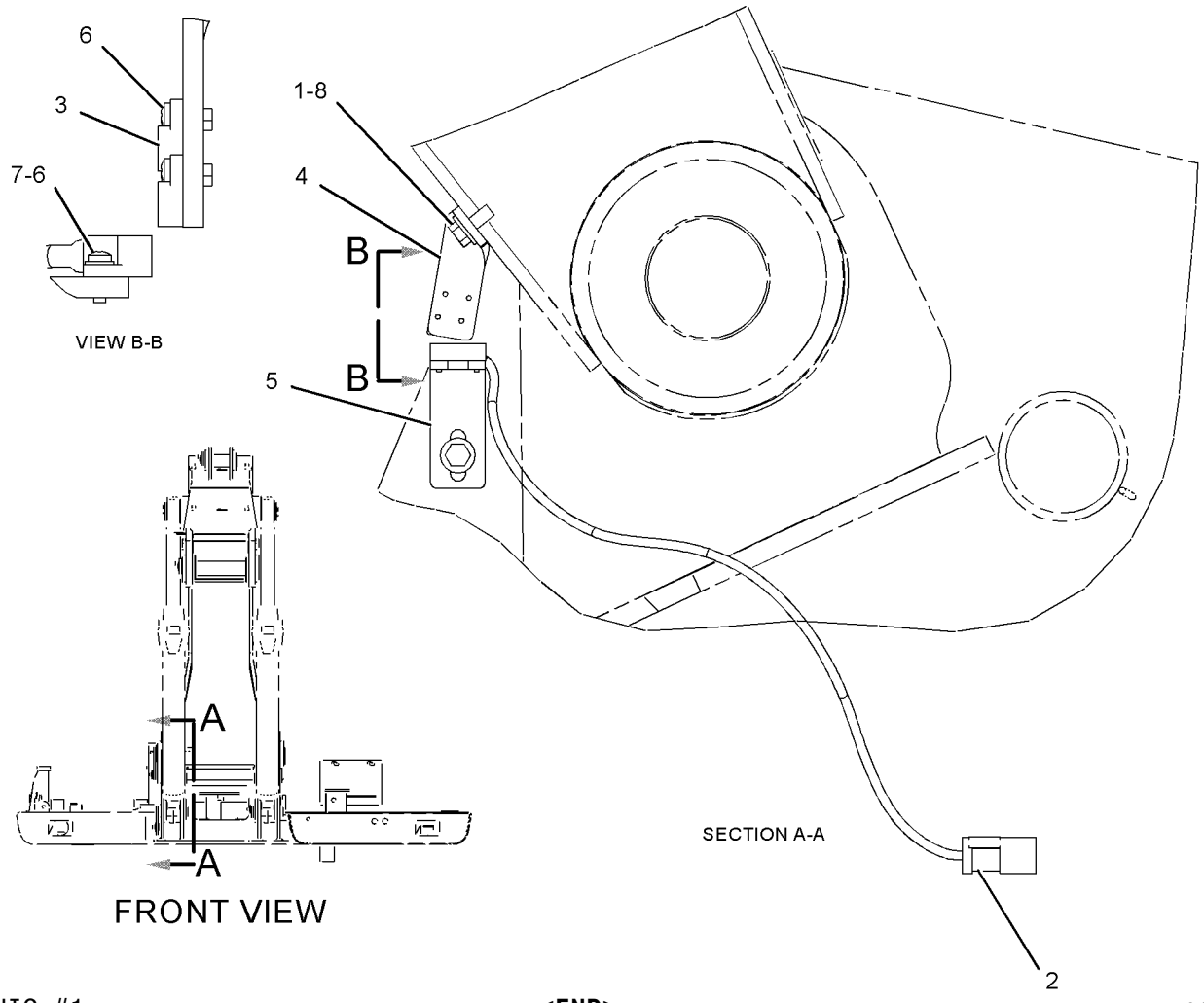

GRAPHIC #1 **<END>** g01092672

MACHINE ARRANGEMENT

223-5782 ROADING AR—UNITED KINGDOM

S/N: BCZ1-2000

VARIABLE ADJUSTABLE,HOMOLOGATION

CANNOT BE USED WITH 1 PIECE OR MATERIAL HANDLING BOOM, FIXED CAB RISER AN ATTACHMENT

SMCS-7000 **i02150878**

NOTE	REF NO	GRAPHIC REF	PART NUMBER	QTY	PART NAME 1 2 3 4 5 6 (PRODUCT LEVEL)	SEE PAGE
	1	1	**154-9096**	1	FILM-IDENTIFICATION (ROADING HEIGHT)	
					(LOCATE INSIDE CAB ON RH WINDOW)	
	2	1	**240-1366**	1	SWITCH AS-POSITION (TRAVEL LOCK)	
	3	1	**194-7843**	1	MAGNET	
	4	1	**223-5783**	1	HARNESS AS-SWITCH (TRAVEL LOCK)	
		1	**102-8803**	1	KIT-RECEPTACLE (3-PIN)	
					(INCLUDES RECEPTACLE AS & WEDGE)	
		1	**155-2260**	2	KIT-CONNECTING PLUG (3-PIN)	
					(INLCUDES PLUG AS & WEDGE)	
	5	1	**224-6218**	1	PLATE	
	6	1	**224-6219**	1	PLATE	
M	7	1	**095-0723**	2	SCREW (M3X0.5X10-MM)	
	8	1	**096-5962**	4	WASHER-HARD (3.4X7X0.8-MM THK)	
M	9	1	**120-9027**	2	SCREW-PAN HEAD (M3X0.5X16-MM)	
M	10	1	**3C-6969**	2	NUT (M3X0.5-THD)	
	11	1	**5P-4116**	2	WASHER-HARD (8.8X20.5X2-MM THK)	
M	12	1	**8T-4189**	2	BOLT (M8X1.25X20-MM)	
BF			**096-0061**	2	STRAP-CABLE	

B-USE AS REQUIRED
F-NOT SHOWN
M-METRIC PART

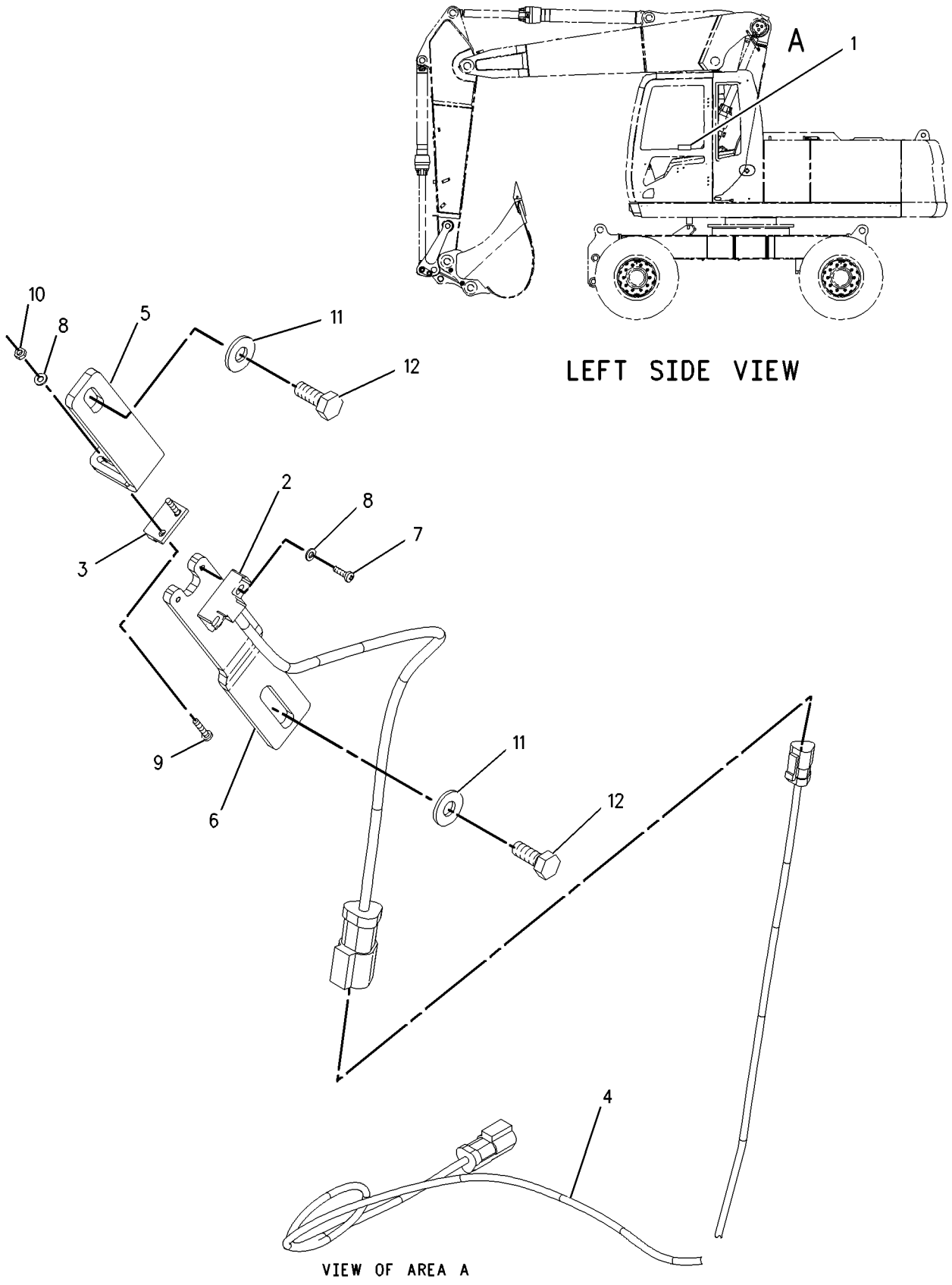

GRAPHIC #1 **<END>** g00914540

MACHINE ARRANGEMENT

243-2598 ROADING AR–GERMAN

S/N: BCZ1-2000
FOR USE WITH ANY STICK
AN ATTACHMENT

SMCS-7000 **i02140571**

NOTE	PART NUMBER	QTY	PART NAME 1 2 3 4 5 6 (PRODUCT LEVEL)	SEE PAGE
Y	*188-4948*	1	LIGHTING GP-ROADING	165
Y	*116-5478*	2	WEDGE GP-WHEEL	350

Y-SEPARATE ILLUSTRATION

<END>

ENGINE ARRANGEMENT

188-5096 ENGINE AR-PRIMARY

S/N: CPT1-UP

PART OF 186-0518 GENERAL AR

SMCS-1000 **i02158782**

NOTE	PART NUMBER	QTY	PART NAME 1 2 3 4 5 6 (PRODUCT LEVEL)	SEE PAGE
Y	*245-2703*	1	ALTERNATOR GP-CHARGING	128
			S/N: CPT1-4476	
Y	*235-4592*	1	ALTERNATOR GP-CHARGING	126
			S/N: CPT4477-UP	
Y	*216-8620*	1	CAMSHAFT GP	11
Y	*228-7387*	1	CONNECTION GP-WATER	57
Y	*196-4472*	1	CONNECTOR GP-CAB HEATER LINES	846
Y	*216-9648*	1	COOLER GP-FLTR BASE & ENG OIL	58
Y	*216-9625*	1	COVER GP-VALVE MECHANISM	12
Y	*216-8316*	1	CRANKSHAFT GP	14
Y	*216-8231*	1	CYLINDER BLOCK GP	18
Y	*216-8343*	1	CYLINDER HEAD GP	22
Y	*217-7875*	1	DRIVE GP-ACCESSORY	24
Y	*233-2553*	1	DRIVE GP-FAN	26
Y	*236-1042*	1	ELBOW GP-AIR INLET	88
Y	*228-7418*	1	FASTENER GP-CYLINDER HEAD	27
Y	*248-2276*	1	MOUNTING GP-FAN	39
Y	*216-9683*	1	FILTER GP-ENGINE OIL	54
Y	*235-6347*	1	FILTER GP-FUEL	97
Y	*234-2653*	1	FLYWHEEL GP	28
Y	*217-1499*	1	GEAR GP-FRONT	29
Y	*234-2651*	1	HOUSING GP-FLYWHEEL	31
Y	*221-6835*	1	HOUSING GP-FRONT	32
Y	*228-7462*	1	LIFTING GP-ENGINE	36
Y	*235-6367*	1	LINES GP-FUEL FILTER	102
Y	*216-9551*	1	PAN GP-OIL	40
Y	*216-8324*	1	PISTON & ROD GP	42
Y	*239-1349*	1	PLUG GP-CYLINDER BLOCK	46
Y	*236-6604*	1	PLUG GP-ENGINE	47
Y	*217-7888*	1	PLUG GP-FLYWHEEL HOUSING	48
Y	*235-8214*	1	PULLEY GP-AUXILIARY DRIVE	49
Y	*6I-4712*	1	PULLEY GP-CRANKSHAFT	50
Y	*235-6331*	1	PUMP GP-FUEL INJECTION	103
Y	*216-9131*	1	PUMP GP-FUEL TRANSFER	110
Y	*233-2744*	1	PUMP GP-ENGINE OIL	55
Y	*216-9735*	1	PUMP GP-WATER	77
			S/N: CPT1-338	
Y	*221-5369*	1	PUMP GP-WATER	79
			S/N: CPT339-UP	
Y	*228-7461*	1	STARTING AID GP (HEATER)	173
Y	*217-5883*	1	STARTING AID GP (LINES)	172
Y	*176-2540*	1	STARTING MOTOR GP-ELECTRIC	174
			S/N: CPT1-4476	
Y	*234-2656*	1	STARTING MOTOR GP-ELECTRIC	175
			S/N: CPT4477-UP	
Y	*237-2264*	1	TURBOCHARGER GP	95
Y	*216-8619*	1	VALVE MECHANISM GP	53
Y	*217-9151*	1	WIRING GP-ENGINE	204
			AVAILABLE GASKET KIT(S):	
	216-9612	1	KIT-GASKET (TOP)	
	216-9616	1	KIT-GASKET (BOTTOM)	

Y-SEPARATE ILLUSTRATION

ENGINE ARRANGEMENT

186-0472 INSTALLATION AR-ENGINE

S/N: BCZ1-2000

PART OF 186-0518 GENERAL AR

SMCS-1000 **i02062296**

NOTE	PART NUMBER	QTY	PART NAME 1 2 3 4 5 6 (PRODUCT LEVEL)	SEE PAGE
Y	*188-2811*	1	AFTERCOOLER GP-AIR	84
Y	*207-2145*	1	AIR CLEANER GP	87
Y	*186-0512*	1	COMPRESSOR GP-REFRIGERANT	840
Y	*198-4684*	1	CONDENSER & MTG GP-REFRIGERANT	842
Y	*198-4679*	1	DRAIN GP-OIL	23
Y	*186-0507*	1	FAN GP-SUCTION	60
Y	*188-2812*	1	FAN GP-SUCTION	61
Y	*223-9606*	1	GUARD GP-BELT	30
			S/N: BCZ1-584	
Y	*186-0508*	1	GUARD GP-FAN	62
			S/N: BCZ1-585	
Y	*238-7016*	1	GUARD GP-FAN	67
			S/N: BCZ586-2000	
Y	*188-2813*	1	GUARD GP-FAN	64
Y	*188-2815*	1	LINES GP-AIR	89
Y	*186-0510*	1	LINES GP-RADIATOR	71
Y	*186-0509*	1	MOTOR & MTG GP-HYDRAULIC FAN	614
Y	*186-0504*	1	MOUNTING GP-ENGINE FLEXIBLE	37
Y	*188-2817*	1	MUFFLER GP	91
Y	*186-0505*	1	RADIATOR GP	81
Y	*211-7985*	1	WIRING GP-FAN	206

Y-SEPARATE ILLUSTRATION

BASIC ENGINE

216-8620 CAMSHAFT GP

S/N: CPT1-UP

PART OF 188-5096 ENGINE AR-PRIMARY

SMCS-1210 **i01644340**

NOTE	REF NO	GRAPHIC REF	PART NUMBER	QTY	PART NAME 1 2 3 4 5 6 (PRODUCT LEVEL)	SEE PAGE
	1	1	**154-8056**	1	CAMSHAFT	

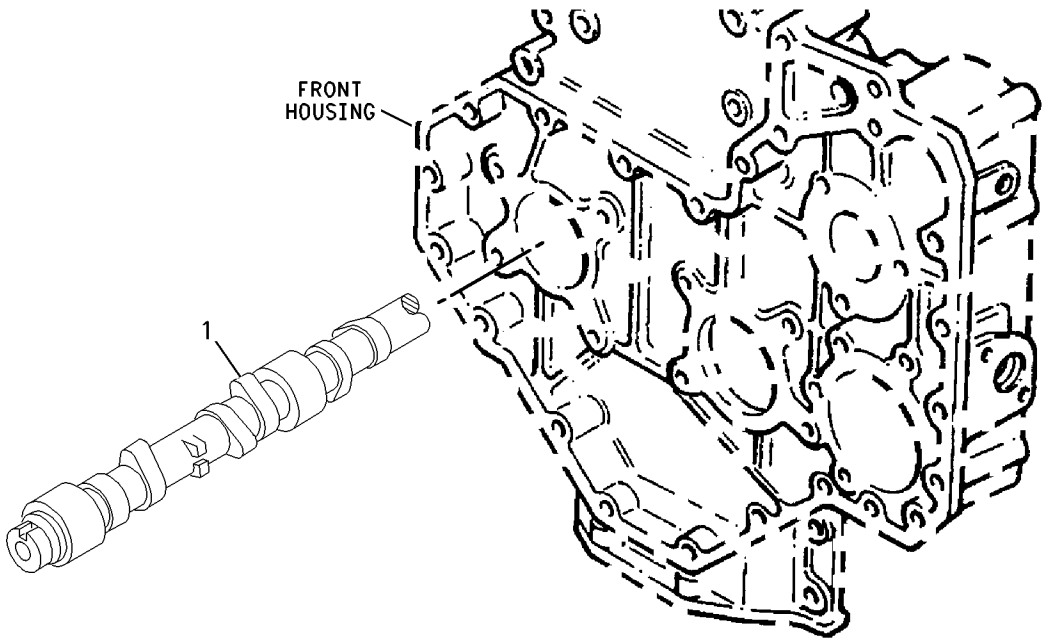

GRAPHIC #1 **<END>** g00857297

BASIC ENGINE

216-9625 COVER GP-VALVE MECHANISM

S/N: CPT1-UP

PART OF 188-5096 ENGINE AR-PRIMARY

SMCS-1107 **i02170825**

NOTE	REF NO	GRAPHIC REF	PART NUMBER	QTY	PART NAME 1 2 3 4 5 6 (PRODUCT LEVEL)	SEE PAGE
	1	1	**2S-3440**	2	CLAMP-HOSE	
	2	1	**5D-1026**	2	CLAMP-HOSE	
	3	1	**6I-0217**	2	BOLT (M8X1.25X20-MM)	
	4	1	**6I-0260**	2	BOLT (M8X1.25X25-MM)	
	5	1	**100-4104**	1	GASKET	
	6	1	**112-7704**	2	BOLT	
	7	1	**197-5015**	1	PLATE AS	
	8	1	**113-1505**	1	SEAL-O-RING	
	9	1	**216-9554**	1	FILLER AS-OIL	
	10	1	**130-9888**	1	CAP AS (ENGINE OIL FILLER)	
	11	1	**113-1504**	1	SEAL-O-RING	
	12	1	**216-9553**	1	SEAL-O-RING	
	13	1	**216-9606**	1	COVER AS (VALVE)	
	13A	1	**229-3557**	1	SEAL-O-RING	
	14	1	**229-3558**	1	BOLT	
	15	1	**216-9600**	8	BOLT	
	16	1	**216-9602**	1	BREATHER AS (CRANKCASE)	
	17	1	**216-9604**	1	GASKET (VALVE COVER)	
	18	1	**216-9608**	1	BREATHER (CRANKCASE)	
	18A	1	**229-3555**	1	FILTER-BREATHER (CRANKCASE)	
	18B	1	**229-3556**	1	SEAL-O-RING	
	19	1	**216-9611**	1	BRACKET	
	20	1	**216-9614**	1	HOSE (UPPER FUMES DISPOSAL)	
	21	1	**216-9617**	1	HOSE (LOWER FUMES DISPOSAL)	
	22	1	**216-9618**	1	VALVE-CHECK	
	23	1	**216-9620**	1	ELBOW	
	24	1	**216-9623**	1	ADAPTER	

216-9625 **COVER GP-VALVE MECHANISM** *(contd.)* **i02170825**

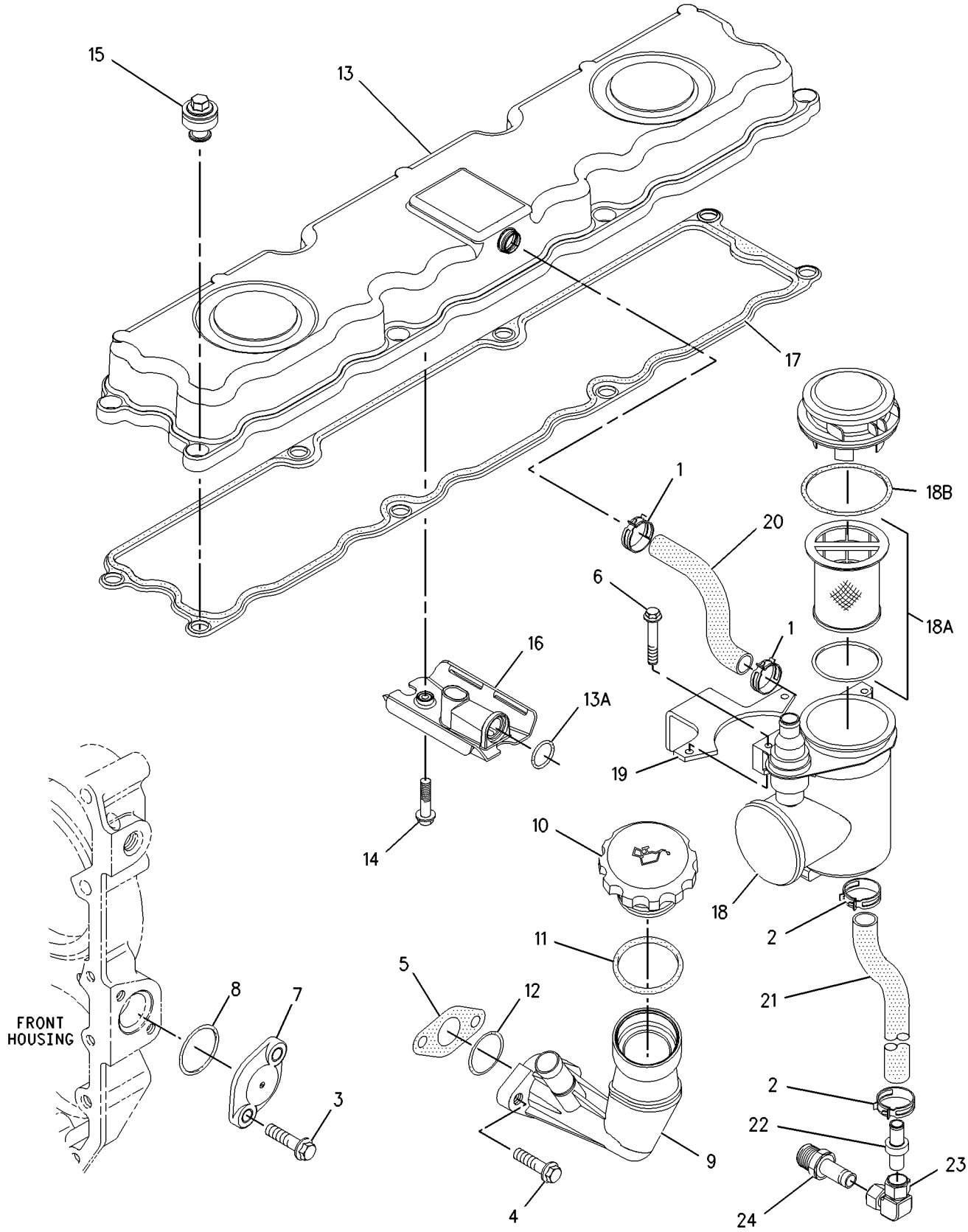

GRAPHIC #1 **<END>** g00936733

BASIC ENGINE

216-8316 CRANKSHAFT GP

S/N: CPT1-843

PART OF 188-5096 ENGINE AR-PRIMARY

SMCS-1202 **i02145190**

NOTE	REF NO	GRAPHIC REF	PART NUMBER	QTY	PART NAME 1 2 3 4 5 6 (PRODUCT LEVEL)	SEE PAGE
	1	1	**1B-8736**	1	KEY-WOODRUFF	
	2	1	**216-8314**	1	GEAR-CRANKSHAFT (34-TEETH)	
	3	1	**216-8315**	1	CRANKSHAFT GP	
	4	1	**7W-4589**	1	BEARING GP-MAIN (STANDARD)	
AB		1	**7W-4590**		BEARING GP-MAIN (0.25 US ID)	
AB		1	**7W-4591**		BEARING GP-MAIN (0.51 US ID)	
AB		1	**7W-4592**		BEARING GP-MAIN (0.76 US ID) (STANDARD)	
	5	1	**7W-4816**	1	BEARING SET-ROD	
AB		1	**7W-4817**		BEARING GP-CONNECTING ROD (0.25 US ID)	
AB		1	**7W-4818**		BEARING GP-CONNECTING ROD (0.51 US ID)	
AB		1	**7W-4819**		BEARING GP-CONNECTING ROD (0.76 US ID)	
	6	1	**032-9090**	2	WASHER-THRUST (STANDARD-UPPER)	
AB		1	**067-6873**		WASHER-THRUST (0.18-MM US)	
	7	1	**032-9091**	2	WASHER-THRUST (STANDARD-LOWER)	
AB		1	**067-6874**		WASHER-THRUST (0.18-MM US)	

A-NOT PART OF THIS GROUP
B-USE AS REQUIRED

216-8316 **CRANKSHAFT GP** *(contd.)* **i02145190**

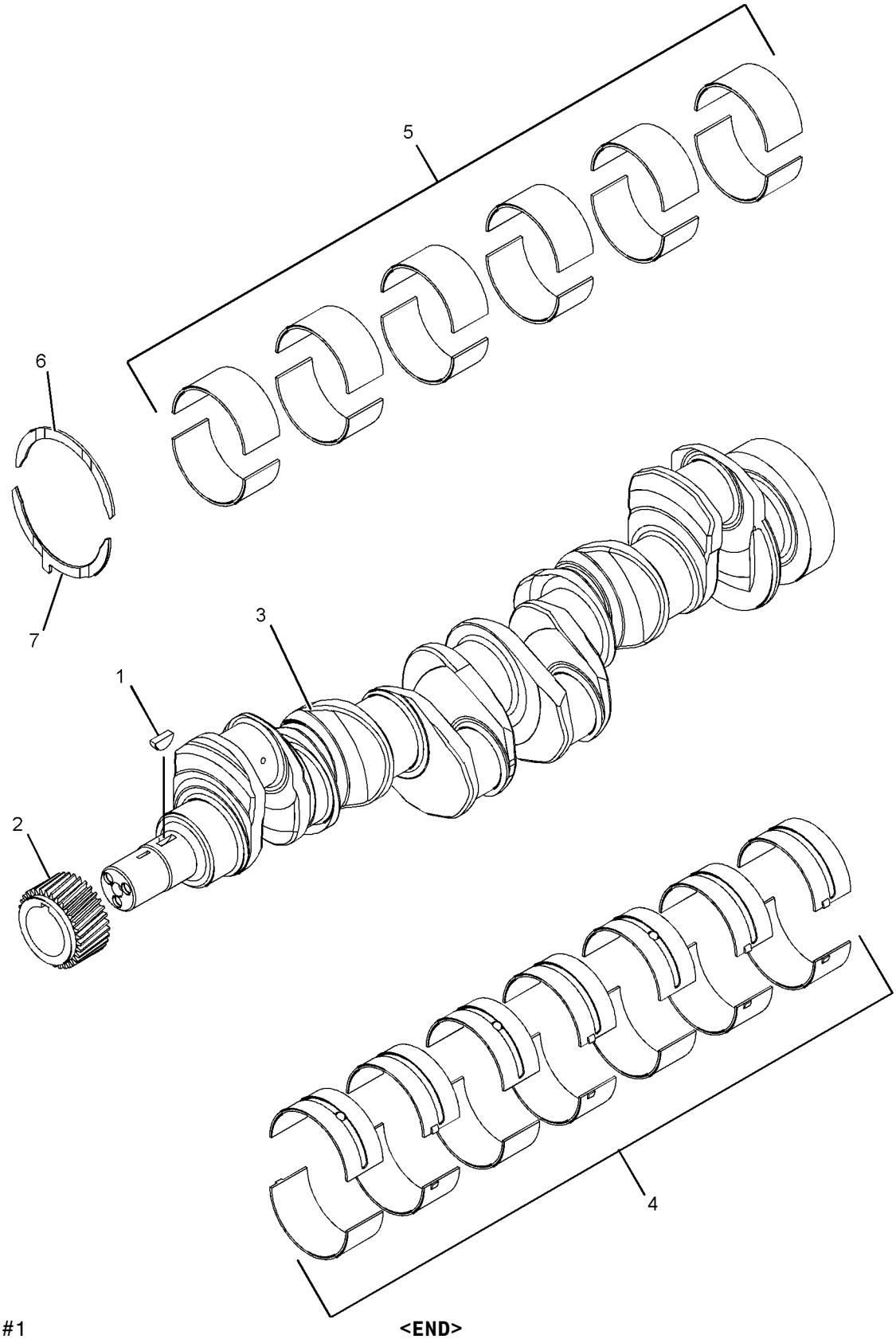

GRAPHIC #1 **<END>** g01064752

BASIC ENGINE

216-8316 CRANKSHAFT GP

S/N: CPT844-UP

PART OF 188-5096 ENGINE AR-PRIMARY

SMCS-1202 **i02145191**

NOTE	REF NO	GRAPHIC REF	PART NUMBER	QTY	PART NAME 1 2 3 4 5 6 (PRODUCT LEVEL)	SEE PAGE
	1	1	**216-8314**	1	GEAR-CRANKSHAFT (34-TEETH)	
	2	1	**240-8467**	1	CRANKSHAFT GP	
	3	1	**1B-8736**	1	KEY-WOODRUFF	
	4	1	**032-9090**	2	WASHER-THRUST (STANDARD-UPPER)	
AB		1	**067-6873**		WASHER-THRUST (0.18-MM US)	
	5	1	**032-9091**	2	WASHER-THRUST (STANDARD-LOWER)	
AB		1	**067-6874**		WASHER-THRUST (0.18-MM US)	
	6	1	**7W-4589**	1	BEARING GP-MAIN (STANDARD)	
AB		1	**7W-4590**		BEARING GP-MAIN (0.25 US ID)	
AB		1	**7W-4591**		BEARING GP-MAIN (0.51 US ID)	
AB		1	**7W-4592**		BEARING GP-MAIN (0.76 US ID) (STANDARD)	
	7	1	**236-4397**	1	BEARING SET-ROD	
	8	1	**225-8839**	1	DOWEL	
	9	1	**226-2036**	1	RING-TIMING	
	10	1	**6I-4716**	1	KEY	

A-NOT PART OF THIS GROUP
B-USE AS REQUIRED

216-8316 **CRANKSHAFT GP** *(contd.)* **i02145191**

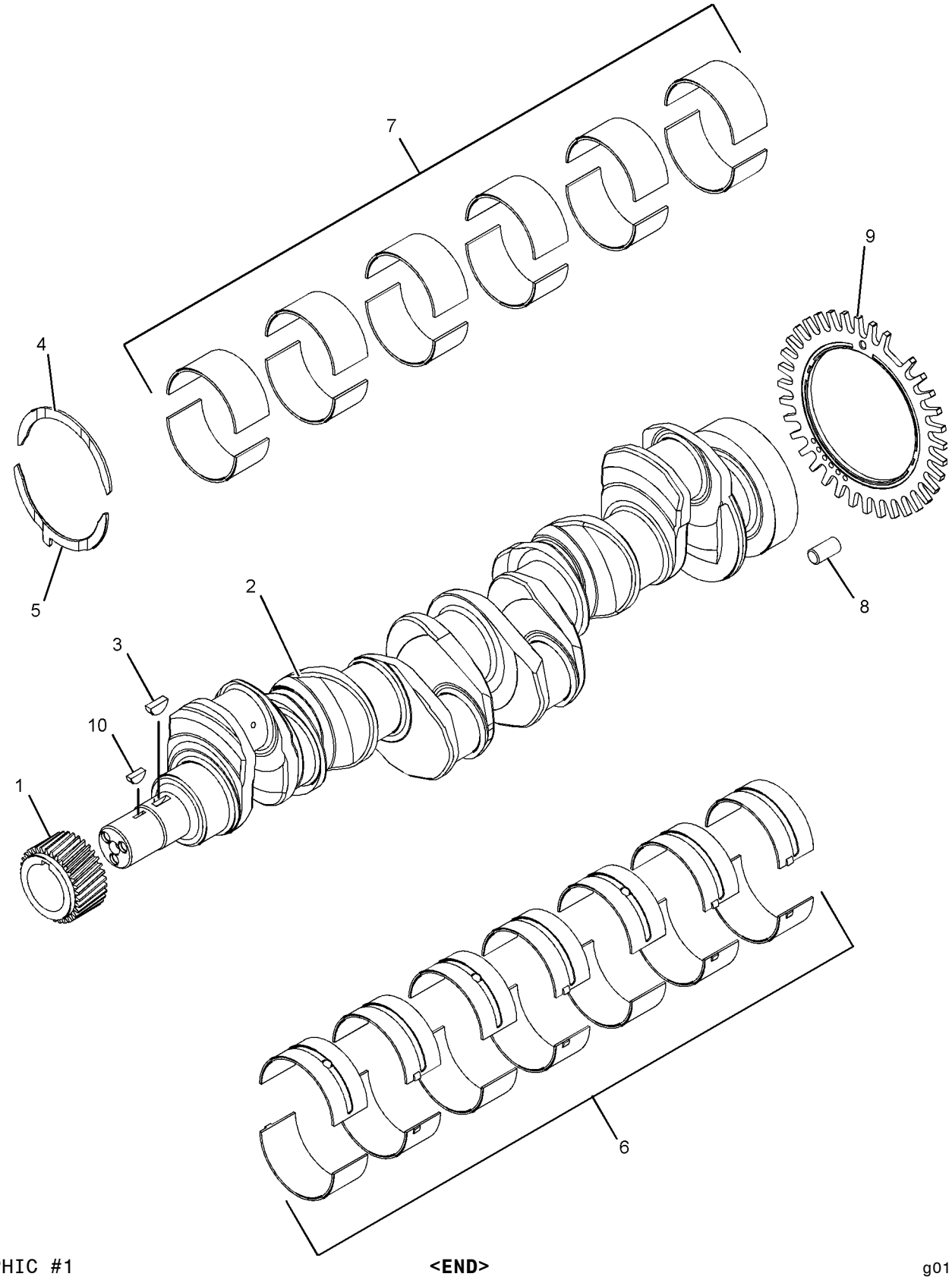

GRAPHIC #1 **<END>** g01064685

BASIC ENGINE

216-8231 CYLINDER BLOCK GP

S/N: CPT1-UP

PART OF 188-5096 ENGINE AR-PRIMARY

SMCS-1201 **i01777342**

NOTE	REF NO	GRAPHIC REF	PART NUMBER	QTY	PART NAME 1 2 3 4 5 6 (PRODUCT LEVEL)	SEE PAGE
	1	1	**209-9218**	1	HOUSING AS	
	2	1	**219-2512**	1	SLEEVE	
	3	1	**209-9219**	10	BOLT (M8X1.25X16MM)	
Y	4	1	**216-8235**	1	CYLINDER BLOCK GP	19

Y-SEPARATE ILLUSTRATION

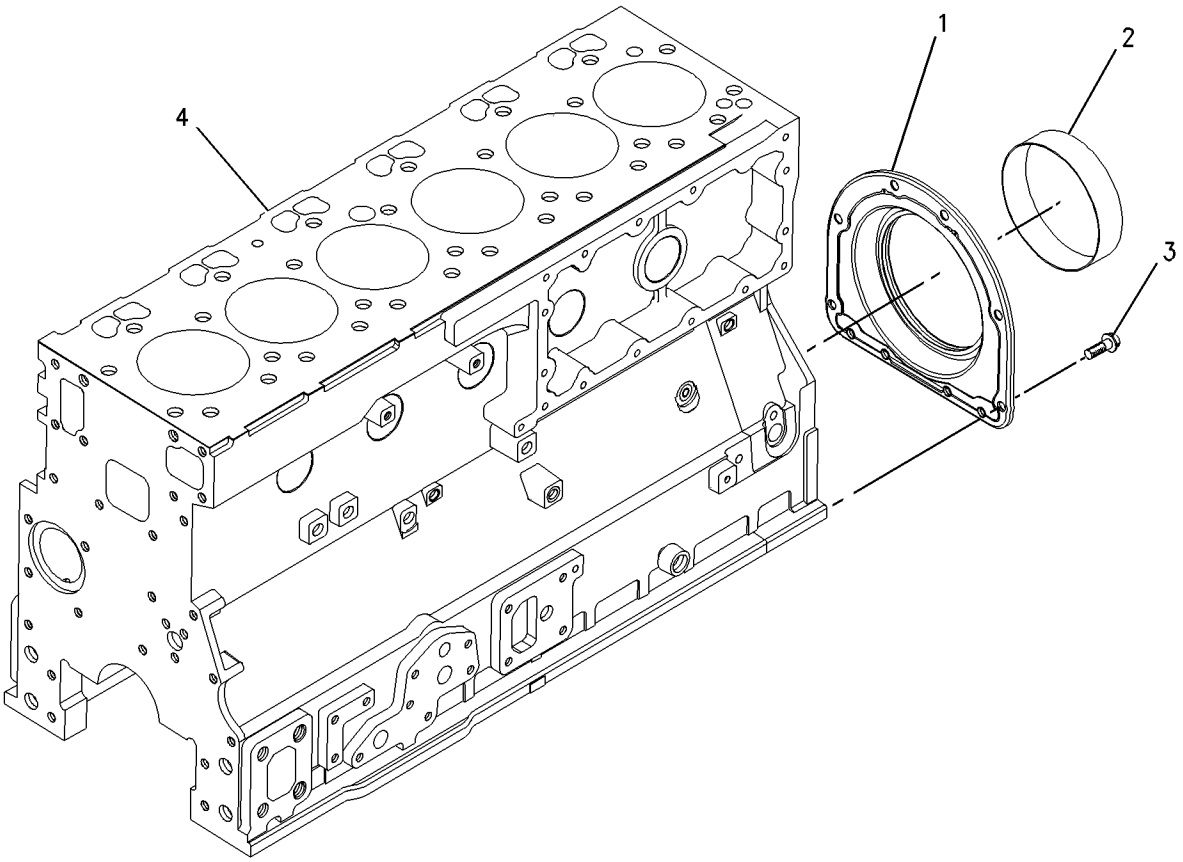

GRAPHIC #1 **<END>** g00862802

216-8235 CYLINDER BLOCK GP

S/N: CPT1-UP

PART OF 216-8231 CYLINDER BLOCK GP

SMCS-1201 **i01875778**

NOTE	REF NO	GRAPHIC REF	PART NUMBER	QTY	PART NAME 1 2 3 4 5 6 (PRODUCT LEVEL)	SEE PAGE
	1	1	**1N-3762**	12	PLUG-CUP	
	2	1	**6I-1074**	6	VALVE AS (OIL JET)	
					(EACH INCLUDES)	
	3	1	**6I-0686**	1	SPRING	
	4	1	**6I-1075**	1	BALL	
	5	1	**6I-1076**	1	RETAINER	
	6	1	**6I-4354**	1	DOWEL	
	7	1	**7W-2501**	1	PLUG	
	8	1	**9Y-5015**	1	PLUG-FREEZE	
	9	1	**035-8068**	14	BOLT	
	10	1	**036-5802**	1	BEARING	
	11	1	**067-6002**	14	DOWEL	
	12	1	**067-6805**	1	PLUG	
	13	1	**067-6808**	1	PLUG	
	14	1	**111-1815**	6	LINER	
	15	1	**127-3294**	1	SHAFT	
	16	1	**148-3026**	6	JET AS-PISTON COOLING	
	17	1	**214-1668**	1	WASHER-SPECIAL	
	18	1	**215-2103**	6	PLUG	

216-8235 CYLINDER BLOCK GP *(contd.)* i01875778

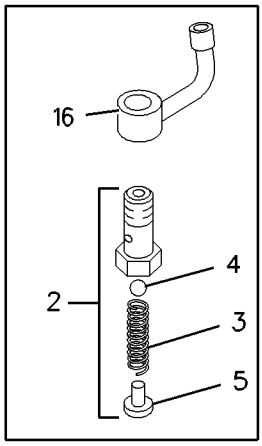

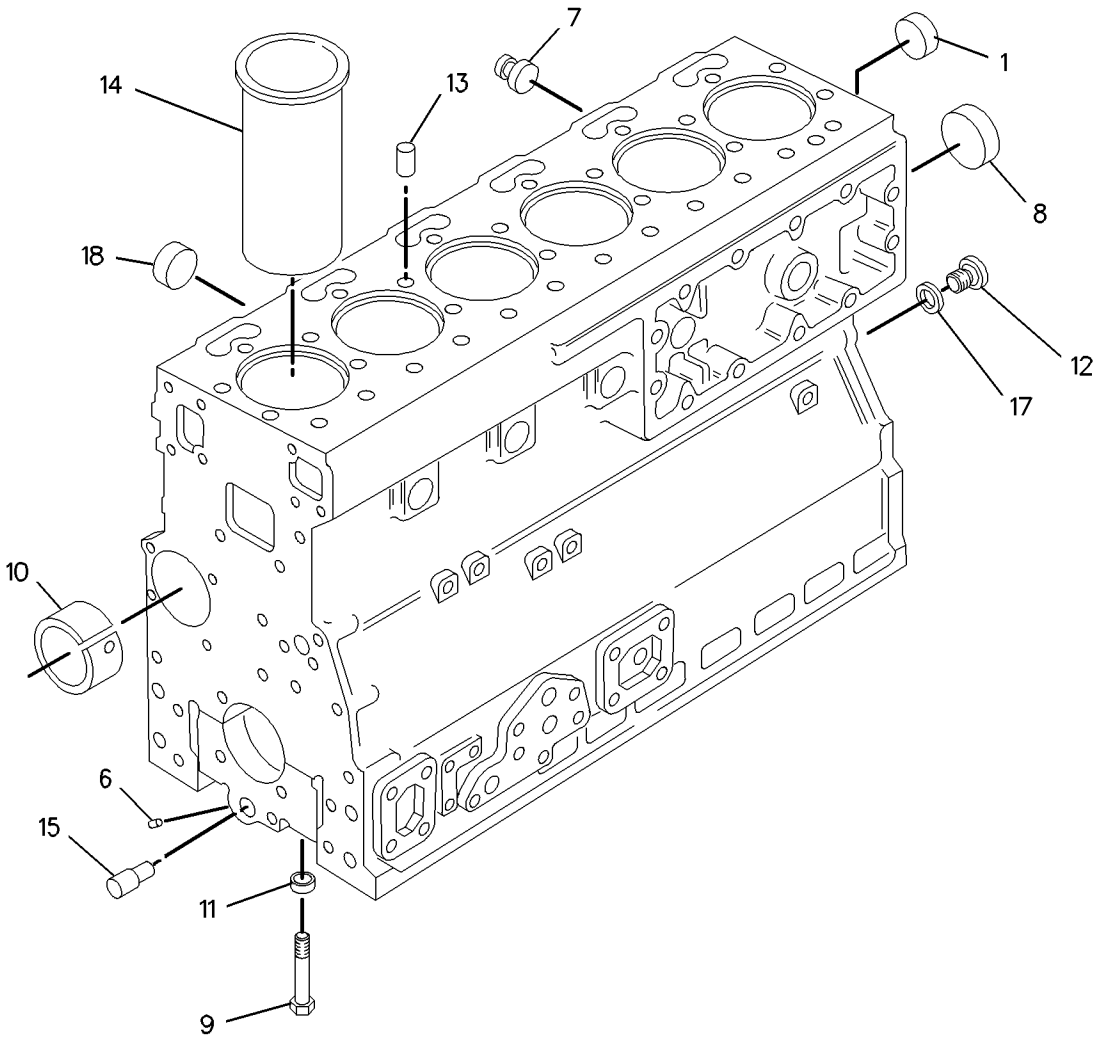

GRAPHIC #1 **<END>** g00954450

216-8335 CYLINDER HEAD GP

S/N: CPT1-UP

PART OF 216-8343 CYLINDER HEAD GP

SMCS-1100 **i01816488**

NOTE	REF NO	GRAPHIC REF	PART NUMBER	QTY	PART NAME 1 2 3 4 5 6 (PRODUCT LEVEL)	SEE PAGE
	1	1	**1N-3762**	1	PLUG-CUP	
	2	1	**7M-7410**	6	PLUG-PIPE	
	3	1	**067-6043**	3	PLUG-SIDE	
	4	1	**138-2050**	6	VALVE-EXHAUST	
	5	1	**138-2060**	12	CAP	
	6	1	**145-6855**	6	VALVE-INLET	
	7	1	**145-6856**	6	SEAL (INLET)	
	8	1	**145-6858**	6	SEAL (EXHAUST)	
	9	1	**147-1979**	24	RETAINER-VALVE SPRING	
	10	1	**163-9256**	6	GUIDE-VALVE (EXHAUST)	
	11	1	**185-0882**	6	GUIDE-VALVE (INTAKE)	
	12	1	**206-4127**	12	SPRING-VALVE	
	13	1	**216-8332**	6	INSERT-VALVE (INLET)	
	14	1	**216-8333**	6	INSERT-VALVE (EXHAUST)	

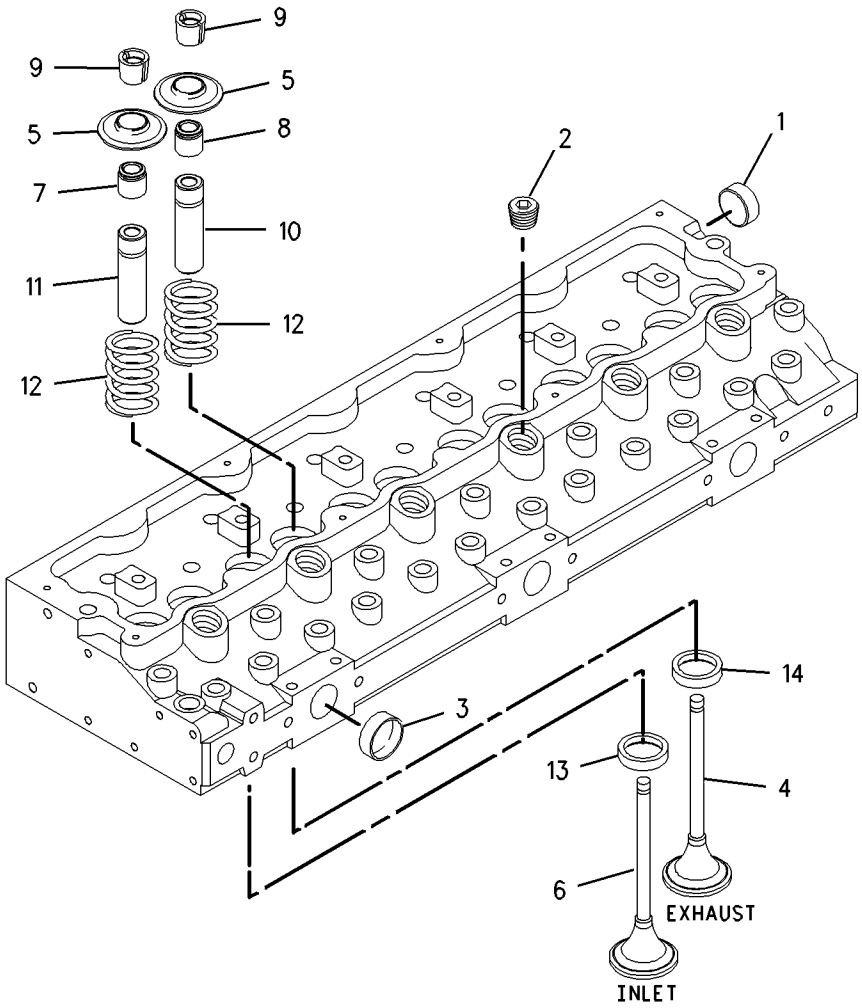

GRAPHIC #1 **<END>** g00860247

BASIC ENGINE

216-8343 CYLINDER HEAD GP

S/N: CPT1-UP

PART OF 188-5096 ENGINE AR-PRIMARY

SMCS-1100 **i02038862**

NOTE	REF NO	GRAPHIC REF	PART NUMBER	QTY	PART NAME 1 2 3 4 5 6 (PRODUCT LEVEL)	SEE PAGE
	1	1	**7W-2518**	12	BOLT (1/2-20X3.63-IN)	
	2	1	**7W-2519**	18	BOLT (1/2-20X4.25-IN)	
	3	1	**7W-2520**	2	BOLT (1/2-20X5.09-IN)	
	4	1	**240-0205**	1	GASKET-CYLINDER HEAD	
	5	1	**161-9820**	2	PIN	
Y	6	1	**216-8335**	1	CYLINDER HEAD GP	21

Y-SEPARATE ILLUSTRATION

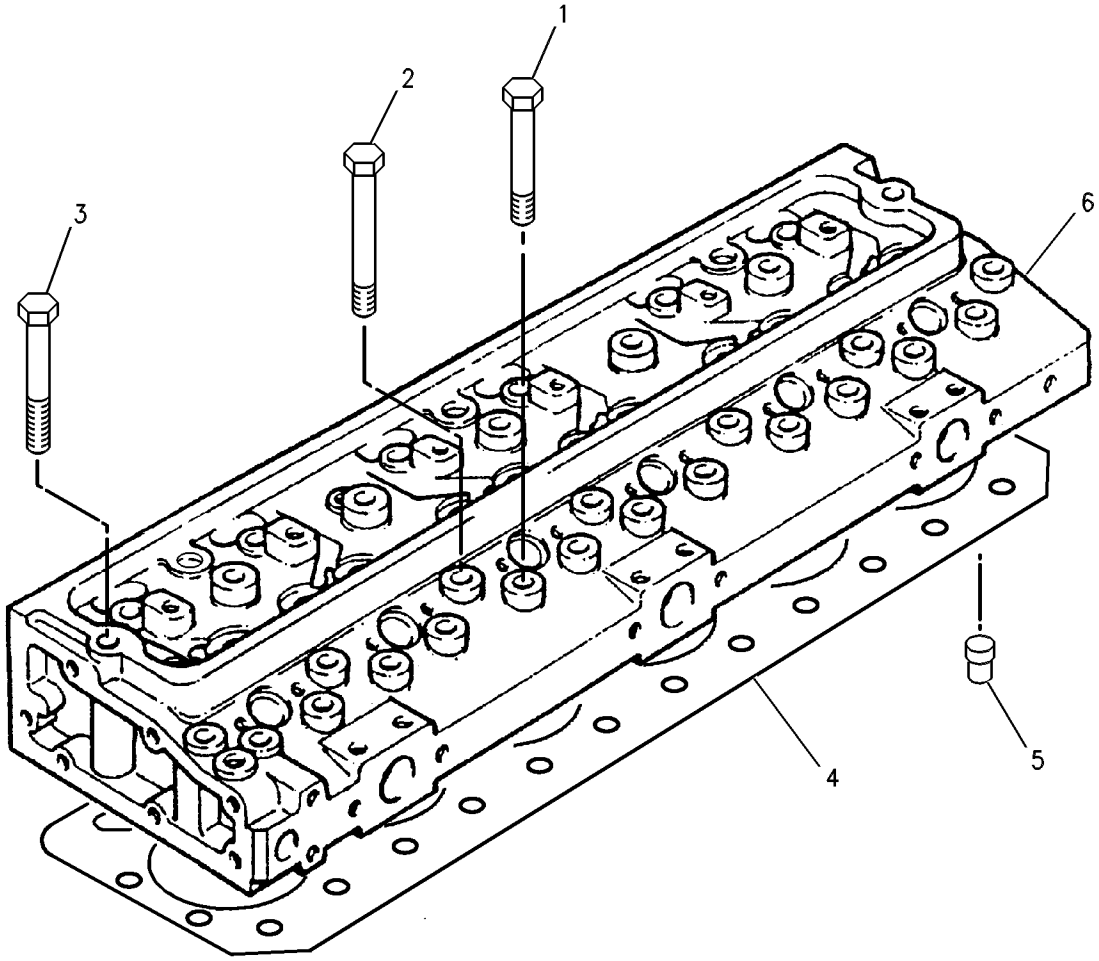

GRAPHIC #1 **<END>** g00605225

198-4679 DRAIN GP-OIL—ENGINE

S/N: BCZ1-2000

PART OF 186-0472 INSTALLATION AR-ENGINE

SMCS-1302 **i02170826**

NOTE	REF NO	GRAPHIC REF	PART NUMBER	QTY	PART NAME 1 2 3 4 5 6 (PRODUCT LEVEL)	SEE PAGE
	1	1	**6V-7238**	1	VALVE-SHUTOFF (ENGINE OIL DRAIN)	
		1	**3K-0360**	1	SEAL-O-RING	
	2	1	**172-8660**	1	SWITCH GP-LIQUID LEVEL (ENGINE OIL)	
		1	**102-8802**	1	KIT-RECEPTACLE (2-PIN)	
	3	1	**159-5255**	1	ADAPTER	
	4	1	**2M-9780**	1	SEAL-O-RING	
	5	1	**5P-9186**	1	SEAL-O-RING	

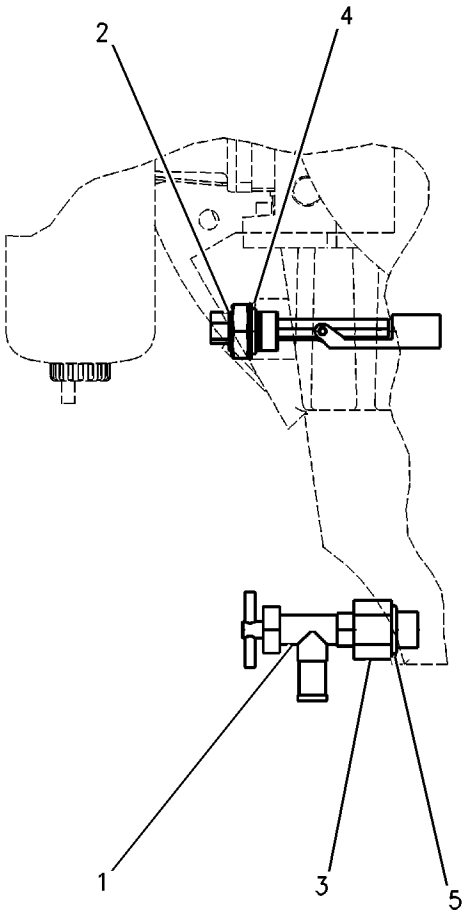

GRAPHIC #1 **<END>** g00955075

BASIC ENGINE

217-7875 DRIVE GP-ACCESSORY

S/N: CPT1-UP

PART OF 188-5096 ENGINE AR-PRIMARY

SMCS-1207 **i01790939**

NOTE	REF NO	GRAPHIC REF	PART NUMBER	QTY	PART NAME 1 2 3 4 5 6 (PRODUCT LEVEL)	SEE PAGE
	1	1	**2B-0858**	2	PLUG-PIPE	
	2	1	**6I-0593**	1	BOLT (M10X1.5X30MM)	
	3	1	**6I-0646**	1	BOLT (M10X1.5X14MM)	
	5	1	**102-2073**	1	SEAL-O-RING	
	6	1	**102-2078**	1	BOLT (M10X1.5X25MM)	
	7	1	**102-2079**	5	BOLT (M8X1.25X20MM)	
	8	1	**214-3203**	1	WASHER	
	9	1	**222-8625**	1	ADAPTER AS	
	10	1	**6H-3957**	1	BALL BEARING	
	11	1	**102-2076**	1	CLIP	
	12	1	**217-7877**	1	GEAR	
	13	1	**217-7878**	1	BEARING	

217-7875 **DRIVE GP-ACCESSORY** *(contd.)* **i01790939**

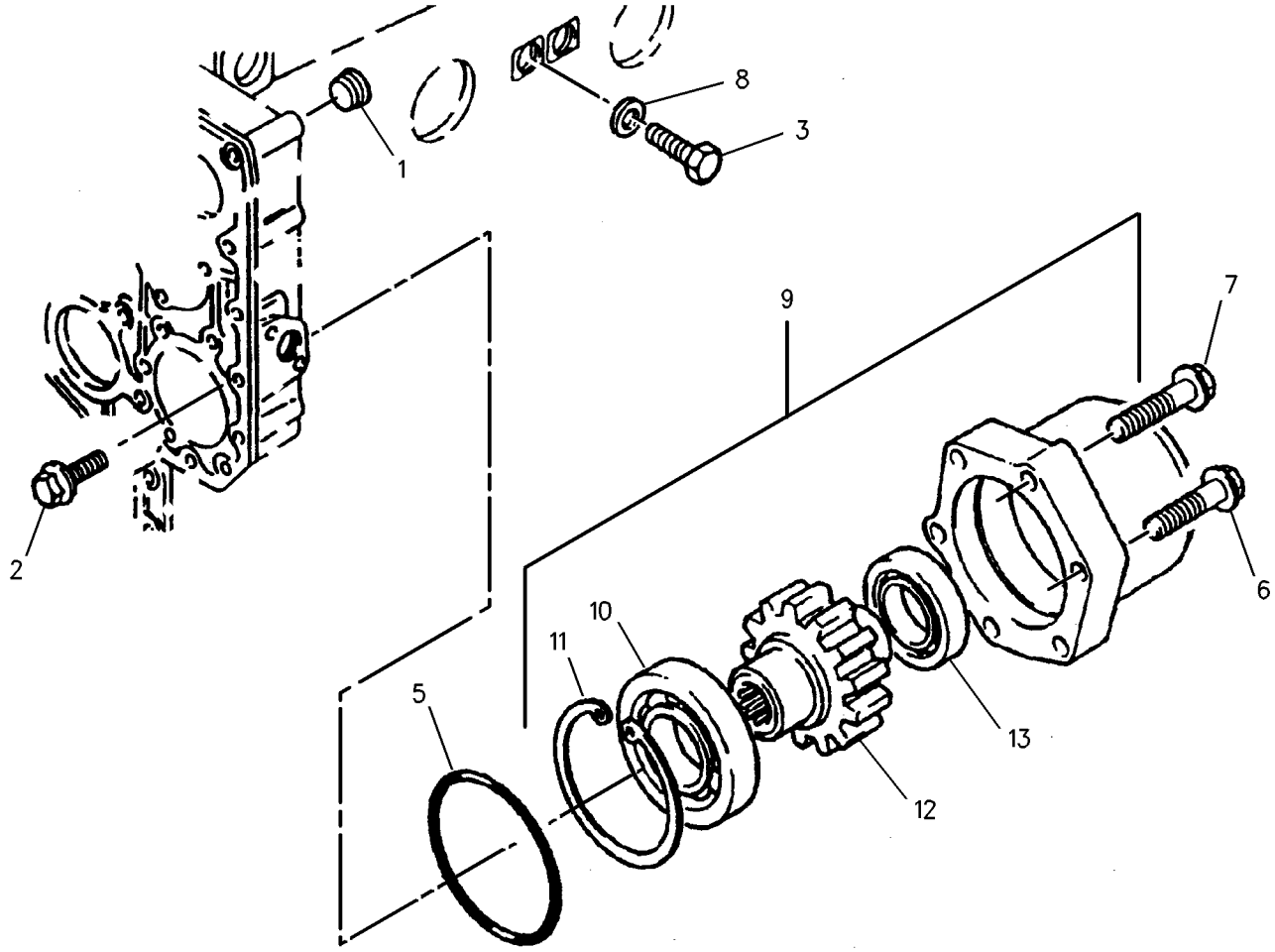

GRAPHIC #1 **<END>** g00916625

BASIC ENGINE

233-2553 DRIVE GP-FAN

S/N: CPT1-UP

PART OF 188-5096 ENGINE AR-PRIMARY

SMCS-1359 **i02156035**

NOTE	REF NO	GRAPHIC REF	PART NUMBER	QTY	PART NAME 1 2 3 4 5 6 (PRODUCT LEVEL)	SEE PAGE
	1	1	**100-4463**	4	BOLT (M10X1.5X80-MM)	
	2	1	**130-3880**	1	PULLEY-FAN DRIVE	
	3	1	**132-8239**	1	HOUSING AS	
	4	1	**2S-2756**	1	V-BELT SET (INCLUDES 2-BELTS) (FAN DRIVE)	

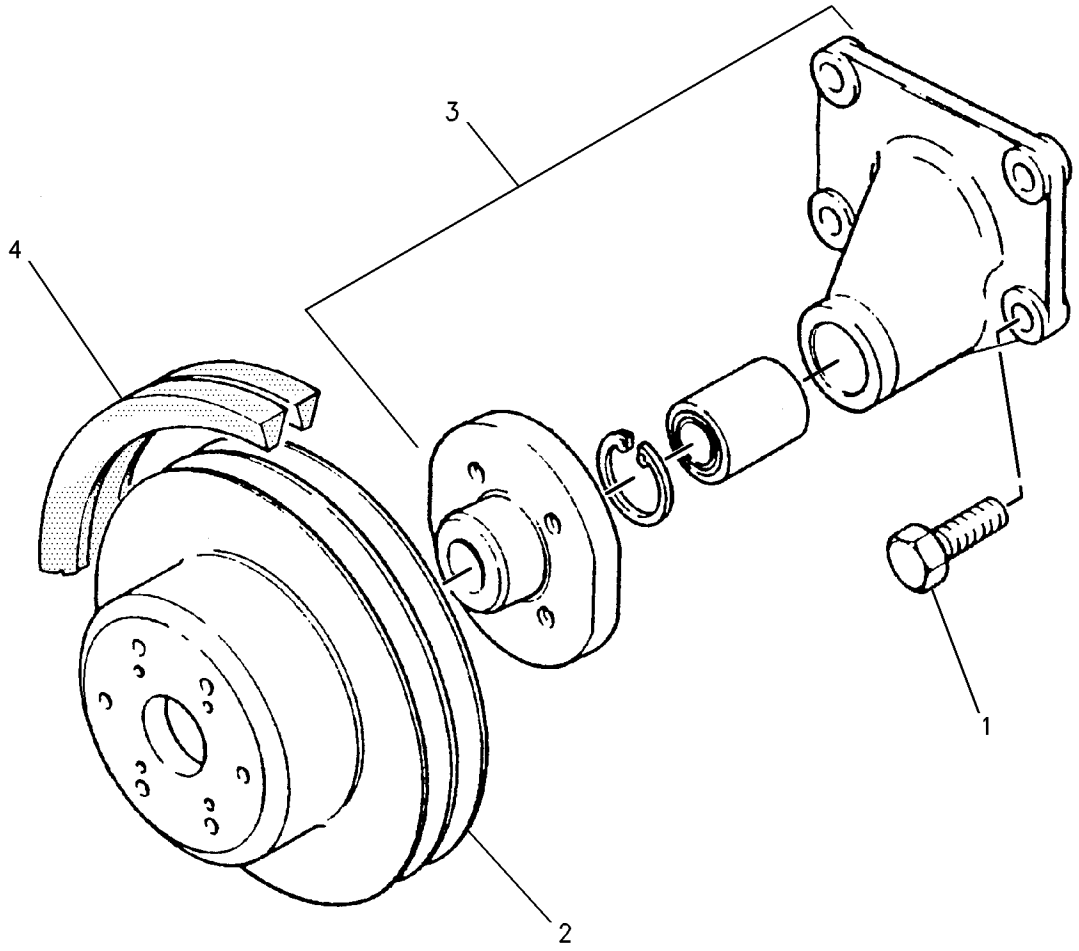

GRAPHIC #1 **<END>** g00720344

228-7418 FASTENER GP-CYLINDER HEAD

S/N: CPT1-UP

PART OF 188-5096 ENGINE AR-PRIMARY

SMCS-1100 **i02156027**

NOTE	REF NO	GRAPHIC REF	PART NUMBER	QTY	PART NAME 1 2 3 4 5 6 (PRODUCT LEVEL)	SEE PAGE
	1	1	**124-3815**	3	BOLT (M8X16X1.25-MM)	

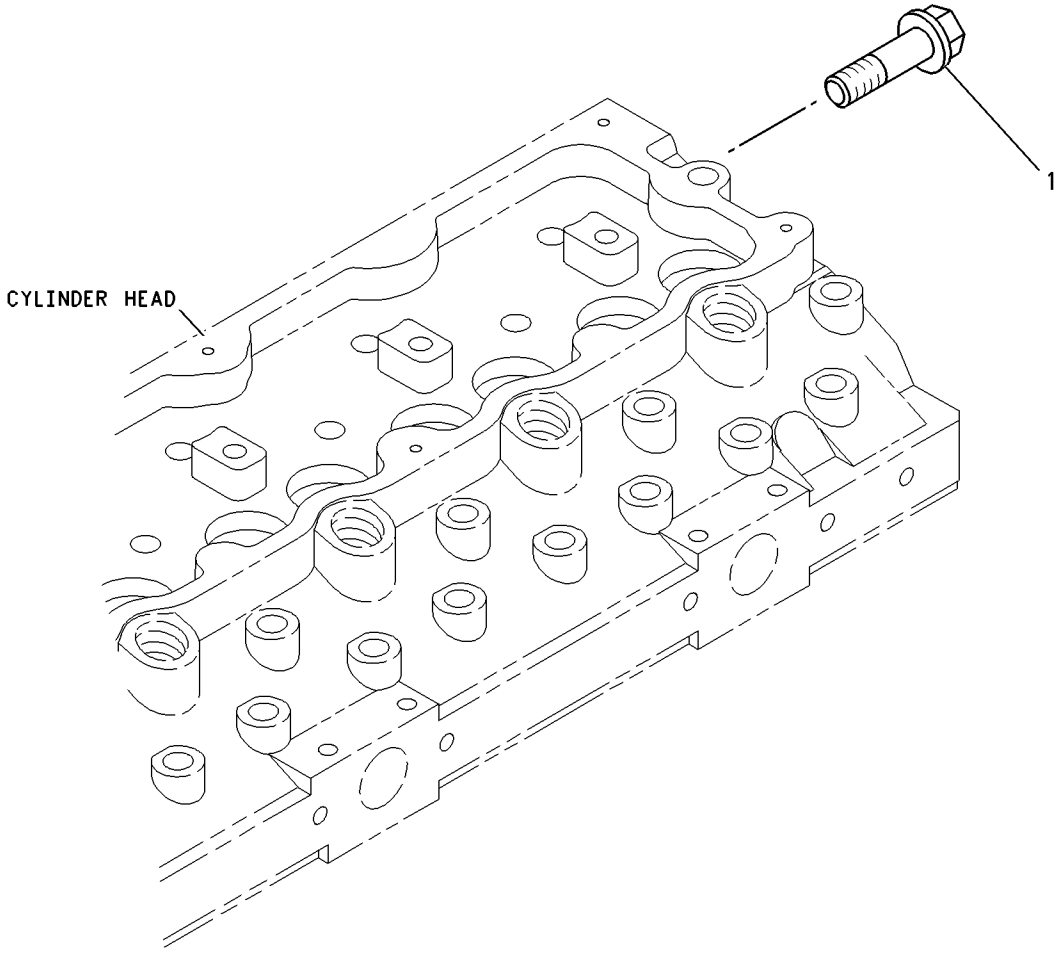

GRAPHIC #1 **<END>** g00932820

234-2653 FLYWHEEL GP

S/N: CPT1-UP

PART OF 188-5096 ENGINE AR-PRIMARY

SMCS-1156 **i02156050**

NOTE	REF NO	GRAPHIC REF	PART NUMBER	QTY	PART NAME 1 2 3 4 5 6 (PRODUCT LEVEL)	SEE PAGE
	1	1	**0S-1603**	10	BOLT (1/2-20X1.5-IN)	
M	2	1	**5P-8245**	10	WASHER-HARD (13.5X25.5X3-MM THK)	
	3	1	**103-6131**	1	FLYWHEEL AS	
	4	1	**033-7687**	1	RING (126-TEETH)	

M-METRIC PART

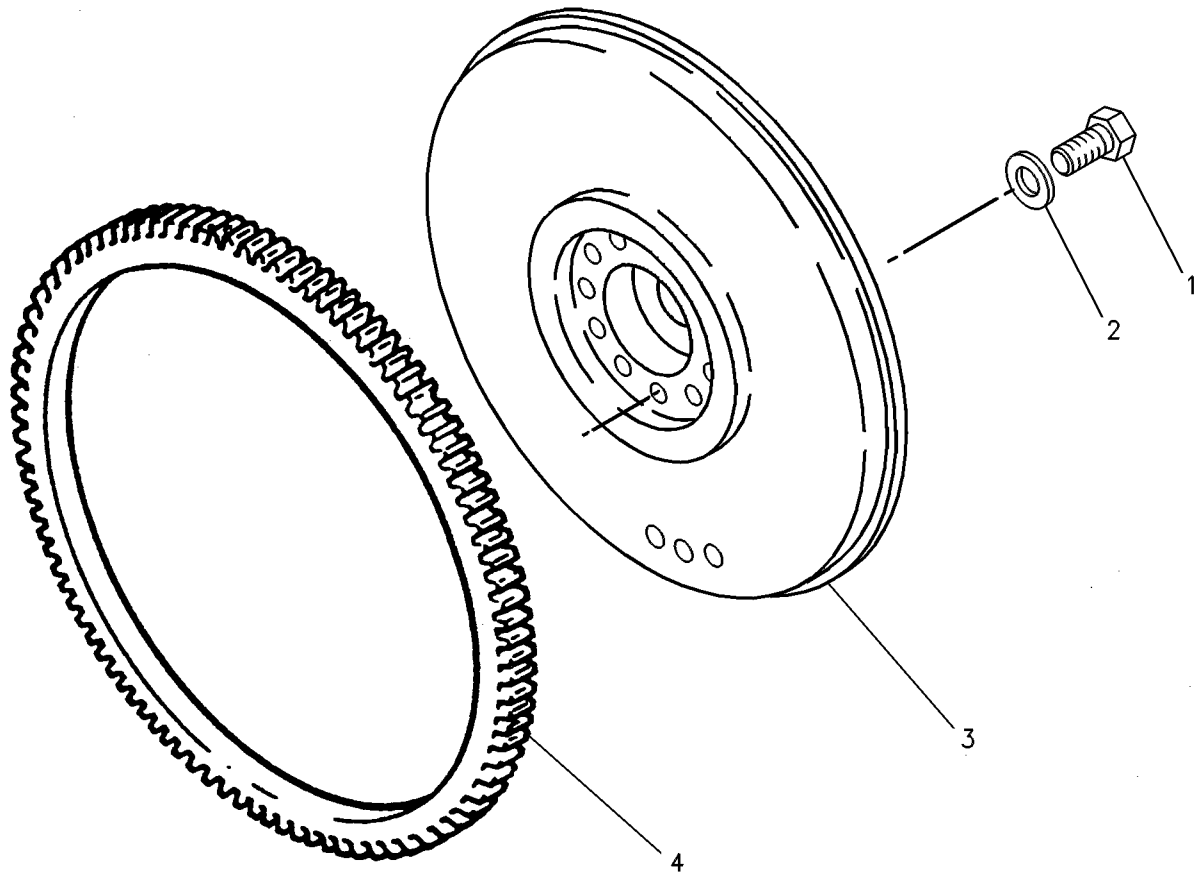

GRAPHIC #1 **<END>** g00240388

BASIC ENGINE

217-1499 GEAR GP-FRONT

S/N: CPT1-UP

PART OF 188-5096 ENGINE AR-PRIMARY

SMCS-1206 **i01819091**

NOTE	REF NO	GRAPHIC REF	PART NUMBER	QTY	PART NAME 1 2 3 4 5 6 (PRODUCT LEVEL)	SEE PAGE
	1	1	**6I-0256**	1	WASHER	
	2	1	**067-6928**	1	CLIP	
	3	1	**216-8348**	1	GEAR AS-IDLER (31 TEETH)	
	4	1	**067-6927**	1	BUSHING-TERMINAL	

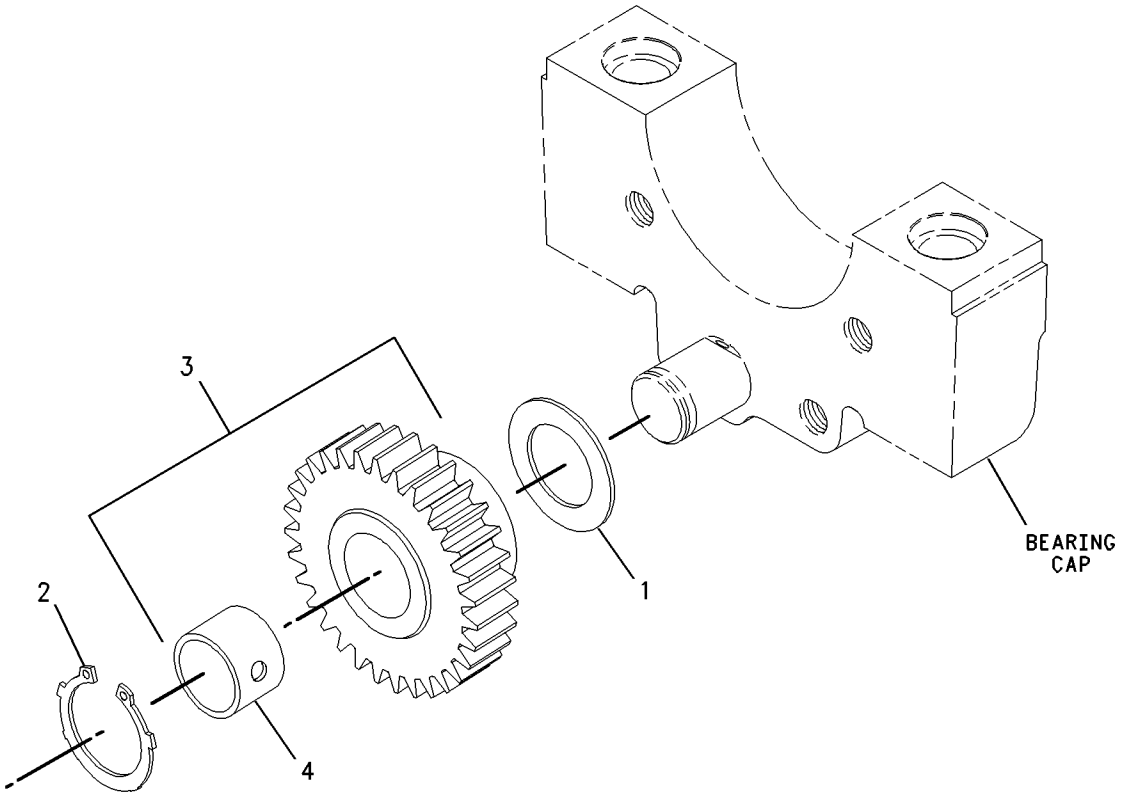

GRAPHIC #1 **<END>** g00860185

223-9606 GUARD GP-BELT

S/N: BCZ1-584

PART OF 186-0472 INSTALLATION AR-ENGINE

SMCS-7174 **i01771334**

NOTE	REF NO	GRAPHIC REF	PART NUMBER	QTY	PART NAME 1 2 3 4 5 6 (PRODUCT LEVEL)	SEE PAGE
	1	1	**5P-4116**	1	WASHER-HARD (8.8X20.5X2MM THK)	
M	2	1	**8T-4200**	1	BOLT (M8X1.25X16MM)	
	3	1	**223-9015**	1	GUARD AS (BELT)	

M-METRIC PART

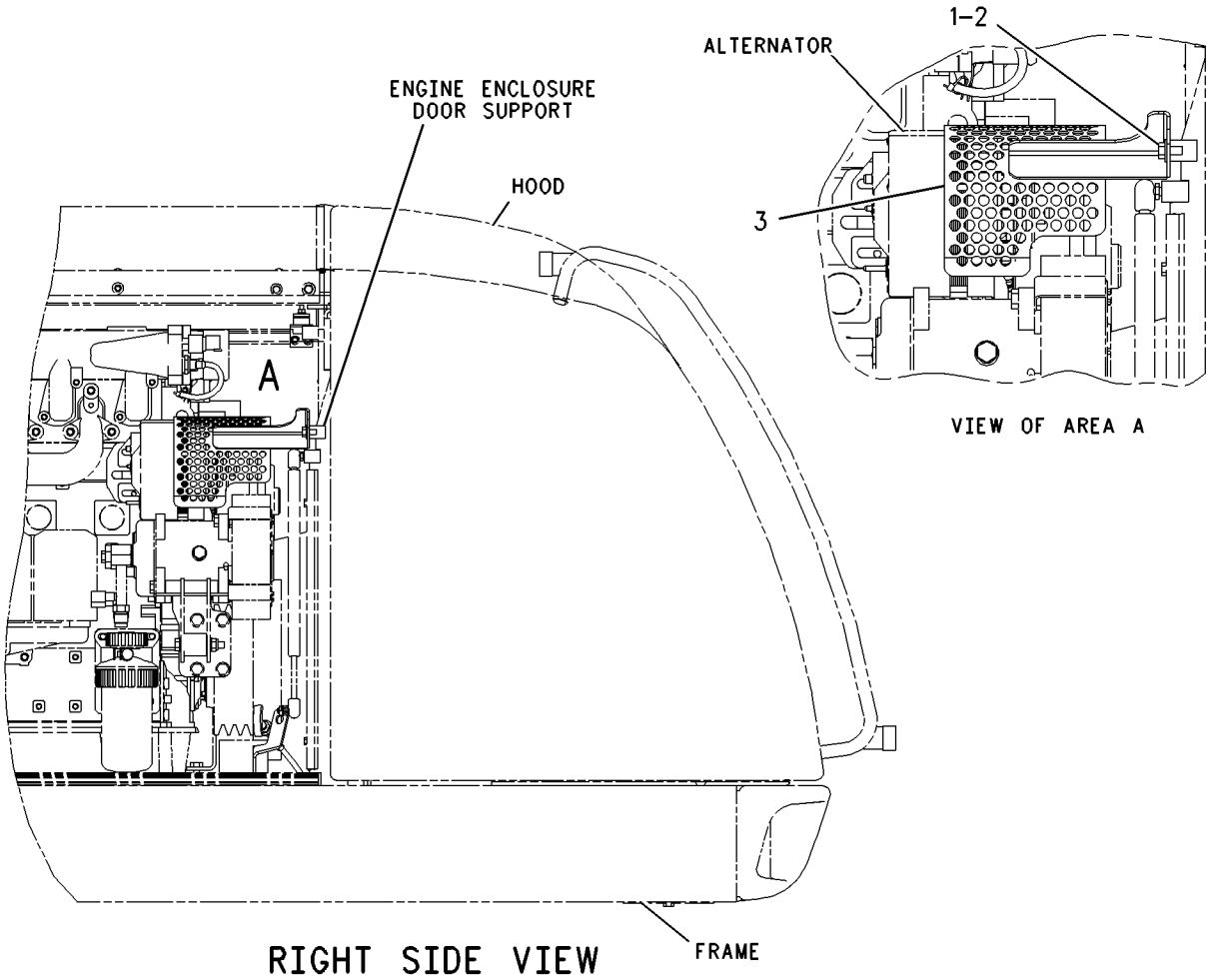

GRAPHIC #1 **<END>** g00907841

BASIC ENGINE

234-2651 HOUSING GP-FLYWHEEL

S/N: CPT1-UP

PART OF 188-5096 ENGINE AR-PRIMARY

SMCS-1157 **i02156048**

NOTE	REF NO	GRAPHIC REF	PART NUMBER	QTY	PART NAME 1 2 3 4 5 6 (PRODUCT LEVEL)	SEE PAGE
	1	1	**7W-4642**	1	SHIELD-DUST	
	2	1	**220-8632**	1	HOUSING-FLYWHEEL	
	3	1	**7W-1176**	1	PLATE-COVER	
	4	1	**114-4363**	2	BOLT (M8X1.25X12-MM)	
	5	1	**6I-0847**	2	PLUG	
	6	1	**067-6123**	2	DOWEL	
	7	1	**101-3617**	3	PLUG	
	8	1	**199-3109**	1	PLUG	
	9	1	**121-0883**	6	BOLT (M10X1.5X30-MM)	
	10	1	**6I-0423**	2	BOLT (M12X1.75X30-MM)	

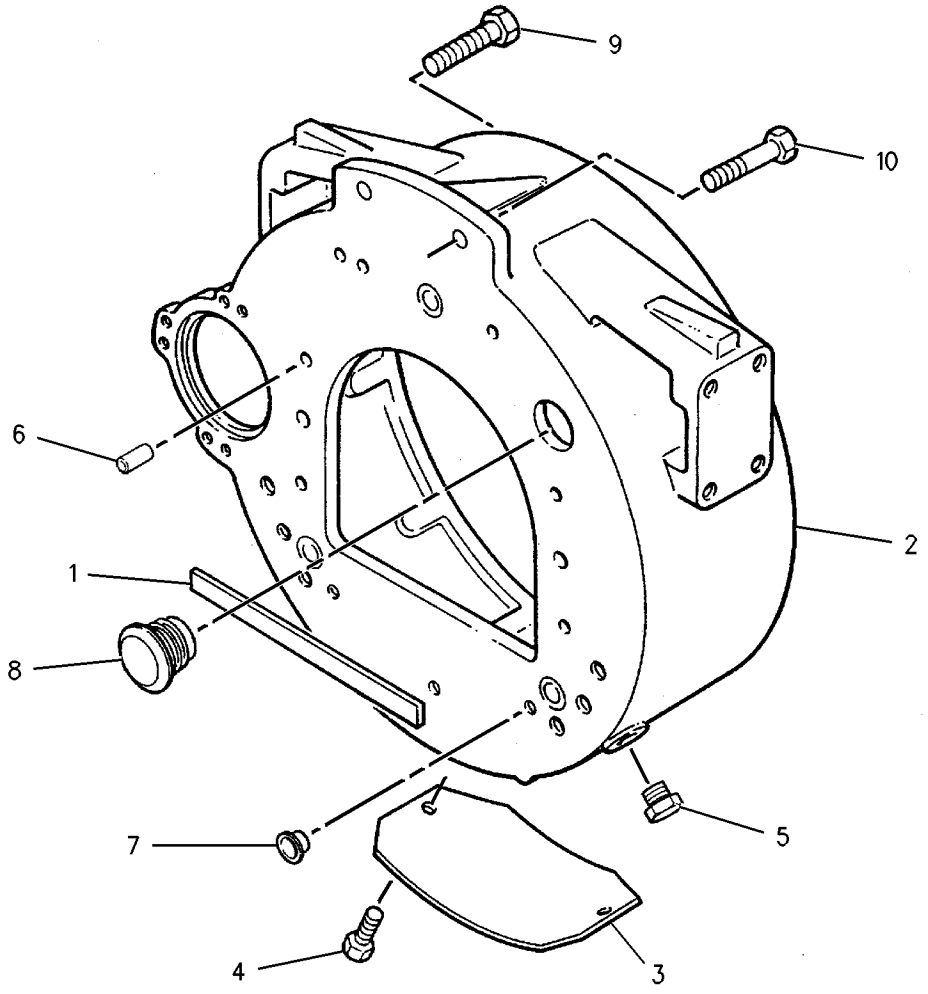

GRAPHIC #1 **<END>** g00906650

BASIC ENGINE

221-6835 HOUSING GP-FRONT

S/N: CPT1-6883

PART OF 188-5096 ENGINE AR-PRIMARY

SMCS-1151 **i02161532**

NOTE	REF NO	GRAPHIC REF	PART NUMBER	QTY	PART NAME 1 2 3 4 5 6 (PRODUCT LEVEL)	SEE PAGE
	1	1	**1B-8736**	1	KEY-WOODRUFF	
	2	1	**6I-0217**	1	BOLT (M8X1.25X20-MM)	
	3	1	**6I-0254**	6	BOLT (M8X1.25X30-MM)	
	4	1	**6I-0260**	1	BOLT (M8X1.25X25-MM)	
	5	1	**6I-0645**	3	BOLT (M8X1.25X25-MM)	
	6	1	**6I-0789**	3	BOLT (M10X1.5X60-MM)	
	7	1	**6I-0839**	6	BOLT (M8X1.25X70-MM)	
	8	1	**6I-0846**	2	BOLT (M6X1X14-MM)	
	9	1	**7C-4616**	1	BOLT (M12X1.75X45-MM)	
	10	1	**133-1011**	1	WASHER	
	11	1	**067-6179**	1	DOWEL	
	12	1	**067-6897**	1	HUB-IDLER GEAR	
	13	1	**067-6900**	1	PLATE-RETAINING	
	14	1	**067-6178**	1	WASHER	
	15	1	**140-7443**	1	GASKET-COVER	
	16	1	**140-7444**	1	SHIELD	
	17	1	**140-7445**	1	DAMPER	
	18	1	**160-3510**	1	GASKET	
	19	1	**183-6317**	1	COVER AS-FRONT	
	20	1	**4W-5359**	1	SEAL-CRANKSHAFT	
	21	1	**167-2153**	1	SLEEVE-CRANKSHAFT	
	22	1	**216-8632**	1	HOUSING-FRONT	
	23	1	**251-4336**	1	GEAR AS-IDLER	
	25	1	**216-8634**	1	GEAR-CAMSHAFT (68-TEETH)	
					AVAILABLE REPAIR KIT(S):	
			252-8739	1	KIT-REPAIR (FRONT COVER, TIMING GEAR)	
					(INCLUDES FRONT SEAL, IDLER GEAR, HUB, PLATE, FRONT HOUSING COVER GASKET AND WATER PUMP GASKET)	

221-6835 **HOUSING GP-FRONT** *(contd.)* **i02161532**

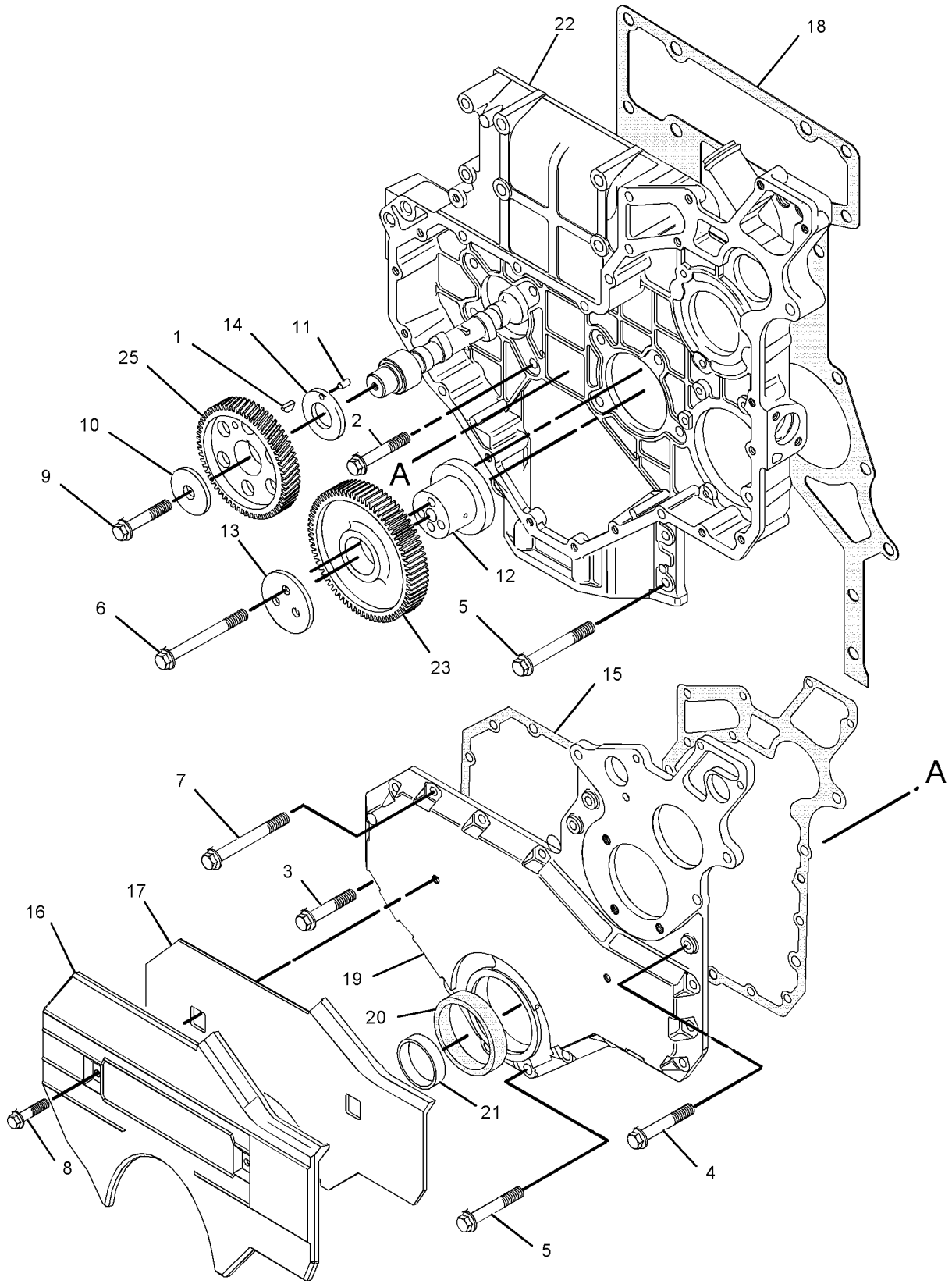

GRAPHIC #1 **<END>** g01053947

BASIC ENGINE

221-6835 HOUSING GP-FRONT

S/N: CPT6884-UP

PART OF 188-5096 ENGINE AR-PRIMARY

SMCS-1151 **i02161526**

NOTE	REF NO	GRAPHIC REF	PART NUMBER	QTY	PART NAME 1 2 3 4 5 6 (PRODUCT LEVEL)	SEE PAGE
	1	1	**1B-8736**	1	KEY-WOODRUFF	
	2	1	**6I-0217**	1	BOLT (M8X1.25X20-MM)	
	3	1	**6I-0254**	6	BOLT (M8X1.25X30-MM)	
	4	1	**6I-0260**	1	BOLT (M8X1.25X25-MM)	
	5	1	**6I-0645**	3	BOLT (M8X1.25X25-MM)	
C	6	1	**6I-0650**	3	BOLT (M10X1.5X65-MM)	
	7	1	**6I-0839**	6	BOLT (M8X1.25X70-MM)	
	8	1	**6I-0846**	2	BOLT (M6X1X14-MM)	
	9	1	**7C-4616**	1	BOLT (M12X1.75X45-MM)	
	10	1	**133-1011**	1	WASHER	
	11	1	**067-6179**	1	DOWEL	
C	12	1	**254-6029**	1	HUB-IDLER GEAR	
C	13	1	**255-1209**	1	PLATE-RETAINING	
	14	1	**067-6178**	1	WASHER	
	15	1	**140-7443**	1	GASKET-COVER	
	16	1	**140-7444**	1	SHIELD	
	17	1	**140-7445**	1	DAMPER	
	18	1	**160-3510**	1	GASKET	
	19	1	**183-6317**	1	COVER AS-FRONT	
	20	1	**4W-5359**	1	SEAL-CRANKSHAFT	
	21	1	**167-2153**	1	SLEEVE-CRANKSHAFT	
	22	1	**216-8632**	1	HOUSING-FRONT	
	23	1	**251-4336**	1	GEAR AS-IDLER	
	25	1	**216-8634**	1	GEAR-CAMSHAFT (68-TEETH)	
					AVAILABLE REPAIR KIT(S):	
			252-8739	1	KIT-REPAIR (FRONT COVER, TIMING GEAR)	
					(INCLUDES FRONT SEAL, IDLER GEAR, HUB, PLATE, FRONT HOUSING COVER GASKET AND WATER PUMP GASKET)	

C-CHANGE FROM PREVIOUS TYPE

221-6835 **HOUSING GP-FRONT** *(contd.)* **i02161526**

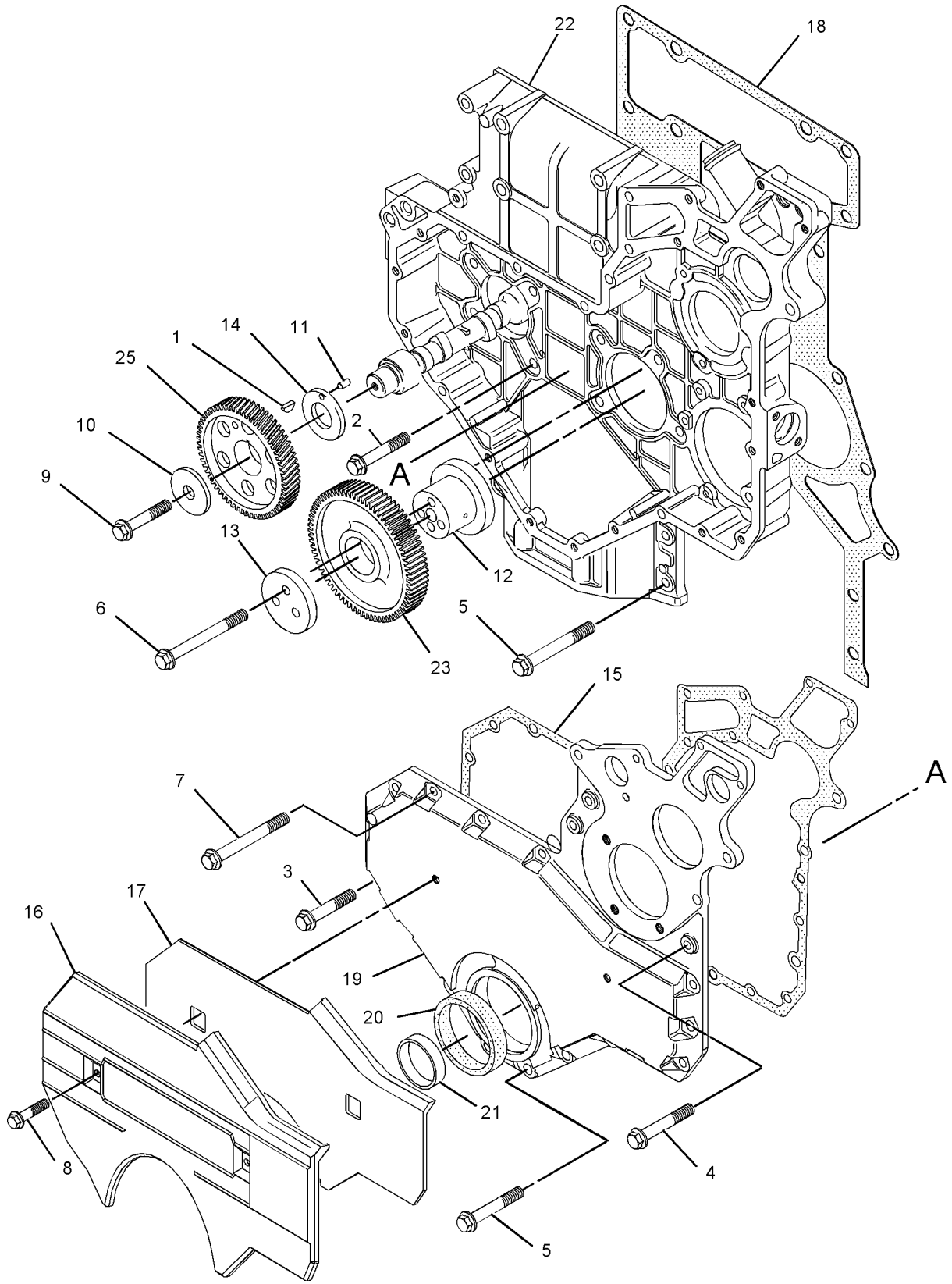

GRAPHIC #1 **<END>** g01081842

BASIC ENGINE

228-7462 LIFTING GP-ENGINE

S/N: CPT1-UP

PART OF 188-5096 ENGINE AR-PRIMARY

SMCS-1122 **i02038724**

NOTE	REF NO	GRAPHIC REF	PART NUMBER	QTY	PART NAME 1 2 3 4 5 6 (PRODUCT LEVEL)	SEE PAGE
	1	1	**6I-0654**	4	BOLT (M10X1.5X25-MM)	
	2	1	**140-8953**	1	PLATE	
	3	1	**142-0349**	1	PLATE-LIFTING	

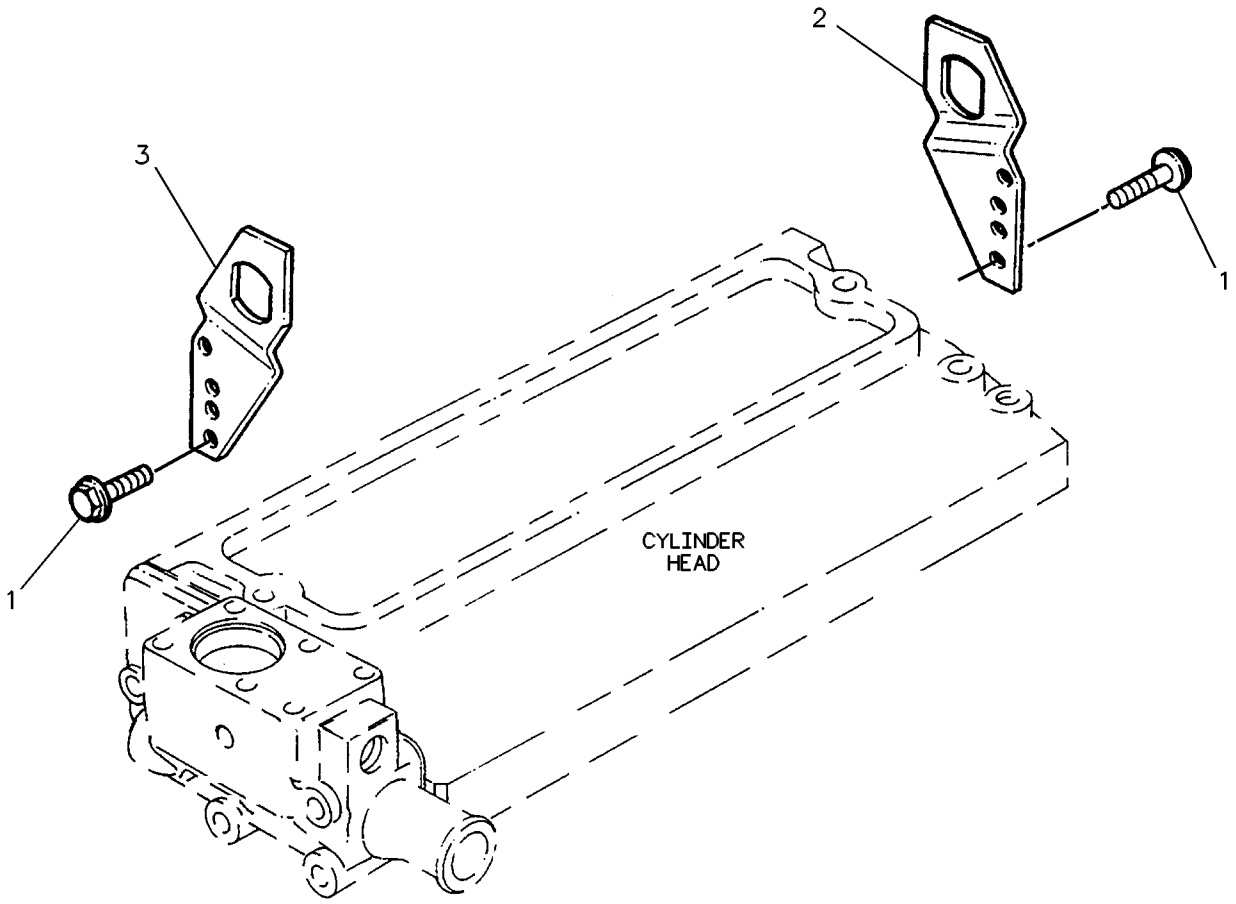

GRAPHIC #1 **<END>** g00272676

186-0504 MOUNTING GP-ENGINE FLEXIBLE

S/N: BCZ1-2000

PART OF 186-0472 INSTALLATION AR-ENGINE

SMCS-1152 **i01795925**

NOTE	REF NO	GRAPHIC REF	PART NUMBER	QTY	PART NAME 1 2 3 4 5 6 (PRODUCT LEVEL)	SEE PAGE
	1	1	**187-3764**	2	MOUNT AS	
	2	1	**207-1707**	2	MOUNT AS	
	3	1	**214-9350**	2	BRACKET AS (REAR)	
	4	1	**214-9376**	4	PLATE	
	5	1	**216-4197**	1	BRACKET AS (FRONT LHS)	
	6	1	**219-2506**	1	BRACKET AS (FRONT RHS)	
	7	1	**216-4199**	2	SPACER	
	8	1	**123-8642**	4	WASHER (17X75X6MM THK)	
M	9	1	**7X-2556**	2	BOLT (M16X2X100MM)	
M	10	1	**8T-4136**	16	BOLT (M10X1.5X25MM)	
M	11	1	**8T-4139**	8	BOLT (M12X1.75X30MM)	
M	12	1	**8T-4140**	4	BOLT (M16X2X60MM)	
M	13	1	**8T-4173**	2	BOLT (M16X2.0X110MM)	

M-METRIC PART

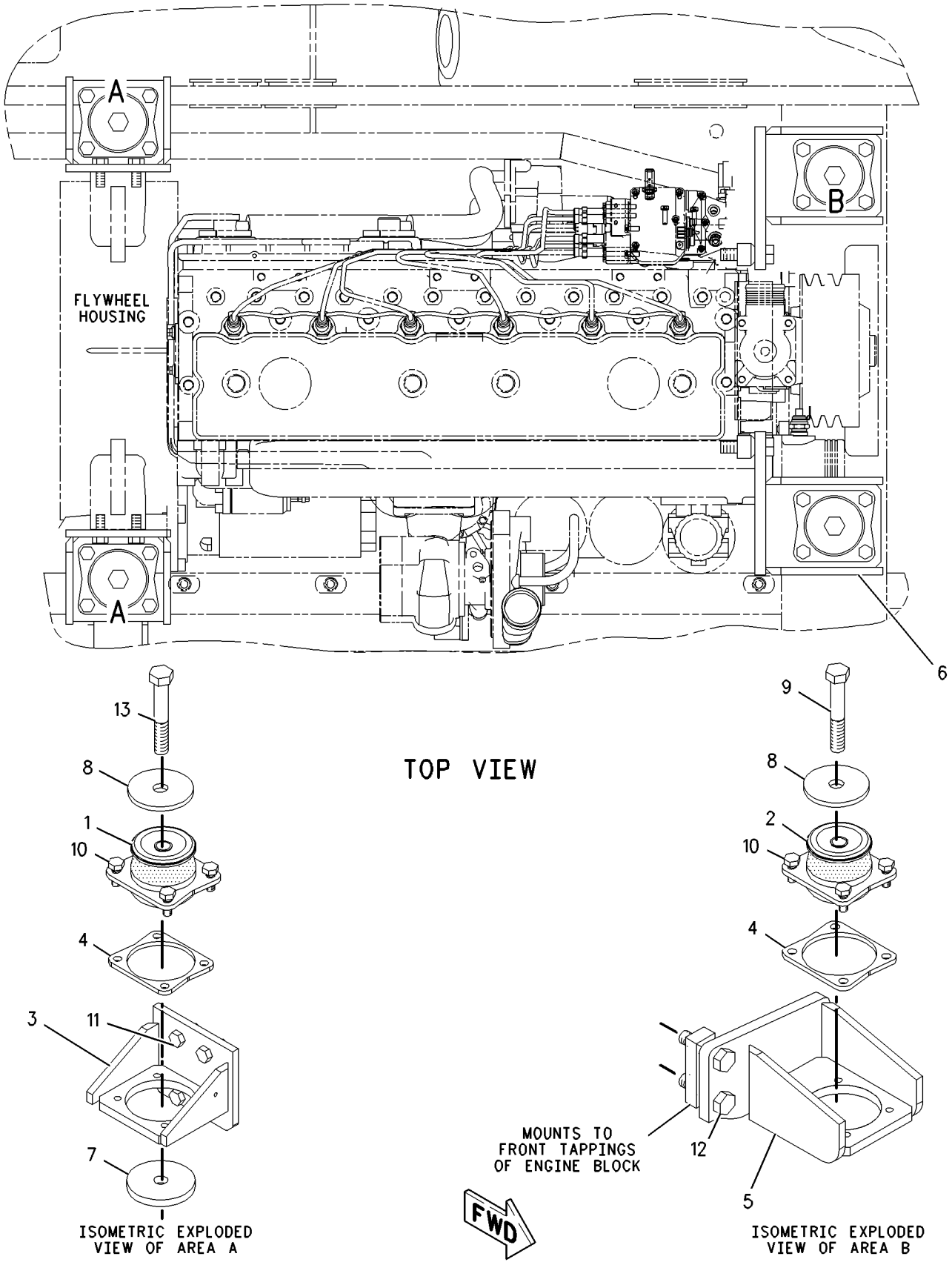

GRAPHIC #1 **<END>** g00919527

248-2276 MOUNTING GP-FAN

S/N: CPT1-UP

PART OF 188-5096 ENGINE AR-PRIMARY

SMCS-1356 **i02066740**

NOTE	REF NO	GRAPHIC REF	PART NUMBER	QTY	PART NAME 1 2 3 4 5 6 (PRODUCT LEVEL)	SEE PAGE
	1	1	**6I-0217**	4	BOLT (M8X1.25X20-MM)	

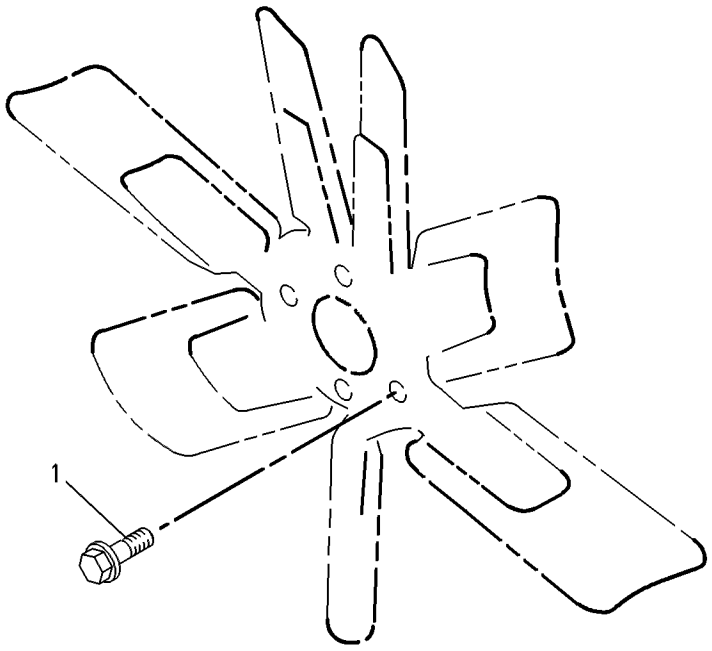

GRAPHIC #1 **<END>** g00287277

BASIC ENGINE

216-9551 PAN GP-OIL

S/N: CPT1-UP

PART OF 188-5096 ENGINE AR-PRIMARY

SMCS-1302 **i02161754**

NOTE	REF NO	GRAPHIC REF	PART NUMBER	QTY	PART NAME 1 2 3 4 5 6 (PRODUCT LEVEL)	SEE PAGE
	1	1	**4P-3838**	1	GAUGE AS-OIL LEVEL (DIPSTICK)	
	2	1	**177-7845**	1	TUBE AS-ENGINE OIL	
	3	1	**5P-6718**	2	SEAL-O-RING (DRAIN PLUG)	
	4	1	**6I-0217**	23	BOLT (M8X1.25X20-MM)	
	5	1	**6I-0260**	4	BOLT (M8X1.25X25-MM)	
	6	1	**6I-0289**	1	PLUG	
	7	1	**6I-0291**	4	NUT (M8X1.25)	
	8	1	**6I-0363**	2	BOLT (M6X1X20-MM)	
	9	1	**6I-0572**	2	BOLT (M8X1.25X20-MM)	
	10	1	**6I-1497**	1	SEAL	
	11	1	**6I-4681**	1	GASKET	
	12	1	**6I-4709**	5	BOLT (M8X1.25X100-MM)	
	13	1	**6I-4710**	1	GASKET	
	14	1	**7C-0351**	2	PLUG-SUMP DRAIN (ENGINE OIL)	
	15	1	**113-8127**	1	TUBE AS	
	16	1	**113-8129**	1	BOLT (M8X75-MM)	
	17	1	**113-8130**	1	CLIP	
	18	1	**113-8131**	1	BRACKET	
	19	1	**113-8133**	1	BRACKET	
	20	1	**113-8134**	1	PLATE	
	21	1	**231-5158**	1	TUBE AS	
	22	1	**6I-4079**	1	NUT	
	23	1	**211-0067**	1	BRIDGE	
	24	1	**216-9546**	1	PAN AS-OIL	
	25	1	**7C-1224**	1	INSERT	
	26	1	**216-9626**	1	PLUG-SEALING	
	27	1	**217-0212**	1	WASHER	
	28	1	**5F-9144**	1	SEAL-O-RING	

216-9551 **PAN GP-OIL** *(contd.)* **i02161754**

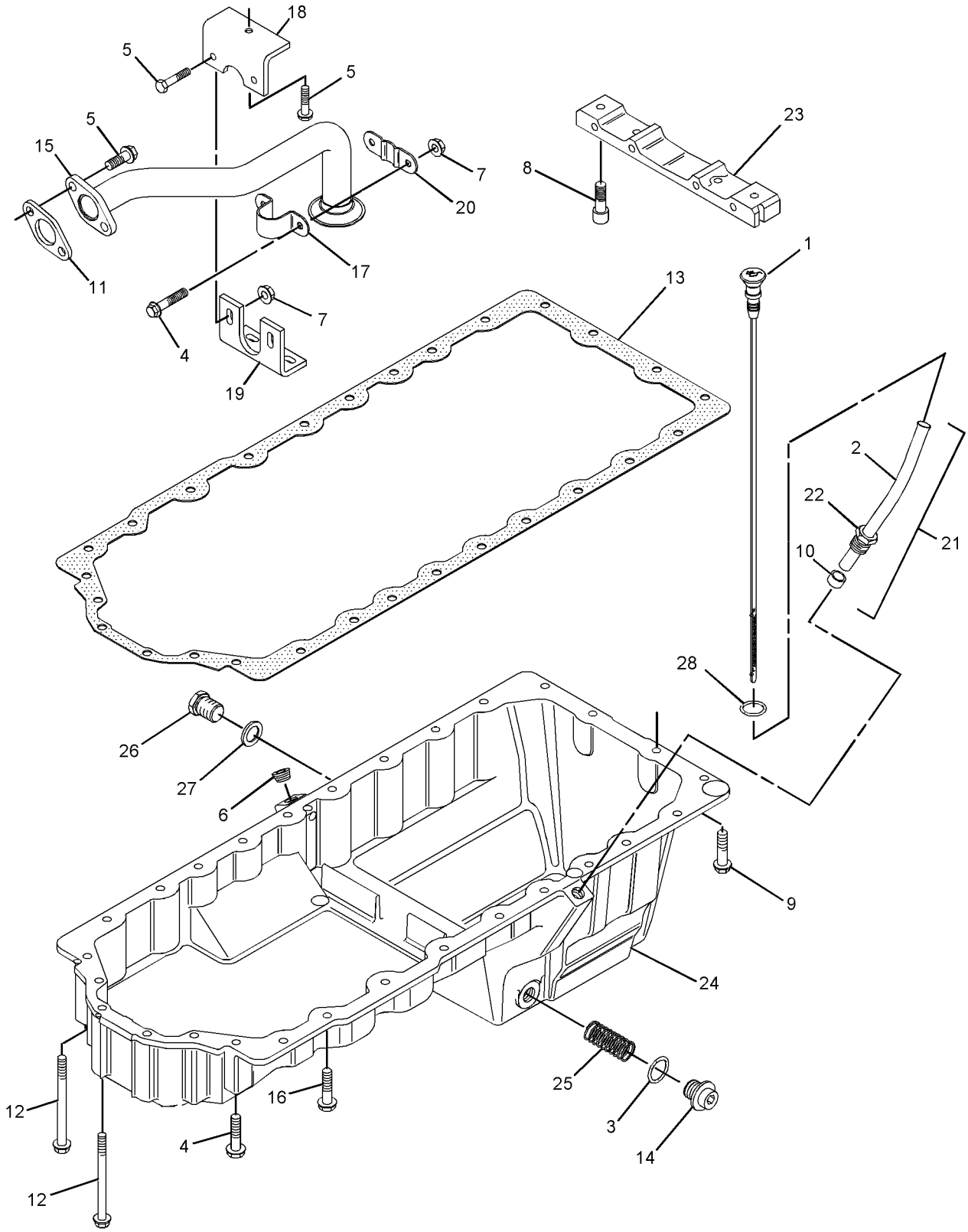

GRAPHIC #1 **<END>** g01089872

BASIC ENGINE

216-8324 PISTON & ROD GP

S/N: CPT1-843

PART OF 188-5096 ENGINE AR-PRIMARY

SMCS-1225 **i01930613**

NOTE	REF NO	GRAPHIC REF	PART NUMBER	QTY	PART NAME 1 2 3 4 5 6 (PRODUCT LEVEL)	SEE PAGE
	1	1	**216-8323**	6	PISTON AS	
					(EACH INCLUDES)	
		1	**124-3536**	2	RING-RETAINING	
	2	1	**217-1573**	1	KIT-PISTON RING	
J	3	1	**160-6493**	6	ROD AS (H)	
					—OR—	
J		1	**160-6494**	6	ROD AS (J)	
					—OR—	
J		1	**160-6495**	6	ROD AS (K)	
					—OR—	
J		1	**160-6496**	6	ROD AS (L)	
					(EACH ROD AS INCLUDES)	
	4	1	**7W-2505**	2	NUT-CONNECTING ROD	
	5	1	**067-6883**	2	BOLT-ROD CAP	
	6	1	**138-2048**	1	BUSHING	
	7	1	**194-2466**	2	DOWEL	

J-ENSURE THAT THE CORRECT ROD LENGTH IS FITTED.

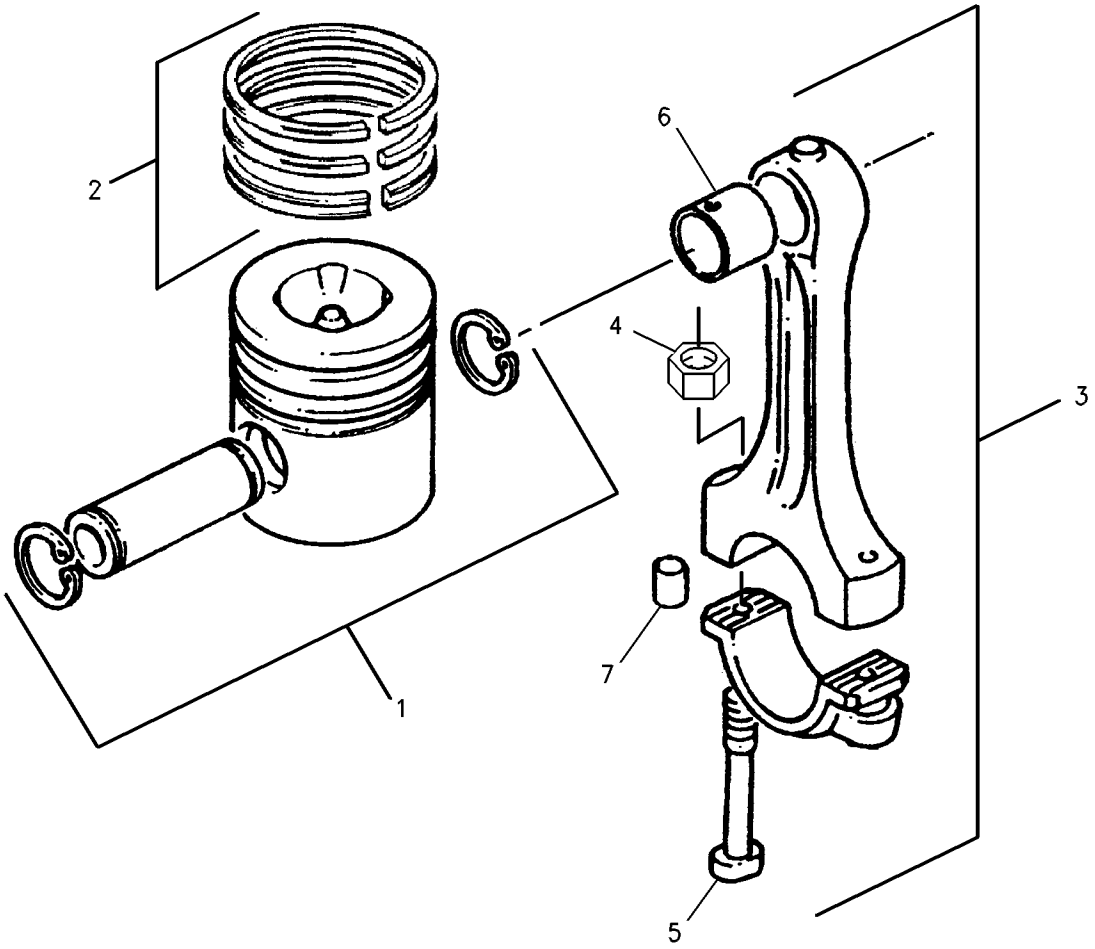

GRAPHIC #1 **<END>** g00716867

BASIC ENGINE

216-8324 PISTON & ROD GP

S/N: CPT844-UP

PART OF 188-5096 ENGINE AR-PRIMARY

SMCS-1225 **i02093394**

NOTE	REF NO	GRAPHIC REF	PART NUMBER	QTY	PART NAME 1 2 3 4 5 6 (PRODUCT LEVEL)	SEE PAGE
	1	1	**216-8323**	6	PISTON AS	
					(EACH INCLUDES)	
	1A	1	**124-3536**	2	RING-RETAINING	
	1B	1	**217-1573**	1	KIT-PISTON RING	
CJ	2	1	**225-5454**	6	ROD AS-CONNECTING (H)	
					—OR—	
CJ		1	**225-5441**	6	ROD AS-CONNECTING (L)	
					(EACH ROD AS INCLUDES)	
	2A	1	**225-5439**	2	BOLT	
	2B	1	**225-5438**	1	BUSHING	

C-CHANGE FROM PREVIOUS TYPE
J-ENSURE THAT THE CORRECT ROD LENGTH IS FITTED.

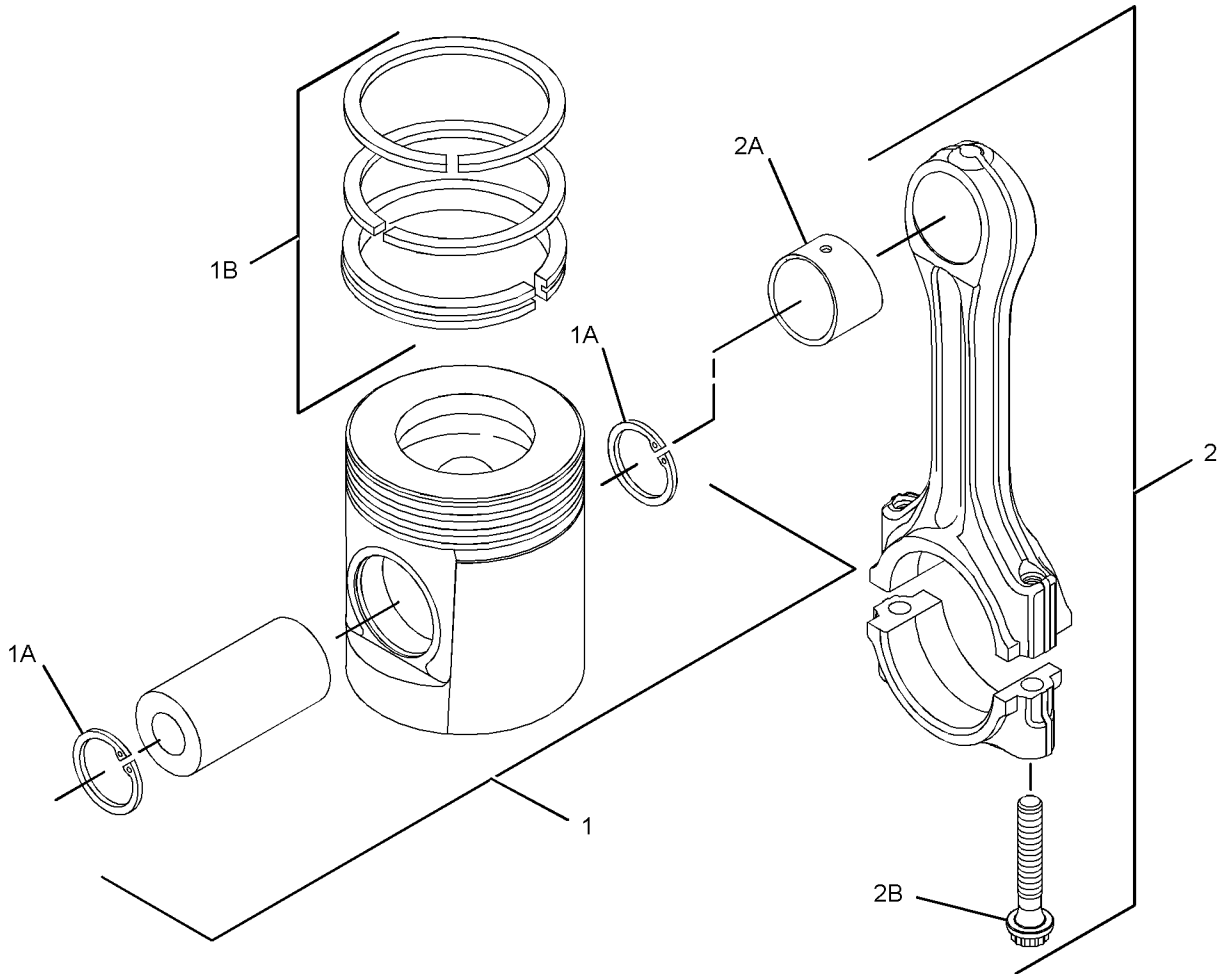

GRAPHIC #1 **<END>** g01053349

BASIC ENGINE

195-9408 PLATE GP-SOUND SUPPRESSION

S/N: BCZ1-584

PART OF 186-0489 ENCLOSURE GP-ENGINE

SMCS-1801 **i01580924**

NOTE	REF NO	GRAPHIC REF	PART NUMBER	QTY	PART NAME 1 2 3 4 5 6 (PRODUCT LEVEL)	SEE PAGE
	1	1	**114-6496**	2	ANGLE	
	2	1	**195-9405**	1	PLATE AS	
M		1	**8T-3612**	1	NUT-WELD (M8X1.25 THD)	
	3	1	**195-9406**	1	PLATE AS	
M		1	**159-9540**	2	NUT-WELD	
	4	1	**206-9349**	1	ROD	
	5	1	**4B-4274**	4	WASHER (5.5X13X1.2MM THK)	
M	6	1	**5C-7261**	4	NUT (M8X1.25 THD)	
	7	1	**5P-4116**	6	WASHER-HARD (8.8X20.5X2MM THK)	
M	8	1	**8T-0287**	4	BOLT (M5X0.8X10MM)	
M	9	1	**8T-4200**	2	BOLT (M8X1.25X16MM)	
E	10	1	**117-0125**		SEAL (16.2CM)	
E	10A	1	**117-0125**		SEAL (89.5 CM)	

E-ORDER BY THE CENTIMETER
M-METRIC PART

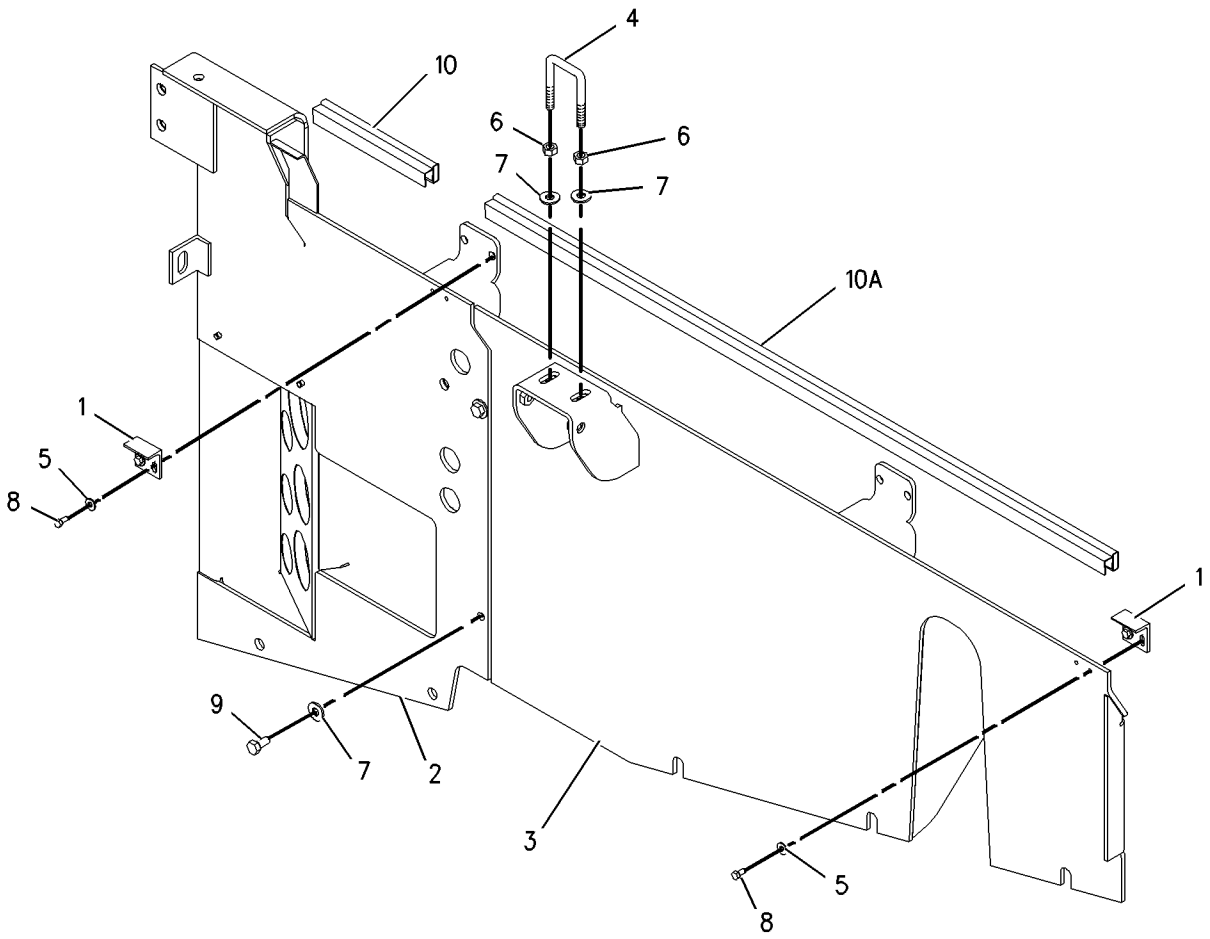

GRAPHIC #1 **<END>** g00822364

195-9408 PLATE GP-SOUND SUPPRESSION

S/N: BCZ585-2000

PART OF 186-0489 ENCLOSURE GP-ENGINE

SMCS-1801 **i02038944**

NOTE	REF NO	GRAPHIC REF	PART NUMBER	QTY	PART NAME 1 2 3 4 5 6 (PRODUCT LEVEL)	SEE PAGE
	1	1	**195-9405**	1	PLATE AS	
M		1	**8T-3612**	1	NUT-WELD (M8X1.25-THD)	
	2	1	**195-9406**	1	PLATE AS	
M		1	**159-9540**	2	NUT-WELD (M8X1.25-THD)	
C	3	1	**203-4464**	2	MOUNT-RESILIENT	
	4	1	**206-9349**	1	ROD	
C	5	1	**233-2980**	1	BRACKET	
CM	6	1	**5C-2890**	2	NUT (M6X1-THD)	
CM	7	1	**5C-7261**	6	NUT (M8X1.25-THD)	
C	8	1,1	**5P-4116**	10	WASHER-HARD (8.8X20.5X2-MM THK)	
CM	9	1	**8T-4189**	2	BOLT (M8X1.25X20-MM)	
M	10	1	**8T-4200**	2	BOLT (M8X1.25X16-MM)	
BE	11	1,1	**117-0125**		SEAL	

B-USE AS REQUIRED
C-CHANGE FROM PREVIOUS TYPE
E-ORDER BY THE CENTIMETER
M-METRIC PART

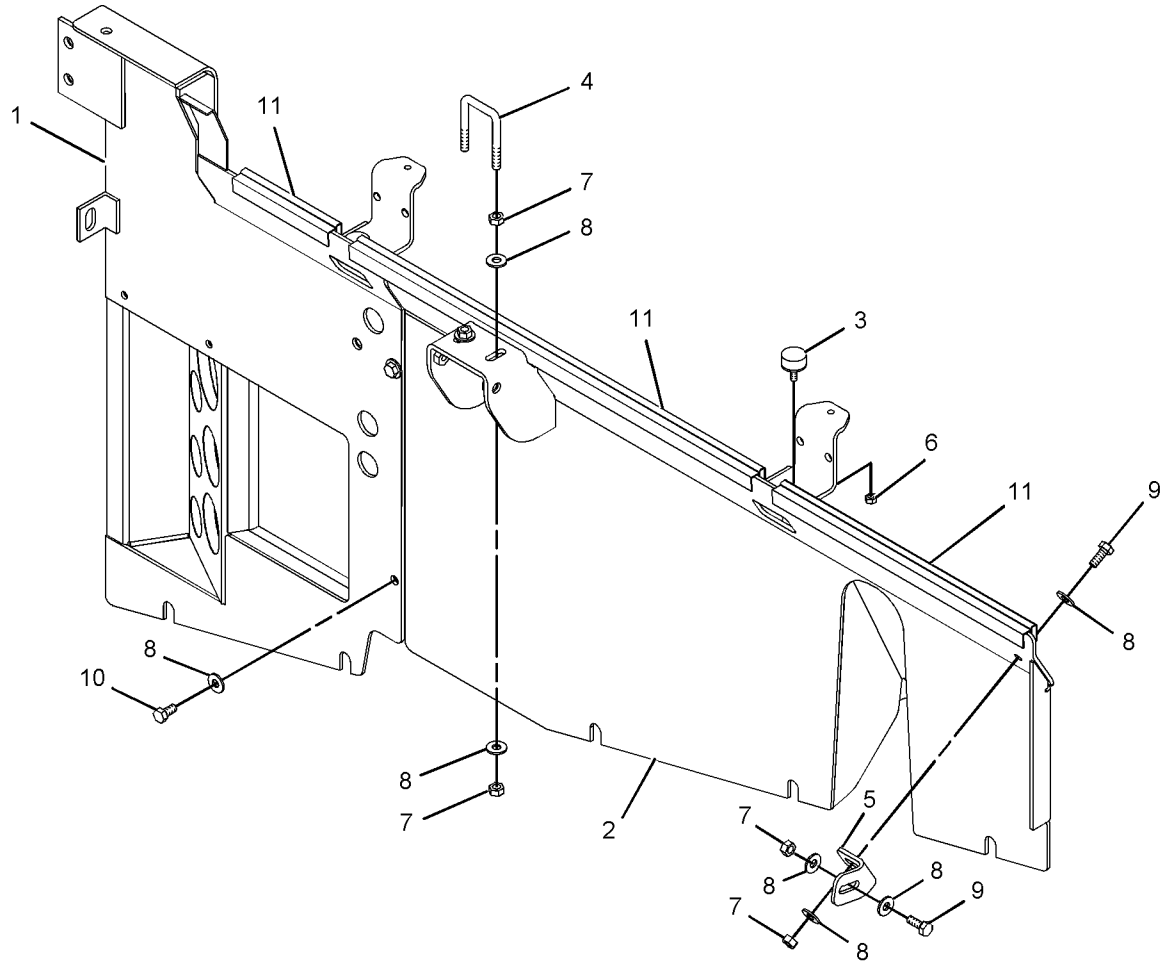

GRAPHIC #1 **<END>** g01060205

BASIC ENGINE

239-1349 PLUG GP-CYLINDER BLOCK

S/N: CPT1-UP

PART OF 188-5096 ENGINE AR-PRIMARY

SMCS-1201 **i02038715**

NOTE	REF NO	GRAPHIC REF	PART NUMBER	QTY	PART NAME 1 2 3 4 5 6 (PRODUCT LEVEL)	SEE PAGE
	1	1	**069-1124**	2	PLUG	

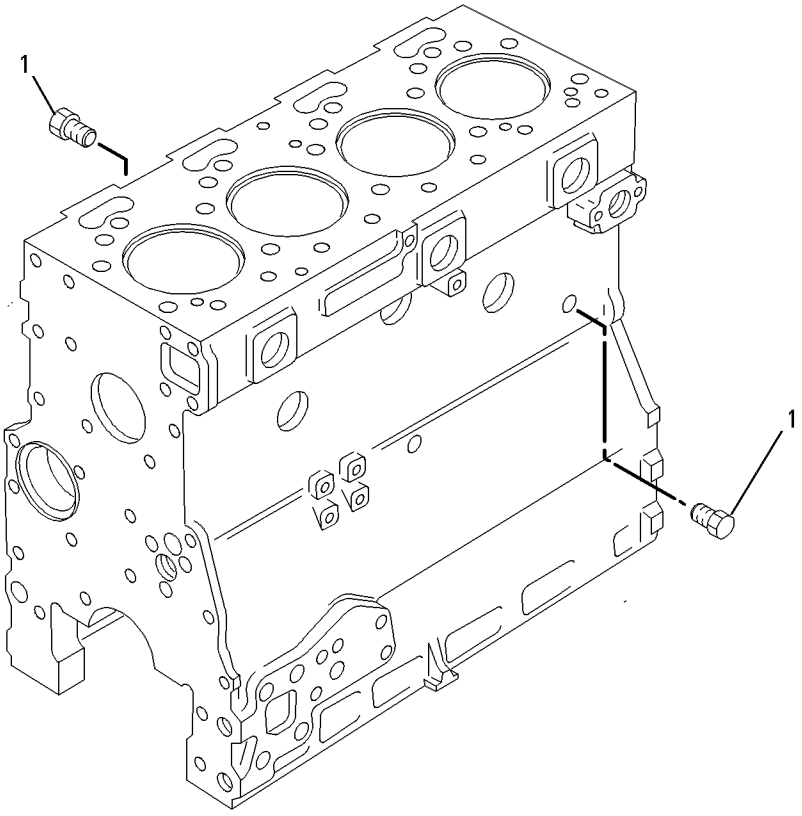

GRAPHIC #1 **<END>** g00517689

236-6604 PLUG GP-ENGINE

S/N: CPT1-UP

PART OF 188-5096 ENGINE AR-PRIMARY

SMCS-1000 **i02038718**

NOTE	REF NO	GRAPHIC REF	PART NUMBER	QTY	PART NAME 1 2 3 4 5 6 (PRODUCT LEVEL)	SEE PAGE
	1	1	**035-8063**	2	PLUG	

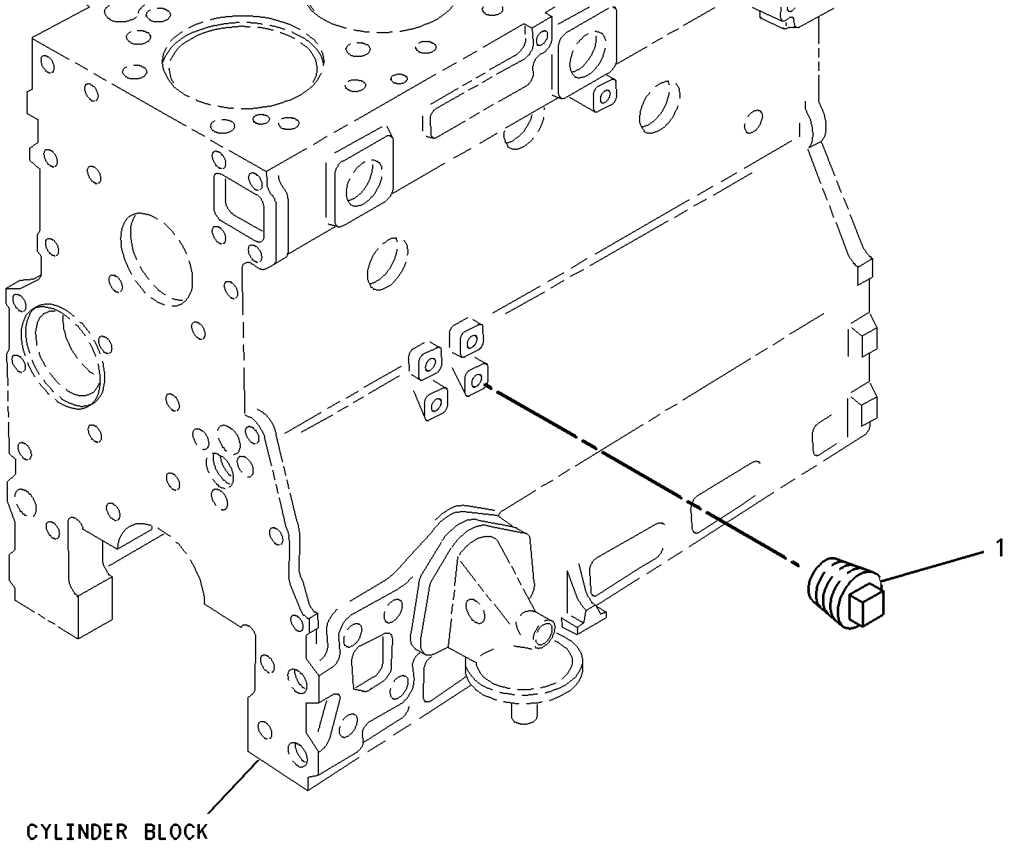

GRAPHIC #1 **<END>** g00777007

BASIC ENGINE

217-7888 PLUG GP-FLYWHEEL HOUSING

S/N: CPT1-UP

PART OF 188-5096 ENGINE AR-PRIMARY

SMCS-1157 **i01694730**

NOTE	REF NO	GRAPHIC REF	PART NUMBER	QTY	PART NAME 1 2 3 4 5 6 (PRODUCT LEVEL)	SEE PAGE
	1	1	**101-2987**	6	PLUG	
	2	1	**102-9460**	3	PLUG	
	3	1	**133-8470**	4	PLUG	

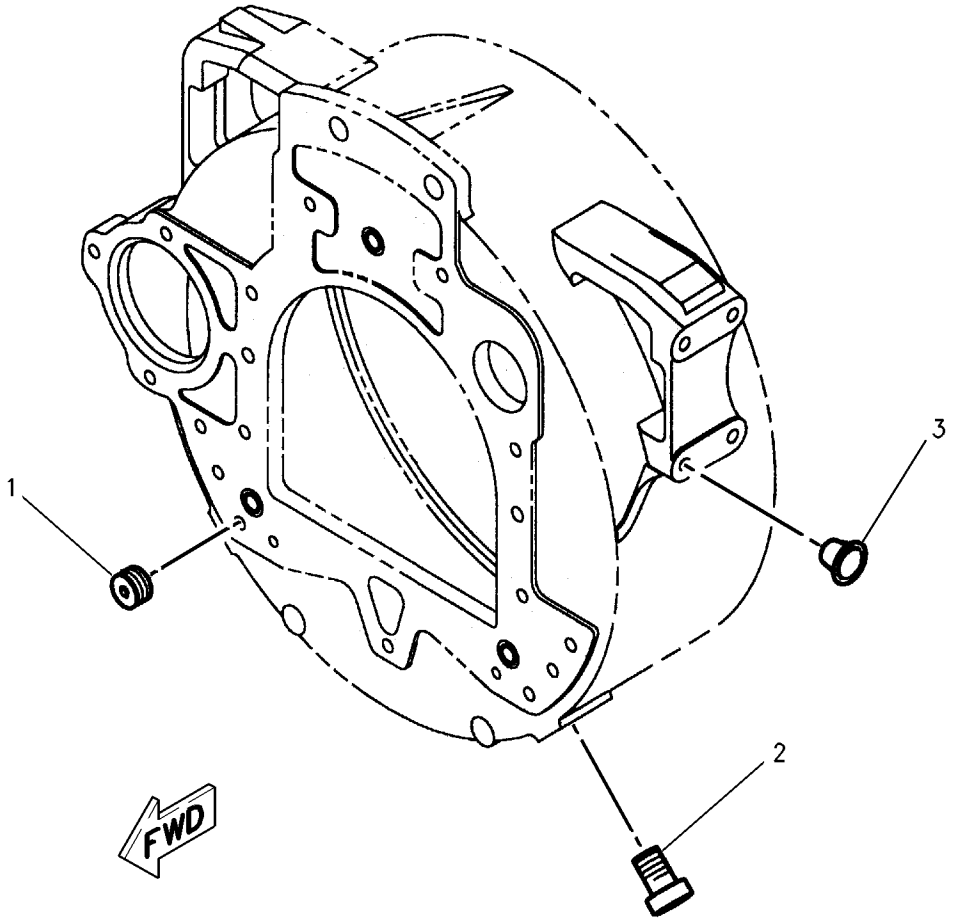

GRAPHIC #1 **<END>** g00878680

235-8214 PULLEY GP-AUXILIARY DRIVE

S/N: CPT1-UP

PART OF 188-5096 ENGINE AR-PRIMARY

SMCS-1205 **i01959138**

NOTE	REF NO	GRAPHIC REF	PART NUMBER	QTY	PART NAME 1 2 3 4 5 6 (PRODUCT LEVEL)	SEE PAGE
	1	1	**130-3881**	1	PULLEY-FAN	

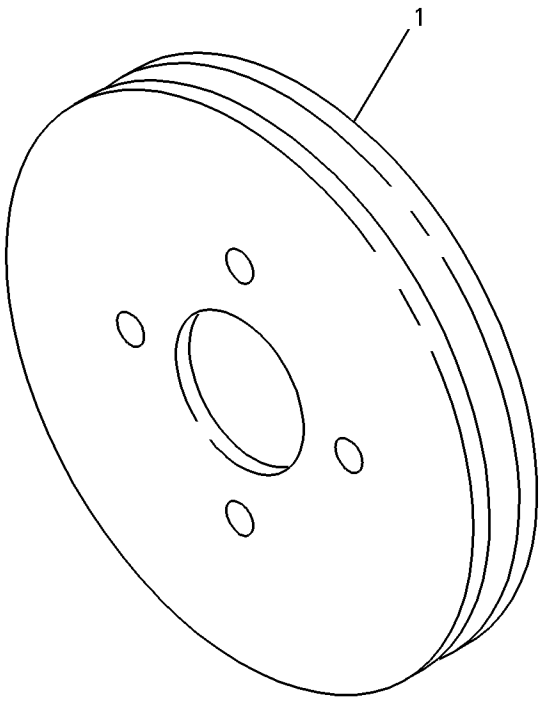

GRAPHIC #1 **<END>** g00734082

6I-4712 PULLEY GP-CRANKSHAFT

S/N: CPT1-UP

PART OF 188-5096 ENGINE AR-PRIMARY

SMCS-1205 **i02005187**

NOTE	REF NO	GRAPHIC REF	PART NUMBER	QTY	PART NAME 1 2 3 4 5 6 (PRODUCT LEVEL)	SEE PAGE
	1	1	**115-7465**	1	PULLEY	
	2	1	**6I-4714**	1	SPACER	
	3	1	**6I-4716**	1	KEY	
	4	1	**7D-8048**	1	SEAL-O-RING	
	5	1	**7W-4632**	1	SET-TAPERED RING	
	6	1	**7W-4634**	3	BOLT (7/16-20X1.5-IN)	
	7	1	**7W-4635**	1	BLOCK-THRUST	
	8	1	**243-2249**	1	DAMPER	
	9	1	**102-9941**	8	BOLT (M12X1.75X25-MM)	

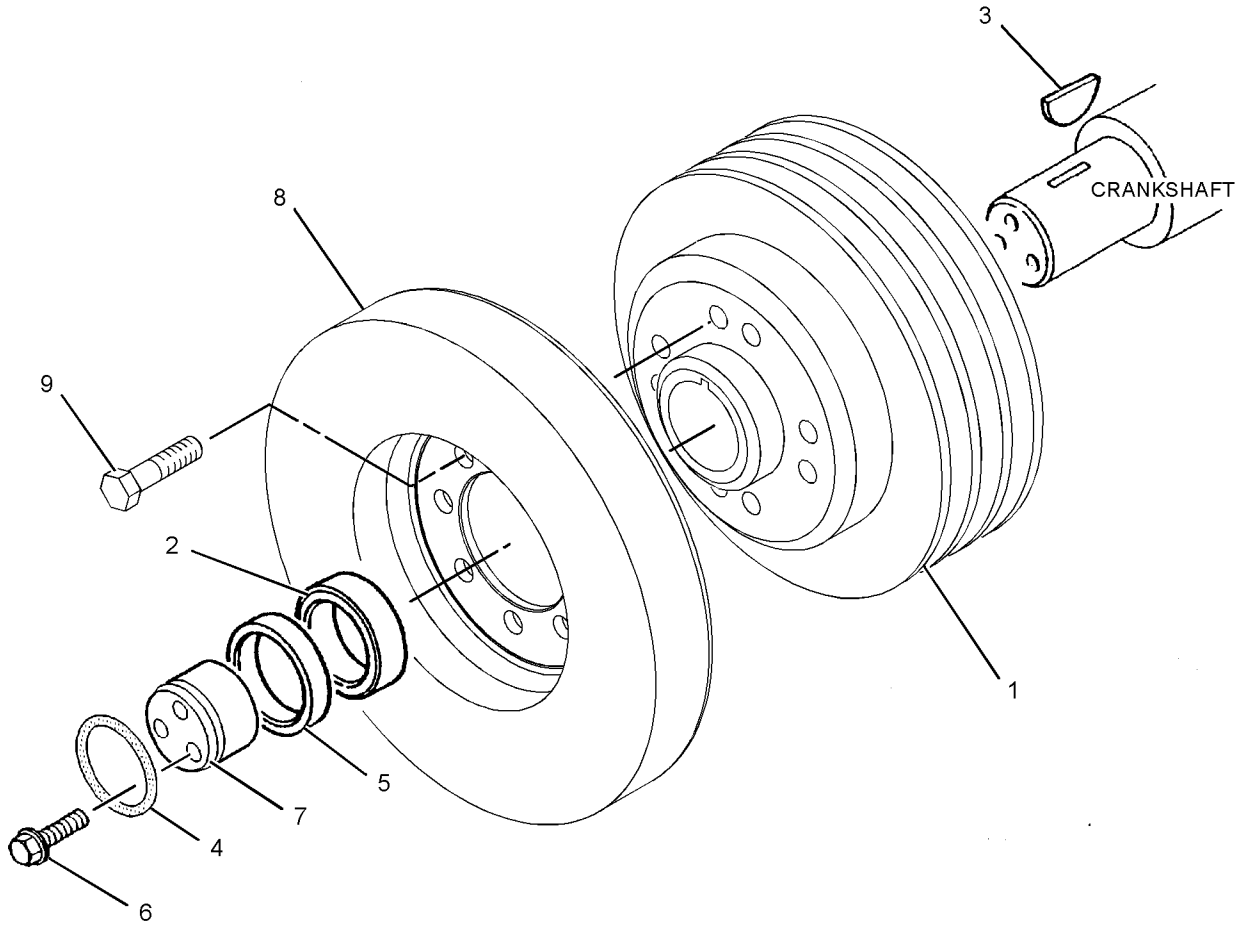

GRAPHIC #1 **<END>** g01042756

146-8956 ROCKER ARM GP

S/N: CPT1-UP

PART OF 216-8619 VALVE MECHANISM GP

SMCS-1123 **i01719179**

NOTE	REF NO	GRAPHIC REF	PART NUMBER	QTY	PART NAME 1 2 3 4 5 6 (PRODUCT LEVEL)	SEE PAGE
	1	1	**6I-1206**	6	BRACKET-SHAFT	
	2	1	**6I-3717**	1	BOLT (NO.10X12.7MM)	
	3	1	**6I-3718**	1	CONNECTION-FEED	
	4	1	**6V-8183**	12	NUT-FULL (3/8-24 THD)	
B	5	1	**195-7004**	2	SHIM	
	6	1	**006-8606**	2	RING-RETAINING	
	7	1	**067-6087**	4	SPRING-SHAFT	
	8	1	**067-6088**	2	SPRING-SHAFT	
	9	1	**185-1546**	8	SCREW	
	10	1	**138-2054**	2	WASHER	
	11	1	**209-0091**	6	LEVER AS (LH)	
					(EACH INCLUDES)	
	12	1	**139-5514**	1	BUSHING-LEVER	
	13	1	**209-0092**	6	LEVER AS (RH)	
					(EACH INCLUDES)	
	14	1	**139-5514**	1	BUSHING-LEVER	
	15	1	**146-8957**	1	SHAFT AS	
	16	1	**067-6083**	2	PLUG-SHAFT END	
	17	1	**129-3493**	1	FERRULE	

B-USE AS REQUIRED

146-8956 **ROCKER ARM GP** *(contd.)* **i01719179**

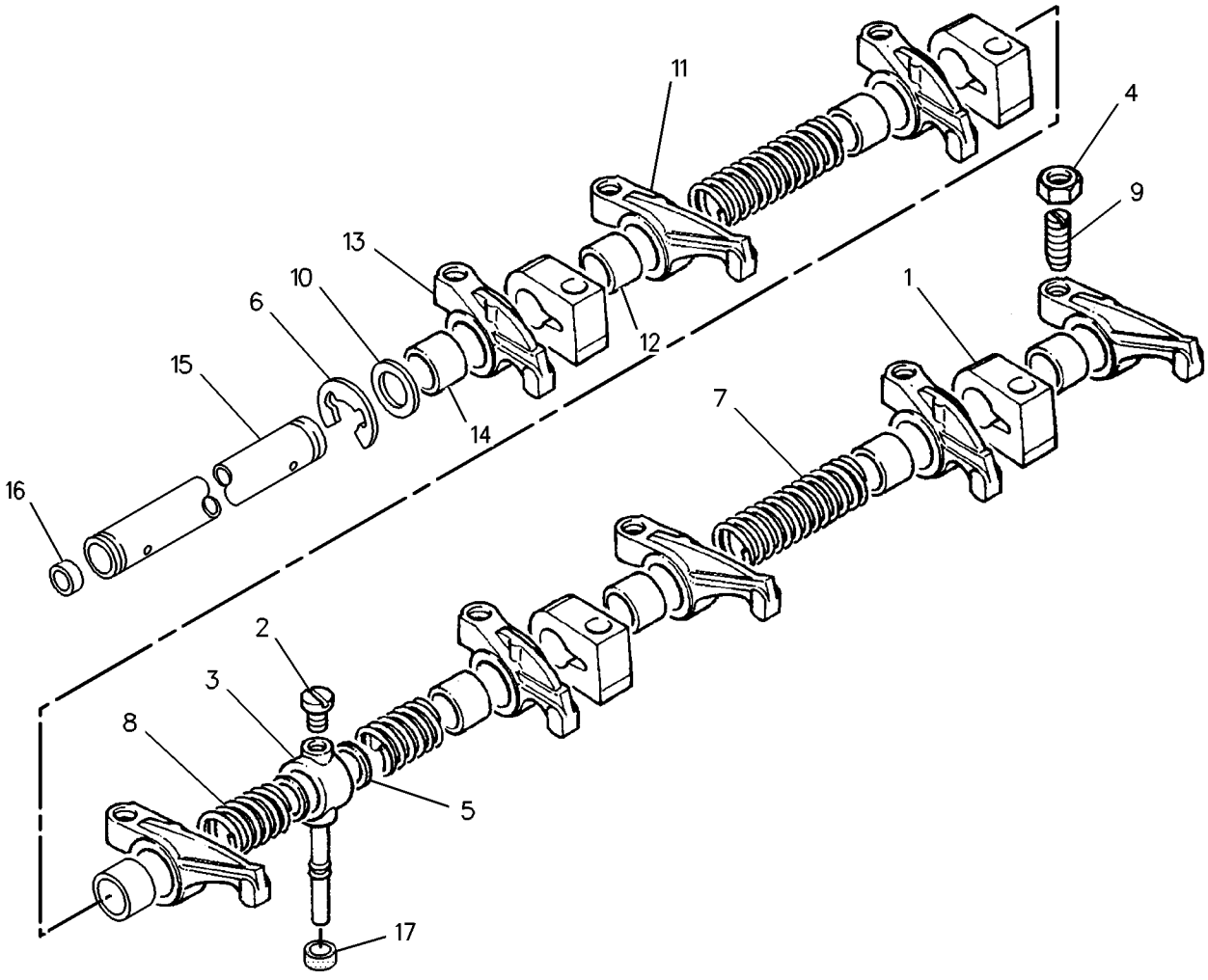

GRAPHIC #1 **<END>** g00735390

216-8619 VALVE MECHANISM GP

S/N: CPT1-UP

PART OF 188-5096 ENGINE AR-PRIMARY

SMCS-1209 **i01644548**

NOTE	REF NO	GRAPHIC REF	PART NUMBER	QTY	PART NAME 1 2 3 4 5 6 (PRODUCT LEVEL)	SEE PAGE
	1	1	**6I-0235**	2	BOLT (M12X1.75X50MM)	
	2	1	**067-6095**	12	ROD	
	3	1	**138-2053**	12	TAPPET	
Y	4	1	**146-8956**	1	ROCKER ARM GP	51

Y-SEPARATE ILLUSTRATION

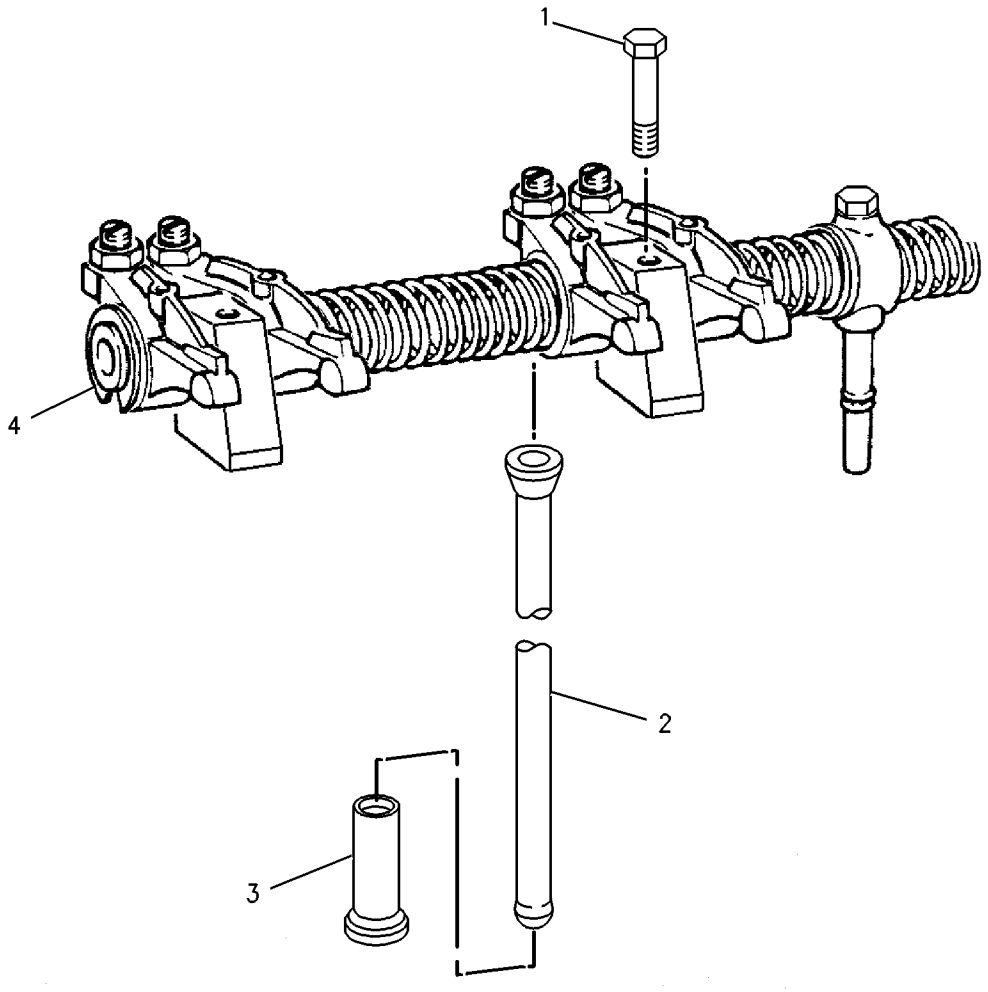

GRAPHIC #1 **<END>** g00857283

LUBRICATION SYSTEM

216-9683 FILTER GP-ENGINE OIL

S/N: CPT1-UP

PART OF 188-5096 ENGINE AR-PRIMARY

SMCS-1308 **i01788033**

NOTE	REF NO	GRAPHIC REF	PART NUMBER	QTY	PART NAME 1 2 3 4 5 6 (PRODUCT LEVEL)	SEE PAGE
	1	1	**7W-2327**	2	FILTER AS-ENGINE OIL	

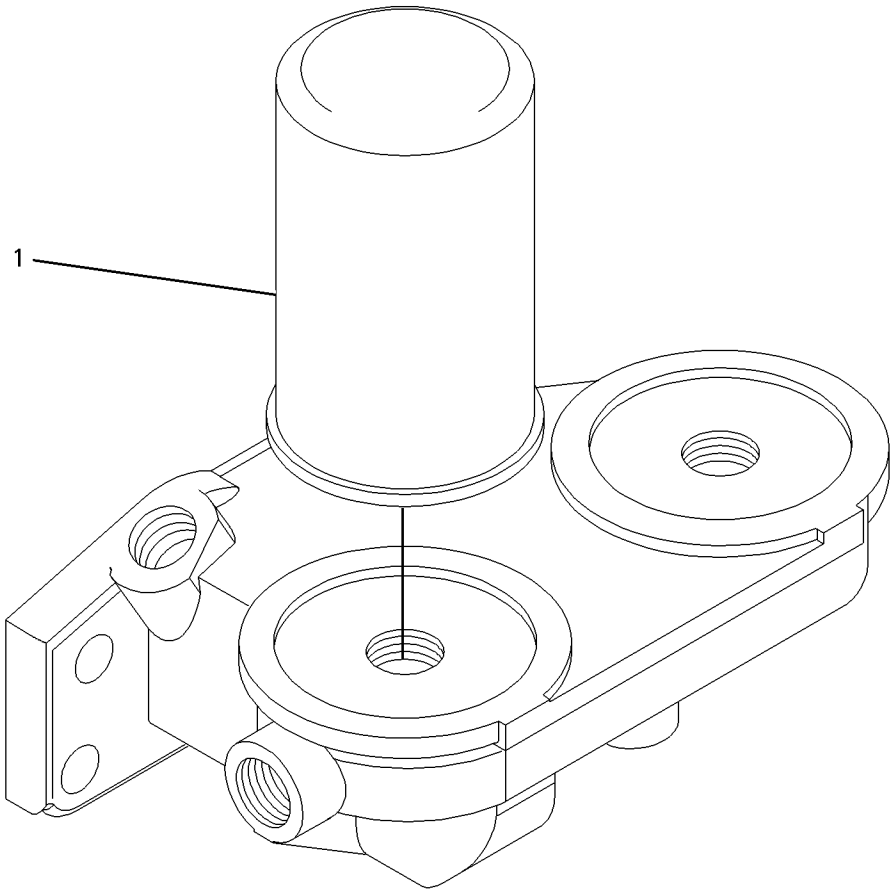

GRAPHIC #1 **<END>** g00861958

233-2744 PUMP GP-ENGINE OIL

S/N: CPT1-UP

PART OF 188-5096 ENGINE AR-PRIMARY

SMCS-1304, 1315 **i02156044**

NOTE	REF NO	GRAPHIC REF	PART NUMBER	QTY	PART NAME 1 2 3 4 5 6 (PRODUCT LEVEL)	SEE PAGE
	1	1	**5C-1796**	1	GASKET	
	2	1	**6I-0260**	6	BOLT (M8X1.25X25-MM)	
	3	1	**6I-0291**	1	NUT (M8X1.25)	
	4	1	**6I-4374**	2	BOLT	
	5	1	**067-6933**	1	GASKET	
	6	1	**106-8916**	2	BOLT (M6X16-MM)	
	7	1	**112-7702**	1	HOUSING AS	
	7A	1	**6I-0787**	1	RING-RETAINING	
	7B	1	**7W-4648**	1	SEAT-SPRING	
	7C	1	**7W-4650**	1	SPRING	
	7D	1	**7W-4782**	1	PLUNGER	
	8	1	**124-3815**	1	BOLT (M8X16X1.25-MM)	
	9	1	**133-6105**	1	TUBE AS	
	10	1	**133-6106**	2	BOLT	
	11	1	**134-4139**	1	STUD	
	12	1	**183-6318**	1	TUBE AS	
	12A	1	**189-5601**	1	SEAL-O-RING	
	13	1	**216-8625**	1	PUMP GP-GEROTOR	

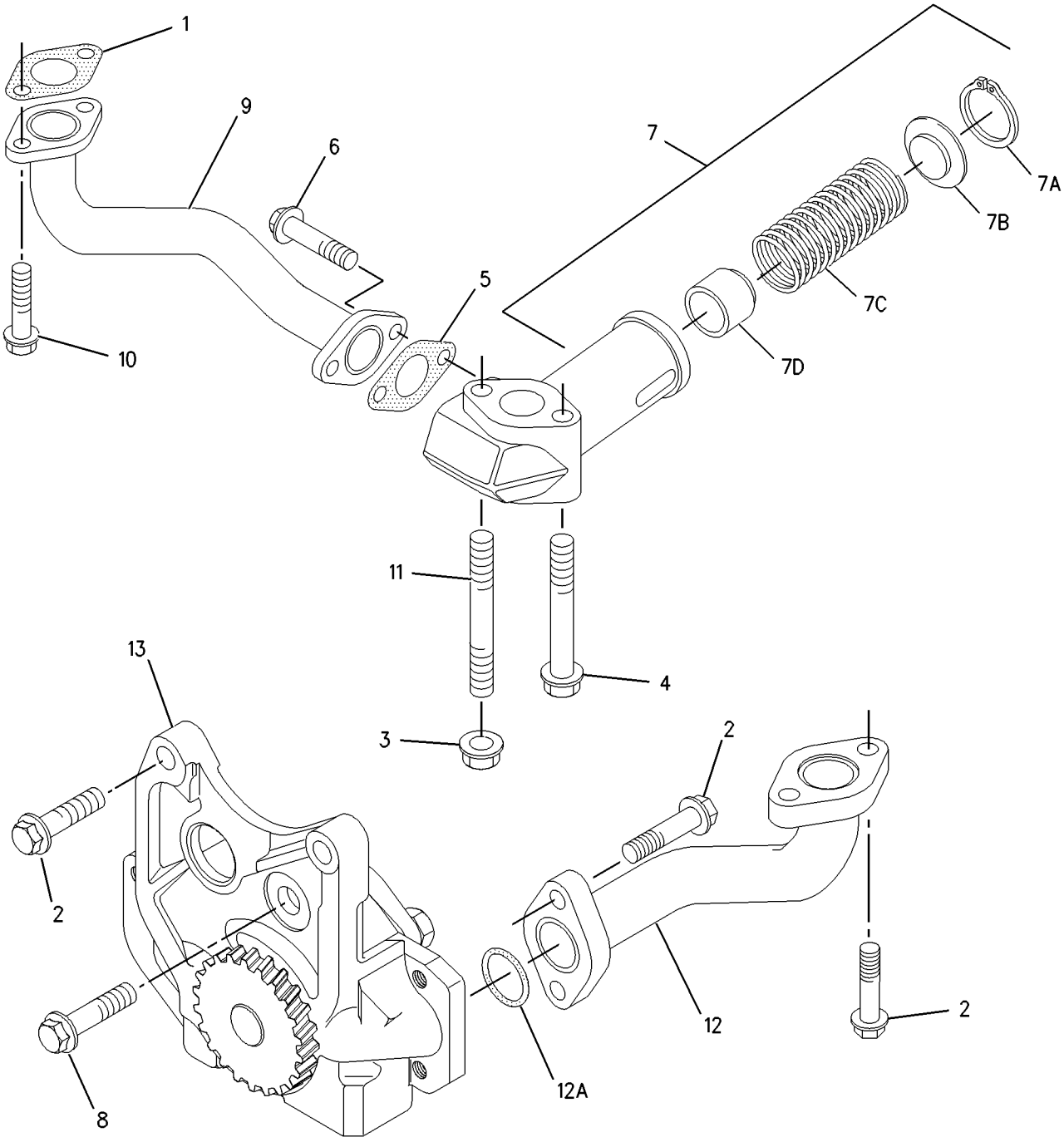

GRAPHIC #1 **<END>** g00983933

228-7387 CONNECTION GP-WATER

S/N: CPT1-UP

PART OF 188-5096 ENGINE AR-PRIMARY

SMCS-1380 **i02038683**

NOTE	REF NO	GRAPHIC REF	PART NUMBER	QTY	PART NAME 1 2 3 4 5 6 (PRODUCT LEVEL)	SEE PAGE
	1	1	**6I-0260**	2	BOLT (M8X1.25X25-MM)	
	2	1	**6I-4374**	2	BOLT	
	3	1	**216-9743**	1	CONNECTION AS	
	3A	1	**140-7515**	1	SEAL-O-RING (REGULATOR)	
	3B	1	**141-6188**	1	SEAL (REGULATOR HOUSING)	
	3C	1	**162-0236**	1	RING	
	3D	1	**162-0237**	1	PLUG	
	3E	1	**216-9737**	1	REGULATOR-WATER TEMPERATURE	

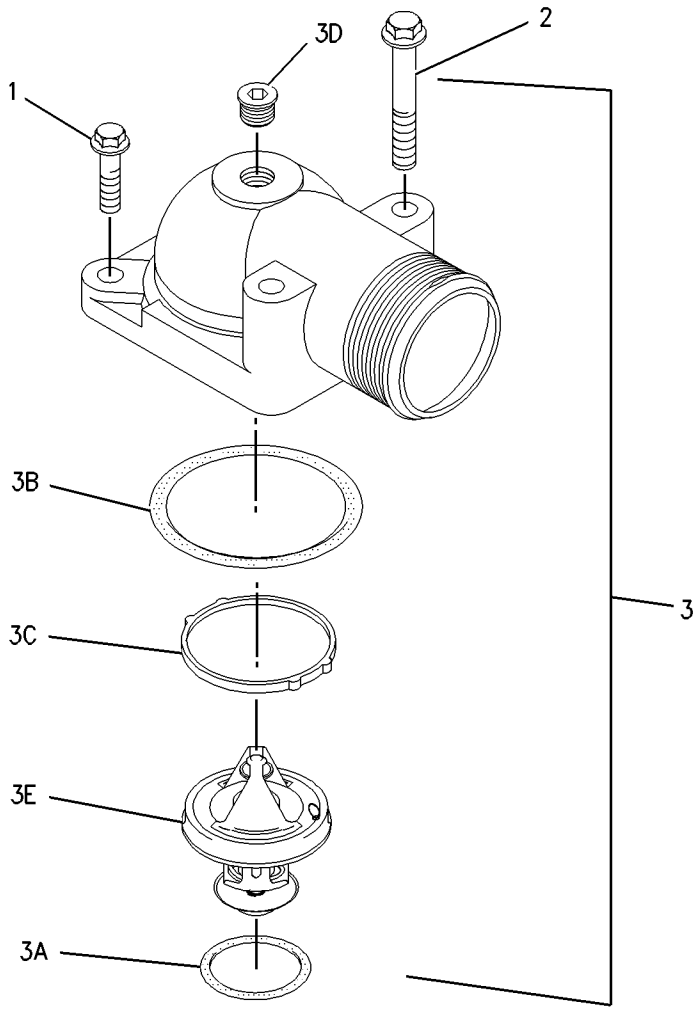

GRAPHIC #1 **<END>** g00932676

216-9648 COOLER GP-FLTR BASE & ENG OIL

S/N: CPT1-UP

PART OF 188-5096 ENGINE AR-PRIMARY

SMCS-1306, 1378 **i02161751**

NOTE	REF NO	GRAPHIC REF	PART NUMBER	QTY	PART NAME 1 2 3 4 5 6 (PRODUCT LEVEL)	SEE PAGE
	1	1	**6I-0260**	4	BOLT (M8X1.25X25-MM)	
	2	1	**6I-0291**	4	NUT (M8X1.25)	
	3	1	**6I-0593**	4	BOLT (M10X1.5X30-MM)	
	4	1	**6I-4786**	1	GASKET	
	5	1	**124-3815**	14	BOLT (M8X16X1.25-MM)	
	6	1	**140-8783**	5	BOLT (M10X45-MM)	
	7	1	**162-0761**	4	FLANGE	
	8	1	**162-9754**	2	SEAL	
	9	1	**175-3915**	1	COOLER-OIL	
	10	1	**216-9633**	1	VALVE AS-FLUID SAMPLING (ENGINE OIL)	
	11	1	**8C-3445**	1	CAP-DUST (OIL CHECK VALVE)	
	12	1	**216-9637**	1	HOUSING	
	13	1	**216-9638**	1	GASKET	
	14	1	**216-9643**	2	GASKET	
	15	1	**220-7171**	1	ADAPTER-HOUSING	
	16	1	**230-3776**	2	SEAL	
	17	1	**231-8047**	1	HOSE AS	
	18	1	**231-8048**	1	HOSE AS	
	18A	1	**166-8725**	1	CLIP	
	19	1	**232-1799**	1	HEAD AS	
	19A	1	**118-9145**	2	CONNECTOR	
	19B	1	**7M-7410**	1	PLUG-PIPE	
	19C	1	**219-1818**	1	CONNECTION	
	20	1	**243-3678**	1	GASKET	

216-9648 **COOLER GP-FLTR BASE & ENG OIL** *(contd.)* **i02161751**

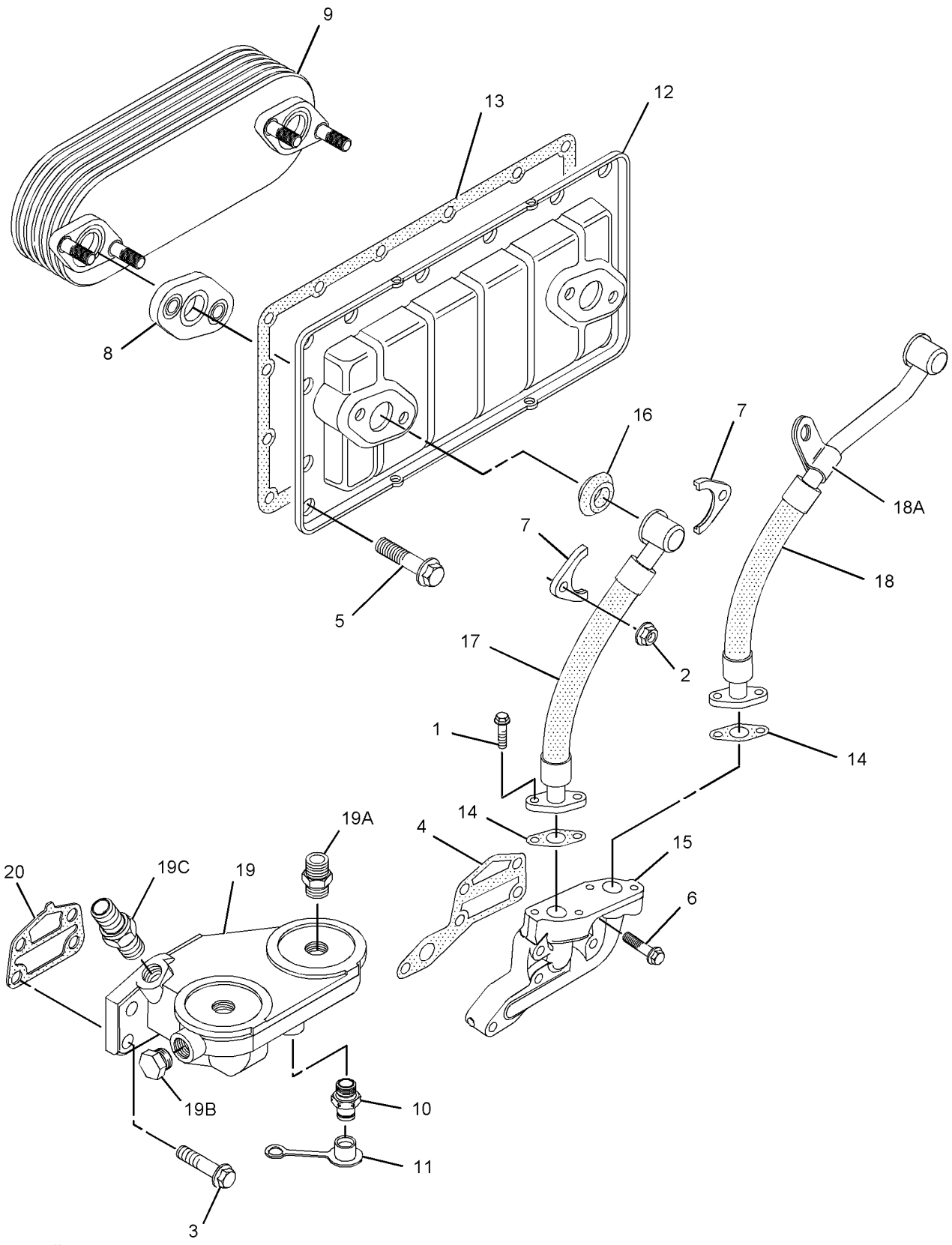

GRAPHIC #1 **<END>** g01068417

COOLING SYSTEM

186-0507 FAN GP-SUCTION

S/N: BCZ1-2000

PART OF 186-0472 INSTALLATION AR-ENGINE

SMCS-1356 **i02159883**

NOTE	REF NO	GRAPHIC REF	PART NUMBER	QTY	PART NAME 1 2 3 4 5 6 (PRODUCT LEVEL)	SEE PAGE
	1	1	**196-1757**	1	ADAPTER	
	2	1	**197-6548**	1	SPIDER AS-FAN (9-BLADES)	
M	3	1	**8T-4189**	4	BOLT (M8X1.25X20-MM)	
	4	1	**8T-4224**	4	WASHER-HARD (8.8X16X2-MM THK)	

M-METRIC PART

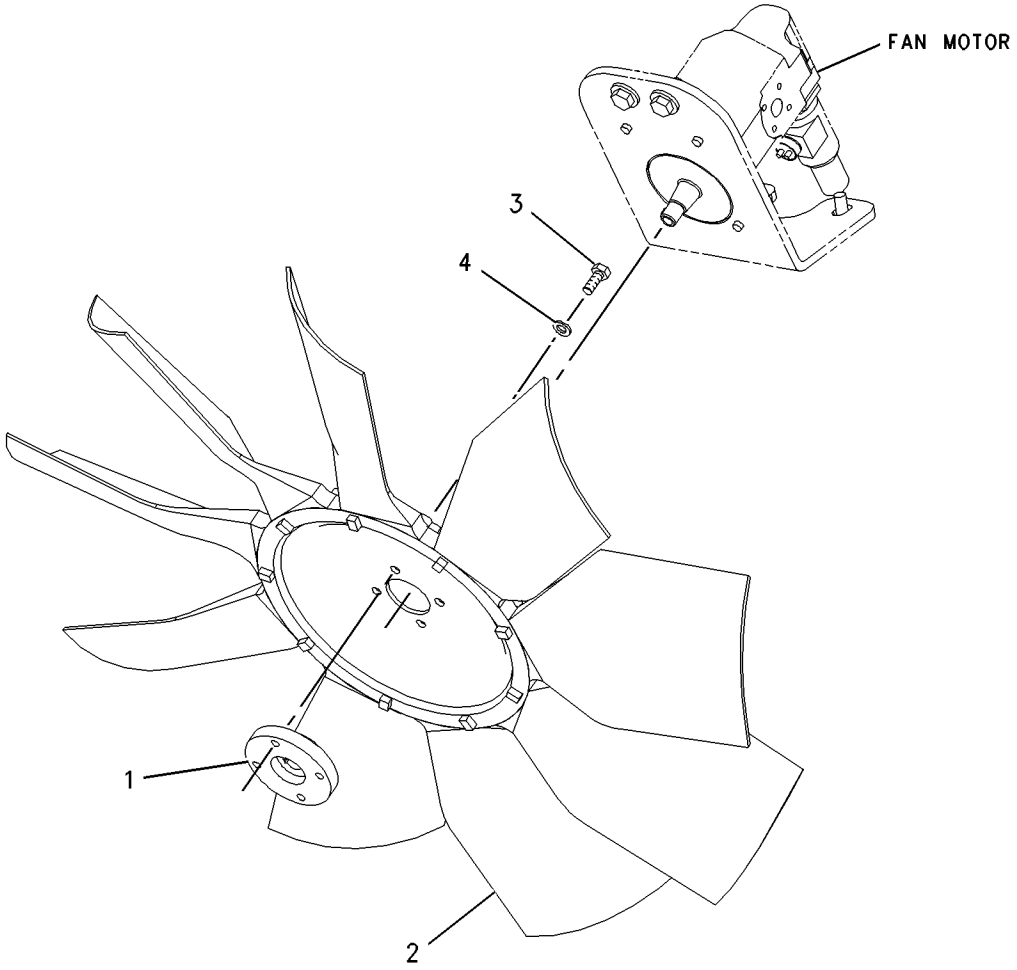

GRAPHIC #1 **<END>** g00829091

COOLING SYSTEM

188-2812 FAN GP-SUCTION

S/N: BCZ1-2000

PART OF 186-0472 INSTALLATION AR-ENGINE

SMCS-1356 **i02159884**

NOTE	REF NO	GRAPHIC REF	PART NUMBER	QTY	PART NAME 1 2 3 4 5 6 (PRODUCT LEVEL)	SEE PAGE
	1	1	**197-8159**	1	SPIDER AS-FAN (9-BLADES)	
	2	1	**210-1443**	1	ADAPTER	
M	3	1	**108-2989**	4	BOLT (M8X1.25X130-MM)	
	4	1	**8T-4224**	4	WASHER-HARD (8.8X16X2-MM THK)	

M-METRIC PART

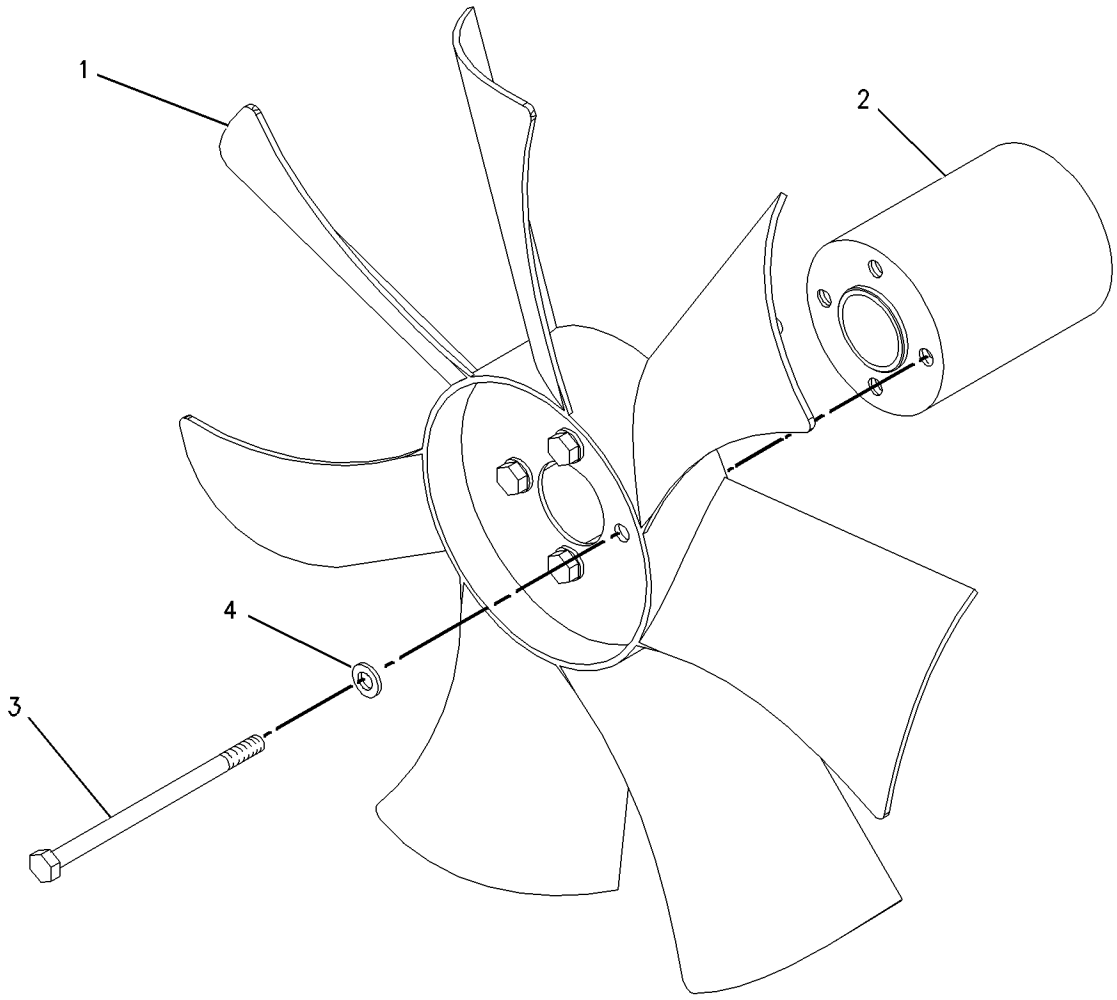

GRAPHIC #1 **<END>** g00836972

COOLING SYSTEM

186-0508 GUARD GP-FAN

S/N: BCZ1-585

PART OF 241-3621 GUARD GP-FAN, 186-0472 INSTALLATION AR-ENGINE

ALSO AN ATTACHMENT

SMCS-1360 **i01897796**

NOTE	REF NO	GRAPHIC REF	PART NUMBER	QTY	PART NAME 1 2 3 4 5 6 (PRODUCT LEVEL)	SEE PAGE
	1	1	**8U-3528**	2	HINGE AS	
M	2	1	**131-6454**	4	SCREW-FLAT HEAD	
	3	1	**197-1711**	1	GRILL AS	
	4	1	**197-8859**	1	SHROUD	
	5	1	**202-5466**	2	BRACKET AS	
	6	1	**202-5467**	2	BRACKET AS	
	7	1	**113-7328**	1	SPRING-GAS	
	8	1	**116-6325**	1	SPRING-GAS	
	9	1	**7X-7729**	12	WASHER (11X25X3MM THK)	
M	10	1	**8T-4137**	12	BOLT (M10X1.5X20MM)	

M-METRIC PART

186-0508 **GUARD GP-FAN** *(contd.)* **i01897796**

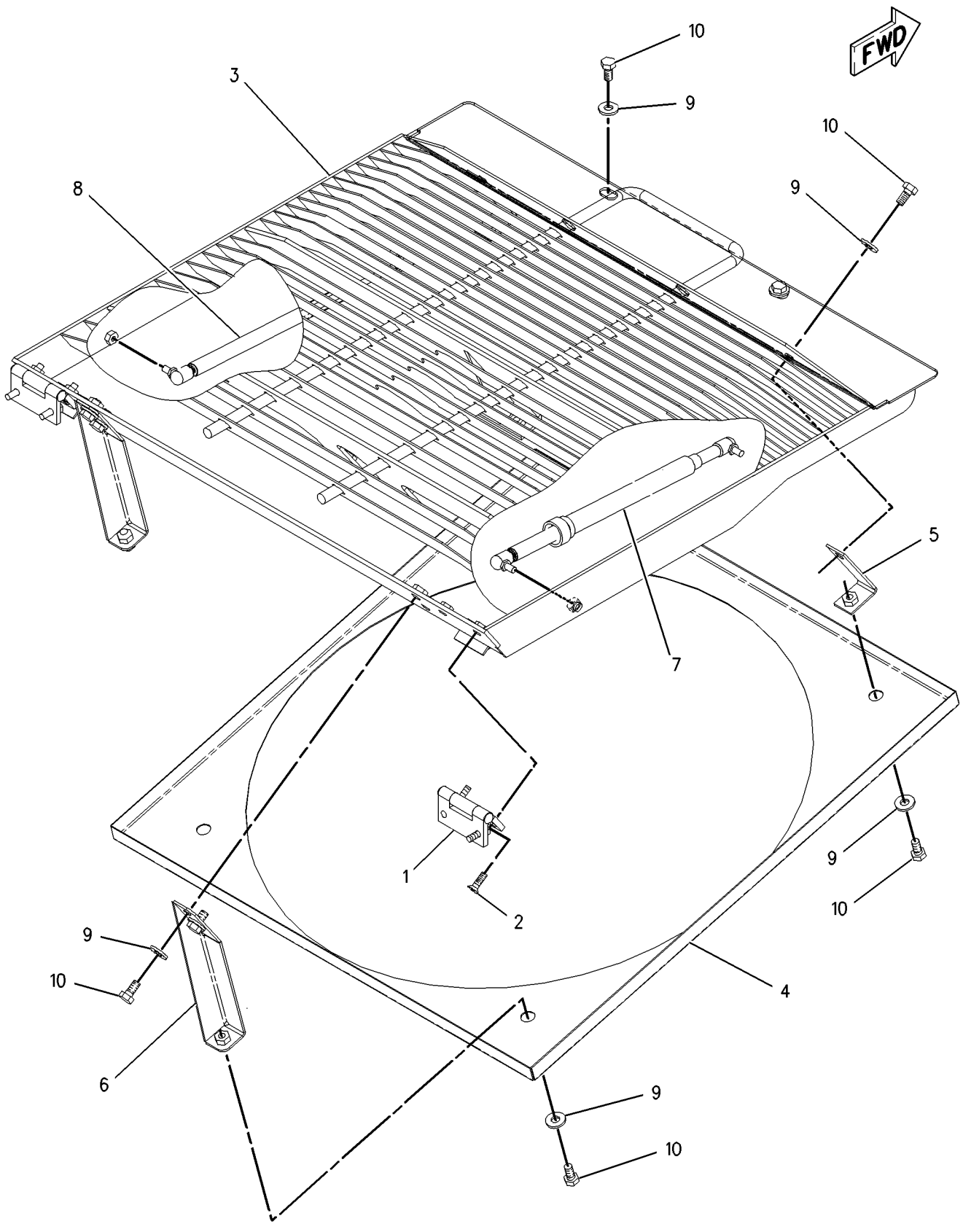

GRAPHIC #1 **<END>** g00988049

COOLING SYSTEM

188-2813 GUARD GP-FAN

S/N: BCZ1-619

PART OF 186-0472 INSTALLATION AR-ENGINE

SMCS-1360 **i01790420**

NOTE	REF NO	GRAPHIC REF	PART NUMBER	QTY	PART NAME 1 2 3 4 5 6 (PRODUCT LEVEL)	SEE PAGE
	1	1	**210-1860**	1	SHROUD	
	2	1	**213-0169**	2	GRILL AS	
	3	1	**214-6199**	1	PLATE	
	4	1	**214-6200**	1	PLATE AS	
M	4A	1	**159-9540**	2	NUT-WELD	
	5	1	**5P-4116**	6	WASHER-HARD (8.8X20.5X2MM THK)	
	6	1	**7X-7729**	8	WASHER (11X25X3MM THK)	
M	7	1	**8T-4136**	8	BOLT (M10X1.5X25MM)	
M	8	1	**8T-4171**	2	BOLT (M6X1X12MM)	
M	9	1	**8T-4189**	6	BOLT (M8X1.25X20MM)	
	10	1	**9X-8256**	2	WASHER (6.6X12X2MM THK)	
E	11	1	**117-0123**		SEAL (239CM)	

E-ORDER BY THE CENTIMETER
M-METRIC PART

188-2813 **GUARD GP-FAN** *(contd.)* **i01790420**

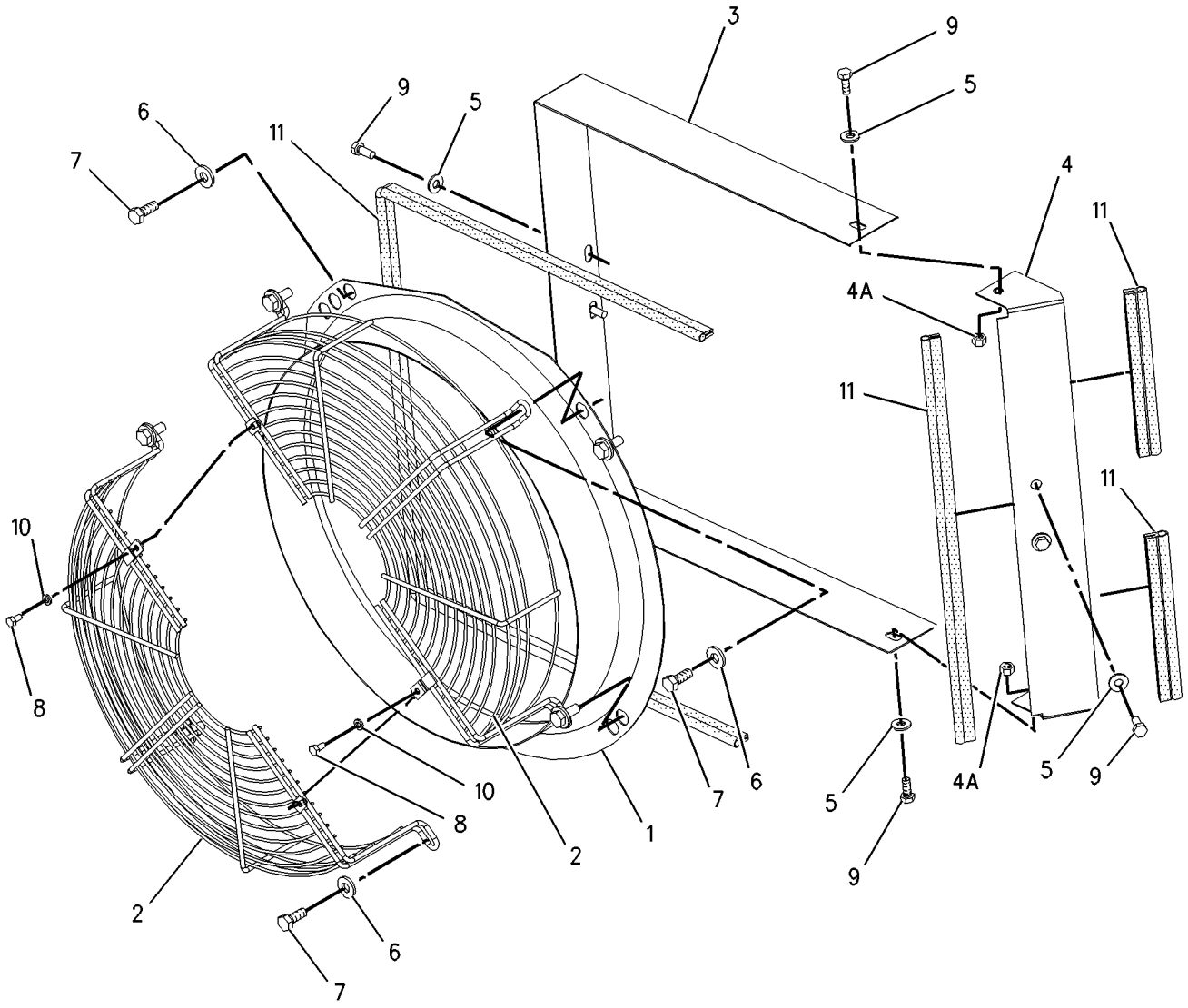

GRAPHIC #1 **<END>** g00918053

COOLING SYSTEM

188-2813 GUARD GP-FAN

S/N: BCZ620-2000

PART OF 186-0472 INSTALLATION AR-ENGINE

SMCS-1360 **i02007109**

NOTE	REF NO	GRAPHIC REF	PART NUMBER	QTY	PART NAME 1 2 3 4 5 6 (PRODUCT LEVEL)	SEE PAGE
	1	1	**210-1860**	1	SHROUD	
	2	1	**214-6199**	1	PLATE	
	3	1	**214-6200**	1	PLATE AS	
M	3A	1	**159-9540**	2	NUT-WELD (M8X1.25-THD)	
C	4	1	**240-8422**	1	GRILL AS	
	5	1	**5P-4116**	6	WASHER-HARD (8.8X20.5X2-MM THK)	
C	6	1	**7X-7729**	5	WASHER (11X25X3-MM THK)	
CM	7	1	**8T-4136**	5	BOLT (M10X1.5X25-MM)	
M	8	1	**8T-4189**	6	BOLT (M8X1.25X20-MM)	
E	9	1	**117-0123**		SEAL (239CM)	

C-CHANGE FROM PREVIOUS TYPE
E-ORDER BY THE CENTIMETER
M-METRIC PART

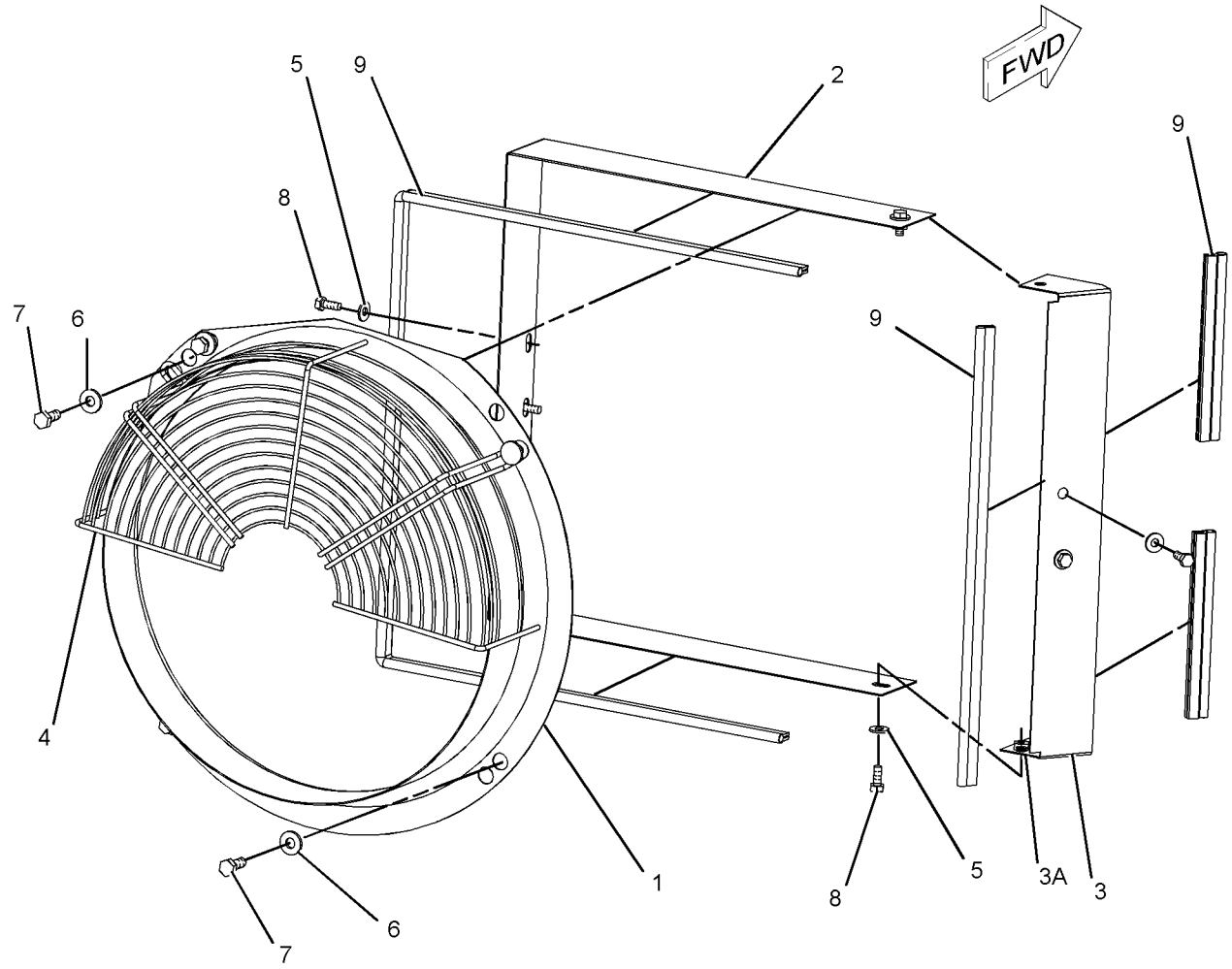

GRAPHIC #1 **<END>** g01083128

238-7016 GUARD GP-FAN

S/N: BCZ586-2000

PART OF 186-0472 INSTALLATION AR-ENGINE

SMCS-1360 **i02007108**

NOTE	REF NO	GRAPHIC REF	PART NUMBER	QTY	PART NAME 1 2 3 4 5 6 (PRODUCT LEVEL)	SEE PAGE
	1	2	**8U-3528**	2	HINGE AS	
	2	1	**128-1465**	1	SPRING-GAS	
M	3	2	**131-6454**	4	SCREW-FLAT HEAD	
	4	2	**197-8859**	1	SHROUD	
	5	2	**202-5466**	2	BRACKET AS	
	6	1	**238-7015**	1	GRILL AS	
	6A	1	**8U-1242**	2	PLATE (50-MM LG)	
M	6B	1	**159-9540**	5	NUT-WELD (M8X1.25-THD)	
	7	1	**239-3798**	2	SPACER	
	8	1,2	**7X-7729**	10	WASHER (11X25X3-MM THK)	
M	9	1,2	**8T-4137**	10	BOLT (M10X1.5X20-MM)	
EF			**117-0123**		SEAL (228-CM)	

E-ORDER BY THE CENTIMETER
F-NOT SHOWN
M-METRIC PART

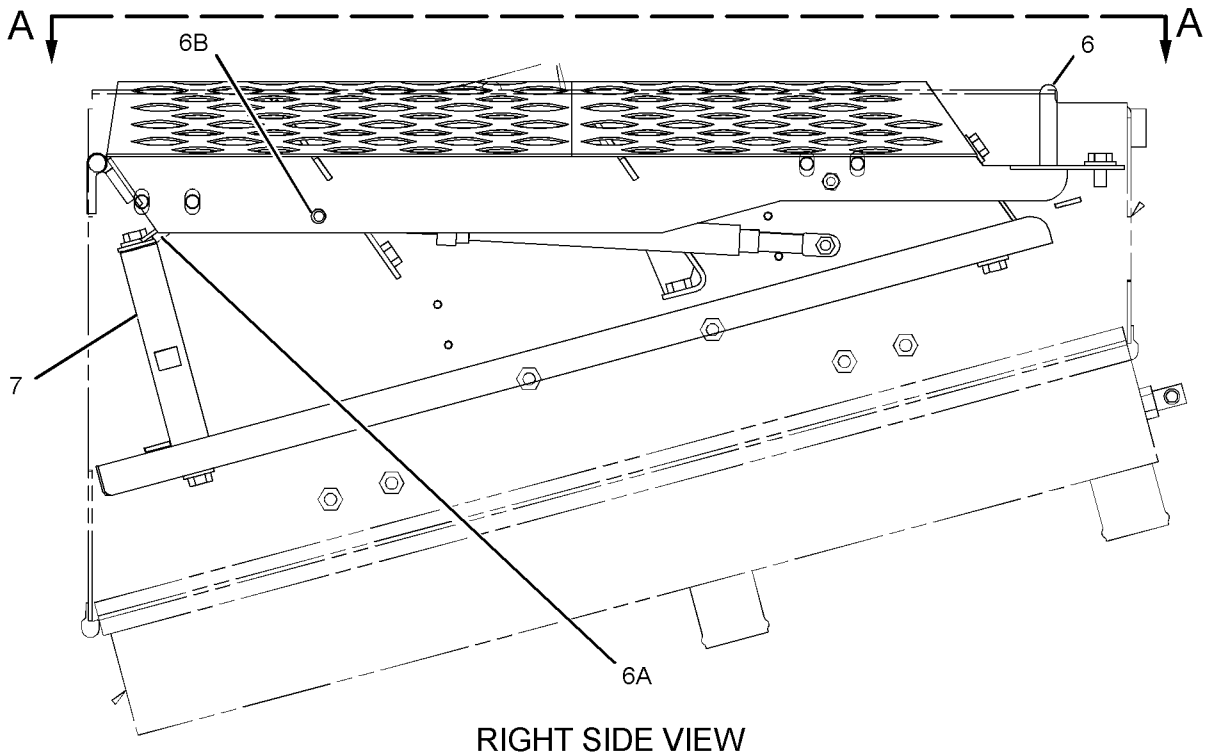

RIGHT SIDE VIEW

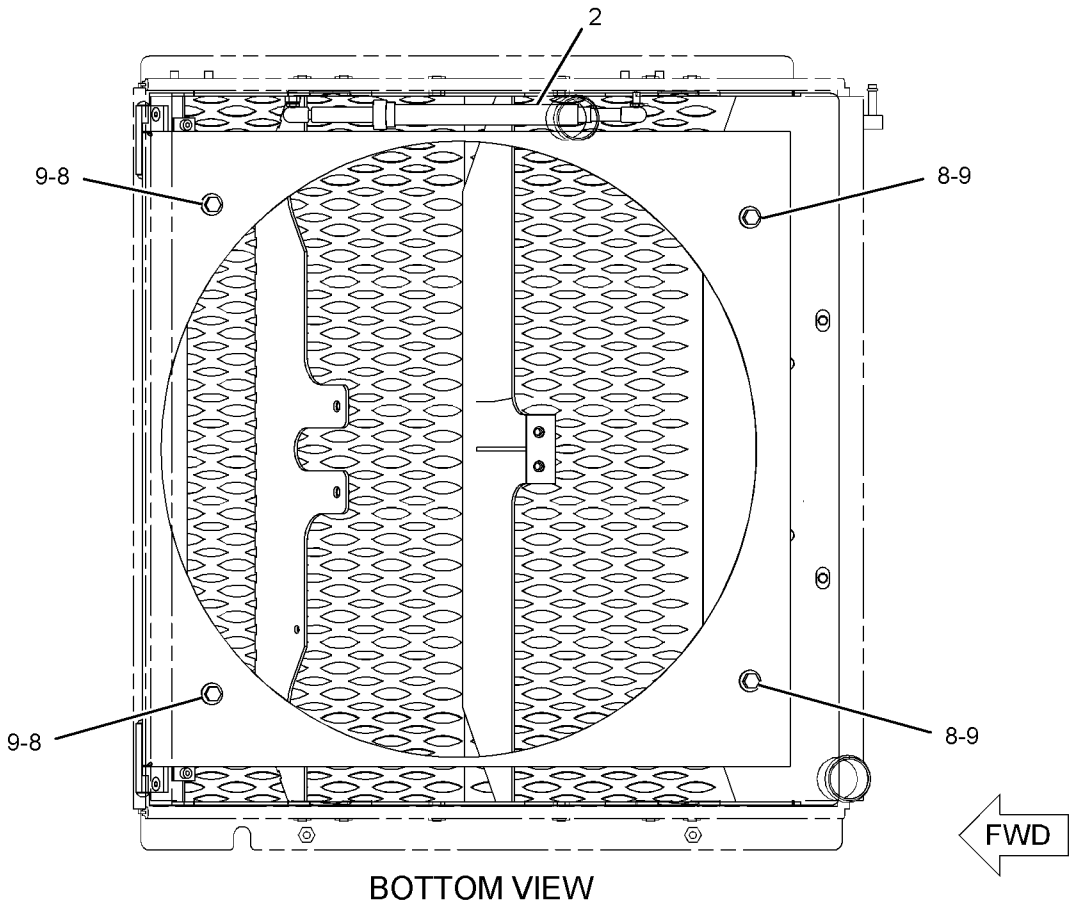

BOTTOM VIEW

GRAPHIC #1

g01087260

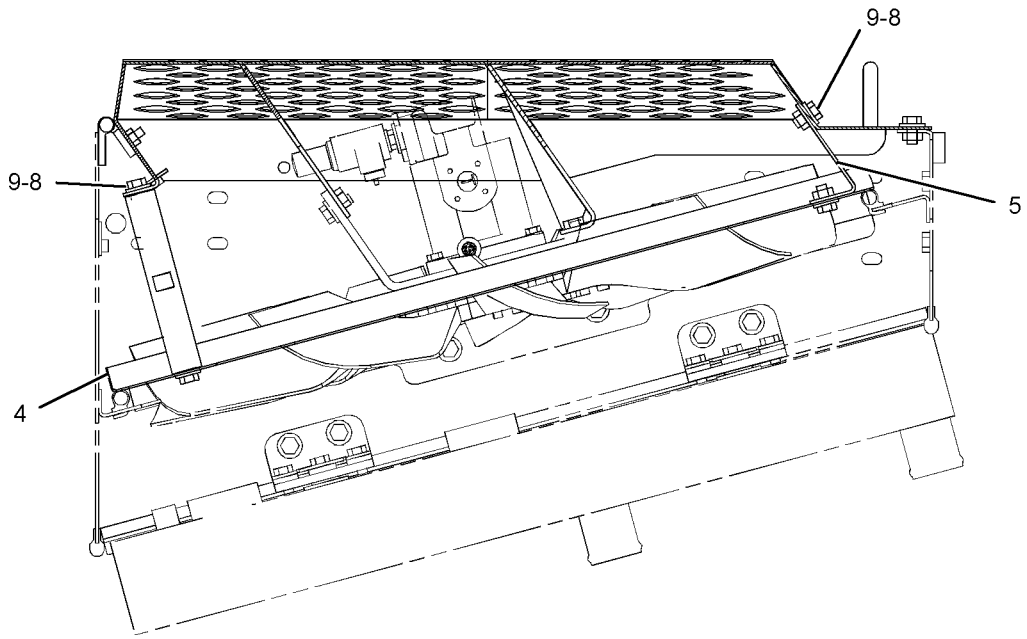

SECTION B-B

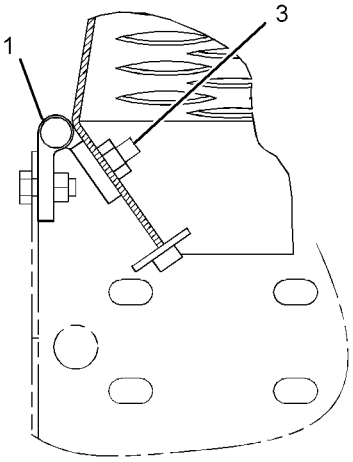

SECTION C-C

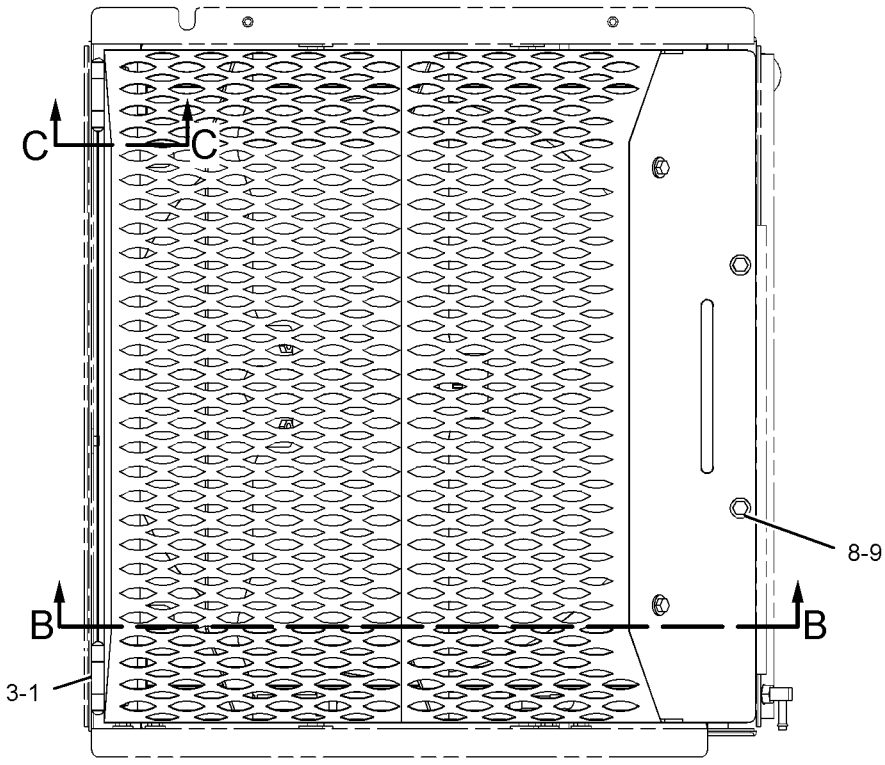

SECTION A-A

GRAPHIC #2 **<END>** g01087237

COOLING SYSTEM

241-3621 GUARD GP-FAN

S/N: BCZ1-2000
AN ATTACHMENT

SMCS-1360 **i02052275**

NOTE	PART NUMBER	QTY	PART NAME 1 2 3 4 5 6 (PRODUCT LEVEL)	SEE PAGE
Y	*186-0508*	1	GUARD GP-FAN	62

Y-SEPARATE ILLUSTRATION

<END>

186-0510 LINES GP-RADIATOR

S/N: BCZ1-217

PART OF 186-0472 INSTALLATION AR-ENGINE

SMCS-1353, 1380 **i02166623**

NOTE	REF NO	GRAPHIC REF	PART NUMBER	QTY	PART NAME 1 2 3 4 5 6 (PRODUCT LEVEL)	SEE PAGE
	1	2	**5P-4924**	2	ELBOW	
	2	1	**6V-7238**	2	VALVE-SHUTOFF (ENGINE COOLANT)	
	3	2	**067-2935**	1	FITTING-PIPE	
	4	2	**111-4013**	1	GROMMET	
Y	5	1	*198-1685*	1	TANK GP-COOLANT	83
	6	1	**199-5926**	1	HOSE-RADIATOR INLET	
	7	2	**199-5927**	1	HOSE-RADIATOR OUTLET	
	8	2	**205-5134**	1	HOSE-RADIATOR (OUTLET)	
	9	1	**205-5135**	1	HOSE-RADIATOR (INLET)	
	10	1	**206-0842**	1	TUBE AS	
	11	1	**206-0843**	1	TUBE AS	
	12	1,2	**104-3173**	6	CLIP	
	13	2	**3J-1907**	2	SEAL-O-RING	
	14	1	**3K-0360**	2	SEAL-O-RING	
	15	1,2	**5P-4961**	4	CLAMP-HOSE	
	16	1,2	**7X-7958**	2	CLAMP-HOSE	
	17	1,2	**8T-4121**	9	WASHER-HARD (11X21X2.5-MM THK)	
M	18	2	**8T-4137**	3	BOLT (M10X1.5X20-MM)	
M	19	1,2	**8T-4191**	6	BOLT (M10X1.5X16-MM)	
	20	1,2	**8T-4984**	8	CLAMP-HOSE	
E	21	1	**5P-1251**		HOSE (81CM)	
E	22	2	**5P-1693**		HOSE (218CM)	
E	23	2	**8C-3681**		HOSE (85CM)	

E-ORDER BY THE CENTIMETER
M-METRIC PART
Y-SEPARATE ILLUSTRATION

186-0510 **LINES GP-RADIATOR** *(contd.)* **i02166623**

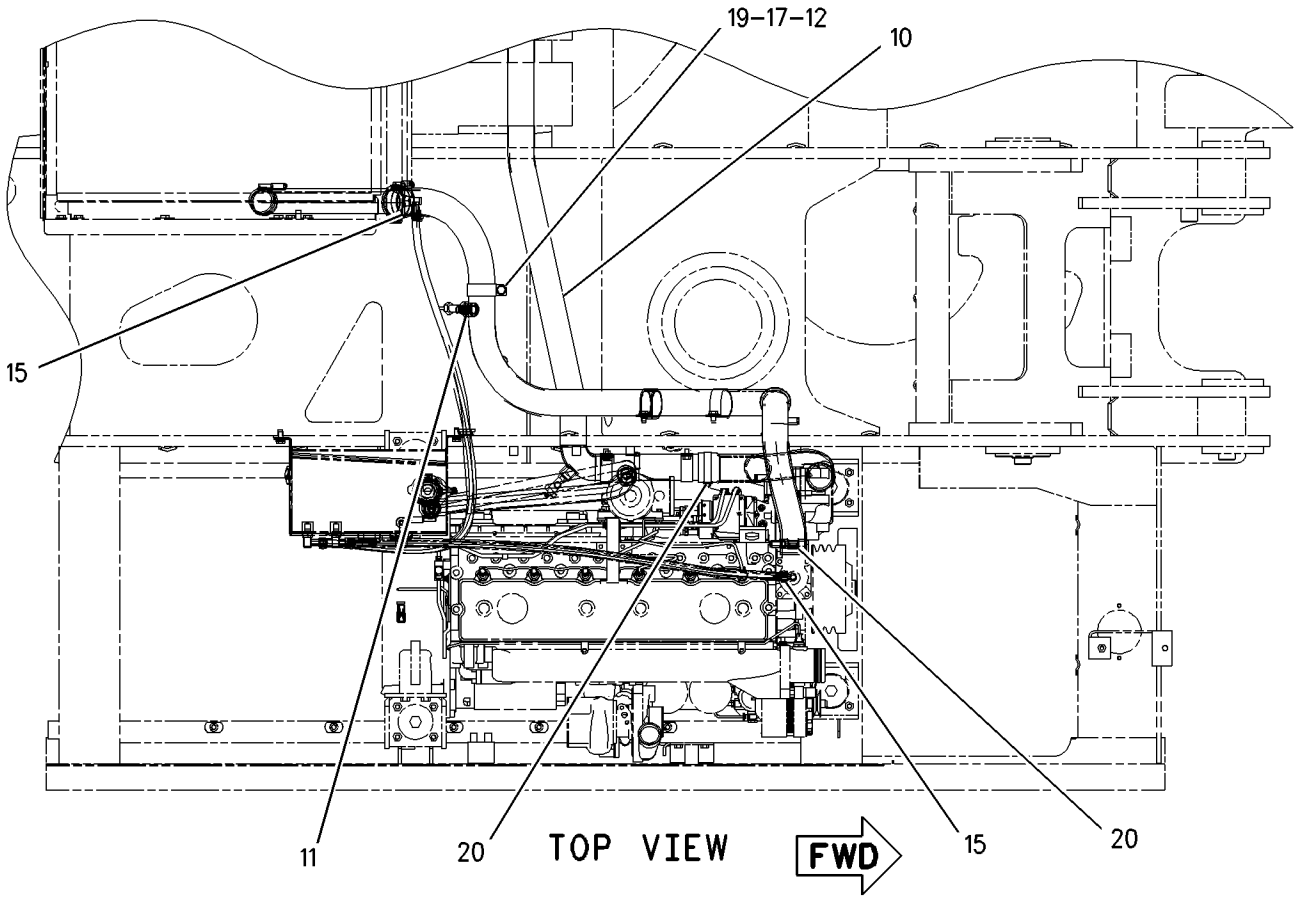

REFER TO ALL ILLUSTRATIONS OF
THIS GROUP FOR AUXILIARY VIEWS

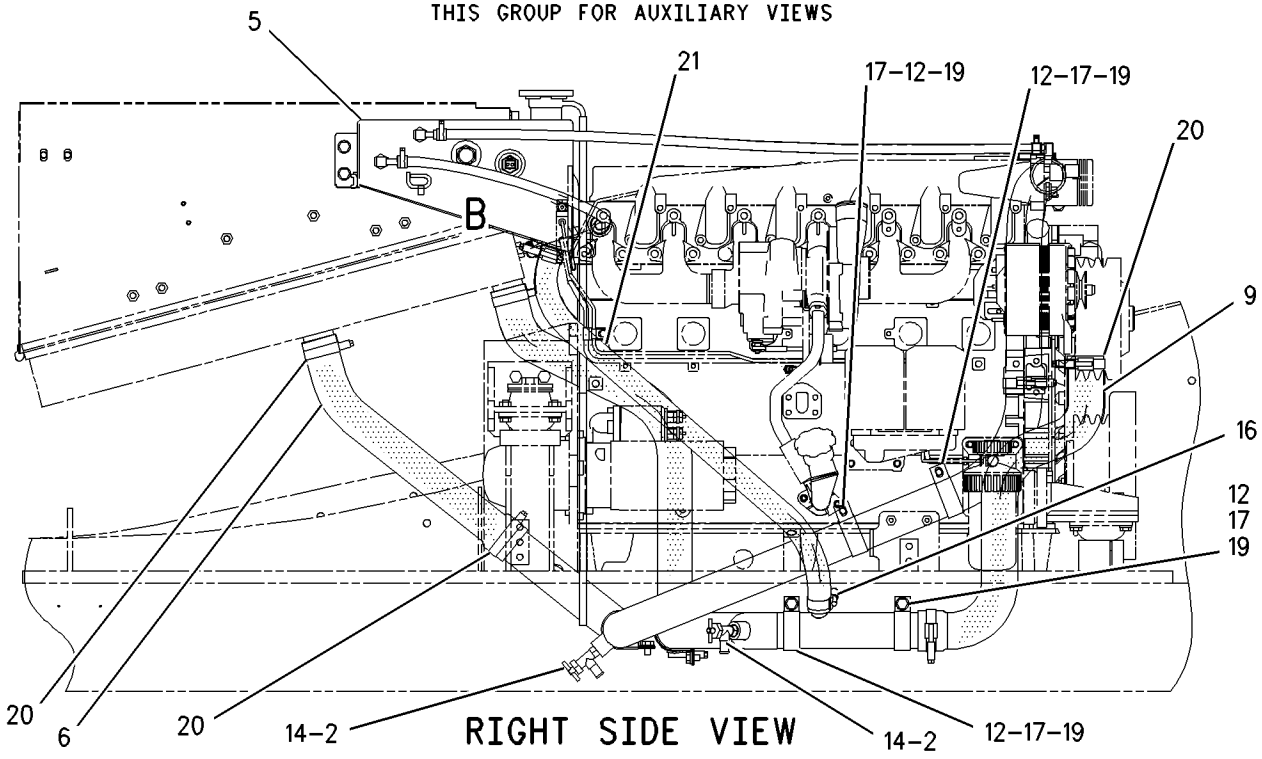

GRAPHIC #1 g00834800

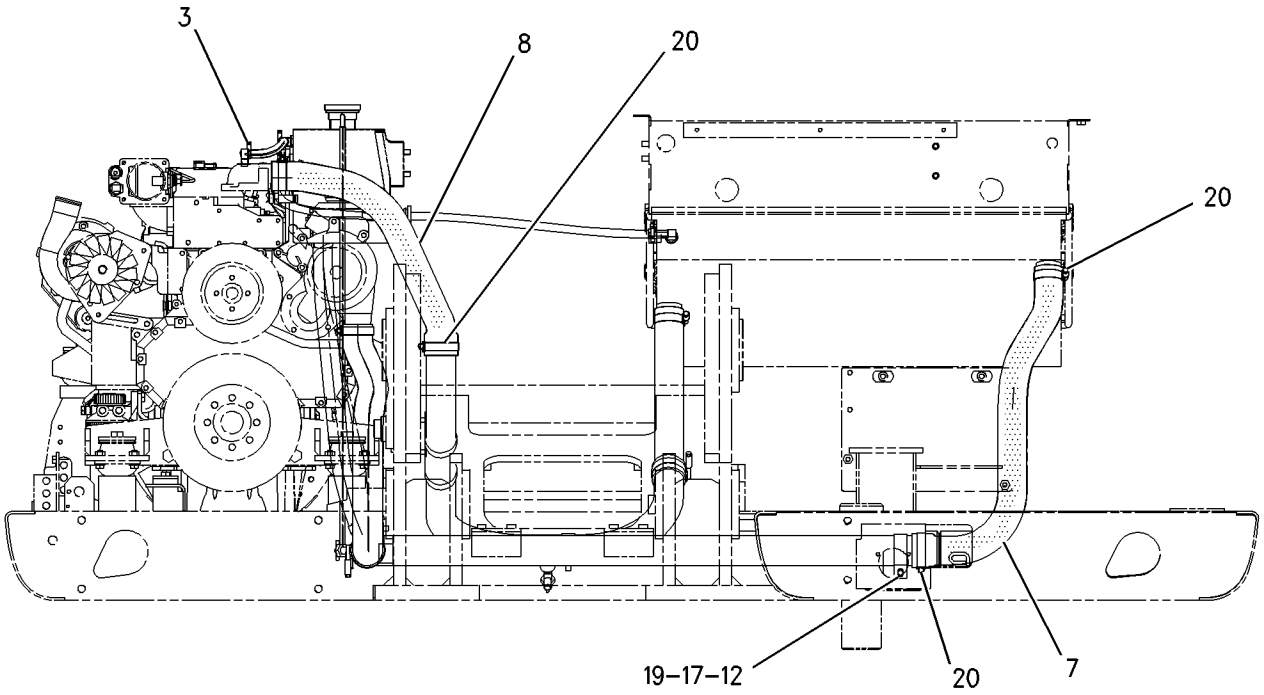

FRONT VIEW

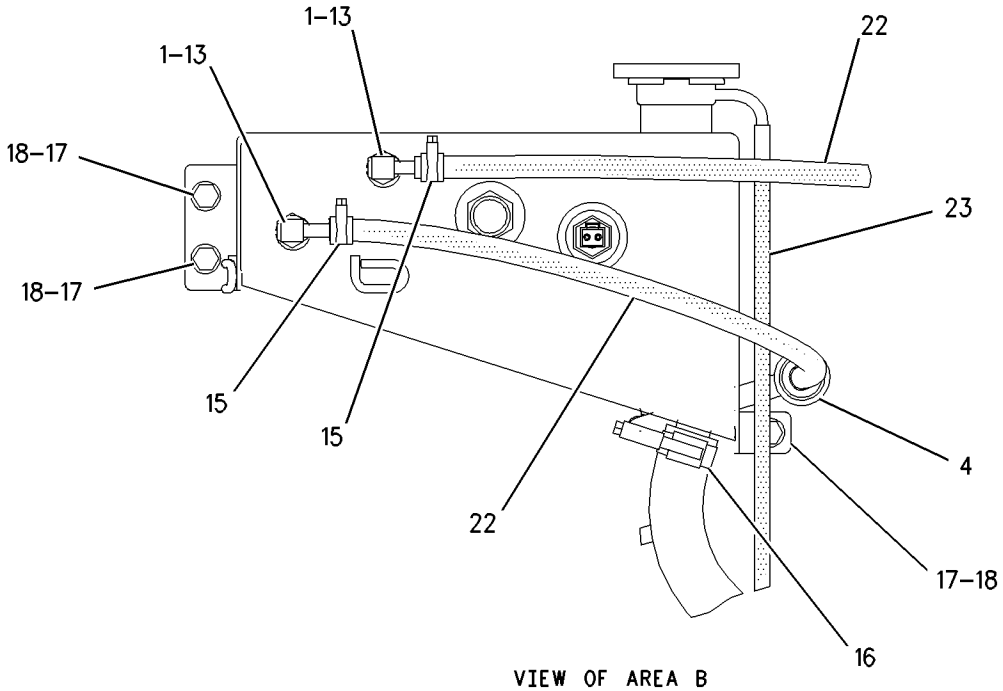

VIEW OF AREA B

GRAPHIC #2 **<END>** g00834801

COOLING SYSTEM

186-0510 LINES GP-RADIATOR

S/N: BCZ218-2000

PART OF 186-0472 INSTALLATION AR-ENGINE

SMCS-1353, 1380 **i02166587**

NOTE	REF NO	GRAPHIC REF	PART NUMBER	QTY	PART NAME 1 2 3 4 5 6 (PRODUCT LEVEL)	SEE PAGE
	1	1	**067-2935**	1	FITTING-PIPE	
	2	2	**111-4013**	1	GROMMET	
C	3	2	*150-3024*	2	ELBOW GP	
					(EACH INCLUDES)	
		2	**3J-1907**	1	SEAL-O-RING	
		2	**5P-4924**	1	ELBOW	
C	4	2	**165-2273**	2	VALVE GP-SHUTOFF (ENGINE COOLANT)	
					(EACH INCLUDES)	
		2	**3K-0360**	1	SEAL-O-RING	
		2	**6V-7238**	1	VALVE-SHUTOFF (ENGINE COOLANT)	
Y	5	2	*198-1685*	1	TANK GP-COOLANT	83
	6	2	**199-5926**	1	HOSE-RADIATOR INLET	
	7	1	**199-5927**	1	HOSE-RADIATOR OUTLET	
	8	1	**205-5134**	1	HOSE-RADIATOR (OUTLET)	
	9	2	**205-5135**	1	HOSE-RADIATOR (INLET)	
	10	1	**233-3051**	1	TUBE AS	
C	11	1	**226-4178**	1	TUBE AS	
	12	2	**227-7477**	4	CLIP	
	13	1,2	**104-3173**	6	CLIP	
	14	1,2	**5P-4961**	4	CLAMP-HOSE	
	15	2	**7X-7958**	2	CLAMP-HOSE	
	16	1,2	**8T-4121**	9	WASHER-HARD (11X21X2.5-MM THK)	
M	17	2	**8T-4137**	5	BOLT (M10X1.5X20-MM)	
M	18	1,2	**8T-4195**	4	BOLT (M10X1.5X30-MM)	
	19	1,2	**8T-4984**	8	CLAMP-HOSE	
E	20	2	**8C-3681**		HOSE (85-CM)	
CE	21	2	**5P-1251**		HOSE (86-CM)	
CE	22	2	**5P-1442**		HOSE (107-CM)	
CE	22A	2	**5P-1442**		HOSE (115-CM)	
	23	1	**230-7251**	1	CLIP	

C-CHANGE FROM PREVIOUS TYPE
E-ORDER BY THE CENTIMETER
M-METRIC PART
Y-SEPARATE ILLUSTRATION

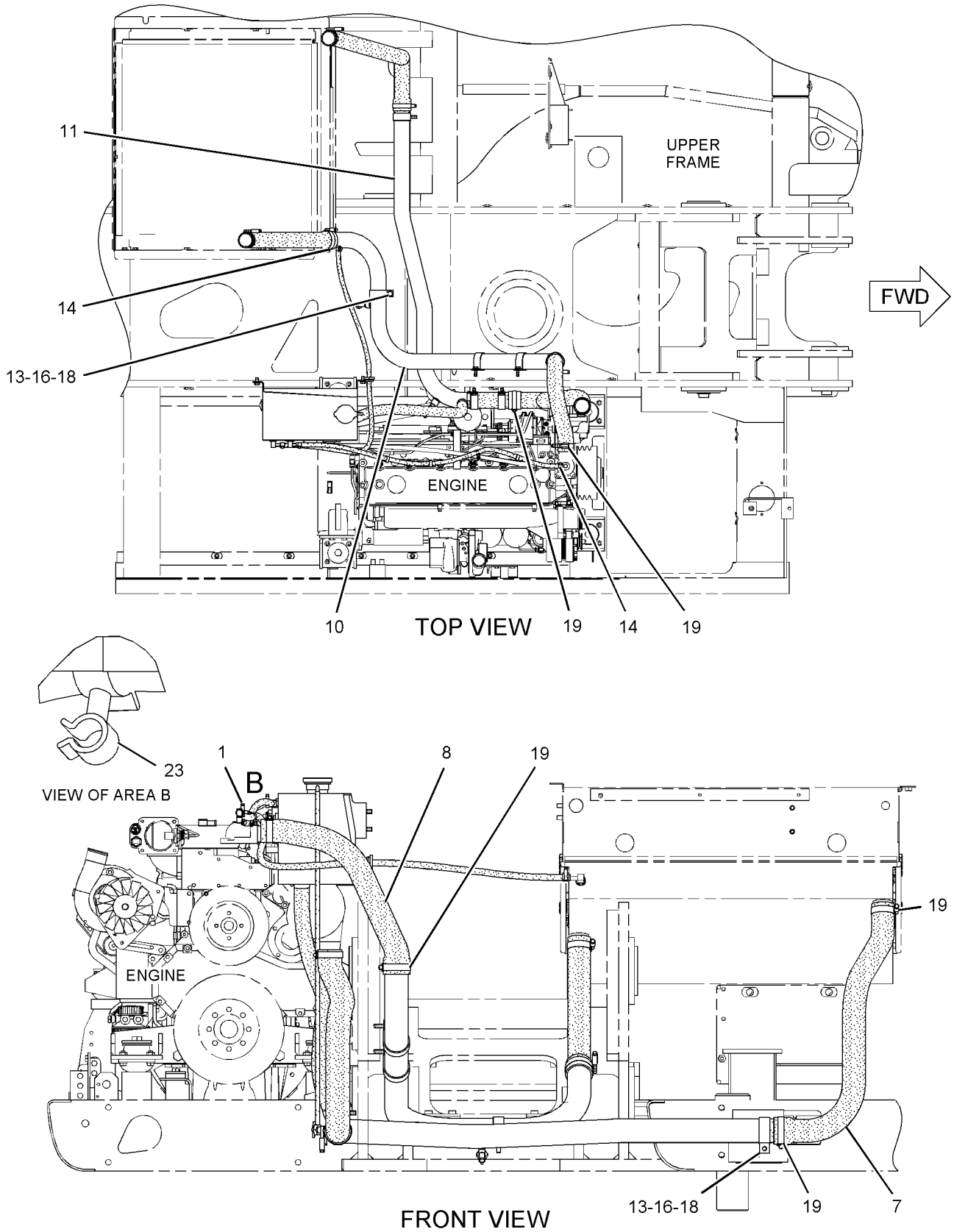

GRAPHIC #1

g01094559

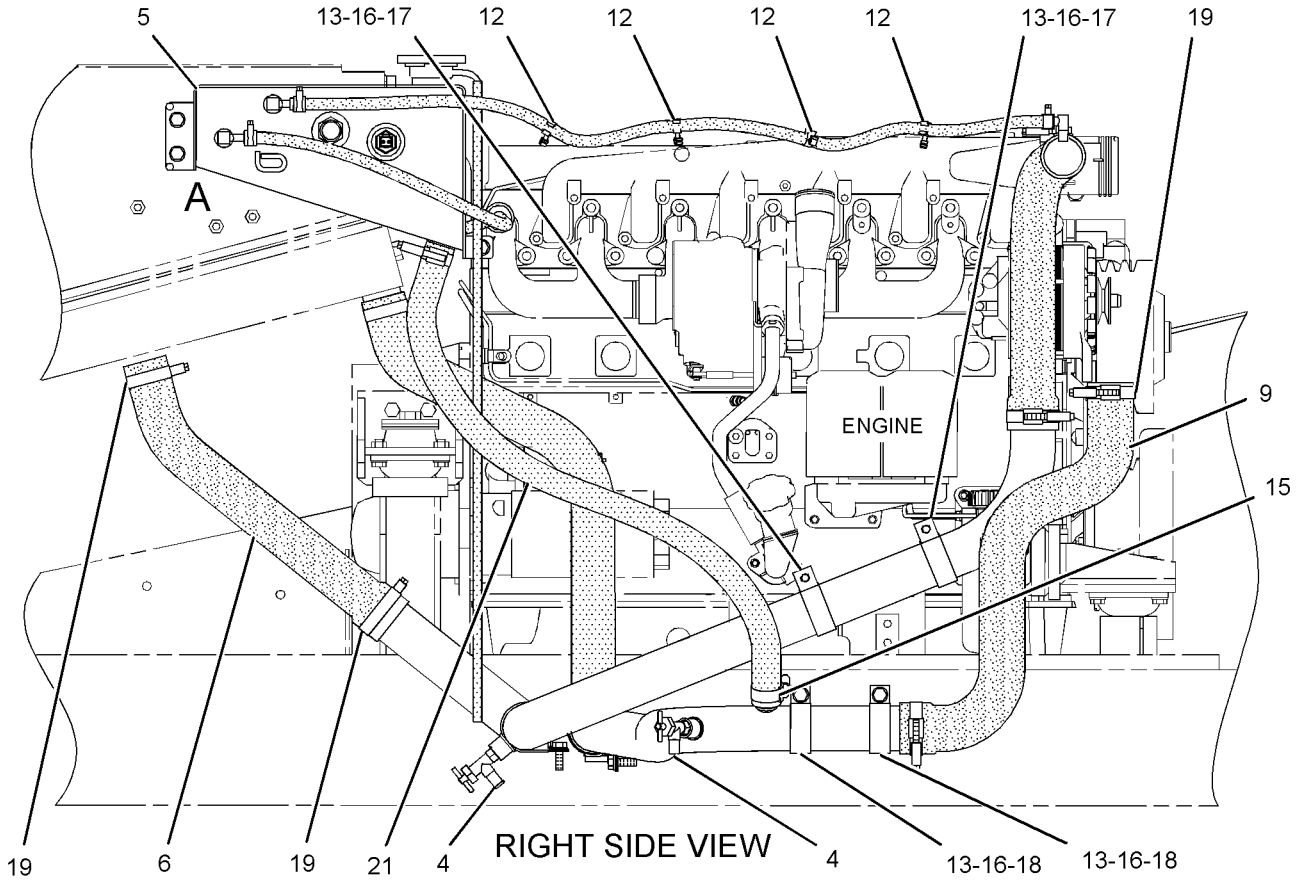

REFER TO ALL ILLUSTRATIONS OF
THIS GROUP FOR AUXILIARY VIEWS

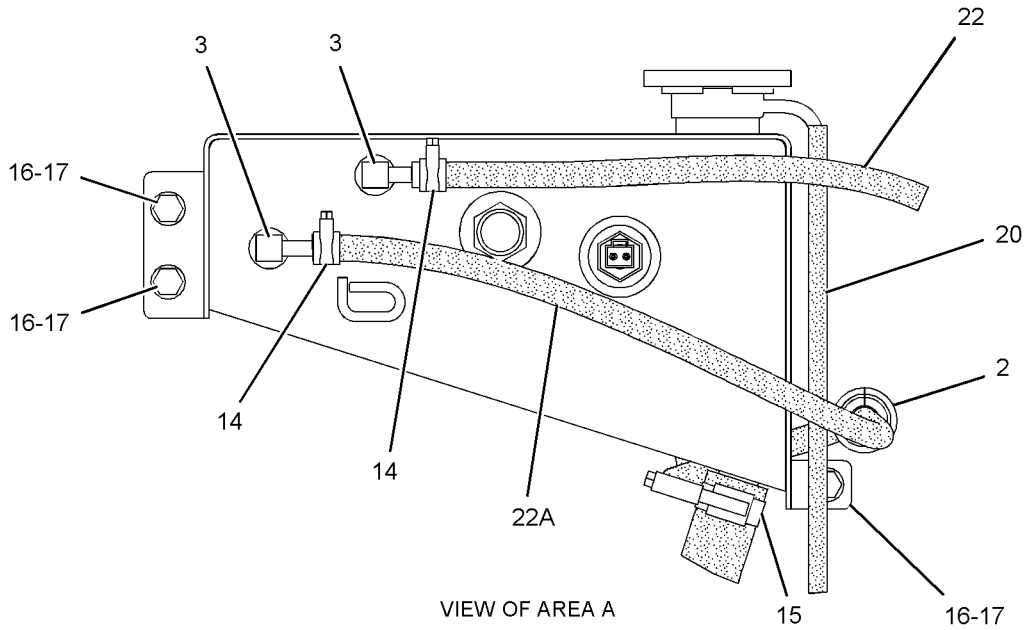

VIEW OF AREA A

GRAPHIC #2

<END>

g01094560

COOLING SYSTEM

216-9735 PUMP GP-WATER

S/N: CPT1-338

PART OF 188-5096 ENGINE AR-PRIMARY

SMCS-1361 **i02161748**

NOTE	REF NO	GRAPHIC REF	PART NUMBER	QTY	PART NAME 1 2 3 4 5 6 (PRODUCT LEVEL)	SEE PAGE
	1	1	**6I-0456**	3	BOLT (M8X1.25X45-MM)	
	2	1	**6I-0645**	3	BOLT (M8X1.25X25-MM)	
	3	1	**6I-4374**	3	BOLT	
	4	1	**6I-4793**	1	BOLT	
	5	1	**100-3751**	2	BOLT (M8X1.25X65-MM)	
	6	1	**101-3771**	1	BOLT	
	7	1	**101-3805**	3	BOLT (M8X1.25X90-MM)	
	8	1	**140-7505**	1	COVER	
	9	1	**140-7506**	1	GASKET-COVER	
	10	1	**140-7512**	1	KIT-HOSE (WATER) (REGULATOR HOUSING)	
	11	1	**2S-3440**	2	CLAMP-HOSE	
	12	1	**171-1076**	1	HOUSING AS (REGULATOR)	
	13	1	**172-4844**	1	SEAL-O-RING	
	14	1	**216-9734**	1	PUMP GP-WATER	
		1	**177-8782**	1	KIT-WATER PUMP	
	15	1	**201-8745**	1	GASKET (WATER PUMP)	

216-9735 **PUMP GP-WATER** *(contd.)* **i02161748**

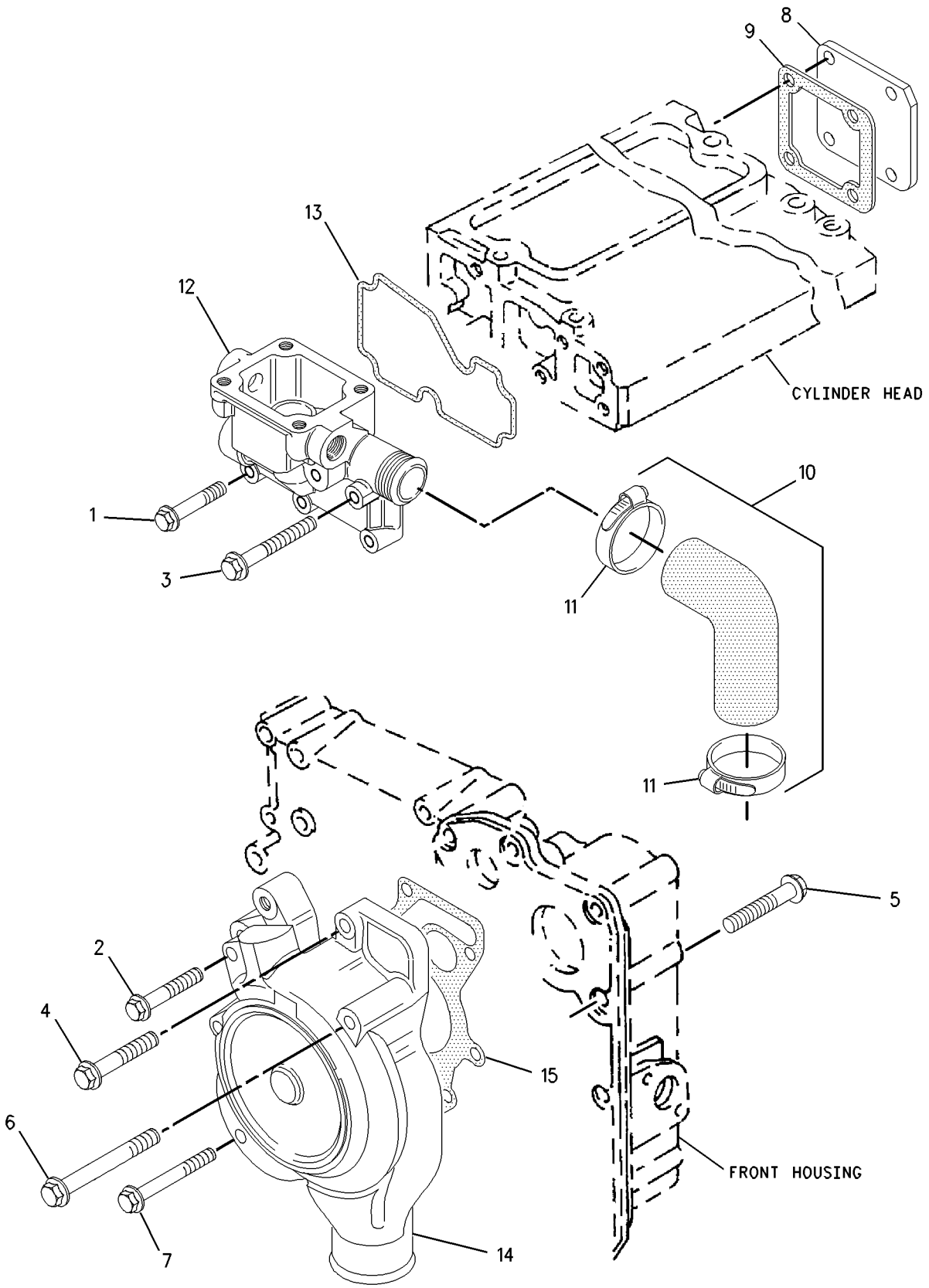

GRAPHIC #1 **<END>** g00861478

221-5369 PUMP GP-WATER

S/N: CPT339-UP

PART OF 188-5096 ENGINE AR-PRIMARY

SMCS-1361 **i02156144**

NOTE	REF NO	GRAPHIC REF	PART NUMBER	QTY	PART NAME 1 2 3 4 5 6 (PRODUCT LEVEL)	SEE PAGE
	1	1	**6I-0456**	3	BOLT (M8X1.25X45-MM)	
	2	1	**6I-0645**	3	BOLT (M8X1.25X25-MM)	
	3	1	**6I-4374**	3	BOLT	
	4	1	**6I-4793**	1	BOLT	
	5	1	**6I-0839**	2	BOLT (M8X1.25X70-MM)	
	6	1	**101-3771**	1	BOLT	
	7	1	**101-3805**	3	BOLT (M8X1.25X90-MM)	
	9	1	**140-7505**	1	COVER	
	10	1	**140-7506**	1	GASKET-COVER	
	11	1	**140-7512**	1	KIT-HOSE (WATER) (REGULATOR HOUSING)	
	12	1	**127-8286**	2	CLAMP-HOSE	
	13	1	**171-1076**	1	HOUSING AS (REGULATOR)	
	14	1	**172-4844**	1	SEAL-O-RING	
	15	1	**216-9734**	1	PUMP GP-WATER	
	15A	1	**201-8745**	1	GASKET (WATER PUMP)	
					AVAILABLE REPAIR KIT(S):	
			177-8782	1	KIT-WATER PUMP	

221-5369 **PUMP GP-WATER** *(contd.)* **i02156144**

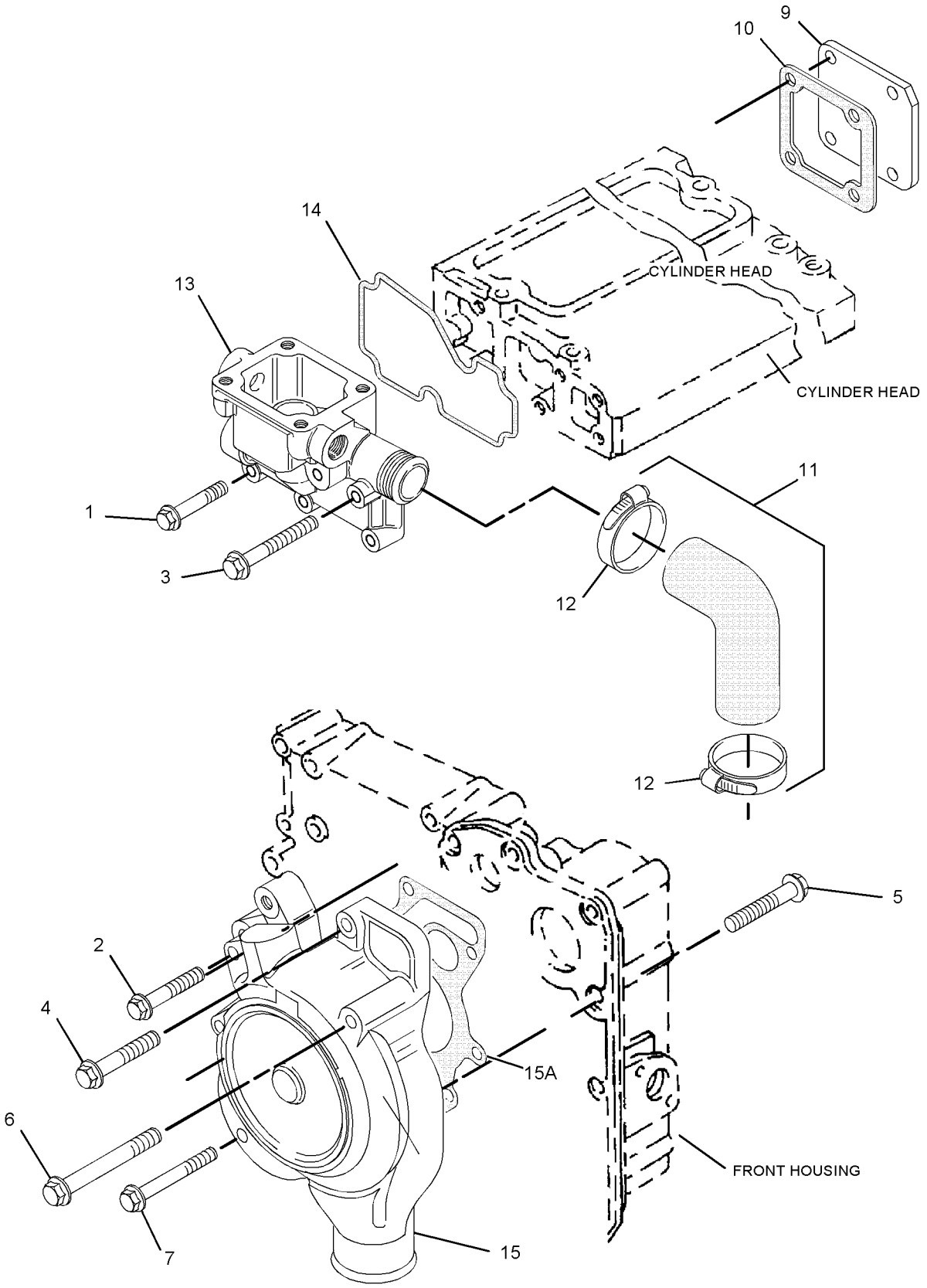

GRAPHIC #1 **<END>** g01094060

186-0505 RADIATOR GP

S/N: BCZ1-2000

PART OF 186-0472 INSTALLATION AR-ENGINE

SMCS-1353 **i02144755**

NOTE	REF NO	GRAPHIC REF	PART NUMBER	QTY	PART NAME 1 2 3 4 5 6 (PRODUCT LEVEL)	SEE PAGE
	1	1	**2W-9710**	4	MOUNT AS	
	2	1	*150-3024*	1	ELBOW GP	
		1	**5P-4924**	1	ELBOW	
			3J-1907	1	SEAL-O-RING	
	3	1	**197-0395**	1	RADIATOR & OIL COOLER GP	
	4	1	**197-0404**	1	SUPPORT AS	
	5	1	**213-5306**	4	PLATE	
	7	1	**198-6361**	2	PLATE	
	9	1	**7X-7729**	16	WASHER (11X25X3-MM THK)	
M	10	1	**8T-4137**	12	BOLT (M10X1.5X20-MM)	
M	11	1	**8T-4196**	4	BOLT (M10X1.5X35-MM)	
	12	1	**8T-4226**	8	WASHER-PLATED (10.5X45X3-MM THK)	
BE	13	1	**117-0121**		SEAL	
BE	14	1	**201-8780**		SEAL	
M	15	1	**8T-4191**	4	BOLT (M10X1.5X16-MM)	
	16	1	**254-7549**	2	PLUG-BUTTON	

B-USE AS REQUIRED
E-ORDER BY THE CENTIMETER
M-METRIC PART

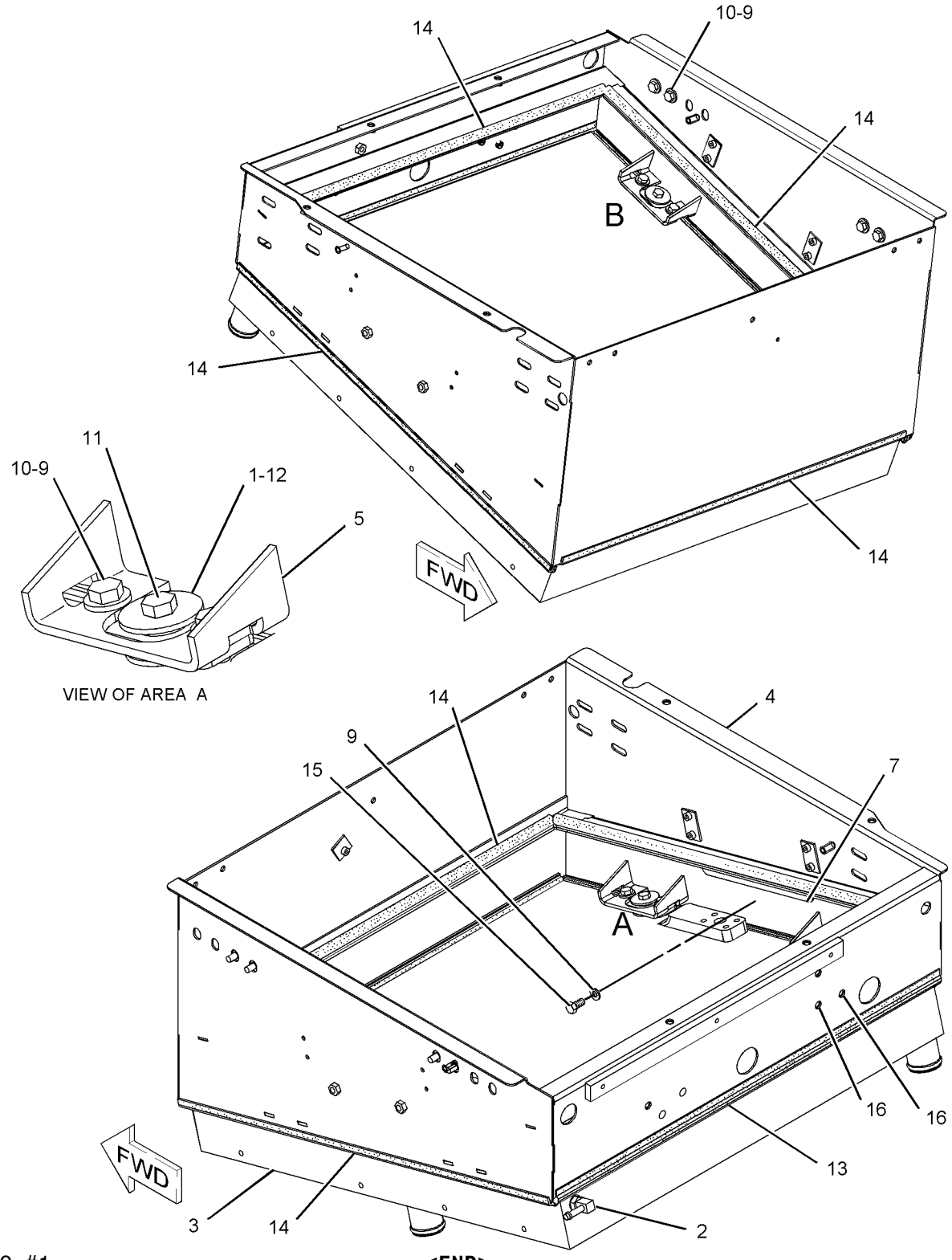

GRAPHIC #1 **<END>** g01095032

COOLING SYSTEM

198-1685 TANK GP-COOLANT

S/N: BCZ1-2000

PART OF 186-0510 LINES GP-RADIATOR

SMCS-1354, 1377 **i02176681**

NOTE	REF NO	GRAPHIC REF	PART NUMBER	QTY	PART NAME 1 2 3 4 5 6 (PRODUCT LEVEL)	SEE PAGE
	1	1	**4E-0041**	1	GAUGE (COOLANT TANK)	
	2	1	**031-1119**	1	CAP AS-RADIATOR	
Y	3	1	**196-5651**	1	SWITCH GP-LIQUID LEVEL (COOLANT LEVEL)	177
	4	1	**198-1686**	1	TANK AS-COOLANT	
	5	1	**3D-2824**	1	SEAL-O-RING	

Y-SEPARATE ILLUSTRATION

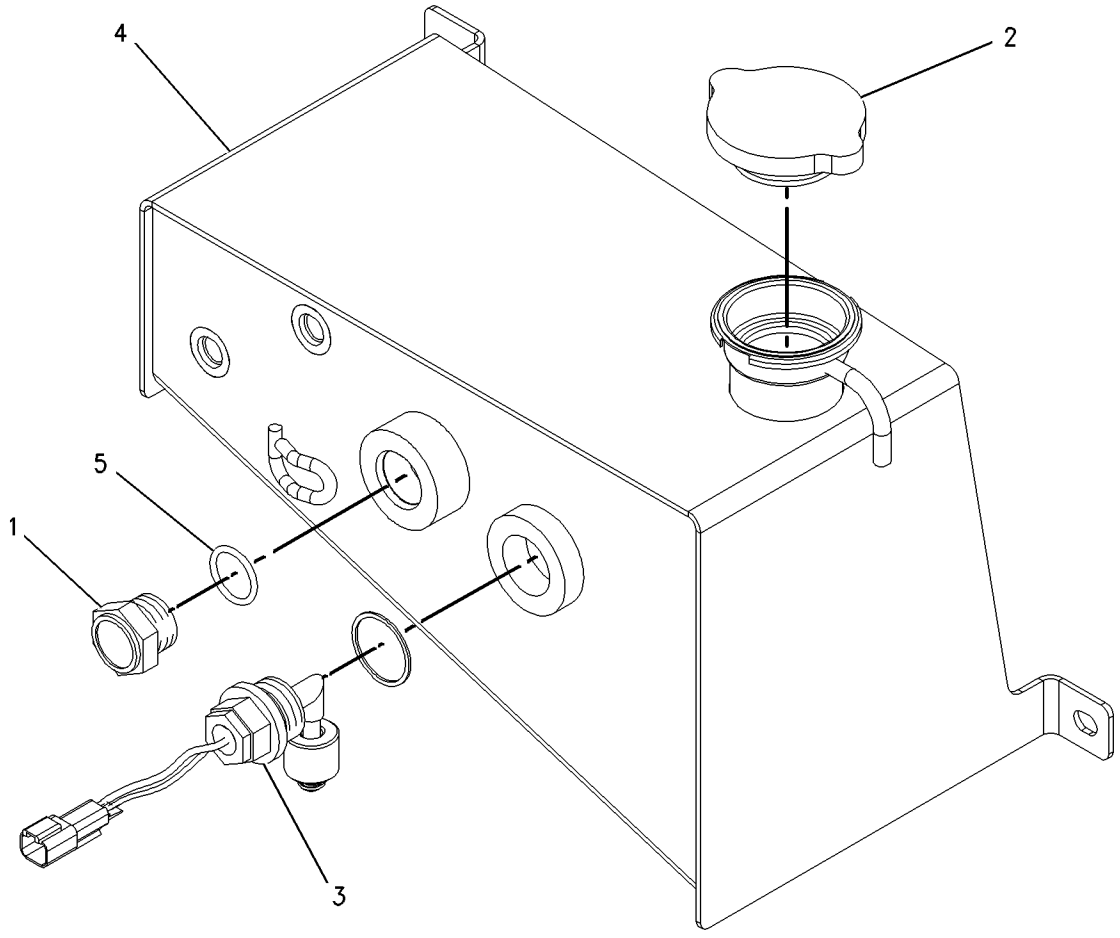

GRAPHIC #1 **<END>** g00869518

AIR INLET AND EXHAUST SYSTEM

188-2811 AFTERCOOLER GP-AIR

S/N: BCZ1-2000

PART OF 186-0472 INSTALLATION AR-ENGINE

SMCS-1063 **i01661534**

NOTE	REF NO	GRAPHIC REF	PART NUMBER	QTY	PART NAME 1 2 3 4 5 6 (PRODUCT LEVEL)	SEE PAGE
	1	1	**2W-9710**	3	MOUNT AS	
	2	1	**197-0953**	1	AFTERCOOLER AS	
	3	1	**198-7591**	3	PLATE	
	4	1	**7X-7729**	6	WASHER (11X25X3MM THK)	
M	5	1	**8T-4137**	6	BOLT (M10X1.5X20MM)	
M	6	1	**8T-4196**	3	BOLT (M10X1.5X35MM)	
	7	1	**8T-4226**	6	WASHER-PLATED (10.5X45X3MM THK)	

M-METRIC PART

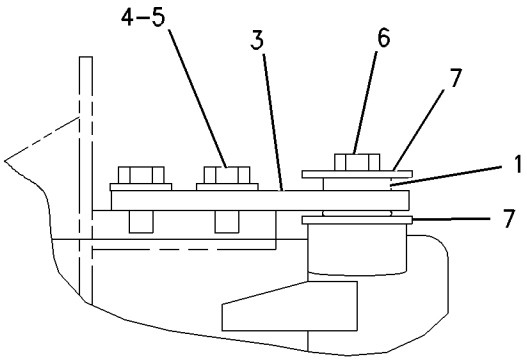

VIEW OF AREA A

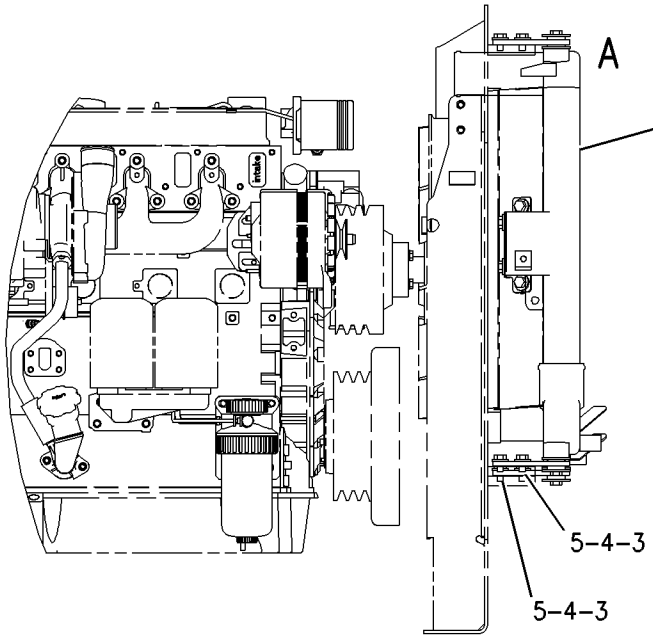

RIGHT SIDE VIEW

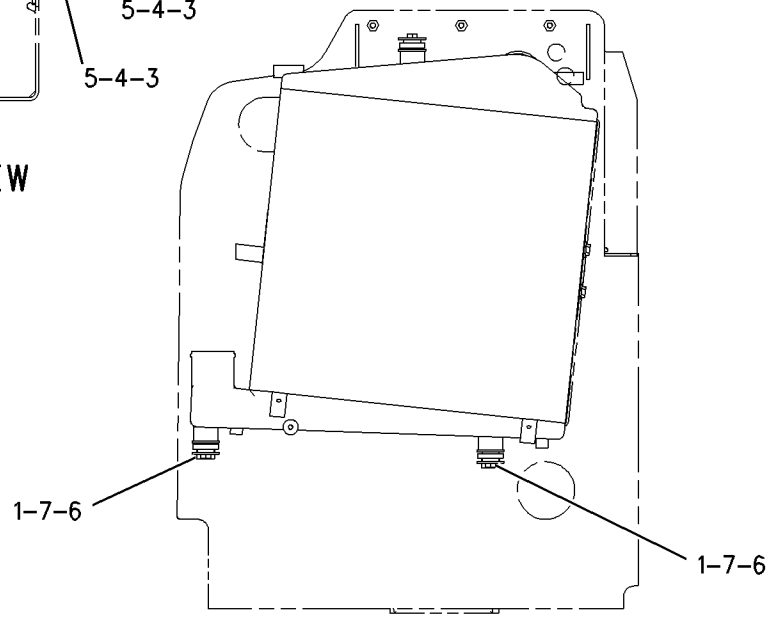

FRONT VIEW

GRAPHIC #1 **<END>** g00865180

207-1704 AIR CLEANER GP

S/N: BCZ1-2000

PART OF 207-2145 AIR CLEANER GP

SMCS-1051, 1054 **i01974757**

NOTE	REF NO	GRAPHIC REF	PART NUMBER	QTY	PART NAME 1 2 3 4 5 6 (PRODUCT LEVEL)	SEE PAGE
	1	1	*222-8651*	1	AIR CLEANER GP	
	1A	1	**222-9020**	1	FILTER ELEMENT AS-AIR (PRIMARY)	
	1B	1	**222-9021**	1	FILTER ELEMENT AS-AIR (SECONDARY)	
	1C	1	**224-2262**	1	COVER AS	
	1D	1	**224-2263**	1	VALVE AS-AIR (DUST)	
	2	1	**222-8652**	1	BRACKET-MOUNTING (AIR CLEANER)	

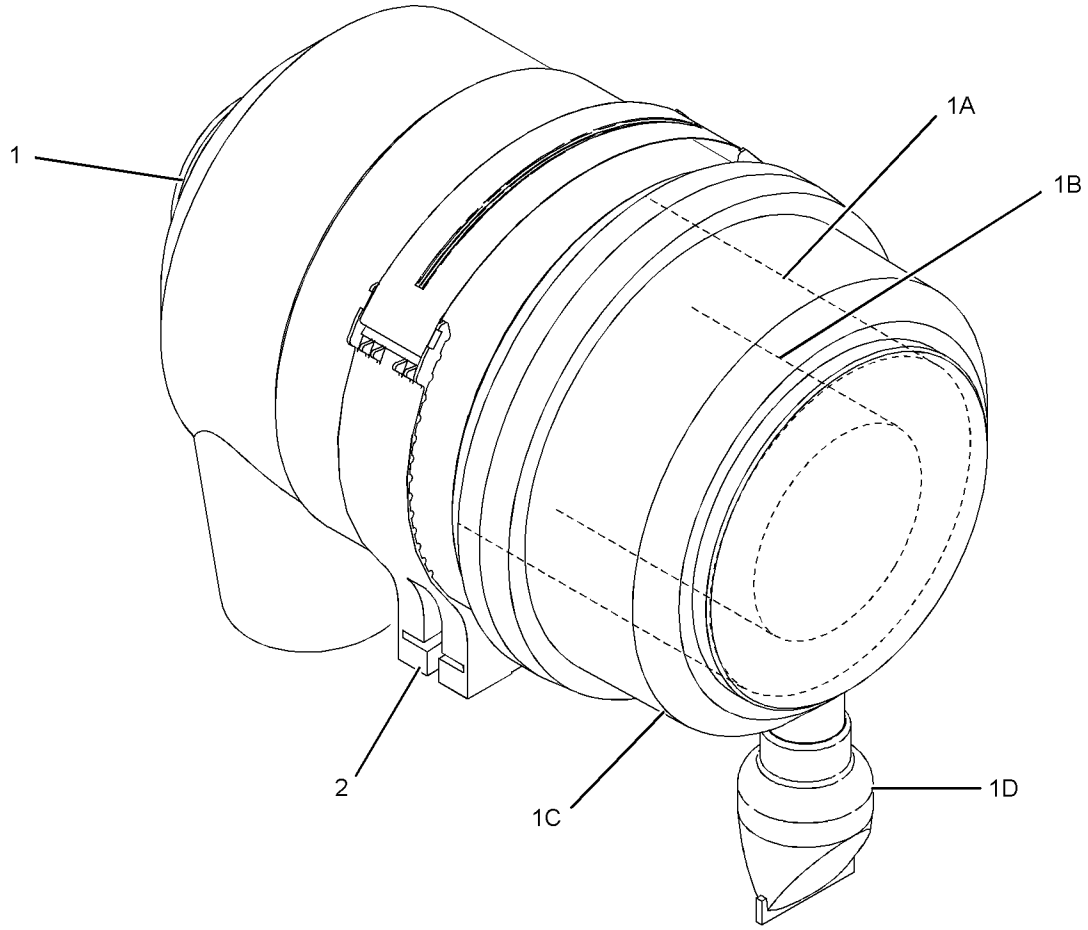

GRAPHIC #1 **<END>** g01037322

AIR INLET AND EXHAUST SYSTEM

207-2145 AIR CLEANER GP

S/N: BCZ1-2000

PART OF 186-0472 INSTALLATION AR-ENGINE

SMCS-1051, 1054 **i02159886**

NOTE	REF NO	GRAPHIC REF	PART NUMBER	QTY	PART NAME 1 2 3 4 5 6 (PRODUCT LEVEL)	SEE PAGE
	1	1	**207-1709**	1	SWITCH AS-PRESSURE (AIR RESTRICTION)	
	2	1	**239-0018**	1	HOSE AS	
Y	3	1	**207-1704**	1	AIR CLEANER GP	86
M	5	1	**5C-7261**	2	NUT (M8X1.25-THD)	
M	6	1	**7X-2537**	2	BOLT (M8X1.25X35-MM)	
	7	1	**8T-4224**	2	WASHER-HARD (8.8X16X2-MM THK)	
	8	1	**9X-2201**	1	CLAMP-HOSE	
	9	1	**8C-0572**	2	WASHER (8.8X25.5X2-MM THK)	
	10	1	**8T-4986**	1	CLAMP-HOSE	

M-METRIC PART
Y-SEPARATE ILLUSTRATION

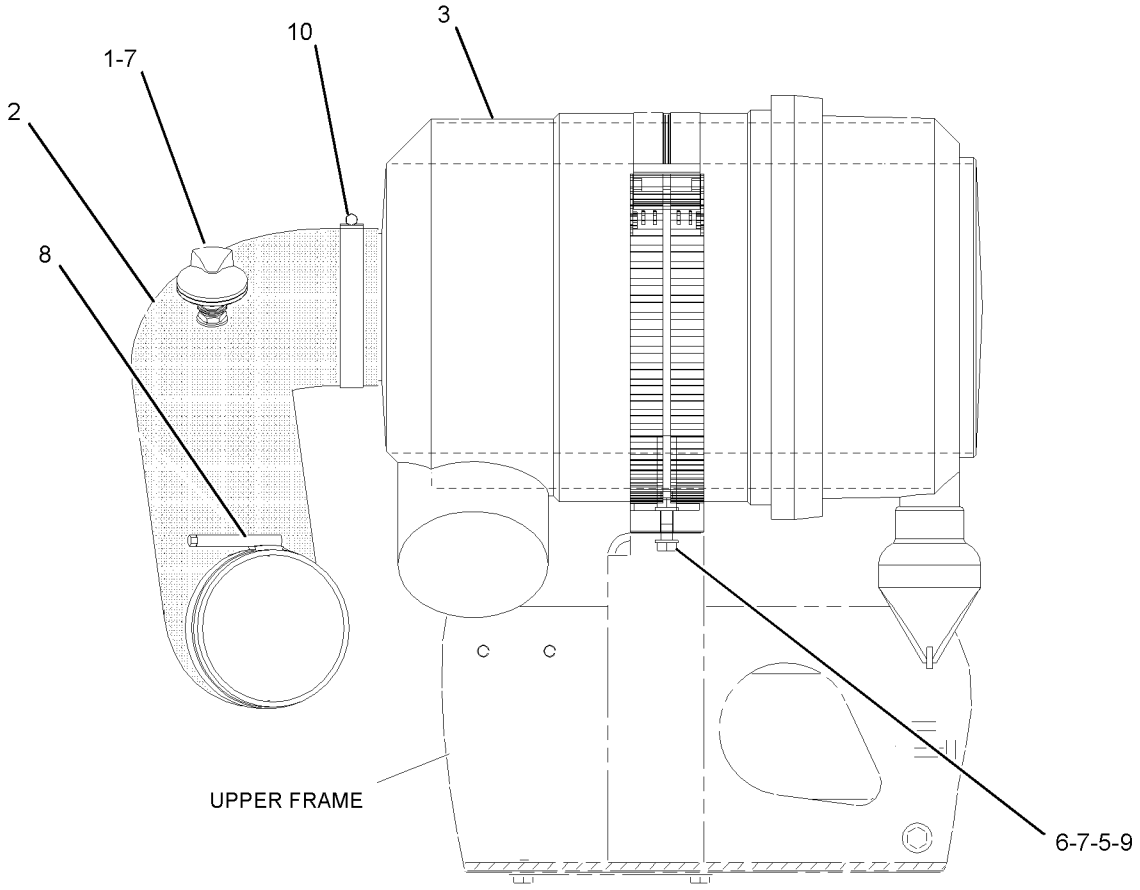

REAR VIEW

GRAPHIC #1 **<END>** g01064560

236-1042 ELBOW GP-AIR INLET

S/N: CPT1-UP

PART OF 188-5096 ENGINE AR-PRIMARY

SMCS-1058 **i02038665**

NOTE	REF NO	GRAPHIC REF	PART NUMBER	QTY	PART NAME 1 2 3 4 5 6 (PRODUCT LEVEL)	SEE PAGE
	1	1	**6I-0260**	4	BOLT (M8X1.25X25-MM)	
	2	1	**217-0595**	1	CONNECTOR	
	3	1	**217-0596**	1	GASKET	

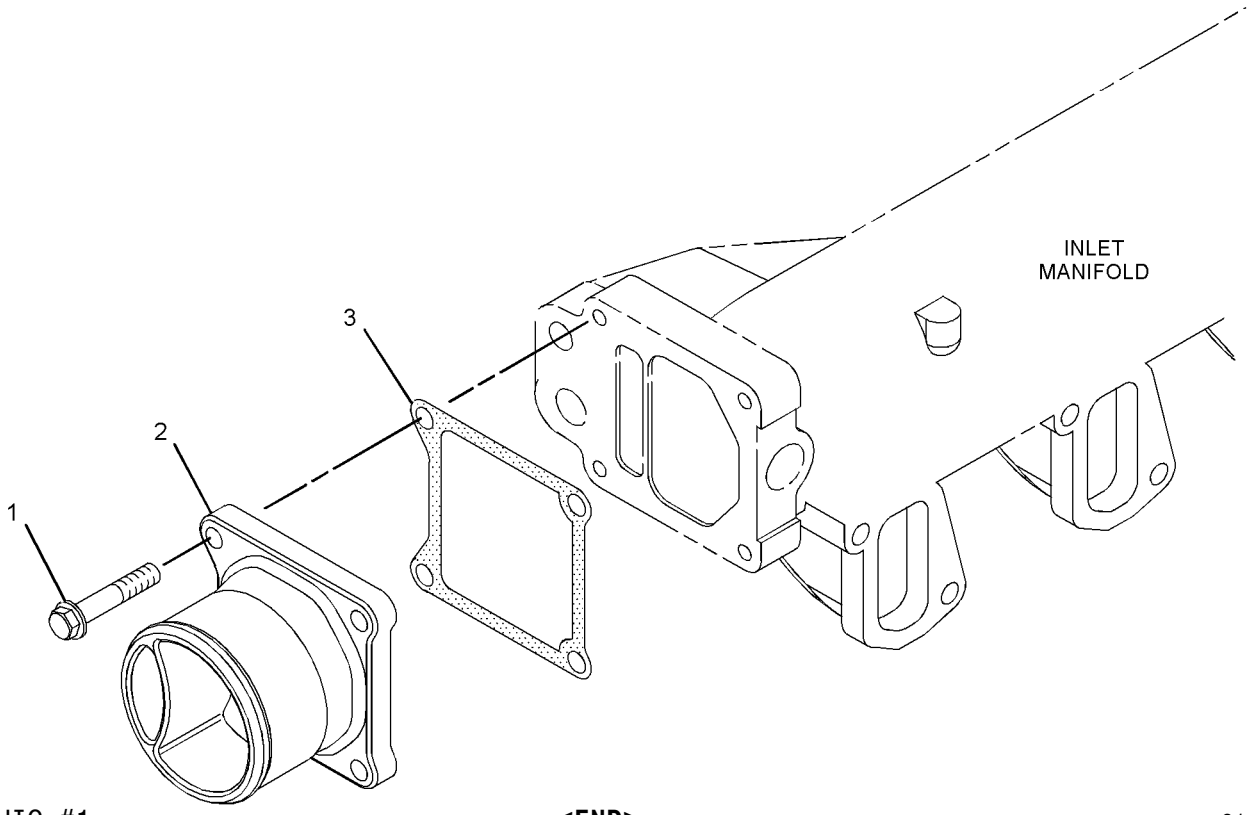

GRAPHIC #1 **<END>** g01018853

AIR INLET AND EXHAUST SYSTEM

188-2815 LINES GP-AIR

S/N: BCZ1-2000

PART OF 186-0472 INSTALLATION AR-ENGINE

SMCS-1071 **i02142626**

NOTE	REF NO	GRAPHIC REF	PART NUMBER	QTY	PART NAME 1 2 3 4 5 6 (PRODUCT LEVEL)	SEE PAGE
	1	1	**132-2155**	1	U-BOLT	
	2	1	**159-1503**	2	CLAMP-HOSE	
	3	1	**197-3909**	1	HOSE-AIR	
	4	1	**197-3910**	1	PLATE	
	5	1	**198-1696**	1	TUBE	
	6	1	**201-1096**	1	CONNECTOR	
	7	1	**201-1109**	1	HOSE-AIR	
	8	1	**201-1110**	1	TUBE	
	9	1	**216-4195**	1	HOSE	
	10	1	**222-8411**	1	TUBE	
	11	1	**222-8412**	1	HOSE-AIR INLET	
	12	1	**222-8413**	1	TUBE	
	13	1	**236-5935**	1	HOSE AS	
	14	1	**144-0367**	8	CLAMP-HOSE	
	15	1	**201-1108**	1	HOSE-AIR	
	16	1	**7I-3921**	1	CLIP	
	17	1	**8T-4121**	2	WASHER-HARD (11X21X2.5-MM THK)	
M	18	1	**8T-4137**	2	BOLT (M10X1.5X20-MM)	
M	19	1	**8T-4195**	1	BOLT (M10X1.5X30-MM)	
M	20	1	**8T-4223**	4	WASHER-HARD (13.5X25.5X3-MM THK)	
	21	1	**8T-4224**	2	WASHER-HARD (8.8X16X2-MM THK)	
M	22	1	**8T-4244**	4	NUT (M12X1.75-THD)	
	23	1	**8T-4986**	2	CLAMP-HOSE	
	24	1	**8T-6703**	1	CLAMP-HOSE	
M	25	1	**8T-7547**	2	BOLT (M8X1.25X30-MM)	
M	26	1	**8T-4133**	1	NUT (M10X1.5-THD)	
	27	1	**7X-7729**	2	WASHER (11X25X3-MM THK)	
	28	1	**8T-4985**	1	CLAMP-HOSE	

M-METRIC PART

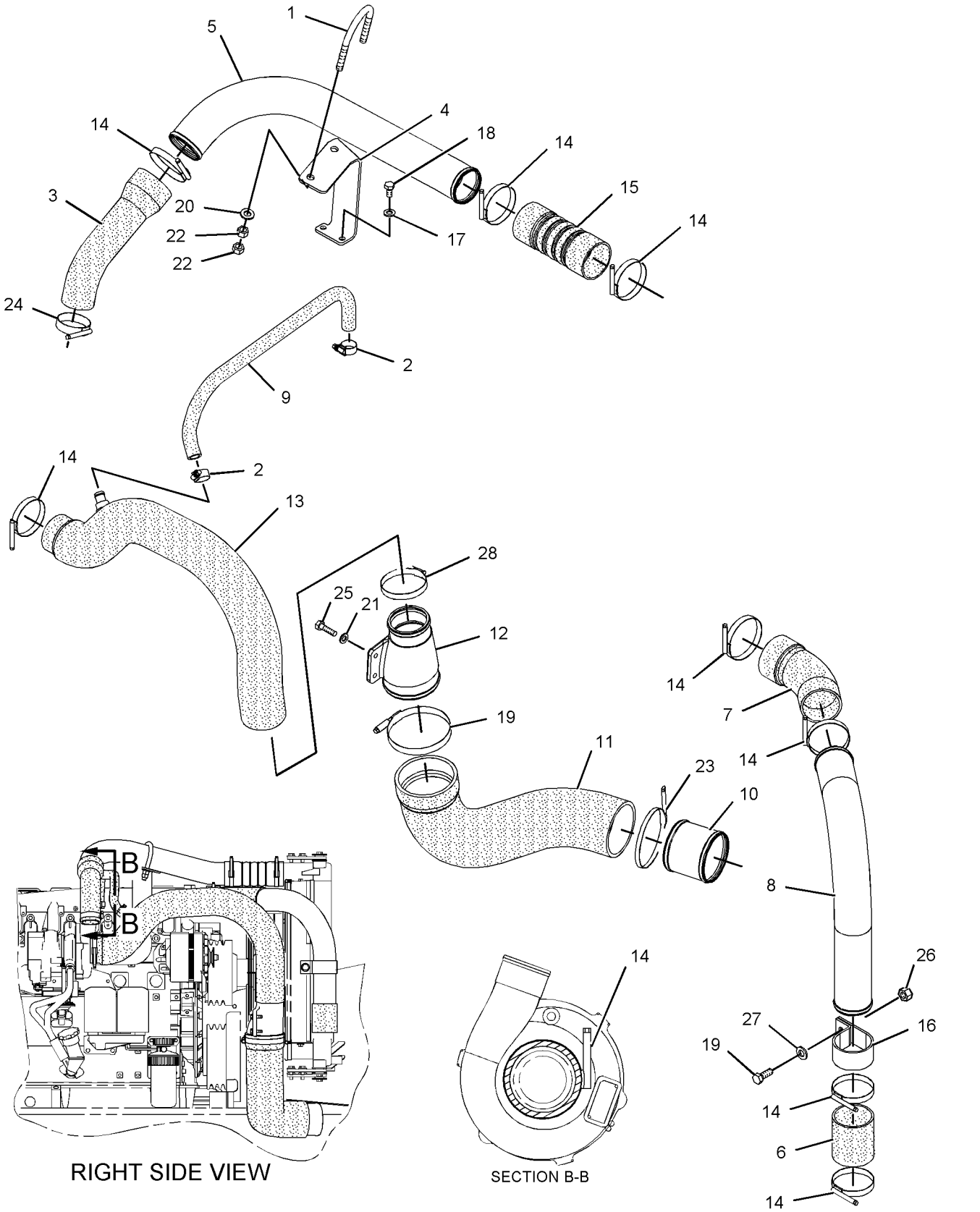

GRAPHIC #1 **<END>** g01092059

AIR INLET AND EXHAUST SYSTEM

188-2817 MUFFLER GP

S/N: BCZ1-2000

PART OF 186-0472 INSTALLATION AR-ENGINE

SMCS-1062 **i01683262**

NOTE	REF NO	GRAPHIC REF	PART NUMBER	QTY	PART NAME 1 2 3 4 5 6 (PRODUCT LEVEL)	SEE PAGE
	1	1	**5W-3418**	2	CLAMP	
	2	1	**141-8597**	1	GASKET	
	3	1	**197-7911**	1	MUFFLER	
	4	1	**197-7915**	1	TUBE-EXHAUST	
	5	1	**197-8156**	1	PIPE AS-EXHAUST	
	6	1	**197-8160**	1	TUBE AS	
	7	1	**198-5145**	2	BRACKET AS	
	8	1	**198-5148**	2	U-BOLT	
M	9	1	**5C-7261**	6	NUT (M8X1.25-THD)	
	10	1	**8T-4121**	12	WASHER-HARD (11X21X2.5-MM THK)	
M	11	1	**8T-4133**	12	NUT (M10X1.5-THD)	
M	12	1	**8T-4136**	2	BOLT (M10X1.5X25-MM)	
M	13	1	**8T-4137**	4	BOLT (M10X1.5X20-MM)	
M	14	1	**8T-4196**	2	BOLT (M10X1.5X35-MM)	
M	15	1	**8T-8894**	4	BOLT-SOCKET HEAD (M10X1.5X20-MM)	

M-METRIC PART

188-2817 **MUFFLER GP** *(contd.)* **i01683262**

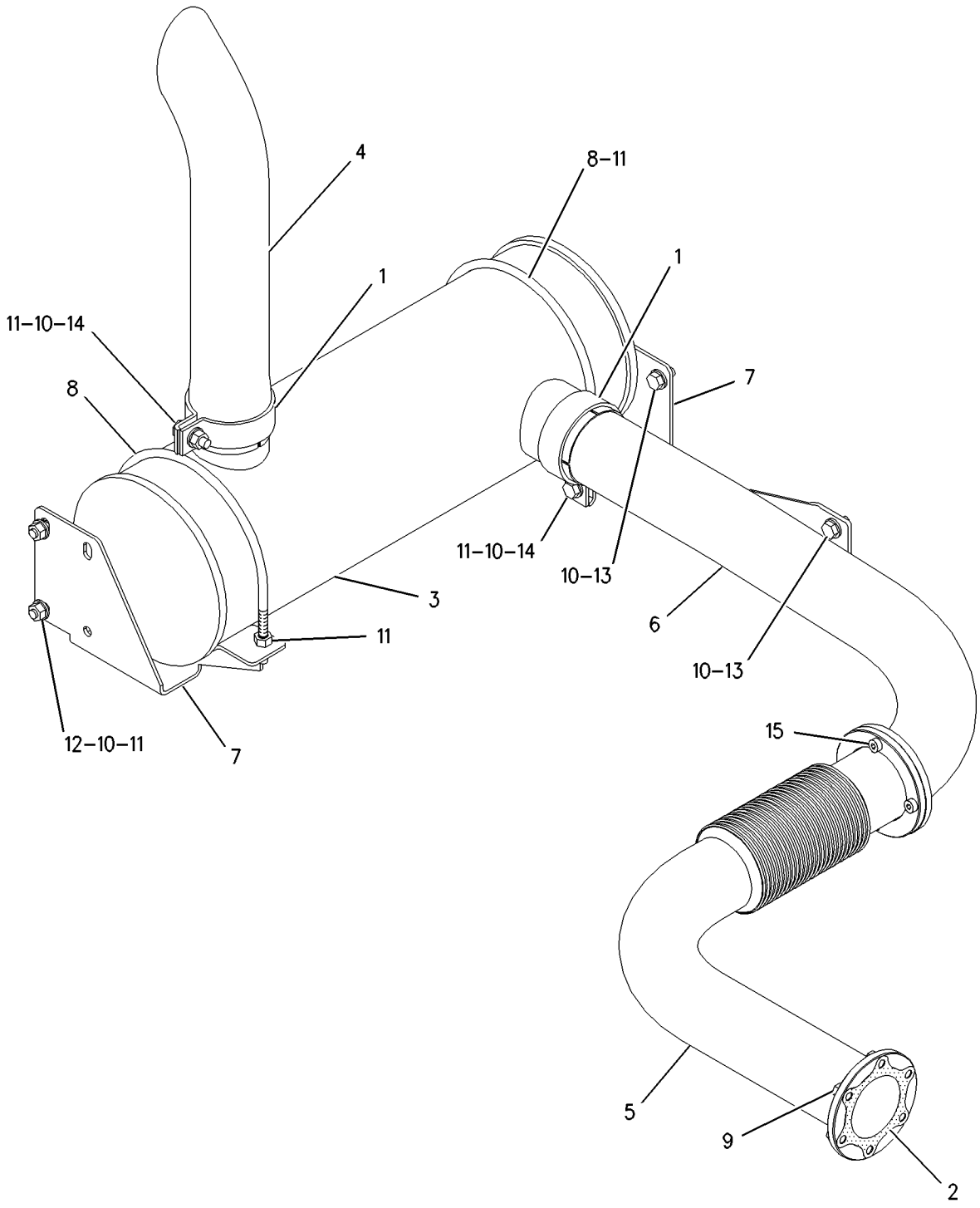

GRAPHIC #1 **<END>** g00867803

196-5701 SHIELD GP-EXHAUST

S/N: BCZ1-2000
FIREWALL
PART OF 186-0489 ENCLOSURE GP-ENGINE

SMCS-1067 **i02061709**

NOTE	REF NO	GRAPHIC REF	PART NUMBER	QTY	PART NAME 1 2 3 4 5 6 (PRODUCT LEVEL)	SEE PAGE
	1	1	**196-9684**	1	PLATE	
	2	1	**139-6039**	11	NUT (U-TYPE RETAINER)	
	3	1	**128-1544**	1	PLATE	
	4	1	**196-9682**	1	MAT (SPRAY SHIELD)	
	5	1	**233-2989**	1	PLATE AS	
	8	1	**5P-4116**	3	WASHER-HARD (8.8X20.5X2-MM THK)	
M	10	1	**5C-9553**	15	BOLT (M6X1X16-MM)	
M	11	1	**8T-4200**	3	BOLT (M8X1.25X16-MM)	
	13	1	**5W-1417**	15	WASHER (6.4X18X1.6-MM THK)	
BE	14	1	**117-0121**		SEAL	

B-USE AS REQUIRED
E-ORDER BY THE CENTIMETER
M-METRIC PART

196-5701 **SHIELD GP-EXHAUST** *(contd.)* **i02061709**

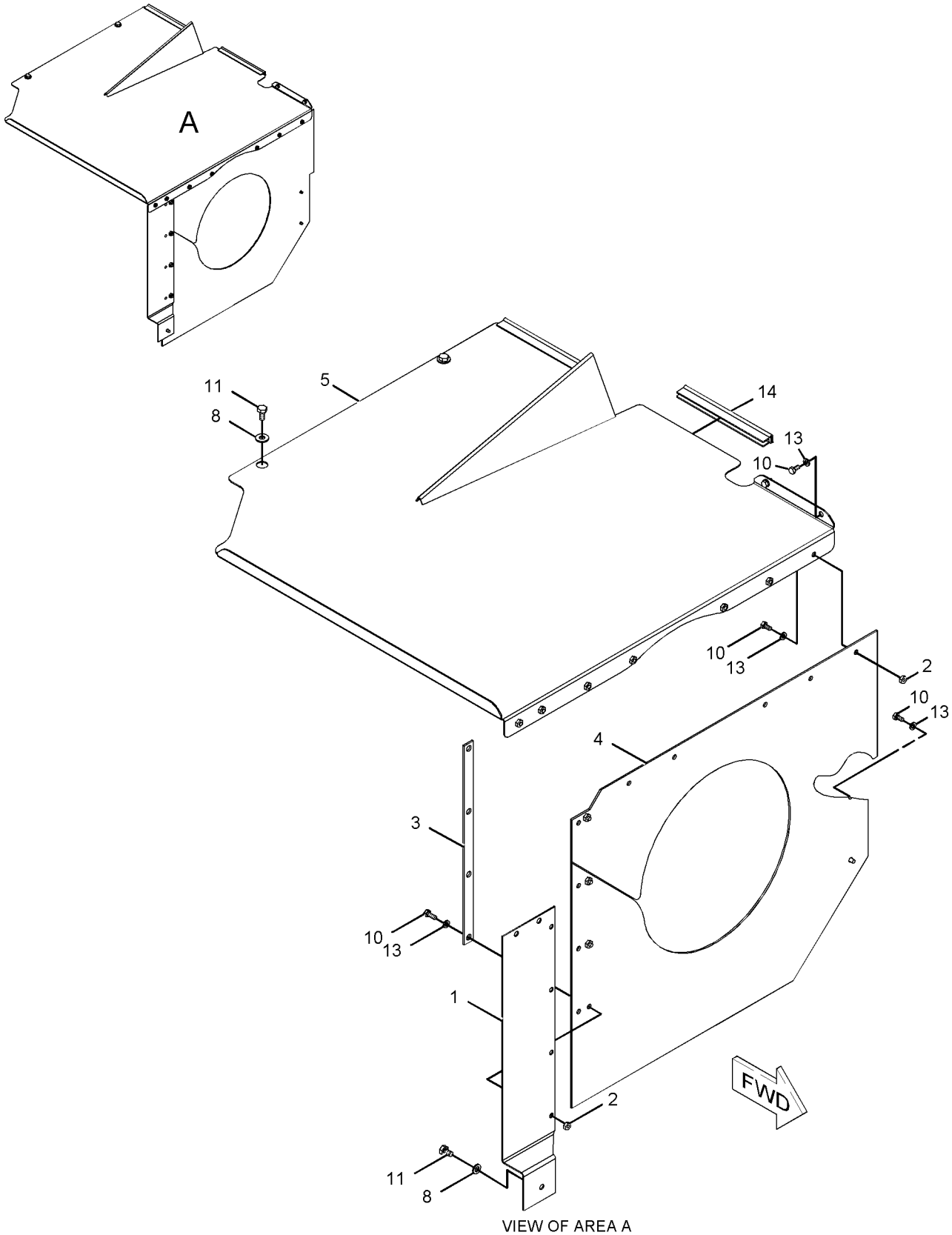

VIEW OF AREA A

GRAPHIC #1 **<END>** g01061086

AIR INLET AND EXHAUST SYSTEM

237-2264 TURBOCHARGER GP

S/N: CPT1-UP

PART OF 188-5096 ENGINE AR-PRIMARY

SMCS-1052, 1053 **i02038717**

NOTE	REF NO	GRAPHIC REF	PART NUMBER	QTY	PART NAME 1 2 3 4 5 6 (PRODUCT LEVEL)	SEE PAGE
	1	1	**5D-1026**	2	CLAMP-HOSE	
	2	1	**6I-0217**	2	BOLT (M8X1.25X20-MM)	
	3	1	**6I-1132**	1	GASKET	
	4	1	**7W-2628**	1	NUT	
	5	1	**032-8048**	1	OLIVE	
	6	1	**100-4453**	6	STUD	
	7	1	**100-4466**	1	GASKET	
	8	1	**124-3815**	3	BOLT (M8X16X1.25-MM)	
	9	1	**138-2042**	4	NUT	
	10	1	**141-8589**	1	GASKET	
	11	1	**141-9777**	1	HEAT SHIELD	
	12	1	**147-5553**	4	STUD	
	13	1	**160-0149**	1	HOSE	
	14	1	**162-1504**	6	BOLT	
	15	1	**216-2892**	1	BOLT-SOCKET HEAD	
	16	1	**216-8685**	1	TURBOCHARGER GP	
	17	1	**216-8686**	1	TUBE AS (SUPPLY)	
	18	1	**216-8690**	1	TUBE AS (DRAIN)	
	19	1	**216-8699**	1	MANIFOLD-INLET	
	20	1	**216-8703**	2	GASKET-MANIFOLD	
	21	1	**216-8705**	6	BOLT	
	22	1	**216-8708**	1	MANIFOLD-EXHAUST	
	23	1	**216-8709**	1	MANIFOLD-EXHAUST	
	24	1	**216-8710**	1	MANIFOLD-EXHAUST	
	25	1	**216-8712**	2	GASKET-MANIFOLD	
	26	1	**237-2312**	18	BOLT	

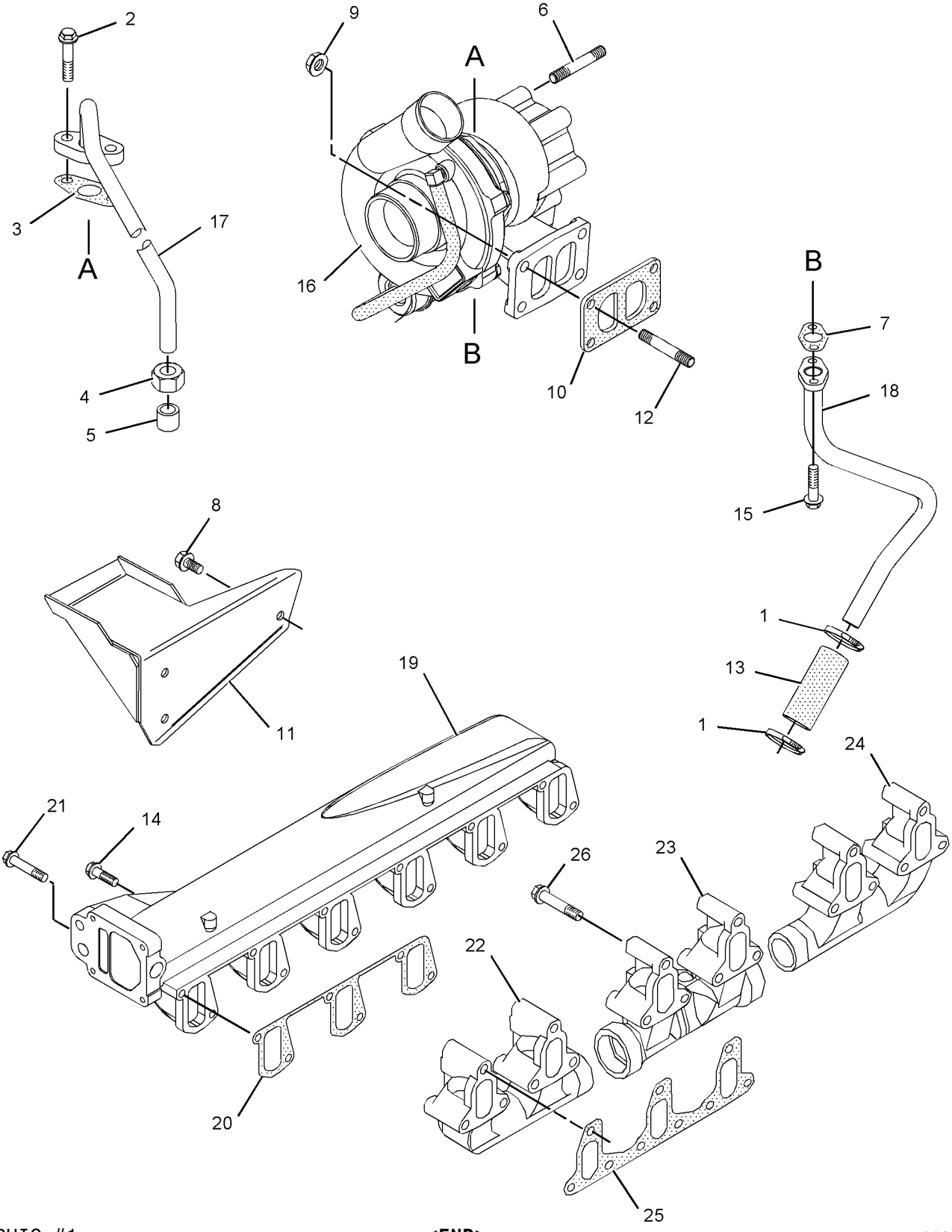

GRAPHIC #1 **<END>** g01061490

235-6347 FILTER GP-FUEL

S/N: CPT1-UP

PART OF 188-5096 ENGINE AR-PRIMARY

SMCS-1261 **i02038652**

NOTE	REF NO	GRAPHIC REF	PART NUMBER	QTY	PART NAME 1 2 3 4 5 6 (PRODUCT LEVEL)	SEE PAGE
	1	1	**141-7844**	1	BASE AS-FUEL FILTER	
	2	1	**145-4501**	1	FILTER ELEMENT AS-FUEL	

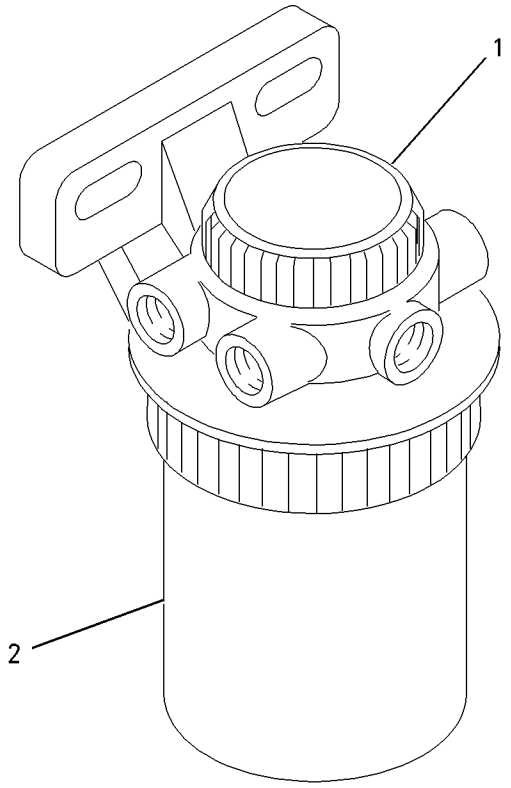

GRAPHIC #1 **<END>** g00992562

8U-0876 HOSE GP-REFUELING

S/N: BCZ1-2000
PART OF 188-4937 PUMP GP-FUEL TRANSFER
AN ATTACHMENT

SMCS-1295 **i02159890**

NOTE	REF NO	GRAPHIC REF	PART NUMBER	QTY	PART NAME 1 2 3 4 5 6 (PRODUCT LEVEL)	SEE PAGE
	1	1	**5W-8654**	1	COUPLING	
	2	1	**5W-8655**	1	HOSE AS	
	3	1	**5W-8656**	1	SCREEN AS (REFUELING)	
	4	1	**5W-8657**	1	COUPLING	
	5	1	**5W-8650**	2	CLAMP-HOSE	

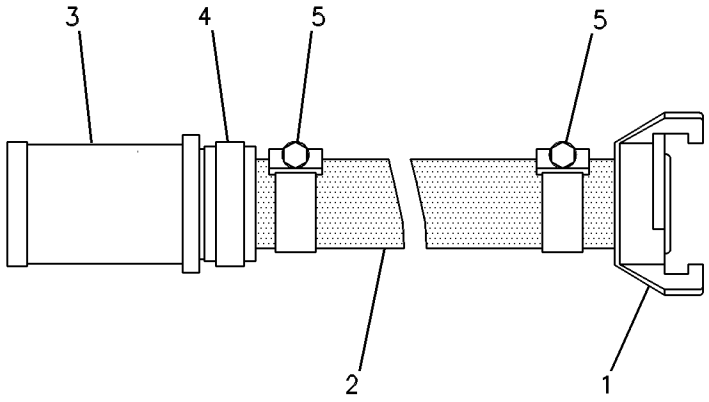

GRAPHIC #1 **<END>** g00244735

186-0502 LINES GP-FUEL

S/N: BCZ1-2000

PART OF 186-0468 CHASSIS AR

SMCS-1274 **i01900919**

NOTE	REF NO	GRAPHIC REF	PART NUMBER	QTY	PART NAME 1 2 3 4 5 6 (PRODUCT LEVEL)	SEE PAGE
	1	1	**8C-0538**	1	GROMMET	
	2	2	**111-4013**	2	GROMMET	
	3	2	**122-9415**	1	CONNECTOR	
Y	4	2	**138-3097**	1	SEPARATOR GP-WATER	116
Y	5	2	**145-7210**	1	VALVE GP-FUEL SHUTOFF	121
	6	1	**160-0645**	1	REDUCER	
I	7	1	**194-9209**	1	HOSE AS	
I	8	2	**194-9218**	1	HOSE AS	
I	9	2	**194-9219**	1	HOSE AS	
	10	2	**198-9126**	1	PLATE	
	11	2	**199-7618**	1	PLATE AS	
	12	2	**199-7619**	1	CLAMP	
I	13	1	**214-2591**	1	HOSE AS	
	14	2	**214-8999**	1	LINE AS-FUEL	
		2	**067-6269**	2	OLIVE	
	15	2	**215-5069**	1	SPACER	
	16	2	**033-7849**	2	PLUG	
	17	2	**129-9959**	1	CLAMP	
	18	1	*148-8367*	1	ELBOW AS	
		1	**6V-8397**	1	SEAL-O-RING	
		1	**6V-9850**	1	ELBOW	
	19	1	**067-6269**	1	OLIVE	
	20	2	**5K-5338**	2	CLIP	
	21	2	**5P-4116**	2	WASHER-HARD (8.8X20.5X2-MM THK)	
	22	2	**5W-1697**	3	WASHER (14.2X17.9X1.5-MM THK)	
	23	1,2	**6V-8397**	8	SEAL-O-RING	
M	24	2	**7X-2534**	1	BOLT (M6X1X50-MM)	
	25	2	**8T-4121**	3	WASHER-HARD (11X21X2.5-MM THK)	
M	26	2	**8T-4137**	3	BOLT (M10X1.5X20-MM)	
M	27	2	**8T-4189**	2	BOLT (M8X1.25X20-MM)	
	28	2	**8T-4224**	2	WASHER-HARD (8.8X16X2-MM THK)	
M	29	2	**8T-4908**	2	BOLT (M8X1.25X25-MM)	
M	30	1	**8T-9534**	4	BOLT (M6X1X50-MM)	
	31	1,2	**9X-8256**	5	WASHER (6.6X12X2-MM THK)	

I-REFER TO HYDRAULIC INFORMATION SYSTEM
M-METRIC PART
Y-SEPARATE ILLUSTRATION

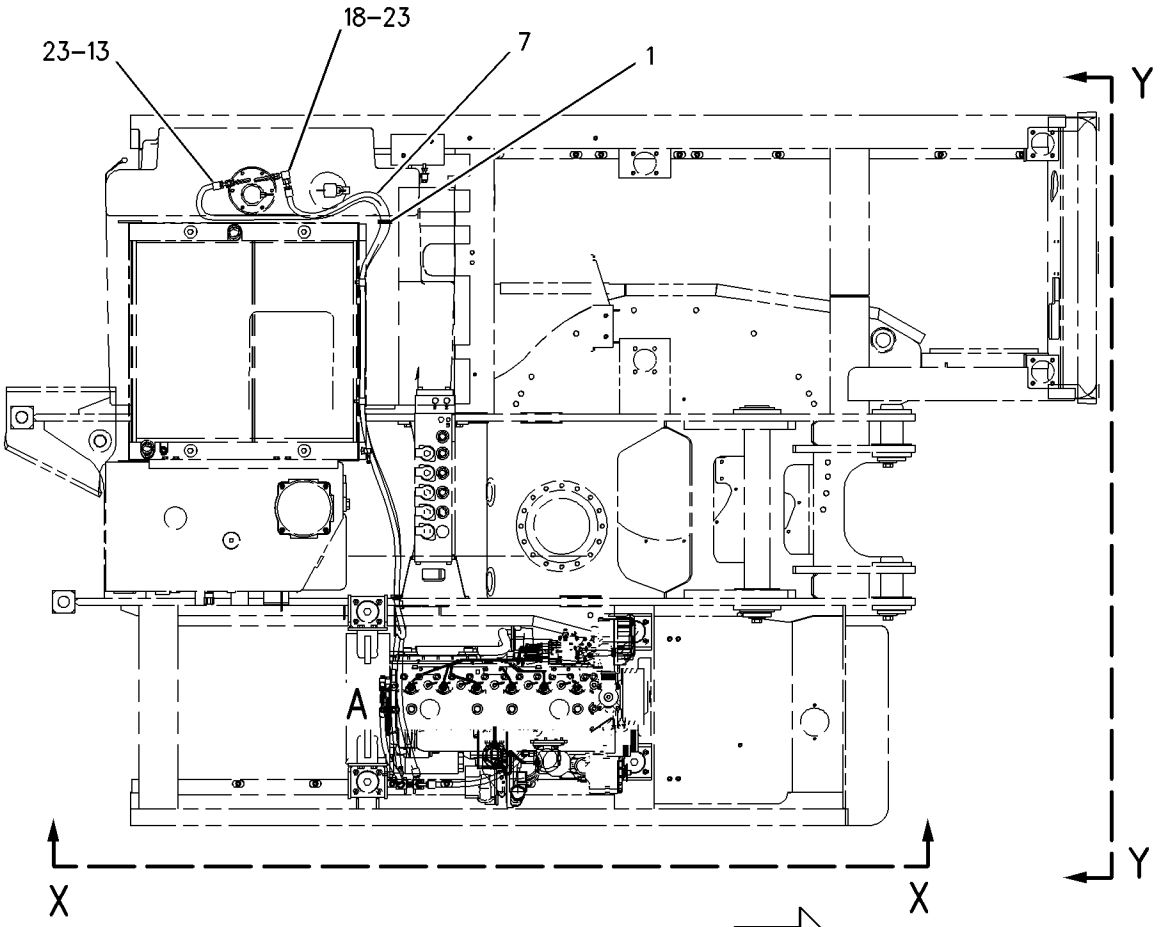

TOP VIEW

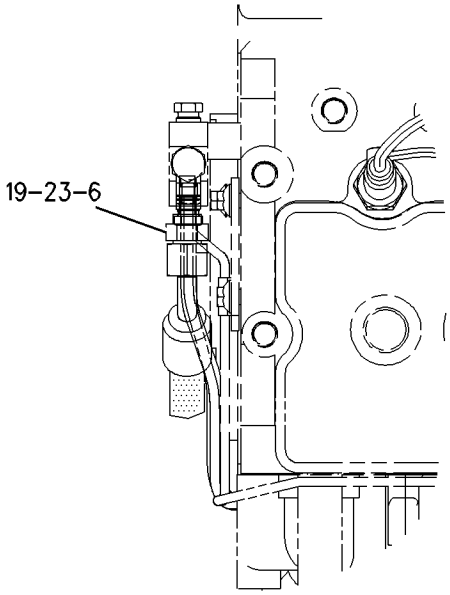

VIEW OF AREA A

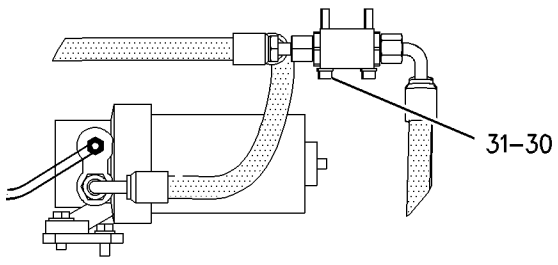

VIEW B–B

REFER TO ALL ILLUSTRATIONS OF THIS GROUP FOR AUXILIARY VIEWS

GRAPHIC #1 g00989405

186-0502 **LINES GP-FUEL** *(contd.)* **i01900919**

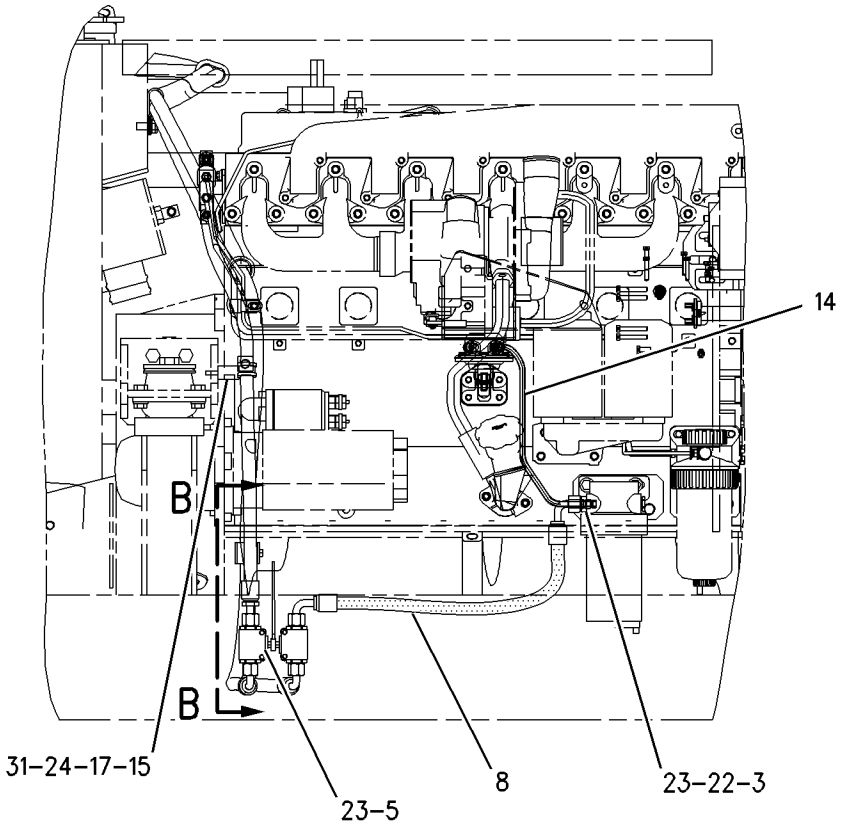

VIEW X-X

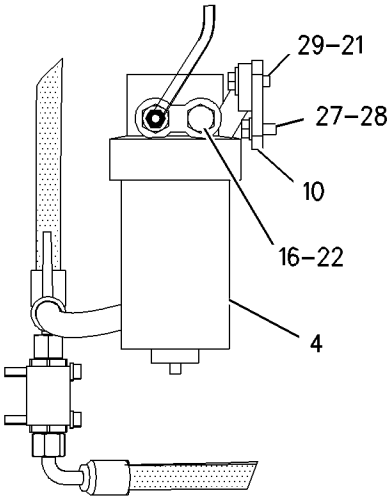

VIEW OF AREA C

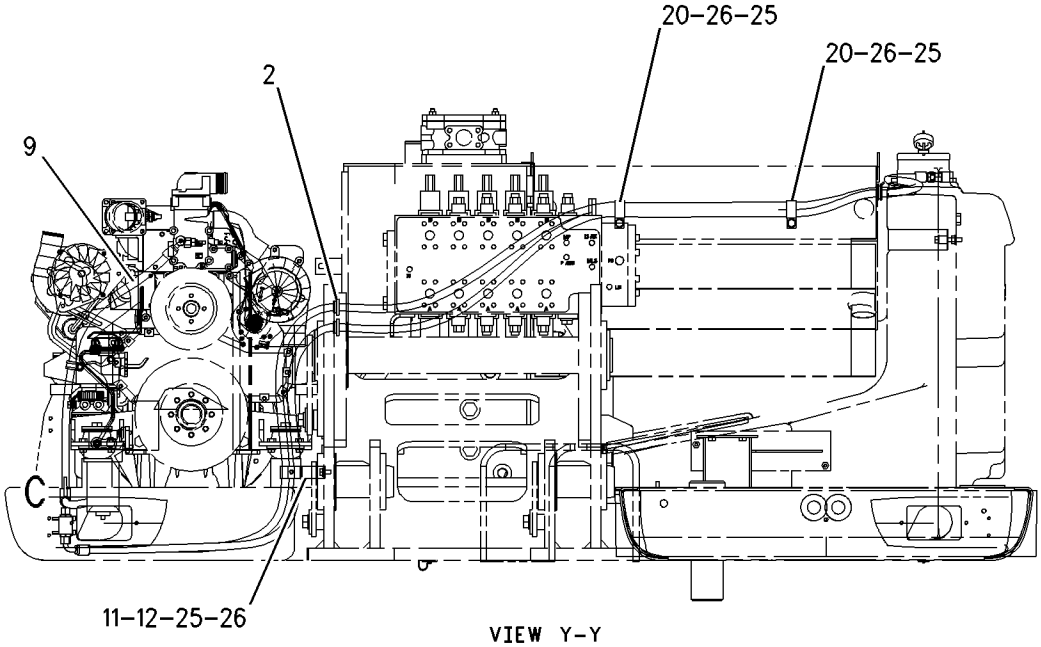

VIEW Y-Y

GRAPHIC #2 **<END>** g00989402

235-6367 LINES GP-FUEL FILTER

S/N: CPT1-UP

PART OF 188-5096 ENGINE AR-PRIMARY

SMCS-1261 **i02038759**

NOTE	REF NO	GRAPHIC REF	PART NUMBER	QTY	PART NAME 1 2 3 4 5 6 (PRODUCT LEVEL)	SEE PAGE
	1	1	**067-6268**	1	NUT-FUEL LINE (1/2-IN)	
	2	1	**067-6269**	1	OLIVE	

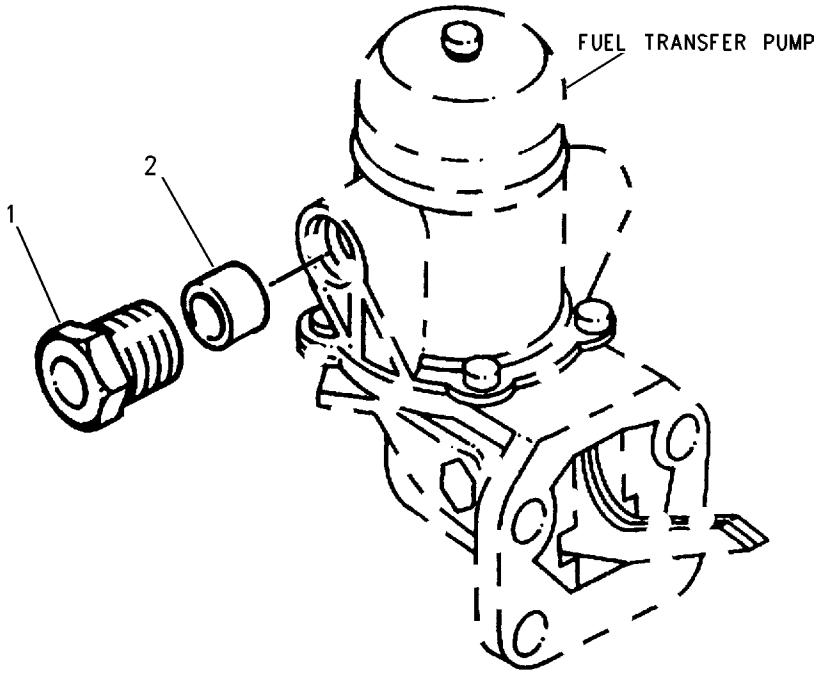

GRAPHIC #1 **<END>** g00759895

FUEL SYSTEM

235-6331 PUMP GP-FUEL INJECTION

S/N: CPT1-UP

PART OF 188-5096 ENGINE AR-PRIMARY

SMCS-1251, 1290 **i02038723**

NOTE	REF NO	GRAPHIC REF	PART NUMBER	QTY	PART NAME 1 2 3 4 5 6 (PRODUCT LEVEL)	SEE PAGE
	1	1	**4B-4277**	4	WASHER (8.8X17.5X1.6-MM THK)	
	2	1	**6I-0217**	1	BOLT (M8X1.25X20-MM)	
	3	1	**6I-0291**	8	NUT (M8X1.25)	
	4	2	**7M-7410**	1	PLUG-PIPE	
	5	1	**100-4830**	1	BOLT (M10X1.5X20-MM)	
	6	1	**101-3877**	3	STUD	
	7	1	**103-1074**	1	STUD	
	8	1,2	**114-4363**	3	BOLT (M8X1.25X12-MM)	
	9	1	**124-3708**	3	CLIP	
	10	1	**145-8327**	1	SEAL-O-RING	
	11	1	**147-5551**	2	STUD	
	12	2	**149-2091**	1	SEAL-O-RING	
	13	1	**155-0576**	5	MOUNT-ISOLATION	
	14	1	**162-9992**	3	CLIP	
	15	1	**164-3207**	6	WASHER	
	16	1	**179-7071**	4	BOLT	
	17	2	**199-9252**	1	SEAL-O-RING	
	18	2	**199-9267**	1	SEAL-O-RING	
	19	2	**199-9751**	2	SEAL-O-RING	
	20	1	**215-9430**	1	CONTROL GP-VOLTAGE (24-VOLT) (LOAD PROTECTION)	
		1	**7T-0093**	4	PIN-CONNECTOR	
		1	**177-9653**	1	KIT-RECEPTACLE (4-PIN)	
					(INCLUDES RECEPTACLE AS AND WEDGE)	
		1	**1S-9593**	2	STRAP-CABLE	
	21	2	**216-3436**	1	SENSOR GP-TEMPERATURE (ENGINE COOLANT)	
	22	2	**216-3436**	1	SENSOR GP-TEMPERATURE (AIR INLET)	
	23	2	**216-3446**	1	SENSOR GP-SPEED (TIMING)	
	24	2	**216-3448**	1	SENSOR GP-PRESSURE (ENGINE OIL)	
	25	2	**216-3450**	1	SENSOR GP-PRESSURE (BOOST)	
	26	1	**216-9786**	6	INJECTOR AS-FUEL	
	27	1	**216-9790**	1	GEAR (FUEL PUMP)	
	28	1	**216-9824**	1	PUMP GP-FUEL INJECTION	
	29	1	**216-9826**	1	TUBE AS (CYL NO.1)	
	30	1	**216-9828**	1	TUBE AS (CYL NO.2)	
	31	1	**216-9830**	1	TUBE AS (CYL NO.3)	
	32	1	**216-9831**	1	TUBE AS (CYL NO.4)	
	33	1	**216-9834**	1	TUBE AS (CYL NO.5)	
	34	1	**216-9835**	1	TUBE AS (CYL NO.6)	
	35	1	**217-0099**	7	SPACER	
	36	1	**217-0100**	4	SPACER	
	37	1	**221-1018**	1	CONTROL GP-ENGINE ELECTRONIC	
	38	1	**228-8943**	1	BRACKET	
	39	1	**228-8956**	1	BRACKET	
	40	1	**228-8960**	1	CLIP	
	41	1	**235-5917**	1	STUD	
	42	1	**235-6281**	1	TIE-CABLE	

235-6331 **PUMP GP-FUEL INJECTION** *(contd.)* **i02038723**

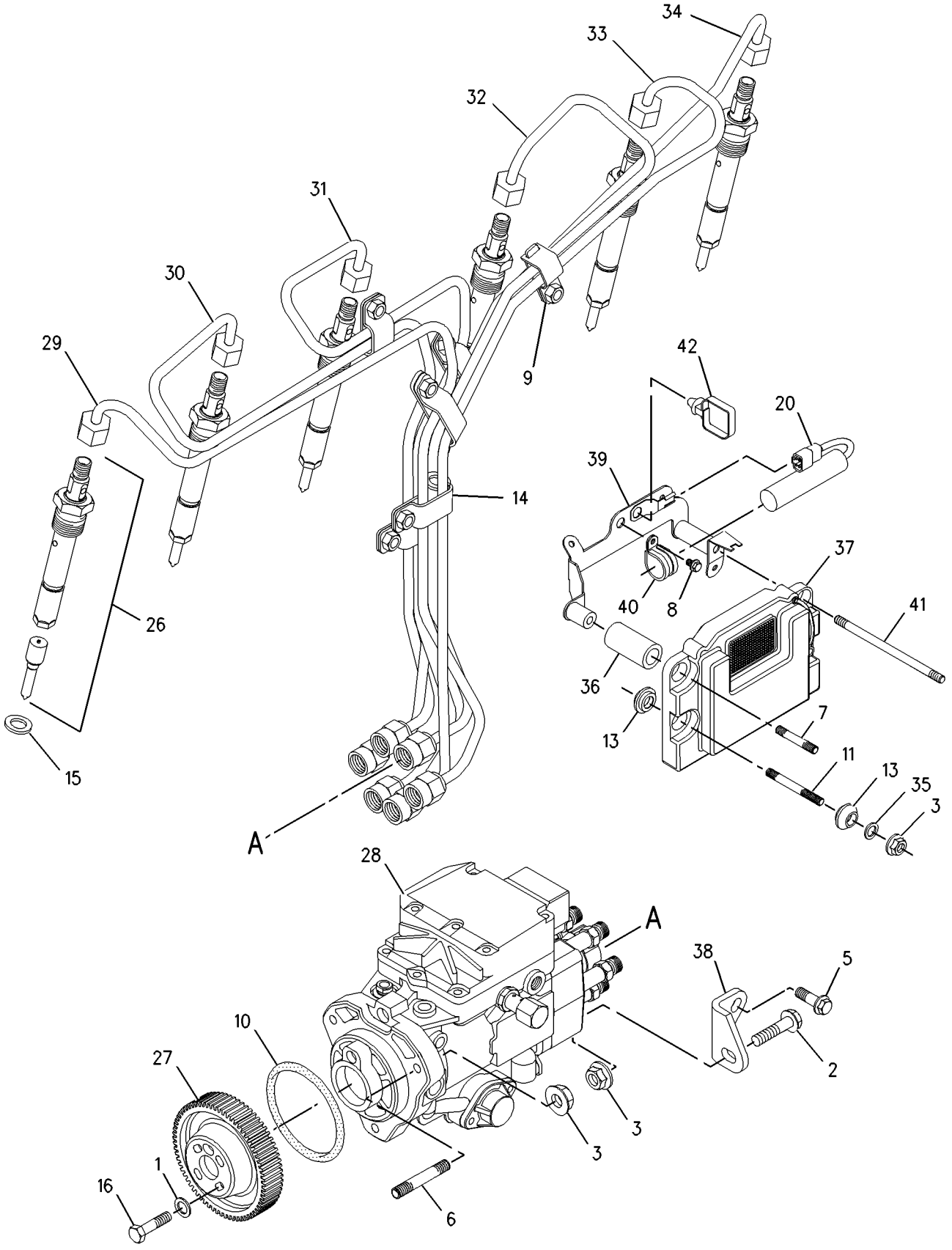

GRAPHIC #1 g00992919

235-6331 **PUMP GP-FUEL INJECTION** *(contd.)* **i02038723**

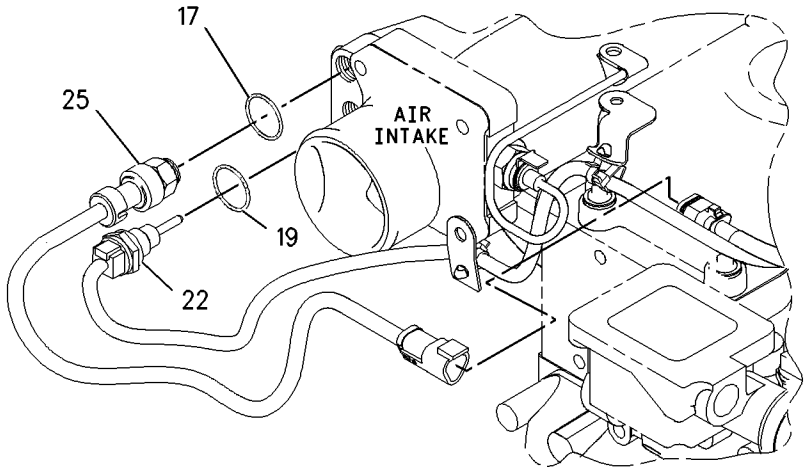

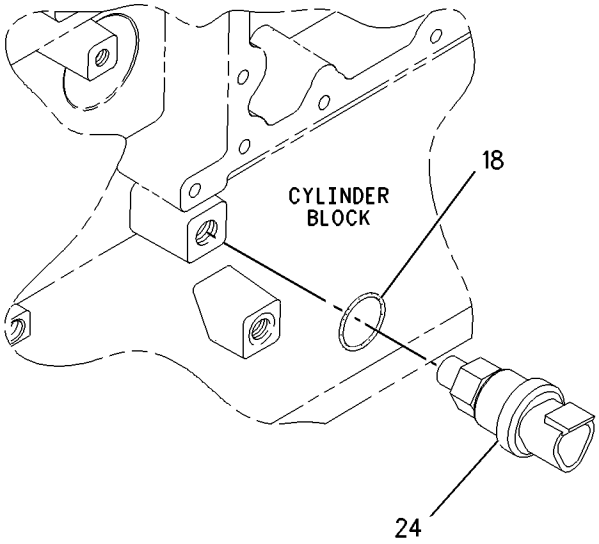

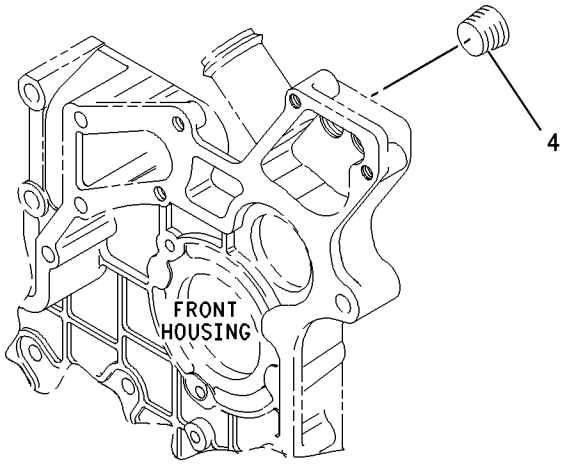

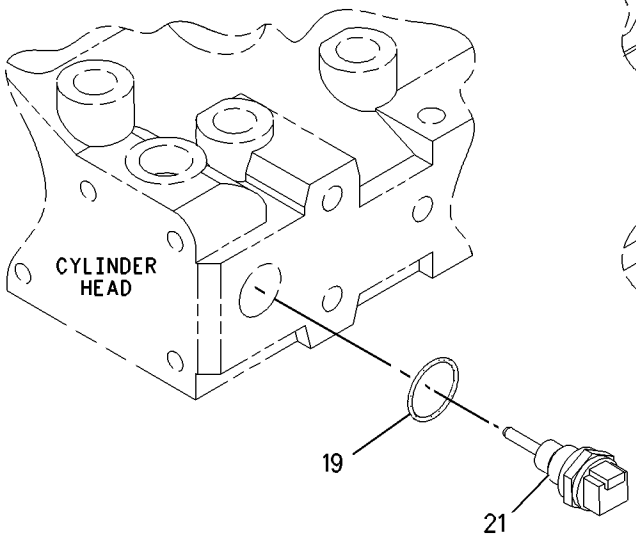

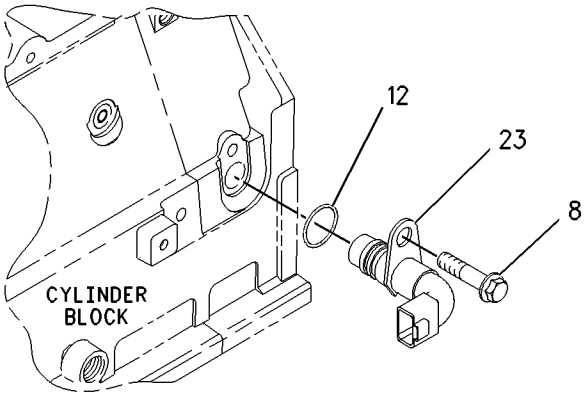

GRAPHIC #2 **<END>** g00992920

FUEL SYSTEM

188-4937 PUMP GP-FUEL TRANSFER

S/N: BCZ1-636
AN ATTACHMENT

SMCS-1256 **i02159899**

NOTE	REF NO	GRAPHIC REF	PART NUMBER	QTY	PART NAME 1 2 3 4 5 6 (PRODUCT LEVEL)	SEE PAGE
	1	1	**4I-8443**	1	VALVE-CHECK (FUEL TRANSFER PUMP)	
	2	1	**5W-8653**	1	COVER	
	3	1	**5W-8658**	1	COUPLING	
	4	1	**7Y-5262**	1	U-BOLT	
Y	5	1	**8U-0876**	1	HOSE GP-REFUELING	98
	6	1	**113-8491**	1	FUSE (15-AMPERE) (FUEL TRANSFER PUMP)	
	7	1	**137-9438**	1	ELBOW	
	8	1	**175-4807**	1	PUMP & MOTOR GP-FUEL TRANSFER	
		1	**102-8802**	1	KIT-RECEPTACLE (2-PIN)	
					(INCLUDES RECEPTACLE AS AND WEDGE)	
		1	**3E-3365**	1	WEDGE-RECEPTACLE LOCK (2-PIN)	
		1	**9W-0852**	2	PIN-CONNECTOR	
	9	1	**196-5650**	1	SWITCH AS (REFUELING PUMP)	
		1	**197-6076**	1	NUT	
		1	**197-6082**	1	BOOT	
	10	1	**196-8643**	1	SWITCH AS-MAGNETIC (FUEL PUMP RELAY)	
	11	1	**207-2159**	3	ELBOW	
	12	1	**208-1658**	1	FILM-INSTRUCTION (REFUELING)	
	13	1	**210-1715**	1	COUPLING	
	14	1	**217-2954**	1	PLATE	
	15	1	**2M-9780**	1	SEAL-O-RING	
M	16	1	**5C-7261**	2	NUT (M8X1.25-THD)	
	17	1	**5W-5131**	1	GROMMET	
M	18	1	**8T-0389**	2	LOCKNUT (M10X1.5-THD)	
	19	1	**8T-4121**	2	WASHER-HARD (11X21X2.5-MM THK)	
	20	1	**8T-4224**	2	WASHER-HARD (8.8X16X2-MM THK)	
M	21	1	**8T-7547**	2	BOLT (M8X1.25X30-MM)	
	22	1	**8T-9402**	4	CLAMP-HOSE	
D	23	1	**120-9729**		HOSE (1.1M)	
E	24	1	**207-5141**		SEAL (9CM)	

D-ORDER BY THE METER
E-ORDER BY THE CENTIMETER
M-METRIC PART
Y-SEPARATE ILLUSTRATION

188-4937 **PUMP GP-FUEL TRANSFER** *(contd.)* **i02159899**

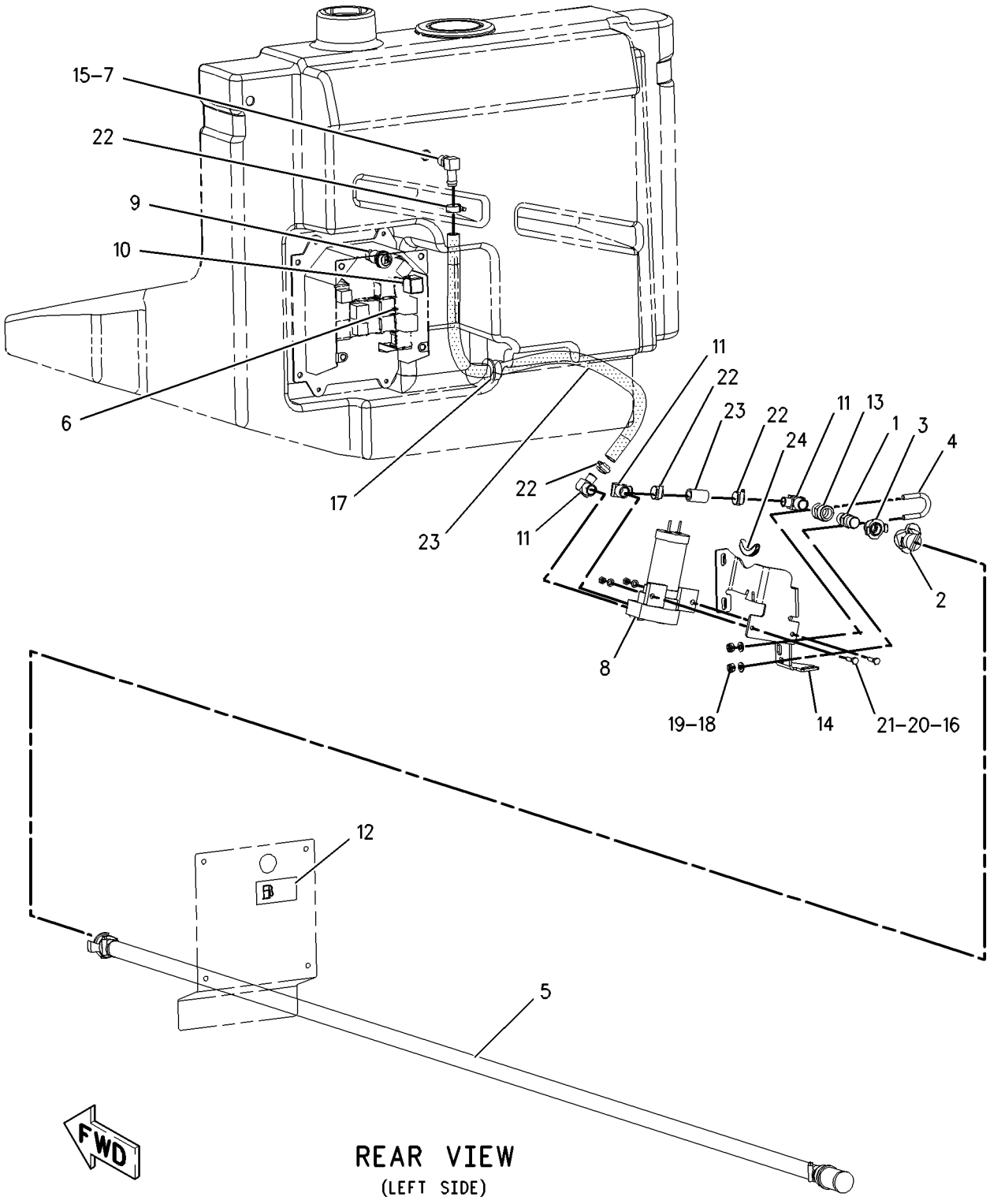

GRAPHIC #1 **<END>** g00905365

FUEL SYSTEM

188-4937 PUMP GP-FUEL TRANSFER

S/N: BCZ637-2000
AN ATTACHMENT

SMCS-1256 **i02159892**

NOTE	REF NO	GRAPHIC REF	PART NUMBER	QTY	PART NAME 1 2 3 4 5 6 (PRODUCT LEVEL)	SEE PAGE
	1	1	**4I-8443**	1	VALVE-CHECK (FUEL TRANSFER PUMP)	
Y	2	1	**8U-0876**	1	HOSE GP-REFUELING	98
	3	1	**113-8491**	1	FUSE (15-AMPERE) (FUEL TRANSFER PUMP)	
	4	1	**137-9438**	1	ELBOW	
	5	1	**175-4807**	1	PUMP & MOTOR GP-FUEL TRANSFER	
		1	**102-8802**	1	KIT-RECEPTACLE (2-PIN)	
					(INCLUDES RECEPTACLE AS AND WEDGE)	
		1	**3E-3365**	1	WEDGE-RECEPTACLE LOCK (2-PIN)	
		1	**9W-0852**	2	PIN-CONNECTOR	
	6	1	**196-5650**	1	SWITCH AS (REFUELING PUMP)	
		1	**197-6076**	1	NUT	
		1	**197-6082**	1	BOOT	
	7	1	**196-8643**	1	SWITCH AS-MAGNETIC (REFUELING PUMP RELAY)	
	8	1	**207-2159**	1	ELBOW	
	9	1	**208-1658**	1	FILM-INSTRUCTION (REFUELING)	
C	10	1	**235-1728**	1	PLATE	
C	11	1	**244-8586**	1	COUPLING	
C	12	1	**244-8587**	1	COVER	
C	13	1	**244-9530**	1	FITTING	
C	14	1	**245-2579**	1	ADAPTER	
	15	1	**2M-9780**	1	SEAL-O-RING	
M	16	1	**5C-7261**	2	NUT (M8X1.25-THD)	
	17	1	**5W-5131**	1	GROMMET	
	18	1	**8T-4224**	2	WASHER-HARD (8.8X16X2-MM THK)	
CM	19	1	**8T-7514**	2	SCREW-HEX SOCKET (M8X1.25X4.23-MM)	
	20	1	**8T-9402**	2	CLAMP-HOSE	
E	21	1	**120-9729**		HOSE (100-CM)	
BE	22	1	**207-5141**		SEAL	
BF			**096-0061**	3	STRAP-CABLE	
BEF			**197-3800**		LOOM	
					(LOCATED ON FUEL PUMP HARNESS)	

B-USE AS REQUIRED
C-CHANGE FROM PREVIOUS TYPE
E-ORDER BY THE CENTIMETER
F-NOT SHOWN
M-METRIC PART
Y-SEPARATE ILLUSTRATION

188-4937 **PUMP GP-FUEL TRANSFER** *(contd.)* **i02159892**

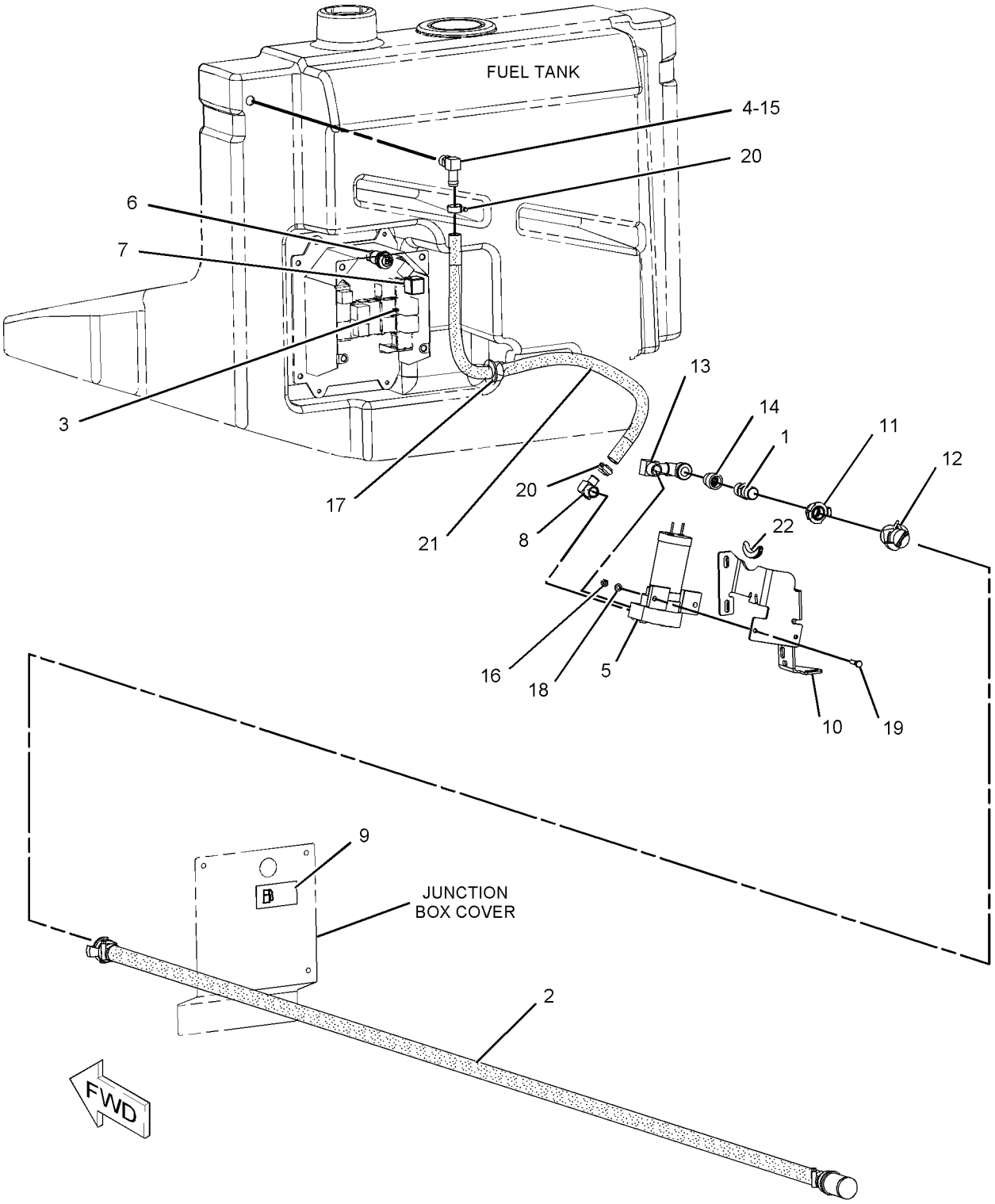

GRAPHIC #1 **<END>** g01082902

FUEL SYSTEM

216-9131 PUMP GP-FUEL TRANSFER

S/N: CPT1-379

PART OF 188-5096 ENGINE AR-PRIMARY

SMCS-1256 **i01798346**

NOTE	REF NO	GRAPHIC REF	PART NUMBER	QTY	PART NAME 1 2 3 4 5 6 (PRODUCT LEVEL)	SEE PAGE
	1	2	**5C-1777**	3	NUT	
	2	1	**5C-1809**	1	SPACER (8X19X6.5MM)	
	3	1	**6I-0217**	1	BOLT (M8X1.25X20MM)	
	4	1	**6I-0254**	4	BOLT (M8X1.25X30MM)	
	5	1	**8N-7983**	1	FITTING	
	6	1,2	**033-7849**	3	PLUG	
	7	2	**067-6269**	3	FITTING (5/16IN)	
	8	1	**067-6998**	1	NUT	
	9	1	**067-6999**	1	FERRULE	
	10	2	**100-4461**	1	BOLT (M10X50MM)	
	11	1	**100-4830**	1	BOLT (M10X1.5X20MM)	
	12	1	**101-3906**	1	BOLT	
	13	1,2	**101-3907**	4	WASHER	
	14	2	**101-7178**	1	BOLT (M10X55MM)	
	15	2	**127-8162**	2	CLIP	
	16	2	**133-9467**	1	BOLT	
	17	2	**133-9472**	1	CONNECTION	
	18	1	**160-7197**	1	CLIP	
	19	1,2	**162-2000**	4	WASHER	
	20	2	**186-0790**	1	SPACER	
	21	1	**216-9043**	1	PUMP AS-FUEL PRIMING	
	22	1	**7W-4553**	1	GASKET-FUEL PUMP	
	23	2	**216-9053**	1	CONNECTOR	
	24	1	**216-9055**	1	BRACKET	
	25	1	**216-9056**	1	TUBE AS	
	26	1	**102-9987**	1	CLIP	
	27	2	**216-9066**	1	TUBE AS	
	28	2	**149-6117**	1	CLIP	
	29	2	**216-9086**	1	SPACER	
	30	2	**216-9092**	2	CONNECTOR	
	31	1	**216-9093**	1	TUBE AS	
	32	1	**102-9986**	2	CLIP	
	33	1	**216-9109**	1	LINE AS-FUEL	
	34	1	**7W-4539**	1	CLIP	
	35	1	**103-0173**	1	CLIP	
	36	2	**216-9110**	1	TUBE AS	
	37	2	**102-9986**	1	CLIP	
	38	2	**216-9752**	4	WASHER	
	39	1	**216-9767**	2	BOLT-FLANGED	
	40	2	**217-0721**	1	BOLT	

216-9131 **PUMP GP-FUEL TRANSFER** *(contd.)* **i01798346**

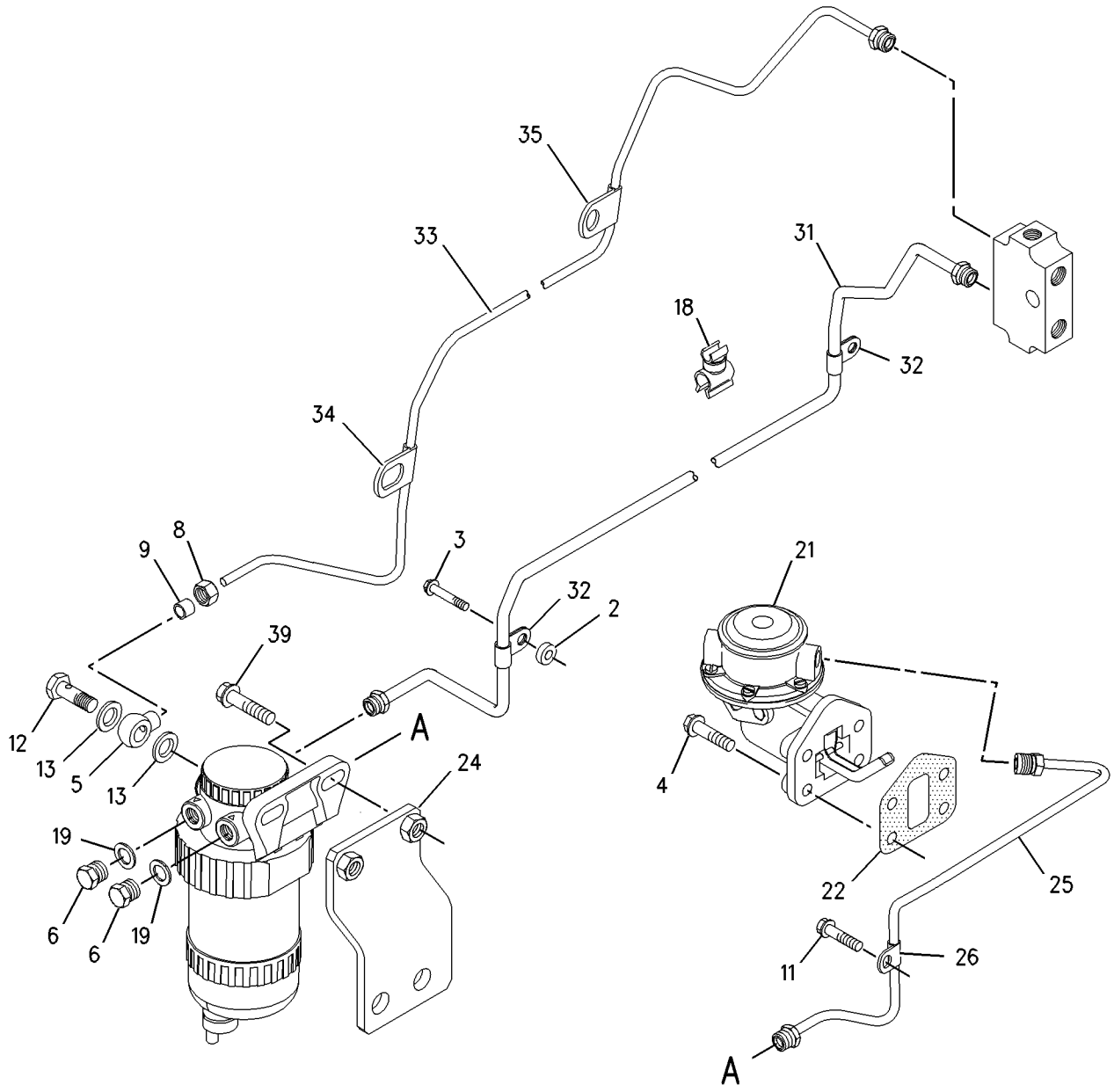

GRAPHIC #1 g00860885

216-9131 **PUMP GP-FUEL TRANSFER** *(contd.)* **i01798346**

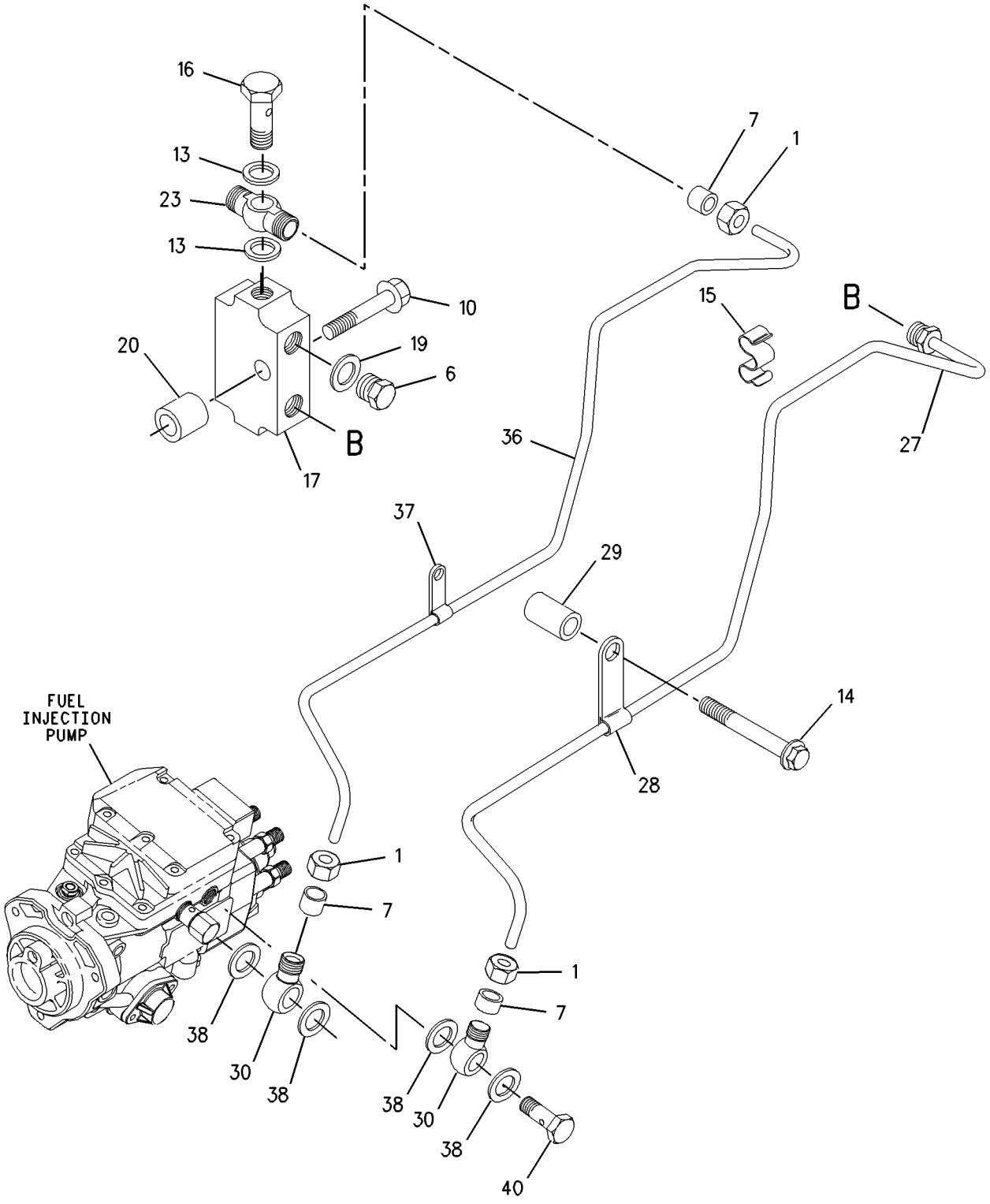

GRAPHIC #2 **<END>** g00860888

FUEL SYSTEM

216-9131 PUMP GP-FUEL TRANSFER

S/N: CPT380-UP

PART OF 188-5096 ENGINE AR-PRIMARY

SMCS-1256 **i01895614**

NOTE	REF NO	GRAPHIC REF	PART NUMBER	QTY	PART NAME 1 2 3 4 5 6 (PRODUCT LEVEL)	SEE PAGE
	1	2	**5C-1777**	3	NUT	
	2	1	**5C-1809**	1	SPACER (8X19X6.5-MM)	
	3	1	**6I-0217**	1	BOLT (M8X1.25X20-MM)	
	4	1	**6I-0254**	4	BOLT (M8X1.25X30-MM)	
	5	1	**8N-7983**	1	FITTING	
	6	1,2	**033-7849**	3	PLUG	
	7	2	**067-6269**	3	OLIVE	
	8	1	**067-6998**	1	NUT (3/8-24-2B-THD)	
	9	1	**067-6999**	1	OLIVE	
	10	2	**100-4461**	1	BOLT (M10X50-MM)	
	11	1	**100-4830**	1	BOLT (M10X1.5X20-MM)	
	12	1	**101-3906**	1	BOLT	
	13	1,2	**101-3907**	4	WASHER	
	14	2	**101-7178**	1	BOLT (M10X55-MM)	
	15	1	**102-9988**	1	SPACER	
	16	2	**127-8162**	2	CLIP	
	17	2	**133-9467**	1	BOLT	
	18	2	**133-9472**	1	CONNECTION	
	19	1	**160-7197**	1	CLIP	
	20	1,2	**162-2000**	4	WASHER	
	21	2	**186-0790**	1	SPACER	
	22	1	**191-1260**	2	BOLT	
	23	1	**191-5941**	1	TUBE AS	
	23A	1	**102-9986**	1	CLIP	
	23B	1	**067-6269**	2	OLIVE	
	24	1	**191-5942**	1	TUBE AS	
	24A	1	**102-9986**	1	CLIP	
	24B	1	**149-6116**	1	CLIP	
	24C	1	**067-6268**	2	NUT-FUEL LINE (1/2-IN)	
	24D	1	**067-6269**	2	OLIVE	
	25	1	**191-5943**	1	LINE AS-FUEL	
	25A	1	**101-3986**	1	CLIP	
	25B	1	**224-8679**	1	CLIP	
	25C	1	**101-3983**	1	NUT (3/16)	
	25D	1	**101-3984**	1	OLIVE	
	26	1	**216-9043**	1	PUMP AS-FUEL TRANSFER	
	26A	1	**7W-4553**	1	GASKET-FUEL PUMP	
	27	2	**216-9053**	1	CONNECTOR	
	28	1	**216-9055**	1	BRACKET	
	29	2	**216-9066**	1	TUBE AS	
	29A	2	**149-6117**	1	CLIP	
	29B	2	**067-6268**	1	NUT-FUEL LINE (1/2-IN)	
	29C	2	**067-6269**	1	OLIVE	
	30	2	**216-9086**	1	SPACER	
	31	2	**216-9092**	2	CONNECTOR	
	32	2	**216-9110**	1	TUBE AS	
	32A	2	**102-9986**	1	CLIP	
	33	2	**216-9752**	4	WASHER	
	34	2	**217-0721**	1	BOLT	

216-9131 **PUMP GP-FUEL TRANSFER** *(contd.)* **i01895614**

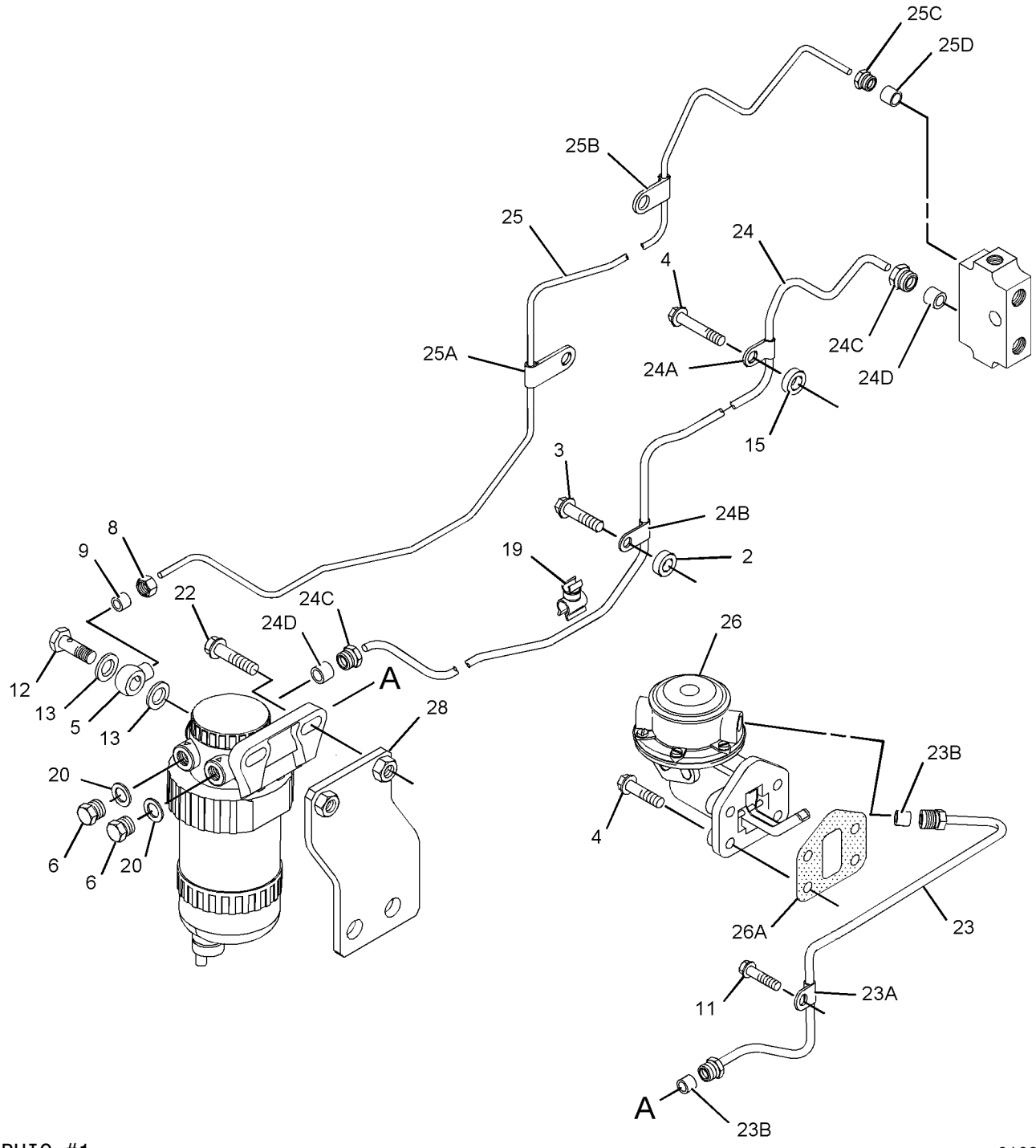

GRAPHIC #1 g01093322

216-9131 **PUMP GP-FUEL TRANSFER** *(contd.)* **i01895614**

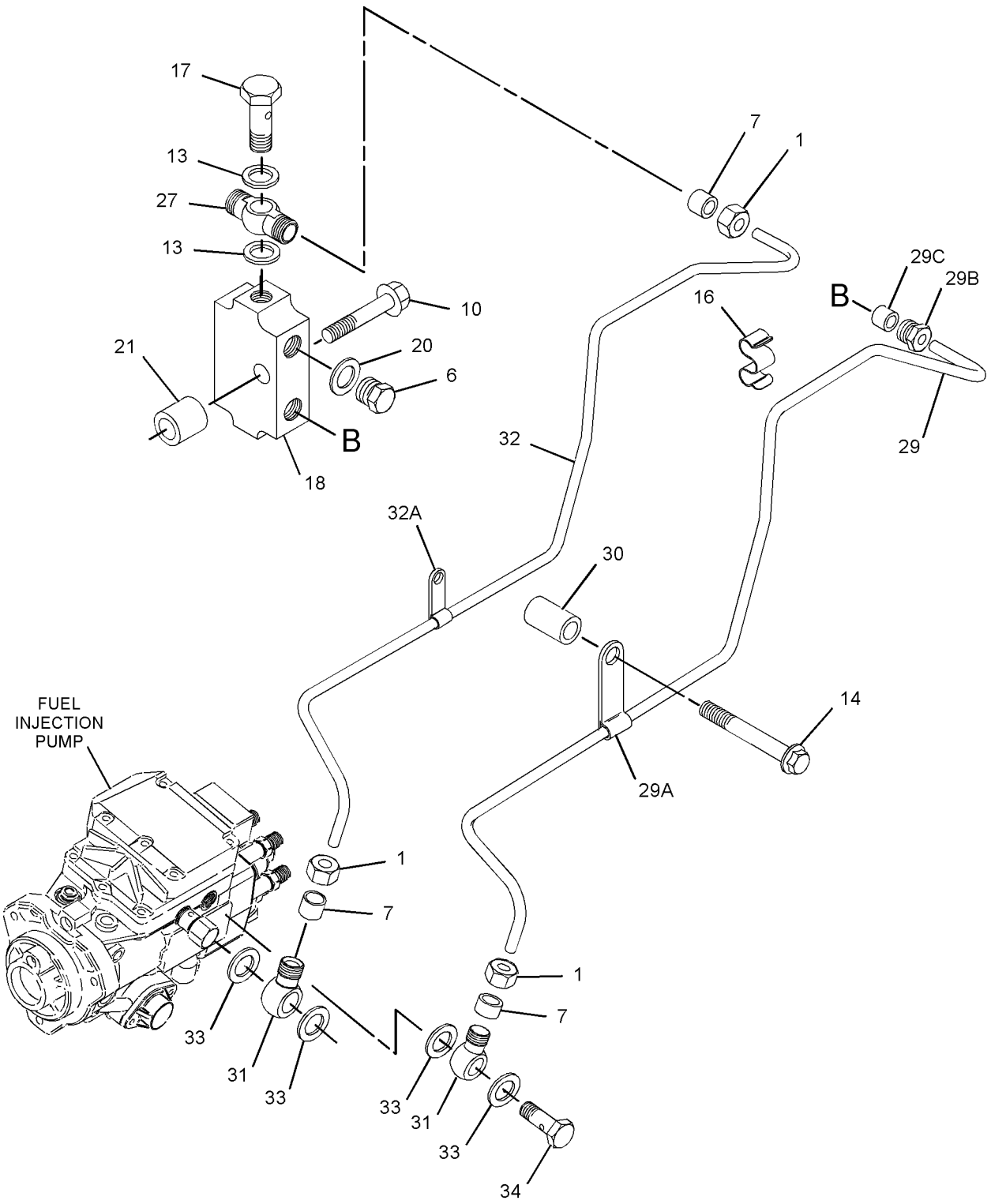

GRAPHIC #2 **<END>** g01093324

FUEL SYSTEM

138-3097 SEPARATOR GP-WATER

S/N: BCZ1-2000

PART OF 186-0502 LINES GP-FUEL

SMCS-1263 **i02052585**

NOTE	REF NO	GRAPHIC REF	PART NUMBER	QTY	PART NAME 1 2 3 4 5 6 (PRODUCT LEVEL)	SEE PAGE
	1	1	**101-3912**	1	WASHER	
	2	1	**101-3949**	1	SEAL	
	3	1	**101-3953**	1	SEAL (WATER SEPARATOR BASE)	
	4	1	**101-3955**	1	SEAL (WATER SEPARATOR CONNECTION)	
	5	1	**138-3100**	1	ELEMENT-WATER SEPARATOR	
	6	1	**101-3739**	1	NUT	
	7	1	**101-3740**	1	CAP	
	8	1	**101-3741**	1	SEAL	
					AVAILABLE REPLACEMENT PART(S):	
			118-5637	1	KIT-BOWL (WATER SEPARATOR)	

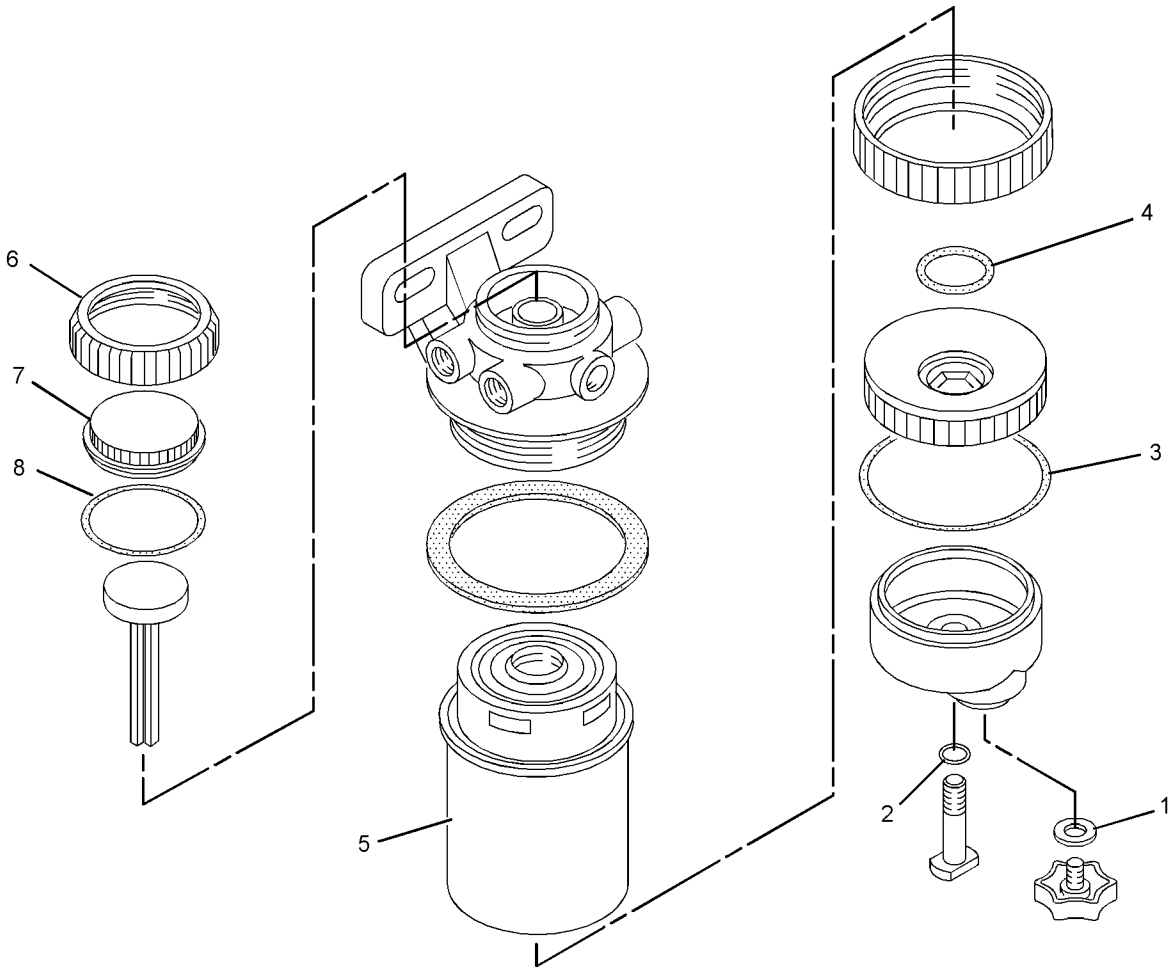

GRAPHIC #1

<END>

g01056576

186-0501 TANK & MTG GP-FUEL

S/N: BCZ1-2000

PART OF 186-0468 CHASSIS AR

SMCS-1273 **i01779543**

NOTE	REF NO	GRAPHIC REF	PART NUMBER	QTY	PART NAME 1 2 3 4 5 6 (PRODUCT LEVEL)	SEE PAGE
	1	1	**159-3727**	1	TUBE AS-DRAIN	
	2	1	**160-9192**	2	CLIP	
	3	1	**196-1767**	1	STRAP AS	
	4	1	**196-1770**	1	BRACKET AS	
Y	5	1	*196-1776*	1	TANK GP-FUEL	119
M	6	1	**8T-0389**	2	LOCKNUT (M10X1.5-THD)	
M	7	1	**8T-4139**	2	BOLT (M12X1.75X30-MM)	
M	8	1	**8T-4172**	1	BOLT (M10X1.50X80-MM)	
M	9	1	**8T-4223**	2	WASHER-HARD (13.5X25.5X3-MM THK)	
M	10	1	**8T-6466**	1	BOLT (M10X1.50X60-MM)	

M-METRIC PART
Y-SEPARATE ILLUSTRATION

186-0501 **TANK & MTG GP-FUEL** *(contd.)* **i01779543**

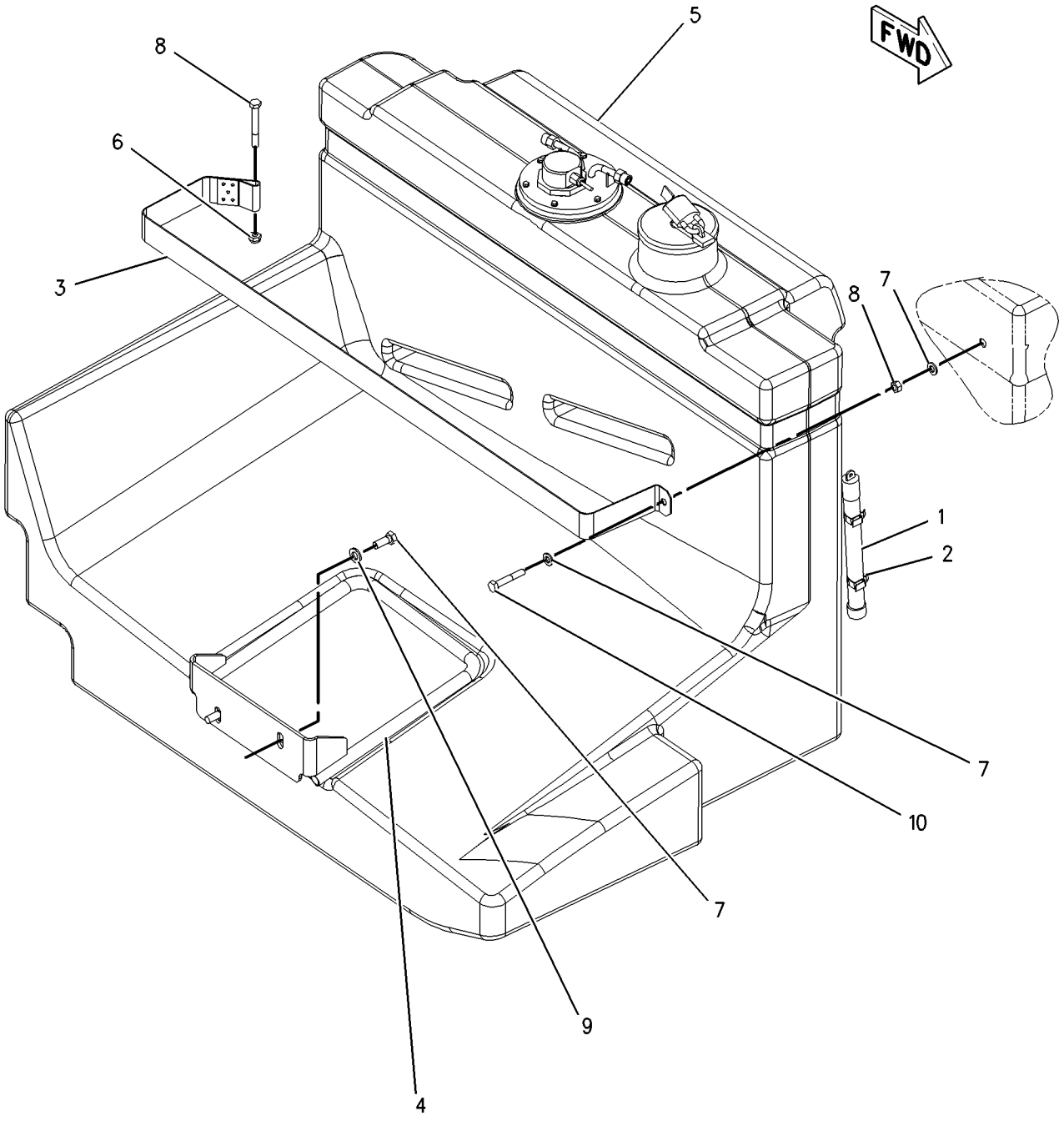

GRAPHIC #1 **<END>** g00910037

FUEL SYSTEM

196-1776 TANK GP-FUEL

S/N: BCZ1-2000
385 LITERS (100.1 GALLONS)
PART OF 186-0501 TANK & MTG GP-FUEL

SMCS-1273 **i02159902**

NOTE	REF NO	GRAPHIC REF	PART NUMBER	QTY	PART NAME 1 2 3 4 5 6 (PRODUCT LEVEL)	SEE PAGE
	1	1	**246-2641**	1	PADLOCK GP	
A		1	**5P-8500**	1	KEY	
	2	1	**7X-7700**	1	CAP AS-FILLER (FUEL, LOCKING, VENTED)	
		1	**9X-2205**	1	KIT-CAP FILTER (FUEL TANK)	
		1	**9X-8600**	1	SEAL-O-RING	
	3	1	**9P-7121**	1	STRAINER-FUEL	
	4	1	**101-4639**	1	VALVE AS-DRAIN (FUEL TANK)	
	5	1	**196-1760**	1	TUBE AS	
	6	1	**196-1777**	1	TANK AS-FUEL	
	7	1	**196-5649**	1	SENSOR GP-FUEL LEVEL	
		1	**208-7012**	1	SEAL	
		1	**6S-8620**	1	CLAMP-HOSE	
		1	**9X-3401**	2	PIN-CONNECTOR	
		1	**102-8802**	1	KIT-RECEPTACLE (2-PIN)	
	8	1	**132-3056**	1	SEAL-O-RING	
	9	1	**2M-9780**	2	SEAL-O-RING	
M	10	1	**8T-0289**	6	BOLT (M5X0.8X20-MM)	
	11	1	**8T-0328**	6	WASHER-HARD (5.5X10X1-MM THK)	
	12	1	**9S-4190**	1	PLUG	

A-NOT PART OF THIS GROUP
M-METRIC PART

196-1776 **TANK GP-FUEL** *(contd.)* **i02159902**

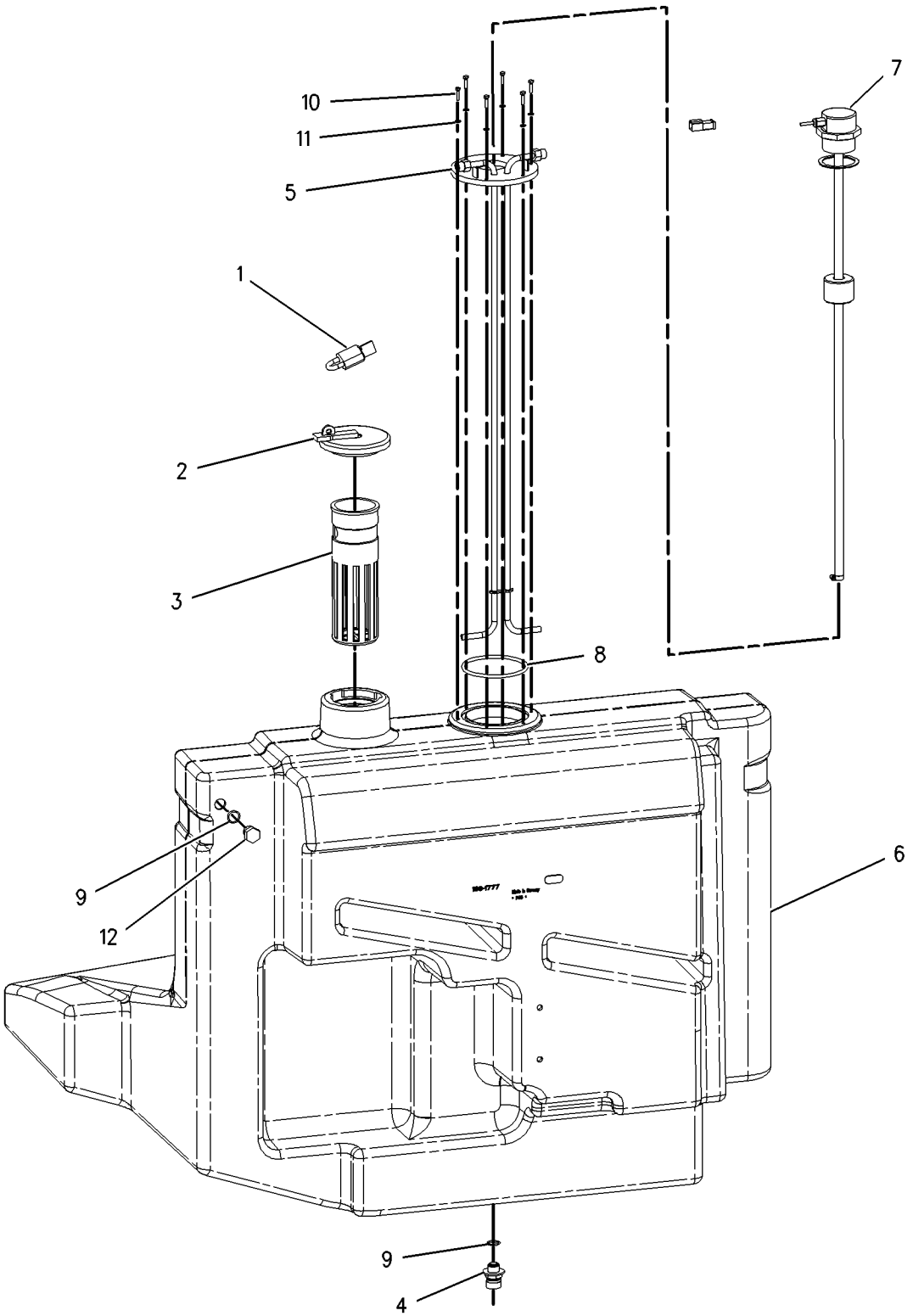

LEFT SIDE VIEW

GRAPHIC #1 **<END>** g00920771

145-7210 VALVE GP-FUEL SHUTOFF

S/N: BCZ1-2000

PART OF 186-0502 LINES GP-FUEL

SMCS-1273 **i02159920**

NOTE	REF NO	GRAPHIC REF	PART NUMBER	QTY	PART NAME 1 2 3 4 5 6 (PRODUCT LEVEL)	SEE PAGE
Y	1	1	**196-7480**	2	VALVE GP-FLOW CONTROL (FUEL)	708
	2	1	**196-7516**	1	LEVER	
	3	1	**5W-9522**	4	WASHER	

Y-SEPARATE ILLUSTRATION

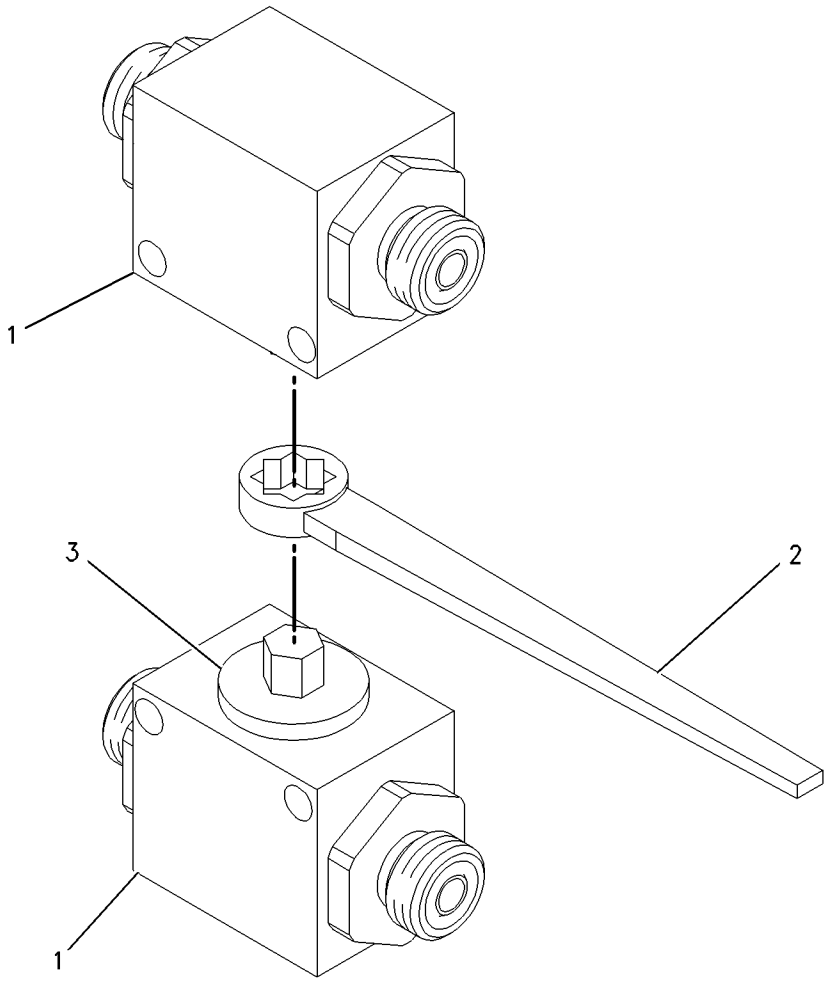

GRAPHIC #1 **<END>** g00863686

188-4970 ALARM GP—OVERLOAD CHECK VALVE

S/N: BCZ1-2000

AN ATTACHMENT

SMCS-7400, 7402, 7407 **i02178146**

NOTE	REF NO	GRAPHIC REF	PART NUMBER	QTY	PART NAME 1 2 3 4 5 6 (PRODUCT LEVEL)	SEE PAGE
	1	1	**5W-8022**	1	SEAL	
	2	1	**8U-1341**	1	FITTING	
	3	1	**8U-7334**	1	ORIFICE	
	4	1	**118-5501**	1	SWITCH GP-PRESSURE (OVERLOAD WARNING)	
	5	1	**152-1267**	1	ELBOW	
	6	1	**3J-1907**	1	SEAL-O-RING	
	7	1	**6V-8397**	1	SEAL-O-RING	
	8	1	**193-9060**	1	SWITCH AS (OVERLOAD WARNING)	
		1	**111-7899**	1	GASKET	
BF		1	**096-0061**	4	STRAP-CABLE	

B-USE AS REQUIRED
F-NOT SHOWN

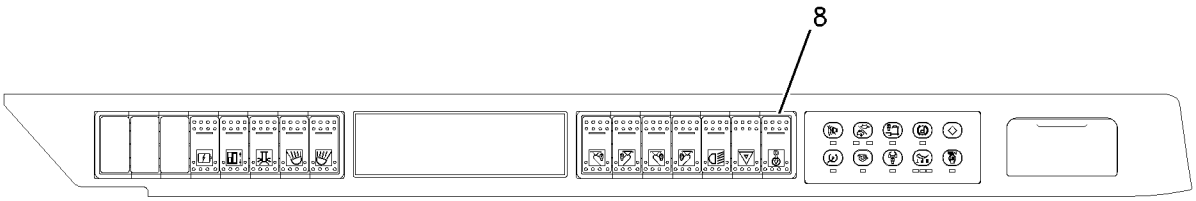

TOP VIEW

FWD

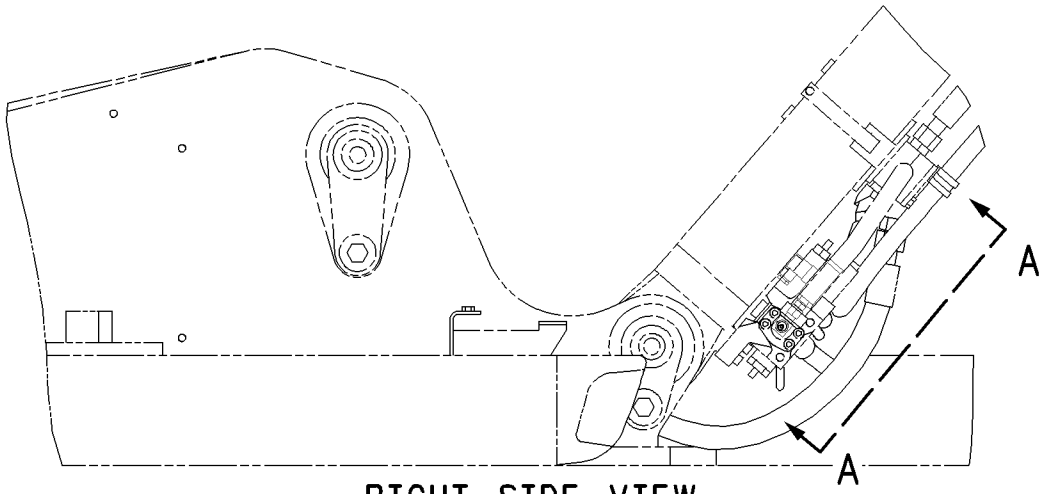

RIGHT SIDE VIEW

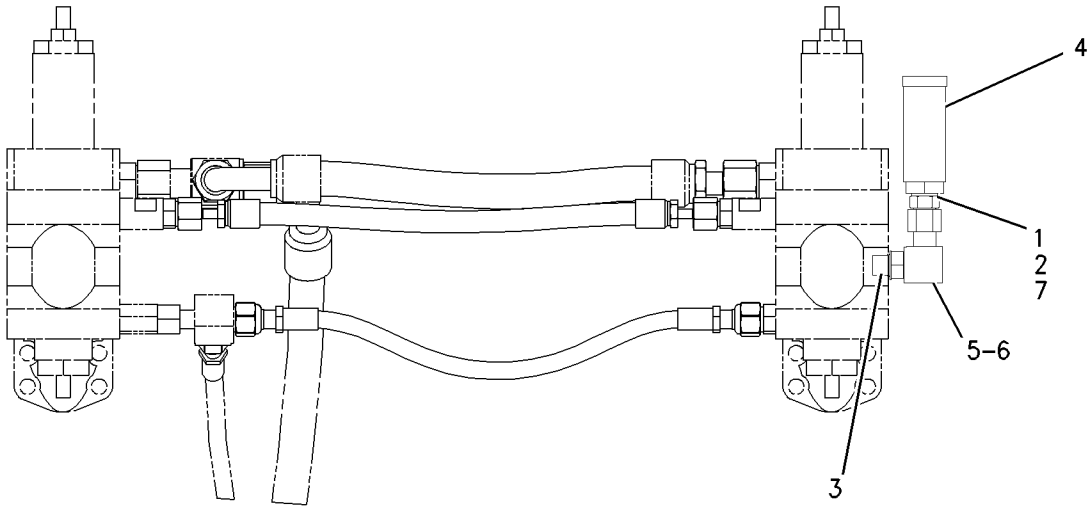

VIEW A-A

GRAPHIC #1 **<END>** g00920784

188-4971 ALARM GP-TRAVEL

S/N: BCZ1-435, 437-441

AN ATTACHMENT

SMCS-7429 **i02159923**

NOTE	REF NO	GRAPHIC REF	PART NUMBER	QTY	PART NAME 1 2 3 4 5 6 (PRODUCT LEVEL)	SEE PAGE
	1	1	**123-6449**	1	ALARM GP	
E		1	**9X-1813**		SLEEVE (28CM)	
		1	**3E-3365**	1	WEDGE-RECEPTACLE LOCK (2-PIN)	
		1	**102-8802**	1	KIT-RECEPTACLE (2-PIN)	
		1	**186-3735**	2	PIN-CONNECTOR	
M	2	1	**5C-7261**	2	NUT (M8X1.25-THD)	
M	3	1	**7X-2538**	2	BOLT (M8X1.25X100-MM)	
	4	1	**8T-4224**	2	WASHER-HARD (8.8X16X2-MM THK)	
	5	1	**9D-3768**	1	GROMMET	

E-ORDER BY THE CENTIMETER
M-METRIC PART

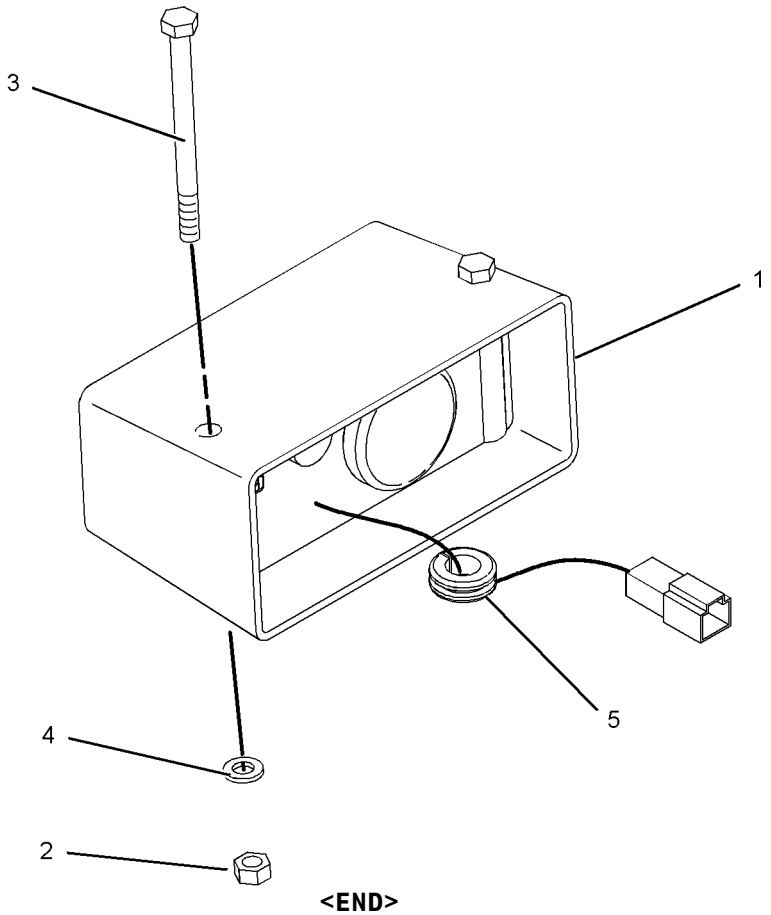

GRAPHIC #1 **<END>** g01095257

188-4971 ALARM GP-TRAVEL

S/N: BCZ436, 442-2000
AN ATTACHMENT

SMCS-7429 **i02150882**

NOTE	REF NO	GRAPHIC REF	PART NUMBER	QTY	PART NAME 1 2 3 4 5 6 (PRODUCT LEVEL)	SEE PAGE
C	1	1	**213-9100**	1	ALARM AS-BACKUP	
		1	**3E-3364**	1	RECEPTACLE (2-PIN)	
E		1	**9X-1813**		SLEEVE (31-CM)	
M	2	1	**5C-7261**	2	NUT (M8X1.25-THD)	
CM	3	1	**8T-4189**	2	BOLT (M8X1.25X20-MM)	
C	4	1	**8T-4224**	2	WASHER-HARD (8.8X16X2-MM THK)	
	5	1	**9D-3768**	1	GROMMET	
C	6	1	**8L-8413**	1	STRAP-CABLE	
	7	1	**5P-4116**	2	WASHER-HARD (8.8X20.5X2-MM THK)	

C-CHANGE FROM PREVIOUS TYPE
E-ORDER BY THE CENTIMETER
M-METRIC PART

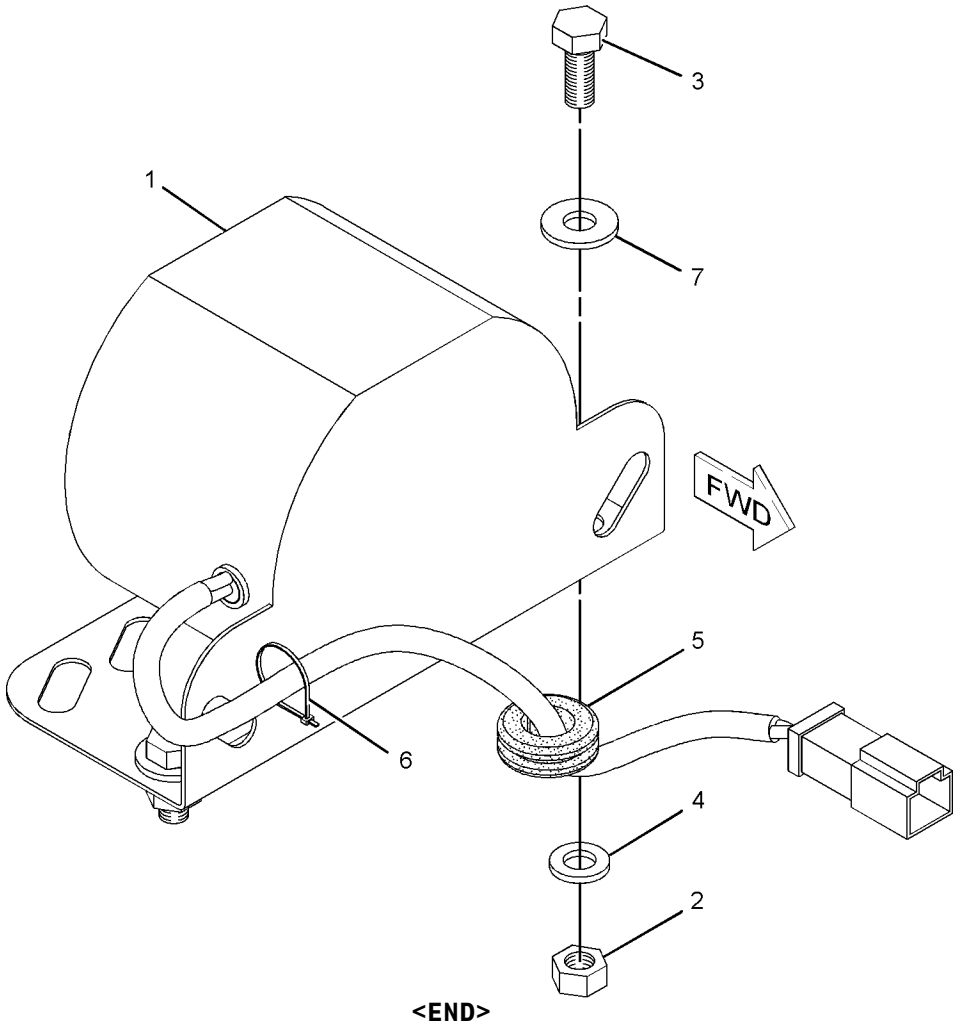

GRAPHIC #1 **<END>** g01093072

ELECTRICAL AND STARTING SYSTEM

235-4592 ALTERNATOR GP-CHARGING

S/N: CPT4477-UP

PART OF 188-5096 ENGINE AR-PRIMARY

SMCS-1405 **i02155688**

NOTE	REF NO	GRAPHIC REF	PART NUMBER	QTY	PART NAME 1 2 3 4 5 6 (PRODUCT LEVEL)	SEE PAGE
	1	1	**6I-0254**	2	BOLT (M8X1.25X30-MM)	
	2	1	**6I-0260**	1	BOLT (M8X1.25X25-MM)	
	3	1	**6I-0423**	1	BOLT (M12X1.75X30-MM)	
	4	1	**6I-0456**	1	BOLT (M8X1.25X45-MM)	
	5	1	**6I-0654**	1	BOLT (M10X1.5X25-MM)	
	6	1	**6I-0839**	3	BOLT (M8X1.25X70-MM)	
	7	1	**6I-1090**	1	BOLT (M8X1.25X40-MM)	
	8	1	**7W-2632**	2	WASHER (8.5X16.8X1.6-MM THK)	
	10	1	**067-6366**	1	WASHER (M8)	
	11	1	**113-6349**	2	NUT (M12-1.75X93-MM THD)	
	12	1	**124-3815**	4	BOLT (M8X16X1.25-MM)	
	13	1	**140-9793**	1	BRACKET	
	14	1	**140-9794**	1	BRACKET	
	15	1	**140-9795**	1	STRAP	
	16	1	**140-9796**	1	SPACER	
	17	1	**225-3147**	1	ALTERNATOR GP-CHARGING	
	18	1	**228-7391**	1	PULLEY-ALTERNATOR	
FM			**8T-4223**	1	WASHER-HARD (13.5X25.5X3-MM THK)	

F-NOT SHOWN
M-METRIC PART

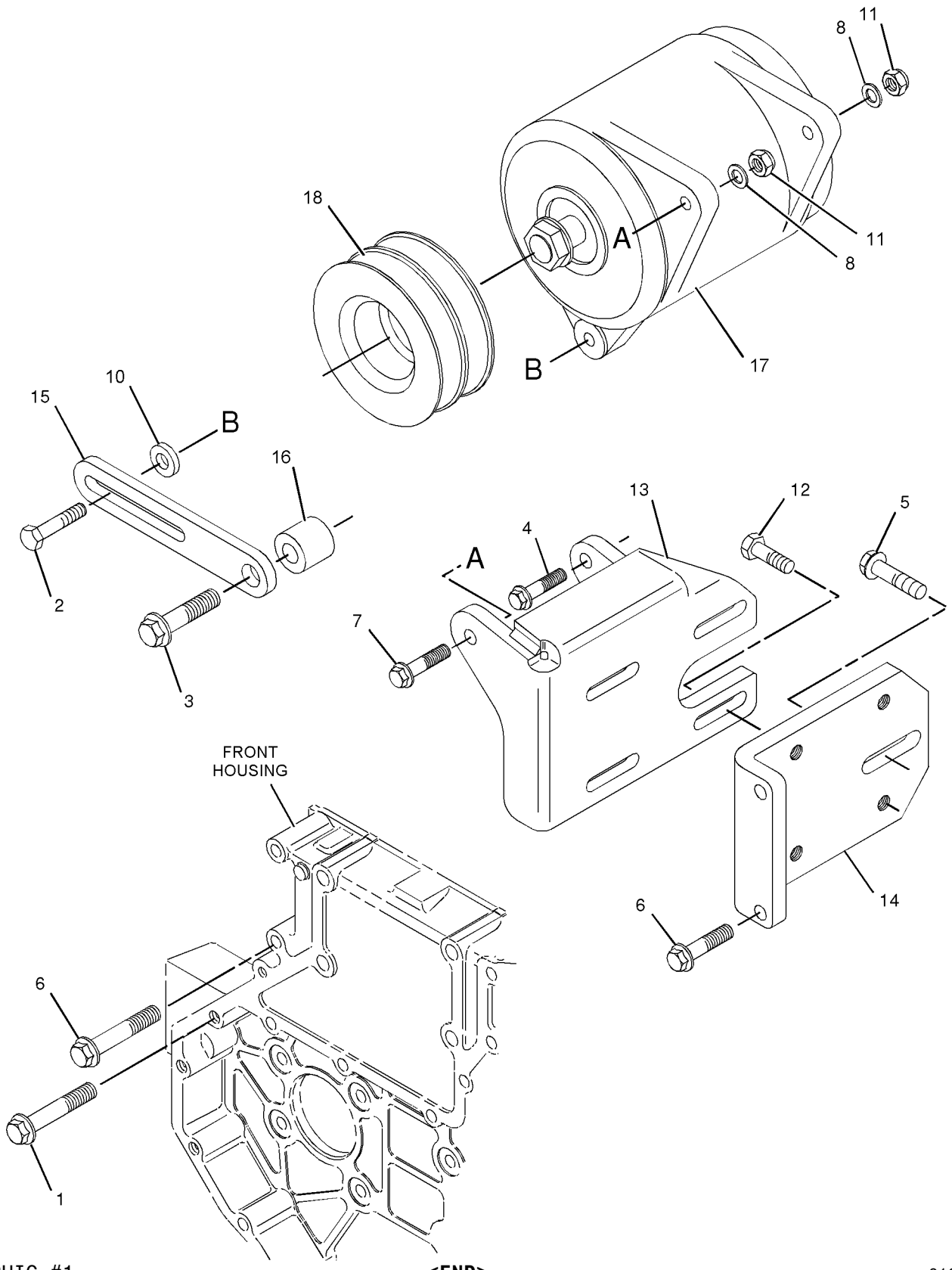

GRAPHIC #1 **<END>** g01055485

ELECTRICAL AND STARTING SYSTEM

245-2703 ALTERNATOR GP-CHARGING

S/N: CPT1-4476

PART OF 188-5096 ENGINE AR-PRIMARY

SMCS-1405 **i02049549**

NOTE	REF NO	GRAPHIC REF	PART NUMBER	QTY	PART NAME 1 2 3 4 5 6 (PRODUCT LEVEL)	SEE PAGE
	1	1	**6I-0254**	2	BOLT (M8X1.25X30-MM)	
	2	1	**6I-0260**	1	BOLT (M8X1.25X25-MM)	
	3	1	**6I-0423**	1	BOLT (M12X1.75X30-MM)	
	4	1	**6I-0456**	1	BOLT (M8X1.25X45-MM)	
	5	1	**6I-0654**	1	BOLT (M10X1.5X25-MM)	
	6	1	**6I-0839**	3	BOLT (M8X1.25X70-MM)	
	7	1	**6I-1090**	1	BOLT (M8X1.25X40-MM)	
	8	1	**7W-2632**	2	WASHER (8.5X16.8X1.6-MM THK)	
	9	1	**067-6366**	1	WASHER (M8)	
	10	1	**109-2362**	1	ALTERNATOR GP-CHARGING	
	11	1	**113-6346**	1	PULLEY	
	12	1	**113-6349**	2	NUT (M12-1.75X93-MM THD)	
	13	1	**113-6352**	1	FAN	
	14	1	**113-6353**	1	SPACER	
	15	1	**124-3815**	4	BOLT (M8X16X1.25-MM)	
	16	1	**140-9793**	1	BRACKET	
	17	1	**140-9794**	1	BRACKET	
	18	1	**140-9795**	1	STRAP	
	19	1	**140-9796**	1	SPACER	

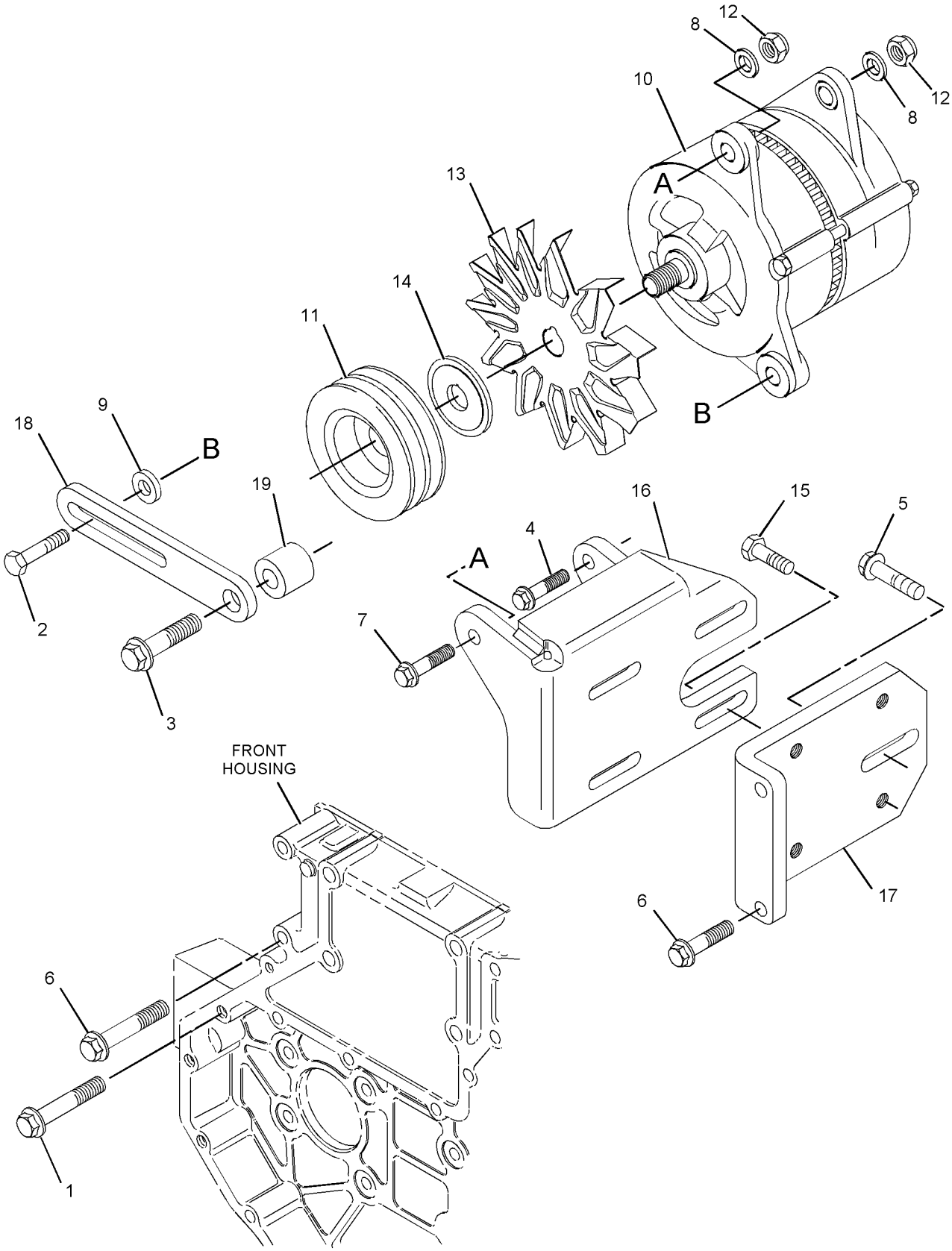

GRAPHIC #1 **<END>** g01089144

ELECTRICAL AND STARTING SYSTEM

186-0483 BATTERY & WIRING GP

S/N: BCZ1-561, 564, 566-567, 569, 571, 573-580, 582, 584

PART OF 186-0468 CHASSIS AR

SMCS-1401, 1402, 1408 **i02171540**

NOTE	REF NO	GRAPHIC REF	PART NUMBER	QTY	PART NAME 1 2 3 4 5 6 (PRODUCT LEVEL)	SEE PAGE
	1	1	**3E-5239**	1	RELAY AS (24-VOLT) (STARTING AID)	
	2	2	**3T-5760**	2	BATTERY (12-VOLT, 750-AMPERE)	
	3	1	**5I-8270**	1	COVER-BATTERY	
	4	1	**5W-1102**	1	CHAIN	
	5	1,2	**5W-2003**	2	CAP-PROTECTION	
	6	1	**6W-6005**	1	HOLD-DOWN-BATTERY	
Y	7	1	**7N-0718**	1	SWITCH GP-DISCONNECT (BATTERY)	176
	8	1	**7W-1251**	1	RESISTOR (STARTING AID)	
	9	1	**8T-0328**	2	WASHER-HARD (5.5X10X1-MM THK)	
	10	2	**8U-2738**	2	CAP-PROTECTION	
	11	2	**8U-6128**	1	CAP-PROTECTION	
	12	2	**091-8792**	2	CLIP	
	13	2	*104-6692*	1	RECEPTACLE AS-CONNECTOR	
		2	**102-8802**	1	KIT-RECEPTACLE (2-PIN)	
					(INCLUDES RECEPTACLE AND WEDGE)	
		2	**8T-8737**	1	PLUG-SEAL	
	14	1	**106-8704**	1	SUPPRESSOR AS-ARC	
		1	**102-8802**	1	KIT-RECEPTACLE (2-PIN)	
					(INCLUDES RECEPTACLE AND WEDGE)	
		1	**3E-3365**	1	WEDGE-RECEPTACLE LOCK (2-PIN)	
	15	1	**118-3534**	1	SWITCH GP-MAGNETIC (24-VOLT) (START RELAY)	
		1	**102-8802**	1	KIT-RECEPTACLE (2-PIN)	
					(INCLUDES RECEPTACLE AND WEDGE)	
		1	**3E-3365**	1	WEDGE-RECEPTACLE LOCK (2-PIN)	
M		1	**5C-2890**	2	NUT (M6X1-THD)	
		1	**8T-8729**	2	PIN-CONNECTOR	
E		1	**9X-1813**		SLEEVE (16CM)	
	16	2	**121-2970**	1	TERMINAL-BATTERY (POSITIVE)	
	17	2	**121-2971**	1	TERMINAL-BATTERY (NEGATIVE)	
	18	1	**123-8838**	4	HOLDER AS-FUSE	
	19	1	**124-2913**	3	FUSE (70-AMPERE)	
	20	2	**128-1041**	1	WIRE AS	
	21	1	**132-1805**	1	STRAP AS-GROUND	
	22	2	**137-4195**	1	CAP	
	23	1	**170-6929**	1	CABLE AS	
E		1	**5P-0761**		CABLE (00-GA, RED) (31CM)	
		1	**9G-0002**	1	COVER-TERMINAL (RED)	
		1	**8L-8413**	1	STRAP-CABLE	
		1	**9G-0005**	1	COVER-TERMINAL (BLACK)	
		1	**8L-8413**	1	STRAP-CABLE	
		1	**8C-5918**	1	TERMINAL AS (NEGATIVE)	
		1	**8T-9756**	1	TERMINAL AS (POSITIVE)	
		1	**1M-6119**	2	BOLT (5/16-18X1.375-IN)	
		1	**1M-6120**	2	NUT (5/16-18-THD)	
	24	2	**193-7759**	1	WIRE AS	
	25	1	**193-7760**	1	WIRE AS	
	26	2	**193-7761**	1	WIRE AS	
	27	1	**193-7763**	1	HARNESS AS-ENGINE	
	28	2	**201-2494**	1	BRACKET AS	
	29	1	**207-1219**	1	FUSE (20-AMPERE)	
	30	2	**211-6476**	1	TERMINAL AS	
	31	2	**212-4849**	1	WIRE AS	
	32	2	**095-0826**	1	LOCKWASHER	
M	33	1	**177-0358**	4	BOLT-SOCKET HEAD (M4X0.7X55-MM)	
	34	1,2	**183-4403**	3	CLIP	
M	35	2	**190-8250**	1	BOLT (M10X1.5X295-MM)	

186-0483 **BATTERY & WIRING GP** *(contd.)* **i02171540**

NOTE	REF NO	GRAPHIC REF	PART NUMBER	QTY	PART NAME 1 2 3 4 5 6 (PRODUCT LEVEL)	SEE PAGE
	36	1,2	**3F-9556**	2	LOCKWASHER	
	37	2	**4P-7429**	1	CLIP	
	38	2	**4P-8134**	1	CLIP	
M	39	1	**5C-2874**	2	NUT (M5X0.8-THD)	
M	40	2	**5C-2890**	1	NUT (M6X1-THD)	
M	41	1,2	**5C-7261**	4	NUT (M8X1.25-THD)	
M	42	1,2	**5C-9553**	3	BOLT (M6X1X16-MM)	
	43	1,2	**5P-4116**	7	WASHER-HARD (8.8X20.5X2-MM THK)	
	44	2	**6D-4244**	1	CLIP	
	45	2	**6V-3265**	1	CLIP	
M	46	1	**6V-5215**	1	BOLT (M8X1.25X16-MM)	
	47	2	**8M-2772**	1	CLIP	
M	48	1	**8T-0287**	2	BOLT (M5X0.8X10-MM)	
M	49	1	**8T-0288**	2	BOLT (M5X0.8X12-MM)	
	50	1	**8T-3016**	2	WASHER (5.3X10X1-MM THK)	
	51	2	**8T-4121**	3	WASHER-HARD (11X21X2.5-MM THK)	
M	52	2	**8T-4133**	3	NUT (M10X1.5-THD)	
M	53	2	**8T-4137**	2	BOLT (M10X1.5X20-MM)	
M	54	2	**8T-4138**	1	BOLT (M6X1X20-MM)	
M	55	1,2	**8T-4171**	7	BOLT (M6X1X12-MM)	
	56	2	**8T-4224**	2	WASHER-HARD (8.8X16X2-MM THK)	
	57	2	**8T-4226**	1	WASHER-PLATED (10.5X45X3-MM THK)	
M	58	2	**8T-4908**	1	BOLT (M8X1.25X25-MM)	
M	59	2	**8T-7547**	1	BOLT (M8X1.25X30-MM)	
	60	1,2	**9X-8256**	10	WASHER (6.6X12X2-MM THK)	
E	61	1	**207-5141**		SEAL (64CM)	
BF		1	**096-0061**	10	STRAP-CABLE (197.5MM)	
BF		1	**9X-6772**	10	STRAP-CABLE (213MM)	

B-USE AS REQUIRED
E-ORDER BY THE CENTIMETER
F-NOT SHOWN
M-METRIC PART
Y-SEPARATE ILLUSTRATION

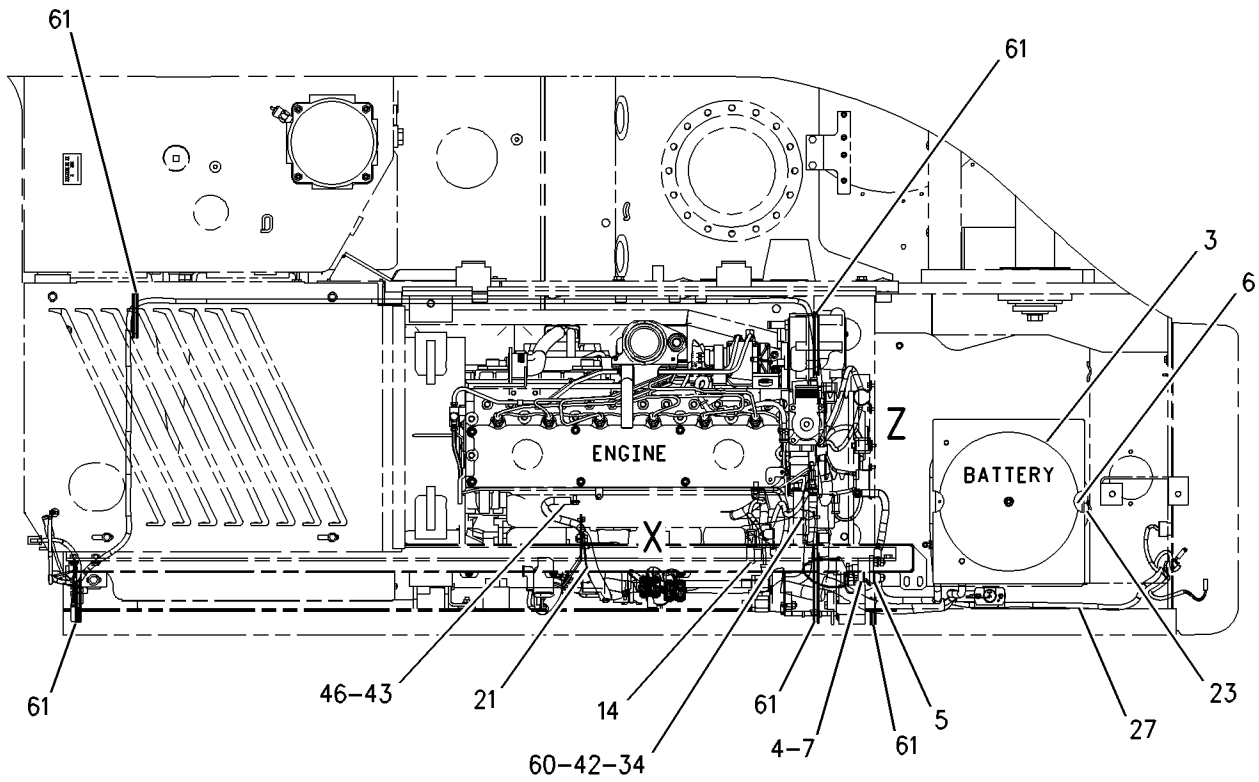

TOP VIEW

FWD

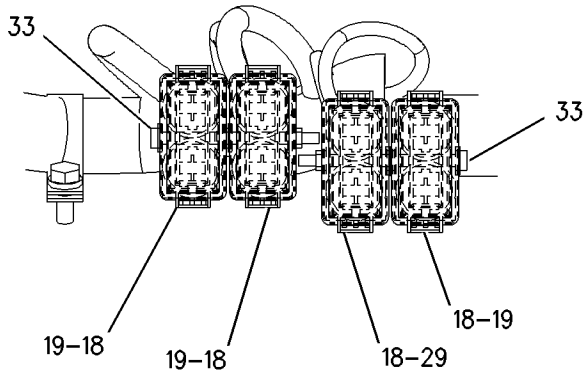

VIEW OF AREA X

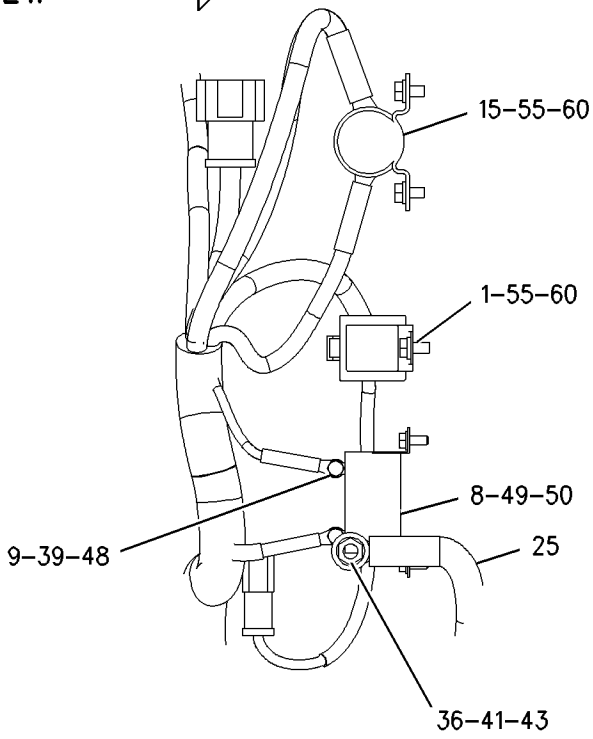

VIEW OF AREA Z

GRAPHIC #1 g00898754

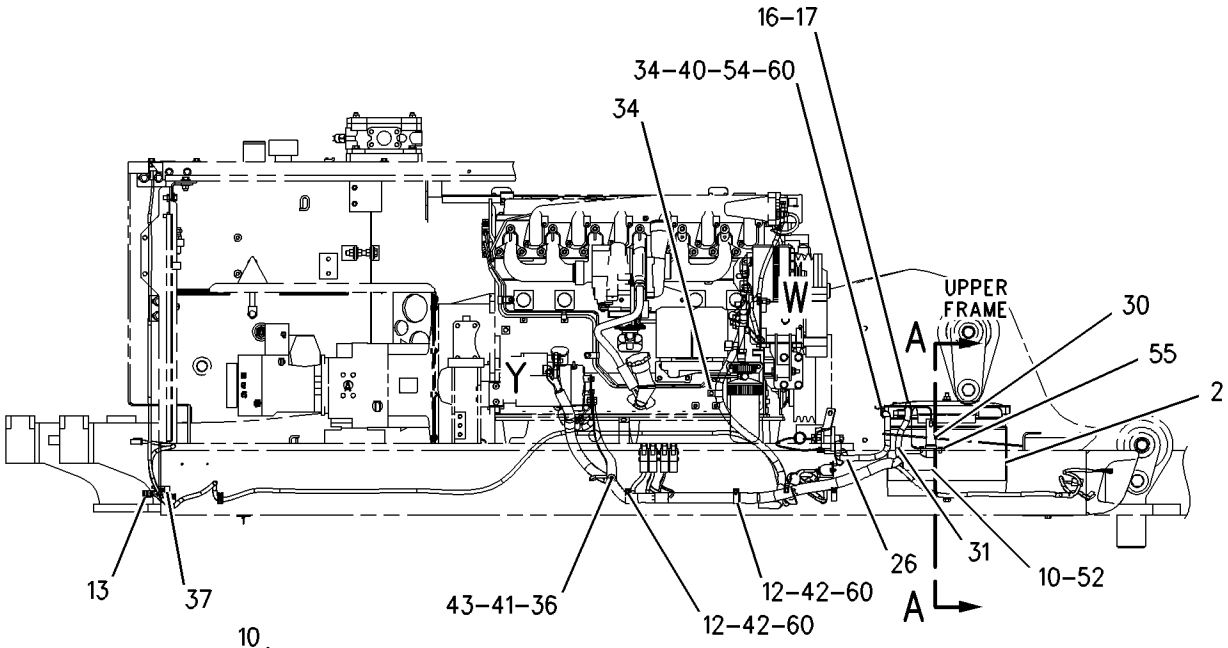

RIGHT SIDE VIEW

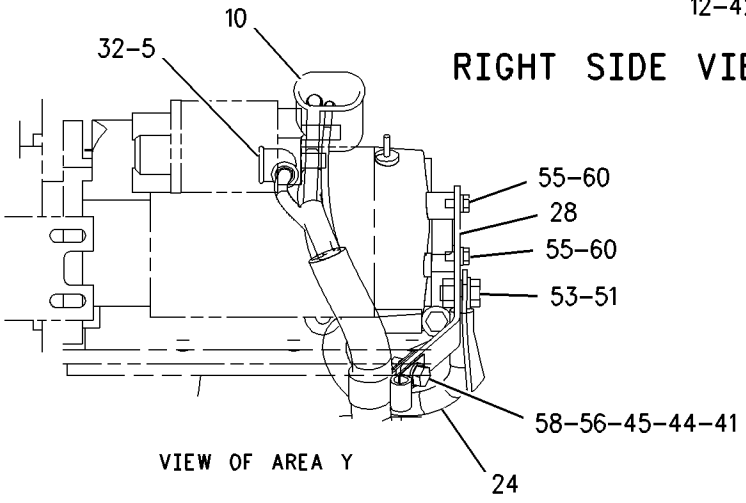

VIEW OF AREA Y

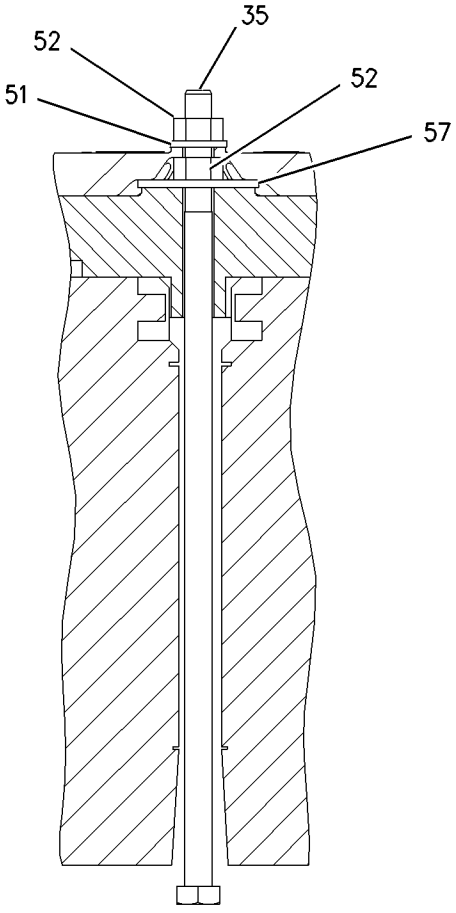

SECTION A–A

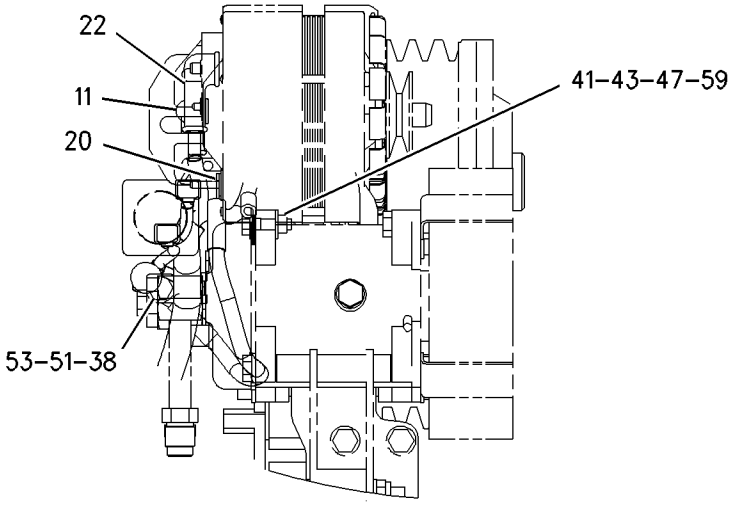

VIEW OF AREA W

GRAPHIC #2 **<END>** g00898755

ELECTRICAL AND STARTING SYSTEM

186-0483 BATTERY & WIRING GP

S/N: BCZ562-563, 565, 568, 570, 572, 581, 583, 585-2000

PART OF 186-0468 CHASSIS AR

SMCS-1401, 1402, 1408 **i02171541**

NOTE	REF NO	GRAPHIC REF	PART NUMBER	QTY	PART NAME 1 2 3 4 5 6 (PRODUCT LEVEL)	SEE PAGE
	1	2	**3E-5239**	1	RELAY AS (24-VOLT) (STARTING AID)	
	2	1	**3T-5760**	2	BATTERY (12-VOLT, 750-AMPERE)	
	3	1	**5I-8270**	1	COVER-BATTERY	
	4	2	**5W-1102**	1	CHAIN	
	5	2	**5W-2003**	1	CAP-PROTECTION	
	6	1	**6W-6005**	1	HOLD-DOWN-BATTERY	
Y	7	2	**7N-0718**	1	SWITCH GP-DISCONNECT (BATTERY)	176
	8	2	**7W-1251**	1	RESISTOR (STARTING AID)	
	9	1,2	**8U-2738**	2	CAP-PROTECTION	
	10	1,2	**091-8792**	3	CLIP	
	11	1	*104-6692*	1	RECEPTACLE AS-CONNECTOR	
		1	**102-8802**	1	KIT-RECEPTACLE (2-PIN)	
					(INCLUDES RECEPTACLE AS & WEDGE)	
		1	**8T-8737**	1	PLUG-SEAL	
	12	2	**106-8704**	1	SUPPRESSOR AS-ARC	
		2	**102-8802**	1	KIT-RECEPTACLE (2-PIN)	
					(INCLUDES RECEPTACLE AS & WEDGE)	
		2	**3E-3365**	1	WEDGE-RECEPTACLE LOCK (2-PIN)	
	13	2	**114-9344**	1	BRACKET	
	14	2	**118-3534**	1	SWITCH GP-MAGNETIC (24-VOLT) (START RELAY)	
		2	**102-8802**	1	KIT-RECEPTACLE (2-PIN)	
					(INCLUDES RECEPTACLE AS & WEDGE)	
		2	**3E-3365**	1	WEDGE-RECEPTACLE LOCK (2-PIN)	
M		2	**5C-2890**	2	NUT (M6X1-THD)	
		2	**8T-8729**	2	PIN-CONNECTOR	
BE		2	**9X-1813**		SLEEVE	
	15	1	**121-2970**	1	TERMINAL-BATTERY (POSITIVE)	
	16	1	**121-2971**	1	TERMINAL-BATTERY (NEGATIVE)	
	17	2	**123-8838**	4	HOLDER AS-FUSE	
	18	2	**128-1041**	1	WIRE AS	
	19	1	**170-6929**	1	CABLE AS	
E		1	**5P-0761**		CABLE (00-GA, RED) (31-CM)	
		1	**9G-0002**	1	COVER-TERMINAL (RED)	
		1	**8L-8413**	1	STRAP-CABLE	
		1	**9G-0005**	1	COVER-TERMINAL (BLACK)	
		1	**8L-8413**	1	STRAP-CABLE	
		1	**8C-5918**	1	TERMINAL AS (NEGATIVE)	
		1	**8T-9756**	1	TERMINAL AS (POSITIVE)	
		1	**1M-6119**	2	BOLT (5/16-18X1.375-IN)	
		1	**1M-6120**	2	NUT (5/16-18-THD)	
	20	2	**193-7760**	1	WIRE AS	
	21	1	**193-7761**	1	WIRE AS	
	22	2	**207-1219**	1	FUSE (20-AMPERE)	
	23	1	**207-7170**	1	BRACKET	
	24	1	**211-6476**	1	TERMINAL AS	
	25	1	**212-4849**	1	WIRE AS	
	26	1	**213-0730**	1	STRAP AS-GROUND	
	27	1	**228-7976**	1	HARNESS AS-ENGINE	
E		1	**5P-0761**		CABLE (00-GA, RED) (137-CM)	
BE		1	**125-7875**		TUBE-HEAT SHRINK	
BE		1	**119-3662**		TUBE-HEAT SHRINK	
		1	**155-2270**	4	KIT-CONNECTING PLUG (2-PIN)	
		1	**155-2271**	1	KIT-CONNECTING PLUG (4-PIN)	
					(EACH KIT-PLUG INCLUDES PLUG AS, WEDGE & INTERFACE SEAL)	
		1	**102-8802**	1	KIT-RECEPTACLE (2-PIN)	

186-0483 **BATTERY & WIRING GP** *(contd.)* **i02171541**

NOTE	REF NO	GRAPHIC REF	PART NUMBER	QTY	PART NAME 1 2 3 4 5 6 (PRODUCT LEVEL)	SEE PAGE
		1	**102-8806**	1	KIT-RECEPTACLE (8-PIN)	
					(EACH KIT-RECEPTACLE INCLUDES RECEPTACLE AS & WEDGE)	
		1	**9X-1054**	1	PLUG AS-CONNECTOR (4-PIN)	
	28	2	**229-7525**	1	WIRE AS	
	29	2	**232-6315**	3	FUSE (80-AMPERE)	
	30	2	**096-0192**	1	LOCKWASHER	
M	31	2	**116-6952**	2	BOLT (M4X0.7X10-MM)	
M	32	2	**177-0358**	4	BOLT-SOCKET HEAD (M4X0.7X55-MM)	
	33	1,2	**183-4403**	3	CLIP	
M	34	2	**190-8250**	1	BOLT (M10X1.5X295-MM)	
	35	1,2	**3F-9556**	3	LOCKWASHER	
	36	1	**4P-7429**	1	CLIP	
	37	2	**4P-8134**	1	CLIP	
M	38	2	**5C-2874**	1	NUT (M5X0.8-THD)	
M	39	1,2	**5C-2890**	3	NUT (M6X1-THD)	
M	40	1,2	**5C-7261**	3	NUT (M8X1.25-THD)	
M	41	2	**5C-8312**	2	NUT (M4X0.7-THD)	
M	42	1,2	**5C-9553**	3	BOLT (M6X1X16-MM)	
	43	1,2	**5P-4116**	8	WASHER-HARD (8.8X20.5X2-MM THK)	
	44	1	**6D-4244**	1	CLIP	
M	45	2	**6V-5215**	2	BOLT (M8X1.25X16-MM)	
	46	2	**6V-9502**	2	LOCKWASHER	
	47	2	**8M-2772**	1	CLIP	
	48	2	**8T-0087**	1	LOCKWASHER	
M	49	2	**8T-0288**	2	BOLT (M5X0.8X12-MM)	
	50	2	**8T-3016**	2	WASHER (5.3X10X1-MM THK)	
	51	1,2	**8T-4121**	3	WASHER-HARD (11X21X2.5-MM THK)	
M	52	1,2	**8T-4133**	3	NUT (M10X1.5-THD)	
M	53	1	**8T-4136**	1	BOLT (M10X1.5X25-MM)	
M	54	1,2	**8T-4137**	2	BOLT (M10X1.5X20-MM)	
M	55	1,2	**8T-4138**	2	BOLT (M6X1X20-MM)	
M	56	1,2	**8T-4171**	5	BOLT (M6X1X12-MM)	
	57	2	**8T-4226**	1	WASHER-PLATED (10.5X45X3-MM THK)	
M	58	2	**8T-7547**	1	BOLT (M8X1.25X30-MM)	
	59	1,2	**9X-8256**	10	WASHER (6.6X12X2-MM THK)	
BE	60	1,1,2	**207-5141**		SEAL	
	61	2	**124-7346**	1	LOCKWASHER	
BF			**096-0061**	10	STRAP-CABLE (197.5-MM)	
BF			**9X-6772**	10	STRAP-CABLE (213-MM)	

B-USE AS REQUIRED
E-ORDER BY THE CENTIMETER
F-NOT SHOWN
M-METRIC PART
Y-SEPARATE ILLUSTRATION

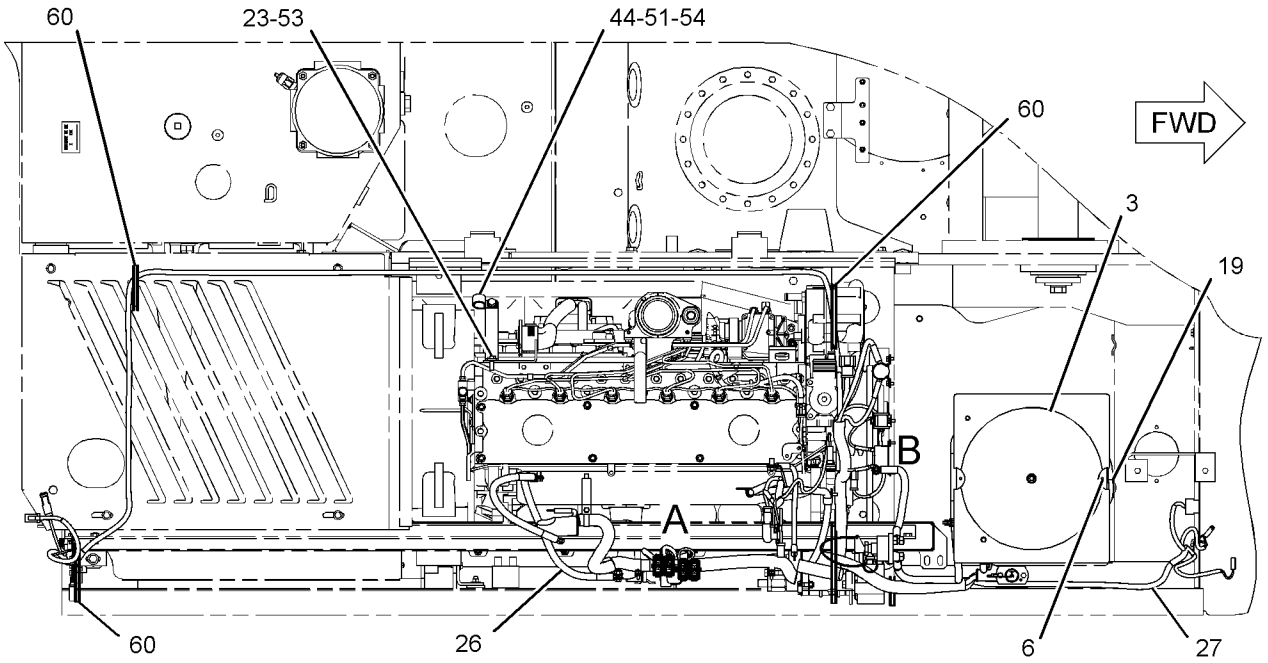

TOP VIEW

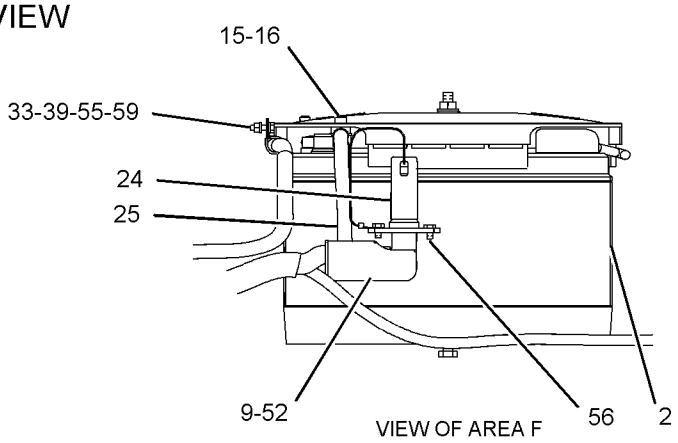

VIEW OF AREA F

REFER TO ALL ILLUSTRATIONS OF THIS GROUP FOR AUXILIARY VIEWS

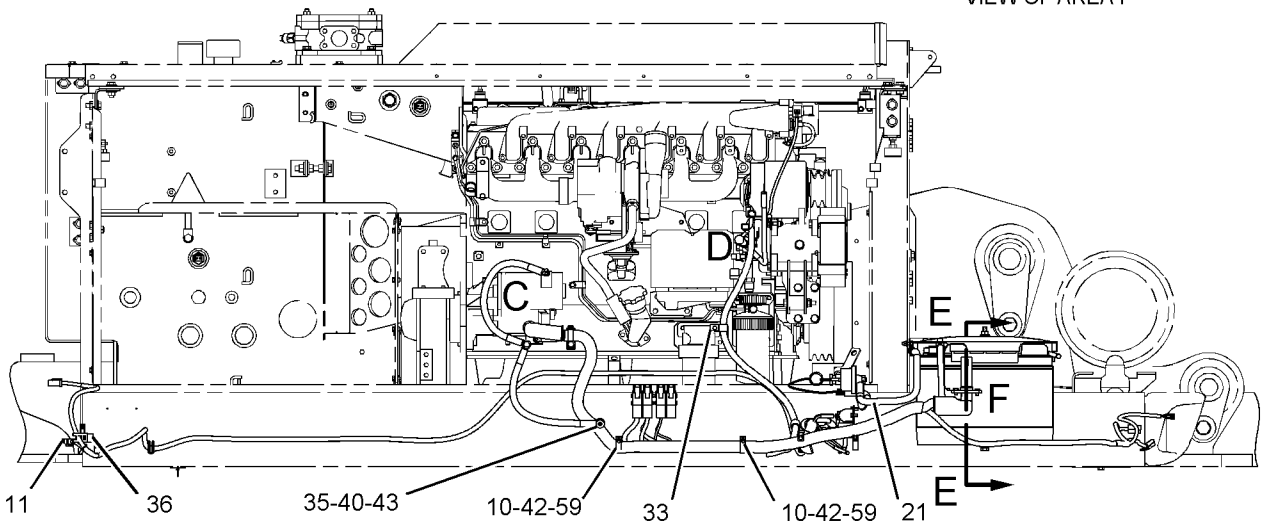

RIGHT SIDE VIEW

GRAPHIC #1

g01092956

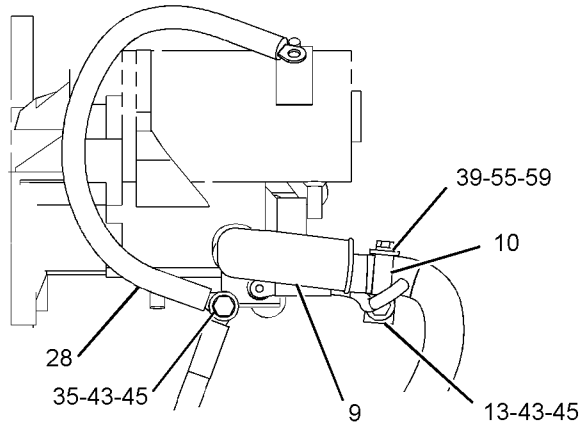

VIEW OF AREA C

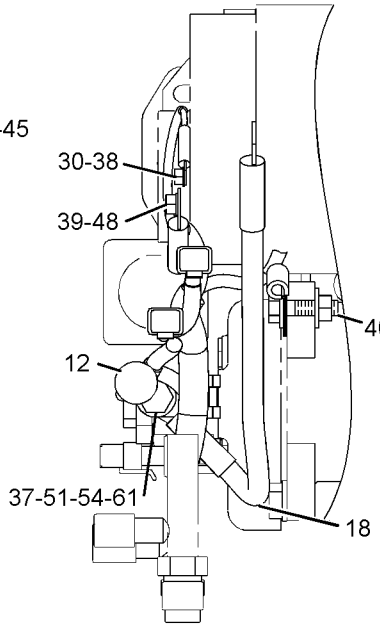

VIEW OF AREA D

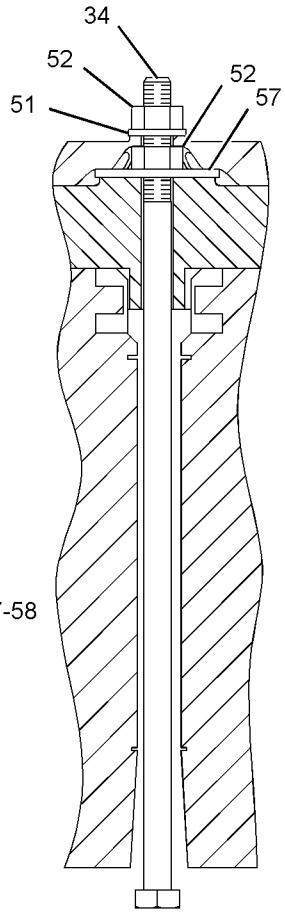

SECTION E-E

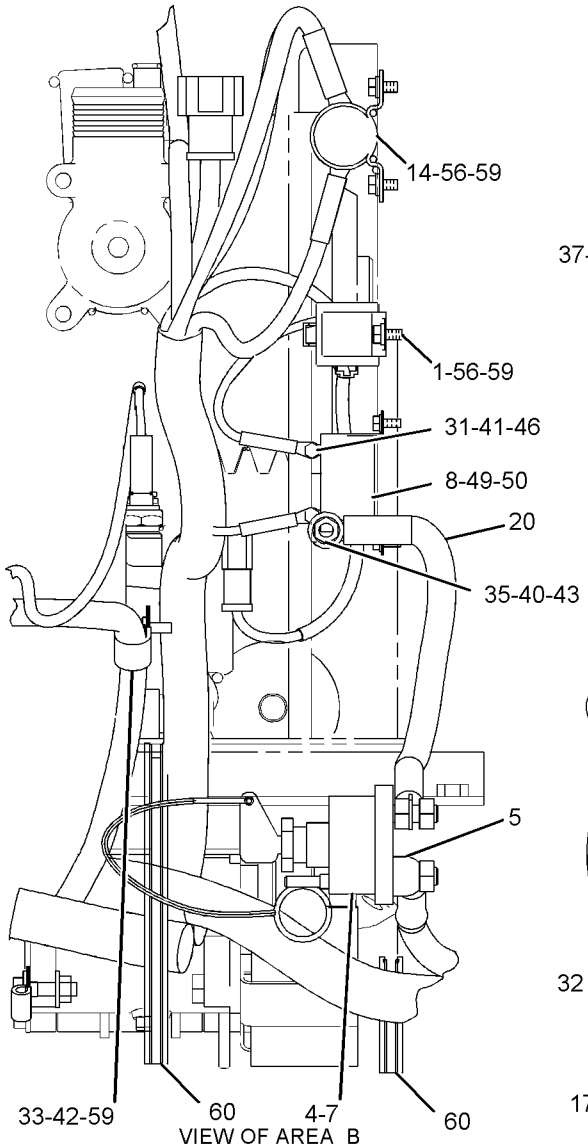

VIEW OF AREA B

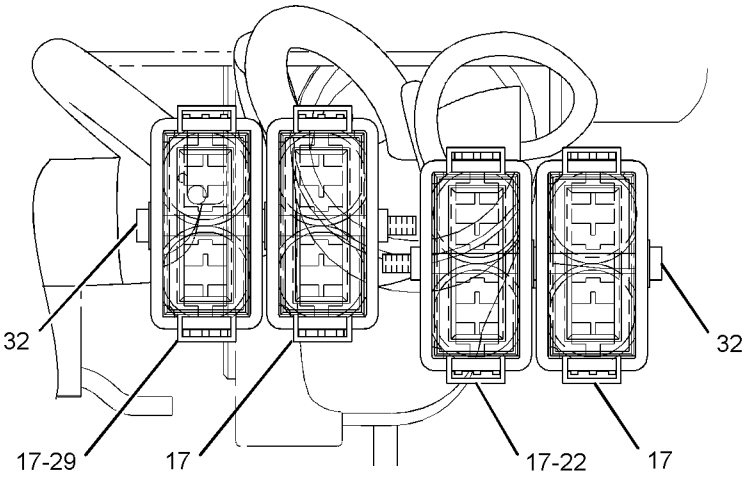

VIEW OF AREA A

GRAPHIC #2

<END>

g01092955

ELECTRICAL AND STARTING SYSTEM

8R-8714 BATTERY GP—HEAVY DUTY

S/N: BCZ1-2000

AN ATTACHMENT

SMCS-1401 **i00617383**

NOTE	PART NUMBER	QTY	PART NAME 1 2 3 4 5 6 (PRODUCT LEVEL)	SEE PAGE
	9X-3404	2	BATTERY-MAINTENANCE FREE (12V)(900 AMP)	

<END>

ELECTRICAL AND STARTING SYSTEM

186-0485 BOX GP-JUNCTION

S/N: BCZ1-561, 564, 566-567, 569, 571, 573-580, 582, 584
PART OF 186-0468 CHASSIS AR

SMCS-7426 **i02180754**

NOTE	REF NO	GRAPHIC REF	PART NUMBER	QTY	PART NAME 1 2 3 4 5 6 (PRODUCT LEVEL)	SEE PAGE
	1	1	**5W-1125**	4	SOCKET	
	2	1	**5W-1291**	4	NUT	
	3	1	*104-6692*	1	RECEPTACLE AS-CONNECTOR	
		1	**102-8802**	1	KIT-RECEPTACLE (2-PIN)	
					(INCLUDES RECEPTACLE AS & WEDGE)	
		1	**8T-8737**	2	PLUG-SEAL	
	4	1	**113-8490**	4	FUSE (10-AMPERE)	
	5	1	**113-8491**	8	FUSE (15-AMPERE)	
	6	1	**113-8492**	2	FUSE (20-AMPERE)	
	7	1	**113-8493**	2	FUSE (25-AMPERE)	
	8	1	**117-4861**	1	RELAY AS (WIPER CUT-OUT)	
	8A	1	**117-4861**	1	RELAY AS (HYDRAULIC LOCKOUT)	
	8B	1	**117-4861**	1	RELAY AS (HORN)	
	9	1	**141-2759**	14	FUSE (5-AMPERE)	
	10	1	**155-4574**	1	RELAY AS (INTERVAL WIPER)	
	11	1	**195-5658**	1	HARNESS AS-JUNCTION BOX	
		1	**102-8806**	1	KIT-RECEPTACLE (8-PIN)	
		1	**102-8801**	1	KIT-RECEPTACLE (12-PIN)	
					(EACH INCLUDES RECEPTACLE AS & WEDGE)	
		1	**155-2255**	2	KIT-CONNECTING PLUG (12-PIN)	
		1	**155-2265**	1	KIT-CONNECTING PLUG (8-PIN)	
		1	**155-2270**	1	KIT-CONNECTING PLUG (2-PIN)	
		1	**155-2271**	1	KIT-CONNECTING PLUG (4-PIN)	
					(EACH INCLUDES PLUG AS & WEDGE)	
	12	1	**196-3537**	1	BOX AS	
	13	1	**196-8643**	1	SWITCH AS-MAGNETIC (MAIN POWER RELAY)	
	13A	1	**196-8643**	1	SWITCH AS-MAGNETIC (FUEL PUMP RELAY)	
	14	1	**197-3528**	1	COVER AS	
		1	**5W-1123**	4	FASTENER	
		1	**5W-1124**	4	WASHER-RETAINING	
		1	**6V-0292**	1	PLUG	
E		1	**128-1423**		SEAL (23CM)	
	15	1	**204-7685**	1	SWITCH AS-MAGNETIC (FLASHER RELAY)	
	16	1	*214-0864*	1	RECEPTACLE AS	
		1	**102-8801**	1	KIT-RECEPTACLE (12-PIN)	
					(INCLUDES RECEPTACLE AS & WEDGE)	
		1	**8T-8737**	4	PLUG-SEAL	
	17	1	**217-2956**	1	PLATE	
B	18	1	**096-0061**	4	STRAP-CABLE	
	19	1	**4P-8134**	2	CLIP	
M	20	1	**5C-2874**	1	NUT (M5X0.8-THD)	
	21	1	**5P-4116**	1	WASHER-HARD (8.8X20.5X2-MM THK)	
M	22	1	**8T-0288**	5	BOLT (M5X0.8X12-MM)	
	23	1	**8T-3016**	5	WASHER (5.3X10X1-MM THK)	
	24	1	**8T-4121**	4	WASHER-HARD (11X21X2.5-MM THK)	
M	25	1	**8T-4136**	4	BOLT (M10X1.5X25-MM)	
M	26	1	**8T-4200**	1	BOLT (M8X1.25X16-MM)	
E	27	1	**128-1423**		SEAL (67CM)	

B-USE AS REQUIRED
E-ORDER BY THE CENTIMETER
M-METRIC PART

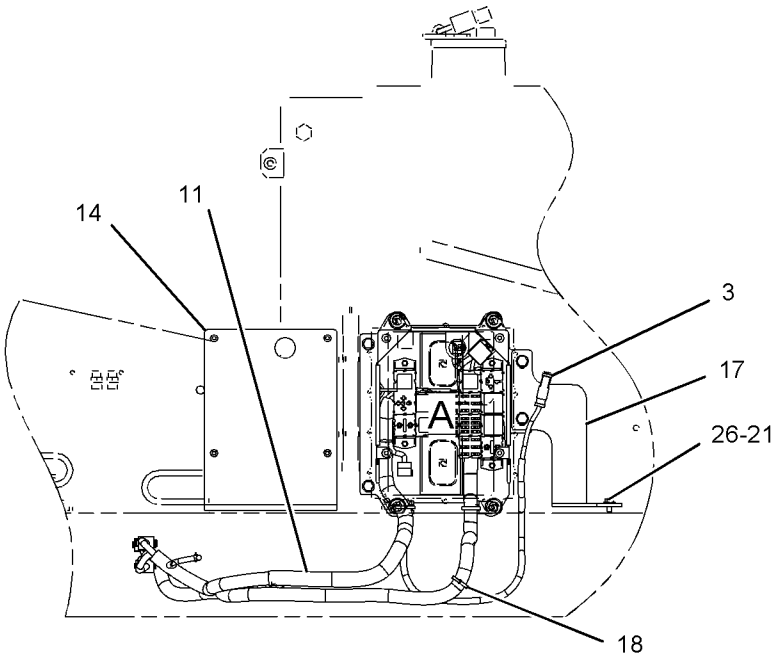

RIGHT SIDE VIEW

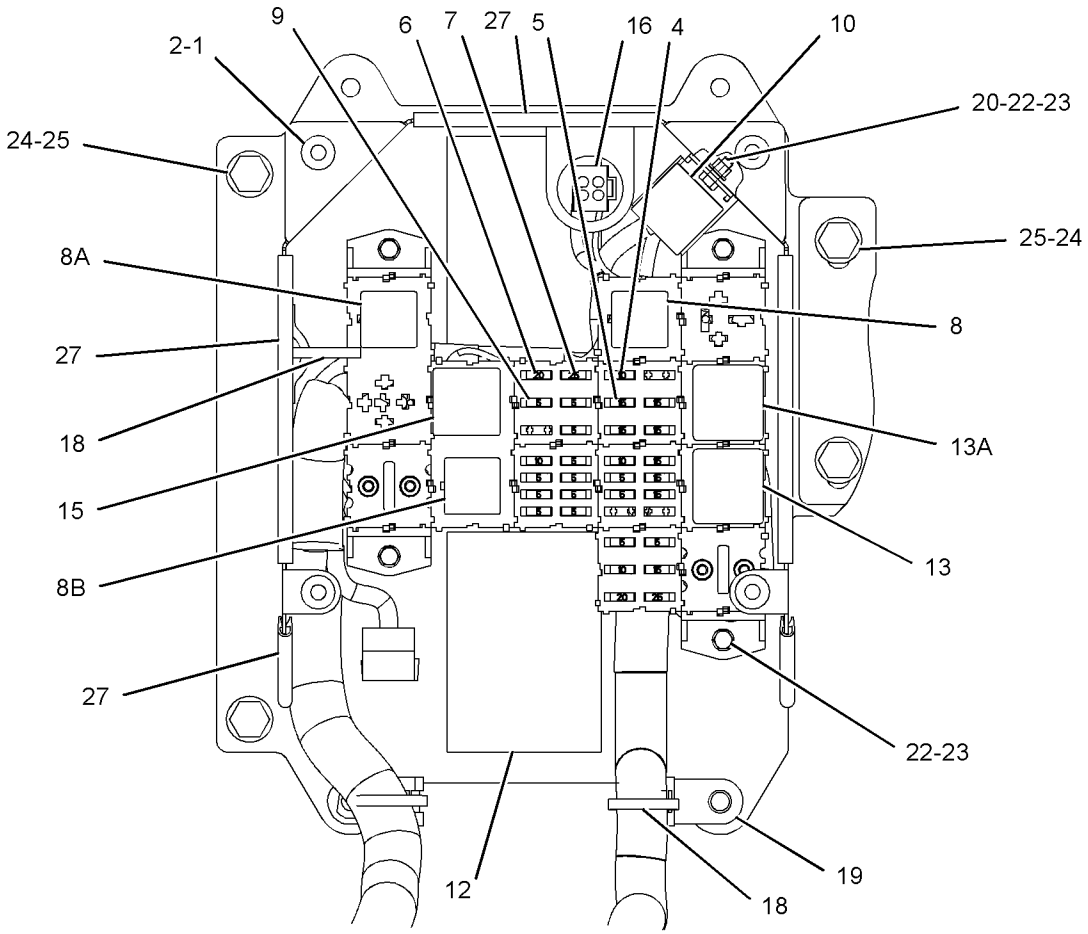

VIEW OF AREA A

GRAPHIC #1 **<END>** g01103647

ELECTRICAL AND STARTING SYSTEM

186-0485 BOX GP-JUNCTION

S/N: BCZ562-563, 565, 568, 570, 572, 581, 583, 585-2000
PART OF 186-0468 CHASSIS AR

SMCS-7426 **i02047191**

NOTE	REF NO	GRAPHIC REF	PART NUMBER	QTY	PART NAME 1 2 3 4 5 6 (PRODUCT LEVEL)	SEE PAGE
	1	1	**5W-1125**	4	SOCKET	
	2	1	**5W-1291**	4	NUT	
	3	1	*104-6692*	1	RECEPTACLE AS-CONNECTOR	
		1	**102-8802**	1	KIT-RECEPTACLE (2-PIN)	
					(INCLUDES RECEPTACLE AS & WEDGE)	
		1	**8T-8737**	2	PLUG-SEAL	
	4	1	**113-8490**	4	FUSE (10-AMPERE)	
	5	1	**113-8491**	8	FUSE (15-AMPERE)	
	6	1	**113-8492**	2	FUSE (20-AMPERE)	
	7	1	**113-8493**	2	FUSE (25-AMPERE)	
	8	1	**117-4861**	1	RELAY AS (WIPER CUT-OUT)	
	8A	1	**117-4861**	1	RELAY AS (HYDRAULIC LOCKOUT)	
	8B	1	**117-4861**	1	RELAY AS (HORN)	
C	9	1	**141-2759**	13	FUSE (5-AMPERE)	
	10	1	**248-7372**	1	RELAY AS (INTERVAL WIPER)	
C	11	1	**228-7979**	1	HARNESS AS-JUNCTION BOX	
		1	**123-8634**	22	BLOCK-LOCK	
		1	**123-8635**	4	BRACKET	
M		1	**129-3178**	4	LOCKNUT (M6X1-THD)	
		1	**8L-8413**	24	STRAP-CABLE	
BE		1	**114-8843**		SLEEVE-PLASTIC	
		1	**102-8806**	1	KIT-RECEPTACLE (8-PIN)	
		1	**102-8801**	1	KIT-RECEPTACLE (12-PIN)	
					(EACH INCLUDES RECEPTACLE AS & WEDGE)	
		1	**155-2255**	1	KIT-CONNECTING PLUG (12-PIN)	
		1	**155-2265**	1	KIT-CONNECTING PLUG (8-PIN)	
		1	**155-2271**	1	KIT-CONNECTING PLUG (4-PIN)	
					(EACH KIT INCLUDES PLUG AS , WEDGE & INTERFACE SEAL)	
	12	1	**196-3537**	1	BOX AS	
	13	1	**196-8643**	1	SWITCH AS-MAGNETIC (MAIN POWER RELAY)	
	13A	1	**196-8643**	1	SWITCH AS-MAGNETIC (FUEL PUMP RELAY)	
	14	1	**197-3528**	1	COVER AS	
		1	**5W-1123**	4	FASTENER	
		1	**5W-1124**	4	WASHER-RETAINING	
		1	**6V-0292**	1	PLUG	
BE		1	**128-1423**		SEAL	
	15	1	**204-7685**	1	SWITCH AS-MAGNETIC (FLASHER RELAY)	
	16	1	*214-0864*	1	RECEPTACLE AS	
		1	**102-8801**	1	KIT-RECEPTACLE (12-PIN)	
					(INCLUDES RECEPTACLE AS & WEDGE)	
		1	**8T-8737**	4	PLUG-SEAL	
	17	1	**217-2956**	1	PLATE	
B	18	1	**096-0061**	4	STRAP-CABLE	
	19	1	**4P-8134**	2	CLIP	
M	20	1	**5C-2874**	1	NUT (M5X.8-THD)	
	21	1	**5P-4116**	1	WASHER-HARD (8.8X20.5X2-MM THK)	
M	22	1	**8T-0288**	5	BOLT (M5X0.8X12-MM)	
	23	1	**8T-3016**	5	WASHER (5.3X10X1-MM THK)	
	24	1	**8T-4121**	4	WASHER-HARD (11X21X2.5-MM THK)	
M	25	1	**8T-4136**	4	BOLT (M10X1.5X25-MM)	
M	26	1	**8T-4200**	1	BOLT (M8X1.25X16-MM)	
BE	27	1	**128-1423**		SEAL	

B-USE AS REQUIRED
C-CHANGE FROM PREVIOUS TYPE
E-ORDER BY THE CENTIMETER
M-METRIC PART

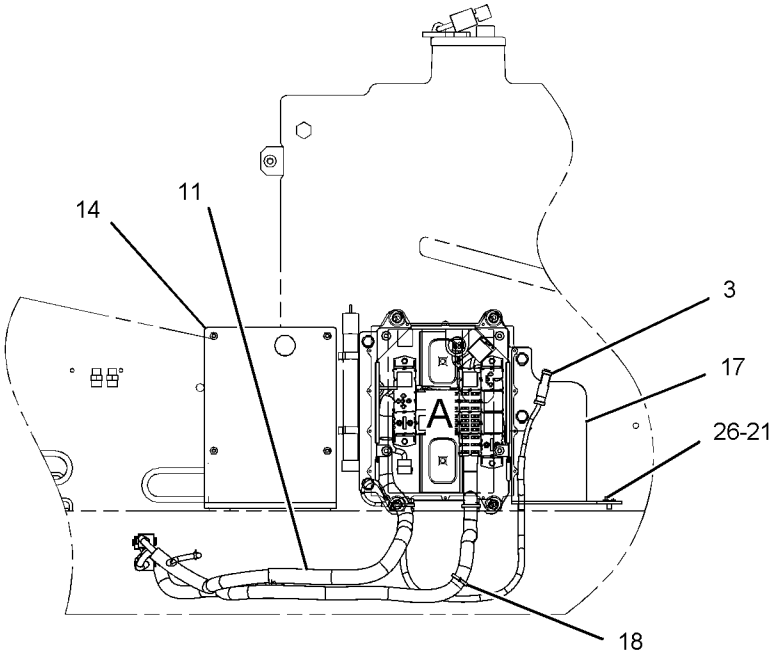

RIGHT SIDE VIEW

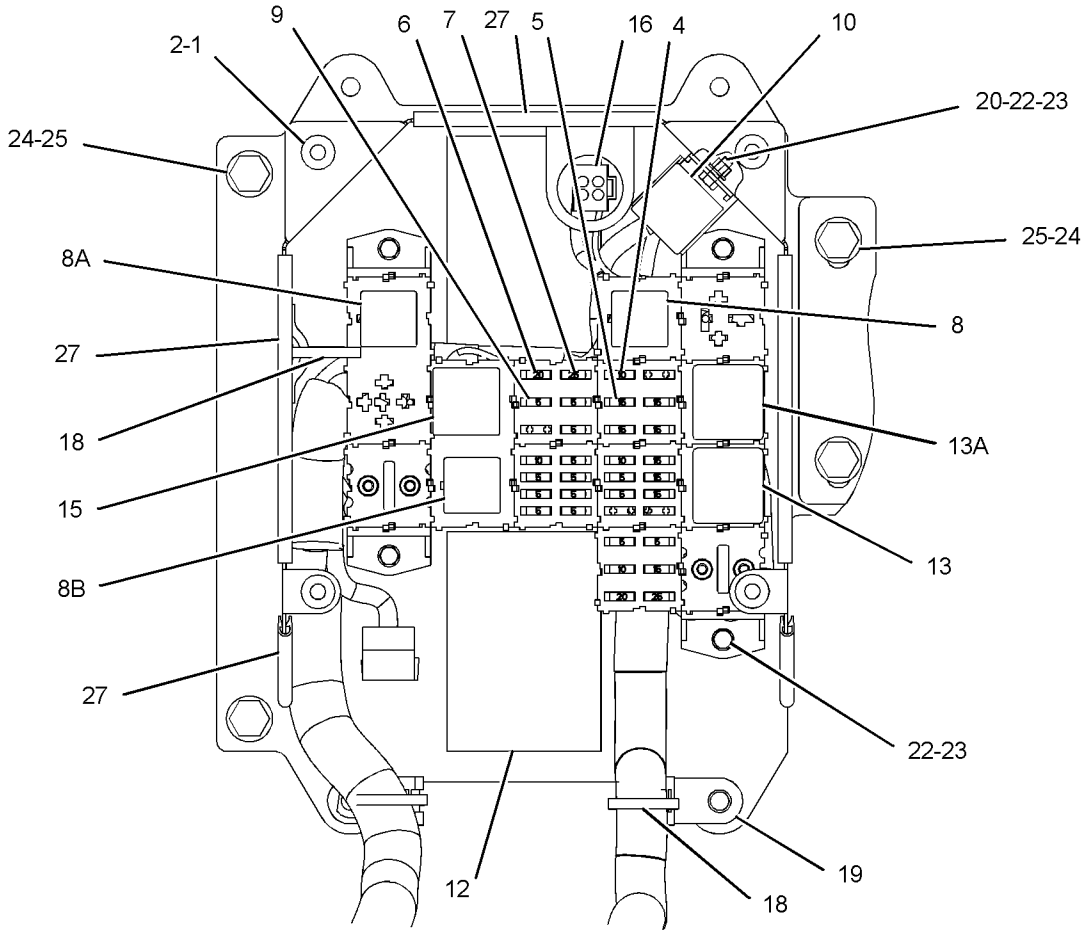

VIEW OF AREA A
<END>

GRAPHIC #1 g01077730

204-7008 CONTROL & MTG GP-MACHINE

S/N: BCZ1-2000

PART OF 186-0468 CHASSIS AR

SMCS-1931, 7600 **i02077292**

NOTE	REF NO	GRAPHIC REF	PART NUMBER	QTY	PART NAME 1 2 3 4 5 6 (PRODUCT LEVEL)	SEE PAGE
	1	1	**6I-1418**	4	SPACER (8.2X12.7X28.7-MM THK)	
	2	1	**155-0576**	8	MOUNT-ISOLATION	
	3	1	**202-3102**	4	SPACER (8.2X17.2X37.5-MM THK)	
Y	4	1	*204-7010*	1	ELECTRONICS GP-MACHINE	145
M	5	1	**5C-7261**	4	NUT (M8X1.25-THD)	
	6	1	**5W-1403**	8	WASHER (8.4X25X2-MM THK)	
M	7	1	**8T-4177**	4	BOLT (M8X1.25X90-MM)	
	8	1	**8T-4224**	4	WASHER-HARD (8.8X16X2-MM THK)	

M-METRIC PART
Y-SEPARATE ILLUSTRATION

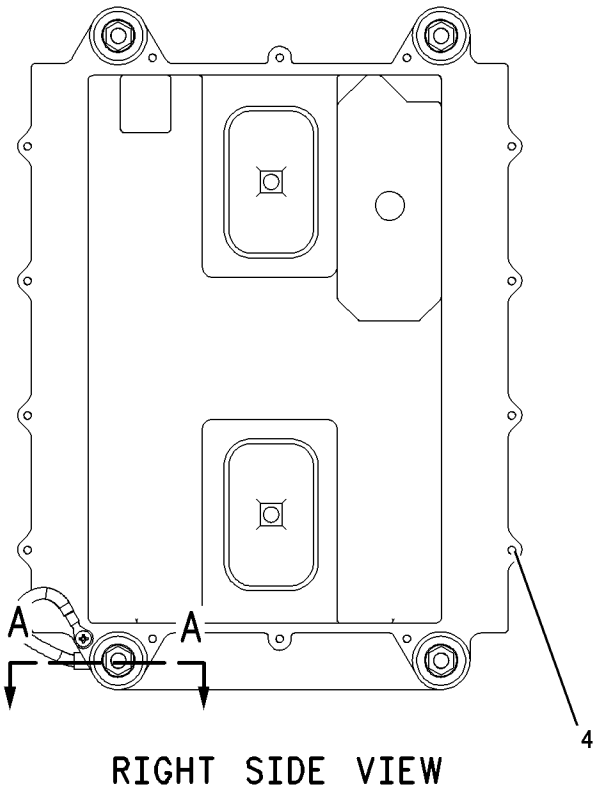

RIGHT SIDE VIEW

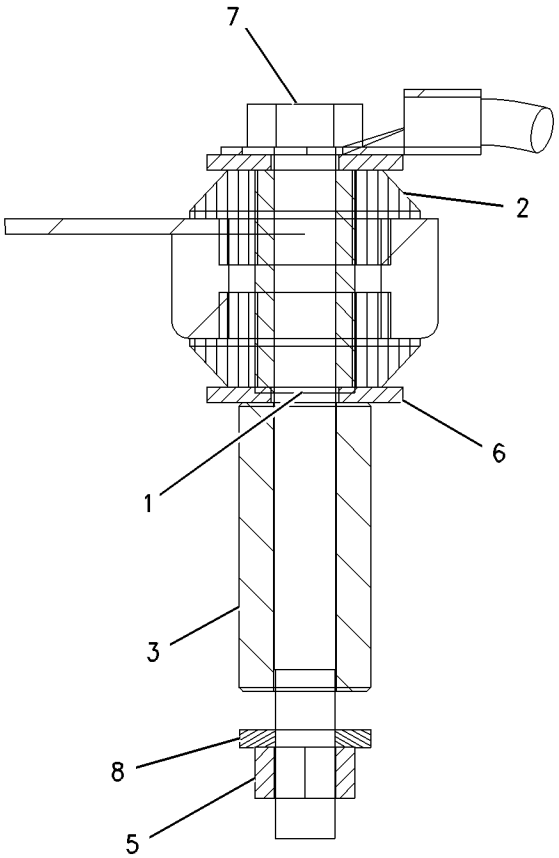

SECTION A-A

GRAPHIC #1 **<END>** g00910591

210-6776 CONTROL GP-UNPROGRAMMED

S/N: BCZ1-2000
AN ATTACHMENT

SMCS-7610 **i02159936**

NOTE	REF NO	GRAPHIC REF	PART NUMBER	QTY	PART NAME 1 2 3 4 5 6 (PRODUCT LEVEL)	SEE PAGE
	1	1	**201-9041**	1	CONTROL GP-UNPROGRAMMED	
		1	**210-6047**	1	FILM-IDENTIFICATION (LABEL)	

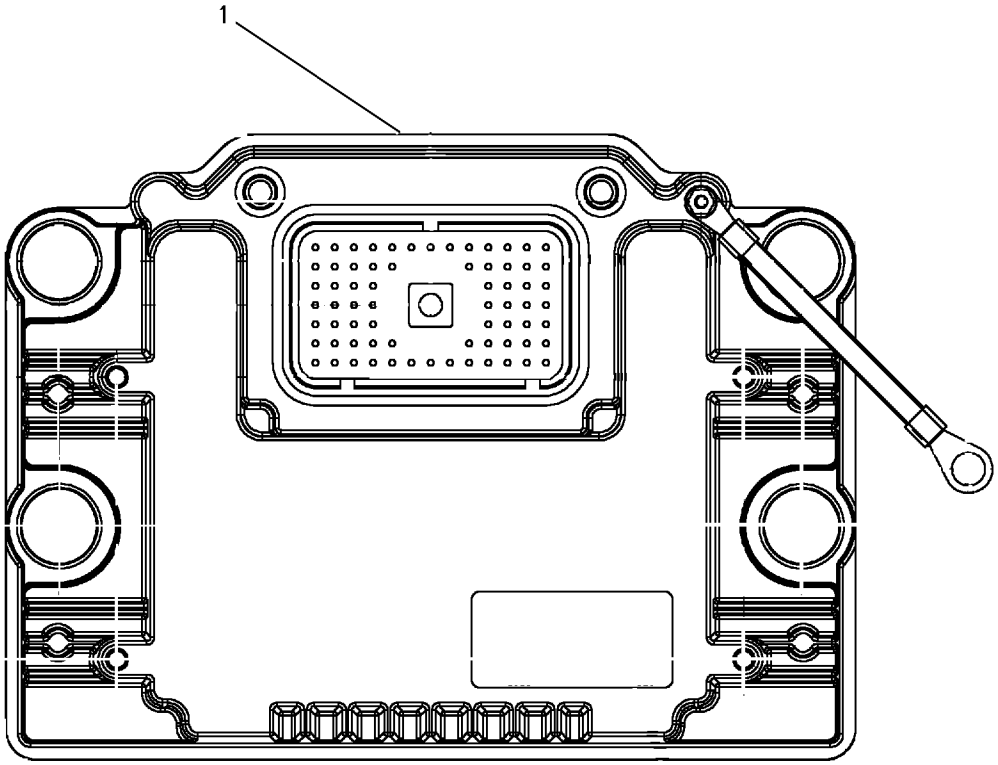

GRAPHIC #1 **<END>** g00909765

204-7010 ELECTRONICS GP-MACHINE

S/N: BCZ1-2000

PART OF 204-7008 CONTROL & MTG GP-MACHINE

SMCS-7610, 7620 **i01890926**

NOTE	PART NUMBER	QTY	PART NAME 1 2 3 4 5 6 (PRODUCT LEVEL)	SEE PAGE
	189-0077	1	CONTROL GP-UNPROGRAMMED (ENGINE & HYDRAULIC)	
	7X-6315	1	STRAP AS-GROUND	
	184-2472	1	SCREW-PAN HEAD (NO.8X9.52MM)	
	232-6183	1	SOFTWARE GP-MACHINE (ENGINE & HYDRAULIC)	
			(SOFTWARE ONLY)	
			-OR-	
	232-6185	1	SERVICE GP-MACHINE (ENGINE & HYDRAULIC)	
			(INCLUDES CONTROL GP & SOFTWARE)(OPTIONAL SERVICE REPLACEMENT)	
			<END>	

217-9535 ELECTRONICS GP-MACHINE

S/N: BCZ1-2000
SOFT SWITCH PANEL
PART OF 187-3799 WIRING GP-CAB
ALSO AN ATTACHMENT

SMCS-7610, 7620 **i02148563**

NOTE	REF NO	GRAPHIC REF	PART NUMBER	QTY	PART NAME 1 2 3 4 5 6 (PRODUCT LEVEL)	SEE PAGE
	1	1	**195-5628**	1	PANEL AS (SOFT SWITCH)	
	2	1	**243-7067**	1	SOFTWARE GP-MACHINE (COMMUNICATION)	
					—OR—	
	3	1	**235-5573**	1	SERVICE GP-MACHINE (COMMUNICATION)	

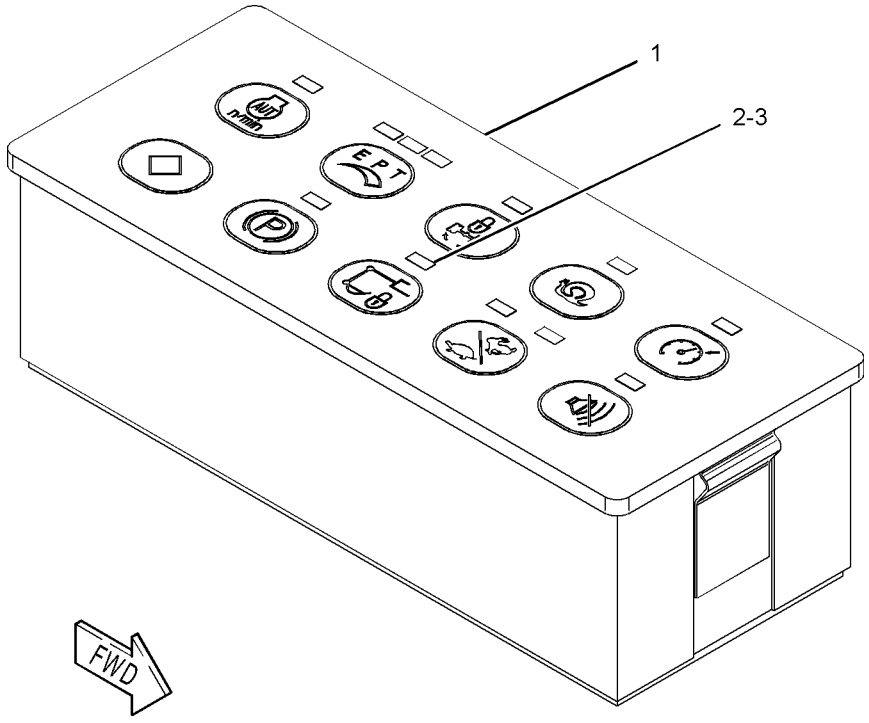

GRAPHIC #1 **<END>** g01090138

205-3967 ELECTRONICS GP-MONITOR

S/N: BCZ1-2000

PART OF 187-3770 MONITOR & MTG GP-OPERATOR

ALSO AN ATTACHMENT

SMCS-7490, 7601, 7610, 7620 **i02148507**

NOTE	PART NUMBER	QTY	PART NAME 1 2 3 4 5 6 (PRODUCT LEVEL)	SEE PAGE
	252-9854	1	SOFTWARE GP-MONITOR	
			(SOFTWARE ONLY)	
			—OR—	
	252-9855	1	SERVICE GP-MONITOR	
			(INCLUDES SOFTWARE)	
			(OPTIONAL SERVICE REPLACEMENT)	

<END>

ELECTRICAL AND STARTING SYSTEM

211-8205 INSTALLATION GP-COMMUNICATION

S/N: BCZ1-2000
AN ATTACHMENT

SMCS-7602 **i02182174**

NOTE	REF NO	GRAPHIC REF	PART NUMBER	QTY	PART NAME 1 2 3 4 5 6 (PRODUCT LEVEL)	SEE PAGE
	1	1	**8C-5607**	8	MOUNT (ISOLATION)	
	2	1	**8C-5608**	4	SPACER (6.5X9.5X25.4-MM THK)	
	3	1	**170-9198**	2	PLATE	
	4	1	**207-6798**	1	ANTENNA AS (MAGNETIC MOUNT, PRODUCT LINK)	
	5	1	**209-6417**	1	CONTROL GP-COMMUNICATION (PRODUCT LINK)	
	6	1	**211-8206**	1	HARNESS AS-CONTROL (COMMUNICATION)	
		1	**102-8805**	1	KIT-RECEPTACLE (6-PIN)	
					(INCLUDES RECEPTACLE AS & WEDGE)	
	7	1	**214-0865**	2	BRACKET	
B	8	1	**096-0061**	6	STRAP-CABLE	
M	9	1	**5C-2890**	4	NUT (M6X1-THD)	
M	10	1	**8T-4171**	8	BOLT (M6X1X12-MM)	
M	11	1	**9X-2480**	4	BOLT (M6X1X45-MM)	
	12	1	**9X-6165**	8	WASHER (6.5X22X2.5-MM THK)	
	13	1	**9X-8256**	8	WASHER (6.6X12X2-MM THK)	
F		1	**230-1341**	1	FILM-WARNING (PRODUCT LINK RADIO, EAME)	
					(LOCATED AT THE RIGHT WINDOW, INSIDE THE CAB)	

B-USE AS REQUIRED
F-NOT SHOWN
M-METRIC PART

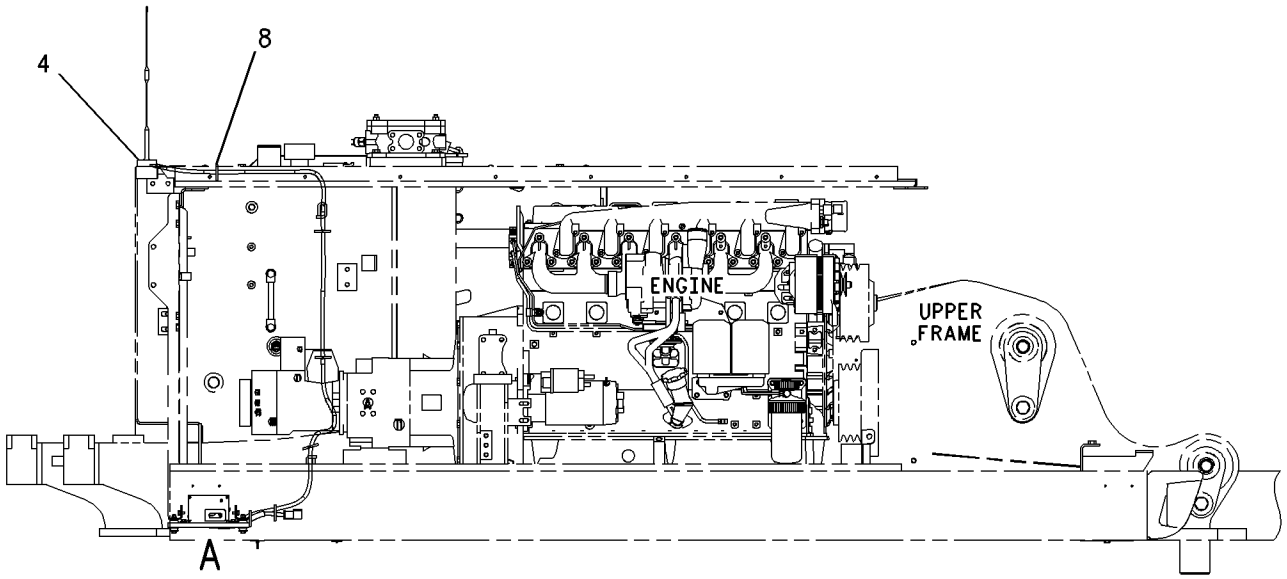

RIGHT SIDE VIEW

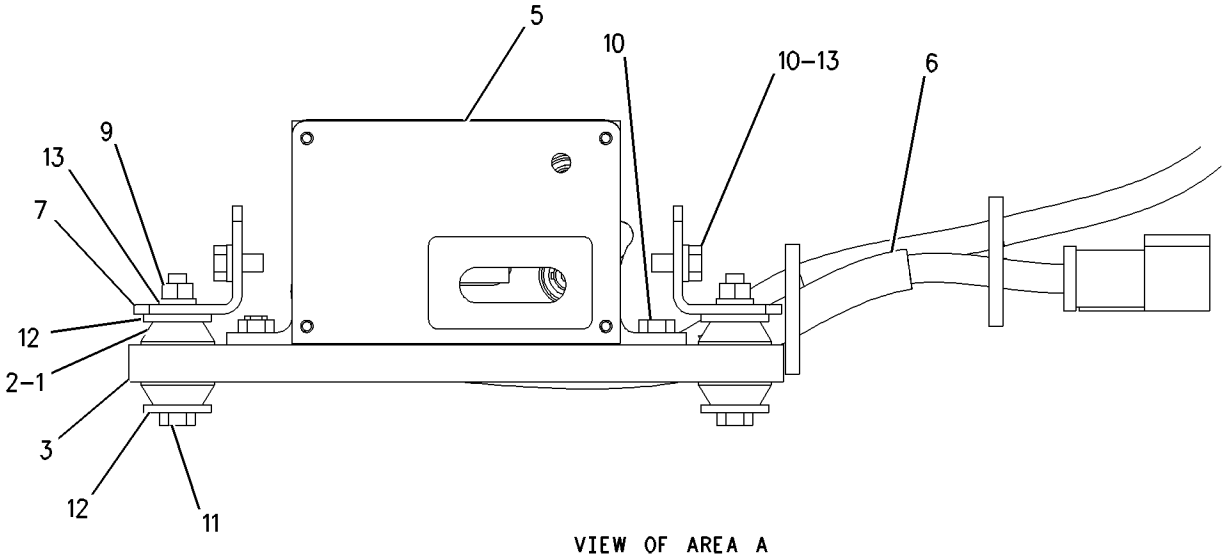

VIEW OF AREA A

GRAPHIC #1 **<END>** g00863924

199-3137 LAMP GP-FLOOD–BOOM

S/N: BCZ1-2000
PART OF 188-4945, 198-4677 LIGHTING GP-FLOOD
AN ATTACHMENT

SMCS-1434 **i02159937**

NOTE	REF NO	GRAPHIC REF	PART NUMBER	QTY	PART NAME 1 2 3 4 5 6 (PRODUCT LEVEL)	SEE PAGE
M	1	1	**3T-0852**	1	LOCKNUT (M8X1.25-THD)	
	2	1	**5W-2039**	1	LAMP AS (24-VOLT, 70-WATT) (FLOOD)	
	3	1	**123-0952**	2	SCREW	
	4	1	**5W-5049**	1	WASHER (8.4X15X0.8-MM THK)	
M	5	1	**6V-7744**	1	LOCKNUT (M10X1.5-THD)	
	6	1	**7X-0796**	1	LOCKWASHER	

M-METRIC PART

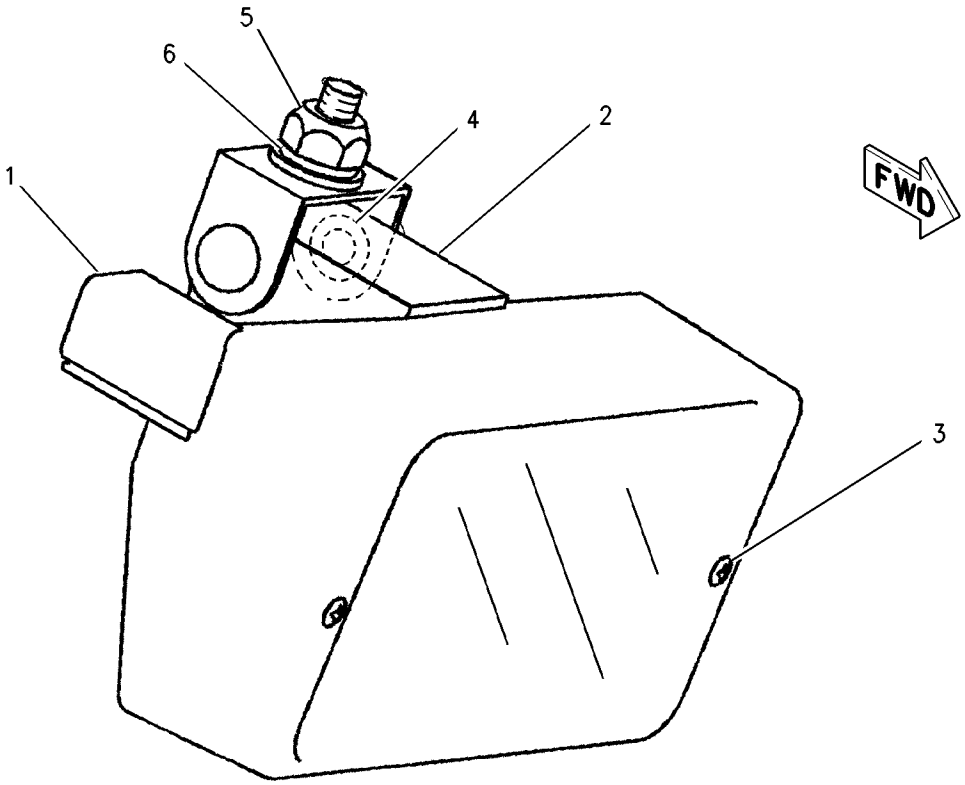

GRAPHIC #1 **<END>** g00924106

193-4287 LAMP GP-HEAD

S/N: BCZ1-2000

PART OF 190-0286 LIGHTING GP-ROADING

SMCS-1429 **i02159939**

NOTE	REF NO	GRAPHIC REF	PART NUMBER	QTY	PART NAME 1 2 3 4 5 6 (PRODUCT LEVEL)	SEE PAGE
	1	1	**211-7560**	2	LAMP (24-VOLT, 75/70-WATT) (HEADLIGHT)	
	2	1	**209-4853**	2	LAMP (24-VOLT, 4-WATT) (HEADLIGHT)	
	3	1	**116-9619**	2	LAMP AS (HEADLIGHT)	
					(EACH INCLUDES)	
		1	**121-9753**	2	LOCKWASHER	
		1	**121-9754**	1	CAP	
		1	**121-9755**	2	WASHER (4.3X8X0.05-MM THK)	
	4	1	**206-7083**	4	CLIP	

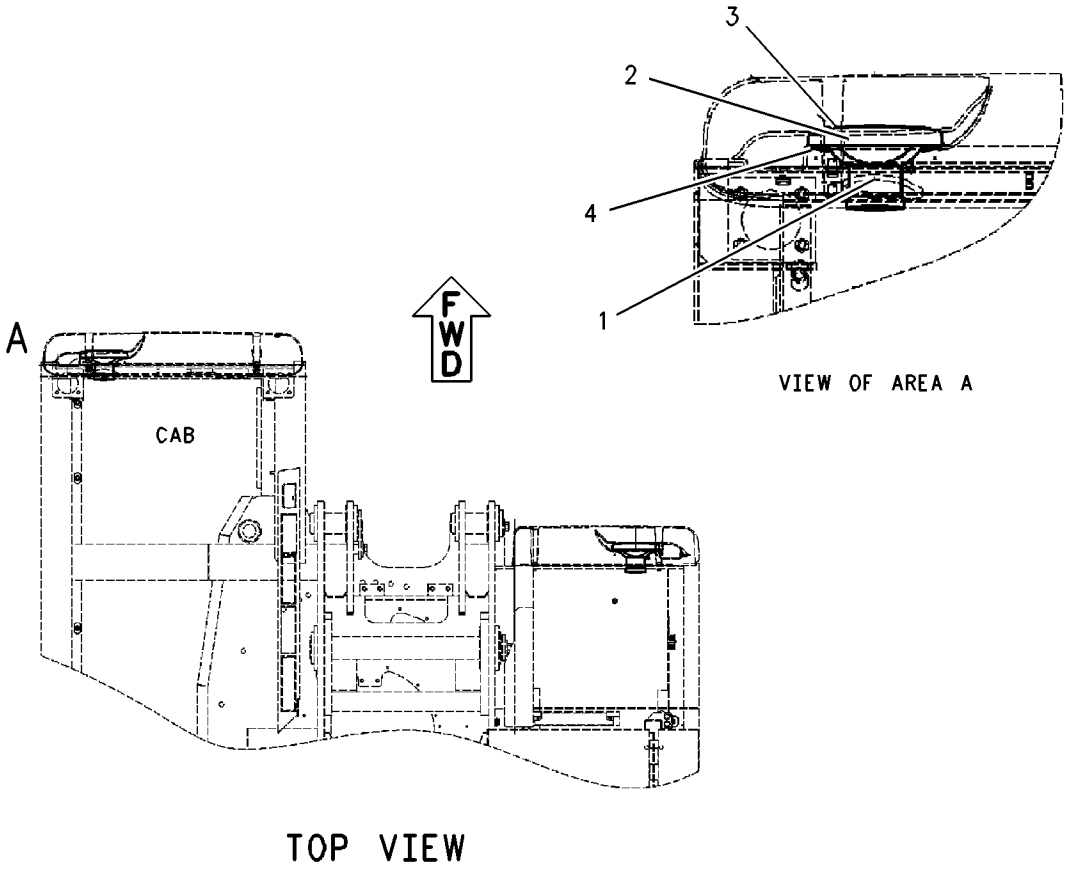

VIEW OF AREA A

TOP VIEW

GRAPHIC #1 **<END>** g00920828

116-9625 LAMP GP-REAR

S/N: BCZ1-2000

PART OF 191-7538 LAMP GP-REAR

SMCS-1432 **i02159941**

NOTE	REF NO	GRAPHIC REF	PART NUMBER	QTY	PART NAME 1 2 3 4 5 6 (PRODUCT LEVEL)	SEE PAGE
	1	1	**117-9420**	1	GLASS AS (REAR LAMP)	
M	1A	1	**117-9470**	2	SCREW	

M-METRIC PART

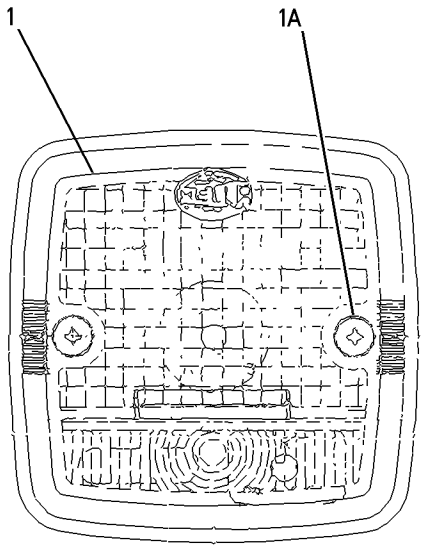

GRAPHIC #1 **<END>** g00919867

191-7538 LAMP GP-REAR

S/N: BCZ1-2000

PART OF 190-0286 LIGHTING GP-ROADING

SMCS-1432 **i02159943**

NOTE	REF NO	GRAPHIC REF	PART NUMBER	QTY	PART NAME 1 2 3 4 5 6 (PRODUCT LEVEL)	SEE PAGE
	1	1	**5W-2040**	2	LAMP (24-VOLT, 5-WATT) (REAR LAMP)	
	2	1	**8U-2622**	4	LAMP (24-VOLT, 21-WATT) (SIGNAL LAMP)	
	3	1	**096-0061**	2	STRAP-CABLE	
Y	4	1	**116-9624**	2	LAMP GP-SIGNAL	155
Y	5	1	**116-9625**	2	LAMP GP-REAR	152
	6	1	**189-4221**	1	SHEET	
	7	1	**189-4222**	1	SHEET	
	8	1	**191-7539**	1	HARNESS AS-LIGHTING (REAR, RH)	
		1	**102-8804**	1	KIT-RECEPTACLE (4-PIN)	
					(INCLUDES RECEPTACLE AS & WEDGE)	
	9	1	**194-8643**	4	SCREW-BUTTON HEAD	
	10	1	**195-3580**	1	HARNESS AS-LIGHTING (REAR,LH)	
		1	**102-8804**	1	KIT-RECEPTACLE (4-PIN)	
					(INCLUDES RECEPTACLE AS & WEDGE)	
	11	1	**201-3975**	2	REFLECTOR AS (RED)	
					(EACH INCLUDES)	
M	11A	1	**5C-2874**	1	NUT (M5X.8-THD)	
	11B	1	**8T-0086**	1	LOCKWASHER	
M	12	1	**6V-5210**	8	SCREW-MACHINE (M4X0.7X10-MM)	

M-METRIC PART
Y-SEPARATE ILLUSTRATION

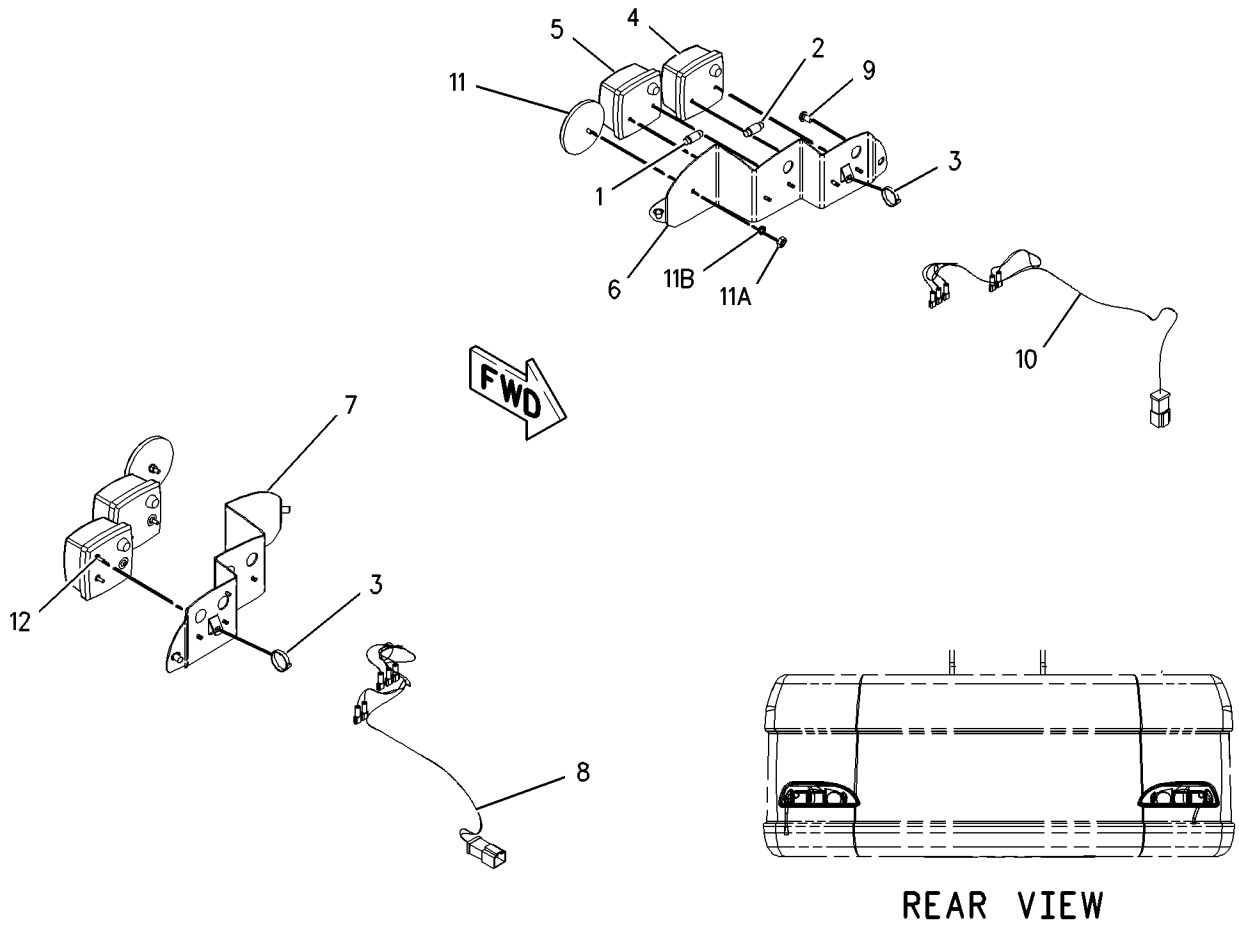

GRAPHIC #1 **<END>** g00923553

116-9624 LAMP GP-SIGNAL

S/N: BCZ1-2000

PART OF 191-7538 LAMP GP-REAR

SMCS-1430 **i02159942**

NOTE	REF NO	GRAPHIC REF	PART NUMBER	QTY	PART NAME 1 2 3 4 5 6 (PRODUCT LEVEL)	SEE PAGE
	1	1	**117-9419**	1	GLASS AS (REAR SIGNAL LAMP)	
M	1A	1	**117-9470**	2	SCREW	

M-METRIC PART

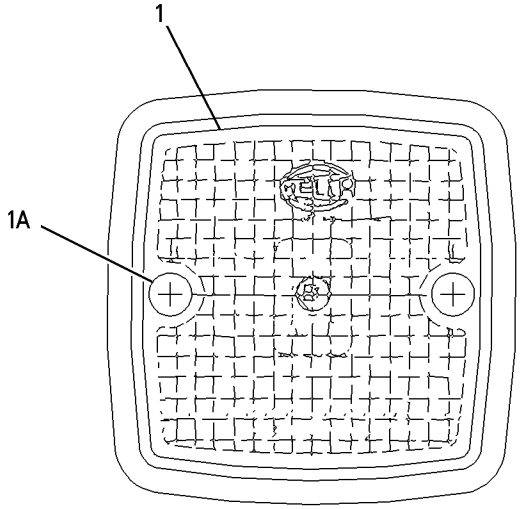

GRAPHIC #1 **<END>** g00919697

116-9626 LAMP GP-SIGNAL

S/N: BCZ1-2000

PART OF 193-4288 LAMP GP-SIGNAL

SMCS-1430 **i02159944**

NOTE	REF NO	GRAPHIC REF	PART NUMBER	QTY	PART NAME 1 2 3 4 5 6 (PRODUCT LEVEL)	SEE PAGE
	1	1	**117-9418**	1	GLASS AS (FRONT SIGNAL LAMP)	
M		1	**117-9469**	1	SCREW	

M-METRIC PART

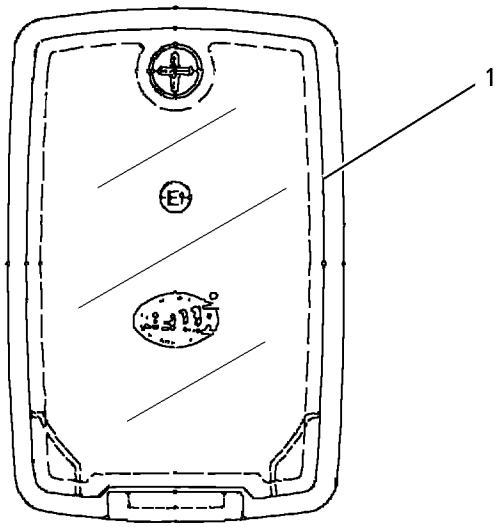

GRAPHIC #1 **<END>** g00923836

193-4288 LAMP GP-SIGNAL–FRONT

S/N: BCZ1-2000

PART OF 190-0286 LIGHTING GP-ROADING

SMCS-1430 **i02159946**

NOTE	REF NO	GRAPHIC REF	PART NUMBER	QTY	PART NAME 1 2 3 4 5 6 (PRODUCT LEVEL)	SEE PAGE
	1	1	**8U-2622**	2	LAMP (24-VOLT, 21-WATT) (SIGNAL LAMP)	
Y	2	1	**116-9626**	2	LAMP GP-SIGNAL	156
M	3	1	**104-3601**	2	SCREW-MACHINE (M5X0.8X25-MM)	
M	4	1	**5C-2874**	4	NUT (M5X.8-THD)	
	5	1	**8T-0328**	4	WASHER-HARD (5.5X10X1-MM THK)	
M	6	1	**8T-6693**	2	SCREW-MACHINE (M5X0.8X16-MM)	

M-METRIC PART
Y-SEPARATE ILLUSTRATION

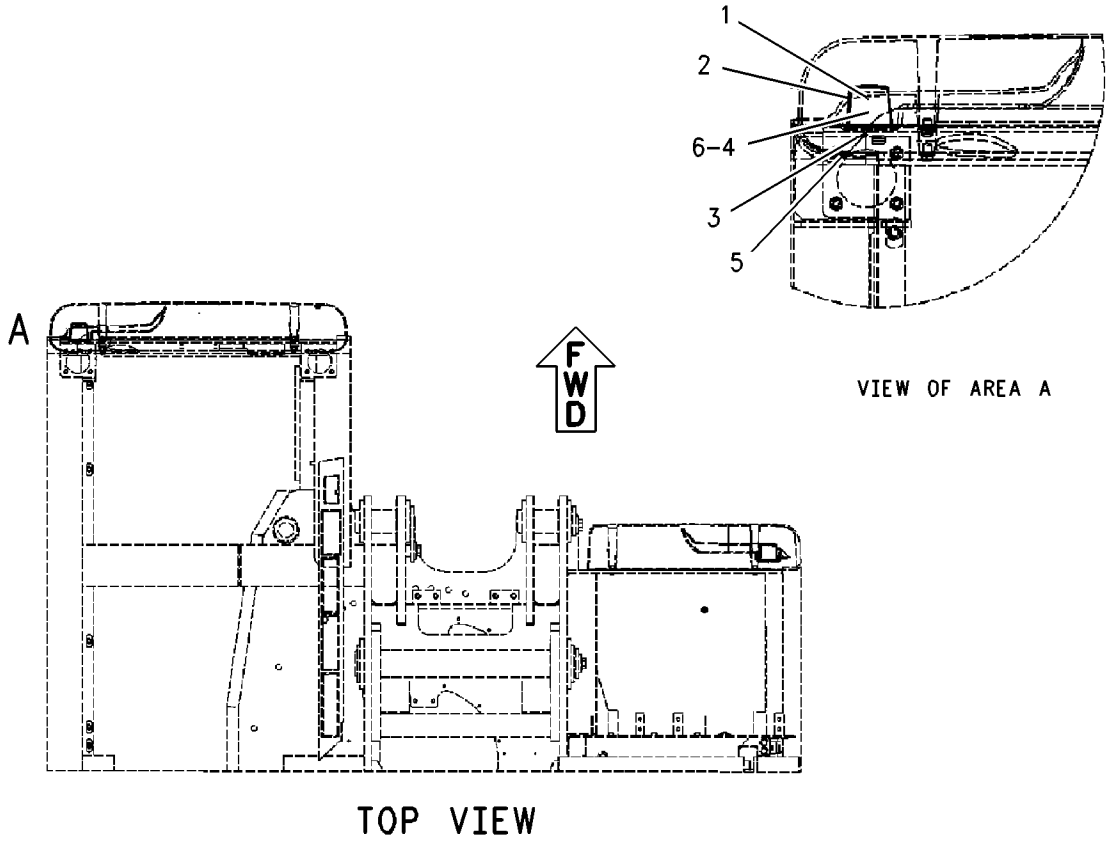

GRAPHIC #1 **<END>** g00919913

199-7529 LAMP GP-WARNING BEACON

S/N: BCZ1-2000
24 VOLT. ROTATING WARNING
PART OF 188-4949 LIGHTING GP-WARNING BEACON
AN ATTACHMENT

SMCS-1431 **i02159949**

NOTE	REF NO	GRAPHIC REF	PART NUMBER	QTY	PART NAME 1 2 3 4 5 6 (PRODUCT LEVEL)	SEE PAGE
	1	1	**117-9421**	1	GLASS (WARNING BEACON)	
	2	1	**117-9422**	1	MOTOR AS	
	3	1	**206-2790**	1	REFLECTOR AS	
	4	1	**8U-9417**	1	LAMP-HALOGEN (24-VOLT, 70-WATT) (WARNING BEACON)	
	5	1	**6C-7592**	1	CONNECTOR	

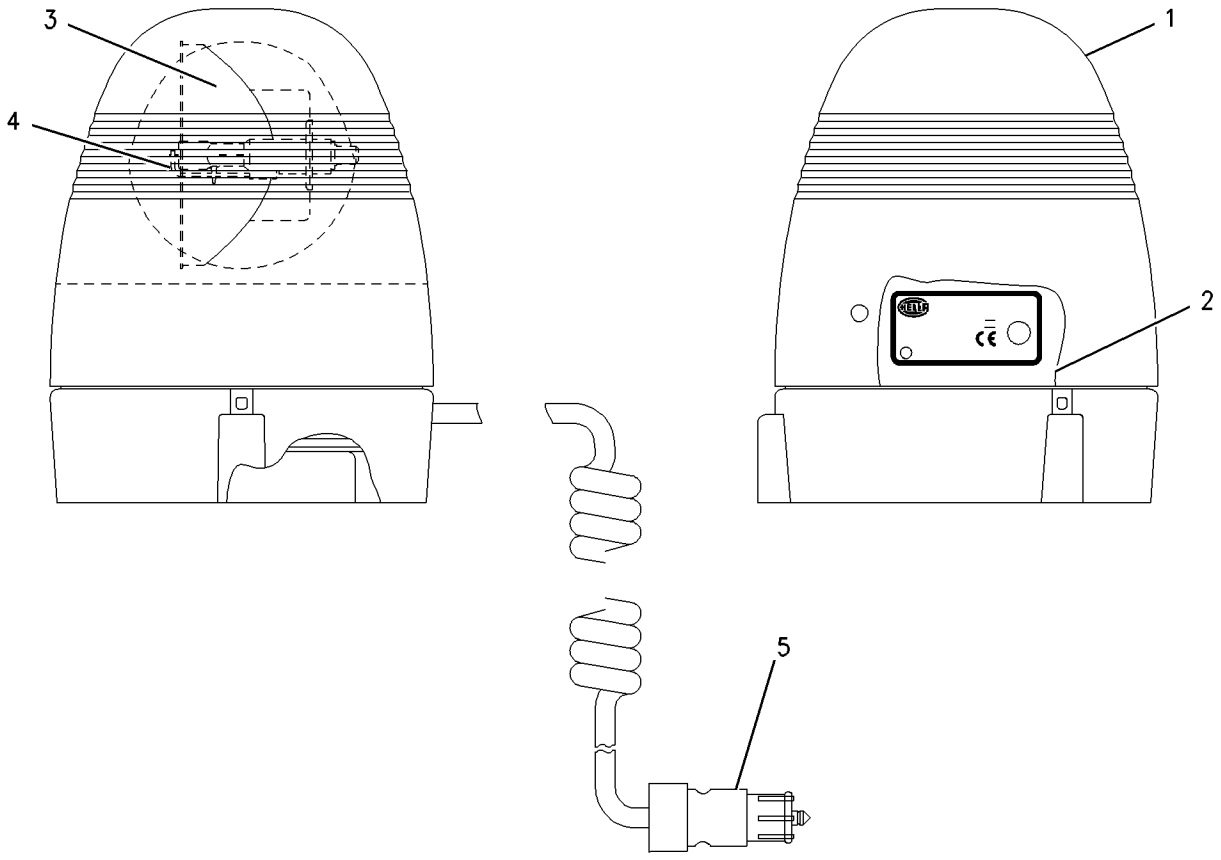

GRAPHIC #1 **<END>** g00894567

ELECTRICAL AND STARTING SYSTEM

195-6851 LIGHTING AR-FLOOD—FRONT, REAR

S/N: BCZ1-2000
AN ATTACHMENT

SMCS-1434 **i01795534**

NOTE	PART NUMBER	QTY	PART NAME 1 2 3 4 5 6 (PRODUCT LEVEL)	SEE PAGE
Y	*196-1130*	1	LIGHTING GP-FLOOD (FRONT)	163
Y	*188-4947*	1	LIGHTING GP-FLOOD (REAR)	162

Y-SEPARATE ILLUSTRATION

<END>

188-4945 LIGHTING GP-FLOOD–BOOM

S/N: BCZ1-2000
PART OF 185-8540, 185-8547 BOOM AR
AN ATTACHMENT

SMCS-1434 **i02109484**

NOTE	REF NO	GRAPHIC REF	PART NUMBER	QTY	PART NAME 1 2 3 4 5 6 (PRODUCT LEVEL)	SEE PAGE
	1	1	**195-5663**	1	HARNESS AS-LIGHTING	
		1	**102-8802**	1	KIT-RECEPTACLE (2-PIN)	
					(INCLUDES RECEPTACLE AS & WEDGE)	
		1	**155-2270**	1	KIT-CONNECTING PLUG (2-PIN)	
					(INCLUDES PLUG AS, WEDGE & INTERFACE SEAL)	
Y	2	1	**199-3137**	1	LAMP GP-FLOOD (BOOM)	150
B	3	1	**096-0061**	15	STRAP-CABLE	

B-USE AS REQUIRED
Y-SEPARATE ILLUSTRATION

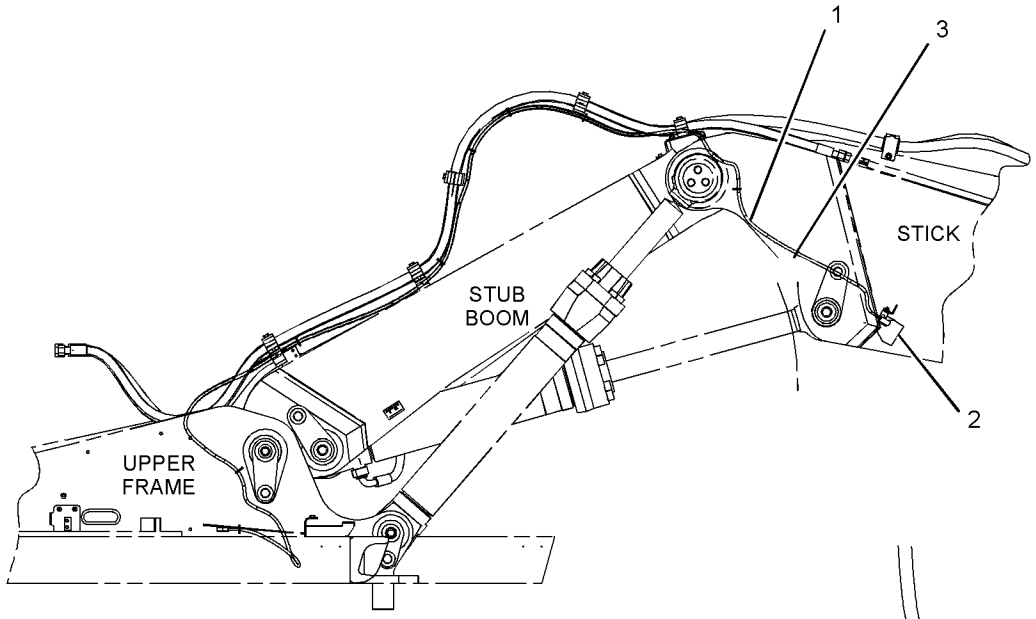

RIGHT SIDE VIEW
(WITH VARIABLE ANGLE BOOM)

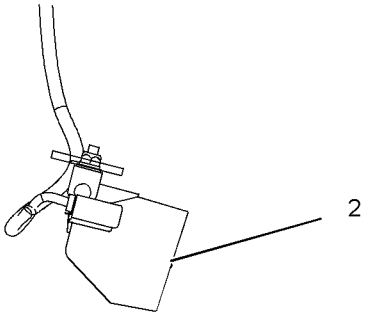

VIEW OF AREA A

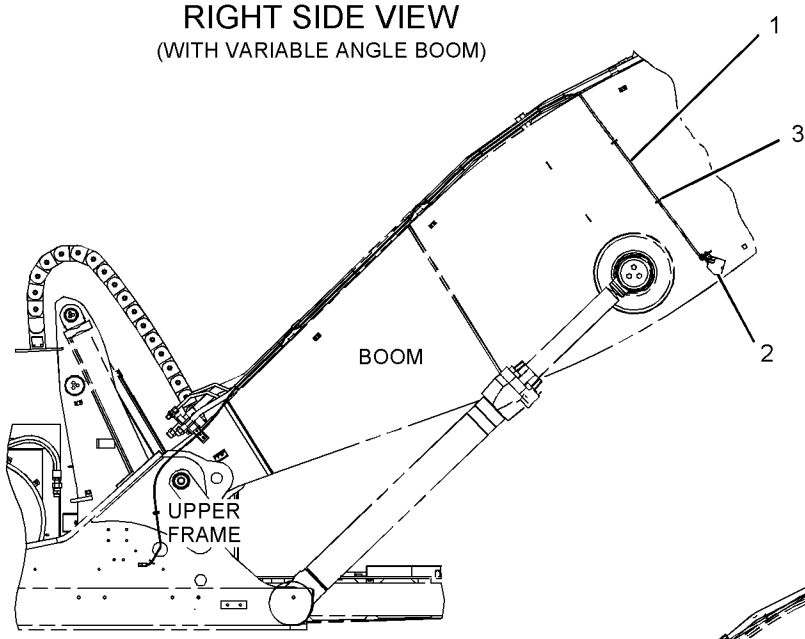

RIGHT SIDE VIEW
(WITH MATERIAL HANDLER BOOM)

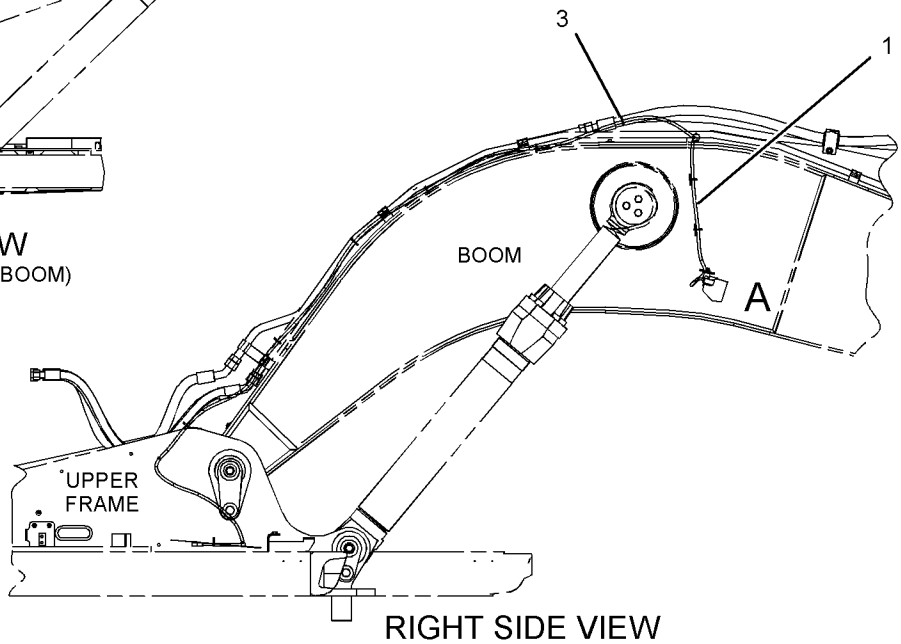

RIGHT SIDE VIEW
(WITH 1 PIECE BOOM)

GRAPHIC #1 **<END>** g01041232

188-4947 LIGHTING GP-FLOOD–REAR

S/N: BCZ1-2000

PART OF 188-4938 GUARD AR-FOG LIGHTS, 195-6851 LIGHTING AR-FLOOD AN ATTACHMENT

SMCS-1434 **i02154549**

NOTE	REF NO	GRAPHIC REF	PART NUMBER	QTY	PART NAME 1 2 3 4 5 6 (PRODUCT LEVEL)	SEE PAGE
	1	1	**174-1319**	1	BOOT	
	2	1	**199-3139**	1	LAMP AS (REAR FLOODLIGHT)	
M	2A	1	**3T-0852**	1	LOCKNUT (M8X1.25-THD)	
	2B	1	**5W-2039**	1	LAMP AS (24-VOLT, 70-WATT) (REAR FLOODLIGHT)	
	2C	1	**5W-5049**	1	WASHER (8.4X15X0.8-MM THK)	
M	2D	1	**6V-7744**	1	LOCKNUT (M10X1.5-THD)	
	2E	1	**7X-0796**	1	LOCKWASHER	
	2F	1	**123-0952**	4	SCREW	
	3	1	**2V-8260**	1	GROMMET	
	4	1	**193-9059**	1	SWITCH AS (REAR FLOODLIGHT)	

M-METRIC PART

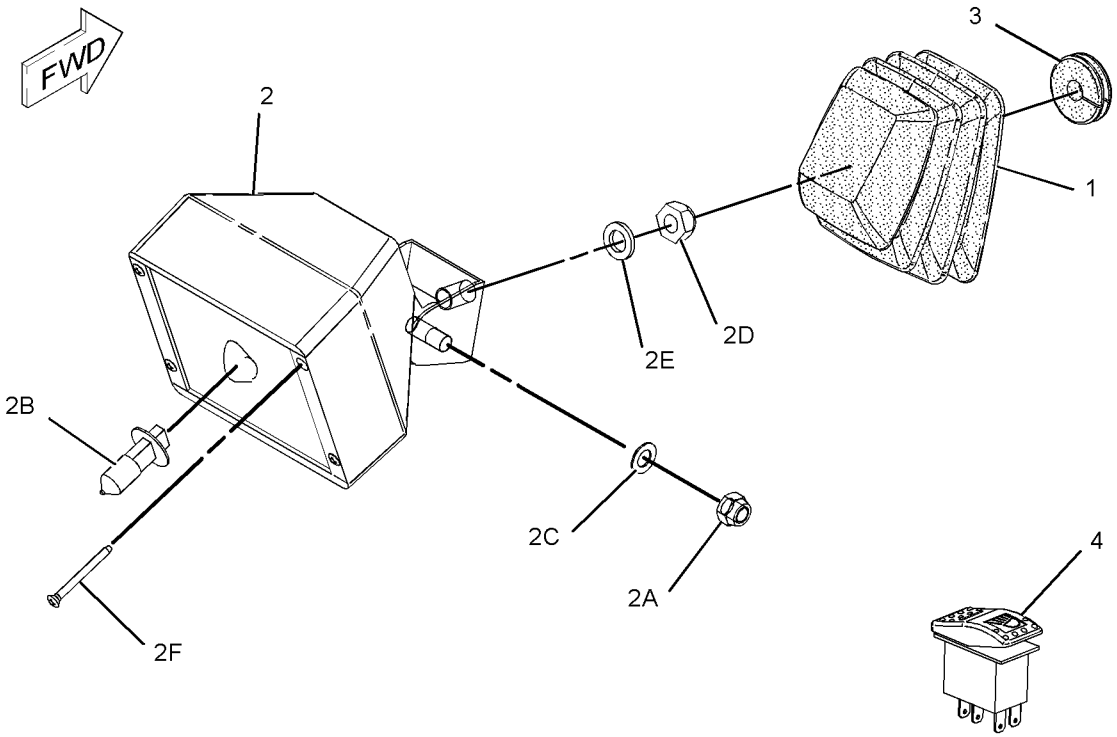

GRAPHIC #1 **<END>** g01095106

196-1130 LIGHTING GP-FLOOD–FRONT

S/N: BCZ1-2000
PART OF 195-6851 LIGHTING AR-FLOOD
AN ATTACHMENT

SMCS-1434 **i02159950**

NOTE	REF NO	GRAPHIC REF	PART NUMBER	QTY	PART NAME 1 2 3 4 5 6 (PRODUCT LEVEL)	SEE PAGE
	1	1	**199-3138**	2	LAMP GP-FLOOD (FRONT)	
					(EACH INCLUDES)	
		1	**5W-2039**	1	LAMP AS (24-VOLT, 70-WATT) (FRONT FLOOD)	
	2	1	**216-2174**	2	BRACKET	
	3	1	**216-2176**	2	COVER	
	4	1	**216-2177**	2	COVER	
M	5	1	**095-0735**	4	SCREW-MACHINE (M5X0.8X8-MM)	

M-METRIC PART

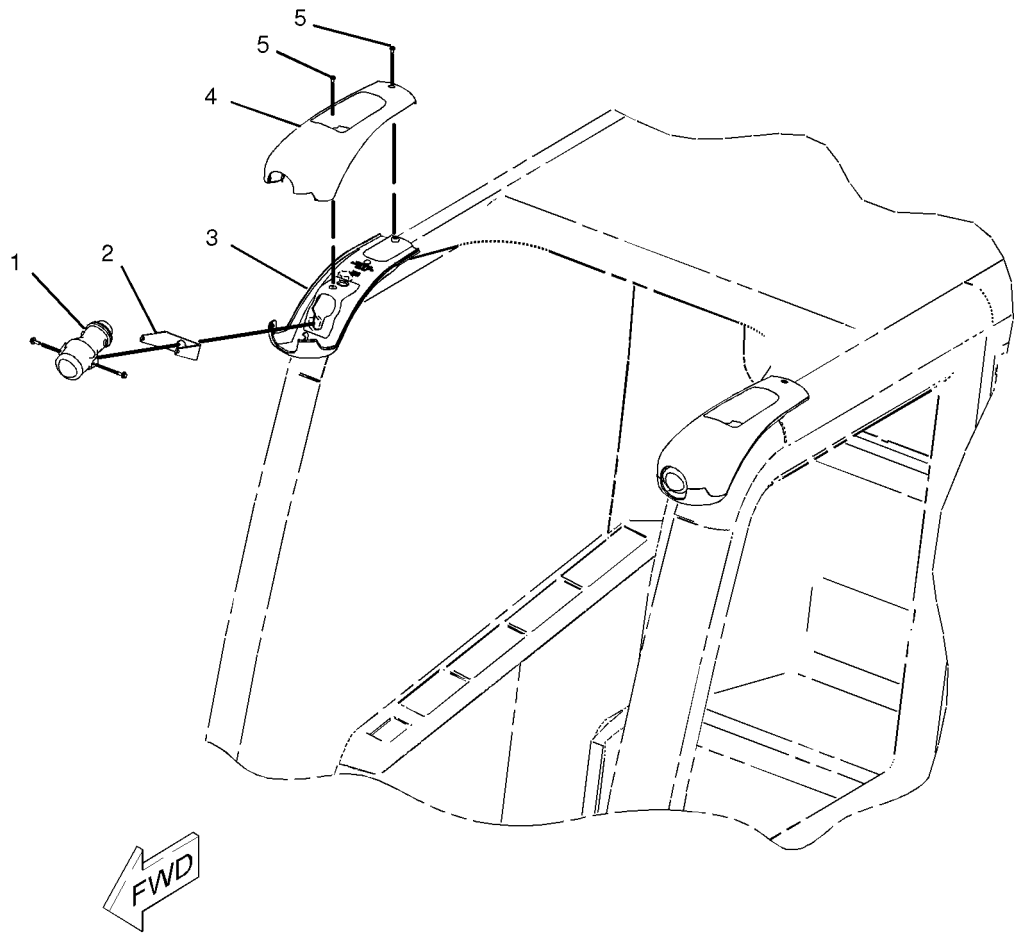

GRAPHIC #1 **<END>** g01042896

198-4677 LIGHTING GP-FLOOD–GUARD, FRONT

S/N: BCZ1-2000
PART OF 188-4938 GUARD AR-FOG LIGHTS
AN ATTACHMENT

SMCS-1434 **i02159951**

NOTE	REF NO	GRAPHIC REF	PART NUMBER	QTY	PART NAME 1 2 3 4 5 6 (PRODUCT LEVEL)	SEE PAGE
	1	1	**186-3736**	4	SOCKET-CONNECTOR	
	2	1	**155-2261**	2	WEDGE-PLUG LOCK (2-PIN)	
Y	3	1	**199-3137**	2	LAMP GP-FLOOD	150
	4	1	**201-0898**	2	HARNESS AS-LIGHTING (FLOODLIGHTS, FRONT)	
					(EACH INCLUDES)	
		1	**102-8802**	1	KIT-RECEPTACLE (2-PIN)	
					(INCLUDES RECPTACLE AS & WEDGE)	
		1	**155-2270**	1	KIT-CONNECTING PLUG (2-PIN)	
					(INCLUDES PLUG AS & WEDGE)	
	5	1	**096-0061**	6	STRAP-CABLE	
	6	1	**155-2270**	2	KIT-CONNECTING PLUG (2-PIN)	
	7	1	**9D-7303**	2	GROMMET	

Y-SEPARATE ILLUSTRATION

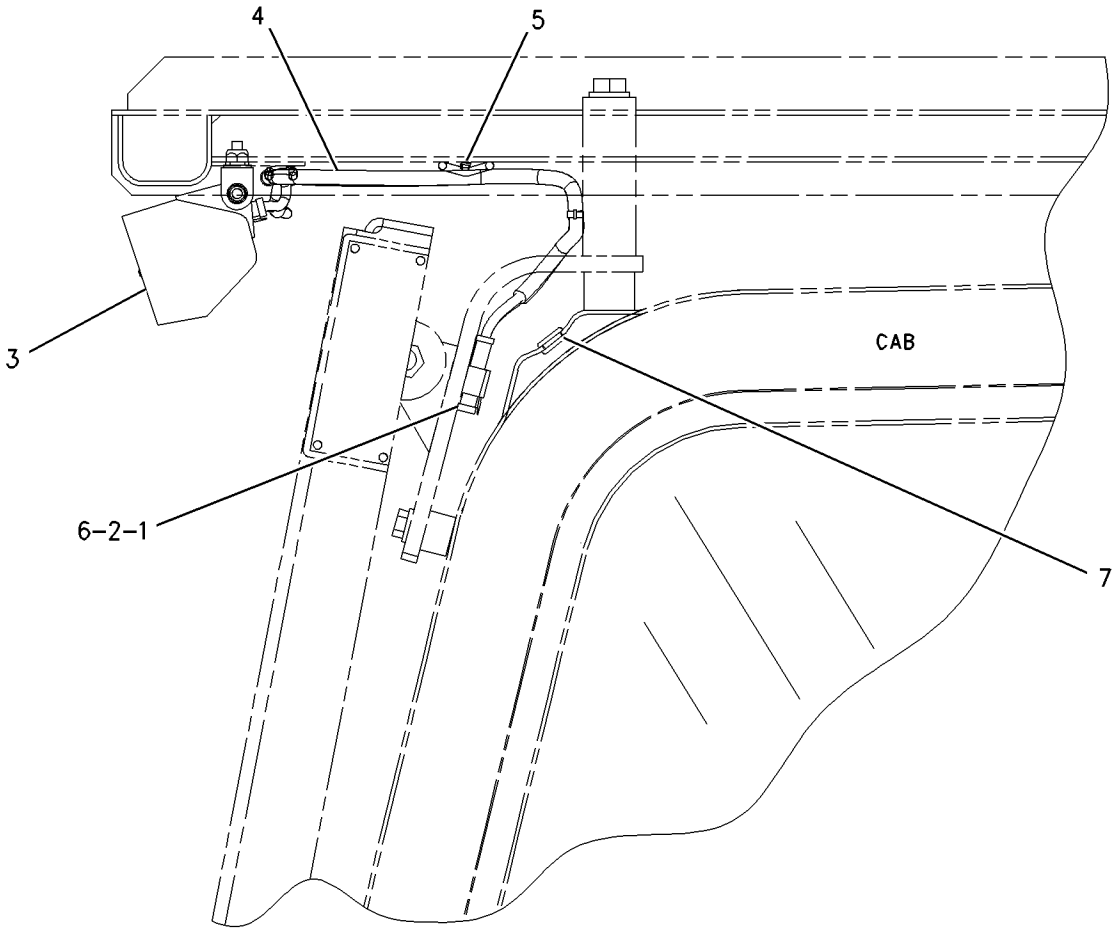

LEFT SIDE VIEW

GRAPHIC #1 **<END>** g00919904

188-4948 LIGHTING GP-ROADING

S/N: BCZ1-2000
PART OF 243-2598 ROADING AR
AN ATTACHMENT

SMCS-1429 **i02159952**

NOTE	REF NO	GRAPHIC REF	PART NUMBER	QTY	PART NAME 1 2 3 4 5 6 (PRODUCT LEVEL)	SEE PAGE
	1	1	**5W-1119**	2	WASHER (9.8X18.5X1.5-MM THK)	
	2	1	**5W-1975**	1	TERMINAL	
	3	1	**8T-3016**	2	WASHER (5.3X10X1-MM THK)	
	4	1	**8U-4742**	1	LAMP AS (MARKER)	
	5	1	**8U-6147**	1	CONNECTOR	
	6	1	**114-8907**	2	CLAMP	
	7	1	**119-1339**	1	PLATE	
	8	1	**126-3831**	1	PLATE AS	
	9	1	**128-8537**	2	LATCH-LOCK	
	10	1	**193-4290**	1	HARNESS AS-LIGHTING (ROADING)	
	11	1	**202-7201**	1	LAMP (24-VOLT, 5-WATT) (MARKER LIGHTS)	
M	12	1	**5C-2874**	2	NUT (M5X.8-THD)	
	13	1	**8M-2771**	1	CLIP	
M	14	1	**9X-6032**	2	BOLT-SOCKET HEAD (M10X1.5X30-MM)	

M-METRIC PART

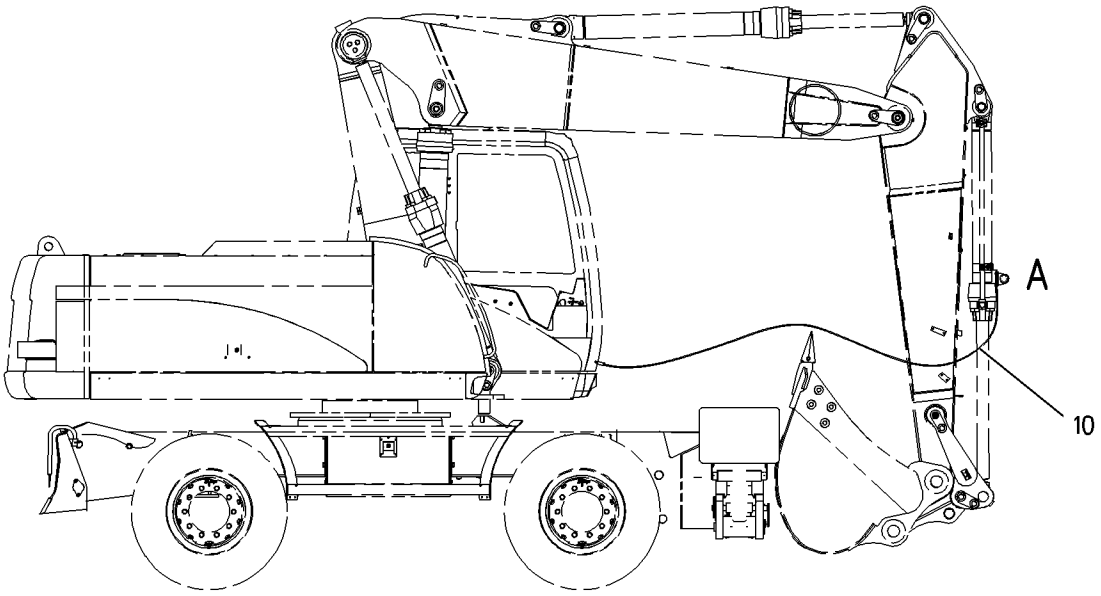

RIGHT SIDE VIEW

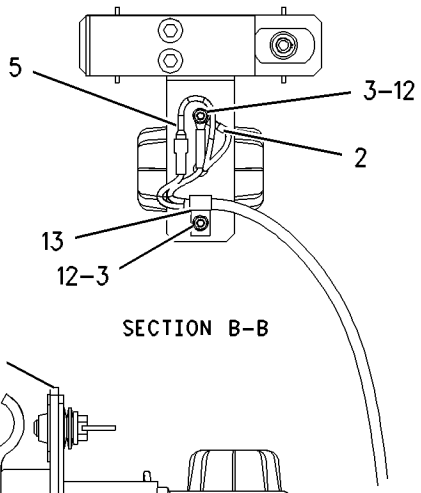

SECTION B–B

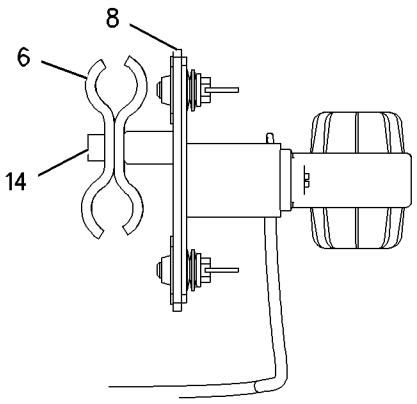

SECTION C–C

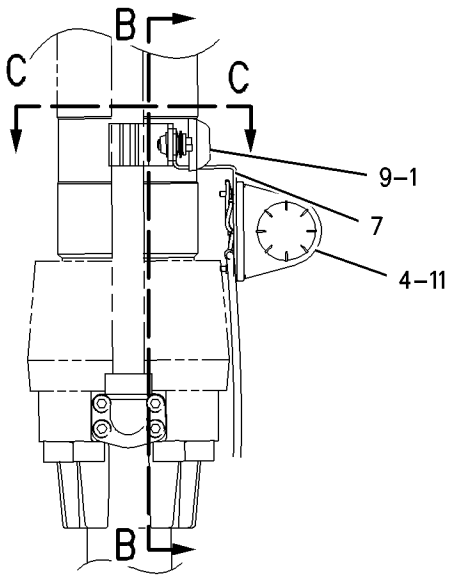

VIEW OF AREA A

GRAPHIC #1 **<END>** g00857904

190-0286 LIGHTING GP-ROADING

S/N: BCZ1-2000

PART OF 186-0468 CHASSIS AR

SMCS-1429 **i01580217**

NOTE	PART NUMBER	QTY	PART NAME 1 2 3 4 5 6 (PRODUCT LEVEL)	SEE PAGE
Y	*193-4287*	1	LAMP GP-HEAD	151
Y	*191-7538*	1	LAMP GP-REAR	153
Y	*193-4288*	1	LAMP GP-SIGNAL	157
Y	*193-4289*	1	REFLECTOR GP	169

Y-SEPARATE ILLUSTRATION

<END>

188-4949 LIGHTING GP-WARNING BEACON

S/N: BCZ1-2000
AN ATTACHMENT

SMCS-1431 **i02055334**

NOTE	REF NO	GRAPHIC REF	PART NUMBER	QTY	PART NAME 1 2 3 4 5 6 (PRODUCT LEVEL)	SEE PAGE
	1	1	**120-5967**	1	SOCKET-WIRING	
	2	1	**193-9065**	1	SWITCH AS-ROCKER (WARNING BEACON)	
		1	**111-7899**	1	GASKET	
Y	3	1	**199-7529**	1	LAMP GP-WARNING BEACON	158

Y-SEPARATE ILLUSTRATION

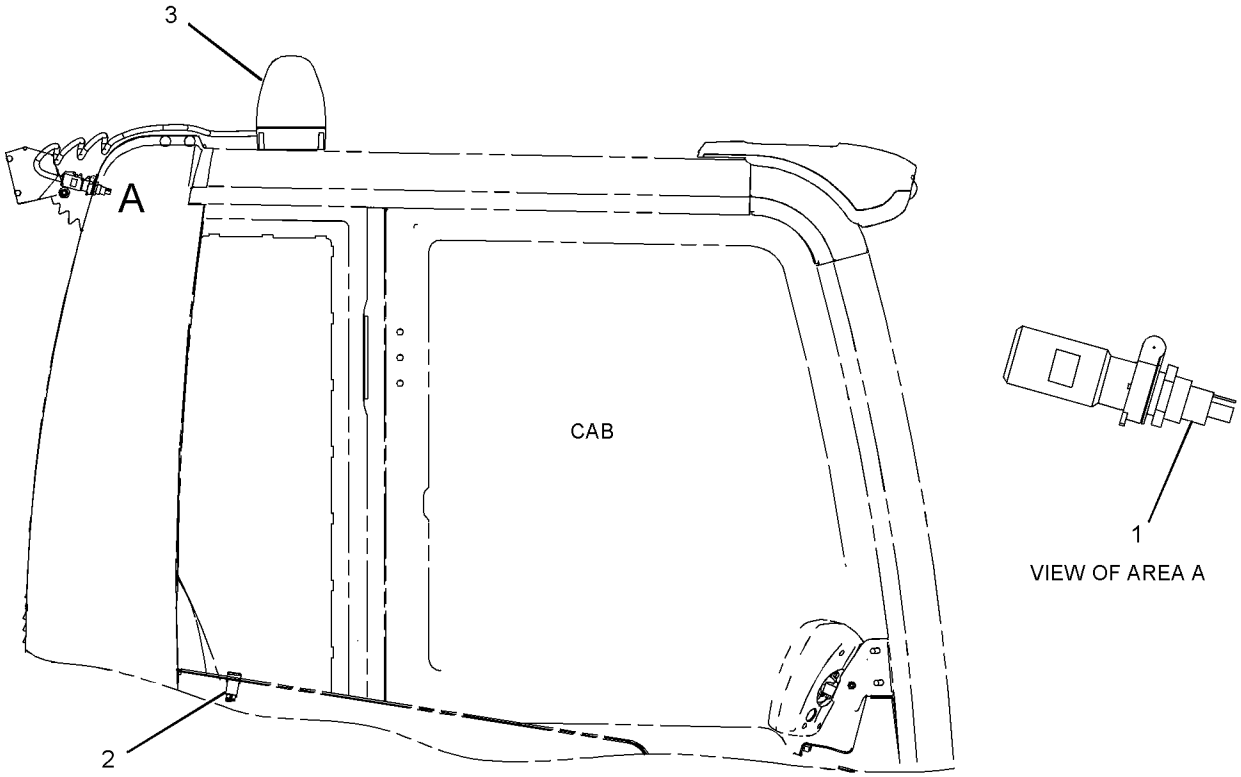

RIGHT SIDE VIEW

GRAPHIC #1 **<END>** g01043779

193-4289 REFLECTOR GP

S/N: BCZ1-2000

PART OF 190-0286 LIGHTING GP-ROADING

SMCS-1432 **i01536069**

NOTE	REF NO	GRAPHIC REF	PART NUMBER	QTY	PART NAME 1 2 3 4 5 6 (PRODUCT LEVEL)	SEE PAGE
	1	1	**5W-1109**	2	REFLECTOR	
	2	1	**116-9621**	4	REFLECTOR-YELLOW	
M	3	1	**5C-2874**	2	NUT (M5X.8 THD)	
M	4	1	**6V-5210**	8	SCREW-MACHINE (M4X0.7X10MM)	

M-METRIC PART

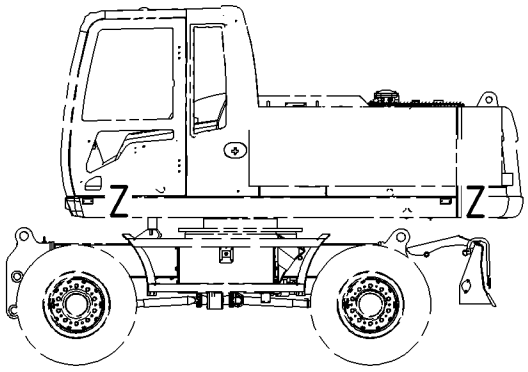

LEFT SIDE VIEW

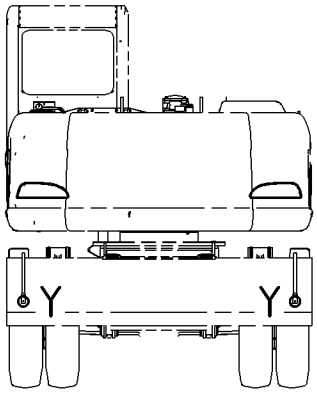

REAR VIEW

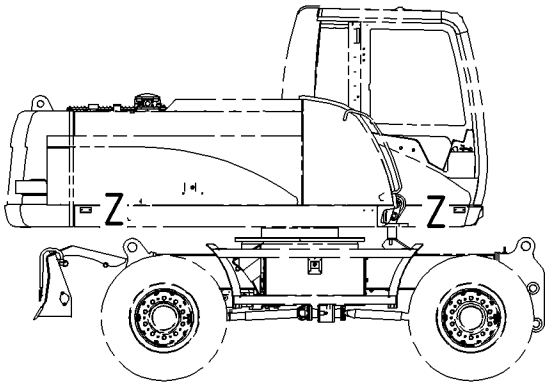

RIGHT SIDE VIEW

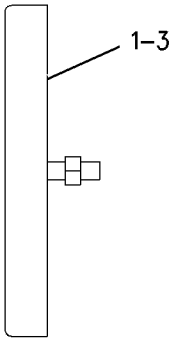

VIEW OF AREA Y

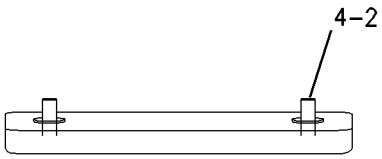

VIEW OF AREA Z

GRAPHIC #1 **<END>** g00813489

199-2976 SENSOR GP-POSITION–SWASHPLATE

S/N: BCZ1-2000

PART OF 190-8198 PUMP GP-PISTON

SMCS-5737 **i02063016**

NOTE	REF NO	GRAPHIC REF	PART NUMBER	QTY	PART NAME 1 2 3 4 5 6 (PRODUCT LEVEL)	SEE PAGE
J	1	1	**203-0062**	1	SHAFT	
	2	1	**203-2251**	1	PIN-SPRING	
J	3	1	**3E-6787**	1	SEAL-O-RING	
J	4	1	**1H-1023**	1	SEAL-O-RING	
J	5	1	**203-0099**	3	BOLT-SOCKET HEAD	
M	6	1	**8T-5433**	2	BOLT-SOCKET HEAD	
J	7	1	**5C-5306**	1	RING-RETAINING	
	8	1	**131-2639**	2	WASHER (3.2X9.0X0.5-MM THK)	
	9	1	**199-5179**	1	SENSOR AS-POSITION (SWASHPLATE ANGLE)	
J	10	1	**240-9424**	1	HOUSING	
					AVAILABLE REPAIR KIT(S):	
J			**240-9425**	1	KIT-SENSOR (SWASHPLATE POSITION)	

J-KIT MARKED J SERVICES PARTS MARKED J
M-METRIC PART

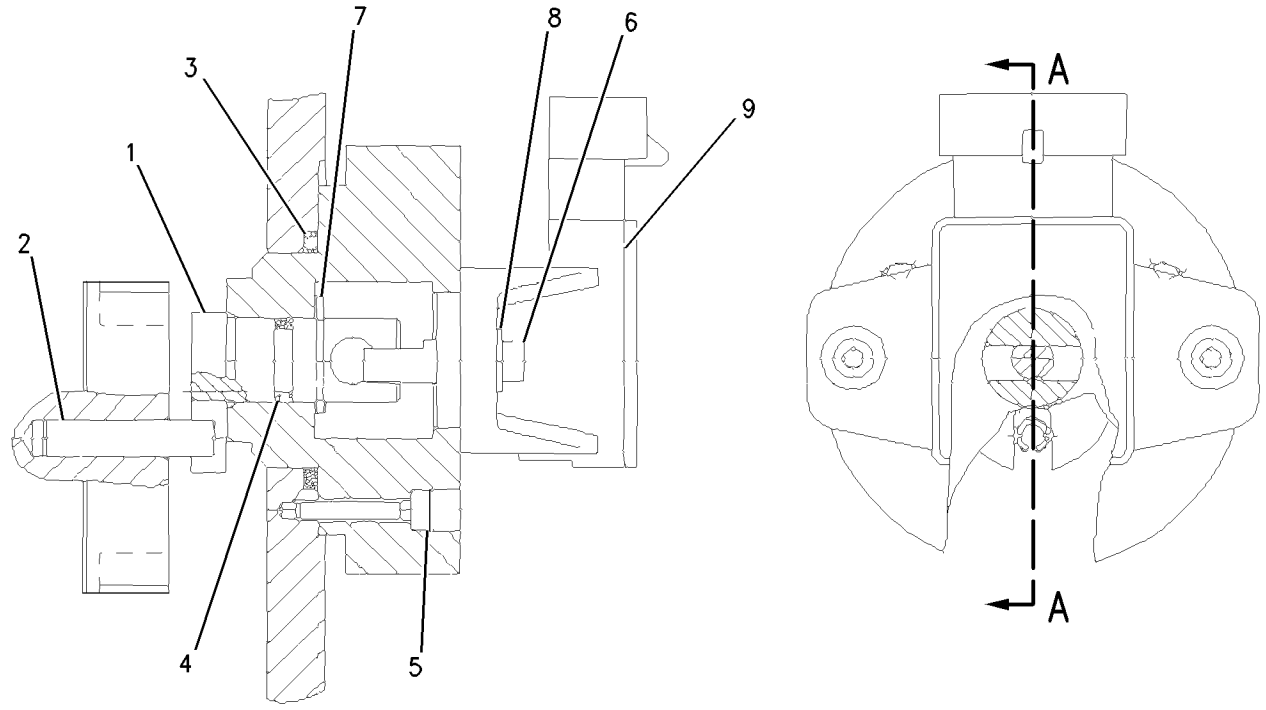

SECTION A-A

GRAPHIC #1 **<END>** g00836225

217-5883 STARTING AID GP

S/N: CPT1-UP

PART OF 188-5096 ENGINE AR-PRIMARY

SMCS-1090 **i01935340**

NOTE	REF NO	GRAPHIC REF	PART NUMBER	QTY	PART NAME 1 2 3 4 5 6 (PRODUCT LEVEL)	SEE PAGE
	1	1	**6I-0217**	1	BOLT (M8X1.25X20-MM)	
	2	1	**8N-7983**	1	FITTING	
	3	1	**067-6998**	2	NUT	
	4	1	**067-6999**	2	OLIVE	
	5	1	**101-3907**	2	WASHER	
	6	1	**124-3815**	2	BOLT (M8X16X1.25-MM)	
	7	1	**133-9467**	1	BOLT	
	8	1	**185-6352**	1	MOUNTING GP-FUEL LINE	
	9	1	**101-3986**	2	CLIP	
	10	1	**185-5760**	1	CLIP	

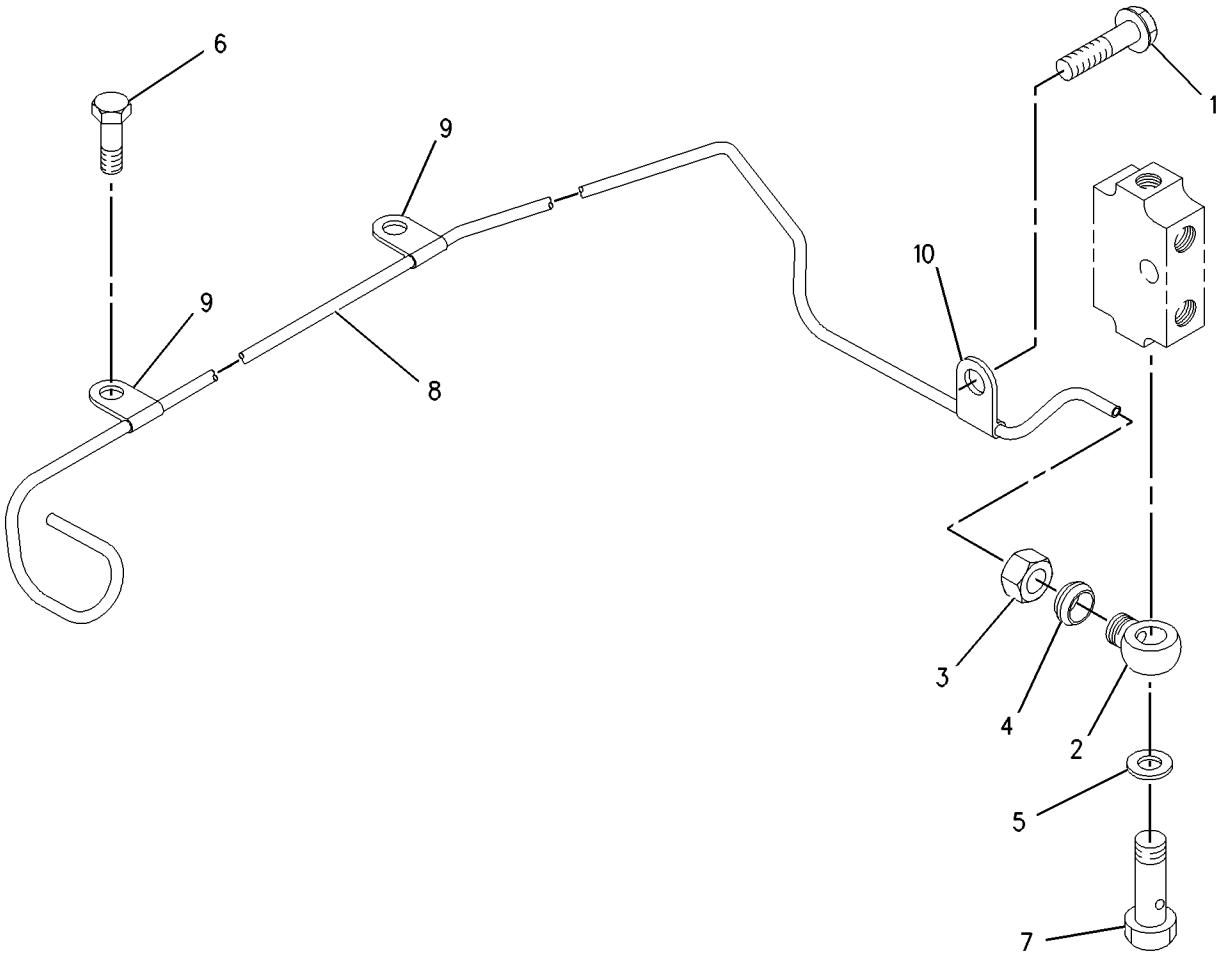

GRAPHIC #1 **<END>** g00873231

ELECTRICAL AND STARTING SYSTEM

228-7461 STARTING AID GP

S/N: CPT1-UP

PART OF 188-5096 ENGINE AR-PRIMARY

SMCS-1090 **i02156063**

NOTE	REF NO	GRAPHIC REF	PART NUMBER	QTY	PART NAME 1 2 3 4 5 6 (PRODUCT LEVEL)	SEE PAGE
	1	1	**252-4460**	1	HEATER AS (AIR INLET)	
F		1	**246-3263**	1	LOCKWASHER	

F-NOT SHOWN

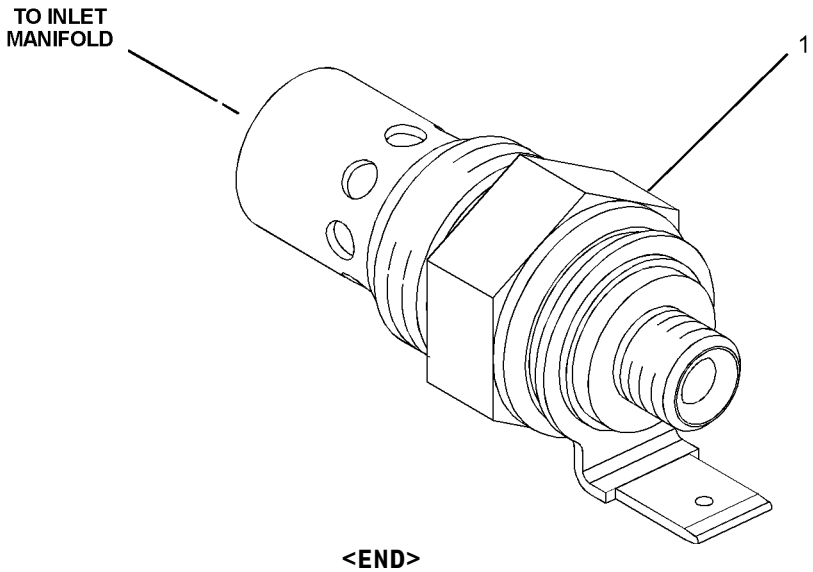

GRAPHIC #1 **<END>** g01082053

176-2540 STARTING MOTOR GP-ELECTRIC

S/N: CPT1-4476

PART OF 188-5096 ENGINE AR-PRIMARY

SMCS-1453 **i01644544**

NOTE	REF NO	GRAPHIC REF	PART NUMBER	QTY	PART NAME 1 2 3 4 5 6 (PRODUCT LEVEL)	SEE PAGE
	1	1	**6I-0594**	3	NUT (M10X1.5)	
	2	1	**6I-4012**	3	STUD	
R	3	1	**109-2361**	1	STARTING MOTOR GP-ELECTRIC	
	4	1	**113-8085**	1	RING	

R-REMFG PART MAY BE AVAILABLE

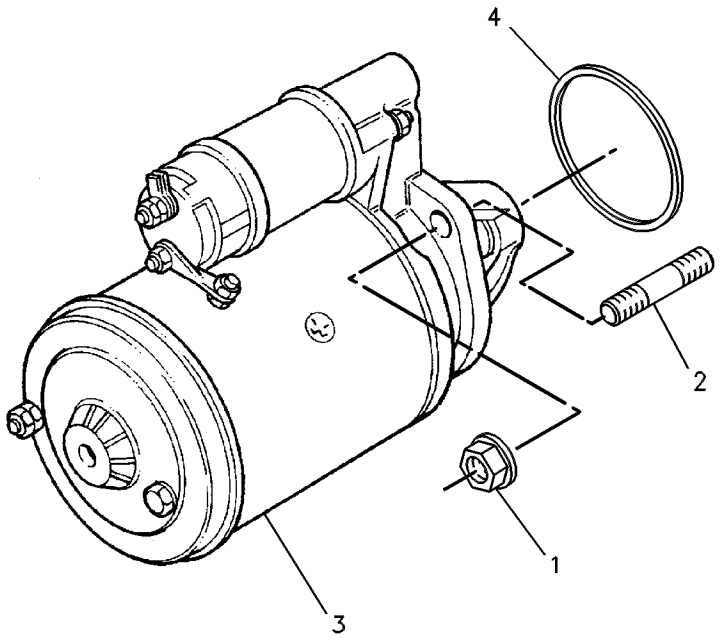

GRAPHIC #1 **<END>** g00238555

ELECTRICAL AND STARTING SYSTEM

234-2656 STARTING MOTOR GP-ELECTRIC

S/N: CPT4477-UP

PART OF 188-5096 ENGINE AR-PRIMARY

SMCS-1453 **i02155816**

NOTE	REF NO	GRAPHIC REF	PART NUMBER	QTY	PART NAME 1 2 3 4 5 6 (PRODUCT LEVEL)	SEE PAGE
	1	1	**6I-0364**	3	STUD (M10X1.5X30-MM)	
	2	1	**6I-0594**	3	NUT (M10X1.5-THD)	
	3	1	**225-3150**	1	STARTING MOTOR GP-ELECTRIC	

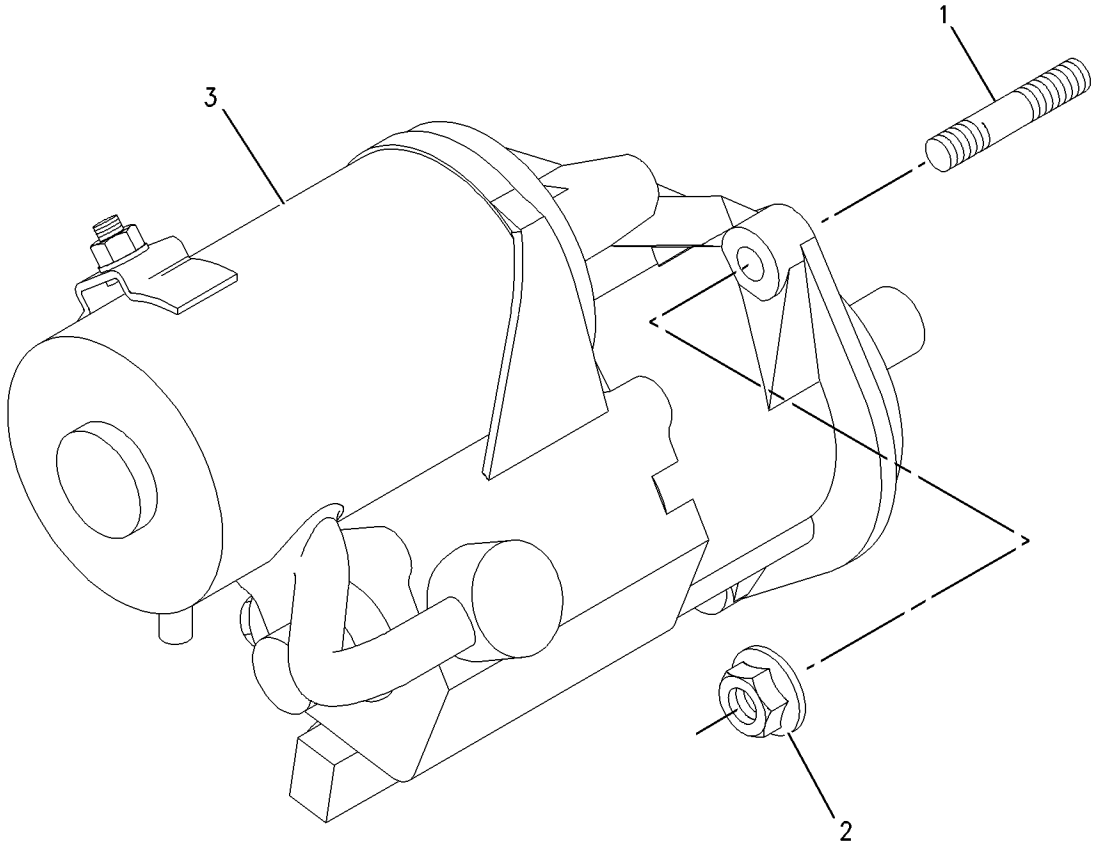

GRAPHIC #1 **<END>** g00933413

7N-0718 SWITCH GP-DISCONNECT–BATTERY

S/N: BCZ1-2000

PART OF 186-0483 BATTERY & WIRING GP

SMCS-1411 **i01782517**

NOTE	REF NO	GRAPHIC REF	PART NUMBER	QTY	PART NAME 1 2 3 4 5 6 (PRODUCT LEVEL)	SEE PAGE
	1	1	**2H-3922**	2	LOCKWASHER	
	2	1	**8H-5303**	1	NUT (3/4-16 THD)	
	3	1	**9F-5644**	2	LOCKWASHER	
	4	1	**6F-7045**	2	NUT-FULL (3/8X24 THD)	
	5	1	**8H-5306**	1	KEY	

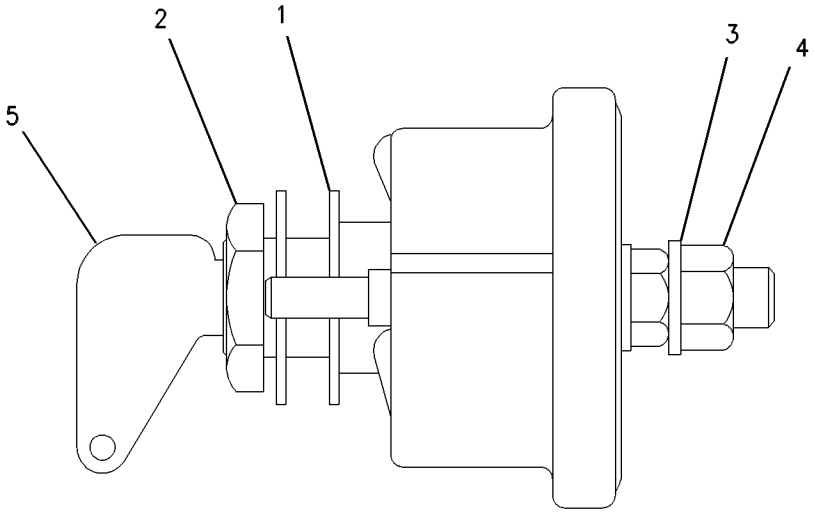

GRAPHIC #1 **<END>** g00397658

196-5651 SWITCH GP-LIQUID LEVEL–HYDRAULIC OIL

S/N: BCZ1-2000

PART OF 198-1685 TANK GP-COOLANT, 183-8956 TANK GP-HYDRAULIC

SMCS-7422 **i02159990**

NOTE	REF NO	GRAPHIC REF	PART NUMBER	QTY	PART NAME 1 2 3 4 5 6 (PRODUCT LEVEL)	SEE PAGE
	1	1	**9X-3401**	2	PIN-CONNECTOR	
	2	1	**102-8802**	1	KIT-RECEPTACLE (2-PIN)	
					(INCLUDES RECEPTACLE AS & WEDGE)	
	3	1	**197-6791**	1	FLOAT	
	4	1	**197-6792**	1	RING	
	5	1	**7J-6288**	1	RING-BACKUP	

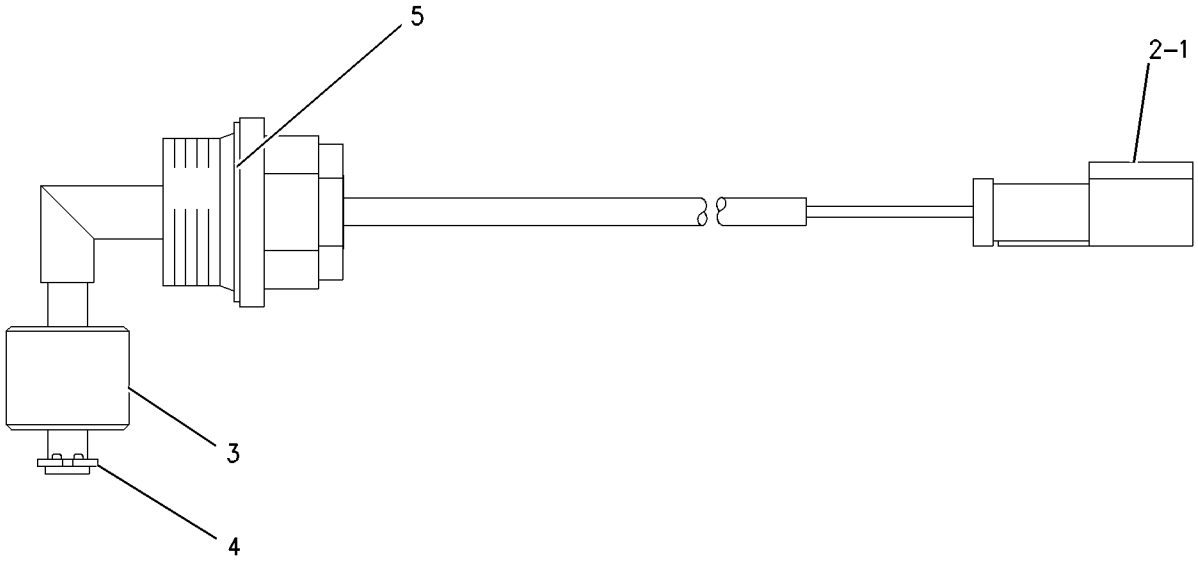

GRAPHIC #1 **<END>** g00917392

9G-7641 SWITCH GP-START

S/N: BCZ1-2000

PART OF 187-3798 WIRING GP-CONSOLE

SMCS-1416 **i01934600**

NOTE	REF NO	GRAPHIC REF	PART NUMBER	QTY	PART NAME 1 2 3 4 5 6 (PRODUCT LEVEL)	SEE PAGE
JZ	1	1		1	LOCK AS-CYLINDER (IGNITION SWITCH)	
	2	1	**6V-8362**	4	SCREW-MACHINE (8-32X7.94-MM)	
	3	1	**9B-7233**	4	LOCKWASHER	
	4	1	**7T-6799**	1	NUT-MOUNTING (1-32-THD)	

J-REQUIRES 5P8500 KEY
Z-NOT SERVICED SEPARATELY

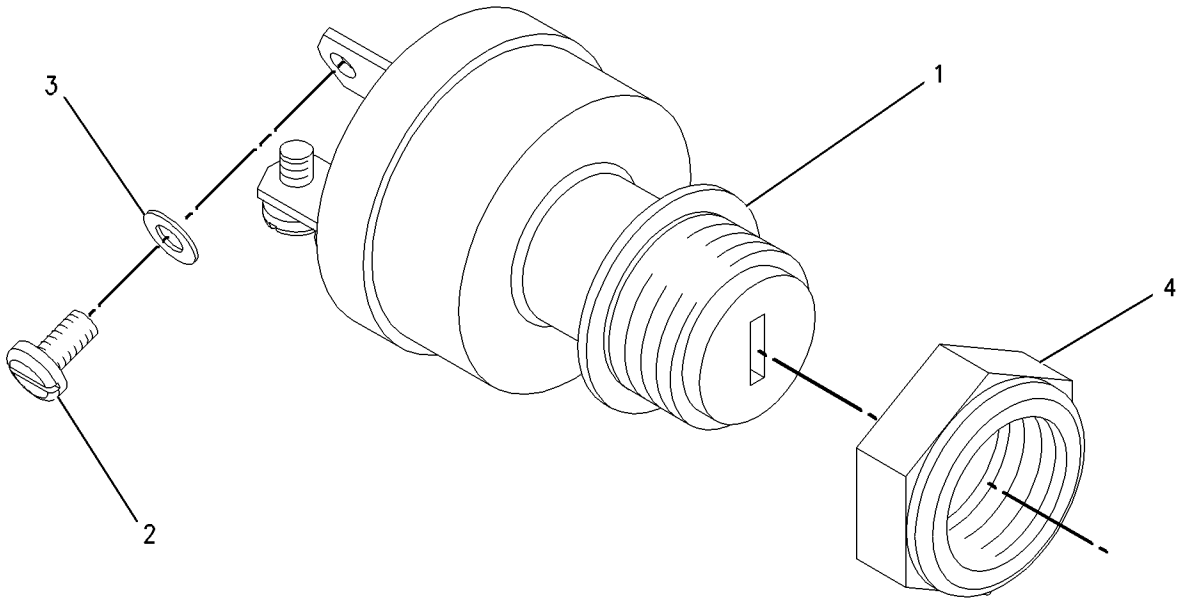

GRAPHIC #1 **<END>** g00886885

187-3799 WIRING GP-CAB

S/N: BCZ1-567, 569-573, 578, 580, 587, 606
PART OF 187-3800, 188-4959 CAB GP
ALSO AN ATTACHMENT

SMCS-7301 **i02174396**

NOTE	REF NO	GRAPHIC REF	PART NUMBER	QTY	PART NAME 1 2 3 4 5 6 (PRODUCT LEVEL)	SEE PAGE
	1	1	**6C-3431**	1	ANTENNA	
	2	2	**9W-1494**	1	METER GP-SERVICE	
					(INCLUDES METER & FILM)	
	3	2	**8C-6354**	1	CAP-RECEPTACLE (DUST)	
	4	1	**109-2353**	11	HOUSING	
	5	1	**109-2354**	4	HOUSING	
	6	1	**109-2356**	11	PLUG	
	7	2	**120-5967**	1	SOCKET-WIRING	
	8	2	**167-3593**	1	STRAP	
	9	2	**176-2002**	1	CAP	
	10	2	**190-8664**	1	SWITCH GP-LIMIT (WINDOW LOWER LIMIT)	
		2	**7Y-3950**	2	TERMINAL (CONNECTOR)	
		2	**7Y-3953**	1	CONNECTOR-RECEPTACLE	
	11	1	**193-9056**	1	SWITCH AS-ROCKER (HAZARD WARNING LIGHTS)	
		1	**111-7899**	1	GASKET	
	12	1	**193-9057**	1	SWITCH AS-ROCKER (HEADLIGHT)	
		1	**111-7899**	1	GASKET	
	13	1	**193-9058**	1	SWITCH AS-ROCKER (FRONT FLOOD LAMP)	
		1	**111-7899**	1	GASKET	
	14	2	**232-5325**	1	HARNESS AS-CAB	
		2	**102-8806**	1	KIT-RECEPTACLE (8-PIN)	
		2	**102-8801**	1	KIT-RECEPTACLE (12-PIN)	
					(EACH RECEPTACLE KIT INCLUDES RECEPTACLE AS & WEDGE)	
		2	**155-2255**	1	KIT-CONNECTING PLUG (12-PIN)	
		2	**155-2265**	4	KIT-CONNECTING PLUG (8-PIN)	
		2	**155-2260**	1	KIT-CONNECTING PLUG (3-PIN)	
		2	**155-2270**	1	KIT-CONNECTING PLUG (2-PIN)	
					(EACH CONNECTING PLUG KIT INCLUDES PLUG AS & WEDGE)	
	15	1	**193-9065**	1	SWITCH AS-ROCKER (WARNING BEACON)	
		1	**111-7899**	1	GASKET	
	16	2	**195-7697**	1	PLATE	
	17	2	**201-4013**	1	HARNESS AS-CAB (SERVICE CONNECTOR)	
		2	**102-8806**	1	KIT-RECEPTACLE (8-PIN)	
					(INCLUDES RECEPTACLE AS & WEDGE)	
Y	18	1	**217-9535**	1	ELECTRONICS GP-MACHINE (COMMUNICATION)	146
	19	2	**226-5444**	1	BRACKET	
B	20	2	**096-0061**	5	STRAP-CABLE	
	21	1	**096-0192**	1	LOCKWASHER	
	22	2	**120-0090**	4	WASHER (3.2X7X0.5-MM THK)	
M	23	2	**120-9027**	4	SCREW-PAN HEAD (M3X0.5X16-MM)	
M	24	2	**3C-6969**	4	NUT (M3X0.5-THD)	
	25	2	**3F-9556**	1	LOCKWASHER	
M	26	2	**5C-7261**	1	NUT (M8X1.25-THD)	
	27	2	**5P-4116**	2	WASHER-HARD (8.8X20.5X2-MM THK)	
	28	1	**7X-0575**	1	WASHER-HARD (10.2X22.5X5-MM THK)	
M	29	2	**8T-0287**	1	BOLT (M5X0.8X10-MM)	
	30	2	**8T-3016**	1	WASHER (5.3X10X1-MM THK)	
M	31	2	**8U-7803**	4	SCREW	
	32	2	**9W-0335**	1	LIGHTER AS (CIGAR, 24-VOLT)	

B-USE AS REQUIRED
M-METRIC PART
Y-SEPARATE ILLUSTRATION

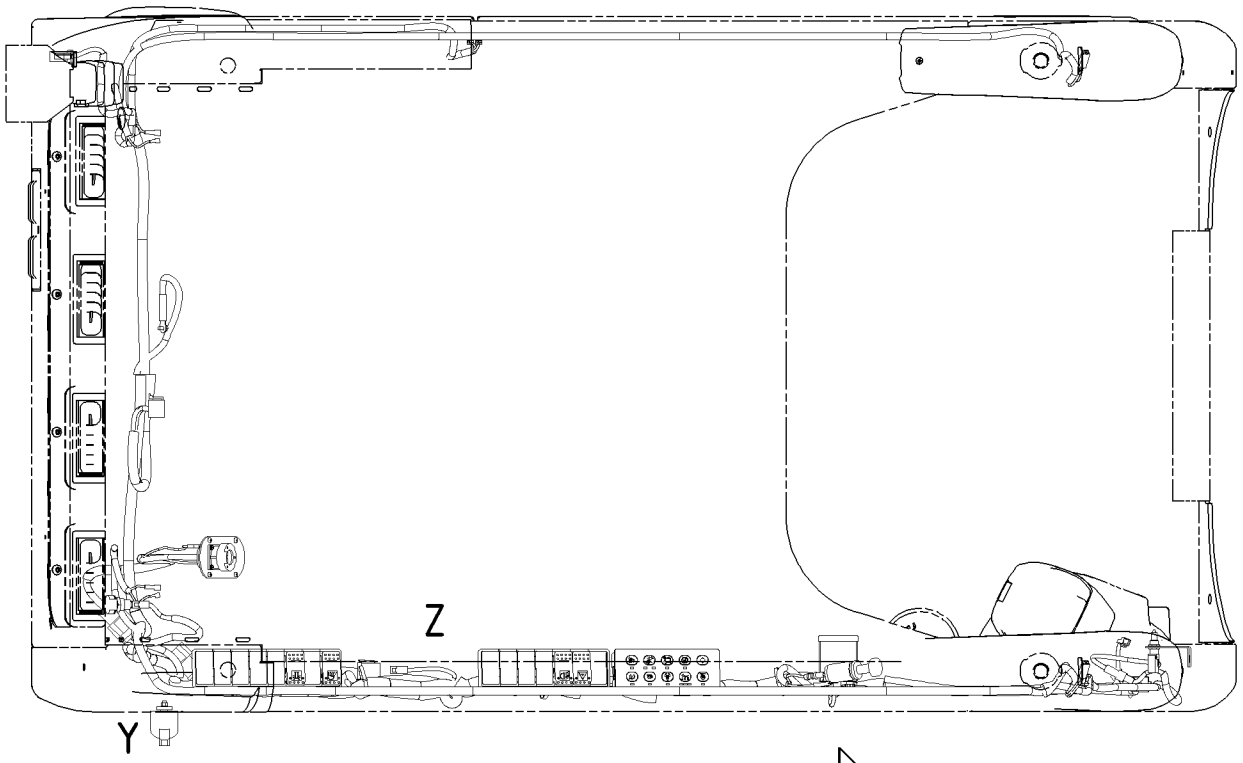

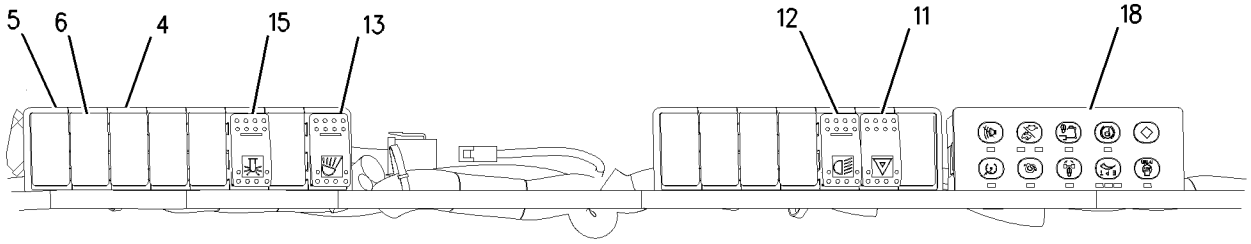

VIEW OF AREA Z

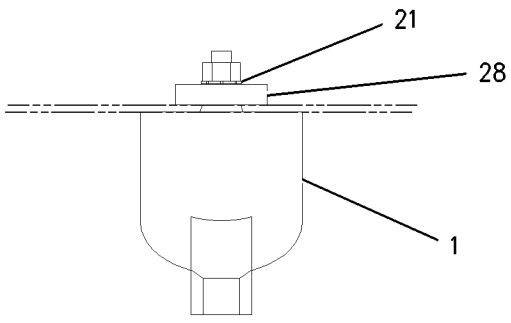

VIEW OF AREA Y

GRAPHIC #1 g00931674

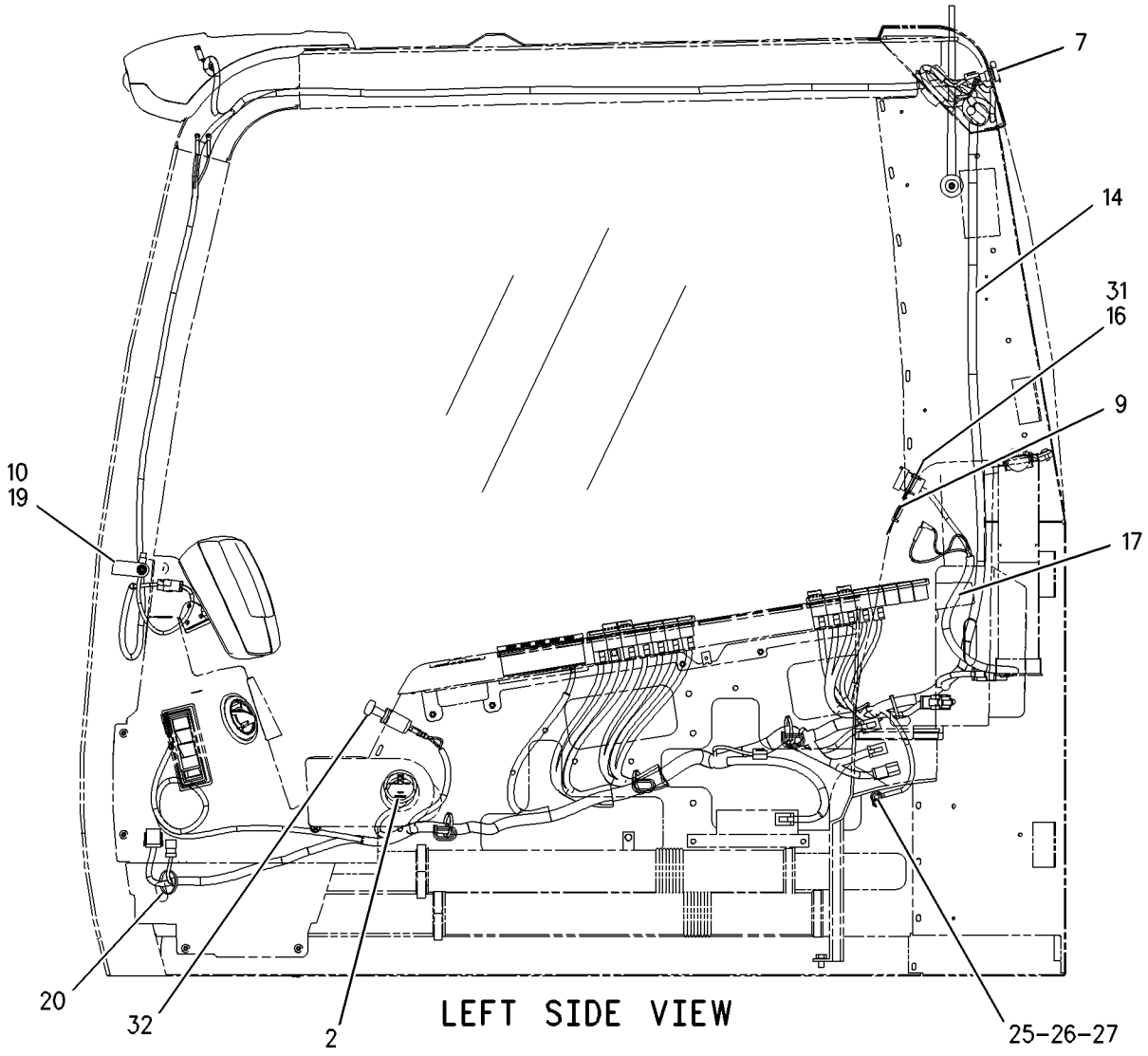

LEFT SIDE VIEW

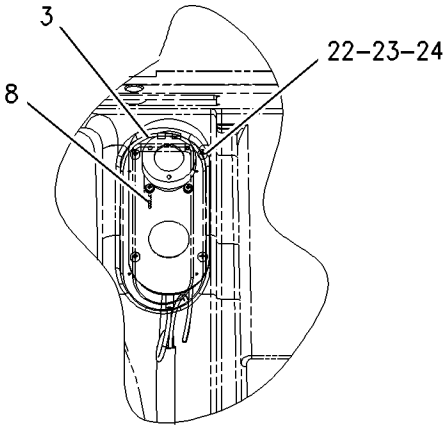

VIEW OF AREA B

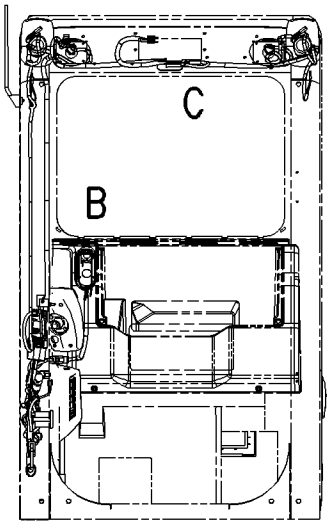

REAR VIEW

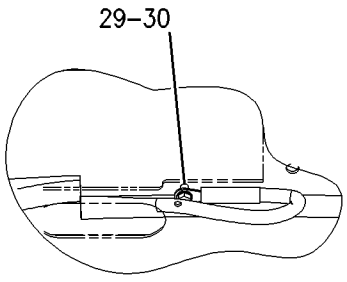

VIEW OF AREA C

GRAPHIC #2

<END>

g00931675

ELECTRICAL AND STARTING SYSTEM

187-3799 WIRING GP-CAB

S/N: BCZ568, 574-577, 579, 581-586, 588-605, 607-2000
PART OF 187-3800, 188-4959 CAB GP
ALSO AN ATTACHMENT

SMCS-7301 **i02174397**

NOTE	REF NO	GRAPHIC REF	PART NUMBER	QTY	PART NAME 1 2 3 4 5 6 (PRODUCT LEVEL)	SEE PAGE
	1	2	**9W-1494**	1	METER GP-SERVICE	
					(INCLUDES METER, FILM, CABLE & WIRE ASSEMBLIES)	
	2	2	**8C-6354**	1	CAP-RECEPTACLE (DUST)	
	3	1	**109-2353**	11	HOUSING	
	4	1	**109-2354**	4	HOUSING	
C	5	1	**109-2356**	12	PLUG	
	6	2	**167-3593**	1	STRAP	
	7	2	**176-2002**	1	CAP	
	8	2	**190-8664**	1	SWITCH GP-LIMIT (WINDOW LOWER LIMIT)	
		2	**7Y-3950**	2	TERMINAL (CONNECTOR)	
		2	**7Y-3953**	1	CONNECTOR-RECEPTACLE	
	9	1	**193-9056**	1	SWITCH AS-ROCKER (HAZARD WARNING LIGHTS)	
		1	**111-7899**	1	GASKET	
	10	1	**193-9057**	1	SWITCH AS-ROCKER (HEADLIGHT)	
		1	**111-7899**	1	GASKET	
	11	1	**193-9058**	1	SWITCH AS-ROCKER (FLOOD LAMP, FRONT)	
		1	**111-7899**	1	GASKET	
	12	2	**195-7697**	1	PLATE	
	13	2	**201-4013**	1	HARNESS AS-CAB (SERVICE CONNECTOR)	
		2	**102-8806**	1	KIT-RECEPTACLE (8-PIN)	
					(INCLUDES RECEPTACLE AS & WEDGE)	
		2	**8T-8737**	3	PLUG-SEAL	
	14	2	**226-5444**	1	BRACKET	
	15	2	**232-5325**	1	HARNESS AS-CAB	
		2	**102-8806**	1	KIT-RECEPTACLE (8-PIN)	
		2	**102-8801**	1	KIT-RECEPTACLE (12-PIN)	
					(EACH RECEPTACLE KIT INCLUDES RECEPTACLE AS & WEDGE)	
		2	**8L-8413**	24	STRAP-CABLE	
		2	**8T-8730**	25	SOCKET-CONNECTOR	
		2	**8T-8737**	5	PLUG-SEAL	
		2	**9W-0844**	3	SOCKET-CONNECTOR	
		2	**9X-3402**	17	SOCKET-CONNECTOR	
		2	**155-2255**	1	KIT-CONNECTING PLUG (12-PIN)	
		2	**155-2265**	4	KIT-CONNECTING PLUG (8-PIN)	
		2	**155-2260**	1	KIT-CONNECTING PLUG (3-PIN)	
		2	**155-2270**	1	KIT-CONNECTING PLUG (2-PIN)	
					(EACH PLUG KIT INCLUDES PLUG AS, WEDGE & INTERFACE SEAL)	
CY	16	1	**217-9535**	1	ELECTRONICS GP-MACHINE (COMMUNICATION)	146
	17	2	**096-0061**	5	STRAP-CABLE	
	18	2	**120-0090**	4	WASHER (3.2X7X0.5-MM THK)	
M	19	2	**120-9027**	4	SCREW-PAN HEAD (M3X0.5X16-MM)	
M	20	2	**3C-6969**	4	NUT (M3X0.5-THD)	
	21	2	**3F-9556**	1	LOCKWASHER	
M	22	2	**5C-7261**	1	NUT (M8X1.25-THD)	
	23	2	**5P-4116**	2	WASHER-HARD (8.8X20.5X2-MM THK)	
M	24	2	**8T-0287**	1	BOLT (M5X0.8X10-MM)	
	25	2	**8T-3016**	1	WASHER (5.3X10X1-MM THK)	
M	26	2	**8U-7803**	4	SCREW	
	27	2	**9W-0335**	1	LIGHTER AS (CIGAR, 24-VOLT)	
	28	1	**240-8786**	1	ANTENNA AS	

C-CHANGE FROM PREVIOUS TYPE
M-METRIC PART
Y-SEPARATE ILLUSTRATION

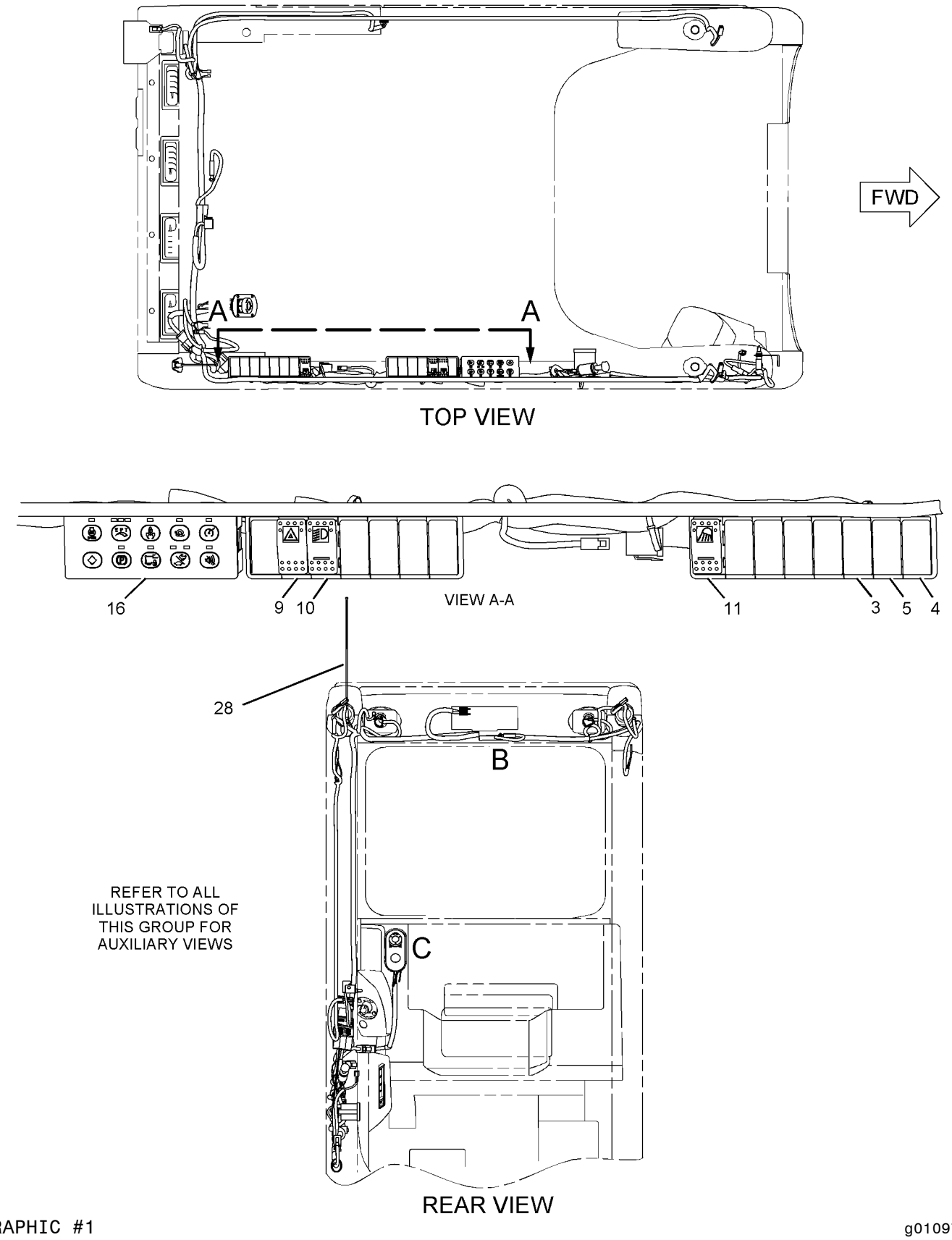

REFER TO ALL ILLUSTRATIONS OF THIS GROUP FOR AUXILIARY VIEWS

GRAPHIC #1

g01097767

187-3799 **WIRING GP-CAB** *(contd.)* **i02174397**

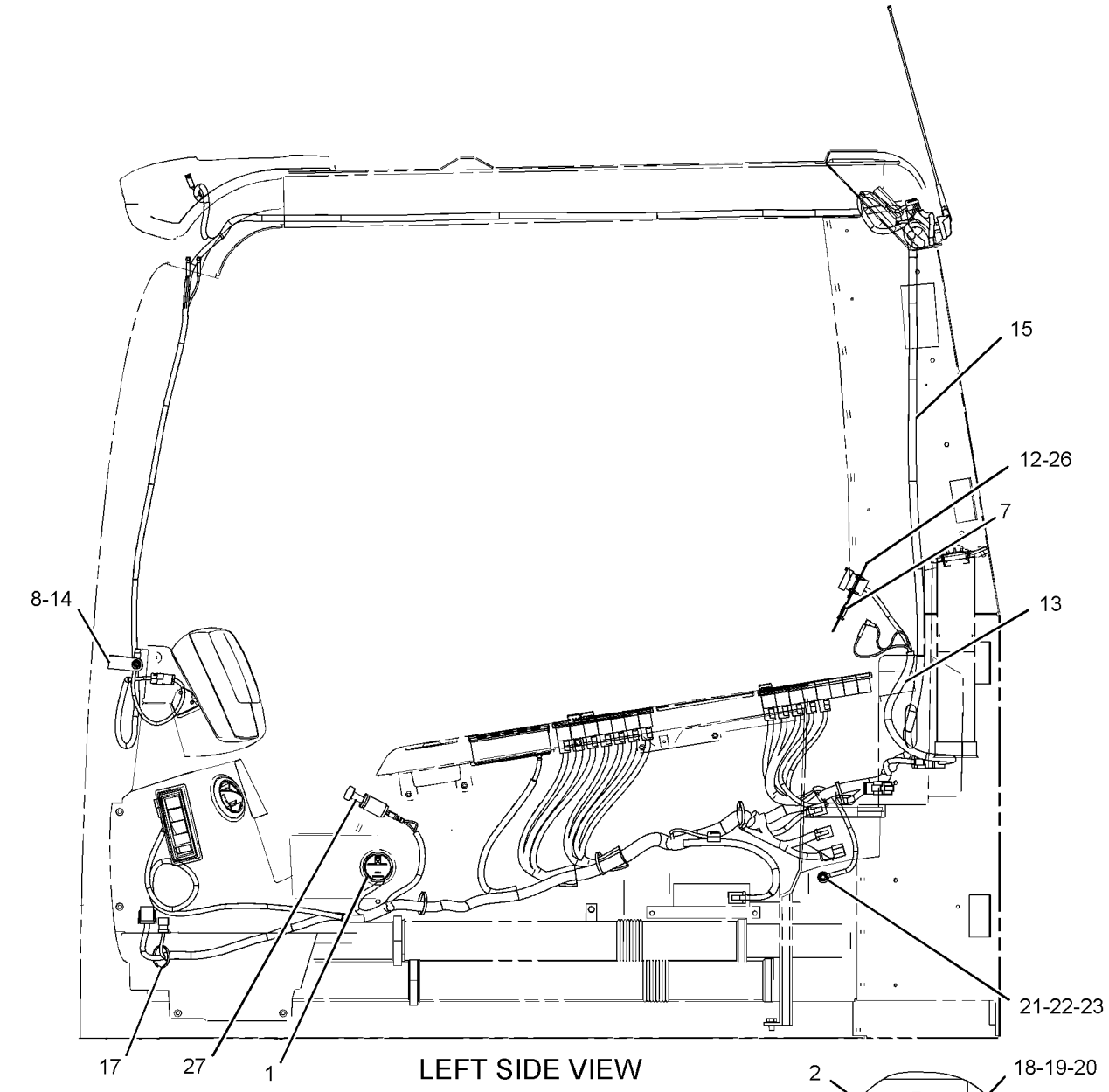

LEFT SIDE VIEW

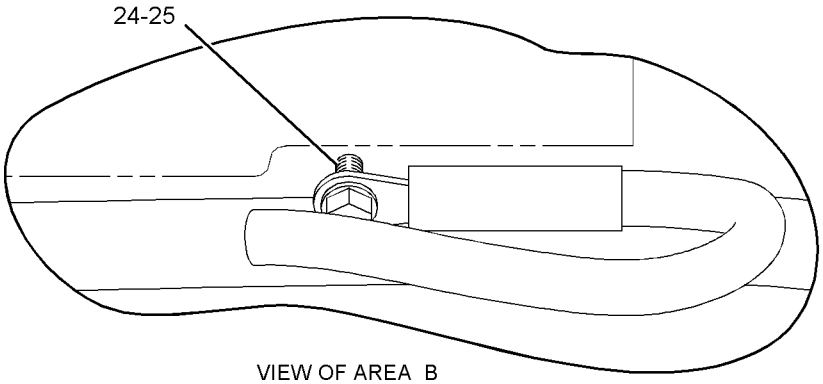

VIEW OF AREA B

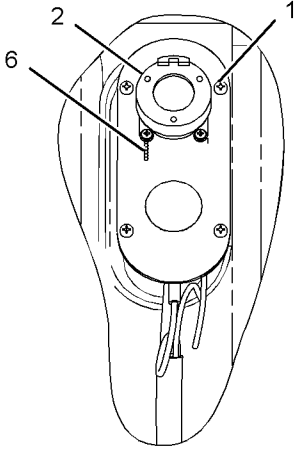

VIEW OF AREA C

GRAPHIC #2 **<END>** g01097768

221-9037 WIRING GP-CAB

S/N: BCZ1-2000
1 PIECE WINDSHIELD
PART OF 219-8500 CAB GP
AN ATTACHMENT

SMCS-7301 **i02020899**

NOTE	REF NO	GRAPHIC REF	PART NUMBER	QTY	PART NAME 1 2 3 4 5 6 (PRODUCT LEVEL)	SEE PAGE
	1	1	**215-2913**	1	GROMMET	
E	2	1	**125-7874**		TUBE-HEAT SHRINK (4CM)	
E	2A	1	**125-7874**		TUBE-HEAT SHRINK (4CM)	

E-ORDER BY THE CENTIMETER

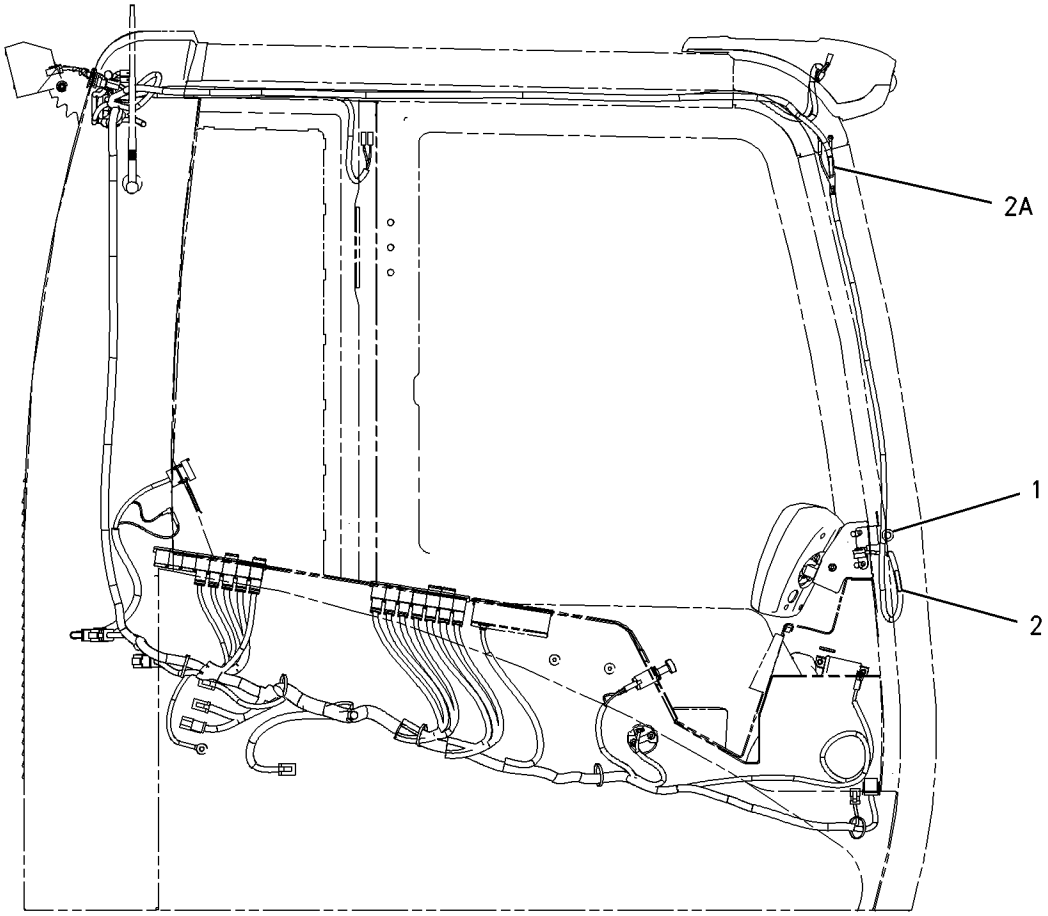

RIGHT SIDE VIEW

GRAPHIC #1 **<END>** g00920918

188-4968 WIRING GP-CHASSIS

S/N: BCZ1-2000
ELECTRONIC
PART OF 188-4960 CAB AR-RISER
AN ATTACHMENT

SMCS-1408 **i02160006**

NOTE	REF NO	GRAPHIC REF	PART NUMBER	QTY	PART NAME 1 2 3 4 5 6 (PRODUCT LEVEL)	SEE PAGE
	1	1	**5W-6315**	1	FITTING	
	2	1	**102-8802**	2	KIT-RECEPTACLE (2-PIN)	
					(INCLUDES RECEPTACLE AS & WEDGE)	
	3	1	**8T-8737**	4	PLUG-SEAL	
	4	2	**127-0833**	1	TANK AS-WINDOW WASHER	
		2	**7T-8891**	1	PUMP AS-WASHER	
		2	**8E-8292**	1	CAP-VENTED (WINDOW WASHER)	
		2	**8E-8293**	1	GROMMET	
	5	2	**132-1805**	2	STRAP AS-GROUND	
	6	1	**137-4195**	1	CAP	
	7	2	**147-1380**	1	SWITCH AS-FOOT (HORN)	
		2	**186-3735**	1	PIN-CONNECTOR	
		2	**102-8802**	1	KIT-RECEPTACLE (2-PIN)	
					(INCLUDES RECEPTACLE AS & WEDGE)	
	8	2	**194-3592**	1	SWITCH AS (HORN, LIGHTS, WIPER)	
		2	**102-8805**	1	KIT-RECEPTACLE (6-PIN)	
		2	**102-8806**	1	KIT-RECEPTACLE (8-PIN)	
					(INCLUDES RECEPTACLE AS & WEDGE)	
		2	**186-3735**	14	PIN-CONNECTOR	
	9	2	**195-7873**	1	BRACKET	
	10	1	**202-1135**	1	HARNESS AS-CHASSIS	
		1	**102-8802**	1	KIT-RECEPTACLE (2-PIN)	
		1	**102-8806**	1	KIT-RECEPTACLE (8-PIN)	
		1	**102-8801**	2	KIT-RECEPTACLE (12-PIN)	
					(EACH RECEPTACLE KIT INCLUDES RECEPTACLE AS & WEDGE)	
		1	**155-2255**	2	KIT-CONNECTING PLUG (12-PIN)	
		1	**155-2265**	5	KIT-CONNECTING PLUG (8-PIN)	
		1	**155-2260**	1	KIT-CONNECTING PLUG (3-PIN)	
		1	**155-2270**	6	KIT-CONNECTING PLUG (2-PIN)	
		1	**155-2271**	2	KIT-CONNECTING PLUG (4-PIN)	
		1	**155-2274**	2	KIT-CONNECTING PLUG (6-PIN)	
					(EACH CONNECTING PLUG INCLUDES PLUG AS & WEDGE)	
	11	2	**207-5153**	1	RECEPTACLE AS	
	12	1	**214-0862**	1	RECEPTACLE AS	
		1	**8T-8737**	6	PLUG-SEAL	
		1	**102-8805**	1	KIT-RECEPTACLE (6-PIN)	
					(INCLUDES RECEPTACLE AS & WEDGE)	
B	13	1	**096-0061**	41	STRAP-CABLE	
M	14	2	**099-2374**	2	BOLT-SOCKET HEAD (M5X0.8X12-MM)	
M	15	1	**129-3178**	1	LOCKNUT (M6X1-THD)	
M	16	1	**159-3050**	1	BOLT-SOCKET HEAD (M10X1.5X20-MM)	
	17	1,2	**3F-9556**	5	LOCKWASHER	
	18	2	**4P-7429**	1	CLIP	
	19	1	**4P-8134**	1	CLIP	
M	20	1,2	**5C-7261**	5	NUT (M8X1.25-THD)	
	21	1,2	**5P-4116**	10	WASHER-HARD (8.8X20.5X2-MM THK)	
M	22	2	**6V-4298**	2	BOLT (M5X0.8X16-MM)	
	23	2	**8T-3016**	4	WASHER (5.3X10X1-MM THK)	
	24	1	**8T-4121**	1	WASHER-HARD (11X21X2.5-MM THK)	
	25	1	**9X-8256**	1	WASHER (6.6X12X2-MM THK)	
E	26	1	**144-0195**		HOSE (460-CM)	
E	27	1	**207-5141**		SEAL (33-CM)	

188-4968 **WIRING GP-CHASSIS** *(contd.)* **i02160006**

NOTE	REF NO	GRAPHIC REF	PART NUMBER	QTY	PART NAME 1 2 3 4 5 6 (PRODUCT LEVEL)	SEE PAGE
E	28	1	**217-3403**		SEAL (17-CM)	
	29	1	**120-5967**	1	SOCKET-WIRING	
E	30	1	**144-0195**		HOSE (10-CM)	
E	31	1	**207-5141**		SEAL (25-CM)	
E	32	1	**207-5141**		SEAL (25-CM)	
M	33	2	**8T-4189**	2	BOLT (M8X1.25X20-MM)	
	34	1	**8T-4224**	2	WASHER-HARD (8.8X16X2-MM THK)	

B-USE AS REQUIRED
E-ORDER BY THE CENTIMETER
M-METRIC PART

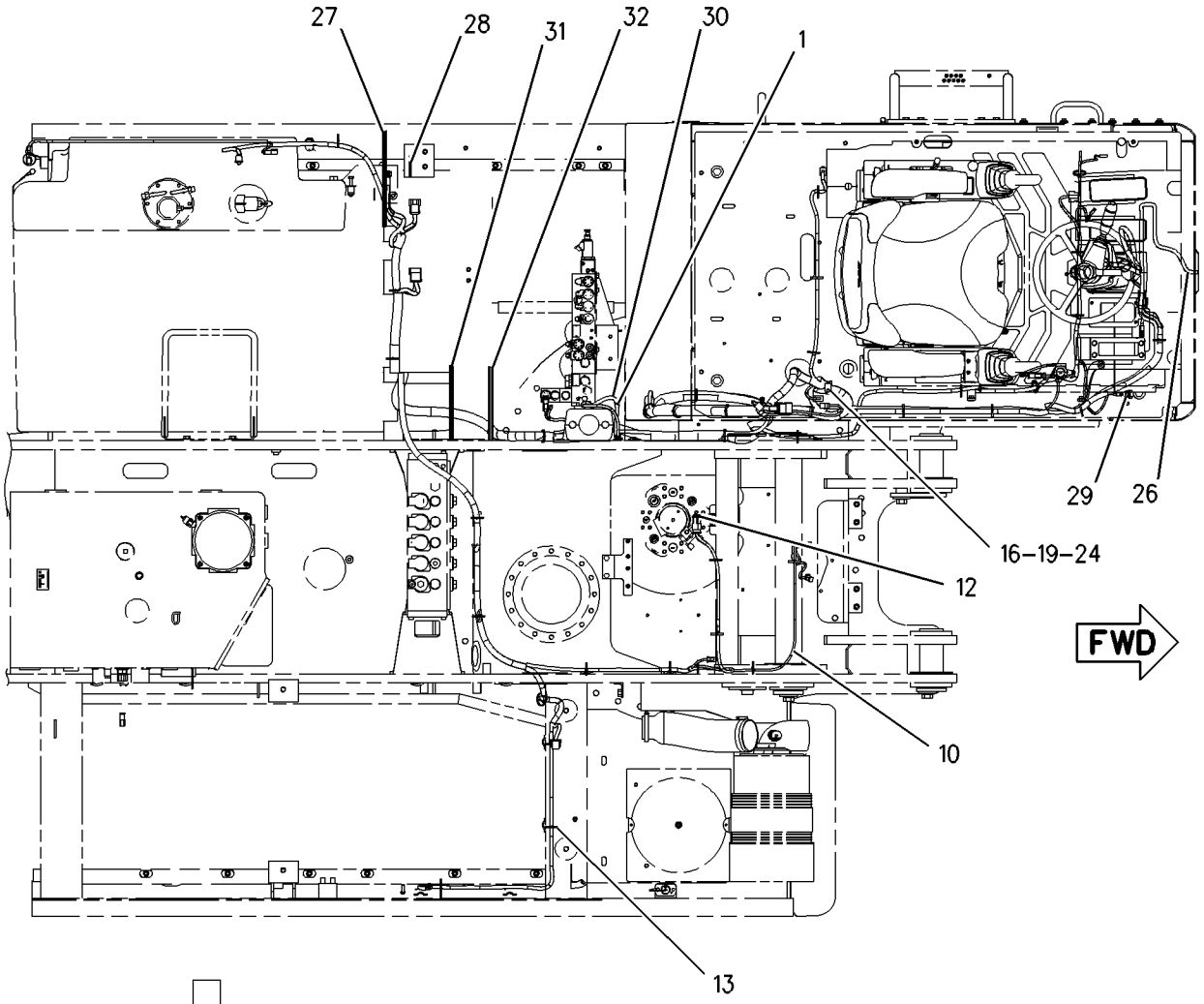

TOP VIEW

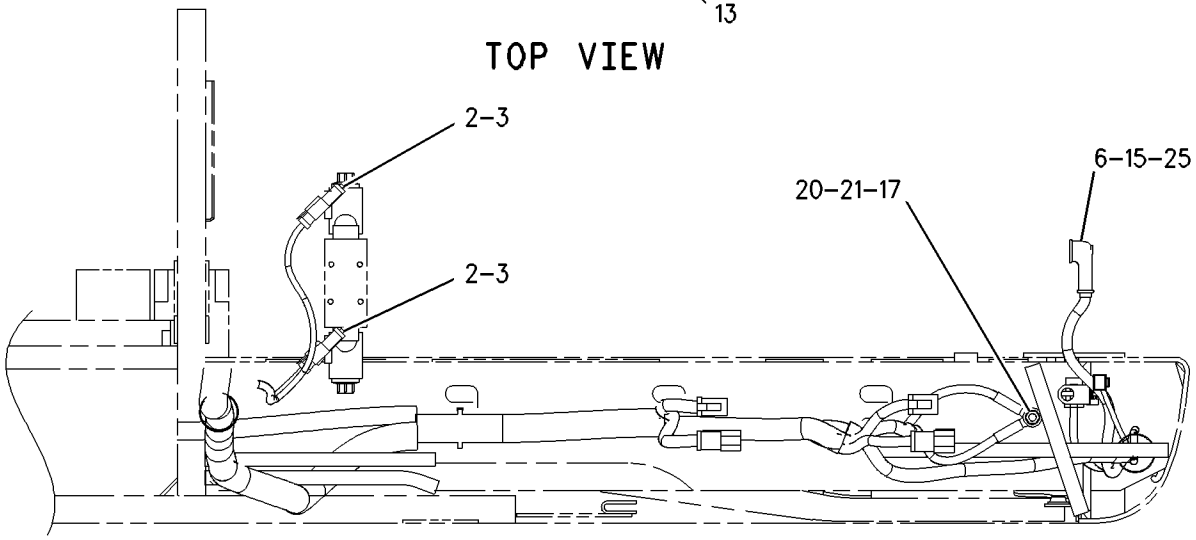

SECTION A-A

REFER TO ALL ILLUSTRATIONS OF
THIS GROUP FOR AUXILIARY VIEWS

GRAPHIC #1 g00991258

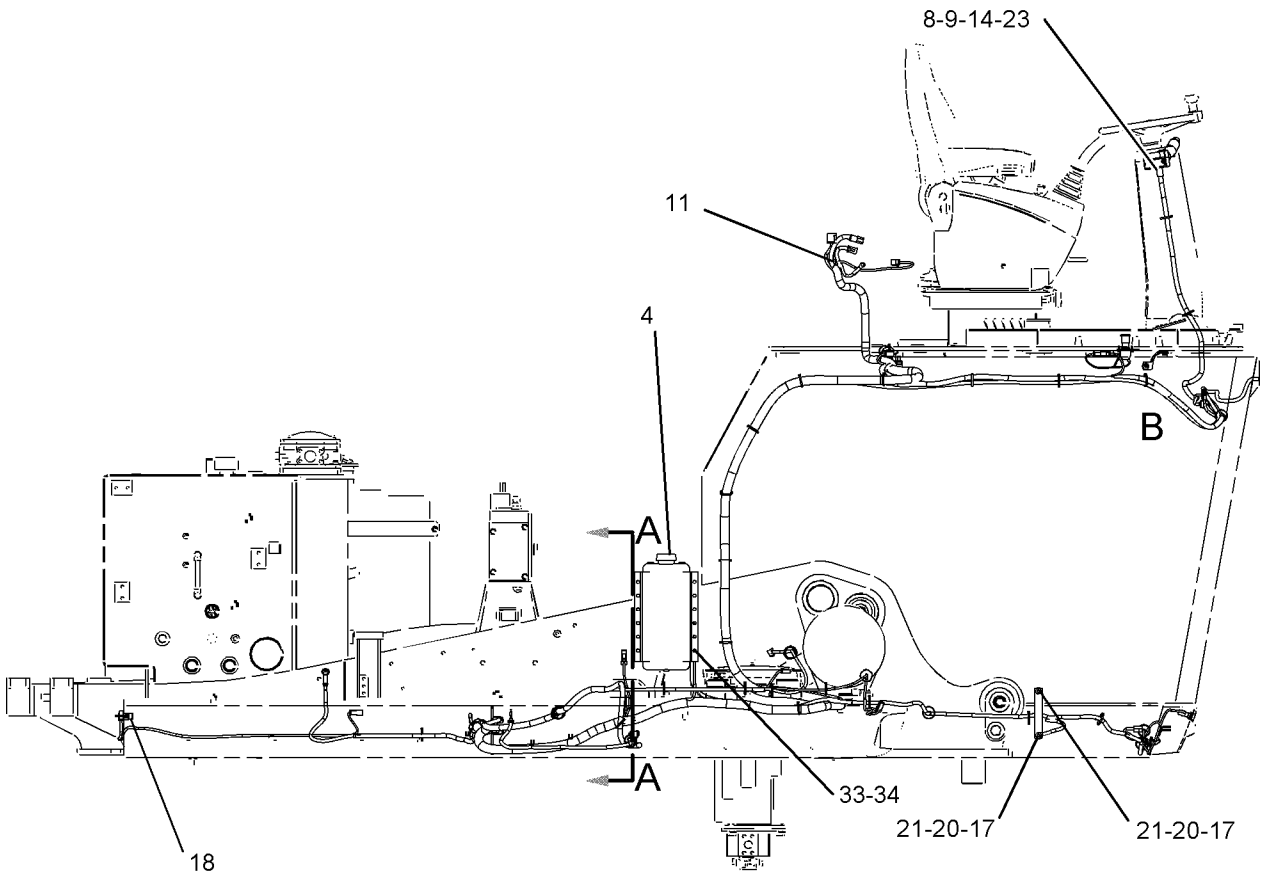

RIGHT SIDE VIEW

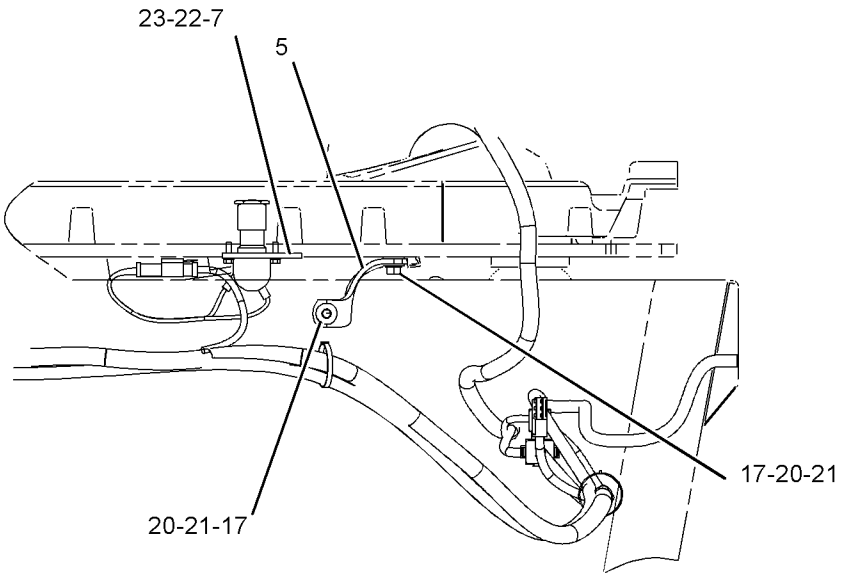

VIEW OF AREA B

GRAPHIC #2

<END>

g01069631

202-1136 WIRING GP-CHASSIS

S/N: BCZ1-839
ELECTRONIC
PART OF 188-4960 CAB AR-RISER
AN ATTACHMENT

SMCS-1408 **i02062923**

NOTE	REF NO	GRAPHIC REF	PART NUMBER	QTY	PART NAME 1 2 3 4 5 6 (PRODUCT LEVEL)	SEE PAGE
	1	2	**102-8802**	3	KIT-RECEPTACLE (2-PIN)	
					(EACH INCLUDES RECEPTACLE AS & WEDGE)	
	2	2	**137-4195**	1	CAP	
	3	2	**202-1137**	1	HARNESS AS-CHASSIS (ELECTRONIC, SWITCHES, SENSORS)	
		2	**102-8806**	1	KIT-RECEPTACLE (8-PIN)	
					(INCLUDES RECEPTACLE AS & WEDGE)	
		2	**155-2255**	1	KIT-CONNECTING PLUG (12-PIN)	
		2	**155-2265**	1	KIT-CONNECTING PLUG (8-PIN)	
		2	**155-2260**	8	KIT-CONNECTING PLUG (3-PIN)	
		2	**155-2270**	23	KIT-CONNECTING PLUG (2-PIN)	
		2	**155-2271**	1	KIT-CONNECTING PLUG (4-PIN)	
		2	**155-2274**	2	KIT-CONNECTING PLUG (6-PIN)	
					(EACH CONNECTING PLUG KIT INCLUDES PLUG AS & WEDGE)	
	4	2	**210-0396**	1	PLUG AS-CODE	
		2	**102-8803**	1	KIT-RECEPTACLE (3-PIN)	
					(INCLUDES RECEPTACLE AS & WEDGE)	
BD		2	**5P-5623**	1	WIRE-ELECTRICAL (16-GA)	
		2	**186-3735**	2	PIN-CONNECTOR	
		2	**8T-8737**	1	PLUG-SEAL	
	5	2	**214-0861**	2	RECEPTACLE GP-AUXILIARY START	
					(EACH INCLUDES)	
		2	**8T-8737**	3	PLUG-SEAL	
		2	**102-8803**	1	KIT-RECEPTACLE (3-PIN)	
					(INCLUDES RECEPTACLE AS & WEDGE)	
	6	1,2	**214-0862**	2	RECEPTACLE AS	
					(EACH INCLUDES)	
		1,2	**8T-8737**	6	PLUG-SEAL	
		1,2	**102-8805**	1	KIT-RECEPTACLE (6-PIN)	
					(INCLUDES RECEPTACLE AS & WEDGE)	
	7	2	**214-0863**	1	RECEPTACLE GP-AUXILIARY START	
		2	**8T-8737**	8	PLUG-SEAL	
		2	**102-8806**	1	KIT-RECEPTACLE (8-PIN)	
					(INCLUDES RECEPTACLE AS & WEDGE)	
	8	1	**219-5762**	1	HARNESS AS-SENSOR (PUMP SWASHPLATE ANGLE)	
		1	**102-8803**	1	KIT-RECEPTACLE (3-PIN)	
					(INCLUDES RECEPTACLE AS & WEDGE)	
	9	1	**096-0192**	1	LOCKWASHER	
M	10	2	**129-3178**	1	LOCKNUT (M6X1-THD)	
	11	2	**134-2540**	1	RECEPTACLE AS (3-PIN)	
	12	2	**4P-8134**	3	CLIP	
M	13	1	**5C-2874**	1	NUT (M5X.8-THD)	
	14	1	**6D-4244**	1	CLIP	
M	15	1	**8T-4200**	1	BOLT (M8X1.25X16-MM)	
	16	1	**8T-4224**	1	WASHER-HARD (8.8X16X2-MM THK)	
	17	2	**9X-8256**	1	WASHER (6.6X12X2-MM THK)	
BF			**096-0061**	15	STRAP-CABLE	

B-USE AS REQUIRED
D-ORDER BY THE METER
F-NOT SHOWN
M-METRIC PART

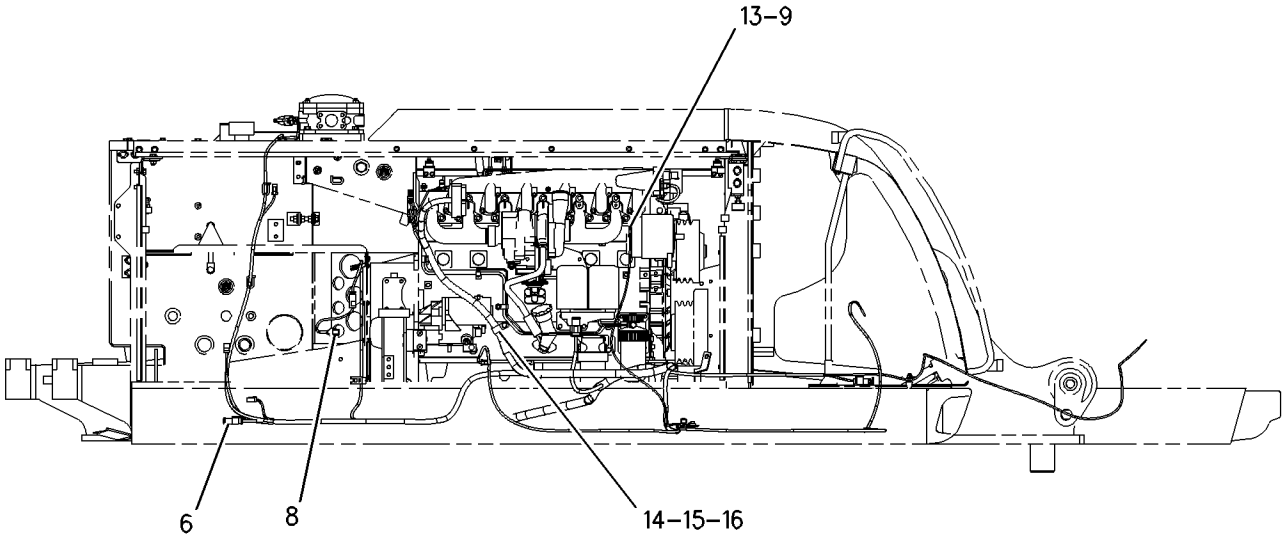

RIGHT SIDE VIEW

GRAPHIC #1 g00990703

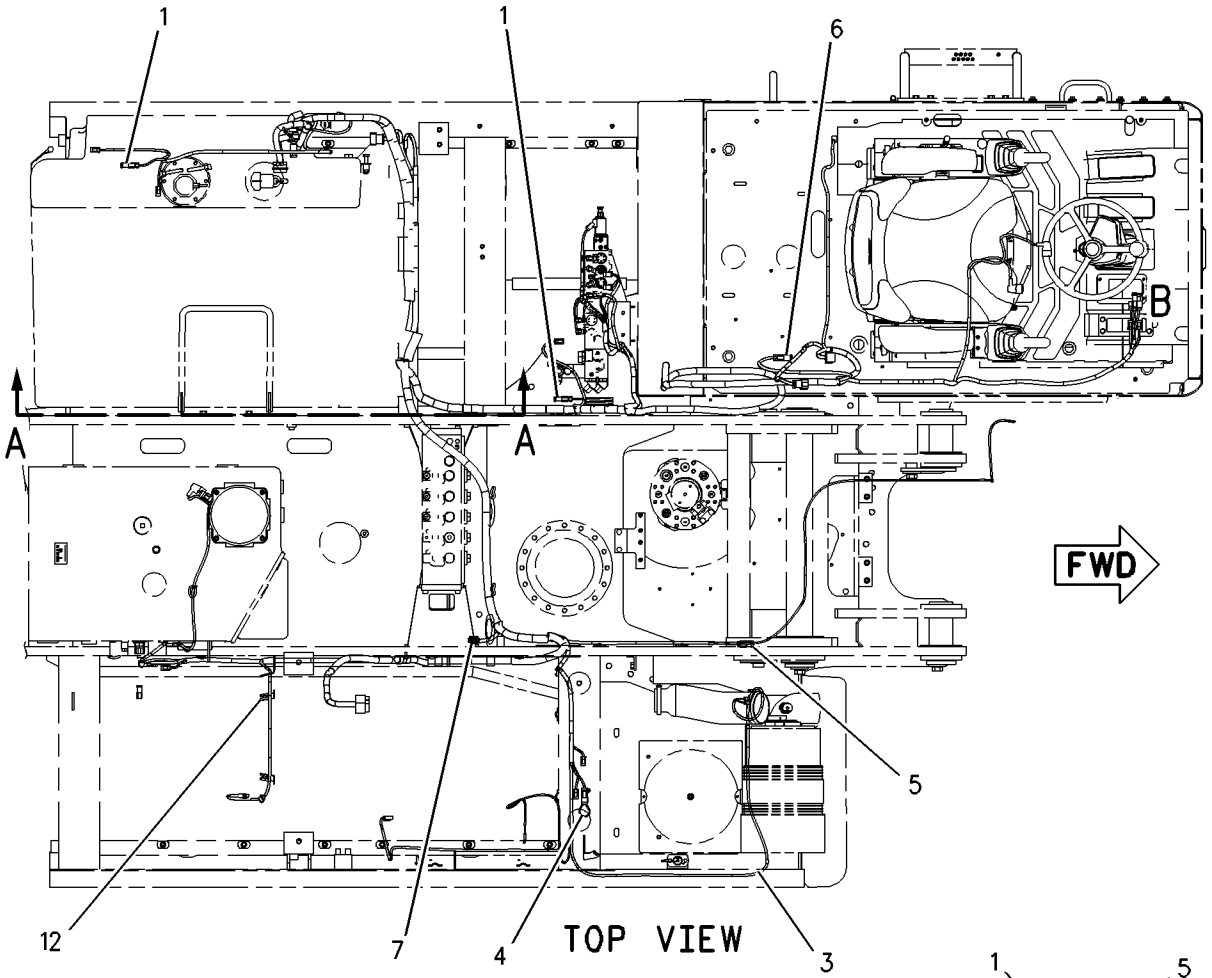

TOP VIEW

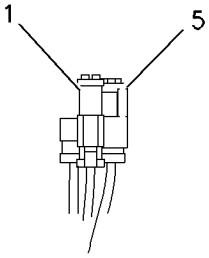

VIEW OF AREA B

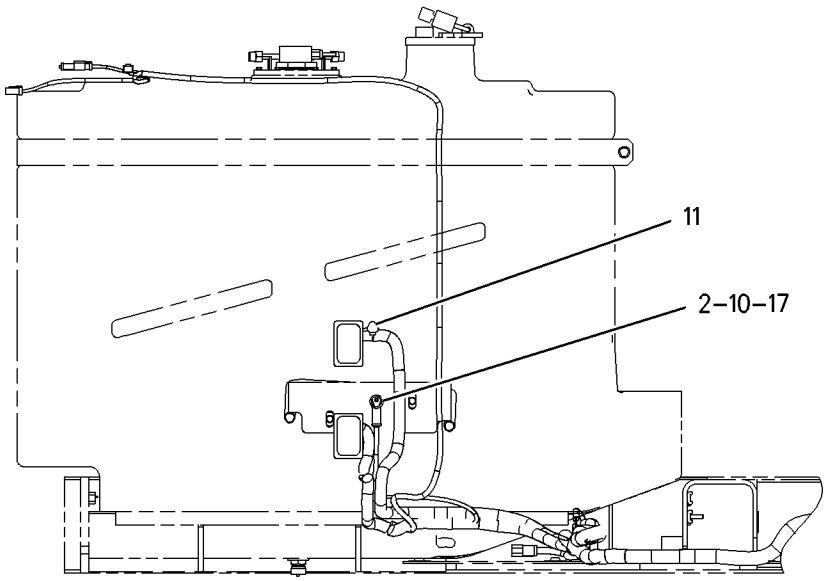

SECTION A-A

GRAPHIC #2 **<END>** g00990705

202-1136 WIRING GP-CHASSIS

S/N: BCZ840-2000
ELECTRONIC
PART OF 188-4960 CAB AR-RISER
AN ATTACHMENT

SMCS-1408 **i02125676**

NOTE	REF NO	GRAPHIC REF	PART NUMBER	QTY	PART NAME 1 2 3 4 5 6 (PRODUCT LEVEL)	SEE PAGE
	1	1	**102-8802**	3	KIT-RECEPTACLE (2-PIN)	
					(EACH INCLUDES RECEPTACLE AS & WEDGE)	
	2	1	**137-4195**	1	CAP	
	3	1	**202-1137**	1	HARNESS AS-CHASSIS (ELECTRONIC, SWITCHES, SENSORS)	
		1	**102-8806**	1	KIT-RECEPTACLE (8-PIN)	
					(INCLUDES RECEPTACLE AS & WEDGE)	
		1	**155-2255**	1	KIT-CONNECTING PLUG (12-PIN)	
		1	**155-2265**	1	KIT-CONNECTING PLUG (8-PIN)	
		1	**155-2260**	8	KIT-CONNECTING PLUG (3-PIN)	
		1	**155-2270**	23	KIT-CONNECTING PLUG (2-PIN)	
		1	**155-2271**	1	KIT-CONNECTING PLUG (4-PIN)	
		1	**155-2274**	2	KIT-CONNECTING PLUG (6-PIN)	
					(EACH CONNECTING PLUG KIT INCLUDES PLUG AS & WEDGE)	
	4	1	**210-0396**	1	PLUG AS-CODE	
		1	**102-8803**	1	KIT-RECEPTACLE (3-PIN)	
					(INCLUDES RECEPTACLE AS & WEDGE)	
BD		1	**5P-5623**	1	WIRE-ELECTRICAL (16-GA)	
		1	**186-3735**	2	PIN-CONNECTOR	
		1	**8T-8737**	1	PLUG-SEAL	
	5	1	**214-0861**	2	RECEPTACLE GP-AUXILIARY START	
					(EACH INCLUDES)	
		1	**8T-8737**	3	PLUG-SEAL	
		1	**102-8803**	1	KIT-RECEPTACLE (3-PIN)	
					(INCLUDES RECEPTACLE AS & WEDGE)	
	6	1	**214-0862**	2	RECEPTACLE AS	
					(EACH INCLUDES)	
		1	**8T-8737**	6	PLUG-SEAL	
		1	**102-8805**	1	KIT-RECEPTACLE (6-PIN)	
					(INCLUDES RECEPTACLE AS & WEDGE)	
	7	1	**214-0863**	1	RECEPTACLE GP-AUXILIARY START	
		1	**8T-8737**	8	PLUG-SEAL	
		1	**102-8806**	1	KIT-RECEPTACLE (8-PIN)	
					(INCLUDES RECEPTACLE AS & WEDGE)	
	8	1	**219-5762**	1	HARNESS AS-SENSOR (PUMP SWASHPLATE ANGLE)	
		1	**102-8803**	1	KIT-RECEPTACLE (3-PIN)	
					(INCLUDES RECEPTACLE AS & WEDGE)	
	9	1	**096-0192**	1	LOCKWASHER	
M	10	1	**129-3178**	1	LOCKNUT (M6X1-THD)	
	11	1	**134-2540**	1	RECEPTACLE AS (3-PIN)	
	12	1	**4P-8134**	3	CLIP	
M	13	1	**5C-2874**	1	NUT (M5X.8-THD)	
	14	1	**6D-4244**	1	CLIP	
M	15	1	**8T-4200**	1	BOLT (M8X1.25X16-MM)	
	16	1	**8T-4224**	1	WASHER-HARD (8.8X16X2-MM THK)	
	17	1	**9X-8256**	1	WASHER (6.6X12X2-MM THK)	
BF			**096-0061**	15	STRAP-CABLE	

B-USE AS REQUIRED
D-ORDER BY THE METER
F-NOT SHOWN
M-METRIC PART

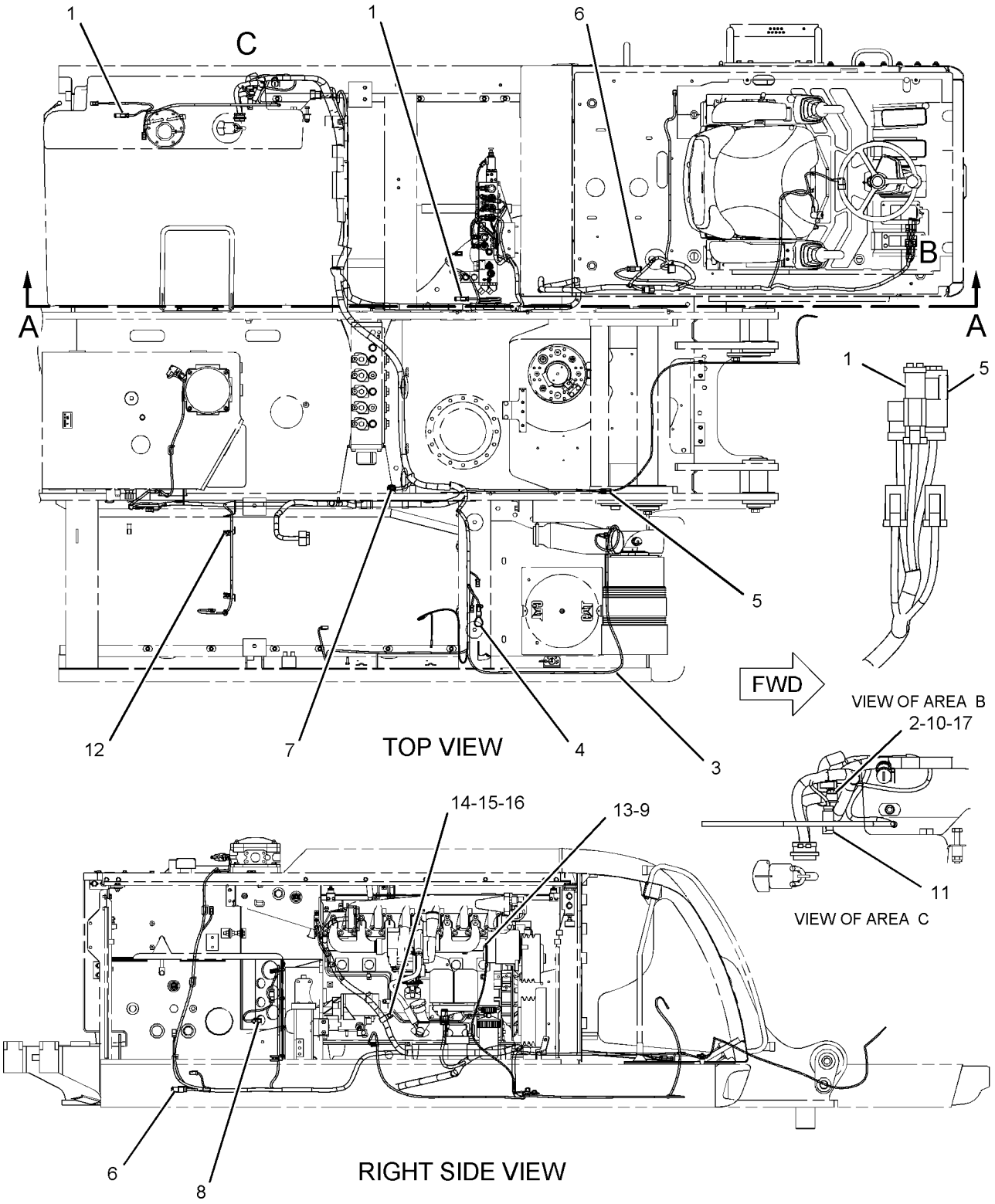

GRAPHIC #1

<END>

g01086104

209-8865 WIRING GP-CHASSIS

S/N: BCZ1-561, 564, 566-567, 569, 571, 573-580, 582, 584

PART OF 186-0468 CHASSIS AR

SMCS-1408 **i02160008**

NOTE	REF NO	GRAPHIC REF	PART NUMBER	QTY	PART NAME 1 2 3 4 5 6 (PRODUCT LEVEL)	SEE PAGE
	1	2	**8U-6128**	1	CAP-PROTECTION	
	2	1	*104-6692*	2	RECEPTACLE AS-CONNECTOR	
					(EACH INCLUDES)	
		1	**102-8802**	1	KIT-RECEPTACLE (2-PIN)	
					(INCLUDES RECEPTACLE AS & WEDGE.)	
	3	2	**137-4195**	1	CAP	
	4	1	**207-7170**	1	BRACKET	
	5	1	**209-8867**	1	HARNESS AS-CHASSIS	
		1	**102-8806**	1	KIT-RECEPTACLE (8-PIN)	
		1	**102-8801**	1	KIT-RECEPTACLE (12-PIN)	
					(EACH RECEPTACLE KIT INCLUDES RECEPTACLE AS & WEDGE)	
		1	**155-2260**	8	KIT-CONNECTING PLUG (3-PIN)	
		1	**155-2265**	1	KIT-CONNECTING PLUG (8-PIN)	
		1	**155-2270**	23	KIT-CONNECTING PLUG (2-PIN)	
					(EACH CONNECTING PLUG KIT INCLUDES PLUG AS & WEDGE)	
	6	1	**210-0396**	1	PLUG AS-CODE	
	7	1	**214-0861**	2	RECEPTACLE GP-AUXILIARY START	
					(EACH INCLUDES)	
		1	**102-8803**	1	KIT-RECEPTACLE (3-PIN)	
					(INCLUDES RECEPTACLE AS & WEDGE.)	
	8	1,2	**214-0862**	2	RECEPTACLE AS	
					(EACH INCLUDES)	
		1,2	**102-8805**	1	KIT-RECEPTACLE (6-PIN)	
					(INCLUDES RECPTACLE AS & WEDGE.)	
	9	1	**214-0863**	1	RECEPTACLE GP-AUXILIARY START	
		1	**102-8806**	1	KIT-RECEPTACLE (8-PIN)	
					(INCLUDES RECEPTACLE AS & WEDGE.)	
	10	2	**219-5762**	1	HARNESS AS-SENSOR (PUMP SWASHPLATE ANGLE)	
		2	**102-8803**	1	KIT-RECEPTACLE (3-PIN)	
					(INCLUDES RECEPTACLE AS & WEDGE.)	
	11	2	**096-0192**	1	LOCKWASHER	
M	12	2	**129-3178**	1	LOCKNUT (M6X1-THD)	
	13	2	**134-2540**	1	RECEPTACLE AS (3-PIN)	
	14	1	**4P-8134**	3	CLIP	
M	15	2	**5C-2874**	1	NUT (M5X.8-THD)	
	16	2	**6D-4244**	2	CLIP	
	17	2	**8T-4121**	1	WASHER-HARD (11X21X2.5-MM THK)	
M	18	2	**8T-4133**	1	NUT (M10X1.5-THD)	
M	19	1	**8T-4136**	1	BOLT (M10X1.5X25-MM)	
M	20	2	**8T-4137**	1	BOLT (M10X1.5X20-MM)	
M	21	2	**8T-4200**	1	BOLT (M8X1.25X16-MM)	
	22	2	**8T-4224**	1	WASHER-HARD (8.8X16X2-MM THK)	
	23	2	**9X-8256**	1	WASHER (6.6X12X2-MM THK)	
BF			**096-0061**	10	STRAP-CABLE	

B-USE AS REQUIRED
F-NOT SHOWN
M-METRIC PART

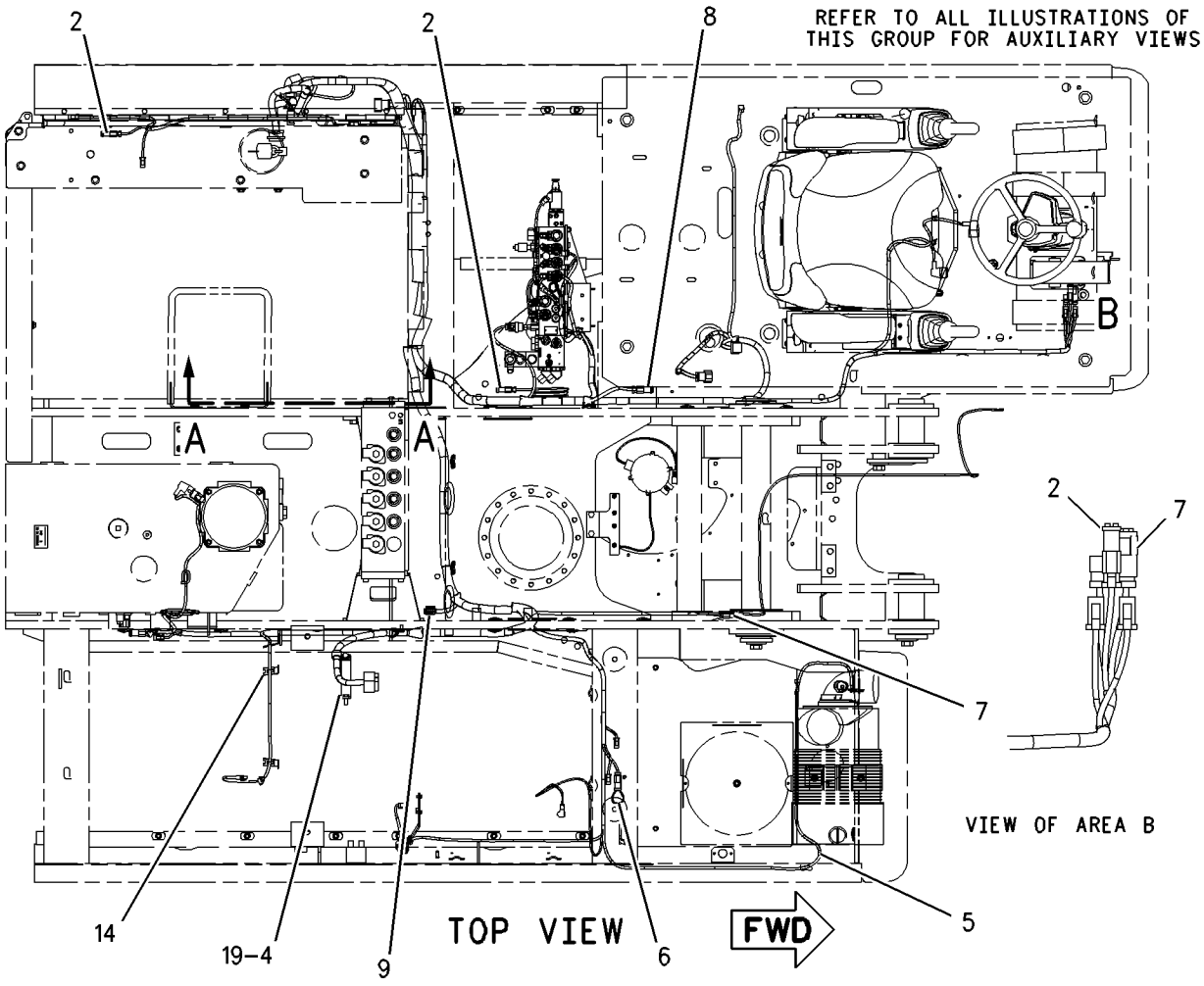

GRAPHIC #1 g00895757

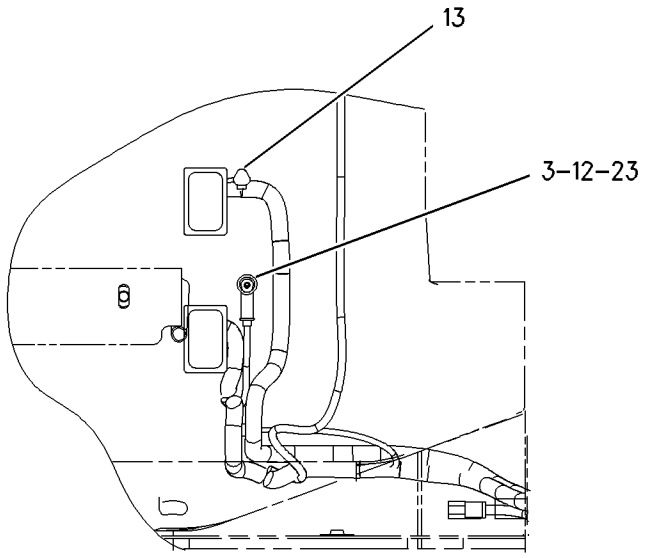

SECTION A–A

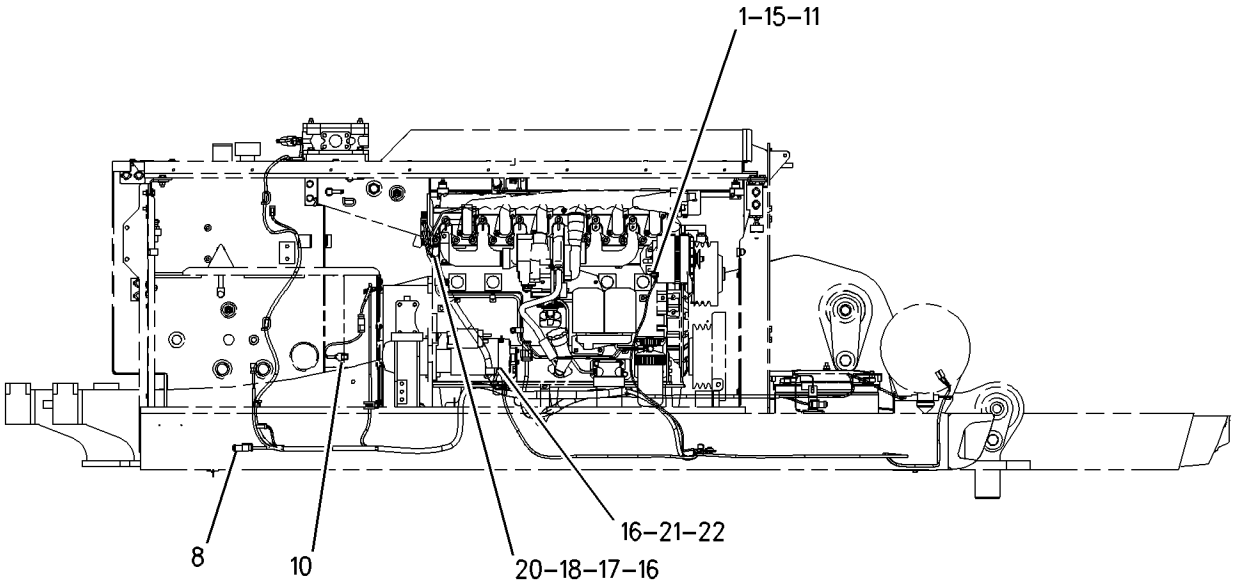

RIGHT SIDE VIEW

GRAPHIC #2 **<END>** g00895758

ELECTRICAL AND STARTING SYSTEM

209-8865 WIRING GP-CHASSIS

S/N: BCZ562-563, 565, 568, 570, 572, 581, 583, 585-839
PART OF 186-0468 CHASSIS AR

SMCS-1408 **i02047272**

NOTE	REF NO	GRAPHIC REF	PART NUMBER	QTY	PART NAME 1 2 3 4 5 6 (PRODUCT LEVEL)	SEE PAGE
	1	1	*104-6692*	3	RECEPTACLE AS-CONNECTOR	
					(EACH INCLUDES)	
		1	**102-8802**	1	KIT-RECEPTACLE (2-PIN)	
					(INCLUDES RECEPTACLE AS & WEDGE.)	
	2	1	**137-4195**	1	CAP	
	3	1	**210-0396**	1	PLUG AS-CODE	
	4	1	**214-0861**	2	RECEPTACLE GP-AUXILIARY START	
					(EACH INCLUDES)	
		1	**102-8803**	1	KIT-RECEPTACLE (3-PIN)	
					(INCLUDES RECEPTACLE AS & WEDGE.)	
	5	1	**214-0862**	2	RECEPTACLE AS	
					(EACH INCLUDES)	
		1	**102-8805**	1	KIT-RECEPTACLE (6-PIN)	
					(INCLUDES RECPTACLE AS & WEDGE.)	
	6	1	**214-0863**	1	RECEPTACLE GP-AUXILIARY START	
		1	**102-8806**	1	KIT-RECEPTACLE (8-PIN)	
					(INCLUDES RECEPTACLE AS & WEDGE.)	
	7	1	**219-5762**	1	HARNESS AS-SENSOR (PUMP SWASHPLATE ANGLE)	
		1	**102-8803**	1	KIT-RECEPTACLE (3-PIN)	
					(INCLUDES RECEPTACLE AS & WEDGE.)	
	8	1	**228-7977**	1	HARNESS AS-CHASSIS (ELECTRONIC)	
		1	**117-3188**	3	COVER	
		1	**147-1446**	1	PLUG AS-CONNECTOR (70-PIN)	
		1	**160-7690**	1	PLUG AS-CONNECTOR (70-PIN)	
		1	**155-2255**	1	KIT-CONNECTING PLUG (12-PIN)	
		1	**155-2265**	1	KIT-CONNECTING PLUG (8-PIN)	
					(EACH KIT-PLUG INCLUDES PLUG AS, WEDGE & INTERFACE SEAL)	
		1	**9X-4391**	1	PLUG AS-CONNECTOR (70-PIN)	
		1	**3E-4367**	1	RING-RETAINING	
M		1	**3E-8557**	1	BOLT (M5X0.8X39.37-MM)	
		1	**9X-5615**	1	SEAL (INTERFACE, 70-PIN)	
		1	**102-8806**	1	KIT-RECEPTACLE (8-PIN)	
		1	**102-8801**	1	KIT-RECEPTACLE (12-PIN)	
					(EACH RECEPTACLE KIT INCLUDES RECEPTACLE AS & WEDGE)	
		1	**155-2260**	8	KIT-CONNECTING PLUG (3-PIN)	
		1	**155-2271**	1	KIT-CONNECTING PLUG (4-PIN)	
		1	**155-2270**	1	KIT-CONNECTING PLUG (2-PIN)	
		1	**155-2274**	1	KIT-CONNECTING PLUG (6-PIN)	
					(EACH CONNECTING PLUG KIT INCLUDES PLUG AS & WEDGE)	
	9	1	**096-0192**	1	LOCKWASHER	
M	10	1	**129-3178**	1	LOCKNUT (M6X1-THD)	
	11	1	**134-2540**	1	RECEPTACLE AS (3-PIN)	
	12	1	**4P-8134**	3	CLIP	
M	13	1	**5C-2874**	1	NUT (M5X.8-THD)	
	14	1	**6D-4244**	1	CLIP	
M	15	1	**8T-4200**	1	BOLT (M8X1.25X16-MM)	
	16	1	**8T-4224**	1	WASHER-HARD (8.8X16X2-MM THK)	
	17	1	**9X-8256**	1	WASHER (6.6X12X2-MM THK)	
BF			**096-0061**	10	STRAP-CABLE	

B-USE AS REQUIRED
F-NOT SHOWN
M-METRIC PART

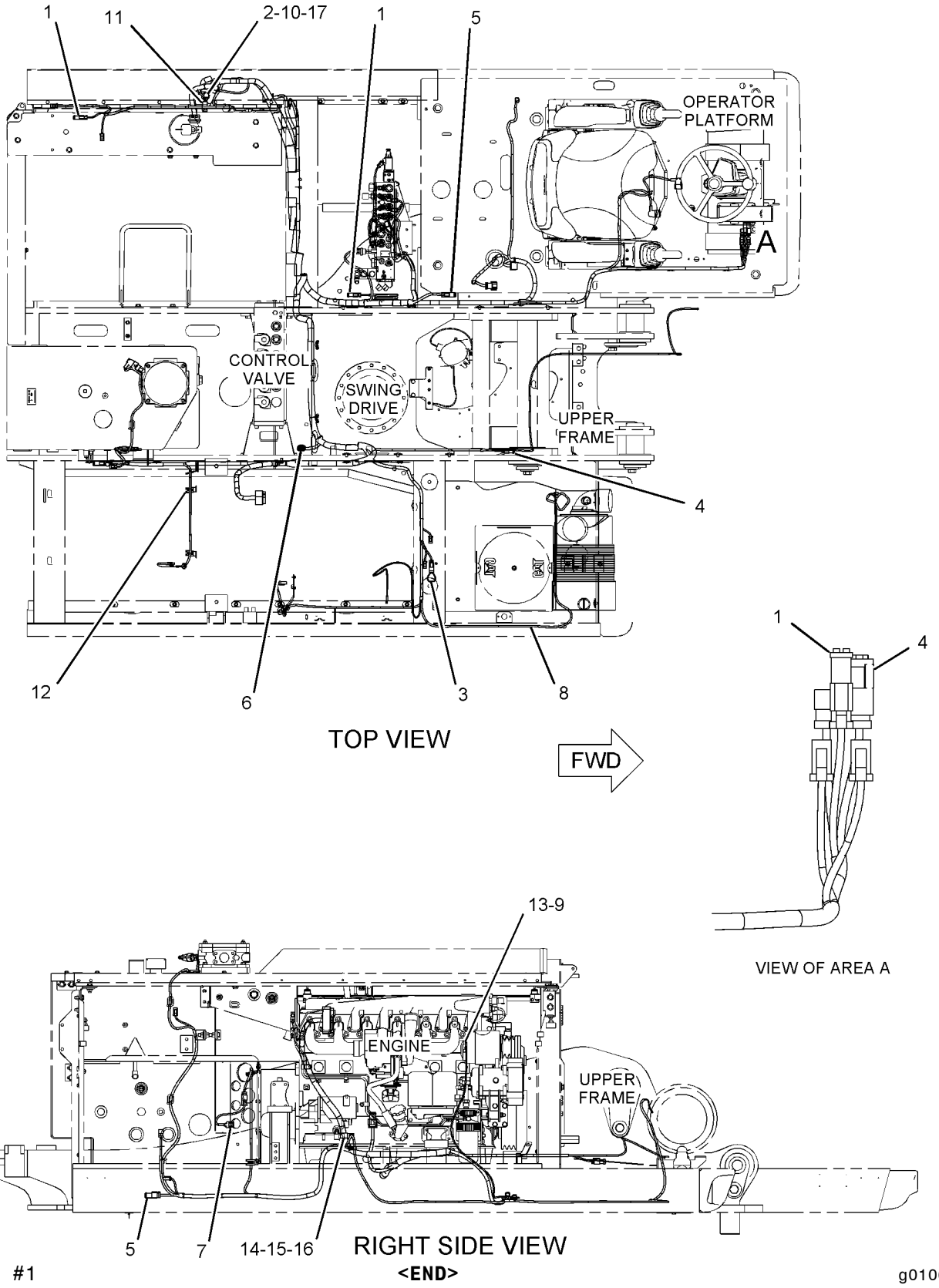

GRAPHIC #1

<END>

g01065528

ELECTRICAL AND STARTING SYSTEM

209-8865 WIRING GP-CHASSIS

S/N: BCZ840-2000

PART OF 186-0468 CHASSIS AR

SMCS-1408 **i02125674**

NOTE	REF NO	GRAPHIC REF	PART NUMBER	QTY	PART NAME 1 2 3 4 5 6 (PRODUCT LEVEL)	SEE PAGE
	1	1	*104-6692*	3	RECEPTACLE AS-CONNECTOR	
					(EACH INCLUDES)	
		1	**102-8802**	1	KIT-RECEPTACLE (2-PIN)	
					(INCLUDES RECEPTACLE AS & WEDGE.)	
	2	1	**137-4195**	1	CAP	
	3	1	**210-0396**	1	PLUG AS-CODE	
	4	1	**214-0861**	2	RECEPTACLE GP-AUXILIARY START	
					(EACH INCLUDES)	
		1	**102-8803**	1	KIT-RECEPTACLE (3-PIN)	
					(INCLUDES RECEPTACLE AS & WEDGE.)	
	5	1	**214-0862**	2	RECEPTACLE AS	
					(EACH INCLUDES)	
		1	**102-8805**	1	KIT-RECEPTACLE (6-PIN)	
					(INCLUDES RECPTACLE AS & WEDGE.)	
	6	1	**214-0863**	1	RECEPTACLE GP-AUXILIARY START	
		1	**102-8806**	1	KIT-RECEPTACLE (8-PIN)	
					(INCLUDES RECEPTACLE AS & WEDGE.)	
	7	1	**219-5762**	1	HARNESS AS-SENSOR (PUMP SWASHPLATE ANGLE)	
		1	**102-8803**	1	KIT-RECEPTACLE (3-PIN)	
					(INCLUDES RECEPTACLE AS & WEDGE.)	
	8	1	**228-7977**	1	HARNESS AS-CHASSIS (ELECTRONIC)	
		1	**117-3188**	3	COVER	
		1	**147-1446**	1	PLUG AS-CONNECTOR (70-PIN)	
		1	**160-7690**	1	PLUG AS-CONNECTOR (70-PIN)	
		1	**155-2255**	1	KIT-CONNECTING PLUG (12-PIN)	
		1	**155-2265**	1	KIT-CONNECTING PLUG (8-PIN)	
					(EACH KIT-PLUG INCLUDES PLUG AS, WEDGE & INTERFACE SEAL)	
		1	**9X-4391**	1	PLUG AS-CONNECTOR (70-PIN)	
		1	**3E-4367**	1	RING-RETAINING	
M		1	**3E-8557**	1	BOLT (M5X0.8X39.37-MM)	
		1	**9X-5615**	1	SEAL (INTERFACE, 70-PIN)	
		1	**102-8806**	1	KIT-RECEPTACLE (8-PIN)	
		1	**102-8801**	1	KIT-RECEPTACLE (12-PIN)	
					(EACH RECEPTACLE KIT INCLUDES RECEPTACLE AS & WEDGE)	
		1	**155-2260**	8	KIT-CONNECTING PLUG (3-PIN)	
		1	**155-2271**	1	KIT-CONNECTING PLUG (4-PIN)	
		1	**155-2270**	1	KIT-CONNECTING PLUG (2-PIN)	
		1	**155-2274**	1	KIT-CONNECTING PLUG (6-PIN)	
					(EACH CONNECTING PLUG KIT INCLUDES PLUG AS & WEDGE)	
	9	1	**096-0192**	1	LOCKWASHER	
M	10	1	**129-3178**	1	LOCKNUT (M6X1-THD)	
	11	1	**134-2540**	1	RECEPTACLE AS (3-PIN)	
	12	1	**4P-8134**	3	CLIP	
M	13	1	**5C-2874**	1	NUT (M5X.8-THD)	
	14	1	**6D-4244**	1	CLIP	
M	15	1	**8T-4200**	1	BOLT (M8X1.25X16-MM)	
	16	1	**8T-4224**	1	WASHER-HARD (8.8X16X2-MM THK)	
	17	1	**9X-8256**	1	WASHER (6.6X12X2-MM THK)	
BF			**096-0061**	10	STRAP-CABLE	

B-USE AS REQUIRED
F-NOT SHOWN
M-METRIC PART

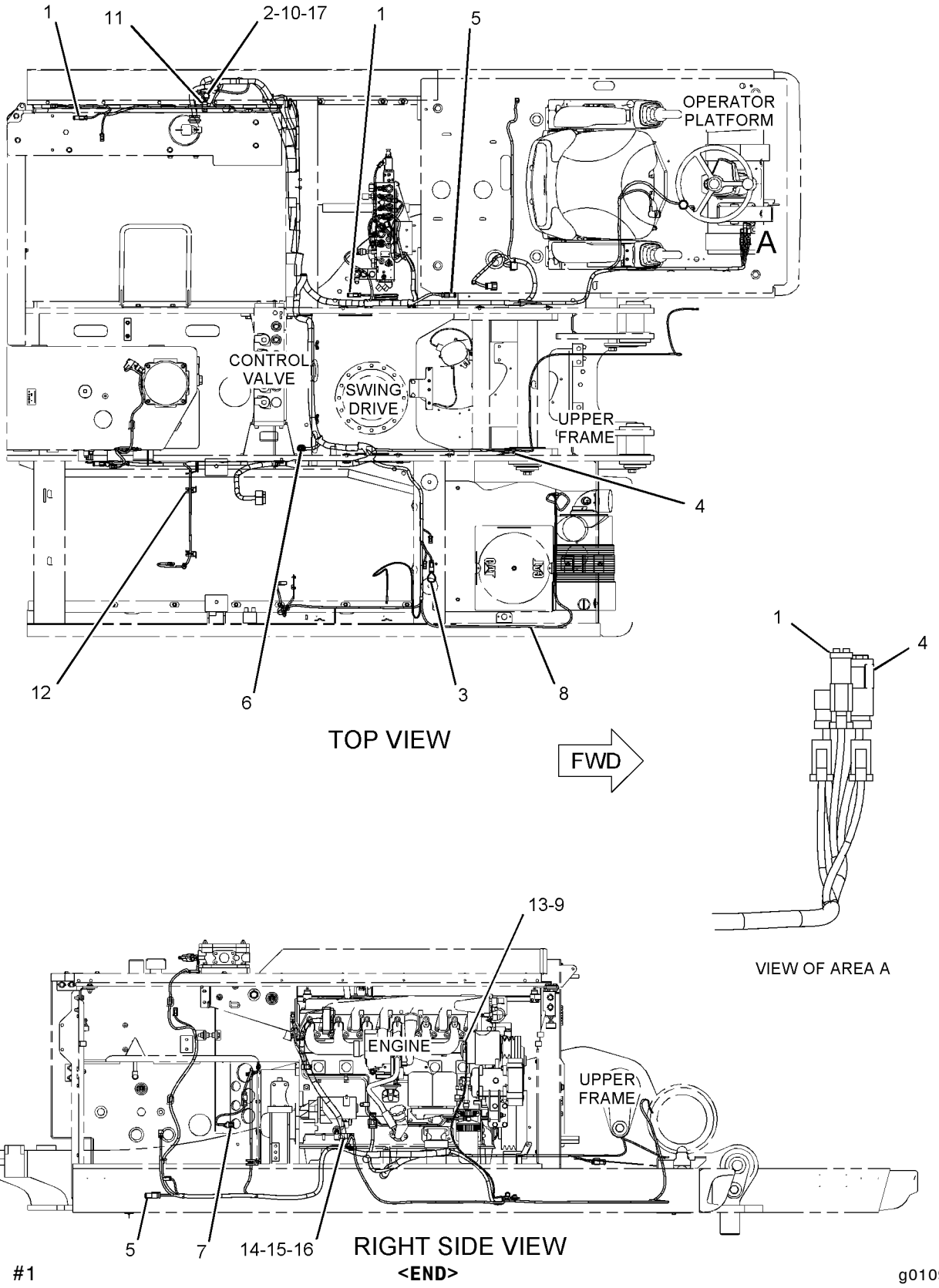

GRAPHIC #1

<END>

g01092102

187-3798 WIRING GP-CONSOLE

S/N: BCZ1-2000

PART OF 198-4680 OPERATOR AR

SMCS-1408 **i02160009**

NOTE	REF NO	GRAPHIC REF	PART NUMBER	QTY	PART NAME 1 2 3 4 5 6 (PRODUCT LEVEL)	SEE PAGE
	1	1	**5W-1992**	6	TERMINAL	
	2	1	**5W-9665**	1	HOUSING-PLUG	
	3	1	**7Y-3950**	2	TERMINAL (CONNECTOR)	
	4	1	**7Y-3953**	1	CONNECTOR-RECEPTACLE	
Y	5	1	**9G-7641**	1	SWITCH GP-START (KEY)	178
	6	1	**106-0107**	1	SWITCH GP-ROTARY (THROTTLE POSITION)	
		1	**3E-3383**	1	WEDGE-RECEPTACLE LOCK (6-PIN)	
M		1	**7Y-5458**	1	NUT (M12X1-THD)	
		1	**7Y-5464**	1	WASHER (M12.2X15.4X0.5)	
		1	**8T-8737**	1	PLUG-SEAL	
		1	**106-0210**	1	SEAL	
		1	**144-1636**	5	PIN-CONNECTOR	
		1	**102-8805**	1	KIT-RECEPTACLE (6-PIN)	
					(INCLUDES RECEPTACLE AS & WEDGE)	
	7	1	**113-3453**	1	KNOB AS	
	8	1	**228-7974**	1	HARNESS AS-CONSOLE (RH)	
		1	**102-8804**	1	KIT-RECEPTACLE (4-PIN)	
		1	**102-8801**	1	KIT-RECEPTACLE (12-PIN)	
					(EACH RECEPTACLE KIT INCLUDES RECEPTACLE AS & WEDGE)	
		1	**155-2270**	1	KIT-CONNECTING PLUG (2-PIN)	
		1	**155-2274**	1	KIT-CONNECTING PLUG (6-PIN)	
					(EACH CONNECTING PLUG KIT INCLUDES PLUG AS & WEDGE	
		1	**8T-8737**	2	PLUG-SEAL	
	9	1	**193-9054**	1	SWITCH AS (CONTROLLER BACKUP)	
	10	1	**200-2555**	1	PANEL	
	11	1	**200-2556**	1	PLATE	
	12	1	**202-0197**	1	HARNESS AS-CONSOLE (LH)	
		1	**102-8804**	1	KIT-RECEPTACLE (4-PIN)	
		1	**102-8806**	1	KIT-RECEPTACLE (8-PIN)	
		1	**102-8801**	1	KIT-RECEPTACLE (12-PIN)	
					(EACH RECEPTACLE KIT INCLUDES RECEPTACLE AS & WEDGE)	
		1	**155-2260**	1	KIT-CONNECTING PLUG (3-PIN)	
					(INCLUDES PLUG AS & WEDGE)	
	13	1	**220-5815**	6	SCREW-PAN HEAD	
B	14	1	**096-0061**	6	STRAP-CABLE	
	15	1	**096-6166**	2	WASHER-HARD (4.5X9X1-MM THK)	
	16	1	**097-5812**	1	SPACER (26X32X2-MM THK)	
M	17	1	**8T-0337**	2	SCREW-MACHINE (M4X0.7X12-MM)	
M	18	1	**8T-4223**	1	WASHER-HARD (13.5X25.5X3-MM THK)	

B-USE AS REQUIRED
M-METRIC PART
Y-SEPARATE ILLUSTRATION

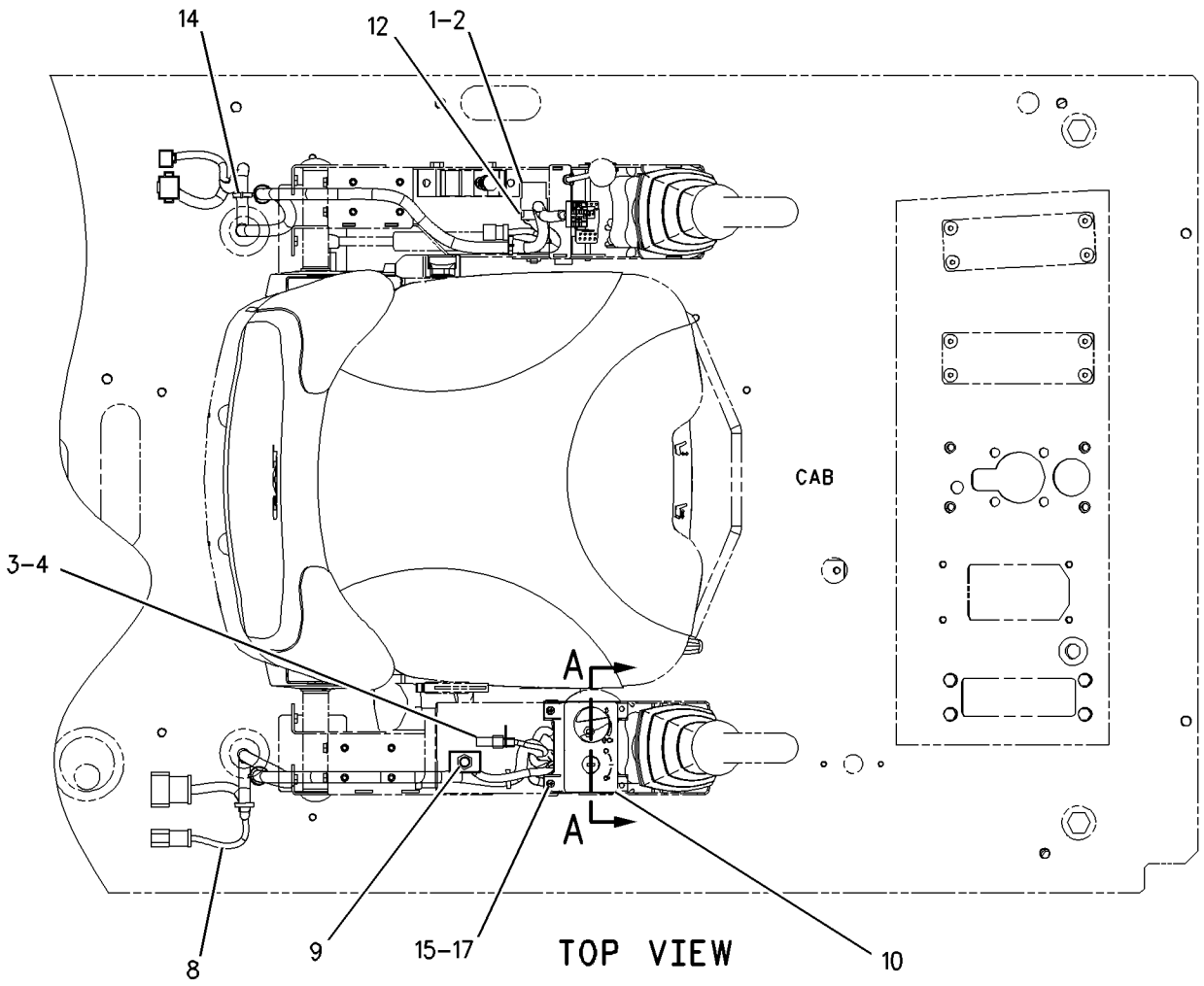

TOP VIEW

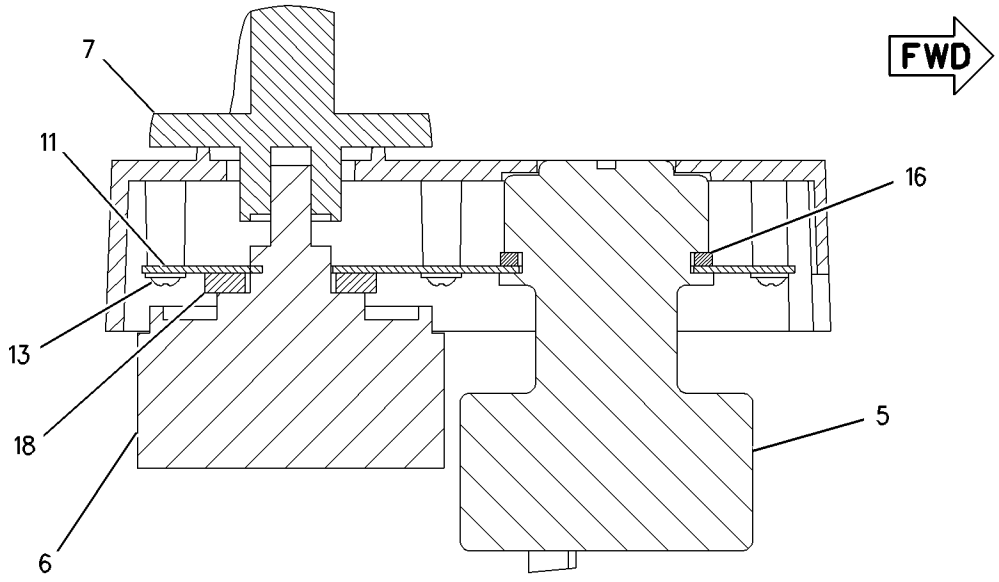

SECTION A-A

GRAPHIC #1 **<END>** g00894543

ELECTRICAL AND STARTING SYSTEM

217-9151 WIRING GP-ENGINE

S/N: CPT1-UP

PART OF 188-5096 ENGINE AR-PRIMARY

SMCS-1408 **i02160011**

NOTE	REF NO	GRAPHIC REF	PART NUMBER	QTY	PART NAME 1 2 3 4 5 6 (PRODUCT LEVEL)	SEE PAGE
	1	1	**100-4458**	3	BOLT (M8X1.25X14-MM)	
	2	1	**100-4830**	2	BOLT (M10X1.5X20-MM)	
	3	1	**124-3815**	1	BOLT (M8X16X1.25-MM)	
	4	1	**140-8783**	1	BOLT (M10X45-MM)	
	5	1	**216-9086**	1	SPACER	
	6	1	**217-8477**	3	CLIP	
	7	1	**217-9038**	3	BOLT	
	8	1	**217-9039**	3	STRAP-CABLE	
	9	1	**217-9041**	1	BRACKET-MOUNTING	
	10	1	**224-8637**	1	HARNESS AS (ENGINE ECM)	
	11	1	**226-8778**	1	BRACKET	
	12	1	**226-8780**	1	BRACKET	
	13	1	**228-7477**	1	CLIP	

217-9151 **WIRING GP-ENGINE** *(contd.)* **i02160011**

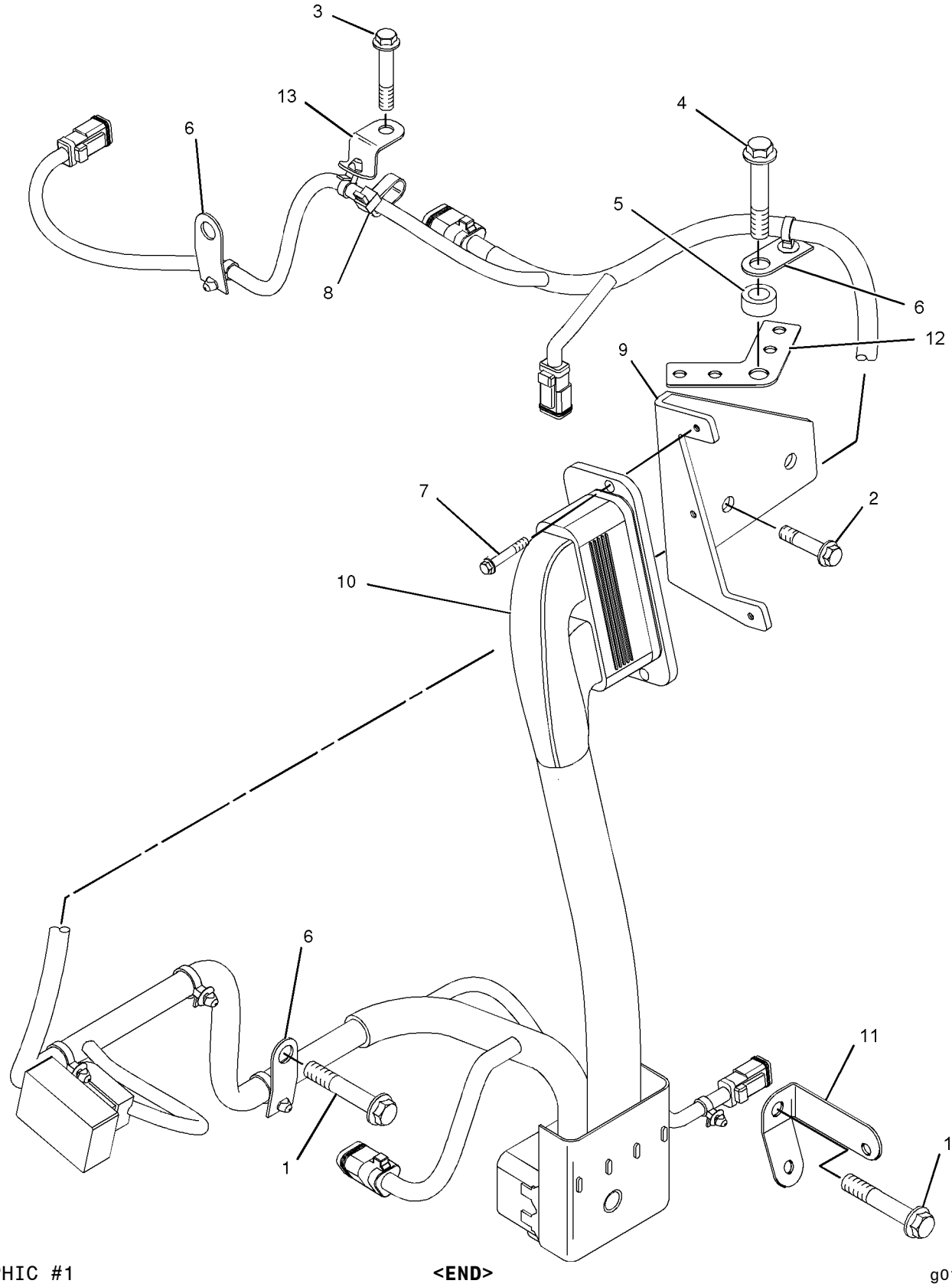

GRAPHIC #1 **<END>** g01051087

211-7985 WIRING GP-FAN

S/N: BCZ1-2000
FAN-DRIVE SOLENOID
PART OF 186-0472 INSTALLATION AR-ENGINE

SMCS-1408 **i02160012**

NOTE	REF NO	GRAPHIC REF	PART NUMBER	QTY	PART NAME 1 2 3 4 5 6 (PRODUCT LEVEL)	SEE PAGE
	1	1	**211-7988**	1	HARNESS AS-WIRING (FAN)	
		1	**102-8802**	1	KIT-RECEPTACLE (2-PIN)	
					(INCLUDES RECEPTACLE AS & WEDGE)	
B	2	1	**096-0061**	3	STRAP-CABLE	
	3	1	**4P-8134**	2	CLIP	
	4	1	**9D-3768**	1	GROMMET	

B-USE AS REQUIRED

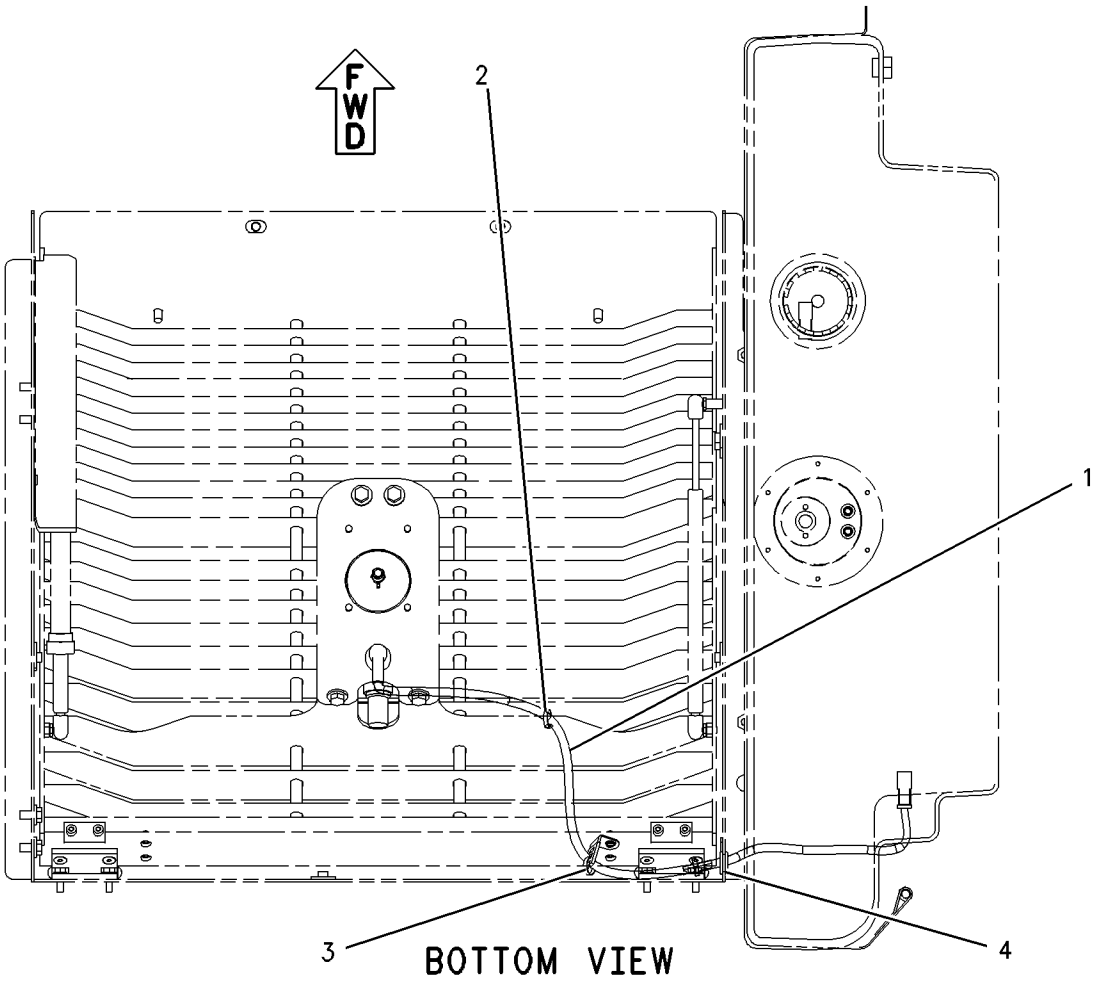

GRAPHIC #1 **<END>** g00920245

213-6476 WIRING GP-HAMMER

S/N: BCZ1-2000
PART OF 192-3175 LINES GP-PILOT
AN ATTACHMENT

SMCS-1408 **i02160014**

NOTE	REF NO	GRAPHIC REF	PART NUMBER	QTY	PART NAME 1 2 3 4 5 6 (PRODUCT LEVEL)	SEE PAGE
	1	1	**213-6477**	1	HARNESS AS-WORK TOOL (HAMMER)	
		1	**102-8806**	1	KIT-RECEPTACLE (8-PIN)	
					(INCLUDES RECEPTACLE AS & WEDGE)	
		1	**155-2270**	1	KIT-CONNECTING PLUG (2-PIN)	
					(INCLUDES PLUG AS & WEDGE)	
	2	1	**096-0061**	2	STRAP-CABLE	

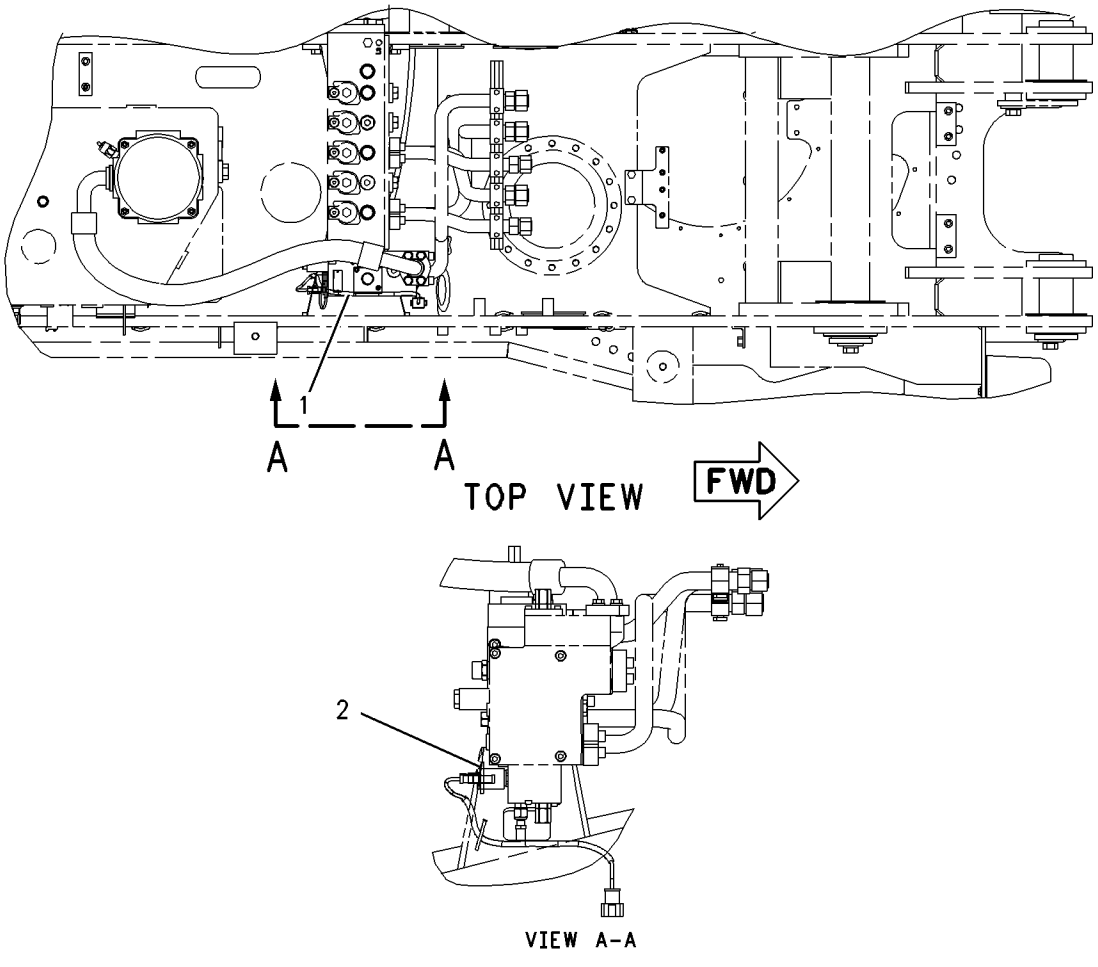

GRAPHIC #1 **<END>** g00911663

ELECTRICAL AND STARTING SYSTEM

206-6097 WIRING GP-MACHINE

S/N: BCZ1-2000

AN ATTACHMENT

SMCS-1408 **i02169252**

NOTE	REF NO	GRAPHIC REF	PART NUMBER	QTY	PART NAME 1 2 3 4 5 6 (PRODUCT LEVEL)	SEE PAGE
	1	2	**3E-3371**	1	WEDGE-RECEPTACLE LOCK (3-PIN)	
	2	1	**6I-1418**	3	SPACER (8.2X12.7X28.7-MM THK)	
	3	1	**155-0576**	6	MOUNT-ISOLATION	
	4	2	**165-5655**	1	LAMP AS (RED, GREEN, LED, 12-VOLT)	
	5	1	**190-2446**	1	ELECTRONICS GP-MACHINE (SECURITY)	
		1	**207-5268**	1	SOFTWARE GP-MACHINE (SECURITY)	
	6	2	**205-0826**	1	FILM (SECURITY)	
	7	2	**206-5162**	2	KEY AS-ELECTRONIC (SECURITY, YELLOW)	
	8	2	**206-5208**	1	COIL AS (EXCITER)	
		2	**3E-3365**	1	WEDGE-RECEPTACLE LOCK (2-PIN)	
		2	**102-8802**	1	KIT-RECEPTACLE (2-PIN)	
					(INCLUDES RECEPTACLE AS & WEDGE)	
	9	2	**211-8207**	1	HARNESS AS-CONTROL (SECURITY)	
		2	**102-8805**	1	KIT-RECEPTACLE (6-PIN)	
					(INCLUDES RECEPTACLE AS & WEDGE)	
		2	**155-2260**	1	KIT-CONNECTING PLUG (3-PIN)	
		2	**155-2270**	1	KIT-CONNECTING PLUG (2-PIN)	
					(EACH CONNECTING PLUG KIT INCLUDES PLUG AS, WEDGE & INTERFACE SEAL)	
	10	1	**222-3870**	1	COIL AS (FERRITE)	
		1	**102-8802**	2	KIT-RECEPTACLE (2-PIN)	
					(INCLUDES RECEPTACLE AS & WEDGE)	
		1	**3E-3365**	2	WEDGE-RECEPTACLE LOCK (2-PIN)	
BE		1	**9X-1813**		SLEEVE	
	11	2	**223-7186**	1	HARNESS AS-CONTROL	
		2	**155-2270**	1	KIT-CONNECTING PLUG (2-PIN)	
					(INCLUDES PLUG AS, WEDGE & INTERFACE SEAL)	
	12	2	**102-8803**	1	KIT-RECEPTACLE (3-PIN)	
					(INCLUDES RECEPTACLE AS & WEDGE)	
	13	1	**7X-0613**	3	WASHER-HARD (8.8X25.5X5-MM THK)	
	14	1	**5W-1403**	6	WASHER (8.4X25X2-MM THK)	
M	15	1	**8T-6912**	3	BOLT (M8X1.25X50-MM)	
B	16	1,2	**096-0061**	6	STRAP-CABLE	
	17	2	**219-6314**	2	KEY RING (IDENTIFICATION)	

B-USE AS REQUIRED
E-ORDER BY THE CENTIMETER
M-METRIC PART

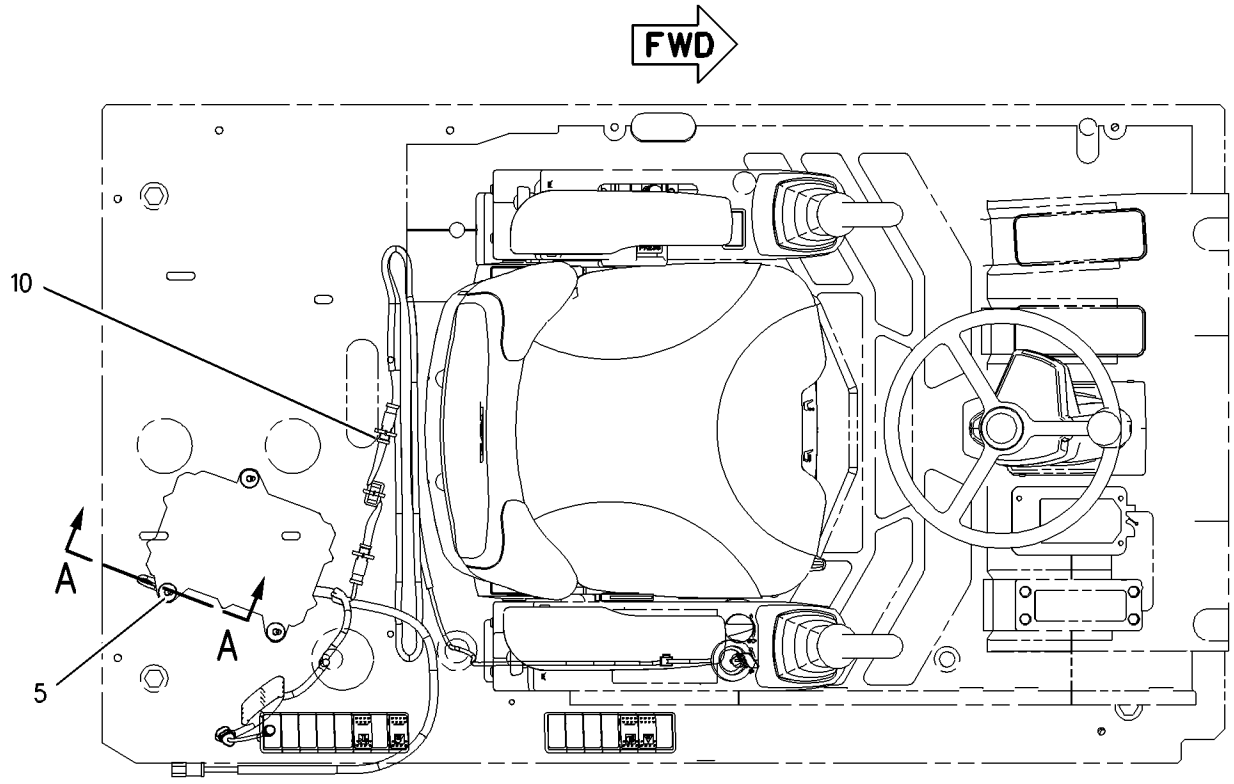

TOP VIEW

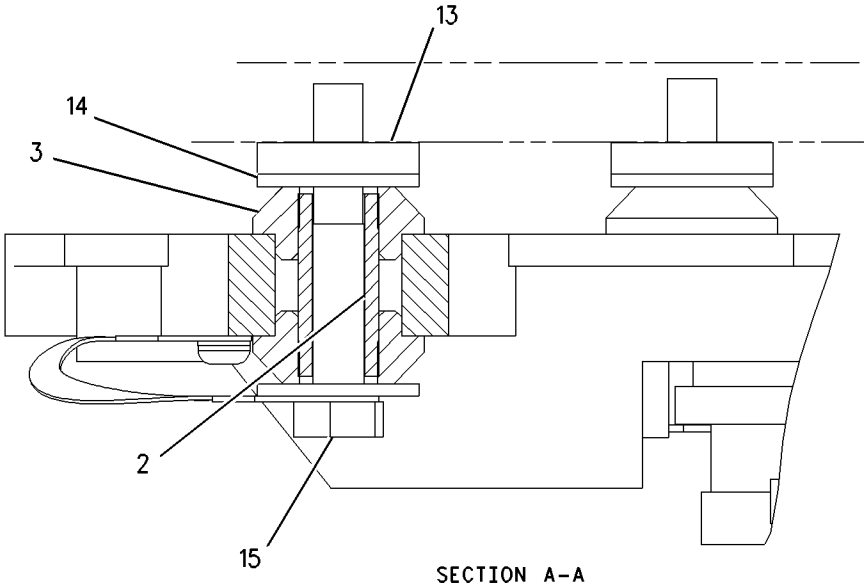

SECTION A-A

GRAPHIC #1 g00988801

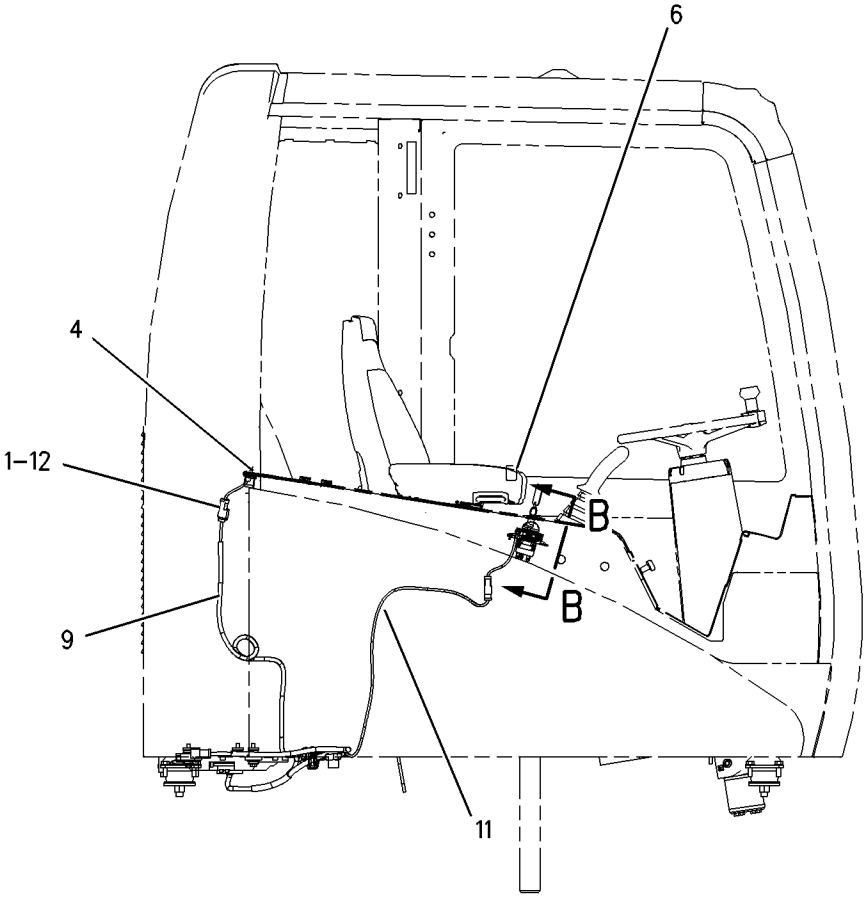

RIGHT SIDE VIEW

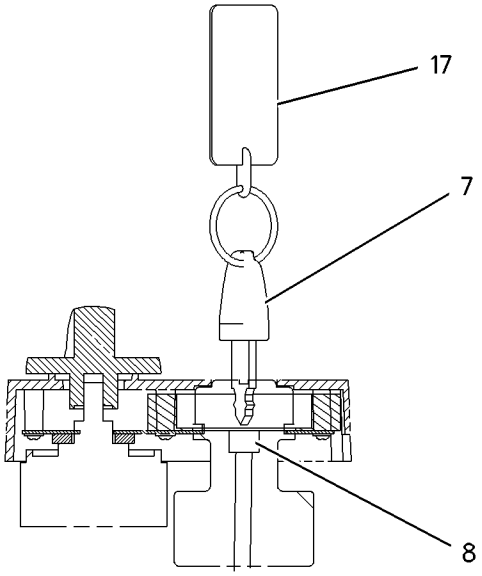

VIEW B-B

GRAPHIC #2 **<END>** g00988793

ELECTRICAL AND STARTING SYSTEM

186-0486 WIRING GP-PLATFORM

S/N: BCZ1-2000

PART OF 186-0468 CHASSIS AR

SMCS-1408 **i02160016**

NOTE	REF NO	GRAPHIC REF	PART NUMBER	QTY	PART NAME 1 2 3 4 5 6 (PRODUCT LEVEL)	SEE PAGE
	1	1	**5W-6315**	1	FITTING	
	2	1	**104-6692**	2	RECEPTACLE AS-CONNECTOR	
					(EACH INCLUDES)	
		1	**102-8802**	1	KIT-RECEPTACLE (2-PIN)	
					(INCLUDES RECEPTACLE AS & WEDGE)	
		1	**8T-8737**	2	PLUG-SEAL	
	3	1	**120-5967**	1	SOCKET-WIRING	
	4	2	**127-0833**	1	TANK AS-WINDOW WASHER	
		2	**7T-8891**	1	PUMP AS-WASHER	
		2	**8E-8292**	1	CAP-VENTED (WINDOW WASHER)	
		2	**8E-8293**	1	GROMMET	
	5	2	**132-1805**	1	STRAP AS-GROUND	
	6	1	**137-4195**	1	CAP	
	7	2	**147-1380**	1	SWITCH AS-FOOT (HORN)	
	8	2	**194-3592**	1	SWITCH AS (HORN, LIGHTS, WIPER)	
	9	1	**232-5326**	1	HARNESS AS-CHASSIS	
		1	**102-8802**	1	KIT-RECEPTACLE (2-PIN)	
		1	**102-8806**	1	KIT-RECEPTACLE (8-PIN)	
		1	**102-8801**	2	KIT-RECEPTACLE (12-PIN)	
					(EACH RECEPTACLE KIT INCLUDES RECEPTACLE AS & WEDGE)	
		1	**155-2255**	2	KIT-CONNECTING PLUG (12-PIN)	
		1	**155-2265**	5	KIT-CONNECTING PLUG (8-PIN)	
		1	**155-2260**	1	KIT-CONNECTING PLUG (3-PIN)	
		1	**155-2270**	6	KIT-CONNECTING PLUG (2-PIN)	
		1	**155-2271**	2	KIT-CONNECTING PLUG (4-PIN)	
		1	**155-2274**	2	KIT-CONNECTING PLUG (6-PIN)	
					(EACH CONNECTING PLUG KIT INCLUDES PLUG AS & WEDGE)	
	10	2	**195-7873**	1	BRACKET	
	11	2	**207-5153**	1	RECEPTACLE AS	
	12	1	**214-0862**	1	RECEPTACLE AS	
		1	**102-8805**	1	KIT-RECEPTACLE (6-PIN)	
					(INCLUDES RECEPTACLE AS & WEDGE)	
		1	**8T-8737**	6	PLUG-SEAL	
B	13	1	**096-0061**	30	STRAP-CABLE	
M	14	2	**099-2374**	2	BOLT-SOCKET HEAD (M5X0.8X12-MM)	
M	15	1	**129-3178**	1	LOCKNUT (M6X1-THD)	
M	16	1	**159-3050**	1	BOLT-SOCKET HEAD (M10X1.5X20-MM)	
	17	1,2	**3F-9556**	3	LOCKWASHER	
	18	2	**4P-7429**	1	CLIP	
	19	1	**4P-8134**	1	CLIP	
M	20	1,2	**5C-7261**	3	NUT (M8X1.25-THD)	
	21	1,2	**5P-4116**	6	WASHER-HARD (8.8X20.5X2-MM THK)	
M	22	2	**6V-4298**	2	BOLT (M5X0.8X16-MM)	
	23	2	**8T-3016**	2	WASHER (5.3X10X1-MM THK)	
	24	1	**8T-4121**	1	WASHER-HARD (11X21X2.5-MM THK)	
	25	1	**9X-8256**	1	WASHER (6.6X12X2-MM THK)	
E	26	1	**144-0195**		HOSE (310CM)	
E	26A	1	**144-0195**		HOSE (10CM)	
E	27	1	**207-5141**		SEAL (32.5CM)	
E	27A	1	**207-5141**		SEAL (25CM)	

B-USE AS REQUIRED
E-ORDER BY THE CENTIMETER
M-METRIC PART

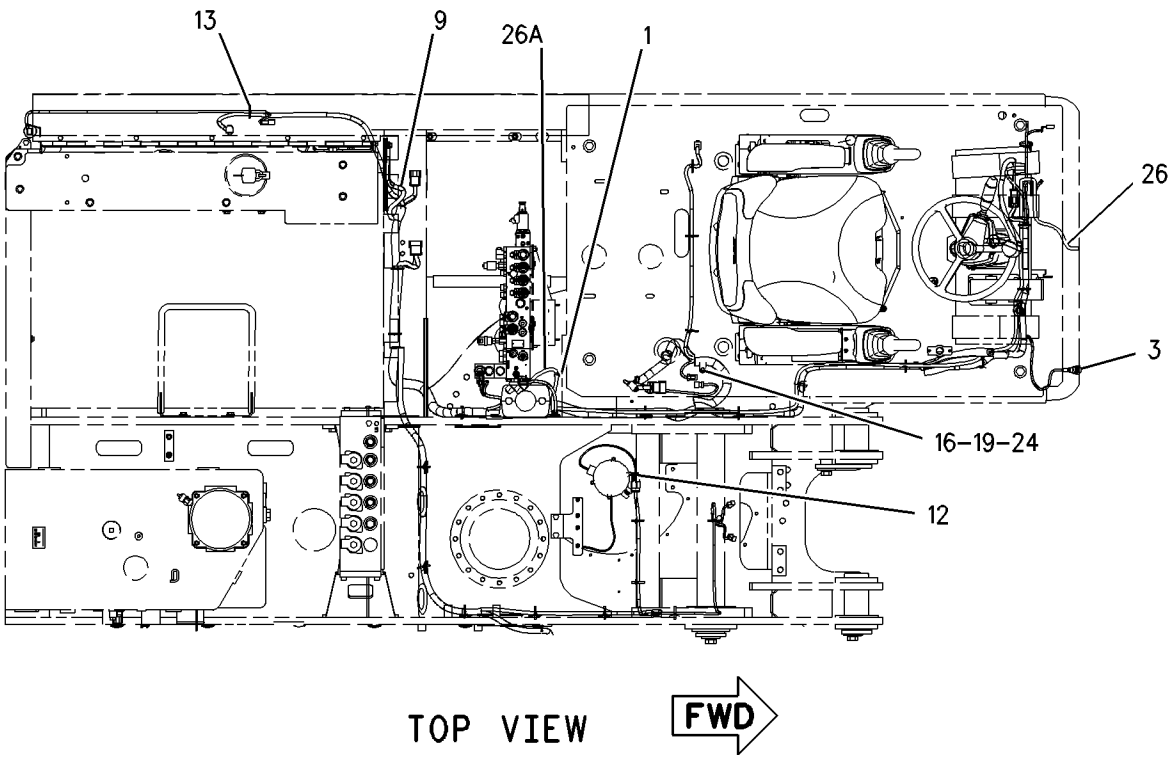

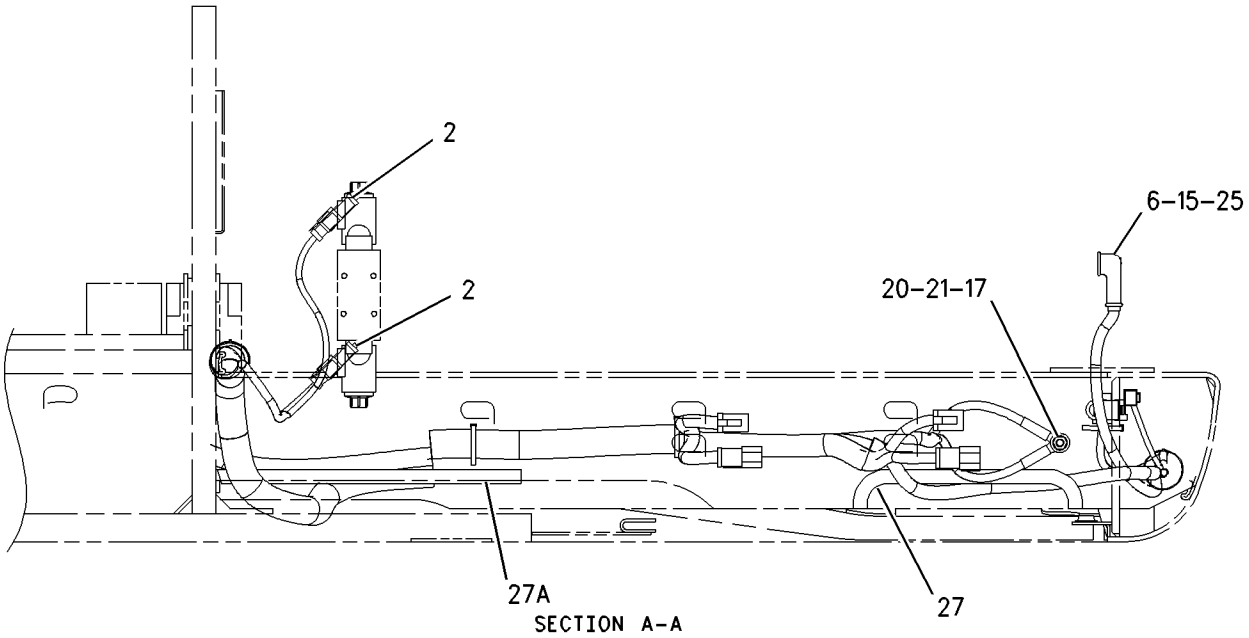

GRAPHIC #1 g00902934

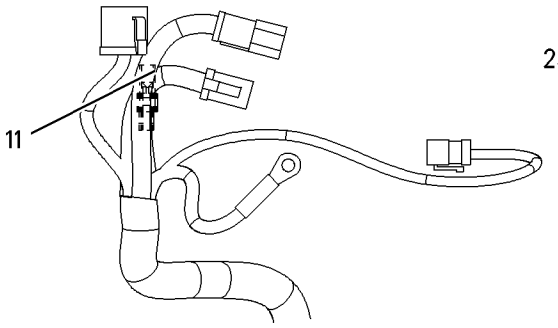

VIEW OF AREA B

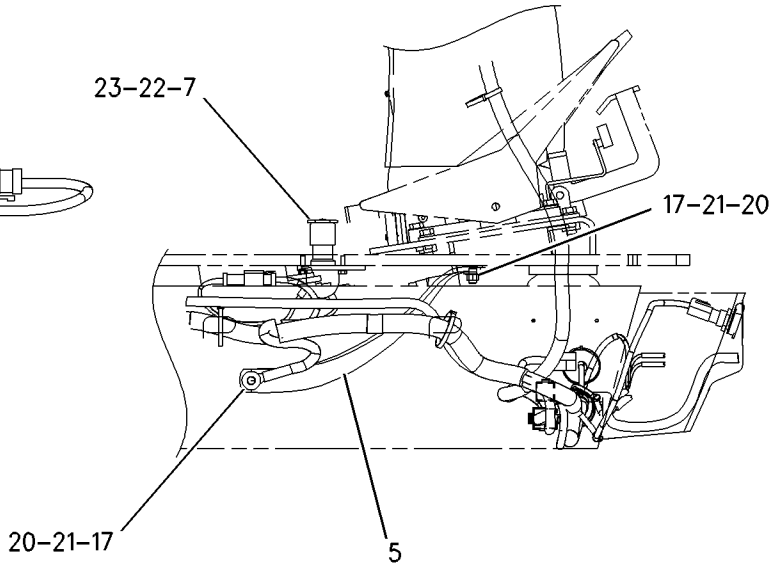

VIEW OF AREA C

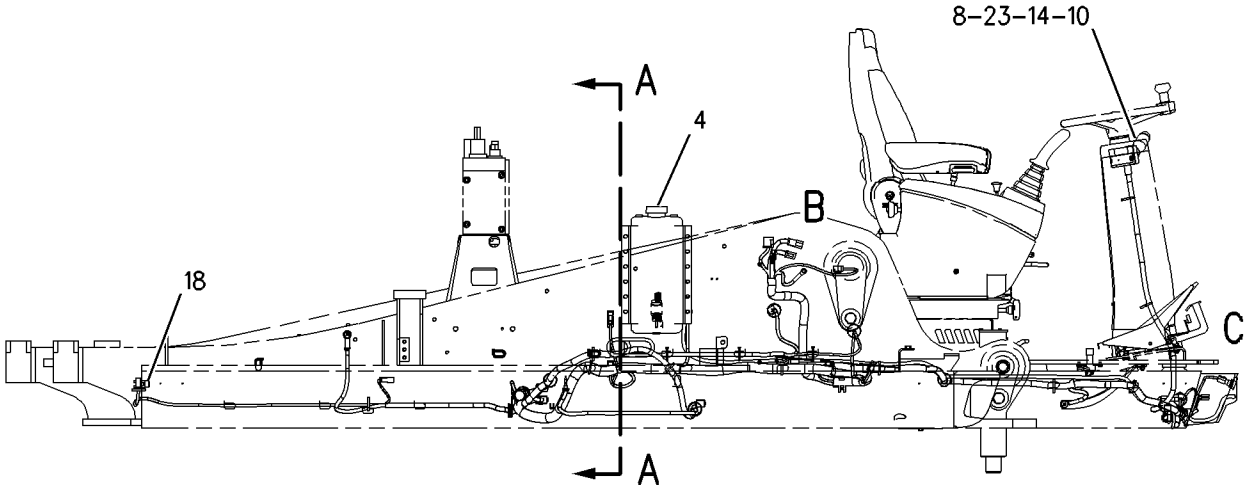

RIGHT SIDE VIEW

REFER TO ALL ILLUSTRATIONS OF
THIS GROUP FOR AUXILIARY VIEWS

GRAPHIC #2 **<END>** g00902935

188-4954 WIRING GP-UNDERCARRIAGE/SWIVEL

S/N: BCZ1-2000
PART OF 198-4697 CONVERSION AR-MACHINE
AN ATTACHMENT

SMCS-1408, 5060 **i02154479**

NOTE	REF NO	GRAPHIC REF	PART NUMBER	QTY	PART NAME 1 2 3 4 5 6 (PRODUCT LEVEL)	SEE PAGE
	1	1	**102-8802**	1	KIT-RECEPTACLE (2-PIN)	
					(INCLUDES RECEPTACLE AS & WEDGE)	
	2	1	**155-2263**	1	WEDGE-PLUG LOCK (6-PIN)	
	3	1	**175-3354**	1	PLUG AS	
	4	1	**193-7757**	1	HARNESS AS-SOLENOID (STABILIZER)	
		1	**102-8805**	1	KIT-RECEPTACLE (6-PIN)	
					(INCLUDES RECEPTACLE AS & WEDGE)	
		1	**155-2270**	8	KIT-CONNECTING PLUG (2-PIN)	
					(INCLUDES PLUG AS & WEDGE)	
Y	5	1	**195-0704**	1	SWIVEL GP	656
	6	1	**199-6978**	1	ROD	
	7	1	**3F-9556**	1	LOCKWASHER	
M	8	1	**5C-7261**	1	NUT (M8X1.25-THD)	
M	9	1	**5C-9553**	2	BOLT (M6X1X16-MM)	
	10	1	**5P-4116**	2	WASHER-HARD (8.8X20.5X2-MM THK)	
BF			**096-0061**	20	STRAP-CABLE	

B-USE AS REQUIRED
F-NOT SHOWN
M-METRIC PART
Y-SEPARATE ILLUSTRATION

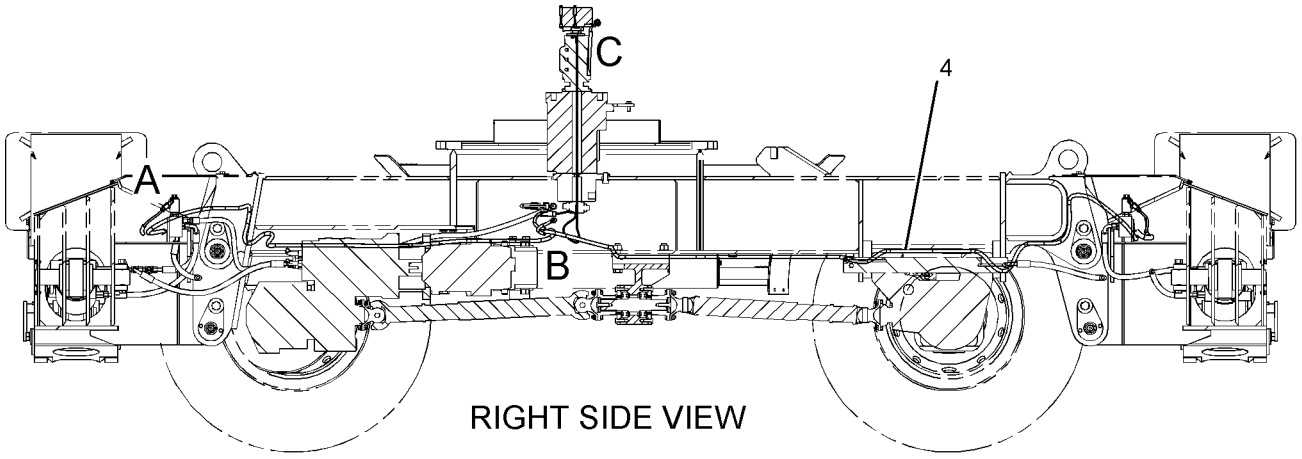

RIGHT SIDE VIEW

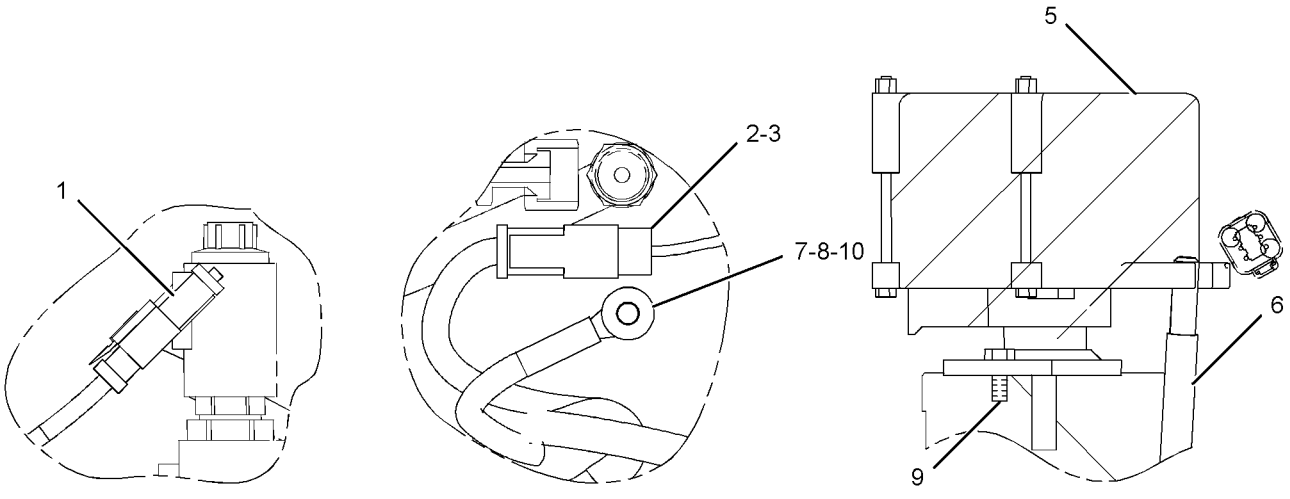

VIEW OF AREA A VIEW OF AREA B VIEW OF AREA C

GRAPHIC #1 **<END>** g01094220

211-8208 WIRING GP-WORK TOOL

S/N: BCZ1-2000
PART OF 187-7364 LINES GP-PILOT
AN ATTACHMENT

SMCS-1408 **i02160025**

NOTE	REF NO	GRAPHIC REF	PART NUMBER	QTY	PART NAME 1 2 3 4 5 6 (PRODUCT LEVEL)	SEE PAGE
	1	1	**201-4012**	1	HARNESS AS (WORK TOOL)	
		1	**102-8806**	1	KIT-RECEPTACLE (8-PIN)	
					(INCLUDES RECEPTACLE AS & WEDGE)	
		1	**155-2270**	5	KIT-CONNECTING PLUG (2-PIN)	
					(INCLUDES PLUG AS & WEDGE)	
B	2	1	**096-0061**	6	STRAP-CABLE	

B-USE AS REQUIRED

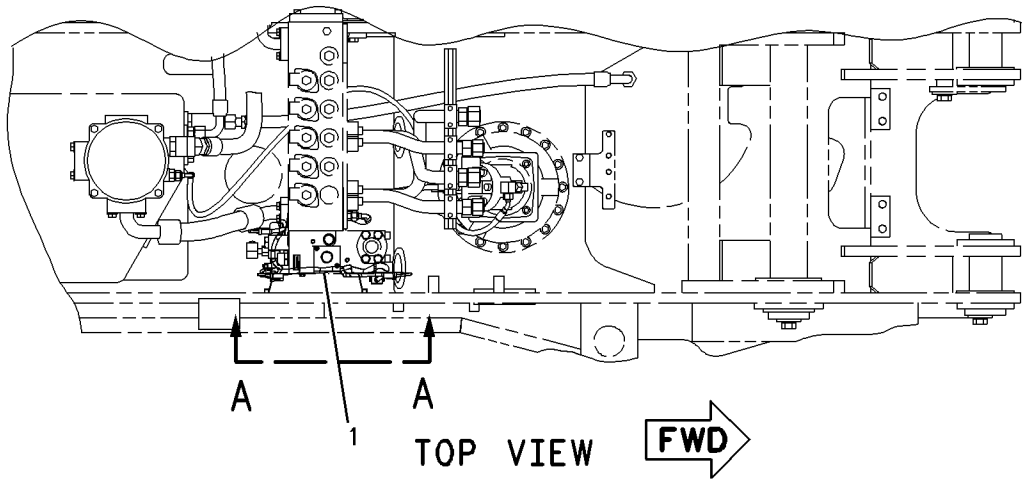

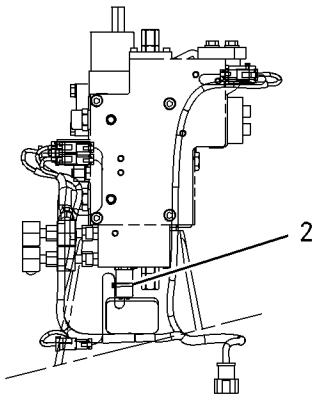

VIEW A-A

GRAPHIC #1 **<END>** g00911822

187-7214 AXLE & TRANSMISSION AR–REAR

S/N: BCZ1-2000
PART OF 188-4931 AXLE AR-REAR
AN ATTACHMENT

SMCS-3013, 3030, 3278 **i01547031**

NOTE	REF NO	GRAPHIC REF	PART NUMBER	QTY	PART NAME 1 2 3 4 5 6 (PRODUCT LEVEL)	SEE PAGE
Y	1	1	**187-7216**	1	TRANSMISSION GP	319
Y	2	1	**187-7215**	1	AXLE GP-REAR	231

Y-SEPARATE ILLUSTRATION

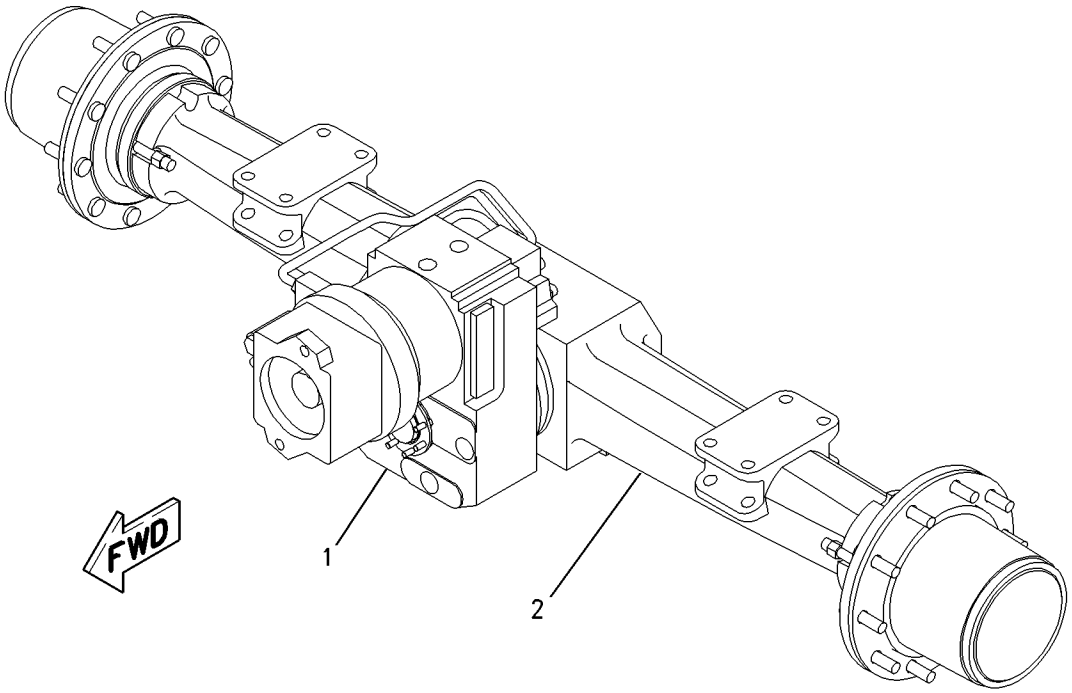

GRAPHIC #1 **<END>** g00813461

187-7217 AXLE & TRANSMISSION AR–REAR

S/N: BCZ1-2000

PART OF 188-4932 AXLE AR-REAR

SMCS-3013, 3030, 3278 **i01816353**

NOTE	REF NO	GRAPHIC REF	PART NUMBER	QTY	PART NAME 1 2 3 4 5 6 (PRODUCT LEVEL)	SEE PAGE
Y	1	1	**187-7216**	1	TRANSMISSION GP	319
Y	2	1	**187-7218**	1	AXLE AR-REAR	220

Y-SEPARATE ILLUSTRATION

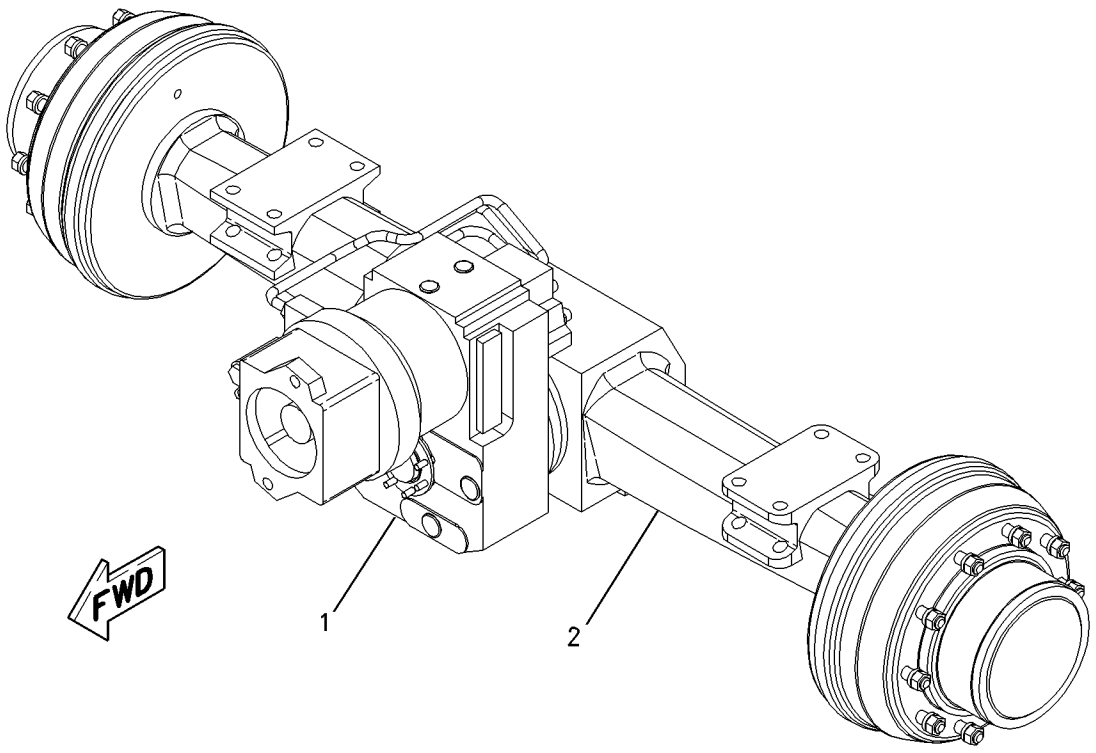

GRAPHIC #1 **<END>** g00927392

204-7742 AXLE & TRANSMISSION AR–REAR

S/N: BCZ1-2000
PART OF 205-3915 AXLE AR-REAR
AN ATTACHMENT

SMCS-3013, 3030, 3278 **i01816356**

NOTE	REF NO	GRAPHIC REF	PART NUMBER	QTY	PART NAME 1 2 3 4 5 6 (PRODUCT LEVEL)	SEE PAGE
Y	1	1	**204-7743**	1	AXLE GP-REAR	236
Y	2	1	**187-7216**	1	TRANSMISSION GP	319

Y-SEPARATE ILLUSTRATION

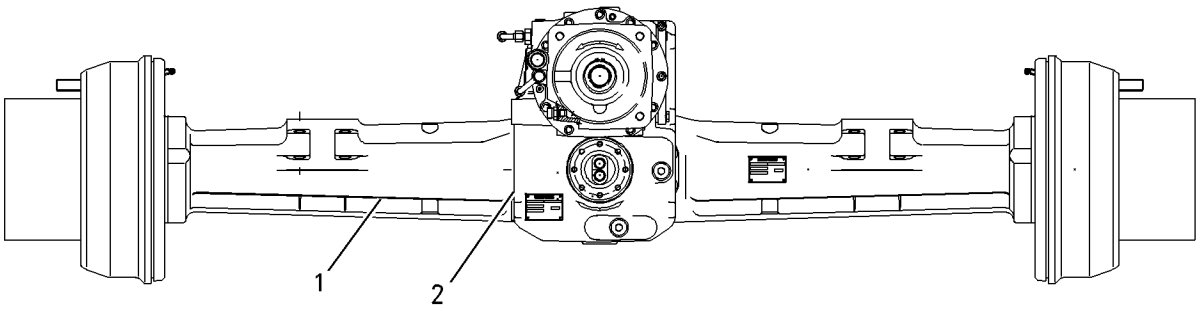

FRONT VIEW

GRAPHIC #1 **<END>** g00927395

188-4930 AXLE AR-FRONT

S/N: BCZ1-2000

PART OF 186-0470 POWER TRAIN AR

SMCS-3020, 3282 **i02089408**

NOTE	REF NO	GRAPHIC REF	PART NUMBER	QTY	PART NAME 1 2 3 4 5 6 (PRODUCT LEVEL)	SEE PAGE
	1	1	**5P-8247**	1	WASHER-HARD (17X32X3.5-MM THK)	
	2	1	**5W-2817**	2	FITTING-GREASE	
	3	1	**110-2170**	1	PIN	
	4	1	**111-1230**	2	PLATE AS	
Y	5	1	**187-7213**	1	AXLE GP-STEERING	242
M	6	1	**6V-5844**	8	BOLT (M16X2X35-MM)	
M	7	1	**8T-0282**	1	BOLT (M16X2X120-MM)	
M	8	1	**8T-4132**	1	NUT (M16X2-THD)	
	9	1	**5W-0965**	20	RING	
M	10	1	**5W-1386**	20	NUT (M22X1.5-THD)	
	11	1	**5W-1440**	20	LOCKWASHER	

M-METRIC PART
Y-SEPARATE ILLUSTRATION

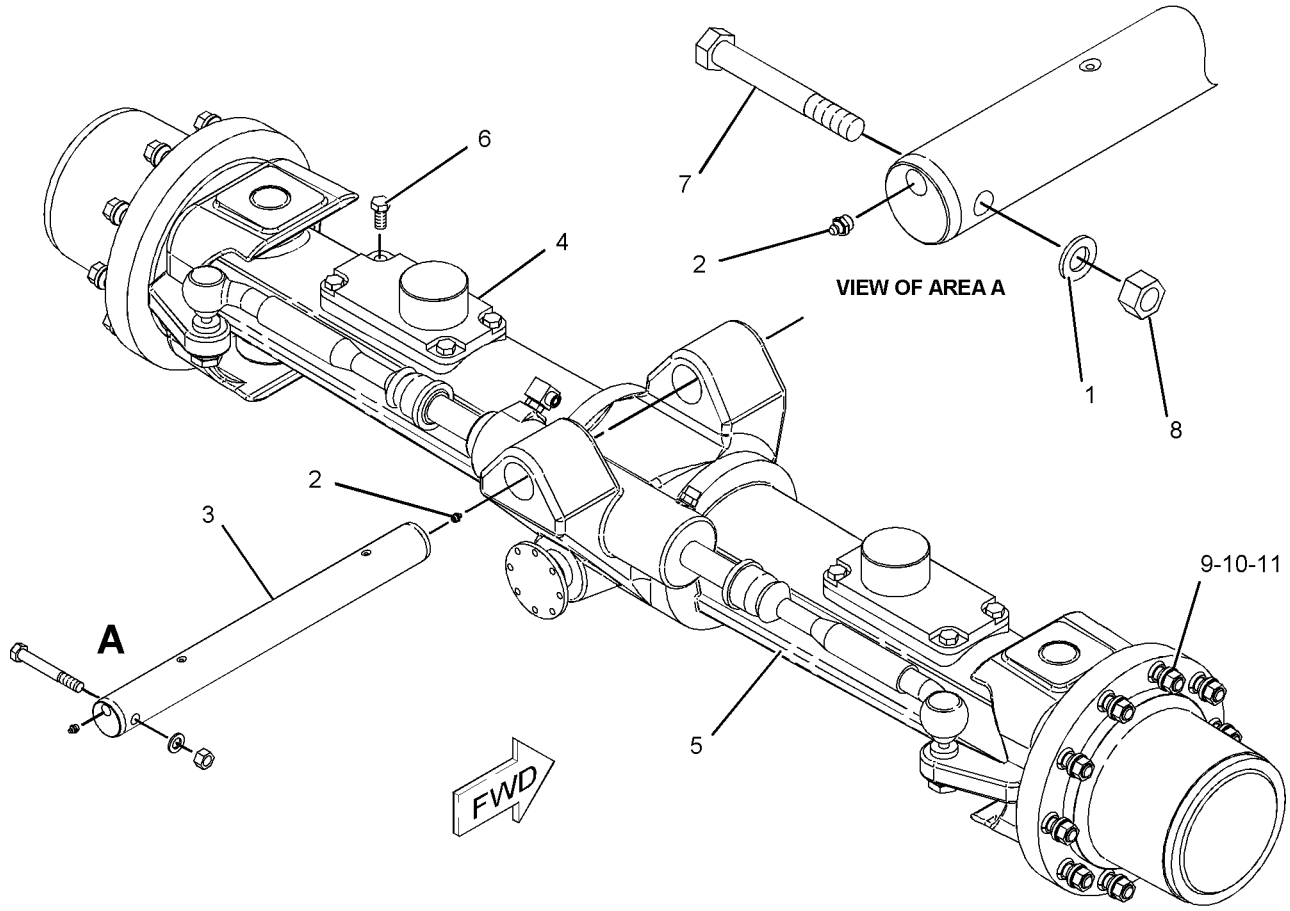

GRAPHIC #1 **<END>** g01083821

POWER TRAIN

187-7218 AXLE AR-REAR

S/N: BCZ1-2000

PART OF 187-7217 AXLE & TRANSMISSION AR

SMCS-3013, 3278, 3282 **i02066991**

NOTE	REF NO	GRAPHIC REF	PART NUMBER	QTY	PART NAME 1 2 3 4 5 6 (PRODUCT LEVEL)	SEE PAGE
	1	1,3	**109-4440**	3	PLUG	
	2	1,3	**190-8676**	4	SEAL-O-RING	
	3	1	**110-0847**	1	PLUG-SCREW	
	4	1	**204-7692**	2	SHAFT	
	5	1	**129-2702**	1	HOUSING-AXLE	
M	6	1	**9R-3533**	14	BOLT-SPECIAL	
	7	1	**135-3406**	2	SLEEVE	
	8	1	**9X-6378**	2	RING-RETAINING	
	9	2	**204-7693**	2	HUB GP-WHEEL	
					(EACH INCLUDES)	
		2	**110-0849**	1	NUT-SLOTTED	
	10	2	**5W-3061**	2	SEAL-O-RING	
	11	2	**135-3408**	2	PLATE-ROUND	
	12	3	**135-3409**	2	RING	
	13	3	**8U-2356**	4	BEARING	
B	14	3	**8U-2365**	2	BUSHING (26-MM THK)	
B		3	**8U-2366**	2	BUSHING (26.2-MM THK)	
B		3	**8U-2367**	2	BUSHING (26.4-MM THK)	
B		3	**8U-2368**	2	BUSHING (26.6-MM THK)	
B		3	**8U-2369**	2	BUSHING (26.8-MM THK)	
B		3	**8U-2370**	2	BUSHING (27-MM THK)	
B		3	**8U-2371**	2	BUSHING (27.2-MM THK)	
B		3	**135-1594**	2	BUSHING (26.23-MM THK)	
B		3	**135-1595**	2	BUSHING (26.26-MM THK)	
B		3	**135-1596**	2	BUSHING (26.29-MM THK)	
B		3	**135-1597**	2	BUSHING (26.32-MM THK)	
B		3	**135-1598**	2	BUSHING (26.35-MM THK)	
B		3	**241-3652**	2	BUSHING (26.38-MM THK)	
B		3	**241-3653**	2	BUSHING (26.41-MM THK)	
B		3	**241-3654**	2	BUSHING (26.44-MM THK)	
B		3	**241-3655**	2	BUSHING (26.47-MM THK)	
B		3	**241-3656**	2	BUSHING (26.5-MM THK)	
	26	3	**135-3410**	2	HUB	
	27	3	**110-4745**	2	SEAL-O-RING	
	28	3	**110-0862**	2	GEAR-RING	
	29	3	**110-0861**	2	WASHER-TAB	
M	30	3	**9R-6965**	4	SCREW (M10X1.5X20)	
	31	3	**8U-4121**	2	GEAR-SUN (15 TEETH)	
	32	3	**135-3412**	2	GEAR	
	33	3	**193-1132**	6	GEAR-PLANETARY	
	34	3	**213-9783**	6	BEARING-ROLLER	
	35	3	**190-8591**	12	WASHER (64.5X72.1X2-MM THK)	
	36	3	**190-8590**	12	RING-SNAP	
	37	3	**110-4737**	6	RING-RETAINING	
B	38	3	**110-0165**	2	WASHER-THRUST (1.5-MM THK)	
B		3	**110-0164**	2	WASHER-THRUST (1.7-MM THK)	
B		3	**110-0163**	2	WASHER-THRUST (2-MM THK)	
B		3	**110-0162**	2	WASHER-THRUST (2.2-MM THK)	
B		3	**110-0161**	2	WASHER-THRUST (2.5-MM THK)	
B		3	**110-0160**	2	WASHER-THRUST (2.7-MM THK)	
B		3	**110-0159**	2	WASHER-THRUST (3-MM THK)	
M	47	3	**5W-2177**	4	BOLT-SOCKET HEAD (M12X1.75X20-MM)	
	48	3	**135-3413**	20	BOLT	
Y	49	4	**158-6333**	2	BRAKE GP-DRUM	286
	50	4	**129-2720**	2	DRUM-BRAKE	
	51	4	**2R-0409**	36	WASHER (16.66X24.64X3-MM THK)	

187-7218 AXLE AR-REAR *(contd.)*

i02066991

NOTE	REF NO	GRAPHIC REF	PART NUMBER	QTY	PART NAME 1 2 3 4 5 6 (PRODUCT LEVEL)	SEE PAGE
M	52	4	**095-9806**	36	BOLT-SOCKET HEAD (M16X2X80-MM)	

B-USE AS REQUIRED
M-METRIC PART
Y-SEPARATE ILLUSTRATION

187-7218 AXLE AR-REAR *(contd.)* **i02066991**

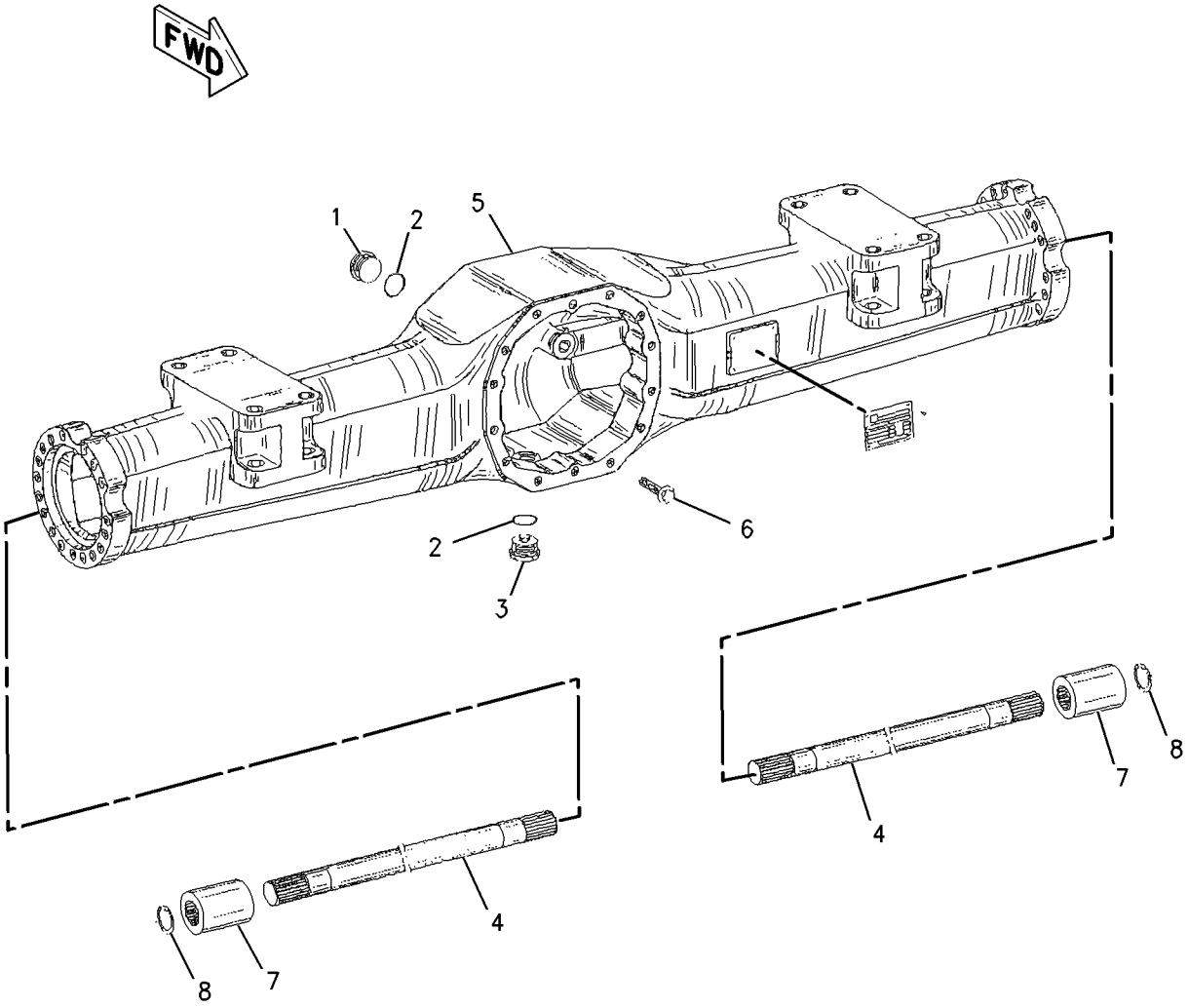

GRAPHIC #1 g00927401

187-7218 AXLE AR-REAR *(contd.)* **i02066991**

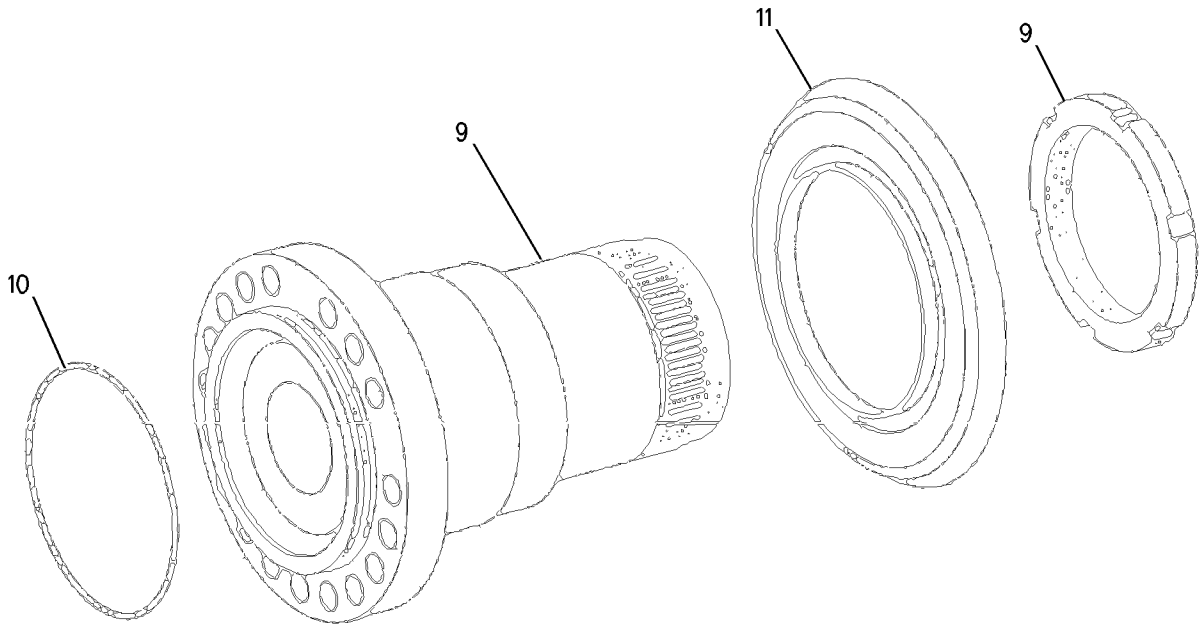

GRAPHIC #2 g00812821

187-7218 AXLE AR-REAR *(contd.)* i02066991

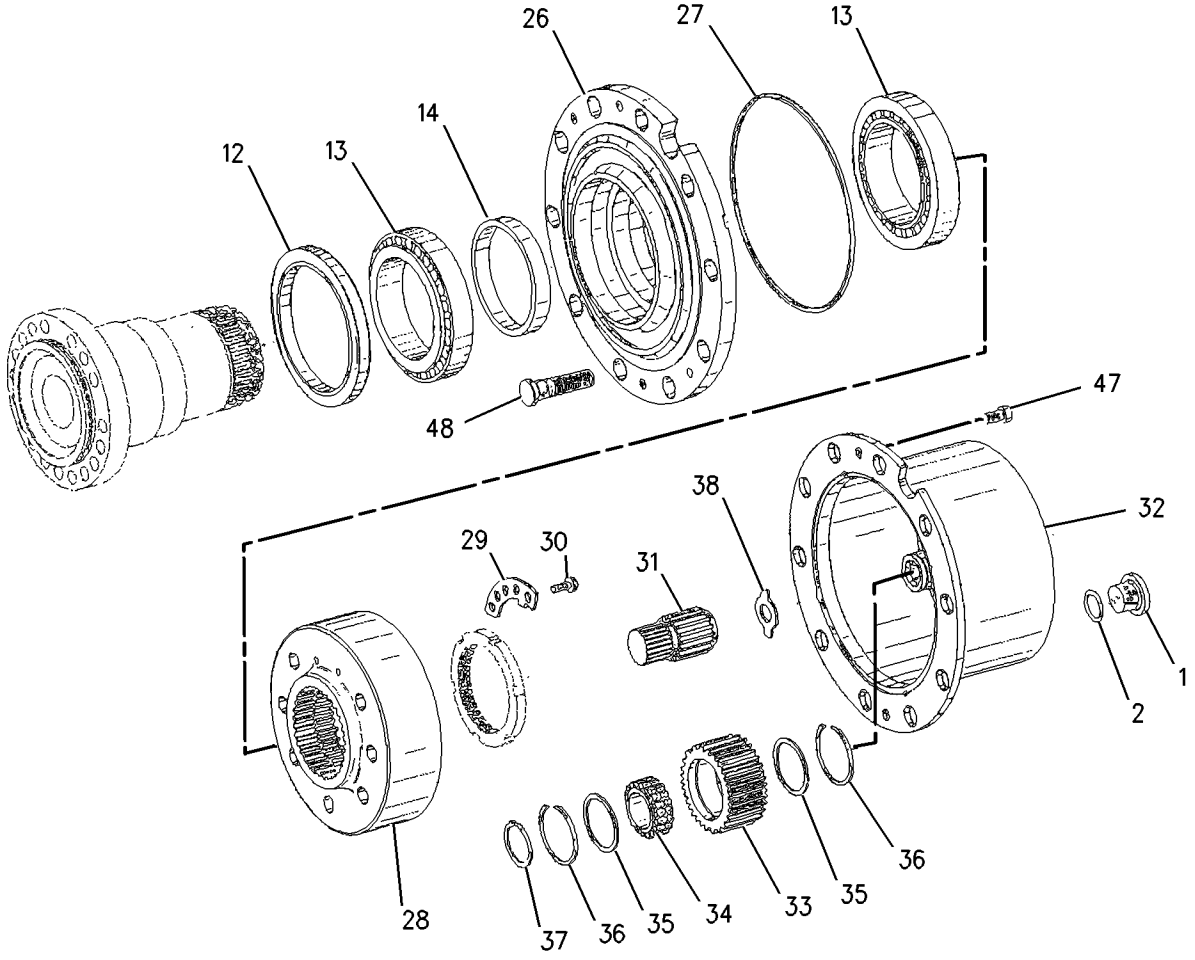

GRAPHIC #3 g00812822

187-7218 AXLE AR-REAR *(contd.)* **i02066991**

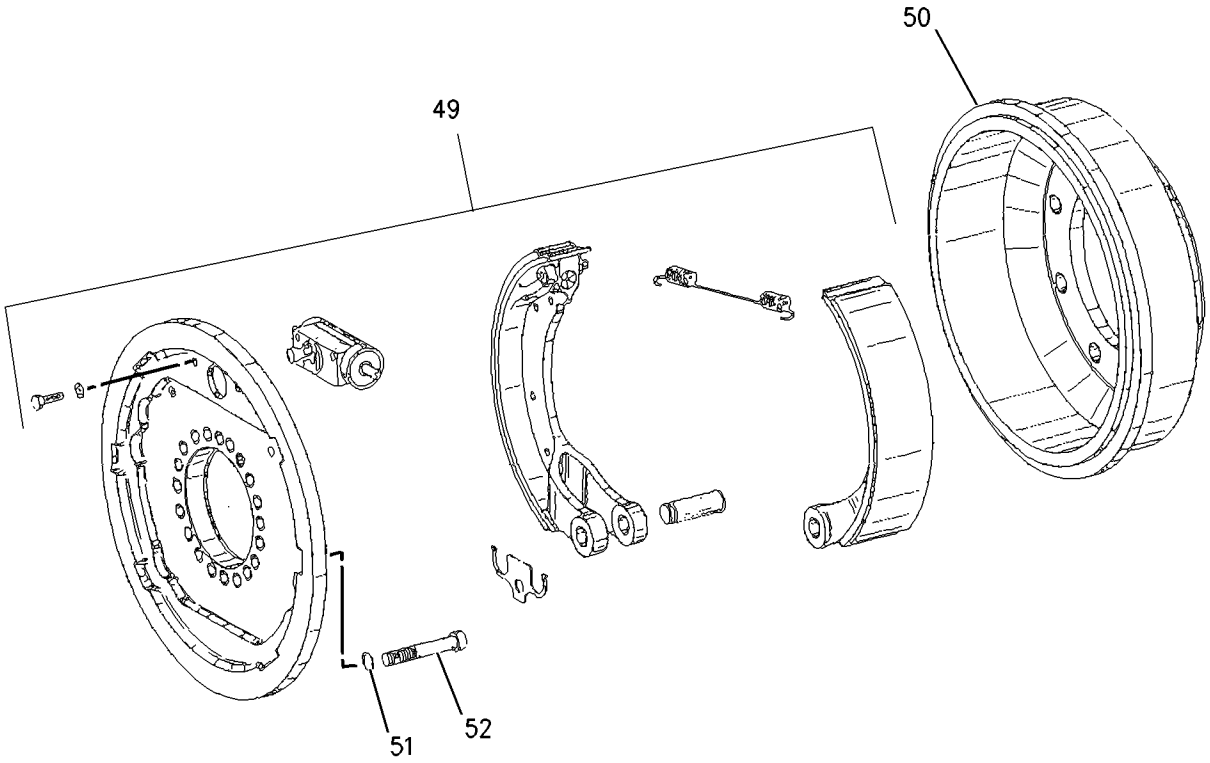

GRAPHIC #4 **<END>** g00812823

188-4931 AXLE AR-REAR—DISC BRAKE

S/N: BCZ1-2000

AN ATTACHMENT

SMCS-3013, 3278, 3282 **i02160028**

NOTE	REF NO	GRAPHIC REF	PART NUMBER	QTY	PART NAME 1 2 3 4 5 6 (PRODUCT LEVEL)	SEE PAGE
M	1	1	**6V-7688**	8	LOCKNUT (M20X2.5-THD)	
	2	1	**7Y-1858**	16	WASHER (21X37X3-MM THK)	
	3	1	**123-8324**	2	CAP	
	4	1	**124-5215**	2	FITTING AS (QUICK DISCONNECT)	
I	5	1	**178-5350**	2	HOSE AS	
Y	6	1	*187-7214*	1	AXLE & TRANSMISSION AR	216
	7	1	**6V-6560**	2	SEAL-O-RING	
M	8	1	**8T-0656**	8	BOLT (M20X2.5X150-MM)	
					—OR—	
M		1	**8T-7505**	8	BOLT (M20X2.5X220-MM)	
	9	1	**5W-0965**	20	RING	
M	10	1	**5W-1386**	20	NUT (M22X1.5-THD)	
	11	1	**5W-1440**	20	LOCKWASHER	

I-REFER TO HYDRAULIC INFORMATION SYSTEM
M-METRIC PART
Y-SEPARATE ILLUSTRATION

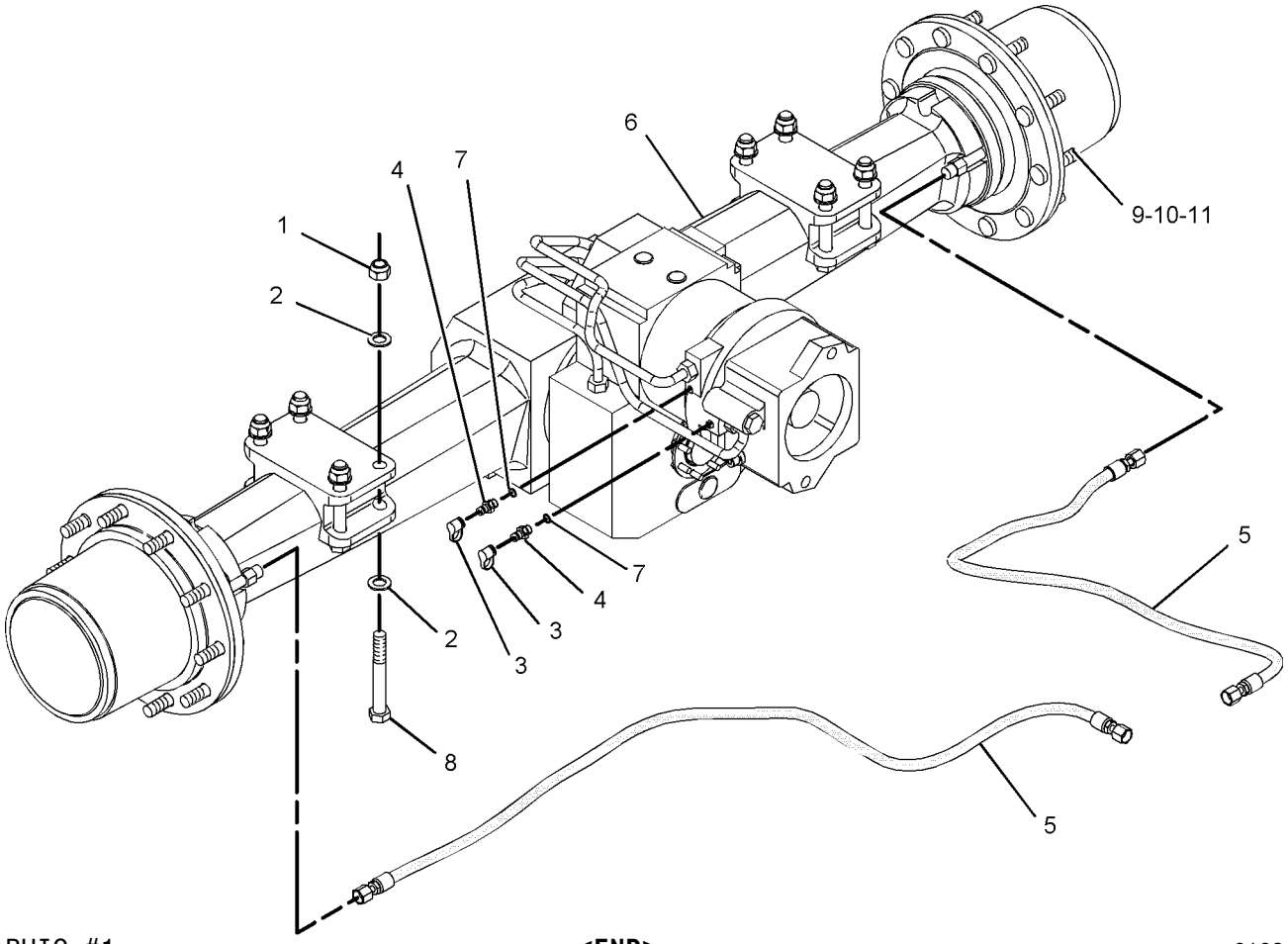

GRAPHIC #1 **<END>** g01084614

188-4932 AXLE AR-REAR

S/N: BCZ1-2000

PART OF 186-0470 POWER TRAIN AR

SMCS-3013, 3278, 3282 **i02160030**

NOTE	REF NO	GRAPHIC REF	PART NUMBER	QTY	PART NAME 1 2 3 4 5 6 (PRODUCT LEVEL)	SEE PAGE
	1	1	**5W-0965**	20	RING	
M	2	1	**5W-1386**	20	NUT (M22X1.5-THD)	
	3	1	**5W-1440**	20	LOCKWASHER	
M	4	1	**6V-7688**	8	LOCKNUT (M20X2.5-THD)	
	5	1	**7Y-1858**	16	WASHER (21X37X3-MM THK)	
	6	1	**123-8324**	2	CAP	
	7	1	**124-5215**	2	FITTING AS (QUICK DISCONNECT)	
	8	1	**132-4618**	2	FITTING GP	
Y	9	1	*187-7217*	1	AXLE & TRANSMISSION AR	217
I	10	1	**199-6976**	2	HOSE AS	
	11	1	**6V-6560**	2	SEAL-O-RING	
M	12	1	**8T-0656**	8	BOLT (M20X2.5X150-MM)	
					—OR—	
M		1	**8T-7505**	8	BOLT (M20X2.5X220-MM)	

I-REFER TO HYDRAULIC INFORMATION SYSTEM
M-METRIC PART
Y-SEPARATE ILLUSTRATION

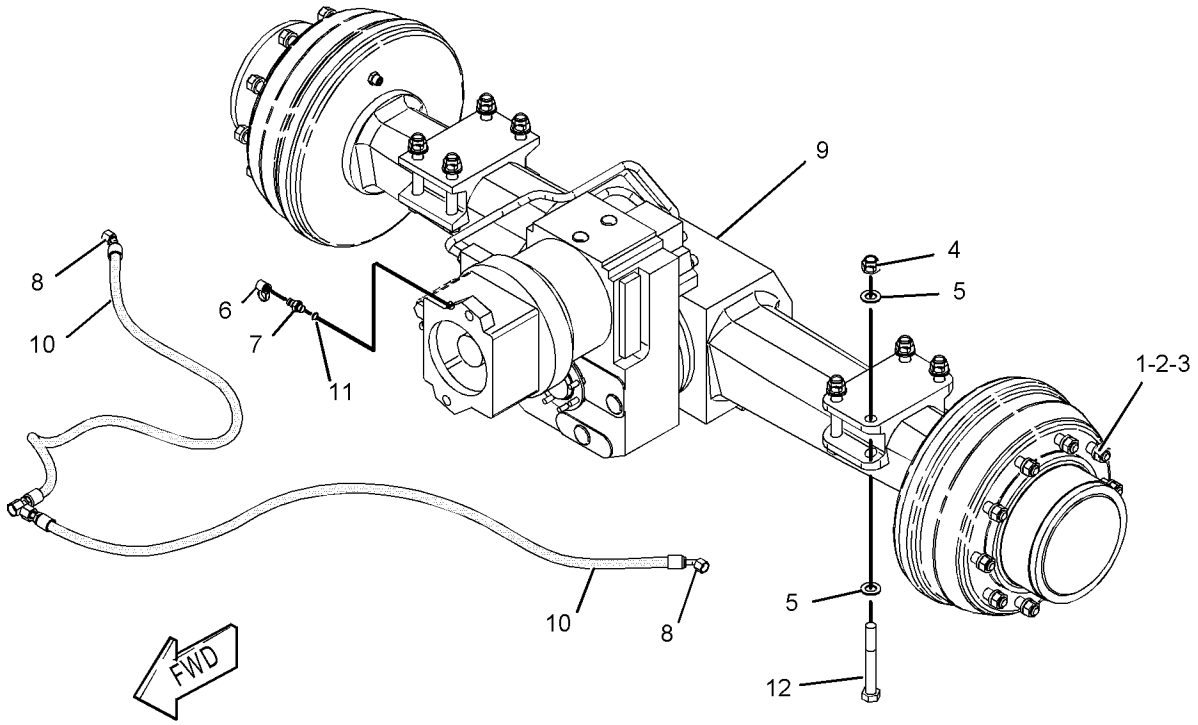

GRAPHIC #1 **<END>** g01084589

205-3915 AXLE AR-REAR—WIDE

S/N: BCZ1-2000
PART OF 205-3911 AXLE AR-WIDE
AN ATTACHMENT

SMCS-3013, 3278, 3282 **i02160032**

NOTE	REF NO	GRAPHIC REF	PART NUMBER	QTY	PART NAME 1 2 3 4 5 6 (PRODUCT LEVEL)	SEE PAGE
M	1	1	**6V-7688**	8	LOCKNUT (M20X2.5-THD)	
	2	1	**7Y-1858**	16	WASHER (21X37X3-MM THK)	
	3	1	**123-8324**	2	CAP	
	4	1	**124-5215**	2	FITTING AS (QUICK DISCONNECT)	
	5	1	**132-4618**	2	FITTING GP	
I	6	1	**149-1249**	2	HOSE AS	
Y	7	1	**204-7742**	1	AXLE & TRANSMISSION AR	218
	8	1	**6V-6560**	2	SEAL-O-RING	
M	9	1	**8T-0656**	8	BOLT (M20X2.5X150-MM)	
					—OR—	
M		1	**8T-7505**	8	BOLT (M20X2.5X220-MM)	
	10	1	**5W-1440**	20	LOCKWASHER	
M	11	1	**5W-1386**	20	NUT (M22X1.5-THD)	
	12	1	**5W-0965**	20	RING	

I-REFER TO HYDRAULIC INFORMATION SYSTEM
M-METRIC PART
Y-SEPARATE ILLUSTRATION

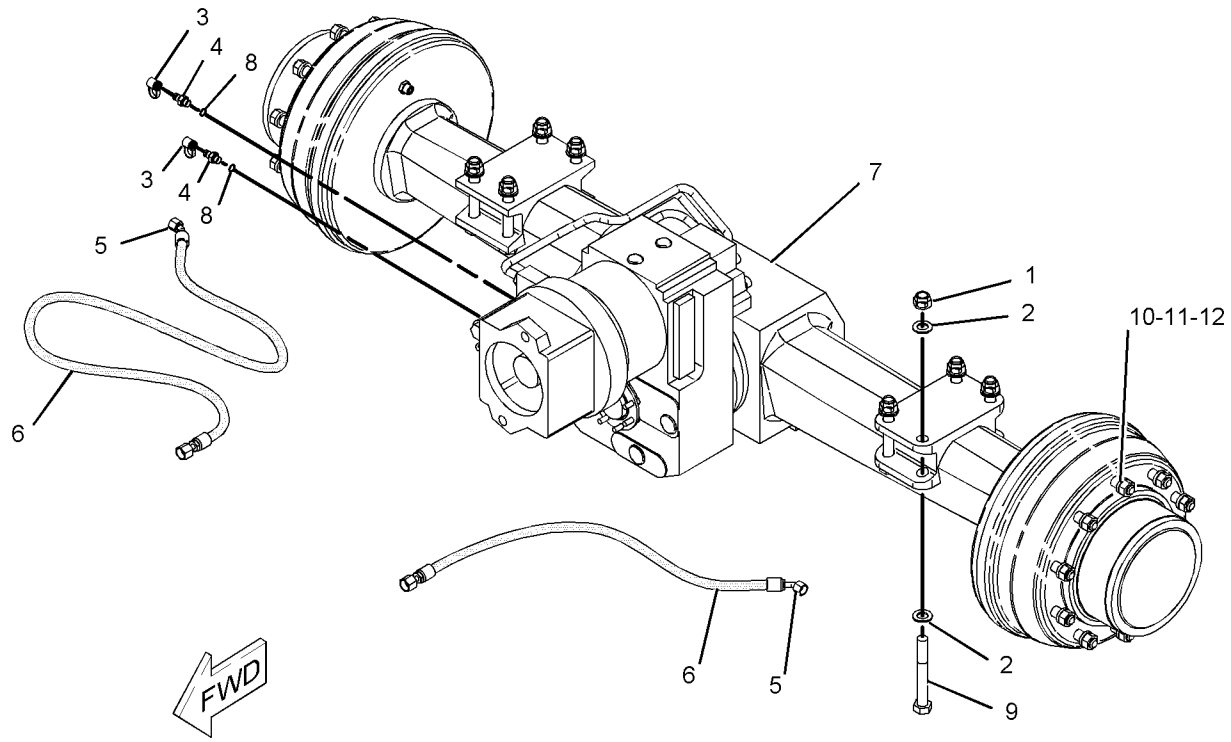

GRAPHIC #1 **<END>** g01095274

205-3910 AXLE AR-WIDE

S/N: BCZ1-2000
PART OF 205-3911 AXLE AR-WIDE
AN ATTACHMENT

SMCS-3013, 3278 **i02160031**

NOTE	REF NO	GRAPHIC REF	PART NUMBER	QTY	PART NAME 1 2 3 4 5 6 (PRODUCT LEVEL)	SEE PAGE
	1	1	**5P-8247**	1	WASHER-HARD (17X32X3.5-MM THK)	
	2	1	**5W-2817**	1	FITTING-GREASE	
	3	1	**110-2170**	1	PIN	
	4	1	**111-1230**	2	PLATE AS	
Y	5	1	**204-7741**	1	AXLE GP-STEERING (WIDE)	264
B	6	1	**163-7180**	1	SHIM (0.5-MM THK)	
M	7	1	**6V-5844**	8	BOLT (M16X2X35-MM)	
M	8	1	**8T-0282**	1	BOLT (M16X2X120-MM)	
M	9	1	**8T-4132**	1	NUT (M16X2-THD)	
	10	1	**5W-0965**	20	RING	
M	11	1	**5W-1386**	20	NUT (M22X1.5-THD)	
	12	1	**5W-1440**	20	LOCKWASHER	

B-USE AS REQUIRED
M-METRIC PART
Y-SEPARATE ILLUSTRATION

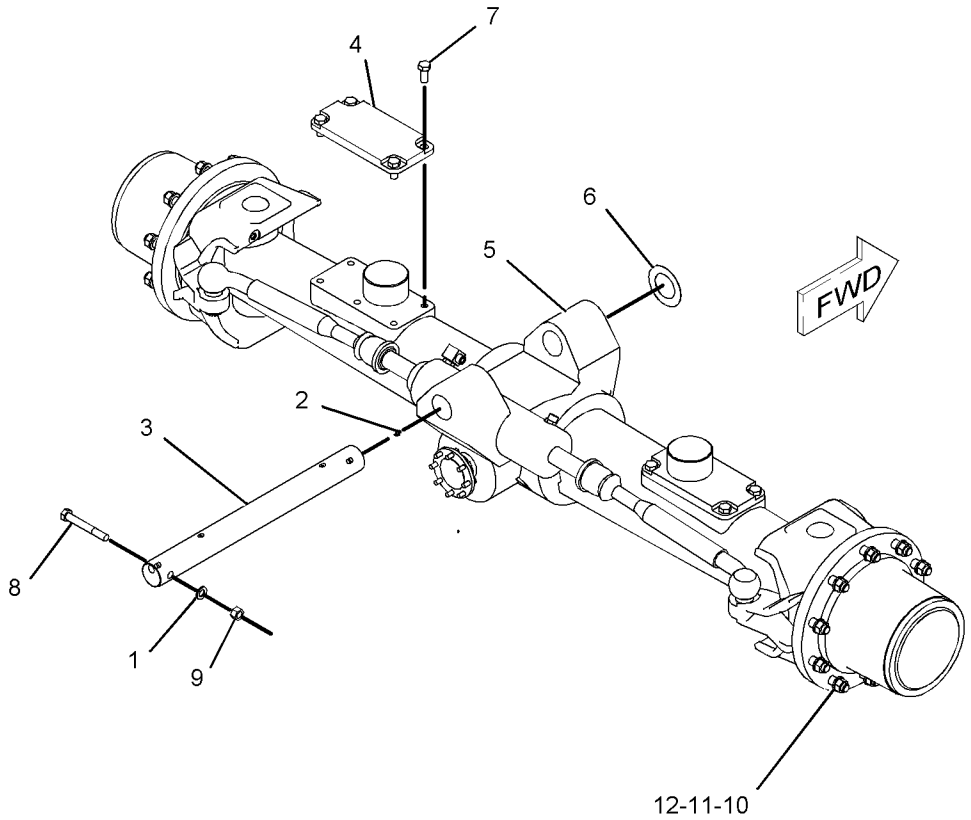

GRAPHIC #1 **<END>** g01095273

205-3911 AXLE AR-WIDE

S/N: BCZ1-2000

AN ATTACHMENT

SMCS-3013, 3278 **i01619010**

NOTE	PART NUMBER	QTY	PART NAME 1 2 3 4 5 6 (PRODUCT LEVEL)	SEE PAGE
Y	*205-3910*	1	AXLE AR-WIDE	229
Y	*205-3915*	1	AXLE AR-REAR	228

Y-SEPARATE ILLUSTRATION

<END>

POWER TRAIN

187-7215 AXLE GP-REAR

S/N: BCZ1-2000
PART OF 187-7214 AXLE & TRANSMISSION AR
AN ATTACHMENT

SMCS-3282 **i02160038**

NOTE	REF NO	GRAPHIC REF	PART NUMBER	QTY	PART NAME 1 2 3 4 5 6 (PRODUCT LEVEL)	SEE PAGE
	1	1	**6V-5225**	4	SCREW-DRIVE	
	2	1	**109-4440**	3	PLUG	
	3	1,3	**190-8676**	4	SEAL-O-RING	
	4	1	**110-0847**	1	PLUG-SCREW	
	5	1	**129-3457**	1	HOUSING-AXLE	
	6	1	**203-7592**	2	ROD-AXLE	
M	7	1	**9R-3533**	14	BOLT-SPECIAL	
	8	2	**203-7593**	2	HUB GP-WHEEL	
					(EACH INCLUDES)	
		2	**8U-2342**	1	NUT	
	9	2	**8U-3602**	8	PLUG	
M	10	2	**8T-2393**	36	BOLT-SOCKET HEAD (M16X2X60-MM)	
	11	2	**5W-3061**	2	SEAL-O-RING	
	12	2	**121-8133**	2	PLATE-BACKING	
	13	2	**5W-5682**	2	VALVE-BREATHER (AXLE)	
	14	2	**8U-5923**	2	FITTING AS	
	15	2	**8U-2233**	2	SEAL-O-RING	
	17	2	**203-0216**	2	SEAL-O-RING	
	18	3	**121-8168**	2	SEAL-LIP TYPE	
	19	3	**8U-2356**	4	BEARING (27-MM 7HK)	
B	20	3	**8U-2365**	2	BUSHING (26-MM THK)	
B		3	**8U-2366**	2	BUSHING (26.2-MM THK)	
B		3	**8U-2367**	2	BUSHING (26.4-MM THK)	
B		3	**8U-2368**	2	BUSHING (26.6-MM THK)	
B		3	**8U-2369**	2	BUSHING (26.8-MM THK)	
B		3	**8U-2370**	2	BUSHING (27-MM THK)	
B		3	**8U-2371**	2	BUSHING (27.2-MM THK)	
B		3	**135-1594**	2	BUSHING (26.23-MM THK)	
B		3	**135-1595**	2	BUSHING (26.26-MM THK)	
B		3	**135-1596**	2	BUSHING (26.29-MM THK)	
B		3	**135-1597**	2	BUSHING (26.32-MM THK)	
B		3	**135-1598**	2	BUSHING (26.35-MM THK)	
B		3	**241-3652**	2	BUSHING (26.38-MM THK)	
B		3	**241-3653**	2	BUSHING (26.41-MM THK)	
B		3	**241-3654**	2	BUSHING (26.44-MM THK)	
B		3	**241-3655**	2	BUSHING (26.47-MM THK)	
B		3	**241-3656**	2	BUSHING (26.5-MM THK)	
	32	3	**203-7594**	2	HUB-WHEEL	
	33	3	**110-4745**	2	SEAL-O-RING	
	34	3	**135-1593**	2	GEAR (81-TEETH)	
	35	3	**5W-6377**	4	PLUG	
	36	3	**8U-2359**	4	SEAL-O-RING	
	37	3	**8U-2360**	2	RING	
	38	3	**8U-2361**	2	RING	
	39	3	**135-1599**	2	PISTON	
	40	3	**8U-2373**	4	SEAL	
	41	3	**8U-2398**	2	RING	
	42	3	**8U-2399**	2	RING	
	43	3	**8U-3590**	2	GASKET	
	44	3	**8U-3591**	16	SPACER	
	45	3	**8U-3592**	16	SPRING	
	46	3	**135-1600**	2	RING	
M	47	3	**8T-0275**	16	BOLT (M6X1X50-MM)	
	48	3	**8U-3594**	16	NUT	
B	49	3	**8U-9508**	8	DISC (2.5-MM THK)	

187-7215 AXLE GP-REAR *(contd.)* i02160038

NOTE	REF NO	GRAPHIC REF	PART NUMBER	QTY	PART NAME 1 2 3 4 5 6 (PRODUCT LEVEL)	SEE PAGE
B	50	3	**8U-9509**	8	DISC (3-MM THK)	
B	51	3	**8U-9507**	8	DISC (2-MM THK)	
	52	3	**110-0842**	6	DISC-FRICTION	
	53	3	**8U-2377**	2	WASHER-THRUST	
	54	3	**8U-2378**	2	RING-LOCK	
	55	3	**135-1601**	2	WASHER	
	56	3	**8U-4119**	2	GEAR (48-TEETH)	
	57	3	**8U-2385**	2	RING-RETAINING (5-MM THK)	
	58	3	**8U-9510**	2	CARRIER-PLANETARY	
	59	3	**9W-4926**	2	PLUG	
	60	3	**6T-6408**	2	SEAL-O-RING	
	61	3	**193-1132**	6	GEAR-PLANETARY	
	62	3	**213-9783**	6	BEARING-ROLLER	
	63	3	**190-8591**	12	WASHER (64.5X72.1X2-MM THK)	
	64	3	**190-8590**	12	RING-SNAP	
	65	3	**110-4737**	6	RING-RETAINING	
B	66	3	**110-0165**	2	WASHER-THRUST (1.5-MM THK)	
B		3	**110-0164**	2	WASHER-THRUST (1.7-MM THK)	
B		3	**110-0163**	2	WASHER-THRUST (2-MM THK)	
B		3	**110-0162**	2	WASHER-THRUST (2.2-MM THK)	
B		3	**110-0161**	2	WASHER-THRUST (2.5-MM THK)	
B		3	**110-0160**	2	WASHER-THRUST (2.7-MM THK)	
B		3	**110-0159**	2	WASHER-THRUST (3-MM THK)	
	74	3	**8U-2449**	2	SEAL	
	75	3	**8U-4121**	2	GEAR-SUN	
	76	3	**204-0728**	2	SEAL-O-RING	
M	77	3	**5W-2177**	4	BOLT-SOCKET HEAD (M12X1.75X20-MM)	
	78	3	**5W-0964**	20	BOLT (M22X1.5X92-MM)	

B-USE AS REQUIRED
M-METRIC PART

187-7215 AXLE GP-REAR *(contd.)* **i02160038**

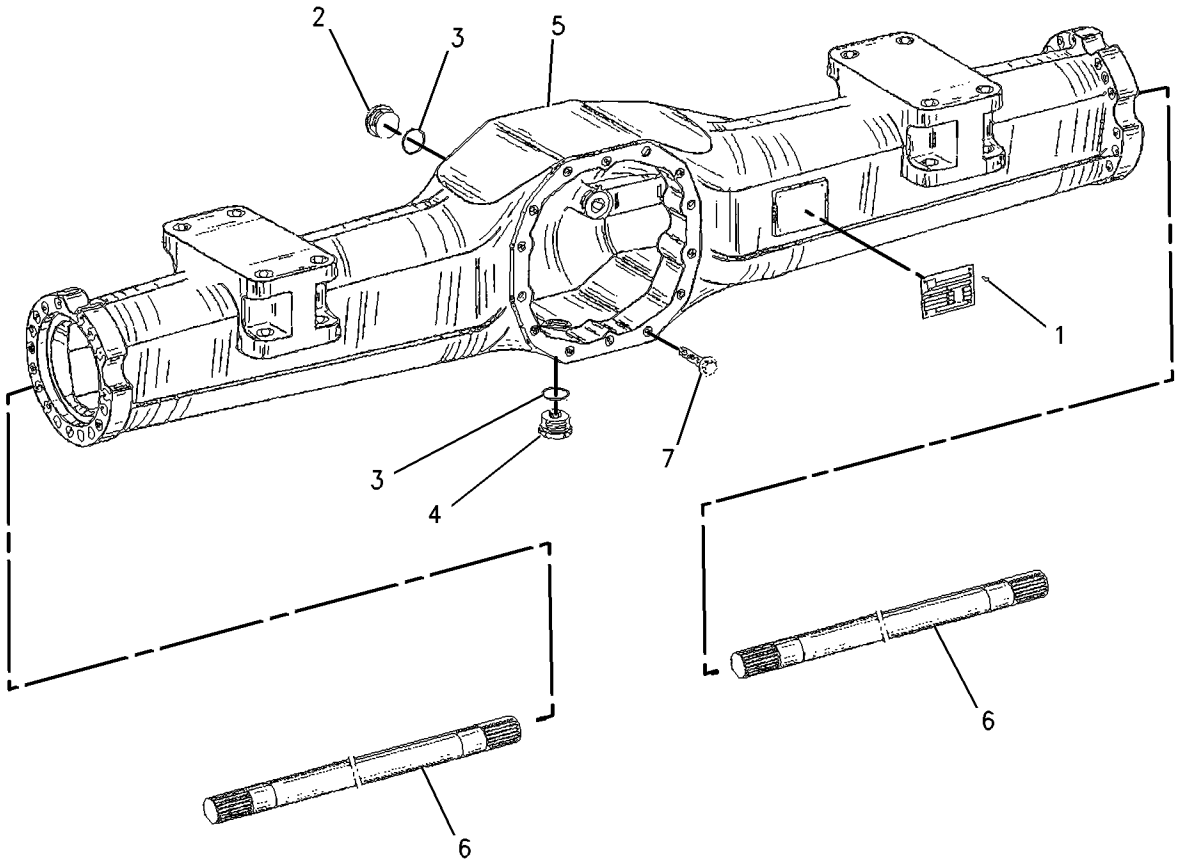

GRAPHIC #1 g00811882

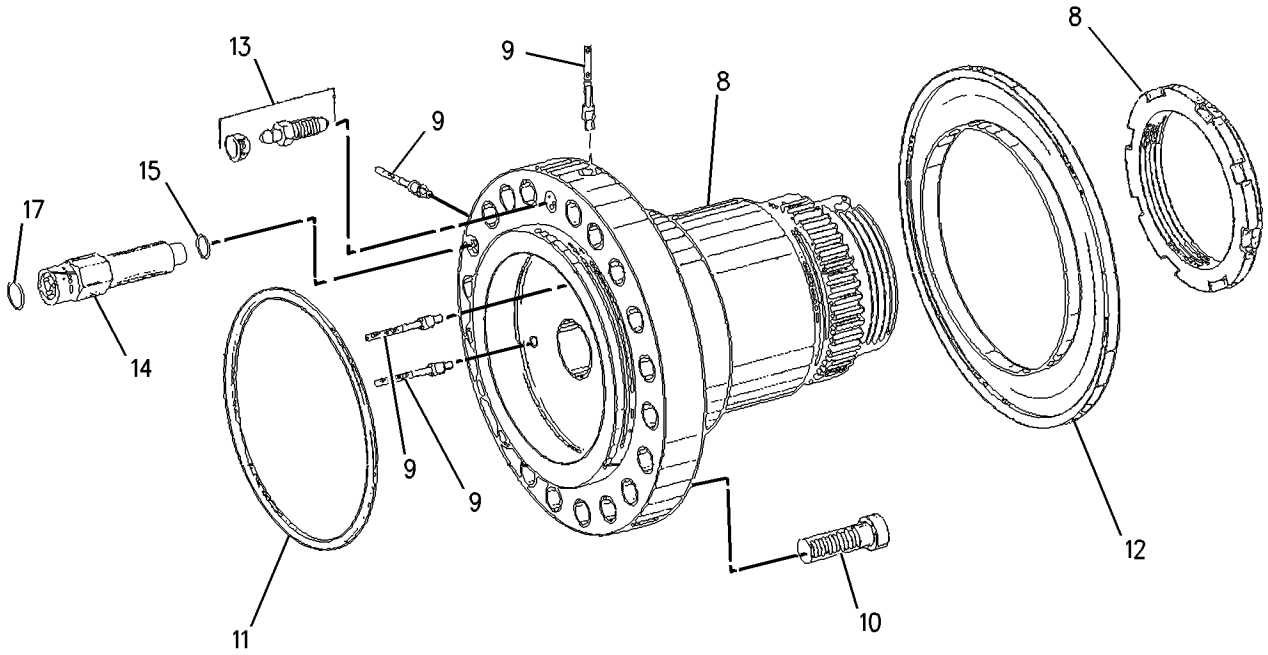

GRAPHIC #2 g00811883

187-7215 AXLE GP-REAR *(contd.)* **i02160038**

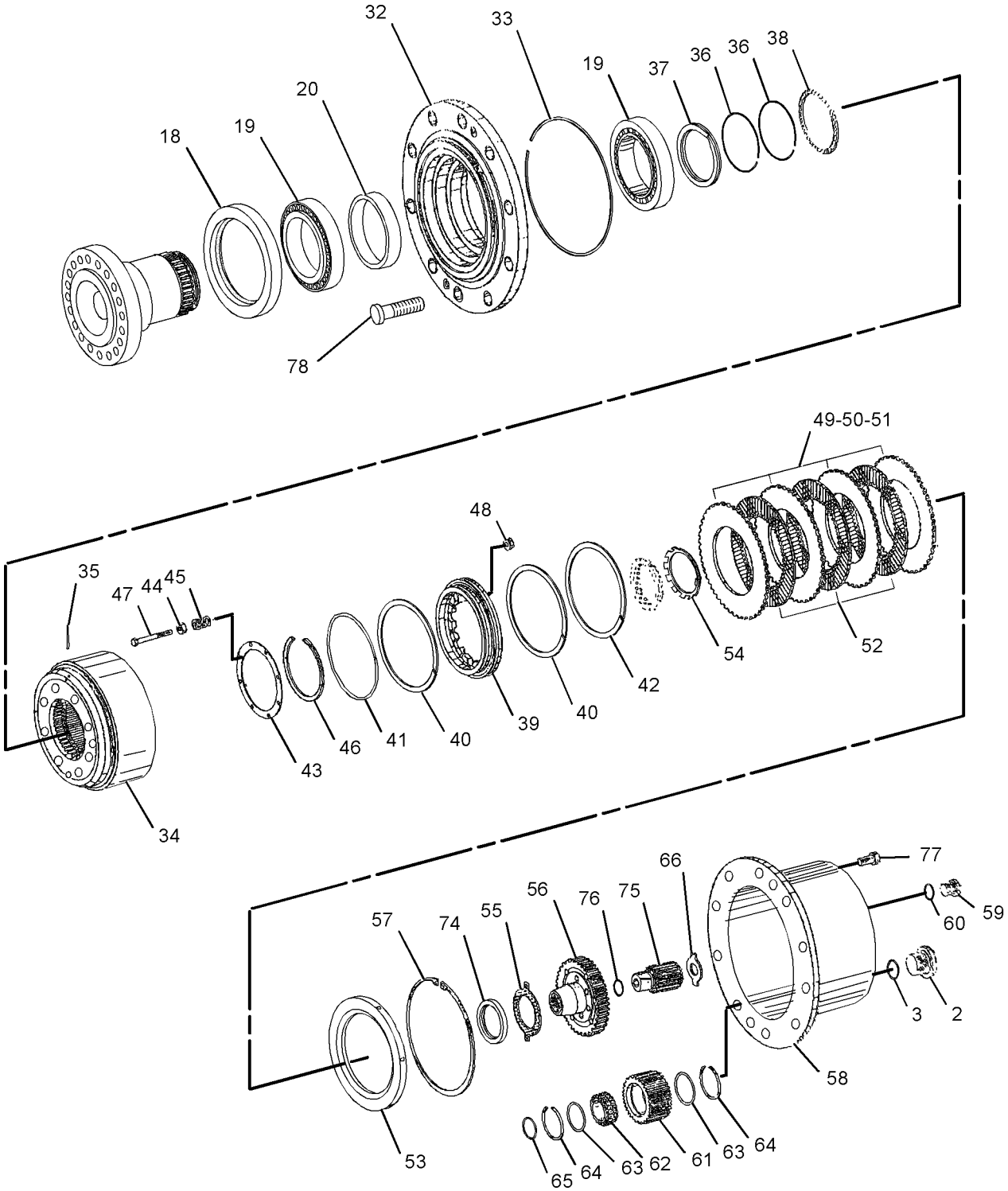

GRAPHIC #3 **<END>** g01093234

204-7743 AXLE GP-REAR

S/N: BCZ1-2000
PART OF 204-7742 AXLE & TRANSMISSION AR
AN ATTACHMENT

SMCS-3282 **i02067672**

NOTE	REF NO	GRAPHIC REF	PART NUMBER	QTY	PART NAME 1 2 3 4 5 6 (PRODUCT LEVEL)	SEE PAGE
	1	1,3	**109-4440**	3	PLUG	
	2	1,3	**190-8676**	4	SEAL-O-RING	
	3	1	**110-0847**	1	PLUG-SCREW	
	4	1	**205-0608**	2	SHAFT	
	5	1	**129-3457**	1	HOUSING-AXLE	
M	6	1	**9R-3533**	14	BOLT-SPECIAL	
	7	1	**135-3406**	2	SLEEVE	
	8	1	**9X-6378**	2	RING-RETAINING	
	9	2	**204-7693**	2	HUB GP-WHEEL	
		2	**110-0849**	1	NUT-SLOTTED	
	10	2	**5W-3061**	2	SEAL-O-RING	
	11	2	**135-3408**	2	PLATE-ROUND	
	12	3	**135-3409**	2	RING	
	13	3	**8U-2356**	4	BEARING	
B	14	3	**8U-2365**	2	BUSHING (26.0-MM THK)	
B		3	**8U-2366**	2	BUSHING (26.2-MM THK)	
B		3	**8U-2367**	2	BUSHING (26.4-MM THK)	
B		3	**8U-2368**	2	BUSHING (26.6-MM THK)	
B		3	**8U-2369**	2	BUSHING (26.8-MM THK)	
B		3	**8U-2370**	2	BUSHING (27-MM THK)	
B		3	**8U-2371**	2	BUSHING (27.2-MM THK)	
B		3	**135-1594**	2	BUSHING (26.23-MM THK)	
B		3	**135-1595**	2	BUSHING (26.26-MM THK)	
B		3	**135-1596**	2	BUSHING (26.29-MM THK)	
B		3	**135-1597**	2	BUSHING (26.32-MM THK)	
B		3	**135-1598**	2	BUSHING (26.35-MM THK)	
B		1	**241-3652**	2	BUSHING (26.38-MM THK)	
B		1	**241-3653**	2	BUSHING (26.41-MM THK)	
B		1	**241-3654**	2	BUSHING (26.44-MM THK)	
B		1	**241-3655**	2	BUSHING (26.47-MM THK)	
B		1	**241-3656**	2	BUSHING (26.5-MM THK)	
	26	3	**135-3410**	2	HUB	
	27	3	**110-4745**	2	SEAL-O-RING	
	28	3	**110-0862**	2	GEAR-RING	
	29	3	**110-0861**	2	WASHER-TAB	
M	30	3	**9R-6965**	4	SCREW (M10X1.5X20)	
	31	3	**8U-4121**	2	GEAR-SUN (15 TEETH)	
	32	3	**135-3412**	2	GEAR	
	33	3	**193-1132**	6	GEAR-PLANET	
	34	3	**213-9783**	6	BEARING-ROLLER	
	35	3	**190-8591**	12	WASHER (64.5X72.1X2-MM THK)	
	36	3	**190-8590**	12	RING-SNAP	
	37	3	**110-4737**	6	RING-RETAINING	
B	38	3	**110-0165**	2	WASHER-THRUST (1.5-MM THK)	
B		3	**110-0164**	2	WASHER-THRUST (1.7-MM THK)	
B		3	**110-0163**	2	WASHER-THRUST (2.0-MM THK)	
B		3	**110-0162**	2	WASHER-THRUST (2.2-MM THK)	
B		3	**110-0161**	2	WASHER-THRUST (2.5-MM THK)	
B		3	**110-0160**	2	WASHER-THRUST (2.7-MM THK)	
B		3	**110-0159**	2	WASHER-THRUST (3.0-MM THK)	
M	45	3	**5W-2177**	4	BOLT-SOCKET HEAD (M12X1.75X20-MM)	
	46	3	**135-3413**	20	BOLT	
Y	47	4	**158-6333**	2	BRAKE GP-DRUM	286
	48	4	**129-2720**	2	DRUM-BRAKE	
	49	4	**2R-0409**	36	WASHER	

204-7743 AXLE GP-REAR *(contd.)*

i02067672

NOTE	REF NO	GRAPHIC REF	PART NUMBER	QTY	PART NAME 1 2 3 4 5 6 (PRODUCT LEVEL)	SEE PAGE
M	50	4	**095-9806**	36	BOLT-SOCKET HEAD (M16X2X80-MM)	

B-USE AS REQUIRED
M-METRIC PART
Y-SEPARATE ILLUSTRATION

204-7743 AXLE GP-REAR *(contd.)* **i02067672**

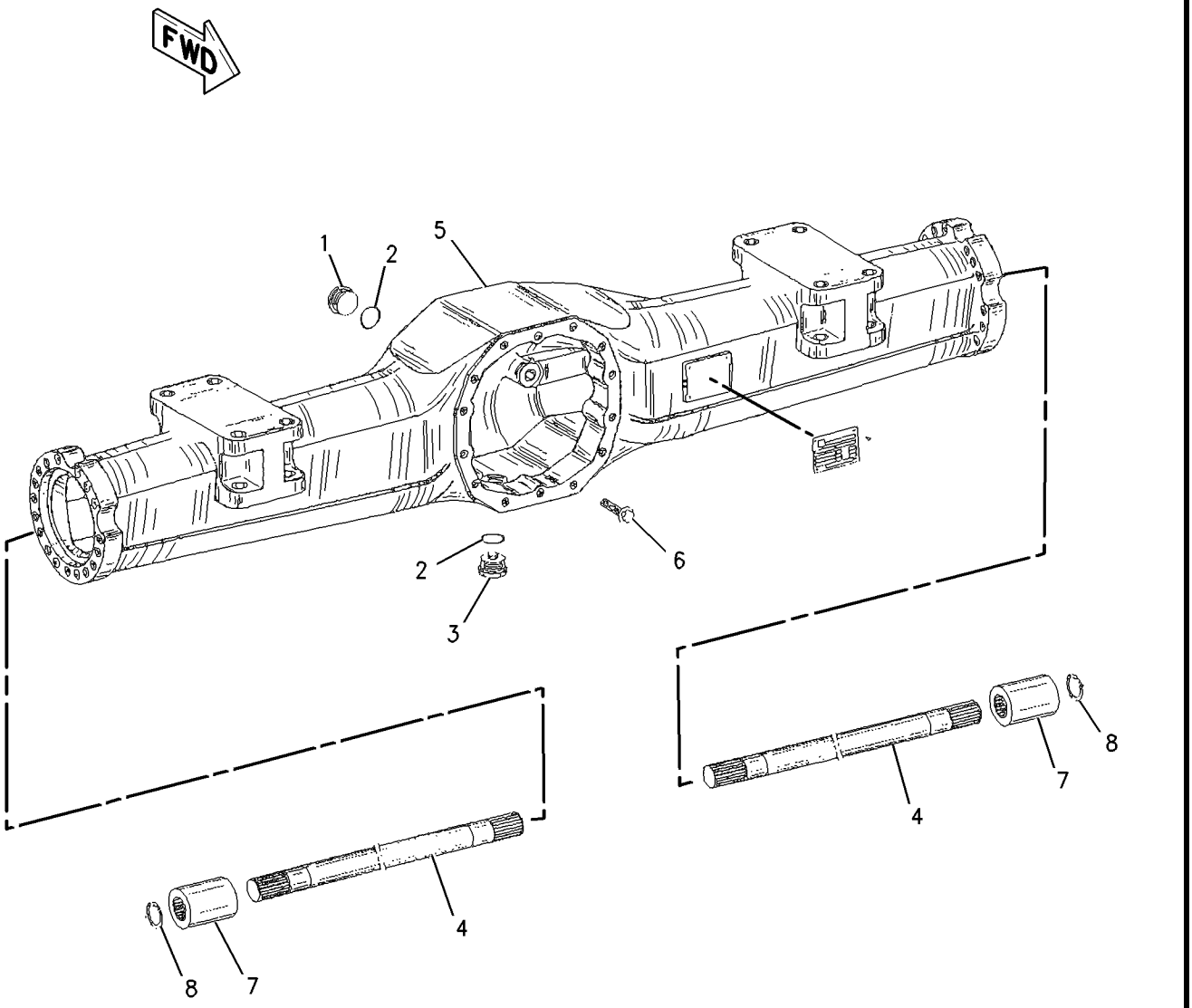

GRAPHIC #1 g00927411

204-7743 AXLE GP-REAR *(contd.)* **i02067672**

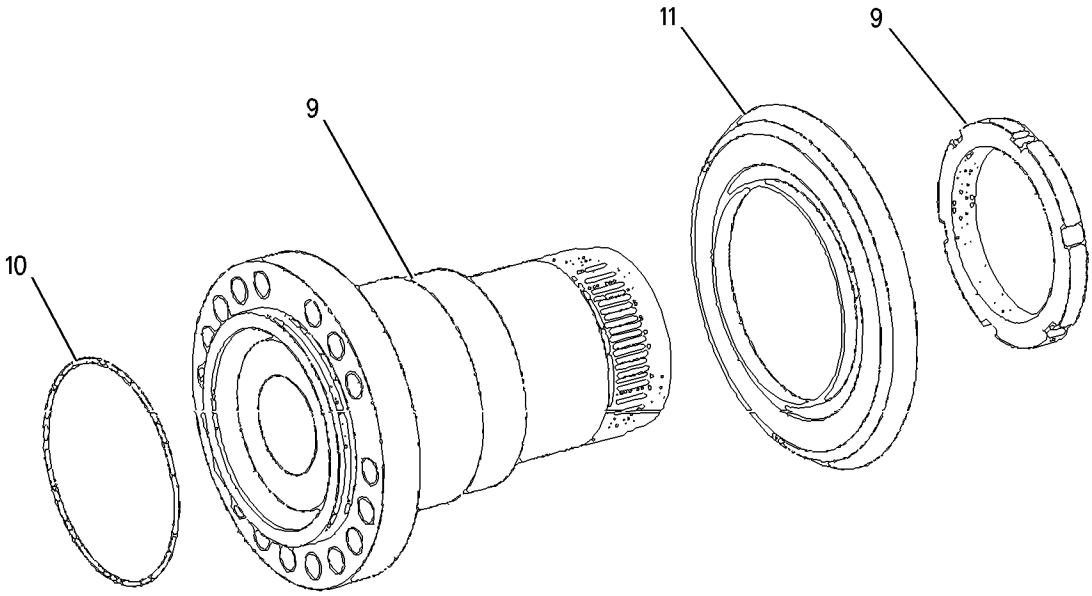

GRAPHIC #2 g00812127

204-7743 AXLE GP-REAR *(contd.)* **i02067672**

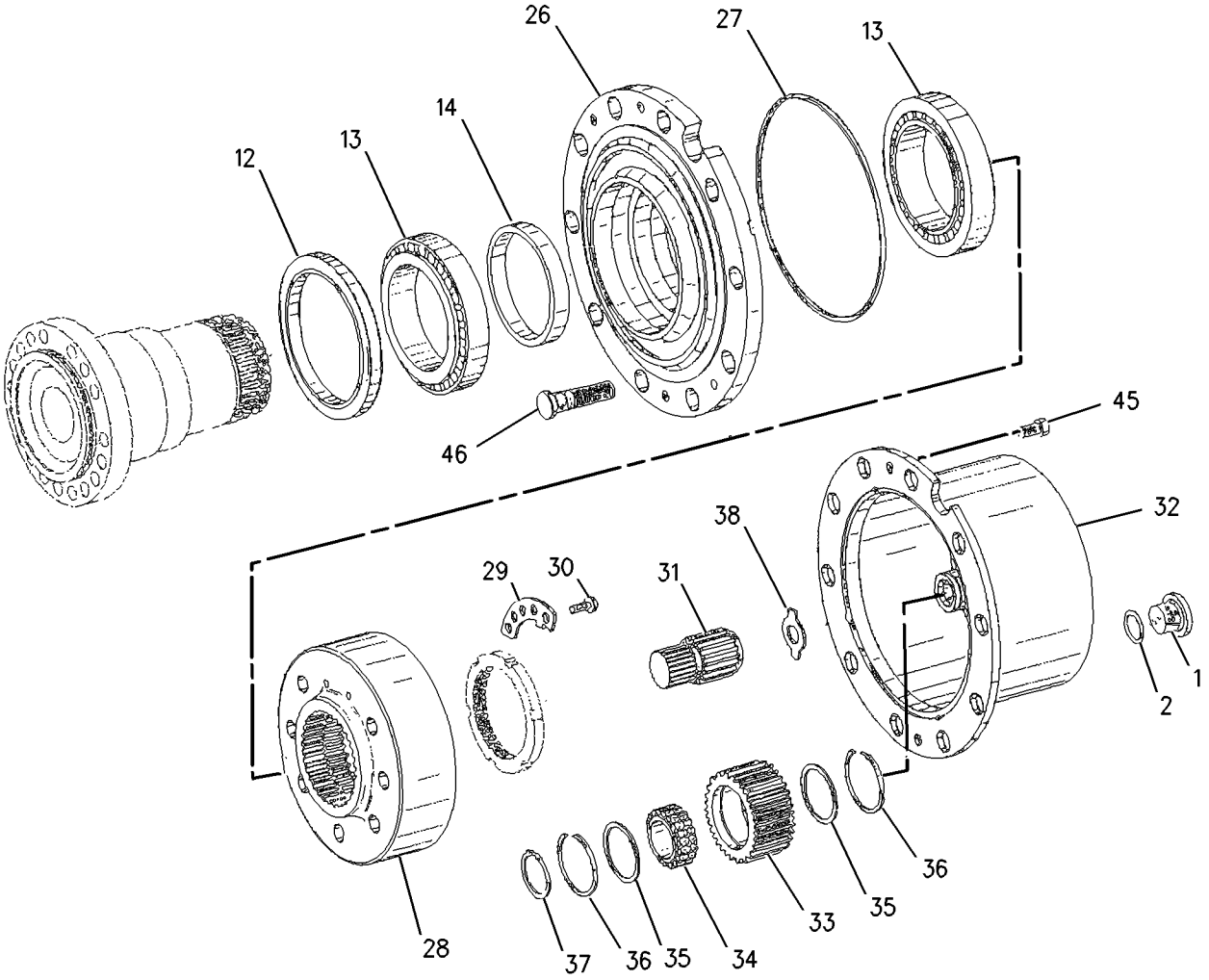

GRAPHIC #3 g00812128

204-7743 AXLE GP-REAR *(contd.)* **i02067672**

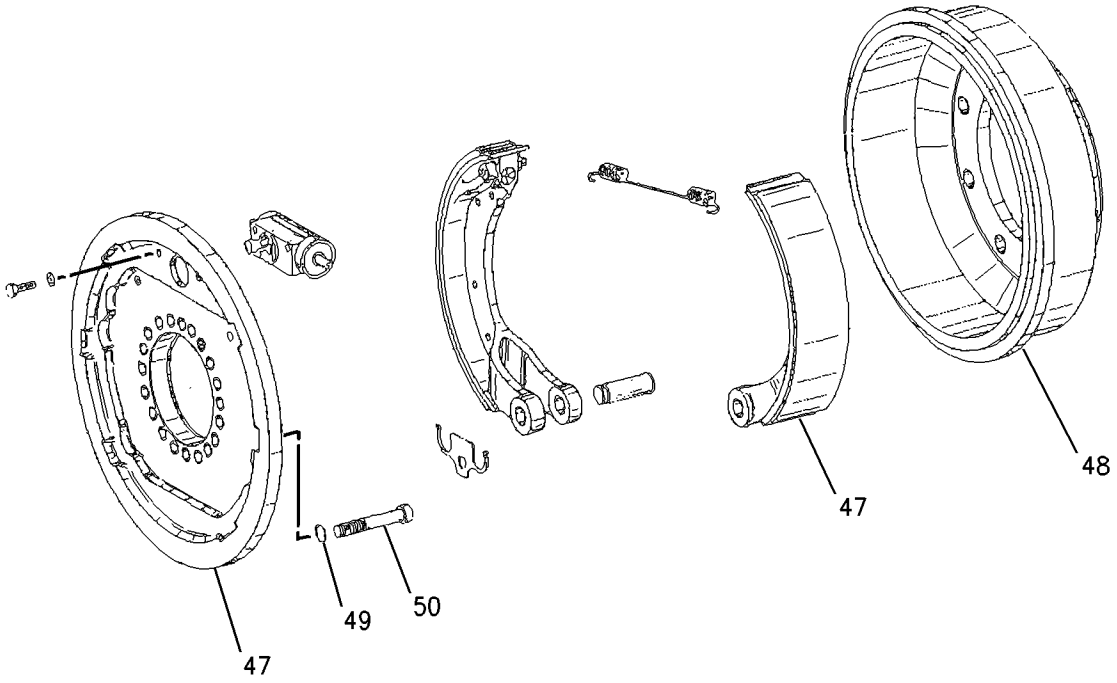

GRAPHIC #4 **<END>** g00812129

POWER TRAIN

187-7213 AXLE GP-STEERING

S/N: BCZ1-217

PART OF 188-4930 AXLE AR-FRONT

SMCS-3020, 3282, 4313, 4321 **i02160040**

NOTE	REF NO	GRAPHIC REF	PART NUMBER	QTY	PART NAME 1 2 3 4 5 6 (PRODUCT LEVEL)	SEE PAGE
	1	3	**203-5397**	1	GEAR AS-PINION (43 TEETH)	
B	2	3	**9R-6814**	2	WASHER (88X104.6X1.5-MM THK)	
B		3	**9R-6805**	1	WASHER (88X104.6X0.9-MM THK)	
B		3	**9R-6806**	1	WASHER (88X104.6X0.95-MM THK)	
B		3	**9R-6807**	1	WASHER (88X104.6X1-MM THK)	
B		3	**9R-6808**	1	WASHER (88X104.6X1.05-MM THK)	
B		3	**9R-6809**	1	WASHER (88X104.6X1.1-MM THK)	
B		3	**9R-6810**	1	WASHER (88X104.6X1.15-MM THK)	
B		3	**9R-6811**	1	WASHER (88X104.6X1.2-MM THK)	
B		3	**9R-6812**	1	WASHER (88X104.6X1.25-MM THK)	
B		3	**9R-6813**	1	WASHER (88X104.6X1.3-MM THK)	
B		3	**9R-6801**	1	WASHER (88X104.6X0.7-MM THK)	
B		3	**9R-6802**	1	WASHER (88X104.6X0.75-MM THK)	
B		3	**9R-6803**	1	WASHER (88X104.6X0.8-MM THK)	
B		3	**9R-6804**	1	WASHER (88X104.6X0.85-MM THK)	
	16	3	**7T-9342**	1	CONE-BEARING	
B	17	3	**9R-6932**	1	RING (11.3-MM THK)	
B		3	**9R-6933**	1	RING (11.33-MM THK)	
B		3	**9R-6934**	1	RING (11.36-MM THK)	
B		3	**9R-6935**	1	RING (11.39-MM THK)	
B		3	**9R-6936**	1	RING (11.42-MM THK)	
B		3	**9R-6937**	1	RING (11.45-MM THK)	
B		3	**9R-6938**	1	RING (11.48-MM THK)	
B		3	**9R-6939**	1	RING (11.51-MM THK)	
B		3	**9R-6940**	1	RING (11.54-MM THK)	
B		3	**9R-6941**	1	RING (11.57-MM THK)	
B		3	**9R-6942**	1	RING (11.6-MM THK)	
B		3	**9R-6943**	1	RING (11.63-MM THK)	
B		3	**9R-6944**	1	RING (11.66-MM THK)	
B		3	**9R-6945**	1	RING (11.69-MM THK)	
B		3	**9R-6836**	1	RING (11.72-MM THK)	
B		3	**9R-6837**	1	RING (11.75-MM THK)	
B		3	**9R-6838**	1	RING (11.78-MM THK)	
B		3	**9R-6839**	1	RING (11.81-MM THK)	
B		3	**9R-6840**	1	RING (11.84-MM THK)	
B		3	**9R-6841**	1	RING (11.87-MM THK)	
B		3	**9R-6842**	1	RING (11.9-MM THK)	
B		3	**9R-6843**	1	RING (11.93-MM THK)	
B		3	**9R-6844**	1	RING (11.96-MM THK)	
B		3	**9R-6845**	1	RING (11.99-MM THK)	
B		3	**9R-6846**	1	RING (12.02-MM THK)	
B		3	**9R-6847**	1	RING (12.05-MM THK)	
B		3	**9R-6848**	1	RING (12.08-MM THK)	
B		3	**9R-6849**	1	RING (12.11-MM THK)	
B		3	**9R-6850**	1	RING (12.14-MM THK)	
B		3	**9R-6924**	1	RING (12.17-MM THK)	
B		3	**9R-6925**	1	RING (12.2-MM THK)	
B		3	**9R-6926**	1	RING (12.23-MM)	
B		3	**9R-6927**	1	RING (12.26-MM THK)	
B		3	**9R-6928**	1	RING (12.29-MM THK)	
B		3	**9R-6929**	1	RING (12.32-MM THK)	
B		3	**9R-6930**	1	RING (12.35-MM THK)	
B		3	**9R-6931**	1	RING (12.38-MM THK)	
B	54	3	**8U-5669**	1	SPACER (11.27-MM THK)	
B		3	**8U-5670**	1	SPACER (11.24-MM THK)	
B		3	**8U-5671**	1	SPACER (11.21-MM THK)	

187-7213 AXLE GP-STEERING *(contd.)* i02160040

NOTE	REF NO	GRAPHIC REF	PART NUMBER	QTY	PART NAME 1 2 3 4 5 6 (PRODUCT LEVEL)	SEE PAGE
B		3	**8U-5672**	1	SPACER (11.18-MM THK)	
B		3	**8U-5673**	1	SPACER (11.15-MM THK)	
B	59	3	**128-7637**	1	RING (11.12-MM THK)	
B		3	**128-7638**	1	RING (11.09-MM THK)	
B		3	**128-7639**	1	RING (11.06-MM THK)	
B		3	**128-7640**	1	RING (11.03-MM THK)	
B		3	**128-7641**	1	RING (11-MM THK)	
B		3	**128-7642**	1	RING (10.97-MM THK)	
B		3	**128-7643**	1	RING (10.94-MM THK)	
	66	3	**9R-7002**	1	BEARING	
	67	3	**9R-6997**	1	SEAL	
	68	3	**9R-6985**	1	WASHER (27.1X50X5-MM THK)	
	69	3	**5W-5352**	1	NUT (M27X1.5 THD)	
	70	3	**5W-5398**	1	WASHER-RETAINING	
	71	3	**5W-5666**	1	FLANGE	
	72	3	**9R-6954**	1	PLATE-COVER	
	73	4	**121-7625**	1	CASE	
	74	4	**9R-6964**	2	GEAR-DIFFERENTIAL (16 TEETH)	
	75	4	**6T-5749**	2	WASHER-THRUST	
	76	4	**128-7855**	4	GEAR-PINION (11 TEETH)	
	77	4	**9R-6994**	4	WASHER-THRUST	
	78	4	**9R-6993**	1	SPIDER	
M	79	4	**8T-2323**	12	BOLT-SOCKET HEAD (M12X1.5X120-MM)	
	80	4	**9R-6819**	12	WASHER (13X21.9X3-MM THK)	
	81	4	**8T-2450**	4	PIN-SPRING	
	82	4	**9R-6962**	4	PIN-CLAMPING	
B	83	1	**054-6514**	2	SHIM (0.1-MM THK)	
B		1	**121-7679**	2	SHIM (0.15-MM THK)	
B		1	**054-6513**	2	SHIM (0.2-MM THK)	
B		1	**121-7680**	2	SHIM (0.25-MM THK)	
B		1	**054-6512**	2	SHIM (0.3-MM THK)	
B		1	**128-7675**	2	SHIM (0.35-MM THK)	
B		1	**7T-0564**	2	SHIM (0.4-MM THK)	
B		1	**121-7677**	2	SHIM (0.45-MM THK)	
B		1	**7T-0563**	2	SHIM (0.5-MM THK)	
B		1	**121-7678**	2	SHIM (0.55-MM THK)	
B		1	**7T-0562**	2	SHIM (0.6-MM THK)	
B		1	**128-7676**	2	SHIM (0.65-MM THK)	
B		1	**128-7677**	2	SHIM (0.7-MM THK)	
B		1	**128-7680**	2	SHIM (75-MM THK)	
B		1	**7T-0561**	2	SHIM (0.8-MM THK)	
B		1	**128-7681**	2	SHIM (0.85-MM THK)	
B		1	**128-7683**	2	SHIM (0.9-MM THK)	
B		1	**128-7684**	2	SHIM (0.95-MM THK)	
B		1	**7T-0560**	2	SHIM (1-MM THK)	
B		1	**128-7685**	2	SHIM (1.05-MM THK)	
B		1	**128-7686**	2	SHIM (1.1-MM THK)	
B		1	**128-7687**	2	SHIM (1.15-MM THK)	
B		1	**128-7688**	2	SHIM (1.25-MM THK)	
B		1	**128-7689**	2	SHIM (1.3-MM THK)	
B		1	**128-7690**	2	SHIM (1.35-MM THK)	
B		1	**7T-0558**	2	SHIM (1.4-MM THK)	
B		1	**128-7691**	2	SHIM (1.45-MM THK)	
B		1	**128-7692**	2	SHIM (1.5-MM THK)	
B		1	**128-7693**	2	SHIM (1.55-MM THK)	
B		1	**128-7694**	2	SHIM (1.6-MM THK)	
B		1	**128-7695**	2	SHIM (1.65-MM THK)	
B		1	**7T-0552**	2	SHIM (2-MM THK)	
B	116	1	**202-8137**	2	WASHER (1.47-MM THK)	

187-7213 AXLE GP-STEERING *(contd.)* i02160040

NOTE	REF NO	GRAPHIC REF	PART NUMBER	QTY	PART NAME 1 2 3 4 5 6 (PRODUCT LEVEL)	SEE PAGE
B		1	**202-8138**	2	WASHER (1.63-MM THK)	
B		1	**202-8139**	2	WASHER (1.75-MM THK)	
B		1	**202-8140**	2	WASHER (1.7-MM THK)	
B		1	**202-8141**	2	WASHER (1.8-MM THK)	
B		1	**202-8142**	2	WASHER (1.85-MM THK)	
B		1	**202-8143**	2	WASHER (1.9-MM THK)	
B		1	**202-8144**	2	WASHER (1.95-MM THK)	
	124	1	**9R-7003**	1	BEARING	
	125	1	**6Y-2942**	1	CONE-BEARING	
		1	**6Y-2943**	1	CUP-BEARING (TAPERED ROLLER BEARING)	
	126	1	**5W-5475**	1	SEAL-O-RING	
	127	1	**5W-5627**	16	BOLT (M18X2.5X60MM)	
	128	1	**5W-5531**	16	WASHER	
	129	1	**6V-5225**	4	SCREW-DRIVE	
	130	1	**9X-0798**	1	PLUG	
	131	1	**203-0215**	2	SEAL-O-RING	
	132	1	**5W-6076**	1	BOLT	
	134	1	**9R-6948**	2	CLIP	
	135	1	**175-4073**	2	BUSHING-SLEEVE	
	136	3	**7T-9343**	1	CUP-BEARING	
	137	1	**121-7681**	1	HOUSING-AXLE	
	138	1	**121-7682**	1	HOUSING-AXLE	
	139	1	**121-7676**	2	SHAFT-AXLE	
	140	1	**121-7675**	4	BUSHING	
	141	1	**164-2657**	1	TIE ROD GP (LH) (LH)	
		1	**8U-9402**	1	CLAMP	
	142	1	**164-2658**	1	TIE ROD GP (RH) (RH)	
		1	**8U-9402**	1	CLAMP	
M	143	1	**164-5912**	2	LOCKNUT	
	144	2	**203-5402**	1	HOUSING GP-AXLE (LH)	
		2	**8U-2342**	1	NUT	
	145	2	**203-5403**	1	HOUSING GP-AXLE (RH)	
		2	**8U-2342**	1	NUT	
	147	2	**8U-5690**	8	PLUG	
	148	2	**6V-2652**	4	CONE-BEARING	
		2	**4D-8648**	4	CUP-BEARING	
	149	2	**110-0858**	4	CAP-SEALING	
	150	2	**110-4743**	4	SEAL-O-RING	
B	151	2	**121-7659**	2	SHIM (0.6-MM THK)	
B		2	**121-7661**	2	SHIM (0.8-MM THK)	
B		2	**121-7662**	2	SHIM (1-MM THK)	
B		2	**121-7663**	2	SHIM (1.2-MM THK)	
B		2	**121-7665**	2	SHIM (1.6-MM THK)	
B		2	**121-7667**	2	SHIM (2-MM THK)	
	157	2	**110-0860**	4	PIN-BEARING	
M	158	2	**8T-4779**	16	BOLT (M16X2X35-MM)	
	159	2	**128-7867**	4	FITTING-HYDRAULIC	
	160	2	**220-2593**	2	BUSHING-SLEEVE	
	161	1,2	**9R-6996**	2	SEAL	
Y	162	2	**203-5415**	2	UNIVERSAL JOINT GP	349
	163	2	**5W-5682**	2	VALVE-BREATHER (AXLE)	
B	164	2	**135-3439**	2	SHIM (3-MM THK)	
B		2	**203-5416**	2	SHIM (2.5-MM THK)	
B		2	**135-3441**	2	SHIM (2-MM THK)	
B		2	**135-3442**	2	SHIM (1.5-MM THK)	
	168	2	**135-3443**	2	TUBE	
M	169	2	**135-3444**	2	BOLT (M12X1.5X30-MM)	
	170	5	**203-5417**	2	SEAL-LIP TYPE	
	171	5	**8U-2356**	4	BEARING	

187-7213 AXLE GP-STEERING *(contd.)* i02160040

NOTE	REF NO	GRAPHIC REF	PART NUMBER	QTY	PART NAME 1 2 3 4 5 6 (PRODUCT LEVEL)	SEE PAGE
	172	5	**8U-2357**	2	FLANGE	
	173	5	**110-4745**	2	SEAL-O-RING	
	174	5	**135-1593**	2	GEAR (81-TEETH)	
	175	5	**5W-6377**	4	PLUG	
	176	5	**8U-2359**	4	SEAL-O-RING	
	177	5	**8U-2360**	2	RING	
	178	5	**8U-2361**	2	RING	
B	179	5	**8U-2365**	2	BUSHING (26-MM THK)	
B		5	**8U-2366**	2	BUSHING (26.2-MM THK)	
B		5	**8U-2367**	2	BUSHING (26.4-MM THK)	
B		5	**8U-2368**	2	BUSHING (26.6-MM THK)	
B		5	**8U-2369**	2	BUSHING (26.8-MM THK)	
B		5	**8U-2370**	2	BUSHING (27-MM THK)	
B		5	**8U-2371**	2	BUSHING (27.2-MM THK)	
B		5	**135-1594**	2	BUSHING (26.23-MM THK)	
B		5	**135-1595**	2	BUSHING (26.26-MM THK)	
B		5	**135-1596**	2	BUSHING (26.29-MM THK)	
B		5	**135-1597**	2	BUSHING (26.32-MM THK)	
B		5	**135-1598**	2	BUSHING (26.35-MM THK)	
	191	5	**135-1599**	2	PISTON	
	192	5	**8U-2373**	4	SEAL	
	193	5	**8U-2398**	2	RING	
	194	5	**8U-2399**	2	RING	
	195	5	**8U-3590**	2	GASKET	
	196	5	**8U-3591**	16	SPACER	
	197	5	**8U-3592**	16	SPRING	
	198	5	**135-1600**	2	RING	
M	199	5	**8T-0275**	16	BOLT (M6X1X50-MM)	
	200	5	**8U-3594**	16	NUT	
B	201	5	**8U-9508**	8	DISC (2.5-MM THK)	
B	202	5	**8U-9509**	8	DISC (3-MM THK)	
B	203	5	**8U-9507**	8	DISC (2-MM THK)	
	204	5	**110-0842**	6	DISC-FRICTION	
	205	5	**8U-2377**	2	WASHER-THRUST	
	206	5	**8U-2378**	2	RING-LOCK	
	207	5	**135-1601**	2	WASHER	
	208	5	**8U-4119**	2	GEAR (48-TEETH)	
	209	5	**8U-2385**	2	RING-RETAINING (5-MM THK)	
	210	5	**8U-9510**	2	CARRIER-PLANETARY	
	211	5	**9W-4926**	2	PLUG	
	212	5	**6T-6408**	2	SEAL-O-RING	
	213	5	**193-1132**	6	GEAR-PLANETARY	
	214	5	**213-9783**	6	BEARING-ROLLER	
	215	5	**190-8591**	12	WASHER (64.5X72.1X2-MM THK)	
	217	5	**190-8590**	12	RING-SNAP	
	218	5	**110-4737**	6	RING-RETAINING	
B	219	5	**110-0165**	2	WASHER-THRUST (1.5-MM THK)	
B		5	**110-0164**	2	WASHER-THRUST (1.7-MM THK)	
B		5	**110-0163**	2	WASHER-THRUST (2-MM THK)	
B		5	**110-0162**	2	WASHER-THRUST (2.2-MM THK)	
B		5	**110-0161**	2	WASHER-THRUST (2.5-MM THK)	
B		5	**110-0160**	2	WASHER-THRUST (2.7-MM THK)	
B		5	**110-0159**	2	WASHER-THRUST (3-MM THK)	
	226	5	**109-4440**	2	PLUG	
	227	5	**190-8676**	2	SEAL-O-RING	
M	228	5	**117-2987**	2	BOLT-SOCKET HEAD (M12X1.75X115-MM)	
	229	5	**8U-2381**	2	WASHER (13X19X1.5-MM THK)	
	230	5	**8U-2382**	2	RING-RETAINING (1-MM THK)	
	231	5	**8U-4120**	2	GEAR-SUN (15-TEETH)	

187-7213 AXLE GP-STEERING *(contd.)* i02160040

NOTE	REF NO	GRAPHIC REF	PART NUMBER	QTY	PART NAME 1 2 3 4 5 6 (PRODUCT LEVEL)	SEE PAGE
M	232	5	**5W-2177**	4	BOLT-SOCKET HEAD (M12X1.75X20-MM)	
	233	5	**5W-0964**	20	BOLT (M22X1.5X92-MM)	
	234	6	**5W-5696**	1	CYLINDER (STEERING)	
	235	6	**5W-4819**	2	SEAL-O-RING	
	236	6	**5W-6643**	1	GUIDE	
	237	6	**5W-5485**	1	SEAL-O-RING	
	238	6	**5W-5483**	2	RING	
	239	6	**5W-6392**	2	SEAL-O-RING	
	240	6	**216-0590**	1	ROD AS	
	247	6	**5W-5646**	1	SEAL	
	248	6	**5W-6391**	2	SCRAPER	
B	249	6	**5W-5547**	1	DISC (1-MM THK)	
B		6	**5W-5548**	1	DISC (1.1-MM THK)	
B		6	**5W-5549**	1	DISC (1.2-MM THK)	
B		6	**5W-5550**	1	DISC (1.3-MM THK)	
B		6	**5W-5551**	1	DISC (1.4-MM THK)	
B		6	**5W-5552**	1	DISC (1.5-MM THK)	
B		6	**5W-5553**	1	DISC (1.6-MM THK)	
B		6	**5W-5554**	1	DISC (1.7-MM THK)	
B		6	**5W-6400**	1	DISC (1.8-MM THK)	
B		6	**5W-5555**	1	DISC (1.05-MM THK)	
B		6	**5W-5556**	1	DISC (1.15-MM THK)	
B		6	**5W-5557**	1	DISC (1.25-M THK)	
B		6	**5W-5558**	1	DISC (1.35-MM THK)	
B		6	**5W-5559**	1	DISC (1.45-MM THK)	
B		6	**5W-5560**	1	DISC (1.55-MM THK)	
B		6	**5W-5561**	1	DISC (1.65-MM THK)	
B		6	**5W-5562**	1	DISC (1.75-MM THK)	
B		6	**8U-2752**	1	DISC (0.7-MM THK)	
B		6	**8U-2753**	1	DISC (0.8-MM THK)	
B		6	**8U-2754**	1	DISC (0.9-MM THK)	
	269	6	**5W-6442**	1	HOUSING	
	270	6	**5W-5632**	4	BOLT (M14X2X100MM)	
	271	6	**203-0216**	2	SEAL-O-RING	
	272	6	**8U-5818**	1	FITTING	
	273	6	**6T-6305**	1	SEAL-O-RING	
	274	6	**128-7901**	1	ELBOW	
	275	6	**121-7686**	2	RING	
	276	6	**121-7687**	2	SEAL-O-RING	

B-USE AS REQUIRED
M-METRIC PART
Y-SEPARATE ILLUSTRATION

187-7213 AXLE GP-STEERING *(contd.)* **i02160040**

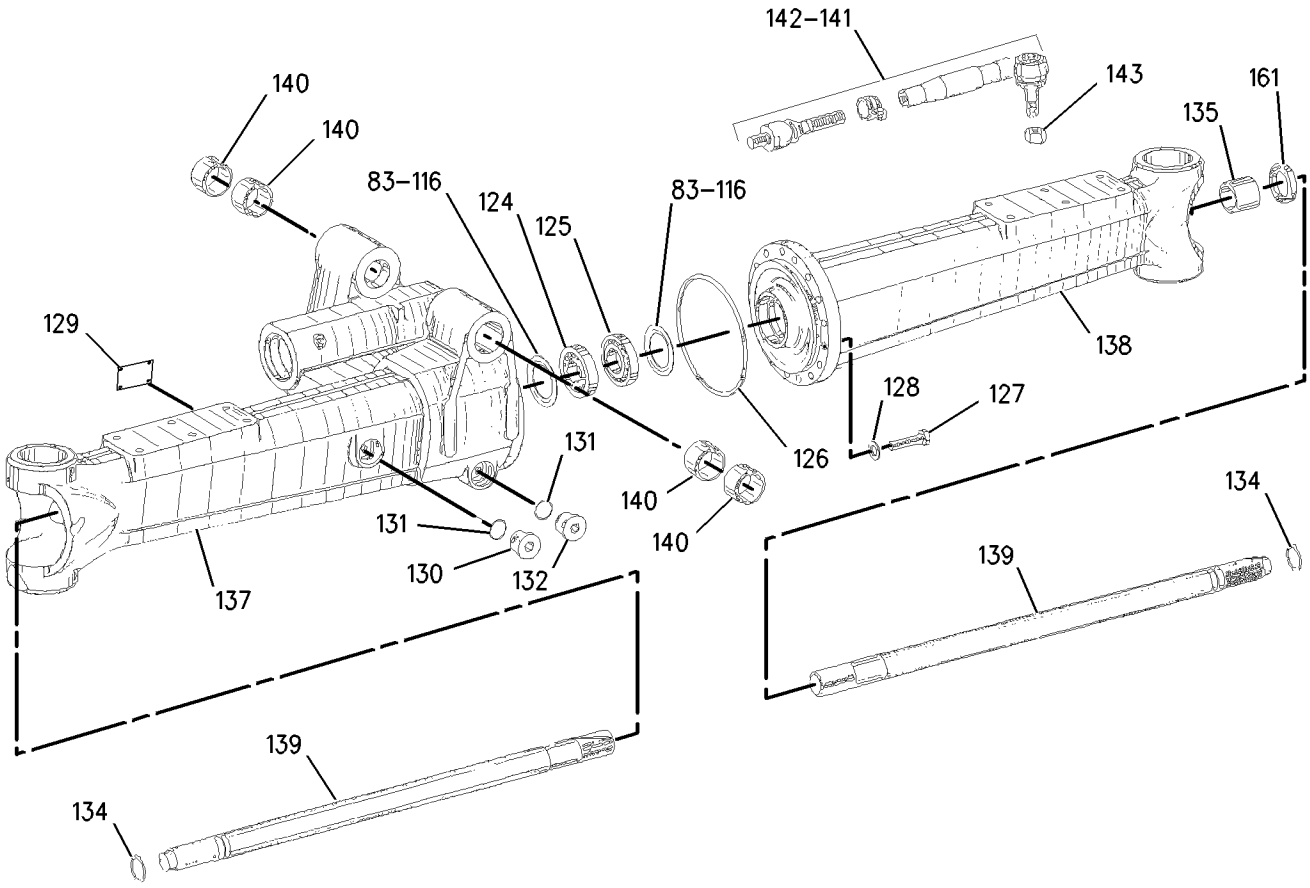

GRAPHIC #1 g00928128

187-7213 AXLE GP-STEERING *(contd.)* i02160040

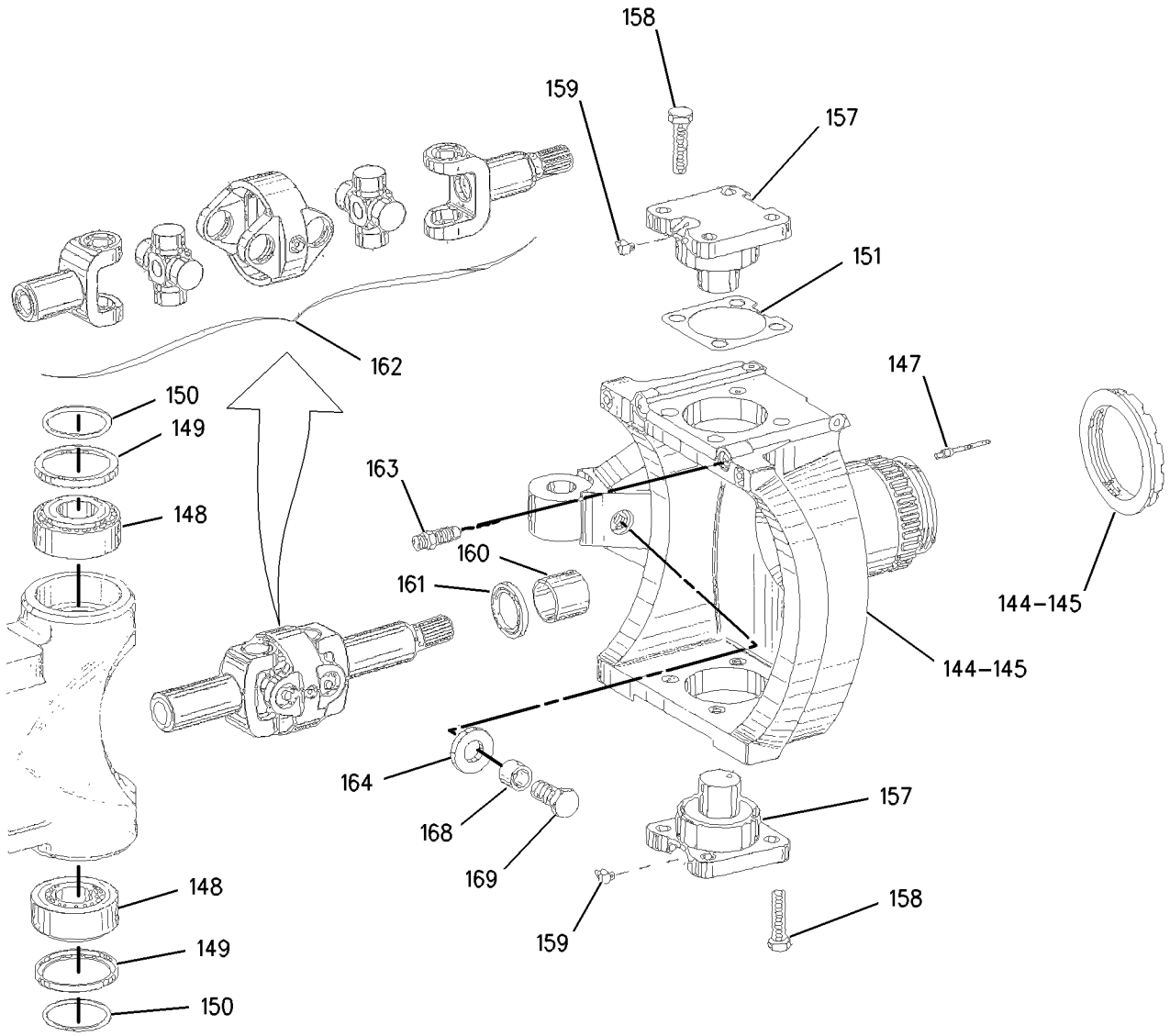

GRAPHIC #2 g00928130

187-7213 AXLE GP-STEERING *(contd.)* **i02160040**

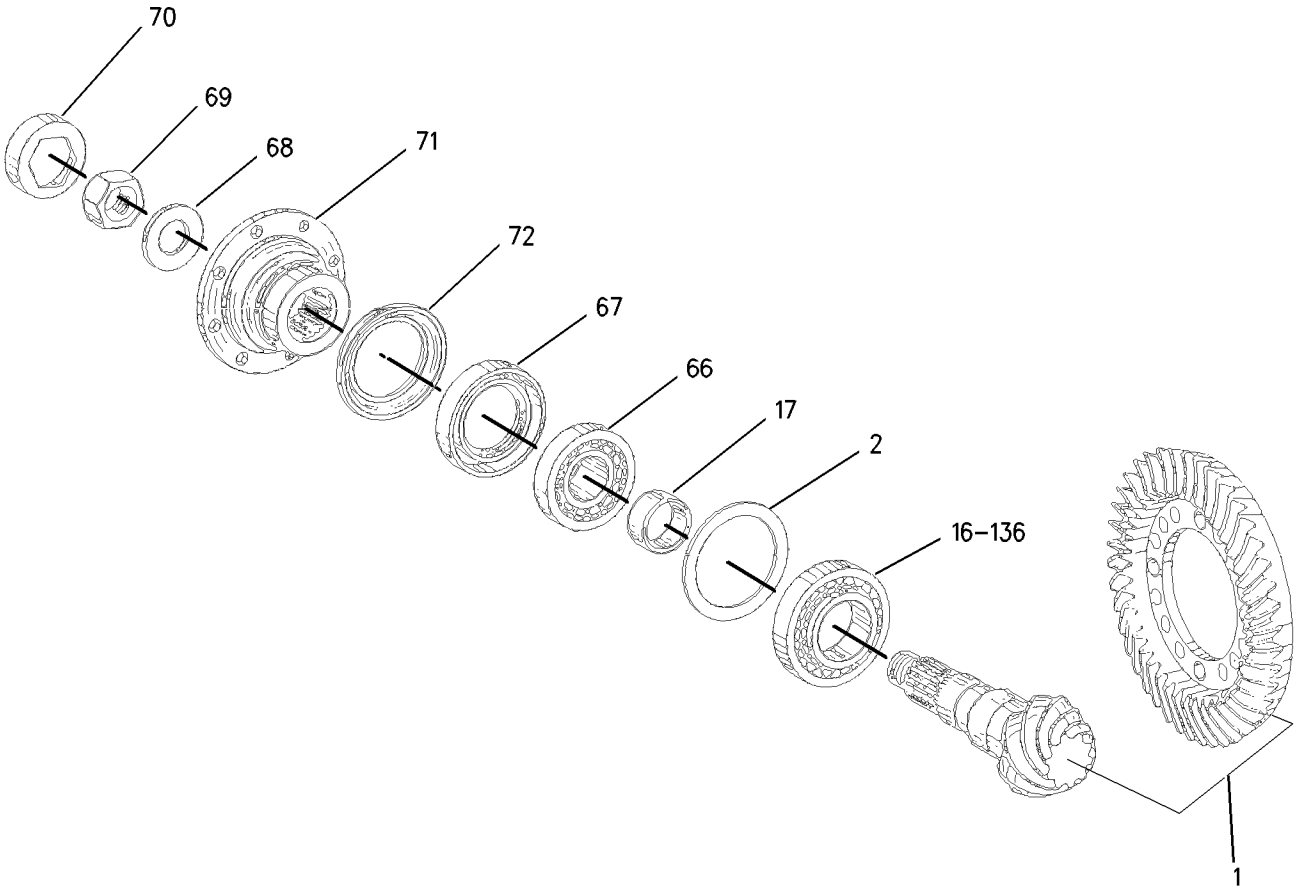

GRAPHIC #3 g00891365

187-7213 AXLE GP-STEERING *(contd.)* i02160040

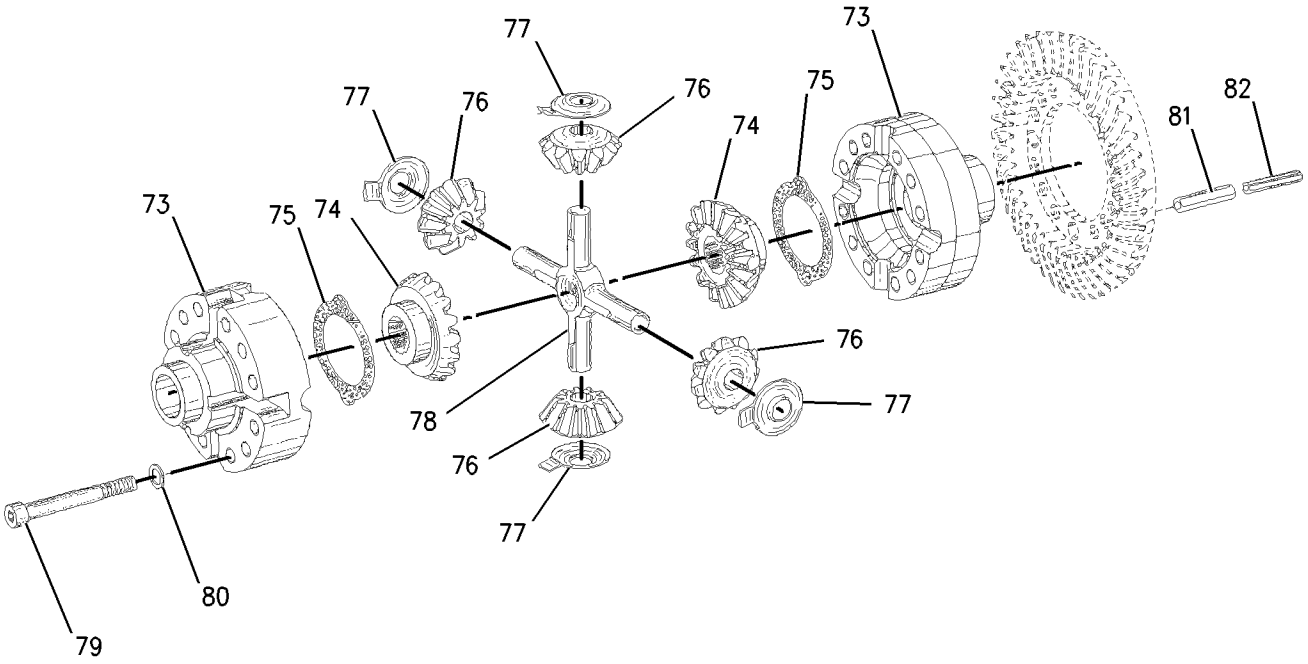

GRAPHIC #4 g00837877

187-7213 AXLE GP-STEERING *(contd.)* **i02160040**

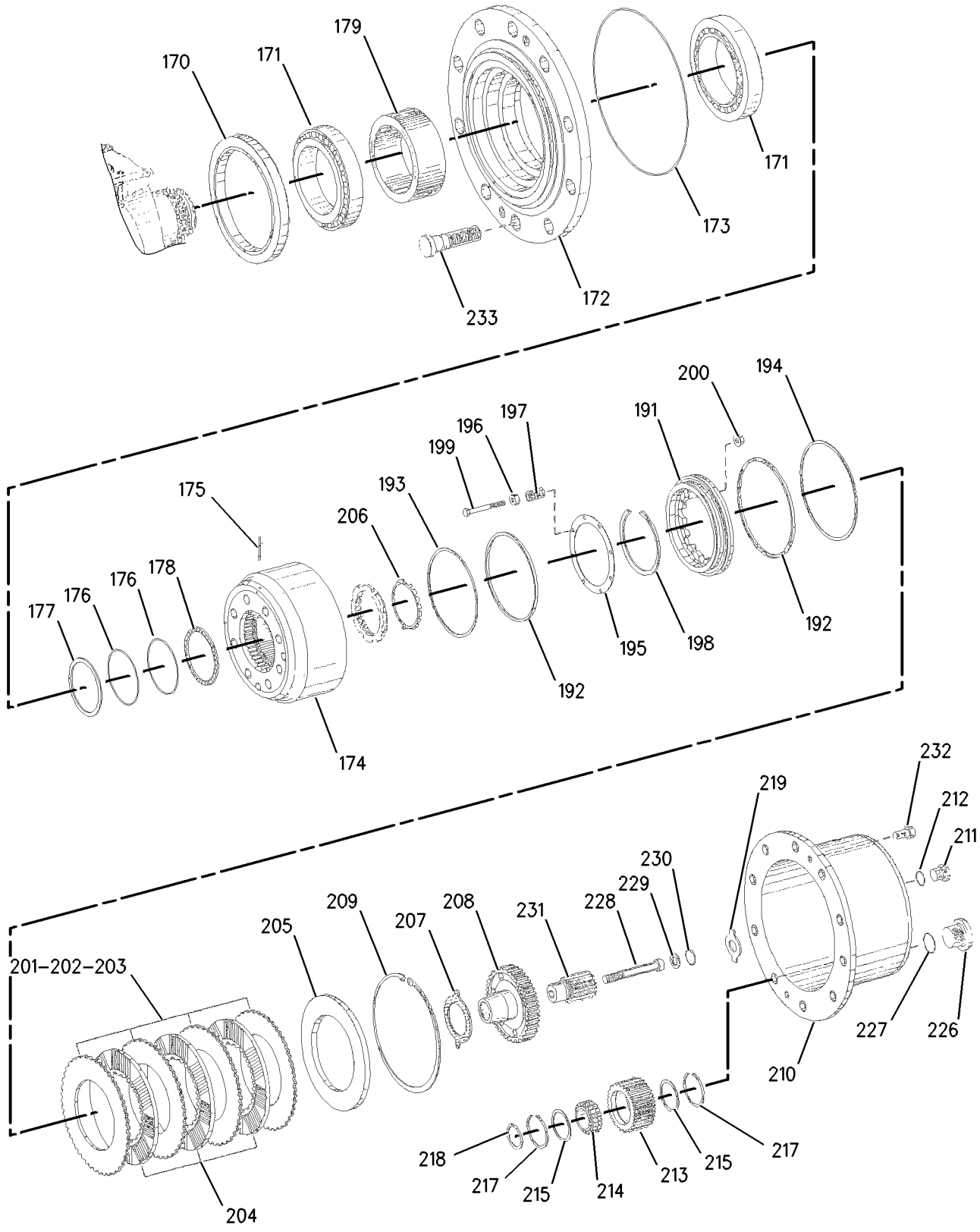

GRAPHIC #5 g00914471

187-7213 AXLE GP-STEERING *(contd.)* i02160040

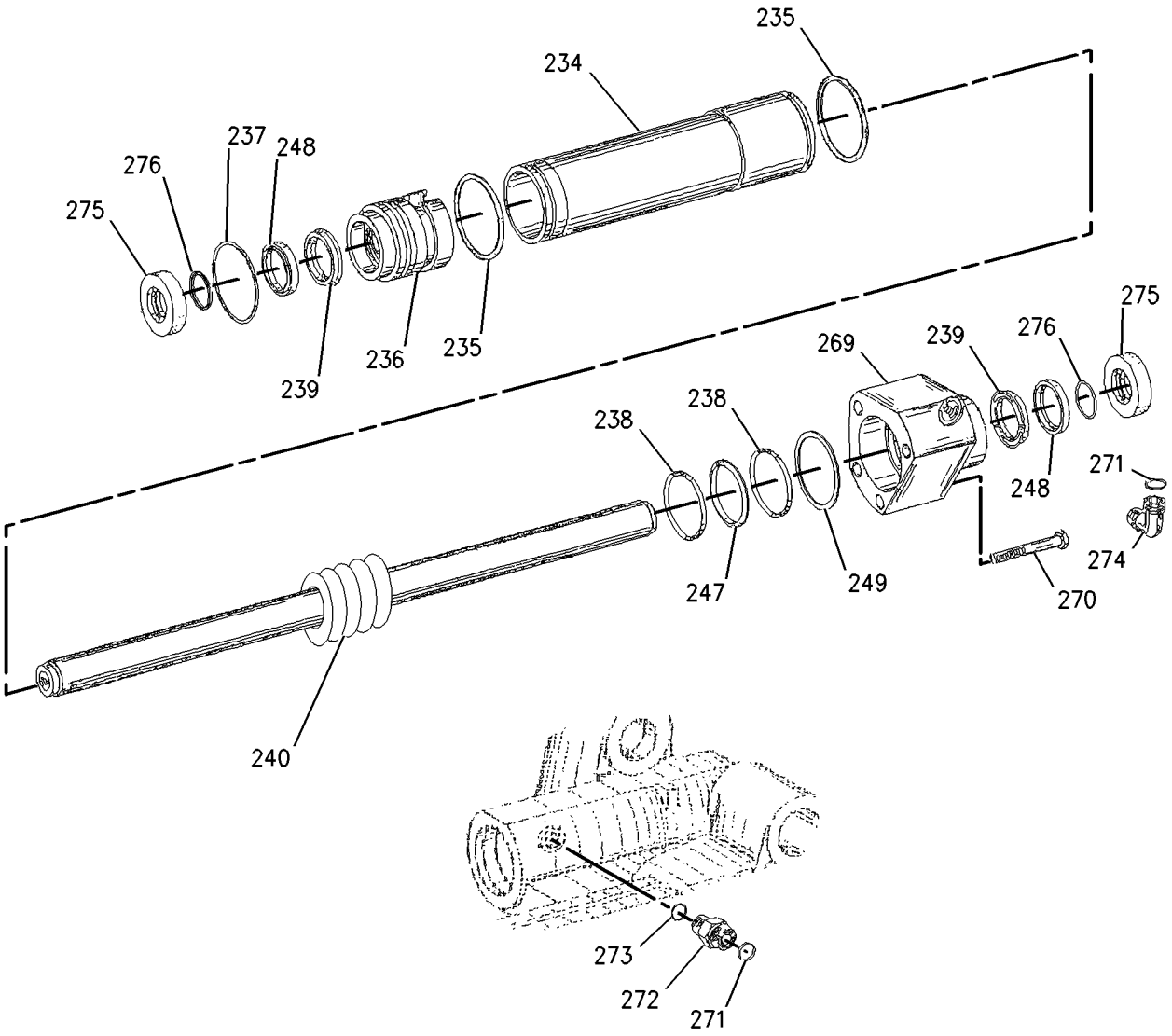

GRAPHIC #6 **<END>** g00891355

187-7213 AXLE GP-STEERING

S/N: BCZ218-2000

PART OF 188-4930 AXLE AR-FRONT

SMCS-3020, 3282, 4313, 4321 **i02160041**

NOTE	REF NO	GRAPHIC REF	PART NUMBER	QTY	PART NAME 1 2 3 4 5 6 (PRODUCT LEVEL)	SEE PAGE
	1	1	**203-5397**	1	GEAR AS-PINION (43 TEETH)	
B	2	1	**9R-6814**	2	WASHER (88X104.6X1.5-MM THK)	
B		1	**9R-6805**	1	WASHER (88X104.6X0.9-MM THK)	
B		1	**9R-6806**	1	WASHER (88X104.6X0.95-MM THK)	
B		1	**9R-6807**	1	WASHER (88X104.6X1-MM THK)	
B		1	**9R-6808**	1	WASHER (88X104.6X1.05-MM THK)	
B		1	**9R-6809**	1	WASHER (88X104.6X1.1-MM THK)	
B		1	**9R-6810**	1	WASHER (88X104.6X1.15-MM THK)	
B		1	**9R-6811**	1	WASHER (88X104.6X1.2-MM THK)	
B		1	**9R-6812**	1	WASHER (88X104.6X1.25-MM THK)	
B		1	**9R-6813**	1	WASHER (88X104.6X1.3-MM THK)	
B		1	**9R-6801**	1	WASHER (88X104.6X0.7-MM THK)	
B		1	**9R-6802**	1	WASHER (88X104.6X0.75-MM THK)	
B		1	**9R-6803**	1	WASHER (88X104.6X0.8-MM THK)	
B		1	**9R-6804**	1	WASHER (88X104.6X0.85-MM THK)	
	16	1	**7T-9342**	1	CONE-BEARING	
B	17	1	**9R-6932**	1	RING (11.3-MM THK)	
B		1	**9R-6933**	1	RING (11.33-MM THK)	
B		1	**9R-6934**	1	RING (11.36-MM THK)	
B		1	**9R-6935**	1	RING (11.39-MM THK)	
B		1	**9R-6936**	1	RING (11.42-MM THK)	
B		1	**9R-6937**	1	RING (11.45-MM THK)	
B		1	**9R-6938**	1	RING (11.48-MM THK)	
B		1	**9R-6939**	1	RING (11.51-MM THK)	
B		1	**9R-6940**	1	RING (11.54-MM THK)	
B		1	**9R-6941**	1	RING (11.57-MM THK)	
B		1	**9R-6942**	1	RING (11.6-MM THK)	
B		1	**9R-6943**	1	RING (11.63-MM THK)	
B		1	**9R-6944**	1	RING (11.66-MM THK)	
B		1	**9R-6945**	1	RING (11.69-MM THK)	
B		1	**9R-6836**	1	RING (11.72-MM THK)	
B		1	**9R-6837**	1	RING (11.75-MM THK)	
B		1	**9R-6838**	1	RING (11.78-MM THK)	
B		1	**9R-6839**	1	RING (11.81-MM THK)	
B		1	**9R-6840**	1	RING (11.84-MM THK)	
B		1	**9R-6841**	1	RING (11.87-MM THK)	
B		1	**9R-6842**	1	RING (11.9-MM THK)	
B		1	**9R-6843**	1	RING (11.93-MM THK)	
B		1	**9R-6844**	1	RING (11.96-MM THK)	
B		1	**9R-6845**	1	RING (11.99-MM THK)	
B		1	**9R-6846**	1	RING (12.02-MM THK)	
B		1	**9R-6847**	1	RING (12.05-MM THK)	
B		1	**9R-6848**	1	RING (12.08-MM THK)	
B		1	**9R-6849**	1	RING (12.11-MM THK)	
B		1	**9R-6850**	1	RING (12.14-MM THK)	
B		1	**9R-6924**	1	RING (12.17-MM THK)	
B		1	**9R-6925**	1	RING (12.2-MM THK)	
B		1	**9R-6926**	1	RING (12.23-MM)	
B		1	**9R-6927**	1	RING (12.26-MM THK)	
B		1	**9R-6928**	1	RING (12.29-MM THK)	
B		1	**9R-6929**	1	RING (12.32-MM THK)	
B		1	**9R-6930**	1	RING (12.35-MM THK)	
B		1	**9R-6931**	1	RING (12.38-MM THK)	
B	54	1	**8U-5669**	1	SPACER (11.27-MM THK)	
B		1	**8U-5670**	1	SPACER (11.24-MM THK)	
B		1	**8U-5671**	1	SPACER (11.21-MM THK)	

187-7213 AXLE GP-STEERING *(contd.)* i02160041

NOTE	REF NO	GRAPHIC REF	PART NUMBER	QTY	PART NAME 1 2 3 4 5 6 (PRODUCT LEVEL)	SEE PAGE
B		1	**8U-5672**	1	SPACER (11.18-MM THK)	
B		1	**8U-5673**	1	SPACER (11.15-MM THK)	
B	59	1	**128-7637**	1	RING (11.12-MM THK)	
B		1	**128-7638**	1	RING (11.09-MM THK)	
B		1	**128-7639**	1	RING (11.06-MM THK)	
B		1	**128-7640**	1	RING (11.03-MM THK)	
B		1	**128-7641**	1	RING (11-MM THK)	
B		1	**128-7642**	1	RING (10.97-MM THK)	
B		1	**128-7643**	1	RING (10.94-MM THK)	
	66	1	**9R-7002**	1	BEARING	
C	67	1	**229-2712**	1	SEAL-SHAFT	
	68	1	**9R-6985**	1	WASHER (27.1X50X5-MM THK)	
	69	1	**5W-5352**	1	NUT (M27X1.5 THD)	
	70	1	**5W-5398**	1	WASHER-RETAINING	
	71	1	**5W-5666**	1	FLANGE	
C	72	1	**229-2711**	1	PLATE-DEFLECTOR	
	73	2	**121-7625**	1	CASE	
	74	2	**9R-6964**	2	GEAR-DIFFERENTIAL (16 TEETH)	
	75	2	**6T-5749**	2	WASHER-THRUST	
	76	2	**128-7855**	4	GEAR-PINION (11 TEETH)	
	77	2	**9R-6994**	4	WASHER-THRUST	
	78	2	**9R-6993**	1	SPIDER	
M	79	2	**8T-2323**	12	BOLT-SOCKET HEAD (M12X1.5X120-MM)	
	80	2	**9R-6819**	12	WASHER (13X21.9X3-MM THK)	
	81	2	**8T-2450**	4	PIN-SPRING	
	82	2	**9R-6962**	4	PIN-CLAMPING	
B	83	3	**054-6514**	2	SHIM (0.1-MM THK)	
B		3	**121-7679**	2	SHIM (0.15-MM THK)	
B		3	**054-6513**	2	SHIM (0.2-MM THK)	
B		3	**121-7680**	2	SHIM (0.25-MM THK)	
B		3	**054-6512**	2	SHIM (0.3-MM THK)	
B		3	**128-7675**	2	SHIM (0.35-MM THK)	
B		3	**7T-0564**	2	SHIM (0.4-MM THK)	
B		3	**121-7677**	2	SHIM (0.45-MM THK)	
B		3	**7T-0563**	2	SHIM (0.5-MM THK)	
B		3	**121-7678**	2	SHIM (0.55-MM THK)	
B		3	**7T-0562**	2	SHIM (0.6-MM THK)	
B		3	**128-7676**	2	SHIM (0.65-MM THK)	
B		3	**128-7677**	2	SHIM (0.7-MM THK)	
B		3	**128-7680**	2	SHIM (75-MM THK)	
B		3	**7T-0561**	2	SHIM (0.8-MM THK)	
B		3	**128-7681**	2	SHIM (0.85-MM THK)	
B		3	**128-7683**	2	SHIM (0.9-MM THK)	
B		3	**128-7684**	2	SHIM (0.95-MM THK)	
B		3	**7T-0560**	2	SHIM (1-MM THK)	
B		3	**128-7685**	2	SHIM (1.05-MM THK)	
B		3	**128-7686**	2	SHIM (1.1-MM THK)	
B		3	**128-7687**	2	SHIM (1.15-MM THK)	
B		3	**128-7688**	2	SHIM (1.25-MM THK)	
B		3	**128-7689**	2	SHIM (1.3-MM THK)	
B		3	**128-7690**	2	SHIM (1.35-MM THK)	
B		3	**7T-0558**	2	SHIM (1.4-MM THK)	
B		3	**128-7691**	2	SHIM (1.45-MM THK)	
B		3	**128-7692**	2	SHIM (1.5-MM THK)	
B		3	**128-7693**	2	SHIM (1.55-MM THK)	
B		3	**128-7694**	2	SHIM (1.6-MM THK)	
B		3	**128-7695**	2	SHIM (1.65-MM THK)	
B		3	**7T-0552**	2	SHIM (2-MM THK)	
B	116	3	**202-8137**	2	WASHER (1.47-MM THK)	

187-7213 AXLE GP-STEERING *(contd.)* i02160041

NOTE	REF NO	GRAPHIC REF	PART NUMBER	QTY	PART NAME 1 2 3 4 5 6 (PRODUCT LEVEL)	SEE PAGE
B		3	**202-8138**	2	WASHER (1.63-MM THK)	
B		3	**202-8139**	2	WASHER (1.75-MM THK)	
B		3	**202-8140**	2	WASHER (1.7-MM THK)	
B		3	**202-8141**	2	WASHER (1.8-MM THK)	
B		3	**202-8142**	2	WASHER (1.85-MM THK)	
B		3	**202-8143**	2	WASHER (1.9-MM THK)	
B		3	**202-8144**	2	WASHER (1.95-MM THK)	
	124	3	**9R-7003**	1	BEARING	
	125	3	**6Y-2942**	1	CONE-BEARING	
		3	**6Y-2943**	1	CUP-BEARING (TAPERED ROLLER)	
	126	3	**5W-5475**	1	SEAL-O-RING	
	127	3	**5W-5627**	16	BOLT (M18X2.5X60MM)	
	128	3	**5W-5531**	16	WASHER	
	129	3	**6V-5225**	4	SCREW-DRIVE	
	130	3	**9X-0798**	1	PLUG	
	131	3	**203-0215**	2	SEAL-O-RING	
	132	3	**5W-6076**	1	BOLT	
	134	3	**9R-6948**	2	CLIP	
	135	3	**175-4073**	2	BUSHING-SLEEVE	
	136	1	**7T-9343**	1	CUP-BEARING	
	137	3	**121-7681**	1	HOUSING-AXLE	
	138	3	**121-7682**	1	HOUSING-AXLE	
	139	3	**121-7676**	2	SHAFT-AXLE	
	140	3	**121-7675**	4	BUSHING	
	141	3	**164-2657**	1	TIE ROD GP (LH) (LH)	
		3	**8U-9402**	1	CLAMP	
	142	3	**164-2658**	1	TIE ROD GP (RH) (RH)	
		3	**8U-9402**	1	CLAMP	
M	143	3	**164-5912**	2	LOCKNUT	
	144	4	**203-5402**	1	HOUSING GP-AXLE (LH)	
		4	**8U-2342**	1	NUT	
	145	4	**203-5403**	1	HOUSING GP-AXLE (RH)	
		4	**8U-2342**	1	NUT	
	147	4	**8U-5690**	8	PLUG	
	148	4	**6V-2652**	4	CONE-BEARING	
		4	**4D-8648**	4	CUP-BEARING	
	149	4	**110-0858**	4	CAP-SEALING	
	150	4	**110-4743**	4	SEAL-O-RING	
B	151	4	**121-7659**	2	SHIM (0.6-MM THK)	
B		4	**121-7661**	2	SHIM (0.8-MM THK)	
B		4	**121-7662**	2	SHIM (1-MM THK)	
B		4	**121-7663**	2	SHIM (1.2-MM THK)	
B		4	**121-7665**	2	SHIM (1.6-MM THK)	
B		4	**121-7667**	2	SHIM (2-MM THK)	
	157	4	**110-0860**	4	PIN-BEARING	
M	158	4	**8T-4779**	16	BOLT (M16X2X35-MM)	
	159	4	**128-7867**	4	FITTING-HYDRAULIC	
	160	4	**220-2593**	2	BUSHING-SLEEVE	
	161	3,4	**9R-6996**	2	SEAL	
Y	162	4	**203-5415**	2	UNIVERSAL JOINT GP	349
	163	4	**5W-5682**	2	VALVE-BREATHER (AXLE)	
B	164	4	**135-3439**	2	SHIM (3-MM THK)	
B		4	**203-5416**	2	SHIM (2.5-MM THK)	
B		4	**135-3441**	2	SHIM (2-MM THK)	
B		4	**135-3442**	2	SHIM (1.5-MM THK)	
	168	4	**135-3443**	2	TUBE	
M	169	4	**135-3444**	2	BOLT (M12X1.5X30-MM)	
	170	5	**203-5417**	2	SEAL-LIP TYPE	
	171	5	**8U-2356**	4	BEARING	

187-7213 AXLE GP-STEERING *(contd.)* i02160041

NOTE	REF NO	GRAPHIC REF	PART NUMBER	QTY	PART NAME 1 2 3 4 5 6 (PRODUCT LEVEL)	SEE PAGE
	172	5	**8U-2357**	2	FLANGE	
	173	5	**110-4745**	2	SEAL-O-RING	
	174	5	**135-1593**	2	GEAR (81-TEETH)	
	175	5	**5W-6377**	4	PLUG	
	176	5	**8U-2359**	4	SEAL-O-RING	
	177	5	**8U-2360**	2	RING	
	178	5	**8U-2361**	2	RING	
B	179	5	**8U-2365**	2	BUSHING (26-MM THK)	
B		5	**8U-2366**	2	BUSHING (26.2-MM THK)	
B		5	**8U-2367**	2	BUSHING (26.4-MM THK)	
B		5	**8U-2368**	2	BUSHING (26.6-MM THK)	
B		5	**8U-2369**	2	BUSHING (26.8-MM THK)	
B		5	**8U-2370**	2	BUSHING (27-MM THK)	
B		5	**8U-2371**	2	BUSHING (27.2-MM THK)	
B		5	**135-1594**	2	BUSHING (26.23-MM THK)	
B		5	**135-1595**	2	BUSHING (26.26-MM THK)	
B		5	**135-1596**	2	BUSHING (26.29-MM THK)	
B		5	**135-1597**	2	BUSHING (26.32-MM THK)	
B		5	**135-1598**	2	BUSHING (26.35-MM THK)	
		5	**135-1599**	2	PISTON	
	192	5	**8U-2373**	4	SEAL	
	193	5	**8U-2398**	2	RING	
	194	5	**8U-2399**	2	RING	
	195	5	**8U-3590**	2	GASKET	
	196	5	**8U-3591**	16	SPACER	
	197	5	**8U-3592**	16	SPRING	
	198	5	**135-1600**	2	RING	
M	199	5	**8T-0275**	16	BOLT (M6X1X50-MM)	
	200	5	**8U-3594**	16	NUT	
B	201	5	**8U-9508**	8	DISC (2.5-MM THK)	
B	202	5	**8U-9509**	8	DISC (3-MM THK)	
B	203	5	**8U-9507**	8	DISC (2-MM THK)	
	204	5	**110-0842**	6	DISC-FRICTION	
	205	5	**8U-2377**	2	WASHER-THRUST	
	206	5	**8U-2378**	2	RING-LOCK	
	207	5	**135-1601**	2	WASHER	
	208	5	**8U-4119**	2	GEAR (48-TEETH)	
	209	5	**8U-2385**	2	RING-RETAINING (5-MM THK)	
	210	5	**8U-9510**	2	CARRIER-PLANETARY	
	211	5	**9W-4926**	2	PLUG	
	212	5	**6T-6408**	2	SEAL-O-RING	
	213	5	**193-1132**	6	GEAR-PLANETARY	
	214	5	**213-9783**	6	BEARING-ROLLER	
	215	5	**190-8591**	12	WASHER (64.5X72.1X2-MM THK)	
	217	5	**190-8590**	12	RING-SNAP	
	218	5	**110-4737**	6	RING-RETAINING	
B	219	5	**110-0165**	2	WASHER-THRUST (1.5-MM THK)	
B		5	**110-0164**	2	WASHER-THRUST (1.7-MM THK)	
B		5	**110-0163**	2	WASHER-THRUST (2-MM THK)	
B		5	**110-0162**	2	WASHER-THRUST (2.2-MM THK)	
B		5	**110-0161**	2	WASHER-THRUST (2.5-MM THK)	
B		5	**110-0160**	2	WASHER-THRUST (2.7-MM THK)	
B		5	**110-0159**	2	WASHER-THRUST (3-MM THK)	
	226	5	**109-4440**	2	PLUG	
	227	5	**190-8676**	2	SEAL-O-RING	
M	228	5	**117-2987**	2	BOLT-SOCKET HEAD (M12X1.75X115-MM)	
	229	5	**8U-2381**	2	WASHER (13X19X1.5-MM THK)	
	230	5	**8U-2382**	2	RING-RETAINING (1-MM THK)	
	231	5	**8U-4120**	2	GEAR-SUN (15-TEETH)	

187-7213 AXLE GP-STEERING *(contd.)* i02160041

NOTE	REF NO	GRAPHIC REF	PART NUMBER	QTY	PART NAME 1 2 3 4 5 6 (PRODUCT LEVEL)	SEE PAGE
M	232	5	**5W-2177**	4	BOLT-SOCKET HEAD (M12X1.75X20-MM)	
	233	5	**5W-0964**	20	BOLT (M22X1.5X92-MM)	
	234	6	**5W-5696**	1	CYLINDER (STEERING)	
	235	6	**5W-4819**	2	SEAL-O-RING	
	236	6	**5W-6643**	1	GUIDE	
	237	6	**5W-5485**	1	SEAL-O-RING	
	238	6	**5W-5483**	2	RING	
	239	6	**5W-6392**	2	SEAL-O-RING	
	240	6	**216-0590**	1	ROD AS	
	247	6	**5W-5646**	1	SEAL	
	248	6	**5W-6391**	2	SCRAPER	
B	249	6	**5W-5547**	1	DISC (1-MM THK)	
B		6	**5W-5548**	1	DISC (1.1-MM THK)	
B		6	**5W-5549**	1	DISC (1.2-MM THK)	
B		6	**5W-5550**	1	DISC (1.3-MM THK)	
B		6	**5W-5551**	1	DISC (1.4-MM THK)	
B		6	**5W-5552**	1	DISC (1.5-MM THK)	
B		6	**5W-5553**	1	DISC (1.6-MM THK)	
B		6	**5W-5554**	1	DISC (1.7-MM THK)	
BC		6	**5W-6400**	1	DISC (1.8-MM THK)	
B		6	**5W-5555**	1	DISC (1.05-MM THK)	
B		6	**5W-5556**	1	DISC (1.15-MM THK)	
B		6	**5W-5557**	1	DISC (1.25-M THK)	
B		6	**5W-5558**	1	DISC (1.35-MM THK)	
B		6	**5W-5559**	1	DISC (1.45-MM THK)	
B		6	**5W-5560**	1	DISC (1.55-MM THK)	
B		6	**5W-5561**	1	DISC (1.65-MM THK)	
B		6	**5W-6400**	1	DISC (1.8-MM THK)	
B		6	**8U-2752**	1	DISC (0.7-MM THK)	
B		6	**8U-2753**	1	DISC (0.8-MM THK)	
B		6	**8U-2754**	1	DISC (0.9-MM THK)	
		6	**5W-6442**	1	HOUSING	
	270	6	**5W-5632**	4	BOLT (M14X2X100MM)	
	271	3,6	**203-0216**	2	SEAL-O-RING	
	272	3	**8U-5818**	1	FITTING	
	273	3	**6T-6305**	1	SEAL-O-RING	
	274	6	**128-7901**	1	ELBOW	
	275	6	**121-7686**	2	RING	
	276	6	**121-7687**	2	SEAL-O-RING	
B	277	5	**241-3652**	2	BUSHING (26.38-MM THK)	
B	278	5	**241-3653**	2	BUSHING (26.41-MM THK)	
B	279	5	**241-3654**	2	BUSHING (26.44-MM THK)	
B	280	5	**241-3655**	2	BUSHING (26.47-MM THK)	
B	281	5	**241-3656**	2	BUSHING (26.5-MM THK)	

B-USE AS REQUIRED
C-CHANGE FROM PREVIOUS TYPE
M-METRIC PART
Y-SEPARATE ILLUSTRATION

187-7213 AXLE GP-STEERING *(contd.)* i02160041

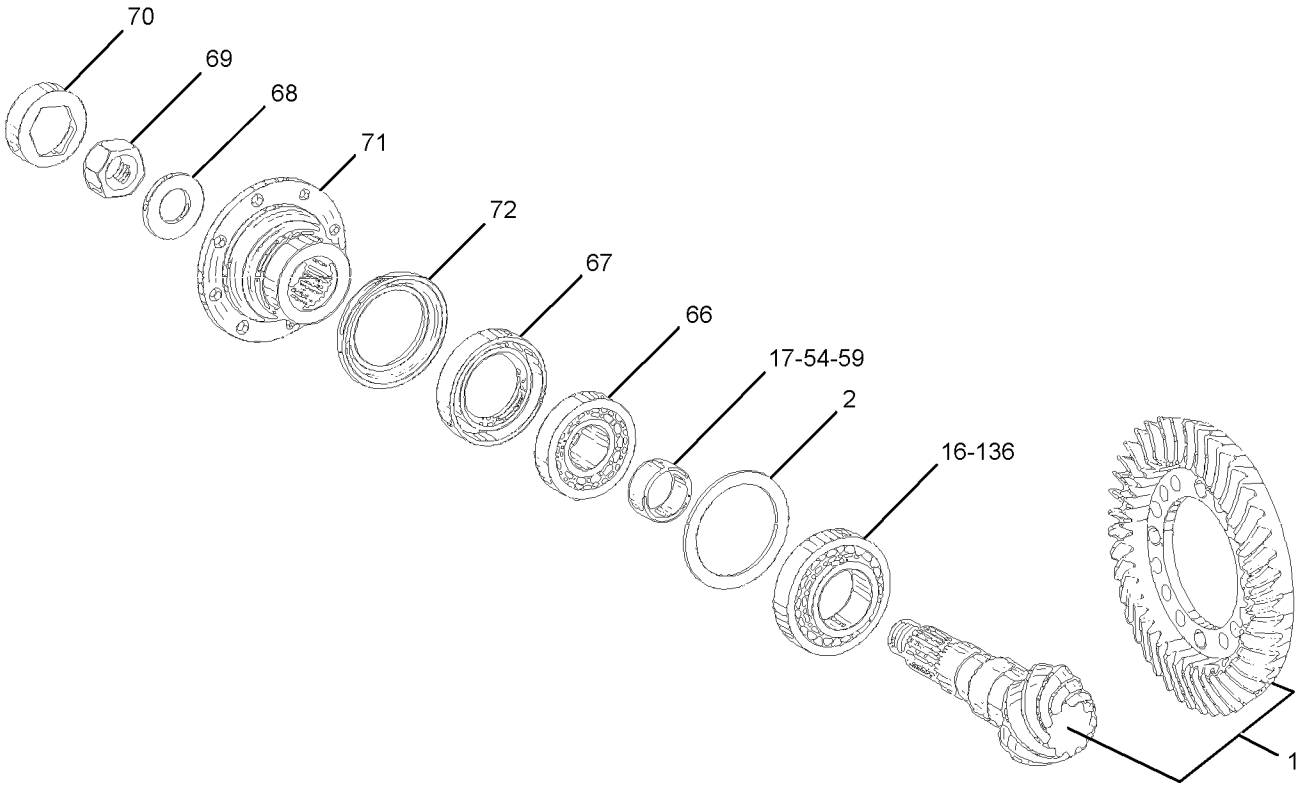

GRAPHIC #1 g01069436

187-7213 AXLE GP-STEERING *(contd.)* **i02160041**

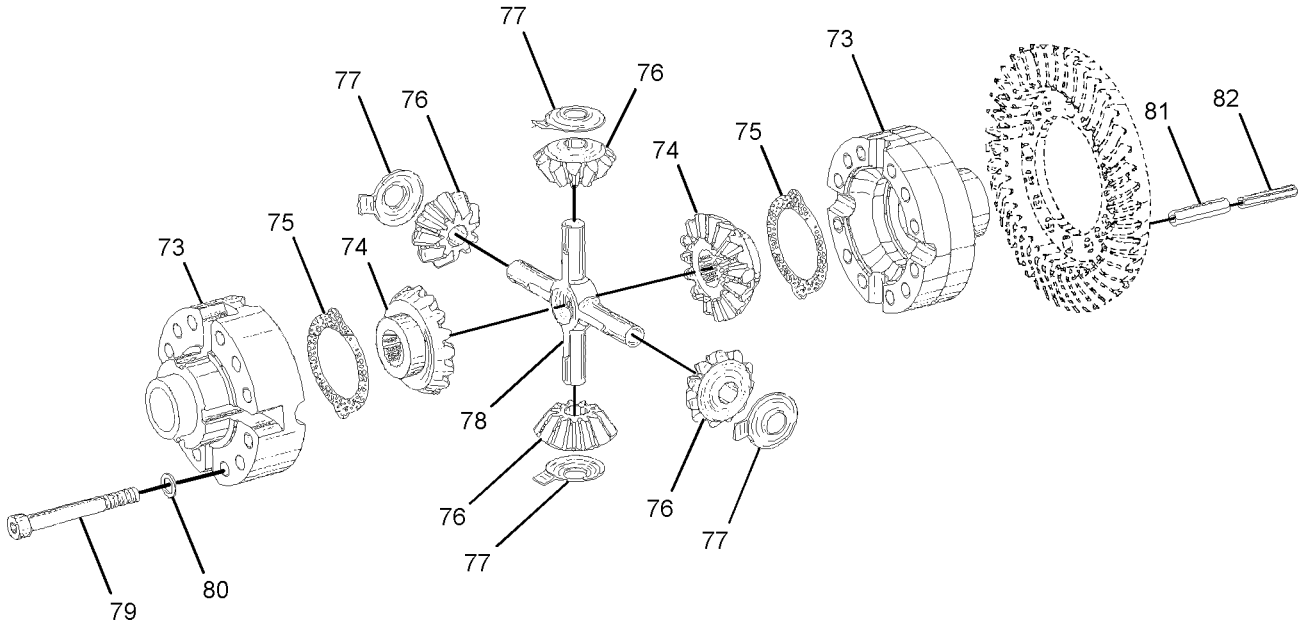

GRAPHIC #2 g01069437

187-7213 AXLE GP-STEERING *(contd.)* i02160041

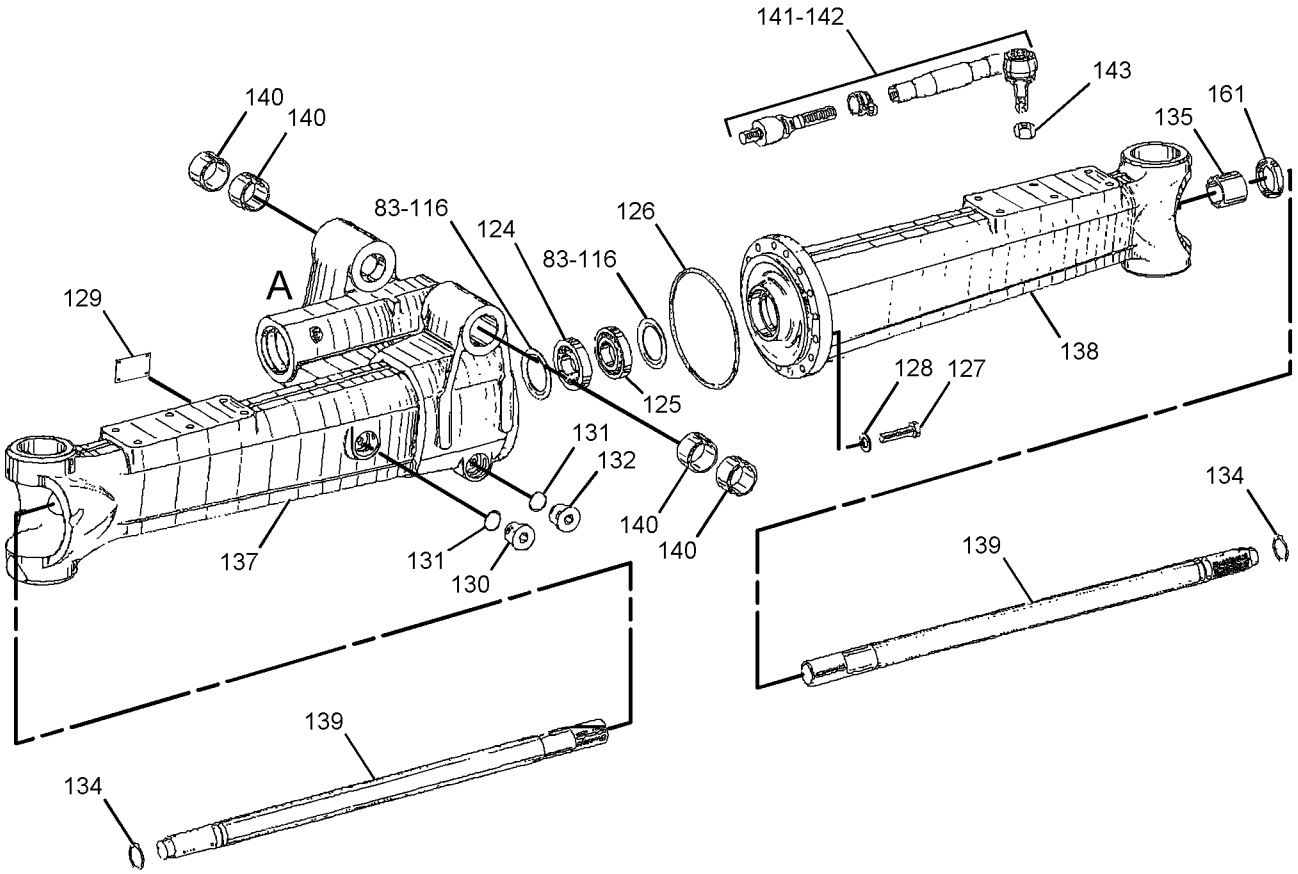

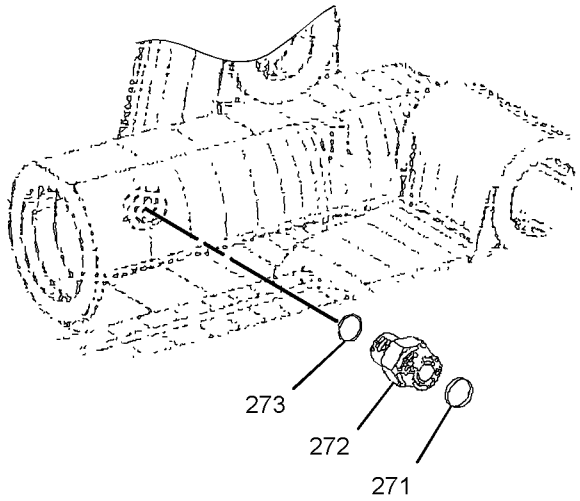

VIEW OF AREA A
(EXPLODED)

GRAPHIC #3 g01069441

187-7213 AXLE GP-STEERING *(contd.)* **i02160041**

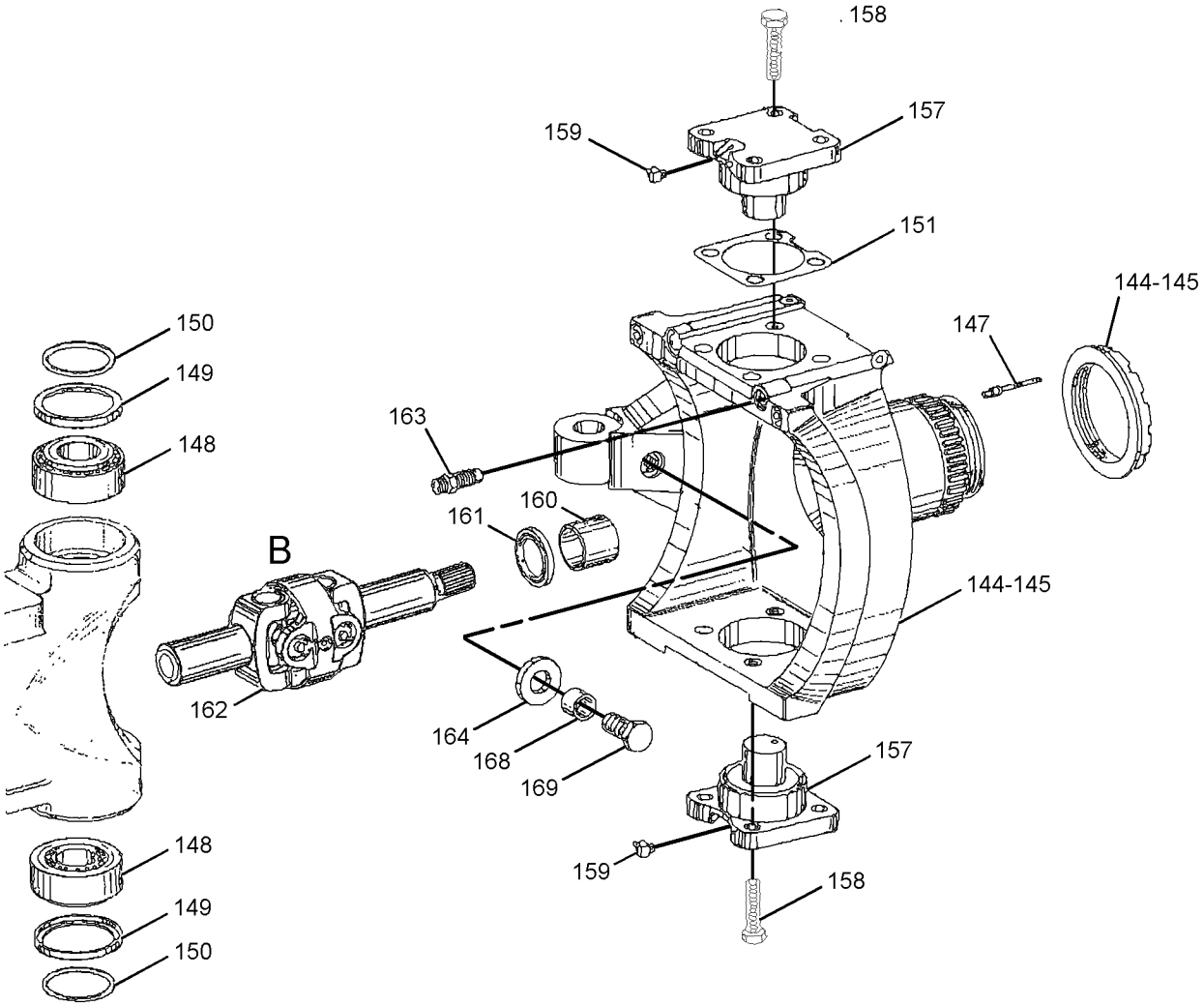

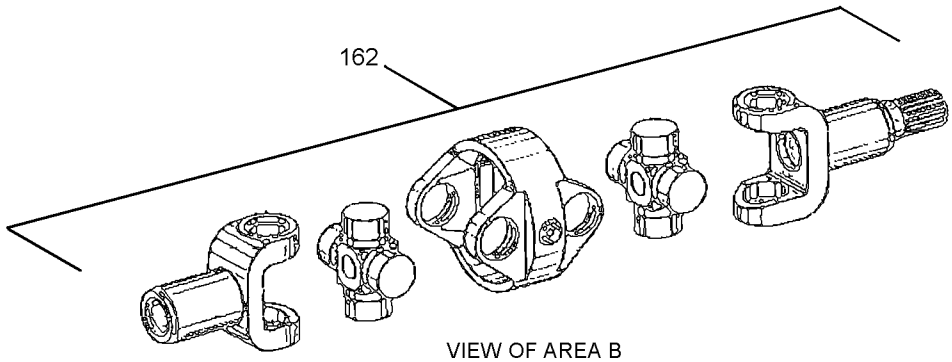

VIEW OF AREA B
(EXPLODED)

GRAPHIC #4 g01069439

187-7213 AXLE GP-STEERING *(contd.)* i02160041

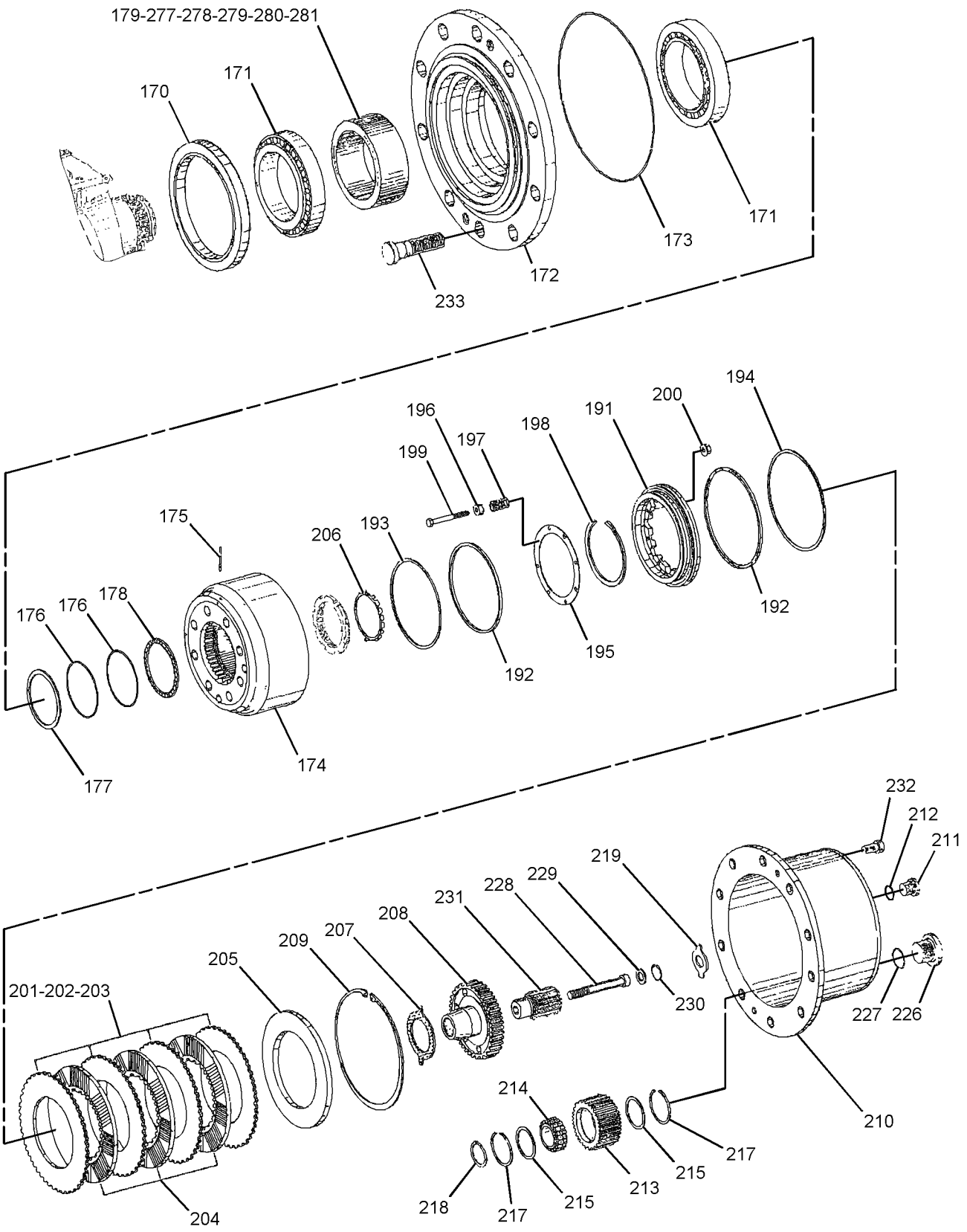

GRAPHIC #5 g01055414

187-7213 AXLE GP-STEERING *(contd.)* **i02160041**

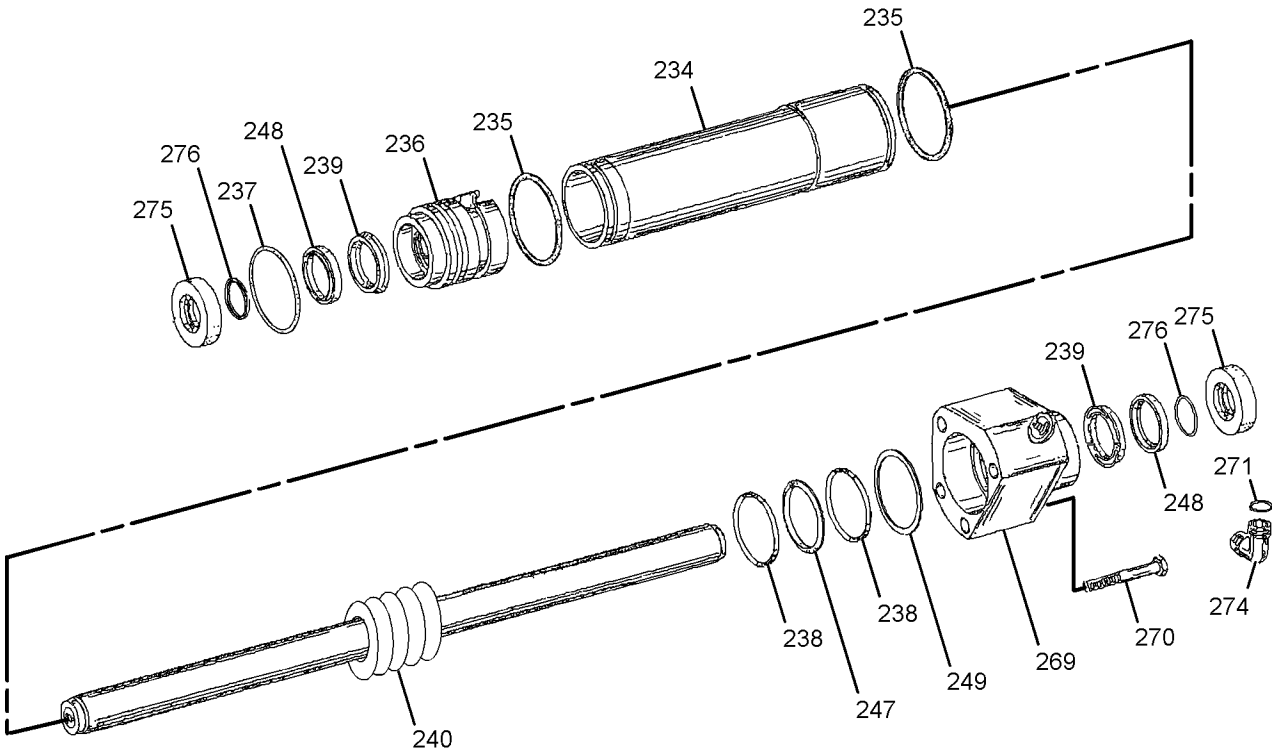

GRAPHIC #6 **<END>** g01069440

POWER TRAIN

204-7741 AXLE GP-STEERING—WIDE

S/N: BCZ1-252
PART OF 205-3910 AXLE AR-WIDE
AN ATTACHMENT

SMCS-3020, 3282, 4313, 4321 **i02160042**

NOTE	REF NO	GRAPHIC REF	PART NUMBER	QTY	PART NAME 1 2 3 4 5 6 (PRODUCT LEVEL)	SEE PAGE
	1	3	**203-5397**	1	GEAR AS-PINION	
B	2	3	**9R-6814**	1	WASHER (88X104.6X1.5-MM THK)	
B		3	**9R-6805**	1	WASHER (88X104.6X0.9-MM THK)	
B		3	**9R-6806**	1	WASHER (88X104.6X0.95-MM THK)	
B		3	**9R-6807**	1	WASHER (88X104.6X1-MM THK)	
B		3	**9R-6808**	1	WASHER (88X104.6X1.05-MM THK)	
B		3	**9R-6809**	1	WASHER (88X104.6X1.1-MM THK)	
B		3	**9R-6810**	1	WASHER (88X104.6X1.15-MM THK)	
B		3	**9R-6811**	1	WASHER (88X104.6X1.2-MM THK)	
B		3	**9R-6812**	1	WASHER (88X104.6X1.25-MM THK)	
B		3	**9R-6813**	1	WASHER (88X104.6X1.3-MM THK)	
B		3	**9R-6801**	1	WASHER (88X104.6X0.7-MM THK)	
B		3	**9R-6802**	1	WASHER (88X104.6X0.75-MM THK)	
B		3	**9R-6803**	1	WASHER (88X104.6X0.8-MM THK)	
B		3	**9R-6804**	1	WASHER (88X104.6X0.85-MM THK)	
	16	3	**7T-9342**	1	CONE-BEARING	
B	17	3	**9R-6932**	1	RING (11.3-MM THK)	
B		3	**9R-6933**	1	RING (11.33-MM THK)	
B		3	**9R-6934**	1	RING (11.36-MM THK)	
B		3	**9R-6935**	1	RING (11.39-MM THK)	
B		3	**9R-6936**	1	RING (11.42-MM THK)	
B		3	**9R-6937**	1	RING (11.45-MM THK)	
B		3	**9R-6938**	1	RING (11.48-MM THK)	
B		3	**9R-6939**	1	RING (11.51-MM THK)	
B		3	**9R-6940**	1	RING (11.54-MM THK)	
B		3	**9R-6941**	1	RING (11.57-MM THK)	
B		3	**9R-6942**	1	RING (11.6-MM THK)	
B		3	**9R-6943**	1	RING (11.63-MM THK)	
B		3	**9R-6944**	1	RING (11.66-MM THK)	
B		3	**9R-6945**	1	RING (11.69-MM THK)	
B		3	**9R-6836**	1	RING (11.72-MM THK)	
B		3	**9R-6837**	1	RING (11.75-MM THK)	
B		3	**9R-6838**	1	RING (11.78-MM THK)	
B		3	**9R-6839**	1	RING (11.81-MM THK)	
B		3	**9R-6840**	1	RING (11.84-MM THK)	
B		3	**9R-6841**	1	RING (11.87-MM THK)	
B		3	**9R-6842**	1	RING (11.9-MM THK)	
B		3	**9R-6843**	1	RING (11.93-MM THK)	
B		3	**9R-6844**	1	RING (11.96-MM THK)	
B		3	**9R-6845**	1	RING (11.99-MM THK)	
B		3	**9R-6846**	1	RING (12.02-MM THK)	
B		3	**9R-6847**	1	RING (12.05-MM THK)	
B		3	**9R-6848**	1	RING (12.08-MM THK)	
B		3	**9R-6849**	1	RING (12.11-MM THK)	
B		3	**9R-6850**	1	RING (12.14-MM THK)	
B		3	**9R-6924**	1	RING (12.17-MM THK)	
B		3	**9R-6925**	1	RING (12.2-MM THK)	
B		3	**9R-6926**	1	RING (12.23-MM)	
B		3	**9R-6927**	1	RING (12.26-MM THK)	
B		3	**9R-6928**	1	RING (12.29-MM THK)	
B		3	**9R-6929**	1	RING (12.32-MM THK)	
B		3	**9R-6930**	1	RING (12.35-MM THK)	
B		3	**9R-6931**	1	RING (12.38-MM THK)	
B	54	3	**8U-5669**	1	SPACER (11.27-MM THK)	
B		3	**8U-5670**	1	SPACER (11.24-MM THK)	

204-7741 AXLE GP-STEERING *(contd.)* i02160042

NOTE	REF NO	GRAPHIC REF	PART NUMBER	QTY	PART NAME 1 2 3 4 5 6 (PRODUCT LEVEL)	SEE PAGE
B		3	**8U-5671**	1	SPACER (11.21-MM THK)	
B		3	**8U-5672**	1	SPACER (11.18-MM THK)	
B		3	**8U-5673**	1	SPACER (11.15-MM THK)	
B	59	3	**128-7637**	1	RING (11.12-MM THK)	
B		3	**128-7638**	1	RING (11.09-MM THK)	
B		3	**128-7639**	1	RING (11.06-MM THK)	
B		3	**128-7640**	1	RING (11.03-MM THK)	
B		3	**128-7641**	1	RING (11-MM THK)	
B		3	**128-7642**	1	RING (10.97-MM THK)	
B		3	**128-7643**	1	RING (10.94-MM THK)	
	66	3	**9R-7002**	1	BEARING	
	67	3	**9R-6997**	1	SEAL	
	68	3	**9R-6985**	1	WASHER (27.1X50X5-MM THK)	
	69	3	**5W-5352**	1	NUT	
	70	3	**5W-5398**	1	WASHER-RETAINING	
	71	3	**5W-5666**	1	FLANGE	
	72	3	**9R-6954**	1	PLATE-COVER	
	73	4	**121-7625**	1	CASE	
	74	4	**9R-6964**	2	GEAR-DIFFERENTIAL	
	75	4	**6T-5749**	2	WASHER-THRUST	
	76	4	**128-7855**	4	GEAR-PINION	
	77	4	**9R-6994**	4	WASHER-THRUST	
	78	4	**9R-6993**	1	SPIDER	
M	79	4	**8T-2323**	12	BOLT-SOCKET HEAD (M12X1.5X120-MM)	
	80	4	**9R-6819**	12	WASHER (13X21.9X3-MM THK)	
	81	4	**8T-2450**	4	PIN-SPRING	
	82	4	**9R-6962**	4	PIN-CLAMPING	
B	83	1	**054-6514**	2	SHIM (0.1-MM THK)	
B		1	**121-7679**	2	SHIM (0.15-MM THK)	
B		1	**054-6513**	2	SHIM (0.2-MM THK)	
B		1	**121-7680**	2	SHIM (0.25-MM THK)	
B		1	**054-6512**	2	SHIM (0.3-MM THK)	
B		1	**128-7675**	2	SHIM (0.35-MM THK)	
B		1	**7T-0564**	2	SHIM (0.4-MM THK)	
B		1	**121-7677**	2	SHIM (0.45-MM THK)	
B		1	**7T-0563**	2	SHIM (0.5-MM THK)	
B		1	**121-7678**	2	SHIM (0.55-MM THK)	
B		1	**7T-0562**	2	SHIM (0.6-MM THK)	
B		1	**128-7676**	2	SHIM (0.65-MM THK)	
B		1	**128-7677**	2	SHIM (0.7-MM THK)	
B		1	**128-7680**	2	SHIM (75-MM THK)	
B		1	**7T-0561**	2	SHIM (0.8-MM THK)	
B		1	**128-7681**	2	SHIM (0.85-MM THK)	
B		1	**128-7683**	2	SHIM (0.9-MM THK)	
B		1	**128-7684**	2	SHIM (0.95-MM THK)	
B		1	**7T-0560**	2	SHIM (1-MM THK)	
B		1	**128-7685**	2	SHIM (1.05-MM THK)	
B		1	**128-7686**	2	SHIM (1.1-MM THK)	
B		1	**128-7687**	2	SHIM (1.15-MM THK)	
B		1	**128-7688**	2	SHIM (1.25-MM THK)	
B		1	**128-7689**	2	SHIM (1.3-MM THK)	
B		1	**128-7690**	2	SHIM (1.35-MM THK)	
B		1	**7T-0558**	2	SHIM (1.4-MM THK)	
B		1	**128-7691**	2	SHIM (1.45-MM THK)	
B		1	**128-7692**	2	SHIM (1.5-MM THK)	
B		1	**128-7693**	2	SHIM (1.55-MM THK)	
B		1	**128-7694**	2	SHIM (1.6-MM THK)	
B		1	**128-7695**	2	SHIM (1.65-MM THK)	
B		1	**7T-0552**	2	SHIM (2-MM THK)	

204-7741 AXLE GP-STEERING *(contd.)* i02160042

NOTE	REF NO	GRAPHIC REF	PART NUMBER	QTY	PART NAME 1 2 3 4 5 6 (PRODUCT LEVEL)	SEE PAGE
B	116	1	**202-8137**	2	WASHER (1.47-MM THK)	
B		1	**202-8138**	2	WASHER (1.63-MM THK)	
B		1	**202-8139**	2	WASHER (1.75-MM THK)	
B		1	**202-8140**	2	WASHER (1.7-MM THK)	
B		1	**202-8141**	2	WASHER (1.8-MM THK)	
B		1	**202-8142**	2	WASHER (1.85-MM THK)	
B		1	**202-8143**	2	WASHER (1.9-MM THK)	
B		1	**202-8144**	2	WASHER (1.95-MM THK)	
	124	1	**9R-7003**	1	BEARING	
	125	1	**6Y-2942**	1	CONE-BEARING	
		1	**6Y-2943**	1	CUP-BEARING (TAPERED ROLLER BEARING)	
	126	1	**5W-5475**	1	SEAL-O-RING	
	127	1	**5W-5627**	16	BOLT	
	128	1	**5W-5531**	16	WASHER	
	129	1	**6V-5225**	4	SCREW-DRIVE	
	130	1	**9X-0798**	1	PLUG	
	131	1	**203-0215**	2	SEAL-O-RING	
	132	1	**5W-6076**	1	BOLT	
	134	1	**9R-6948**	2	CLIP	
	135	1	**175-4073**	2	BUSHING-SLEEVE	
	136	3	**7T-9343**	1	CUP-BEARING	
	137	1	**132-6519**	1	HOUSING-AXLE-LH	
	138	1	**132-6520**	1	HOUSING-AXLE-RH	
	139	1	**204-7842**	2	SHAFT-AXLE	
	140	1	**121-7675**	4	BUSHING	
	141	1	**132-6521**	1	TIE ROD GP (LH)	
	142	1	**132-6522**	1	TIE ROD GP (RH)	
	144	2	**203-5402**	1	HOUSING GP-AXLE (LH)	
		2	**8U-2342**	1	NUT	
	145	2	**203-5403**	1	HOUSING GP-AXLE (RH)	
		2	**8U-2342**	1	NUT	
	147	2	**8U-5690**	8	PLUG	
	148	2	**6V-2652**	4	CONE-BEARING	
		2	**4D-8648**	4	CUP-BEARING	
	149	2	**110-0858**	4	CAP-SEALING	
	150	2	**110-4743**	4	SEAL-O-RING	
B	151	2	**121-7659**	2	SHIM (0.6-MM THK)	
B	152	2	**121-7661**	2	SHIM (0.8-MM THK)	
B	153	2	**121-7662**	2	SHIM (1-MM THK)	
B	154	2	**121-7663**	2	SHIM (1.2-MM THK)	
B	155	2	**121-7665**	2	SHIM (1.6-MM THK)	
B	156	2	**121-7667**	2	SHIM (2-MM THK)	
	157	2	**110-0860**	4	PIN-BEARING	
M	158	2	**8T-4779**	16	BOLT (M16X2X35-MM)	
	159	2	**128-7867**	4	FITTING-HYDRAULIC	
	160	2	**220-2593**	2	BUSHING-SLEEVE	
	161	1,2	**9R-6996**	4	SEAL	
Y	162	2	**203-5415**	2	UNIVERSAL JOINT GP	349
	163	2	**5W-5682**	2	VALVE-BREATHER (AXLE)	
B	164	2	**135-3439**	2	SHIM (3-MM THK)	
B		2	**203-5416**	2	SHIM (2.5-MM THK)	
B		2	**135-3441**	2	SHIM (2-MM THK)	
B		2	**135-3442**	2	SHIM (1.5-MM THK)	
B	168	2	**135-3443**	2	TUBE	
M	169	2	**135-3444**	2	BOLT (M12X1.5X30-MM)	
	170	5	**203-5417**	2	SEAL-LIP TYPE	
	171	5	**8U-2356**	4	BEARING	
	172	5	**8U-2357**	2	FLANGE	
	173	5	**110-4745**	2	SEAL-O-RING	

204-7741 AXLE GP-STEERING *(contd.)* i02160042

NOTE	REF NO	GRAPHIC REF	PART NUMBER	QTY	PART NAME 1 2 3 4 5 6 (PRODUCT LEVEL)	SEE PAGE
	174	5	**135-1593**	2	GEAR (81-TEETH)	
	175	5	**5W-6377**	4	PLUG	
	176	5	**8U-2359**	4	SEAL-O-RING	
	177	5	**8U-2360**	2	RING	
	178	5	**8U-2361**	2	RING	
B	179	5	**8U-2365**	2	BUSHING (26-MM THK)	
B		5	**8U-2366**	2	BUSHING (26.2-MM THK)	
B		5	**8U-2367**	2	BUSHING (26.4-MM THK)	
B		5	**8U-2368**	2	BUSHING (26.6-MM THK)	
B		5	**8U-2369**	2	BUSHING (26.8-MM THK)	
B		5	**8U-2370**	2	BUSHING (27-MM THK)	
B		5	**8U-2371**	2	BUSHING (27.2-MM THK)	
B		5	**135-1594**	2	BUSHING (26.23-MM THK)	
B		5	**135-1595**	2	BUSHING (26.26-MM THK)	
B		5	**135-1596**	2	BUSHING (26.29-MM THK)	
B		5	**135-1597**	2	BUSHING (26.32-MM THK)	
B		5	**135-1598**	2	BUSHING (26.35-MM THK)	
	191	5	**135-1599**	2	PISTON	
	192	5	**8U-2373**	4	SEAL	
	193	5	**8U-2398**	2	RING	
	194	5	**8U-2399**	2	RING	
	195	5	**8U-3590**	2	GASKET	
	196	5	**8U-3591**	16	SPACER	
	197	5	**8U-3592**	16	SPRING	
	198	5	**135-1600**	2	RING	
M	199	5	**8T-0275**	16	BOLT (M6X1X50-MM)	
	200	5	**8U-3594**	16	NUT	
B	201	5	**8U-9508**	8	DISC (2.5-MM THK)	
B	202	5	**8U-9509**	8	DISC (3-MM THK)	
B	203	5	**8U-9507**	8	DISC (2-MM THK)	
	204	5	**110-0842**	6	DISC-FRICTION	
	205	5	**8U-2377**	2	WASHER-THRUST	
	206	5	**8U-2378**	2	RING-LOCK	
	207	5	**135-1601**	2	WASHER	
	208	5	**8U-4119**	2	GEAR (48-TEETH)	
	209	5	**8U-2385**	2	RING-RETAINING (5-MM THK)	
	210	5	**8U-9510**	2	CARRIER-PLANETARY	
	211	5	**9W-4926**	2	PLUG	
	212	5	**6T-6408**	2	SEAL-O-RING	
	213	5	**193-1132**	6	GEAR-PLANETARY	
	214	5	**213-9783**	6	BEARING-ROLLER	
	215	5	**190-8591**	12	WASHER (64.5X72.1X2-MM THK)	
	217	5	**190-8590**	12	RING-SNAP	
	218	5	**110-4737**	6	RING-RETAINING	
B	219	5	**110-0165**	2	WASHER-THRUST (1.5-MM THK)	
B		5	**110-0164**	2	WASHER-THRUST (1.7-MM THK)	
B		5	**110-0163**	2	WASHER-THRUST (2-MM THK)	
B		5	**110-0162**	2	WASHER-THRUST (2.2-MM THK)	
B		5	**110-0161**	2	WASHER-THRUST (2.5-MM THK)	
B		5	**110-0160**	2	WASHER-THRUST (2.7-MM THK)	
B		5	**110-0159**	2	WASHER-THRUST (3-MM THK)	
	226	5	**109-4440**	2	PLUG	
	227	5	**190-8676**	2	SEAL-O-RING	
M	228	5	**117-2987**	2	BOLT-SOCKET HEAD (M12X1.75X115-MM)	
	229	5	**8U-2381**	2	WASHER (13X19X1.5-MM THK)	
	230	5	**8U-2382**	2	RING-RETAINING (1-MM THK)	
	231	5	**8U-4120**	2	GEAR-SUN (15-TEETH)	
M	232	5	**5W-2177**	4	BOLT-SOCKET HEAD (M12X1.75X20-MM)	
	233	5	**5W-0964**	20	BOLT (M22X1.5X92-MM)	

204-7741 AXLE GP-STEERING *(contd.)* i02160042

NOTE	REF NO	GRAPHIC REF	PART NUMBER	QTY	PART NAME 1 2 3 4 5 6 (PRODUCT LEVEL)	SEE PAGE
	234	6	**5W-5696**	1	CYLINDER (STEERING)	
	235	6	**5W-4819**	2	SEAL-O-RING	
	236	6	**5W-6643**	1	GUIDE	
	237	6	**5W-5485**	1	SEAL-O-RING	
	238	6	**5W-5483**	2	RING	
	239	6	**5W-6392**	2	SEAL-O-RING	
	240	6	**216-0590**	1	ROD AS	
	247	6	**5W-5646**	1	SEAL	
	248	6	**5W-6391**	1	SCRAPER	
	249	6	**5W-5547**	1	DISC (1-MM THK)	
B		6	**5W-5548**	1	DISC (1.1-MM THK)	
B		6	**5W-5549**	1	DISC (1.2-MM THK)	
B		6	**5W-5550**	1	DISC (1.3-MM THK)	
B		6	**5W-5551**	1	DISC (1.4-MM THK)	
B		6	**5W-5552**	1	DISC (1.5-MM THK)	
B		6	**5W-5553**	1	DISC (1.6-MM THK)	
B		6	**5W-5554**	1	DISC (1.7-MM THK)	
B		6	**5W-6400**	1	DISC (1.8-MM THK)	
B		6	**5W-5555**	1	DISC (1.05-MM THK)	
B		6	**5W-5556**	1	DISC (1.15-MM THK)	
B		6	**5W-5557**	1	DISC (1.25-M THK)	
B		6	**5W-5558**	1	DISC (1.35-MM THK)	
B		6	**5W-5559**	1	DISC (1.45-MM THK)	
B		6	**5W-5560**	1	DISC (1.55-MM THK)	
B		6	**5W-5561**	1	DISC (1.65-MM THK)	
B		6	**5W-5562**	1	DISC (1.75-MM THK)	
B		6	**8U-2752**	1	DISC (0.7-MM THK)	
B		6	**8U-2753**	1	DISC (0.8-MM THK)	
B		6	**8U-2754**	1	DISC (0.9-MM THK)	
	269	6	**5W-6442**	1	HOUSING	
	270	6	**5W-5632**	4	BOLT	
	271	6	**203-0216**	2	SEAL-O-RING	
	272	6	**8U-5818**	1	FITTING	
	273	6	**6T-6305**	1	SEAL-O-RING	
	274	6	**128-7901**	1	ELBOW	
	275	6	**121-7686**	2	RING	
	276	6	**121-7687**	2	SEAL-O-RING	

B-USE AS REQUIRED
M-METRIC PART
Y-SEPARATE ILLUSTRATION

204-7741 AXLE GP-STEERING *(contd.)* i02160042

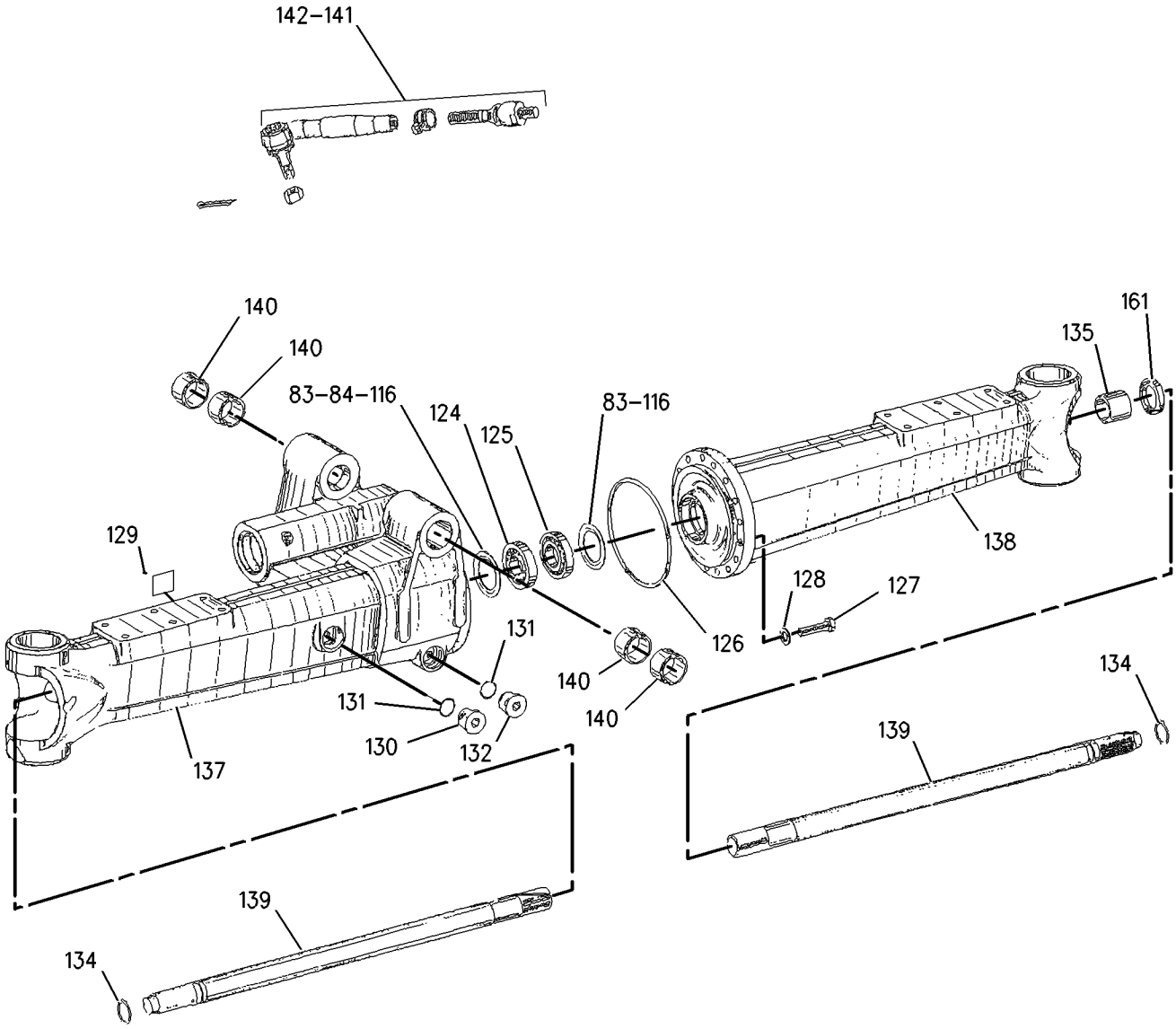

GRAPHIC #1 g00928377

204-7741 AXLE GP-STEERING *(contd.)* i02160042

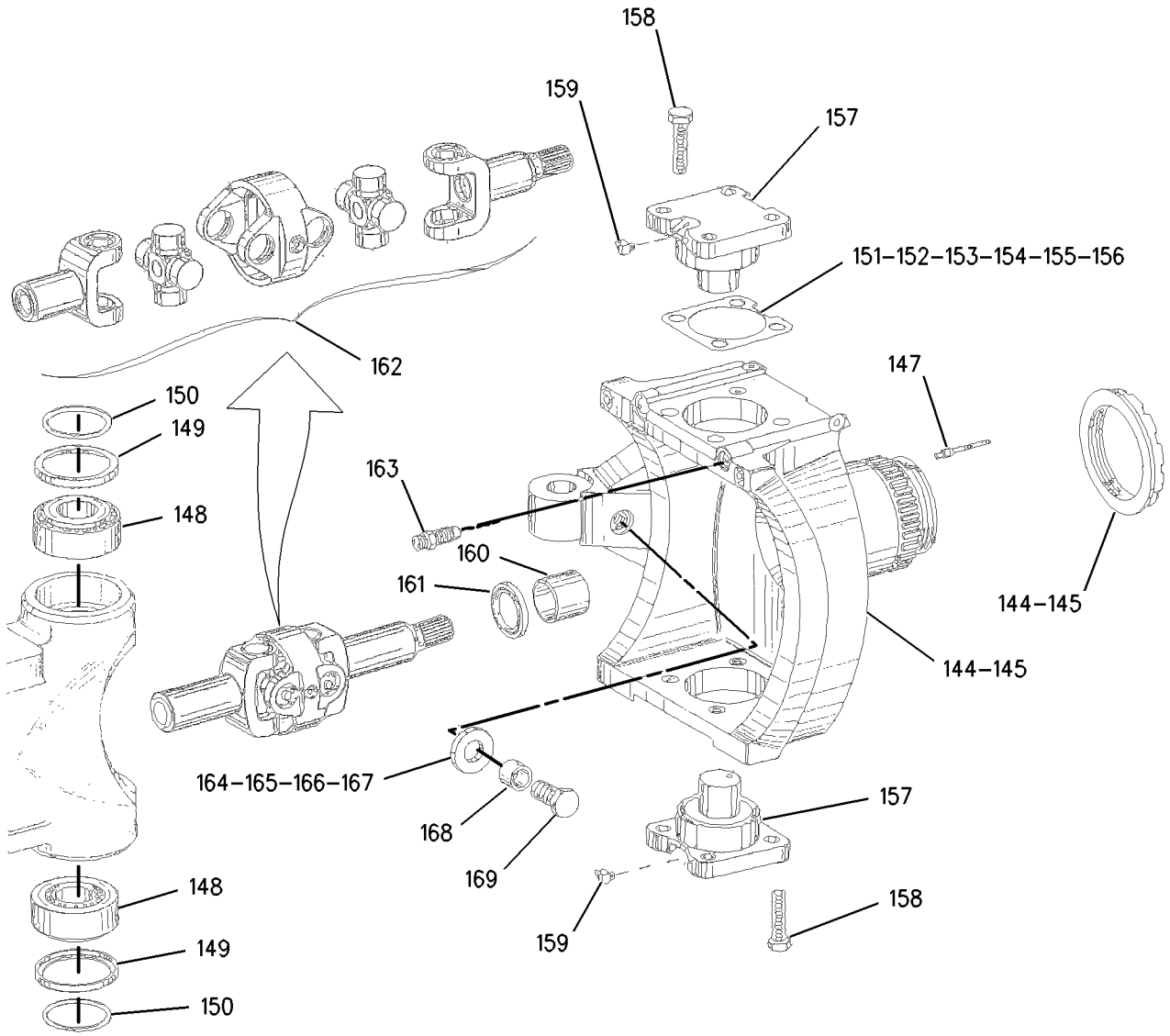

GRAPHIC #2 g00837875

204-7741 AXLE GP-STEERING *(contd.)* **i02160042**

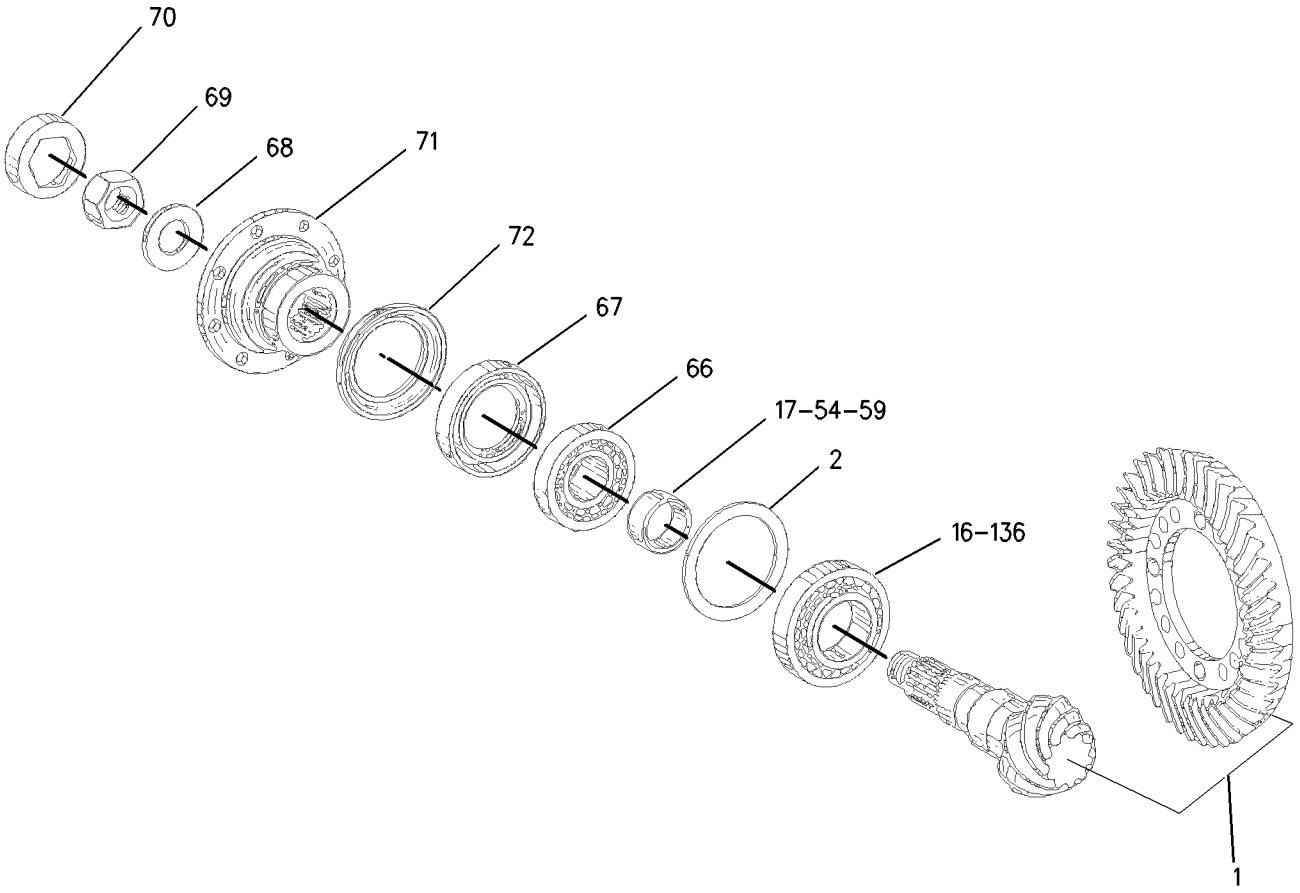

GRAPHIC #3 g00928385

204-7741 AXLE GP-STEERING *(contd.)* i02160042

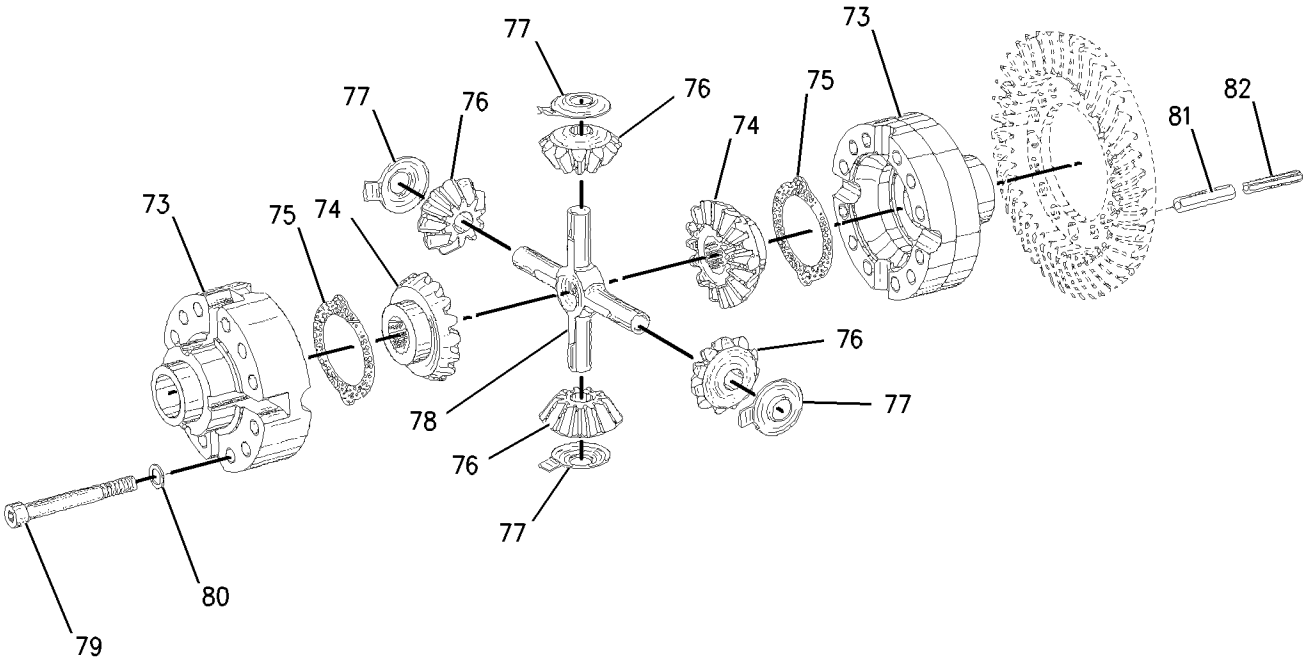

GRAPHIC #4 g00837877

204-7741 AXLE GP-STEERING *(contd.)* **i02160042**

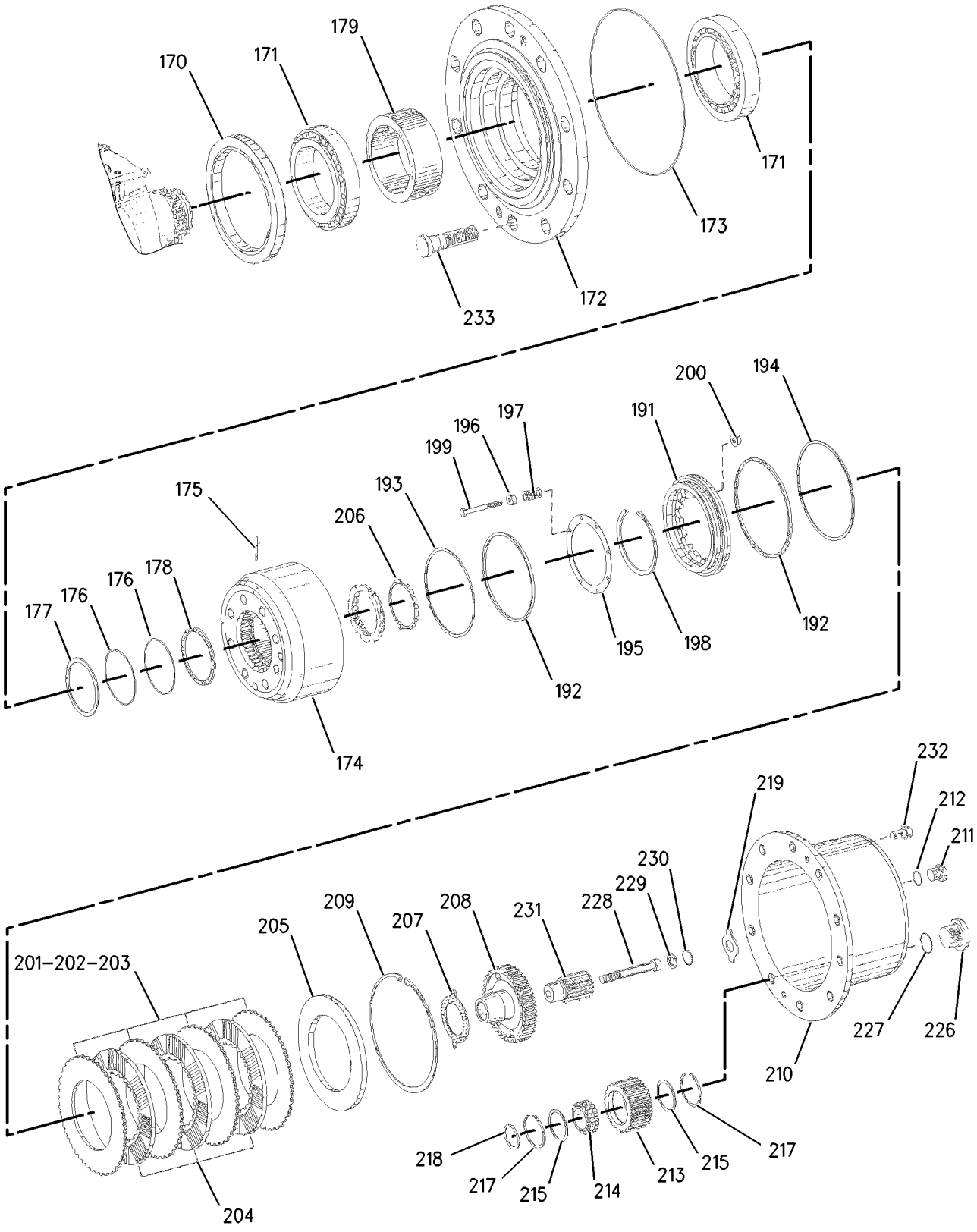

GRAPHIC #5 g00928392

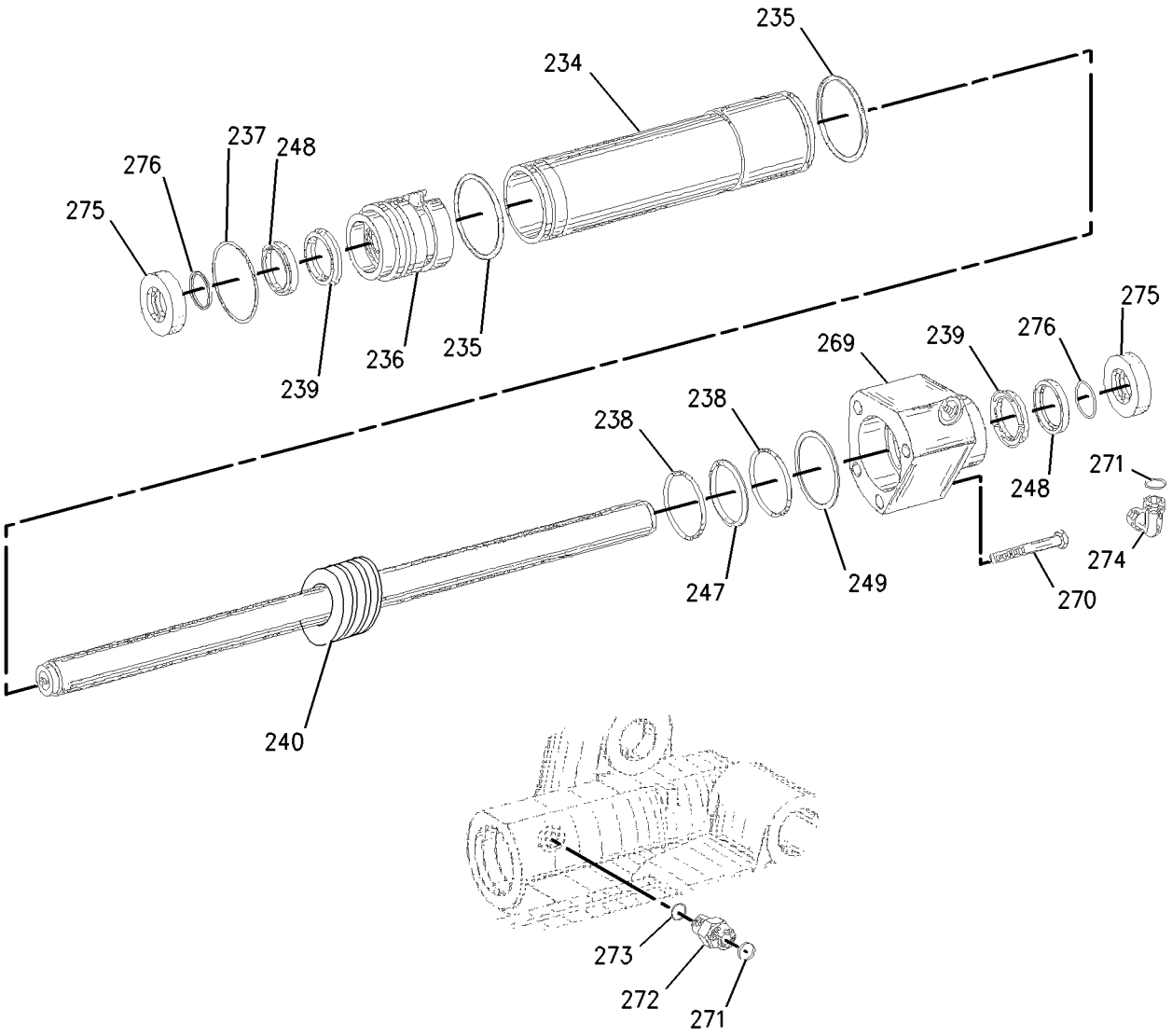

GRAPHIC #6 **<END>** g00899532

204-7741 AXLE GP-STEERING–WIDE

S/N: BCZ253-2000

PART OF 205-3910 AXLE AR-WIDE

AN ATTACHMENT

SMCS-3020, 3282, 4313, 4321 **i02160043**

NOTE	REF NO	GRAPHIC REF	PART NUMBER	QTY	PART NAME 1 2 3 4 5 6 (PRODUCT LEVEL)	SEE PAGE
	1	3	**203-5397**	1	GEAR AS-PINION	
B	2	3	**9R-6814**	1	WASHER (88X104.6X1.5-MM THK)	
B		3	**9R-6805**	1	WASHER (88X104.6X0.9-MM THK)	
B		3	**9R-6806**	1	WASHER (88X104.6X0.95-MM THK)	
B		3	**9R-6807**	1	WASHER (88X104.6X1-MM THK)	
B		3	**9R-6808**	1	WASHER (88X104.6X1.05-MM THK)	
B		3	**9R-6809**	1	WASHER (88X104.6X1.1-MM THK)	
B		3	**9R-6810**	1	WASHER (88X104.6X1.15-MM THK)	
B		3	**9R-6811**	1	WASHER (88X104.6X1.2-MM THK)	
B		3	**9R-6812**	1	WASHER (88X104.6X1.25-MM THK)	
B		3	**9R-6813**	1	WASHER (88X104.6X1.3-MM THK)	
B		3	**9R-6801**	1	WASHER (88X104.6X0.7-MM THK)	
B		3	**9R-6802**	1	WASHER (88X104.6X0.75-MM THK)	
B		3	**9R-6803**	1	WASHER (88X104.6X0.8-MM THK)	
B		3	**9R-6804**	1	WASHER (88X104.6X0.85-MM THK)	
	16	3	**7T-9342**	1	CONE-BEARING	
B	17	3	**9R-6932**	1	RING (11.3-MM THK)	
B		3	**9R-6933**	1	RING (11.33-MM THK)	
B		3	**9R-6934**	1	RING (11.36-MM THK)	
B		3	**9R-6935**	1	RING (11.39-MM THK)	
B		3	**9R-6936**	1	RING (11.42-MM THK)	
B		3	**9R-6937**	1	RING (11.45-MM THK)	
B		3	**9R-6938**	1	RING (11.48-MM THK)	
B		3	**9R-6939**	1	RING (11.51-MM THK)	
B		3	**9R-6940**	1	RING (11.54-MM THK)	
B		3	**9R-6941**	1	RING (11.57-MM THK)	
B		3	**9R-6942**	1	RING (11.6-MM THK)	
B		3	**9R-6943**	1	RING (11.63-MM THK)	
B		3	**9R-6944**	1	RING (11.66-MM THK)	
B		3	**9R-6945**	1	RING (11.69-MM THK)	
B		3	**9R-6836**	1	RING (11.72-MM THK)	
B		3	**9R-6837**	1	RING (11.75-MM THK)	
B		3	**9R-6838**	1	RING (11.78-MM THK)	
B		3	**9R-6839**	1	RING (11.81-MM THK)	
B		3	**9R-6840**	1	RING (11.84-MM THK)	
B		3	**9R-6841**	1	RING (11.87-MM THK)	
B		3	**9R-6842**	1	RING (11.9-MM THK)	
B		3	**9R-6843**	1	RING (11.93-MM THK)	
B		3	**9R-6844**	1	RING (11.96-MM THK)	
B		3	**9R-6845**	1	RING (11.99-MM THK)	
B		3	**9R-6846**	1	RING (12.02-MM THK)	
B		3	**9R-6847**	1	RING (12.05-MM THK)	
B		3	**9R-6848**	1	RING (12.08-MM THK)	
B		3	**9R-6849**	1	RING (12.11-MM THK)	
B		3	**9R-6850**	1	RING (12.14-MM THK)	
B		3	**9R-6924**	1	RING (12.17-MM THK)	
B		3	**9R-6925**	1	RING (12.2-MM THK)	
B		3	**9R-6926**	1	RING (12.23-MM)	
B		3	**9R-6927**	1	RING (12.26-MM THK)	
B		3	**9R-6928**	1	RING (12.29-MM THK)	
B		3	**9R-6929**	1	RING (12.32-MM THK)	
B		3	**9R-6930**	1	RING (12.35-MM THK)	
B		3	**9R-6931**	1	RING (12.38-MM THK)	
B	54	3	**8U-5669**	1	SPACER (11.27-MM THK)	
B		3	**8U-5670**	1	SPACER (11.24-MM THK)	

204-7741 AXLE GP-STEERING *(contd.)* i02160043

NOTE	REF NO	GRAPHIC REF	PART NUMBER	QTY	PART NAME 1 2 3 4 5 6 (PRODUCT LEVEL)	SEE PAGE
B		3	**8U-5671**	1	SPACER (11.21-MM THK)	
B		3	**8U-5672**	1	SPACER (11.18-MM THK)	
B		3	**8U-5673**	1	SPACER (11.15-MM THK)	
B	59	3	**128-7637**	1	RING (11.12-MM THK)	
B		3	**128-7638**	1	RING (11.09-MM THK)	
B		3	**128-7639**	1	RING (11.06-MM THK)	
B		3	**128-7640**	1	RING (11.03-MM THK)	
B		3	**128-7641**	1	RING (11-MM THK)	
B		3	**128-7642**	1	RING (10.97-MM THK)	
B		3	**128-7643**	1	RING (10.94-MM THK)	
	66	3	**9R-7002**	1	BEARING	
C	67	3	**229-2712**	1	SEAL-SHAFT	
	68	3	**9R-6985**	1	WASHER (27.1X50X5-MM THK)	
	69	3	**5W-5352**	1	NUT	
	70	3	**5W-5398**	1	WASHER-RETAINING	
	71	3	**5W-5666**	1	FLANGE	
C	72	3	**229-2711**	1	PLATE-DEFLECTOR	
	73	4	**121-7625**	1	CASE	
	74	4	**9R-6964**	2	GEAR-DIFFERENTIAL	
	75	4	**6T-5749**	2	WASHER-THRUST	
	76	4	**128-7855**	4	GEAR-PINION	
	77	4	**9R-6994**	4	WASHER-THRUST	
	78	4	**9R-6993**	1	SPIDER	
M	79	4	**8T-2323**	12	BOLT-SOCKET HEAD (M12X1.5X120-MM)	
	80	4	**9R-6819**	12	WASHER (13X21.9X3-MM THK)	
	81	4	**8T-2450**	4	PIN-SPRING	
	82	4	**9R-6962**	4	PIN-CLAMPING	
B	83	1	**054-6514**	2	SHIM (0.1-MM THK)	
B		1	**121-7679**	2	SHIM (0.15-MM THK)	
B		1	**054-6513**	2	SHIM (0.2-MM THK)	
B		1	**121-7680**	2	SHIM (0.25-MM THK)	
B		1	**054-6512**	2	SHIM (0.3-MM THK)	
B		1	**128-7675**	2	SHIM (0.35-MM THK)	
B		1	**7T-0564**	2	SHIM (0.4-MM THK)	
B		1	**121-7677**	2	SHIM (0.45-MM THK)	
B		1	**7T-0563**	2	SHIM (0.5-MM THK)	
B		1	**121-7678**	2	SHIM (0.55-MM THK)	
B		1	**7T-0562**	2	SHIM (0.6-MM THK)	
B		1	**128-7676**	2	SHIM (0.65-MM THK)	
B		1	**128-7677**	2	SHIM (0.7-MM THK)	
B		1	**128-7680**	2	SHIM (75-MM THK)	
B		1	**7T-0561**	2	SHIM (0.8-MM THK)	
B		1	**128-7681**	2	SHIM (0.85-MM THK)	
B		1	**128-7683**	2	SHIM (0.9-MM THK)	
B		1	**128-7684**	2	SHIM (0.95-MM THK)	
B		1	**7T-0560**	2	SHIM (1-MM THK)	
B		1	**128-7685**	2	SHIM (1.05-MM THK)	
B		1	**128-7686**	2	SHIM (1.1-MM THK)	
B		1	**128-7687**	2	SHIM (1.15-MM THK)	
B		1	**128-7688**	2	SHIM (1.25-MM THK)	
B		1	**128-7689**	2	SHIM (1.3-MM THK)	
B		1	**128-7690**	2	SHIM (1.35-MM THK)	
B		1	**7T-0558**	2	SHIM (1.4-MM THK)	
B		1	**128-7691**	2	SHIM (1.45-MM THK)	
B		1	**128-7692**	2	SHIM (1.5-MM THK)	
B		1	**128-7693**	2	SHIM (1.55-MM THK)	
B		1	**128-7694**	2	SHIM (1.6-MM THK)	
B		1	**128-7695**	2	SHIM (1.65-MM THK)	
B		1	**7T-0552**	2	SHIM (2-MM THK)	

204-7741 AXLE GP-STEERING *(contd.)* i02160043

NOTE	REF NO	GRAPHIC REF	PART NUMBER	QTY	PART NAME 1 2 3 4 5 6 (PRODUCT LEVEL)	SEE PAGE
B	116	1	**202-8137**	2	WASHER (1.47-MM THK)	
B		1	**202-8138**	2	WASHER (1.63-MM THK)	
B		1	**202-8139**	2	WASHER (1.75-MM THK)	
B		1	**202-8140**	2	WASHER (1.7-MM THK)	
B		1	**202-8141**	2	WASHER (1.8-MM THK)	
B		1	**202-8142**	2	WASHER (1.85-MM THK)	
B		1	**202-8143**	2	WASHER (1.9-MM THK)	
B		1	**202-8144**	2	WASHER (1.95-MM THK)	
	124	1	**9R-7003**	1	BEARING	
	125	1	**5W-2793**	1	BEARING	
	126	1	**5W-5475**	1	SEAL-O-RING	
	127	1	**5W-5627**	16	BOLT	
	128	1	**5W-5531**	16	WASHER	
	129	1	**6V-5225**	4	SCREW-DRIVE	
	130	1	**9X-0798**	1	PLUG	
	131	1	**203-0215**	2	SEAL-O-RING	
	132	1	**5W-6076**	1	BOLT	
	134	1	**9R-6948**	2	CLIP	
	135	1	**175-4073**	2	BUSHING-SLEEVE	
	136	3	**7T-9343**	1	CUP-BEARING	
	137	1	**132-6519**	1	HOUSING-AXLE-LH	
	138	1	**132-6520**	1	HOUSING-AXLE-RH	
	139	1	**204-7842**	2	SHAFT-AXLE	
	140	1	**121-7675**	4	BUSHING	
	141	1	**132-6521**	1	TIE ROD GP (LH)	
	142	1	**132-6522**	1	TIE ROD GP (RH)	
	144	2	**203-5402**	1	HOUSING GP-AXLE (LH)	
		2	**8U-2342**	1	NUT	
	145	2	**203-5403**	1	HOUSING GP-AXLE (RH)	
		2	**8U-2342**	1	NUT	
	147	2	**8U-5690**	8	PLUG	
	148	2	**8U-7285**	4	BEARING-ROLLER	
	149	2	**110-0858**	4	CAP-SEALING	
	150	2	**110-4743**	4	SEAL-O-RING	
B	151	2	**121-7659**	2	SHIM (0.6-MM THK)	
B	152	2	**121-7661**	2	SHIM (0.8-MM THK)	
B	153	2	**121-7662**	2	SHIM (1-MM THK)	
B	154	2	**121-7663**	2	SHIM (1.2-MM THK)	
B	155	2	**121-7665**	2	SHIM (1.6-MM THK)	
B	156	2	**121-7667**	2	SHIM (2-MM THK)	
	157	2	**110-0860**	4	PIN-BEARING	
M	158	2	**8T-4779**	16	BOLT (M16X2X35-MM)	
	159	2	**128-7867**	4	FITTING-HYDRAULIC	
	160	2	**220-2593**	2	BUSHING-SLEEVE	
	161	1,2	**9R-6996**	4	SEAL	
Y	162	2	**203-5415**	2	UNIVERSAL JOINT GP	349
	163	2	**5W-5682**	2	VALVE-BREATHER (AXLE)	
B	164	2	**135-3439**	2	SHIM (3-MM THK)	
B		2	**203-5416**	2	SHIM (2.5-MM THK)	
B		2	**135-3441**	2	SHIM (2-MM THK)	
B		2	**135-3442**	2	SHIM (1.5-MM THK)	
	168	2	**135-3443**	2	TUBE	
M	169	2	**135-3444**	2	BOLT (M12X1.5X30-MM)	
	170	5	**203-5417**	2	SEAL-LIP TYPE	
	171	5	**8U-2356**	4	BEARING	
	172	5	**8U-2357**	2	FLANGE	
	173	5	**110-4745**	2	SEAL-O-RING	
	174	5	**135-1593**	2	GEAR (81-TEETH)	
	175	5	**5W-6377**	4	PLUG	

204-7741 AXLE GP-STEERING *(contd.)* i02160043

NOTE	REF NO	GRAPHIC REF	PART NUMBER	QTY	PART NAME 1 2 3 4 5 6 (PRODUCT LEVEL)	SEE PAGE
	176	5	**8U-2359**	4	SEAL-O-RING	
	177	5	**8U-2360**	2	RING	
	178	5	**8U-2361**	2	RING	
B	179	5	**8U-2365**	2	BUSHING (26-MM THK)	
B		5	**8U-2366**	2	BUSHING (26.2-MM THK)	
B		5	**8U-2367**	2	BUSHING (26.4-MM THK)	
B		5	**8U-2368**	2	BUSHING (26.6-MM THK)	
B		5	**8U-2369**	2	BUSHING (26.8-MM THK)	
B		5	**8U-2370**	2	BUSHING (27-MM THK)	
B		5	**8U-2371**	2	BUSHING (27.2-MM THK)	
B		5	**135-1594**	2	BUSHING (26.23-MM THK)	
B		5	**135-1595**	2	BUSHING (26.26-MM THK)	
B		5	**135-1596**	2	BUSHING (26.29-MM THK)	
B		5	**135-1597**	2	BUSHING (26.32-MM THK)	
B		5	**135-1598**	2	BUSHING (26.35-MM THK)	
B		5	**241-3652**	2	BUSHING (26.38-MM THK)	
B		5	**241-3653**	2	BUSHING (26.41-MM THK)	
B		5	**241-3654**	2	BUSHING (26.44-MM THK)	
B		5	**241-3655**	2	BUSHING (26.47-MM THK)	
B		5	**241-3656**	2	BUSHING (26.5-MM THK)	
	191	5	**135-1599**	2	PISTON	
	192	5	**8U-2373**	4	SEAL	
	193	5	**8U-2398**	2	RING	
	194	5	**8U-2399**	2	RING	
	195	5	**8U-3590**	2	GASKET	
	196	5	**8U-3591**	16	SPACER	
	197	5	**8U-3592**	16	SPRING	
	198	5	**135-1600**	2	RING	
M	199	5	**8T-0275**	16	BOLT (M6X1X50-MM)	
	200	5	**8U-3594**	16	NUT	
B	201	5	**8U-9508**	8	DISC (2.5-MM THK)	
B	202	5	**8U-9509**	8	DISC (3-MM THK)	
B	203	5	**8U-9507**	8	DISC (2-MM THK)	
	204	5	**110-0842**	6	DISC-FRICTION	
	205	5	**8U-2377**	2	WASHER-THRUST	
	206	5	**8U-2378**	2	RING-LOCK	
	207	5	**135-1601**	2	WASHER	
	208	5	**8U-4119**	2	GEAR (48-TEETH)	
	209	5	**8U-2385**	2	RING-RETAINING (5-MM THK)	
	210	5	**8U-9510**	2	CARRIER-PLANETARY	
	211	5	**9W-4926**	2	PLUG	
	212	5	**6T-6408**	2	SEAL-O-RING	
	213	5	**193-1132**	6	GEAR-PLANETARY	
	214	5	**213-9783**	6	BEARING-ROLLER	
	215	5	**110-4751**	12	WASHER	
	217	5	**190-8590**	12	RING-SNAP	
	218	5	**110-4737**	6	RING-RETAINING	
B	219	5	**110-0165**	2	WASHER-THRUST (1.5-MM THK)	
B		5	**110-0164**	2	WASHER-THRUST (1.7-MM THK)	
B		5	**110-0163**	2	WASHER-THRUST (2-MM THK)	
B		5	**110-0162**	2	WASHER-THRUST (2.2-MM THK)	
B		5	**110-0161**	2	WASHER-THRUST (2.5-MM THK)	
B		5	**110-0160**	2	WASHER-THRUST (2.7-MM THK)	
B		5	**110-0159**	2	WASHER-THRUST (3-MM THK)	
	226	5	**109-4440**	2	PLUG	
	227	5	**190-8676**	2	SEAL-O-RING	
M	228	5	**117-2987**	2	BOLT-SOCKET HEAD (M12X1.75X115-MM)	
	229	5	**8U-2381**	2	WASHER (13X19X1.5-MM THK)	
	230	5	**8U-2382**	2	RING-RETAINING (1-MM THK)	

204-7741 AXLE GP-STEERING *(contd.)* i02160043

NOTE	REF NO	GRAPHIC REF	PART NUMBER	QTY	PART NAME 1 2 3 4 5 6 (PRODUCT LEVEL)	SEE PAGE
	231	5	**8U-4120**	2	GEAR-SUN (15-TEETH)	
M	232	5	**5W-2177**	4	BOLT-SOCKET HEAD (M12X1.75X20-MM)	
	233	5	**5W-0964**	20	BOLT (M22X1.5X92-MM)	
	234	6	**5W-5696**	1	CYLINDER (STEERING)	
	235	6	**5W-4819**	2	SEAL-O-RING	
	236	6	**5W-6643**	1	GUIDE	
	237	6	**5W-5485**	1	SEAL-O-RING	
	238	6	**5W-5483**	2	RING	
	239	6	**5W-6392**	2	SEAL-O-RING	
	240	6	**216-0590**	1	ROD AS	
	247	6	**5W-5646**	1	SEAL	
	248	6	**5W-6391**	1	SCRAPER	
	249	6	**5W-5547**	1	DISC (1-MM THK)	
B		6	**5W-5548**	1	DISC (1.1-MM THK)	
B		6	**5W-5549**	1	DISC (1.2-MM THK)	
B		6	**5W-5550**	1	DISC (1.3-MM THK)	
B		6	**5W-5551**	1	DISC (1.4-MM THK)	
B		6	**5W-5552**	1	DISC (1.5-MM THK)	
B		6	**5W-5553**	1	DISC (1.6-MM THK)	
B		6	**5W-5554**	1	DISC (1.7-MM THK)	
B		6	**5W-6400**	1	DISC (1.8-MM THK)	
B		6	**5W-5555**	1	DISC (1.05-MM THK)	
B		6	**5W-5556**	1	DISC (1.15-MM THK)	
B		6	**5W-5557**	1	DISC (1.25-M THK)	
B		6	**5W-5558**	1	DISC (1.35-MM THK)	
B		6	**5W-5559**	1	DISC (1.45-MM THK)	
B		6	**5W-5560**	1	DISC (1.55-MM THK)	
B		6	**5W-5561**	1	DISC (1.65-MM THK)	
B		6	**8U-2752**	1	DISC (0.7-MM THK)	
B		6	**8U-2753**	1	DISC (0.8-MM THK)	
B		6	**8U-2754**	1	DISC (0.9-MM THK)	
	269	6	**5W-6442**	1	HOUSING	
	270	6	**5W-5632**	4	BOLT	
	271	6	**203-0216**	2	SEAL-O-RING	
	272	6	**8U-5818**	1	FITTING	
	273	6	**6T-6305**	1	SEAL-O-RING	
	274	6	**128-7901**	1	ELBOW	
	275	6	**121-7686**	2	RING	
	276	6	**121-7687**	2	SEAL-O-RING	

B-USE AS REQUIRED
C-CHANGE FROM PREVIOUS TYPE
M-METRIC PART
Y-SEPARATE ILLUSTRATION

204-7741 AXLE GP-STEERING *(contd.)* i02160043

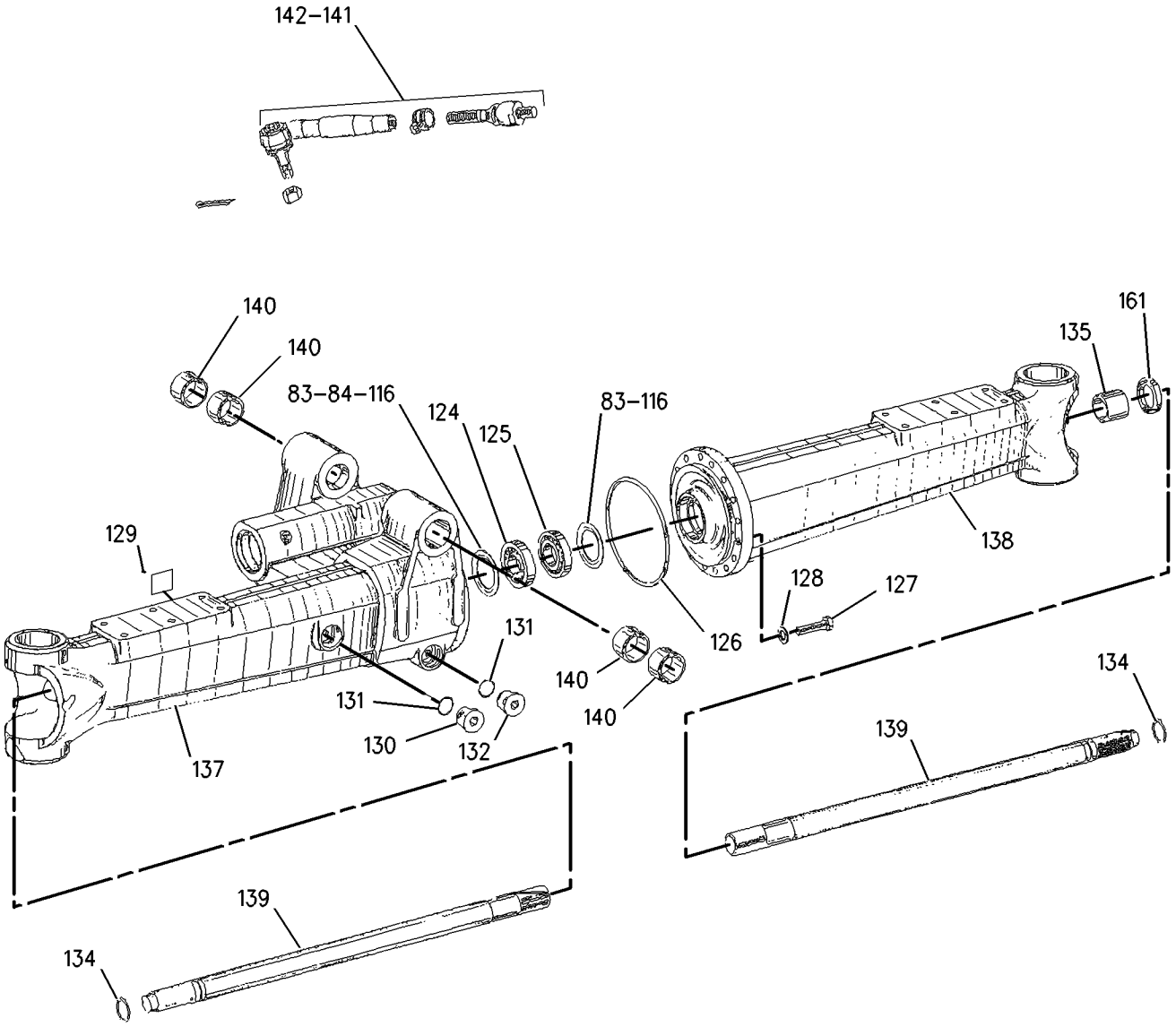

GRAPHIC #1 g00928377

204-7741 AXLE GP-STEERING *(contd.)* i02160043

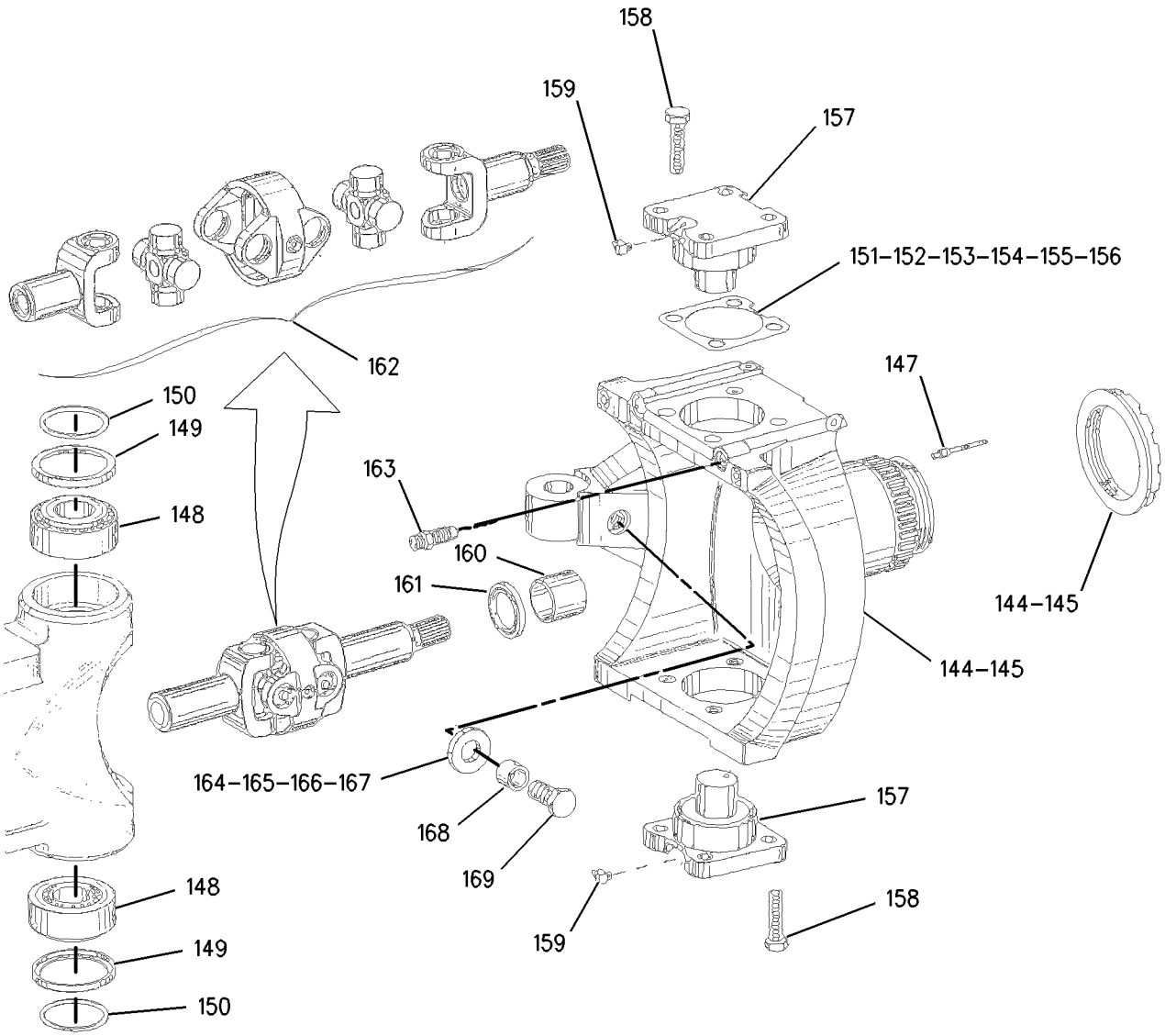

GRAPHIC #2 g00837875

204-7741 AXLE GP-STEERING *(contd.)* i02160043

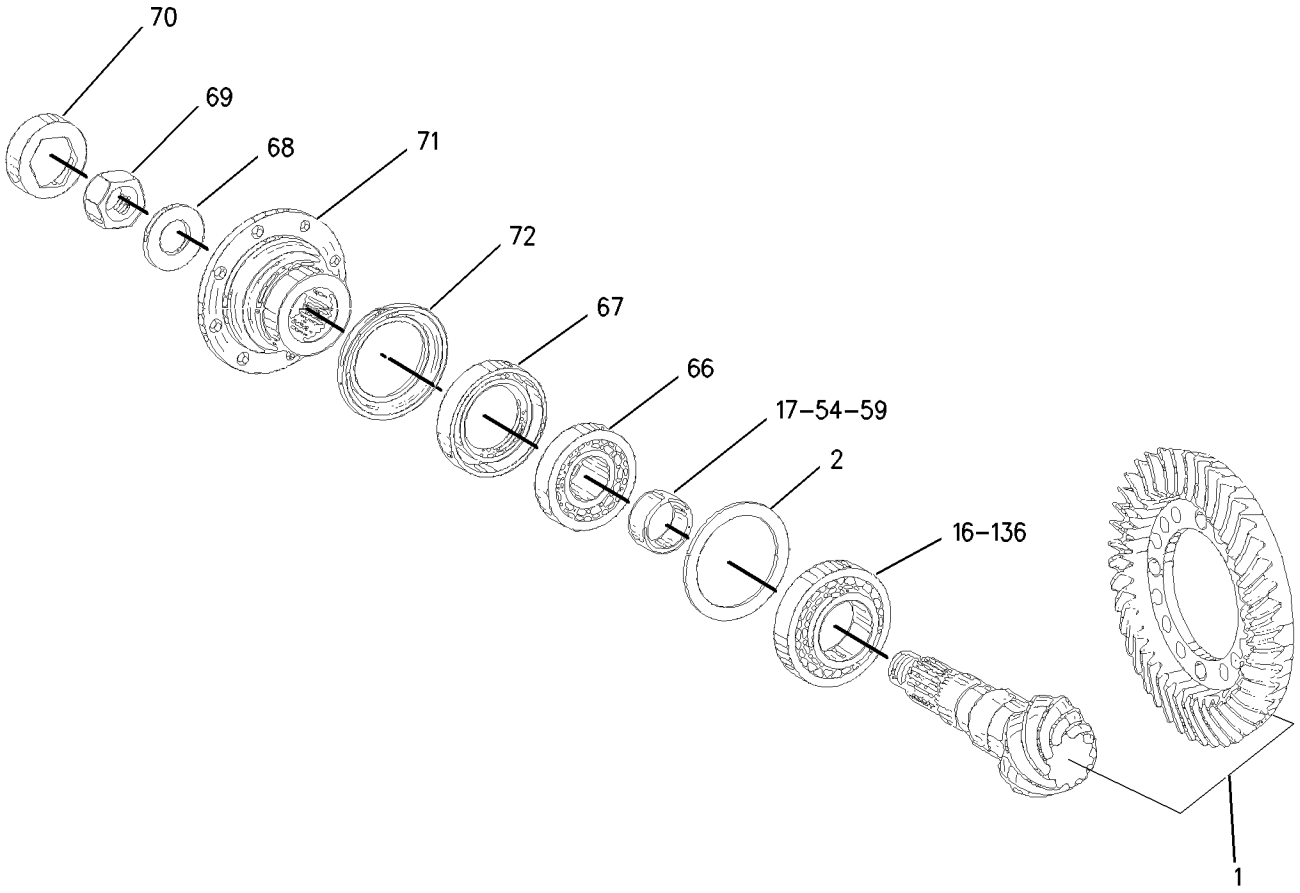

GRAPHIC #3 g00928385

204-7741 AXLE GP-STEERING *(contd.)* **i02160043**

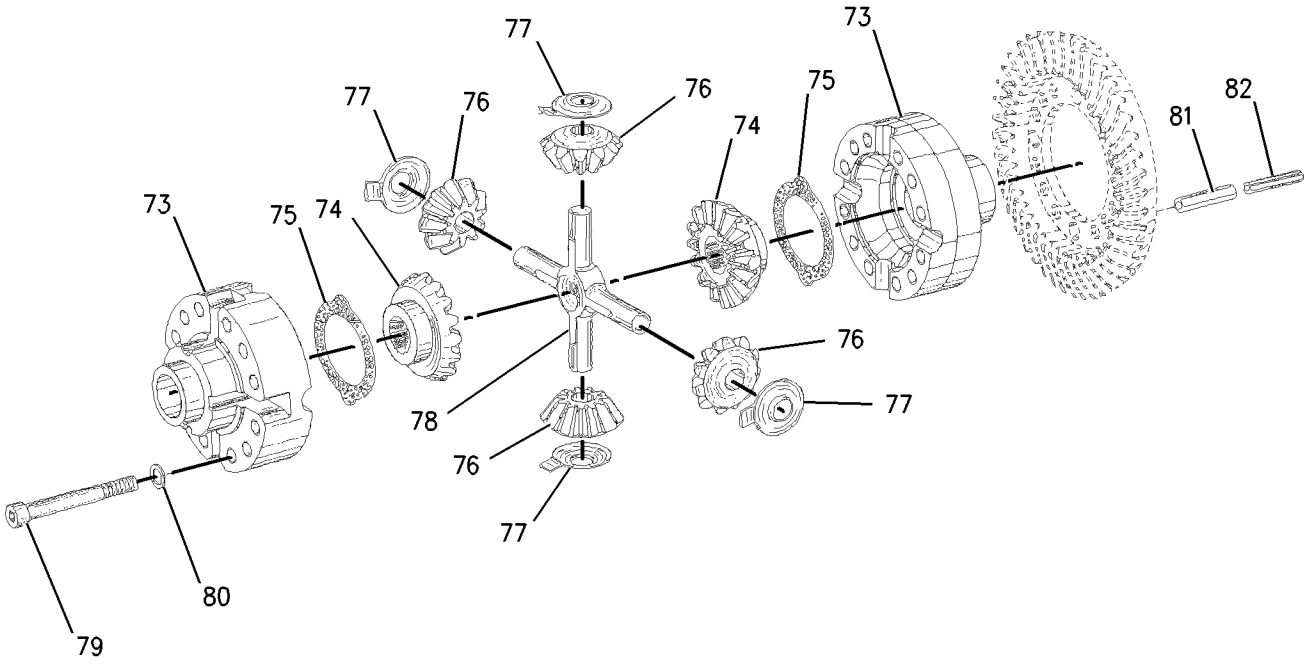

GRAPHIC #4 g00837877

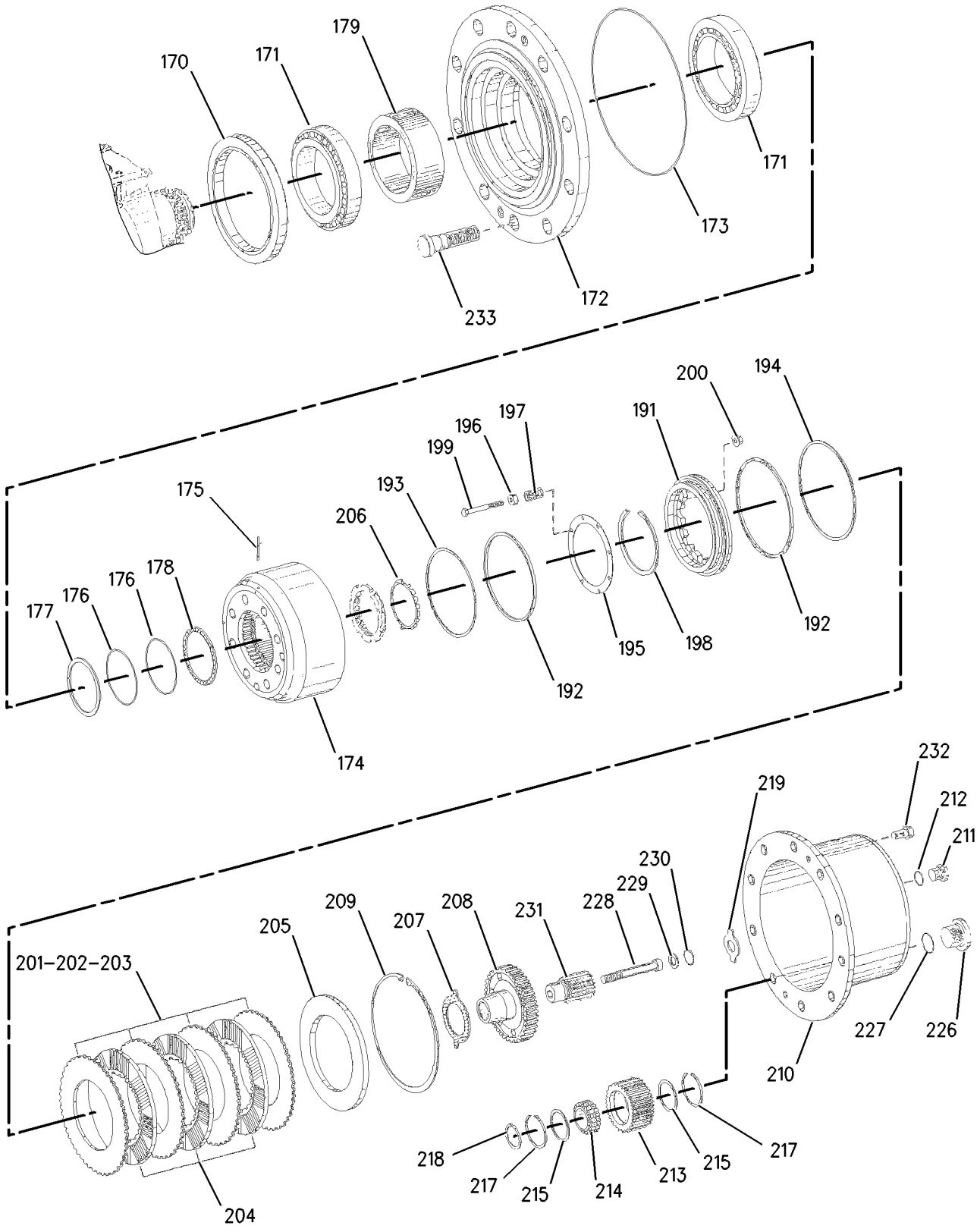

GRAPHIC #5 g00928392

204-7741 AXLE GP-STEERING *(contd.)* **i02160043**

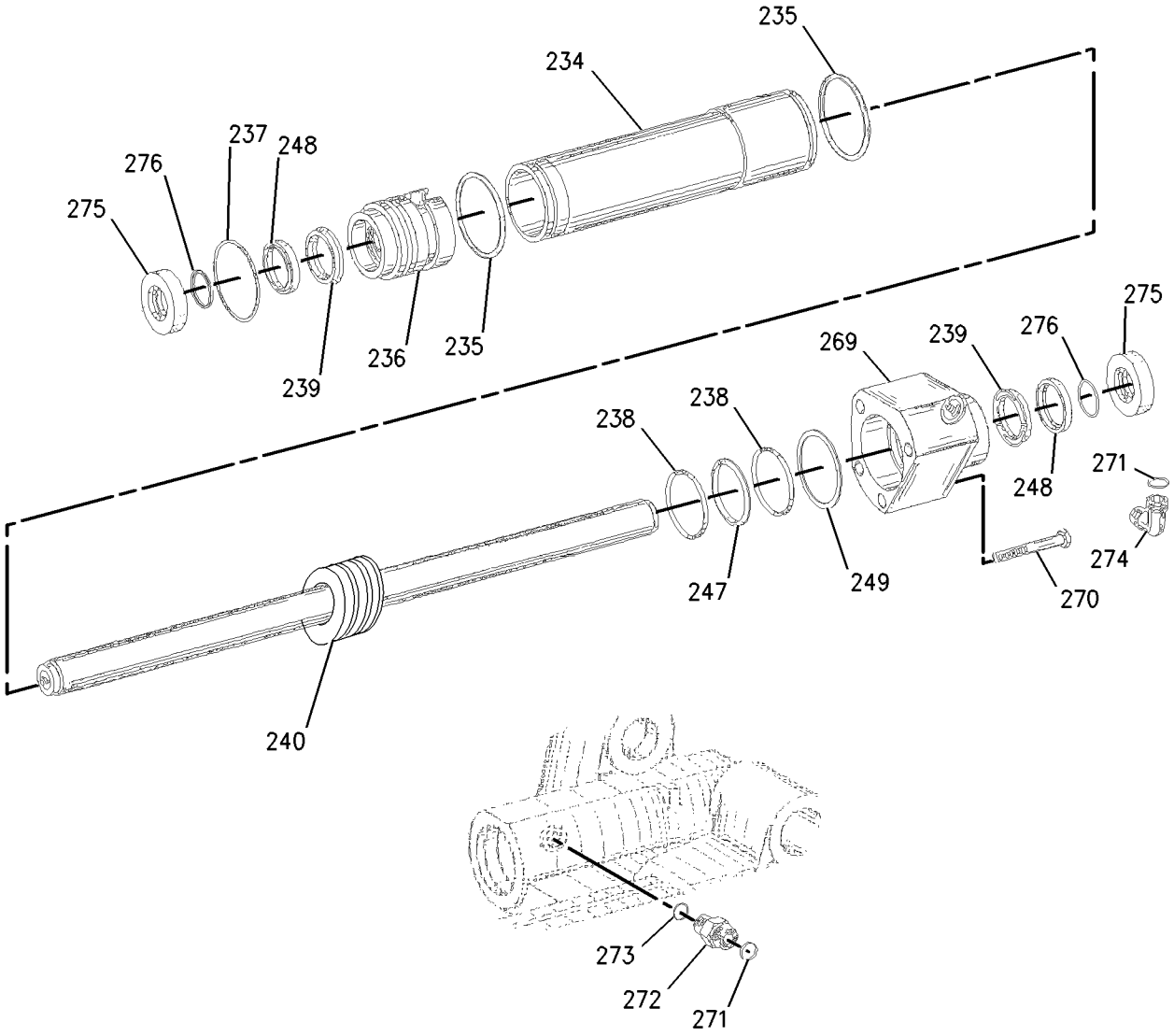

GRAPHIC #6 **<END>** g00899532

158-6333 BRAKE GP-DRUM

S/N: BCZ1-2000
PART OF 187-7218 AXLE AR-REAR, 204-7743 AXLE GP-REAR
ALSO AN ATTACHMENT

SMCS-4252 **i02158074**

NOTE	REF NO	GRAPHIC REF	PART NUMBER	QTY	PART NAME 1 2 3 4 5 6 (PRODUCT LEVEL)	SEE PAGE
	1	1	**129-2753**	1	SPRING	
	2	1	**158-7461**	1	CYLINDER (BRAKE)	
	3	1	**3E-4988**	2	LOCKWASHER	
M	4	1	**8T-4192**	2	BOLT (M12X1.75X25-MM)	
	5	1	**129-2750**	2	SHOE-BRAKE	
	6	1	**129-2751**	2	BOLT	
	7	1	**129-2752**	1	PLATE	
	8	1	**218-1563**	1	PLATE AS	

M-METRIC PART

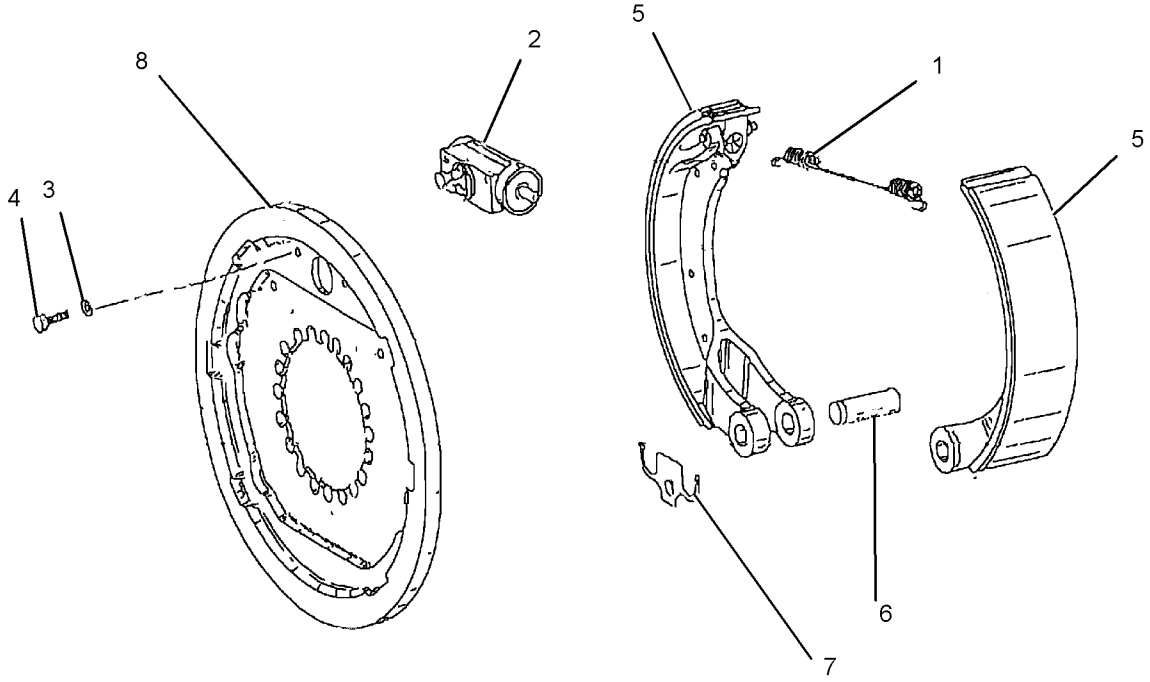

GRAPHIC #1 **<END>** g01095782

186-0470 POWER TRAIN AR

S/N: BCZ1-2000

PART OF 186-0518 GENERAL AR

SMCS-3000, 4000 **i01589232**

NOTE	PART NUMBER	QTY	PART NAME 1 2 3 4 5 6 (PRODUCT LEVEL)	SEE PAGE
Y	*188-4930*	1	AXLE AR-FRONT	219
Y	*188-4932*	1	AXLE AR-REAR	227
Y	*207-2169*	1	MOTOR & MTG GP-TRAVEL	615
Y	*194-9211*	1	SHAFT GP-DRIVE	294
Y	*113-1866*	1	TIRE & RIM AR	298

Y-SEPARATE ILLUSTRATION

<END>

8U-6723 RING GP-TIRE

S/N: BCZ1-2000
60MM (2.36 IN) THICK
FOR USE WITH DUAL TIRES
AN ATTACHMENT

SMCS-4200 **i00617791**

NOTE	REF NO	GRAPHIC REF	PART NUMBER	QTY	PART NAME 1 2 3 4 5 6 (PRODUCT LEVEL)	SEE PAGE
	1	1	**8U-6724**	4	RING-TIRE	

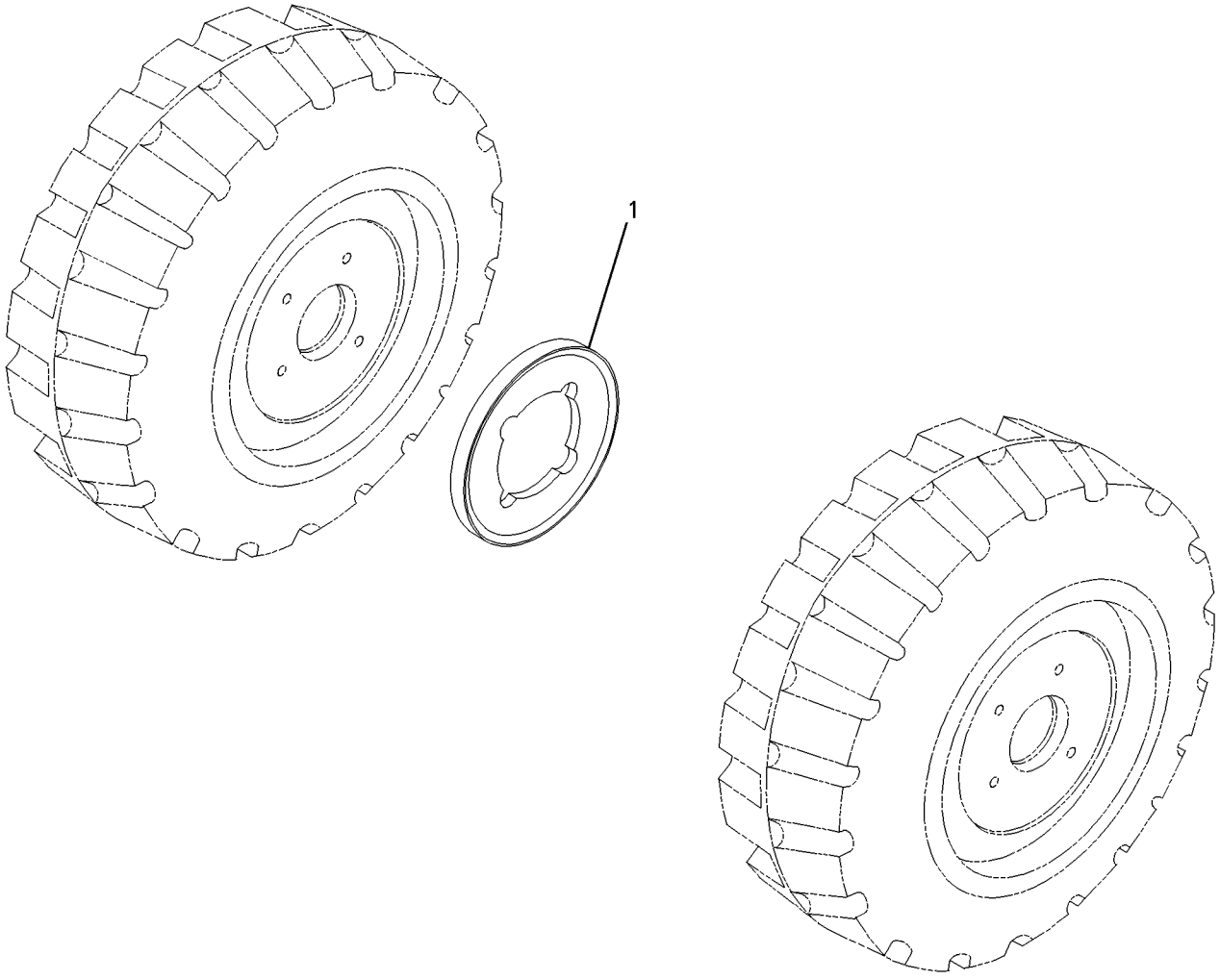

GRAPHIC #1 **<END>** g00282262

8U-6725 RING GP-TIRE

S/N: BCZ1-2000
68MM (2.68 IN) THICK
FOR USE WITH DUAL TIRES
AN ATTACHMENT

SMCS-4200 **i00617804**

NOTE	REF NO	GRAPHIC REF	PART NUMBER	QTY	PART NAME 1 2 3 4 5 6 (PRODUCT LEVEL)	SEE PAGE
	1	1	**8U-6726**	4	RING-TIRE	

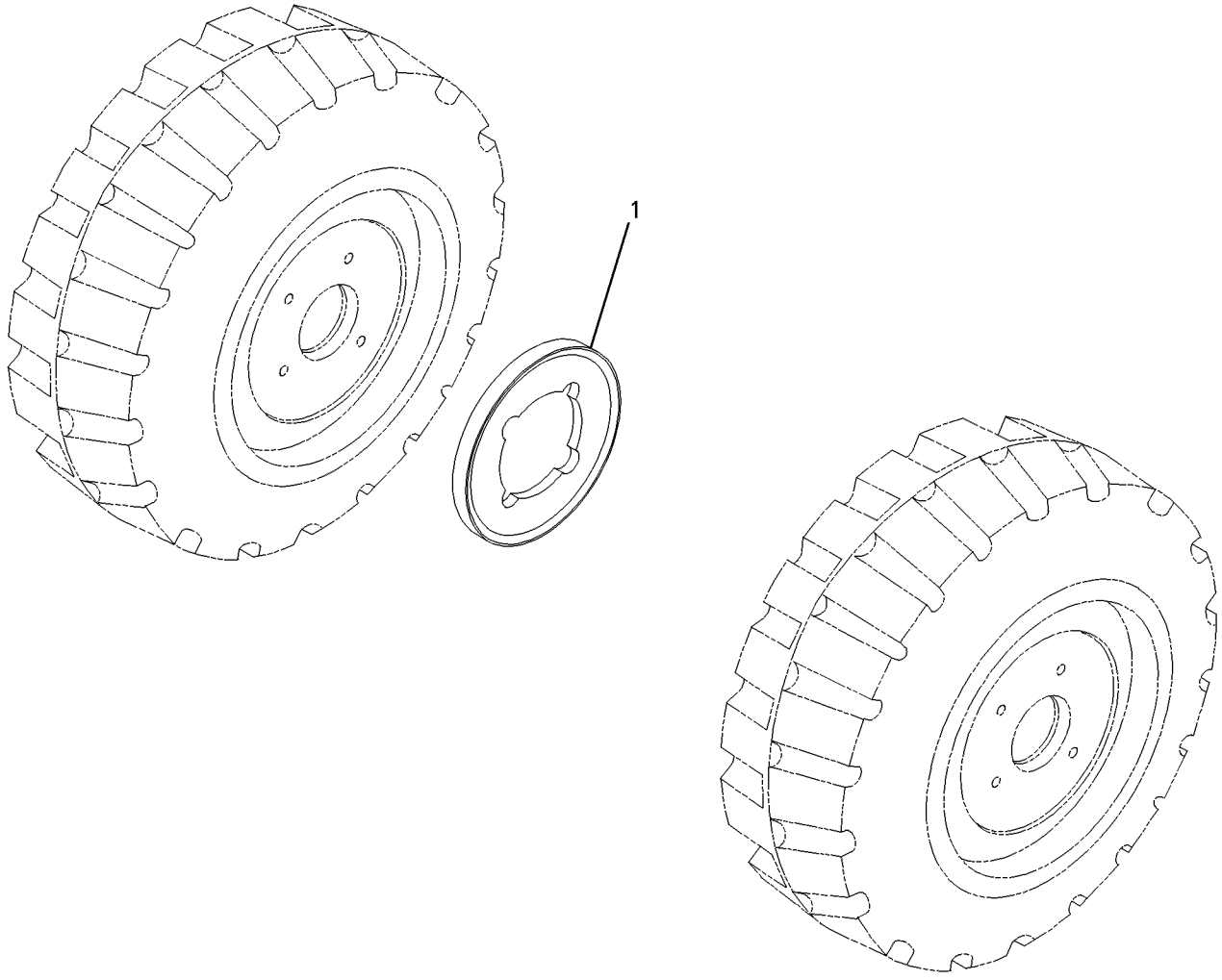

GRAPHIC #1 **<END>** g00282262

110-6135 SHAFT GP-MIDBEARING DRIVE

S/N: BCZ1-592

PART OF 194-9211 SHAFT GP-DRIVE

SMCS-3253 **i01795556**

NOTE	REF NO	GRAPHIC REF	PART NUMBER	QTY	PART NAME 1 2 3 4 5 6 (PRODUCT LEVEL)	SEE PAGE
	1	1	**5W-0113**	1	HOUSING-BRAKE	
	2	1	**5W-0116**	1	SHAFT	
	3	1	**5W-0118**	2	FLANGE	
	4	1	**5W-0119**	2	FLANGE-BRAKE	
	5	1	**5W-0122**	2	SPACER	
B	6	1	**5W-1422**	2	WASHER	
	7	1	**5W-2750**	2	BUSHING	
	8	1	**5W-2784**	2	BEARING	
	9	1	**5W-6355**	1	PLUG	
	10	1	**5W-8380**	2	SEAL	
B	11	1	**5W-1418**	3	WASHER (.1MM THK)	
B	12	1	**5W-1419**	5	WASHER (.3MM THK)	
B	13	1	**5W-1420**	5	WASHER (1MM THK)	
	14	1	**5W-1693**	1	WASHER (10.2MM ID)	
M	15	1	**8T-4183**	2	BOLT (M12X1.75X40MM)	
M	16	1	**8T-4195**	12	BOLT (M10X1.5X30MM)	

B-USE AS REQUIRED
M-METRIC PART

110-6135 **SHAFT GP-MIDBEARING DRIVE** *(contd.)* **i01795556**

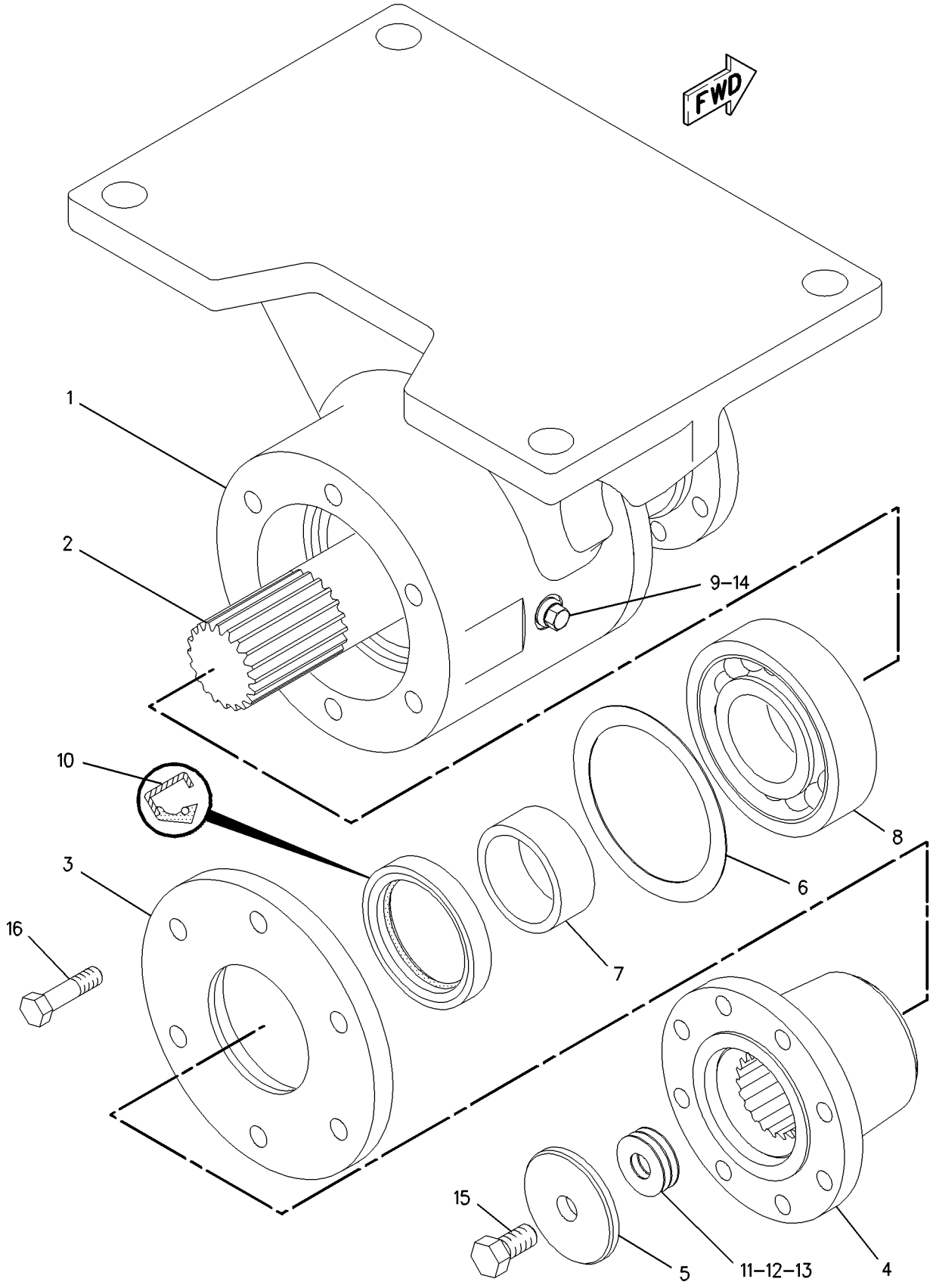

GRAPHIC #1 **<END>** g00923555

110-6135 SHAFT GP-MIDBEARING DRIVE

S/N: BCZ593-2000

PART OF 194-9211 SHAFT GP-DRIVE

SMCS-3253 **i02086311**

NOTE	REF NO	GRAPHIC REF	PART NUMBER	QTY	PART NAME 1 2 3 4 5 6 (PRODUCT LEVEL)	SEE PAGE
C	1	1	**237-4163**	1	HOUSING-BRAKE	
	2	1	**5W-0116**	1	SHAFT	
	3	1	**5W-0118**	2	FLANGE	
	4	1	**5W-0119**	2	FLANGE-BRAKE	
	5	1	**5W-0122**	2	SPACER	
B	6	1	**5W-1422**	2	WASHER	
	7	1	**5W-2750**	2	BUSHING	
	8	1	**5W-2784**	2	BEARING	
	9	1	**5W-6355**	1	PLUG	
	10	1	**5W-8380**	2	SEAL	
B	11	1	**5W-1418**	3	WASHER (0.1-MM THK)	
B	12	1	**5W-1419**	5	WASHER (0.3-MM THK)	
B	13	1	**5W-1420**	5	WASHER (1-MM THK)	
	14	1	**5W-1693**	1	WASHER (10.2-MM ID)	
M	15	1	**8T-4183**	2	BOLT (M12X1.75X40-MM)	
M	16	1	**8T-4195**	12	BOLT (M10X1.5X30-MM)	

B-USE AS REQUIRED
C-CHANGE FROM PREVIOUS TYPE
M-METRIC PART

110-6135 **SHAFT GP-MIDBEARING DRIVE** *(contd.)* **i02086311**

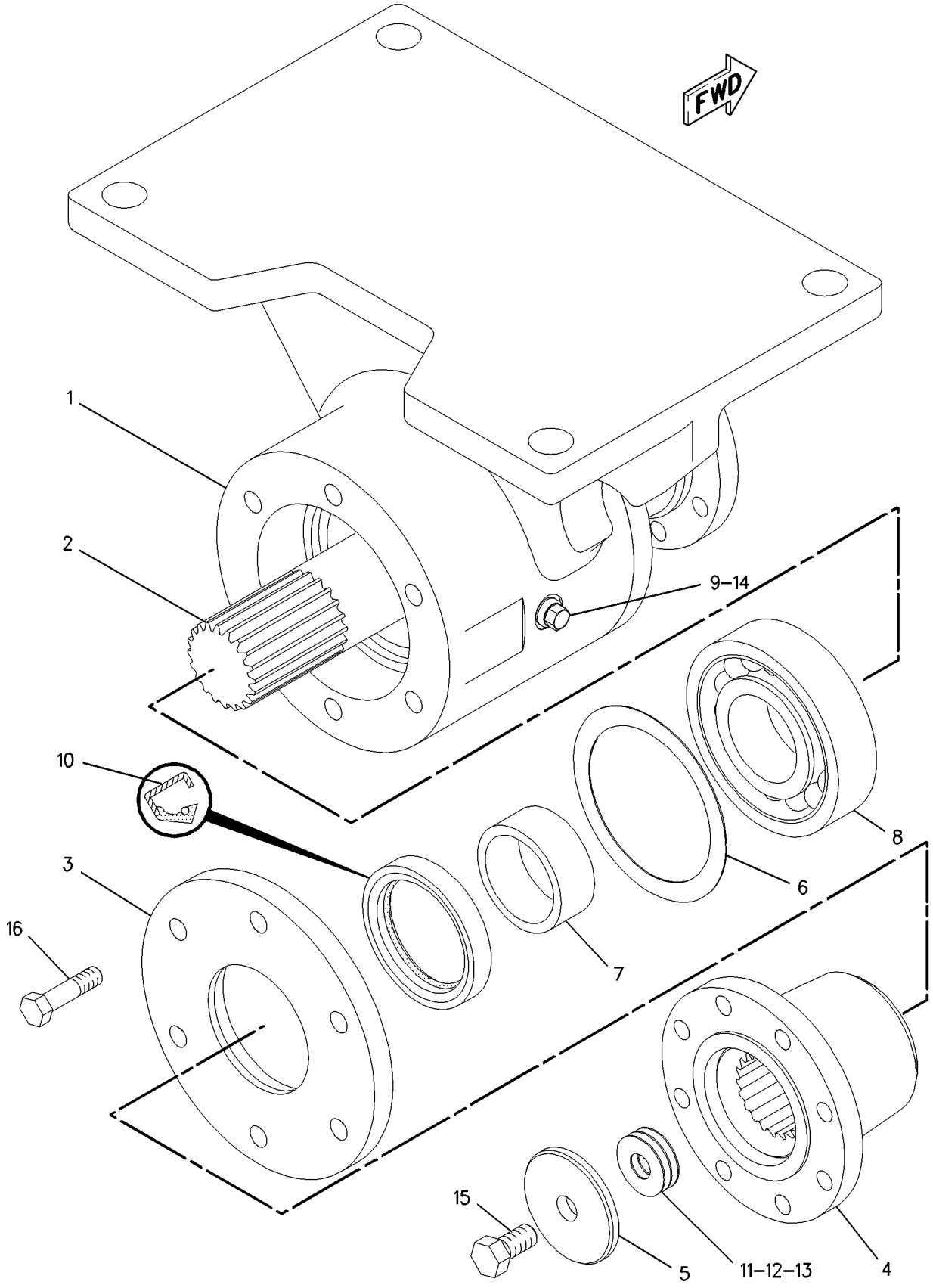

GRAPHIC #1 **<END>** g00923555

194-9211 SHAFT GP-DRIVE

S/N: BCZ1-2000

PART OF 186-0470 POWER TRAIN AR

SMCS-3253 **i01798582**

NOTE	REF NO	GRAPHIC REF	PART NUMBER	QTY	PART NAME 1 2 3 4 5 6 (PRODUCT LEVEL)	SEE PAGE
	1	1	**5W-4987**	8	BOLT-HEX HEAD (M10X1.0X30MM)	
	2	1	**7Y-1858**	8	WASHER (21X37X3MM THK)	
Y	3	1	*110-6135*	1	SHAFT GP-MIDBEARING DRIVE	290
M	4	1	**112-9142**	16	BOLT-HEX HEAD	
M	5	1	**112-9145**	32	NUT (M10X1.0 THD)	
	6	1	**130-0458**	2	ADAPTER	
Y	7	1	**134-1376**	1	UNIVERSAL JOINT GP	347
Y	8	1	**194-9216**	1	UNIVERSAL JOINT GP	348
M	9	1	**7X-2565**	4	BOLT (M20X2.5X100MM)	
M	10	1	**8T-4131**	4	NUT (M20X2.5 THD)	

M-METRIC PART
Y-SEPARATE ILLUSTRATION

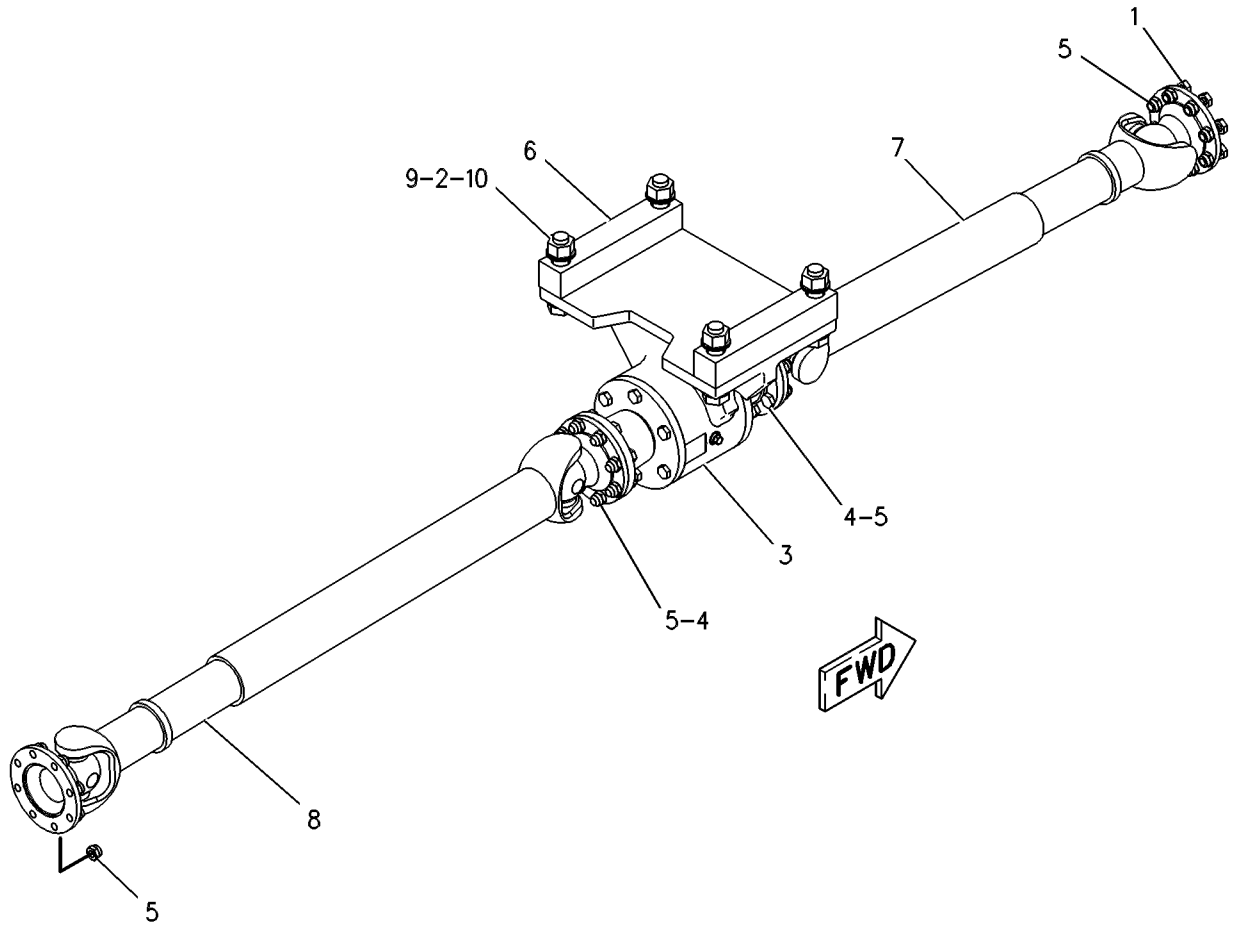

GRAPHIC #1 **<END>** g00264944

111-1999 TIRE & RIM AR

S/N: BCZ1-2000
10X20
AN ATTACHMENT

SMCS-4202, 4203, 4209 **i01777473**

NOTE	REF NO	GRAPHIC REF	PART NUMBER	QTY	PART NAME 1 2 3 4 5 6 (PRODUCT LEVEL)	SEE PAGE
Y	1	1	*111-2007*	8	TIRE & RIM GP	308
	2	1	**224-6474**	4	STEM-VALVE	

Y-SEPARATE ILLUSTRATION

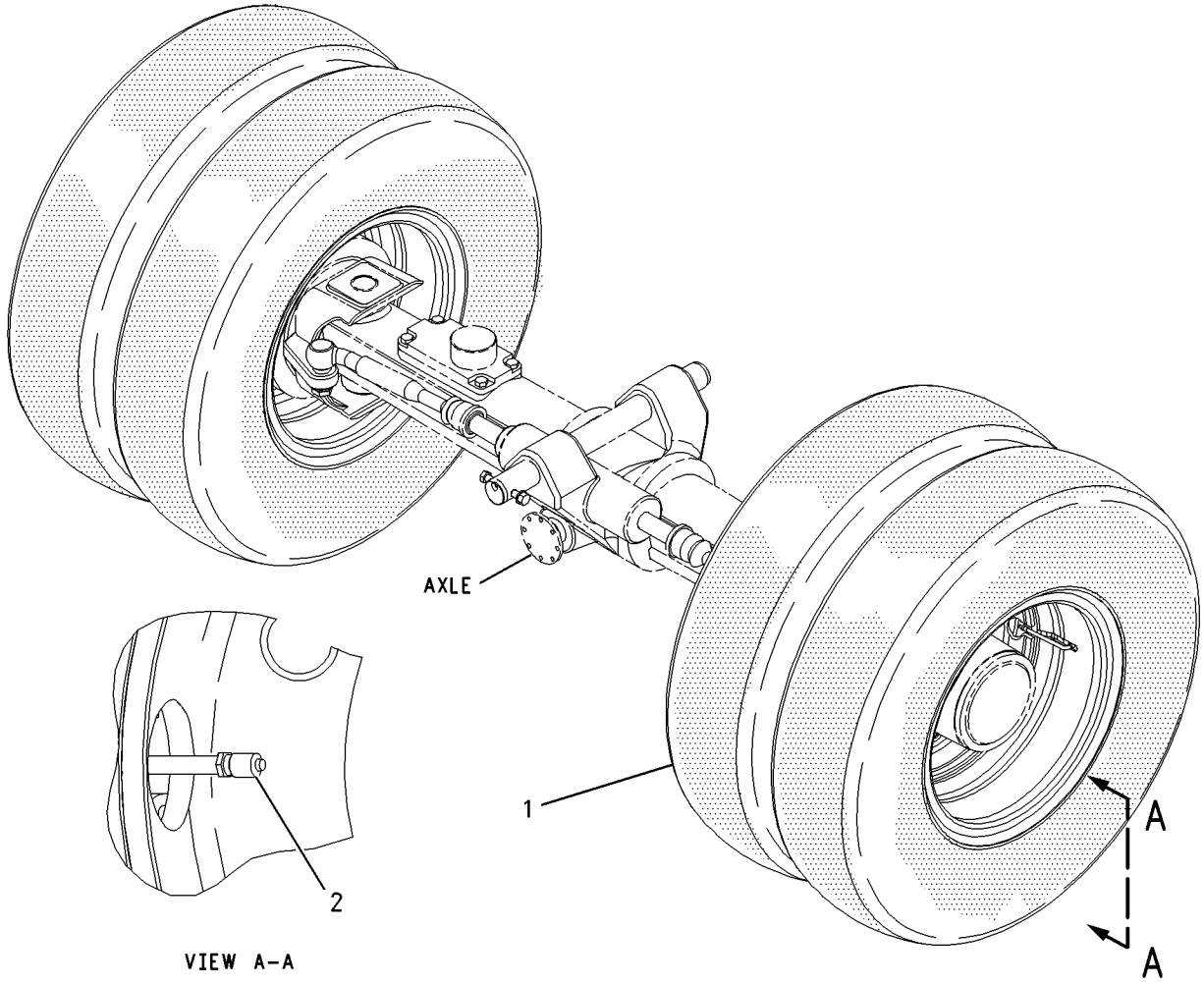

GRAPHIC #1 **<END>** g00908943

111-2001 TIRE & RIM AR

S/N: BCZ1-2000
18R19.5, XF
AN ATTACHMENT

SMCS-4202, 4203, 4209 **i01816675**

NOTE	REF NO	GRAPHIC REF	PART NUMBER	QTY	PART NAME 1 2 3 4 5 6 (PRODUCT LEVEL)	SEE PAGE
Y	1	1	*111-2009*	4	TIRE & RIM GP	309

Y-SEPARATE ILLUSTRATION

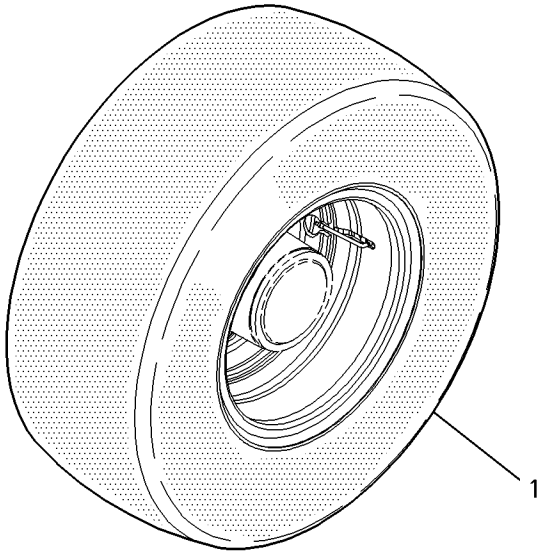

GRAPHIC #1 **<END>** g00927617

111-2003 TIRE & RIM AR

S/N: BCZ1-2000
10.00X20 SOLID
AN ATTACHMENT

SMCS-4202, 4203, 4209 **i01816734**

NOTE	REF NO	GRAPHIC REF	PART NUMBER	QTY	PART NAME 1 2 3 4 5 6 (PRODUCT LEVEL)	SEE PAGE
Y	1	1	*111-2011*	8	TIRE & RIM GP	310

Y-SEPARATE ILLUSTRATION

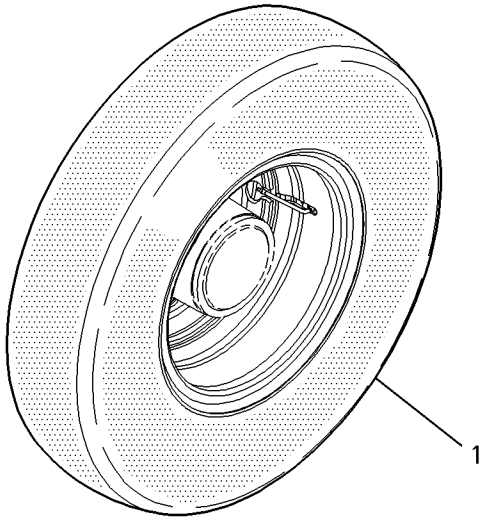

GRAPHIC #1 **<END>** g00927643

113-1866 TIRE & RIM AR

S/N: BCZ1-2000
10.00X20
PART OF 186-0470 POWER TRAIN AR

SMCS-4202, 4203, 4209 **i01816767**

NOTE	REF NO	GRAPHIC REF	PART NUMBER	QTY	PART NAME 1 2 3 4 5 6 (PRODUCT LEVEL)	SEE PAGE
Y	1	1	*111-2004*	8	TIRE & RIM GP	307
	2	1	**224-6474**	4	STEM-VALVE	

Y-SEPARATE ILLUSTRATION

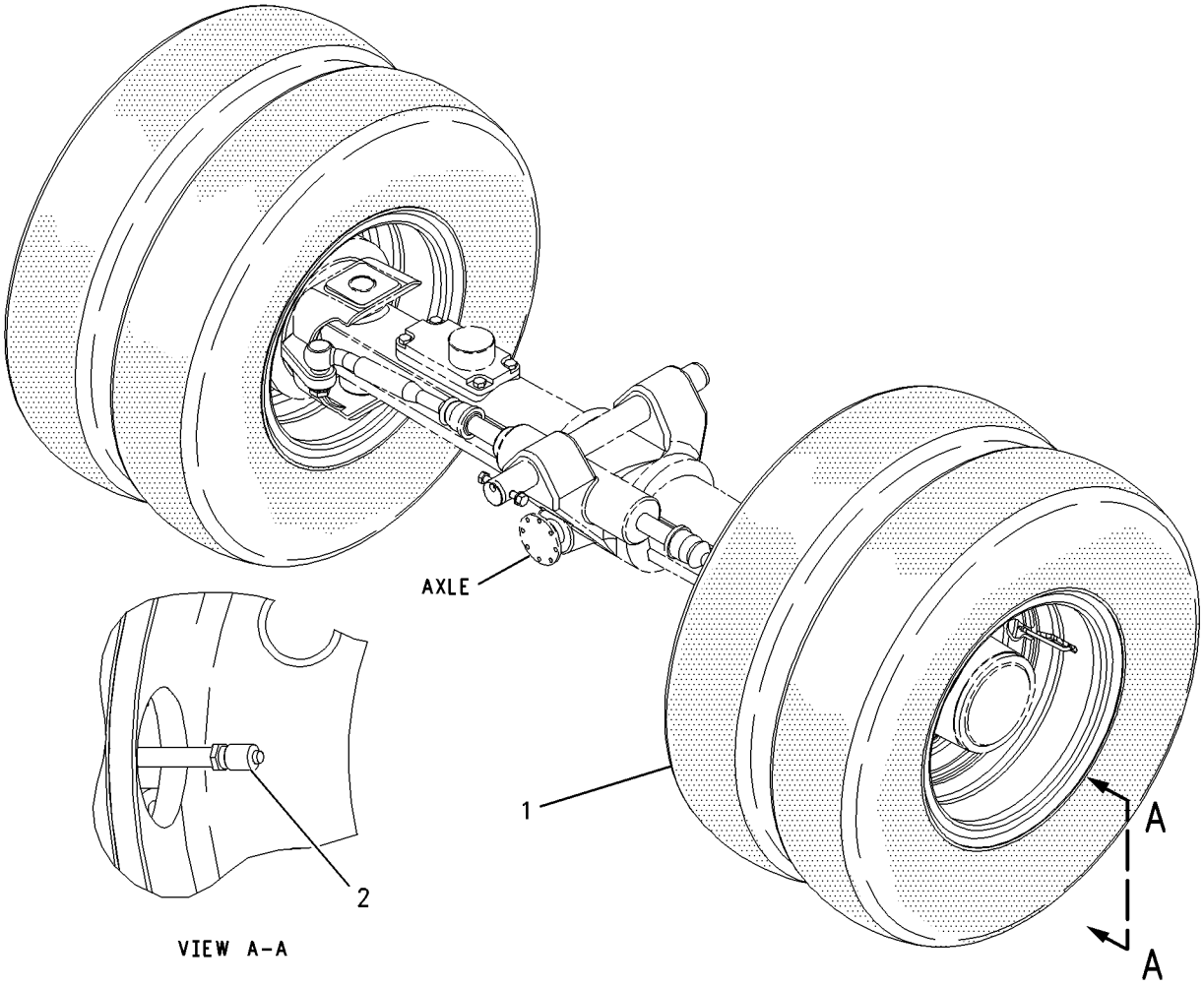

GRAPHIC #1 **<END>** g00908989

123-3879 TIRE & RIM AR

S/N: BCZ1-2000
10.00X20
AN ATTACHMENT

SMCS-4202, 4203, 4209 **i01816783**

NOTE	REF NO	GRAPHIC REF	PART NUMBER	QTY	PART NAME 1 2 3 4 5 6 (PRODUCT LEVEL)	SEE PAGE
Y	1	1	*124-2910*	8	TIRE & RIM GP	311
	2	1	**224-6474**	4	STEM-VALVE	

Y-SEPARATE ILLUSTRATION

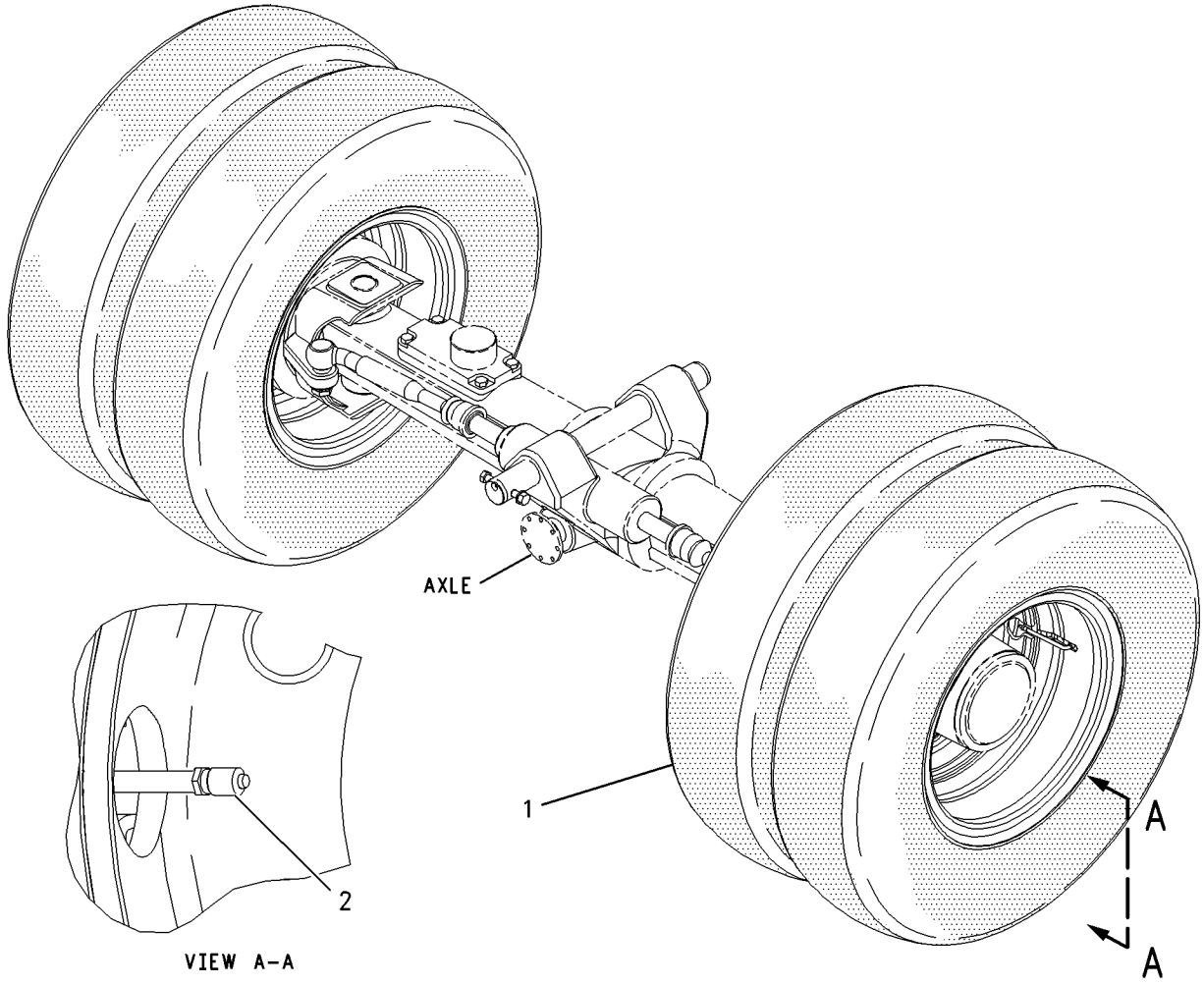

GRAPHIC #1 **<END>** g00909002

125-9671 TIRE & RIM AR

S/N: BCZ1-2000
10.00X20
AN ATTACHMENT

SMCS-4202, 4203, 4209 **i01777516**

NOTE	REF NO	GRAPHIC REF	PART NUMBER	QTY	PART NAME 1 2 3 4 5 6 (PRODUCT LEVEL)	SEE PAGE
Y	1	1	*125-9672*	8	TIRE & RIM GP	312
	2	1	**224-6474**	4	STEM-VALVE	

Y-SEPARATE ILLUSTRATION

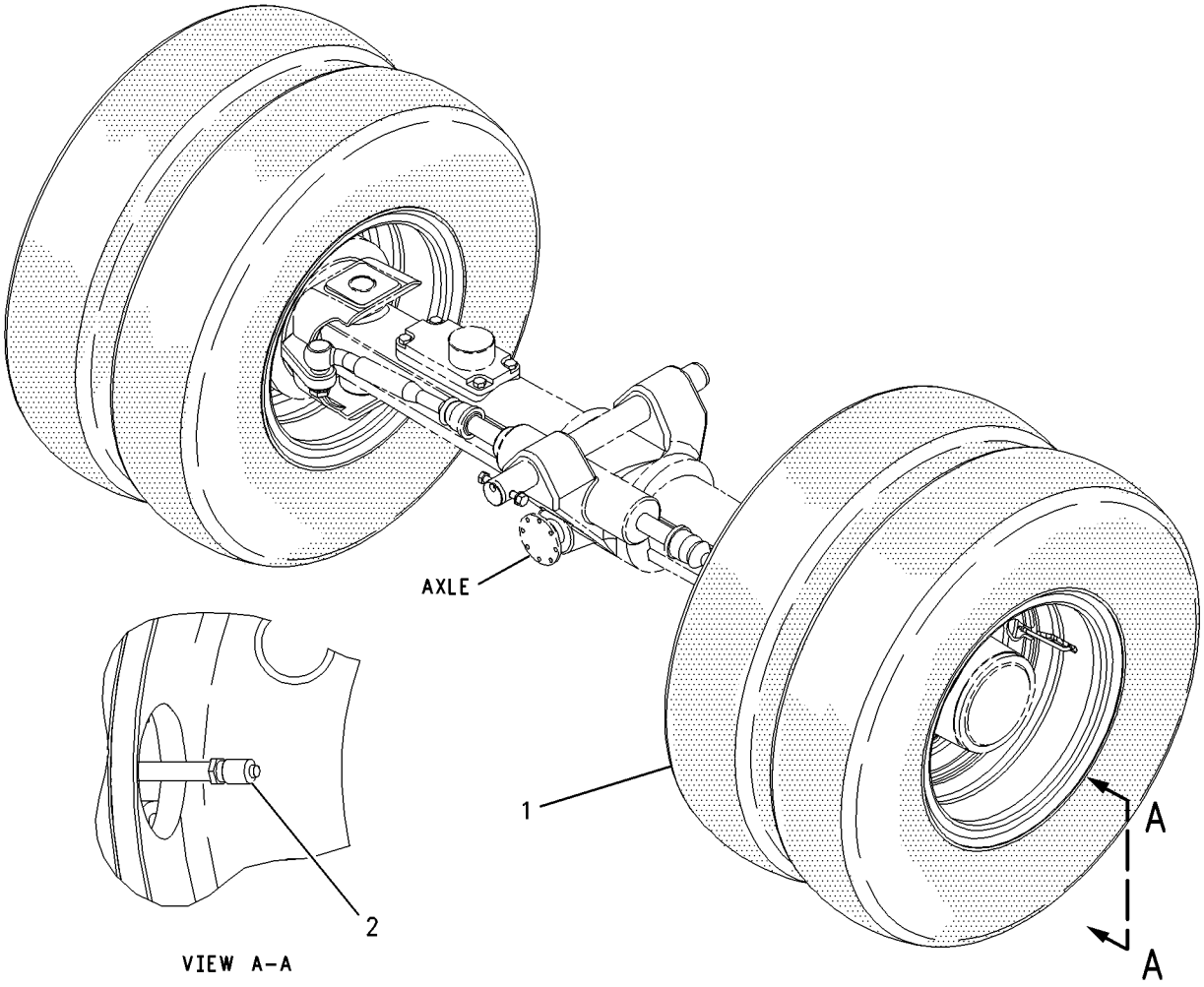

GRAPHIC #1 **<END>** g00909015

POWER TRAIN

125-9674 TIRE & RIM AR

S/N: BCZ1-2000
11X20
AN ATTACHMENT

SMCS-4202, 4203, 4209 **i02166581**

NOTE	REF NO	GRAPHIC REF	PART NUMBER	QTY	PART NAME 1 2 3 4 5 6 (PRODUCT LEVEL)	SEE PAGE
L	1	1	**5W-2173**	2	BOLT (M18X2.5X40-MM)	
B	2	1	**5W-9495**	6	WASHER (20X28X1-MM THK)	
M	3	1	**6V-5192**	4	BOLT-SOCKET HEAD (M8X1.25X30-MM)	
Y	4	1	*125-9675*	8	TIRE & RIM GP	313
B	5	1	**126-8376**	2	WASHER (19X30X8-MM THK)	
	6	1	**127-5002**	2	RING-GUIDE	
	7	1	**131-4927**	2	FLANGE-STOP	
	8	1	**224-6474**	4	STEM-VALVE	
J	9	1	**227-4204**	2	BOLT (M12X1.5X40-MM)	

B-USE AS REQUIRED
J-USE ONLY FOR M318C
L-USE ONLY FOR M315C & M316C
M-METRIC PART
Y-SEPARATE ILLUSTRATION

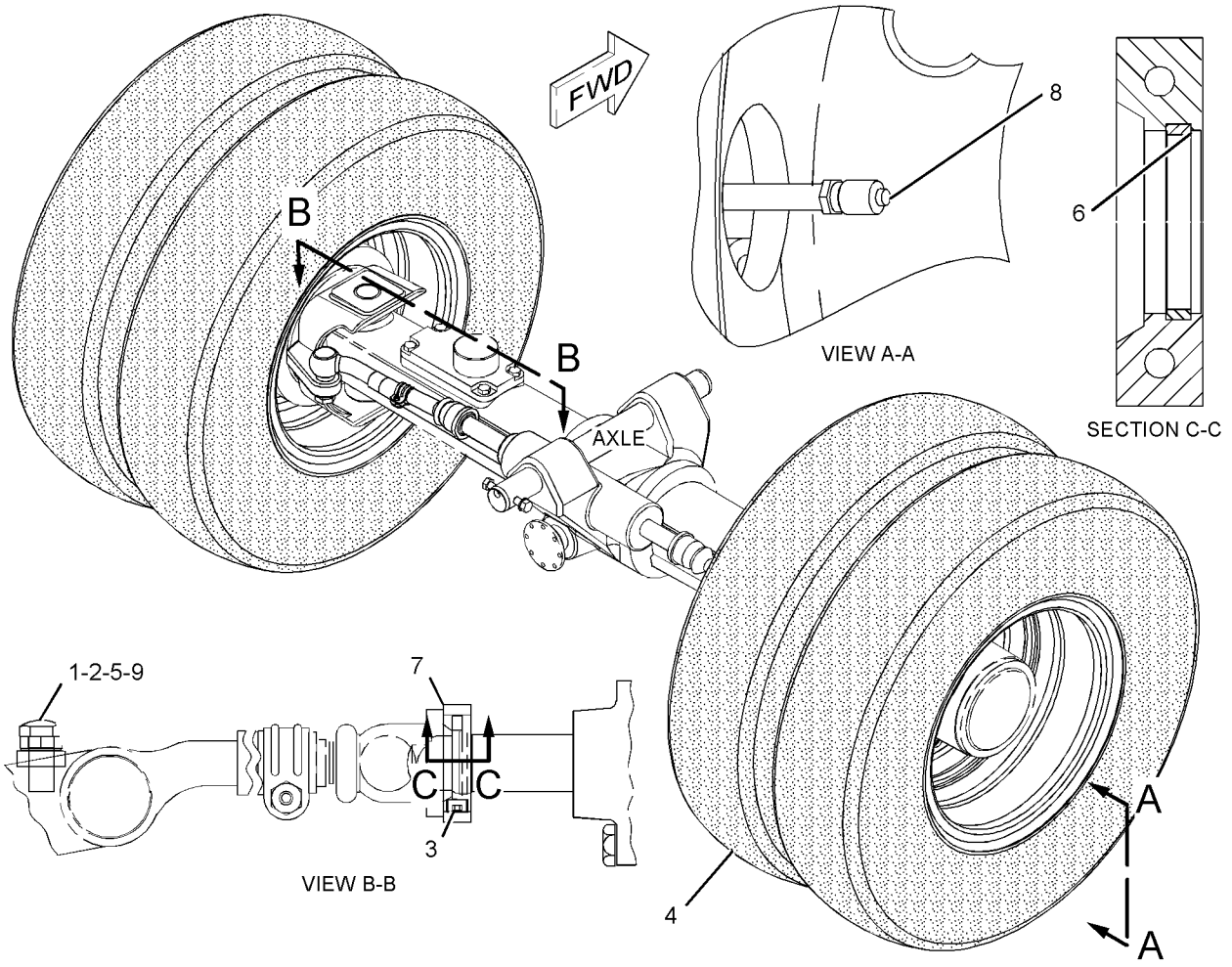

GRAPHIC #1 **<END>** g01056202

144-0685 TIRE & RIM AR

S/N: BCZ1-2000
600/40-22.5. SUPER SINGLE
AN ATTACHMENT

SMCS-4202, 4203, 4209 **i01816862**

NOTE	REF NO	GRAPHIC REF	PART NUMBER	QTY	PART NAME 1 2 3 4 5 6 (PRODUCT LEVEL)	SEE PAGE
Y	1	1	*144-0688*	4	TIRE & RIM GP	314

Y-SEPARATE ILLUSTRATION

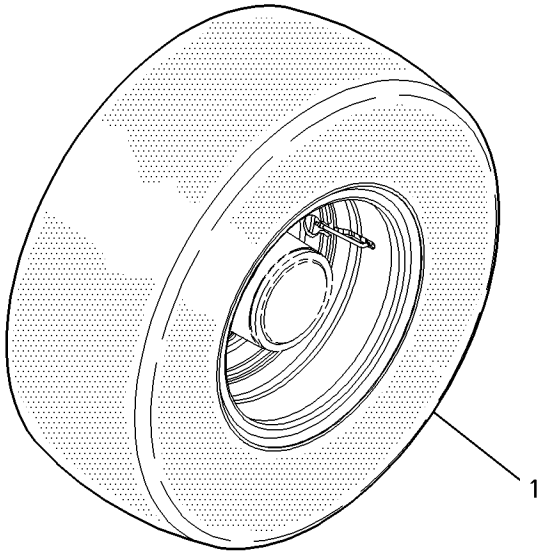

GRAPHIC #1 **<END>** g00927677

150-7806 TIRE & RIM AR

S/N: BCZ1-2000
11.00X20
AN ATTACHMENT

SMCS-4202, 4203, 4209 **i02166583**

NOTE	REF NO	GRAPHIC REF	PART NUMBER	QTY	PART NAME 1 2 3 4 5 6 (PRODUCT LEVEL)	SEE PAGE
L	1	1	**5W-2173**	2	BOLT (M18X2.5X40-MM)	
B	2	1	**5W-9495**	6	WASHER (20X28X1-MM THK)	
M	3	1	**6V-5192**	4	BOLT-SOCKET HEAD (M8X1.25X30-MM)	
B	4	1	**126-8376**	2	WASHER (19X30X8-MM THK)	
	5	1	**127-5002**	2	RING-GUIDE	
	6	1	**131-4927**	2	FLANGE-STOP	
Y	7	1	*150-7808*	8	TIRE & RIM GP	315
	8	1	**224-6474**	4	STEM-VALVE	
J	9	1	**227-4204**	2	BOLT (M12X1.5X40-MM)	

B-USE AS REQUIRED
J-USE ONLY FOR M318C
L-USE ONLY FOR M315C & M316C
M-METRIC PART
Y-SEPARATE ILLUSTRATION

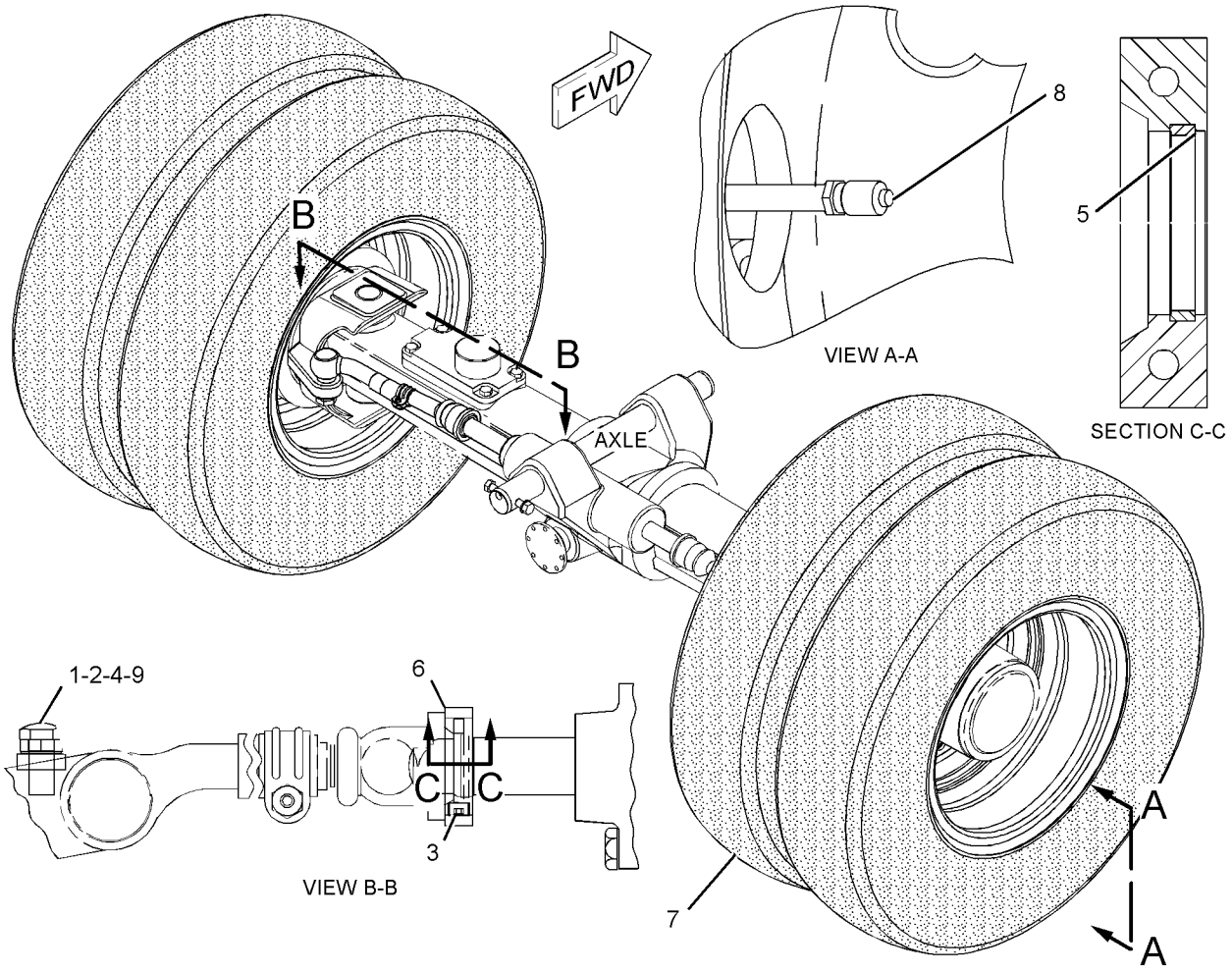

GRAPHIC #1 **<END>** g01056200

224-3190 TIRE & RIM AR

S/N: BCZ1-2000
10.00X20
AN ATTACHMENT

SMCS-4202, 4203, 4209 **i01927932**

NOTE	REF NO	GRAPHIC REF	PART NUMBER	QTY	PART NAME 1 2 3 4 5 6 (PRODUCT LEVEL)	SEE PAGE
M	1	1	**3T-0849**	4	BOLT-SOCKET HEAD (M6X1X25MM)	
	2	1	**5W-2173**	2	BOLT (M18X2.5X40MM)	
B	3	1	**5W-9495**	6	WASHER (20X28X1MM THK)	
	4	1	**126-8376**	2	WASHER (19X30X8MM THK)	
	5	1	**127-5002**	2	RING-GUIDE	
Y	6	1	*219-9856*	8	TIRE & RIM GP	317
	7	1	**224-6474**	4	STEM-VALVE	
	8	1	**224-6476**	2	FLANGE	

B-USE AS REQUIRED
M-METRIC PART
Y-SEPARATE ILLUSTRATION

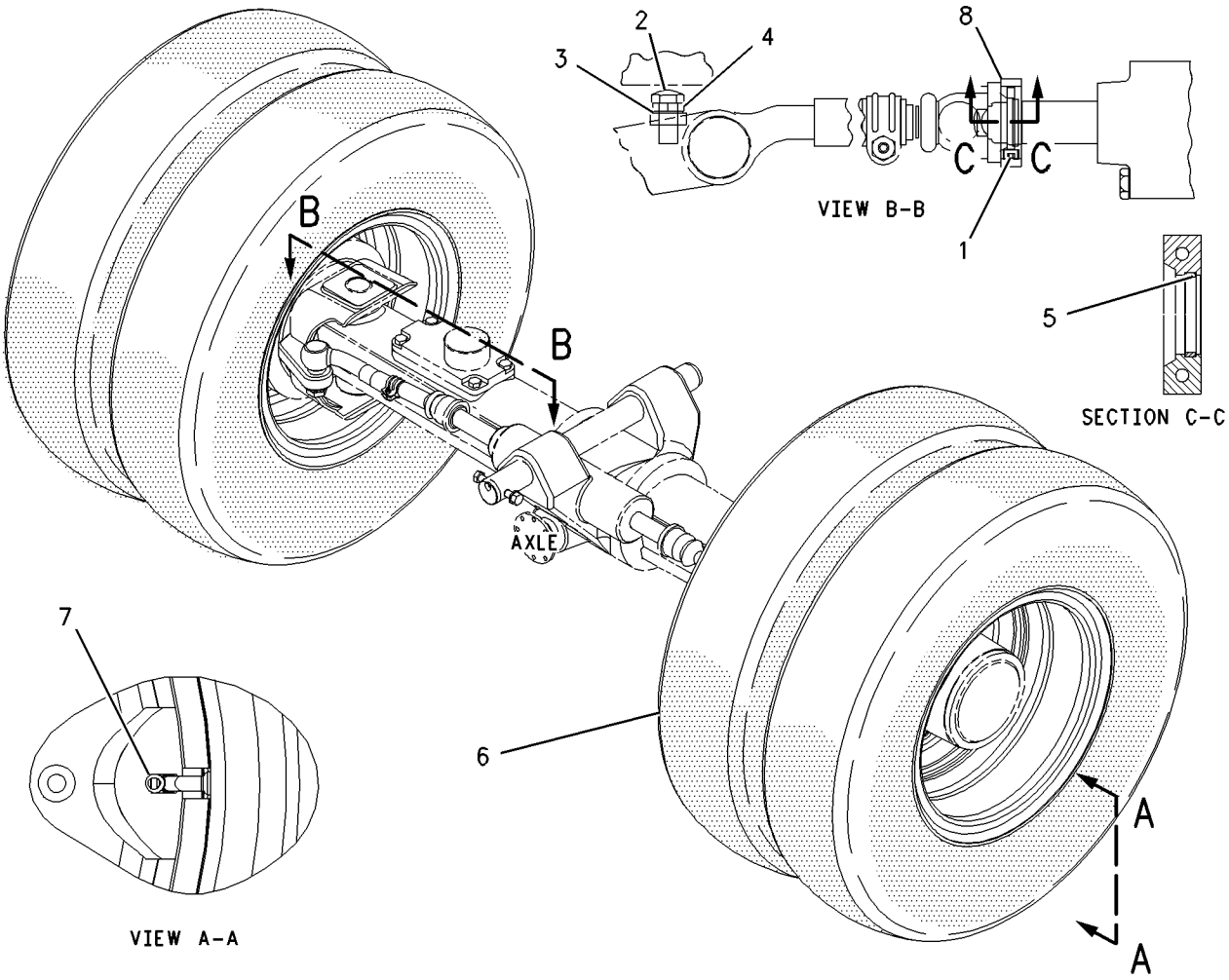

GRAPHIC #1 **<END>** g00912805

227-4203 TIRE & RIM AR

S/N: BCZ1-2000
AN ATTACHMENT

SMCS-4202, 4203, 4209 **i02166586**

NOTE	REF NO	GRAPHIC REF	PART NUMBER	QTY	PART NAME 1 2 3 4 5 6 (PRODUCT LEVEL)	SEE PAGE
B	1	1	**5W-2173**	2	BOLT (M18X2.5X40-MM)	
B	2	1	**5W-9495**	6	WASHER (20X28X1-MM THK)	
M	3	1	**6V-5192**	4	BOLT-SOCKET HEAD (M8X1.25X30-MM)	
B	4	1	**126-8376**	2	WASHER (19X30X8-MM THK)	
	5	1	**127-5002**	2	RING-GUIDE	
	6	1	**131-4927**	2	FLANGE-STOP	
Y	7	1	*224-6473*	8	TIRE & RIM GP	318
	8	1	**224-6474**	4	STEM-VALVE	
B	9	1	**227-4204**	2	BOLT (M12X1.5X40-MM)	

B-USE AS REQUIRED
M-METRIC PART
Y-SEPARATE ILLUSTRATION

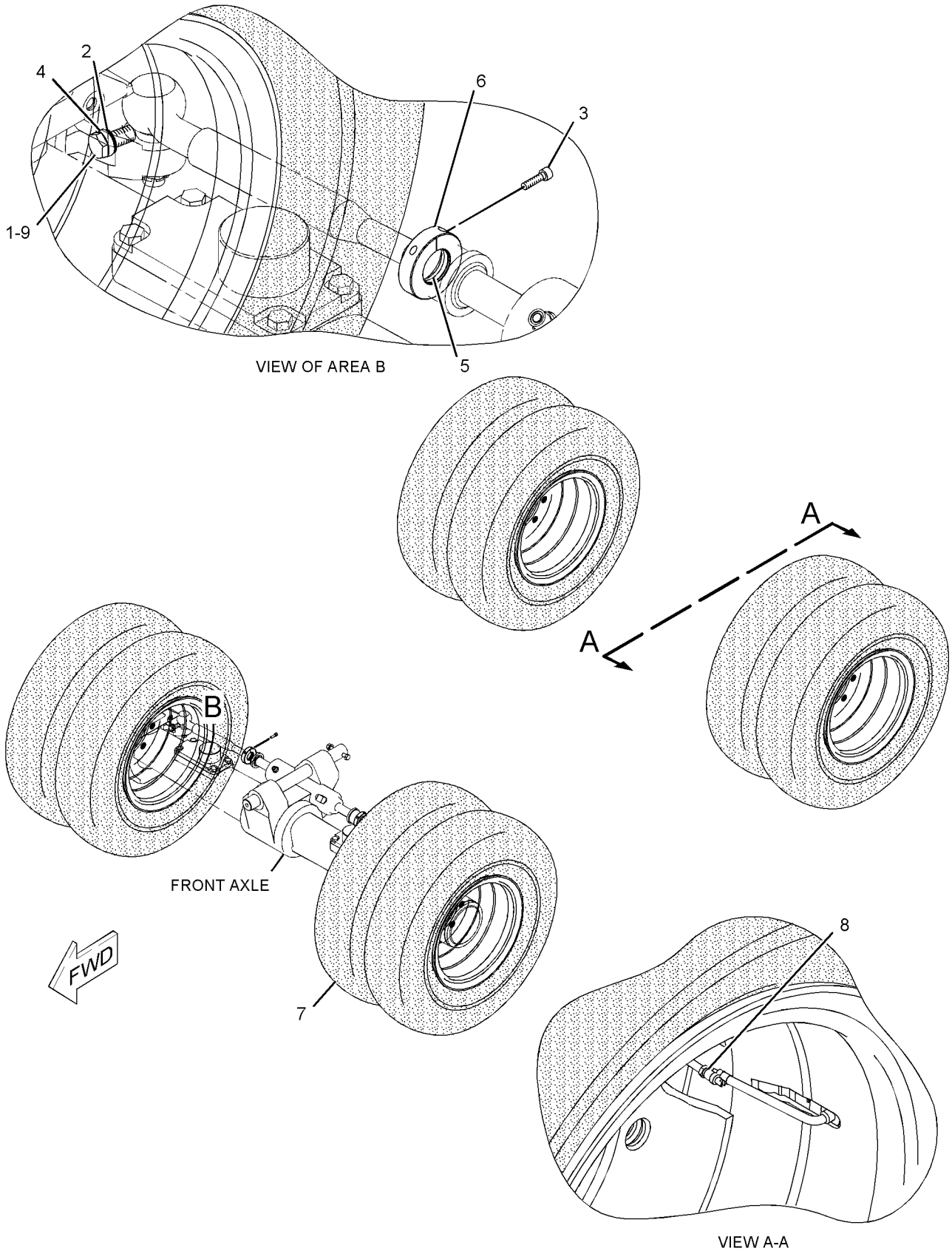

GRAPHIC #1 **<END>** g01061774

111-2004 TIRE & RIM GP

S/N: BCZ1-2000
10 X 20
PART OF 113-1866 TIRE & RIM AR

SMCS-4202, 4203 **i01816942**

NOTE	REF NO	GRAPHIC REF	PART NUMBER	QTY	PART NAME 1 2 3 4 5 6 (PRODUCT LEVEL)	SEE PAGE
	1	1	*5W-2234*	1	FLAP (PROCURE LOCALLY)	
	2	1	*5W-5121*	1	TUBE-TIRE (PROCURE LOCALLY)	
	3	1	**8U-7339**	1	VALVE AS-AIR	
	4	1	**224-6475**	1	RIM AS	
	5	1	**5W-5123**	1	RING-SEAL	
	6	1	*8U-3739*	1	TIRE (10 X 20 - 14 PLY) (PROCURE LOCALLY)	

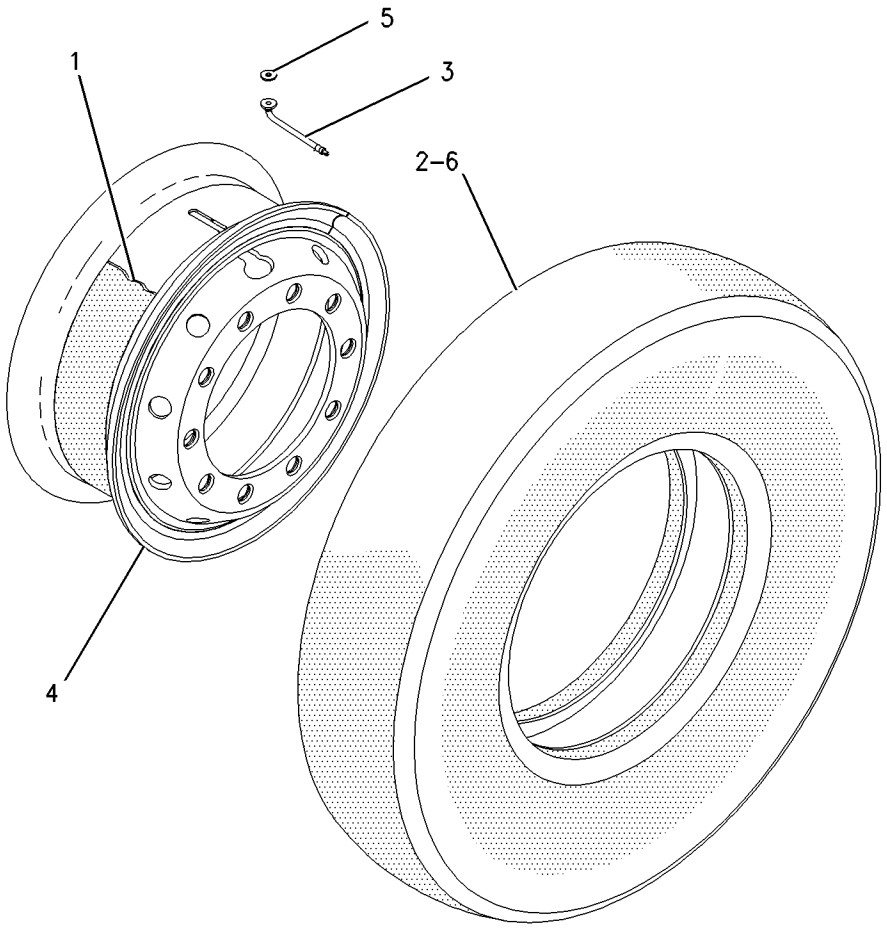

GRAPHIC #1 **<END>** g00912689

111-2007 TIRE & RIM GP

S/N: BCZ1-2000
10 X 20
PART OF 111-1999 TIRE & RIM AR
AN ATTACHMENT

SMCS-4202, 4203 **i01816952**

NOTE	REF NO	GRAPHIC REF	PART NUMBER	QTY	PART NAME 1 2 3 4 5 6 (PRODUCT LEVEL)	SEE PAGE
	1	1	*5W-2234*	1	FLAP (PROCURE LOCALLY)	
	2	1	*5W-5121*	1	TUBE-TIRE (PROCURE LOCALLY)	
	3	1	**8U-7339**	1	VALVE AS-AIR	
	4	1	**224-6475**	1	RIM AS	
	5	1	**5W-5123**	1	RING-SEAL	
	6	1	*8U-3747*	1	TIRE (10 X 20 - 14 PLY) (PROCURE LOCALLY)	

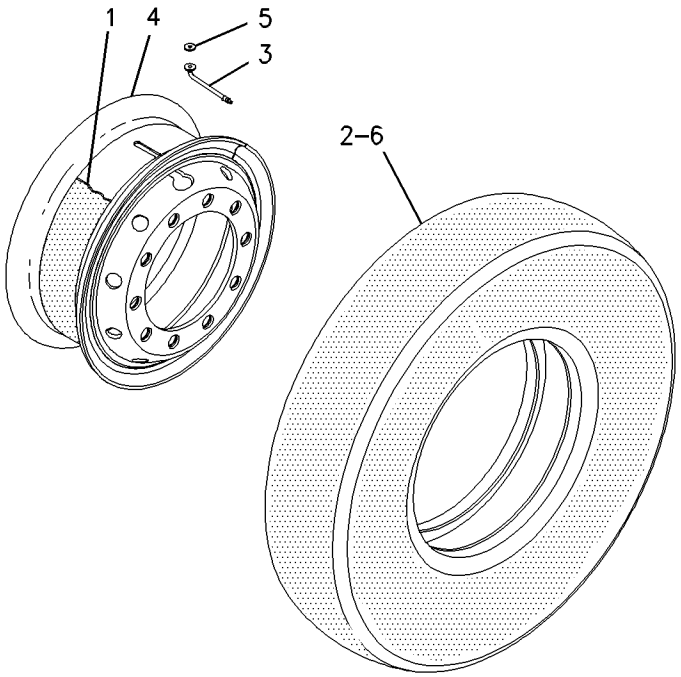

GRAPHIC #1 **<END>** g00908951

111-2009 TIRE & RIM GP

S/N: BCZ1-2000
18R19.5, XF. SUPER SINGLE
PART OF 111-2001 TIRE & RIM AR
AN ATTACHMENT

SMCS-4202, 4203 **i01798592**

NOTE	REF NO	GRAPHIC REF	PART NUMBER	QTY	PART NAME 1 2 3 4 5 6 (PRODUCT LEVEL)	SEE PAGE
	1	1	*5W-2236*	1	TIRE (18R19.5,XF)	
					(PROCURE LOCALLY)	
	2	1	**5W-2248**	1	EXTENSION-VALVE	
	3	1	**155-4562**	1	RIM AS-WHEEL	

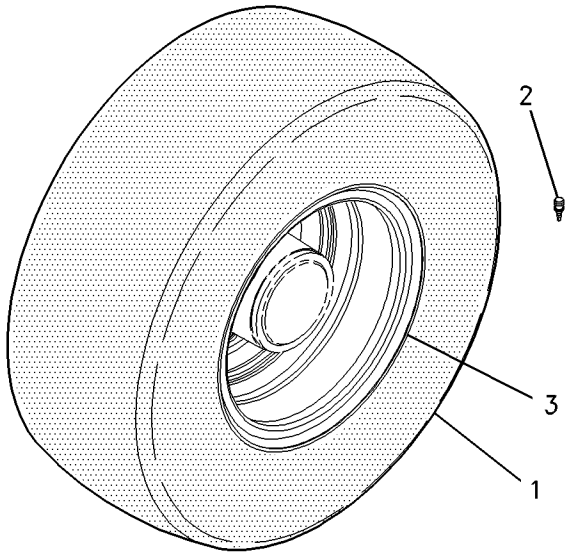

GRAPHIC #1 **<END>** g00919923

111-2011 TIRE & RIM GP

S/N: BCZ1-2000
10:00 X 20. SOLID
PART OF 111-2003 TIRE & RIM AR
AN ATTACHMENT

SMCS-4202, 4203 **i02148567**

NOTE	REF NO	GRAPHIC REF	PART NUMBER	QTY	PART NAME 1 2 3 4 5 6 (PRODUCT LEVEL)	SEE PAGE
	1	1	**247-7971**	1	RIM AS	
	2	1	**5W-8752**	1	TIRE-SOLID (10-20)	

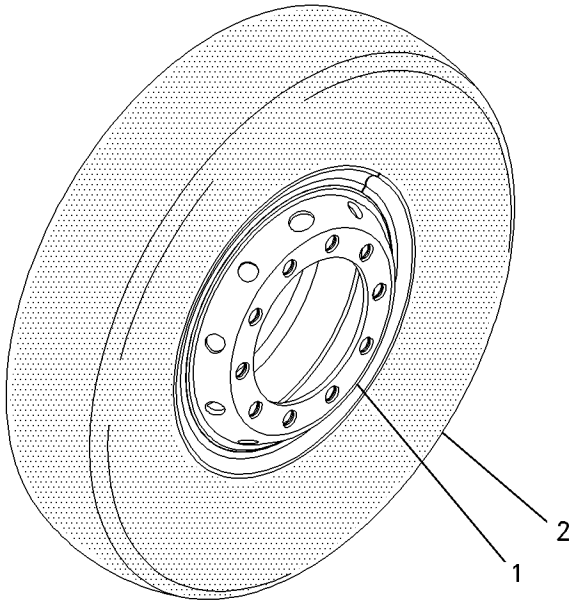

GRAPHIC #1 **<END>** g00919925

124-2910 TIRE & RIM GP

S/N: BCZ1-2000
10 X 20
PART OF 123-3879 TIRE & RIM AR
AN ATTACHMENT

SMCS-4202, 4203 **i01816958**

NOTE	REF NO	GRAPHIC REF	PART NUMBER	QTY	PART NAME 1 2 3 4 5 6 (PRODUCT LEVEL)	SEE PAGE
	1	1	*5W-2234*	1	FLAP (PROCURE LOCALLY)	
	2	1	*5W-5121*	1	TUBE-TIRE (PROCURE LOCALLY)	
	3	1	*8U-7338*	1	TIRE (10 X 20) (PROCURE LOCALLY)	
	4	1	**8U-7339**	1	VALVE AS-AIR	
	5	1	**224-6475**	1	RIM AS	
	6	1	**5W-5123**	1	RING-SEAL	

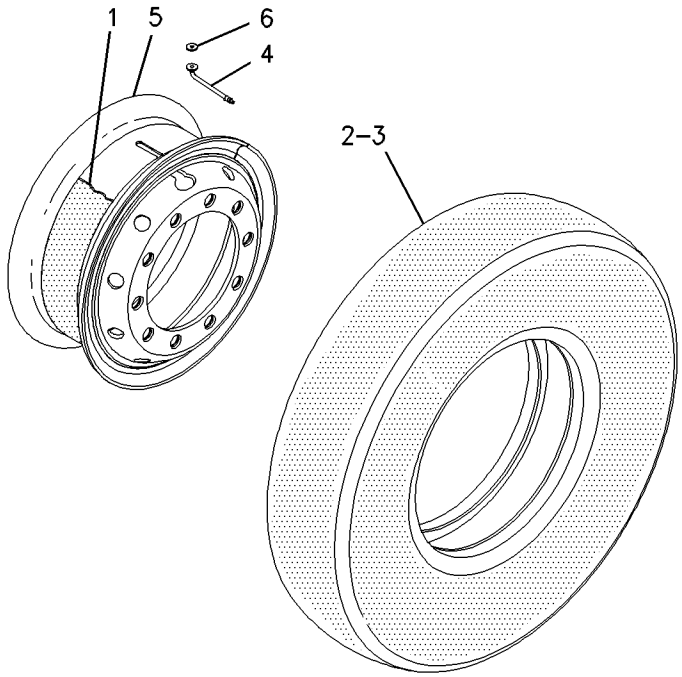

GRAPHIC #1 **<END>** g00909005

125-9672 TIRE & RIM GP

S/N: BCZ1-2000
10 X 20
PART OF 125-9671 TIRE & RIM AR
AN ATTACHMENT

SMCS-4202, 4203 **i01816975**

NOTE	REF NO	GRAPHIC REF	PART NUMBER	QTY	PART NAME 1 2 3 4 5 6 (PRODUCT LEVEL)	SEE PAGE
	1	1	*5W-2234*	1	FLAP (PROCURE LOCALLY)	
	2	1	*5W-5121*	1	TUBE-TIRE (PROCURE LOCALLY)	
	3	1	**8U-7339**	1	VALVE AS-AIR	
	4	1	*128-3756*	1	TIRE (10 X 20) (PROCURE LOCALLY)	
	5	1	**224-6475**	1	RIM AS	
	6	1	**5W-5123**	1	RING-SEAL	

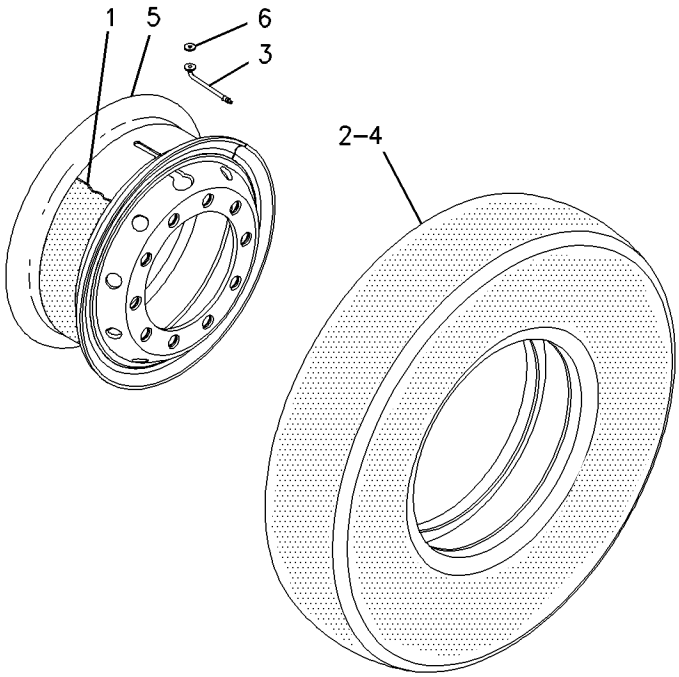

GRAPHIC #1 **<END>** g00909048

125-9675 TIRE & RIM GP

S/N: BCZ1-2000
11.00 X 20
PART OF 125-9674 TIRE & RIM AR
AN ATTACHMENT

SMCS-4202, 4203 **i01806526**

NOTE	REF NO	GRAPHIC REF	PART NUMBER	QTY	PART NAME 1 2 3 4 5 6 (PRODUCT LEVEL)	SEE PAGE
	1	1	**5W-1237**	1	RIM AS-WHEEL	
	2	1	*5W-2240*	1	TUBE-TIRE (11.00-20)	
					(PROCURE LOCALLY)	
	3	1	*5W-2241*	1	FLAP-PROTECTOR	
					(PROCURE LOCALLY)	
	4	1	**8U-7339**	1	VALVE AS-AIR	
	5	1	*128-3755*	1	TIRE	
					(PROCURE LOCALLY)	
	6	1	**5W-5123**	1	RING-SEAL	

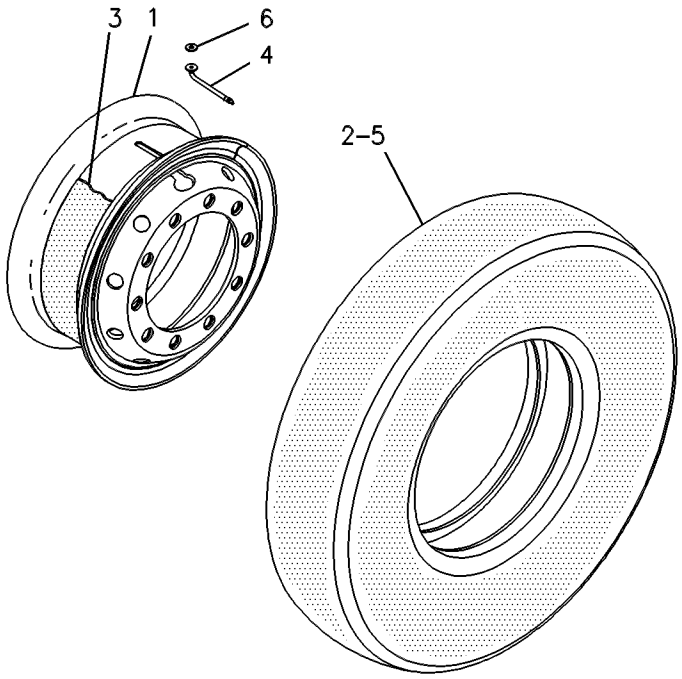

GRAPHIC #1 **<END>** g00254940

144-0688 TIRE & RIM GP

S/N: BCZ1-2000
600/40-22.5. SUPER SINGLE
PART OF 144-0685 TIRE & RIM AR
AN ATTACHMENT

SMCS-4202, 4203 **i01817006**

NOTE	REF NO	GRAPHIC REF	PART NUMBER	QTY	PART NAME 1 2 3 4 5 6 (PRODUCT LEVEL)	SEE PAGE
	1	1	**5W-2248**	1	EXTENSION-VALVE	
	2	1	**141-9069**	1	RIM AS-WHEEL	
	3	1	*144-0689*	1	TIRE (600/40-22.5) (PROCURE LOCALLY)	

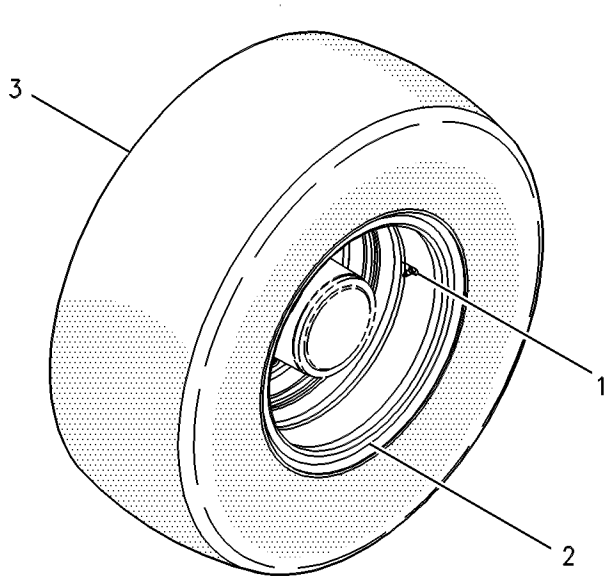

GRAPHIC #1 **<END>** g00251583

150-7808 TIRE & RIM GP

S/N: BCZ1-217
11 X 20
PART OF 150-7806 TIRE & RIM AR
AN ATTACHMENT

SMCS-4202, 4203 **i01796628**

NOTE	REF NO	GRAPHIC REF	PART NUMBER	QTY	PART NAME 1 2 3 4 5 6 (PRODUCT LEVEL)	SEE PAGE
	1	1	**5W-1237**	1	RIM AS-WHEEL	
	2	1	*5W-2241*	1	FLAP-PROTECTOR	
					(PROCURE LOCALLY)	
	3	1	**8U-7339**	1	VALVE AS-AIR	
	4	1	*150-7807*	1	TIRE	
					(PROCURE LOCALLY)	
	5	1	**5W-5123**	1	RING-SEAL	

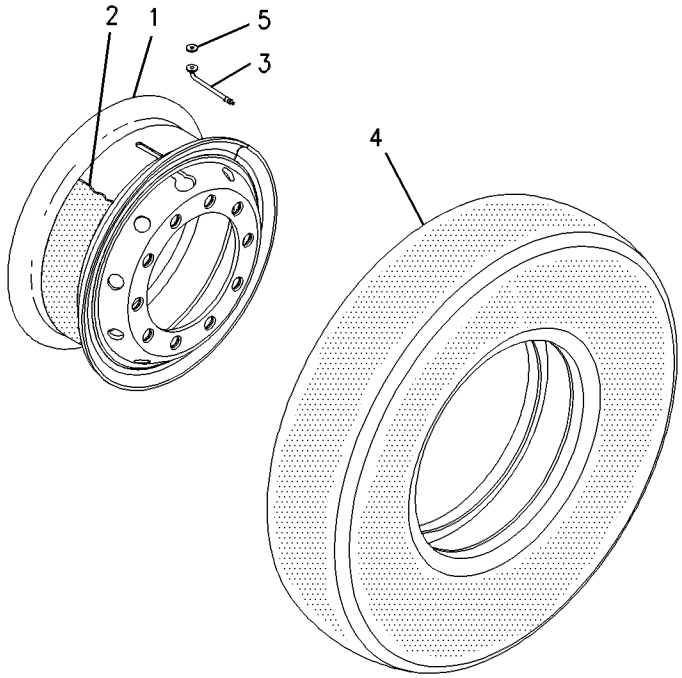

GRAPHIC #1 **<END>** g00379419

150-7808 TIRE & RIM GP

S/N: BCZ218-2000
11 X 20
PART OF 150-7806 TIRE & RIM AR
AN ATTACHMENT

SMCS-4202, 4203 **i01795567**

NOTE	REF NO	GRAPHIC REF	PART NUMBER	QTY	PART NAME 1 2 3 4 5 6 (PRODUCT LEVEL)	SEE PAGE
	1	1	*5W-2241*	1	FLAP-PROTECTOR	
					(PROCURE LOCALLY)	
	2	1	**8U-7339**	2	VALVE AS-AIR	
	3	1	*150-7807*	1	TIRE	
					(PROCURE LOCALLY)	
	4	1	**224-6480**	1	RIM AS-WHEEL	
	5	1	**5W-5123**	1	RING-SEAL	

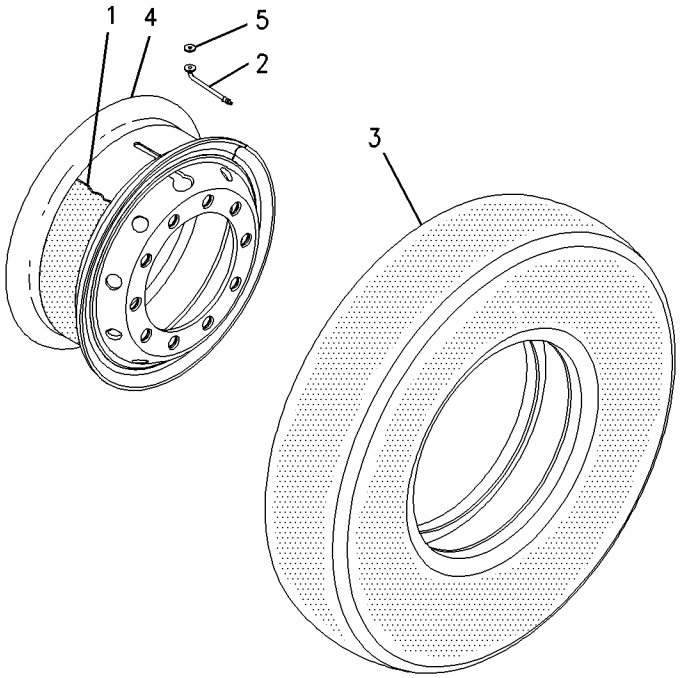

GRAPHIC #1 **<END>** g00907938

219-9856 TIRE & RIM GP

S/N: BCZ1-2000
10 X 20
PART OF 224-3190 TIRE & RIM AR
AN ATTACHMENT

SMCS-4202, 4203 **i01817007**

NOTE	REF NO	GRAPHIC REF	PART NUMBER	QTY	PART NAME 1 2 3 4 5 6 (PRODUCT LEVEL)	SEE PAGE
	1	1	*5W-2234*	1	FLAP (PROCURE LOCALLY)	
	2	1	*5W-5121*	1	TUBE-TIRE (PROCURE LOCALLY)	
	3	1	**8U-7339**	1	VALVE AS-AIR	
	4	1	*219-9853*	1	TIRE (PROCURE LOCALLY)	
	5	1	**224-6475**	1	RIM AS	
	6	1	**5W-5123**	1	RING-SEAL	

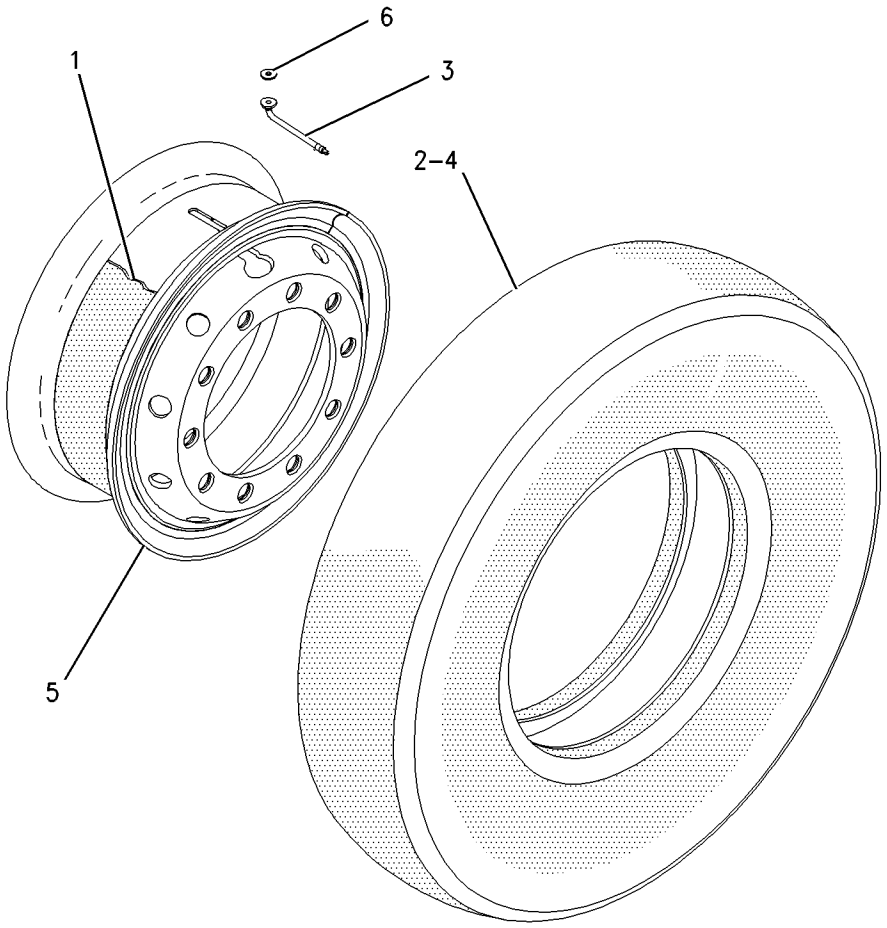

GRAPHIC #1 **<END>** g00912721

224-6473 TIRE & RIM GP

S/N: BCZ1-2000
PART OF 227-4203 TIRE & RIM AR
AN ATTACHMENT

SMCS-4202, 4203 **i02052299**

NOTE	REF NO	GRAPHIC REF	PART NUMBER	QTY	PART NAME 1 2 3 4 5 6 (PRODUCT LEVEL)	SEE PAGE
	1	1	*5W-2240*	1	TUBE-TIRE (11.00-20)	
	2	1	*5W-2241*	1	FLAP-PROTECTOR	
	3	1	**8U-7339**	1	VALVE AS-AIR	
	4	1	*224-6479*	1	TIRE (11.00-20)	
	5	1	**224-6480**	1	RIM AS-WHEEL	
	6	1	**5W-5123**	1	RING-SEAL	

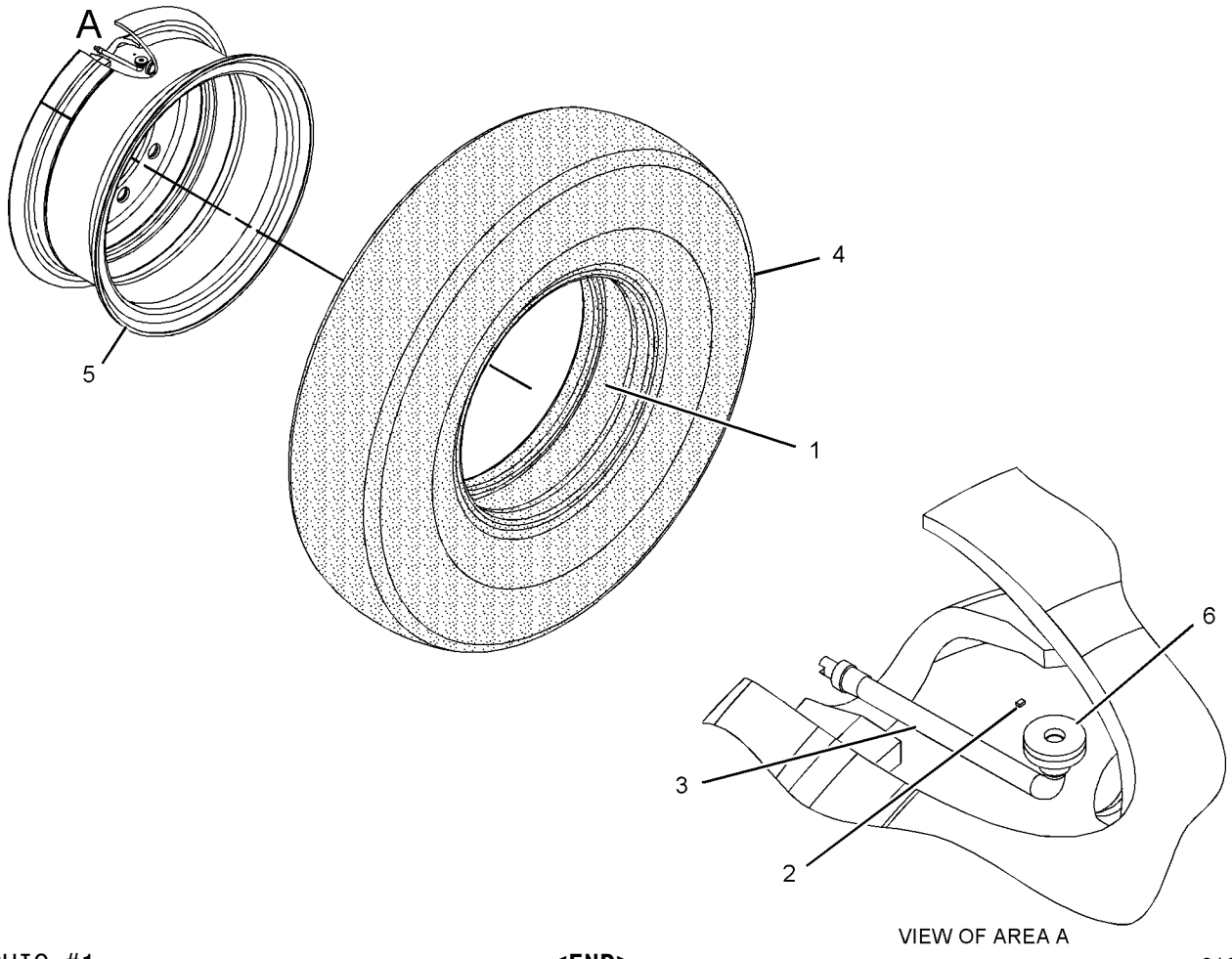

VIEW OF AREA A

GRAPHIC #1 **<END>** g01061040

POWER TRAIN

187-7216 TRANSMISSION GP

S/N: BCZ1-406, 408-412, 418, 420-421, 423-426, 430, 452-453, 455
PART OF 187-7214, 187-7217, 204-7742 AXLE & TRANSMISSION AR
ALSO AN ATTACHMENT

SMCS-3030 **i02154763**

NOTE	REF NO	GRAPHIC REF	PART NUMBER	QTY	PART NAME 1 2 3 4 5 6 (PRODUCT LEVEL)	SEE PAGE
	1	1	**190-8595**	1	HOUSING	
	2	1	**9X-0640**	1	SEAL-O-RING	
	3	1	**5W-5348**	3	PLUG	
	5	1	**8U-5930**	1	PISTON	
	6	1	**8U-5931**	1	SPRING	
	7	1	**8U-5932**	1	WASHER (17.7X25X3-MM THK)	
	8	1	**8U-5933**	1	PLUG	
	9	1	**8C-3103**	1	SEAL-FACE	
	10	1	**107-5665**	1	SEAL-O-RING	
	11	1	**8U-6888**	1	FITTING	
	12	1	**8U-2233**	1	SEAL-O-RING	
	13	1,7	**203-0216**	3	SEAL-O-RING	
	14	1	**190-8589**	2	RING-PISTON	
	15	1	**8U-6889**	1	RING-BACKUP	
	16	1	**5W-6378**	1	SEAL-O-RING	
	17	1	**8U-5938**	1	RING-RETAINING	
	18	1	**8U-5939**	1	BALL BEARING	
	19	1	**8U-5940**	1	RING-RETAINING	
	20	1	**8U-5941**	1	VALVE GP-CHECK (HIGH SPEED CLUTCH, ORIFICE)	
	20A	1	**8U-5942**	1	SEAL-O-RING	
	20B	1	**8U-5943**	1	SEAL-O-RING	
	21	1	**8U-5944**	1	BUSHING	
	22	1	**5W-1772**	2	SEAL-O-RING	
	23	1	**8U-5946**	1	SEAL-WAVE WASHER	
	24	1	**5W-6373**	1	RING-RETAINING	
	25	1	**121-8083**	1	RING-RETAINING	
	26	1	**121-8082**	1	SHAFT	
	27	2	**121-8081**	1	HOUSING	
	28	2	**121-8080**	1	SEAL-O-RING	
	29	2	**9T-3931**	1	PLUG	
	30	2	**8U-5951**	1	SEAL-O-RING	
	31	2	**106-0699**	2	PLUG	
	32	2	**8U-5952**	1	SEAL-O-RING	
	33	2	**121-8079**	1	GASKET	
	34	2	**8U-6893**	1	SEAL-O-RING	
M	35	2	**8T-3957**	10	BOLT-SOCKET HEAD (M12X1.75X30-MM)	
	36	2	**8U-6894**	1	VALVE GP-CHECK (LOW SPEED CLUTCH, ORIFICE)	
	36A	2	**8U-5942**	1	SEAL-O-RING	
	36B	2	**8U-5943**	1	SEAL-O-RING	
J	37	2,7	**3T-6376**	3	PLUG	
	38	2	**6T-6308**	2	SEAL-O-RING	
	39	2	**9X-0630**	1	VALVE	
	40	2	**8U-5957**	1	PLUG-RELIEF	
	41	2	**9T-6322**	2	PLUG AS	
					(EACH INCLUDES)	
	41A	2	**8C-3082**	2	SEAL-O-RING	
	43	2	**5W-7392**	2	PLUG	
	44	2	**5W-1698**	2	WASHER (18.2X21.9X1.5-MM THK)	
	45	2	**6Y-0529**	1	SEAL-O-RING	
	47	2	**8U-5960**	1	TUBE AS	
	48	2	**5W-1509**	1	FITTING	
	49	2	**121-8077**	1	TUBE	
	50	2	**169-9761**	1	ADAPTER	
	51	1	**8U-3473**	1	SEAL-O-RING	
M	52	2	**7X-2563**	1	BOLT (M20X2.5X60-MM)	

187-7216 TRANSMISSION GP *(contd.)* i02154763

NOTE	REF NO	GRAPHIC REF	PART NUMBER	QTY	PART NAME 1 2 3 4 5 6 (PRODUCT LEVEL)	SEE PAGE
	53	2	**121-8113**	1	HOSE AS	
	54	2	**121-8114**	1	HOSE AS	
	55	2	**121-8112**	1	SEAL-O-RING	
	56	2	**121-8111**	1	BOLT-HOLLOW	
	57	2	**7T-0508**	1	SEAL-O-RING	
	58	2	**5W-8375**	3	FITTING	
	59	2	**8U-2233**	3	SEAL-O-RING	
	60	3	**8U-5967**	1	FLANGE	
	61	3	**8U-6897**	1	KIT-DISC SPRING (TRANSMISSION)	
	62	3	**8U-6898**	1	GEAR (34-TEETH)	
	63	3	**8U-6899**	1	RING-BACKUP	
	64	3	**121-8076**	1	DISC-GEAR	
	65	1	**8H-9789**	1	BALL BEARING	
	66	3	**095-0942**	1	RING-RETAINING	
	67	3	**8U-6900**	1	DISC-CENTERING	
	68	3	**6V-5202**	1	RING	
	69	3	**121-8075**	1	WASHER-BACKUP	
	70	3	**121-8074**	1	RING-RETAINING	
B	71	3	**6T-6277**	11	PLATE-CLUTCH	
B	72	3	**8U-0531**	1	GEAR-DISC (1.8-MM THK)	
B	73	3	**8U-5976**	1	DISC-DRIVE	
B	74	3	**121-8073**	1	GEAR-DISC (1.4-MM THK)	
B	75	3	**136-3022**	1	GEAR-DISC (1.6-MM THK)	
	76	3	**6T-6283**	11	DISC-FRICTION	
	77	4	**169-8388**	1	PISTON	
	78	4	**121-8072**	1	WASHER-SPRING	
	79	4	**128-9414**	1	RING	
	80	4	**121-8071**	1	GASKET	
	81	4	**8U-5982**	1	RING-RETAINING	
	82	4	**169-8394**	1	SHIM	
	83	4	**109-0121**	1	RING-RETAINING	
	84	4	**169-8398**	5	DISC-CLUTCH (2.9-MM THK)	
B	85	4	**8U-5985**	1	GEAR-DISC (3-MM THK)	
B	86	4	**121-8066**	1	GEAR-DISC (3.3-MM THK)	
B	87	4	**169-8398**	1	DISC-CLUTCH (2.9-MM THK)	
B	88	4	**169-8402**	1	GEAR-DISC (2.8-MM THK)	
B	89	4	**8U-5987**	1	GEAR-DISC (3.5-MM THK)	
B	90	4	**121-8067**	1	GEAR-DISC (3.4-MM THK)	
B	91	4	**121-8068**	1	GEAR-DISC (3.7-MM THK)	
	92	4	**8U-5988**	6	DISC-FRICTION (3-MM THK)	
	93	5	**8U-5989**	1	CARRIER-PLANETARY	
	94	5	**8U-5990**	1	BEARING	
	95	5	**8T-9598**	1	RING-RETAINING	
	96	5	**8U-5991**	3	GEAR (36-TEETH)	
	97	5	**8U-5992**	3	BEARING-ROLLER	
	98	5	**121-8065**	3	RING-RETAINING	
	99	5	**8U-5994**	1	GEAR (39-TEETH)	
B	100	5	**8U-5995**	1	WASHER (3-MM THK)	
B		5	**8U-5997**	1	WASHER (30.05X46.4X3.15-MM THK)	
B		5	**8U-6000**	1	WASHER (3.4-MM THK)	
B		5	**8U-6001**	1	WASHER (3.5-MM THK)	
B		5	**8U-6003**	1	WASHER (3.7-MM THK)	
B		5	**121-8064**	1	WASHER (3.2-MM THK)	
	110	5	**121-8063**	1	RING-RETAINING	
	111	5	**121-8062**	1	HOUSING-GEAR	
	112	5	**8U-6906**	1	COLLAR-SHIFT	
	113	5	**096-5516**	1	RING-RETAINING	
	114	5	**8U-6009**	1	GEAR (18-TEETH)	
	115	5	**8U-6010**	1	FORK-SHIFT	

187-7216 TRANSMISSION GP *(contd.)* i02154763

NOTE	REF NO	GRAPHIC REF	PART NUMBER	QTY	PART NAME 1 2 3 4 5 6 (PRODUCT LEVEL)	SEE PAGE
	116	5	**8U-6011**	2	PAD	
	117	5	**8U-6012**	1	PIN	
	118	5	**8U-6013**	1	SEAL-O-RING	
	119	5	**8U-6014**	1	PIN	
	120	5	**095-0919**	1	RING-RETAINING	
	121	5	**8U-6016**	1	LEVER	
M	122	5	**8T-4195**	1	BOLT (M10X1.5X30-MM)	
B	123	5	**121-8060**	1	WASHER (2.3-MM THK)	
B	125	5	**8U-6020**	1	WASHER (2.2-MM THK)	
B		5	**8U-6021**	1	WASHER (2.4-MM THK)	
B		5	**8U-6022**	1	WASHER (2.6-MM THK)	
B		5	**8U-6023**	1	WASHER (55.2X68X2.8-MM THK)	
B		5	**121-8061**	1	WASHER (2.5-MM THK)	
M	130	5	**7I-8479**	1	BOLT-SOCKET HEAD (M10X1.5X40-MM)	
	131	5	**5W-1401**	1	WASHER (10.5X18X1.6-MM THK)	
	132	6	**095-0946**	1	RING-RETAINING	
	133	6	**109-0121**	1	RING-RETAINING	
	134	6	**8U-6028**	1	FLANGE	
	135	6	**5W-1487**	1	RING-RETAINING (32.2-MM ID)	
	136	6	**8U-6029**	1	BEARING	
	137	6	**121-8059**	1	GEAR	
	138	6	**1F-2771**	2	BALL BEARING	
J	139	7	**147-5043**	1	HOUSING	
J	140	7	**121-8109**	1	GASKET	
J	141	7	**121-8108**	1	SPRING	
J	142	7	**121-8107**	1	PLUG	
J	143	7	**9R-3176**	1	SEAL	
J	145	7	**5W-1693**	1	WASHER (10.2-MM ID)	
J	146	7	**121-8106**	1	PISTON	
J	147	7	**149-5881**	1	VALVE AS-RELIEF (DOWNSHIFT INHIBITOR)	
		7	**169-8432**	1	SEAL	
		7	**169-8433**	1	SEAL	
J	148	7	**121-8104**	1	VALVE AS-CHECK (DOWNSHIFT INHIBITOR)	
		7	**8U-3899**	1	SEAL-O-RING	
		7	**123-2341**	1	SEAL-O-RING	
J	149	7	**121-8103**	1	VALVE AS-CHECK (DOWNSHIFT INHIBITOR)	
		7	**8U-3899**	1	SEAL-O-RING	
		7	**6T-6308**	1	SEAL-O-RING	
		7	**123-2341**	1	SEAL-O-RING	
J	150	7	**121-8102**	1	VALVE AS-CHECK (DOWNSHIFT INHIBITOR)	
		7	**8U-3899**	1	SEAL-O-RING	
		7	**123-2341**	1	SEAL-O-RING	
J	151	7	**121-8101**	1	SLEEVE	
J	152	7	**121-8100**	1	ROTOR AS	
J	153	7	**147-5044**	1	FILTER (TRANSMISSION)	
J	154	7	**121-8098**	4	BALL	
J	155	7	**121-8097**	3	SPRING	
J	156	7	**096-2323**	1	RING-RETAINING	
JM	157	7	**6V-6936**	3	BOLT (M6X1X22-MM)	
J	158	7	**147-5045**	1	SEAL	
J	159	7	**147-5046**	1	COVER	
J	160	7	**121-8094**	1	SEAL-O-RING	
	161	7	**7T-0510**	1	BOLT	
JM	162	7	**8T-7547**	23	BOLT (M8X1.25X30-MM)	
M	163	7	**6V-5196**	2	BOLT-SOCKET HEAD (M8X1.25X80-MM)	
J	164	7	**121-8093**	26	WASHER (8.4X17X1.5-MM THK)	
	165	7	**121-8091**	1	SHAFT	
J	166	7	**121-8090**	1	SHAFT	
J	167	7	**121-8089**	1	COVER	

187-7216 TRANSMISSION GP *(contd.)* i02154763

NOTE	REF NO	GRAPHIC REF	PART NUMBER	QTY	PART NAME 1 2 3 4 5 6 (PRODUCT LEVEL)	SEE PAGE
J	168	7	**121-8088**	1	BALL BEARING	
J	169	7	**095-0934**	1	RING-RETAINING	
	170	7	**8T-7488**	2	CONNECTOR	
	171	7	**8U-6058**	2	SEAL-O-RING	
	173	8	**8U-6076**	1	SHROUD	
	174	8	**121-8129**	1	BEARING-ROLLER	
	175	8	**5W-2795**	1	BEARING	
	176	8	**129-9908**	1	SEAL	
	177	8	**121-8128**	1	PLATE-DEFLECTOR	
	178	8	**8U-6062**	1	GEAR	
M	179	8	**121-8127**	8	BOLT	
	180	8	**121-8116**	1	SEAL-O-RING	
	181	8	**8U-6065**	1	PLATE	
M	182	8	**8T-4186**	2	BOLT (M10X1.5X40-MM)	
	183	8	**3T-5608**	1	LOCK	
B	185	8	**8U-6068**	1	WASHER (2.05-MM THK)	
B		8	**8U-6069**	1	WASHER (2.1-MM THK)	
B		8	**8U-6072**	1	WASHER (2.25-MM THK)	
B		8	**8U-6074**	1	WASHER (2.35-MM THK)	
B		8	**121-8118**	1	WASHER (50.1X62X2.4-MM THK)	
B		8	**121-8119**	1	WASHER (2.45-MM THK)	
B		8	**121-8120**	1	WASHER (2.5-MM THK)	
B		8	**121-8121**	1	WASHER (2.55-MM THK)	
B		8	**121-8122**	1	WASHER (2.6-MM THK)	
B		8	**121-8123**	1	WASHER (2.65-MM THK)	
B		8	**121-8126**	1	WASHER (2.85-MM THK)	
B		8	**153-4708**	1	WASHER (50.1X61.8X2.9-MM THK)	
B		8	**153-4709**	1	WASHER (50.1X61.8X2.93-MM THK)	
B		8	**153-4710**	1	WASHER (2.96-MM THK)	
B		8	**153-4711**	1	WASHER (2.99-MM THK)	
B		8	**153-4712**	1	WASHER (3.02-MM THK)	
B		8	**202-8389**	1	WASHER (50.1X62X2.23-MM THK)	
B		8	**202-8390**	1	WASHER (2.73-MM THK)	
	208	8	**8U-6075**	1	SEAL-LIP TYPE	
	209	8	**121-8117**	1	SEAL-O-RING	
	210	8	**121-8115**	1	GEAR (57-TEETH)	
	211	8	**171-0807**	1	HOUSING AS-DIFFERENTIAL	
	212	8	**109-5701**	1	SEAL-O-RING	
BM	213	8	**8T-4139**	15	BOLT (M12X1.75X30-MM)	
B	214	8	**110-0124**	1	SHIM (2-MM THK)	
B		8	**110-0122**	1	SHIM (1.8-MM THK)	
B		8	**110-0121**	1	SHIM (1.5-MM THK)	
B		8	**110-0120**	1	SHIM (1.2-MM THK)	
B		8	**129-9912**	1	SHIM (1.9-MM THK)	
B		8	**129-9913**	1	SHIM (1.7-MM THK)	
B		8	**129-9914**	1	SHIM (1.6-MM THK)	
B		8	**129-9915**	1	SHIM (1.4-MM THK)	
B		8	**129-9916**	1	SHIM (1.3-MM THK)	
B		8	**190-8567**	1	SHIM (1-MM THK)	
B		8	**190-8566**	1	SHIM (0.9-MM THK)	
B		8	**190-8565**	1	SHIM (0.8-MM THK)	
B		8	**190-8563**	1	SHIM (0.7-MM THK)	
B		8	**190-8561**	1	SHIM (0.6-MM THK)	
B		8	**5W-2074**	1	SHIM (0.5-MM THK)	
B		8	**5W-2073**	1	SHIM (0.3-MM THK)	
B		8	**5W-3644**	1	SHIM (0.2-MM THK)	
B		8	**5W-2072**	1	SHIM (0.1-MM THK)	
B		8	**193-1123**	1	SHIM (0.75-MM THK)	
B		8	**193-1124**	1	SHIM (0.65-MM THK)	

187-7216 TRANSMISSION GP *(contd.)* i02154763

NOTE	REF NO	GRAPHIC REF	PART NUMBER	QTY	PART NAME 1 2 3 4 5 6 (PRODUCT LEVEL)	SEE PAGE
	233	8	**6Y-2943**	1	CUP-BEARING (TAPERED ROLLER BEARING)	
	234	8	**9R-7003**	1	BEARING	
	235	8	**6Y-2942**	1	CONE-BEARING	
	236	8	**9R-2828**	2	NUT	
	237	8	**9R-3158**	2	PIN	
	238	8	**9R-3521**	2	DOWEL	
	239	8	**204-7265**	1	GEAR AS-PINION	
	240	8	**8U-6081**	1	BUSHING	
	241	9	**9R-6991**	1	CASE-DIFFERENTIAL	
	242	9	**9R-6964**	2	GEAR-DIFFERENTIAL	
	243	9	**6T-5749**	2	WASHER-THRUST	
	244	9	**128-7855**	4	GEAR-PINION	
	245	9	**9R-6994**	4	WASHER-THRUST	
	246	9	**119-9288**	2	SHAFT	
M	247	9	**9R-6818**	12	BOLT	
	248	9	**9R-6819**	12	WASHER (13X21.9X3-MM THK)	
	249	9	**8T-2450**	4	PIN-SPRING	
	250	9	**9R-6962**	4	PIN-CLAMPING	
					AVAILABLE REPAIR KIT(S):	
J			**204-7660**	1	KIT-REPAIR (TRANSMISSION)	

B-USE AS REQUIRED
J-KIT MARKED J SERVICES PARTS MARKED J
M-METRIC PART

187-7216 TRANSMISSION GP *(contd.)* **i02154763**

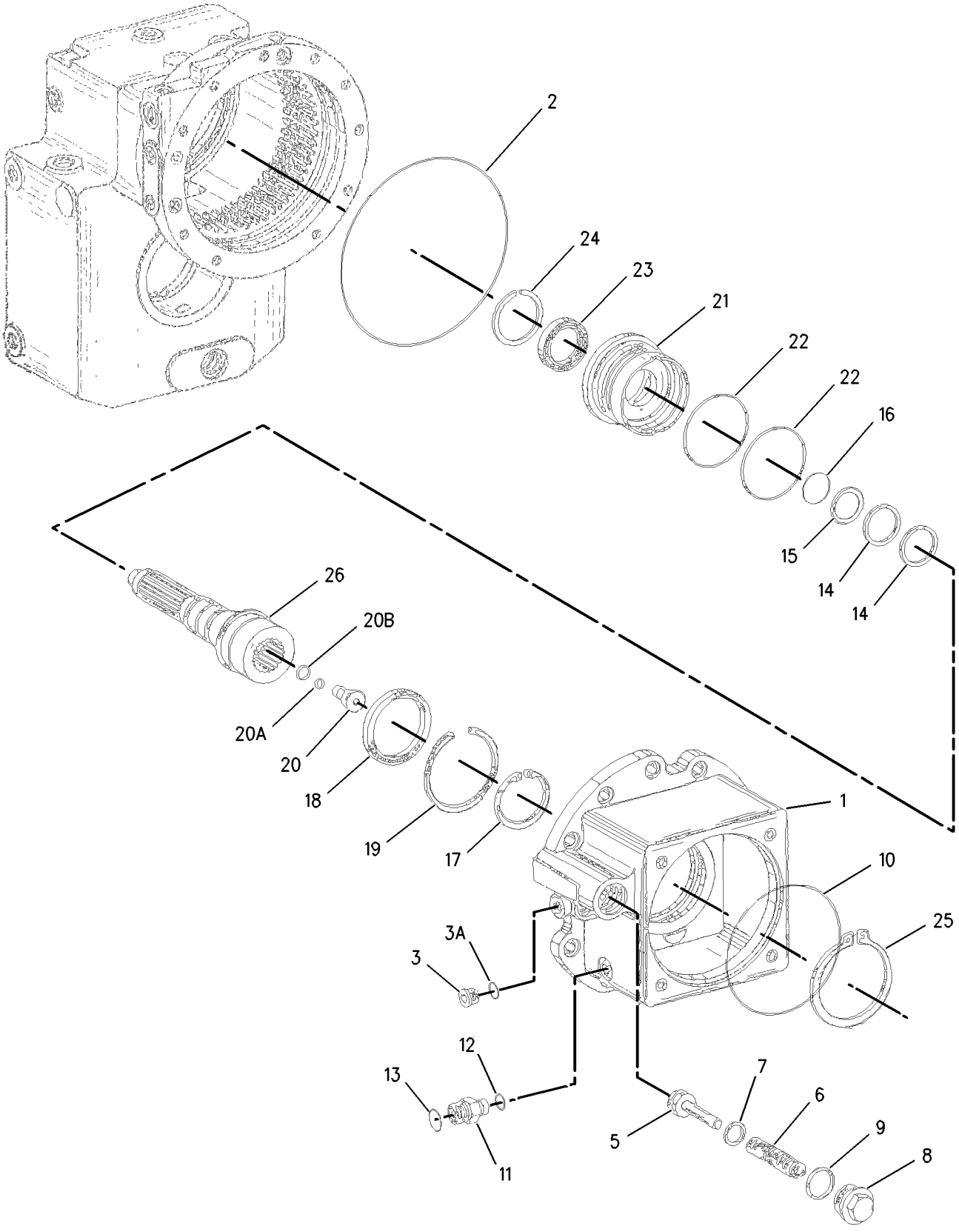

GRAPHIC #1 g00928451

187-7216 TRANSMISSION GP *(contd.)* i02154763

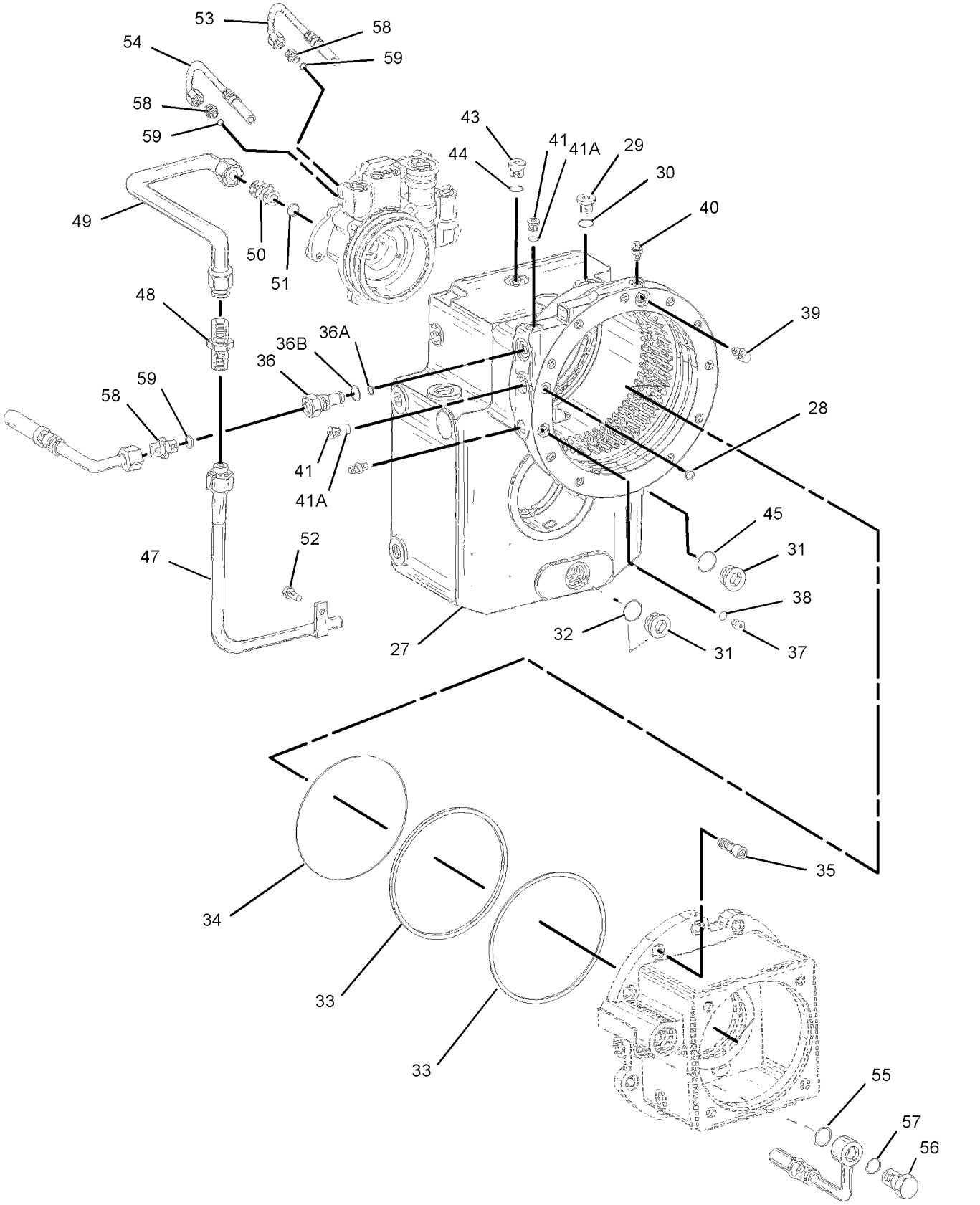

GRAPHIC #2 g01092974

187-7216 TRANSMISSION GP *(contd.)* i02154763

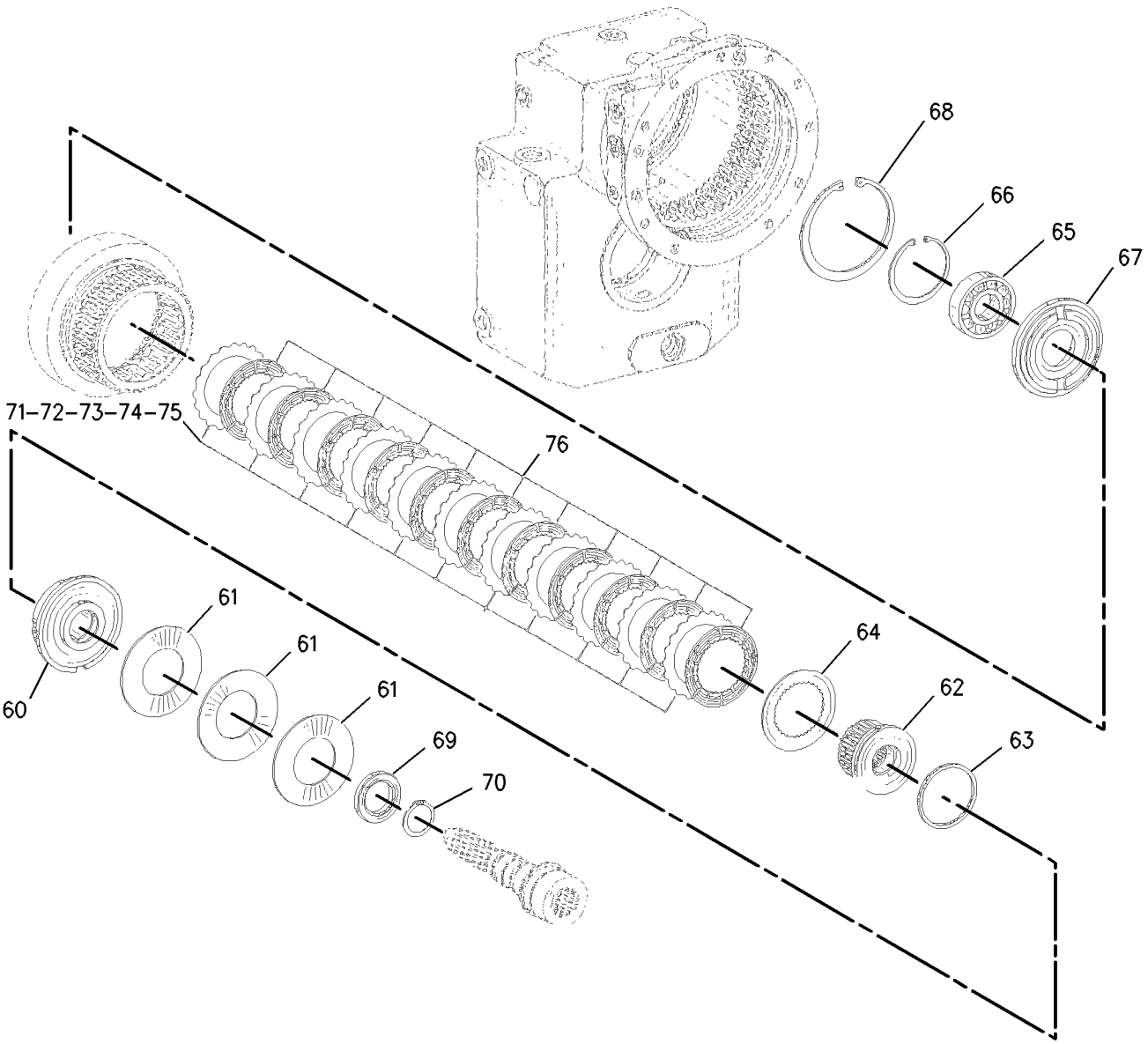

GRAPHIC #3 g00837157

187-7216 TRANSMISSION GP *(contd.)* **i02154763**

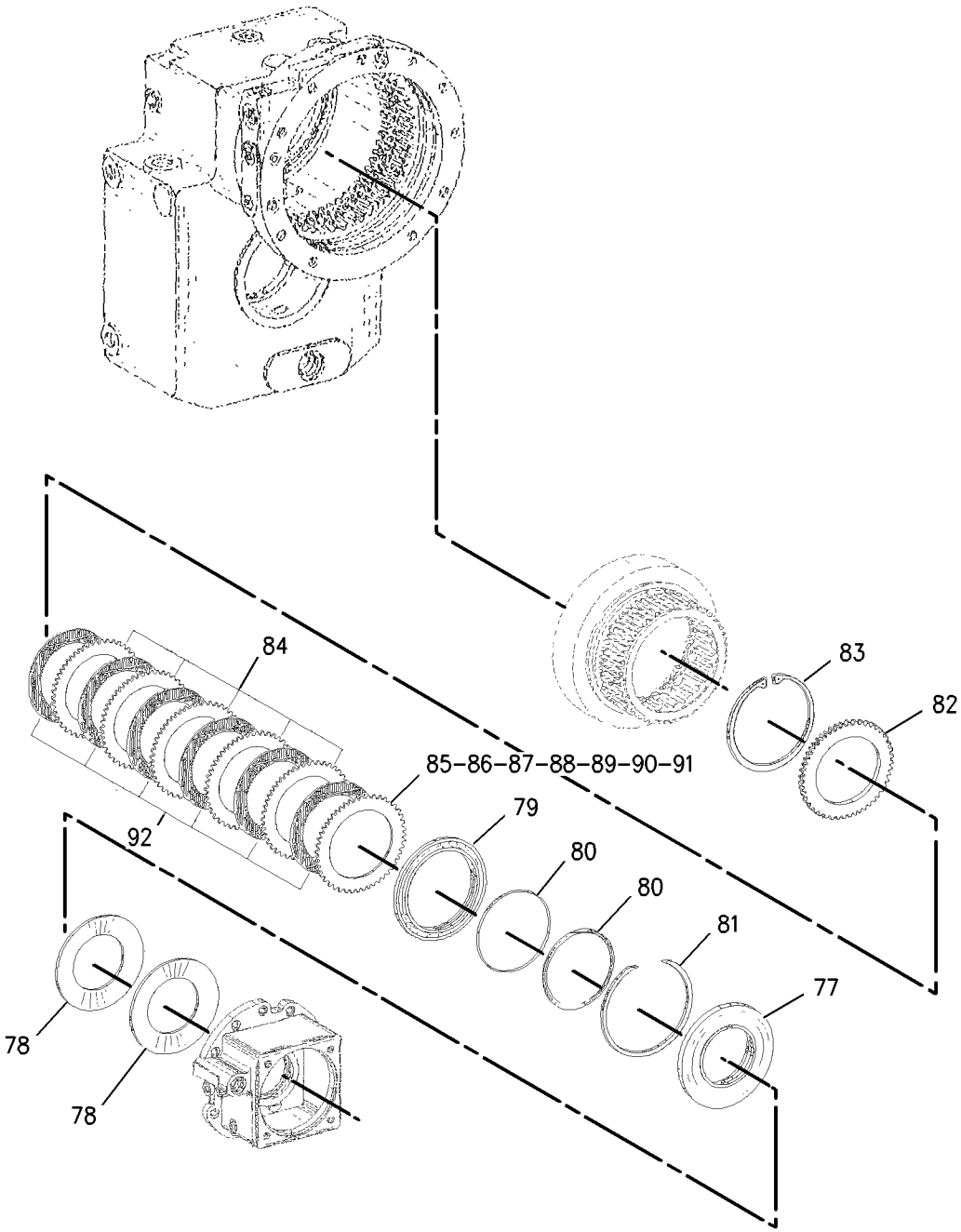

GRAPHIC #4 g00837158

187-7216 TRANSMISSION GP *(contd.)* i02154763

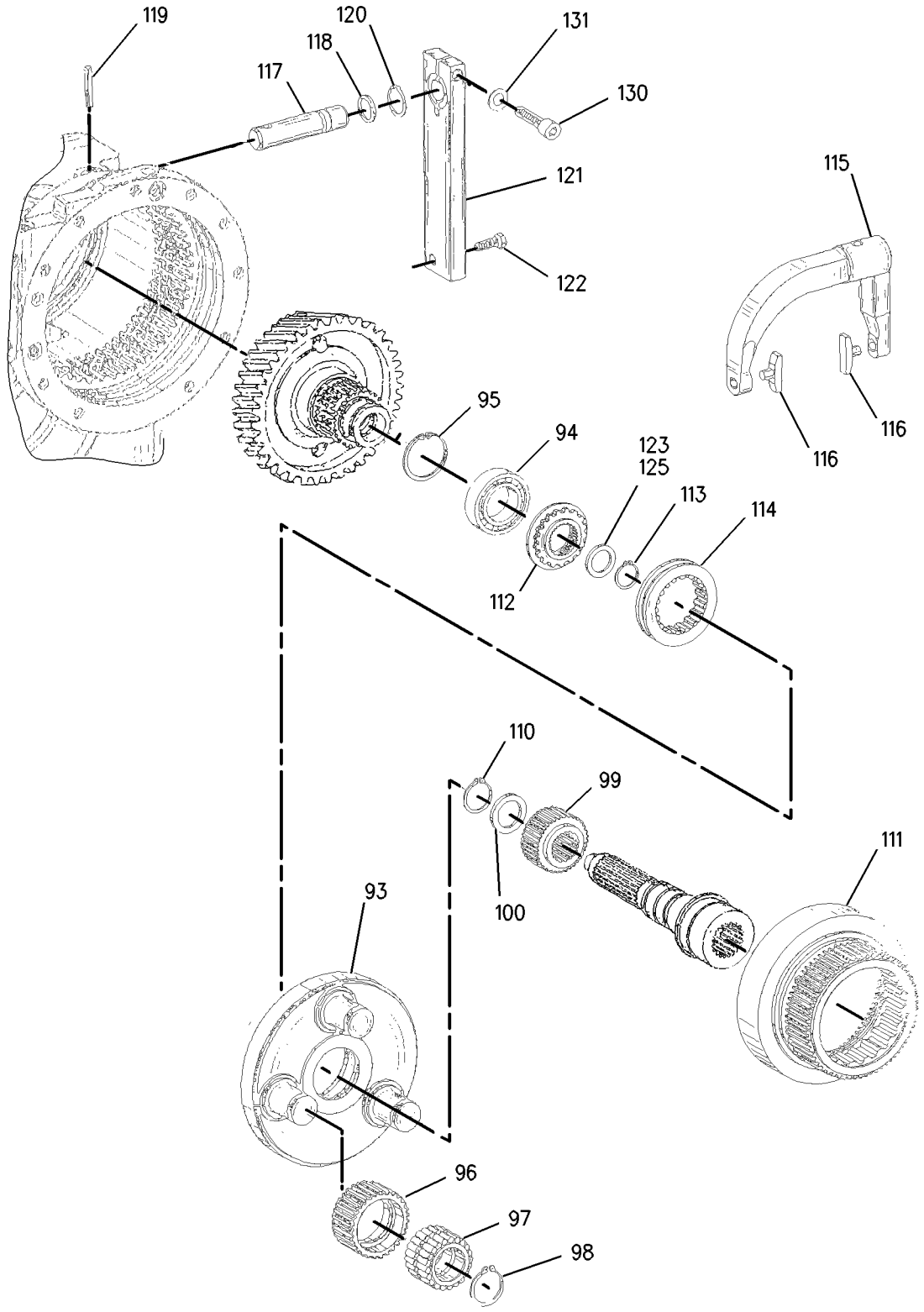

GRAPHIC #5 g00837159

187-7216 TRANSMISSION GP *(contd.)* **i02154763**

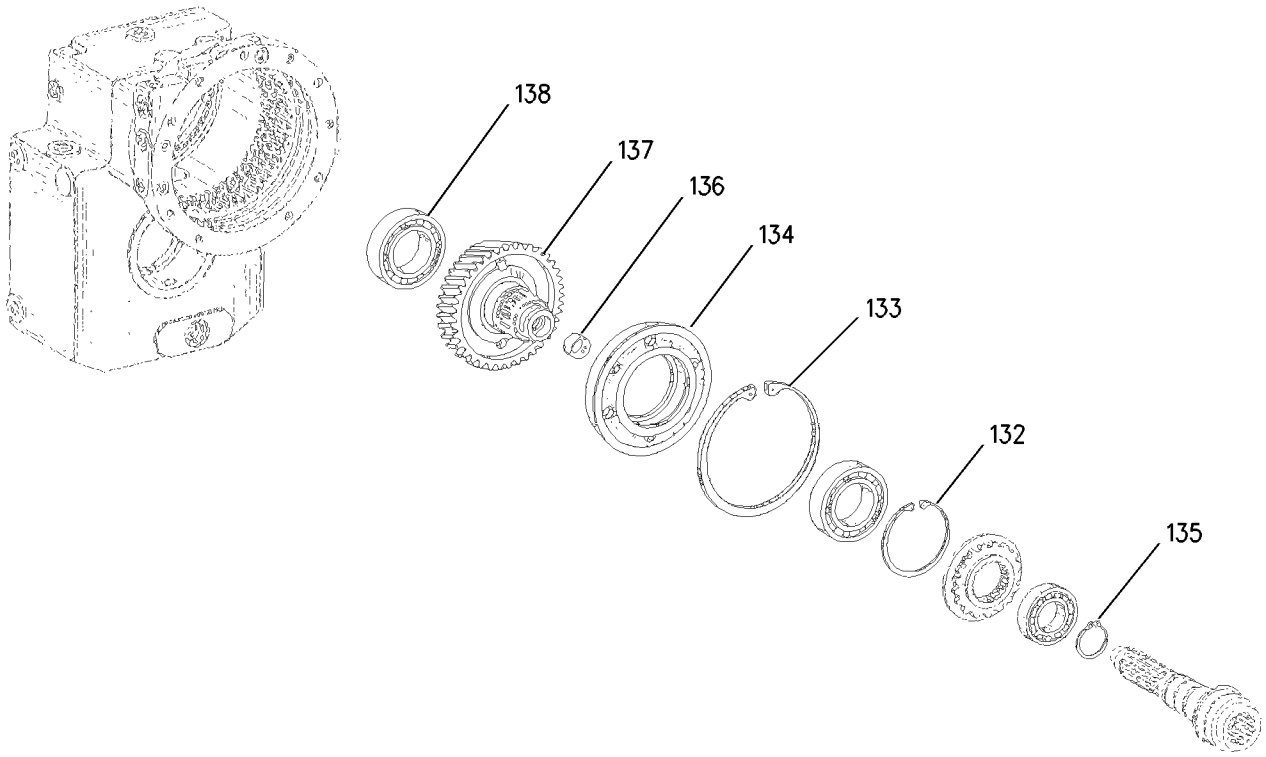

GRAPHIC #6 g00837160

187-7216 TRANSMISSION GP *(contd.)* i02154763

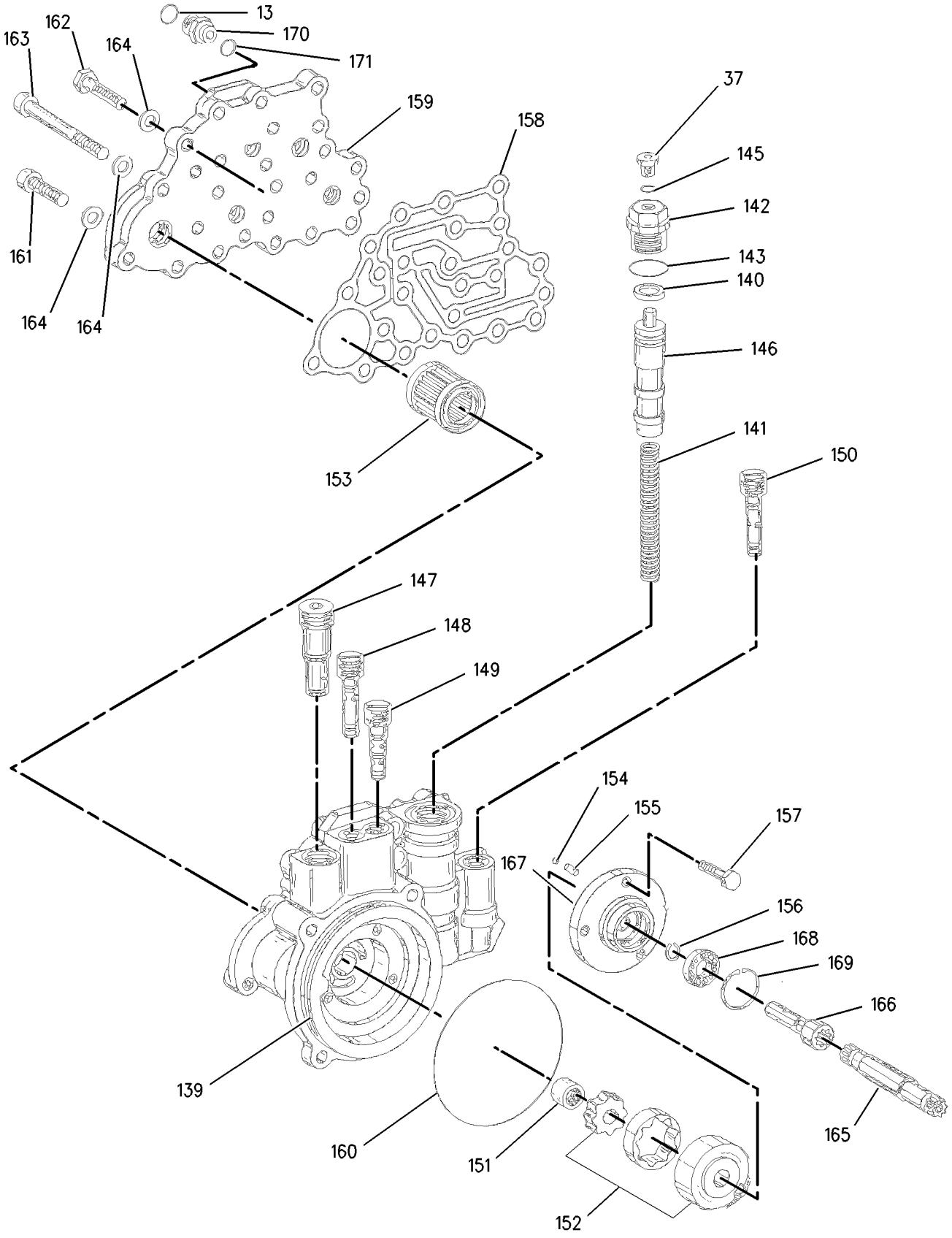

GRAPHIC #7 g00837161

187-7216 TRANSMISSION GP *(contd.)* **i02154763**

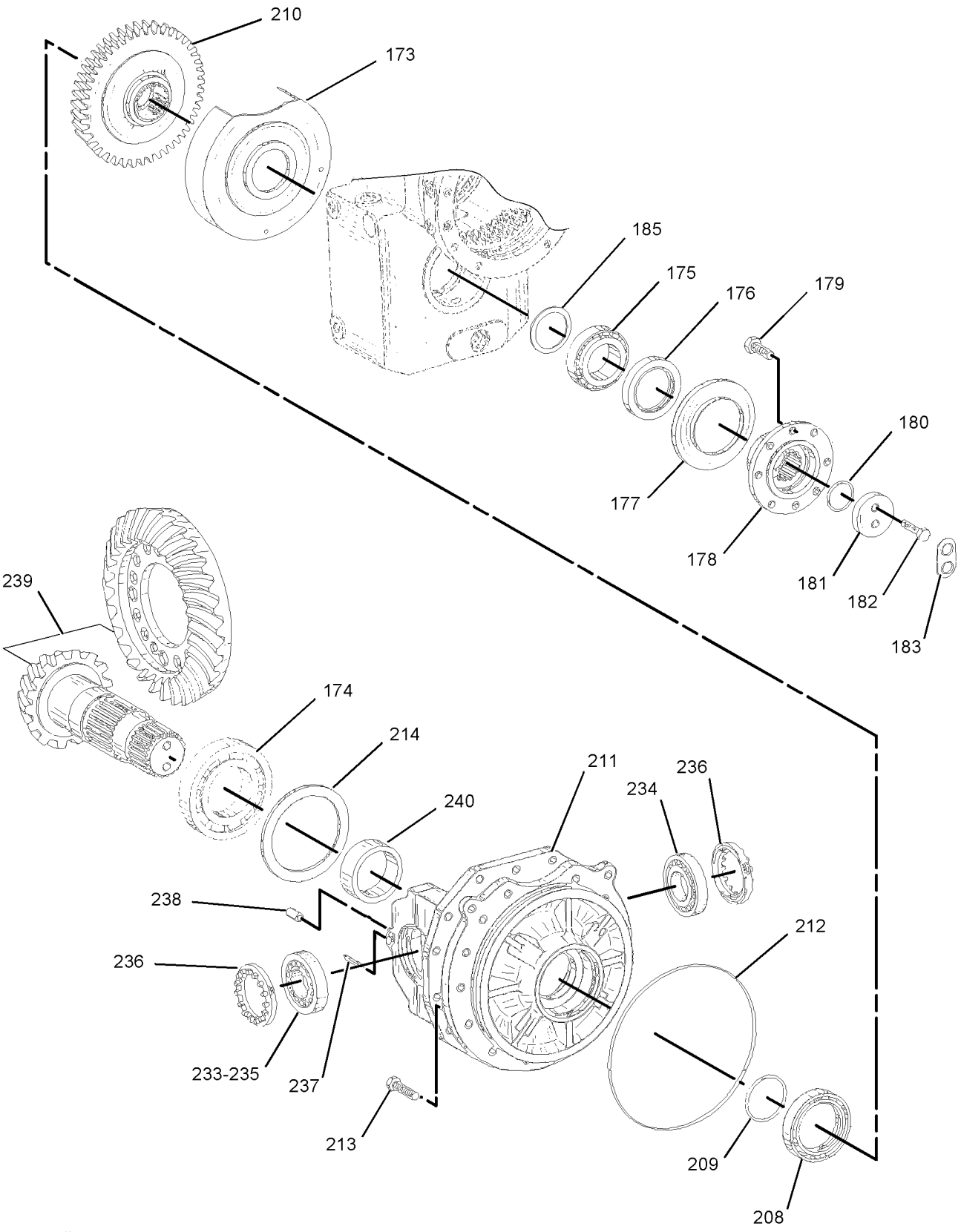

GRAPHIC #8

g01092959

187-7216 TRANSMISSION GP *(contd.)* **i02154763**

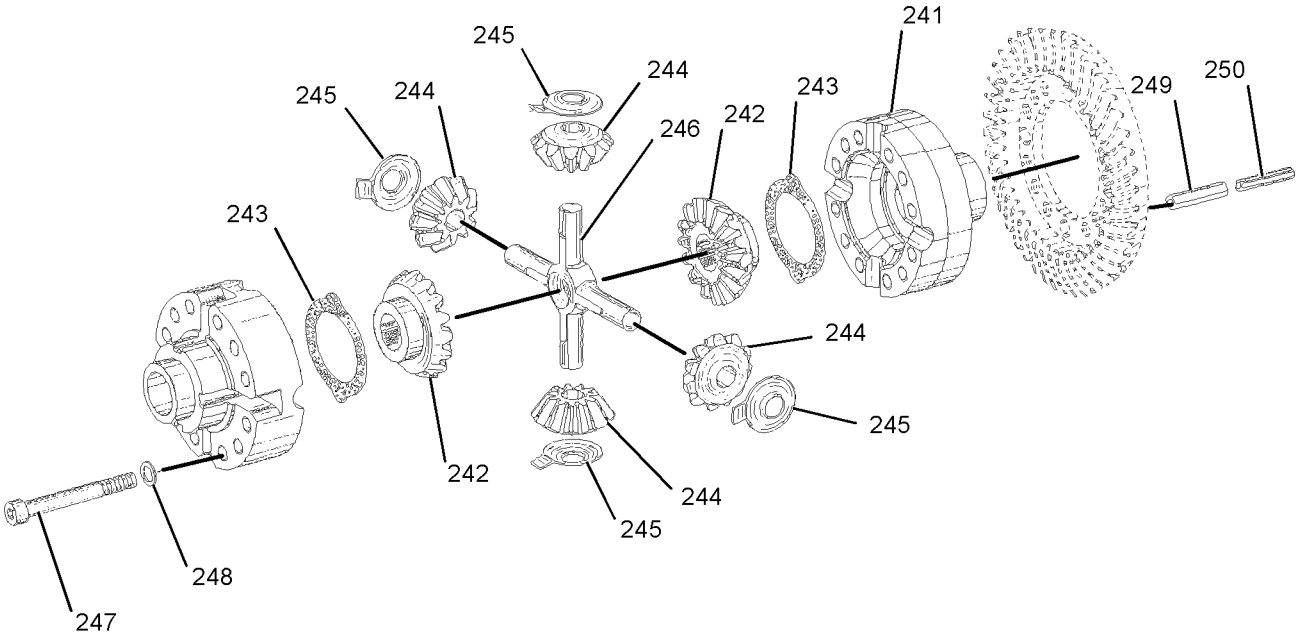

GRAPHIC #9 **<END>** g01092440

187-7216 TRANSMISSION GP

S/N: BCZ407, 413-417, 419, 422, 427-429, 431-451, 454, 456-2000
PART OF 187-7214, 187-7217, 204-7742 AXLE & TRANSMISSION AR
ALSO AN ATTACHMENT

SMCS-3030 **i02160048**

NOTE	REF NO	GRAPHIC REF	PART NUMBER	QTY	PART NAME 1 2 3 4 5 6 (PRODUCT LEVEL)	SEE PAGE
	1	1	**190-8595**	1	HOUSING	
	2	1	**9X-0640**	1	SEAL-O-RING	
	3	1	**9T-6322**	1	PLUG AS	
	3A	1	**8C-3082**	2	SEAL-O-RING	
	5	1	**8U-5930**	1	PISTON	
	6	1	**8U-5931**	1	SPRING	
	7	1	**8U-5932**	1	WASHER (17.7X25X3-MM THK)	
	8	1	**8U-5933**	1	PLUG	
	9	1	**8C-3103**	1	SEAL-FACE	
	10	1	**107-5665**	1	SEAL-O-RING	
	11	1	**8U-6888**	1	FITTING	
	12	1	**8U-2233**	1	SEAL-O-RING	
	13	1,7	**203-0216**	3	SEAL-O-RING	
	14	1	**190-8589**	2	RING-PISTON	
	15	1	**8U-6889**	1	RING-BACKUP	
	16	1	**5W-6378**	1	SEAL-O-RING	
	17	1	**8U-5938**	1	RING-RETAINING	
	18	1	**8U-5939**	1	BALL BEARING	
	19	1	**8U-5940**	1	RING-RETAINING	
	20	1	**8U-5941**	1	VALVE GP-CHECK (HIGH SPEED CLUTCH, ORIFICE)	
	20A	1	**8U-5942**	1	SEAL-O-RING	
	20B	1	**8U-5943**	1	SEAL-O-RING	
	21	1	**8U-5944**	1	BUSHING	
	22	1	**5W-1772**	2	SEAL-O-RING	
	23	1	**8U-5946**	1	SEAL-WAVE WASHER	
	24	1	**5W-6373**	1	RING-RETAINING	
	25	1	**121-8083**	1	RING-RETAINING	
	26	1	**121-8082**	1	SHAFT	
	27	2	**121-8081**	1	HOUSING	
	28	2	**121-8080**	1	SEAL-O-RING	
	29	2	**9T-3931**	1	PLUG	
	30	2	**8U-5951**	1	SEAL-O-RING	
	31	2	**106-0699**	2	PLUG	
	32	2	**8U-5952**	1	SEAL-O-RING	
	33	2	**121-8079**	1	GASKET	
	34	2	**8U-6893**	1	SEAL-O-RING	
M	35	2	**8T-3957**	10	BOLT-SOCKET HEAD (M12X1.75X30-MM)	
	36	2	**8U-6894**	1	VALVE GP-CHECK (LOW SPEED CLUTCH, ORIFICE)	
	36A	2	**8U-5942**	1	SEAL-O-RING	
	36B	2	**8U-5943**	1	SEAL-O-RING	
J	37	2,7	**3T-6376**	3	PLUG	
	38	2	**6T-6308**	2	SEAL-O-RING	
	39	2	**9X-0630**	1	VALVE	
	40	2	**8U-5957**	1	PLUG-RELIEF	
	41	2	**9T-6322**	2	PLUG AS	
					(EACH INCLUDES)	
	41A	2	**8C-3082**	2	SEAL-O-RING	
	43	2	**5W-7392**	2	PLUG	
	44	2	**5W-1698**	2	WASHER (18.2X21.9X1.5-MM THK)	
	45	2	**6Y-0529**	1	SEAL-O-RING	
	47	2	**8U-5960**	1	TUBE AS	
	48	2	**5W-1509**	1	FITTING	
	49	2	**121-8077**	1	TUBE	
	50	2	**5W-1602**	1	FITTING GP-TUBE	
	50A	2	**5W-8034**	1	SEAL	

187-7216 TRANSMISSION GP *(contd.)* i02160048

NOTE	REF NO	GRAPHIC REF	PART NUMBER	QTY	PART NAME 1 2 3 4 5 6 (PRODUCT LEVEL)	SEE PAGE
M	52	2	**7X-2563**	1	BOLT (M20X2.5X60-MM)	
	53	2	**121-8113**	1	HOSE AS	
	54	2	**121-8114**	1	HOSE AS	
	55	2	**121-8112**	1	SEAL-O-RING	
	56	2	**121-8111**	1	BOLT-HOLLOW	
	57	2	**7T-0508**	1	SEAL-O-RING	
	58	2	**5W-8375**	3	FITTING	
	59	2	**8U-2233**	3	SEAL-O-RING	
	60	3	**8U-5967**	1	FLANGE	
	61	3	**8U-6897**	1	KIT-DISC SPRING (TRANSMISSION)	
	62	3	**8U-6898**	1	GEAR (34-TEETH)	
	63	3	**8U-6899**	1	RING-BACKUP	
	64	3	**121-8076**	1	DISC-GEAR	
	65	3	**8U-5972**	1	BALL BEARING	
	66	3	**095-0942**	1	RING-RETAINING	
	67	3	**8U-6900**	1	DISC-CENTERING	
	68	3	**6V-5202**	1	RING	
	69	3	**121-8075**	1	WASHER-BACKUP	
	70	3	**121-8074**	1	RING-RETAINING	
B	71	3	**6T-6277**	11	PLATE-CLUTCH	
B	72	3	**8U-0531**	1	GEAR-DISC (1.8-MM THK)	
B	73	3	**8U-5976**	1	DISC-DRIVE	
B	74	3	**121-8073**	1	GEAR-DISC (1.4-MM THK)	
B	75	3	**136-3022**	1	GEAR-DISC (1.6-MM THK)	
	76	3	**6T-6283**	11	DISC-FRICTION	
	77	4	**169-8388**	1	PISTON	
	78	4	**121-8072**	1	WASHER-SPRING	
	79	4	**128-9414**	1	RING	
	80	4	**121-8071**	1	GASKET	
	81	4	**8U-5982**	1	RING-RETAINING	
	82	4	**169-8394**	1	SHIM	
	83	4	**109-0121**	1	RING-RETAINING	
	84	4	**169-8398**	5	DISC-CLUTCH (2.9-MM THK)	
B	85	4	**8U-5985**	1	GEAR-DISC (3-MM THK)	
B	86	4	**121-8066**	1	GEAR-DISC (3.3-MM THK)	
B	87	4	**169-8398**	1	DISC-CLUTCH (2.9-MM THK)	
B	88	4	**169-8402**	1	GEAR-DISC (2.8-MM THK)	
B	89	4	**8U-5987**	1	GEAR-DISC (3.5-MM THK)	
B	90	4	**121-8067**	1	GEAR-DISC (3.4-MM THK)	
B	91	4	**121-8068**	1	GEAR-DISC (3.7-MM THK)	
	92	4	**8U-5988**	6	DISC-FRICTION (3-MM THK)	
	93	5	**8U-5989**	1	CARRIER-PLANETARY	
	94	5	**8U-5990**	1	BEARING	
	95	5	**8T-9598**	1	RING-RETAINING	
	96	5	**8U-5991**	3	GEAR (36-TEETH)	
	97	5	**8U-5992**	3	BEARING-ROLLER	
	98	5	**121-8065**	3	RING-RETAINING	
	99	5	**8U-5994**	1	GEAR (39-TEETH)	
B	100	5	**8U-5995**	1	WASHER (3-MM THK)	
B		5	**8U-5997**	1	WASHER (30.05X46.4X3.15-MM THK)	
B		5	**8U-6000**	1	WASHER (3.4-MM THK)	
B		5	**8U-6001**	1	WASHER (3.5-MM THK)	
B		5	**8U-6003**	1	WASHER (3.7-MM THK)	
B		5	**121-8064**	1	WASHER (3.2-MM THK)	
	110	5	**121-8063**	1	RING-RETAINING	
	111	5	**121-8062**	1	HOUSING-GEAR	
	112	5	**8U-6906**	1	COLLAR-SHIFT	
	113	5	**096-5516**	1	RING-RETAINING	
	114	5	**8U-6009**	1	GEAR (18-TEETH)	

187-7216 TRANSMISSION GP *(contd.)* i02160048

NOTE	REF NO	GRAPHIC REF	PART NUMBER	QTY	PART NAME 1 2 3 4 5 6 (PRODUCT LEVEL)	SEE PAGE
	115	5	**8U-6010**	1	FORK-SHIFT	
	116	5	**8U-6011**	2	PAD	
	117	5	**8U-6012**	1	PIN	
	118	5	**8U-6013**	1	SEAL-O-RING	
	119	5	**8U-6014**	1	PIN	
	120	5	**095-0919**	1	RING-RETAINING	
	121	5	**8U-6016**	1	LEVER	
M	122	5	**8T-4195**	1	BOLT (M10X1.5X30-MM)	
B	123	5	**121-8060**	1	WASHER (2.3-MM THK)	
B	125	5	**8U-6020**	1	WASHER (2.2-MM THK)	
B		5	**8U-6021**	1	WASHER (2.4-MM THK)	
B		5	**8U-6022**	1	WASHER (2.6-MM THK)	
B		5	**8U-6023**	1	WASHER (55.2X68X2.8-MM THK)	
B		5	**121-8061**	1	WASHER (2.5-MM THK)	
M	130	5	**7I-8479**	1	BOLT-SOCKET HEAD (M10X1.5X40-MM)	
	131	5	**5W-1401**	1	WASHER (10.5X18X1.6-MM THK)	
	132	6	**095-0946**	1	RING-RETAINING	
	133	6	**109-0121**	1	RING-RETAINING	
	134	6	**8U-6028**	1	FLANGE	
	135	6	**5W-1487**	1	RING-RETAINING (32.2-MM ID)	
	136	6	**8U-6029**	1	BEARING	
	137	6	**121-8059**	1	GEAR	
	138	6	**1F-2771**	2	BALL BEARING	
J	139	7	**147-5043**	1	HOUSING	
J	140	7	**121-8109**	1	GASKET	
J	141	7	**121-8108**	1	SPRING	
J	142	7	**121-8107**	1	PLUG	
J	143	7	**9R-3176**	1	SEAL	
J	145	7	**5W-1693**	1	WASHER (10.2-MM ID)	
J	146	7	**121-8106**	1	PISTON	
J	147	7	**149-5881**	1	VALVE AS-RELIEF (DOWNSHIFT INHIBITOR)	
		7	**169-8432**	1	SEAL	
		7	**169-8433**	1	SEAL	
J	148	7	**121-8104**	1	VALVE AS-CHECK (DOWNSHIFT INHIBITOR)	
		7	**8U-3899**	1	SEAL-O-RING	
		7	**123-2341**	1	SEAL-O-RING	
J	149	7	**121-8103**	1	VALVE AS-CHECK (DOWNSHIFT INHIBITOR)	
		7	**8U-3899**	1	SEAL-O-RING	
		7	**6T-6308**	1	SEAL-O-RING	
		7	**123-2341**	1	SEAL-O-RING	
J	150	7	**121-8102**	1	VALVE AS-CHECK (DOWNSHIFT INHIBITOR)	
		7	**8U-3899**	1	SEAL-O-RING	
		7	**123-2341**	1	SEAL-O-RING	
J	151	7	**121-8101**	1	SLEEVE	
J	152	7	**121-8100**	1	ROTOR AS	
J	153	7	**147-5044**	1	FILTER (TRANSMISSION)	
J	154	7	**121-8098**	4	BALL	
J	155	7	**121-8097**	3	SPRING	
J	156	7	**096-2323**	1	RING-RETAINING	
JM	157	7	**6V-6936**	3	BOLT (M6X1X22-MM)	
J	158	7	**147-5045**	1	SEAL	
J	159	7	**147-5046**	1	COVER	
J	160	7	**121-8094**	1	SEAL-O-RING	
	161	7	**7T-0510**	1	BOLT	
JM	162	7	**8T-7547**	23	BOLT (M8X1.25X30-MM)	
M	163	7	**6V-5196**	2	BOLT-SOCKET HEAD (M8X1.25X80-MM)	
J	164	7	**121-8093**	26	WASHER (8.4X17X1.5-MM THK)	
	165	7	**121-8091**	1	SHAFT	
J	166	7	**121-8090**	1	SHAFT	

187-7216 TRANSMISSION GP *(contd.)* i02160048

NOTE	REF NO	GRAPHIC REF	PART NUMBER	QTY	PART NAME 1 2 3 4 5 6 (PRODUCT LEVEL)	SEE PAGE
J	167	7	**121-8089**	1	COVER	
J	168	7	**121-8088**	1	BALL BEARING	
J	169	7	**095-0934**	1	RING-RETAINING	
	170	7	**8T-7488**	2	CONNECTOR	
	171	7	**8U-6058**	2	SEAL-O-RING	
	173	8	**8U-6076**	1	SHROUD	
	174	8	**121-8129**	1	BEARING-ROLLER	
	175	8	**5W-2795**	1	BEARING	
C	176	8	**233-8729**	1	SEAL	
C	177	8	**233-8731**	1	PLATE-DEFLECTOR	
C	178	8	**233-8732**	1	GEAR	
C	179	8	**237-7251**	8	STUD	
	180	8	**121-8116**	1	SEAL-O-RING	
	181	8	**8U-6065**	1	PLATE	
M	182	8	**8T-4186**	2	BOLT (M10X1.5X40-MM)	
	183	8	**3T-5608**	1	LOCK	
B	185	8	**8U-6068**	1	WASHER (2.05-MM THK)	
B		8	**8U-6069**	1	WASHER (2.1-MM THK)	
B		8	**8U-6072**	1	WASHER (2.25-MM THK)	
B		8	**8U-6074**	1	WASHER (2.35-MM THK)	
B		8	**121-8118**	1	WASHER (50.1X62X2.4-MM THK)	
B		8	**121-8119**	1	WASHER (2.45-MM THK)	
B		8	**121-8120**	1	WASHER (2.5-MM THK)	
B		8	**121-8121**	1	WASHER (2.55-MM THK)	
B		8	**121-8122**	1	WASHER (2.6-MM THK)	
B		8	**121-8123**	1	WASHER (2.65-MM THK)	
B		8	**121-8126**	1	WASHER (2.85-MM THK)	
B		8	**153-4708**	1	WASHER (50.1X61.8X2.9-MM THK)	
B		8	**153-4709**	1	WASHER (50.1X61.8X2.93-MM THK)	
B		8	**153-4710**	1	WASHER (2.96-MM THK)	
B		8	**153-4711**	1	WASHER (2.99-MM THK)	
B		8	**153-4712**	1	WASHER (3.02-MM THK)	
B		8	**202-8389**	1	WASHER (50.1X62X2.23-MM THK)	
B		8	**202-8390**	1	WASHER (2.73-MM THK)	
	208	8	**8U-6075**	1	SEAL-LIP TYPE	
	209	8	**121-8117**	1	SEAL-O-RING	
	210	8	**121-8115**	1	GEAR (57-TEETH)	
	211	8	**171-0807**	1	HOUSING AS-DIFFERENTIAL	
	212	8	**109-5701**	1	SEAL-O-RING	
BM	213	8	**8T-4139**	15	BOLT (M12X1.75X30-MM)	
B	214	8	**110-0124**	1	SHIM (2-MM THK)	
B		8	**110-0122**	1	SHIM (1.8-MM THK)	
B		8	**110-0121**	1	SHIM (1.5-MM THK)	
B		8	**110-0120**	1	SHIM (1.2-MM THK)	
B		8	**129-9912**	1	SHIM (1.9-MM THK)	
B		8	**129-9913**	1	SHIM (1.7-MM THK)	
B		8	**129-9914**	1	SHIM (1.6-MM THK)	
B		8	**129-9915**	1	SHIM (1.4-MM THK)	
B		8	**129-9916**	1	SHIM (1.3-MM THK)	
B		8	**190-8567**	1	SHIM (1-MM THK)	
B		8	**190-8566**	1	SHIM (0.9-MM THK)	
B		8	**190-8565**	1	SHIM (0.8-MM THK)	
B		8	**190-8563**	1	SHIM (0.7-MM THK)	
B		8	**190-8561**	1	SHIM (0.6-MM THK)	
B		8	**5W-2074**	1	SHIM (0.5-MM THK)	
B		8	**5W-2073**	1	SHIM (0.3-MM THK)	
B		8	**5W-3644**	1	SHIM (0.2-MM THK)	
B		8	**5W-2072**	1	SHIM (0.1-MM THK)	
B		8	**193-1123**	1	SHIM (0.75-MM THK)	

187-7216 TRANSMISSION GP *(contd.)* i02160048

NOTE	REF NO	GRAPHIC REF	PART NUMBER	QTY	PART NAME 1 2 3 4 5 6 (PRODUCT LEVEL)	SEE PAGE
B		8	**193-1124**	1	SHIM (0.65-MM THK)	
	234	8	**9R-7003**	1	BEARING	
	235	8	**5W-2793**	1	BEARING	
	236	8	**9R-2828**	2	NUT	
	237	8	**9R-3158**	2	PIN	
	238	8	**9R-3521**	2	DOWEL	
	239	8	**204-7265**	1	GEAR AS-PINION	
	240	8	**8U-6081**	1	BUSHING	
	241	9	**9R-6991**	1	CASE-DIFFERENTIAL	
	242	9	**9R-6964**	2	GEAR-DIFFERENTIAL	
	243	9	**6T-5749**	2	WASHER-THRUST	
	244	9	**128-7855**	4	GEAR-PINION	
	245	9	**9R-6994**	4	WASHER-THRUST	
	246	9	**9R-6993**	1	SPIDER	
M	247	9	**9R-6818**	12	BOLT	
	248	9	**9R-6819**	12	WASHER (13X21.9X3-MM THK)	
	249	9	**8T-2450**	4	PIN-SPRING	
	250	9	**9R-6962**	4	PIN-CLAMPING	
					AVAILABLE REPAIR KIT(S):	
J			**204-7660**	1	KIT-REPAIR (TRANSMISSION)	

B-USE AS REQUIRED
C-CHANGE FROM PREVIOUS TYPE
J-KIT MARKED J SERVICES PARTS MARKED J
M-METRIC PART

187-7216 TRANSMISSION GP *(contd.)* i02160048

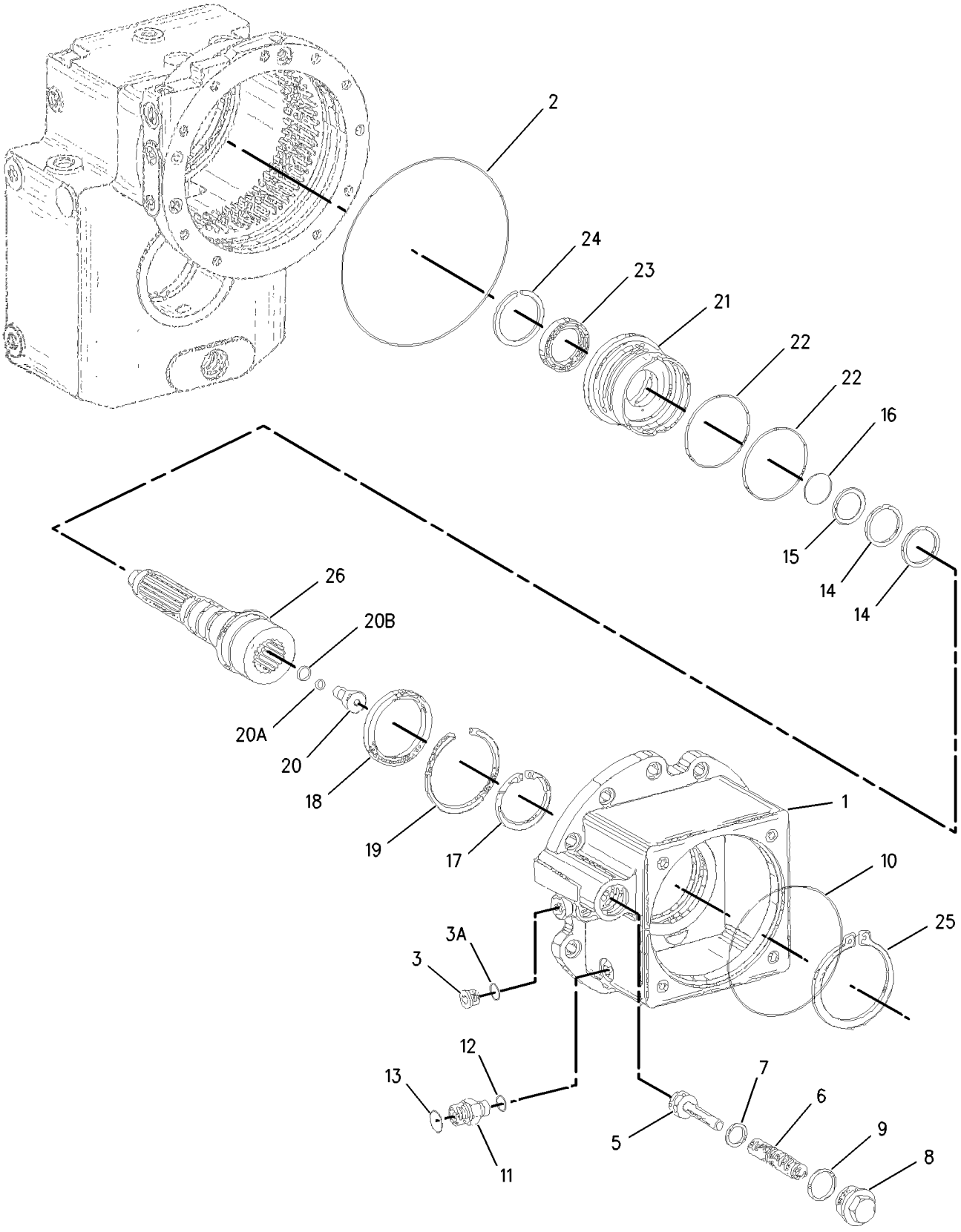

GRAPHIC #1 g00928451

187-7216 TRANSMISSION GP *(contd.)* **i02160048**

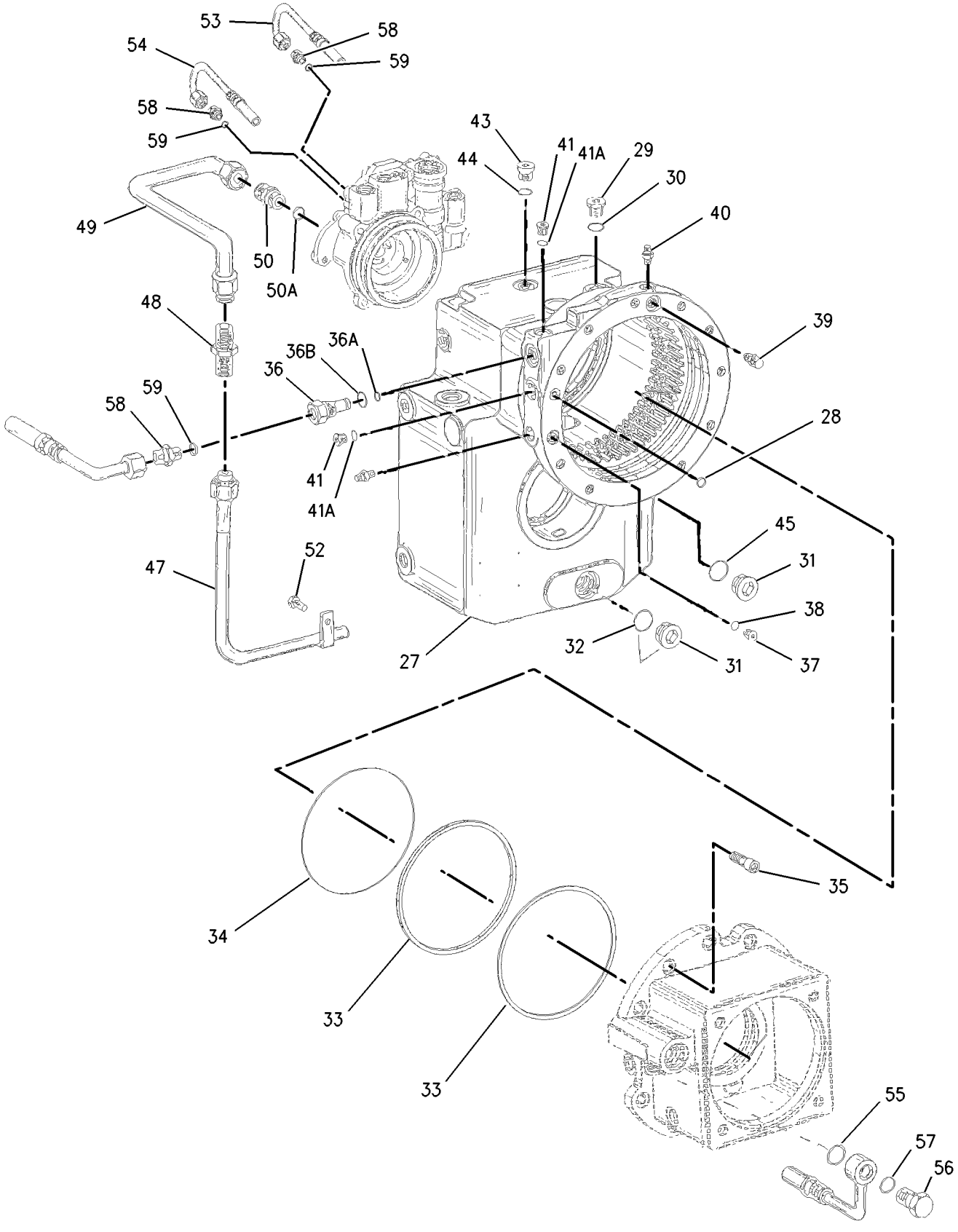

GRAPHIC #2 g00929772

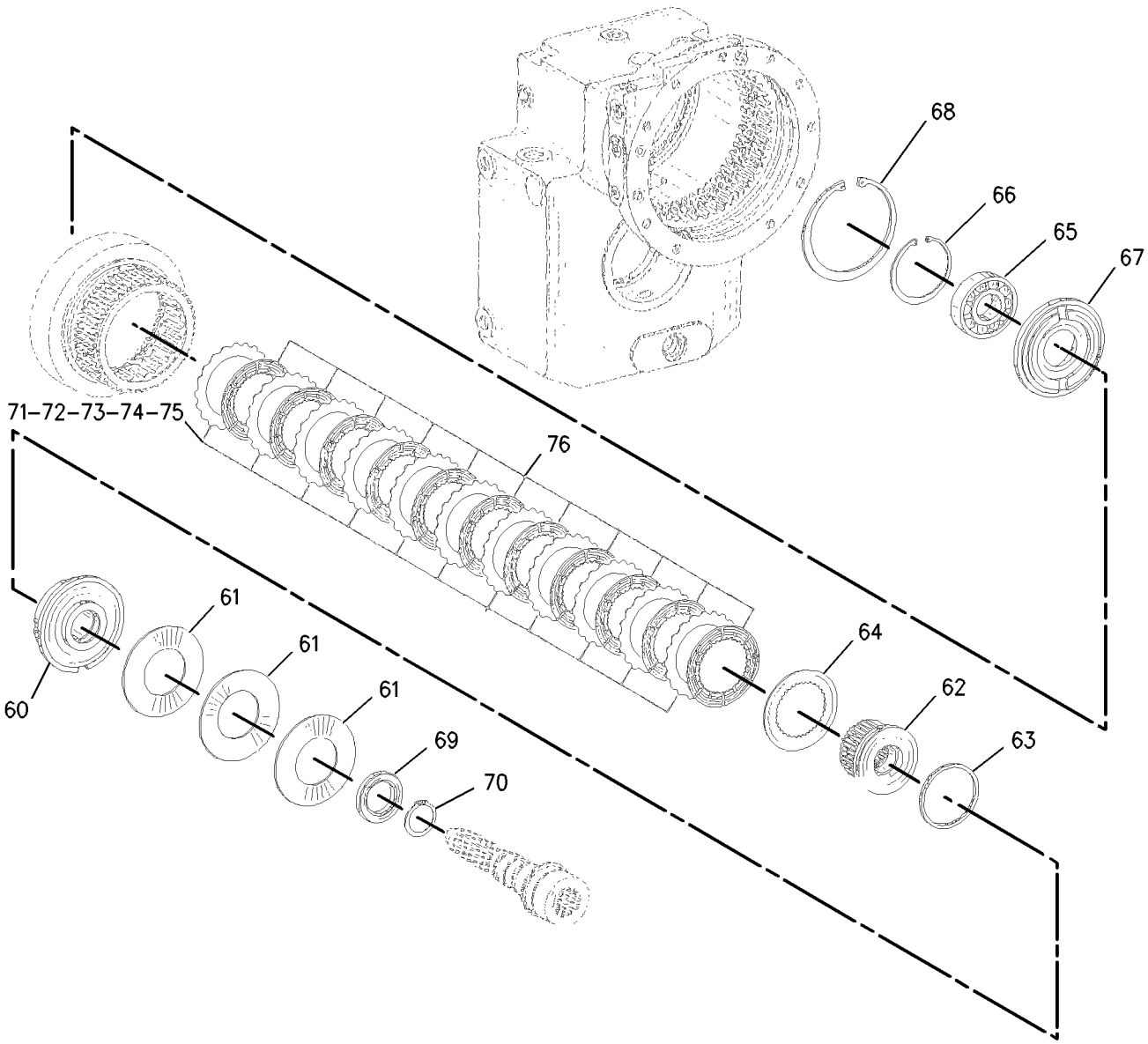

GRAPHIC #3 g00837157

187-7216 TRANSMISSION GP *(contd.)* **i02160048**

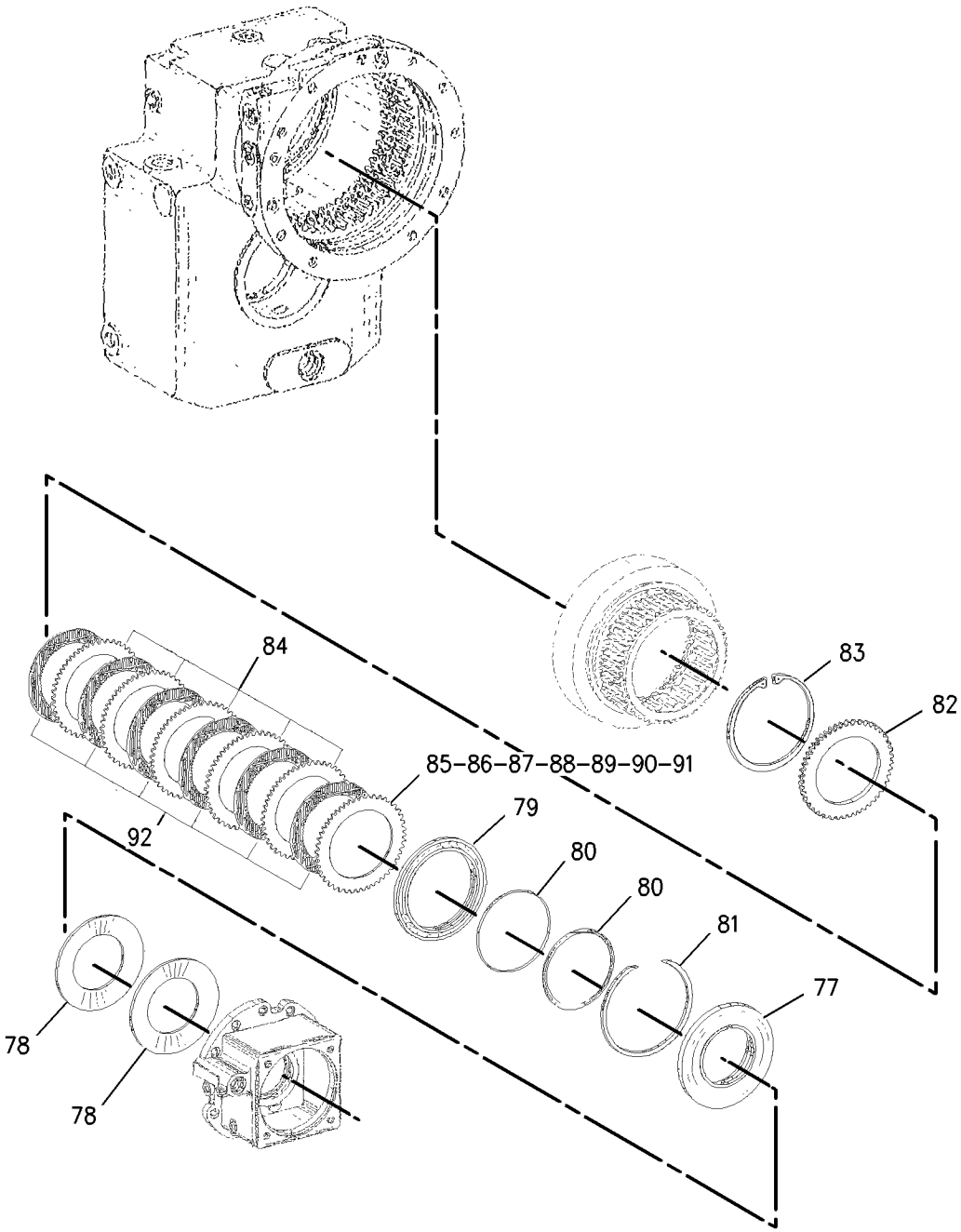

GRAPHIC #4 g00837158

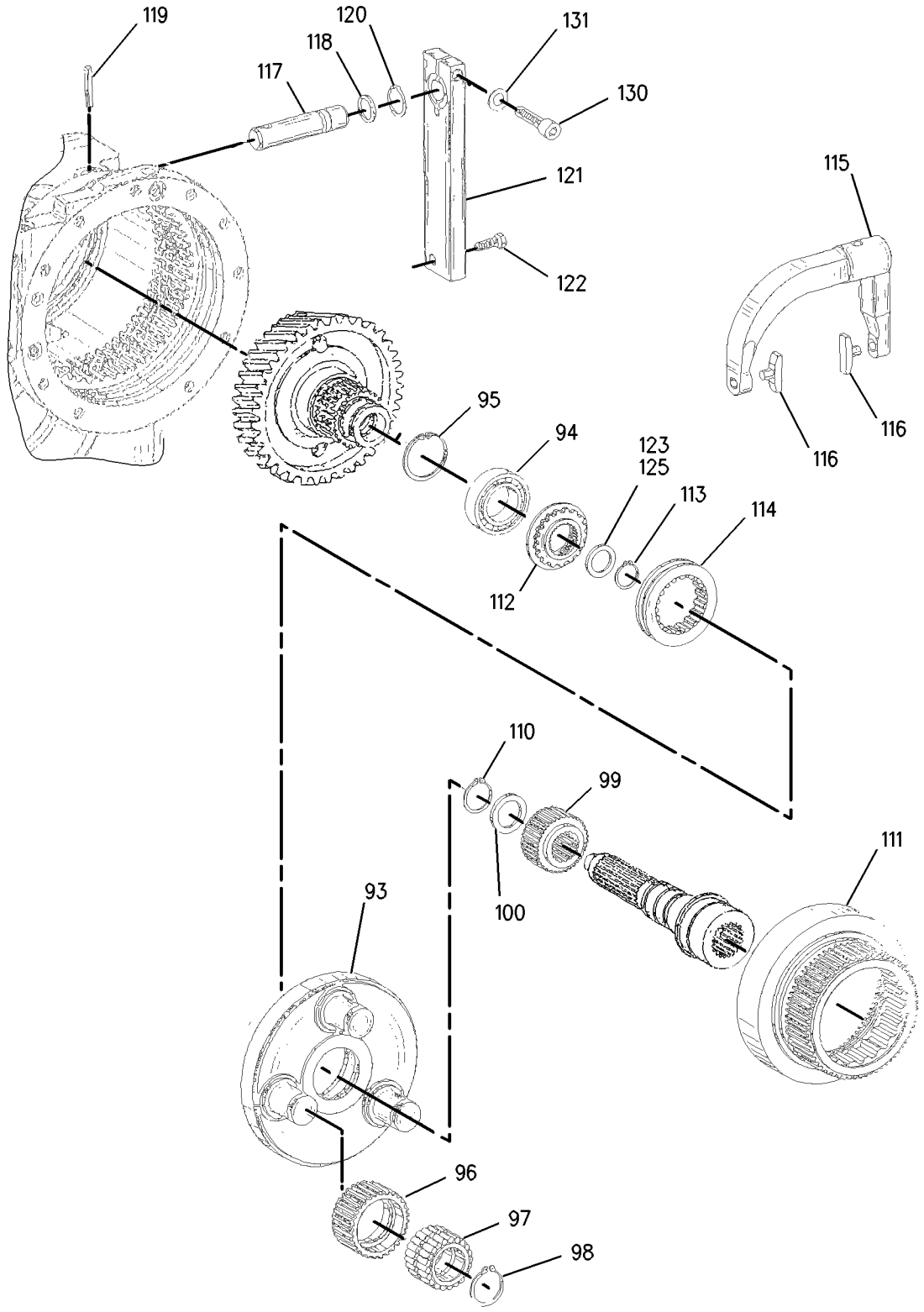

GRAPHIC #5 g00837159

187-7216 TRANSMISSION GP *(contd.)* **i02160048**

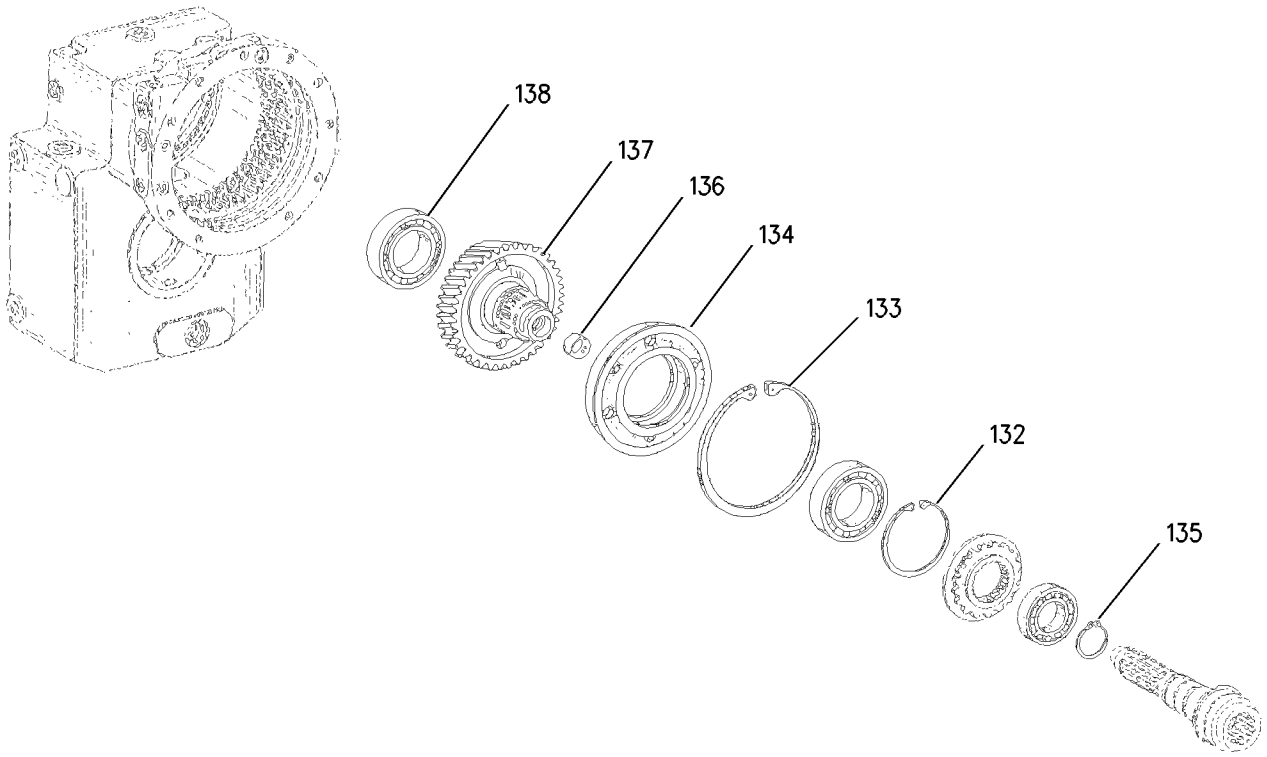

GRAPHIC #6 g00837160

187-7216 TRANSMISSION GP *(contd.)* i02160048

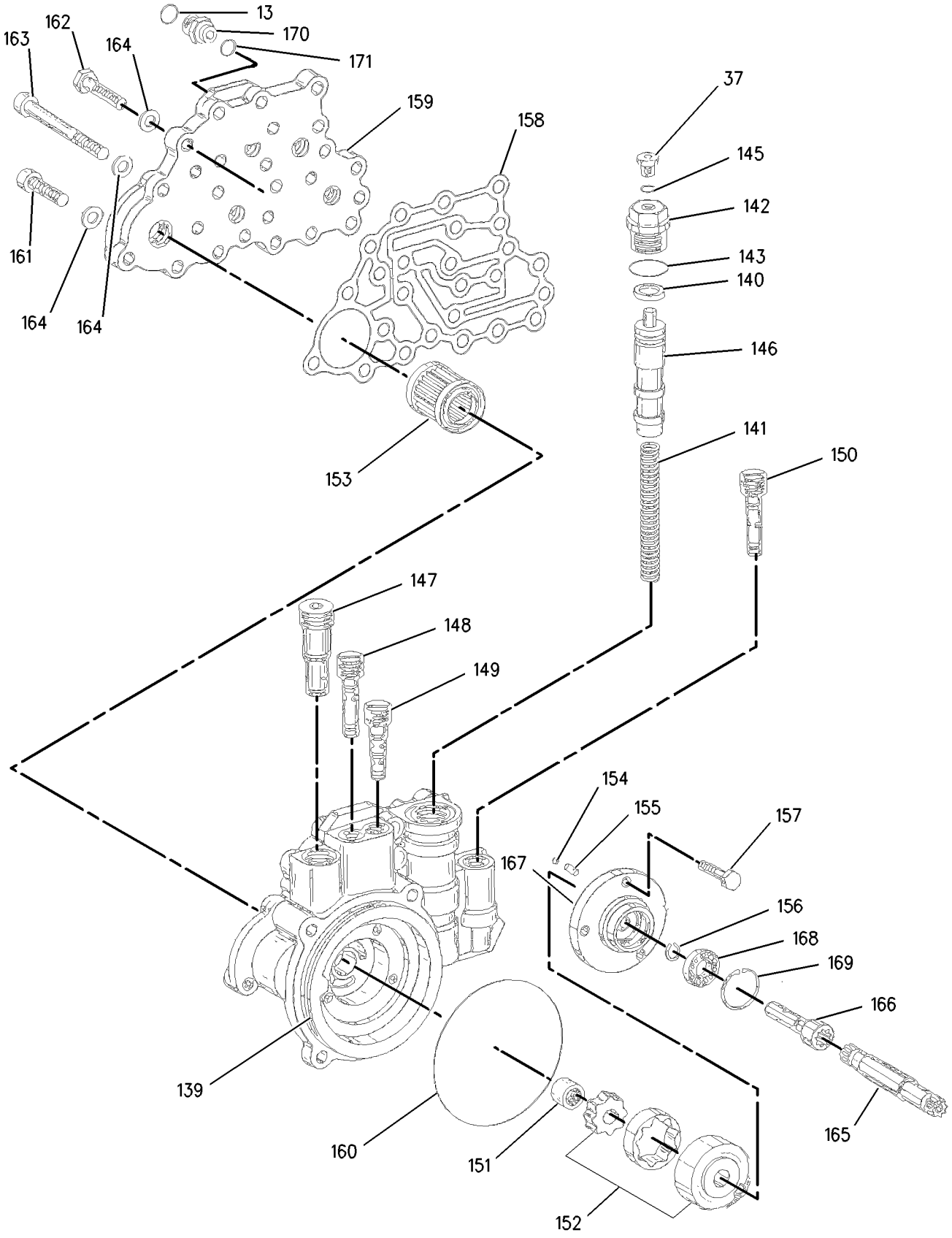

GRAPHIC #7 g00837161

187-7216 TRANSMISSION GP *(contd.)* **i02160048**

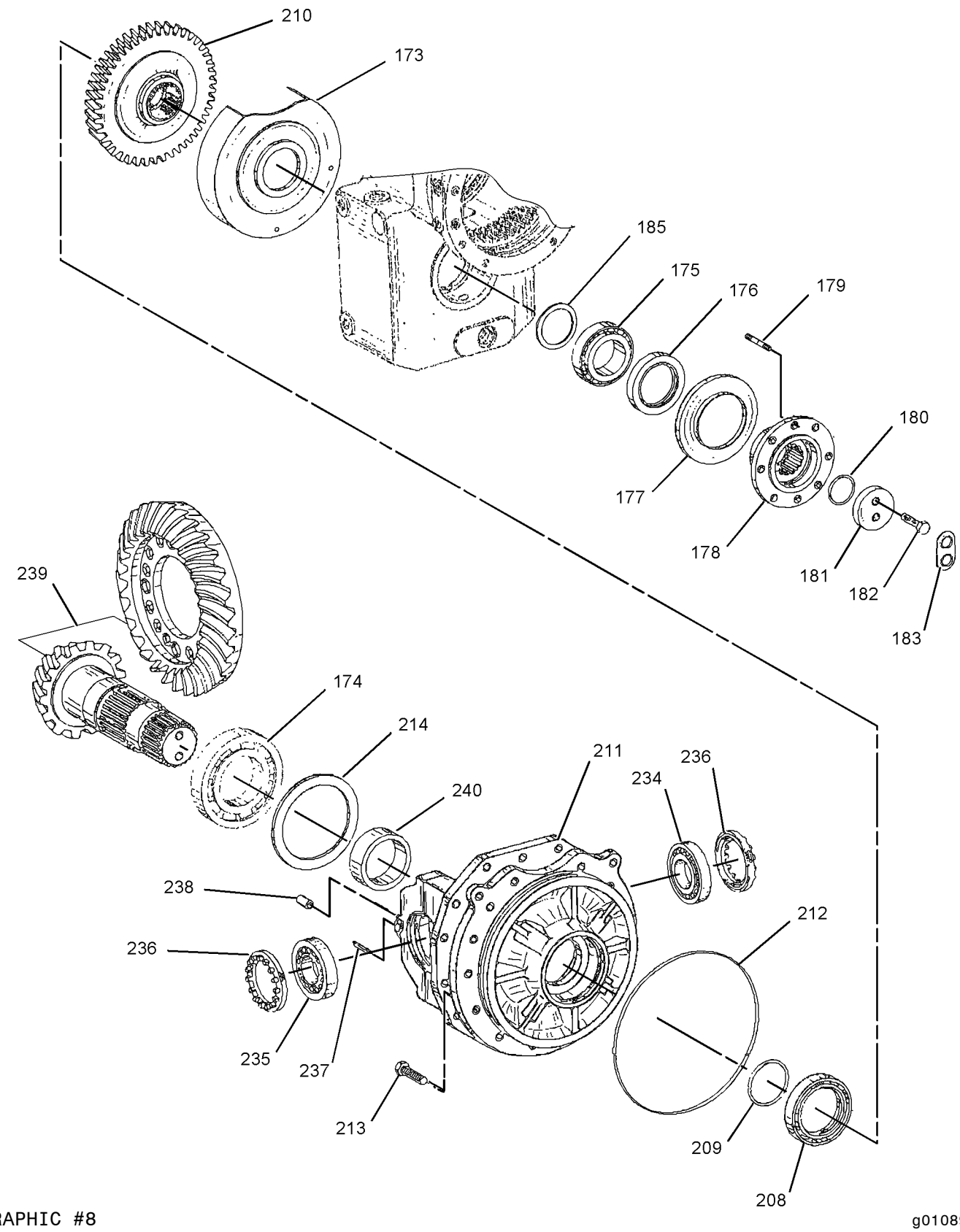

GRAPHIC #8

g01089830

187-7216 TRANSMISSION GP *(contd.)* **i02160048**

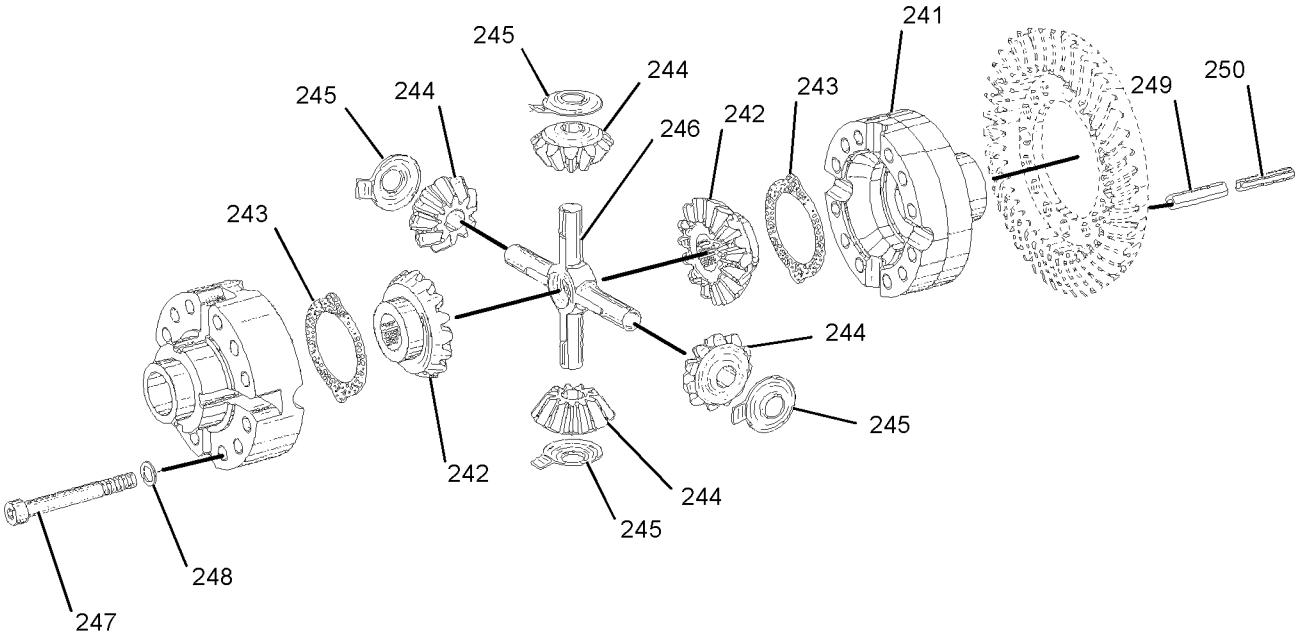

GRAPHIC #9 **<END>** g01092440

134-1376 UNIVERSAL JOINT GP

S/N: BCZ1-2000

PART OF 194-9211 SHAFT GP-DRIVE

SMCS-3251, 3253 **i02160049**

NOTE	REF NO	GRAPHIC REF	PART NUMBER	QTY	PART NAME 1 2 3 4 5 6 (PRODUCT LEVEL)	SEE PAGE
	1	1	**8U-5853**	2	SPIDER & BEARING AS	
					(EACH INCLUDES)	
	1A	1	**5W-7258**	1	FITTING-GREASE	
	2	1	**8U-5854**	2	FLANGE	

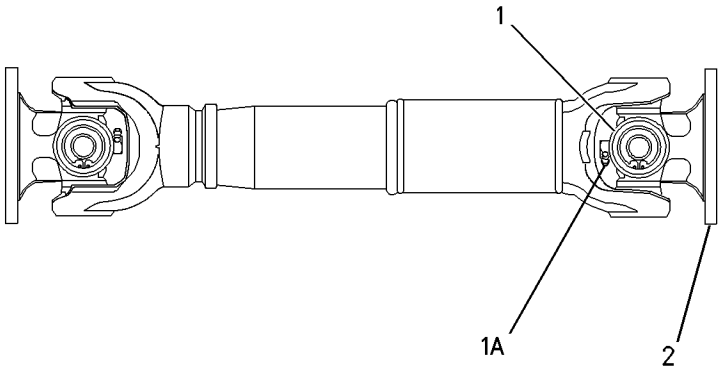

GRAPHIC #1 **<END>** g00921227

194-9216 UNIVERSAL JOINT GP

S/N: BCZ1-2000

PART OF 194-9211 SHAFT GP-DRIVE

SMCS-3251, 3253 **i01818581**

NOTE	REF NO	GRAPHIC REF	PART NUMBER	QTY	PART NAME 1 2 3 4 5 6 (PRODUCT LEVEL)	SEE PAGE
	1	1	**199-4128**	2	SPIDER & BEARING AS	
					(EACH INCLUDES)	
	1A	1	**5W-7258**	1	FITTING-GREASE	

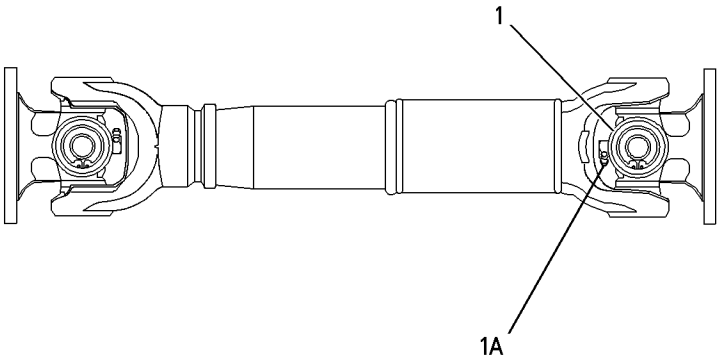

GRAPHIC #1 **<END>** g00921080

203-5415 UNIVERSAL JOINT GP

S/N: BCZ1-2000
PART OF 187-7213, 204-7741 AXLE GP-STEERING
ALSO AN ATTACHMENT

SMCS-3251, 3253 **i02160050**

NOTE	REF NO	GRAPHIC REF	PART NUMBER	QTY	PART NAME 1 2 3 4 5 6 (PRODUCT LEVEL)	SEE PAGE
	1	1	**209-3543**	1	YOKE AS	
		1	**5W-2819**	2	FITTING-GREASE	
	2	1	**209-3544**	2	SPIDER AS	
	3	1	**209-3545**	1	JOINT AS	
	4	1	**209-3546**	1	JOINT AS	

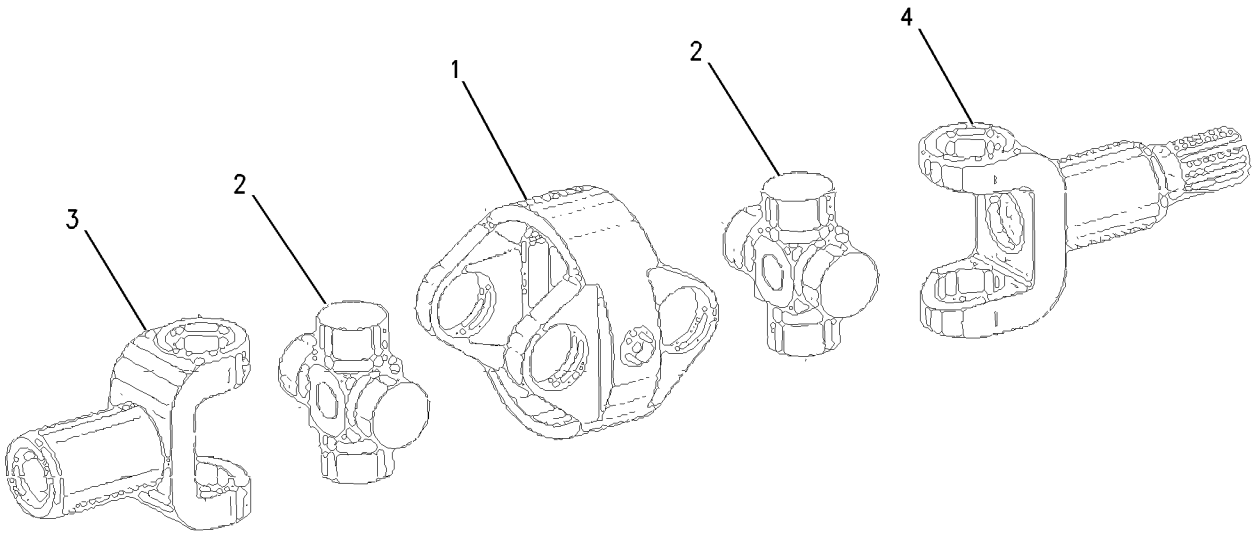

GRAPHIC #1 **<END>** g00821302

116-5478 WEDGE GP-WHEEL

S/N: BCZ1-495

PART OF 186-0469 FRAME AR-UNDERCARRIAGE, 243-2598 ROADING AR

ALSO AN ATTACHMENT

SMCS-4200 **i00751734**

NOTE	REF NO	GRAPHIC REF	PART NUMBER	QTY	PART NAME 1 2 3 4 5 6 (PRODUCT LEVEL)	SEE PAGE
	1	1	**134-0855**	1	WEDGE	
	2	1	**116-3735**	1	BRACKET	
M	3	1	**5C-7261**	4	NUT (M8X1.25 THD)	
M	4	1	**8T-4189**	4	BOLT (M8X1.25X20MM)	
	5	1	**8T-4224**	4	WASHER-HARD (2MM THK)	

M-METRIC PART

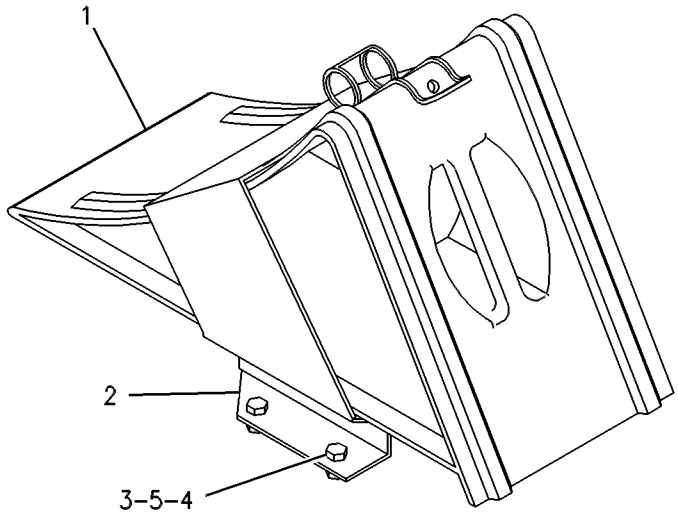

GRAPHIC #1 **<END>** g00273327

186-0487 COUNTERWEIGHT GP

S/N: BCZ1-2000

PART OF 186-0468 CHASSIS AR

SMCS-7056 **i02160051**

NOTE	REF NO	GRAPHIC REF	PART NUMBER	QTY	PART NAME 1 2 3 4 5 6 (PRODUCT LEVEL)	SEE PAGE
	1	1	**112-9837**	3	WASHER	
B	2	1	**135-5815**	3	RING	
	3	1	**140-6312**	1	SPACER	
	4	1	**185-6003**	1	COUNTERWEIGHT AS	
M	5	1	**9X-6385**	3	BOLT (M30X3.5X200-MM)	

B-USE AS REQUIRED
M-METRIC PART

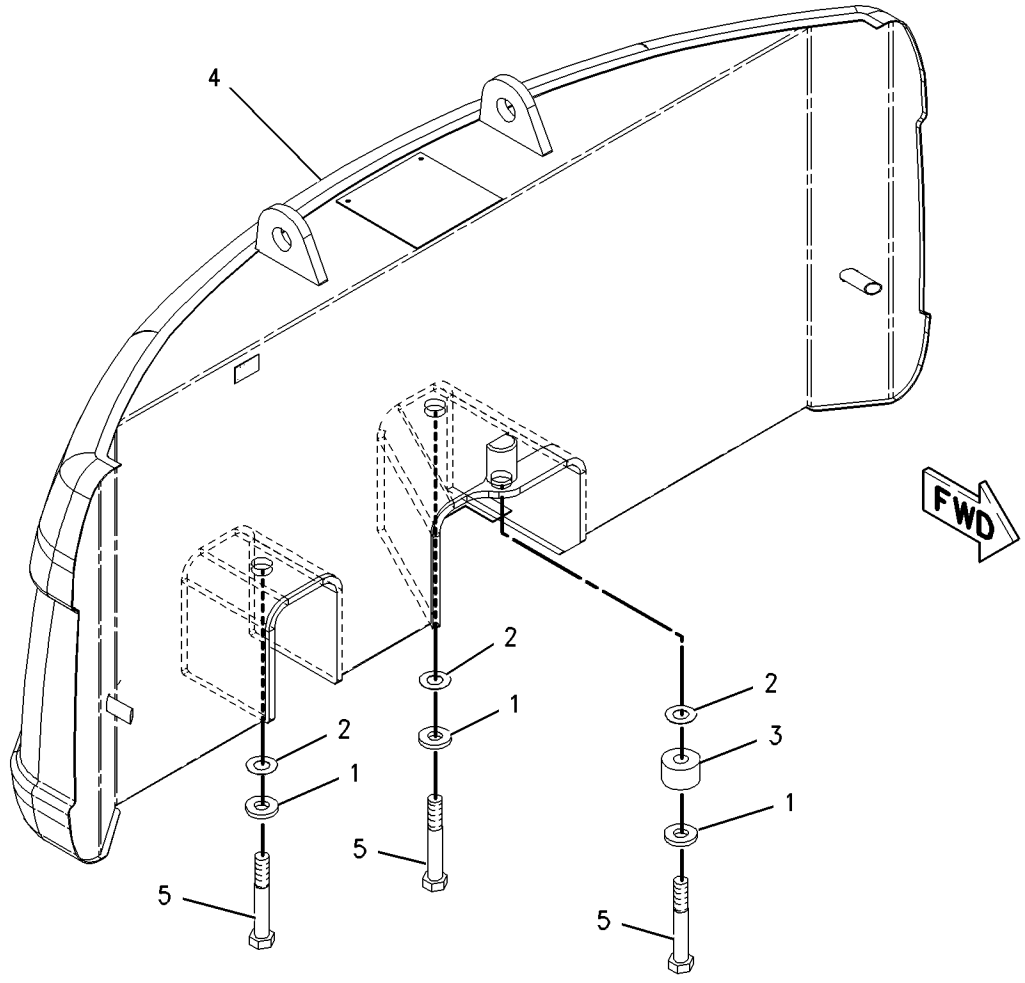

GRAPHIC #1 **<END>** g00821326

FRAME AND BODY

219-8494 COVER AS–CAB STORAGE

S/N: BCZ1-2000

AN ATTACHMENT

SMCS-7253 **i01927065**

NOTE	REF NO	GRAPHIC REF	PART NUMBER	QTY	PART NAME 1 2 3 4 5 6 (PRODUCT LEVEL)	SEE PAGE
					(NO SERVICED PARTS)	

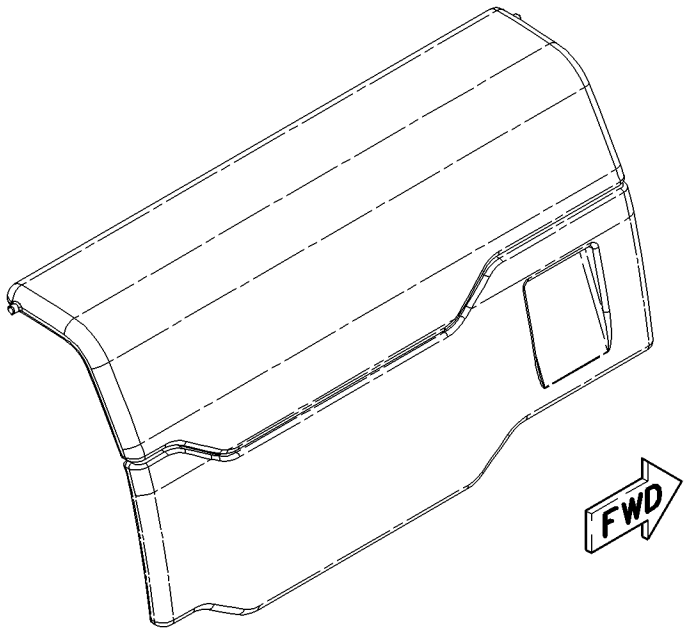

GRAPHIC #1 **<END>** g01002700

251-5964 COVER GP-ACCESS–GENERATOR

S/N: BCZ1-2000
FOR USE WITH GENERATOR AR
AN ATTACHMENT

SMCS-726A **i02140945**

NOTE	REF NO	GRAPHIC REF	PART NUMBER	QTY	PART NAME 1 2 3 4 5 6 (PRODUCT LEVEL)	SEE PAGE
	1	1	**251-5965**	1	COVER	
	2	1	**8T-4121**	4	WASHER-HARD (11X21X2.5-MM THK)	
M	3	1	**8T-4133**	2	NUT (M10X1.5-THD)	
M	4	1	**8T-4136**	4	BOLT (M10X1.5X25-MM)	

M-METRIC PART

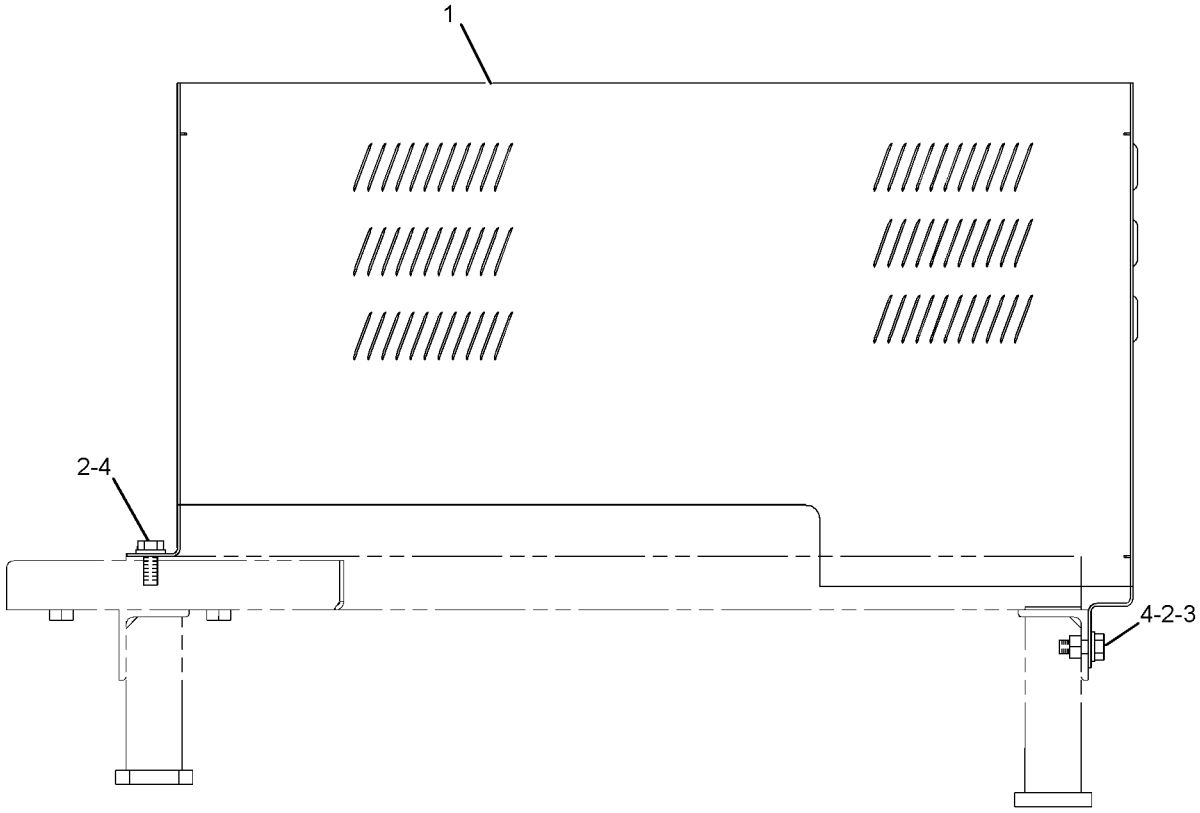

REAR VIEW

GRAPHIC #1

<END>

g01090547

186-0491 DOOR GP-ACCESS

S/N: BCZ1-2000

PART OF 186-0488 HOOD & GUARD AR

SMCS-7273 **i01927069**

NOTE	REF NO	GRAPHIC REF	PART NUMBER	QTY	PART NAME 1 2 3 4 5 6 (PRODUCT LEVEL)	SEE PAGE
	1	1	**5W-6863**	1	ROD END	
	2	1	**5Y-2425**	2	WASHER (6.5X17.5X1.5MM THK)	
	3	1	**115-8523**	2	RING-RETAINING	
J	4	1	**142-5542**	1	LOCK AS	
	5	1	**193-8993**	1	DOOR AS	
		1	**196-5693**	2	HINGE AS	
B	6	1	**201-3088**	2	SHIM (1MM THK)	
	7	1	**203-4462**	1	ANGLE	
	8	1	**203-4464**	2	MOUNT-RESILIENT	
	9	1	**206-9360**	1	ROD AS	
	10	1	**215-9413**	2	HINGE AS	
	11	1	**215-9415**	2	PIN	
M	12	1	**5C-2890**	6	NUT (M6X1 THD)	
M	13	1	**5C-7261**	2	NUT (M8X1.25 THD)	
	14	1	**5P-4116**	4	WASHER-HARD (8.8X20.5X2MM THK)	
M	15	1	**8T-4171**	2	BOLT (M6X1X12MM)	
M	16	1	**8T-4200**	4	BOLT (M8X1.25X16MM)	
	17	1	**9X-8256**	4	WASHER (6.6X12X2MM THK)	

B-USE AS REQUIRED
J-REQUIRES 5P8500 KEY
M-METRIC PART

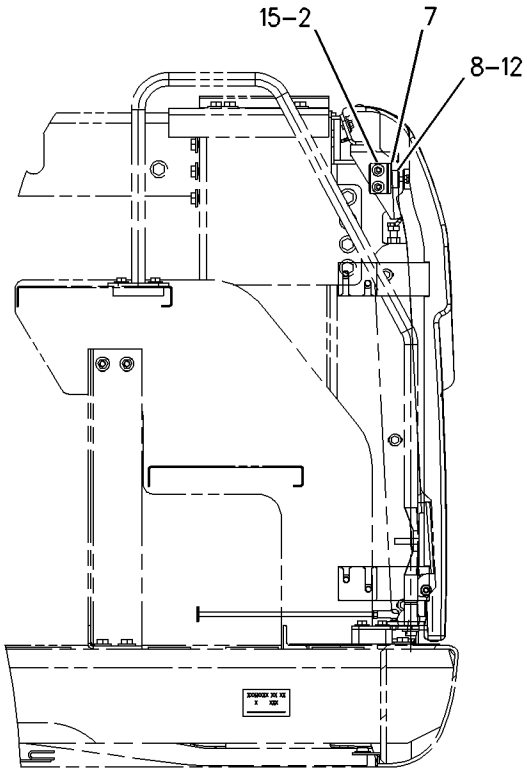

FRONT VIEW

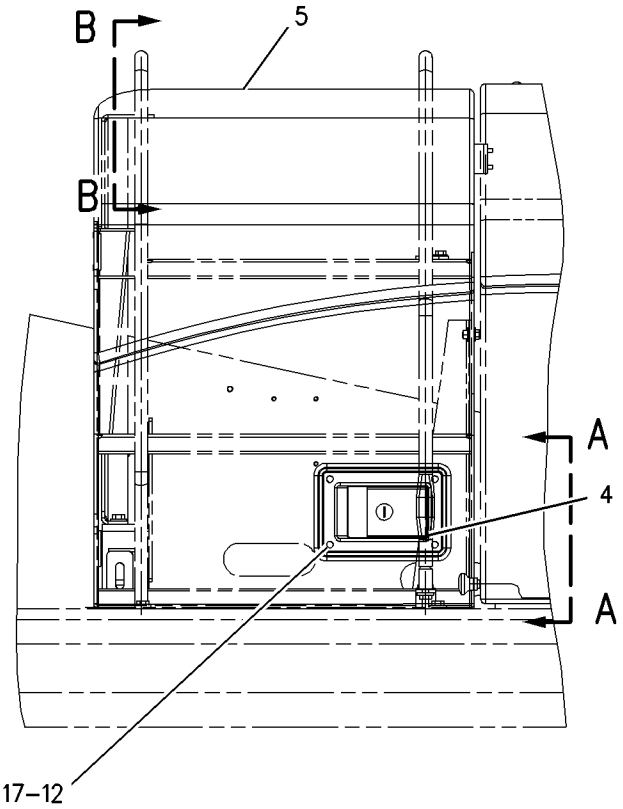

LEFT SIDE VIEW

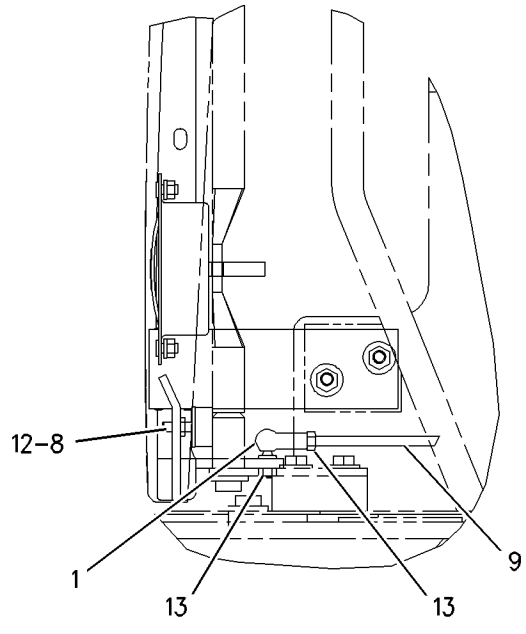

VIEW A-A

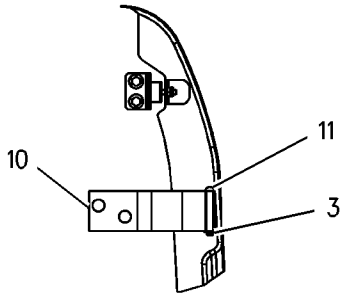

SECTION B-B

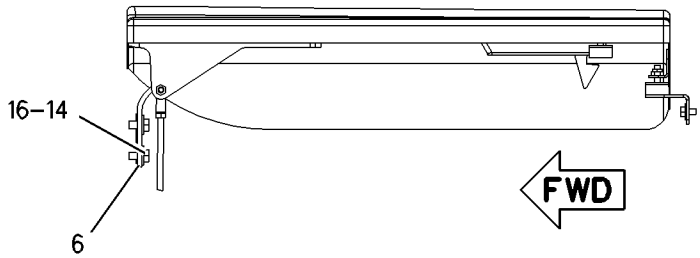

BOTTOM VIEW

GRAPHIC #1 **<END>** g01002702

193-8990 DOOR GP-ACCESS—ENGINE, SIDE

S/N: BCZ1-2000

PART OF 186-0489 ENCLOSURE GP-ENGINE

SMCS-7273 **i01766888**

NOTE	REF NO	GRAPHIC REF	PART NUMBER	QTY	PART NAME 1 2 3 4 5 6 (PRODUCT LEVEL)	SEE PAGE
	1	1	**115-8523**	2	RING-RETAINING	
	2	1	**142-5542**	1	LOCK AS	
	3	1	**196-9711**	2	PIN	
	4	1	**219-5695**	2	HINGE AS	
	5	1	**221-3167**	1	DOOR AS	
M	6	1	**5C-2890**	4	NUT (M6X1 THD)	
	7	1	**9X-8256**	4	WASHER (6.6X12X2MM THK)	

M-METRIC PART

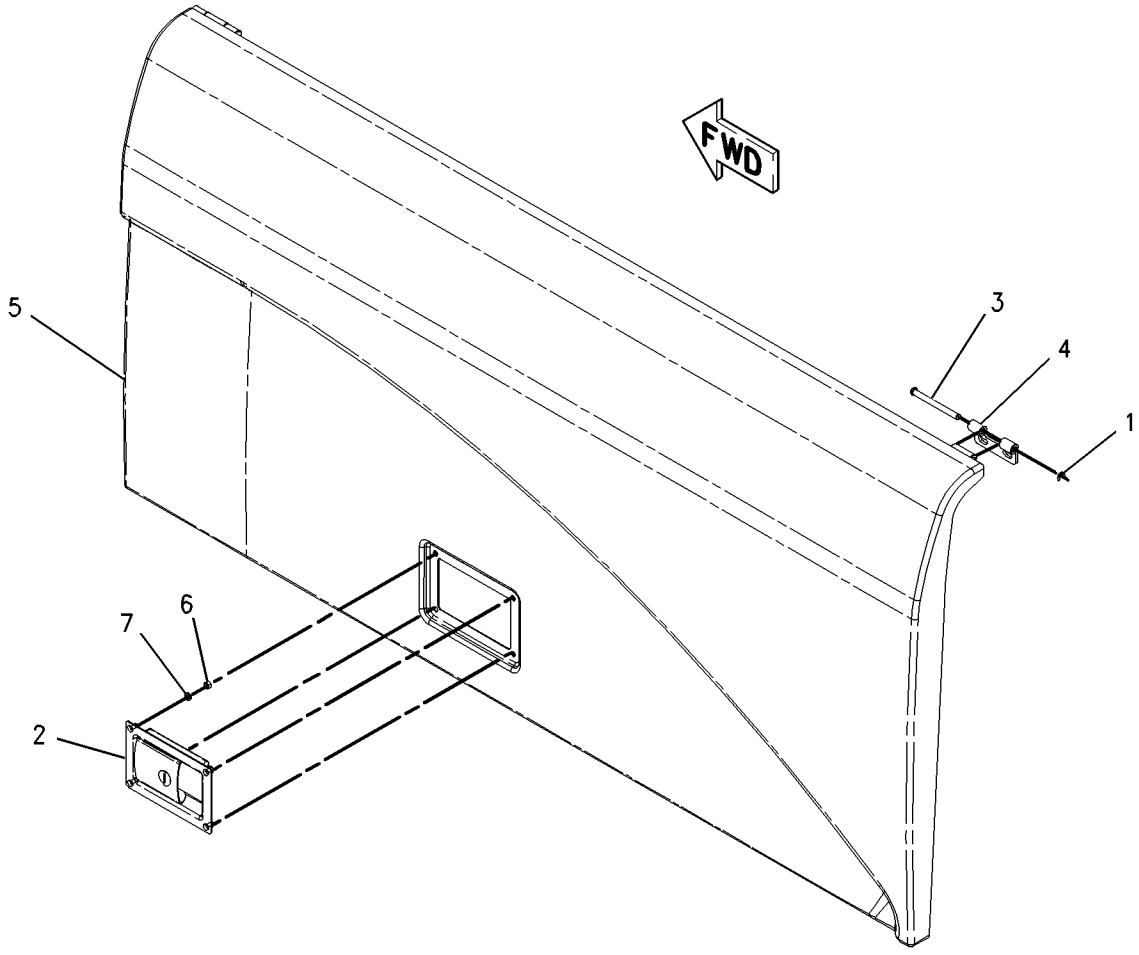

GRAPHIC #1 **<END>** g00908307

195-6308 DOOR GP-ACCESS—ENGINE, UPPER

S/N: BCZ1-584

PART OF 186-0489 ENCLOSURE GP-ENGINE

SMCS-7273 **i01795570**

NOTE	REF NO	GRAPHIC REF	PART NUMBER	QTY	PART NAME 1 2 3 4 5 6 (PRODUCT LEVEL)	SEE PAGE
	1	1	**5Y-2425**	5	WASHER	
	2	1	**194-3243**	1	HINGE	
	3	1	**195-6307**	1	COVER AS	
	4	1	**203-4464**	2	MOUNT-RESILIENT	
	5	1	**203-4509**	1	ROD	
	6	1	**206-3623**	1	HANDLE AS	
	7	1	**206-9348**	1	LATCH AS	
M	8	1	**127-4038**	5	SCREW-MACHINE (M6X1X16MM)	
M	9	1	**131-3539**	2	SCREW-FLAT HEAD	
M	10	1	**5C-2890**	7	NUT (M6X1 THD)	
M	11	1	**6V-6889**	2	NUT (M8X1.25 THD)	
M	12	1	**6V-8127**	1	NUT	
M	13	1	**8T-4171**	2	BOLT (M6X1X12MM)	
	14	1	**9X-8256**	4	WASHER (6.6X12X2MM THK)	
E	15	1	**126-5648**		SEAL (81CM)	

E-ORDER BY THE CENTIMETER
M-METRIC PART

195-6308 **DOOR GP-ACCESS** *(contd.)* **i01795570**

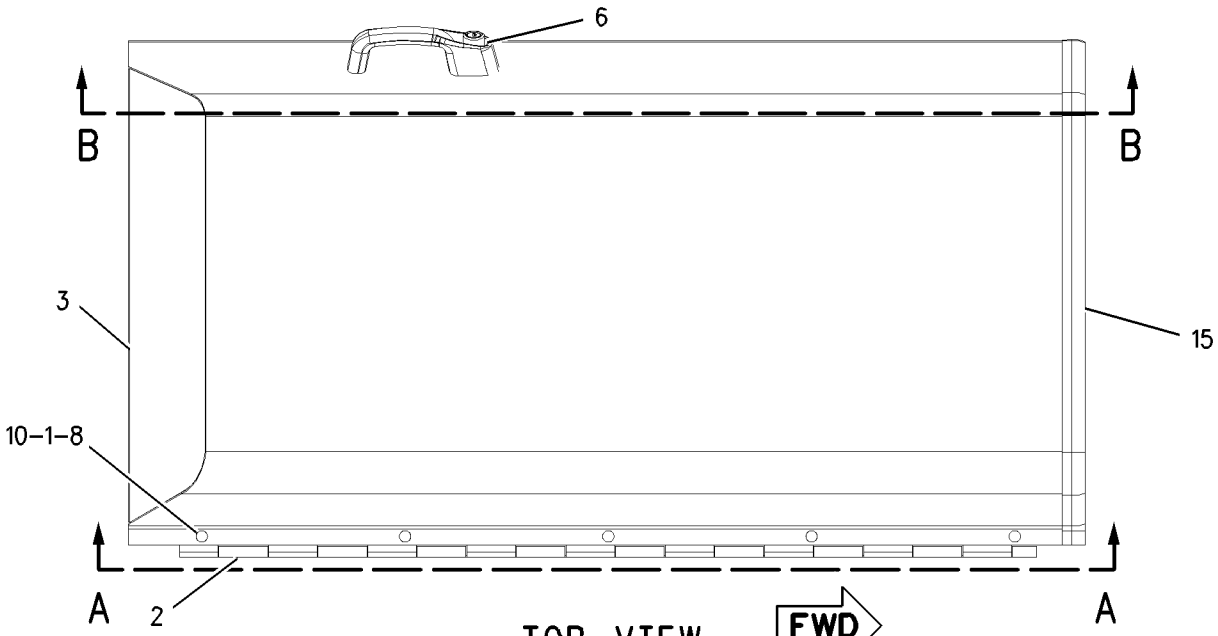

TOP VIEW

FWD

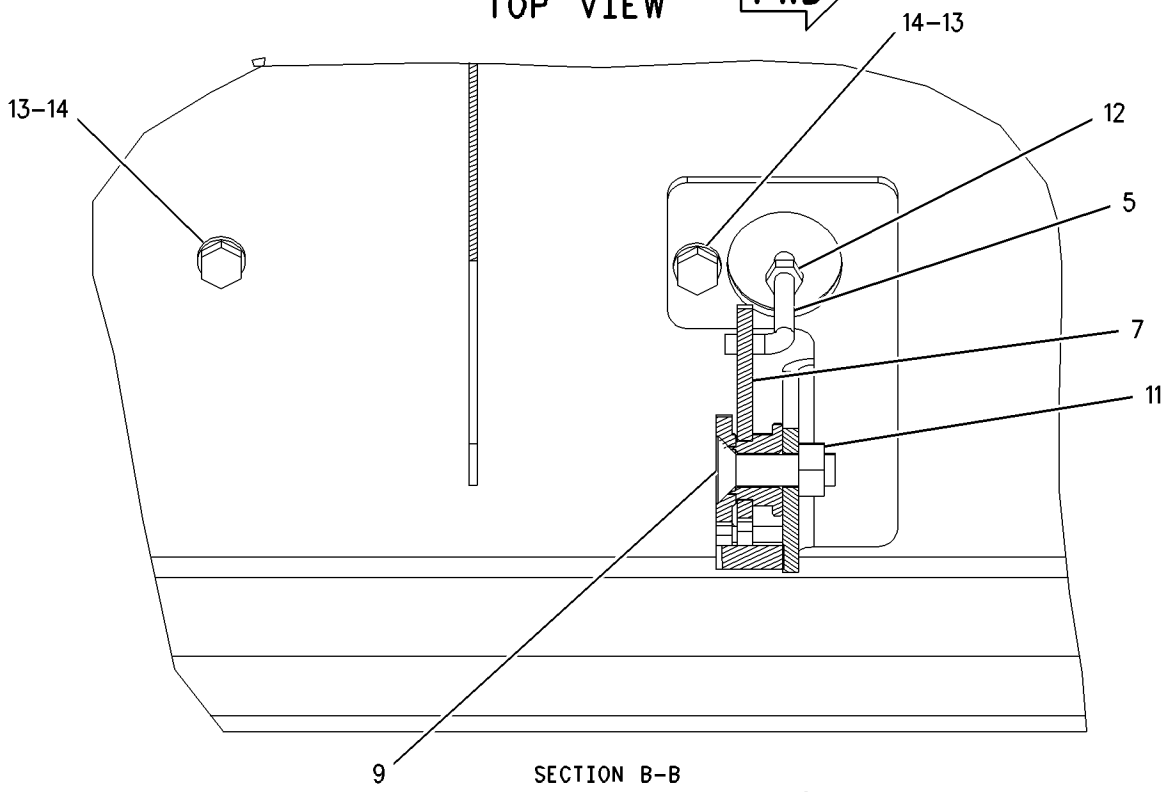

SECTION B-B

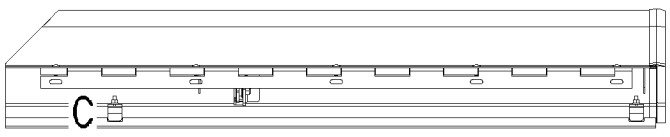

VIEW A-A

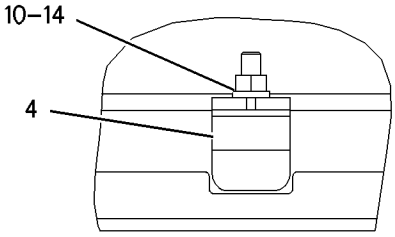

VIEW OF AREA C

GRAPHIC #1 **<END>** g00923581

FRAME AND BODY

201-5675 DOOR GP-ACCESS–TOOL BOX

S/N: BCZ1-2000

PART OF 194-9212, 206-1351 STEP GP-TOOL BOX

ALSO AN ATTACHMENT

SMCS-7273 **i01795571**

NOTE	REF NO	GRAPHIC REF	PART NUMBER	QTY	PART NAME 1 2 3 4 5 6 (PRODUCT LEVEL)	SEE PAGE
	1	1	**6V-6957**	1	LATCH AS-HANDLE	
	2	1	**201-5673**	1	DOOR AS	
	3	1	**8T-9082**	5	RIVET-POP	

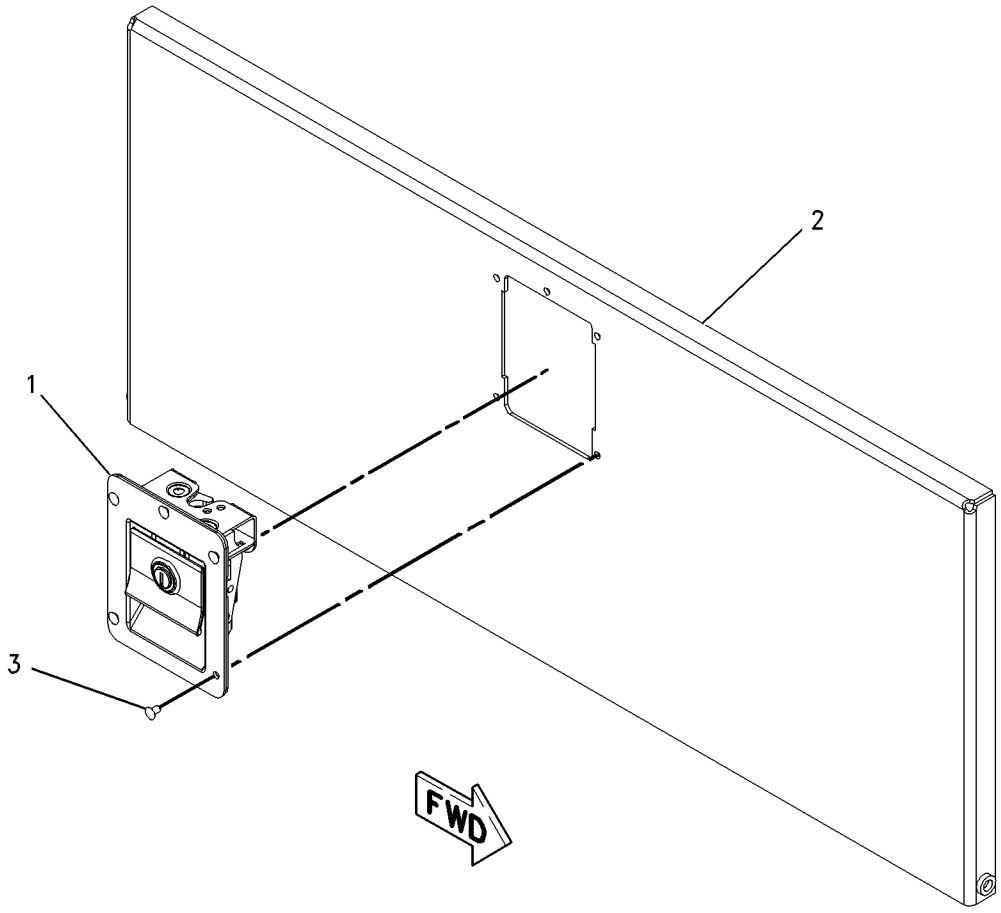

GRAPHIC #1 **<END>** g00920252

219-5284 DOOR GP-ACCESS—CAB RISER

S/N: BCZ1-2000

PART OF 188-4961 FRAME GP-CAB RISER

AN ATTACHMENT

SMCS-7273 **i02160074**

NOTE	REF NO	GRAPHIC REF	PART NUMBER	QTY	PART NAME 1 2 3 4 5 6 (PRODUCT LEVEL)	SEE PAGE
	1	1	**5W-6863**	1	ROD END	
	2	1	**115-8523**	2	RING-RETAINING	
	3	1	**142-5542**	1	LOCK AS	
	4	1	**196-9711**	2	PIN	
	5	1	**206-9360**	1	ROD AS	
	6	1	**219-5266**	1	DOOR AS	
	7	1	**219-5695**	2	HINGE AS	
M	8	1	**5C-2890**	4	NUT (M6X1-THD)	
M	9	1	**5C-7261**	2	NUT (M8X1.25-THD)	
	10	1	**8T-4224**	1	WASHER-HARD (8.8X16X2-MM THK)	
	11	1	**9X-8256**	4	WASHER (6.6X12X2-MM THK)	

M-METRIC PART

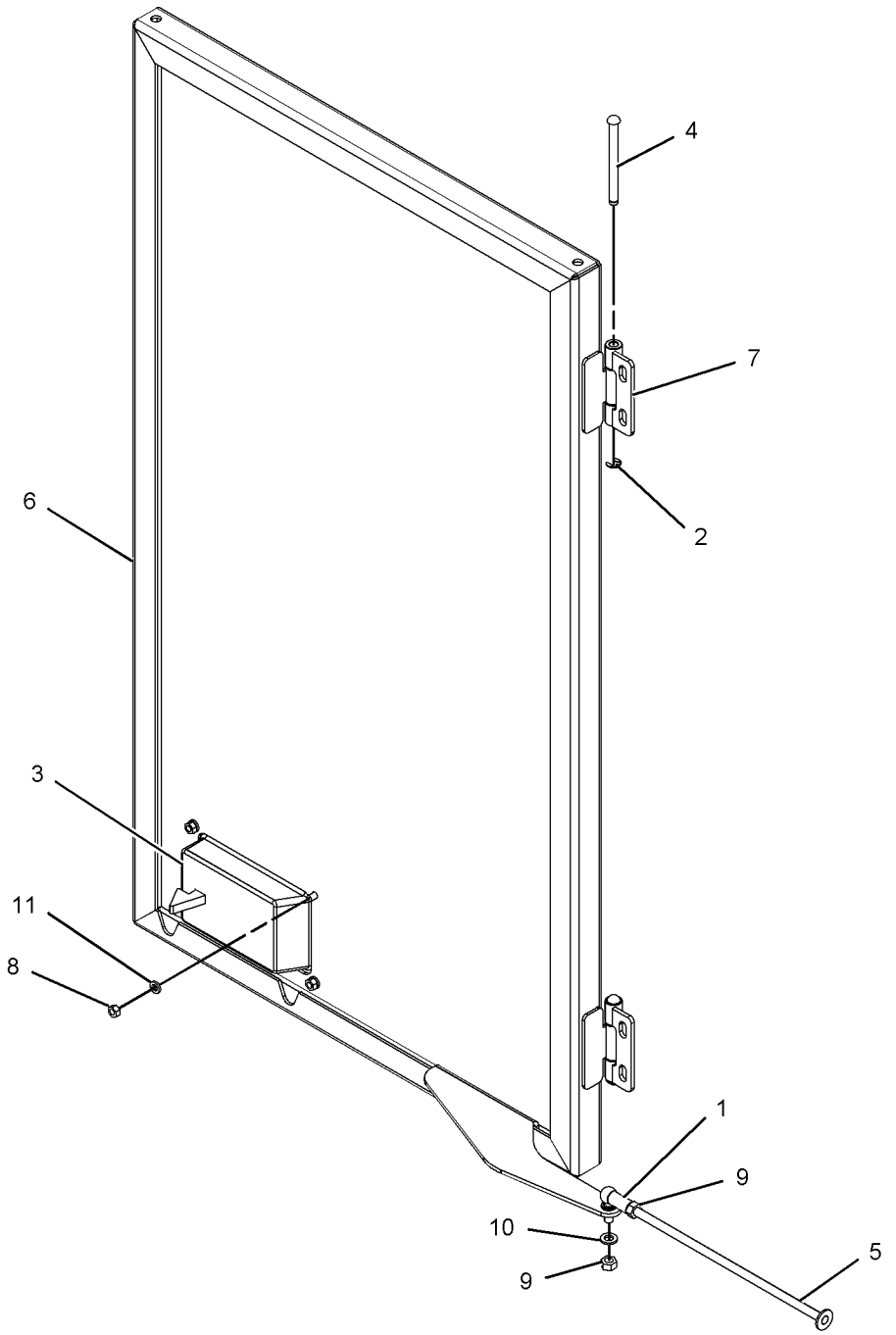

GRAPHIC #1 **<END>** g01097478

219-5686 DOOR GP-ACCESS—LH SIDE

S/N: BCZ1-2000

PART OF 186-0490 ENCLOSURE GP-ENGINE

SMCS-7273 **i01818605**

NOTE	REF NO	GRAPHIC REF	PART NUMBER	QTY	PART NAME 1 2 3 4 5 6 (PRODUCT LEVEL)	SEE PAGE
	1	1	**115-8523**	2	RING-RETAINING	
	2	1	**196-9711**	2	PIN	
	3	1	**211-4592**	1	BRACKET AS	
	4	1	**219-5685**	1	DOOR AS	
	5	1	**219-5695**	2	HINGE AS	
M	6	1	**8T-3992**	2	SCREW (M6X1X12MM)	

M-METRIC PART

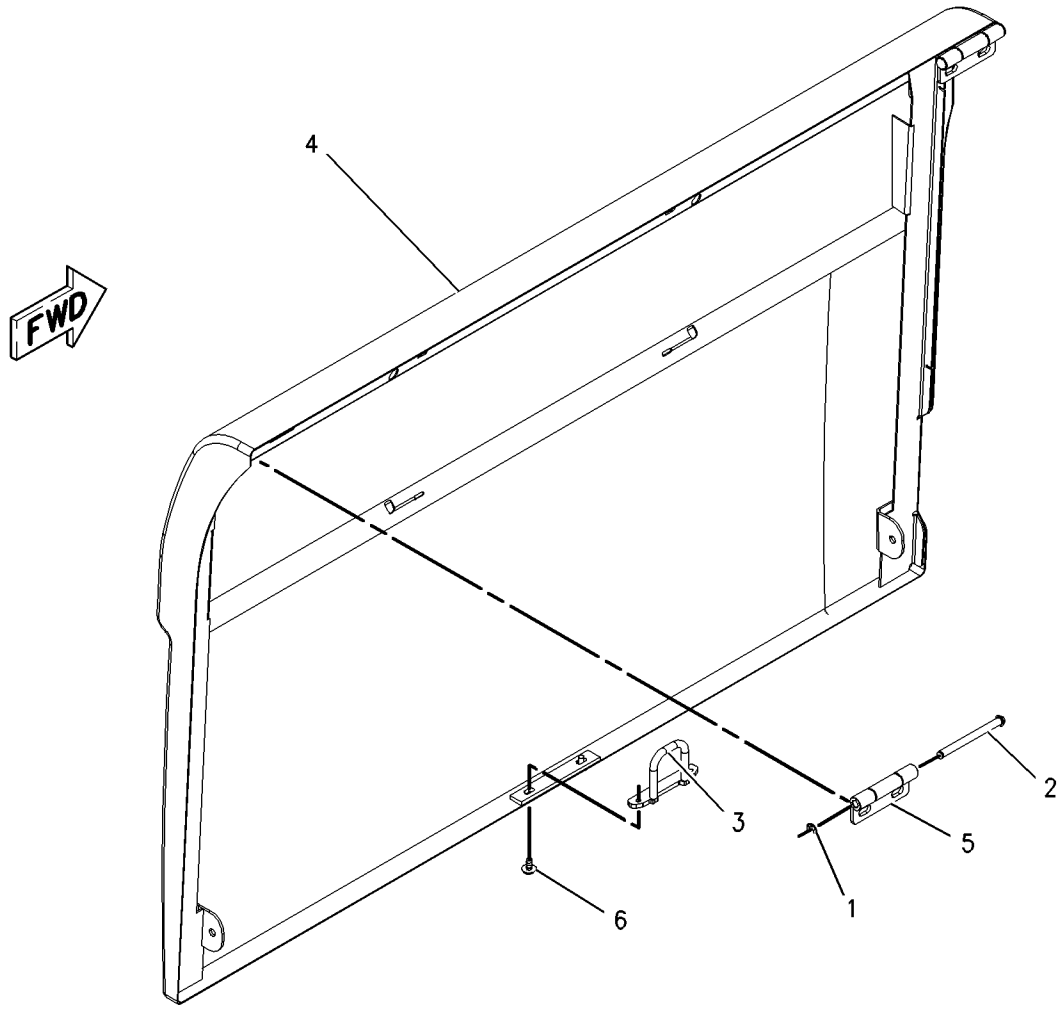

GRAPHIC #1 **<END>** g00928315

233-2981 DOOR GP-ACCESS—ENGINE, UPPER

S/N: BCZ585-2000

PART OF 186-0489 ENCLOSURE GP-ENGINE

SMCS-7273 **i01900622**

NOTE	REF NO	GRAPHIC REF	PART NUMBER	QTY	PART NAME 1 2 3 4 5 6 (PRODUCT LEVEL)	SEE PAGE
	1	1	**5Y-2425**	5	WASHER (6.5X17.5X1.5MM THK)	
	2	1	**194-3243**	1	HINGE	
	3	1	**203-4509**	1	ROD	
	4	1	**206-3623**	1	HANDLE AS	
	5	1	**206-9348**	1	LATCH AS	
	6	1	**233-2982**	1	COVER AS	
M	7	1	**127-4038**	5	SCREW-MACHINE (M6X1X16MM)	
M	8	1	**131-3539**	2	SCREW-FLAT HEAD	
M	9	1	**5C-2890**	5	NUT (M6X1 THD)	
M	10	1	**6V-6889**	2	NUT (M8X1.25 THD)	
M	11	1	**6V-8127**	1	NUT	
M	12	1	**8T-4171**	2	BOLT (M6X1X12MM)	
	13	1	**9X-8256**	2	WASHER (6.6X12X2MM THK)	
E	14	1	**126-5648**		SEAL (81CM)	

E-ORDER BY THE CENTIMETER
M-METRIC PART

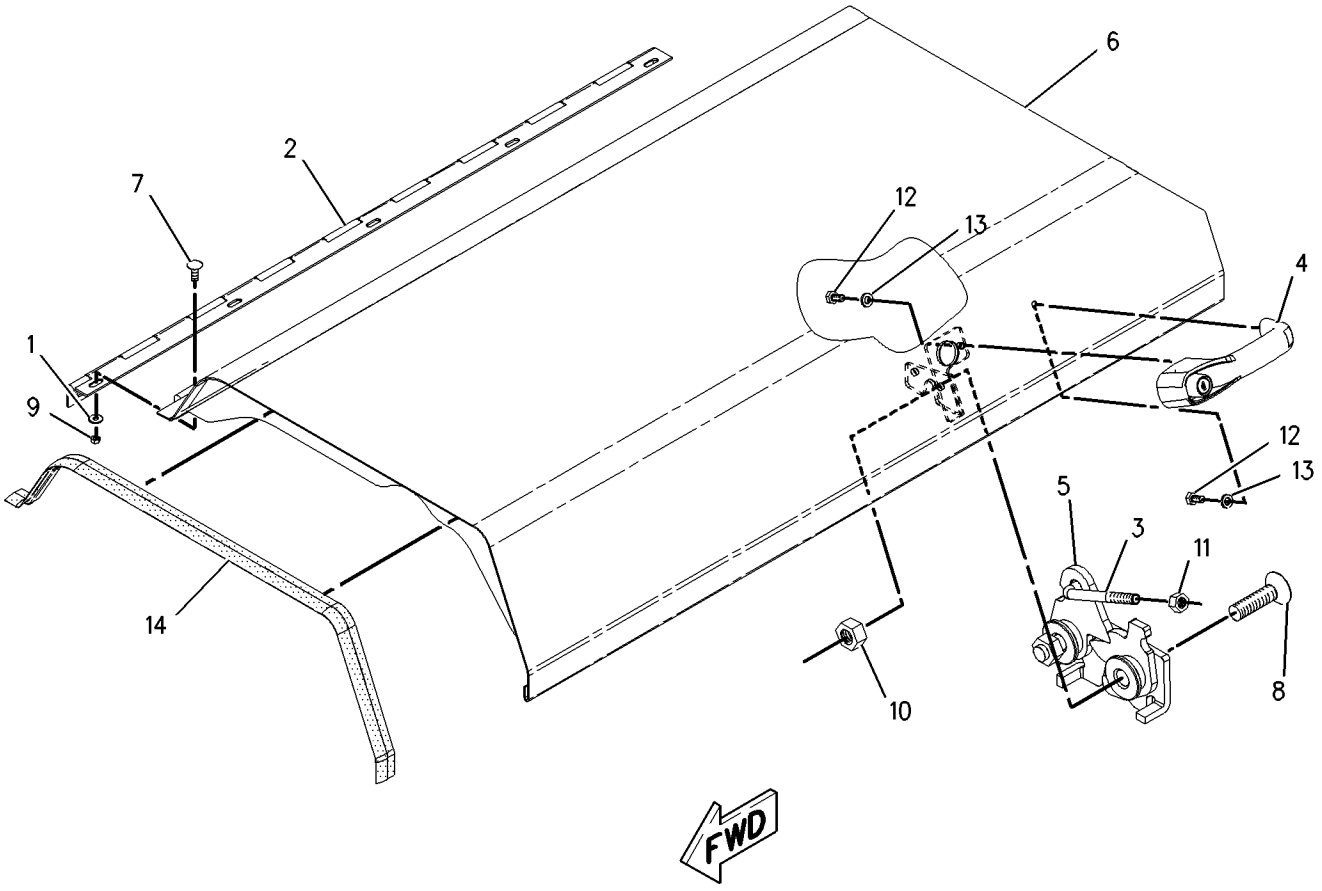

GRAPHIC #1 **<END>** g00990512

FRAME AND BODY

186-0489 ENCLOSURE GP-ENGINE

S/N: BCZ1-584

PART OF 186-0488 HOOD & GUARD AR

SMCS-7263 **i01782718**

NOTE	REF NO	GRAPHIC REF	PART NUMBER	QTY	PART NAME 1 2 3 4 5 6 (PRODUCT LEVEL)	SEE PAGE
	1	2,3	**5Y-2425**	15	WASHER (6.5X17.5X1.5-MM THK)	
	2	2	**113-7328**	1	SPRING-GAS	
	3	2	**116-6325**	1	SPRING-GAS	
	4	1	**129-0309**	1	SPRING-GAS	
Y	5	1	*193-8990*	1	DOOR GP-ACCESS	356
	6	3	**195-6289**	1	PLATE	
	7	3	**195-6300**	1	SUPPORT	
	8	2	**195-6302**	1	PLATE	
Y	9	1	*195-6308*	1	DOOR GP-ACCESS	357
	10	1	**195-6310**	1	SUPPORT AS	
	11	1	**195-9382**	1	SUPPORT AS	
	12	2	**195-9396**	1	ANGLE	
	13	2	**195-9397**	1	PLATE	
Y	14	3	*195-9408*	1	PLATE GP-SOUND SUPPRESSION	44
	15	3	**196-5689**	1	PLATE	
	16	1	**196-5699**	1	SHEET	
Y	17	1	*196-5700*	1	ENCLOSURE GP-RADIATOR	375
Y	18	3	*196-5701*	1	SHIELD GP-EXHAUST	93
	19	3	**197-6537**	1	SHEET AS	
	20	1	**206-9362**	1	PLATE	
	21	3	**206-9363**	1	BRACKET AS	
	22	1	**206-9365**	1	SHEET AS	
	23	3	**221-3170**	1	SUPPORT AS	
M	24	2	**092-5524**	1	BOLT (M12X1.75X80-MM)	
M	25	3	**151-8754**	2	BOLT (M10X1.5X40-MM)	
M	26	2	**188-9644**	2	SCREW-FLAT HEAD (M8X1.25X25-MM)	
M	27	3	**5C-2890**	5	NUT (M6X1-THD)	
M	28	1,2	**5C-7261**	5	NUT (M8X1.25-THD)	
	29	1,2,3	**5P-1076**	8	WASHER-HARD (13.5X30X4-MM THK)	
	30	1,2,3	**5P-4116**	13	WASHER-HARD (8.8X20.5X2-MM THK)	
	31	1,3	**7X-7729**	20	WASHER (11X25X3-MM THK)	
M	32	3	**8T-4133**	6	NUT (M10X1.5-THD)	
M	33	3	**8T-4136**	6	BOLT (M10X1.5X25-MM)	
M	34	1,3	**8T-4137**	6	BOLT (M10X1.5X20-MM)	
M	35	3	**8T-4138**	5	BOLT (M6X1X20-MM)	
M	36	2,3	**8T-4171**	5	BOLT (M6X1X12-MM)	
M	37	1,2,3	**8T-4189**	11	BOLT (M8X1.25X20-MM)	
M	38	1,3	**8T-4192**	9	BOLT (M12X1.75X25-MM)	
M	39	3	**8T-4195**	4	BOLT (M10X1.5X30-MM)	
M	40	2,3	**8T-4223**	9	WASHER-HARD (13.5X25.5X3-MM THK)	
	41	2	**8T-4224**	2	WASHER-HARD (8.8X16X2-MM THK)	
M	42	2	**8T-4244**	5	NUT (M12X1.75-THD)	
M	43	2	**8T-4956**	2	BOLT (M12X1.75X35-MM)	
E	44	1	**117-0124**		SEAL (80CM)	
E	45	3	**117-0125**		SEAL (99CM)	
E	46A	2	**117-0121**		SEAL (63CM)	
E	46B	3	**117-0121**		SEAL (46.5CM)	
E	46C	2	**117-0121**		SEAL (190.5CM)	

E-ORDER BY THE CENTIMETER
M-METRIC PART
Y-SEPARATE ILLUSTRATION

186-0489 **ENCLOSURE GP-ENGINE** *(contd.)* **i01782718**

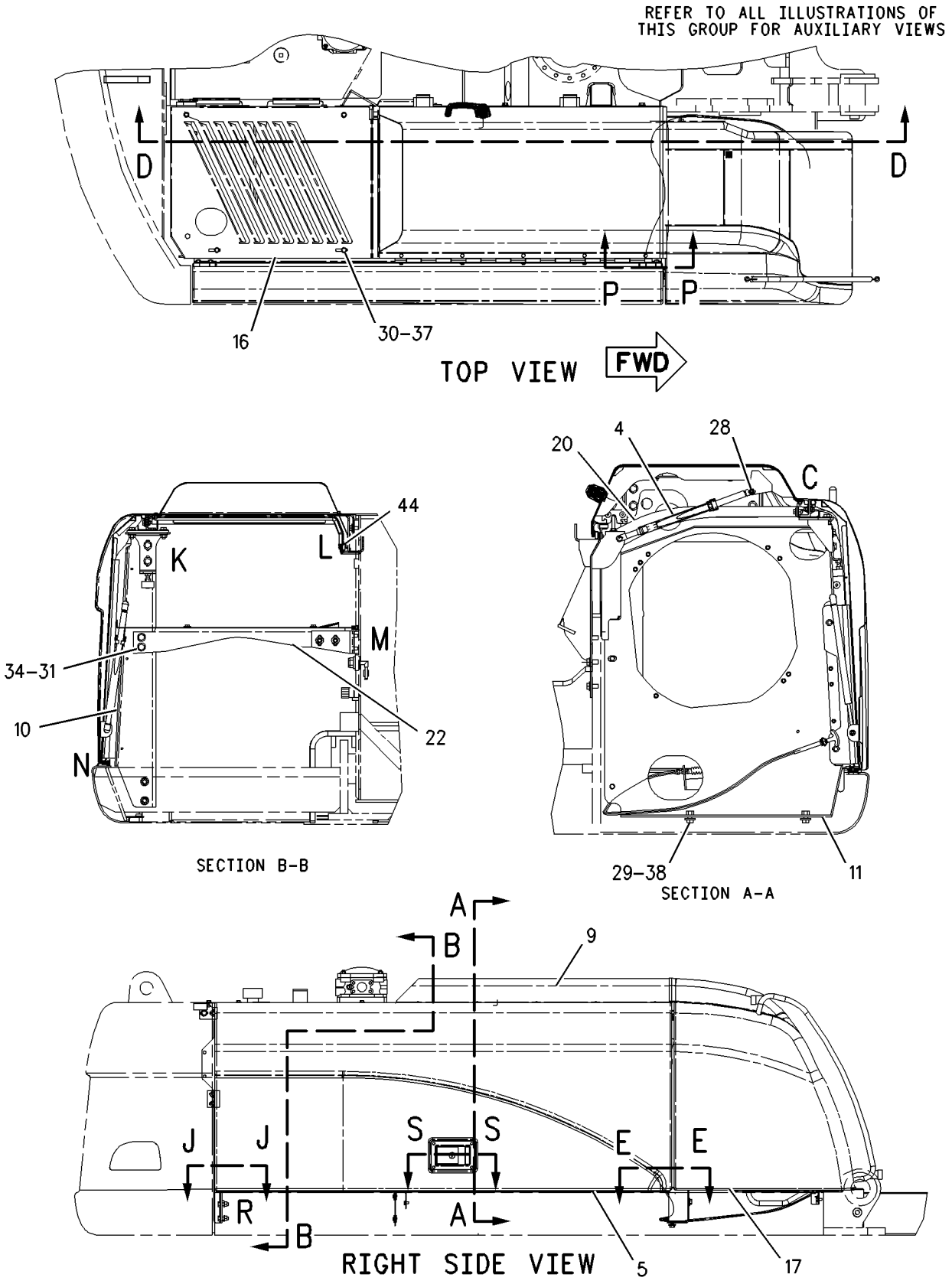

GRAPHIC #1 g00916257

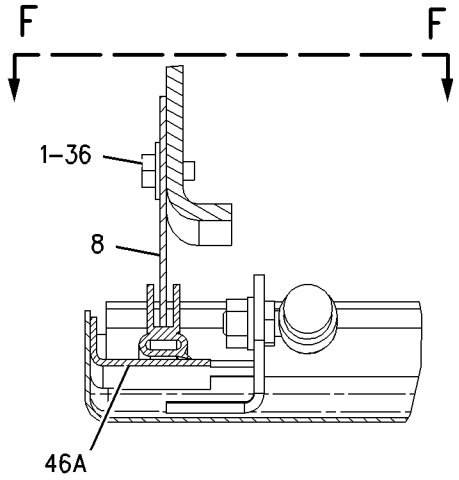

SECTION J–J

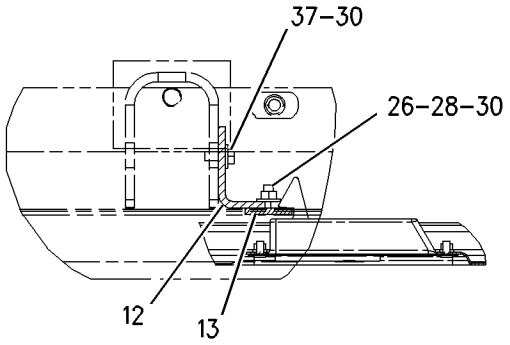

SECTION S–S

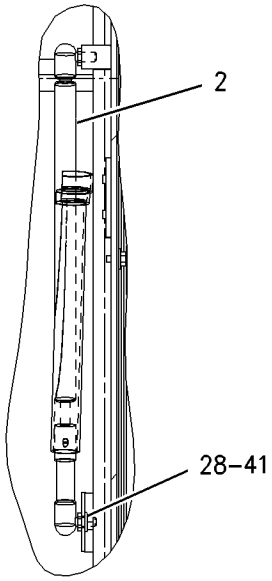

SECTION F–F

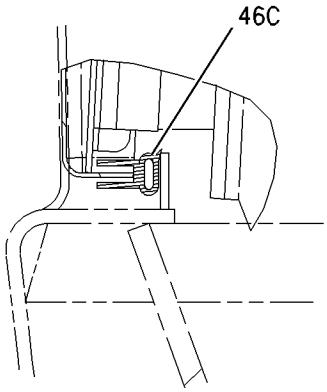

VIEW OF AREA N

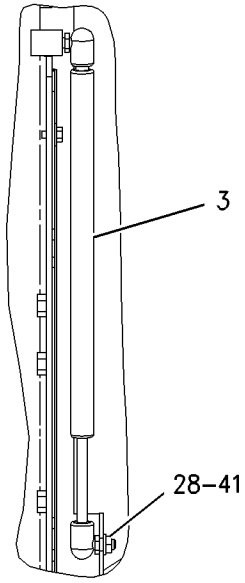

SECTION G–G

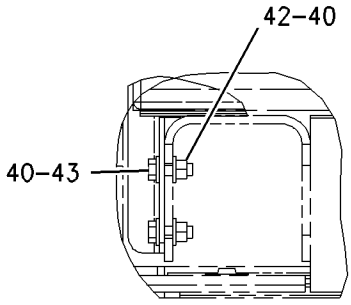

VIEW OF AREA R

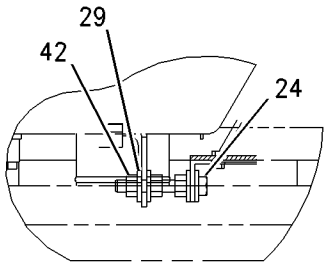

SECTION H–H

GRAPHIC #2 g00916258

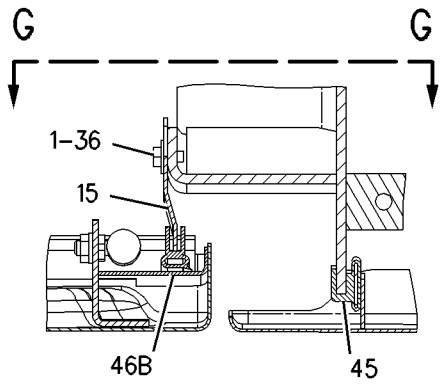

SECTION E-E

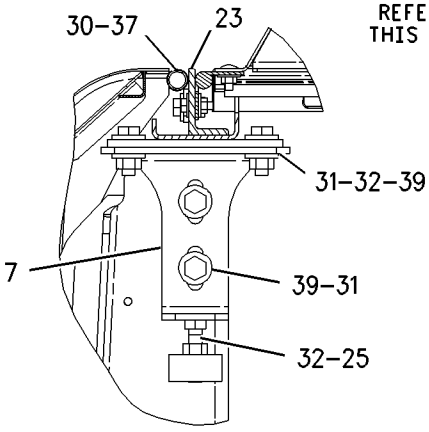

VIEW OF AREA K

REFER TO ALL ILLUSTRATIONS OF THIS GROUP FOR AUXILIARY VIEWS

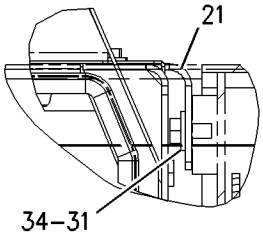

VIEW OF AREA L

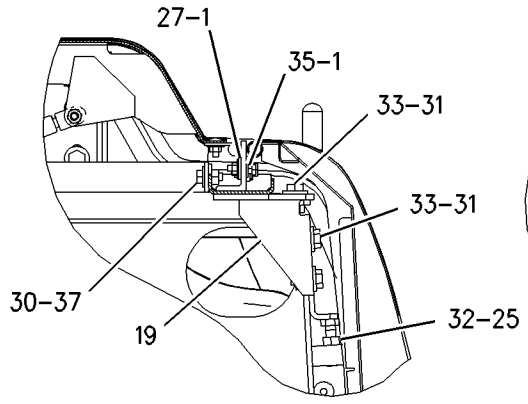

VIEW OF AREA C

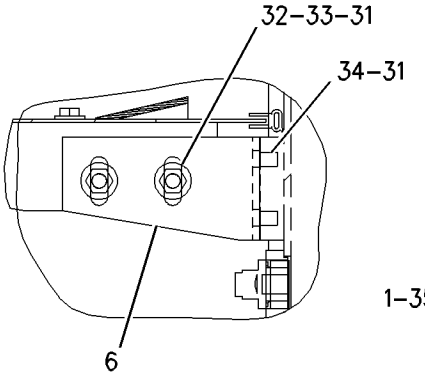

VIEW OF AREA M

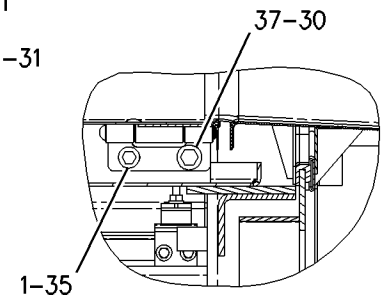

SECTION P-P

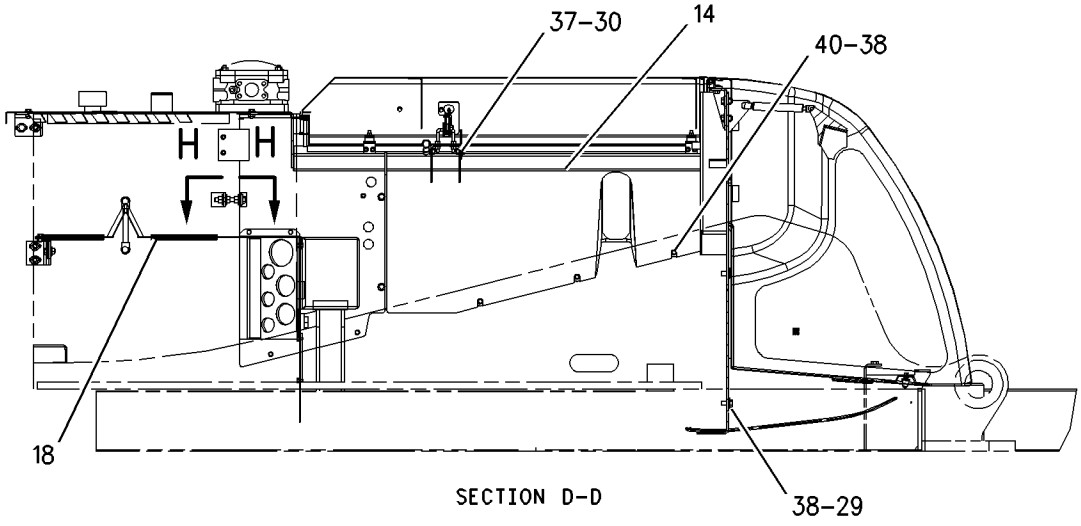

SECTION D-D

GRAPHIC #3 **<END>** g00916260

186-0489 ENCLOSURE GP-ENGINE

S/N: BCZ585-2000

PART OF 186-0488 HOOD & GUARD AR

SMCS-7263 **i01900616**

NOTE	REF NO	GRAPHIC REF	PART NUMBER	QTY	PART NAME 1 2 3 4 5 6 (PRODUCT LEVEL)	SEE PAGE
	1	2,3	**5Y-2425**	15	WASHER (6.5X17.5X1.5-MM THK)	
	2	2	**113-7328**	1	SPRING-GAS	
	3	2	**116-6325**	1	SPRING-GAS	
	4	1	**129-0309**	1	SPRING-GAS	
Y	5	1	*193-8990*	1	DOOR GP-ACCESS	356
	6	3	**195-6289**	1	PLATE	
	7	3	**195-6300**	1	SUPPORT	
	8	2	**195-6302**	1	PLATE	
CY	9	1	*233-2981*	1	DOOR GP-ACCESS	363
	10	1	**195-6310**	1	SUPPORT AS	
	11	1	**195-9382**	1	SUPPORT AS	
	12	2	**195-9396**	1	ANGLE	
	13	2	**195-9397**	1	PLATE	
Y	14	3	*195-9408*	1	PLATE GP-SOUND SUPPRESSION	44
	15	3	**196-5689**	1	PLATE	
	16	1	**196-5699**	1	SHEET	
Y	17	1	*196-5700*	1	ENCLOSURE GP-RADIATOR	375
Y	18	3	*196-5701*	1	SHIELD GP-EXHAUST	93
	19	3	**197-6537**	1	SHEET AS	
	20	1	**206-9362**	1	PLATE	
	21	3	**206-9363**	1	BRACKET AS	
	22	1	**206-9365**	1	SHEET AS	
	23	3	**221-3170**	1	SUPPORT AS	
M	24	2	**092-5524**	1	BOLT (M12X1.75X80-MM)	
M	25	3	**151-8754**	2	BOLT (M10X1.5X40-MM)	
M	26	2	**188-9644**	2	SCREW-FLAT HEAD (M8X1.25X25-MM)	
M	27	3	**5C-2890**	5	NUT (M6X1-THD)	
M	28	1,2	**5C-7261**	5	NUT (M8X1.25-THD)	
	29	1,2,3	**5P-1076**	8	WASHER-HARD (13.5X30X4-MM THK)	
	30	1,2,3	**5P-4116**	13	WASHER-HARD (8.8X20.5X2-MM THK)	
	31	1,3	**7X-7729**	20	WASHER (11X25X3-MM THK)	
M	32	3	**8T-4133**	6	NUT (M10X1.5-THD)	
M	33	3	**8T-4136**	6	BOLT (M10X1.5X25-MM)	
M	34	1,3	**8T-4137**	6	BOLT (M10X1.5X20-MM)	
M	35	3	**8T-4138**	5	BOLT (M6X1X20-MM)	
M	36	2,3	**8T-4171**	5	BOLT (M6X1X12-MM)	
M	37	1,2,3	**8T-4189**	11	BOLT (M8X1.25X20-MM)	
M	38	1,3	**8T-4192**	9	BOLT (M12X1.75X25-MM)	
M	39	3	**8T-4195**	4	BOLT (M10X1.5X30-MM)	
M	40	2,3	**8T-4223**	9	WASHER-HARD (13.5X25.5X3-MM THK)	
	41	2	**8T-4224**	2	WASHER-HARD (8.8X16X2-MM THK)	
M	42	2	**8T-4244**	5	NUT (M12X1.75-THD)	
M	43	2	**8T-4956**	2	BOLT (M12X1.75X35-MM)	
E	44	1	**117-0124**		SEAL (80CM)	
E	45	3	**117-0125**		SEAL (99CM)	
E	46	2	**117-0121**		SEAL (63CM)	
E	46A	3	**117-0121**		SEAL (46.5CM)	
E	46B	2	**117-0121**		SEAL (190.5CM)	

C-CHANGE FROM PREVIOUS TYPE
E-ORDER BY THE CENTIMETER
M-METRIC PART
Y-SEPARATE ILLUSTRATION

186-0489 **ENCLOSURE GP-ENGINE** *(contd.)* **i01900616**

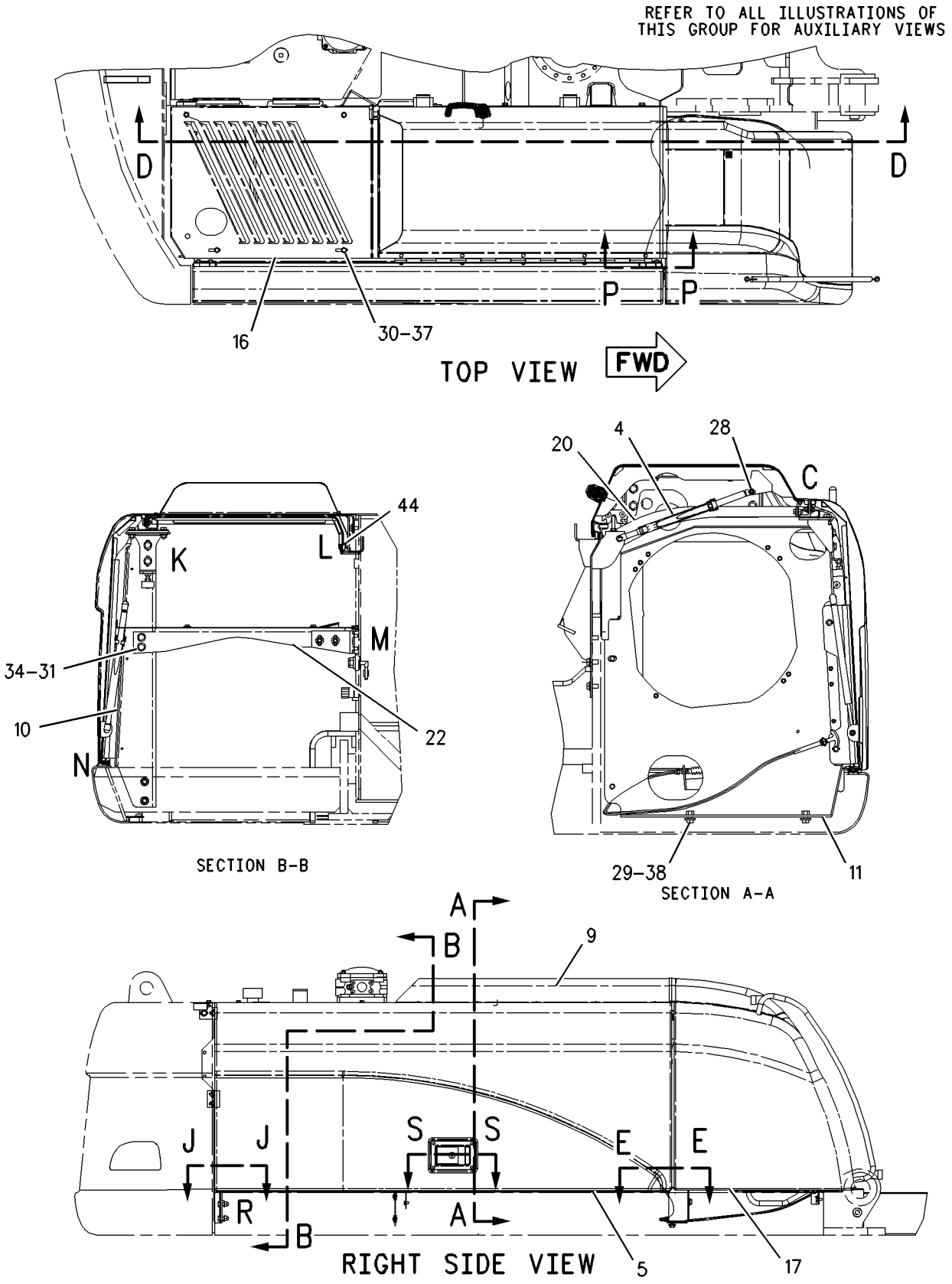

GRAPHIC #1 g00916257

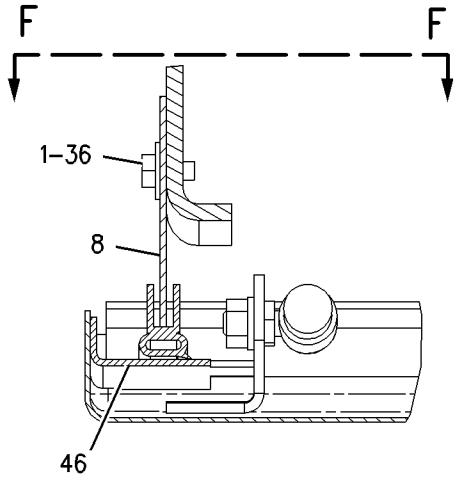

SECTION J–J

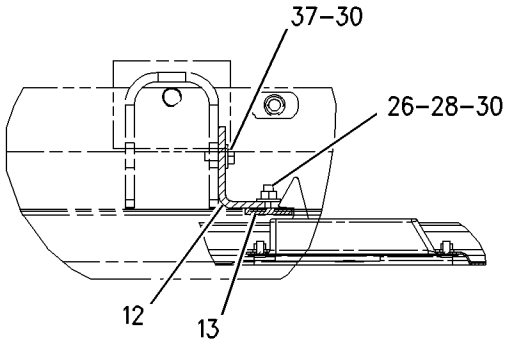

SECTION S–S

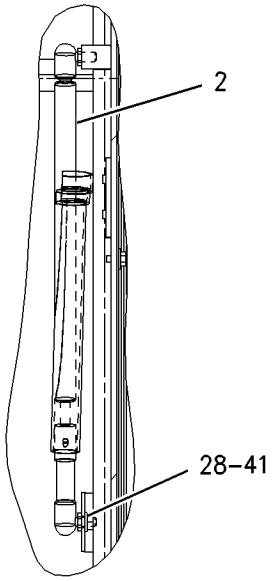

SECTION F–F

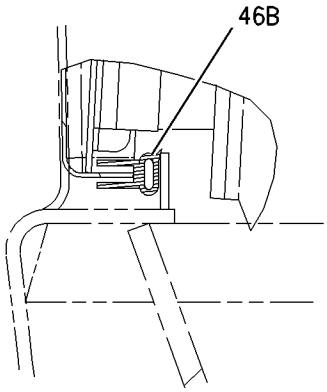

VIEW OF AREA N

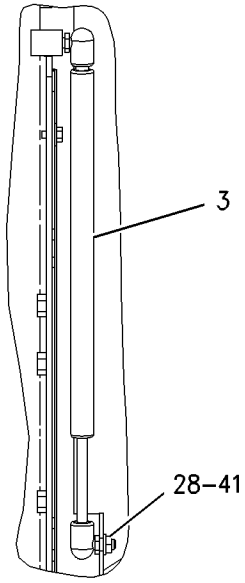

SECTION G–G

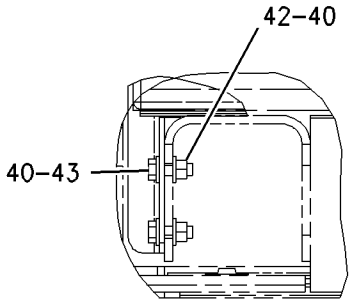

VIEW OF AREA R

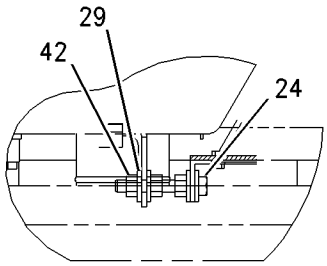

SECTION H–H

GRAPHIC #2 g00989052

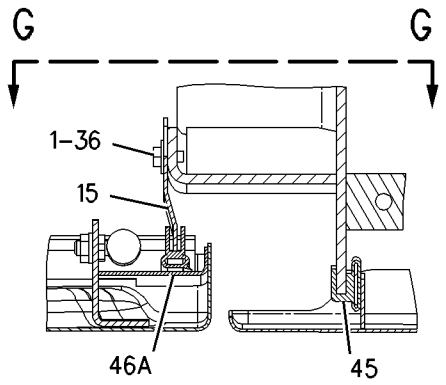

SECTION E-E

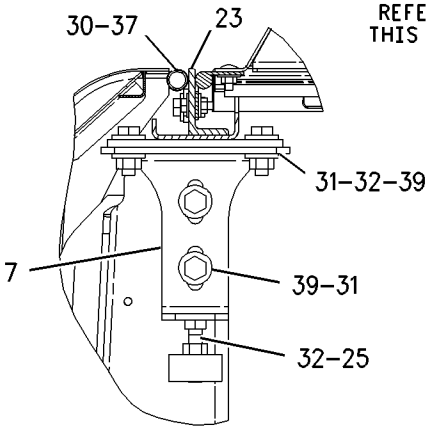

VIEW OF AREA K

REFER TO ALL ILLUSTRATIONS OF THIS GROUP FOR AUXILIARY VIEWS

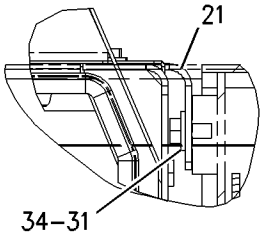

VIEW OF AREA L

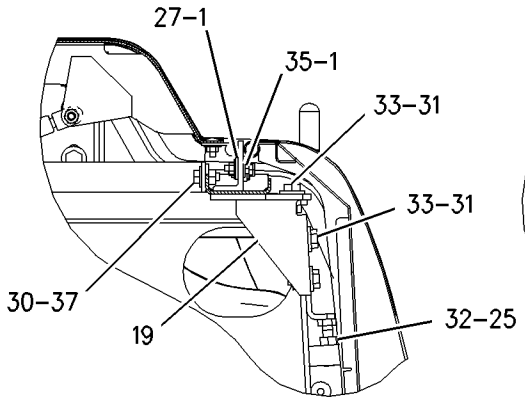

VIEW OF AREA C

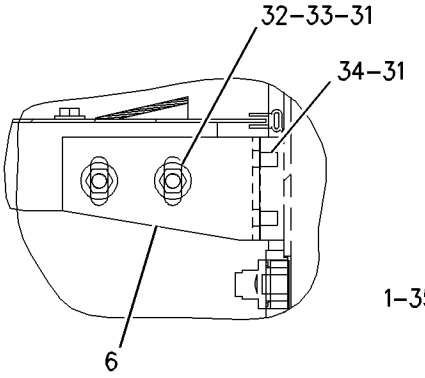

VIEW OF AREA M

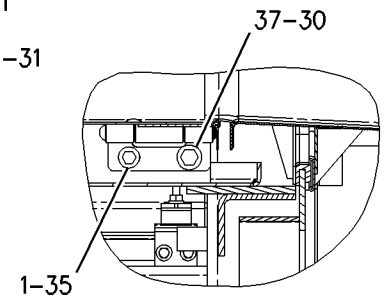

SECTION P-P

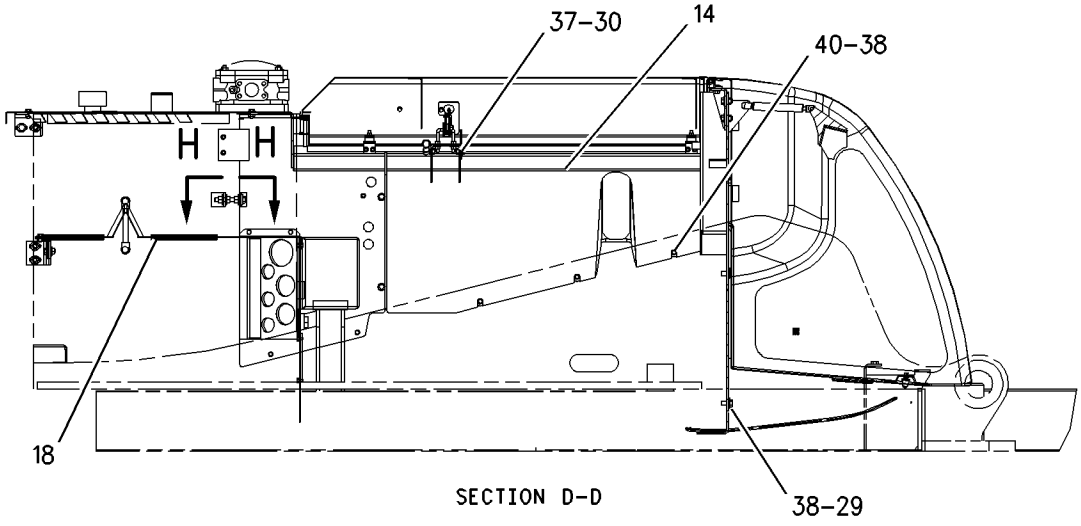

SECTION D-D

GRAPHIC #3 **<END>** g00989056

FRAME AND BODY

186-0490 ENCLOSURE GP-ENGINE

S/N: BCZ1-2000

PART OF 186-0488 HOOD & GUARD AR

SMCS-7263 **i02061763**

NOTE	REF NO	GRAPHIC REF	PART NUMBER	QTY	PART NAME 1 2 3 4 5 6 (PRODUCT LEVEL)	SEE PAGE
	1	2	**5Y-2425**	7	WASHER (6.5X17.5X1.5-MM THK)	
	2	2	**113-7329**	1	SPRING-GAS	
	3	2	**116-6326**	1	SPRING-GAS	
	4	1	**196-9692**	1	SHEET AS	
	5	1	**197-3805**	1	PLATE AS	
	6	1	**197-6046**	1	PLATE	
	7	2	**197-6522**	1	SHEET	
	8	1	**198-4064**	1	BRACKET AS	
	9	1	**097-4896**	4	SPACER (12X20X23-MM THK)	
	10	2	**201-3094**	1	SPRING	
	11	2	**201-8768**	1	KNOB	
	12	1	**202-4140**	1	SHEET AS	
	13	2	**206-9348**	1	LATCH AS	
	14	1	**215-9416**	1	SUPPORT AS	
	15	1	**215-9424**	1	SUPPORT AS	
	16	1	**219-2715**	1	BRACKET AS	
	18	2	**219-2717**	1	ROD	
Y	19	1	*219-5686*	1	DOOR GP-ACCESS	362
M	20	2	**129-3178**	2	LOCKNUT (M6X1-THD)	
M	21	2	**131-3539**	2	SCREW-FLAT HEAD (M8X1.25-MM THD)	
M	22	1,2	**151-8754**	2	BOLT (M10X1.5X40-MM)	
M	23	2	**5C-2890**	1	NUT (M6X1-THD)	
M	24	2	**5C-7261**	6	NUT (M8X1.25-THD)	
M	25	2	**5C-9553**	5	BOLT (M6X1X16-MM)	
	26	1,2	**5P-1076**	4	WASHER-HARD (13.5X30X4-MM THK)	
	27	1,2	**5P-4116**	5	WASHER-HARD (8.8X20.5X2-MM THK)	
	28	1,2	**7X-7729**	24	WASHER (11X25X3-MM THK)	
M	29	1,2	**8T-4133**	3	NUT (M10X1.5-THD)	
M	30	1	**8T-4136**	10	BOLT (M10X1.5X25-MM)	
M	31	1	**8T-4137**	4	BOLT (M10X1.5X20-MM)	
M	32	1,2	**8T-4183**	4	BOLT (M12X1.75X40-MM)	
M	33	1,2	**8T-4189**	4	BOLT (M8X1.25X20-MM)	
M	34	1,2	**8T-4195**	7	BOLT (M10X1.5X30-MM)	
	35	2	**8T-4224**	6	WASHER-HARD (8.8X16X2-MM THK)	
M	36	1,2	**8T-4908**	6	BOLT (M8X1.25X25-MM)	
M	37	1	**8T-5005**	2	BOLT (M10X1.50X70-MM)	
E	38	2	**117-0121**		SEAL (52CM)	
E	38A	2	**117-0121**		SEAL (49CM)	
E	38B	2	**117-0121**		SEAL (57CM)	
E	38C	2	**117-0121**		SEAL (36CM)	

E-ORDER BY THE CENTIMETER
M-METRIC PART
Y-SEPARATE ILLUSTRATION

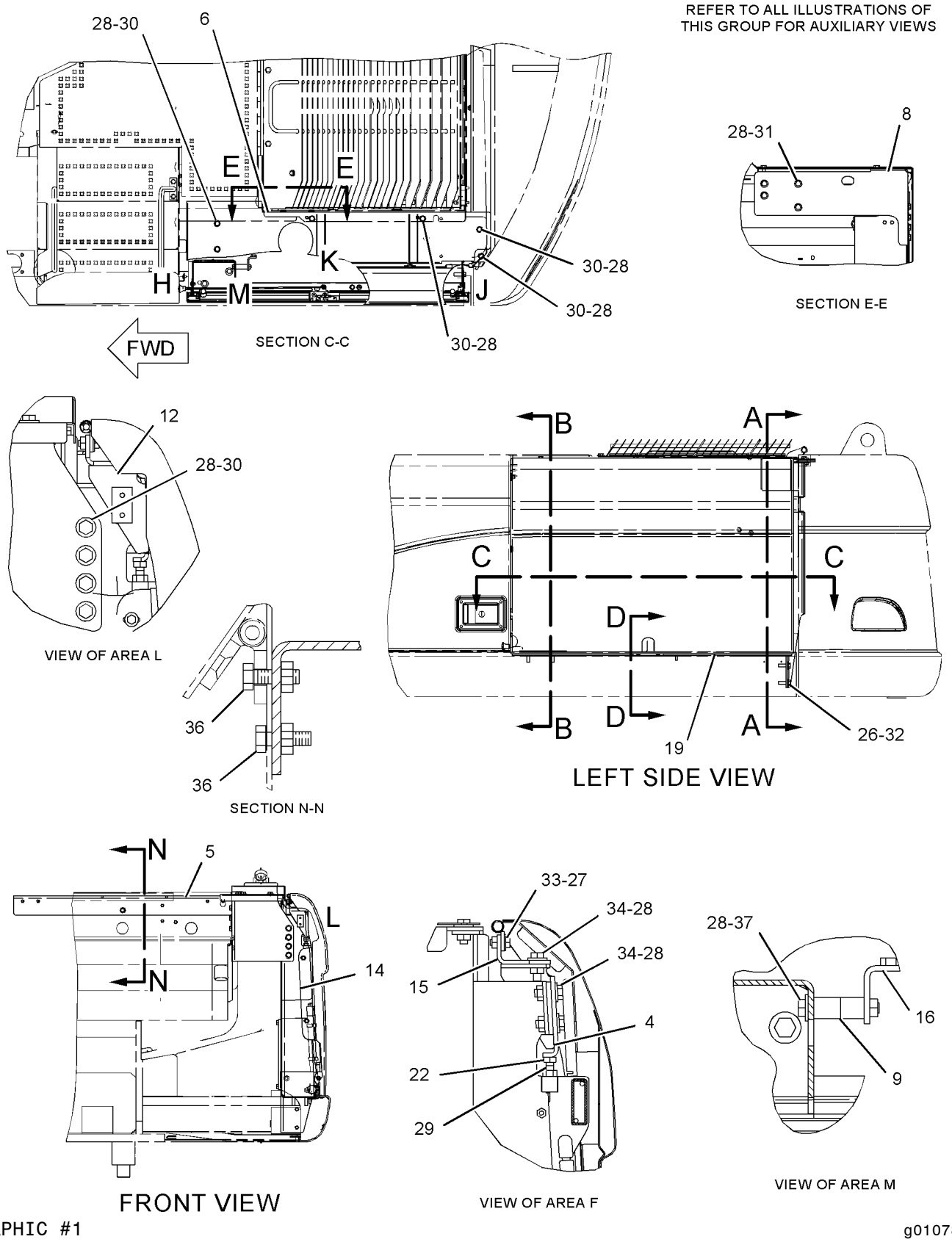

GRAPHIC #1

g01078296

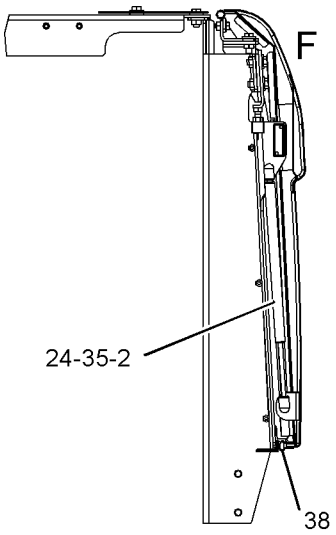

SECTION A-A

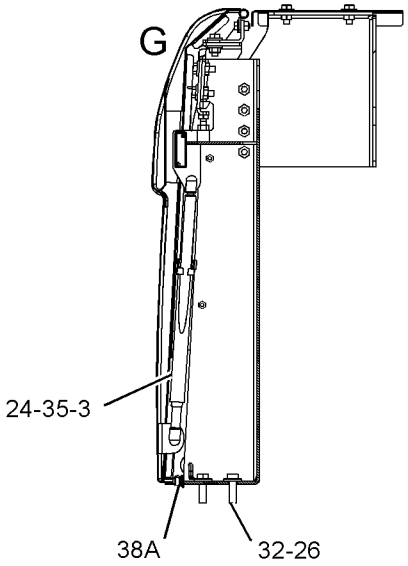

SECTION B-B

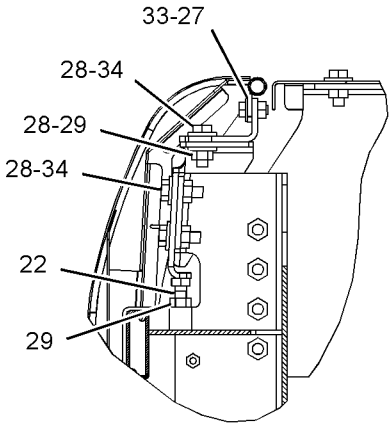

VIEW OF AREA G

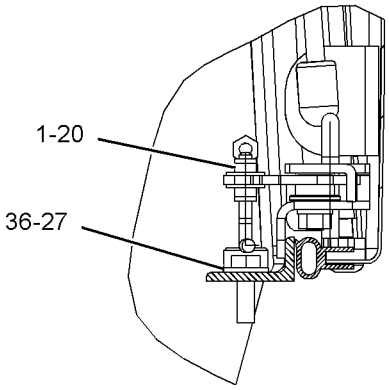

SECTION D-D

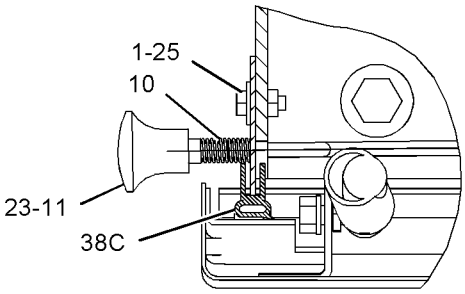

VIEW OF AREA H

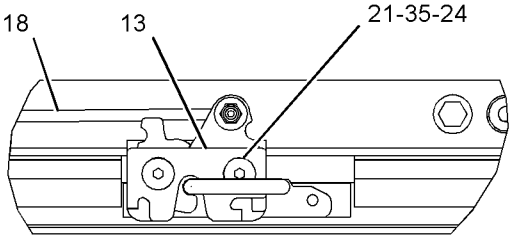

VIEW OF AREA K

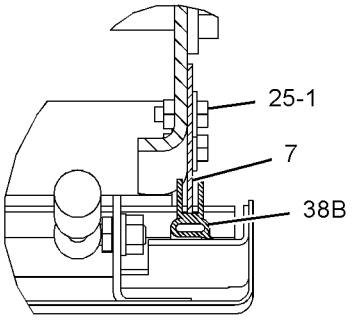

VIEW OF AREA J

REFER TO ALL ILLUSTRATIONS OF THIS GROUP FOR AUXILIARY VIEWS

GRAPHIC #2 **<END>** g01078297

196-5700 ENCLOSURE GP-RADIATOR

S/N: BCZ1-217

PART OF 186-0489 ENCLOSURE GP-ENGINE

SMCS-7272 **i02092043**

NOTE	REF NO	GRAPHIC REF	PART NUMBER	QTY	PART NAME 1 2 3 4 5 6 (PRODUCT LEVEL)	SEE PAGE
	1	1	**115-8523**	2	RING-RETAINING	
	2	2	**116-7303**	2	BUMPER	
	3	2	**196-9700**	1	HOOD AS	
	4	1	**196-9710**	2	HINGE AS	
	5	1	**196-9711**	2	PIN	
	6	1	**196-9720**	2	SPRING-GAS	
	7	3	**196-9730**	1	HANDHOLD AS	
		3	**6W-6672**	2	SPACER (10.5X20X38-MM THK)	
	8	1	**201-3986**	1	BRACKET AS	
	9	4	**201-3988**	1	BRACKET	
	10	4	**206-9348**	1	LATCH AS	
	11	4	**206-9349**	1	ROD	
	12	4	**206-9364**	1	CABLE AS	
M	13	4	**131-3539**	2	SCREW-FLAT HEAD (M8X1.25-MM THD)	
M	14	2	**5C-2890**	2	NUT (M6X1-THD)	
M	15	1,3,4	**5C-7261**	14	NUT (M8X1.25-THD)	
	16	3,4	**5P-4116**	10	WASHER-HARD (8.8X20.5X2-MM THK)	
	17	3	**7X-7729**	4	WASHER (11X25X3-MM THK)	
M	18	3	**8T-4136**	4	BOLT (M10X1.5X25-MM)	
M	19	3,4	**8T-4189**	4	BOLT (M8X1.25X20-MM)	
	20	2	**8T-4205**	2	WASHER-HARD (7.2X14.5X2-MM THK)	
	21	1,3	**8T-4224**	6	WASHER-HARD (8.8X16X2-MM THK)	
M	22	3	**9X-8290**	4	BOLT (M8X1.25X20-MM)	
E	23	2	**125-0600**		SEAL (139CM)	

E-ORDER BY THE CENTIMETER
M-METRIC PART

REFER TO ALL ILLUSTRATIONS OF
THIS GROUP FOR AUXILIARY VIEWS

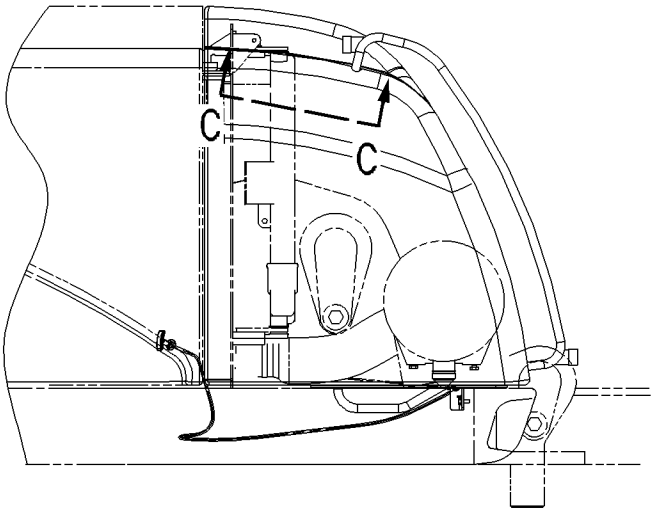

RIGHT SIDE VIEW

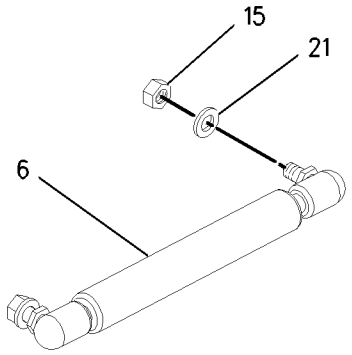

VIEW C-C

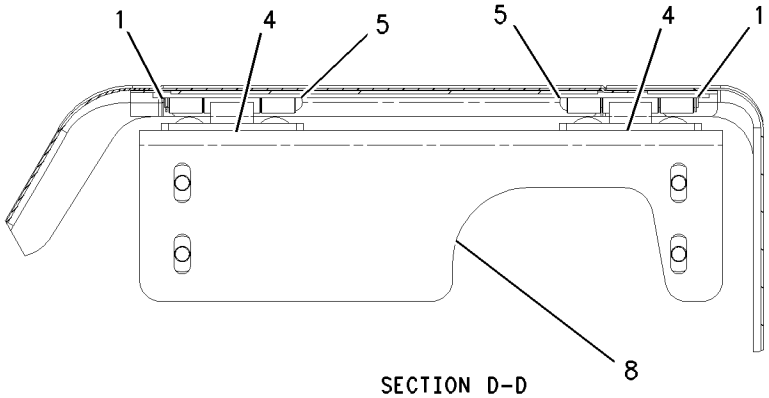

SECTION D-D

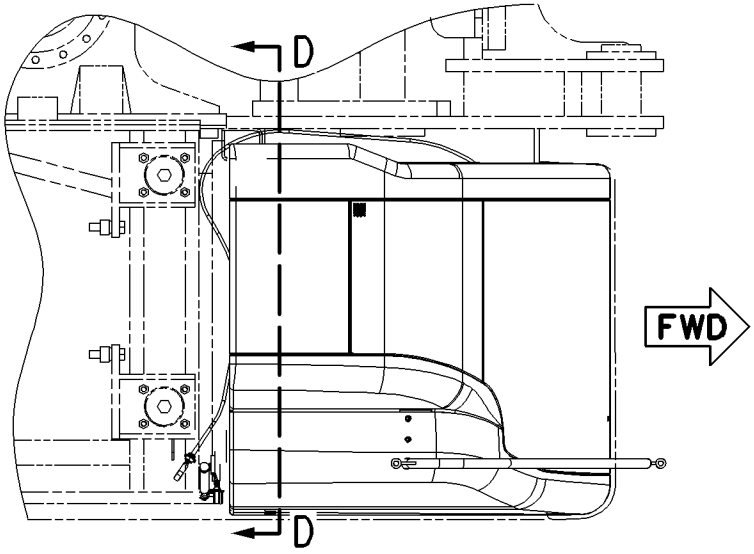

TOP VIEW

FWD

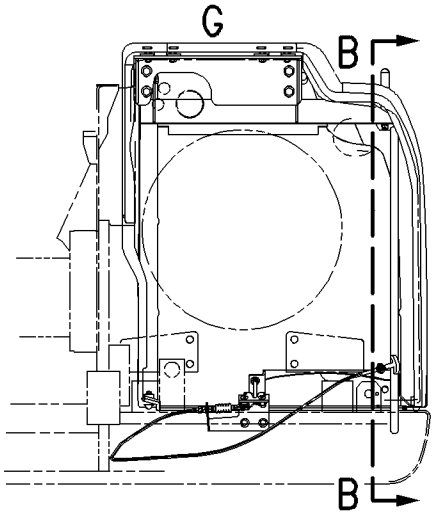

REAR VIEW

GRAPHIC #1

g00915394

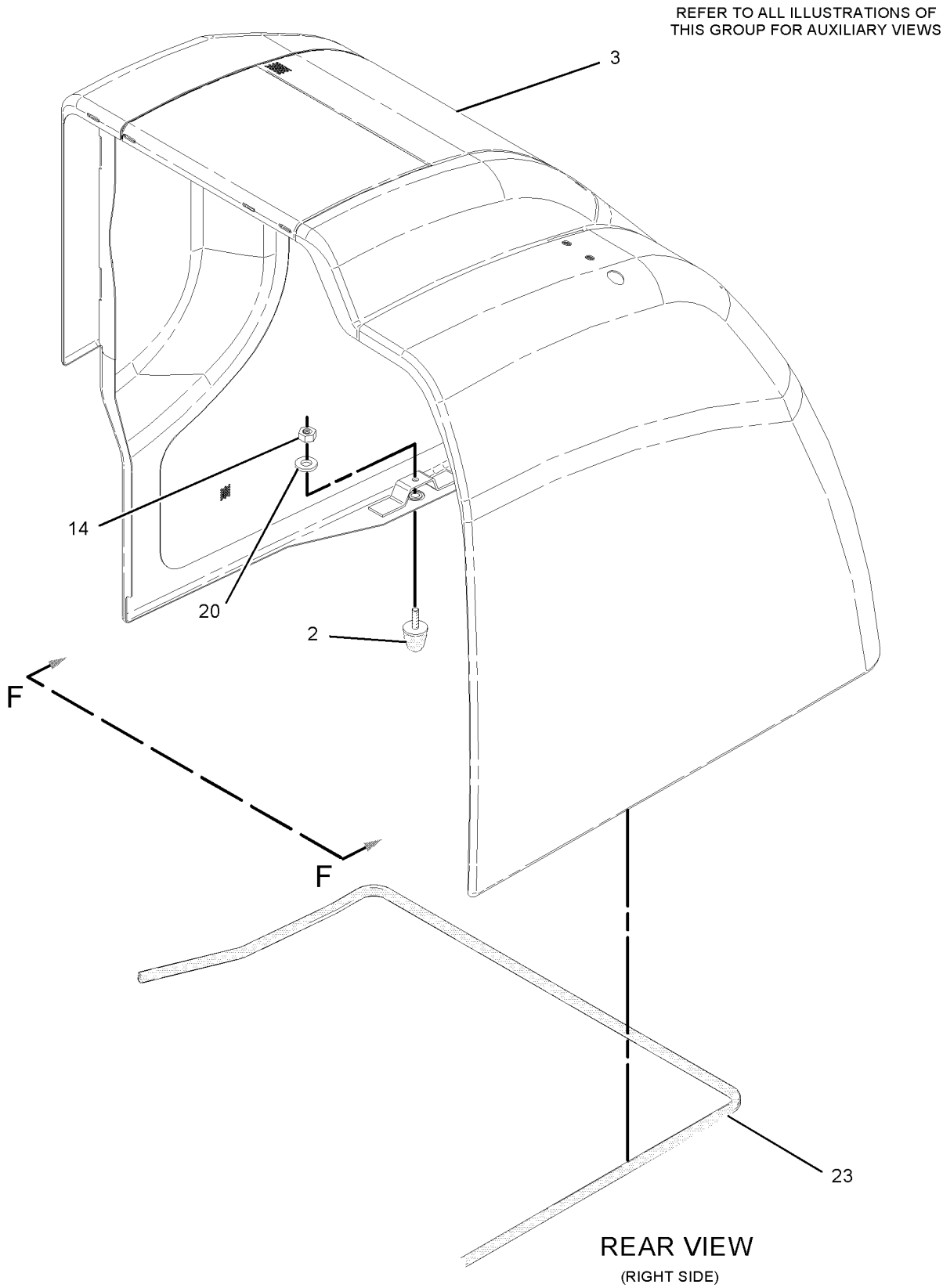

GRAPHIC #2

g01064572

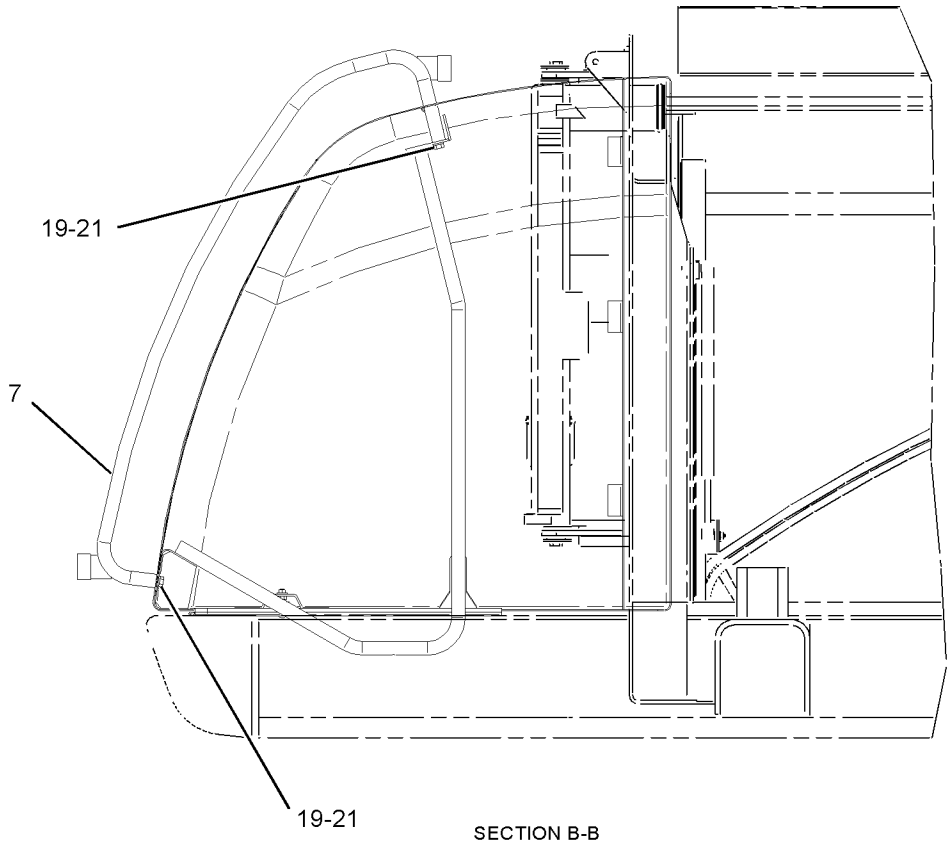

SECTION B-B

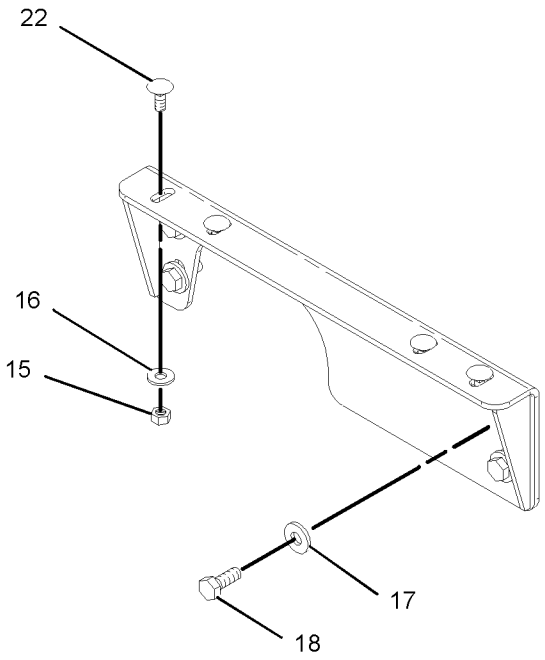

VIEW OF AREA G

GRAPHIC #3 g01064571

196-5700 **ENCLOSURE GP-RADIATOR** *(contd.)* **i02092043**

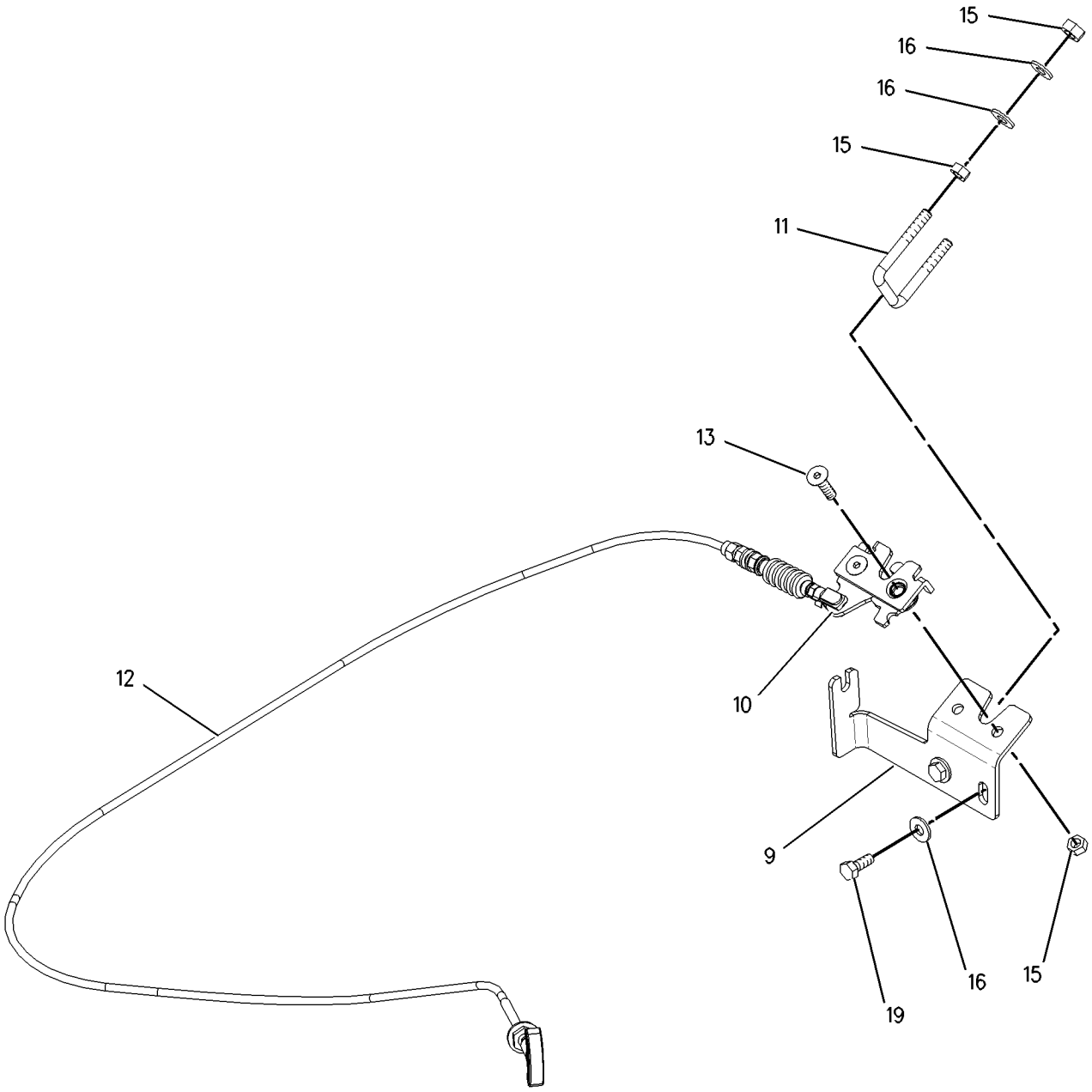

VIEW F-F

GRAPHIC #4 **<END>** g00915398

FRAME AND BODY

196-5700 ENCLOSURE GP-RADIATOR

S/N: BCZ218-2000

PART OF 186-0489 ENCLOSURE GP-ENGINE

SMCS-7272 **i02092044**

NOTE	REF NO	GRAPHIC REF	PART NUMBER	QTY	PART NAME 1 2 3 4 5 6 (PRODUCT LEVEL)	SEE PAGE
	1	2	**115-8523**	2	RING-RETAINING	
	2	1	**196-9700**	1	HOOD AS	
	3	2	**196-9710**	2	HINGE AS	
	4	2	**196-9711**	2	PIN	
	5	1	**196-9720**	2	SPRING-GAS	
C	6	2	**196-9728**	1	BRACKET	
	7	2	**201-3986**	1	BRACKET AS	
	8	2	**201-3988**	1	BRACKET	
	9	2	**206-9348**	1	LATCH AS	
	10	2	**206-9349**	1	ROD	
	11	2	**206-9364**	1	CABLE AS	
M	12	2	**131-8203**	2	SCREW-FLAT HEAD (M8X1.25X30-MM)	
CM	13	1,2	**5C-7261**	18	NUT (M8X1.25-THD)	
C	14	2	**5P-4116**	14	WASHER-HARD (8.8X20.5X2-MM THK)	
	15	2	**7X-7729**	4	WASHER (11X25X3-MM THK)	
M	16	2	**8T-4136**	4	BOLT (M10X1.5X25-MM)	
M	17	2	**8T-4189**	2	BOLT (M8X1.25X20-MM)	
C	18	1,2	**8T-4224**	8	WASHER-HARD (8.8X16X2-MM THK)	
CM	19	2	**8T-4908**	4	BOLT (M8X1.25X25-MM)	
M	20	2	**9X-8290**	4	BOLT (M8X1.25X20-MM)	
C	21	2	**148-8514**		SEAL (139 CM)	

C-CHANGE FROM PREVIOUS TYPE
M-METRIC PART

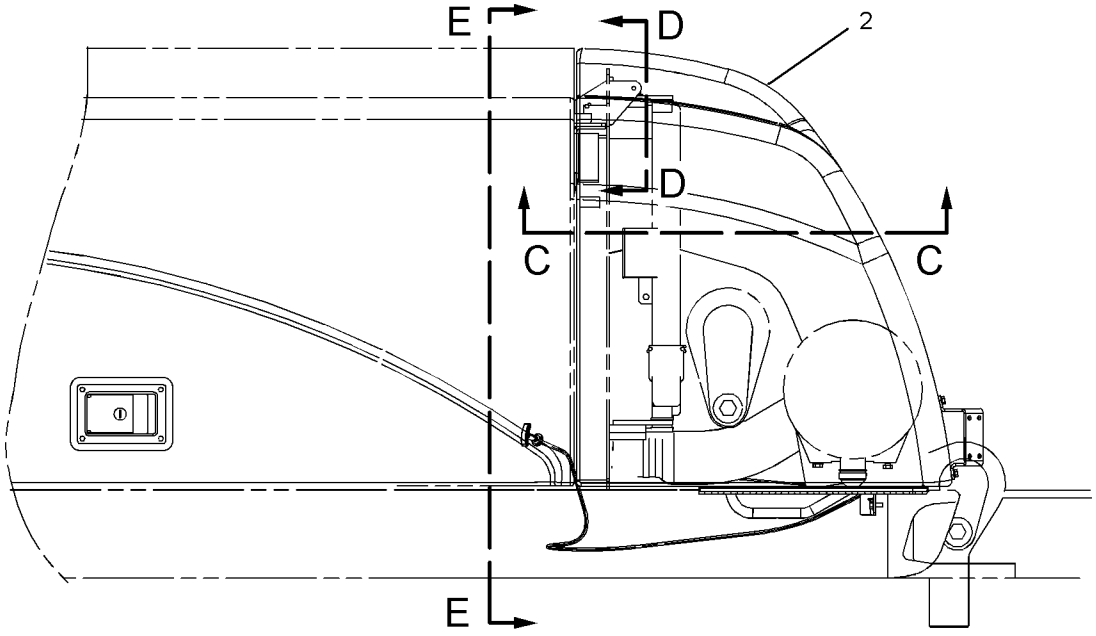

RIGHT SIDE VIEW

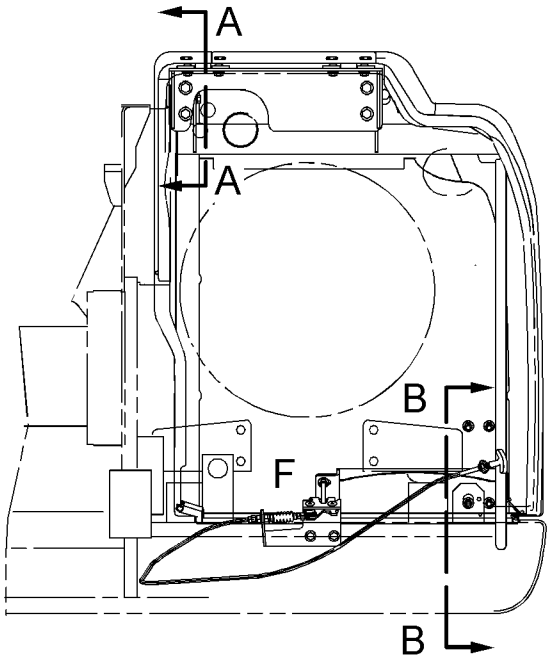

VIEW E-E

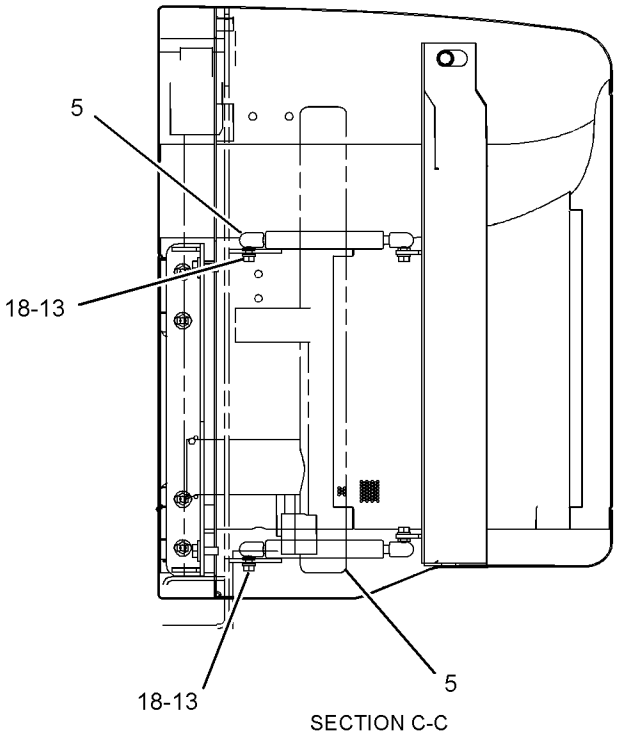

SECTION C-C

REFER TO ALL ILLUSTRATIONS OF
THIS GROUP FOR AUXILIARY VIEWS

GRAPHIC #1

g01054195

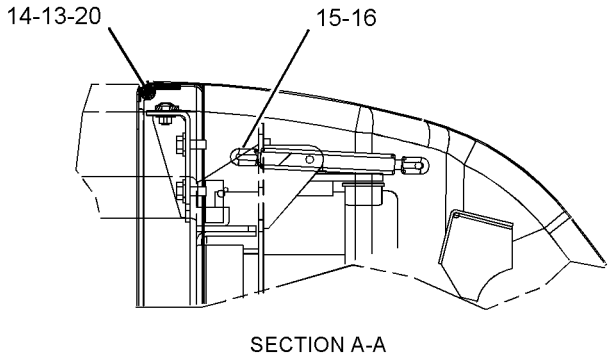

SECTION A-A

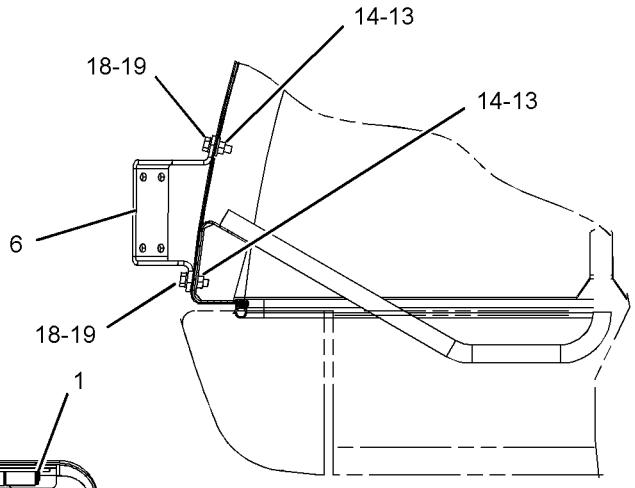

SECTION B-B

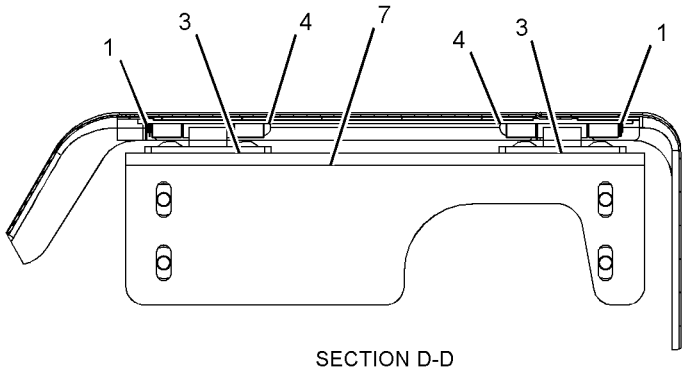

SECTION D-D

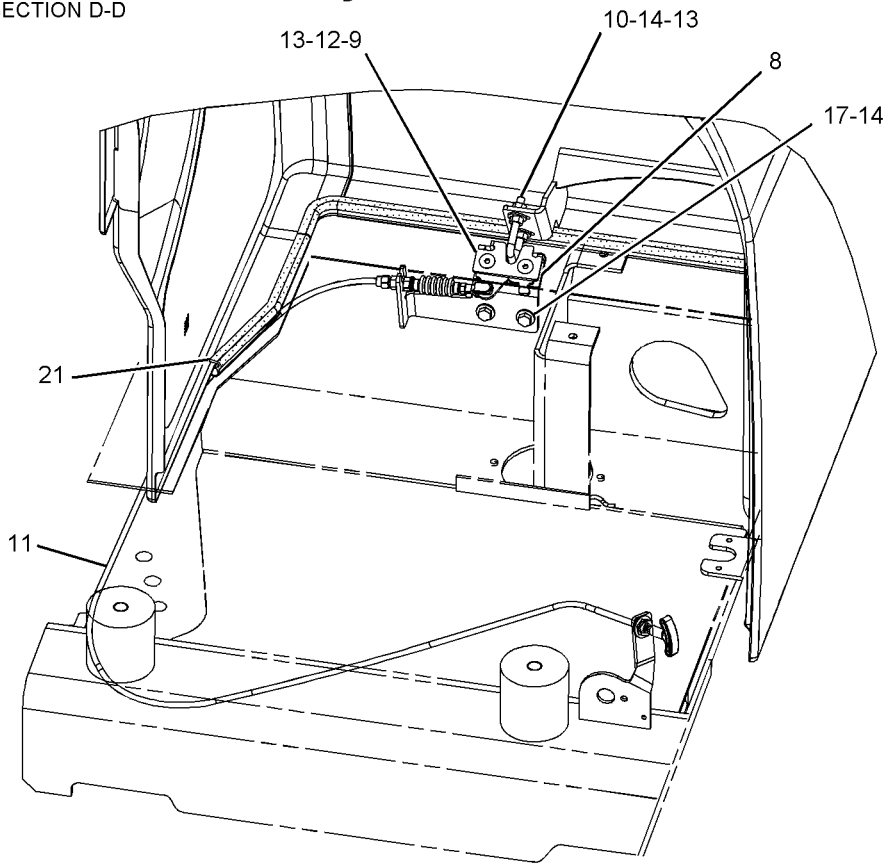

PICTORIAL VIEW OF AREA F

GRAPHIC #2

<END>

g01054196

188-4961 FRAME GP-CAB RISER

S/N: BCZ1-2000
PART OF 188-4960 CAB AR-RISER
AN ATTACHMENT

SMCS-7260 **i02171731**

NOTE	REF NO	GRAPHIC REF	PART NUMBER	QTY	PART NAME 1 2 3 4 5 6 (PRODUCT LEVEL)	SEE PAGE
	1	1	**6V-0292**	2	PLUG	
	2	1	**125-0661**	1	STEP AS	
Y	3	1	**125-4903**	1	COVER GP-CAB RISER	855
	4	1	**144-1183**	1	FILM-WARNING (AVOID BUMPING HEAD ON DOOR)	
	5	1	**219-2375**	1	BRACKET	
	6	1	**219-5269**	4	PLATE AS	
	7	1	**219-5278**	1	ANGLE	
Y	8	1	**219-5284**	1	DOOR GP-ACCESS (CAB RISER)	360
	9	1	**219-5289**	1	BRACKET AS	
	10	1	**219-5293**	1	FRAME AS	
	11	1	**219-5300**	1	TUBE AS	
M	12	1	**5C-7261**	6	NUT (M8X1.25-THD)	
M	13	1	**7X-2549**	8	BOLT (M12X1.75X100-MM)	
	14	1	**7X-7729**	4	WASHER (11X25X3-MM THK)	
	15	1	**8T-4121**	16	WASHER-HARD (11X21X2.5-MM THK)	
M	16	1	**8T-4137**	4	BOLT (M10X1.5X20-MM)	
M	17	1	**8T-4140**	4	BOLT (M16X2X60-MM)	
M	18	1	**8T-4195**	16	BOLT (M10X1.5X30-MM)	
M	19	1	**8T-4223**	16	WASHER-HARD (13.5X25.5X3-MM THK)	
	20	1	**8T-4224**	10	WASHER-HARD (8.8X16X2-MM THK)	
M	21	1	**8T-4244**	8	NUT (M12X1.75-THD)	
M	22	1	**8T-4908**	4	BOLT (M8X1.25X25-MM)	
	23	1	**9X-8257**	4	WASHER (17.5X30X3.5-MM THK)	
M	24	1	**9X-8290**	4	BOLT (M8X1.25X20-MM)	
BE	25	1	**117-0124**		SEAL	

B-USE AS REQUIRED
E-ORDER BY THE CENTIMETER
M-METRIC PART
Y-SEPARATE ILLUSTRATION

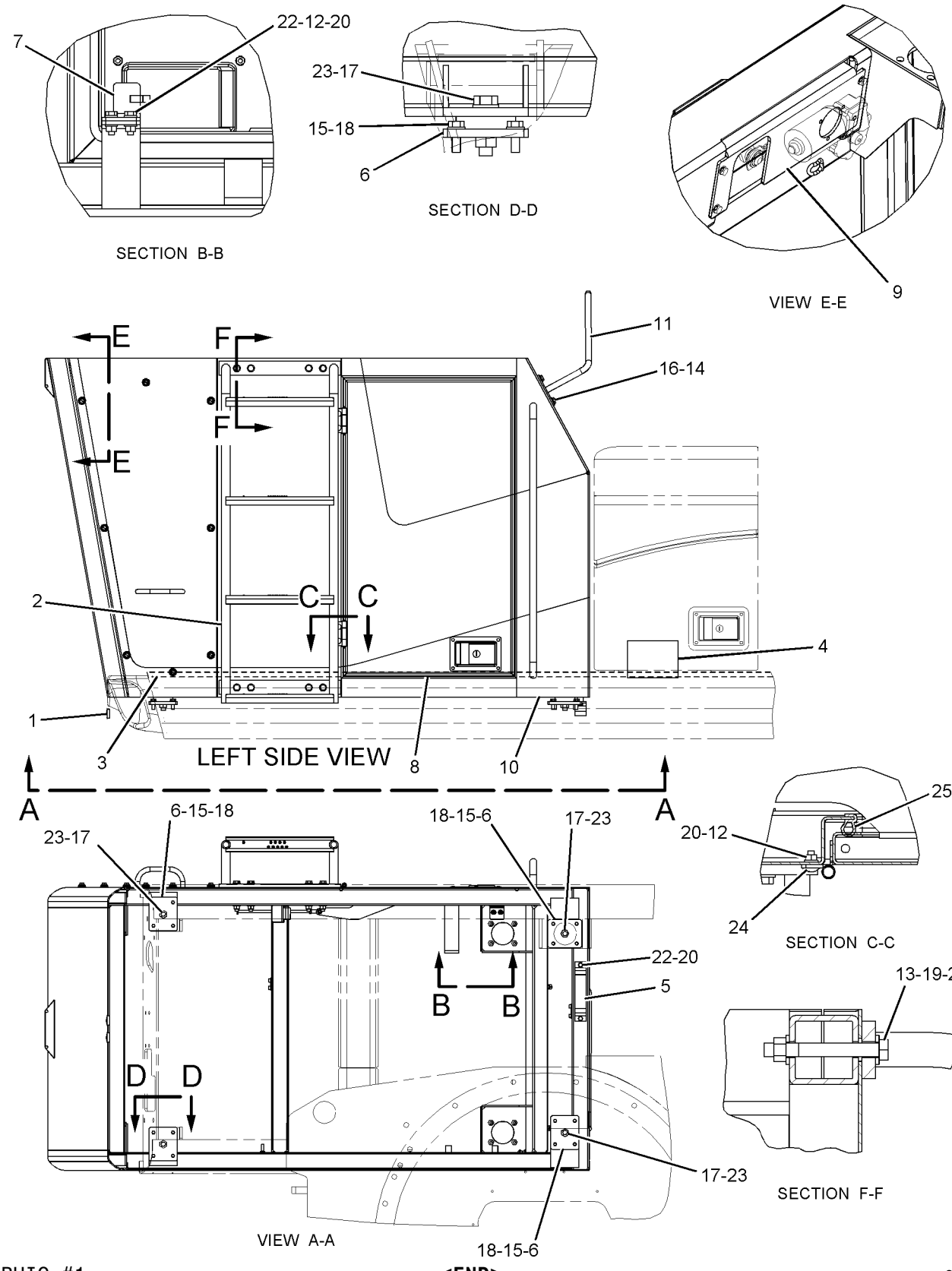

GRAPHIC #1 **<END>** g01090576

186-0500 FRAME GP-UPPER

S/N: BCZ1-2000

PART OF 186-0468 CHASSIS AR

SMCS-7051 **i01741556**

NOTE	REF NO	GRAPHIC REF	PART NUMBER	QTY	PART NAME 1 2 3 4 5 6 (PRODUCT LEVEL)	SEE PAGE
B	1	1	**7Y-2497**	1	SHIM (1.6MM THK)	
B	2	1,2	**7Y-2498**	2	SHIM (1.6MM THK)	
B	3	1,2	**093-0083**	2	SHIM (1.0MM THK)	
B	4	1	**093-0084**	1	SHIM (1.0MM THK)	
B	5	1,2	**093-0115**	2	SHIM (2.0MM THK)	
B	6	1	**093-0116**	1	SHIM (2.0MM THK)	
	7	1,2	**093-0349**	3	WASHER (6.0MM THK)	
	8	1,2	**128-0994**	2	GROMMET	
	9	2	**129-9111**	1	GROMMET	
	10	1,2	**188-3352**	2	PIN AS	
	11	1	**188-3761**	1	PIN AS	
	12	1	**189-2061**	1	BRACKET AS	
	13	1	**189-4201**	1	FRAME & BEARING AS	
	13A	1	**189-4208**	2	BEARING	
	14	1	**195-9400**	1	BUMPER AS (LH)	
	15	1	**195-9401**	1	BUMPER AS (RH)	
	16	2	**209-3062**	2	GROMMET	
	17	2	**210-1939**	1	PLATE	
	18	1	**128-8389**	1	PLATE	
B	19	1,2	**133-2425**	2	SHIM (0.5MM THK)	
B	20	1	**133-2426**	1	SHIM (0.5MM THK)	
M	21	1,2	**2W-9533**	4	BOLT (M8X1.25X10MM)	
	22	1,2	**5P-4116**	8	WASHER-HARD (8.8X20.5X2MM THK)	
	23	1	**7Y-8165**	3	GROMMET	
	24	1,2	**8T-4123**	3	WASHER-PLATED (22X35X3.5MM THK)	
M	25	1	**8T-4137**	2	BOLT (M10X1.5X20MM)	
M	26	1	**8T-4171**	1	BOLT (M6X1X12MM)	
M	27	1,2	**8T-4189**	8	BOLT (M8X1.25X20MM)	
M	28	1,2	**8T-4780**	3	BOLT (M20X2.5X30MM)	
E	29	2	**5P-0804**		SEAL (60CM)	
E	29A	2	**5P-0804**		SEAL (77CM)	

B-USE AS REQUIRED
E-ORDER BY THE CENTIMETER
M-METRIC PART

186-0500 **FRAME GP-UPPER** *(contd.)* **i01741556**

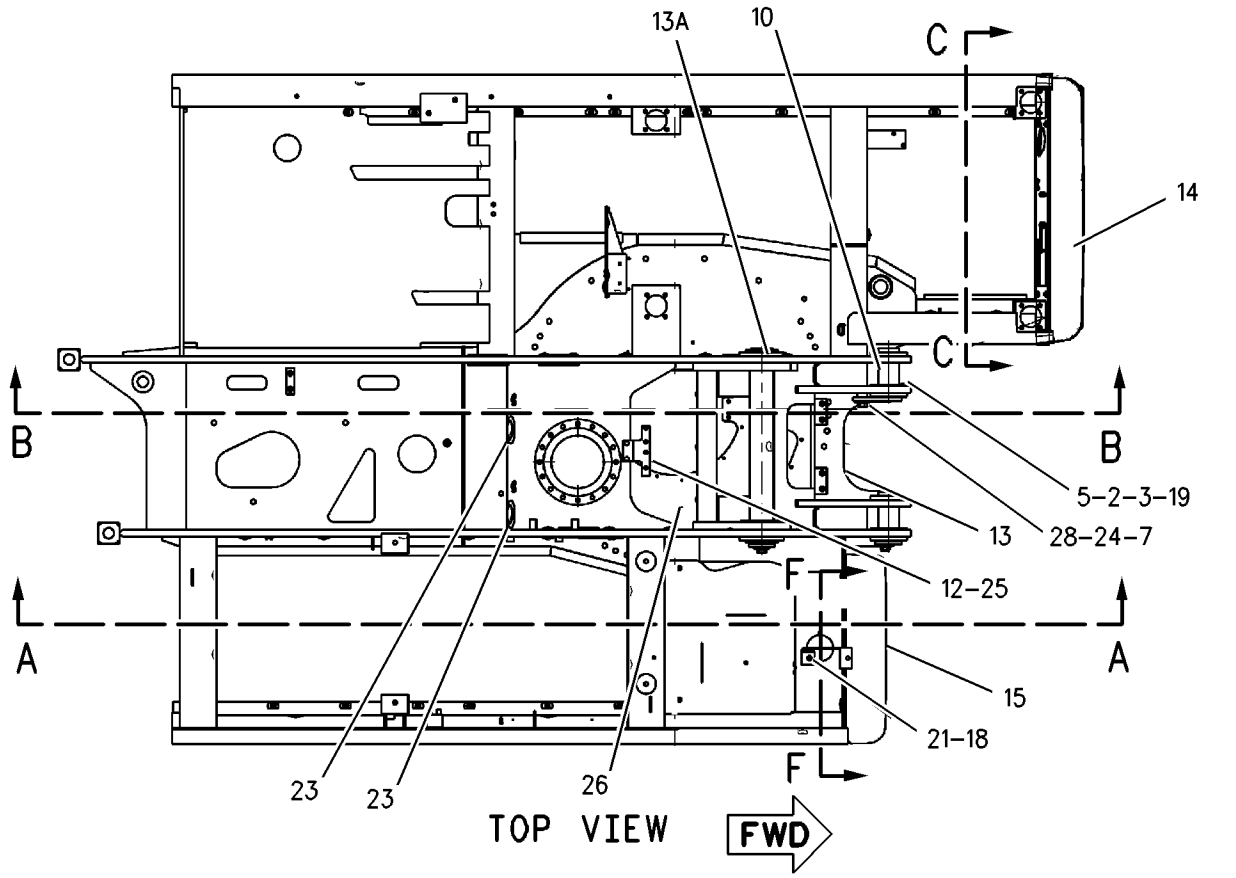

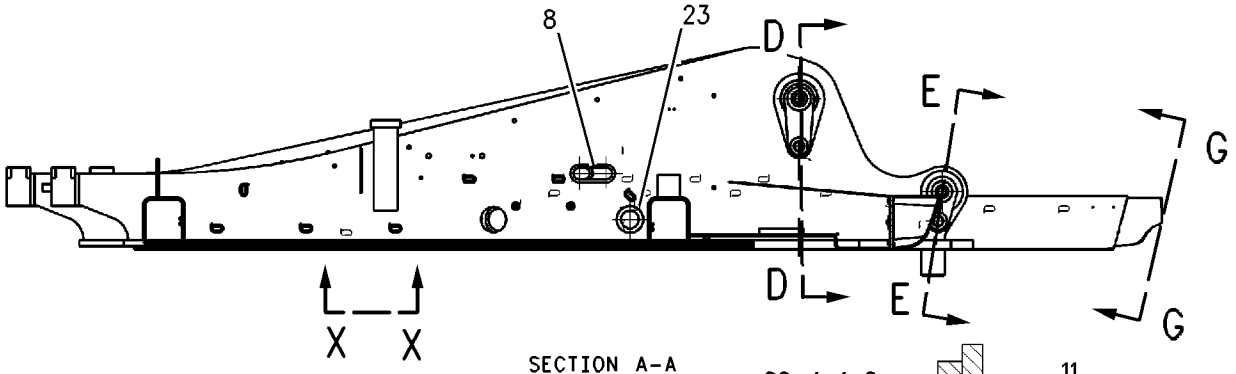

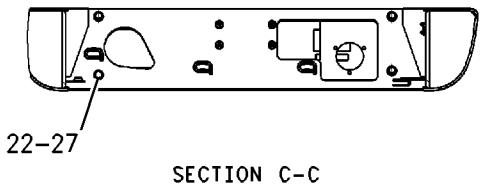

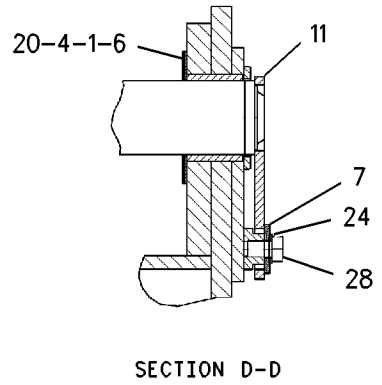

REFER TO ALL ILLUSTRATIONS OF THIS GROUP FOR AUXILIARY VIEWS

GRAPHIC #1 g00892325

186-0500 **FRAME GP-UPPER** *(contd.)* **i01741556**

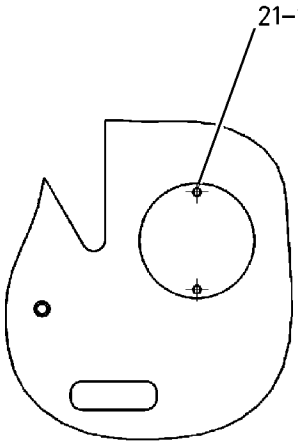

VIEW X–X

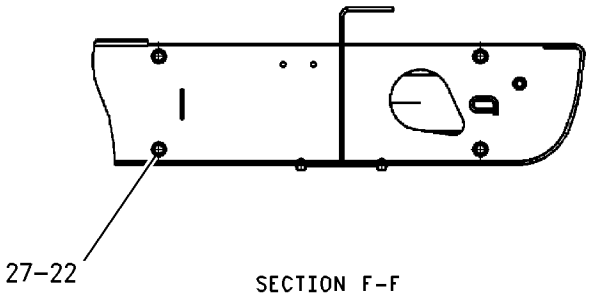

SECTION F–F

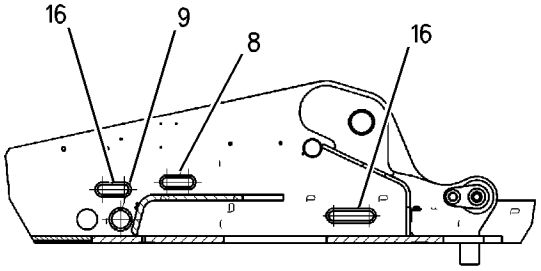

SECTION B–B

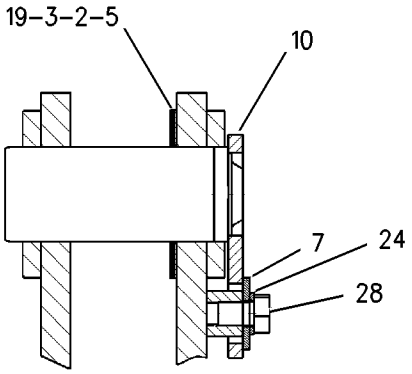

SECTION E–E

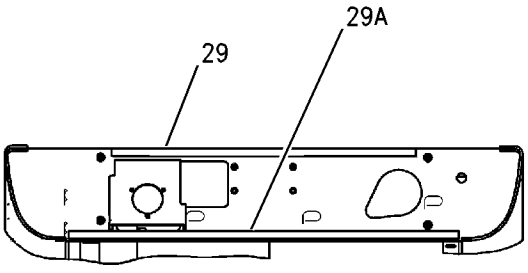

VIEW G–G

GRAPHIC #2 **<END>** g00892326

190-8206 GEAR & BEARING GP-SWING

S/N: BCZ1-2000

PART OF 186-0468 CHASSIS AR

SMCS-7063 **i02093473**

NOTE	REF NO	GRAPHIC REF	PART NUMBER	QTY	PART NAME 1 2 3 4 5 6 (PRODUCT LEVEL)	SEE PAGE
	1	1	**7Y-1647**	1	GASKET	
	2	1	**085-9311**	34	SPACER (20.6X38X6-MM THK)	
	3	1	**126-1529**	1	PLATE-SWING BEAR	
	4	1	**131-1055**	30	SPACER (20.5X38X34-MM THK)	
	5	1	**190-8207**	1	GEAR & BEARING GP	
BE		1	**148-4685**		SEAL	
M	6	1	**137-3297**	34	BOLT	
M	7	1	**137-3299**	30	BOLT	
	8	1	**4M-6921**	4	WASHER-SPRING	
	9	1	**7Y-1648**	1	STRIP	
M	10	1	**8T-4137**	4	BOLT (M10X1.5X20-MM)	
M	11	1	**8T-4199**	6	BOLT (M8X1.25X12-MM)	
	12	1	**9T-2905**	6	SPRING	
B	13	1	**1U-8846**		SEALANT-GASKET	

B-USE AS REQUIRED
E-ORDER BY THE CENTIMETER
M-METRIC PART

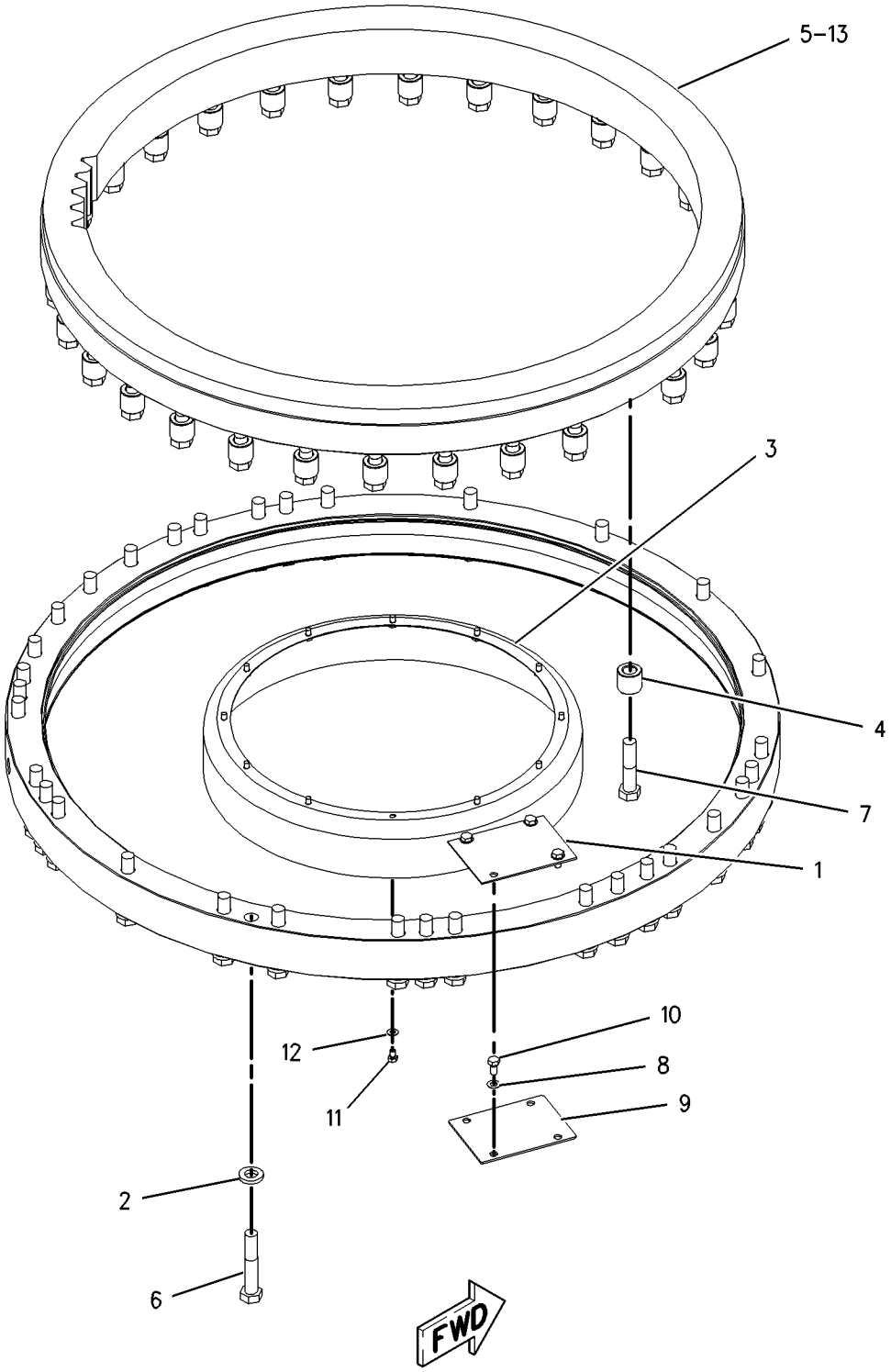

GRAPHIC #1 **<END>** g00812394

186-0503 GUARD GP-BOTTOM

S/N: BCZ1-2000

PART OF 186-0468 CHASSIS AR

SMCS-7153 **i01782703**

NOTE	REF NO	GRAPHIC REF	PART NUMBER	QTY	PART NAME 1 2 3 4 5 6 (PRODUCT LEVEL)	SEE PAGE
	1	1	**5W-1119**	20	WASHER (9.8X18.5X1.5-MM THK)	
	2	1	**112-8624**	2	COVER	
	3	1	**112-8625**	1	COVER	
	4	1	**112-9862**	1	COVER	
	5	1	**113-4686**	1	COVER	
	6	1	**140-7197**	1	COVER (FRONT LH)	
	7	1	**144-7122**	1	COVER (MID LH)	
	8	1	**216-4191**	1	PLATE	
	9	1	**216-4193**	1	PLATE AS	
M	10	1	**7X-2621**	2	BOLT (M10X1.50X12-MM)	
M	11	1	**8T-4137**	2	BOLT (M10X1.5X20-MM)	
	12	1	**8T-6467**	20	FASTENER-HEX HEAD	
E	13	1	**148-9561**		SEAL (18CM)	
E	13A	1	**148-9561**		SEAL (75CM)	
E	13B	1	**148-9561**		SEAL (53CM)	
E	13C	1	**148-9561**		SEAL (13CM)	

E-ORDER BY THE CENTIMETER
M-METRIC PART

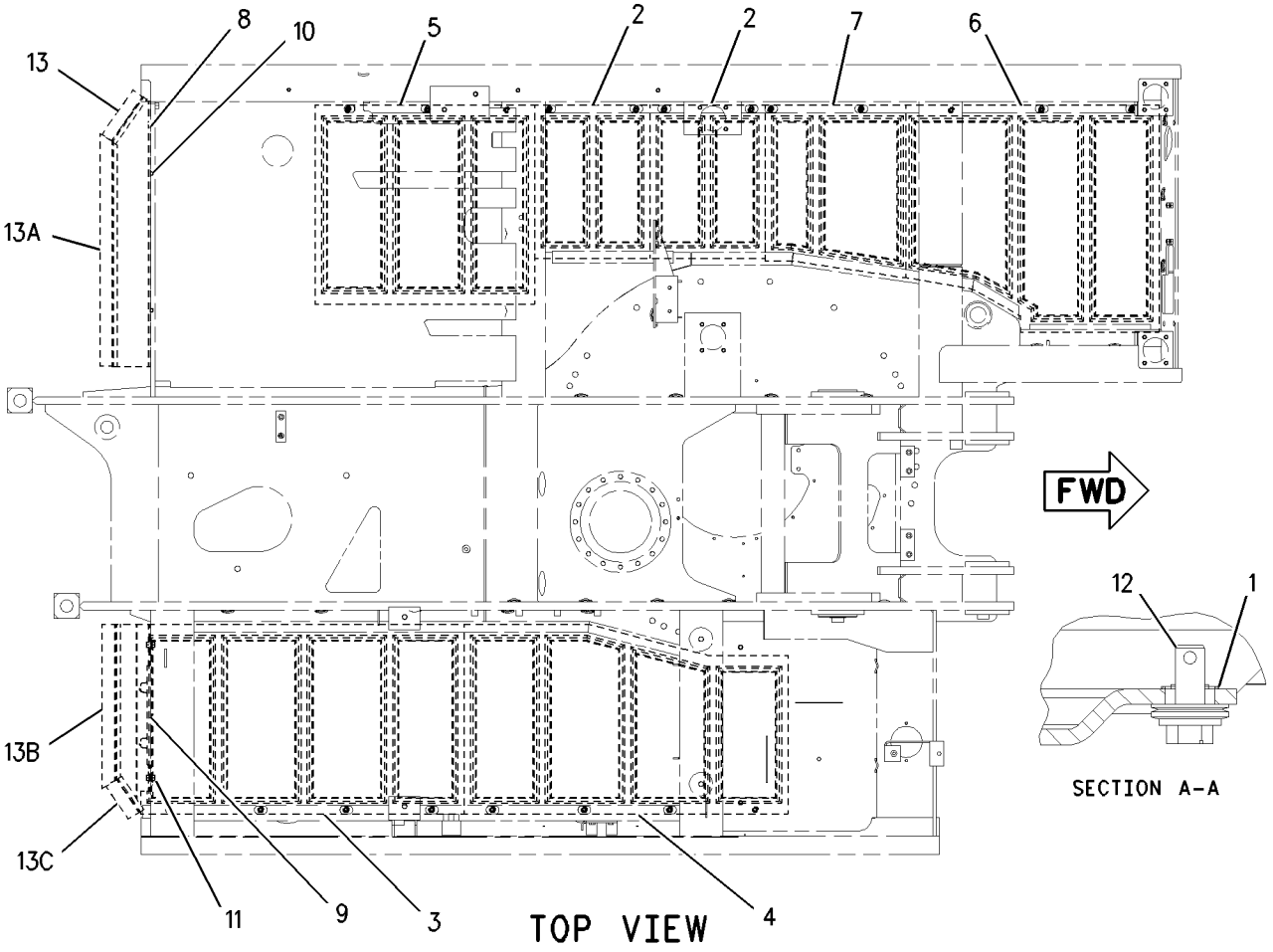

GRAPHIC #1 **<END>** g00915127

186-0488 HOOD & GUARD AR

S/N: BCZ1-2000

PART OF 186-0468 CHASSIS AR

SMCS-7251 **i01640779**

NOTE	PART NUMBER	QTY	PART NAME 1 2 3 4 5 6 (PRODUCT LEVEL)	SEE PAGE
Y	*186-0491*	1	DOOR GP-ACCESS	354
Y	*186-0489*	1	ENCLOSURE GP-ENGINE	364
Y	*186-0490*	1	ENCLOSURE GP-ENGINE	372
Y	*186-0492*	1	STEP GP	396
Y	*207-2163*	1	SUPPRESSION GP-SOUND	402
Y	*186-0493*	1	WALKWAY GP	403

Y-SEPARATE ILLUSTRATION

<END>

210-0610 INSULATION GP-HEAT

S/N: BCZ1-2000

PART OF 207-2163 SUPPRESSION GP-SOUND

SMCS-7150, 7301 **i02171716**

NOTE	REF NO	GRAPHIC REF	PART NUMBER	QTY	PART NAME 1 2 3 4 5 6 (PRODUCT LEVEL)	SEE PAGE
	1	1	**210-0616**	1	INSULATION	
	2	1	**210-0617**	1	INSULATION	
	3	1	**244-2422**	1	INSULATION	
	4	1	**210-0624**	1	INSULATION	
	5	1	**210-0629**	1	INSULATION	

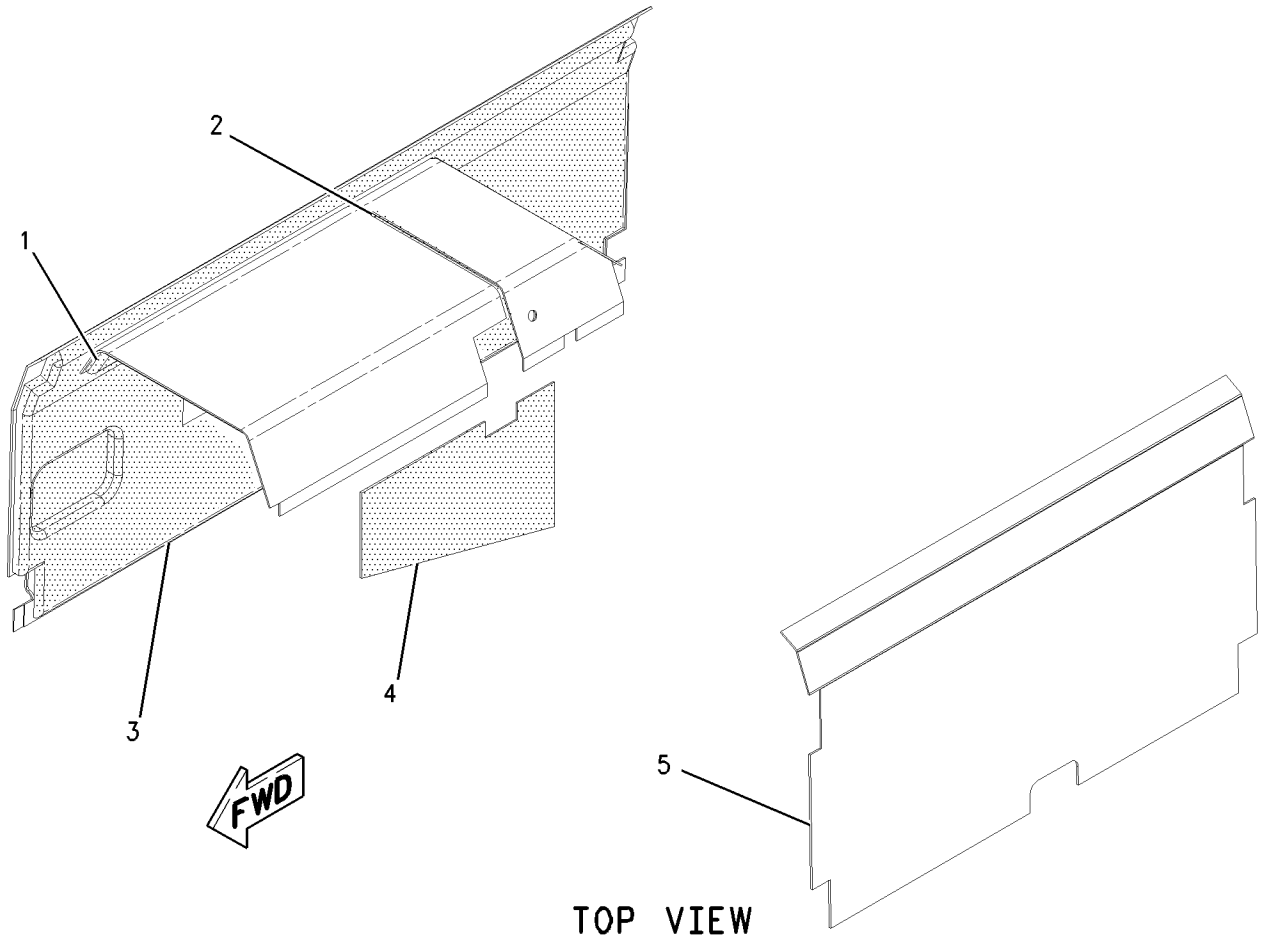

TOP VIEW

(LEFT SIDE)

GRAPHIC #1 **<END>** g00988947

210-0603 INSULATION GP-SOUND SUPPR

S/N: BCZ1-2000

PART OF 207-2163 SUPPRESSION GP-SOUND

SMCS-1801, 7076, 7261 **i01892332**

NOTE	REF NO	GRAPHIC REF	PART NUMBER	QTY	PART NAME 1 2 3 4 5 6 (PRODUCT LEVEL)	SEE PAGE
	1	1	**210-0613**	1	INSULATION	
	2	1	**210-0605**	1	INSULATION	
	3	1	**210-0606**	1	INSULATION	

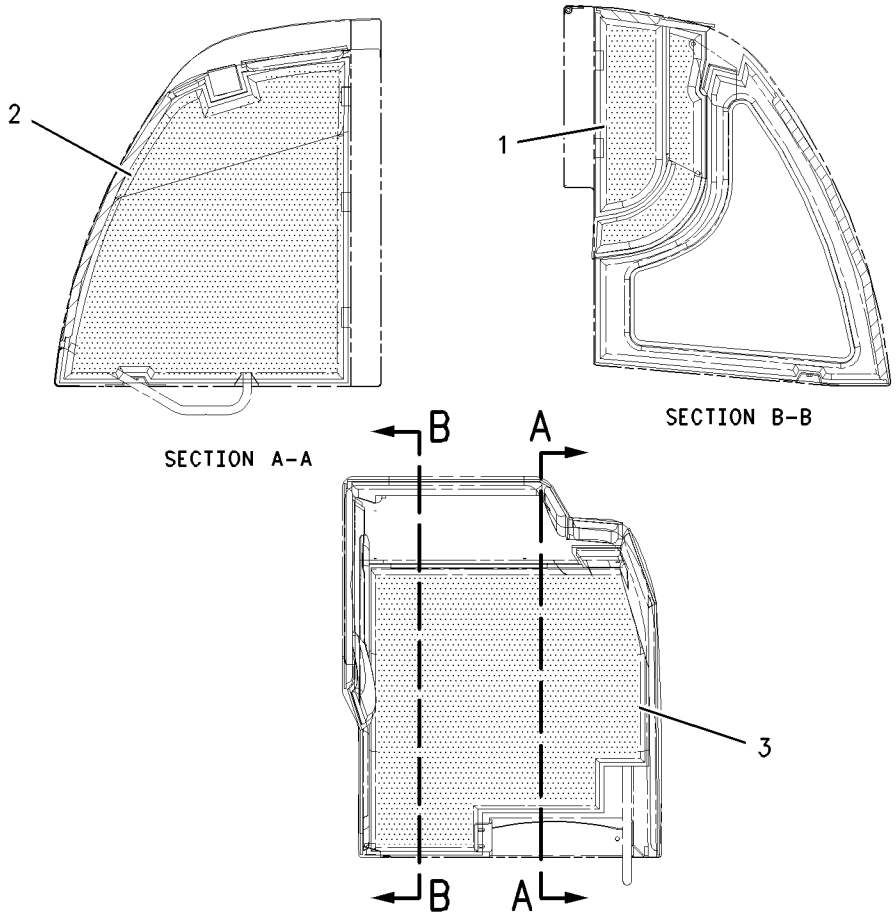

GRAPHIC #1 **<END>** g00985002

FRAME AND BODY

187-3801 MOUNTING GP-CAB

S/N: BCZ1-2000

PART OF 198-4680 OPERATOR AR

SMCS-7301 **i02160062**

NOTE	REF NO	GRAPHIC REF	PART NUMBER	QTY	PART NAME 1 2 3 4 5 6 (PRODUCT LEVEL)	SEE PAGE
	1	1	**8Y-6967**	4	LOUVER AS	
	2	1	**9R-5616**	1	PLUG	
	3	1	**139-6039**	2	NUT (U-TYPE RETAINER)	
	4	1	**170-7721**	1	MIRROR AS	
	5	1	**205-0453**	1	BRACKET	
	6	1	**216-2175**	1	BOX GP-STORAGE	
	7	1	**218-4257**	1	COVER	
	8	1	**219-8499**	1	COVER AS	
	9	1	**241-2482**	1	PLUG	
	10	1	**241-2483**	1	PLUG	
M	11	1	**131-3540**	2	LOCKNUT (M8X1.25-THD)	
	12	1	**156-6568**	1	COVER	
M	13	1	**3E-8020**	6	SCREW-TRUSS HEAD	
	14	1	**5P-1076**	2	WASHER-HARD (13.5X30X4-MM THK)	
	15	1	**8T-4121**	2	WASHER-HARD (11X21X2.5-MM THK)	
M	16	1	**8T-4179**	2	BOLT (M12X1.75X20-MM)	
M	17	1	**8T-4195**	2	BOLT (M10X1.5X30-MM)	
M	18	1	**8T-4223**	8	WASHER-HARD (13.5X25.5X3-MM THK)	
	19	1	**8T-4224**	6	WASHER-HARD (8.8X16X2-MM THK)	
M	20	1	**8T-4910**	6	BOLT (M12X1.75X60-MM)	
M	21	1	**8T-6868**	2	BOLT (M12X1.75X80-MM)	
M	22	1	**8T-7547**	2	BOLT (M8X1.25X30-MM)	
	23	1	**9R-5615**	1	PLUG	
M	24	1	**9X-2044**	6	SCREW-TRUSS HEAD (M6X1.0X16-MM)	

M-METRIC PART

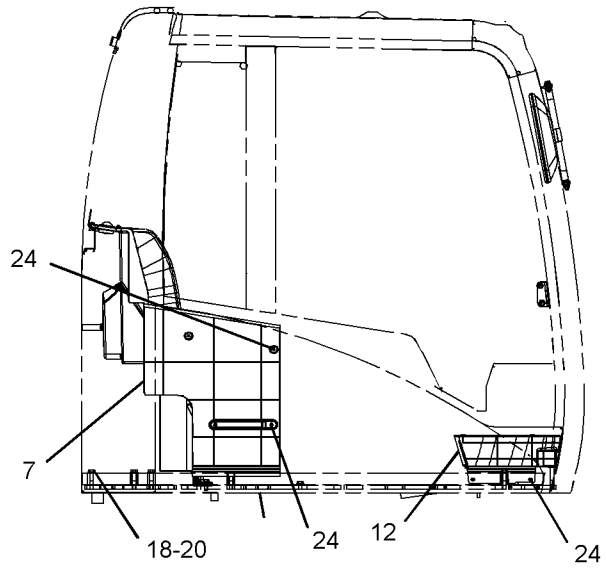

RIGHT SIDE VIEW

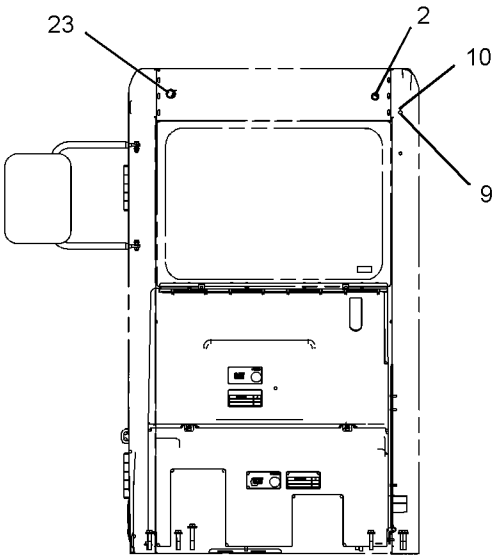

REAR VIEW

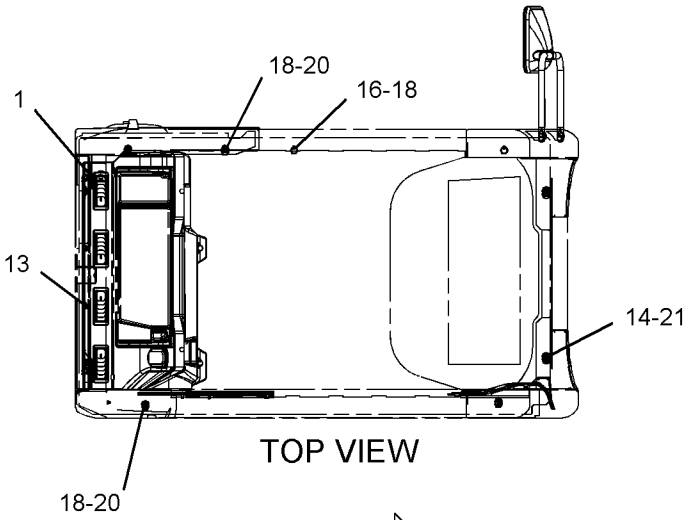

TOP VIEW

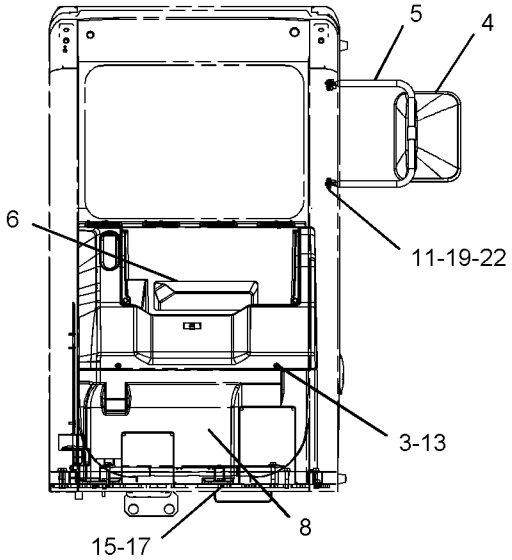

FRONT VIEW

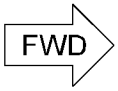

GRAPHIC #1 **<END>** g01045674

186-0492 STEP GP

S/N: BCZ1-560, 564, 566-567, 569, 571, 573-580
PART OF 186-0488 HOOD & GUARD AR

SMCS-7254 **i01684882**

NOTE	REF NO	GRAPHIC REF	PART NUMBER	QTY	PART NAME 1 2 3 4 5 6 (PRODUCT LEVEL)	SEE PAGE
	1	1	**193-8994**	1	STEP AS	
	2	1	**195-9395**	1	SHEET	
	3	1	**195-9399**	1	SHEET	
	4	1	**200-8115**	1	PLATE	
	5	1	**201-3097**	1	PIPE AS	
M	6	1	**5C-7261**	2	NUT (M8X1.25 THD)	
	7	1	**5P-4116**	10	WASHER-HARD (8.8X20.5X2MM THK)	
	8	1	**7X-7729**	9	WASHER (11X25X3MM THK)	
M	9	1	**8T-4133**	2	NUT (M10X1.5 THD)	
M	10	1	**8T-4189**	8	BOLT (M8X1.25X20MM)	
M	11	1	**8T-4195**	7	BOLT (M10X1.5X30MM)	

M-METRIC PART

186-0492 **STEP GP** *(contd.)* **i01684882**

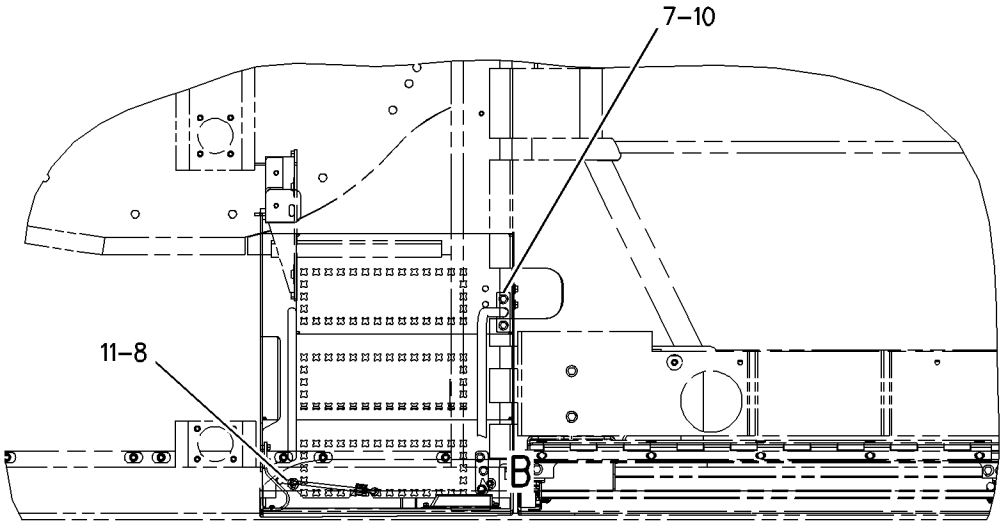

SECTION A–A

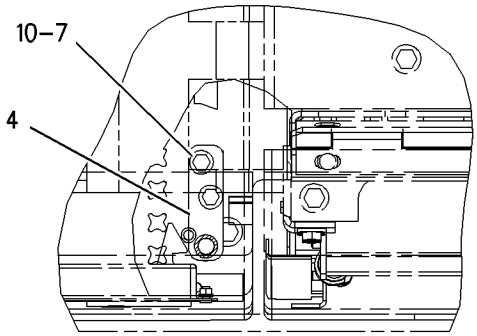

VIEW OF AREA B

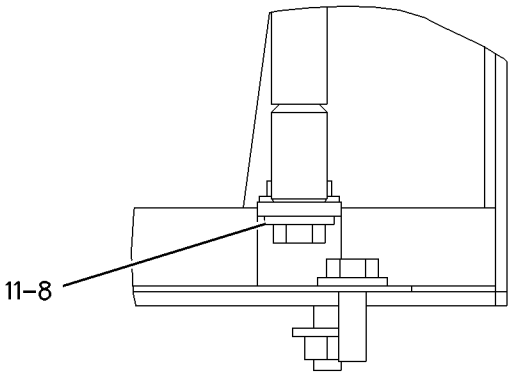

VIEW OF AREA C

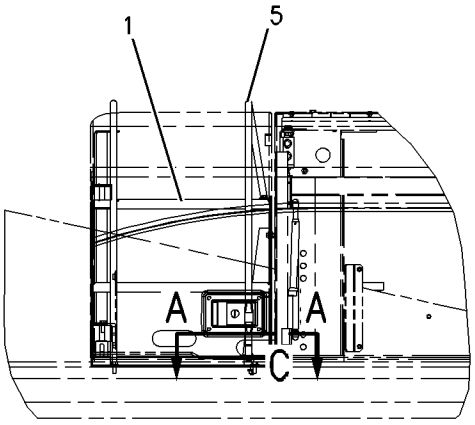

LEFT SIDE VIEW

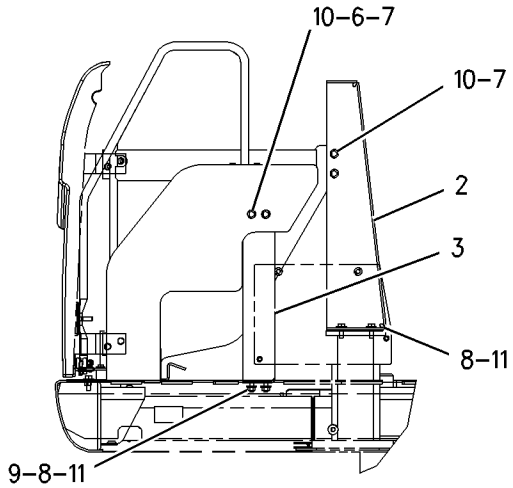

REAR VIEW

GRAPHIC #1 **<END>** g00816557

FRAME AND BODY

186-0492 STEP GP

S/N: BCZ561-563, 565, 568, 570, 572, 581-2000
PART OF 186-0488 HOOD & GUARD AR

SMCS-7254 **i02154530**

NOTE	REF NO	GRAPHIC REF	PART NUMBER	QTY	PART NAME 1 2 3 4 5 6 (PRODUCT LEVEL)	SEE PAGE
	1	1	**195-9395**	1	SHEET	
C	2	1	**223-3570**	1	SHEET	
C	3	1	**233-2976**	1	TUBE	
C	4	1	**233-2985**	1	STEP AS	
C	5	1	**237-2228**	1	BOLT	
CM	6	1	**5C-7261**	3	NUT (M8X1.25-THD)	
C	7	1	**5P-4116**	8	WASHER-HARD (8.8X20.5X2-MM THK)	
C	8	1	**7X-7729**	5	WASHER (11X25X3-MM THK)	
C	9	1	**8T-4121**	4	WASHER-HARD (11X21X2.5-MM THK)	
CM	10	1	**8T-4133**	3	NUT (M10X1.5-THD)	
CM	11	1	**8T-4189**	5	BOLT (M8X1.25X20-MM)	
CM	12	1	**8T-4195**	5	BOLT (M10X1.5X30-MM)	

C-CHANGE FROM PREVIOUS TYPE
M-METRIC PART

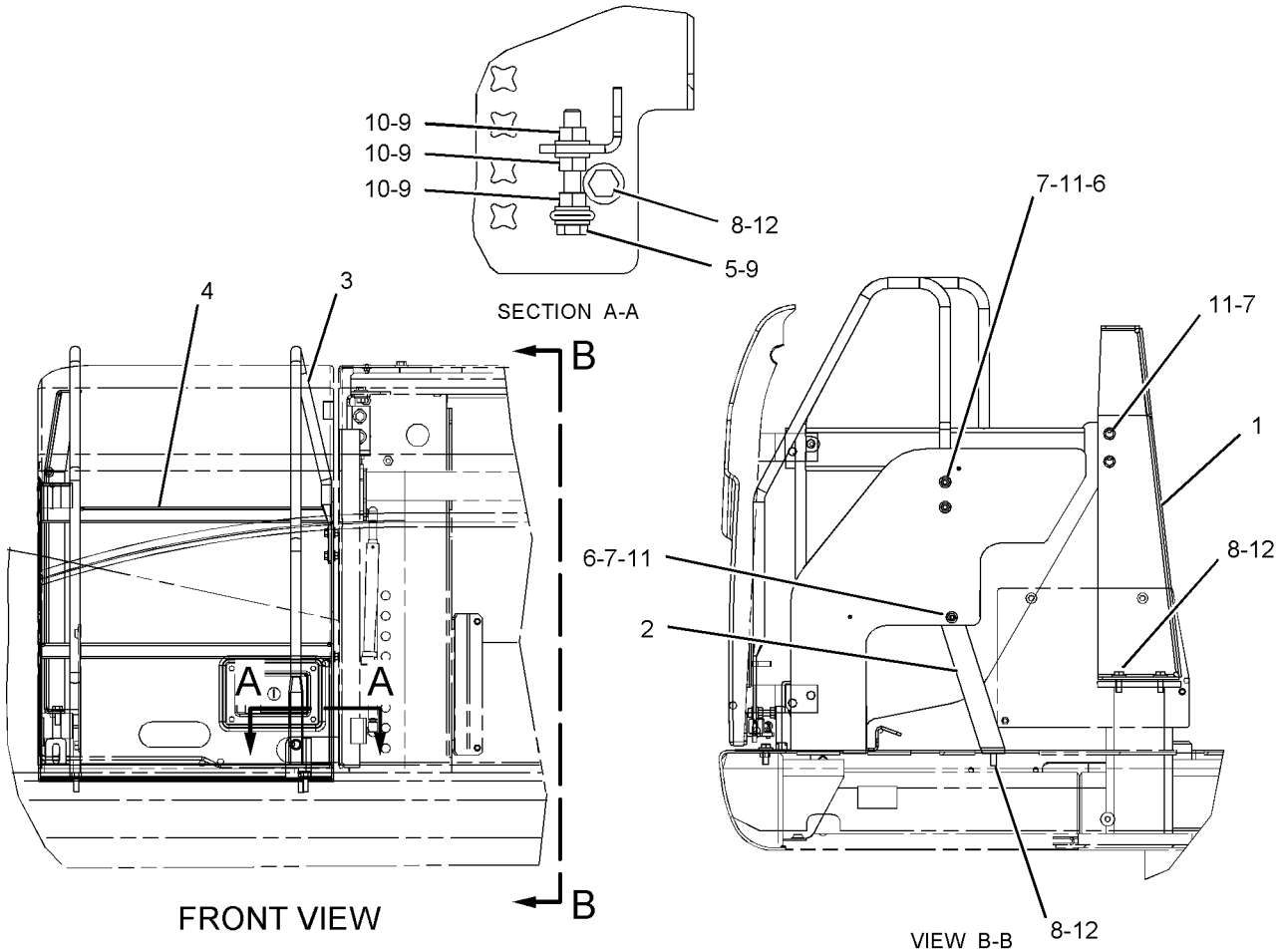

GRAPHIC #1 **<END>** g01093602

FRAME AND BODY

194-9213 STEP GP

S/N: BCZ1-2000

PART OF 186-0469 FRAME AR-UNDERCARRIAGE

SMCS-7254 **i01818677**

NOTE	REF NO	GRAPHIC REF	PART NUMBER	QTY	PART NAME 1 2 3 4 5 6 (PRODUCT LEVEL)	SEE PAGE
	1	1	**194-9215**	1	STEP AS	
M	2	1	**8T-4132**	4	NUT (M16X2 THD)	
M	3	1	**8T-4779**	4	BOLT (M16X2X35MM)	
	4	1	**9X-8257**	8	WASHER (17.5X30X3.5MM THK)	

M-METRIC PART

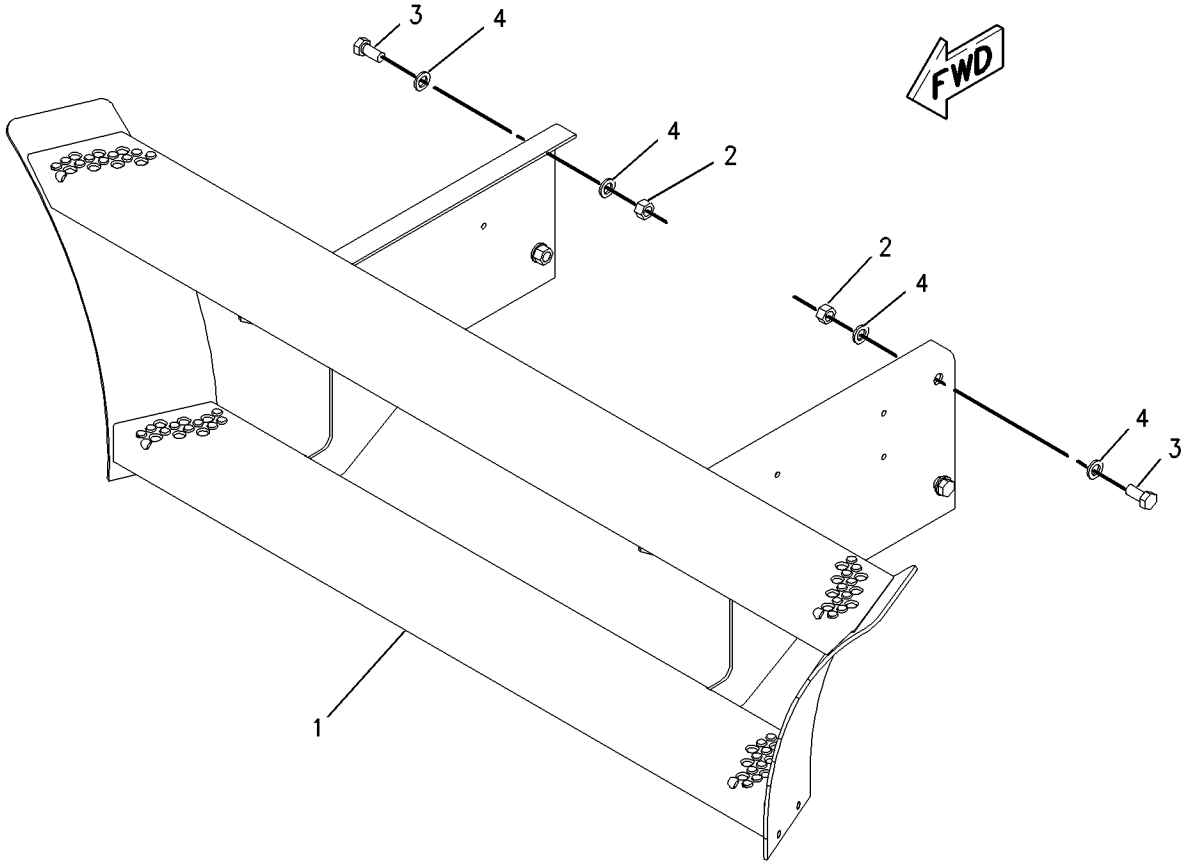

GRAPHIC #1 **<END>** g00928338

FRAME AND BODY

194-9212 STEP GP-TOOL BOX

S/N: BCZ1-2000

PART OF 186-0469 FRAME AR-UNDERCARRIAGE

SMCS-7254 **i02062548**

NOTE	REF NO	GRAPHIC REF	PART NUMBER	QTY	PART NAME 1 2 3 4 5 6 (PRODUCT LEVEL)	SEE PAGE
M	1	1	**3T-0852**	2	LOCKNUT (M8X1.25-THD)	
BE	2	1	**118-7987**		SEAL	
	3	1	**194-9214**	1	STEP AS	
		1	**201-4600**	1	BOX AS-TOOL	
	5	1	**238-8015**	1	PIN AS	
Y	6	1	*201-5675*	1	DOOR GP-ACCESS	359
	7	1	**208-5619**	3	BUMPER	
M	8	1	**5C-7261**	8	NUT (M8X1.25-THD)	
M	9	1	**8T-0288**	2	BOLT (M5X0.8X12-MM)	
	10	1	**8T-0328**	2	WASHER-HARD (5.5X10X1-MM THK)	
M	11	1	**8T-4132**	4	NUT (M16X2-THD)	
M	12	1	**8T-4189**	8	BOLT (M8X1.25X20-MM)	
	13	1	**8T-4224**	20	WASHER-HARD (8.8X16X2-MM THK)	
M	14	1	**8T-4779**	4	BOLT (M16X2X35-MM)	
M	15	1	**8T-7547**	2	BOLT (M8X1.25X30-MM)	
	16	1	**9X-8257**	8	WASHER (17.5X30X3.5-MM THK)	

B-USE AS REQUIRED
E-ORDER BY THE CENTIMETER
M-METRIC PART
Y-SEPARATE ILLUSTRATION

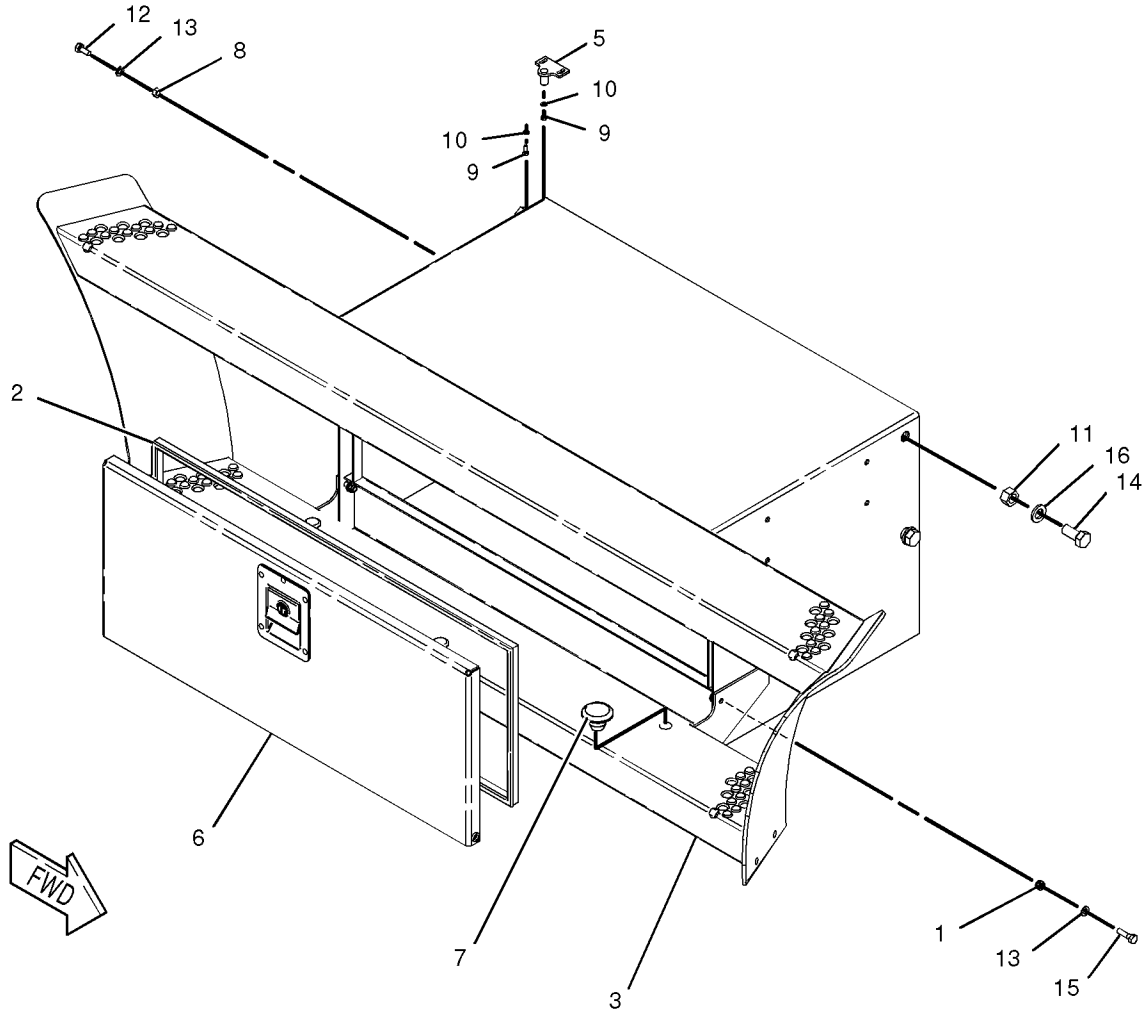

GRAPHIC #1 **<END>** g01056914

FRAME AND BODY

206-1351 STEP GP-TOOL BOX

S/N: BCZ1-2000
AN ATTACHMENT

SMCS-7254 **i02062412**

NOTE	REF NO	GRAPHIC REF	PART NUMBER	QTY	PART NAME 1 2 3 4 5 6 (PRODUCT LEVEL)	SEE PAGE
M	1	1	**3T-0852**	2	LOCKNUT (M8X1.25-THD)	
BE	2	1	**118-7987**		SEAL	
	3	1	**194-9214**	1	STEP AS	
		1	**201-4600**	1	BOX AS-TOOL	
	5	1	**238-8015**	1	PIN AS	
Y	6	1	*201-5675*	1	DOOR GP-ACCESS	359
	7	1	**208-5619**	3	BUMPER	
M	8	1	**5C-7261**	8	NUT (M8X1.25-THD)	
M	9	1	**8T-0288**	2	BOLT (M5X0.8X12-MM)	
	10	1	**8T-0328**	2	WASHER-HARD (5.5X10X1-MM THK)	
M	11	1	**8T-4132**	4	NUT (M16X2-THD)	
M	12	1	**8T-4189**	8	BOLT (M8X1.25X20-MM)	
	13	1	**8T-4224**	20	WASHER-HARD (8.8X16X2-MM THK)	
M	14	1	**8T-4779**	4	BOLT (M16X2X35-MM)	
M	15	1	**8T-7547**	2	BOLT (M8X1.25X30-MM)	
	16	1	**9X-8257**	8	WASHER (17.5X30X3.5-MM THK)	

B-USE AS REQUIRED
E-ORDER BY THE CENTIMETER
M-METRIC PART
Y-SEPARATE ILLUSTRATION

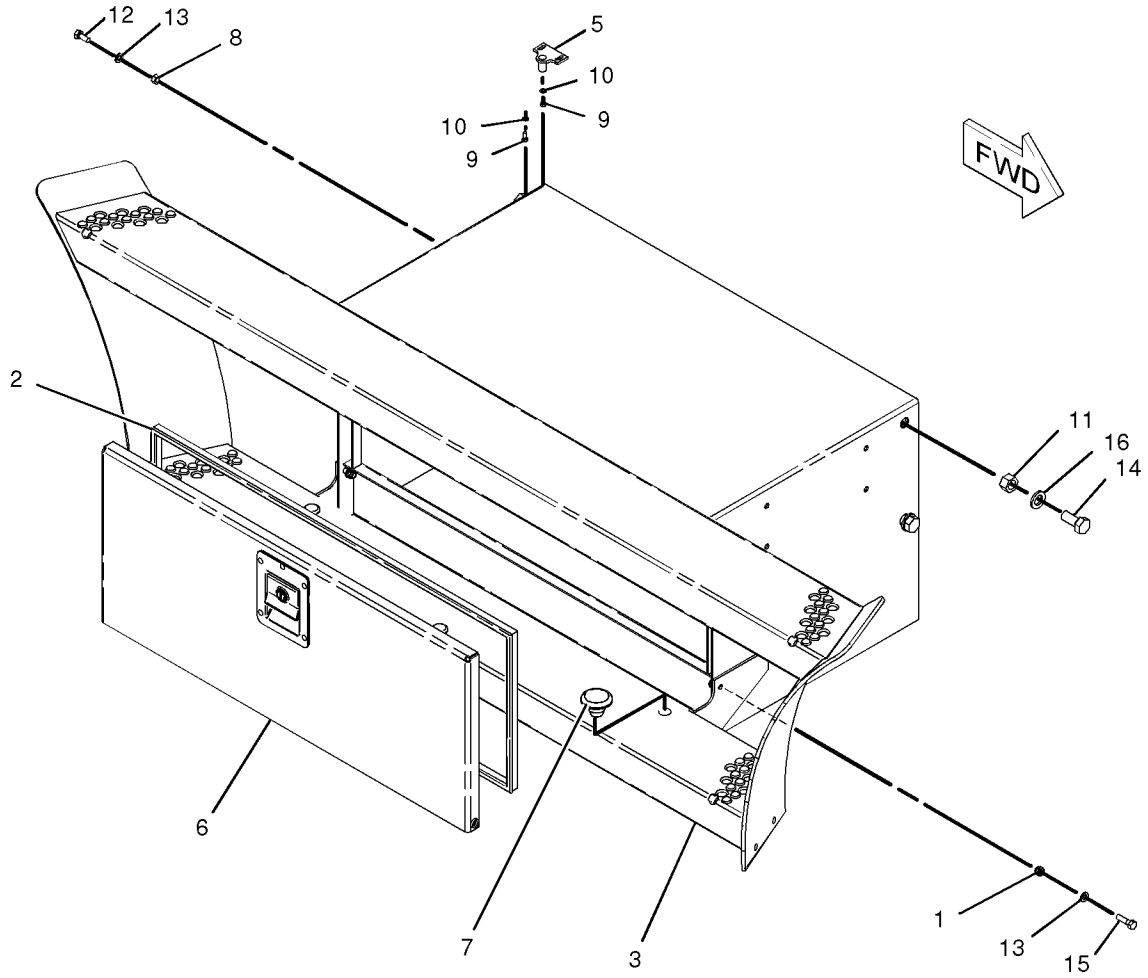

GRAPHIC #1 **<END>** g01056832

FRAME AND BODY

207-2163 SUPPRESSION GP-SOUND

S/N: BCZ1-2000

PART OF 186-0488 HOOD & GUARD AR

SMCS-1801, 7261 **i01794152**

NOTE	PART NUMBER	QTY	PART NAME 1 2 3 4 5 6 (PRODUCT LEVEL)	SEE PAGE
Y	*210-0610*	1	INSULATION GP-HEAT	392
Y	*210-0603*	1	INSULATION GP-SOUND SUPPR	393

Y-SEPARATE ILLUSTRATION

<END>

FRAME AND BODY

186-0493 WALKWAY GP

S/N: BCZ1-584

PART OF 186-0488 HOOD & GUARD AR

SMCS-7255 **i02093510**

NOTE	REF NO	GRAPHIC REF	PART NUMBER	QTY	PART NAME 1 2 3 4 5 6 (PRODUCT LEVEL)	SEE PAGE
	1	1	**5Y-2425**	2	WASHER (6.5X17.5X1.5-MM THK)	
	2	1	**117-0669**	1	SNUBBER	
	3	1	**117-0670**	1	BUFFER	
	4	1	**118-0582**	1	BOSS	
	5	1	**129-0309**	1	SPRING-GAS	
	6	1	**196-5703**	1	WALKWAY AS	
	7	1	**199-8497**	2	ANGLE	
	8	1	**199-8499**	1	ANGLE	
	9	1	**203-4464**	2	MOUNT-RESILIENT	
M	10	1	**5C-2890**	4	NUT (M6X1-THD)	
M	11	1	**5C-7261**	6	NUT (M8X1.25-THD)	
	12	1	**5P-4116**	7	WASHER-HARD (8.8X20.5X2-MM THK)	
M	13	1	**7X-2536**	3	BOLT (M8X1.25X14-MM)	
M	14	1	**8C-8451**	1	BOLT (M6X1X40-MM)	
M	15	1	**8T-0639**	1	BOLT (M6X1X12-MM)	
	16	1	**8T-4121**	2	WASHER-HARD (11X21X2.5-MM THK)	
M	17	1	**8T-4137**	2	BOLT (M10X1.5X20-MM)	
	18	1	**8T-4224**	6	WASHER-HARD (8.8X16X2-MM THK)	
M	19	1	**8T-4908**	4	BOLT (M8X1.25X25-MM)	
	20	1	**9X-8256**	2	WASHER (6.6X12X2-MM THK)	

M-METRIC PART

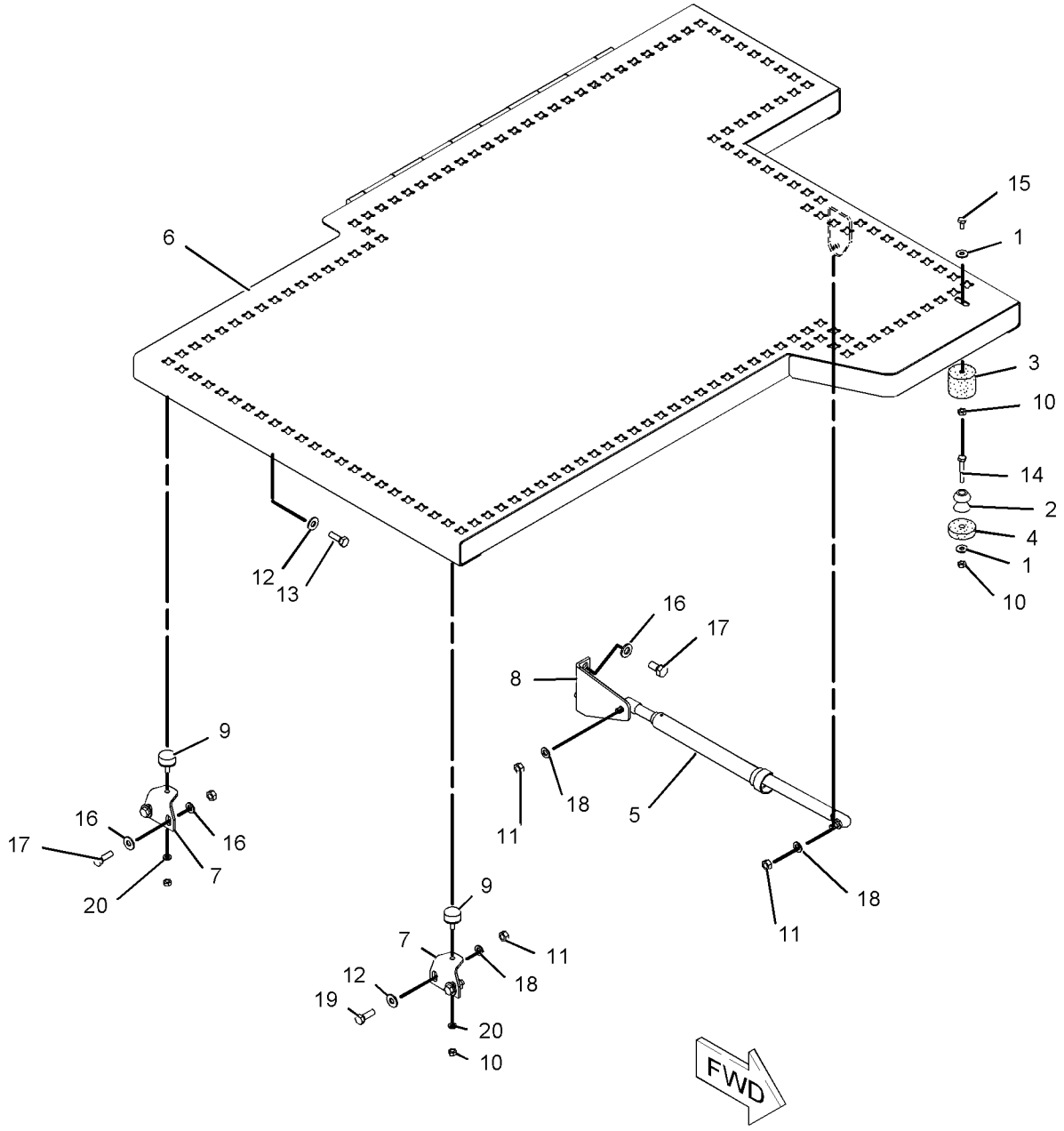

GRAPHIC #1 **<END>** g01069156

FRAME AND BODY

186-0493 WALKWAY GP

S/N: BCZ585-2000

PART OF 186-0488 HOOD & GUARD AR

SMCS-7255 **i02038943**

NOTE	REF NO	GRAPHIC REF	PART NUMBER	QTY	PART NAME 1 2 3 4 5 6 (PRODUCT LEVEL)	SEE PAGE
	1	1	**5Y-2425**	2	WASHER (6.5X17.5X1.5-MM THK)	
	2	1	**117-0669**	1	SNUBBER	
	3	1	**117-0670**	1	BUFFER	
	4	1	**129-0309**	1	SPRING-GAS	
	5	1	**196-5703**	1	WALKWAY AS	
	7	1	**199-8499**	1	ANGLE	
	8	1	**203-4464**	2	MOUNT-RESILIENT	
CM	9	1	**129-3178**	4	LOCKNUT (M6X1-THD)	
CM	10	1	**5C-7261**	2	NUT (M8X1.25-THD)	
C	11	1	**5P-4116**	3	WASHER-HARD (8.8X20.5X2-MM THK)	
M	12	1	**7X-2536**	3	BOLT (M8X1.25X14-MM)	
M	13	1	**8C-8451**	1	BOLT (M6X1X40-MM)	
					—OR—	
M			**8T-4971**	1	BOLT (M6X1X30-MM)	
M	14	1	**8T-0639**	1	BOLT (M6X1X12-MM)	
	15	1	**8T-4121**	2	WASHER-HARD (11X21X2.5-MM THK)	
M	16	1	**8T-4137**	2	BOLT (M10X1.5X20-MM)	
C	17	1	**8T-4224**	2	WASHER-HARD (8.8X16X2-MM THK)	
	19	1	**9X-8256**	2	WASHER (6.6X12X2-MM THK)	

C-CHANGE FROM PREVIOUS TYPE
M-METRIC PART

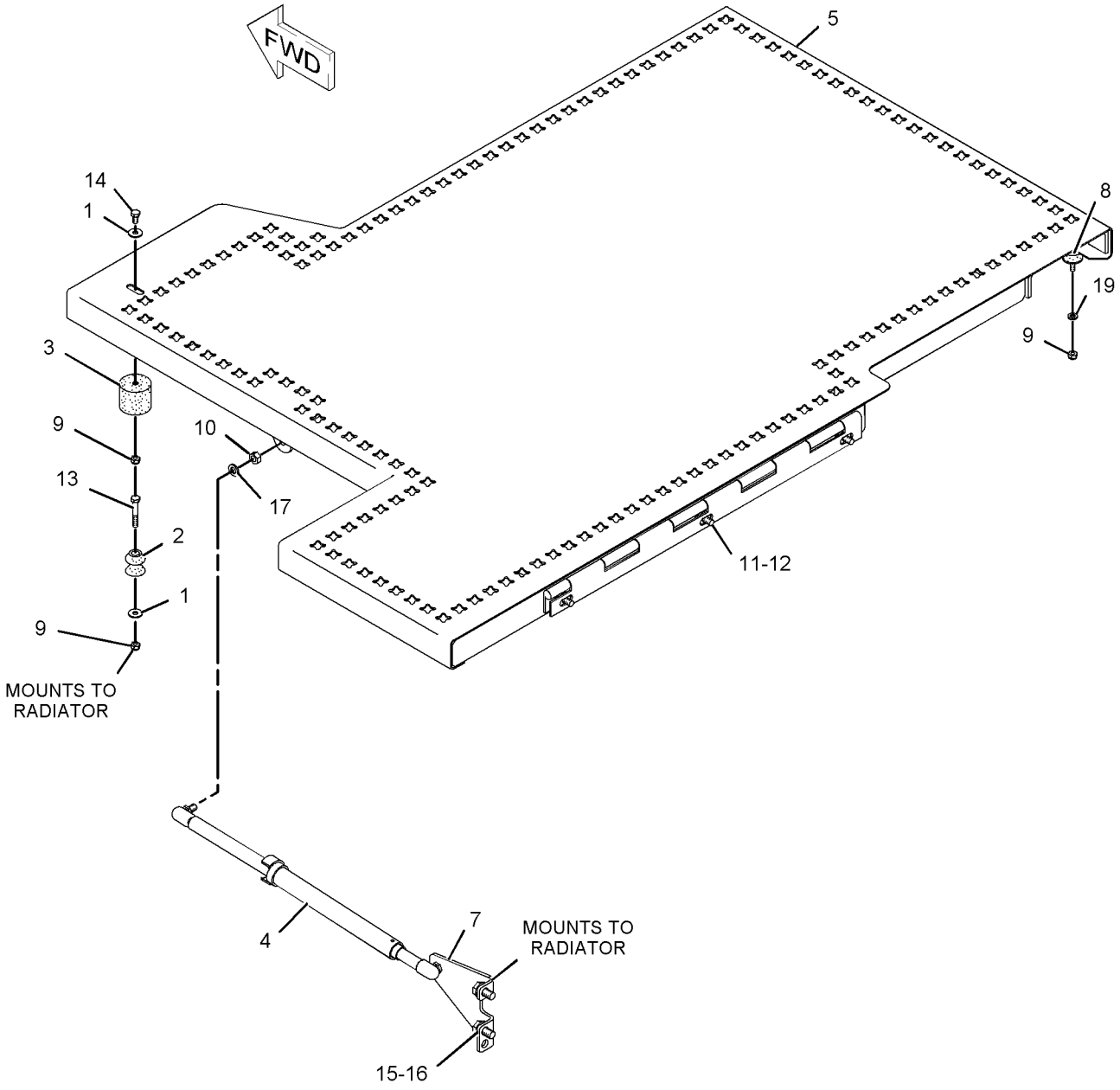

GRAPHIC #1 **<END>** g01061372

186-0469 FRAME AR-UNDERCARRIAGE

S/N: BCZ1-2000

PART OF 186-0518 GENERAL AR

SMCS-4151 **i02033294**

NOTE	PART NUMBER	QTY	PART NAME 1 2 3 4 5 6 (PRODUCT LEVEL)	SEE PAGE
Y	*188-5000*	1	FRAME GP-UNDERCARRIAGE	408
			S/N: BCZ1-495	
Y	**228-3840**	1	FRAME GP-UNDERCARRIAGE	409
			S/N: BCZ496-2000	
Y	*194-9213*	1	STEP GP	399
Y	*194-9212*	1	STEP GP-TOOL BOX	400

Y-SEPARATE ILLUSTRATION

<END>

UNDERCARRIAGE

188-5000 FRAME GP-UNDERCARRIAGE

S/N: BCZ1-495

PART OF 186-0469 FRAME AR-UNDERCARRIAGE

SMCS-4150 **i01818858**

NOTE	REF NO	GRAPHIC REF	PART NUMBER	QTY	PART NAME 1 2 3 4 5 6 (PRODUCT LEVEL)	SEE PAGE
	1	1	**096-6095**	1	PLUG	
	2	1	**188-4999**	1	FRAME AS-UNDERCARRIAGE	
	3	1	**095-1608**	1	SEAL-O-RING	

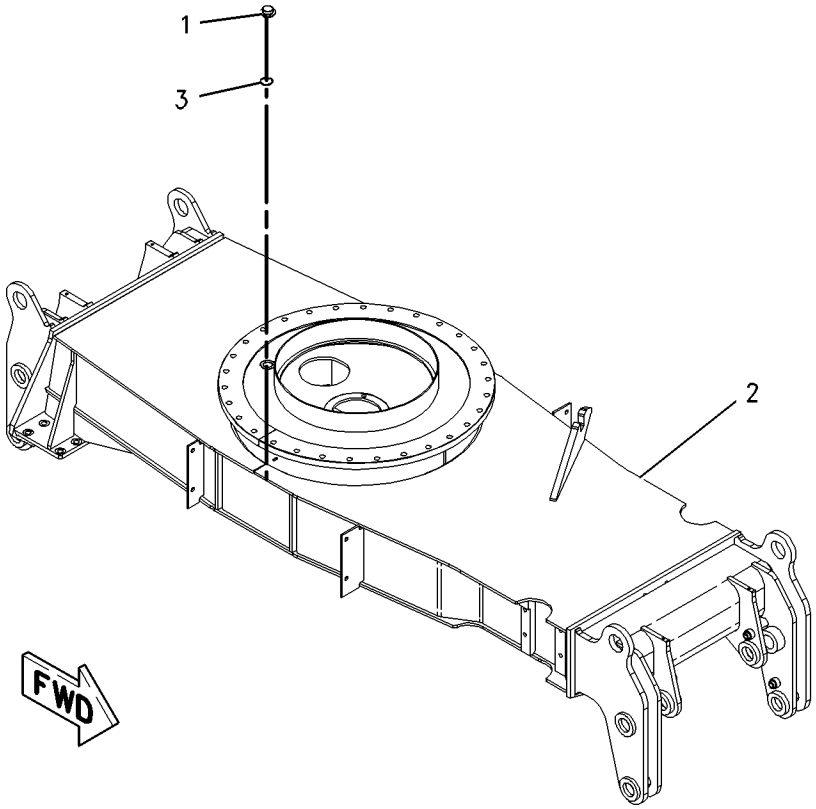

GRAPHIC #1 **<END>** g00928418

UNDERCARRIAGE

228-3840 FRAME GP-UNDERCARRIAGE

S/N: BCZ496-2000

PART OF 186-0469 FRAME AR-UNDERCARRIAGE

SMCS-4150 **i02151090**

NOTE	REF NO	GRAPHIC REF	PART NUMBER	QTY	PART NAME 1 2 3 4 5 6 (PRODUCT LEVEL)	SEE PAGE
	1	1	**096-6095**	1	PLUG	
	2	1	**224-2440**	1	FRAME AS-UNDERCARRIAGE	
	3	1	**257-9736**	1	PLATE AS	
	4	1	**095-1608**	1	SEAL-O-RING	
M	5	1	**8T-4137**	1	BOLT (M10X1.5X20-MM)	
	6	1	**8T-4121**	1	WASHER-HARD (11X21X2.5-MM THK)	

M-METRIC PART

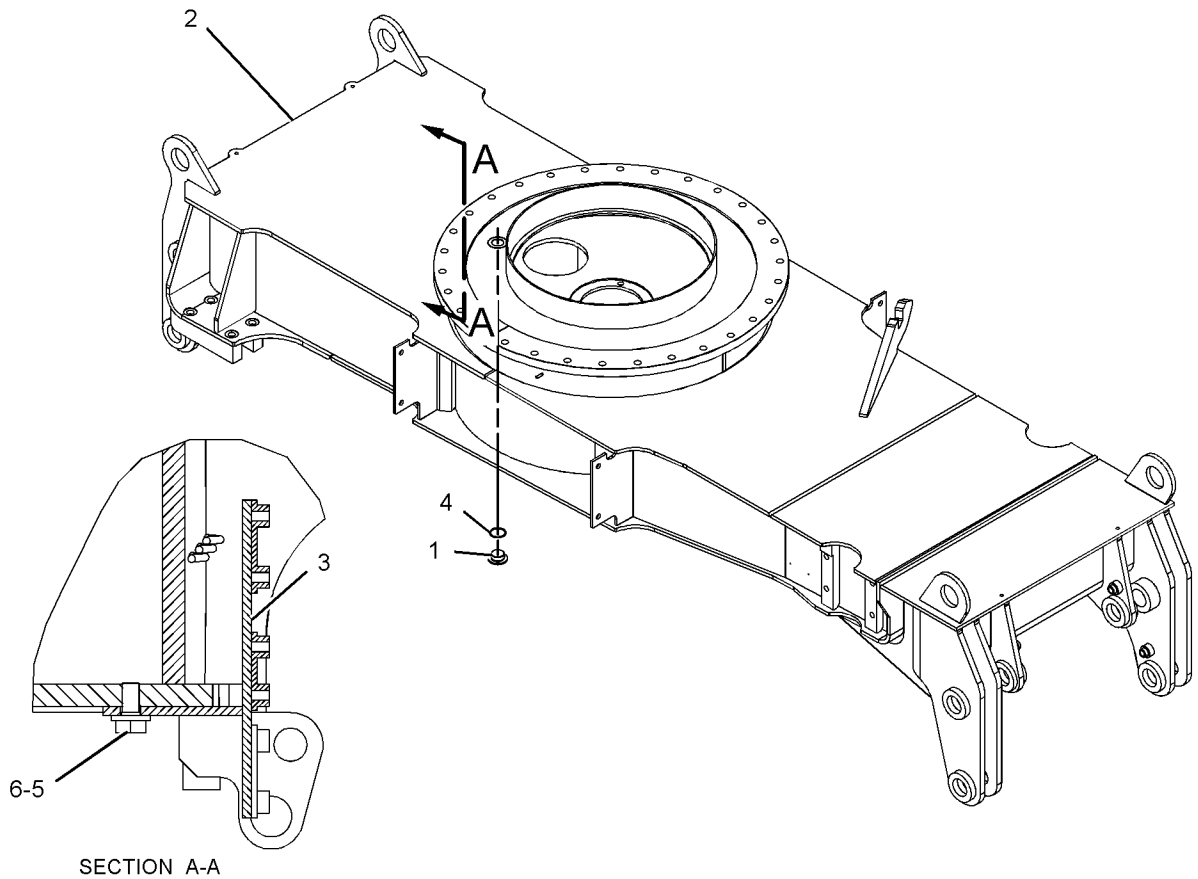

GRAPHIC #1 **<END>** g01093692

UNDERCARRIAGE

224-3861 LOCK GP-TRANSPORT

S/N: BCZ496-2000
FOR POWER TRAIN, WITH OUT DOZER/STABILIZER
AN ATTACHMENT

SMCS-7505 **i01853984**

NOTE	REF NO	GRAPHIC REF	PART NUMBER	QTY	PART NAME 1 2 3 4 5 6 (PRODUCT LEVEL)	SEE PAGE
	1	1	**7X-0543**	2	WASHER-HARD	
	2	1	**8U-7683**	2	PIN	
	3	1	**119-0413**	1	HOOK AS-RH	
	4	1	**119-0414**	1	HOOK AS-LH	
	5	1	**224-3860**	1	BRACKET AS	
	6	1	**5W-2732**	2	LOCK PIN	
	7	1	**5W-2733**	2	LOCK PIN	

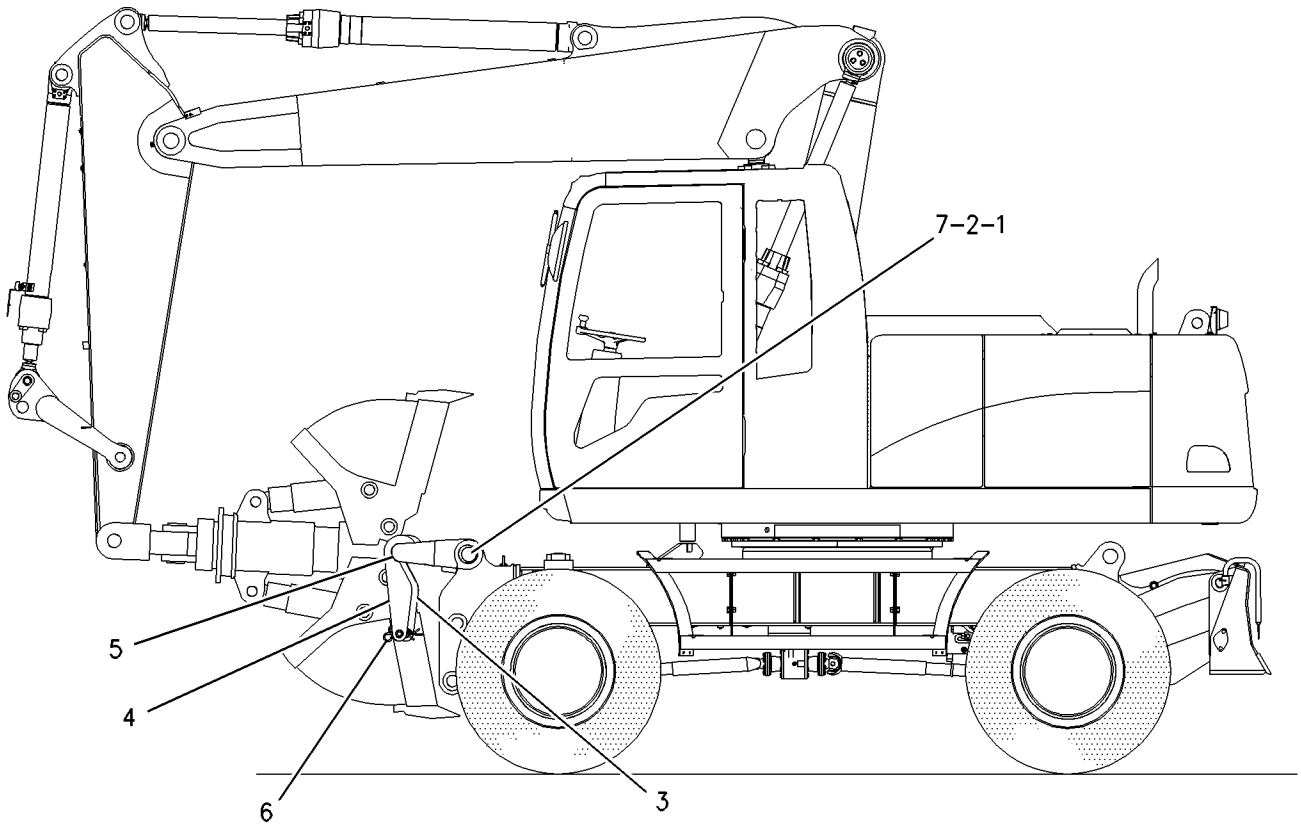

LEFT SIDE VIEW

GRAPHIC #1 **<END>** g00988904

8U-6159 ACCUMULATOR AS-HYDRAULIC—CHARGED

S/N: BCZ1-2000

PART OF 187-3776 LINES GP-PILOT

FIELD REPLACEMENT ORDER 255-8548—PAGE 416

SMCS-5077 **i02182197**

NOTE	REF NO	GRAPHIC REF	PART NUMBER	QTY	PART NAME 1 2 3 4 5 6 (PRODUCT LEVEL)	SEE PAGE
					(NO SERVICED PARTS)	

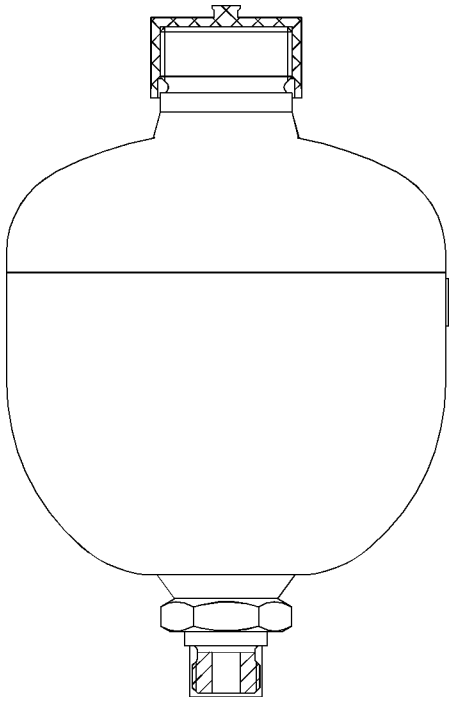

GRAPHIC #1

<END>

g01084579

HYDRAULIC SYSTEM

8U-7274 ACCUMULATOR AS-HYDRAULIC—CHARGED

S/N: BCZ1-2000
PART OF 187-3776 LINES GP-PILOT
FIELD REPLACEMENT ORDER 8U-3661—PAGE 415

SMCS-5077 **i02182206**

NOTE	REF NO	GRAPHIC REF	PART NUMBER	QTY	PART NAME 1 2 3 4 5 6 (PRODUCT LEVEL)	SEE PAGE
					(NO SERVICED PARTS)	

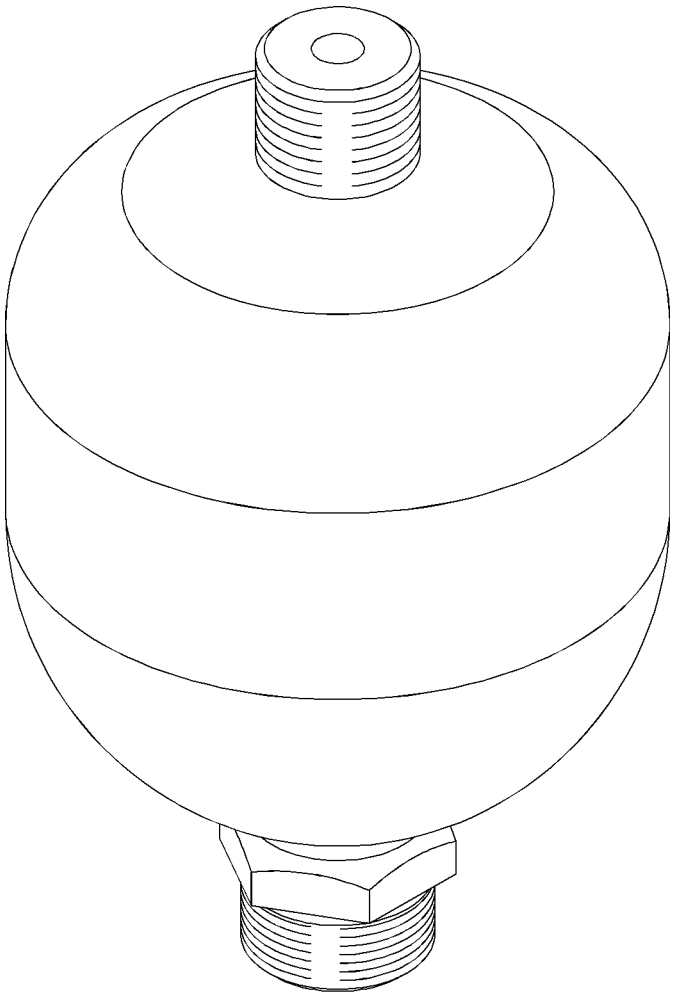

GRAPHIC #1 **<END>** g01084573

HYDRAULIC SYSTEM

5W-9971 ACCUMULATOR GP-HYDRAULIC—CHARGED

S/N: BCZ1-2000

PART OF 188-7582 LINES GP-PILOT

FIELD REPLACEMENT ORDER 8U-3661—PAGE 415

SMCS-5077 **i02124990**

NOTE	REF NO	GRAPHIC REF	PART NUMBER	QTY	PART NAME 1 2 3 4 5 6 (PRODUCT LEVEL)	SEE PAGE
					(NO SERVICED PARTS)	

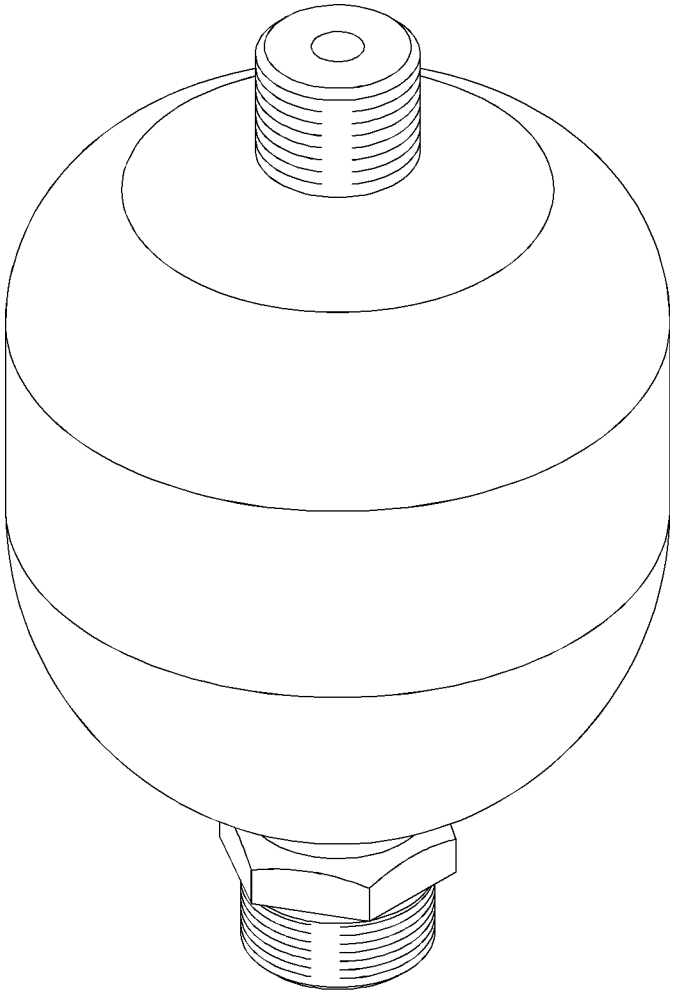

GRAPHIC #1

<END>

g01084573

HYDRAULIC SYSTEM

8U-2924 ACCUMULATOR GP-HYDRAULIC—CHARGED

S/N: BCZ1-2000
PART OF 188-7622, 233-8260 LINES GP-HYDRAULIC
FIELD REPLACEMENT ORDER 255-8549—PAGE 417

SMCS-5077 **i02148150**

NOTE	REF NO	GRAPHIC REF	PART NUMBER	QTY	PART NAME 1 2 3 4 5 6 (PRODUCT LEVEL)	SEE PAGE
					(NO SERVICED PARTS)	

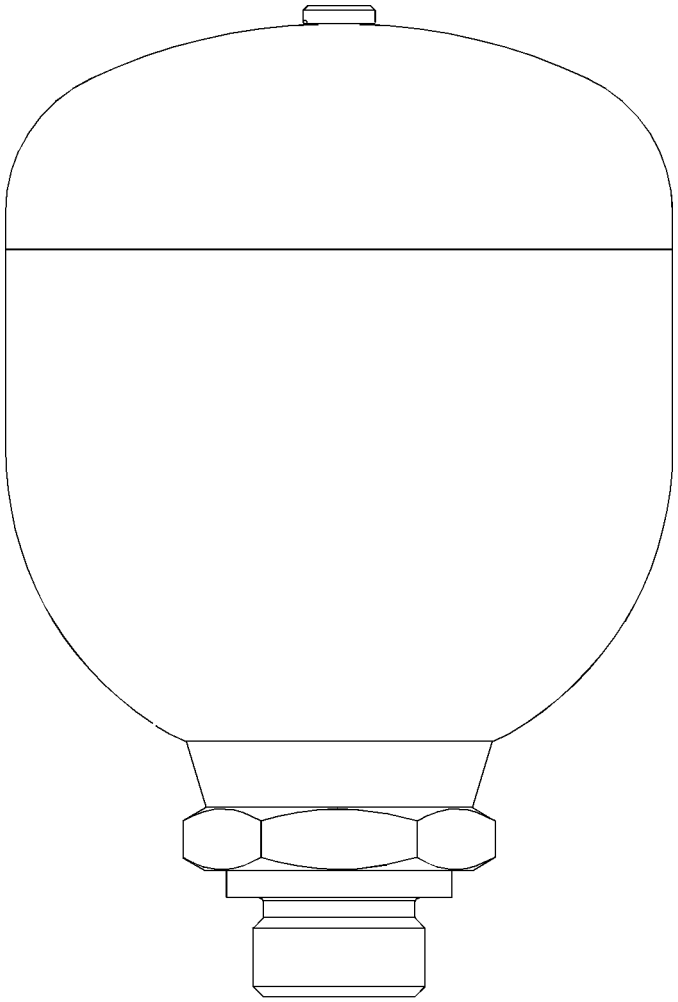

GRAPHIC #1 **<END>** g01093301

8U-3661 ACCUMULATOR GP-HYDRAULIC—UNCHARGED

S/N: BCZ1-2000

FIELD REPLACEMENT FOR 8U-7274—PAGE 412, 5W-9971—PAGE 413

SMCS-5077 **i02117341**

NOTE	REF NO	GRAPHIC REF	PART NUMBER	QTY	PART NAME 1 2 3 4 5 6 (PRODUCT LEVEL)	SEE PAGE
F		1	**159-4700**	1	FILM-WARNING (HIGH PRESSURE CYLINDER)	

F-NOT SHOWN

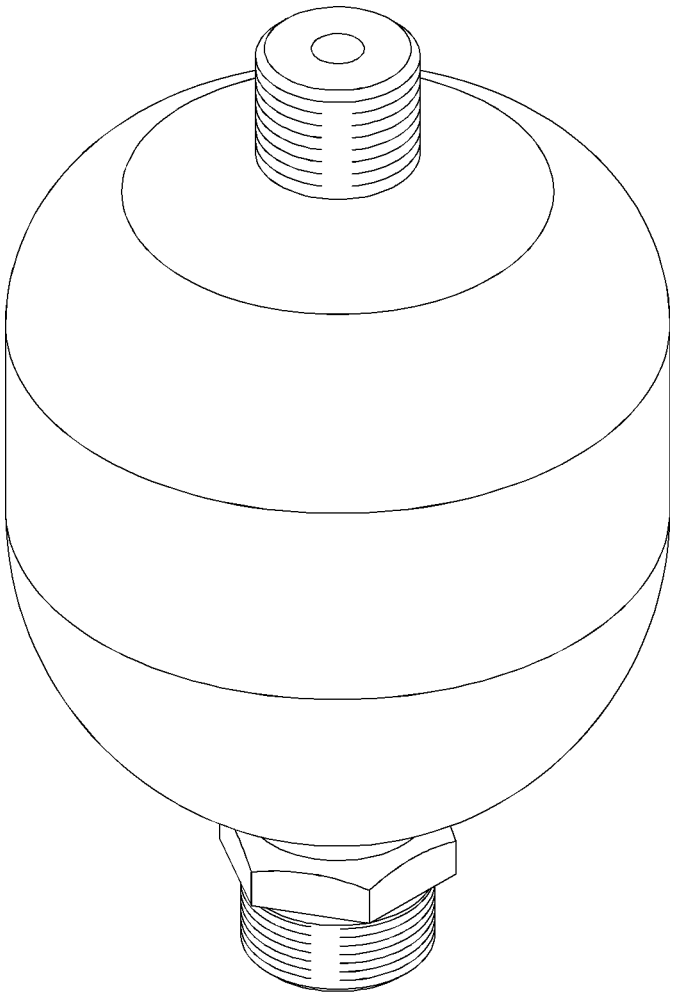

GRAPHIC #1

<END>

g01084573

HYDRAULIC SYSTEM

255-8548 ACCUMULATOR GP-HYDRAULIC—UNCHARGED

S/N: BCZ1-2000

FIELD REPLACEMENT FOR 8U-6159—PAGE 411

SMCS-5077 **i02117323**

NOTE	REF NO	GRAPHIC REF	PART NUMBER	QTY	PART NAME 1 2 3 4 5 6 (PRODUCT LEVEL)	SEE PAGE
F		1	**159-4700**	1	FILM-WARNING (HIGH PRESSURE CYLINDER)	

F-NOT SHOWN

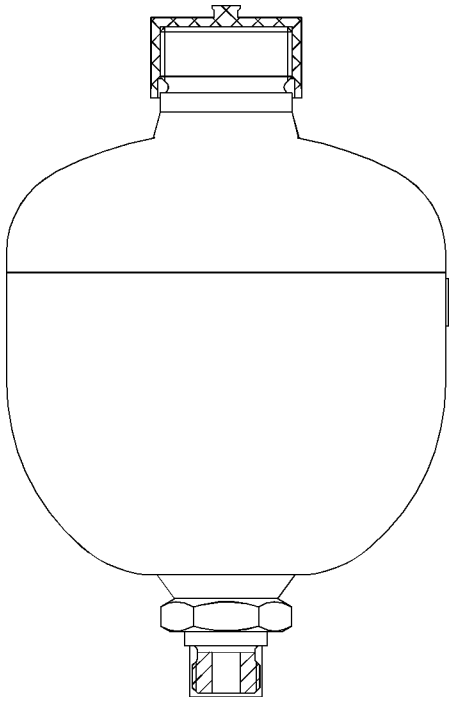

GRAPHIC #1 **<END>** g01084579

255-8549 ACCUMULATOR GP-HYDRAULIC—UNCHARGED

S/N: BCZ1-2000

FIELD REPLACEMENT FOR 8U-2924—PAGE 414

FIELD INSTALLATION

SMCS-5077 **i02148705**

NOTE	REF NO	GRAPHIC REF	PART NUMBER	QTY	PART NAME 1 2 3 4 5 6 (PRODUCT LEVEL)	SEE PAGE
F		1	**159-4700**	1	FILM-WARNING (HIGH PRESSURE CYLINDER)	

F-NOT SHOWN

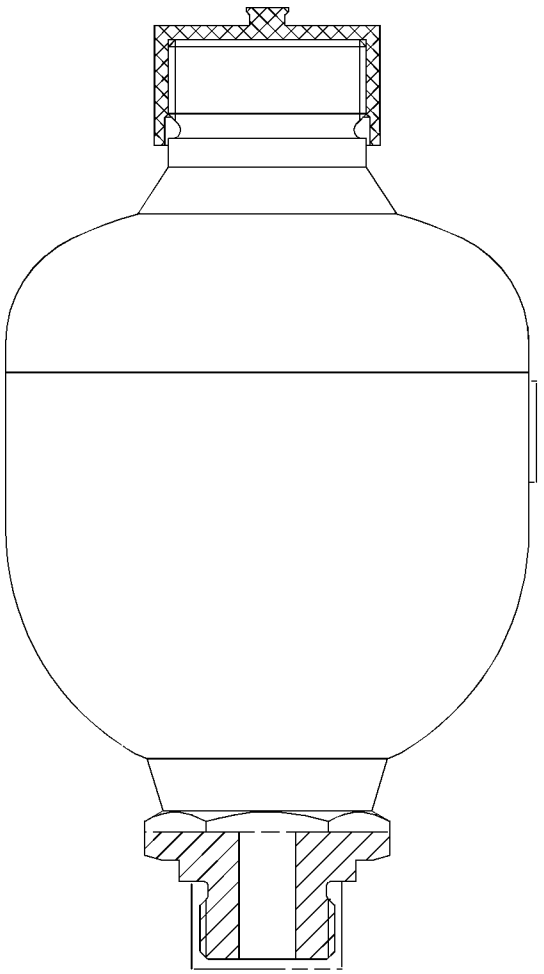

GRAPHIC #1

<END>

g01093428

207-4704 ACTUATOR GP

S/N: BCZ1-2000
PART OF 191-2778 VALVE GP-COMBINATION
AN ATTACHMENT

SMCS-5078 **i01780851**

NOTE	REF NO	GRAPHIC REF	PART NUMBER	QTY	PART NAME 1 2 3 4 5 6 (PRODUCT LEVEL)	SEE PAGE
	1	1	**207-4724**	1	VALVE AS-CHECK	
	2	1	**189-9977**	1	SETSCREW	
	3	1	**114-3025**	1	NUT	
	4	1	**061-8639**	2	SEAL-O-RING	
	5	1	**114-2999**	1	NUT-CAP	
	6	1	**206-7647**	2	SCREW	
	7	1	**214-4059**	2	PIN	
	8	1	**189-3014**	1	SCREW	
	9	1	**214-5818**	1	NOZZLE	
	10	1	**214-4061**	1	NOZZLE	
	11	1	**8U-5784**	1	PLUG	

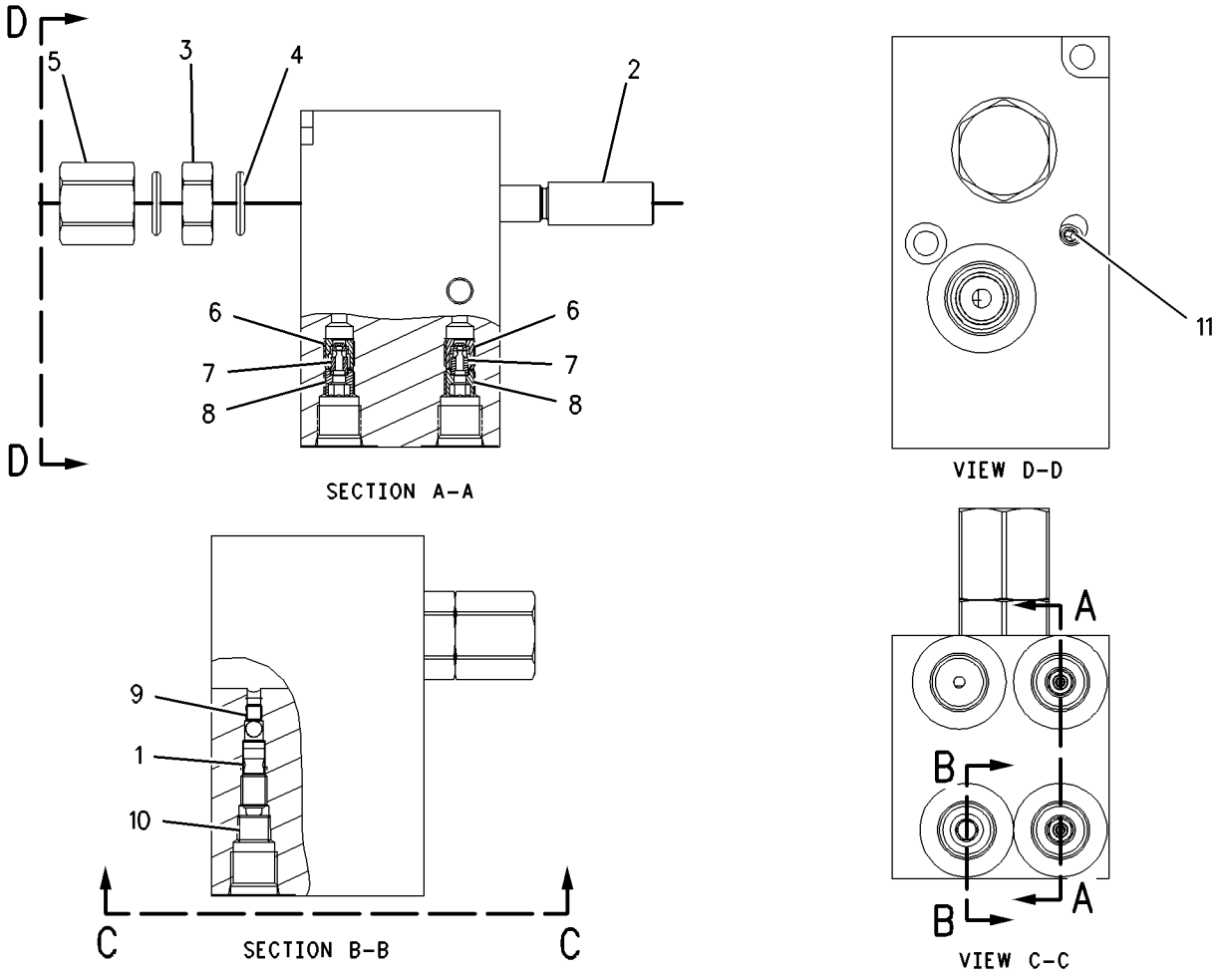

GRAPHIC #1 **<END>** g00912229

HYDRAULIC SYSTEM

207-4706 ACTUATOR GP

S/N: BCZ1-2000

PART OF 192-3176 VALVE GP-CONTROL

AN ATTACHMENT

SMCS-5078 **i01929394**

NOTE	REF NO	GRAPHIC REF	PART NUMBER	QTY	PART NAME 1 2 3 4 5 6 (PRODUCT LEVEL)	SEE PAGE
	1	1	**189-9977**	1	SETSCREW (M12X1X38MM)	
	2	1	**114-3025**	1	NUT (M12X1 THD)	
	3	1	**061-8639**	2	SEAL-O-RING	
	4	1	**114-2999**	1	NUT-CAP (M12X1 THD)	
	5	1	**126-0930**	1	PLUG	
	6	1	**5W-1722**	1	WASHER (6.2X9.9X1MM THK)	

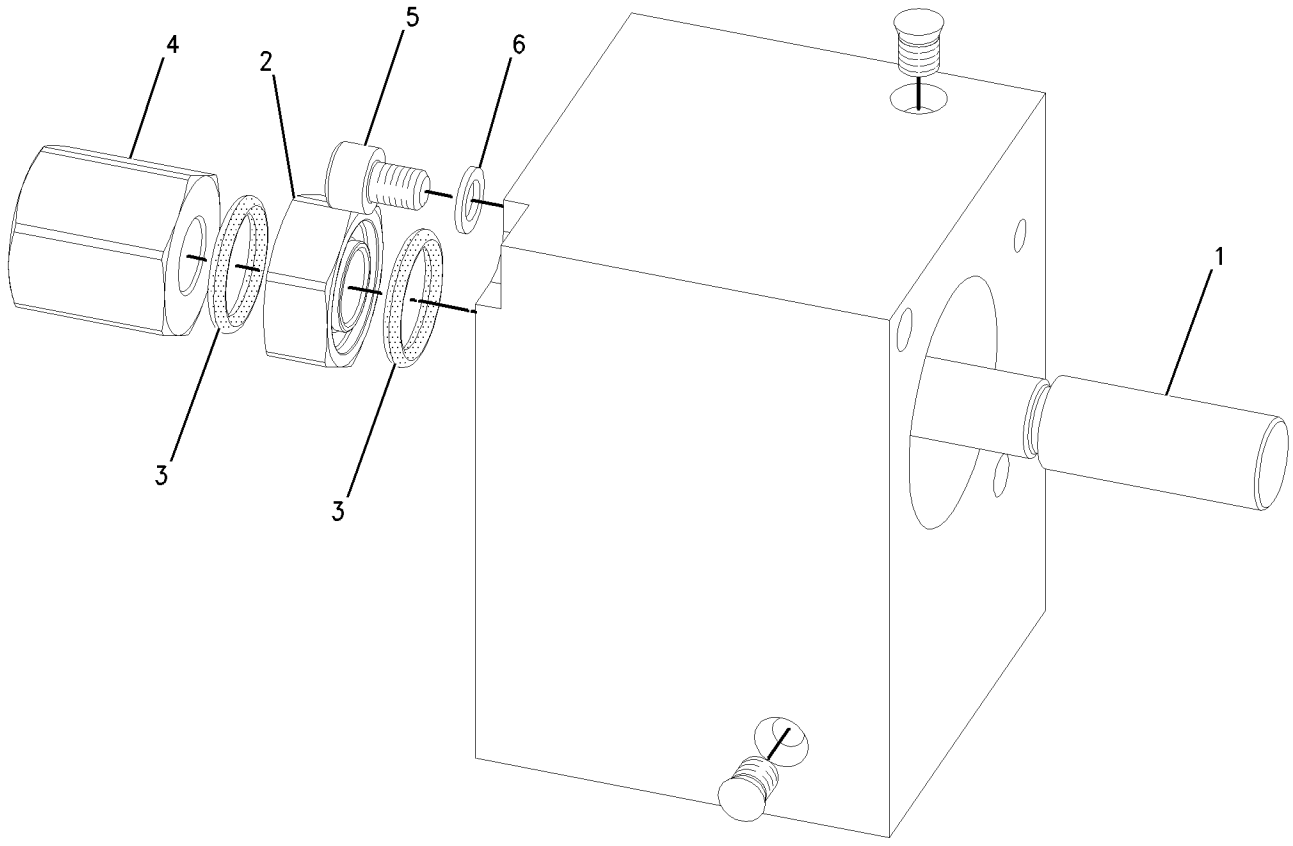

GRAPHIC #1 **<END>** g00835339

HYDRAULIC SYSTEM

117-5710 ACTUATOR GP-PUMP

S/N: BCZ1-2000

PART OF 190-8198 PUMP GP-PISTON

SMCS-5078 **i00615957**

NOTE	REF NO	GRAPHIC REF	PART NUMBER	QTY	PART NAME 1 2 3 4 5 6 (PRODUCT LEVEL)	SEE PAGE
	1	1	**125-9095**	1	PISTON	
	2	1	**117-5917**	1	ROD (128.6MM)	
	3	1	**117-5920**	1	SPRING	
	4	1	**125-9096**	1	BUSHING	

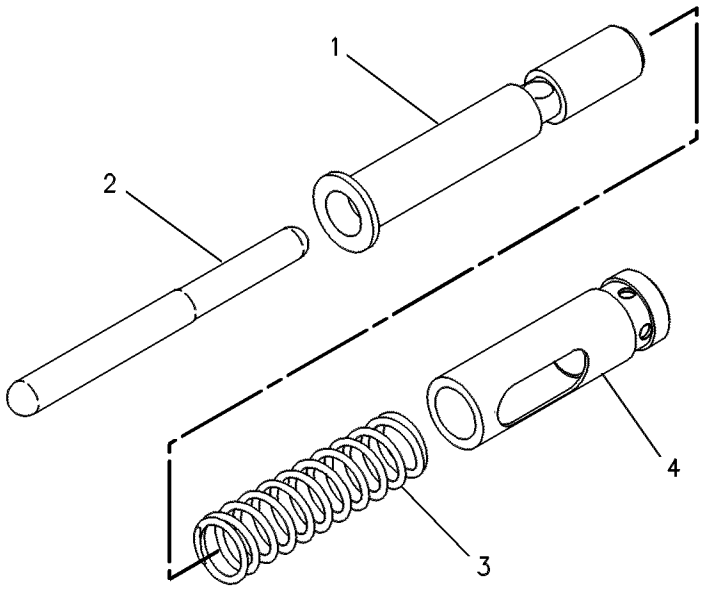

GRAPHIC #1 **<END>** g00247550

117-5712 ACTUATOR GP-PUMP

S/N: BCZ1-2000

PART OF 190-8198 PUMP GP-PISTON

SMCS-5078 **i00825100**

NOTE	REF NO	GRAPHIC REF	PART NUMBER	QTY	PART NAME 1 2 3 4 5 6 (PRODUCT LEVEL)	SEE PAGE
	1	1	**125-9108**	1	PISTON	
B	2	1	**117-5923**	1	ROD (119.3MM)	
B		1	**117-5924**	1	ROD (119.1MM)	
B		1	**117-5925**	1	ROD (119.5MM)	
	3	1	**117-5926**	1	SPRING	

B-USE AS REQUIRED

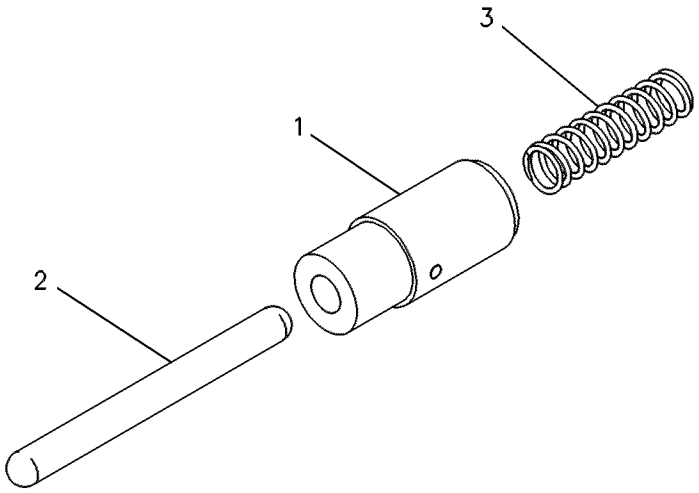

GRAPHIC #1 **<END>** g00247551

HYDRAULIC SYSTEM

136-7701 BARREL GP-PUMP

S/N: BCZ1-2000

PART OF 190-8199 PUMP GP-PISTON

SMCS-5070 **i01505004**

NOTE	REF NO	GRAPHIC REF	PART NUMBER	QTY	PART NAME 1 2 3 4 5 6 (PRODUCT LEVEL)	SEE PAGE
	1	1	**136-7703**	1	CYLINDER AS	
	2	1	**117-7238**	9	PISTON	
	3	1	**117-7239**	1	SPRING-CUP	
	4	1	**117-7240**	1	CRADLE	
	5	1	**117-7241**	1	PLATE	
	6	1	**117-7242**	1	SHAFT-DRIVE	
	7	1	**1G-3410**	1	WIRE	
	8	1	**112-4657**	1	PIN	
	9	1	**122-9068**	1	WIRE	
B	10	1	**117-7245**	1	SHIM (1.2-MM THK)	
B	11	1	**117-7246**	1	SHIM (1.0-MM THK)	
B	12	1	**117-7247**	1	SHIM (0.8-MM THK)	
B	13	1	**117-7248**	1	SHIM (0.6-MM THK)	
	14	1	**117-7249**	1	PLATE-RETAINER	
	15	1	**117-7250**	1	RETAINER	
	16	1	**125-9134**	1	BEARING	
B	17	1	**122-9070**	2	SHIM (3-MM THK)	
	18	1	**122-9071**	1	SPRING	
	19	1	**117-7251**	1	BEARING	
	20	1	**117-7252**	1	CAGE	
	21	1	**6V-5200**	1	RING-RETAINING	
	22	1	**095-0941**	2	RING-RETAINING	
	23	1	**194-1983**	1	SEAL-SHAFT	
	24	1	**6V-7723**	1	RING-RETAINING	

B-USE AS REQUIRED

136-7701 BARREL GP-PUMP *(contd.)* **i01505004**

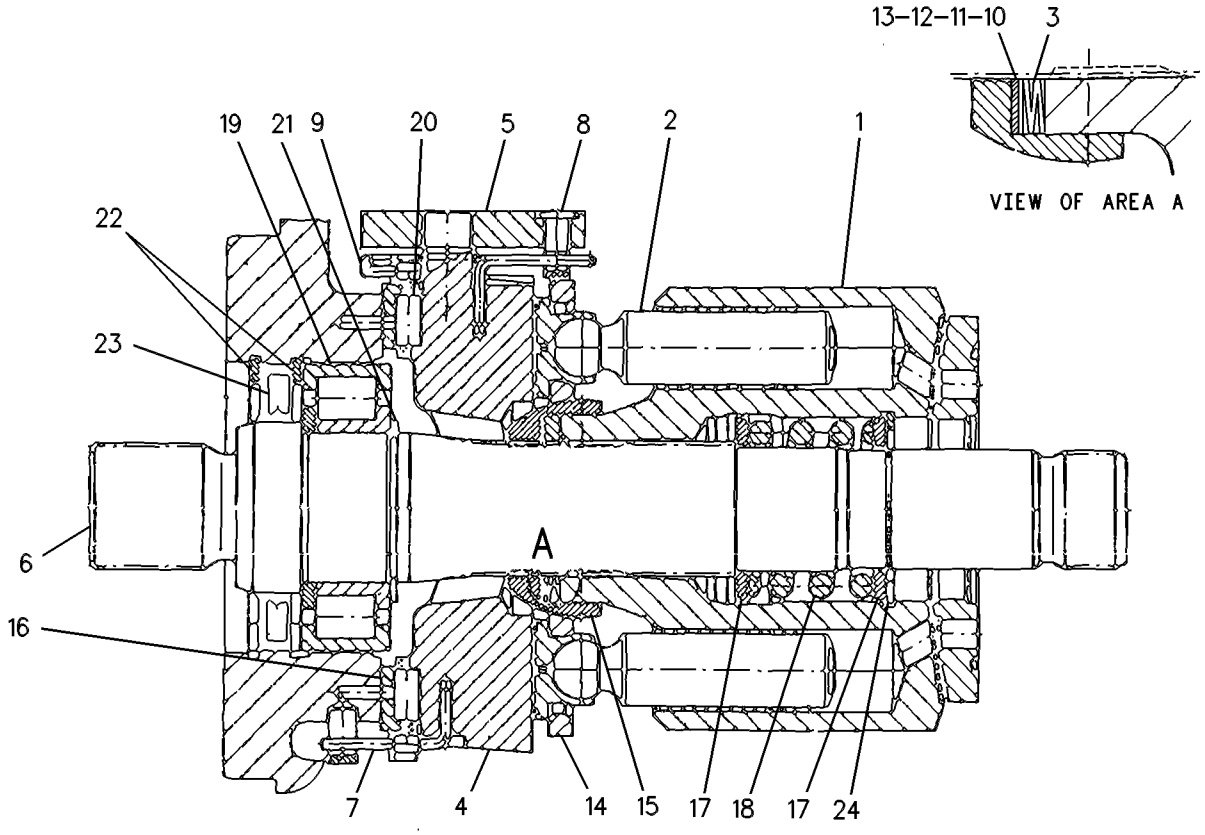

GRAPHIC #1 **<END>** g00247501

HYDRAULIC SYSTEM

199-2395 BARREL GP-PUMP

S/N: BCZ1-2000

PART OF 190-8198 PUMP GP-PISTON

SMCS-5070 **i01584832**

NOTE	REF NO	GRAPHIC REF	PART NUMBER	QTY	PART NAME 1 2 3 4 5 6 (PRODUCT LEVEL)	SEE PAGE
	1	1	**199-2439**	1	CYLINDER AS	
	2	1	**199-2441**	9	PISTON AS	
	3	1	**6E-0715**	1	SPRING-CUP	
	4	1	**199-2442**	1	CRADLE	
	5	1	**117-5762**	1	SHAFT-DRIVE	
	6	1	**6E-0719**	4	ROD	
B	7	1	**6E-0720**	1	SHIM (1.80MM THK)	
B		1	**6E-0721**	1	SHIM (0.90MM THK)	
B		1	**6E-0722**	1	SHIM (1.30MM THK)	
B		1	**6E-0723**	1	SHIM (0.90MM THK)	
B	8	1	**6E-0721**	1	SHIM (0.90MM THK)	
	9	1	**6E-0725**	4	ROLLER	
	10	1	**6E-0726**	1	PLATE-RETAINER	
	11	1	**6E-1569**	1	RETAINER	
	12	1	**117-5764**	1	LINER	
	13	1	**6E-1570**	2	RETAINER	
	14	1	**6E-1571**	1	BEARING AS (CYLINDRICAL ROLLER)	
	15	1	**117-5765**	1	CAGE	
	16	1	**8T-4241**	1	RING-RETAINING	
	17	1	**183-8452**	2	RING-RETAINING	
	18	1	**183-8453**	1	RING-SEAL	
M	19	1	**120-4204**	4	BOLT-SOCKET HEAD	

B-USE AS REQUIRED
M-METRIC PART

199-2395 BARREL GP-PUMP *(contd.)* **i01584832**

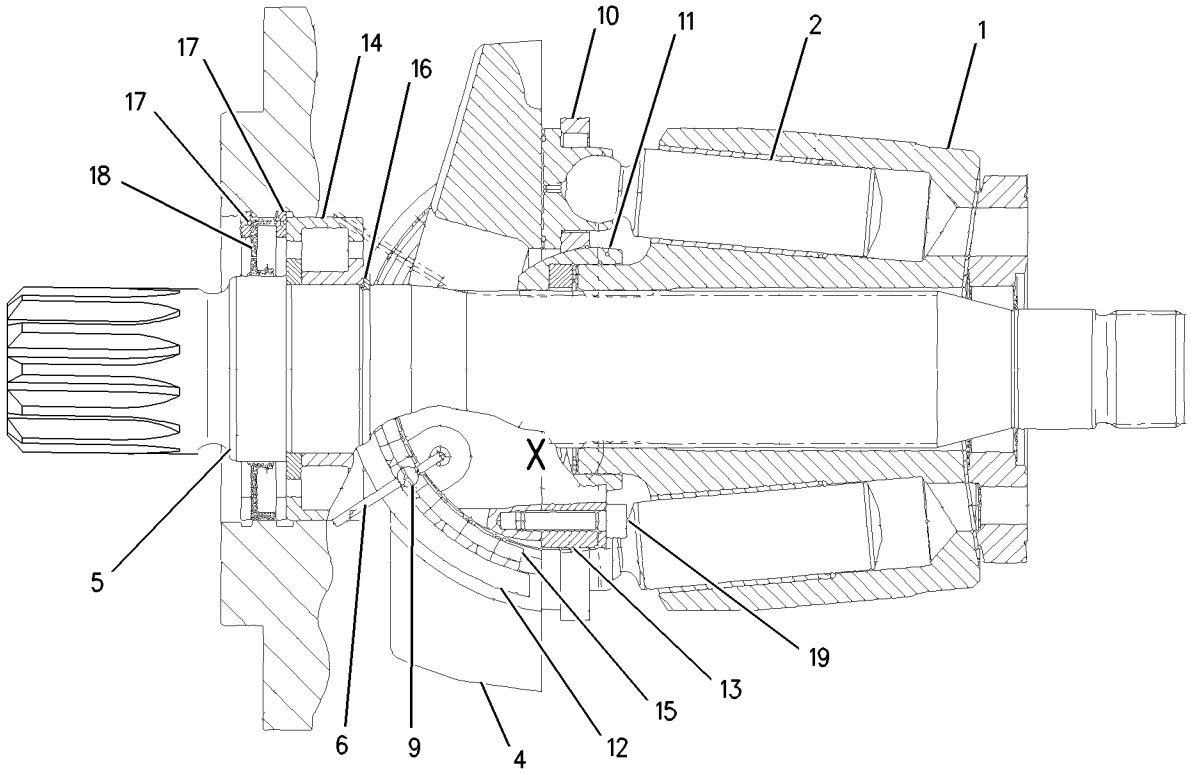

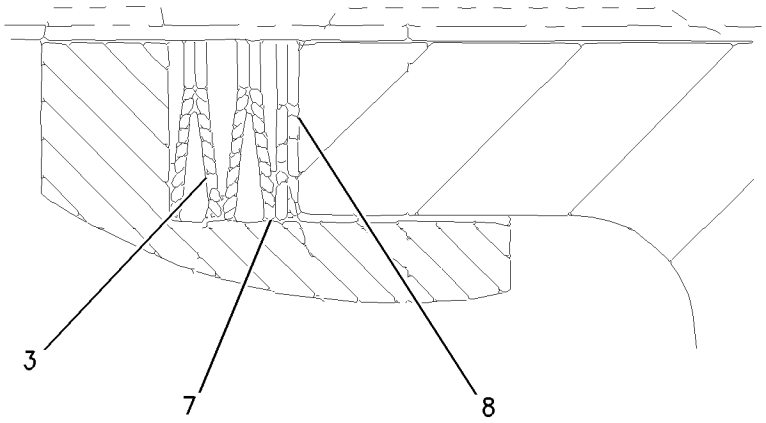

VIEW OF AREA X

GRAPHIC #1 **<END>** g00823153

HYDRAULIC SYSTEM

187-3794 CONTROL GP-BRAKE

S/N: BCZ1-839

PART OF 198-4680 OPERATOR AR

SMCS-4269 **i02160065**

NOTE	REF NO	GRAPHIC REF	PART NUMBER	QTY	PART NAME 1 2 3 4 5 6 (PRODUCT LEVEL)	SEE PAGE
	1	1	**5W-9972**	1	SWITCH AS-PRESSURE (BRAKE OIL ACCUMULATOR)	
	2	1	**8T-5063**	1	ROD END	
	3	1	**8T-5381**	1	PIN AS-SPRING	
	4	1	**121-5977**	1	PLATE	
Y	5	1	**160-1501**	1	PEDAL GP-BRAKE	892
	6	1	**163-2084**	1	SWITCH AS-PRESSURE (SERVICE BRAKE)	
Y	7	1	**176-7800**	1	VALVE GP-BRAKE CONTROL	685
	8	1	**193-7788**	1	BRACKET	
	9	1	**240-1366**	1	SWITCH AS-POSITION (OSCILLATING AXLE LOCK)	
	10	1	**194-7843**	1	MAGNET	
M	11	1	**095-0723**	2	SCREW (M3X0.5X10-MM)	
	12	1	**096-5962**	2	WASHER-HARD (3.4X7X0.8-MM THK)	
M	13	1	**117-3393**	2	SCREW (M3X0.5X8-MM)	
M	14	1	**3C-6969**	2	NUT (M3X0.5-THD)	
	15	1	**4J-5309**	3	SEAL-O-RING	
M	16	1	**5C-7261**	3	NUT (M8X1.25-THD)	
	17	1	**5W-1696**	1	WASHER (12.2-MM ID)	
M	18	1	**6V-5196**	3	BOLT-SOCKET HEAD (M8X1.25X80-MM)	
M	19	1	**8T-4133**	1	NUT (M10X1.5-THD)	
	20	1	**8T-4224**	4	WASHER-HARD (8.8X16X2-MM THK)	
M	21	1	**8T-4908**	4	BOLT (M8X1.25X25-MM)	

M-METRIC PART
Y-SEPARATE ILLUSTRATION

187-3794 **CONTROL GP-BRAKE** *(contd.)* **i02160065**

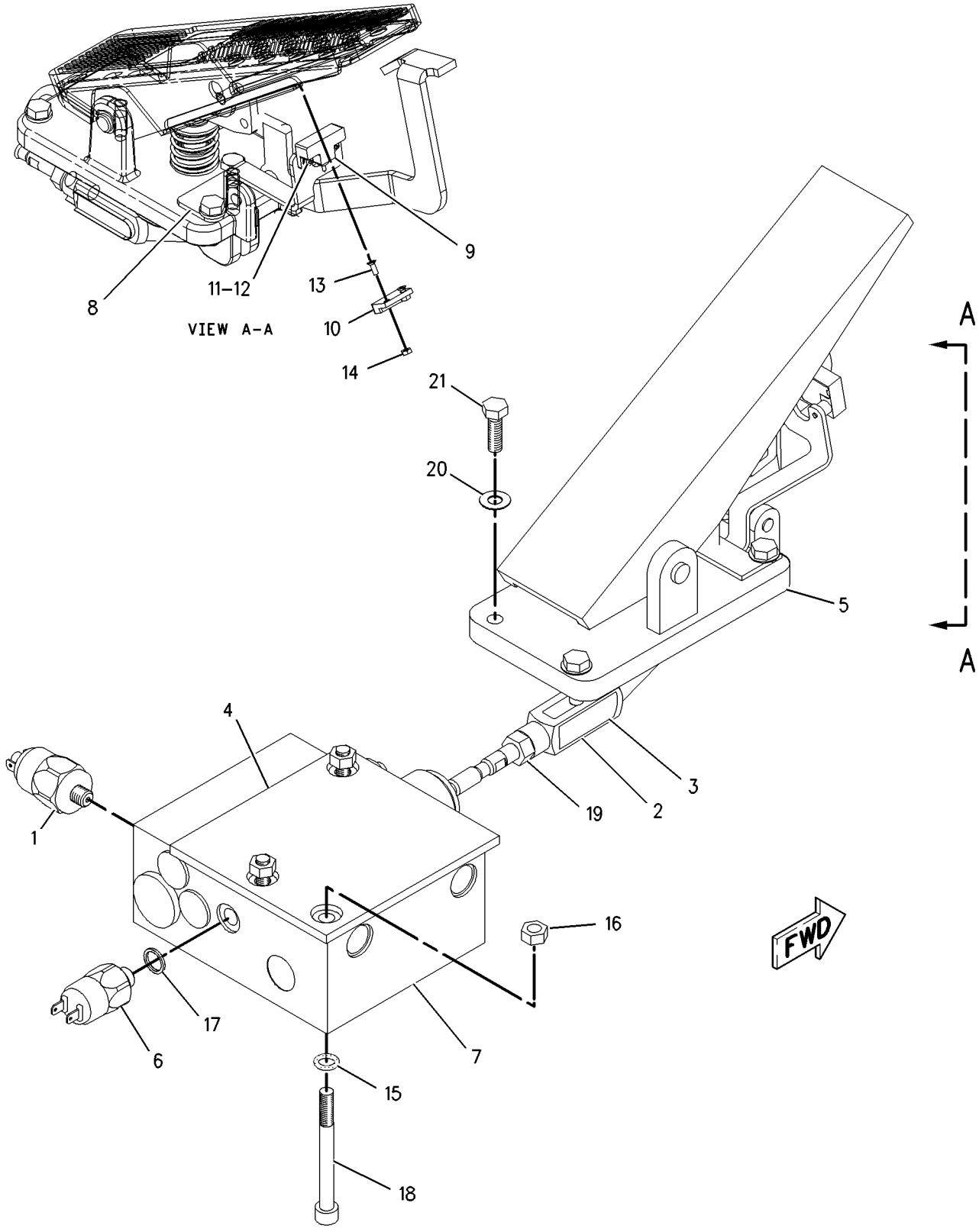

GRAPHIC #1 **<END>** g00906059

HYDRAULIC SYSTEM

187-3794 CONTROL GP-BRAKE

S/N: BCZ840-2000

PART OF 198-4680 OPERATOR AR

SMCS-4269 **i02160066**

NOTE	REF NO	GRAPHIC REF	PART NUMBER	QTY	PART NAME 1 2 3 4 5 6 (PRODUCT LEVEL)	SEE PAGE
C	1	1	**245-5709**	1	SWITCH AS-PRESSURE (BRAKE OIL ACCUMULATOR)	
	2	1	**8T-5063**	1	ROD END	
	3	1	**8T-5381**	1	PIN AS-SPRING	
	4	1	**121-5977**	1	PLATE	
Y	5	1	**160-1501**	1	PEDAL GP-BRAKE	892
	6	1	**252-6677**	1	SWITCH AS-PRESSURE (SERVICE BRAKE)	
CY	7	1	**249-5527**	1	VALVE GP-BRAKE CONTROL	689
	8	1	**193-7788**	1	BRACKET	
	9	1	**240-1366**	1	SWITCH AS-POSITION (OSCILLATING AXLE LOCK)	
	10	1	**194-7843**	1	MAGNET	
M	11	1	**095-0723**	2	SCREW (M3X0.5X10-MM)	
	12	1	**096-5962**	2	WASHER-HARD (3.4X7X0.8-MM THK)	
M	13	1	**117-3393**	2	SCREW (M3X0.5X8-MM)	
M	14	1	**3C-6969**	2	NUT (M3X0.5-THD)	
	15	1	**4J-5309**	3	SEAL-O-RING	
M	16	1	**5C-7261**	3	NUT (M8X1.25-THD)	
C	17	1	**5W-1696**	2	WASHER (12.2-MM ID)	
M	18	1	**6V-5196**	3	BOLT-SOCKET HEAD (M8X1.25X80-MM)	
M	19	1	**8T-4133**	1	NUT (M10X1.5-THD)	
	20	1	**8T-4224**	4	WASHER-HARD (8.8X16X2-MM THK)	
M	21	1	**8T-4908**	4	BOLT (M8X1.25X25-MM)	

C-CHANGE FROM PREVIOUS TYPE
M-METRIC PART
Y-SEPARATE ILLUSTRATION

187-3794 **CONTROL GP-BRAKE** *(contd.)* **i02160066**

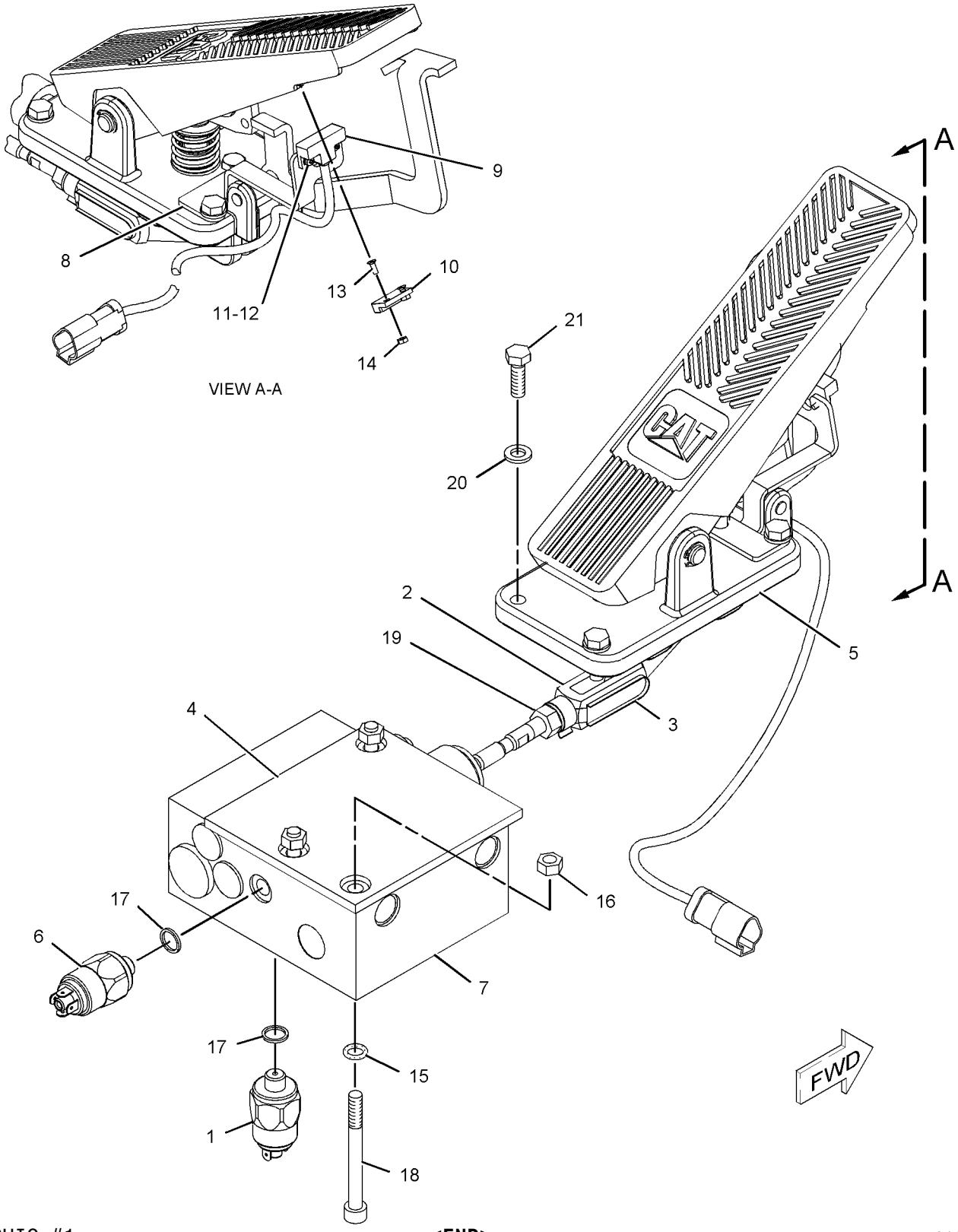

GRAPHIC #1 **<END>** g01090509

HYDRAULIC SYSTEM

193-7789 CONTROL GP-HYDRAULIC HAND–BLADE, STABILIZER

S/N: BCZ1-2000

PART OF 187-3793 CONTROL GP-PILOT OPERATED HYD

SMCS-5059, 5063 **i01927911**

NOTE	REF NO	GRAPHIC REF	PART NUMBER	QTY	PART NAME 1 2 3 4 5 6 (PRODUCT LEVEL)	SEE PAGE
	1	1	**116-4481**	1	PLATE	
	2	1	**223-1394**	1	KIT-LEVER (HAND CONTROL)	
					(INCLUDES BOLTS, COVER, LEVER, LEVER PIN & CAM)	
M	3	1	**8T-9534**	2	BOLT (M6X1X50MM)	
	4	1	**131-0432**	1	KIT-SPRING (HAND CONTROL)	
					(INCLUDES SPRINGS)	
	5	1	**8U-5892**	1	BOOT	
	6	1	**201-2484**	2	KIT-REGULATOR (HAND CONTROL)	
	7	1	**201-2485**	2	KIT-PLUNGER (HAND CONTROL)	
					(EACH INCLUDES PLUNGER GUIDE, HOLLOW PLUNGER, WASHER, STANDARD PLATE & SNAP RING)	
	8	1	**116-4484**	1	HANDLE	

M-METRIC PART

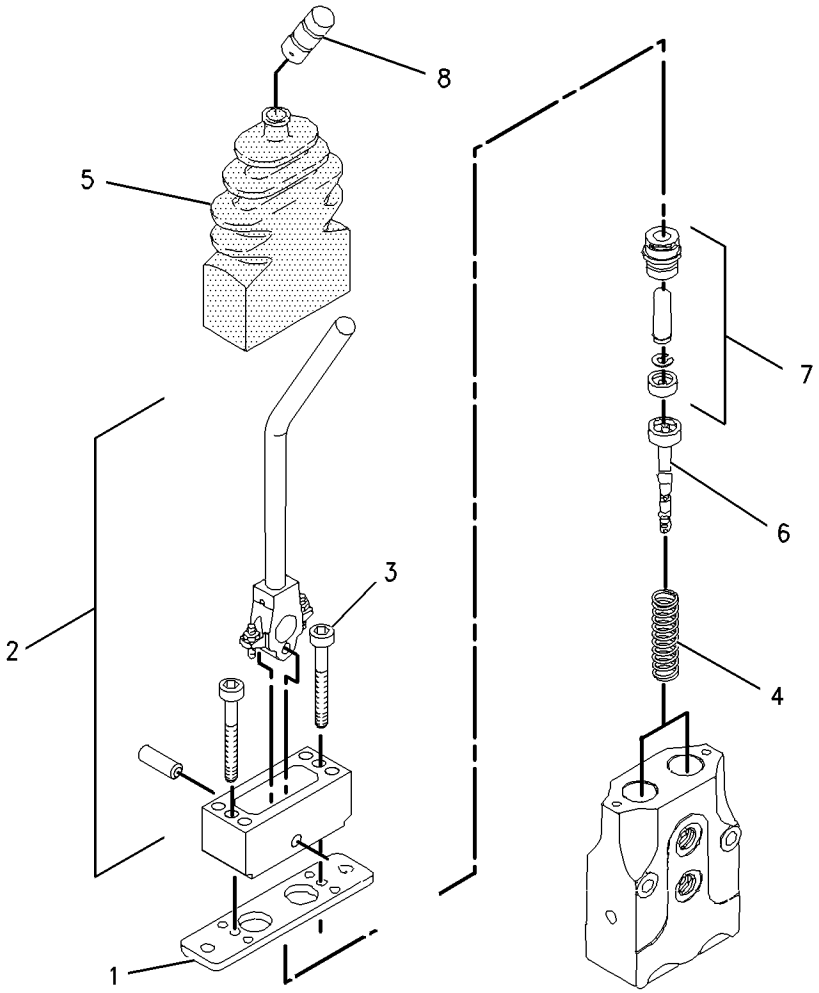

GRAPHIC #1 **<END>** g00905028

112-5704 CONTROL GP-HYDRAULIC PEDAL

S/N: BCZ1-2000

PART OF 187-7364, 187-7365, 192-3175 LINES GP-PILOT, 198-4680 OPERATOR AR ALSO AN ATTACHMENT

SMCS-5059, 5063 **i02160067**

NOTE	REF NO	GRAPHIC REF	PART NUMBER	QTY	PART NAME 1 2 3 4 5 6 (PRODUCT LEVEL)	SEE PAGE
	1	1	**201-0895**	1	KIT-PLATE (PEDAL CONTROL)	
					(INCLUDES BUSHINGS & PLATE)	
	2	1	**117-8699**	1	WASHER (12.1X24X.95-MM THK)	
M	3	1	**107-2723**	1	BOLT-SOCKET HEAD (M12X1.75X20-MM)	
	4	1	**201-0901**	1	SPRING (INCLUDES TWO) (PEDAL CONTROL)	
					(INCLUDES SPRINGS)	
	5	1	**117-8700**	1	PEDAL	
J	6	1	**201-0502**	1	KIT-PEDAL (PEDAL CONTROL)	
					(INCLUDES SCREWS, NUTS & PEDAL AXIS)	
JM	7	1	**116-1119**	1	SETSCREW	
M	8	1	**5P-7970**	2	NUT (M8X1.25-THD)	
	9	1	**242-1979**	2	PLUNGER GP (WITH SPRING) (PEDAL CONTROL)	
					(INCLUDES WASHER RETAINER, SPRING RETAINER, SPRING, SHIMS, & SPOOL)	
	10	1	**126-8059**	1	CAP-PLASTIC	
	11	1	**242-1978**	2	PLUNGER GP (PEDAL) (PEDAL CONTROL)	
					(INCLUDES PLUNGER, PLUNGER GUIDE, WASHER, PLATER, SNAP RING & PROTECTING CAP)	
	12	1	**201-0533**	1	GROMMET (INCLUDES TWO) (PEDAL CONTROL)	
					(INCLUDES BELLOWS)	

J-KIT MARKED J SERVICES PARTS MARKED J
M-METRIC PART

112-5704 **CONTROL GP-HYDRAULIC PEDAL** *(contd.)* **i02160067**

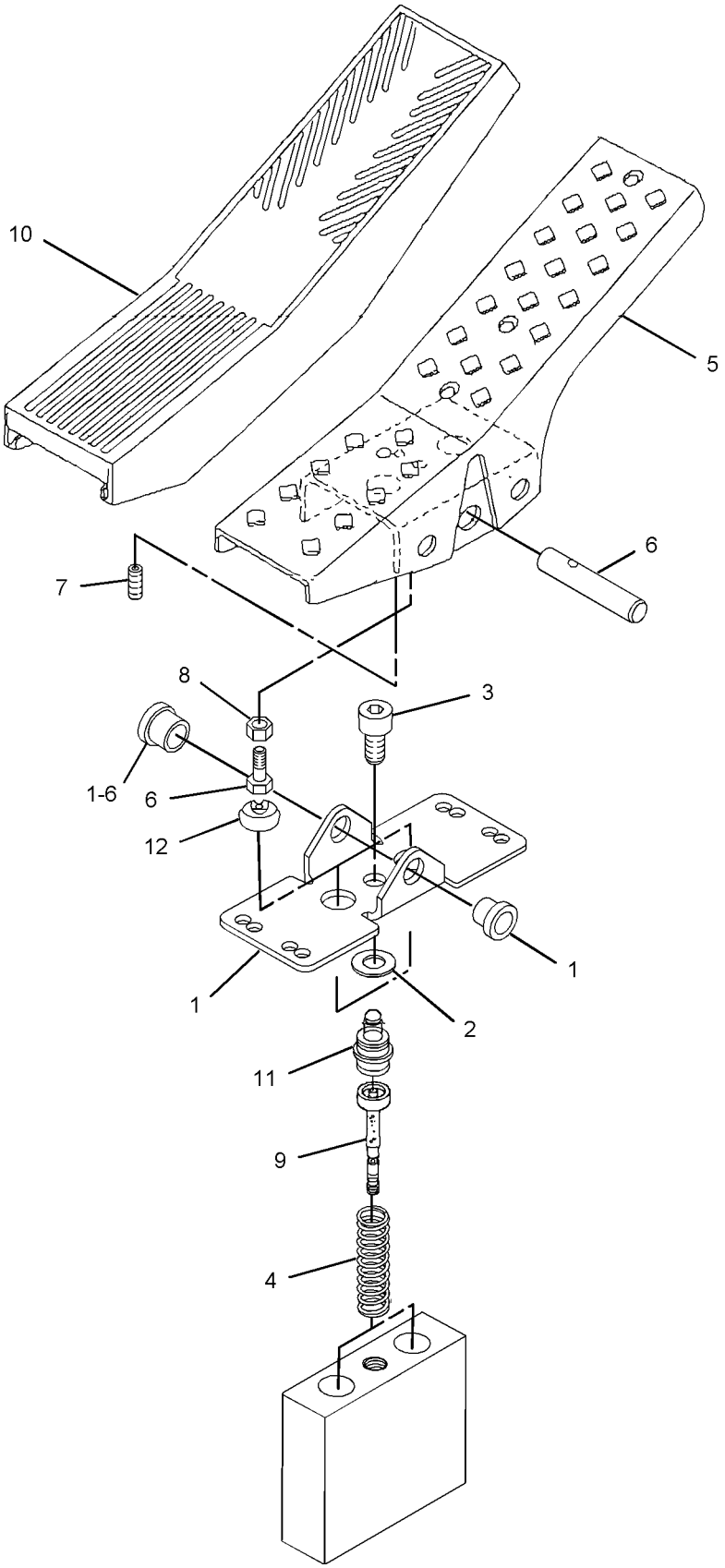

GRAPHIC #1

<END>

g01044205

188-4972 CONTROL GP-HYDRAULIC PEDAL

S/N: BCZ1-556
AN ATTACHMENT

SMCS-5059, 5063 **i01861121**

NOTE	REF NO	GRAPHIC REF	PART NUMBER	QTY	PART NAME 1 2 3 4 5 6 (PRODUCT LEVEL)	SEE PAGE
	1	1	**3E-3365**	1	WEDGE-RECEPTACLE LOCK (2-PIN)	
	2	1	**186-3735**	2	PIN-CONNECTOR	
Y	3	1	**112-5699**	1	PEDAL GP (TRAVEL)	890
	4	1	**175-3349**	1	RECEPTACLE AS	
	5	1	**193-9191**	1	BRACKET	
	6	1	**194-7839**	1	SWITCH AS-POSITION (TRAVEL LOCK)	
	7	1	**194-7843**	1	MAGNET	
M	8	1	**095-0723**	2	SCREW (M3X0.5X10-MM)	
	9	1	**096-5962**	2	WASHER-HARD (3.4X7X0.8-MM THK)	
M	10	1	**117-3393**	2	SCREW (M3X0.5X8-MM)	
M	11	1	**3C-6969**	2	NUT (M3X0.5-THD)	

M-METRIC PART
Y-SEPARATE ILLUSTRATION

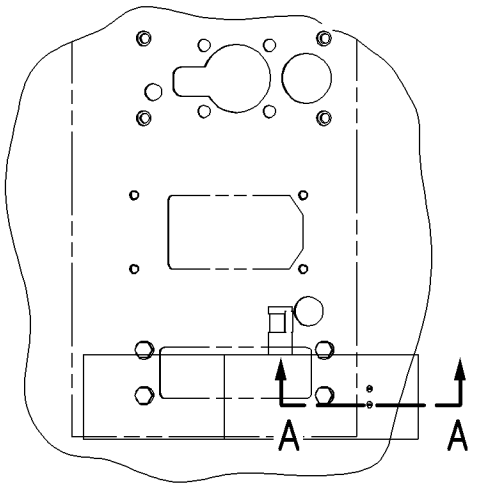

TOP VIEW FWD

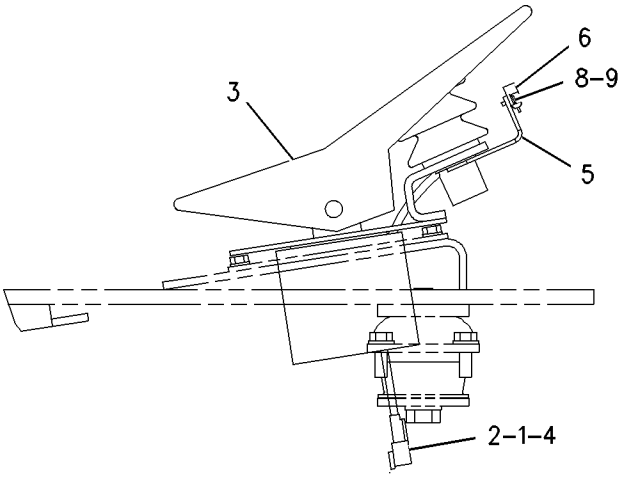

RIGHT SIDE VIEW

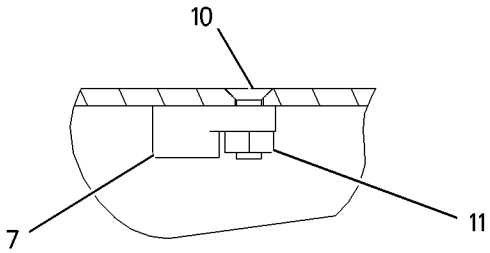

SECTION A–A

GRAPHIC #1 **<END>** g00898778

188-4972 CONTROL GP-HYDRAULIC PEDAL

S/N: BCZ557-2000

AN ATTACHMENT

SMCS-5059, 5063 **i02049064**

NOTE	REF NO	GRAPHIC REF	PART NUMBER	QTY	PART NAME 1 2 3 4 5 6 (PRODUCT LEVEL)	SEE PAGE
	1	1	**3E-3365**	1	WEDGE-RECEPTACLE LOCK (2-PIN)	
	2	1	**186-3735**	2	PIN-CONNECTOR	
Y	3	1	**112-5699**	1	PEDAL GP (TRAVEL)	890
	4	1	**175-3349**	1	RECEPTACLE AS	
	5	1	**193-9191**	1	BRACKET	
C	6	1	**240-1366**	1	SWITCH AS-POSITION (TRAVEL LOCK)	
C	7	1	**194-7843**	1	MAGNET	
M	8	1	**095-0723**	2	SCREW (M3X0.5X10-MM)	
	9	1	**096-5962**	2	WASHER-HARD (3.4X7X0.8-MM THK)	
M	10	1	**117-3393**	2	SCREW (M3X0.5X8-MM)	
M	11	1	**3C-6969**	2	NUT (M3X0.5-THD)	
M	12	1	**8C-8580**	2	BOLT-SOCKET HEAD (M5X.8X16-MM)	

C-CHANGE FROM PREVIOUS TYPE
M-METRIC PART
Y-SEPARATE ILLUSTRATION

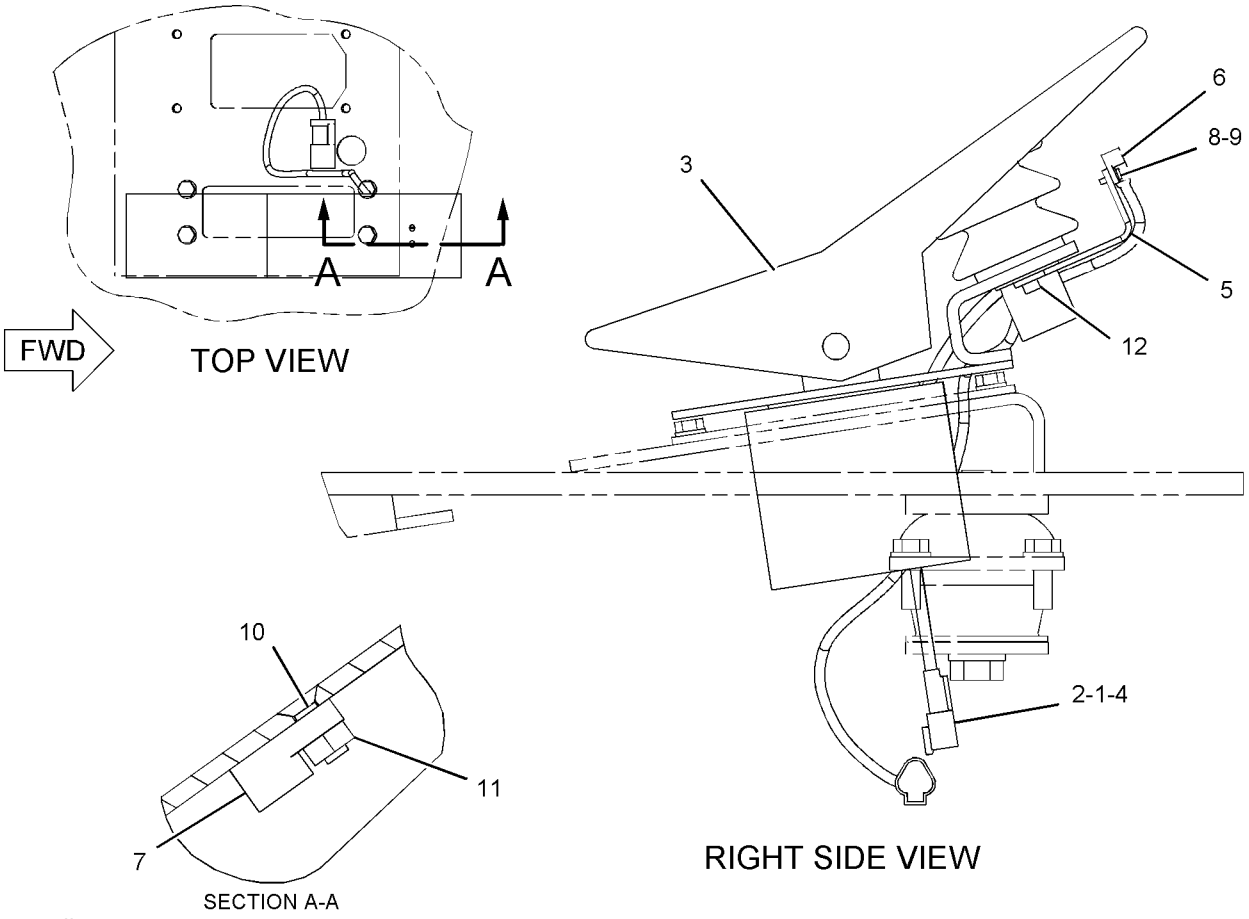

GRAPHIC #1 **<END>** g01061507

222-6205 CONTROL GP-JOYSTICK

S/N: BCZ1-2000

PART OF 187-3793 CONTROL GP-PILOT OPERATED HYD

SMCS-5063, 5705 **i01927884**

NOTE	REF NO	GRAPHIC REF	PART NUMBER	QTY	PART NAME 1 2 3 4 5 6 (PRODUCT LEVEL)	SEE PAGE
	1	1	**136-1206**	1	CONTROL GP-HANDLE (JOYSTICK) (LH/RH)	
	2	1	**122-1905**	1	BELLOWS	
	3	1	**151-4522**	1	KIT-LEVER (JOYSTICK CONTROL)	
					(INCLUDES NUT, LEVER & PIN)	
	4	1	**198-1016**	1	KIT-PILOT VALVE (CONNECTOR JOINT) (JOYSTICK CONTROL)	
					(INCLUDES SHIMS & CARDAN)	
	5	1	**122-1904**	1	PLATE	
	6	1	**203-4579**	1	KIT-PLUNGER (JOYSTICK CONTROL)	
					(INCLUDES PLUNGERS, PLUNGER GUIDES, PLATERS & SNAP RINGS)	
	7	1	**205-4015**	1	KIT-PLUNGER (JOYSTICK CONTROL)	
					(INCLUDES PLUNGERS, PLUNGER GUIDES, PLATERS & SNAP RINGS)	
	8	1	**9T-2837**	1	KIT-SEAL (JOYSTICK CONTROL)	
					(INCLUDES RINGS, PINS & BOLT)	

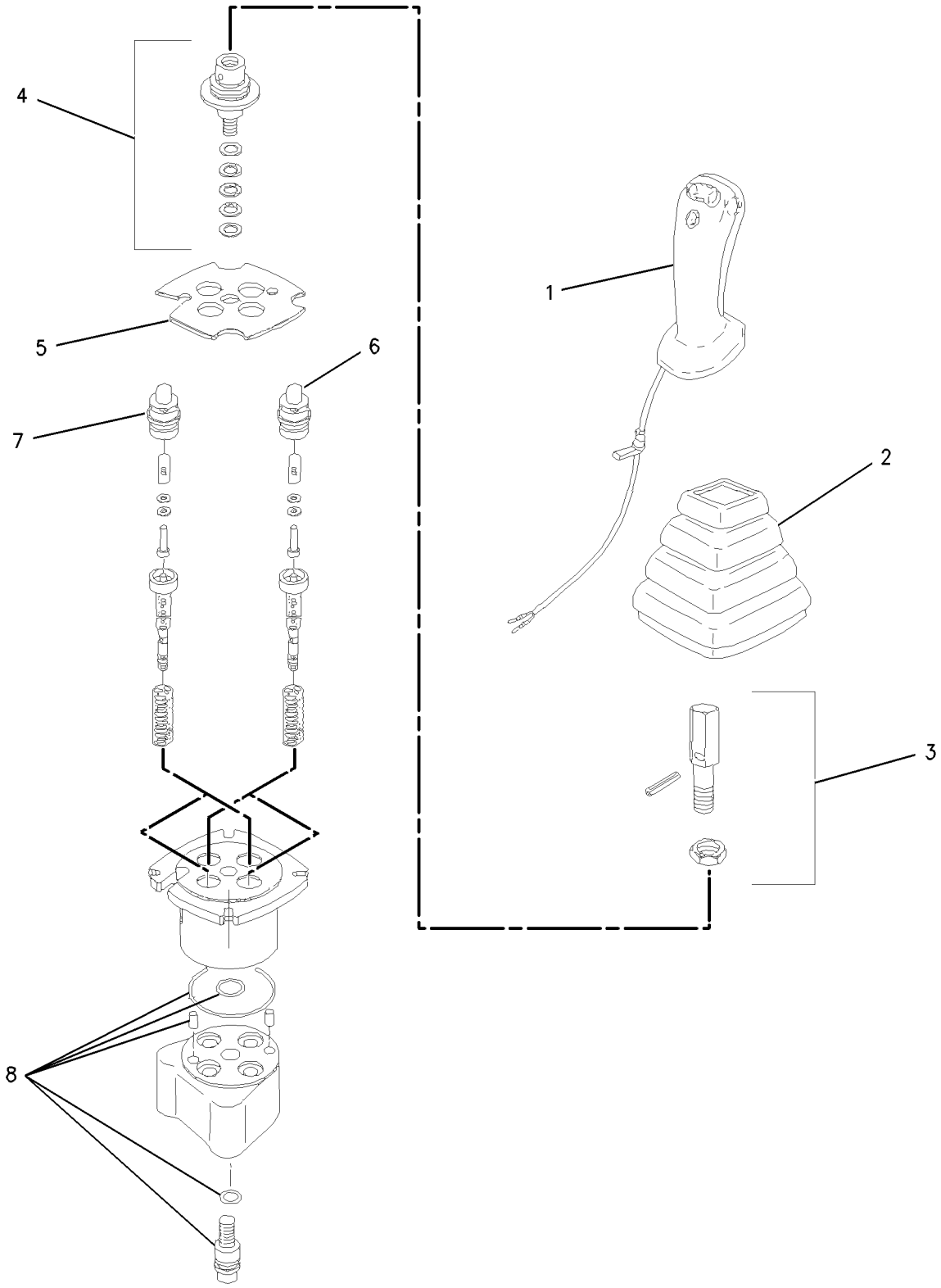

GRAPHIC #1 **<END>** g00894427

187-3793 CONTROL GP-PILOT OPERATED HYD

S/N: BCZ1-2000

PART OF 198-4680 OPERATOR AR

SMCS-5059 **i01794559**

NOTE	REF NO	GRAPHIC REF	PART NUMBER	QTY	PART NAME 1 2 3 4 5 6 (PRODUCT LEVEL)	SEE PAGE
Y	1	1	**193-7789**	1	CONTROL GP-HYDRAULIC HAND (LH/RH)	430
Y	2	1	**222-6205**	2	CONTROL GP-JOYSTICK (LH/RH)	435
M	3	1	**5C-7883**	6	BOLT-SOCKET HEAD (M6X1.0X16MM)	
M	4	1	**8T-4200**	2	BOLT (M8X1.25X16MM)	
	5	1	**9X-8256**	6	WASHER (6.6X12X2MM THK)	

M-METRIC PART
Y-SEPARATE ILLUSTRATION

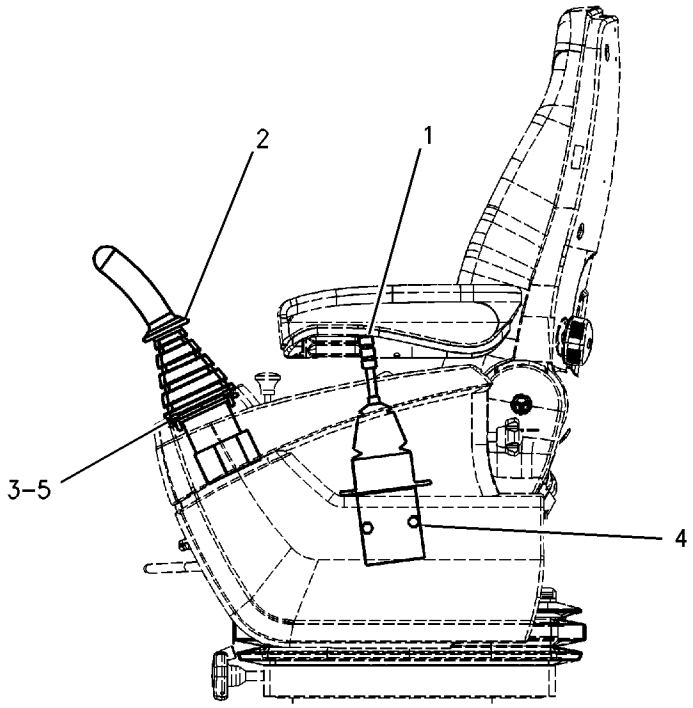

LEFT SIDE VIEW

GRAPHIC #1 **<END>** g00891265

122-1207 COUPLING GP-FLEXIBLE

S/N: BCZ1-2000

PART OF 186-0471 HYDRAULIC AR

SMCS-3252 **i01060927**

NOTE	REF NO	GRAPHIC REF	PART NUMBER	QTY	PART NAME 1 2 3 4 5 6 (PRODUCT LEVEL)	SEE PAGE
Y	1	1	**134-9717**	1	COUPLING GP-FLEXIBLE	440
	2	1	**7X-3174**	8	BOLT	

Y-SEPARATE ILLUSTRATION

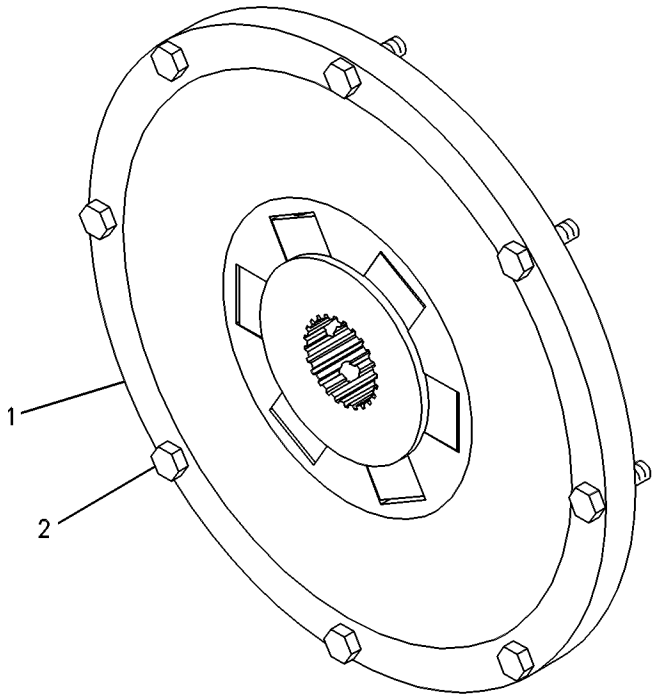

GRAPHIC #1 **<END>** g00250836

134-9680 COUPLING GP-FLEXIBLE

S/N: BCZ1-2000

PART OF 134-9717 COUPLING GP-FLEXIBLE

SMCS-3252 **i01927338**

NOTE	REF NO	GRAPHIC REF	PART NUMBER	QTY	PART NAME 1 2 3 4 5 6 (PRODUCT LEVEL)	SEE PAGE
M	1	1	**6V-4429**	1	BOLT (M16X2X40MM)	
	2	1	**134-9682**	1	HUB	
	3	1	**170-1350**	1	WASHER (16.5X55X12MM THK)	

M-METRIC PART

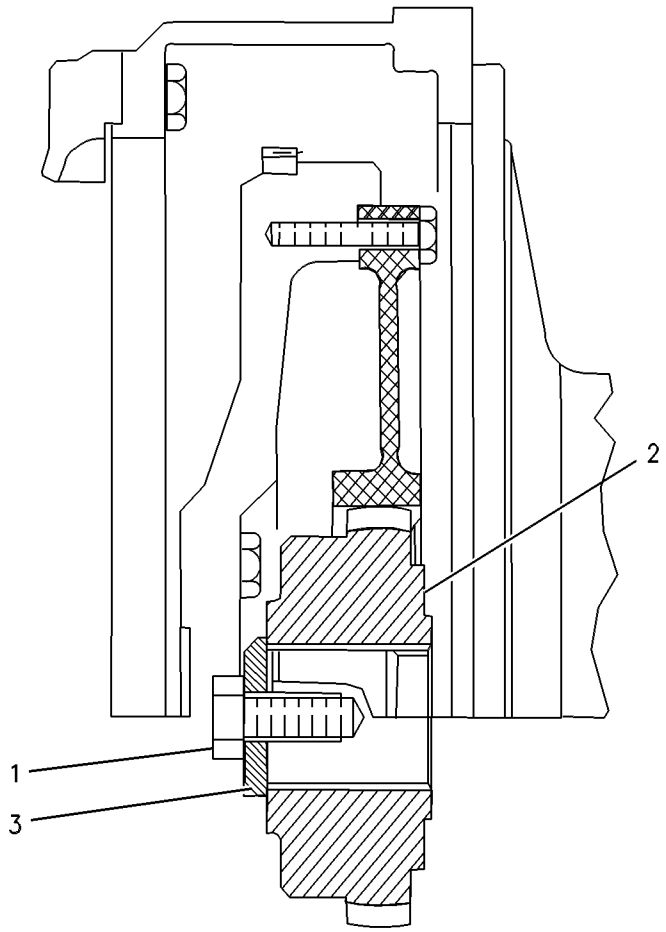

GRAPHIC #1 **<END>** g00277311

134-9717 COUPLING GP-FLEXIBLE

S/N: BCZ1-2000

PART OF 122-1207 COUPLING GP-FLEXIBLE

SMCS-3252 **i01896196**

NOTE	PART NUMBER	QTY	PART NAME 1 2 3 4 5 6 (PRODUCT LEVEL)	SEE PAGE
Y	*134-9680*	1	COUPLING GP-FLEXIBLE	439
			-OR-	
Y	*142-0467*	1	COUPLING GP-FLEXIBLE	441

Y-SEPARATE ILLUSTRATION

<END>

HYDRAULIC SYSTEM

142-0467 COUPLING GP-FLEXIBLE

S/N: BCZ1-2000

PART OF 134-9717 COUPLING GP-FLEXIBLE

SMCS-3252 **i01375461**

NOTE	REF NO	GRAPHIC REF	PART NUMBER	QTY	PART NAME 1 2 3 4 5 6 (PRODUCT LEVEL)	SEE PAGE
	1	1	**8U-9351**	1	GEAR	
	2	1	**142-8103**	1	COUPLING AS	
	3	1	**8U-9352**	2	PIN	

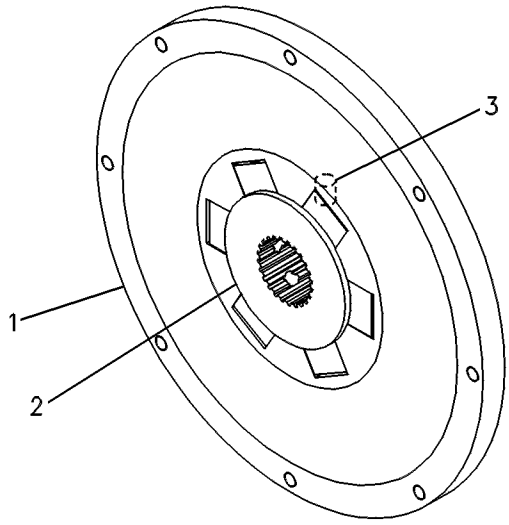

GRAPHIC #1 **<END>** g00244908

HYDRAULIC SYSTEM

111-1897 CYLINDER & MTG GP-AXLE LOCK

S/N: BCZ1-485, 488

PART OF 186-0473 HYDRAULIC AR

SMCS-7201 **i01070737**

NOTE	REF NO	GRAPHIC REF	PART NUMBER	QTY	PART NAME 1 2 3 4 5 6 (PRODUCT LEVEL)	SEE PAGE
Y	1	1	**8U-6848**	2	CYLINDER GP-AXLE OSC LOCK	449
M	2	1	**6V-6787**	8	BOLT (M20X2.5X55MM)	
	3	1	**7Y-1858**	8	WASHER	

M-METRIC PART
Y-SEPARATE ILLUSTRATION

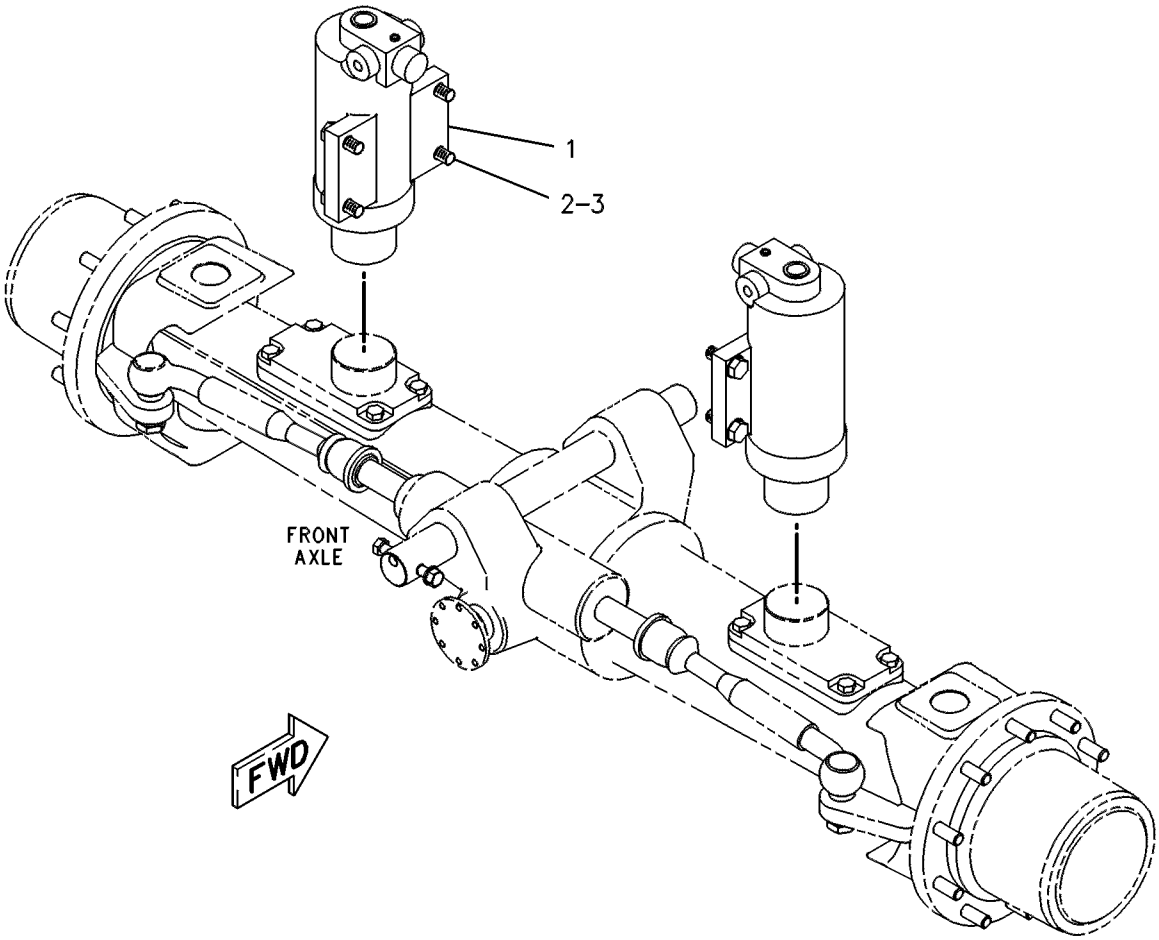

GRAPHIC #1 **<END>** g00244555

HYDRAULIC SYSTEM

111-1897 CYLINDER & MTG GP-AXLE LOCK

S/N: BCZ486-487, 489-2000
PART OF 186-0473 HYDRAULIC AR

SMCS-7201 **i01899601**

NOTE	REF NO	GRAPHIC REF	PART NUMBER	QTY	PART NAME 1 2 3 4 5 6 (PRODUCT LEVEL)	SEE PAGE
CY	1	1	**226-3699**	2	CYLINDER GP-AXLE OSC LOCK	451
M	2	1	**6V-6787**	8	BOLT (M20X2.5X55MM)	
	3	1	**7Y-1858**	8	WASHER (21X37X3MM THK)	

C-CHANGE FROM PREVIOUS TYPE
M-METRIC PART
Y-SEPARATE ILLUSTRATION

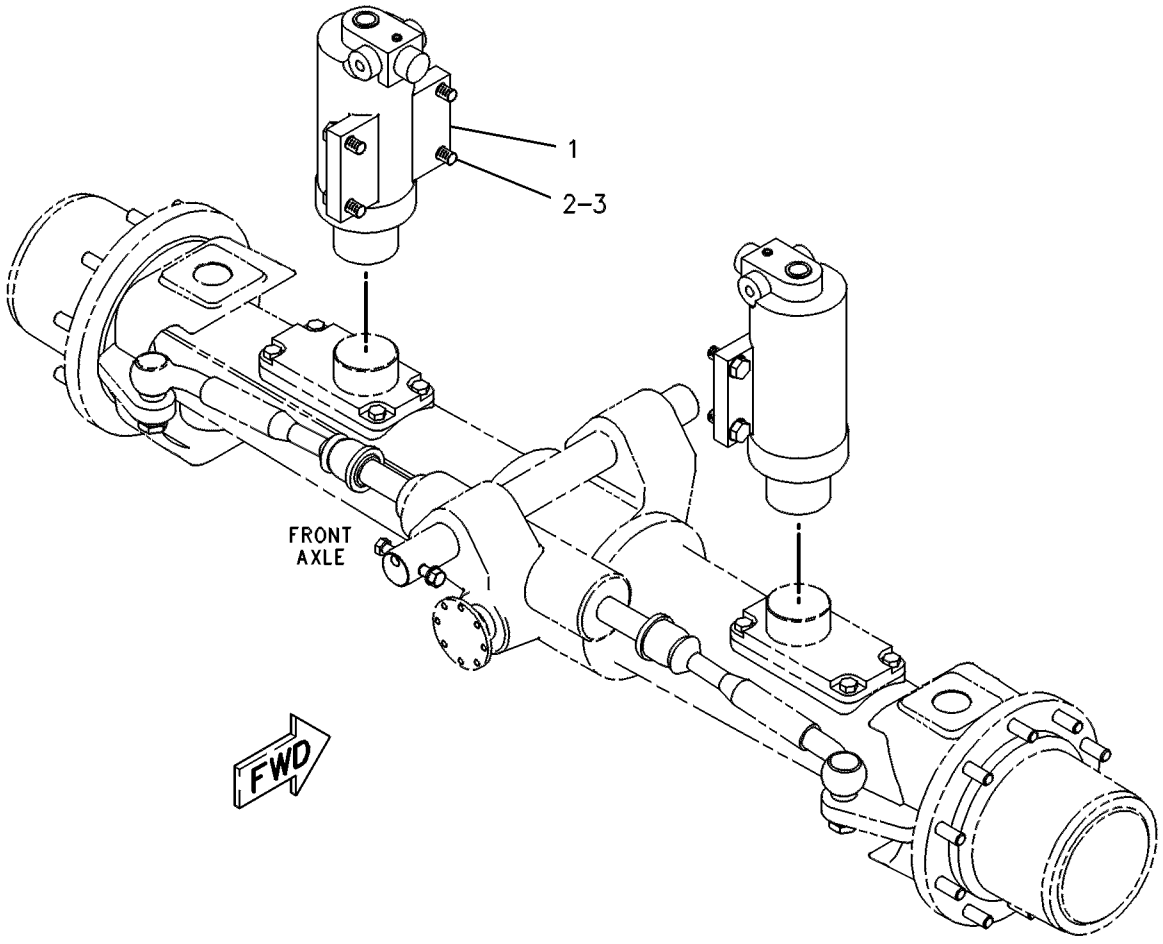

GRAPHIC #1 **<END>** g00244555

183-8873 CYLINDER & SEAL GP-BOOM–STUB

S/N: BCZ1-2000
PART OF 185-8547 BOOM AR
AN ATTACHMENT

SMCS-5456 **i01549529**

NOTE	REF NO	GRAPHIC REF	PART NUMBER	QTY	PART NAME 1 2 3 4 5 6 (PRODUCT LEVEL)	SEE PAGE
	1	1	**9X-4597**	2	SEAL-LIP	
	2	1	**096-0854**	2	SEAL-LIP TYPE	
Y	3	1	**183-8850**	1	CYLINDER GP-BOOM	457

Y-SEPARATE ILLUSTRATION

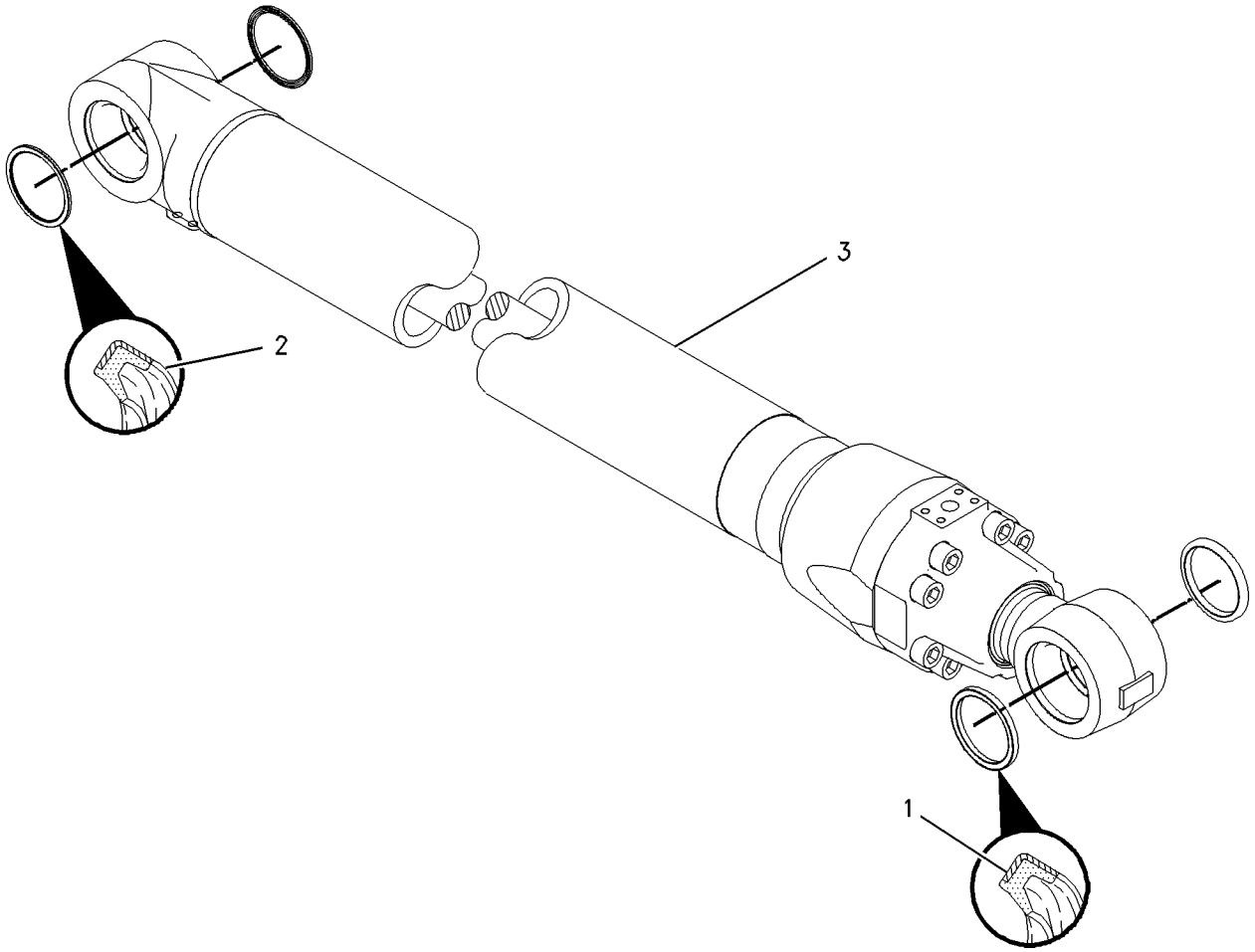

GRAPHIC #1 **<END>** g00806635

HYDRAULIC SYSTEM

183-8874 CYLINDER & SEAL GP-BOOM

S/N: BCZ1-2000
PART OF 185-8540 BOOM AR
AN ATTACHMENT

SMCS-5456 **i01585407**

NOTE	REF NO	GRAPHIC REF	PART NUMBER	QTY	PART NAME 1 2 3 4 5 6 (PRODUCT LEVEL)	SEE PAGE
	1	1	**9X-4597**	2	SEAL-LIP	
	2	1	**096-0854**	2	SEAL-LIP TYPE	
Y	3	1	**183-8851**	1	CYLINDER GP-BOOM	459

Y-SEPARATE ILLUSTRATION

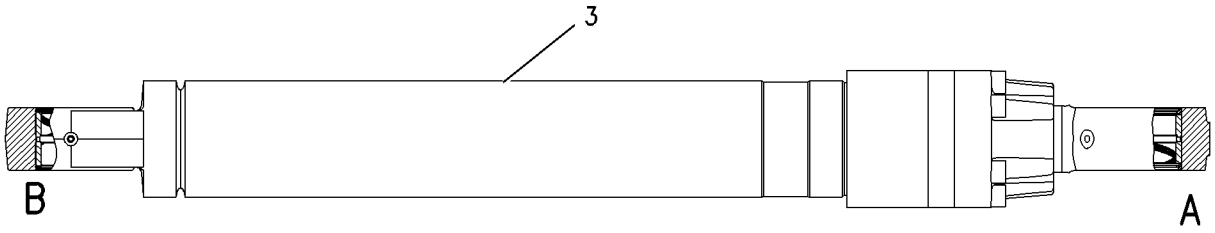

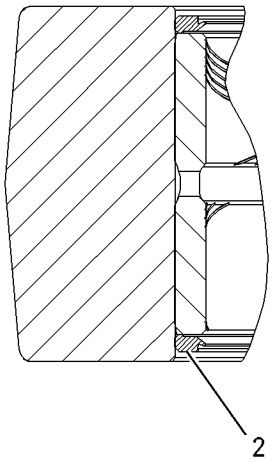

VIEW OF AREA B

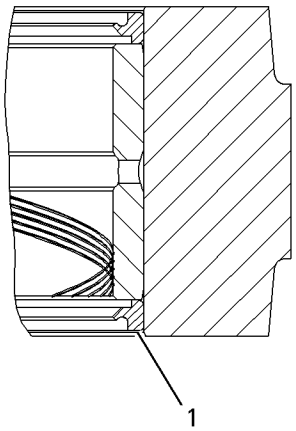

VIEW OF AREA A

GRAPHIC #1 **<END>** g00824411

183-8875 CYLINDER & SEAL GP-BOOM–FORE

S/N: BCZ1-2000
PART OF 185-8547 BOOM AR
AN ATTACHMENT

SMCS-5456 **i01549484**

NOTE	REF NO	GRAPHIC REF	PART NUMBER	QTY	PART NAME 1 2 3 4 5 6 (PRODUCT LEVEL)	SEE PAGE
	1	1	**9X-4597**	2	SEAL-LIP TYPE	
Y	2	1	**183-8852**	1	CYLINDER GP-BOOM	461
	3	1	**9X-4598**	2	SEAL-LIP TYPE	

Y-SEPARATE ILLUSTRATION

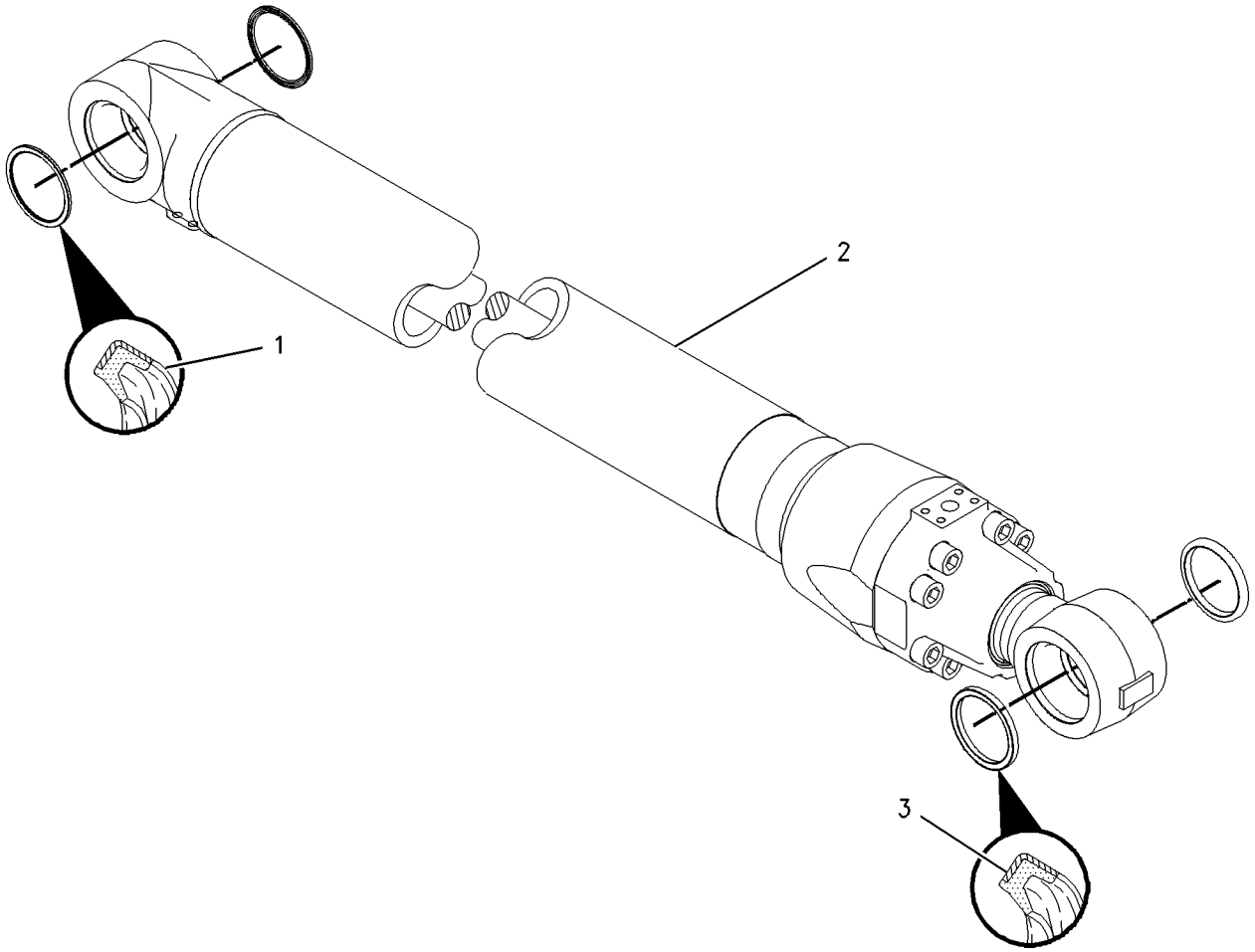

GRAPHIC #1 **<END>** g00806815

183-8877 CYLINDER & SEAL GP-BUCKET

S/N: BCZ1-2000
PART OF 188-4952, 188-4953 LINKAGE AR-BUCKET
AN ATTACHMENT

SMCS-5457 **i01580041**

NOTE	REF NO	GRAPHIC REF	PART NUMBER	QTY	PART NAME 1 2 3 4 5 6 (PRODUCT LEVEL)	SEE PAGE
	1	1	**5W-2817**	2	FITTING-GREASE	
	2	1	**093-1434**	4	SEAL-LIP	
Y	3	1	**183-8854**	1	CYLINDER GP-BUCKET	463

Y-SEPARATE ILLUSTRATION

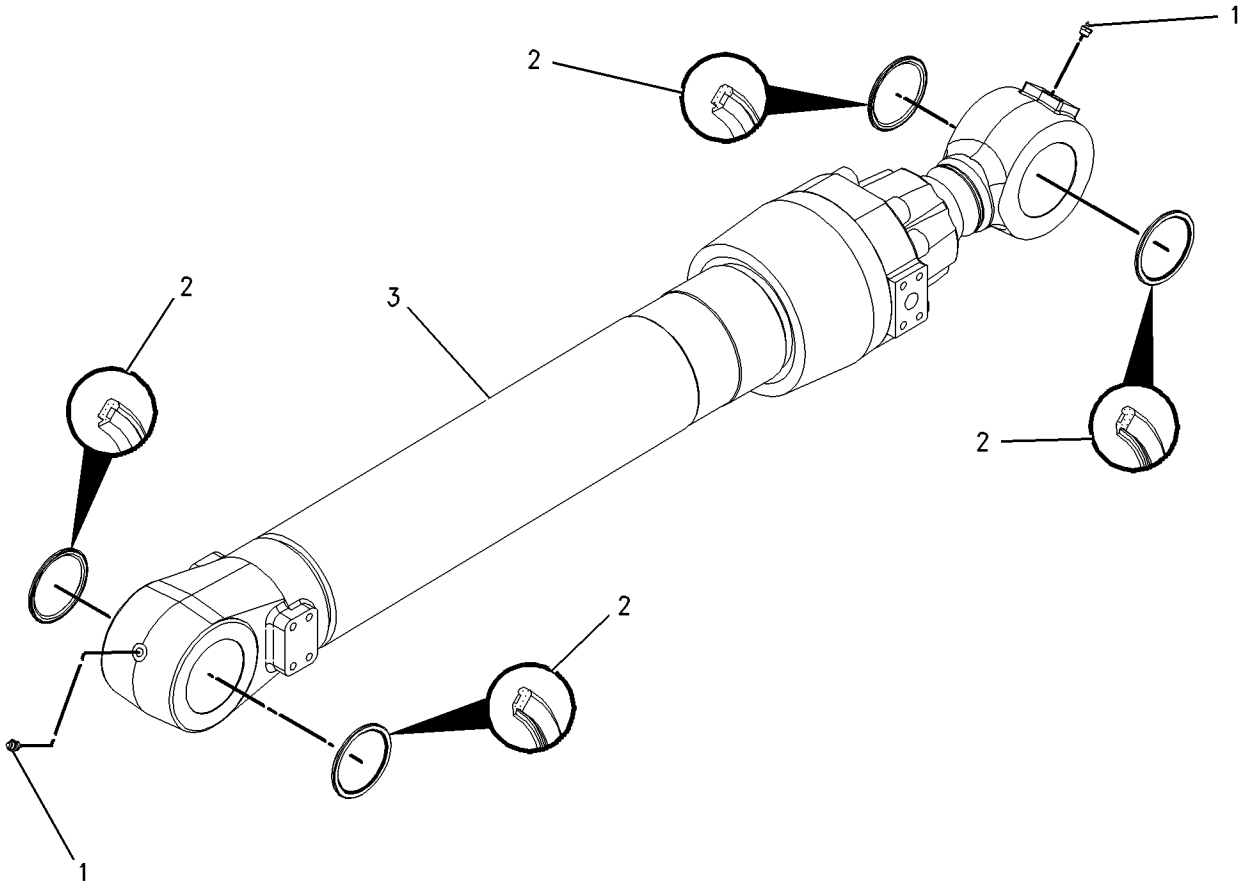

GRAPHIC #1 **<END>** g00821448

183-8876 CYLINDER & SEAL GP-STICK–
VARIABLE ADJUSTABLE BOOM
S/N: BCZ1-2000
PART OF 185-8540, 185-8547 BOOM AR
AN ATTACHMENT

SMCS-5458 **i01549490**

NOTE	REF NO	GRAPHIC REF	PART NUMBER	QTY	PART NAME 1 2 3 4 5 6 (PRODUCT LEVEL)	SEE PAGE
	1	1	**5W-2817**	1	FITTING-GREASE	
	2	1	**096-0854**	4	SEAL-LIP TYPE	
Y	3	1	**183-8853**	1	CYLINDER GP-STICK	468

Y-SEPARATE ILLUSTRATION

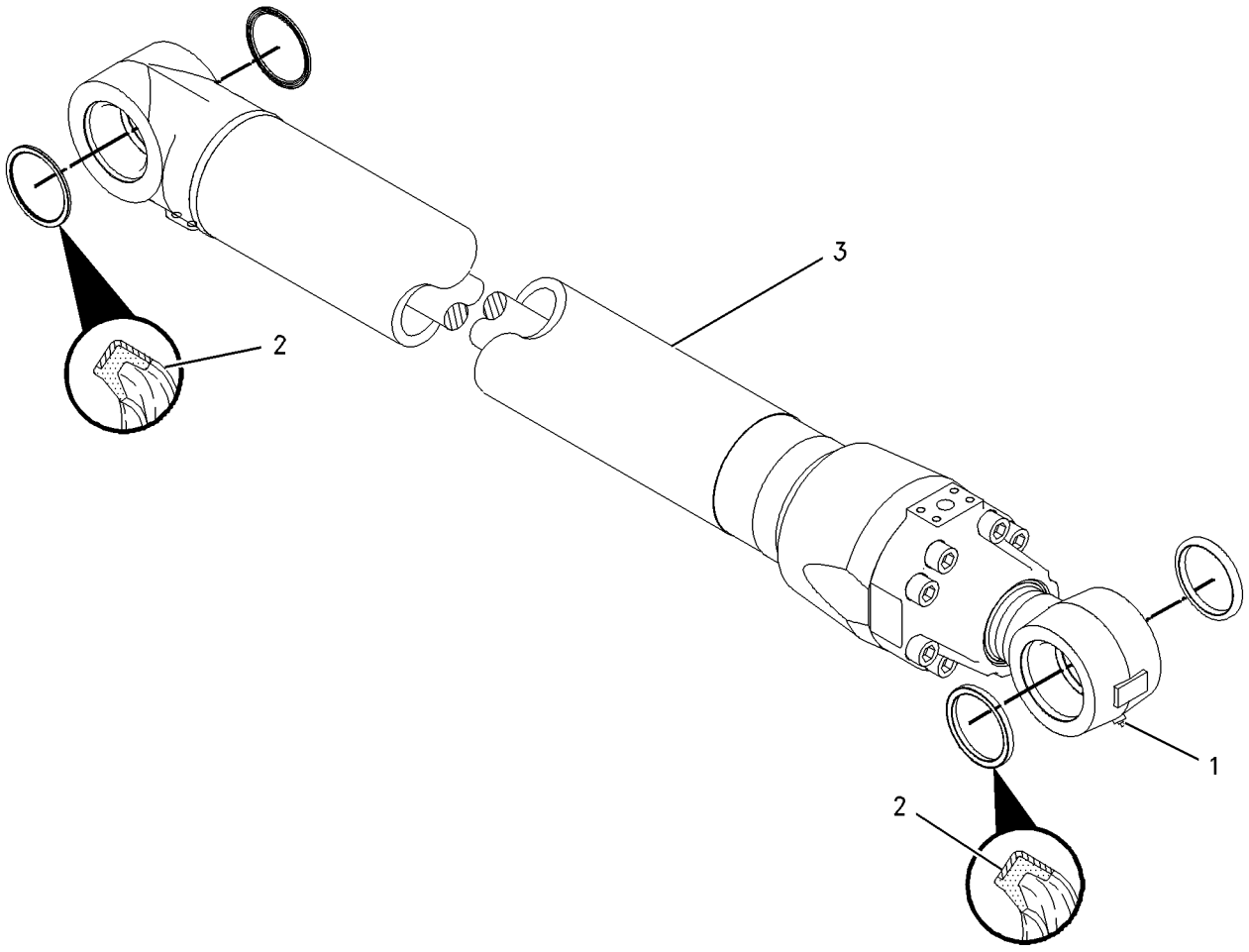

GRAPHIC #1 **<END>** g00806561

8U-6848 CYLINDER GP-AXLE OSC LOCK

S/N: BCZ1-485, 488

PART OF 111-1897 CYLINDER & MTG GP-AXLE LOCK

SMCS-5468 **i02160068**

NOTE	REF NO	GRAPHIC REF	PART NUMBER	QTY	PART NAME 1 2 3 4 5 6 (PRODUCT LEVEL)	SEE PAGE
	1	1	**8U-1965**	1	CYLINDER	
	2	1	**5W-5276**	1	VALVE (HYDRAULIC CHECK)	
	3	1	**8U-1966**	1	HOUSING	
	4	1	**5W-5273**	1	PISTON	
	5	1	**5W-5272**	1	GUIDE-TAPPET	
	6	1	**5W-5271**	1	TAPPET	
	7	1	**8U-1967**	1	PISTON	
	8	1	**5W-5162**	1	SPRING	
J	9	1	**8U-2918**	1	RING-SCRAPER	
J	10	1	**8U-6849**	1	RING	
J	11	1	**5W-4882**	1	SPACER	
J	12	1	**8U-6850**	1	SEAL-O-RING	
J	13	1	**5W-4877**	1	SEAL-O-RING	
J	14	1	**5W-4881**	1	SEAL-O-RING	
J	15	1	**095-1751**	1	SEAL-O-RING	
J	16	1	**5W-5108**	1	RING	
M	17	1	**105-3480**	4	BOLT-SOCKET HEAD (M5X0.8X16-MM)	
	18	1	**5W-1453**	4	LOCKWASHER	
	19	1	**9S-8002**	1	PLUG	
	20	1	**3J-7354**	1	SEAL-O-RING	
	21	1	**9S-8005**	1	PLUG	
	22	1	**3K-0360**	1	SEAL-O-RING	
	23	1	**9S-9334**	1	PLUG	
	24	1	**7M-8485**	1	SEAL-O-RING	
					AVAILABLE REPAIR KIT(S):	
J			**8U-6851**	1	KIT-REPAIR (AXLE OSC LOCK CYLINDER)	

J-KIT MARKED J SERVICES PARTS MARKED J
M-METRIC PART

8U-6848 **CYLINDER GP-AXLE OSC LOCK** *(contd.)* **i02160068**

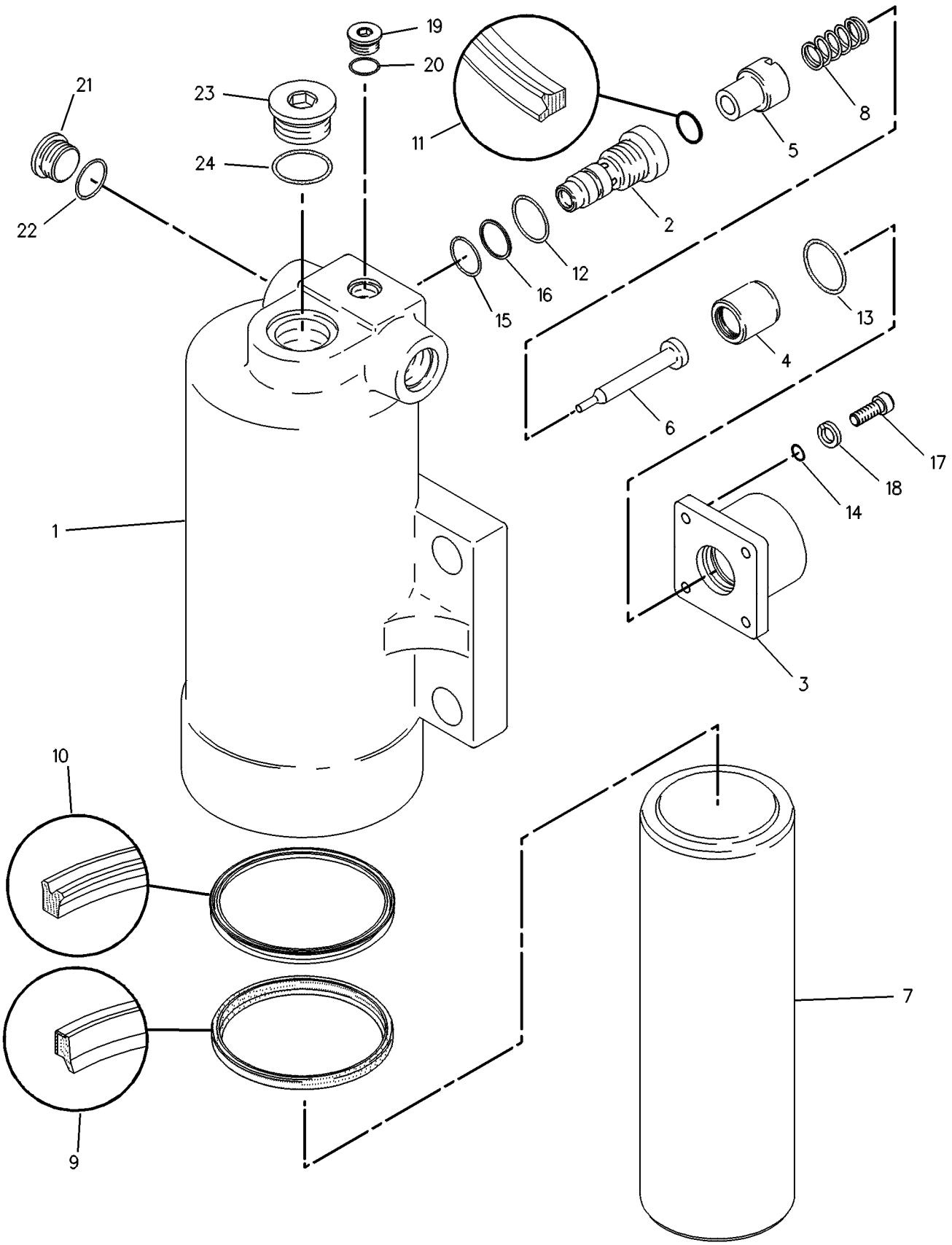

GRAPHIC #1 **<END>** g00244896

226-3699 CYLINDER GP-AXLE OSC LOCK

S/N: BCZ486-487, 489-2000

PART OF 111-1897 CYLINDER & MTG GP-AXLE LOCK

SMCS-5468 **i02171739**

NOTE	REF NO	GRAPHIC REF	PART NUMBER	QTY	PART NAME 1 2 3 4 5 6 (PRODUCT LEVEL)	SEE PAGE
	1	1	**234-3242**	1	CYLINDER	
	2	1	**8U-1967**	1	PISTON	
	3	1	**234-3243**	1	VALVE GP-CHECK (AXLE OSC LOCK CYLINDER)	
		1	**4J-5351**	1	SEAL-O-RING	
		1	**6V-3922**	1	SEAL-O-RING	
		1	**123-2342**	1	SEAL-O-RING	
		1	**221-3541**	1	RING-BACKUP	
	4	1	**234-3244**	1	COVER	
	5	1	**234-3245**	1	PISTON	
J	6	1	**234-4855**	1	SEAL-SCRAPER	
J	7	1	**8U-6849**	1	RING	
J	8	1	**9H-6761**	1	SEAL-O-RING	
M	9	1	**8T-0267**	5	BOLT-SOCKET HEAD (M6X1X12-MM)	
	10	1	**9S-9334**	1	PLUG	
	11	1	**9S-8002**	1	PLUG	
	12	1	**9S-8005**	1	PLUG	
J	13	1	**7M-8485**	1	SEAL-O-RING	
J	14	1	**3K-0360**	1	SEAL-O-RING	
J	15	1	**3J-7354**	1	SEAL-O-RING	
					AVAILABLE REPAIR KIT(S):	
J			**234-4074**	1	KIT-SEAL (AXLE OSC LOCK CYLINDER)	

J-KIT MARKED J SERVICES PARTS MARKED J
M-METRIC PART

226-3699 CYLINDER GP-AXLE OSC LOCK *(contd.)* **i02171739**

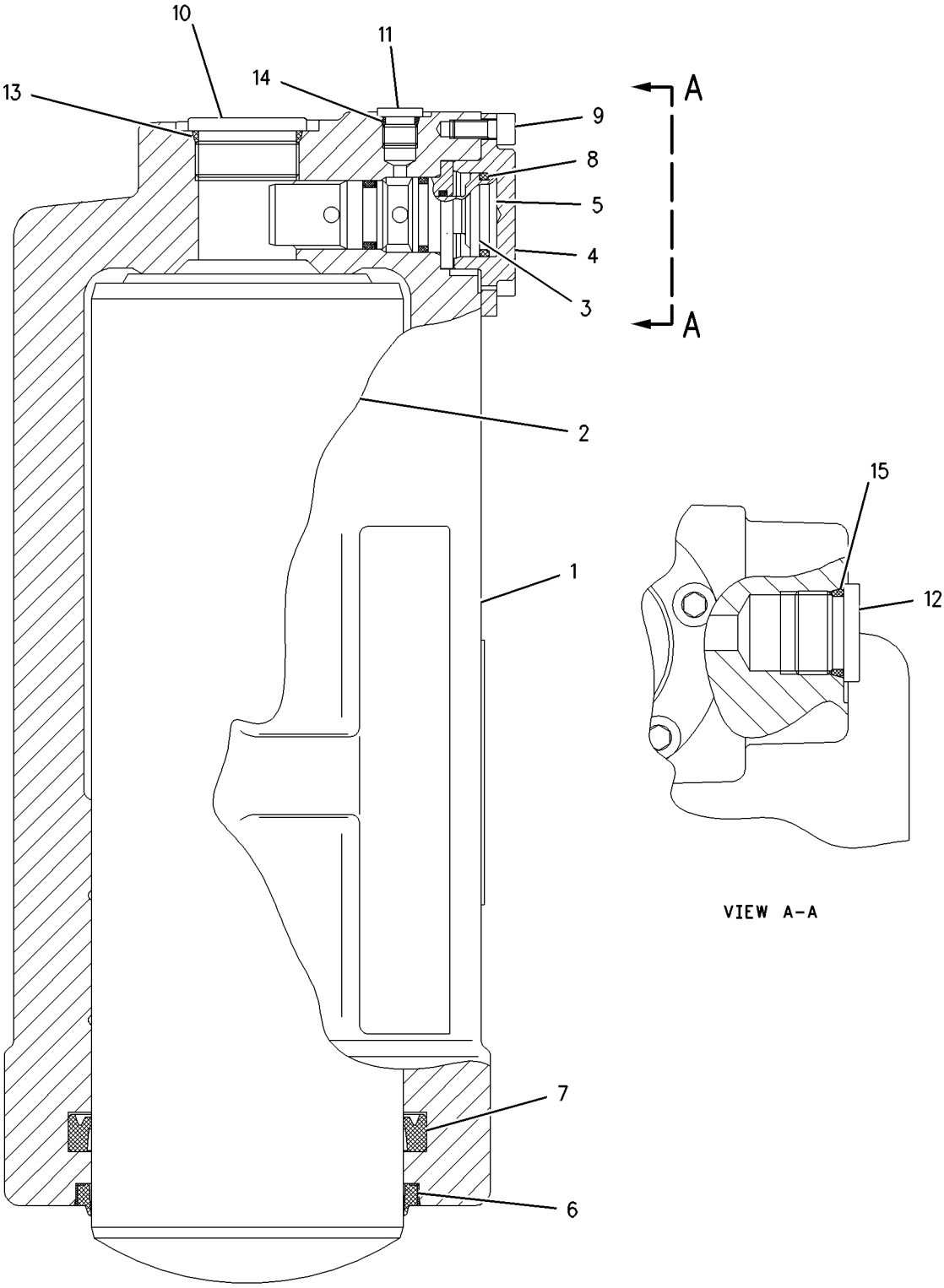

RIGHT SIDE VIEW

GRAPHIC #1 **<END>** g00991609

HYDRAULIC SYSTEM

221-3545 CYLINDER GP-BLADE

S/N: BCZ1-885
PART OF 188-4997, 188-4998 BLADE AR
AN ATTACHMENT

SMCS-5102 **i02160073**

NOTE	REF NO	GRAPHIC REF	PART NUMBER	QTY	PART NAME 1 2 3 4 5 6 (PRODUCT LEVEL)	SEE PAGE
	1	1	**118-3111**	1	CYLINDER	
	2	1	**118-3112**	1	ROD	
	3	1	**118-3113**	1	PISTON	
	4	1	**118-3114**	1	COLLAR	
	5	1	**221-3546**	1	PISTON	
	6	1	**118-3116**	1	RETAINER	
	7	1	**118-3117**	1	CONE	
	8	1	**5W-1274**	2	PLUG	
	9	1	**142-1622**	1	RETAINER	
	10	1	**142-1623**	1	PIN	
J	11	1	**118-3119**	1	SEAL	
J	12	1	**118-3120**	1	RING	
J	13	1	**118-3121**	2	RING	
J	14	1	**8U-1958**	1	SEAL-O-RING	
J	15	1	**118-3123**	1	RING-BACKUP	
J	16	1	**118-3122**	1	SEAL-O-RING	
J	17	1	**118-3124**	1	RING	
J	18	1	**118-3125**	1	SEAL-O-RING	
J	19	1	**118-3126**	1	RING-BACKUP	
J	20	1	**118-3127**	1	RING	
J	21	1	**118-3128**	1	SEAL-O-RING	
J	22	1	**118-3129**	1	RING-BACKUP	
J	23	1	**4J-5351**	3	SEAL-O-RING	
J	24	1	**118-3130**	2	RING-BACKUP	
J	25	1	**118-3131**	2	SEAL-O-RING	
	26	1	**118-3132**	2	SPRING	
	27	1	**118-3133**	1	NUT	
	28	1	**118-2731**	1	PIN	
	29	1	**118-3134**	2	BEARING	
	30	1	**118-2732**	2	FITTING-GREASE	
					AVAILABLE REPAIR KIT(S):	
J			**118-3135**	1	KIT-SEAL (BLADE CYLINDER)	

J-KIT MARKED J SERVICES PARTS MARKED J

221-3545 CYLINDER GP-BLADE *(contd.)* i02160073

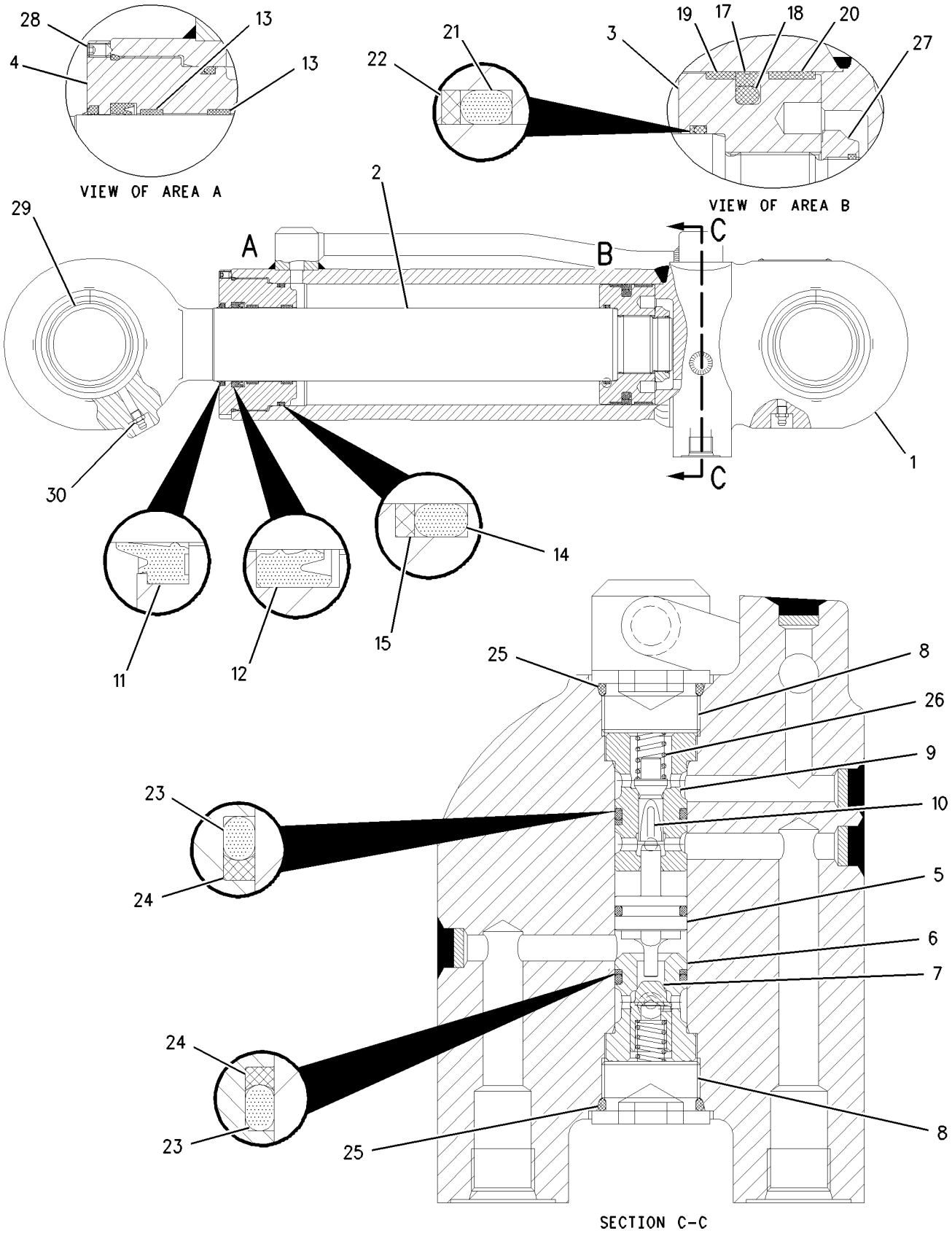

GRAPHIC #1 **<END>** g00895440

252-7305 CYLINDER GP-BLADE

S/N: BCZ886-2000
100MM (3.9IN) BORE X 250MM (9.8IN) STROKE
PART OF 188-4997, 188-4998 BLADE AR
AN ATTACHMENT

SMCS-5102 **i02160345**

NOTE	REF NO	GRAPHIC REF	PART NUMBER	QTY	PART NAME 1 2 3 4 5 6 (PRODUCT LEVEL)	SEE PAGE
	1	1	**118-3111**	1	CYLINDER	
	2	1	**118-3112**	1	ROD	
	3	1	**118-3113**	1	PISTON	
	4	1	**118-3114**	1	COLLAR	
	5	1	**221-3546**	1	PISTON	
	6	1	**118-3116**	1	RETAINER	
	7	1	**118-3117**	1	CONE	
	8	1	**5W-1274**	2	PLUG	
	9	1	**252-7302**	1	RETAINER AS	
		1	**4J-5351**	1	SEAL-O-RING	
		1	**118-3130**	1	RING-BACKUP	
	10	1	**142-1623**	1	PIN	
J	11	1	**118-3119**	1	SEAL	
J	12	1	**118-3120**	1	RING	
J	13	1	**118-3121**	2	RING	
J	14	1	**8U-1958**	1	SEAL-O-RING	
J	15	1	**118-3123**	1	RING-BACKUP	
J	16	1	**118-3122**	1	SEAL-O-RING	
J	17	1	**118-3124**	1	RING	
J	18	1	**118-3125**	1	SEAL-O-RING	
J	19	1	**118-3126**	1	RING-BACKUP	
J	20	1	**118-3127**	1	RING	
J	21	1	**118-3128**	1	SEAL-O-RING	
J	22	1	**118-3129**	1	RING-BACKUP	
J	23	1	**4J-5351**	2	SEAL-O-RING	
J	24	1	**118-3130**	1	RING-BACKUP	
J	25	1,1	**118-3131**	2	SEAL-O-RING	
	26	1	**118-3132**	1	SPRING	
	27	1	**118-3133**	1	NUT	
	28	1	**118-2731**	1	PIN	
	29	1	**118-3134**	2	BEARING	
	30	1	**118-2732**	2	FITTING-GREASE	
					AVAILABLE REPAIR KIT(S):	
J			**118-3135**	1	KIT-SEAL (BLADE CYLINDER)	

J-KIT MARKED J SERVICES PARTS MARKED J

252-7305 CYLINDER GP-BLADE *(contd.)* **i02160345**

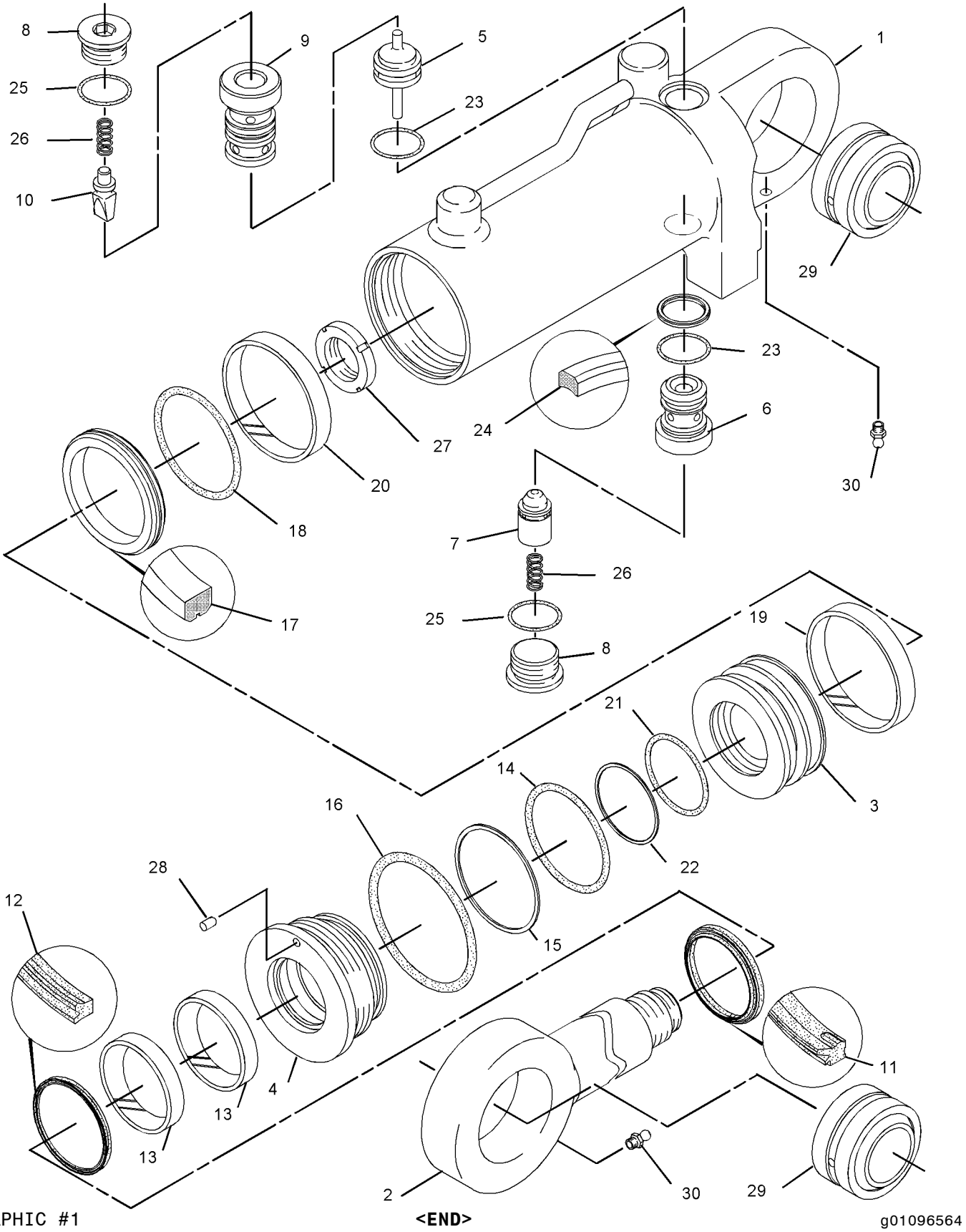

GRAPHIC #1 **<END>** g01096564

183-8850 CYLINDER GP-BOOM

S/N: BCZ1-2000
130MM (5.12IN) BORE X 906MM (35.67IN) STROKE
PART OF 183-8873 CYLINDER & SEAL GP-BOOM
AN ATTACHMENT

SMCS-5456 **i02144282**

NOTE	REF NO	GRAPHIC REF	PART NUMBER	QTY	PART NAME 1 2 3 4 5 6 (PRODUCT LEVEL)	SEE PAGE
M	1	1	**7Y-4622**	1	LOCKNUT (SPECIAL)	
	2	1	**172-1029**	1	HEAD	
	3	1	**183-8855**	1	CYLINDER AS	
	3A	1	**183-8885**	1	BEARING-SLEEVE	
	4	1	**183-8863**	1	ROD & BEARING AS-CYLINDER	
	4A	1	**143-3842**	1	BEARING-SLEEVE	
	5	1	**093-1571**	1	RING-RETAINING	
J	6	1	**095-1631**	1	SEAL-O-RING	
J	7	1	**216-0003**	1	SEAL-U-CUP	
J	8	1	**096-1588**	1	RING-BACKUP	
	9	1	**114-0758**	1	BEARING-SLEEVE	
J	10	1	**170-9845**	1	SEAL-BUFFER	
J	11	1	**150-5884**	1	RING	
J	12	1	**165-9287**	1	SEAL-LIP TYPE	
	13	1	**179-9770**	1	PISTON	
J	14	1	**179-9771**	2	RING	
	15	1	**7I-1351**	1	STOP	
J	16	1	**7I-1352**	1	RING-SEAL	
J	17	1	**7Y-4633**	1	RING-BACKUP	
M	18	1	**7Y-5216**	8	BOLT-SOCKET HEAD (M20X2.5X80-MM)	
J	19	1	**9X-3595**	1	SEAL AS	
					AVAILABLE REPAIR KIT(S):	
J			**215-9986**	1	KIT-SEAL (BOOM CYLINDER)	

J-KIT MARKED J SERVICES PART(S) MARKED J
M-METRIC PART

183-8850 CYLINDER GP-BOOM *(contd.)* **i02144282**

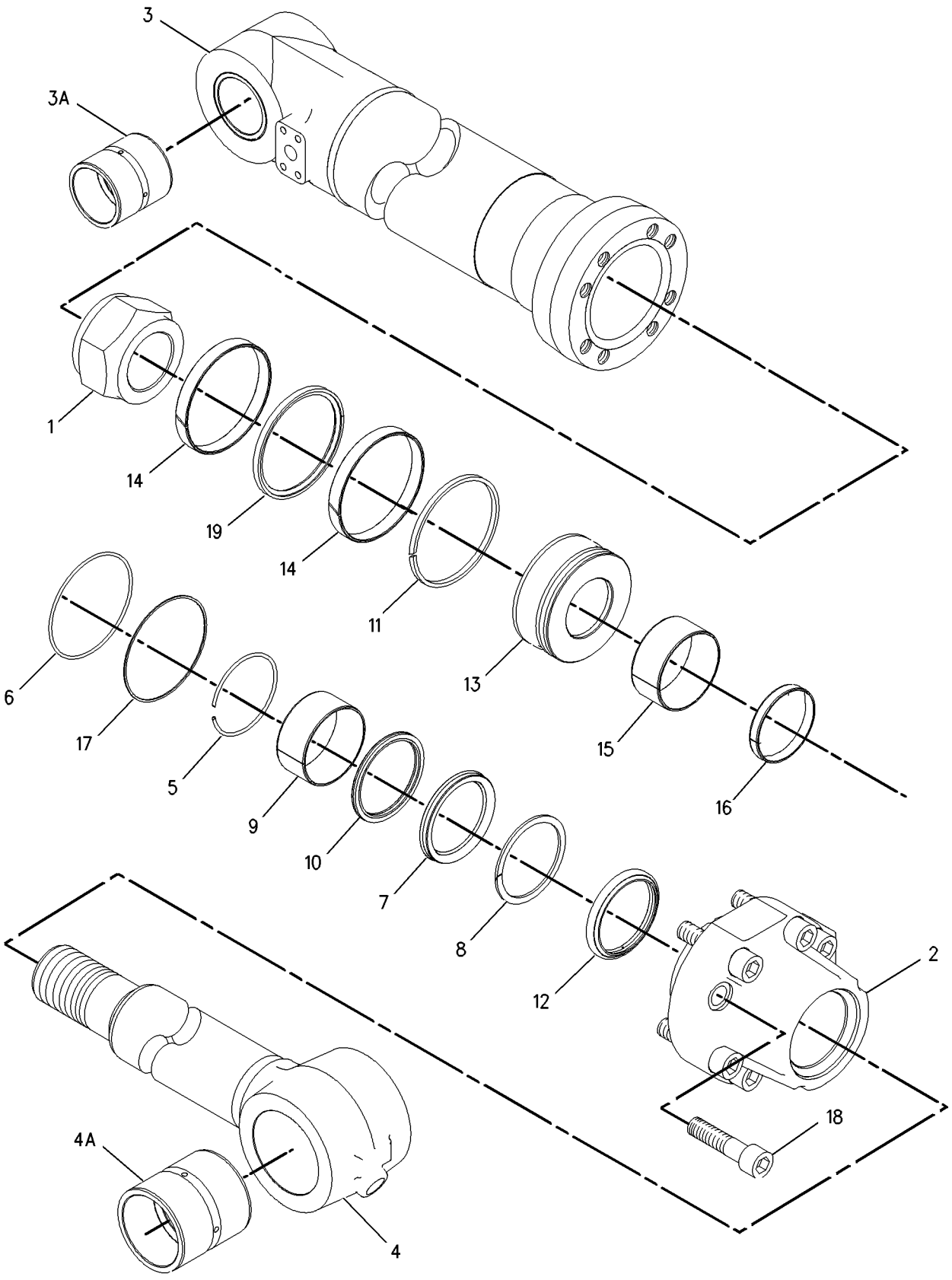

GRAPHIC #1 **<END>** g00806480

183-8851 CYLINDER GP-BOOM

S/N: BCZ1-2000
130MM (5.12IN) BORE X 906MM (35.67IN) STROKE
PART OF 183-8874 CYLINDER & SEAL GP-BOOM
AN ATTACHMENT

SMCS-5456 **i02144287**

NOTE	REF NO	GRAPHIC REF	PART NUMBER	QTY	PART NAME 1 2 3 4 5 6 (PRODUCT LEVEL)	SEE PAGE
M	1	1	**7Y-4622**	1	LOCKNUT (SPECIAL)	
	2	1	**172-1029**	1	HEAD	
	3	1	**183-8855**	1	CYLINDER AS	
	3A	1	**183-8885**	1	BEARING-SLEEVE	
	4	1	**183-8864**	1	ROD & BEARING AS	
	4A	1	**143-3842**	1	BEARING-SLEEVE	
	5	1	**093-1571**	1	RING-RETAINING	
J	6	1	**095-1631**	1	SEAL-O-RING	
J	7	1	**216-0003**	1	SEAL-U-CUP	
J	8	1	**096-1588**	1	RING-BACKUP	
	9	1	**114-0758**	1	BEARING-SLEEVE	
J	10	1	**170-9845**	1	SEAL-BUFFER	
J	11	1	**150-5884**	1	RING	
J	12	1	**165-9287**	1	SEAL-LIP TYPE	
	13	1	**179-9770**	1	PISTON	
J	14	1	**179-9771**	2	RING	
	15	1	**7I-1351**	1	STOP	
J	16	1	**7I-1352**	1	RING-SEAL	
J	17	1	**7Y-4633**	1	RING-BACKUP	
M	18	1	**7Y-5216**	8	BOLT-SOCKET HEAD (M20X2.5X80-MM)	
J	19	1	**9X-3595**	1	SEAL AS	
					AVAILABLE REPAIR KIT(S):	
J			**215-9986**	1	KIT-SEAL (BOOM CYLINDER)	

J-KIT MARKED J SERVICES PART(S) MARKED J
M-METRIC PART

183-8851 CYLINDER GP-BOOM *(contd.)* **i02144287**

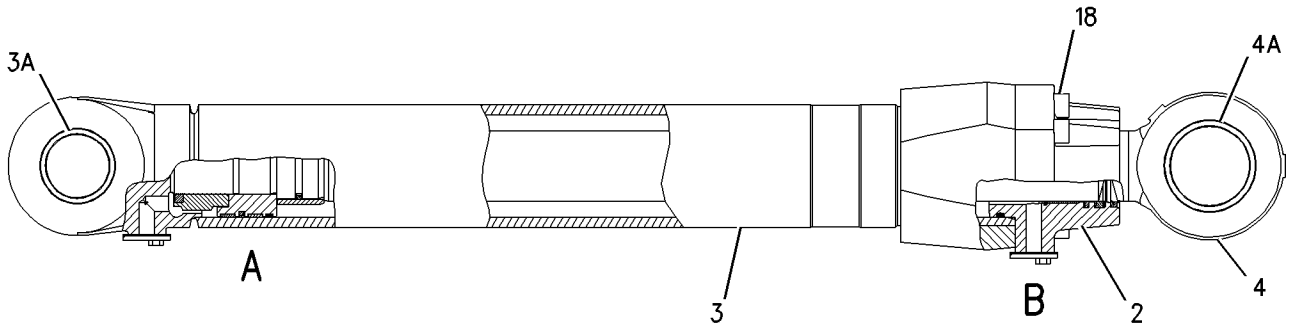

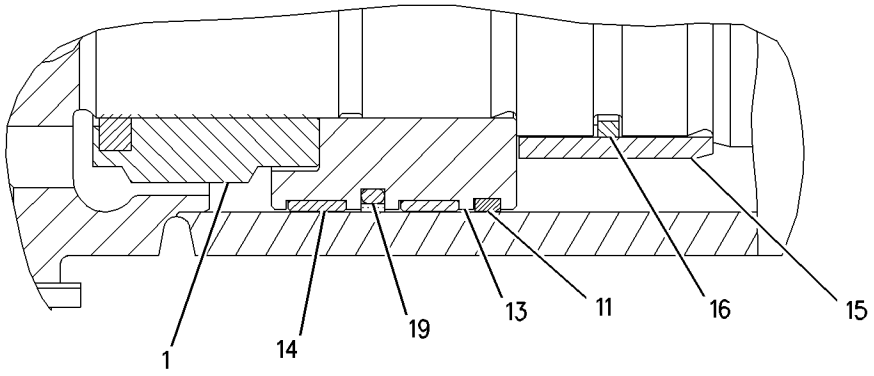

VIEW OF AREA A

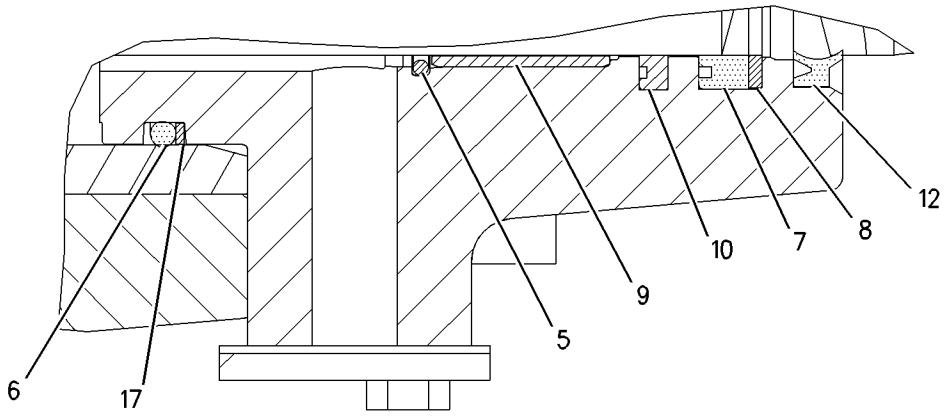

VIEW OF AREA B

GRAPHIC #1 **<END>** g00928491

HYDRAULIC SYSTEM

183-8852 CYLINDER GP-BOOM

S/N: BCZ1-2000
160MM (6.30IN) BORE X 731MM (28.78IN) STROKE
PART OF 183-8875 CYLINDER & SEAL GP-BOOM
AN ATTACHMENT

SMCS-5456 **i02159599**

NOTE	REF NO	GRAPHIC REF	PART NUMBER	QTY	PART NAME 1 2 3 4 5 6 (PRODUCT LEVEL)	SEE PAGE
	1	1	**112-6429**	1	HEAD	
J	2	1	**170-9844**	1	SEAL-BUFFER	
	3	1	**183-8856**	1	CYLINDER AS	
	3A	1	**087-5548**	1	BEARING-SLEEVE	
	4	1	**183-8865**	1	ROD & BEARING AS-CYLINDER	
	4A	1	**7Y-3591**	1	BEARING-SLEEVE	
	5	1	**183-8896**	1	PISTON	
J	6	1	**087-5550**	1	RING-BACKUP	
M	7	1	*095-1267*	1	SETSCREW-SOCKET (M110X1.5-THD)	
J	8	1	**095-1635**	1	SEAL-O-RING	
J	9	1	**112-6921**	1	SEAL-O-RING	
	10	1	**114-0756**	1	BEARING-SLEEVE	
J	11	1	**165-9286**	1	SEAL-LIP TYPE	
J	12	1	**185-0230**	2	RING	
J	13	1	**185-0231**	1	RING	
J	14	1	**7Y-5116**	1	RING	
J	15	1	**170-9860**	1	SEAL-U-CUP	
	16	1	**7Y-5119**	1	RING-RETAINING	
M	17	1	**7Y-5239**	8	BOLT-SOCKET HEAD (M24X3X100-MM)	
J	18	1	**9X-3604**	1	SEAL AS	
					AVAILABLE REPAIR KIT(S):	
J			**258-0504**	1	KIT-SEAL (BOOM CYLINDER)	

J-KIT MARKED J SERVICES PART(S) MARKED J
M-METRIC PART

183-8852 CYLINDER GP-BOOM *(contd.)* i02159599

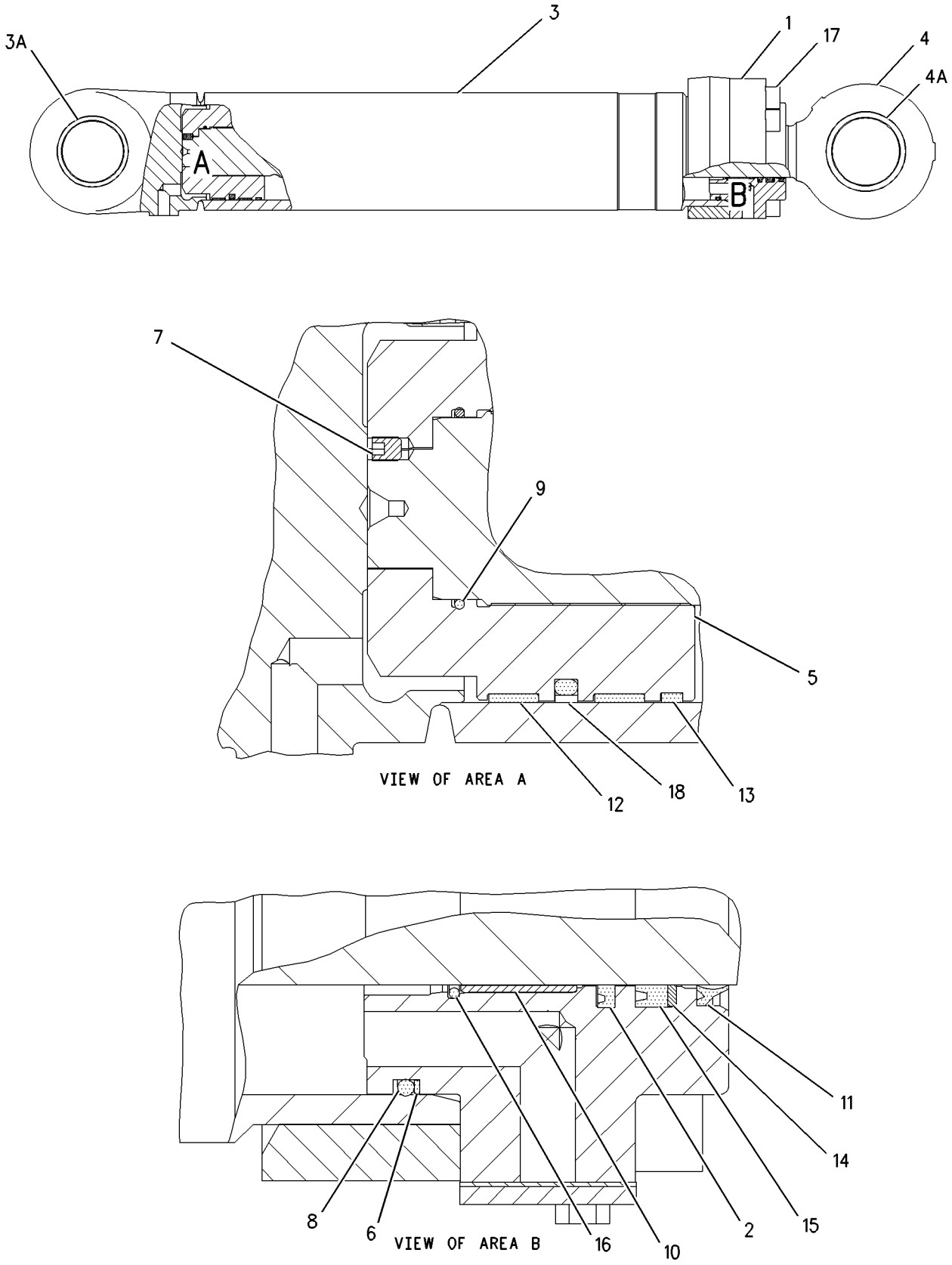

GRAPHIC #1 **<END>** g00700289

183-8854 CYLINDER GP-BUCKET

S/N: BCZ1-2000
110MM (4.33IN) BORE X 1055MM (41.54IN) STROKE
PART OF 183-8877 CYLINDER & SEAL GP-BUCKET
AN ATTACHMENT

SMCS-5457 **i02171887**

NOTE	REF NO	GRAPHIC REF	PART NUMBER	QTY	PART NAME 1 2 3 4 5 6 (PRODUCT LEVEL)	SEE PAGE
	1	1	**183-8858**	1	CYLINDER AS	
	1A	1	**105-7366**	1	BEARING-SLEEVE	
	2	1	**183-8867**	1	ROD & BEARING AS	
	2A	1	**190-5335**	1	BEARING-SLEEVE	
	3	1	**183-8878**	1	HEAD	
J	4	1	**170-9859**	1	SEAL-U-CUP	
J	5	1	**095-1716**	1	SEAL-O-RING	
J	6	1	**096-1054**	1	RING-BACKUP	
	7	1	**096-8139**	1	RING-RETAINING	
J	8	1	**103-8341**	1	RING-SEAL	
J	9	1	**105-7360**	1	RING-BACKUP	
	10	1	**114-0755**	1	BEARING-SLEEVE	
J	11	1	**170-9843**	1	SEAL-BUFFER	
J	12	1	**143-8031**	1	RING	
J	13	1	**143-8034**	1	RING	
M	14	1	**143-8150**	1	LOCKNUT-SPECIAL	
	15	1	**147-5818**	1	PISTON	
J	16	1	**147-5819**	1	RING	
	17	1	**150-5814**	1	STOP	
J	18	1	**165-9285**	1	SEAL-LIP TYPE	
M	19	1	**7Y-5216**	8	BOLT-SOCKET HEAD (M20X2.5X80-MM)	
J	20	1	**9X-7301**	1	SEAL AS	
					AVAILABLE REPAIR KIT(S):	
J			**179-9625**	1	KIT-SEAL (BUCKET CYLINDER)	

J-KIT MARKED J SERVICES PARTS MARKED J
M-METRIC PART

183-8854 CYLINDER GP-BUCKET *(contd.)* **i02171887**

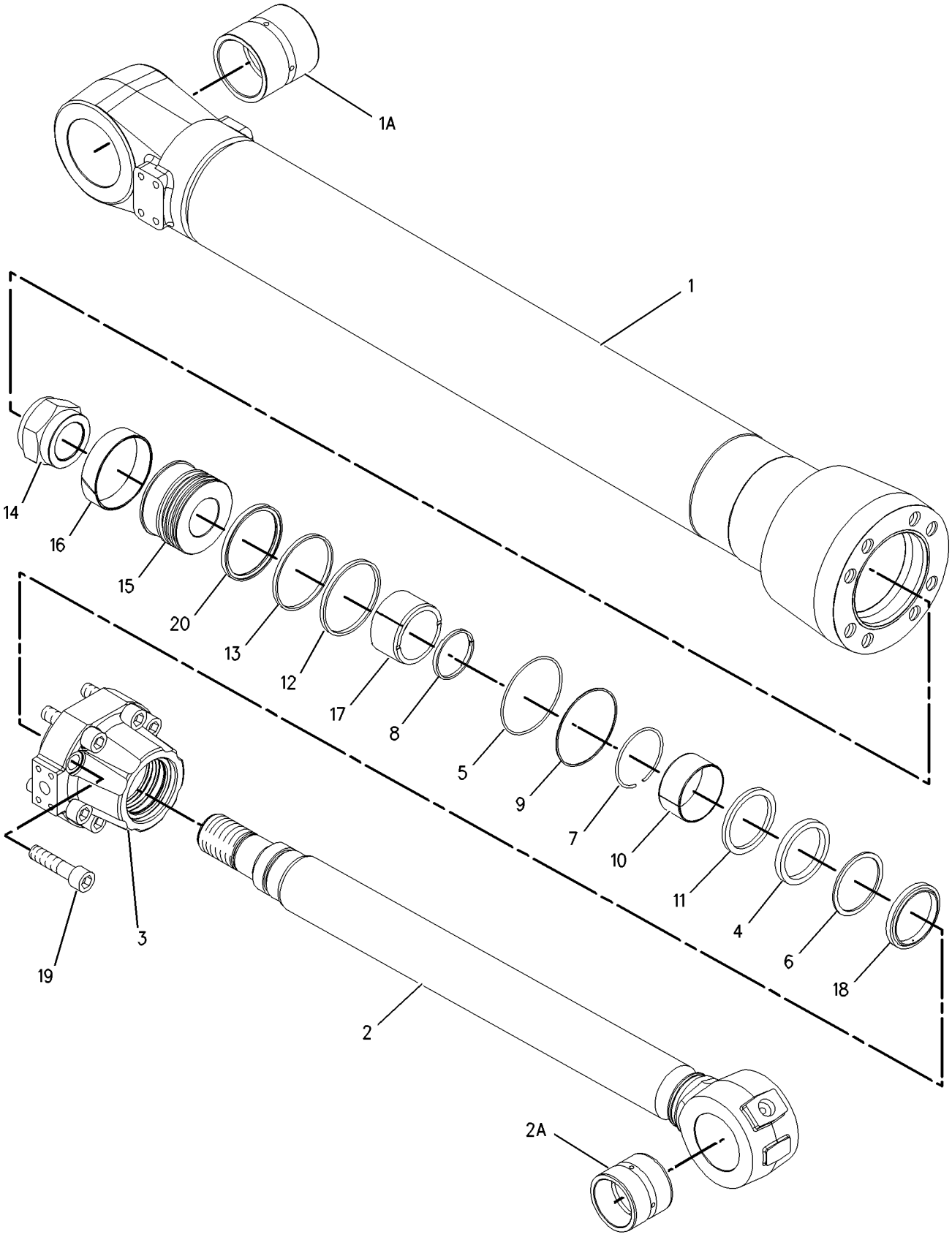

GRAPHIC #1 **<END>** g00824732

185-1736 CYLINDER GP-BUCKET

S/N: BCZ1-2000
100MM (3.94IN) BORE X 250MM (9.84IN) STROKE
PART OF 117-0931, 125-4428 LINKAGE AR-BUCKET
AN ATTACHMENT

SMCS-5457 **i02160070**

NOTE	REF NO	GRAPHIC REF	PART NUMBER	QTY	PART NAME 1 2 3 4 5 6 (PRODUCT LEVEL)	SEE PAGE
	1	1	**185-1735**	1	CYLINDER AS	
	2	1	**8U-3885**	1	ROD	
J	3	1	**8U-3886**	3	SEAL	
J	4	1	**8U-3887**	1	SEAL	
J	5	1	**8U-2918**	1	RING-SCRAPER	
	6	1	**8T-0707**	4	RING-RETAINING	
	7	1	**8G-4189**	2	BEARING-SELF-ALIGNING	
					AVAILABLE REPAIR KIT(S):	
J			**8U-3888**		KIT-REPAIR (BUCKET CYLINDER)	

J-KIT MARKED J SERVICES PARTS MARKED J

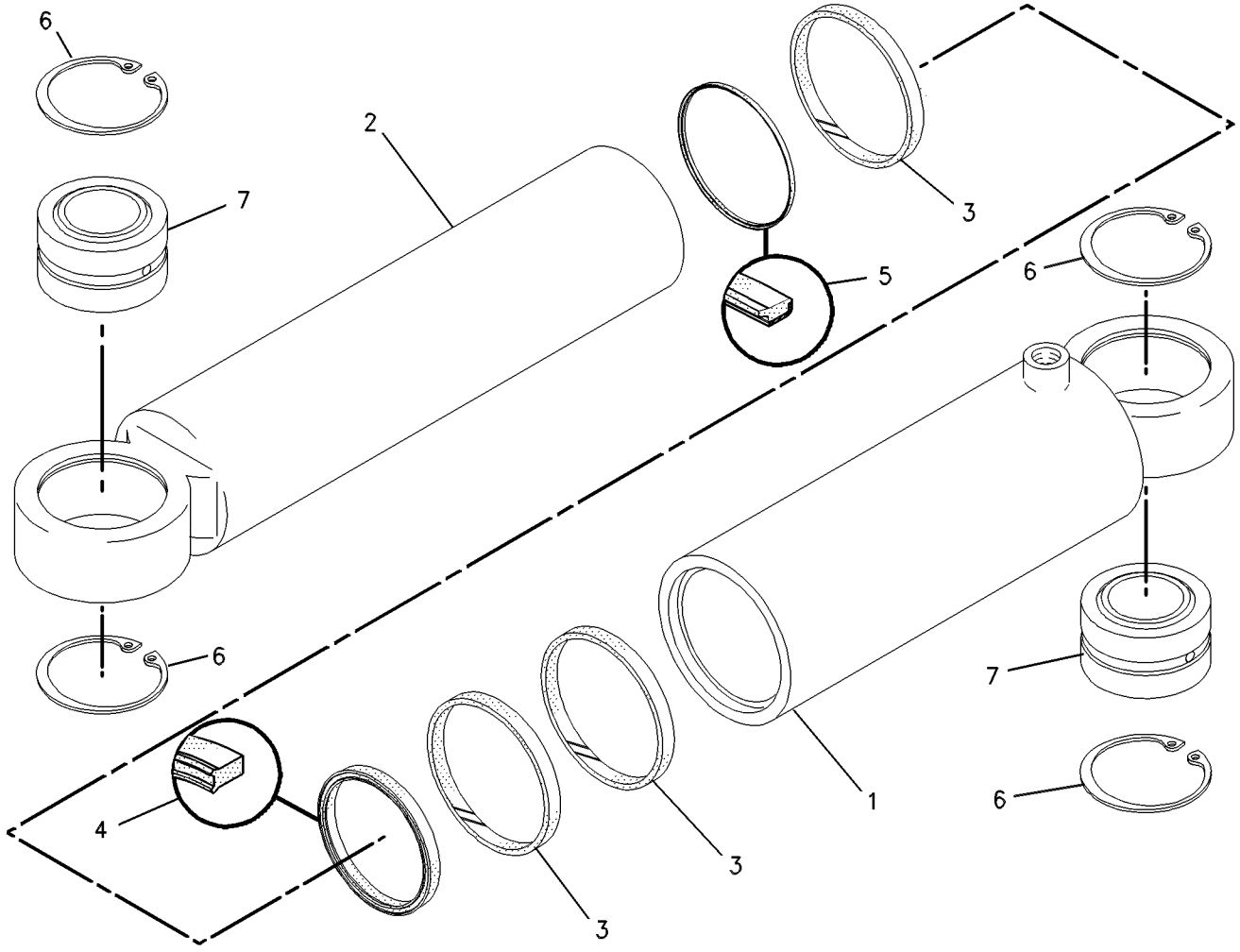

GRAPHIC #1 **<END>** g00320595

HYDRAULIC SYSTEM

188-4991 CYLINDER GP-STABILIZER

S/N: BCZ1-2000
130MM (3.94IN) BORE X 492MM (19.37) STROKE
PART OF 188-4992 STABILIZER AR
AN ATTACHMENT

SMCS-5468 **i02160071**

NOTE	REF NO	GRAPHIC REF	PART NUMBER	QTY	PART NAME 1 2 3 4 5 6 (PRODUCT LEVEL)	SEE PAGE
	1	1	**200-0916**	1	CYLINDER AS	
	2	1	**200-0917**	1	ROD	
	3	1	**200-0918**	1	PISTON	
	4	1	**200-0919**	1	COLLAR	
	5	1	**221-3539**	1	PISTON	
	6	1	**118-3116**	2	RETAINER	
	7	1	**118-3117**	2	CONE	
	8	1	**5W-1274**	2	PLUG	
J	9	1	**225-8698**	1	SEAL	
J	10	1	**118-2716**	1	RING	
J	11	1	**118-2717**	2	RING	
J	12	1	**135-7933**	1	SEAL-O-RING	
J	13	1	**135-7934**	1	RING-BACKUP	
J	14	1	**135-7935**	1	SEAL-O-RING	
J	15	1	**135-7936**	1	RING	
J	16	1	**135-7937**	1	SEAL-O-RING	
J	17	1	**135-7938**	1	RING-BACKUP	
J	18	1	**135-7939**	1	RING	
J	19	1	**5W-6388**	1	SEAL-O-RING	
J	20	1	**118-2727**	1	RING-BACKUP	
J	21	1	**4J-5351**	3	SEAL-O-RING	
J	22	1	**118-3130**	2	RING-BACKUP	
J	23	1	**118-3131**	2	SEAL-O-RING	
	24	1	**118-3132**	2	SPRING	
	25	1	**118-2730**	1	NUT (M52X1.5 LH THD)	
	26	1	**118-2731**	1	PIN	
	27	1	**8G-4189**	2	BEARING-SELF-ALIGNING	
	28	1	**8T-0707**	4	RING-RETAINING	
	29	1	**118-2732**	1	FITTING-GREASE	
J	30	1	**221-3541**	2	RING-BACKUP	
					AVAILABLE REPAIR KIT(S):	
J			**200-0920**	1	KIT-SEAL (STABILIZER CYLINDER)	

J-KIT MARKED J SERVICES PARTS MARKED J

188-4991 CYLINDER GP-STABILIZER *(contd.)* **i02160071**

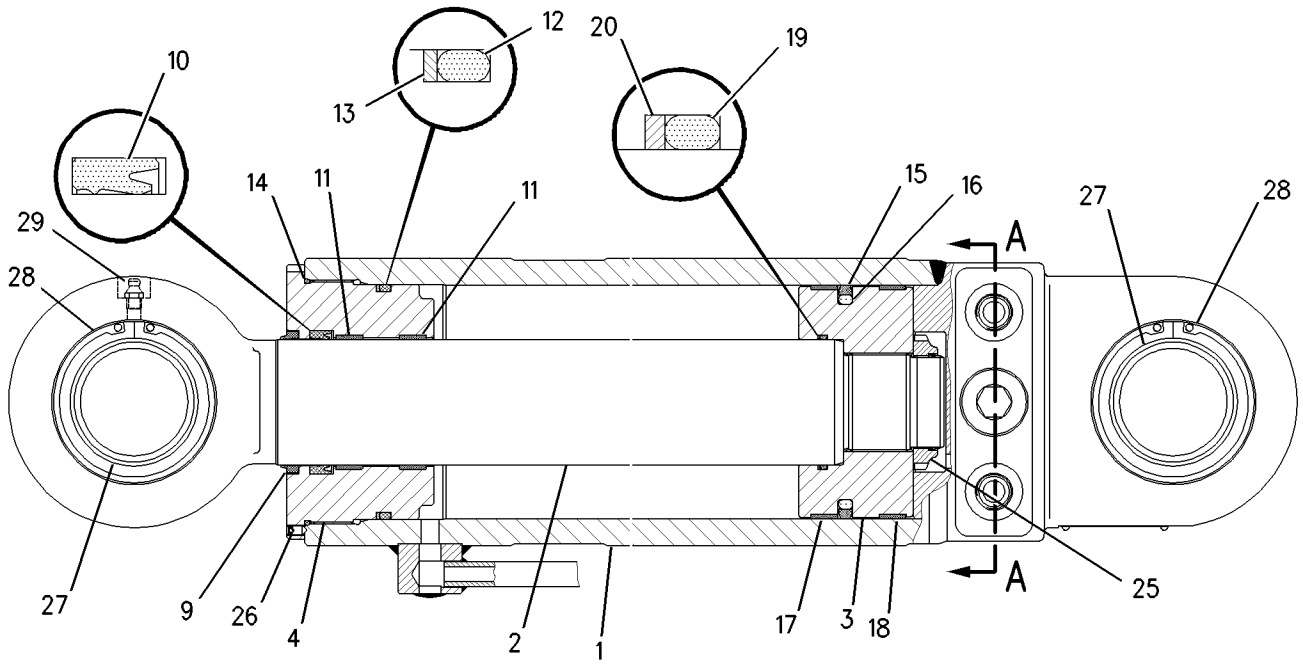

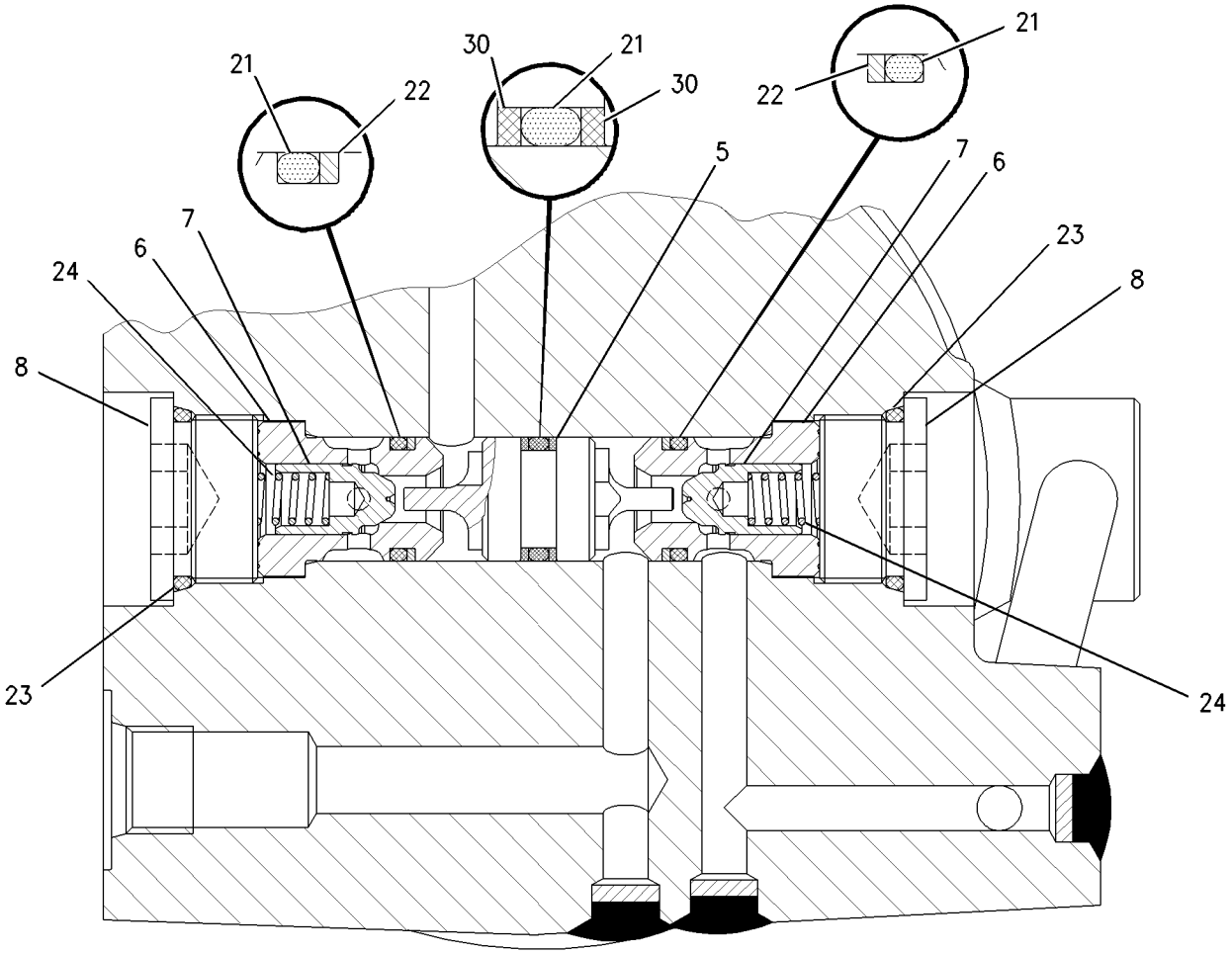

SECTION A-A

GRAPHIC #1 **<END>** g00912709

HYDRAULIC SYSTEM

183-8853 CYLINDER GP-STICK

S/N: BCZ1-2000
130MM (5.12IN) BORE X 1223MM (48.15IN) STROKE
PART OF 183-8876 CYLINDER & SEAL GP-STICK
AN ATTACHMENT

SMCS-5458 **i02144546**

NOTE	REF NO	GRAPHIC REF	PART NUMBER	QTY	PART NAME 1 2 3 4 5 6 (PRODUCT LEVEL)	SEE PAGE
	1	1	**7I-1353**	1	HEAD	
M	2	1	**7Y-4622**	1	LOCKNUT (SPECIAL)	
	3	1	**183-8857**	1	CYLINDER AS	
	3A	1	**128-3031**	1	BEARING-SLEEVE	
	4	1	**183-8866**	1	ROD & BEARING AS-CYLINDER	
	4A	1	**128-3031**	1	BEARING-SLEEVE	
	5	1	**093-1571**	1	RING-RETAINING	
	6	1	**095-0929**	2	RING-RETAINING	
J	7	1	**095-1631**	1	SEAL-O-RING	
J	8	1	**216-0003**	1	SEAL-U-CUP	
J	9	1	**096-1588**	1	RING-BACKUP	
	10	1	**103-8378**	1	RING-RETAINING	
	11	1	**103-8379**	1	RING	
	12	1	**103-8380**	1	STOP	
	13	1	**114-0758**	1	BEARING-SLEEVE	
J	14	1	**170-9845**	1	SEAL-BUFFER	
J	15	1	**150-5884**	1	RING	
J	16	1	**167-2473**	1	SEAL-WIPER	
	17	1	**179-9770**	1	PISTON	
J	18	1	**179-9771**	2	RING	
	19	1	**7I-1351**	1	STOP	
J	20	1	**7I-1352**	1	RING-SEAL	
J	21	1	**7Y-4633**	1	RING-BACKUP	
M	22	1	**7Y-5216**	8	BOLT-SOCKET HEAD (M20X2.5X80-MM)	
J	23	1	**9X-3595**	1	SEAL AS	
					AVAILABLE REPAIR KIT(S):	
J			**215-9986**	1	KIT-SEAL (STICK CYLINDER)	

J-KIT MARKED J SERVICES PART(S) MARKED J
M-METRIC PART

183-8853 CYLINDER GP-STICK *(contd.)* **i02144546**

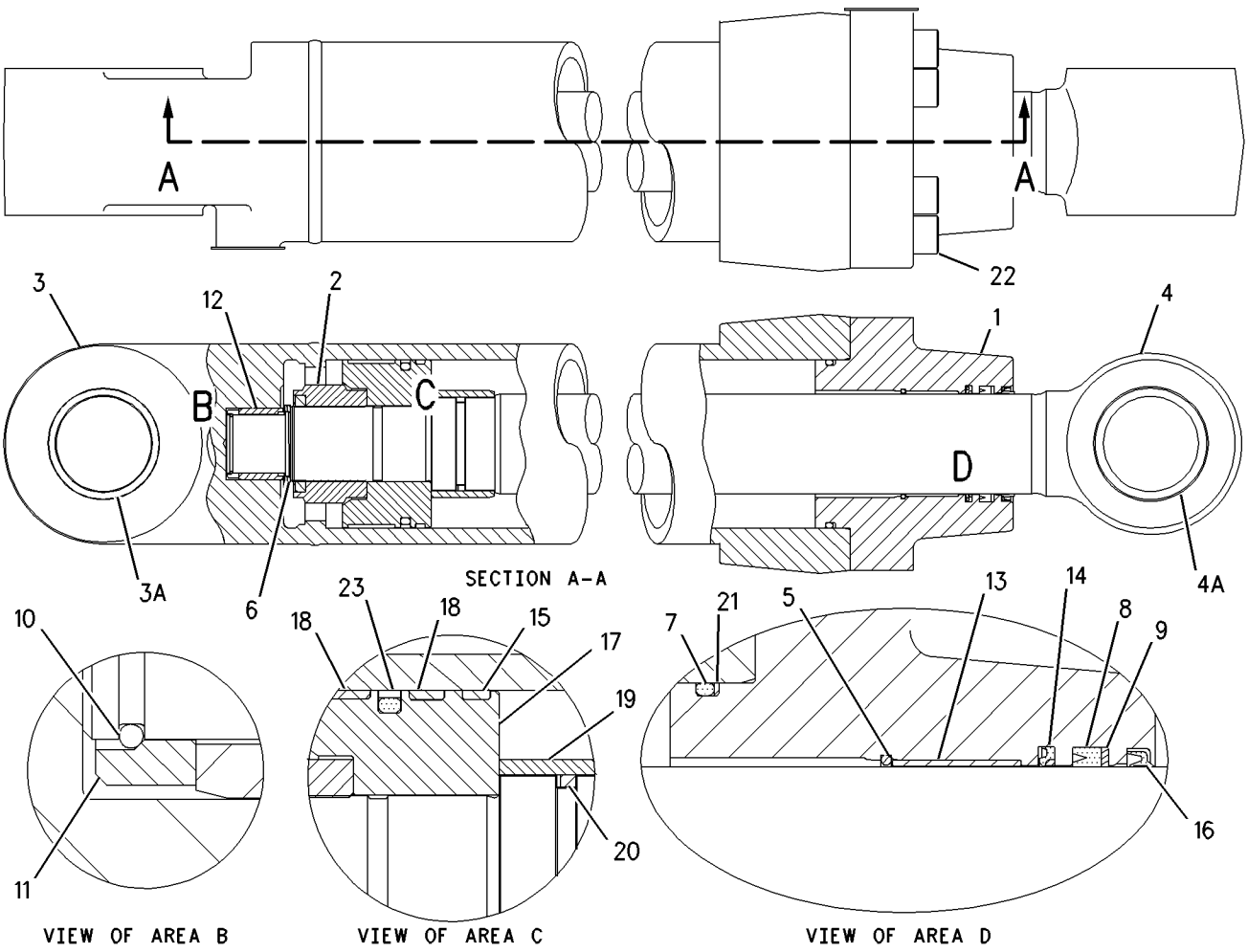

GRAPHIC #1 **<END>** g00806587

HYDRAULIC SYSTEM

217-5636 DRIVE GP-PUMP

S/N: BCZ1-2000

PART OF 190-8198 PUMP GP-PISTON

SMCS-3108 **i01741547**

NOTE	REF NO	GRAPHIC REF	PART NUMBER	QTY	PART NAME 1 2 3 4 5 6 (PRODUCT LEVEL)	SEE PAGE
	1	1	**117-5927**	1	FLANGE	
	2	1	**216-0088**	1	HUB-CLUTH	
	3	1	**3K-0715**	1	SEAL-O-RING	
	4	1	**7J-6285**	1	SEAL-O-RING	
M	5	1	**8T-3957**	4	BOLT-HEX SOCKET (M12X1.75X30MM)	

M-METRIC PART

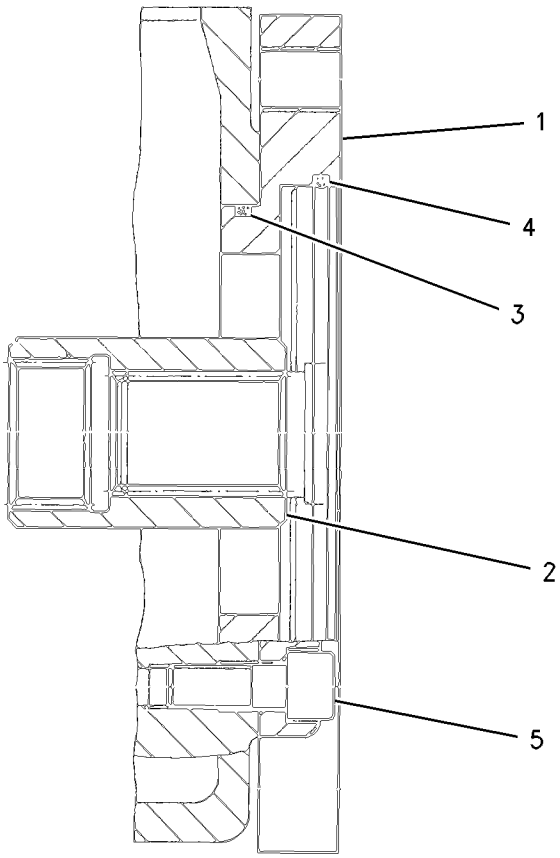

GRAPHIC #1 **<END>** g00894425

HYDRAULIC SYSTEM

111-1858 DRIVE GP-SWING

S/N: BCZ1-2000

PART OF 186-0468 CHASSIS AR

SMCS-5459 **i01230526**

NOTE	REF NO	GRAPHIC REF	PART NUMBER	QTY	PART NAME 1 2 3 4 5 6 (PRODUCT LEVEL)	SEE PAGE
Y	1	1	**152-7371**	1	MOTOR GP-SWING	618
Y	2	1	**152-7372**	1	DRIVE GP-SWING	472
M	3	1	**6V-8200**	4	BOLT-HEX SOCKET (M12X1.75X35MM)	
M	4	1	**8T-4944**	16	BOLT-SOCKET HEAD (M16X2X40MM)	

M-METRIC PART
Y-SEPARATE ILLUSTRATION

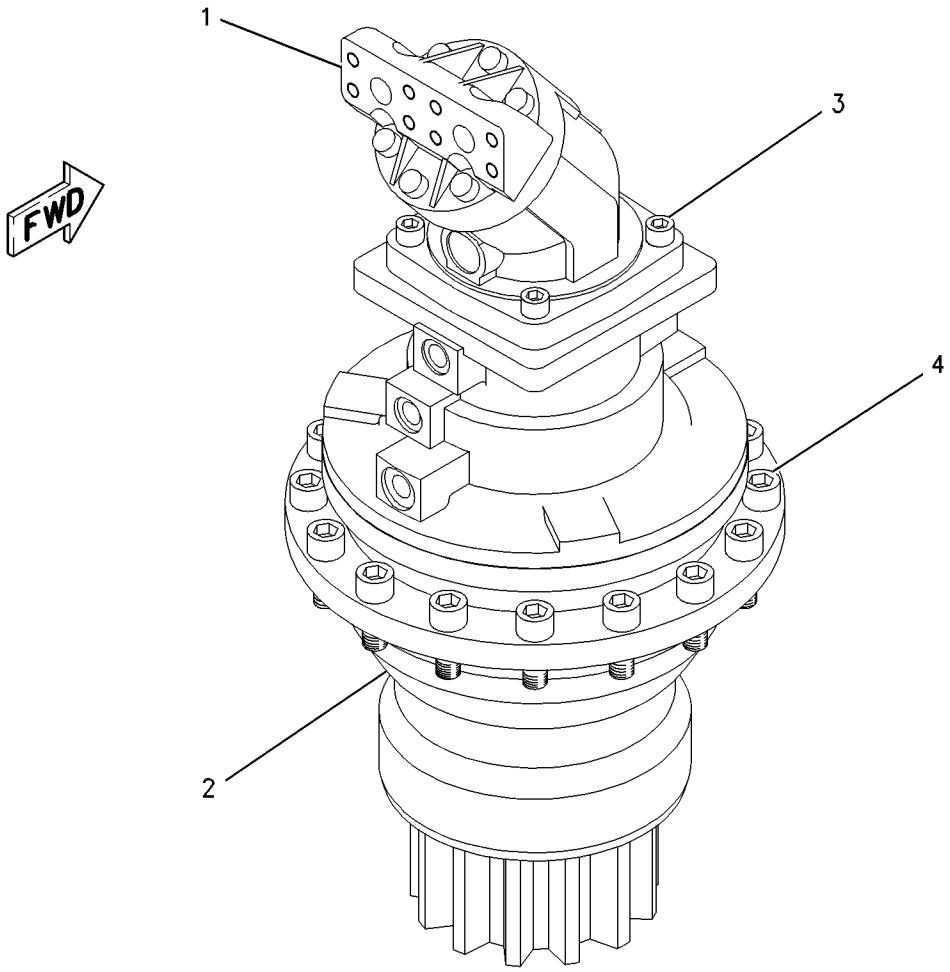

GRAPHIC #1 **<END>** g00658853

HYDRAULIC SYSTEM

152-7372 DRIVE GP-SWING

S/N: BCZ1-2000

PART OF 111-1858 DRIVE GP-SWING

SMCS-5459 **i01797011**

NOTE	REF NO	GRAPHIC REF	PART NUMBER	QTY	PART NAME 1 2 3 4 5 6 (PRODUCT LEVEL)	SEE PAGE
	1	1	**155-0856**	1	SHAFT	
	2	1	**155-0857**	3	GEAR-PLANETARY (33 TEETH)	
	3	1	**155-0858**	1	CARRIER	
	4	1	**155-0824**	3	PIN	
	5	1	**082-3084**	6	WASHER	
	6	1	**082-3085**	6	WASHER	
	7	1	**132-4292**	63	BEARING AS-NEEDLE	
	8	1	**095-0919**	3	RING-RETAINING	
	9	1	**155-0864**	1	HOUSING AS-SWING	
	10	1	**155-0865**	1	SEAL-LIP TYPE	
	11	1	**155-0866**	1	SEAL	
	12	1	**155-0867**	1	PINION	
	13	1	**155-0868**	1	WASHER	
	14	1	**155-0869**	1	BEARING AS-ROLLER	
	15	1	**155-0870**	1	BEARING AS-ROLLER	
	16	1	**179-3152**	2	NUT	
	17	1	**155-0872**	1	RING	
	19	1	**155-0874**	1	CARRIER-PLANETARY	
	20	1	**155-0875**	4	GEAR-PLANETARY (32 TEETH)	
	21	1	**155-0876**	4	BEARING AS-ROLLER	
	22	1	**9X-0656**	4	RING	
	23	1	**8U-5005**	3	SHIM	
	24	1	**127-8987**	1	RING-RETAINING	
	25	1	**121-8088**	2	BALL BEARING	
	26	1	**155-0877**	1	GEAR-SUN (19 TEETH)	
	27	1	**098-2982**	4	SHIM (1.5MM THK)	
	28	1	**110-4737**	2	RING-RETAINING	
	29	2	**155-0878**	1	HOUSING-BRAKE	
	30	2	**155-0849**	1	ORIFICE	
M	31	2	**8T-4139**	4	BOLT (M12X1.75X30MM)	
	32	2	**222-5793**	1	SEAL-O-RING	
	33	2	**155-0850**	1	PISTON	
	34	2	**155-0851**	1	SEAL-LIP TYPE	
	35	2	**155-0852**	1	SEAL-LIP TYPE	
	36	2	**179-3151**	1	SPRING	
	37	2	**179-3154**	1	SHIM (3.5MM THK)	
	38	2	**132-4268**	5	DISC-CLUTCH	
B	39	2	**132-4262**	6	DISC-CLUTCH	
B	40	2	**132-4263**	1	DISC-CLUTCH	
B	41	2	**132-4265**	1	DISC-CLUTCH	
B	42	2	**132-4266**	1	DISC-CLUTCH	
	43	2	**7X-9364**	1	RING	
	44	2	**155-0855**	1	SLEEVE	
	45	2	**8T-0707**	1	RING-RETAINING	
	46	2	**222-5792**	1	SEAL-O-RING	
	47	2	**197-6054**	1	WASHER	

B-USE AS REQUIRED
M-METRIC PART

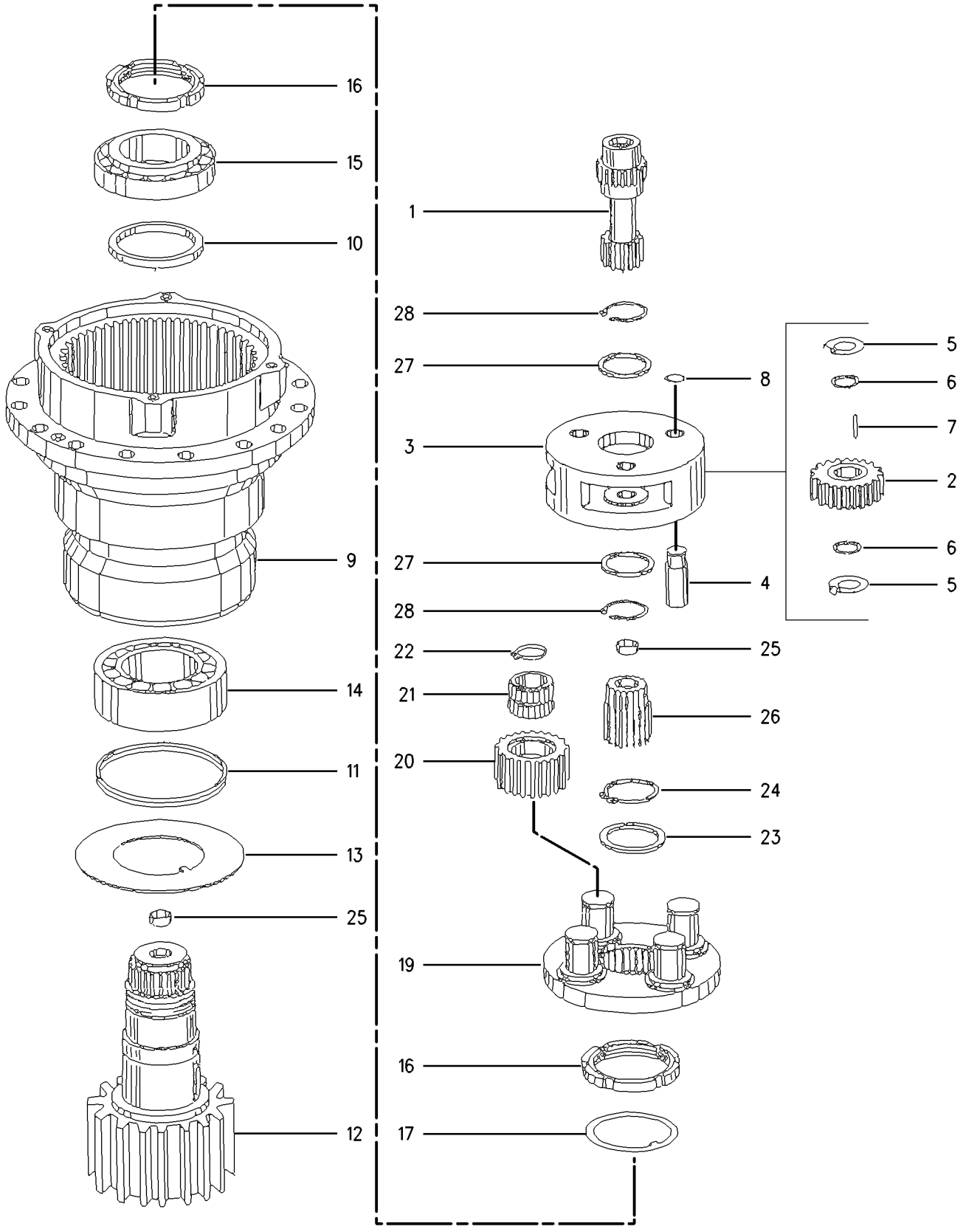

GRAPHIC #1 g00913548

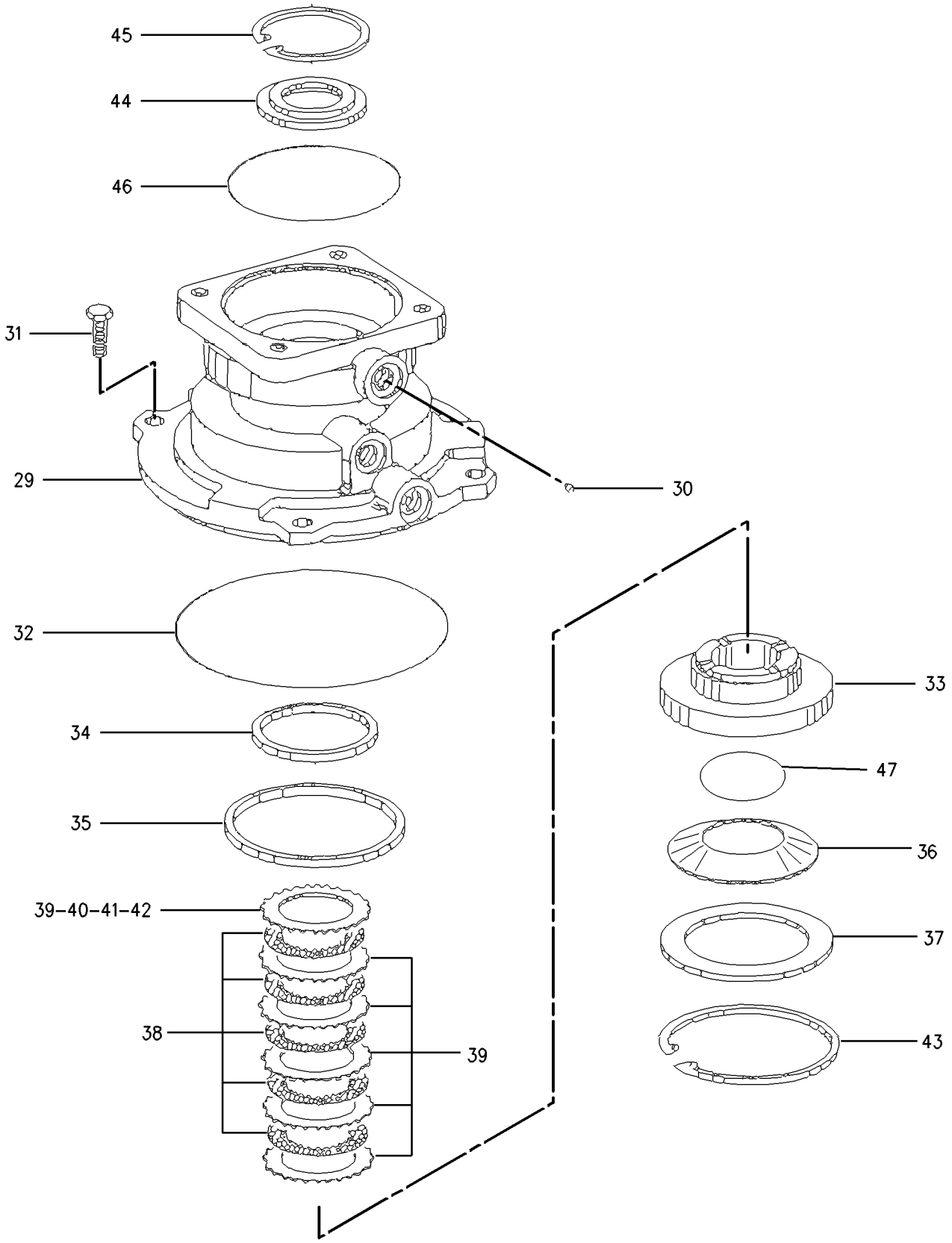

GRAPHIC #2 **<END>** g00781163

8U-0198 FILTER GP-OIL–HYDRAULIC, RETURN

S/N: BCZ1-2000

PART OF 188-7592 LINES GP-RETURN

SMCS-3004, 4295, 431F, 5068, 5091, 5092 **i01927018**

NOTE	REF NO	GRAPHIC REF	PART NUMBER	QTY	PART NAME 1 2 3 4 5 6 (PRODUCT LEVEL)	SEE PAGE
	1	1	**8U-0722**	1	HOLDER	
	2	1	**8U-0723**	1	FILTER (HYDRAULIC OIL RETURN)	
	3	1	**8U-0724**	1	SEAL-O-RING	

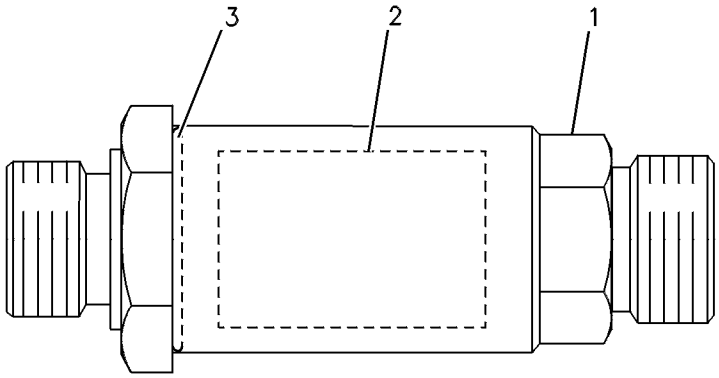

GRAPHIC #1 **<END>** g00244503

109-7288 FILTER GP-OIL–HYDRAULIC, SWING CIRCUIT

S/N: BCZ1-2000

PART OF 188-7587 LINES GP-SWING DRIVE

SMCS-3004, 4295, 431F, 5068, 5091, 5092 **i01797017**

NOTE	REF NO	GRAPHIC REF	PART NUMBER	QTY	PART NAME 1 2 3 4 5 6 (PRODUCT LEVEL)	SEE PAGE
	1	1	**124-3598**	1	BASE-FILTER	
	2	1	**117-1495**	1	SEAL-O-RING	
	3	1	**117-0951**	1	HOUSING	
	4	1	**109-7289**	1	FILTER ELEMENT AS-OIL (HYDRAULIC) (SWING CIRCUIT)	

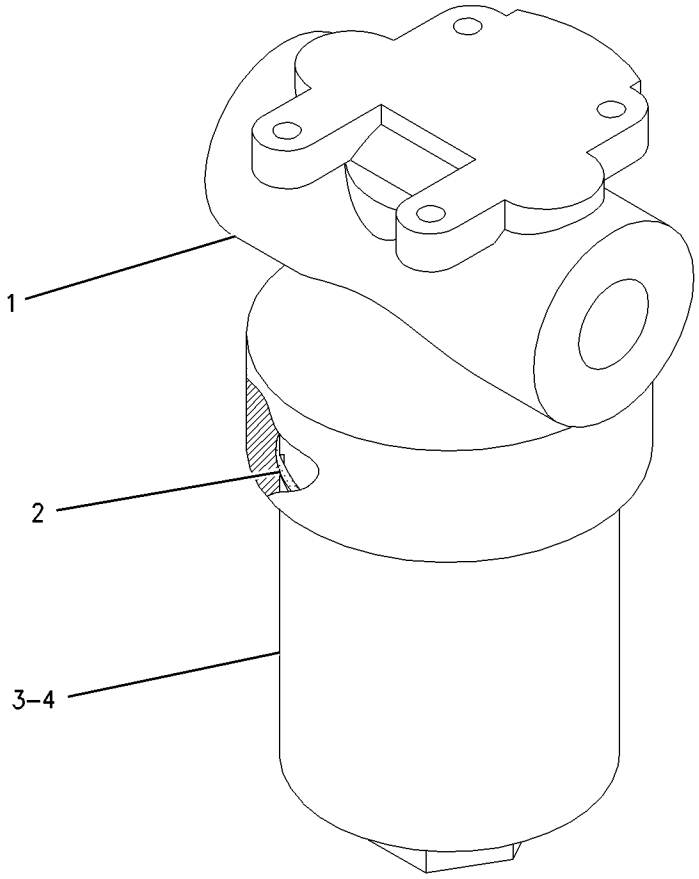

GRAPHIC #1 **<END>** g00911843

145-7750 FILTER GP-OIL–HYDRAULIC, PILOT

S/N: BCZ1-2000

PART OF 188-7582 LINES GP-PILOT

SMCS-3004, 4295, 431F, 5068, 5091, 5092 **i02163514**

NOTE	REF NO	GRAPHIC REF	PART NUMBER	QTY	PART NAME 1 2 3 4 5 6 (PRODUCT LEVEL)	SEE PAGE
	1	1	**4J-0526**	1	SEAL-O-RING	
	2	1	**109-7289**	1	FILTER ELEMENT AS-OIL (HYDRAULIC) (PILOT)	
	3	1	**149-6246**	1	HOUSING	

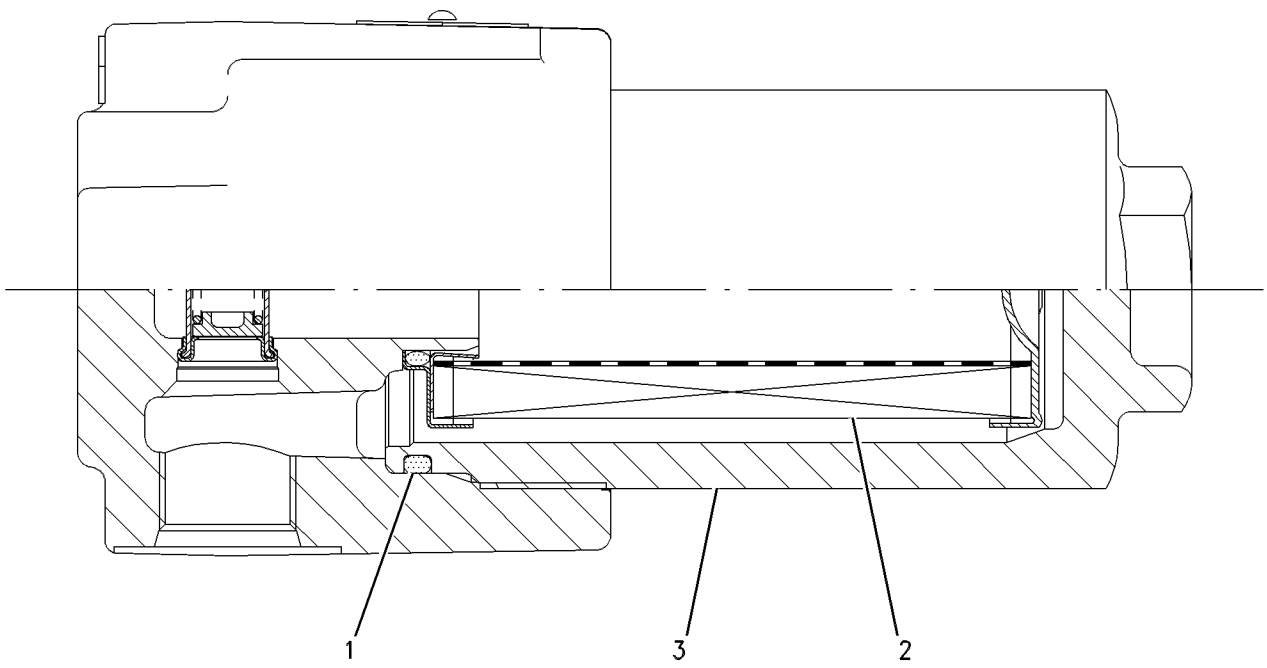

GRAPHIC #1 **<END>** g00277806

193-5975 FILTER GP-OIL–HYDRAULIC

S/N: BCZ1-2000

PART OF 183-8956 TANK GP-HYDRAULIC

SMCS-3004, 4295, 431F, 5068, 5091, 5092 **i01956214**

NOTE	REF NO	GRAPHIC REF	PART NUMBER	QTY	PART NAME 1 2 3 4 5 6 (PRODUCT LEVEL)	SEE PAGE
	1	1	**198-9084**	1	COVER AS-FILTER	
	2	1	**198-9085**	1	HEAD AS	
M		1	**8U-5056**	4	STUD	
	3	1	**145-2513**	1	VALVE AS	
	4	1	**145-2514**	1	TUBE AS	
	5	1	**137-7249**	1	FILTER ELEMENT-HYDRAULIC (RETURN OIL)	
	6	1	**145-6735**	2	SEAL-O-RING	
	7	1	**3S-1223**	1	SEAL-O-RING	
	8	1	**8U-1862**	4	LOCKWASHER	
M	9	1	**8T-4133**	4	NUT (M10X1.5 THD)	

M-METRIC PART

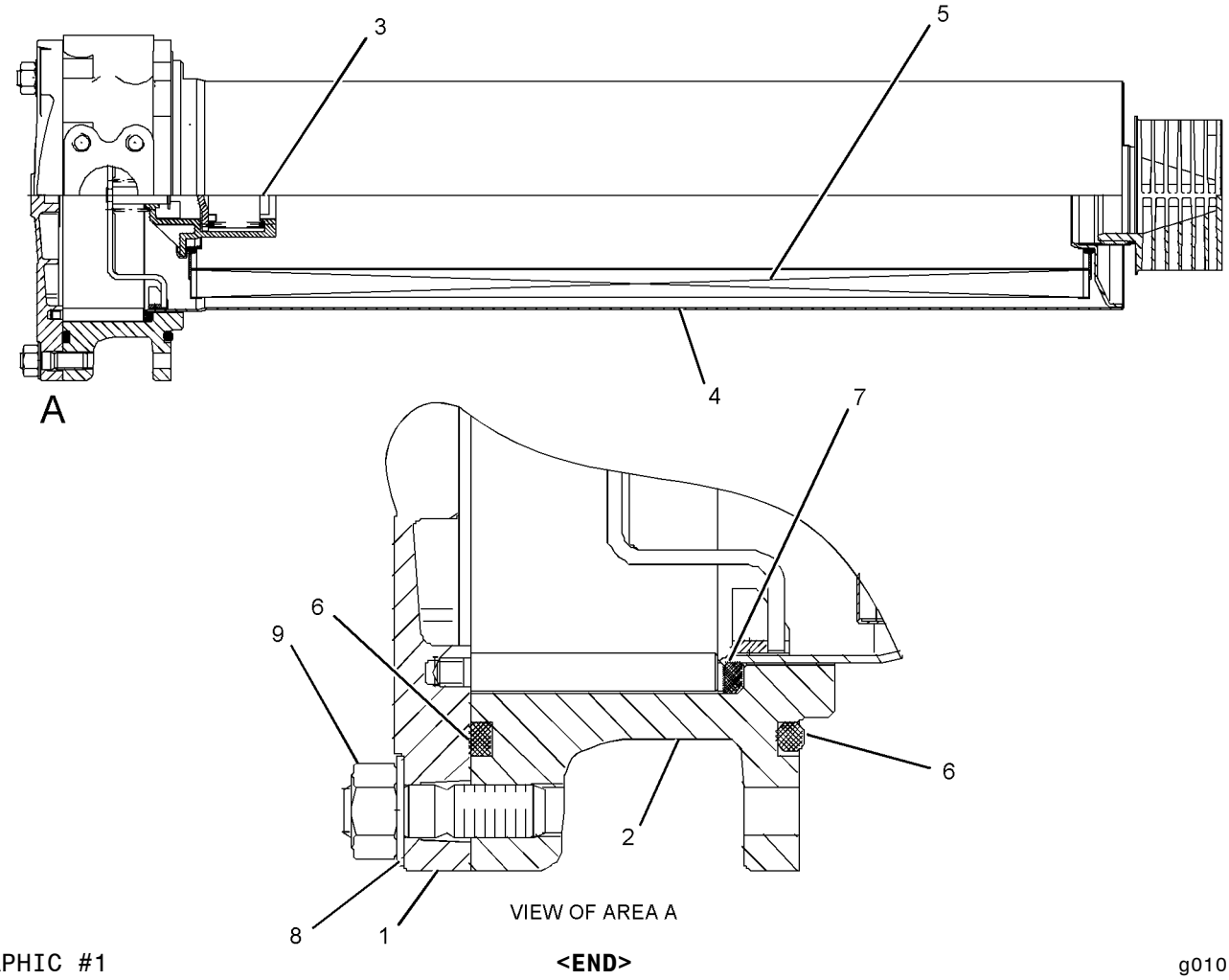

GRAPHIC #1 **<END>** g01016920

HYDRAULIC SYSTEM

121-0530 FITTING GP

S/N: BCZ1-2000

PART OF 188-7612 LINES GP-PRESSURE TEST

SMCS-5057 **i01928448**

NOTE	REF NO	GRAPHIC REF	PART NUMBER	QTY	PART NAME 1 2 3 4 5 6 (PRODUCT LEVEL)	SEE PAGE
	1	1	**6V-8397**	1	SEAL-O-RING	

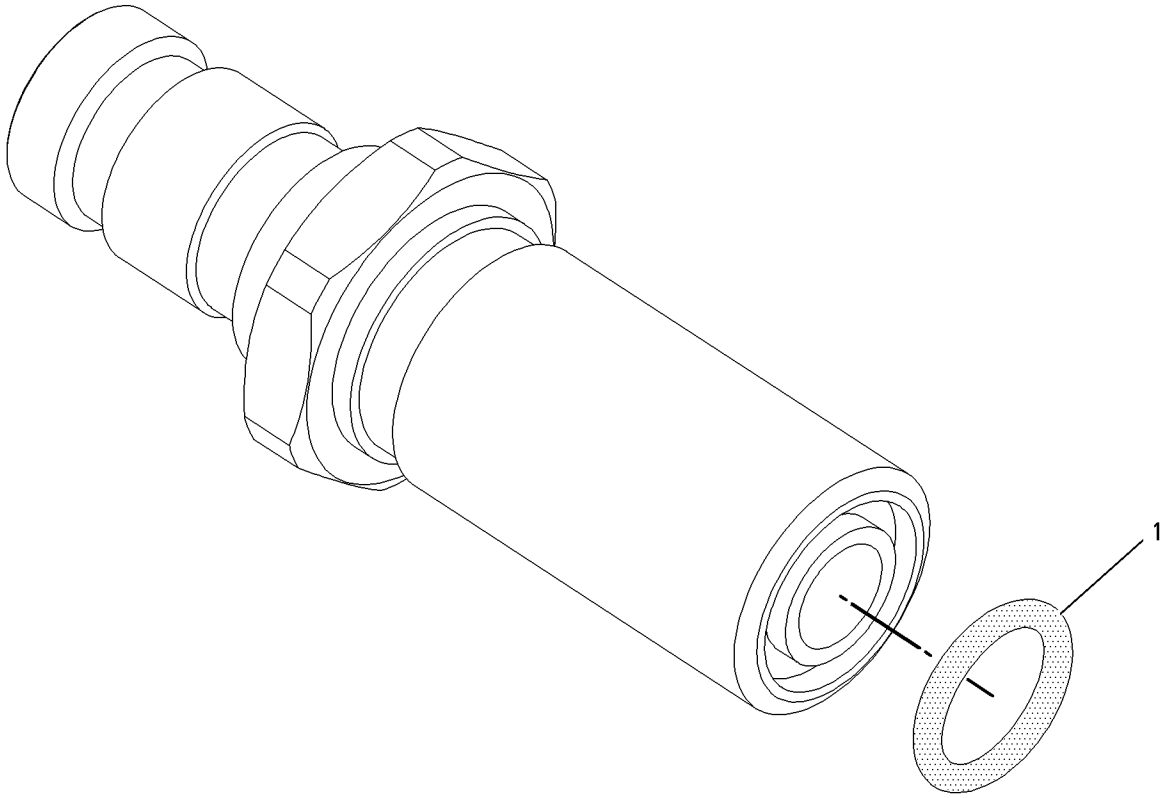

GRAPHIC #1 **<END>** g00684731

HYDRAULIC SYSTEM

176-6765 FITTING GP

S/N: BCZ1-2000
QUICK DISCONNECT COUPLING
FOR USE WITH DITCH CLEANING BUCKET MEDIUM PRESSURE FUNCTION
AN ATTACHMENT

SMCS-5057 **i02171754**

NOTE	REF NO	GRAPHIC REF	PART NUMBER	QTY	PART NAME 1 2 3 4 5 6 (PRODUCT LEVEL)	SEE PAGE
	1	1	**8T-7491**	2	CONNECTOR	
	2	1	**8U-7656**	2	COUPLER GP-QUICK DISCONNECT	
					(EACH INCLUDES)	
		1	**9X-7692**	1	SEAL-O-RING	
		1	**192-7114**	1	RING-BACKUP	
		1	**9X-7744**	1	SEAL-O-RING	
	3	1	**8U-7658**	2	CAP-PROTECTION	
	4	1	**6V-7970**	2	SEAL-O-RING	

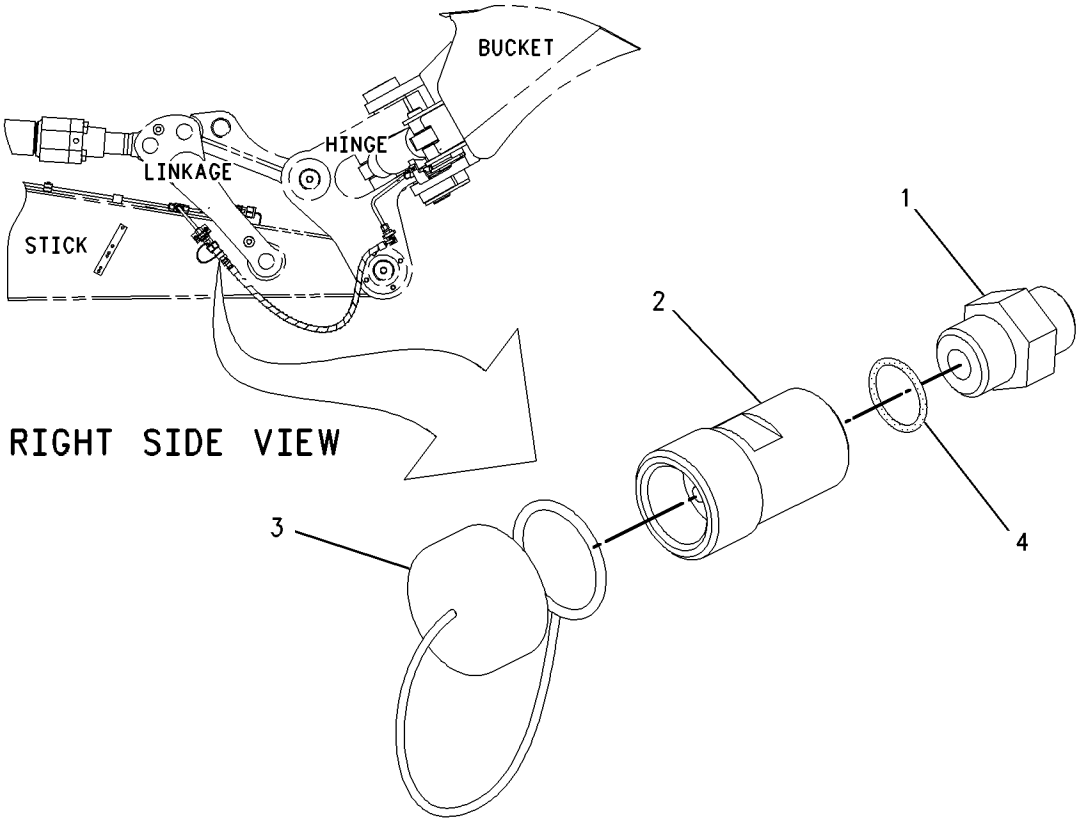

GRAPHIC #1 **<END>** g00682787

188-7655 FITTING GP

S/N: BCZ1-2000

FOR USE WITH LINES GP-STICK MEDIUM PRESSURE FUNCTION FUNCTION. CANNOT BE USED WITH MATERIAL HANDLER STICK AN ATTACHMENT

SMCS-5057 **i01641134**

NOTE	REF NO	GRAPHIC REF	PART NUMBER	QTY	PART NAME 1 2 3 4 5 6 (PRODUCT LEVEL)	SEE PAGE
	1	1	**8U-8009**	4	CAP-PROTECTION	
	2	1	**126-1540**	4	FITTING GP-COUPLING (MALE)(13/16-16 THD))	

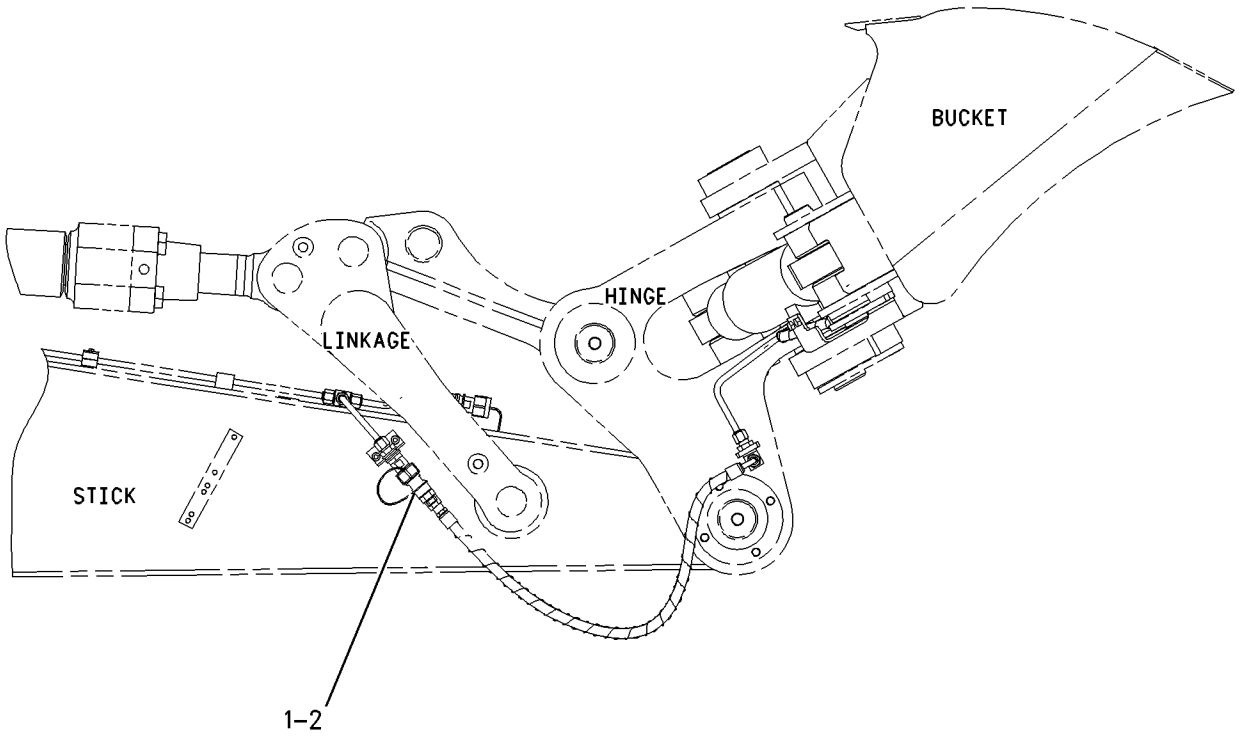

RIGHT SIDE VIEW

GRAPHIC #1 **<END>** g00802097

HYDRAULIC SYSTEM

8U-0966 FITTING GP-HYD LINES

S/N: BCZ1-2000

PART OF 185-3443 LINES GP-DIVERTER VALVE, 242-1708 LINES GP-STICK AN ATTACHMENT

SMCS-5057 **i01513315**

NOTE	REF NO	GRAPHIC REF	PART NUMBER	QTY	PART NAME 1 2 3 4 5 6 (PRODUCT LEVEL)	SEE PAGE
	1	1	**193-4726**	1	SEAL-O-RING	
	2	1	**096-6100**	1	SEAL-O-RING	
	3	1	**193-4727**	1	RING-BACKUP	

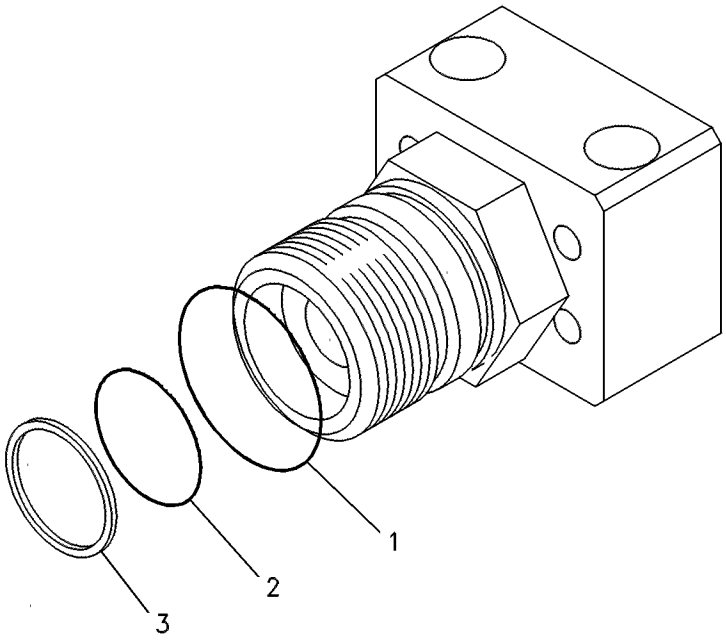

GRAPHIC #1 **<END>** g00244652

125-5387 FITTING GP-HYD LINES

S/N: BCZ1-2000
QUICK DISCONNECT COUPLING
FOR USE WITH LINKAGE AR-BUCKET WITH DIVERTER VALVE
AN ATTACHMENT

SMCS-5057 **i02161436**

NOTE	REF NO	GRAPHIC REF	PART NUMBER	QTY	PART NAME 1 2 3 4 5 6 (PRODUCT LEVEL)	SEE PAGE
	1	1	**8U-8011**	2	CAP-PROTECTION	
	2	1	**126-1541**	2	FITTING GP	

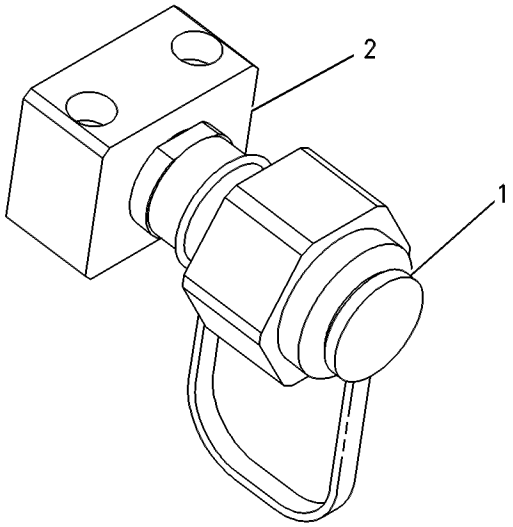

GRAPHIC #1 **<END>** g00254402

163-4210 FITTING GP-HYD LINES

S/N: BCZ1-2000
QUICK DISCONNECT COUPLING
FOR USE WITH INDUSTRIAL BOOM/STICK, LINES GP-STICK MATERIAL HANDLER AN ATTACHMENT

SMCS-5057 **i02161440**

NOTE	REF NO	GRAPHIC REF	PART NUMBER	QTY	PART NAME 1 2 3 4 5 6 (PRODUCT LEVEL)	SEE PAGE
	1	1	**8U-8009**	2	CAP-PROTECTION	
	2	1	**8U-8011**	2	CAP-PROTECTION	
	3	1	**126-1540**	2	FITTING GP-COUPLING (MALE, 13/16-16-THD)	
	4	1	**126-1541**	2	FITTING GP	

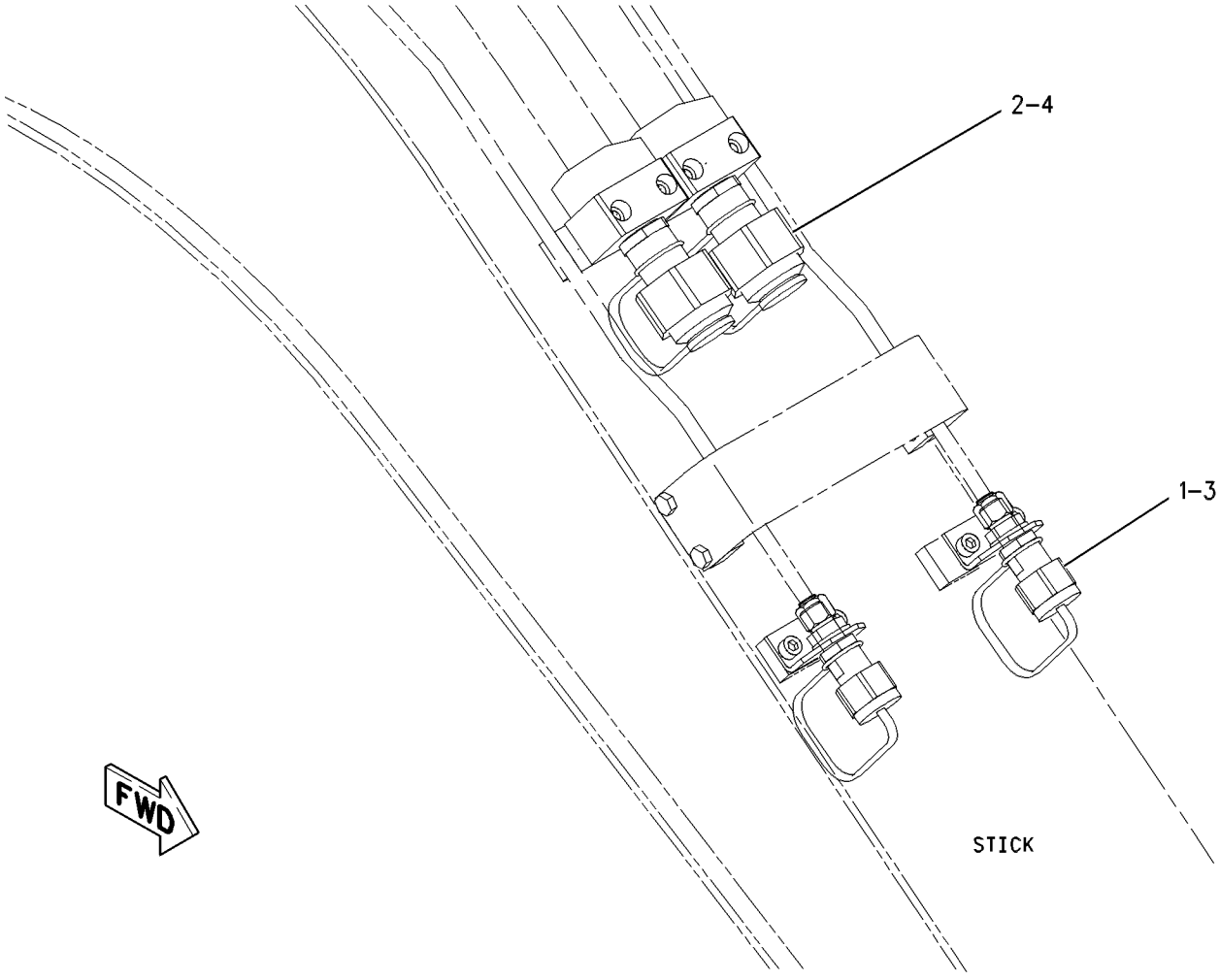

GRAPHIC #1 **<END>** g00561313

190-8124 HEAD GP-MOTOR

S/N: BCZ1-2000

PART OF 211-0062 MOTOR GP-TRAVEL

SMCS-5058 **i02173522**

NOTE	REF NO	GRAPHIC REF	PART NUMBER	QTY	PART NAME 1 2 3 4 5 6 (PRODUCT LEVEL)	SEE PAGE
Y	1	1	**190-8653**	1	VALVE GP-MOTOR CONTROL	723
Y	2	1	**190-8655**	1	VALVE GP-MOTOR CONTROL	725
	3	1	**190-8658**	1	HEAD	
	4	1	**124-9881**	1	PISTON	
	5	1	**124-9882**	1	TRUNNION	
	6	1	**135-7454**	1	PISTON	
	7	1	**124-9884**	1	PIN-THREADED	
M	9	1	**6V-8201**	8	BOLT-SOCKET HEAD (M16X2X45-MM)	
	10	1	**9X-7680**	8	SEAL-O-RING	
M	11	1	**125-2205**	1	BOLT-SHALLOW HEAD (M14X1.5X25-MM)	
	12	1	**135-7455**	3	SEAL	
	13	1	**6W-5677**	2	ROD	
	14	1	**120-4394**	1	PLUG-BREAK OFF	
M	15	1	**123-2017**	1	PLUG	
	16	1	**123-5800**	2	PLUG	
	17	1	**190-8657**	2	VALVE GP-RELIEF (CROSSOVER, MAKEUP)	
					(EACH INCLUDES)	
		1	**123-7556**	1	CAP	
		1	**190-8718**	1	KIT-SEAL (RELIEF VALVE)	

M-METRIC PART
Y-SEPARATE ILLUSTRATION

190-8124 HEAD GP-MOTOR *(contd.)* **i02173522**

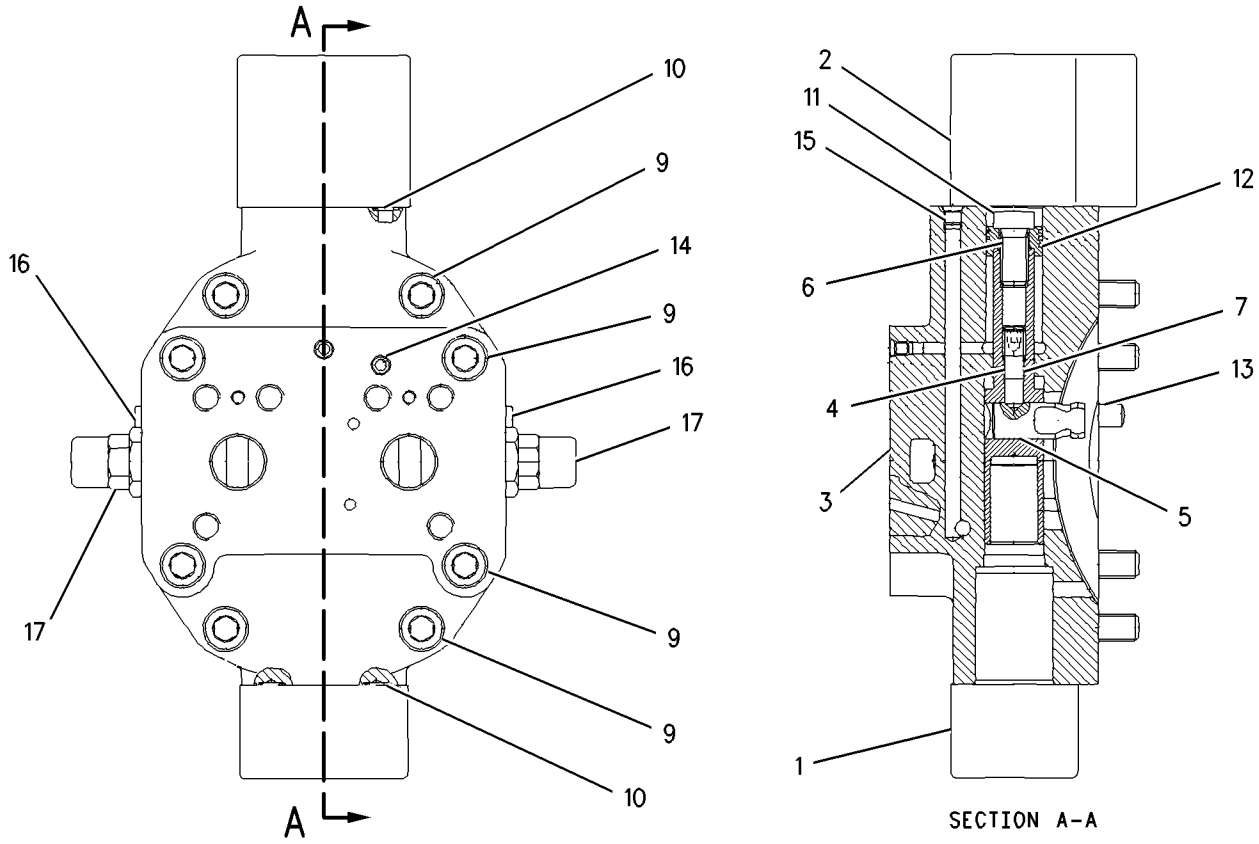

GRAPHIC #1 **<END>** g00920742

HYDRAULIC SYSTEM

117-5708 HEAD GP-PUMP

S/N: BCZ1-2000

PART OF 190-8198 PUMP GP-PISTON

SMCS-3222, 5070, 5086 **i02161444**

NOTE	REF NO	GRAPHIC REF	PART NUMBER	QTY	PART NAME 1 2 3 4 5 6 (PRODUCT LEVEL)	SEE PAGE
	1	1	**165-9367**	1	VALVE	
	2	1	**6E-1580**	1	BEARING	
	3	1	**117-5768**	2	PIN	
	4	1	**8T-6628**	1	DOWEL	
J	5	1	**8C-3080**	1	SEAL-O-RING	
J	6	1	**160-9539**	3	SEAL-O-RING	
J	7	1	**099-5845**	3	PLUG	
J	8	1	**087-4772**	2	PLUG	
	9	1	**6E-3873**	1	PLUG-ORIFICE	
	10	1	**5I-4277**	1	ORIFICE	
					AVAILABLE REPAIR KIT(S):	
J			**122-9046**	1	KIT-SEAL (PUMP HEAD)	

J-KIT MARKED J SERVICES PARTS MARKED J

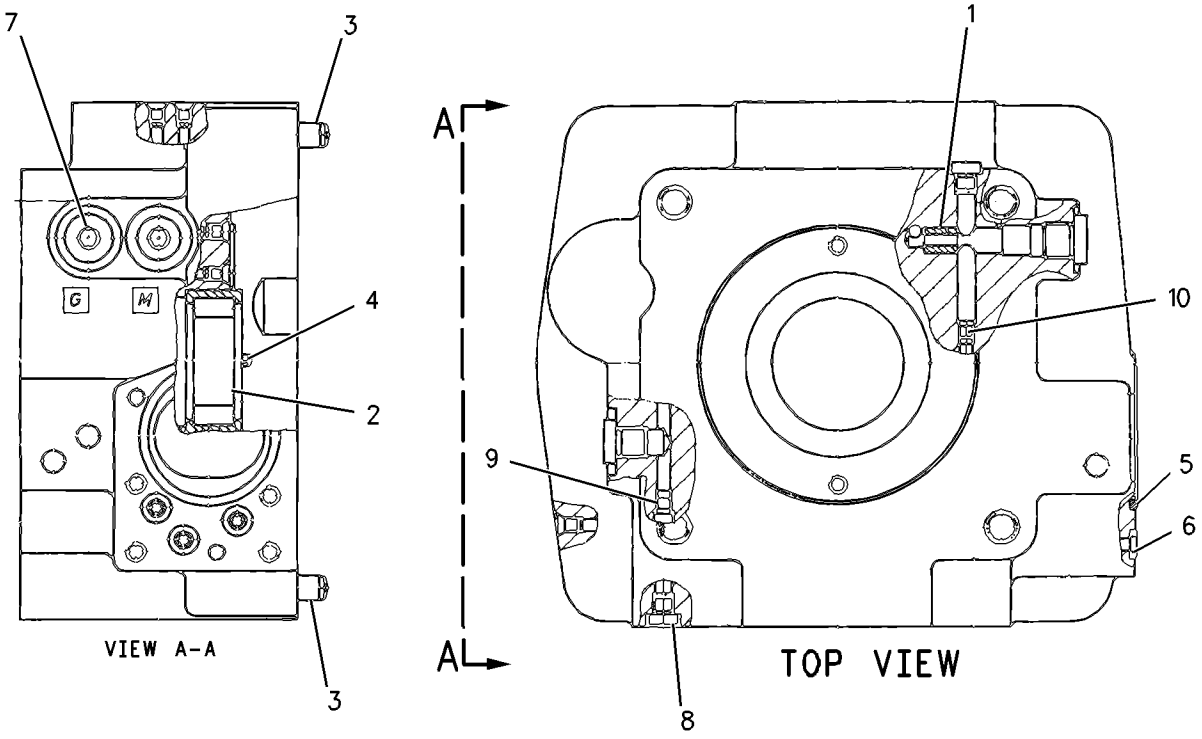

GRAPHIC #1 **<END>** g00989260

HYDRAULIC SYSTEM

145-3543 HEAD GP-PUMP

S/N: BCZ1-2000

PART OF 190-8199 PUMP GP-PISTON

SMCS-3222, 5070, 5086 **i01168822**

NOTE	REF NO	GRAPHIC REF	PART NUMBER	QTY	PART NAME 1 2 3 4 5 6 (PRODUCT LEVEL)	SEE PAGE
Y	1	1	**117-7275**	2	VALVE GP-RELIEF (CROSSOVER)	737
Y	2	1	**177-7122**	1	VALVE GP-RELIEF (CHARGE)	740
Y	3	1	**117-7276**	1	VALVE GP-RELIEF (STEERING HIGH PRESSURE CUTOFF)	738
	4	1	**117-7278**	1	BUSHING	
	5	1	**117-7279**	1	BUSHING	
	6	1	**117-7280**	1	BUSHING	
M	7	1	**8C-4365**	4	BOLT (M14X2X80-MM)	
	8	1	**5W-1250**	2	PIN	
	9	1	**117-7282**	1	SEAL-O-RING	
	10	1	**087-4772**	3	PLUG	
	11	1	**6V-8397**	2	SEAL-O-RING	
	12	1	**112-4628**	2	SCREW	

M-METRIC PART
Y-SEPARATE ILLUSTRATION

145-3543 HEAD GP-PUMP *(contd.)* **i01168822**

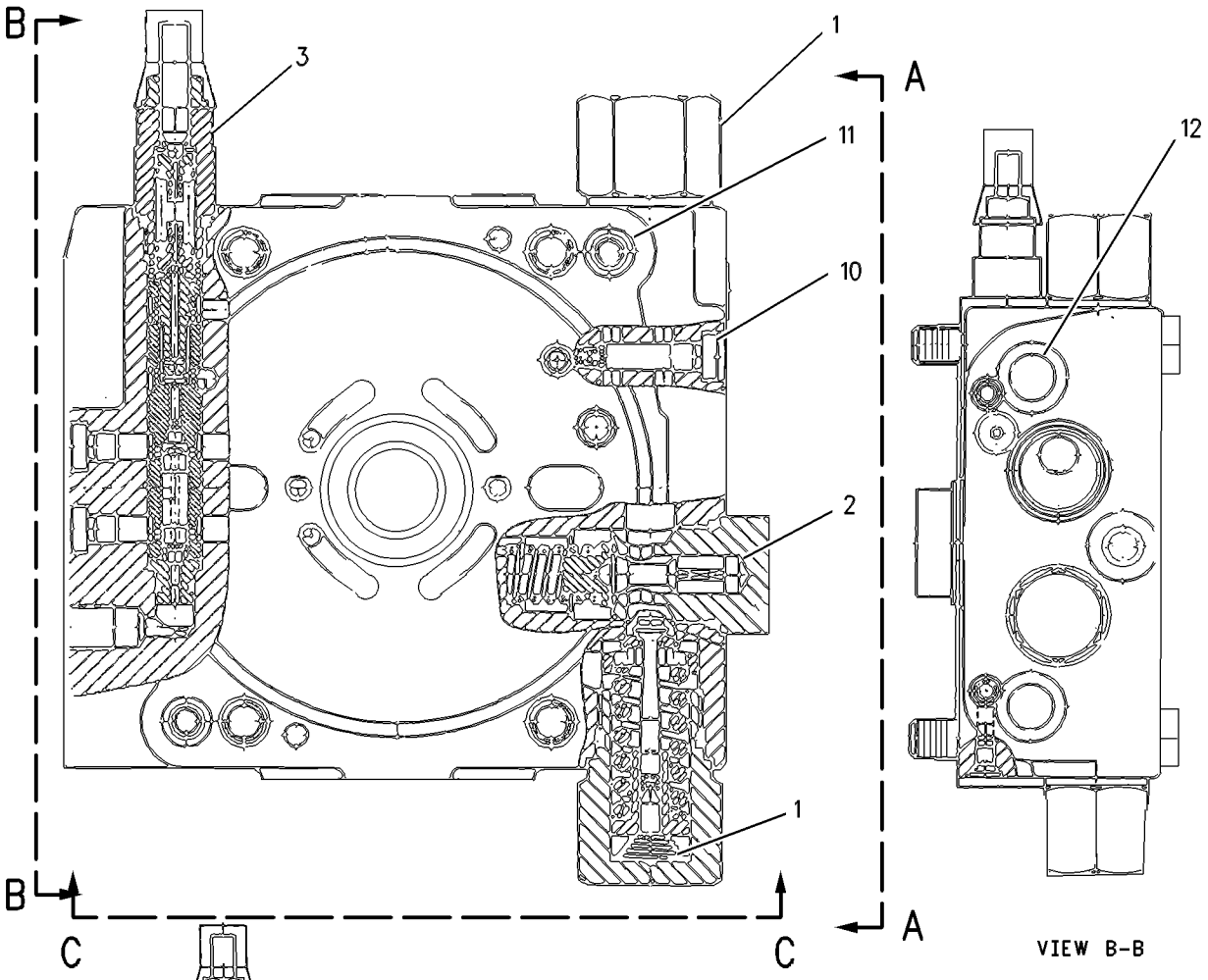

VIEW B-B

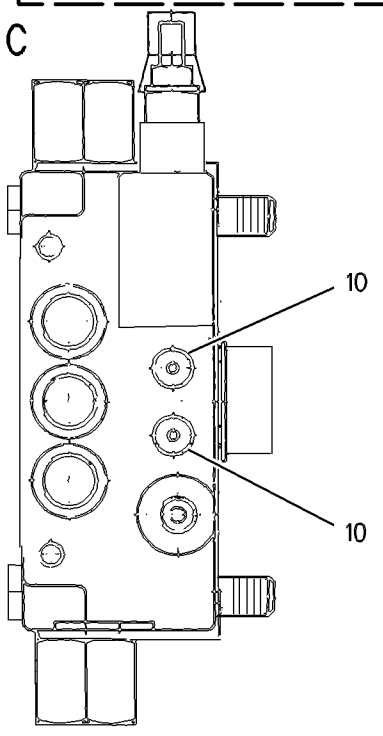

VIEW A-A

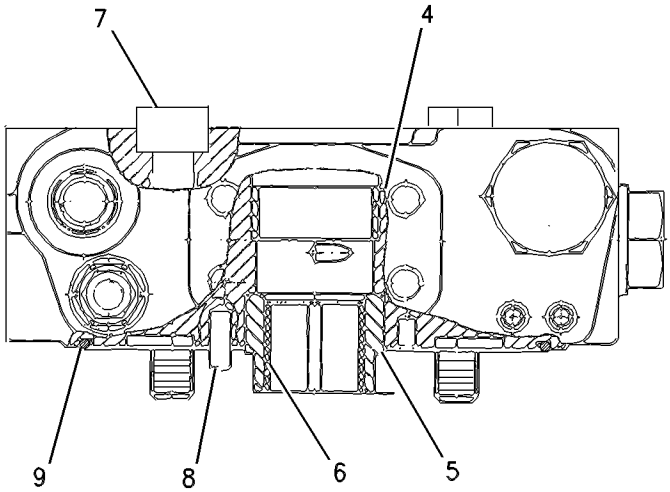

VIEW C-C

GRAPHIC #1 **<END>** g00624909

HYDRAULIC SYSTEM

186-0471 HYDRAULIC AR—UPPER

S/N: BCZ1-2000

PART OF 186-0518 GENERAL AR

SMCS-5050 **i01640921**

NOTE	PART NUMBER	QTY	PART NAME 1 2 3 4 5 6 (PRODUCT LEVEL)	SEE PAGE
Y	*122-1207*	1	COUPLING GP-FLEXIBLE	438
Y	*187-7243*	1	LINES GP-FRONT	518
Y	*188-7607*	1	LINES GP-HYDRAULIC	519
Y	*188-7632*	1	LINES GP-HYDRAULIC FAN	535
Y	*187-3775*	1	LINES GP-PILOT	544
Y	*187-3776*	1	LINES GP-PILOT	547
Y	*187-3777*	1	LINES GP-PILOT	551
Y	*188-7582*	1	LINES GP-PILOT	566
Y	*188-7612*	1	LINES GP-PRESSURE TEST	574
Y	*188-7597*	1	LINES GP-PUMP	576
Y	*188-7592*	1	LINES GP-RETURN	580
Y	*188-7602*	1	LINES GP-STEERING	587
Y	*188-7587*	1	LINES GP-SWING DRIVE	610
Y	*186-0498*	1	PUMP & MTG GP-MAIN HYDRAULIC	623
Y	*188-4941*	1	PUMP & MTG GP-HYDRAULIC FAN	622
Y	*186-0499*	1	PUMP & MTG GP-PILOT	624
Y	*186-0495*	1	TANK & MTG GP-HYDRAULIC	660
Y	*187-7368*	1	VALVE & LINES GP-LOAD CONTROL	677
Y	*187-7208*	1	VALVE & MTG GP-MAIN CONTROL	680

Y-SEPARATE ILLUSTRATION

<END>

186-0473 HYDRAULIC AR—LOWER

S/N: BCZ1-2000

PART OF 186-0518 GENERAL AR

SMCS-5050 **i02161157**

NOTE	PART NUMBER	QTY	PART NAME 1 2 3 4 5 6 (PRODUCT LEVEL)	SEE PAGE
Y	*111-1897*	1	CYLINDER & MTG GP-AXLE LOCK	442
Y	*235-1832*	1	LINES GP-GREASE	770
			S/N: BCZ885-2000	
Y	*188-7617*	1	LINES GP-HYDRAULIC	521
			S/N: BCZ1-495	
Y	*233-8259*	1	LINES GP-HYDRAULIC	528
			S/N: BCZ496-2000	
Y	*188-7622*	1	LINES GP-HYDRAULIC	525
			S/N: BCZ1-495	
Y	*233-8260*	1	LINES GP-HYDRAULIC (BK, CREEPER SP, OSC AX, TMSN)	531
			S/N: BCZ496-2000	
Y	*111-1896*	1	SWIVEL & MOUNTING GP	646

Y-SEPARATE ILLUSTRATION

<END>

HYDRAULIC SYSTEM

185-3399 LINES GP-AUXILIARY HYDRAULIC

S/N: BCZ1-2000
FOR USE WITH 1 PIECE BOOM
AN ATTACHMENT

SMCS-5057 **i01579784**

NOTE	REF NO	GRAPHIC REF	PART NUMBER	QTY	PART NAME 1 2 3 4 5 6 (PRODUCT LEVEL)	SEE PAGE
	1	1	**114-8908**	12	CLAMP	
	2	1	**120-8843**	12	CLAMP	
I	3	1	**185-6804**	1	HOSE AS	
	4	1	**185-6848**	1	TUBE AS	
	5	1	**185-6850**	1	TUBE AS	
I	6	1	**196-7925**	1	HOSE AS	
M	7	1	**095-0670**	4	BOLT (M12X1.75X45-MM)	
	8	1	**1P-3703**	1	SEAL-RECTANGULAR	
	9	1	**5K-9090**	4	SEAL-O-RING	
	10	1	**6V-0400**	2	FLANGE-HALF	
	11	1	**6V-9833**	2	CAP AS	
					(EACH INCLUDES)	
		1	**6V-8557**	1	NUT-FACE SEAL (1-7/16-12-THD)	
M	12	1	**8T-4223**	4	WASHER-HARD (13.5X25.5X3-MM THK)	

I-REFER TO HYDRAULIC INFORMATION SYSTEM
M-METRIC PART

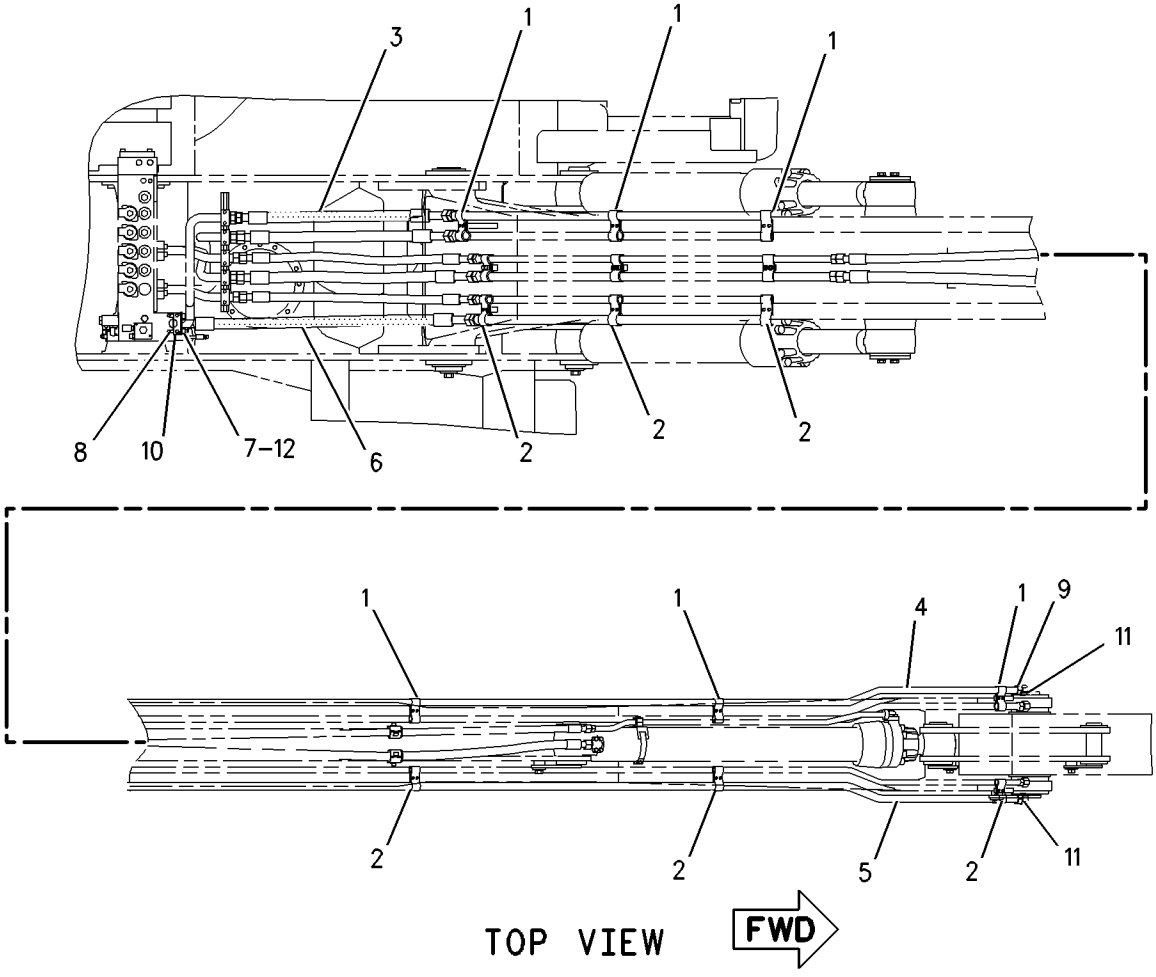

GRAPHIC #1 **<END>** g00821859

HYDRAULIC SYSTEM

185-3405 LINES GP-AUXILIARY HYDRAULIC

S/N: BCZ1-2000
FOR USE WITH VARIABLE ADJUSTABLE BOOM
AN ATTACHMENT

SMCS-5057 **i02156845**

NOTE	REF NO	GRAPHIC REF	PART NUMBER	QTY	PART NAME 1 2 3 4 5 6 (PRODUCT LEVEL)	SEE PAGE
	1	1	**114-8908**	2	CLAMP	
	2	1	**120-8843**	2	CLAMP	
	3	1	**129-9884**	6	CLAMP	
	4	1	**146-1571**	6	CLAMP	
	5	1	**185-6823**	1	TUBE AS	
	6	1	**185-6849**	1	TUBE AS	
I	7	1	**191-1641**	1	HOSE AS	
I	8	1	**191-1642**	1	HOSE AS	
	9	1	**198-1166**	1	PLATE	
M	10	1	**113-2004**	4	BOLT-SOCKET HEAD (M12X1.75X45-MM)	
M	11	1	**166-1984**	12	BOLT-SOCKET HEAD (M10X1.5X40-MM)	
	12	1	**1P-3703**	1	SEAL-RECTANGULAR	
	13	1	**5K-9090**	4	SEAL-O-RING	
	14	1	**5P-7468**	10	CLIP (SLOT)	
	15	1	**5P-7469**	10	CLIP (TAB)	
	16	1	**5P-8444**	10	GROMMET	
	17	1	**6V-0400**	2	FLANGE-HALF	
	18	1	**6V-9833**	2	CAP AS	
	19	1	**7X-7729**	10	WASHER (11X25X3-MM THK)	
M	20	1	**8T-4133**	1	NUT (M10X1.5-THD)	
M	21	1	**8T-4137**	1	BOLT (M10X1.5X20-MM)	
M	22	1	**8T-4195**	10	BOLT (M10X1.5X30-MM)	
M	23	1	**8T-4223**	4	WASHER-HARD (13.5X25.5X3-MM THK)	

I-REFER TO HYDRAULIC INFORMATION SYSTEM
M-METRIC PART

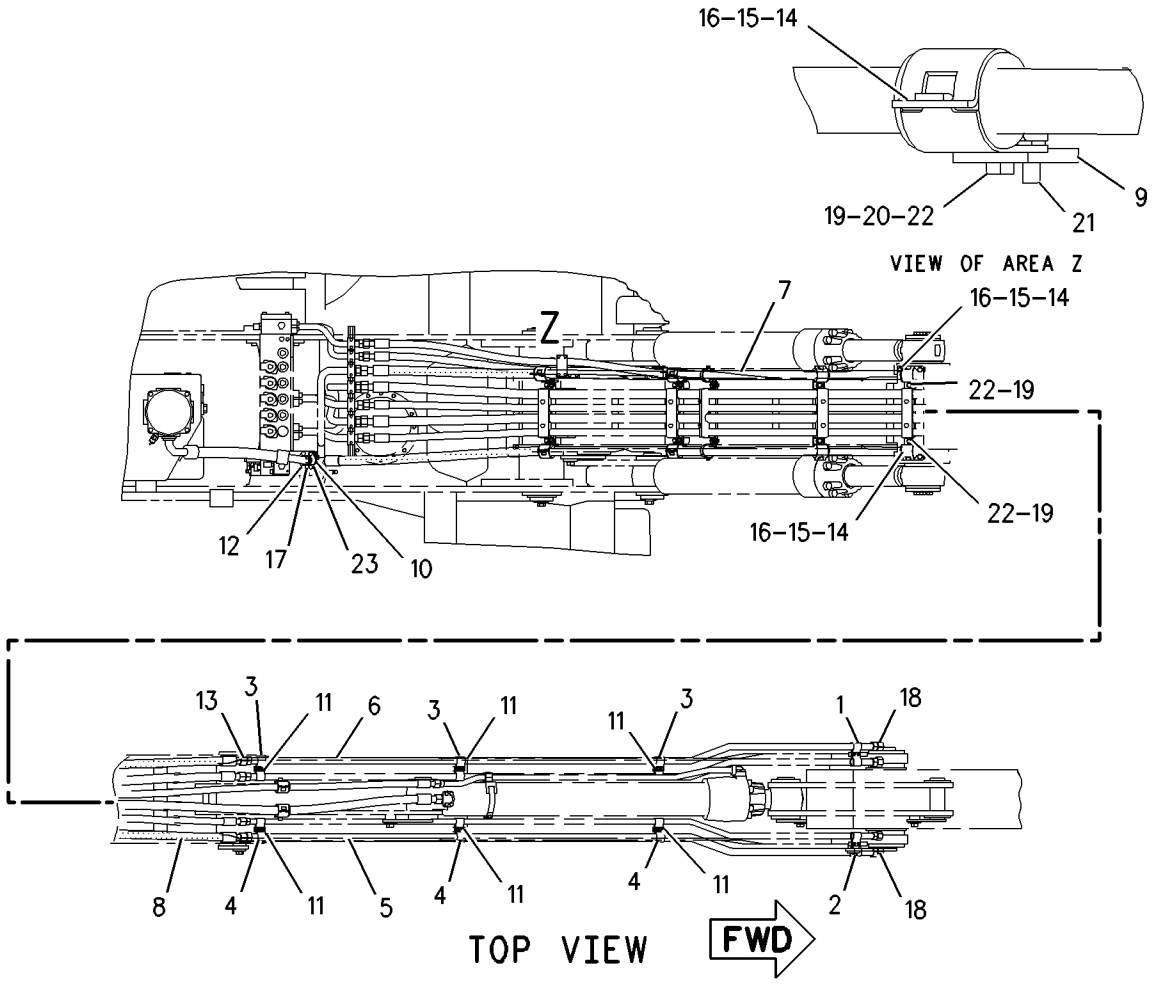

GRAPHIC #1 **<END>** g00824484

185-3411 LINES GP-AUXILIARY HYDRAULIC–

MEDIUM PRESSURE
S/N: BCZ1-2000
FOR USE WITH 1 PIECE BOOM
AN ATTACHMENT

SMCS-5057 **i01549333**

NOTE	REF NO	GRAPHIC REF	PART NUMBER	QTY	PART NAME 1 2 3 4 5 6 (PRODUCT LEVEL)	SEE PAGE
	1	1	**114-9324**	4	CLAMP-SINGLE	
	2	1	**114-9325**	10	CLAMP-DOUBLE	
	3	1	**179-9316**	2	PLATE AS	
I	4	1	**185-6795**	2	HOSE AS	
	5	1	**188-1792**	1	TUBE AS	
	6	1	**188-1793**	1	TUBE AS	
	7	1	**188-1794**	1	TUBE AS	
	8	1	**188-1795**	1	TUBE AS	
	9	1	*194-9387*	1	CLAMP AS	
		1	**194-9386**	2	CLAMP	
		1	**197-5319**	1	PLATE	
	10	1	**195-7685**	10	ADAPTER	
	11	1	**6V-8398**	6	SEAL-O-RING	
	12	1	**6V-9830**	2	CAP AS	
M	13	1	**7X-2533**	2	BOLT (M6X1X35-MM)	
M	14	1	**8T-8894**	4	BOLT-SOCKET HEAD (M10X1.5X20-MM)	

I-REFER TO HYDRAULIC INFORMATION SYSTEM
M-METRIC PART

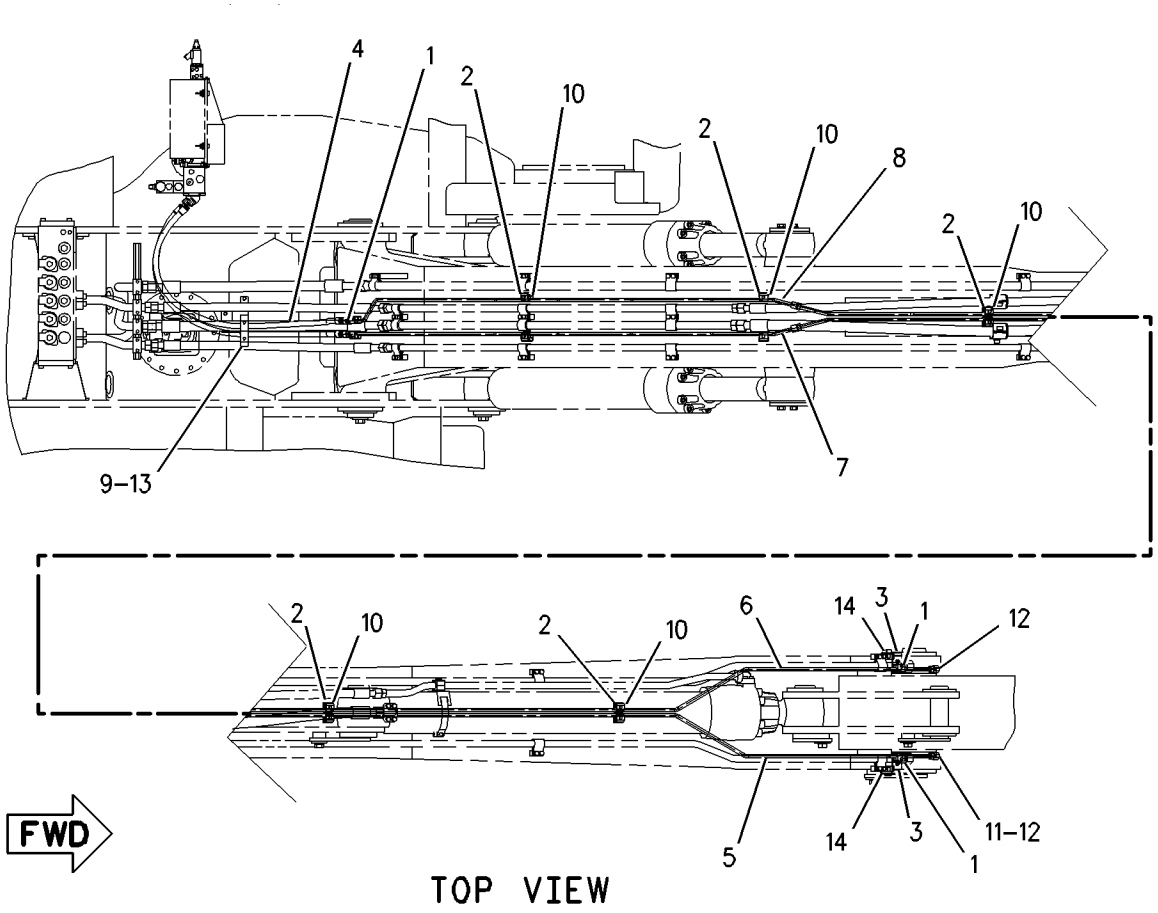

GRAPHIC #1 **<END>** g00807876

185-3417 LINES GP-AUXILIARY HYDRAULIC–

MEDIUM PRESSURE

S/N: BCZ1-2000

FOR USE WITH VARIABLE ADJUSTABLE BOOM

AN ATTACHMENT

SMCS-5057 **i01549345**

NOTE	REF NO	GRAPHIC REF	PART NUMBER	QTY	PART NAME 1 2 3 4 5 6 (PRODUCT LEVEL)	SEE PAGE
	1	1	**114-9324**	2	CLAMP-SINGLE	
	2	1	**114-9325**	6	CLAMP-DOUBLE	
I	3	1	**153-0281**	2	HOSE AS	
	4	1	**179-9316**	2	PLATE AS	
	5	1	**185-6824**	1	TUBE AS	
	6	1	**185-6825**	1	TUBE AS	
	7	1	**187-5080**	1	PLATE AS	
	8	1	*194-9387*	6	CLAMP AS	
					(EACH INCLUDES)	
		1	**194-9386**	2	CLAMP	
		1	**197-5319**	1	PLATE	
	9	1	**195-7685**	6	ADAPTER	
	10	1	**6V-8398**	4	SEAL-O-RING	
	11	1	**6V-9830**	2	CAP AS	
M	12	1	**7X-2533**	12	BOLT (M6X1X35-MM)	
M	13	1	**8T-8894**	4	BOLT-SOCKET HEAD (M10X1.5X20-MM)	

I-REFER TO HYDRAULIC INFORMATION SYSTEM
M-METRIC PART

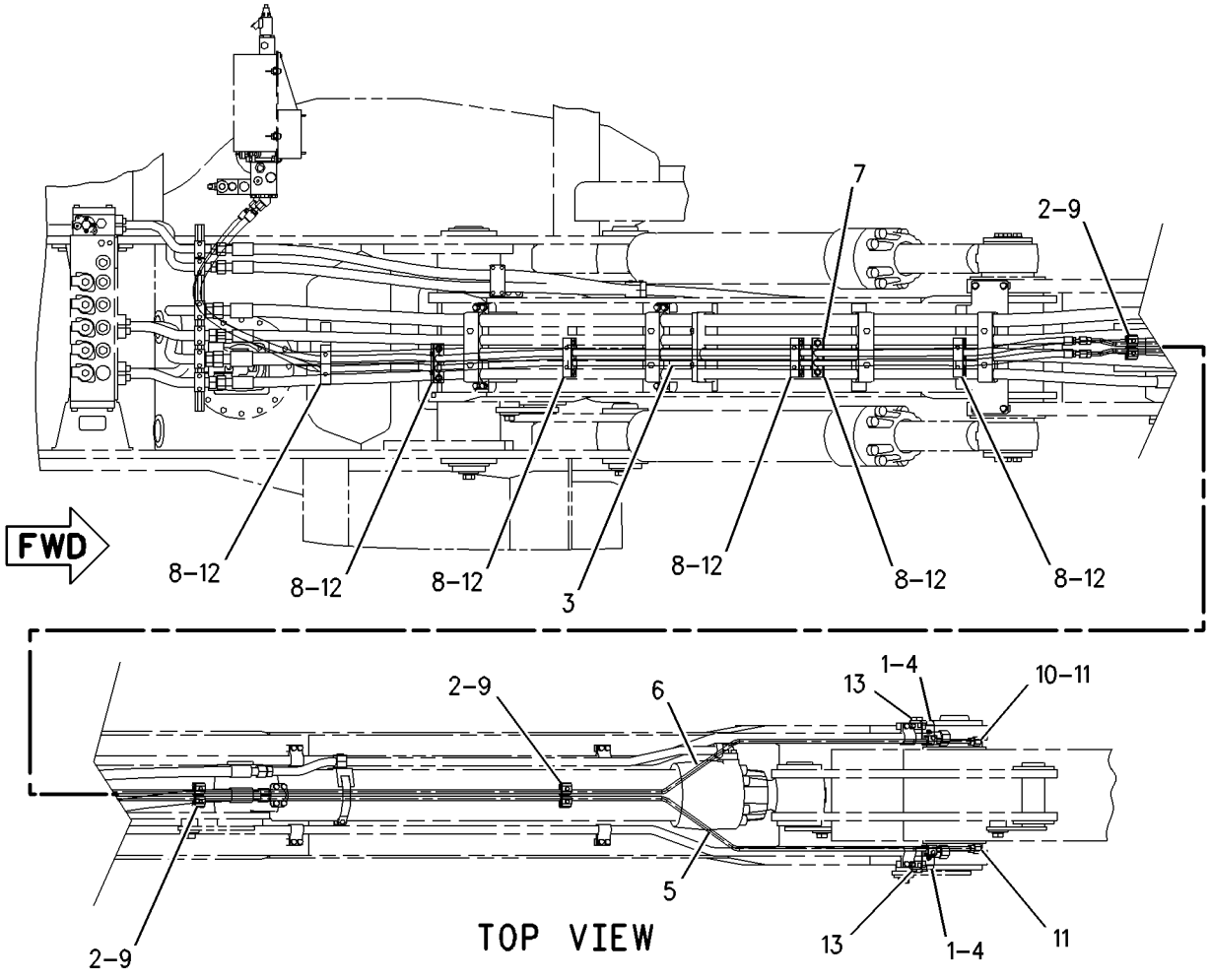

GRAPHIC #1 **<END>** g00807894

HYDRAULIC SYSTEM

185-3732 LINES GP-AUXILIARY HYDRAULIC

S/N: BCZ1-2000
FOR USE WITH 2.2-M STICK
AN ATTACHMENT

SMCS-5057 **i01552724**

NOTE	REF NO	GRAPHIC REF	PART NUMBER	QTY	PART NAME 1 2 3 4 5 6 (PRODUCT LEVEL)	SEE PAGE
	1	1	**114-9324**	4	CLAMP-SINGLE	
	2	1	**114-9325**	10	CLAMP-DOUBLE	
	3	1	**179-9316**	2	PLATE AS	
I	4	1	**185-6806**	2	HOSE AS	
	5	1	**188-1798**	1	TUBE AS	
	6	1	**188-1799**	1	TUBE AS	
	7	1	**188-1800**	1	TUBE AS	
	8	1	**188-1801**	1	TUBE AS	
	9	1	*194-9387*	1	CLAMP AS	
		1	**194-9386**	2	CLAMP	
		1	**197-5319**	1	PLATE	
	10	1	**195-7685**	10	ADAPTER	
	11	1	**6V-8397**	4	SEAL-O-RING	
	12	1	**6V-8398**	2	SEAL-O-RING	
	13	1	**6V-9829**	2	CAP AS	
M	14	1	**7X-2533**	2	BOLT (M6X1X35-MM)	
M	15	1	**8T-8894**	4	BOLT-SOCKET HEAD (M10X1.5X20-MM)	

I-REFER TO HYDRAULIC INFORMATION SYSTEM
M-METRIC PART

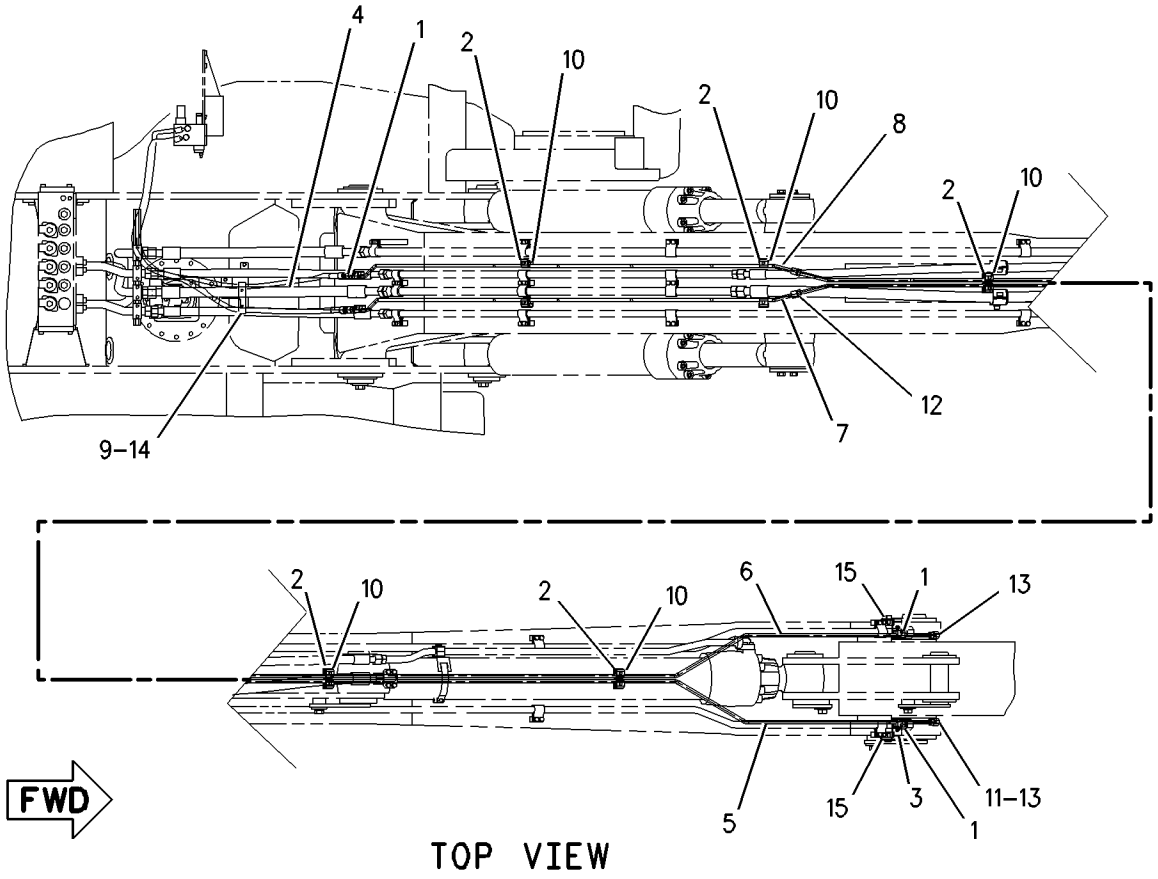

GRAPHIC #1 **<END>** g00808195

HYDRAULIC SYSTEM

188-7647 LINES GP-BLADE CYL & VALVE

S/N: BCZ1-2000

FOR USE WITH COMBINATION REAR BLADE/FRONT BLADE OR BLADE/STABILIZER ON EACH BLADE. CANNOT BE USED WITH ONE OR TWO SETS OF OUTRIGGERS, BLADE REAR SIDE ONLY

AN ATTACHMENT

SMCS-5102 **i02163519**

NOTE	REF NO	GRAPHIC REF	PART NUMBER	QTY	PART NAME 1 2 3 4 5 6 (PRODUCT LEVEL)	SEE PAGE
I	1	1	**112-8566**	1	HOSE AS	
Y	2	1	**196-7544**	1	VALVE GP-SOLENOID (BLADE)	746
I	3	1	**230-0787**	2	HOSE AS	
I	4	1	**230-0788**	1	HOSE AS	
I	5	1	**234-7771**	1	HOSE AS	
I	6	1	**234-7780**	1	HOSE AS	
	7	1	*148-8318*	1	CONNECTOR AS	
		1	**3K-0360**	1	SEAL-O-RING	
		1	**6V-8397**	1	SEAL-O-RING	
		1	**6V-8634**	1	CONNECTOR	
	8	1	*148-8365*	1	ELBOW AS	
		1	**3J-1907**	1	SEAL-O-RING	
		1	**6V-8398**	1	SEAL-O-RING	
		1	**8T-6876**	1	ELBOW	
	9	1	*148-8374*	5	ELBOW AS	
					(EACH INCLUDES)	
		1	**3K-0360**	1	SEAL-O-RING	
		1	**6V-8397**	1	SEAL-O-RING	
		1	**6V-8723**	1	ELBOW	
	10	1	*148-8433*	2	TEE AS	
					(EACH INCLUDES)	
		1	**6V-8397**	2	SEAL-O-RING	
		1	**6V-9836**	1	TEE-SWIVEL	
M	11	1	**7X-2535**	2	BOLT (M6X1X60-MM)	
	12	1	**193-9063**	1	SWITCH AS-ROCKER (BLADE/LEFT STABILIZER)	
		1	**111-7899**	1	GASKET	

I-REFER TO HYDRAULIC INFORMATION SYSTEM
M-METRIC PART
Y-SEPARATE ILLUSTRATION

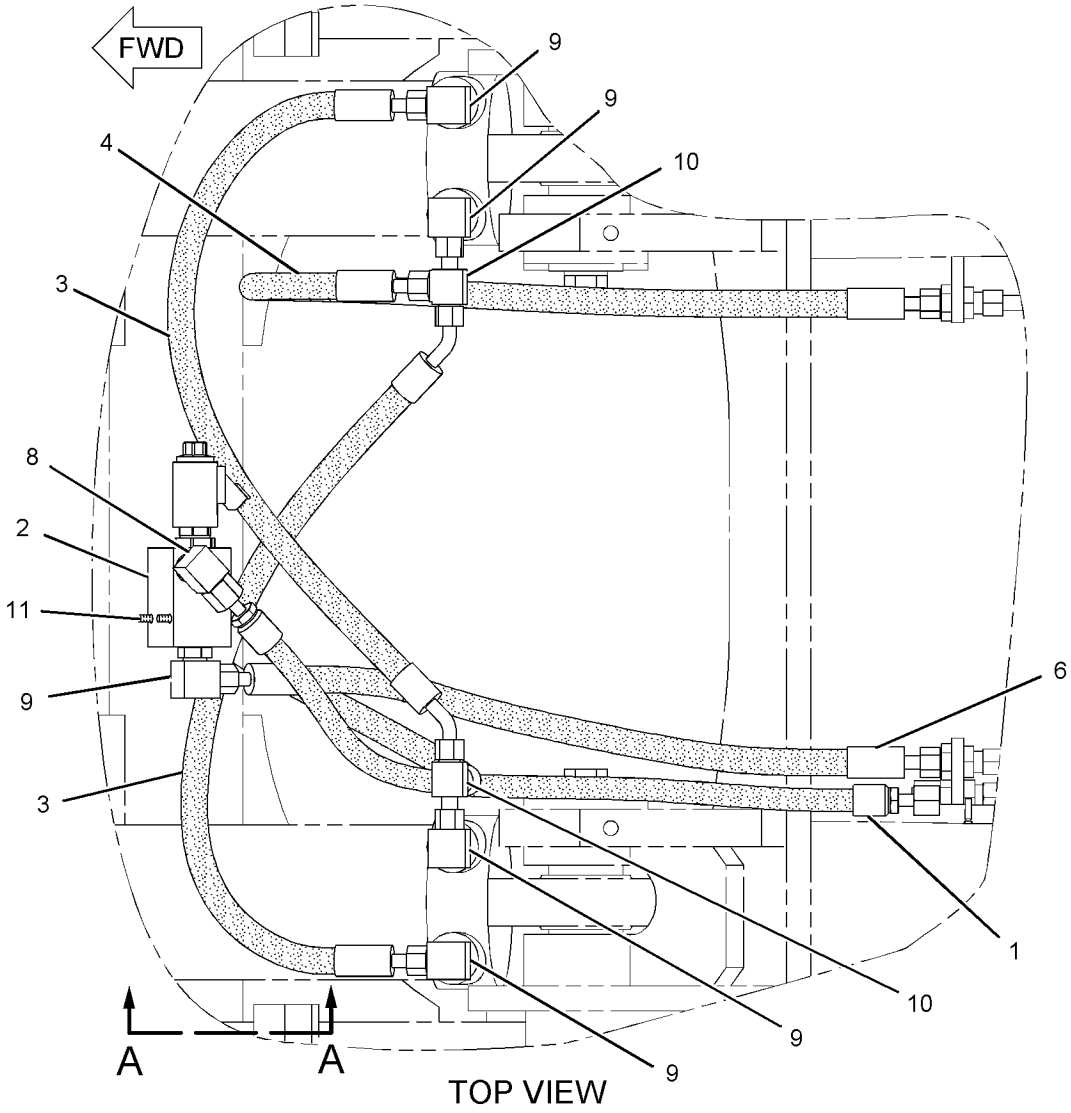

GRAPHIC #1 **<END>** g01094268

HYDRAULIC SYSTEM

188-7637 LINES GP-BLADE CYLINDER

S/N: BCZ1-2000

PART OF 188-4997, 188-4998 BLADE AR

AN ATTACHMENT

SMCS-5102 **i02086769**

NOTE	REF NO	GRAPHIC REF	PART NUMBER	QTY	PART NAME 1 2 3 4 5 6 (PRODUCT LEVEL)	SEE PAGE
I	1	1	**230-0787**	2	HOSE AS	
I	2	1	**230-0788**	2	HOSE AS	
	3	1	*148-8374*	4	ELBOW AS	
					(EACH INCLUDES)	
		1	**3K-0360**	1	SEAL-O-RING	
		1	**6V-8397**	1	SEAL-O-RING	
		1	**6V-8723**	1	ELBOW	
	4	1	*148-8433*	2	TEE AS	
					(EACH INCLUDES)	
		1	**6V-8397**	2	SEAL-O-RING	
		1	**6V-9836**	1	TEE-SWIVEL	

I-REFER TO HYDRAULIC INFORMATION SYSTEM

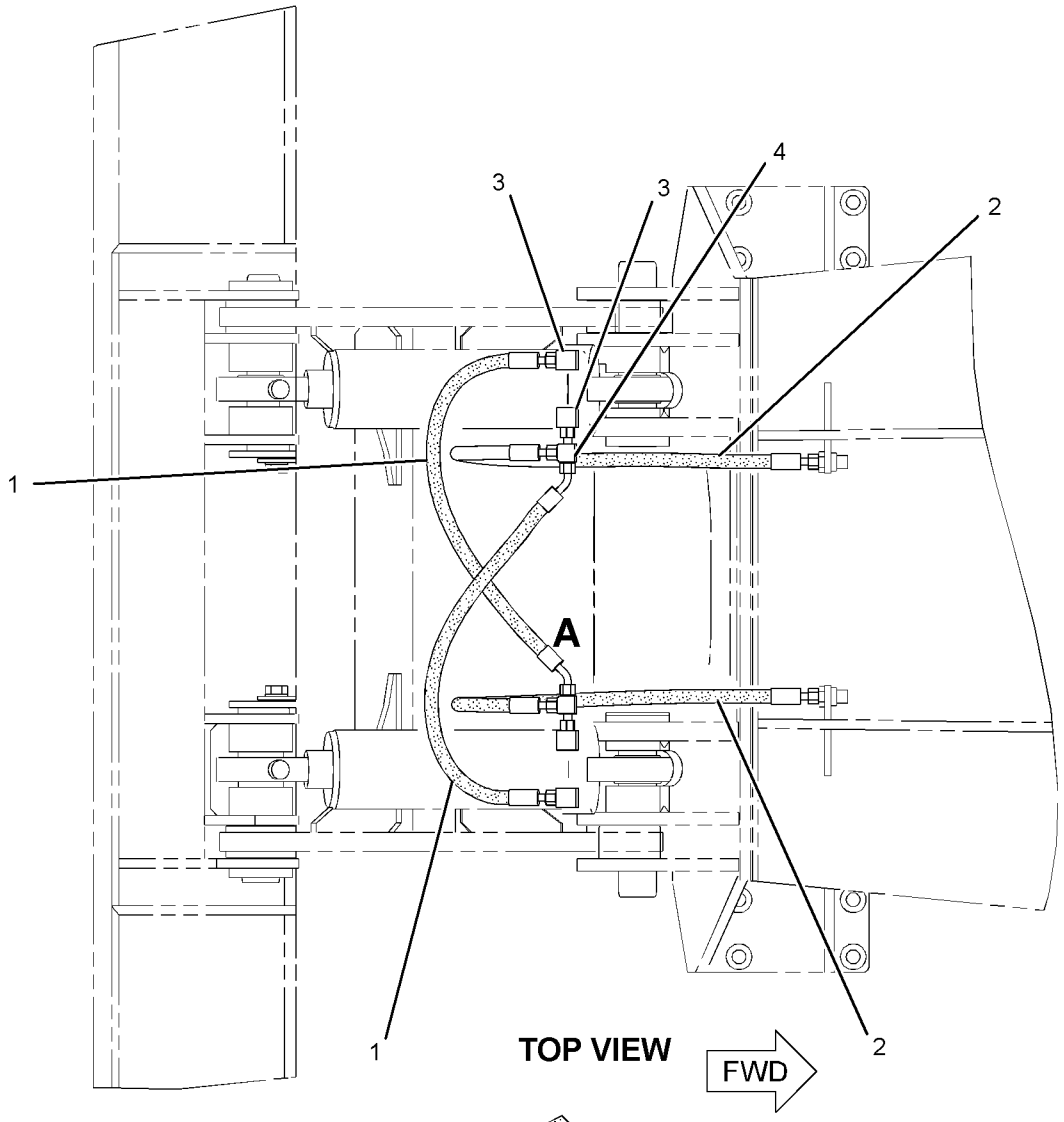

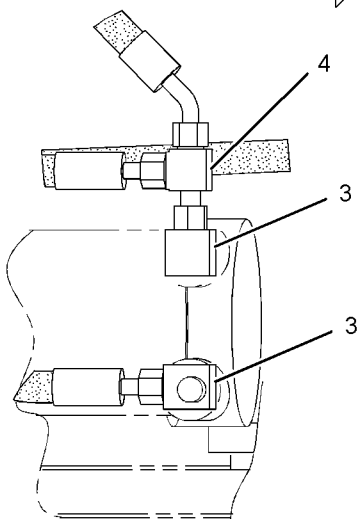

VIEW OF AREA A

GRAPHIC #1

<END>

g01083786

HYDRAULIC SYSTEM

185-3387 LINES GP-BOOM

S/N: BCZ1-2000
PART OF 185-8540 BOOM AR
AN ATTACHMENT

SMCS-5057 **i01586800**

NOTE	REF NO	GRAPHIC REF	PART NUMBER	QTY	PART NAME 1 2 3 4 5 6 (PRODUCT LEVEL)	SEE PAGE
M	1	1	**8T-4957**	34	BOLT-SOCKET HEAD (M10X1.5X30-MM)	
	2	1	**116-7286**	1	CLAMP-SINGLE	
	3	1	**129-9884**	12	CLAMP	
	4	1	**138-6959**	6	CLAMP	
	5	1	**151-8865**	1	ELBOW	
I	6	1	**185-6798**	1	HOSE AS	
I	7	1	**185-6799**	1	HOSE AS	
I	8	1	**185-6804**	2	HOSE AS	
I	9	1	**185-6805**	2	HOSE AS	
	10	1	**185-6847**	1	TUBE AS	
	11	1	**185-6848**	1	TUBE AS	
	12	1	**187-5076**	1	CLAMP AS	
	13	1	**188-1796**	1	TUBE AS	
	14	1	**188-1797**	1	TUBE AS	
	15	1	**206-2389**	1	TUBE AS	
	16	1	**120-9811**	12	CLAMP	
	17	1	**4J-5267**	2	SEAL-O-RING	
	18	1	**5K-9090**	5	SEAL-O-RING	
	19	1	**5P-7466**	1	CLIP (SLOT)	
	20	1	**5P-7467**	1	CLIP (TAB)	
	21	1	**5P-7468**	1	CLIP (SLOT)	
	22	1	**5P-7469**	1	CLIP (TAB)	
	23	1	**5P-8112**	1	GROMMET	
	24	1	**5P-8444**	1	GROMMET	
	25	1	**6V-9746**	5	SEAL-O-RING	
	26	1	**6V-9832**	1	CAP AS	
		1	**6V-8556**	1	NUT (1 3/16-12-THD)	
	27	1	**6V-9833**	1	CAP AS	
		1	**6V-8557**	1	NUT-FACE SEAL (1-7/16-12-THD)	
	28	1	**7X-7729**	2	WASHER (11X25X3-MM THK)	
M	29	1	**8T-9515**	6	BOLT-SOCKET HEAD (M10X1.5X40-MM)	

I-REFER TO HYDRAULIC INFORMATION SYSTEM
M-METRIC PART

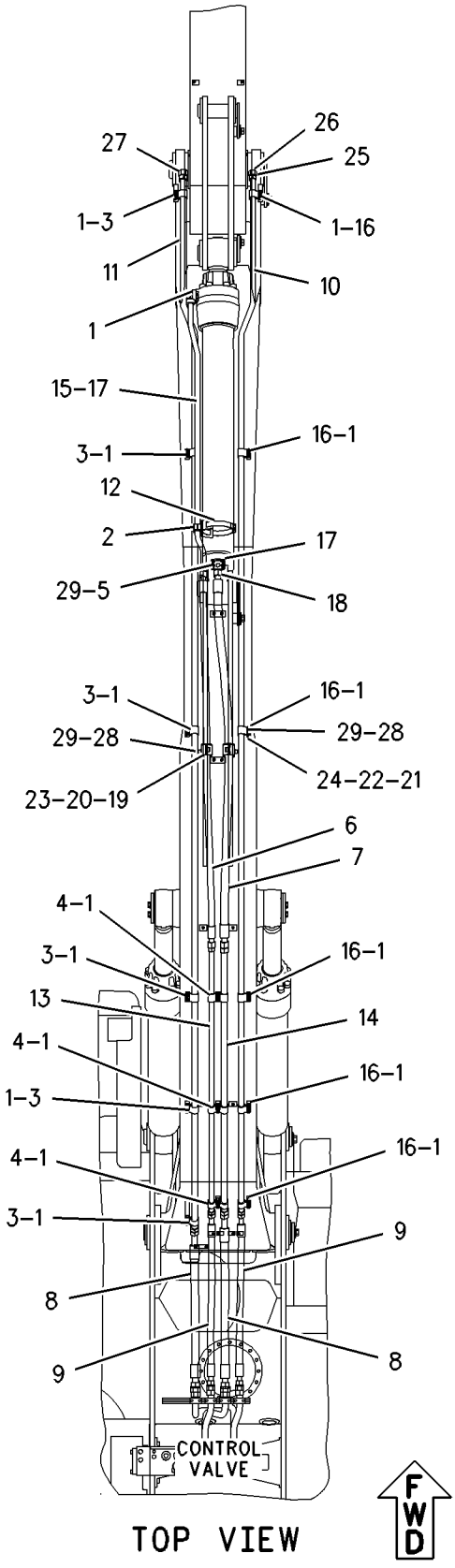

TOP VIEW

GRAPHIC #1 **<END>** g00829581

HYDRAULIC SYSTEM

185-3393 LINES GP-BOOM

S/N: BCZ1-2000
PART OF 185-8547 BOOM AR
AN ATTACHMENT

SMCS-5057 **i01758409**

NOTE	REF NO	GRAPHIC REF	PART NUMBER	QTY	PART NAME 1 2 3 4 5 6 (PRODUCT LEVEL)	SEE PAGE
M	1	1	**101-7398**	10	BOLT-SOCKET HEAD (M10X1.5X40-MM)	
	2	1	**116-7286**	1	CLAMP-SINGLE	
	3	1	**129-9884**	8	CLAMP	
	4	1	**151-8865**	1	ELBOW	
	5	1	**151-8866**	1	ELBOW	
I	6	1	**185-6791**	1	HOSE AS	
I	7	1	**185-6792**	1	HOSE AS	
I	8	1	**185-6793**	1	HOSE AS	
I	9	1	**185-6794**	1	HOSE AS	
	10	1	**185-6821**	1	TUBE AS	
	11	1	**185-6822**	1	TUBE AS	
	12	1	**187-5076**	1	CLAMP AS	
	13	1	**187-5079**	2	PLATE AS	
	14	1	**189-2059**	1	PLATE AS	
	15	1	**189-2060**	1	PLATE AS	
	16	1	**189-2062**	2	PLATE AS	
I	17	1	**190-8552**	1	HOSE AS	
I	18	1	**191-1641**	1	HOSE AS	
	19	1	*194-9391*	5	CLAMP AS	
					(EACH INCLUDES)	
		1	**187-5081**	2	SPACER	
		1	**189-2055**	1	PLATE	
		1	**194-9397**	2	CLAMP	
	20	1	*194-9396*	1	CLAMP GP-HYDRAULIC LINES	
		1	**194-9394**	2	CLAMP	
		1	**194-9395**	1	PLATE	
	21	1	**206-2389**	1	TUBE AS	
M	22	1	**101-7404**	28	BOLT-SOCKET HEAD (M10X1.5X30-MM)	
	23	1	**120-9811**	2	CLAMP	
	24	1	**121-0221**	6	CLAMP	
	25	1	**135-4990**	1	CLAMP-SINGLE	
	26	1	**1P-3702**	1	SEAL-RECTANGULAR	
	27	1	**4J-5267**	3	SEAL-O-RING	
	28	1	**5K-9090**	3	SEAL-O-RING	
	29	1	**5P-7466**	1	CLIP (SLOT)	
	30	1	**5P-7467**	1	CLIP (TAB)	
	31	1	**5P-7468**	1	CLIP (SLOT)	
	32	1	**5P-7469**	1	CLIP (TAB)	
	33	1	**5P-8112**	1	GROMMET	
	34	1	**5P-8444**	1	GROMMET	
	35	1	**6V-9746**	4	SEAL-O-RING	
	36	1	**6V-9832**	1	CAP AS	
	37	1	**6V-9833**	1	CAP AS	
M	38	1	**7X-2534**	4	BOLT (M6X1X50-MM)	
	39	1	**7X-7729**	2	WASHER (11X25X3-MM THK)	
M	40	1	**7Y-7992**	10	BOLT (12X1.75X75-MM)	
	41	1	**8T-4121**	16	WASHER-HARD (11X21X2.5-MM THK)	
M	42	1	**8T-4136**	4	BOLT (M10X1.5X25-MM)	
M	43	1	**8T-4137**	2	BOLT (M10X1.5X20-MM)	
M	44	1	**8T-4182**	4	BOLT (M10X1.5X45-MM)	
	45	1	**8T-9403**	2	FLANGE-HALF	

I-REFER TO HYDRAULIC INFORMATION SYSTEM
M-METRIC PART

185-3393 **LINES GP-BOOM** *(contd.)* **i01758409**

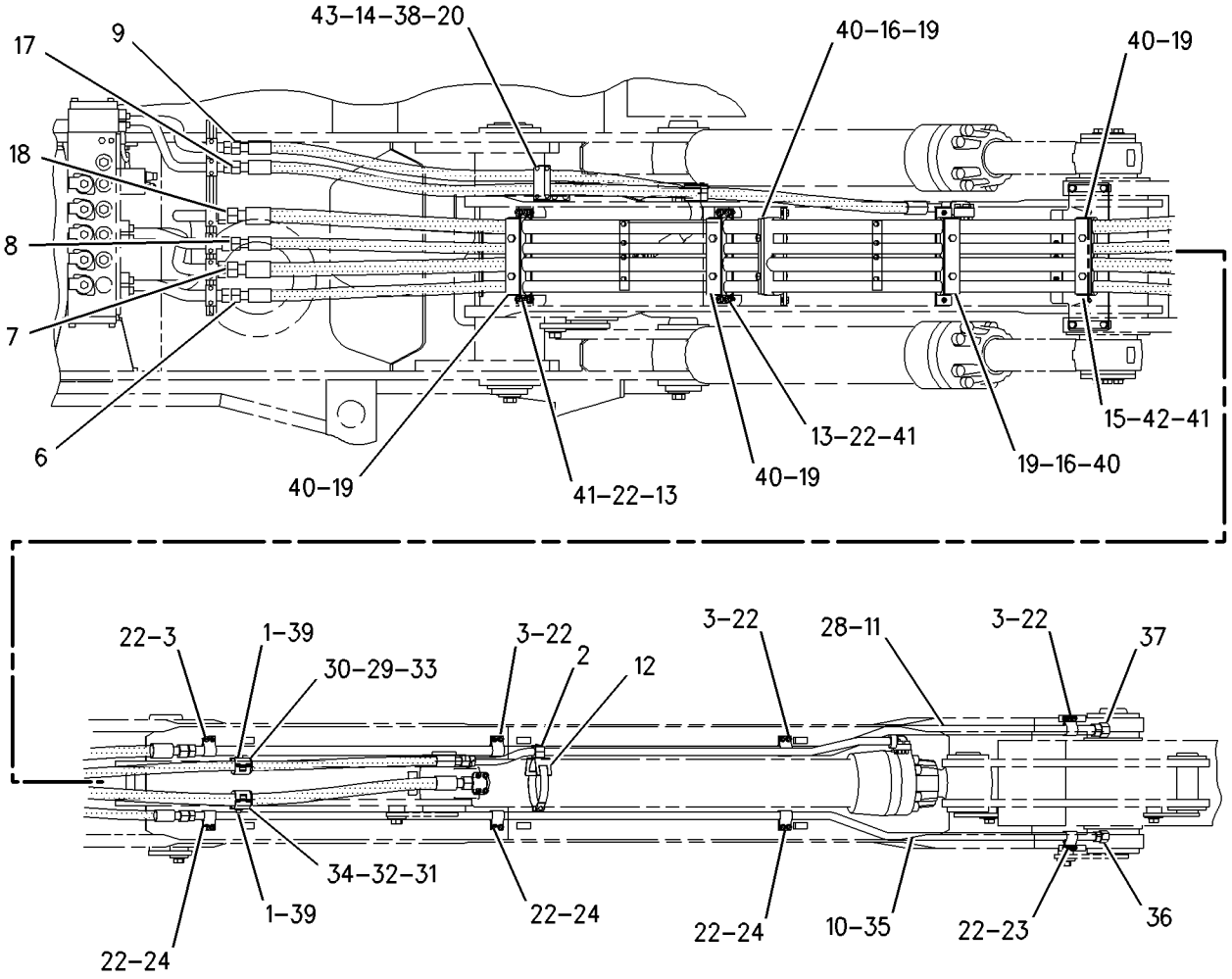

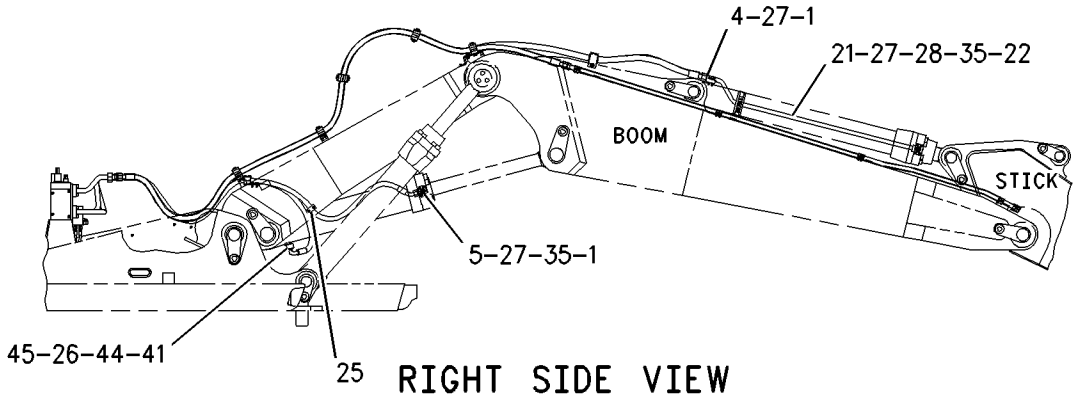

GRAPHIC #1 **<END>** g00899608

HYDRAULIC SYSTEM

185-3736 LINES GP-BOOM

S/N: BCZ1-2000
FOR USE WITH VARIABLE ADJUSTABLE BOOM
AN ATTACHMENT

SMCS-5057 **i01549381**

NOTE	REF NO	GRAPHIC REF	PART NUMBER	QTY	PART NAME 1 2 3 4 5 6 (PRODUCT LEVEL)	SEE PAGE
	1	1	**114-9324**	2	CLAMP-SINGLE	
	2	1	**114-9325**	6	CLAMP-DOUBLE	
	3	1	**179-9316**	2	PLATE AS	
	4	1	**185-6826**	1	TUBE AS	
	5	1	**185-6827**	1	TUBE AS	
	6	1	**187-5080**	1	PLATE AS	
	7	1	*194-9387*	6	CLAMP AS	
					(EACH INCLUDES)	
		1	**194-9386**	12	CLAMP	
		1	**197-5319**	6	PLATE	
	8	1	**195-7685**	6	ADAPTER	
I	9	1	**196-7916**	2	HOSE AS	
	10	1	**6V-8397**	4	SEAL-O-RING	
	11	1	**6V-9829**	2	CAP AS	
M	12	1	**7X-2533**	12	BOLT (M6X1X35-MM)	
M	13	1	**8T-8894**	4	BOLT-SOCKET HEAD (M10X1.5X20-MM)	

I-REFER TO HYDRAULIC INFORMATION SYSTEM
M-METRIC PART

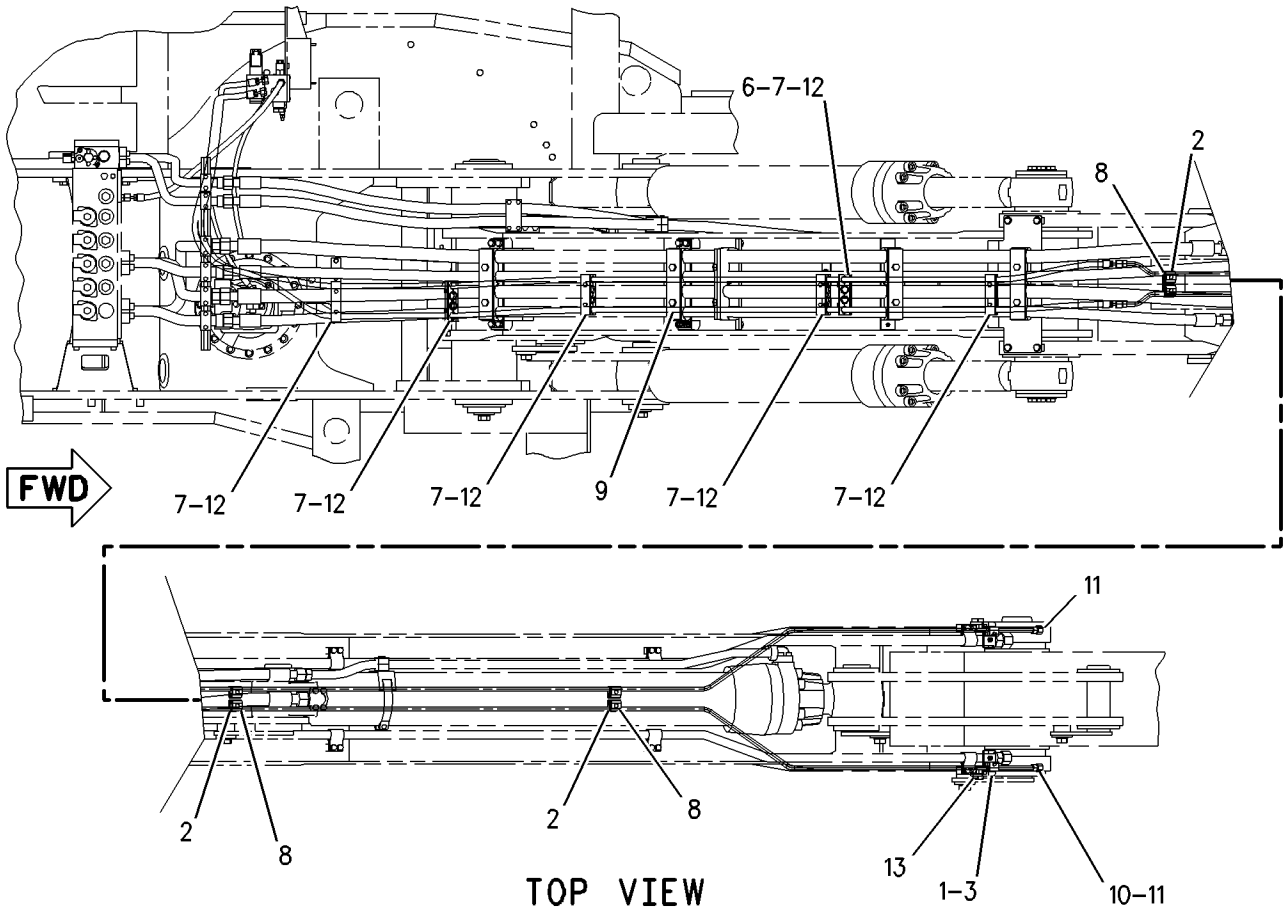

GRAPHIC #1 **<END>** g00807909

HYDRAULIC SYSTEM

185-3379 LINES GP-BOOM CYLINDER

S/N: BCZ1-2000
PART OF 185-8540, 185-8547 BOOM AR
AN ATTACHMENT

SMCS-5057, 5456 **i02089098**

NOTE	REF NO	GRAPHIC REF	PART NUMBER	QTY	PART NAME 1 2 3 4 5 6 (PRODUCT LEVEL)	SEE PAGE
M	1	1	**8T-4957**	4	BOLT-SOCKET HEAD (M10X1.5X30-MM)	
	2	1	**139-4016**	2	INSERT-RUBBER	
	3	1	**142-7423**	1	TUBE AS	
	4	1	**142-7425**	1	TUBE AS	
	5	1	**145-7713**	2	BLOCK	
I	6	1	**185-6807**	1	HOSE AS	
I	7	1	**185-6808**	1	HOSE AS	
I	8	1	**185-6809**	1	HOSE AS	
	9	1	**185-6810**	1	CLAMP AS	
	10	1	**187-5078**	1	CLAMP AS	
I	11	1	**212-6763**	1	HOSE AS	
I	12	1	**190-8532**	1	HOSE AS	
M	13	1	**095-0670**	4	BOLT (M12X1.75X45-MM)	
	14	1	**137-4279**	1	CLAMP-SINGLE	
	15	1	**139-5751**	2	CLAMP-SINGLE	
	16	1	**140-7599**	1	CLAMP	
	17	1	*148-8327*	1	CONNECTOR AS	
		1	**3D-2824**	1	SEAL-O-RING	
		1	**6V-8637**	1	CONNECTOR	
		1	**6V-9746**	1	SEAL-O-RING	
	18	1	*148-8395*	3	PLUG AS	
					(EACH INCLUDES)	
		1	**3K-0360**	1	SEAL-O-RING	
		1	**9S-8005**	1	PLUG	
	19	1	*153-6237*	1	ELBOW AS	
		1	**3D-2824**	1	SEAL-O-RING	
		1	**6V-9004**	1	ELBOW	
		1	**6V-9746**	1	SEAL-O-RING	
	20	1	**1P-3702**	4	SEAL-RECTANGULAR	
	21	1	**1P-3703**	2	SEAL-RECTANGULAR	
	22	1	**4J-5267**	3	SEAL-O-RING	
	23	1	**5K-9090**	2	SEAL-O-RING	
	27	1	**6V-0400**	4	FLANGE-HALF	
M	28	1	**8T-2223**	8	BOLT-SOCKET HEAD (M10X1.5X45-MM)	
	29	1	**8T-4121**	16	WASHER-HARD (11X21X2.5-MM THK)	
M	30	1	**8T-4182**	8	BOLT (M10X1.5X45-MM)	
M	31	1	**8T-4185**	2	BOLT (M10X1.5X50-MM)	
M	32	1	**8T-4223**	4	WASHER-HARD (13.5X25.5X3-MM THK)	
M	34	1	**8T-5005**	4	BOLT (M10X1.5X70-MM)	
	35	1	**8T-9403**	8	FLANGE-HALF	
M	36	1	**8T-9515**	8	BOLT-SOCKET HEAD (M10X1.5X40-MM)	

I-REFER TO HYDRAULIC INFORMATION SYSTEM
M-METRIC PART

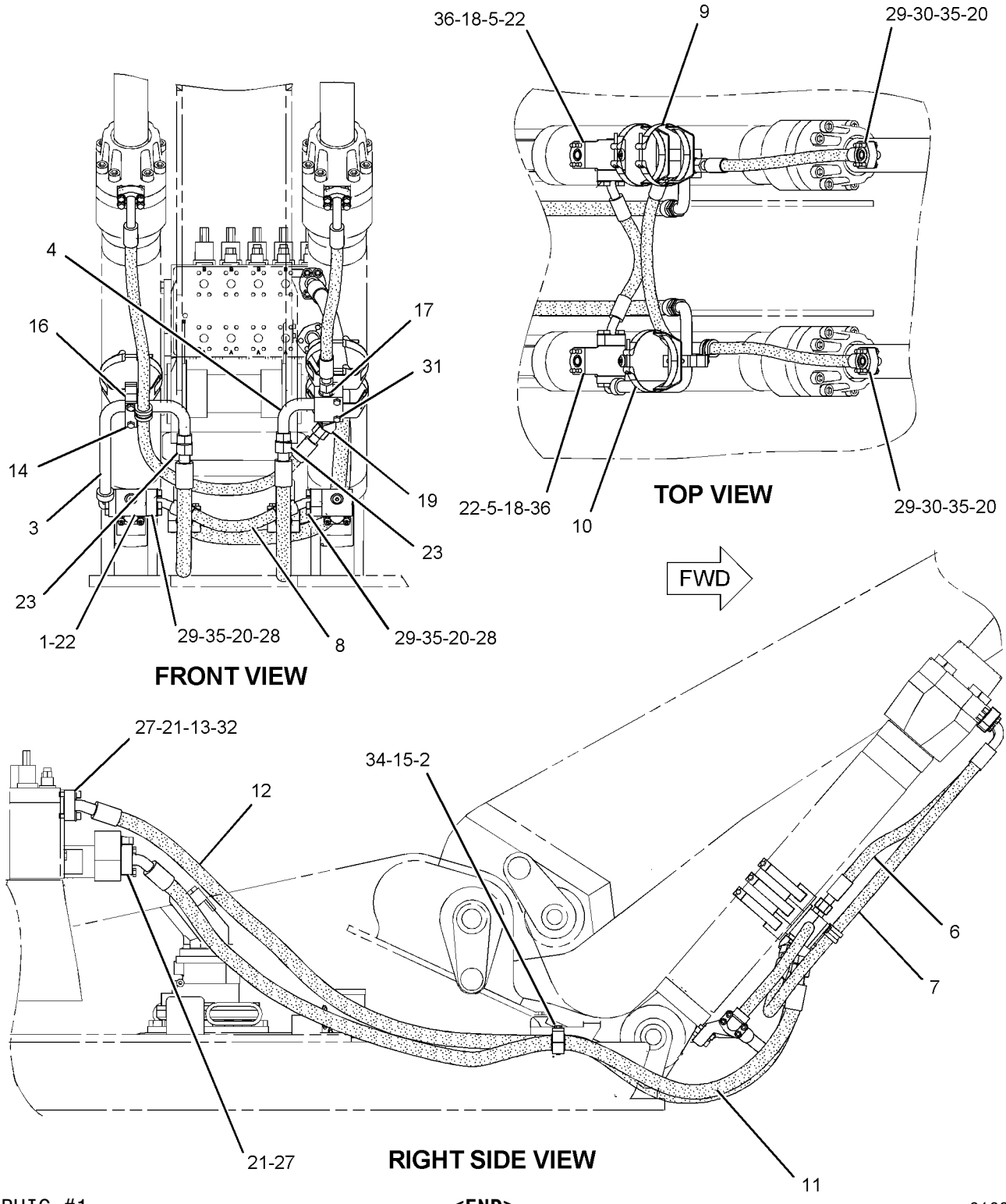

GRAPHIC #1

<END>

g01083845

HYDRAULIC SYSTEM

117-0929 LINES GP-BUCKET TILT CYLINDER

S/N: BCZ1-2000

PART OF 117-0931, 125-4428 LINKAGE AR-BUCKET

AN ATTACHMENT

SMCS-5457 **i01819029**

NOTE	REF NO	GRAPHIC REF	PART NUMBER	QTY	PART NAME 1 2 3 4 5 6 (PRODUCT LEVEL)	SEE PAGE
	1	1	**114-9149**	2	FITTING (QUICK DISCONNECT)	
	2	1	**114-9154**	2	CAP (FITTING)	
	3	1	**129-2636**	1	TUBE AS	
	4	1	**129-2637**	1	TUBE AS	
I	5	1	**148-0619**	2	HOSE AS	
I	6	1	**148-0620**	2	HOSE AS	
	7	1	**3J-1907**	4	SEAL-O-RING	
	8	1	**3K-0360**	2	SEAL-O-RING	
	9	1	**6V-8398**	12	SEAL-O-RING	
	10	1	**6V-8625**	2	ELBOW	
	11	1	**6V-8981**	2	ELBOW	
	12	1	**6V-9169**	2	NUT-BULKHEAD (13/16-16-THD)	
	13	1	**9X-2085**	4	ELBOW	

I-REFER TO HYDRAULIC INFORMATION SYSTEM

117-0929 **LINES GP-BUCKET TILT CYLINDER** *(contd.)* **i01819029**

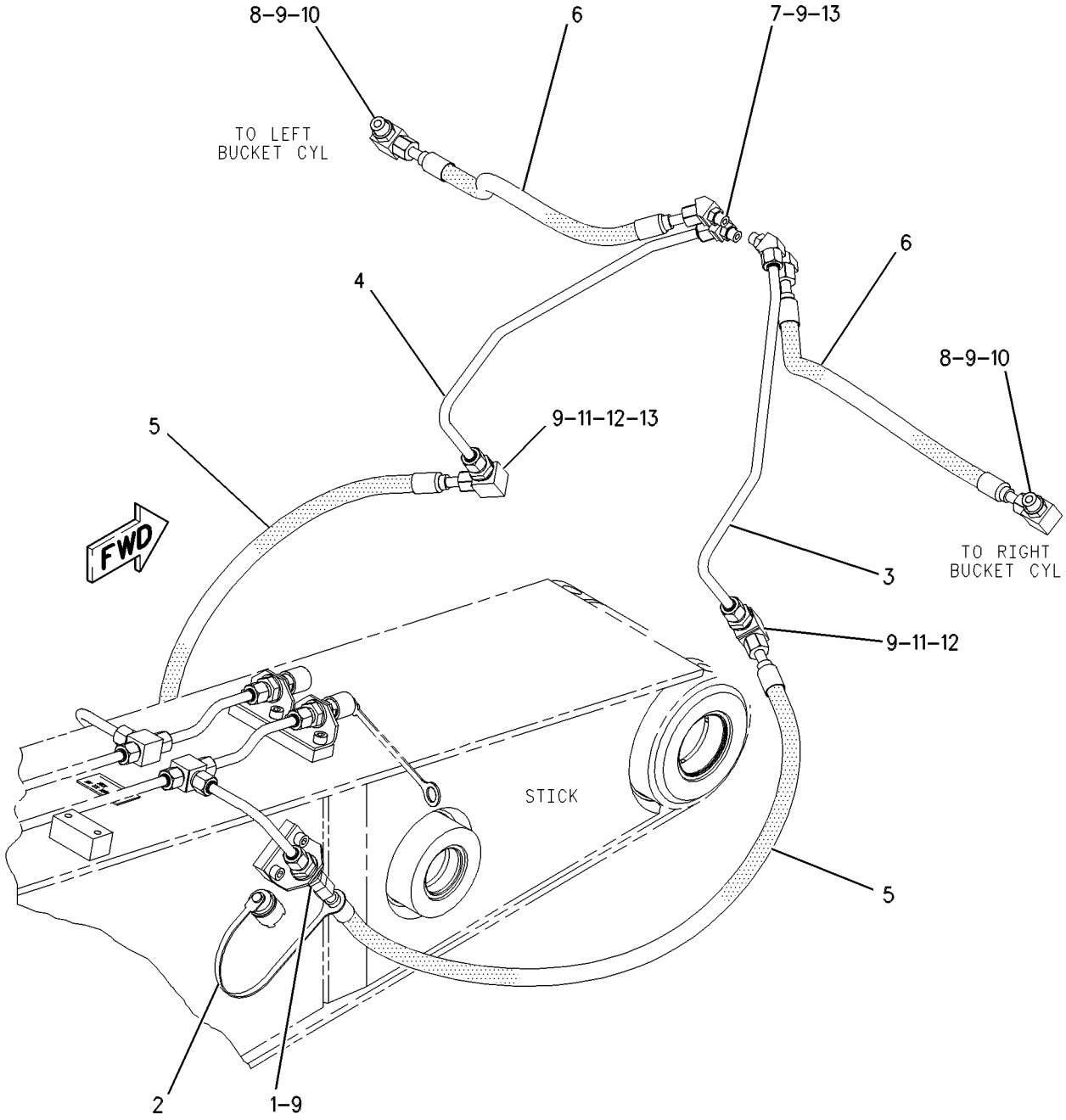

GRAPHIC #1 **<END>** g00280276

HYDRAULIC SYSTEM

185-3383 LINES GP-CHECK VALVE—BOOM CYLINDER

S/N: BCZ1-2000

FOR USE WITH ANTI DRIFT VALVE BOOM CYLINDER

AN ATTACHMENT

SMCS-5057, 5067 **i02161803**

NOTE	REF NO	GRAPHIC REF	PART NUMBER	QTY	PART NAME 1 2 3 4 5 6 (PRODUCT LEVEL)	SEE PAGE
	1	1	**137-9373**	1	HOSE AS	
I	2	1	**139-1942**	1	HOSE AS	
I	3	1	**190-8537**	1	HOSE AS	
I	4	1	**190-8539**	1	HOSE AS	
	5	1	*194-9390*	2	CLAMP AS	
					(EACH INCLUDES)	
		1	**194-9388**	2	CLAMP	
		1	**194-9389**	1	PLATE	
Y	6	1	**195-1907**	2	VALVE GP-FLOW CONTROL	707
	7	1	**200-6181**	1	PLATE AS	
	8	1	**201-7153**	1	PLATE AS	
I	9	1	**203-1913**	1	HOSE AS	
I	10	1	**203-1920**	1	HOSE AS	
M	11	1	**095-0670**	4	BOLT (M12X1.75X45-MM)	
	12	1	*148-8315*	2	CONNECTOR AS	
					(EACH INCLUDES)	
		1	**2M-9780**	1	SEAL-O-RING	
		1	**6V-8642**	1	CONNECTOR	
		1	**7J-9108**	1	SEAL-O-RING	
	13	1	*148-8336*	3	CONNECTOR AS	
					(EACH INCLUDES)	
		1	**3J-1907**	1	SEAL-O-RING	
		1	**6V-8397**	1	SEAL-O-RING	
		1	**6V-8636**	1	CONNECTOR	
	14	1	*148-8338*	1	CONNECTOR AS	
		1	**3J-1907**	1	SEAL-O-RING	
		1	**6V-8397**	1	SEAL-O-RING	
		1	**8T-0075**	1	CONNECTOR	
	15	1	*148-8341*	1	CONNECTOR GP	
		1	**3D-2824**	1	SEAL-O-RING	
		1	**6V-8713**	1	CONNECTOR	
		1	**7J-9108**	1	SEAL-O-RING	
	16	1	*148-8433*	1	TEE AS	
		1	**6V-8397**	2	SEAL-O-RING	
		1	**6V-9836**	1	TEE-SWIVEL	
	17	1	*148-8435*	1	TEE AS	
		1	**3J-1907**	1	SEAL-O-RING	
		1	**6V-8397**	2	SEAL-O-RING	
		1	**6V-8781**	1	TEE-FACE SEAL	
	18	1	*148-8446*	1	TEE GP-SWIVEL	
		1	**6V-9838**	1	TEE-SWIVEL	
		1	**7J-9108**	2	SEAL-O-RING	
Y	19	1	**202-4095**	2	VALVE GP-CHECK (BOOM CYLINDER)	693
M	20	1	**7X-2533**	2	BOLT (M6X1X35-MM)	
M	21	1	**8C-8451**	2	BOLT (M6X1X40-MM)	
M	22	1	**8T-4172**	2	BOLT (M10X1.5X80-MM)	
M	23	1	**8T-4223**	4	WASHER-HARD (13.5X25.5X3-MM THK)	

I-REFER TO HYDRAULIC INFORMATION SYSTEM
M-METRIC PART
Y-SEPARATE ILLUSTRATION

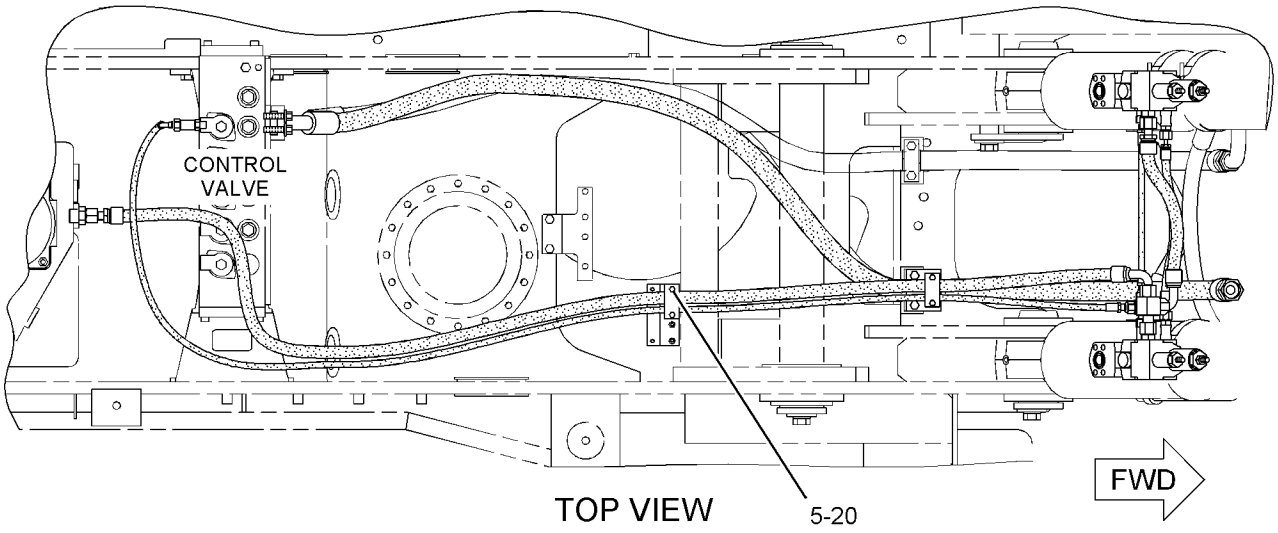

TOP VIEW

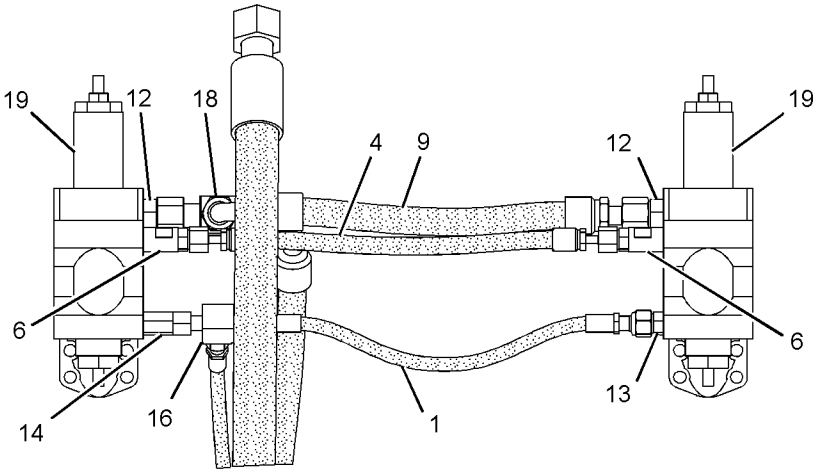

VIEW A-A

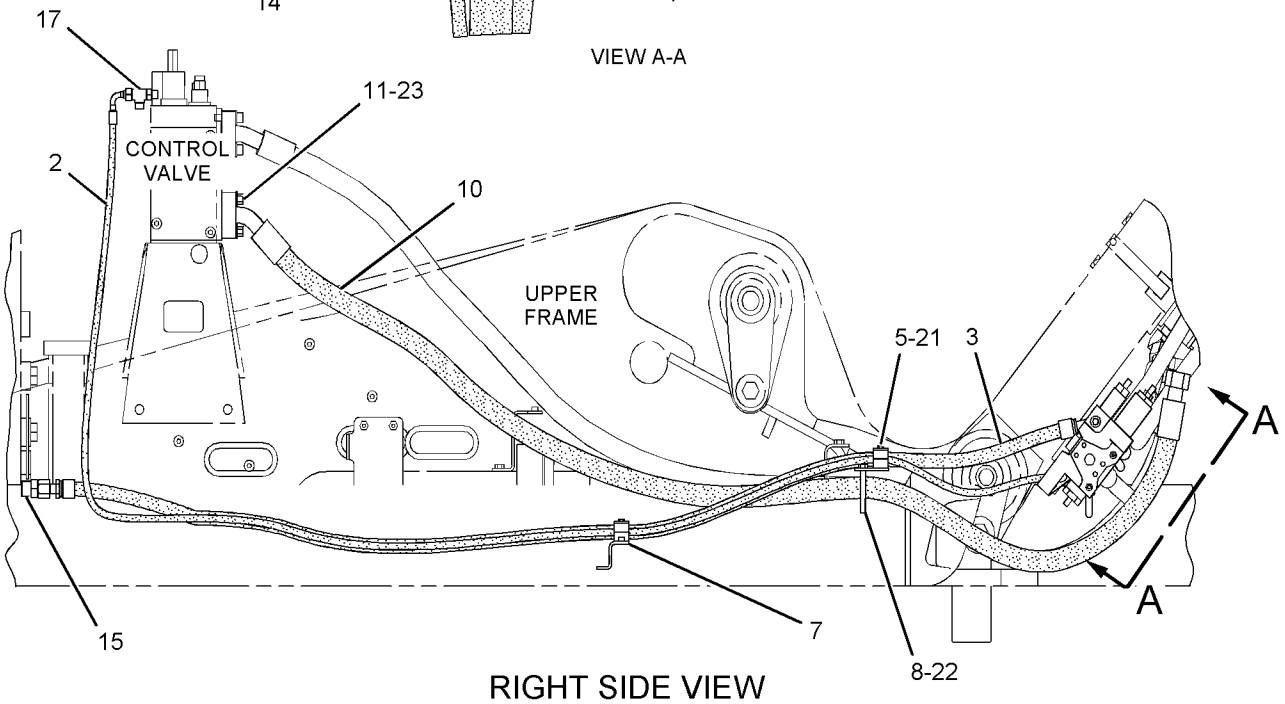

RIGHT SIDE VIEW

GRAPHIC #1

<END>

g01060571

HYDRAULIC SYSTEM

202-4100 LINES GP-CONNECTING

S/N: BCZ1-2000
AN ATTACHMENT

SMCS-5057 **i01797350**

NOTE	REF NO	GRAPHIC REF	PART NUMBER	QTY	PART NAME 1 2 3 4 5 6 (PRODUCT LEVEL)	SEE PAGE
	1	1	**170-5121**	2	ADAPTER AS	
					(EACH INCLUDES)	
	1A	1	**4J-5477**	1	SEAL-O-RING	
	1B	1	**162-6816**	1	SEAL	
I	2	1	**196-5387**	2	HOSE AS	

I-SEE HOSE FABRICATION GUIDE

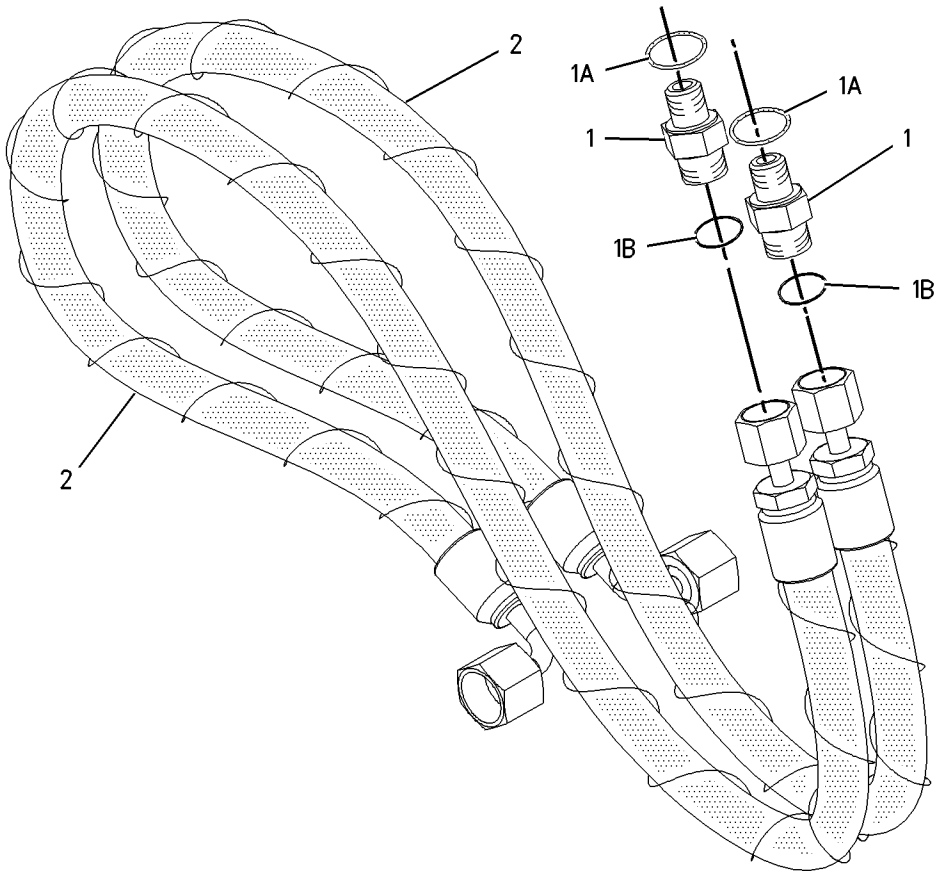

GRAPHIC #1 **<END>** g00919125

HYDRAULIC SYSTEM

185-3443 LINES GP-DIVERTER VALVE

S/N: BCZ1-2000
PART OF 188-4952 LINKAGE AR-BUCKET
AN ATTACHMENT

SMCS-5057 **i02017746**

NOTE	REF NO	GRAPHIC REF	PART NUMBER	QTY	PART NAME 1 2 3 4 5 6 (PRODUCT LEVEL)	SEE PAGE
Y	1	1	**8U-0966**	2	FITTING GP-HYD LINES	482
	2	1	**8U-0967**	2	CAP	
M	3	1	**101-7398**	8	BOLT-SOCKET HEAD (M10X1.5X40-MM)	
M	4	1	**101-7399**	4	BOLT-SOCKET HEAD (M10X1.5X120-MM)	
Y	5	1	**129-6666**	1	VALVE GP-DIVERTER	704
	6	1	**242-8884**	1	TUBE AS	
	7	1	**151-8866**	2	ELBOW	
Y	8	1	**171-7016**	1	VALVE GP-DIVERTER	706
M	9	1	**192-7636**	4	BOLT-SOCKET HEAD	
I	10	1	**196-5382**	1	HOSE AS	
I	11	1	**196-5383**	1	HOSE AS	
I	12	1	**196-5384**	1	HOSE AS	
	13	1	**1P-3702**	4	SEAL-RECTANGULAR	
	14	1	**4J-5267**	2	SEAL-O-RING	
	15	1	**6V-9746**	2	SEAL-O-RING	
M	16	1	**8T-0341**	4	BOLT-SOCKET HEAD (M10X1.5X60-MM)	
	17	1	**8T-4121**	16	WASHER-HARD (11X21X2.5-MM THK)	
M	18	1	**8T-4182**	16	BOLT (M10X1.5X45-MM)	
	19	1	**8T-9403**	8	FLANGE-HALF	

I-REFER TO HYDRAULIC INFORMATION SYSTEM
M-METRIC PART
Y-SEPARATE ILLUSTRATION

185-3443 **LINES GP-DIVERTER VALVE** *(contd.)* **i02017746**

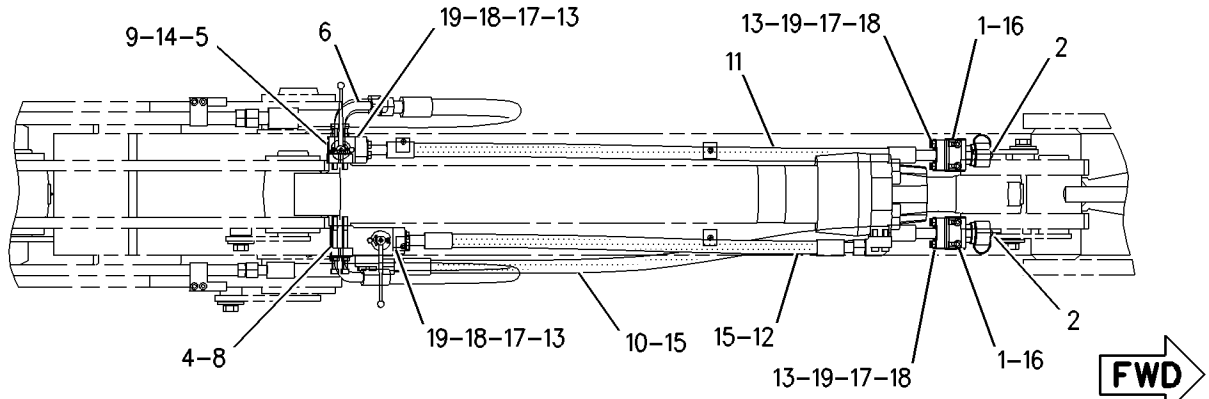

TOP VIEW

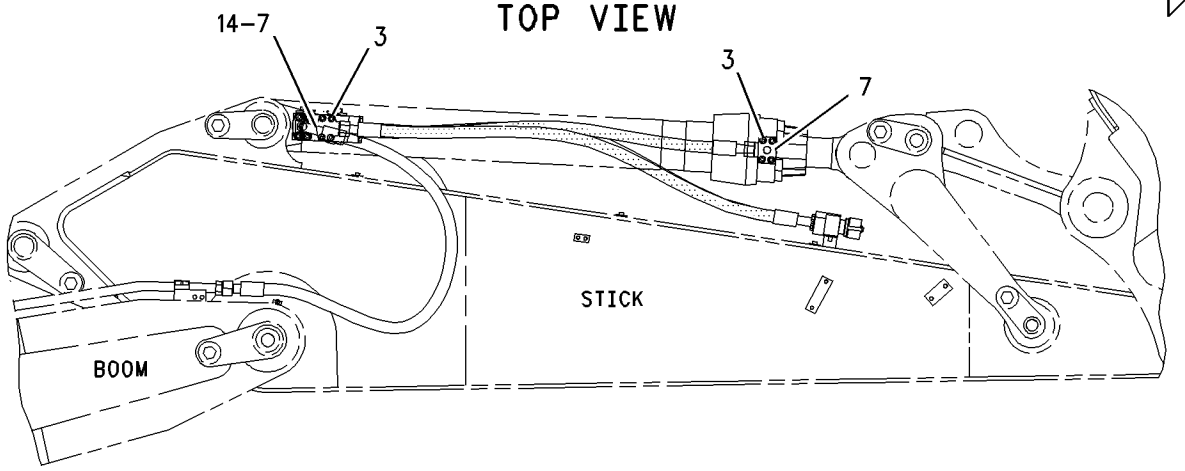

RIGHT SIDE VIEW

GRAPHIC #1 **<END>** g00902580

HYDRAULIC SYSTEM

187-7243 LINES GP-FRONT

S/N: BCZ1-2000

PART OF 186-0471 HYDRAULIC AR

SMCS-5057 **i01794590**

NOTE	REF NO	GRAPHIC REF	PART NUMBER	QTY	PART NAME 1 2 3 4 5 6 (PRODUCT LEVEL)	SEE PAGE
	1	1	**8U-0284**	8	FLANGE-HALF	
	2	1	**118-8985**	8	BOSS	
Z	3	1		1	GUIDE	
	4	1	**185-6843**	2	TUBE AS	
	5	1	**185-6844**	1	TUBE AS	
	6	1	**185-6845**	1	TUBE AS	
	7	1	**118-8984**	4	CLAMP	
	8	1	**4J-0520**	4	SEAL-O-RING	
	9	1	**5K-9090**	2	SEAL-O-RING	
	10	1	**6V-9746**	2	SEAL-O-RING	
	11	1	**6V-9832**	2	CAP AS	
					(EACH INCLUDES)	
		1	**6V-8556**	1	NUT (1 3/16-12-THD)	
	12	1	**6V-9833**	2	CAP AS	
					(EACH INCLUDES)	
		1	**6V-8557**	1	NUT-FACE SEAL (1-7/16-12-THD)	
M	13	1	**8T-0273**	16	BOLT-SOCKET HEAD (M12X1.75X40-MM)	

M-METRIC PART
Z-NOT SERVICED SEPARATELY

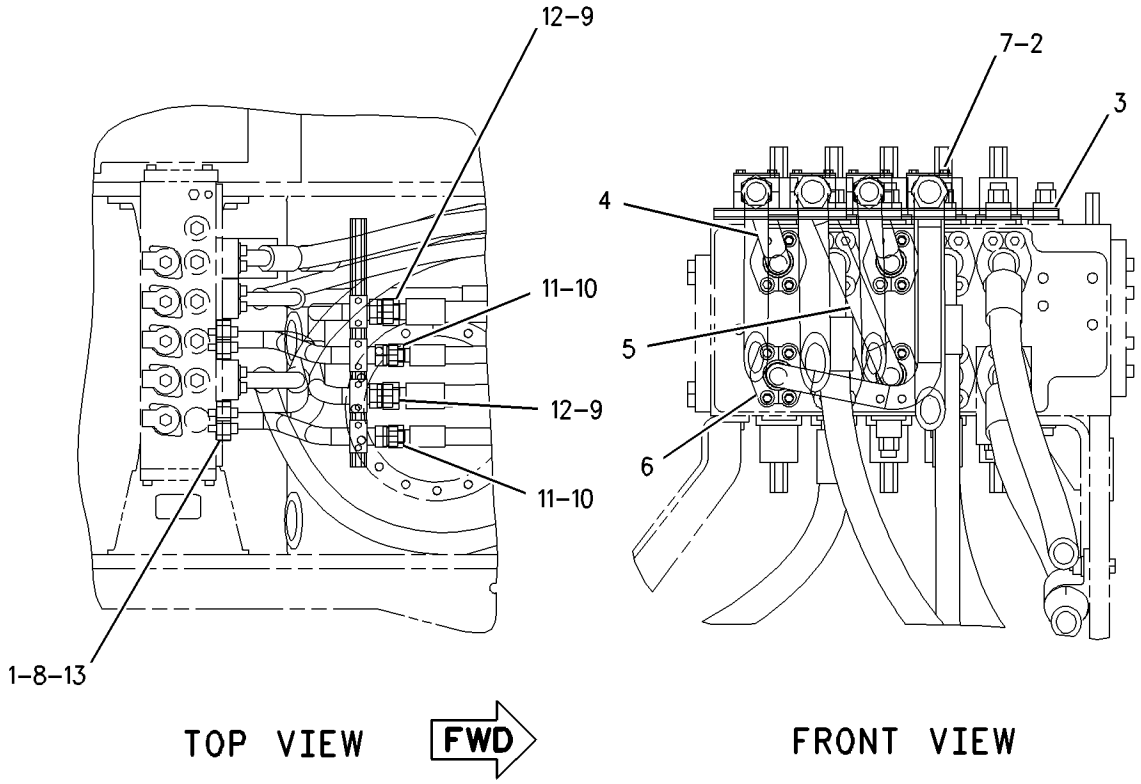

GRAPHIC #1 **<END>** g00821876

188-7607 LINES GP-HYDRAULIC

S/N: BCZ1-2000

PART OF 186-0471 HYDRAULIC AR

SMCS-5057 **i02019728**

NOTE	REF NO	GRAPHIC REF	PART NUMBER	QTY	PART NAME 1 2 3 4 5 6 (PRODUCT LEVEL)	SEE PAGE
	1	1	**5W-9857**	4	FLANGE-HALF	
	2	1	**8U-0284**	2	FLANGE-HALF	
I	3	1	**185-6800**	1	HOSE AS	
I	4	1	**185-6801**	1	HOSE AS	
I	5	1	**185-6802**	1	HOSE AS	
I	6	1	**185-6803**	1	HOSE AS	
	7	1	**188-1806**	1	TUBE AS	
	8	1	**242-9343**	1	TUBE AS	
	9	1	**188-1809**	1	TUBE AS	
M	10	1	**095-0670**	24	BOLT (M12X1.75X45-MM)	
	11	1	**1P-3703**	5	SEAL-RECTANGULAR	
	12	1	**4J-0520**	1	SEAL-O-RING	
	13	1	**4J-5267**	2	SEAL-O-RING	
	14	1	**5K-9090**	1	SEAL-O-RING	
	15	1	**6V-0400**	10	FLANGE-HALF	
	16	1	**6V-9746**	2	SEAL-O-RING	
M	17	1	**8T-0271**	8	BOLT-SOCKET HEAD (M10X1.5X35-MM)	
M	18	1	**8T-4223**	24	WASHER-HARD (13.5X25.5X3-MM THK)	

I-REFER TO HYDRAULIC INFORMATION SYSTEM
M-METRIC PART

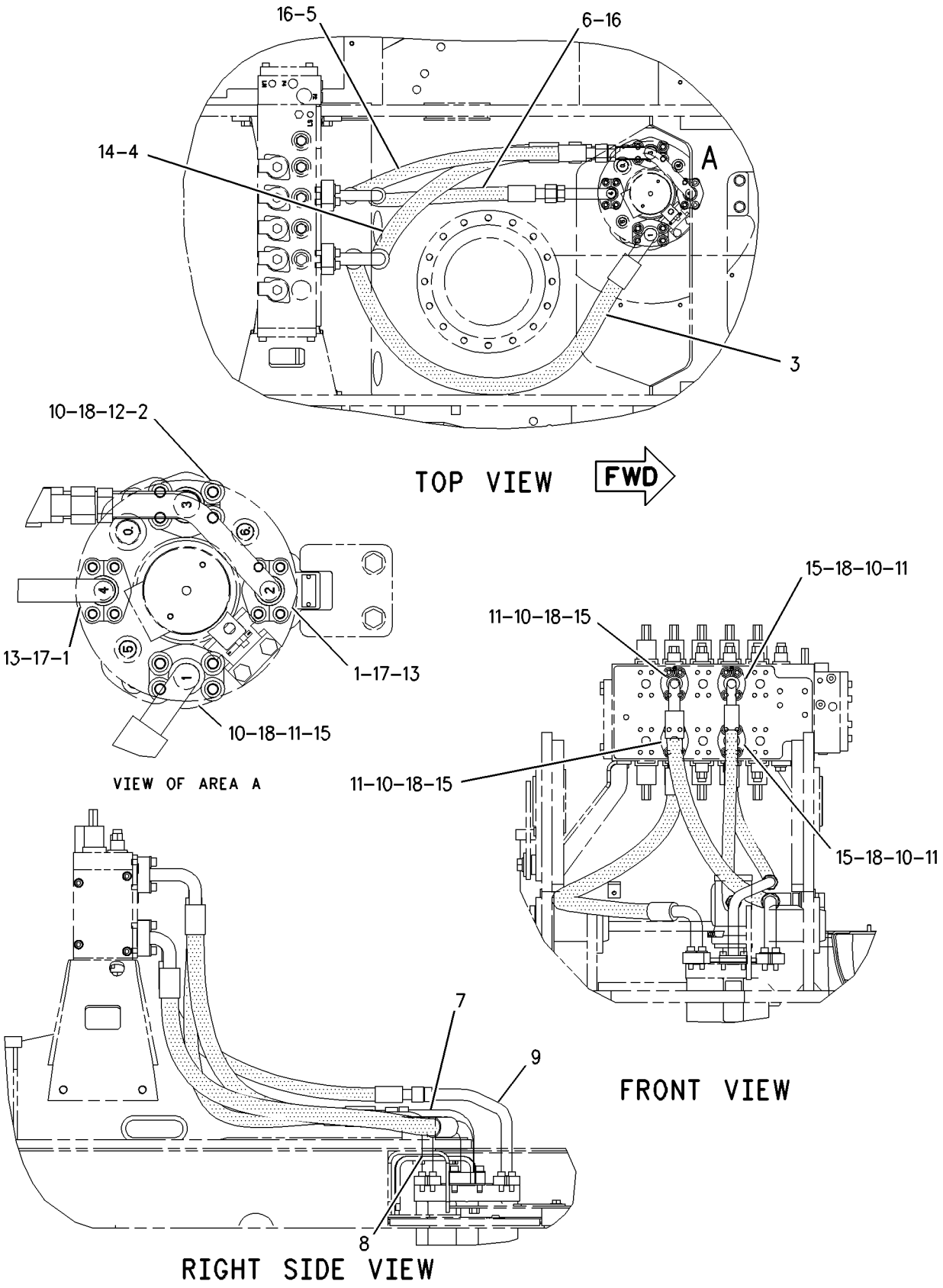

GRAPHIC #1 **<END>** g00816452

HYDRAULIC SYSTEM

188-7617 LINES GP-HYDRAULIC

S/N: BCZ1-495

PART OF 186-0473 HYDRAULIC AR

SMCS-5057 **i01799259**

NOTE	REF NO	GRAPHIC REF	PART NUMBER	QTY	PART NAME 1 2 3 4 5 6 (PRODUCT LEVEL)	SEE PAGE
I	1	1	**4E-9273**	1	HOSE AS	
	2	2	**5W-9857**	4	FLANGE-HALF	
	3	2	**8U-1670**	2	FLANGE	
I	4	1	**143-8758**	2	HOSE AS	
	5	1	*198-4054*	6	CLAMP AS	
I	6	1	**199-7646**	1	HOSE AS	
I	7	1	**199-7647**	1	HOSE AS	
	8	1	**200-1806**	6	BOLT-SOCKET HEAD	
I	9	1	**200-7498**	1	HOSE AS	
I	10	1	**200-7499**	1	HOSE AS	
I	11	1	**200-7500**	2	HOSE AS	
M	12	2	**101-7397**	8	BOLT-SOCKET HEAD (M12X1.75X50-MM)	
	13	2	**117-1805**	2	CLAMP-SINGLE	
M	14	1	**124-5222**	2	BOLT (M14X2X50-MM)	
	15	1	*148-8327*	2	CONNECTOR AS	
					(EACH INCLUDES)	
		1	**3D-2824**	1	SEAL-O-RING	
		1	**6V-8637**	1	CONNECTOR	
		1	**6V-9746**	1	SEAL-O-RING	
	16	2	*148-8340*	2	CONNECTOR AS	
					(EACH INCLUDES)	
		2	**3K-0360**	1	SEAL-O-RING	
		2	**6V-8398**	1	SEAL-O-RING	
		2	**6V-8639**	1	CONNECTOR	
	17	2	*148-8370*	1	ELBOW AS	
		2	**6V-8398**	1	SEAL-O-RING	
		2	**6V-9851**	1	ELBOW	
	18	2	*148-8415*	4	REDUCER GP	
					(EACH INCLUDES)	
		2	**6V-8397**	1	SEAL-O-RING	
		2	**6V-8936**	1	REDUCER	
	19	2	*148-8418*	1	REDUCER GP	
		2	**6V-8398**	1	SEAL-O-RING	
		2	**6V-8942**	1	REDUCER-O-RING (FACE)	
	20	2	*148-8444*	4	TEE AS-SWIVEL	
					(EACH INCLUDES)	
		2	**6V-8398**	2	SEAL-O-RING	
		2	**6V-9837**	1	TEE-SWIVEL	
	21	2	*148-8457*	1	UNION AS	
		2	**6V-8398**	2	SEAL-O-RING	
		2	**6V-8995**	1	UNION	
	22	2	*149-5452*	2	UNION AS	
					(EACH INCLUDES)	
		2	**6V-8397**	2	SEAL-O-RING	
		2	**6V-8994**	1	UNION	
	23	2	*150-4033*	1	TEE AS	
		2	**6V-9746**	2	SEAL-O-RING	
		2	**6V-9846**	1	TEE-SWIVEL	
	24	2	**1P-3703**	2	SEAL-RECTANGULAR	
	25	1	**1P-3704**	2	SEAL-RECTANGULAR	
	26	2	**4J-5267**	2	SEAL-O-RING	
	27	2	**6V-0400**	4	FLANGE-HALF	
	28	1	**6V-0401**	4	FLANGE-HALF	
	29	1,2	**6V-8398**	5	SEAL-O-RING	
	30	1,2	**6V-9168**	2	NUT (11/16-16-THD)	
	31	1,2	**6V-9169**	1	NUT-BULKHEAD (13/16-16-THD)	

188-7617 **LINES GP-HYDRAULIC** *(contd.)* **i01799259**

NOTE	REF NO	GRAPHIC REF	PART NUMBER	QTY	PART NAME 1 2 3 4 5 6 (PRODUCT LEVEL)	SEE PAGE
	32	1,2	**6V-9829**	4	CAP AS	
	33	1,2	**6V-9830**	2	CAP AS	
	34	1	**7X-0510**	8	WASHER-HARD (15.5X29X3-MM THK)	
M	35	1	**7X-2533**	12	BOLT (M6X1X35-MM)	
M	36	2	**8T-4196**	8	BOLT (M10X1.5X35-MM)	
M	37	2	**8T-4223**	8	WASHER-HARD (13.5X25.5X3-MM THK)	
	38	2	**9X-6580**	1	NUT (1-3/16-12-THD)	

I-REFER TO HYDRAULIC INFORMATION SYSTEM
M-METRIC PART

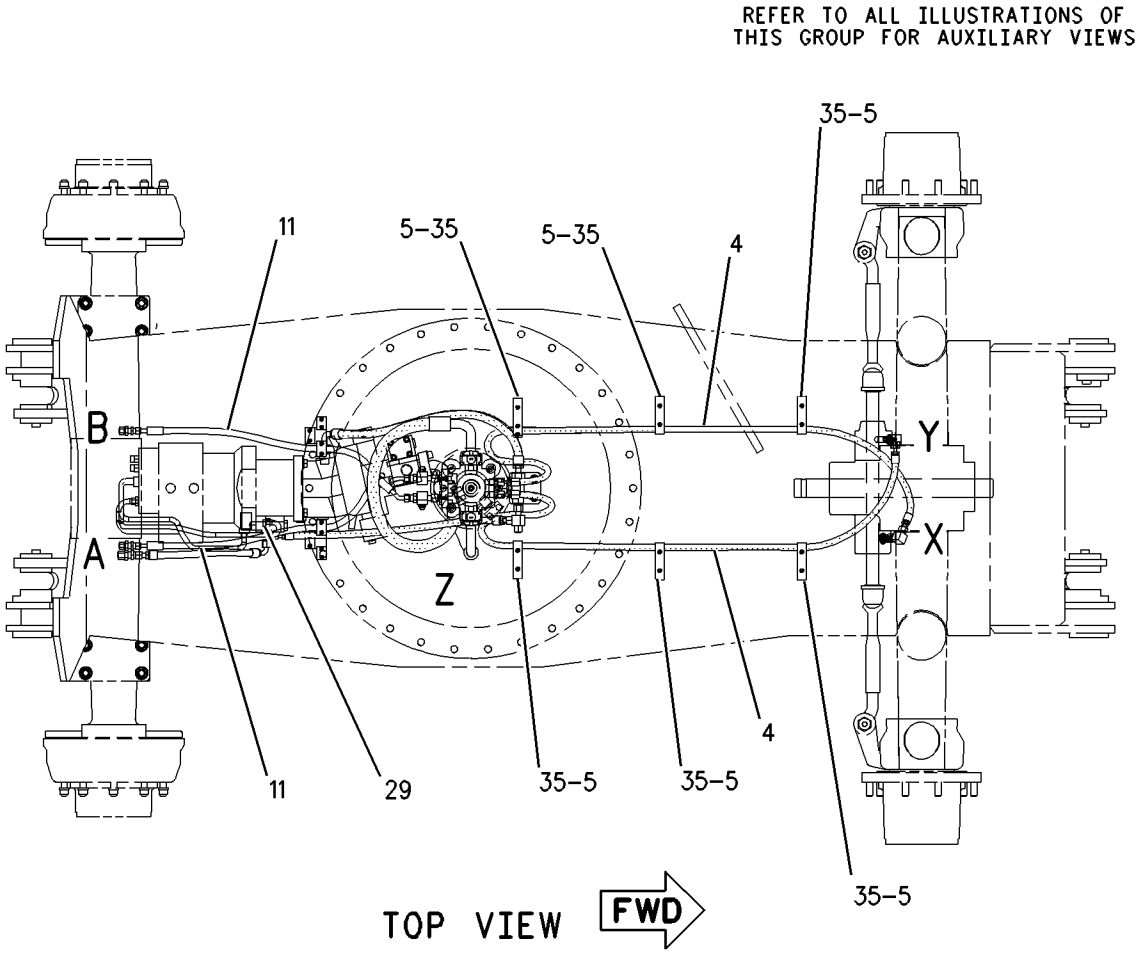

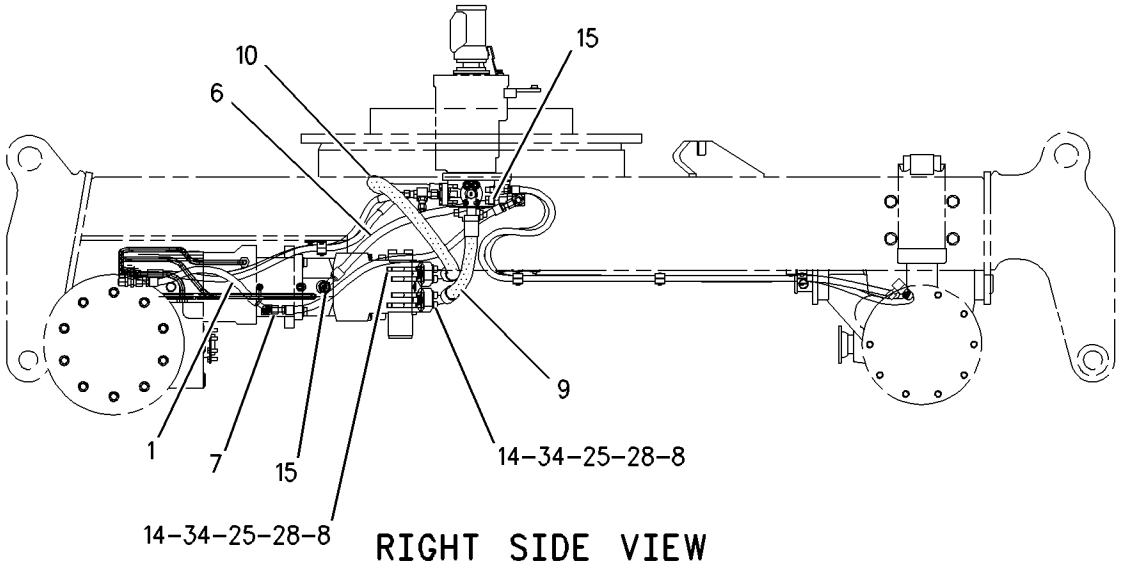

GRAPHIC #1 g00811754

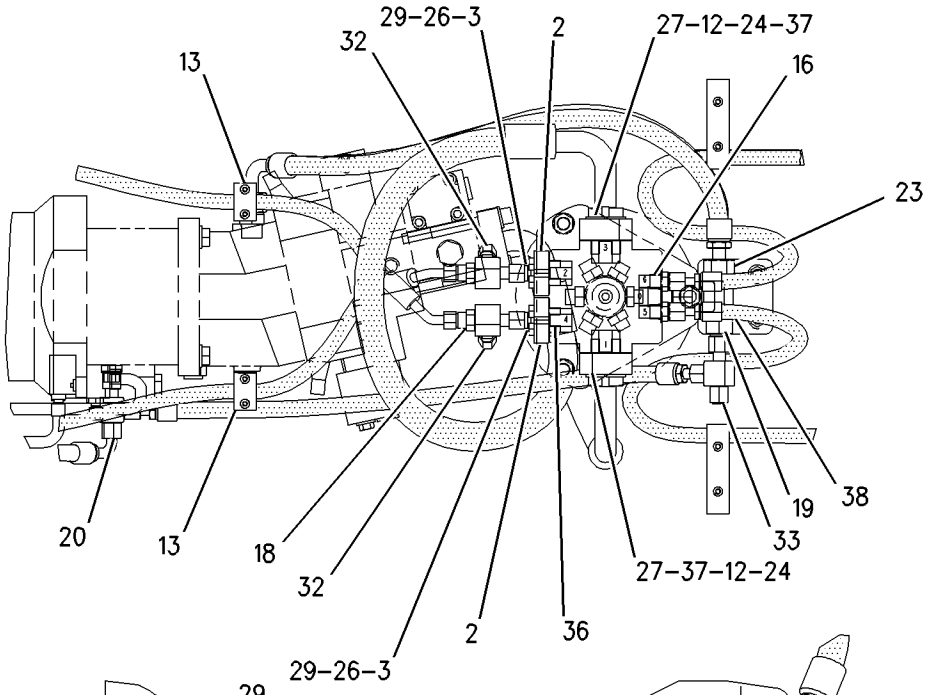

VIEW OF AREA Z

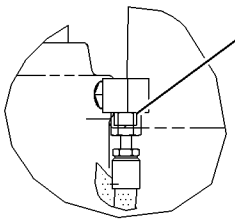

VIEW OF AREA Y

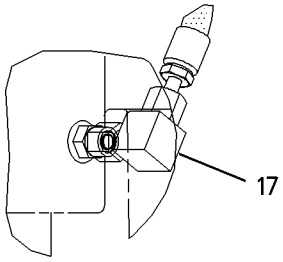

VIEW OF AREA X

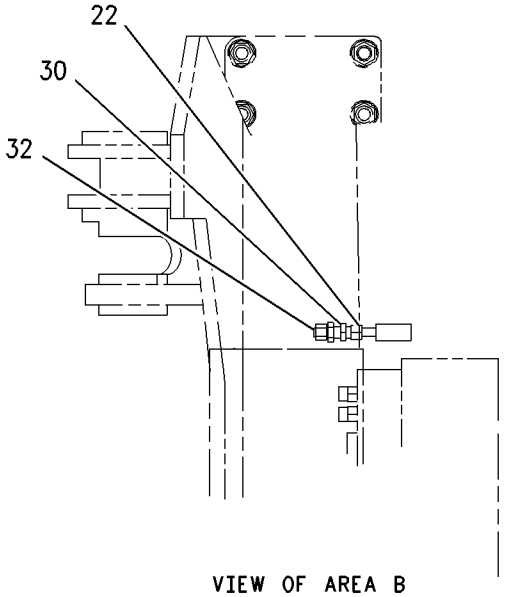

VIEW OF AREA B

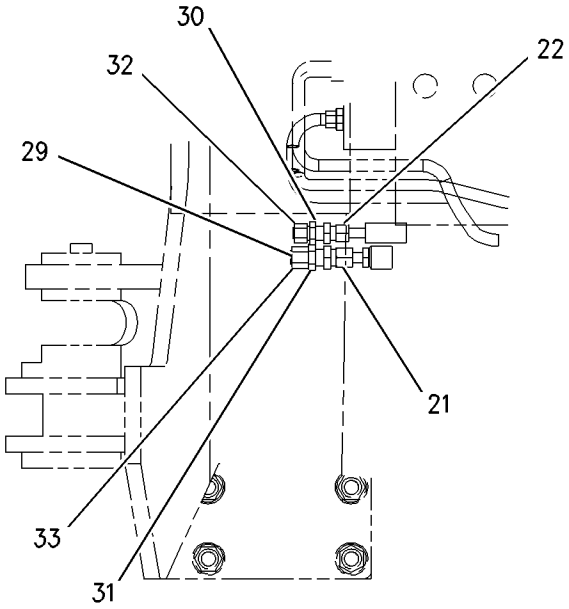

VIEW OF AREA A

GRAPHIC #2 **<END>** g00811760

HYDRAULIC SYSTEM

188-7622 LINES GP-HYDRAULIC

S/N: BCZ1-495

PART OF 186-0473 HYDRAULIC AR

SMCS-5057 **i02148036**

NOTE	REF NO	GRAPHIC REF	PART NUMBER	QTY	PART NAME 1 2 3 4 5 6 (PRODUCT LEVEL)	SEE PAGE
Y	1	1	**8U-2924**	1	ACCUMULATOR GP-HYDRAULIC (CHARGED)	414
	2	1	**8U-2925**	1	ADAPTER	
	3	1	**115-9114**	2	BRACKET AS	
					(EACH INCLUDES)	
		1	**5W-1112**	1	PLATE (42-MM LG)	
	4	1	**116-8151**	2	CLAMP-SINGLE	
	5	1	**118-5272**	1	TUBE AS	
	6	1	**118-5274**	1	TUBE AS	
I	7	1	**160-6028**	1	HOSE AS	
I	8	1	**176-7803**	1	HOSE AS	
I	9	1	**199-7479**	1	HOSE AS	
I	10	1	**199-7480**	1	HOSE AS	
I	11	1	**199-7481**	2	HOSE AS	
	12	1	**117-7002**	6	CLAMP	
	13	1	*148-8336*	3	CONNECTOR AS	
					(EACH INCLUDES)	
		1	**6V-8636**	1	CONNECTOR	
		1	**3J-1907**	1	SEAL-O-RING	
		1	**6V-8397**	1	SEAL-O-RING	
	14	1	*148-8364*	2	ELBOW AS	
					(EACH INCLUDES)	
		1	**6V-8625**	1	ELBOW	
		1	**3K-0360**	1	SEAL-O-RING	
		1	**6V-8398**	1	SEAL-O-RING	
	15	1	*148-8370*	2	ELBOW AS	
					(EACH INCLUDES)	
		1	**6V-9851**	1	ELBOW	
		1	**6V-8398**	1	SEAL-O-RING	
	16	1	*148-8427*	1	TEE AS	
		1	**8T-6895**	1	TEE-UNION	
		1	**6V-8398**	3	SEAL-O-RING	
	17	1	*148-8444*	2	TEE AS-SWIVEL	
					(EACH INCLUDES)	
		1	**6V-9837**	1	TEE-SWIVEL	
		1	**6V-8398**	2	SEAL-O-RING	
	18	1	*150-4037*	1	TEE AS	
		1	**6V-9844**	1	TEE-SWIVEL	
		1	**6V-8398**	2	SEAL-O-RING	
	19	1	**3K-0360**	1	SEAL-O-RING	
	20	1	**6V-8398**	7	SEAL-O-RING	
	21	1	**6V-9169**	1	NUT-BULKHEAD (13/16-16-THD)	

I-REFER TO HYDRAULIC INFORMATION SYSTEM
Y-SEPARATE ILLUSTRATION

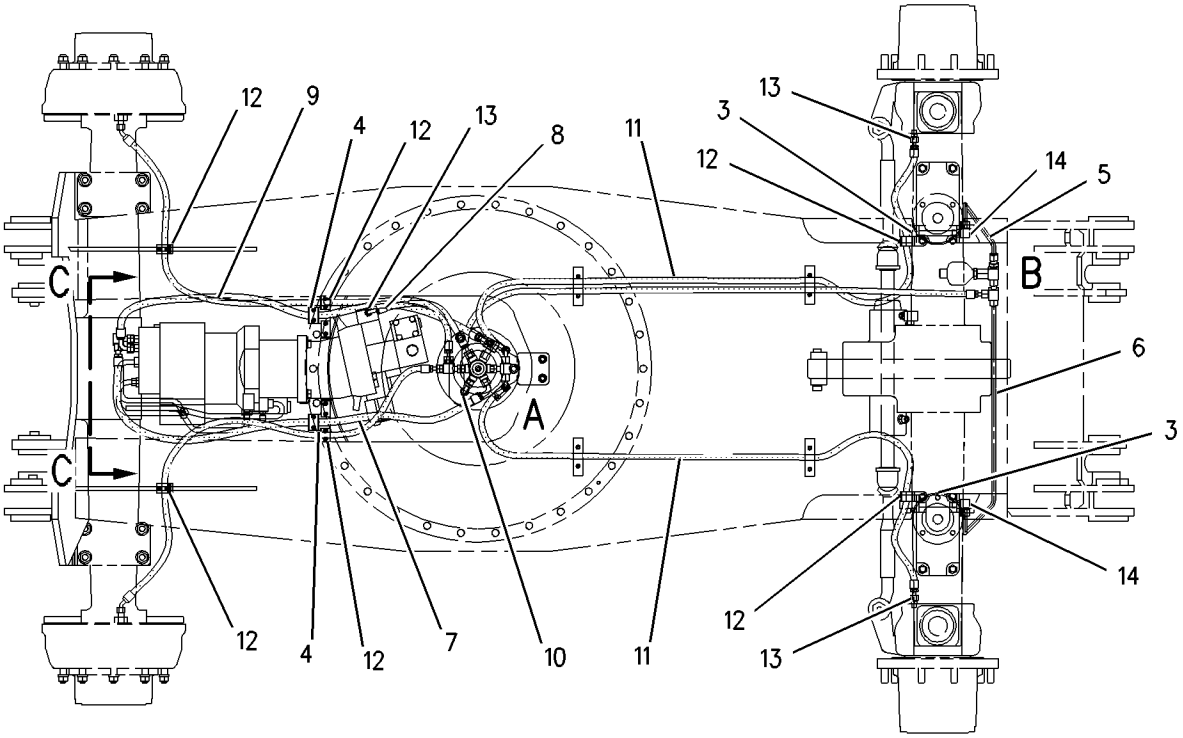

TOP VIEW FWD

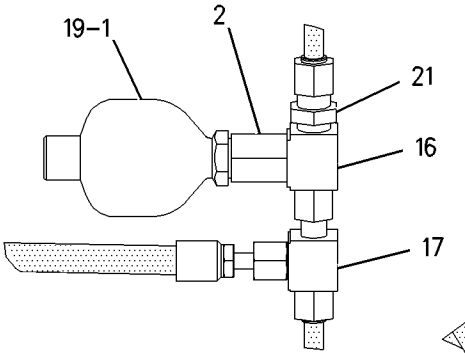

VIEW OF AREA B

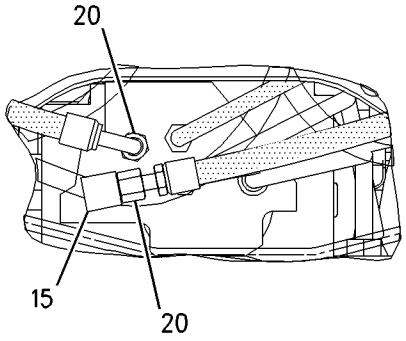

VIEW C-C

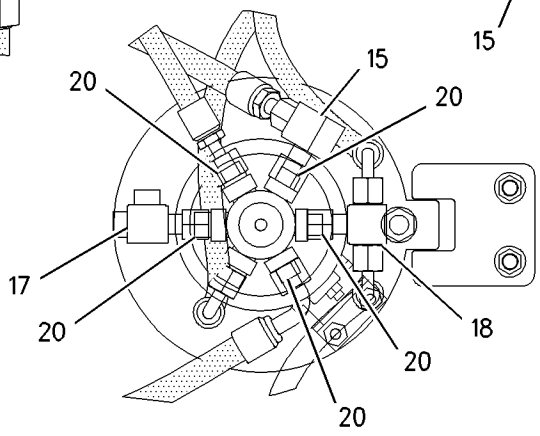

VIEW OF AREA A

GRAPHIC #1 **<END>** g00812592

HYDRAULIC SYSTEM

188-7627 LINES GP-HYDRAULIC

S/N: BCZ1-495
PART OF 198-4697 CONVERSION AR-MACHINE
AN ATTACHMENT

SMCS-5057 **i01536017**

NOTE	REF NO	GRAPHIC REF	PART NUMBER	QTY	PART NAME 1 2 3 4 5 6 (PRODUCT LEVEL)	SEE PAGE
I	1	1	**145-7119**	1	HOSE AS	
I	2	1	**200-7495**	2	HOSE AS	
	3	1	*148-8457*	1	UNION AS	
		1	**6V-8398**	2	SEAL-O-RING	
		1	**6V-8995**	1	UNION	
	4	1	*149-5452*	2	UNION AS	
					(EACH INCLUDES)	
		1	**6V-8397**	2	SEAL-O-RING	
		1	**6V-8994**	1	UNION	
	5	1	**6V-9168**	2	NUT (11/16-16-THD)	
	6	1	**6V-9169**	1	NUT-BULKHEAD (13/16-16-THD)	
	7	1	**6V-9829**	2	CAP AS	
					(EACH INCLUDES)	
		1	**6V-8553**	1	NUT (11/16X16-THD)	
	8	1	**6V-9830**	1	CAP AS	
		1	**6V-8554**	1	NUT (13/16-16-THD)	
		1	**6V-9356**	1	PLUG	

I-REFER TO HYDRAULIC INFORMATION SYSTEM

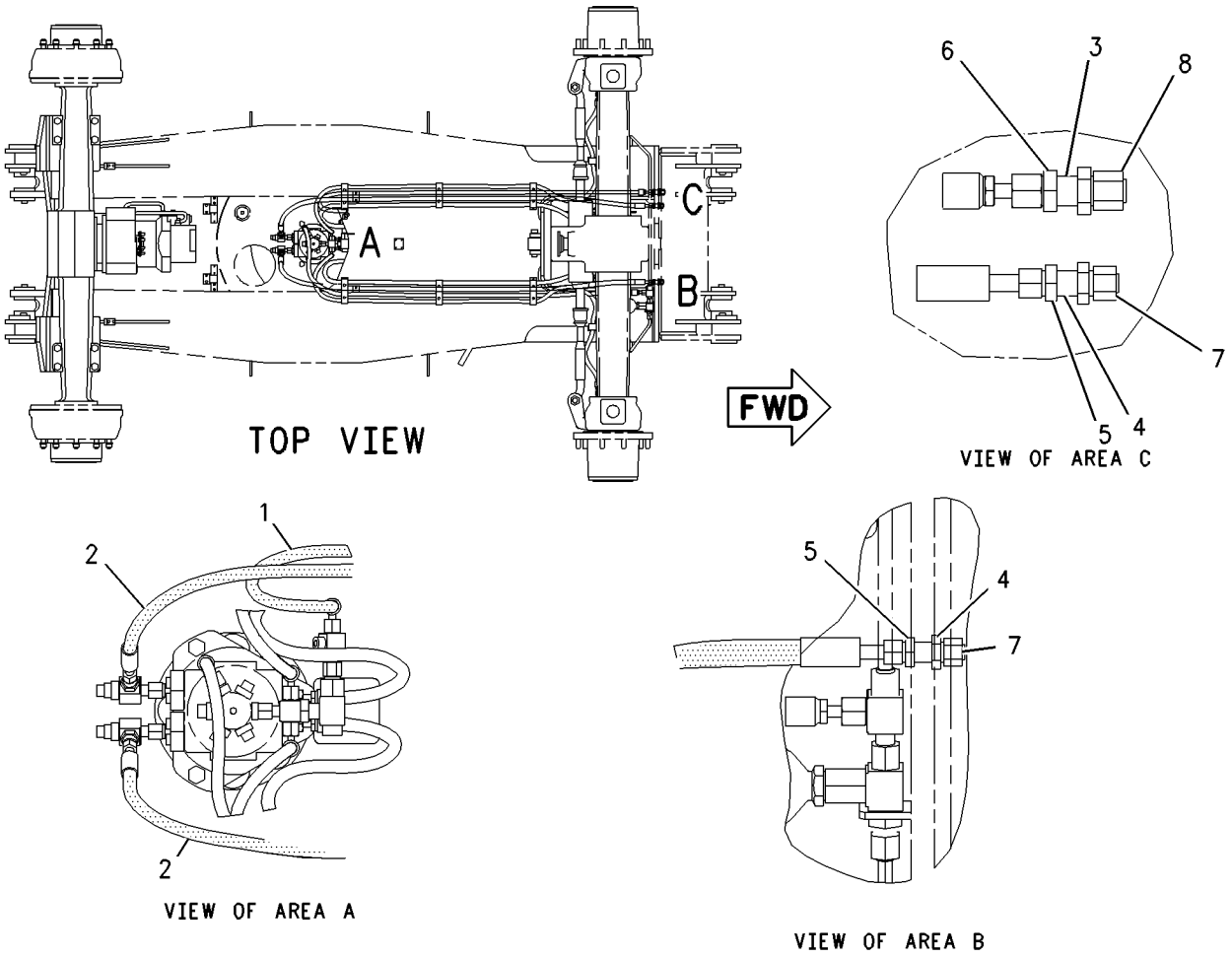

GRAPHIC #1 **<END>** g00819087

HYDRAULIC SYSTEM

233-8259 LINES GP-HYDRAULIC

S/N: BCZ496-2000
3 CIRCUITS
PART OF 186-0473 HYDRAULIC AR

SMCS-5057 **i02034571**

NOTE	REF NO	GRAPHIC REF	PART NUMBER	QTY	PART NAME 1 2 3 4 5 6 (PRODUCT LEVEL)	SEE PAGE
	1	1	**5W-9857**	4	FLANGE-HALF	
	2	1	**8U-0284**	4	FLANGE-HALF	
	3	1	**8U-1670**	2	FLANGE	
	4	1	**127-4996**	4	FLANGE-HALF	
I	5	1	**196-0212**	1	HOSE AS	
	6	1	*198-4054*	6	CLAMP AS	
I	7	1	**199-7646**	1	HOSE AS	
I	8	1	**199-7647**	1	HOSE AS	
	9	1	**200-1806**	6	BOLT-SOCKET HEAD	
I	10	1	**200-7498**	1	HOSE AS	
I	11	1	**200-7499**	1	HOSE AS	
I	12	1	**225-1943**	2	HOSE AS	
I	13	1	**230-0783**	1	HOSE AS	
I	14	1	**230-0784**	1	HOSE AS	
M	15	1	**101-7397**	8	BOLT-SOCKET HEAD (M12X1.75X50-MM)	
	16	1	**117-1823**	2	CLAMP-SINGLE	
M	17	1	**124-5222**	2	BOLT (M14X2X50-MM)	
	18	1	*148-8327*	2	CONNECTOR AS	
					(EACH INCLUDES)	
		1	**3D-2824**	1	SEAL-O-RING	
		1	**6V-8637**	1	CONNECTOR	
		1	**6V-9746**	1	SEAL-O-RING	
	19	1	*148-8340*	2	CONNECTOR AS	
					(EACH INCLUDES)	
		1	**3K-0360**	1	SEAL-O-RING	
		1	**6V-8398**	1	SEAL-O-RING	
		1	**6V-8639**	1	CONNECTOR	
	20	1	*148-8415*	4	REDUCER GP	
					(EACH INCLUDES)	
		1	**6V-8397**	1	SEAL-O-RING	
		1	**6V-8936**	1	REDUCER	
	21	1	*148-8418*	1	REDUCER GP	
		1	**6V-8398**	1	SEAL-O-RING	
		1	**6V-8942**	1	REDUCER-O-RING (FACE)	
	22	1	*148-8444*	4	TEE AS-SWIVEL	
					(EACH INCLUDES)	
		1	**6V-8398**	2	SEAL-O-RING	
		1	**6V-9837**	1	TEE-SWIVEL	
	23	1	*148-8457*	1	UNION AS	
		1	**6V-8398**	2	SEAL-O-RING	
		1	**6V-8995**	1	UNION	
	24	1	*149-5452*	2	UNION AS	
					(EACH INCLUDES)	
		1	**6V-8397**	2	SEAL-O-RING	
		1	**6V-8994**	1	UNION	
	25	1	*150-4033*	1	TEE AS	
		1	**6V-9746**	2	SEAL-O-RING	
		1	**6V-9846**	1	TEE-SWIVEL	
	26	1	**1P-3703**	2	SEAL-RECTANGULAR	
	27	1	**1P-3704**	2	SEAL-RECTANGULAR	
	28	1	**4J-5267**	2	SEAL-O-RING	
	29	1	**6V-8398**	2	SEAL-O-RING	
	30	1	**6V-9168**	2	NUT (11/16-16-THD)	
	31	1	**6V-9169**	1	NUT-BULKHEAD (13/16-16-THD)	
	32	1	**6V-9829**	4	CAP AS	

233-8259 **LINES GP-HYDRAULIC** *(contd.)* **i02034571**

NOTE	REF NO	GRAPHIC REF	PART NUMBER	QTY	PART NAME 1 2 3 4 5 6 (PRODUCT LEVEL)	SEE PAGE
	33	1	**6V-9830**	2	CAP AS	
M	34	1	**7X-2533**	12	BOLT (M6X1X35-MM)	
M	35	1	**8T-4196**	8	BOLT (M10X1.5X35-MM)	
	36	1	**9X-6580**	1	NUT (1-3/16-12-THD)	

I-REFER TO HYDRAULIC INFORMATION SYSTEM
M-METRIC PART

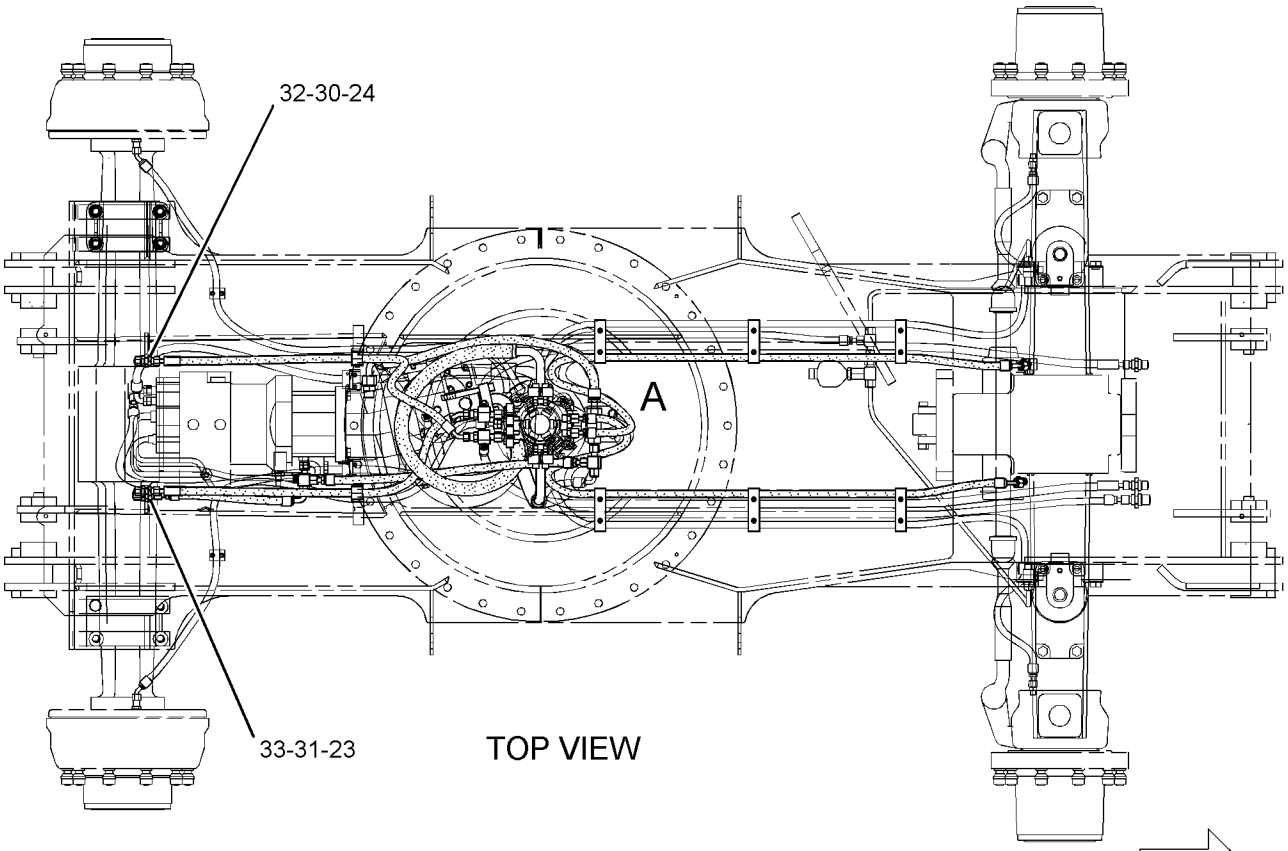

TOP VIEW

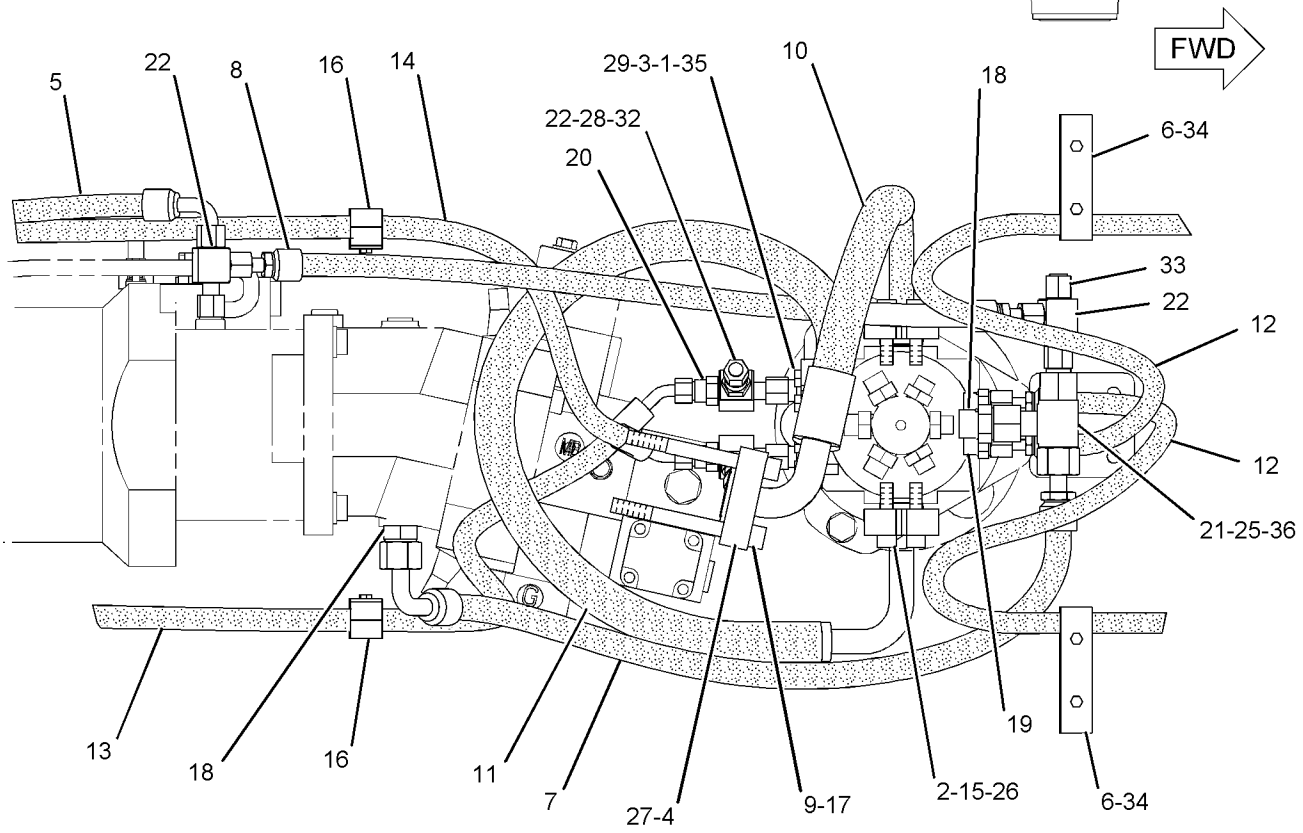

BOTTOM VIEW OF AREA A

GRAPHIC #1

<END>

g01085608

HYDRAULIC SYSTEM

233-8260 LINES GP-HYDRAULIC

S/N: BCZ496-2000
BRAKES, CREEPER SPEED, OSCILLATING AXLE, TRANSMISSION
PART OF 186-0473 HYDRAULIC AR

SMCS-5057 **i02035212**

NOTE	REF NO	GRAPHIC REF	PART NUMBER	QTY	PART NAME 1 2 3 4 5 6 (PRODUCT LEVEL)	SEE PAGE
I	1	1	*8I-0685*	1	HOSE AS	
Y	2	2	**8U-2924**	1	ACCUMULATOR GP-HYDRAULIC (CHARGED)	414
	3	2	**8U-2925**	1	ADAPTER	
	4	1	**253-9680**	1	PLATE AS	
	5	1	**116-8151**	2	CLAMP-SINGLE	
I	6	2	**160-6028**	1	HOSE AS	
I	7	2	**176-7803**	1	HOSE AS	
I	8	2	**199-7479**	1	HOSE AS	
I	9	2	**199-7481**	2	HOSE AS	
	10	1	**230-9871**	1	TUBE AS	
	11	1	**230-9872**	1	TUBE AS	
	12	1	**117-7002**	6	CLAMP	
	13	1	*148-8336*	3	CONNECTOR AS	
					(EACH INCLUDES)	
		1	**3J-1907**	1	SEAL-O-RING	
		1	**6V-8397**	1	SEAL-O-RING	
		1	**6V-8636**	1	CONNECTOR	
	14	1	*148-8364*	2	ELBOW AS	
					(EACH INCLUDES)	
		1	**3K-0360**	1	SEAL-O-RING	
		1	**6V-8398**	1	SEAL-O-RING	
		1	**6V-8625**	1	ELBOW	
	15	2	*148-8370*	2	ELBOW AS	
					(EACH INCLUDES)	
		2	**6V-8398**	1	SEAL-O-RING	
		2	**6V-9851**	1	ELBOW	
	16	2	*148-8427*	1	TEE AS	
					(EACH INCLUDES)	
		2	**6V-8398**	3	SEAL-O-RING	
		2	**8T-6895**	1	TEE-UNION	
	17	2	*148-8444*	2	TEE AS-SWIVEL	
					(EACH INCLUDES)	
		2	**6V-8398**	2	SEAL-O-RING	
		2	**6V-9837**	1	TEE-SWIVEL	
	18	2	*150-4037*	1	TEE AS	
		2	**6V-8398**	2	SEAL-O-RING	
		2	**6V-9844**	1	TEE-SWIVEL	
	19	2	**6V-9169**	1	NUT-BULKHEAD (13/16-16-THD)	
	20	1	**253-9681**	1	PLATE AS	

I-REFER TO HYDRAULIC INFORMATION SYSTEM
Y-SEPARATE ILLUSTRATION

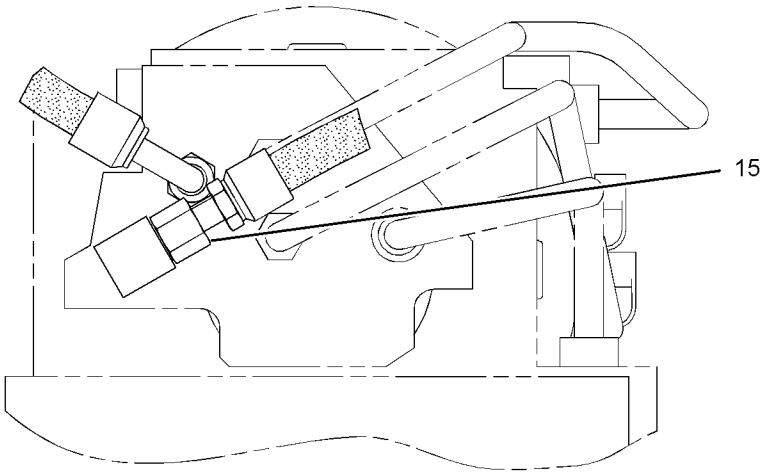

VIEW A-A

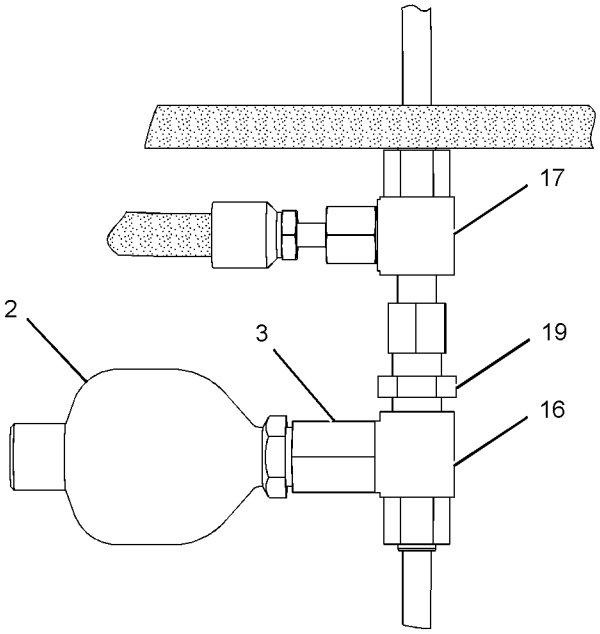

VIEW OF AREA B

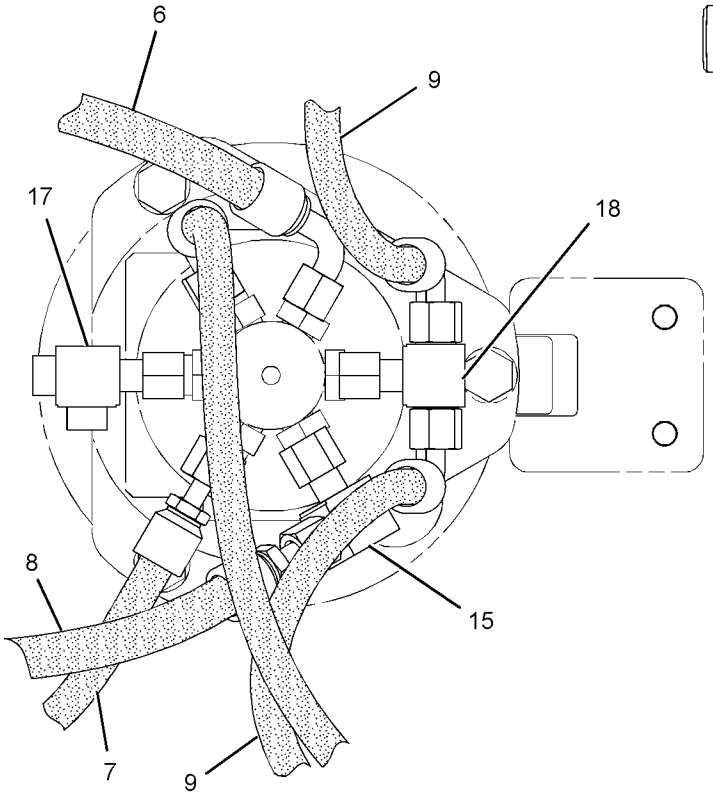

VIEW C-C

GRAPHIC #1

g01093189

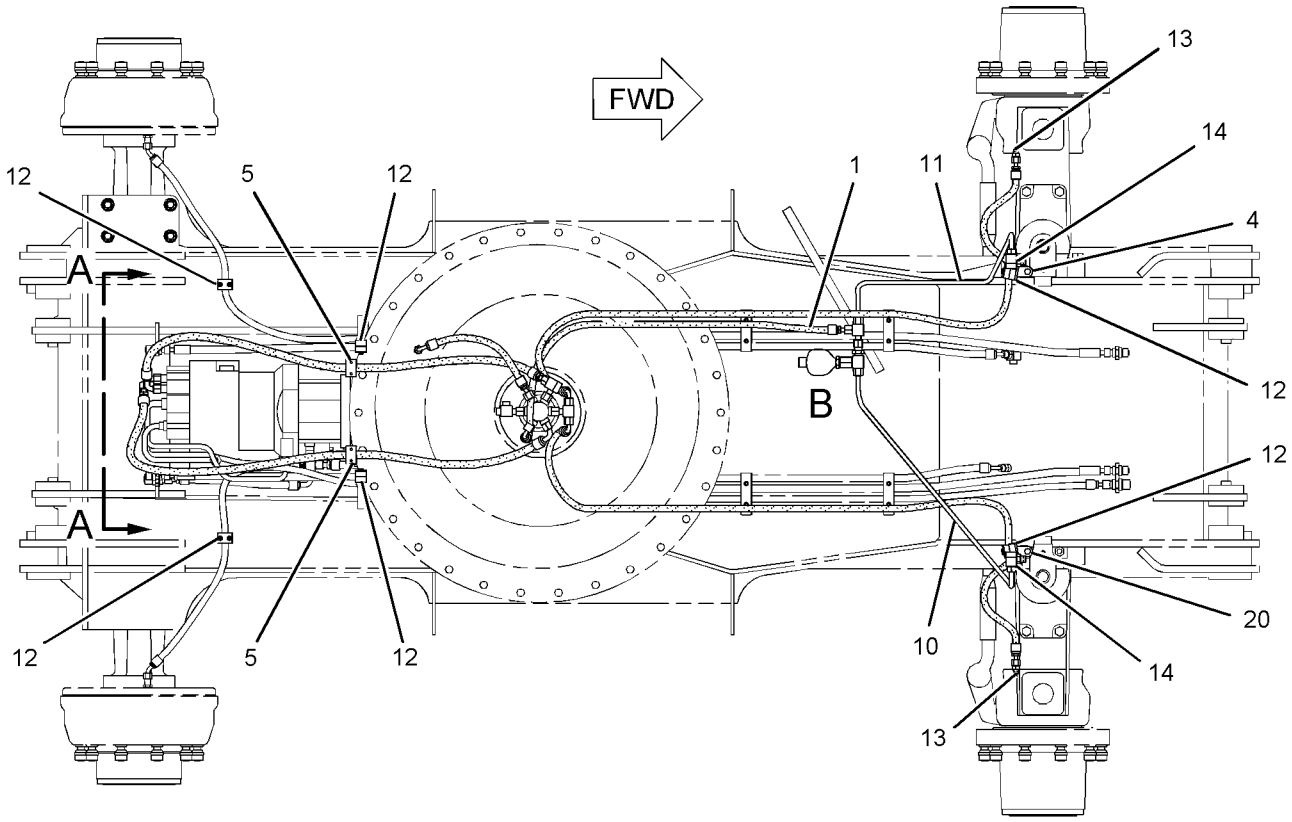

TOP VIEW

REFER TO ALL ILLUSTRATIONS OF
THIS GROUP FOR AUXILIARY VIEWS

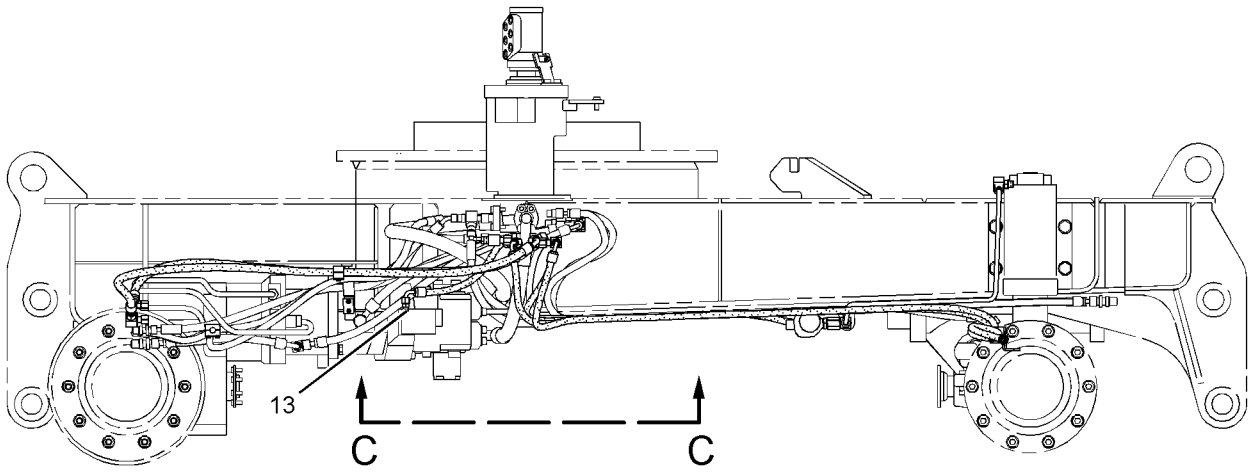

RIGHT SIDE VIEW

GRAPHIC #2

<END>

g01093188

233-8261 LINES GP-HYDRAULIC—DOZER, STABILIZER, FRONT

S/N: BCZ496-2000
PART OF 198-4697 CONVERSION AR-MACHINE
AN ATTACHMENT

SMCS-5057 **i02033286**

NOTE	REF NO	GRAPHIC REF	PART NUMBER	QTY	PART NAME 1 2 3 4 5 6 (PRODUCT LEVEL)	SEE PAGE
I	1	1	**230-0785**	2	HOSE AS	
I	2	1	**230-0786**	1	HOSE AS	
	3	1	*148-8457*	1	UNION AS	
		1	**6V-8398**	2	SEAL-O-RING	
		1	**6V-8995**	1	UNION	
	4	1	*149-5452*	2	UNION AS	
					(EACH INCLUDES)	
		1	**6V-8397**	2	SEAL-O-RING	
		1	**6V-8994**	1	UNION	
	5	1	**6V-9168**	2	NUT (11/16-16-THD)	
	6	1	**6V-9169**	1	NUT-BULKHEAD (13/16-16-THD)	
	7	1	**6V-9829**	2	CAP AS	
	8	1	**6V-9830**	1	CAP AS	

I-REFER TO HYDRAULIC INFORMATION SYSTEM

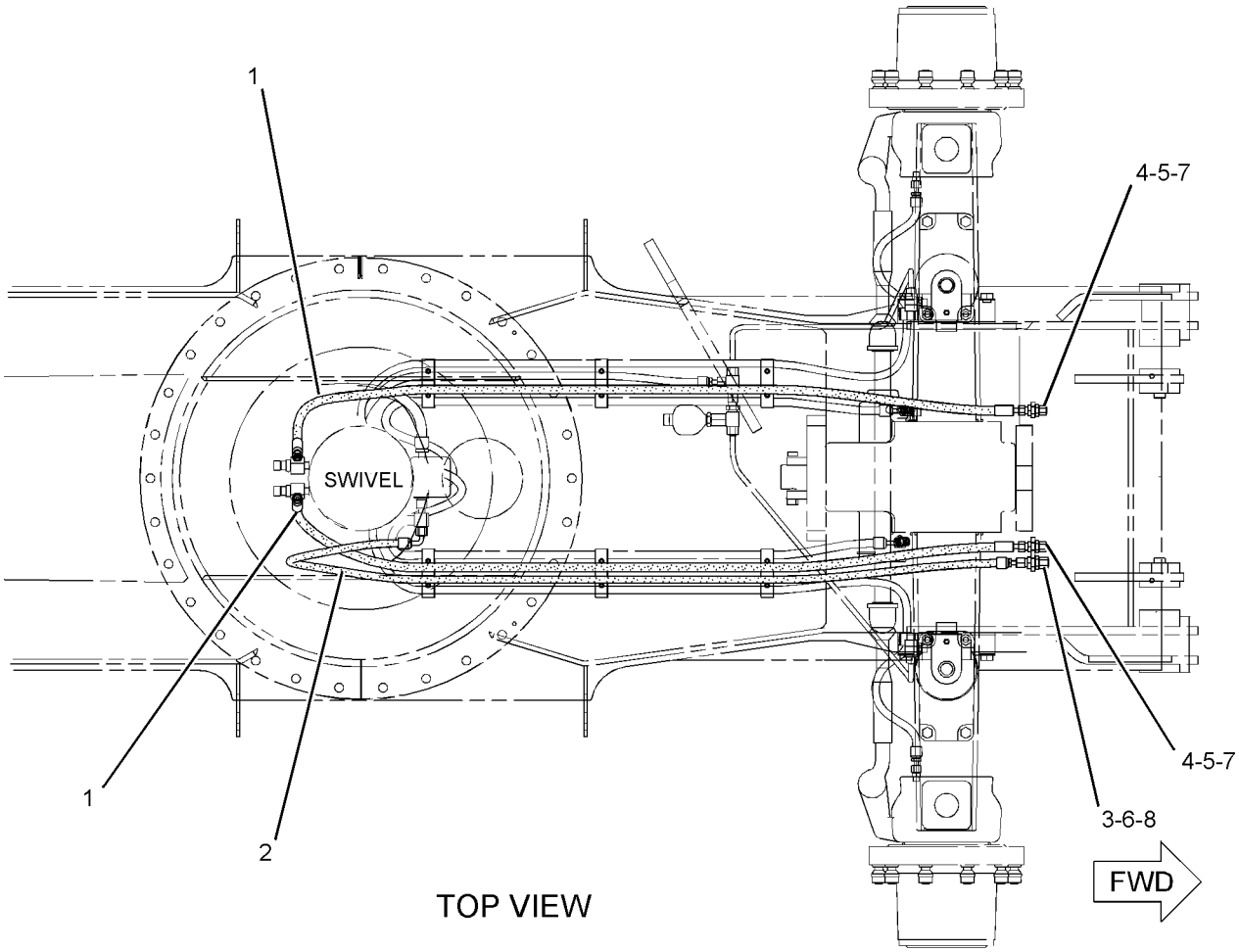

TOP VIEW

GRAPHIC #1 **<END>** g01093868

HYDRAULIC SYSTEM

188-7632 LINES GP-HYDRAULIC FAN

S/N: BCZ1-2000

PART OF 186-0471 HYDRAULIC AR

SMCS-1386, 1387, 5057 **i02161805**

NOTE	REF NO	GRAPHIC REF	PART NUMBER	QTY	PART NAME 1 2 3 4 5 6 (PRODUCT LEVEL)	SEE PAGE
	1	1	**8U-0235**	1	ELBOW	
	2	1	**8U-0236**	1	ADAPTER	
	3	1	**8U-0241**	1	ADAPTER-HOSE	
	4	1	**114-9324**	1	CLAMP-SINGLE	
I	5	1	**122-1233**	1	HOSE AS	
	6	1	**140-1983**	6	CLAMP-SINGLE	
I	7	1	**142-8751**	1	HOSE AS	
	8	1	**197-9995**	1	FLANGE	
I	9	1	**203-1930**	1	HOSE AS	
I	10	1	**203-1932**	1	HOSE AS	
I	11	1	**203-1933**	1	HOSE AS	
	12	1	**205-3930**	1	CONNECTOR AS	
		1	**6V-8397**	1	SEAL-O-RING	
M	13	1	**105-3487**	6	BOLT-SOCKET HEAD (M6X1X20-MM)	
M	14	1	**136-1613**	2	BOLT-SOCKET HEAD	
	15	1	*148-8336*	1	CONNECTOR AS	
		1	**3J-1907**	1	SEAL-O-RING	
		1	**6V-8397**	1	SEAL-O-RING	
		1	**6V-8636**	1	CONNECTOR	
	16	1	*148-8372*	1	ELBOW AS	
		1	**2M-9780**	1	SEAL-O-RING	
		1	**6V-8398**	1	SEAL-O-RING	
		1	**6V-8721**	1	ELBOW	
	17	1	*148-8375*	1	ELBOW GP	
		1	**6V-8398**	2	SEAL-O-RING	
		1	**6V-8981**	1	ELBOW	
	18	1	*148-8414*	1	REDUCER AS	
		1	**6V-8943**	1	REDUCER	
		1	**7J-9108**	1	SEAL-O-RING	
	19	1	*148-8415*	1	REDUCER GP	
		1	**6V-8397**	1	SEAL-O-RING	
		1	**6V-8936**	1	REDUCER	
	20	1	*148-8444*	1	TEE AS-SWIVEL	
		1	**6V-8398**	2	SEAL-O-RING	
		1	**6V-9837**	1	TEE-SWIVEL	
	21	1	**1M-4543**	1	GROMMET	
M	22	1	**5C-7883**	6	BOLT-SOCKET HEAD (M6X1X16-MM)	
	23	1	**5K-9090**	1	SEAL-O-RING	
	24	1	**6V-8398**	2	SEAL-O-RING	
	25	1	**6V-9169**	2	NUT-BULKHEAD (13/16-16-THD)	
	26	1	**6V-9746**	1	SEAL-O-RING	
M	27	1	**8T-9534**	2	BOLT (M6X1X50-MM)	
	28	1	**8U-0215**	2	SEAL-O-RING	
	29	1	**8U-0216**	2	SEAL-O-RING	
	30	1	**9X-7345**	1	GROMMET	
	31	1	**227-6000**	1	FILTER GP-OIL (HYDRAULIC) (HIGH PRESSURE)	
		1	**229-2800**	1	FILTER ELEMENT AS-OIL (HYDRAULIC) (HIGH PRESSURE)	
		1	**085-7539**	1	SEAL-O-RING	
	32	1	**5I-8307**	1	GROMMET	
	33	1	*148-8354*	1	ELBOW AS	
		1	**3K-0360**	1	SEAL-O-RING	
		1	**6V-8398**	1	SEAL-O-RING	
		1	**6V-9002**	1	ELBOW	
	34	1	**8T-0252**	1	ELBOW (SWIVEL)	
	35	1	**3K-0360**	1	SEAL-O-RING	

188-7632 **LINES GP-HYDRAULIC FAN** ***(contd.)*** **i02161805**

I-REFER TO HYDRAULIC INFORMATION SYSTEM
M-METRIC PART

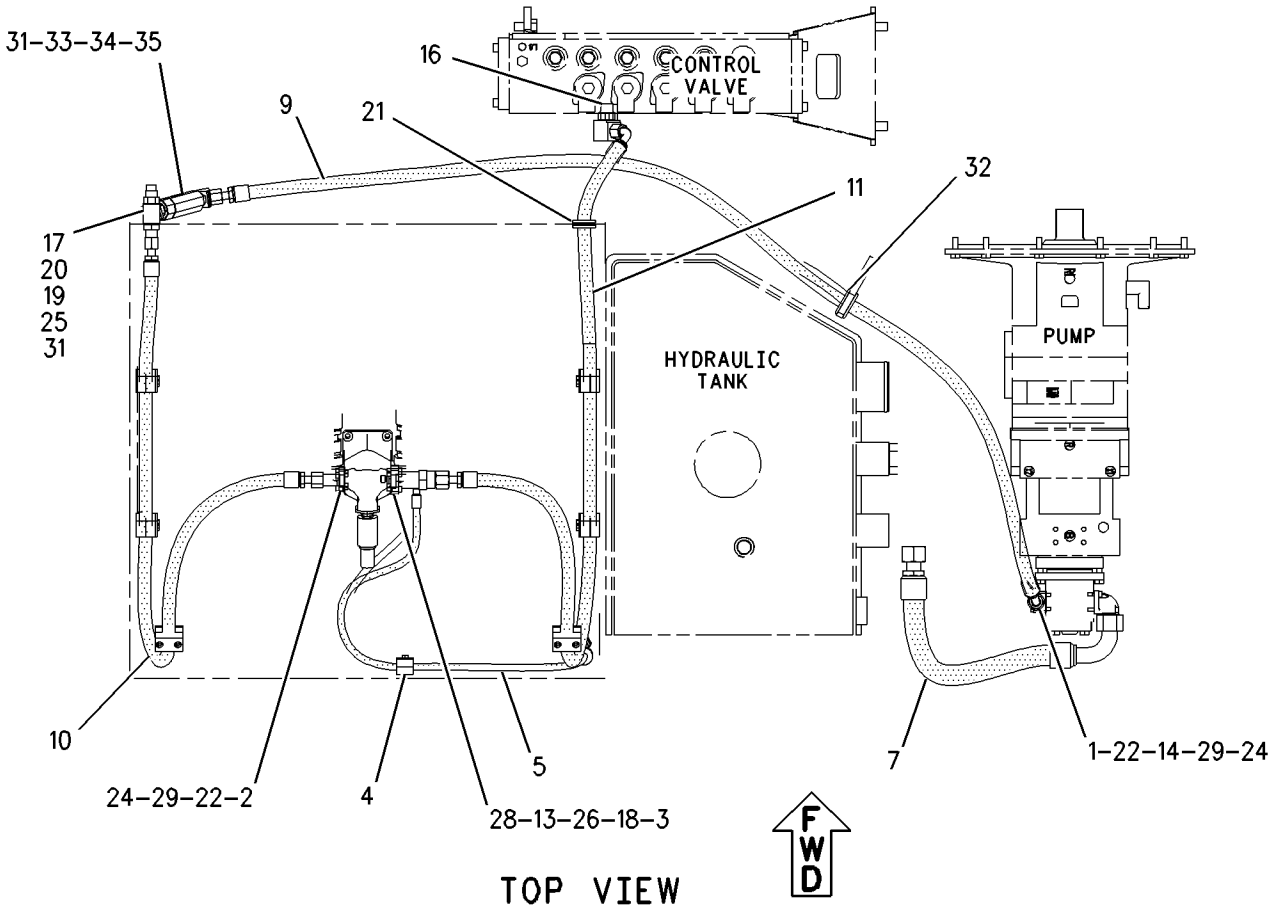

TOP VIEW

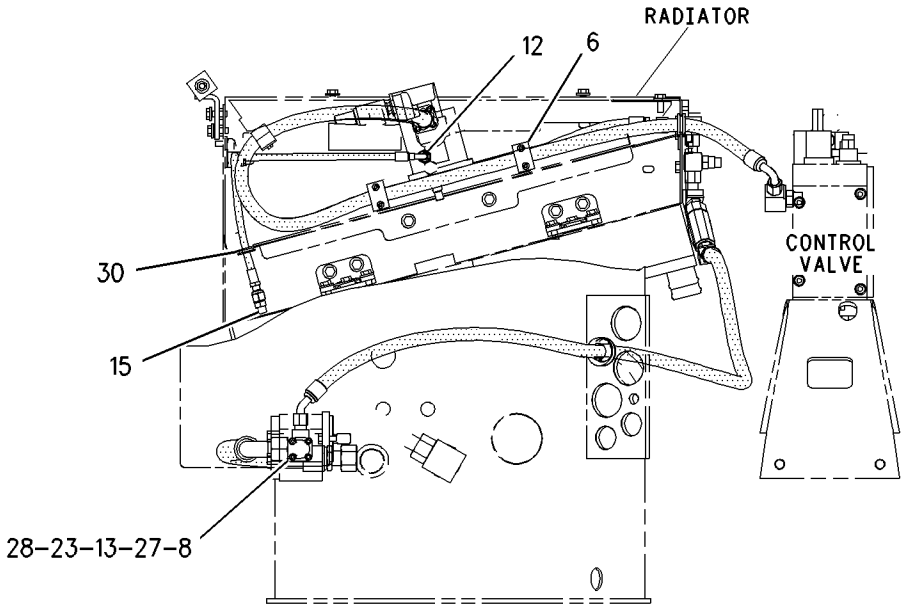

RIGHT SIDE VIEW

GRAPHIC #1 **<END>** g00991807

HYDRAULIC SYSTEM

185-3430 LINES GP-LOAD CONTROL—STICK CYLINDER

S/N: BCZ1-2000

CANNOT BE USED WITH ANTI DRIFT VALVE STICK CYLINDER

AN ATTACHMENT

SMCS-5057, 5811 **i02148401**

NOTE	REF NO	GRAPHIC REF	PART NUMBER	QTY	PART NAME 1 2 3 4 5 6 (PRODUCT LEVEL)	SEE PAGE
I	1	1	**190-8534**	1	HOSE AS	
	2	1	*194-9390*	2	CLAMP AS	
					(EACH INCLUDES)	
		1	**194-9388**	2	CLAMP	
		1	**194-9389**	1	PLATE	
	3	1	**201-7473**	1	HOSE AS	
	4	1	**206-2390**	1	TUBE AS	
	5	1	**249-7540**	1	VALVE GP-SHUTTLE	
		1	**189-3014**	1	SCREW (M10X9-MM)	
		1	**206-7647**	1	SCREW (M10X1X10-MM)	
		1	**216-8581**	1	SEAL-O-RING	
		1	**250-1643**	1	ORIFICE-SHUTTLE	
	6	1	*148-8336*	1	CONNECTOR AS	
		1	**3J-1907**	1	SEAL-O-RING	
		1	**6V-8397**	1	SEAL-O-RING	
		1	**6V-8636**	1	CONNECTOR	
	7	1	*148-8341*	1	CONNECTOR GP	
		1	**3D-2824**	1	SEAL-O-RING	
		1	**6V-8713**	1	CONNECTOR	
		1	**7J-9108**	1	SEAL-O-RING	
	8	1	*148-8367*	1	ELBOW AS	
		1	**6V-8397**	1	SEAL-O-RING	
		1	**6V-9850**	1	ELBOW	
	9	1	*148-8390*	1	ELBOW AS	
		1	**2M-9780**	1	SEAL-O-RING	
		1	**6V-8626**	1	ELBOW	
		1	**7J-9108**	1	SEAL-O-RING	
	10	1	*148-8435*	1	TEE AS	
		1	**3J-1907**	1	SEAL-O-RING	
		1	**6V-8397**	2	SEAL-O-RING	
		1	**6V-8781**	1	TEE-FACE SEAL	
Y	11	1	**202-4094**	1	VALVE GP-LOAD CONTROL (STICK CYLINDER)	713
	12	1	**4J-5267**	1	SEAL-O-RING	
M	13	1	**7X-2533**	4	BOLT (M6X1X35-MM)	
M	14	1	**8T-2223**	4	BOLT-SOCKET HEAD (M10X1.5X45-MM)	
B	15	1	**9X-6772**	11	STRAP-CABLE	

B-USE AS REQUIRED
I-REFER TO HYDRAULIC INFORMATION SYSTEM
M-METRIC PART
Y-SEPARATE ILLUSTRATION

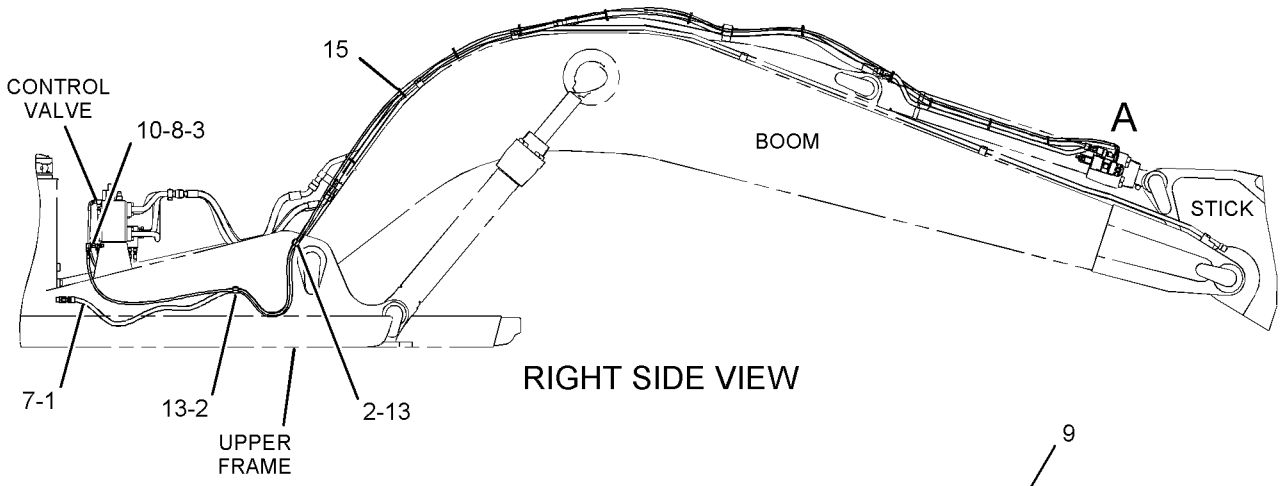

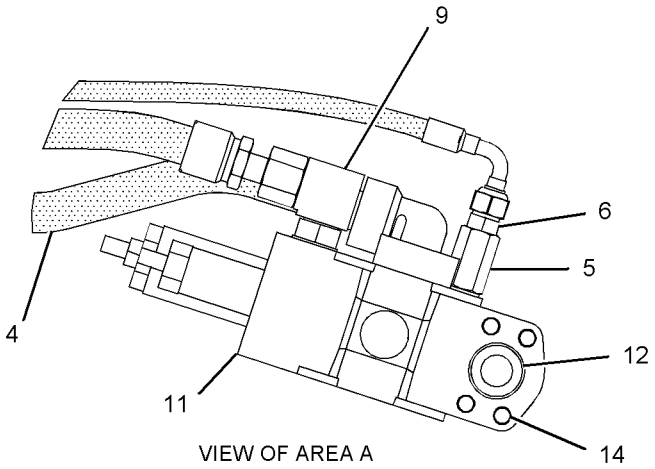

GRAPHIC #1 **<END>** g01091467

185-3434 LINES GP-LOAD CONTROL–
STICK CYLINDER, VAR ADJ BOOM
S/N: BCZ1-2000
CANNOT BE USED WITH ANTI DRIFT VALVE STICK CYLINDER ROD END AN ATTACHMENT

SMCS-5057, 5811 **i02148397**

NOTE	REF NO	GRAPHIC REF	PART NUMBER	QTY	PART NAME 1 2 3 4 5 6 (PRODUCT LEVEL)	SEE PAGE
	1	1	*144-2654*	1	PLATE	
I	2	1	**190-8543**	1	HOSE AS	
	3	1	**190-8544**	1	HOSE AS	
	4	1	*194-9390*	6	CLAMP AS	
					(EACH INCLUDES)	
		1	**194-9388**	2	CLAMP	
		1	**194-9389**	1	PLATE	
	5	1	**206-2390**	1	TUBE AS	
	6	1	**249-7540**	1	VALVE GP-SHUTTLE	
		1	**189-3014**	1	SCREW (M10X9-MM)	
		1	**206-7647**	1	SCREW (M10X1X10-MM)	
		1	**216-8581**	1	SEAL-O-RING	
		1	**250-1643**	1	ORIFICE-SHUTTLE	
	7	1	*148-8336*	1	CONNECTOR AS	
		1	**3J-1907**	1	SEAL-O-RING	
		1	**6V-8397**	1	SEAL-O-RING	
		1	**6V-8636**	1	CONNECTOR	
	8	1	*148-8341*	1	CONNECTOR GP	
		1	**3D-2824**	1	SEAL-O-RING	
		1	**6V-8713**	1	CONNECTOR	
		1	**7J-9108**	1	SEAL-O-RING	
	9	1	*148-8390*	1	ELBOW AS	
		1	**2M-9780**	1	SEAL-O-RING	
		1	**6V-8626**	1	ELBOW	
		1	**7J-9108**	1	SEAL-O-RING	
	10	1	*148-8367*	1	ELBOW AS	
		1	**6V-8397**	1	SEAL-O-RING	
		1	**6V-9850**	1	ELBOW	
	11	1	*148-8435*	1	TEE AS	
		1	**3J-1907**	1	SEAL-O-RING	
		1	**6V-8397**	2	SEAL-O-RING	
		1	**6V-8781**	1	TEE-FACE SEAL	
Y	12	1	**202-4094**	1	VALVE GP-LOAD CONTROL (STICK CYLINDER)	713
	13	1	**4J-5267**	1	SEAL-O-RING	
M	14	1	**7X-2533**	12	BOLT (M6X1X35-MM)	
M	15	1	**8T-2223**	4	BOLT-SOCKET HEAD (M10X1.5X45-MM)	
B	16	1	**9X-6772**	6	STRAP-CABLE	

B-USE AS REQUIRED
I-REFER TO HYDRAULIC INFORMATION SYSTEM
M-METRIC PART
Y-SEPARATE ILLUSTRATION

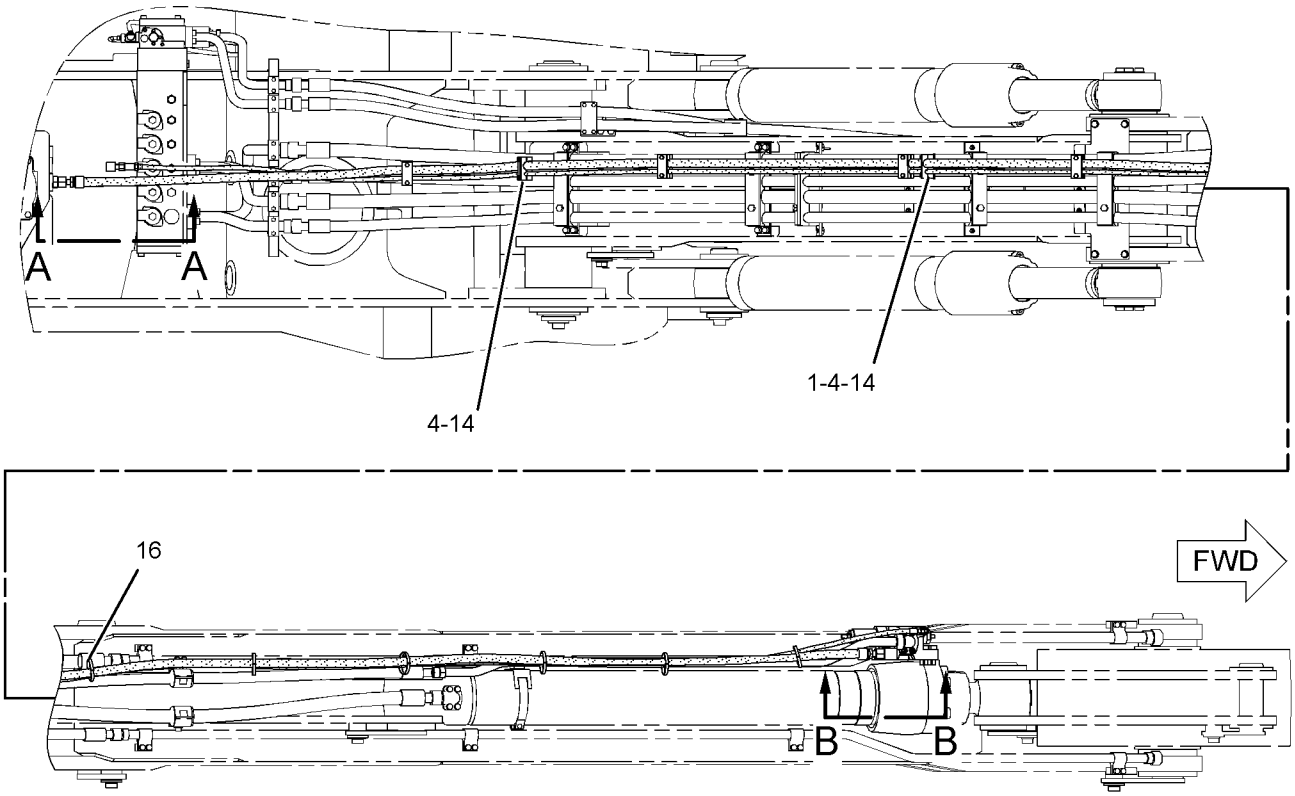

TOP VIEW

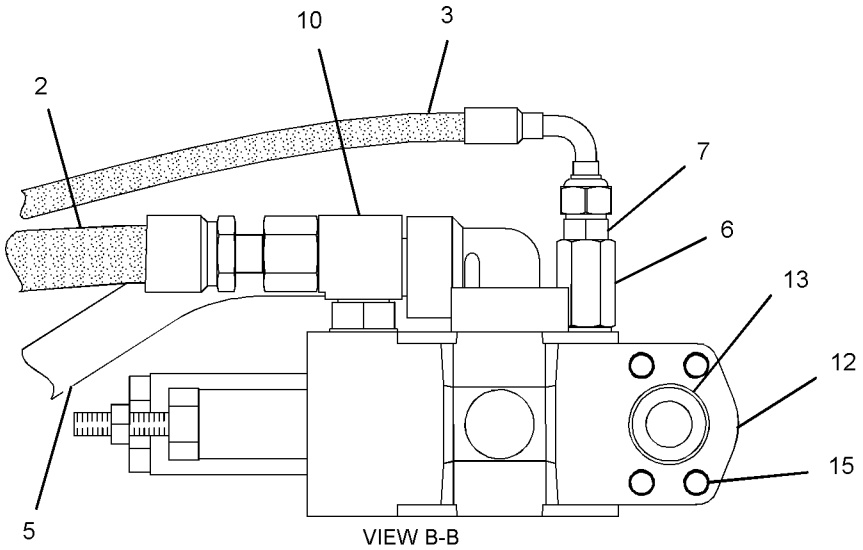

VIEW B-B

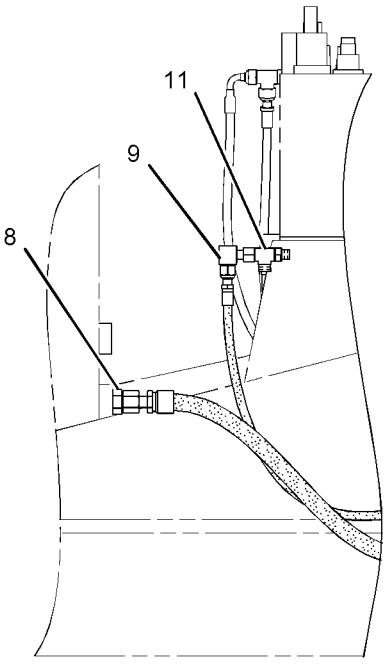

VIEW A-A

GRAPHIC #1

<END>

g01094524

HYDRAULIC SYSTEM

185-3439 LINES GP-LOAD CONTROL—BOOM CYLINDER

S/N: BCZ1-2000
AN ATTACHMENT

SMCS-5057, 5811 **i02163524**

NOTE	REF NO	GRAPHIC REF	PART NUMBER	QTY	PART NAME 1 2 3 4 5 6 (PRODUCT LEVEL)	SEE PAGE
M	1	1	**096-5968**	1	BOLT-SOCKET HEAD (M5X0.8X8-MM)	
I	2	1	**124-9270**	1	HOSE AS	
	3	1	**140-1983**	1	CLAMP-SINGLE	
	4	1	**200-5659**	1	PLATE	
	5	1	**200-6181**	1	PLATE AS	
I	6	1	**201-3197**	1	HOSE AS	
I	7	1	**201-7471**	1	HOSE AS	
I	8	1	**201-7472**	1	HOSE AS	
	9	1	*148-8336*	1	CONNECTOR AS	
		1	**3J-1907**	1	SEAL-O-RING	
		1	**6V-8397**	1	SEAL-O-RING	
		1	**6V-8636**	1	CONNECTOR	
	10	1	*148-8341*	1	CONNECTOR GP	
		1	**3D-2824**	1	SEAL-O-RING	
		1	**6V-8713**	1	CONNECTOR	
		1	**7J-9108**	1	SEAL-O-RING	
	11	1	*148-8390*	1	ELBOW AS	
		1	**2M-9780**	1	SEAL-O-RING	
		1	**6V-8626**	1	ELBOW	
		1	**7J-9108**	1	SEAL-O-RING	
	12	1	*148-8435*	1	TEE AS	
		1	**3J-1907**	1	SEAL-O-RING	
		1	**6V-8397**	2	SEAL-O-RING	
		1	**6V-8781**	1	TEE-FACE SEAL	
	13	1	*169-7404*	1	ELBOW AS	
		1	**6V-8982**	1	ELBOW	
		1	**7J-9108**	2	SEAL-O-RING	
	14	1	**187-5073**	1	CLIP	
	15	1	**1P-3702**	1	SEAL-RECTANGULAR	
Y	16	1	**202-4096**	1	VALVE GP-LOAD CONTROL (BOOM CYLINDER)	716
	17	1	**4J-5267**	1	SEAL-O-RING	
	18	1	**6V-9170**	1	NUT-BULKHEAD (1-14-THD)	
	19	1	**8T-0328**	1	WASHER-HARD (5.5X10X1-MM THK)	
M	20	1	**8T-2223**	4	BOLT-SOCKET HEAD (M10X1.5X45-MM)	
M	21	1	**8T-8894**	2	BOLT-SOCKET HEAD (M10X1.5X20-MM)	
B	22	1	**9X-6772**	3	STRAP-CABLE	

B-USE AS REQUIRED
I-REFER TO HYDRAULIC INFORMATION SYSTEM
M-METRIC PART
Y-SEPARATE ILLUSTRATION

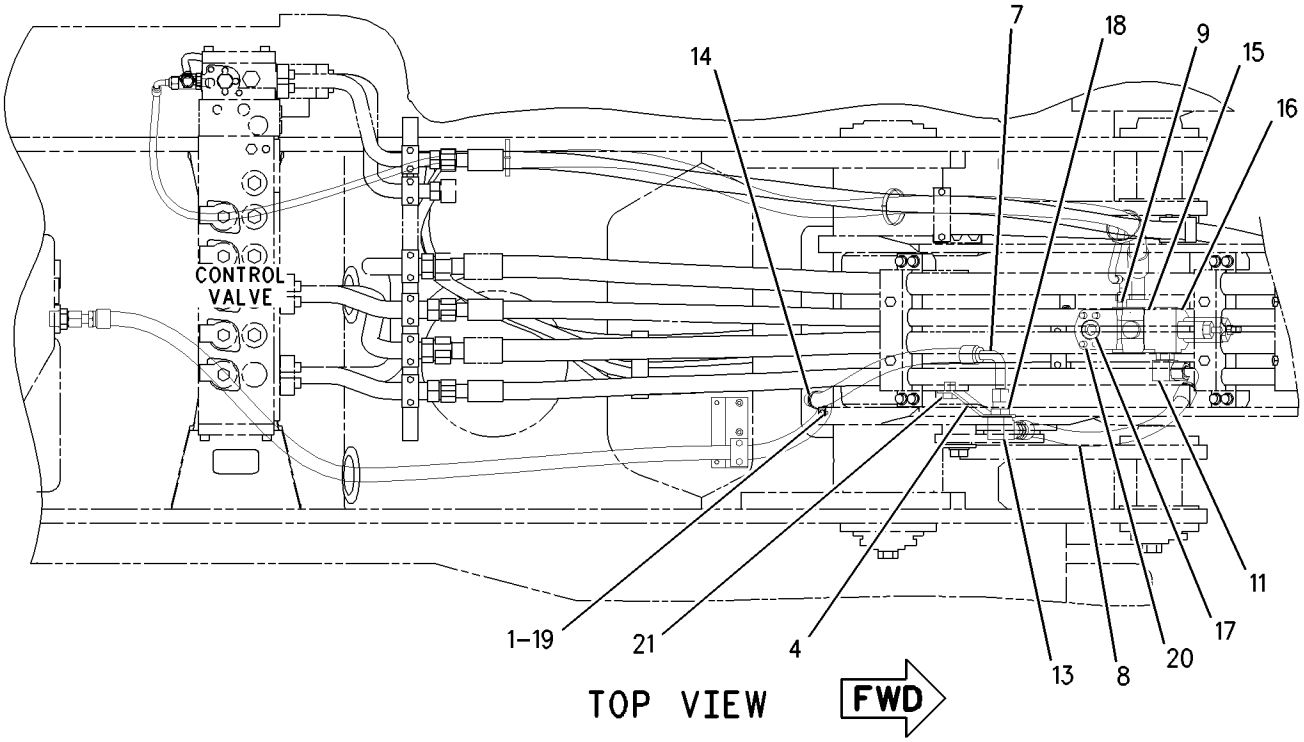

TOP VIEW

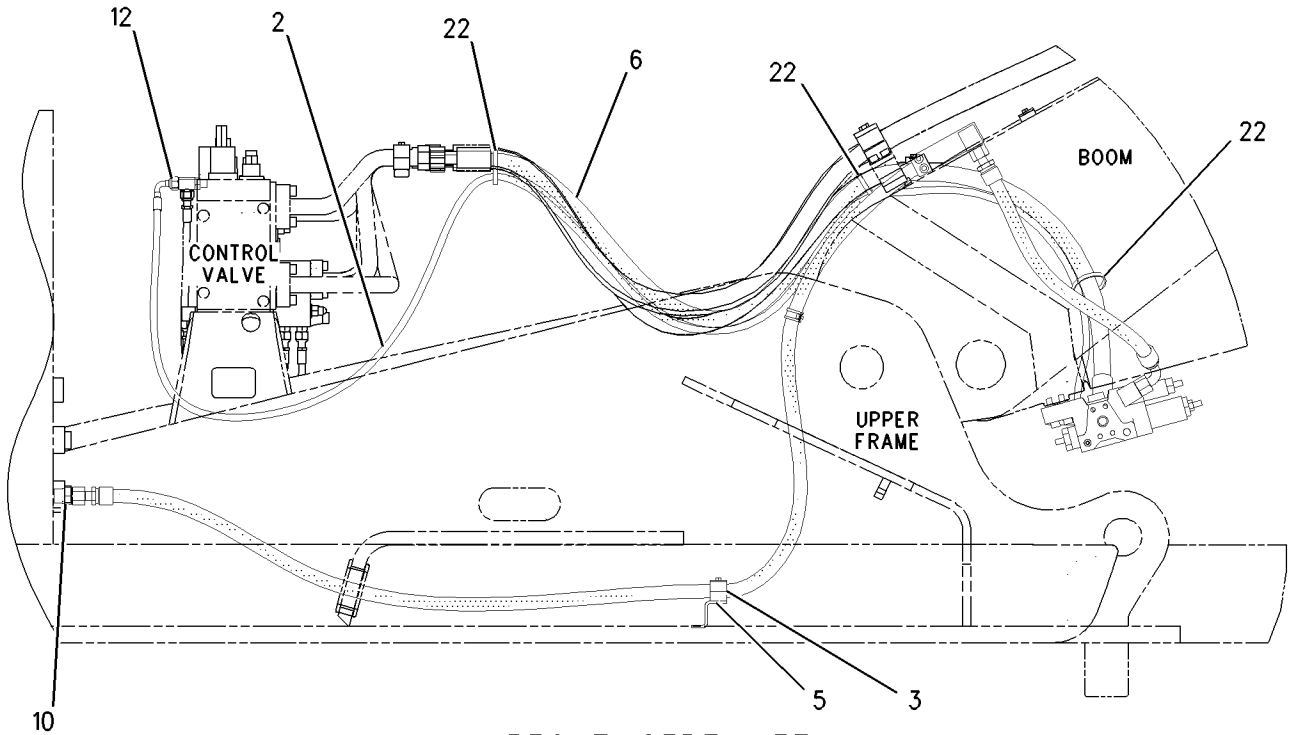

RIGHT SIDE VIEW

GRAPHIC #1 **<END>** g00924350

HYDRAULIC SYSTEM

187-3775 LINES GP-PILOT–OPERATOR

S/N: BCZ1-2000

PART OF 186-0471 HYDRAULIC AR

SMCS-5057, 5059 **i01896313**

NOTE	REF NO	GRAPHIC REF	PART NUMBER	QTY	PART NAME 1 2 3 4 5 6 (PRODUCT LEVEL)	SEE PAGE
I	1	2	**113-0434**	1	HOSE AS	
	2	1	**113-0436**	2	HOSE AS	
I	3	2	**113-0467**	1	HOSE AS	
	4	1	**114-9324**	2	CLAMP-SINGLE	
	5	1	**114-9325**	7	CLAMP-DOUBLE	
	6	1	**130-1156**	1	HOSE AS	
I	7	1	**133-2154**	2	HOSE AS	
	8	2	**140-9370**	1	HOSE AS	
	9	1	**138-9357**	2	HOSE AS	
	10	1	**138-9358**	1	HOSE AS	
	11	1	**196-9068**	1	BRACKET AS	
	12	1	**197-5699**	1	BRACKET AS	
	13	1	**201-8749**	1	HOSE AS	
	14	2	**201-8751**	1	HOSE AS	
	15	1	**201-8752**	1	HOSE AS	
	16	1	**201-8753**	2	HOSE AS	
	17	1,2	*148-8336*	22	CONNECTOR AS	
					(EACH INCLUDES)	
		1,2	**3J-1907**	1	SEAL-O-RING	
		1,2	**6V-8397**	1	SEAL-O-RING	
		1,2	**6V-8636**	1	CONNECTOR	
	18	2	*148-8367*	2	ELBOW AS	
					(EACH INCLUDES)	
		2	**6V-8397**	1	SEAL-O-RING	
		2	**6V-9850**	1	ELBOW	
	19	2	*148-8378*	9	ELBOW AS	
					(EACH INCLUDES)	
		2	**3J-1907**	1	SEAL-O-RING	
		2	**6V-8397**	1	SEAL-O-RING	
		2	**6V-8724**	1	ELBOW	
M	20	1	**8T-4200**	2	BOLT (M8X1.25X16-MM)	
	21	1	**8T-4224**	2	WASHER-HARD (8.8X16X2-MM THK)	
	22	1	**5I-8307**	1	GROMMET	

I-REFER TO HYDRAULIC INFORMATION SYSTEM
M-METRIC PART

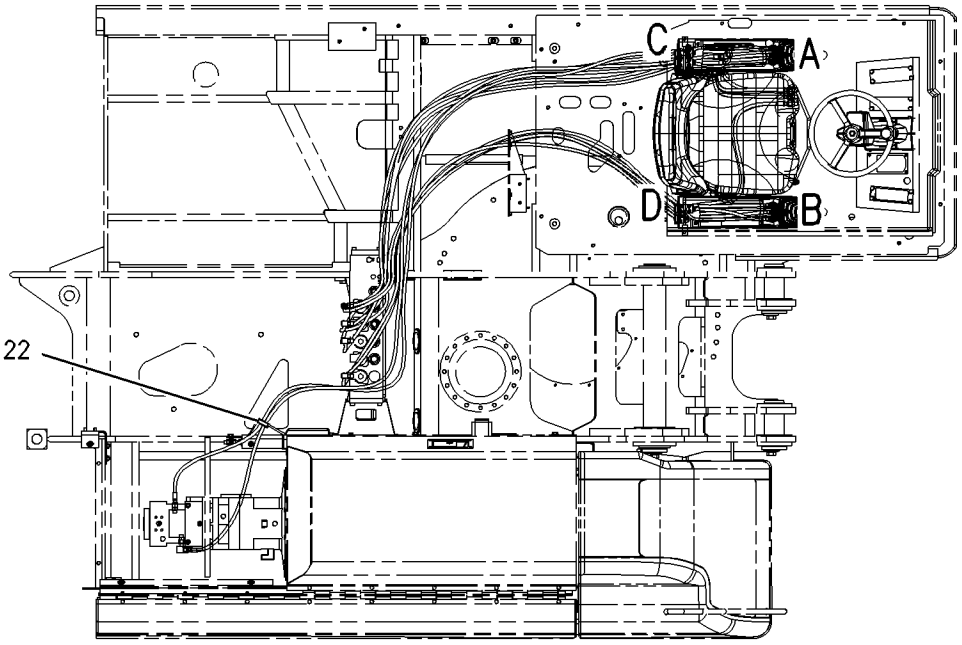

TOP VIEW FWD

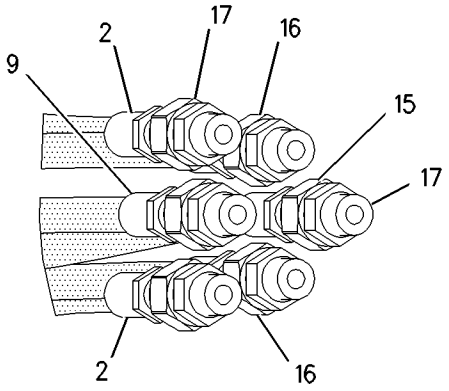

VIEW OF AREA A

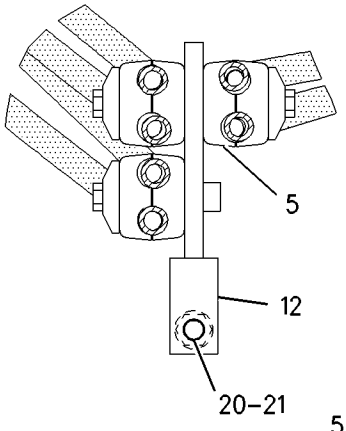

VIEW OF AREA D

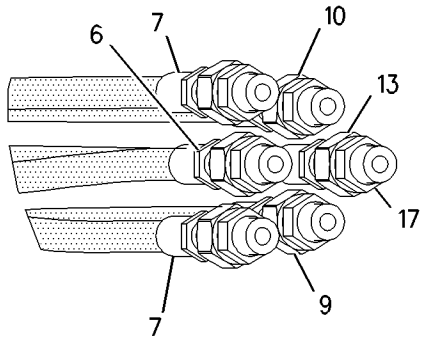

VIEW OF AREA B

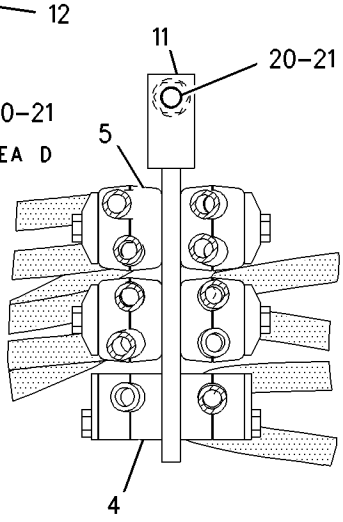

VIEW OF AREA C

GRAPHIC #1 g00986596

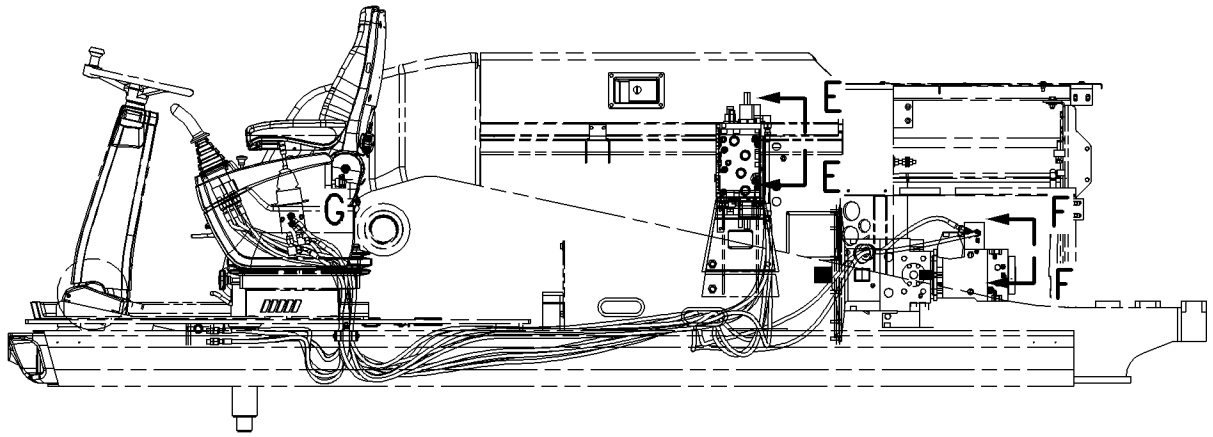

LEFT SIDE VIEW

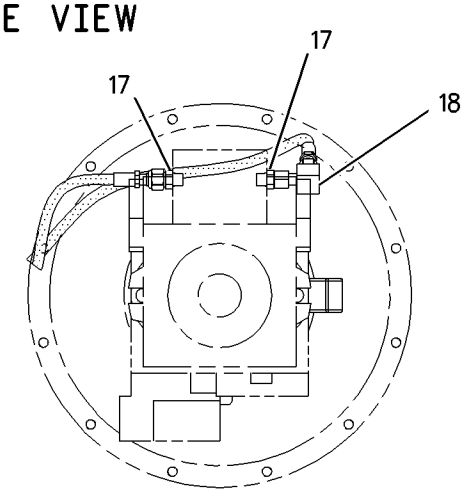

VIEW F-F

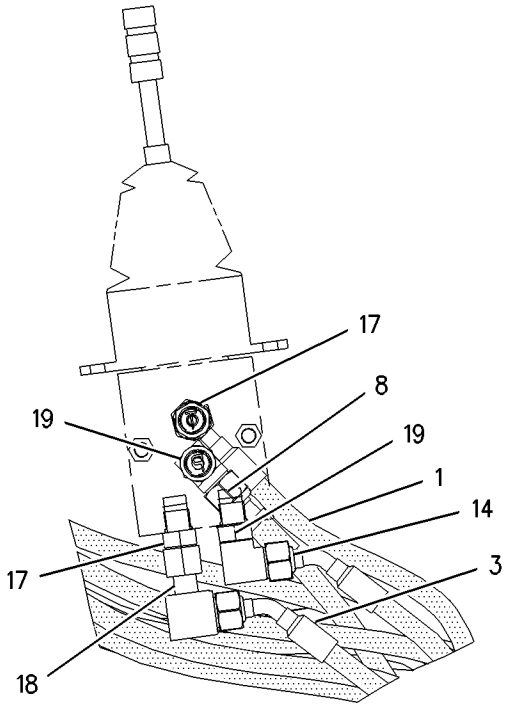

VIEW OF AREA G

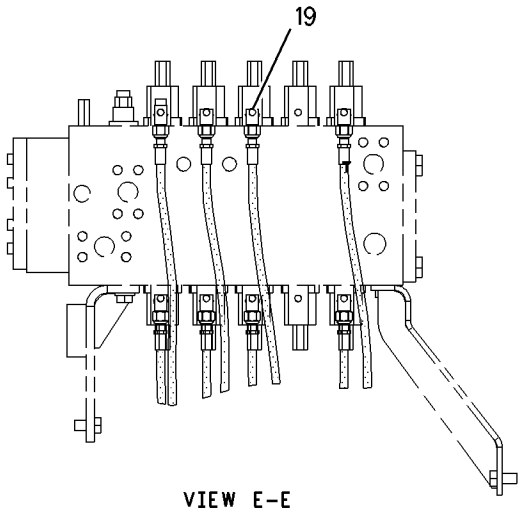

VIEW E-E

GRAPHIC #2 **<END>** g00989710

HYDRAULIC SYSTEM

187-3776 LINES GP-PILOT—UPPER

S/N: BCZ1-2000

PART OF 186-0471 HYDRAULIC AR

SMCS-5057, 5059 **i02096726**

NOTE	REF NO	GRAPHIC REF	PART NUMBER	QTY	PART NAME 1 2 3 4 5 6 (PRODUCT LEVEL)	SEE PAGE
	1	2	**5W-1119**	2	WASHER (9.8X18.5X1.5-MM THK)	
	2	2	**8U-4744**	2	LATCH-LOCK	
Y	3	2	**8U-6159**	1	ACCUMULATOR AS-HYDRAULIC (CHARGED)	411
Y	4	2	**8U-7274**	1	ACCUMULATOR AS-HYDRAULIC (CHARGED)	412
	5	2	**108-5678**	1	UNION	
I	6	1	**113-0434**	1	HOSE AS	
I	7	1	**113-0442**	1	HOSE AS	
	8	2	**6V-0852**	2	CAP-DUST	
I	9	2	**143-4730**	1	HOSE AS	
	10	1	**144-6060**	1	ORIFICE	
	11	1	**144-8070**	1	TEE	
	12	2	*148-8424*	1	TEE AS	
		2	**6V-8397**	1	SEAL-O-RING	
		2	**8T-8902**	1	TEE	
I	13	1	**148-9868**	2	HOSE AS	
	14	1	**155-6985**	1	HOSE AS	
	15	2	*164-5629*	1	FITTING AS	
		2	**108-7516**	1	FITTING	
		2	**3J-1907**	1	SEAL-O-RING	
	16	2	**165-5877**	1	PLATE AS	
	17	2	**167-3466**	1	SWITCH GP-PRESSURE (SWING PUMP SIGNAL OIL)	
		2	**144-1636**	2	PIN-CONNECTOR	
		2	**102-8802**	1	KIT-RECEPTACLE (2-PIN)	
					(INCLUDES RECEPTACLE AND WEDGE.)	
		2	**3E-3365**	1	WEDGE-RECEPTACLE LOCK (2-PIN)	
	18	2	**188-3823**	1	SENSOR GP-PRESSURE (TRANSMISSION CLUTCH)	
	19	1	**201-8756**	2	HOSE AS	
	20	1	**201-8758**	1	HOSE AS	
	21	1	**201-8759**	2	HOSE AS	
Y	22	2	**210-0696**	1	MANIFOLD GP-CONTROL (PILOT OIL)	612
	23	1	*148-8318*	1	CONNECTOR AS	
		1	**3K-0360**	1	SEAL-O-RING	
		1	**6V-8397**	1	SEAL-O-RING	
		1	**6V-8634**	1	CONNECTOR	
	24	1,2	*148-8336*	15	CONNECTOR AS	
					(EACH INCLUDES)	
		1,2	**3J-1907**	1	SEAL-O-RING	
		1,2	**6V-8397**	1	SEAL-O-RING	
		1,2	**6V-8636**	1	CONNECTOR	
	25	2	*148-8340*	2	CONNECTOR AS	
					(EACH INCLUDES)	
		2	**3K-0360**	1	SEAL-O-RING	
		2	**6V-8398**	1	SEAL-O-RING	
		2	**6V-8639**	1	CONNECTOR	
	26	2	*148-8364*	1	ELBOW AS	
		2	**3K-0360**	1	SEAL-O-RING	
		2	**6V-8398**	1	SEAL-O-RING	
		2	**6V-8625**	1	ELBOW	
	27	1	*148-8367*	1	ELBOW AS	
		1	**6V-8397**	1	SEAL-O-RING	
		1	**6V-9850**	1	ELBOW	
	28	2	*148-8372*	1	ELBOW AS	
		2	**2M-9780**	1	SEAL-O-RING	
		2	**6V-8398**	1	SEAL-O-RING	
		2	**6V-8721**	1	ELBOW	
	29	2	*148-8378*	1	ELBOW AS	

187-3776 **LINES GP-PILOT** *(contd.)* **i02096726**

NOTE	REF NO	GRAPHIC REF	PART NUMBER	QTY	PART NAME 1 2 3 4 5 6 (PRODUCT LEVEL)	SEE PAGE
		2	**3J-1907**	1	SEAL-O-RING	
		2	**6V-8397**	1	SEAL-O-RING	
		2	**6V-8724**	1	ELBOW	
	30	2	**162-0177**	1	PLUG AS	
		2	**3J-1907**	1	SEAL-O-RING	
	31	2	**3J-1907**	3	SEAL-O-RING	
	32	2	**3J-7354**	2	SEAL-O-RING	
	33	2	**5W-1705**	1	WASHER (33.3X38.9X2-MM THK)	
	34	2	**6V-4433**	2	FITTING	
	35	1	**6V-8397**	3	SEAL-O-RING	
	36	1	**8T-6725**	1	CONNECTOR	
	37	1	**8T-6850**	1	SEAL-O-RING	
M	38	2	**108-4282**	2	BOLT-SOCKET HEAD (M10X1.5X100-MM)	
	39	1	**8T-7934**	2	WASHER-HARD (11X21X5-MM THK)	
	40	1	**5I-8307**	1	GROMMET	

I-REFER TO HYDRAULIC INFORMATION SYSTEM
M-METRIC PART
Y-SEPARATE ILLUSTRATION

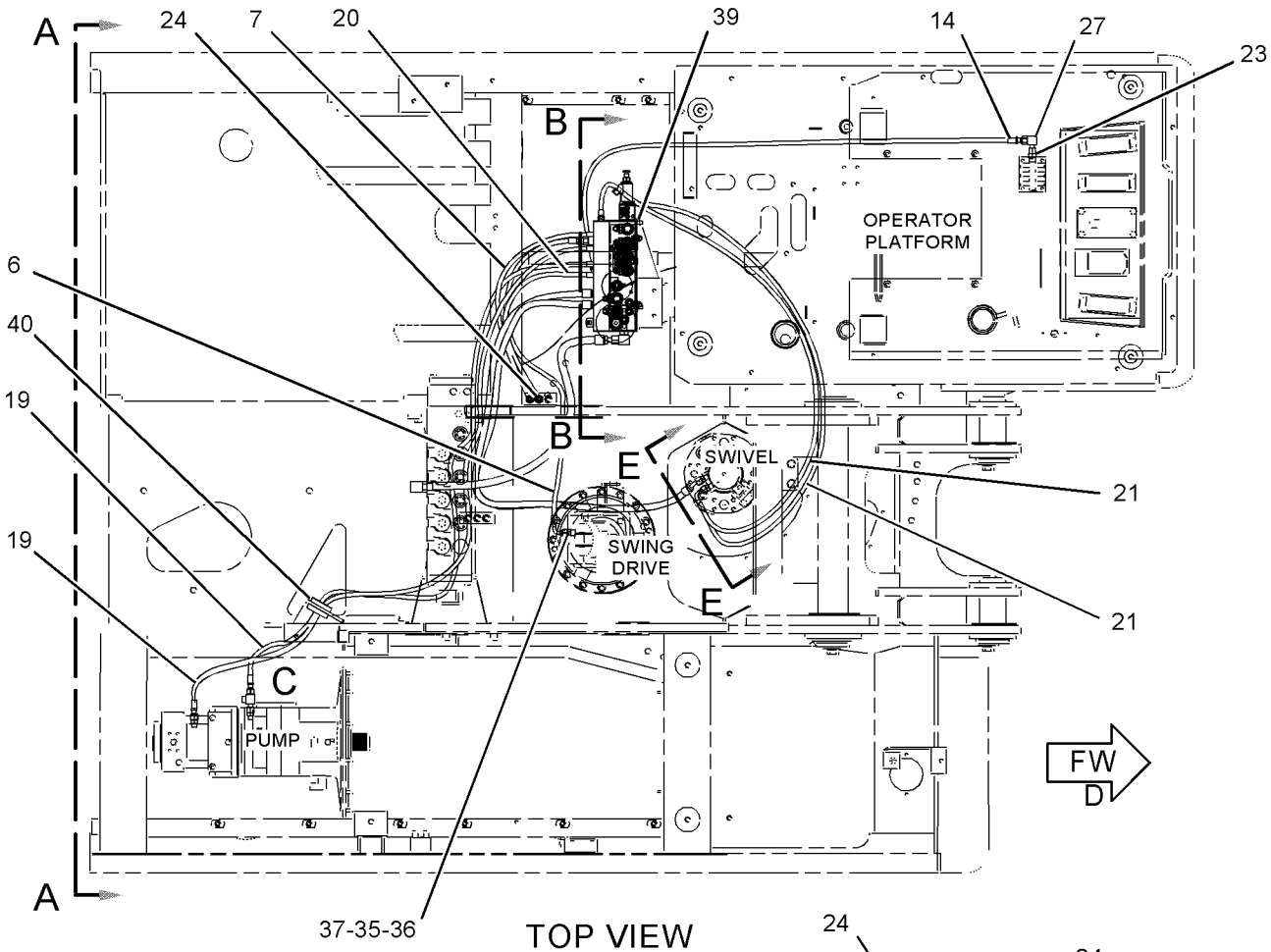

TOP VIEW

REFER TO ALL ILLUSTRATIONS OF
THIS GROUP FOR AUXILIARY VIEWS

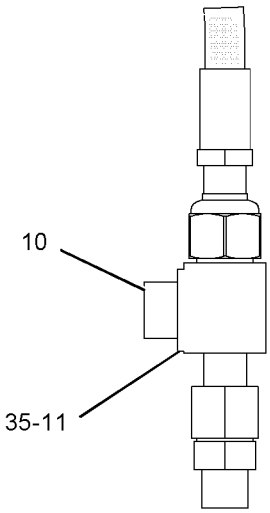

VIEW OF AREA C

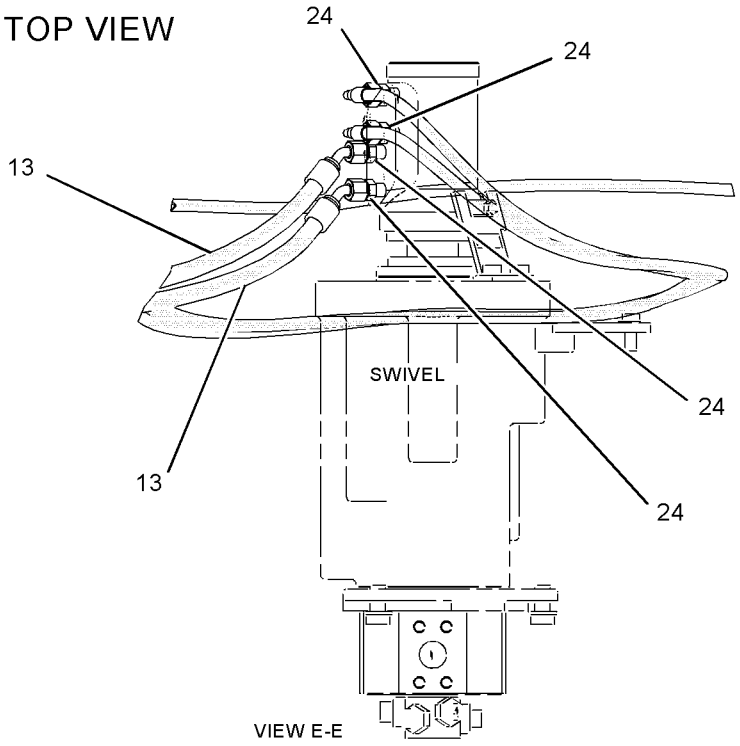

VIEW E-E

GRAPHIC #1

g01078443

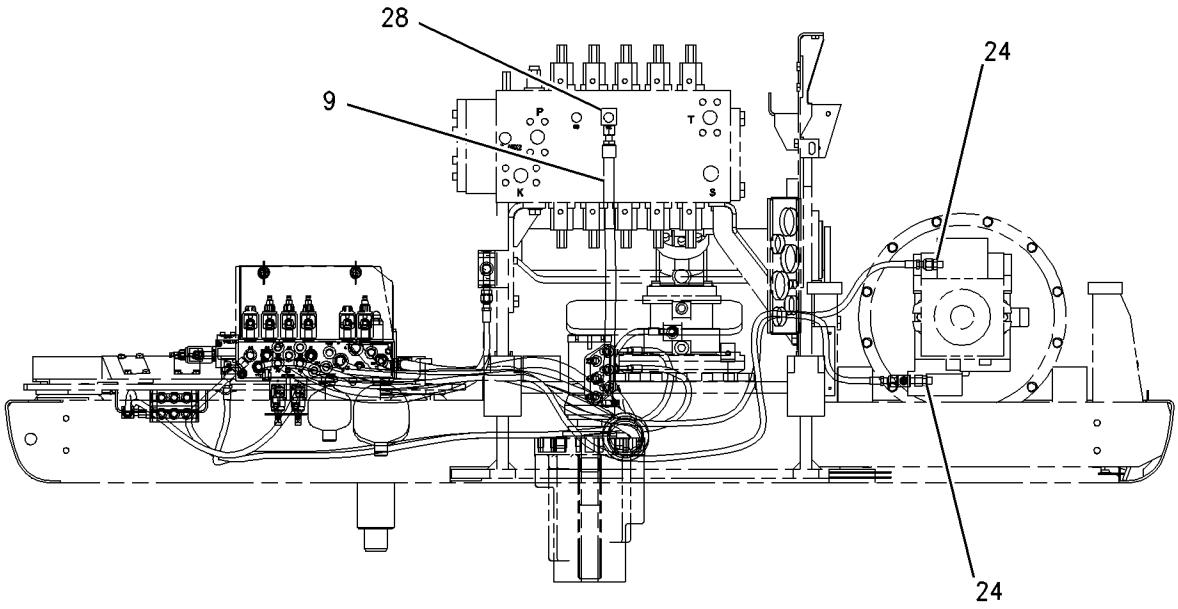

VIEW A-A

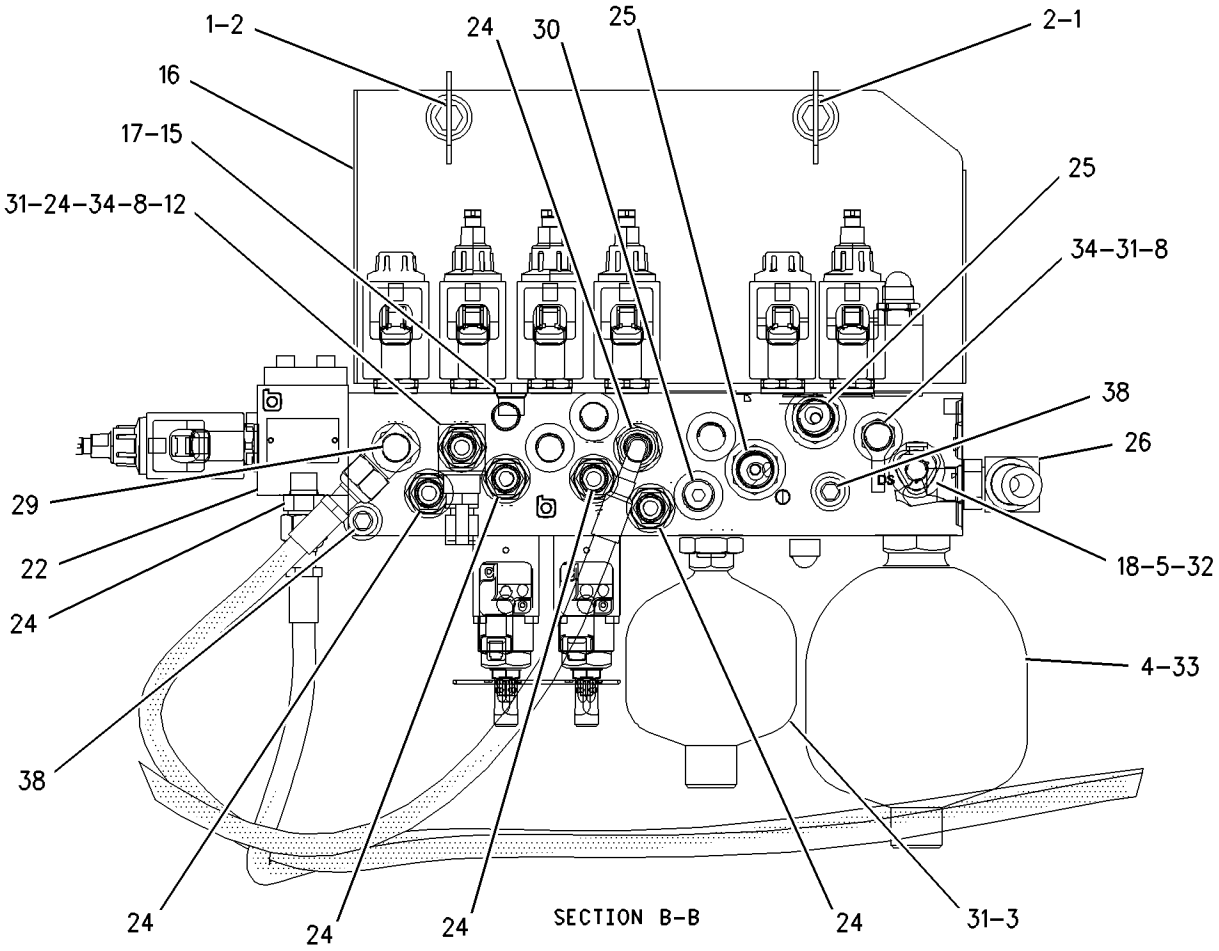

GRAPHIC #2 **<END>** g00858171

HYDRAULIC SYSTEM

187-3777 LINES GP-PILOT—PLATFORM TRAVEL

S/N: BCZ1-2000

PART OF 186-0471 HYDRAULIC AR

SMCS-5057, 5059 **i01896408**

NOTE	REF NO	GRAPHIC REF	PART NUMBER	QTY	PART NAME 1 2 3 4 5 6 (PRODUCT LEVEL)	SEE PAGE
	1	1	**148-8424**	2	TEE AS	
		1	**6V-8397**	1	SEAL-O-RING	
		1	**8T-8902**	1	TEE	
I	2	1	**113-0489**	1	HOSE AS	
I	3	1	**130-8153**	1	HOSE AS	
I	4	1	**130-8154**	1	HOSE AS	
	5	1	**155-6985**	1	HOSE AS	
	6	1	*164-5629*	2	FITTING AS	
					(EACH INCLUDES)	
		1	**108-7516**	1	FITTING	
		1	**3J-1907**	1	SEAL-O-RING	
	7	1	**167-3466**	1	SWITCH GP-PRESSURE (AUTO. ENGINE CONTROL-ACTUATION)	
					(EACH INCLUDES)	
		1	**3E-3365**	1	WEDGE-RECEPTACLE LOCK (2-PIN)	
		1	**144-1636**	2	PIN-CONNECTOR	
		1	**102-8802**	1	KIT-RECEPTACLE (2-PIN)	
					(INCLUDES RECEPTACLE AS & WEDGE)	
	7A	1	**167-3466**	1	SWITCH GP-PRESSURE (AUTO. ENG. CONTROL-DEACTUATION)	
					(EACH INCLUDES)	
		1	**3E-3365**	1	WEDGE-RECEPTACLE LOCK (2-PIN)	
		1	**144-1636**	2	PIN-CONNECTOR	
		1	**102-8802**	1	KIT-RECEPTACLE (2-PIN)	
					(INCLUDES RECEPTACLE & WEDGE)	
	8	1	**197-9999**	2	BLOCK-MANIFOLD	
	9	1	**201-8755**	1	HOSE AS	
	10	1	*148-8318*	1	CONNECTOR AS	
		1	**3K-0360**	1	SEAL-O-RING	
		1	**6V-8397**	1	SEAL-O-RING	
		1	**6V-8634**	1	CONNECTOR	
	11	1	*148-8336*	4	CONNECTOR AS	
					(EACH INCLUDES)	
		1	**3J-1907**	1	SEAL-O-RING	
		1	**6V-8397**	1	SEAL-O-RING	
	12	1	*148-8378*	4	ELBOW AS	
					(EACH INCLUDES)	
		1	**3J-1907**	1	SEAL-O-RING	
		1	**6V-8397**	1	SEAL-O-RING	
		1	**6V-8724**	1	ELBOW	
	13	1	*148-8395*	1	PLUG AS	
		1	**3K-0360**	1	SEAL-O-RING	
		1	**9S-8005**	1	PLUG	
	14	1	**162-0177**	5	PLUG AS	
					(EACH INCLUDES)	
		1	**3J-1907**	1	SEAL-O-RING	
M	15	1	**8T-3647**	2	BOLT (M8X1.25X80-MM)	

I-REFER TO HYDRAULIC INFORMATION SYSTEM
M-METRIC PART

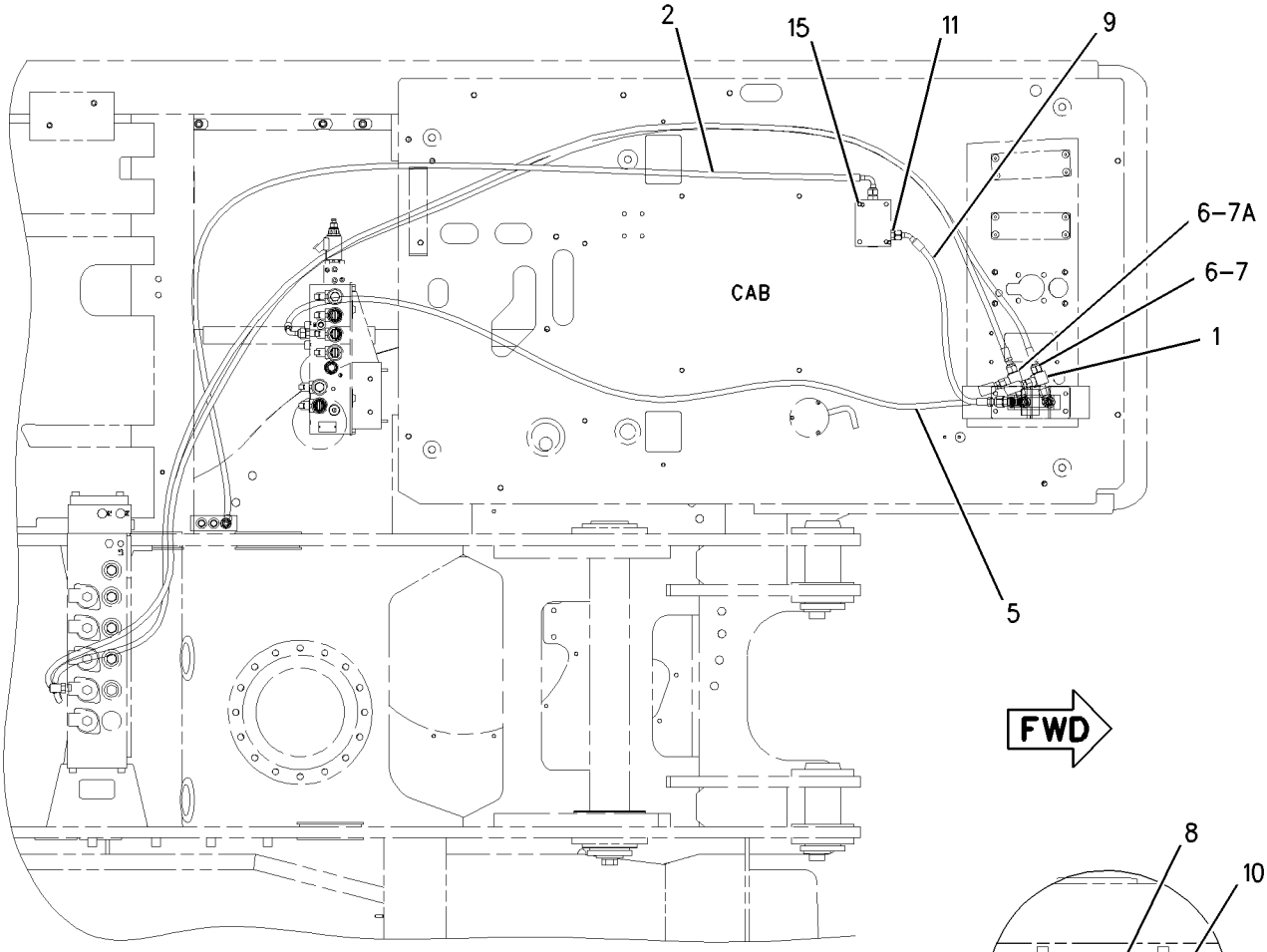

TOP VIEW

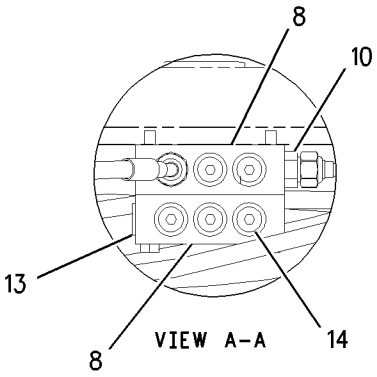

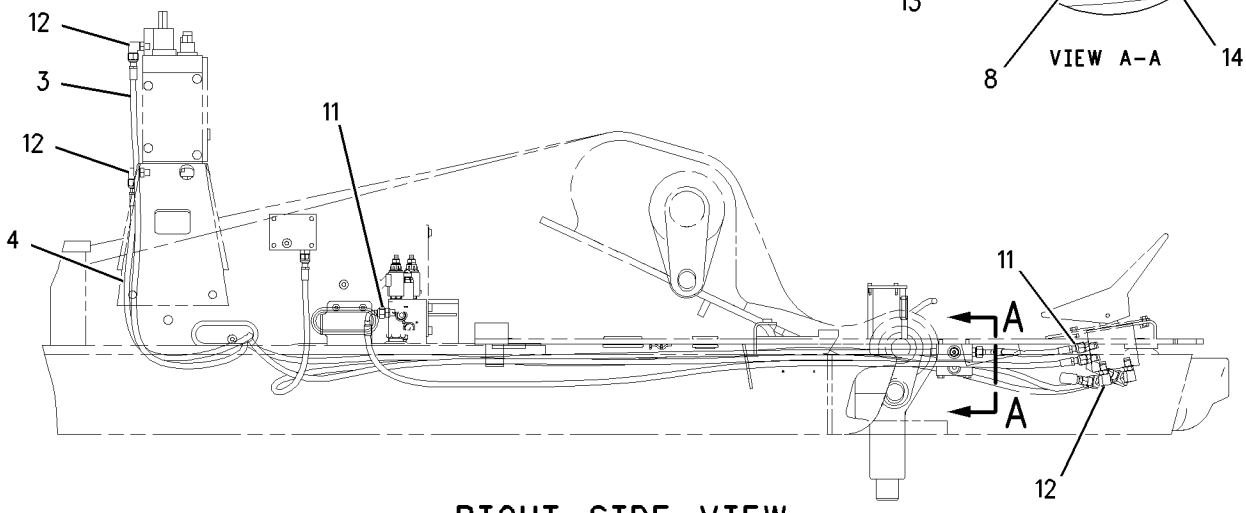

RIGHT SIDE VIEW

GRAPHIC #1 **<END>** g00986628

HYDRAULIC SYSTEM

187-7364 LINES GP-PILOT

S/N: BCZ1-2000
CANNOT BE USED WITH HAMMER LINES VALVE GP
AN ATTACHMENT

SMCS-5057, 5059 **i02148400**

NOTE	REF NO	GRAPHIC REF	PART NUMBER	QTY	PART NAME 1 2 3 4 5 6 (PRODUCT LEVEL)	SEE PAGE
	1	2	**8U-0284**	2	FLANGE-HALF	
	2	2	**8U-0891**	1	FLANGE	
Y	3	2	**112-5704**	1	CONTROL GP-HYDRAULIC PEDAL	431
I	4	1	**113-0477**	1	HOSE AS	
	5	2	**118-8985**	2	BOSS	
	6	2	**138-9355**	2	HOSE AS	
	7	1	**139-2936**	1	HOSE AS	
	8	2	*148-8424*	2	TEE AS	
					(EACH INCLUDES)	
		2	**6V-8397**	1	SEAL-O-RING	
		2	**8T-8902**	1	TEE	
	9	2	*164-5629*	2	FITTING AS	
					(EACH INCLUDES)	
		2	**3J-1907**	1	SEAL-O-RING	
		2	**108-7516**	1	FITTING	
	10	2	**167-3466**	2	SWITCH GP-PRESSURE (AUXILIARY WORK TOOL SIGNAL OIL)	
					(EACH SWITCH GP INCLUDES)	
		2	**144-1636**	2	PIN-CONNECTOR	
		2	**102-8802**	1	KIT-RECEPTACLE (2-PIN)	
					(INCLUDES RECEPTACLE AND WEDGE)	
		2	**3E-3365**	1	WEDGE-RECEPTACLE LOCK (2-PIN)	
	11	2	**188-1790**	1	TUBE AS	
I	12	2	**188-6380**	1	HOSE AS	
Y	13	1	**191-2778**	1	VALVE GP-COMBINATION (COMBINED FUNCTION)	696
	14	2	**196-8422**	2	HOSE AS	
	15	2	**196-9060**	1	PLATE	
	16	2	**203-1911**	1	HOSE AS	
	17	2	**206-2400**	1	TUBE AS	
	18	2	**239-9683**	1	BOLT-SPECIAL	
	19	2	**239-9686**	1	PLATE	
	20	2	**239-9688**	1	BOLT (M10X1.5X96-MM)	
	21	2	**239-9689**	1	LEVER AS	
	22	2	**118-8984**	1	CLAMP	
	23	1,2	*148-8336*	14	CONNECTOR AS	
					(EACH INCLUDES)	
		1,2	**3J-1907**	1	SEAL-O-RING	
		1,2	**6V-8397**	1	SEAL-O-RING	
		1,2	**6V-8636**	1	CONNECTOR	
	24	2	*148-8367*	2	ELBOW AS	
					(EACH INCLUDES)	
		2	**6V-8397**	1	SEAL-O-RING	
		2	**6V-9850**	1	ELBOW	
	25	1,2	*148-8433*	1	TEE AS	
		1,2	**6V-8397**	2	SEAL-O-RING	
		1,2	**6V-9836**	1	TEE-SWIVEL	
	26	2	*148-8435*	1	TEE AS	
		2	**6V-8397**	2	SEAL-O-RING	
		2	**6V-8781**	1	TEE-FACE SEAL	
		2	**3J-1907**	1	SEAL-O-RING	
	27	2	**1P-4578**	2	FLANGE-HALF	
	28	2	**4J-0520**	2	SEAL-O-RING	
	29	2	**4J-0522**	1	SEAL-O-RING	
	30	2	**4J-0524**	1	SEAL-O-RING	
	31	1	**5K-9090**	1	SEAL-O-RING	

187-7364 **LINES GP-PILOT** *(contd.)* **i02148400**

NOTE	REF NO	GRAPHIC REF	PART NUMBER	QTY	PART NAME 1 2 3 4 5 6 (PRODUCT LEVEL)	SEE PAGE
	32	1	**6V-9833**	1	CAP AS	
M	33	1	**8T-0272**	4	BOLT-SOCKET HEAD (M10X1.5X110-MM)	
M	34	2	**8T-0273**	8	BOLT-SOCKET HEAD (M12X1.75X40-MM)	
M	35	2	**8T-0389**	1	LOCKNUT (M10X1.5-THD)	
	36	2	**8T-4121**	5	WASHER-HARD (11X21X2.5-MM THK)	
M	37	2	**8T-4189**	2	BOLT (M8X1.25X20-MM)	
M	38	2	**8T-4196**	4	BOLT (M10X1.5X35-MM)	
	39	2	**8T-4224**	3	WASHER-HARD (8.8X16X2-MM THK)	
M	40	2	**8T-4908**	1	BOLT (M8X1.25X25-MM)	
FY			*211-8208*	1	WIRING GP-WORK TOOL (AUXILIARY)	215
F			**143-5907**	1	FILM-INSTRUCTION (HYDRAULIC HAMMER)	
					(LOCATE ON TOP OF CONTROL FILM ON THE RH CAB WINDOW)	

F-NOT SHOWN
I-REFER TO HYDRAULIC INFORMATION SYSTEM
M-METRIC PART
Y-SEPARATE ILLUSTRATION

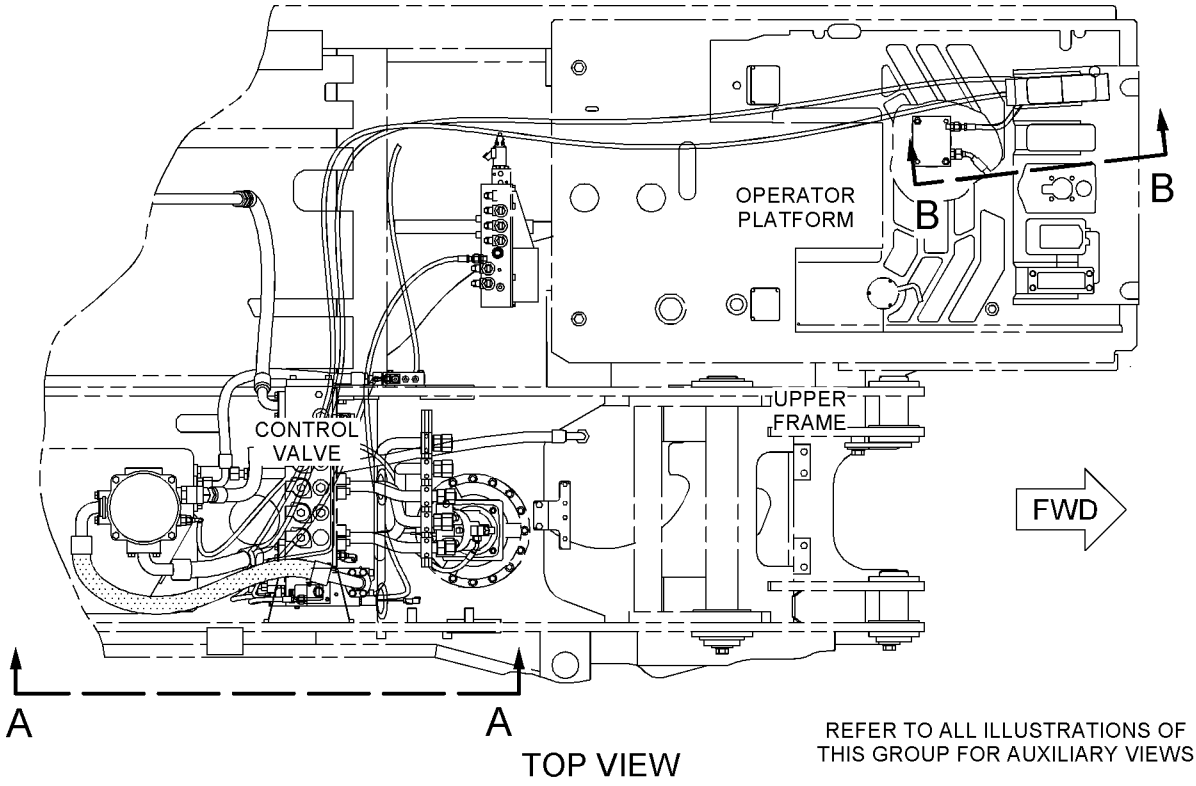

TOP VIEW

REFER TO ALL ILLUSTRATIONS OF THIS GROUP FOR AUXILIARY VIEWS

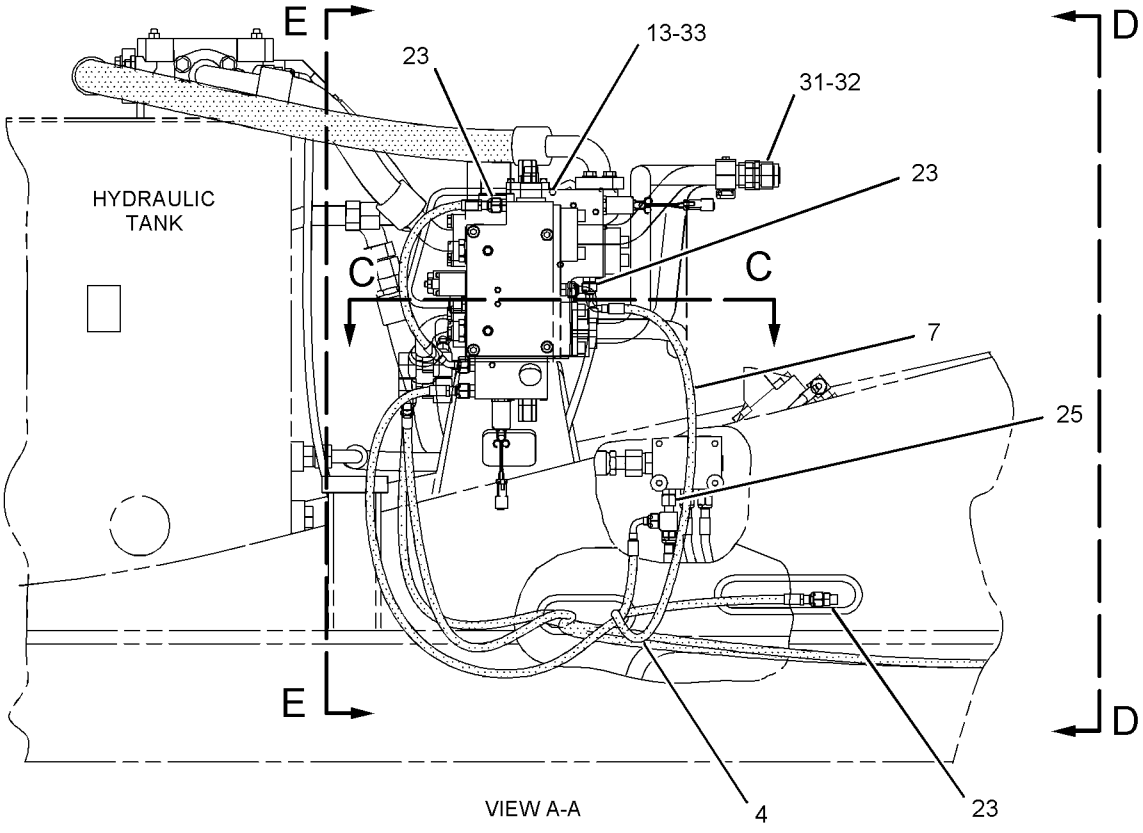

VIEW A-A

GRAPHIC #1

g01094478

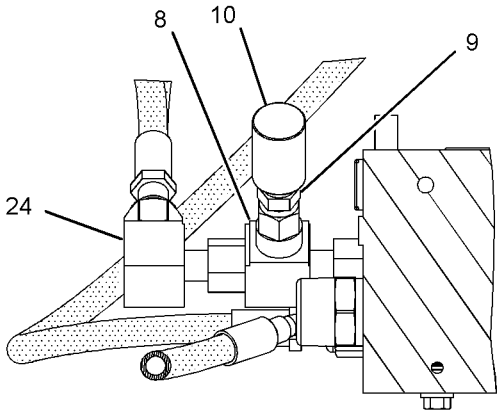

SECTION C-C

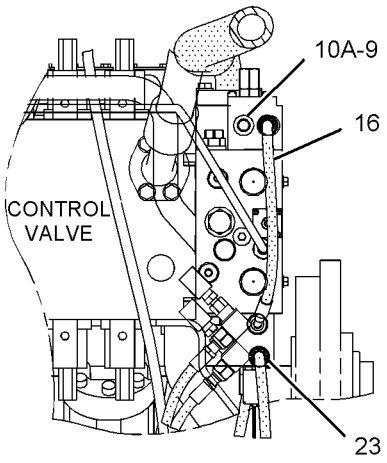

SECTION E-E

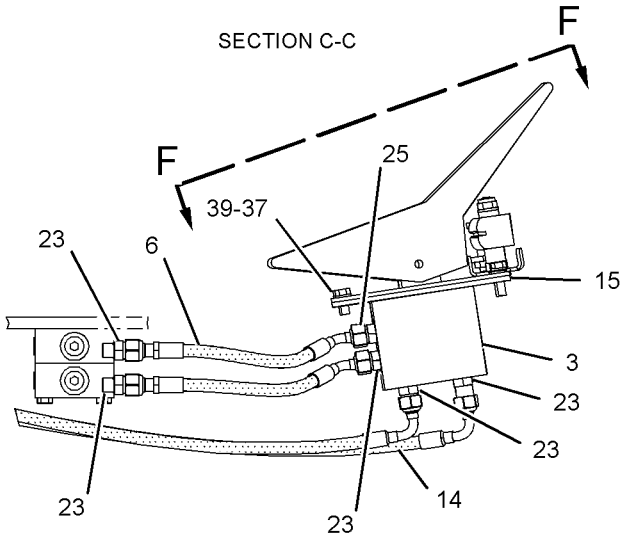

VIEW B-B

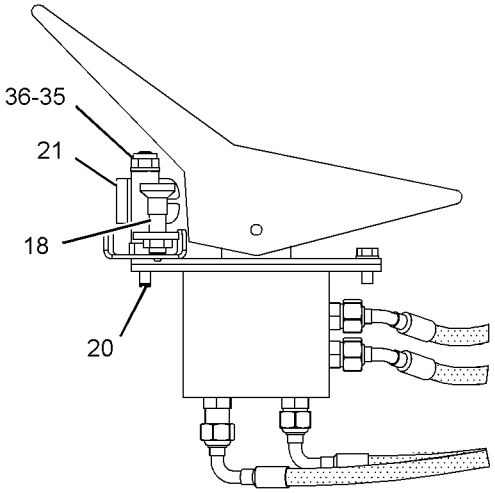

VIEW G-G

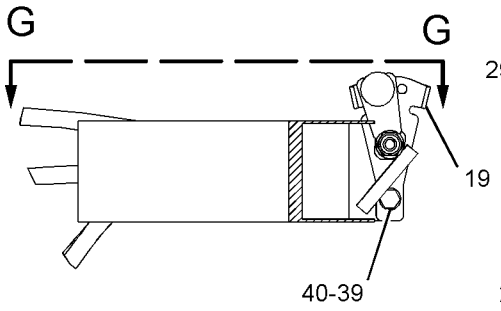

SECTION F-F

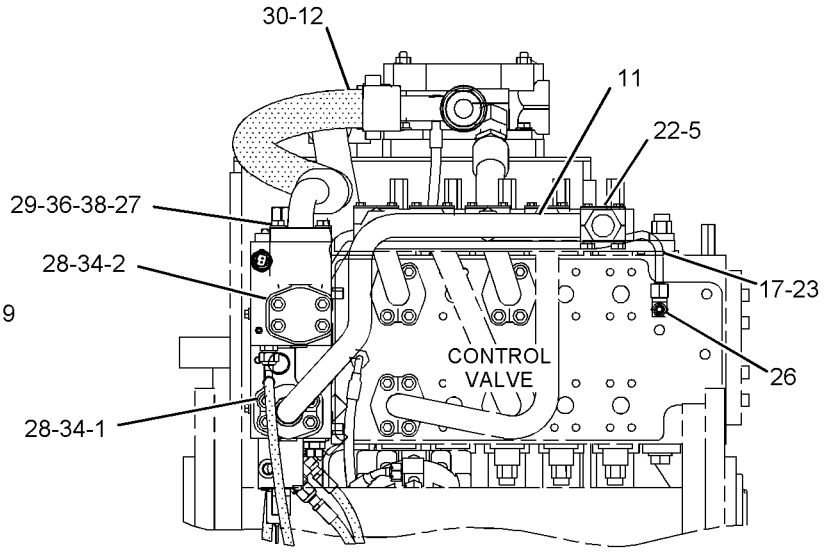

SECTION D-D

GRAPHIC #2 **<END>** g01094477

HYDRAULIC SYSTEM

187-7365 LINES GP-PILOT—VARIABLE ADJUSTABLE BOOM

S/N: BCZ1-2000
PART OF 185-8547 BOOM AR
AN ATTACHMENT

SMCS-5057, 5059 **i02166713**

NOTE	REF NO	GRAPHIC REF	PART NUMBER	QTY	PART NAME 1 2 3 4 5 6 (PRODUCT LEVEL)	SEE PAGE
	1	1	**5W-9857**	4	FLANGE-HALF	
M	2	1	**105-3478**	8	BOLT-SOCKET HEAD (M10X1.5X35-MM)	
Y	3	1	**112-5704**	1	CONTROL GP-HYDRAULIC PEDAL	431
	4	1	**116-7286**	2	CLAMP-SINGLE	
	5	1	*118-3139*	1	GUIDE	
	6	1	**118-8985**	4	BOSS	
	7	1	**138-9355**	2	HOSE AS	
I	8	1	**139-1942**	1	HOSE AS	
I	9	1	**140-1250**	1	HOSE AS	
	10	1	**185-6838**	1	TUBE AS	
	11	1	**185-6839**	1	TUBE AS	
Y	12	1	**192-3183**	1	VALVE GP-CONTROL (VARIABLE ADJUSTABLE)	701
	13	1	**194-7841**	1	PLATE-COVER	
M	14	1	**108-4282**	4	BOLT-SOCKET HEAD (M10X1.5X100-MM)	
	15	1	*148-8336*	6	CONNECTOR AS	
					(EACH INCLUDES)	
		1	**3J-1907**	1	SEAL-O-RING	
		1	**6V-8397**	1	SEAL-O-RING	
		1	**6V-8636**	1	CONNECTOR	
	16	1	*148-8378*	2	ELBOW AS	
					(EACH INCLUDES)	
		1	**3J-1907**	1	SEAL-O-RING	
		1	**6V-8397**	1	SEAL-O-RING	
		1	**6V-8724**	1	ELBOW	
	17	1	**4J-5267**	2	SEAL-O-RING	
	18	1	**6V-9746**	2	SEAL-O-RING	
	19	1	**6V-9832**	2	CAP AS	
M	20	1	**8T-4189**	4	BOLT (M8X1.25X20-MM)	
	21	1	**8T-4224**	4	WASHER-HARD (8.8X16X2-MM THK)	
	22	1	**196-9060**	1	PLATE	
F			**143-5906**	1	FILM-INSTRUCTION (VARIABLE ADJUSTABLE BOOM)	
					(LOCATE ON TOP OF CONTROL FILM ON THE RH CAB WINDOW)	

F-NOT SHOWN
I-REFER TO HYDRAULIC INFORMATION SYSTEM
M-METRIC PART
Y-SEPARATE ILLUSTRATION

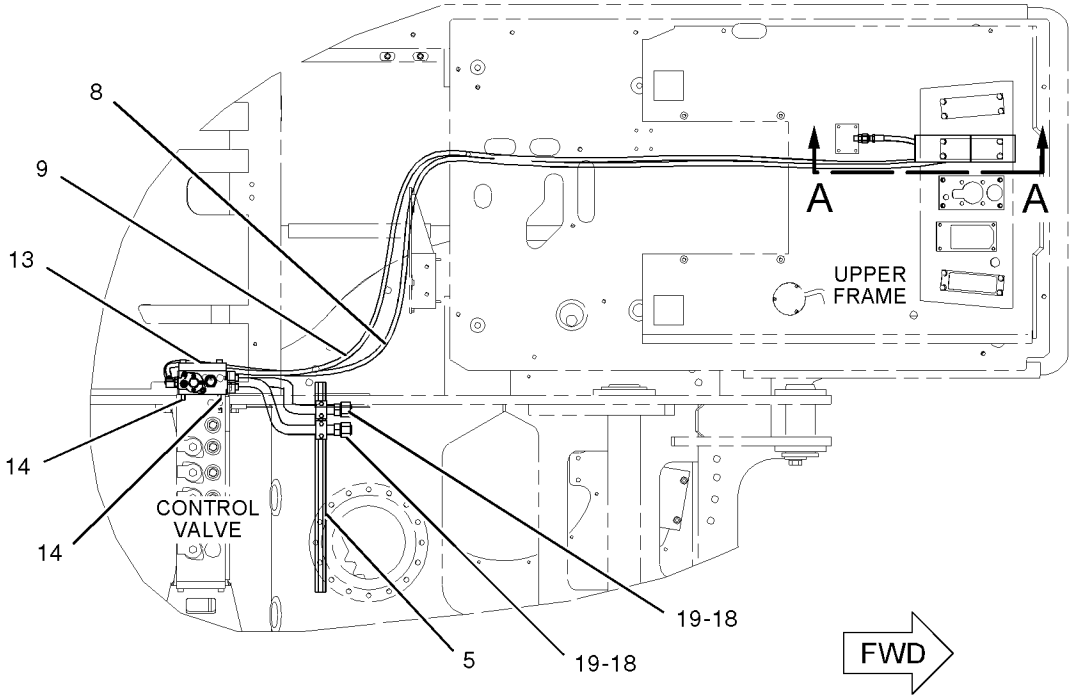

TOP VIEW

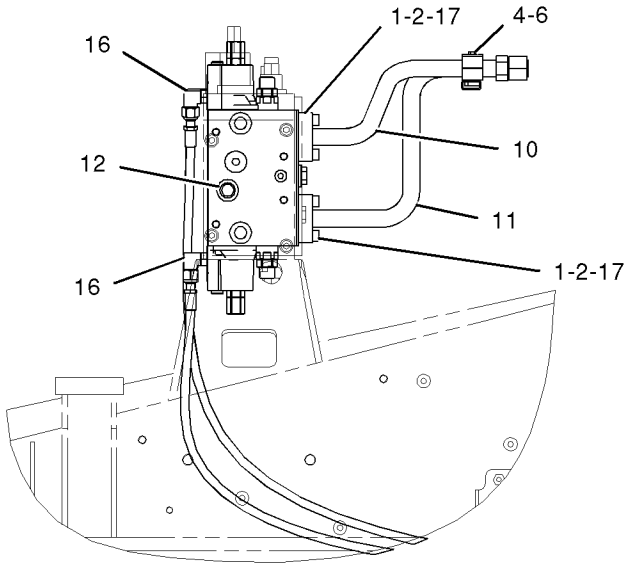

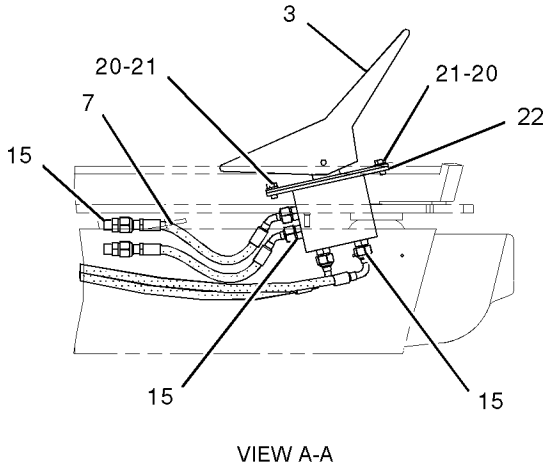

VIEW A-A

RIGHT SIDE VIEW

GRAPHIC #1 **<END>** g01029586

188-4962 LINES GP-PILOT–OPERATOR, EXTENSION

S/N: BCZ1-2000
PART OF 188-4960 CAB AR-RISER
AN ATTACHMENT

SMCS-5057, 5059 **i01902271**

NOTE	REF NO	GRAPHIC REF	PART NUMBER	QTY	PART NAME 1 2 3 4 5 6 (PRODUCT LEVEL)	SEE PAGE
	1	1	**114-9324**	1	CLAMP-SINGLE	
	2	1	**114-9325**	7	CLAMP-DOUBLE	
I	3	1	**133-2154**	4	HOSE AS	
	4	1	**196-9068**	1	BRACKET AS	
	5	1	**197-5699**	1	BRACKET AS	
	6	1	**234-2752**	2	HOSE AS	
	7	1	**234-9377**	4	HOSE AS	
	8	1	*164-5570*	10	UNION AS	
					(EACH INCLUDES)	
		1	**6V-8397**	2	SEAL-O-RING	
		1	**6V-8730**	1	UNION	
M	9	1	**8T-4200**	2	BOLT (M8X1.25X16-MM)	
	10	1	**8T-4224**	2	WASHER-HARD (8.8X16X2-MM THK)	

I-REFER TO HYDRAULIC INFORMATION SYSTEM
M-METRIC PART

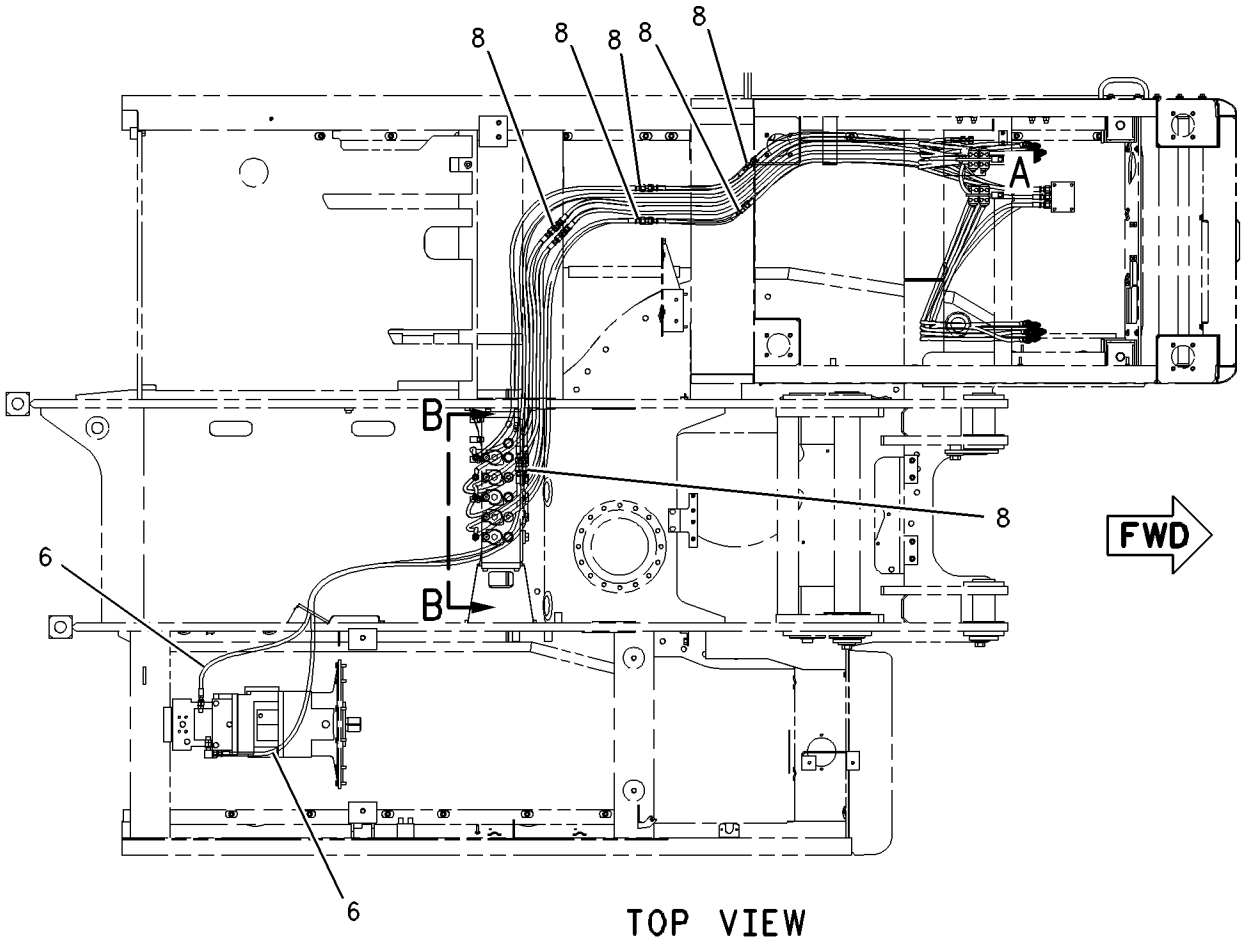

TOP VIEW

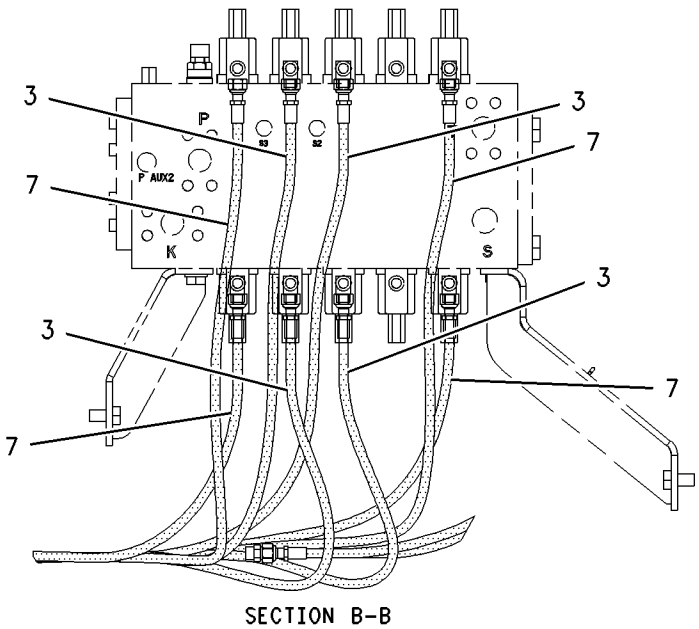

SECTION B-B

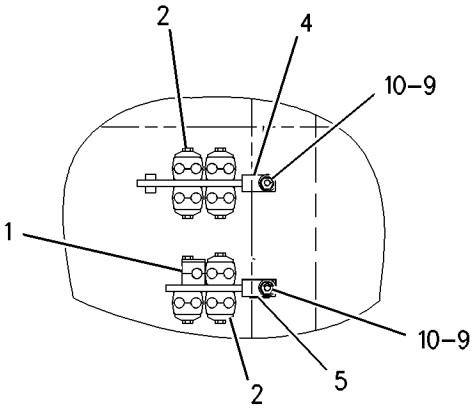

VIEW OF AREA A

GRAPHIC #1 **<END>** g00991301

188-4963 LINES GP-PILOT–UPPER, EXTENSION

S/N: BCZ1-2000
PART OF 188-4960 CAB AR-RISER
AN ATTACHMENT

SMCS-5057, 5059 **i01902264**

NOTE	REF NO	GRAPHIC REF	PART NUMBER	QTY	PART NAME 1 2 3 4 5 6 (PRODUCT LEVEL)	SEE PAGE
I	1	1	**113-0477**	1	HOSE AS	
	2	1	*164-5570*	1	UNION AS	
		1	**6V-8397**	2	SEAL-O-RING	
		1	**6V-8730**	1	UNION	

I-REFER TO HYDRAULIC INFORMATION SYSTEM

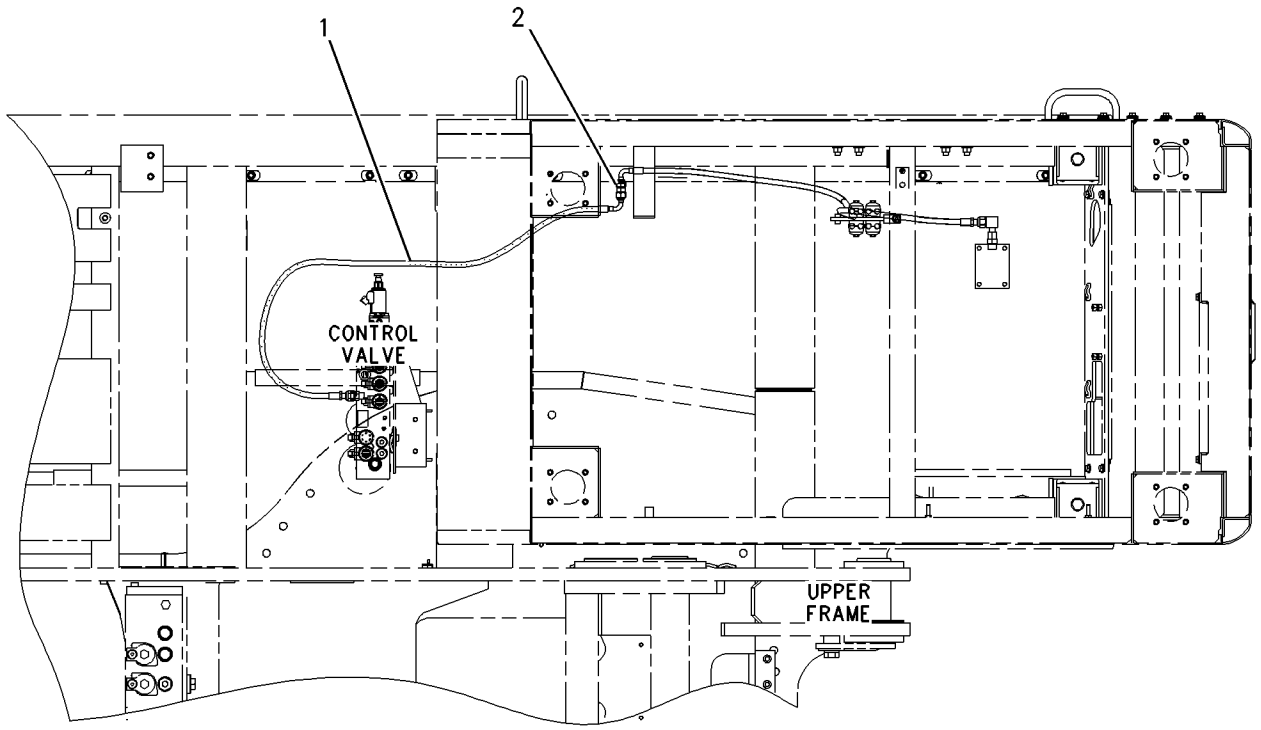

TOP VIEW FWD

GRAPHIC #1 **<END>** g00991079

HYDRAULIC SYSTEM

188-4964 LINES GP-PILOT–BRAKE, EXTENSION

S/N: BCZ1-2000

PART OF 188-4960 CAB AR-RISER

AN ATTACHMENT

SMCS-5057, 5059 **i01902257**

NOTE	REF NO	GRAPHIC REF	PART NUMBER	QTY	PART NAME 1 2 3 4 5 6 (PRODUCT LEVEL)	SEE PAGE
I	1	1	**110-1994**	1	HOSE AS	
I	2	1	**115-7053**	1	HOSE AS	
	3	1	**140-1983**	2	CLAMP-SINGLE	
I	4	1	**165-3097**	1	HOSE AS	
I	5	1	**233-9616**	2	HOSE AS	
I	6	1	**233-9617**	1	HOSE AS	
	7	1	*148-8370*	1	ELBOW AS	
		1	**6V-8398**	1	SEAL-O-RING	
		1	**6V-9851**	1	ELBOW	
	8	1	*164-5572*	2	UNION AS	
					(EACH INCLUDES)	
		1	**6V-8398**	2	SEAL-O-RING	
		1	**6V-8731**	1	UNION	
	9	1	**6V-8397**	2	SEAL-O-RING	
	10	1	**6V-8398**	2	SEAL-O-RING	
	11	1	**6V-9169**	2	NUT-BULKHEAD (13/16-16-THD)	
	12	1	**8T-0129**	2	UNION	

I-REFER TO HYDRAULIC INFORMATION SYSTEM

188-4964 **LINES GP-PILOT** *(contd.)* **i01902257**

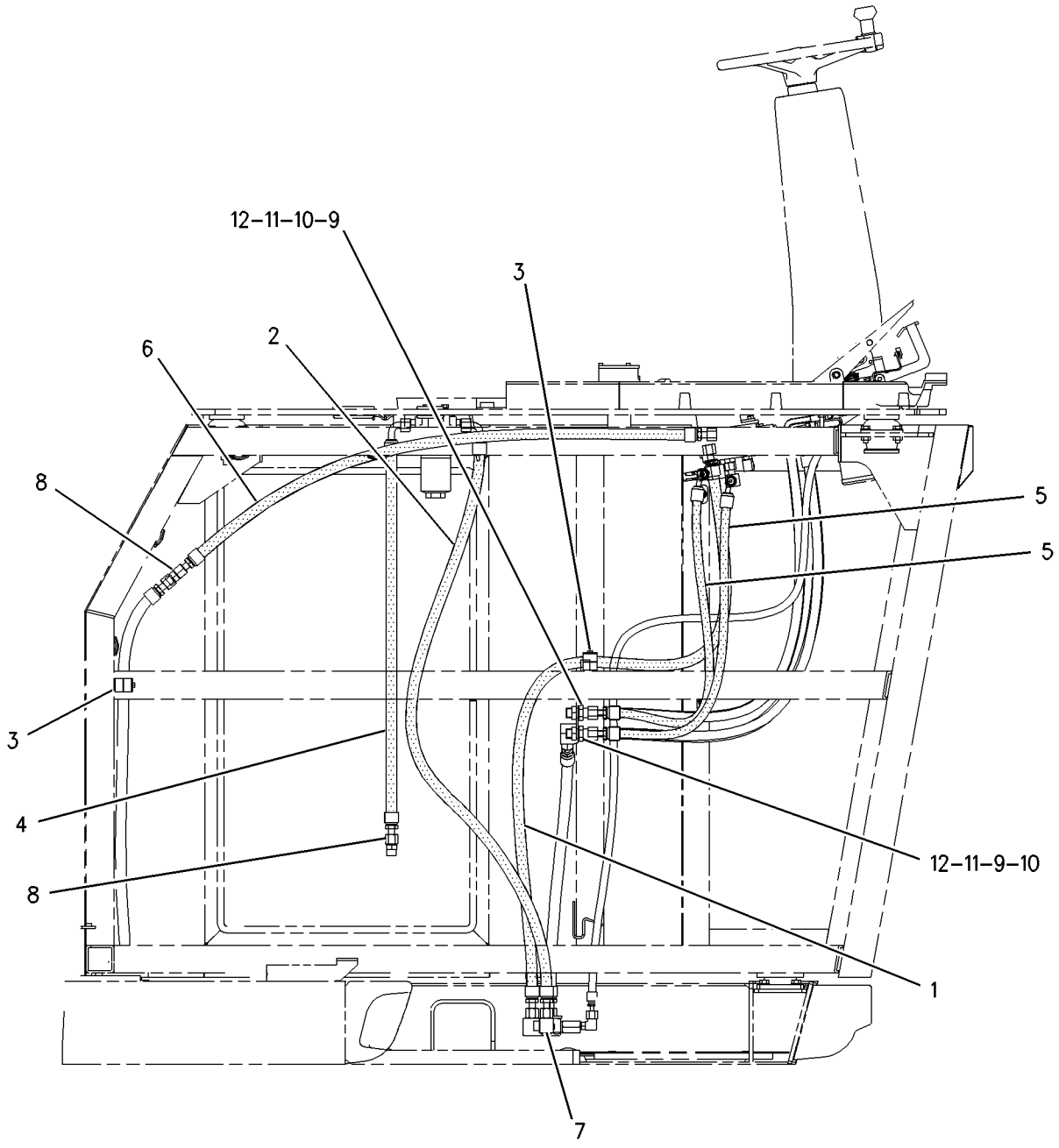

RIGHT SIDE VIEW

GRAPHIC #1 **<END>** g00991127

188-4975 LINES GP-PILOT–VARIABLE ADJUSTABLE EXTENSION

S/N: BCZ1-2000

FOR USE WITH FIXED CAB RISER, VARIABLE ADJUSTABLE BOOM AN ATTACHMENT

SMCS-5057, 5059 **i01902602**

NOTE	REF NO	GRAPHIC REF	PART NUMBER	QTY	PART NAME 1 2 3 4 5 6 (PRODUCT LEVEL)	SEE PAGE
	1	1	**114-9325**	1	CLAMP-DOUBLE	
I	2	1	**122-1232**	2	HOSE AS	
	3	1	*164-5570*	2	UNION AS	
					(EACH INCLUDES)	
		1	**6V-8397**	2	SEAL-O-RING	
		1	**6V-8730**	1	UNION	

I-REFER TO HYDRAULIC INFORMATION SYSTEM

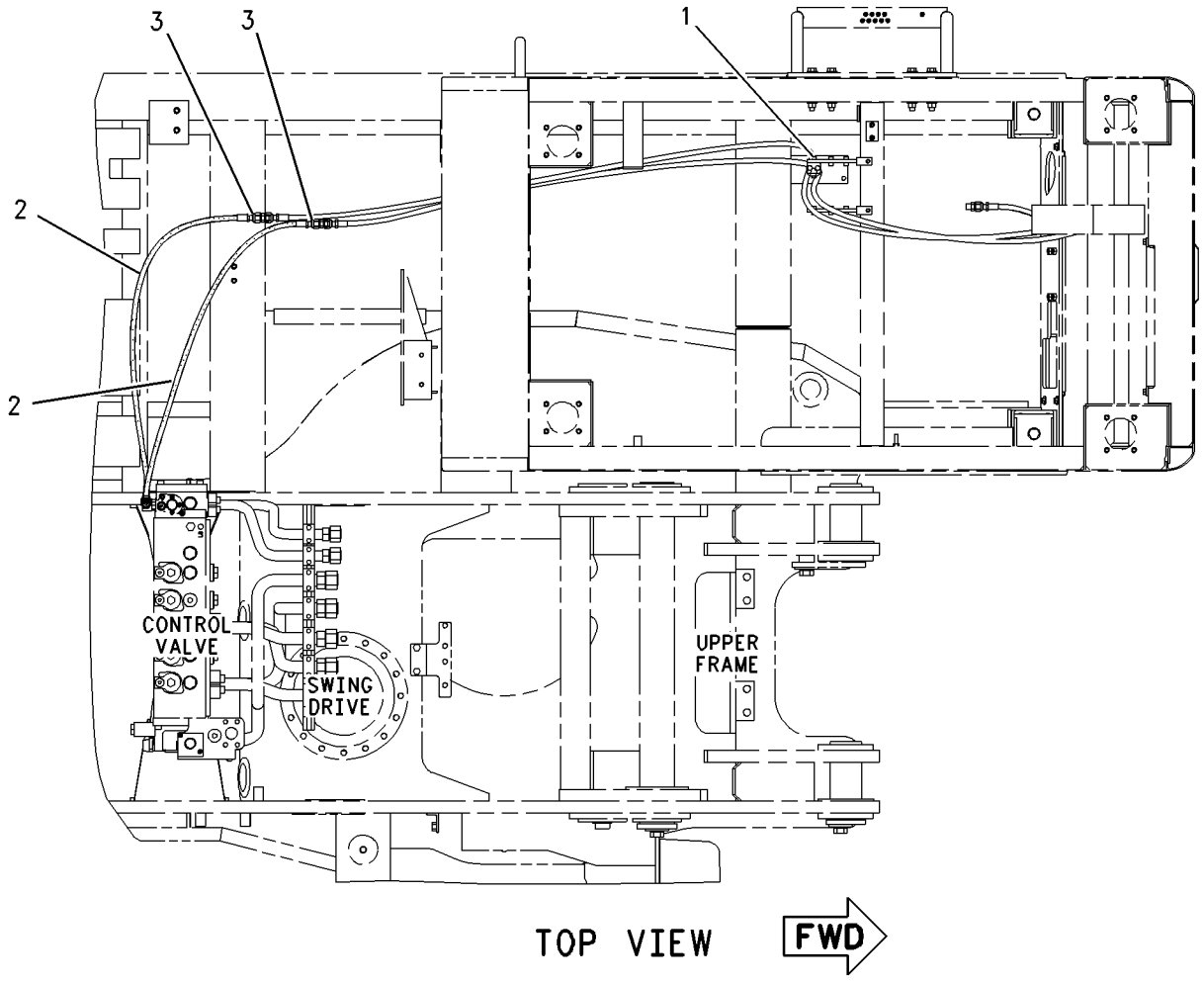

GRAPHIC #1 **<END>** g00991165

188-4976 LINES GP-PILOT–HAMMER, EXTENSION

S/N: BCZ1-2000
FOR USE WITH FIXED CAB RISER, MULTI COMBINED VALVE
AN ATTACHMENT

SMCS-5057, 5059 **i01902606**

NOTE	REF NO	GRAPHIC REF	PART NUMBER	QTY	PART NAME 1 2 3 4 5 6 (PRODUCT LEVEL)	SEE PAGE
	1	1	**114-9325**	1	CLAMP-DOUBLE	
I	2	1	**122-1232**	2	HOSE AS	
	3	1	*164-5570*	2	UNION AS	
					(EACH INCLUDES)	
		1	**6V-8397**	2	SEAL-O-RING	
		1	**6V-8730**	1	UNION	

I-REFER TO HYDRAULIC INFORMATION SYSTEM

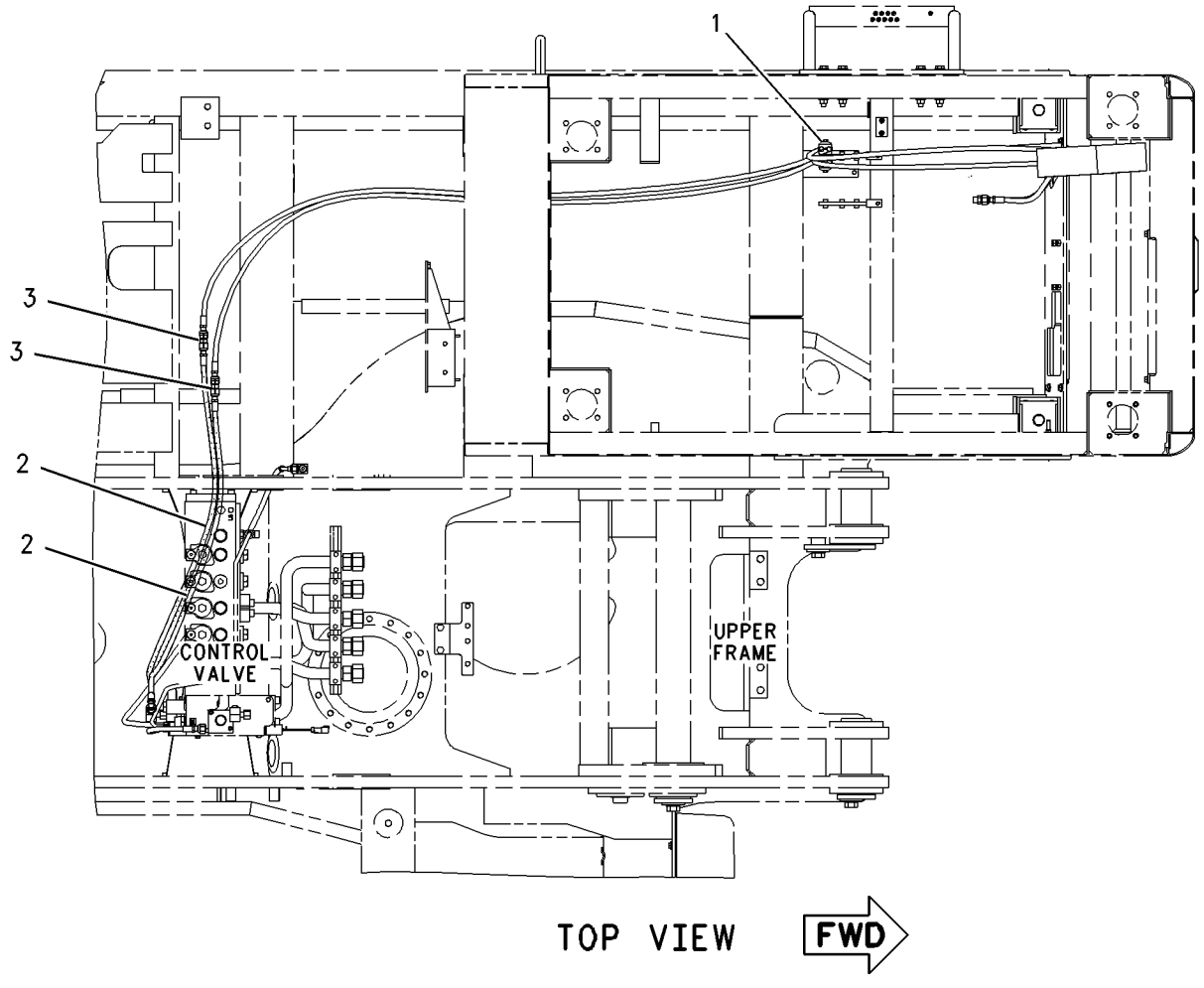

GRAPHIC #1 **<END>** g00991094

HYDRAULIC SYSTEM

188-7582 LINES GP-PILOT—PLATFORM, BRAKE

S/N: BCZ1-2000

PART OF 186-0471 HYDRAULIC AR

SMCS-5057, 5059 **i02161808**

NOTE	REF NO	GRAPHIC REF	PART NUMBER	QTY	PART NAME 1 2 3 4 5 6 (PRODUCT LEVEL)	SEE PAGE
Y	1	1	**5W-9971**	2	ACCUMULATOR GP-HYDRAULIC (CHARGED)	413
	2	1	**119-0744**	1	HOSE AS	
	3	1	**6V-0852**	3	CAP-DUST	
Y	4	1	**145-7750**	1	FILTER GP-OIL (HYDRAULIC)	477
	5	1	*148-8420*	1	TEE GP	
		1	**3K-0360**	1	SEAL-O-RING	
		1	**6V-8398**	1	SEAL-O-RING	
		1	**8T-6338**	1	TEE-O-RING PORT	
	6	1	*148-8424*	1	TEE AS	
		1	**6V-8397**	1	SEAL-O-RING	
		1	**8T-8902**	1	TEE	
I	7	1	**172-0685**	1	HOSE AS	
I	8	1	**195-0799**	2	HOSE AS	
I	9	1	**196-7917**	2	HOSE AS	
I	10	1	**196-7924**	1	HOSE AS	
	11	1	**197-9995**	1	FLANGE	
I	12	1	**203-1921**	1	HOSE AS	
I	13	1	**208-7047**	1	HOSE AS	
I	14	1	**214-3998**	1	HOSE AS	
M	15	1	**105-3487**	2	BOLT-SOCKET HEAD (M6X1X20-MM)	
	16	1	**118-8599**	2	NUT-HEX	
	17	1	*148-8318*	2	CONNECTOR AS	
					(EACH INCLUDES)	
		1	**3K-0360**	1	SEAL-O-RING	
		1	**6V-8397**	1	SEAL-O-RING	
		1	**6V-8634**	1	CONNECTOR	
	18	1	*148-8336*	2	CONNECTOR AS	
					(EACH INCLUDES)	
		1	**3J-1907**	1	SEAL-O-RING	
		1	**6V-8397**	1	SEAL-O-RING	
		1	**6V-8636**	1	CONNECTOR	
	19	1	*148-8340*	1	CONNECTOR AS	
		1	**3K-0360**	1	SEAL-O-RING	
		1	**6V-8398**	1	SEAL-O-RING	
		1	**6V-8639**	1	CONNECTOR	
	20	1	*148-8345*	6	CONNECTOR AS	
					(EACH INCLUDES)	
		1	**2M-9780**	1	SEAL-O-RING	
		1	**6V-8398**	1	SEAL-O-RING	
		1	**6V-8638**	1	CONNECTOR	
	21	1	*148-8364*	1	ELBOW AS	
		1	**3K-0360**	1	SEAL-O-RING	
		1	**6V-8398**	1	SEAL-O-RING	
		1	**6V-8625**	1	ELBOW	
	22	1	*148-8367*	1	ELBOW AS	
		1	**6V-8397**	1	SEAL-O-RING	
		1	**6V-9850**	1	ELBOW	
	23	1	*148-8370*	2	ELBOW AS	
					(EACH INCLUDES)	
		1	**6V-8398**	1	SEAL-O-RING	
		1	**6V-9851**	1	ELBOW	
	24	1	*148-8372*	1	ELBOW AS	
		1	**2M-9780**	1	SEAL-O-RING	
		1	**6V-8398**	1	SEAL-O-RING	
		1	**6V-8721**	1	ELBOW	
	25	1	*148-8374*	1	ELBOW AS	

188-7582 **LINES GP-PILOT** ***(contd.)*** **i02161808**

NOTE	REF NO	GRAPHIC REF	PART NUMBER	QTY	PART NAME 1 2 3 4 5 6 (PRODUCT LEVEL)	SEE PAGE
		1	**3K-0360**	1	SEAL-O-RING	
		1	**6V-8397**	1	SEAL-O-RING	
		1	**6V-8723**	1	ELBOW	
	26	1	*148-8378*	1	ELBOW AS	
		1	**3J-1907**	1	SEAL-O-RING	
		1	**6V-8397**	1	SEAL-O-RING	
		1	**6V-8724**	1	ELBOW	
	27	1	*148-8391*	1	ELBOW GP	
		1	**2S-4078**	1	SEAL-O-RING	
		1	**5K-9090**	1	SEAL-O-RING	
		1	**8T-8987**	1	ELBOW	
	28	1	*148-8415*	1	REDUCER GP	
		1	**6V-8397**	1	SEAL-O-RING	
		1	**6V-8936**	1	REDUCER	
	29	1	*148-8444*	1	TEE AS-SWIVEL	
		1	**6V-8398**	2	SEAL-O-RING	
		1	**6V-9837**	1	TEE-SWIVEL	
	30	1	*164-5608*	1	CONNECTOR AS	
		1	**3K-0360**	1	SEAL-O-RING	
		1	**6V-8398**	1	SEAL-O-RING	
		1	**8T-1687**	1	CONNECTOR	
	31	1	**3J-1907**	3	SEAL-O-RING	
	32	1	**5K-9090**	1	SEAL-O-RING	
	33	1	**6V-4433**	3	FITTING	
	34	1	**8T-4224**	4	WASHER-HARD (8.8X16X2-MM THK)	
M	35	1	*8T-4908*	4	BOLT (M8X1.25X25-MM)	
M	36	1	**8T-9534**	2	BOLT (M6X1X50-MM)	
	37	1	**8U-0215**	1	SEAL-O-RING	

I-REFER TO HYDRAULIC INFORMATION SYSTEM
M-METRIC PART
Y-SEPARATE ILLUSTRATION

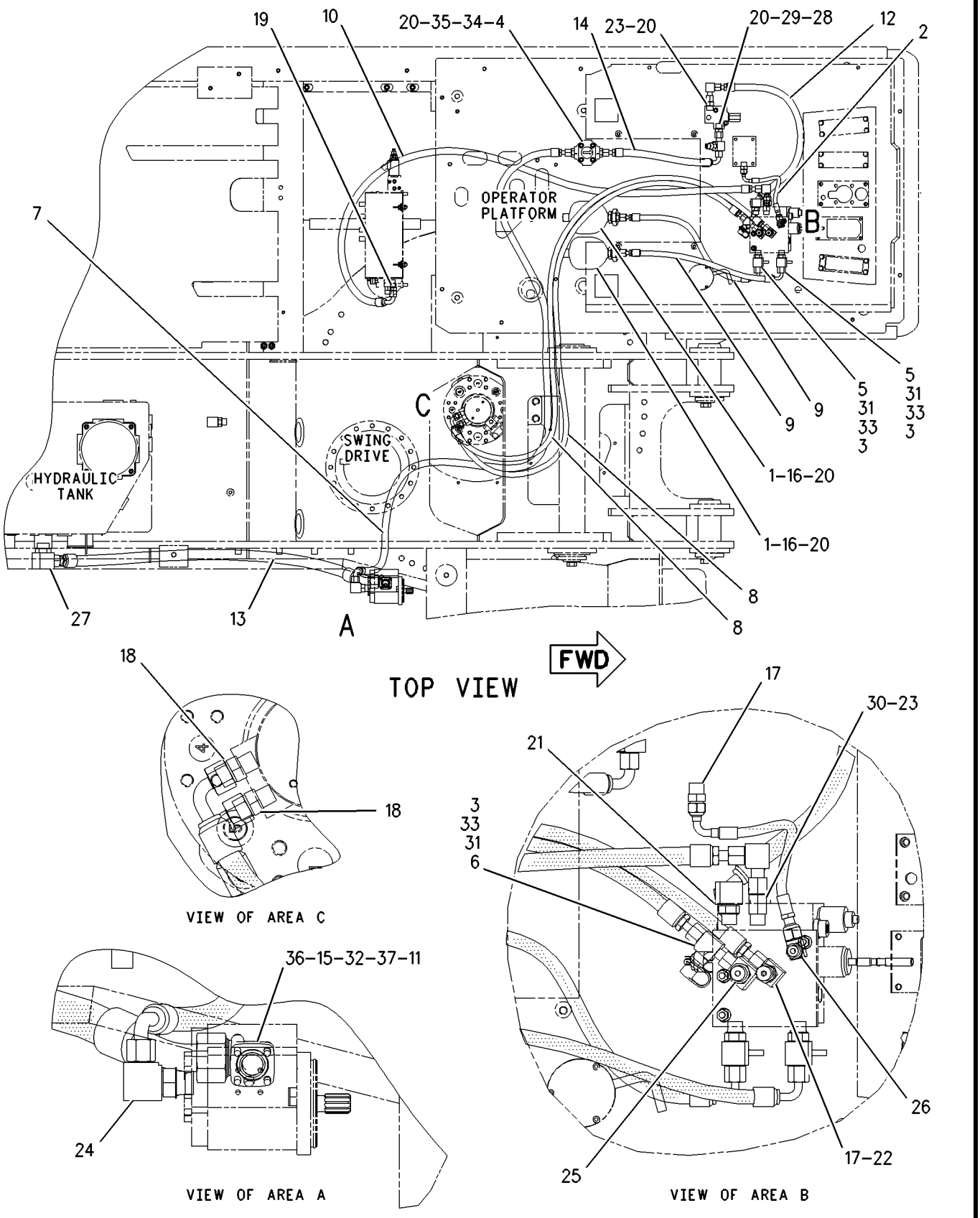

GRAPHIC #1 **<END>** g00916910

HYDRAULIC SYSTEM

192-3175 LINES GP-PILOT—HAMMER

S/N: BCZ1-2000

CANNOT BE USED WITH COMBINED FUNCTION LINES VALVE GP AN ATTACHMENT

SMCS-5057, 5059 **i02155018**

NOTE	REF NO	GRAPHIC REF	PART NUMBER	QTY	PART NAME 1 2 3 4 5 6 (PRODUCT LEVEL)	SEE PAGE
	1	1	**8U-0284**	2	FLANGE-HALF	
	2	1	**8U-0891**	1	FLANGE	
Y	3	1	**112-5704**	1	CONTROL GP-HYDRAULIC PEDAL	431
	4	1	**118-8985**	2	BOSS	
	5	1	**138-9355**	2	HOSE AS	
	6	1	**188-1790**	1	TUBE AS	
I	7	1	**188-6380**	1	HOSE AS	
Y	8	1	**192-3176**	1	VALVE GP-CONTROL (HYDRAULIC HAMMER)	699
	9	1	**196-8422**	1	HOSE AS	
	10	1	**196-9060**	1	PLATE	
	11	1	**239-9683**	1	BOLT-SPECIAL	
	12	1	**239-9686**	1	PLATE	
	13	1	**239-9688**	1	BOLT (M10X1.5X96-MM)	
	14	1	**239-9689**	1	LEVER AS	
	15	1	**118-8984**	1	CLAMP	
	16	1	*148-8336*	6	CONNECTOR AS	
					(EACH INCLUDES)	
		1	**3J-1907**	1	SEAL-O-RING	
		1	**6V-8397**	1	SEAL-O-RING	
		1	**6V-8636**	1	CONNECTOR	
	17	1	*162-0177*	1	PLUG AS	
		1	**9S-8004**	1	PLUG	
		1	**3J-1907**	1	SEAL-O-RING	
	18	1	**1P-4578**	2	FLANGE-HALF	
	19	1	**4J-0520**	2	SEAL-O-RING	
	20	1	**4J-0522**	1	SEAL-O-RING	
	21	1	**4J-0524**	1	SEAL-O-RING	
	22	1	**5K-9090**	1	SEAL-O-RING	
	23	1	**6V-9833**	1	CAP AS	
M	24	1	**8T-0272**	4	BOLT-SOCKET HEAD (M10X1.5X110-MM)	
M	25	1	**8T-0273**	8	BOLT-SOCKET HEAD (M12X1.75X40-MM)	
M	26	1	**8T-0389**	1	LOCKNUT (M10X1.5-THD)	
	27	1	**8T-4121**	5	WASHER-HARD (11X21X2.5-MM THK)	
M	28	1	**8T-4189**	2	BOLT (M8X1.25X20-MM)	
M	29	1	**8T-4196**	4	BOLT (M10X1.5X35-MM)	
	30	1	**8T-4224**	3	WASHER-HARD (8.8X16X2-MM THK)	
M	31	1	**8T-4908**	1	BOLT (M8X1.25X25-MM)	
FY			**213-6476**	1	WIRING GP-HAMMER	207
F			**143-5907**	1	FILM-INSTRUCTION (HYDRAULIC HAMMER)	
					(LOCTE ON TOP OF CONTROL FILM ON THE RH CAB WINDOW	

F-NOT SHOWN
I-REFER TO HYDRAULIC INFORMATION SYSTEM
M-METRIC PART
Y-SEPARATE ILLUSTRATION

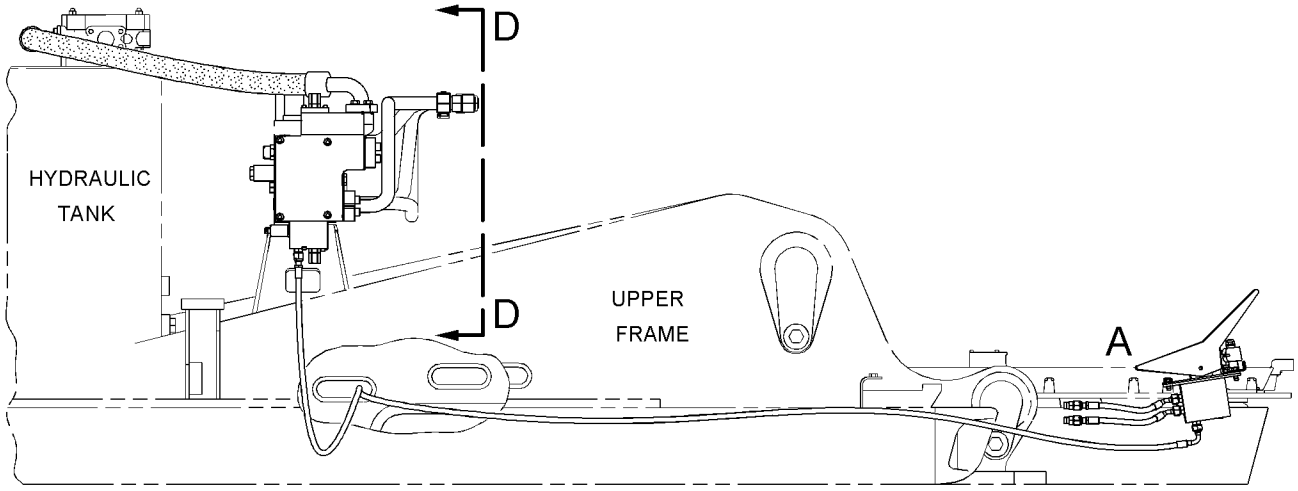

RIGHT SIDE VIEW

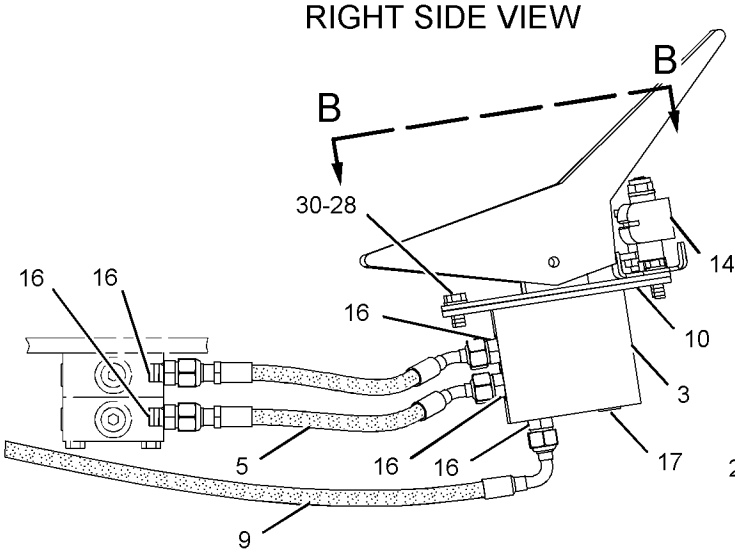

VIEW OF AREA A

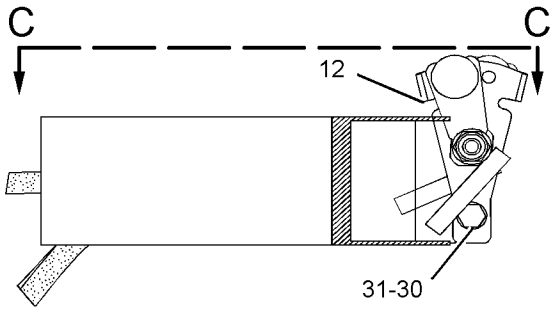

SECTION B-B

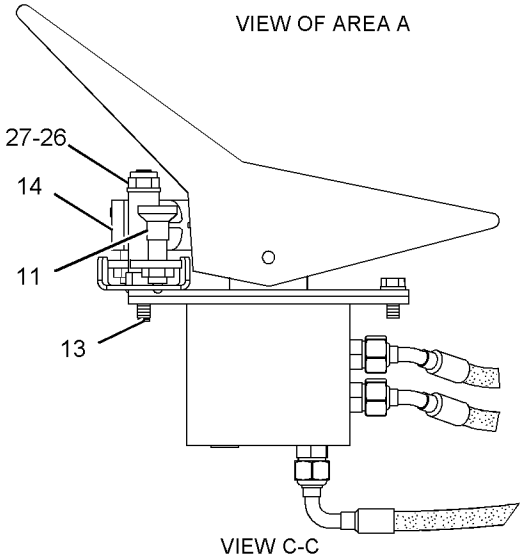

VIEW C-C

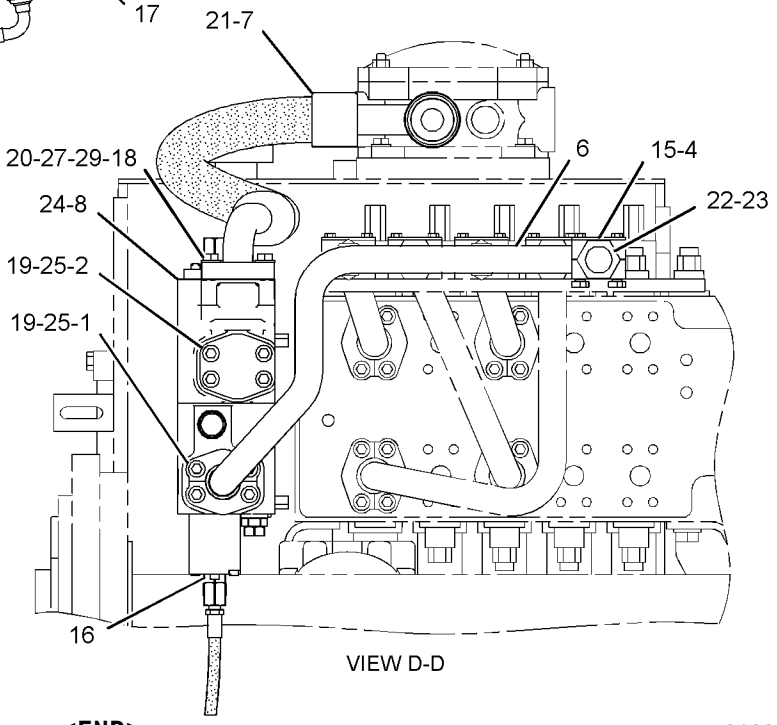

VIEW D-D

GRAPHIC #1 **<END>** g01094484

207-2170 LINES GP-PILOT–TRAVEL, EXTENSION

S/N: BCZ1-2000
PART OF 188-4960 CAB AR-RISER
AN ATTACHMENT

SMCS-5057, 5059 **i02066240**

NOTE	REF NO	GRAPHIC REF	PART NUMBER	QTY	PART NAME 1 2 3 4 5 6 (PRODUCT LEVEL)	SEE PAGE
I	1	1	**113-0442**	2	HOSE AS	
I	2	1	**113-0477**	1	HOSE AS	
I	3	1	**136-1862**	1	HOSE AS	
	4	1	*164-5570*	4	UNION AS	
					(EACH INCLUDES)	
		1	**6V-8397**	2	SEAL-O-RING	
		1	**6V-8730**	1	UNION	
I-REFER TO HYDRAULIC INFORMATION SYSTEM						

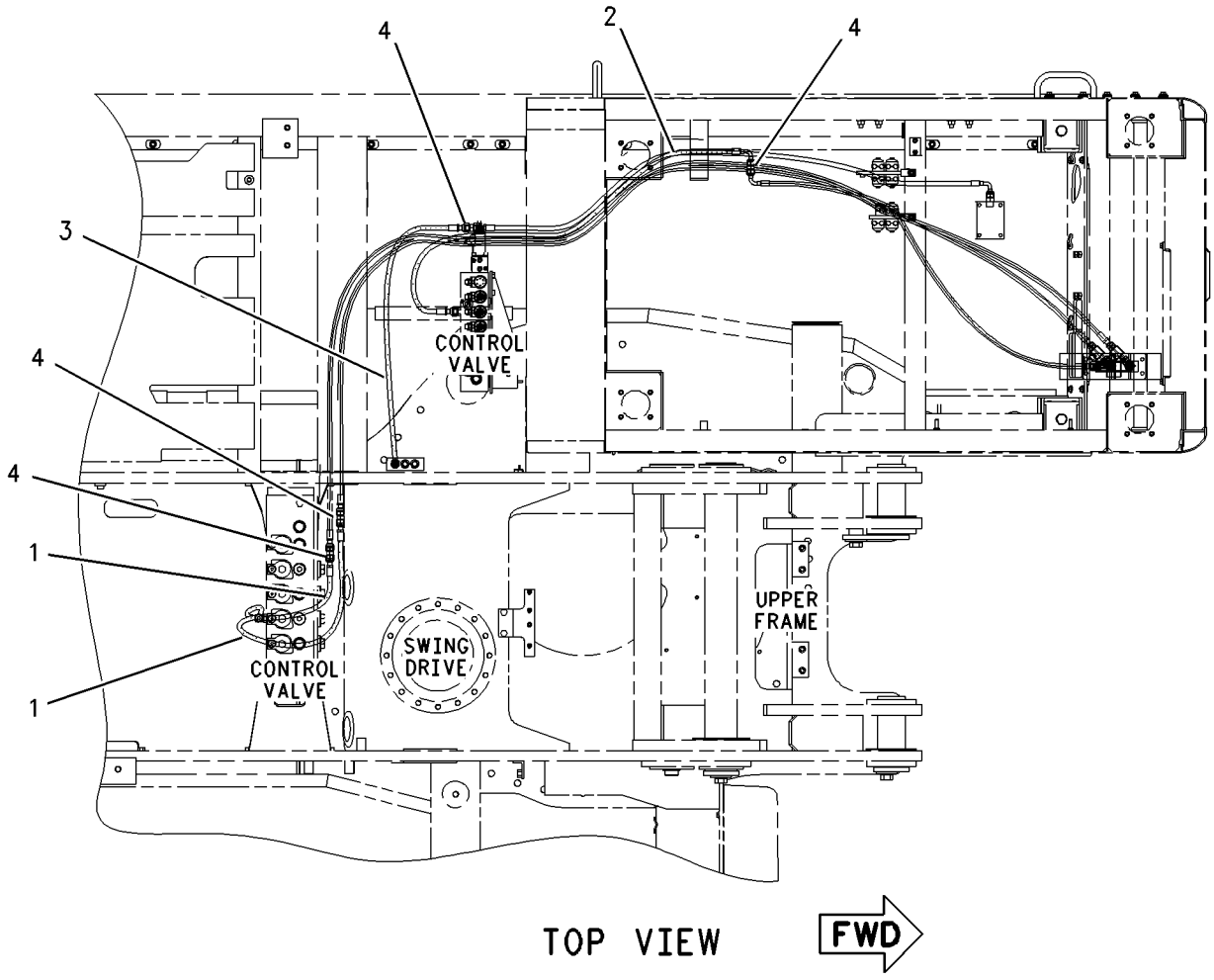

GRAPHIC #1 **<END>** g00991108

HYDRAULIC SYSTEM

243-2225 LINES GP-PILOT

S/N: BCZ1-2000

CANNOT BE USED WITH FIXED CAB RISER, MATERIAL HANDLER BOOM AN ATTACHMENT

SMCS-5057, 5059 **i02063231**

NOTE	REF NO	GRAPHIC REF	PART NUMBER	QTY	PART NAME 1 2 3 4 5 6 (PRODUCT LEVEL)	SEE PAGE
I	1	1	**113-0457**	2	HOSE AS	
I	2	1	**125-4907**	1	HOSE AS	
	3	1	**151-1948**	1	HOSE AS	
	4	1	**243-2226**	1	BRACKET	
	5	1	**243-5227**	1	VALVE	
	6	1	*148-8336*	2	CONNECTOR AS	
					(EACH INCLUDES)	
	6A	1	**3J-1907**	1	SEAL-O-RING	
	6B	1	**6V-8397**	1	SEAL-O-RING	
	6C	1	**6V-8636**	1	CONNECTOR	
	7	1	*148-8338*	2	CONNECTOR AS	
					(EACH INCLUDES)	
	7A	1	**3J-1907**	1	SEAL-O-RING	
	7B	1	**6V-8397**	1	SEAL-O-RING	
	7C	1	**8T-0075**	1	CONNECTOR	
	8	1	*148-8367*	3	ELBOW AS	
					(EACH INCLUDES)	
	8A	1	**6V-8397**	1	SEAL-O-RING	
	8B	1	**6V-9850**	1	ELBOW	
	9	1	*148-8378*	2	ELBOW AS	
					(EACH INCLUDES)	
	9A	1	**3J-1907**	1	SEAL-O-RING	
	9B	1	**6V-8397**	1	SEAL-O-RING	
	9C	1	**6V-8724**	1	ELBOW	
M	10	1	**8U-5746**	2	BOLT (M6X1X75-MM)	
F			**243-4129**	1	FILM-CONTROL PATTERN	
F			**243-4130**	1	FILM-INSTRUCTION (ALTERNATE CONTROL PATTERN)	

F-NOT SHOWN
I-REFER TO HYDRAULIC INFORMATION SYSTEM
M-METRIC PART

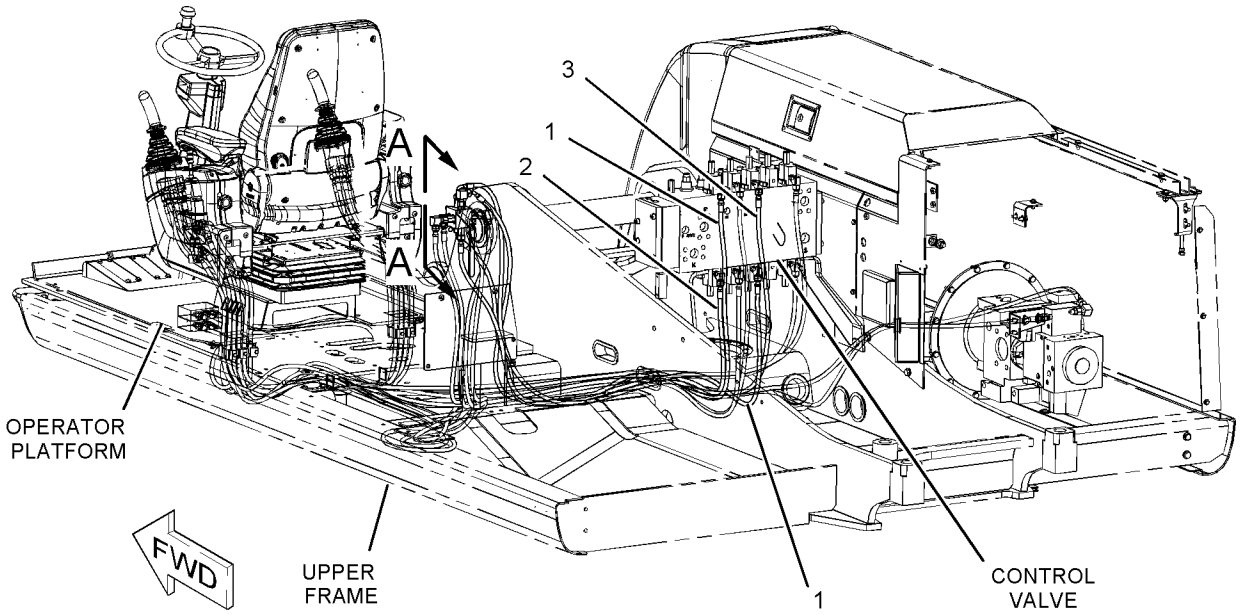

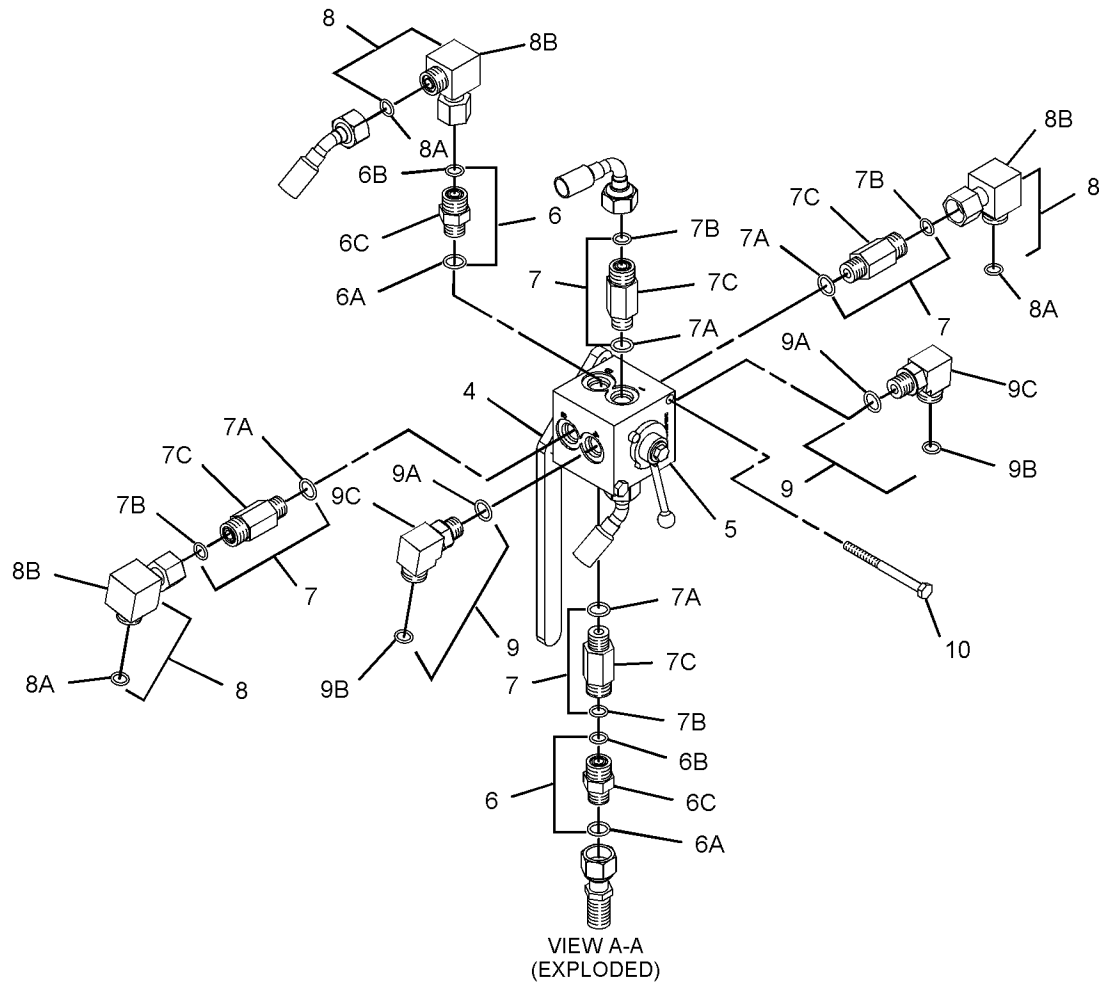

GRAPHIC #1

<END>

g01069508

HYDRAULIC SYSTEM

188-7612 LINES GP-PRESSURE TEST

S/N: BCZ1-2000

PART OF 186-0471 HYDRAULIC AR

SMCS-5057 **i01807992**

NOTE	REF NO	GRAPHIC REF	PART NUMBER	QTY	PART NAME 1 2 3 4 5 6 (PRODUCT LEVEL)	SEE PAGE
	1	1	**8U-7203**	4	HOSE AS	
	2	1	**120-4162**	7	WASHER	
Y	3	1	**121-0530**	7	FITTING GP (QUICK DISCONNECT)	479
	4	1	**137-9629**	3	HOSE AS	
	5	1	*148-8336*	5	CONNECTOR AS	
					(EACH INCLUDES)	
		1	**3J-1907**	1	SEAL-O-RING	
		1	**6V-8397**	1	SEAL-O-RING	
		1	**6V-8636**	1	CONNECTOR	
	6	1	**6V-8397**	7	SEAL-O-RING	
	7	1	**6V-9168**	7	NUT (11/16-16-THD)	
B	8	1	**9X-6772**	3	STRAP-CABLE	

B-USE AS REQUIRED
Y-SEPARATE ILLUSTRATION

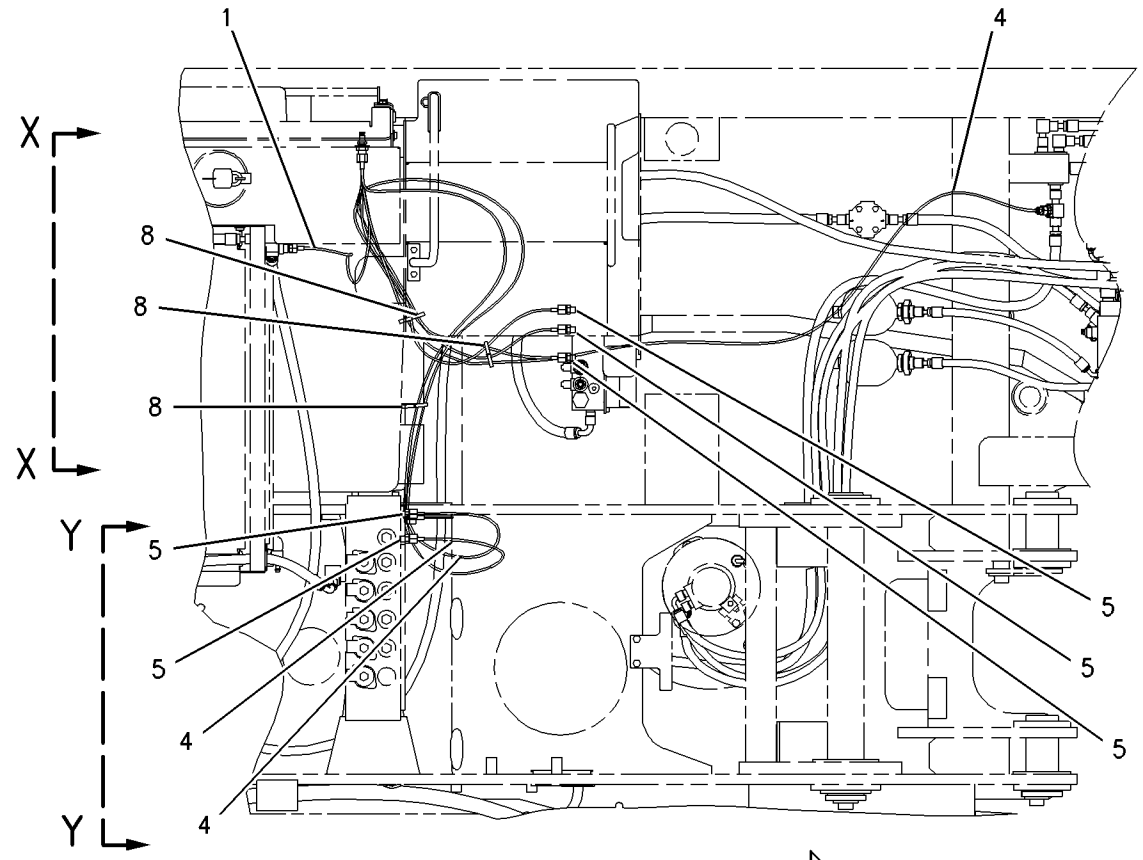

TOP VIEW FWD

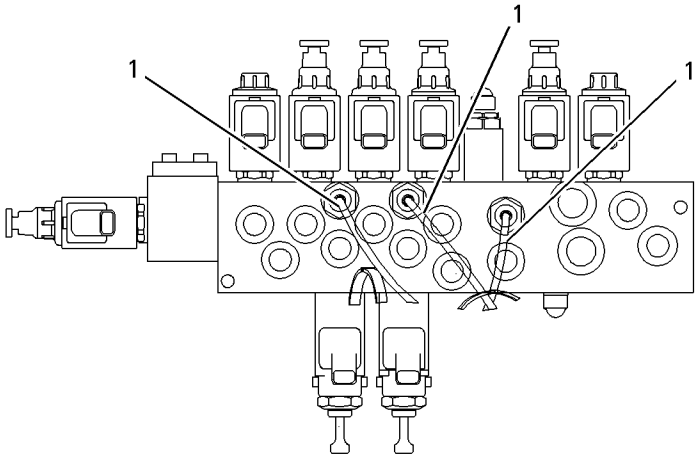

VIEW X-X

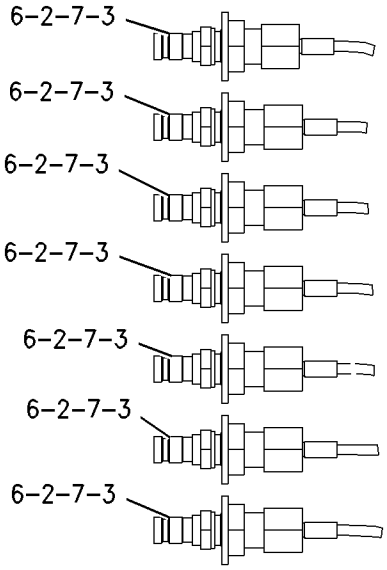

VIEW Y-Y

GRAPHIC #1 **<END>** g00924437

HYDRAULIC SYSTEM

188-7597 LINES GP-PUMP

S/N: BCZ1-2000

PART OF 186-0471 HYDRAULIC AR

SMCS-5057 **i02019562**

NOTE	REF NO	GRAPHIC REF	PART NUMBER	QTY	PART NAME 1 2 3 4 5 6 (PRODUCT LEVEL)	SEE PAGE
	1	2	**6V-0852**	3	CAP-DUST	
	2	2	**6V-4433**	1	FITTING	
	3	2	**8U-0284**	2	FLANGE-HALF	
	4	2	**107-4316**	1	FLANGE	
	5	2	**112-8166**	1	HOSE	
M	6	1	**8T-5005**	2	BOLT (M10X1.5X70-MM)	
	7	1	**139-4016**	1	INSERT-RUBBER	
	8	2	**242-9358**	1	TUBE AS	
I	9	1	**190-8545**	1	HOSE AS	
I	10	1	**190-8546**	1	HOSE AS	
I	11	1	**190-8547**	1	HOSE AS	
I	12	1	**190-8548**	1	HOSE AS	
I	13	1	**190-8549**	1	HOSE AS	
	14	2	**8T-6726**	2	CLAMP-HOSE	
	15	2	**110-6349**	2	FITTING AS (QUICK DISCONNECT)	
	16	2	**117-1266**	1	SEAL-O-RING	
	17	1	**139-5751**	1	CLAMP-SINGLE	
	18	1,2	**9X-6579**	2	NUT-ORIFICE (7/16-12-THD)	
	19	2	*148-8339*	1	CONNECTOR AS	
		2	**6V-8716**	1	CONNECTOR	
		2	**6V-9746**	1	SEAL-O-RING	
		2	**7M-8485**	1	SEAL-O-RING	
	20	2	*148-8365*	1	ELBOW AS	
		2	**3J-1907**	1	SEAL-O-RING	
		2	**6V-8398**	1	SEAL-O-RING	
		2	**8T-6876**	1	ELBOW	
	21	1	*148-8370*	1	ELBOW AS	
		1	**6V-8398**	1	SEAL-O-RING	
		1	**6V-9851**	1	ELBOW	
	22	1,2	*148-8412*	2	REDUCER AS	
					(EACH INCLUDES)	
		1,2	**6V-8398**	1	SEAL-O-RING	
		1,2	**6V-8944**	1	REDUCER-O-RING	
	23	1	*150-4043*	1	CONNECTOR AS	
		1	**3J-1907**	1	SEAL-O-RING	
		1	**6V-8398**	1	SEAL-O-RING	
		1	**6V-9873**	1	CONNECTOR	
	24	1	*153-6243*	1	TEE AS	
		1	**2S-4078**	1	SEAL-O-RING	
		1	**5K-9090**	1	SEAL-O-RING	
		1	**6V-9746**	1	SEAL-O-RING	
		1	**8T-1120**	1	TEE-O-RING PORT	
	25	1	*153-6262*	1	UNION AS	
		1	**5K-9090**	2	SEAL-O-RING	
		1	**6V-8734**	1	UNION	
	26	2	*164-5577*	1	ELBOW GP	
		2	**5K-9090**	2	SEAL-O-RING	
		2	**6V-8984**	1	ELBOW	
	27	1	**1P-3703**	1	SEAL-RECTANGULAR	
	28	1	**1P-3704**	1	SEAL-RECTANGULAR	
	29	2	**4J-0520**	1	SEAL-O-RING	
	30	1	**6V-0400**	2	FLANGE-HALF	
	31	1	**6V-0401**	2	FLANGE-HALF	
	32	2	**6V-9172**	1	NUT (1 7/16-12-THD)	
	33	1	**7X-0510**	4	WASHER-HARD (15.5X29X3-MM THK)	
	34	1	**7Y-8170**	1	GROMMET	

188-7597 **LINES GP-PUMP** ***(contd.)*** **i02019562**

NOTE	REF NO	GRAPHIC REF	PART NUMBER	QTY	PART NAME 1 2 3 4 5 6 (PRODUCT LEVEL)	SEE PAGE
M	35	1	**8T-0226**	4	BOLT (M14X2X45-MM)	
M	36	2	**8T-4183**	4	BOLT (M12X1.75X40-MM)	
M	37	1	**8T-4184**	4	BOLT (M12X1.75X45-MM)	
M	38	1	**8T-4223**	4	WASHER-HARD (13.5X25.5X3-MM THK)	
M	39	2	**8T-4779**	4	BOLT (M16X2X35-MM)	

I-REFER TO HYDRAULIC INFORMATION SYSTEM
M-METRIC PART

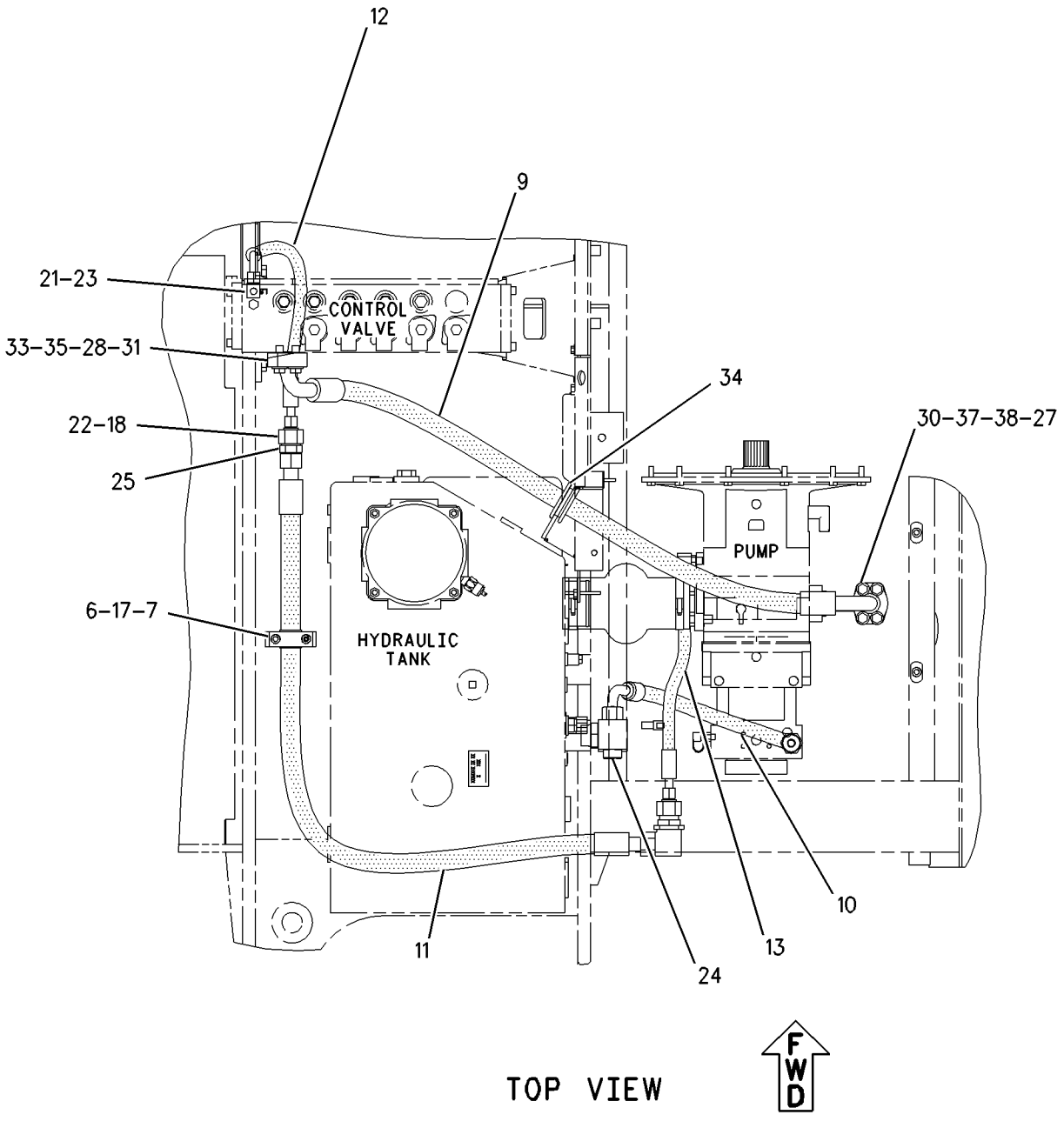

GRAPHIC #1 g00989762

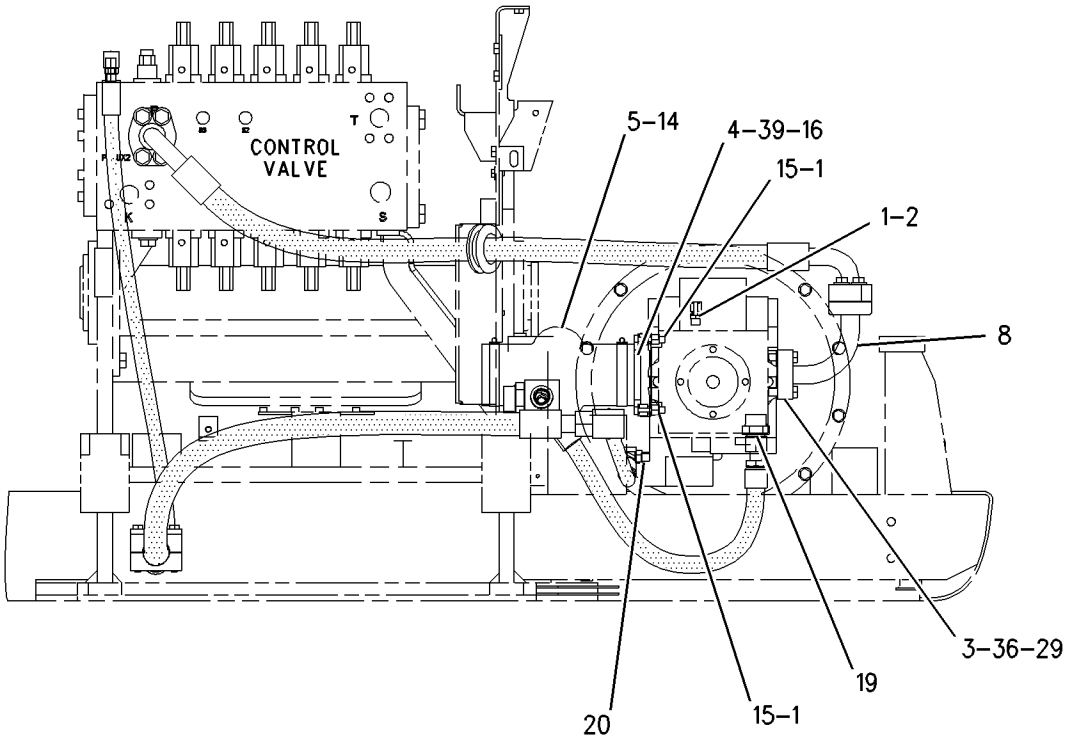

REAR VIEW

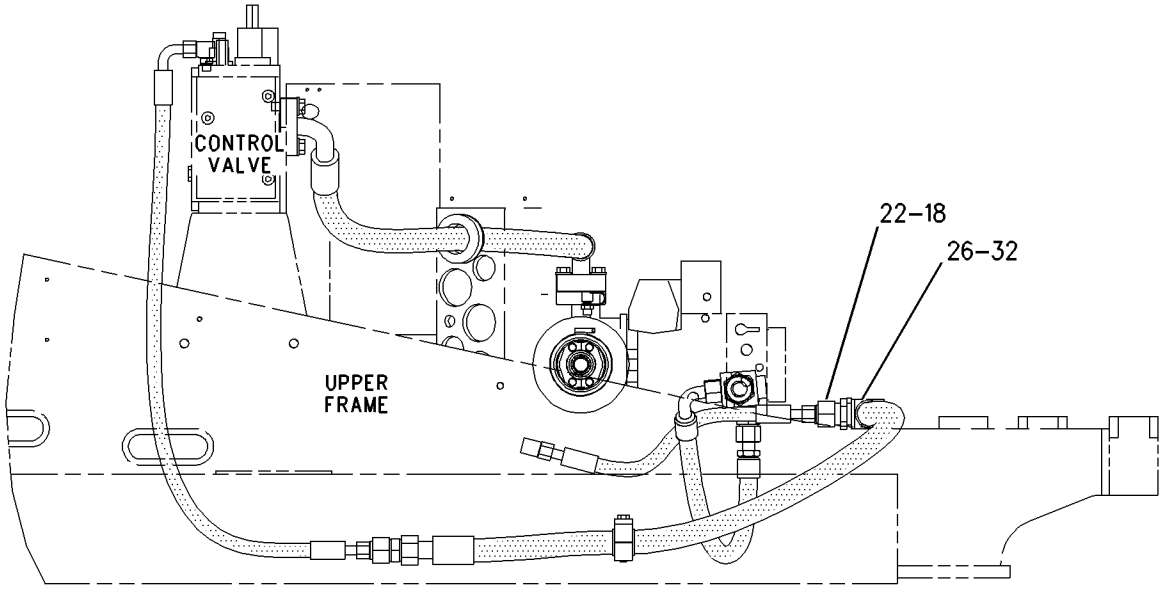

LEFT SIDE VIEW

GRAPHIC #2 **<END>** g00989763

HYDRAULIC SYSTEM

188-7592 LINES GP-RETURN

S/N: BCZ1-2000

PART OF 186-0471 HYDRAULIC AR

SMCS-5057 **i02161811**

NOTE	REF NO	GRAPHIC REF	PART NUMBER	QTY	PART NAME 1 2 3 4 5 6 (PRODUCT LEVEL)	SEE PAGE
Y	1	1	**8U-0198**	2	FILTER GP-OIL (IN-LINE) (HYDRAULIC)	475
	2	1	**8U-5818**	1	FITTING	
I	3	1	**113-0440**	1	HOSE AS	
I	4	1	**113-0478**	1	HOSE AS	
I	5	1	**117-6716**	1	HOSE AS	
I	6	1	**130-8233**	1	HOSE AS	
I	7	1	**138-7948**	1	HOSE AS	
	8	1	**139-7392**	1	HOSE AS	
I	9	1	**166-8553**	1	HOSE AS	
	10	1	**185-6632**	1	CONNECTOR	
I	11	1	**188-6374**	1	HOSE AS	
I	12	1	**194-7844**	1	HOSE AS	
	13	1	**194-7845**	1	HOSE AS	
I	14	1	**196-7930**	1	HOSE AS	
I	15	1	**196-8427**	1	HOSE AS	
	16	1	**196-8430**	1	TUBE AS	
	17	1	**196-8431**	1	TUBE AS	
	18	1	**197-9999**	1	BLOCK-MANIFOLD	
	19	1	**199-8026**	2	GROMMET	
M	20	1	**101-7404**	8	BOLT-SOCKET HEAD (M10X1.5X30-MM)	
	21	1	*148-8319*	1	CONNECTOR AS	
		1	**2M-9780**	1	SEAL-O-RING	
		1	**6V-8397**	1	SEAL-O-RING	
		1	**6V-8715**	1	CONNECTOR	
	22	1	*148-8322*	1	CONNECTOR GP	
		1	**2M-9780**	1	SEAL-O-RING	
		1	**6V-8640**	1	CONNECTOR	
		1	**6V-9746**	1	SEAL-O-RING	
	23	1	*148-8324*	1	CONNECTOR GP	
		1	**3K-0360**	1	SEAL-O-RING	
		1	**6V-9746**	1	SEAL-O-RING	
		1	**6V-9874**	1	CONNECTOR	
	24	1	*148-8328*	2	CONNECTOR AS	
					(EACH INCLUDES)	
		1	**3D-2824**	1	SEAL-O-RING	
		1	**6V-8398**	1	SEAL-O-RING	
		1	**6V-8633**	1	CONNECTOR	
	25	1	*148-8336*	3	CONNECTOR AS	
					(EACH INCLUDES)	
		1	**3J-1907**	1	SEAL-O-RING	
		1	**6V-8397**	1	SEAL-O-RING	
		1	**6V-8636**	1	CONNECTOR	
	26	1	*148-8355*	1	ELBOW AS	
		1	**5K-9090**	1	SEAL-O-RING	
		1	**6V-9005**	1	ELBOW	
		1	**7M-8485**	1	SEAL-O-RING	
	27	1	*148-8367*	1	ELBOW AS	
		1	**6V-8397**	1	SEAL-O-RING	
		1	**6V-9850**	1	ELBOW	
	28	1	*148-8378*	1	ELBOW AS	
		1	**3J-1907**	1	SEAL-O-RING	
		1	**6V-8397**	1	SEAL-O-RING	
		1	**6V-8724**	1	ELBOW	
	29	1	*148-8395*	1	PLUG AS	
		1	**3K-0360**	1	SEAL-O-RING	
		1	**9S-8005**	1	PLUG	

188-7592 **LINES GP-RETURN** *(contd.)* **i02161811**

NOTE	REF NO	GRAPHIC REF	PART NUMBER	QTY	PART NAME 1 2 3 4 5 6 (PRODUCT LEVEL)	SEE PAGE
	30	1	*148-8415*	1	REDUCER GP	
		1	**6V-8397**	1	SEAL-O-RING	
		1	**6V-8936**	1	REDUCER	
	31	1	*148-8418*	1	REDUCER GP	
		1	**6V-8398**	1	SEAL-O-RING	
		1	**6V-8942**	1	REDUCER-O-RING (FACE)	
	32	1	*148-8433*	1	TEE AS	
		1	**6V-8397**	2	SEAL-O-RING	
		1	**6V-9836**	1	TEE-SWIVEL	
	33	1	*148-8434*	1	TEE AS	
		1	**6V-8397**	2	SEAL-O-RING	
		1	**6V-9843**	1	TEE-SWIVEL	
	34	1	*148-8444*	1	TEE AS-SWIVEL	
		1	**6V-8398**	2	SEAL-O-RING	
		1	**6V-9837**	1	TEE-SWIVEL	
	35	1	*150-4044*	1	CONNECTOR AS	
		1	**3J-1907**	1	SEAL-O-RING	
		1	**6V-8397**	1	SEAL-O-RING	
		1	**8T-1779**	1	CONNECTOR	
	36	1	**162-0177**	2	PLUG AS	
					(EACH INCLUDES)	
		1	**3J-1907**	1	SEAL-O-RING	
	37	1	**1P-4578**	4	FLANGE-HALF	
	38	1	**1P-4579**	4	FLANGE-HALF	
	39	1	**2J-2668**	1	COVER	
	40	1	**3D-2824**	3	SEAL-O-RING	
	41	1	**4J-0522**	2	SEAL-O-RING	
	42	1	**4J-0524**	2	SEAL-O-RING	
	43	1	**4J-5267**	2	SEAL-O-RING	
	44	1	**5K-9090**	2	SEAL-O-RING	
	45	1	**6V-8397**	1	SEAL-O-RING	
	46	1	**6V-8398**	1	SEAL-O-RING	
	47	1	**9X-6580**	1	NUT (1-3/16-12-THD)	
	48	1	**6V-9746**	1	SEAL-O-RING	
	49	1	**7X-0613**	2	WASHER-HARD (8.8X25.5X5-MM THK)	
	50	1	**8T-4121**	8	WASHER-HARD (11X21X2.5-MM THK)	
M	51	1	**8T-4183**	8	BOLT (M12X1.75X40-MM)	
M	52	1	**8T-4196**	8	BOLT (M10X1.5X35-MM)	
M	53	1	**8T-4223**	8	WASHER-HARD (13.5X25.5X3-MM THK)	
	54	1	**8T-6725**	1	CONNECTOR	
	55	1	**8T-6850**	1	SEAL-O-RING	
M	56	1	**8T-6912**	2	BOLT (M8X1.25X50-MM)	
	57	1	**8T-7524**	1	SEAL-O-RING	
	58	1	**9X-7454**	2	SEAL-O-RING	

I-REFER TO HYDRAULIC INFORMATION SYSTEM
M-METRIC PART
Y-SEPARATE ILLUSTRATION

188-7592 **LINES GP-RETURN** *(contd.)* **i02161811**

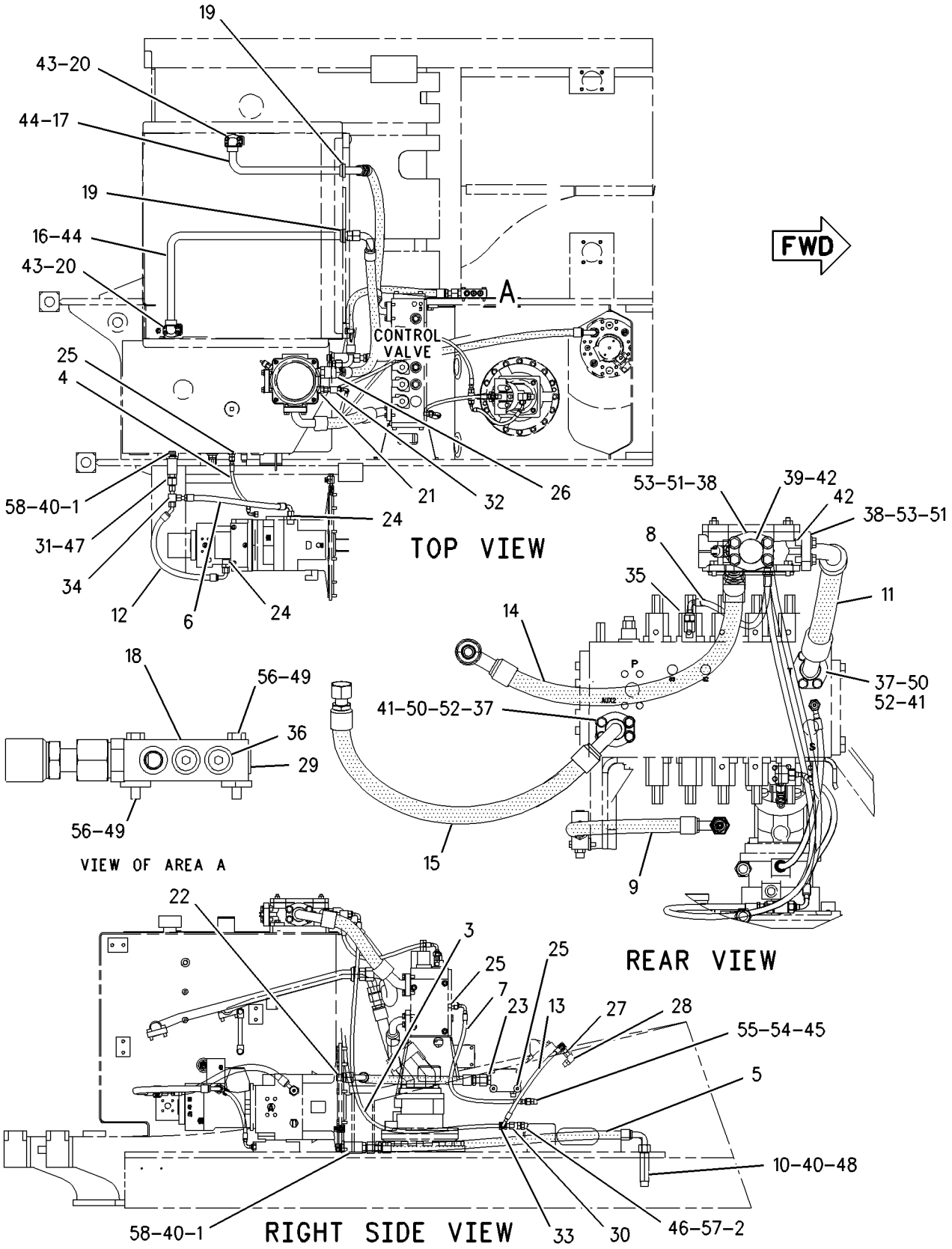

GRAPHIC #1 **<END>** g00918261

HYDRAULIC SYSTEM

188-7642 LINES GP-STABILIZER

S/N: BCZ1-2000
PART OF 188-4992 STABILIZER AR
AN ATTACHMENT

SMCS-5057, 5468 **i02142114**

NOTE	REF NO	GRAPHIC REF	PART NUMBER	QTY	PART NAME 1 2 3 4 5 6 (PRODUCT LEVEL)	SEE PAGE
	1	1	**193-9063**	1	SWITCH AS-ROCKER (BLADE/LEFT STABILIZER)	
		1	**111-7899**	1	GASKET	
	2	1	**9X-2304**	1	CONNECTOR	
I	3	1	**230-7876**	1	HOSE AS	
M	4	1	**194-6989**	2	ORIFICE	
Y	5	1	**196-7543**	1	VALVE GP-SOLENOID (STABILIZER)	745
I	6	1	**225-1944**	2	HOSE AS	
I	7	1	**230-0790**	1	HOSE AS	
	8	1	**199-8495**	2	CONNECTOR-SPECIAL	
	9	1	*148-8378*	1	ELBOW AS	
		1	**3J-1907**	1	SEAL-O-RING	
		1	**6V-8397**	1	SEAL-O-RING	
		1	**6V-8724**	1	ELBOW	
I	10	1	**230-0789**	1	HOSE AS	
I	11	1	**200-6801**	1	HOSE AS	
	12	1	*148-8367*	1	ELBOW AS	
		1	**6V-8397**	1	SEAL-O-RING	
		1	**6V-9850**	1	ELBOW	
	13	1	*148-8318*	2	CONNECTOR AS	
					(EACH INCLUDES)	
		1	**3K-0360**	1	SEAL-O-RING	
		1	**6V-8397**	1	SEAL-O-RING	
		1	**6V-8634**	1	CONNECTOR	
	14	1	*148-8415*	1	REDUCER GP	
		1	**6V-8397**	1	SEAL-O-RING	
		1	**6V-8936**	1	REDUCER	
	15	1	*148-8433*	1	TEE AS	
		1	**6V-8397**	2	SEAL-O-RING	
		1	**6V-9836**	1	TEE-SWIVEL	
	16	1	**193-9064**	1	SWITCH AS-ROCKER (RIGHT STABILIZER)	
		1	**111-7899**	1	GASKET	
	17	1	*164-5605*	2	CONNECTOR AS	
					(EACH INCLUDES)	
		1	**3K-0360**	1	SEAL-O-RING	
		1	**6V-8397**	1	SEAL-O-RING	
		1	**8T-0076**	1	CONNECTOR	
	18	1	**3K-0360**	3	SEAL-O-RING	
	19	1	**6V-8397**	2	SEAL-O-RING	
	20	1	**6V-8398**	1	SEAL-O-RING	
M	21	1	**8T-9535**	2	BOLT-SOCKET HEAD (M8X1.25X60-MM)	

I-REFER TO HYDRAULIC INFORMATION SYSTEM
M-METRIC PART
Y-SEPARATE ILLUSTRATION

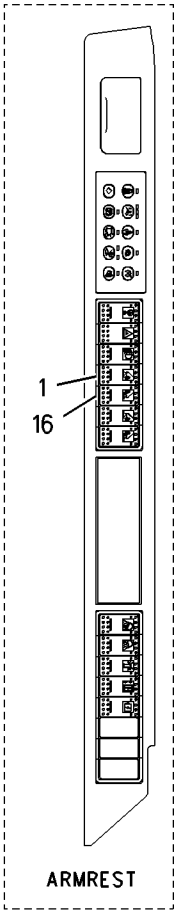

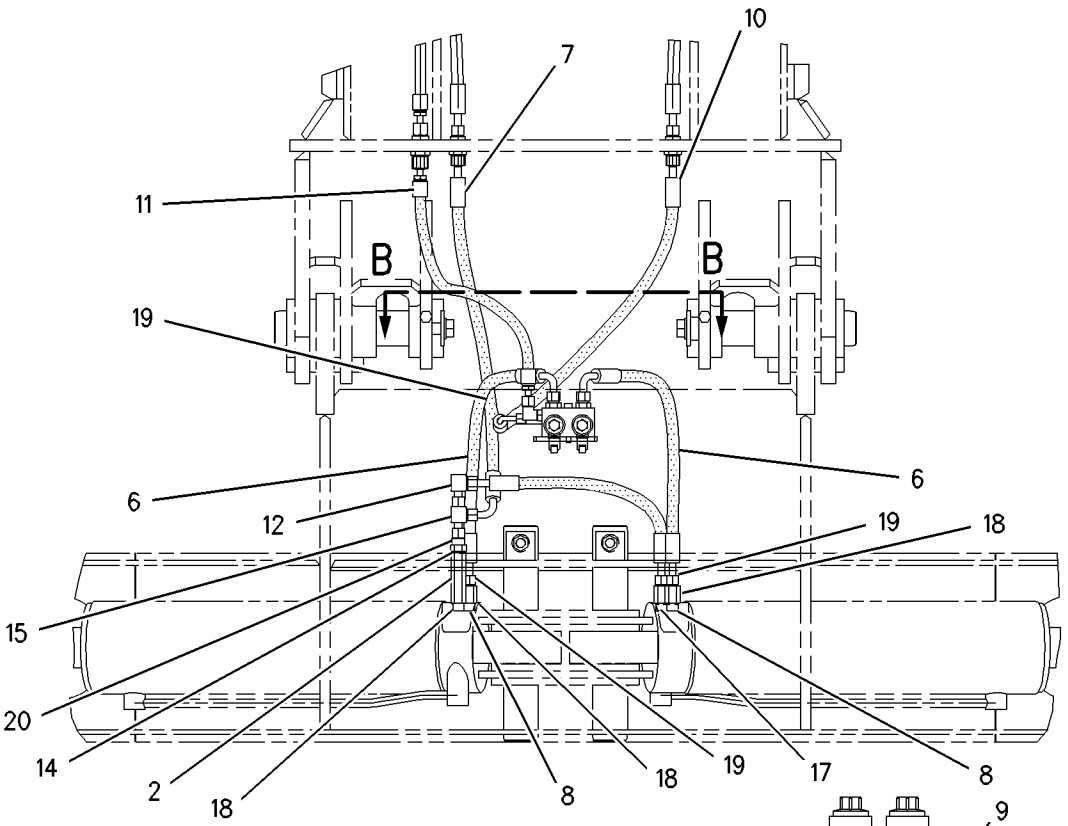

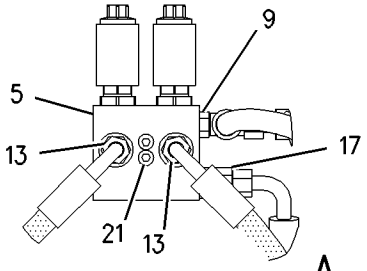

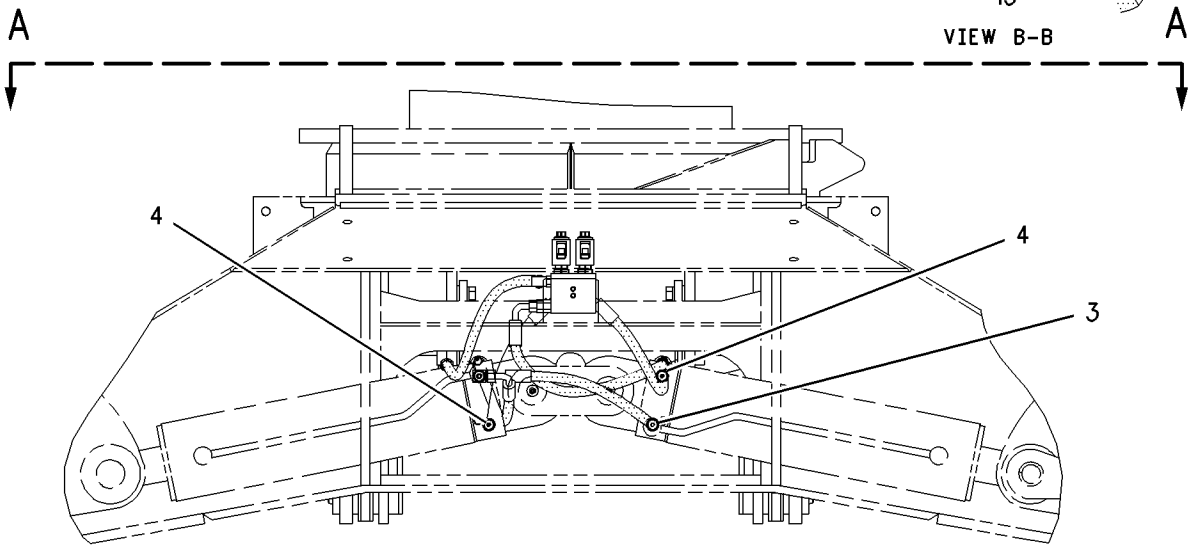

FRONT VIEW

GRAPHIC #1 **<END>** g00913234

HYDRAULIC SYSTEM

188-4967 LINES GP-STEERING–EXTENSION

S/N: BCZ1-2000
PART OF 188-4960 CAB AR-RISER
AN ATTACHMENT

SMCS-4304 **i01902214**

NOTE	REF NO	GRAPHIC REF	PART NUMBER	QTY	PART NAME 1 2 3 4 5 6 (PRODUCT LEVEL)	SEE PAGE
I	1	1	**137-3872**	1	HOSE AS	
I	2	1	**139-5108**	1	HOSE AS	
I	3	1	**145-9954**	1	HOSE AS	
I	4	1	**233-9613**	1	HOSE AS	
I	5	1	**233-9614**	1	HOSE AS	
I	6	1	**233-9615**	1	HOSE AS	
	7	1	**119-1111**	1	CLAMP	
	8	1	*148-8361*	1	ELBOW AS	
		1	**3J-7354**	1	SEAL-O-RING	
		1	**6V-8397**	1	SEAL-O-RING	
		1	**6V-9200**	1	ELBOW	
	9	1	*148-8375*	1	ELBOW GP	
		1	**6V-8398**	2	SEAL-O-RING	
		1	**6V-8981**	1	ELBOW	
	10	1	*148-8457*	3	UNION AS	
					(EACH INCLUDES)	
		1	**6V-8398**	2	SEAL-O-RING	
		1	**6V-8995**	1	UNION	
	11	1	**6V-9169**	4	NUT-BULKHEAD (13/16-16-THD)	

I-REFER TO HYDRAULIC INFORMATION SYSTEM

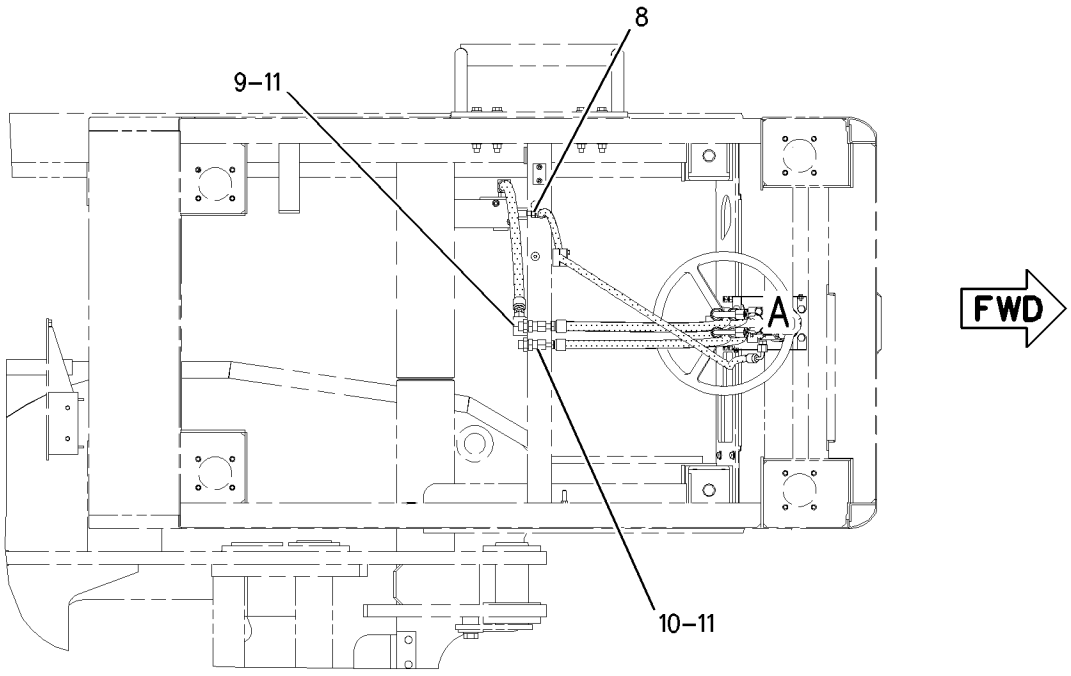

TOP VIEW

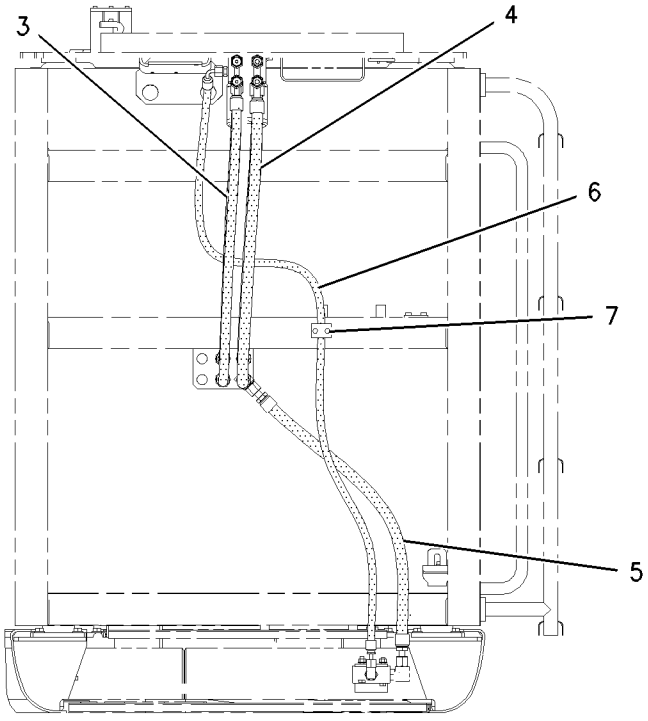

FRONT VIEW

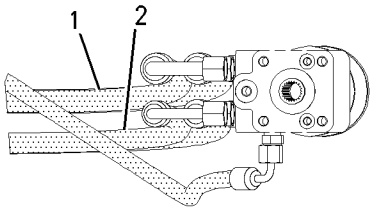

VIEW OF AREA A

GRAPHIC #1 **<END>** g00991168

HYDRAULIC SYSTEM

188-7602 LINES GP-STEERING

S/N: BCZ1-2000

PART OF 186-0471 HYDRAULIC AR

SMCS-4304 **i02136376**

NOTE	REF NO	GRAPHIC REF	PART NUMBER	QTY	PART NAME 1 2 3 4 5 6 (PRODUCT LEVEL)	SEE PAGE
I	1	1	**145-7118**	1	HOSE AS	
	2	1	**188-1814**	1	VALVE GP-PRIORITY (STEERING)	
I	3	1	**190-8553**	1	HOSE AS	
I	4	1	**190-8557**	1	HOSE AS	
I	5	1	**190-8558**	1	HOSE AS	
I	6	1	**190-8560**	1	HOSE AS	
	7	1	*148-8326*	2	CONNECTOR AS	
					(EACH INCLUDES)	
		1	**3J-7354**	1	SEAL-O-RING	
		1	**6V-8397**	1	SEAL-O-RING	
		1	**6V-9872**	1	CONNECTOR	
	8	1	*148-8340*	6	CONNECTOR AS	
					(EACH INCLUDES)	
		1	**3K-0360**	1	SEAL-O-RING	
		1	**6V-8398**	1	SEAL-O-RING	
		1	**6V-8639**	1	CONNECTOR	
	9	1	*148-8345*	1	CONNECTOR AS	
		1	**2M-9780**	1	SEAL-O-RING	
		1	**6V-8398**	1	SEAL-O-RING	
		1	**6V-8638**	1	CONNECTOR	
	10	1	*148-8364*	1	ELBOW AS	
		1	**3K-0360**	1	SEAL-O-RING	
		1	**6V-8398**	1	SEAL-O-RING	
		1	**6V-8625**	1	ELBOW	
M	11	1	**5C-7261**	2	NUT (M8X1.25-THD)	
	12	1	**8T-4224**	2	WASHER-HARD (8.8X16X2-MM THK)	
M	13	1	**8T-6912**	1	BOLT (M8X1.25X50-MM)	
M	14	1	**8T-7329**	1	BOLT (M8X1.25X55-MM)	

I-REFER TO HYDRAULIC INFORMATION SYSTEM
M-METRIC PART

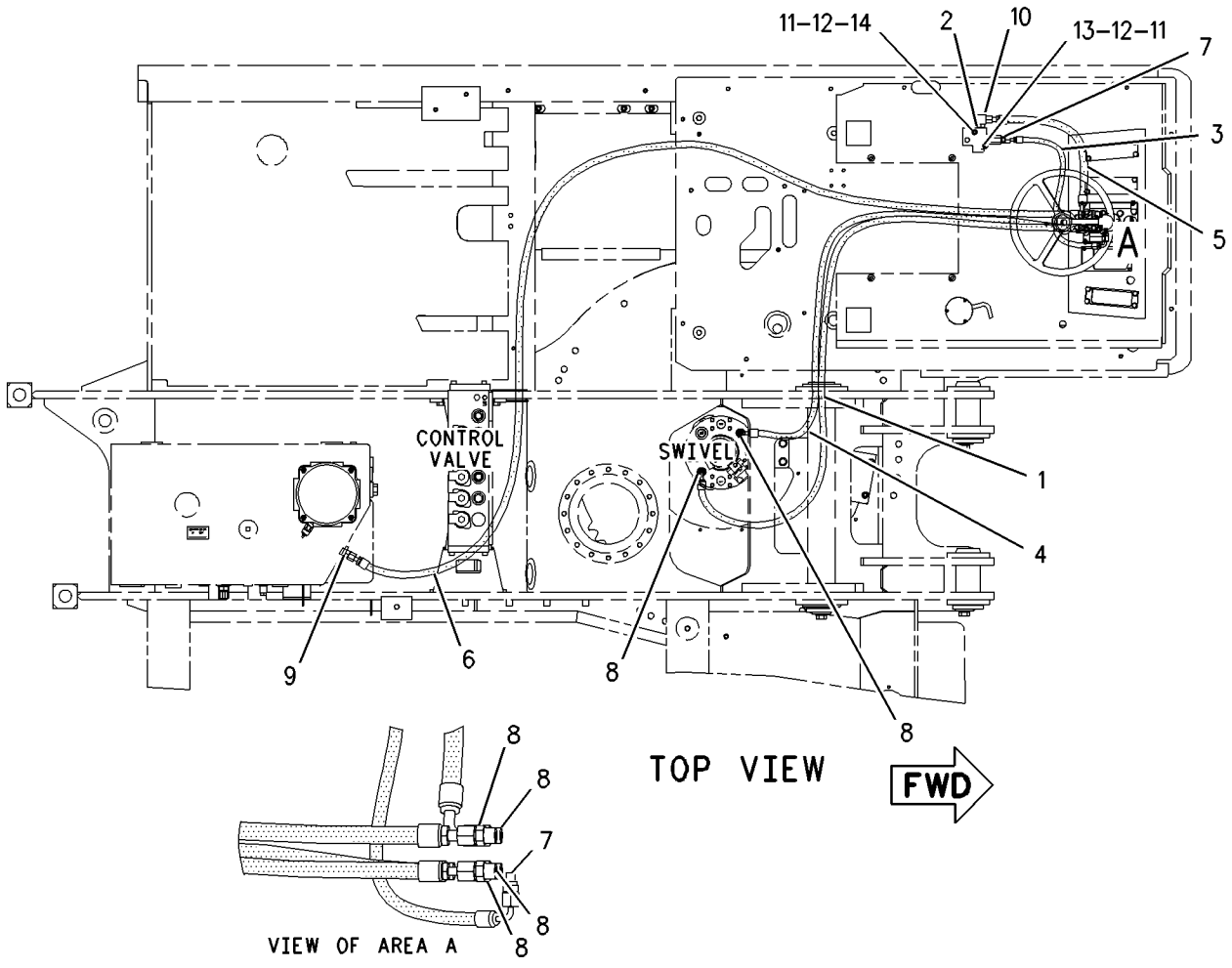

GRAPHIC #1 **<END>** g00829487

HYDRAULIC SYSTEM

185-3469 LINES GP-STICK

S/N: BCZ1-2000
2.2-M (7.2-FT) STICK
PART OF 185-8552 STICK AR
AN ATTACHMENT

SMCS-5057, 5458 **i02017779**

NOTE	REF NO	GRAPHIC REF	PART NUMBER	QTY	PART NAME 1 2 3 4 5 6 (PRODUCT LEVEL)	SEE PAGE
	1	1	**5W-9857**	2	FLANGE-HALF	
M	2	1	**105-3478**	8	BOLT-SOCKET HEAD (M10X1.5X35-MM)	
	3	1	**196-5389**	1	TUBE AS	
	4	1	**242-8860**	1	TUBE AS	
I	5	1	**200-4055**	1	HOSE AS	
I	6	1	**201-3955**	1	HOSE AS	
M	7	1	**108-4282**	4	BOLT-SOCKET HEAD (M10X1.5X100-MM)	
	8	1	**1P-3702**	1	SEAL-RECTANGULAR	
	9	1	**4J-5267**	2	SEAL-O-RING	
	10	1	**5K-9090**	1	SEAL-O-RING	
	11	1	**8T-4121**	4	WASHER-HARD (11X21X2.5-MM THK)	
	12	1	**8T-9403**	2	FLANGE-HALF	

I-REFER TO HYDRAULIC INFORMATION SYSTEM
M-METRIC PART

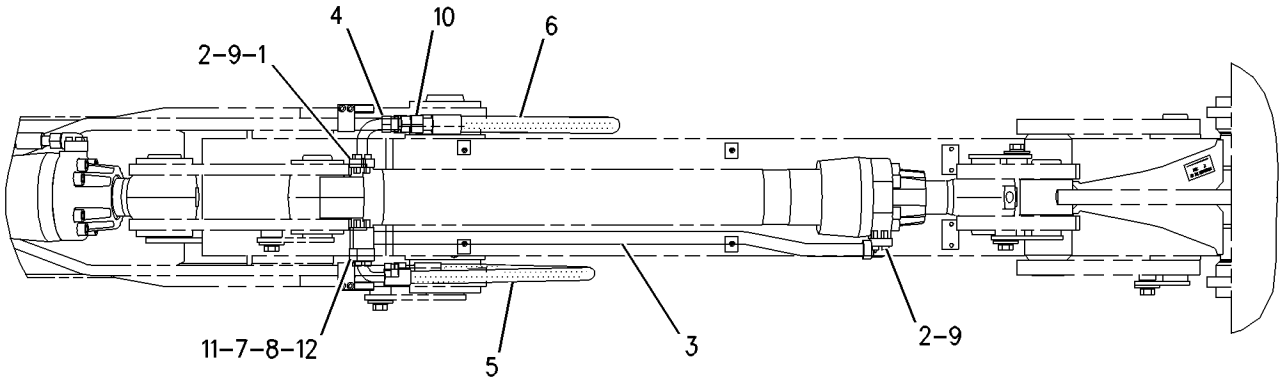

TOP VIEW FWD

GRAPHIC #1 **<END>** g00821643

HYDRAULIC SYSTEM

185-3470 LINES GP-STICK

S/N: BCZ1-2000
2.5-M (8.2-FT) STICK
PART OF 185-8562 STICK AR
AN ATTACHMENT

SMCS-5057, 5458 **i02018348**

NOTE	REF NO	GRAPHIC REF	PART NUMBER	QTY	PART NAME 1 2 3 4 5 6 (PRODUCT LEVEL)	SEE PAGE
	1	1	**5W-9857**	2	FLANGE-HALF	
M	2	1	**105-3478**	8	BOLT-SOCKET HEAD (M10X1.5X35-MM)	
I	3	1	**196-5380**	1	HOSE AS	
I	4	1	**196-5381**	1	HOSE AS	
	5	1	**196-5389**	1	TUBE AS	
	6	1	**242-8860**	1	TUBE AS	
M	7	1	**108-4282**	4	BOLT-SOCKET HEAD (M10X1.5X100-MM)	
	8	1	**1P-3702**	1	SEAL-RECTANGULAR	
	9	1	**4J-5267**	2	SEAL-O-RING	
	10	1	**5K-9090**	1	SEAL-O-RING	
	11	1	**8T-4121**	4	WASHER-HARD (11X21X2.5-MM THK)	
	12	1	**8T-9403**	2	FLANGE-HALF	

I-REFER TO HYDRAULIC INFORMATION SYSTEM
M-METRIC PART

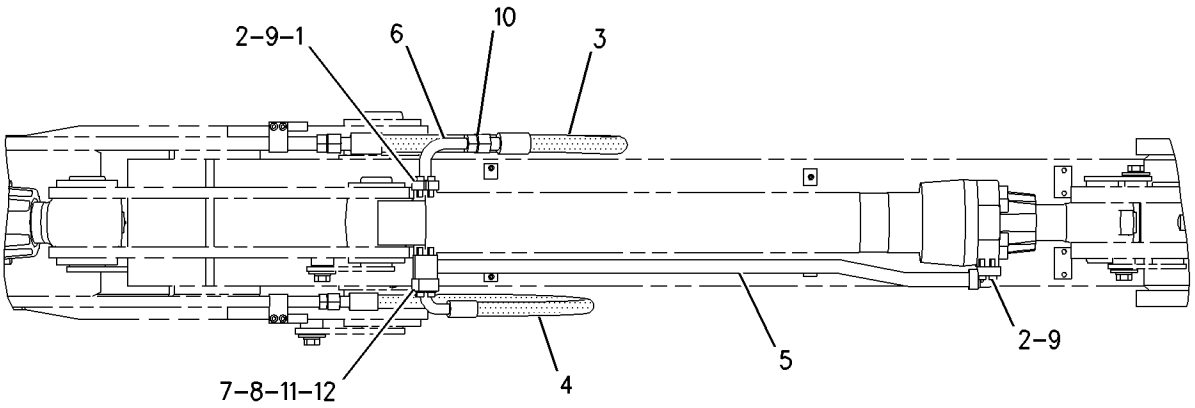

TOP VIEW FWD

GRAPHIC #1 **<END>** g00820687

185-3471 LINES GP-STICK

S/N: BCZ1-2000
2.8-M (9.19-FT) STICK
PART OF 185-8568 STICK AR
AN ATTACHMENT

SMCS-5057, 5458 **i02018468**

NOTE	REF NO	GRAPHIC REF	PART NUMBER	QTY	PART NAME 1 2 3 4 5 6 (PRODUCT LEVEL)	SEE PAGE
	1	1	**5W-9857**	2	FLANGE-HALF	
M	2	1	**105-3478**	8	BOLT-SOCKET HEAD (M10X1.5X35-MM)	
	3	1	**196-5389**	1	TUBE AS	
	4	1	**200-4047**	1	TUBE AS	
I	5	1	**200-4051**	1	HOSE AS	
	6	1	**242-8860**	1	TUBE AS	
M	7	1	**108-4282**	4	BOLT-SOCKET HEAD (M10X1.5X100-MM)	
	8	1	**1P-3702**	1	SEAL-RECTANGULAR	
	9	1	**4J-5267**	2	SEAL-O-RING	
	10	1	**5K-9090**	1	SEAL-O-RING	
	11	1	**8T-4121**	4	WASHER-HARD (11X21X2.5-MM THK)	
	12	1	**8T-9403**	2	FLANGE-HALF	

I-REFER TO HYDRAULIC INFORMATION SYSTEM
M-METRIC PART

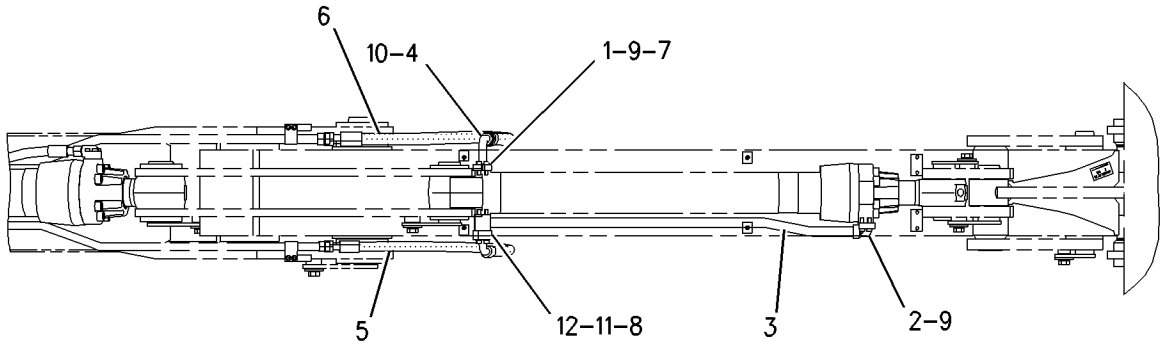

GRAPHIC #1 **<END>** g00820674

HYDRAULIC SYSTEM

185-3472 LINES GP-STICK

S/N: BCZ1-2000
2.2M (7.22FT) STICK
AN ATTACHMENT

SMCS-5057, 5458 **i02156030**

NOTE	REF NO	GRAPHIC REF	PART NUMBER	QTY	PART NAME 1 2 3 4 5 6 (PRODUCT LEVEL)	SEE PAGE
	1	1	**8U-0284**	2	FLANGE-HALF	
	2	1	**127-4613**	2	COVER-FLANGE	
	3	1	**127-4996**	2	FLANGE-HALF	
	4	1	**129-9884**	2	CLAMP	
Y	5	1	*173-7992*	2	VALVE GP-BALL (HIGH PRESSURE, AUXILIARY)	682
	6	1	**146-1571**	2	CLAMP	
I	7	1	**199-2461**	2	HOSE AS	
	8	1	**199-2462**	1	TUBE AS	
	9	1	**199-2463**	1	TUBE AS	
	10	1	**4J-0520**	3	SEAL-O-RING	
	11	1	**4J-0522**	1	SEAL-O-RING	
	12	1	**5K-9090**	2	SEAL-O-RING	
M	13	1	**8T-4183**	4	BOLT (M12X1.75X40-MM)	
M	14	1	**8T-4184**	4	BOLT (M12X1.75X45-MM)	
M	15	1	**101-7404**	12	BOLT-SOCKET HEAD (M10X1.5X30-MM)	
M	16	1	**8T-4198**	4	BOLT (M10X1.5X100-MM)	
M	17	1	**8T-4223**	4	WASHER-HARD (13.5X25.5X3-MM THK)	

I-REFER TO HYDRAULIC INFORMATION SYSTEM
M-METRIC PART
Y-SEPARATE ILLUSTRATION

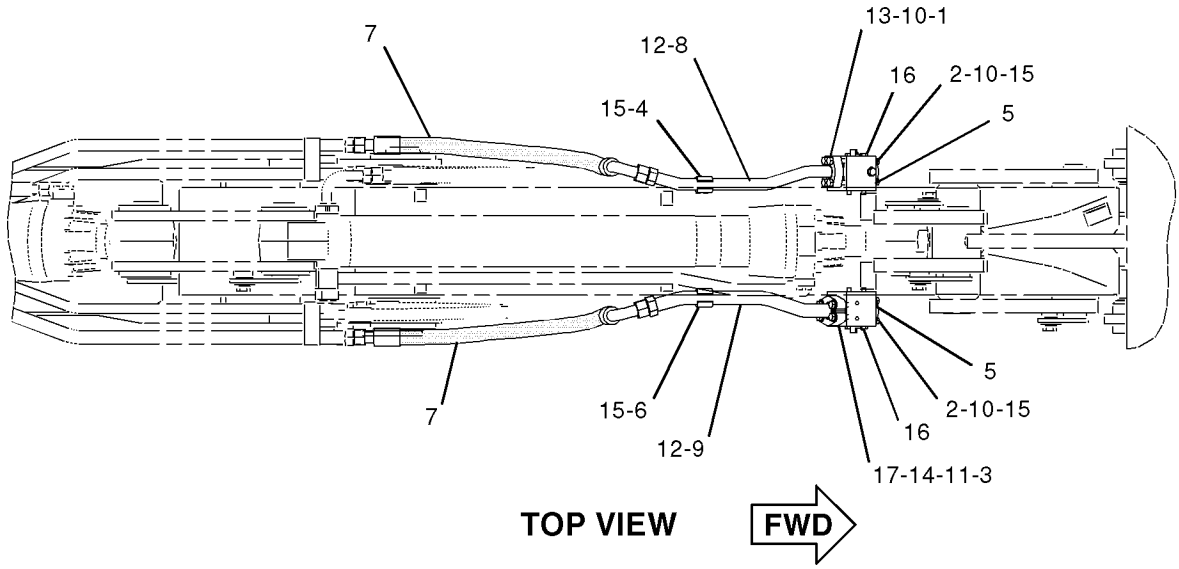

GRAPHIC #1 **<END>** g01052012

HYDRAULIC SYSTEM

185-3473 LINES GP-STICK

S/N: BCZ1-2000
2.5M (8.20FT) STICK
AN ATTACHMENT

SMCS-5057, 5458 **i02156033**

NOTE	REF NO	GRAPHIC REF	PART NUMBER	QTY	PART NAME 1 2 3 4 5 6 (PRODUCT LEVEL)	SEE PAGE
	1	1	**8U-0284**	2	FLANGE-HALF	
	2	1	**127-4613**	2	COVER-FLANGE	
	3	1	**127-4996**	2	FLANGE-HALF	
	4	1	**129-9884**	2	CLAMP	
Y	5	1	*173-7992*	2	VALVE GP-BALL (HIGH PRESSURE, AUXILIARY)	682
	6	1	**146-1571**	2	CLAMP	
	7	1	**185-6829**	1	TUBE AS	
	8	1	**185-6831**	1	TUBE AS	
I	9	1	**196-5390**	2	HOSE AS	
	10	1	**4J-0520**	3	SEAL-O-RING	
	11	1	**4J-0522**	1	SEAL-O-RING	
	12	1	**5K-9090**	2	SEAL-O-RING	
M	13	1	**8T-4183**	4	BOLT (M12X1.75X40-MM)	
M	14	1	**8T-4184**	4	BOLT (M12X1.75X45-MM)	
M	15	1	**101-7404**	12	BOLT-SOCKET HEAD (M10X1.5X30-MM)	
M	16	1	**8T-4198**	4	BOLT (M10X1.5X100-MM)	
M	17	1	**8T-4223**	4	WASHER-HARD (13.5X25.5X3-MM THK)	

I-REFER TO HYDRAULIC INFORMATION SYSTEM
M-METRIC PART
Y-SEPARATE ILLUSTRATION

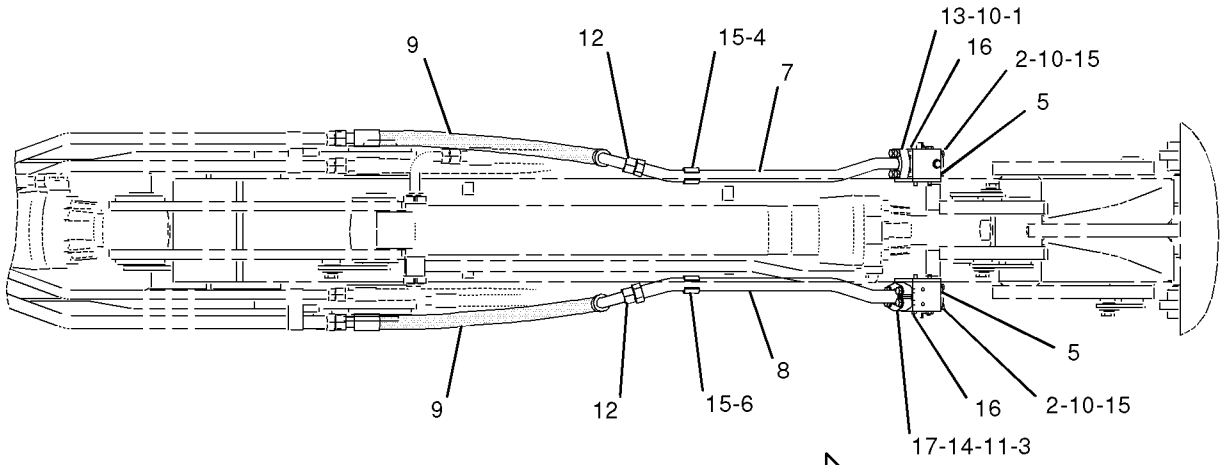

TOP VIEW **FWD**

GRAPHIC #1 **<END>** g01052056

HYDRAULIC SYSTEM

185-3474 LINES GP-STICK

S/N: BCZ1-2000
2.8M (9.19FT) STICK
AN ATTACHMENT

SMCS-5057, 5458 **i02156034**

NOTE	REF NO	GRAPHIC REF	PART NUMBER	QTY	PART NAME 1 2 3 4 5 6 (PRODUCT LEVEL)	SEE PAGE
	1	1	**8U-0284**	2	FLANGE-HALF	
	2	1	**127-4613**	2	COVER-FLANGE	
	3	1	**127-4996**	2	FLANGE-HALF	
	4	1	**129-9884**	2	CLAMP	
Y	5	1	*173-7992*	2	VALVE GP-BALL (HIGH PRESSURE, AUXILIARY)	682
	6	1	**146-1571**	2	CLAMP	
	7	1	**200-4048**	1	TUBE AS	
	8	1	**200-4049**	1	TUBE AS	
I	9	1	**200-4050**	2	HOSE AS	
	10	1	**4J-0520**	3	SEAL-O-RING	
	11	1	**4J-0522**	1	SEAL-O-RING	
	12	1	**5K-9090**	2	SEAL-O-RING	
M	13	1	**8T-4183**	4	BOLT (M12X1.75X40-MM)	
M	14	1	**8T-4184**	4	BOLT (M12X1.75X45-MM)	
M	15	1	**101-7404**	12	BOLT-SOCKET HEAD (M10X1.5X30-MM)	
M	16	1	**8T-4198**	4	BOLT (M10X1.5X100-MM)	
M	17	1	**8T-4223**	4	WASHER-HARD (13.5X25.5X3-MM THK)	

I-REFER TO HYDRAULIC INFORMATION SYSTEM
M-METRIC PART
Y-SEPARATE ILLUSTRATION

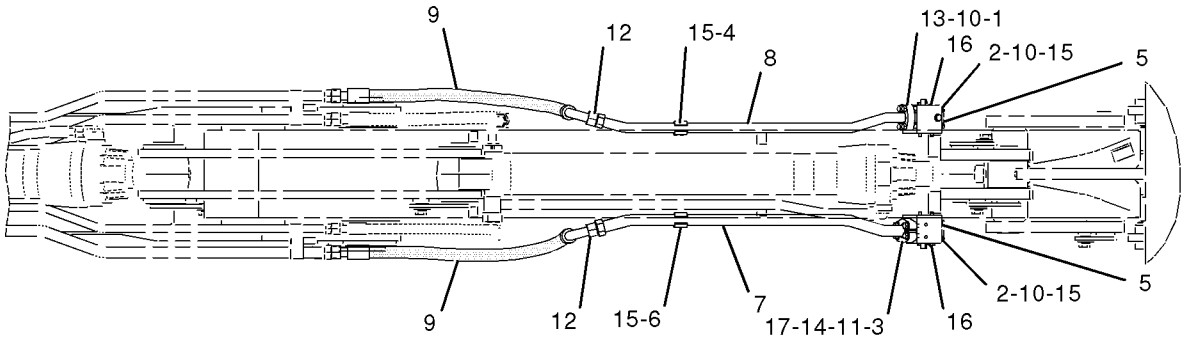

TOP VIEW **FWD**

GRAPHIC #1 **<END>** g01052061

HYDRAULIC SYSTEM

185-3475 LINES GP-STICK—MEDIUM PRESSURE

S/N: BCZ1-2000
2.2M (7.22FT) STICK
AN ATTACHMENT

SMCS-5057, 5458 **i02161813**

NOTE	REF NO	GRAPHIC REF	PART NUMBER	QTY	PART NAME 1 2 3 4 5 6 (PRODUCT LEVEL)	SEE PAGE
	1	1	**114-9153**	4	CAP (FITTING)	
	2	1	**114-9155**	4	FITTING	
	3	1	**114-9324**	4	CLAMP-SINGLE	
	4	1	**117-7511**	2	PLATE	
I	5	1	**204-0682**	2	HOSE AS	
	6	1	**192-9074**	2	TUBE AS	
	7	1	**192-9075**	2	TUBE AS	
	8	1	**199-2460**	2	TUBE AS	
M	9	1	**096-4835**	4	BOLT-SOCKET HEAD (M10X1.75X16-MM)	
	10	1	*148-8454*	2	TEE AS	
					(EACH INCLUDES)	
		1	**6V-8398**	3	SEAL-O-RING	
		1	**6V-8789**	1	TEE	
	11	1	*153-6257*	2	UNION AS	
					(EACH INCLUDES)	
		1	**6V-8398**	2	SEAL-O-RING	
		1	**6V-9808**	1	UNION	
	12	1	**6V-8398**	4	SEAL-O-RING	
	13	1	**6V-9169**	4	NUT-BULKHEAD (13/16-16-THD)	
BM	14	1	**8T-4123**	8	WASHER-PLATED (22X35X3.5-MM THK)	

B-USE AS REQUIRED
I-REFER TO HYDRAULIC INFORMATION SYSTEM
M-METRIC PART

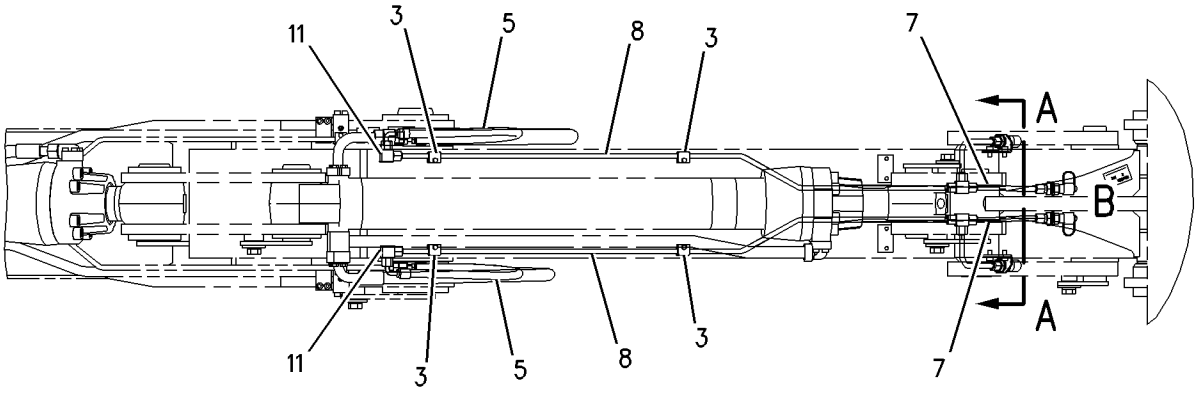



TOP VIEW

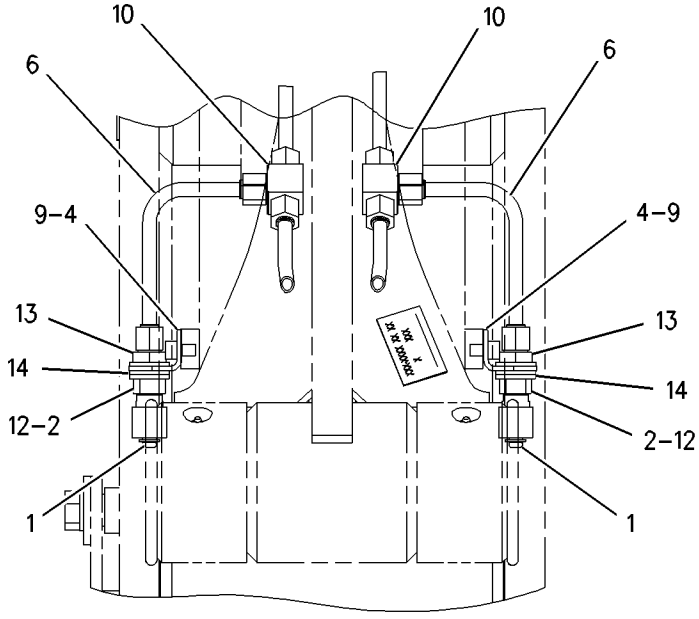

SECTION A-A

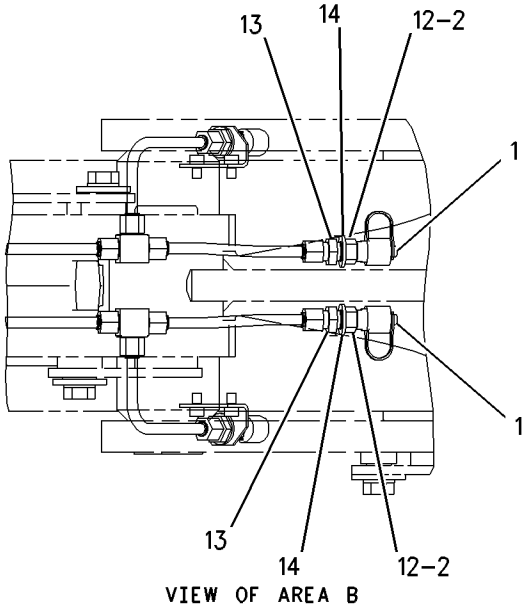

VIEW OF AREA B

GRAPHIC #1 **<END>** g00866270

HYDRAULIC SYSTEM

185-3476 LINES GP-STICK—MEDIUM PRESSURE

S/N: BCZ1-2000
2.5M (8.20FT) STICK
AN ATTACHMENT

SMCS-5057, 5458 **i02161814**

NOTE	REF NO	GRAPHIC REF	PART NUMBER	QTY	PART NAME 1 2 3 4 5 6 (PRODUCT LEVEL)	SEE PAGE
	1	1	**114-9153**	4	CAP (FITTING)	
	2	1	**114-9155**	4	FITTING	
	3	1	**114-9324**	6	CLAMP-SINGLE	
	4	1	**117-7511**	2	PLATE	
I	5	1	**204-0682**	2	HOSE AS	
	6	1	**192-9074**	2	TUBE AS	
	7	1	**192-9075**	2	TUBE AS	
	8	1	**192-9076**	2	TUBE AS	
M	9	1	**096-4835**	4	BOLT-SOCKET HEAD (M10X1.75X16-MM)	
	10	1	*148-8454*	2	TEE AS	
					(EACH INCLUDES)	
		1	**6V-8398**	3	SEAL-O-RING	
		1	**6V-8789**	1	TEE	
	11	1	*153-6257*	2	UNION AS	
					(EACH INCLUDES)	
		1	**6V-8398**	2	SEAL-O-RING	
		1	**6V-9808**	1	UNION	
	12	1	**6V-8398**	4	SEAL-O-RING	
	13	1	**6V-9169**	4	NUT-BULKHEAD (13/16-16-THD)	
BM	14	1	**8T-4123**	6	WASHER-PLATED (22X35X3.5-MM THK)	

B-USE AS REQUIRED
I-REFER TO HYDRAULIC INFORMATION SYSTEM
M-METRIC PART

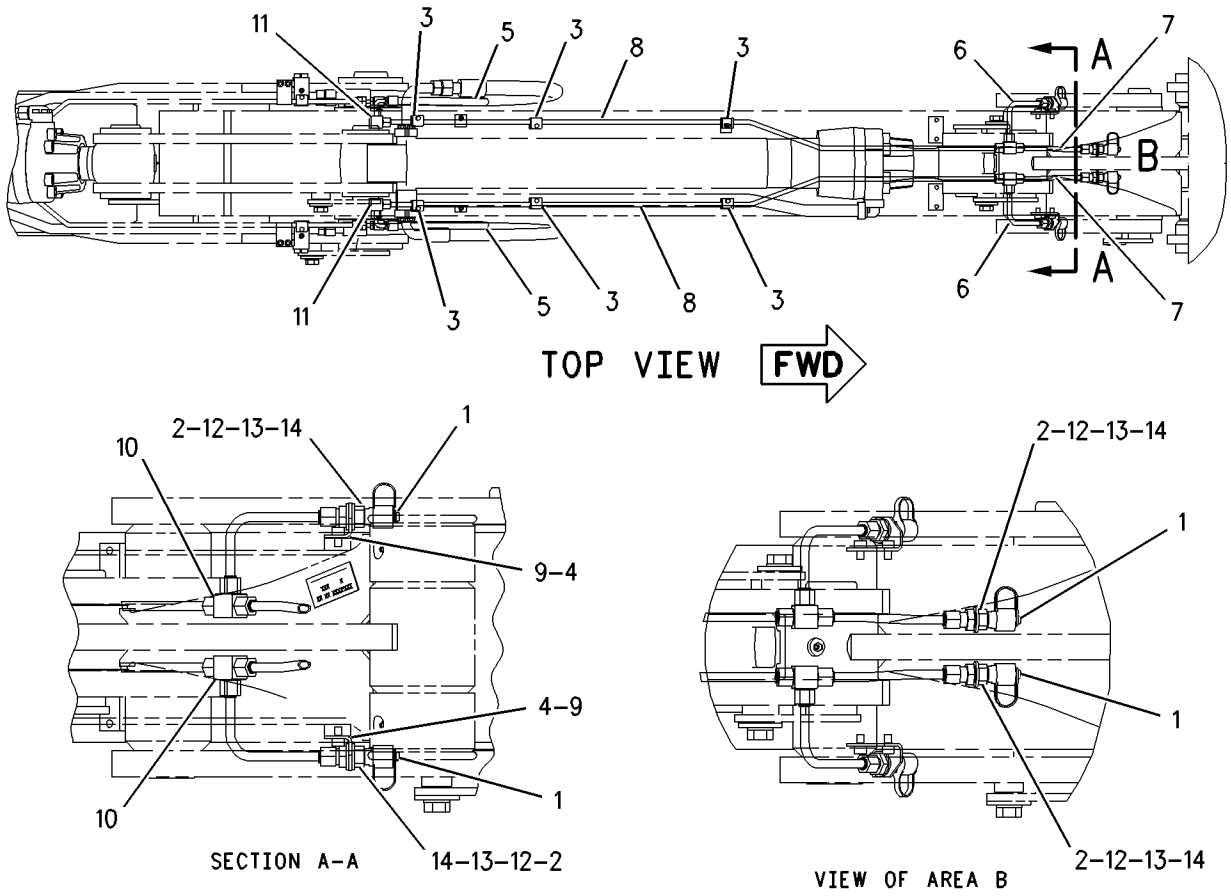

GRAPHIC #1 **<END>** g00813436

HYDRAULIC SYSTEM

185-3477 LINES GP-STICK—MEDIUM PRESSURE

S/N: BCZ1-2000
2.8M(9.18FT)STICK
AN ATTACHMENT

SMCS-5057, 5458 **i02161818**

NOTE	REF NO	GRAPHIC REF	PART NUMBER	QTY	PART NAME 1 2 3 4 5 6 (PRODUCT LEVEL)	SEE PAGE
	1	1	**114-9153**	4	CAP (FITTING)	
	2	1	**114-9155**	4	FITTING	
	3	1	**114-9324**	6	CLAMP-SINGLE	
	4	1	**117-7511**	2	PLATE	
I	5	1	**204-0682**	2	HOSE AS	
	6	1	**192-9074**	2	TUBE AS	
	7	1	**192-9075**	2	TUBE AS	
	8	1	**195-0168**	1	TUBE AS	
	9	1	**195-0176**	1	TUBE AS	
M	10	1	**096-4835**	4	BOLT-SOCKET HEAD (M10X1.75X16-MM)	
	11	1	*148-8454*	2	TEE AS	
					(EACH INCLUDES)	
		1	**6V-8398**	3	SEAL-O-RING	
		1	**6V-8789**	1	TEE	
	12	1	*153-6257*	2	UNION AS	
					(EACH INCLUDES)	
		1	**6V-8398**	2	SEAL-O-RING	
		1	**6V-9808**	1	UNION	
	13	1	**6V-8398**	4	SEAL-O-RING	
	14	1	**6V-9169**	4	NUT-BULKHEAD (13/16-16-THD)	
BM	15	1	**8T-4123**	8	WASHER-PLATED (22X35X3.5-MM THK)	

B-USE AS REQUIRED
I-REFER TO HYDRAULIC INFORMATION SYSTEM
M-METRIC PART

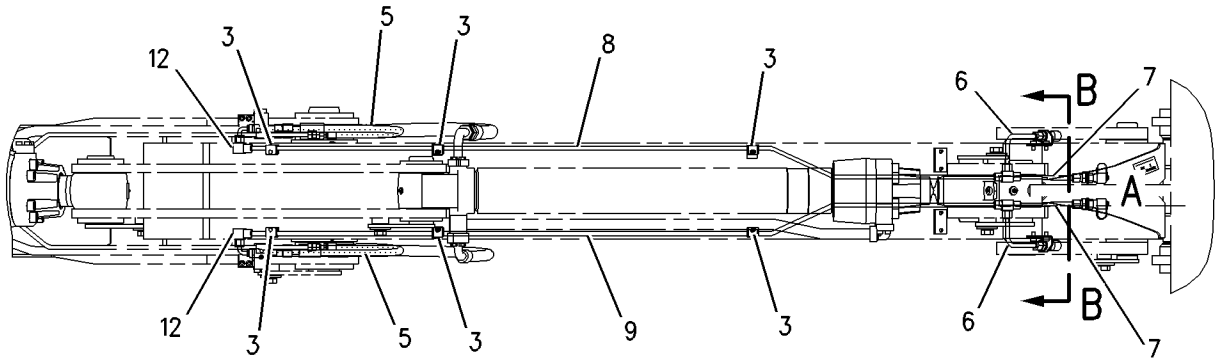

TOP VIEW FWD

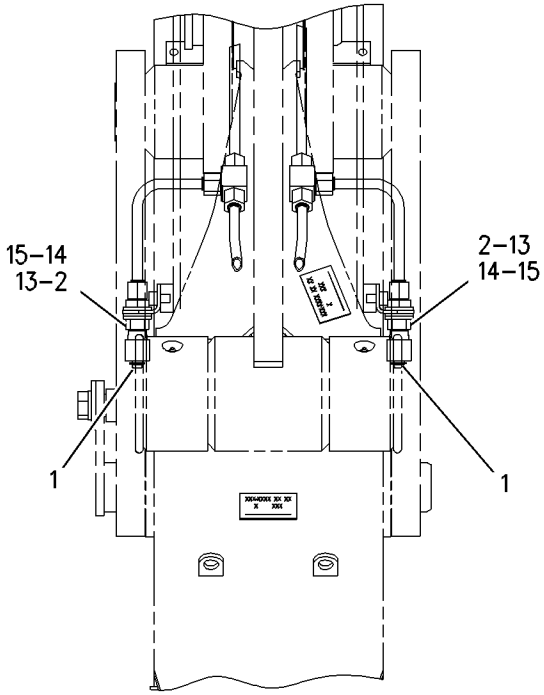

SECTION B–B

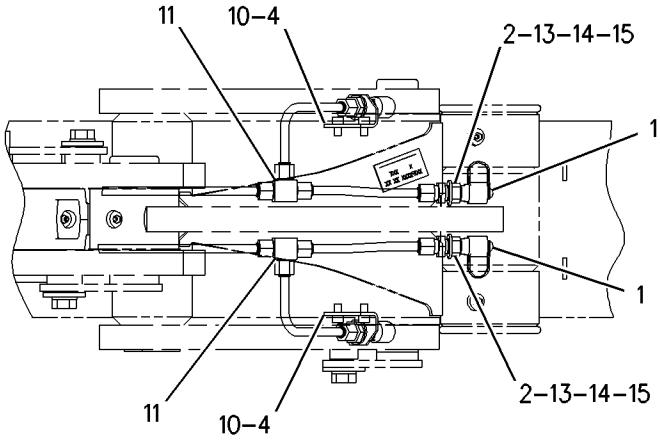

VIEW OF AREA A

GRAPHIC #1 **<END>** g00820667

185-3478 LINES GP-STICK–AUXILIARY HYD, QUICK COUPLER

S/N: BCZ1-2000
2.2-M (7.22-FT) STICK
AN ATTACHMENT

SMCS-5057, 5458 **i01772054**

NOTE	REF NO	GRAPHIC REF	PART NUMBER	QTY	PART NAME 1 2 3 4 5 6 (PRODUCT LEVEL)	SEE PAGE
	1	1	**153-6199**	2	CLAMP-SINGLE	
	2	1	**179-3341**	1	CLAMP-DOUBLE	
	3	1	**195-7685**	2	ADAPTER	
I	4	1	**196-5388**	2	HOSE AS	
	5	1	**199-2457**	2	CLAMP-DOUBLE	
	6	1	**199-2464**	1	TUBE AS	
	7	1	**199-2465**	1	TUBE AS	
	8	1	**203-2917**	2	BLOCK	
	9	1	*148-8377*	2	ELBOW AS	
					(EACH INCLUDES)	
		1	**6V-8397**	2	SEAL-O-RING	
		1	**6V-8980**	1	ELBOW	
	10	1	*148-8458*	2	UNION GP	
					(EACH INCLUDES)	
		1	**6V-8397**	2	SEAL-O-RING	
		1	**6V-9807**	1	UNION	
	11	1	**6V-9168**	2	NUT (11/16-16-THD)	
M	13	1	**7X-2535**	2	BOLT (M6X1X60-MM)	

I-REFER TO HYDRAULIC INFORMATION SYSTEM
M-METRIC PART

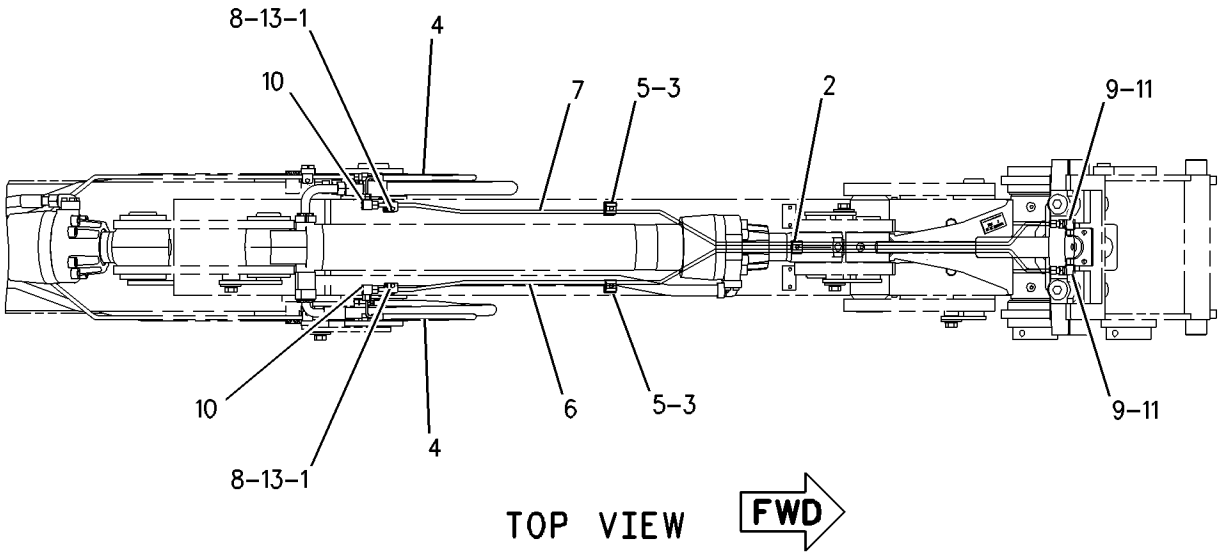

GRAPHIC #1 **<END>** g00908321

HYDRAULIC SYSTEM

185-3479 LINES GP-STICK—AUXILIARY HYD, QUICK COUPLER

S/N: BCZ1-2000
2.5-M (8.2-FT) STICK
AN ATTACHMENT

SMCS-5057, 5458 **i01772209**

NOTE	REF NO	GRAPHIC REF	PART NUMBER	QTY	PART NAME 1 2 3 4 5 6 (PRODUCT LEVEL)	SEE PAGE
	1	1	**153-6199**	2	CLAMP-SINGLE	
	2	1	**179-3341**	1	CLAMP-DOUBLE	
	3	1	**185-6820**	1	TUBE AS	
	4	1	**195-7685**	4	ADAPTER	
I	5	1	**196-5388**	2	HOSE AS	
	6	1	**199-2455**	1	TUBE AS	
	7	1	**199-2457**	4	CLAMP-DOUBLE	
	8	1	**203-2917**	2	BLOCK	
	9	1	*148-8377*	2	ELBOW AS	
					(EACH INCLUDES)	
		1	**6V-8397**	2	SEAL-O-RING	
		1	**6V-8980**	1	ELBOW	
	10	1	*148-8458*	2	UNION GP	
					(EACH INCLUDES)	
		1	**6V-8397**	2	SEAL-O-RING	
		1	**6V-9807**	1	UNION	
	11	1	**6V-9168**	2	NUT (11/16-16-THD)	
M	13	1	**7X-2535**	2	BOLT (M6X1X60-MM)	

I-REFER TO HYDRAULIC INFORMATION SYSTEM
M-METRIC PART

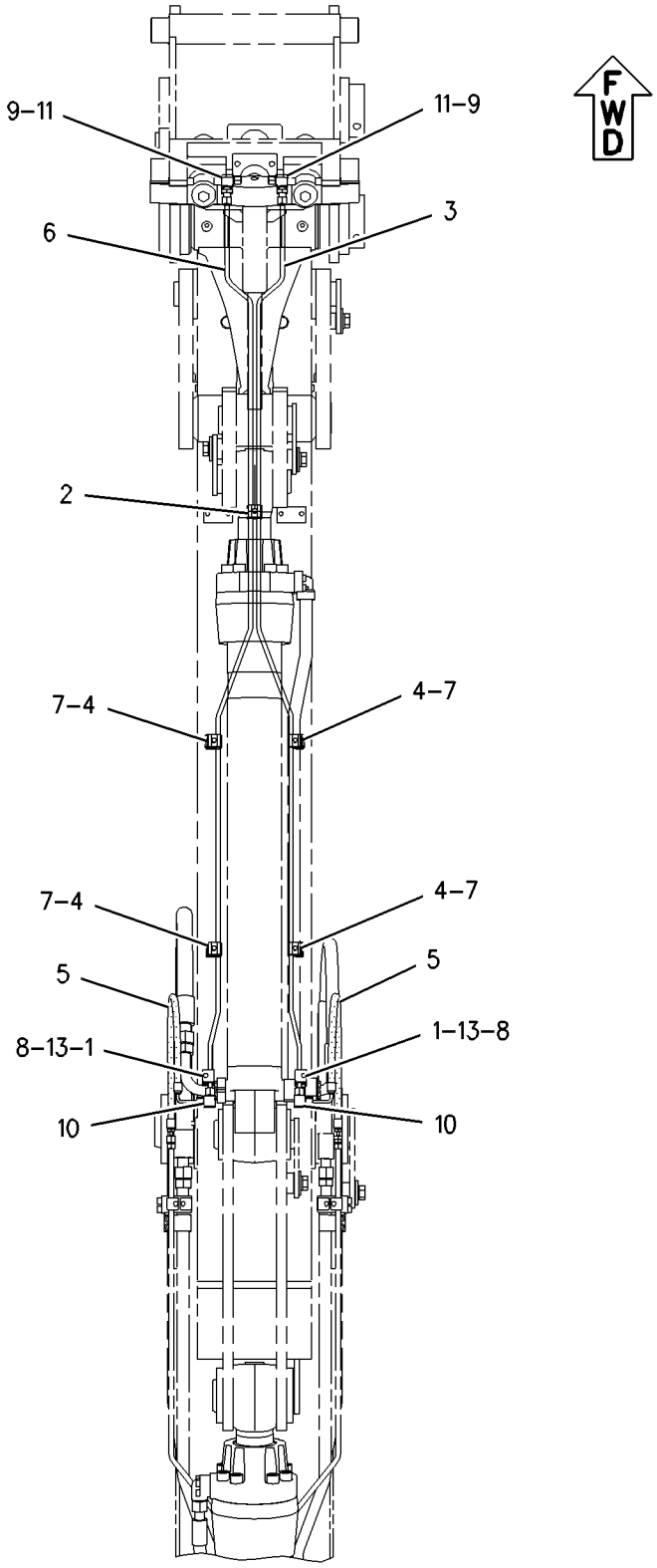

TOP VIEW

GRAPHIC #1 **<END>** g00906191

HYDRAULIC SYSTEM

185-3480 LINES GP-STICK–
AUXILIARY HYDRAULIC, QUICK COUPLER
S/N: BCZ1-2000
2.8-M (9.19-FT) STICK
AN ATTACHMENT

SMCS-5057, 5458 **i01764075**

NOTE	REF NO	GRAPHIC REF	PART NUMBER	QTY	PART NAME 1 2 3 4 5 6 (PRODUCT LEVEL)	SEE PAGE
	1	1	**153-6199**	4	CLAMP-SINGLE	
	2	1	**179-3341**	1	CLAMP-DOUBLE	
	3	1	**195-7685**	2	ADAPTER	
I	4	1	**196-5388**	2	HOSE AS	
	5	1	**199-2457**	2	CLAMP-DOUBLE	
	6	1	**199-2458**	1	TUBE AS	
	7	1	**199-2459**	1	TUBE AS	
	8	1	**203-2917**	4	BLOCK	
	9	1	*148-8377*	2	ELBOW AS	
					(EACH INCLUDES)	
		1	**6V-8397**	2	SEAL-O-RING	
		1	**6V-8980**	1	ELBOW	
	10	1	*148-8458*	2	UNION GP	
					(EACH INCLUDES)	
		1	**6V-8397**	2	SEAL-O-RING	
		1	**6V-9807**	1	UNION	
	11	1	**6V-9168**	2	NUT (11/16-16-THD)	
	12	1	**6V-9829**	2	CAP AS	
M	13	1	**7X-2535**	4	BOLT (M6X1X60-MM)	

I-REFER TO HYDRAULIC INFORMATION SYSTEM
M-METRIC PART

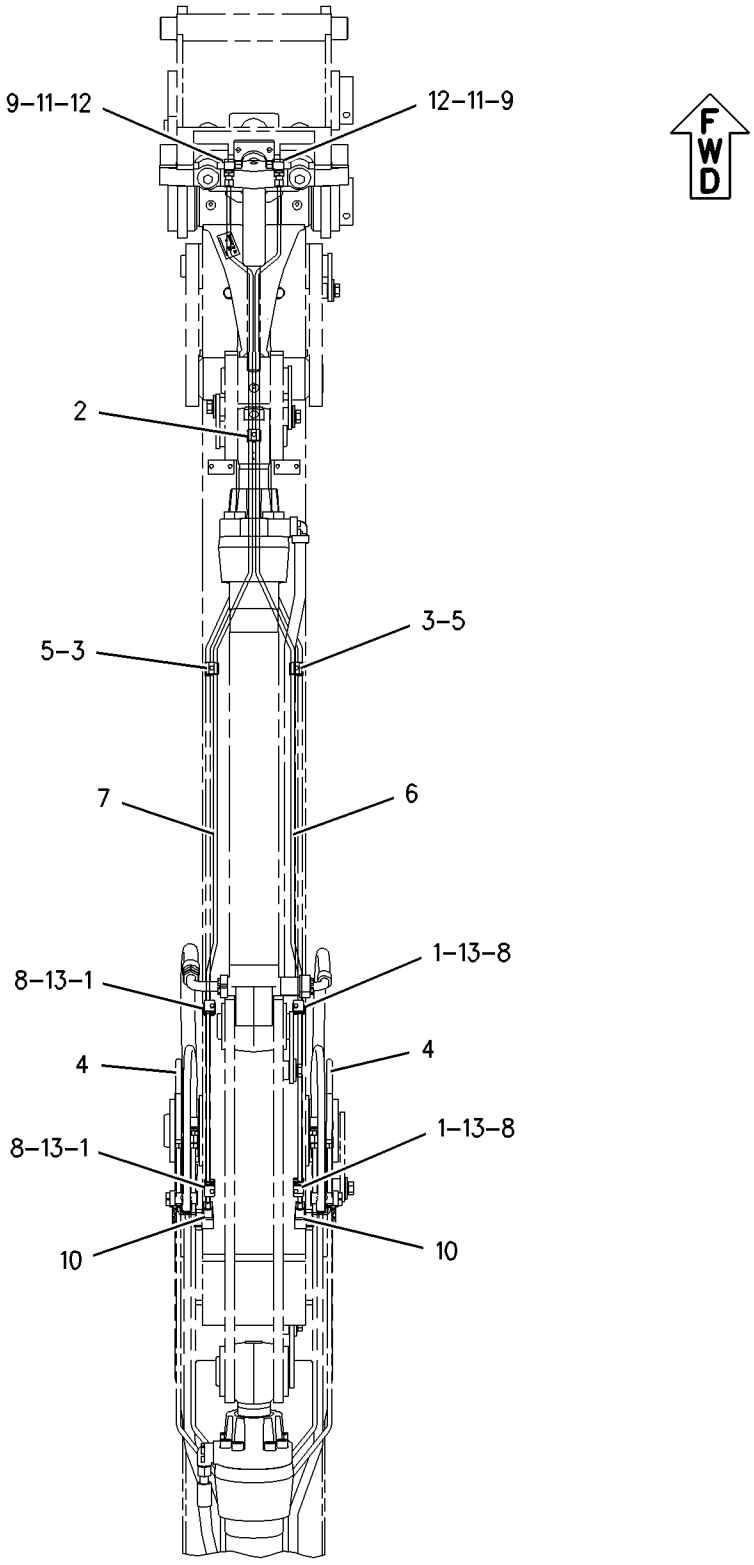

TOP VIEW

GRAPHIC #1 **<END>** g00821654

HYDRAULIC SYSTEM

242-1704 LINES GP-STICK–MEDIUM PRESSURE

S/N: BCZ1-2000
PART OF 235-1831 STICK AR-MATERIAL HANDLING
AN ATTACHMENT

SMCS-5057, 5458 **i02140903**

NOTE	REF NO	GRAPHIC REF	PART NUMBER	QTY	PART NAME 1 2 3 4 5 6 (PRODUCT LEVEL)	SEE PAGE
	1	1	**114-9153**	2	CAP (FITTING)	
	2	1	**114-9155**	2	FITTING	
	3	1	**114-9324**	6	CLAMP-SINGLE	
I	4	1	**204-0682**	2	HOSE AS	
	5	1	**239-7782**	1	TUBE AS	
	6	1	**239-7783**	1	TUBE AS	
	7	1	*153-6257*	2	UNION AS	
					(EACH INCLUDES)	
		1	**6V-8398**	2	SEAL-O-RING	
		1	**6V-9808**	1	UNION	
	8	1	**6V-8398**	2	SEAL-O-RING	
	9	1	**6V-9169**	2	NUT-BULKHEAD (13/16-16-THD)	
M	10	1	**8T-4123**	2	WASHER-PLATED (22X35X3.5-MM THK)	

I-REFER TO HYDRAULIC INFORMATION SYSTEM
M-METRIC PART

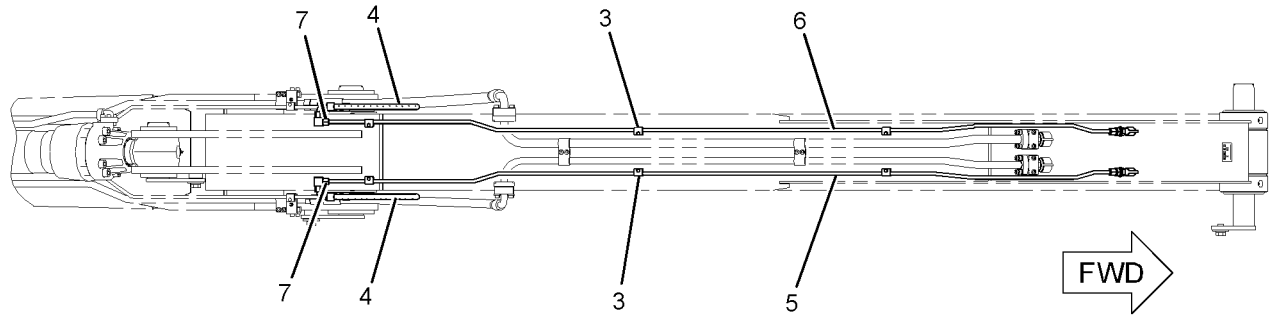

TOP VIEW

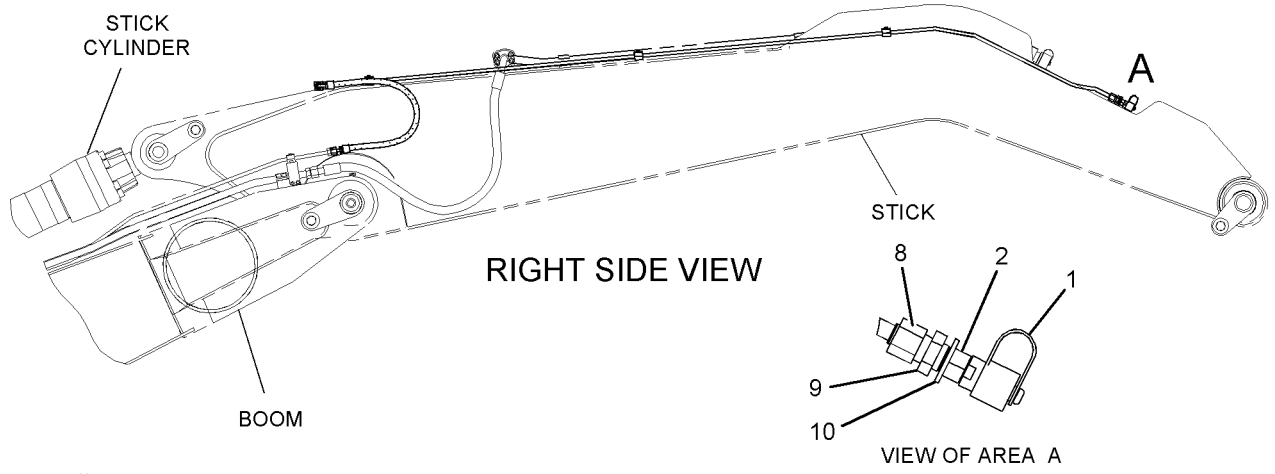

RIGHT SIDE VIEW

VIEW OF AREA A

GRAPHIC #1 **<END>** g01090413

HYDRAULIC SYSTEM

242-1708 LINES GP-STICK—HIGH PRESSURE

S/N: BCZ1-2000

PART OF 235-1831 STICK AR-MATERIAL HANDLING

AN ATTACHMENT

SMCS-5057, 5458 **i02140905**

NOTE	REF NO	GRAPHIC REF	PART NUMBER	QTY	PART NAME 1 2 3 4 5 6 (PRODUCT LEVEL)	SEE PAGE
	1	1	**5W-9857**	2	FLANGE-HALF	
Y	2	1	**8U-0966**	2	FITTING GP-HYD LINES	482
	3	1	**8U-0967**	2	CAP	
M	4	1	**101-7396**	4	BOLT-SOCKET HEAD (M10X1.5X50-MM)	
M	5	1	**105-3478**	8	BOLT-SOCKET HEAD (M10X1.5X35-MM)	
	6	1	**138-6959**	4	CLAMP	
I	7	1	**196-5381**	1	HOSE AS	
I	8	1	**233-9622**	1	HOSE AS	
	9	1	**239-7780**	1	TUBE AS	
	10	1	**239-7781**	1	TUBE AS	
M	11	1	**101-7397**	4	BOLT-SOCKET HEAD (M12X1.75X50-MM)	
M	12	1	**101-7404**	4	BOLT-SOCKET HEAD (M10X1.5X30-MM)	
	13	1	**1P-3702**	1	SEAL-RECTANGULAR	
	14	1	**1P-3703**	1	SEAL-RECTANGULAR	
	15	1	**4J-5267**	2	SEAL-O-RING	
	16	1	**6V-0400**	2	FLANGE-HALF	
M	17	1	**8T-0341**	4	BOLT-SOCKET HEAD (M10X1.5X60-MM)	
	18	1	**8T-4121**	8	WASHER-HARD (11X21X2.5-MM THK)	
M	19	1	**8T-4223**	4	WASHER-HARD (13.5X25.5X3-MM THK)	
	20	1	**8T-9403**	2	FLANGE-HALF	

I-REFER TO HYDRAULIC INFORMATION SYSTEM
M-METRIC PART
Y-SEPARATE ILLUSTRATION

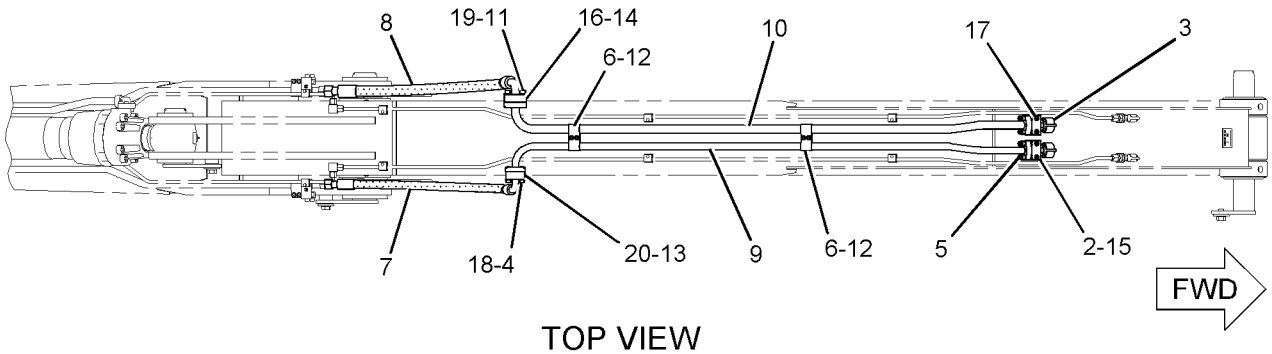

TOP VIEW

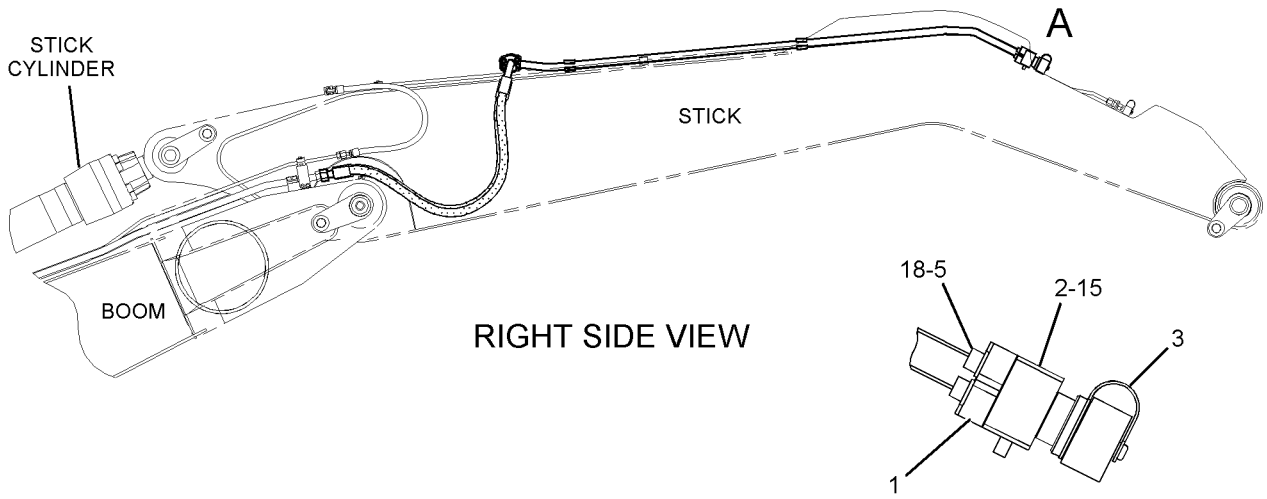

RIGHT SIDE VIEW

VIEW OF AREA A

GRAPHIC #1 **<END>** g01090292

HYDRAULIC SYSTEM

188-7587 LINES GP-SWING DRIVE

S/N: BCZ1-2000

PART OF 186-0471 HYDRAULIC AR

SMCS-5057, 5459 **i02161823**

NOTE	REF NO	GRAPHIC REF	PART NUMBER	QTY	PART NAME 1 2 3 4 5 6 (PRODUCT LEVEL)	SEE PAGE
Y	1	1	**109-7288**	1	FILTER GP-OIL (HYDRAULIC)	476
I	2	1	**113-0454**	2	HOSE AS	
	3	1	**188-1813**	1	PLATE	
I	4	1	**190-8550**	1	HOSE AS	
I	5	1	**190-8551**	1	HOSE AS	
	6	1	*148-8318*	3	CONNECTOR AS	
					(EACH INCLUDES)	
		1	**3K-0360**	1	SEAL-O-RING	
		1	**6V-8397**	1	SEAL-O-RING	
		1	**6V-8634**	1	CONNECTOR	
	7	1	*148-8319*	1	CONNECTOR AS	
		1	**2M-9780**	1	SEAL-O-RING	
		1	**6V-8397**	1	SEAL-O-RING	
		1	**6V-8715**	1	CONNECTOR	
	8	1	*148-8336*	2	CONNECTOR AS	
					(EACH INCLUDES)	
		1	**3J-1907**	1	SEAL-O-RING	
		1	**6V-8397**	1	SEAL-O-RING	
		1	**6V-8636**	1	CONNECTOR	
	9	1	*148-8367*	1	ELBOW AS	
		1	**6V-8397**	1	SEAL-O-RING	
		1	**6V-9850**	1	ELBOW	
	10	1	**150-5931**	2	GROMMET	
	11	1	**1P-3702**	4	SEAL-RECTANGULAR	
M	12	1	**5C-7261**	2	NUT (M8X1.25-THD)	
M	13	1	**8T-2223**	16	BOLT-SOCKET HEAD (M10X1.5X45-MM)	
	14	1	**8T-4121**	16	WASHER-HARD (11X21X2.5-MM THK)	
	15	1	**8T-4224**	2	WASHER-HARD (8.8X16X2-MM THK)	
M	16	1	**8T-4908**	2	BOLT (M8X1.25X25-MM)	
M	17	1	**8T-4970**	4	BOLT (M6X1X14-MM)	
	18	1	**8T-9403**	8	FLANGE-HALF	

I-REFER TO HYDRAULIC INFORMATION SYSTEM
M-METRIC PART
Y-SEPARATE ILLUSTRATION

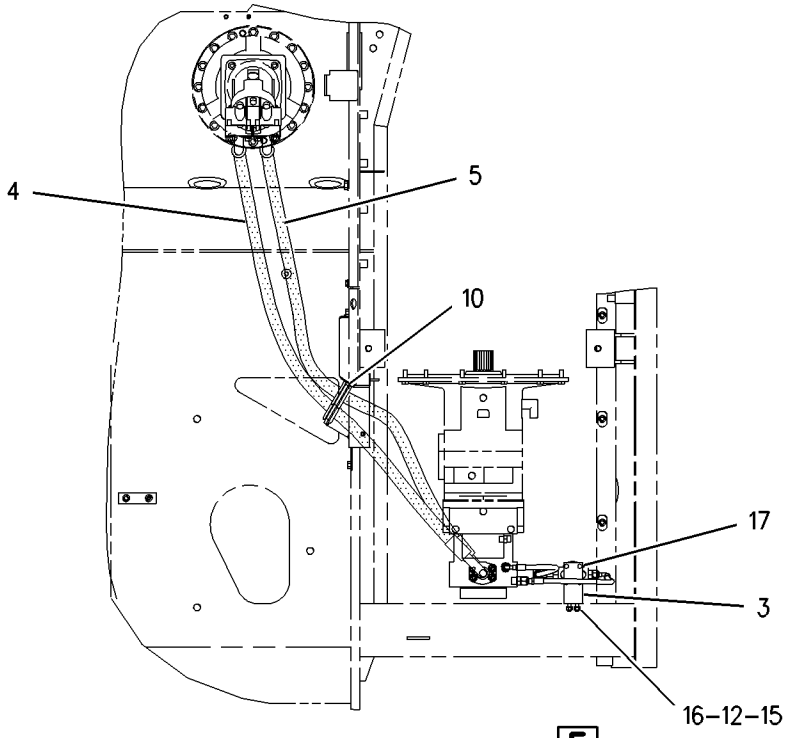

TOP VIEW

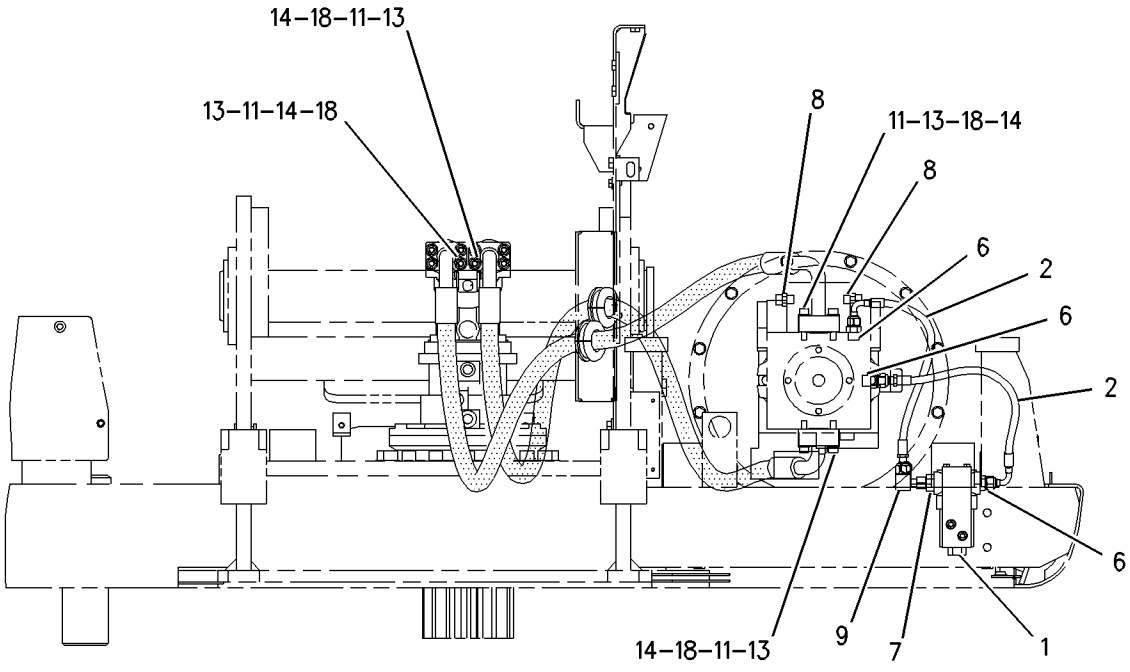

FRONT VIEW

GRAPHIC #1 **<END>** g00899873

HYDRAULIC SYSTEM

210-0696 MANIFOLD GP-CONTROL

S/N: BCZ1-2000

PART OF 187-3776 LINES GP-PILOT

SMCS-5264 **i02179048**

NOTE	REF NO	GRAPHIC REF	PART NUMBER	QTY	PART NAME 1 2 3 4 5 6 (PRODUCT LEVEL)	SEE PAGE
Y	1	1	**196-7486**	1	VALVE GP-SOLENOID (CREEPER SPEED)	744
Y	2	1	**199-1153**	1	VALVE GP-SOLENOID (SWING BRAKE LOCK)	747
Y	2A	1	**199-1153**	1	VALVE GP-SOLENOID (TRAVEL LOCKOUT)	747
Y	2B	1	**199-1153**	1	VALVE GP-SOLENOID (IMPLEMENT)	747
Y	2C	1	**199-1153**	1	VALVE GP-SOLENOID (PARKING BRAKE)	747
	3	1	**199-1154**	1	VALVE GP-SOLENOID (TRANSMISSION SHIFT)	
	3A	1	**177-6628**	1	COVER	
	3B	1	**195-7747**	1	SOLENOID	
	3C	1	**210-1925**	1	KIT-SEAL (TRANSMISSION SHIFT VALVE) (INCLUDES SEALS & RINGS)	
Y	4	1	**221-3103**	1	VALVE GP-PRESSURE REDUCING (SWING PUMP)	727
Y	4A	1	**221-3103**	1	VALVE GP-PRESSURE REDUCING (MAIN PUMP)	727
Y	5	1	**148-7291**	1	VALVE GP-PILOT RELIEF	726
Y	6	1	**202-4725**	1	VALVE GP-SOLENOID (OSCILLATING AXLE)	749
	7	1	**123-0179**	1	VALVE GP-CHECK	
		1	**121-8112**	1	SEAL-O-RING	
	8	1	**202-5486**	1	VALVE GP-CHECK	
	8A	1	**9X-7377**	1	SEAL-O-RING	
	9	1	**123-0173**	1	PLUG	
	10	1	**120-9702**	1	SCREW	
	11	1	**225-6726**	1	SPRING	
	12	1	**5W-9420**	1	LOCKNUT	
	13	1	**5W-7476**	1	BALL	
	14	1	**8U-1218**	1	NUT	
	15	1	**220-6425**	1	RETAINER	
	16	1	**5W-8104**	2	PLUG	
	17	1	**8U-7119**	1	NOZZLE	
	18	1	**6V-3922**	1	SEAL-O-RING	
	19	1	**221-2727**	1	SPRING	
	20	1	**223-3662**	1	BALL	
	21	1	**9S-8003**	2	PLUG	
	22	1	**1J-9671**	2	SEAL-O-RING	
	23	1	**221-3208**	1	WASHER	

Y-SEPARATE ILLUSTRATION

210-0696 MANIFOLD GP-CONTROL *(contd.)* **i02179048**

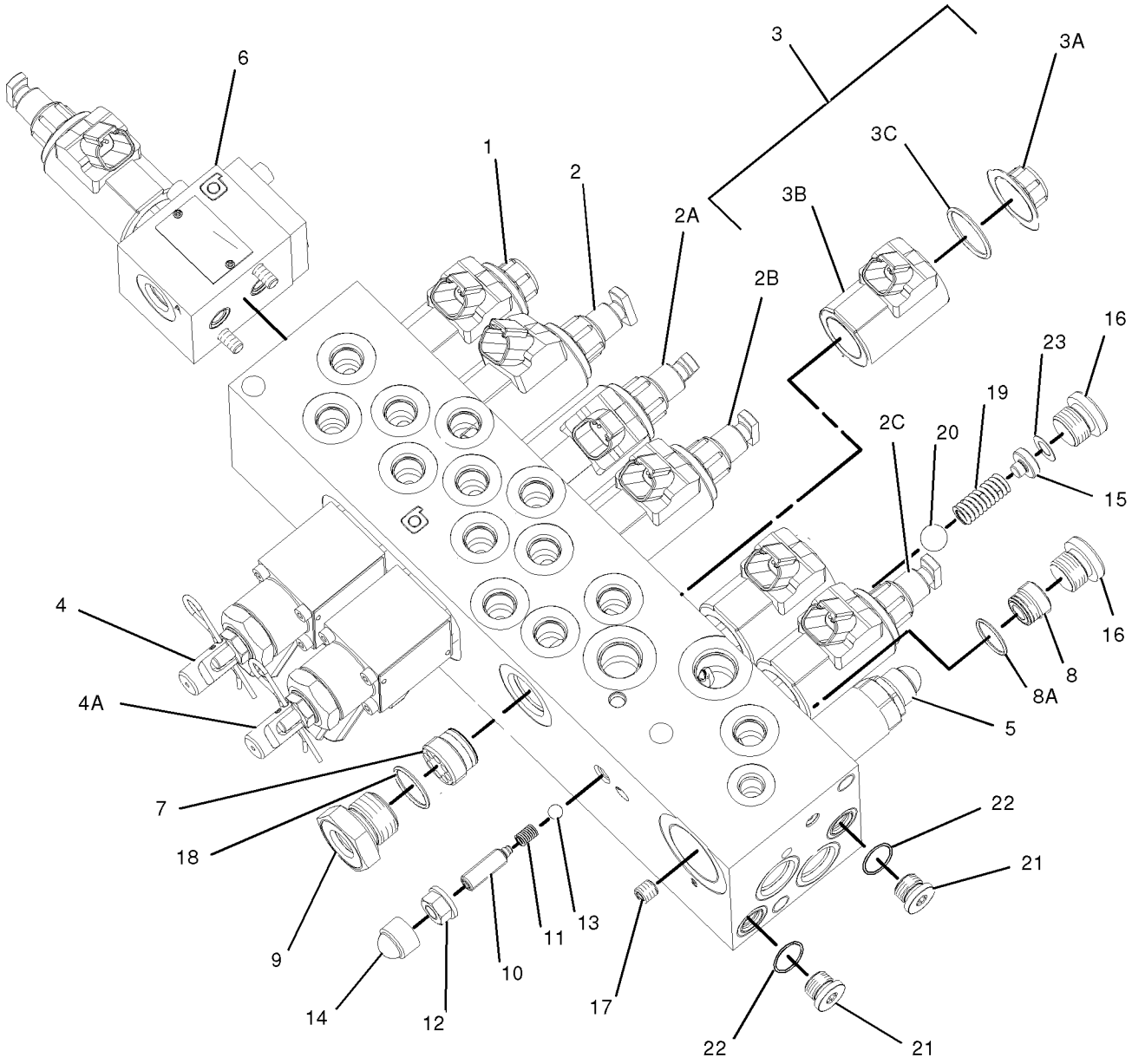

GRAPHIC #1 **<END>** g01052189

186-0509 MOTOR & MTG GP-HYDRAULIC FAN

S/N: BCZ1-2000

PART OF 186-0472 INSTALLATION AR-ENGINE

SMCS-1386 **i02161824**

NOTE	REF NO	GRAPHIC REF	PART NUMBER	QTY	PART NAME 1 2 3 4 5 6 (PRODUCT LEVEL)	SEE PAGE
Y	1	1	**197-4602**	1	MOTOR GP-GEAR (FAN DRIVE)	616
	2	1	**197-4858**	1	PLATE	
	3	1	**7X-7729**	4	WASHER (11X25X3-MM THK)	
M	4	1	**8T-4136**	4	BOLT (M10X1.5X25-MM)	
	5	1	**8T-4224**	4	WASHER-HARD (8.8X16X2-MM THK)	
M	6	1	**8T-4908**	4	BOLT (M8X1.25X25-MM)	

M-METRIC PART
Y-SEPARATE ILLUSTRATION

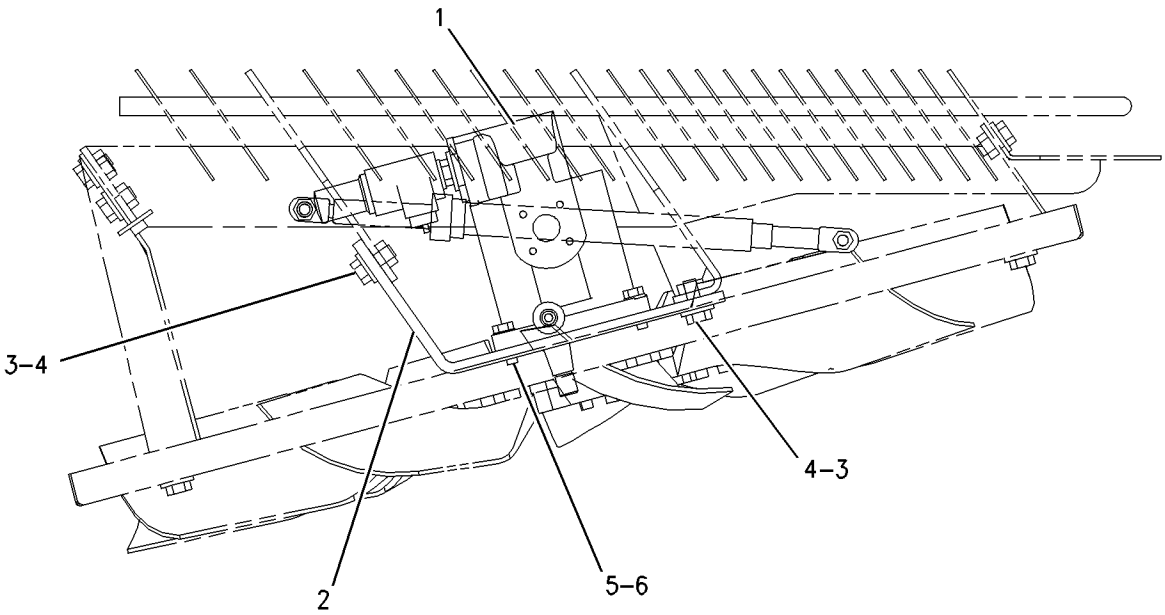

RIGHT SIDE VIEW

GRAPHIC #1 **<END>** g00829567

HYDRAULIC SYSTEM

207-2169 MOTOR & MTG GP-TRAVEL

S/N: BCZ1-2000

PART OF 186-0470 POWER TRAIN AR

SMCS-4351 **i02155719**

NOTE	REF NO	GRAPHIC REF	PART NUMBER	QTY	PART NAME 1 2 3 4 5 6 (PRODUCT LEVEL)	SEE PAGE
Y	1	1	**211-0062**	1	MOTOR GP-TRAVEL	619
M	2	1	**099-0169**	4	BOLT (M16X2X60-MM)	
	3	1	**9X-8257**	4	WASHER (17.5X30X3.5-MM THK)	
	4	1	**107-5665**	1	SEAL-O-RING	

M-METRIC PART
Y-SEPARATE ILLUSTRATION

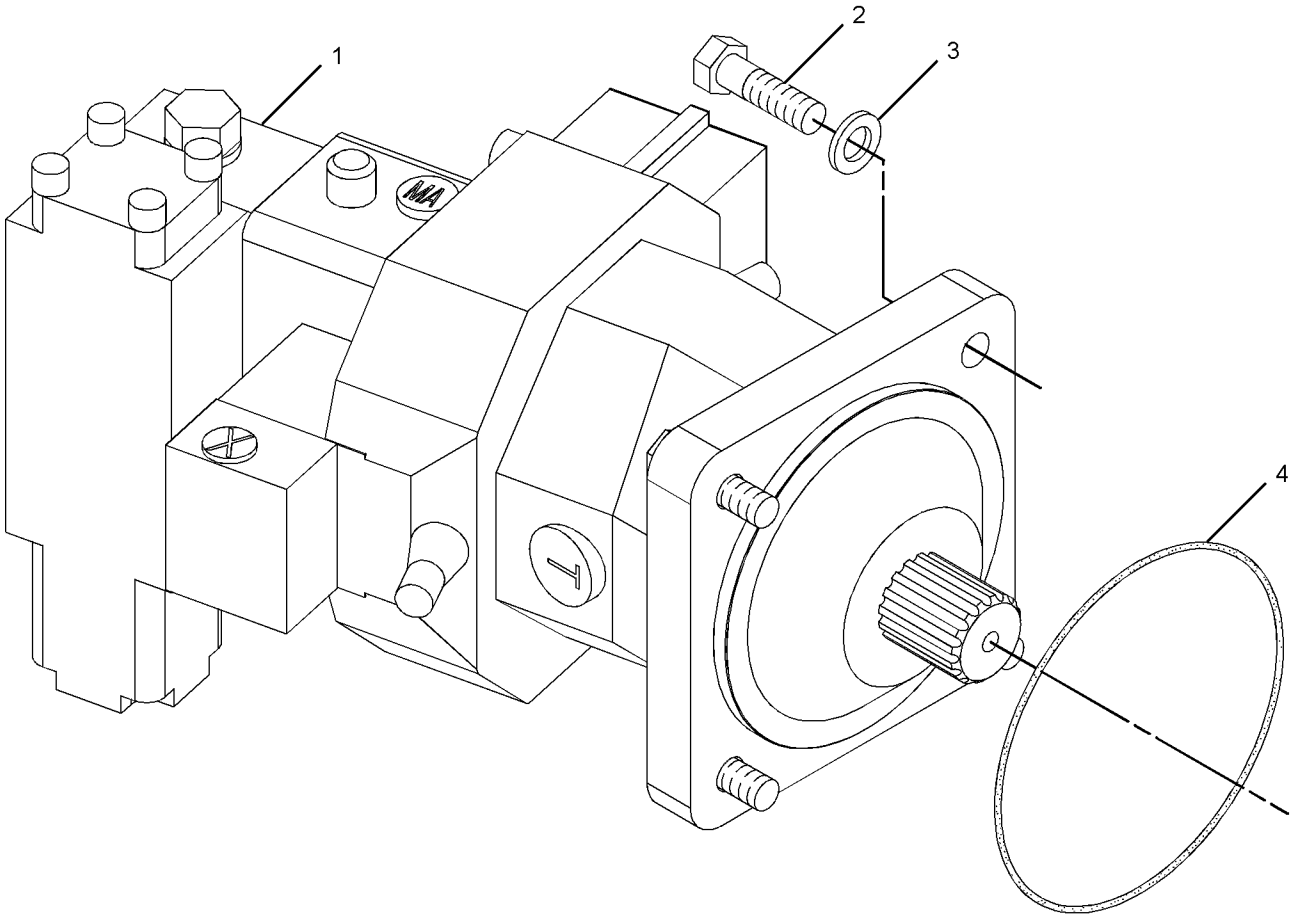

GRAPHIC #1 **<END>** g01094388

197-4602 MOTOR GP-GEAR–HYDRAULIC FAN

S/N: BCZ1-2000

PART OF 186-0509 MOTOR & MTG GP-HYDRAULIC FAN

SMCS-1386, 5061 **i02163525**

NOTE	REF NO	GRAPHIC REF	PART NUMBER	QTY	PART NAME 1 2 3 4 5 6 (PRODUCT LEVEL)	SEE PAGE
	1	1	**202-3060**	1	VALVE GP-SOLENOID & RELIEF (HYDRAULIC FAN MOTOR)	
	1A	1	**5W-9436**	1	SEAL-O-RING	
	1B	1	**6V-8352**	1	SEAL-O-RING	
	1C	1	**202-3077**	1	CAP	
	2	1	**202-4124**	1	BEARING GP-SELF-ALIGNING	
	2A	1	**3E-4333**	6	KEY-WOODRUFF	
	2B	1	**3E-4988**	1	LOCKWASHER	
	2C	1	**095-0919**	1	RING-RETAINING	
M	2D	1	**125-2976**	1	NUT	
	3	1	**202-3061**	1	KIT-SEAL (HYDRAULIC FAN MOTOR)	
	4	1	**202-3081**	1	COUPLING	
	5	1	**202-6705**	2	BOLT-SOCKET HEAD	
	6	1	**202-6704**	2	BOLT-SOCKET HEAD	

M-METRIC PART

197-4602 MOTOR GP-GEAR *(contd.)* **i02163525**

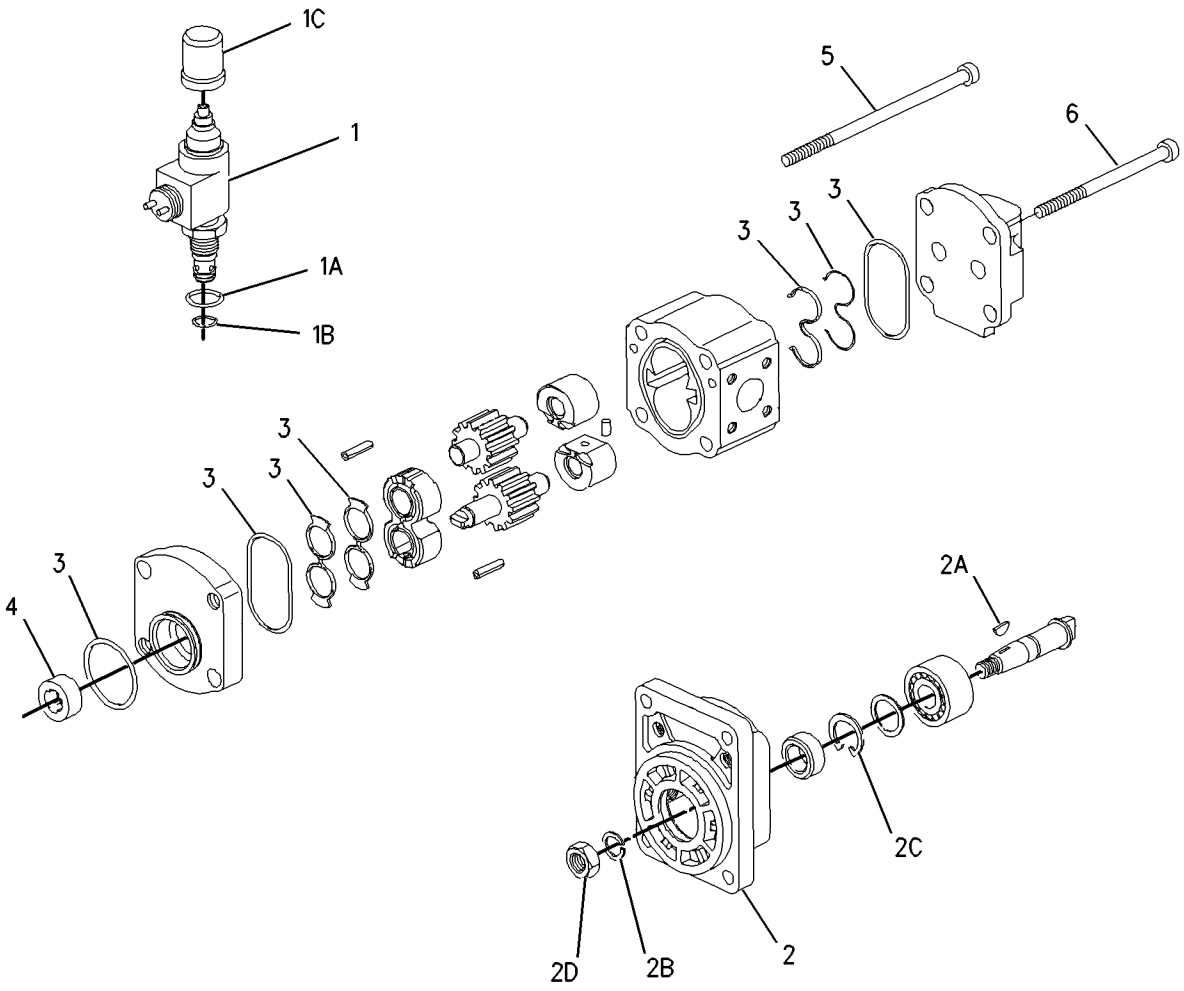

GRAPHIC #1 **<END>** g00813363

HYDRAULIC SYSTEM

152-7371 MOTOR GP-SWING

S/N: BCZ1-2000

PART OF 111-1858 DRIVE GP-SWING

SMCS-5058 **i01224977**

NOTE	REF NO	GRAPHIC REF	PART NUMBER	QTY	PART NAME 1 2 3 4 5 6 (PRODUCT LEVEL)	SEE PAGE
Y	1	1	**157-0054**	1	ROTATING GP-MOTOR	632
	2	1	**157-0055**	1	HOUSING-MOTOR	
	3	1	**157-0056**	1	PLATE-PORT	
	4	1	**099-3094**	1	DOWEL	
	5	1	**6V-1179**	1	SEAL-O-RING	
M	6	1	**8T-1159**	6	BOLT-SOCKET HEAD (M10X1.5X25-MM)	
	7	1	**9S-8004**	1	PLUG	
	8	1	**3J-1907**	1	SEAL-O-RING	

M-METRIC PART
Y-SEPARATE ILLUSTRATION

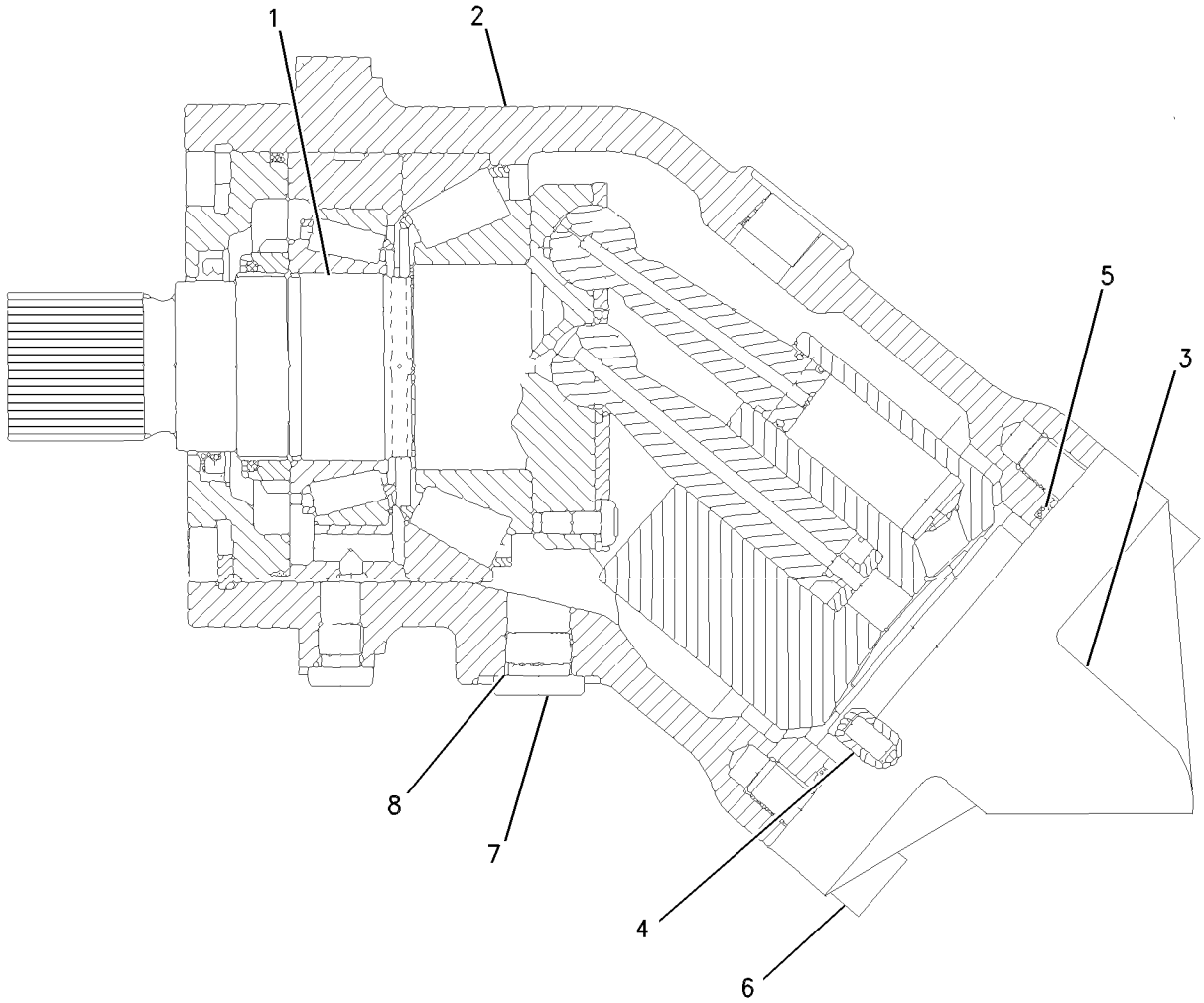

GRAPHIC #1 **<END>** g00656819

HYDRAULIC SYSTEM

211-0062 MOTOR GP-TRAVEL

S/N: BCZ1-2000

PART OF 207-2169 MOTOR & MTG GP-TRAVEL

SMCS-4351, 5058 **i01585102**

NOTE	REF NO	GRAPHIC REF	PART NUMBER	QTY	PART NAME 1 2 3 4 5 6 (PRODUCT LEVEL)	SEE PAGE
Y	1	1	**190-8122**	1	ROTATING GP-MOTOR	633
Y	2	1	**190-8124**	1	HEAD GP-MOTOR	485
	3	1	**190-8127**	1	HOUSING	
	4	1	**9S-8005**	1	PLUG	
	5	1	**033-6028**	1	SEAL-O-RING	
	6	1	**2W-1145**	1	RING-RETAINING	
	7	1	**124-9913**	1	SEAL-SHAFT	
	8	1	**124-9914**	1	SHIM (3-MM THK)	
	9	1	**3J-0634**	1	SEAL-O-RING	
	10	1	**9S-8008**	1	PLUG	
	11	1	**033-6036**	1	SEAL-O-RING	
M	12	1	**113-7824**	1	SETSCREW-SOCKET (M12X1.75-THD)	
M	13	1	**123-4954**	1	SETSCREW (M12X1.75-THD)	
	14	1	**6E-3283**	2	LOCKNUT	
Y	15	1	**211-0081**	1	VALVE GP-BRAKE CONTROL	687

M-METRIC PART
Y-SEPARATE ILLUSTRATION

211-0062 MOTOR GP-TRAVEL *(contd.)* **i01585102**

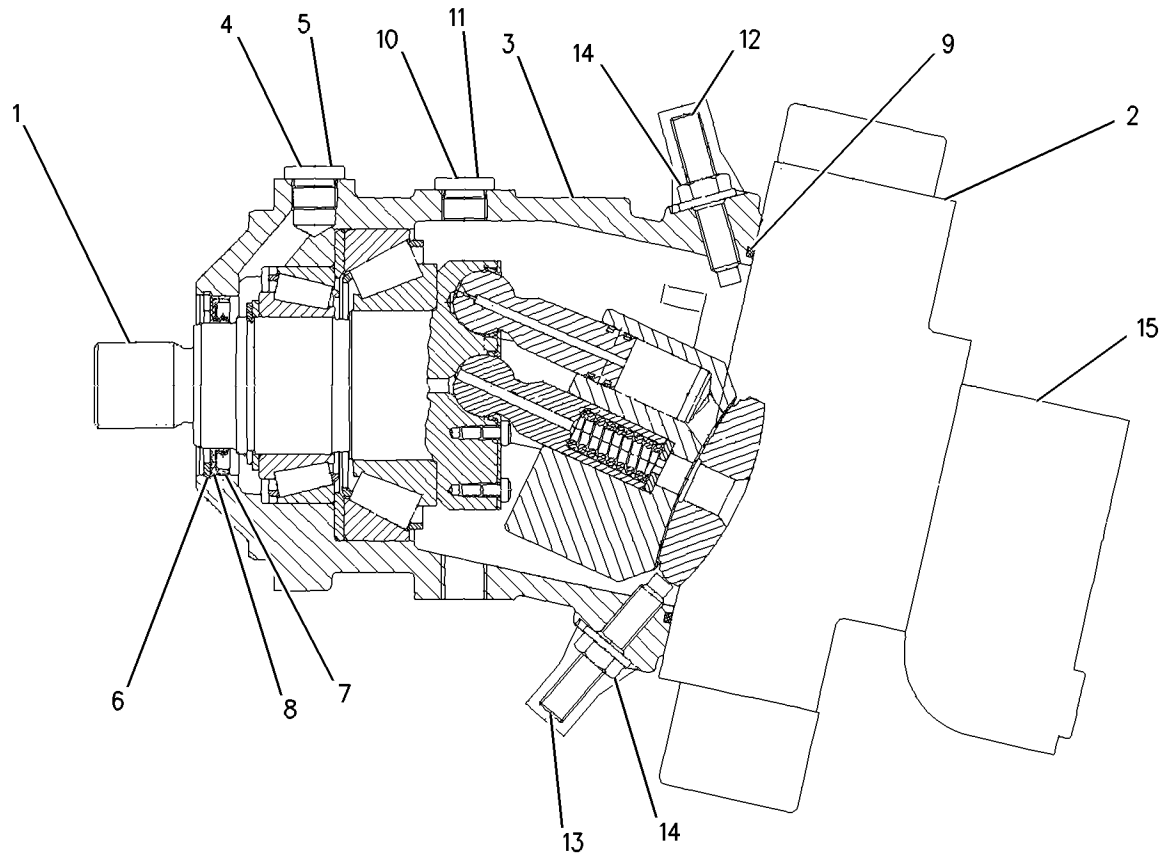

GRAPHIC #1 **<END>** g00834009

114-0215 PLUG GP-CONTROL VALVE

S/N: BCZ1-2000

PART OF 191-2762 VALVE GP-MAIN CONTROL

SMCS-0663, 5051 **i02161829**

NOTE	REF NO	GRAPHIC REF	PART NUMBER	QTY	PART NAME 1 2 3 4 5 6 (PRODUCT LEVEL)	SEE PAGE
J	1	1	**5P-3456**	1	SEAL-O-RING	
J	2	1	**5P-8356**	1	SEAL-O-RING	
J	3	1	**115-7764**	2	RING-BACKUP	
					AVAILABLE REPAIR KIT(S):	
J			**114-2943**	1	KIT-SEAL (MAIN CONTROL VALVE)	

J-KIT MARKED J SERVICES PARTS MARKED J

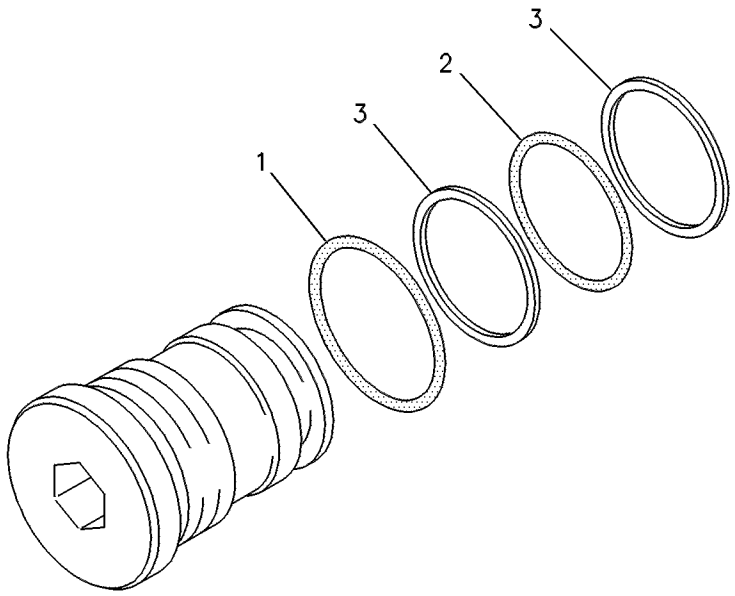

GRAPHIC #1 **<END>** g00247640

HYDRAULIC SYSTEM

188-4941 PUMP & MTG GP-HYDRAULIC FAN

S/N: BCZ1-2000

PART OF 186-0471 HYDRAULIC AR

SMCS-1387 **i02161830**

NOTE	REF NO	GRAPHIC REF	PART NUMBER	QTY	PART NAME 1 2 3 4 5 6 (PRODUCT LEVEL)	SEE PAGE
	1	1	**100-4830**	2	BOLT (M10X1.5X20-MM)	
Y	2	1	**196-8428**	1	PUMP GP-GEAR (HYDRAULIC FAN)	626

Y-SEPARATE ILLUSTRATION

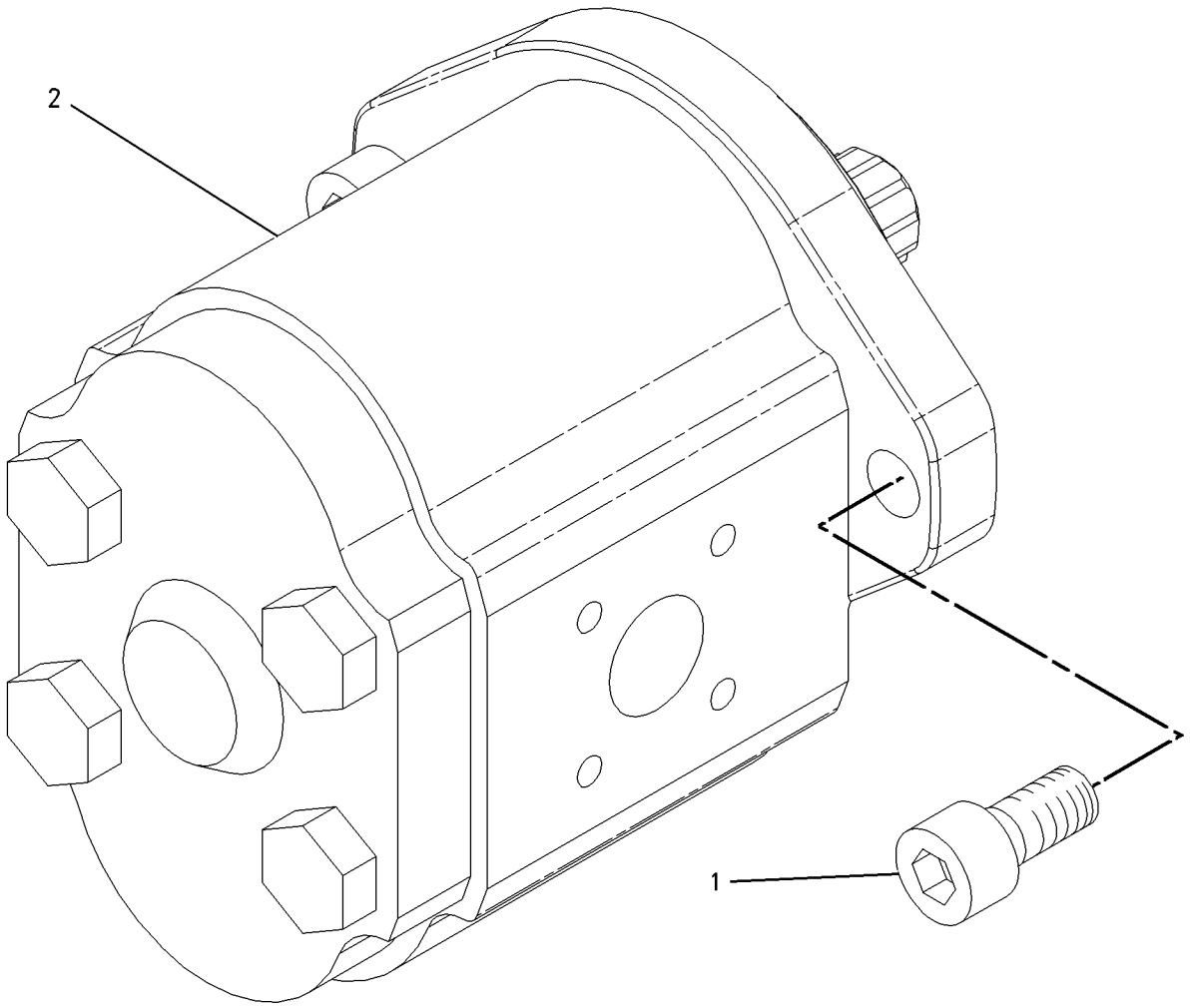

GRAPHIC #1 **<END>** g00909724

186-0498 PUMP & MTG GP-MAIN HYDRAULIC

S/N: BCZ1-2000

PART OF 186-0471 HYDRAULIC AR

SMCS-5070 **i01783041**

NOTE	REF NO	GRAPHIC REF	PART NUMBER	QTY	PART NAME 1 2 3 4 5 6 (PRODUCT LEVEL)	SEE PAGE
Y	1	1	**190-8197**	1	PUMP GP-MAIN HYDRAULIC	627
	2	1	**8T-4121**	12	WASHER-HARD (11X21X2.5-MM THK)	
M	3	1	**8T-4195**	12	BOLT (M10X1.5X30-MM)	

M-METRIC PART
Y-SEPARATE ILLUSTRATION

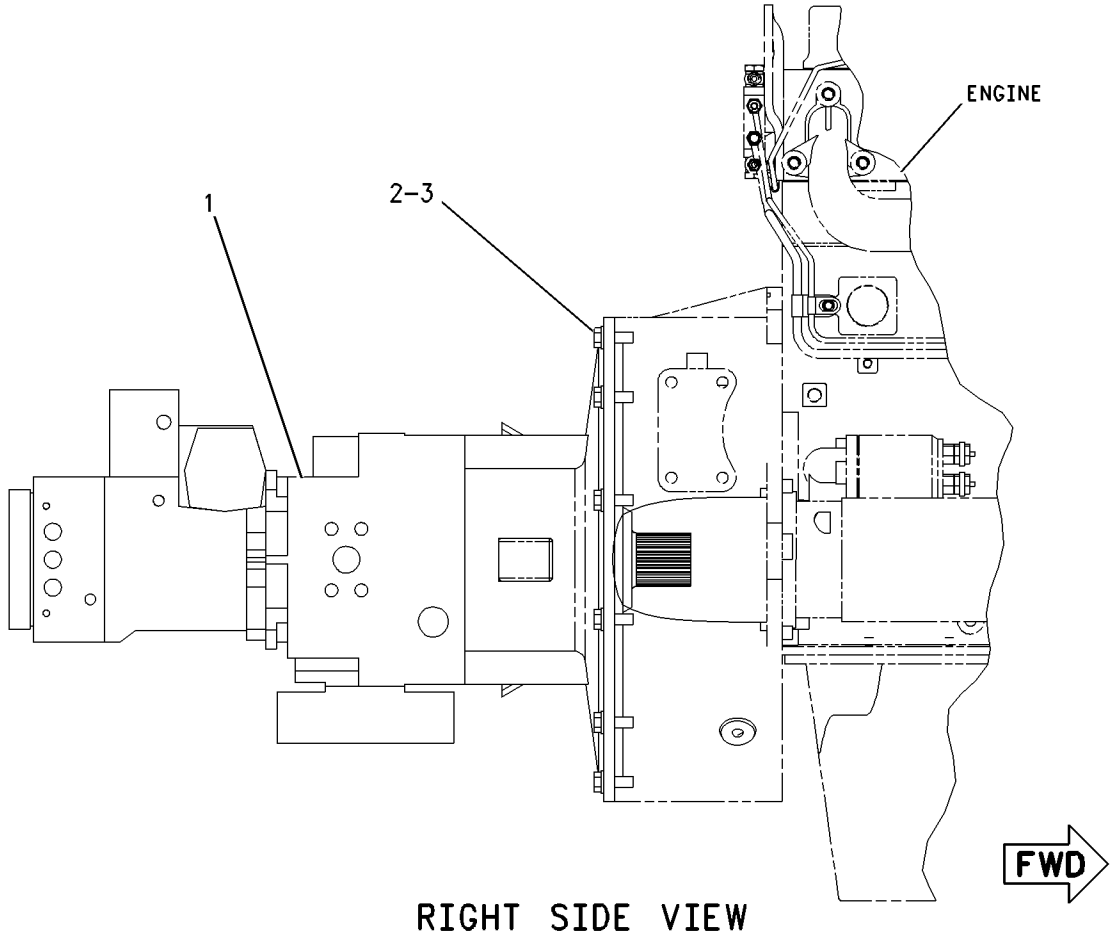

RIGHT SIDE VIEW

GRAPHIC #1 **<END>** g00842613

186-0499 PUMP & MTG GP-PILOT–BRAKE, STEERING

S/N: BCZ1-2000

PART OF 186-0471 HYDRAULIC AR

SMCS-5085 **i02164329**

NOTE	REF NO	GRAPHIC REF	PART NUMBER	QTY	PART NAME 1 2 3 4 5 6 (PRODUCT LEVEL)	SEE PAGE
Y	1	1	**196-8424**	1	PUMP GP-GEAR (AUX, BRAKE, PILOT, STEERING)	625
M	2	1	**105-3484**	2	BOLT-SOCKET HEAD (M10X1.5X25-MM)	

M-METRIC PART
Y-SEPARATE ILLUSTRATION

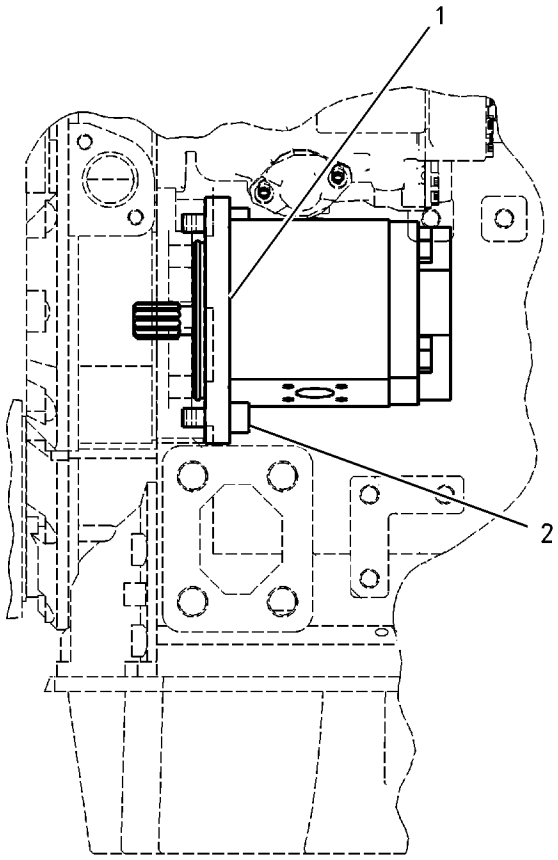

GRAPHIC #1 **<END>** g00834824

196-8424 PUMP GP-GEAR–AUX, BRAKE, PILOT, STEERING

S/N: BCZ1-2000

PART OF 186-0499 PUMP & MTG GP-PILOT

SMCS-5073 **i02161832**

NOTE	REF NO	GRAPHIC REF	PART NUMBER	QTY	PART NAME 1 2 3 4 5 6 (PRODUCT LEVEL)	SEE PAGE
	1	1	**199-7560**	2	RING-RETAINING	
M	2	1	**8T-6685**	4	BOLT (M10X1.5X110-MM)	
	3	1	**113-7617**	4	DOWEL	
	4	1	**192-7120**	1	SEAL-O-RING	
	5	1	**5W-8104**	1	PLUG	
	6	1	**199-4885**	1	KIT-PUMP SEAL (BRAKE, STEERING)	
					(INCLUDES SEALS, RINGS & PLUGS)	

M-METRIC PART

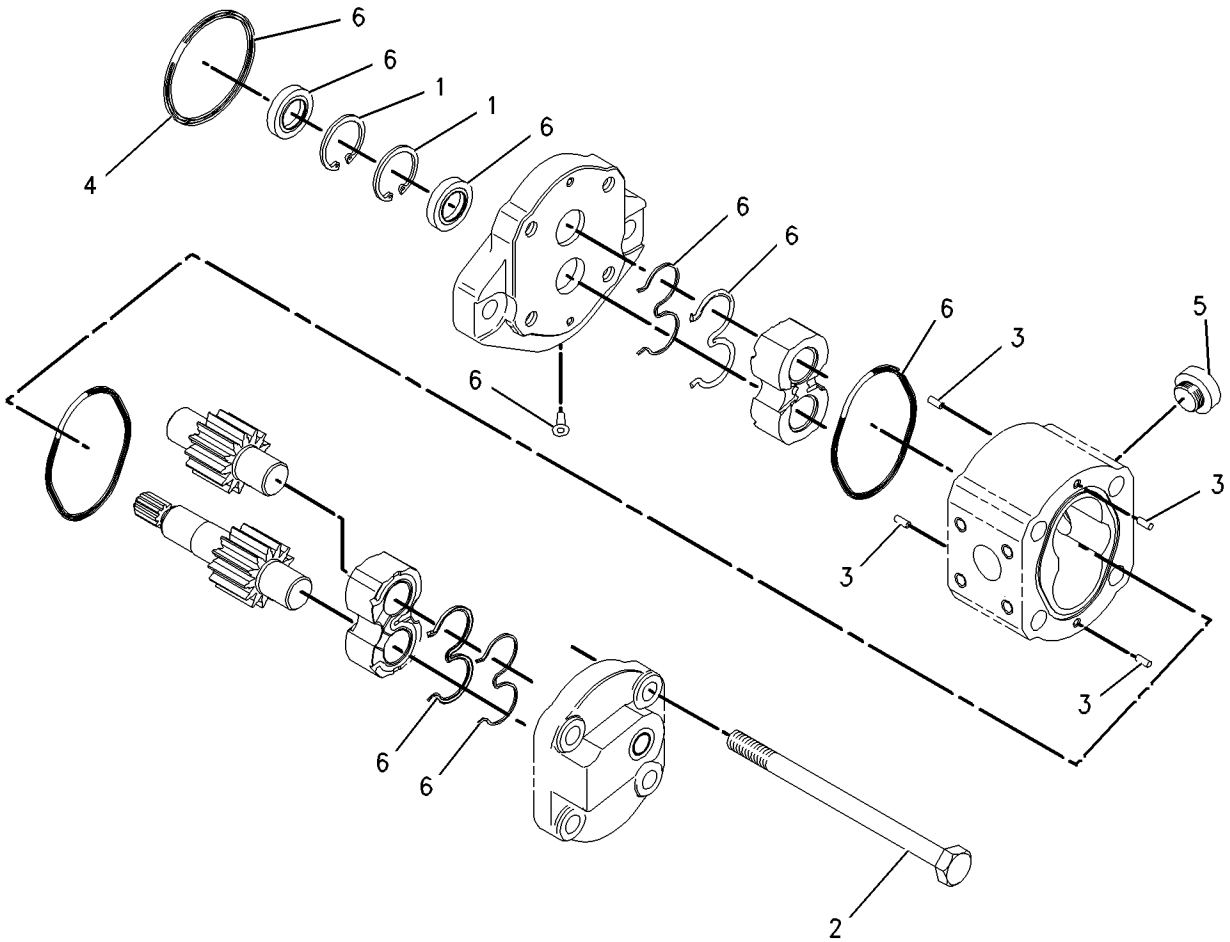

GRAPHIC #1 **<END>** g00858273

HYDRAULIC SYSTEM

196-8428 PUMP GP-GEAR–HYDRAULIC FAN

S/N: BCZ1-2000

PART OF 188-4941 PUMP & MTG GP-HYDRAULIC FAN

SMCS-5073 **i02161833**

NOTE	REF NO	GRAPHIC REF	PART NUMBER	QTY	PART NAME 1 2 3 4 5 6 (PRODUCT LEVEL)	SEE PAGE
	1	1	**199-7552**	1	LOCKWASHER	
	2	1	**175-0137**	4	SHIM (3.0MM THK)	
M	3	1	**095-0661**	4	BOLT-SOCKET HEAD	
	4	1	**113-7617**	4	DOWEL	
	5	1	**199-4885**	1	KIT-PUMP SEAL (HYDRAULIC FAN PUMP)	
					(INCLUDES SEALS, RINGS, AND PLUGS)	

M-METRIC PART

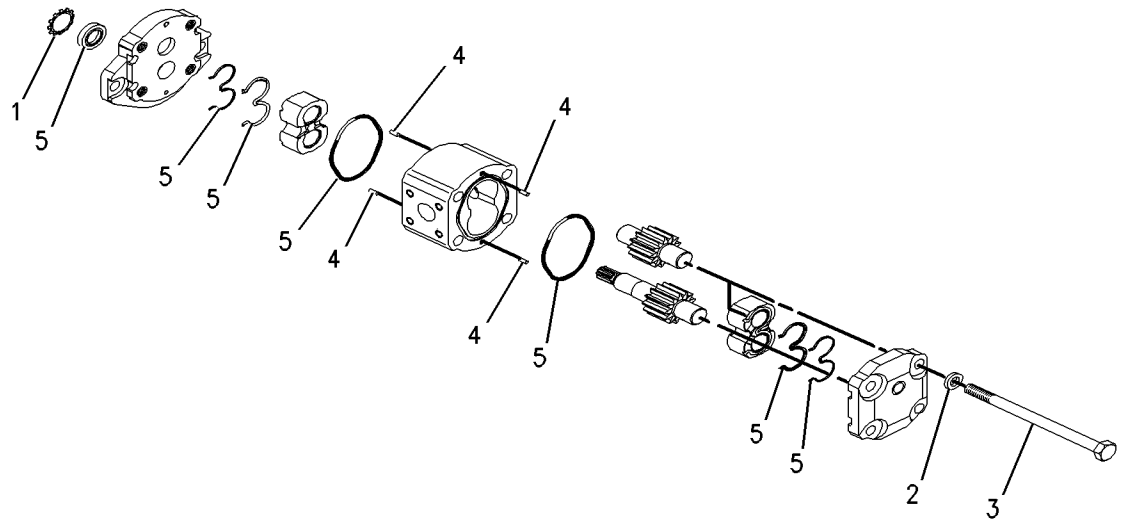

GRAPHIC #1 **<END>** g00821826

190-8197 PUMP GP-MAIN HYDRAULIC

S/N: BCZ1-2000

PART OF 186-0498 PUMP & MTG GP-MAIN HYDRAULIC

SMCS-5070 **i02163526**

NOTE	REF NO	GRAPHIC REF	PART NUMBER	QTY	PART NAME 1 2 3 4 5 6 (PRODUCT LEVEL)	SEE PAGE
Y	1	1	**190-8198**	1	PUMP GP-PISTON (IMPLEMENT, TRAVEL, WORK TOOL)	628
Y	2	1	**190-8199**	1	PUMP GP-PISTON (SWING, CHARGE)	630
	3	1	**4J-2677**	2	WASHER (16.7X27X5-MM THK)	
M	4	1	**6V-8201**	2	BOLT-SOCKET HEAD (M16X2X45-MM)	

M-METRIC PART
Y-SEPARATE ILLUSTRATION

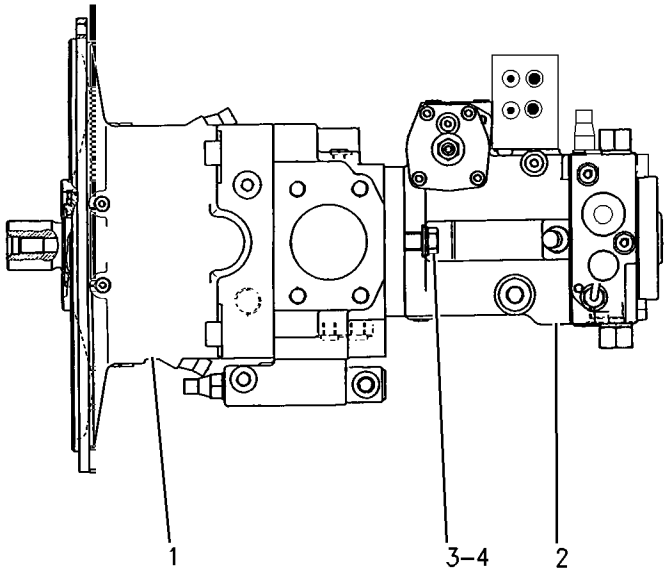

GRAPHIC #1 **<END>** g00820074

190-8198 PUMP GP-PISTON—IMPLEMENT, TRAVEL, WORK TOOL

S/N: BCZ1-2000

PART OF 190-8197 PUMP GP-MAIN HYDRAULIC

SMCS-5070 **i02163527**

NOTE	REF NO	GRAPHIC REF	PART NUMBER	QTY	PART NAME 1 2 3 4 5 6 (PRODUCT LEVEL)	SEE PAGE
Y	1	1	**199-2395**	1	BARREL GP-PUMP	424
Y	2	1	**117-5708**	1	HEAD GP-PUMP	487
Y	3	1	**199-2396**	1	VALVE GP-PUMP CONTROL	732
Y	4	1	**117-5710**	1	ACTUATOR GP-PUMP	420
Y	5	1	**117-5712**	1	ACTUATOR GP-PUMP	421
Y	6	1	**217-5636**	1	DRIVE GP-PUMP	470
Y	7	1	**199-2976**	1	SENSOR GP-POSITION (SWASHPLATE)	171
	8	1	**117-5716**	4	PIN	
	9	1	**174-9972**	2	PIN	
	10	1	**191-3539**	2	NUT	
M	11	1	**9T-3928**	4	PLUG AS	
					(EACH INCLUDES)	
		1	**187-8001**	1	SEAL	
M	12	1	**117-5718**	4	BOLT-SOCKET HEAD	
	13	1	**9M-5024**	1	SEAL-O-RING	
	14	1	**9S-8008**	3	PLUG	
	15	1	**125-8601**	2	PIN-SPRING	
	16	1	**099-5845**	1	PLUG	
	17	1	**216-0084**	1	SPRING	
	18	1	**216-0086**	1	BUSHING-GUIDE	

M-METRIC PART
Y-SEPARATE ILLUSTRATION

190-8198 PUMP GP-PISTON *(contd.)* **i02163527**

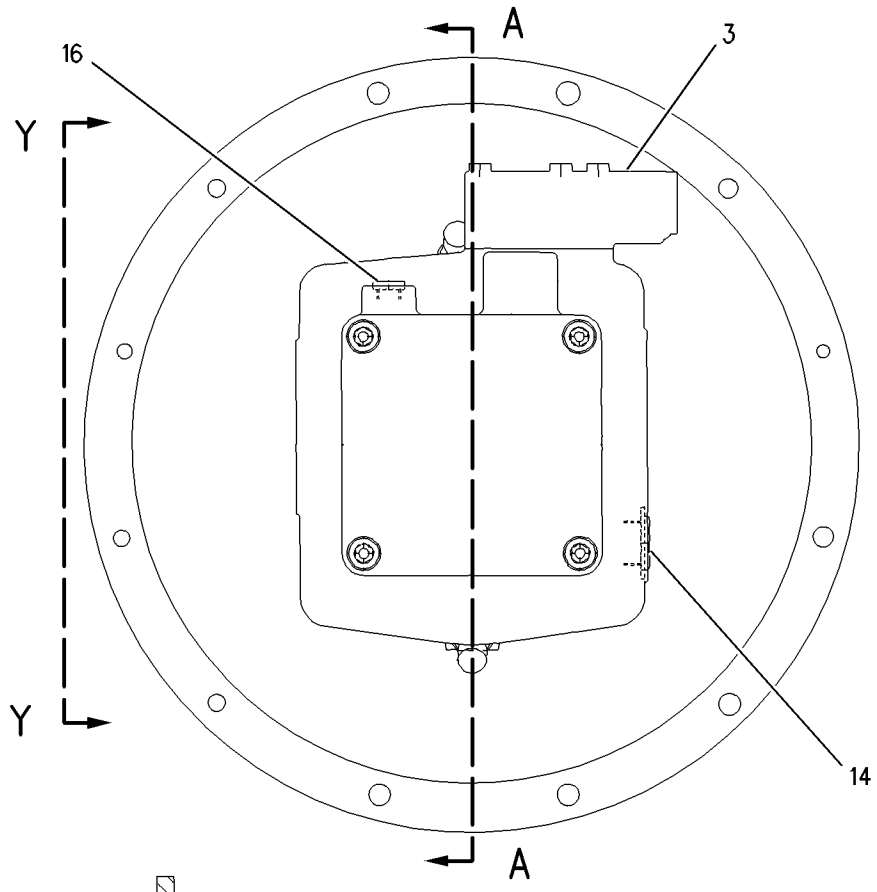

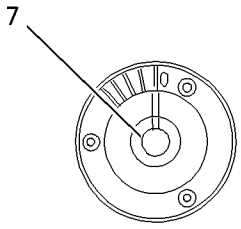

VIEW Y-Y

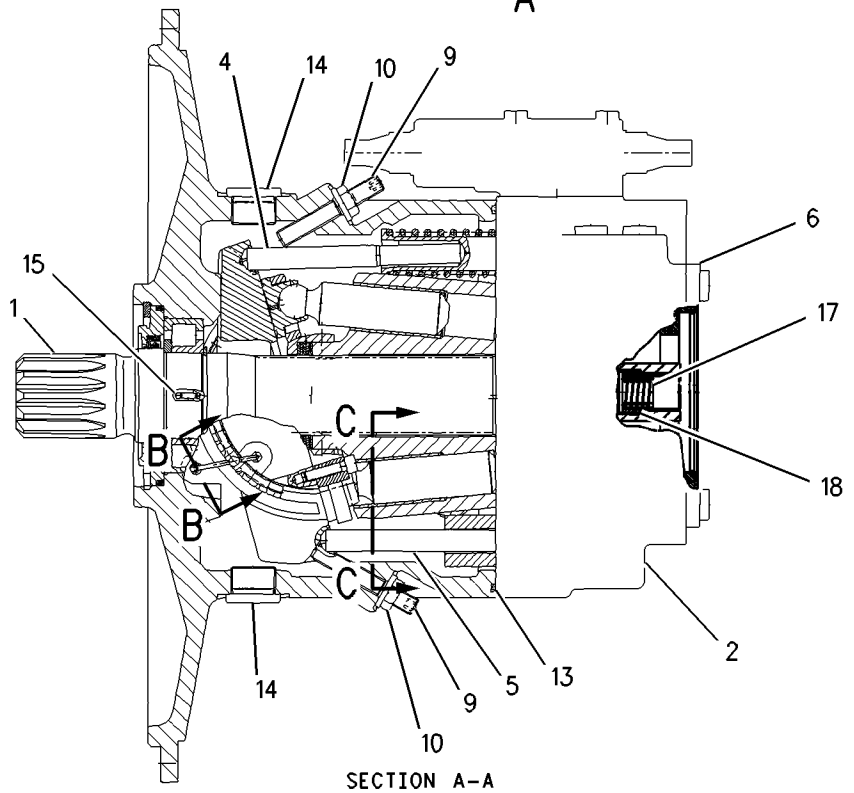

SECTION A-A

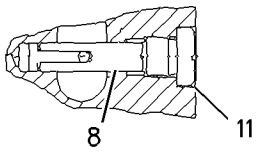

SECTION B-B

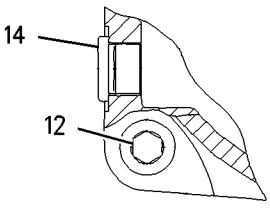

SECTION C-C

GRAPHIC #1 **<END>** g00928579

190-8199 PUMP GP-PISTON—SWING, CHARGE

S/N: BCZ1-2000

PART OF 190-8197 PUMP GP-MAIN HYDRAULIC

SMCS-5070 **i02163528**

NOTE	REF NO	GRAPHIC REF	PART NUMBER	QTY	PART NAME 1 2 3 4 5 6 (PRODUCT LEVEL)	SEE PAGE
Y	1	1	**136-7701**	1	BARREL GP-PUMP	422
Y	2	1	**145-3542**	1	VALVE GP-PUMP CONTROL (PRESSURE COMPENSATOR)	731
Y	3	1	**145-3543**	1	HEAD GP-PUMP (ADAPTER)	488
	4	1	**152-1809**	1	PUMP GP-GEROTOR (CHARGE)	
		1	**6V-5778**	1	SEAL-O-RING	
		1	**179-0464**	2	SEAL-O-RING	
Y	5	1	**139-8929**	1	VALVE GP-PUMP CONTROL	730
	7	1	**122-9718**	1	PIN	
	8	1	**9S-8008**	1	PLUG	
	9	1	**099-5845**	2	PLUG	
	10	1	**112-4628**	4	SCREW	
	11	1	**9T-3726**	2	PLUG	
	12	1	**123-7575**	1	SCREW-LOCK	
	13	1	**6V-8978**	1	SEAL-O-RING	
M	14	1	**1G-3176**	1	SCREW-LOCK (M8-THD)	
	15	1	**125-8601**	2	PIN-SPRING	
M	16	1	**9T-3928**	1	PLUG AS	
		1	**187-8001**	1	SEAL	
	17	1	**8U-1361**	1	PLUG	
	18	1	**117-7235**	1	SCREW	
M	19	1	**6E-4240**	1	NUT-SEALING (M10X1-THD)	
	20	1	**117-7236**	1	PLUG	

M-METRIC PART
Y-SEPARATE ILLUSTRATION

190-8199 PUMP GP-PISTON *(contd.)* **i02163528**

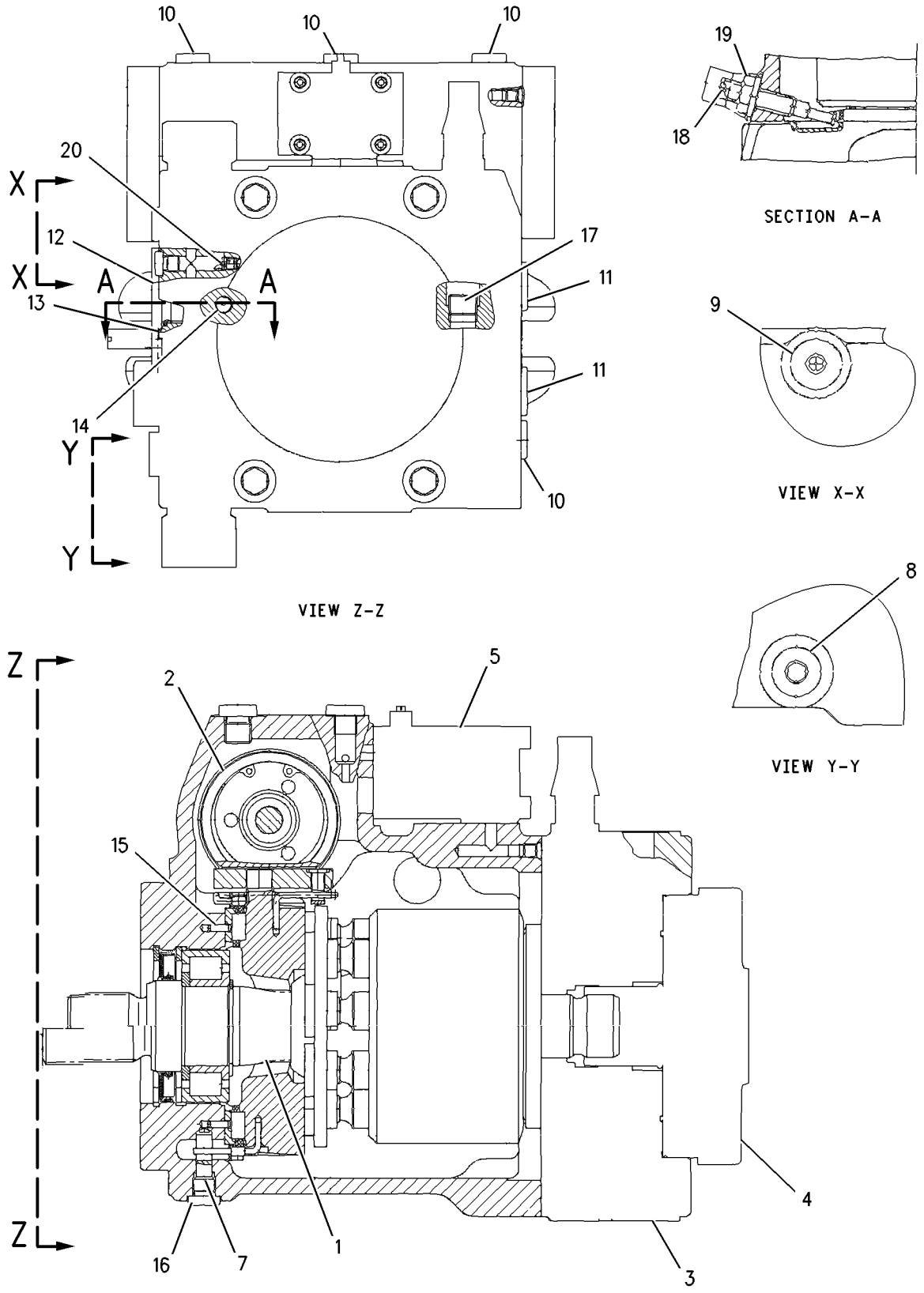

GRAPHIC #1 **<END>** g00822646

HYDRAULIC SYSTEM

157-0054 ROTATING GP-MOTOR

S/N: BCZ1-2000

PART OF 152-7371 MOTOR GP-SWING

SMCS-5058 **i01799037**

NOTE	REF NO	GRAPHIC REF	PART NUMBER	QTY	PART NAME 1 2 3 4 5 6 (PRODUCT LEVEL)	SEE PAGE
Y	1	1	**179-9936**	1	ROTATING GP-PUMP	636
Y	2	1	**180-2652**	1	SHAFT GP-HYDRAULIC MOTOR	637
	3	1	**157-0387**	1	COVER	
	4	1	**095-0944**	1	RING-RETAINING	
	5	1	**139-2840**	1	SEAL-SHAFT	
	6	1	**6V-8002**	1	SEAL-O-RING	
B	7	1	**180-1375**	2	SHIM (0.1MM THK)	
B	8	1	**180-1376**	1	SHIM (0.3MM THK)	

B-USE AS REQUIRED
Y-SEPARATE ILLUSTRATION

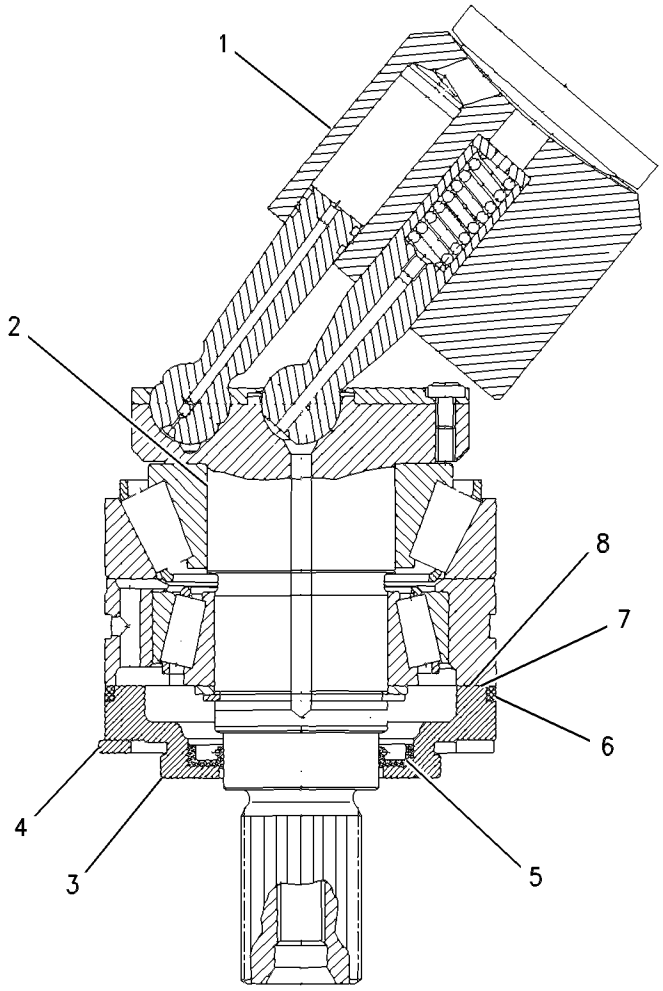

GRAPHIC #1 **<END>** g00657566

190-8122 ROTATING GP-MOTOR

S/N: BCZ1-2000

PART OF 211-0062 MOTOR GP-TRAVEL

SMCS-5058 **i01798271**

NOTE	REF NO	GRAPHIC REF	PART NUMBER	QTY	PART NAME 1 2 3 4 5 6 (PRODUCT LEVEL)	SEE PAGE
Y	1	1	**191-0885**	1	ROTATING GP-MOTOR	634
Y	2	1	**191-0887**	1	SHAFT GP-HYDRAULIC MOTOR	638

Y-SEPARATE ILLUSTRATION

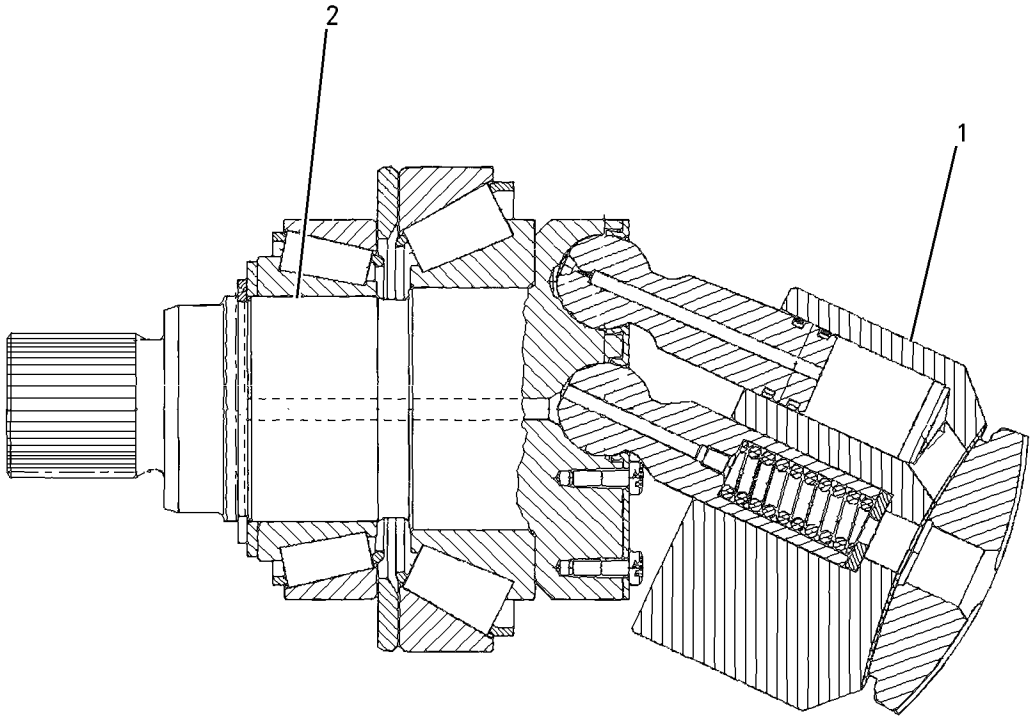

GRAPHIC #1 **<END>** g00700637

HYDRAULIC SYSTEM

191-0885 ROTATING GP-MOTOR

S/N: BCZ1-2000

PART OF 190-8122 ROTATING GP-MOTOR

SMCS-5058 **i01309669**

NOTE	REF NO	GRAPHIC REF	PART NUMBER	QTY	PART NAME 1 2 3 4 5 6 (PRODUCT LEVEL)	SEE PAGE
	1	1	**191-1393**	1	BARREL-CYLINDER	
	2	1	**191-1394**	1	PLATE-CONTROL	
	3	1	**191-1395**	1	PIN	
	4	1	**191-1396**	7	PISTON AS	
					(EACH INCLUDES)	
		1	**191-1398**	2	RING-PISTON	
B	5	1	**124-9855**	1	SHIM (4.5MM THK)	
B	6	1	**124-9856**	1	SHIM (4.6MM THK)	
B	7	1	**124-9857**	1	SHIM (4.7MM THK)	
B	8	1	**124-9858**	1	SHIM (4.8MM THK)	
B	9	1	**124-9859**	1	SHIM (4.9MM THK)	
B	10	1	**124-9860**	1	SHIM (5.0MM THK)	
	11	1	**124-9861**	1	SPRING	
	12	1	**191-1397**	1	PLATE-RETAINING	
	13	1	**113-4418**	7	SCREW	

B-USE AS REQUIRED

191-0885 **ROTATING GP-MOTOR** *(contd.)* **i01309669**

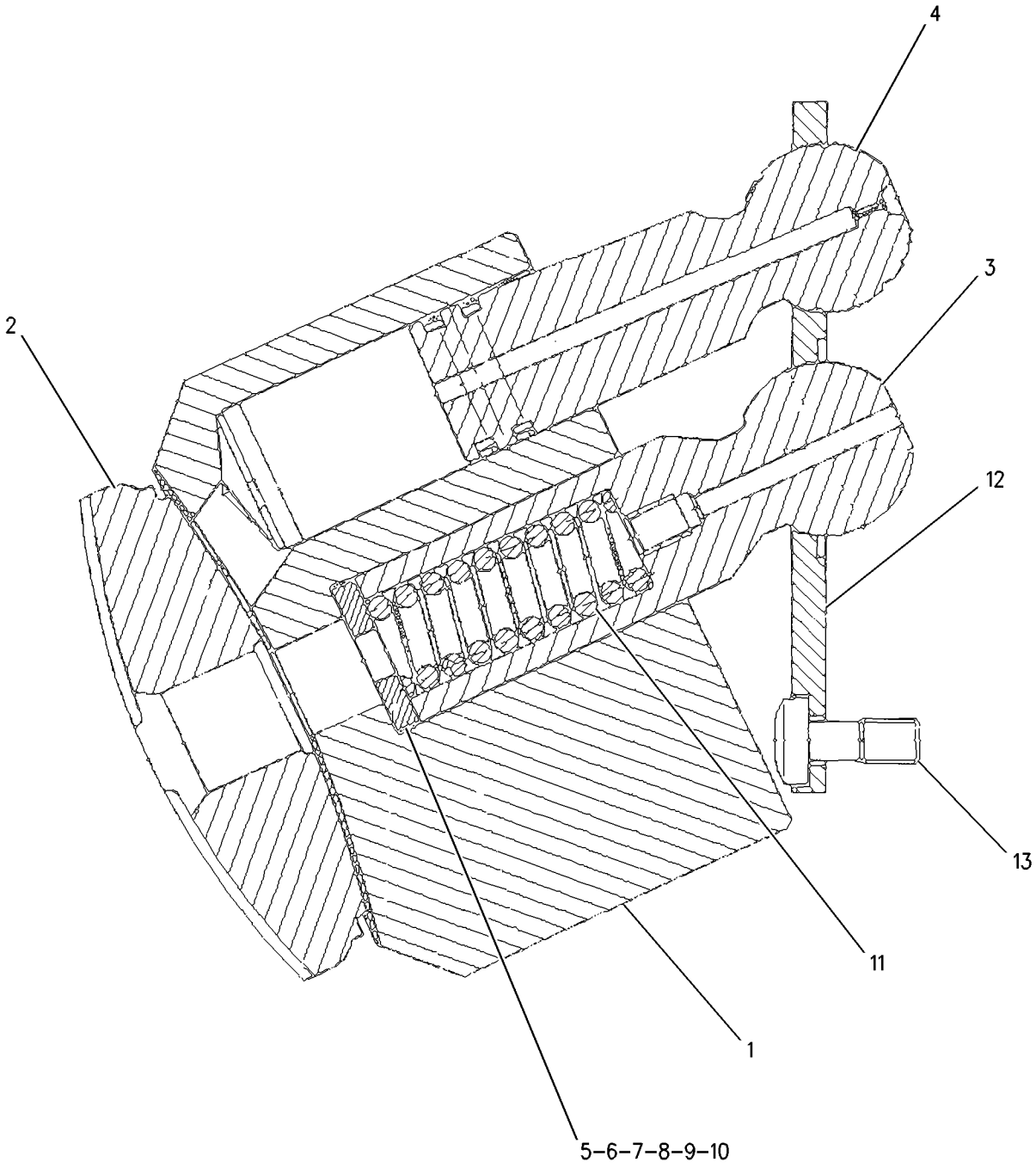

GRAPHIC #1 **<END>** g00713987

HYDRAULIC SYSTEM

179-9936 ROTATING GP-PUMP

S/N: BCZ1-2000

PART OF 157-0054 ROTATING GP-MOTOR

SMCS-5070 **i01225004**

NOTE	REF NO	GRAPHIC REF	PART NUMBER	QTY	PART NAME 1 2 3 4 5 6 (PRODUCT LEVEL)	SEE PAGE
	1	1	**157-0394**	1	BARREL	
	2	1	**157-0393**	1	PLATE-CONTROL	
	3	1	**157-0395**	1	PIN-CENTER	
	4	1	**179-9938**	7	PISTON AS	
	5	1	**157-0388**	1	WASHER	
B	6	1	**180-1274**	1	SPACER (3.8MM THK)	
B	7	1	**180-1275**	1	SPACER (3.9MM THK)	
B	8	1	**180-1276**	1	SPACER (4.0MM THK)	
B	9	1	**180-1277**	1	SPACER (3.7MM THK)	
B	10	1	**180-1278**	1	SPACER (3.6MM THK)	
B	11	1	**180-1279**	1	SPACER (3.5MM THK)	
	12	1	**157-0401**	1	SPRING-CUP	
	13	1	**157-0389**	1	PLATE-RETAINING	
M	14	1	**6V-9673**	7	SCREW-MACHINE (M5X0.8X12MM)	
	15	1	**157-0402**	1	WASHER	

B-USE AS REQUIRED
M-METRIC PART

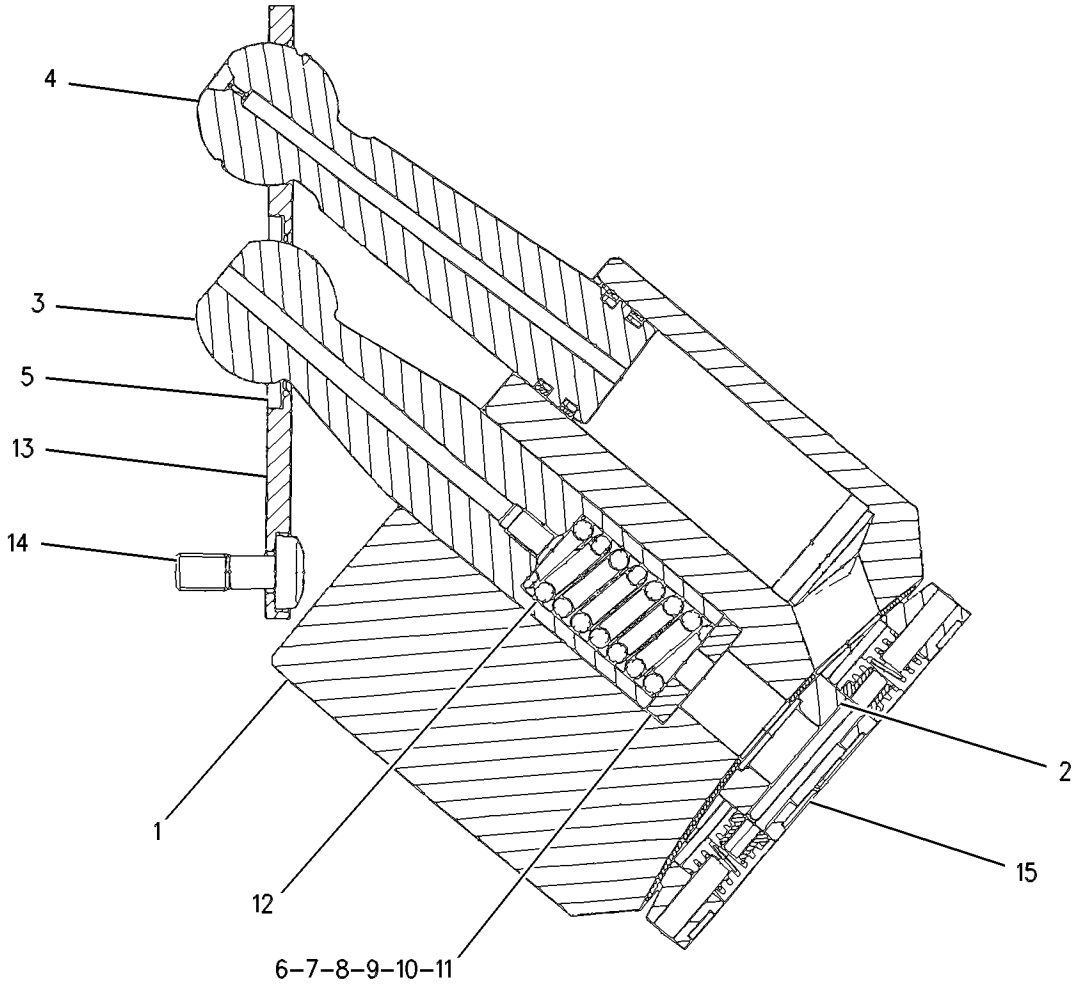

GRAPHIC #1 **<END>** g00656767

180-2652 SHAFT GP-HYDRAULIC MOTOR

S/N: BCZ1-2000

PART OF 157-0054 ROTATING GP-MOTOR

SMCS-5058 **i02161871**

NOTE	REF NO	GRAPHIC REF	PART NUMBER	QTY	PART NAME 1 2 3 4 5 6 (PRODUCT LEVEL)	SEE PAGE
	1	1	**6V-5201**	1	RING-RETAINING	
	2	1	**180-1288**	1	KIT-BEARING (HYDRAULIC MOTOR)	

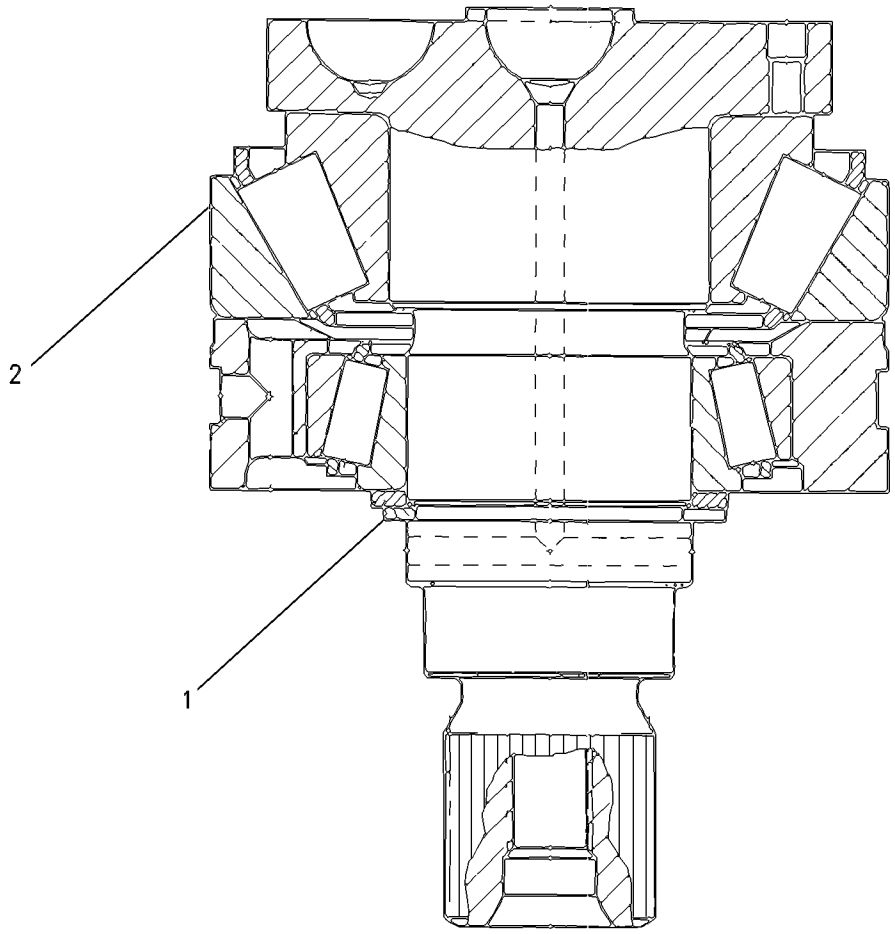

GRAPHIC #1 **<END>** g00657761

HYDRAULIC SYSTEM

191-0887 SHAFT GP-HYDRAULIC MOTOR

S/N: BCZ1-2000

PART OF 190-8122 ROTATING GP-MOTOR

SMCS-5058 **i02161872**

NOTE	REF NO	GRAPHIC REF	PART NUMBER	QTY	PART NAME 1 2 3 4 5 6 (PRODUCT LEVEL)	SEE PAGE
	1	1	**191-1956**	1	KIT-BEARING (HYDRAULIC MOTOR)	
	2	1	**095-7950**	1	RING-RETAINING	

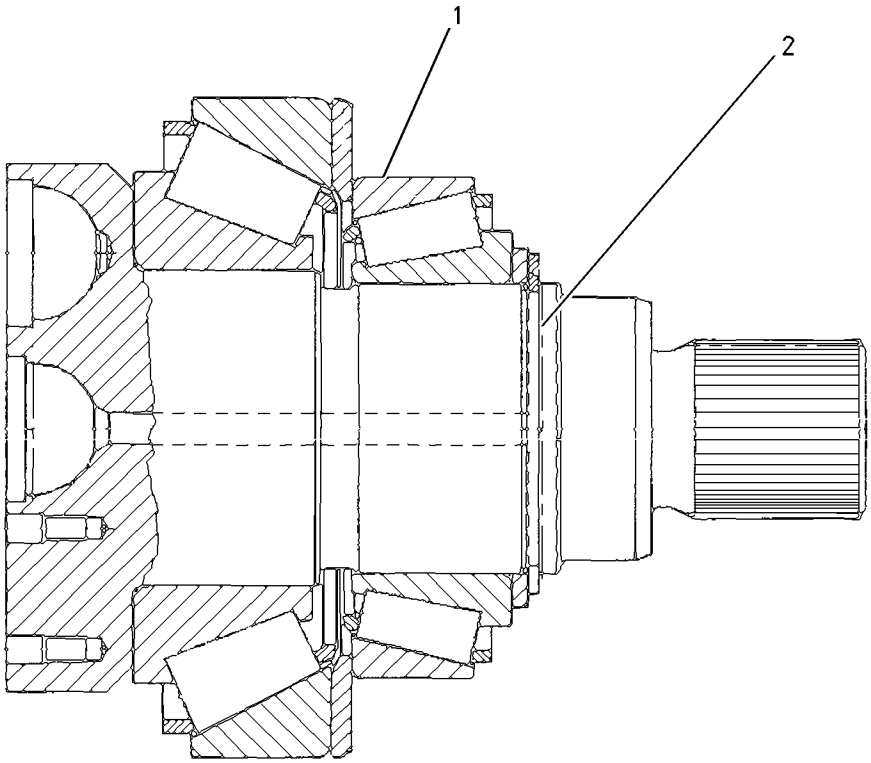

GRAPHIC #1 **<END>** g00700094

188-4992 STABILIZER AR

S/N: BCZ1-2000
PART OF 235-1827 STABILIZER AR
AN ATTACHMENT

SMCS-7222 **i02161874**

NOTE	PART NUMBER	QTY	PART NAME 1 2 3 4 5 6 (PRODUCT LEVEL)	SEE PAGE
Y	**188-4991**	2	CYLINDER GP-STABILIZER	466
Y	*188-7642*	1	LINES GP-STABILIZER	583
Y	*188-4993*	1	STABILIZER GP	780
Y-SEPARATE ILLUSTRATION				

<END>

235-1827 STABILIZER AR

S/N: BCZ1-2000
CANNOT BE USED WITH BLADE, 1 SET OF OUTRIGGERS, CONVERSION ARRANGEMENT
AN ATTACHMENT

SMCS-7222 **i02047020**

NOTE	PART NUMBER	QTY	PART NAME 1 2 3 4 5 6 (PRODUCT LEVEL)	SEE PAGE
Y	*198-4697*	1	CONVERSION AR-MACHINE (AUXILIARY FUNCTION)	1
Y	*188-4992*	2	STABILIZER AR	639
Y-SEPARATE ILLUSTRATION				

<END>

HYDRAULIC SYSTEM

176-5133 STEERING COLUMN GP

S/N: BCZ1-2000

PART OF 187-3796 STEERING COLUMN GP

SMCS-4310 **i02060345**

NOTE	REF NO	GRAPHIC REF	PART NUMBER	QTY	PART NAME 1 2 3 4 5 6 (PRODUCT LEVEL)	SEE PAGE
	1	1	**188-1853**	1	RING-COVER	
	2	1	**188-1859**	1	BOSS-BEARING	
	3	1	**188-1860**	1	BOSS-BEARING	
	4	1	**204-5384**	1	LEVER	
	5	1	**188-1863**	1	SPRING-LEVER	
	6	1	**188-1864**	1	SHAFT AS-LEVER	
	7	1	**245-0964**	1	SPRING-GAS	
	8	1	**188-1867**	1	HEAD AS	
M	9	1	**188-1868**	1	BOLT (M8X1X15-MM)	
M	10	1	**188-1869**	1	BOLT (M8X1.25X36-MM)	
	11	1	**188-1870**	1	PLATE	
	12	1	**188-1871**	1	SPACER (10.25X25X13.5-MM THK)	
	13	1	**188-1872**	1	PIN	
	14	1	**2L-8509**	1	RING-LOCK	
M	15	1	**132-7705**	1	BOLT (M6X1.0X24-MM)	
M	16	1	**8T-4970**	1	BOLT (M6X1X14-MM)	
M	17	1	**6V-2313**	1	BOLT (M5X0.8X30-MM)	
M	20	1	**5C-2874**	1	NUT (M5X.8-THD)	
	21	1	**8T-9597**	2	RING-RETAINING	
	22	1	**188-1930**	1	SHIM (0.5-MM THK)	
	23	1	**9X-6381**	2	WASHER (6.5X12.5X1.6-MM THK)	
	24	1	**188-1873**	1	CABLE AS	
M	25	1	**2Y-9286**	1	NUT (M10X1-THD)	
M	26	1	**6V-8227**	1	NUT (M18X1.5-6-THD)	
M	27	1	**131-3540**	1	LOCKNUT (M8X1.25-THD)	
M	28	1	**8T-0389**	1	LOCKNUT (M10X1.5-THD)	
	29	1	**096-0061**	1	STRAP-CABLE	
	30	1	**176-5143**	1	LEVER AS	
M	31	1	**8T-0269**	3	BOLT-SOCKET HEAD (M6X1X20-MM)	
	32	1	**201-0100**	1	PIN	
M	33	1	**129-3178**	1	LOCKNUT (M6X1-THD)	

M-METRIC PART

176-5133 STEERING COLUMN GP *(contd.)* i02060345

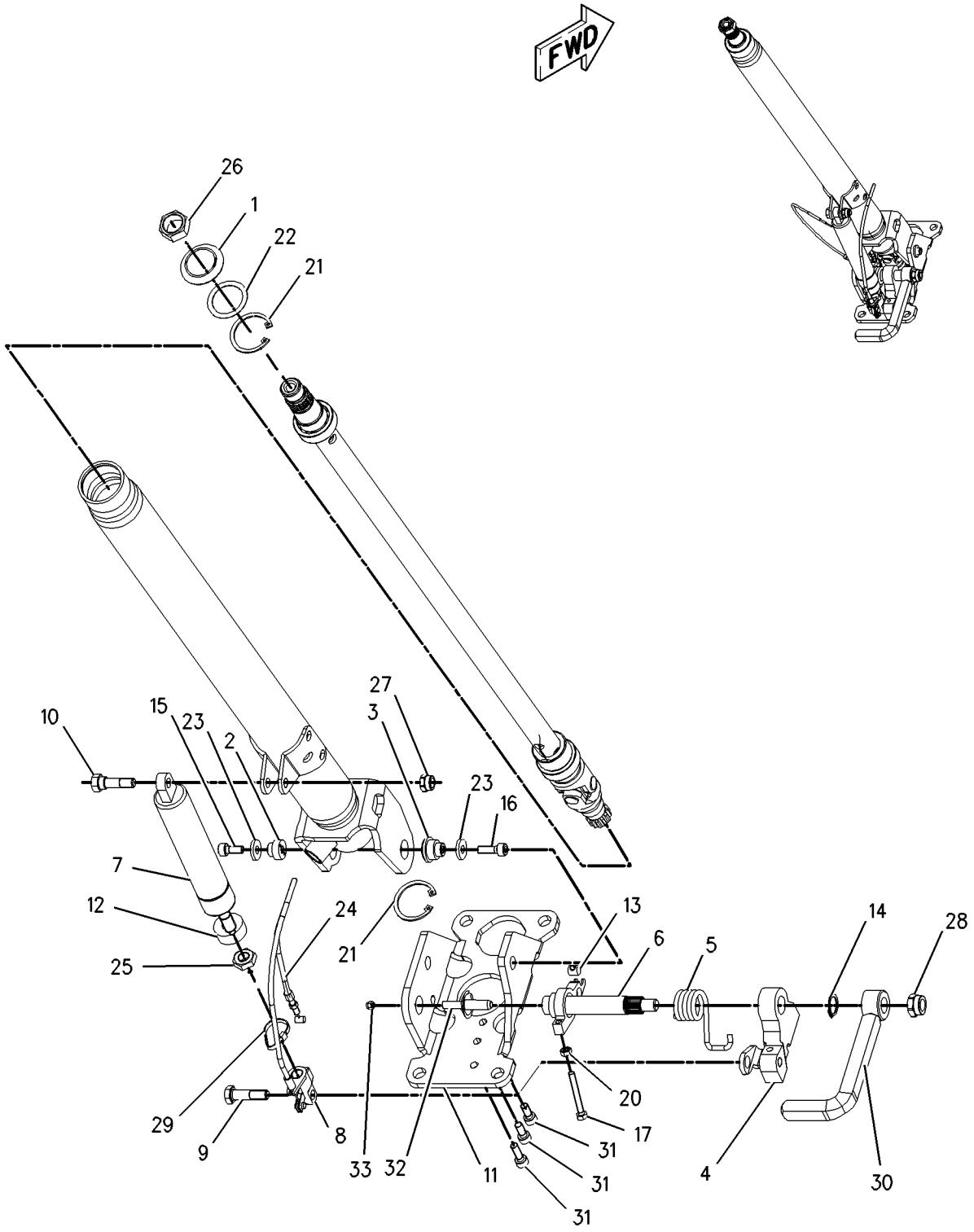

GRAPHIC #1 **<END>** g00781765

HYDRAULIC SYSTEM

187-3796 STEERING COLUMN GP

S/N: BCZ1-616

PART OF 198-4680 OPERATOR AR

SMCS-4310 **i01888854**

NOTE	REF NO	GRAPHIC REF	PART NUMBER	QTY	PART NAME 1 2 3 4 5 6 (PRODUCT LEVEL)	SEE PAGE
	1	1	**5W-2590**	1	KNOB AS-STEERING	
	2	1	**5W-5900**	1	STEERING WHEEL AS	
	3	1	**125-3249**	12	NUT-SPEED	
Y	4	1	**176-5133**	1	STEERING COLUMN GP	640
	5	1	**176-5140**	2	BRACKET AS	
	6	1	**176-5143**	1	LEVER AS	
	7	1	**194-6535**	1	COVER	
	8	1	**197-5691**	1	COVER	
	9	1	**197-5692**	1	COVER	
	10	1	**197-5693**	1	COVER	
	11	1	**197-5694**	1	COVER	
	12	1	**197-5695**	1	COVER	
	13	1	**197-5696**	1	COVER	
	14	1	**205-6215**	1	PUMP GP-METERING	
		1	**201-0048**	1	KIT-SEAL (METERING PUMP)	
	15	1	**095-9785**	2	CLAMP-HOSE	
	16	1	**125-6083**	12	SCREW-PAN HEAD	
	17	1	**4M-6921**	4	WASHER-SPRING	
M	18	1	**7Y-7388**	2	SCREW-BUTTON HEAD (M5X0.8X12MM)	
M	19	1	**8T-4136**	4	BOLT (M10X1.5X25MM)	
M	20	1	**8T-4137**	4	BOLT (M10X1.5X20MM)	

M-METRIC PART
Y-SEPARATE ILLUSTRATION

187-3796 **STEERING COLUMN GP** *(contd.)* **i01888854**

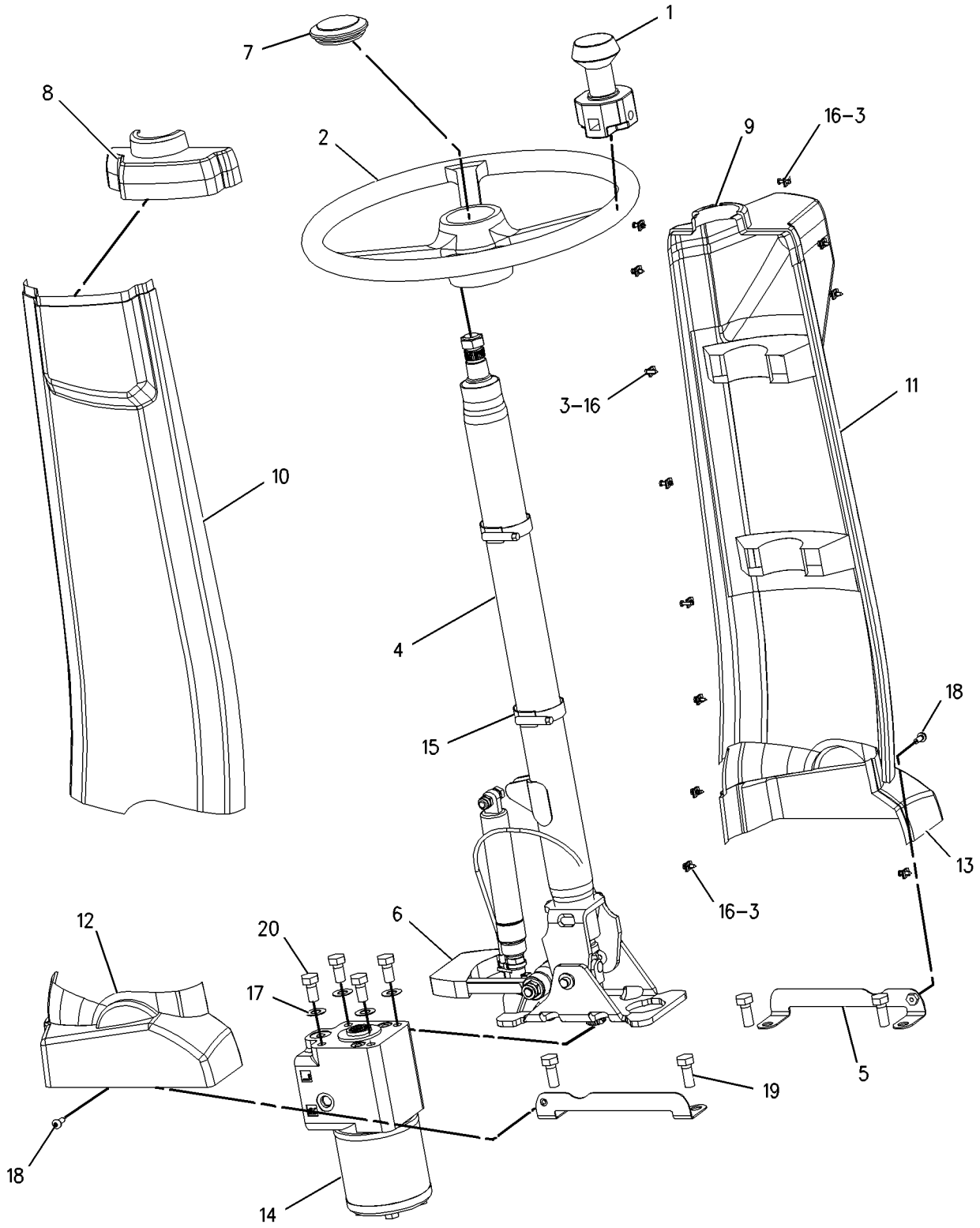

GRAPHIC #1 **<END>** g00813907

HYDRAULIC SYSTEM

187-3796 STEERING COLUMN GP

S/N: BCZ617-2000

PART OF 198-4680 OPERATOR AR

SMCS-4310 **i02049029**

NOTE	REF NO	GRAPHIC REF	PART NUMBER	QTY	PART NAME 1 2 3 4 5 6 (PRODUCT LEVEL)	SEE PAGE
C	1	1	**227-6009**	1	KNOB AS-STEERING	
C	2	1	**227-6007**	1	STEERING WHEEL AS	
	3	1	**125-3249**	12	NUT-SPEED	
Y	4	1	**176-5133**	1	STEERING COLUMN GP	640
	5	1	**176-5140**	2	BRACKET AS	
	6	1	**176-5143**	1	LEVER AS	
C	7	1	**241-2481**	1	COVER	
	8	1	**197-5691**	1	COVER	
	9	1	**197-5692**	1	COVER	
	10	1	**197-5693**	1	COVER	
	11	1	**197-5694**	1	COVER	
	12	1	**197-5695**	1	COVER	
	13	1	**197-5696**	1	COVER	
	14	1	**205-6215**	1	PUMP GP-METERING	
		1	**201-0048**	1	KIT-SEAL (METERING PUMP)	
	15	1	**095-9785**	2	CLAMP-HOSE	
	16	1	**125-6083**	12	SCREW-PAN HEAD	
	17	1	**4M-6921**	4	WASHER-SPRING	
M	18	1	**7Y-7388**	2	SCREW-BUTTON HEAD (M5X0.8X12-MM)	
M	19	1	**8T-4136**	4	BOLT (M10X1.5X25-MM)	
M	20	1	**8T-4137**	4	BOLT (M10X1.5X20-MM)	

C-CHANGE FROM PREVIOUS TYPE
M-METRIC PART
Y-SEPARATE ILLUSTRATION

187-3796 **STEERING COLUMN GP** *(contd.)* **i02049029**

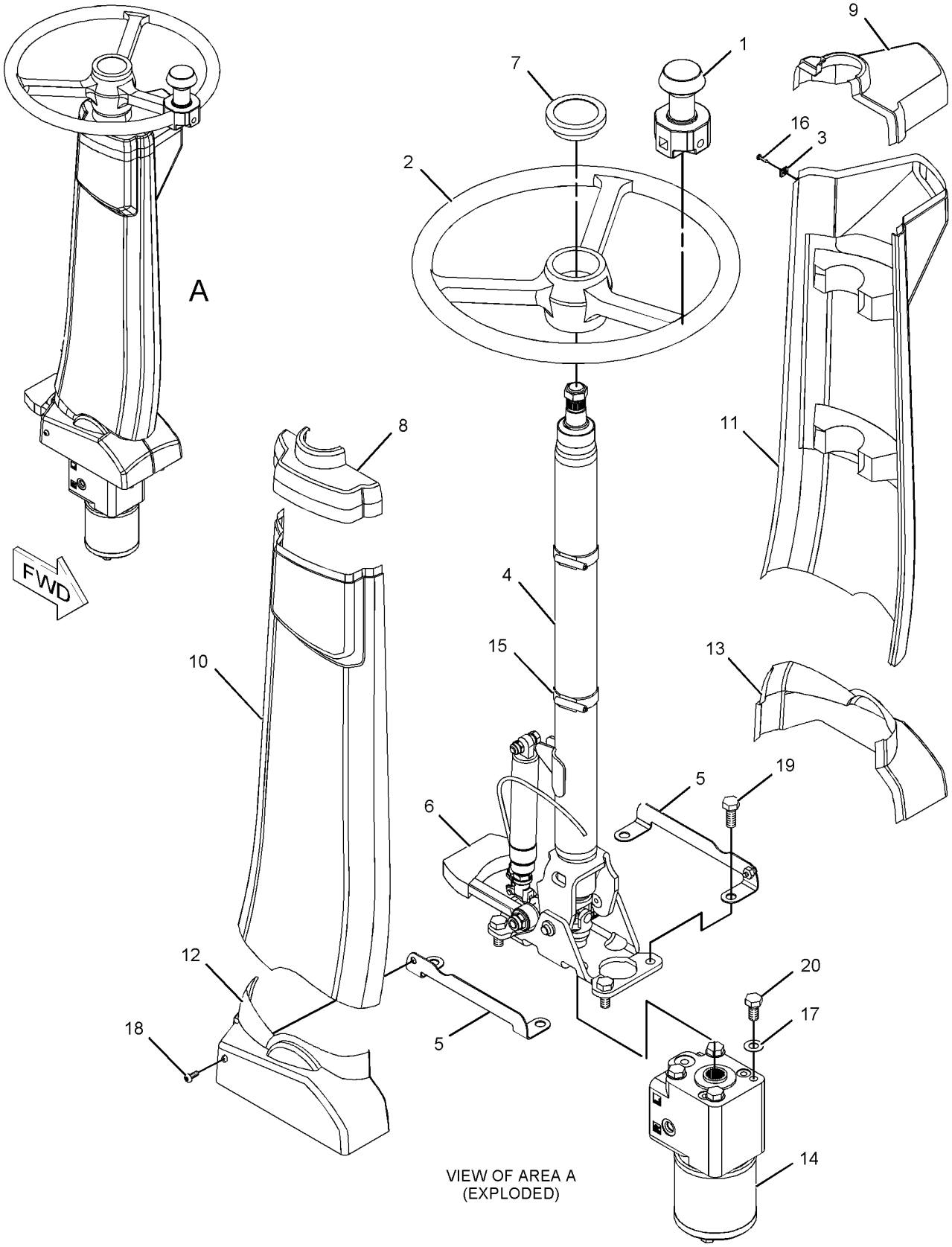

GRAPHIC #1 **<END>** g01070217

111-1896 SWIVEL & MOUNTING GP

S/N: BCZ1-687

PART OF 186-0473 HYDRAULIC AR

SMCS-5060 **i02062857**

NOTE	REF NO	GRAPHIC REF	PART NUMBER	QTY	PART NAME 1 2 3 4 5 6 (PRODUCT LEVEL)	SEE PAGE
	1	1	**110-6628**	1	PLATE	
Y	2	1	**139-3368**	1	SWIVEL GP	653
M	3	1	**8T-4223**	2	WASHER-HARD (13.5X25.5X3-MM THK)	
M	4	1	**8T-4956**	2	BOLT (M12X1.75X35-MM)	
	5	1	**7X-0591**	3	WASHER-HARD (17X29X3-MM THK)	
M	6	1	**7X-2552**	3	BOLT (M16X2X30-MM)	

M-METRIC PART
Y-SEPARATE ILLUSTRATION

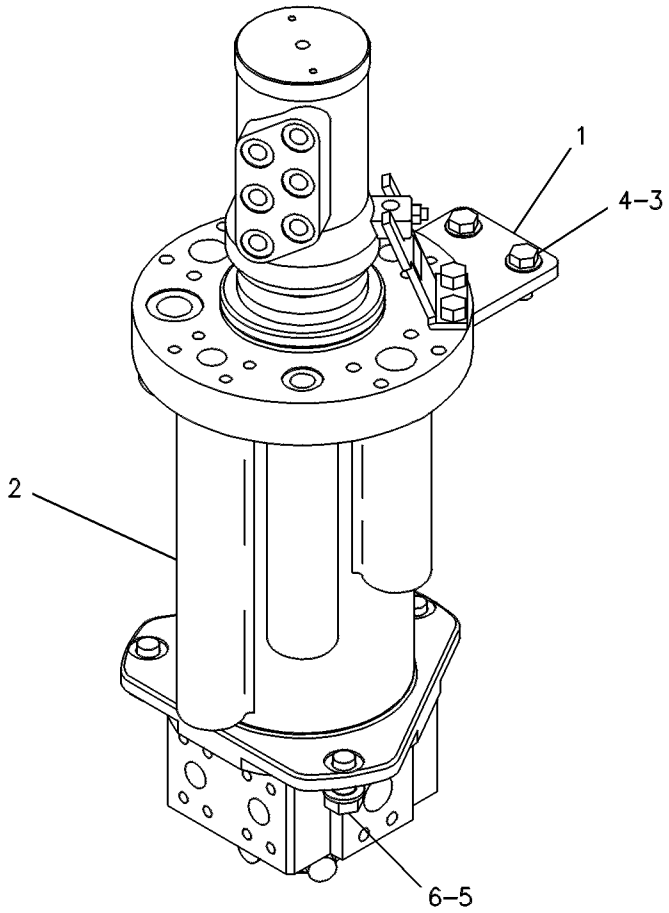

GRAPHIC #1 **<END>** g00244550

111-1896 SWIVEL & MOUNTING GP

S/N: BCZ688-2000

PART OF 186-0473 HYDRAULIC AR

SMCS-5060 **i02063443**

NOTE	REF NO	GRAPHIC REF	PART NUMBER	QTY	PART NAME 1 2 3 4 5 6 (PRODUCT LEVEL)	SEE PAGE
	1	1	**110-6628**	1	PLATE	
CY	2	1	**249-1277**	1	SWIVEL GP	658
M	3	1	**8T-4223**	2	WASHER-HARD (13.5X25.5X3-MM THK)	
M	4	1	**8T-4956**	2	BOLT (M12X1.75X35-MM)	
	5	1	**7X-0591**	3	WASHER-HARD (17X29X3-MM THK)	
M	6	1	**7X-2552**	3	BOLT (M16X2X30-MM)	

C-CHANGE FROM PREVIOUS TYPE
M-METRIC PART
Y-SEPARATE ILLUSTRATION

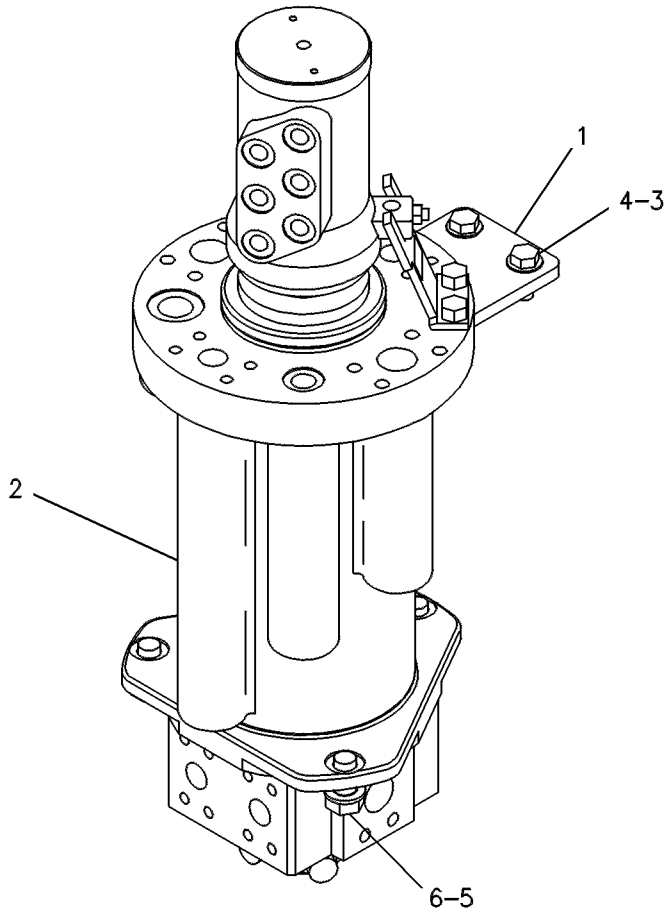

GRAPHIC #1 **<END>** g00244550

HYDRAULIC SYSTEM

8U-5851 SWIVEL GP

S/N: BCZ1-2000

PART OF 111-2015, 249-1277 SWIVEL GP

SMCS-5060 **i02161877**

NOTE	REF NO	GRAPHIC REF	PART NUMBER	QTY	PART NAME 1 2 3 4 5 6 (PRODUCT LEVEL)	SEE PAGE
M	1	1	**8U-0767**	2	BOLT (M8X16-MM)	
J	2	1	**8U-1980**	2	RING	
J	3	1	**8U-1981**	2	SEAL-O-RING	
	4	1	**8U-1366**	1	COVER	
J	5	1	**8U-1982**	1	SEAL	
J	6	1	**8U-1367**	2	RING	
	7	1	**8U-1368**	1	HOUSING	
	8	1	**8U-1369**	1	ROTOR	
J	9	1	**1H-5728**	5	SEAL-O-RING	
J	10	1	**8U-1376**	5	RING-SLIP	
M	11	1	**8T-2997**	1	SETSCREW-SOCKET	
M	12	1	**5P-7970**	7	NUT (M8X1.25-THD)	
	13	1	**8U-1371**	6	PIN	
J	14	1	**5W-5024**	12	SEAL	
	15	1	**2Y-5881**	6	LOCKWASHER	
	16	1	**8U-1372**	1	DISTRIBUTOR	
	17	1	**8U-1373**	1	COLLAR	
	18	1	**5W-5002**	1	PIN-GROOVED	
J	19	1	**8U-1377**	1	RING	
	20	1	**8U-1378**	6	FITTING	
					AVAILABLE REPAIR KIT(S):	
J			**8U-5852**	1	KIT-REPAIR (SWIVEL)	

J-KITS MARKED J SERVICES PARTS MARKED J
M-METRIC PART

8U-5851 **SWIVEL GP** *(contd.)* **i02161877**

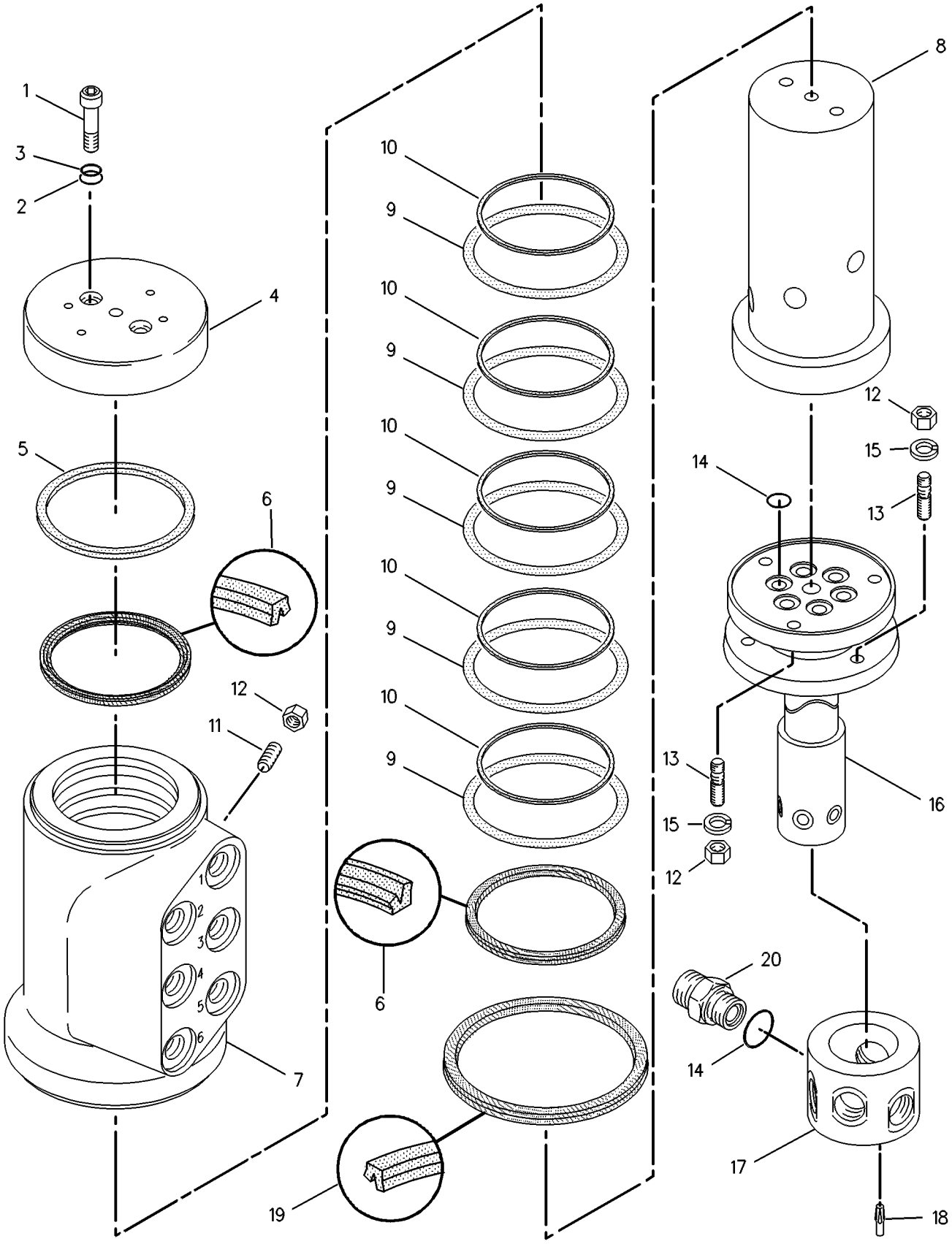

GRAPHIC #1 **<END>** g00269004

HYDRAULIC SYSTEM

111-2015 SWIVEL GP

S/N: BCZ1-687

PART OF 139-3368 SWIVEL GP

SMCS-5060 **i01061018**

NOTE	REF NO	GRAPHIC REF	PART NUMBER	QTY	PART NAME 1 2 3 4 5 6 (PRODUCT LEVEL)	SEE PAGE
Y	1	1	**117-1738**	1	SWIVEL GP	651
Y	2	1	**8U-5851**	1	SWIVEL GP	648
	3	1	**5W-5095**	1	PLATE-TORQUE	
M	4	1	**6V-6317**	2	BOLT (M10X20MM)	
	5	1	**2Y-5881**	2	LOCKWASHER	

M-METRIC PART
Y-SEPARATE ILLUSTRATION

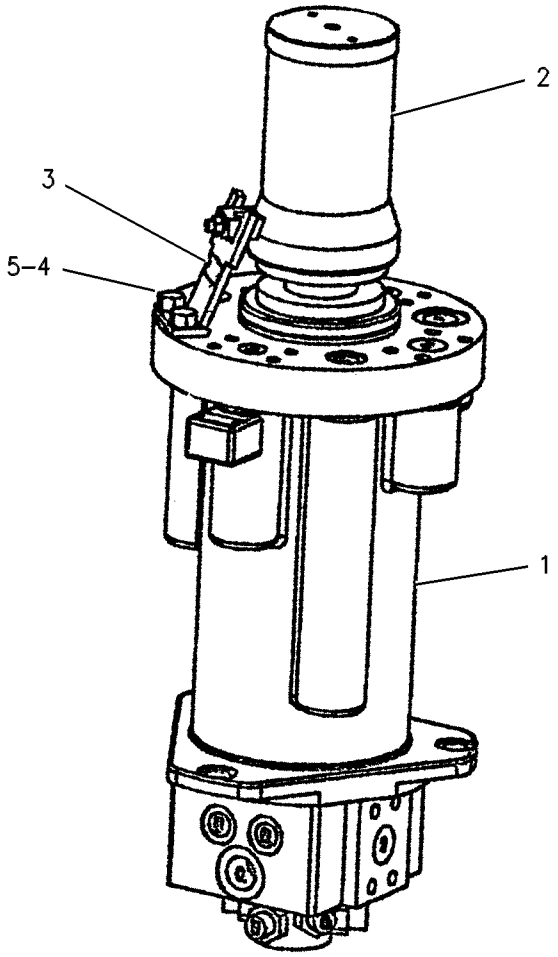

GRAPHIC #1 **<END>** g00244930

HYDRAULIC SYSTEM

117-1738 SWIVEL GP

S/N: BCZ1-687

PART OF 111-2015 SWIVEL GP

SMCS-5060 **i02161878**

NOTE	REF NO	GRAPHIC REF	PART NUMBER	QTY	PART NAME 1 2 3 4 5 6 (PRODUCT LEVEL)	SEE PAGE
	1	1	**8U-9216**	2	PLUG GP-SWIVEL	
					(EACH INCLUDES)	
		1	**7T-0508**	1	SEAL-O-RING	
		1	**117-4874**	1	RING-SPLIT	
J	2	1	**8U-7965**	7	RING-SEAL	
	3	1	**8U-1362**	1	HOUSING	
J	4	1	**5W-4081**	1	RING-BACKUP	
	5	1	**2Y-5881**	3	LOCKWASHER	
M	6	1	**6V-5215**	3	BOLT (M8X1.25X16-MM)	
	7	1	**8U-1363**	1	COVER	
J	8	1	**5W-4082**	1	RING-SEAL	
	9	1	**117-1755**	1	ROTOR	
	10	1	**8U-9215**	7	PLUG GP	
					(EACH INCLUDES)	
		1	**3E-4299**	1	SEAL-O-RING	
		1	**117-4875**	1	RING-SPLIT	
					AVAILABLE REPAIR KIT(S):	
J			**8U-7966**	1	KIT-SEAL REPAIR (SWIVEL)	

J-KIT MARKED J SERVICES PARTS MARKED J
M-METRIC PART

117-1738 SWIVEL GP *(contd.)* **i02161878**

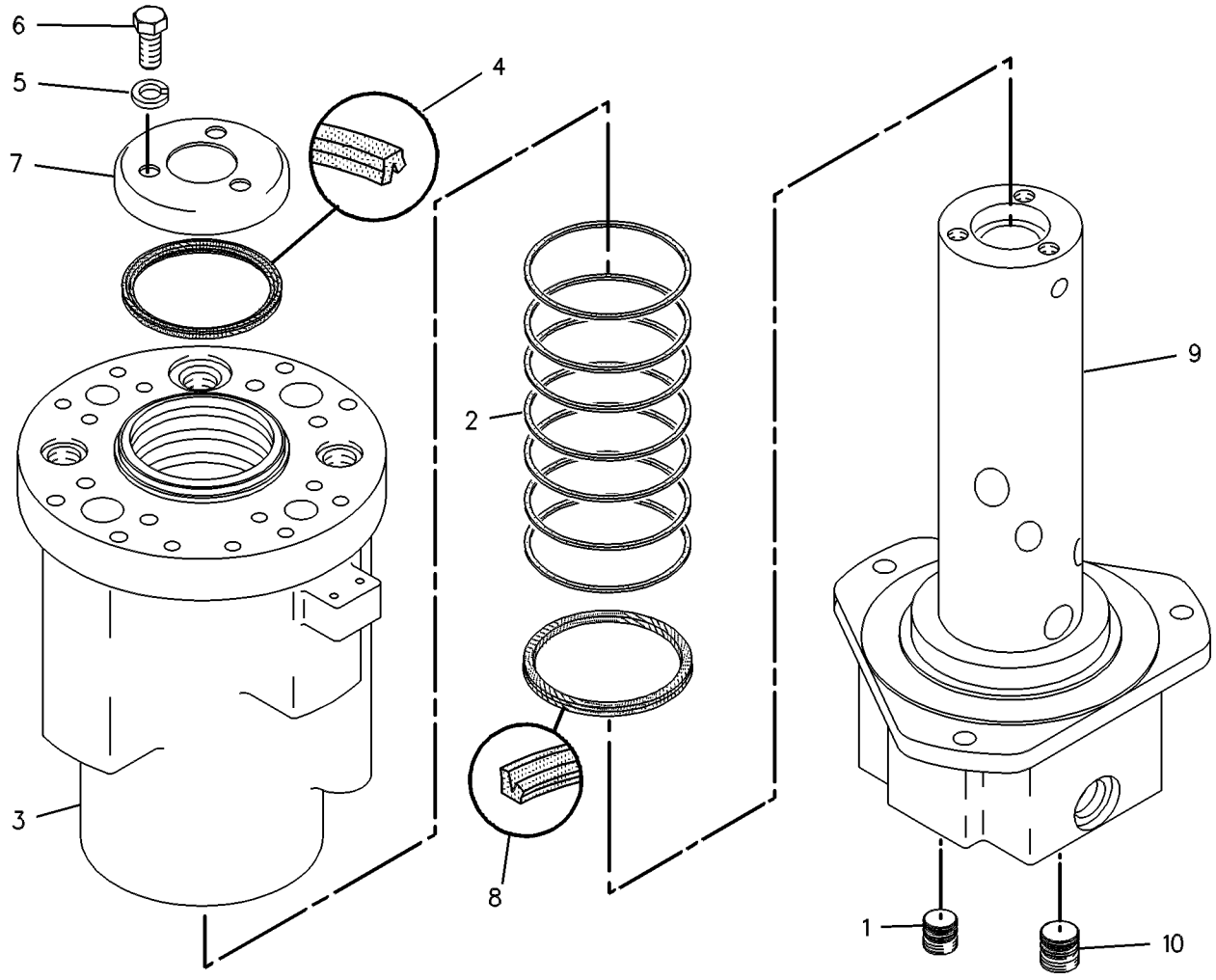

GRAPHIC #1 **<END>** g00269010

HYDRAULIC SYSTEM

139-3368 SWIVEL GP

S/N: BCZ1-687
PART OF 111-1896 SWIVEL & MOUNTING GP
FIELD REPLACEMENT ORDER 249-1277—PAGE 658

SMCS-5060 **i01904921**

NOTE	PART NUMBER	QTY	PART NAME 1 2 3 4 5 6 (PRODUCT LEVEL)	SEE PAGE
Y	*111-2015*	1	SWIVEL GP	650
			-OR-	
Y	*139-3369*	1	SWIVEL GP	654

Y-SEPARATE ILLUSTRATION

<END>

HYDRAULIC SYSTEM

139-3369 SWIVEL GP

S/N: BCZ1-687

PART OF 139-3368 SWIVEL GP

SMCS-5060 **i02166582**

NOTE	REF NO	GRAPHIC REF	PART NUMBER	QTY	PART NAME 1 2 3 4 5 6 (PRODUCT LEVEL)	SEE PAGE
	1	1	**140-1999**	1	STATOR	
	2	1	**147-7242**	1	HOUSING	
	3	1	**140-2001**	1	COVER-STATOR	
	4	1	**147-7243**	1	COVER-ROTOR	
	6	1	**140-2004**	1	COVER	
	7	1	**140-2005**	1	RING	
	8	1	**140-2006**	1	RING	
M	9	1	**134-8273**	2	SCREW-FLAT HEAD (M10X1.5-THD)	
M	10	1	**8T-0269**	2	BOLT-SOCKET HEAD (M6X1X20-MM)	
M	11	1	**8C-7505**	3	SCREW-FLAT HEAD (M8X1.25X20-MM)	
M	12	1	**6V-6317**	2	BOLT (M10X1.5X20-MM)	
	13	1	**124-7346**	2	LOCKWASHER	
	14	1	**140-2007**	1	ANGLE	
J	15	1	**140-2008**	1	SEAL	
M	16	1	**8T-9532**	1	SETSCREW-SOCKET	
M	17	1	**5C-7261**	1	NUT (M8X1.25-THD)	
	18	1	**6V-9873**	6	CONNECTOR	
	19	1	**3J-1907**	6	SEAL-O-RING	
	20	1	**6V-8398**	6	SEAL-O-RING	
					AVAILABLE REPAIR KIT(S):	
J			**169-5695**	1	KIT-SEAL (SWIVEL)	

J-KIT MARKED J SERVICES PART MARKED J
M-METRIC PART

139-3369 **SWIVEL GP** *(contd.)* **i02166582**

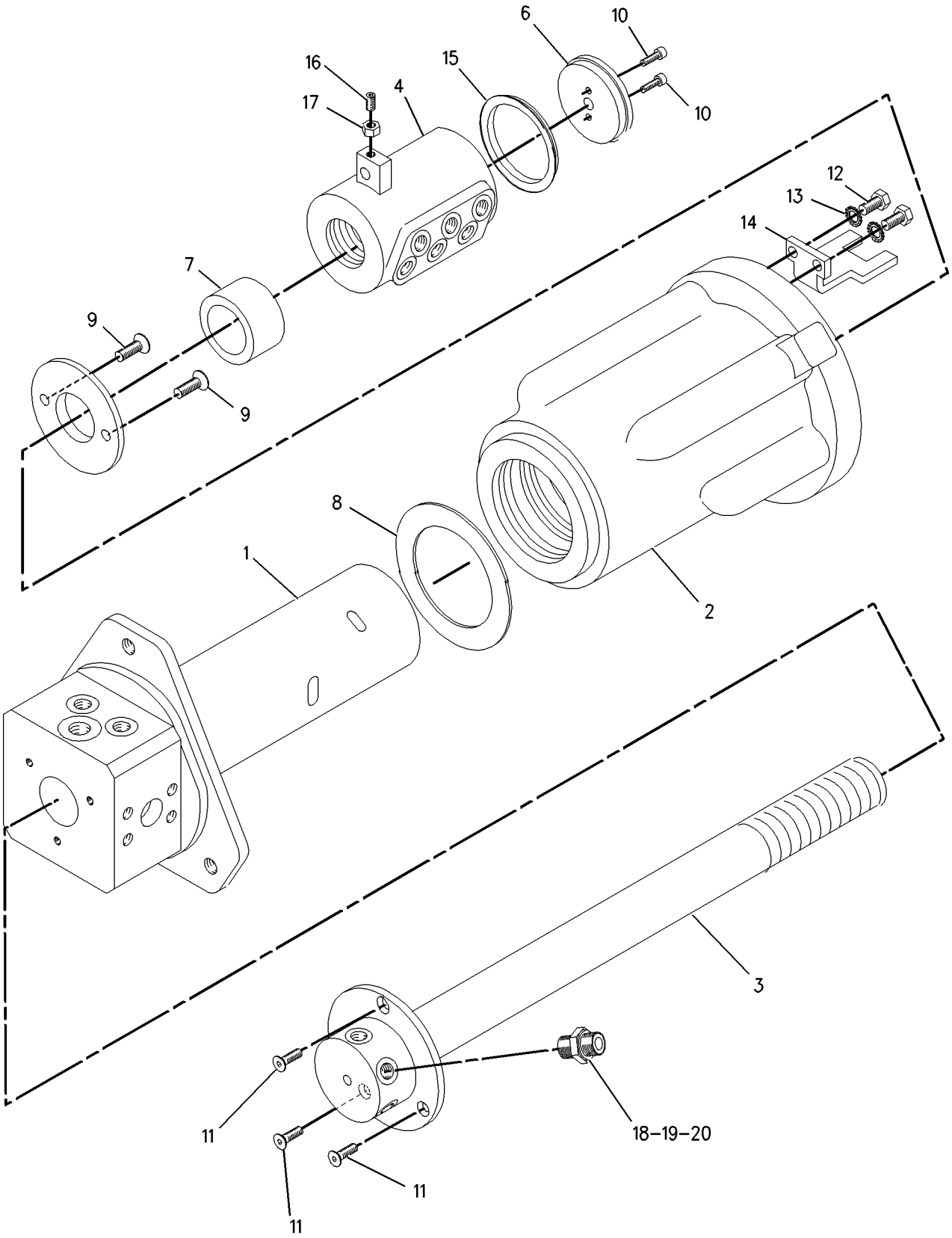

GRAPHIC #1 **<END>** g00669046

HYDRAULIC SYSTEM

195-0704 SWIVEL GP–ELECTRIC

S/N: BCZ1-2000

PART OF 188-4954 WIRING GP-UNDERCARRIAGE/SWIVEL

AN ATTACHMENT

SMCS-5060 **i01798282**

NOTE	REF NO	GRAPHIC REF	PART NUMBER	QTY	PART NAME 1 2 3 4 5 6 (PRODUCT LEVEL)	SEE PAGE
	1	1	**201-8224**	1	COVER	
	2	1	**201-8225**	5	BRACKET AS	
	3	1	**095-1740**	1	SEAL-O-RING	
	4	1	**201-8231**	1	PLUG	
M	5	1	**5C-8312**	3	NUT (M4X0.7 THD)	
	6	1	**3B-4501**	3	LOCKWASHER	
M	7	1	**178-9983**	4	LOCKNUT	
	8	1	**096-6166**	4	WASHER-HARD (4.5X9X1MM THK)	
M	9	1	**5C-2874**	2	NUT (M5X.8 THD)	
	10	1	**8T-0328**	2	WASHER-HARD (5.5X10X1MM THK)	
	11	1	**186-3736**	5	SOCKET-CONNECTOR	
	12	1	**186-3735**	5	PIN-CONNECTOR	
	13	1	**175-3355**	1	RECEPTACLE AS	
	14	1	**3E-3383**	1	WEDGE-RECEPTACLE LOCK	
	15	1	**8T-8737**	1	PLUG-SEAL	

M-METRIC PART

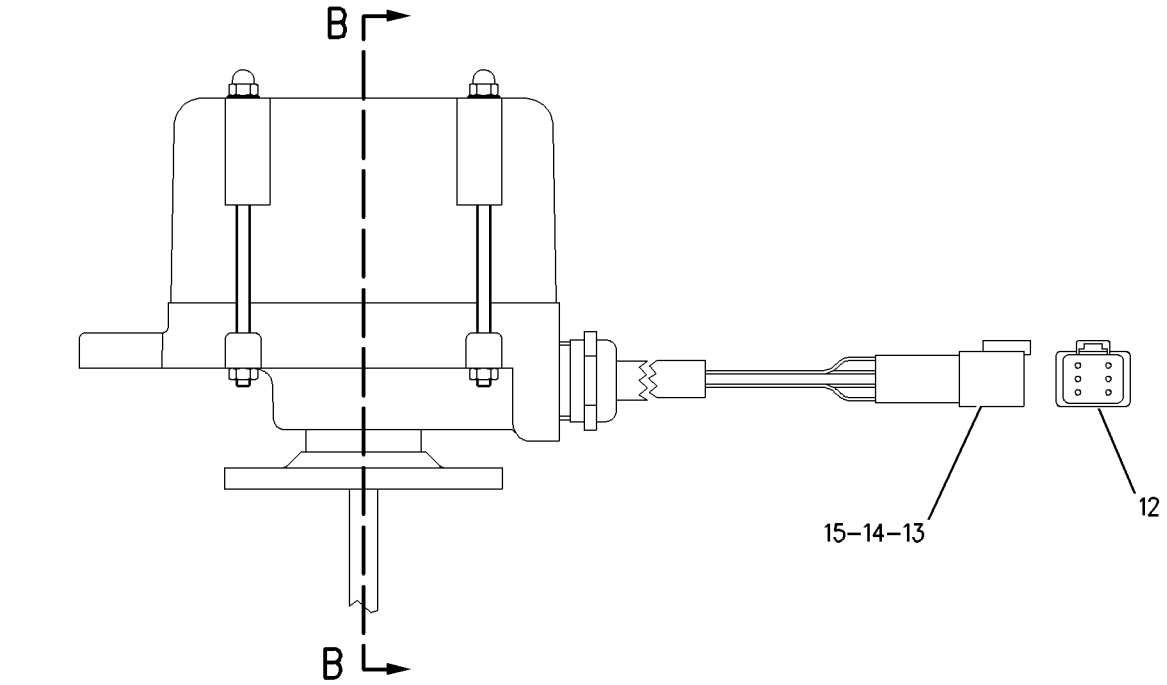

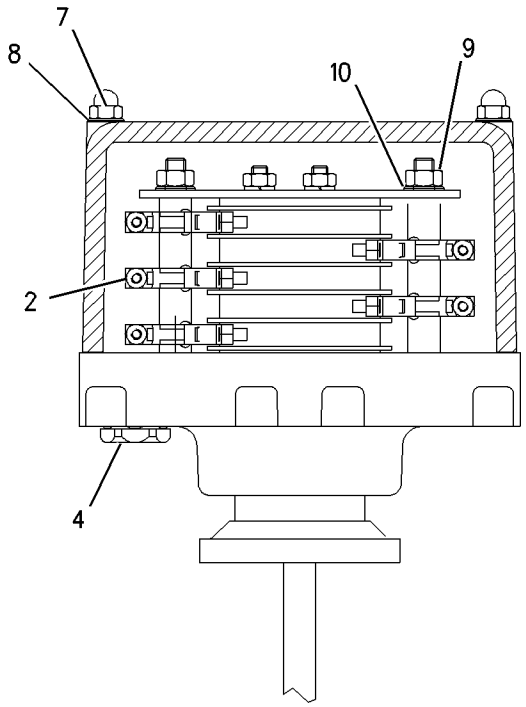

VIEW A–A

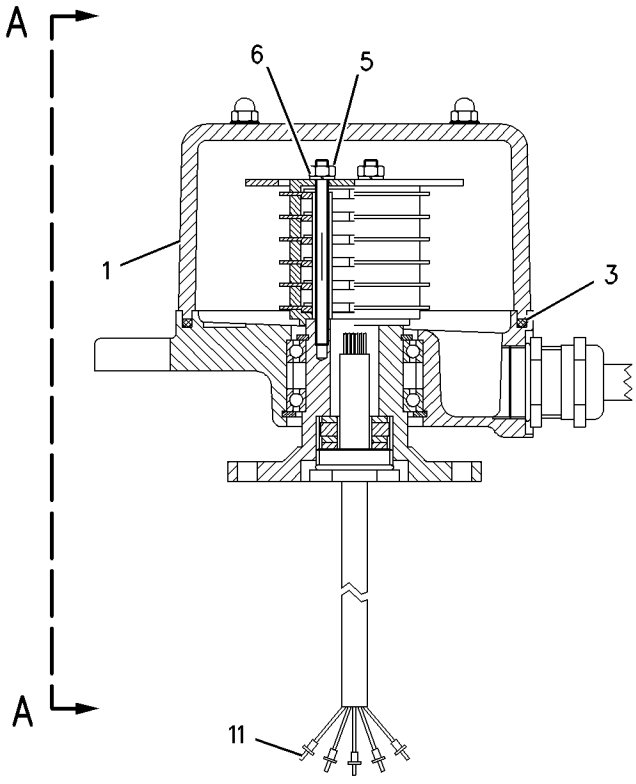

SECTION B-B

GRAPHIC #1 **<END>** g00812235

HYDRAULIC SYSTEM

249-1277 SWIVEL GP

S/N: BCZ688-2000
PART OF 111-1896 SWIVEL & MOUNTING GP
FIELD REPLACEMENT FOR 139-3368—PAGE 653

SMCS-5060 **i02063453**

NOTE	REF NO	GRAPHIC REF	PART NUMBER	QTY	PART NAME 1 2 3 4 5 6 (PRODUCT LEVEL)	SEE PAGE
Y	1	1	**249-1278**	1	SWIVEL GP	659
Y	2	1	**8U-5851**	1	SWIVEL GP	648
	3	1	**5W-5095**	1	PLATE	
M	4	1	**6V-6317**	2	BOLT (M10X1.5X20-MM)	
	5	1	**113-0693**	2	LOCKWASHER	

M-METRIC PART
Y-SEPARATE ILLUSTRATION

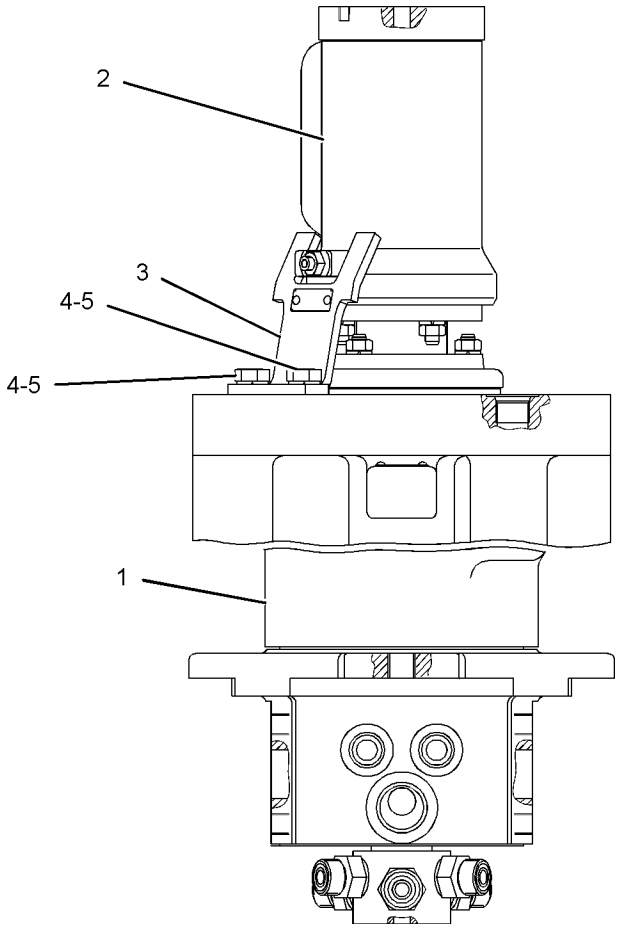

GRAPHIC #1 **<END>** g01083754

HYDRAULIC SYSTEM

249-1278 SWIVEL GP

S/N: BCZ688-2000

PART OF 249-1277 SWIVEL GP

SMCS-5060 **i02154537**

NOTE	REF NO	GRAPHIC REF	PART NUMBER	QTY	PART NAME 1 2 3 4 5 6 (PRODUCT LEVEL)	SEE PAGE
	1	1	**8U-9216**	2	PLUG GP-SWIVEL	
					(EACH INCLUDES)	
		1	**7T-0508**	1	SEAL-O-RING	
		1	**117-4874**	1	RING-SPLIT	
J	2	1	**8U-7965**	7	RING-SEAL	
	3	1	**250-1045**	1	HOUSING	
J	4	1	**250-1041**	1	SEAL-LIP TYPE (HIGH TEMPERATURE)	
	5	1	**2Y-5881**	3	LOCKWASHER	
M	6	1	**6V-5215**	3	BOLT (M8X1.25X16-MM)	
	7	1	**250-1044**	1	COVER	
J	8	1	**250-1042**	1	SEAL-LIP TYPE (HIGH TEMPERATURE)	
	9	1	**117-1755**	1	ROTOR	
	10	1	**8U-9215**	7	PLUG GP	
					(EACH INCLUDES)	
		1	**117-4875**	1	RING-SPLIT	
		1	**3E-4299**	1	SEAL-O-RING	
					AVAILABLE REPAIR KIT(S):	
J			**250-1047**	1	KIT-SEAL (SWIVEL)	

J-KIT MARKED J SERVICES PARTS MARKED J
M-METRIC PART

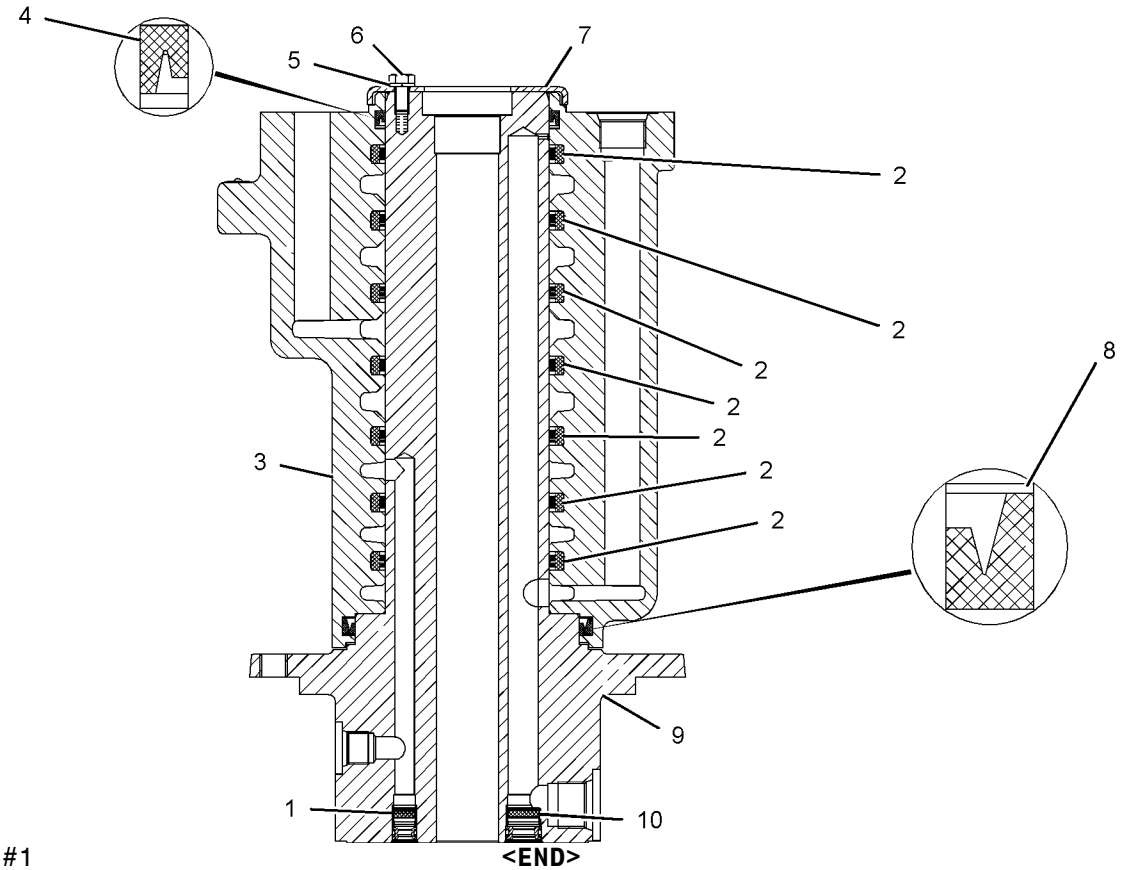

GRAPHIC #1

<END>

g01083740

HYDRAULIC SYSTEM

186-0495 TANK & MTG GP-HYDRAULIC

S/N: BCZ1-2000

PART OF 186-0471 HYDRAULIC AR

SMCS-5056 **i02161883**

NOTE	REF NO	GRAPHIC REF	PART NUMBER	QTY	PART NAME 1 2 3 4 5 6 (PRODUCT LEVEL)	SEE PAGE
Y	1	1	*183-8956*	1	TANK GP-HYDRAULIC	662
	2	1	**198-6224**	1	SWITCH AS-PRESSURE (HYDRAULIC OIL TANK)	
M	3	1	**8T-4944**	3	BOLT-SOCKET HEAD (M16X2X40-MM)	

M-METRIC PART
Y-SEPARATE ILLUSTRATION

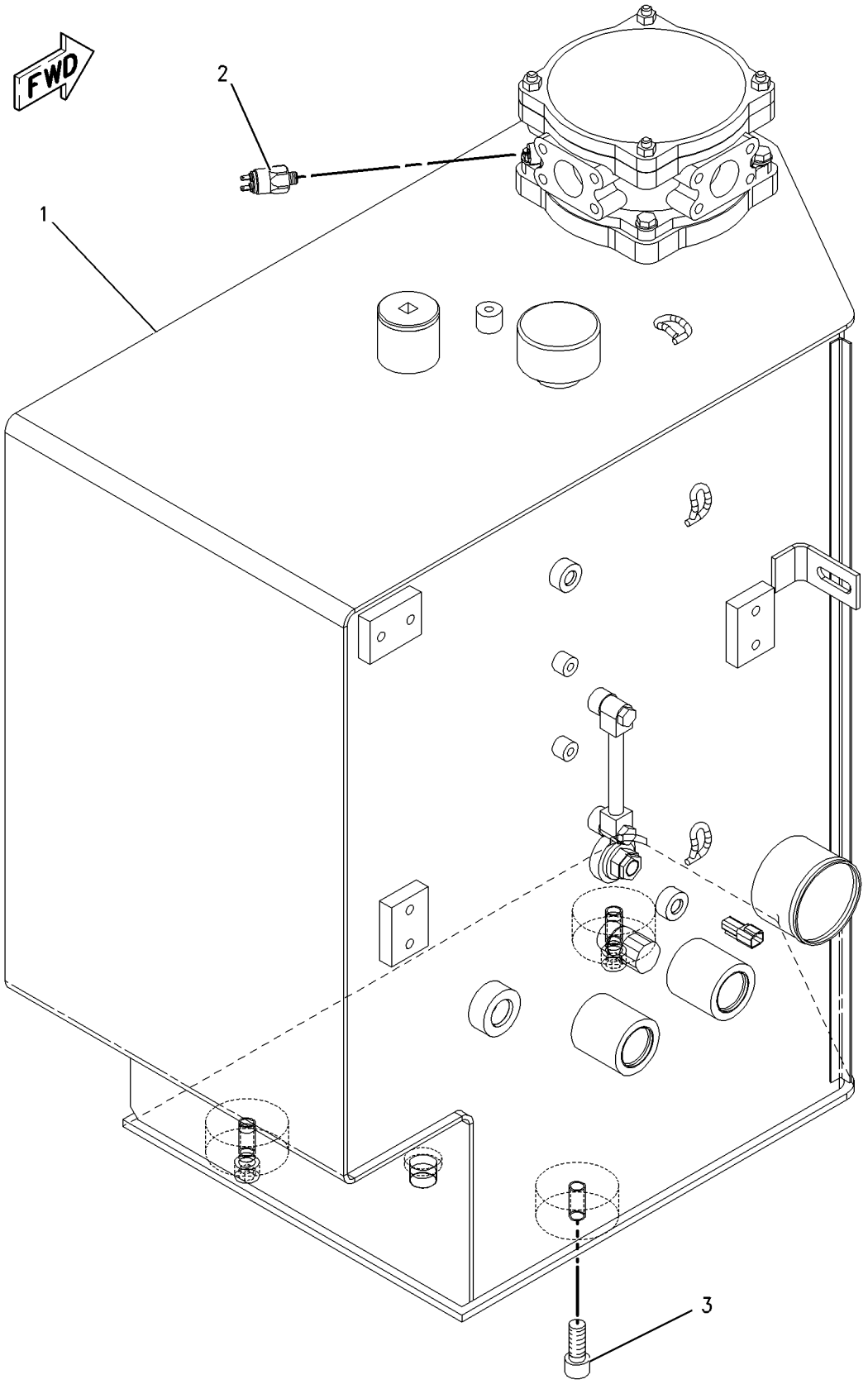

GRAPHIC #1 **<END>** g00824531

HYDRAULIC SYSTEM

183-8956 TANK GP-HYDRAULIC

S/N: BCZ1-2000

PART OF 186-0495 TANK & MTG GP-HYDRAULIC

SMCS-5056 **i02166708**

NOTE	REF NO	GRAPHIC REF	PART NUMBER	QTY	PART NAME 1 2 3 4 5 6 (PRODUCT LEVEL)	SEE PAGE
	1	1	**5W-2585**	1	COCK-DRAIN (HYDRAULIC TANK)	
	2	1	**236-2428**	1	GAUGE GP-SIGHT (HYDRAULIC OIL)	
		1	**236-5189**	5	SEAL-O-RING	
		1	**236-5193**	4	SEAL-O-RING	
		1	**236-5300**	2	BOLT-SPECIAL	
	3	1	**096-6095**	1	PLUG	
	4	1	**107-6738**	1	PLATE	
	5	1	**118-7226**	1	SENSOR GP-TEMPERATURE (HYDRAULIC OIL)	
		1	**102-8803**	1	KIT-RECEPTACLE (3-PIN)	
					(INCLUDES RECEPTACLE AS AND WEDGE)	
		1	**186-3735**	3	PIN-CONNECTOR	
E		1	**9X-1813**		SLEEVE (33CM)	
	6	1	**183-8965**	1	TANK AS-HYDRAULIC	
Y	7	1	*193-5975*	1	FILTER GP-OIL (HYDRAULIC)	478
	8	1	**194-7849**	1	CAP-BREATHER (HYDRAULIC OIL TANK)	
Y	9	1	**196-5651**	1	SWITCH GP-LIQUID LEVEL (HYDRAULIC OIL)	177
	10	1	**031-4392**	1	SEAL-O-RING	
	11	1	**095-1608**	1	SEAL-O-RING	
	12	1	*148-8408*	3	PLUG AS	
					(EACH INCLUDES)	
	12A	1	**3D-2824**	1	SEAL-O-RING	
	12B	1	**9S-4183**	1	PLUG	
	13	1	**3J-1907**	1	SEAL-O-RING	
M	14	1	**7X-2621**	1	BOLT (M10X1.5X12-MM)	
	15	1	**8T-4121**	9	WASHER-HARD (11X21X2.5-MM THK)	
M	16	1	**8T-4136**	4	BOLT (M10X1.5X25-MM)	
M	17	1	**8T-4137**	4	BOLT (M10X1.5X20-MM)	
E	18	1	**117-0123**		SEAL (87.2CM)	

E-ORDER BY THE CENTIMETER
M-METRIC PART
Y-SEPARATE ILLUSTRATION

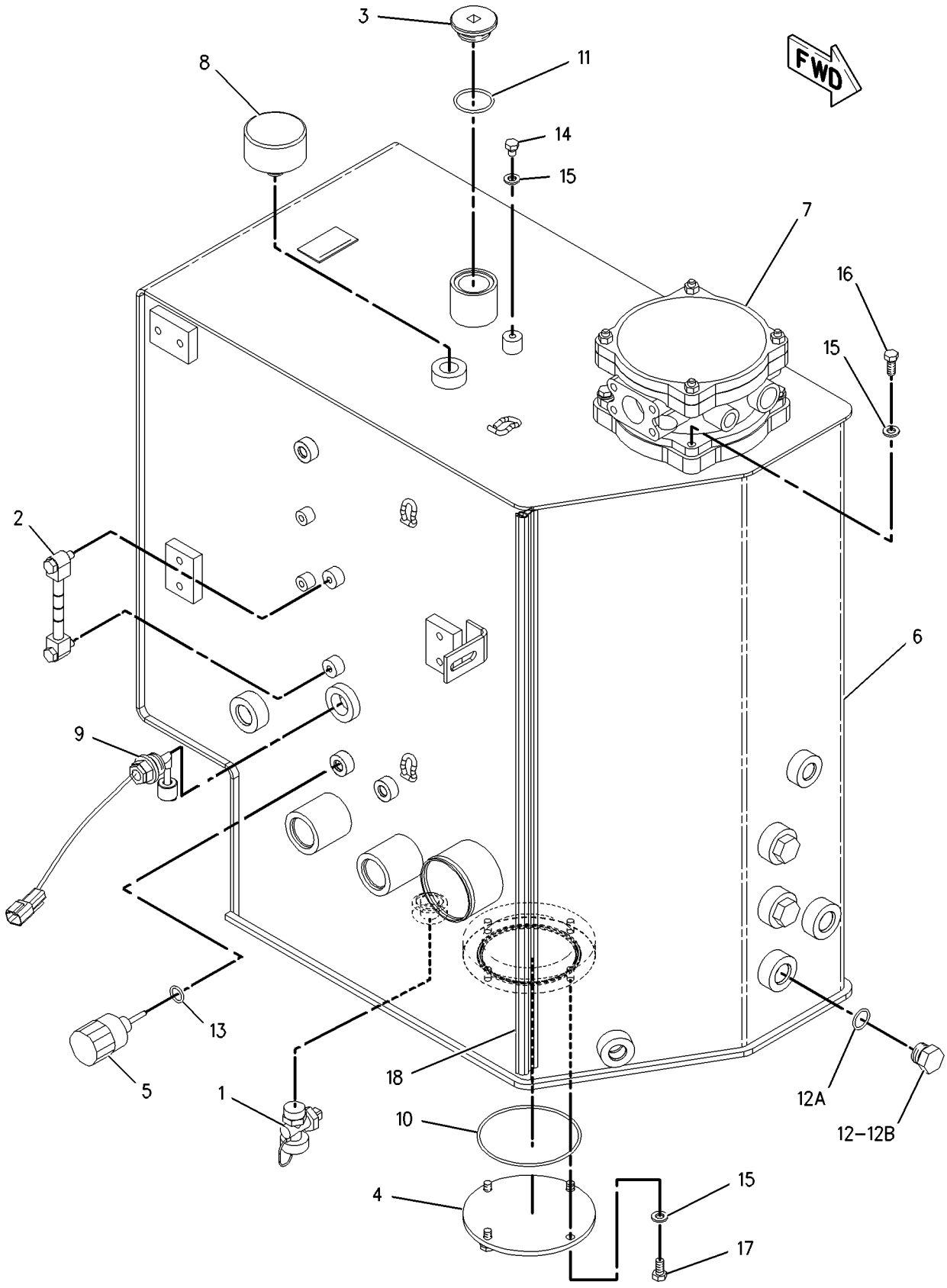

GRAPHIC #1 **<END>** g00990012

HYDRAULIC SYSTEM

187-7366 VALVE & LINES GP-AUXILIARY—MEDIUM PRESSURE

S/N: BCZ1-2000
CANNOT BE USED WITH OFFSET BOOM
AN ATTACHMENT

SMCS-5051, 5057 **i02163529**

NOTE	REF NO	GRAPHIC REF	PART NUMBER	QTY	PART NAME 1 2 3 4 5 6 (PRODUCT LEVEL)	SEE PAGE
	1	1	**8U-0119**	1	FITTING GP	
		1	**6V-5049**	1	SEAL-O-RING	
		1	**131-1085**	1	CAP	
M	2	1	**101-7399**	2	BOLT-SOCKET HEAD (M10X1.5X120-MM)	
Y	3	1	**195-2944**	1	VALVE & MTG GP-CONTROL (MEDIUM PRESSURE)	679
Y	4	1	**212-6749**	1	VALVE GP-COMBINATION (MEDIUM PRESSURE)	698
	5	1	*148-8340*	2	CONNECTOR AS	
					(EACH INCLUDES)	
	5A	1	**3K-0360**	1	SEAL-O-RING	
	5B	1	**6V-8398**	1	SEAL-O-RING	
	5C	1	**6V-8639**	1	CONNECTOR	
	6	1	*148-8354*	2	ELBOW AS	
					(EACH INCLUDES)	
	6A	1	**3K-0360**	1	SEAL-O-RING	
	6B	1	**6V-8398**	1	SEAL-O-RING	
	6C	1	**6V-9002**	1	ELBOW	
	7	1	**6V-9830**	2	CAP AS	
M	8	1	**9X-2609**	1	SETSCREW-SOCKET	
	9	1	**147-0934**	1	DIODE AS	

M-METRIC PART
Y-SEPARATE ILLUSTRATION

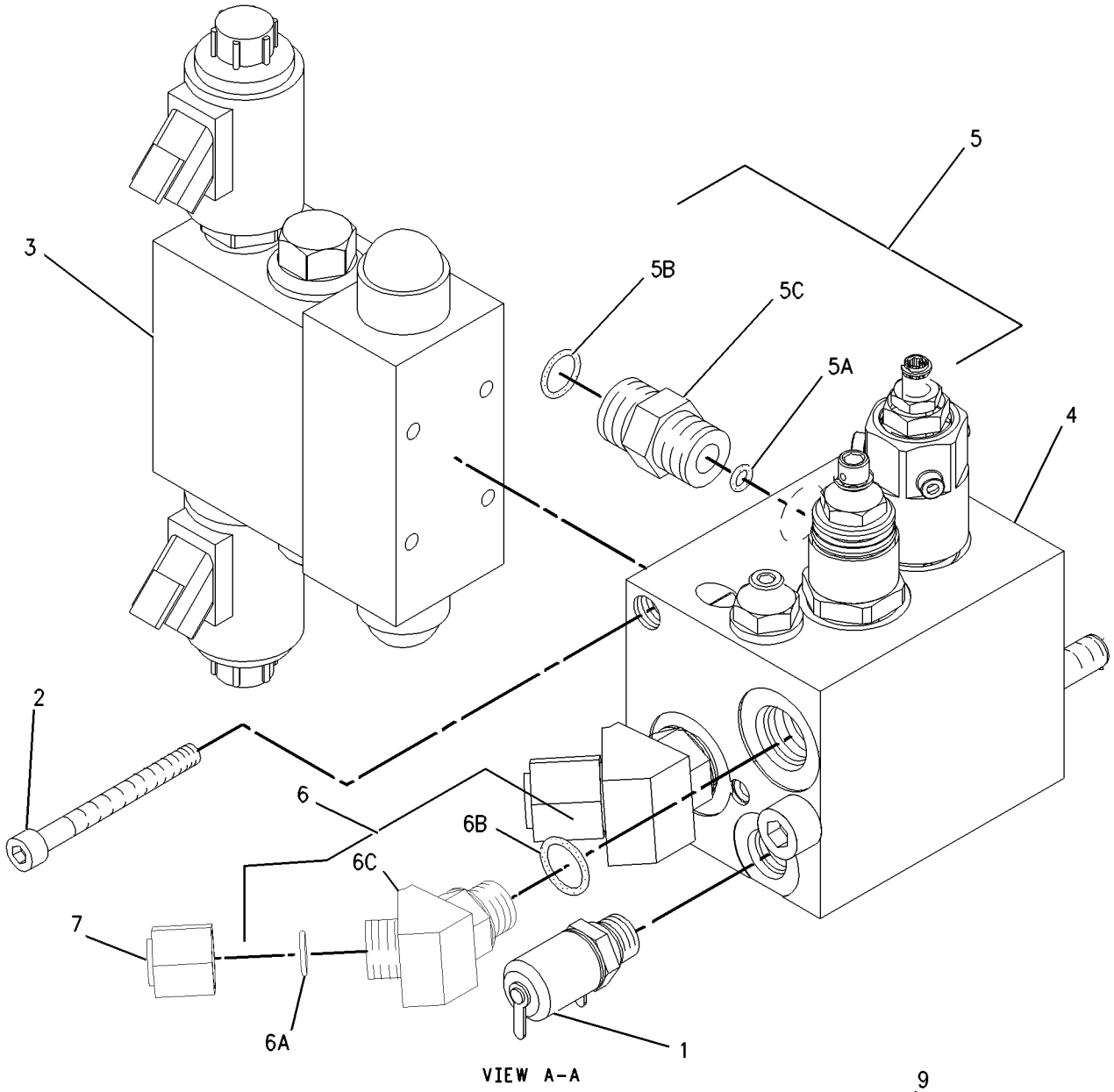

VIEW A-A

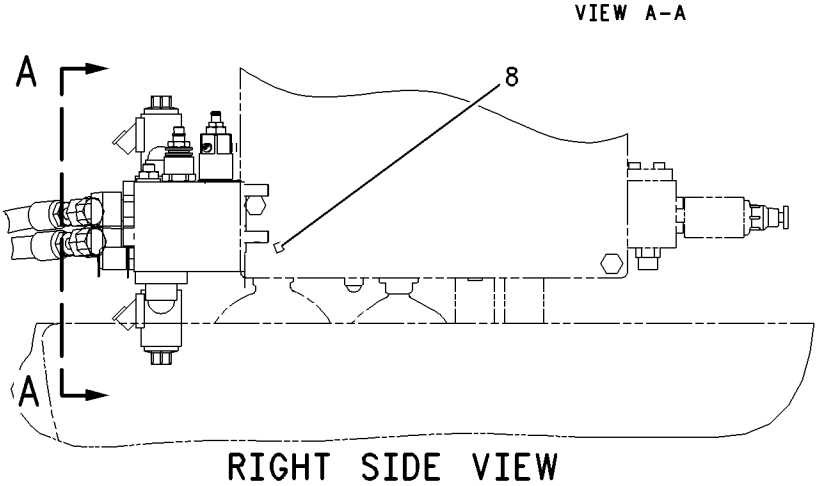

RIGHT SIDE VIEW

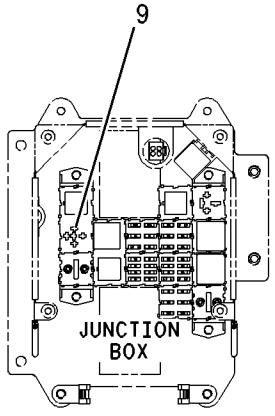

GRAPHIC #1 **<END>** g00894526

HYDRAULIC SYSTEM

187-7367 VALVE & LINES GP-AUXILIARY—QUICK COUPLER

S/N: BCZ1-2000
AN ATTACHMENT

SMCS-5051, 5057 **i01580240**

NOTE	REF NO	GRAPHIC REF	PART NUMBER	QTY	PART NAME 1 2 3 4 5 6 (PRODUCT LEVEL)	SEE PAGE
	1	1	**5W-5842**	1	ADAPTER-SOLENOID	
	2	1	**8I-3633**	4	ADAPTER AS	
					(EACH INCLUDES)	
		1	**6V-8397**	1	SEAL-O-RING	
		1	**162-6816**	1	SEAL	
	3	1	**8U-2003**	1	GASKET	
I	4	1	**140-1248**	1	HOSE AS	
	5	1	**140-7583**	1	HOSE AS	
	6	1	**176-9667**	1	VALVE GP-CONTROL (QUICK COUPLER)	
	7	1	**209-0000**	1	PLATE	
	8	1	*148-8336*	1	CONNECTOR AS	
		1	**3J-1907**	1	SEAL-O-RING	
		1	**6V-8397**	1	SEAL-O-RING	
		1	**6V-8636**	1	CONNECTOR	
	9	1	*148-8367*	2	ELBOW AS	
					(EACH INCLUDES)	
		1	**6V-8397**	1	SEAL-O-RING	
		1	**6V-9850**	1	ELBOW	
	10	1	*148-8434*	1	TEE AS	
		1	**6V-8397**	2	SEAL-O-RING	
		1	**6V-9843**	1	TEE-SWIVEL	
	11	1	**6V-9829**	2	CAP AS	
M	12	1	**7X-2536**	2	BOLT (M8X1.25X14-MM)	
M	13	1	**8U-5746**	3	BOLT (M6X1X75-MM)	

I-REFER TO HYDRAULIC INFORMATION SYSTEM
M-METRIC PART

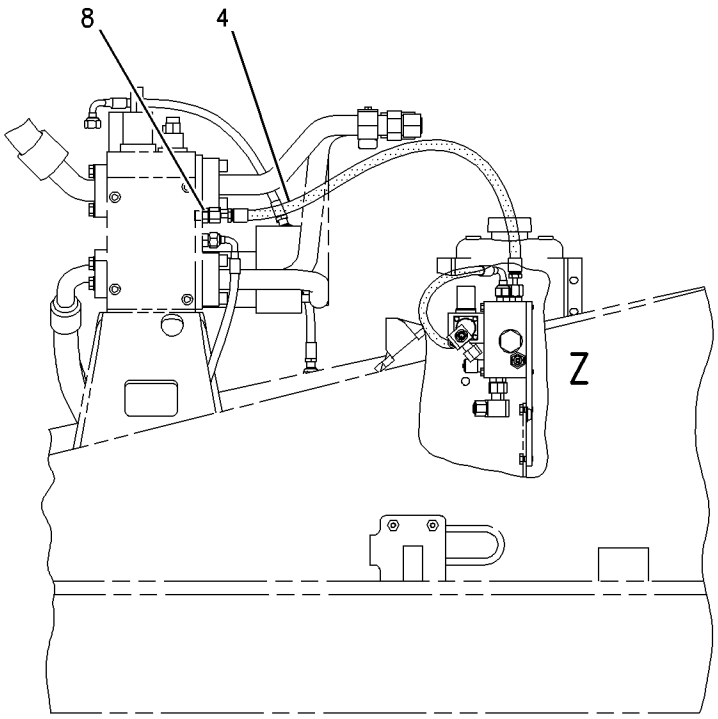

RIGHT SIDE VIEW

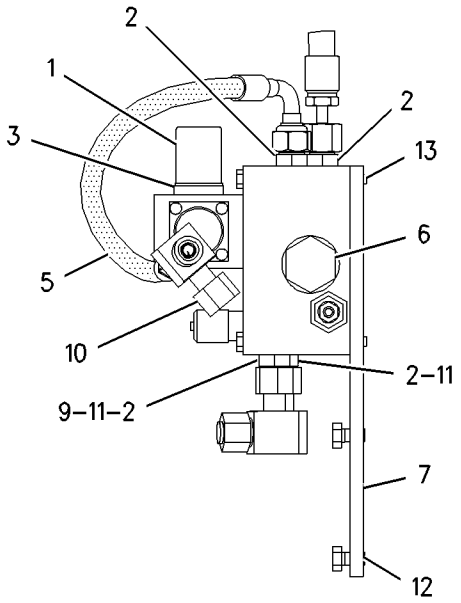

VIEW OF AREA Z

GRAPHIC #1 **<END>** g00825051

188-4958 VALVE & LINES GP-AUXILIARY–HAMMER, EXTENSION

S/N: BCZ1-2000

FOR USE WITH FIXED CAB RISER, HAMMER VALVE AN ATTACHMENT

SMCS-5051, 5057 **i01901035**

NOTE	REF NO	GRAPHIC REF	PART NUMBER	QTY	PART NAME 1 2 3 4 5 6 (PRODUCT LEVEL)	SEE PAGE
	1	1	**114-9324**	1	CLAMP-SINGLE	
I	2	1	**122-1232**	1	HOSE AS	
	3	1	*164-5570*	1	UNION AS	
		1	**6V-8397**	2	SEAL-O-RING	
		1	**6V-8730**	1	UNION	

I-REFER TO HYDRAULIC INFORMATION SYSTEM

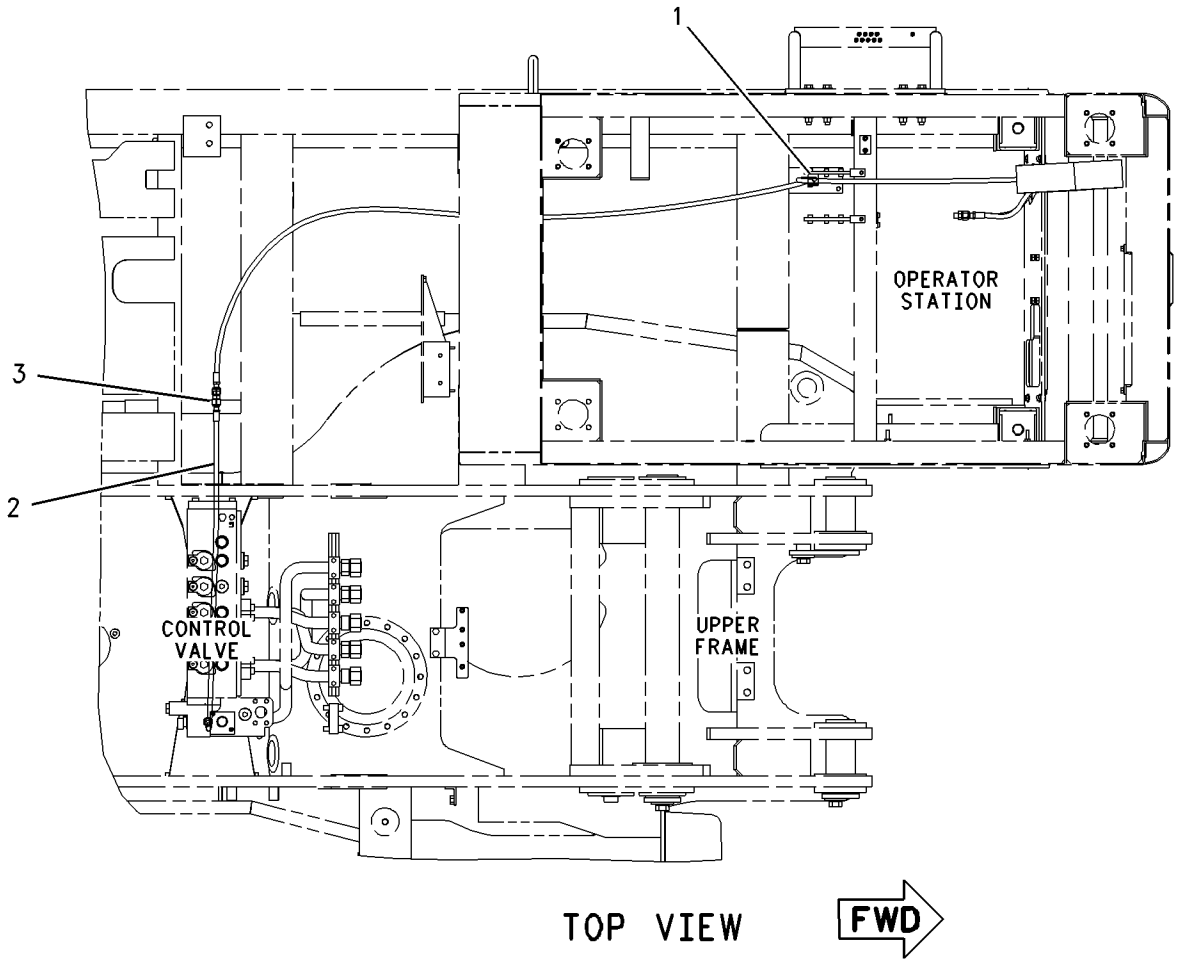

GRAPHIC #1 **<END>** g00990327

187-7360 VALVE & LINES GP-LOAD CONTROL–STICK

S/N: BCZ1-2000
DRIFT REDUCTION
CANNOT BE USED WITH CHECK VALVE STICK CYLINDER
AN ATTACHMENT

SMCS-5057, 5811 **i02163530**

NOTE	REF NO	GRAPHIC REF	PART NUMBER	QTY	PART NAME 1 2 3 4 5 6 (PRODUCT LEVEL)	SEE PAGE
I	1	1	**122-1233**	1	HOSE AS	
	2	1	**148-7050**	1	HOSE AS	
	3	1	**185-6846**	1	TUBE AS	
Y	4	1	**202-4092**	1	VALVE GP-LOAD CONTROL (STICK CYLINDER)	709
M	5	1	**095-9804**	4	BOLT-SOCKET HEAD (M12X1.75X110-MM)	
	6	1	*148-8336*	2	CONNECTOR AS	
					(EACH INCLUDES)	
		1	**3J-1907**	1	SEAL-O-RING	
		1	**6V-8397**	1	SEAL-O-RING	
		1	**6V-8636**	1	CONNECTOR	
	7	1	*148-8367*	1	ELBOW AS	
		1	**6V-8397**	1	SEAL-O-RING	
		1	**6V-9850**	1	ELBOW	
	8	1	*148-8378*	1	ELBOW AS	
		1	**3J-1907**	1	SEAL-O-RING	
		1	**6V-8397**	1	SEAL-O-RING	
		1	**6V-8724**	1	ELBOW	
	9	1	*148-8435*	1	TEE AS	
		1	**3J-1907**	1	SEAL-O-RING	
		1	**6V-8397**	2	SEAL-O-RING	
		1	**6V-8781**	1	TEE-FACE SEAL	
	10	1	**4J-0520**	1	SEAL-O-RING	

I-REFER TO HYDRAULIC INFORMATION SYSTEM
M-METRIC PART
Y-SEPARATE ILLUSTRATION

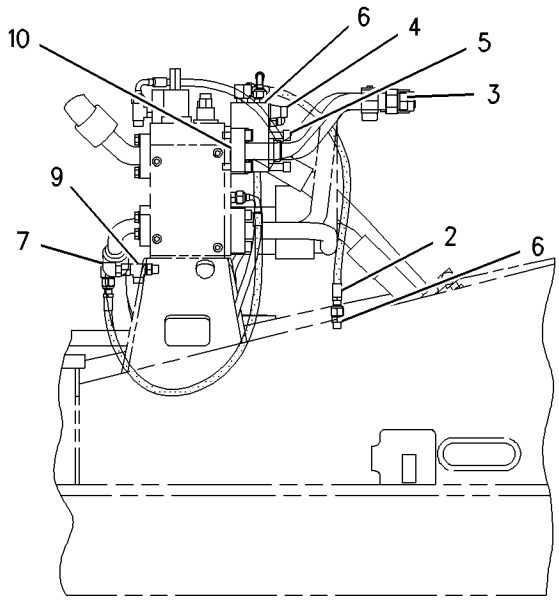

RIGHT SIDE VIEW

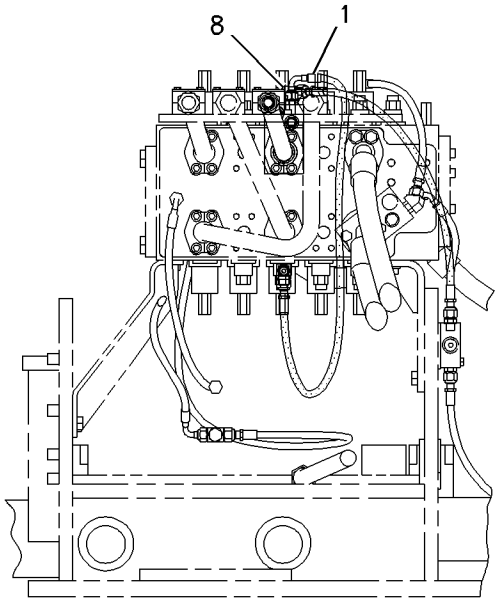

FRONT VIEW

GRAPHIC #1 **<END>** g00825208

HYDRAULIC SYSTEM

187-7361 VALVE & LINES GP-LOAD CONTROL–BUCKET

S/N: BCZ1-2000
DRIFT REDUCTION
CANNOT BE USED WITH BUCKET CYLINDER
AN ATTACHMENT

SMCS-5057, 5811 **i02163531**

NOTE	REF NO	GRAPHIC REF	PART NUMBER	QTY	PART NAME 1 2 3 4 5 6 (PRODUCT LEVEL)	SEE PAGE
	1	1	**8U-0284**	2	FLANGE-HALF	
I	2	1	**138-7948**	1	HOSE AS	
	3	1	**139-7392**	1	HOSE AS	
	4	1	**199-7035**	1	TUBE AS	
	5	1	**199-7036**	1	TUBE AS	
Y	6	1	**202-4092**	1	VALVE GP-LOAD CONTROL (BUCKET CYLINDER)	709
M	7	1	**108-1784**	4	BOLT-SOCKET HEAD (M12X1.75X120-MM)	
	8	1	*148-8336*	2	CONNECTOR AS	
					(EACH INCLUDES)	
		1	**3J-1907**	1	SEAL-O-RING	
		1	**6V-8397**	1	SEAL-O-RING	
		1	**6V-8636**	1	CONNECTOR	
	9	1	*148-8378*	1	ELBOW AS	
		1	**3J-1907**	1	SEAL-O-RING	
		1	**6V-8397**	1	SEAL-O-RING	
		1	**6V-8724**	1	ELBOW	
	10	1	*148-8439*	1	TEE AS	
		1	**3J-1907**	1	SEAL-O-RING	
		1	**6V-8397**	2	SEAL-O-RING	
		1	**6V-8774**	1	TEE	
	11	1	**4J-0520**	2	SEAL-O-RING	

I-REFER TO HYDRAULIC INFORMATION SYSTEM
M-METRIC PART
Y-SEPARATE ILLUSTRATION

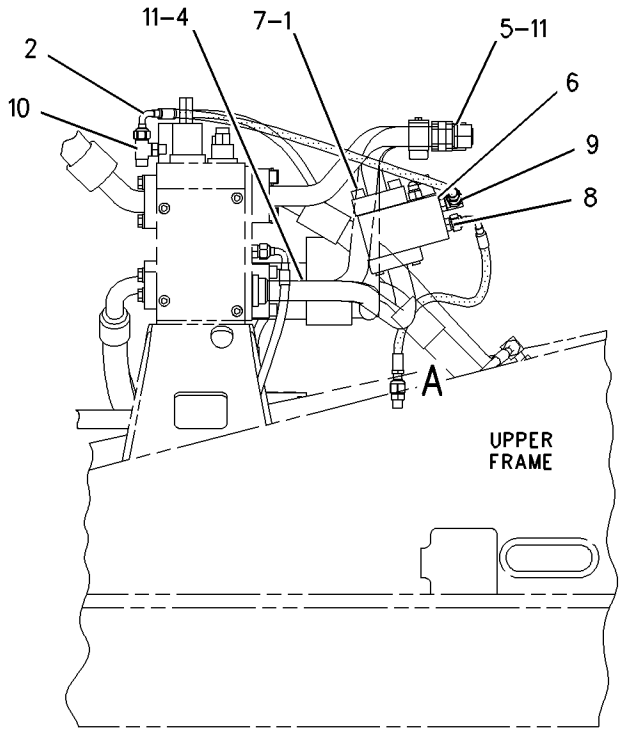

RIGHT SIDE VIEW

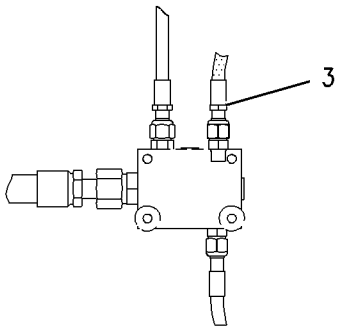

VIEW OF AREA A

GRAPHIC #1 **<END>** g00919197

187-7362 VALVE & LINES GP-LOAD CONTROL–STICK

S/N: BCZ1-2000
DRIFT REDUCTION
FOR USE WITH STICK CYLINDER
AN ATTACHMENT

SMCS-5057, 5811 **i02163532**

NOTE	REF NO	GRAPHIC REF	PART NUMBER	QTY	PART NAME 1 2 3 4 5 6 (PRODUCT LEVEL)	SEE PAGE
	1	1	**8U-0284**	2	FLANGE-HALF	
I	2	1	**138-7948**	2	HOSE AS	
	3	1	**199-7036**	1	TUBE AS	
	4	1	**199-7037**	1	TUBE AS	
Y	5	1	**202-4092**	1	VALVE GP-LOAD CONTROL (STICK CYLINDER)	709
M	6	1	**108-1784**	4	BOLT-SOCKET HEAD (M12X1.75X120-MM)	
	7	1	*148-8336*	2	CONNECTOR AS	
					(EACH INCLUDES)	
		1	**3J-1907**	1	SEAL-O-RING	
		1	**6V-8397**	1	SEAL-O-RING	
		1	**6V-8636**	1	CONNECTOR	
	8	1	*148-8367*	1	ELBOW AS	
		1	**6V-8397**	1	SEAL-O-RING	
		1	**6V-9850**	1	ELBOW	
	9	1	*148-8374*	1	ELBOW AS	
		1	**3K-0360**	1	SEAL-O-RING	
		1	**6V-8397**	1	SEAL-O-RING	
		1	**6V-8723**	1	ELBOW	
	10	1	*148-8439*	1	TEE AS	
		1	**3J-1907**	1	SEAL-O-RING	
		1	**6V-8397**	2	SEAL-O-RING	
		1	**6V-8774**	1	TEE	
	11	1	**4J-0520**	2	SEAL-O-RING	

I-REFER TO HYDRAULIC INFORMATION SYSTEM
M-METRIC PART
Y-SEPARATE ILLUSTRATION

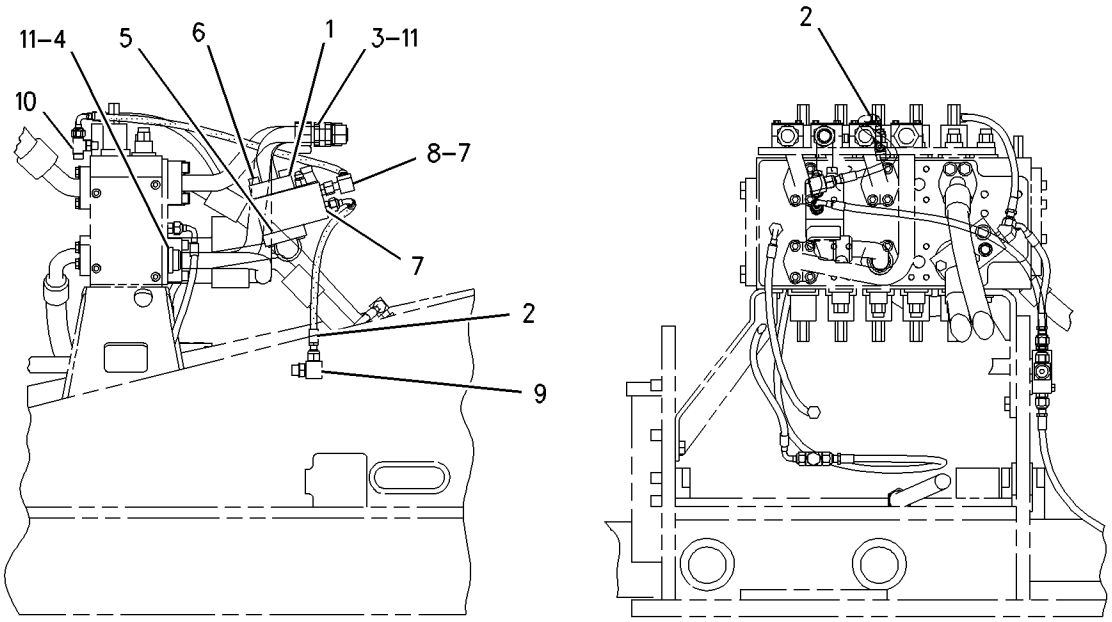

RIGHT SIDE VIEW

FRONT VIEW

GRAPHIC #1 **<END>** g00824825

187-7363 VALVE & LINES GP-LOAD CONTROL–
VARIABLE ADJUSTABLE BOOM
S/N: BCZ1-2000
DRIFT REDUCTION
CANNOT BE USED WITH LINES GP-CHECK VALVE VARIABLE ADJUSTABLE CYLINDER AN ATTACHMENT

SMCS-5057, 5811 **i02163533**

NOTE	REF NO	GRAPHIC REF	PART NUMBER	QTY	PART NAME 1 2 3 4 5 6 (PRODUCT LEVEL)	SEE PAGE
M	1	1	**095-0661**	4	BOLT-SOCKET HEAD	
I	2	1	**129-4682**	1	HOSE AS	
	3	1	**150-3954**	1	HOSE AS	
	4	1	**185-6837**	1	TUBE AS	
Y	5	1	**202-4093**	1	VALVE GP-LOAD CONTROL (VARIABLE ADJUSTABLE BOOM)	711
	6	1	*148-8336*	1	CONNECTOR AS	
		1	**3J-1907**	1	SEAL-O-RING	
		1	**6V-8397**	1	SEAL-O-RING	
		1	**6V-8636**	1	CONNECTOR	
	7	1	*148-8378*	1	ELBOW AS	
		1	**3J-1907**	1	SEAL-O-RING	
		1	**6V-8397**	1	SEAL-O-RING	
		1	**6V-8724**	1	ELBOW	
	8	1	*148-8374*	1	ELBOW AS	
		1	**3K-0360**	1	SEAL-O-RING	
		1	**6V-8397**	1	SEAL-O-RING	
		1	**6V-8723**	1	ELBOW	
	9	1	*148-8435*	1	TEE AS	
		1	**3J-1907**	1	SEAL-O-RING	
		1	**6V-8397**	2	SEAL-O-RING	
		1	**6V-8781**	1	TEE-FACE SEAL	
	10	1	*148-8371*	1	ELBOW AS	
		1	**6V-8397**	1	SEAL-O-RING	
		1	**8C-8988**	1	ELBOW	
	11	1	**4J-5267**	1	SEAL-O-RING	

I-REFER TO HYDRAULIC INFORMATION SYSTEM
M-METRIC PART
Y-SEPARATE ILLUSTRATION

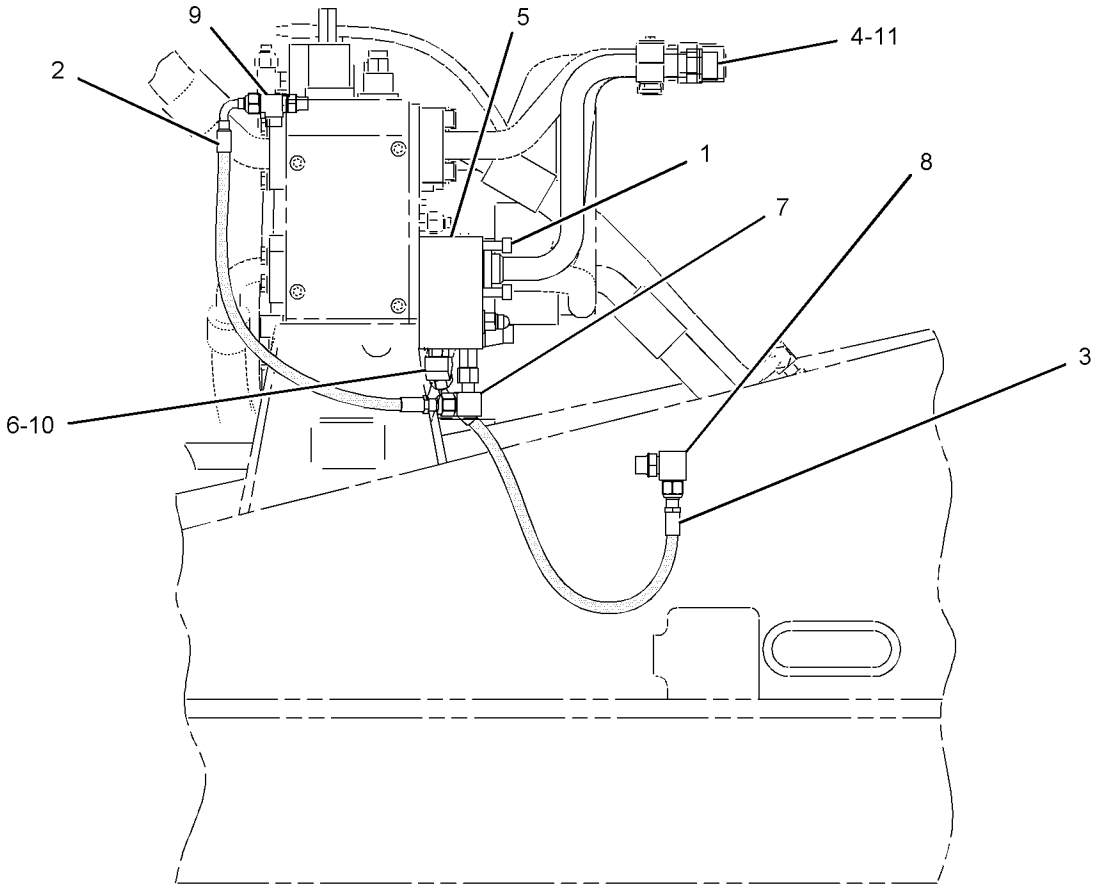

RIGHT SIDE VIEW

GRAPHIC #1

<END>

g01061166

187-7368 VALVE & LINES GP-LOAD CONTROL–

BOOM CYLINDER
S/N: BCZ1-2000
DRIFT REDUCTION
PART OF 186-0471 HYDRAULIC AR
CANNOT BE USED WITH VALVE GP-LINES HAMMER

SMCS-5057, 5811 **i02163534**

NOTE	REF NO	GRAPHIC REF	PART NUMBER	QTY	PART NAME 1 2 3 4 5 6 (PRODUCT LEVEL)	SEE PAGE
I	1	1	**138-1898**	1	HOSE AS	
Y	2	1	**202-4092**	1	VALVE GP-LOAD CONTROL (BOOM CYLINDER)	709
	3	1	**203-1919**	1	HOSE AS	
	4	1	**205-2453**	1	FLANGE	
	5	1	*148-8336*	2	CONNECTOR AS	
					(EACH INCLUDES)	
		1	**3J-1907**	1	SEAL-O-RING	
		1	**6V-8397**	1	SEAL-O-RING	
		1	**6V-8636**	1	CONNECTOR	
	6	1	*148-8353*	1	ELBOW AS	
		1	**3J-1907**	1	SEAL-O-RING	
		1	**6V-8397**	1	SEAL-O-RING	
		1	**6V-9001**	1	ELBOW	
	7	1	*148-8439*	1	TEE AS	
		1	**3J-1907**	1	SEAL-O-RING	
		1	**6V-8397**	2	SEAL-O-RING	
		1	**6V-8774**	1	TEE	
	8	1	**4J-0520**	2	SEAL-O-RING	
M	9	1	**7X-2551**	2	BOLT (M12X1.75X200-MM)	
M	10	1	**8C-8729**	2	BOLT-SOCKET HEAD (M12X1.75X80-MM)	
M	11	1	**8T-4223**	4	WASHER-HARD (13.5X25.5X3-MM THK)	
M	12	1	**8T-5041**	2	BOLT (M12X1.75X120-MM)	

I-REFER TO HYDRAULIC INFORMATION SYSTEM
M-METRIC PART
Y-SEPARATE ILLUSTRATION

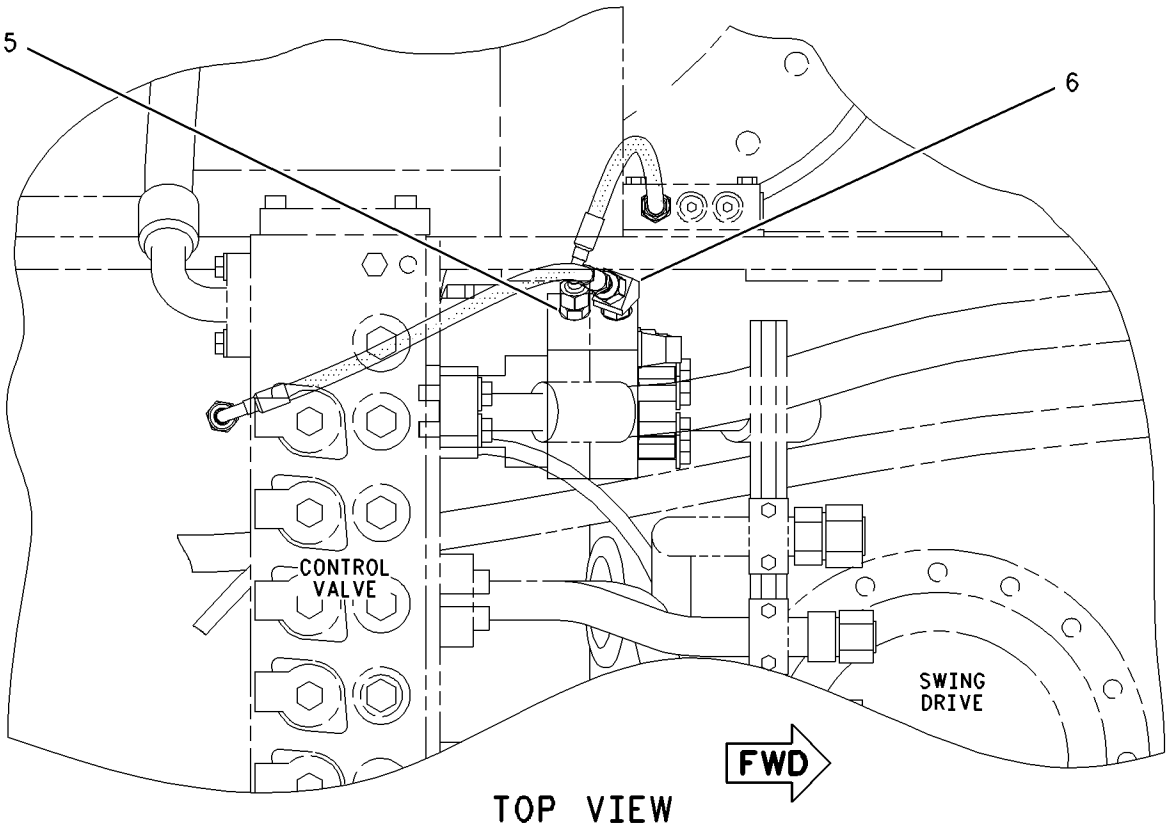

TOP VIEW

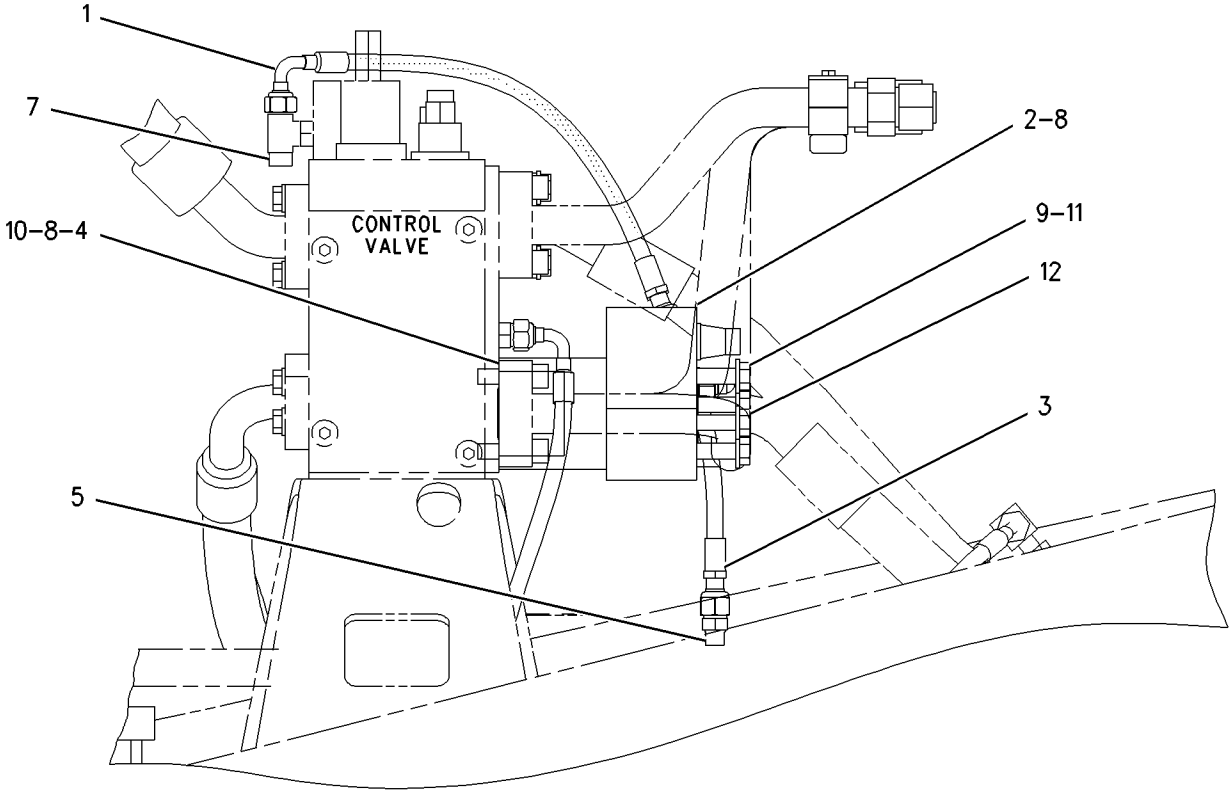

RIGHT SIDE VIEW

GRAPHIC #1 **<END>** g00857872

195-2944 VALVE & MTG GP-CONTROL–MEDIUM PRESSURE

S/N: BCZ1-2000

PART OF 187-7366 VALVE & LINES GP-AUXILIARY

AN ATTACHMENT

SMCS-5051 **i02163540**

NOTE	REF NO	GRAPHIC REF	PART NUMBER	QTY	PART NAME 1 2 3 4 5 6 (PRODUCT LEVEL)	SEE PAGE
Y	1	1	**199-1152**	1	VALVE GP-CONTROL (MEDIUM PRESSURE)	703
Y	2	1	**142-3952**	1	VALVE GP-RELIEF (LINE, MEDIUM PRESSURE)	739
	3	1	**205-3966**	4	BOLT-SOCKET HEAD	

Y-SEPARATE ILLUSTRATION

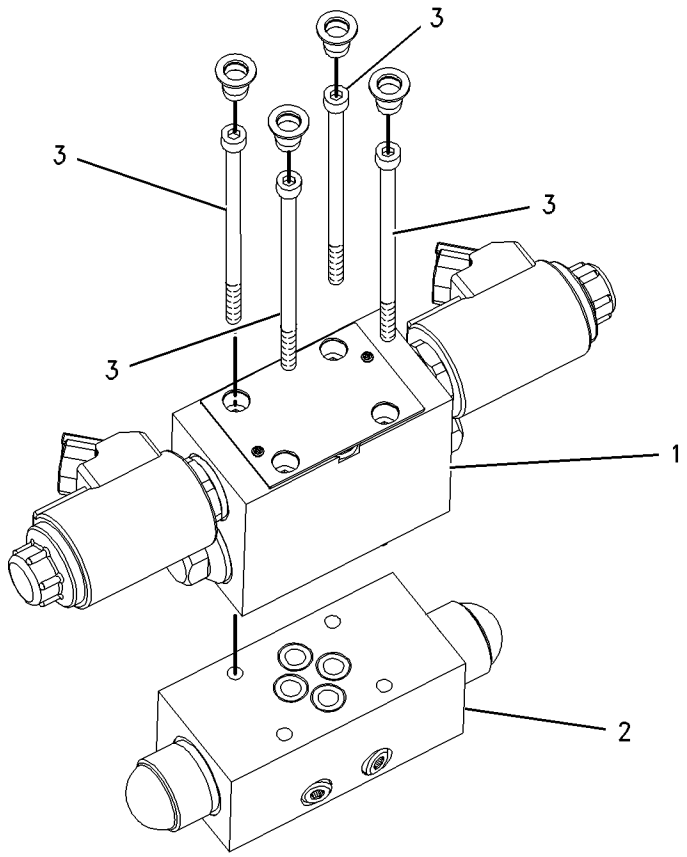

GRAPHIC #1 **<END>** g00835460

HYDRAULIC SYSTEM

187-7208 VALVE & MTG GP-MAIN CONTROL

S/N: BCZ1-2000

PART OF 186-0471 HYDRAULIC AR

SMCS-5051 **i01579453**

NOTE	REF NO	GRAPHIC REF	PART NUMBER	QTY	PART NAME 1 2 3 4 5 6 (PRODUCT LEVEL)	SEE PAGE
Y	1	1	**191-2762**	1	VALVE GP-MAIN CONTROL	719
	2	1	**193-5970**	1	SUPPORT AS	
	3	1	**193-5976**	1	SUPPORT AS	
M	4	1	**7X-2552**	4	BOLT (M16X2X30MM)	
M	5	1	**8T-4190**	1	BOLT (M16X2X25MM)	
M	6	1	**8T-4779**	2	BOLT (M16X2X35MM)	
	7	1	**9X-8257**	2	WASHER (17.5X30X3.5MM THK)	

M-METRIC PART
Y-SEPARATE ILLUSTRATION

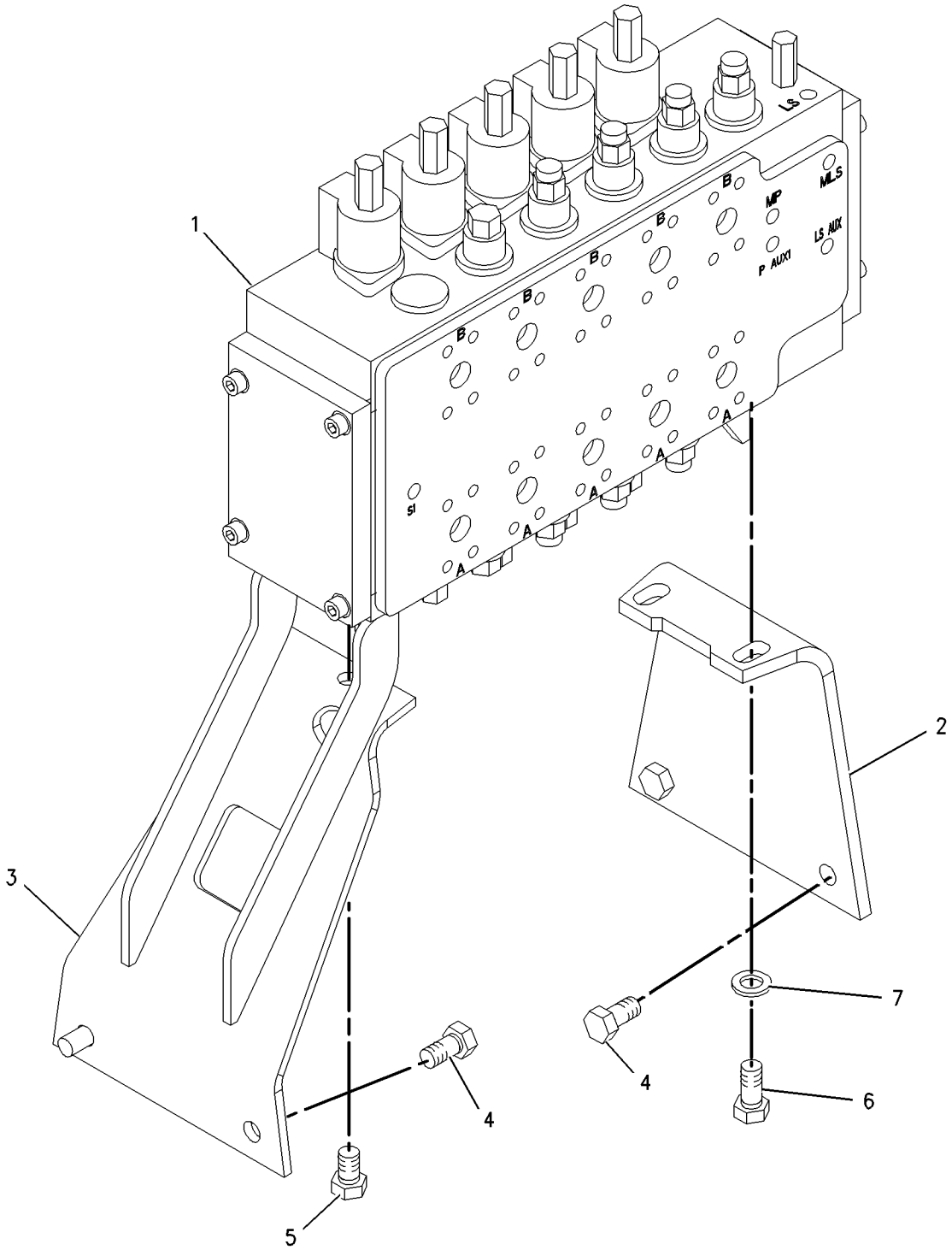

GRAPHIC #1 **<END>** g00821957

HYDRAULIC SYSTEM

173-7992 VALVE GP-BALL–HIGH PRESSURE, AUXILIARY

S/N: BCZ1-2000

PART OF 185-3472, 185-3473, 185-3474 LINES GP-STICK

AN ATTACHMENT

SMCS-1329 **i02161894**

NOTE	PART NUMBER	QTY	PART NAME 1 2 3 4 5 6 (PRODUCT LEVEL)	SEE PAGE
Y	**197-2248**	1	VALVE GP-BALL (HIGH PRESSURE, AUXILIARY)	684
			–OR–	
Y	**197-2247**	1	VALVE GP-BALL (HIGH PRESSURE, AUXILIARY)	683

Y-SEPARATE ILLUSTRATION

<END>

197-2247 VALVE GP-BALL–HIGH PRESSURE, AUXILIARY

S/N: BCZ1-2000
PART OF 173-7992 VALVE GP-BALL
AN ATTACHMENT

SMCS-1329 **i02155833**

NOTE	REF NO	GRAPHIC REF	PART NUMBER	QTY	PART NAME 1 2 3 4 5 6 (PRODUCT LEVEL)	SEE PAGE
	1	1	**119-9447**	1	HANDLE	
	2	1	**3J-1907**	1	SEAL-O-RING	
	3	1	**099-5845**	1	PLUG	
	4	1	**153-8644**	1	STOP AS	
		1	**153-8645**	1	PLUNGER	
	5	1	**153-8748**	1	SEAL	
	6	1	**5J-2974**	1	SEAL-O-RING	
	7	1	**8T-0706**	1	RING-RETAINING	
	8	1	**095-1783**	1	RING-BACKUP	
	9	1	**142-6742**	1	SEAL-O-RING	

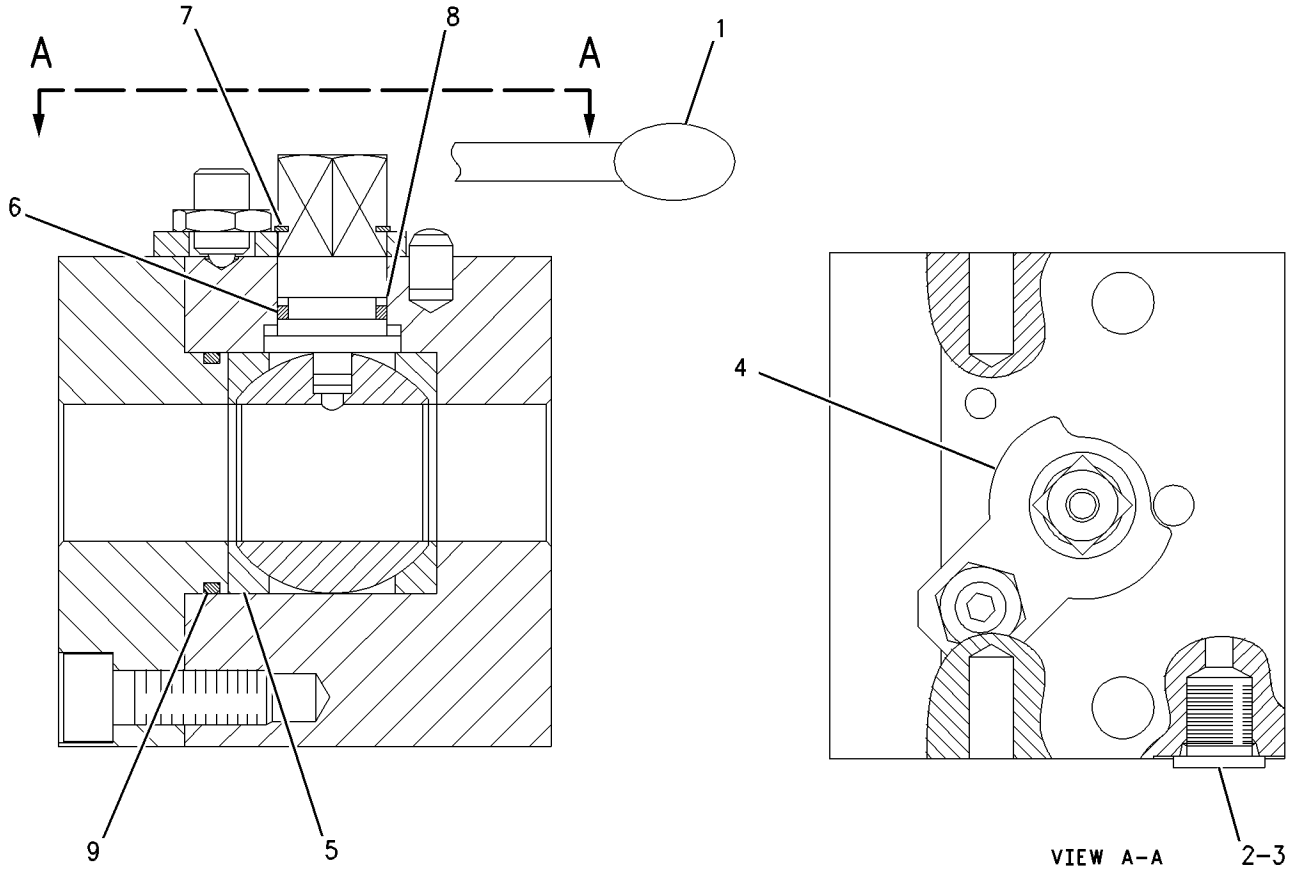

GRAPHIC #1 **<END>** g00709011

197-2248 VALVE GP-BALL–HIGH PRESSURE, AUXILIARY

S/N: BCZ1-2000
PART OF 173-7992 VALVE GP-BALL
AN ATTACHMENT

SMCS-1329 **i02155834**

NOTE	REF NO	GRAPHIC REF	PART NUMBER	QTY	PART NAME 1 2 3 4 5 6 (PRODUCT LEVEL)	SEE PAGE
	1	1	**9S-4191**	1	PLUG	
	2	1	**3J-1907**	1	SEAL-O-RING	
	3	1	**119-1353**	1	HANDLE	

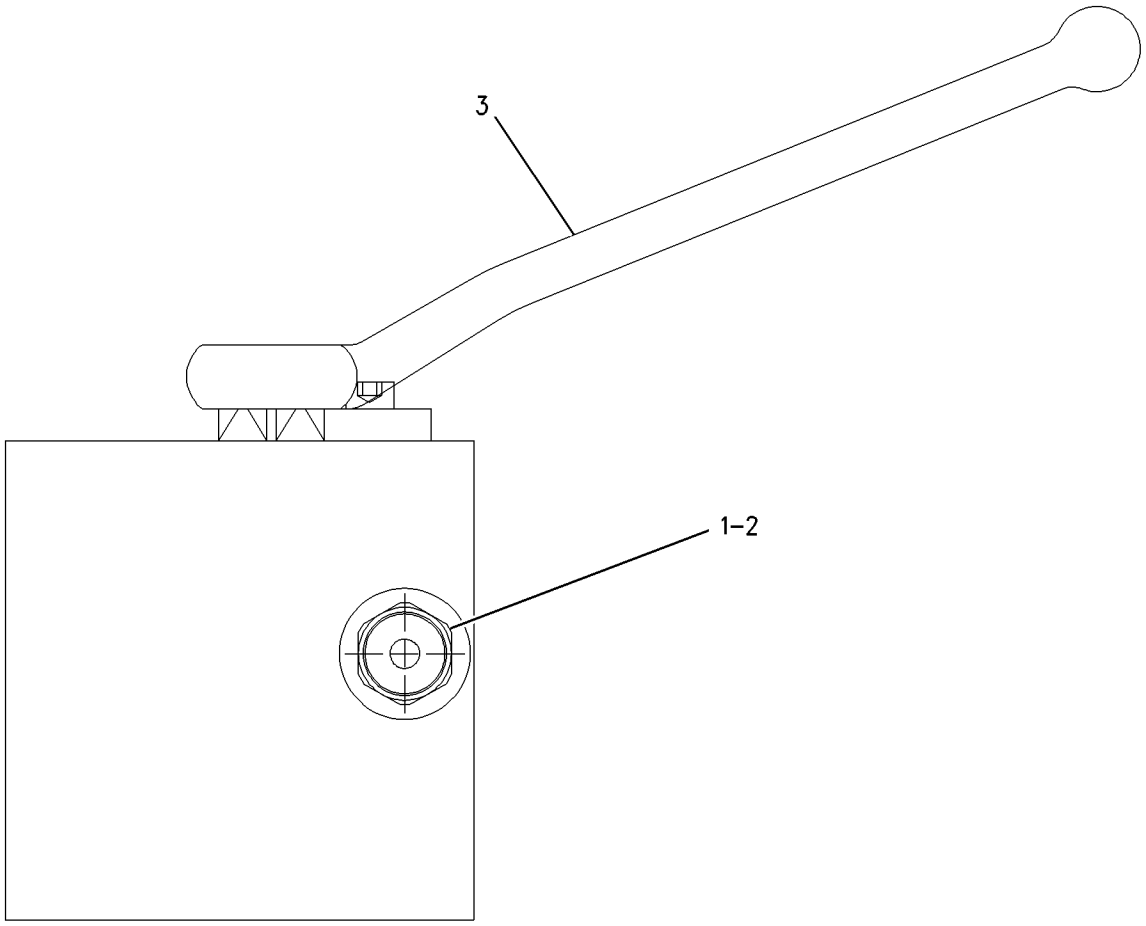

GRAPHIC #1 **<END>** g00843158

HYDRAULIC SYSTEM

176-7800 VALVE GP-BRAKE CONTROL

S/N: BCZ1-839
PART OF 187-3794 CONTROL GP-BRAKE
FIELD REPLACEMENT ORDER 249-5527—PAGE 689

SMCS-4265, 5051 **i02161897**

NOTE	REF NO	GRAPHIC REF	PART NUMBER	QTY	PART NAME 1 2 3 4 5 6 (PRODUCT LEVEL)	SEE PAGE
	1	1	**5W-5009**	3	PLUG	
	2	1	**8U-5784**	2	PLUG	
	3	1	**117-4837**	2	PLUG	
	4	1	**117-4838**	1	PLUG	
	5	1	**8U-5776**	1	CASE	
	6	1	**8U-5778**	1	SCREW	
	7	1	**117-0335**	1	WASHER	
	8	1	**180-7840**	1	PIPE	
	9	1	**8U-5780**	1	COLLAR	
	10	1	**117-0337**	1	SCREW	
	11	1	**117-0338**	1	SPOOL	
	12	1	**8U-3179**	2	SEAT	
	13	1	**8U-5788**	1	SPRING	
	14	1	**117-0339**	1	SPRING	
	15	1	**8U-3182**	1	SPRING	
	16	1	**117-0340**	1	SPRING	
	17	1	**117-0341**	1	SPRING	
	18	1	**8U-3181**	1	SPRING	
	19	1	**180-7841**	1	SPRING	
	20	1	**8U-5786**	1	PLUG	
	21	1	**117-0342**	1	PLUG	
	22	1	**8C-3428**	1	RING-RETAINING	
	23	1	**180-7842**	2	PIN	
	24	1	**117-0345**	1	LEVER	
	25	1	**117-0346**	1	PLUG	
	26	1	**117-0348**	1	SLEEVE GP	
	26A	1	**4K-2039**	2	SEAL-O-RING	
	27	1	**117-0349**	1	SLEEVE GP	
	27A	1	**1H-1023**	1	SEAL-O-RING	
	27B	1	**5W-9411**	1	SEAL-O-RING	
	27C	1	**6M-5062**	1	SEAL-O-RING	
	27D	1	**117-0355**	2	RING-BACKUP (9.2-MM ID)	
	27E	1	**117-0356**	1	RING-BACKUP	
	27F	1	**117-0357**	2	RING-BACKUP (11.2-MM ID)	
	28	1	**117-0350**	1	SLEEVE GP	
	28A	1	**4D-2297**	1	SEAL-O-RING	
	29	1	**117-0351**	1	PLUG GP	
	29A	1	**8U-3183**	1	LOCKNUT	
	29B	1	**8U-5069**	1	SEAL-O-RING	
	30	1	**117-0352**	1	PLUG GP	
	30A	1	**2Y-2272**	1	SEAL-O-RING	
	31	1	**180-7839**	1	SPRING AS-VALVE	
	31A	1	**9X-6381**	1	WASHER (6.5X12.5X1.6-MM THK)	
M	31B	1	**099-0492**	1	LOCKNUT (M6X1-THD)	
J	32	1	**117-0354**	1	CAP	
J	33	1	**8U-5801**	1	BOOT	
J	34	1	**8U-5795**	3	SEAL-O-RING	
J	35	1	**4D-2297**	1	SEAL-O-RING	
J	36	1	**117-0353**	1	RING-BACKUP	
J	37	1	**8U-5800**	1	SEAL	
	38	1	**9W-2146**	1	PLUG	
					AVAILABLE REPAIR KIT(S):	
J			**117-1283**	1	KIT-SEAL (BRAKE CONTROL VALVE)	

J-KIT MARKED J SERVICES PARTS MARKED J
M-METRIC PART

176-7800 VALVE GP-BRAKE CONTROL *(contd.)* i02161897

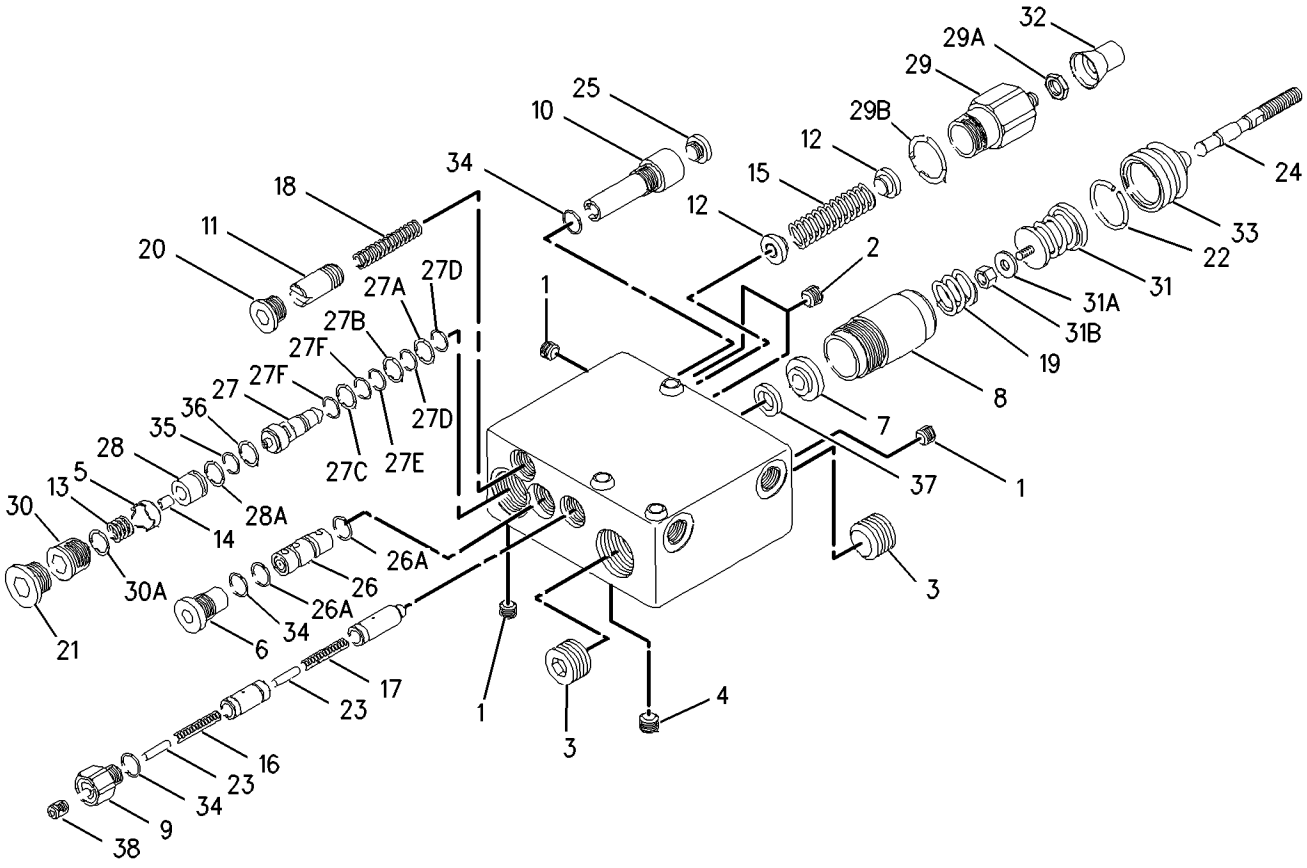

GRAPHIC #1 **<END>** g00921331

211-0081 VALVE GP-BRAKE CONTROL

S/N: BCZ1-2000

PART OF 211-0062 MOTOR GP-TRAVEL

SMCS-4265, 5051 **i02163577**

NOTE	REF NO	GRAPHIC REF	PART NUMBER	QTY	PART NAME 1 2 3 4 5 6 (PRODUCT LEVEL)	SEE PAGE
Y	1	1	**191-3952**	2	VALVE GP-RELIEF (TRAVEL BRAKE)	741
	2	1	**191-2708**	1	VALVE AS-SHUTTLE	
	3	1	**212-1346**	1	PISTON AS	
	4	1	**219-6714**	2	VALVE AS-CHECK	
					(EACH INCLUDES)	
		1	**221-2760**	1	RING-RETAINING	
		1	**221-3491**	1	SEAL-O-RING	
	5	1	**191-2710**	1	COVER	
	6	1	**191-2711**	1	COVER	
M	7	1	**191-2809**	2	BOLT-SOCKET HEAD	
	8	1	**179-6919**	1	ORIFICE	
	9	1	**5P-1480**	2	SEAL-O-RING	
	10	1	**191-2962**	2	SEAL-O-RING	
	11	1	**9X-4617**	2	SEAL-O-RING	
	12	1	**191-2712**	1	PLUG	
	13	1	**196-8804**	2	PLUG GP	
					(EACH INCLUDES)	
		1	**196-6803**	1	SEAL-O-RING	
	14	1	**9T-3929**	1	PLUG AS	
		1	**6E-5479**	1	SEAL	
M	15	1	**3E-8007**	4	BOLT-SOCKET HEAD (M12X1.75X90-MM)	
M	16	1	**6V-8200**	4	BOLT-SOCKET HEAD (M12X1.75X35-MM)	

M-METRIC PART
Y-SEPARATE ILLUSTRATION

211-0081 VALVE GP-BRAKE CONTROL *(contd.)* i02163577

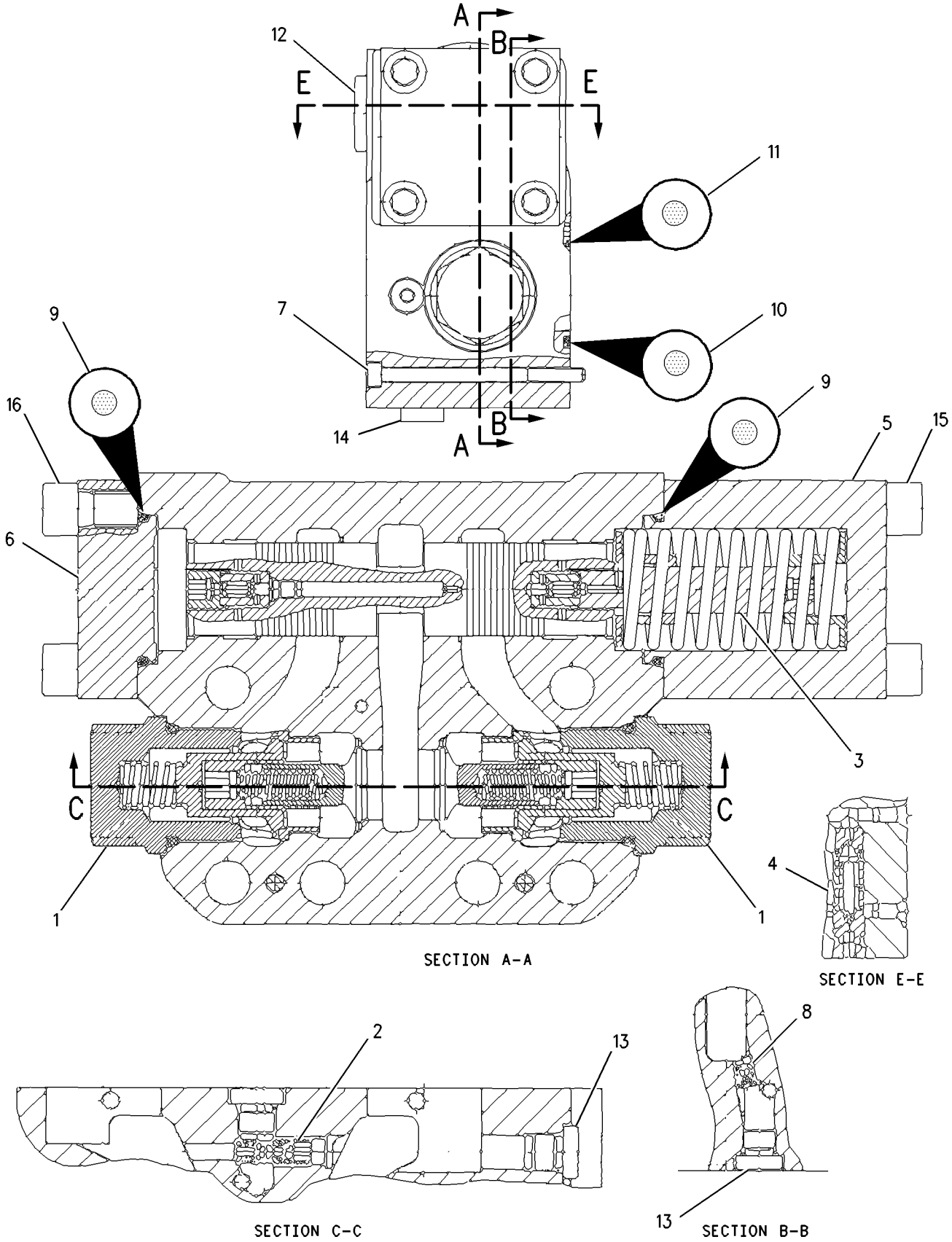

GRAPHIC #1 **<END>** g00902948

HYDRAULIC SYSTEM

249-5527 VALVE GP-BRAKE CONTROL

S/N: BCZ840-2000

PART OF 187-3794 CONTROL GP-BRAKE

FIELD REPLACEMENT FOR 176-7800—PAGE 685

SMCS-4265, 5051 **i02149040**

NOTE	REF NO	GRAPHIC REF	PART NUMBER	QTY	PART NAME 1 2 3 4 5 6 (PRODUCT LEVEL)	SEE PAGE
	1	1	**5W-5009**	3	PLUG	
	2	1	**8U-5784**	2	PLUG	
	3	1	**117-4837**	2	PLUG	
	4	1	**117-4838**	1	PLUG	
	5	1	**8U-5776**	1	CASE	
	6	1	**8U-5778**	1	SCREW	
	7	1	**117-0335**	1	WASHER	
	8	1	**180-7840**	1	PIPE	
	9	1	**8U-5780**	1	COLLAR	
	10	1	**117-0337**	1	SCREW	
	11	1	**117-0338**	1	SPOOL	
	12	1	**8U-3179**	2	SEAT	
	13	1	**8U-5788**	1	SPRING	
	14	1	**117-0339**	1	SPRING	
	15	1	**8U-3182**	1	SPRING	
	16	1	**117-0340**	1	SPRING	
	17	1	**117-0341**	1	SPRING	
	18	1	**8U-3181**	1	SPRING	
	19	1	**180-7841**	1	SPRING	
	20	1	**8U-5786**	1	PLUG	
	21	1	**117-0342**	1	PLUG	
	22	1	**8C-3428**	1	RING-RETAINING	
	23	1	**180-7842**	2	PIN	
	24	1	**117-0345**	1	LEVER	
	25	1	**117-0346**	1	PLUG	
	26	1	**117-0348**	1	SLEEVE GP	
		1	**4K-2039**	2	SEAL-O-RING	
	27	1	**117-0349**	1	SLEEVE GP (BRAKE CONTROL VALVE)	
J		1	**4K-2039**	2	SEAL-O-RING	
	28	1	**117-0350**	1	SLEEVE GP (BRAKE CONTROL VALVE)	
J		1	**4D-2297**	1	SEAL-O-RING	
	29	1	**117-0351**	1	PLUG GP	
J		1	**8U-5069**	1	SEAL-O-RING	
		1	**8U-3183**	1	LOCKNUT	
	30	1	**117-0352**	1	PLUG GP	
J		1	**2Y-2272**	1	SEAL-O-RING	
	31	1	**180-7839**	1	SPRING AS-VALVE	
		1	**9X-6381**	1	WASHER (6.5X12.5X1.6-MM THK)	
M		1	**099-0492**	1	LOCKNUT (M6X1-THD)	
J	32	1	**117-0354**	1	CAP	
J	33	1	**8U-5801**	1	BOOT	
J	34	1	**8U-5795**	3	SEAL-O-RING	
J	35	1	**4D-2297**	1	SEAL-O-RING	
J	36	1	**117-0353**	1	RING-BACKUP	
J	37	1	**8U-5800**	1	SEAL	
	38	1	**9W-2146**	1	PLUG	
	39	1	**117-0346**	1	PLUG	
Z	40	1		1	BLOCK	
Z	41	1		1	SPOOL	
Z	42	1		1	SPOOL	
					AVAILABLE REPAIR KIT(S):	
J			**117-1283**	1	KIT-SEAL (BRAKE CONTROL VALVE)	

J-KIT MARKED J SERVICES PARTS MARKED J
M-METRIC PART
Z-NOT SERVICED SEPARATELY

249-5527 VALVE GP-BRAKE CONTROL *(contd.)* i02149040

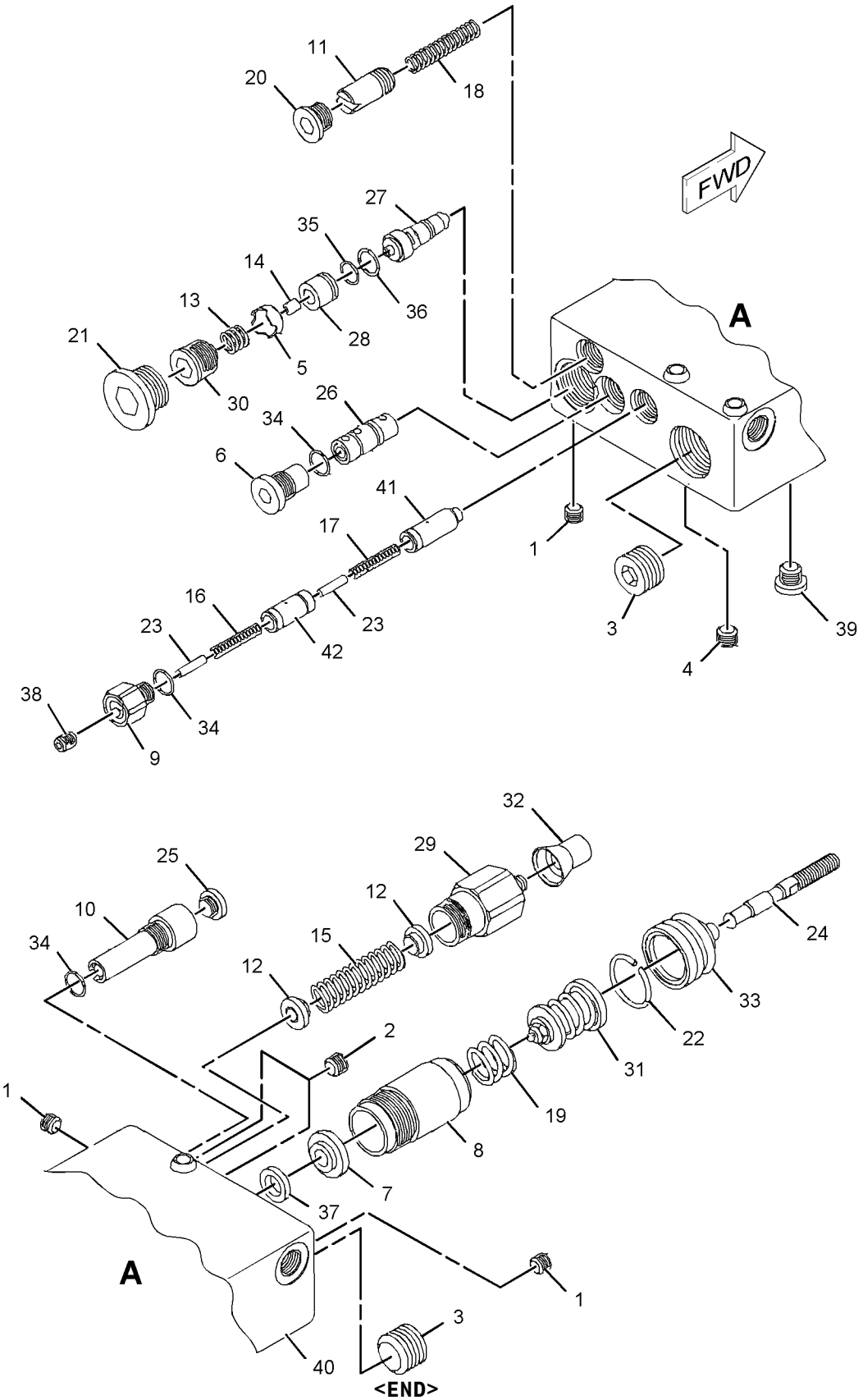

GRAPHIC #1 **<END>** g01084587

119-9045 VALVE GP-CHECK–LOAD CONTROL

S/N: BCZ1-2000

PART OF 202-4094, 202-4096 VALVE GP-LOAD CONTROL

AN ATTACHMENT

SMCS-5067 **i01928588**

NOTE	REF NO	GRAPHIC REF	PART NUMBER	QTY	PART NAME 1 2 3 4 5 6 (PRODUCT LEVEL)	SEE PAGE
	1	1	**119-9375**	1	HOUSING	
	2	1	**119-9376**	2	RETAINER-SPRING	
	3	1	**119-9377**	1	SPINDLE	
	4	1	**119-9378**	1	SPRING	
M	5	1	**2Y-9286**	1	NUT (M10X1-THD)	
	6	1	**121-3157**	1	RING	
	7	1	**6V-5326**	1	SEAL-O-RING	
	8	1	**095-1751**	1	SEAL-O-RING	

M-METRIC PART

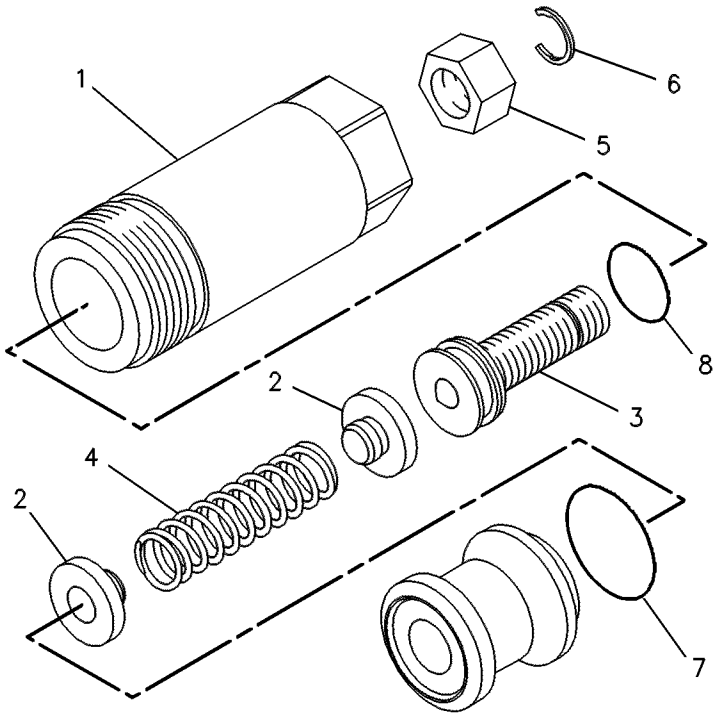

GRAPHIC #1 **<END>** g00245121

173-4387 VALVE GP-CHECK–BOOM CYLINDER

S/N: BCZ1-2000
PART OF 202-4095 VALVE GP-CHECK
AN ATTACHMENT

SMCS-5067 **i01111549**

NOTE	REF NO	GRAPHIC REF	PART NUMBER	QTY	PART NAME 1 2 3 4 5 6 (PRODUCT LEVEL)	SEE PAGE
	1	1	**119-9375**	1	HOUSING	
	2	1	**119-9376**	2	RETAINER-SPRING	
	3	1	**119-9377**	1	SPINDLE	
	4	1	**173-4383**	1	SPRING	
M	5	1	**2Y-9286**	1	NUT (M10X1 THD)	
	6	1	**121-3157**	1	RING	
	7	1	**6V-5326**	1	SEAL-O-RING (23.47MM ID)	
	8	1	**095-1751**	1	SEAL-O-RING (14.00MM ID)	

M-METRIC PART

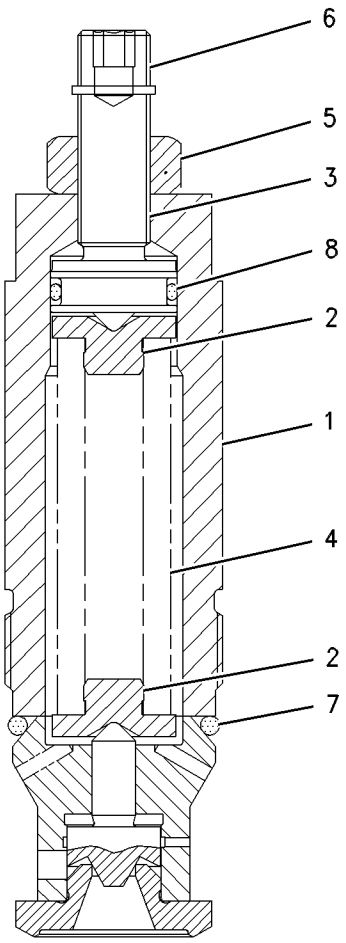

GRAPHIC #1 **<END>** g00627655

202-4095 VALVE GP-CHECK–BOOM CYLINDER

S/N: BCZ1-2000

PART OF 185-3383 LINES GP-CHECK VALVE

AN ATTACHMENT

SMCS-5067 **i02161902**

NOTE	REF NO	GRAPHIC REF	PART NUMBER	QTY	PART NAME 1 2 3 4 5 6 (PRODUCT LEVEL)	SEE PAGE
	1	2	**148-9036**	1	HOUSING	
	2	2	**148-9037**	1	HOUSING	
	3	2	**148-9038**	1	SLEEVE	
	4	2	**148-9039**	1	PISTON	
	5	2	**148-9042**	1	PISTON	
	6	2	**148-9043**	1	SPINDLE	
	7	2	**148-9044**	1	SPINDLE	
	8	2	**148-9045**	1	SHIM (4-MM THK)	
	9	2	**148-9046**	2	RETAINER	
	10	2	**148-9047**	1	ROD	
	11	2	**148-9048**	1	BALL	
	12	2	**148-9049**	1	ROD	
	13	2	**148-9050**	1	RETAINER	
	14	2	**148-9051**	1	CONE	
	15	2	**148-9052**	1	SPRING	
	16	2	**148-9053**	1	SPRING	
	17	2	**148-9054**	1	SPRING	
	18	2	**148-9055**	1	SPRING	
Y	19	2	**173-4387**	1	VALVE GP-CHECK (BOOM CYLINDER)	692
	20	1	**9S-8004**	2	PLUG	
	21	1	**9S-8005**	1	PLUG	
	22	1	**9S-8006**	1	PLUG	
	23	2	**5W-9420**	1	LOCKNUT	
	24	2	**5W-5066**	3	BALL	
	25	2	**8U-1218**	1	NUT	
M	26	2	**2Y-9286**	1	NUT (M10X1-THD)	
	27	2	**3D-7943**	1	RING-RETAINING	
	28	2	**030-6121**	1	RING-BACKUP	
	29	2	**6V-8397**	1	SEAL-O-RING	
	30	2	**7J-9933**	1	SEAL-O-RING	
	31	2	**3D-4245**	2	SEAL-O-RING	
	32	2	**6V-5391**	1	SEAL-O-RING	
	33	2	**1R-5318**	1	SEAL-O-RING	
	34	2	**4J-5267**	1	SEAL-O-RING	
	35	1	**3J-1907**	2	SEAL-O-RING	
	36	1	**3K-0360**	1	SEAL-O-RING	
	37	1	**2M-9780**	1	SEAL-O-RING	

M-METRIC PART
Y-SEPARATE ILLUSTRATION

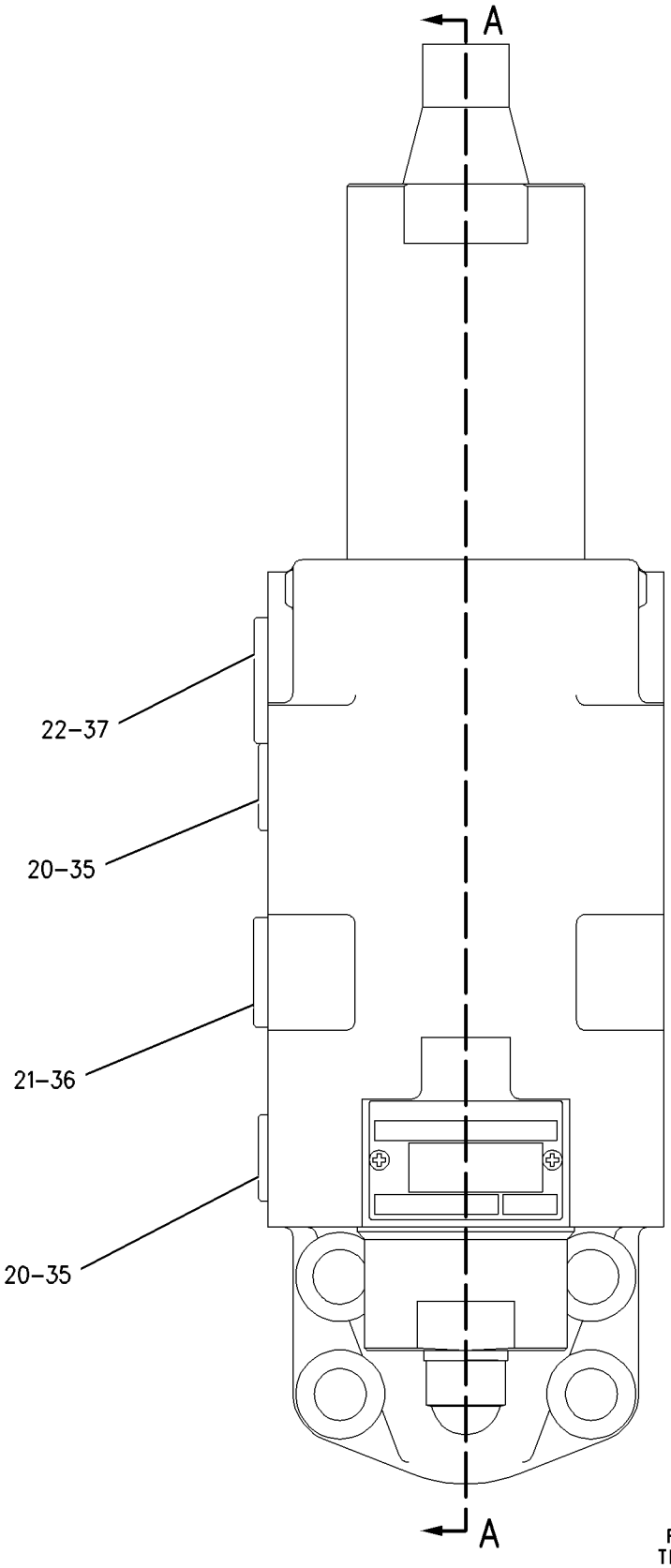

REFER TO ALL ILLUSTRATIONS OF THIS GROUP FOR AUXILIARY VIEWS

GRAPHIC #1 g00807814

202-4095 VALVE GP-CHECK *(contd.)* **i02161902**

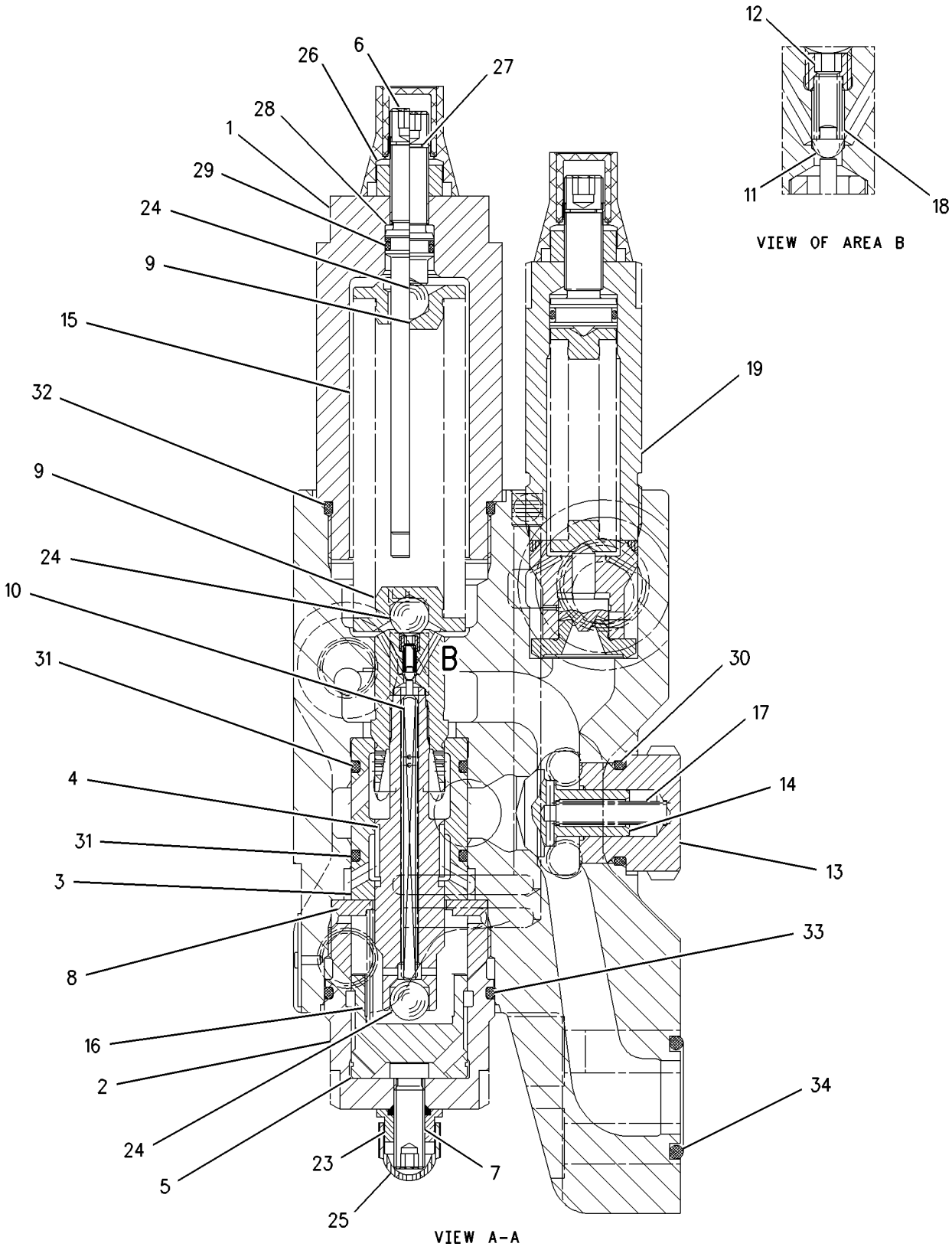

GRAPHIC #2 **<END>** g00922101

HYDRAULIC SYSTEM

191-2778 VALVE GP-COMBINATION—COMBINED FUNCTION

S/N: BCZ1-2000

PART OF 187-7364 LINES GP-PILOT

AN ATTACHMENT

SMCS-5064 **i02179193**

NOTE	REF NO	GRAPHIC REF	PART NUMBER	QTY	PART NAME 1 2 3 4 5 6 (PRODUCT LEVEL)	SEE PAGE
J	1	1	**3E-6788**	2	SEAL-O-RING	
	2	1	**114-0787**	2	SPRING-RETAINER	
	3	1	**202-8518**	2	SPRING	
Y	4	1	**207-4704**	1	ACTUATOR GP	418
M	5	1	**9X-2537**	2	BOLT-SOCKET HEAD (M6X1X70-MM)	
Y	6	1	**214-3914**	1	VALVE GP-SOLENOID (FLOW CONTROL)	752
	7	1	**236-0933**	1	PLATE AS	
		1	**216-8277**	1	BOLT-SOCKET HEAD	
		1	**236-0935**	1	SEAL-RING	
M	8	1	**8T-0269**	2	BOLT-SOCKET HEAD (M6X1X20-MM)	
	9	1	**189-9977**	1	SETSCREW (M12X1X38-MM)	
	10	1	**114-3025**	1	NUT (M12X1-THD)	
J	11	1	**061-8639**	2	SEAL-O-RING	
	12	1	**114-2999**	1	NUT-CAP (M12X1-THD)	
	13	1	**214-3402**	1	SPOOL	
	14	1	**202-8519**	1	SPRING	
J	15	1	**5P-7530**	1	SEAL-O-RING	
	16	1	**207-0416**	1	PLUG	
	17	1	**207-1716**	1	CONE	
	18	1	**202-8517**	1	SPRING	
J	19	1	**5P-9186**	1	SEAL-O-RING	
	20	1	**207-0419**	1	PLUG	
	21	1	**207-5149**	2	VALVE GP-MAKEUP	
					(EACH INCLUDES)	
		1	**204-6351**	1	KIT-SEAL (MAKEUP VALVE)	
					(INCLUDES SEALS & RING)	
Y	22	1	**214-3916**	2	VALVE GP-RELIEF (LINE, MAKEUP)	742
	23	1	**207-2607**	1	VALVE AS	
		1	**207-3085**	1	KIT-SEAL (VALVE)	
					(INCLUDES SEALS & RING)	
	24	1	**207-0983**	1	NUT	
	25	1	**202-8525**	1	SPRING	
J	26	1	**9X-4619**	1	SEAL-O-RING	
	27	1	**207-0418**	1	PLUG	
	29	1	**202-8524**	1	SPRING	
	30	1	**207-0807**	1	SPOOL	
	31	1	**207-3164**	1	PLUG GP	
	31A	1	**5W-9413**	1	SEAL-O-RING	
Y	32	1	**214-3915**	1	VALVE GP-SOLENOID (HAMMER ENABLE)	753
	33	1	**207-2266**	2	VALVE AS-CHECK	
Y	34	1	**208-7751**	1	VALVE GP-SOLENOID (PRESSURE CONTROL)	751
BH	35	1	**207-0981**	1	SPOOL	
					(USE WITH VALUE BODY MARKED 0)	
BH	36	1	**207-1249**	1	SPOOL	
					(USE WITH VALUE BODY MARKED 30)	
J	37	1	**032-9313**	2	SEAL-O-RING	
J	38	1	**3P-1155**	3	SEAL-O-RING	
	39	1	**214-3413**	1	NOZZLE	
	40	1	**114-0207**	3	PLUG GP-CONTROL VALVE	
					(EACH INCLUDES)	
		1	**6V-5049**	1	SEAL-O-RING	
	41	1	**214-3403**	1	VALVE AS-CHECK	
					AVAILABLE REPAIR KIT(S):	
J			**204-4951**	1	KIT-SEAL (COMBINATION VALVE)	

191-2778 VALVE GP-COMBINATION *(contd.)* i02179193

B-USE AS REQUIRED
H-HOUSING MARKED 0 OR 30 MUST USE CORRESPONDING SPOOL
J-KIT MARKED J SERVICES PARTS MARKED J
M-METRIC PART
Y-SEPARATE ILLUSTRATION

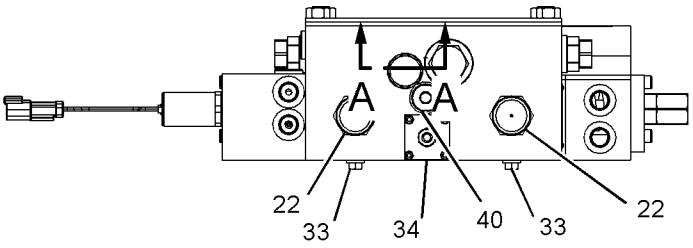

VIEW B-B

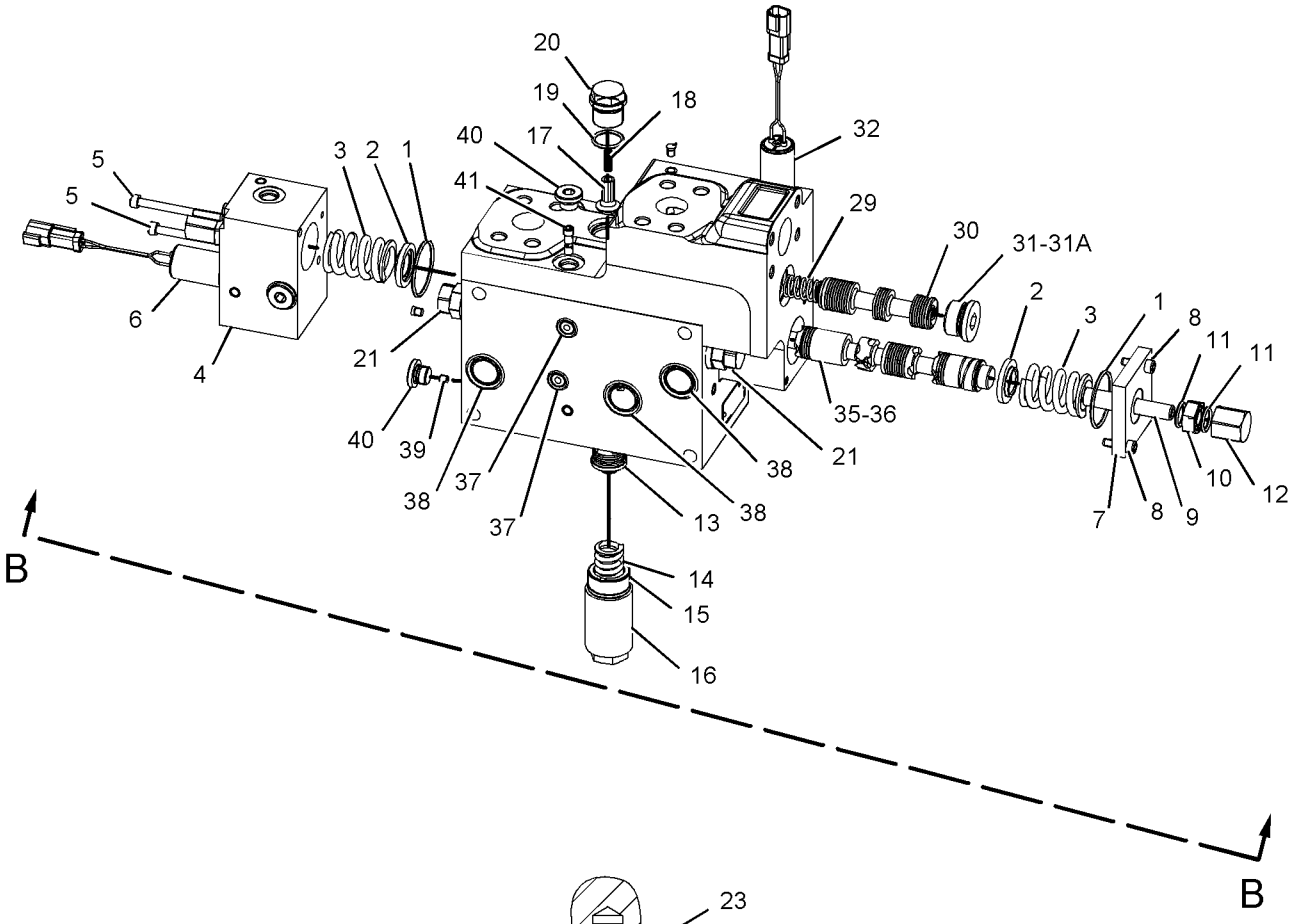

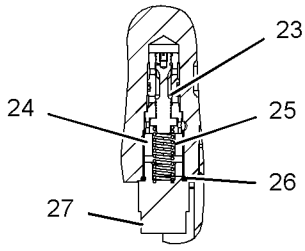

VIEW A-A

GRAPHIC #1

<END>

g01085806

HYDRAULIC SYSTEM

212-6749 VALVE GP-COMBINATION—MEDIUM PRESSURE

S/N: BCZ1-2000

PART OF 187-7366 VALVE & LINES GP-AUXILIARY

AN ATTACHMENT

SMCS-5064 **i01747833**

NOTE	REF NO	GRAPHIC REF	PART NUMBER	QTY	PART NAME 1 2 3 4 5 6 (PRODUCT LEVEL)	SEE PAGE
Y	1	1	**224-2982**	1	VALVE GP-RELIEF (LINE)	743
Y	2	1	**224-2983**	1	VALVE GP-PRESSURE REDUCING	728
	3	1	**224-2984**	1	BOLT	
	4	1	**224-2985**	1	BOLT-SPECIAL	
	5	1	**179-4180**	1	LOCKNUT	
	6	1	**8C-3131**	1	SEAL-O-RING	
	7	1	**7J-9108**	2	SEAL-O-RING	
	8	1	**7J-9933**	2	SEAL-O-RING	
	9	1	**5W-7843**	1	NUT-CAP	

Y-SEPARATE ILLUSTRATION

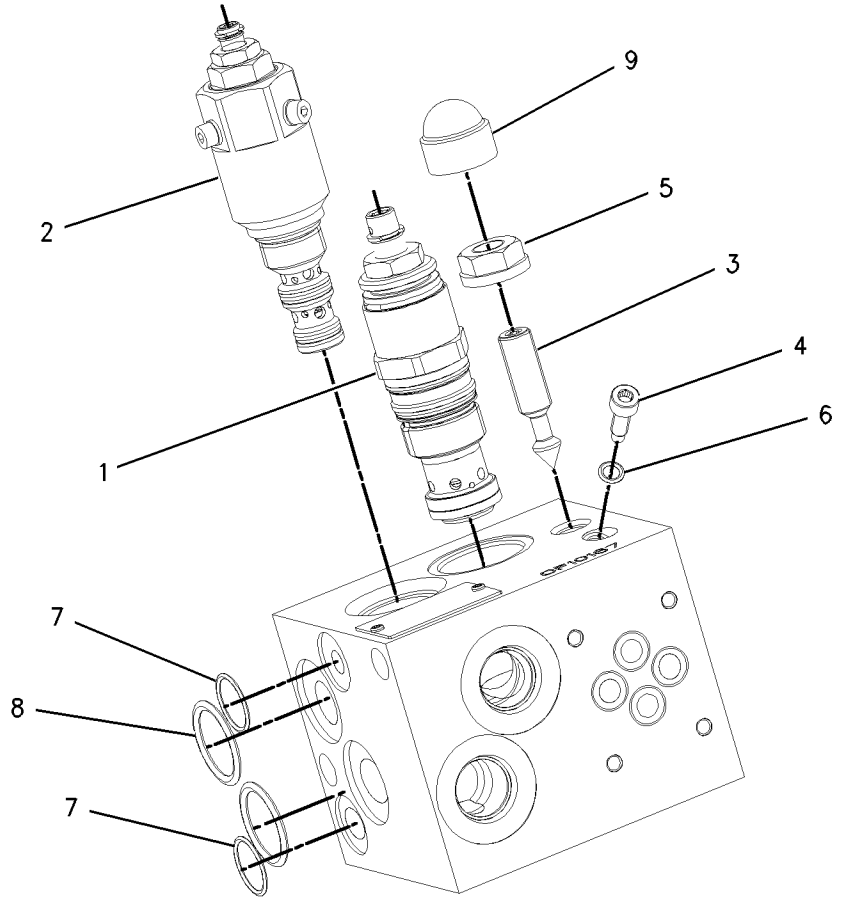

GRAPHIC #1 **<END>** g00896538

192-3176 VALVE GP-CONTROL—HYDRAULIC HAMMER

S/N: BCZ1-2000
PART OF 192-3175 LINES GP-PILOT
AN ATTACHMENT

SMCS-5051 **i02164218**

NOTE	REF NO	GRAPHIC REF	PART NUMBER	QTY	PART NAME 1 2 3 4 5 6 (PRODUCT LEVEL)	SEE PAGE
J	1	1	**3E-6788**	2	SEAL-O-RING	
	2	1	**114-0787**	2	SPRING-RETAINER	
	3	1	**202-8518**	2	SPRING	
J	4	1	**9X-4626**	1	SEAL-O-RING	
Y	5	1	**207-4706**	1	ACTUATOR GP	419
M	6	1	**8T-2396**	2	BOLT (M6X1X60-MM)	
Y	7	1	**214-3915**	1	VALVE GP-SOLENOID (HAMMER ENABLE)	753
	8	1	**236-0933**	1	PLATE AS	
		1	**216-8277**	1	BOLT-SOCKET HEAD	
		1	**236-0935**	1	SEAL-RING	
M	9	1	**8T-0269**	2	BOLT-SOCKET HEAD (M6X1X20-MM)	
	10	1	**189-9977**	1	SETSCREW (M12X1X38-MM)	
	11	1	**114-3025**	1	NUT (M12X1-THD)	
J	12	1	**061-8639**	2	SEAL-O-RING	
	13	1	**114-2999**	1	NUT-CAP (M12X1-THD)	
	14	1	**214-3402**	1	SPOOL	
	15	1	**202-8519**	1	SPRING	
J	16	1	**5P-7530**	1	SEAL-O-RING	
	17	1	**207-0416**	1	PLUG	
	18	1	**207-1716**	1	CONE	
	19	1	**202-8517**	1	SPRING	
J	20	1	**5P-9186**	1	SEAL-O-RING	
	21	1	**207-0419**	1	PLUG	
	22	1	**190-9752**	1	PLUG	
	23	1	**207-2711**	1	VALVE GP-RELIEF (LINE)	
		1	**204-6354**	1	KIT-SEAL (RELIEF VALVE)	
	24	1	**207-0805**	1	SPOOL	
	25	1	**207-3164**	1	PLUG GP	
	25A	1	**5W-9413**	1	SEAL-O-RING	
BH	26	1	**207-0981**	1	SPOOL	
					(USE WITH VALUE BODY MARKED O)	
BH	27	1	**207-1249**	1	SPOOL	
					(USE WITH VALUE BODY MARKED 30)	
J	28	1	**032-9313**	1	SEAL-O-RING	
J	29	1	**3P-1155**	3	SEAL-O-RING	
	30	1	**214-3413**	1	NOZZLE	
	31	1	**114-0207**	3	PLUG GP-CONTROL VALVE	
					(EACH INCLUDES)	
		1	**6V-5049**	1	SEAL-O-RING	
	32	1	**214-3403**	1	VALVE AS-CHECK	
					AVAILABLE REPAIR KIT(S):	
J			**204-4964**	1	KIT-SEAL (HAMMER CONTROL VALVE)	

B-USE AS REQUIRED
H-HOUSING MARKED O OR 30 MUST USE CORRESPONDING SPOOL
J-KIT MARKED J SERVICES PARTS MARKED J
M-METRIC PART
Y-SEPARATE ILLUSTRATION

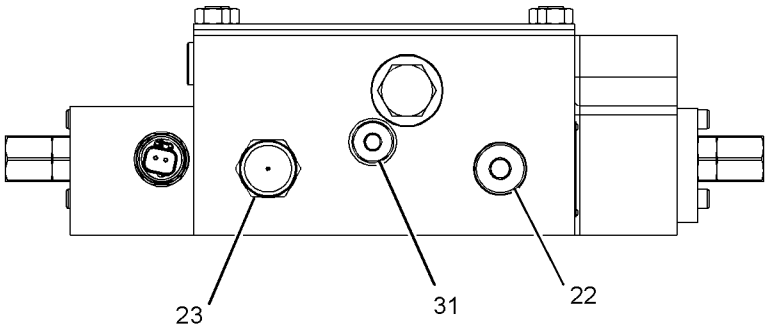

VIEW A-A

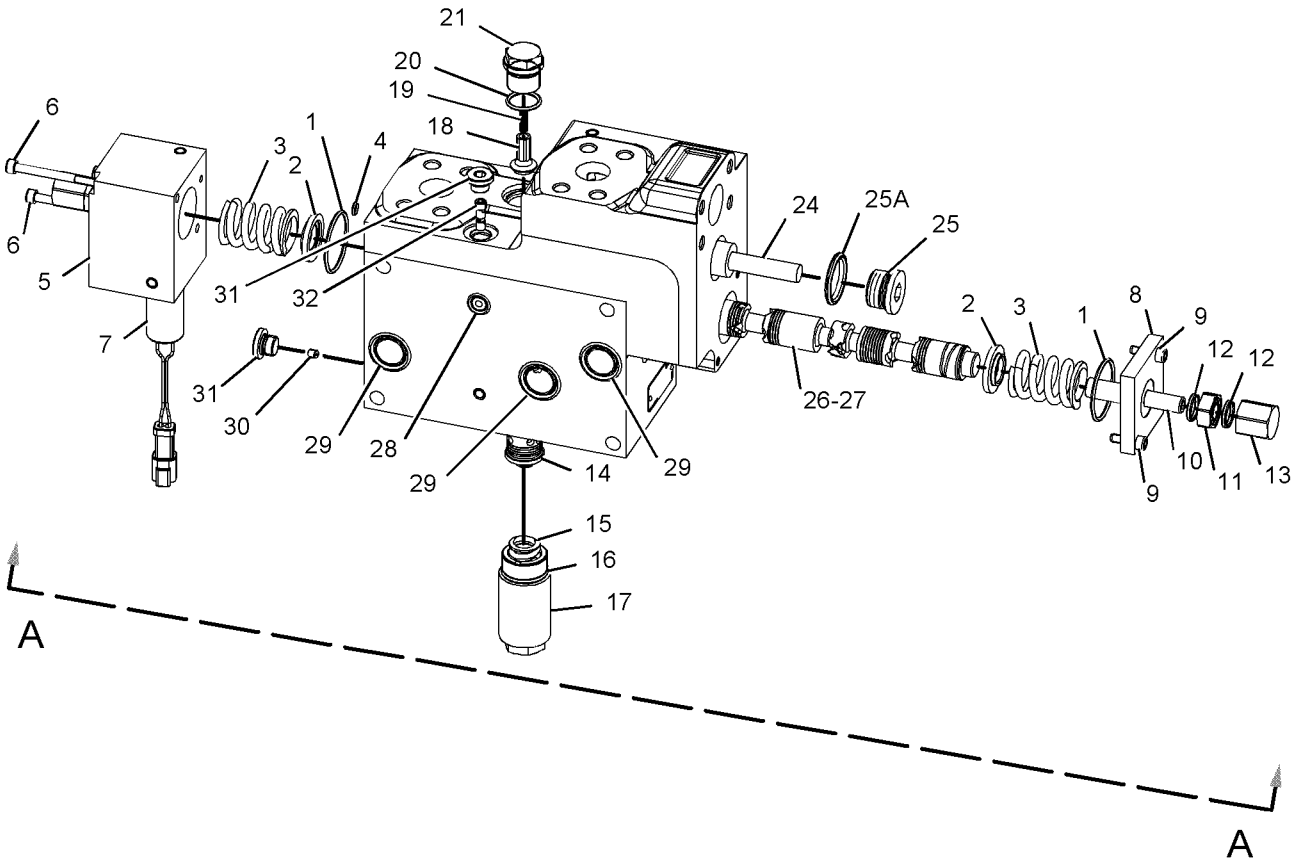

GRAPHIC #1 **<END>** g01085808

192-3183 VALVE GP-CONTROL–VARIABLE ADJUSTABLE

S/N: BCZ1-2000
PART OF 187-7365 LINES GP-PILOT
AN ATTACHMENT

SMCS-5051 **i02179195**

NOTE	REF NO	GRAPHIC REF	PART NUMBER	QTY	PART NAME 1 2 3 4 5 6 (PRODUCT LEVEL)	SEE PAGE
J	1	1	**3E-6788**	2	SEAL-O-RING	
	2	1	**114-0787**	2	SPRING-RETAINER	
	3	1	**202-8518**	2	SPRING	
	4	1	**189-5681**	2	ACTUATOR GP	
					(EACH INCLUDES)	
	4A	1	**061-8639**	2	SEAL-O-RING	
	4B	1	**114-2999**	1	NUT-CAP (M12X1-THD)	
	4C	1	**114-3025**	1	NUT (M12X1-THD)	
	4D	1	**189-9977**	1	SETSCREW (M12X1X38-MM)	
M	5	1	**6V-5683**	4	BOLT (M6X1X16-MM)	
	6	1	**122-7946**	2	VALVE GP-THROTTLE (PILOT OIL)	
					(EACH INCLUDES)	
L	6A	1	**115-6850**	1	SEAL-RING	
L	6B	1	**192-7117**	1	SEAL-O-RING	
L		1	**192-0705**	1	KIT-SEAL (THROTTLE VALVE)	
	7	1	**206-5011**	1	SPOOL	
	8	1	**202-8521**	1	SPRING	
J	9	1	**033-6034**	1	SEAL-O-RING	
	10	1	**206-5010**	1	PLUG	
	11	1	**206-5007**	2	CONE	
	12	1	**202-8520**	2	SPRING	
	13	1	**206-5008**	2	PLUG	
	14	1	**206-5013**	2	VALVE GP-RELIEF (LINE, VARIABLE ADJUSTABLE BOOM)	
					(EACH INCLUDES)	
		1	**204-6353**	1	KIT-SEAL (VALVE)	
	15	1	**214-5087**	1	SPOOL	
	16	1	**214-5088**	1	SPOOL	
J	17	1	**032-9313**	1	SEAL-O-RING	
J	18	1	**3P-1155**	4	SEAL-O-RING	
					AVAILABLE REPAIR KIT(S):	
J			**204-4981**	1	KIT-SEAL (CONTROL VALVE)	

J-KIT MARKED J SERVICES PARTS MARKED J
L-KIT MARKED L SERVICES PARTS MARKED L
M-METRIC PART

192-3183 VALVE GP-CONTROL *(contd.)* **i02179195**

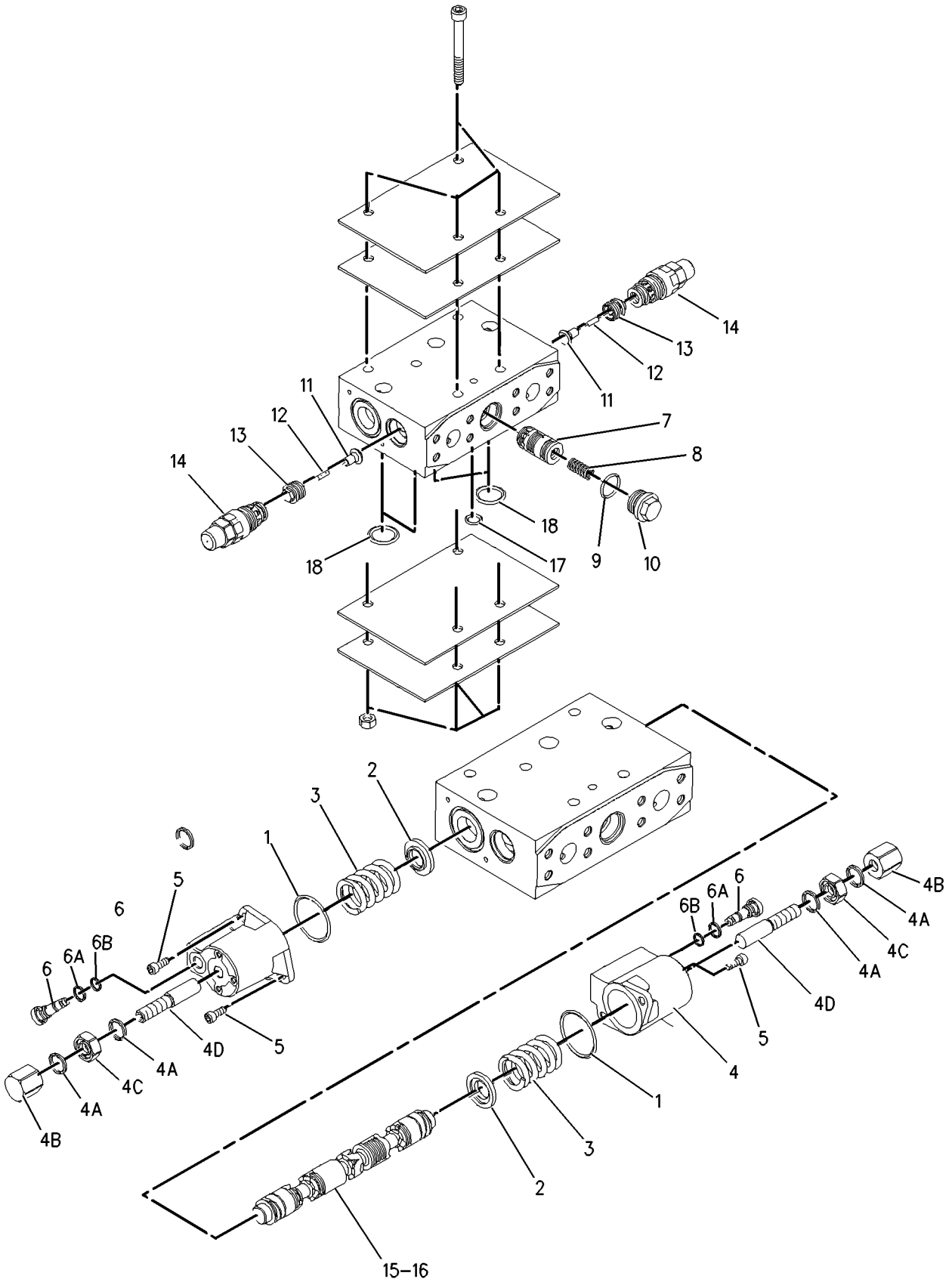

GRAPHIC #1 **<END>** g00922175

HYDRAULIC SYSTEM

199-1152 VALVE GP-CONTROL–MEDIUM PRESSURE

S/N: BCZ1-2000

PART OF 195-2944 VALVE & MTG GP-CONTROL

AN ATTACHMENT

SMCS-5051 **i02164221**

NOTE	REF NO	GRAPHIC REF	PART NUMBER	QTY	PART NAME 1 2 3 4 5 6 (PRODUCT LEVEL)	SEE PAGE
	1	1	**205-9830**	1	BODY-VALVE	
Y	2	1	**205-8069**	2	VALVE GP-SOLENOID (MEDIUM PRESSURE)	750
	3	1	**206-2431**	1	SPOOL AS	
	4	1	**5W-1401**	2	WASHER (10.5X18X1.6-MM THK)	
	5	1	**206-2433**	2	PLUG	
	6	1	**214-2166**	1	SPOOL	
	7	1	**214-2167**	1	PLUG	
	8	1	**214-2168**	1	SPRING	
	9	1	**214-2169**	2	SPRING	
	10	1	**161-6154**	5	SEAL-O-RING	
	11	1	**5K-9090**	2	SEAL-O-RING	

Y-SEPARATE ILLUSTRATION

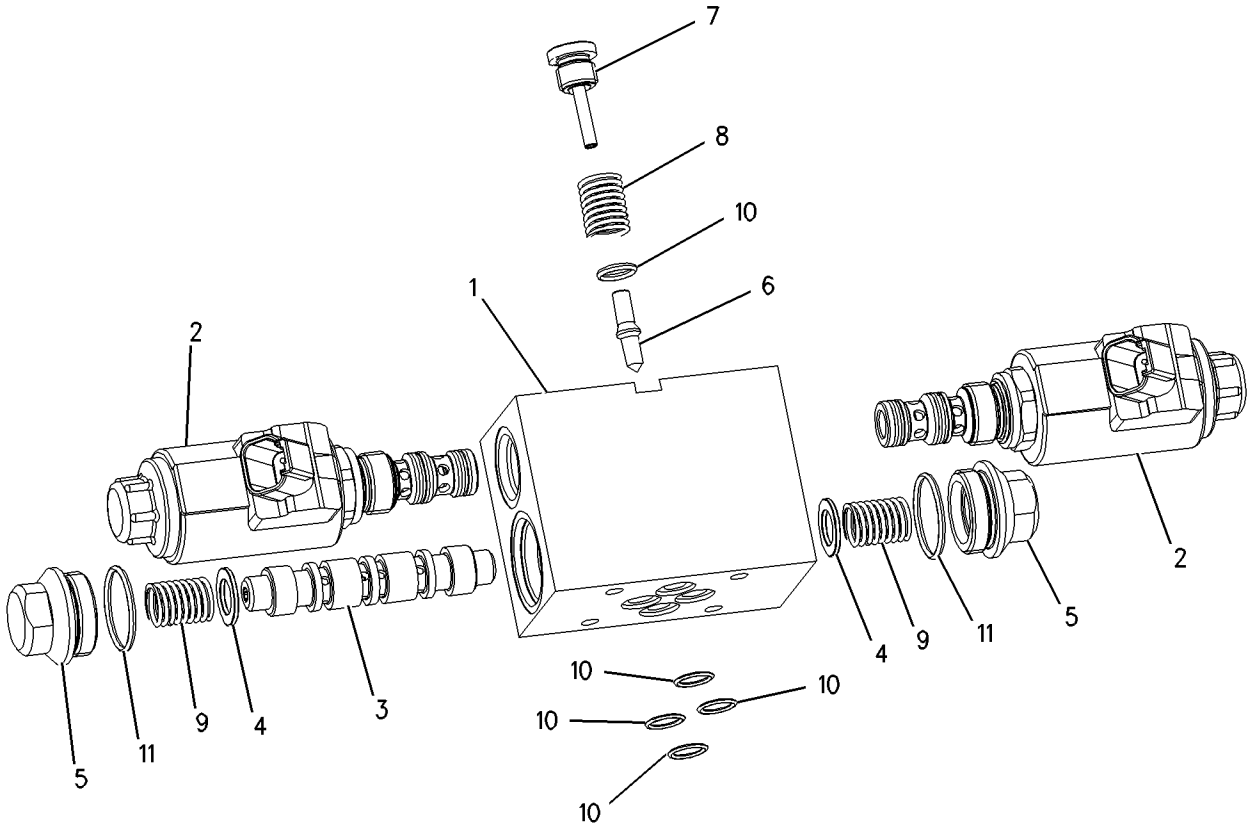

GRAPHIC #1 **<END>** g00835426

129-6666 VALVE GP-DIVERTER–HYDRAULIC LINES

S/N: BCZ1-2000

PART OF 185-3443 LINES GP-DIVERTER VALVE

AN ATTACHMENT

SMCS-5066 **i02182362**

NOTE	REF NO	GRAPHIC REF	PART NUMBER	QTY	PART NAME 1 2 3 4 5 6 (PRODUCT LEVEL)	SEE PAGE
	1	1	**135-1911**	1	SHIM	
	2	1	**096-2323**	1	RING-RETAINING	
	3	1	**5F-1678**	1	SEAL-O-RING	
	4	1	**121-7196**	1	LEVER	
	5	1	**135-1912**	1	BOLT	
	6	1	**135-1913**	1	SPRING	
	7	1	**6V-5586**	1	SEAL-O-RING	

129-6666 VALVE GP-DIVERTER *(contd.)* **i02182362**

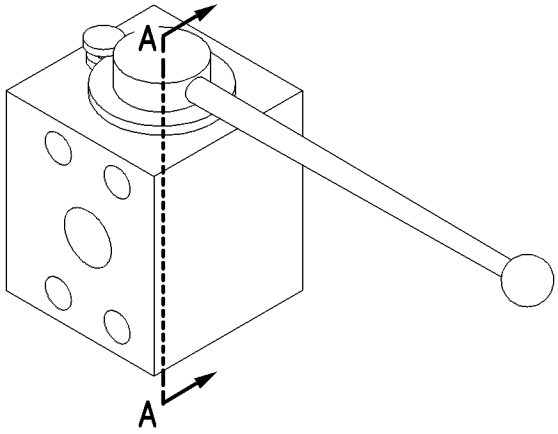

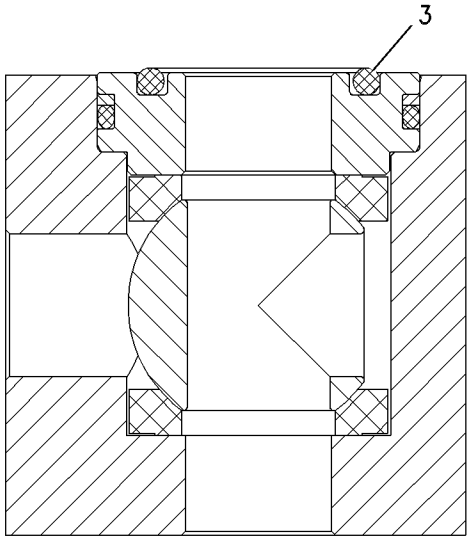

SECTION B-B

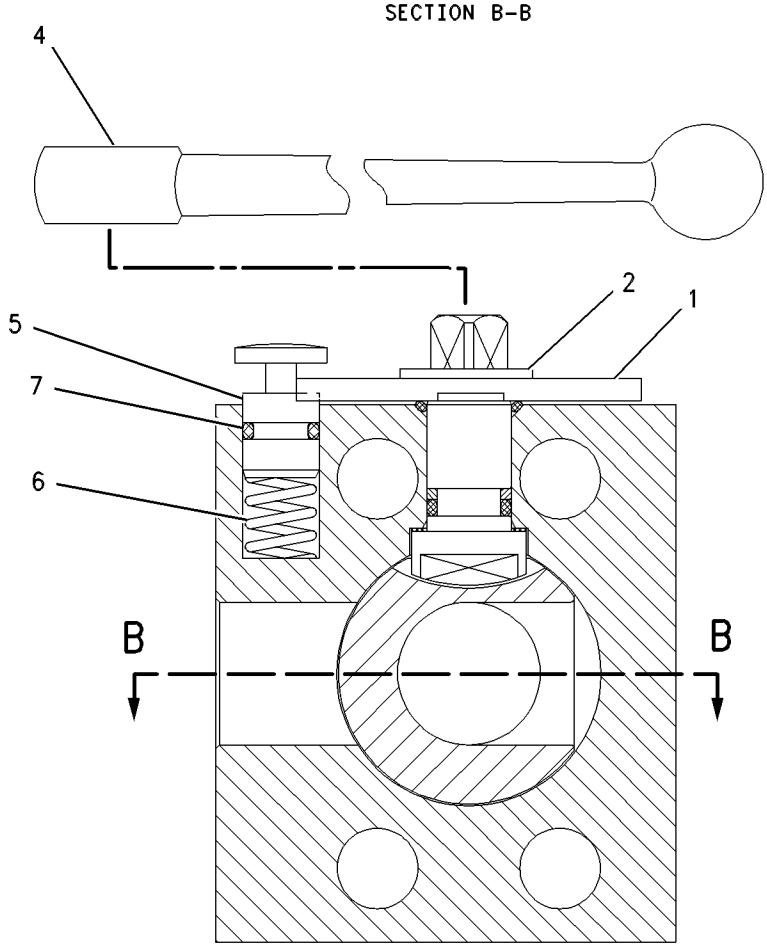

SECTION A-A

GRAPHIC #1 **<END>** g00565483

HYDRAULIC SYSTEM

171-7016 VALVE GP-DIVERTER

S/N: BCZ1-2000
PART OF 185-3443 LINES GP-DIVERTER VALVE
AN ATTACHMENT

SMCS-5066 **i01928421**

NOTE	REF NO	GRAPHIC REF	PART NUMBER	QTY	PART NAME 1 2 3 4 5 6 (PRODUCT LEVEL)	SEE PAGE
	1	1	**135-1911**	1	SHIM	
	2	1	**096-2323**	1	RING-RETAINING	
	3	1	**121-7196**	1	LEVER	
	4	1	**135-1912**	1	BOLT	
	5	1	**135-1913**	1	SPRING	
	6	1	**6V-5586**	1	SEAL-O-RING	

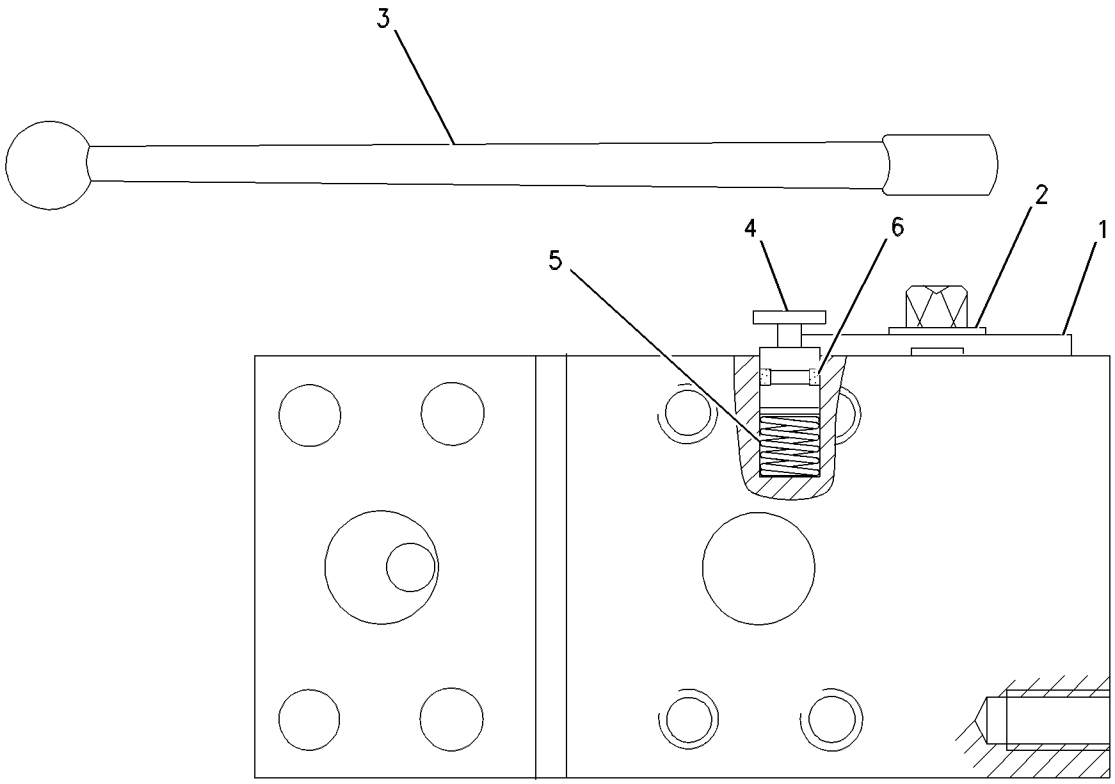

GRAPHIC #1 **<END>** g00570857

195-1907 VALVE GP-FLOW CONTROL–BOOM CYLINDER

S/N: BCZ1-2000
PART OF 185-3383 LINES GP-CHECK VALVE
AN ATTACHMENT

SMCS-5137 **i01480867**

NOTE	REF NO	GRAPHIC REF	PART NUMBER	QTY	PART NAME 1 2 3 4 5 6 (PRODUCT LEVEL)	SEE PAGE
	1	1	**161-6154**	1	SEAL-O-RING	

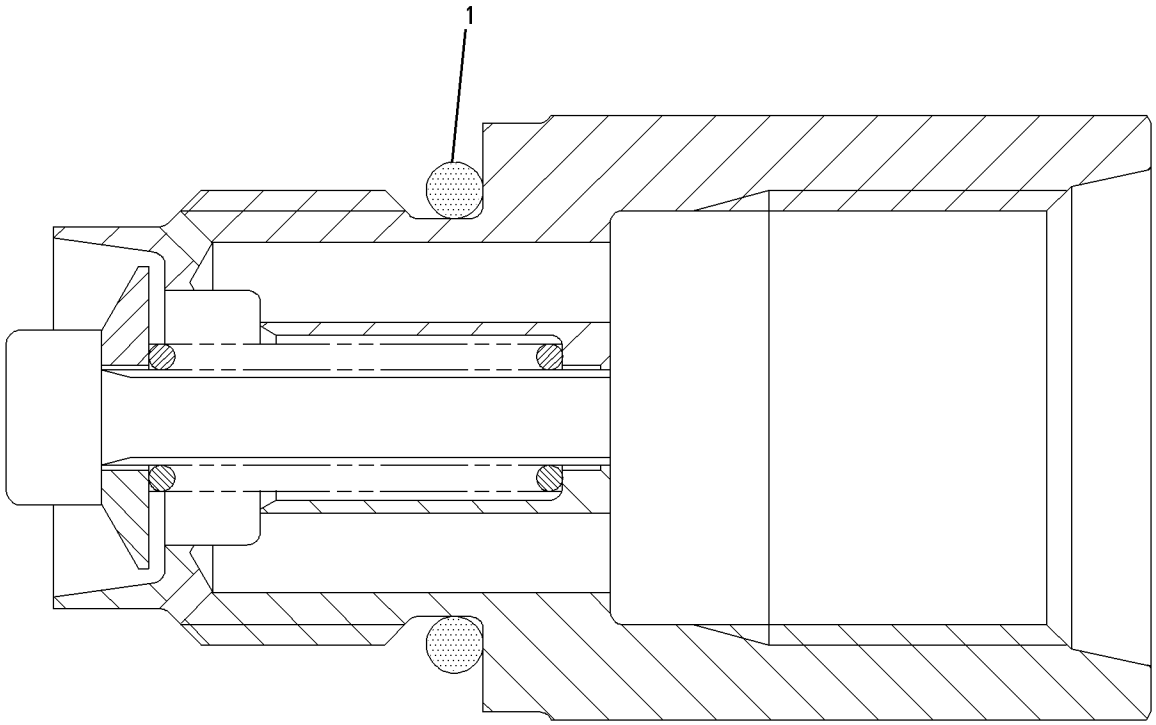

GRAPHIC #1 **<END>** g00770934

HYDRAULIC SYSTEM

196-7480 VALVE GP-FLOW CONTROL–FUEL SHUTOFF

S/N: BCZ1-2000

PART OF 145-7210 VALVE GP-FUEL SHUTOFF

SMCS-5137 **i02161914**

NOTE	REF NO	GRAPHIC REF	PART NUMBER	QTY	PART NAME 1 2 3 4 5 6 (PRODUCT LEVEL)	SEE PAGE
J	1	1	**157-0488**	1	RING	
J	2	1	**9T-4057**	1	SEAL-O-RING	
J	3	1	**3E-6761**	2	SEAL-O-RING	
	4	1	**157-0737**	1	PIN-GROOVED	
	5	1	**157-0489**	1	WASHER	
					AVAILABLE REPAIR KIT(S):	
J			**196-7484**	1	KIT-SEAL (FLOW CONTROL VALVE)	

J-KIT MARKED J SERVICES PARTS MARKED J

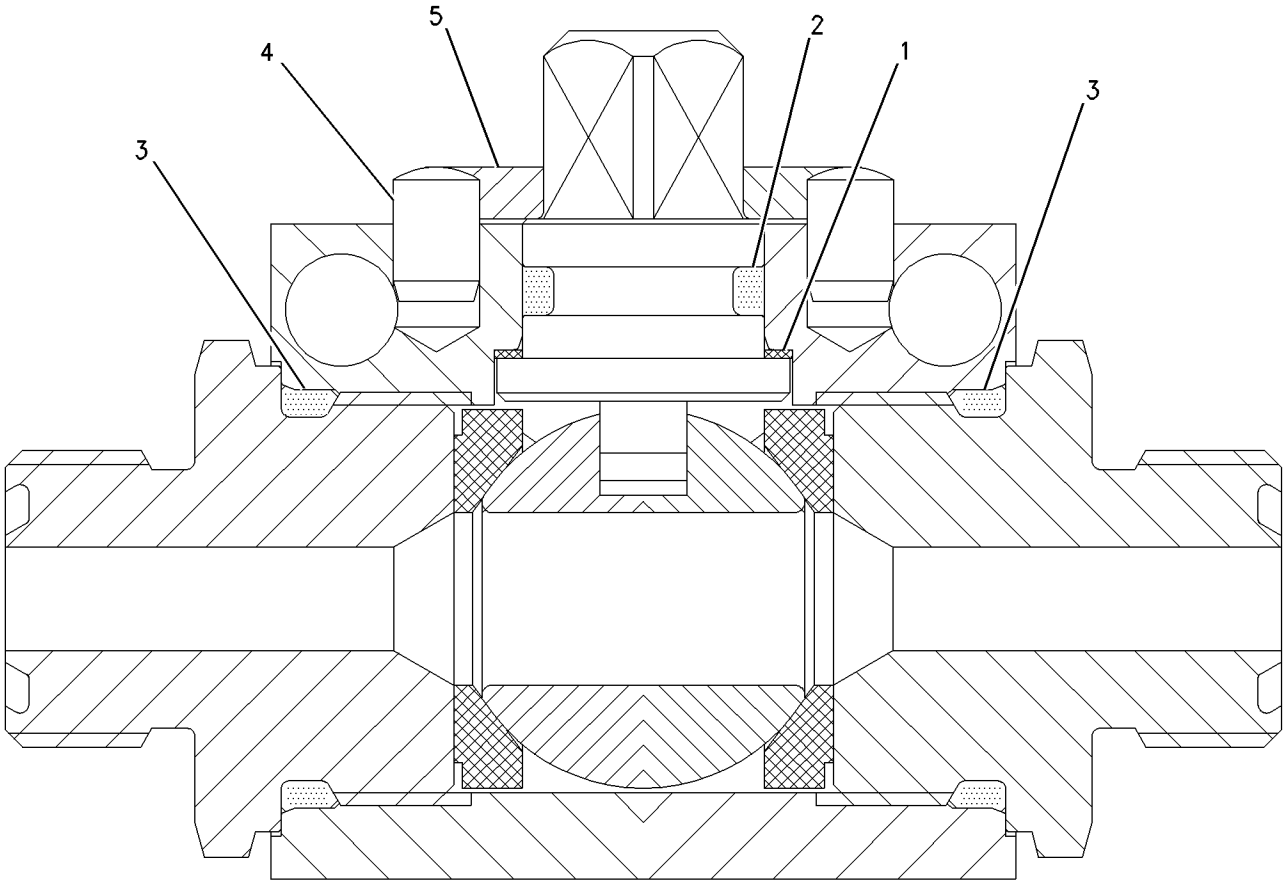

GRAPHIC #1 **<END>** g00922207

202-4092 VALVE GP-LOAD CONTROL

S/N: BCZ1-2000

PART OF 187-7360, 187-7361, 187-7362, 187-7368 VALVE & LINES GP-LOAD CONTROL

ALSO AN ATTACHMENT

SMCS-5067, 5117, 5147, 5811 **i02161903**

NOTE	REF NO	GRAPHIC REF	PART NUMBER	QTY	PART NAME 1 2 3 4 5 6 (PRODUCT LEVEL)	SEE PAGE
	1	1	**179-4649**	1	BODY AS	
	2	1	**179-4651**	1	BODY	
	3	1	**179-4652**	1	VALVE AS-CHECK	
	4	1	**179-4654**	1	CONE	
	5	1	**179-4656**	1	BODY	
	6	1	**179-4657**	1	PISTON	
	7	1	**179-4658**	1	PISTON	
	8	1	**179-4169**	1	PLUG-ADJUSTMENT	
	9	1	**179-4661**	1	SPINDLE	
	10	1	**179-4666**	1	CONE-SPINDLE	
	11	1	**179-4667**	1	POPPET	
	12	1	**179-4668**	1	RETAINER-BALL	
	13	1	**179-4669**	1	ADAPTER	
	14	1	**179-4670**	1	SPINDLE	
	15	1	**8U-6465**	1	SPRING	
	16	1	**179-4170**	1	SPRING	
	17	1	**179-4171**	1	SPRING	
	18	1	**179-4173**	1	SPRING	
J	19	1	**179-4176**	1	RING-BACKUP	
J	20	1	**179-4178**	1	RING-BACKUP	
J	21	1	**8U-7383**	1	SEAL-O-RING	
J	22	1	**161-6149**	2	SEAL-O-RING	
J	23	1	**6V-8399**	2	SEAL-O-RING	
J	24	1	**9X-7454**	1	SEAL-O-RING	
J	25	1	**5K-5221**	1	SEAL-O-RING	
J	26	1	**096-6100**	1	SEAL-O-RING	
J	27	1	**4J-0520**	1	SEAL-O-RING	
J	28	1	**8U-7389**	1	RING	
	29	1	**3D-7943**	1	RING-RETAINING	
J	30	1	**5W-9420**	1	LOCKNUT	
J	31	1	**179-4180**	1	LOCKNUT	
	32	1	**8U-1218**	1	NUT	
					AVAILABLE REPAIR KIT(S):	
J			**179-4672**	1	KIT-SEAL (LOAD CONTROL VALVE)	

J-KIT MARKED J SERVICES PARTS MARKED J

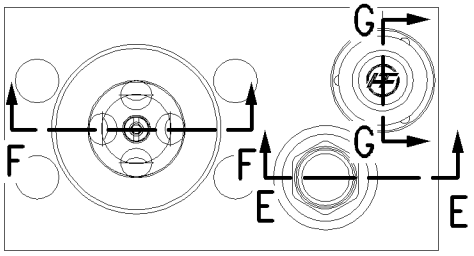

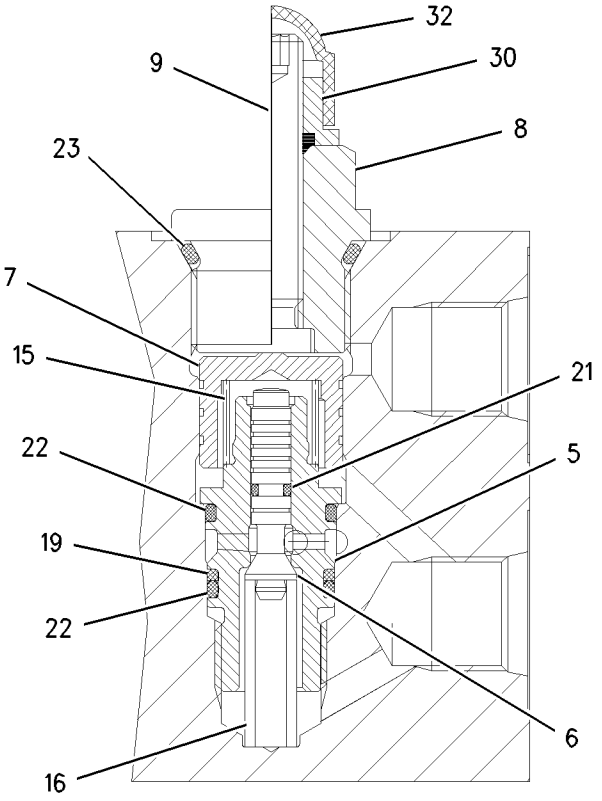

SECTION E-E

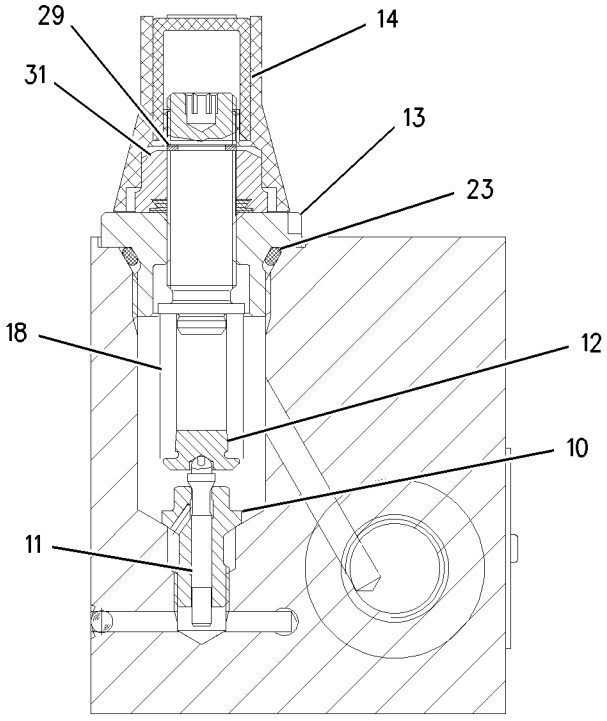

SECTION G-G

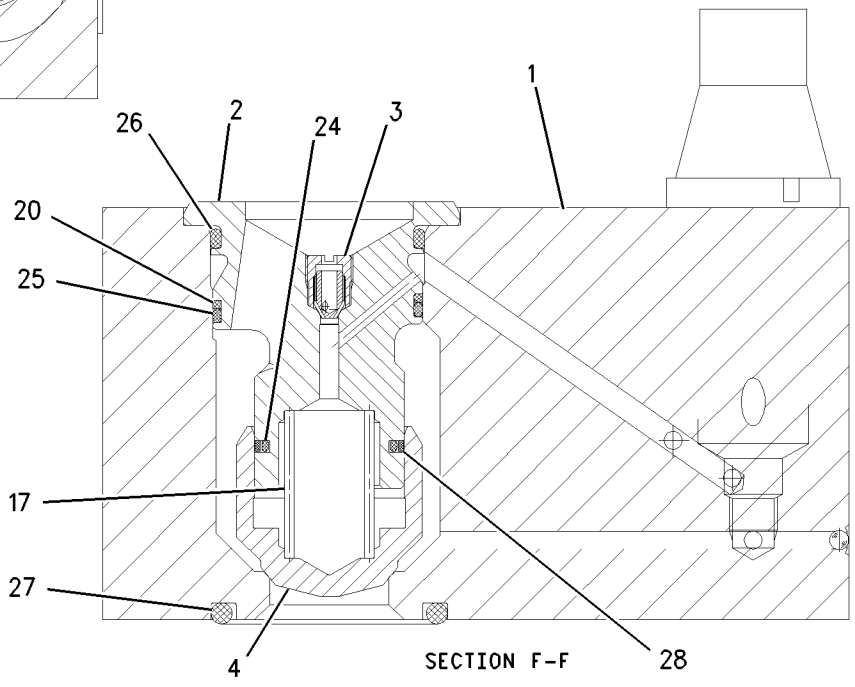

SECTION F-F

GRAPHIC #1 **<END>** g00825327

HYDRAULIC SYSTEM

202-4093 VALVE GP-LOAD CONTROL

S/N: BCZ1-2000

PART OF 187-7363 VALVE & LINES GP-LOAD CONTROL

AN ATTACHMENT

SMCS-5067, 5117, 5147, 5811 **i02161971**

NOTE	REF NO	GRAPHIC REF	PART NUMBER	QTY	PART NAME 1 2 3 4 5 6 (PRODUCT LEVEL)	SEE PAGE
	1	1	**179-4648**	1	BODY AS	
	2	1	**179-4650**	1	BODY	
	3	1	**179-4652**	1	VALVE AS-CHECK	
	4	1	**179-4654**	1	CONE	
	5	1	**179-4656**	1	BODY	
	6	1	**179-4657**	1	PISTON	
	7	1	**179-4658**	1	PISTON	
	8	1	**179-4169**	1	PLUG-ADJUSTMENT	
	9	1	**179-4661**	1	SPINDLE	
	10	1	**179-4666**	1	CONE-SPINDLE	
	11	1	**179-4667**	1	POPPET	
	12	1	**179-4668**	1	RETAINER-BALL	
	13	1	**179-4669**	1	ADAPTER	
	14	1	**179-4670**	1	SPINDLE	
	15	1	**8U-6465**	1	SPRING	
	16	1	**179-4170**	1	SPRING	
	17	1	**179-4171**	1	SPRING	
	18	1	**179-4173**	1	SPRING	
J	19	1	**179-4176**	1	RING-BACKUP	
J	20	1	**179-4177**	1	RING-BACKUP	
J	21	1	**8U-7383**	1	SEAL-O-RING	
J	22	1	**161-6149**	2	SEAL-O-RING	
J	23	1	**6V-8399**	2	SEAL-O-RING	
J	24	1	**9X-7454**	1	SEAL-O-RING	
J	25	1	**005-8592**	1	SEAL-O-RING	
J	26	1	**099-8232**	1	SEAL-O-RING	
J	27	1	**4J-5267**	1	SEAL-O-RING	
J	28	1	**8U-7389**	1	RING	
	29	1	**3D-7943**	1	RING-RETAINING	
J	30	1	**5W-9420**	1	LOCKNUT	
J	31	1	**179-4180**	1	LOCKNUT	
	32	1	**8U-1218**	1	NUT	
					AVAILABLE REPAIR KIT(S):	
J			**179-4671**	1	KIT-SEAL (LOAD CONTROL VALVE)	

J-KIT MARKED J SERVICES PARTS MARKED J

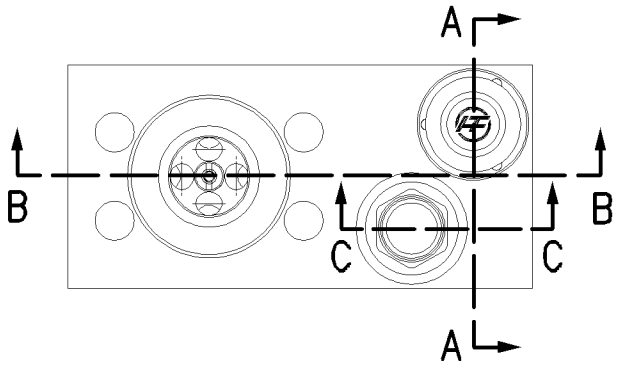

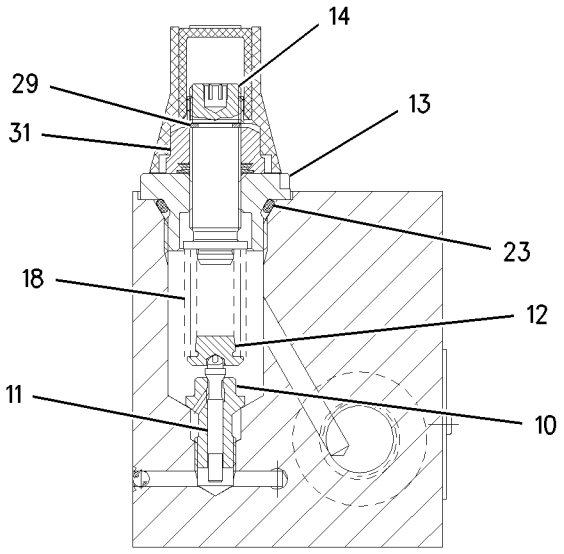

SECTION A-A

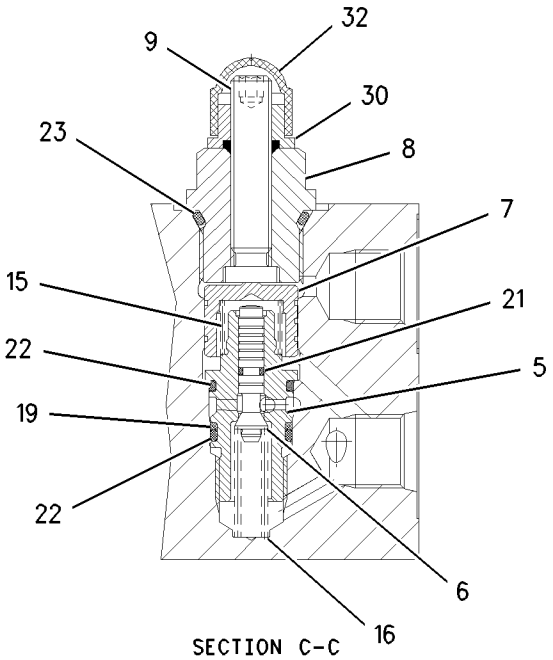

SECTION C-C

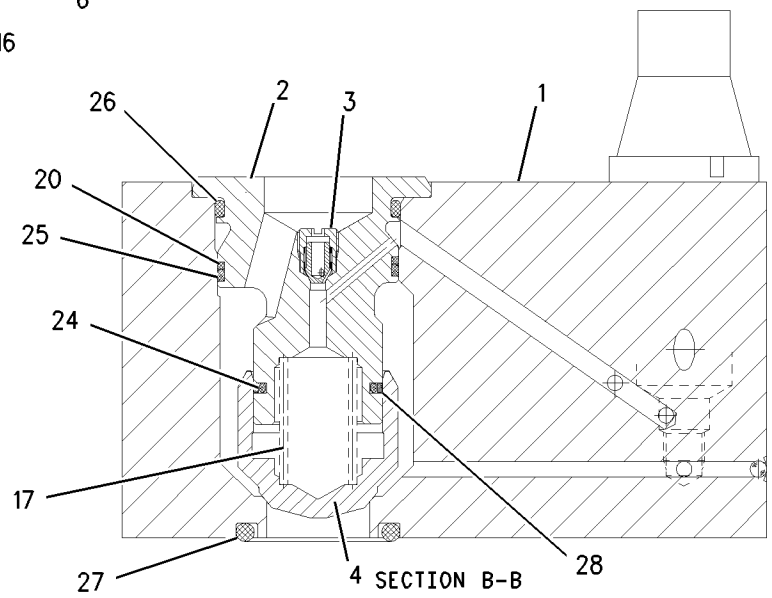

SECTION B-B

GRAPHIC #1 **<END>** g00922121

HYDRAULIC SYSTEM

202-4094 VALVE GP-LOAD CONTROL—STICK CYLINDER

S/N: BCZ1-2000

PART OF 185-3430, 185-3434 LINES GP-LOAD CONTROL

AN ATTACHMENT

SMCS-5067, 5117, 5147, 5811 **i02163566**

NOTE	REF NO	GRAPHIC REF	PART NUMBER	QTY	PART NAME 1 2 3 4 5 6 (PRODUCT LEVEL)	SEE PAGE
	1	2	**148-9036**	1	HOUSING	
	2	2	**148-9037**	1	HOUSING	
	3	2	**148-9038**	1	SLEEVE	
	4	2	**223-7303**	1	PISTON AS	
	5	2	**148-9042**	1	PISTON	
	6	2	**148-9043**	1	SPINDLE	
	7	2	**148-9044**	1	SPINDLE	
	8	2	**148-9045**	1	SHIM (4-MM THK)	
	9	2	**148-9046**	2	RETAINER	
	10	2	**148-9047**	1	ROD	
	11	2	**148-9048**	1	BALL	
	12	2	**148-9049**	1	ROD	
	13	2	**148-9050**	1	RETAINER	
	14	2	**148-9051**	1	CONE	
	15	2	**148-9052**	1	SPRING	
	16	2	**148-9053**	1	SPRING	
	17	2	**148-9054**	1	SPRING	
	18	2	**148-9055**	1	SPRING	
Y	19	2	**119-9045**	1	VALVE GP-CHECK (LOAD CONTROL)	691
	20	1	**9S-8004**	2	PLUG	
	21	1	**9S-8005**	1	PLUG	
	22	1	**9S-8006**	1	PLUG	
	23	2	**5W-9420**	1	LOCKNUT	
	24	2	**5W-5066**	3	BALL	
	25	2	**8U-1218**	1	NUT	
M	26	2	**2Y-9286**	1	NUT (M10X1-THD)	
	27	2	**3D-7943**	1	RING-RETAINING	
	28	2	**030-6121**	1	RING-BACKUP	
	29	2	**6V-8397**	1	SEAL-O-RING	
	30	2	**7J-9933**	1	SEAL-O-RING	
	31	2	**3D-4245**	2	SEAL-O-RING	
	32	2	**6V-5391**	1	SEAL-O-RING	
	33	2	**1R-5318**	1	SEAL-O-RING	
	34	2	**4J-5267**	1	SEAL-O-RING	
	35	1	**3J-1907**	2	SEAL-O-RING	
	36	1	**3K-0360**	1	SEAL-O-RING	
	37	1	**2M-9780**	1	SEAL-O-RING	

M-METRIC PART
Y-SEPARATE ILLUSTRATION

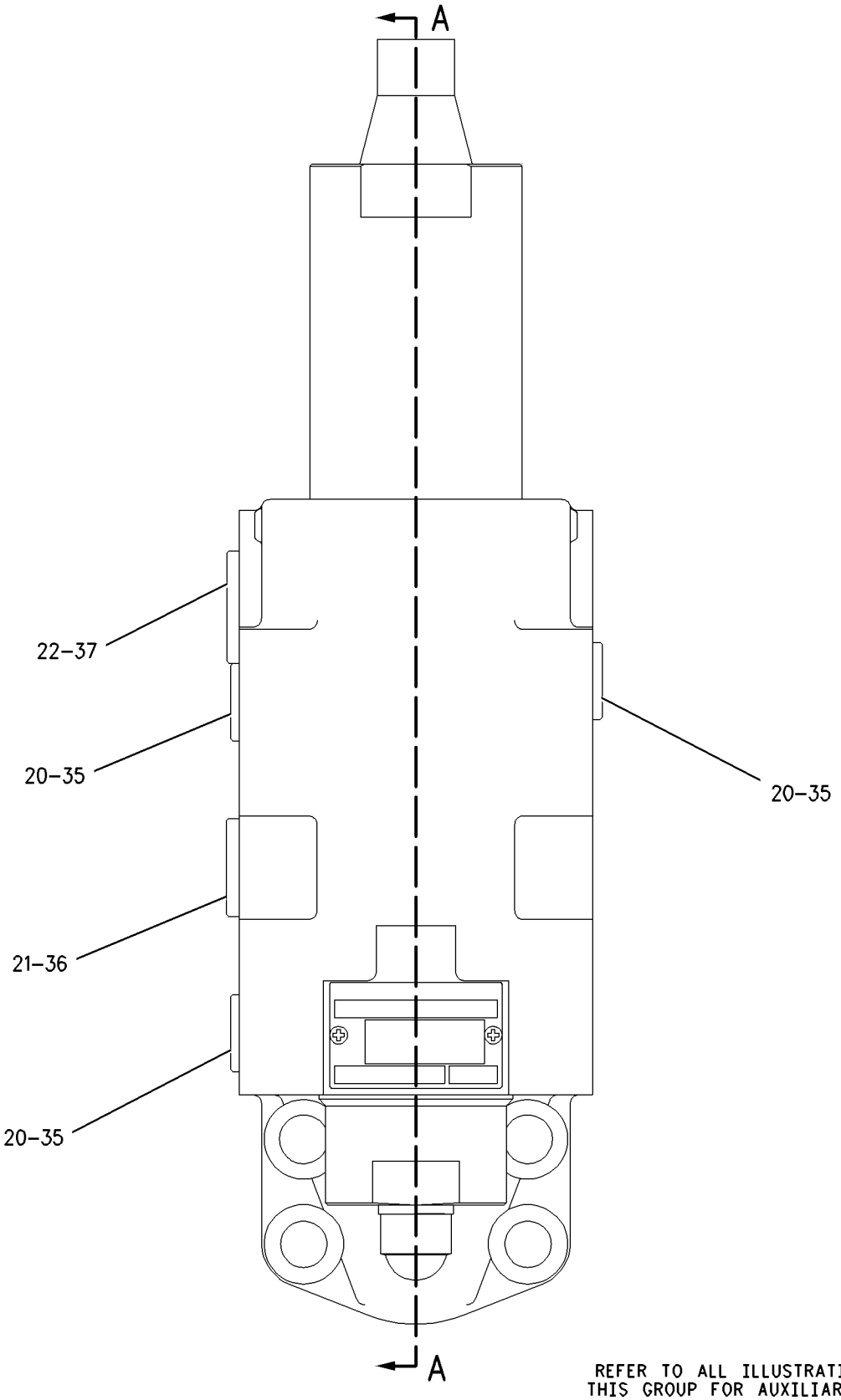

GRAPHIC #1 g00807831

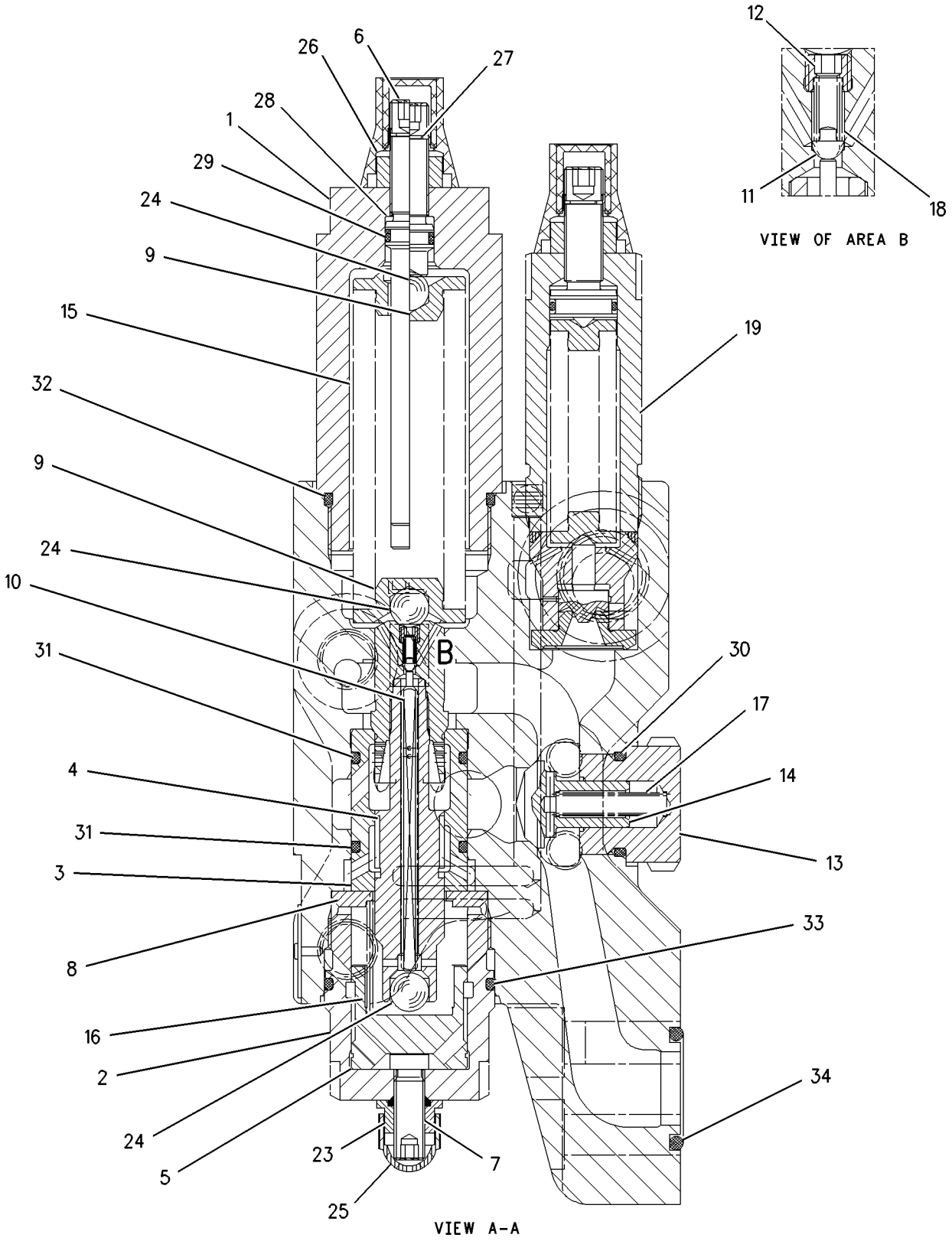

GRAPHIC #2 **<END>** g00922057

202-4096 VALVE GP-LOAD CONTROL—BOOM CYLINDER

S/N: BCZ1-2000

PART OF 185-3439 LINES GP-LOAD CONTROL

AN ATTACHMENT

SMCS-5067, 5117, 5147, 5811 **i02163549**

NOTE	REF NO	GRAPHIC REF	PART NUMBER	QTY	PART NAME 1 2 3 4 5 6 (PRODUCT LEVEL)	SEE PAGE
	1	2	**148-9036**	1	HOUSING	
	2	2	**148-9037**	1	HOUSING	
	3	2	**148-9038**	1	SLEEVE	
	4	2	**148-9040**	1	PISTON	
	5	2	**148-9042**	1	PISTON	
	6	2	**148-9043**	1	SPINDLE	
	7	2	**148-9044**	1	SPINDLE	
	8	2	**148-9045**	1	SHIM (4-MM THK)	
	9	2	**148-9046**	2	RETAINER	
	10	2	**148-9047**	1	ROD	
	11	2	**148-9048**	1	BALL	
	12	2	**148-9049**	1	ROD	
	13	2	**148-9050**	1	RETAINER	
	14	2	**148-9051**	1	CONE	
	15	2	**148-9052**	1	SPRING	
	16	2	**148-9053**	1	SPRING	
	17	2	**148-9054**	1	SPRING	
	18	2	**148-9055**	1	SPRING	
Y	19	2	**119-9045**	1	VALVE GP-CHECK (LOAD CONTROL)	691
	20	1	**9S-8004**	3	PLUG	
	21	1	**9S-8005**	1	PLUG	
	22	1	**9S-8006**	1	PLUG	
	23	2	**5W-9420**	1	LOCKNUT	
	24	2	**5W-5066**	3	BALL	
	25	2	**8U-1218**	1	NUT	
M	26	2	**2Y-9286**	1	NUT (M10X1-THD)	
	27	2	**3D-7943**	1	RING-RETAINING	
	28	2	**030-6121**	1	RING-BACKUP	
	29	2	**6V-8397**	1	SEAL-O-RING	
	30	2	**7J-9933**	1	SEAL-O-RING	
	31	2	**3D-4245**	2	SEAL-O-RING	
	32	2	**6V-5391**	1	SEAL-O-RING	
	33	2	**1R-5318**	1	SEAL-O-RING	
	34	2	**4J-5267**	1	SEAL-O-RING	
	35	1	**3J-1907**	3	SEAL-O-RING	
	36	1	**3K-0360**	1	SEAL-O-RING	
	37	1	**2M-9780**	1	SEAL-O-RING	

M-METRIC PART
Y-SEPARATE ILLUSTRATION

202-4096 VALVE GP-LOAD CONTROL *(contd.)* **i02163549**

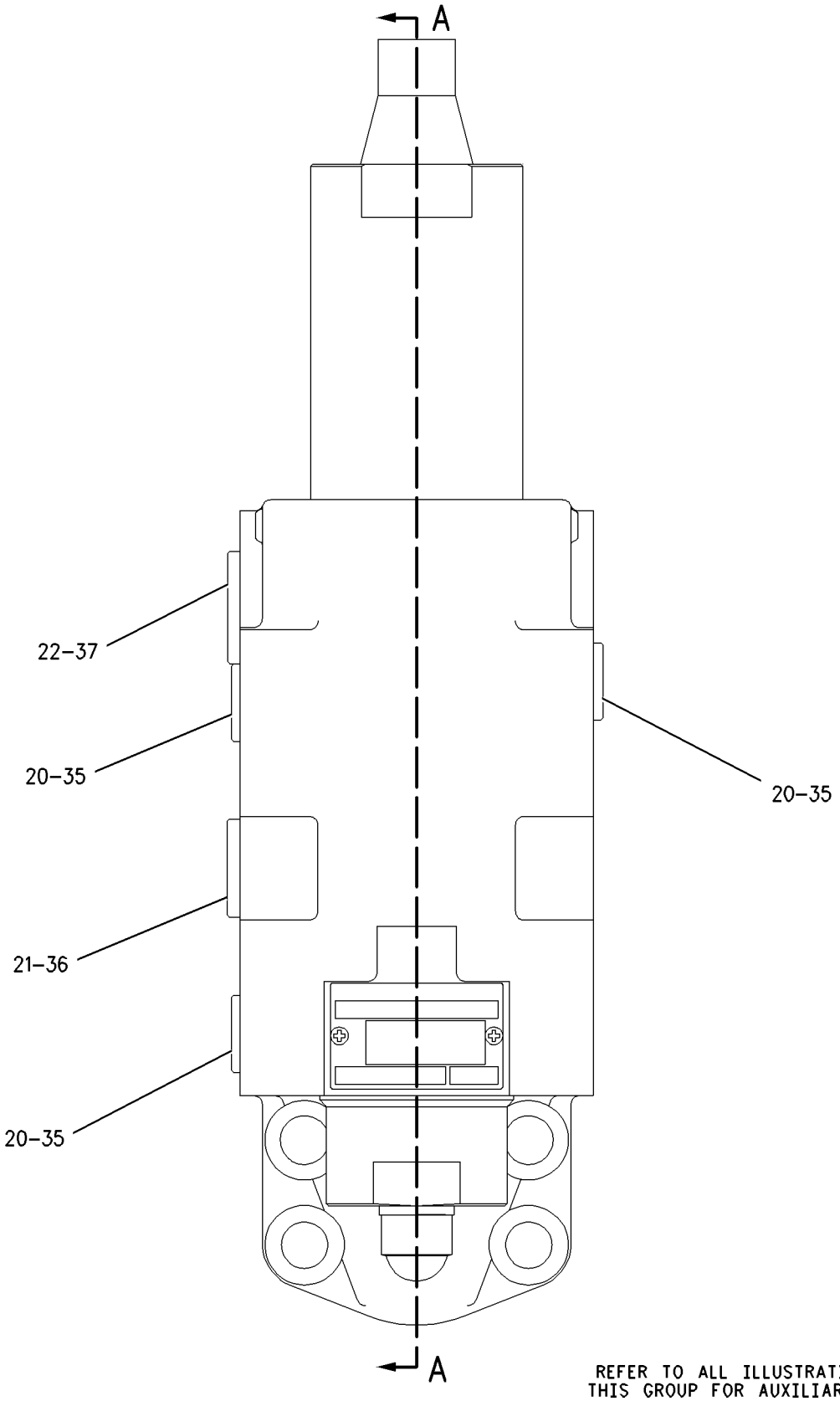

GRAPHIC #1 g00807831

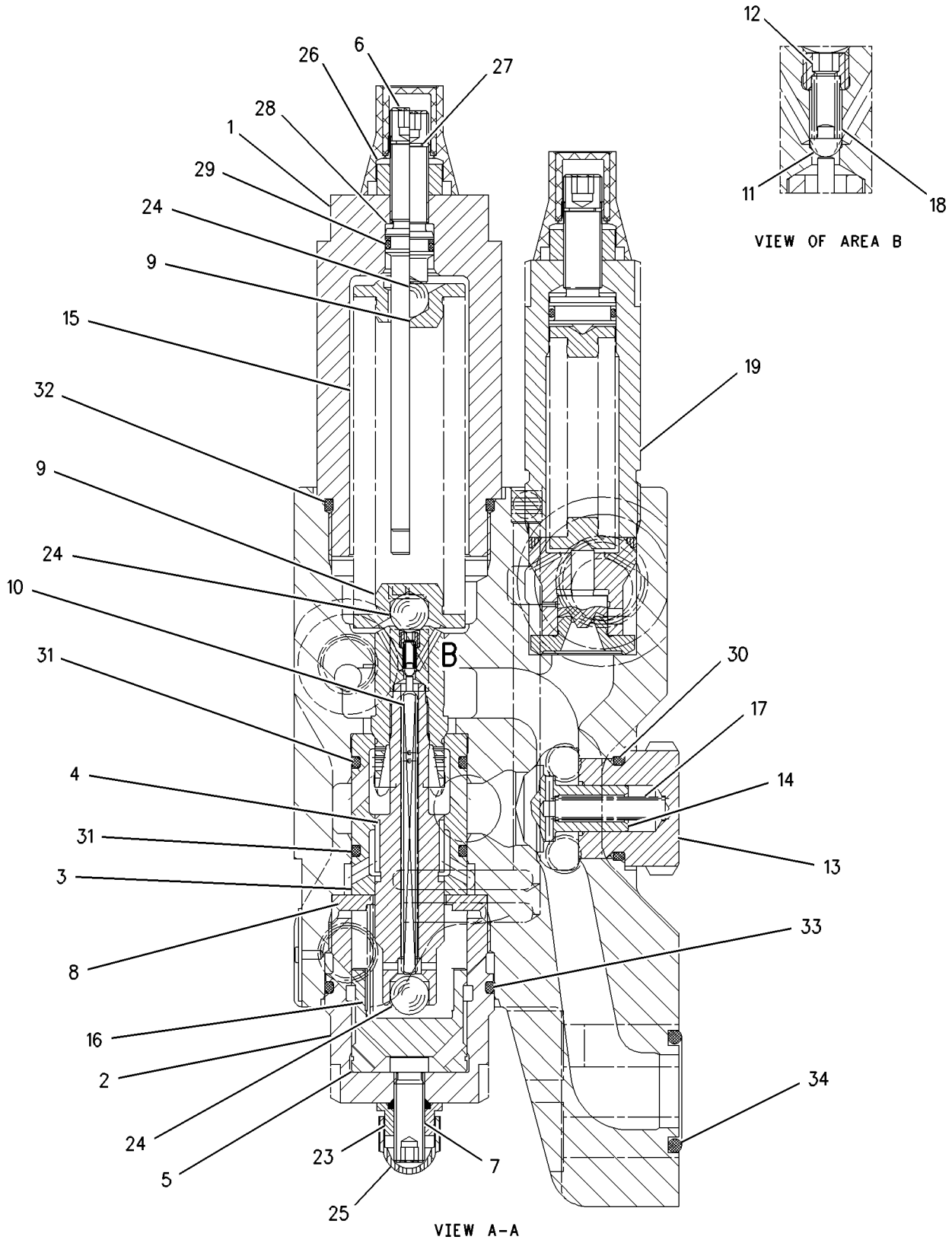

GRAPHIC #2 **<END>** g00922109

HYDRAULIC SYSTEM

191-2762 VALVE GP-MAIN CONTROL

S/N: BCZ1-2000

PART OF 187-7208 VALVE & MTG GP-MAIN CONTROL

SMCS-5051 **i01901124**

NOTE	REF NO	GRAPHIC REF	PART NUMBER	QTY	PART NAME 1 2 3 4 5 6 (PRODUCT LEVEL)	SEE PAGE
	1	1	**189-5681**	10	ACTUATOR GP	
					(EACH INCLUDES)	
J	1A	1	**061-8639**	2	SEAL-O-RING	
	1B	1	**114-2999**	1	NUT-CAP (M12X1-THD)	
	1C	1	**114-3025**	1	NUT (M12X1-THD)	
	1D	1	**189-9977**	1	SETSCREW (M12X1X38-MM)	
M	2	1	**6V-5683**	20	BOLT (M6X1X16-MM)	
	3	2	**114-0203**	10	CONE	
	4	2	**114-0204**	10	SPRING	
	5	2	**114-0205**	10	PLUG	
	6	2	**122-7945**	1	NOZZLE	
	7	2	**162-0177**	4	PLUG AS	
					(EACH INCLUDES)	
	7A	2	**3J-1907**	1	SEAL-O-RING	
J	8	2	**032-9313**	1	SEAL-O-RING	
J	9	2	**3P-1155**	4	SEAL-O-RING	
J	10	2	**7X-4744**	2	SEAL-O-RING	
J	11	1	**3E-6788**	10	SEAL-O-RING	
J	12	2	**6V-4367**	5	SEAL-O-RING	
	13	1	**189-6159**	1	SPOOL (USE WITH VALVE BODY MARKED 0)	
					—OR—	
			206-7095	1	SPOOL (USE WITH VALVE BODY MARKED 30)	
	14	1	**215-1191**	1	SPOOL (USE WITH VALVE BODY MARKED 0)	
					—OR—	
			215-1192	1	SPOOL (USE WITH VALVE BODY MARKED 30)	
	15	1	**215-1193**	1	SPOOL (USE WITH VALVE BODY MARKED 0)	
					—OR—	
			215-1194	1	SPOOL (USE WITH VALVE BODY MARKED 30)	
	16	1	**189-6154**	1	SPOOL (USE WITH VALVE BODY MARKED 0)	
					—OR—	
			206-7097	1	SPOOL (USE WITH VALVE BODY MARKED 30)	
	17	1	**215-1195**	1	SPOOL (USE WITH VALVE BODY MARKED 0)	
					—OR—	
			215-1196	1	SPOOL (USE WITH VALVE BODY MARKED 30)	
	18	2	**224-8832**	1	PISTON	
	19	2	**219-5628**	1	ADAPTER AS	
	19A	2	**5P-3456**	1	SEAL-O-RING	
	19B	2	**5P-8356**	1	SEAL-O-RING	
	19C	2	**115-7764**	2	RING-BACKUP	
	20	2	**234-9355**	1	PLUG	
	21	2	**234-9354**	1	SPOOL AS	
		2	**163-4565**	2	SEAL-O-RING	
	23	2	**190-9752**	4	PLUG	
M	24	2	**160-8758**	4	BOLT-SOCKET HEAD (M10X1.5X55-MM)	
	25	2	**235-1838**	1	SEAL-O-RING	
	26	2	**235-2175**	1	SEAL-RING	
	27	2	**206-7122**	1	VALVE GP-FLOW CONTROL	
		2	**206-7127**	1	KIT-SEAL (FLOW CONTROL VALVE)	
	28	2	**206-7647**	1	SCREW (M10X1X10-MM)	
	29	2	**234-9356**	1	ORIFICE-SHUTTLE	
	30	2	**189-3014**	1	SCREW (M10X9-MM)	
	31	2	**206-7123**	1	VALVE GP-RELIEF	
		2	**206-7128**	1	KIT-SEAL (RELIEF VALVE)	
Y	32	2	**114-0215**	1	PLUG GP-CONTROL VALVE	621
Y	33	2	**114-0216**	2	VALVE GP-RELIEF (MAKEUP)	735
Y	34	2	**114-0217**	7	VALVE GP-RELIEF (LINE)	736

191-2762 VALVE GP-MAIN CONTROL *(contd.)* i01901124

NOTE	REF NO	GRAPHIC REF	PART NUMBER	QTY	PART NAME 1 2 3 4 5 6 (PRODUCT LEVEL)	SEE PAGE
	35	2	**206-7126**	4	SPOOL	
	36	2	**202-8523**	5	SPRING	
	37	2	**206-7656**	4	PLUG	
	38	1	**114-0787**	10	SPRING-RETAINER	
	39	1	**224-8831**	10	SPRING	
	40	2	**206-7124**	1	VALVE AS-CHECK	
	40A	2	**8C-3078**	1	SEAL-O-RING	
	41	2	**206-7125**	1	VALVE AS-CHECK	
	41A	2	**8C-3078**	1	SEAL-O-RING	
	42	1	**122-7946**	6	VALVE GP-THROTTLE	
					(EACH INCLUDES)	
	42A	1	**115-6850**	1	SEAL-RING	
		1	**192-0705**	1	KIT-SEAL (THROTTLE VALVE)	
J	42B	1	**192-7117**	1	SEAL-O-RING	
	43	2	**9S-8008**	2	PLUG	
	44	2	**3D-2824**	2	SEAL-O-RING	
	45	2	**194-7841**	1	PLATE-COVER (MAIN COVER)	
	46	2	**234-9357**	1	PLATE-COVER	
M	47	2	**8T-0271**	4	BOLT-SOCKET HEAD (M10X1.5X35-MM)	
	48	1	**215-1187**	4	VALVE GP-THROTTLE	
					(EACH INCLUDES)	
J	48A	1	**115-6850**	1	SEAL-RING	
		1	**192-0705**	1	KIT-SEAL (THROTTLE VALVE)	
	48B	1	**192-7117**	1	SEAL-O-RING	
					AVAILABLE REPAIR KIT(S):	
J			**217-1660**	1	KIT-SEAL (SPOOL)	
					(INCLUDES O-RING SEALS AND RING SEALS)	

J-KIT MARKED J SERVICES PARTS MARKED J
M-METRIC PART
Y-SEPARATE ILLUSTRATION

191-2762 VALVE GP-MAIN CONTROL *(contd.)* i01901124

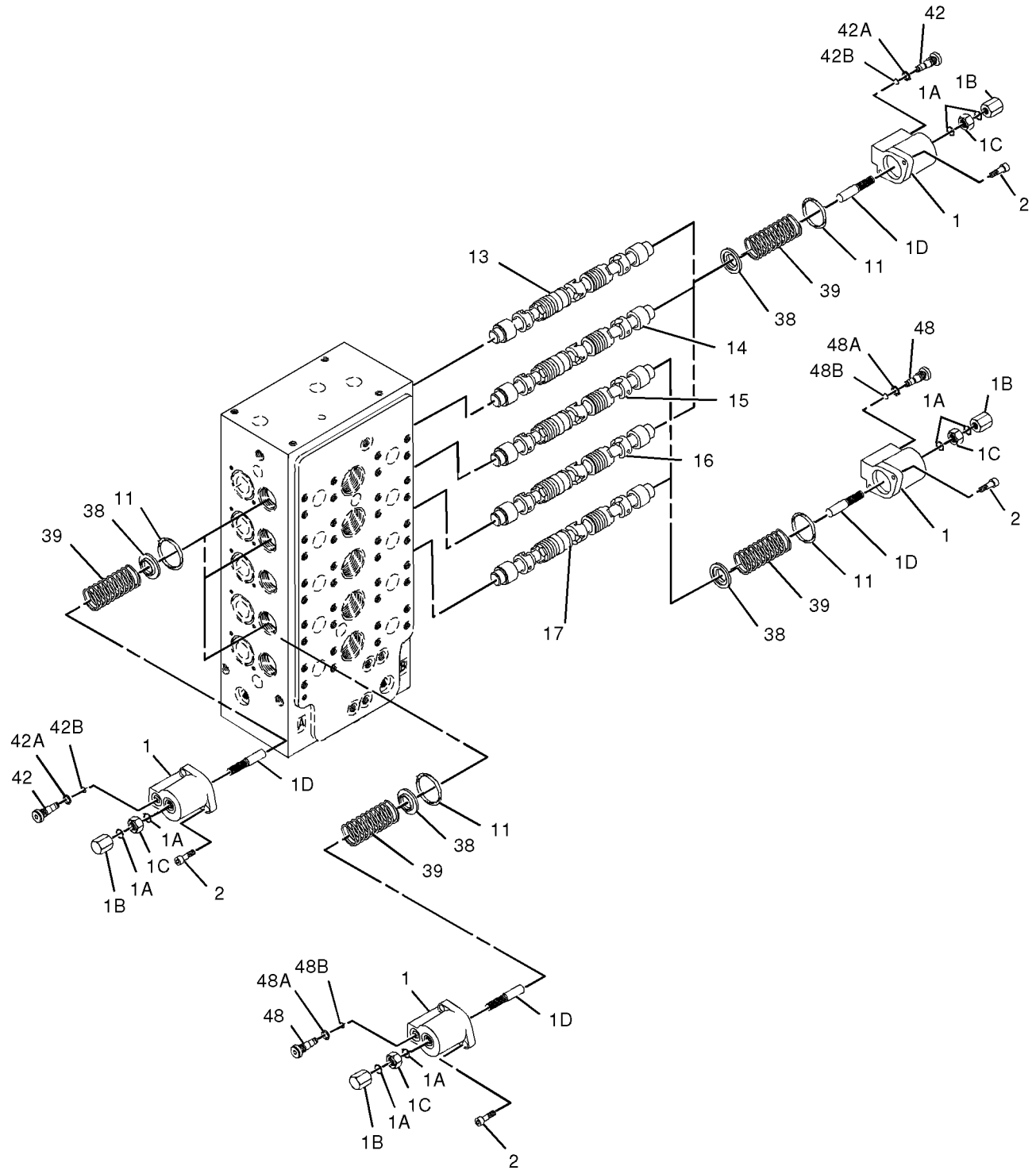

GRAPHIC #1 g01026990

191-2762 VALVE GP-MAIN CONTROL *(contd.)* i01901124

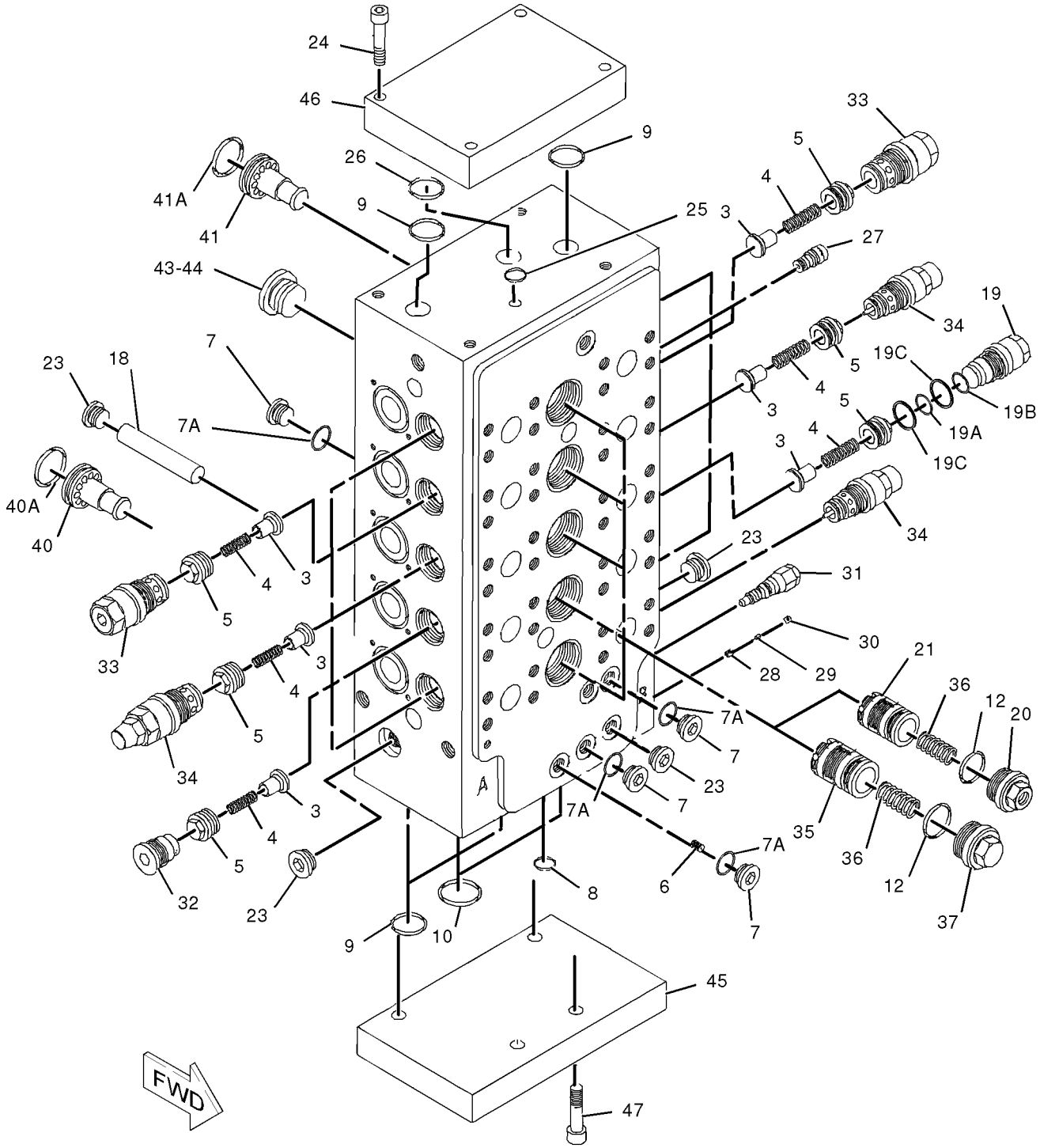

GRAPHIC #2 **<END>** g01026992

190-8653 VALVE GP-MOTOR CONTROL

S/N: BCZ1-2000

PART OF 190-8124 HEAD GP-MOTOR

SMCS-5455 **i01820028**

NOTE	REF NO	GRAPHIC REF	PART NUMBER	QTY	PART NAME 1 2 3 4 5 6 (PRODUCT LEVEL)	SEE PAGE
	1	1	**138-4272**	1	HOUSING	
	2	1	**143-9025**	1	BUSHING-CONTROL	
	3	1	**190-9758**	1	PISTON	
	4	1	**124-9887**	1	BUSHING	
	5	1	**123-5790**	1	RETAINER-SPRING	
	6	1	**123-5791**	1	SPRING	
	7	1	**124-9888**	1	SPRING	
	8	1	**7X-8592**	1	SEAL-O-RING	
M	9	1	**136-4184**	4	BOLT-SOCKET HEAD (M8X1.25X40-MM)	
	10	1	**9S-8004**	1	PLUG	
	11	1	**033-6042**	1	SEAL-O-RING	
	12	1	**095-0933**	1	RING-RETAINING	
	13	1	**145-8746**	1	SCREW (M6)	
	14	1	**125-3553**	1	DOWEL	
	15	1	**9T-3853**	1	LOCKNUT (M6-THD)	
	16	1	**123-9769**	2	PLUG	
M	17	1	**123-2017**	1	PLUG	
	18	1	**5W-9431**	1	RING-RETAINING	

M-METRIC PART

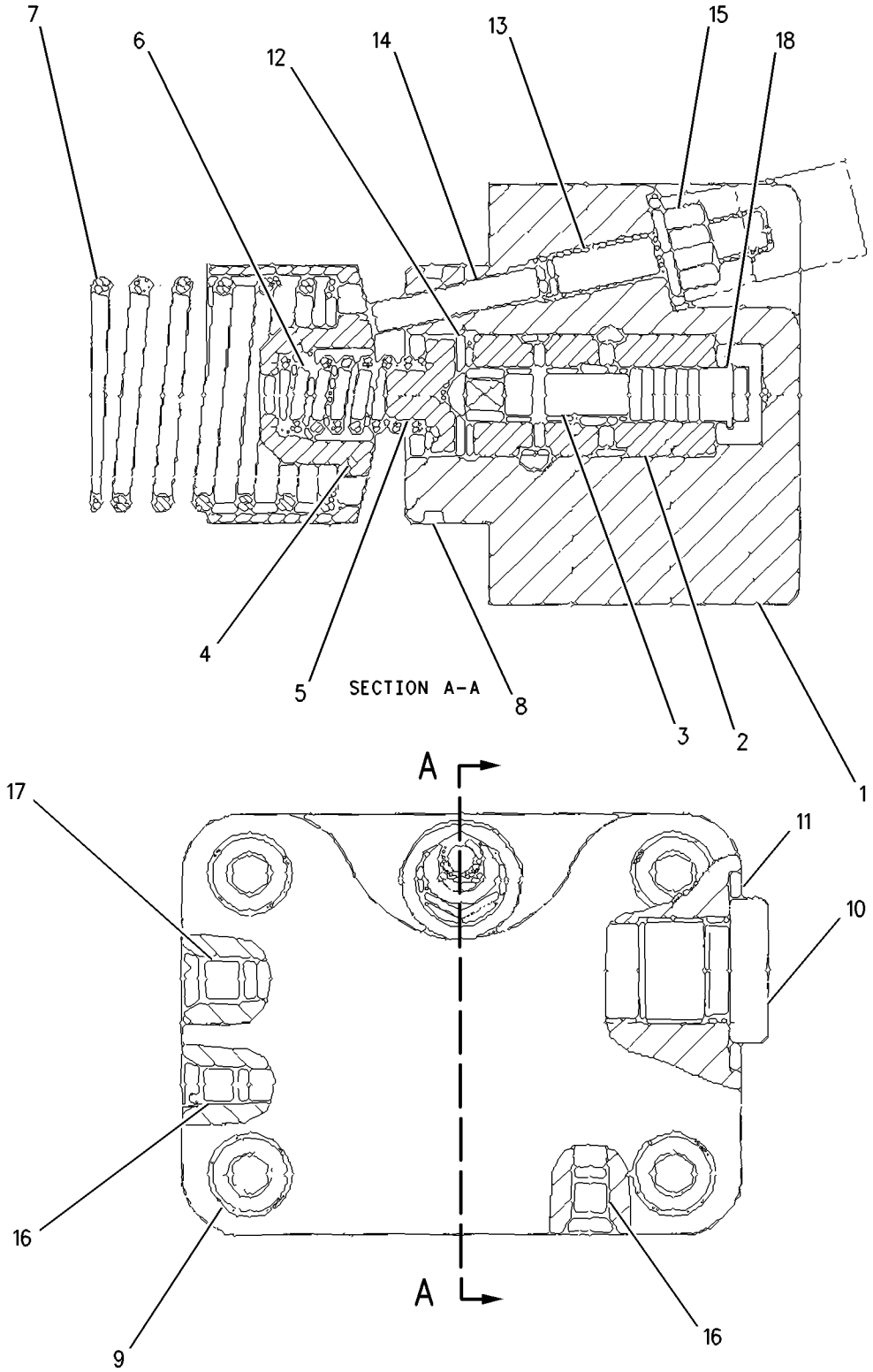

GRAPHIC #1 **<END>** g00929215

190-8655 VALVE GP-PRESS & FLOW CMPNSTR

S/N: BCZ1-2000

PART OF 190-8124 HEAD GP-MOTOR

SMCS-5455 **i01777568**

NOTE	REF NO	GRAPHIC REF	PART NUMBER	QTY	PART NAME 1 2 3 4 5 6 (PRODUCT LEVEL)	SEE PAGE
	1	1	**190-9813**	1	HOUSING	
	2	1	**190-9817**	1	PISTON	
	3	1	**190-9818**	1	PISTON	
	4	1	**190-9819**	1	SPRING	
	5	1	**190-9820**	1	PLUG	
M	6	1	**3E-6910**	4	BOLT-HEX SOCKET (M12X1.75X70MM)	
	7	1	**061-7540**	1	SEAL-O-RING	
	8	1	**190-9754**	1	PLUG	
	9	1	**139-7757**	2	PLUG	
	10	1	**087-4774**	1	NOZZLE	
	11	1	**6V-8351**	1	SEAL-O-RING	
	12	1	**222-5387**	1	SHIM	
	13	1	**123-9769**	2	PLUG	

M-METRIC PART

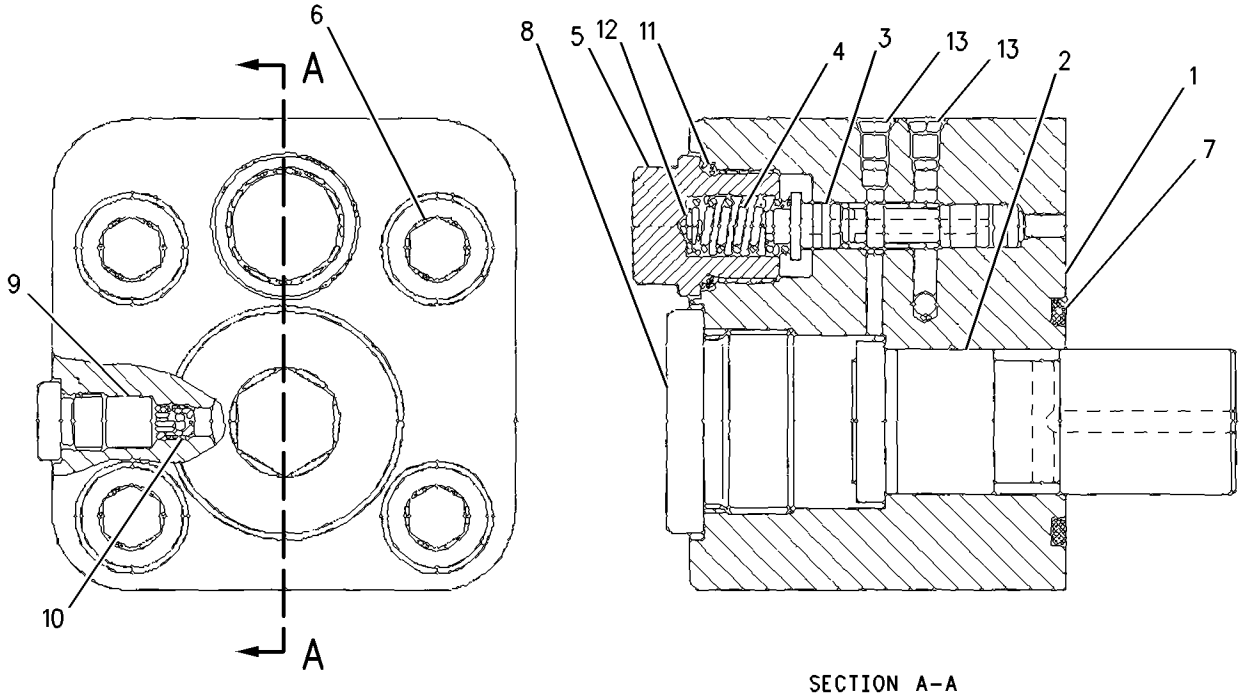

SECTION A-A

GRAPHIC #1 **<END>** g00700022

HYDRAULIC SYSTEM

148-7291 VALVE GP-PILOT RELIEF

S/N: BCZ1-2000

PART OF 210-0696 MANIFOLD GP-CONTROL

SMCS-5072 **i01969179**

NOTE	REF NO	GRAPHIC REF	PART NUMBER	QTY	PART NAME 1 2 3 4 5 6 (PRODUCT LEVEL)	SEE PAGE
	1	1	**123-0369**	1	SPRING	
	2	1	**123-0371**	2	RETAINER	
M	3	1	**123-0368**	1	ROD-THREADED (M8X1.25X30MM)	
	4	1	**5W-9420**	1	LOCKNUT	
	5	1	**8U-1218**	1	NUT	
	6	1	**095-1751**	1	SEAL-O-RING	
	7	1	**8C-3086**	1	SEAL-O-RING	
	8	1	**8J-2413**	1	SEAL-O-RING	
	9	1	**5J-2974**	1	SEAL-O-RING	

M-METRIC PART

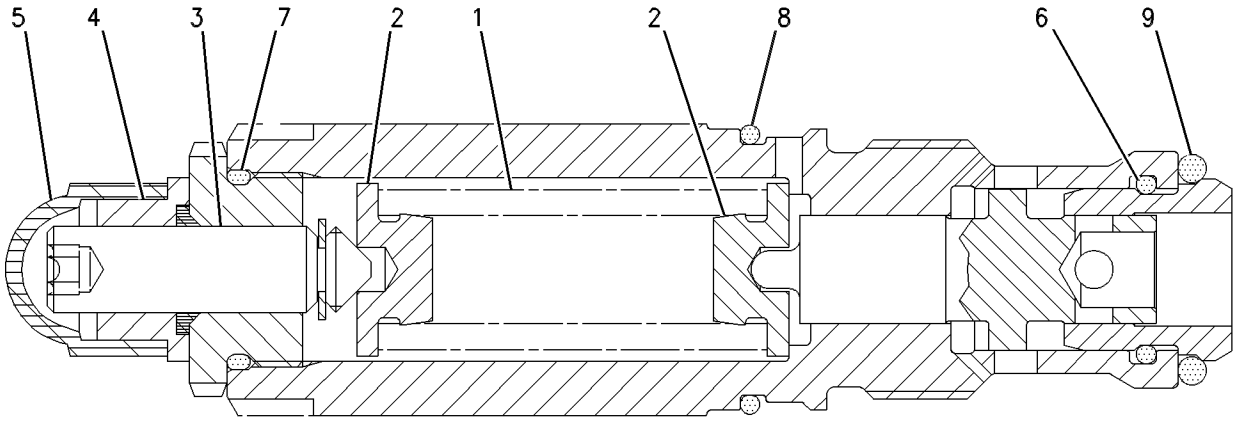

GRAPHIC #1 **<END>** g00277812

HYDRAULIC SYSTEM

221-3103 VALVE GP-PRESSURE REDUCING

S/N: BCZ1-2000

PART OF 210-0696 MANIFOLD GP-CONTROL

SMCS-5117 **i01928420**

NOTE	REF NO	GRAPHIC REF	PART NUMBER	QTY	PART NAME 1 2 3 4 5 6 (PRODUCT LEVEL)	SEE PAGE
	1	1	**125-6932**	1	LOCK-PIN	
M	2	1	**154-0172**	4	BOLT-HEX SOCKET (M4X.07 THD)	
	3	1	**161-6154**	1	SEAL-O-RING	
	4	1	**095-1750**	1	SEAL-O-RING	
	5	1	**8C-3093**	1	SEAL-O-RING	

M-METRIC PART

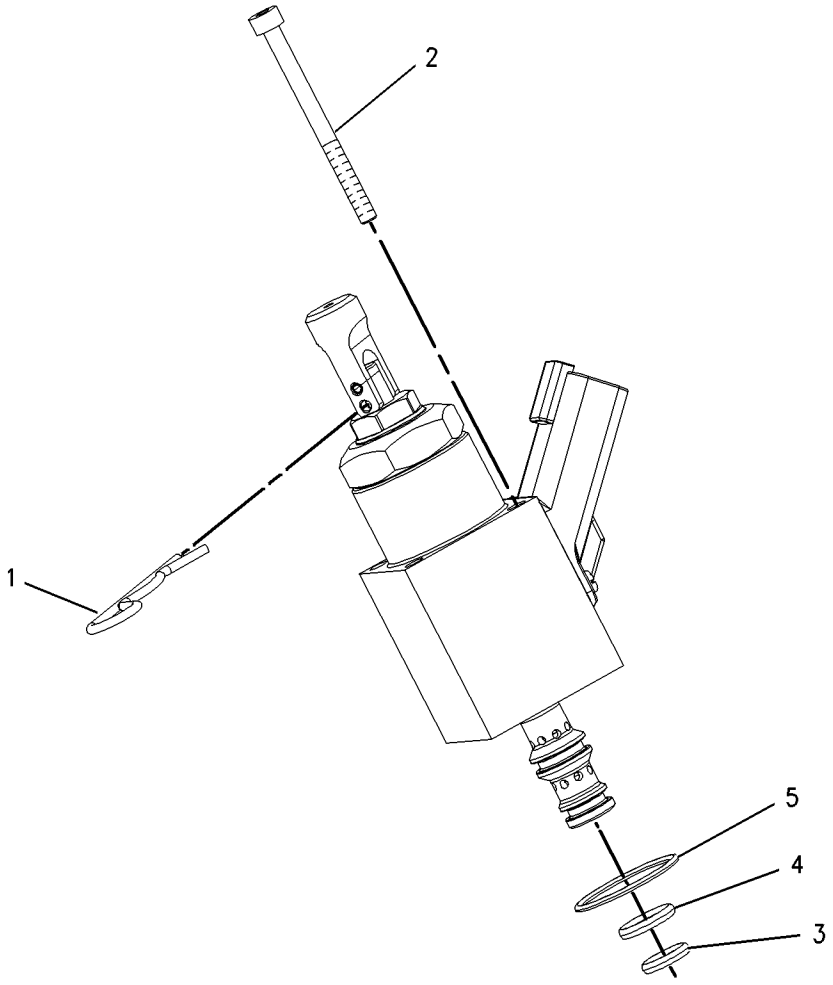

GRAPHIC #1 **<END>** g00929223

HYDRAULIC SYSTEM

224-2983 VALVE GP-PRESSURE REDUCING

S/N: BCZ1-2000
PART OF 212-6749 VALVE GP-COMBINATION
AN ATTACHMENT

SMCS-5117 **i02161962**

NOTE	REF NO	GRAPHIC REF	PART NUMBER	QTY	PART NAME 1 2 3 4 5 6 (PRODUCT LEVEL)	SEE PAGE
M	1	1	**142-6000**	1	NUT-HEX (M8X1-THD)	
	2	1	**197-7930**	3	BOLT-SOCKET HEAD	
	3	1	**5Y-0648**	1	RING	
J	4	1	**124-1806**	3	RING	
J	5	1	**149-4076**	1	RING-BACKUP	
J	6	1	**149-4077**	1	RING-BACKUP	
J	7	1	**095-1750**	1	SEAL-O-RING	
J	8	1	**161-6149**	1	SEAL-O-RING	
J	9	1	**6V-8399**	1	SEAL-O-RING	
					AVAILABLE REPAIR KIT(S):	
J			**224-3025**	1	KIT-SEAL (PRESSURE REDUCING VALVE)	

J-KIT MARKED J SERVICES PARTS MARKED J
M-METRIC PART

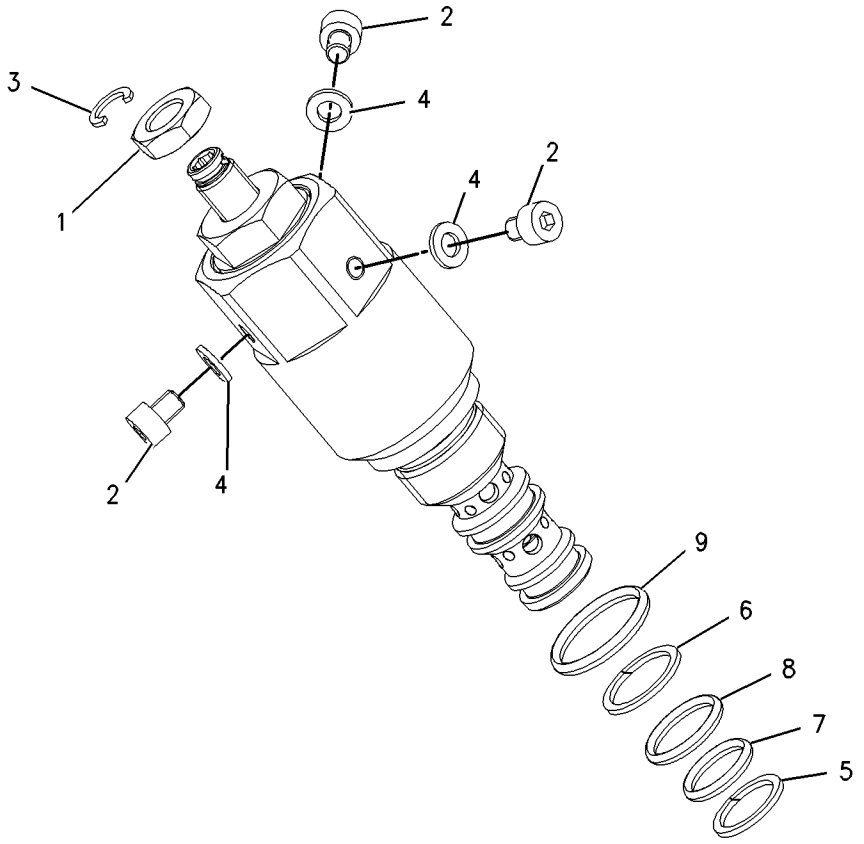

GRAPHIC #1 **<END>** g00902698

117-5784 VALVE GP-PUMP CONTROL

S/N: BCZ1-2000

PART OF 199-2396 VALVE GP-PUMP CONTROL

SMCS-5455 **i02161963**

NOTE	REF NO	GRAPHIC REF	PART NUMBER	QTY	PART NAME 1 2 3 4 5 6 (PRODUCT LEVEL)	SEE PAGE
	1	1	**124-2634**	1	PLUG	
	2	1	**117-5909**	1	PISTON-CONTROL	
	3	1	**107-6593**	2	RETAINER	
	4	1	**165-9383**	1	SPRING	
	5	1	**6E-3855**	1	SPRING	
	6	1	**117-7524**	1	SETSCREW	
	7	1	**125-9091**	1	BUSHING	
	8	1	**124-2637**	1	PLUG	
JM	9	1	**6E-1607**	1	LOCKNUT-SEALING	
J	10	1	**6V-3922**	1	SEAL-O-RING	
J	11	1	**4J-5309**	1	SEAL-O-RING	
					AVAILABLE REPAIR KIT(S):	
J			**124-2638**	1	KIT-SEAL (REGULATOR CONTROL VALVE)	

J-KIT MARKED J SERVICES PARTS MARKED J
M-METRIC PART

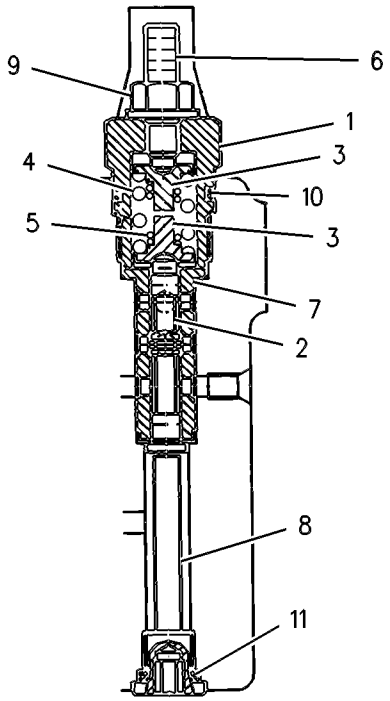

GRAPHIC #1 **<END>** g00254583

HYDRAULIC SYSTEM

139-8929 VALVE GP-PUMP CONTROL–SWING

S/N: BCZ1-2000

PART OF 190-8199 PUMP GP-PISTON

SMCS-5455 **i01659852**

NOTE	REF NO	GRAPHIC REF	PART NUMBER	QTY	PART NAME 1 2 3 4 5 6 (PRODUCT LEVEL)	SEE PAGE
	1	1	**139-9220**	1	VALVE AS	
B	2	1	**139-9222**	2	PISTON	
B	3	1	**139-9223**	2	PISTON	
B	4	1	**139-9224**	2	PISTON	
	5	1	**209-3565**	1	SEAL	
	6	1	**5P-5874**	1	SEAL-O-RING	
M	7	1	**102-7364**	1	BOLT-HEX SOCKET (M6X1X80MM)	
M	8	1	**8T-2922**	4	BOLT-SOCKET HEAD (M6X1X65MM)	
M	9	1	**9X-2609**	1	SETSCREW-SOCKET	
	10	1	**9T-3726**	4	PLUG (M18)	
	11	1	**9T-3929**	1	PLUG AS	
	12	1	**139-9225**	2	SPRING	
	13	1	**139-9227**	2	VALVE	

B-USE AS REQUIRED
M-METRIC PART

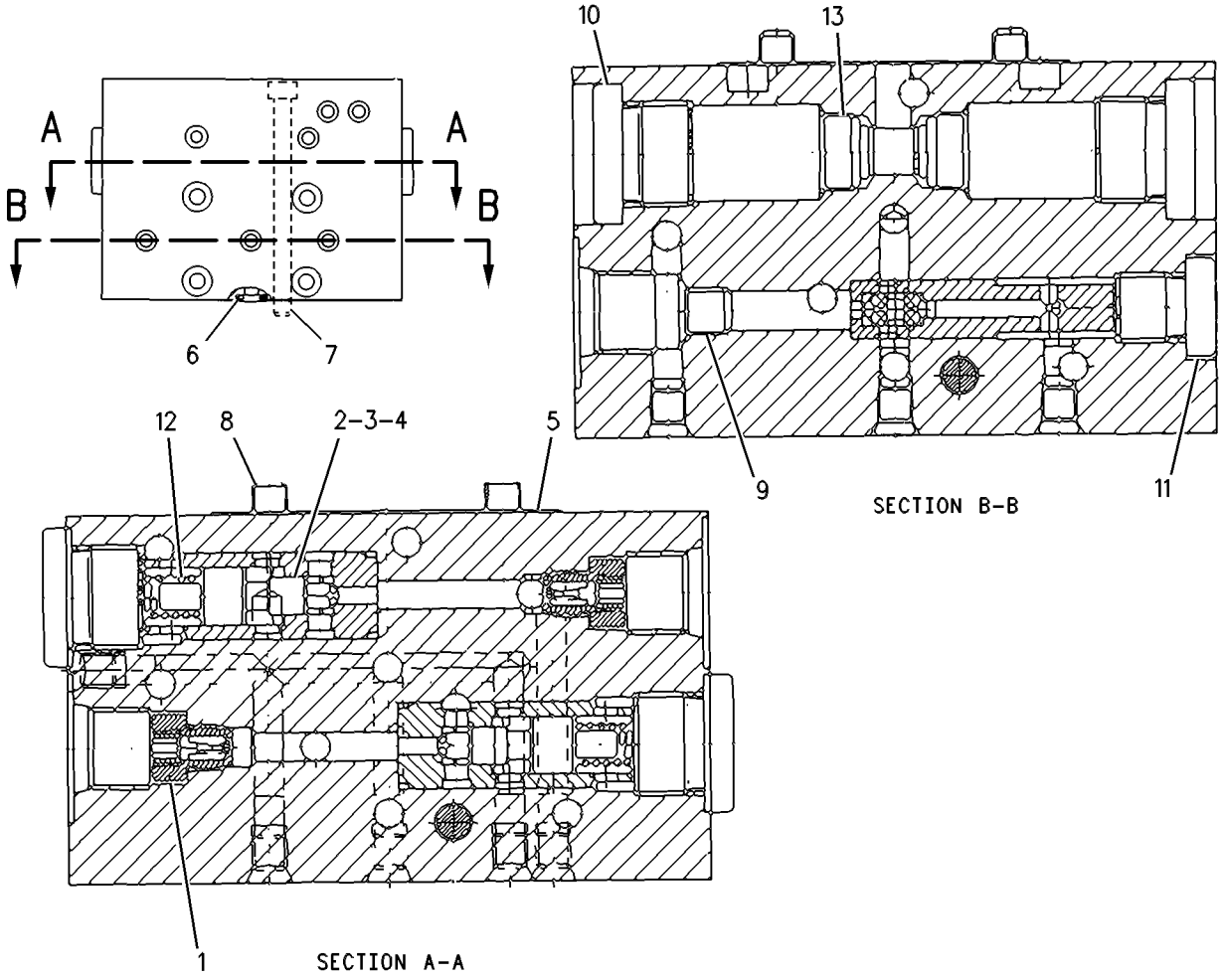

GRAPHIC #1 **<END>** g00265900

HYDRAULIC SYSTEM

145-3542 VALVE GP-PUMP CONTROL

S/N: BCZ1-2000

PART OF 190-8199 PUMP GP-PISTON

SMCS-5455 **i01166618**

NOTE	REF NO	GRAPHIC REF	PART NUMBER	QTY	PART NAME 1 2 3 4 5 6 (PRODUCT LEVEL)	SEE PAGE
	1	1	**176-5158**	1	PISTON AS	
	3	1	**145-3810**	1	COVER	
	4	1	**145-3811**	1	COVER	
M	6	1	**9X-8488**	1	NUT-HEX THIN (M12X1.5 THD)	
M	7	1	**6V-8202**	8	BOLT-HEX SOCKET (M8X1.25X16MM)	
	8	1	**5W-1437**	8	LOCKWASHER	
	9	1	**117-7273**	4	SEAL-O-RING (64.77MM ID)	
	10	1	**145-3812**	2	RING	
	11	1	**145-3813**	2	RING	

M-METRIC PART

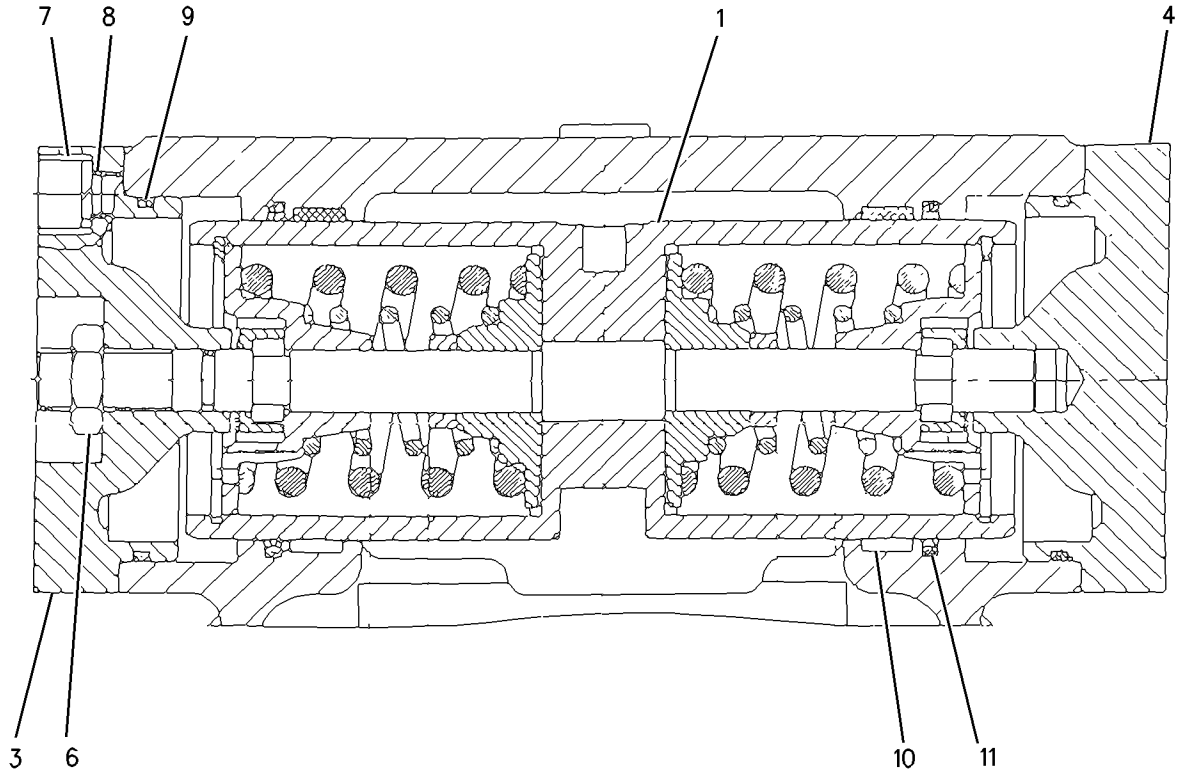

GRAPHIC #1 **<END>** g00621764

HYDRAULIC SYSTEM

199-2396 VALVE GP-PUMP CONTROL

S/N: BCZ1-2000

PART OF 190-8198 PUMP GP-PISTON

SMCS-5455 **i01794927**

NOTE	REF NO	GRAPHIC REF	PART NUMBER	QTY	PART NAME 1 2 3 4 5 6 (PRODUCT LEVEL)	SEE PAGE
Y	1	1	**199-3057**	1	VALVE GP-PUMP CONTROL	734
	2	1	**199-3058**	1	REGULATOR AS	
		1	**6V-3922**	1	SEAL-O-RING	
		1	**9T-3931**	1	PLUG	
Y	3	1	**117-5784**	1	VALVE GP-PUMP CONTROL	729
	4	1	**117-5787**	1	PISTON AS	
		1	**117-5912**	1	BUSHING	
		1	**117-5913**	1	SPRING	
		1	**117-5914**	1	ROLLER	
	5	1	**117-5789**	1	LEVER	
	6	1	**117-5790**	1	BOLT	
	7	1	**4I-7690**	1	BUSHING	
M	8	1	**3E-8025**	5	BOLT-SOCKET HEAD (M8X1.25X50-MM)	
	9	1	**199-3060**	2	DOWEL	
	10	1	**087-4772**	1	PLUG	
	11	1	**125-8689**	1	NOZZLE	
	12	1	**099-5845**	1	PLUG	
	13	1	**4I-5663**	1	RING-RETAINING	
	14	1	**2D-6392**	1	SEAL-O-RING	

M-METRIC PART
Y-SEPARATE ILLUSTRATION

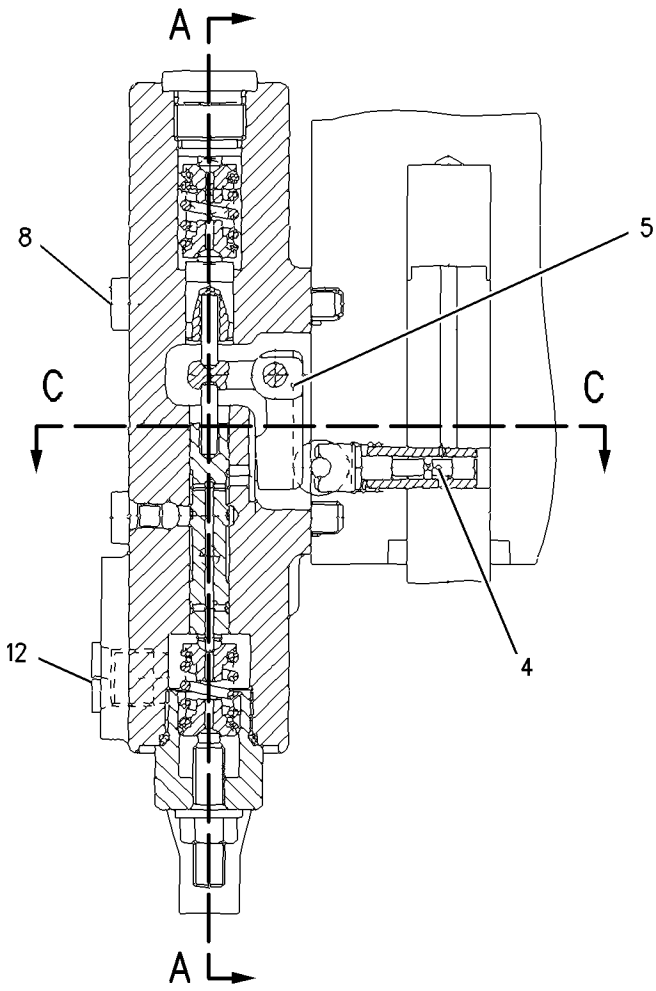

SECTION B-B

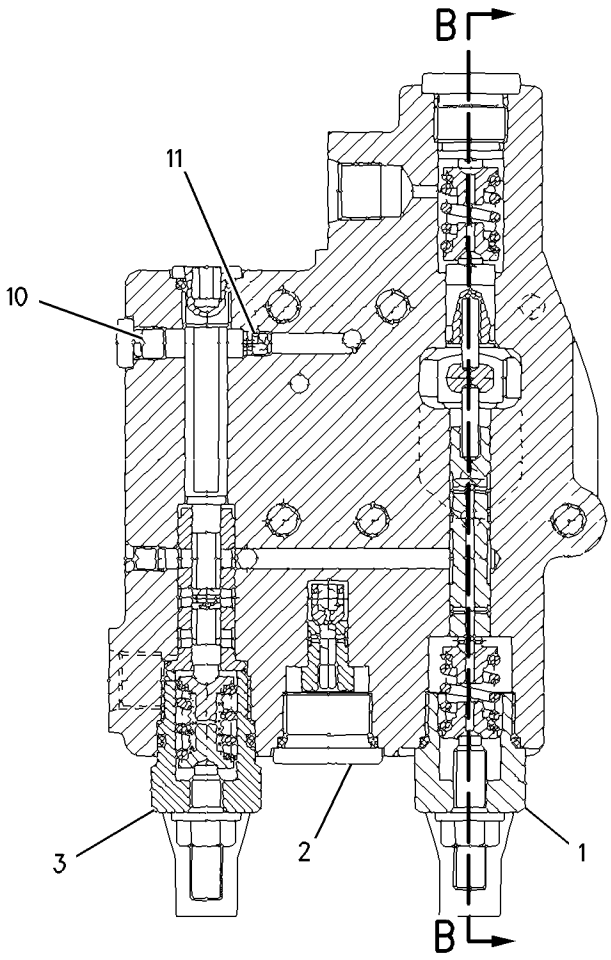

SECTION A-A

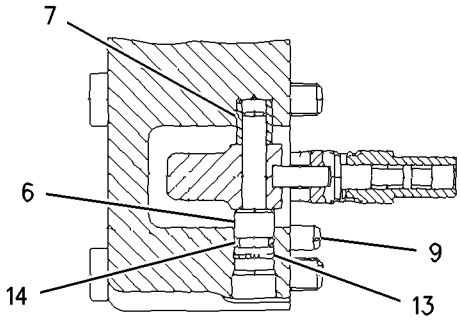

SECTION C-C

GRAPHIC #1 **<END>** g00919218

HYDRAULIC SYSTEM

199-3057 VALVE GP-PUMP CONTROL

S/N: BCZ1-2000

PART OF 199-2396 VALVE GP-PUMP CONTROL

SMCS-5455 **i01622505**

NOTE	REF NO	GRAPHIC REF	PART NUMBER	QTY	PART NAME 1 2 3 4 5 6 (PRODUCT LEVEL)	SEE PAGE
	1	1	**117-5899**	1	PLUG	
	2	1	**117-5900**	1	PISTON-CONTROL	
	3	1	**6E-3861**	4	RETAINER-SPRING	
	4	1	**179-6922**	2	SPRING	
	5	1	**117-7525**	1	SETSCREW	
	6	1	**117-5905**	2	BOLT	
M	7	1	**6E-1607**	1	LOCKNUT-SEALING	
	8	1	**6V-3922**	1	SEAL-O-RING	
	9	1	**9T-3726**	1	PLUG	
	10	1	**199-4853**	1	BOLT	
	11	1	**117-5904**	1	PISTON-CONTROL	

M-METRIC PART

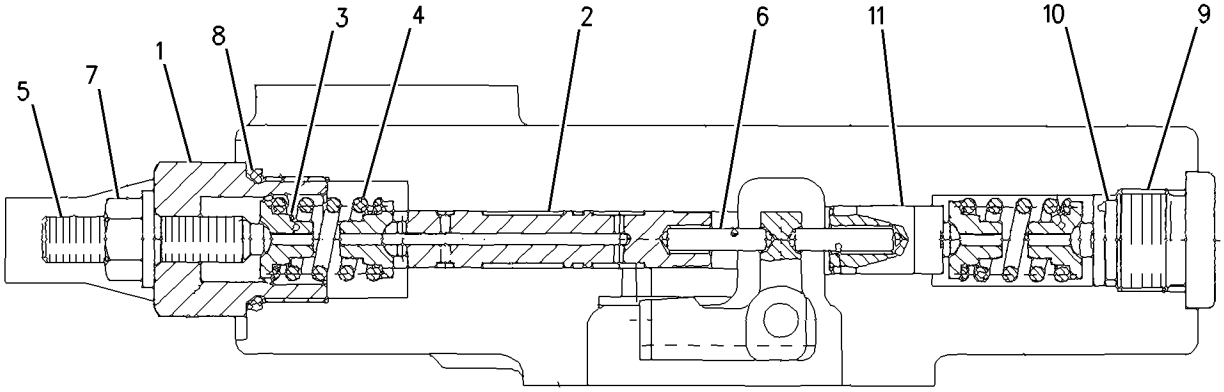

GRAPHIC #1 **<END>** g00846557

114-0216 VALVE GP-RELIEF–LINE

S/N: BCZ1-2000

PART OF 191-2762 VALVE GP-MAIN CONTROL

SMCS-5069, 5117 **i02163570**

NOTE	REF NO	GRAPHIC REF	PART NUMBER	QTY	PART NAME 1 2 3 4 5 6 (PRODUCT LEVEL)	SEE PAGE
J	1	1	**115-7764**	2	RING-BACKUP	
J	2	1	**033-6044**	1	SEAL-O-RING	
J	3	1	**5P-3456**	1	SEAL-O-RING	
J	4	1	**5P-8356**	1	SEAL-O-RING	
J	5	1	**115-8262**	1	SEAL AS-PISTON	
					AVAILABLE REPAIR KIT(S):	
J			**114-3070**	1	KIT-SEAL (RELIEF VALVE)	

J-KIT MARKED J SERVICES PARTS MARKED J

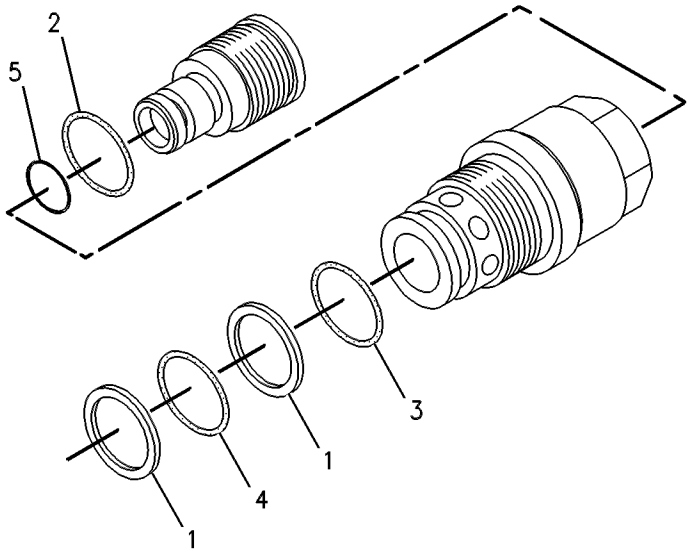

GRAPHIC #1 **<END>** g00247642

HYDRAULIC SYSTEM

114-0217 VALVE GP-RELIEF—LINE

S/N: BCZ1-2000

PART OF 191-2762 VALVE GP-MAIN CONTROL

SMCS-5069, 5117 **i02163561**

NOTE	REF NO	GRAPHIC REF	PART NUMBER	QTY	PART NAME 1 2 3 4 5 6 (PRODUCT LEVEL)	SEE PAGE
J	1	1	**115-8262**	1	SEAL AS-PISTON	
J	2	1	**5P-8356**	1	SEAL-O-RING	
J	3	1	**115-7764**	2	RING-BACKUP	
J	4	1	**033-6044**	1	SEAL-O-RING	
J	5	1	**5P-3456**	1	SEAL-O-RING	
J	6	1	**033-5879**	1	SEAL-O-RING	
					AVAILABLE REPAIR KIT(S):	
J			**114-3070**	1	KIT-SEAL (RELIEF VALVE)	

J-KIT MARKED J SERVICES PARTS MARKED J

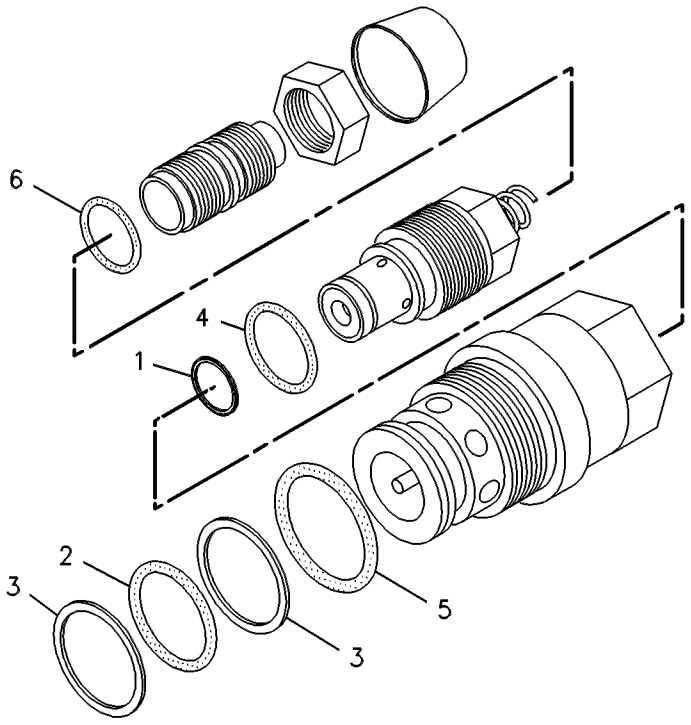

GRAPHIC #1 **<END>** g00246956

117-7275 VALVE GP-RELIEF–CROSSOVER

S/N: BCZ1-2000

PART OF 145-3543 HEAD GP-PUMP

SMCS-5069, 5117 **i02163562**

NOTE	REF NO	GRAPHIC REF	PART NUMBER	QTY	PART NAME 1 2 3 4 5 6 (PRODUCT LEVEL)	SEE PAGE
	1	1	**6V-5326**	1	SEAL-O-RING	
	2	1	**112-4719**	1	RING-BACKUP	

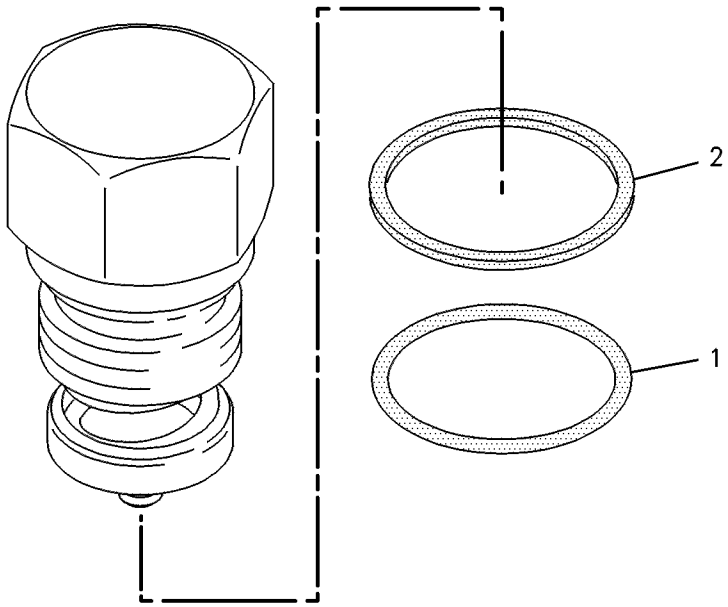

GRAPHIC #1 **<END>** g00247524

117-7276 VALVE GP-RELIEF—STEERING HIGH PRESSURE CUTOFF

S/N: BCZ1-2000

PART OF 145-3543 HEAD GP-PUMP

SMCS-5069, 5117 **i02163545**

NOTE	REF NO	GRAPHIC REF	PART NUMBER	QTY	PART NAME 1 2 3 4 5 6 (PRODUCT LEVEL)	SEE PAGE
	1	1	**117-7287**	1	SCREW	
M	2	1	**6E-4401**	1	SETSCREW-ADJUSTMENT	
J	3	1	**7Y-5219**	1	SEAL-O-RING	
JM	4	1	**6E-1607**	1	LOCKNUT-SEALING	
J	5	1	**6V-5586**	1	SEAL-O-RING	
					AVAILABLE REPAIR KIT(S):	
J			**122-9363**	1	KIT-SEAL (VALVE RELIEF)	

J-KIT MARKED J SERVICES PARTS MARKED J
M-METRIC PART

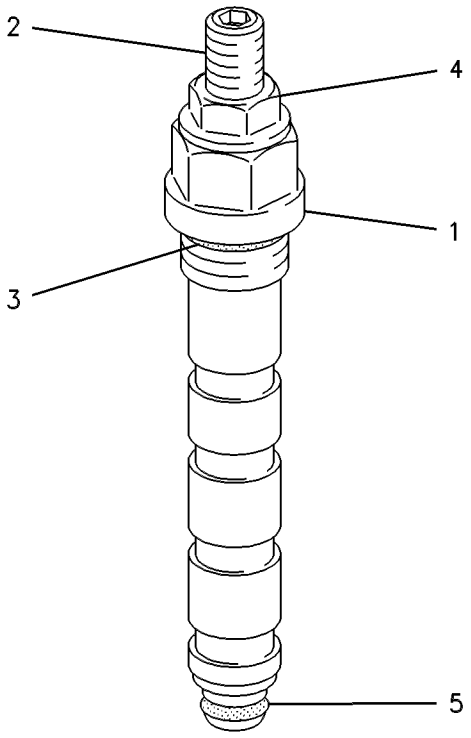

GRAPHIC #1 **<END>** g00250747

HYDRAULIC SYSTEM

142-3952 VALVE GP-RELIEF–LINE, MEDIUM PRESSURE

S/N: BCZ1-2000
PART OF 195-2944 VALVE & MTG GP-CONTROL
AN ATTACHMENT

SMCS-5069, 5117 **i02163563**

NOTE	REF NO	GRAPHIC REF	PART NUMBER	QTY	PART NAME 1 2 3 4 5 6 (PRODUCT LEVEL)	SEE PAGE
	1	1	*214-2963*	1	PLATE	
	2	1	**120-0694**	2	BOLT	
	3	1	**142-4021**	2	CONE	
	4	1	**120-0696**	2	WASHER	
	5	1	**125-1257**	2	CONE	
	6	1	**125-1258**	2	PLUG	
	7	1	**120-0697**	2	SPRING	
	8	1	**125-1259**	2	SPRING	
M	9	1	**120-0698**	2	NUT-SEALING	
	10	1	**6V-5586**	4	SEAL-O-RING	
	11	1	**6V-8397**	4	SEAL-O-RING	
	12	1	**120-0699**	2	COVER-PROTECTION	

M-METRIC PART

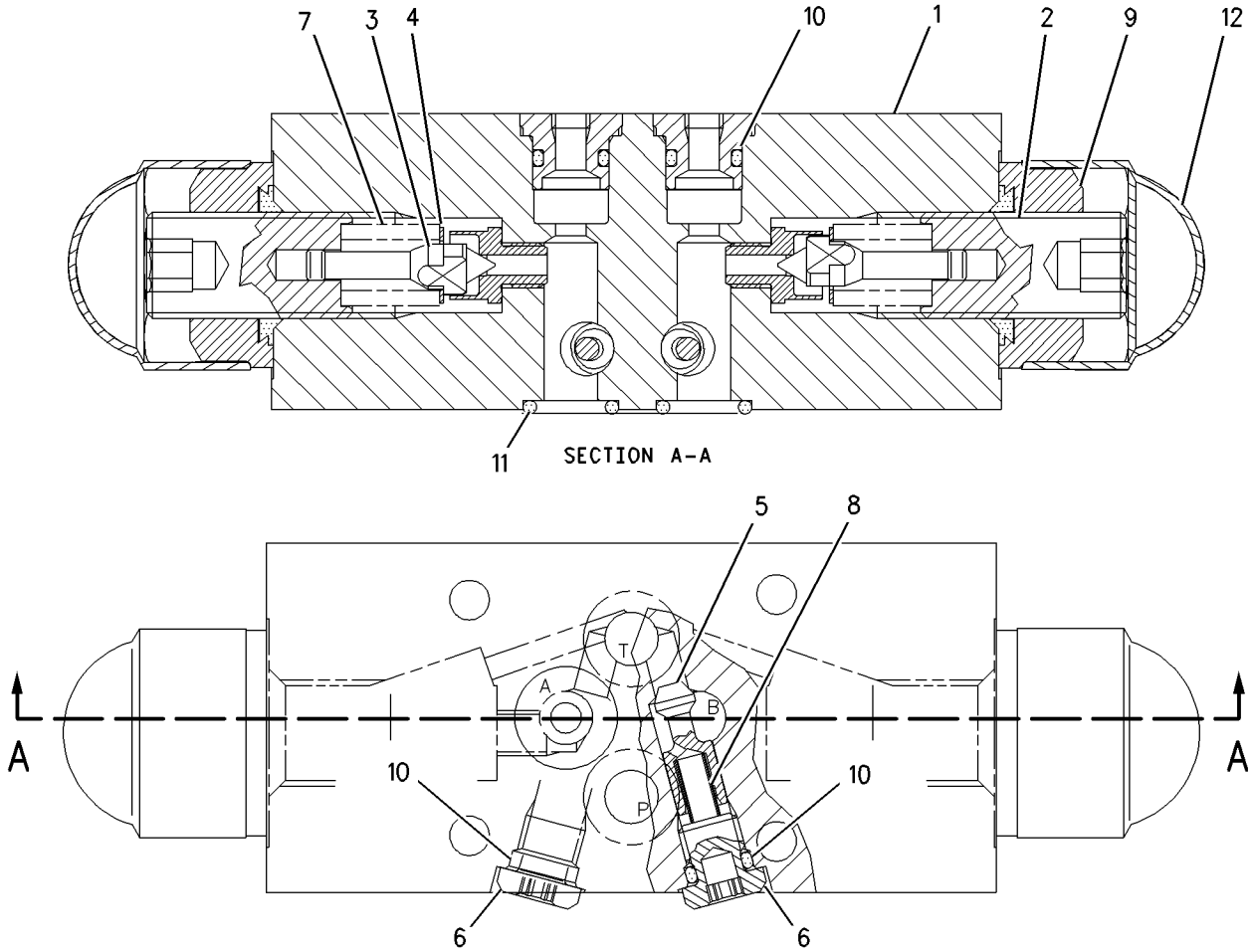

GRAPHIC #1 **<END>** g00857978

HYDRAULIC SYSTEM

177-7122 VALVE GP-RELIEF–CHARGE

S/N: BCZ1-2000

PART OF 145-3543 HEAD GP-PUMP

SMCS-5069, 5117 **i02161966**

NOTE	REF NO	GRAPHIC REF	PART NUMBER	QTY	PART NAME 1 2 3 4 5 6 (PRODUCT LEVEL)	SEE PAGE
	2	1	**6E-4404**	1	VALVE-POPPET	
	3	1	**167-7715**	1	RETAINER-SPRING	
	4	1	**112-4645**	1	SPRING	
	5	1	**6V-8352**	1	SEAL-O-RING	
	6	1	**112-4647**	1	SHIM (0.3-MM THK)	
	7	1	**177-7747**	1	RING	
F			**215-7697**	1	KIT-SHIM (RELIEF VALVE)	
					(INCLUDES 4 SHIMS)	

F-NOT SHOWN

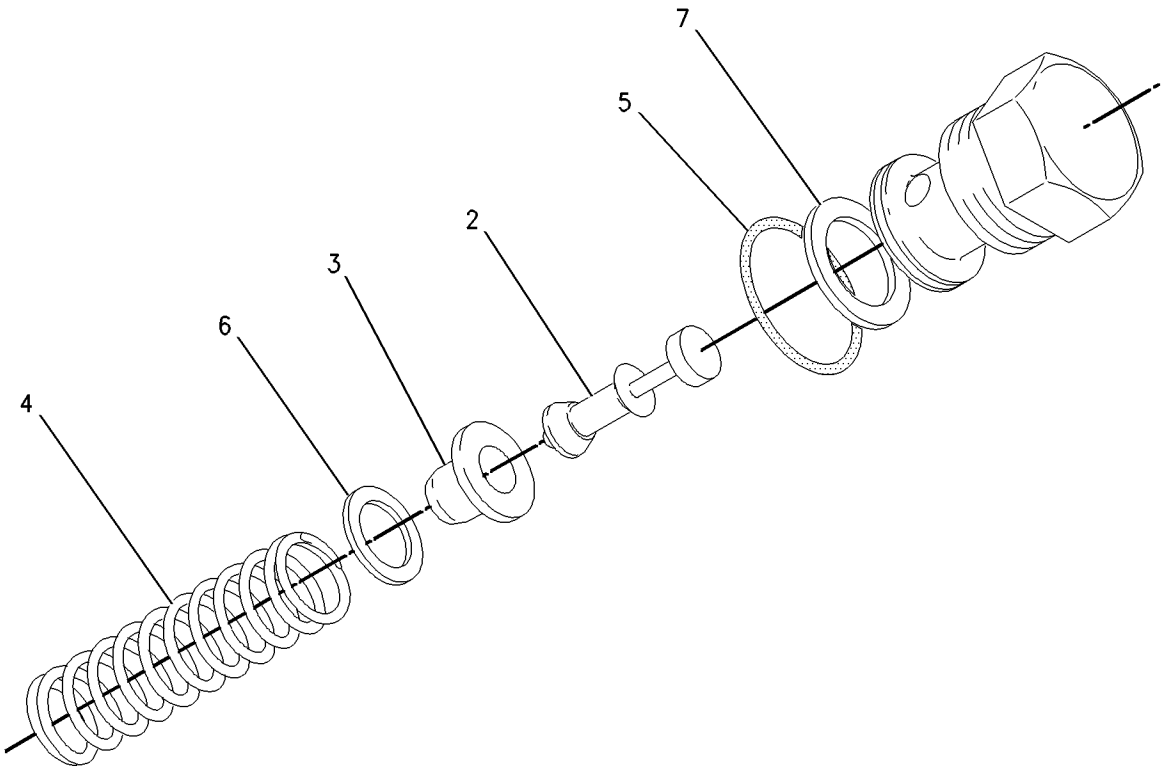

GRAPHIC #1 **<END>** g00909068

191-3952 VALVE GP-RELIEF–TRAVEL BRAKE

S/N: BCZ1-2000

PART OF 211-0081 VALVE GP-BRAKE CONTROL

SMCS-5069, 5117 **i01309441**

NOTE	REF NO	GRAPHIC REF	PART NUMBER	QTY	PART NAME 1 2 3 4 5 6 (PRODUCT LEVEL)	SEE PAGE
	1	1	**191-3954**	1	PISTON	
	2	1	**191-2713**	1	SPRING	
	3	1	**191-2714**	1	POPPET	
	4	1	**191-3956**	1	PISTON	
	5	1	**191-2715**	1	SPRING	
	6	1	**191-2716**	1	PLUG	
	7	1	**3E-6766**	1	SEAL-O-RING	

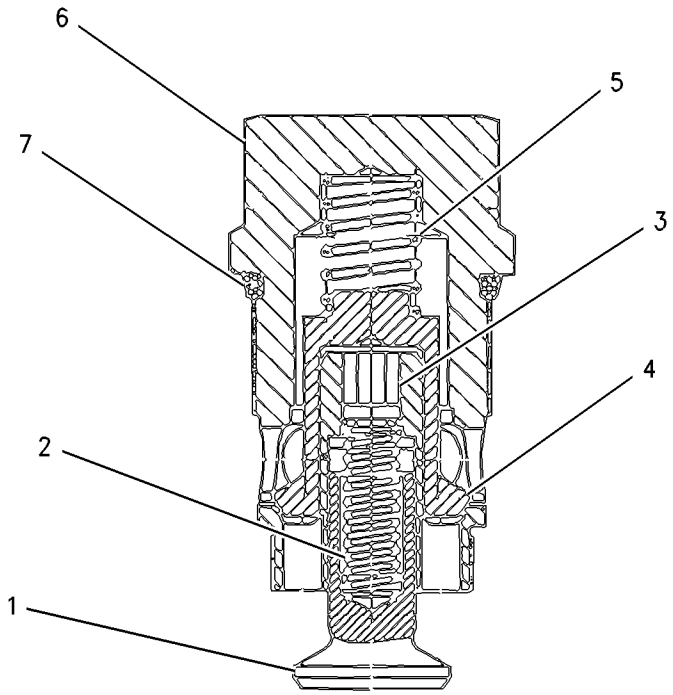

GRAPHIC #1 **<END>** g00700838

HYDRAULIC SYSTEM

214-3916 VALVE GP-RELIEF–LINE, MAKEUP

S/N: BCZ1-2000
PART OF 191-2778 VALVE GP-COMBINATION
AN ATTACHMENT

SMCS-5069, 5117 **i02161967**

NOTE	REF NO	GRAPHIC REF	PART NUMBER	QTY	PART NAME 1 2 3 4 5 6 (PRODUCT LEVEL)	SEE PAGE
	1	1	**204-6350**	1	KIT-SEAL (RELIEF VALVE)	

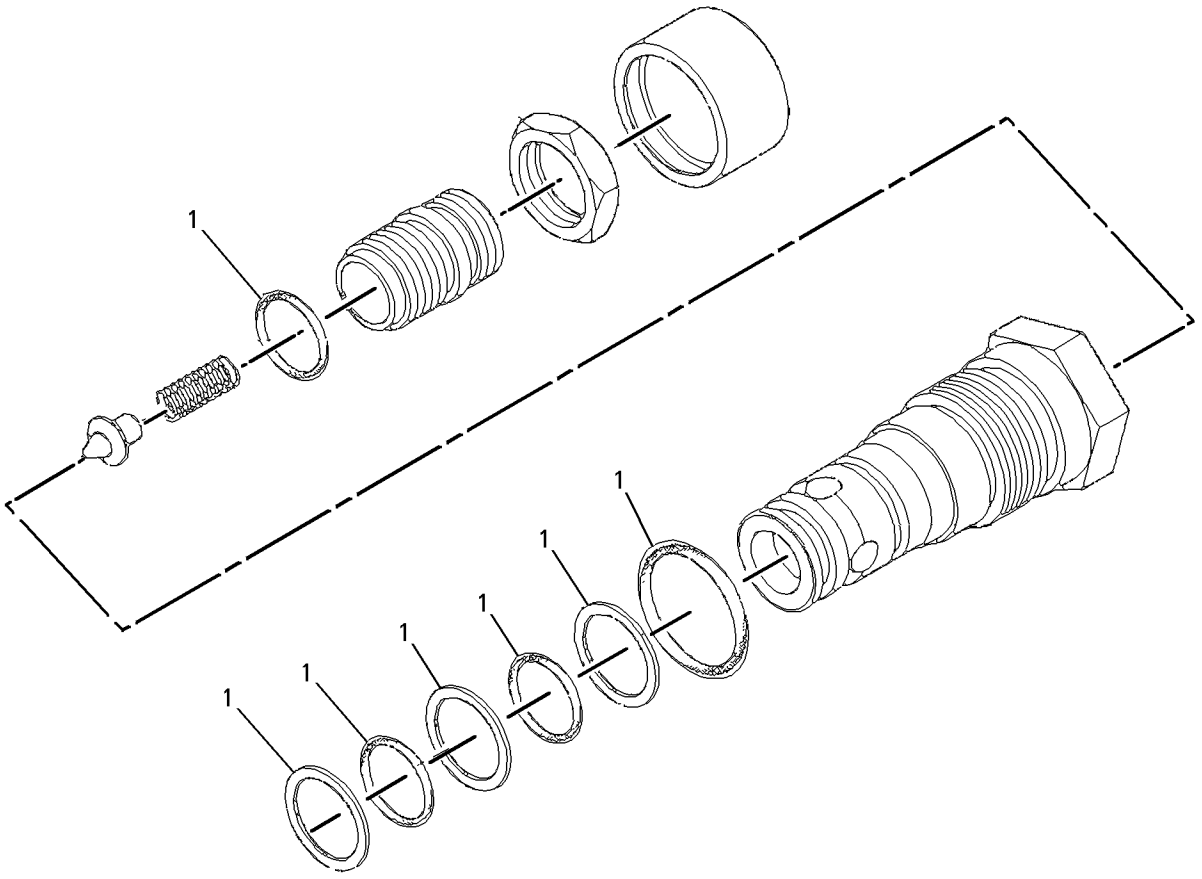

GRAPHIC #1 **<END>** g00869877

HYDRAULIC SYSTEM

224-2982 VALVE GP-RELIEF–LINE

S/N: BCZ1-2000
PART OF 212-6749 VALVE GP-COMBINATION
AN ATTACHMENT

SMCS-5069, 5117 **i01748223**

NOTE	REF NO	GRAPHIC REF	PART NUMBER	QTY	PART NAME 1 2 3 4 5 6 (PRODUCT LEVEL)	SEE PAGE
	1	1	**123-0693**	1	RING	
	2	1	**8J-2413**	2	SEAL-O-RING	
M	3	1	**2Y-9286**	1	NUT (M10X1 THD)	
	4	1	**121-3157**	1	RING	

M-METRIC PART

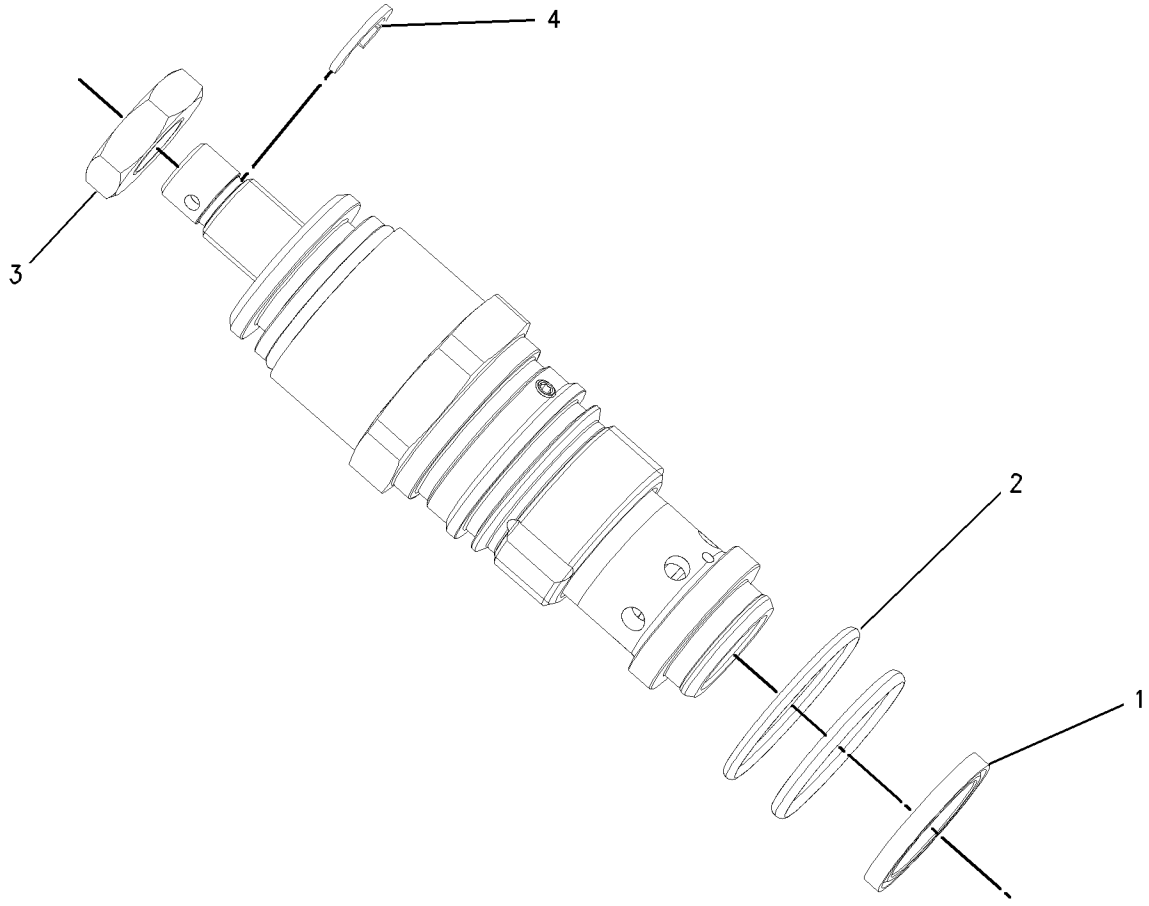

GRAPHIC #1 **<END>** g00896549

196-7486 VALVE GP-SOLENOID–CREEPER SPEED

S/N: BCZ1-2000

PART OF 210-0696 MANIFOLD GP-CONTROL

SMCS-5479 **i02161977**

NOTE	REF NO	GRAPHIC REF	PART NUMBER	QTY	PART NAME 1 2 3 4 5 6 (PRODUCT LEVEL)	SEE PAGE
J	1	1	**149-4076**	1	RING-BACKUP	
J	2	1	**149-4077**	1	RING-BACKUP	
J	3	1	**095-1750**	1	SEAL-O-RING	
J	4	1	**6V-8398**	1	SEAL-O-RING	
J	5	1	**6V-8399**	1	SEAL-O-RING	
	6	1	**195-7747**	1	SOLENOID	
J	7	1	**177-6628**	1	COVER	
J	8	1	**173-8277**	1	SEAL-O-RING	
J	9	1	**177-6970**	1	SEAL-O-RING	
					AVAILABLE REPAIR KIT(S):	
J			**177-6629**	1	KIT-SEAL (SOLENOID VALVE)	

J-KIT MARKED J SERVICES PARTS MARKED J

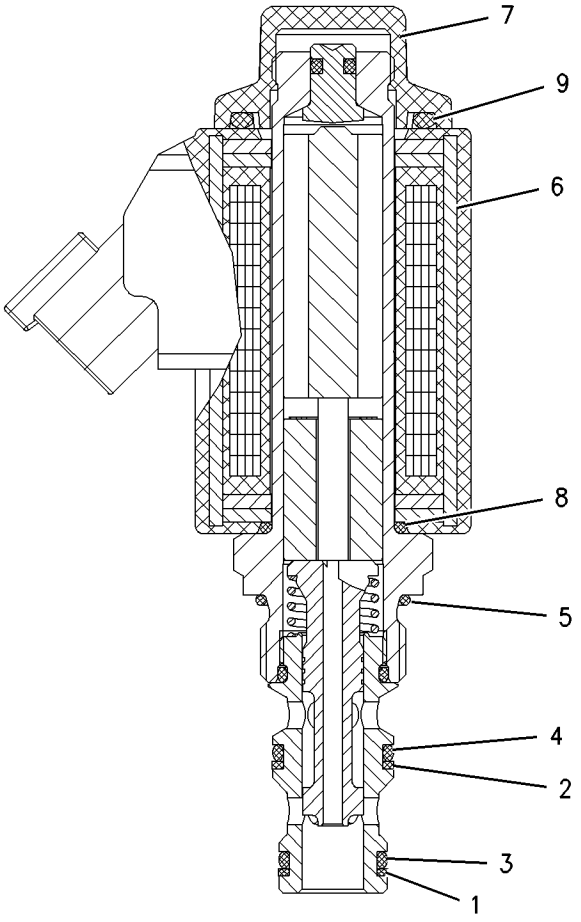

GRAPHIC #1 **<END>** g00821836

HYDRAULIC SYSTEM

196-7543 VALVE GP-SOLENOID

S/N: BCZ1-2000
PART OF 188-7642 LINES GP-STABILIZER
AN ATTACHMENT

SMCS-5479 **i02171873**

NOTE	REF NO	GRAPHIC REF	PART NUMBER	QTY	PART NAME 1 2 3 4 5 6 (PRODUCT LEVEL)	SEE PAGE
	1	1	**199-1155**	2	VALVE GP-SOLENOID (STABILIZER)	
					(EACH INCLUDES)	
	1A	1	**177-6628**	1	COVER	
	1B	1	**195-9089**	1	SOLENOID	
	1C	1	**205-1414**	1	KIT-SEAL (SOLENOID VALVE) (STABILIZER)	

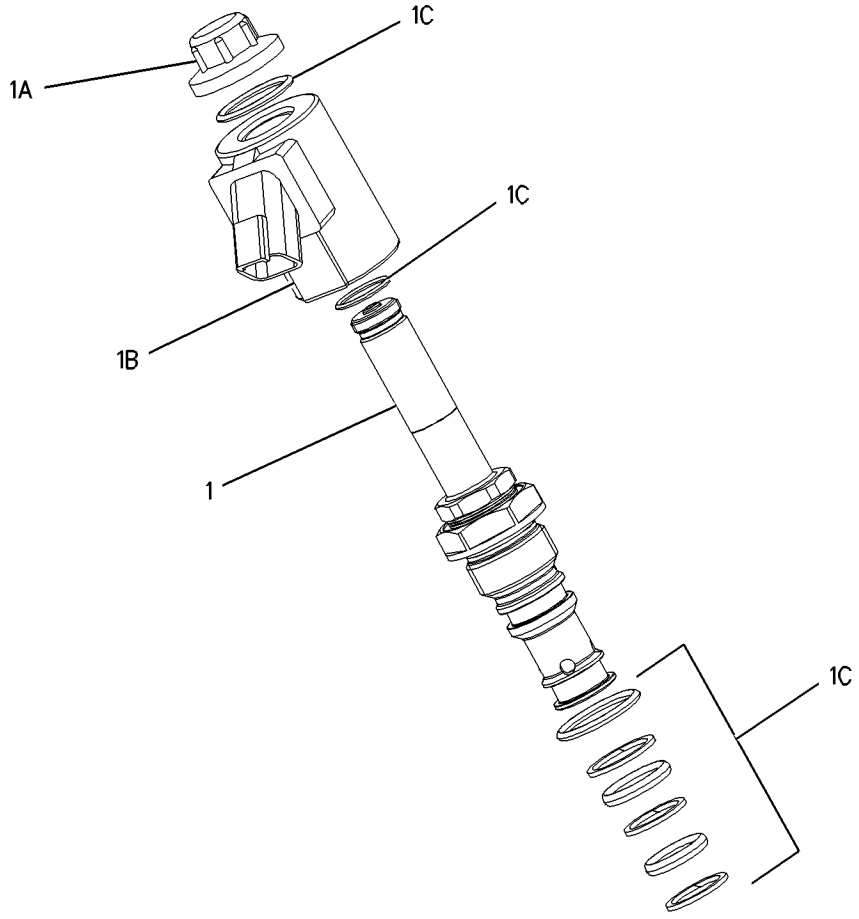

GRAPHIC #1 **<END>** g00921764

196-7544 VALVE GP-SOLENOID–BLADE

S/N: BCZ1-2000
PART OF 188-7647 LINES GP-BLADE CYL & VALVE
AN ATTACHMENT

SMCS-5479 **i02171874**

NOTE	REF NO	GRAPHIC REF	PART NUMBER	QTY	PART NAME 1 2 3 4 5 6 (PRODUCT LEVEL)	SEE PAGE
	1	1	**199-1155**	1	VALVE GP-SOLENOID (BLADE)	
	1A	1	**177-6628**	1	COVER	
	1B	1	**195-9089**	1	SOLENOID	
	1C	1	**205-1414**	1	KIT-SEAL (SOLENOID VALVE) (BLADE)	

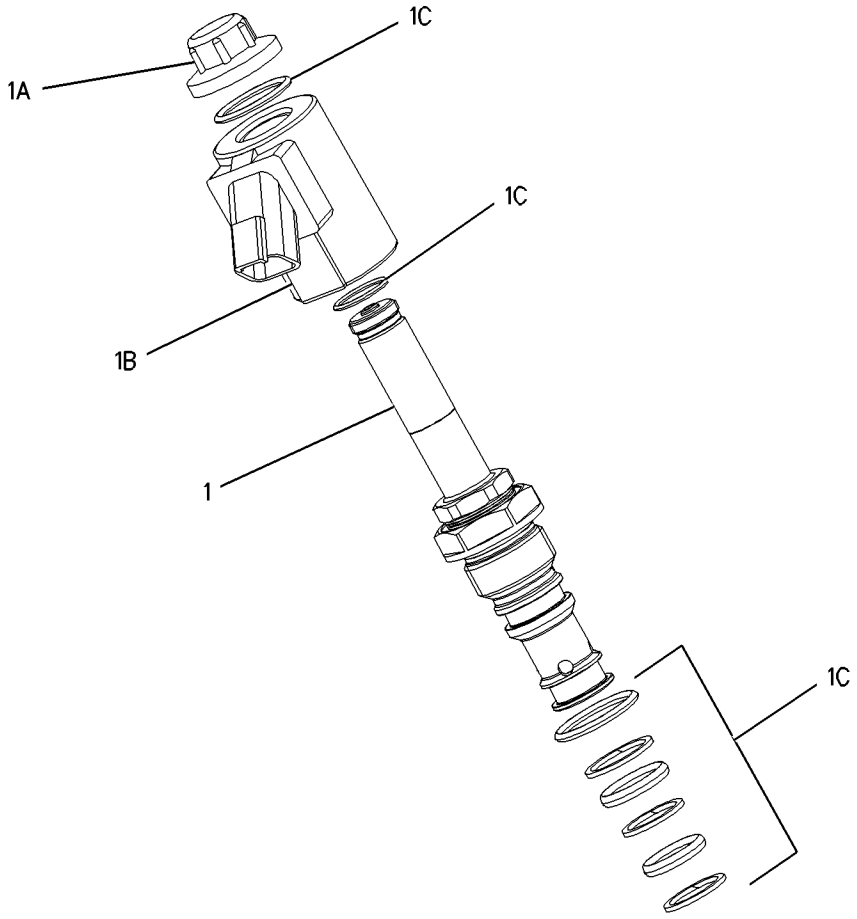

GRAPHIC #1 **<END>** g00921764

HYDRAULIC SYSTEM

199-1153 VALVE GP-SOLENOID

S/N: BCZ1-2000

PART OF 210-0696 MANIFOLD GP-CONTROL, 202-4725 VALVE GP-SOLENOID

SMCS-5479 **i02161972**

NOTE	REF NO	GRAPHIC REF	PART NUMBER	QTY	PART NAME 1 2 3 4 5 6 (PRODUCT LEVEL)	SEE PAGE
J	1	1	**149-4076**	1	RING-BACKUP	
J	2	1	**149-4077**	1	RING-BACKUP	
J	3	1	**095-1750**	1	SEAL-O-RING	
J	4	1	**6V-8398**	1	SEAL-O-RING	
J	5	1	**6V-8399**	1	SEAL-O-RING	
	6	1	**195-7747**	1	SOLENOID	
	7	1	**204-5099**	1	ACTUATOR AS	
J	8	1	**173-8277**	1	SEAL-O-RING	
J	9	1	**177-6970**	1	SEAL-O-RING	
					AVAILABLE REPAIR KIT(S):	
J			**177-6629**	1	KIT-SEAL (SOLENOID VALVE)	

J-KIT MARKED J SERVICES PART(S) MARKED J

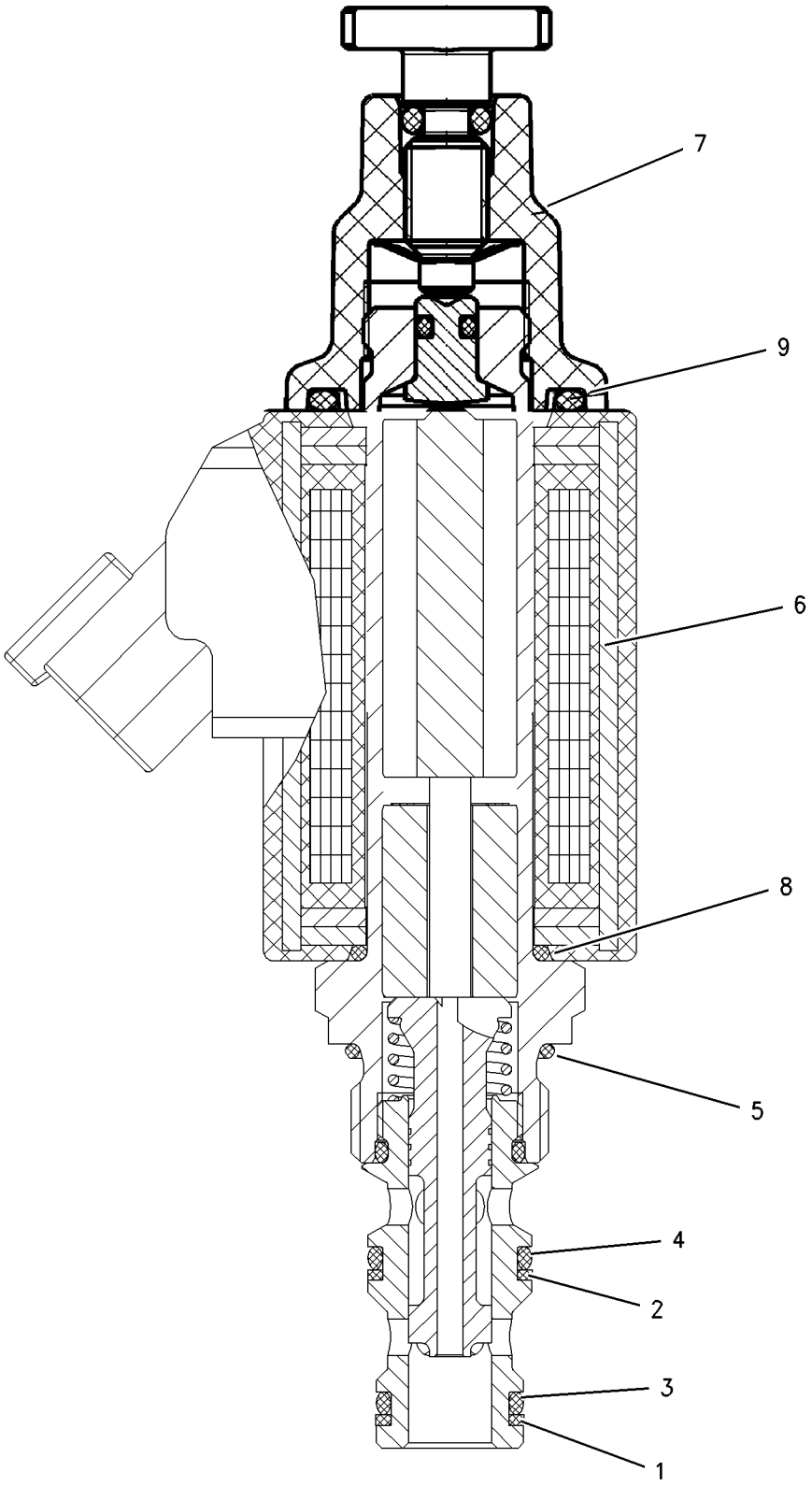

GRAPHIC #1 **<END>** g00822383

202-4725 VALVE GP-SOLENOID–OSCILLATING AXLE LOCK

S/N: BCZ1-2000

PART OF 210-0696 MANIFOLD GP-CONTROL

SMCS-5479 **i02163576**

NOTE	REF NO	GRAPHIC REF	PART NUMBER	QTY	PART NAME 1 2 3 4 5 6 (PRODUCT LEVEL)	SEE PAGE
	1	1	**180-5366**	1	BODY-VALVE	
Y	2	1	**199-1153**	1	VALVE GP-SOLENOID (OSCILLATING AXLE LOCK)	747
	3	1	**123-0175**	1	BODY	
	4	1	**161-6154**	4	SEAL-O-RING	
M	5	1	**8T-2396**	2	BOLT (M6X1X60-MM)	
M	6	1	**8T-0269**	2	BOLT-SOCKET HEAD (M6X1X20-MM)	

M-METRIC PART
Y-SEPARATE ILLUSTRATION

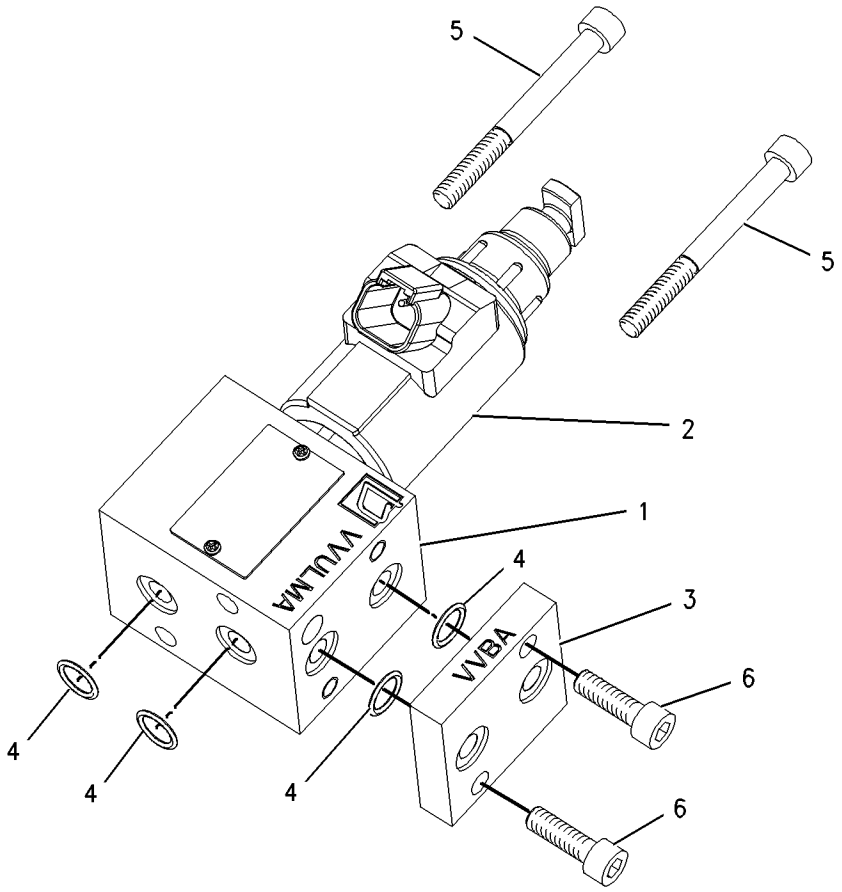

GRAPHIC #1 **<END>** g00922230

205-8069 VALVE GP-SOLENOID—MEDIUM PRESSURE

S/N: BCZ1-2000
PART OF 199-1152 VALVE GP-CONTROL
AN ATTACHMENT

SMCS-5479 **i02161970**

NOTE	REF NO	GRAPHIC REF	PART NUMBER	QTY	PART NAME 1 2 3 4 5 6 (PRODUCT LEVEL)	SEE PAGE
J	1	1	**149-4076**	1	RING-BACKUP	
J	2	1	**149-4077**	1	RING-BACKUP	
J	3	1	**095-1750**	1	SEAL-O-RING	
J	4	1	**6V-8398**	1	SEAL-O-RING	
J	5	1	**6V-8399**	1	SEAL-O-RING	
	6	1	**195-9089**	1	SOLENOID	
J	7	1	**177-6628**	1	COVER	
J	8	1	**173-8277**	1	SEAL-O-RING	
J	9	1	**177-6970**	1	SEAL-O-RING	
					AVAILABLE REPAIR KIT(S):	
J			**177-6629**	1	KIT-SEAL (SOLENOID VALVE)	

J-KIT MARKED J SERVICES PARTS MARKED J

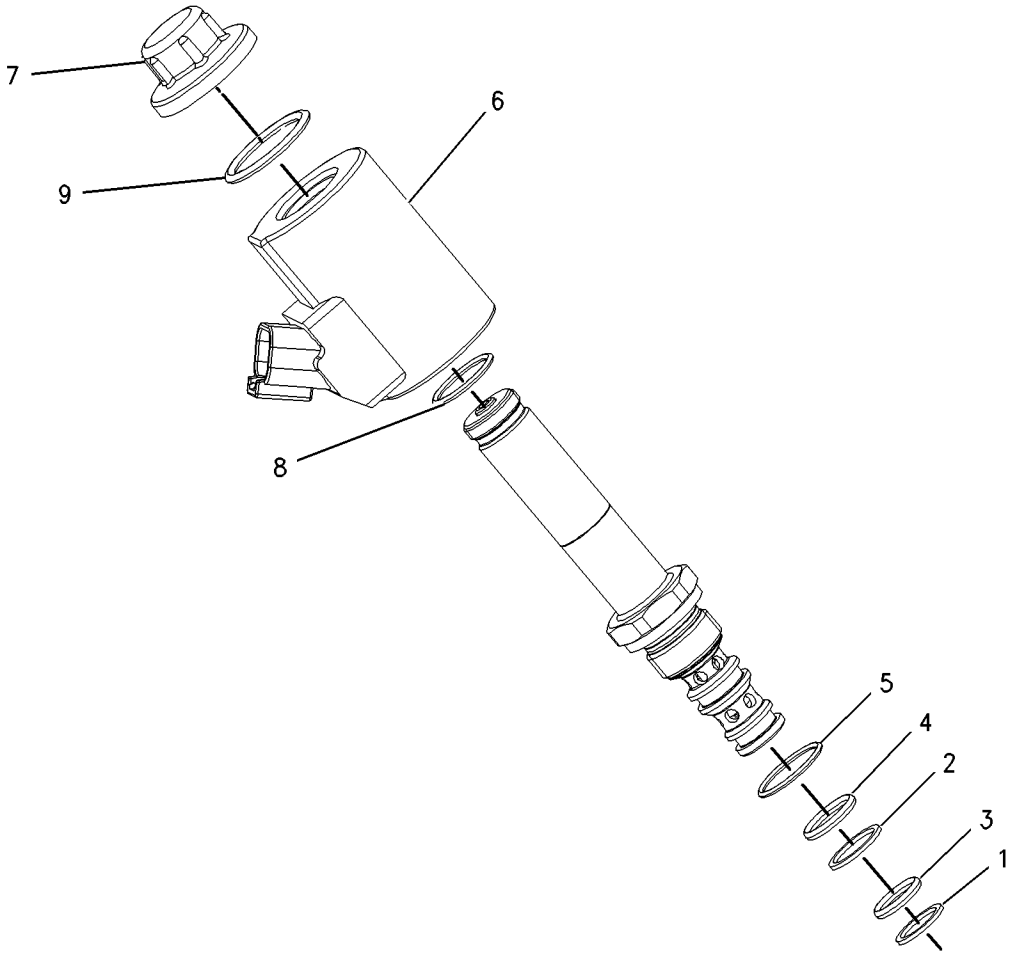

GRAPHIC #1 **<END>** g00835374

208-7751 VALVE GP-SOLENOID–PRESSURE CONTROL

S/N: BCZ1-2000
PART OF 191-2778 VALVE GP-COMBINATION
AN ATTACHMENT

SMCS-5479 **i01925874**

NOTE	REF NO	GRAPHIC REF	PART NUMBER	QTY	PART NAME 1 2 3 4 5 6 (PRODUCT LEVEL)	SEE PAGE
	1	1	**102-8802**	1	KIT-RECEPTACLE (2-PIN)	
					(INCLUDES RECEPTACLE AS & WEDGE)	
	2	1	**186-3735**	2	PIN-CONNECTOR	
M	3	1	**154-0172**	4	BOLT-SOCKET HEAD (M4X.07-THD)	
	4	1	**9X-7454**	1	SEAL-O-RING	
	5	1	**209-4526**	1	SEAL-O-RING	

M-METRIC PART

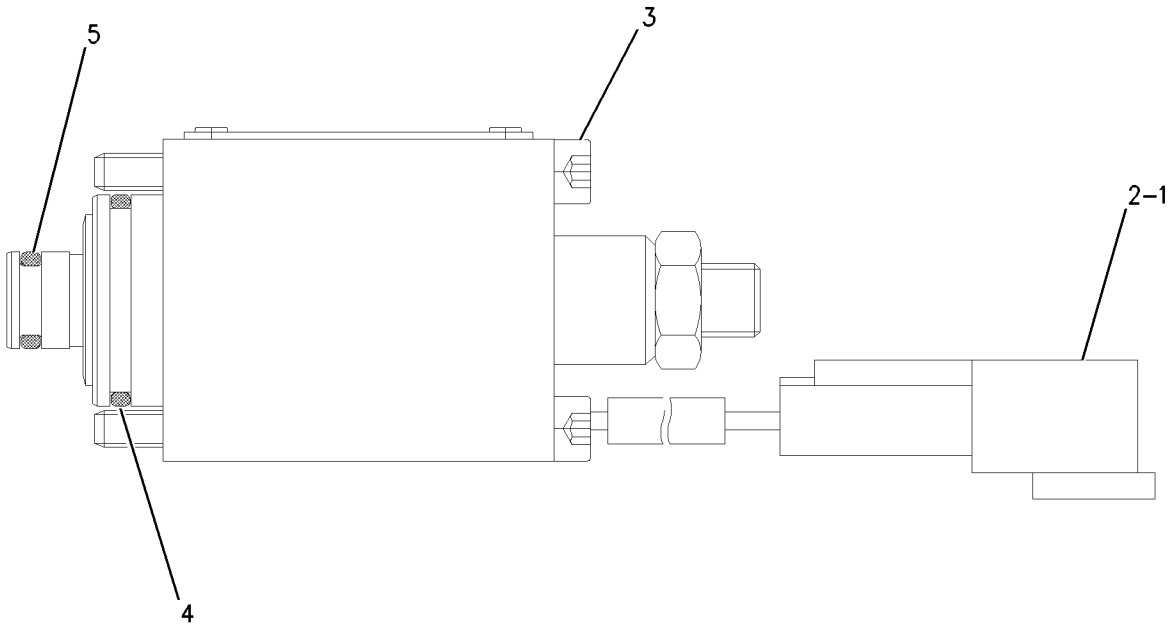

GRAPHIC #1 **<END>** g00869673

214-3914 VALVE GP-SOLENOID–FLOW CONTROL

S/N: BCZ1-2000
PART OF 191-2778 VALVE GP-COMBINATION
AN ATTACHMENT

SMCS-5479 **i02161969**

NOTE	REF NO	GRAPHIC REF	PART NUMBER	QTY	PART NAME 1 2 3 4 5 6 (PRODUCT LEVEL)	SEE PAGE
	1	1	**102-8802**	1	KIT-RECEPTACLE (2-PIN)	
					(INCLUDES RECEPTACLE AS & WEDGE)	
	2	1	**186-3735**	2	PIN-CONNECTOR	
	3	1	**210-1330**	1	KIT-SEAL (SOLENOID VALVE) (FLOW CONTROL)	

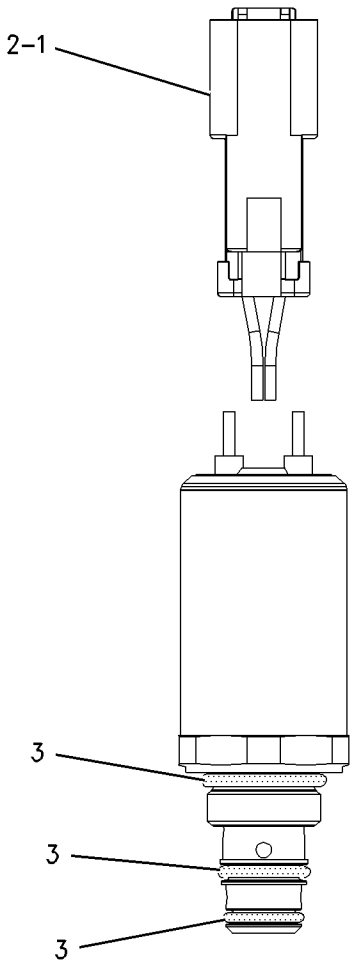

GRAPHIC #1 **<END>** g00870016

214-3915 VALVE GP-SOLENOID–HAMMER ENABLE

S/N: BCZ1-2000

PART OF 191-2778 VALVE GP-COMBINATION, 192-3176 VALVE GP-CONTROL

AN ATTACHMENT

SMCS-5479 **i02161968**

NOTE	REF NO	GRAPHIC REF	PART NUMBER	QTY	PART NAME 1 2 3 4 5 6 (PRODUCT LEVEL)	SEE PAGE
	1	1	**102-8802**	1	KIT-RECEPTACLE (2-PIN)	
					(INCLUDES RECEPTACLE AS & WEDGE)	
	2	1	**186-3735**	2	PIN-CONNECTOR	
	3	1	**210-1330**	1	KIT-SEAL (SOLENOID VALVE)	

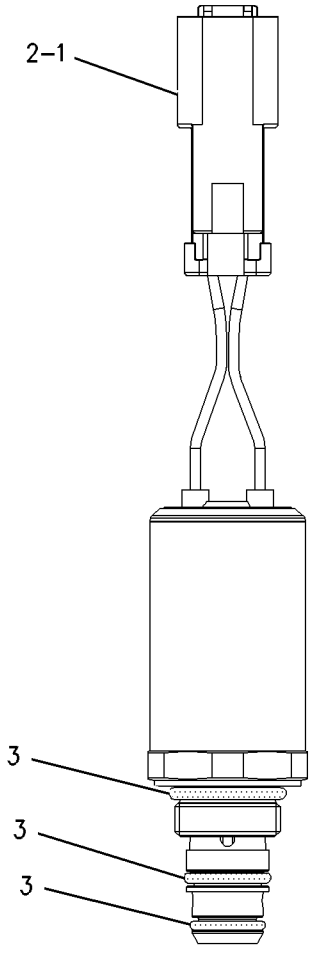

GRAPHIC #1 **<END>** g00870000

IMPLEMENTS

185-8540 BOOM AR

S/N: BCZ1-2000
1 PIECE
AN ATTACHMENT

SMCS-6000 **i01988788**

NOTE	PART NUMBER	QTY	PART NAME 1 2 3 4 5 6 (PRODUCT LEVEL)	SEE PAGE
Y	*185-8539*	1	BOOM GP	755
Y	*183-8874*	2	CYLINDER & SEAL GP-BOOM	445
Y	*183-8876*	1	CYLINDER & SEAL GP-STICK (VARIABLE ADJUSTABLE BOOM)	448
Y	*188-4945*	1	LIGHTING GP-FLOOD	160
Y	*185-3387*	1	LINES GP-BOOM	504
Y	*185-3379*	1	LINES GP-BOOM CYLINDER	509
Y	*185-3421*	1	LINES GP-GREASE	761
Y	*196-9732*	1	MIRROR GP-REAR VIEW	886

Y-SEPARATE ILLUSTRATION

<END>

185-8547 BOOM AR–VARIABLE ADJUSTABLE

S/N: BCZ1-2000
AN ATTACHMENT

SMCS-6000 **i01988787**

NOTE	PART NUMBER	QTY	PART NAME 1 2 3 4 5 6 (PRODUCT LEVEL)	SEE PAGE
Y	*185-8543*	1	BOOM GP-FORE	757
Y	*185-8546*	1	BOOM GP-STUB	759
Y	*183-8875*	1	CYLINDER & SEAL GP-BOOM (FORE)	446
Y	*183-8873*	2	CYLINDER & SEAL GP-BOOM (STUB)	444
Y	*183-8876*	1	CYLINDER & SEAL GP-STICK (VARIABLE ADJUSTABLE BOOM)	448
Y	*188-4945*	1	LIGHTING GP-FLOOD	160
Y	*185-3393*	1	LINES GP-BOOM	506
Y	*185-3379*	1	LINES GP-BOOM CYLINDER	509
Y	*185-3425*	1	LINES GP-GREASE	763
Y	*187-7365*	1	LINES GP-PILOT	557
Y	*186-0494*	1	MIRROR GP-REAR VIEW	884

Y-SEPARATE ILLUSTRATION

<END>

IMPLEMENTS

185-8539 BOOM GP

S/N: BCZ1-2000
PART OF 185-8540 BOOM AR
AN ATTACHMENT

SMCS-6460, 6501, 6516, 6521, 6535, 6536 **i02066540**

NOTE	REF NO	GRAPHIC REF	PART NUMBER	QTY	PART NAME 1 2 3 4 5 6 (PRODUCT LEVEL)	SEE PAGE
B	1	1	**7Y-2497**	1	SHIM (1.60-MM THK)	
B	2	1	**7Y-2498**	1	SHIM (1.60-MM THK)	
	3	1	**087-6444**	2	PLATE	
B	4	1	**093-0083**	1	SHIM (1-MM THK)	
B	5	1	**093-0084**	1	SHIM (1.0-MM THK)	
B	6	1	**093-0090**	1	SHIM (1.0-MM THK)	
B	7	1	**093-0115**	1	SHIM (2-MM THK)	
B	8	1	**093-0116**	1	SHIM (2-MM THK)	
B	9	1	**093-0122**	1	SHIM (2.0-MM THK)	
	10	1	**093-0349**	2	WASHER (22X60X6-MM THK)	
	11	1	**202-3165**	1	PIN AS	
	12	1	**128-5858**	2	SPACER (103X150X8-MM THK)	
	13	1	**185-8538**	1	BOOM & BEARING AS	
	13A	1	**7X-4803**	2	SEAL-LIP TYPE	
	13B	1	**137-2819**	2	BEARING-SLEEVE	
	14	1	**188-1361**	1	PIN AS	
	15	1	**188-3351**	1	PIN	
B	16	1	**133-2425**	1	SHIM (0.5-MM THK)	
B	17	1	**133-2426**	1	SHIM (0.5-MM THK)	
B	18	1	**133-2427**	1	SHIM (0.5-MM THK)	
M	19	1	**7X-2553**	6	BOLT (M16X2X40-MM)	
	20	1	**7X-4803**	2	SEAL-LIP TYPE	
	21	1	**8T-4123**	2	WASHER-PLATED (22X35X3.5-MM THK)	
M	22	1	**8T-4780**	2	BOLT (M20X2.5X30-MM)	
	23	1	**9X-8257**	6	WASHER (17.5X30X3.5-MM THK)	

B-USE AS REQUIRED
M-METRIC PART

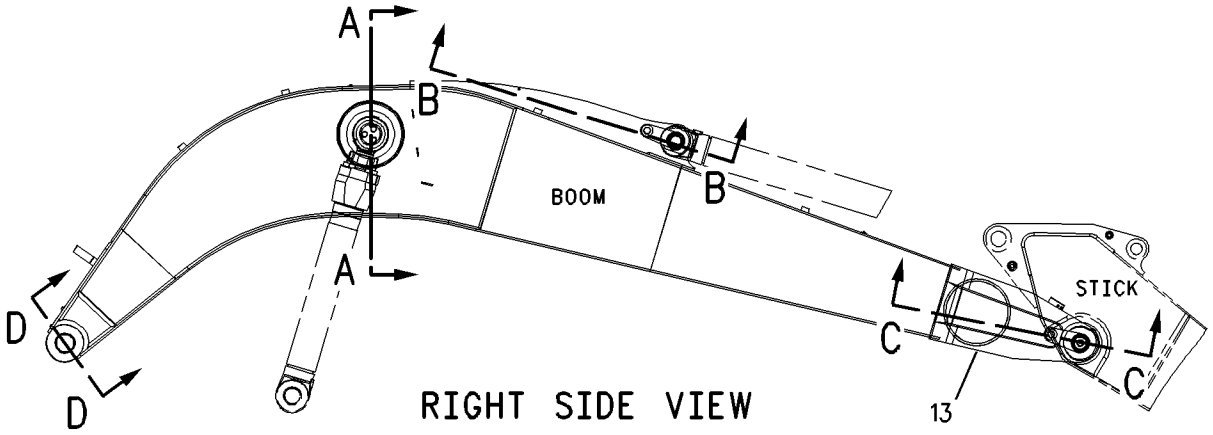

RIGHT SIDE VIEW

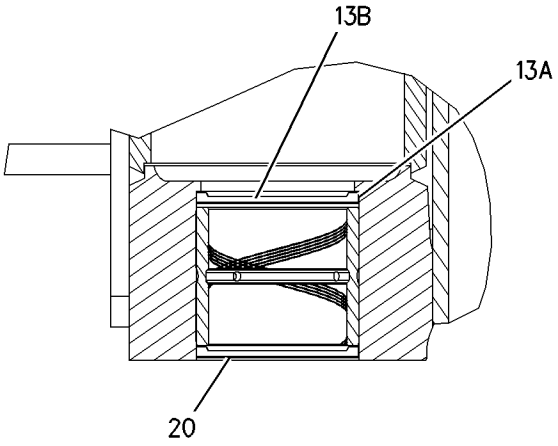

SECTION D-D

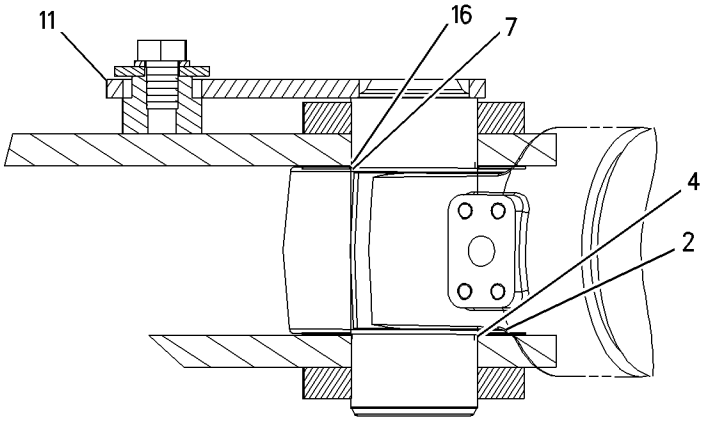

SECTION B-B

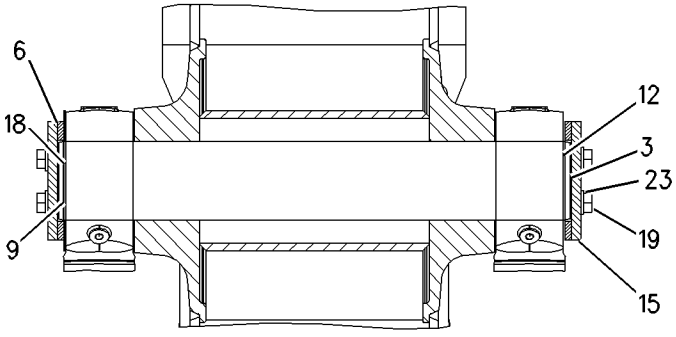

SECTION A-A

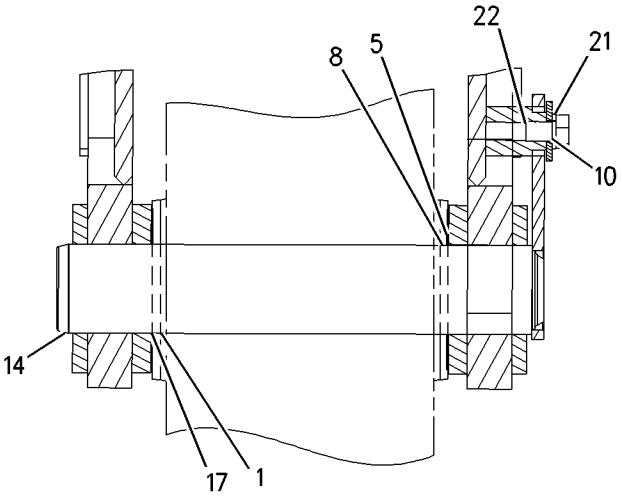

SECTION C-C

GRAPHIC #1 **<END>** g00931549

IMPLEMENTS

185-8543 BOOM GP-FORE

S/N: BCZ1-2000
PART OF 185-8547 BOOM AR
AN ATTACHMENT

SMCS-6535 **i02066519**

NOTE	REF NO	GRAPHIC REF	PART NUMBER	QTY	PART NAME 1 2 3 4 5 6 (PRODUCT LEVEL)	SEE PAGE
B	1	1	**4I-0575**	1	SHIM (1-MM THK)	
B	2	1	**4I-0576**	1	SHIM (1.60-MM THK)	
B	3	1	**4I-0577**	1	SHIM (2-MM THK)	
B	4	1	**7Y-2497**	1	SHIM (1.60-MM THK)	
B	5	1	**7Y-2498**	1	SHIM (1.60-MM THK)	
B	6	1	**093-0083**	1	SHIM (1-MM THK)	
B	7	1	**093-0084**	1	SHIM (1.0-MM THK)	
B	8	1	**093-0115**	1	SHIM (2-MM THK)	
B	9	1	**093-0116**	1	SHIM (2-MM THK)	
	10	1	**093-0349**	3	WASHER (22X60X6-MM THK)	
	11	1	**202-3165**	1	PIN AS	
B	12	1	**133-2428**	1	SHIM (0.5-MM THK)	
	13	1	**185-8542**	1	BOOM & BEARING AS	
	13A	1	**190-5334**	2	BEARING-SLEEVE	
	14	1	**187-9307**	2	BOSS	
	15	1	**188-1361**	1	PIN AS	
	16	1	**188-3357**	1	PIN AS	
B	17	1	**133-2425**	1	SHIM (0.5-MM THK)	
B	18	1	**133-2426**	1	SHIM (0.5-MM THK)	
	19	1	**8T-4123**	3	WASHER-PLATED (22X35X3.5-MM THK)	
M	20	1	**8T-4780**	3	BOLT (M20X2.5X30-MM)	
F			**132-4099**	1	FILM-CAT (RH)	
F			**132-4100**	1	FILM-CAT (LH)	

B-USE AS REQUIRED
F-NOT SHOWN
M-METRIC PART

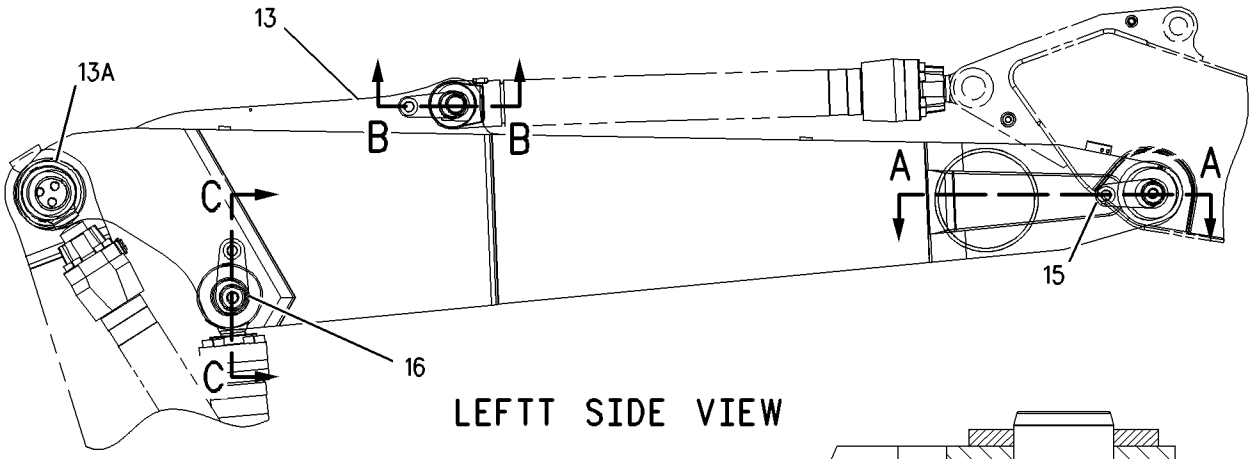

LEFTT SIDE VIEW

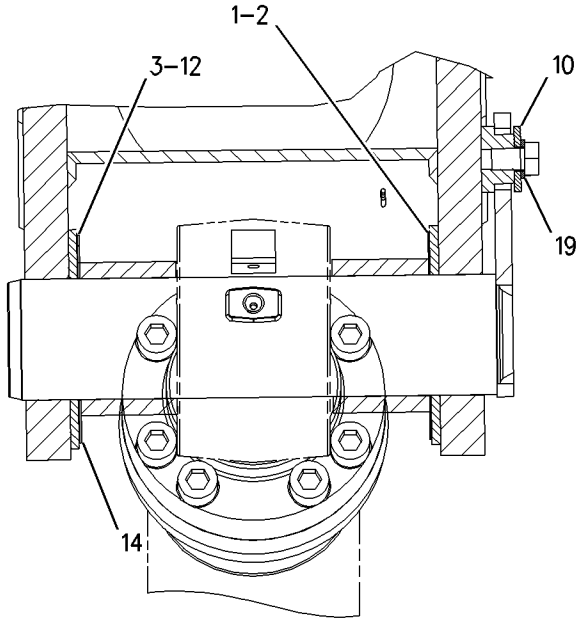

SECTION C–C

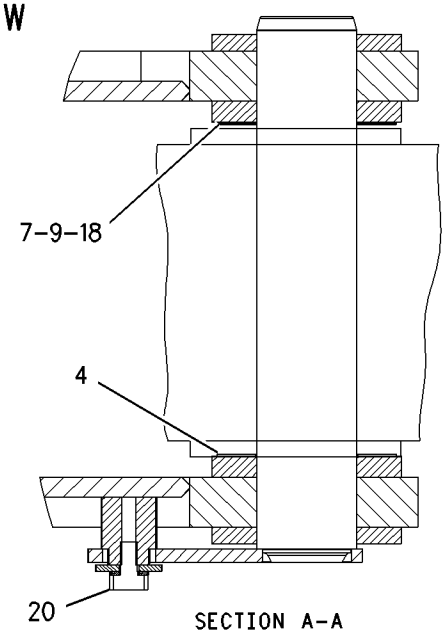

SECTION A–A

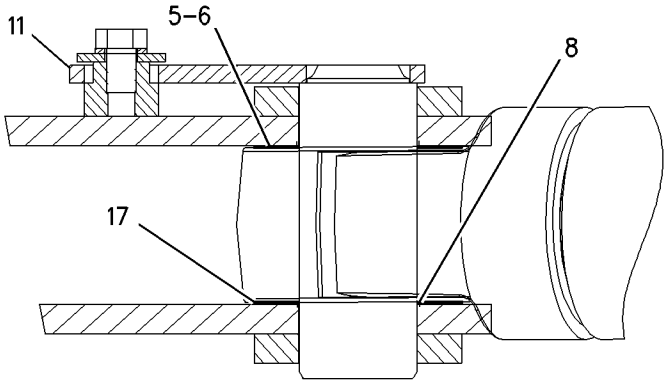

SECTION B–B

GRAPHIC #1 **<END>** g00807354

185-8546 BOOM GP-STUB

S/N: BCZ1-2000
PART OF 185-8547 BOOM AR
AN ATTACHMENT

SMCS-6536 **i02093451**

NOTE	REF NO	GRAPHIC REF	PART NUMBER	QTY	PART NAME 1 2 3 4 5 6 (PRODUCT LEVEL)	SEE PAGE
B	1	1	**7Y-3355**	2	SHIM (1.60-MM THK)	
	2	1	**087-6444**	2	PLATE	
B	3	1	**093-0090**	3	SHIM (1.0-MM THK)	
B	4	1	**093-0122**	2	SHIM (2-MM THK)	
	5	1	**093-0349**	1	WASHER (22X60X6-MM THK)	
	6	1	**128-5858**	2	SPACER (103X150X8-MM THK)	
	7	1	**185-8545**	1	BOOM & BEARING AS	
	7A	1	**7Y-2397**	2	BEARING-SLEEVE	
	7B	1	**190-2777**	2	BEARING-SLEEVE	
	8	1	**187-9305**	2	BOSS	
	9	1	**188-3351**	1	PIN	
	10	1	**188-3354**	1	PIN AS	
B	11	1	**133-2427**	2	SHIM (0.5-MM THK)	
M	12	1	**7X-2553**	6	BOLT (M16X2X40-MM)	
	13	1	**7X-4803**	2	SEAL-LIP TYPE	
M	14	1	**8T-4123**	1	WASHER-PLATED (22X35X3.5-MM THK)	
M	15	1	**8T-4780**	1	BOLT (M20X2.5X30-MM)	
	16	1	**9X-4597**	2	SEAL-LIP TYPE	
	17	1	**9X-8257**	6	WASHER (17.5X30X3.5-MM THK)	

B-USE AS REQUIRED
M-METRIC PART

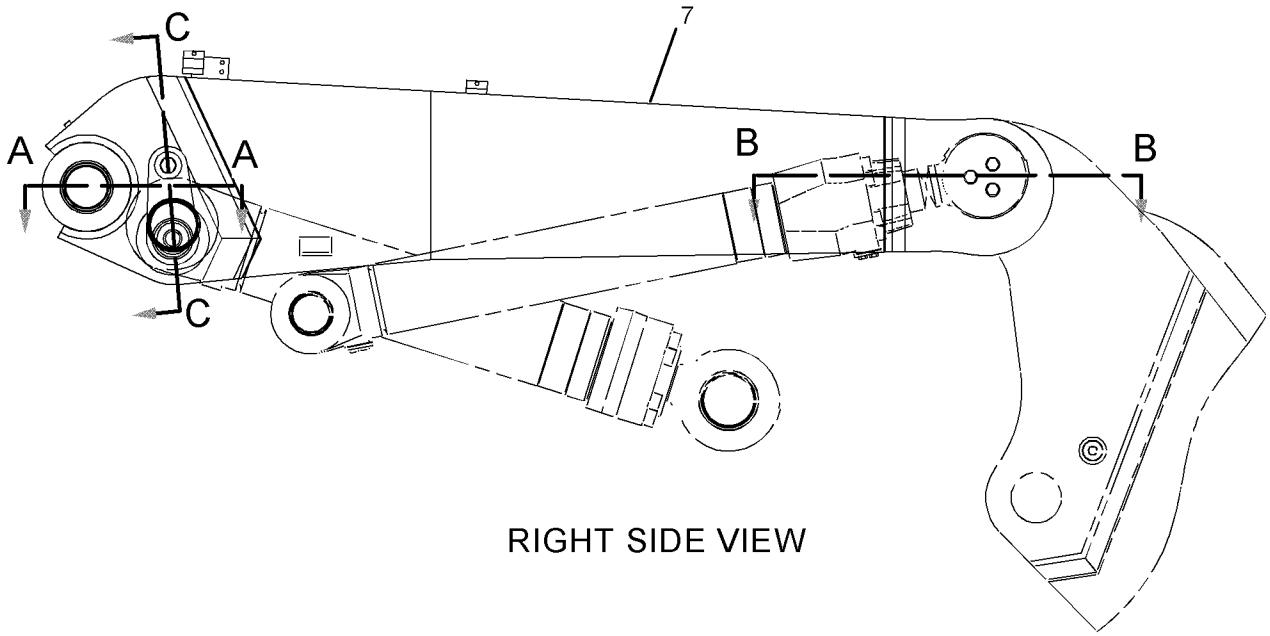

RIGHT SIDE VIEW

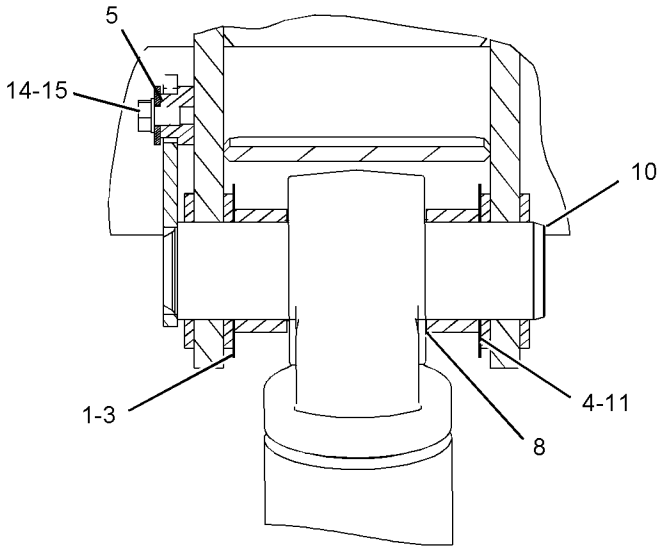

SECTION C-C

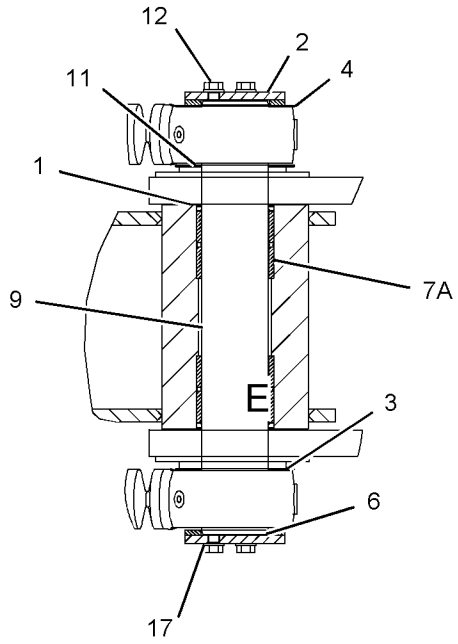

SECTION B-B

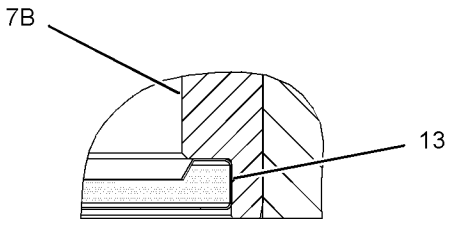

VIEW OF AREA D

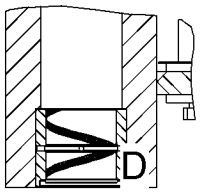

SECTION A-A

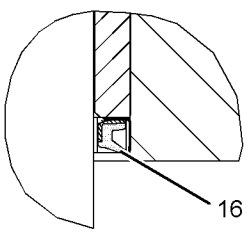

VIEW OF AREA E

GRAPHIC #1 **<END>** g01067304

185-3421 LINES GP-GREASE–BOOM

S/N: BCZ1-2000
PART OF 185-8540 BOOM AR
AN ATTACHMENT

SMCS-7510 **i02166589**

NOTE	REF NO	GRAPHIC REF	PART NUMBER	QTY	PART NAME 1 2 3 4 5 6 (PRODUCT LEVEL)	SEE PAGE
	1	1	**5W-2817**	1	FITTING-GREASE	
M	2	1	**9X-6615**	2	BOLT (M5X0.8X30-MM)	
	3	1	**117-7629**	3	TUBE AS	
	4	1	**117-7630**	11	FITTING-ADAPTER	
	5	1	**117-7631**	14	FITTING-COUPLER	
	6	1	**117-7634**	3	FITTING-STRAIGHT	
	7	1	**117-7635**	4	ELBOW	
	8	1	**141-2778**	1	FITTING-STRAIGHT	
	9	1	**141-2785**	2	FITTING-ADAPTER	
	10	1	**141-2786**	2	FITTING-COUPLER	
Y	11	1	**142-7434**	1	VALVE GP-LUBE DISTRIBUTION	793
	12	1	**166-0036**	1	FILTER GP-GREASE (BOOM)	
		1	**5W-1701**	1	WASHER (22X27X1.5-MM THK)	
		1	**168-3158**	1	FILTER-GREASE (BOOM)	
BM	13	1	**8T-6699**	1	BOLT-SOCKET HEAD (M5X0.8X35-MM)	
B	14	1	**9X-6772**	10	STRAP-CABLE	
D	15	1	**169-8323**		HOSE (0.28M)	
D	16	1	**169-8323**		HOSE (3.6M)	
D	17	1	**169-8323**		HOSE (2.9M)	
D	18	1	**169-8323**		HOSE (3.77M)	
D	19	1	**169-8323**		HOSE (0.52M)	
D	20	1	**169-8323**		HOSE (3.3M)	
D	21	1	**169-8323**		HOSE (2.75M)	
D	22	1	**169-8324**		HOSE (3.85M)	

B-USE AS REQUIRED
D-ORDER BY THE METER
M-METRIC PART
Y-SEPARATE ILLUSTRATION

185-3421 **LINES GP-GREASE** *(contd.)* **i02166589**

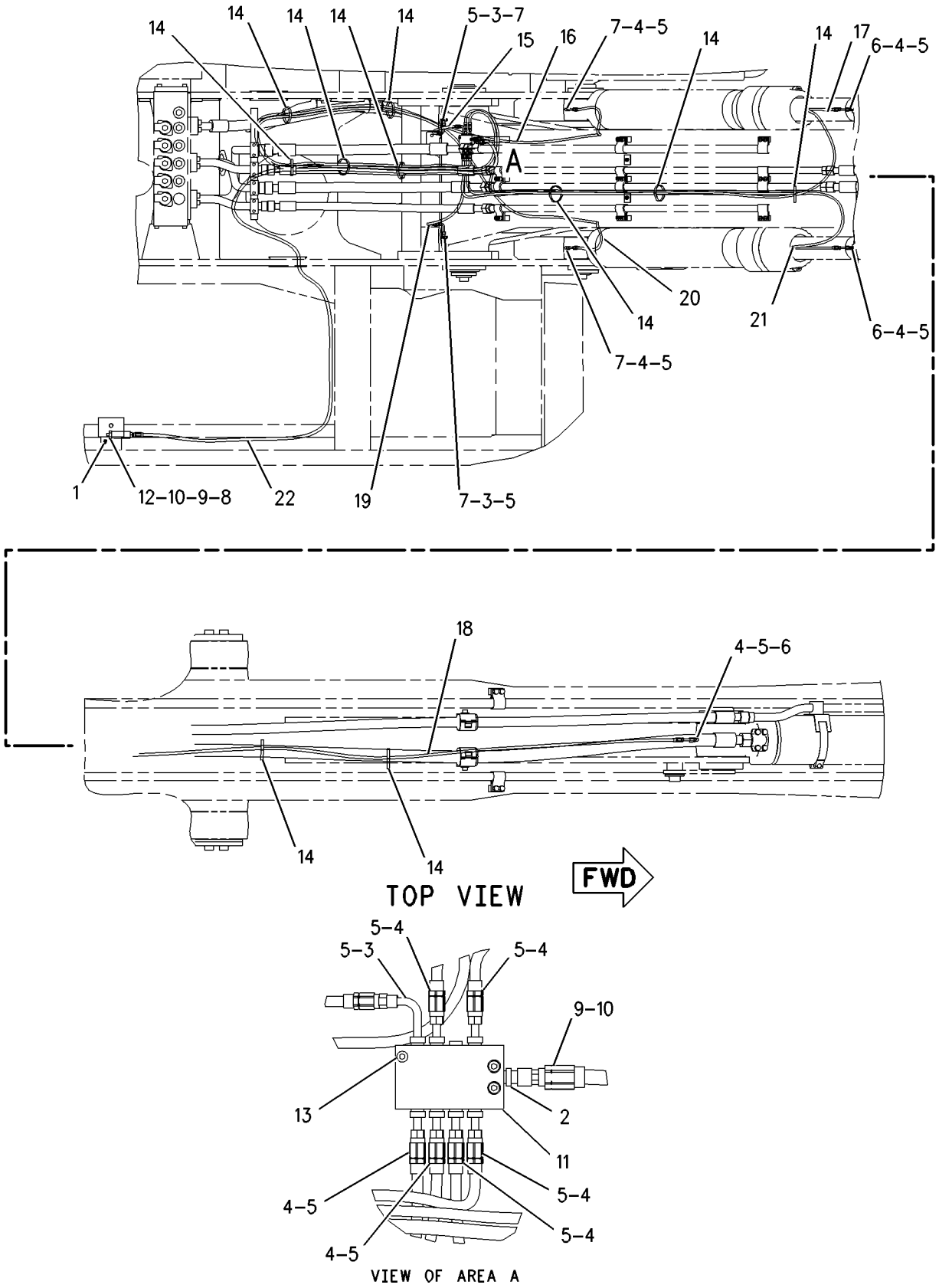

GRAPHIC #1 **<END>** g00929622

185-3425 LINES GP-GREASE–BOOM, VARIABLE ADJUSTABLE

S/N: BCZ1-2000
PART OF 185-8547 BOOM AR
AN ATTACHMENT

SMCS-7510 **i02166591**

NOTE	REF NO	GRAPHIC REF	PART NUMBER	QTY	PART NAME 1 2 3 4 5 6 (PRODUCT LEVEL)	SEE PAGE
	1	1	**5W-2817**	1	FITTING-GREASE	
M	2	2	**9X-6615**	2	BOLT (M5X0.8X30-MM)	
	3	2	**117-7629**	1	TUBE AS	
	4	1,2	**117-7630**	17	FITTING-ADAPTER	
	5	1,2	**117-7631**	18	FITTING-COUPLER	
	6	1	**117-7634**	3	FITTING-STRAIGHT	
	7	1,2	**117-7635**	8	ELBOW	
	8	1	**141-2778**	1	FITTING-STRAIGHT	
	9	1	**141-2785**	2	FITTING-ADAPTER	
	10	1	**141-2786**	2	FITTING-COUPLER	
Y	11	2	**142-7433**	1	VALVE GP-LUBE DISTRIBUTION	792
	12	1	**166-0036**	1	FILTER GP-GREASE (BOOM)	
		1	**5W-1701**	1	WASHER (22X27X1.5-MM THK)	
		1	**168-3158**	1	FILTER-GREASE (BOOM)	
	13	1	**203-4561**	1	TUBE	
	14	1	**203-4562**	1	TUBE	
M	15	2	**8T-6699**	1	BOLT-SOCKET HEAD (M5X0.8X35-MM)	
B	16	2	**9X-6772**	12	STRAP-CABLE	
D	19	1	**169-8323**		HOSE (2.15M)	
D	20	1	**169-8323**		HOSE (2.75M)	
D	21	1	**169-8323**		HOSE (4.7M)	
D	22	1	**169-8323**		HOSE (0.5M)	
D	23	1	**169-8323**		HOSE (3.65M)	
D	24	1	**169-8323**		HOSE (0.5M)	
D	25	1	**169-8323**		HOSE (4.75M)	
D	26	1	**169-8323**		HOSE (1.95M)	
D	27	2	**169-8323**		HOSE (3.55M)	
D	28	1	**169-8324**		HOSE (5.15M)	

B-USE AS REQUIRED
D-ORDER BY THE METER
M-METRIC PART
Y-SEPARATE ILLUSTRATION

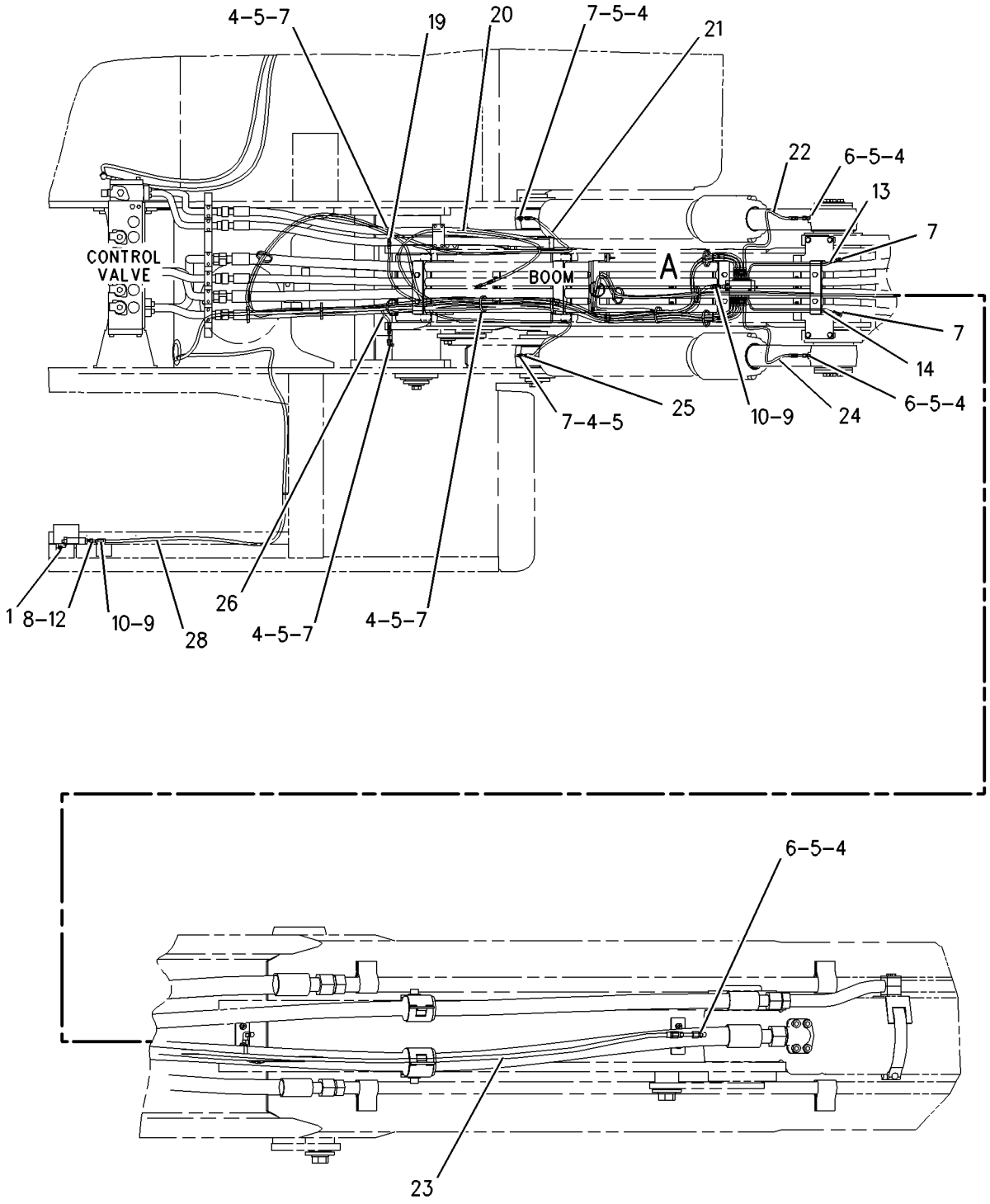

TOP VIEW FWD

REFER TO ALL ILLUSTRATIONS OF THIS GROUP FOR AUXILIARY VIEWS

GRAPHIC #1 g00930049

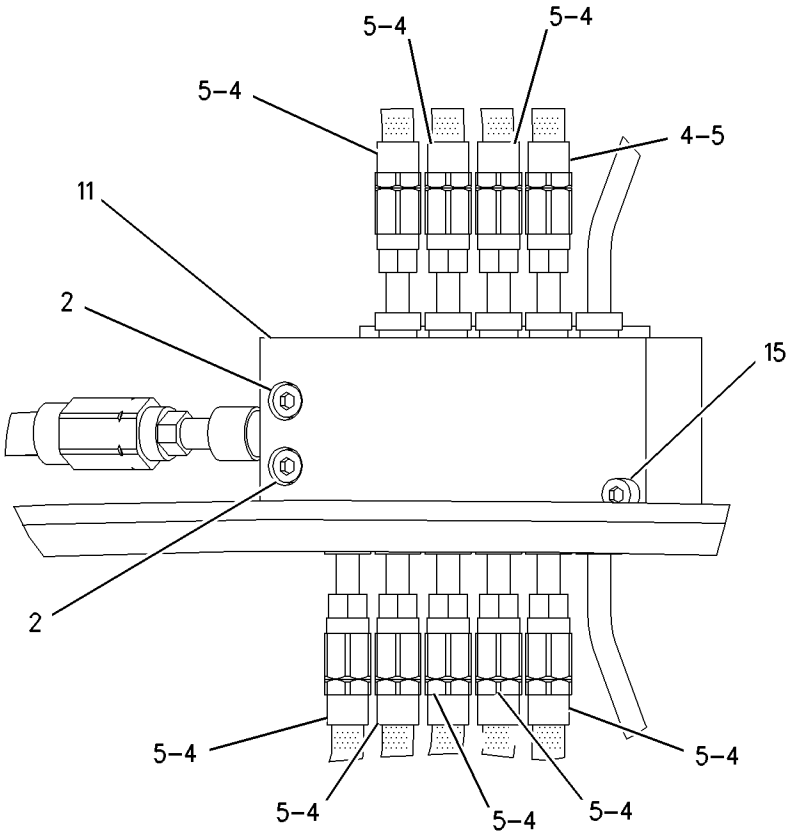

VIEW OF AREA A

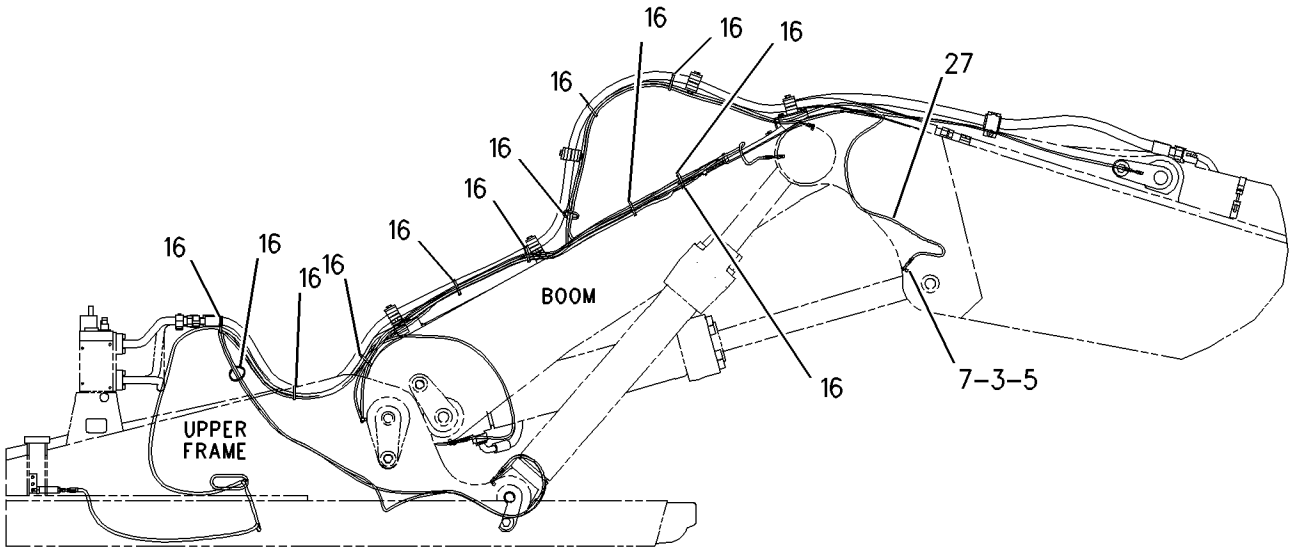

RIGHT SIDE VIEW

GRAPHIC #2 **<END>** g00930050

214-8993 LINES GP-GREASE–SWING GEAR

S/N: BCZ1-223, 230-283

PART OF 186-0468 CHASSIS AR

SMCS-7510 **i01820981**

NOTE	REF NO	GRAPHIC REF	PART NUMBER	QTY	PART NAME 1 2 3 4 5 6 (PRODUCT LEVEL)	SEE PAGE
	1	1	**5W-2817**	2	FITTING-GREASE	
	2	1	**117-7630**	4	FITTING-ADAPTER (MALE) (M7X0.75 THD)	
	3	1	**117-7631**	4	FITTING-COUPLER (M7X0.75 THD)	
	4	1	**117-7634**	2	FITTING-STRAIGHT (FOR 6MM O.D. HOSE)	
	5	1	**117-7635**	2	ELBOW	
	6	1	**204-3388**	2	FITTING	
B	7	1	**9X-6772**	3	STRAP-CABLE	
D	8	1	**169-8323**		HOSE (3.15M)	
D	9	1	**169-8323**		HOSE (2.9M)	

B-USE AS REQUIRED
D-ORDER BY THE METER

214-8993 **LINES GP-GREASE** *(contd.)* **i01820981**

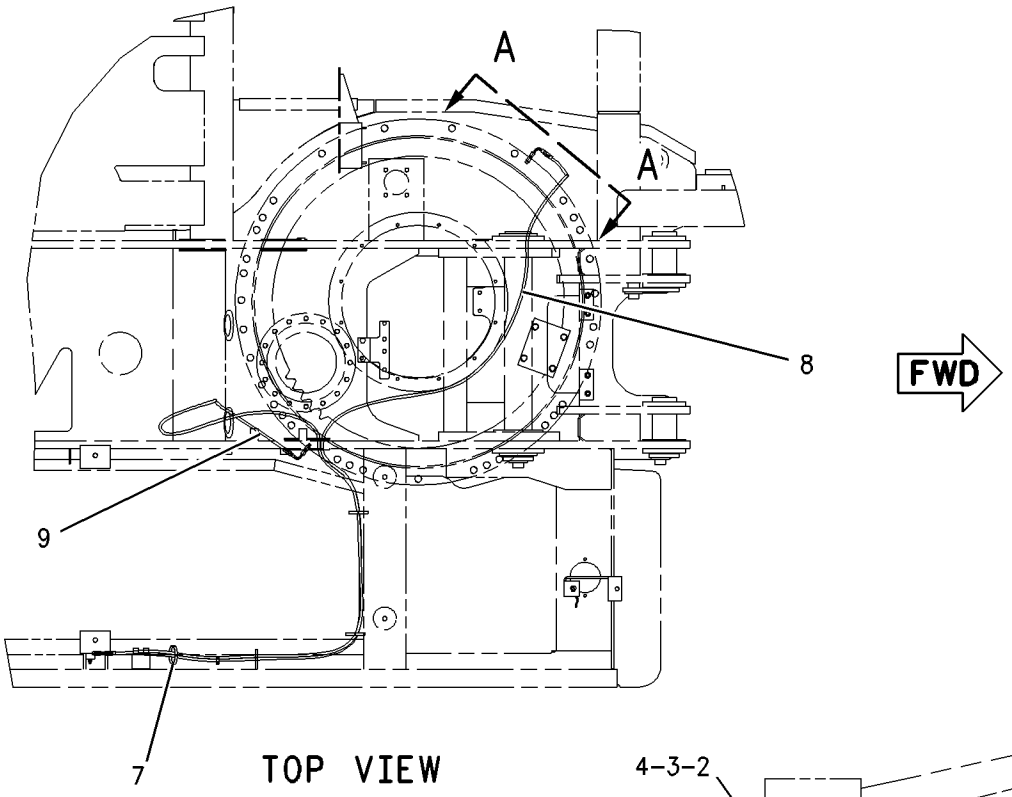

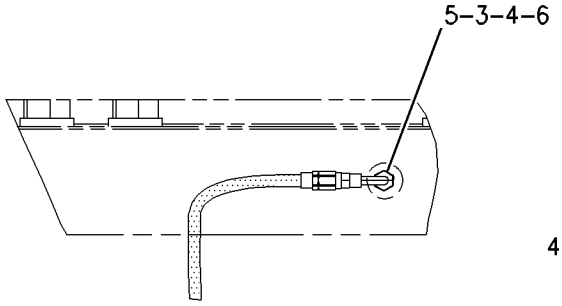

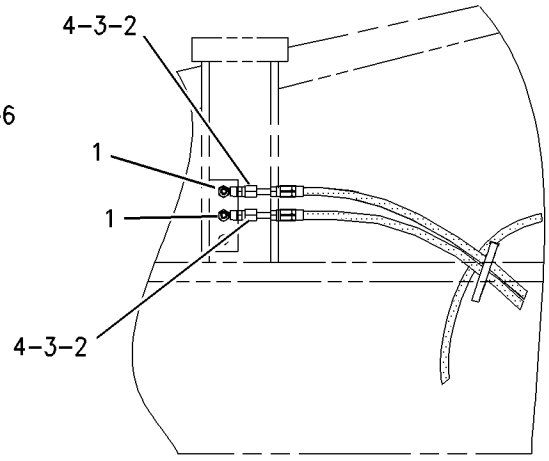

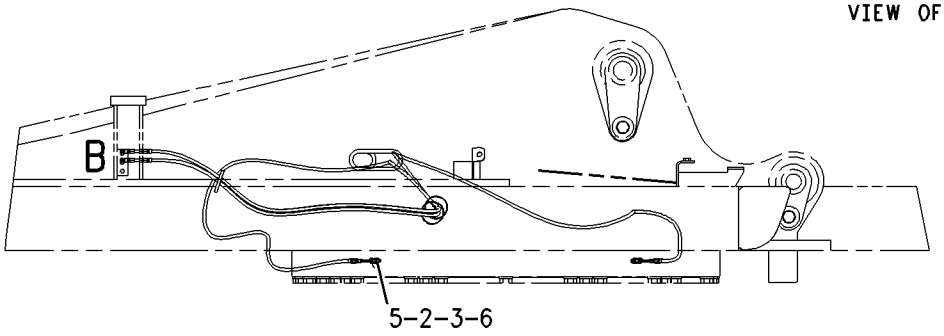

GRAPHIC #1 **<END>** g00929732

214-8993 LINES GP-GREASE–SWING GEAR

S/N: BCZ224-229, 284-2000

PART OF 186-0468 CHASSIS AR

SMCS-7510 **i02090280**

NOTE	REF NO	GRAPHIC REF	PART NUMBER	QTY	PART NAME 1 2 3 4 5 6 (PRODUCT LEVEL)	SEE PAGE
	1	1	**5W-2817**	2	FITTING-GREASE	
	2	1	**117-7630**	4	FITTING-ADAPTER	
	3	1	**117-7631**	4	FITTING-COUPLER	
	4	1	**117-7634**	2	FITTING-STRAIGHT	
	5	1	**117-7635**	2	ELBOW	
B	7	1	**9X-6772**	3	STRAP-CABLE	
D	8	1	**169-8323**		HOSE (3.15-M)	
D	9	1	**169-8323**		HOSE (2.9M)	

B-USE AS REQUIRED
D-ORDER BY THE METER

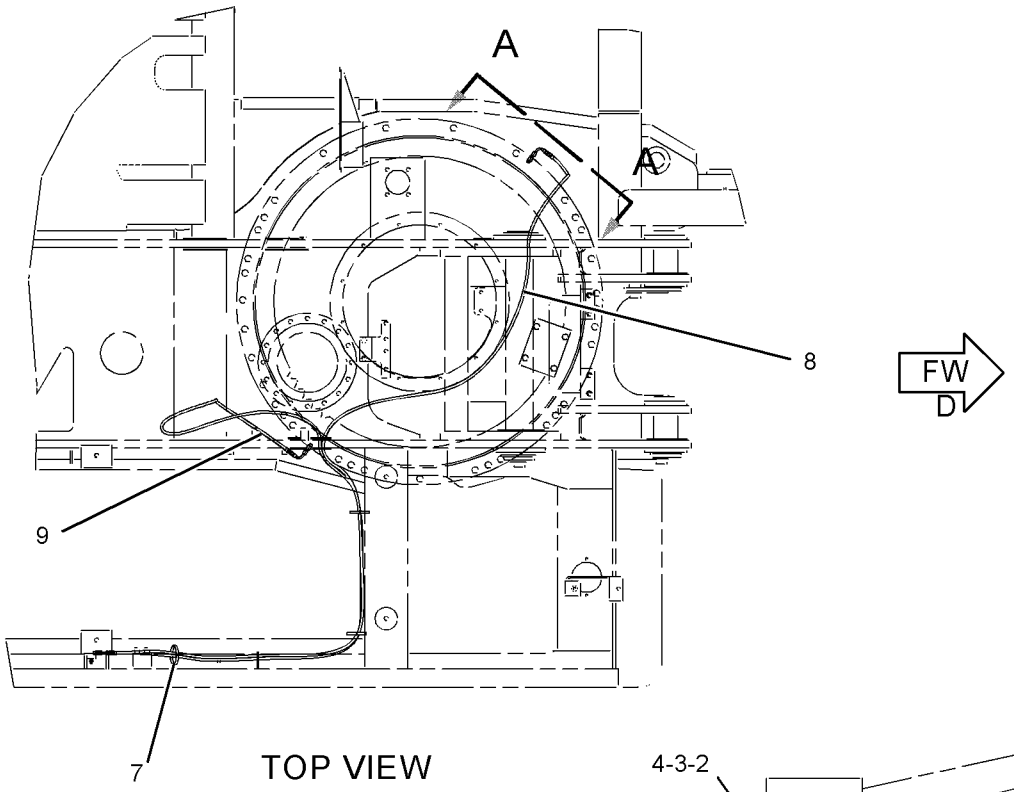

TOP VIEW

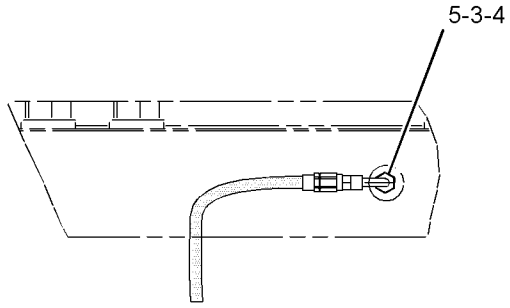

SECTION A-A

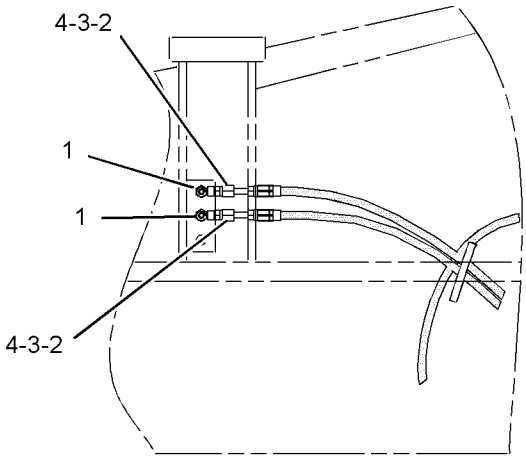

VIEW OF AREA B

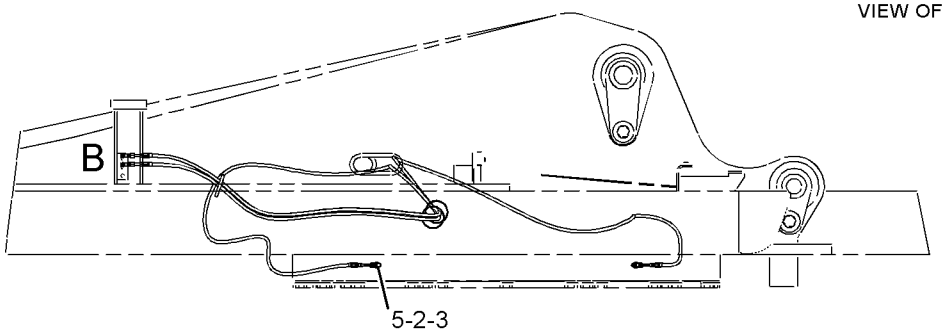

RIGHT SIDE VIEW

GRAPHIC #1 **<END>** g01082743

235-1832 LINES GP-GREASE—OSCILLATING AXLE

S/N: BCZ885-2000

PART OF 186-0473 HYDRAULIC AR

SMCS-7510 **i02161160**

NOTE	REF NO	GRAPHIC REF	PART NUMBER	QTY	PART NAME 1 2 3 4 5 6 (PRODUCT LEVEL)	SEE PAGE
	1	1	**5W-2817**	2	FITTING-GREASE (HYDRAULIC)	
	2	1	**117-7629**	2	TUBE AS	
	3	1	**117-7630**	2	FITTING-ADAPTER	
	4	1	**117-7631**	4	FITTING-COUPLER	
	5	1	**117-7634**	4	FITTING-STRAIGHT	
B	6	1	**9X-6772**	4	STRAP-CABLE	
D	7	1	**169-8323**		HOSE (0.98-M)	
D	7A	1	**169-8323**		HOSE (1.5-M)	

B-USE AS REQUIRED
D-ORDER BY THE METER

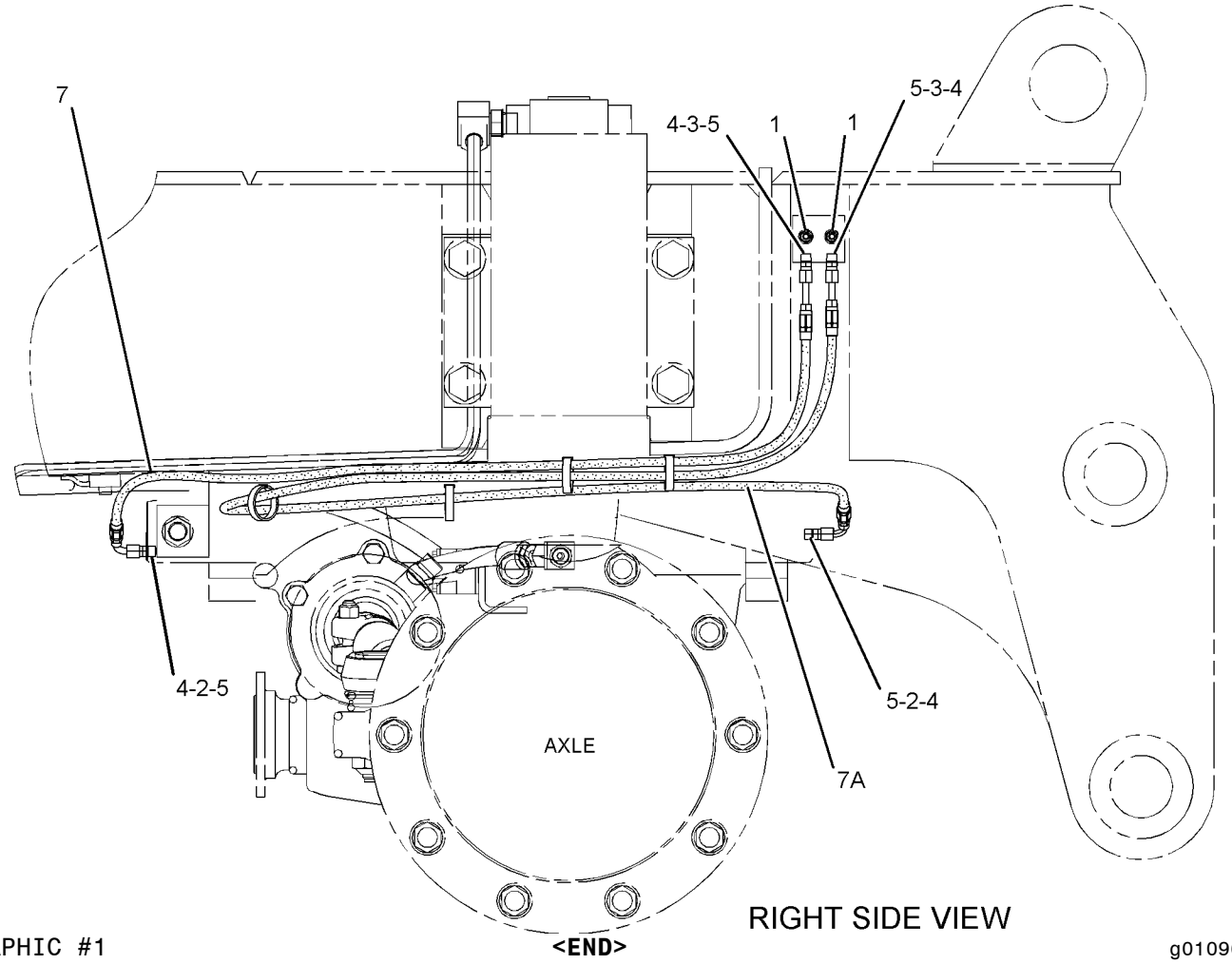

GRAPHIC #1

<END>

g01096984

117-0931 LINKAGE AR-BUCKET—TILTING

S/N: BCZ1-2000

FOR USE WITH STANDARD STICKS. CANNOT BE USED WITH MATERIAL HANDLING STICK AN ATTACHMENT

SMCS-6513 **i01755656**

NOTE	PART NUMBER	QTY	PART NAME 1 2 3 4 5 6 (PRODUCT LEVEL)	SEE PAGE
Y	**185-1736**	2	CYLINDER GP-BUCKET	465
	126-8751	1	HINGE & BEARING AS	
	8U-2691	2	BUSHING	
	8U-2692	2	SEAL	
Y	*117-0929*	1	LINES GP-BUCKET TILT CYLINDER	511
Y	*117-0930*	1	PIN GP-EXCAVATOR	775
Y-SEPARATE ILLUSTRATION				

<END>

125-4428 LINKAGE AR-BUCKET—ADJUSTER

S/N: BCZ1-2000

FOR USE WITH STANDARD STICKS. CANNOT BE USED WITH MATERIAL HANDLING STICK AN ATTACHMENT

SMCS-6513 **i01684958**

NOTE	PART NUMBER	QTY	PART NAME 1 2 3 4 5 6 (PRODUCT LEVEL)	SEE PAGE
Y	*7Y-2219*	1	ADJUSTER GP-WORK TOOL	794
Y	**185-1736**	2	CYLINDER GP-BUCKET	465
Y	*117-0929*	1	LINES GP-BUCKET TILT CYLINDER	511
Y	*117-0930*	1	PIN GP-EXCAVATOR	775
	129-2094	1	HINGE AS	
	8U-2691	2	BUSHING	
	8U-2692	2	SEAL	
Y-SEPARATE ILLUSTRATION				

<END>

188-4952 LINKAGE AR-BUCKET—WITH DIVERTER

S/N: BCZ1-2000

FOR USE WITH ALL NORMAL STICKS, GRAPPLE. CANNOT BE USED WITH MATERIAL HANDLING STICK, STRAIGHT STICK AN ATTACHMENT

SMCS-6513 **i01764301**

NOTE	PART NUMBER	QTY	PART NAME 1 2 3 4 5 6 (PRODUCT LEVEL)	SEE PAGE
Y	*183-8877*	1	CYLINDER & SEAL GP-BUCKET	447
Y	*185-3443*	1	LINES GP-DIVERTER VALVE	516
Y	*190-0284*	1	LINKAGE GP-BUCKET	773
Y-SEPARATE ILLUSTRATION				

<END>

188-4953 LINKAGE AR-BUCKET—WITHOUT DIVERTER

S/N: BCZ1-2000

FOR USE WITH ALL NORMAL STICKS, STRAIGHT STICK. CANNOT BE USED WITH MATERIAL HANDLING STICK, GRAPPLE

AN ATTACHMENT

SMCS-6513 **i01764326**

NOTE	PART NUMBER	QTY	PART NAME 1 2 3 4 5 6 (PRODUCT LEVEL)	SEE PAGE
Y	*183-8877*	1	CYLINDER & SEAL GP-BUCKET	447
Y	*190-0284*	1	LINKAGE GP-BUCKET	773

Y-SEPARATE ILLUSTRATION

<END>

190-0284 LINKAGE GP-BUCKET

S/N: BCZ1-2000
PART OF 188-4952, 188-4953 LINKAGE AR-BUCKET
AN ATTACHMENT

SMCS-6513 **i01576827**

NOTE	REF NO	GRAPHIC REF	PART NUMBER	QTY	PART NAME 1 2 3 4 5 6 (PRODUCT LEVEL)	SEE PAGE
	1	1	**196-3533**	1	PIN AS	
	2	1	**5W-2817**	4	FITTING-GREASE	
B	3	1	**7Y-2496**	2	SHIM (1.6MM THK)	
B	4	1	**093-0065**	2	SHIM (1.0MM THK)	
B	5	1	**093-0086**	4	SHIM (1.0MM THK)	
B	6	1	**093-0097**	1	SHIM (2.0MM THK)	
B	7	1	**093-0118**	2	SHIM (2.0MM THK)	
	8	1	**093-0349**	3	WASHER (6.0MM THK)	
	9	1	**093-1434**	2	SEAL-LIP	
B	10	1	**099-7091**	1	SHIM (1.5MM THK)	
	11	1	**185-6066**	2	PIN AS	
	12	1	**188-6042**	1	LINK AS	
	13	1	**190-9825**	1	LINK & BEARING AS (BUCKET)	
	13A	1	**096-0854**	2	SEAL-LIP TYPE	
	13B	1	**111-7604**	2	BEARING-SLEEVE	
	13C	1	**190-5335**	1	BEARING-SLEEVE	
	14	1	**093-1344**	2	SEAL-O-RING	
	16	1	**107-9976**	2	SEAL-O-RING	
	17	1	**8T-4123**	3	WASHER-PLATED (22X35X3.5MM THK)	
M	18	1	**8T-4780**	3	BOLT (M20X2.5X30MM)	

B-USE AS REQUIRED
M-METRIC PART

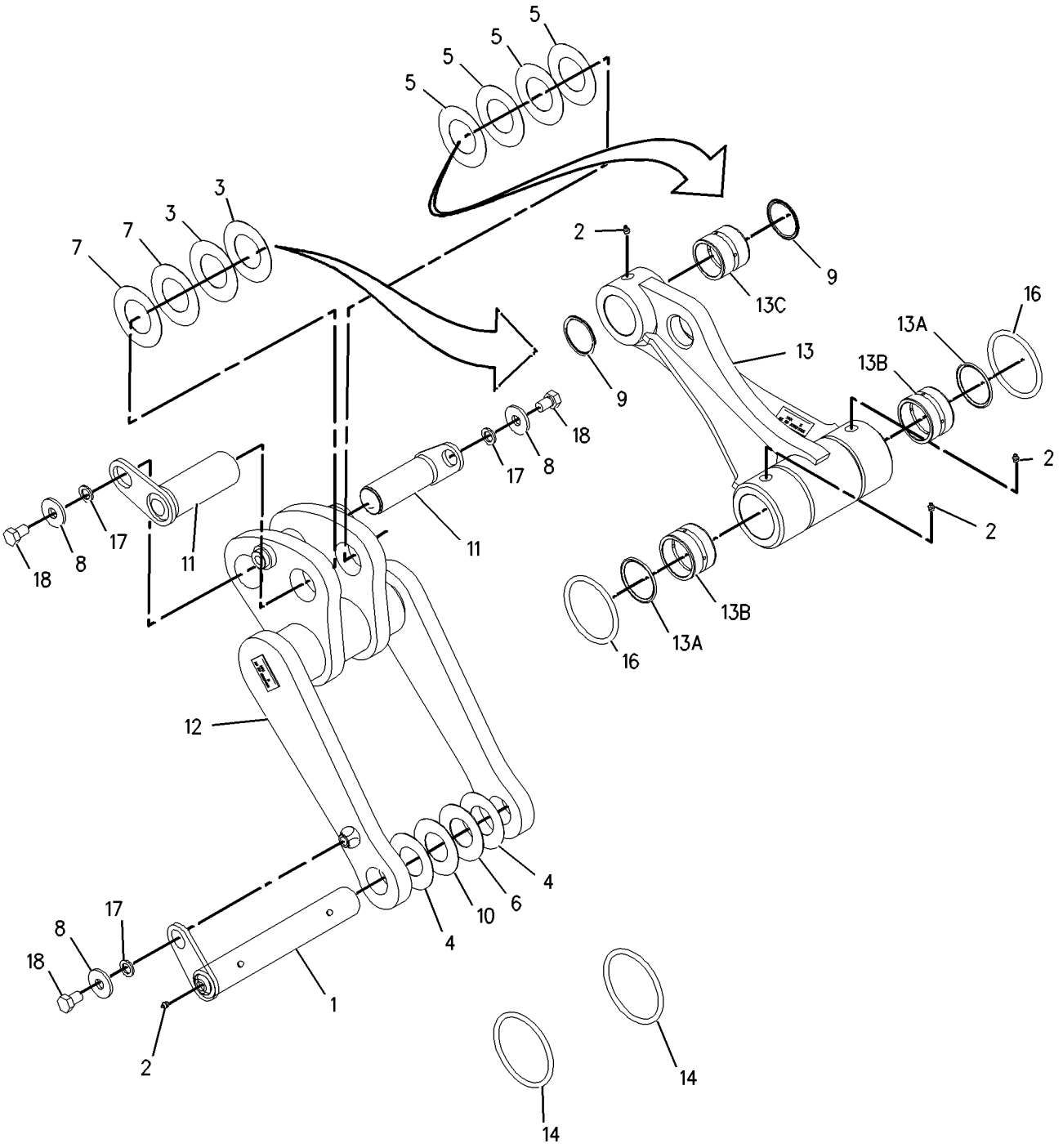

GRAPHIC #1 **<END>** g00822972

117-0930 PIN GP-EXCAVATOR

S/N: BCZ1-2000
PART OF 117-0931, 125-4428 LINKAGE AR-BUCKET
FOR USE WITH TILT BUCKETS
AN ATTACHMENT

SMCS-6108, 6501, 6502 **i01821307**

NOTE	REF NO	GRAPHIC REF	PART NUMBER	QTY	PART NAME 1 2 3 4 5 6 (PRODUCT LEVEL)	SEE PAGE
	1	1	**132-4588**	1	PIN GP	
		1	**5W-2817**	1	FITTING-GREASE	
	2	1	**8U-2677**	4	PIN GP	
		1	**5W-2817**	1	FITTING-GREASE	
	3	1	**4I-3308**	1	PLATE	
M	4	1	**8T-4956**	3	BOLT (M12X1.75X35-MM)	
M	5	1	**8T-4223**	3	WASHER-HARD (13.5X25.5X3-MM THK)	
M	6	1	**7X-2552**	5	BOLT (M16X2X30-MM)	
	7	1	**5W-1412**	5	WASHER	

M-METRIC PART

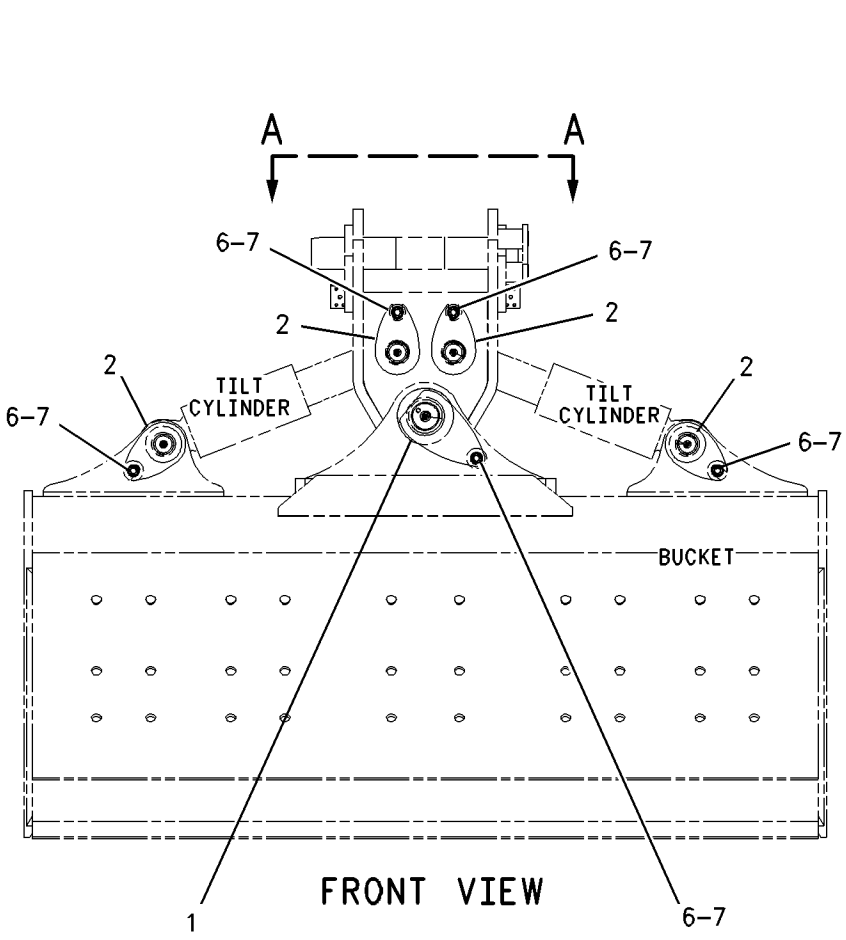

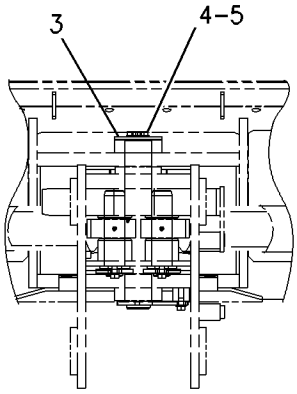

VIEW A-A

GRAPHIC #1 **<END>** g00929906

123-4801 PIN GP-EXCAVATOR

S/N: BCZ1-2000
FOR USE WITH ADJUSTER RETENTION BUCKETS
AN ATTACHMENT

SMCS-6108, 6501, 6502 **i01821468**

NOTE	REF NO	GRAPHIC REF	PART NUMBER	QTY	PART NAME 1 2 3 4 5 6 (PRODUCT LEVEL)	SEE PAGE
	1	1	**087-5805**	2	PIN	
M	2	1	**7Y-5227**	2	BOLT (M16X2X190MM)	
M	3	1	**8T-4132**	4	NUT (M16X2 THD)	

M-METRIC PART

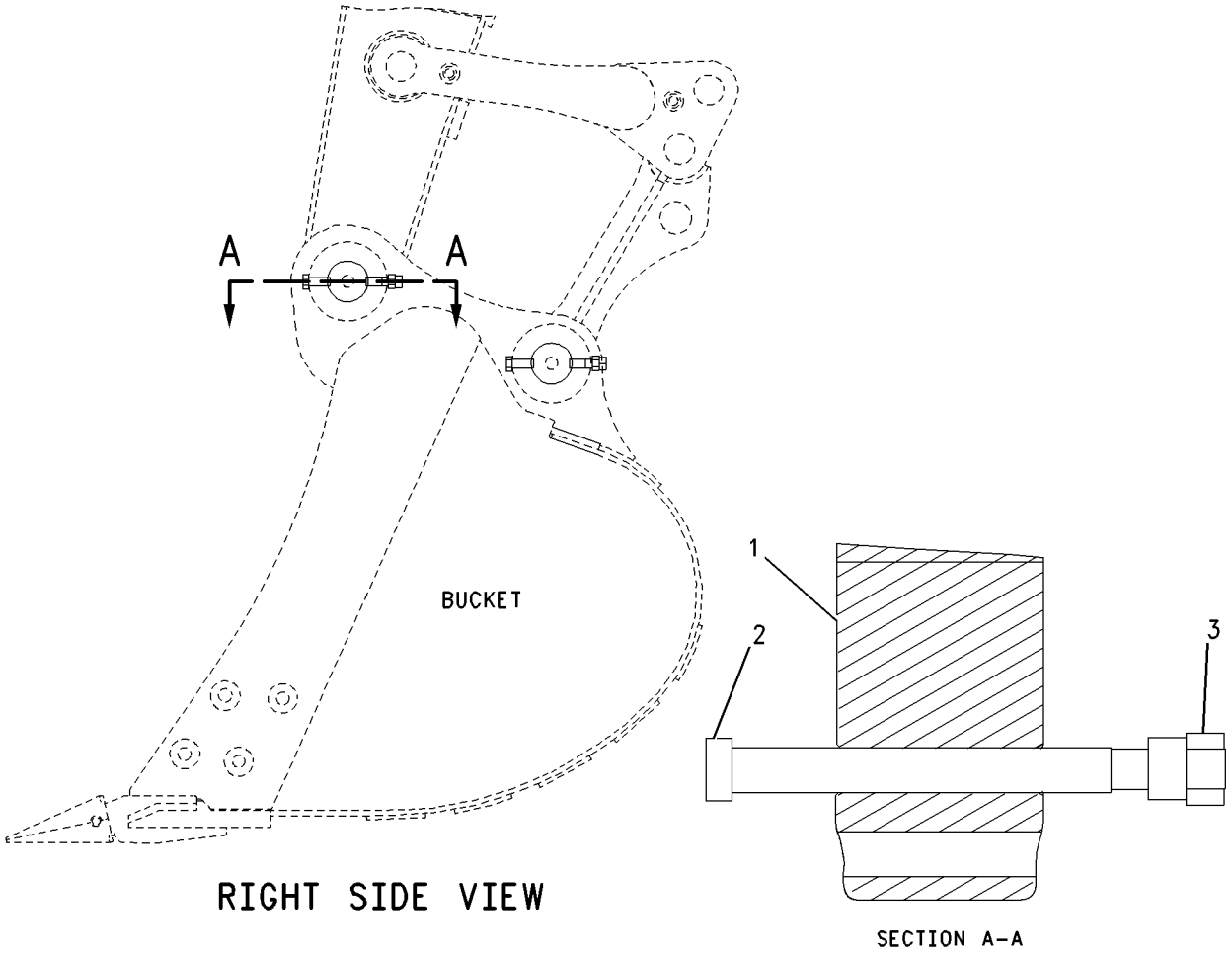

RIGHT SIDE VIEW

SECTION A-A

GRAPHIC #1 **<END>** g00929932

IMPLEMENTS

228-6708 PIN GP-EXCAVATOR

S/N: BCZ1-2000
FOR USE WITH WELD-ON RETENTION BUCKETS
AN ATTACHMENT

SMCS-6108, 6501, 6502 **i01814293**

NOTE	REF NO	GRAPHIC REF	PART NUMBER	QTY	PART NAME 1 2 3 4 5 6 (PRODUCT LEVEL)	SEE PAGE
	1	1	**111-8443**	2	PIN AS	
M	2	1	**7X-2552**	2	BOLT (M16X2X30MM)	
	3	1	**7Y-3110**	2	WASHER (17X65X6MM THK)	
	4	1	**9X-8257**	2	WASHER (17.5X30X3.5MM THK)	

M-METRIC PART

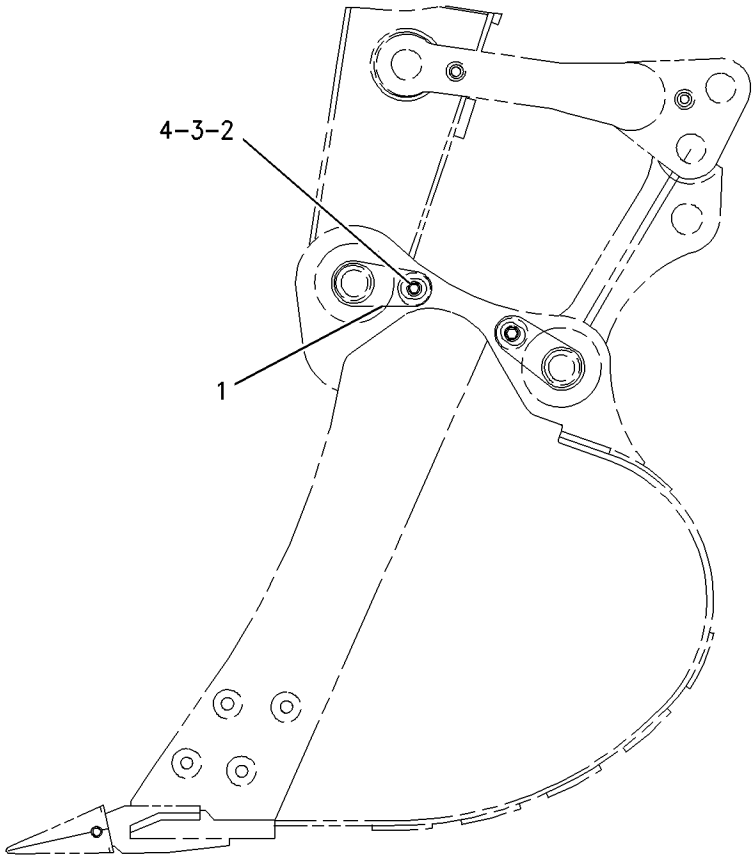

GRAPHIC #1 **<END>** g00927389

111-1919 RESTRAINT GP-TRAVEL

S/N: BCZ1-2000
4 POINT
FOR USE WITH UNDERCARRIAGE TYPE FRONT AND REAR MOUNTING, FRONT MOUNTED STABILIZER. CANNOT BE USED WITH FRONT MOUNTED BLADE
AN ATTACHMENT

i00625980

NOTE	REF NO	GRAPHIC REF	PART NUMBER	QTY	PART NAME 1 2 3 4 5 6 (PRODUCT LEVEL)	SEE PAGE
	1	1	**112-7139**	1	BRACKET AS	
M	2	1	**8T-4132**	4	NUT (M16X2.0 THD)	
M	3	1	**8T-4193**	4	BOLT (M16X2.0X50MM)	
	4	1	**9X-8257**	8	WASHER (3.50MM THK)	

M-METRIC PART

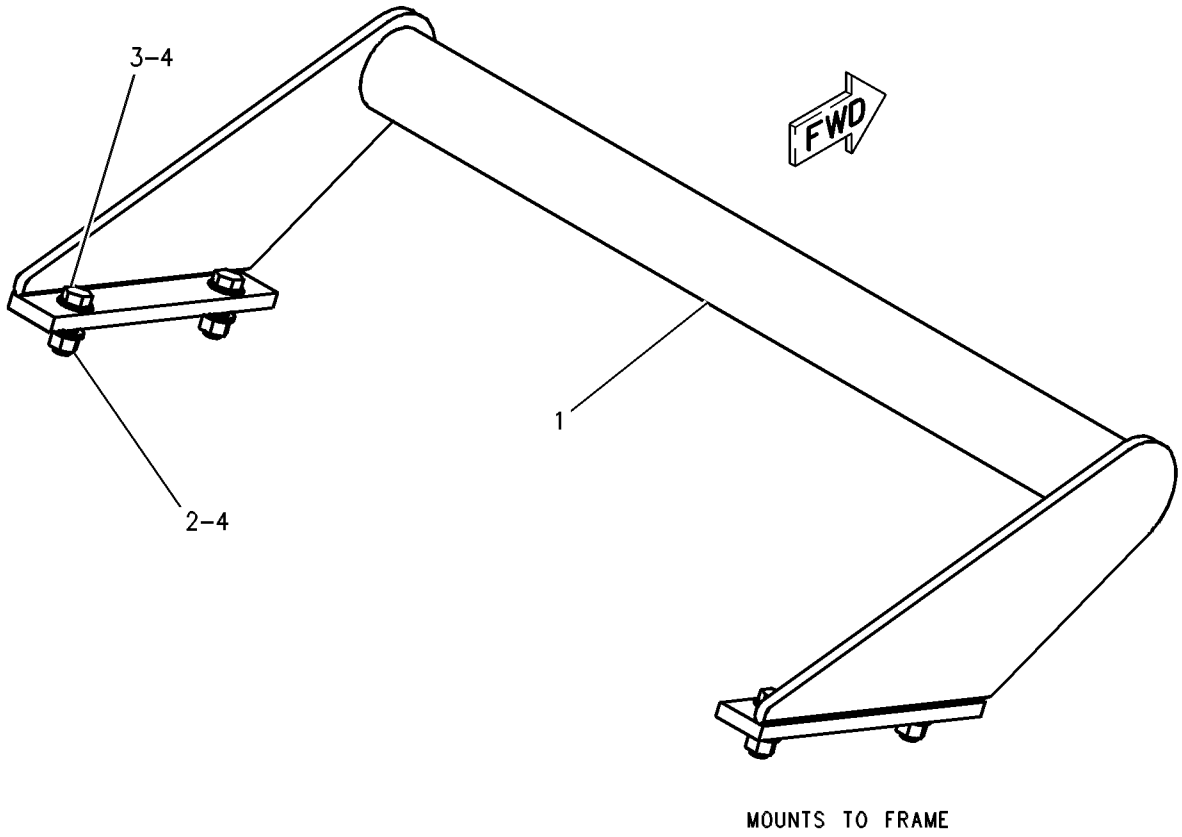

GRAPHIC #1

<END>

g00254914

126-1575 RESTRAINT GP-TRAVEL

S/N: BCZ1-495

FOR USE WITH 4 POINT UNDERCARRIAGE ONLY AND NO BLADE OR 2 POINT FRONT MOUNTED STABILIZER

AN ATTACHMENT

i01416773

NOTE	REF NO	GRAPHIC REF	PART NUMBER	QTY	PART NAME 1 2 3 4 5 6 (PRODUCT LEVEL)	SEE PAGE
	1	1	**8U-7683**	2	PIN	
	2	1	**126-1571**	1	BRACKET AS	
	3	1	**119-0413**	1	HOOK AS-RH	
	4	1	**119-0414**	1	HOOK AS-LH	
	5	1	**5W-2732**	2	LOCKPIN	
	6	1	**5W-2733**	2	LOCKPIN	
	7	1	**7X-0543**	2	WASHER-HARD	

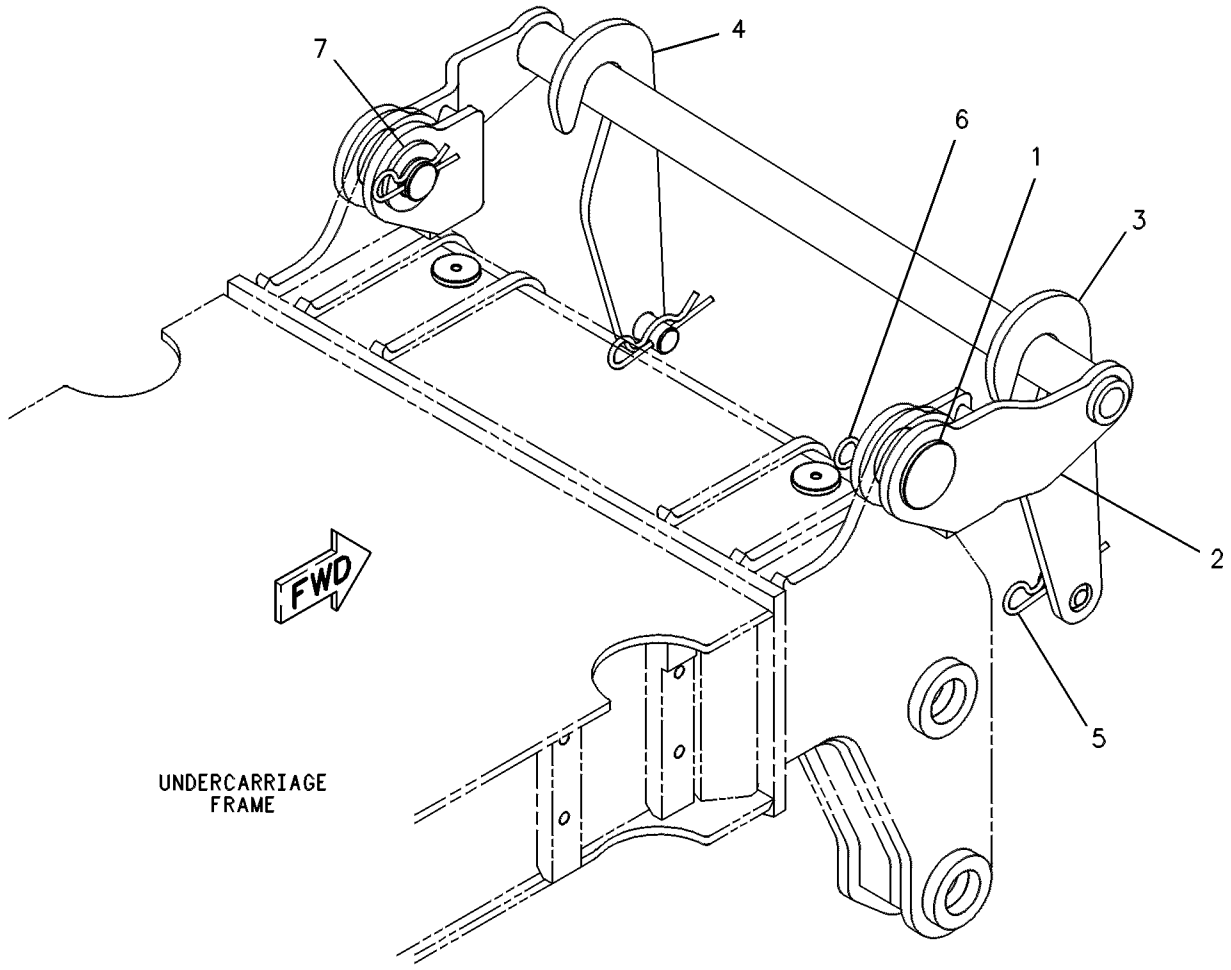

GRAPHIC #1

<END>

g00245261

IMPLEMENTS

188-4993 STABILIZER GP

S/N: BCZ1-2000
PART OF 188-4992 STABILIZER AR
AN ATTACHMENT

SMCS-7222 **i02109742**

NOTE	REF NO	GRAPHIC REF	PART NUMBER	QTY	PART NAME 1 2 3 4 5 6 (PRODUCT LEVEL)	SEE PAGE
	1	1	**5I-3523**	2	WASHER (14X50X6-MM THK)	
	2	1	**5W-2817**	10	FITTING-GREASE	
	3	1	**093-0349**	8	WASHER (22X60X6-MM THK)	
	4	1	**248-3216**	2	PIN AS	
	5	1	**110-2158**	2	PIN AS	
	6	1	**111-3997**	1	PIN-LH	
	7	1	**111-3998**	1	PIN-RH	
	8	1	**111-3999**	2	PIN AS	
	9	1	**111-4002**	2	PIN AS	
	10	1	**111-4063**	2	PIN AS	
	11	1	**111-4584**	2	PIN AS	
					(EACH INCLUDES)	
		1	**110-8248**	1	BRACKET	
	12	1	**117-9896**	4	SLEEVE	
	13	1	**122-7252**	26	PLATE-SPRING	
	14	1	**128-8389**	2	PLATE	
	15	1	**133-5518**	1	COVER AS	
	16	1	**141-8666**	2	BRACKET AS	
	17	1	**192-4450**	1	FRAME AS-STABILIZER	
	18	1	**192-4451**	2	ARM AS (STABILIZER)	
	19	1	**196-4760**	2	PAD AS (STABILIZER)	
	20	1	**196-5323**	2	GUARD AS (STABILIZER)	
	21	1	**197-9990**	2	PIN AS	
	22	1	**170-5707**	2	LOCK PIN	
M	23	1	**6V-5215**	4	BOLT (M8X1.25X16-MM)	
M	24	1	**8T-4123**	8	WASHER-PLATED (22X35X3.5-MM THK)	
M	25	1	**8T-4132**	2	NUT (M16X2-THD)	
M	26	1	**8T-4174**	2	BOLT (M16X2X120-MM)	
M	27	1	**8T-4179**	4	BOLT (M12X1.75X20-MM)	
M	28	1	**8T-4192**	2	BOLT (M12X1.75X25-MM)	
M	29	1	**8T-4223**	4	WASHER-HARD (13.5X25.5X3-MM THK)	
	30	1	**8T-4224**	4	WASHER-HARD (8.8X16X2-MM THK)	
M	31	1	**8T-4780**	10	BOLT (M20X2.5X30-MM)	
	32	1	**9X-8257**	2	WASHER (17.5X30X3.5-MM THK)	
BE	33	1	**226-2134**		SEAL	

B-USE AS REQUIRED
E-ORDER BY THE CENTIMETER
M-METRIC PART

188-4993 **STABILIZER GP** *(contd.)* **i02109742**

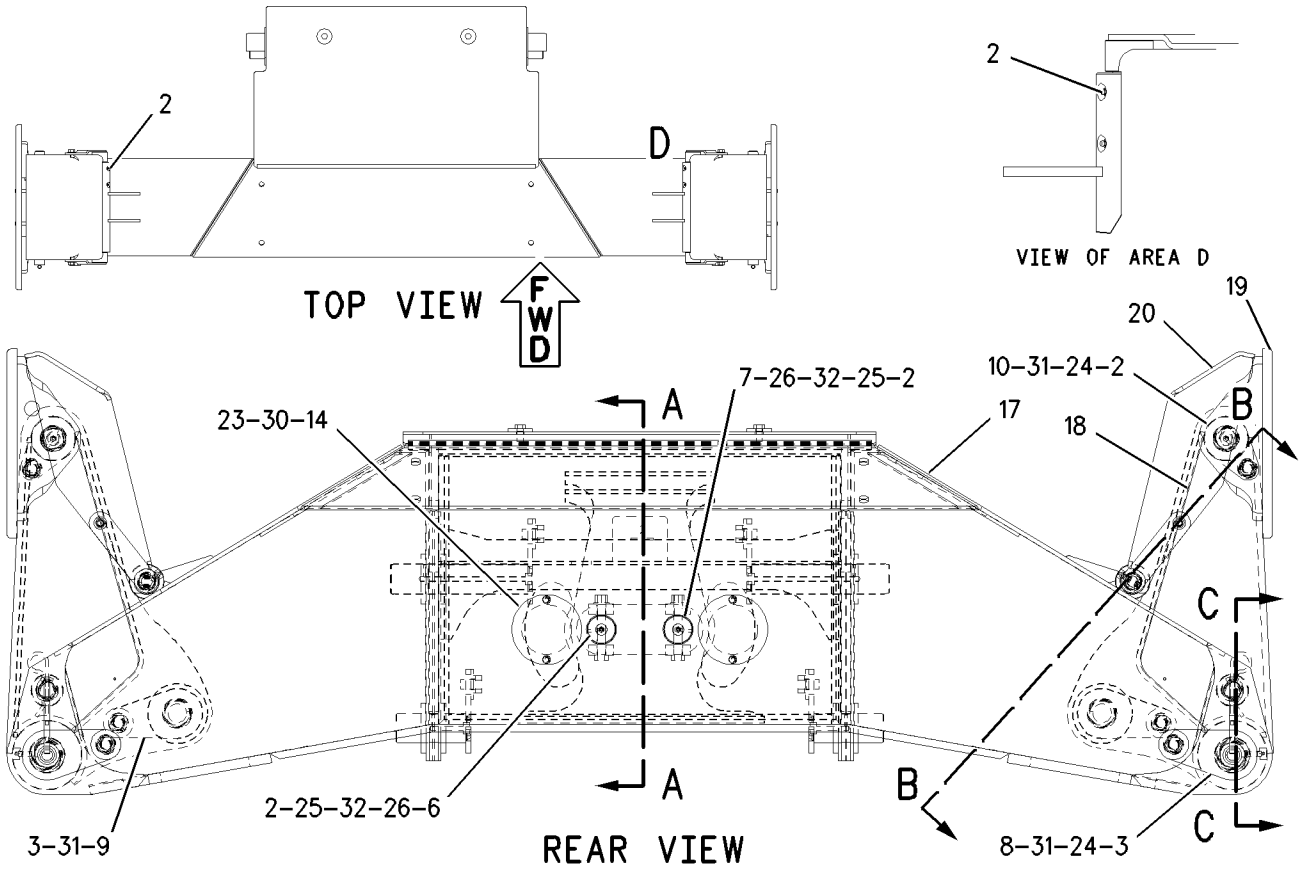

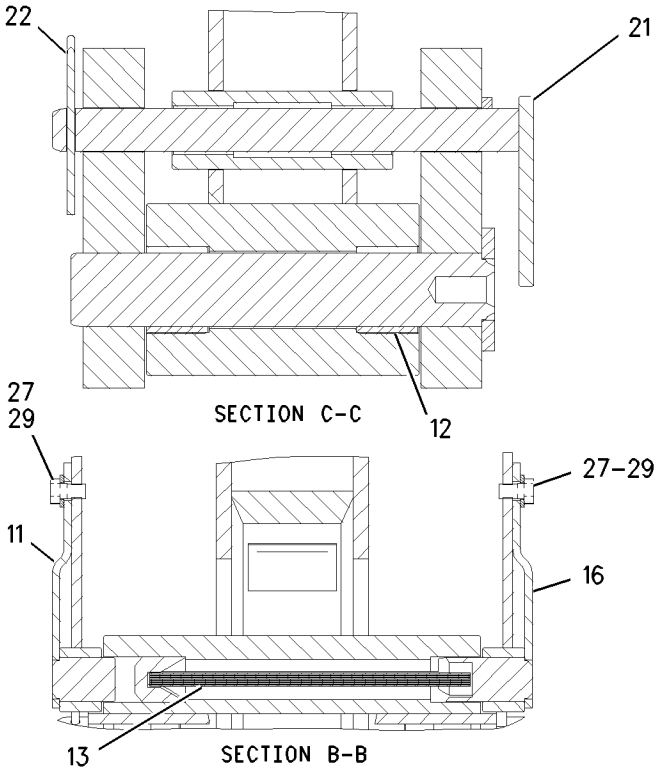

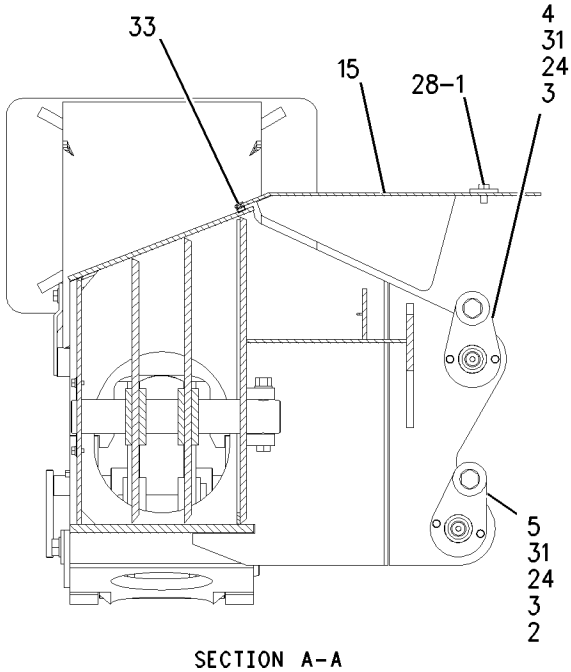

GRAPHIC #1 **<END>** g00920790

185-8552 STICK AR

S/N: BCZ1-2000
2.2M (7.28FT)REACH
FOR USE WITH VARIABLE ADJUSTABLE-BOOM OR 1 PIECE BOOM
AN ATTACHMENT

SMCS-6502 **i01764159**

NOTE	PART NUMBER	QTY	PART NAME 1 2 3 4 5 6 (PRODUCT LEVEL)	SEE PAGE
Y	*185-3469*	1	LINES GP-STICK	589
Y	*185-8551*	1	STICK GP-HOE	784

Y-SEPARATE ILLUSTRATION

<END>

185-8562 STICK AR

S/N: BCZ1-2000
2.5M (8.2FT) REACH
FOR USE WITH VARIABLE ADJUSTABLE BOOM OR 1 PIECE BOOM
AN ATTACHMENT

SMCS-6502 **i01764305**

NOTE	PART NUMBER	QTY	PART NAME 1 2 3 4 5 6 (PRODUCT LEVEL)	SEE PAGE
Y	*185-3470*	1	LINES GP-STICK	590
Y	*185-8559*	1	STICK GP-HOE	786

Y-SEPARATE ILLUSTRATION

<END>

185-8568 STICK AR

S/N: BCZ1-2000
2.8M (9.18FT) REACH
FOR USE WITH VARIABLE ADJUSTABLE BOOM OR 1-PIECE BOOM
AN ATTACHMENT

SMCS-6502 **i01766696**

NOTE	PART NUMBER	QTY	PART NAME 1 2 3 4 5 6 (PRODUCT LEVEL)	SEE PAGE
Y	*185-3471*	1	LINES GP-STICK	591
Y	*185-8567*	1	STICK GP-HOE	788

Y-SEPARATE ILLUSTRATION

<END>

IMPLEMENTS

235-1831 STICK AR-MATERIAL HANDLING

S/N: BCZ1-2000

FOR USE WITH ONE PIECE AND VARIABLE ADJUSTABLE BOOM. CANNOT BE USED WITH BUCKETS

AN ATTACHMENT

SMCS-6502 **i02161142**

NOTE	PART NUMBER	QTY	PART NAME 1 2 3 4 5 6 (PRODUCT LEVEL)	SEE PAGE
Y	*242-1704*	1	LINES GP-STICK (MEDIUM PRESSURE)	607
Y	*242-1708*	1	LINES GP-STICK (HIGH PRESSURE)	608
Y	*242-2938*	1	STICK GP-HOE	790

Y-SEPARATE ILLUSTRATION

<END>

185-8551 STICK GP-HOE—SHORT

S/N: BCZ1-2000
2.2-M (7.2-FT)
PART OF 185-8552 STICK AR
AN ATTACHMENT

SMCS-6502 **i02066500**

NOTE	REF NO	GRAPHIC REF	PART NUMBER	QTY	PART NAME 1 2 3 4 5 6 (PRODUCT LEVEL)	SEE PAGE
	1	1	**5W-2817**	4	FITTING-GREASE	
B	2	1	**7Y-2496**	1	SHIM (1.60-MM THK)	
B	3	1	**7Y-2498**	1	SHIM (1.60-MM THK)	
B	4	1	**093-0083**	1	SHIM (1-MM THK)	
B	5	1	**093-0086**	1	SHIM (1-MM THK)	
B	6	1	**093-0115**	1	SHIM (2-MM THK)	
B	7	1	**093-0118**	1	SHIM (2-MM THK)	
	8	1	**093-0349**	2	WASHER (22X60X6-MM THK)	
	9	1	**093-1433**	2	SEAL-LIP TYPE	
	10	1	**202-3165**	1	PIN AS	
	11	1	**188-3917**	1	PIN AS	
	12	1	**185-8550**	1	STICK & BEARING AS	
	12A	1	**111-7604**	2	BEARING-SLEEVE	
	12B	1	**111-7605**	2	BEARING-SLEEVE	
	12C	1	**194-5039**	2	BEARING-SLEEVE	
	13	1	**096-0854**	2	SEAL-LIP TYPE	
B	14	1	**133-2424**	1	SHIM (0.5-MM THK)	
B	15	1	**133-2425**	1	SHIM (0.5-MM THK)	
	16	1	**7X-4803**	2	SEAL-LIP TYPE	
	17	1	**8T-4123**	2	WASHER-PLATED (22X35X3.5-MM THK)	
M	18	1	**8T-4780**	2	BOLT (M20X2.5X30-MM)	

B-USE AS REQUIRED
M-METRIC PART

185-8551 **STICK GP-HOE** *(contd.)* **i02066500**

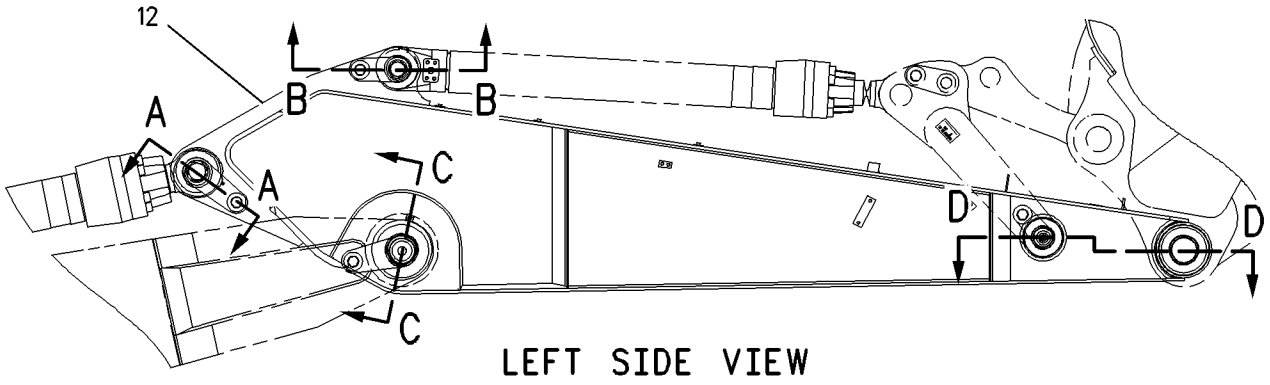

LEFT SIDE VIEW

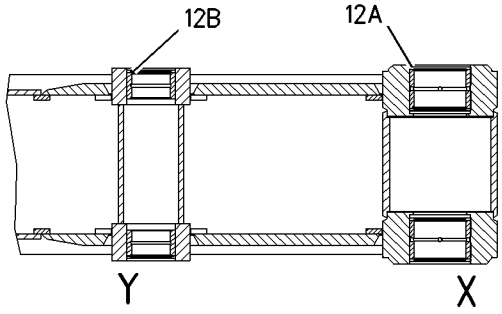

SECTION D-D

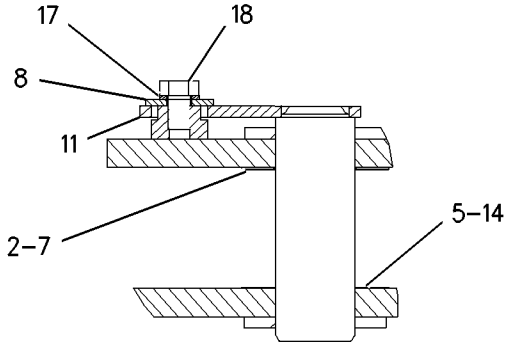

SECTION B-B

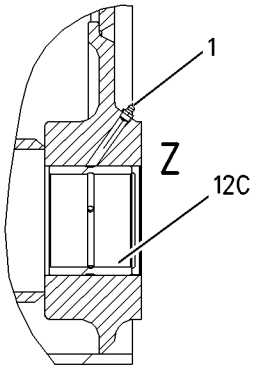

SECTION C-C

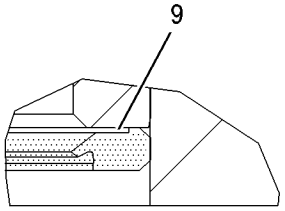

VIEW OF AREA Y

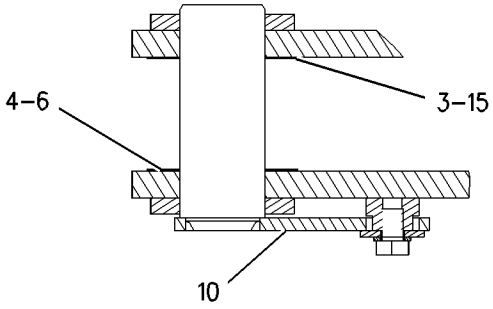

SECTION A-A

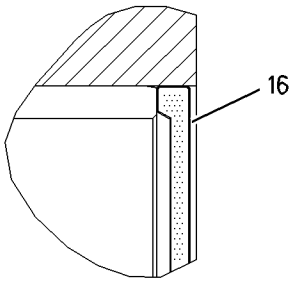

VIEW OF AREA Z

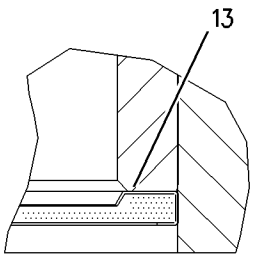

VIEW OF AREA X

GRAPHIC #1 **<END>** g00931078

185-8559 STICK GP-HOE—MEDIUM

S/N: BCZ1-2000
2.5-M (8.2-FT)
PART OF 185-8562 STICK AR
AN ATTACHMENT

SMCS-6502 **i02075230**

NOTE	REF NO	GRAPHIC REF	PART NUMBER	QTY	PART NAME 1 2 3 4 5 6 (PRODUCT LEVEL)	SEE PAGE
	1	1	**5W-2817**	4	FITTING-GREASE	
B	2	1	**7Y-2496**	1	SHIM (1.60-MM THK)	
B	3	1	**7Y-2498**	1	SHIM (1.60-MM THK)	
B	4	1	**093-0083**	1	SHIM (1-MM THK)	
B	5	1	**093-0086**	1	SHIM (1-MM THK)	
B	6	1	**093-0115**	1	SHIM (2-MM THK)	
B	7	1	**093-0118**	1	SHIM (2-MM THK)	
	8	1	**093-0349**	2	WASHER (22X60X6-MM THK)	
	9	1	**093-1433**	2	SEAL-LIP TYPE	
	10	1	**202-3165**	1	PIN AS	
	11	1	**188-3917**	1	PIN AS	
	12	1	**185-8556**	1	STICK & BEARING AS	
	12A	1	**111-7604**	2	BEARING-SLEEVE	
	12B	1	**111-7605**	2	BEARING-SLEEVE	
	12C	1	**194-5039**	2	BEARING-SLEEVE	
	13	1	**096-0854**	2	SEAL-LIP TYPE	
B	14	1	**133-2424**	1	SHIM (0.5-MM THK)	
B	15	1	**133-2425**	1	SHIM (0.5-MM THK)	
	16	1	**7X-4803**	2	SEAL-LIP TYPE	
M	17	1	**8T-4123**	2	WASHER-PLATED (22X35X3.5-MM THK)	
M	18	1	**8T-4780**	2	BOLT (M20X2.5X30-MM)	

B-USE AS REQUIRED
M-METRIC PART

185-8559 **STICK GP-HOE** *(contd.)* **i02075230**

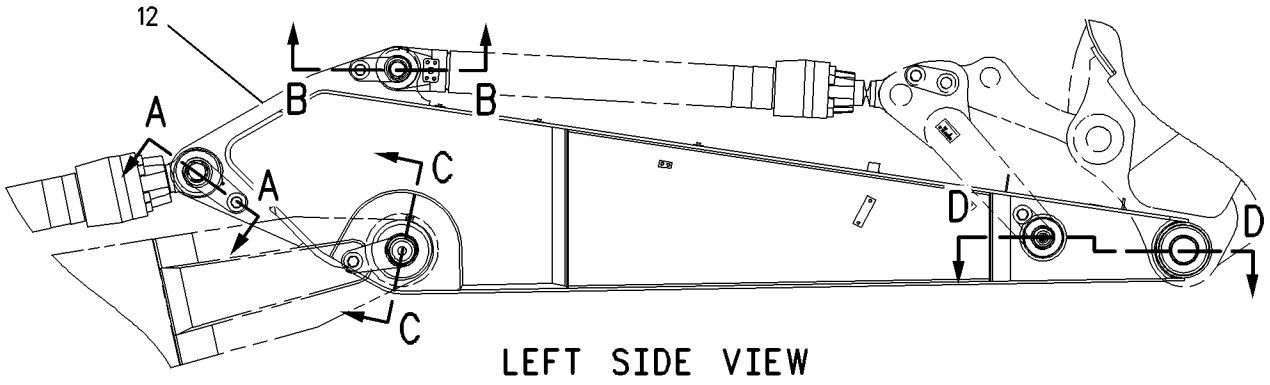

LEFT SIDE VIEW

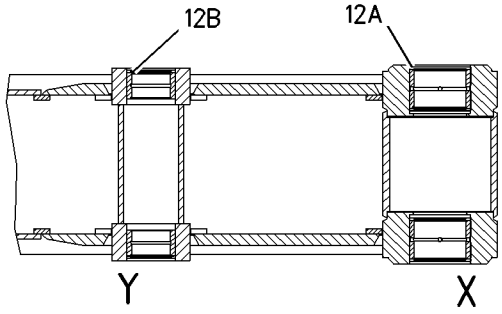

SECTION D-D

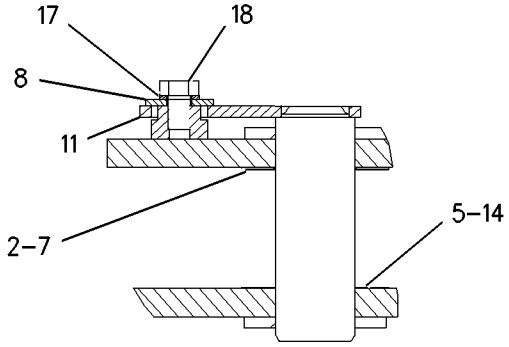

SECTION B-B

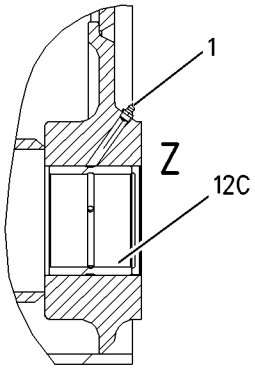

SECTION C-C

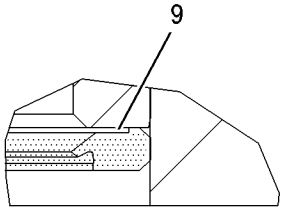

VIEW OF AREA Y

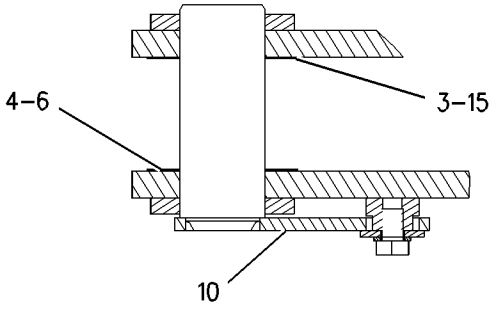

SECTION A-A

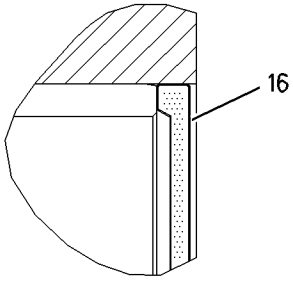

VIEW OF AREA Z

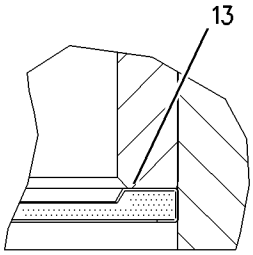

VIEW OF AREA X

GRAPHIC #1 **<END>** g00931068

185-8567 STICK GP-HOE–LONG

S/N: BCZ1-2000
2.8-M (9.2-FT)
PART OF 185-8568 STICK AR
AN ATTACHMENT

SMCS-6502 **i02148376**

NOTE	REF NO	GRAPHIC REF	PART NUMBER	QTY	PART NAME 1 2 3 4 5 6 (PRODUCT LEVEL)	SEE PAGE
	1	1	**5W-2817**	4	FITTING-GREASE	
B	2	1	**7Y-2496**	1	SHIM (1.60-MM THK)	
B	3	1	**7Y-2498**	1	SHIM (1.60-MM THK)	
B	4	1	**093-0083**	1	SHIM (1-MM THK)	
B	5	1	**093-0086**	1	SHIM (1-MM THK)	
B	6	1	**093-0115**	1	SHIM (2-MM THK)	
B	7	1	**093-0118**	1	SHIM (2-MM THK)	
	8	1	**093-0349**	2	WASHER (22X60X6-MM THK)	
	9	1	**093-1433**	2	SEAL-LIP TYPE	
	10	1	**202-3165**	1	PIN AS	
	11	1	**188-3917**	1	PIN AS	
	12	1	**185-8566**	1	STICK & BEARING AS	
	12A	1	**111-7604**	2	BEARING-SLEEVE	
	12B	1	**111-7605**	2	BEARING-SLEEVE	
	12C	1	**194-5039**	2	BEARING-SLEEVE	
	13	1	**096-0854**	2	SEAL-LIP TYPE	
B	14	1	**133-2424**	1	SHIM (0.5-MM THK)	
B	15	1	**133-2425**	1	SHIM (0.5-MM THK)	
	16	1	**7X-4803**	2	SEAL-LIP TYPE	
M	17	1	**8T-4123**	2	WASHER-PLATED (22X35X3.5-MM THK)	
M	18	1	**8T-4780**	2	BOLT (M20X2.5X30-MM)	

B-USE AS REQUIRED
M-METRIC PART

185-8567 **STICK GP-HOE** *(contd.)* **i02148376**

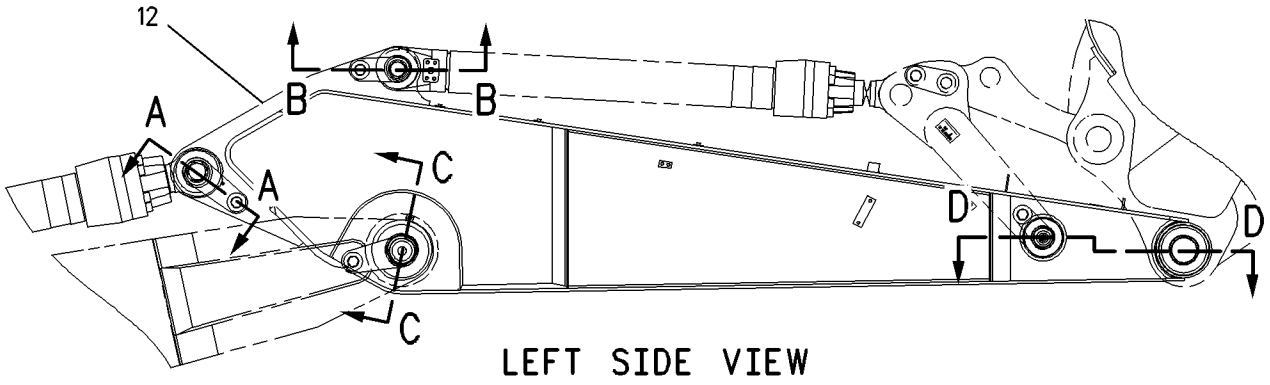

LEFT SIDE VIEW

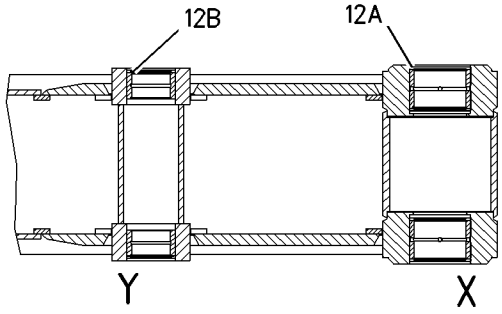

SECTION D-D

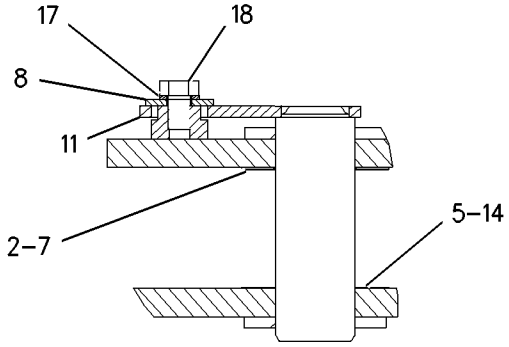

SECTION B-B

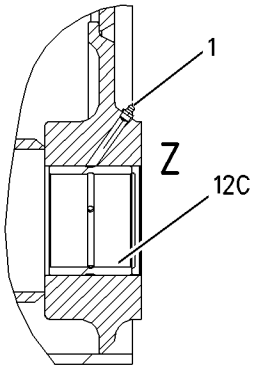

SECTION C-C

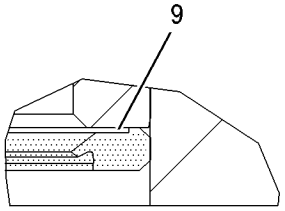

VIEW OF AREA Y

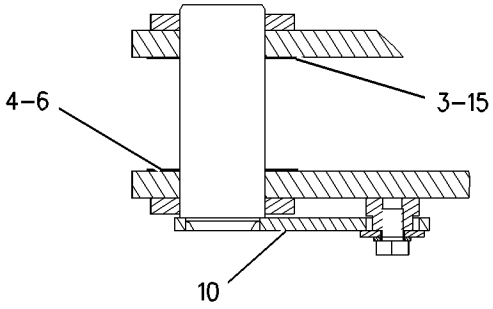

SECTION A-A

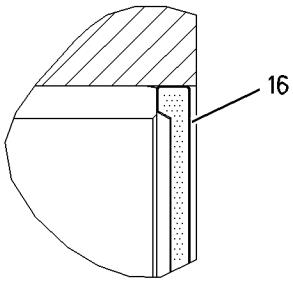

VIEW OF AREA Z

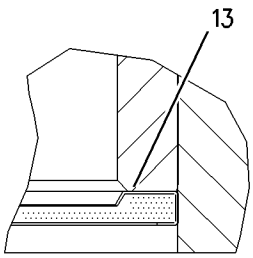

VIEW OF AREA X

GRAPHIC #1 **<END>** g00931068

242-2938 STICK GP-HOE–MATERIAL HANDLER

S/N: BCZ1-2000

PART OF 235-1831 STICK AR-MATERIAL HANDLING

AN ATTACHMENT

SMCS-6502 **i02140907**

NOTE	REF NO	GRAPHIC REF	PART NUMBER	QTY	PART NAME 1 2 3 4 5 6 (PRODUCT LEVEL)	SEE PAGE
	1	1	**5W-2817**	4	FITTING-GREASE	
	2	1	**7X-4803**	2	SEAL-LIP TYPE	
B	3	1	**7Y-2498**	1	SHIM (1.6-MM THK)	
B	4	1	**093-0083**	1	SHIM (1-MM THK)	
B	5	1	**093-0115**	1	SHIM (2-MM THK)	
	6	1	**093-0349**	2	WASHER (22X60X6-MM THK)	
	7	1	**096-0854**	2	SEAL-LIP TYPE	
	8	1	**111-8443**	1	PIN AS	
	9	1	**202-3165**	1	PIN AS	
	10	1	**242-2936**	1	STICK & BEARING AS	
	10A	1	**096-0854**	2	SEAL-LIP TYPE	
	10B	1	**111-7604**	2	BEARING-SLEEVE	
	10C	1	**194-5039**	2	BEARING-SLEEVE	
B	11	1	**133-2425**	1	SHIM (0.5-MM THK)	
M	12	1	**8T-4123**	2	WASHER-PLATED (22X35X3.5-MM THK)	
M	13	1	**8T-4780**	2	BOLT (M20X2.5X30-MM)	

B-USE AS REQUIRED
M-METRIC PART

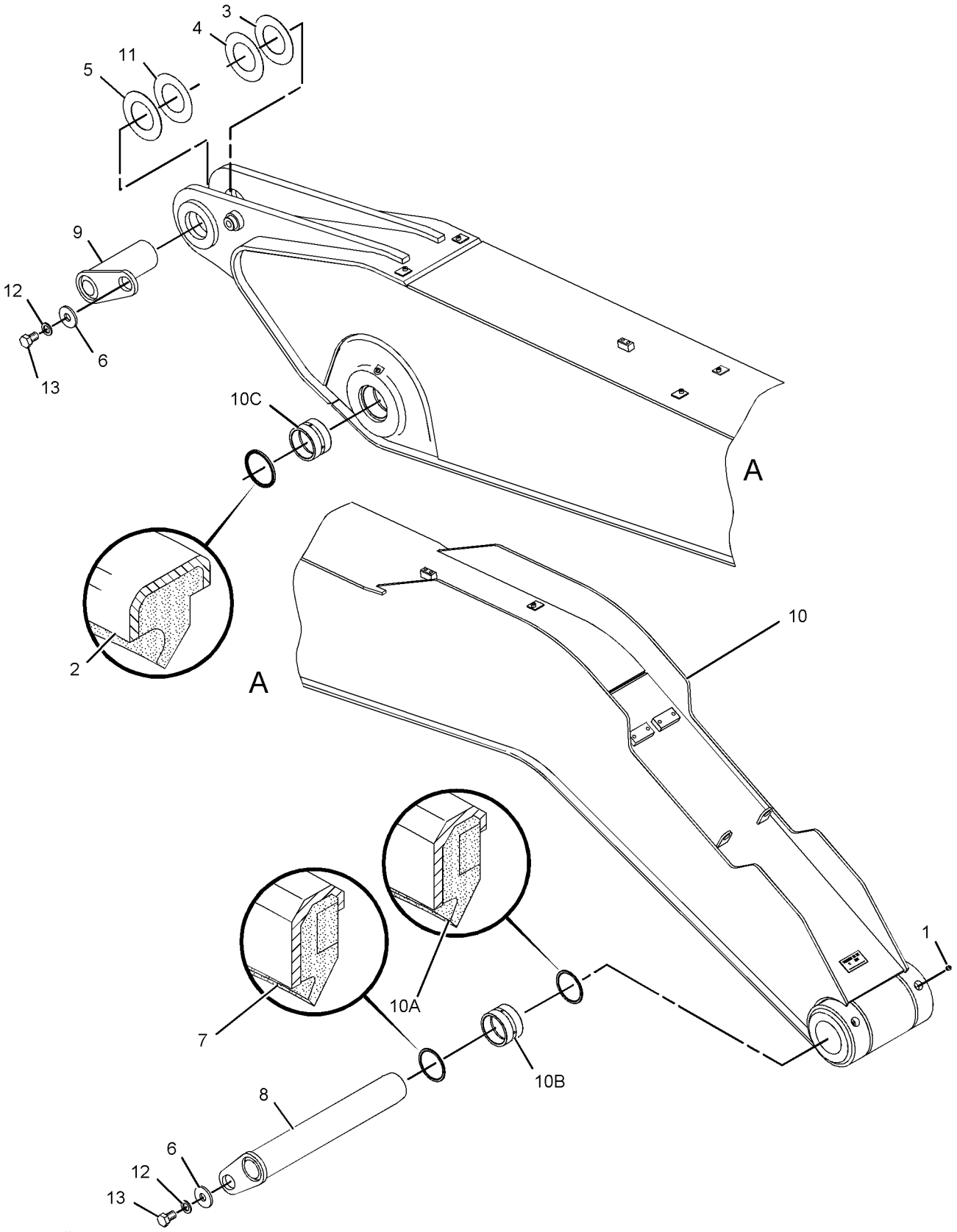

GRAPHIC #1 **<END>** g01090505

142-7433 VALVE GP-LUBE DISTRIBUTION

S/N: BCZ1-2000
PART OF 185-3425 LINES GP-GREASE
AN ATTACHMENT

SMCS-7540 **i00617678**

NOTE	REF NO	GRAPHIC REF	PART NUMBER	QTY	PART NAME 1 2 3 4 5 6 (PRODUCT LEVEL)	SEE PAGE
	1	1	**141-2778**	1	FITTING	
	2	1	**135-2442**	11	FITTING	
	3	1	**135-2443**	11	RING	
M	4	1	**135-2444**	1	BOLT (M10X1X12MM)	

M-METRIC PART

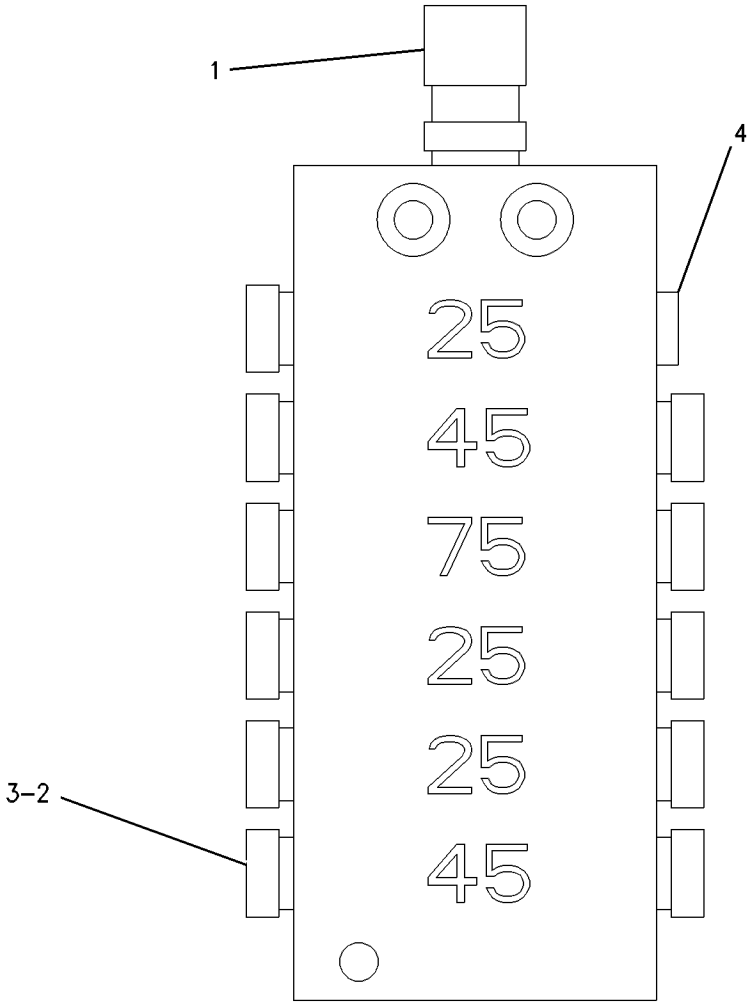

GRAPHIC #1 **<END>** g00278667

142-7434 VALVE GP-LUBE DISTRIBUTION

S/N: BCZ1-2000
PART OF 185-3421 LINES GP-GREASE
AN ATTACHMENT

SMCS-7540 **i00617684**

NOTE	REF NO	GRAPHIC REF	PART NUMBER	QTY	PART NAME 1 2 3 4 5 6 (PRODUCT LEVEL)	SEE PAGE
	1	1	**141-2778**	1	FITTING	
	2	1	**135-2442**	7	FITTING	
	3	1	**135-2443**	7	RING	
M	4	1	**135-2444**	1	BOLT	

M-METRIC PART

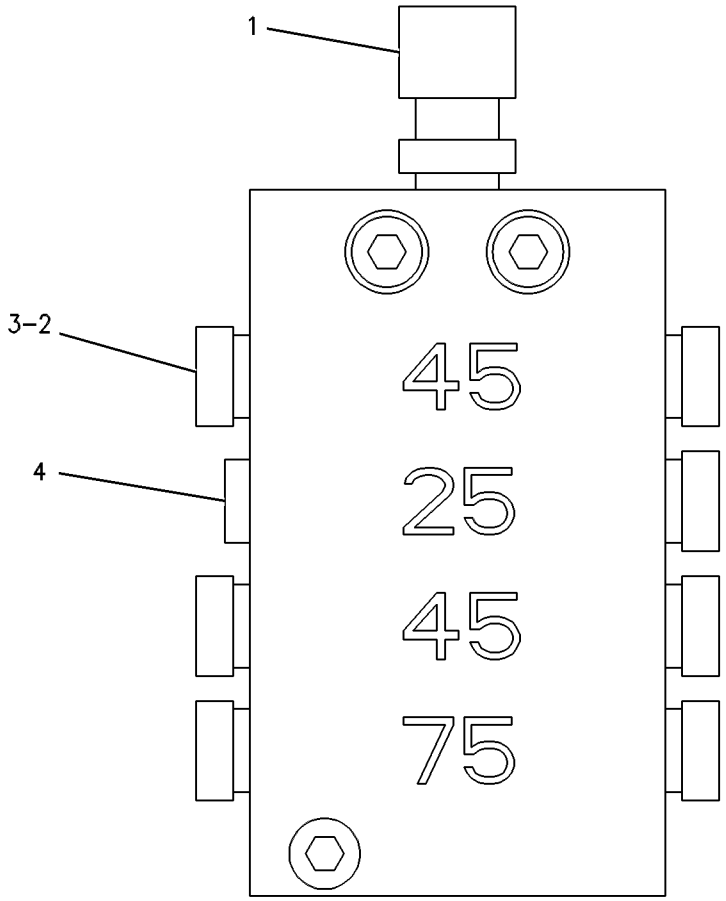

GRAPHIC #1 **<END>** g00277719

WORK TOOLS

7Y-2219 ADJUSTER GP-WORK TOOL

S/N: BCZ1-2000
B-FAMILY
PART OF 118-7741, 118-7971, 118-7974, 118-7975, 118-7976, 137-3292 BUCKET & ADJUSTER AR, 125-4428 LINKAGE AR-BUCKET AN ATTACHMENT

SMCS-6513, 6700 **i01777343**

NOTE	REF NO	GRAPHIC REF	PART NUMBER	QTY	PART NAME 1 2 3 4 5 6 (PRODUCT LEVEL)	SEE PAGE
B	1	1	**086-0322**	6	SHIM (1.0MM THK)	
B	2	1	**086-0321**	4	SHIM (0.5MM THK)	
	3	1	**193-5014**	1	PIN	
	4	1	**134-8948**	1	PLATE	
M	5	1	**8T-4193**	4	BOLT (M16X2X50MM)	
	6	1	**9X-8257**	4	WASHER (17.5X30X3.5MM THK)	
	7	1	**193-5015**	1	FLANGE	

B-USE AS REQUIRED
M-METRIC PART

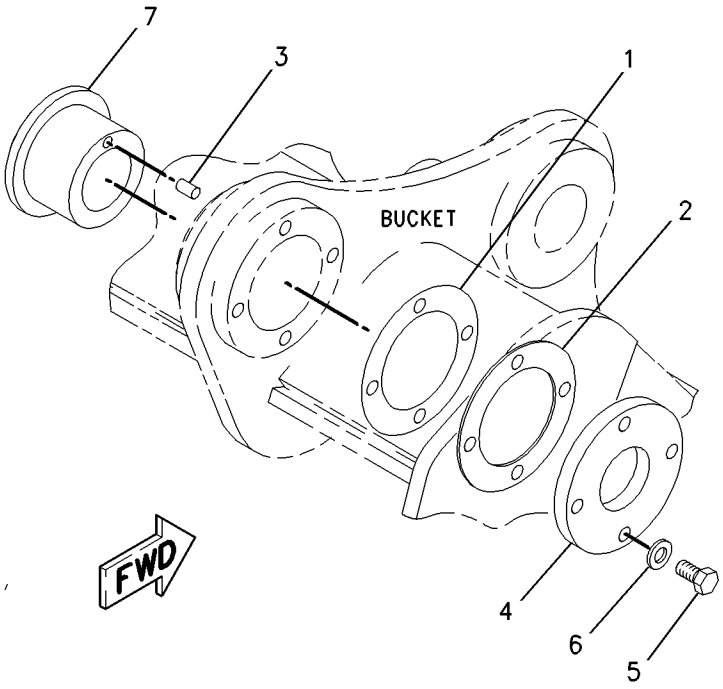

GRAPHIC #1 **<END>** g00910731

WORK TOOLS

118-1865 BLADE & MOUNTING GP

S/N: BCZ1-2000
PART OF 188-4998 BLADE AR
AN ATTACHMENT

SMCS-6060 **i02155736**

NOTE	REF NO	GRAPHIC REF	PART NUMBER	QTY	PART NAME 1 2 3 4 5 6 (PRODUCT LEVEL)	SEE PAGE
	1	1	**5W-0911**	2	PIPE	
	2	1	**5W-2731**	2	LOCK PIN	
	3	1	**5W-2817**	8	FITTING-GREASE	
	4	1	**5W-4223**	2	COVER	
	5	1	**8U-3528**	2	HINGE AS	
	6	1	**8U-3537**	2	PIN	
	7	1	**093-0349**	8	WASHER (22X60X6-MM THK)	
	8	1	**109-2092**	1	BRACKET AS	
	9	1	**109-2947**	1	LINKAGE AS	
	10	1	**248-3216**	2	PIN AS	
	11	1	**110-2158**	2	PIN AS	
	12	1	**110-2159**	2	PIN AS	
	13	1	**117-9893**	2	SLEEVE	
	14	1	**117-9896**	6	SLEEVE	
	15	1	**126-6760**	1	BLADE AS-BULLDOZER	
		1	**8U-3536**	1	BAR	
		1	**107-2168**	2	BRACKET AS	
M	16	1	**131-6454**	4	SCREW-FLAT HEAD (M8X1.25X25MM)	
	17	1	**196-7156**	1	GUARD AS	
M	18	1	**5C-7261**	4	NUT (M8X1.25-THD)	
M	19	1	**6V-8202**	4	BOLT-SOCKET HEAD (M8X1.25X16-MM)	
M	20	1	**6V-8212**	4	BOLT (M10X1.5X16-MM)	
M	21	1	**8T-4123**	12	WASHER-PLATED (22X35X3.5-MM THK)	
	22	1	**8T-4224**	4	WASHER-HARD (8.8X16X2-MM THK)	
M	23	1	**8T-4780**	8	BOLT (M20X2.5X30-MM)	
	24	1	**248-5684**	2	PIN AS	
	25	1	**5P-4116**	4	WASHER-HARD (8.8X20.5X2-MM THK)	

M-METRIC PART

118-1865 **BLADE & MOUNTING GP** *(contd.)* **i02155736**

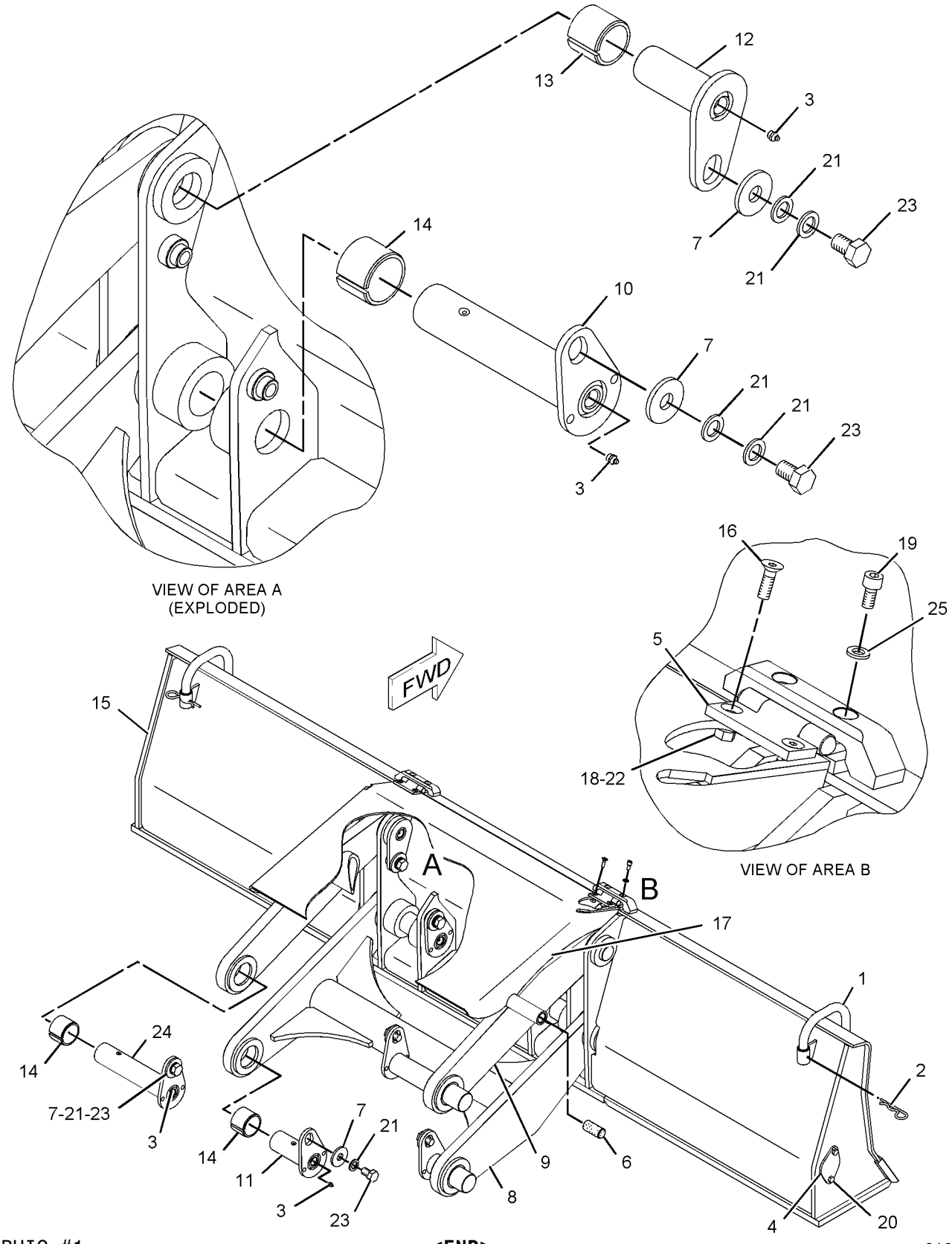

GRAPHIC #1 **<END>** g01093226

WORK TOOLS

190-0287 BLADE & MOUNTING GP

S/N: BCZ1-2000
PART OF 188-4997 BLADE AR
AN ATTACHMENT

SMCS-6060 **i02159611**

NOTE	REF NO	GRAPHIC REF	PART NUMBER	QTY	PART NAME 1 2 3 4 5 6 (PRODUCT LEVEL)	SEE PAGE
	1	1	**5W-0911**	2	PIPE	
	2	1	**5W-2731**	2	LOCK PIN	
	3	1	**5W-2817**	8	FITTING-GREASE	
	4	1	**5W-4223**	2	COVER	
	5	1	**8U-3528**	2	HINGE AS	
	6	1	**8U-3537**	2	PIN	
	7	1	**093-0349**	8	WASHER (22X60X6-MM THK)	
	8	1	**109-2092**	1	BRACKET AS	
	9	1	**109-2947**	1	LINKAGE AS	
	10	1	**248-3216**	2	PIN AS	
	11	1	**110-2158**	2	PIN AS	
	12	1	**110-2159**	2	PIN AS	
	13	1	**117-9893**	2	SLEEVE	
	14	1	**117-9896**	6	SLEEVE	
M	15	1	**131-6454**	4	SCREW-FLAT HEAD	
	16	1	**191-7529**	1	BLADE AS	
	17	1	**196-7156**	1	GUARD AS	
M	18	1	**5C-7261**	4	NUT (M8X1.25-THD)	
M	19	1	**6V-8202**	4	BOLT-SOCKET HEAD (M8X1.25X16-MM)	
M	20	1	**6V-8212**	4	BOLT (M10X1.5X16-MM)	
M	21	1	**8T-4123**	12	WASHER-PLATED (22X35X3.5-MM THK)	
	22	1	**8T-4224**	4	WASHER-HARD (8.8X16X2-MM THK)	
M	23	1	**8T-4780**	8	BOLT (M20X2.5X30-MM)	
	24	1	**248-5684**	2	PIN AS	
	25	1	**5P-4116**	4	WASHER-HARD (8.8X20.5X2-MM THK)	

M-METRIC PART

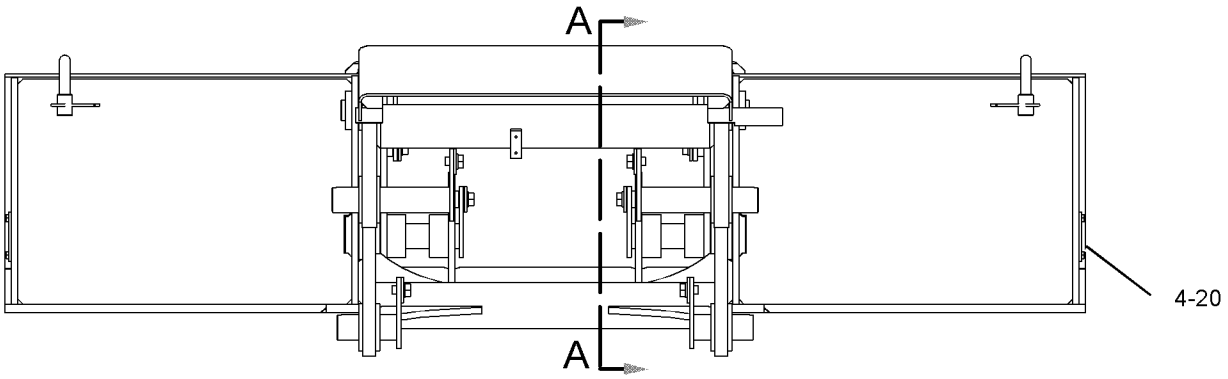

REAR VIEW

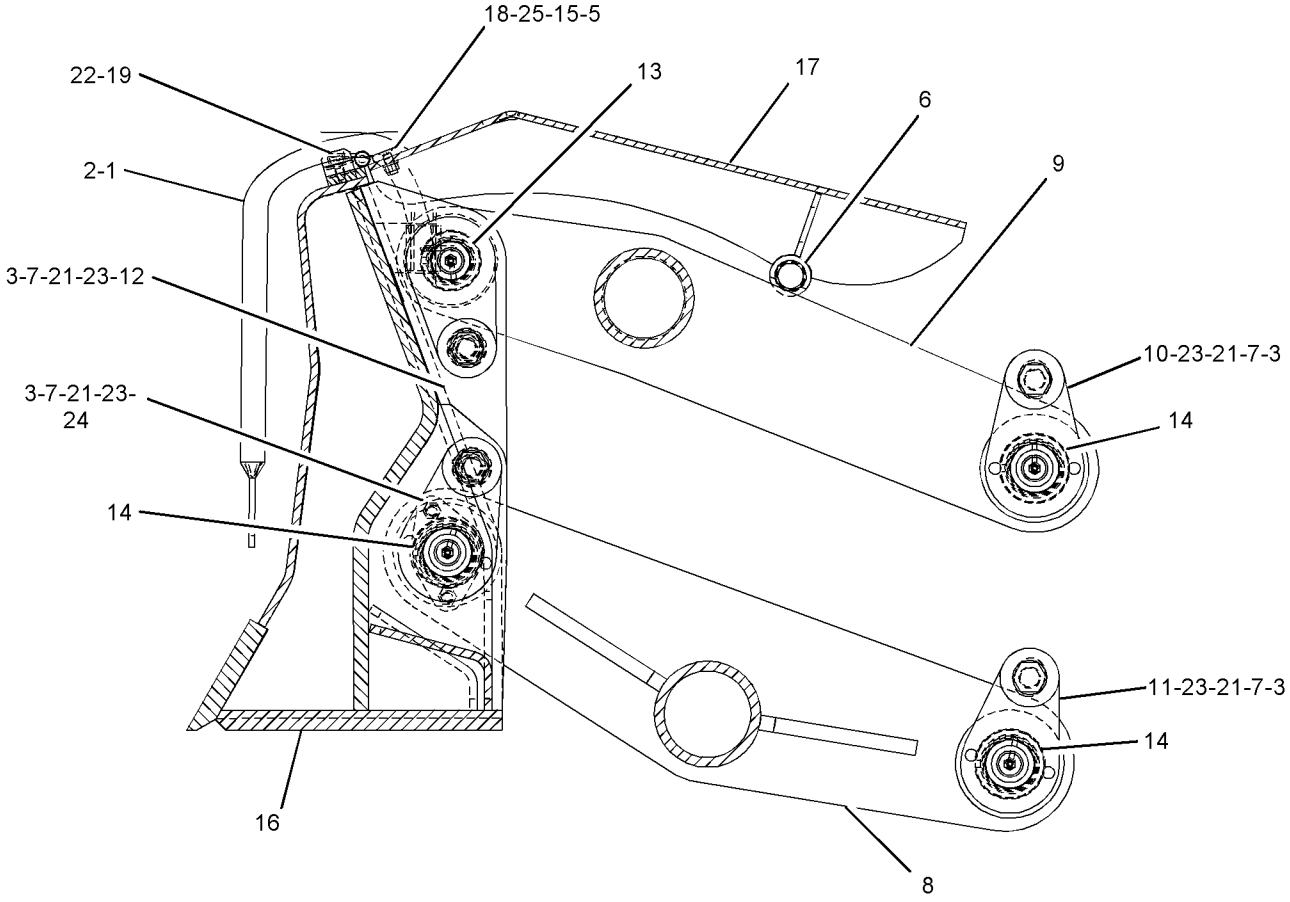

SECTION A-A

GRAPHIC #1 **<END>** g01095225

WORK TOOLS

188-4997 BLADE AR

S/N: BCZ1-2000
FOR USE WITH ANY UNDERCARRIAGE CONFIGURATION
AN ATTACHMENT

SMCS-6060 **i02164910**

NOTE	PART NUMBER	QTY	PART NAME 1 2 3 4 5 6 (PRODUCT LEVEL)	SEE PAGE
Y	*190-0287*	1	BLADE & MOUNTING GP	797
Y	**221-3545**	2	CYLINDER GP-BLADE	453
			S/N: BCZ1-885	
Y	**252-7305**	2	CYLINDER GP-BLADE	455
			S/N: BCZ886-2000	
Y	*188-7637*	1	LINES GP-BLADE CYLINDER	502

Y-SEPARATE ILLUSTRATION

<END>

188-4998 BLADE AR

S/N: BCZ1-2000
2750MM (108.27IN) WIDE
FOR USE WITH WIDE GAUGE AXLE
AN ATTACHMENT

SMCS-6060 **i02164911**

NOTE	PART NUMBER	QTY	PART NAME 1 2 3 4 5 6 (PRODUCT LEVEL)	SEE PAGE
Y	*118-1865*	1	BLADE & MOUNTING GP	795
Y	**221-3545**	2	CYLINDER GP-BLADE	453
			S/N: BCZ1-885	
Y	**252-7305**	2	CYLINDER GP-BLADE	455
			S/N: BCZ886-2000	
Y	*188-7637*	1	LINES GP-BLADE CYLINDER	502

Y-SEPARATE ILLUSTRATION

<END>

118-7741 BUCKET & ADJUSTER AR

S/N: BCZ1-2000
1000MM (39.37IN) WIDE X .7CU M (.91CU YD) CAPACITY. B-FAMILY
CANNOT BE USED WITH MATERIAL HANDLING STICK
AN ATTACHMENT

SMCS-6503, 6513 **i01763241**

NOTE	PART NUMBER	QTY	PART NAME 1 2 3 4 5 6 (PRODUCT LEVEL)	SEE PAGE
Y	**7Y-2219**	1	ADJUSTER GP-WORK TOOL	794
Y	**116-3459**	1	BUCKET AS-EXCAVATION	814

Y-SEPARATE ILLUSTRATION

<END>

WORK TOOLS

118-7971 BUCKET & ADJUSTER AR

S/N: BCZ1-2000
1200MM (47.24IN) WIDE X .9CU M (1.17CU YD) CAPACITY. B-FAMILY
CANNOT BE USED WITH MATERIAL HANDLING STICK
AN ATTACHMENT

SMCS-6503, 6513 **i01763235**

NOTE	PART NUMBER	QTY	PART NAME 1 2 3 4 5 6 (PRODUCT LEVEL)	SEE PAGE
Y	**7Y-2219**	1	ADJUSTER GP-WORK TOOL	794
Y	**106-7747**	1	BUCKET AS-EXCAVATION	813

Y-SEPARATE ILLUSTRATION

<END>

118-7974 BUCKET & ADJUSTER AR

S/N: BCZ1-2000
750MM (29.5IN) WIDE X .55CU M (.72CU YD) CAPACITY. B-FAMILY
CANNOT BE USED WITH MATERIAL HANDLING STICK
AN ATTACHMENT

SMCS-6503, 6513 **i01764143**

NOTE	PART NUMBER	QTY	PART NAME 1 2 3 4 5 6 (PRODUCT LEVEL)	SEE PAGE
Y	**7Y-2219**	1	ADJUSTER GP-WORK TOOL	794
Y	**117-1426**	1	BUCKET AS-EXCAVATION	815

Y-SEPARATE ILLUSTRATION

<END>

118-7975 BUCKET & ADJUSTER AR

S/N: BCZ1-2000
1000MM (39.4 IN) WIDE X .81CU M (1.06CU YD) CAPACITY. B-FAMILY
CANNOT BE USED WITH MATERIAL HANDLING STICK
AN ATTACHMENT

SMCS-6503, 6513 **i01763242**

NOTE	PART NUMBER	QTY	PART NAME 1 2 3 4 5 6 (PRODUCT LEVEL)	SEE PAGE
Y	**7Y-2219**	1	ADJUSTER GP-WORK TOOL	794
Y	**117-1428**	1	BUCKET AS-EXCAVATION	816

Y-SEPARATE ILLUSTRATION

<END>

118-7976 BUCKET & ADJUSTER AR

S/N: BCZ1-2000
1250MM (49.2IN) WIDE X 1.05CU M (1.37CU YD) CAPACITY. B-FAMILY
CANNOT BE USED WITH MATERIAL HANDLING STICK
AN ATTACHMENT

SMCS-6503, 6513 **i01763237**

NOTE	PART NUMBER	QTY	PART NAME 1 2 3 4 5 6 (PRODUCT LEVEL)	SEE PAGE
Y	**7Y-2219**	1	ADJUSTER GP-WORK TOOL	794
Y	**117-1430**	1	BUCKET AS-EXCAVATION	817
Y-SEPARATE ILLUSTRATION				

<END>

137-3292 BUCKET & ADJUSTER AR

S/N: BCZ1-2000
FOR USE WITH 1 PC-BOOM OR VARIABLE ADJUSTABLE-BOOM , RIGID DESIGN
AN ATTACHMENT

SMCS-6503, 6513 **i01763210**

NOTE	PART NUMBER	QTY	PART NAME 1 2 3 4 5 6 (PRODUCT LEVEL)	SEE PAGE
Y	**7Y-2219**	1	ADJUSTER GP-WORK TOOL	794
Y	**125-4429**	1	BUCKET AS-DITCH CLEANING	810
Y-SEPARATE ILLUSTRATION				

<END>

8U-2135 BUCKET & BEARING AS—DITCH CLEANING

S/N: BCZ1-2000
1800MM (72IN) WIDE X CAPACITY
FOR USE WITH TILTING DEVICE, 1 PIECE BOOM OR VARIABLE ADJUSTABLE-BOOM
AN ATTACHMENT

SMCS-6503 **i01821561**

NOTE	REF NO	GRAPHIC REF	PART NUMBER	QTY	PART NAME 1 2 3 4 5 6 (PRODUCT LEVEL)	SEE PAGE
	1	1	**5W-2975**	2	BEARING	
Y	2	1	**116-5997**	1	BUCKET AS-DITCH CLEANING	805

Y-SEPARATE ILLUSTRATION

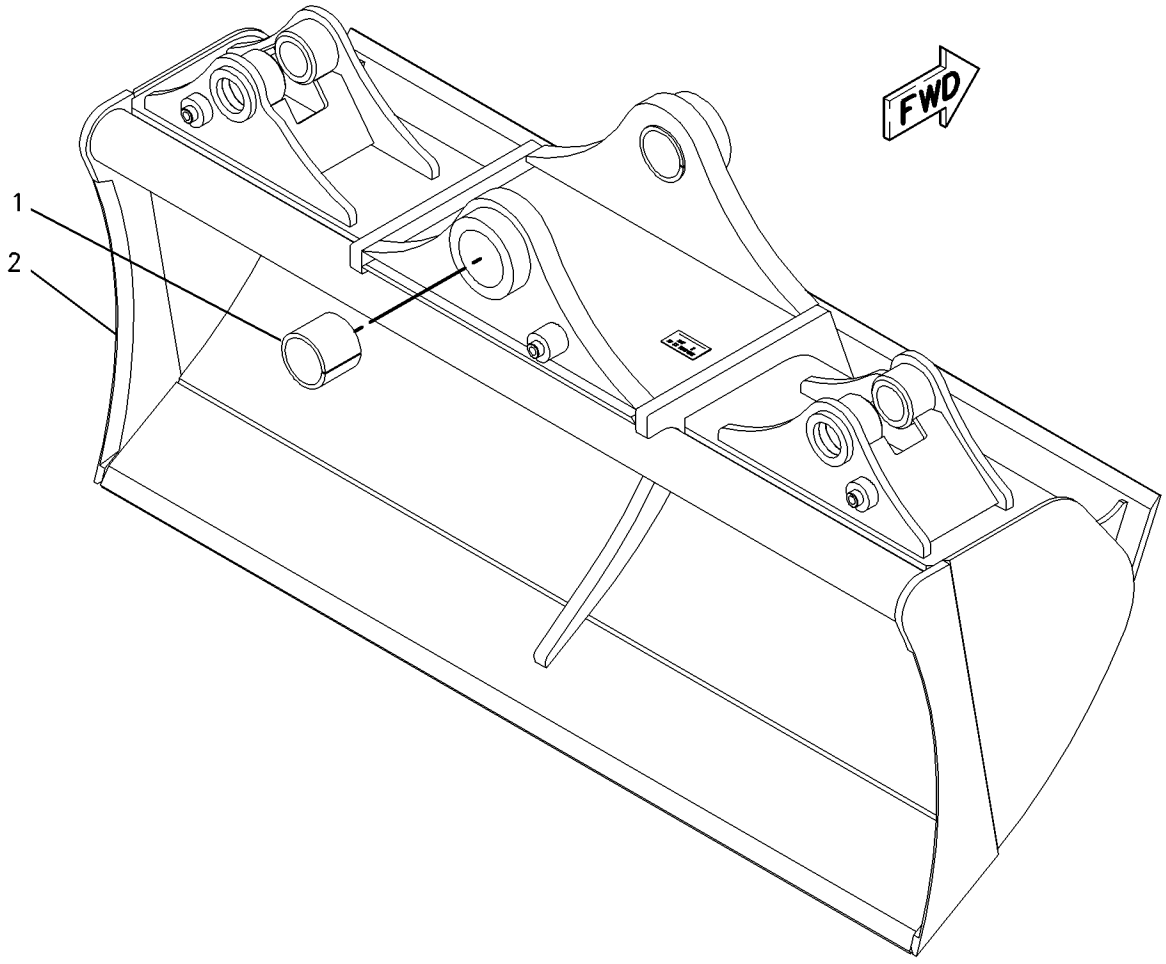

GRAPHIC #1 **<END>** g00930007

8U-2137 BUCKET & BEARING AS—DITCH CLEANING

S/N: BCZ1-2000

2300MM (90IN) WIDE X .6 CU M (.81 CU YD) CAPACITY

FOR USE WITH TILTING DEVICE, 1 PIECE BOOM OR VARIABLE ADJUSTABLE-BOOM

AN ATTACHMENT

SMCS-6503 **i01821605**

NOTE	REF NO	GRAPHIC REF	PART NUMBER	QTY	PART NAME 1 2 3 4 5 6 (PRODUCT LEVEL)	SEE PAGE
	1	1	**5W-2975**	2	BEARING	
Y	2	1	**116-6993**	1	BUCKET AS-DITCH CLEANING	808

Y-SEPARATE ILLUSTRATION

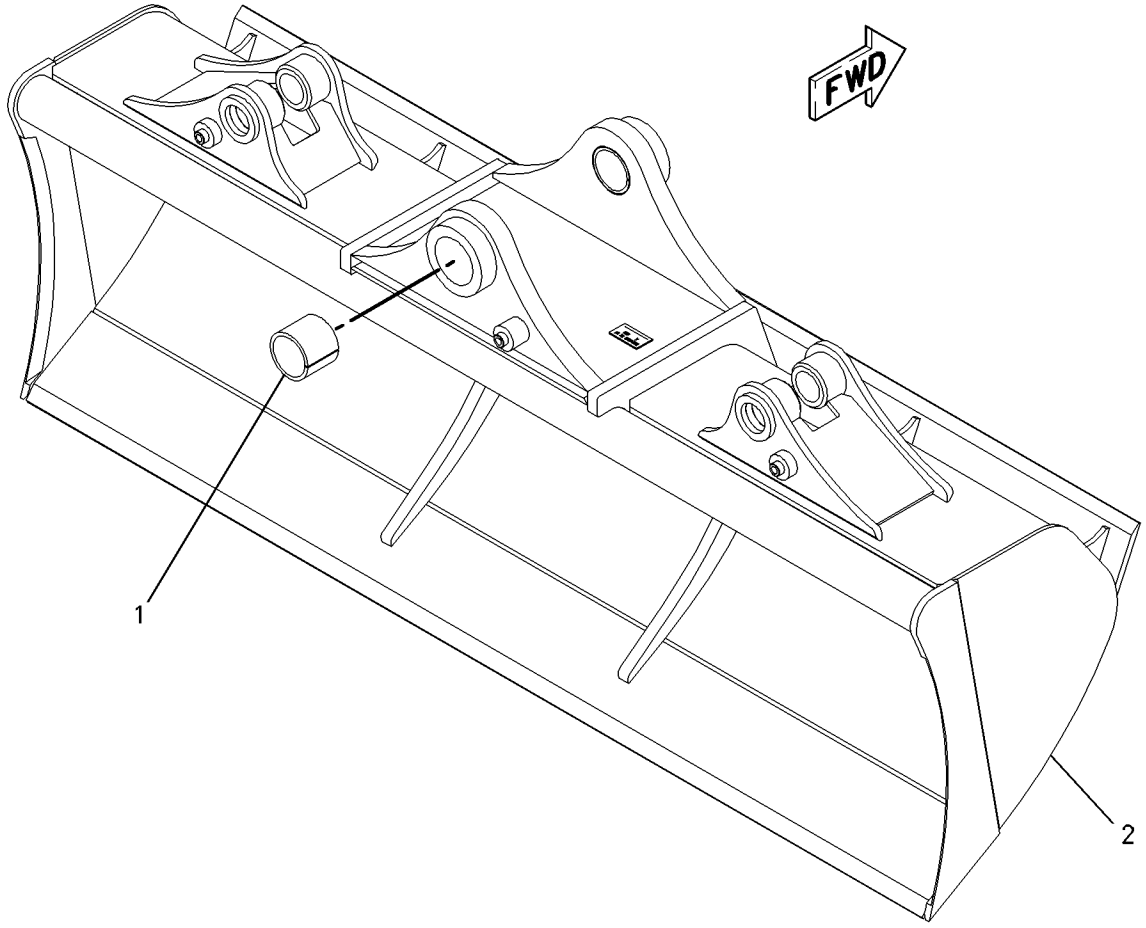

GRAPHIC #1 **<END>** g00930059

125-5817 BUCKET & BEARING AS—DITCH CLEANING

S/N: BCZ1-2000

2000MM (78IN) WIDE X .6CU M (.76 CU YD) CAPACITY

FOR USE WITH TILTING DEVICE, 1 PIECE BOOM OR VARIABLE ADJUSTABLE-BOOM AN ATTACHMENT

SMCS-6503 **i01821612**

NOTE	REF NO	GRAPHIC REF	PART NUMBER	QTY	PART NAME 1 2 3 4 5 6 (PRODUCT LEVEL)	SEE PAGE
	1	1	**5W-2975**	2	BEARING	
Y	2	1	**125-6756**	1	BUCKET AS-DITCH CLEANING	812

Y-SEPARATE ILLUSTRATION

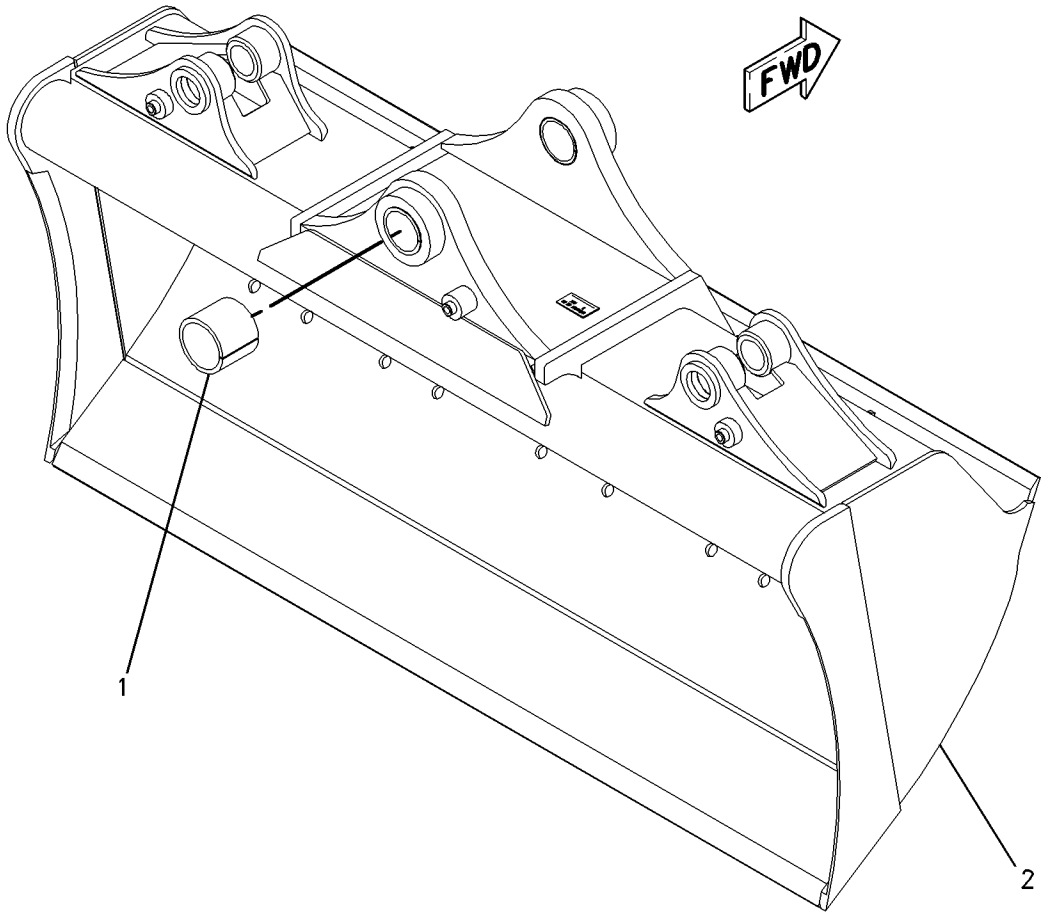

GRAPHIC #1 **<END>** g00930068

116-5997 BUCKET AS-DITCH CLEANING

S/N: BCZ1-2000
1800MM (72IN) WIDE X .4 CU M (.52 CU YD) CAPACITY
PART OF 8U-2135 BUCKET & BEARING AS
FOR USE WITH TILTING DEVICE, 1 PIECE BOOM OR VARIABLE ADJUSTABLE-BOOM
AN ATTACHMENT

SMCS-6526 **i01821640**

NOTE	REF NO	GRAPHIC REF	PART NUMBER	QTY	PART NAME 1 2 3 4 5 6 (PRODUCT LEVEL)	SEE PAGE
Y	1	1	*116-6011*	1	BUCKET AS-DITCH CLEANING	806
	2	1	**116-6012**	1	BRACKET AS	
	3	1	**116-6013**	1	BRACKET AS-LH	
	4	1	**116-6014**	1	BRACKET AS-RH	

Y-SEPARATE ILLUSTRATION

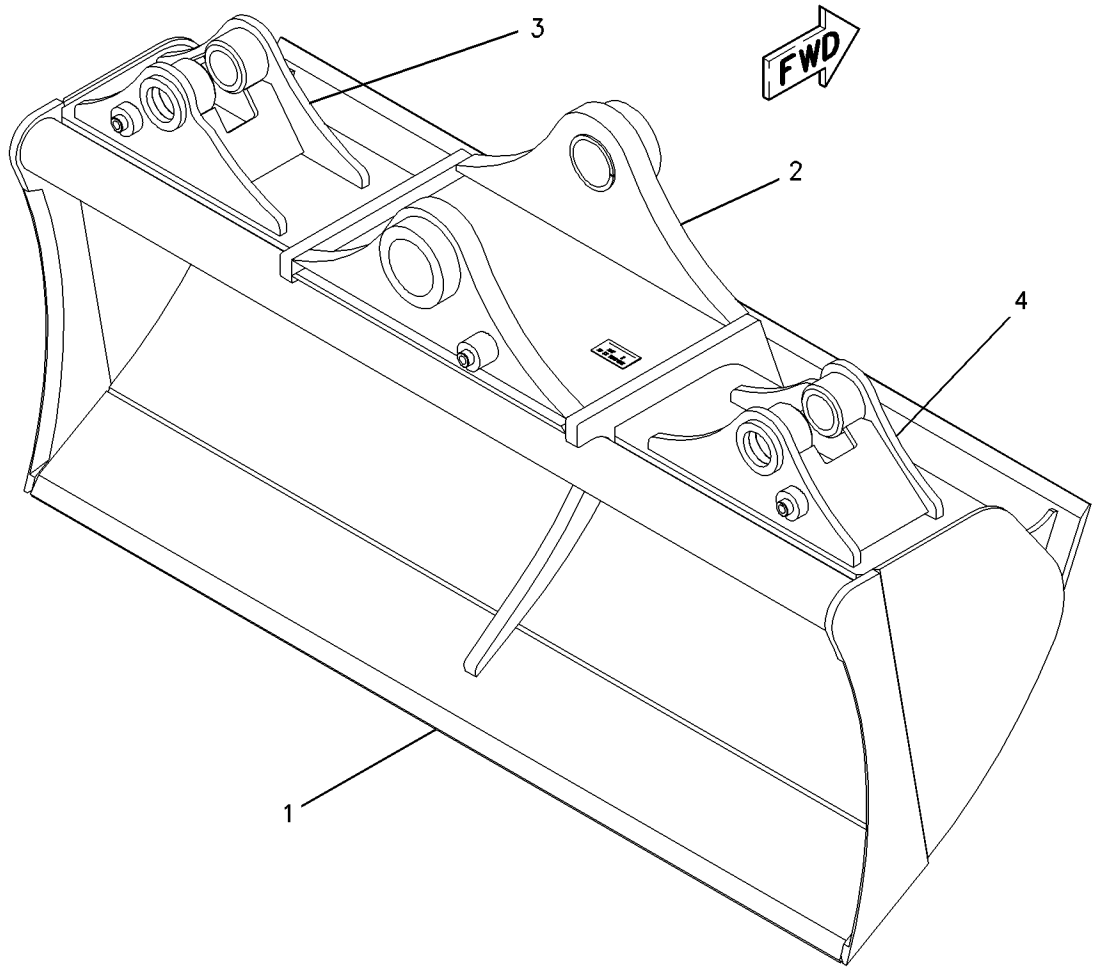

GRAPHIC #1 **<END>** g00930097

WORK TOOLS

116-6011 BUCKET AS-DITCH CLEANING

S/N: BCZ1-2000
1800MM (72IN) WIDE X .4 CU M (.52 CU YD) CAPACITY
PART OF 116-5997 BUCKET AS-DITCH CLEANING
FOR USE WITH TILTING DEVICE, 1 PIECE BOOM OR VARIABLE ADJUSTABLE-BOOM
AN ATTACHMENT

SMCS-6526 **i01821655**

NOTE	REF NO	GRAPHIC REF	PART NUMBER	QTY	PART NAME 1 2 3 4 5 6 (PRODUCT LEVEL)	SEE PAGE
	1	1	**5W-7955**	1	EDGE-CUTTING	
	2	1	**116-6622**	6	PLATE-WEAR	

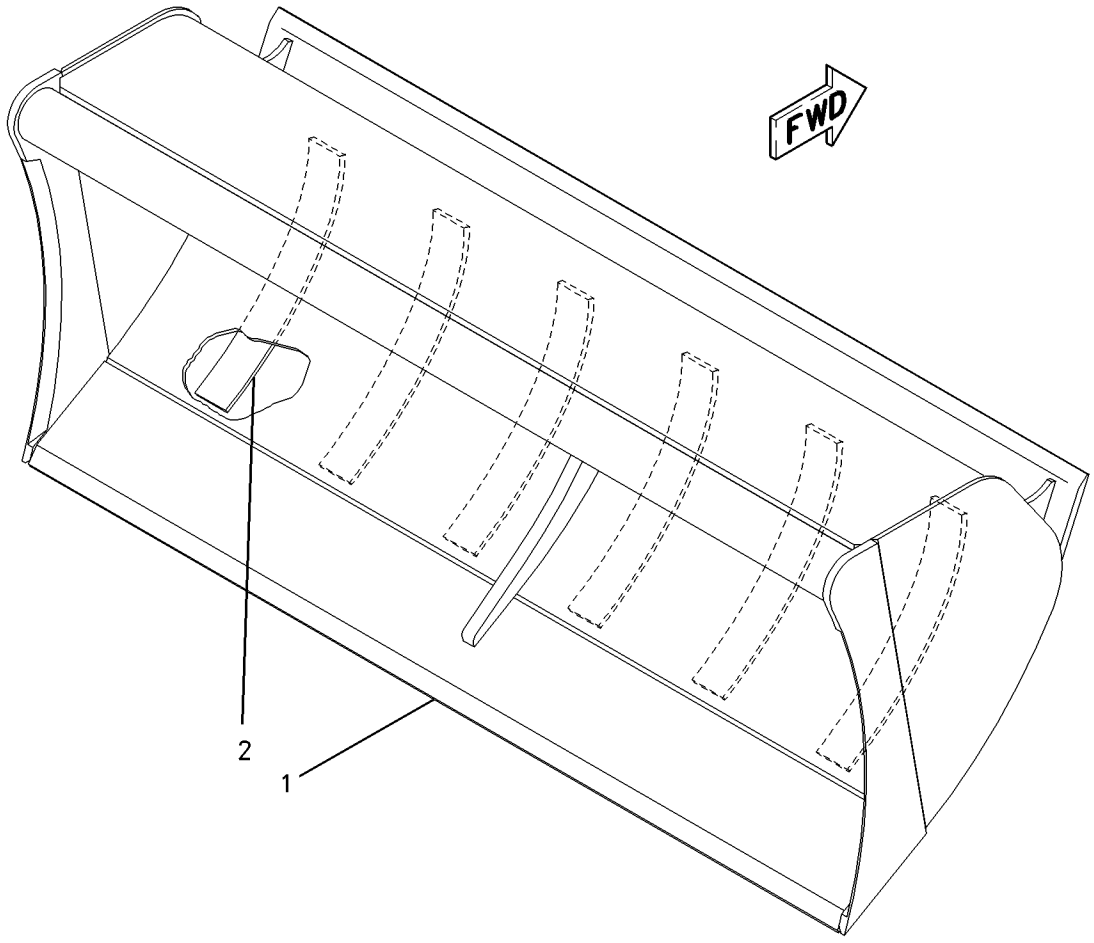

GRAPHIC #1 **<END>** g00930101

WORK TOOLS

116-6929 BUCKET AS-DITCH CLEANING

S/N: BCZ1-2000
2000MM (78IN) WIDE X .7 CU M (.96 CU YD) CAPACITY. RIGID DESIGN
PART OF 125-4429 BUCKET AS-DITCH CLEANING
FOR USE WITH 1 PIECE BOOM OR VARIABLE ADJUSTABLE-BOOM
AN ATTACHMENT

SMCS-6526 **i01821661**

NOTE	REF NO	GRAPHIC REF	PART NUMBER	QTY	PART NAME 1 2 3 4 5 6 (PRODUCT LEVEL)	SEE PAGE
	1	1	**5W-7957**	1	EDGE-CUTTING	
	2	1	**116-6971**	1	EDGE-CUTTING	
	3	1	**116-6972**	6	PLATE-WEAR	

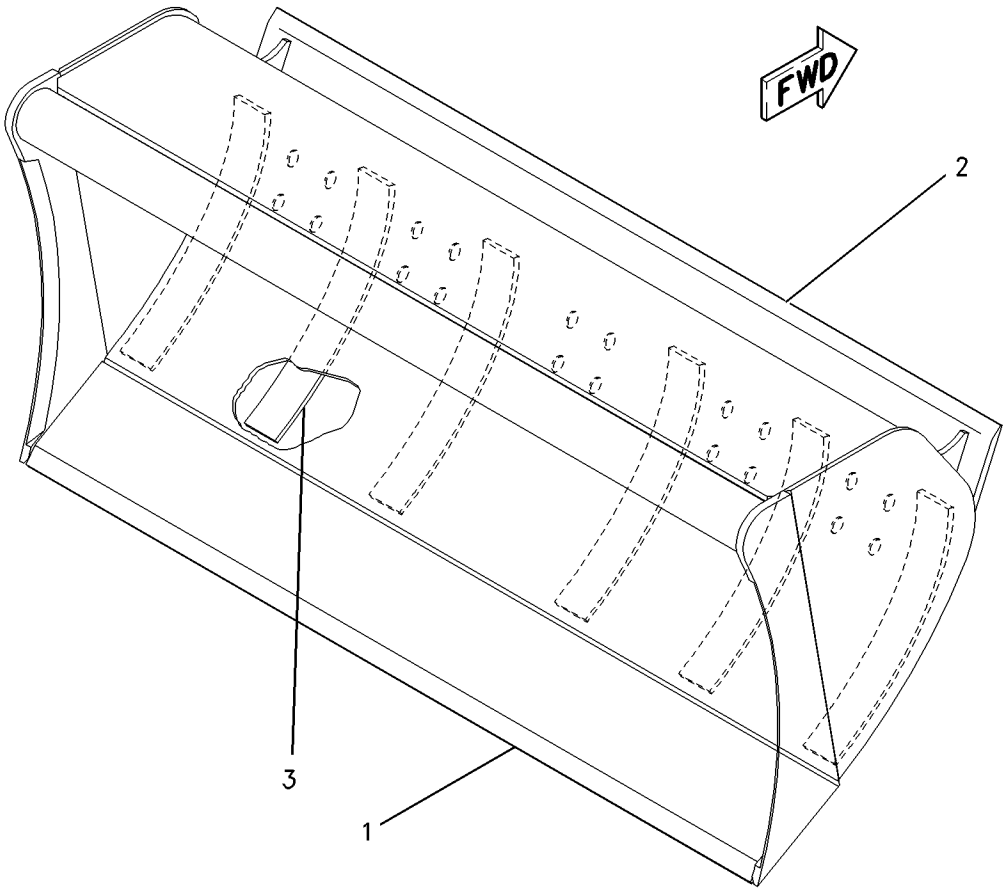

GRAPHIC #1 **<END>** g00930107

116-6993 BUCKET AS-DITCH CLEANING

S/N: BCZ1-2000
2300MM (90IN) WIDE X .6 CU M (.81 CU YD) CAPACITY
PART OF 8U-2137 BUCKET & BEARING AS
FOR USE WITH TILTING DEVICE, 1 PIECE BOOM OR VARIABLE ADJUSTABLE-BOOM
AN ATTACHMENT

SMCS-6526 **i01821688**

NOTE	REF NO	GRAPHIC REF	PART NUMBER	QTY	PART NAME 1 2 3 4 5 6 (PRODUCT LEVEL)	SEE PAGE
	1	1	**116-6012**	1	BRACKET AS	
Y	2	1	*116-6994*	1	BUCKET AS-DITCH CLEANING	809
	3	1	**116-6997**	1	BRACKET AS	
	4	1	**116-6998**	1	BRACKET AS	

Y-SEPARATE ILLUSTRATION

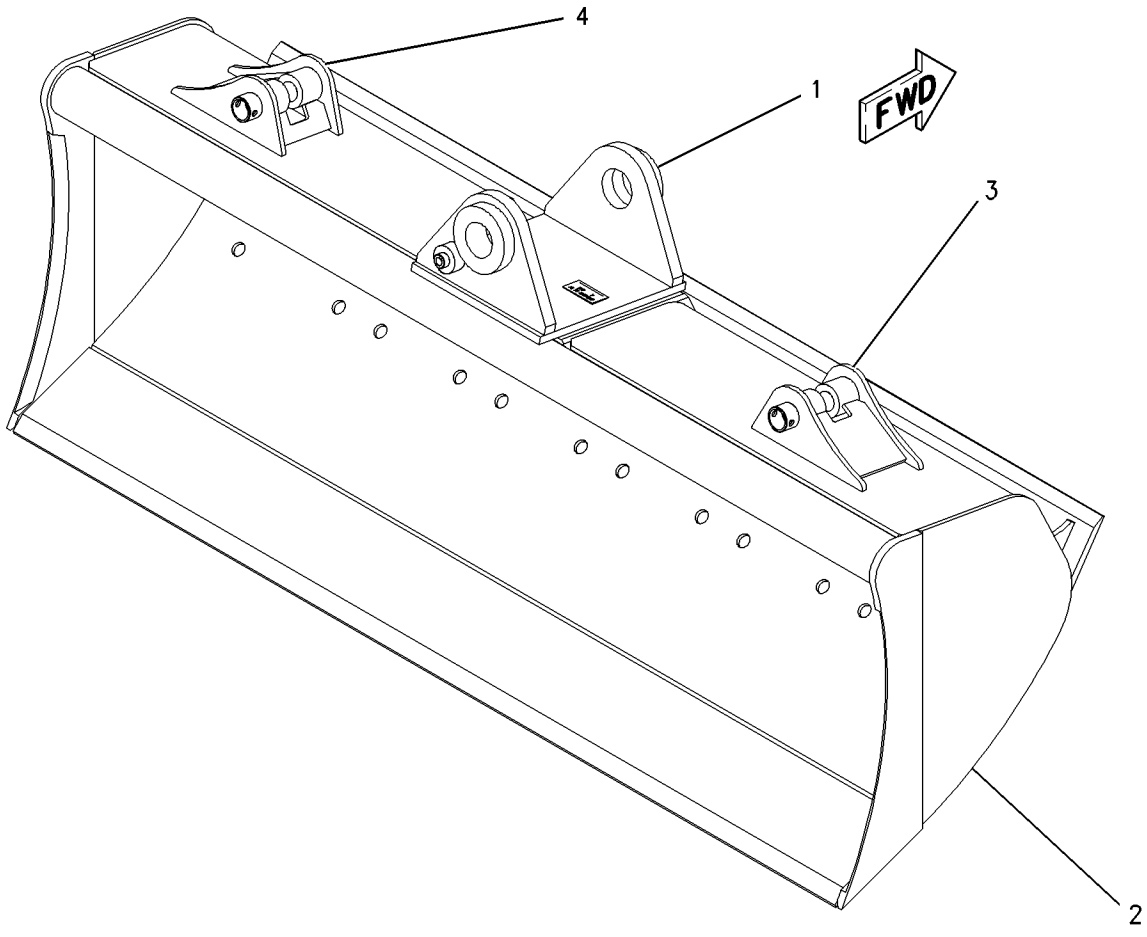

GRAPHIC #1 **<END>** g00930137

116-6994 BUCKET AS-DITCH CLEANING

S/N: BCZ1-2000
2300MM (90IN) WIDE X .6 CU M (.81 CU YD) CAPACITY
PART OF 116-6993 BUCKET AS-DITCH CLEANING
FOR USE WITH 1 PIECE BOOM OR VARIABLE ADJUSTABLE-BOOM
AN ATTACHMENT

SMCS-6526 **i01794983**

NOTE	REF NO	GRAPHIC REF	PART NUMBER	QTY	PART NAME 1 2 3 4 5 6 (PRODUCT LEVEL)	SEE PAGE
	1	1	**8U-2639**	1	EDGE-CUTTING	
	2	1	**116-6622**	7	PLATE-WEAR	
	3	1	**116-7028**	1	EDGE-CUTTING	

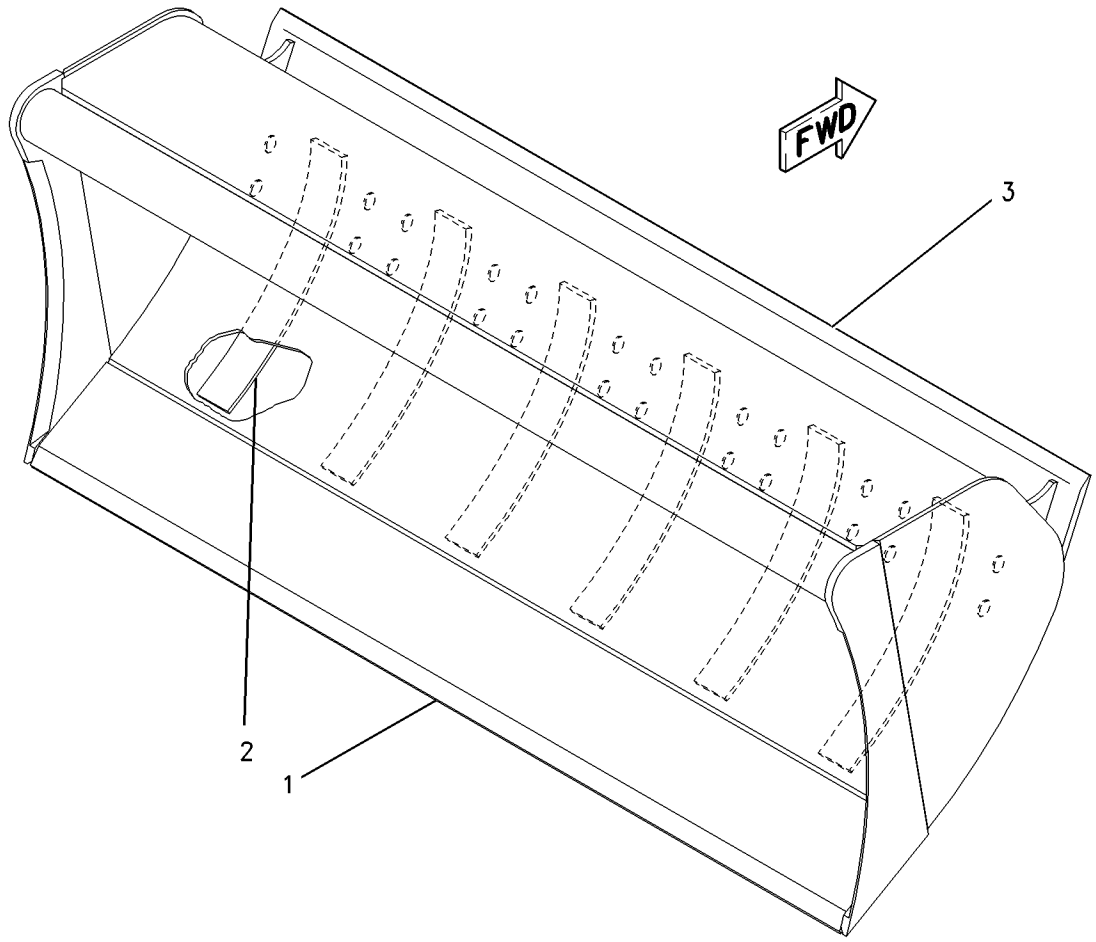

GRAPHIC #1 **<END>** g00919017

WORK TOOLS

125-4429 BUCKET AS-DITCH CLEANING

S/N: BCZ1-2000
2000MM (78IN) WIDE X .7 CU M (.96 CU YD) CAPACITY. B-FAMILY, RIGID DESIGN
PART OF 137-3292 BUCKET & ADJUSTER AR
FOR USE WITH 1 PIECE BOOM OR VARIABLE ADJUSTABLE-BOOM
AN ATTACHMENT

SMCS-6526 **i01821698**

NOTE	REF NO	GRAPHIC REF	PART NUMBER	QTY	PART NAME 1 2 3 4 5 6 (PRODUCT LEVEL)	SEE PAGE
	1	1	**127-6214**	1	BAFFLE AS-RH	
Y	2	1	*116-6929*	1	BUCKET AS-DITCH CLEANING	807
	3	1	**117-3403**	1	SECTION	
	4	1	**117-3404**	2	SECTION	
	5	1	**117-3405**	2	REINFORCEMENT	
	6	1	**127-6213**	1	BAFFLE AS-LH	

Y-SEPARATE ILLUSTRATION

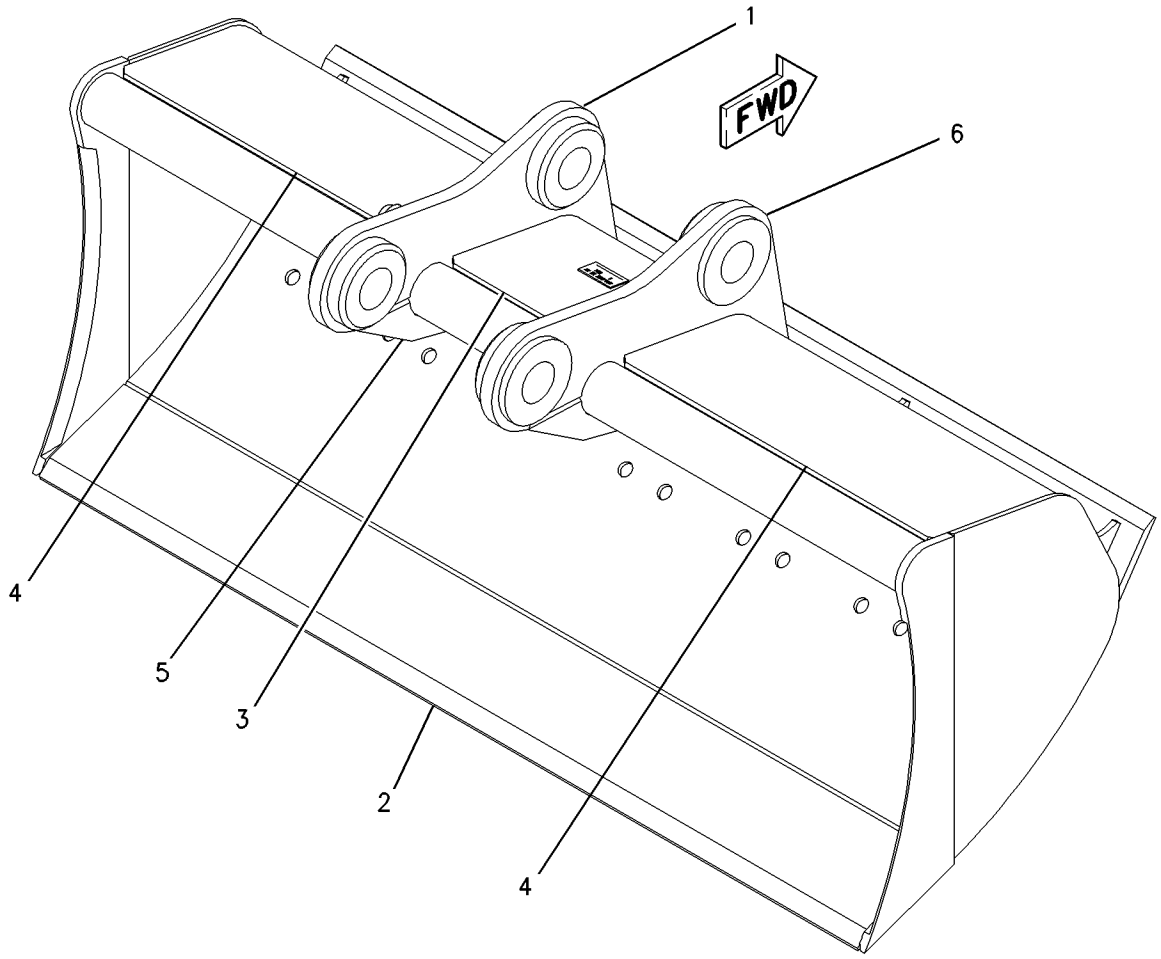

GRAPHIC #1 **<END>** g00919068

125-4430 BUCKET AS-DITCH CLEANING

S/N: BCZ1-2000
2000MM (78IN) WIDE X .6 CU M (.76 CU YD) CAPACITY
PART OF 125-6756 BUCKET AS-DITCH CLEANING
FOR USE WITH 1 PIECE BOOM OR VARIABLE ADJUSTABLE-BOOM, TILTING DEVICE
AN ATTACHMENT

SMCS-6526 **i01821703**

NOTE	REF NO	GRAPHIC REF	PART NUMBER	QTY	PART NAME 1 2 3 4 5 6 (PRODUCT LEVEL)	SEE PAGE
	1	1	**121-5585**	1	EDGE-CUTTING	
	2	1	**125-4433**	1	PLATE-LH	
	3	1	**125-4434**	1	PLATE-RH	
	4	1	**125-4909**	6	PLATE-WEAR	
	5	1	**125-6169**	1	EDGE-CUTTING	

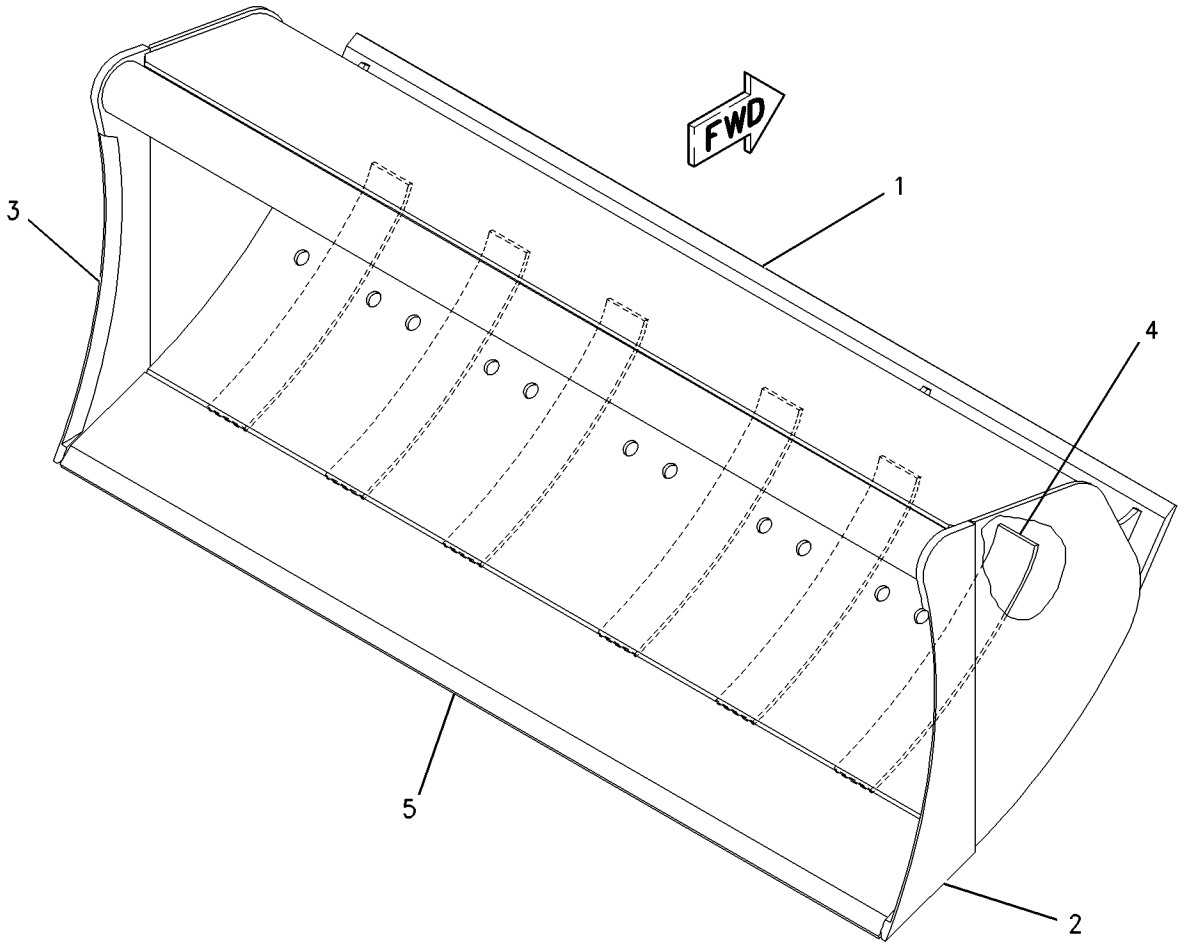

GRAPHIC #1 **<END>** g00919070

125-6756 BUCKET AS-DITCH CLEANING

S/N: BCZ1-2000
2000MM (78IN) WIDE X .6 CU M (.76 CU YD) CAPACITY
PART OF 125-5817 BUCKET & BEARING AS
FOR USE WITH TILTING DEVICE, 1 PIECE BOOM OR VARIABLE ADJUSTABLE-BOOM
AN ATTACHMENT

SMCS-6526 **i01794988**

NOTE	REF NO	GRAPHIC REF	PART NUMBER	QTY	PART NAME 1 2 3 4 5 6 (PRODUCT LEVEL)	SEE PAGE
	1	1	**125-6614**	1	PLATE	
	2	1	**116-6013**	1	BRACKET AS-LH	
	3	1	**116-6014**	1	BRACKET AS-RH	
Y	4	1	*125-4430*	1	BUCKET AS-DITCH CLEANING	811

Y-SEPARATE ILLUSTRATION

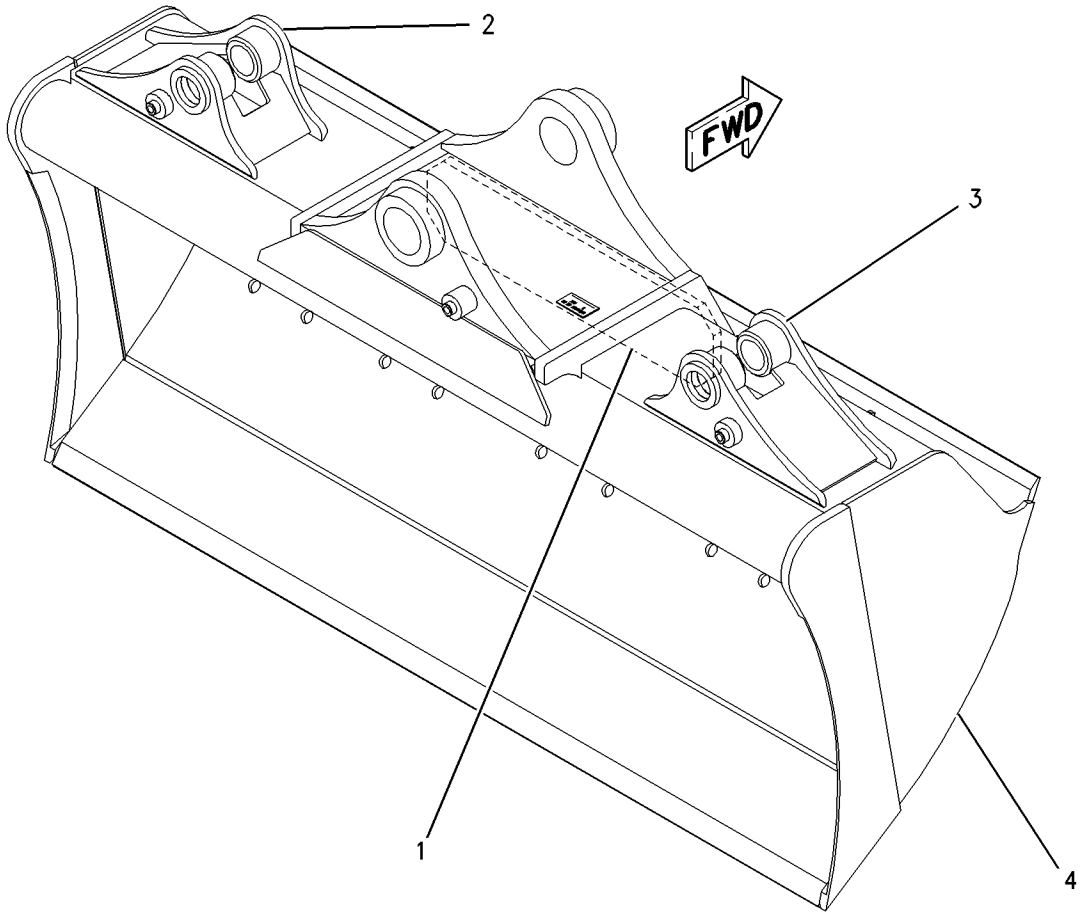

GRAPHIC #1 **<END>** g00919071

106-7747 BUCKET AS-EXCAVATION

S/N: BCZ1-2000
1200MM (48IN) WIDE X .9 CU M (1.18 CU YD) CAPACITY. B-FAMILY
PART OF 118-7971 BUCKET & ADJUSTER AR
AN ATTACHMENT

SMCS-6523 **i01794995**

NOTE	REF NO	GRAPHIC REF	PART NUMBER	QTY	PART NAME 1 2 3 4 5 6 (PRODUCT LEVEL)	SEE PAGE
	1	1	**114-0791**	1	EDGE AS	
	2	1	**8E-9490**	5	ADAPTER-STRAP	
	3	1	**8P-9770**	1	PLATE	

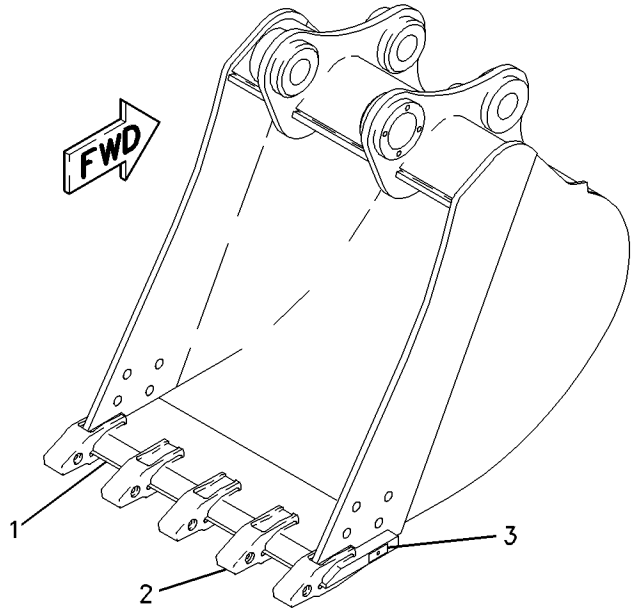

GRAPHIC #1 **<END>** g00919113

WORK TOOLS

116-3459 BUCKET AS-EXCAVATION

S/N: BCZ1-2000
1000MM (40IN) WIDE X .7 CU M (.92 CU YD) CAPACITY. B-FAMILY
PART OF 118-7741 BUCKET & ADJUSTER AR
AN ATTACHMENT

SMCS-6523 **i01822044**

NOTE	REF NO	GRAPHIC REF	PART NUMBER	QTY	PART NAME 1 2 3 4 5 6 (PRODUCT LEVEL)	SEE PAGE
	1	1	**107-7436**	1	EDGE AS	
	2	1	**8E-9490**	5	ADAPTER-STRAP	
	3	1	**8P-9770**	1	PLATE	

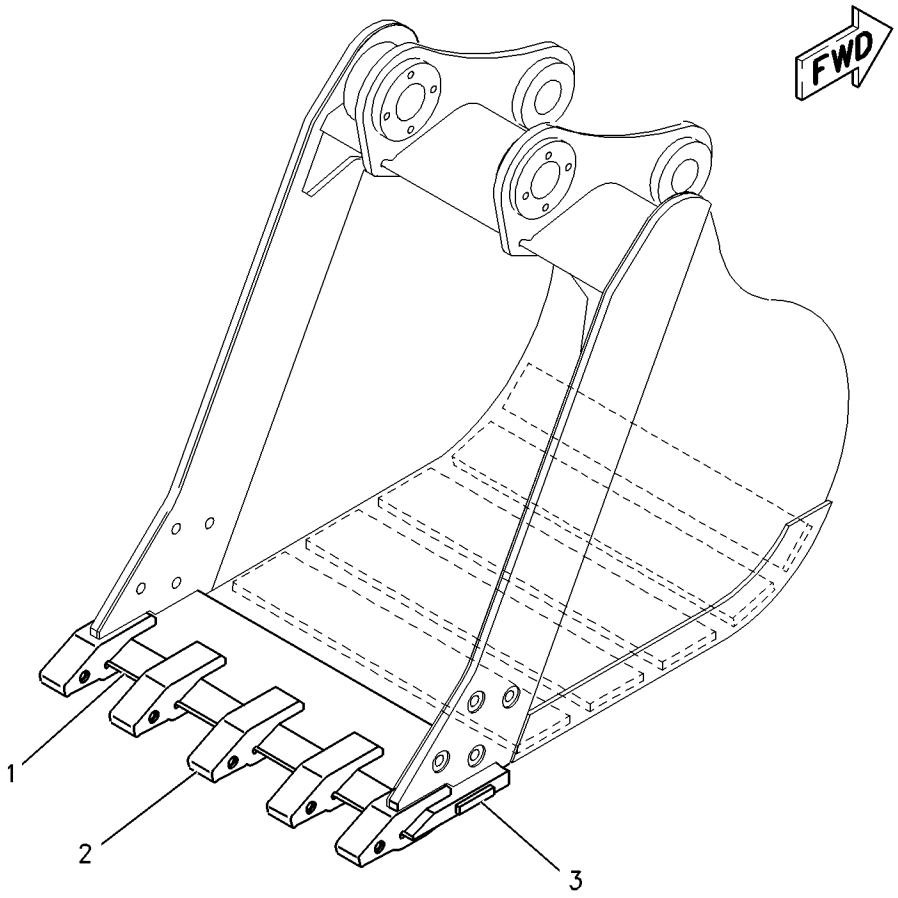

GRAPHIC #1 **<END>** g00930306

117-1426 BUCKET AS-EXCAVATION

S/N: BCZ1-2000
750 MM (29.53 IN) WIDE X .55 CU M (.72CU YD) CAPACITY. B FAMILY
PART OF 118-7974 BUCKET & ADJUSTER AR
FOR USE WITH MATERIAL HANDLING STICK
AN ATTACHMENT

SMCS-6523 **i00615752**

NOTE	REF NO	GRAPHIC REF	PART NUMBER	QTY	PART NAME 1 2 3 4 5 6 (PRODUCT LEVEL)	SEE PAGE
	1	1	**119-3951**	1	EDGE AS	
	2	1	**8E-9490**	3	ADAPTER-STRAP	

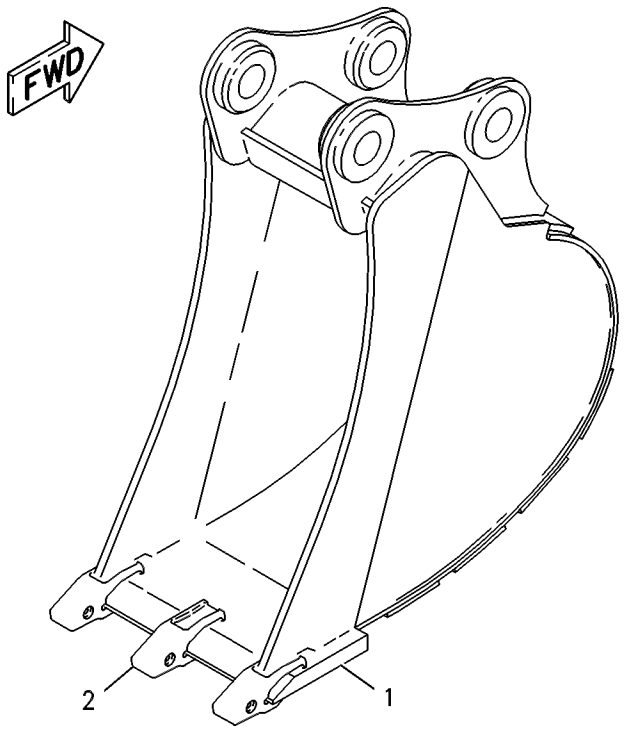

GRAPHIC #1 **<END>** g00278271

WORK TOOLS

117-1428 BUCKET AS-EXCAVATION

S/N: BCZ1-2000
1000MM (39.38IN) WIDE X .8 CU M (1.04 CU YD) CAPACITY. B-FAMILY
PART OF 118-7975 BUCKET & ADJUSTER AR
CANNOT BE USED WITH MATERIAL HANDLING STICK
AN ATTACHMENT

SMCS-6523 **i00615763**

NOTE	REF NO	GRAPHIC REF	PART NUMBER	QTY	PART NAME 1 2 3 4 5 6 (PRODUCT LEVEL)	SEE PAGE
	1	1	**4K-4345**	2	PLATE	
	2	1	**131-6417**	1	EDGE AS	
	3	1	**8E-9490**	4	ADAPTER-STRAP	

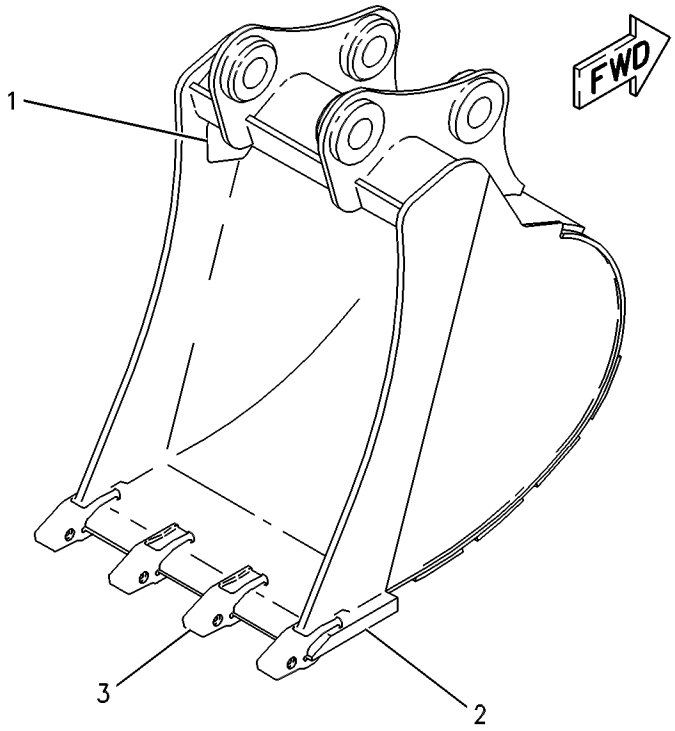

GRAPHIC #1 **<END>** g00278272

WORK TOOLS

117-1430 BUCKET AS-EXCAVATION

S/N: BCZ1-2000
1250 MM (49.22 IN) X 1.05 CU M(1.37 CU YD) CAPACITY . B FAMILY
PART OF 118-7976 BUCKET & ADJUSTER AR
CANNOT BE USED WITH MATERIAL HANDLING STICK
AN ATTACHMENT

SMCS-6523 **i01795079**

NOTE	REF NO	GRAPHIC REF	PART NUMBER	QTY	PART NAME 1 2 3 4 5 6 (PRODUCT LEVEL)	SEE PAGE
	1	1	**4K-4345**	2	PLATE	
	2	1	**119-3953**	1	EDGE AS	
	2A	1	**8E-9490**	5	ADAPTER-STRAP	
	3	1	**189-4216**	4	PLATE-WEAR	
	4	1	*189-4266*	1	PLATE AS	
	4A	1	**177-0799**	1	HINGE AS	
	4B	1	**177-0800**	1	HINGE AS	

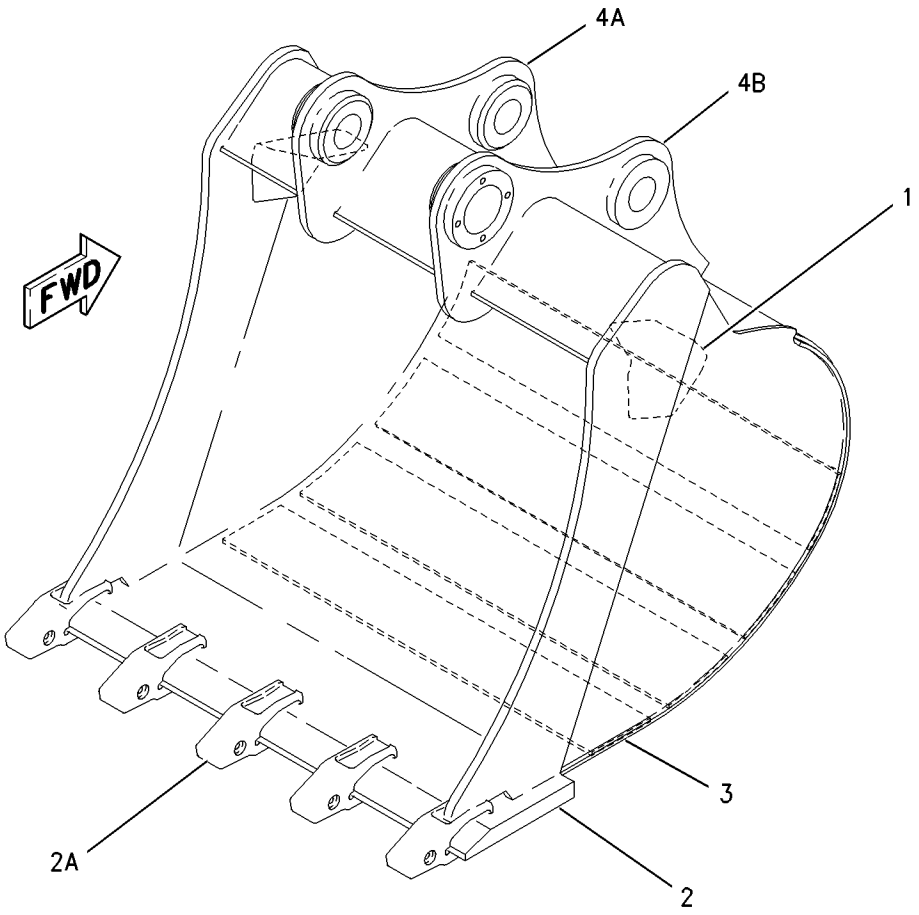

GRAPHIC #1 **<END>** g00919181

WORK TOOLS

8E-3751 TIP GP-LONG

S/N: BCZ1-2000

AN ATTACHMENT

SMCS-6805 **i01777346**

NOTE	REF NO	GRAPHIC REF	PART NUMBER	QTY	PART NAME 1 2 3 4 5 6 (PRODUCT LEVEL)	SEE PAGE
	1	1	**107-3308**	1	PIN-G.E.T.	
	2	1	**8E-6259**	1	RETAINER AS-G.E.T.	
	3	1	**9N-4302**	1	TIP-LONG	

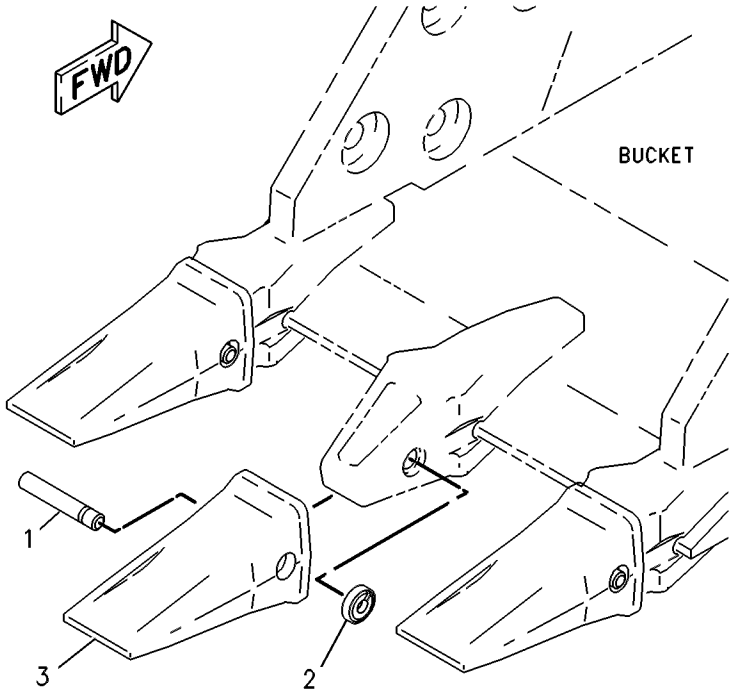

GRAPHIC #1 **<END>** g00117668

9J-3167 TIP GP-LONG

S/N: BCZ1-2000
FOR USE WITH HOE BUCKETS
AN ATTACHMENT

SMCS-6805 **i01777347**

NOTE	REF NO	GRAPHIC REF	PART NUMBER	QTY	PART NAME 1 2 3 4 5 6 (PRODUCT LEVEL)	SEE PAGE
	1	1	**107-3308**	1	PIN-G.E.T.	
	2	1	**8E-6259**	1	RETAINER AS-G.E.T.	
	3	1	**1U-3302**	1	TIP-LONG	

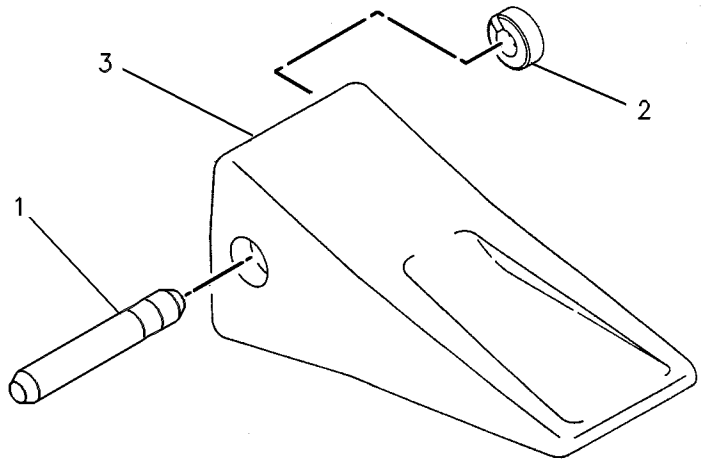

GRAPHIC #1 **<END>** g00245092

WORK TOOLS

3G-3237 TIP GP-PENETRATION

S/N: BCZ1-2000

AN ATTACHMENT

SMCS-6805 **i01775985**

NOTE	REF NO	GRAPHIC REF	PART NUMBER	QTY	PART NAME 1 2 3 4 5 6 (PRODUCT LEVEL)	SEE PAGE
	1	1	**9J-4309**	1	TIP-PENETRATION	
	2	1	**107-3308**	1	PIN-G.E.T.	
	3	1	**8E-6259**	1	RETAINER AS-G.E.T.	

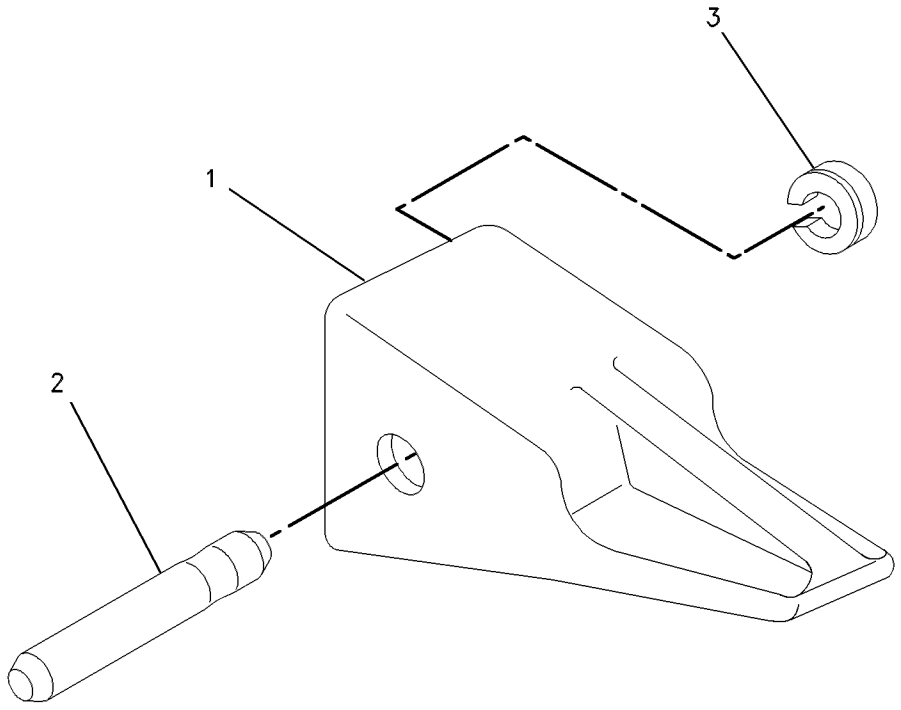

GRAPHIC #1 **<END>** g00406478

WORK TOOLS

9J-3175 TIP GP-SHORT

S/N: BCZ1-2000
AN ATTACHMENT

SMCS-6805 **i01777676**

NOTE	REF NO	GRAPHIC REF	PART NUMBER	QTY	PART NAME 1 2 3 4 5 6 (PRODUCT LEVEL)	SEE PAGE
	1	1	**107-3308**	1	PIN-G.E.T.	
	2	1	**8E-6259**	1	RETAINER AS-G.E.T.	
	3	1	**1U-3301**	1	TIP-SHORT	

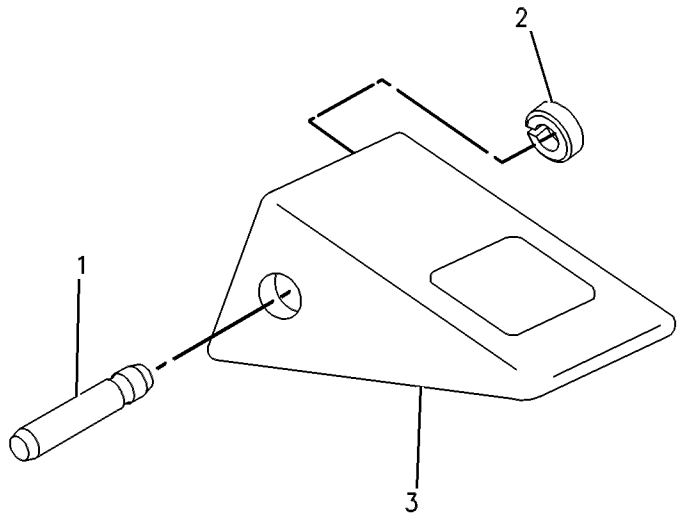

GRAPHIC #1 **<END>** g00121917

OPERATOR STATION

198-4685 AIR CONDITIONER & MOUNTING GP

S/N: BCZ1-2000

PART OF 198-4680 OPERATOR AR

SMCS-7320 **i01928403**

NOTE	REF NO	GRAPHIC REF	PART NUMBER	QTY	PART NAME 1 2 3 4 5 6 (PRODUCT LEVEL)	SEE PAGE
	1	1	**167-7083**	1	SENSOR AS-TEMPERATURE (CAB)	
Y	2	1	*198-4686*	1	AIR CONDITIONER GP	823
	3	1	**198-4690**	1	PANEL-CONTROL	
	4	1	**216-2173**	1	FRAME	
	5	1	**5W-1417**	2	WASHER (6.4X18X1.6-MM THK)	
	6	1	**8T-4121**	4	WASHER-HARD (11X21X2.5-MM THK)	
M	7	1	**8T-4136**	4	BOLT (M10X1.5X25-MM)	
M	8	1	**8T-4138**	2	BOLT (M6X1X20-MM)	

M-METRIC PART
Y-SEPARATE ILLUSTRATION

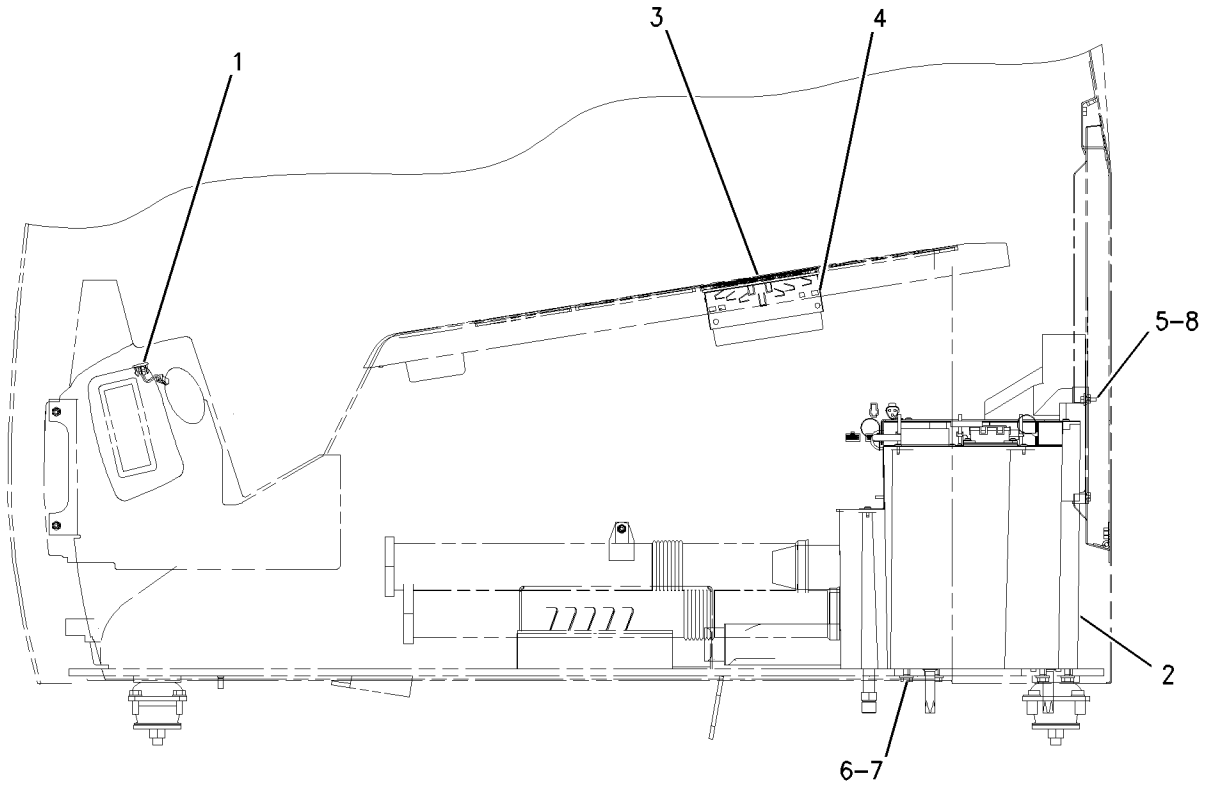

LEFT SIDE VIEW

GRAPHIC #1 **<END>** g00894421

OPERATOR STATION

198-4686 AIR CONDITIONER GP

S/N: BCZ1-2000

PART OF 198-4685 AIR CONDITIONER & MOUNTING GP

SMCS-7320 **i01814213**

NOTE	REF NO	GRAPHIC REF	PART NUMBER	QTY	PART NAME 1 2 3 4 5 6 (PRODUCT LEVEL)	SEE PAGE
	1	1	**205-0444**	1	ANGLE	
	2	1	**210-1332**	1	DUCT AS	
	3	1	**210-1333**	1	DUCT AS	
	4	1	**210-1334**	1	DUCT AS	
	5	1	**210-1335**	1	DUCT AS	
Y	6	1	**210-1339**	1	AIR CONDITIONER GP	824
	7	1	**216-2172**	1	ADAPTER AS	
	8	1	**8C-6440**	2	SCREW-PAN HEAD (10-16X0.50 IN)	
E	9	1	**9X-2093**		GASKET (25CM)	
E	9A	1	**9X-2093**		GASKET (55CM)	
E	9B	1	**9X-2093**		GASKET (25CM)	

E-ORDER BY THE CENTIMETER
Y-SEPARATE ILLUSTRATION

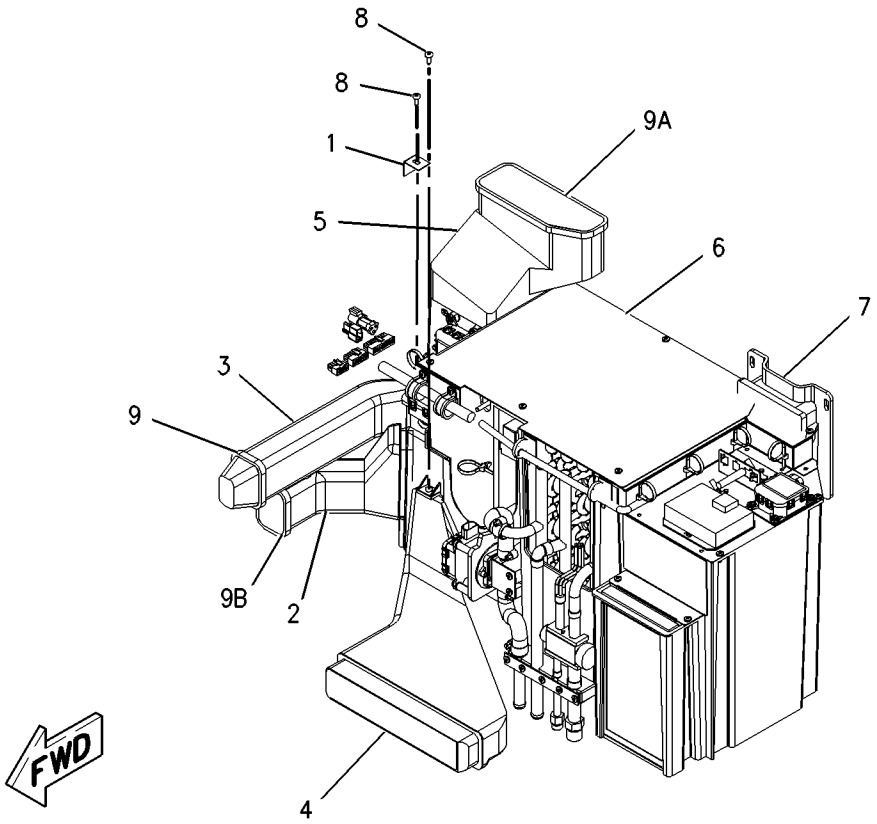

GRAPHIC #1 **<END>** g00926922

OPERATOR STATION

210-1339 AIR CONDITIONER GP

S/N: BCZ1-2000

PART OF 198-4686 AIR CONDITIONER GP

SMCS-7320 **i02176621**

NOTE	REF NO	GRAPHIC REF	PART NUMBER	QTY	PART NAME 1 2 3 4 5 6 (PRODUCT LEVEL)	SEE PAGE
	1	1	**8T-0154**	4	CLAMP-HOSE	
	2	1	**5W-5104**	9	BOLT	
	3	1	**117-4861**	1	RELAY AS (AIR CONDITIONER COMPRESSOR)	
	4	1	**185-8154**	1	FILTER-RECIRCULATION (AIR CONDITIONER)	
	5	1	**197-0829**	3	CLIP	
Y	6	1	**217-2810**	1	CONDENSER GP-REFRIGERANT	844
	7	1	**217-2811**	1	VALVE AS	
	8	1	**217-2812**	1	HOSE-ELBOW	
	9	1	**217-2813**	1	HOSE-ELBOW	
	10	1	**217-2814**	1	PIPE	
	11	1	**217-2815**	1	BLOWER AS	
	12	1	**217-6806**	3	SENSOR-TEMPERATURE (AIR CONDITIONING)	
	13	1	**217-6815**	1	CONTROL GP-CAB HEATER	
	14	1	**217-6816**	2	MOTOR AS	
	15	1	**217-6817**	1	MOTOR AS	
	16	1	**217-6818**	3	CLIP	
	17	1	**217-6819**	3	PLATE	
	18	1	**217-6820**	1	HARNESS AS (AIR CONDITIONER, HEATER)	
	19	1	**217-6821**	2	DIAPHRAGM	
	20	1	**217-9077**	6	SCREW-PAN HEAD	
	21	1	**217-9511**	33	SCREW	
	22	1	**163-6795**	9	STRAP-CABLE	
	23	1	**187-5073**	2	CLIP	
	24	1	**8L-5828**	3	SCREW-TAPPING (8-18X0.875-IN)	

Y-SEPARATE ILLUSTRATION

210-1339 AIR CONDITIONER GP *(contd.)* i02176621

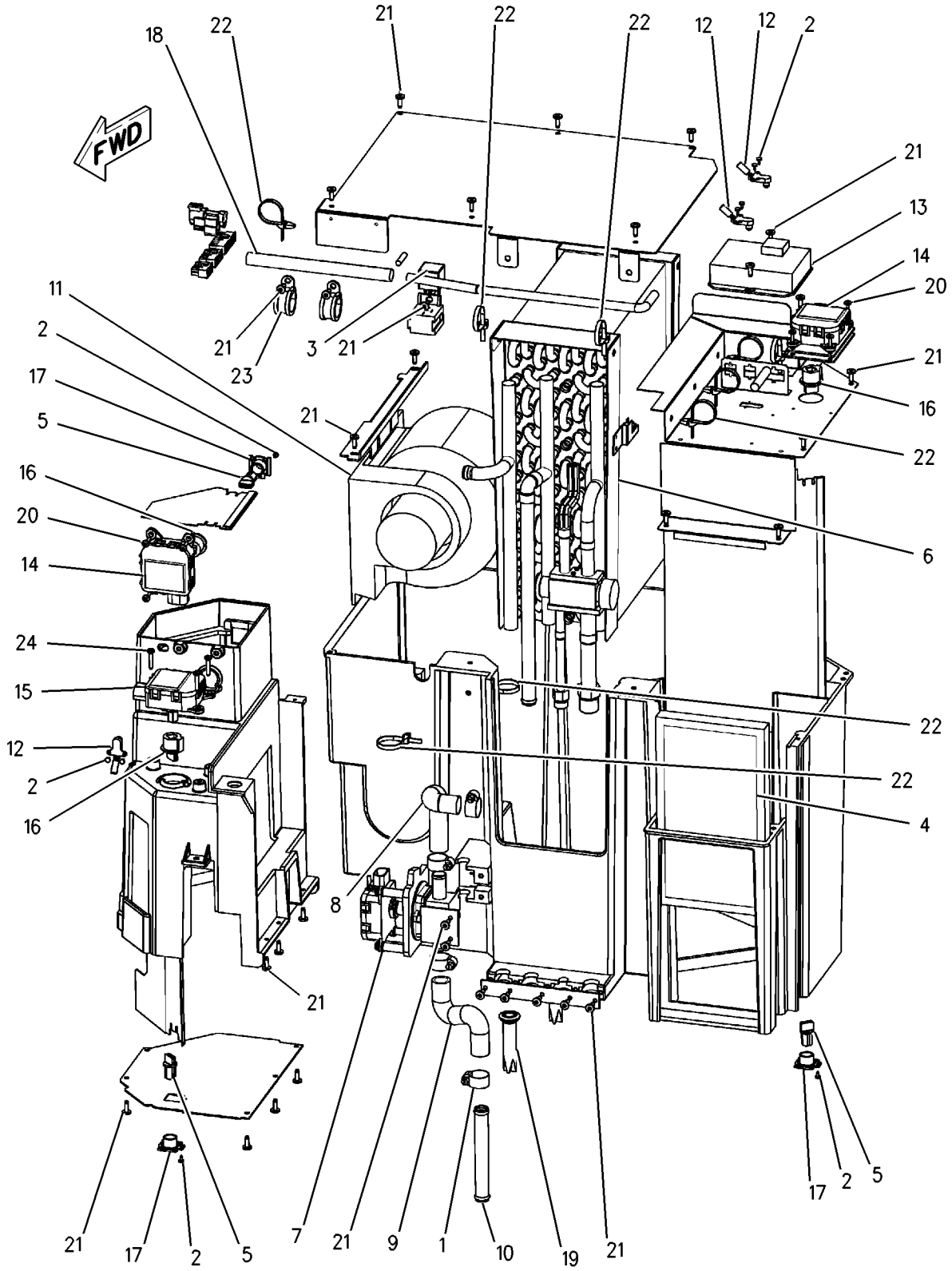

GRAPHIC #1 **<END>** g00867159

OPERATOR STATION

196-1118 ARMREST GP–RH

S/N: BCZ1-2000

PART OF 187-3782 CONSOLE GP-RH

SMCS-7307 **i02176624**

NOTE	REF NO	GRAPHIC REF	PART NUMBER	QTY	PART NAME 1 2 3 4 5 6 (PRODUCT LEVEL)	SEE PAGE
	1	1	**196-1114**	1	ADJUSTER AS	
	2	1	**196-1119**	1	ARMREST AS	
	3	1	**196-1122**	1	KNOB AS	
	4	1	**205-6218**	1	BOLT	
	5	1	**205-6219**	1	ARMREST GP	
	6	1	**3C-8388**	1	PIN-ROLL	
M	7	1	**6V-5683**	1	BOLT (M6X1X16-MM)	

M-METRIC PART

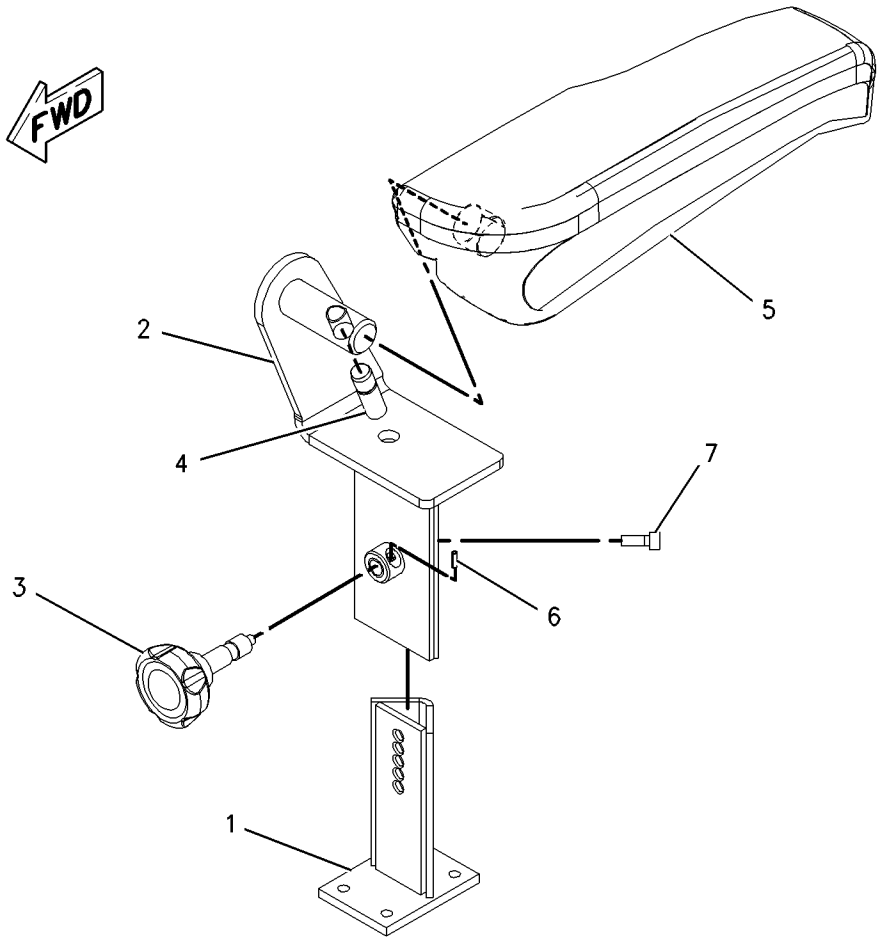

GRAPHIC #1 **<END>** g00860996

OPERATOR STATION

196-1120 ARMREST GP–LH

S/N: BCZ1-2000

PART OF 187-3767 CONSOLE GP-LH

SMCS-7307 **i01684935**

NOTE	REF NO	GRAPHIC REF	PART NUMBER	QTY	PART NAME 1 2 3 4 5 6 (PRODUCT LEVEL)	SEE PAGE
	1	1	**196-1114**	1	ADJUSTER AS	
	2	1	**196-1121**	1	ARMREST AS	
	3	1	**196-1122**	1	KNOB AS	
	4	1	**205-6218**	1	BOLT	
	5	1	**210-1331**	1	ARMREST GP	
	6	1	**3C-8388**	1	PIN-ROLL	
M	7	1	**6V-5683**	1	BOLT (M6X1X16MM)	

M-METRIC PART

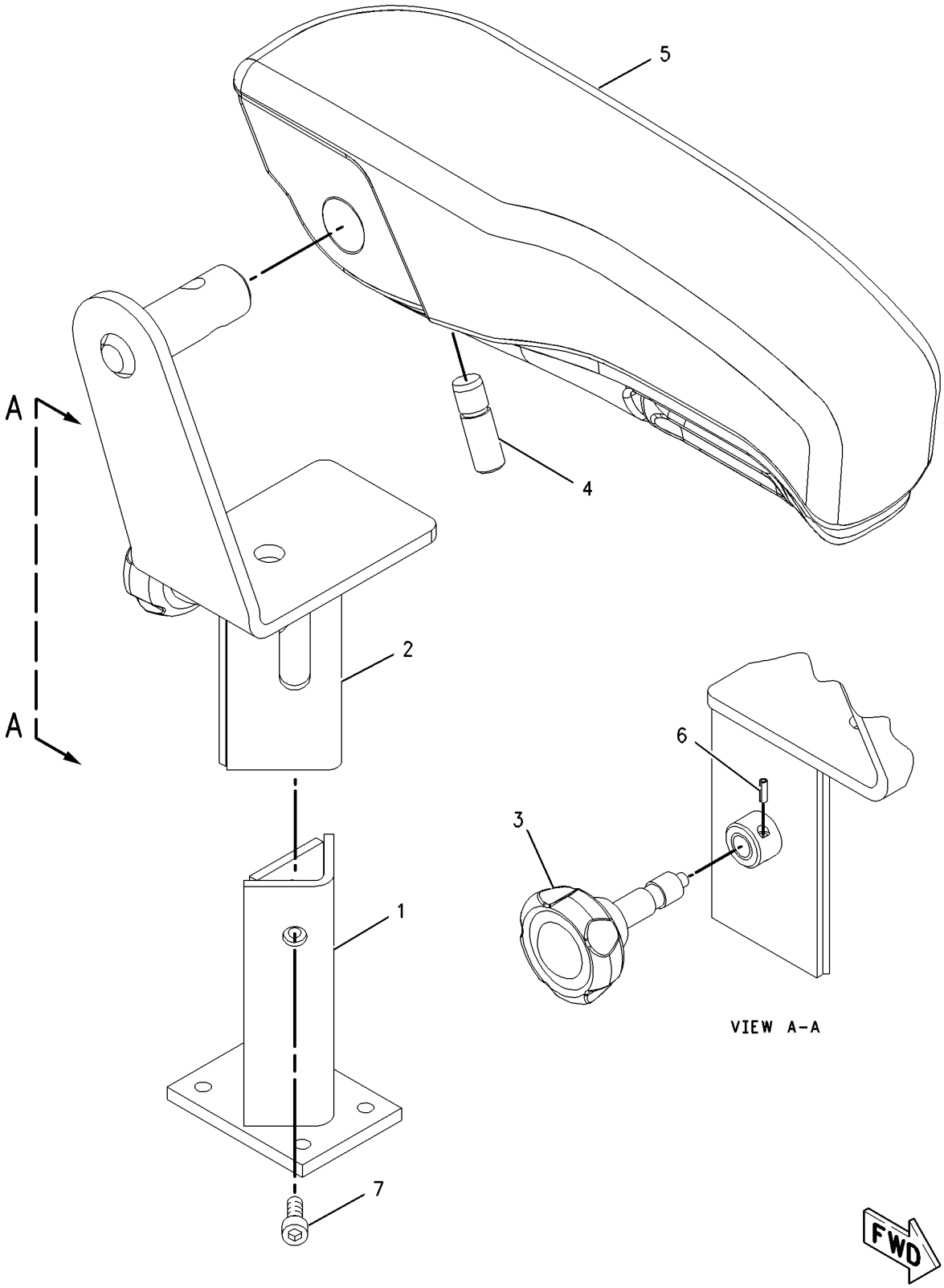

GRAPHIC #1 **<END>** g00866468

OPERATOR STATION

188-4960 CAB AR-RISER—FIXED

S/N: BCZ1-2000

AN ATTACHMENT

SMCS-7260 **i02132065**

NOTE	PART NUMBER	QTY	PART NAME 1 2 3 4 5 6 (PRODUCT LEVEL)	SEE PAGE
Y	*188-4961*	1	FRAME GP-CAB RISER	383
Y	*188-4974*	1	LINES GP-AIR CONDITIONER	877
Y	*188-4965*	1	LINES GP-HEATER	882
Y	*188-4962*	1	LINES GP-PILOT	559
Y	*188-4963*	1	LINES GP-PILOT	561
Y	*188-4964*	1	LINES GP-PILOT	562
Y	*207-2170*	1	LINES GP-PILOT	571
Y	*188-4967*	1	LINES GP-STEERING	585
Y	*202-1136*	1	WIRING GP-CHASSIS	190
Y	*188-4968*	1	WIRING GP-CHASSIS	186
	151-2856	1	COVER-PROTECTION	
M	**8T-3220**	4	EYEBOLT	

M-METRIC PART
Y-SEPARATE ILLUSTRATION

<END>

187-3800 CAB GP

S/N: BCZ1-2000

PART OF 198-4680 OPERATOR AR

SMCS-7301 **i01900310**

NOTE	PART NUMBER	QTY	PART NAME 1 2 3 4 5 6 (PRODUCT LEVEL)	SEE PAGE
Y	*201-8750*	1	CAB GP	831
Y	*197-5700*	1	COVER GP-CONSOLE	856
Y	**189-2768**	1	DOOR GP-CAB	860
Y	*210-1338*	1	DUCT GP-AIR	864
Y	*187-3770*	1	MONITOR & MTG GP-OPERATOR	888
Y	**184-7621**	1	SCREEN GP-SUN	901
Y	**184-7619**	1	WINDOW GP-CAB (FRONT)	918
Y	*201-8760*	1	WINDOW GP-CAB (REAR)	921
Y	*187-3799*	1	WIRING GP-CAB	179

Y-SEPARATE ILLUSTRATION

<END>

OPERATOR STATION

188-4959 CAB GP–LEXAN

S/N: BCZ1-2000
FOR USE IN NACD MARKET
AN ATTACHMENT

SMCS-7301 **i02160581**

NOTE	PART NUMBER	QTY	PART NAME 1 2 3 4 5 6 (PRODUCT LEVEL)	SEE PAGE
Y	*201-8750*	1	CAB GP	831
Y	*197-5700*	1	COVER GP-CONSOLE	856
Y	*201-8770*	1	DOOR GP-CAB	861
Y	*210-1338*	1	DUCT GP-AIR	864
Y	*187-3770*	1	MONITOR & MTG GP-OPERATOR	888
Y	**184-7621**	1	SCREEN GP-SUN	901
Y	**184-7619**	1	WINDOW GP-CAB (FRONT)	918
Y	*201-8765*	1	WINDOW GP-CAB (REAR)	922
Y	*187-3799*	1	WIRING GP-CAB	179

Y-SEPARATE ILLUSTRATION

<END>

OPERATOR STATION

201-8750 CAB GP

S/N: BCZ1-531

PART OF 187-3800, 188-4959 CAB GP

ALSO AN ATTACHMENT

SMCS-7301 **i02179229**

NOTE	REF NO	GRAPHIC REF	PART NUMBER	QTY	PART NAME 1 2 3 4 5 6 (PRODUCT LEVEL)	SEE PAGE
	1	1	**2S-1647**	3	GROMMET	
	2	1	**4E-1384**	2	BUMPER-CONICAL	
	3	1	**4I-1206**	2	GUIDE	
	4	1	**4I-3063**	1	SPRING	
	5	1	**6C-8584**	3	SCREW	
	6	1	**6C-8972**	1	HOOK	
	7	1	*6C-8986*	4	CLIP-AXLE	
	8	1	**6C-9078**	14	WASHER	
	9	1	**6C-9087**	3	WASHER	
	10	1	**6C-9121**	1	LAMP AS (CAB)	
	11	1	**6C-9122**	2	LAMP (CAB)	
	12	1	**6C-9232**	8	RIVET	
	13	1	**6C-9235**	1	PLATE-IDENTIFICATION (CAB)	
	14	1	**9U-8263**	1	COVER	
	15	1	**109-1270**	1	GROMMET	
	16	1	**114-6658**	2	WASHER (6.5X17X1-MM THK)	
	17	1	**119-8340**	6	SEAL	
	18	1	**119-8353**	1	SCREW	
	19	1	**120-4777**	2	COVER	
	20	1	**120-4831**	1	WASHER (18.5X32X1.5-MM THK)	
	21	1	**120-5737**	6	WASHER (17.5X40X4-MM THK)	
	22	1	**121-4794**	1	SEAL	
	23	1	**139-6039**	3	NUT (U-TYPE RETAINER)	
	24	1	**154-4811**	1	SPACER-SPECIAL	
	25	1	**156-6599**	1	STRIKER	
	26	1	**161-3660**	1	BRACKET AS	
	27	1	**161-3685**	1	ROD	
	28	1	**164-0527**	1	ROD	
	29	1	*164-0528*	1	LEVER AS	
		1	**164-0664**	1	BRACKET	
		1	**176-1941**	1	PIN	
		1	**185-8280**	1	WASHER-WAVE	
		1	**185-8281**	1	SPRING	
	30	1	**164-4344**	8	PLUG	
	31	1	**167-4079**	1	LINER (RH)	
	32	1	**167-4080**	1	LINER (LH)	
	33	1	**167-4081**	1	LINER (ROOF)	
	36	1	**167-4089**	1	COVER AS	
	37	1	**167-4099**	1	PLATE	
	38	1	**167-4146**	1	SUPPORT AS	
	39	1	**167-4148**	1	LEVER	
	40	1	**167-4158**	1	PLATE	
	41	1	**167-4159**	1	PLATE	
	42	1	**167-4160**	2	PLATE	
	44	1	**167-7042**	2	SEAL	
	45	1	**167-7272**	1	FILM (CATERPILLAR)	
	46	1	**171-7426**	1	CABLE AS	
	47	1	*176-1939*	1	LEVER AS	
M		1	**9X-2044**	1	SCREW-TRUSS HEAD (M6X1.0X16-MM)	
		1	**176-1937**	1	BRACKET AS	
		1	**176-1938**	1	LEVER	
	48	1	**176-1942**	1	COVER	
	49	1	**191-2767**	1	COVER	
	50	1	**191-2468**	1	ROD	
	51	1	**198-1747**	1	LINER (REAR LH)	

NOTE	REF NO	GRAPHIC REF	PART NUMBER	QTY	PART NAME 1 2 3 4 5 6 (PRODUCT LEVEL)	SEE PAGE
	52	1	**201-8766**	1	HANDLE AS	
	53	1	**201-8767**	1	HANDLE AS	
	54	1	**205-6203**	1	GUARD	
	55	1	**205-6216**	1	BRACKET (LOWER)	
	56	1	**205-6217**	1	BRACKET (UPPER)	
	57	1	**205-6220**	1	CAB AS	
	58	1	**205-6295**	1	LATCH AS	
	59	1	**215-2913**	2	GROMMET	
	60	1	**217-0557**	2	SUPPORT	
	61	1	**104-2091**	2	SCREW-FLAT HEAD (6-20X0.5-IN)	
	62	1	**120-4779**	8	HOOK	
M	63	1	**188-9644**	2	SCREW-FLAT HEAD (M8X1.25X25-MM)	
	64	1	**217-6340**	1	COVER	
M	65	1	**4Y-8774**	8	SCREW-TAPPING	
M	66	1	**5C-7261**	2	NUT (M8X1.25-THD)	
M	67	1	**5C-9553**	10	BOLT (M6X1X16-MM)	
	68	1	**6C-4000**	4	SHIM (1-MM THK)	
M	69	1	**6V-7357**	4	BOLT (M6X1X25-MM)	
	70	1	**8C-0572**	2	WASHER (8.8X25.5X2-MM THK)	
	72	1	**8T-4121**	9	WASHER-HARD (11X21X2.5-MM THK)	
M	73	1	**8T-4133**	3	NUT (M10X1.5-THD)	
M	74	1	**8T-4136**	6	BOLT (M10X1.5X25-MM)	
M	75	1	**8T-4190**	6	BOLT (M16X2X25-MM)	
M	76	1	**8T-4192**	6	BOLT (M12X1.75X25-MM)	
M	77	1	**8T-4200**	3	BOLT (M8X1.25X16-MM)	
M	78	1	**8T-4223**	6	WASHER-HARD (13.5X25.5X3-MM THK)	
	79	1	**9M-0057**	6	GASKET	
	80	1	**9M-5870**	1	GROMMET (11.11-MM ID)	
M	81	1	**9X-2041**	6	SCREW-TRUSS HEAD	
M	82	1	**9X-2042**	4	SCREW-TRUSS HEAD (M6X1X12-MM)	
M	83	1	**9X-2044**	17	SCREW-TRUSS HEAD (M6X1.0X16-MM)	
M	84	1	**9X-2045**	2	SCREW-TRUSS HEAD (M6X1X20-MM)	
	85	1	**9X-8256**	3	WASHER (6.6X12X2-MM THK)	

M-METRIC PART

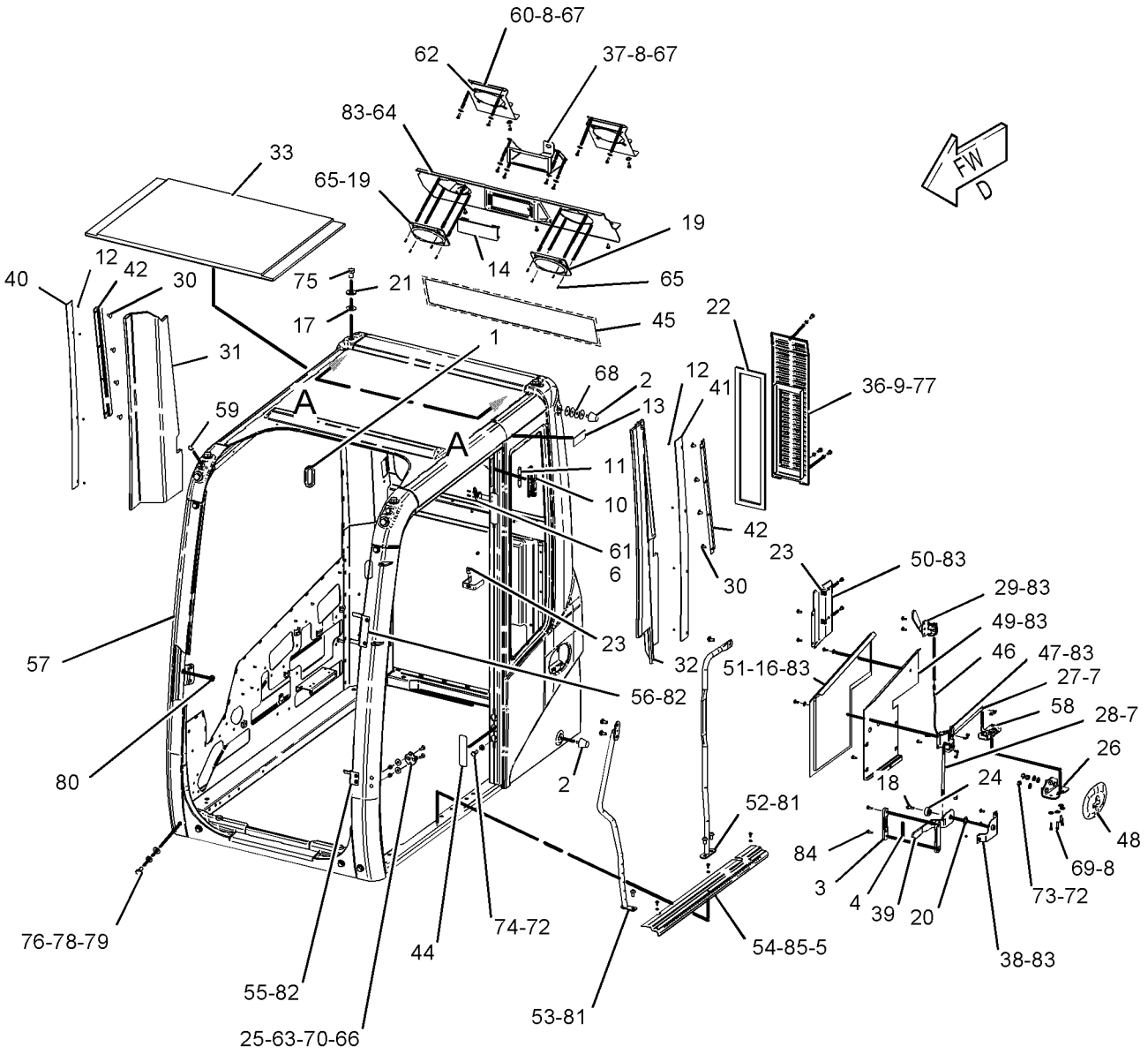

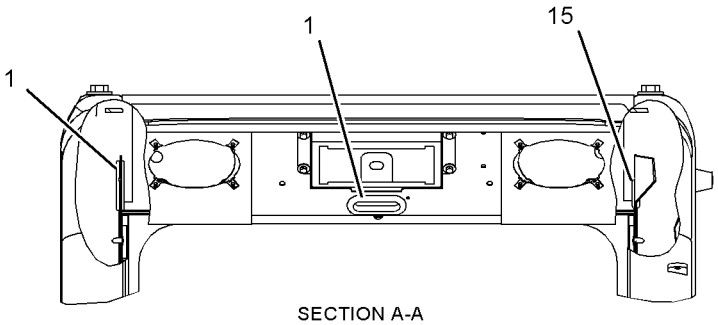

SECTION A-A

GRAPHIC #1 **<END>** g01099164

OPERATOR STATION

201-8750 CAB GP

S/N: BCZ532-2000
PART OF 187-3800, 188-4959 CAB GP
ALSO AN ATTACHMENT

SMCS-7301 **i02179226**

NOTE	REF NO	GRAPHIC REF	PART NUMBER	QTY	PART NAME 1 2 3 4 5 6 (PRODUCT LEVEL)	SEE PAGE
	1	1,2	**2S-1647**	3	GROMMET	
	2	1	**4E-1384**	2	BUMPER-CONICAL	
	3	2	**4I-1206**	2	GUIDE	
	4	2	**4I-3063**	1	SPRING	
CM	5	1	**129-5167**	3	SCREW (M6X1X8-MM)	
	6	1	**6C-8972**	1	HOOK	
	7	2	**6C-8986**	4	CLIP-AXLE	
	8	2	**6C-9078**	14	WASHER	
	9	1	**6C-9087**	3	WASHER	
	10	1	**6C-9121**	1	LAMP AS (CAB)	
	11	1	**6C-9122**	2	LAMP (CAB)	
	12	1	**6C-9232**	8	RIVET	
	13	1	**6C-9235**	1	PLATE-IDENTIFICATION (CAB)	
	14	2	**9U-8263**	1	COVER	
	15	2	**109-1270**	1	GROMMET	
	16	2	**114-6658**	2	WASHER (6.5X17X1-MM THK)	
C	17	1	**120-5738**	6	SEAL	
	18	2	**119-8353**	1	SCREW	
	19	2	**120-4777**	2	COVER	
	20	2	**120-4831**	1	WASHER (18.5X32X1.5-MM THK)	
	21	1	**120-5737**	6	WASHER (17.5X40X4-MM THK)	
BCE	22	1	**117-4473**		SEAL	
C	23	2	**139-6039**	2	NUT (U-TYPE RETAINER)	
	24	2	**154-4811**	1	SPACER-SPECIAL	
	25	1	**156-6599**	1	STRIKER	
C	26	2	**201-4530**	1	BRACKET AS	
	27	2	**161-3685**	1	ROD	
	28	2	**164-0527**	1	ROD	
	29	2	*164-0528*	1	LEVER AS	
		2	**156-6642**	1	LEVER AS	
		2	**164-0664**	1	BRACKET	
		2	**176-1941**	1	PIN	
		2	**185-8280**	1	WASHER-WAVE	
		2	**185-8281**	1	SPRING	
	30	1	**164-4344**	8	PLUG (PLASTIC)	
	31	1	**167-4079**	1	LINER (RH)	
	32	1	**167-4080**	1	LINER (LH)	
	33	1	**167-4081**	1	LINER (ROOF)	
	36	1	**167-4089**	1	COVER AS	
	37	2	**167-4099**	1	PLATE	
	38	2	**167-4146**	1	SUPPORT AS	
	39	2	**167-4148**	1	LEVER	
	40	1	**167-4158**	1	PLATE	
	41	1	**167-4159**	1	PLATE	
	42	1	**167-4160**	2	PLATE	
	44	1	**167-7042**	2	SEAL	
	45	2	**167-7272**	1	FILM (CATERPILLAR)	
	46	2	**171-7426**	1	CABLE AS	
	47	2	*176-1939*	1	LEVER AS	
M		2	**9X-2044**	1	SCREW-TRUSS HEAD (M6X1.0X16-MM)	
		2	**176-1937**	1	BRACKET AS	
		2	**176-1938**	1	LEVER	
	48	2	**176-1942**	1	COVER	
	49	2	**191-2767**	1	COVER	
	50	2	**191-2468**	1	ROD	

OPERATOR STATION

201-8750 **CAB GP** *(contd.)* **i02179226**

NOTE	REF NO	GRAPHIC REF	PART NUMBER	QTY	PART NAME 1 2 3 4 5 6 (PRODUCT LEVEL)	SEE PAGE
	51	2	**198-1747**	1	LINER (REAR, LH)	
	53	1	**201-8767**	1	HANDLE AS	
	54	1	**205-6203**	1	GUARD	
C	55	1	**233-0987**	1	BRACKET (LOWER)	
	56	1	**205-6217**	1	BRACKET (UPPER)	
	57	1	**254-3271**	1	CAB AS	
	58	2	**205-6295**	1	LATCH AS	
	59	1	**215-2913**	2	GROMMET	
	60	2	**217-0557**	2	SUPPORT	
	61	1	**104-2091**	2	SCREW-FLAT HEAD (6-20X0.5-IN)	
	62	2	**120-4779**	8	HOOK	
M	63	1	**188-9644**	2	SCREW-FLAT HEAD (M8X1.25X25-MM)	
	64	2	**217-6340**	1	COVER	
C	65	2	**220-6420**	8	SCREW	
M	66	1	**5C-7261**	2	NUT (M8X1.25-THD)	
M	67	2	**5C-9553**	10	BOLT (M6X1X16-MM)	
C	68	1	**8M-4069**	2	WASHER (10.3X38.1X5-MM THK)	
M	69	2	**6V-7357**	4	BOLT (M6X1X25-MM)	
	70	1	**8C-0572**	2	WASHER (8.8X25.5X2-MM THK)	
	72	1,2	**8T-4121**	9	WASHER-HARD (11X21X2.5-MM THK)	
M	73	2	**8T-4133**	3	NUT (M10X1.5-THD)	
M	74	1	**8T-4136**	6	BOLT (M10X1.5X25-MM)	
M	75	1	**8T-4190**	6	BOLT (M16X2X25-MM)	
M	76	1	**8T-4192**	6	BOLT (M12X1.75X25-MM)	
M	77	1	**8T-4200**	3	BOLT (M8X1.25X16-MM)	
M	78	1	**8T-4223**	6	WASHER-HARD (13.5X25.5X3-MM THK)	
	79	1	**9M-0057**	6	GASKET	
	80	1	**9M-5870**	1	GROMMET (11.11-MM ID)	
M	81	1	**9X-2041**	3	SCREW-TRUSS HEAD	
M	82	1	**9X-2042**	4	SCREW-TRUSS HEAD (M6X1X12-MM)	
M	83	2	**9X-2044**	17	SCREW-TRUSS HEAD (M6X1.0X16-MM)	
M	84	2	**9X-2045**	2	SCREW-TRUSS HEAD (M6X1X20-MM)	
C	85	2	**4I-4392**	3	CLIP	
C	86	2	**5P-7689**	1	PLUG-BUTTON	
CM	87	1	**8T-0269**	2	BOLT-SOCKET HEAD (M6X1X20-MM)	
CM	88	1	**108-1780**	4	BOLT-SOCKET HEAD (M6X1X45-MM)	
C	89	2	**121-4795**	13	PLUG	
C	90	2	**215-4379**	1	CAP	
C	91	2	**217-0559**	1	SEAL	
C	92	1	**224-2669**	2	PLUG-PLASTIC	
C	93	1	**229-8059**	1	STRIKER (RH)	
C	94	1	**229-8060**	1	STRIKER (LH)	
C	95	2	**233-7864**	1	FASTENER	
C	96	1	**233-7865**	2	FASTENER	

B-USE AS REQUIRED
C-CHANGE FROM PREVIOUS TYPE
E-ORDER BY THE CENTIMETER
M-METRIC PART

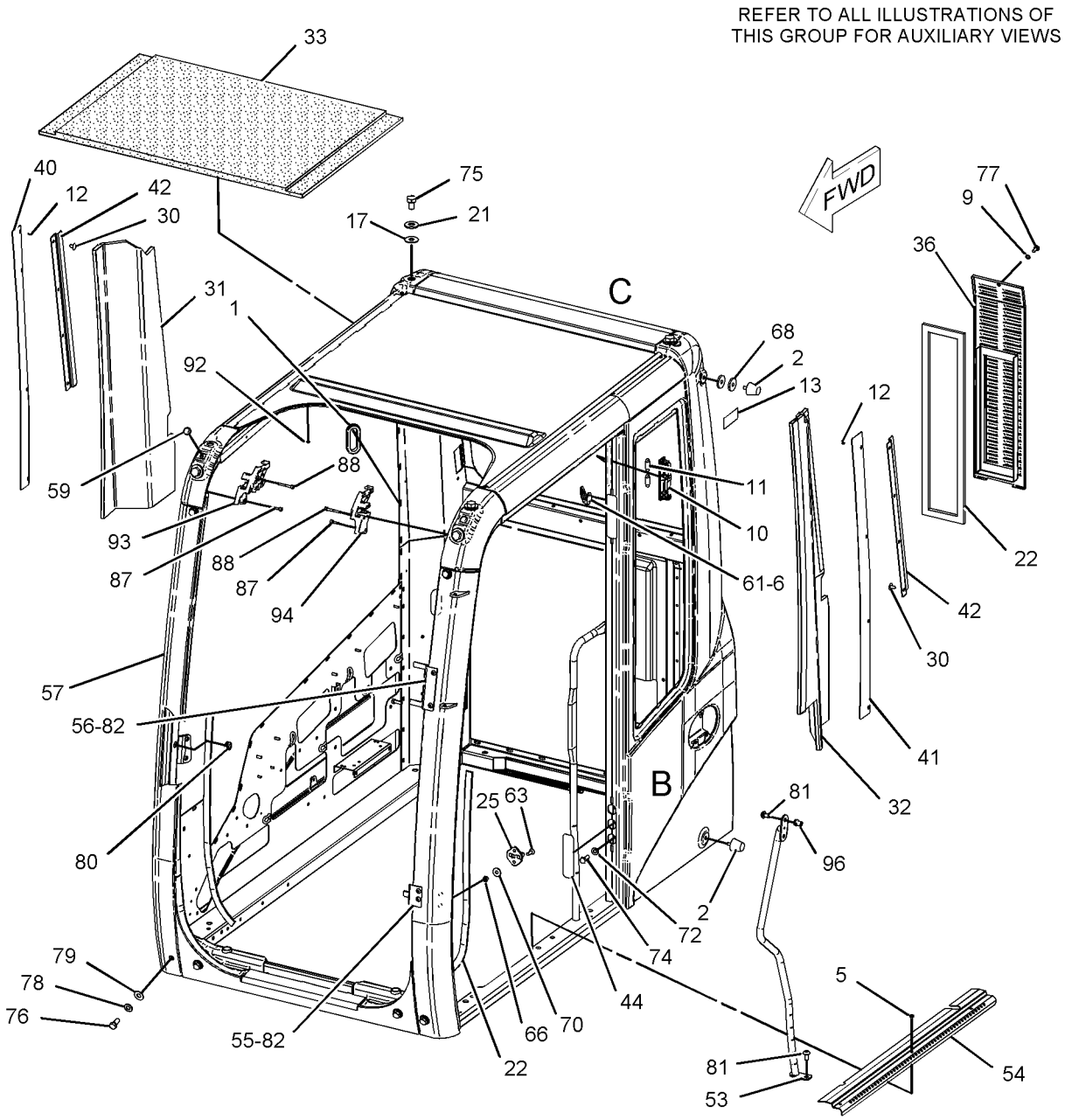

GRAPHIC #1

g01099168

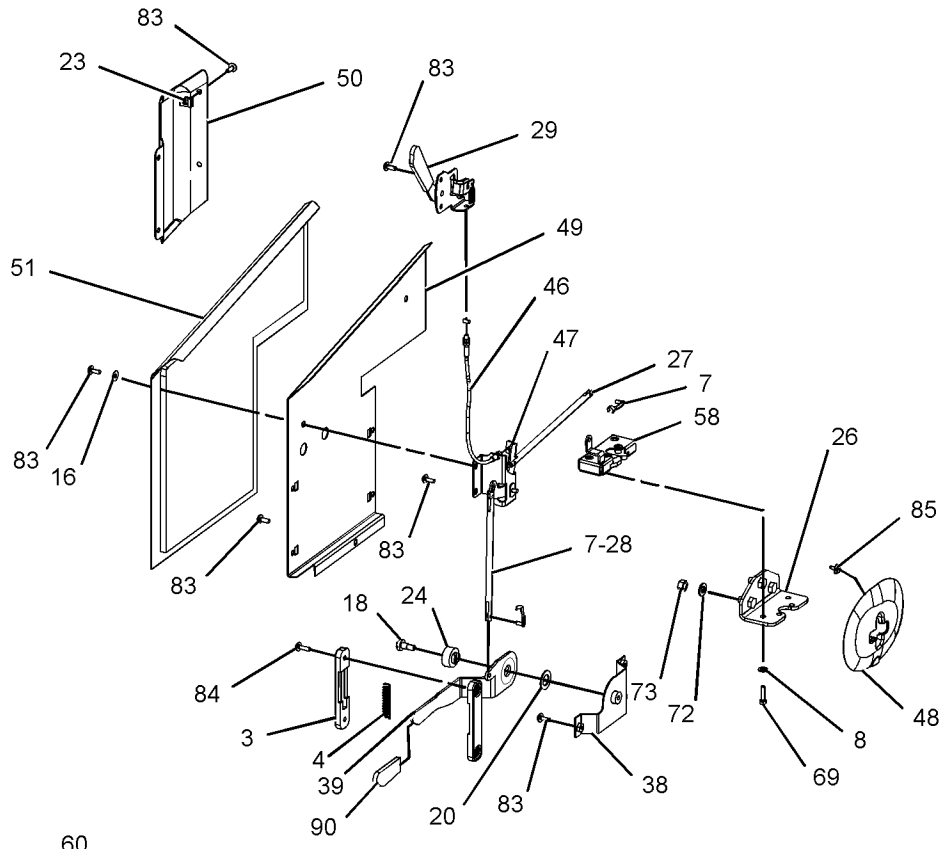

EXPLODED VIEW OF AREA B

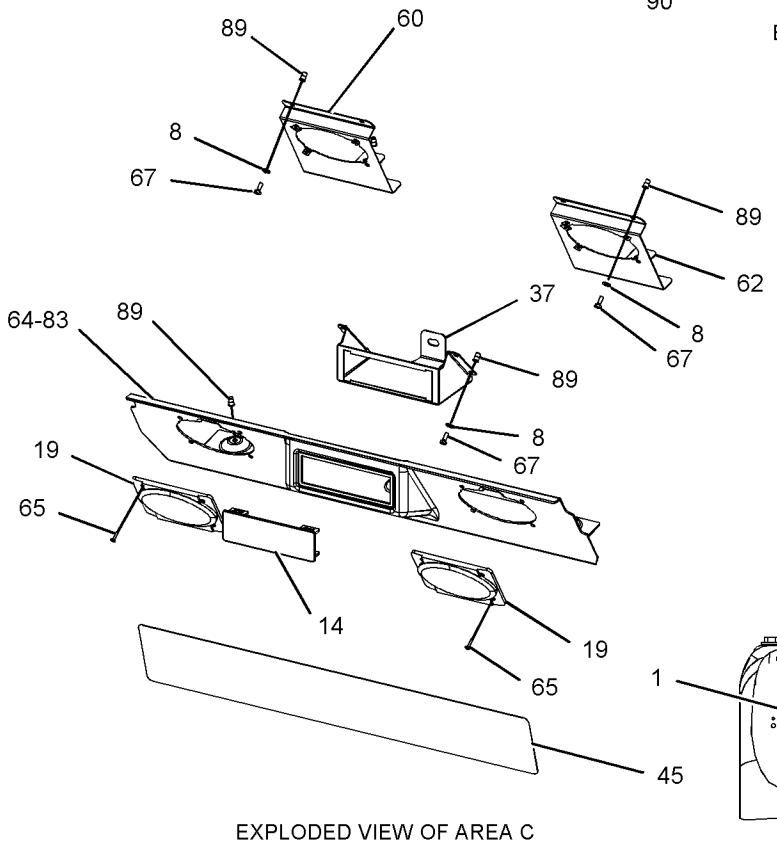

EXPLODED VIEW OF AREA C

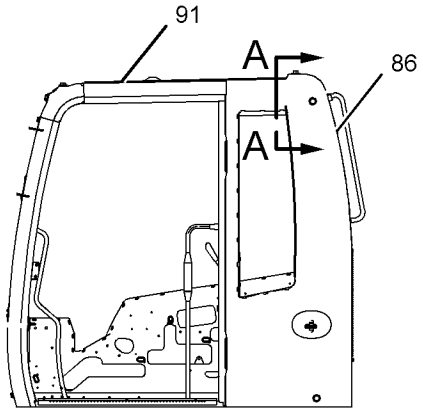

LEFT SIDE VIEW

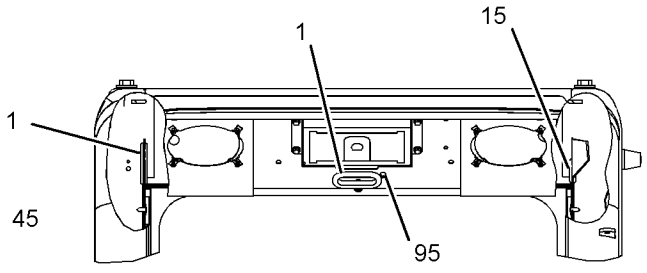

SECTION A-A

GRAPHIC #2 **<END>** g01094402

OPERATOR STATION

219-8500 CAB GP

S/N: BCZ1-2000
1 PC WINDSHIELD
AN ATTACHMENT

SMCS-7301 **i01745580**

NOTE	PART NUMBER	QTY	PART NAME 1 2 3 4 5 6 (PRODUCT LEVEL)	SEE PAGE
Y	*219-8495*	1	WINDOW GP-CAB	924
Y	*205-0460*	1	WIPER GP-WINDOW	932
Y	*221-9037*	1	WIRING GP-CAB	185

Y-SEPARATE ILLUSTRATION

<END>

3E-1906 COMPRESSOR GP-REFRIGERANT

S/N: BCZ1-2000

PART OF 186-0512 COMPRESSOR GP-REFRIGERANT

SMCS-1802 **i01802470**

NOTE	REF NO	GRAPHIC REF	PART NUMBER	QTY	PART NAME 1 2 3 4 5 6 (PRODUCT LEVEL)	SEE PAGE
	1	1	**7T-4532**	1	PLUG AS	
	2	1	**9X-7385**	1	SEAL-O-RING	

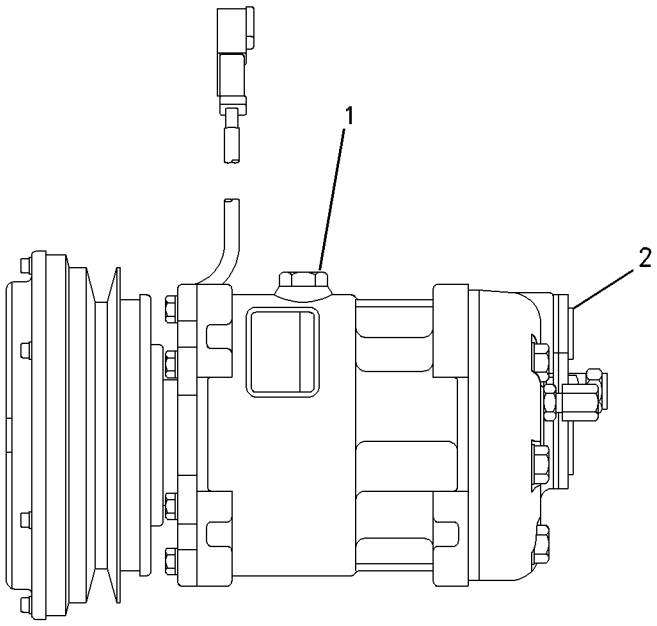

GRAPHIC #1 **<END>** g00922632

OPERATOR STATION

186-0512 COMPRESSOR GP-REFRIGERANT

S/N: BCZ1-2000

PART OF 186-0472 INSTALLATION AR-ENGINE

SMCS-1802 **i02030590**

NOTE	REF NO	GRAPHIC REF	PART NUMBER	QTY	PART NAME 1 2 3 4 5 6 (PRODUCT LEVEL)	SEE PAGE
	1	1	**1P-6356**	1	PLATE	
Y	2	1	**3E-1906**	1	COMPRESSOR GP-REFRIGERANT	839
	3	1	**121-4342**	1	SEAL-O-RING	
	4	1	**121-4344**	1	SEAL-O-RING	
	5	1	**145-7211**	1	V-BELT (1250-MM LG) (REFRIGERANT COMPRESSOR)	
	6	1	**168-6666**	2	PLATE	
	7	1	**169-5660**	1	STRAP AS	
	8	1	**169-5680**	1	COVER AS	
	9	1	**171-7566**	1	BRACKET AS	
B	10	1	**172-3565**	1	SHIM (.20MM THK)	
	11	1	**3E-4053**	1	FITTING AS-AIR CONDITIONER	
	11A	1	**3E-4052**	1	CAP-SEAL (AIR CONDITIONER, HIGH SIDE)	
	11B	1	**3E-4058**	1	VALVE AS (AIR CONDITIONER, HIGH SIDE)	
	12	1	**3E-4054**	1	FITTING AS-AIR CONDITIONER	
	12A	1	**3E-4051**	1	CAP-SEAL (AIR CONDITIONER, LOW SIDE)	
	12B	1	**3E-4057**	1	VALVE AS (AIR CONDITIONER, LOW SIDE)	
	13	1	**7X-0623**	4	WASHER (10.5X21X2-MM THK)	
M	14	1	**7X-2436**	1	BOLT (M12X1.75X100-MM)	
M	15	1	**8T-0389**	1	LOCKNUT (M10X1.5-THD)	
M	16	1	**8T-1159**	4	BOLT-SOCKET HEAD (M10X1.5X25-MM)	
	17	1	**8T-4121**	7	WASHER-HARD (11X21X2.5-MM THK)	
M	18	1	**8T-4185**	1	BOLT (M10X1.5X50-MM)	
M	19	1	**8T-4195**	5	BOLT (M10X1.5X30-MM)	
M	20	1	**8T-5005**	1	BOLT (M10X1.50X70-MM)	
M	21	1	**8T-5436**	1	BOLT (M10X1.50X130-MM)	
M	22	1	**8T-8549**	1	LOCKNUT (M12X1.75-THD)	
	23	1	**114-5333**	1	SWITCH AS-PRESSURE (REFRIGERANT HIGH, LOW)	
	24	1	**9X-7378**	1	SEAL-O-RING	

B-USE AS REQUIRED
M-METRIC PART
Y-SEPARATE ILLUSTRATION

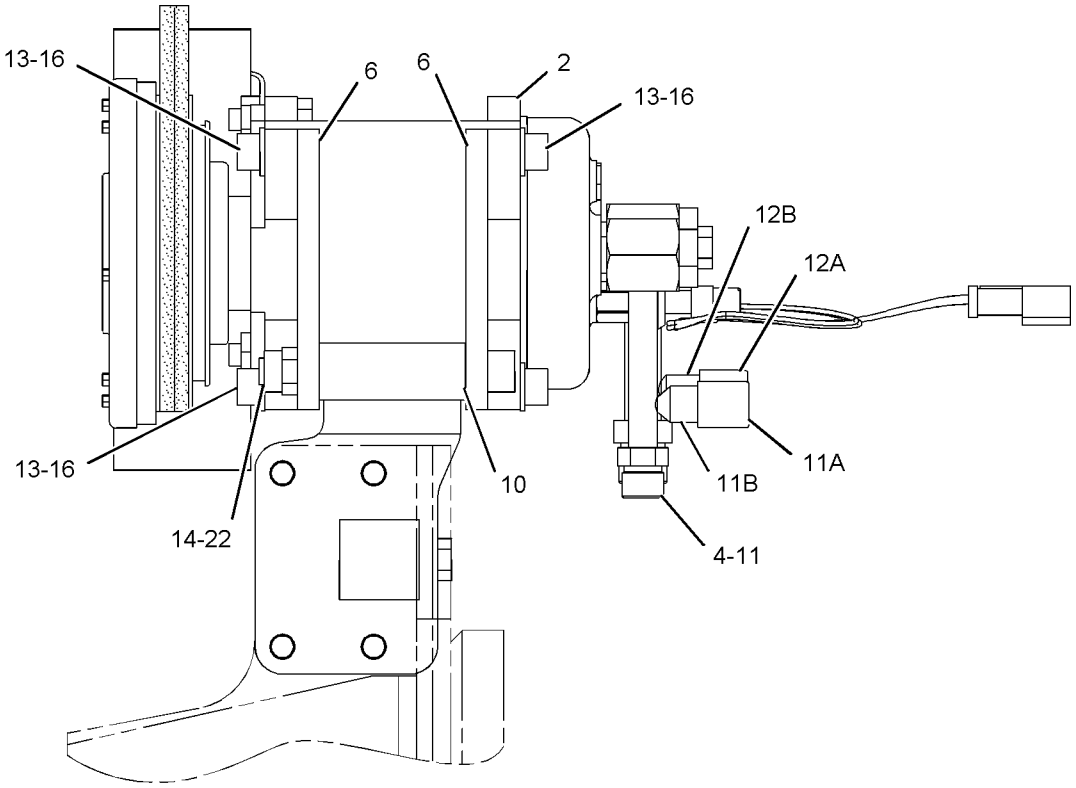

LEFT SIDE VIEW

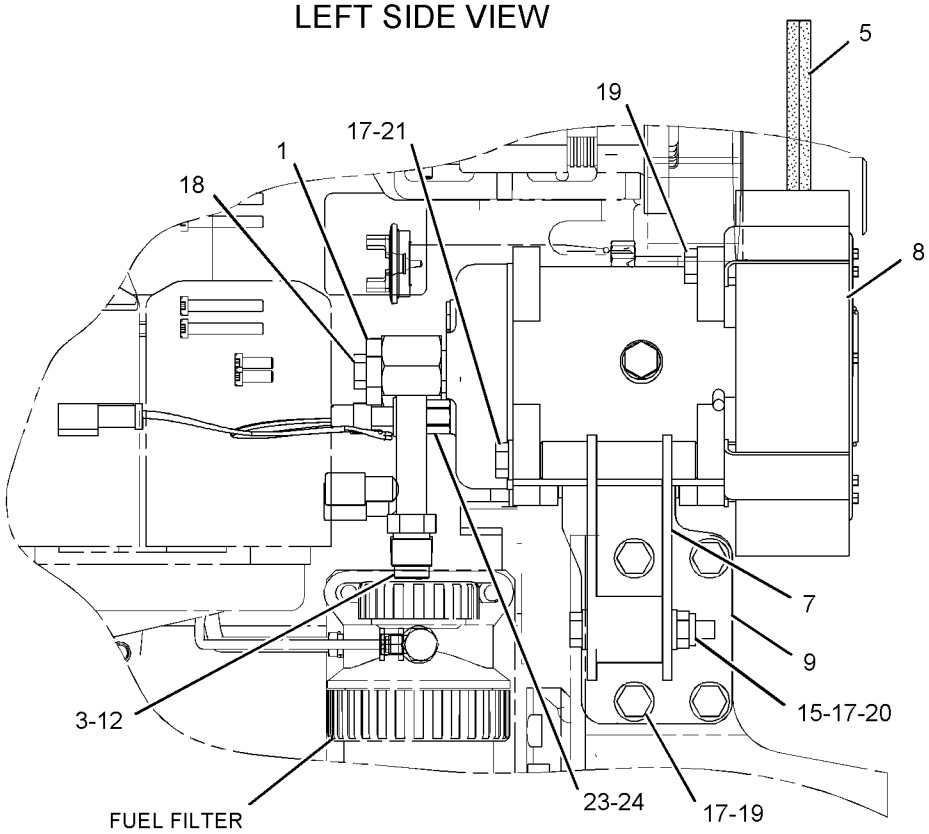

RIGHT SIDE VIEW

GRAPHIC #1

<END>

g01047542

OPERATOR STATION

198-4684 CONDENSER & MTG GP-REFRIGERANT

S/N: BCZ1-2000

PART OF 186-0472 INSTALLATION AR-ENGINE

SMCS-1805 **i01777581**

NOTE	REF NO	GRAPHIC REF	PART NUMBER	QTY	PART NAME 1 2 3 4 5 6 (PRODUCT LEVEL)	SEE PAGE
	1	1	**2S-2109**	1	BRACKET	
	2	1	**9M-3835**	1	LATCH-RUBBER	
	3	1	**9M-3838**	1	BRACKET	
	4	1	**154-3153**	4	BOSS	
	5	1	**198-4066**	2	BRACKET AS	
	6	1	**198-4067**	1	PLATE	
Y	7	1	*217-3086*	1	CONDENSER GP-REFRIGERANT	845
	8	1	**225-5970**	1	PLATE	
M	9	1	**129-3178**	1	LOCKNUT (M6X1 THD)	
M	10	1	**5C-7261**	2	NUT (M8X1.25 THD)	
M	11	1	**5C-9553**	2	BOLT (M6X1X16MM)	
	12	1	**5P-4116**	12	WASHER-HARD (8.8X20.5X2MM THK)	
M	13	1	**7X-2534**	1	BOLT (M6X1X50MM)	
M	14	1	**8T-4189**	6	BOLT (M8X1.25X20MM)	
M	15	1	**8T-4199**	4	BOLT (M8X1.25X12MM)	
	16	1	**9X-8256**	4	WASHER (6.6X12X2MM THK)	

M-METRIC PART
Y-SEPARATE ILLUSTRATION

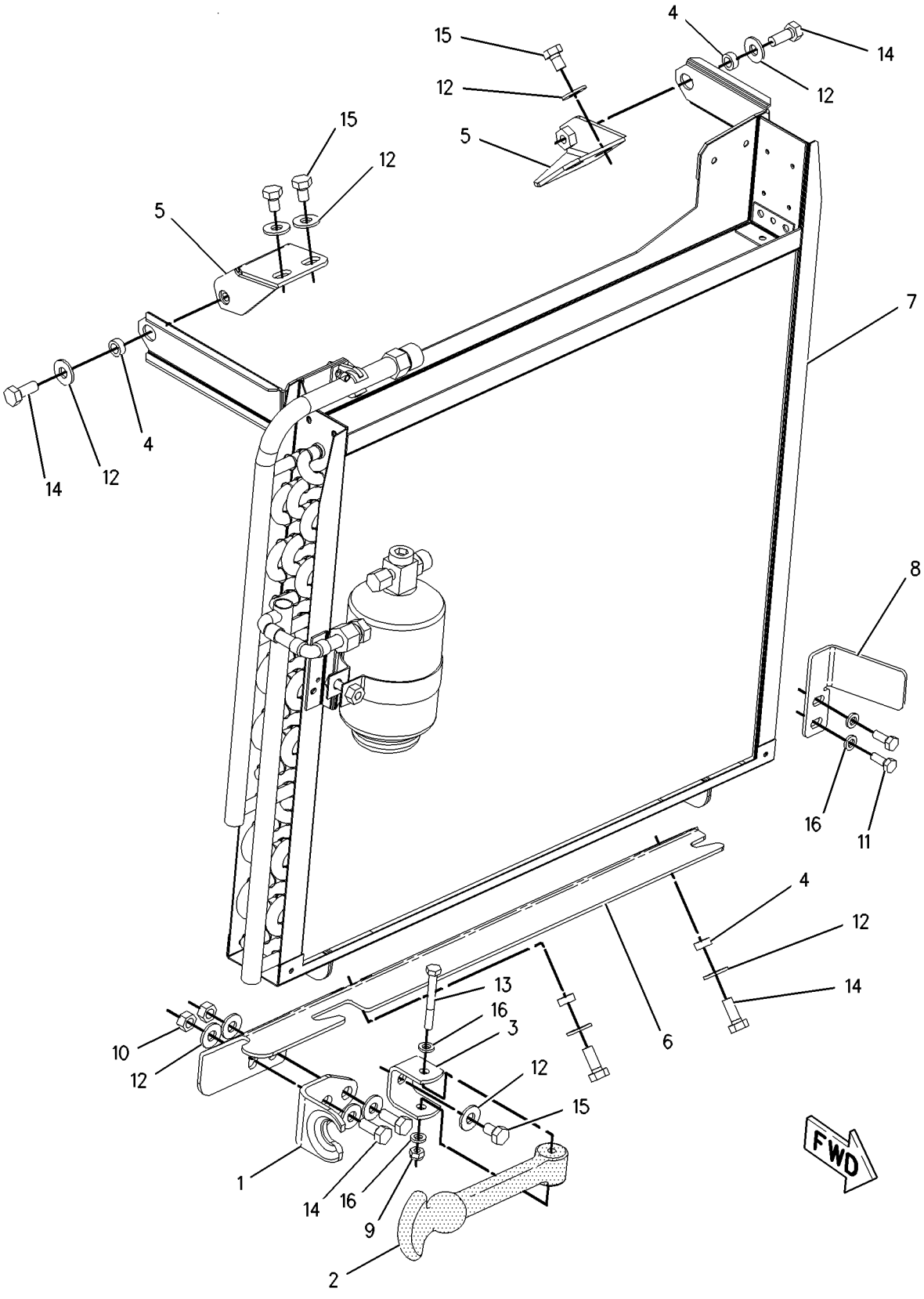

GRAPHIC #1 **<END>** g00912393

OPERATOR STATION

217-2810 CONDENSER GP-REFRIGERANT

S/N: BCZ1-2000

PART OF 210-1339 AIR CONDITIONER GP

SMCS-1805 **i02160554**

NOTE	REF NO	GRAPHIC REF	PART NUMBER	QTY	PART NAME 1 2 3 4 5 6 (PRODUCT LEVEL)	SEE PAGE
	1	1	**217-3812**	1	ADAPTER AS	
	2	1	**217-3813**	1	ADAPTER AS	
	3	1	**122-6015**	1	VALVE	
	4	1	**121-4342**	1	SEAL-O-RING	
	5	1	**121-4344**	1	SEAL-O-RING	
	6	1	**121-4345**	1	SEAL-O-RING	
	7	1	**121-4801**	1	SEAL-O-RING	
	8	1	**156-0065**	1	PLATE (INSIDE)	
	9	1	**156-0066**	1	PLATE (OUTSIDE)	
M	10	1	**8T-6699**	2	BOLT-SOCKET HEAD (M5X0.8X35-MM)	
M	11	1	**5C-9553**	1	BOLT (M6X1X16-MM)	
	12	1	**095-1255**	1	LOCKWASHER	
	13	1	**217-3814**	1	SENSOR AS-TEMPERATURE (AIR CONDITIONER CONDENSER)	

M-METRIC PART

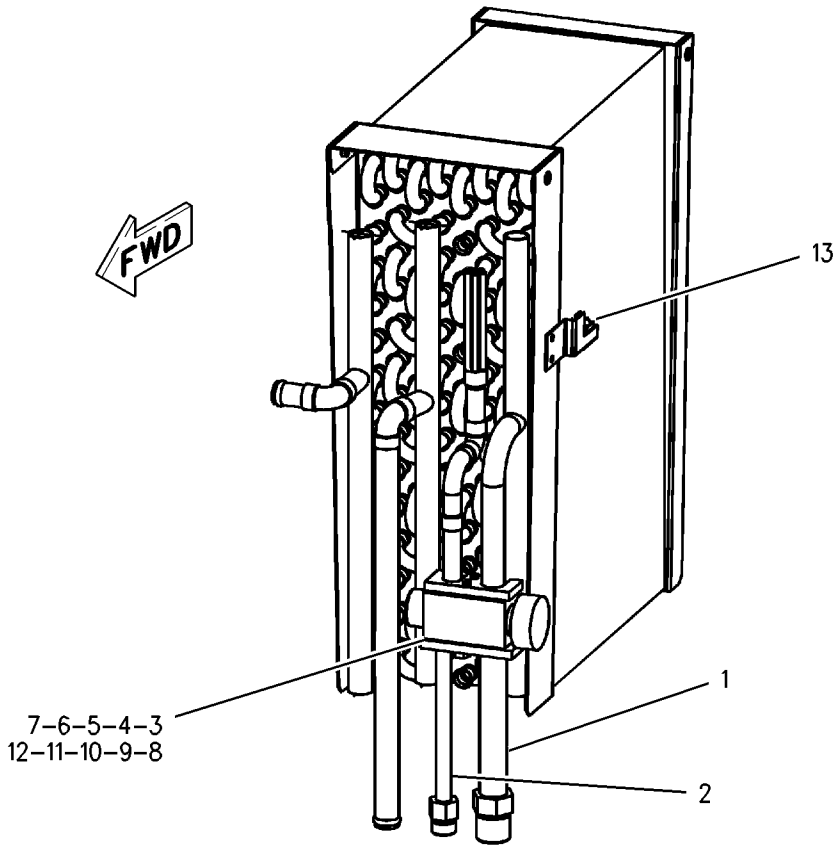

GRAPHIC #1 **<END>** g00867144

OPERATOR STATION

217-3086 CONDENSER GP-REFRIGERANT

S/N: BCZ1-2000

PART OF 198-4684 CONDENSER & MTG GP-REFRIGERANT

SMCS-1805 **i02160553**

NOTE	REF NO	GRAPHIC REF	PART NUMBER	QTY	PART NAME 1 2 3 4 5 6 (PRODUCT LEVEL)	SEE PAGE
	1	1	**121-4345**	1	SEAL-O-RING	
	2	1	**196-9051**	1	CLAMP AS	
	3	1	**196-9083**	1	ACCUMULATOR AS (REFRIGERANT)	
	4	1	**198-4688**	1	COIL AS	
	5	1	**217-2804**	1	CLIP	
M	6	1	**7X-2619**	1	BOLT (M6X1X20-MM)	
	7	1	**9X-8256**	1	WASHER (6.6X12X2-MM THK)	

M-METRIC PART

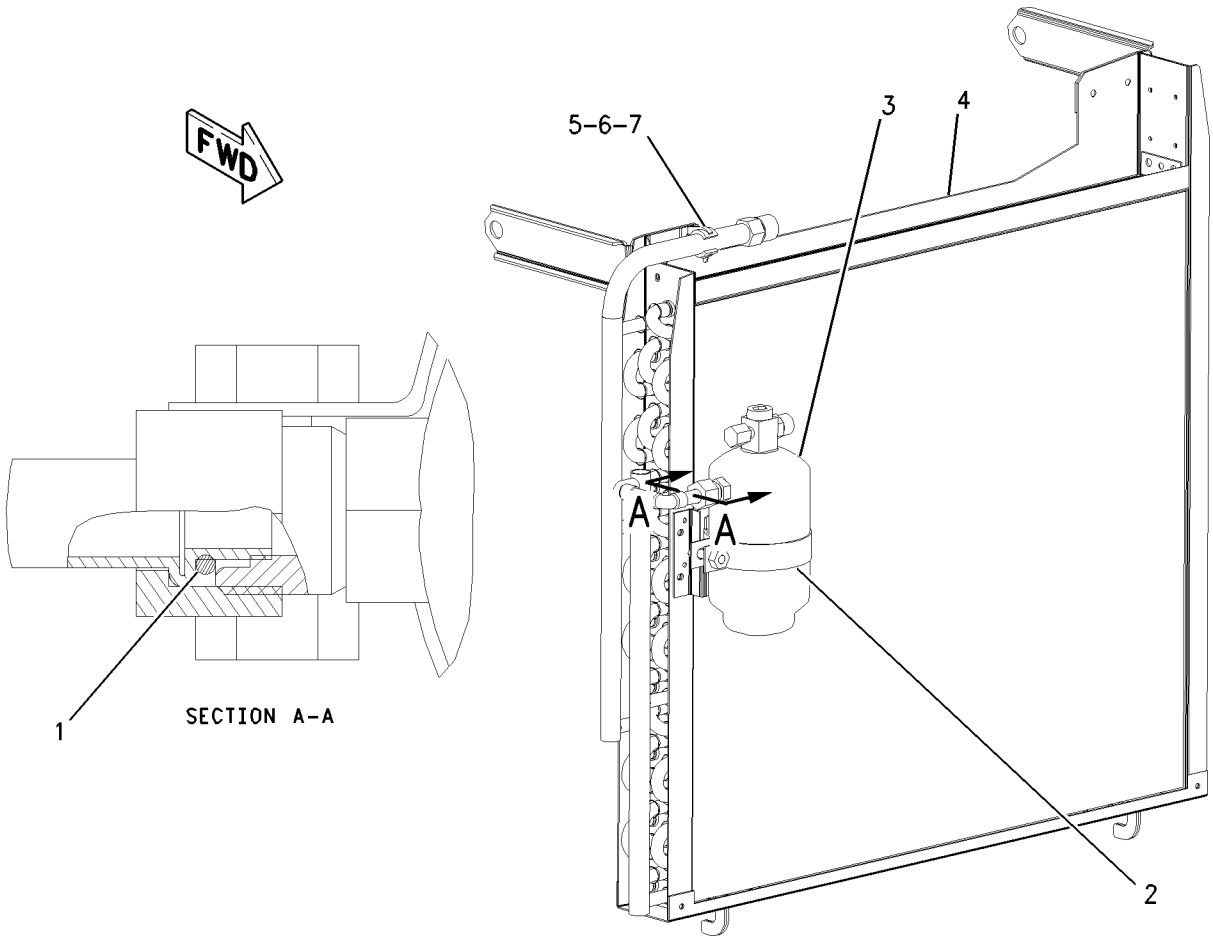

GRAPHIC #1 **<END>** g00922512

196-4472 CONNECTOR GP-CAB HEATER LINES

S/N: CPT1-UP

PART OF 188-5096 ENGINE AR-PRIMARY

SMCS-7304 **i01644443**

NOTE	REF NO	GRAPHIC REF	PART NUMBER	QTY	PART NAME 1 2 3 4 5 6 (PRODUCT LEVEL)	SEE PAGE
	1	1	**7W-4669**	1	ADAPTER (THERMOSTAT HOUSING)	
	2	1	**7W-4669**	1	ADAPTER (HEATER RETURN)	

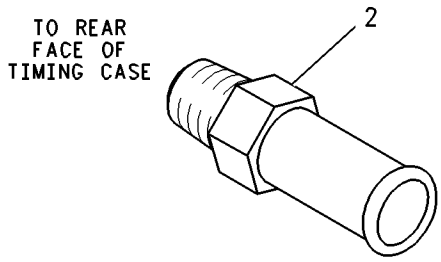

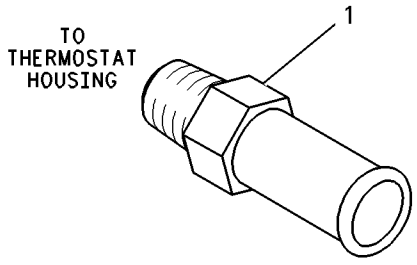

GRAPHIC #1 **<END>** g00736073

OPERATOR STATION

187-3767 CONSOLE GP-LH

S/N: BCZ1-556

PART OF 187-3797 CONSOLE GP-OPERATOR

SMCS-5258 **i02160546**

NOTE	REF NO	GRAPHIC REF	PART NUMBER	QTY	PART NAME 1 2 3 4 5 6 (PRODUCT LEVEL)	SEE PAGE
	1	1	**089-7436**	1	PIN-SPRING	
	2	1	**109-2355**	1	HOUSING-SWITCH	
	3	1	**109-2356**	1	PLUG	
	4	1	**125-6084**	1	NUT-SPEED	
	5	1	**194-7839**	1	SWITCH AS-POSITION (ARMREST)	
	6	1	**194-7843**	1	MAGNET	
	7	1	**195-7691**	1	LATCH AS	
Y	8	1	*196-1120*	1	ARMREST GP (LH)	827
	9	1	**196-9061**	1	COVER	
	10	1	**196-9062**	1	COVER	
	11	1	**196-9063**	1	COVER	
	12	1	**197-5681**	1	SPRING AS	
	13	1	**201-8754**	1	BUMPER	
	14	1	**201-8768**	1	KNOB	
	15	1	**219-8487**	1	BRACKET AS	
	16	1	**219-8488**	1	SUPPORT AS	
	17	1	**219-8493**	1	ROD	
	18	1	**089-7435**	1	CLEVIS	
M	19	1	**095-0723**	4	SCREW (M3X0.5X10-MM)	
	20	1	**096-5962**	4	WASHER-HARD (3.4X7X0.8-MM THK)	
	21	1	**125-6083**	1	SCREW-PAN HEAD	
M	22	1	**131-8203**	2	SCREW-FLAT HEAD (M8X1.25X30-MM)	
M	23	1	**5C-7261**	2	NUT (M8X1.25-THD)	
M	24	1	**5Y-0660**	3	NUT (M6-THD)	
M	25	1	**8T-4138**	4	BOLT (M6X1X20-MM)	
M	26	1	**8T-4171**	2	BOLT (M6X1X12-MM)	
	27	1	**8T-4224**	2	WASHER-HARD (8.8X16X2-MM THK)	
M	28	1	**8U-7803**	1	SCREW	
M	29	1	**9X-2042**	5	SCREW-TRUSS HEAD (M6X1X12-MM)	
	30	1	**9X-8256**	6	WASHER (6.6X12X2-MM THK)	

M-METRIC PART
Y-SEPARATE ILLUSTRATION

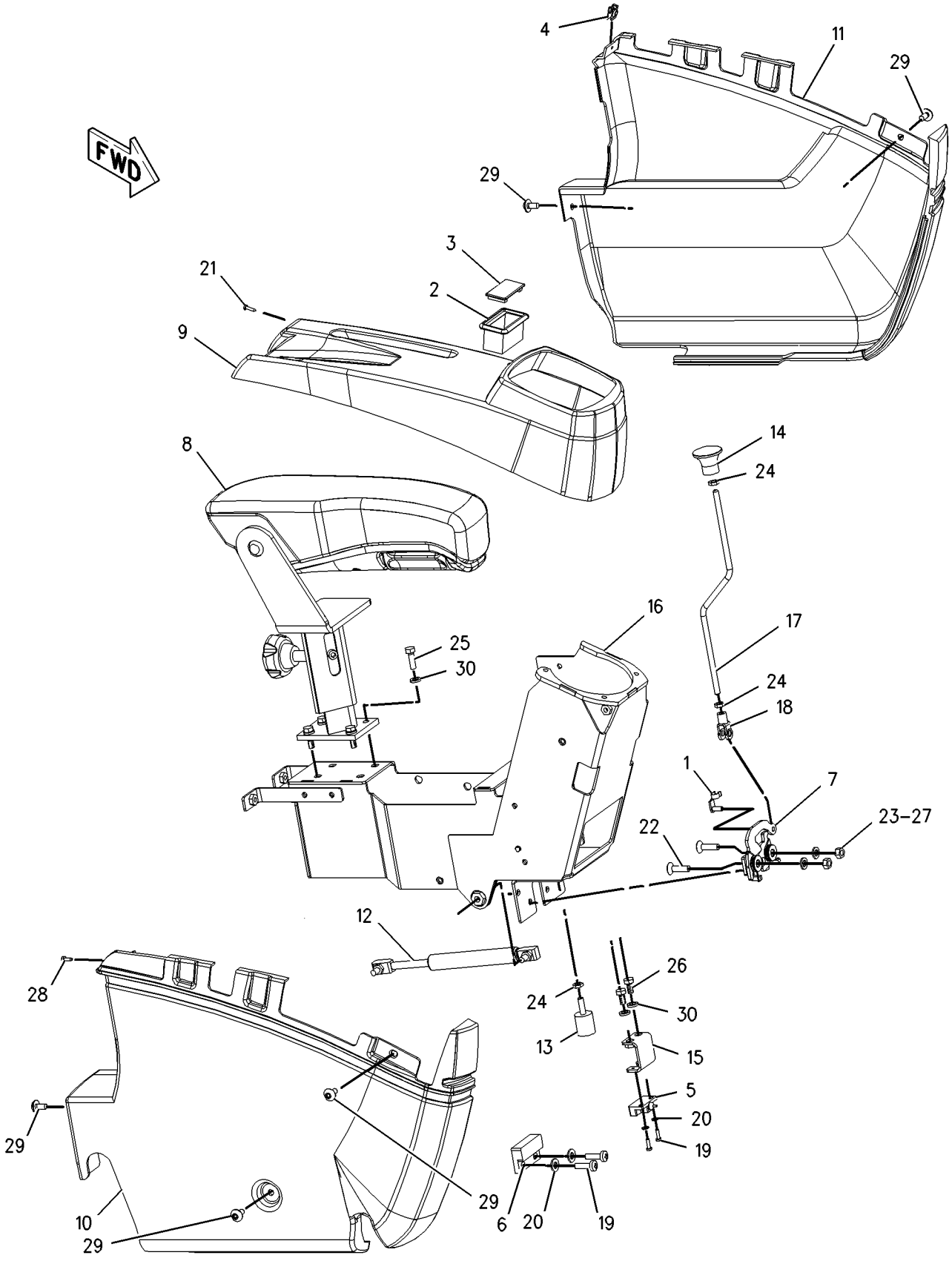

GRAPHIC #1 **<END>** g00922513

OPERATOR STATION

187-3767 CONSOLE GP-LH

S/N: BCZ557-2000

PART OF 187-3797 CONSOLE GP-OPERATOR

SMCS-5258 **i02160547**

NOTE	REF NO	GRAPHIC REF	PART NUMBER	QTY	PART NAME 1 2 3 4 5 6 (PRODUCT LEVEL)	SEE PAGE
	1	2	**089-7436**	1	PIN-SPRING	
	2	1	**109-2355**	1	HOUSING-SWITCH	
	3	1	**109-2356**	1	PLUG	
	4	1	**125-6084**	1	NUT-SPEED	
C	5	2	**240-1366**	1	SWITCH AS-POSITION (ARMREST)	
	6	2	**194-7843**	1	MAGNET	
	7	2	**195-7691**	1	LATCH AS	
Y	8	1	*196-1120*	1	ARMREST GP (LH)	827
	9	1	**196-9061**	1	COVER	
	10	1	**196-9062**	1	COVER	
	11	1	**196-9063**	1	COVER	
	12	1	**197-5681**	1	SPRING AS	
	13	2	**201-8754**	1	BUMPER	
	14	1	**201-8768**	1	KNOB	
	15	2	**219-8487**	1	BRACKET AS	
	16	1	**219-8488**	1	SUPPORT AS	
	17	2	**219-8493**	1	ROD	
	18	2	**089-7435**	1	CLEVIS	
M	19	2	**095-0723**	4	SCREW (M3X0.5X10-MM)	
	20	2	**096-5962**	4	WASHER-HARD (3.4X7X0.8-MM THK)	
	21	1	**125-6083**	1	SCREW-PAN HEAD	
M	22	2	**131-8203**	2	SCREW-FLAT HEAD (M8X1.25X30-MM)	
M	23	2	**131-3540**	2	LOCKNUT (M8X1.25-THD)	
M	24	1,2	**5Y-0660**	3	NUT (M6-THD)	
M	25	1	**8T-4138**	4	BOLT (M6X1X20-MM)	
M	26	2	**8T-4171**	2	BOLT (M6X1X12-MM)	
	27	2	**8T-4224**	2	WASHER-HARD (8.8X16X2-MM THK)	
M	28	1	**8U-7803**	1	SCREW	
M	29	1	**9X-2042**	5	SCREW-TRUSS HEAD (M6X1X12-MM)	
	30	1,2	**9X-8256**	6	WASHER (6.6X12X2-MM THK)	

C-CHANGE FROM PREVIOUS TYPE
M-METRIC PART
Y-SEPARATE ILLUSTRATION

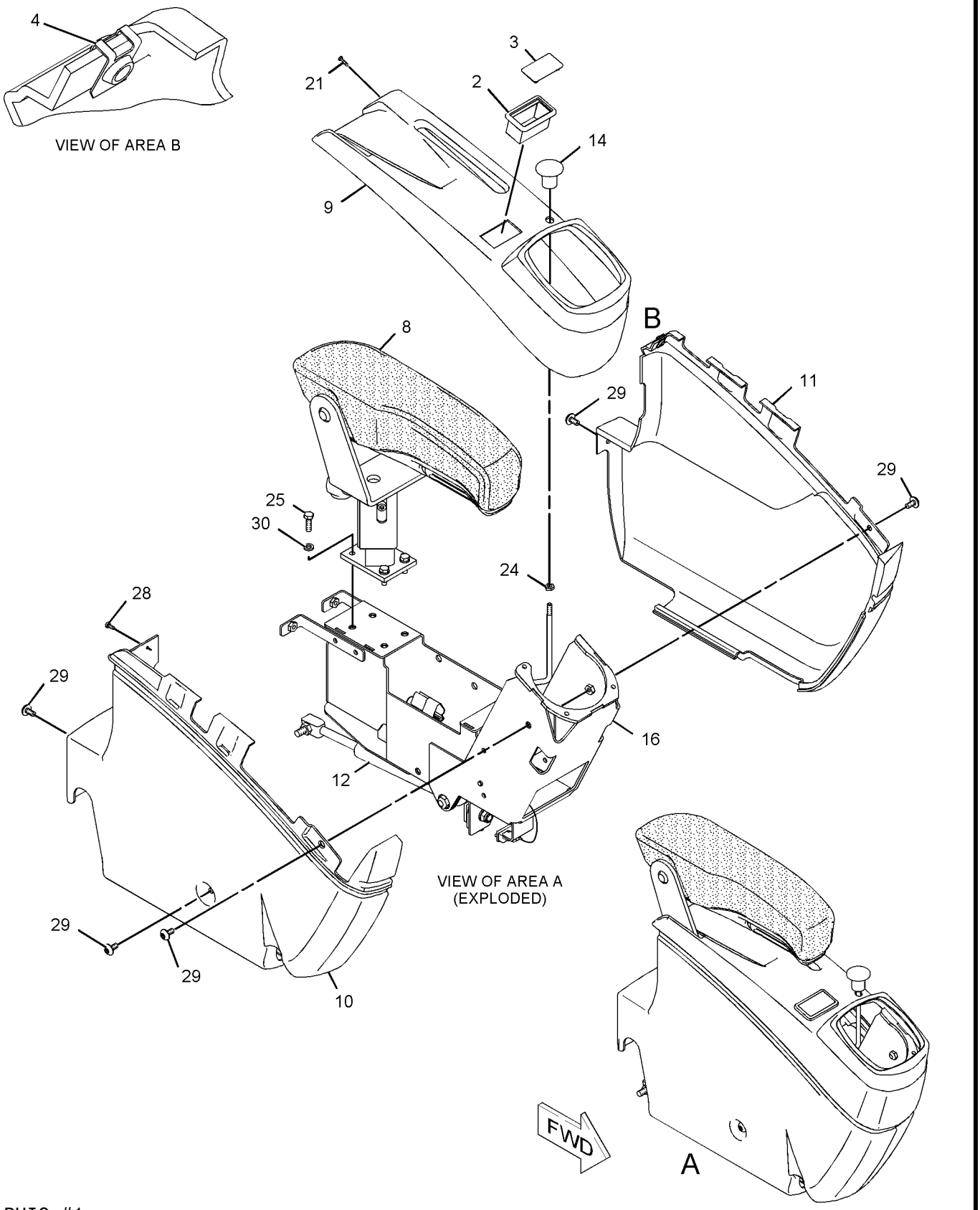

GRAPHIC #1

g01088865

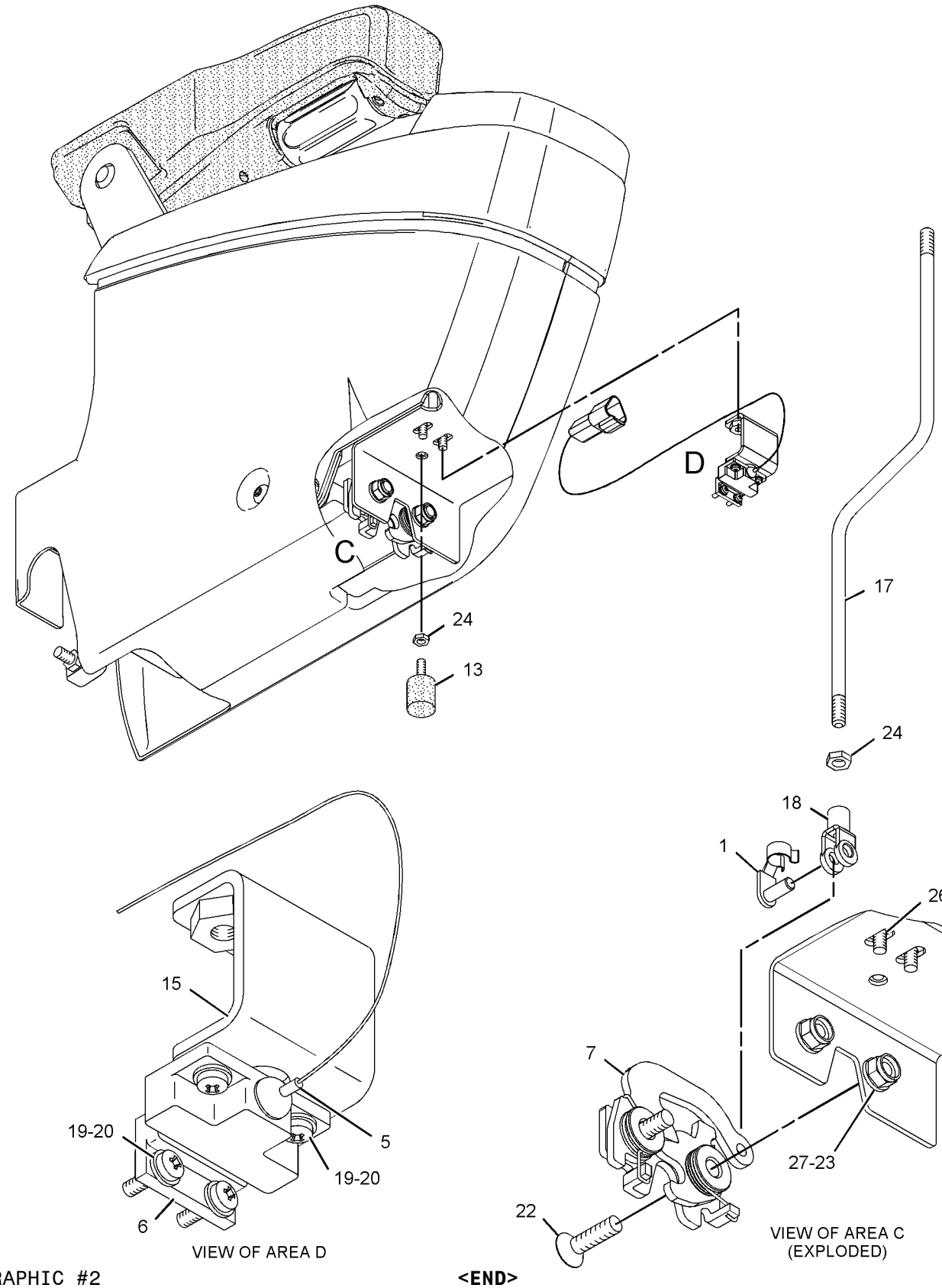

VIEW OF AREA D

VIEW OF AREA C (EXPLODED)

GRAPHIC #2 **<END>** g01088866

OPERATOR STATION

187-3797 CONSOLE GP-OPERATOR

S/N: BCZ1-2000

PART OF 198-4680 OPERATOR AR

SMCS-5258 **i01740351**

NOTE	REF NO	GRAPHIC REF	PART NUMBER	QTY	PART NAME 1 2 3 4 5 6 (PRODUCT LEVEL)	SEE PAGE
Y	1	1	*187-3767*	1	CONSOLE GP-LH	847
Y	2	1	*187-3782*	1	CONSOLE GP-RH	853
	3	1	**197-5687**	1	COVER	
	4	1	**125-6083**	1	SCREW-PAN HEAD	
M	5	1	**5C-9553**	8	BOLT (M6X1X16MM)	
M	6	1	**8T-4138**	4	BOLT (M6X1X20MM)	
	7	1	**9X-8256**	12	WASHER (6.6X12X2MM THK)	

M-METRIC PART
Y-SEPARATE ILLUSTRATION

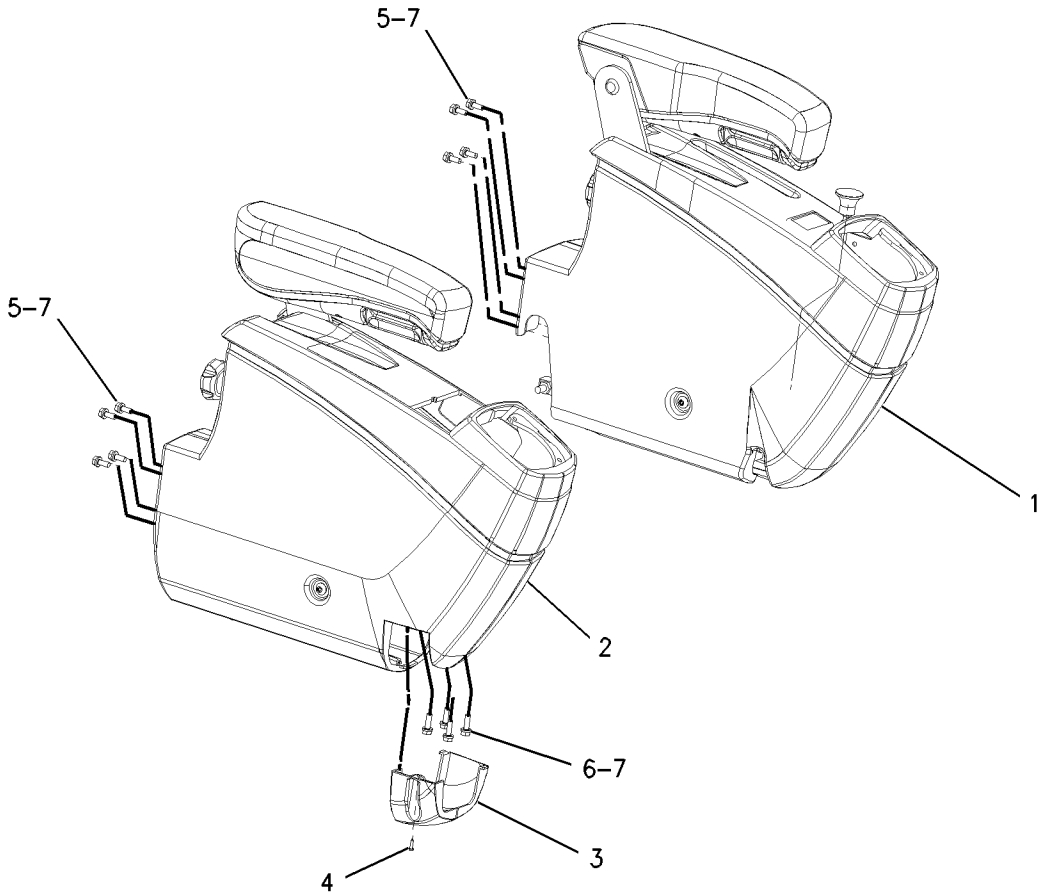

RIGHT SIDE VIEW
(FRONT)

GRAPHIC #1 **<END>** g00891263

OPERATOR STATION

187-3782 CONSOLE GP-RH

S/N: BCZ1-2000

PART OF 187-3797 CONSOLE GP-OPERATOR

SMCS-5258 **i01661591**

NOTE	REF NO	GRAPHIC REF	PART NUMBER	QTY	PART NAME 1 2 3 4 5 6 (PRODUCT LEVEL)	SEE PAGE
	1	1	**187-3772**	1	SUPPORT AS	
Y	2	1	*196-1118*	1	ARMREST GP	826
	3	1	**196-9064**	1	COVER	
	4	1	**196-9065**	1	COVER	
	5	1	**196-9066**	1	COVER	
	6	1	**197-5686**	1	COVER	
	7	1	**125-6083**	1	SCREW-PAN HEAD	
M	8	1	**6R-7653**	2	SCREW	
M	9	1	**8T-3992**	4	SCREW (M6X1X12MM)	
M	10	1	**8U-7803**	4	SCREW	

M-METRIC PART
Y-SEPARATE ILLUSTRATION

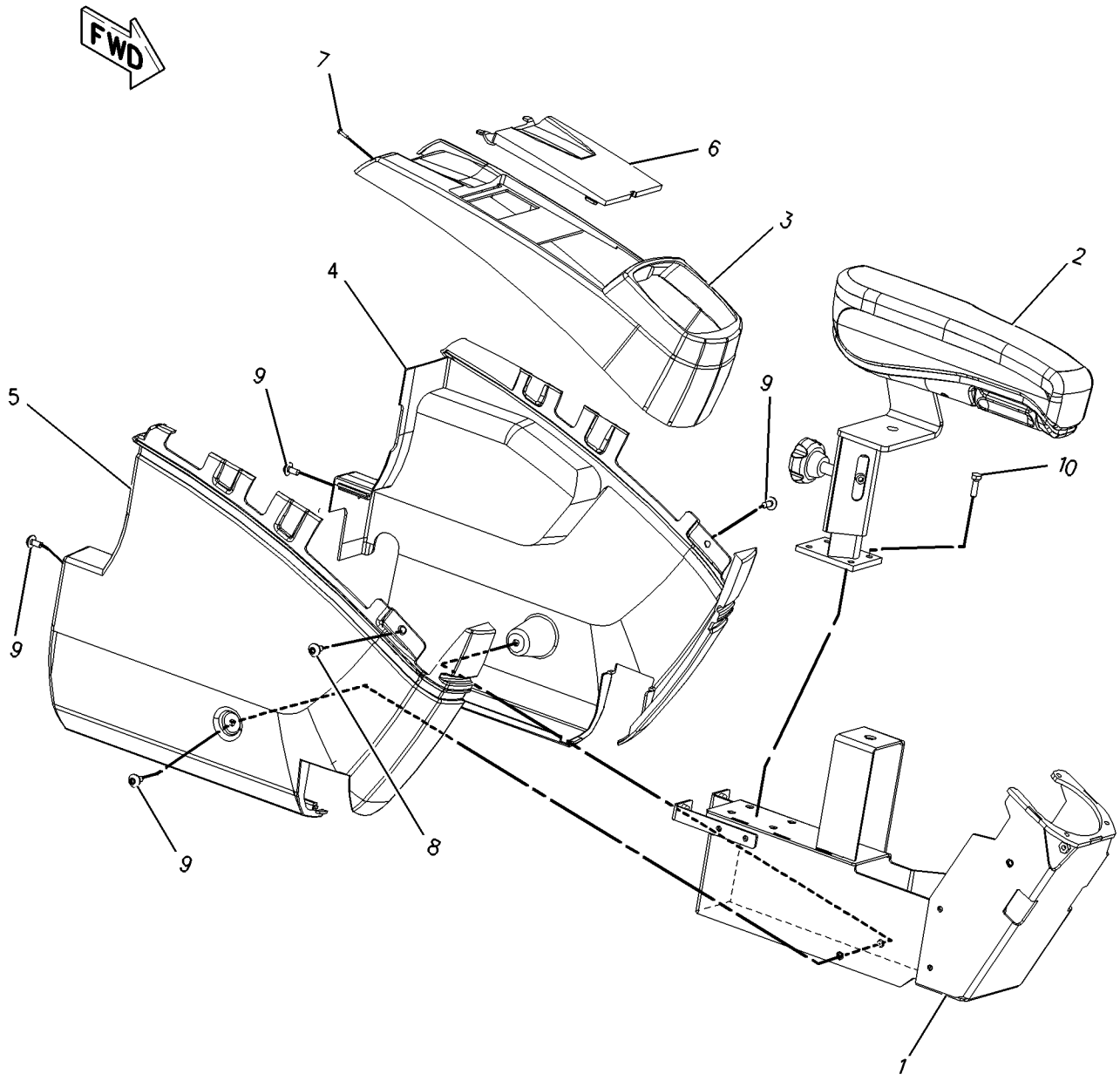

GRAPHIC #1 **<END>** g00859819

OPERATOR STATION

125-4903 COVER GP-CAB RISER

S/N: BCZ1-2000
PART OF 188-4961 FRAME GP-CAB RISER
AN ATTACHMENT

SMCS-7260 **i00615811**

NOTE	REF NO	GRAPHIC REF	PART NUMBER	QTY	PART NAME 1 2 3 4 5 6 (PRODUCT LEVEL)	SEE PAGE
	1	1	**5W-1119**	8	WASHER	
	2	1	**8U-9482**	8	COVER-RING	
	3	1	**8U-9483**	8	RING-RUBBER	
	4	1	**130-7671**	1	PLATE AS	
	5	1	**8U-0827**	8	FASTENER	

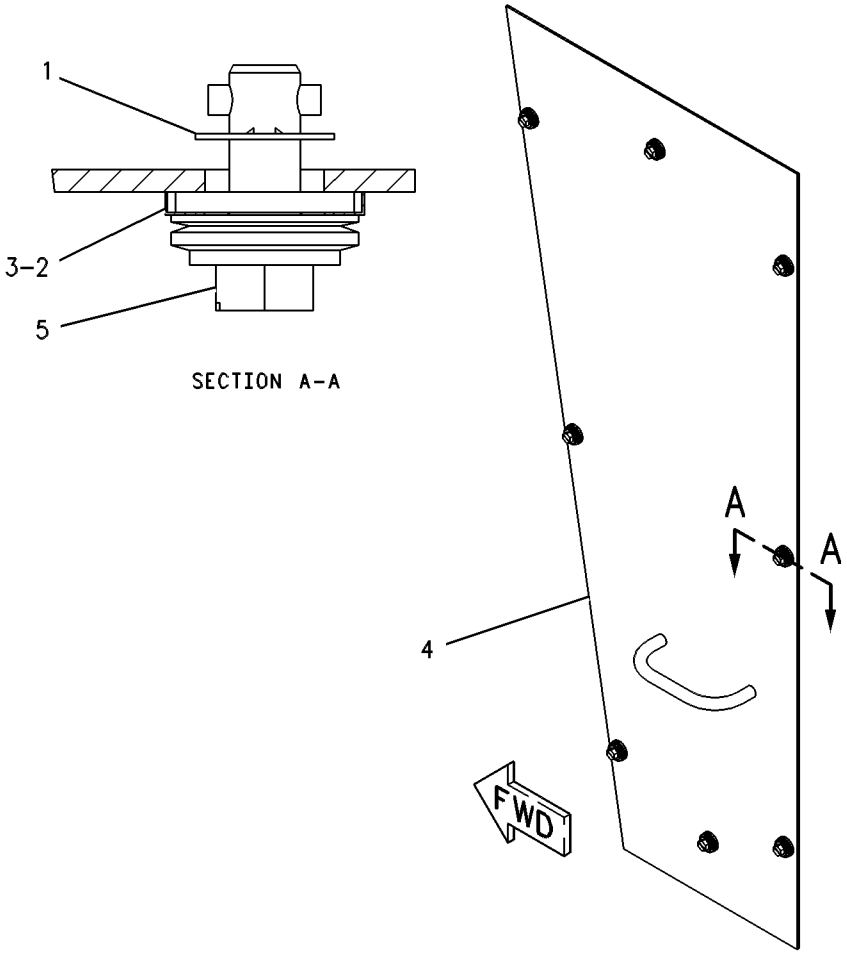

GRAPHIC #1 **<END>** g00278302

OPERATOR STATION

197-5700 COVER GP-CONSOLE

S/N: BCZ1-2000

PART OF 187-3800, 188-4959 CAB GP

ALSO AN ATTACHMENT

SMCS-5258 **i01889357**

NOTE	REF NO	GRAPHIC REF	PART NUMBER	QTY	PART NAME 1 2 3 4 5 6 (PRODUCT LEVEL)	SEE PAGE
	1	1	**6C-9119**	15	SCREW (M5X0.8X12-MM)	
	2	1	**139-6039**	3	NUT (U-TYPE RETAINER)	
	3	1	**156-6567**	1	COVER	
	4	1	**156-6593**	1	DUCT	
	5	1	*170-9723*	1	COVER GP	
		1	**156-6564**	1	COVER	
		1	**156-6595**	1	HOUSING	
		1	**164-0673**	1	LOUVER	
	6	1	*171-7405*	1	DUCT AS	
		1	**099-0139**	4	RIVET	
		1	**156-6594**	1	DUCT	
		1	**171-7406**	1	DUCT	
	7	1	**171-7415**	1	LOUVER	
	8	1	**170-9721**	1	BRACKET	
	9	1	**193-7791**	1	COVER	
	10	1	**193-7793**	1	SUPPORT AS	
	11	1	**164-0522**	1	HOLDER-CUP	
	12	1	**164-0646**	1	CUP	
	13	1	**167-7033**	1	RUBBER	
	14	1	**178-5530**	1	ASHTRAY	
	15	1	**5I-3707**	1	LOUVER	
M	16	1	**8T-4134**	5	NUT (M6X1-THD)	
M	17	1	**9X-2044**	12	SCREW-TRUSS HEAD (M6X1.0X16-MM)	
	18	1	**220-4083**	1	SEAL	

M-METRIC PART

197-5700 **COVER GP-CONSOLE** *(contd.)* **i01889357**

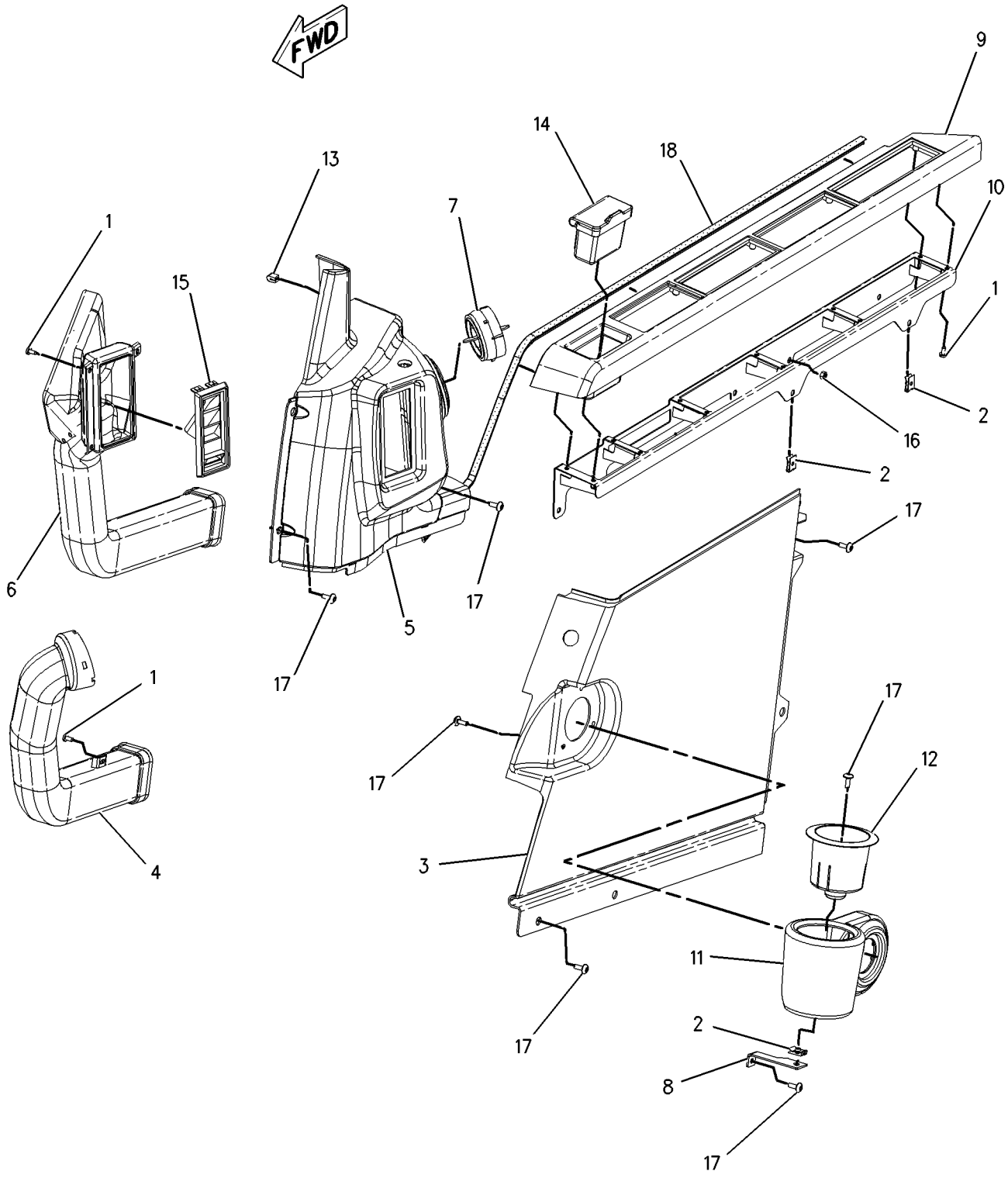

GRAPHIC #1 **<END>** g00981193

OPERATOR STATION

139-7100 D0OR GP-CAB

S/N: BCZ1-2000

PART OF 189-2768 D0OR GP-CAB

SMCS-7308 **i01889340**

NOTE	REF NO	GRAPHIC REF	PART NUMBER	QTY	PART NAME 1 2 3 4 5 6 (PRODUCT LEVEL)	SEE PAGE
	1	1	**151-6703**	1	HANDLE-PULL	
	2	1	**151-6704**	2	CAP	
Y	3	1	**151-6792**	1	WINDOW GP-DOOR	926
	4	1	**156-6471**	1	GLASS	
	5	1	**156-6598**	1	HOOK	
	6	1	**156-6600**	1	LOCK AS	
		1	**164-0514**	1	CLIP	
		1	**164-0519**	1	CLIP	
	7	1	**156-6643**	1	COVER	
	8	1	**156-6645**	1	HANDLE AS	
		1	**201-4391**	1	CLIP	
	9	1	**161-3639**	1	HANDLE AS	
	10	1	**161-3650**	1	COVER AS	
	11	1	**161-3663**	1	SEAL AS	
		1	**151-9497**	45	CLIP	
	12	1	**161-3665**	1	SEAL	
	13	1	**161-3699**	1	COVER	
	14	1	**164-0515**	1	JOINT	
	15	1	**167-7039**	1	GROMMET	
M	16	1	**185-8180**	3	SCREW (M6X1X16-MM)	
	17	1	**189-2711**	2	WASHER (8.5X16X2.3-MM THK)	
M	18	1	**096-2622**	2	SCREW-MACHINE (M4X0.7X8-MM)	
M	19	1	*096-3884*	2	NUT-SPRING	
					(EACH INCLUDES)	
M		1	**095-0772**	1	NUT	
		1	**3B-4505**	1	LOCKWASHER	
M	20	1	*101-8899*	2	SCREW AS	
					(EACH INCLUDES)	
M		1	**095-0742**	1	SCREW-MACHINE (M6X1X16-MM)	
		1	**095-0827**	1	LOCKWASHER	
M	21	1	*101-8900*	2	SCREW AS	
					(EACH INCLUDES)	
M		1	**8T-6412**	1	SCREW-MACHINE (M6X1X20-MM)	
		1	**095-0827**	1	LOCKWASHER	
	22	1	**151-9461**	4	SPACER	
	23	1	**156-6644**	1	COVER	
	24	1	**178-5573**	4	SPACER	
	25	1	**178-5574**	2	SPACER	
	26	1	**189-2690**	1	HANDLE AS	
	27	1	**4I-4286**	1	KNOB	
M	28	1	**9X-2042**	10	SCREW-TRUSS HEAD (M6X1X12-MM)	

M-METRIC PART
Y-SEPARATE ILLUSTRATION

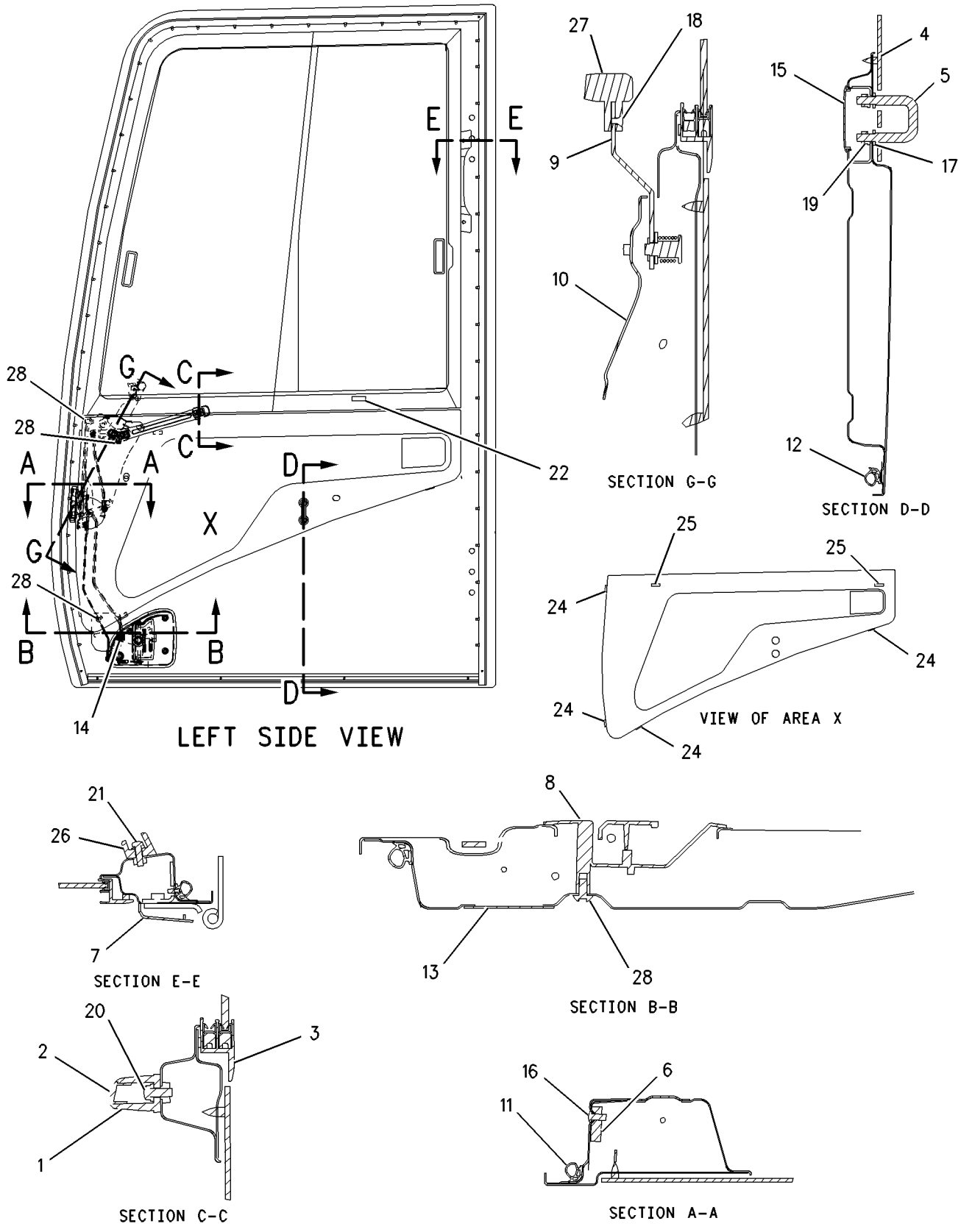

GRAPHIC #1 **<END>** g00981144

OPERATOR STATION

189-2768 DOOR GP-CAB

S/N: BCZ1-2000

PART OF 187-3800 CAB GP

SMCS-7308 **i01781226**

NOTE	REF NO	GRAPHIC REF	PART NUMBER	QTY	PART NAME 1 2 3 4 5 6 (PRODUCT LEVEL)	SEE PAGE
Y	1	1	**139-7100**	1	DOOR GP-CAB	858
	2	1	*151-6767*	1	DOOR AS	
M		1	**9X-2041**	6	SCREW-TRUSS HEAD	
		1	**151-6777**	2	HINGE	

M-METRIC PART
Y-SEPARATE ILLUSTRATION

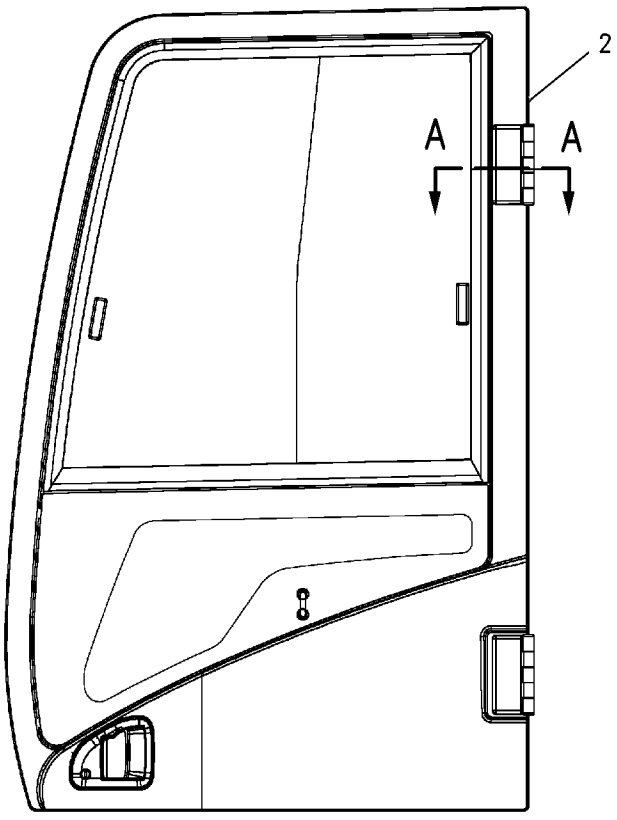

LEFT SIDE VIEW

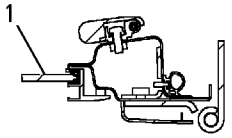

SECTION A-A

GRAPHIC #1 **<END>** g00840880

OPERATOR STATION

201-8770 DOOR GP-CAB

S/N: BCZ1-2000
PART OF 188-4959 CAB GP
AN ATTACHMENT

SMCS-7308 **i02160544**

NOTE	REF NO	GRAPHIC REF	PART NUMBER	QTY	PART NAME 1 2 3 4 5 6 (PRODUCT LEVEL)	SEE PAGE
Y	1	1	*205-0450*	1	DOOR GP-CAB	862
	2	1	*151-6767*	1	DOOR AS	
M		1	**9X-2041**	6	SCREW-TRUSS HEAD	
		1	**151-6777**	2	HINGE	

M-METRIC PART
Y-SEPARATE ILLUSTRATION

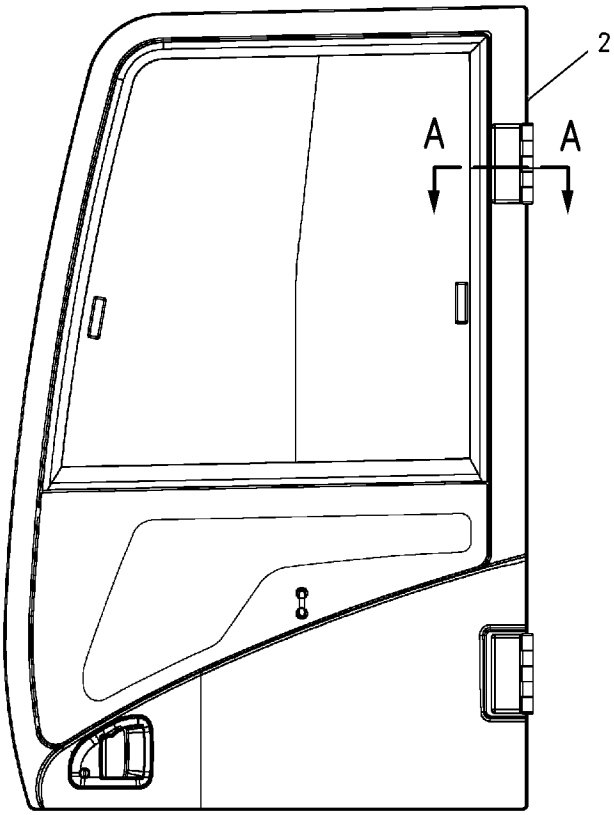

LEFT SIDE VIEW

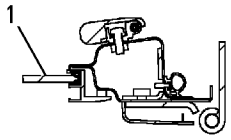

SECTION A-A

GRAPHIC #1 **<END>** g00840880

OPERATOR STATION

205-0450 D00R GP-CAB

S/N: BCZ1-2000
PART OF 201-8770 D00R GP-CAB
AN ATTACHMENT

SMCS-7308 **i02005556**

NOTE	REF NO	GRAPHIC REF	PART NUMBER	QTY	PART NAME 1 2 3 4 5 6 (PRODUCT LEVEL)	SEE PAGE
	1	1	**4I-4286**	1	KNOB	
M	2	1	**096-3884**	2	NUT-SPRING	
M	3	1	**101-8900**	2	SCREW AS	
	4	1	**151-6703**	1	HANDLE-PULL	
	5	1	**151-6704**	2	CAP	
	6	1	**151-9461**	4	SPACER	
	7	1	**156-6598**	1	HOOK	
	8	1	**156-6600**	1	LOCK AS	
	8A	1	**164-0514**	1	CLIP	
	8B	1	**164-0519**	1	CLIP	
	9	1	**156-6643**	1	COVER	
	10	1	**156-6644**	1	COVER	
	11	1	**156-6645**	1	HANDLE AS	
		1	**201-4391**	1	CLIP	
	12	1	**161-3639**	1	HANDLE AS	
	13	1	**161-3650**	1	COVER AS	
	14	1	**161-3663**	1	SEAL AS	
		1	**151-9497**	45	CLIP	
	15	1	**161-3665**	1	SEAL	
	16	1	**161-3699**	1	COVER	
	17	1	**164-0515**	1	JOINT	
	18	1	**167-7038**	1	GLASS	
	19	1	**167-7039**	1	GROMMET	
	20	1	**178-5573**	4	SPACER	
	21	1	**178-5574**	3	SPACER	
M	22	1	**185-8180**	3	SCREW (M6X1X16-MM)	
	23	1	**189-2690**	1	HANDLE AS	
	24	1	**8T-8224**	2	SEAL AS	
Y	25	1	*205-0442*	1	WINDOW GP-DOOR	928
M	26	1	**096-2622**	2	SCREW-MACHINE (M4X0.7X8-MM)	
M	27	1	**101-8899**	2	SCREW AS	
M	28	1	**9X-2042**	10	SCREW-TRUSS HEAD (M6X1X12-MM)	

M-METRIC PART
Y-SEPARATE ILLUSTRATION

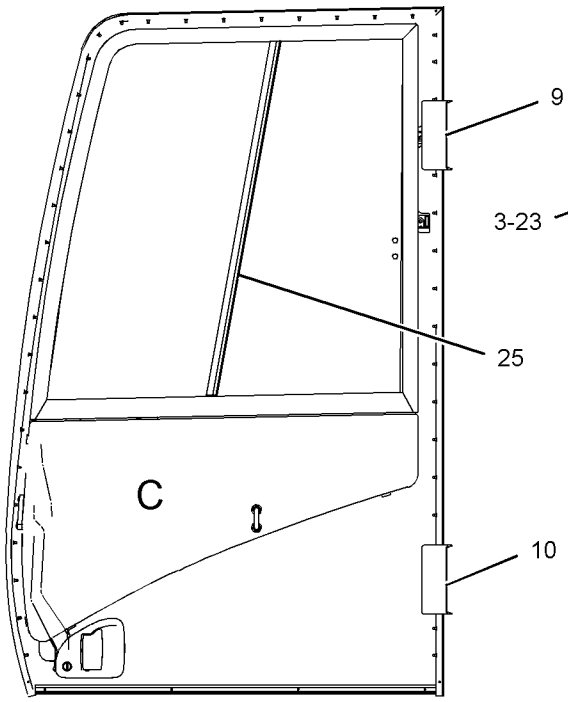

LEFT SIDE VIEW

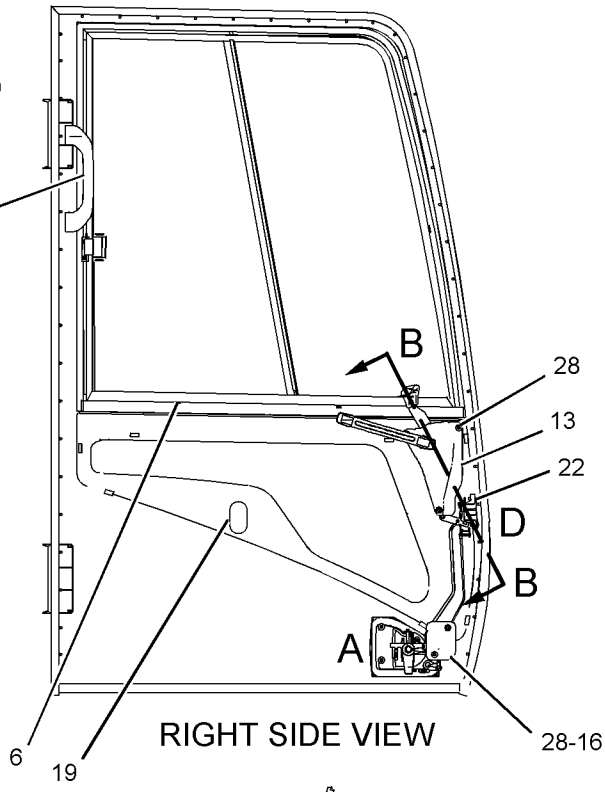

RIGHT SIDE VIEW

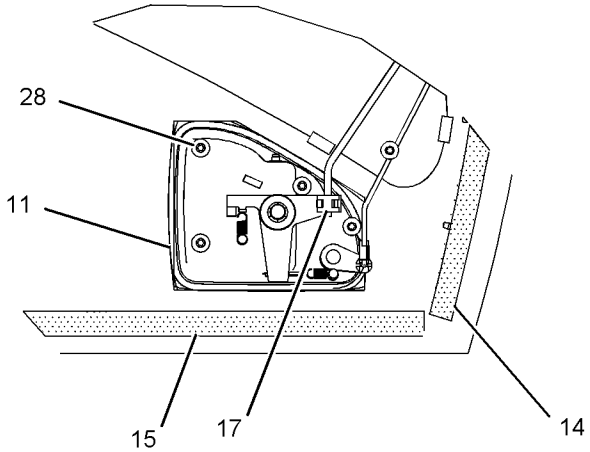

VIEW OF AREA A

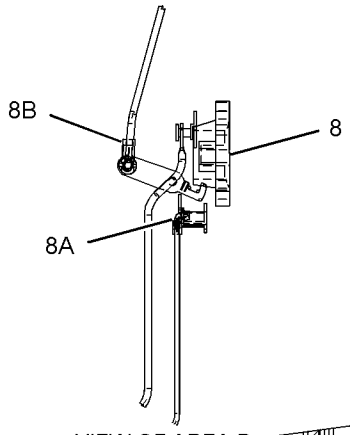

VIEW OF AREA D

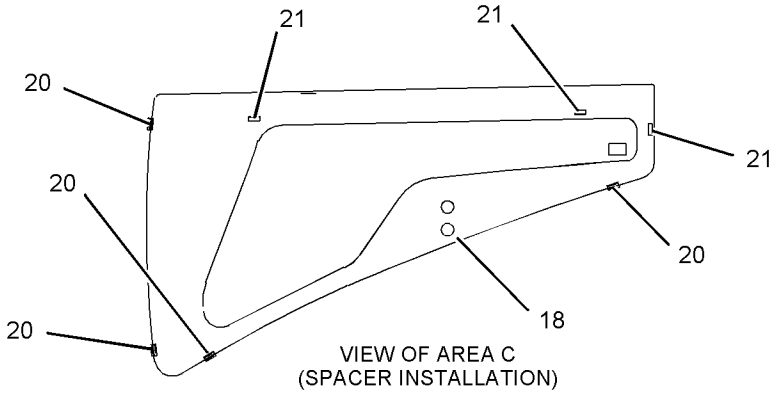

VIEW OF AREA C
(SPACER INSTALLATION)

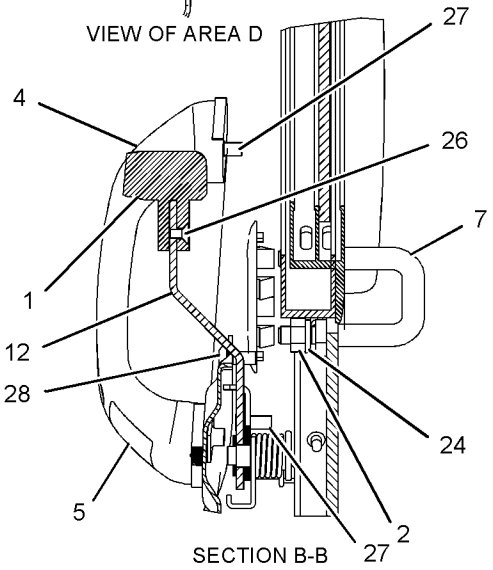

SECTION B-B

GRAPHIC #1 **<END>** g01028169

OPERATOR STATION

210-1338 DUCT GP-AIR

S/N: BCZ1-2000
PART OF 187-3800, 188-4959 CAB GP
ALSO AN ATTACHMENT

SMCS-734D **i01987296**

NOTE	REF NO	GRAPHIC REF	PART NUMBER	QTY	PART NAME 1 2 3 4 5 6 (PRODUCT LEVEL)	SEE PAGE
	1	1	**4I-1278**	1	FILTER-CAB AIR (FRESH)	
	2	1	**164-0592**	1	DUCT AS	
		1	**6I-5331**	4	RIVET	
	2A	1	**189-3415**	2	INSULATOR	
	3	1	**198-0024**	1	DUCT AS-VENT	
	3A	1	**167-7118**	1	INSULATION (UPPER)	
	3B	1	**167-7119**	1	INSULATION (UPPER)	
	3C	1	**189-3426**	4	INSULATION (LOUVER)	
M	4	1	**8T-4171**	1	BOLT (M6X1X12-MM)	
M	5	1	**9X-2044**	3	SCREW-TRUSS HEAD (M6X1.0X16-MM)	
	6	1	**9X-8256**	1	WASHER (6.6X12X2-MM THK)	

M-METRIC PART

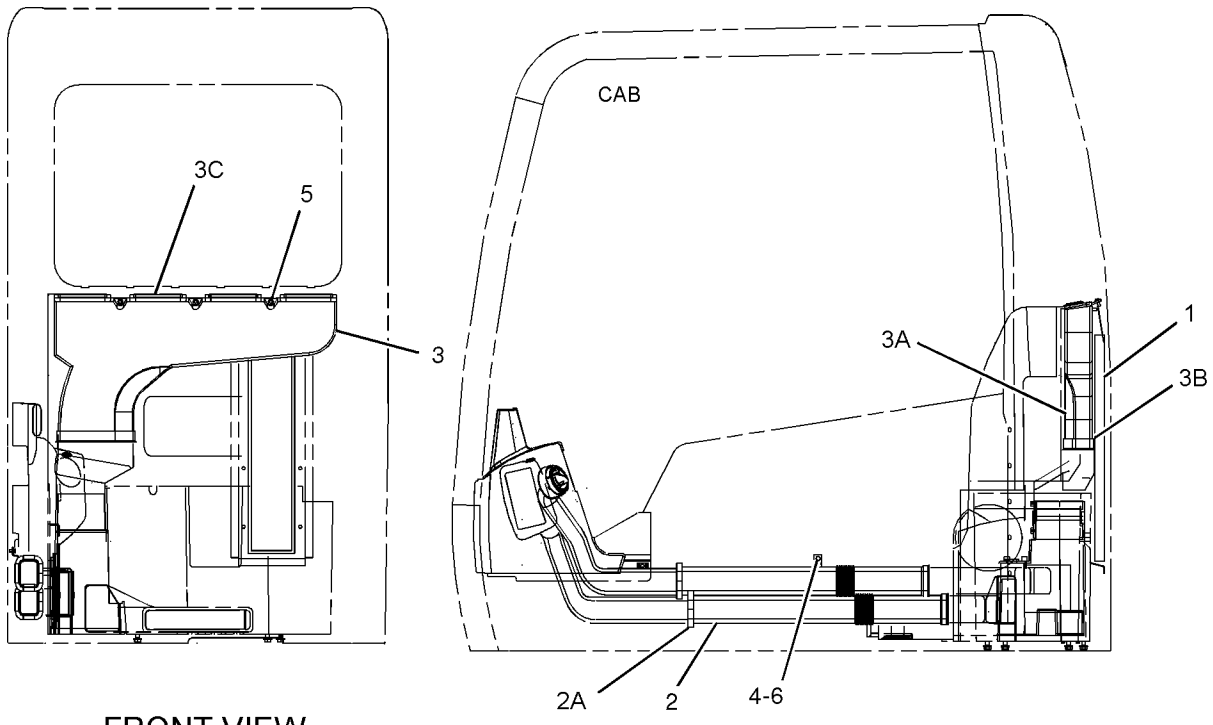

GRAPHIC #1 **<END>** g01028196

OPERATOR STATION

188-4938 GUARD AR-FOG LIGHTS

S/N: BCZ1-2000

FALLING OBJECT GUARD STRUCTURE

AN ATTACHMENT

SMCS-1429, 7159 **i02160541**

NOTE	PART NUMBER	QTY	PART NAME 1 2 3 4 5 6 (PRODUCT LEVEL)	SEE PAGE
Y	*194-3259*	1	GUARD GP-OVERHEAD	866
Y	*213-4640*	1	GUARD GP-WINDOW	869
Y	*188-4947*	1	LIGHTING GP-FLOOD (REAR)	162
Y	*198-4677*	1	LIGHTING GP-FLOOD (FRONT)	164

Y-SEPARATE ILLUSTRATION

<END>

OPERATOR STATION

194-3259 GUARD GP-OVERHEAD

S/N: BCZ1-2000
PART OF 188-4938 GUARD AR-FOG LIGHTS
AN ATTACHMENT

SMCS-7159 **i02160537**

NOTE	REF NO	GRAPHIC REF	PART NUMBER	QTY	PART NAME 1 2 3 4 5 6 (PRODUCT LEVEL)	SEE PAGE
	1	1	**6C-8787**	2	TUBE	
	2	1	**9X-8937**	4	TACK-FASTENER	
	3	1	**193-2153**	1	GUARD AS	
	4	1	**116-1517**	1	PLATE-WARNING (STRUCTURE MODIFICATION)	
M	5	1	**7X-2475**	2	BOLT (M16X2X130-MM)	
M	6	1	**7Y-5227**	2	BOLT (M16X2X190-MM)	
	7	1	**9X-8257**	2	WASHER (17.5X30X3.5-MM THK)	

M-METRIC PART

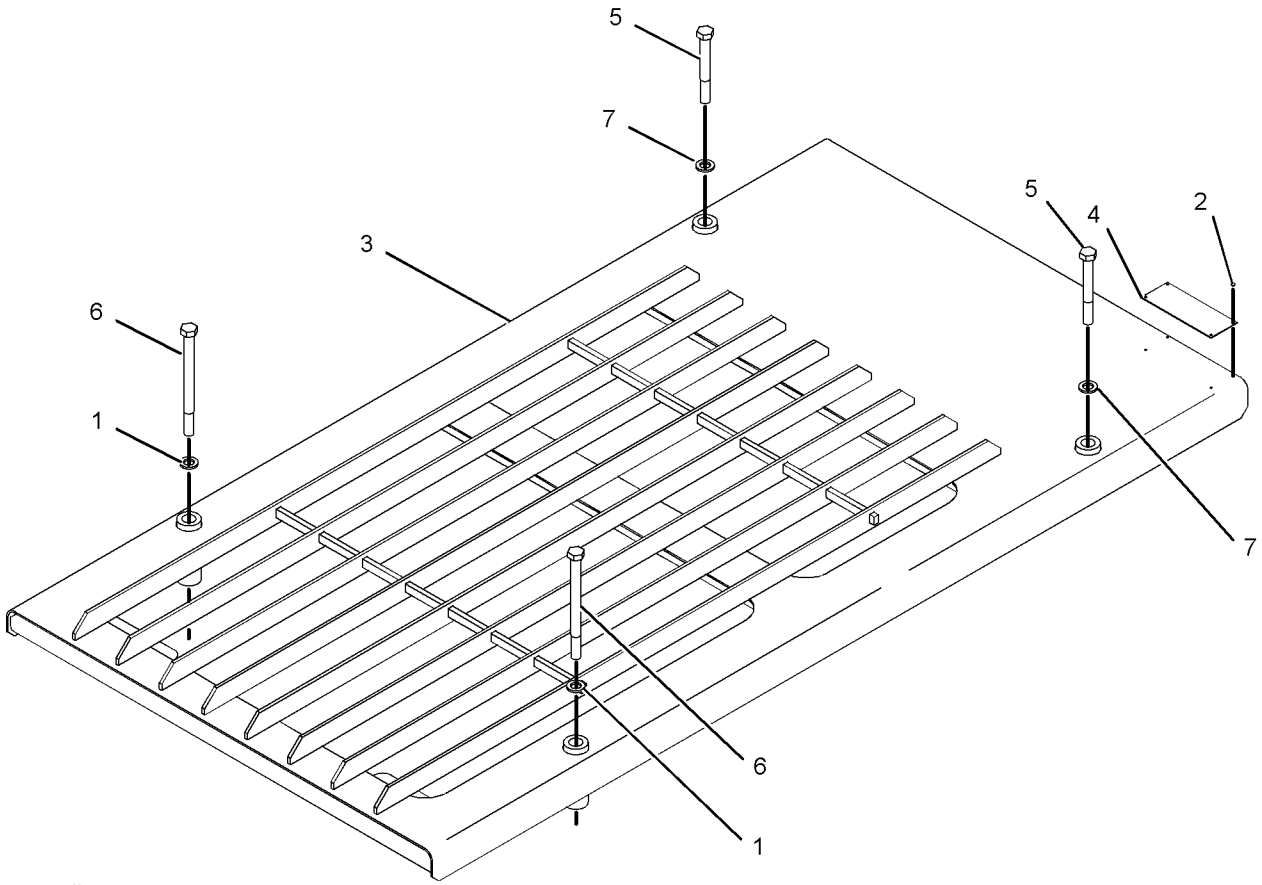

GRAPHIC #1 **<END>** g01095576

OPERATOR STATION

188-4940 GUARD GP-VANDALISM

S/N: BCZ1-2000
CANNOT BE USED WITH GUARD AR-FOG LIGHTS
AN ATTACHMENT

SMCS-7315 **i02180861**

NOTE	REF NO	GRAPHIC REF	PART NUMBER	QTY	PART NAME 1 2 3 4 5 6 (PRODUCT LEVEL)	SEE PAGE
M	1	1	**3T-0852**	2	LOCKNUT (M8X1.25-THD)	
	2	1	**197-5688**	1	BRACKET	
	3	1	**197-5689**	1	PLATE	
	4	1	**197-5690**	1	PLATE	
	5	1	**213-4636**	1	COVER AS	
M	5A	1	**8T-4908**	2	BOLT (M8X1.25X25-MM)	
	6	1	**216-2178**	2	BOLT	
	7	1	**216-2179**	2	BRACKET	
	8	1	**216-2180**	1	GUARD AS	
	8A	1	**4B-4863**	8	WASHER (4.7X11X1.2-MM THK)	
M	8B	1	**6S-8584**	8	SCREW	
M	8C	1	**8T-2659**	8	LOCKNUT (M4X0.7-THD)	
	9	1	**218-2619**	2	LATCH	
	10	1	**4B-4863**	6	WASHER (4.7X11X1.2-MM THK)	
M	11	1	**5C-2890**	2	NUT (M6X1-THD)	
M	12	1	**5C-8312**	6	NUT (M4X0.7-THD)	
M	13	1	**6V-5210**	6	SCREW-MACHINE (M4X0.7X10-MM)	
	14	1	**7X-0605**	4	WASHER-HARD (13X28X1.6-MM THK)	
M	15	1	**8T-4138**	1	BOLT (M6X1X20-MM)	
	16	1	**8T-4224**	4	WASHER-HARD (8.8X16X2-MM THK)	
	17	1	**9X-6381**	1	WASHER (6.5X12.5X1.6-MM THK)	
E	18	1	**5P-6903**		SEAL (30CM)	
E	19	1	**117-0121**		SEAL (251CM)	

E-ORDER BY THE CENTIMETER
M-METRIC PART

188-4940 GUARD GP-VANDALISM *(contd.)* i02180861

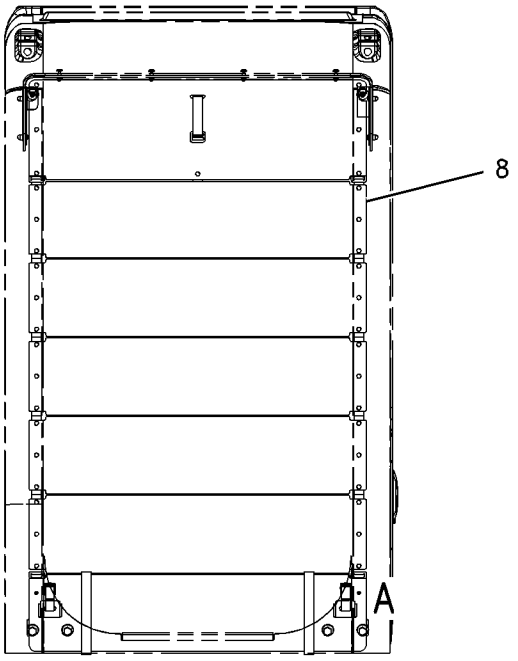

FRONT VIEW

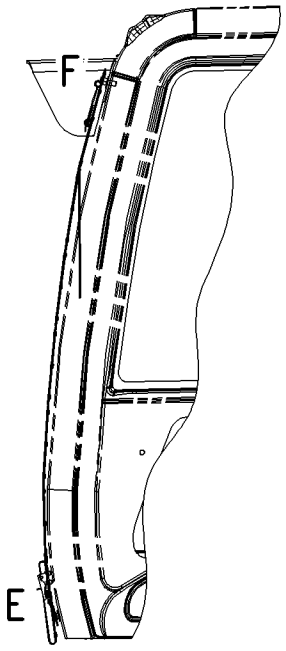

LEFT SIDE VIEW

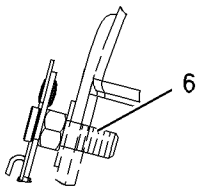

VIEW OF AREA F

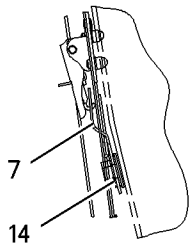

VIEW OF AREA E

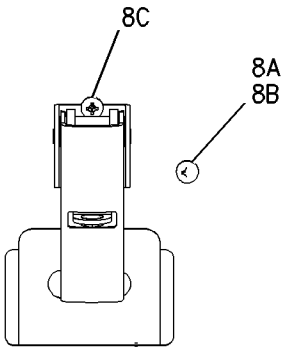

VIEW OF AREA A

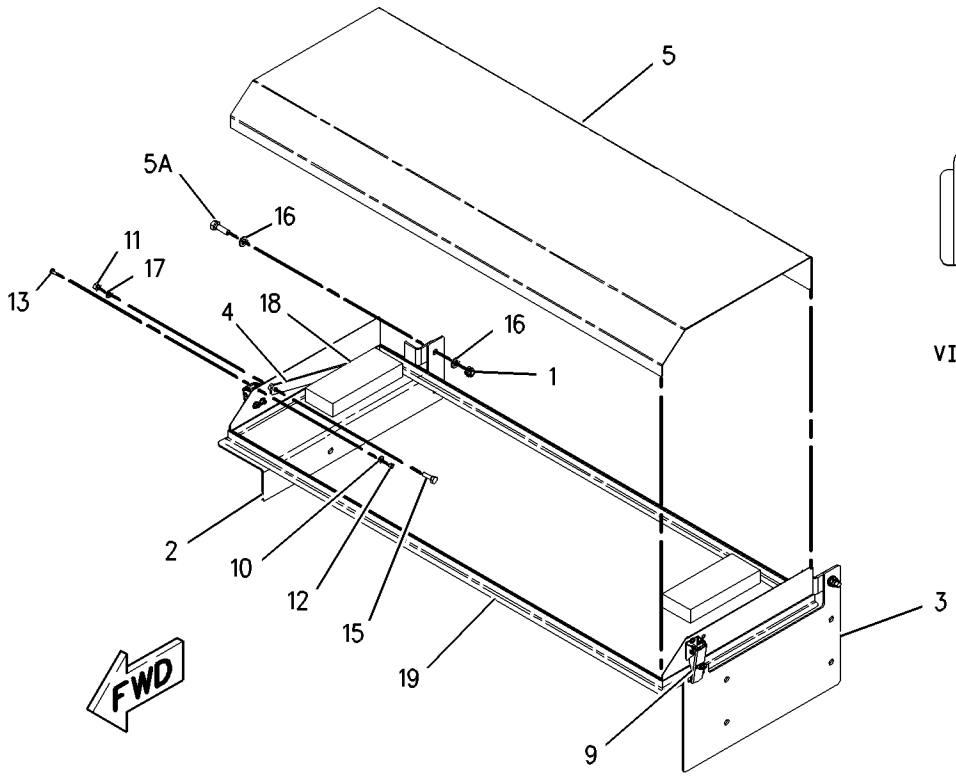

GRAPHIC #1 **<END>** g00903320

OPERATOR STATION

213-4640 GUARD GP-WINDOW

S/N: BCZ1-624
PART OF 188-4938 GUARD AR-FOG LIGHTS
AN ATTACHMENT

SMCS-7182, 7315 **i02160529**

NOTE	REF NO	GRAPHIC REF	PART NUMBER	QTY	PART NAME 1 2 3 4 5 6 (PRODUCT LEVEL)	SEE PAGE
	1	1	**4E-1384**	2	BUMPER-CONICAL	
	2	1	**6C-8379**	2	LATCH AS	
	3	1	**6C-8382**	2	SPRING-LATCH	
	4	1	**115-1624**	2	SPRING AS-GAS	
	5	1	**171-7464**	1	SUPPORT AS	
	6	1	**171-7467**	1	SUPPORT AS	
	7	1	**191-2743**	1	GUARD AS	
	8	1	**191-2752**	1	BRACKET AS	
	9	1	**191-2753**	1	BRACKET AS	
	10	1	**191-6243**	6	SPACER (13.5X30X20-MM THK)	
	11	1	**194-0715**	2	SPACER (18X38X29-MM THK)	
	12	1	**219-0305**	1	FILM-WARNING (NO WELD, NO DRILL)	
	13	1	**227-1085**	1	FILM (FRONT GUARD)	
M	14	1	**5C-7261**	8	NUT (M8X1.25-THD)	
	15	1	**5P-1076**	2	WASHER-HARD (13.5X30X4-MM THK)	
B	16	1	**6C-4000**	8	SHIM (1-MM THK)	
M	17	1	**7X-2555**	2	BOLT (M16X2X80-MM)	
M	18	1	**8T-4223**	6	WASHER-HARD (13.5X25.5X3-MM THK)	
	19	1	**8T-4224**	2	WASHER-HARD (8.8X16X2-MM THK)	
B	20	1	**8T-4897**	2	WASHER (10.2X35X6-MM THK)	
M	21	1	**8T-4910**	6	BOLT (M12X1.75X60-MM)	
M	22	1	**8T-6869**	2	BOLT (M8X1.25X60-MM)	
	23	1	**9X-8257**	2	WASHER (17.5X30X3.5-MM THK)	

B-USE AS REQUIRED
M-METRIC PART

213-4640 **GUARD GP-WINDOW** *(contd.)* **i02160529**

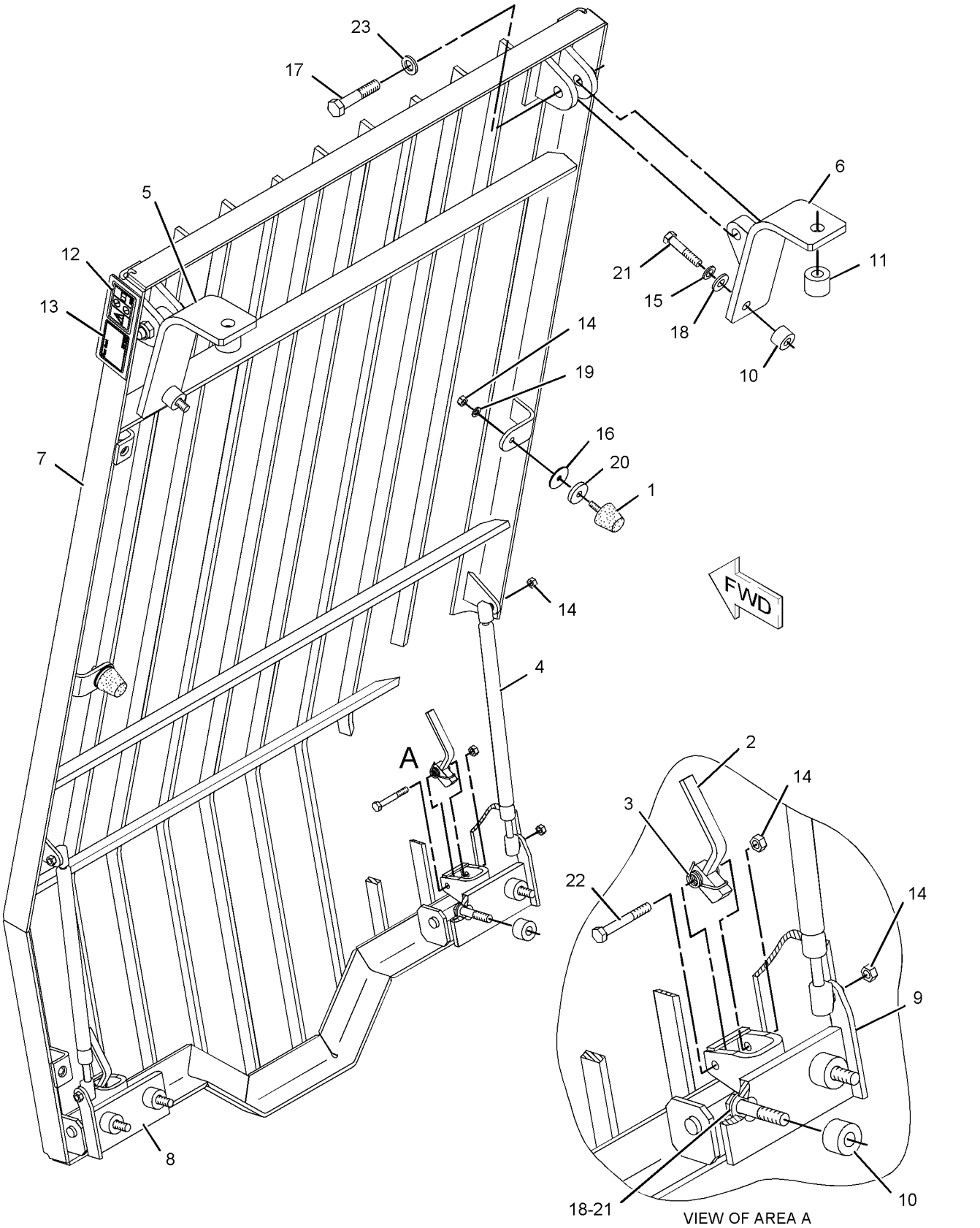

GRAPHIC #1 **<END>** g01053696

OPERATOR STATION

213-4640 GUARD GP-WINDOW

S/N: BCZ625-2000

PART OF 188-4938 GUARD AR-FOG LIGHTS

AN ATTACHMENT

SMCS-7182, 7315 **i02160528**

NOTE	REF NO	GRAPHIC REF	PART NUMBER	QTY	PART NAME 1 2 3 4 5 6 (PRODUCT LEVEL)	SEE PAGE
	1	1	**4E-1384**	2	BUMPER-CONICAL	
	2	1	**6C-8379**	2	LATCH AS	
	3	1	**6C-8382**	2	SPRING-LATCH	
	4	1	**115-1624**	2	SPRING AS-GAS	
C	5	1	**198-1652**	1	SUPPORT AS	
C	6	1	**198-1654**	1	SUPPORT AS	
	7	1	**191-2743**	1	GUARD AS	
	8	1	**191-2752**	1	BRACKET AS	
	9	1	**191-2753**	1	BRACKET AS	
C	10	1	**191-6243**	4	SPACER (13.5X30X20-MM THK)	
M	11	1	**7Y-0623**	2	LOCKNUT (M16X2-THD)	
	12	1	**219-0305**	1	FILM-WARNING (NO WELD, NO DRILL)	
	13	1	**227-1085**	1	FILM (FRONT GUARD)	
M	14	1	**5C-7261**	8	NUT (M8X1.25-THD)	
C	15	1	**141-6518**	2	SPACER (13.5X30X10-MM THK)	
B	16	1	**6C-4000**	8	SHIM (1-MM THK)	
M	17	1	**7X-2555**	2	BOLT (M16X2X80-MM)	
CM	18	1	**8T-4223**	4	WASHER-HARD (13.5X25.5X3-MM THK)	
	19	1	**8T-4224**	2	WASHER-HARD (8.8X16X2-MM THK)	
B	20	1	**8T-4897**	2	WASHER (10.2X35X6-MM THK)	
M	21	1	**8T-4910**	6	BOLT (M12X1.75X60-MM)	
M	22	1	**8T-6869**	2	BOLT (M8X1.25X60-MM)	
	23	1	**9X-8257**	2	WASHER (17.5X30X3.5-MM THK)	

B-USE AS REQUIRED
C-CHANGE FROM PREVIOUS TYPE
M-METRIC PART

213-4640 **GUARD GP-WINDOW** *(contd.)* **i02160528**

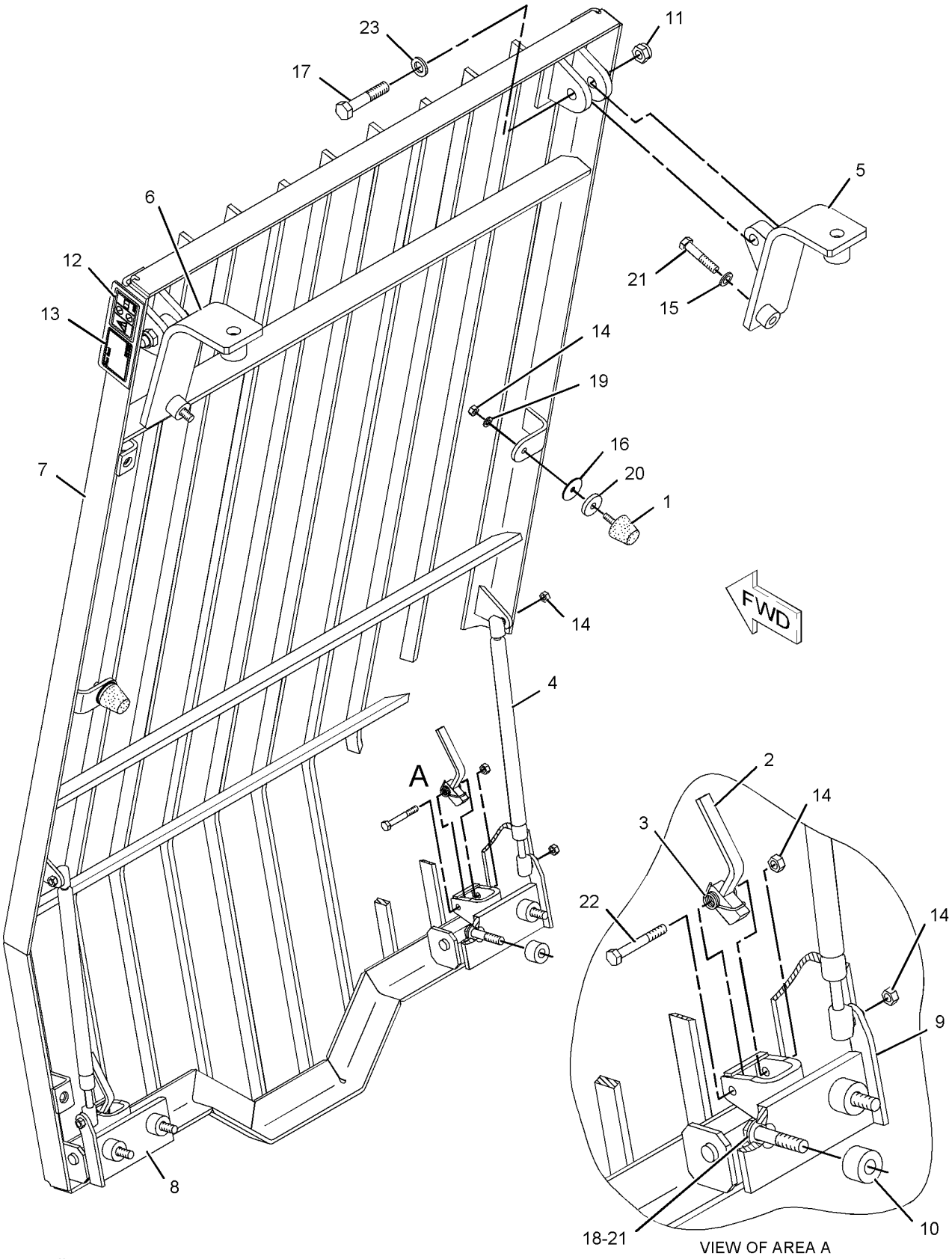

GRAPHIC #1 **<END>** g01057854

OPERATOR STATION

193-7800 HEADREST AS

S/N: BCZ1-2000

AN ATTACHMENT

SMCS-7312 **i01816009**

NOTE	REF NO	GRAPHIC REF	PART NUMBER	QTY	PART NAME 1 2 3 4 5 6 (PRODUCT LEVEL)	SEE PAGE
					(NO SERVICED PARTS)	

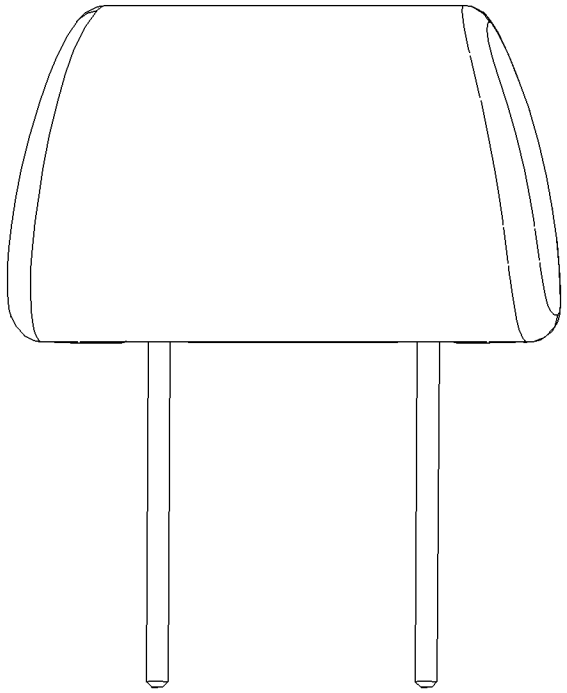

FRONT VIEW

GRAPHIC #1 **<END>** g00930292

OPERATOR STATION

186-0484 HORN GP-ELECTRIC

S/N: BCZ1-517

PART OF 186-0468 CHASSIS AR

SMCS-7402 **i01536060**

NOTE	REF NO	GRAPHIC REF	PART NUMBER	QTY	PART NAME 1 2 3 4 5 6 (PRODUCT LEVEL)	SEE PAGE
	1	1	**163-1201**	1	HORN AS (24-VOLT, LOW TONE)	
		1	**177-9853**	1	RECEPTACLE AS	
		1	**178-3586**	1	LOCK	
	2	1	**174-7875**	1	HORN AS (24-VOLT, HIGH TONE)	
		1	**177-9853**	1	RECEPTACLE AS	
		1	**178-3586**	1	LOCK	
	3	1	**8T-4121**	1	WASHER-HARD (11X21X2.5-MM THK)	
M	4	1	**8T-4136**	1	BOLT (M10X1.5X25-MM)	

M-METRIC PART

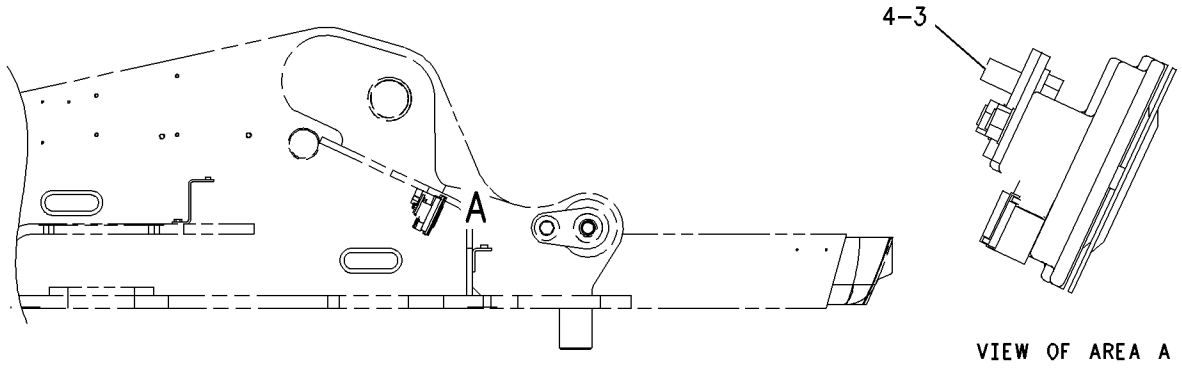

VIEW OF AREA A

RIGHT SIDE VIEW

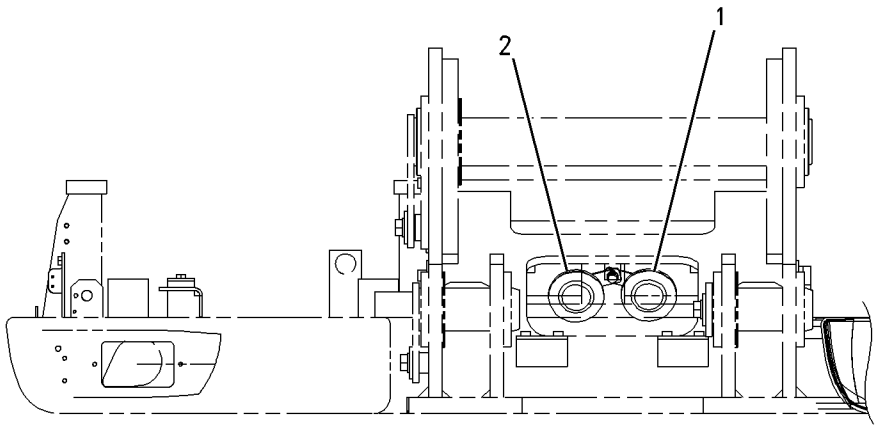

FRONT VIEW

GRAPHIC #1 **<END>** g00811459

OPERATOR STATION

186-0484 HORN GP-ELECTRIC

S/N: BCZ518-2000

PART OF 186-0468 CHASSIS AR

SMCS-7402 **i02090277**

NOTE	REF NO	GRAPHIC REF	PART NUMBER	QTY	PART NAME 1 2 3 4 5 6 (PRODUCT LEVEL)	SEE PAGE
C	1	1	*104-6692*	1	RECEPTACLE AS-CONNECTOR	
		1	**8T-8737**	2	PLUG-SEAL	
	2	1	**174-7875**	1	HORN AS (24-VOLT, HIGH TONE)	
		1	**177-9853**	1	RECEPTACLE AS	
		1	**178-3586**	1	LOCK	
	3	1	**8T-4121**	1	WASHER-HARD (11X21X2.5-MM THK)	
M	4	1	**8T-4136**	1	BOLT (M10X1.5X25-MM)	

C-CHANGE FROM PREVIOUS TYPE
M-METRIC PART

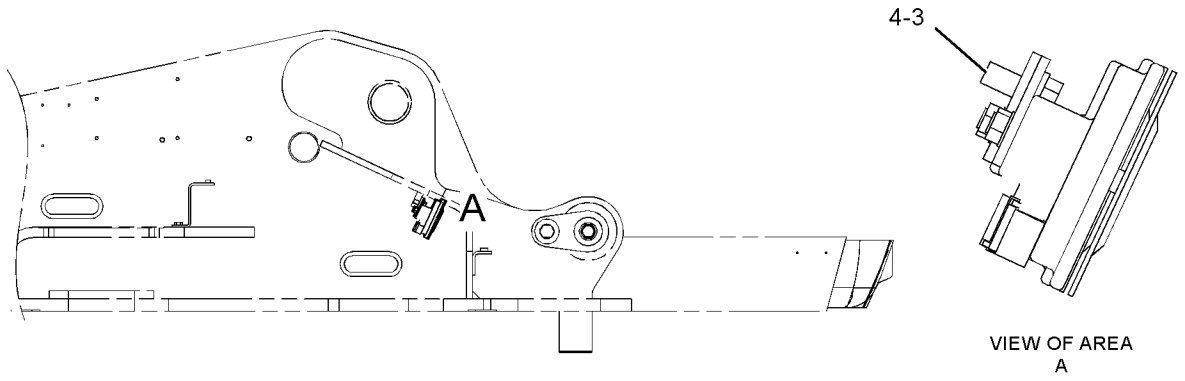

RIGHT SIDE VIEW

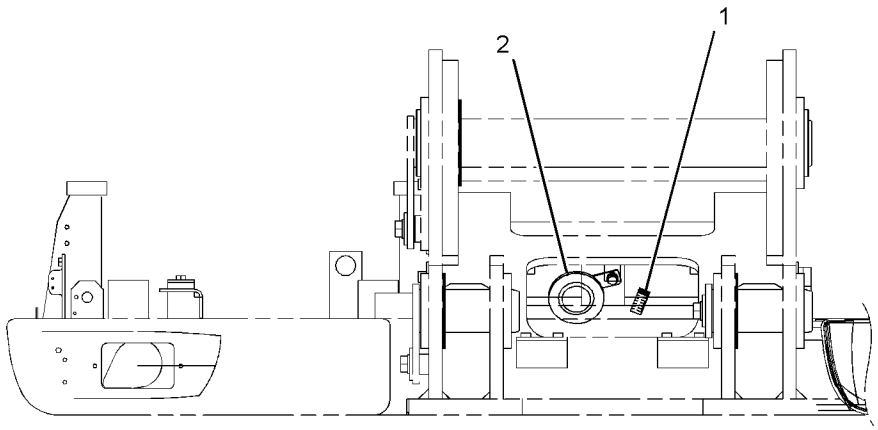

FRONT VIEW

GRAPHIC #1

<END>

g01083831

OPERATOR STATION

188-4943 INSTALLATION GP-RADIO

S/N: BCZ1-2000

AN ATTACHMENT

SMCS-7338 **i02160527**

NOTE	REF NO	GRAPHIC REF	PART NUMBER	QTY	PART NAME 1 2 3 4 5 6 (PRODUCT LEVEL)	SEE PAGE
	1	1	**5W-8937**	1	SPEAKER	
	2	1	**121-0987**	1	SOCKET (12-VOLT, 5-AMPERE)	
	3	1	**131-0327**	1	CONVERTER AS (12/24-VOLT)	
	4	1	**201-4014**	1	SWITCH AS (RADIO ON, OFF)	
		1	**111-7899**	1	GASKET	
M	5	1	**5C-2890**	2	NUT (M6X1-THD)	
M	6	1	**5C-9553**	2	BOLT (M6X1X16-MM)	
	7	1	**9X-8256**	2	WASHER (6.6X12X2-MM THK)	

M-METRIC PART

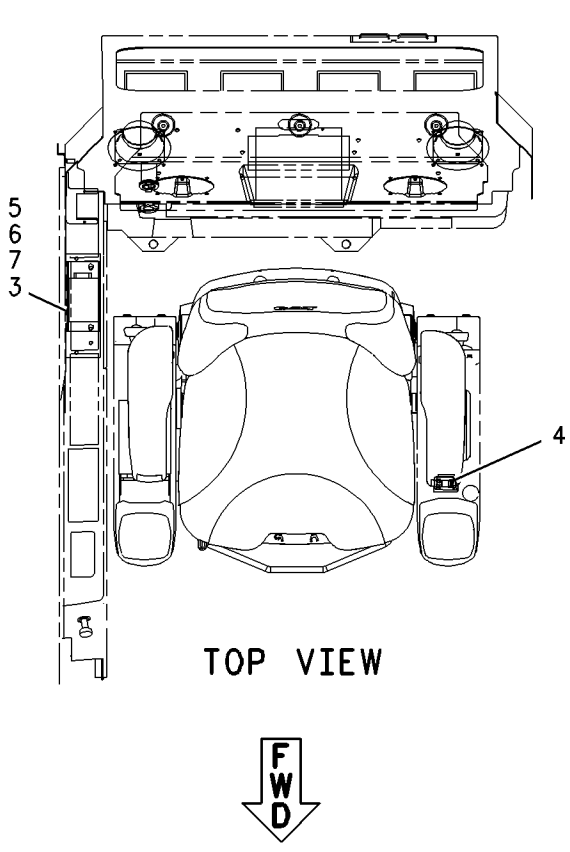

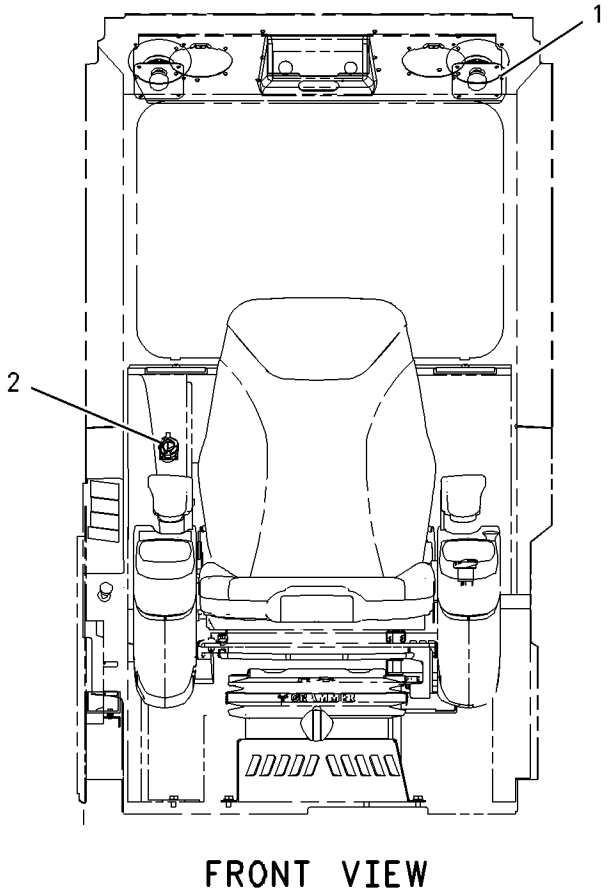

GRAPHIC #1 **<END>** g00865264

OPERATOR STATION

188-4974 LINES GP-AIR CONDITIONER–EXTENSION

S/N: BCZ1-2000
PART OF 188-4960 CAB AR-RISER
AN ATTACHMENT

SMCS-1808 **i01901607**

NOTE	REF NO	GRAPHIC REF	PART NUMBER	QTY	PART NAME 1 2 3 4 5 6 (PRODUCT LEVEL)	SEE PAGE
	1	1	**121-4342**	2	SEAL-O-RING	
	2	1	**121-4345**	2	SEAL-O-RING	
	3	1	**134-5202**	1	CONNECTOR	
	4	1	**165-5880**	1	CONNECTOR	
	5	1	**234-4141**	1	HOSE AS	
	6	1	**234-4142**	1	HOSE AS	
	7	1	**3E-4321**	2	CLIP	
	8	1	**8T-4121**	1	WASHER-HARD (11X21X2.5-MM THK)	
M	9	1	**8T-4191**	1	BOLT (M10X1.5X16-MM)	
B	10	1	**9X-6772**	1	STRAP-CABLE	

B-USE AS REQUIRED
M-METRIC PART

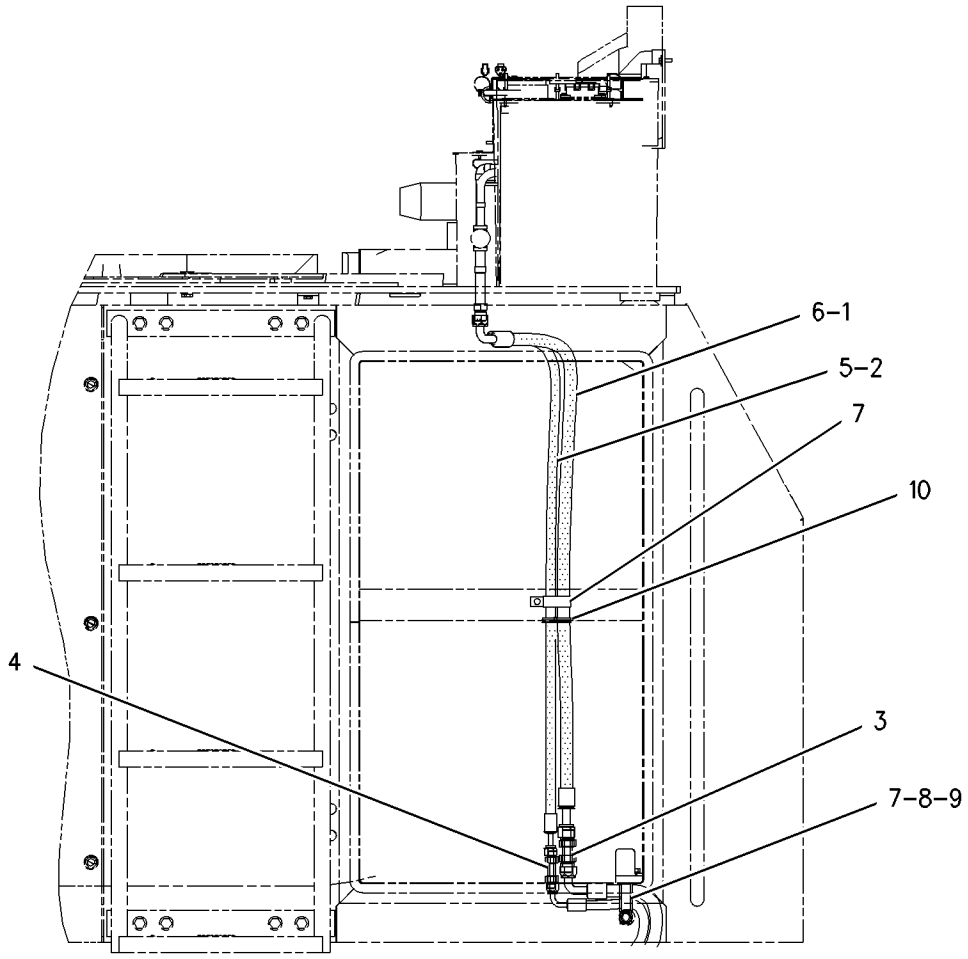

LEFT SIDE VIEW

GRAPHIC #1 **<END>** g00990583

OPERATOR STATION

198-4687 LINES GP-AIR CONDITIONER

S/N: BCZ1-2000

PART OF 198-4680 OPERATOR AR

SMCS-1808 **i01889415**

NOTE	REF NO	GRAPHIC REF	PART NUMBER	QTY	PART NAME 1 2 3 4 5 6 (PRODUCT LEVEL)	SEE PAGE
	1	1	**121-4342**	2	SEAL-O-RING	
	2	1	**121-4344**	2	SEAL-O-RING	
	3	1	**121-4345**	2	SEAL-O-RING	
	4	2	**154-3153**	2	BOSS	
	5	1	**210-1534**	1	HOSE AS	
	6	1	**210-1535**	1	HOSE AS	
	7	1	**210-1536**	1	HOSE AS	
	8	2	**096-0061**	2	STRAP-CABLE	
	9	1	**140-7598**	1	CLAMP	
	10	2	**3E-4321**	2	CLIP	
	11	2	**3S-8664**	2	CLIP	
M	12	2	**5C-7261**	1	NUT (M8X1.25-THD)	
	13	1	**6P-4467**	2	GROMMET	
	14	2	**8T-4121**	2	WASHER-HARD (11X21X2.5-MM THK)	
M	15	2	**8T-4191**	2	BOLT (M10X1.5X16-MM)	
	16	1,2	**8T-4224**	5	WASHER-HARD (8.8X16X2-MM THK)	
M	17	1,2	**8T-4908**	3	BOLT (M8X1.25X25-MM)	

M-METRIC PART

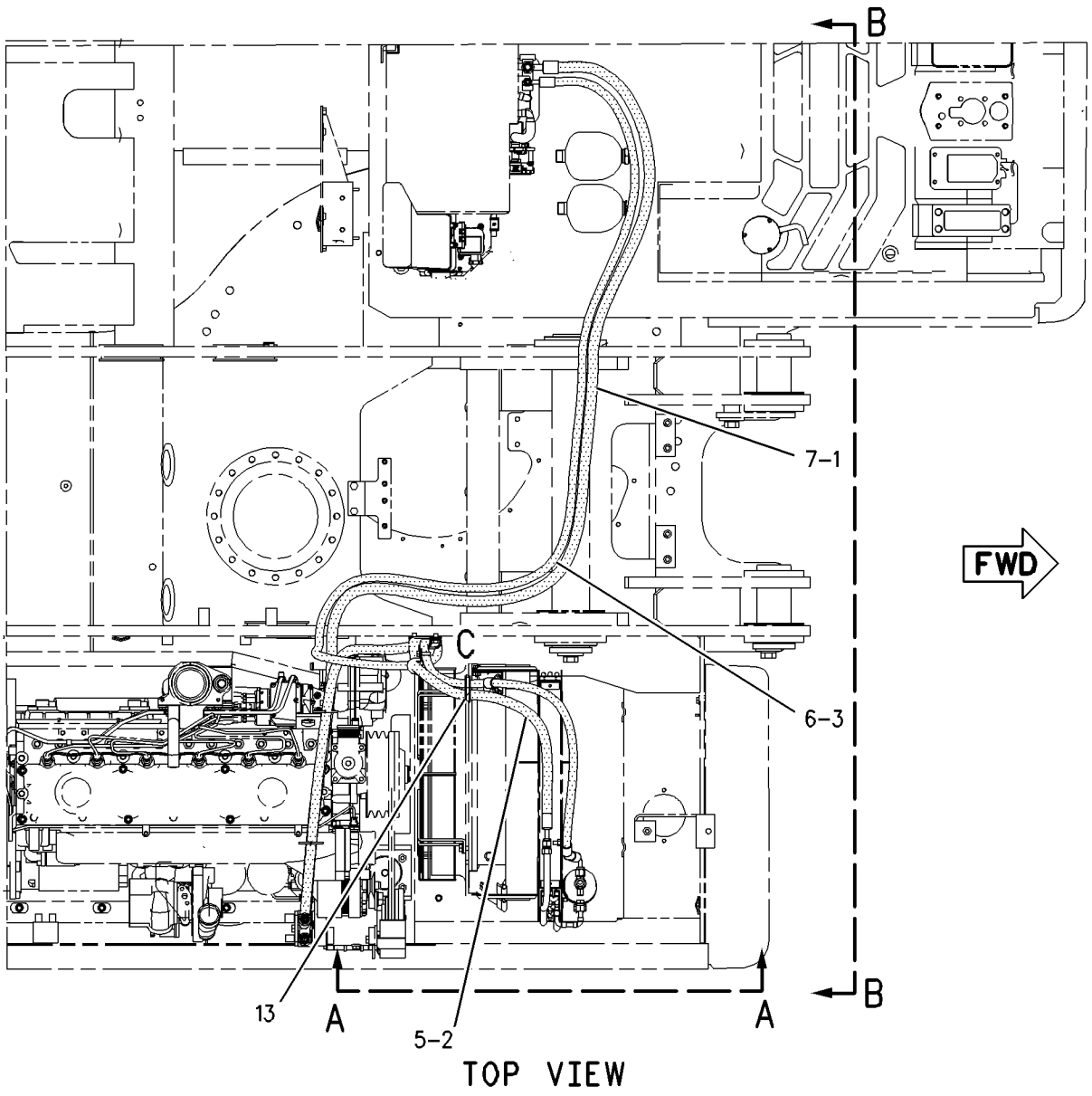

TOP VIEW

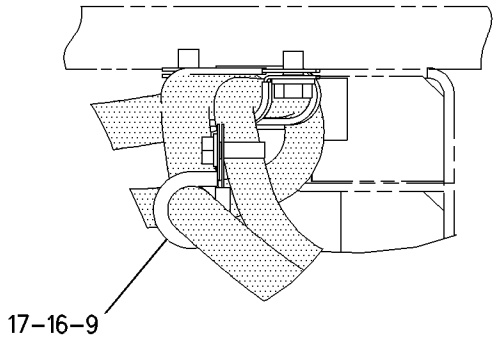

VIEW OF AREA C

REFER TO ALL ILLUSTRATIONS OF THIS GROUP FOR AUXILIARY VIEWS

GRAPHIC #1

g00984060

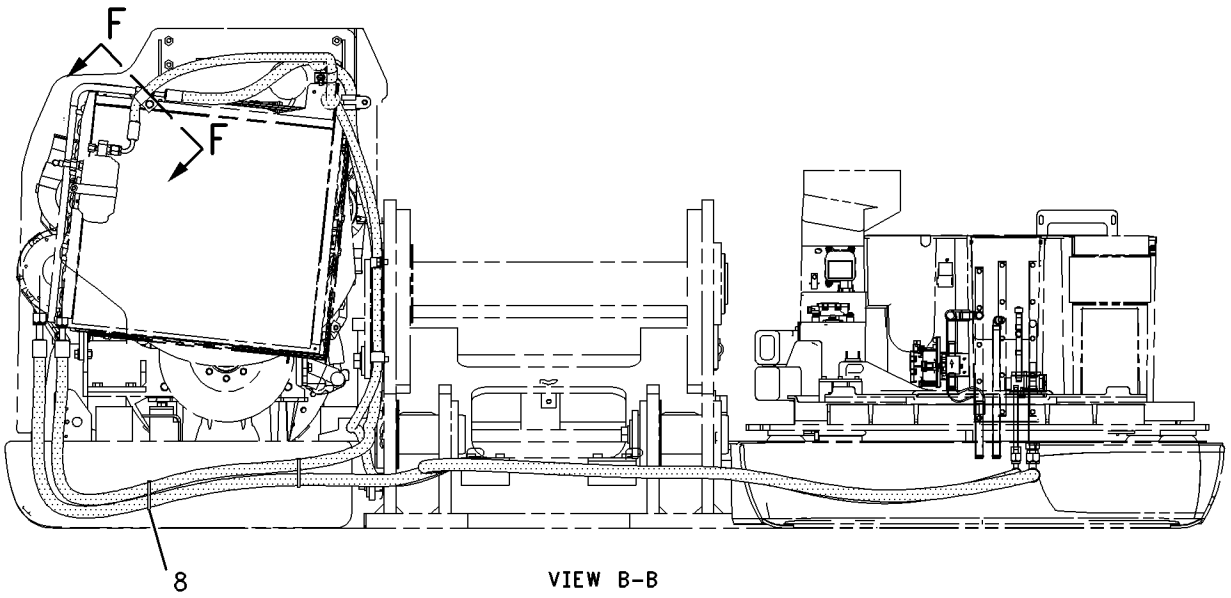

VIEW B-B

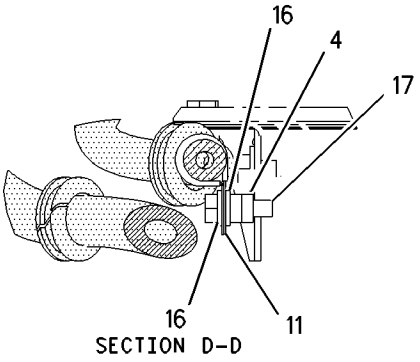

SECTION D-D

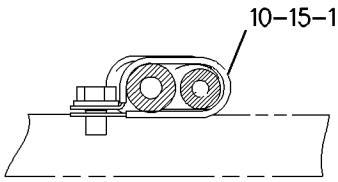

SECTION E-E

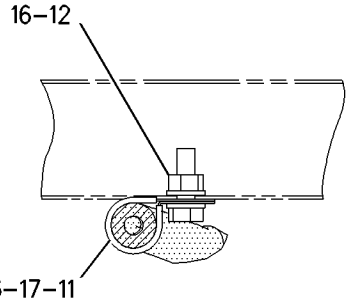

SECTION F-F

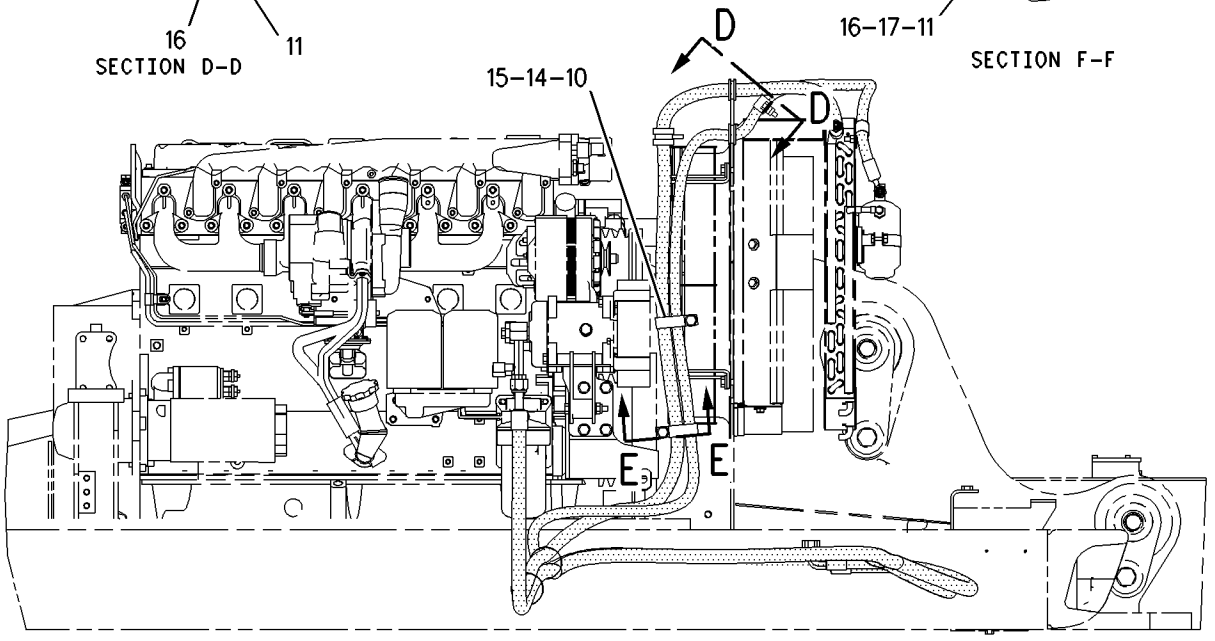

VIEW A-A

GRAPHIC #2 **<END>** g00987937

OPERATOR STATION

186-0496 LINES GP-HEATER

S/N: BCZ1-2000

PART OF 198-4680 OPERATOR AR

SMCS-1812, 7304 **i01760454**

NOTE	REF NO	GRAPHIC REF	PART NUMBER	QTY	PART NAME 1 2 3 4 5 6 (PRODUCT LEVEL)	SEE PAGE
	1	1	**3E-4321**	1	CLIP	
	2	1	**8T-0154**	4	CLAMP-HOSE	
	3	1	**8T-4121**	1	WASHER-HARD (11X21X2.5-MM THK)	
M	4	1	**8T-4191**	1	BOLT (M10X1.5X16-MM)	
E	5	1	**5P-0767**		HOSE (290CM)	
E	5A	1	**5P-0767**		HOSE (275CM)	

E-ORDER BY THE CENTIMETER
M-METRIC PART

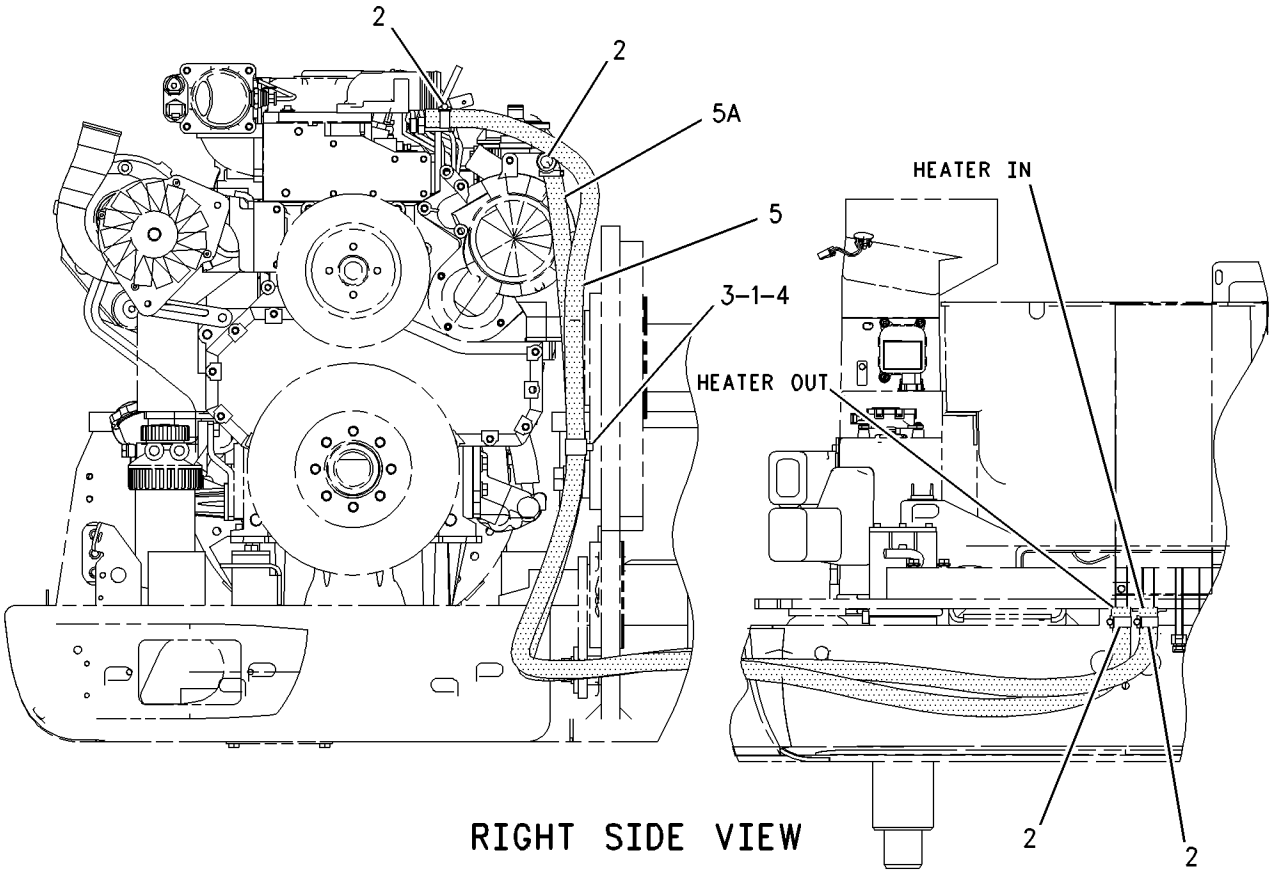

RIGHT SIDE VIEW

GRAPHIC #1 **<END>** g00901596

OPERATOR STATION

188-4965 LINES GP-HEATER–EXTENSION

S/N: BCZ1-2000
PART OF 188-4960 CAB AR-RISER
AN ATTACHMENT

SMCS-1812, 7304 **i02148347**

NOTE	REF NO	GRAPHIC REF	PART NUMBER	QTY	PART NAME 1 2 3 4 5 6 (PRODUCT LEVEL)	SEE PAGE
	1	1	**129-1881**	2	PIPE	
	2	1	**3E-4321**	1	CLIP	
	3	1	**8T-0154**	4	CLAMP-HOSE	
	4	1	**8T-4121**	1	WASHER-HARD (11X21X2.5-MM THK)	
M	5	1	**8T-4136**	1	BOLT (M10X1.5X25-MM)	
E	6	1	**5P-0767**		HOSE (100-CM)	
E	7	1	**5P-0767**		HOSE (100-CM)	

E-ORDER BY THE CENTIMETER
M-METRIC PART

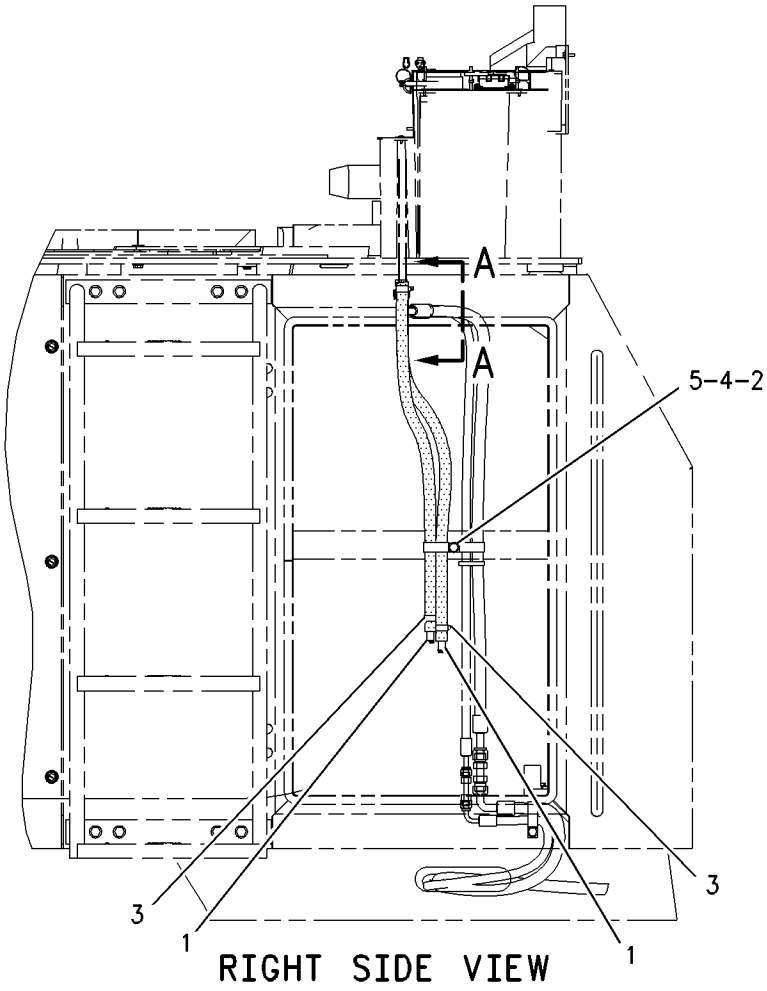

RIGHT SIDE VIEW

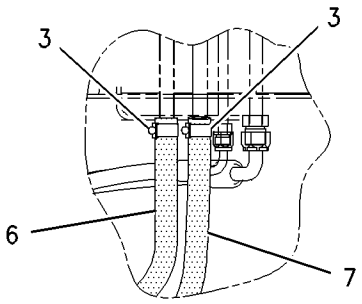

VIEW A-A

GRAPHIC #1 **<END>** g00991857

OPERATOR STATION

111-1857 LITERATURE GP

S/N: BCZ1-2000

PART OF 186-0468 CHASSIS AR

SMCS-7300 **i00747508**

NOTE	PART NUMBER	QTY	PART NAME 1 2 3 4 5 6 (PRODUCT LEVEL)	SEE PAGE
	099-3645	1	CABLE-LANYARD	
	5P-7958	2	SLEEVE-CABLE SPLICE	

<END>

OPERATOR STATION

186-0494 MIRROR GP-REAR VIEW—FRONT, RIGHT

S/N: BCZ1-2000
PART OF 185-8547 BOOM AR
AN ATTACHMENT

SMCS-7319 **i02021665**

NOTE	REF NO	GRAPHIC REF	PART NUMBER	QTY	PART NAME 1 2 3 4 5 6 (PRODUCT LEVEL)	SEE PAGE
	1	1	**126-5211**	1	SPACER	
	2	1	**170-7721**	1	MIRROR AS	
	3	1	**201-3977**	1	ADAPTER	
	4	1	**201-3976**	1	ARM-MIRROR	
	5	1	**200-6797**	1	MIRROR AS	
	6	1	**212-6831**	1	CLAMP	
	7	1	**212-6833**	1	TUBE	
	8	1	**120-9724**	1	STRIP	
M	9	1	**131-3540**	1	LOCKNUT (M8X1.25-THD)	
M	10	1	**131-8203**	4	SCREW-FLAT HEAD (M8X1.25X30-MM)	
M	11	1	**5C-7261**	4	NUT (M8X1.25-THD)	
	12	1	**8T-4224**	6	WASHER-HARD (8.8X16X2-MM THK)	

M-METRIC PART

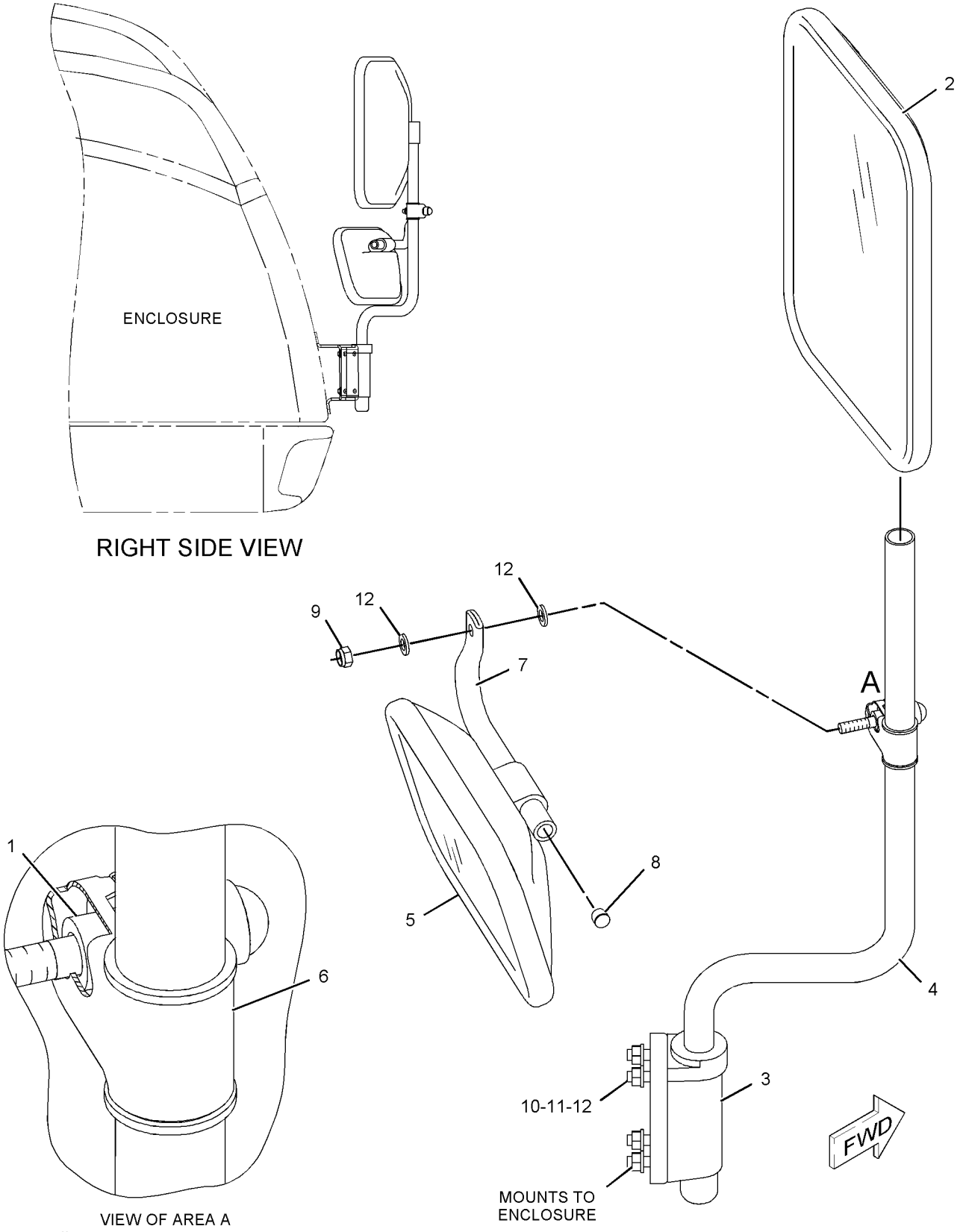

GRAPHIC #1

<END>

g01054527

OPERATOR STATION

196-9732 MIRROR GP-REAR VIEW—TOP, RH

S/N: BCZ1-2000
PART OF 185-8540 BOOM AR
AN ATTACHMENT

SMCS-7319 **i02136520**

NOTE	REF NO	GRAPHIC REF	PART NUMBER	QTY	PART NAME 1 2 3 4 5 6 (PRODUCT LEVEL)	SEE PAGE
	1	1	**126-5211**	1	SPACER	
	2	1	**170-7721**	1	MIRROR AS	
	3	1	**196-9729**	1	BRACKET	
	4	1	**200-6797**	1	MIRROR AS	
	5	1	**201-3976**	1	ARM-MIRROR	
	6	1	**201-3977**	1	ADAPTER	
	7	1	**212-6831**	1	CLAMP	
	8	1	**212-6833**	1	TUBE	
	9	1	**120-9794**	1	PLUG	
M	10	1	**131-8203**	4	SCREW-FLAT HEAD (M8X1.25X30-MM)	
M	11	1	**131-3540**	1	LOCKNUT (M8X1.25-THD)	
M	12	1	**5C-7261**	8	NUT (M8X1.25-THD)	
	13	1	**5P-4116**	4	WASHER-HARD (8.8X20.5X2-MM THK)	
M	14	1	**8T-4189**	4	BOLT (M8X1.25X20-MM)	
	15	1	**8T-4224**	10	WASHER-HARD (8.8X16X2-MM THK)	

M-METRIC PART

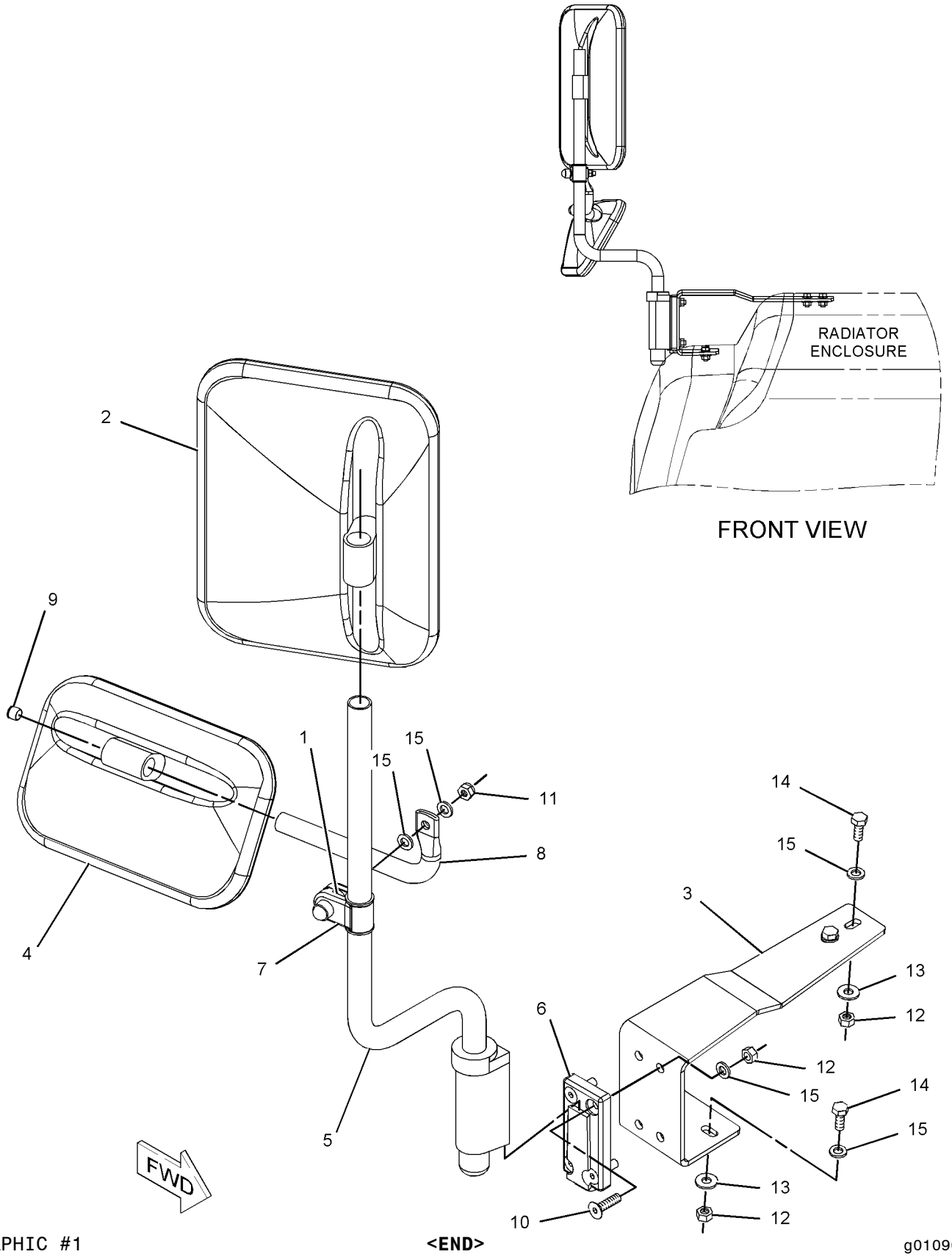

GRAPHIC #1 **<END>** g01090047

OPERATOR STATION

187-3770 MONITOR & MTG GP-OPERATOR

S/N: BCZ1-2000

PART OF 187-3800, 188-4959 CAB GP

ALSO AN ATTACHMENT

SMCS-7490 **i01889159**

NOTE	REF NO	GRAPHIC REF	PART NUMBER	QTY	PART NAME 1 2 3 4 5 6 (PRODUCT LEVEL)	SEE PAGE
Y	1	1	*205-3967*	1	ELECTRONICS GP-MONITOR	147
	2	1	**223-0845**	1	BRACKET AS	
	3	1	**216-7352**	2	SCREW-TRUSS HEAD	

Y-SEPARATE ILLUSTRATION

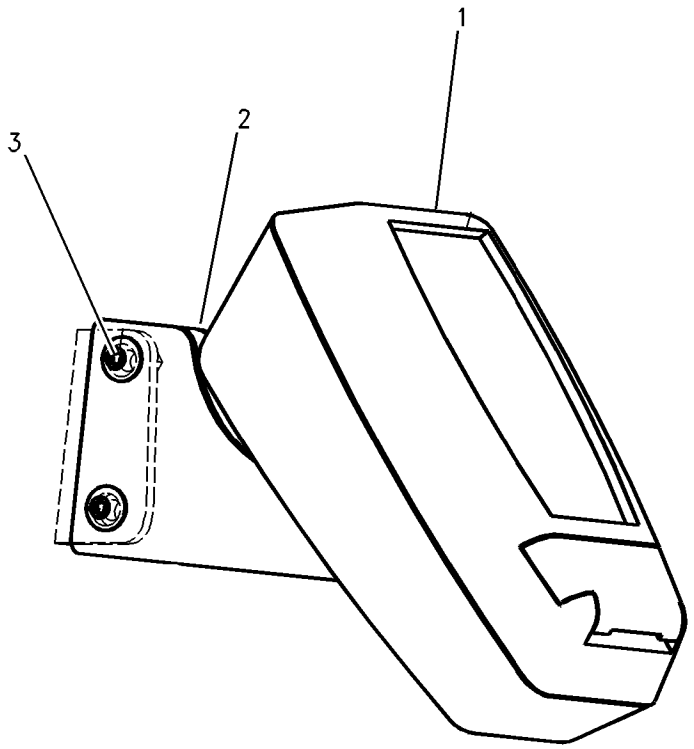

GRAPHIC #1 **<END>** g00981042

OPERATOR STATION

198-4680 OPERATOR AR

S/N: BCZ1-2000

PART OF 186-0468 CHASSIS AR

SMCS-7301 **i01742655**

NOTE	PART NUMBER	QTY	PART NAME 1 2 3 4 5 6 (PRODUCT LEVEL)	SEE PAGE
Y	*198-4685*	1	AIR CONDITIONER & MOUNTING GP	822
Y	*187-3800*	1	CAB GP	829
Y	*187-3797*	1	CONSOLE GP-OPERATOR	852
Y	*187-3794*	1	CONTROL GP-BRAKE	426
Y	**112-5704**	1	CONTROL GP-HYDRAULIC PEDAL	431
Y	*187-3793*	1	CONTROL GP-PILOT OPERATED HYD	437
Y	*198-4687*	1	LINES GP-AIR CONDITIONER	878
Y	*186-0496*	1	LINES GP-HEATER	881
Y	*187-3801*	1	MOUNTING GP-CAB	394
Y	*187-3780*	1	PLATFORM GP-OPERATOR	896
Y	*187-3785*	1	SEAT GP	906
Y	*187-3796*	1	STEERING COLUMN GP	642
Y	*187-3791*	1	SUPPORT GP-SEAT	910
Y	*190-0290*	1	WIPER GP-WINDOW	929
Y	*187-3798*	1	WIRING GP-CONSOLE	202

Y-SEPARATE ILLUSTRATION

<END>

OPERATOR STATION

112-5699 PEDAL GP–TRAVEL

S/N: BCZ1-2000
PART OF 188-4972 CONTROL GP-HYDRAULIC PEDAL
AN ATTACHMENT

SMCS-5059 **i02166579**

NOTE	REF NO	GRAPHIC REF	PART NUMBER	QTY	PART NAME 1 2 3 4 5 6 (PRODUCT LEVEL)	SEE PAGE
LZ	1	1		1	PLATE	
	2	1	**117-8699**	1	WASHER (12.1X24X0.95-MM THK)	
M	3	1	**107-2723**	1	BOLT-SOCKET HEAD (M12X1.75X20-MM)	
	4	1	**201-0533**	1	GROMMET (INCLUDES TWO) (PEDAL)	
	5	1	**223-1445**	1	PEDAL	
HZ	6	1		1	AXLE	
M	7	1	**116-1119**	1	SETSCREW	
M	8	1	**5P-7970**	2	NUT (M8X1.25-THD)	
	9	1	**201-0901**	1	SPRING (INCLUDES TWO)	
	10	1	**126-8059**	1	CAP-PLASTIC	
	11	1	**201-1376**	2	KIT-REGULATOR (PEDAL)	
	12	1	**201-1373**	1	KIT-PLUNGER (PEDAL)	
					(INCLUDES BELLOW, PLUNGER, WASHER, PLATER, RING-RETAINING & GUIDE)	
JZ	13	1		1	GROMMET	
J	14	1	**116-1132**	1	BOOT	
JM	15	1	**5C-2890**	2	NUT (M6X1-THD)	
JM	16	1	**5W-1341**	1	BOLT-SOCKET HEAD (M8X1.25X16-MM)	
J	17	1	**117-8683**	1	PIN-SPRING	
	18	1	**129-4508**	1	COIL AS	
JM	19	1	**7X-2619**	2	BOLT (M6X1X20-MM)	
JM	20	1	**8C-6364**	2	BOLT-SOCKET HEAD (M5X0.8X14-MM)	
LZ	21	1		2	BUSHING	
HZ	22	1		2	SCREW	
JZ	23	1		1	CAP	
JZ	24	1		1	SPRING	
JZ	25	1		1	PLUNGER	
JZ	26	1		1	SUPPORT	
JZ	27	1		1	PLATE	
JZ	28	1		1	BUSHING	
JZ	29	1		1	BUSHING	
JZ	30	1		1	PLATE	
					AVAILABLE REPAIR KIT(S):	
J			**201-1395**	1	KIT-PEDAL	
H			**201-0502**	1	KIT-PEDAL	
L			**201-1357**	1	KIT-PLATE (PEDAL)	

H-KIT MARKED H SERVICES PARTS MARKED H
J-KIT MARKED J SERVICES PARTS MARKED J
L-KIT MARKED L SERVICES PARTS MARKED L
M-METRIC PART
Z-NOT SERVICED SEPARATELY

112-5699 PEDAL GP *(contd.)*

i02166579

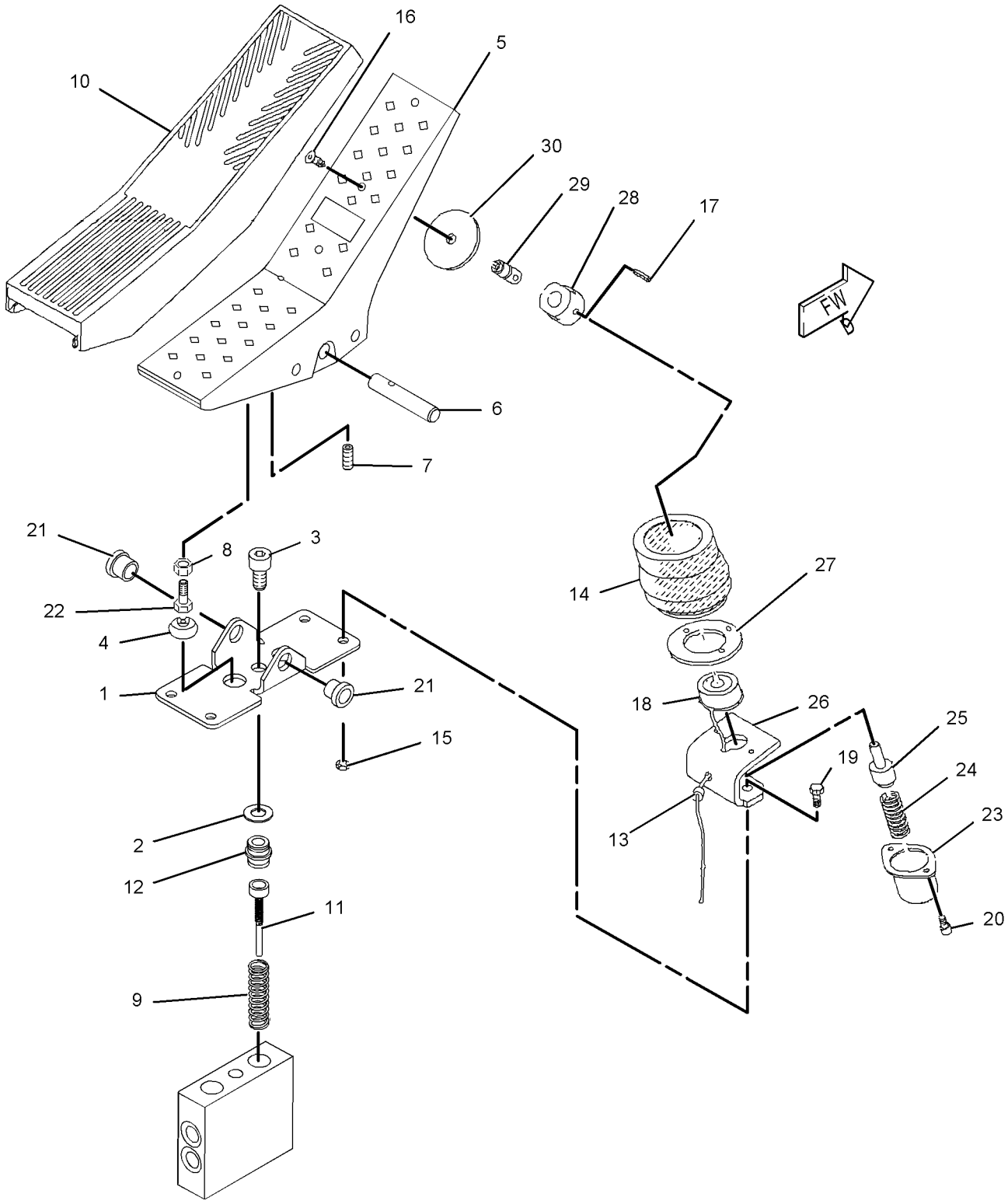

GRAPHIC #1

<END>

g01098422

OPERATOR STATION

160-1501 PEDAL GP-BRAKE

S/N: BCZ1-2000

PART OF 187-3794 CONTROL GP-BRAKE

SMCS-4269 **i01928385**

NOTE	REF NO	GRAPHIC REF	PART NUMBER	QTY	PART NAME 1 2 3 4 5 6 (PRODUCT LEVEL)	SEE PAGE
	1	1	**180-6519**	1	BRACKET	
	2	1	**227-8179**	1	PEDAL	
	3	1	**8U-3213**	1	BRACKET	
	4	1	**180-6520**	1	PLATE	
Y	5	1	**8U-3214**	1	PIN GP-PEDAL	894
Y	6	1	**8U-5805**	1	PIN GP-PEDAL	895
	7	1	**8U-5806**	1	DOWEL	
	8	1	**180-6523**	1	PIN-DOWEL	
	9	1	**180-6524**	1	LEVER	
	10	1	**8U-5807**	1	SPRING	
M	11	1	**6V-2317**	2	BOLT (M8X1.25X30MM)	
M	12	1	**6V-5217**	1	BOLT (M8X1.25X20MM)	
	13	1	**5W-1259**	2	NUT (M8X1.25 THD)	
M	14	1	**5W-1318**	1	NUT (M8X1.25 THD)	
	15	1	**8U-3216**	1	LOCKWASHER	
	16	1	**116-9945**	1	RETAINER-SPRING	
	17	1	**095-0916**	1	RING-RETAINING	
	18	1	**5W-9431**	1	RING-RETAINING	
	19	1	**8U-5809**	1	RING-WIPER	
	20	1	**180-6526**	1	SPRING	
	21	1	**116-9946**	1	PLATE	

M-METRIC PART
Y-SEPARATE ILLUSTRATION

160-1501 PEDAL GP-BRAKE *(contd.)* i01928385

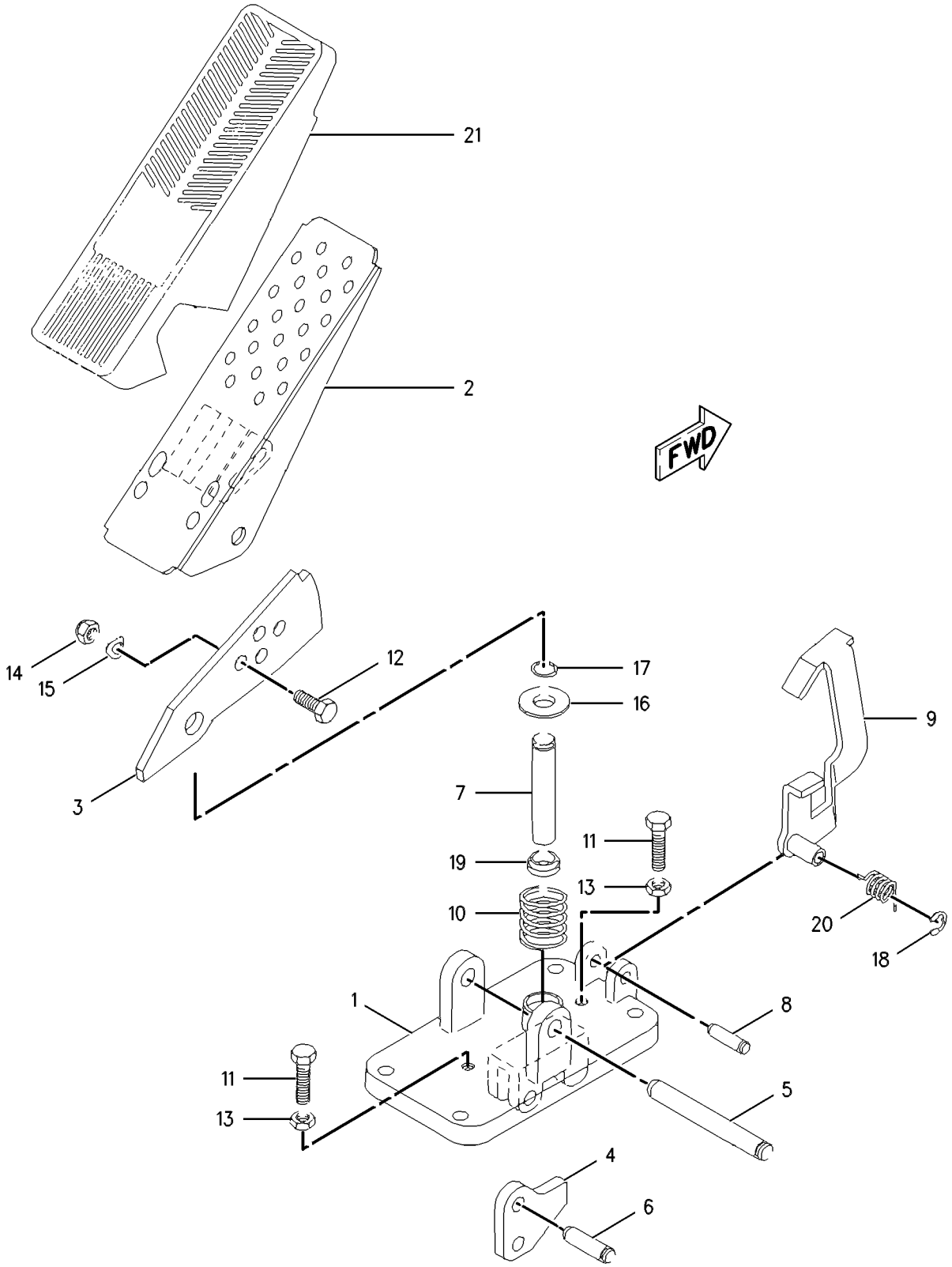

GRAPHIC #1 **<END>** g00641241

OPERATOR STATION

8U-3214 PIN GP-PEDAL

S/N: BCZ1-2000

PART OF 160-1501 PEDAL GP-BRAKE

SMCS-4269 **i00617682**

NOTE	REF NO	GRAPHIC REF	PART NUMBER	QTY	PART NAME 1 2 3 4 5 6 (PRODUCT LEVEL)	SEE PAGE
	1	1	**5C-5306**	2	RING-RETAINING	

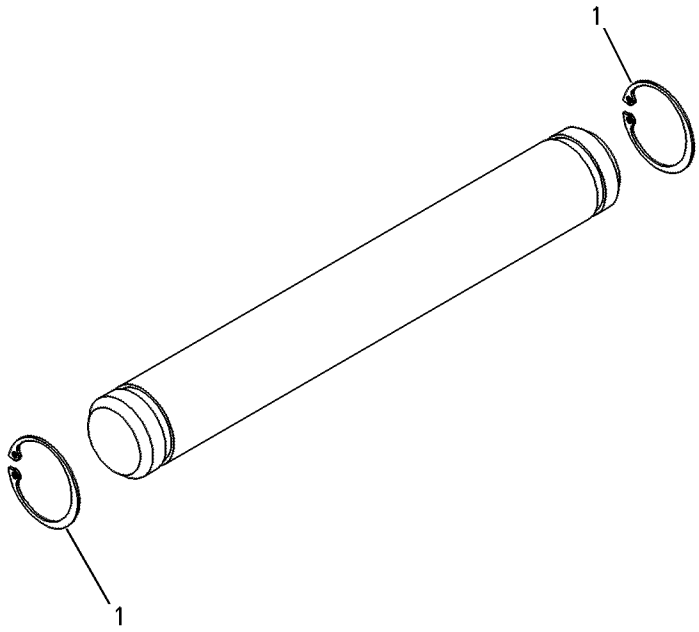

GRAPHIC #1 **<END>** g00245035

OPERATOR STATION

8U-5805 PIN GP-PEDAL

S/N: BCZ1-2000

PART OF 160-1501 PEDAL GP-BRAKE

SMCS-4269 **i00617746**

NOTE	REF NO	GRAPHIC REF	PART NUMBER	QTY	PART NAME 1 2 3 4 5 6 (PRODUCT LEVEL)	SEE PAGE
	1	1	**096-2323**	2	RING-RETAINING	

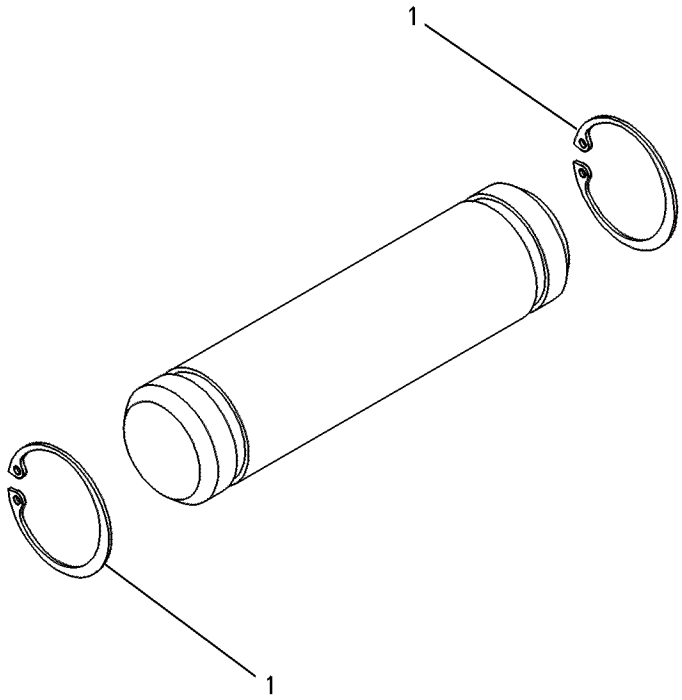

GRAPHIC #1 **<END>** g00245036

OPERATOR STATION

187-3780 PLATFORM GP-OPERATOR

S/N: BCZ1-517

PART OF 198-4680 OPERATOR AR

SMCS-7253 **i01802388**

NOTE	REF NO	GRAPHIC REF	PART NUMBER	QTY	PART NAME 1 2 3 4 5 6 (PRODUCT LEVEL)	SEE PAGE
	1	1	**8U-4683**	1	COVER	
	2	1	**9X-7449**	2	GROMMET	
	3	1	**114-8690**	1	RING	
	4	1	**122-1228**	1	PIN AS	
	5	1	**164-0616**	1	GROMMET	
	6	1	**187-3764**	4	MOUNT AS	
	7	1	**187-3765**	1	FLOOR MAT	
	8	1	**198-9124**	2	PLATE	
	9	1	**201-8763**	1	PLATFORM AS	
M	10	1	**099-2374**	3	BOLT-SOCKET HEAD (M5X0.8X12-MM)	
	11	1	**123-8642**	4	WASHER (17X75X6-MM THK)	
	12	1	**3P-5414**	1	GROMMET	
M	13	1	**5W-1341**	8	BOLT-SOCKET HEAD (M8X1.25X16-MM)	
	14	1	**8T-4121**	16	WASHER-HARD (11X21X2.5-MM THK)	
M	15	1	**8T-4132**	4	NUT (M16X2-THD)	
M	16	1	**8T-4173**	4	BOLT (M16X2X110-MM)	
M	17	1	**8T-4195**	16	BOLT (M10X1.5X30-MM)	
M	18	1	**8T-4200**	4	BOLT (M8X1.25X16-MM)	
	19	1	**8T-4224**	4	WASHER-HARD (8.8X16X2-MM THK)	

M-METRIC PART

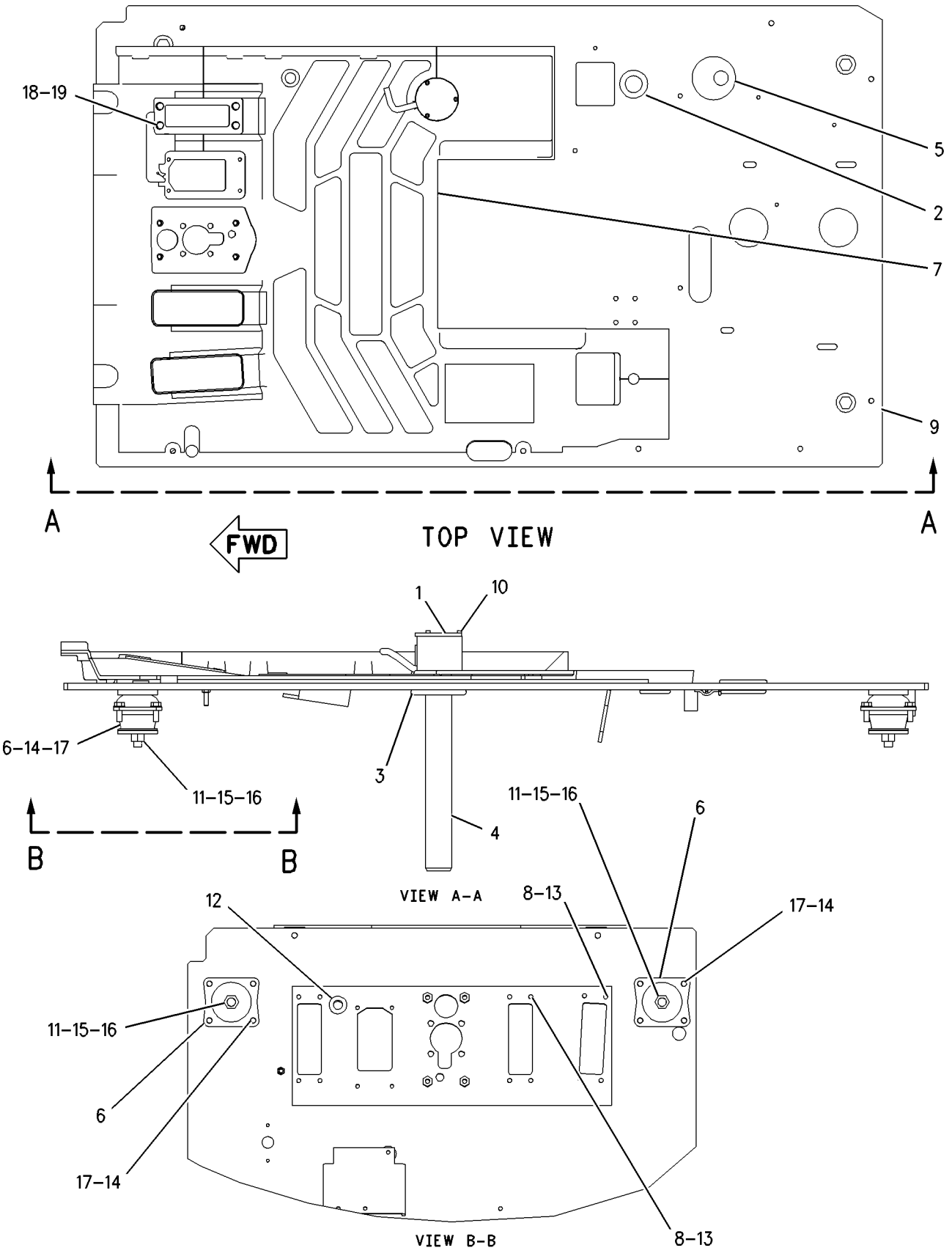

GRAPHIC #1

<END>

g00922553

OPERATOR STATION

187-3780 PLATFORM GP-OPERATOR

S/N: BCZ518-2000

PART OF 198-4680 OPERATOR AR

SMCS-7253 **i02148341**

NOTE	REF NO	GRAPHIC REF	PART NUMBER	QTY	PART NAME 1 2 3 4 5 6 (PRODUCT LEVEL)	SEE PAGE
	1	1	**8U-4683**	1	COVER	
	2	1	**9X-7449**	2	GROMMET	
	3	1	**8T-4224**	4	WASHER-HARD (8.8X16X2-MM THK)	
	4	1	**227-6008**	1	PIN AS	
	5	1	**164-0616**	1	GROMMET	
	6	1	**187-3764**	4	MOUNT AS	
	7	1	**187-3765**	1	FLOOR MAT	
	8	1	**198-9124**	2	PLATE	
	9	1	**201-8763**	1	PLATFORM AS	
M	10	1	**099-2374**	3	BOLT-SOCKET HEAD (M5X0.8X12-MM)	
	11	1	**123-8642**	4	WASHER (17X75X6-MM THK)	
	12	1	**3P-5414**	1	GROMMET	
M	13	1	**5W-1341**	8	BOLT-SOCKET HEAD (M8X1.25X16-MM)	
	14	1	**8T-4121**	16	WASHER-HARD (11X21X2.5-MM THK)	
M	15	1	**8T-4132**	4	NUT (M16X2-THD)	
M	16	1	**8T-4173**	4	BOLT (M16X2X110-MM)	
M	17	1	**8T-4195**	16	BOLT (M10X1.5X30-MM)	
M	18	1	**8T-4189**	4	BOLT (M8X1.25X20-MM)	
	19	1	**196-9060**	1	PLATE	

M-METRIC PART

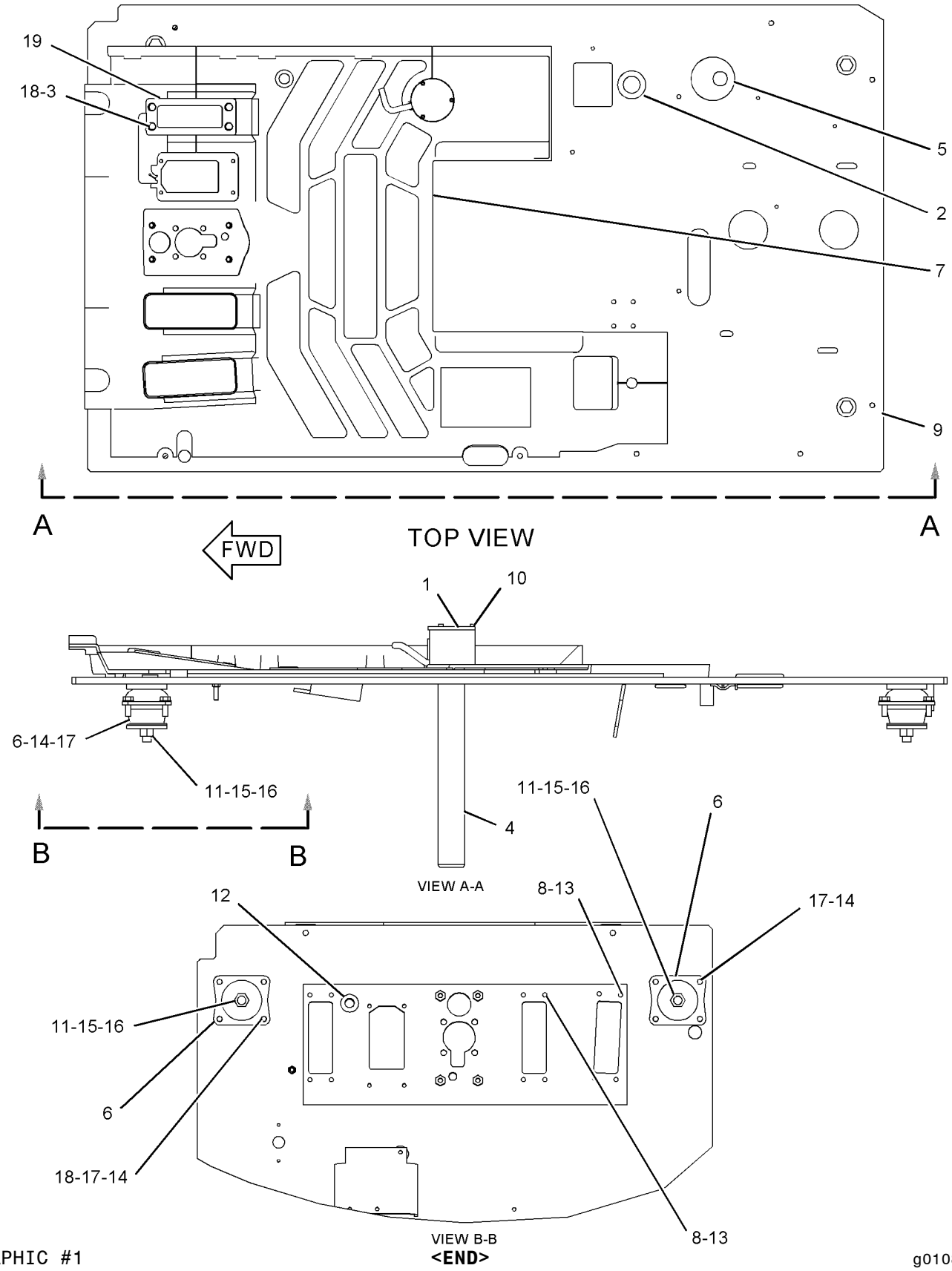

GRAPHIC #1

<END>

g01089733

OPERATOR STATION

196-7485 RADIO GP

S/N: BCZ1-2000
24 VOLT DIRECT CURRENT
AN ATTACHMENT

SMCS-7338 **i02160501**

NOTE	REF NO	GRAPHIC REF	PART NUMBER	QTY	PART NAME 1 2 3 4 5 6 (PRODUCT LEVEL)	SEE PAGE
	1	1	**5W-1987**	4	TERMINAL	
	2	1	**5W-4957**	1	HOUSING	
	3	1	**163-6708**	1	RADIO GP (AM/FM)	
	4	1	**232-1474**	1	HARNESS AS-RADIO	
		1	**102-8806**	1	KIT-RECEPTACLE (8-PIN)	
					(INCLUDES RECEPTACLE AS & WEDGE)	
		1	**155-2265**	1	KIT-CONNECTING PLUG (8-PIN)	
					(INCLUDES PLUG AS, WEDGE & INTERFACE SEAL)	
BF		1	**096-0061**	4	STRAP-CABLE	

B-USE AS REQUIRED
F-NOT SHOWN

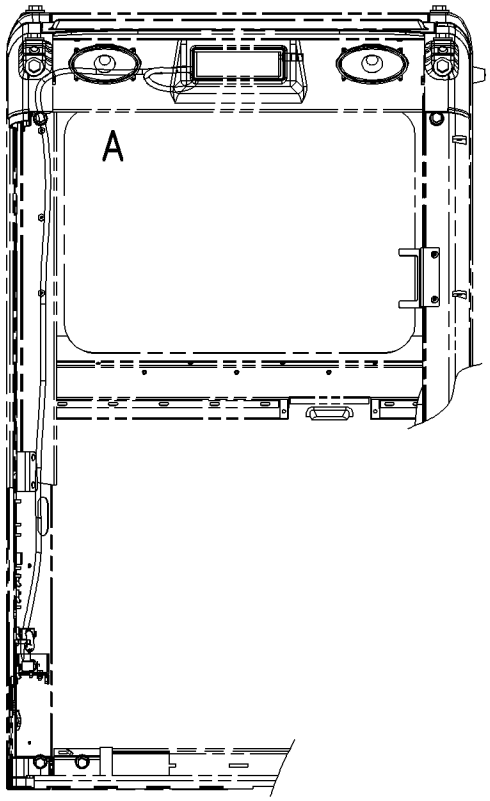

FRONT VIEW

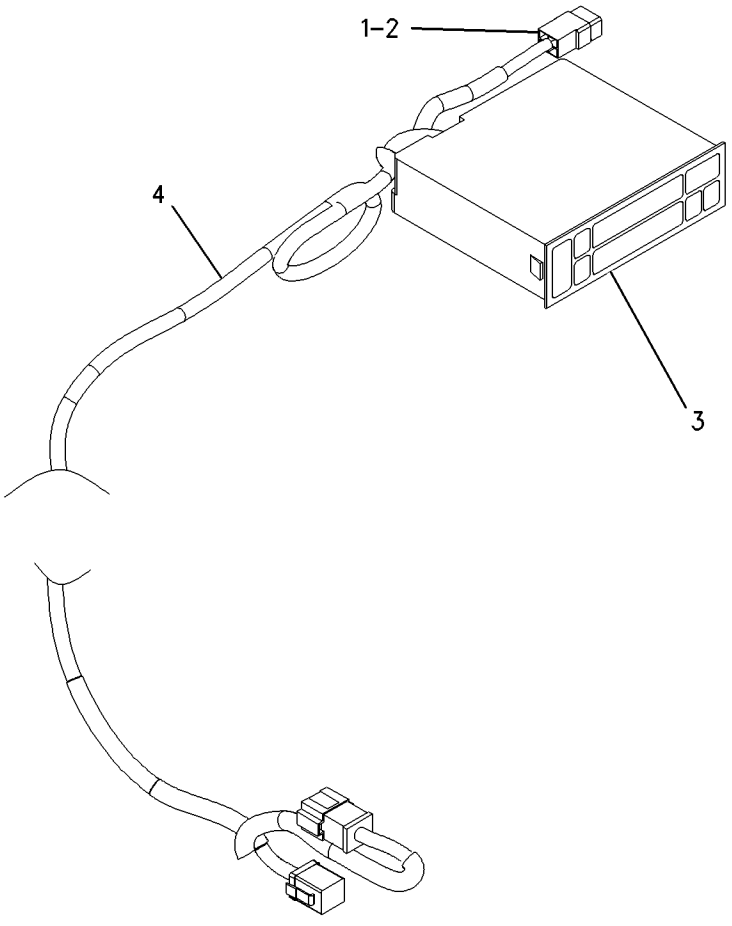

VIEW OF AREA A

GRAPHIC #1 **<END>** g00916544

OPERATOR STATION

184-7621 SCREEN GP-SUN

S/N: BCZ1-2000
PART OF 187-3800, 188-4959 CAB GP
ALSO AN ATTACHMENT

SMCS-7165 **i01900217**

NOTE	REF NO	GRAPHIC REF	PART NUMBER	QTY	PART NAME 1 2 3 4 5 6 (PRODUCT LEVEL)	SEE PAGE
	1	1	**229-4818**	1	SHADE AS-SUN	
	2	1	**6C-9119**	4	SCREW (M5X0.8X12MM)	
	3	1	**229-3756**	1	SUPPORT	
	4	1	**229-3757**	1	SUPPORT	

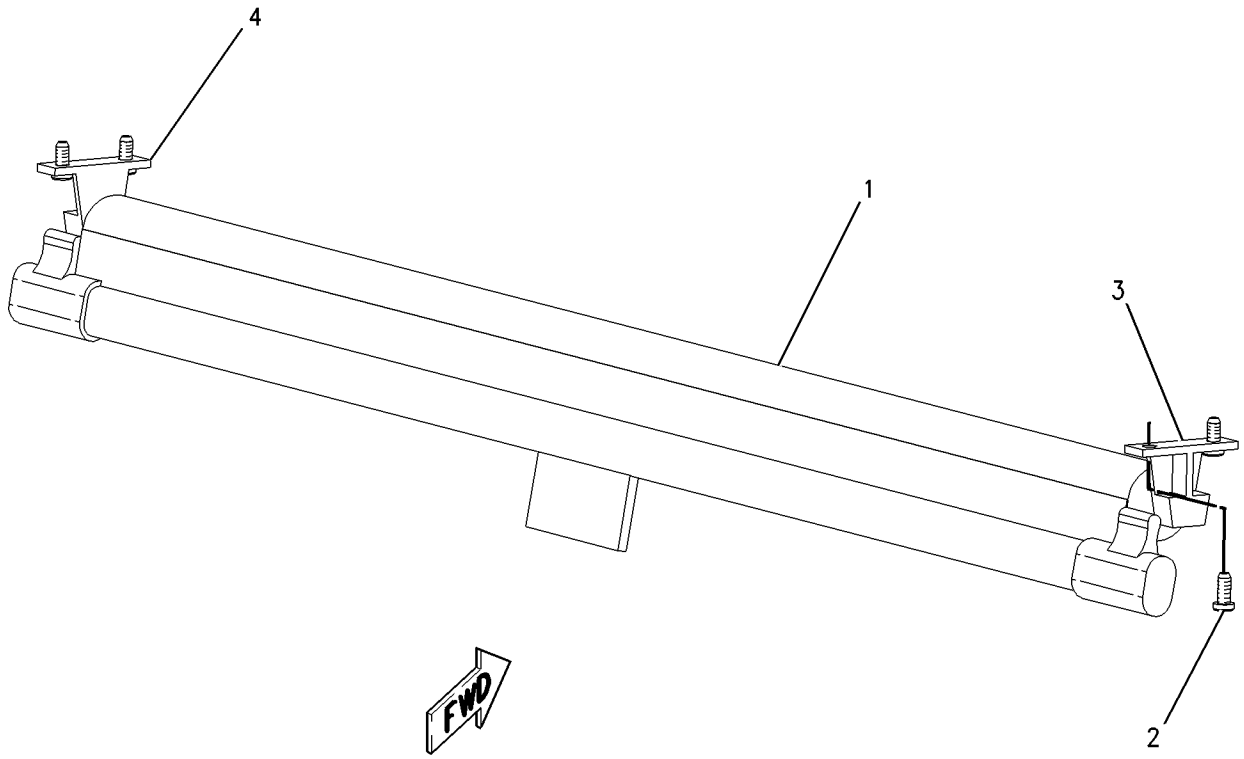

GRAPHIC #1 **<END>** g00943485

OPERATOR STATION

8Y-4030 SEAT BELT GP

S/N: BCZ1-2000
PART OF 205-6214 SEAT BELT GP
AN ATTACHMENT

SMCS-7327 **i02166577**

NOTE	REF NO	GRAPHIC REF	PART NUMBER	QTY	PART NAME 1 2 3 4 5 6 (PRODUCT LEVEL)	SEE PAGE
					(NO SERVICED PARTS)	

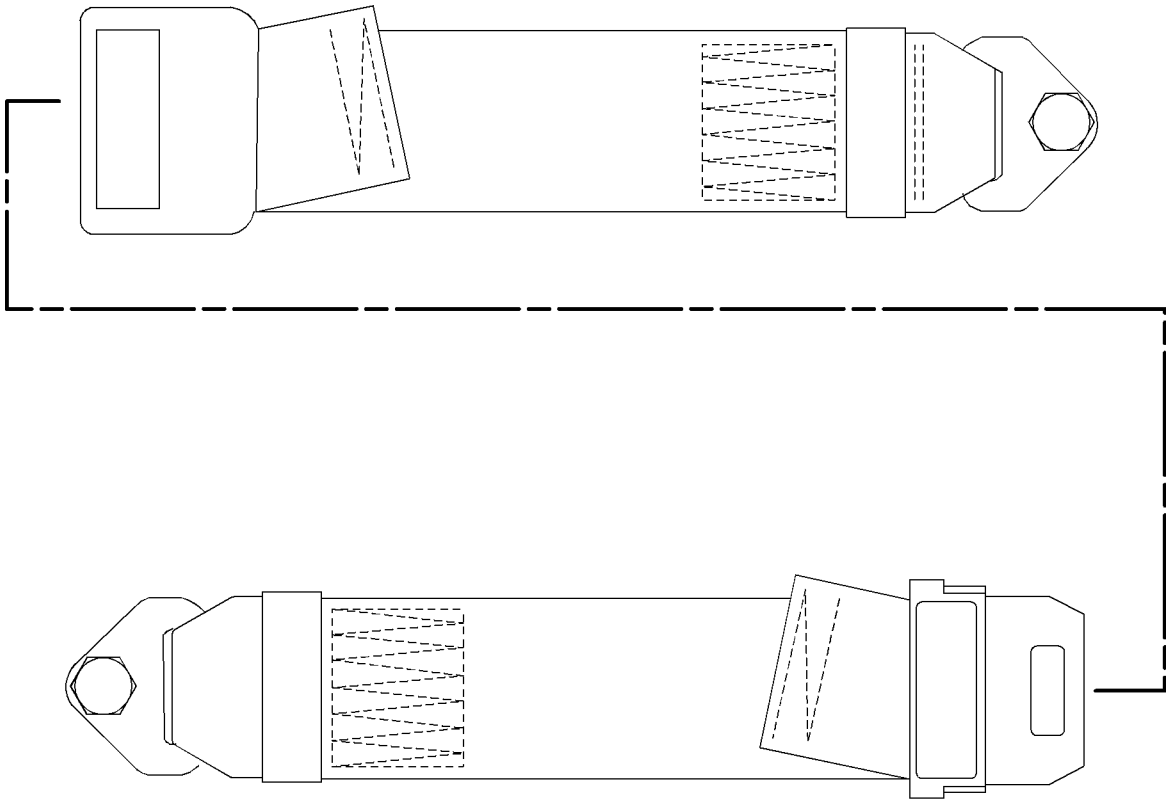

GRAPHIC #1 **<END>** g01098384

OPERATOR STATION

205-6214 SEAT BELT GP

S/N: BCZ1-2000

AN ATTACHMENT

SMCS-7327 **i01584998**

NOTE	PART NUMBER	QTY	PART NAME 1 2 3 4 5 6 (PRODUCT LEVEL)	SEE PAGE
Y	**8Y-4030**	1	SEAT BELT GP	902

Y-SEPARATE ILLUSTRATION

<END>

OPERATOR STATION

187-3781 SEAT GP

S/N: BCZ1-2000

PART OF 187-3785 SEAT GP

SMCS-7312 **i02160591**

NOTE	REF NO	GRAPHIC REF	PART NUMBER	QTY	PART NAME 1 2 3 4 5 6 (PRODUCT LEVEL)	SEE PAGE
Y	1	1	**202-7211**	1	SUSPENSION GP-SEAT	911
	2	1	**202-7210**	1	CUSHION AS-BACKREST	
	3	1	**202-7212**	1	CUSHION AS-SEAT	
	4	1	**208-0230**	1	BEARING	
	5	1	**208-0231**	1	COVER	
	6	1	**208-0232**	1	HANDLE	
	7	1	**208-0233**	1	COVER	
	8	1	**208-0234**	1	KIT-LEVER (SUSPENSION SEAT)	
					(INCLUDES SPRING, BUSHING, LEVER & SCREW)	
	9	1	**208-0235**	1	KIT-ADJUSTER (SUSPENSION SEAT)	
					(INCLUDES NUTS, WASHER, LEVER, HANDLE, PLATE & ADJUSTERS)	
	10	1	**208-0236**	1	HANDLE	
	11	1	**208-0237**	1	KIT-PLATE (SUSPENSION SEAT)	
					(INCLUDES PLATE, BRACKET, RIVETS, PLATE-SPRING & SEALS)	
	12	1	**208-0238**	1	KIT-SEAT COVER	
					(INCLUDES RIVETS, WASHERS, LH COVER & RH COVER)	
	13	1	**208-0239**	4	BEARING	
	14	1	**208-0240**	1	KIT-PLATE (SUSPENSION SEAT)	
					(INCLUDES PLATE, BEARINGS & RIVETS)	
	15	1	**208-1126**	1	SPRING	
	16	1	**208-1127**	1	KIT-SEAL (SUSPENSION SEAT)	
					(INCLUDES PLATE, RIVETS, SCREWS & PLATE-SPRING)	
	17	1	**208-1128**	1	LATCH	
	18	1	**208-1129**	1	KIT-SEAT COVER	
					(INCLUDES COVER & SCREWS)	
	19	1	**208-1130**	1	KIT-HANDLE (SUSPENSION SEAT)	
					(INCLUDES HANDLE & ROD)	
	20	1	**208-1131**	1	HANDLE	
	21	1	**208-1132**	1	KIT-BACKREST (SUSPENSION SEAT)	
					(INCLUDES BACKREST, RIVETS, FOAM & PLUGS)	
	22	1	**208-1133**	1	KIT-SUPPORT (SUSPENSION SEAT)	
					(INCLUDES PLATES, RIVETS, ROD, CARRIER, SPRING-BRAKE, GEAR, HANDLE & BOLTS)	
	23	1	**208-1134**	1	KIT-HANDLE (SUSPENSION SEAT)	
					(INCLUDES HANDLE & BOLT)	
	24	1	**208-1135**	1	CONSOLE	
	25	1	**208-1137**	1	CONSOLE	
	26	1	**208-1138**	1	KIT-BEARING (SUSPENSION SEAT)	
					(INCLUDES PLATE AS, BUSHINGS, WASHER & CAP)	
	27	1	**225-1221**	1	KIT-REPAIR (SUSPENSION SEAT)	
					(INCLUDES NUTS, WASHERS, BOLTS & SCREWS)	
	28	1	**225-1917**	1	LEVER	

Y-SEPARATE ILLUSTRATION

187-3781 SEAT GP *(contd.)* **i02160591**

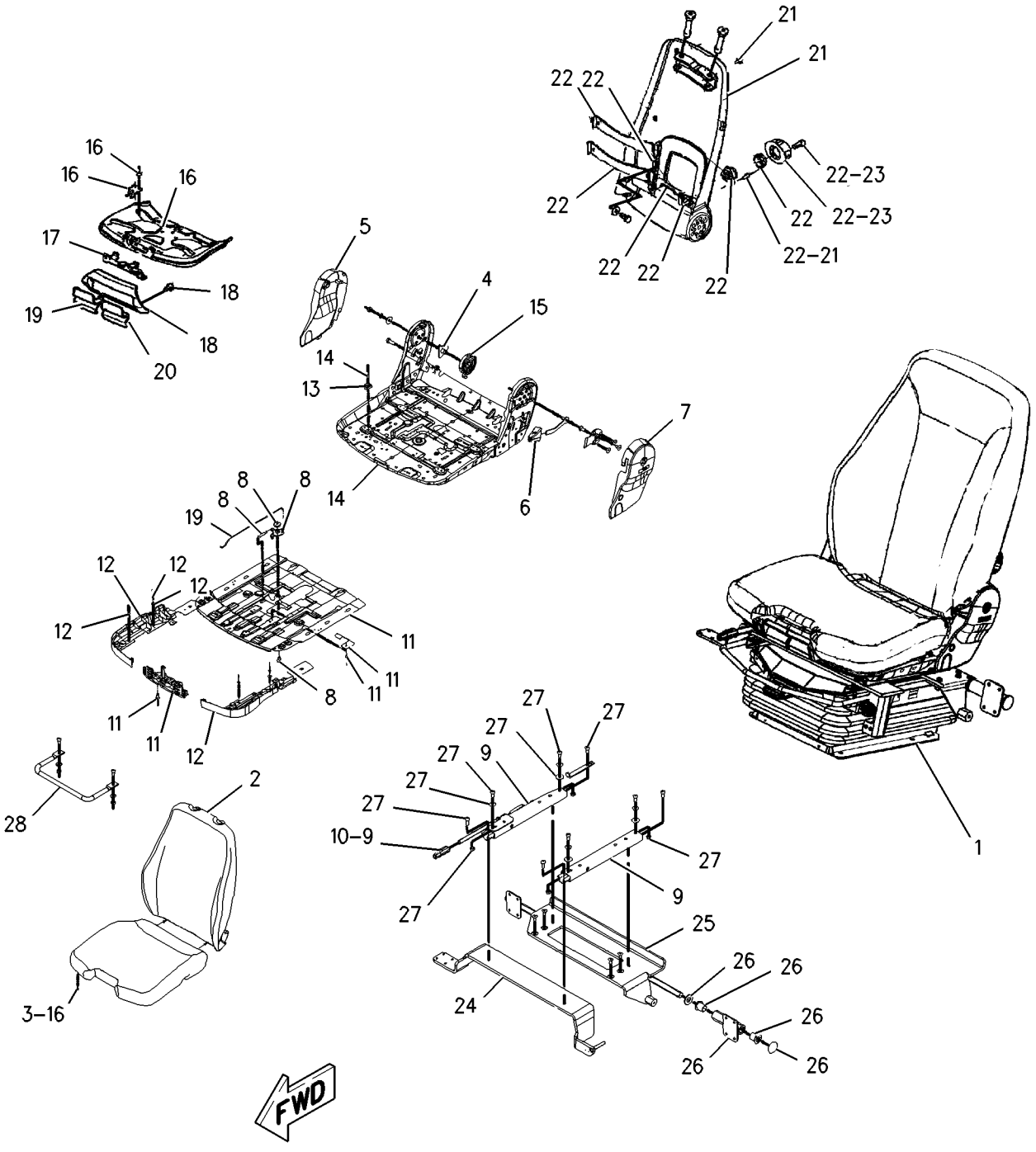

GRAPHIC #1 **<END>** g00931033

OPERATOR STATION

187-3785 SEAT GP

S/N: BCZ1-2000

PART OF 198-4680 OPERATOR AR

SMCS-7312 **i02160495**

NOTE	REF NO	GRAPHIC REF	PART NUMBER	QTY	PART NAME 1 2 3 4 5 6 (PRODUCT LEVEL)	SEE PAGE
M	1	1	**105-3488**	4	BOLT-SOCKET HEAD (M10X1.5X16-MM)	
Y	2	1	**187-3781**	1	SEAT GP	904
	3	1	**205-6210**	1	SEAT BELT GP	
	4	1	**208-1163**	1	KIT-FASTENER (SEAT & MOUNTING)	
					(INCLUDES CAPS, BUSHING & BOLTS)	

M-METRIC PART
Y-SEPARATE ILLUSTRATION

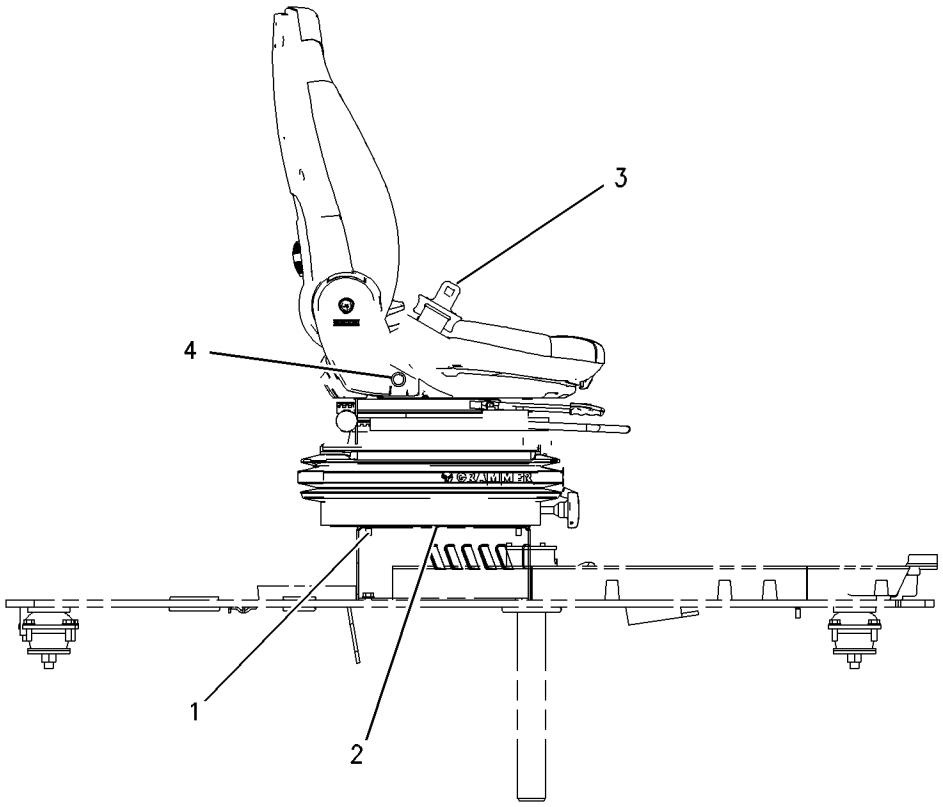

RIGHT SIDE VIEW

GRAPHIC #1 **<END>** g00913526

OPERATOR STATION

190-0288 SEAT GP-SUSPENSION

S/N: BCZ1-2000
AN ATTACHMENT

SMCS-7324, 7336 **i01547793**

NOTE	REF NO	GRAPHIC REF	PART NUMBER	QTY	PART NAME 1 2 3 4 5 6 (PRODUCT LEVEL)	SEE PAGE
Y	1	1	**195-7700**	1	SEAT GP-SUSPENSION	908

Y-SEPARATE ILLUSTRATION

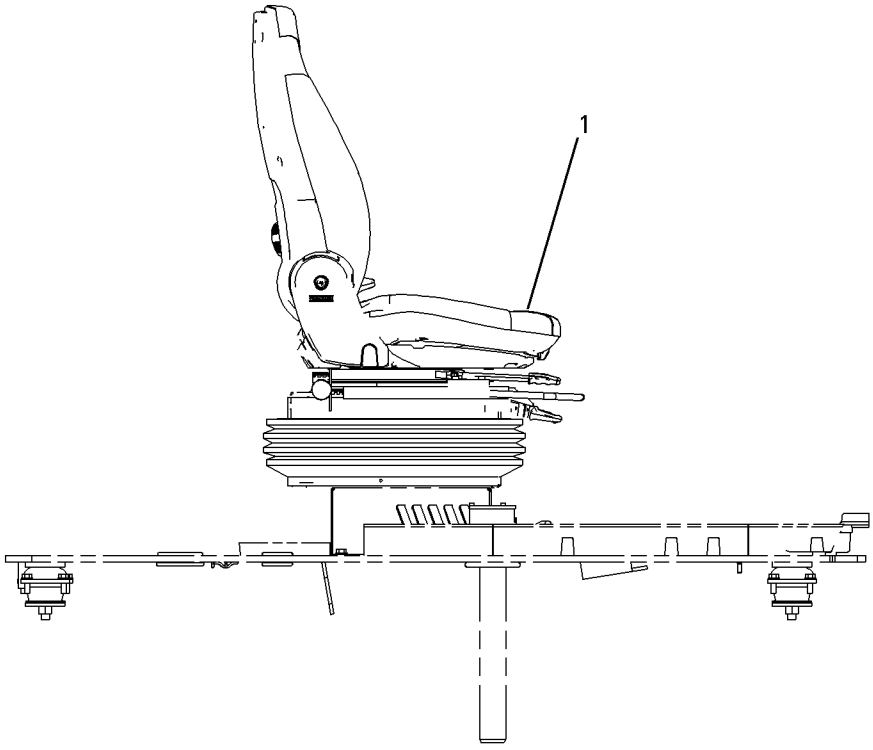

RIGHT SIDE VIEW

GRAPHIC #1 **<END>** g00816324

OPERATOR STATION

195-7700 SEAT GP-SUSPENSION

S/N: BCZ1-2000

PART OF 190-0288 SEAT GP-SUSPENSION

AN ATTACHMENT

SMCS-7324, 7336 **i02160592**

NOTE	REF NO	GRAPHIC REF	PART NUMBER	QTY	PART NAME 1 2 3 4 5 6 (PRODUCT LEVEL)	SEE PAGE
Y	1	1	**202-7213**	1	SUSPENSION GP-SEAT	913
	2	1	**208-2531**	1	CUSHION AS-BACKREST	
	3	1	**208-2532**	1	CUSHION AS-SEAT	
	4	1	**208-0230**	1	BEARING	
	5	1	**208-0231**	1	COVER	
	6	1	**208-0232**	1	HANDLE	
	7	1	**208-0233**	1	COVER	
	8	1	**208-0234**	1	KIT-LEVER (SEAT SUSPENSION)	
					(INCLUDES SPRING, BUSHING, LEVER & SCREW)	
	9	1	**208-0235**	1	KIT-ADJUSTER (SEAT SUSPENSION)	
					(INCLUDES NUTS, WASHER, LEVER, HANDLE, PLATE & ADJUSTERS)	
	10	1	**208-0236**	1	HANDLE	
	11	1	**208-0237**	1	KIT-PLATE (SEAT SUSPENSION)	
					(INCLUDES PLATE, BRACKET, RIVETS, PLATE-SPRING & SEALS)	
	12	1	**208-0238**	1	KIT-SEAT COVER (SEAT SUSPENSION)	
					(INCLUDES RIVETS, WASHERS, LH COVER & RH COVER)	
	13	1	**208-0239**	4	BEARING	
	14	1	**208-0240**	1	KIT-PLATE (SEAT SUSPENSION)	
					(INCLUDES PLATE, BEARINGS & RIVETS)	
	15	1	**208-1126**	1	SPRING	
	16	1	**208-2534**	1	SWITCH AS (SEAT HEATER)	
	17	1	**208-2536**	1	HARNESS AS-SWITCH (SEAT HEATER)	
	18	1	**208-1127**	1	KIT-SEAL (SEAT SUSPENSION)	
					(INCLUDES PLATE, RIVETS, SCREWS & PLATE-SPRING)	
	19	1	**208-1128**	1	LATCH	
	20	1	**208-1129**	1	KIT-SEAT COVER (SEAT SUSPENSION)	
					(INCLUDES COVER & SCREWS)	
	21	1	**208-1130**	1	KIT-HANDLE (SEAT SUSPENSION)	
					(INCLUDES HANDLE & ROD)	
	22	1	**208-1131**	1	HANDLE	
	23	1	**208-1132**	1	KIT-BACKREST (SEAT SUSPENSION)	
					(INCLUDES BACKREST, RIVETS, FOAM & PLUGS)	
	24	1	**208-1133**	1	KIT-SUPPORT (SEAT SUSPENSION)	
					(INCLUDES PLATES, RIVETS, ROD, CARRIER, SPRING-BRAKE, GEAR, HANDLE & BOLTS)	
	25	1	**208-1134**	1	KIT-HANDLE (SEAT SUSPENSION)	
					(INCLUDES HANDLE & BOLT)	
	26	1	**208-1135**	1	CONSOLE	
	27	1	**208-1137**	1	CONSOLE	
	28	1	**208-1138**	1	KIT-BEARING (SEAT SUSPENSION)	
					(INCLUDES PLATE AS, BUSHINGS, WASHER & CAP)	
	29	1	**225-1221**	1	KIT-REPAIR (SEAT SUSPENSION)	
					(INCLUDES NUTS, WASHERS, BOLTS & SCREWS)	

Y-SEPARATE ILLUSTRATION

195-7700 SEAT GP-SUSPENSION *(contd.)* i02160592

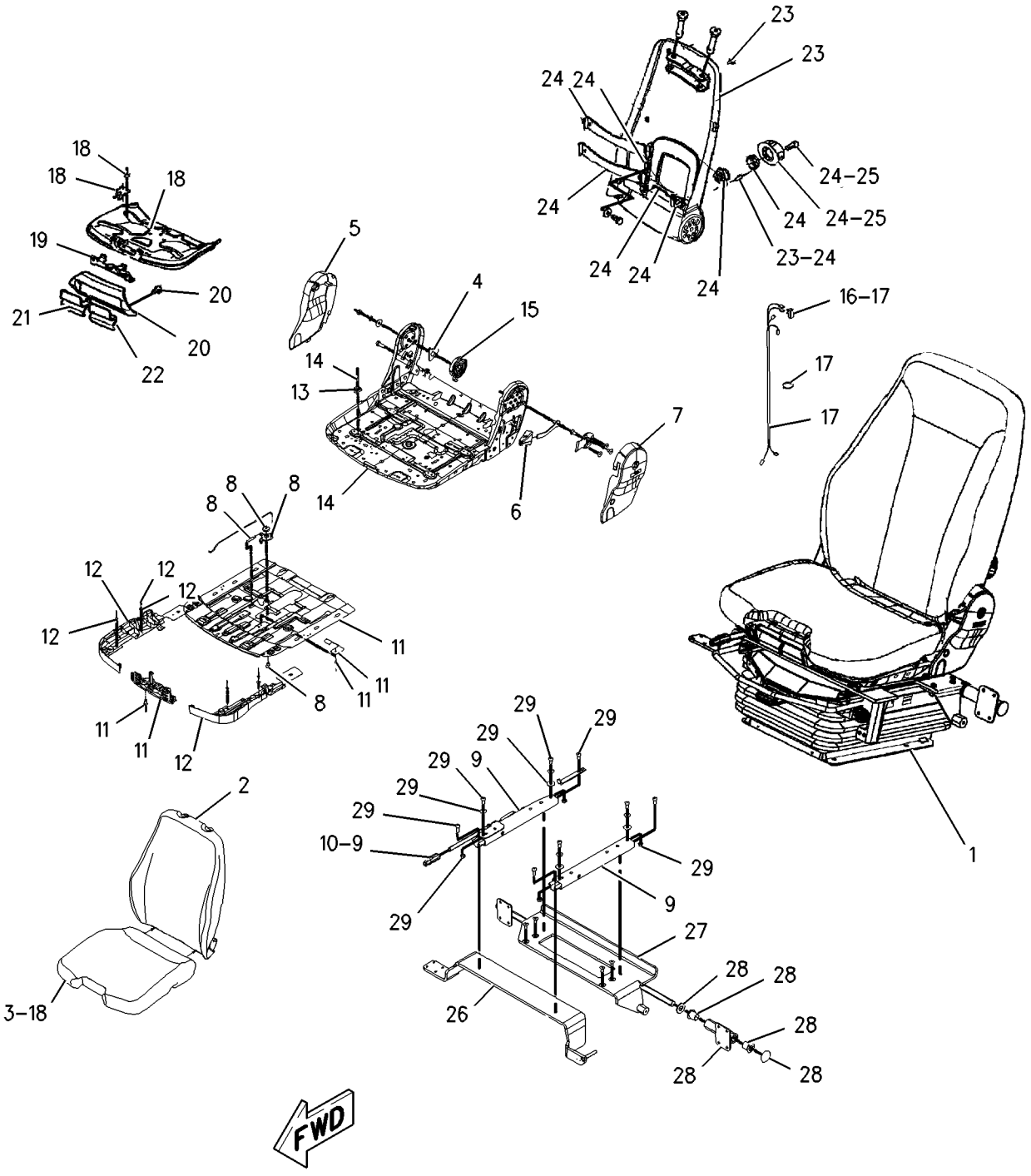

GRAPHIC #1 **<END>** g00931027

OPERATOR STATION

187-3791 SUPPORT GP-SEAT

S/N: BCZ1-2000

PART OF 198-4680 OPERATOR AR

SMCS-7321 **i01661521**

NOTE	REF NO	GRAPHIC REF	PART NUMBER	QTY	PART NAME 1 2 3 4 5 6 (PRODUCT LEVEL)	SEE PAGE
	1	1	**187-3779**	1	SUPPORT AS-SEAT	
	2	1	**8T-4121**	4	WASHER-HARD (11X21X2.5-MM THK)	
M	3	1	**8T-4191**	4	BOLT (M10X1.5X16-MM)	

M-METRIC PART

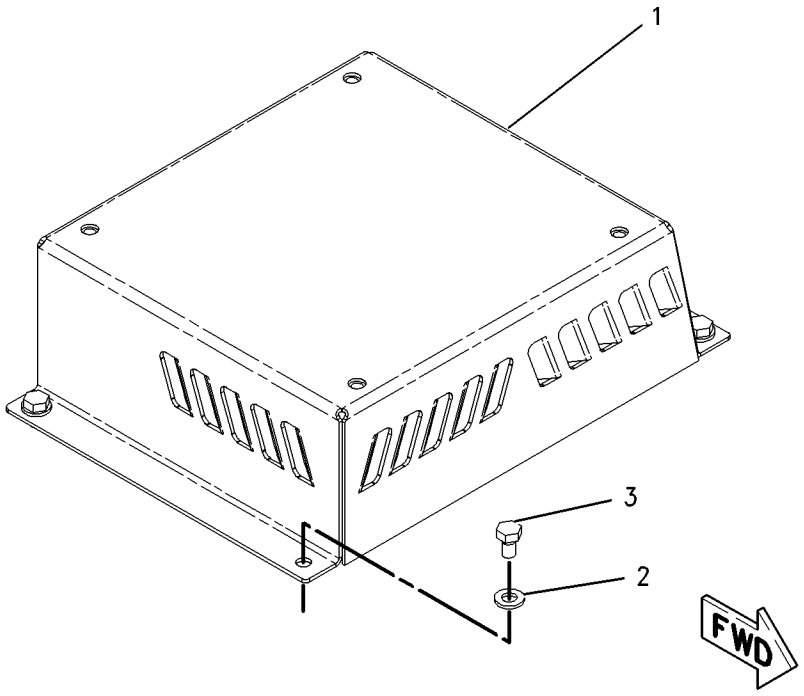

GRAPHIC #1 **<END>** g00865009

OPERATOR STATION

202-7211 SUSPENSION GP-SEAT

S/N: BCZ1-2000

PART OF 187-3781 SEAT GP

SMCS-7324 **i02160590**

NOTE	REF NO	GRAPHIC REF	PART NUMBER	QTY	PART NAME 1 2 3 4 5 6 (PRODUCT LEVEL)	SEE PAGE
	1	1	**208-0211**	1	KIT-PLATE (SEAT SUSPENSION)	
					(INCLUDES PLATE-SUSPENSION, BUMPERS, PLATES & RIVETS)	
	2	1	**226-7433**	1	KIT-ADJUSTER (SEAT SUSPENSION)	
					(INCLUDES WASHERS , NUTS, LEVER, RH ADJUSTER & LH ADJUSTER)	
	3	1	**208-0213**	1	PLATE-UPPER	
	4	1	**208-0214**	1	KIT-STRAP (SEAT SUSPENSION)	
					(INCLUDES PLATES, STRAP, FASTENERS & RIVETS	
	5	1	**208-0215**	1	KIT-BEARING (SEAT SUSPENSION)	
					(INCLUDES SCREWS, BEARINGS, BUSHINGS & FASTENERS)	
	6	1	**208-0216**	2	SPRING	
	7	1	**208-0217**	1	KIT-LINKAGE (SEAT SUSPENSION)	
					(INCLUDES LINKAGE, BEARINGS, BUSHINGS, SPRINGS, PLATES, BOLT, ROLLER, RING-RETAINING & FASTENERS)	
	8	1	**8R-1573**	1	PLATE	
	9	1	**208-0218**	2	SPRING	
	10	1	**8R-1617**	1	BEARING AS	
	11	1	**208-0219**	1	KIT-BUMPER (SEAT SUSPENSION)	
					(INCLUDES BUMPERS & FASTENERS)	
	12	1	**8R-3260**	1	WASHER	
	13	1	**8R-1578**	1	BEARING-THRUST	
	14	1	**208-0220**	2	SPRING	
					(INCLUDES BUSHINGS, NUTS, WASHERS, FASTENERS & SHOCK ABSORBER)	
	15	1	**208-0221**	1	KIT-SHOCK ABSORBER (SEAT SUSPENSION)	
					(INCLUDES SHOCK-ABSORBER, BUSHINGS, NUTS, WASHERS & FASTENERS)	
	16	1	**208-0222**	1	BRACKET-SPRING	
	17	1	**8R-1577**	1	PLUG-RETAINER	
	18	1	**208-0223**	1	GUIDE	
	19	1	**8R-1571**	1	ROLLER	
	20	1	**208-0224**	1	TAPE-INDICATOR	
	21	1	**8R-1585**	1	SPRING-TENSION	
	22	1	**208-0225**	2	BUSHING-LINKAGE	
	23	1	**208-0226**	1	BELLOWS	
	24	1	**208-0227**	1	KIT-SPINDLE (SEAT SUSPENSION)	
					(INCLUDES SPINDLE, RING, BEARING & PIN)	
	25	1	**208-0228**	2	KIT-BRACKET (SEAT SUSPENSION)	
					(INCLUDES WASHER, NUT, BOLT, TUBE & BRACKET)	
	26	1	**208-0229**	1	STOP-ADJUSTER	
	27	1	**226-7751**	1	SUPPORT	
	28	1	**225-1221**	1	KIT-REPAIR (SEAT SUSPENSION)	
					(INCLUDES BOLTS, NUTS, WASHERS & SRCEWS)	

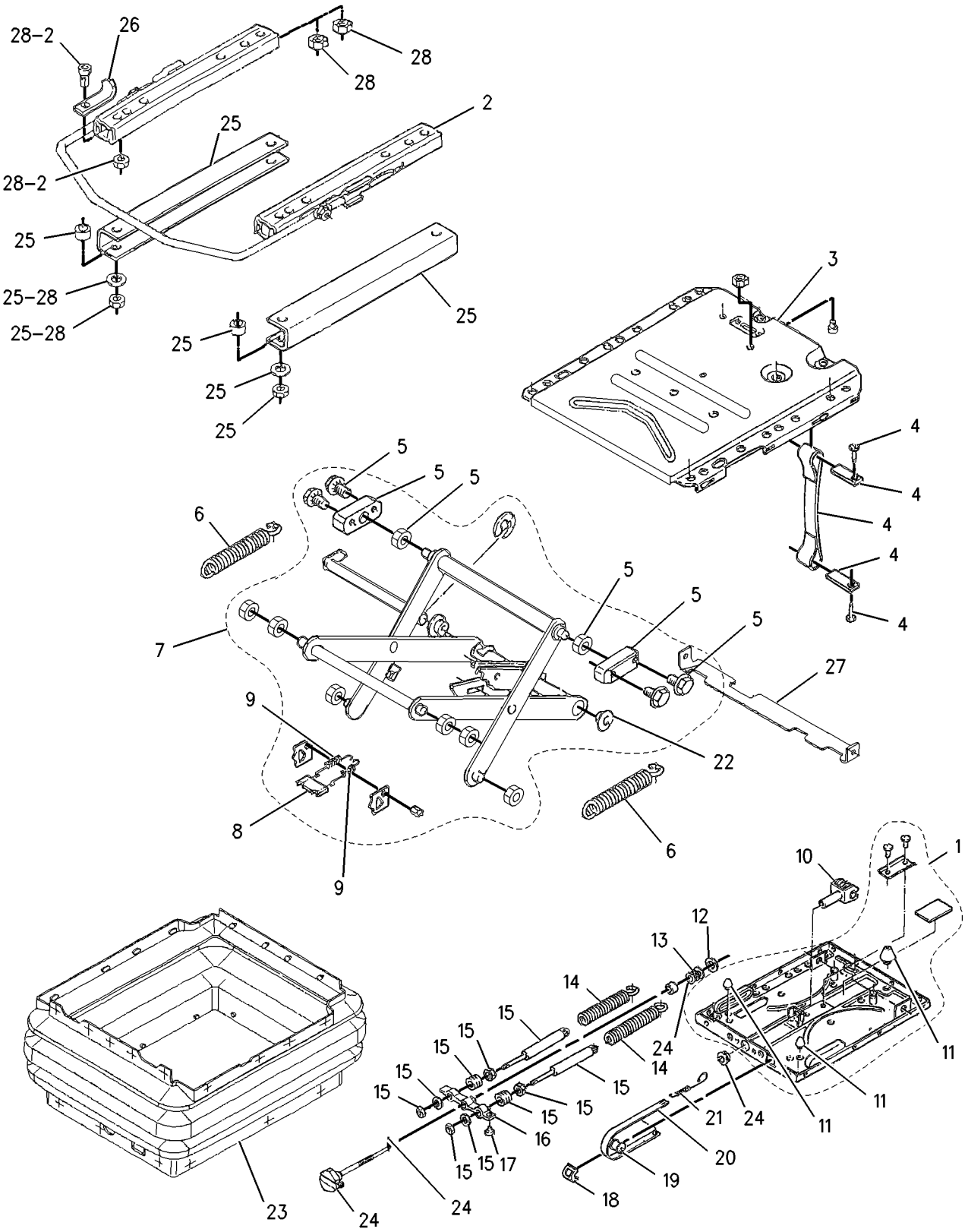

GRAPHIC #1 **<END>** g00914373

OPERATOR STATION

202-7213 SUSPENSION GP-SEAT

S/N: BCZ1-2000

PART OF 195-7700 SEAT GP-SUSPENSION

AN ATTACHMENT

SMCS-7324 **i02087577**

NOTE	REF NO	GRAPHIC REF	PART NUMBER	QTY	PART NAME 1 2 3 4 5 6 (PRODUCT LEVEL)	SEE PAGE
	1	1	**208-3483**	1	KIT-CONTROL (SEAT SUSPENSION)	
					(INCLUDES SCREWS, PLATE, RETAINER, BUMPER, NIPPLE, PIN, NUT, FASTENER, LEVEL CONTROL & STRAPS)	
	2	1	**208-3484**	1	KIT-COVER (SEAT SUSPENSION)	
					(INCLUDES COVER & FASTENERS)	
	3	1	**208-3485**	1	KIT-SHOCK ABSORBER (SEAT SUSPENSION)	
					(INCLUDES ABSORBER, WASHER, RING & FASTENERS)	
	5	1	**208-3487**	1	KIT-LATCH (SEAT SUSPENSION)	
					(INCLUDES SPRING, STOP-LEVER, LINKAGE, HANDLE, SCREWS, WASHER, PIN-SPRING SLOTTED & FASTENERS)	
	6	1	**208-3488**	2	KIT-STOP (SEAT SUSPENSION)	
					(INCLUDES STOP, RIVET & FASTENERS)	
	7	1	**208-3491**	1	CABLE AS	
	8	1	**208-3492**	1	CABLE AS	
	9	1	**208-3493**	1	ACTUATOR AS	
	10	1	**208-3494**	1	HANDLE	
	11	1	**208-3495**	1	KIT-SPRING (SEAT SUSPENSION)	
					(INCLUDES SPRING, TUBES, BUMPERS, BRACKET, BUSHINGS, BOLTS, RIVETS & FASTENERS)	
	12	1	**208-3496**	1	KIT-LINKAGE (SEAT SUSPENSION)	
					(INCLUDES LINKAGE AS, BOLTS, WASHER, RIVETS, ROLLERS, RETAINERS, TUBES, NUTS, PLATES, BUMPERS, STRAPS & FASTENERS)	
	14	1	**208-3499**	1	KIT-BOOT (SEAT SUSPENSION)	
					(INCLUDES BELLOWS & FASTENERS)	
	15	1	**208-3502**	1	KIT-GAS SPRING (SEAT SUSPENSION)	
					(INCLUDES SPRING, BOLTS, WASHER, O-RING SEAL, NIPPLE, CLAMPS & FASTENERS)	
	16	1	**208-3505**	1	HARNESS AS-WIRING (SEAT)	
	17	1	**208-3508**	1	KIT-HOSE (SEAT SUSPENSION)	
					(INCLUDES HOSES, FASTENERS, CLAMPS, STRAPS & NIPPLES)	
	18	1	**208-3510**	1	KIT-COVER (SEAT SUSPENSION)	
					(INCLUDES COVER & RIVETS)	
	19	1	**208-3511**	1	KIT-SHOCK ABSORBER (SEAT SUSPENSION)	
					(INCLUDES ABSORBER-SHOCK, BOLTS, RINGS & WASHERS)	
	20	1	**208-0212**	1	KIT-ADJUSTER (SEAT SUSPENSION)	
					(INCLUDES LEVER, ADJUSTERS, NUTS & WASHERS)	
	21	1	**208-0229**	1	STOP-ADJUSTER	
	22	1	**208-3503**	1	KIT-AIR COMPRESSOR (SEAT SUSPENSION)	
					(INCLUDES COMPRESSOR, BRACKET, PLATE, STRAPS, BOLT, NUT,CLAMP & FASTENERS)	
	23	1	**8R-1677**	2	BUMPER	
	24	1	**8R-1569**	24	FASTENER	
	25	1	**225-1221**	1	KIT-REPAIR (SEAT SUSPENSION)	
					(INCLUDES NUTS, WASHERS, BOLTS & SCREWS)	
					AVAILABLE REPAIR KIT(S):	
			208-3490	1	KIT-PARTS (SEAT SUSPENSION)	
					(INCLUDES ROLLERS, BOLTS, PLATES, STRAPS, WASHERS, NUTS, BEARINGS, BUMPERS, TUBES, RETAINERS, RINGS, RIVETS, ADJUSTERS,)	
					(FASTENERS & CLAMPS)	

202-7213 SUSPENSION GP-SEAT *(contd.)* i02087577

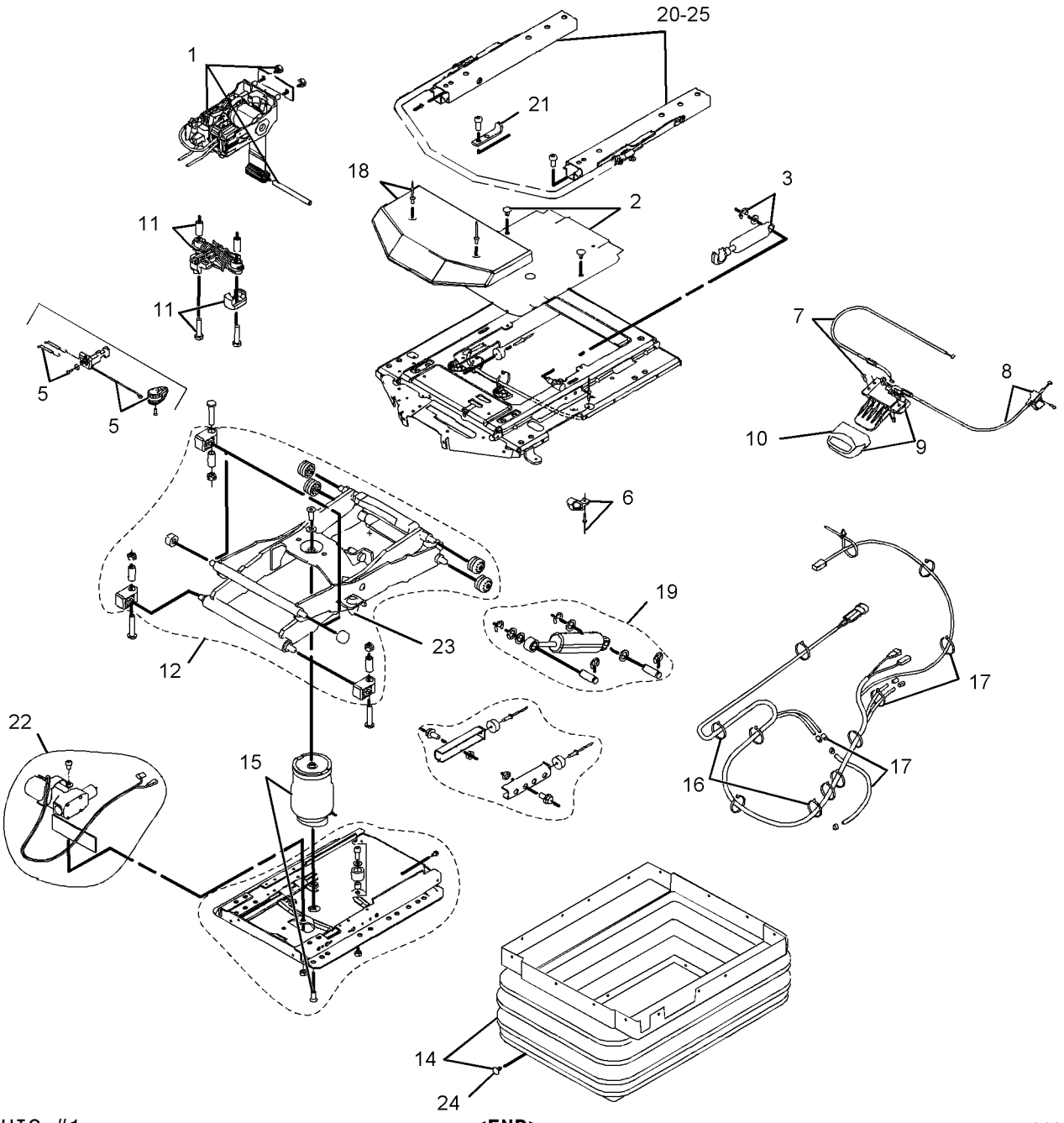

GRAPHIC #1 **<END>** g01064540

OPERATOR STATION

189-6117 VISOR GP-CAB

S/N: BCZ1-2000
RAIN
AN ATTACHMENT

SMCS-7301 **i01928083**

NOTE	REF NO	GRAPHIC REF	PART NUMBER	QTY	PART NAME 1 2 3 4 5 6 (PRODUCT LEVEL)	SEE PAGE
	1	1	**6C-9089**	4	NUT-CAP	
	2	1	**146-0218**	4	NUT (M6X1-THD)	
	3	1	**167-4195**	1	VISOR	
	4	1	**167-4196**	1	BRACKET	
	5	1	**167-4197**	1	BRACKET	
M	6	1	**129-3178**	4	LOCKNUT (M6X1-THD)	
	7	1	**6C-9130**	8	WASHER	
M	8	1	**8T-4971**	4	BOLT (M6X1X30-MM)	
M	9	1	**9X-2045**	4	SCREW-TRUSS HEAD (M6X1X20-MM)	

M-METRIC PART

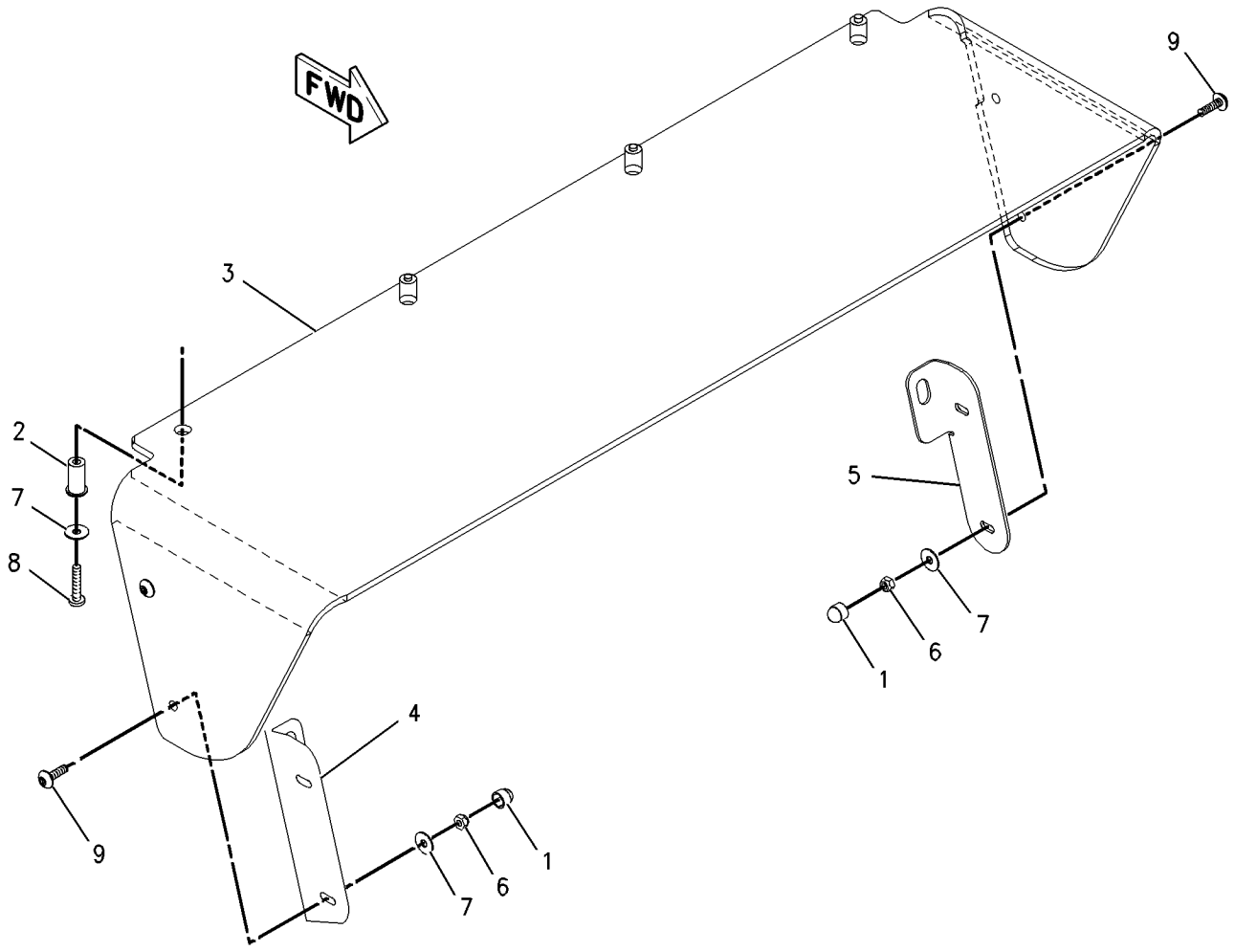

GRAPHIC #1 **<END>** g00751675

OPERATOR STATION

167-4060 WINDOW GP-CAB—FRONT

S/N: BCZ1-2000

PART OF 189-2053 WINDOW GP-CAB

ALSO AN ATTACHMENT

SMCS-7310 **i01900193**

NOTE	REF NO	GRAPHIC REF	PART NUMBER	QTY	PART NAME 1 2 3 4 5 6 (PRODUCT LEVEL)	SEE PAGE
	1	1	**167-4062**	4	RING-RETAINING	
	2	1	**167-4063**	18	SCREW	
	3	1	**167-4065**	1	GLASS (UPPER FRONT)	
	4	1	**167-4066**	1	GLASS (LOWER FRONT)	
	5	1	**167-4071**	1	RAIL (UPPER RH)	
	6	1	**167-4072**	1	RAIL (UPPER LH)	
	7	1	**167-4073**	1	RAIL (LOWER RH)	
	8	1	**167-4074**	1	RAIL (LOWER LH)	
	9	1	**167-4075**	2	LEVER	
	10	1	**167-4076**	2	LATCH	
	11	1	**167-4086**	1	FRAME AS-WINDOW	
	12	1	**167-4130**	1	SUPPORT AS (RH)	
	13	1	**167-4131**	1	SUPPORT AS (LH)	
	14	1	**167-4140**	1	LATCH	
	15	1	**167-4141**	1	LATCH	
	16	1	**167-4179**	2	SPRING AS-GAS	
	17	1	**167-4180**	4	BEARING	
	18	1	**167-4181**	2	SPRING	
	19	1	**167-4182**	1	SEAL	
	20	1	**167-4187**	1	SEAL	
	21	1	**167-4191**	2	BUMPER	
	22	1	**167-4192**	2	BUMPER	
	23	1	**175-1198**	4	PAD	
	24	1	**175-1199**	2	ROLLER	
	25	1	**180-1714**	2	CLIP	
	26	1	**228-9711**	4	SCREW	
	27	1	**6C-9037**	2	CATCH	
E	28	1	**167-4189**		SEAL (285CM)	
	29	1	**231-4826**	2	SCREW	

E-ORDER BY THE CENTIMETER

167-4060 WINDOW GP-CAB *(contd.)* **i01900193**

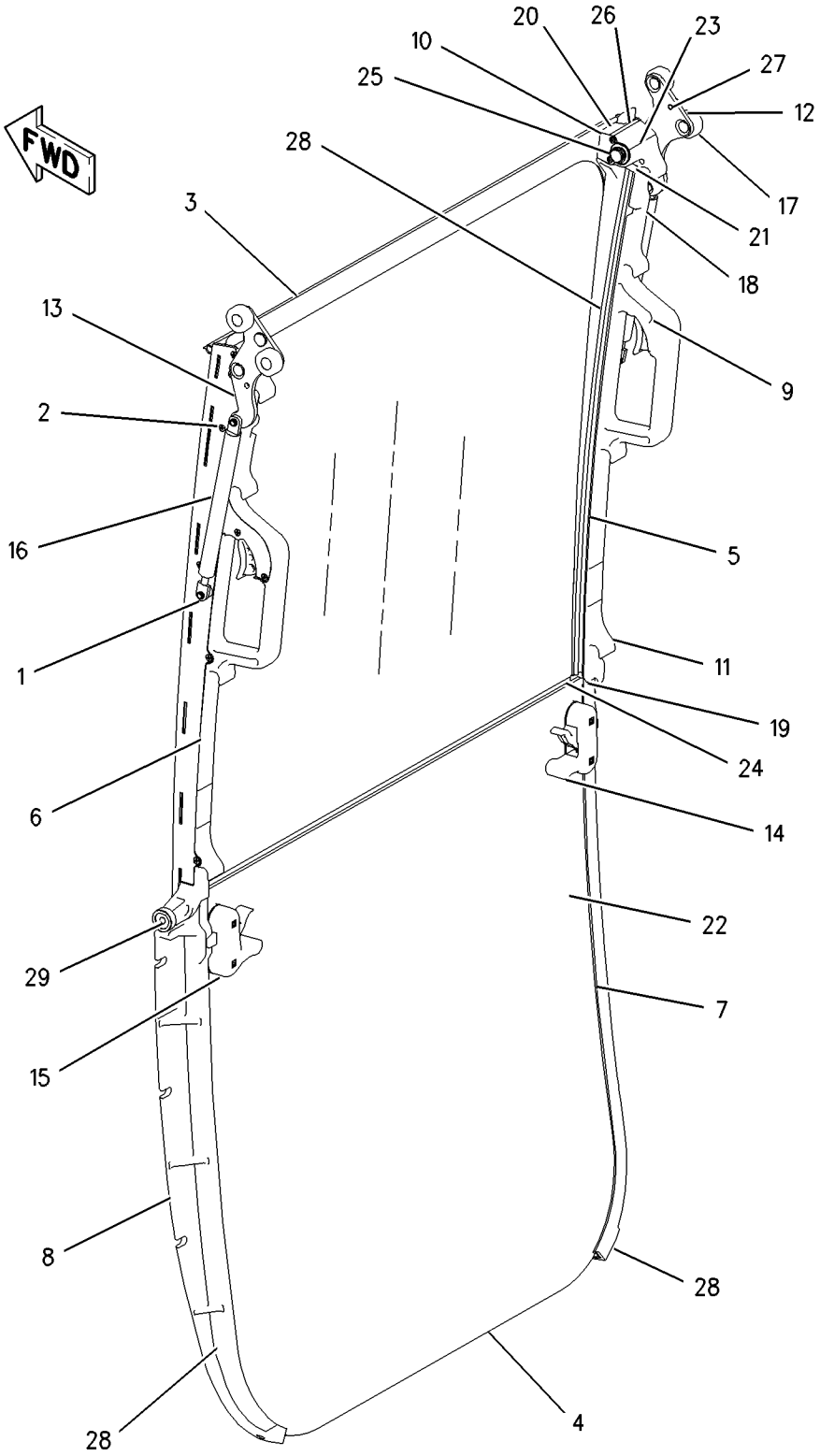

GRAPHIC #1 **<END>** g00988575

OPERATOR STATION

184-7619 WINDOW GP-CAB

S/N: BCZ1-2000
PART OF 187-3800, 188-4959 CAB GP
ALSO AN ATTACHMENT

SMCS-7310 **i02160490**

NOTE	REF NO	GRAPHIC REF	PART NUMBER	QTY	PART NAME 1 2 3 4 5 6 (PRODUCT LEVEL)	SEE PAGE
Y	1	1	**189-2053**	1	WINDOW GP-CAB	919
	2	1	**189-2054**	1	SWITCH AS (WIPER LOCKOUT)	
		1	**6T-3631**	2	NUT-HEX (15/32-32-THD)	
		1	**6V-8373**	2	SCREW-MACHINE (6-32X0.187-IN)	

Y-SEPARATE ILLUSTRATION

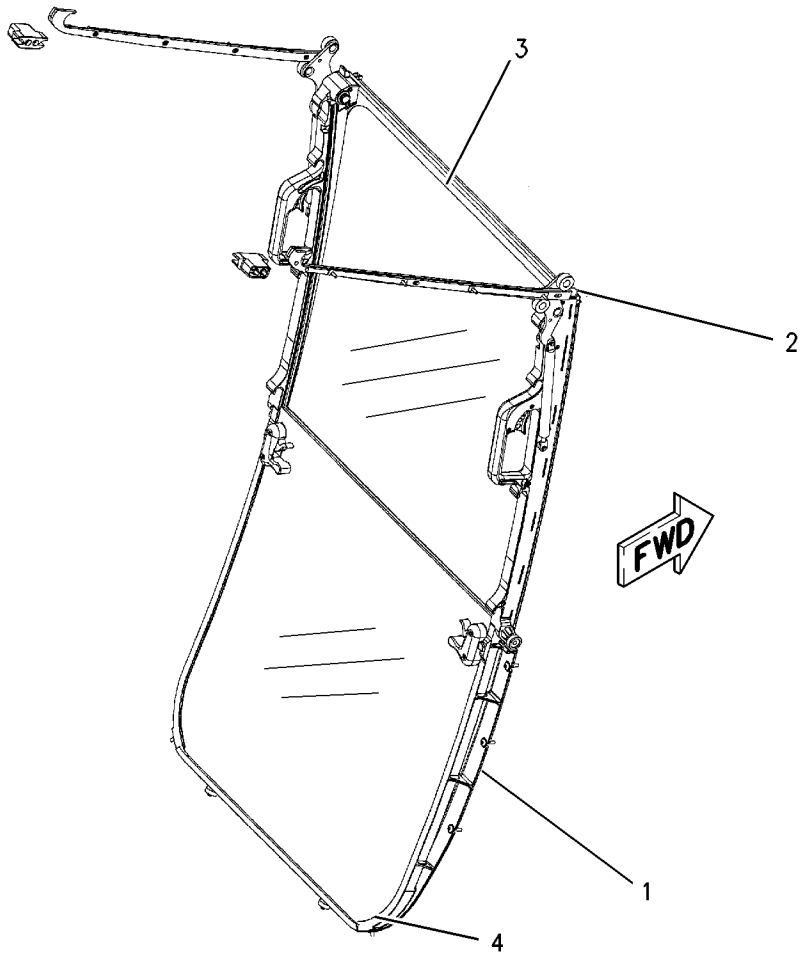

GRAPHIC #1 **<END>** g00926180

OPERATOR STATION

189-2053 WINDOW GP-CAB

S/N: BCZ1-2000
PART OF 184-7619 WINDOW GP-CAB
ALSO AN ATTACHMENT

SMCS-7310 **i01900183**

NOTE	REF NO	GRAPHIC REF	PART NUMBER	QTY	PART NAME 1 2 3 4 5 6 (PRODUCT LEVEL)	SEE PAGE
Y	1	1	**167-4060**	1	WINDOW GP-CAB	916
	2	1	**167-4061**	2	BUMPER	
	3	1	**167-4084**	2	STRIKER	
	4	1	**167-4087**	1	SEAL	
	5	1	**167-4097**	4	SHIM	
	6	1	**167-4174**	1	RAIL AS (LH)	
	7	1	**167-4176**	1	RAIL AS (RH)	
	8	1	**167-4178**	2	SEAL	
M	9	1	**105-3486**	4	BOLT-SOCKET HEAD (M6X1X50-MM)	
M	10	1	**134-1374**	8	BOLT-SOCKET HEAD (M5X0.8X20-MM)	
M	11	1	**3E-8020**	8	SCREW-TRUSS HEAD	
	12	1	**6C-9130**	8	WASHER	
	13	1	**215-4377**	2	SPACER	

M-METRIC PART
Y-SEPARATE ILLUSTRATION

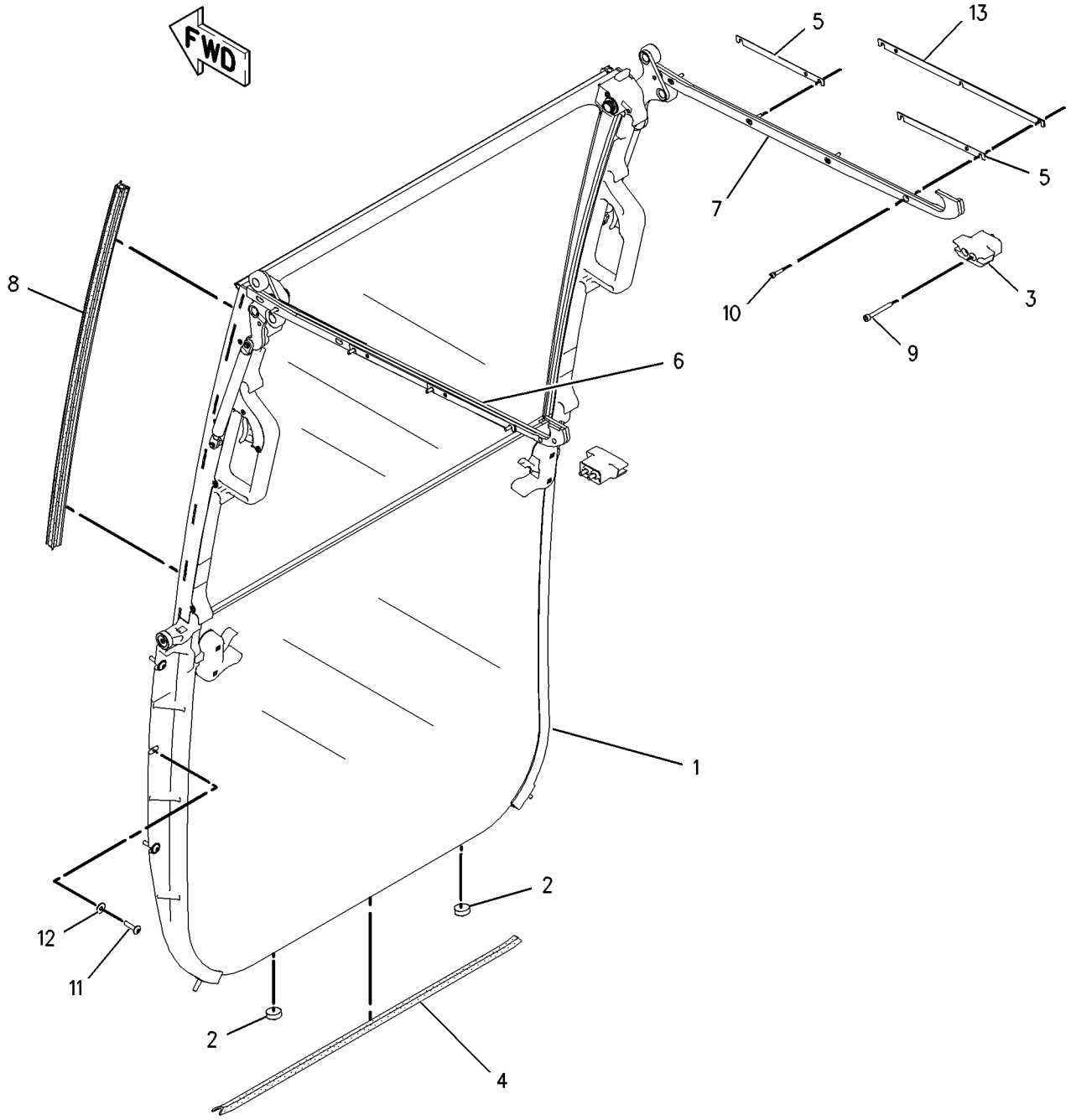

GRAPHIC #1 **<END>** g00991629

OPERATOR STATION

201-8760 WINDOW GP-CAB

S/N: BCZ1-2000

PART OF 187-3800 CAB GP

SMCS-7310 **i02159592**

NOTE	REF NO	GRAPHIC REF	PART NUMBER	QTY	PART NAME 1 2 3 4 5 6 (PRODUCT LEVEL)	SEE PAGE
	1	1	**6C-9236**	2	RETAINER	
	2	1	**6C-9237**	2	RIVET	
	3	1	**100-5612**	1	FILM-INSTRUCTION (ALTERNATE EXIT, REMOVE WINDOW)	
	4	1	**133-5514**	1	HAMMER	
	5	1	**151-6789**	1	GLASS (RH)	
	6	1	**151-6790**	1	GLASS (LH)	
	7	1	**167-4067**	1	GLASS (FRONT)	
	8	1	**167-4142**	1	GLASS (REAR)	
	9	1	**9N-1995**	2	RIVET-POP	

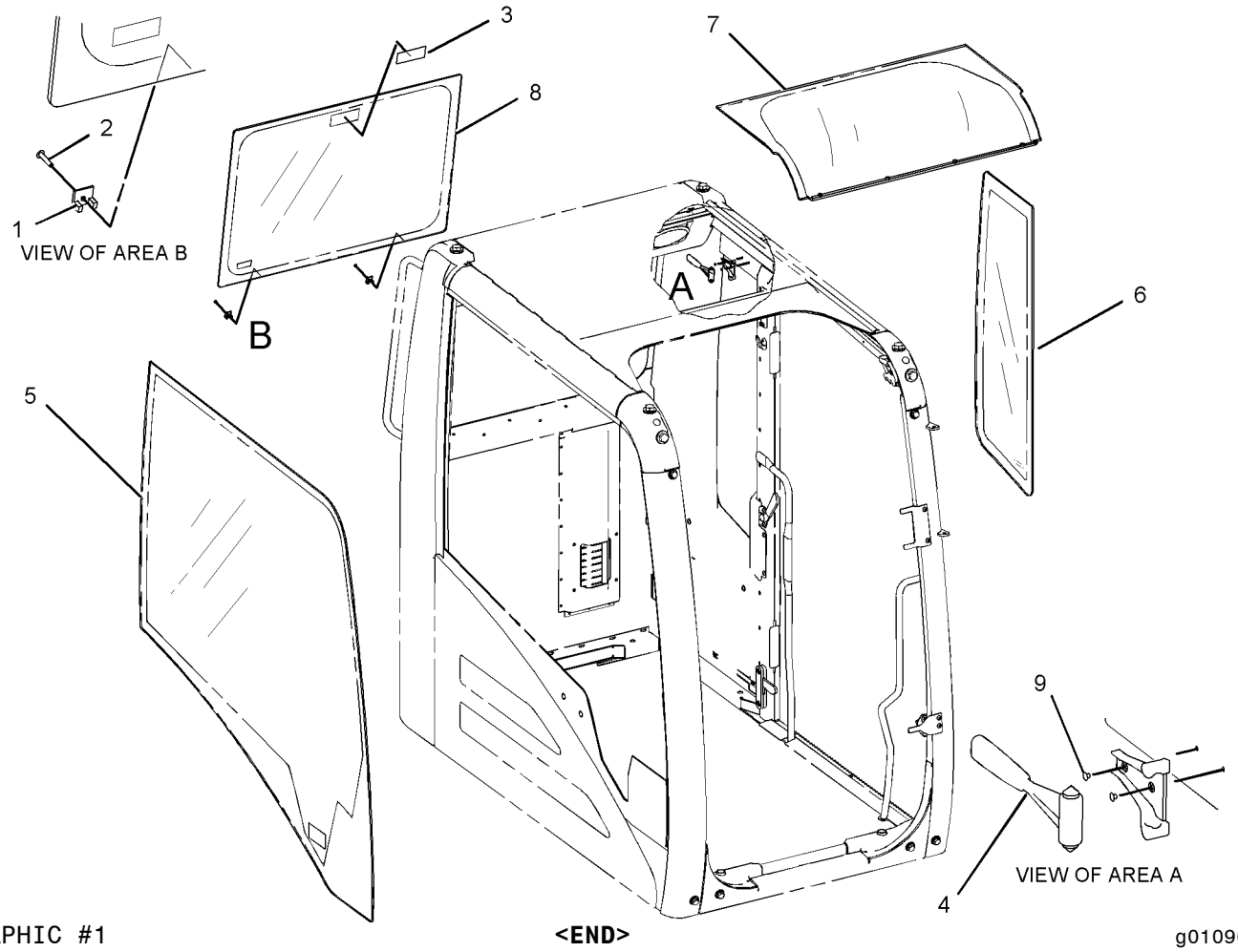

GRAPHIC #1 **<END>** g01096417

OPERATOR STATION

201-8765 WINDOW GP-CAB—LEXAN

S/N: BCZ1-2000
PART OF 188-4959 CAB GP
AN ATTACHMENT

SMCS-7310 **i02171876**

NOTE	REF NO	GRAPHIC REF	PART NUMBER	QTY	PART NAME 1 2 3 4 5 6 (PRODUCT LEVEL)	SEE PAGE
	1	1	**6C-9237**	2	RIVET	
	2	1	**8T-6842**	1	FILM (ALTERNATE EXIT)	
	3	1	**147-8450**	1	RING-PULL	
	4	1	**167-4067**	1	GLASS (FRONT)	
	5	1	**167-7035**	1	GLASS (RH)	
	6	1	**167-7036**	1	GLASS (LH)	
	7	1	**187-0661**	1	FILM (ALTERNATE EXIT)	
	8	1	**205-0445**	1	GLASS (REAR)	
	9	1	**096-0061**	1	STRAP-CABLE	
E	10	1	**5W-9702**		SEAL-WINDOW (260-CM)	
E	11	1	**5W-9703**		SEAL-LOCK (260-CM)	

E-ORDER BY THE CENTIMETER

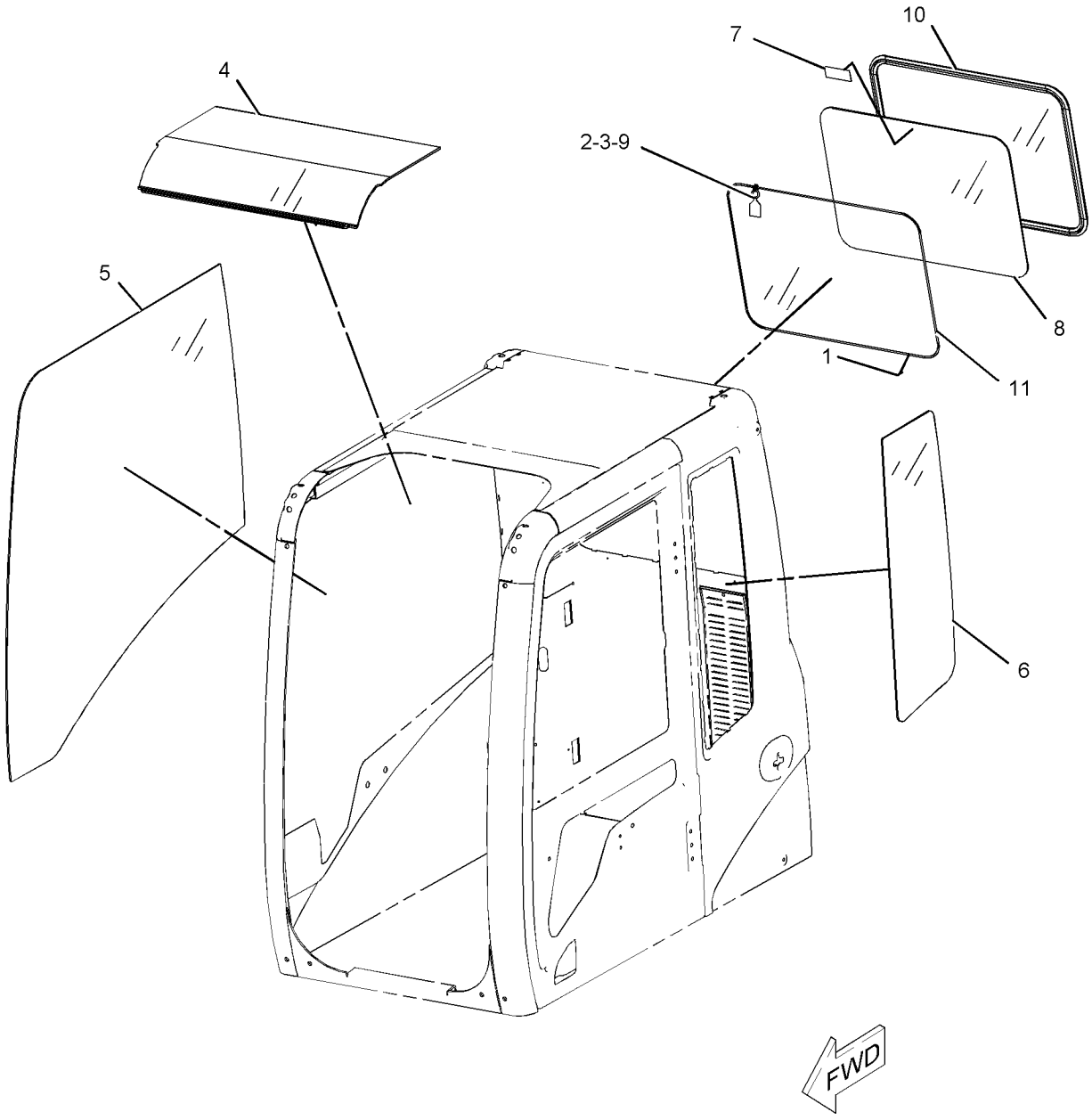

GRAPHIC #1 **<END>** g01101344

OPERATOR STATION

219-8495 WINDOW GP-CAB

S/N: BCZ1-2000
PART OF 219-8500 CAB GP
AN ATTACHMENT

SMCS-7310 **i02020425**

NOTE	REF NO	GRAPHIC REF	PART NUMBER	QTY	PART NAME 1 2 3 4 5 6 (PRODUCT LEVEL)	SEE PAGE
	1	1	**167-4064**	1	GLASS	
	2	1	**167-4182**	1	SEAL	
	3	1	**167-4183**	6	BRACKET	
	4	1	**167-4184**	1	CLIP	
	5	1	**191-2757**	3	BRACKET	
	6	1	**191-2758**	3	BRACKET	
	7	1	**198-1754**	6	HOOK	
	8	1	**199-3677**	1	SEAL	
	9	1	**205-0448**	6	RUBBER	
	10	1	**220-4080**	12	FASTENER	
M	11	1	**9X-2044**	12	SCREW-TRUSS HEAD (M6X1.0X16-MM)	

M-METRIC PART

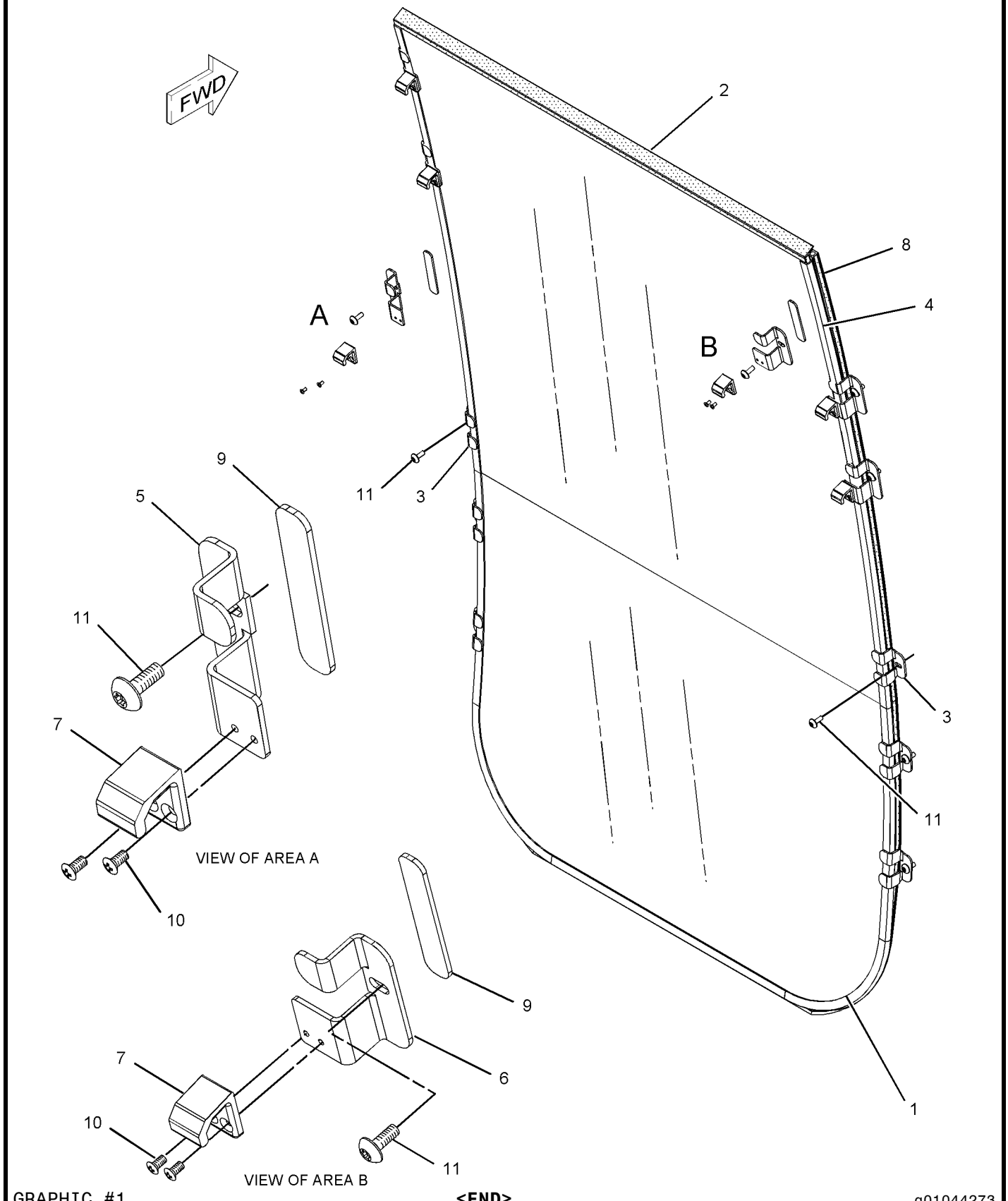

GRAPHIC #1 **<END>** g01044273

OPERATOR STATION

151-6792 WINDOW GP-DOOR—GLASS

S/N: BCZ1-2000

PART OF 139-7100 DOOR GP-CAB

SMCS-7308, 7310 **i01822485**

NOTE	REF NO	GRAPHIC REF	PART NUMBER	QTY	PART NAME 1 2 3 4 5 6 (PRODUCT LEVEL)	SEE PAGE
	1	1	**151-6793**	1	FRAME AS	
	2	1	**151-6841**	1	SEAL	
	3	1	**156-6474**	1	GLASS	
	4	1	**156-6475**	1	GLASS	
	5	1	**161-3695**	1	SEAL	
	6	1	**161-3705**	1	SEAL	
	7	1	**164-0516**	1	RUBBER	
	8	1	**164-0517**	1	RUBBER	
	9	1	**164-0518**	1	RUBBER	
	10	1	**171-7413**	1	SPACER	
	11	1	**171-7414**	1	SPACER	
	12	1	**176-1951**	1	SPACER	
	13	1	**176-1952**	1	SPACER	
	14	1	**176-1953**	1	STOP	
	15	1	**176-1954**	1	SEAL	
	16	1	**176-1955**	1	SEAL	
	17	1	**176-1956**	1	SEAL	
	18	1	**176-1957**	1	SEAL	
	19	1	**085-6444**	2	LOCK AS	
					(EACH INCLUDES)	
		1	**085-6445**	1	LOCK	
		1	**085-6446**	1	LOCK	
		1	**085-6447**	1	RETAINER	
M		1	**085-6448**	2	SCREW	
		1	**085-6449**	1	PACKING	

M-METRIC PART

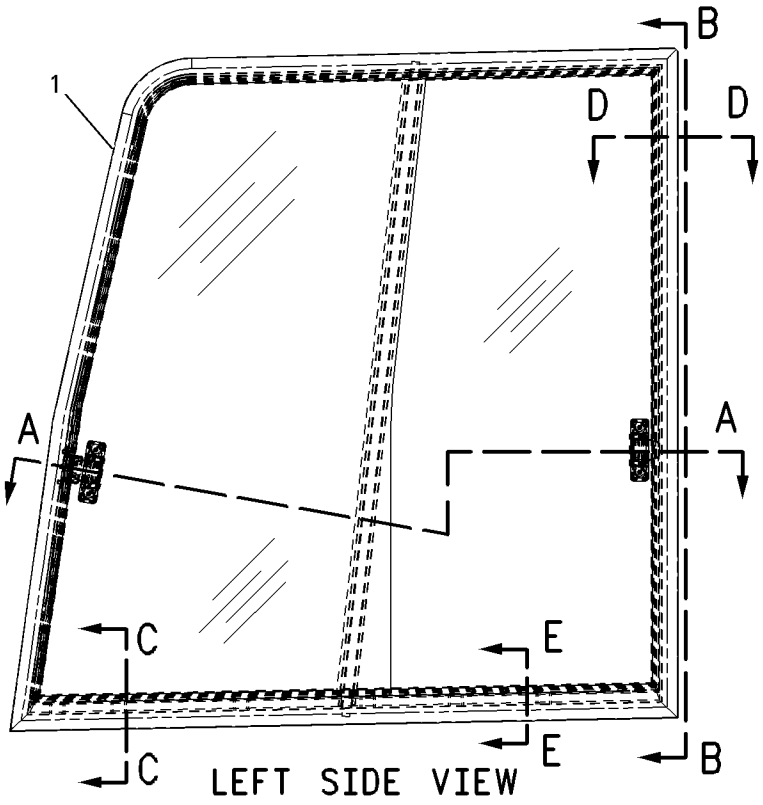

LEFT SIDE VIEW

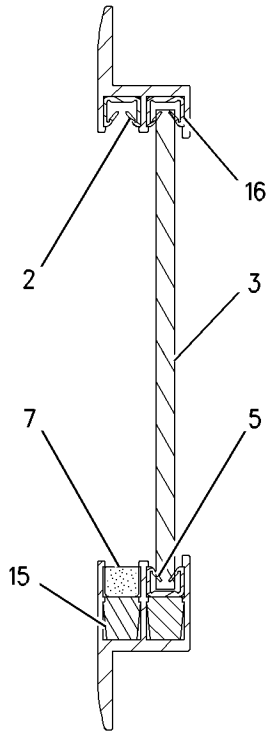

SECTION B-B

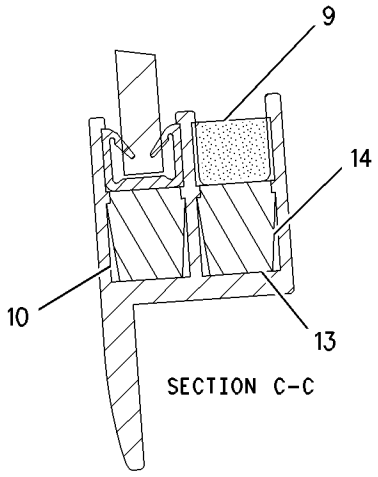

SECTION C-C

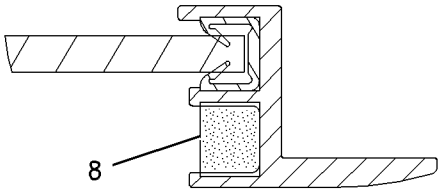

SECTION D-D

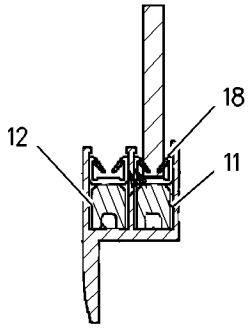

VIEW E-E

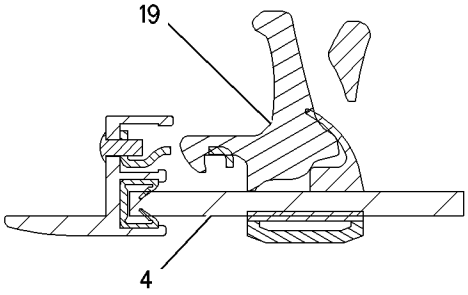

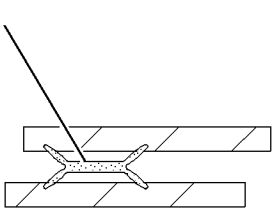

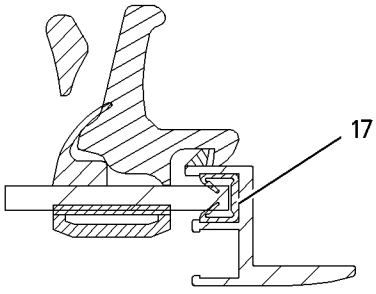

SECTION A-A

GRAPHIC #1 **<END>** g00930481

OPERATOR STATION

205-0442 WINDOW GP-DOOR—LEXAN

S/N: BCZ1-2000
PART OF 205-0450 DOOR GP-CAB
AN ATTACHMENT

SMCS-7308, 7310 **i02148127**

NOTE	REF NO	GRAPHIC REF	PART NUMBER	QTY	PART NAME 1 2 3 4 5 6 (PRODUCT LEVEL)	SEE PAGE
	1	1	**141-6603**	1	KIT-CATCH (CAB DOOR WINDOW)	
					(INCLUDES HANDLE, 4 SCREWS, BASE PLATE AND CATCH)	
	2	1	**205-0446**	1	KIT-WINDOW (POLYCARBONATE) (CAB DOOR, FRONT)	
					(INCLUDES GLASS, RAIL AND SEAL)	
	3	1	**205-0447**	1	KIT-WINDOW (POLYCARBONATE) (CAB DOOR, REAR)	
					(INCLUDES GLASS, 2 RAILS AND SEAL)	
	4	1	**210-9334**	1	KIT-SEAL (CAB DOOR WINDOW)	
					(INCLUDES SEAL AND 4 BUMPERS)	
	5	1	**210-9336**	1	KIT-RAIL (CAB DOOR WINDOW)	
					(INCLUDES 3 RAILS AND 3 SCREWS)	

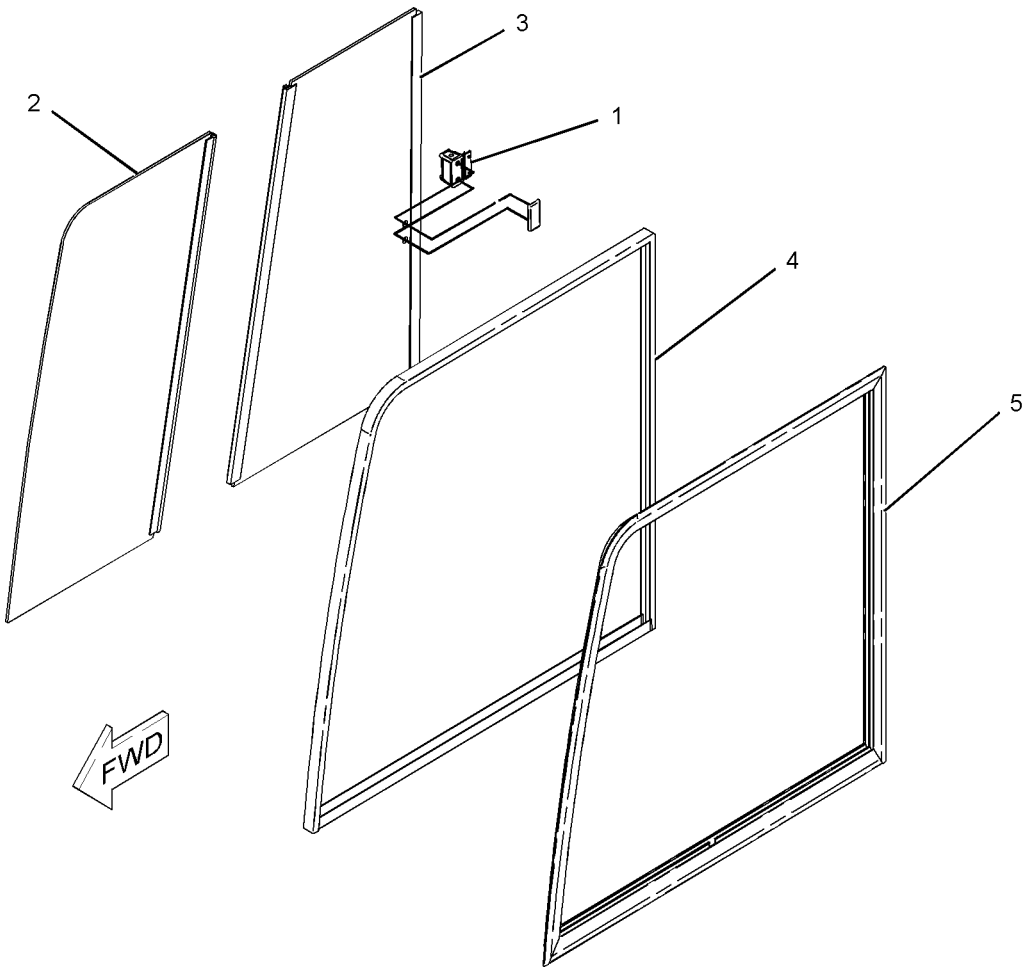

GRAPHIC #1 **<END>** g01028034

OPERATOR STATION

190-0290 WIPER GP-WINDOW

S/N: BCZ1-2000

PART OF 198-4680 OPERATOR AR

SMCS-7305 **i02160486**

NOTE	REF NO	GRAPHIC REF	PART NUMBER	QTY	PART NAME 1 2 3 4 5 6 (PRODUCT LEVEL)	SEE PAGE
	1	2	**5G-3296**	1	ELBOW	
	2	2	**193-7799**	1	PLATE AS	
	3	1	**195-7690**	1	MOTOR AS	
	4	1	**195-7692**	1	LINK	
	5	2	**195-7694**	1	CRANK AS	
	6	1	**195-7695**	1	SHAFT AS	
	7	2	**196-1125**	2	CAP	
	8	1	**196-9058**	1	BLADE AS-WIPER (LOWER)	
	9	1	**196-9059**	1	BLADE AS-WIPER (UPPER)	
	10	1	**196-9067**	1	LINK	
		1	**243-4047**	2	CLIP	
	11	1	**196-9070**	1	ARM AS-WIPER	
	12	1	**205-6207**	3	BOLT (M6X1X21.6-MM)	
	13	2	**205-6208**	2	WASHER (26X35X0.6-MM THK)	
	14	2	**205-6209**	2	NUT (M26X1.00-THD)	
	15	2	**213-4631**	1	NOZZLE AS (WASHER)	
	16	2	**213-4632**	1	NOZZLE AS (WASHER)	
	17	2	**213-4633**	1	CONNECTOR (TEE)	
	18	2	**213-4634**	2	CLIP (WASHER HOSE)	
	19	2	**213-4635**	3	CLIP (WASHER HOSE)	
M	20	2	**8T-4133**	3	NUT (M10X1.5-THD)	
	21	2	**8T-4224**	4	WASHER-HARD (8.8X16X2-MM THK)	
M	22	2	**8T-4908**	4	BOLT (M8X1.25X25-MM)	
	23	2	**8U-1862**	2	LOCKWASHER	
E	24	2	**122-5727**		HOSE (25-CM)	
E	25	2	**122-5727**		HOSE (100-CM)	
E	26	2	**122-5727**		HOSE (30-CM)	

E-ORDER BY THE CENTIMETER
M-METRIC PART

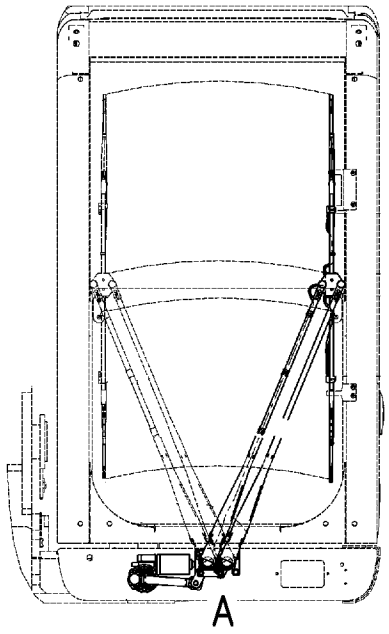

FRONT VIEW

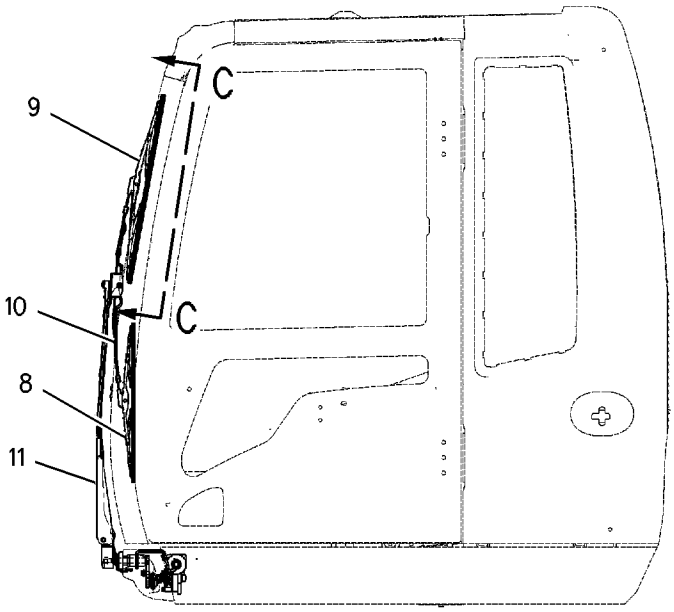

LEFT SIDE VIEW

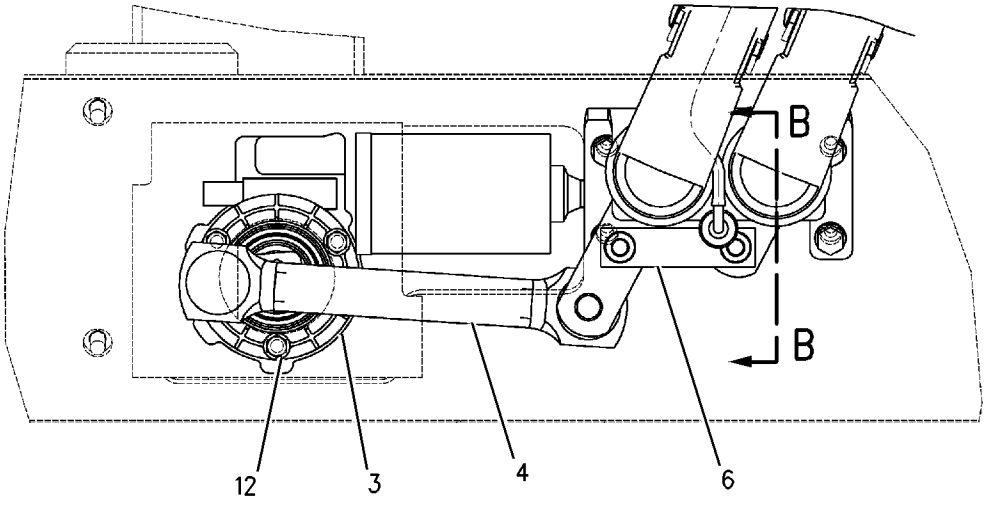

VIEW OF AREA A

REFER TO ALL ILLUSTRATIONS OF
THIS GROUP FOR AUXILIARY VIEWS

GRAPHIC #1 g00905673

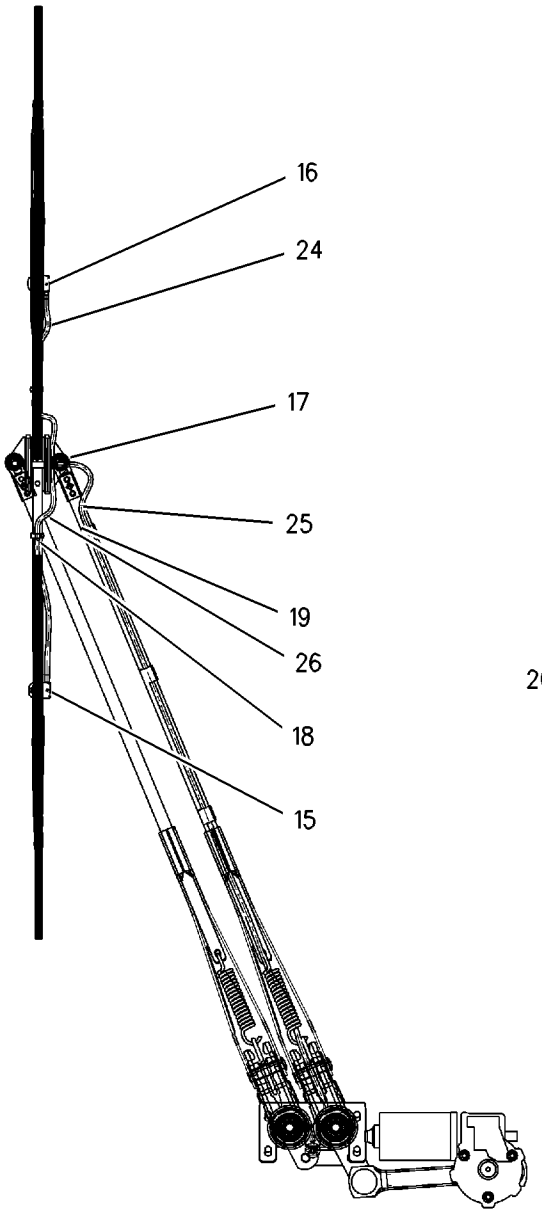

VIEW C-C

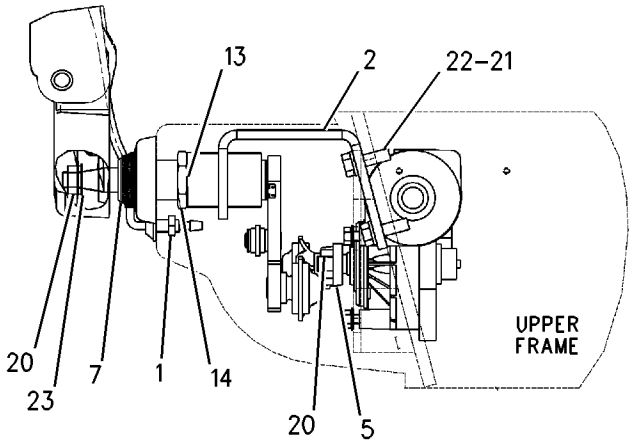

VIEW B-B

GRAPHIC #2 **<END>** g00905674

OPERATOR STATION

205-0460 WIPER GP-WINDOW

S/N: BCZ1-2000
1 PC WINDSHIELD
PART OF 219-8500 CAB GP
AN ATTACHMENT

SMCS-7305 **i02160485**

NOTE	REF NO	GRAPHIC REF	PART NUMBER	QTY	PART NAME 1 2 3 4 5 6 (PRODUCT LEVEL)	SEE PAGE
	1	1	**5G-3296**	1	ELBOW	
	2	1	**193-7799**	1	PLATE AS	
	3	1	**195-7690**	1	MOTOR AS	
	4	1	**195-7692**	1	LINK	
	5	1	**196-9059**	2	BLADE AS-WIPER	
	6	1	**195-7694**	1	CRANK AS	
	7	1	**195-7695**	1	SHAFT AS	
	8	1	**196-1125**	2	CAP	
	9	1	**196-9067**	1	LINK	
	10	1	**196-9070**	1	ARM AS-WIPER	
	11	1	**205-6207**	3	BOLT (M6X1X21.6-MM)	
	12	1	**205-6208**	2	WASHER (26X35X0.6-MM THK)	
	13	1	**205-6209**	2	NUT (M26X1.00-THD)	
	14	1	**213-4631**	1	NOZZLE AS (WASHER)	
	15	1	**213-4632**	1	NOZZLE AS (WASHER)	
	16	1	**213-4633**	1	CONNECTOR (TEE)	
	17	1	**213-4634**	2	CLIP (WASHER HOSE)	
	18	1	**213-4635**	3	CLIP (WASHER HOSE)	
M	19	1	**8T-4133**	3	NUT (M10X1.5-THD)	
	20	1	**8T-4224**	4	WASHER-HARD (8.8X16X2-MM THK)	
M	21	1	**8T-4908**	4	BOLT (M8X1.25X25-MM)	
	22	1	**8U-1862**	2	LOCKWASHER	
	23	1	**122-5727**	2	HOSE	
	24	1	**210-1337**	1	LINK AS	

M-METRIC PART

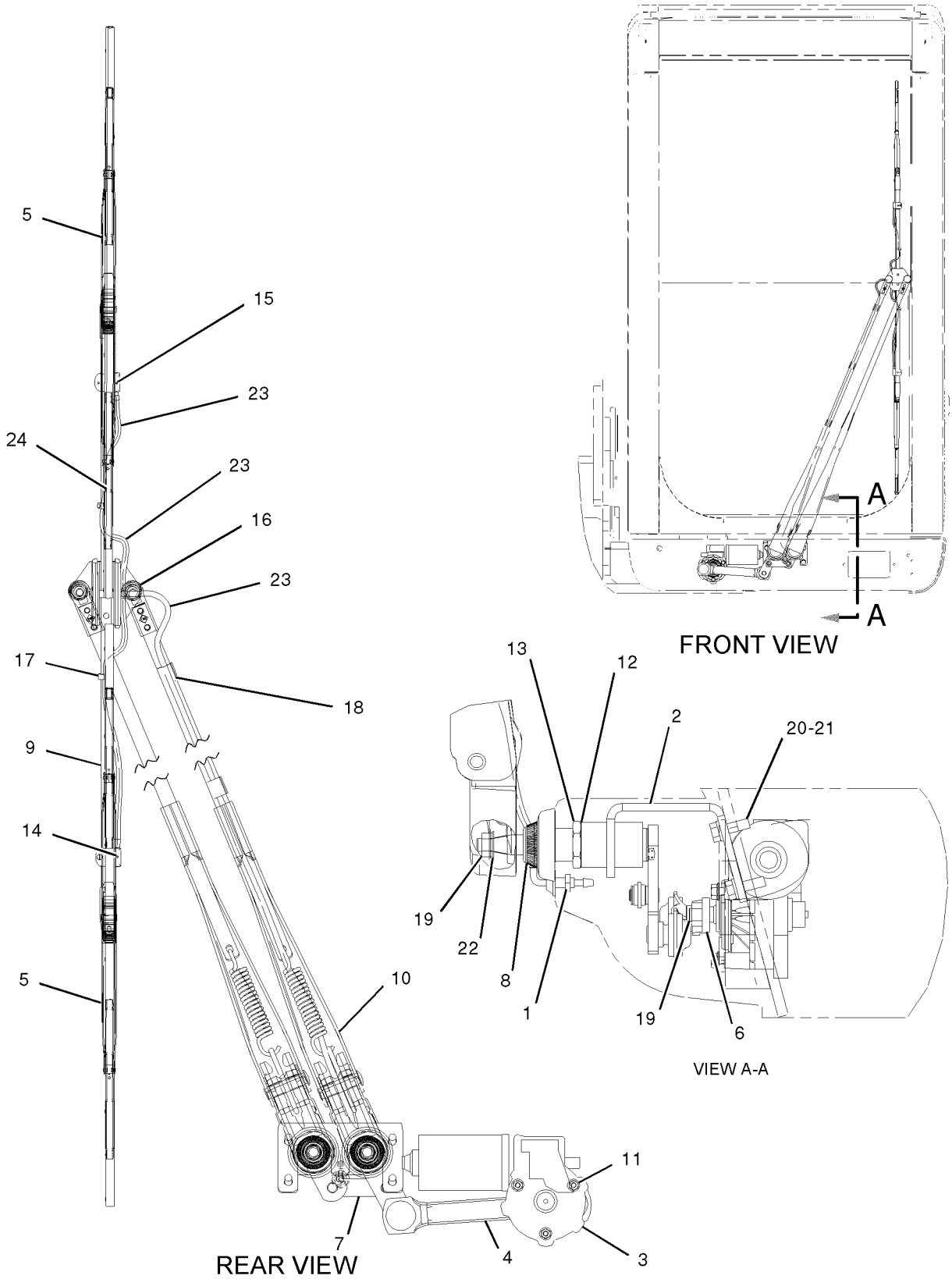

GRAPHIC #1

<END>

g01043470

SERVICE EQUIPMENT AND SUPPLIES

186-0520 PLATE & FILM GP

S/N: BCZ1-2000

PART OF 186-0468 CHASSIS AR

SMCS-7405, 7557 **i02096701**

NOTE	REF NO	GRAPHIC REF	PART NUMBER	QTY	PART NAME 1 2 3 4 5 6 (PRODUCT LEVEL)	SEE PAGE
	1	1	**208-1653**	2	FILM (M318C) (M318C)	
	2	1	**150-8108**	1	FILM-CAT (COUNTERWEIGHT) (CTWT)	
	3	1	**9X-6668**	2	FILM-CAT (LH/RH)	
	4	1	**223-3930**	1	FILM-CATERPILLAR	
E	5	1	**134-6146**		FILM-STRIPE (RED) (615-CM)	
	6	1	**188-7268**	2	FILM-WARNING (CRUSHING SWING MACHINE CTWT)	
F			**1P-2808**	2	FILM (LIFT EYE LOCATION)	
					(LOCATE TO LIFT EYES ON TOP COUNTERWEIGHT)	
F			**7X-3007**	1	FILM-INSTRUCTION (STABILIZER, BRAKE)	
					(LOCATE ON LH CONSOLE ADJACENT TO STABILIZER/DOZER CONTROL LEVER)	
F			**7X-3229**	2	FILM-INSTRUCTION (LIFT EYE, TIE-DOWN)	
					(LOCATE TO FRONT EYELETS, LIFT AND TIE DOWN, ON UNDERCARRIAGE)	
F			**7X-7644**	2	FILM-INSTRUCTION (TIE-DOWN)	
					(LOCATE TO REAR EYELETS, TIE DOWN, ON UNDERCARRIAGE)	
F			**8C-4316**	1	FILM (HYDRAULIC OIL)	
					(LOCATE ON TOP OF HYDR TANK ADJACENT TO FILL COVER)	
F			**8H-8648**	1	PLATE-INSTRUCTION (DISCONNECT SWITCH)	
					(LOCATE ON SWITCH OF BATTERY CONTACT BREAKER)	
F			**9X-1878**	1	PLATE (PRODUCT IDENTIFICATION)	
					(LOCATE ON RH SIDE OF CAB SUPPORT FRAME NEXT TO REFLECTOR)	
F			**208-1655**	1	FILM-NOTICE (SHIP)	
					(LOCATE OUTSIDE OF CAB ON RH SIDE)	
F			**117-6542**	1	FILM-WARNING (CABLE CONNECTION)	
					(LOCATE TOP ON PLASTIC COVER OF BATTERY)	
F			**117-6549**	1	FILM-INSTRUCTION (SWING LOCK)	
					(LOCATE INSIDE CAB ON GUIDE TUBE FOR UPPER/LOWER LOCKPIN)	
F			**223-5955**	1	FILM-INSTRUCTION (BACKUP SWITCH)	
					LOCATE INSIDE RH CONSOLE	
F			**134-7258**	1	FILM-IDENTIFICATION (EXTENDED LIFE COOLANT)	
					(LOCATE ON RADIATOR RESERVOIR RESP. ADJACENT FILLING TUBE)	
F			**208-1660**		FILM (FUSE, RELAY) (FUSE/RELAY)	
					(LOCATE INSIDE FRONT COVER OF ELECTRIC BOX)	
F			**208-1656**	1	FILM-IDENTIFICATION (OPERATOR CONTROLS) (CONTROLS)	
					(LOCATE INSIDE CAB ON RH WINDOW)	
F			**114-0065**	1	PLATE-INSTRUCTION (AIR CONDITIONER) (A/C)	
					(LOCATE ON THE HOSE AS. AT THE COMPRESSOR GP-A/C)	
F			**227-2998**	1	FILM-WARNING (FAN)	
					(LOCATE ON FAN COVER OF HYDRAULIC OIL COOLER IN THE RANGE OF THE HANDLE)	
F			**227-3000**	1	FILM-WARNING (ACCUMULATOR PRESSURE)	
					(LOCATE ON EACH ACCUMULATOR CYLINDERS)	
F			**230-0859**	1	FILM (LUBRICANT POINTS)	
					(LOCATE INSIDE ENGINE ROOM ON FIREWALL IN THE RANGE OF THE BLOCK FOR GREASE FITTINGS)	
F			**224-9029**	1	FILM (DRY AIR CLEANER)	
					(LOCATE ON BELT TENSIONER OF THE ENGINE AIR FILTER)	

186-0520 **PLATE & FILM GP** ***(contd.)*** **i02096701**

NOTE	REF NO	GRAPHIC REF	PART NUMBER	QTY	PART NAME 1 2 3 4 5 6 (PRODUCT LEVEL)	SEE PAGE
F			**167-7270**	1	FILM-INSTRUCTION (NO STEP)	
					(LOCATE ON COVER OF THE MUFFLER COMPARTMENT)	
F			**205-3230**	1	FILM (EXTERIOR SOUND, 102-DB)	
					(LOCATE INSIDE CAB ON COVER OF CAB DOOR)	
F		1	**218-7172**	1	FILM (OPERATOR SOUND, 72-DB)	
					(LOCATE INSIDE CAB ON COVER OF CAB DOOR)	
F			**156-3849**	1	FILM-WARNING (RADIATOR)	
					(LOCATE ON RADIATOR RESERVOIR RESP. ADJACENT FILLING TUBE)	
F			**4P-6422**	1	FILM-WARNING (NO ETHER SPRAY/AIR INTAKE)	
					LOCATED ON THE BELT TENSIONER OF THE ENGINE AIR FILTER	

E-ORDER BY THE CENTIMETER
F-NOT SHOWN

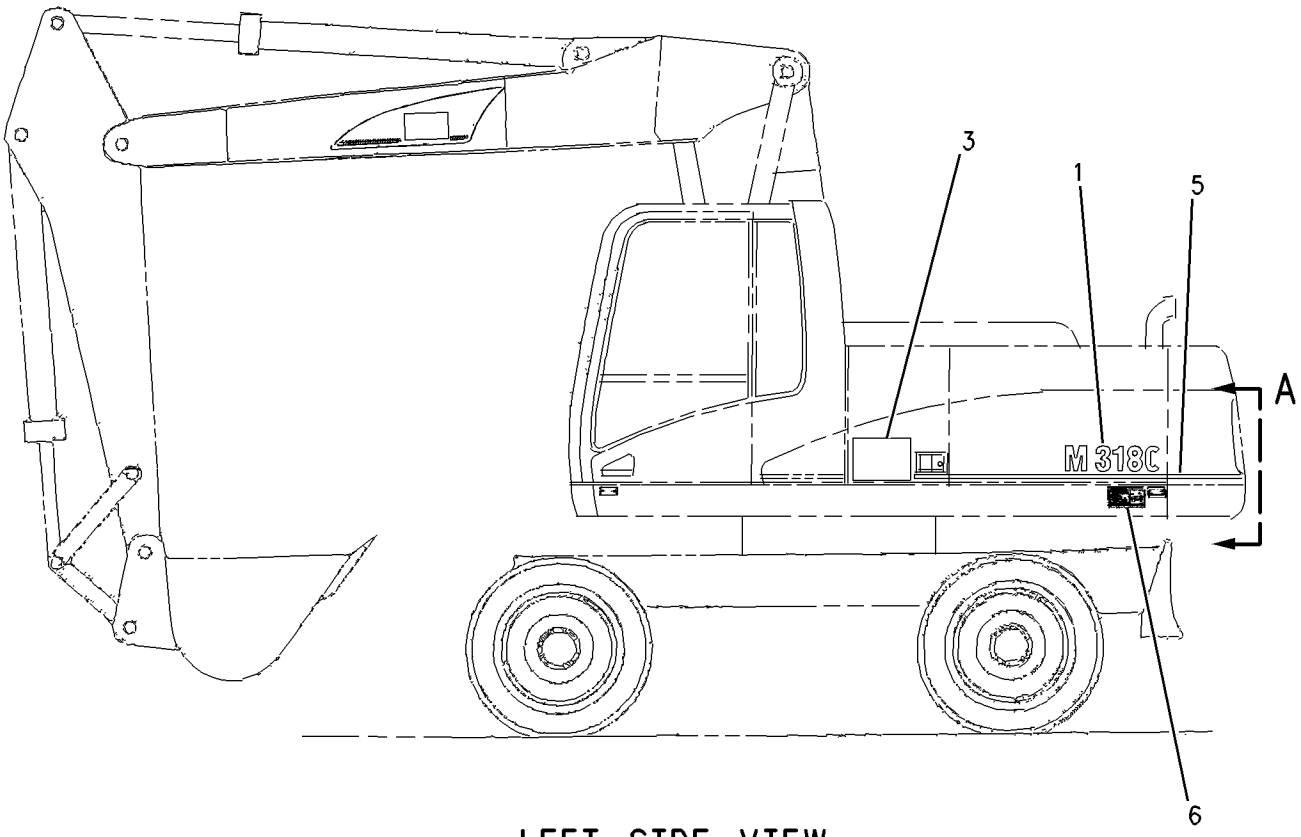

LEFT SIDE VIEW

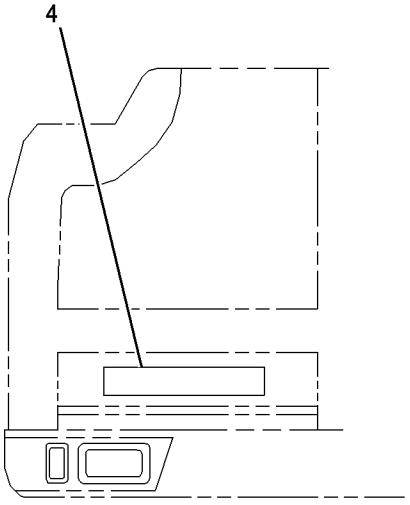

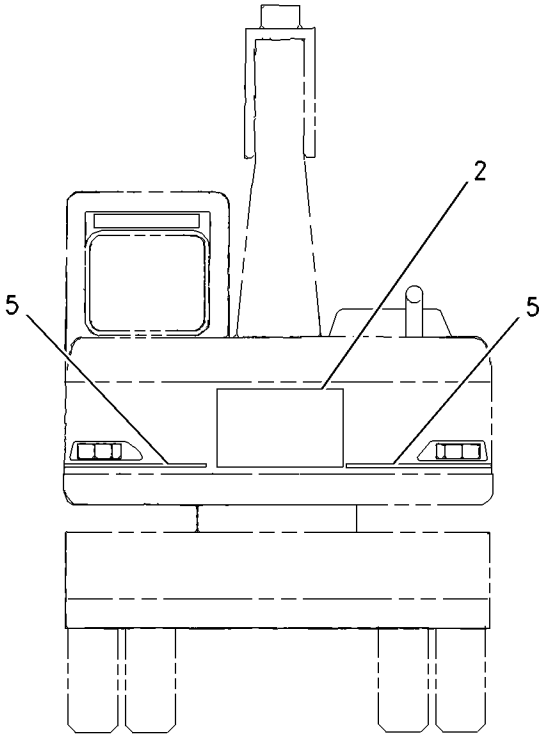

REAR VIEW

GRAPHIC #1 **<END>** g00917957

SERVICE EQUIPMENT AND SUPPLIES

188-4977 PLATE & FILM GP—ENGLISH

S/N: BCZ1-2000
AN ATTACHMENT

SMCS-7405, 7557 **i02161413**

NOTE	PART NUMBER	QTY	PART NAME 1 2 3 4 5 6 (PRODUCT LEVEL)	SEE PAGE
	208-1659	1	FILM-IDENTIFICATION (PRESSURE TAP)	
			(LOCATE INSIDE LEFT SERVICE BOX BESIDE PRESSURE FITTINGS)	
	7Y-0014	1	FILM-INSTRUCTION (HYDRAULIC OIL LEVEL)	
			(LOCATE INSIDE ENGINE ROOM ON THE SUPPRT AS-LH)	
	8C-3123	1	FILM-NOTICE (OSCILLATING AXLE)	
			(LOCATE INSIDE CAB ON RH WINDOW NEAR FILM-CONTROLS)	
	7Y-0005	1	FILM-WARNING (ENGINE SPEED CONTROL)	
			(LOCATE INSIDE CAB ON RH WINDOW NEAR FILM-CONTROLS	
	8T-6845	1	FILM-WARNING (DIRECTION CONTROL)	
			(LOCATE INSIDE CAB ON COVER OF CAB DOOR)	
	167-7223	1	FILM-WARNING (UNIVERSAL-READ MANUAL)	
			(LOCATE INSIDE CAB ON RH WINDOW NEAR FILM-CONTROLS)	

<END>

188-4978 PLATE & FILM GP—FINNISH

S/N: BCZ1-2000
AN ATTACHMENT

SMCS-7405, 7557 **i02160461**

NOTE	PART NUMBER	QTY	PART NAME 1 2 3 4 5 6 (PRODUCT LEVEL)	SEE PAGE
	208-8730	1	FILM-IDENTIFICATION (PRESSURE TAP)	
			(INSIDE LEFT SERVICE BOX BESIDE PRESSURE FITTINGS)	
	128-4998	1	FILM-NOTICE (OSCILLATING AXLE)	
			(ON RH BOOM TOWER NEAR BOOM PIN)	
	109-1448	1	FILM-WARNING (ENGINE SPEED CONTROL)	
			(INSIDE CAB ON RH WINDOW NEAR FILM CONTROLS)	
	128-4996	1	FILM-WARNING (DIRECTION CONTROL) (BOOM OVER REAR AXLE)	
			(INSIDE CAB ON RH WINDOW NEAR FILM CONTROLS)	
	190-8150	1	FILM-WARNING (UNIVERSAL-READ MANUAL)	
			(INSIDE CAB ON RH WINDOW NEAR FILM-CONTROLS)	

<END>

188-4979 PLATE & FILM GP—DANISH

S/N: BCZ1-2000

AN ATTACHMENT

SMCS-7405, 7557 **i02176626**

NOTE	PART NUMBER	QTY	PART NAME 1 2 3 4 5 6 (PRODUCT LEVEL)	SEE PAGE
	208-8728	1	FILM-IDENTIFICATION (PRESSURE TAP)	
			(INSIDE LEFT SERVICE BOX BESIDE PRESSURE FITTINGS)	
	3E-1033	1	FILM-NOTICE (AXLE OSCILLATION) (OSCILLATING AXLE)	
			(RH BOOM TOWER NEAR BOOM PIN)	
	3E-1406	1	FILM-WARNING (DIRECTION CONTROL) (BOOM OVER REAR AXLE)	
			(INSIDE CAB ON RH WINDOW NEAR FILM CONTROLS)	
	6I-5904	1	FILM-WARNING (ENGINE SPEED CONTROL)	
			(INSIDE CAB ON RH WINDOW NEAR FILM CONTROLS)	
	167-7231	1	FILM-WARNING (UNIVERSAL-READ MANUAL)	
			(INSIDE CAB ON RH WINDOW NEAR FILM-CONTROLS)	

<END>

188-4980 PLATE & FILM GP—DUTCH

S/N: BCZ1-2000

AN ATTACHMENT

SMCS-7405, 7557 **i02160372**

NOTE	PART NUMBER	QTY	PART NAME 1 2 3 4 5 6 (PRODUCT LEVEL)	SEE PAGE
	208-8729	1	FILM-IDENTIFICATION (PRESSURE TAP)	
			(INSIDE LEFT SERVICE BOX BESIDE PRESSURE FITTINGS)	
	3E-1035	1	FILM-NOTICE (OSCILLATING AXLE)	
			(RH BOOM TOWER NEAR BOOM PIN)	
	3E-1408	1	FILM-WARNING (DIRECTION CONTROL) (BOOM OVER REAR AXLE)	
			(INSIDE CAB ON RH WINDOW NEAR FILM CONTROLS)	
	4I-8665	1	FILM-WARNING (ENGINE SPEED CONTROL)	
			(INSIDE CAB ON RH WINDOW NEAR FILM CONTROLS)	
	167-7229	1	FILM-WARNING (UNIVERSAL-READ MANUAL)	
			(INSIDE CAB ON RH WINDOW NEAR FILM-CONTROLS)	

<END>

SERVICE EQUIPMENT AND SUPPLIES

188-4981 PLATE & FILM GP–FRENCH

S/N: BCZ1-2000
AN ATTACHMENT

SMCS-7405, 7557 **i02160373**

NOTE	PART NUMBER	QTY	PART NAME 1 2 3 4 5 6 (PRODUCT LEVEL)	SEE PAGE
	208-8731	1	FILM-IDENTIFICATION (PRESSURE TAP)	
			(INSIDE LEFT SERVICE BOX BESIDE PRESSURE FITTINGS)	
	8C-3124	1	FILM-NOTICE (OSCILLATING AXLE)	
			(RH BOOM TOWER NEAR BOOM PIN)	
	7Y-0034	1	FILM-WARNING (ENGINE SPEED CONTROL)	
			(INSIDE CAB ON RH WINDOW NEAR FILM CONTROLS)	
	8T-7123	1	FILM-WARNING (DIRECTION CONTROL) (BOOM OVER REAR AXLE)	
			(INSIDE CAB ON RH WINDOW NEAR FILM CONTROLS)	
	167-7224	1	FILM-WARNING (UNIVERSAL-READ MANUAL)	
			(INSIDE CAB ON RH WINDOW NEAR FILM-CONTROL)	
			<END>	

SERVICE EQUIPMENT AND SUPPLIES

188-4982 PLATE & FILM GP—GERMAN

S/N: BCZ1-2000

AN ATTACHMENT

SMCS-7405, 7557 **i02160374**

NOTE	PART NUMBER	QTY	PART NAME 1 2 3 4 5 6 (PRODUCT LEVEL)	SEE PAGE
	208-8732	1	FILM-IDENTIFICATION (PRESSURE TAP)	
			(INSIDE LEFT SERVICE BOX BESIDE PRESSURE FITTINGS)	
B	**118-7755**	2	FILM-IDENTIFICATION (ENVIRONMENTAL CONFIGURATION)	
			(ON C-POST OF CAB AND ON TOP ENGINE DOOR ON LH SIDE)	
	117-6558	3	FILM-IDENTIFICATION (20-KM/H)	
			(ON C-POST FROM CAB GP, COUNTERWEIGHT LH SIDE, HOOD AS-RADIATOR)	
	8C-3127	1	FILM-NOTICE (OSCILLATING AXLE)	
			(ON RH BOOM TOWER NEAR BOOM PIN)	
	123-5112	2	FILM-STRIPE (RED, WHITE) (ENGINE)	
			(ON BOTH SIDES OF STICK GP BETWEEN ROTATION POINT AND EYE OF BUCKER CYLINDER)	
	127-7181	1	FILM-CERTIFICATION (ENGINE)	
			(ON RH BUMPER NEAR BEAM/TURN GP)	
	7Y-6123	1	FILM-WARNING (ENGINE SPEED CONTROL)	
			(INSIDE CAB ON RH WINDOW NEAR FILM CONTROLS)	
	8T-7126	1	FILM-WARNING (DIRECTION CONTROL) (BOOM OVER REAR AXLE)	
			(INSIDE CAB ON RH WINDOW NEAR FILM CONTROLS)	
	117-6560	1	FILM-WARNING (ENGINE)	
			(ON TOP ENGINE COVER NEAR LOCK AS)	
	167-7226	1	FILM-WARNING (UNIVERSAL-READ MANUAL)	
			(INSIDE CB ON RH WINDOW NEAR FILM-CONTROLS)	

B-USE AS REQUIRED

<END>

SERVICE EQUIPMENT AND SUPPLIES

188-4983 PLATE & FILM GP—GREEK

S/N: BCZ1-2000

AN ATTACHMENT

SMCS-7405, 7557 **i02160375**

NOTE	PART NUMBER	QTY	PART NAME 1 2 3 4 5 6 (PRODUCT LEVEL)	SEE PAGE
	208-8733	1	FILM-IDENTIFICATION (PRESSURE TAP)	
			(INSIDE LEFT SERVICE BOX BESIDE PRESSURE FITTINGS)	
	3E-1034	1	FILM-NOTICE (OSCILLATING AXLE)	
			(RH BOOM TOWER NEAR BOOM PIN)	
	3E-1407	1	FILM-WARNING (DIRECTION CONTROL) (BOOM OVER REAR AXLE)	
			(INSIDE CAB ON RH WINDOW NEAR FILM CONTROLS	
	4I-8683	1	FILM-WARNING (ENGINE SPEED CONTROL)	
			(INSIDE CAB ON RH WINDOW NEAR FILM CONTROLS)	
	167-7230	1	FILM-WARNING (UNIVERSAL-READ MANUAL)	
			(INSIDE CAB ON RH WINDOW NEAR FILM-CONTROLS)	

<END>

188-4984 PLATE & FILM GP—ITALIAN

S/N: BCZ1-2000

AN ATTACHMENT

SMCS-7405, 7557 **i02160382**

NOTE	PART NUMBER	QTY	PART NAME 1 2 3 4 5 6 (PRODUCT LEVEL)	SEE PAGE
	208-8734	1	FILM-IDENTIFICATION (PRESSURE TAP)	
			(INSIDE LEFT SERVICE BOX BESIDE PRESSURE FITTINGS)	
	8C-3128	1	FILM-NOTICE (OSCILLATING AXLE)	
			(RH BOOM TOWER NEAR BOOM PIN)	
	7Y-6124	1	FILM-WARNING (ENGINE SPEED CONTROL)	
			(INSIDE CAB ON RH WINDOW NEAR FILM CONTROLS)	
	8T-7127	1	FILM-WARNING (DIRECTION CONTROL) (BOOM OVER REAR AXLE)	
			(INSIDE CAB ON RH WINDOW NEAR FILM CONTROLS)	
	167-7227	1	FILM-WARNING (UNIVERSAL-READ MANUAL)	
			(INSIDE CAB ON RH WINDOW NEAR FILM CONTROLS)	

<END>

SERVICE EQUIPMENT AND SUPPLIES

188-4985 PLATE & FILM GP—NORWEGIAN

S/N: BCZ1-2000

AN ATTACHMENT

SMCS-7405, 7557 **i02160379**

NOTE	PART NUMBER	QTY	PART NAME 1 2 3 4 5 6 (PRODUCT LEVEL)	SEE PAGE
	208-8735	1	FILM-IDENTIFICATION (PRESSURE TAP)	
			(INSIDE LEFT SERVICE BOX BESIDE PRESSURE FITTINGS)	
	122-4634	1	FILM-NOTICE (OSCILLATING AXLE)	
			(RH BOOM TOWER NEAR BOOM PIN)	
	109-1447	1	FILM-WARNING (ENGINE SPEED CONTROL)	
			(INSIDE CAB ON RH WINDOW NEAR FILM CONTROLS)	
	122-4631	1	FILM-WARNING (DIRECTION CONTROL) (BOOM OVER REAR AXLE)	
			(INSIDE CAB ON RH WINDOW NEAR FILM CONTROLS)	
	190-8152	1	FILM-WARNING (UNIVERSAL-READ MANUAL)	
			(INSIDE CAB ON RH WINDOW NEAR FILM-CONTROLS)	

<END>

188-4986 PLATE & FILM GP—PORTUGUESE

S/N: BCZ1-2000

AN ATTACHMENT

SMCS-7405, 7557 **i02160378**

NOTE	PART NUMBER	QTY	PART NAME 1 2 3 4 5 6 (PRODUCT LEVEL)	SEE PAGE
	208-8736	1	FILM-IDENTIFICATION (PRESSURE TAP)	
			(INSIDE LEFT SERVICE BOX BESIDE PRESSURE FITTINGS)	
	8C-3126	1	FILM-NOTICE (OSCILLATING AXLE)	
			(RH BOOM TOWER NEAR BOOM PIN)	
	4I-1998	1	FILM-WARNING (ENGINE SPEED CONTROL)	
			(INSIDE CAB ON RH WINDOW NEAR FILM CONTROLS)	
	8T-7125	1	FILM-WARNING (DIRECTION CONTROL) (BOOM OVER REAR AXLE)	
			(INSIDE CAB ON RH WINDOW NEAR FILM CONTROLS)	
	167-7228	1	FILM-WARNING (UNIVERSAL-READ MANUAL)	
			(INSIDE CAB ON RH WINDOW NEAR FILM-CONTROLS)	

<END>

188-4987 PLATE & FILM GP—SPANISH

S/N: BCZ1-2000
AN ATTACHMENT

SMCS-7405, 7557 **i02161411**

NOTE	PART NUMBER	QTY	PART NAME 1 2 3 4 5 6 (PRODUCT LEVEL)	SEE PAGE
	208-8738	1	FILM (PRESSURE TAP)	
			(INSIDE LEFT SERVICE BOX BESIDE PRESSURE FITTINGS)	
	8C-3125	1	FILM-NOTICE (OSCILLATING AXLE)	
			(RH BOOM TOWER NEAR BOOM PIN)	
	7Y-0021	1	FILM-WARNING (ENGINE SPEED CONTROL)	
			(INSIDE CAB ON RH WINDOW NEAR FILM CONTROLS)	
	8T-7124	1	FILM-WARNING (BOOM OVER REAR AXLE)	
			(INSIDE CAB ON RH WINDOW NEAR FILM CONTROLS)	
	167-7225	1	FILM-WARNING (UNIVERSAL-READ MANUAL)	
			(INSIDE CAB ON RH WINDOW NEAR FILM-CONTROLS)	

<END>

188-4988 PLATE & FILM GP—SWEDISH

S/N: BCZ1-2000
AN ATTACHMENT

SMCS-7405, 7557 **i02162665**

NOTE	PART NUMBER	QTY	PART NAME 1 2 3 4 5 6 (PRODUCT LEVEL)	SEE PAGE
	208-8739	1	FILM-IDENTIFICATION (PRESSURE TAP)	
			(INSIDE LEFT SERVICE BOX BESIDE PRESSURE FITTINGS)	
	118-7755	2	FILM-IDENTIFICATION (ENVIRONMENTAL CONFIGURATION) (SOUND LEVEL)	
			(ON C-POST OF CAB AND ON TOP ENGINE DOOR LH SIDE)	
	8C-2210	1	FILM-NOTICE (OSCILLATING AXLE)	
			(RH BOOM TOWER NEAR BOOM PIN)	
	8C-3158	1	FILM-WARNING (BOOM OVER REAR AXLE)	
			(INSIDE CAB ON RH WINDOW NEAR FILM CONTROLS)	
	104-7263	1	FILM-WARNING (ENGINE SPEED CONTROL)	
			(INSIDE CAB ON RH WINDOW NEAR FILM CONTROLS)	
	190-8154	1	FILM-WARNING (UNIVERSAL-READ MANUAL)	
			(INSIDE CAB ON RH WINDOW NEAR FILM-CONTROLS)	

<END>

SERVICE EQUIPMENT AND SUPPLIES

198-0859 PLATE & FILM GP—RUSSIAN

S/N: BCZ1-2000

AN ATTACHMENT

SMCS-7405, 7557 **i02162662**

NOTE	PART NUMBER	QTY	PART NAME 1 2 3 4 5 6 (PRODUCT LEVEL)	SEE PAGE
	208-8737	1	FILM (PRESSURE TAP)	
			(INSIDE LEFT SERVICE BOX BESIDE PRESSURE FITTINGS)	
	122-2039	1	FILM-NOTICE (BOOM, STICK REMOVAL)	
			(RH BOOM TOWER NEAR BOOM PIN)	
	111-9081	1	FILM-WARNING (ENGINE SPEED CONTROL)	
			(INSIDE CAB ON RH WINDOW NEAR FILM CONTROLS)	
	122-2045	1	FILM-WARNING (BOOM OVER REAR AXLE)	
			(INSIDE CAB ON RH WINDOW NEAR FILM CONTROLS)	
	190-8153	1	FILM-WARNING (UNIVERSAL-READ MANUAL)	
			(INSIDE CAB ON RH WINDOW NEAR FILM CONTROLS)	

<END>

198-0860 PLATE & FILM GP—TURKISH

S/N: BCZ1-2000

AN ATTACHMENT

SMCS-7405, 7557 **i02162663**

NOTE	PART NUMBER	QTY	PART NAME 1 2 3 4 5 6 (PRODUCT LEVEL)	SEE PAGE
	208-8740	1	FILM (PRESSURE TAP)	
			(INSIDE LEFT SERVICE BOX BESIDE PRESSURE FITTING)	
	227-6887	1	FILM (HYDRAULIC OIL LEVEL)	
			(INSIDE ENGINE ROOM ON THE SUPRT AS-LH)	
	189-1603	1	FILM-NOTICE (OSCILLATING AXLE)	
			(RH BOOM TOWER NEAR BOOM PIN)	
	189-1602	1	FILM-WARNING (ENGINE SPEED CONTROL)	
			(INSIDE CAB ON RH WINDOW NEAR FILM CONTROLS)	
	189-1604	1	FILM-WARNING (BOOM OVER REAR AXLE)	
			(INSIDE CAB ON RH WINDOW NEAR FILM CONTROLS)	
	190-8155	1	FILM-WARNING (UNIVERSAL-READ MANUAL)	
			(INSIDE CAB ON RH WINDOW NEAR FILM-CONTROLS)	

<END>

PART NUMBER INDEX

Part	Page
0	
0S-1603	28
1	
1B-8736	14
	16
	32
	34
1F-2771	321
	335
1G-3176	630
1G-3410	422
1H-1023	171
	685
1H-5728	648
1J-9671	612
1M-4543	535
1M-6119	130
	134
1M-6120	130
	134
1N-3762	19
	21
1P-2808	934
1P-3702	506
	509
	516
	542
	589
	590
	591
	608
	610
1P-3703	491
	492
	509
	519
	521
	528
	576
	608
1P-3704	521
	528
	576
1P-4578	553
	569
	581
1P-4579	581
1P-6356	840
1R-5318	693
	713
	716
1S-9593	103
1U-3301	821
1U-3302	819
1U-8846	388
2	
2B-0858	24
2D-6392	732
2H-3922	176
2J-2668	581
2L-8509	640
2M-9780	23
	106
	108
	119
	513
	535
	538
	540
	542
	547
	566
	580
	587
	610
	693
	713
	716
2R-0409	220
	236
2S-1647	831
	834
2S-2109	842
2S-2756	26
2S-3440	12
	77
2S-4078	567
	576
2V-8260	162
2W-1145	619
2W-9533	385
2W-9710	81
	84
2Y-2272	685
	689
2Y-5881	648
	650
	651
	659
2Y-9286	640
	691
	692
	693
	713
	716
	743
3	
3B-4501	656
3B-4505	858
3C-6969	6
	179
	182
	426
	428
	433
	434
3C-8388	826
	827
3D-2824	83
	509
	513
	521
	528
	538
	540
	542
	580
	581
	662
	720
3D-4245	693
	713
	716
3D-7943	693
	709
	711
	713
	716
3E-1033	938
3E-1034	941
3E-1035	938
3E-1406	938
3E-1407	941
3E-1408	938
3E-1906	▶839
	840
3E-3364	125
3E-3365	106
	108
	124
	130
	134
	208
	433
	434
	547
	551
	553
3E-3371	208
3E-3383	202
	656
3E-4051	840
3E-4052	840
3E-4053	840
3E-4054	840
3E-4057	840
3E-4058	840
3E-4299	651
	659
3E-4321	877
	878
	881
	882
3E-4333	616
3E-4367	198
	200
3E-4988	286
	616
3E-5239	130
	134
3E-6761	708
3E-6766	741
3E-6787	171
3E-6788	696
	699
	701
	719
3E-6910	725
3E-8007	687
3E-8020	394
	919
3E-8025	732
3E-8557	198
	200
3F-9556	131
	135
	179
	182
	186
	211
	214
3G-3237	▶820
3J-0634	619
3J-1907	71
	74
	81
	122
	500
	511
	513
	525
	531
	535
	538
	540
	542
	544
	547
	548
	551
	553
	557
	566
	567
	569
	572
	574
	576
	580
	581
	583
	610
	618
	654
	662
	666
	669
	671
	673
	675
	677
	683
	684
	693
	713
	716
	719
3J-7354	449
	451
	548
	585

▶ **PRIMARY REFERENCE**

PART NUMBER INDEX

Part	Page
	587
3K-0360	23
	71
	74
	449
	451
	500
	502
	509
	511
	521
	525
	528
	531
	535
	547
	551
	566
	567
	580
	583
	587
	610
	664
	673
	675
	693
	713
	716
3K-0715	470
3P-1155	696
	699
	701
	719
3P-5414	896
	898
3S-1223	478
3S-8664	878
3T-0849	304
3T-0852	150
	162
	400
	401
	867
3T-5608	322
	336
3T-5760	130
	134
3T-6376	319
	333

4

Part	Page
4B-4274	44
4B-4277	103
4B-4863	867
4D-2297	685
	689
4D-8648	244
	255
	266
4E-0041	83
4E-1384	831
	834
	869
	871
4E-9273	521
4I-0575	757
4I-0576	757
4I-0577	757
4I-1206	831
	834
4I-1278	864
4I-1998	942
4I-3063	831
	834
4I-3308	775
4I-4286	858
	862
4I-4392	835
4I-5663	732
4I-7690	732
4I-8443	106
	108
4I-8665	938
4I-8683	941
4J-0520	518
	519
	553
	569
	576
	592
	593
	594
	669
	671
	673
	677
	709
4J-0522	553
	569
	581
	592
	593
	594
4J-0524	553
	569
	581
4J-0526	477
4J-2677	627
4J-5267	504
	506
	509
	516
	519
	521
	528
	538
	540
	542
	557
	581
	589
	590
	591
	608
	675
	693
	711
	713
	716
4J-5309	426
	428
	729
4J-5351	451
	453
	455
	466
4J-5477	515
4K-2039	685
	689
4K-4345	816
	817
4M-6921	388
	642
	644
4P-3838	40
4P-6422	935
4P-7429	131
	135
	186
	211
4P-8134	131
	135
	139
	141
	186
	190
	193
	195
	198
	200
	206
	211
4W-5359	32
	34
4Y-8774	832

5

Part	Page
5C-1777	110
	113
5C-1796	55
5C-1809	110
	113
5C-2874	131
	135
	139
	141
	153
	157
	165
	169
	190
	193
	195
	198
	200
	640
	656
5C-2890	45
	130
	131
	134
	135
	148
	354
	356
	357
	360
	363
	364
	368
	372
	403
	867
	876
	890
5C-5306	171
	894
5C-7261	44
	45
	87
	91
	106
	108
	124
	125
	131
	135
	143
	179
	182
	186
	211
	214
	350
	354
	360
	364
	368
	372
	375
	380
	383
	396
	398
	400
	401
	403
	405
	426
	428
	587
	610
	654
	795
	797
	832
	835
	842
	847
	869
	871
	878
	884
	886

► **PRIMARY REFERENCE**

PART NUMBER INDEX

Part	Page	Part	Page	Part	Page	Part	Page
5C-7883	437		869		699	5W-1291	139
	535	5P-1251	71	5P-7689	835		141
5C-8312	3		74	5P-7958	883	5W-1318	892
	135	5P-1442	74	5P-7970	431	5W-1341	890
	656	5P-1480	687		648		896
	867	5P-1693	71		890		898
5C-9553	93	5P-3456	621	5P-8112	504	5W-1386	219
	131		719		506		226
	135		735	5P-8245	28		227
	214		736	5P-8247	219		228
	372	5P-4116	5		229		229
	832		6	5P-8356	621	5W-1401	321
	835		30		719		335
	842		44		735		703
	844		45		736	5W-1403	143
	852		64	5P-8444	492		208
	876		66		504	5W-1412	775
5D-1026	12		93		506	5W-1417	93
	95		99	5P-8500	119		822
5F-1678	704		125	5P-9186	23	5W-1418	290
5F-9144	40		131		696		292
5G-3296	929		135		699	5W-1419	290
	932		139	5W-0113	290		292
5I-3523	780		141	5W-0116	290	5W-1420	290
5I-3707	856		179		292		292
5I-4277	487		182	5W-0118	290	5W-1422	290
5I-8270	130		186		292		292
	134		211	5W-0119	290	5W-1437	731
5I-8307	535		214		292	5W-1440	219
	544		354	5W-0122	290		226
	548		364		292		227
5J-2974	683		368	5W-0911	795		228
	726		372		797		229
5K-5221	709		375	5W-0964	232	5W-1453	449
5K-5338	99		380		246	5W-1487	321
5K-9090	491		385		257		335
	492		396		267	5W-1509	319
	504		398		279		333
	506		403	5W-0965	219	5W-1602	333
	509		405		226	5W-1693	290
	518		795		227		292
	519		797		228		321
	535		842		229		335
	553		886	5W-1102	130	5W-1696	426
	567	5P-4924	71		134		428
	569		74	5W-1109	169	5W-1697	99
	576		81	5W-1112	525	5W-1698	319
	580	5P-4961	71	5W-1119	3		333
	581		74		165	5W-1701	761
	589	5P-5623	190		390		763
	590		193		547	5W-1705	548
	591	5P-5874	730		855	5W-1722	419
	592	5P-6718	40	5W-1123	139	5W-1772	319
	593	5P-6903	867		141		333
	594	5P-7466	504	5W-1124	139	5W-1975	165
	703		506		141	5W-1987	900
5P-0761	130	5P-7467	504	5W-1125	139	5W-1992	202
	134		506		141	5W-2003	130
5P-0767	881	5P-7468	492	5W-1237	313		134
	882		504		315	5W-2039	150
5P-0804	385		506	5W-1250	488		162
5P-1076	364	5P-7469	492	5W-1259	892		163
	368		504	5W-1274	453	5W-2040	153
	372		506		455	5W-2072	322
	394	5P-7530	696		466		336

► **PRIMARY REFERENCE**

PART NUMBER INDEX

Part	Page
5W-2073	322
	336
5W-2074	322
	336
5W-2173	301
	303
	304
	305
5W-2177	220
	232
	236
	246
	257
	267
	279
5W-2234	307
	308
	311
	312
	317
5W-2236	309
5W-2240	313
	318
5W-2241	313
	315
	316
	318
5W-2248	309
	314
5W-2585	662
5W-2590	642
5W-2731	795
	797
5W-2732	410
	779
5W-2733	410
	779
5W-2750	290
	292
5W-2784	290
	292
5W-2793	277
	337
5W-2795	322
	336
5W-2817	219
	229
	447
	448
	761
	763
	766
	768
	770
	773
	775
	780
	784
	786
	788
	790
	795
	797
5W-2819	349
5W-2975	802
	803
	804
5W-3061	220
	231
	236
5W-3418	91
5W-3644	322
	336
5W-4081	651
5W-4082	651
5W-4223	795
	797
5W-4819	246
	257
	268
	279
5W-4877	449
5W-4881	449
5W-4882	449
5W-4957	900
5W-4987	294
5W-5002	648
5W-5009	685
	689
5W-5024	648
5W-5049	150
	162
5W-5066	693
	713
	716
5W-5095	650
	658
5W-5104	824
5W-5108	449
5W-5121	307
	308
	311
	312
	317
5W-5123	307
	308
	311
	312
	313
	315
	316
	317
	318
5W-5131	106
	108
5W-5162	449
5W-5271	449
5W-5272	449
5W-5273	449
5W-5276	449
5W-5348	319
5W-5352	243
	254
	265
	276
5W-5398	243
	254
	265
	276
5W-5475	244
	255
	266
	277
5W-5483	246
	257
	268
	279
5W-5485	246
	257
	268
	279
5W-5531	244
	255
	266
	277
5W-5547	246
	257
	268
	279
5W-5548	246
	257
	268
	279
5W-5549	246
	257
	268
	279
5W-5550	246
	257
	268
	279
5W-5551	246
	257
	268
	279
5W-5552	246
	257
	268
	279
5W-5553	246
	257
	268
	279
5W-5554	246
	257
	268
	279
5W-5555	246
	257
	268
	279
5W-5556	246
	257
	268
	279
5W-5557	246
	257
	268
	279
5W-5558	246
	257
	268
	279
5W-5559	246
	257
	268
	279
5W-5560	246
	257
	268
	279
5W-5561	246
	257
	268
	279
5W-5562	246
	268
5W-5627	244
	255
	266
	277
5W-5632	246
	257
	268
	279
5W-5646	246
	257
	268
	279
5W-5666	243
	254
	265
5W-5682	231
	244
	255
	266
	277
5W-5696	246
	257
	268
	279
5W-5842	666
5W-5900	642
5W-6076	244
	255
	266
	277
5W-6315	186
	211
5W-6355	290
	292
5W-6373	319
	333
5W-6377	231
	245
	256
	267
	277
5W-6378	319
	333
5W-6388	466
5W-6391	246
	257
	268
	279
5W-6392	246
	257
	268
	279

► PRIMARY REFERENCE

PART NUMBER INDEX

Part	Page	Part	Page	Part	Page	Part	Page
5W-6400	246		590	6E-0719	424		128
	257		591	6E-0720	424	6I-0572	40
	268		608	6E-0721	424	6I-0593	24
	279	5W-9971	▶413	6E-0722	424		58
5W-6442	246		566	6E-0723	424	6I-0594	174
	257	5W-9972	426	6E-0725	424		175
	268	5Y-0648	728	6E-0726	424	6I-0645	32
	279	5Y-0660	847	6E-1569	424		34
5W-6643	246		849	6E-1570	424		77
	257	5Y-2425	354	6E-1571	424		79
	268		357	6E-1580	487	6I-0646	24
	279		363	6E-1607	729	6I-0650	34
5W-6863	354		364		734	6I-0654	36
	360		368		738		126
5W-7258	347		372	6E-3283	619		128
	348		403	6E-3855	729	6I-0686	19
5W-7392	319		405	6E-3861	734	6I-0787	55
	333			6E-3873	487	6I-0789	32
5W-7476	612			6E-4240	630	6I-0839	32
5W-7843	698	**6**		6E-4401	738		34
5W-7955	806			6E-4404	740		79
5W-7957	807	6C-3431	179	6E-5479	687		126
5W-8022	122	6C-4000	832	6F-7045	176		128
5W-8034	333		869	6H-3957	24	6I-0846	32
5W-8104	612		871	6I-0217	12		34
	625	6C-7592	158		32	6I-0847	31
5W-8375	320	6C-8379	869		34	6I-1074	19
	334		871		39	6I-1075	19
5W-8380	290	6C-8382	869		40	6I-1076	19
	292		871		95	6I-1090	126
5W-8650	98	6C-8584	831		103		128
5W-8653	106	6C-8787	866		110	6I-1132	95
5W-8654	98	6C-8972	831		113	6I-1206	51
5W-8655	98		834		172	6I-1418	143
5W-8656	98	6C-8986	831	6I-0235	53		208
5W-8657	98		834	6I-0254	32	6I-1497	40
5W-8658	106	6C-9037	916		34	6I-3717	51
5W-8752	310	6C-9078	831		110	6I-3718	51
5W-8937	876		834		113	6I-4012	174
5W-9411	685	6C-9087	831		126	6I-4079	40
5W-9413	696		834		128	6I-4354	19
	699	6C-9089	915	6I-0256	29	6I-4374	55
5W-9420	612	6C-9119	856	6I-0260	12		57
	693		901		32		77
	709	6C-9121	831		34		79
	711		834		40	6I-4681	40
	713	6C-9122	831		55	6I-4709	40
	716		834		57	6I-4710	40
	726	6C-9130	915		58	6I-4712	9
5W-9431	723		919		88		▶50
	892	6C-9232	831		126	6I-4714	50
5W-9436	616		834		128	6I-4716	16
5W-9495	301	6C-9235	831	6I-0289	40		50
	303		834	6I-0291	40	6I-4786	58
	304	6C-9236	921		55	6I-4793	77
	305	6C-9237	921		58		79
5W-9522	121		922		103	6I-5331	864
5W-9665	202	6D-4244	131	6I-0363	40	6I-5904	938
5W-9702	922		135	6I-0364	175	6M-5062	685
5W-9703	922		190	6I-0423	31	6P-4467	878
5W-9857	519		193		126	6R-7653	853
	521		195		128	6S-8584	867
	528		198	6I-0456	77	6S-8620	119
	557		200		79	6T-3631	918
	589	6E-0715	424		126	6T-5749	243

▶ **PRIMARY REFERENCE**

PART NUMBER INDEX

Part	Page
	254
	265
	276
	323
	337
6T-6277	320
	334
6T-6283	320
	334
6T-6305	246
	257
	268
	279
6T-6308	319
	321
	333
	335
6T-6408	232
	245
	256
	267
	278
6V-0292	139
	141
	383
6V-0400	491
	492
	509
	519
	521
	576
	608
6V-0401	521
	576
6V-0852	547
	566
	576
6V-1179	618
6V-2313	640
6V-2317	892
6V-2652	244
	255
	266
6V-3265	131
6V-3922	451
	612
	729
	732
	734
6V-4298	186
	211
6V-4367	719
6V-4429	439
6V-4433	548
	567
	576
6V-5049	664
	696
	699
6V-5192	301
	303
	305
6V-5196	321
	335
	426
	428
6V-5200	422
6V-5201	637
6V-5202	320
	334
6V-5210	153
	169
	867
6V-5215	131
	135
	651
	659
	780
6V-5217	892
6V-5225	231
	244
	255
	266
	277
6V-5326	691
	692
	737
6V-5391	693
	713
	716
6V-5586	704
	706
	738
	739
6V-5683	701
	719
	826
	827
6V-5778	630
6V-5844	219
	229
6V-6317	650
	654
	658
6V-6560	226
	227
	228
6V-6787	442
	443
6V-6889	357
	363
6V-6936	321
	335
6V-6957	359
6V-7238	23
	71
	74
6V-7357	832
	835
6V-7688	226
	227
	228
6V-7723	422
6V-7744	150
	162
6V-7970	480
6V-8002	632
6V-8127	357
	363
6V-8183	51
6V-8200	471
	687
6V-8201	485
	627
6V-8202	731
	795
	797
6V-8212	795
	797
6V-8227	640
6V-8351	725
6V-8352	616
	740
6V-8362	178
6V-8373	918
6V-8397	99
	122
	479
	488
	498
	500
	502
	508
	513
	521
	525
	527
	528
	531
	534
	535
	538
	540
	542
	544
	547
	548
	551
	553
	557
	559
	561
	562
	564
	565
	566
	567
	569
	571
	572
	574
	580
	581
	583
	585
	587
	601
	603
	605
	610
	666
	668
	669
	671
	673
	675
	677
	693
	713
	716
	739
6V-8398	494
	496
	498
	500
	511
	521
	525
	527
	528
	531
	534
	535
	547
	562
	566
	567
	576
	580
	581
	583
	585
	587
	595
	597
	599
	607
	654
	664
	744
	747
	750
6V-8399	709
	711
	728
	744
	747
	750
6V-8553	527
6V-8554	527
6V-8556	504
	518
6V-8557	491
	504
	518
6V-8625	511
	525
	531
	547
	566
	587
6V-8626	538
	540
	542
6V-8633	580
6V-8634	500
	547
	551
	566
	583

► **PRIMARY REFERENCE**

PART NUMBER INDEX

Part	Page	Part	Page	Part	Page	Part	Page
	610		564		528		553
6V-8636	513		565		531		581
	525		571		534		583
	531		668		535	6V-9837	521
	535	6V-8731	562		562		525
	538	6V-8734	576		585		528
	540	6V-8774	671		595		531
	542		673		597		535
	544		677		599		567
	547	6V-8781	513		607		581
	553		538	6V-9170	542	6V-9838	513
	557		540	6V-9172	576	6V-9843	581
	566		542	6V-9200	585		666
	569		553	6V-9356	527	6V-9844	525
	572		669	6V-9502	135		531
	574		675	6V-9673	636	6V-9846	521
	580	6V-8789	595	6V-9746	504		528
	610		597		506	6V-9850	99
	666		599		509		538
	669	6V-8936	521		516		540
	671		528		518		544
	673		535		519		547
	675		567		521		553
	677		581		528		566
6V-8637	509		583		535		572
	521	6V-8942	521		557		580
	528		528		576		583
6V-8638	566		581		580		610
	587	6V-8943	535		581		666
6V-8639	521	6V-8944	576	6V-9807	601		669
	528	6V-8978	630		603		673
	547	6V-8980	601		605	6V-9851	521
	566		603	6V-9808	595		525
	587		605		597		531
	664	6V-8981	511		599		562
6V-8640	580		535		607		566
6V-8642	513		585	6V-9829	498		576
6V-8713	513	6V-8982	542		508	6V-9872	587
	538	6V-8984	576		522	6V-9873	576
	540	6V-8994	521		527		654
	542		527		528	6V-9874	580
6V-8715	580		528		534	6W-5677	485
	610		534		605	6W-6005	130
6V-8716	576	6V-8995	521		666		134
6V-8721	535		527	6V-9830	494	6W-6672	375
	547		528		496	6Y-0529	319
	566		534		522		333
6V-8723	500		585		527	6Y-2942	244
	502	6V-9001	677		529		255
	567	6V-9002	535		534		266
	673		664		664		323
	675	6V-9004	509	6V-9832	504	6Y-2943	244
6V-8724	544	6V-9005	580		506		255
	548	6V-9168	521		518		266
	551		527		557		323
	557		528	6V-9833	491		
	567		534		492		
	572		574		504		
	580		601		506		
	583		603		518	7C-0351	40
	669		605		554	7C-1224	40
	671	6V-9169	511		569	7C-4616	32
	675		521	6V-9836	500		34
6V-8730	559		525		502	7D-8048	50
	561		527		513	7I-1351	457

7

► **PRIMARY REFERENCE**

PART NUMBER INDEX

Part	Page	Part	Page	Part	Page	Part	Page
	459		276		498		396
	468	7T-4532	839		508		398
7I-1352	457	7T-6799	178		513		492
	459	7T-8891	186		522		504
	468		211		529		506
7I-1353	468	7T-9342	242		538		614
7I-3921	89		253		540	7X-7958	71
7I-8479	321		264	7X-2534	99		74
	335		275		506	7X-8592	723
7J-6285	470	7T-9343	244		842	7X-9364	472
7J-6288	177		255	7X-2535	500	7Y-0005	937
7J-9108	513		266		601	7Y-0014	937
	535		277		603	7Y-0021	943
	538	7W-1176	31		605	7Y-0034	939
	540	7W-1251	130	7X-2536	403	7Y-0623	871
	542		134		405	7Y-1647	388
	698	7W-2327	54		666	7Y-1648	388
7J-9933	693	7W-2501	19	7X-2537	87	7Y-1858	226
	698	7W-2505	42	7X-2538	124		227
	713	7W-2518	22	7X-2549	383		228
	716	7W-2519	22	7X-2551	677		294
7M-7410	21	7W-2520	22	7X-2552	646		442
	58	7W-2628	95		647		443
	103	7W-2632	126		680	7Y-2219	771
7M-8485	449		128		775		▶794
	451	7W-4539	110		777		799
	576	7W-4553	110	7X-2553	755		800
	580		113		759		801
7N-0718	130	7W-4589	14	7X-2555	869	7Y-2397	759
	134		16		871	7Y-2496	773
	▶176	7W-4590	14	7X-2556	37		784
7T-0093	103		16	7X-2563	319		786
7T-0508	320	7W-4591	14		334		788
	334		16	7X-2565	294	7Y-2497	385
	651	7W-4592	14	7X-2619	845		755
	659		16		890		757
7T-0510	321	7W-4632	50	7X-2621	390	7Y-2498	385
	335	7W-4634	50		662		755
7T-0552	243	7W-4635	50	7X-3007	934		757
	254	7W-4642	31	7X-3174	438		784
	265	7W-4648	55	7X-3229	934		786
	276	7W-4650	55	7X-4744	719		788
7T-0558	243	7W-4669	846	7X-4803	755		790
	254	7W-4782	55		759	7Y-3110	777
	265	7W-4816	14		784	7Y-3355	759
	276	7W-4817	14		786	7Y-3591	461
7T-0560	243	7W-4818	14		788	7Y-3950	179
	254	7W-4819	14		790		182
	265	7X-0510	522	7X-6315	145		202
	276		576	7X-7644	934	7Y-3953	179
7T-0561	243	7X-0543	410	7X-7700	119		182
	254		779	7X-7729	3		202
	265	7X-0575	179		62	7Y-4622	457
	276	7X-0591	646		64		459
7T-0562	243		647		66		468
	254	7X-0605	867		67	7Y-4633	457
	265	7X-0613	208		81		459
	276		581		84		468
7T-0563	243	7X-0623	840		89	7Y-5116	461
	254	7X-0796	150		364	7Y-5119	461
	265		162		368	7Y-5216	457
	276	7X-2436	840		372		459
7T-0564	243	7X-2475	866		375		463
	254	7X-2533	494		380		468
	265		496		383	7Y-5219	738

▶ PRIMARY REFERENCE

PART NUMBER INDEX

Part	Page	Part	Page	Part	Page	Part	Page
7Y-5227	776	8E-8292	186		569		254
	866		211	8T-0273	518		265
7Y-5239	461	8E-8293	186		554		276
7Y-5262	106		211		569		323
7Y-5458	202	8E-9490	813	8T-0275	231		337
7Y-5464	202		814		245	8T-2659	867
7Y-6123	940		815		256	8T-2922	730
7Y-6124	941		816		267	8T-2997	648
7Y-7388	642		817		278	8T-3016	131
	644	8G-4189	465	8T-0282	219		135
7Y-7992	506		466		229		139
7Y-8165	385	8H-5303	176	8T-0287	44		141
7Y-8170	576	8H-5306	176		131		165
		8H-8648	934		179		179
8		8H-9789	320		182		182
		8I-0685	531	8T-0288	131		186
		8I-3633	666		135		211
8C-0538	99	8J-2413	726		139	8T-3220	829
8C-0572	87		743		141	8T-3612	44
	832	8L-5828	824		400		45
	835	8L-8413	125		401	8T-3647	551
8C-2210	943		130	8T-0289	119	8T-3957	319
8C-3078	720		134	8T-0328	119		333
8C-3080	487		141		130		470
8C-3082	319		182		157	8T-3992	362
	333	8M-2771	165		400		853
8C-3086	726	8M-2772	131		401	8T-3998	3
8C-3093	727		135		542	8T-4121	71
8C-3103	319	8M-4069	835		656		74
	333	8N-7983	110	8T-0337	202		89
8C-3123	937		113	8T-0341	516		91
8C-3124	939		172		608		99
8C-3125	943	8P-9770	813	8T-0389	106		106
8C-3126	942		814		117		131
8C-3127	940	8R-1569	913		554		135
8C-3128	941	8R-1571	911		569		139
8C-3131	698	8R-1573	911		640		141
8C-3158	943	8R-1577	911		840		186
8C-3428	685	8R-1578	911	8T-0639	403		195
	689	8R-1585	911		405		211
8C-3445	58	8R-1617	911	8T-0656	226		353
8C-3681	71	8R-1677	913		227		383
	74	8R-3260	911		228		394
8C-4316	934	8R-8714	▶138	8T-0706	683		398
8C-4365	488	8T-0075	513	8T-0707	465		403
8C-5607	148		572		466		405
8C-5608	148	8T-0076	583		472		409
8C-5918	130	8T-0086	153	8T-1120	576		506
	134	8T-0087	135	8T-1159	618		509
8C-6354	179	8T-0129	562		840		516
	182	8T-0154	824	8T-1687	567		554
8C-6364	890		881	8T-1779	581		569
8C-6440	823		882	8T-2223	509		581
8C-7505	654	8T-0226	577		538		589
8C-8451	403	8T-0252	535		540		590
	405	8T-0267	451		542		591
	513	8T-0269	640		610		608
8C-8580	434		654	8T-2323	243		610
8C-8729	677		696		254		623
8C-8988	675		699		265		662
8E-3751	▶818		749		276		822
8E-6259	818		835	8T-2393	231		832
	819	8T-0271	519	8T-2396	699		835
	820		720		749		840
	821	8T-0272	554	8T-2450	243		874

▶ **PRIMARY REFERENCE**

PART NUMBER INDEX

Part	Page
	875
	877
	878
	881
	882
	896
	898
	910
8T-4123	385
	595
	597
	599
	607
	755
	757
	759
	773
	780
	784
	786
	788
	790
	795
	797
8T-4131	294
8T-4132	219
	229
	399
	400
	401
	776
	778
	780
	896
	898
8T-4133	89
	91
	131
	135
	195
	353
	364
	368
	372
	396
	398
	426
	428
	478
	492
	832
	835
	929
	932
8T-4134	856
8T-4136	37
	64
	66
	91
	135
	139
	141
	195
	353
	364
	368
	372
	375
	380
	506
	614
	642
	644
	662
	822
	832
	835
	874
	875
	882
8T-4137	3
	62
	67
	71
	74
	81
	84
	89
	91
	99
	131
	135
	195
	364
	368
	372
	383
	385
	388
	390
	403
	405
	409
	492
	506
	642
	644
	662
8T-4138	131
	135
	364
	368
	822
	847
	849
	852
	867
8T-4139	37
	117
	322
	336
	472
8T-4140	37
	383
8T-4171	64
	131
	135
	148
	354
	357
	363
	364
	368
	385
	847
	849
	864
8T-4172	117
	513
8T-4173	37
	896
	898
8T-4174	780
8T-4177	143
8T-4179	394
	780
8T-4182	506
	509
	516
8T-4183	290
	292
	372
	577
	581
	592
	593
	594
8T-4184	577
	592
	593
	594
8T-4185	509
	840
8T-4186	322
	336
8T-4189	5
	6
	45
	60
	64
	66
	99
	125
	187
	350
	364
	368
	372
	375
	380
	385
	396
	398
	400
	401
	554
	557
	569
	842
	886
	898
8T-4190	680
	832
	835
8T-4191	71
	81
	877
	878
	881
	910
8T-4192	286
	364
	368
	780
	832
	835
8T-4193	778
	794
8T-4195	74
	89
	290
	292
	321
	335
	364
	368
	372
	383
	394
	396
	398
	492
	623
	840
	896
	898
8T-4196	81
	84
	91
	522
	529
	554
	569
	581
8T-4198	592
	593
	594
8T-4199	388
	842
8T-4200	30
	44
	45
	93
	139
	141
	190
	193
	195
	198
	200
	354
	437
	544
	559
	832
	835
	896
8T-4205	375
8T-4223	89
	117

► **PRIMARY REFERENCE**

PART NUMBER INDEX

Part	Page	Part	Page	Part	Page	Part	Page
	126		587		929	8T-7126	940
	202		610		932	8T-7127	941
	364		614	8T-4910	394	8T-7329	587
	368		780		869	8T-7488	322
	383		795		871		336
	394		797	8T-4944	471	8T-7491	480
	491		847		660	8T-7505	226
	492		849	8T-4956	364		227
	509		867		368		228
	513		869		646	8T-7514	108
	519		871		647	8T-7524	581
	522		878		775	8T-7547	89
	577		884	8T-4957	504		106
	581		886		509		131
	592		896	8T-4970	610		135
	593		898		640		321
	594		929	8T-4971	405		335
	608		932		915		394
	646	8T-4226	81	8T-4984	71		400
	647		84		74		401
	677		131	8T-4985	89	8T-7934	548
	775		135	8T-4986	87	8T-8224	862
	780	8T-4241	424		89	8T-8549	840
	832	8T-4244	89	8T-5005	372	8T-8729	130
	835		364		509		134
	869		368		576	8T-8730	182
	871		383		840	8T-8737	130
8T-4224	60	8T-4779	244	8T-5041	677		134
	61		255	8T-5063	426		139
	87		266		428		141
	89		277	8T-5381	426		182
	99		399		428		186
	106		400	8T-5433	171		190
	108		401	8T-5436	840		193
	124		577	8T-6338	566		202
	125		680	8T-6412	858		211
	131	8T-4780	385	8T-6466	117		656
	143		755	8T-6467	390		875
	187		757	8T-6628	487	8T-8894	91
	190		759	8T-6685	625		494
	193		773	8T-6693	157		496
	195		780	8T-6699	761		498
	198		784		763		508
	200		786		844		542
	350		788	8T-6703	89	8T-8902	547
	360		790	8T-6725	548		551
	364		795		581		553
	368		797	8T-6726	576		566
	372	8T-4897	869	8T-6842	922	8T-8987	567
	375		871	8T-6845	937	8T-9082	359
	380	8T-4908	99	8T-6850	548	8T-9402	106
	383		131		581		108
	394		372	8T-6868	394	8T-9403	506
	400		380	8T-6869	869		509
	401		383		871		516
	403		403	8T-6876	500		589
	405		426		576		590
	426		428	8T-6895	525		591
	428		554		531		608
	544		567	8T-6912	208		610
	554		569		581	8T-9515	504
	557		610		587		509
	559		614	8T-7123	939	8T-9532	654
	567		867	8T-7124	943	8T-9534	99
	569		878	8T-7125	942		430

► **PRIMARY REFERENCE**

PART NUMBER INDEX

Part	Page
	535
	567
8T-9535	583
8T-9597	640
8T-9598	320
	334
8T-9756	130
	134
8U-0119	664
8U-0198	▶475
	580
8U-0215	535
	567
8U-0216	535
8U-0235	535
8U-0236	535
8U-0241	535
8U-0284	518
	519
	528
	553
	569
	576
	592
	593
	594
	671
	673
8U-0531	320
	334
8U-0722	475
8U-0723	475
8U-0724	475
8U-0767	648
8U-0827	855
8U-0876	▶98
	106
	108
8U-0891	553
	569
8U-0966	▶482
	516
	608
8U-0967	516
	608
8U-1218	612
	693
	709
	711
	713
	716
	726
8U-1242	67
8U-1341	122
8U-1361	630
8U-1362	651
8U-1363	651
8U-1366	648
8U-1367	648
8U-1368	648
8U-1369	648
8U-1371	648
8U-1372	648
8U-1373	648
8U-1376	648
8U-1377	648
8U-1378	648
8U-1670	521
	528
8U-1862	478
	929
	932
8U-1958	453
	455
8U-1965	449
8U-1966	449
8U-1967	449
	451
8U-1980	648
8U-1981	648
8U-1982	648
8U-2003	666
8U-2135	▶802
8U-2137	▶803
8U-2233	231
	319
	320
	333
	334
8U-2342	231
	244
	255
	266
	277
8U-2356	220
	231
	236
	244
	255
	266
	277
8U-2357	245
	256
	266
	277
8U-2359	231
	245
	256
	267
	278
8U-2360	231
	245
	256
	267
	278
8U-2361	231
	245
	256
	267
	278
8U-2365	220
	231
	236
	245
	256
	267
	278
8U-2366	220
	231
	236
	245
	256
	267
	278
8U-2367	220
	231
	236
	245
	256
	267
	278
8U-2368	220
	231
	236
	245
	256
	267
	278
8U-2369	220
	231
	236
	245
	256
	267
	278
8U-2370	220
	231
	236
	245
	256
	267
	278
8U-2371	220
	231
	236
	245
	256
	267
	278
8U-2373	231
	245
	256
	267
	278
8U-2377	232
	245
	256
	267
	278
8U-2378	232
	245
	256
	267
	278
8U-2381	245
	256
	267
	278
8U-2382	245
	256
	267
	278
8U-2385	232
	245
	256
	267
	278
8U-2398	231
	245
	256
	267
	278
8U-2399	231
	245
	256
	267
	278
8U-2449	232
8U-2622	153
	157
8U-2639	809
8U-2677	775
8U-2691	771
8U-2692	771
8U-2738	130
	134
8U-2752	246
	257
	268
	279
8U-2753	246
	257
	268
	279
8U-2754	246
	257
	268
	279
8U-2918	449
	465
8U-2924	▶414
	525
	531
8U-2925	525
	531
8U-3179	685
	689
8U-3181	685
	689
8U-3182	685
	689
8U-3183	685
	689
8U-3213	892
8U-3214	892
	▶894
8U-3216	892
8U-3473	319
8U-3528	62
	67
	795
	797
8U-3536	795
8U-3537	795
	797
8U-3590	231
	245
	256
	267
	278

▶ **PRIMARY REFERENCE**

PART NUMBER INDEX

Part	Page	Part	Page	Part	Page	Part	Page
8U-3591	231	8U-5690	244	8U-5946	319	8U-6028	321
	245		255		333		335
	256		266	8U-5951	319	8U-6029	321
	267		277		333		335
	278	8U-5746	572	8U-5952	319	8U-6058	322
8U-3592	231		666		333		336
	245	8U-5776	685	8U-5957	319	8U-6062	322
	256		689		333	8U-6065	322
	267	8U-5778	685	8U-5960	319		336
	278		689		333	8U-6068	322
8U-3594	231	8U-5780	685	8U-5967	320		336
	245		689		334	8U-6069	322
	256	8U-5784	418	8U-5972	334		336
	267		685	8U-5976	320	8U-6072	322
	278		689		334		336
8U-3602	231	8U-5786	685	8U-5982	320	8U-6074	322
8U-3661	▶415		689		334		336
8U-3739	307	8U-5788	685	8U-5985	320	8U-6075	322
8U-3747	308		689		334		336
8U-3885	465	8U-5795	685	8U-5987	320	8U-6076	322
8U-3886	465		689		334		336
8U-3887	465	8U-5800	685	8U-5988	320	8U-6081	323
8U-3888	465		689		334		337
8U-3899	321	8U-5801	685	8U-5989	320	8U-6128	130
	335		689		334		195
8U-4119	232	8U-5805	892	8U-5990	320	8U-6147	165
	245		▶895		334	8U-6159	▶411
	256	8U-5806	892	8U-5991	320		547
	267	8U-5807	892		334	8U-6465	709
	278	8U-5809	892	8U-5992	320		711
8U-4120	245	8U-5818	246		334	8U-6723	▶288
	256		257	8U-5994	320	8U-6724	288
	267		268		334	8U-6725	▶289
	279		279	8U-5995	320	8U-6726	289
8U-4121	220		580		334	8U-6848	442
	232	8U-5851	▶648	8U-5997	320		▶449
	236		650		334	8U-6849	449
8U-4683	896		658	8U-6000	320		451
	898	8U-5852	648		334	8U-6850	449
8U-4742	165	8U-5853	347	8U-6001	320	8U-6851	449
8U-4744	547	8U-5854	347		334	8U-6888	319
8U-5005	472	8U-5892	430	8U-6003	320		333
8U-5056	478	8U-5923	231		334	8U-6889	319
8U-5069	685	8U-5930	319	8U-6009	320		333
	689		333		334	8U-6893	319
8U-5669	242	8U-5931	319	8U-6010	320		333
	253		333		335	8U-6894	319
	264	8U-5932	319	8U-6011	321		333
	275		333		335	8U-6897	320
8U-5670	242	8U-5933	319	8U-6012	321		334
	253		333		335	8U-6898	320
	264	8U-5938	319	8U-6013	321		334
	275		333		335	8U-6899	320
8U-5671	242	8U-5939	319	8U-6014	321		334
	253		333		335	8U-6900	320
	265	8U-5940	319	8U-6016	321		334
	276		333		335	8U-6906	320
8U-5672	243	8U-5941	319	8U-6020	321		334
	254		333		335	8U-7119	612
	265	8U-5942	319	8U-6021	321	8U-7203	574
	276		333		335	8U-7274	▶412
8U-5673	243	8U-5943	319	8U-6022	321		547
	254		333		335	8U-7285	277
	265	8U-5944	319	8U-6023	321	8U-7334	122
	276		333		335	8U-7338	311

▶ **PRIMARY REFERENCE**

PART NUMBER INDEX

Part	Page
8U-7339	307
	308
	311
	312
	313
	315
	316
	317
	318
8U-7383	709
	711
8U-7389	709
	711
8U-7656	480
8U-7658	480
8U-7683	410
	779
8U-7803	179
	182
	847
	849
	853
8U-7965	651
	659
8U-7966	651
8U-8009	481
	484
8U-8011	483
	484
8U-9215	651
	659
8U-9216	651
	659
8U-9351	441
8U-9352	441
8U-9402	244
	255
8U-9417	158
8U-9482	855
8U-9483	855
8U-9507	232
	245
	256
	267
	278
8U-9508	231
	245
	256
	267
	278
8U-9509	232
	245
	256
	267
	278
8U-9510	232
	245
	256
	267
	278
8Y-4030	▶902
	903
8Y-6967	394

9

Part	Page
9B-7233	178
9D-3768	124
	125
	206
9D-7303	164
9F-5644	176
9G-0002	130
	134
9G-0005	130
	134
9G-7641	▶178
	202
9H-6761	451
9J-3167	▶819
9J-3175	▶821
9J-4309	820
9M-0057	832
	835
9M-3835	842
9M-3838	842
9M-5024	628
9M-5870	832
	835
9N-1995	921
9N-4302	818
9P-7121	119
9R-2828	323
	337
9R-3158	323
	337
9R-3176	321
	335
9R-3521	323
	337
9R-3533	220
	231
	236
9R-5615	394
9R-5616	394
9R-6801	242
	253
	264
	275
9R-6802	242
	253
	264
	275
9R-6803	242
	253
	264
	275
9R-6804	242
	253
	264
	275
9R-6805	242
	253
	264
	275
9R-6806	242
	253
	264
	275
9R-6807	242
	253
	264
	275
9R-6808	242
	253
	264
	275
9R-6809	242
	253
	264
	275
9R-6810	242
	253
	264
	275
9R-6811	242
	253
	264
	275
9R-6812	242
	253
	264
	275
9R-6813	242
	253
	264
	275
9R-6814	242
	253
	264
	275
9R-6818	323
	337
9R-6819	243
	254
	265
	276
	323
	337
9R-6836	242
	253
	264
	275
9R-6837	242
	253
	264
	275
9R-6838	242
	253
	264
	275
9R-6839	242
	253
	264
	275
9R-6840	242
	253
	264
	275
9R-6841	242
	253
	264
	275
9R-6842	242
	253
	264
	275
9R-6843	242
	253
	264
	275
9R-6844	242
	253
	264
	275
9R-6845	242
	253
	264
	275
9R-6846	242
	253
	264
	275
9R-6847	242
	253
	264
	275
9R-6848	242
	253
	264
	275
9R-6849	242
	253
	264
	275
9R-6850	242
	253
	264
	275
9R-6924	242
	253
	264
	275
9R-6925	242
	253
	264
	275
9R-6926	242
	253
	264
	275
9R-6927	242
	253
	264
	275
9R-6928	242
	253
	264
	275
9R-6929	242
	253
	264
	275
9R-6930	242
	253
	264
	275
9R-6931	242
	253

▶ PRIMARY REFERENCE

PART NUMBER INDEX

Part	Page	Part	Page	Part	Page	Part	Page
	264		254		713		835
	275		265		716		847
9R-6932	242		276	9S-8006	693		849
	253		323		713		858
	264		337		716		862
	275	9R-6964	243	9S-8008	619	9X-2044	394
9R-6933	242		254		628		831
	253		265		630		832
	264		276		720		834
	275		323	9S-9334	449		835
9R-6934	242		337		451		856
	253	9R-6965	220	9T-2837	435		864
	264		236	9T-2905	388		924
	275	9R-6985	243	9T-3726	630	9X-2045	832
9R-6935	242		254		730		835
	253		265		734		915
	264		276	9T-3853	723	9X-2085	511
	275	9R-6991	323	9T-3928	628	9X-2093	823
9R-6936	242		337		630	9X-2201	87
	253	9R-6993	243	9T-3929	687	9X-2205	119
	264		254		730	9X-2304	583
	275		265	9T-3931	319	9X-2480	148
9R-6937	242		276		333	9X-2537	696
	253		337		732	9X-2609	664
	264	9R-6994	243	9T-4057	708		730
	275		254	9T-6322	319	9X-3401	119
9R-6938	242		265		333		177
	253		276	9U-8263	831	9X-3402	182
	264		323		834	9X-3404	138
	275		337	9W-0335	179	9X-3595	457
9R-6939	242	9R-6996	244		182		459
	253		255	9W-0844	182		468
	264		266	9W-0852	106	9X-3604	461
	275		277		108	9X-4391	198
9R-6940	242	9R-6997	243	9W-1494	179		200
	253		265		182	9X-4597	444
	264	9R-7002	243	9W-2146	685		445
	275		254		689		446
9R-6941	242		265	9W-4926	232		759
	253		276		245	9X-4598	446
	264	9R-7003	244		256	9X-4617	687
	275		255		267	9X-4619	696
9R-6942	242		266		278	9X-4626	699
	253		277	9X-0630	319	9X-5615	198
	264		323		333		200
	275		337	9X-0640	319	9X-6032	3
9R-6943	242	9S-4183	662		333		165
	253	9S-4190	119	9X-0656	472	9X-6165	148
	264	9S-4191	684	9X-0798	244	9X-6378	220
	275	9S-8002	449		255		236
9R-6944	242		451		266	9X-6381	640
	253	9S-8003	612		277		685
	264	9S-8004	569	9X-1054	135		689
	275		618	9X-1813	124		867
9R-6945	242		693		125	9X-6385	351
	253		713		130	9X-6579	576
	264		716		134	9X-6580	522
	275		723		208		529
9R-6948	244	9S-8005	449		662		581
	255		451	9X-1878	934	9X-6615	761
	266		509	9X-2041	832		763
	277		551		835	9X-6668	934
9R-6954	243		580		860	9X-6772	131
	265		619		861		135
9R-6962	243		693	9X-2042	832		538

► **PRIMARY REFERENCE**

PART NUMBER INDEX

Part	Page
	540
	542
	574
	761
	763
	766
	768
	770
	877
9X-7301	463
9X-7345	535
9X-7377	612
9X-7378	840
9X-7385	839
9X-7449	896
	898
9X-7454	581
	709
	711
	751
9X-7680	485
9X-7692	480
9X-7744	480
9X-8256	64
	99
	131
	135
	148
	186
	190
	193
	195
	198
	200
	211
	354
	356
	357
	360
	363
	403
	405
	437
	832
	842
	845
	847
	849
	852
	864
	876
9X-8257	383
	399
	400
	401
	615
	680
	755
	759
	777
	778
	780
	794
	866
	869
9X-8290	375
	380
	383
9X-8488	731
9X-8600	119
9X-8937	866
9Y-5015	19

0

Part	Page
005-8592	711
006-8606	51
030-6121	693
	713
	716
031-1119	83
031-4392	662
032-8048	95
032-9090	14
	16
032-9091	14
	16
032-9313	696
	699
	701
	719
033-5879	736
033-6028	619
033-6034	701
033-6036	619
033-6042	723
033-6044	735
	736
033-7687	28
033-7849	99
	110
	113
035-8063	47
035-8068	19
036-5802	19
054-6512	243
	254
	265
	276
054-6513	243
	254
	265
	276
054-6514	243
	254
	265
	276
061-7540	725
061-8639	418
	419
	696
	699
	701
	719
067-2935	71
	74
067-6002	19
067-6043	21
067-6083	51
067-6087	51
067-6088	51
067-6095	53
067-6123	31
067-6178	32
	34
067-6179	32
	34
067-6268	102
	113
067-6269	99
	102
	110
	113
067-6366	126
	128
067-6805	19
067-6808	19
067-6873	14
	16
067-6874	14
	16
067-6883	42
067-6897	32
067-6900	32
067-6927	29
067-6928	29
067-6933	55
067-6998	110
	113
	172
067-6999	110
	113
	172
069-1124	46
082-3084	472
082-3085	472
085-6444	926
085-6445	926
085-6446	926
085-6447	926
085-6448	926
085-6449	926
085-7539	535
085-9311	388
086-0321	794
086-0322	794
087-4772	487
	488
	732
087-4774	725
087-5548	461
087-5550	461
087-5805	776
087-6444	755
	759
089-7435	847
	849
089-7436	847
	849
091-8792	130
	134
092-5524	364
	368
093-0065	773
093-0083	385
	755
	757
	784
	786
	788
	790
093-0084	385
	755
	757
093-0086	773
	784
	786
	788
093-0090	755
	759
093-0097	773
093-0115	385
	755
	757
	784
	786
	788
	790
093-0116	385
	755
	757
093-0118	773
	784
	786
	788
093-0122	755
	759
093-0349	385
	755
	757
	759
	773
	780
	784
	786
	788
	790
	795
	797
093-1344	773
093-1433	784
	786
	788
093-1434	447
	773
093-1571	457
	459
	468
095-0661	626
	675
095-0670	491
	509
	513
	519
095-0723	5
	6
	426
	428

► **PRIMARY REFERENCE**

PART NUMBER INDEX

Part	Page
	433
	434
	847
	849
095-0735	163
095-0742	858
095-0772	858
095-0826	130
095-0827	858
095-0916	892
095-0919	321
	335
	472
	616
095-0929	468
095-0933	723
095-0934	322
	336
095-0941	422
095-0942	320
	334
095-0944	632
095-0946	321
	335
095-1255	844
095-1267	461
095-1608	408
	409
	662
095-1631	457
	459
	468
095-1635	461
095-1716	463
095-1740	656
095-1750	727
	728
	744
	747
	750
095-1751	449
	691
	692
	726
095-1783	683
095-7950	638
095-9785	642
	644
095-9804	669
095-9806	221
	237
096-0061	3
	5
	6
	108
	122
	131
	135
	139
	141
	148
	153
	160
	164
	179
	182
	186
	190
	193
	195
	198
	200
	202
	206
	207
	208
	211
	214
	215
	640
	878
	900
	922
096-0192	135
	179
	190
	193
	195
	198
	200
096-0854	444
	445
	448
	773
	784
	786
	788
	790
096-1054	463
096-1588	457
	459
	468
096-2323	321
	335
	704
	706
	895
096-2622	858
	862
096-3884	858
	862
096-4835	595
	597
	599
096-5516	320
	334
096-5962	5
	6
	426
	428
	433
	434
	847
	849
096-5968	542
096-6095	408
	409
	662
096-6100	482
	709
096-6166	3
	202
	656
096-8139	463
097-4896	372
097-5812	202
098-2982	472
099-0139	856
099-0169	615
099-0492	685
	689
099-2374	186
	211
	896
	898
099-3094	618
099-3645	883
099-5845	487
	628
	630
	683
	732
099-7091	773
099-8232	711
1	
100-3751	77
100-4104	12
100-4453	95
100-4458	204
100-4461	110
	113
100-4463	26
100-4466	95
100-4830	103
	110
	113
	204
	622
100-5612	921
101-2987	48
101-3617	31
101-3739	116
101-3740	116
101-3741	116
101-3771	77
	79
101-3805	77
	79
101-3877	103
101-3906	110
	113
101-3907	110
	113
	172
101-3912	116
101-3949	116
101-3953	116
101-3955	116
101-3983	113
101-3984	113
101-3986	113
	172
101-4639	119
101-7178	110
	113
101-7396	608
101-7397	521
	528
	608
101-7398	506
	516
101-7399	516
	664
101-7404	506
	580
	592
	593
	594
	608
101-8899	858
	862
101-8900	858
	862
102-2073	24
102-2076	24
102-2078	24
102-2079	24
102-7364	730
102-8801	139
	141
	179
	182
	186
	195
	198
	200
	202
	211
102-8802	3
	23
	106
	108
	119
	124
	130
	134
	139
	141
	160
	164
	177
	186
	190
	193
	195
	198
	200
	206
	208
	211
	214
	547
	551
	553
	751
	752
	753

► **PRIMARY REFERENCE**

PART NUMBER INDEX

Part	Page
102-8803	6
	190
	193
	195
	198
	200
	208
	662
102-8804	153
	202
102-8805	148
	186
	190
	193
	195
	198
	200
	202
	208
	211
	214
102-8806	135
	139
	141
	179
	182
	186
	190
	193
	195
	198
	200
	202
	207
	211
	215
	900
102-9460	48
102-9941	50
102-9986	110
	113
102-9987	110
102-9988	113
103-0173	110
103-1074	103
103-6131	28
103-8341	463
103-8378	468
103-8379	468
103-8380	468
104-2091	832
	835
104-3173	71
	74
104-3601	157
104-6692	130
	134
	139
	141
	195
	198
	200
	211
	875
104-7263	943
105-3478	557
	589
	590
	591
	608
105-3480	449
105-3484	624
105-3486	919
105-3487	535
	566
105-3488	906
105-7360	463
105-7366	463
106-0107	202
106-0210	202
106-0699	319
	333
106-7747	800
	▶813
106-8704	130
	134
106-8916	55
107-2168	795
107-2723	431
	890
107-3308	818
	819
	820
	821
107-4316	576
107-5665	319
	333
	615
107-6593	729
107-6738	662
107-7436	814
107-9976	773
108-1780	835
108-1784	671
	673
108-2989	61
108-4282	548
	557
	589
	590
	591
108-5678	547
108-7516	547
	551
	553
109-0121	320
	321
	334
	335
109-1270	831
	834
109-1447	942
109-1448	937
109-2092	795
	797
109-2353	179
	182
109-2354	179
	182
109-2355	847
	849
109-2356	179
	182
	847
	849
109-2361	174
109-2362	128
109-2947	795
	797
109-4440	220
	231
	236
	245
	256
	267
	278
109-5701	322
	336
109-7288	▶476
	610
109-7289	476
	477
110-0120	322
	336
110-0121	322
	336
110-0122	322
	336
110-0124	322
	336
110-0159	220
	232
	236
	245
	256
	267
	278
110-0160	220
	232
	236
	245
	256
	267
	278
110-0161	220
	232
	236
	245
	256
	267
	278
110-0162	220
	232
	236
	245
	256
	267
	278
110-0163	220
	232
	236
	245
	256
	267
	278
110-0164	220
	232
	236
	245
	256
	267
	278
110-0165	220
	232
	236
	245
	256
	267
	278
110-0842	232
	245
	256
	267
	278
110-0847	220
	231
	236
110-0849	220
	236
110-0858	244
	255
	266
	277
110-0860	244
	255
	266
	277
110-0861	220
	236
110-0862	220
	236
110-1994	562
110-2158	780
	795
	797
110-2159	795
	797
110-2170	219
	229
110-4737	220
	232
	236
	245
	256
	267
	278
110-4743	244
	255
	266
	277
110-4745	220
	231
	236
	245
	256
	266
	277
110-4751	278
110-6135	▶290

▶ **PRIMARY REFERENCE**

PART NUMBER INDEX

Part	Page	Part	Page	Part	Page	Part	Page
	▶292	112-4719	737		141		597
	294	112-5699	433	113-8491	106		599
110-6349	576		434		108		607
110-6628	646		▶890		139	114-9324	494
	647	112-5704	▶431		141		496
110-8248	780		553	113-8492	139		498
111-1230	219		557		141		508
	229		569	113-8493	139		535
111-1815	19		889		141		544
111-1857	1	112-6429	461	114-0065	934		559
	▶883	112-6921	461	114-0203	719		595
111-1858	1	112-7139	778	114-0204	719		597
	▶471	112-7702	55	114-0205	719		599
111-1896	490	112-7704	12	114-0207	696		607
	▶646	112-8166	576		699		668
	▶647	112-8566	500	114-0215	▶621	114-9325	494
111-1897	▶442	112-8624	390		719		496
	▶443	112-8625	390	114-0216	719		498
	490	112-9142	294		▶735		508
111-1919	▶778	112-9145	294	114-0217	719		544
111-1999	▶295	112-9837	351		▶736		559
111-2001	▶296	112-9862	390	114-0755	463		564
111-2003	▶297	113-0434	544	114-0756	461		565
111-2004	298		547	114-0758	457	114-9344	134
	▶307	113-0436	544		459	115-1624	869
111-2007	295	113-0440	580		468		871
	▶308	113-0442	547	114-0787	696	115-6850	701
111-2009	296		571		699		720
	▶309	113-0454	610		701	115-7053	562
111-2011	297	113-0457	572		720	115-7465	50
	▶310	113-0467	544	114-0791	813	115-7764	621
111-2015	▶650	113-0477	553	114-2943	621		719
	653		561	114-2999	418		735
111-3997	780		571		419		736
111-3998	780	113-0478	580		696	115-8262	735
111-3999	780	113-0489	551		699		736
111-4002	780	113-0693	658		701	115-8523	354
111-4013	71	113-1504	12		719		356
	74	113-1505	12	114-3025	418		360
	99	113-1866	287		419		362
111-4063	780		▶298		696		375
111-4584	780	113-2004	492		699		380
111-7604	773	113-3453	202		701	115-9114	525
	784	113-4418	634		719	116-1119	431
	786	113-4686	390	114-3070	735		890
	788	113-6346	128		736	116-1132	890
	790	113-6349	126	114-4363	31	116-1517	866
111-7605	784		128		103	116-3459	799
	786	113-6352	128	114-5333	840		▶814
	788	113-6353	128	114-6496	44	116-3735	350
111-7899	122	113-7328	62	114-6658	831	116-4481	430
	168		364		834	116-4484	430
	179		368	114-8690	896	116-5478	8
	182	113-7329	372	114-8843	141		▶350
	500	113-7617	625	114-8907	3	116-5997	802
	583		626		165		▶805
	876	113-7824	619	114-8908	491	116-6011	805
111-8443	777	113-8085	174		492		▶806
	790	113-8127	40	114-9149	511	116-6012	805
111-9081	944	113-8129	40	114-9153	595		808
112-4628	488	113-8130	40		597	116-6013	805
	630	113-8131	40		599		812
112-4645	740	113-8133	40		607	116-6014	805
112-4647	740	113-8134	40	114-9154	511		812
112-4657	422	113-8490	139	114-9155	595	116-6325	62

▶ **PRIMARY REFERENCE**

PART NUMBER INDEX

Part	Page
	364
	368
116-6326	372
116-6622	806
	809
116-6929	▶807
	810
116-6952	135
116-6971	807
116-6972	807
116-6993	803
	▶808
116-6994	808
	▶809
116-6997	808
116-6998	808
116-7028	809
116-7286	504
	506
	557
116-7303	375
116-8151	525
	531
116-9619	151
116-9621	169
116-9624	153
	▶155
116-9625	▶152
	153
116-9626	▶156
	157
116-9945	892
116-9946	892
117-0121	81
	93
	364
	368
	372
	867
117-0123	64
	66
	67
	662
117-0124	364
	368
	383
117-0125	44
	45
	364
	368
117-0335	685
	689
117-0337	685
	689
117-0338	685
	689
117-0339	685
	689
117-0340	685
	689
117-0341	685
	689
117-0342	685
	689
117-0345	685
	689
117-0346	685
	689
117-0348	685
	689
117-0349	685
	689
117-0350	685
	689
117-0351	685
	689
117-0352	685
	689
117-0353	685
	689
117-0354	685
	689
117-0355	685
117-0356	685
117-0357	685
117-0669	403
	405
117-0670	403
	405
117-0929	▶511
	771
117-0930	771
	▶775
117-0931	▶771
117-0951	476
117-1266	576
117-1283	685
	689
117-1426	800
	▶815
117-1428	800
	▶816
117-1430	801
	▶817
117-1495	476
117-1738	650
	▶651
117-1755	651
	659
117-1805	521
117-1823	528
117-2987	245
	256
	267
	278
117-3188	198
	200
117-3393	426
	428
	433
	434
117-3403	810
117-3404	810
117-3405	810
117-4473	834
117-4837	685
	689
117-4838	685
	689
117-4861	139
	141
	824
117-4874	651
	659
117-4875	651
	659
117-5708	▶487
	628
117-5710	▶420
	628
117-5712	▶421
	628
117-5716	628
117-5718	628
117-5762	424
117-5764	424
117-5765	424
117-5768	487
117-5784	▶729
	732
117-5787	732
117-5789	732
117-5790	732
117-5899	734
117-5900	734
117-5904	734
117-5905	734
117-5909	729
117-5912	732
117-5913	732
117-5914	732
117-5917	420
117-5920	420
117-5923	421
117-5924	421
117-5925	421
117-5926	421
117-5927	470
117-6542	934
117-6549	934
117-6558	940
117-6560	940
117-6716	580
117-7002	525
	531
117-7235	630
117-7236	630
117-7238	422
117-7239	422
117-7240	422
117-7241	422
117-7242	422
117-7245	422
117-7246	422
117-7247	422
117-7248	422
117-7249	422
117-7250	422
117-7251	422
117-7252	422
117-7273	731
117-7275	488
	▶737
117-7276	488
	▶738
117-7278	488
117-7279	488
117-7280	488
117-7282	488
117-7287	738
117-7511	595
	597
	599
117-7524	729
117-7525	734
117-7629	761
	763
	770
117-7630	761
	763
	766
	768
	770
117-7631	761
	763
	766
	768
	770
117-7634	761
	763
	766
	768
	770
117-7635	761
	763
	766
	768
117-8683	890
117-8699	431
	890
117-8700	431
117-9418	156
117-9419	155
117-9420	152
117-9421	158
117-9422	158
117-9469	156
117-9470	152
	155
117-9893	795
	797
117-9896	780
	795
	797
118-0582	403
118-1865	▶795
	799
118-2716	466
118-2717	466
118-2727	466
118-2730	466
118-2731	453
	455
	466
118-2732	453
	455
	466
118-3111	453
	455
118-3112	453

▶ PRIMARY REFERENCE

PART NUMBER INDEX

Part	Page	Part	Page	Part	Page	Part	Page
	455	118-8599	566	120-9729	106		255
118-3113	453	118-8984	518		108		266
	455		553	120-9794	886		277
118-3114	453		569	120-9811	504	121-7676	244
	455	118-8985	518		506		255
118-3116	453		553	121-0221	506	121-7677	243
	455		557	121-0530	▶479		254
	466		569		574		265
118-3117	453	118-9145	58	121-0883	31		276
	455	119-0413	410	121-0987	876	121-7678	243
	466		779	121-2970	130		254
118-3119	453	119-0414	410		134		265
	455		779	121-2971	130		276
118-3120	453	119-0744	566		134	121-7679	243
	455	119-1111	585	121-3157	691		254
118-3121	453	119-1339	165		692		265
	455	119-1353	684		743		276
118-3122	453	119-3662	134	121-4342	840	121-7680	243
	455	119-3951	815		844		254
118-3123	453	119-3953	817		877		265
	455	119-8340	831		878		276
118-3124	453	119-8353	831	121-4344	840	121-7681	244
	455		834		844		255
118-3125	453	119-9045	▶691		878	121-7682	244
	455		713	121-4345	844		255
118-3126	453		716		845	121-7686	246
	455	119-9288	323		877		257
118-3127	453	119-9375	691		878		268
	455		692	121-4794	831		279
118-3128	453	119-9376	691	121-4795	835	121-7687	246
	455		692	121-4801	844		257
118-3129	453	119-9377	691	121-5585	811		268
	455		692	121-5977	426		279
118-3130	453	119-9378	691		428	121-8059	321
	455	119-9447	683	121-7196	704		335
	466	120-0090	179		706	121-8060	321
118-3131	453		182	121-7625	243		335
	455	120-0694	739		254	121-8061	321
	466	120-0696	739		265		335
118-3132	453	120-0697	739		276	121-8062	320
	455	120-0698	739	121-7659	244		334
	466	120-0699	739		255	121-8063	320
118-3133	453	120-4162	574		266		334
	455	120-4204	424		277	121-8064	320
118-3134	453	120-4394	485	121-7661	244		334
	455	120-4777	831		255	121-8065	320
118-3135	453		834		266		334
	455	120-4779	832		277	121-8066	320
118-3139	557		835	121-7662	244		334
118-3534	130	120-4831	831		255	121-8067	320
	134		834		266		334
118-5272	525	120-5737	831		277	121-8068	320
118-5274	525		834	121-7663	244		334
118-5501	122	120-5738	834		255	121-8071	320
118-5637	116	120-5967	168		266		334
118-7226	662		179		277	121-8072	320
118-7741	▶799		187	121-7665	244		334
118-7755	940		211		255	121-8073	320
	943	120-8843	491		266		334
118-7971	▶800		492		277	121-8074	320
118-7974	▶800	120-9027	6	121-7667	244		334
118-7975	▶800		179		255	121-8075	320
118-7976	▶801		182		266		334
118-7987	400	120-9702	612		277	121-8076	320
	401	120-9724	884	121-7675	244		334

▶ **PRIMARY REFERENCE**

PART NUMBER INDEX

Part	Page	Part	Page	Part	Page	Part	Page
121-8077	319		336	123-4954	619	125-1259	739
	333	121-8120	322	123-5112	940	125-2205	485
121-8079	319		336	123-5790	723	125-2976	616
	333	121-8121	322	123-5791	723	125-3249	642
121-8080	319		336	123-5800	485		644
	333	121-8122	322	123-6449	124	125-3553	723
121-8081	319		336	123-7556	485	125-4428	▶771
	333	121-8123	322	123-7575	630	125-4429	801
121-8082	319		336	123-8324	226		▶810
	333	121-8126	322		227	125-4430	▶811
121-8083	319		336		228		812
	333	121-8127	322	123-8634	141	125-4433	811
121-8088	322	121-8128	322	123-8635	141	125-4434	811
	336	121-8129	322	123-8642	37	125-4903	383
	472		336		896		▶855
121-8089	321	121-8133	231		898	125-4907	572
	336	121-8168	231	123-8838	130	125-4909	811
121-8090	321	121-9753	151		134	125-5387	▶483
	335	121-9754	151	123-9769	723	125-5817	▶804
121-8091	321	121-9755	151		725	125-6083	642
	335	122-1207	▶438	124-1806	728		644
121-8093	321		490	124-2634	729		847
	335	122-1228	896	124-2637	729		849
121-8094	321	122-1232	564	124-2638	729		852
	335		565	124-2910	299		853
121-8097	321		668		▶311	125-6084	847
	335	122-1233	535	124-2913	130		849
121-8098	321		669	124-3536	42	125-6169	811
	335	122-1904	435		43	125-6614	812
121-8100	321	122-1905	435	124-3598	476	125-6756	804
	335	122-2039	944	124-3708	103		▶812
121-8101	321	122-2045	944	124-3815	27	125-6932	727
	335	122-4631	942		55	125-7874	185
121-8102	321	122-4634	942		58	125-7875	134
	335	122-5727	929		95	125-8601	628
121-8103	321		932		126		630
	335	122-6015	844		128	125-8689	732
121-8104	321	122-7252	780		172	125-9091	729
	335	122-7945	719		204	125-9095	420
121-8106	321	122-7946	701	124-5215	226	125-9096	420
	335		720		227	125-9108	421
121-8107	321	122-9046	487		228	125-9134	422
	335	122-9068	422	124-5222	521	125-9671	▶300
121-8108	321	122-9070	422		528	125-9672	300
	335	122-9071	422	124-7346	135		▶312
121-8109	321	122-9363	738		654	125-9674	▶301
	335	122-9415	99	124-9270	542	125-9675	301
121-8111	320	122-9718	630	124-9855	634		▶313
	334	123-0173	612	124-9856	634	126-0930	419
121-8112	320	123-0175	749	124-9857	634	126-1529	388
	334	123-0179	612	124-9858	634	126-1540	481
	612	123-0368	726	124-9859	634		484
121-8113	320	123-0369	726	124-9860	634	126-1541	483
	334	123-0371	726	124-9861	634		484
121-8114	320	123-0693	743	124-9881	485	126-1571	779
	334	123-0952	150	124-9882	485	126-1575	▶779
121-8115	322		162	124-9884	485	126-3831	3
	336	123-2017	485	124-9887	723		165
121-8116	322		723	124-9888	723	126-5211	884
	336	123-2341	321	124-9913	619		886
121-8117	322		335	124-9914	619	126-5648	357
	336	123-2342	451	125-0600	375		363
121-8118	322	123-3605	3	125-0661	383	126-6760	795
	336	123-3879	▶299	125-1257	739	126-8059	431
121-8119	322	123-4801	▶776	125-1258	739		890

▶ PRIMARY REFERENCE

PART NUMBER INDEX

Part	Page
126-8376	301
	303
	304
	305
126-8751	771
127-0833	186
	211
127-3294	19
127-4038	357
	363
127-4613	592
	593
	594
127-4996	528
	592
	593
	594
127-5002	301
	303
	304
	305
127-6213	810
127-6214	810
127-7181	940
127-8162	110
	113
127-8286	79
127-8987	472
127-9580	3
128-0994	385
128-1041	130
	134
128-1423	139
	141
128-1465	67
128-1544	93
128-3031	468
128-3755	313
128-3756	312
128-4996	937
128-4998	937
128-5858	755
	759
128-7637	243
	254
	265
	276
128-7638	243
	254
	265
	276
128-7639	243
	254
	265
	276
128-7640	243
	254
	265
	276
128-7641	243
	254
	265
	276
128-7642	243
	254
	265
	276
128-7643	243
	254
	265
	276
128-7675	243
	254
	265
	276
128-7676	243
	254
	265
	276
128-7677	243
	254
	265
	276
128-7680	243
	254
	265
	276
128-7681	243
	254
	265
	276
128-7683	243
	254
	265
	276
128-7684	243
	254
	265
	276
128-7685	243
	254
	265
	276
128-7686	243
	254
	265
	276
128-7687	243
	254
	265
	276
128-7688	243
	254
	265
	276
128-7689	243
	254
	265
	276
128-7690	243
	254
	265
	276
128-7691	243
	254
	265
	276
128-7692	243
	254
	265
	276
128-7693	243
	254
	265
	276
128-7694	243
	254
	265
	276
128-7695	243
	254
	265
	276
128-7855	243
	254
	265
	276
	323
	337
128-7867	244
	255
	266
	277
128-7901	246
	257
	268
	279
128-8389	385
	780
128-8537	3
	165
128-9414	320
	334
129-0309	364
	368
	403
	405
129-1881	882
129-2094	771
129-2636	511
129-2637	511
129-2702	220
129-2720	220
	236
129-2750	286
129-2751	286
129-2752	286
129-2753	286
129-3178	141
	186
	190
	193
	195
	198
	200
	211
	372
	405
	640
	842
	915
129-3457	231
	236
129-3493	51
129-4508	890
129-4682	675
129-5167	834
129-6666	516
	▶704
129-9111	385
129-9884	492
	504
	506
	592
	593
	594
129-9908	322
129-9912	322
	336
129-9913	322
	336
129-9914	322
	336
129-9915	322
	336
129-9916	322
	336
129-9959	99
130-0458	294
130-1156	544
130-3880	26
130-3881	49
130-7671	855
130-8153	551
130-8154	551
130-8233	580
130-9888	12
131-0327	876
131-0432	430
131-1055	388
131-1085	664
131-2639	171
131-3539	357
	363
	372
	375
131-3540	394
	640
	849
	884
	886
131-4927	301
	303
	305
131-6417	816
131-6454	62
	67
	795
	797
131-8203	380
	847
	849
	884
	886
132-1805	130
	186
	211
132-2155	89
132-3056	119
132-4099	757

▶ **PRIMARY REFERENCE**

PART NUMBER INDEX

Part	Page	Part	Page	Part	Page	Part	Page
132-4100	757	134-9680	▶439		706		186
132-4262	472		440	135-2442	792		190
132-4263	472	134-9682	439		793		193
132-4265	472	134-9717	438	135-2443	792		195
132-4266	472		▶440		793		198
132-4268	472	135-1593	231	135-2444	792		200
132-4292	472		245		793		211
132-4588	775		256	135-3406	220	137-4279	509
132-4618	227		267		236	137-7249	478
	228		277	135-3408	220	137-9373	513
132-6519	266	135-1594	220		236	137-9438	106
	277		231	135-3409	220		108
132-6520	266		236		236	137-9629	574
	277		245	135-3410	220	138-1898	677
132-6521	266		256		236	138-2042	95
	277		267	135-3412	220	138-2048	42
132-6522	266		278		236	138-2050	21
	277	135-1595	220	135-3413	220	138-2053	53
132-7705	640		231		236	138-2054	51
132-8239	26		236	135-3439	244	138-2060	21
133-1011	32		245		255	138-3097	99
	34		256		266		▶116
133-2154	544		267		277	138-3100	116
	559		278	135-3441	244	138-4272	723
133-2424	784	135-1596	220		255	138-6959	504
	786		231		266		608
	788		236		277	138-7948	580
133-2425	385		245	135-3442	244		671
	755		256		255		673
	757		267		266	138-9355	553
	784		278		277		557
	786	135-1597	220	135-3443	244		569
	788		231		255	138-9357	544
	790		236		266	138-9358	544
133-2426	385		245		277	139-1942	513
	755		256	135-3444	244		557
	757		267		255	139-2840	632
133-2427	755		278		266	139-2936	553
	759	135-1598	220		277	139-3368	646
133-2428	757		231	135-4990	506		▶653
133-5514	921		236	135-5815	351	139-3369	653
133-5518	780		245	135-7454	485		▶654
133-6105	55		256	135-7455	485	139-4016	509
133-6106	55		267	135-7933	466		576
133-8470	48		278	135-7934	466	139-5108	585
133-9467	110	135-1599	231	135-7935	466	139-5514	51
	113		245	135-7936	466	139-5751	509
	172		256	135-7937	466		576
133-9472	110		267	135-7938	466	139-6039	93
	113		278	135-7939	466		394
134-0855	350	135-1600	231	136-1206	435		831
134-1374	919		245	136-1613	535		834
134-1376	294		256	136-1862	571		856
	▶347		267	136-3022	320	139-7100	▶858
134-2540	190		278		334		860
	193	135-1601	232	136-4184	723	139-7392	580
	195		245	136-7701	▶422		671
	198		256		630	139-7757	725
	200		267	136-7703	422	139-8929	630
134-4139	55		278	137-2819	755		▶730
134-5202	877	135-1911	704	137-3292	▶801	139-9220	730
134-6146	934		706	137-3297	388	139-9222	730
134-7258	934	135-1912	704	137-3299	388	139-9223	730
134-8273	654		706	137-3872	585	139-9224	730
134-8948	794	135-1913	704	137-4195	130	139-9225	730

▶ PRIMARY REFERENCE

PART NUMBER INDEX

Part	Page	Part	Page	Part	Page	Part	Page
139-9227	730	142-1622	453		▶121		540
140-1248	666	142-1623	453	145-7211	840		542
140-1250	557		455	145-7713	509		544
140-1983	535	142-3952	679	145-7750	▶477		547
	542		▶739		566		551
	562	142-4021	739	145-8327	103		553
140-1999	654	142-5542	354	145-8746	723		557
140-2001	654		356	145-9954	585		566
140-2004	654		360	146-0218	915		569
140-2005	654	142-6000	728	146-1571	492		572
140-2006	654	142-6742	683		592		574
140-2007	654	142-7423	509		593		580
140-2008	654	142-7425	509		594		610
140-6312	351	142-7433	763	146-8956	▶51		666
140-7197	390		▶792		53		669
140-7443	32	142-7434	761	146-8957	51		671
	34		▶793	147-0934	664		673
140-7444	32	142-8103	441	147-1380	186		675
	34	142-8751	535		211		677
140-7445	32	143-3842	457	147-1446	198	148-8338	513
	34		459		200		572
140-7505	77	143-4730	547	147-1979	21	148-8339	576
	79	143-5906	557	147-5043	321	148-8340	521
140-7506	77	143-5907	554		335		528
	79		569	147-5044	321		547
140-7512	77	143-8031	463		335		566
	79	143-8034	463	147-5045	321		587
140-7515	57	143-8150	463		335		664
140-7583	666	143-8758	521	147-5046	321	148-8341	513
140-7598	878	143-9025	723		335		538
140-7599	509	144-0195	186	147-5551	103		540
140-8783	58		187	147-5553	95		542
	204		211	147-5818	463	148-8345	566
140-8953	36	144-0367	89	147-5819	463		587
140-9370	544	144-0685	▶302	147-7242	654	148-8353	677
140-9793	126	144-0688	302	147-7243	654	148-8354	535
	128		▶314	147-8450	922		664
140-9794	126	144-0689	314	148-0619	511	148-8355	580
	128	144-1183	383	148-0620	511	148-8361	585
140-9795	126	144-1636	202	148-3026	19	148-8364	525
	128		547	148-4685	388		531
140-9796	126		551	148-7050	669		547
	128		553	148-7291	612		566
141-2759	139	144-2654	540		▶726		587
	141	144-6060	547	148-8315	513	148-8365	500
141-2778	761	144-7122	390	148-8318	500		576
	763	144-8070	547		547	148-8367	99
	792	145-2513	478		551		538
	793	145-2514	478		566		540
141-2785	761	145-3542	630		583		544
	763		▶731		610		547
141-2786	761	145-3543	▶488	148-8319	580		553
	763		630		610		566
141-6188	57	145-3810	731	148-8322	580		572
141-6518	871	145-3811	731	148-8324	580		580
141-6603	928	145-3812	731	148-8326	587		583
141-7844	97	145-3813	731	148-8327	509		610
141-8589	95	145-4501	97		521		666
141-8597	91	145-6735	478		528		669
141-8666	780	145-6855	21	148-8328	580		673
141-9069	314	145-6856	21	148-8336	513	148-8370	521
141-9777	95	145-6858	21		525		525
142-0349	36	145-7118	587		531		531
142-0467	440	145-7119	527		535		562
	▶441	145-7210	99		538		566

▶ **PRIMARY REFERENCE**

PART NUMBER INDEX

Part	Page	Part	Page	Part	Page	Part	Page
	576		669		716	151-6777	860
148-8371	675		675	148-9052	693		861
148-8372	535	148-8439	671		713	151-6789	921
	547		673		716	151-6790	921
	566		677	148-9053	693	151-6792	858
148-8374	500	148-8444	521		713		▶926
	502		525		716	151-6793	926
	566		528	148-9054	693	151-6841	926
	673		531		713	151-8754	364
	675		535		716		368
148-8375	535		567	148-9055	693		372
	585		581		713	151-8865	504
148-8377	601	148-8446	513		716		506
	603	148-8454	595	148-9561	390	151-8866	506
	605		597	148-9868	547		516
148-8378	544		599	149-1249	228	151-9461	858
	547	148-8457	521	149-2091	103		862
	551		527	149-4076	728	151-9497	858
	557		528		744		862
	567		534		747	152-1267	122
	572		585		750	152-1809	630
	580	148-8458	601	149-4077	728	152-7371	471
	583		603		744		▶618
	669		605		747	152-7372	471
	671	148-8514	380		750		▶472
	675	148-9036	693	149-5452	521	153-0281	496
148-8390	538		713		527	153-4708	322
	540		716		528		336
	542	148-9037	693		534	153-4709	322
148-8391	567		713	149-5881	321		336
148-8395	509		716		335	153-4710	322
	551	148-9038	693	149-6116	113		336
	580		713	149-6117	110	153-4711	322
148-8408	662		716		113		336
148-8412	576	148-9039	693	149-6246	477	153-4712	322
148-8414	535	148-9040	716	150-3024	74		336
148-8415	521	148-9042	693		81	153-6199	601
	528		713	150-3954	675		603
	535		716	150-4033	521		605
	567	148-9043	693		528	153-6237	509
	581		713	150-4037	525	153-6243	576
	583		716		531	153-6257	595
148-8418	521	148-9044	693	150-4043	576		597
	528		713	150-4044	581		599
	581		716	150-5814	463		607
148-8420	566	148-9045	693	150-5884	457	153-6262	576
148-8424	547		713		459	153-8644	683
	551		716		468	153-8645	683
	553	148-9046	693	150-5931	610	153-8748	683
	566		713	150-7806	▶303	154-0172	727
148-8427	525		716	150-7807	315		751
	531	148-9047	693		316	154-3153	842
148-8433	500		713	150-7808	303		878
	502		716		▶315	154-4811	831
	513	148-9048	693		▶316		834
	553		713	150-8108	934	154-8056	11
	581		716	151-1948	572	154-9095	5
	583	148-9049	693	151-2856	829	154-9096	6
148-8434	581		713	151-4522	435	155-0576	103
	666		716	151-6703	858		143
148-8435	513	148-9050	693		862		208
	538		713	151-6704	858	155-0824	472
	540		716		862	155-0849	472
	542	148-9051	693	151-6767	860	155-0850	472
	553		713		861	155-0851	472

▶ PRIMARY REFERENCE

PART NUMBER INDEX

Part	Page
155-0852	472
155-0855	472
155-0856	472
155-0857	472
155-0858	472
155-0864	472
155-0865	472
155-0866	472
155-0867	472
155-0868	472
155-0869	472
155-0870	472
155-0872	472
155-0874	472
155-0875	472
155-0876	472
155-0877	472
155-0878	472
155-2255	139
	141
	179
	182
	186
	190
	193
	198
	200
	211
155-2260	6
	179
	182
	186
	190
	193
	195
	198
	200
	202
	208
	211
155-2261	164
155-2263	214
155-2265	139
	141
	179
	182
	186
	190
	193
	195
	198
	200
	211
	900
155-2270	134
	139
	160
	164
	179
	182
	186
	190
	193
	195
	198
	200
	211
155-2271	134
	139
	141
	186
	190
	193
	198
	200
	211
155-2274	186
	190
	193
	198
	200
	202
	211
155-4562	309
155-4574	139
155-6985	547
	551
156-0065	844
156-0066	844
156-3849	935
156-6471	858
156-6474	926
156-6475	926
156-6564	856
156-6567	856
156-6568	394
156-6593	856
156-6594	856
156-6595	856
156-6598	858
	862
156-6599	831
	834
156-6600	858
	862
156-6642	834
156-6643	858
	862
156-6644	858
	862
156-6645	858
	862
157-0054	618
	▶632
157-0055	618
157-0056	618
157-0387	632
157-0388	636
157-0389	636
157-0393	636
157-0394	636
157-0395	636
157-0401	636
157-0402	636
157-0488	708
157-0489	708
157-0737	708
158-6333	220
	236
	▶286
158-7461	286
159-1503	89
159-3050	186
	211
159-3727	117
159-4700	415
	416
	417
159-5255	23
159-9540	44
	45
	64
	66
	67
160-0149	95
160-0645	99
160-1501	426
	428
	▶892
160-3510	32
	34
160-6028	525
	531
160-6493	42
160-6494	42
160-6495	42
160-6496	42
160-7197	110
	113
160-7690	198
	200
160-8758	719
160-9192	117
160-9539	487
161-3639	858
	862
161-3650	858
	862
161-3660	831
161-3663	858
	862
161-3665	858
	862
161-3685	831
	834
161-3695	926
161-3699	858
	862
161-3705	926
161-6149	709
	711
	728
161-6154	703
	707
	727
	749
161-9820	22
162-0177	548
	551
	569
162-0236	57
162-0237	57
162-0761	58
162-1504	95
162-2000	110
	113
162-6816	515
	666
162-9754	58
162-9992	103
163-1201	874
163-2084	426
163-4210	▶484
163-4565	719
163-6708	900
163-6795	824
163-7180	229
163-9256	21
164-0514	858
	862
164-0515	858
	862
164-0516	926
164-0517	926
164-0518	926
164-0519	858
	862
164-0522	856
164-0527	831
	834
164-0528	831
	834
164-0592	864
164-0616	896
	898
164-0646	856
164-0664	831
	834
164-0673	856
164-2657	244
	255
164-2658	244
	255
164-3207	103
164-4344	831
	834
164-5570	559
	561
	564
	565
	571
	668
164-5572	562
164-5577	576
164-5605	583
164-5608	567
164-5629	547
	551
	553
164-5912	244
	255
165-2273	74
165-3097	562

▶ **PRIMARY REFERENCE**

PART NUMBER INDEX

Part	Page	Part	Page	Part	Page	Part	Page
165-5655	208	167-4160	831	169-8432	321	175-3354	214
165-5877	547		834		335	175-3355	656
165-5880	877	167-4174	919	169-8433	321	175-3915	58
165-9285	463	167-4176	919		335	175-4073	244
165-9286	461	167-4178	919	169-9761	319		255
165-9287	457	167-4179	916	170-1350	439		266
	459	167-4180	916	170-5121	515		277
165-9367	487	167-4181	916	170-5707	780	175-4807	106
165-9383	729	167-4182	916	170-6929	130		108
166-0036	761		924		134	176-1937	831
	763	167-4183	924	170-7721	394		834
166-1984	492	167-4184	924		884	176-1938	831
166-8553	580	167-4187	916		886		834
166-8725	58	167-4189	916	170-9198	148	176-1939	831
167-2153	32	167-4191	916	170-9721	856		834
	34	167-4192	916	170-9723	856	176-1941	831
167-2473	468	167-4195	915	170-9843	463		834
167-3466	547	167-4196	915	170-9844	461	176-1942	831
	551	167-4197	915	170-9845	457		834
	553	167-7033	856		459	176-1951	926
167-3593	179	167-7035	922		468	176-1952	926
	182	167-7036	922	170-9859	463	176-1953	926
167-4060	▶916	167-7038	862	170-9860	461	176-1954	926
	919	167-7039	858	171-0807	322	176-1955	926
167-4061	919		862		336	176-1956	926
167-4062	916	167-7042	831	171-1076	77	176-1957	926
167-4063	916		834		79	176-2002	179
167-4064	924	167-7083	822	171-7016	516		182
167-4065	916	167-7118	864		▶706	176-2540	9
167-4066	916	167-7119	864	171-7405	856		▶174
167-4067	921	167-7223	937	171-7406	856	176-5133	▶640
	922	167-7224	939	171-7413	926		642
167-4071	916	167-7225	943	171-7414	926		644
167-4072	916	167-7226	940	171-7415	856	176-5140	642
167-4073	916	167-7227	941	171-7426	831		644
167-4074	916	167-7228	942		834	176-5143	640
167-4075	916	167-7229	938	171-7464	869		642
167-4076	916	167-7230	941	171-7467	869		644
167-4079	831	167-7231	938	171-7566	840	176-5158	731
	834	167-7270	935	172-0685	566	176-6765	▶480
167-4080	831	167-7272	831	172-1029	457	176-7800	426
	834		834		459		▶685
167-4081	831	167-7715	740	172-3565	840	176-7803	525
	834	168-3158	761	172-4844	77		531
167-4084	919		763		79	176-9667	666
167-4086	916	168-6666	840	172-8660	23	177-0358	130
167-4087	919	169-5660	840	173-4383	692		135
167-4089	831	169-5680	840	173-4387	▶692	177-0799	817
	834	169-5695	654		693	177-0800	817
167-4097	919	169-7404	542	173-7992	592	177-6628	612
167-4099	831	169-8323	761		593		744
	834		763		594		745
167-4130	916		766		▶682		746
167-4131	916		768	173-8277	744		750
167-4140	916		770		747	177-6629	744
167-4141	916	169-8324	761		750		747
167-4142	921		763	174-1319	162		750
167-4146	831	169-8388	320	174-7875	874	177-6970	744
	834		334		875		747
167-4148	831	169-8394	320	174-9972	628		750
	834		334	175-0137	626	177-7122	488
167-4158	831	169-8398	320	175-1198	916		▶740
	834		334	175-1199	916	177-7747	740
167-4159	831	169-8402	320	175-3349	433	177-7845	40
	834		334		434	177-8782	77

▶ PRIMARY REFERENCE

PART NUMBER INDEX

Part	Page	Part	Page	Part	Page	Part	Page
	79	179-7071	103	183-8865	461	185-3476	▶597
177-9653	103	179-9316	494	183-8866	468	185-3477	▶599
177-9853	874		496	183-8867	463	185-3478	▶601
	875		498	183-8873	▶444	185-3479	▶603
178-3586	874		508		754	185-3480	▶605
	875	179-9625	463	183-8874	▶445	185-3732	▶498
178-5350	226	179-9770	457		754	185-3736	▶508
178-5530	856		459	183-8875	▶446	185-5760	172
178-5573	858		468		754	185-6003	351
	862	179-9771	457	183-8876	▶448	185-6066	773
178-5574	858		459		754	185-6352	172
	862		468	183-8877	▶447	185-6632	580
178-9983	656	179-9936	632		771	185-6791	506
179-0464	630		▶636		772	185-6792	506
179-3151	472	179-9938	636	183-8878	463	185-6793	506
179-3152	472	180-1274	636	183-8885	457	185-6794	506
179-3154	472	180-1275	636		459	185-6795	494
179-3341	601	180-1276	636	183-8896	461	185-6798	504
	603	180-1277	636	183-8956	660	185-6799	504
	605	180-1278	636		▶662	185-6800	519
179-4169	709	180-1279	636	183-8965	662	185-6801	519
	711	180-1288	637	184-2472	145	185-6802	519
179-4170	709	180-1375	632	184-7619	829	185-6803	519
	711	180-1376	632		830	185-6804	491
179-4171	709	180-1714	916		▶918		504
	711	180-2652	632	184-7621	829	185-6805	504
179-4173	709		▶637		830	185-6806	498
	711	180-5366	749		▶901	185-6807	509
179-4176	709	180-6519	892	185-0230	461	185-6808	509
	711	180-6520	892	185-0231	461	185-6809	509
179-4177	711	180-6523	892	185-0882	21	185-6810	509
179-4178	709	180-6524	892	185-1546	51	185-6820	603
179-4180	698	180-6526	892	185-1735	465	185-6821	506
	709	180-7839	685	185-1736	▶465	185-6822	506
	711		689		771	185-6823	492
179-4648	711	180-7840	685	185-3379	▶509	185-6824	496
179-4649	709		689		754	185-6825	496
179-4650	711	180-7841	685	185-3383	▶513	185-6826	508
179-4651	709		689	185-3387	▶504	185-6827	508
179-4652	709	180-7842	685		754	185-6829	593
	711		689	185-3393	▶506	185-6831	593
179-4654	709	183-4403	130		754	185-6837	675
	711		135	185-3399	▶491	185-6838	557
179-4656	709	183-6317	32	185-3405	▶492	185-6839	557
	711		34	185-3411	▶494	185-6843	518
179-4657	709	183-6318	55	185-3417	▶496	185-6844	518
	711	183-8452	424	185-3421	754	185-6845	518
179-4658	709	183-8453	424		▶761	185-6846	669
	711	183-8850	444	185-3425	754	185-6847	504
179-4661	709		▶457		▶763	185-6848	491
	711	183-8851	445	185-3430	▶538		504
179-4666	709		▶459	185-3434	▶540	185-6849	492
	711	183-8852	446	185-3439	▶542	185-6850	491
179-4667	709		▶461	185-3443	▶516	185-8154	824
	711	183-8853	448		771	185-8180	858
179-4668	709		▶468	185-3469	▶589		862
	711	183-8854	447		782	185-8280	831
179-4669	709		▶463	185-3470	▶590		834
	711	183-8855	457		782	185-8281	831
179-4670	709		459	185-3471	▶591		834
	711	183-8856	461		782	185-8538	755
179-4671	711	183-8857	468	185-3472	▶592	185-8539	754
179-4672	709	183-8858	463	185-3473	▶593		▶755
179-6919	687	183-8863	457	185-3474	▶594	185-8540	▶754
179-6922	734	183-8864	459	185-3475	▶595	185-8542	757

▶ **PRIMARY REFERENCE**

PART NUMBER INDEX

Part	Page
185-8543	754
	▶757
185-8545	759
185-8546	754
	▶759
185-8547	▶754
185-8550	784
185-8551	782
	▶784
185-8552	▶782
185-8556	786
185-8559	782
	▶786
185-8562	▶782
185-8566	788
185-8567	782
	▶788
185-8568	▶782
186-0468	▶1
	2
186-0469	2
	▶407
186-0470	2
	▶287
186-0471	2
	▶490
186-0472	2
	▶10
186-0473	2
	▶490
186-0483	1
	▶130
	▶134
186-0484	1
	▶874
	▶875
186-0485	1
	▶139
	▶141
186-0486	1
	▶211
186-0487	1
	▶351
186-0488	1
	▶391
186-0489	▶364
	▶368
	391
186-0490	▶372
	391
186-0491	▶354
	391
186-0492	391
	▶396
	▶398
186-0493	391
	▶403
	▶405
186-0494	754
	▶884
186-0495	490
	▶660
186-0496	▶881
	889
186-0498	490
	▶623
186-0499	490
	▶624
186-0500	1
	▶385
186-0501	1
	▶117
186-0502	1
	▶99
186-0503	1
	▶390
186-0504	10
	▶37
186-0505	10
	▶81
186-0507	10
	▶60
186-0508	10
	▶62
	70
186-0509	10
	▶614
186-0510	10
	▶71
	▶74
186-0512	10
	▶840
186-0518	▶2
186-0520	1
	▶934
186-0790	110
	113
186-3735	124
	186
	190
	193
	433
	434
	656
	662
	751
	752
	753
186-3736	164
	656
187-0661	922
187-3764	37
	896
	898
187-3765	896
	898
187-3767	▶847
	▶849
	852
187-3770	829
	830
	▶888
187-3772	853
187-3775	490
	▶544
187-3776	490
	▶547
187-3777	490
	▶551
187-3779	910
187-3780	889
	▶896
	▶898
187-3781	▶904
	906
187-3782	852
	▶853
187-3785	889
	▶906
187-3791	889
	▶910
187-3793	▶437
	889
187-3794	▶426
	▶428
	889
187-3796	▶642
	▶644
	889
187-3797	▶852
	889
187-3798	▶202
	889
187-3799	▶179
	▶182
	829
	830
187-3800	▶829
	889
187-3801	▶394
	889
187-5073	542
	824
187-5076	504
	506
187-5078	509
187-5079	506
187-5080	496
	508
187-5081	506
187-7208	490
	▶680
187-7213	219
	▶242
	▶253
187-7214	▶216
	226
187-7215	216
	▶231
187-7216	216
	217
	218
	▶319
	▶333
187-7217	▶217
	227
187-7218	217
	▶220
187-7243	490
	▶518
187-7360	▶669
187-7361	▶671
187-7362	▶673
187-7363	▶675
187-7364	▶553
187-7365	▶557
	754
187-7366	▶664
187-7367	▶666
187-7368	490
	▶677
187-8001	628
	630
187-9305	759
187-9307	757
188-1361	755
	757
188-1790	553
	569
188-1792	494
188-1793	494
188-1794	494
188-1795	494
188-1796	504
188-1797	504
188-1798	498
188-1799	498
188-1800	498
188-1801	498
188-1806	519
188-1809	519
188-1813	610
188-1814	587
188-1853	640
188-1859	640
188-1860	640
188-1863	640
188-1864	640
188-1867	640
188-1868	640
188-1869	640
188-1870	640
188-1871	640
188-1872	640
188-1873	640
188-1930	640
188-2811	10
	▶84
188-2812	10
	▶61
188-2813	10
	▶64
	▶66
188-2815	10
	▶89
188-2817	10
	▶91
188-3351	755
	759
188-3352	385
188-3354	759
188-3357	757
188-3761	385
188-3823	547
188-3917	784
	786
	788
188-4930	▶219
	287
188-4931	▶226

▶ PRIMARY REFERENCE

PART NUMBER INDEX

Part	Page
188-4932	▶227
	287
188-4937	▶106
	▶108
188-4938	▶865
188-4940	▶867
188-4941	490
	▶622
188-4943	▶876
188-4945	▶160
	754
188-4947	159
	▶162
	865
188-4948	8
	▶165
188-4949	▶168
188-4952	▶771
188-4953	▶772
188-4954	1
	▶214
188-4958	▶668
188-4959	▶830
188-4960	▶829
188-4961	▶383
	829
188-4962	▶559
	829
188-4963	▶561
	829
188-4964	▶562
	829
188-4965	829
	▶882
188-4967	▶585
	829
188-4968	▶186
	829
188-4970	▶122
188-4971	▶124
	▶125
188-4972	▶433
	▶434
188-4974	829
	▶877
188-4975	▶564
188-4976	▶565
188-4977	▶937
188-4978	▶937
188-4979	▶938
188-4980	▶938
188-4981	▶939
188-4982	▶940
188-4983	▶941
188-4984	▶941
188-4985	▶942
188-4986	▶942
188-4987	▶943
188-4988	▶943
188-4991	▶466
	639
188-4992	639
188-4993	639
	▶780
188-4997	▶799
188-4998	▶799
188-4999	408
188-5000	407
	▶408
188-5096	2
	▶9
188-6042	773
188-6374	580
188-6380	553
	569
188-7268	934
188-7582	490
	▶566
188-7587	490
	▶610
188-7592	490
	▶580
188-7597	490
	▶576
188-7602	490
	▶587
188-7607	490
	▶519
188-7612	490
	▶574
188-7617	490
	▶521
188-7622	490
	▶525
188-7627	1
	▶527
188-7632	490
	▶535
188-7637	▶502
	799
188-7642	▶583
	639
	▶500
188-7655	▶481
188-9644	364
	368
	832
	835
189-0077	145
189-1602	944
189-1603	944
189-1604	944
189-2053	918
	▶919
189-2054	918
189-2055	506
189-2059	506
189-2060	506
189-2061	385
189-2062	506
189-2690	858
	862
189-2711	858
189-2768	829
	▶860
189-3014	418
	538
	540
	719
189-3415	864
189-3426	864
189-4201	385
189-4208	385
189-4216	817
189-4221	153
189-4222	153
189-4266	817
189-5601	55
189-5681	701
	719
189-6117	▶915
189-6154	719
189-6159	719
189-9977	418
	419
	696
	699
	701
	719
190-0283	▶3
190-0284	771
	772
	▶773
190-0286	1
	▶167
190-0287	▶797
	799
190-0288	▶907
190-0290	889
	▶929
190-2446	208
190-2777	759
190-5334	757
190-5335	463
	773
190-8122	619
	▶633
190-8124	▶485
	619
190-8127	619
190-8150	937
190-8152	942
190-8153	944
190-8154	943
190-8155	944
190-8197	623
	▶627
190-8198	627
	▶628
190-8199	627
	▶630
190-8206	1
	▶388
190-8207	388
190-8250	130
	135
190-8532	509
190-8534	538
190-8537	513
190-8539	513
190-8543	540
190-8544	540
190-8545	576
190-8546	576
190-8547	576
190-8548	576
190-8549	576
190-8550	610
190-8551	610
190-8552	506
190-8553	587
190-8557	587
190-8558	587
190-8560	587
190-8561	322
	336
190-8563	322
	336
190-8565	322
	336
190-8566	322
	336
190-8567	322
	336
190-8589	319
	333
190-8590	220
	232
	236
	245
	256
	267
	278
190-8591	220
	232
	236
	245
	256
	267
190-8595	319
	333
190-8653	485
	▶723
190-8655	485
	▶725
190-8657	485
190-8658	485
190-8664	179
	182
190-8676	220
	231
	236
	245
	256
	267
	278
190-8718	485
190-9752	699
	719
190-9754	725
190-9758	723
190-9813	725
190-9817	725
190-9818	725
190-9819	725
190-9820	725
190-9825	773
191-0885	633
	▶634
191-0887	633

▶ **PRIMARY REFERENCE**

PART NUMBER INDEX

Part	Page	Part	Page	Part	Page	Part	Page
	▶638	192-7636	516	193-9063	500		540
191-1260	113	192-9074	595		583	194-9390	513
191-1393	634		597	193-9064	583		538
191-1394	634		599	193-9065	168		540
191-1395	634	192-9075	595		179	194-9391	506
191-1396	634		597	193-9191	433	194-9394	506
191-1397	634		599		434	194-9395	506
191-1398	634	192-9076	597	194-0715	869	194-9396	506
191-1641	492	193-1123	322	194-1983	422	194-9397	506
	506		336	194-2466	42	195-0168	599
191-1642	492	193-1124	322	194-3243	357	195-0176	599
191-1956	638		337		363	195-0704	214
191-2468	831	193-1132	220	194-3259	865		▶656
	834		232		▶866	195-0799	566
191-2708	687		236	194-3592	186	195-1907	513
191-2710	687		245		211		▶707
191-2711	687		256	194-5039	784	195-2944	664
191-2712	687		267		786		▶679
191-2713	741		278		788	195-3580	153
191-2714	741	193-2153	866		790	195-5628	146
191-2715	741	193-4287	▶151	194-6535	642	195-5658	139
191-2716	741		167	194-6989	583	195-5663	160
191-2743	869	193-4288	▶157	194-7839	433	195-6289	364
	871		167		847		368
191-2752	869	193-4289	167	194-7841	557	195-6300	364
	871		▶169		720		368
191-2753	869	193-4290	165	194-7843	5	195-6302	364
	871	193-4726	482		6		368
191-2757	924	193-4727	482		426	195-6307	357
191-2758	924	193-5014	794		428	195-6308	▶357
191-2762	680	193-5015	794		433		364
	▶719	193-5970	680		434	195-6310	364
191-2767	831	193-5975	▶478		847		368
	834		662		849	195-6851	▶159
191-2778	553	193-5976	680	194-7844	580	195-7004	51
	▶696	193-7757	214	194-7845	580	195-7685	494
191-2809	687	193-7759	130	194-7849	662		496
191-2962	687	193-7760	130	194-8643	153		498
191-3539	628		134	194-9209	99		508
191-3952	687	193-7761	130	194-9211	287		601
	▶741		134		▶294		603
191-3954	741	193-7763	130	194-9212	▶400		605
191-3956	741	193-7788	426		407	195-7690	929
191-5941	113		428	194-9213	▶399		932
191-5942	113	193-7789	▶430		407	195-7691	847
191-5943	113		437	194-9214	400		849
191-6243	869	193-7791	856		401	195-7692	929
	871	193-7793	856	194-9215	399		932
191-7529	797	193-7799	929	194-9216	294	195-7694	929
191-7538	▶153		932		▶348		932
	167	193-7800	▶873	194-9218	99	195-7695	929
191-7539	153	193-8990	▶356	194-9219	99		932
192-0705	701		364	194-9386	494	195-7697	179
	720		368		496		182
192-3175	▶569	193-8993	354		498	195-7700	907
192-3176	569	193-8994	396		508		▶908
	▶699	193-9054	202	194-9387	494	195-7747	612
192-3183	557	193-9056	179		496		744
	▶701		182		498		747
192-4450	780	193-9057	179		508	195-7873	186
192-4451	780		182	194-9388	513		211
192-7114	480	193-9058	179		538	195-9089	745
192-7117	701		182		540		746
	720	193-9059	162	194-9389	513		750
192-7120	625	193-9060	122		538	195-9382	364

▶ PRIMARY REFERENCE

PART NUMBER INDEX

Part	Page
	368
195-9395	396
	398
195-9396	364
	368
195-9397	364
	368
195-9399	396
195-9400	385
195-9401	385
195-9405	44
	45
195-9406	44
	45
195-9408	▶44
	▶45
	364
	368
196-0212	528
196-1114	826
	827
196-1118	▶826
	853
196-1119	826
196-1120	▶827
	847
	849
196-1121	827
196-1122	826
	827
196-1125	929
	932
196-1130	159
	▶163
196-1757	60
196-1760	119
196-1767	117
196-1770	117
196-1776	117
	▶119
196-1777	119
196-3533	773
196-3537	139
	141
196-4472	9
	▶846
196-4760	780
196-5323	780
196-5380	590
196-5381	590
	608
196-5382	516
196-5383	516
196-5384	516
196-5387	515
196-5388	601
	603
	605
196-5389	589
	590
	591
196-5390	593
196-5649	119
196-5650	106
	108
196-5651	83
	▶177
	662
196-5689	364
	368
196-5693	354
196-5699	364
	368
196-5700	364
	368
196-5701	▶93
	364
	368
196-5703	403
	405
196-6803	687
196-7156	795
	797
196-7480	121
	▶708
196-7484	708
196-7485	▶900
196-7486	612
	▶744
196-7516	121
196-7543	583
	▶745
196-7544	500
	▶746
196-7916	508
196-7917	566
196-7924	566
196-7925	491
196-7930	580
196-8422	553
	569
196-8424	624
	▶625
196-8427	580
196-8428	622
	▶626
196-8430	580
196-8431	580
196-8643	106
	108
	139
	141
196-8804	687
196-9051	845
196-9058	929
196-9059	929
	932
196-9060	553
	557
	569
	898
196-9061	847
	849
196-9062	847
	849
196-9063	847
	849
196-9064	853
196-9065	853
196-9066	853
196-9067	929
	932
196-9068	544
	559
196-9070	929
	932
196-9083	845
196-9682	93
196-9684	93
196-9692	372
196-9700	375
	380
196-9710	375
	380
196-9711	356
	360
	362
	375
	380
196-9720	375
	380
196-9728	380
196-9729	886
196-9730	375
196-9732	754
	▶886
197-0395	81
197-0404	81
197-0829	824
197-0953	84
197-1711	62
197-2247	682
	▶683
197-2248	682
	▶684
197-3528	139
	141
197-3800	108
197-3805	372
197-3909	89
197-3910	89
197-4602	614
	▶616
197-4858	614
197-5015	12
197-5319	494
	496
	498
	508
197-5681	847
	849
197-5686	853
197-5687	852
197-5688	867
197-5689	867
197-5690	867
197-5691	642
	644
197-5692	642
	644
197-5693	642
	644
197-5694	642
	644
197-5695	642
	644
197-5696	642
	644
197-5699	544
	559
197-5700	829
	830
	▶856
197-6046	372
197-6054	472
197-6076	106
	108
197-6082	106
	108
197-6522	372
197-6537	364
	368
197-6548	60
197-6791	177
197-6792	177
197-7911	91
197-7915	91
197-7930	728
197-8156	91
197-8159	61
197-8160	91
197-8859	62
	67
197-9990	780
197-9995	535
	566
197-9999	551
	580
198-0024	864
198-0859	▶944
198-0860	▶944
198-1016	435
198-1166	492
198-1652	871
198-1654	871
198-1685	71
	74
	▶83
198-1686	83
198-1696	89
198-1747	831
	835
198-1754	924
198-4054	521
	528
198-4064	372
198-4066	842
198-4067	842
198-4677	▶164
	865
198-4679	10
	▶23
198-4680	1
	▶889
198-4684	10
	▶842
198-4685	▶822
	889

▶ **PRIMARY REFERENCE**

PART NUMBER INDEX

Part	Page
198-4686	822
	▶823
198-4687	▶878
	889
198-4688	845
198-4690	822
198-4697	▶1
	639
198-5145	91
198-5148	91
198-6224	660
198-6361	81
198-7591	84
198-9084	478
198-9085	478
198-9124	896
	898
198-9126	99
199-1152	679
	▶703
199-1153	612
	▶747
	749
199-1154	612
199-1155	745
	746
199-2395	▶424
	628
199-2396	628
	▶732
199-2439	424
199-2441	424
199-2442	424
199-2455	603
199-2457	601
	603
	605
199-2458	605
199-2459	605
199-2460	595
199-2461	592
199-2462	592
199-2463	592
199-2464	601
199-2465	601
199-2976	▶171
	628
199-3057	732
	▶734
199-3058	732
199-3060	732
199-3109	31
199-3137	▶150
	160
	164
199-3138	163
199-3139	162
199-3677	924
199-4128	348
199-4853	734
199-4885	625
	626
199-5179	171
199-5926	71
	74
199-5927	71
	74
199-6976	227
199-6978	214
199-7035	671
199-7036	671
	673
199-7037	673
199-7479	525
	531
199-7480	525
199-7481	525
	531
199-7529	▶158
	168
199-7552	626
199-7560	625
199-7618	99
199-7619	99
199-7646	521
	528
199-7647	521
	528
199-8026	580
199-8495	583
199-8497	403
199-8499	403
	405
199-9252	103
199-9267	103
199-9751	103

2

Part	Page
200-0916	466
200-0917	466
200-0918	466
200-0919	466
200-0920	466
200-1806	521
	528
200-2555	202
200-2556	202
200-4047	591
200-4048	594
200-4049	594
200-4050	594
200-4051	591
200-4055	589
200-5659	542
200-6181	513
	542
200-6797	884
	886
200-6801	583
200-7495	527
200-7498	521
	528
200-7499	521
	528
200-7500	521
200-8115	396
201-0048	642
	644
201-0100	640
201-0502	431
	890
201-0533	431
	890
201-0895	431
201-0898	164
201-0901	431
	890
201-1096	89
201-1108	89
201-1109	89
201-1110	89
201-1357	890
201-1373	890
201-1376	890
201-1395	890
201-2484	430
201-2485	430
201-2494	130
201-3088	354
201-3094	372
201-3097	396
201-3197	542
201-3955	589
201-3975	153
201-3976	884
	886
201-3977	884
	886
201-3986	375
	380
201-3988	375
	380
201-4012	215
201-4013	179
	182
201-4014	876
201-4391	858
	862
201-4530	834
201-4600	400
	401
201-5673	359
201-5675	▶359
	400
	401
201-7153	513
201-7471	542
201-7472	542
201-7473	538
201-8224	656
201-8225	656
201-8231	656
201-8745	77
	79
201-8749	544
201-8750	829
	830
	▶831
	▶834
201-8751	544
201-8752	544
201-8753	544
201-8754	847
	849
201-8755	551
201-8756	547
201-8758	547
201-8759	547
201-8760	829
	▶921
201-8763	896
	898
201-8765	830
	▶922
201-8766	832
201-8767	832
	835
201-8768	372
	847
	849
201-8770	830
	▶861
201-8780	81
201-9041	144
202-0197	202
202-1135	186
202-1136	▶190
	▶193
	829
202-1137	190
	193
202-3060	616
202-3061	616
202-3077	616
202-3081	616
202-3102	143
202-3165	755
	757
	784
	786
	788
	790
202-4092	669
	671
	673
	677
	▶709
202-4093	675
	▶711
202-4094	538
	540
	▶713
202-4095	513
	▶693
202-4096	542
	▶716
202-4100	▶515
202-4124	616
202-4140	372
202-4725	612
	▶749
202-5466	62
	67
202-5467	62
202-5486	612
202-6704	616
202-6705	616
202-7201	165

▶ PRIMARY REFERENCE

PART NUMBER INDEX

Part	Page
202-7202	3
202-7210	904
202-7211	904
	▶911
202-7212	904
202-7213	908
	▶913
202-8137	243
	254
	266
	277
202-8138	244
	255
	266
	277
202-8139	244
	255
	266
	277
202-8140	244
	255
	266
	277
202-8141	244
	255
	266
	277
202-8142	244
	255
	266
	277
202-8143	244
	255
	266
	277
202-8144	244
	255
	266
	277
202-8389	322
	336
202-8390	322
	336
202-8517	696
	699
202-8518	696
	699
	701
202-8519	696
	699
202-8520	701
202-8521	701
202-8523	720
202-8524	696
202-8525	696
203-0062	171
203-0099	171
203-0215	244
	255
	266
	277
203-0216	231
	246
	257
	268
203-1911	553
203-1913	513
203-1919	677
203-1920	513
203-1921	566
203-1930	535
203-1932	535
203-1933	535
203-2251	171
203-2917	601
	603
	605
203-4462	354
203-4464	45
	354
	357
	403
	405
203-4509	357
	363
203-4561	763
203-4562	763
203-4579	435
203-5397	242
	253
	264
	275
203-5402	244
	255
	266
	277
203-5403	244
	255
	266
	277
203-5415	244
	255
	266
	277
203-5416	244
	255
	266
	277
203-5417	244
	255
	266
	277
203-7592	231
203-7593	231
203-7594	231
204-0682	595
	597
	599
	607
204-0728	232
204-3388	766
204-4951	696
204-4964	699
204-4981	701
204-5099	747
204-5384	640
204-6350	742
204-6351	696
204-6353	701
204-6354	699
204-7008	1
	▶143
204-7010	143
	▶145
204-7265	323
	337
204-7660	323
	337
204-7685	139
	141
204-7692	220
204-7693	220
	236
204-7741	229
	▶264
	▶275
204-7742	▶218
	228
204-7743	218
	▶236
204-7842	266
	277
205-0442	862
	▶928
205-0444	823
205-0445	922
205-0446	928
205-0447	928
205-0448	924
205-0450	861
	▶862
205-0453	394
205-0460	838
	▶932
205-0608	236
205-0826	208
205-1414	745
	746
205-2453	677
205-3230	935
205-3910	▶229
	230
205-3911	▶230
205-3915	▶228
	230
205-3930	535
205-3966	679
205-3967	▶147
	888
205-4015	435
205-5134	71
	74
205-5135	71
	74
205-6203	832
	835
205-6207	929
	932
205-6208	929
	932
205-6209	929
205-6210	906
205-6214	▶903
205-6215	642
	644
205-6216	832
205-6217	832
	835
205-6218	826
	827
205-6219	826
205-6220	832
205-6295	832
	835
205-6308	3
205-8069	703
	▶750
205-9830	703
206-0842	71
206-0843	71
206-1351	▶401
206-2389	504
	506
206-2390	538
	540
206-2400	553
206-2431	703
206-2433	703
206-2790	158
206-3623	357
	363
206-4127	21
206-5007	701
206-5008	701
206-5010	701
206-5011	701
206-5013	701
206-5162	208
206-5208	208
206-6097	▶208
206-7083	151
206-7095	719
206-7097	719
206-7122	719
206-7123	719
206-7124	720
206-7125	720
206-7126	720
206-7127	719
206-7128	719
206-7647	418
	538
	540
	719
206-7656	720
206-9348	357
	363
	372
	375
	380
206-9349	44
	45
	375
	380
206-9360	354

▶ **PRIMARY REFERENCE**

PART NUMBER INDEX

Part	Page	Part	Page	Part	Page	Part	Page
	360	207-7170	134		908	209-4853	151
206-9362	364		195	208-1138	904	209-6417	148
	368	208-0211	911		908	209-8865	1
206-9363	364	208-0212	913	208-1163	906		▶195
	368	208-0213	911	208-1653	934		▶198
206-9364	375	208-0214	911	208-1655	934		▶200
	380	208-0215	911	208-1656	934	209-8867	195
206-9365	364	208-0216	911	208-1658	106	209-9218	18
	368	208-0217	911		108	209-9219	18
207-0416	696	208-0218	911	208-1659	937	210-0396	190
	699	208-0219	911	208-1660	934		193
207-0418	696	208-0220	911	208-2531	908		195
207-0419	696	208-0221	911	208-2532	908		198
	699	208-0222	911	208-2534	908		200
207-0805	699	208-0223	911	208-2536	908	210-0603	▶393
207-0807	696	208-0224	911	208-3483	913		402
207-0981	696	208-0225	911	208-3484	913	210-0605	393
	699	208-0226	911	208-3485	913	210-0606	393
207-0983	696	208-0227	911	208-3487	913	210-0610	▶392
207-1219	130	208-0228	911	208-3488	913		402
	134	208-0229	911	208-3490	913	210-0613	393
207-1249	696		913	208-3491	913	210-0616	392
	699	208-0230	904	208-3492	913	210-0617	392
207-1704	▶86		908	208-3493	913	210-0624	392
	87	208-0231	904	208-3494	913	210-0629	392
207-1707	37		908	208-3495	913	210-0696	547
207-1709	87	208-0232	904	208-3496	913		▶612
207-1716	696		908	208-3499	913	210-1330	752
	699	208-0233	904	208-3502	913		753
207-2145	10		908	208-3503	913	210-1331	827
	▶87	208-0234	904	208-3505	913	210-1332	823
207-2159	106		908	208-3508	913	210-1333	823
	108	208-0235	904	208-3510	913	210-1334	823
207-2163	391		908	208-3511	913	210-1335	823
	▶402	208-0236	904	208-5619	400	210-1337	932
207-2169	287		908		401	210-1338	829
	▶615	208-0237	904	208-7012	119		830
207-2170	▶571		908	208-7047	566		▶864
	829	208-0238	904	208-7751	696	210-1339	823
207-2266	696		908		▶751		▶824
207-2607	696	208-0239	904	208-8728	938	210-1443	61
207-2711	699		908	208-8729	938	210-1534	878
207-3085	696	208-0240	904	208-8730	937	210-1535	878
207-3164	696		908	208-8731	939	210-1536	878
	699	208-1126	904	208-8732	940	210-1715	106
207-4105	3		908	208-8733	941	210-1860	64
207-4699	3	208-1127	904	208-8734	941		66
207-4704	▶418		908	208-8735	942	210-1925	612
	696	208-1128	904	208-8736	942	210-1939	385
207-4706	▶419		908	208-8737	944	210-6047	144
	699	208-1129	904	208-8738	943	210-6776	▶144
207-4724	418		908	208-8739	943	210-9334	928
207-5141	106	208-1130	904	208-8740	944	210-9336	928
	108		908	209-0000	666	211-0062	615
	131	208-1131	904	209-0091	51		▶619
	135		908	209-0092	51	211-0067	40
	186	208-1132	904	209-0208	5	211-0081	619
	187		908	209-0209	5		▶687
	211	208-1133	904	209-3062	385	211-4592	362
207-5149	696		908	209-3543	349	211-6476	130
207-5153	186	208-1134	904	209-3544	349		134
	211		908	209-3545	349	211-7560	151
207-5268	208	208-1135	904	209-3546	349	211-7985	10
207-5466	3		908	209-3565	730		▶206
207-6798	148	208-1137	904	209-4526	751	211-7988	206

▶ **PRIMARY REFERENCE**

PART NUMBER INDEX

Part	Page	Part	Page	Part	Page	Part	Page
211-8205	▶148	214-2167	703		257	216-8709	95
211-8206	148	214-2168	703		268	216-8710	95
211-8207	208	214-2169	703		279	216-8712	95
211-8208	▶215	214-2591	99	216-2172	823	216-9043	110
	554	214-2963	739	216-2173	822		113
212-1346	687	214-3203	24	216-2174	163	216-9053	110
212-4849	130	214-3402	696	216-2175	394		113
	134		699	216-2176	163	216-9055	110
212-6749	664	214-3403	696	216-2177	163		113
	▶698		699	216-2178	867	216-9056	110
212-6763	509	214-3413	696	216-2179	867	216-9066	110
212-6831	884		699	216-2180	867		113
	886	214-3914	696	216-2892	95	216-9086	110
212-6833	884		▶752	216-3436	103		113
	886	214-3915	696	216-3446	103		204
213-0169	64		699	216-3448	103	216-9092	110
213-0730	134		▶753	216-3450	103		113
213-4631	929	214-3916	696	216-4191	390	216-9093	110
	932		▶742	216-4193	390	216-9109	110
213-4632	929	214-3998	566	216-4195	89	216-9110	110
	932	214-4059	418	216-4197	37		113
213-4633	929	214-4061	418	216-4199	37	216-9131	9
	932	214-5087	701	216-7352	888		▶110
213-4634	929	214-5088	701	216-8231	9		▶113
	932	214-5818	418		▶18	216-9546	40
213-4635	929	214-6199	64	216-8235	18	216-9551	9
	932		66		▶19		▶40
213-4636	867	214-6200	64	216-8277	696	216-9553	12
213-4640	865		66		699	216-9554	12
	▶869	214-8993	1	216-8314	14	216-9600	12
	▶871		▶766		16	216-9602	12
213-5306	81		▶768	216-8315	14	216-9604	12
213-6476	▶207	214-8999	99	216-8316	9	216-9606	12
	569	214-9350	37		▶14	216-9608	12
213-6477	207	214-9376	37		▶16	216-9611	12
213-9100	125	215-1187	720	216-8323	42	216-9612	9
213-9783	220	215-1191	719		43	216-9614	12
	232	215-1192	719	216-8324	9	216-9616	9
	236	215-1193	719		▶42	216-9617	12
	245	215-1194	719		▶43	216-9618	12
	256	215-1195	719	216-8332	21	216-9620	12
	267	215-1196	719	216-8333	21	216-9623	12
	278	215-2103	19	216-8335	▶21	216-9625	9
214-0861	190	215-2913	185		22		▶12
	193		832	216-8343	9	216-9626	40
	195		835		▶22	216-9633	58
	198	215-4377	919	216-8348	29	216-9637	58
	200	215-4379	835	216-8581	538	216-9638	58
214-0862	186	215-5069	99		540	216-9643	58
	190	215-7697	740	216-8619	9	216-9648	9
	193	215-9413	354		▶53		▶58
	195	215-9415	354	216-8620	9	216-9683	9
	198	215-9416	372		▶11		▶54
	200	215-9424	372	216-8625	55	216-9734	77
	211	215-9430	103	216-8632	32		79
214-0863	190	215-9986	457		34	216-9735	9
	193		459	216-8634	32		▶77
	195		468		34	216-9737	57
	198	216-0003	457	216-8685	95	216-9743	57
	200		459	216-8686	95	216-9752	110
214-0864	139		468	216-8690	95		113
	141	216-0084	628	216-8699	95	216-9767	110
214-0865	148	216-0086	628	216-8703	95	216-9786	103
214-1668	19	216-0088	470	216-8705	95	216-9790	103
214-2166	703	216-0590	246	216-8708	95	216-9824	103

▶ **PRIMARY REFERENCE**

PART NUMBER INDEX

Part	Page	Part	Page	Part	Page	Part	Page
216-9826	103	217-9511	824	221-2760	687	224-6218	6
216-9828	103	217-9535	▶146	221-3103	612	224-6219	6
216-9830	103		179		▶727	224-6473	305
216-9831	103		182	221-3167	356		▶318
216-9834	103	218-1563	286	221-3170	364	224-6474	295
216-9835	103	218-2619	867		368		298
217-0099	103	218-4257	394	221-3208	612		299
217-0100	103	218-7172	935	221-3491	687		300
217-0212	40	219-0305	869	221-3539	466		301
217-0557	832		871	221-3541	451		303
	835	219-1818	58		466		304
217-0559	835	219-2375	383	221-3545	▶453		305
217-0595	88	219-2506	37		799	224-6475	307
217-0596	88	219-2512	18	221-3546	453		308
217-0721	110	219-2715	372		455		311
	113	219-2717	372	221-5369	9		312
217-1499	9	219-5266	360		▶79		317
	▶29	219-5269	383	221-6835	9	224-6476	304
217-1573	42	219-5278	383		▶32	224-6479	318
	43	219-5284	▶360		▶34	224-6480	316
217-1660	720		383	221-9037	▶185		318
217-2804	845	219-5289	383		838	224-8637	204
217-2810	824	219-5293	383	222-3870	208	224-8679	113
	▶844	219-5300	383	222-5387	725	224-8831	720
217-2811	824	219-5628	719	222-5792	472	224-8832	719
217-2812	824	219-5685	362	222-5793	472	224-9029	934
217-2813	824	219-5686	▶362	222-6205	▶435	225-1221	904
217-2814	824		372		437		908
217-2815	824	219-5695	356	222-8411	89		911
217-2954	106		360	222-8412	89		913
217-2956	139		362	222-8413	89	225-1917	904
	141	219-5762	190	222-8625	24	225-1943	528
217-3086	842		193	222-8651	86	225-1944	583
	▶845		195	222-8652	86	225-3147	126
217-3403	187		198	222-9020	86	225-3150	175
217-3812	844		200	222-9021	86	225-5438	43
217-3813	844	219-6314	208	223-0845	888	225-5439	43
217-3814	844	219-6714	687	223-1394	430	225-5441	43
217-5636	▶470	219-8487	847	223-1445	890	225-5454	43
	628		849	223-3570	398	225-5970	842
217-5883	9	219-8488	847	223-3662	612	225-6726	612
	▶172		849	223-3930	934	225-8698	466
217-6340	832	219-8493	847	223-5781	▶5	225-8839	16
	835		849	223-5782	▶6	226-2036	16
217-6806	824	219-8494	▶352	223-5783	6	226-2134	780
217-6815	824	219-8495	838	223-5955	934	226-3699	443
217-6816	824		▶924	223-7186	208		▶451
217-6817	824	219-8499	394	223-7303	713	226-4178	74
217-6818	824	219-8500	▶838	223-9015	30	226-5444	179
217-6819	824	219-9853	317	223-9606	10		182
217-6820	824	219-9856	304		▶30	226-7433	911
217-6821	824		▶317	224-2262	86	226-7751	911
217-7875	9	220-2593	244	224-2263	86	226-8778	204
	▶24		255	224-2440	409	226-8780	204
217-7877	24		266	224-2669	835	227-1085	869
217-7878	24		277	224-2982	698		871
217-7888	9	220-4080	924		▶743	227-2998	934
	▶48	220-4083	856	224-2983	698	227-3000	934
217-8477	204	220-5815	202		▶728	227-4203	▶305
217-9038	204	220-6420	835	224-2984	698	227-4204	301
217-9039	204	220-6425	612	224-2985	698		303
217-9041	204	220-7171	58	224-3025	728		305
217-9077	824	220-8632	31	224-3190	▶304	227-6000	535
217-9151	9	221-1018	103	224-3860	410	227-6007	644
	▶204	221-2727	612	224-3861	▶410	227-6008	898

▶ PRIMARY REFERENCE

PART NUMBER INDEX

Part	Page	Part	Page	Part	Page	Part	Page
227-6009	644		182		▶126	241-2481	644
227-6887	944	232-5326	211	235-5573	146	241-2482	394
227-7477	74	232-6183	145	235-5917	103	241-2483	394
227-8179	892	232-6185	145	235-6281	103	241-3621	▶70
228-3840	407	232-6315	135	235-6331	9	241-3652	220
	▶409	233-0987	835		▶103		231
228-6708	▶777	233-2553	9	235-6347	9		236
228-7387	9		▶26		▶97		257
	▶57	233-2744	9	235-6367	9		278
228-7391	126		▶55		▶102	241-3653	220
228-7418	9	233-2976	398	235-8214	9		231
	▶27	233-2980	45		▶49		236
228-7461	9	233-2981	▶363	236-0933	696		257
	▶173		368		699		278
228-7462	9	233-2982	363	236-0935	696	241-3654	220
	▶36	233-2985	398		699		231
228-7477	204	233-2989	93	236-1042	9		236
228-7974	202	233-3051	74		▶88		257
228-7976	134	233-7864	835	236-2428	662		278
228-7977	198	233-7865	835	236-4397	16	241-3655	220
	200	233-8259	490	236-5189	662		231
228-7979	141		▶528	236-5193	662		236
228-8943	103	233-8260	490	236-5300	662		257
228-8956	103		▶531	236-5935	89		278
228-8960	103	233-8261	1	236-6604	9	241-3656	220
228-9711	916		▶534		▶47		231
229-2711	254	233-8729	336	237-2228	398		236
	276	233-8731	336	237-2264	9		257
229-2712	254	233-8732	336		▶95		278
	276	233-9613	585	237-2312	95	242-1704	▶607
229-2800	535	233-9614	585	237-4163	292		783
229-3555	12	233-9615	585	237-7251	336	242-1708	▶608
229-3556	12	233-9616	562	238-7015	67		783
229-3557	12	233-9617	562	238-7016	10	242-1978	431
229-3558	12	233-9622	608		▶67	242-1979	431
229-3756	901	234-2651	9	238-8015	400	242-2936	790
229-3757	901		▶31		401	242-2938	783
229-4818	901	234-2653	9	239-0018	87		▶790
229-7525	135		▶28	239-1349	9	242-8860	589
229-8059	835	234-2656	9		▶46		590
229-8060	835		▶175	239-3798	67		591
230-0783	528	234-2752	559	239-7780	608	242-8884	516
230-0784	528	234-3242	451	239-7781	608	242-9343	519
230-0785	534	234-3243	451	239-7782	607	242-9358	576
230-0786	534	234-3244	451	239-7783	607	243-2225	▶572
230-0787	500	234-3245	451	239-9683	553	243-2226	572
	502	234-4074	451		569	243-2249	50
230-0788	500	234-4141	877	239-9686	553	243-2598	▶8
	502	234-4142	877		569	243-3678	58
230-0789	583	234-4855	451	239-9688	553	243-4047	929
230-0790	583	234-7771	500		569	243-4129	572
230-0859	934	234-7780	500	239-9689	553	243-4130	572
230-1341	148	234-9354	719		569	243-5227	572
230-3776	58	234-9355	719	240-0205	22	243-7067	146
230-7251	74	234-9356	719	240-1366	5	244-2422	392
230-7876	583	234-9357	720		6	244-8586	108
230-9871	531	234-9377	559		426	244-8587	108
230-9872	531	235-1728	108		428	244-9530	108
231-4826	916	235-1827	▶639		434	245-0964	640
231-5158	40	235-1831	▶783		849	245-2579	108
231-8047	58	235-1832	490	240-8422	66	245-2703	9
231-8048	58		▶770	240-8467	16		▶128
232-1474	900	235-1838	719	240-8786	182	245-5709	428
232-1799	58	235-2175	719	240-9424	171	246-2641	119
232-5325	179	235-4592	9	240-9425	171	246-3263	173

▶ **PRIMARY REFERENCE**

PART NUMBER INDEX

Part	Page	Part	Page	Part	Page	Part	Page
247-7971	310						
248-2276	9						
	▶39						
248-3216	780						
	795						
	797						
248-5684	795						
	797						
248-7372	141						
249-1277	647						
	▶658						
249-1278	658						
	▶659						
249-5527	428						
	▶689						
249-7540	538						
	540						
250-1041	659						
250-1042	659						
250-1044	659						
250-1045	659						
250-1047	659						
250-1643	538						
	540						
251-4336	32						
	34						
251-5964	▶353						
251-5965	353						
252-4460	173						
252-6677	428						
252-7302	455						
252-7305	▶455						
	799						
252-8739	32						
	34						
252-9854	147						
252-9855	147						
253-9680	531						
253-9681	531						
254-3271	835						
254-6029	34						
254-7549	81						
255-1209	34						
255-8548	▶416						
255-8549	▶417						
257-9736	409						
258-0504	461						

▶ PRIMARY REFERENCE



© 2004 Caterpillar
All Rights Reserved

Printed in U.S.A.