RUTHZIL TRATOR COMERCIAL DE PEÇAS LTDA 11 97083-6812 ROLANDO CITRANGULO

M65

MOTOR GRADER

(Diesel and Gas)

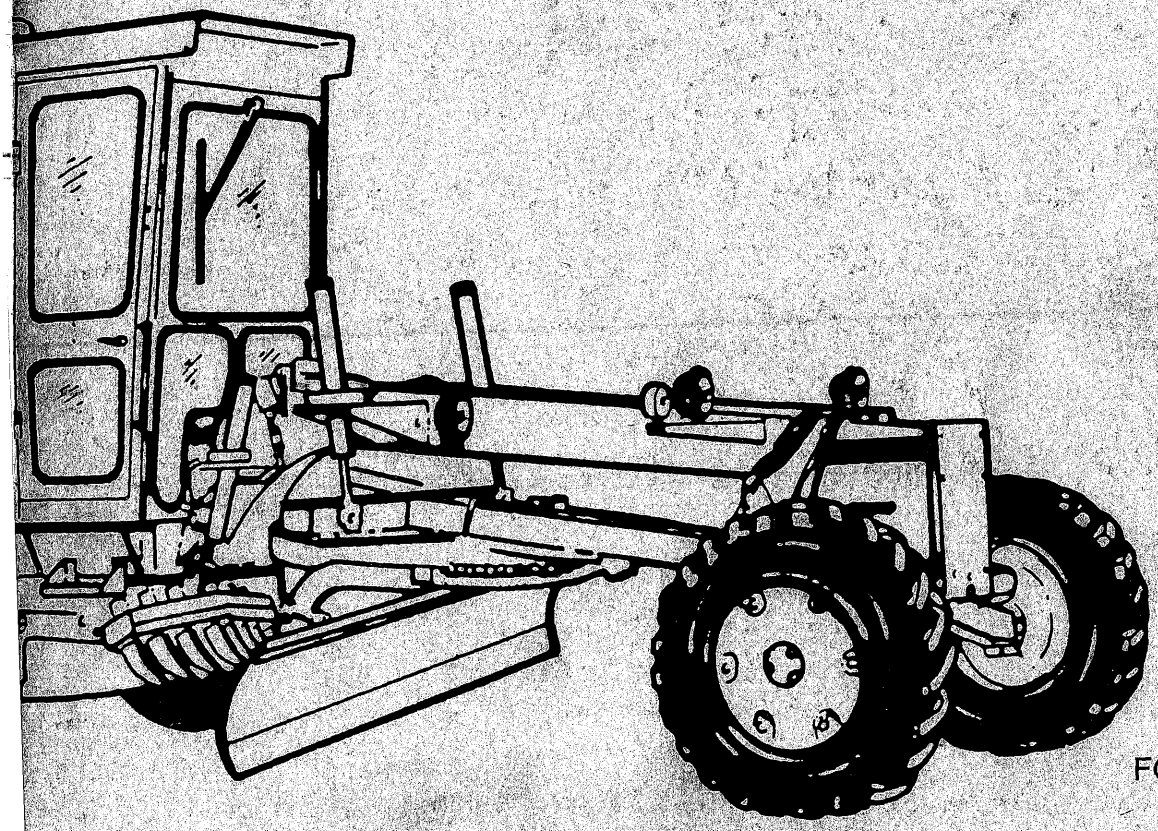

FORM 70677549
Reprint 7/89

AVOID ACCIDENTS

Most accidents, whether they occur in industry, on the farm, at home or on the highway, are caused by the failure of some individual to follow simple and fundamental safety rules or precautions. For this reason MOST ACCIDENTS CAN BE PREVENTED by recognizing the real cause and doing something about it before the accident occurs.

Regardless of the care used in the design and construction of any type of equipment there are conditions that cannot be completely safeguarded against without interfering with reasonable accessibility and efficient operation.

A careful operator is the best insurance against an accident.
The complete observance of one simple rule would prevent many thousand serious injuries each year.
That rule is:

Never attempt to clean, oil or adjust a machine while it is in motion.

WARNING

On machines having hydraulically, mechanically, and/or cable controlled equipment (such as shovels, loaders, dozers, scrapers, etc.) be certain the equipment is lowered to the ground before servicing, adjusting and/or repairing. If it is necessary to have the hydraulically, mechanically, and/or cable controlled equipment partially or fully raised to gain access to certain items, be sure the equipment is suitably supported by means other than the hydraulic lift cylinders, cable and/or mechanical devices used for controlling the equipment.

COPYRIGHT BY FIATALLIS

All rights reserved. Reproduction of text and illustrations in whole or in part, is strictly prohibited.

Fiatallis is not responsible for any liability arising from any damage resulting from defects caused by parts and/or components not approved by Fiatallis for use in maintaining and/or repairing products manufactured or merchandized by Fiatallis.

In any case, no warranty of any kind is made or shall be imposed with respect to products manufactured or merchandized by Fiatallis when failures are casued by the use of parts and/or components not approved by Fiatallis.

SUPPLEMENT NO. 2

FIAT-ALLIS

PARTS CATALOG FORM 70677549 (Same as 0677549-8)

65 MOTOR GRADER

(7-75)

ATTENTION: Insert this sheet in the front of publication as record of receipt. Replace or add pages in the publication according to instructions below.

Additional copies of this supplement are available. Please direct your request to *Fiat-Allis Construction Machinery, Inc., Technical Publications Dept., 3000 South 6th Street, Springfield, Illinois, 62710 U.S.A.*

43 (No change)
44 (Revised)

79 (Revised)
80 (No change)

137 (Revised)
138 (No change)

142A (Added)
BLANK

161 (Revised)
162 (No change)

*170A (Added January 1975)
170B (Added)

* 175 (Revised January 1975)
175A (Added)

BLANK
176 (Revised)

177 (Revised)
177A (Added)

BLANK
178 (No change)

179 (Revised)
180 (No change)

182A (Added)
BLANK

188A (Revised)
188B (Revised)

188C (Revised)
188D (Revised)

188G (Added)
BLANK

* 191 (Revised January 1975)
192 (Revised)

193 (Revised)
194 (Revised)

199 (Revised)
199A (Revised)

199B (Revised)
200 (No change)

NOTICE
THESE CHANGES ARE INCLUDED IN THIS COPY

* Previously issued pages

NOTICE: Allis-Chalmers Corporation and FIAT S.p.A. entered into a joint venture agreement to combine their manufacture, sale and service of construction machinery products throughout the world after January 1, 1974.

In view of the new enterprise, wherever in this publication reference is made to Allis-Chalmers or your Allis-Chalmers dealer, such reference is intended to identify FIAT-ALLIS Construction Machinery Inc. or your FIAT-ALLIS dealer

IMPORTANT

All parts listed herein, which have no specific usage indicated, are applicable to all models. Those parts which are used only on specific models are so indicated.

Attaching parts such as bolts, nuts, rivets, screws, washers, etc., are indented immediately following the parts which they attach.

Parts indicated with a square (□) are also available in packaged sets. Refer to section titled "PACKAGED PARTS".

The terms "right" and "left" used throughout this parts catalog are determined by facing the direction of forward travel.

The engine is mounted unconventionally with the flywheel toward the front of the machine, but all engine parts are designated in respect to the engine as it would be installed in a conventional machine with the flywheel to the rear.

INSTRUCTIONS FOR ORDERING PARTS

> At the time this parts catalog was published the listed part numbers were current. It is our policy to constantly improve our machines and therefore, part numbers and design may change. When ordering parts, verify part numbers through your dealer's parts catalog which is up to date with all latest part numbers.

Order parts from the dealer covering the local territory.

ALWAYS GIVE THE MODEL AND SERIAL NUMBER OF MACHINE. IF PARTS ARE FOR AN ASSEMBLY WHICH HAS A MODEL AND/OR SERIAL NUMBER (SUCH AS ENGINE ASSEMBLY, PUMP ASSEMBLY), ALSO INCLUDE THIS INFORMATION.

To obtain parts promptly, give part name and part number.

Give post office address, town, county and state where parts are to be shipped. Also specify whether material is to be shipped by freight, express or parcel post.

Confirm all telephone or telegraph orders in writing.

Parts for standard motor accessories such as generators and starting motors should be ordered from authorized Service Stations maintained by manufacturers of these units throughout the country.

No credit will be allowed on parts unless they are returned to the dealer from whom they were purchased; from there they will be returned, at the customer's expense, to the factory for inspection.

Unless claims for shortages or errors are made immediately upon receipt of goods, they will not be considered.

When broken goods are received, a full description of the damage should be made by the carrier agent on the freight bill. If this description is insisted upon, full damage can always be collected from the transportation company.

No responsibility is assumed for delay or damage to merchandise while in transit. Our responsibility ceases upon delivery of shipment to the transportation company from whom a receipt is received showing that shipment was in good condition when delivered to them; therefore, claims (if any) should be filed with the transportation company

The right is reserved to change the construction or material of any parts where it seems desirable to do so without incurring the obligation of installing such changes on units already delivered.

(Specifications and design subject to change without notice)

PUBLICATIONS AVAILABLE
FOR
65 MOTOR GRADER

DESCRIPTION	ENGLISH	ESPANOL (Spanish)	FRANCAIS (French)	PORTUGUES (Portuguese)	ITALIANO (Italian)	DEUTSCH (German)
PARTS CATALOGS						
Motor Grader	70677549					
Cab Glass Data	70698502					
Injection Pump Roosa Master	70685399					
OPERATOR AND MAINTENANCE INSTRUCTION MANUAL	70677548	70689285	70689284		70695617	70695618
SERVICE MANUALS						
Electrical System	70696657	70681718	70688844		*	*
Engine						
G226 (Gas)	-------					
D262 (Diesel)	70667141	70669673	70697448		70696479	70696457
Front Wheel, Axle & Wheel Lean	70683941	*	*		*	*
Fuel Injection Nozzles	70682797					
Fuel Injection Pump Roosa Master	73111954					
Hydraulic System	70683873	*	*		*	*
Moldboard, Drawbar, Circle, Scarifier & Gear Cases	70680007	*	*		*	*
Tandems & Brakes	70664028	*	*		*	*
Transmission, Engine Clutch & Rear Axle	70682414	*	*		*	*
SERVICE MANUAL SET	70685820	70697458	70697449		70696480	70696458

*Use Complete Service Manual Set

NOTICE

ORDER FROM LOCAL FIAT-ALLIS DEALER UNLESS OTHERWISE NOTED.

SEE CONSTRUCTION MACHINERY TECHNICAL PUBLICATIONS INDEX (FORM 70658800) FOR ALL AVAILABLE PUBLICATIONS.

PUBLICATIONS INDEX (FORM 70658800) IS AVAILABLE FREE FROM YOUR DEALER.

MODEL IDENTIFICATION

MODEL SYMBOL	ENGINE MODEL	DESCRIPTION
M65	D262	Diesel engine driven grader
M65	G226	Gasoline engine driven grader

RECORD YOUR SERIAL NUMBERS BELOW

GRADER SERIAL NUMBER _____ ENGINE SERIAL NUMBER _____

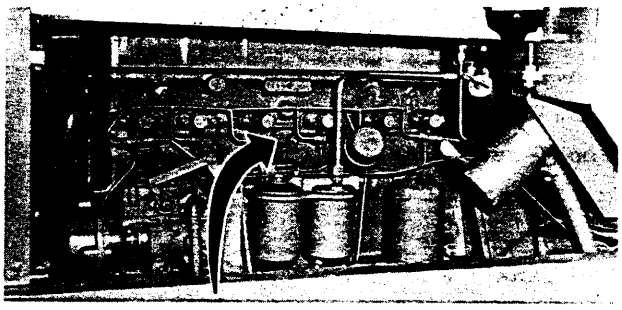

T-76382

ENGINE SERIAL NO. (Diesel)

Stamped on right side of engine block

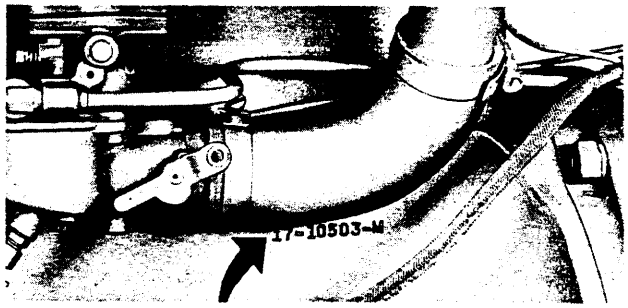

T-23036

ENGINE SERIAL NO. (Gasoline)

Stamped on right side of engine block near the carburetor

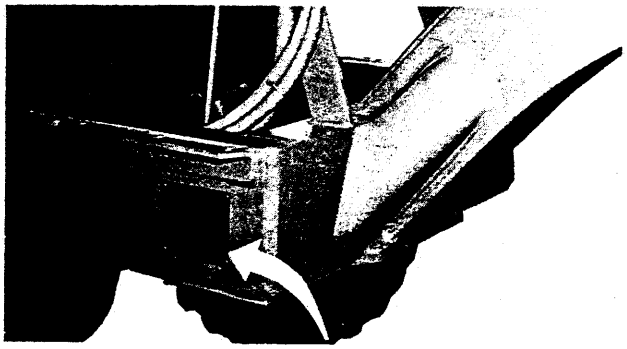

T-76381

MODEL SERIAL NO.

On plate attached to right side of frame near the operator's platform

MODEL SERIAL NUMBER

Models are identified by an 8-character combination of letters and numerals.

***SERIAL NUMBER**, consisting of all 8 characters must always be submitted for positive identification of your machine. This Point Cannot Be Overemphasized.

GRADER MODEL	*SERIAL NO.	
	PRODUCT CODE	UNIT NO.
M65 (Diesel)	24A	00201
	56Y	02201
M65 (Gasoline)	75Y	00201

(Revised May 1978)

ALPHABETICAL INDEX

Air Cleaner. . . . . 73 thru 78
Air Heater 79
Alternator 182, 183
Batteries and Cables 181
Belt, drive 83, 85, 182
Brake Control 106
Brakes
  Parking 108
  Transmission 105
  Wheel 123
Cab 189
Cab Heater 197
Camshaft 27, 32
Carburetor 61
Chain 115
Choke Control (Gasoline Engine). 53
Circle Turn Hydraulics 153
Clutch. 89
Clutch Control 91
Connecting Rod 22, 23
Crankshaft 24, 25
Cylinder Block 15, 19
Cylinder Head 29, 31
Cylinder Liner 23
Cylinders
  Brake Master 125
  Brake Wheel 126
  Moldboard Lift 161, 171
  Power Steering 143
  Scarifier Lift 171, 199
  Shiftable Moldboard 166, 170
  Wheel Lean 150
Cylinder Sleeve 15
Defroster Fan 193
Distributor 48
Elements
  Air Cleaner 73
  Engine Oil Filter 40, 41
  Fuel 42
Engine 12, 13
Engine Clutch. 89
Engine Clutch Control 91
Engine Primer 80
Engine Shut-Off Control 57
Fan 83, 85
Filter
  Engine Oil 40, 41
  Fuel 42, 46
  Hydraulic Oil 129
Flywheel
  Diesel Engine 26
  Gasoline Engine 25
Frame 119
Front Axle 146
Front Wheel Lean . . . . . 145 thru 150
Front Wheels 120
Fuel Filter. 42, 46
Fuel Lines 44, 46
Fuel Tank 44, 46
Gauges
  Air Restriction Indicator. 75
  Ammeter 186
  Engine Oil Level 16, 19
  Engine Oil Pressure 186
  Engine Temperature 186
  Fuel Pressure 188
  Hour Meter 185
  Hydraulic Oil Level 131
  Odometer 190
Gear Shift 99
Governor (Gasoline Engine). 65
Hood 174
Hood Side Plates. 191
Horn 194
Hose Parts. 6
Hour Meter 185
Hydraulic Controls 136
Hydraulic Motor 154
Hydraulic Pump Lines. 129
Hydraulic Tank. 131
Ignition (Gasoline Engine). 48
Injection Nozzles and Lines 68
Injection Pump. 67
Instruments 186
Lights and Wiring 177

MODEL IDENTIFICATION

MODEL SYMBOL	ENGINE MODEL	DESCRIPTION
M65	D262	Diesel engine driven grader
M65	G226	Gasoline engine driven grader

RECORD YOUR SERIAL NUMBERS BELOW

GRADER SERIAL NUMBER _____ ENGINE SERIAL NUMBER _____

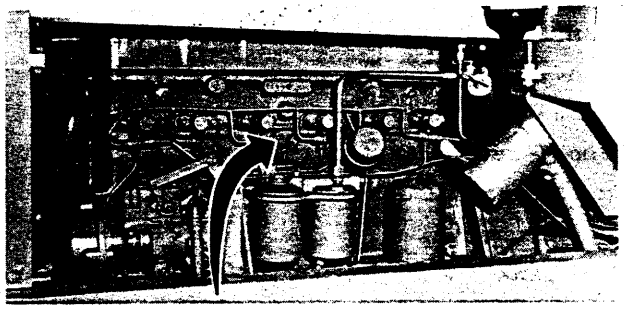

T-76382

ENGINE SERIAL NO. (Diesel)

Stamped on right side of engine block

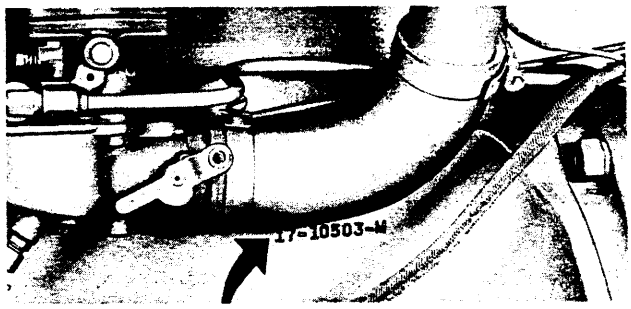

T-23036

ENGINE SERIAL NO. (Gasoline)

Stamped on right side of engine block near the carburetor

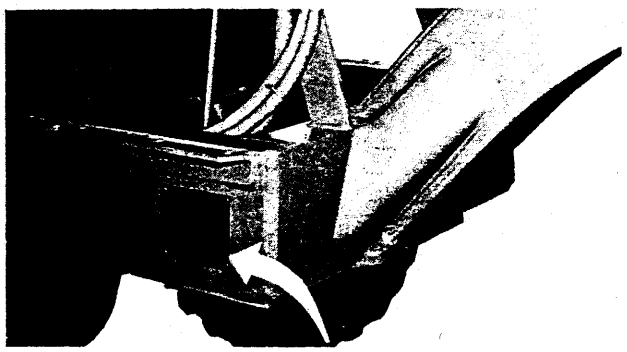

MODEL SERIAL NO. T-76381

On plate attached to right side of frame near the operator's platform

MODEL SERIAL NUMBER

Models are identified by an 8-character combination of letters and numerals.

***SERIAL NUMBER**, consisting of all 8 characters must always be submitted for positive identification of your machine. This Point Cannot Be Overemphasized.

GRADER MODEL	*SERIAL NO.	
	PRODUCT CODE	UNIT NO.
M65 (Diesel)	24A	00201
	56Y	02201
M65 (Gasoline)	75Y	00201

(Revised May 1978)

ALPHABETICAL INDEX

Air Cleaner . . . . . 73 thru 78
Air Heater 79
Alternator 182, 183
Batteries and Cables 181
Belt, drive 83, 85, 182
Brake Control 106
Brakes
  Parking 108
  Transmission 105
  Wheel 123
Cab 189
Cab Heater 197
Camshaft 27, 32
Carburetor 61
Chain 115
Choke Control (Gasoline Engine) 53
Circle Turn Hydraulics 153
Clutch 89
Clutch Control 91
Connecting Rod 22, 23
Crankshaft 24, 25
Cylinder Block 15, 19
Cylinder Head 29, 31
Cylinder Liner 23
Cylinders
  Brake Master 125
  Brake Wheel 126
  Moldboard Lift 161, 171
  Power Steering 143
  Scarifier Lift 171, 199
  Shiftable Moldboard 166, 170
  Wheel Lean 150
Cylinder Sleeve 15
Defroster Fan 193
Distributor 48
Elements
  Air Cleaner 73
  Engine Oil Filter 40, 41
  Fuel 42
Engine 12, 13
Engine Clutch 89
Engine Clutch Control 91
Engine Primer 80
Engine Shut-Off Control 57
Fan 83, 85
Filter
  Engine Oil 40, 41
  Fuel 42, 46
  Hydraulic Oil 129
Flywheel
  Diesel Engine 26
  Gasoline Engine 25
Frame 119
Front Axle 146
Front Wheel Lean . . . . . 145 thru 150
Front Wheels 120
Fuel Filter 42, 46
Fuel Lines 44, 46
Fuel Tank 44, 46
Gauges
  Air Restriction Indicator 75
  Ammeter 186
  Engine Oil Level 16, 19
  Engine Oil Pressure 186
  Engine Temperature 186
  Fuel Pressure 188
  Hour Meter 185
  Hydraulic Oil Level 131
  Odometer 190
Gear Shift 99
Governor (Gasoline Engine) 65
Hood 174
Hood Side Plates 191
Horn 194
Hose Parts 6
Hour Meter 185
Hydraulic Controls 136
Hydraulic Motor 154
Hydraulic Pump Lines 129
Hydraulic Tank 131
Ignition (Gasoline Engine) 48
Injection Nozzles and Lines 68
Injection Pump 67
Instruments 186
Lights and Wiring 177

ALPHABETICAL INDEX

Lights
- Head 177, 178
- Instrument 186
- Stop 179
- Tail 179

Manifold
- Exhaust 61,71
- Intake 61,71
- Water 86

Moldboard
- Assembly 162
- Circle 157
- Circle Turn 158
- Cutting Edges 162
- Drawbar 157
- Extensions 164
- Lift 161
- Shiftable 166

Muffler 61, 72
Numerical Index 200
Odometer 190
Oil Filter 40, 41
Oil Pan (Diesel Engine) 36
Oil Pump 38, 39
Oil Sump (Gasoline Engine) 37
Packaged Parts 8, 9
Painting and Marking 175
Piston 22, 23
Power Steering Lines 141
Pumps
- Engine Oil 38, 39
- Fuel Injection 67
- Hydraulic Control 129
- Tire 189
- Water 83,85

Radiator 88
Radiator Shell 174
Rear Axle 92, 113
Rear Wheels 121
Rocker Arms 32, 35
Scarifier 199
Seat 44, 173
Spark Plug 48
Starting Motor 184
Steering . . . . . 137 thru 143
Switches
- Heater 197
- Horn 194
- Hour Meter 177
- Light 177
- Starter 177
- Stop Light 179
- Windshield Wiper 192

Tandems 115
Thermostat 86, 87
Throttle Control 55, 59
Timing Gear Cover 20, 21
Timing Gears . . . . . 24 thru 32
Tire Pump 189
Tools 195
Transmission
- Assembly 92
- Auxiliary Creeper 101
- Brake 105
- Directional Control 111
- Housing 93
- Intermediate Shaft 95
- Pinion Shaft 97
- Reverse Shaft 94
- Top Shaft 96

Valve Mechanism 32
Valves
- Engine Oil Pressure Regulating 15
- Exhaust 29,35
- Hydraulic Control 134
- Intake 29, 35

Water Manifold (Diesel) 86
Water Outlet Connection (Gasoline) 87
Water Pump 83, 85
Wheels 120, 121
Windshield Wiper 192

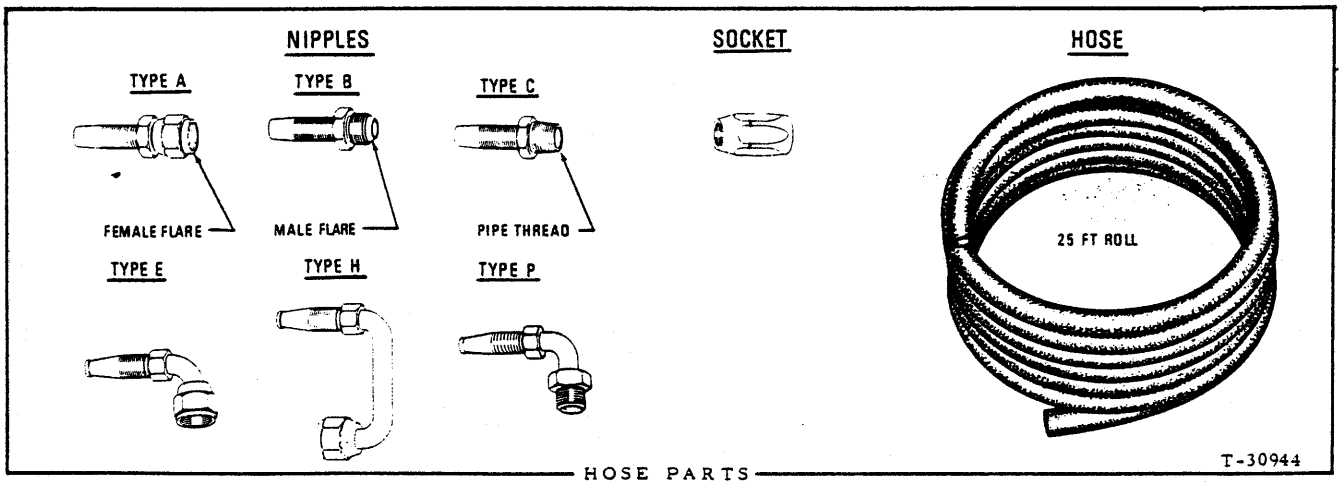

HOSE PARTS

NOTE: Refer to right hand column for identity of interchangeable crimped-type hose (fittings not re-usable). Assembly number shown in left hand column indicates available replacement hose assembly with re-usable components; where no assembly number is listed, hose assembly is not available from factory but may be constructed in the field from data indicated.

HOSE ASSEMBLY NO. (See NOTE)	BULK HOSE (25' roll)	HOSE LENGTH (inches)	NIPPLE (#1 end)			NIPPLE (#2 end)			SOCKET (both ends)	NIPPLE FLANGE		CRIMPED-TYPE HOSE (See NOTE)
			Including SOCKET	NIPPLE only	Type	Including SOCKET	NIPPLE only	Type		Part No.	X Dim	Part No.
	70919218	25-1/2	70920850	70920303	A	70920865	70919081	E	70919076			70649622
	70919218	20-3/4	70920850	70920303	A	70920865	70919081	E	70919076			70649623
	70919218	19-1/4	70920850	70920303	A	70920865	70919081	E	70919076			70649629
	70919218	27-7/8	70920850	70920303	A	70920850	70920303	A	70919076			70649631
	70919218	13	70920850	70920303	A	70920855	70920303	A	70919076			70649639
	70919218	23-3/4	70920850	70920303	A	70920872	70919158	E	70919076			70673118
	70919218	23-3/4	70920850	70920303	A	70920865	70919081	E	70919076			70673119
	70919218	17-1/4	70920850	70920303	A	70920850	70920303	A	70919076			70673120
	70919218	26-3/8	70920850	70920303	A	70920850	70920303	A	70919076			70673121
	70919218	135-3/4	70920850	70920303	A	70920850	70920303	A	70919076			70673122
	70919218	48	70920850	70920303	A	70920850	70920303	A	70919076			70673123
	70920726	109	70920851	70921046	A	70920851	70921046	A	70919469			70673124
	70919218	27-3/4	70920850	70920303	A	70920865	70919081	E	70919076			70675541
	70919218	28-3/4	70920850	70920303	A	70920872	70919158	E	70919076			70675542
	70920726	105	70920851	70921046	A	70920851	70921046	A	70919469			70677231
	70919218	132-1/4	70920850	70920303	A	70920850	70920303	A	70919076			70677232

(Revised May 1978)

MEMO

PACKAGED PARTS

DIESEL-POWERED UNITS (Effective Serial No. 24A00201 and 56Y02201)

PACKAGE NO.	DESCRIPTION
70077951	GEAR SET, transmission
	1 -------- SHAFT
	1 -------- GEAR, bevel
74511664	GASKET KIT, cylinder block
	1 70923719 O-RING, oil filter base (Discard)
	1 74503956 GASKET, pad cover
	1 74507505 GASKET, gear cover
	1 74508186 GASKET, front plate
	1 74508872 O-RING, oil filter base (Discard)
	1 74508941 GASKET, oil line flange (Discard)
	1 74513809 GASKET, air inlet housing
74514580	GASKET KIT, cylinder head
	2 74105451 GAKSET, rocker cover nut
	1 74504562 GASKET, intake and exhaust manifold
	6 74511204 GASKET, injection nozzle
	1 74512212 GASKET, water pump to block
	1 74513482 GASKET, cylinder head cover
	1 74513527 GASKET, water outlet pipe
	1 74513722 GASKET, thermostat housing
	1 74513723 GASKET, water hole cover
	1 74514398 GASKET ASSY., cylinder head
74516867	PISTON AND SLEEVE KIT
	1 74510817 SLEEVE, cylinder
	1 74516606 RING, packing, upper
	1 74514615 RING, packing, lower
	1 74516864 PISTON
	1 74507710 PIN
	2 74514586 RETAINER, pin
	1 74516738 RING SET
74516868	PISTON AND SLEEVE KIT (Same as 74516867 except has .020" thicker top flange on cylinder sleeve)
	1 74508465 SLEEVE, cylinder
	1 74516606 RING, packing, upper
	1 74514615 RING, packing, lower
	1 74516864 PISTON
	1 74507710 PIN
	2 74514586 RETAINER, pin
	1 74516738 RING SET
--------	REPAIR KIT, brake master cylinder (See page 125)
--------	REPAIR KIT, circle turn motor (See page 155)
--------	REPAIR KIT, water pump (See page 83)

(Revised September 1976)

PACKAGED PARTS

GASOLINE-POWERED UNITS (Effective Serial No. 75Y00201)

PACKAGE NO.	DESCRIPTION
---	CRANKSHAFT KITS (See CRANKSHAFT)
---	GASKET SET, carburetor overhaul (See page 63)
70233239	GASKET SETS, cylinder head overhaul
	4 70226477 PACKING, rocker cover stud
	2 70229337 GASKET } Discard. Not required
	2 70229338 RETAINER } Discard. Not required
	1 70229406 GASKET, cylinder head
	1 70229958 GASKET SET, manifold
	1 70232449 GASKET, rocker cover
	1 70233209 GASKET, carburetor
	2 70233216 GASKET, water manifold
	1 70233218 GASKET, thermostat housing
70226638	GASKET SET, engine overhaul
	2 70203036 GASKET, rear bearing cap (Discard)
	1 70203061 GASKET, water pump to block
	1 70203176 GASKET, oil pump cover (Discard)
	1 70205834 SEAL, magneto drive shaft (Discard)
	1 70210158 GASKET, thermostat cover
	1 70218604 GASKET, push rod cover (Discard)
	1 70226117 GASKET, distributor housing cover
	4 70226477 PACKING, rocker cover stud
	1 70226620 SEAL, crankshaft, front
	2 70227120 SEAL, crankshaft, rear (Discard)
	1 70229406 GASKET, cylinder head
	1 70229958 GASKET SET, manifold
	1 70230643 GASKET, thermostat
	1 70232449 GASKET, rocker cover
	1 70233209 GASKET, carburetor
	1 70233211 GASKET, distributor base
	1 70233214 GASKET, timing gear cover
	1 70233215 GASKET, governor cover
	2 70233216 GASKET, water hole cover
	1 70233217 GASKET, distributor drive housing
	1 70233218 GASKET, thermostat housing
	1 70233228 GASKET, oil filter base (Discard)
	2 70233602 GASKET, oil sump, side
	2 70236660 GASKET, oil sump, end
70229860	GASKET SET, oil sump
	2 70203036 GASKET, rear bearing cap (Discard)
	2 70233602 GASKET, side
	6 70229177 CLIP (Discard)
	2 70229178 GASKET, rear bearing cap
	2 70236660 GASKET, end
---	GEAR SET, transmission
	1 --- SHAFT, pinion
	1 --- GEAR, bevel
---	MOTOR KIT (See PISTON AND CYLINDER LINER)
---	REPAIR KIT, brake master cylinder (See page 125)
---	REPAIR KIT, carburetor (See CARBURETOR section)
---	REPAIR KIT, circle turn motor (See page 155)
---	RING SET, piston (See PISTON AND CYLINDER LINER)
---	SEAL KIT, water pump (See page 83)

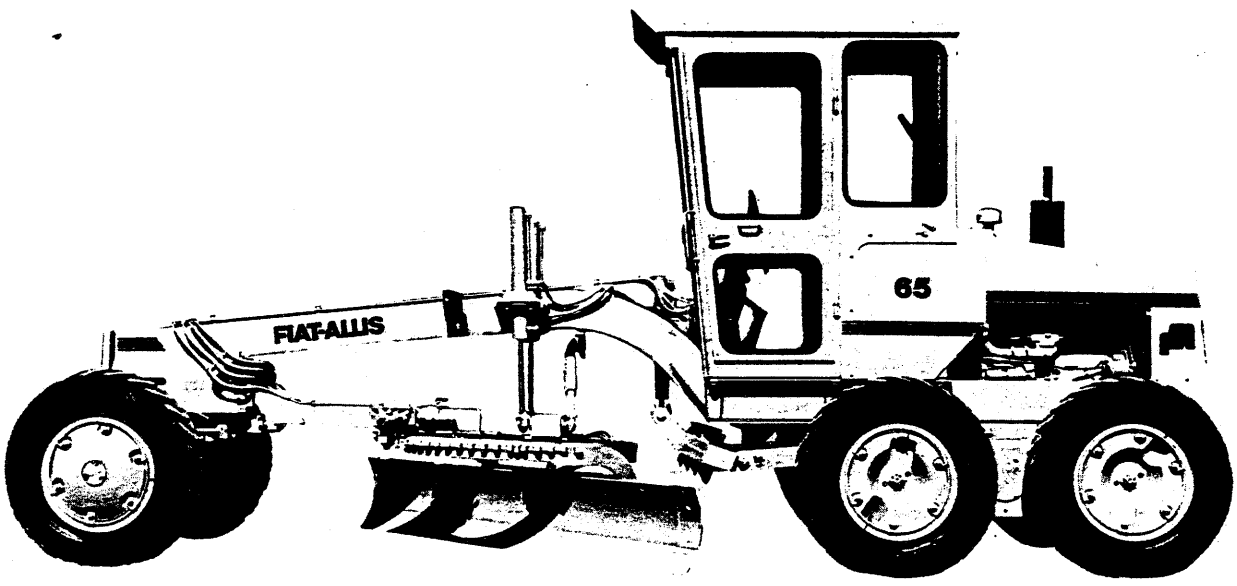

MODEL 65 MOTOR GRADER — T-76380

(Revised May 1978)

MEMO

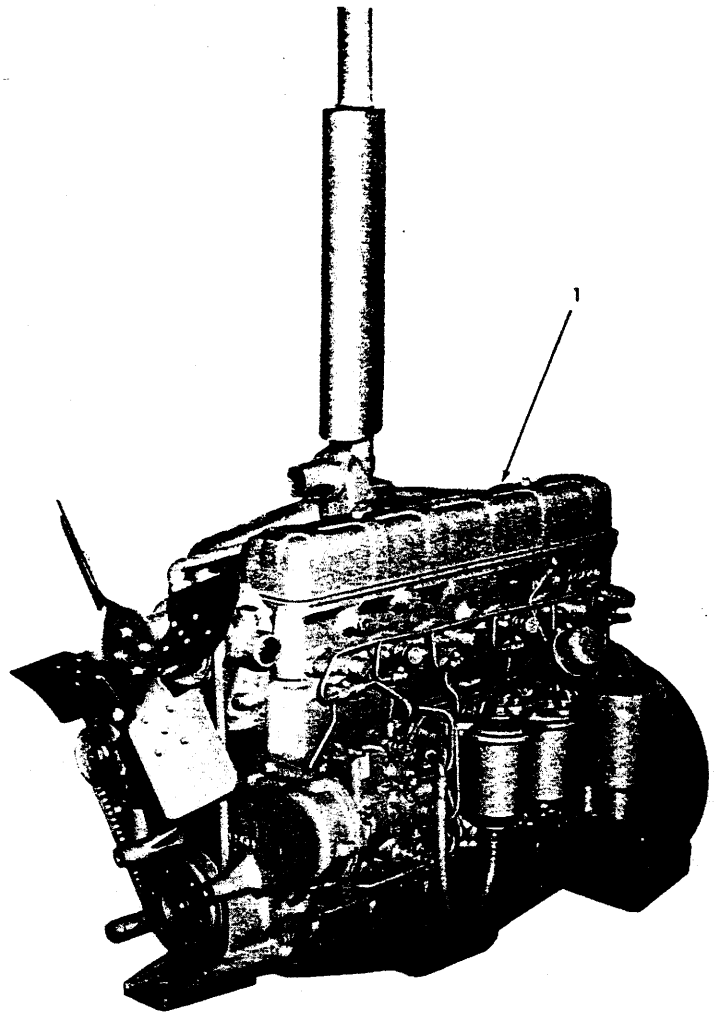

T-76362

ENGINE ASSEMBLY

USAGE: Diesel-powered. Effective Serial No. 24A00201, 56Y02201

ITEM	PART NO.	QTY.	DESCRIPTION
1	74516525	1	ENGINE ASSY. (Includes oil filter, fuel filter and water pump but does not include air cleaner, fan, starter, alternator or muffler)
	74517196	1	SHORT BLOCK ASSY. (Includes pistons and rings, cylinder sleeves, connecting rods, main rod and camshaft bearings; camshaft and crankshaft. Does not include oil filter, fuel filters, water pump, manifolds, air cleaner, fan, starter, timing gear cover, flywheel, oil pump, fuel injection pump, alternator, muffler, fuel injection nozzles, cylinder head, oil pan or gaskets)

NOTE: See MAIN FRAME for engine mounting parts.

(Revised June 1977)

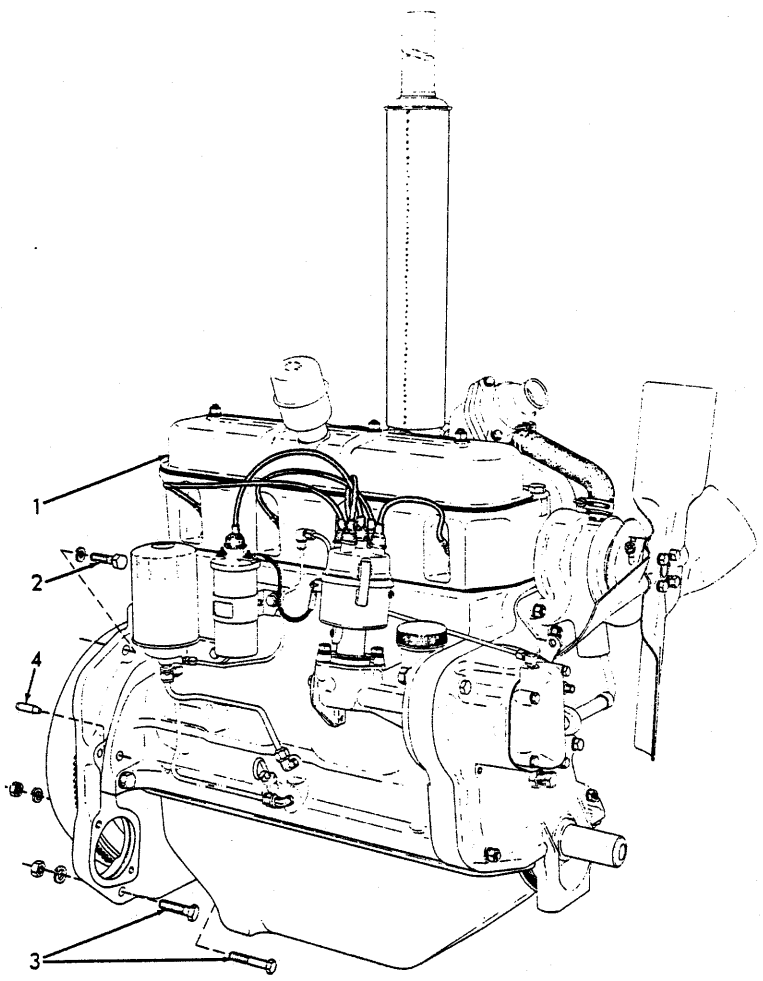

ENGINE ASSEMBLY (Model 17) T-19574

USAGE: Gas - powered, effective serial No. 75Y00201

ITEM	PART NO.	QTY.	DESCRIPTION
1	70677257	1	ENGINE ASSY. (Includes carburetor, distributor, coil, fan, oil filter, muffler and clutch. For burning gasoline. Compression ratio 7.25 to 1).
2	70920583	1	CAPSCREW, 1/2"NC x 1-1/2"
3	70921556	1	CAPSCREW, 1/2"NC x 2" (Used prior to grader unit #00642)
3	70924864	1	CAPSCREW, 1/2"NC x 2-1/4" (Grader unit #00642 and up)
3	70920752	1	CAPSCREW, 1/2"NC x 2-1/4"
3	70922526	1	CAPSCREW, 1/2"NC x 2-1/2"
3	70922510	1	CAPSCREW, 1/2"NC x 2-3/4"
	70912441	5	LOCKWASHER, 1/2"
	70911028	4	NUT, 1/2"NC
4	70202532	1	PIN, dowel, engine to transmission
4	70647445	1	STUD, dowel, engine to transmission

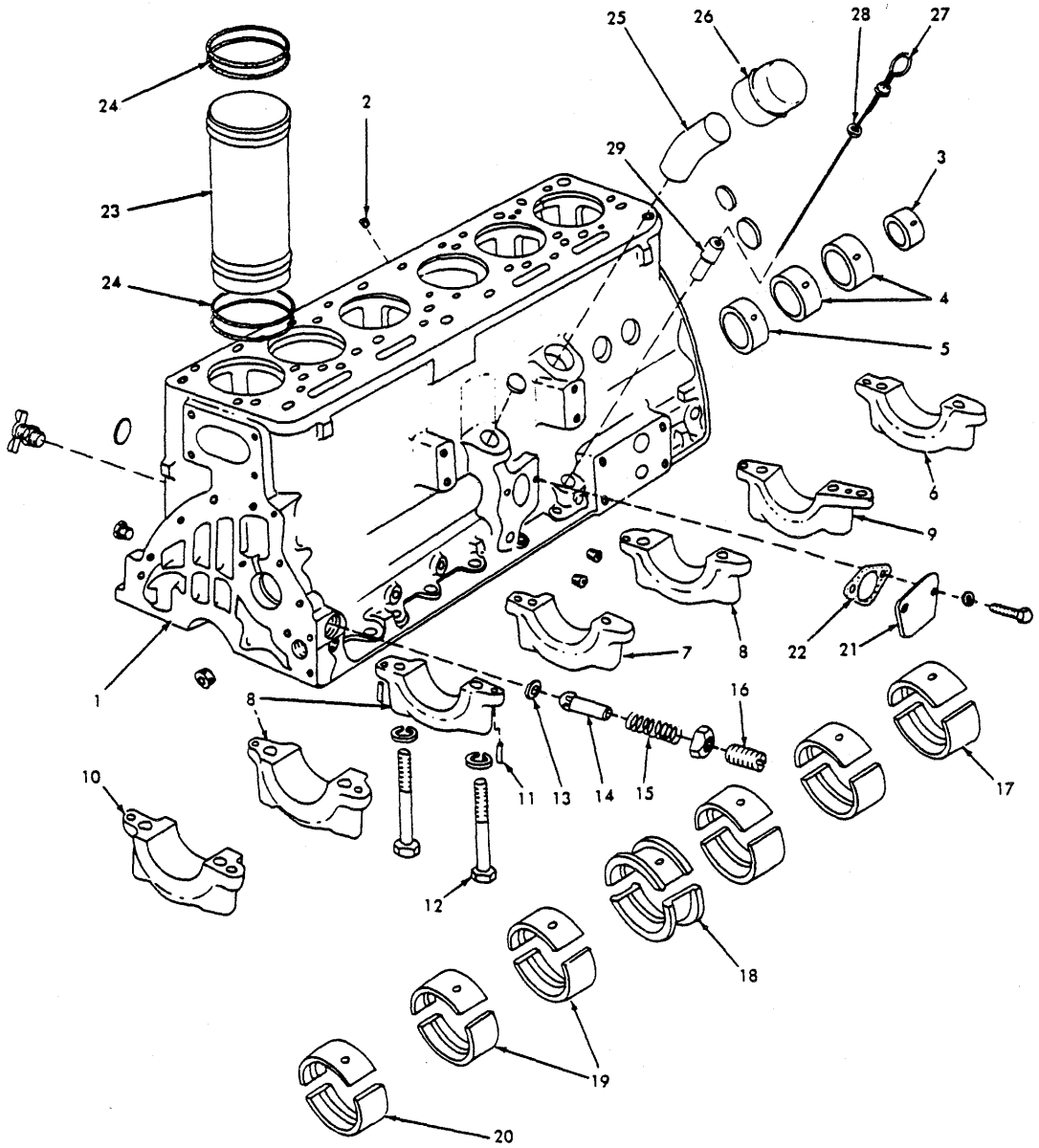

CYLINDER BLOCK T-40525

(Revised May 1976)

CYLINDER BLOCK

USAGE: Diesel-powered, effective Serial No. 24A00201, 56Y02201

ITEM	PART NO.	QTY.	DESCRIPTION
1	74514963	1	BLOCK ASSY., cylinder
	70919134	5	PLUG, pipe, hex-hd., 1/8"NPT
	70919840	1	PLUG, pipe, hex-hd., 1/4"NPT
	70920333	1	PLUG, pipe, hex-hd., 3/8"NPT
	70904260	2	PLUG, pipe, sq-socket, 3/8"NPT
	70917299	1	PLUG, expansion, 1-5/16" diam.
	70910014	1	PLUG, expansion, 1-1/2" diam.
	70912415	1	COCK, drain, 1/4"NPT
			NOTE: Each BLOCK ASSEMBLY includes items 2 thru 13 and hardware indented above
2	74511159	1	PLUG, oil level gauge hole (right side)
3	74514025	1	BEARING, camshaft, rear
4	74514024	2	BEARING, camshaft, intermediate
5	74514023	1	BEARING, camshaft, front
6	74511248	1	*CAP, rear main bearing
7	74511250	1	*CAP, center main bearing
8	74511246	3	*CAP, intermediate main bearing (#2, #3, #5)
9	74513575	1	*CAP, intermediate main bearing (#6)
10	74511252	1	*CAP, front main bearing
11	74514110	14	PIN, dowel, main bearing cap (standard size)
	74511822	14	PIN, dowel, main bearing cap (.030" oversize)
12	74500327	14	CAPSCREW, main bearing cap
	70910153	14	LOCKWASHER, 9/16"
13	74507673	1	INSERT, oil pressure regulating valve
14	74507374	1	PISTON, oil pressure regulating valve
15	74500231	1	SPRING, oil pressure regulating valve
16	74022129	1	SCREW, oil pressure regulating valve
17	74514858	2	△BEARING, rear main (standard size)
	74514862	2	BEARING, rear main (.002" undersize)
	74514859	2	BEARING, rear main (.010" undersize)
	74514860	2	BEARING, rear main (.020" undersize)
	74514861	2	BEARING, rear main (.040" undersize)

*Replacement bearing caps are semi-finished and must be line-bored after installing

△Indicates component of item 30

(Continued)

CYLINDER BLOCK (Continued)

ITEM	PART NO.	QTY.	DESCRIPTION
18	74514843	2	△BEARING, center main (standard size)
	74514847	2	BEARING, center main (.002" undersize)
	74514844	2	BEARING, center main (.010" undersize)
	74514845	2	BEARING, center main (.020" undersize)
	74514846	2	BEARING, center main (.040" undersize)
19	74514853	8	△BEARING, intermediate main (standard size)
	74514857	8	BEARING, intermediate main (.002" undersize)
	74514854	8	BEARING, intermediate main (.010" undersize)
	74514855	8	BEARING, intermediate main (.020" undersize)
	74514856	8	BEARING, intermediate main (.040" undersize)
20	74514848	2	△BEARING, front main (standard size)
	74514852	2	BEARING, front main (.002" undersize)
	74514849	2	BEARING, front main (.010" undersize)
	74514850	2	BEARING, front main (.020" undersize)
	74514851	2	BEARING, front main (.040" undersize)
21	74500332	1	COVER, fuel pump pad
	70916277	2	CAPSCREW, 5/16"NC x 5/8"
	70917330	2	WASHER, copper
22	74503956	1	□GASKET, pad cover
23	74510817	6	□SLEEVE, cylinder (3-9/16" bore)
	74508465	6	□SLEEVE, cylinder (3-9/16" bore. Has .020" thicker top flange. Requires remachining of cylinder block)
24	74514615	6	□RING, packing, lower
	74516606	6	□RING, packing, upper
25	74507375	1	TUBE, oil filler
26	74514000	1	CAP, oil filler pipe
27	74509242	1	GAUGE, oil level
28	74506607	1	SEAL, oil level gauge
29	74506593	1	ADAPTER, oil level gauge
30	74061112	1	KIT, bearing, standard size (Includes items 17 thru 20)

△Indicates component of item 30

(Revised September 1976)

MEMO

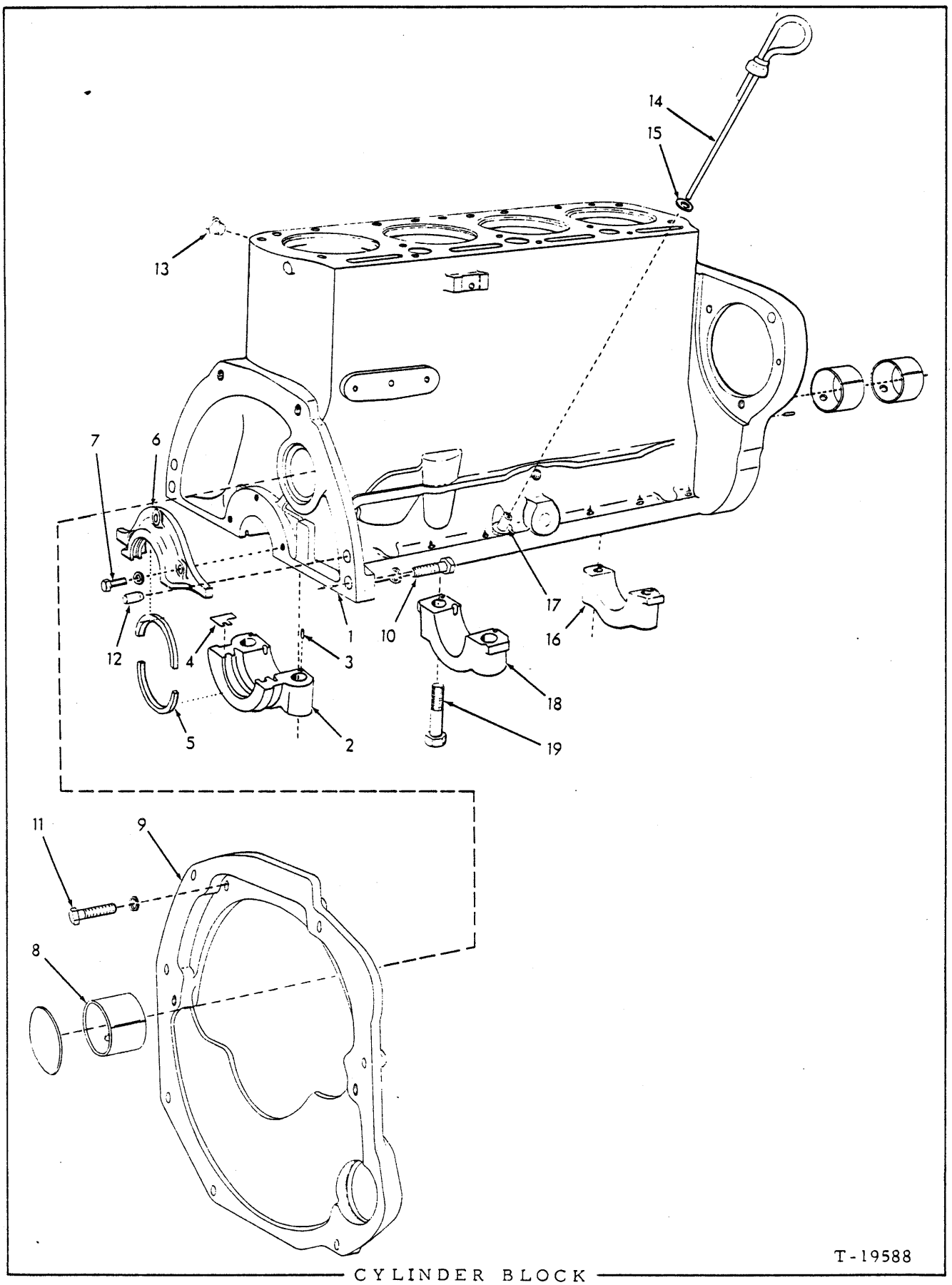

CYLINDER BLOCK

CYLINDER BLOCK

USAGE: Gas - powered, effective serial No. 75Y00201

ITEM	PART NO.	QTY.	DESCRIPTION
1	70232545	1	BLOCK ASSY., cylinder (Includes items 2, 3, 8, 16, 18 and 19; also 1 PLUG 70910011)
	70910011	1	PLUG, expansion, 2-1/2" diam. (camshaft hole)
2	70229171	1	CAP, rear bearing
3	70229370	6	PIN, dowel, bearing cap
4	70229178	2	□GASKET, rear bearing cap
5	-------	2	SEAL, oil (See CRANKSHAFT)
6	70229179	1	RETAINER, crankshaft rear oil seal
7	70229715	3	CAPSCREW, drilled head, 5/16"NC x 7/8"
	70904205	3	LOCKWASHER, 5/16"
8	-------	3	BUSHING, camshaft (See CAMSHAFT)
9	70677345	1	ADAPTER, engine to transmission
10	70920574	2	CAPSCREW, 1/2"NC x 1-3/8"
11	70921556	2	CAPSCREW, 1/2"NC x 2"
	70904208	4	LOCKWASHER, 1/2"
12	70202532	2	PIN, dowel, engine adapter
13	70919840	1	PLUG, pipe, hex-hd., 1/4"NPT
14	70230066	1	ROD ASSY., oil level gauge (Includes item 15)
15	70204014	1	SEAL, oil level gauge rod
16	70229173	1	CAP, front bearing
17	70230331	1	BUSHING, oil level gauge rod
18	70229172	1	CAP, center bearing
19	70229174	6	CAPSCREW, bearing cap

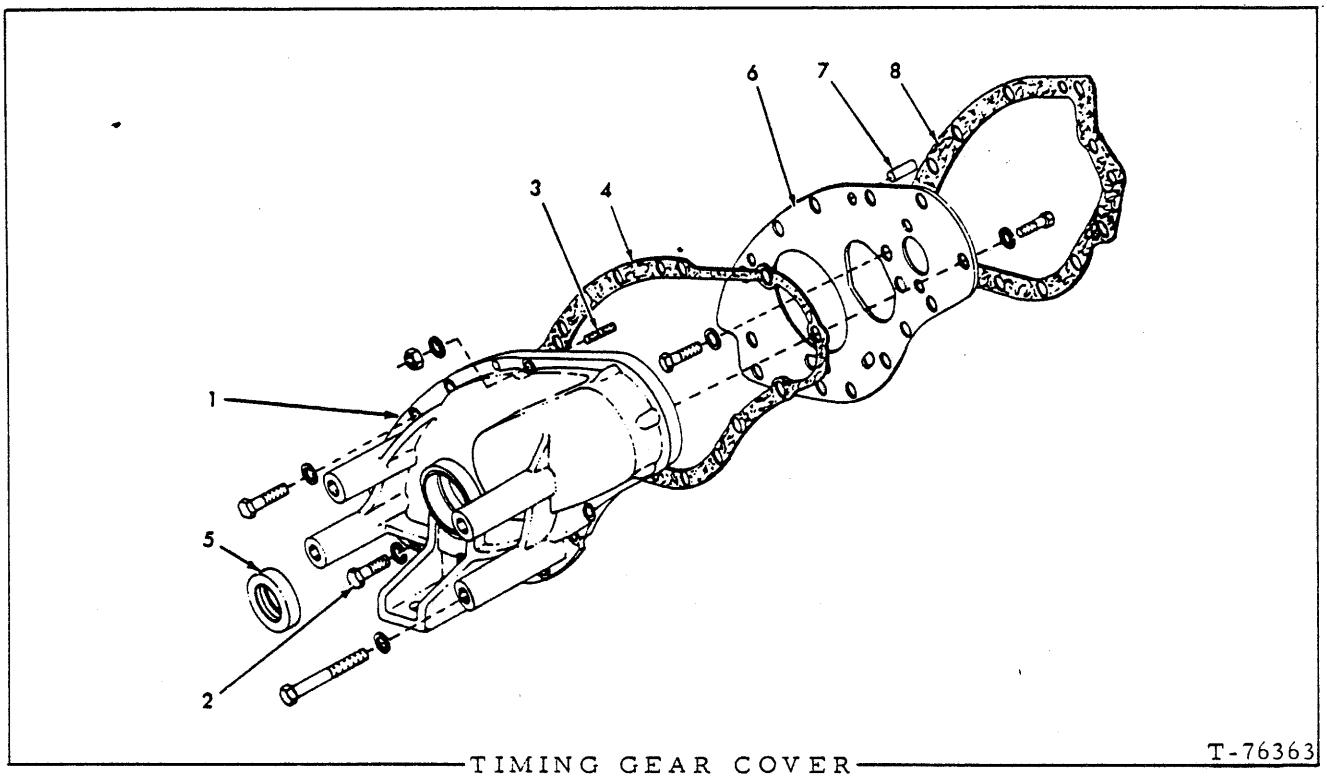

TIMING GEAR COVER

USAGE: Diesel-powered, effective Serial No. 24A00201, 56Y02201

ITEM	PART NO.	QTY.	DESCRIPTION
1	74512402	1	COVER, timing gear
	70916272	3	CAPSCREW, 3/8"NC x 1-1/4"
	70916274	1	CAPSCREW, 3/8"NC x 2-1/4"
2	74513383	5	CAPSCREW, Nylok, 3/8"NC x 1-1/8"
	70904206	9	LOCKWASHER, 3/8"
3	74514034	1	STUD, timing gear cover
	70904206	1	LOCKWASHER, 3/8"
	70910123	1	NUT, 3/8"NF
4	74507505	1	□GASKET, gear cover
5	74513621	1	SEAL, oil, crankshaft
6	74515486	1	PLATE, engine mounting
	70916269	3	CAPSCREW, 3/8"NC x 7/8"
	70915408	2	CAPSCREW, 3/8"NC x 3/4"
	70904206	5	LOCKWASHER, 3/8"
7	70917539	2	PIN, dowel, gear cover (3/8" x 1")
8	74508186	1	□GASKET, mounting plate

(Revised June 1977)

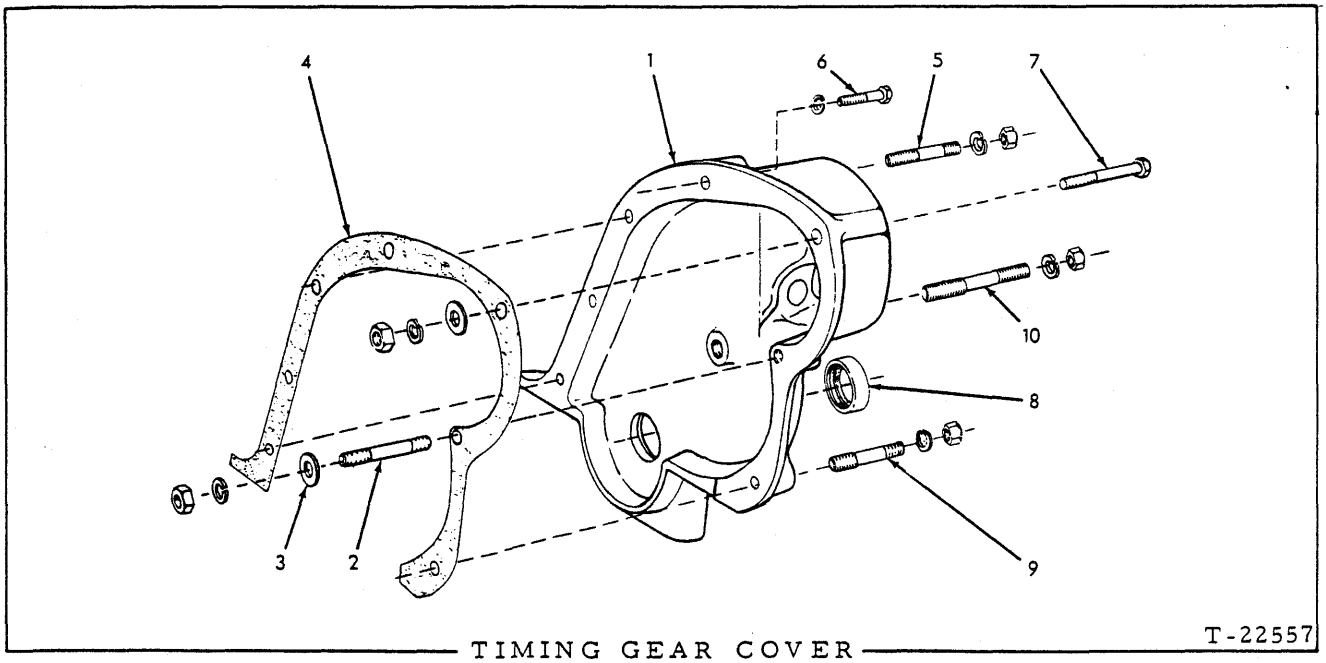

TIMING GEAR COVER

USAGE: Gas - pcwered, effective serial No. 75Y00201

ITEM	PART NO.	QTY.	DESCRIPTION
1	70224915	1	COVER. timing gear
2	70229706	1	STUD, gear cover (3/8"NC x 3-1/8")(Also attaches distributor drive housing)
	70904206	1	LOCKWASHER, 3/8"
	70910324	1	NUT, 3/8"NC
3	70225771	2	WASHER, plain
4	70233214	1	□GASKET, cover to cylinder block
5	70228394	1	STUD, gear cover
	70904206	1	LOCKWASHER, 3/8"
	70910324	1	NUT, 3/8"NC
6	70227307	2	CAPSCREW, gear cover (3/8"NC x 1-3/4")
	70904206	2	LOCKWASHER, 3/8"
7	70919015	1	CAPSCREW, gear cover (3/8"NC x 3-1/2")(Also attaches distributor drive housing)
	70904206	1	LOCKWASHER, 3/8"
	70900367	1	NUT, 3/8"NC
8	-------	1	SEAL, oil (See CRANKSHAFT AND FLYWHEEL)
9	70230392	1	STUD, gear cover (2-1/2" long)
	70904206	1	LOCKWASHER, 3/8"
	70910324	1	NUT, 3/8"NC
10	70234226	1	STUD, gear cover (4" long)
	70904206	1	LOCKWASHER, 3/8"
	70910324	1	NUT, 3/8"NC

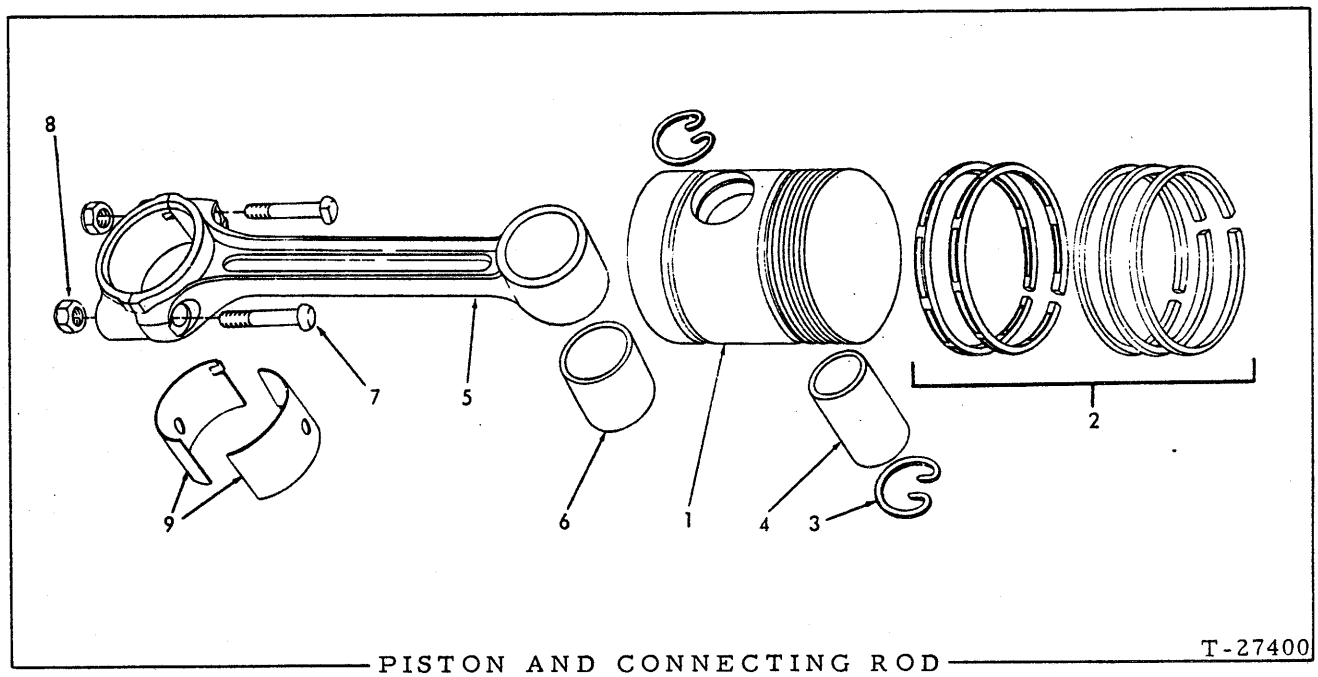

PISTON AND CONNECTING ROD

USAGE: Diesel-powered, effective Serial No. 24A00201, 56Y02201

ITEM	PART NO.	QTY.	DESCRIPTION
1	74061559	6	□PISTON (Includes items 2, 3, and 4)
2	74516738	6	RING SET
3	74514586	12	RING, snap, piston pin retaining
4	74507710	6	PIN, piston
5	74515119	6	ROD ASSY., connecting (Includes items 6 thru 8)
6	74507127	6	BUSHING, piston pin
7	74515070	12	BOLT, connecting rod
8	74516821	12	NUT, connecting rod bolt
9	74514863	12	BEARING, connecting rod (Standard size)
	74514867	12	BEARING, connecting rod (.002" undersize)
	74514864	12	BEARING, connecting rod (.010" undersize)
	74514865	12	BEARING, connecting rod (.020" undersize)
	74514866	12	BEARING, connecting rod (.040" undersize)

(Revised January 1979)

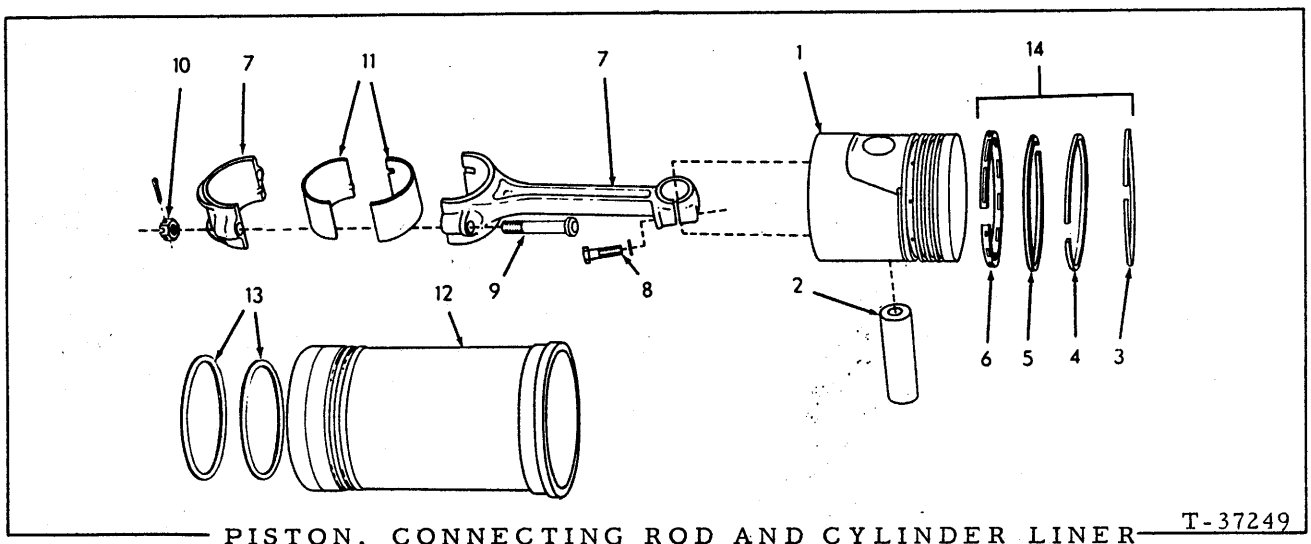

T-37249

PISTON, CONNECTING ROD AND CYLINDER LINER

USAGE: Gas - powered, effective serial No. 75Y00201

ITEM	PART NO.	QTY.	DESCRIPTION
			NOTE: Each piston assembly listed below includes fitted piston pin
1	70229718	4	*PISTON ASSY. (7.25 to 1 ratio. For gasoline at low altitude)
	70230577	4	*PISTON ASSY. (8.25 to 1 ratio. For gasoline at high altitude)
2	70203052	4	*PIN, piston
3	70230086	4	□RING, compression (top groove)
4	70229537	4	□RING, compression (2nd groove)
5	70229537	4	□RING, compression (3rd groove)
6	70229538	4	□RING, oil control
7	70232569	4	ROD ASSY., connecting (Includes items 8 thru 10)
8	70232443	4	CAPSCREW, piston pin retaining
	70904206	4	LOCKWASHER, 3/8"
9	70224620	8	BOLT, connecting rod cap
10	70915652	8	NUT, connecting rod bolt (self-locking, 7/16"NF)
11	70231125	4	*BEARING, connecting rod (two halves-std. size)
	70231126	4	BEARING, connecting rod (two halves - .001" undersize)
	70231127	4	BEARING, connecting rod (two halves - .0025" undersize)
12	70257450	4	*LINER, cylinder
13	70227500	8	*RING, packing, cylinder liner
14	70230091	1	RING SET, piston (Sufficient for entire engine; items 3 thru 6)
			NOTE: Each MOTOR KIT listed below includes full set of pistons, pins, rings, cylinder liners and packing rings
--	70283605	1	MOTOR KIT (Includes PISTON ASSY. 70229718)
--	70283730	1	MOTOR KIT (Includes PISTON ASSY. 70230577)

□ Indicates components of item 14

* Indicates components of MOTOR KIT

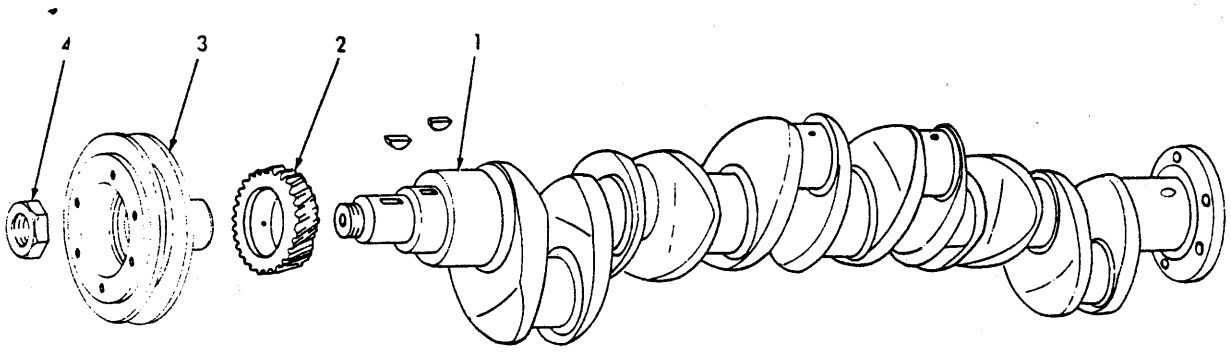

CRANKSHAFT T-40527

USAGE: Diesel-powered, effective Serial No. 24A00201, 56Y02201

ITEM	PART NO.	QTY.	DESCRIPTION
1	74507700	1	CRANKSHAFT
	70905845	2	KEY, #A woodruff, 1/4" x 7/8"
2	74511258	1	GEAR, crankshaft
3	74512483	1	PULLEY
4	74512820	1	NUT, pulley retaining (self-locking)

(Revised June 1977)

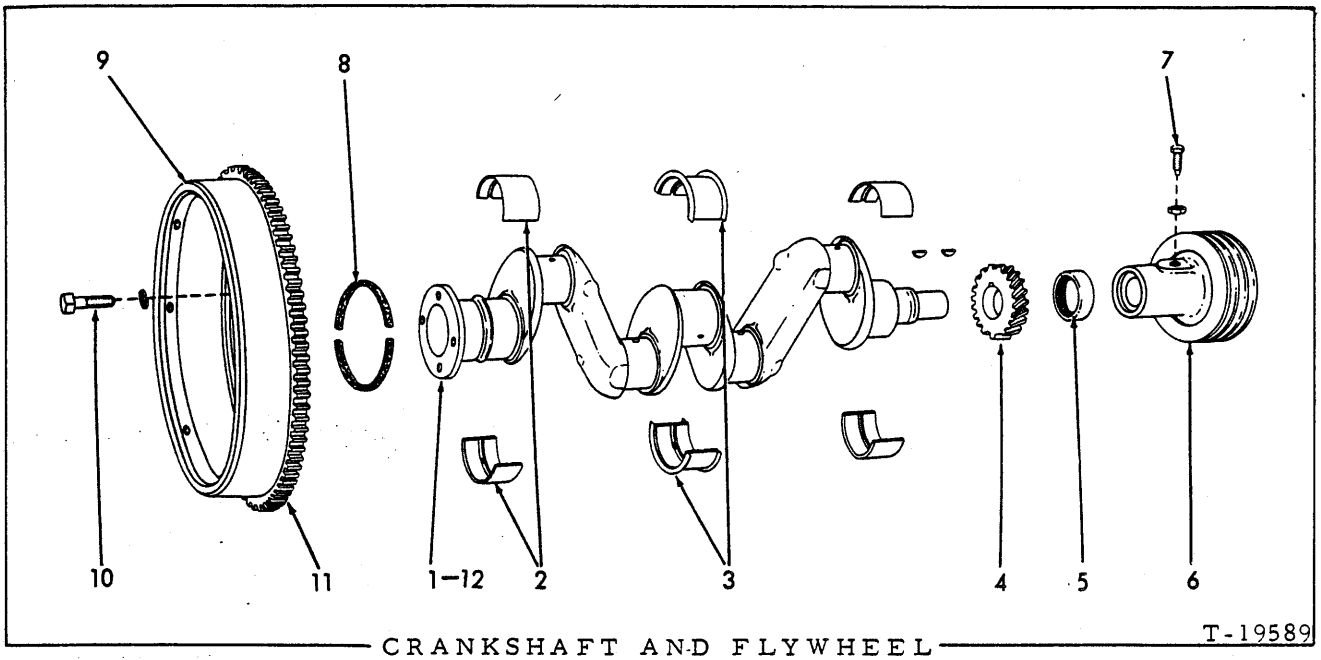

CRANKSHAFT AND FLYWHEEL

USAGE: Gas - powered, effective serial No. 75Y00201

ITEM	PART NO.	QTY.	DESCRIPTION
1	---------	1	□CRANKSHAFT (Order item 12)
2	70234178	2	□BEARING, two halves, front and rear main (standard size)
	70234469	2	BEARING, two halves, front and rear main (.001" undersize)
	70234471	2	BEARING, two halves, front and rear main (.0025" undersize)
3	70234177	1	□BEARING, two halves, center main (standard size)
	70234468	1	BEARING, two halves, center main (.001" undersize)
	70234470	1	BEARING, two halves, center main (.0025" undersize)
4	70230217	1	□GEAR, timing
	70910184	1	□KEY, #8 woodruff, 5/32" x 3/4"
5	70226620	1	SEAL, front
6	70677214	1	PULLEY, crankshaft (First type. 3 tapped holes)
	70698208	1	PULLEY, crankshaft (Second type. 6 tapped holes)
	70910184	1	KEY, #8 woodruff, 5/32" x 3/4"
7	70207872	1	SETSCREW, pulley retaining
	70911036	1	NUT, jam, 5/8"NC
8	70241294	2	SEAL, rear (half only)
9	70232444	1	FLYWHEEL ASSY. (Includes item 11)
10	70223527	4	CAPSCREW, 1/2"NF x 1-1/8"
	70904208	4	LOCKWASHER, 1/2"
11	70226830	1	GEAR, flywheel ring
12	70241291	-	CRANKSHAFT KIT (Includes set of connecting rod bearings; main bearings and shims, crankshaft gear and gear key)

(Revised May 1976)

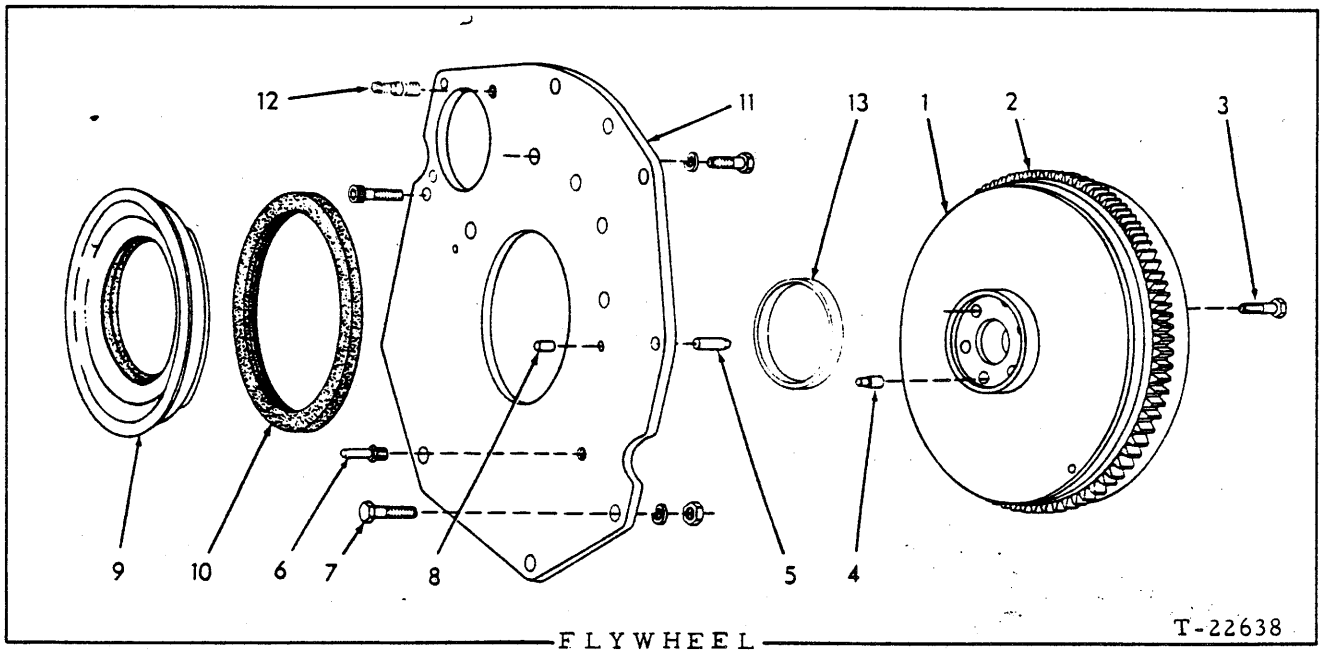

FLYWHEEL

USAGE: Diesel-powered, effective serial No. 24A00201, 56Y02201

ITEM	PART NO.	QTY.	DESCRIPTION
1	74516660	1	FLYWHEEL ASSY. (Includes item 2)(If for first replacement on Engines prior to #D-18093 also order ADAPTER 70681807 , 1 STUD 70681805 and 2 STUD 70681804)
2	74508877	1	GEAR, flywheel ring
3	74254594	4	CAPSCREW, flywheel attaching
4	74500300	2	DOWEL, flywheel
5	70202532	1	PIN, dowel, adapting plate to transmission housing
6	74508897	1	PIN, timing locater
7	70921556	4	CAPSCREW, adapting plate to transmission housing (1/2"NC x 2") (1 less used effective with grader unit #00642)
	70924864	1	CAPSCREW, adapting plate to transmission housing (Also attaches horn bracket)(1/2"NC x 2-1/4")(Grader unit #00642 and up)
	70912441	4	LOCKWASHER, 1/2"
	70911028	4	NUT, 1/2"NC
8	70917539	2	PIN, dowel, adapter to cylinder block (3/8" x 1")
9	74516486	1	SEAL, oil (6" O. D., 4-5/8" I. D.)
10	74502930	1	SEAL, engine adapting plate
11	74516559	1	ADAPTER, engine to transmission
	70918683	7	CAPSCREW, 1/2"NC x 1-1/8"
	70904208	7	LOCKWASHER, 1/2"
	77125012	1	CAPSCREW, hex-socket-hd. (1/2"NC x 2")
12	-------	1	STUD, adapting plate to transmission housing (See STARTING MOTOR)
	-------	1	LOCKWASHER
	-------	1	NUT
13	74514813	1	SLEEVE, wear, flywheel oil seal

(Revised June 1977)

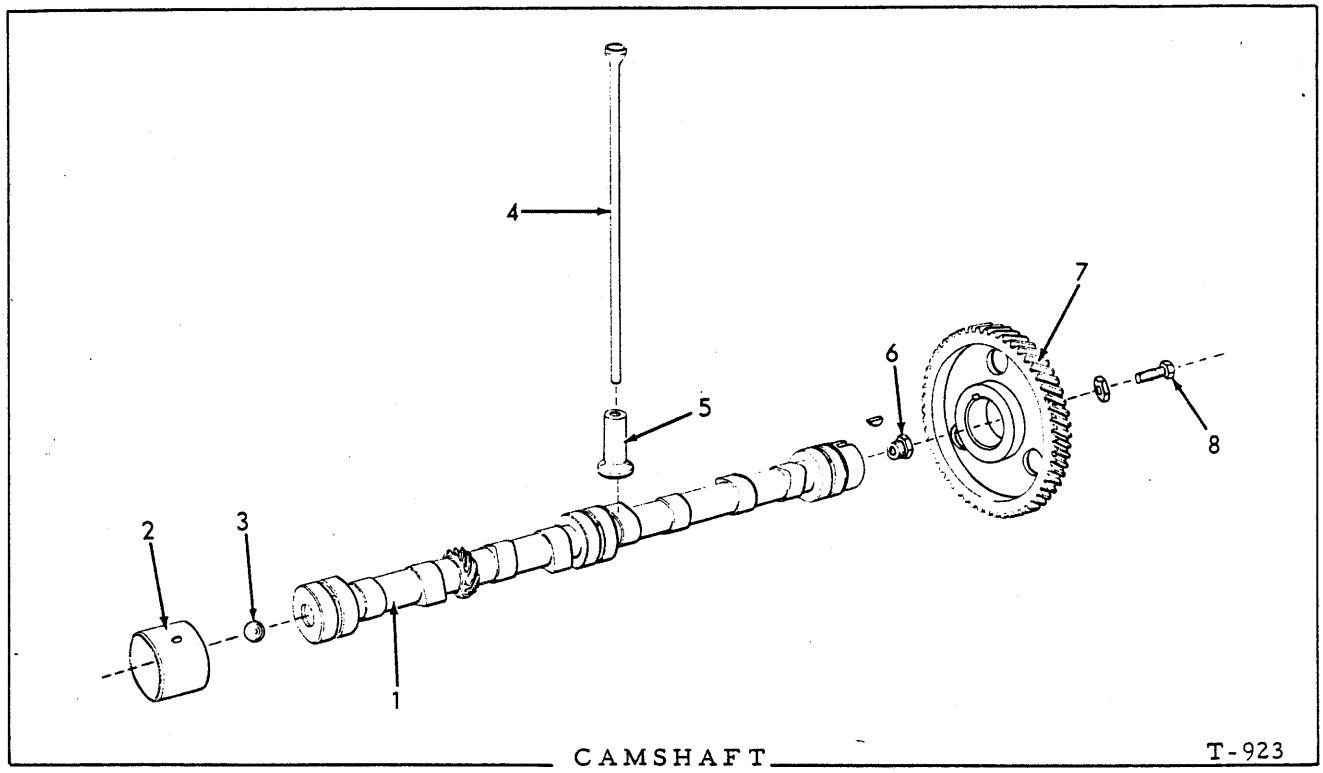

CAMSHAFT T-923

USAGE: Gas - powered, effective serial No. 75Y00201

ITEM	PART NO.	QTY.	DESCRIPTION
1	70236580	1	CAMSHAFT
2	70229953	3	BUSHING (std. size)
	70229955	3	BUSHING (. 0025" undersize)
3	70917148	1	BALL, steel, 9/16" diam.
4	70203018	8	ROD, push
5	70203017	8	TAPPET, valve
6	70225689	1	PLUG, front thrust
7	70227038	1	GEAR, timing
	70910184	1	KEY, #8 woodruff, 5/32" x 3/4"
8	70225688	1	SCREW, front thrust
	70910345	1	NUT, jam, 5/8"NF

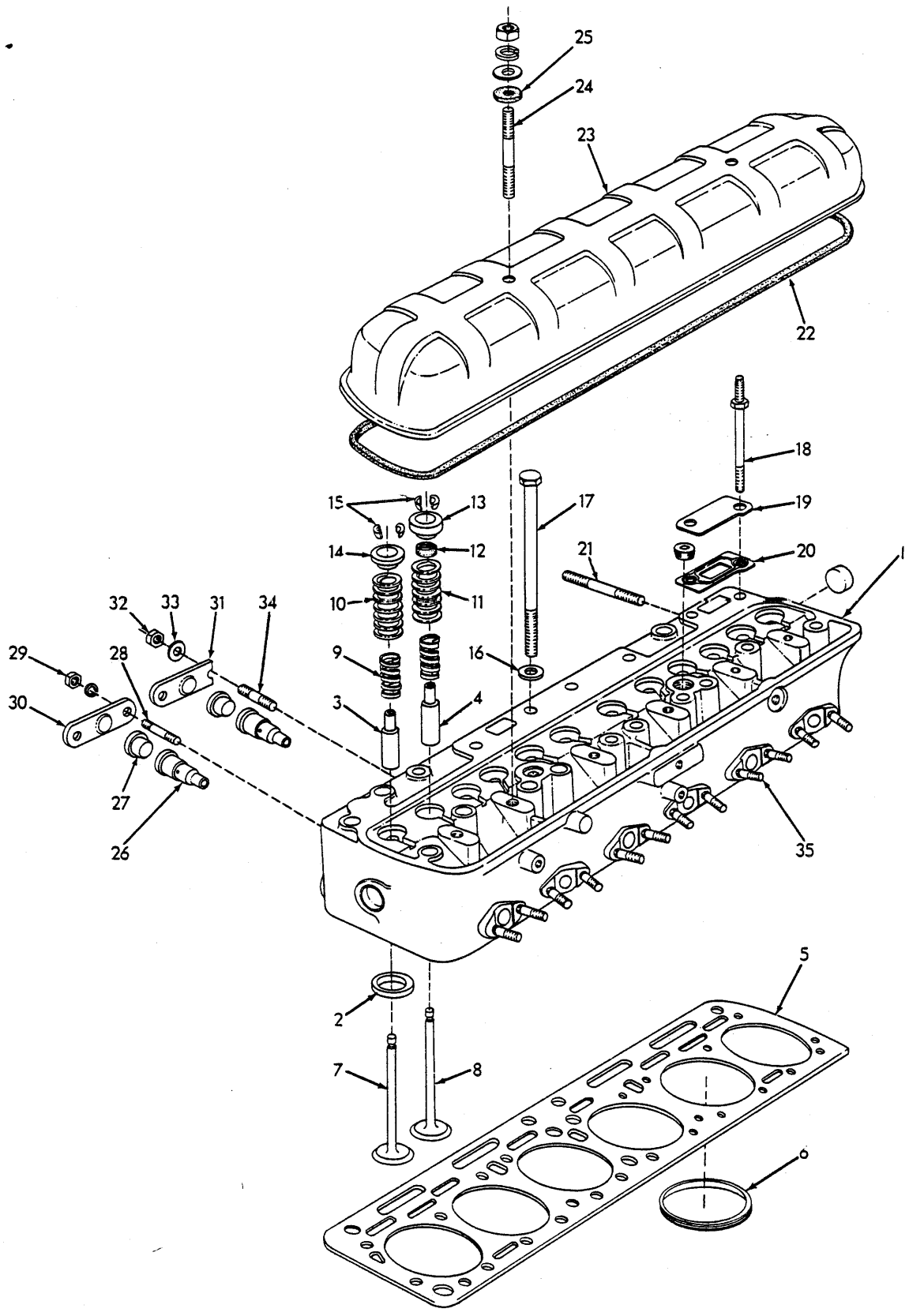

CYLINDER HEAD AND VALVES

T-40533

CYLINDER HEAD AND VALVES

USAGE: Diesel-powered, effective serial No. 24A00201, 56Y02201

ITEM	PART NO.	QTY.	DESCRIPTION
1	74514789	1	HEAD ASSY., cylinder (Includes items 2, 3 and 4; also PLUGS indented below)
	70930202	2	PLUG, cup, 1-1/8" drain
	70918851	2	PLUG, pipe, hex-socket, 3/4"NPT
2	74514297	6	INSERT, exhaust valve (standard size)
	74514311	6	INSERT, exhaust valve (.005" oversize)
3	74504475	6	GUIDE, exhaust valve
4	74513354	6	GUIDE, intake valve
5	74514398	1	□GASKET ASSY., cylinder head (Includes item 6)
6	74513721	6	GASKET, fire ring (cylinder sealing)
7	74514299	6	VALVE, exhaust
8	74514298	6	VALVE, intake
9	74513812	12	DAMPENER, valve spring
10	74513811	6	SPRING ASSY., exhaust valve (Includes item 9)
11	74513813	6	SPRING ASSY., intake valve (Includes item 9)
12	74513421	1	SEAL KIT, intake valve (6 seals; also includes installing tool)
13	74513139	6	CAP, rotating, intake valve spring
14	74353139	6	RETAINER, exhaust valve spring
15	74356080	24	LOCK, half, valve spring retainer
16	74372864	20	WASHER, cylinder head hold-down (Not used with second type capscrews, item 17)
17	74514380	15	CAPSCREW, cylinder head (5-3/8")(Engines prior to #D-18842)
	74516589	1	CAPSCREW, cylinder head (Engine #D-18842 and up)
	74514381	1	CAPSCREW, cylinder head (5-3/4")(Engines prior to #D-19300)
	74516585	1	CAPSCREW, cylinder head (Engine #D-19300 and up)
	74514386	2	CAPSCREW, cylinder head (6-7/8")
18	74514402	1	CAPSCREW, cylinder head (5-3/4" with stud head)
	74514400	1	CAPSCREW, cylinder head (5-3/8" with stud head)
19	74513529	1	COVER, water hole
20	74513723	1	□GASKET, water hole cover
21	74501050	6	STUD, intake and exhaust manifold
22	74513482	1	□GASKET, cylinder head cover

(Continued)

(Revised June 1977)

CYLINDER HEAD AND VALVES (Continued)

ITEM	PART NO.	QTY.	DESCRIPTION
23	74504350	1	COVER, cylinder head
24	-------	2	STUD, cylinder head cover (See VALVE MECHANISM AND CAMSHAFT)
	70900817	2	WASHER, plain, U.S. std., 3/8"
	70904206	2	LOCKWASHER, 3/8
	70910123	2	NUT, 3/8"NF
25	74105451	2	□GASKET, cylinder head cover nut
26	74507386	6	CELL ASSY., air (Includes orifice and pin (Serviced only as a unit)
27	74500967	6	PLUG, air cell
28	74506946	8	STUD, air cell retaining
29	74253346	8	NUT, air cell retaining stud (3/8"NF)
	70904206	8	LOCKWASHER, 3/8"
30	74502009	2	FLANGE, air cell retaining, end
31	74504454	4	FLANGE, air cell retaining, center
32	74253348	2	NUT, air cell retaining stud (1/2"NF)
33	74250723	2	WASHER, plain
34	74507343	2	STUD, air cell retaining
35	-------	12	STUD, nozzle retaining (See INJECTION NOZZLES AND LINES)

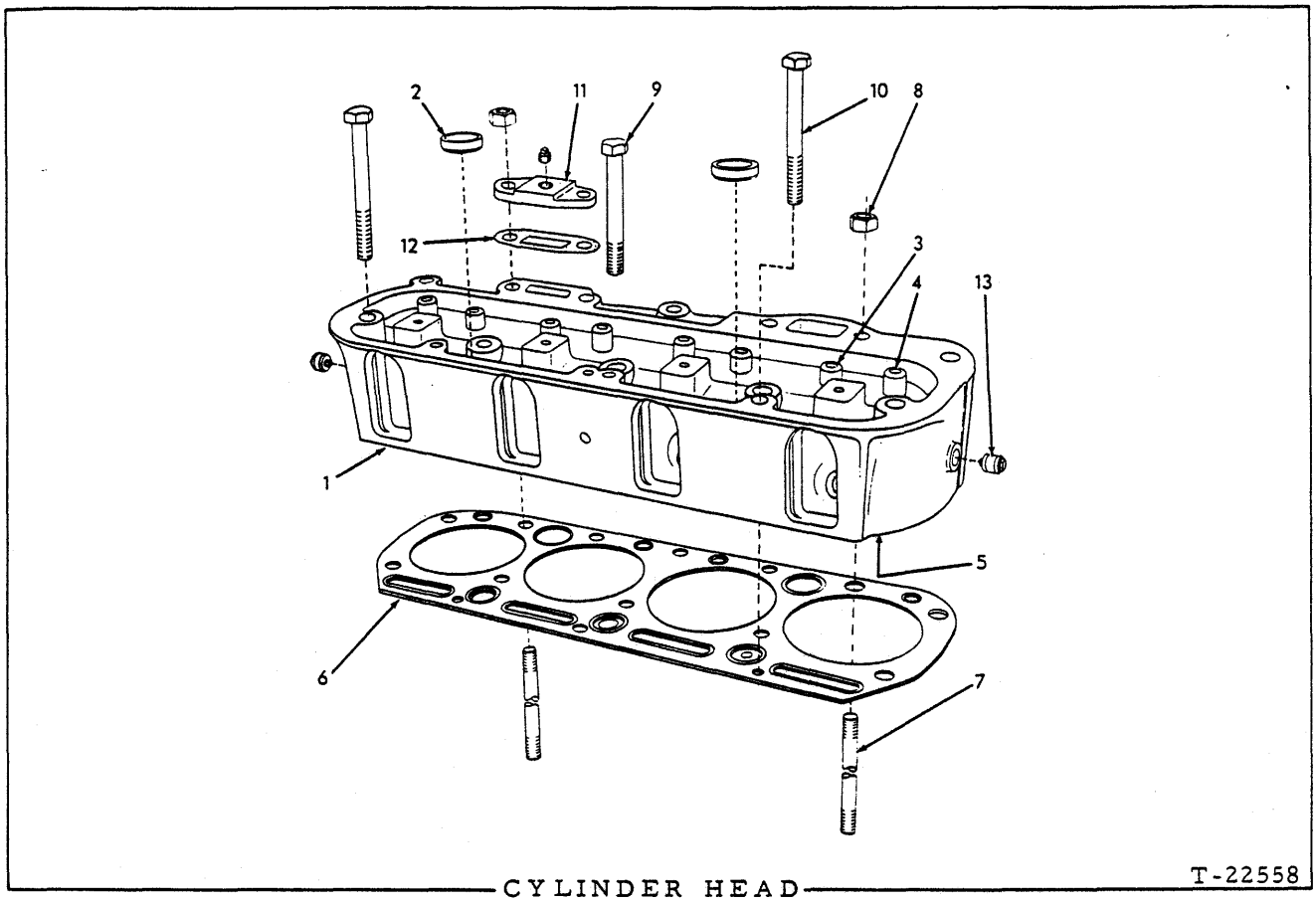

CYLINDER HEAD

USAGE: Gas - powered, effective serial No. 75Y00201

ITEM	PART NO.	QTY.	DESCRIPTION
1	70241524	1	HEAD ASSY. (Includes items 2 thru 5 and 13)
2	70230357	2	PLUG, water hole
3	-------	4	GUIDE, intake valve
4	-------	4	GUIDE, exhaust valve
5	-------	4	SEAT, exhaust valve
			See VALVES AND ROCKER ARMS
6	70229406	1	□ GASKET, cylinder head
7	70224729	4	STUD, cylinder head (1/2" x 5-7/8")
8	70203461	4	NUT, cylinder head stud (1/2"NF)
9	70224731	3	CAPSCREW, cylinder head (1/2"NC x 4")
	70236531	5	CAPSCREW, cylinder head (1/2"NC x 4-3/4")
10	70229410	3	CAPSCREW, cylinder head (7/16"NC x 4-1/2")
11	70229409	1	COVER, water hole
	70905261	1	PLUG, pipe, 1/2"NPT (Removed when cab heater is installed)
12	70233216	1	□ GASKET, water hole cover
13	70233155	2	PLUG ASSY., clean-out

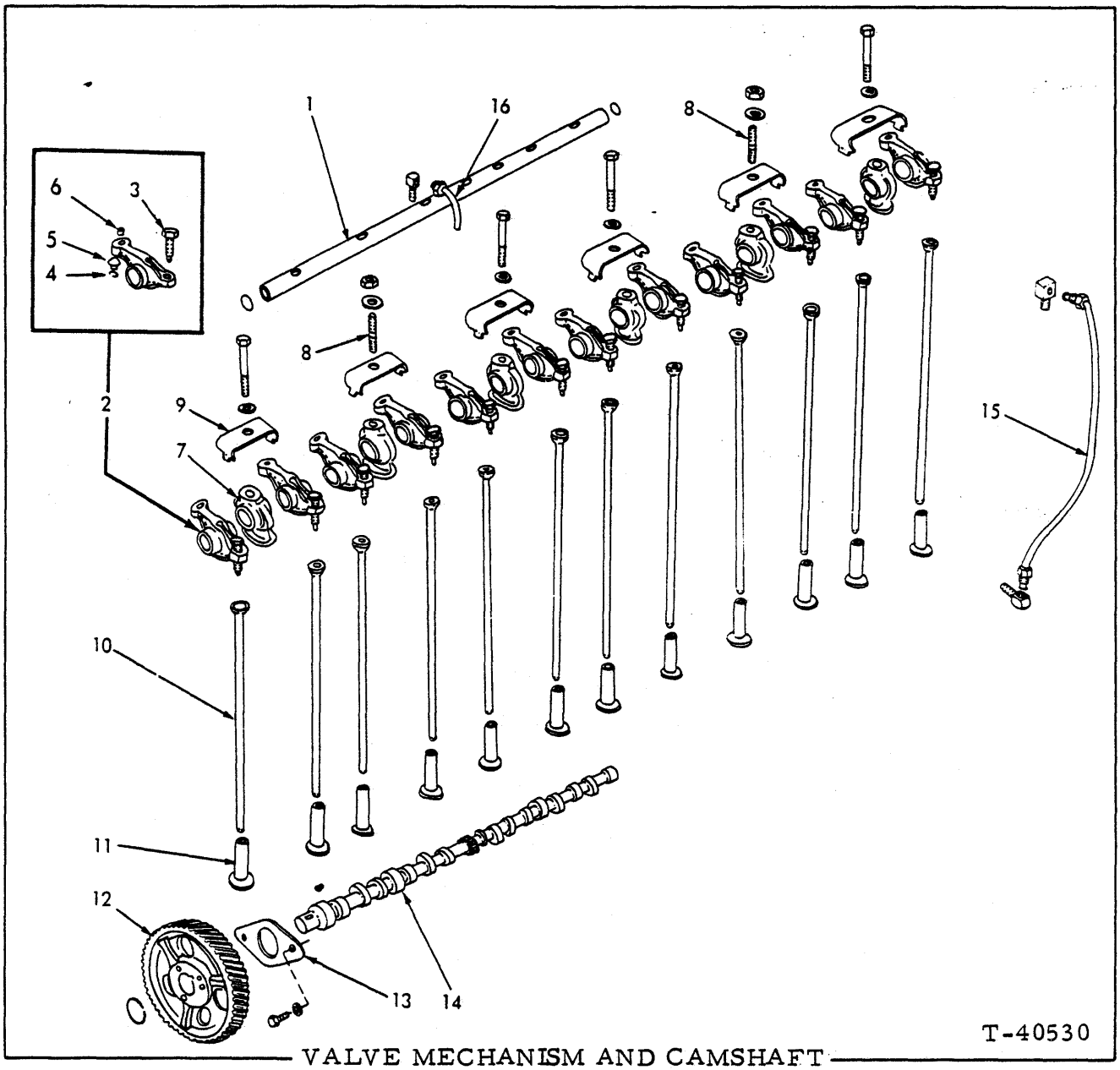

VALVE MECHANISM AND CAMSHAFT

USAGE: Diesel-powered, effective serial No. 24A00201, 56Y02201

ITEM	PART NO.	QTY.	DESCRIPTION	
1	74505260	1	SHAFT ASSY., rocker arm (Includes PLUGS indented below)	
	70914590	2	PLUG, expansion, 11/16" diam.	
2	--------	12	ARM ASSY., rocker (Engines prior to #D-22649) (Order 12 ARM ASSY. 74517036)	
	74517036	12	ARM ASSY., rocker (Includes items 3 thru 6) (Engines #D-22649 and up)	
3	74513206	12	SCREW, adjusting	
	74001304	12	NUT, locking	
4	74501178	12	RETAINER, rocker ball	Effective on engine #D-22649 and up
5	74501177	12	BALL, rocker arm	
6	74501211	12	WICK, oiling, rocker arm	

(Continued)

(Revised June 1977)

VALVE MECHANISM AND CAMSHAFT (Continued)

ITEM	PART NO.	QTY.	DESCRIPTION
7	74514031	6	BRACKET, rocker shaft
	70919227	4	CAPSCREW, 3/8"NC x 3-1/4"
	70900817	6	WASHER, plain, U.S. std., 3/8"
8	74508061	2	STUD
	70910123	2	NUT, 3/8"NF
9	74500176	6	CLIP, spring
10	74504052	12	ROD, push
11	74512982	12	LIFTER, valve
12	74516088	1	GEAR, camshaft
	70905845	1	KEY, #A woodruff, 1/4" x 7/8"
13	74502467	1	PLATE, thrust
	74502468	2	CAPSCREW
	70907863	2	LOCKWASHER, int-tooth, 7/16"
14	74516085	1	CAMSHAFT
15	74510833	1	LINE ASSY., oil, crankcase to cylinder head (Includes NUTS indented below)
	70913536	2	NUT, inverted flare, 1/4" tube
	70913039	2	ELBOW, inverted flare, 90°, 1/4" tube, 1/8"NPT male
16	74502408	1	LINE ASSY., oil owerflow, rocker shaft (Includes NUT indented below)
	70913536	1	NUT, inverted flare, 1/4" tube
	70913040	1	ELBOW, inverted flare, 90°, 1/4" tube, 1/4"NPT male

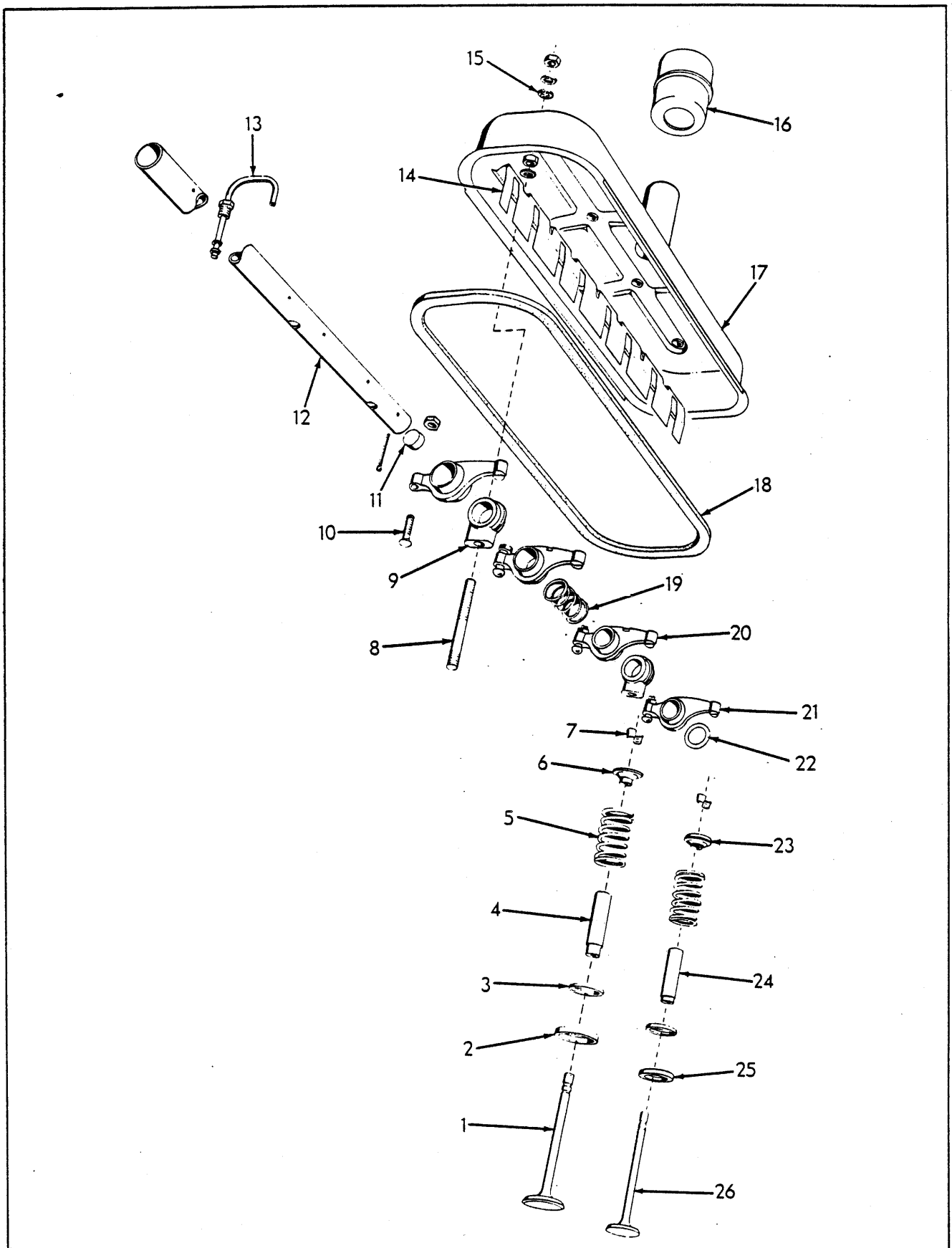

VALVES AND ROCKER ARMS

T-20567

VALVES AND ROCKER ARMS

USAGE: Gas - powered, effective serial No. 75Y00201

ITEM	PART NO.	QTY.	DESCRIPTION	
1	70241535	4	VALVE, intake	
2	70229904	4	SEAT, intake valve (For service only. Installation requires machining of counterbore in head)	
3	70206876	8	SEAT, valve spring	
4	70241536	4	GUIDE, intake valve	
5	70206879	8	SPRING, valve	
6	70209099	4	RETAINER, intake valve spring	
7	70209103	16	LOCK, half, valve spring retainer	
8	70224733	4	STUD, rocker shaft support and cover (3-7/8" long)	
	70910123	8	NUT, 3/8"NF	
	70911115	8	WASHER, plain, SAE std., 3/8"	
9	70225019	4	SUPPORT, rocker shaft	
10	70203132	8	SCREW, valve adjustment	
	70912794	8	NUT, jam, 3/8"NF	
11	70212004	2	STOPPER, rocker shaft (cork)	
12	70225893	1	SHAFT ASSY., rocker (Includes item 11 and cotter pins indented below)	
	70900807	2	PIN, cotter, 1/8" x 1-1/4"	
13	70227636	1	TUBE ASSY., rocker oiling (Includes NUT indented below)	
	70913526	1	NUT, inverted flare, 3/16" tube	
14	70232926	1	BAFFLE, oil	
15	70226477	4	□ PACKING, rocker cover stud	
16	70203196	1	CAP, breather	
17	70229408	1	COVER, rocker	
18	70232449	1	□ GASKET, rocker cover	
19	70203011	3	SPRING, rocker shaft	
20	70209862	4	ARM ASSY., rocker, intake valve	Each includes item 10. Bushing is not serviced separately.
21	70208049	4	ARM ASSY., rocker exhaust valve	
22	70203009	2	WASHER, rocker shaft	
23	70224926	4	ROTO-CAP, exhaust valve spring	
24	70229911	4	GUIDE, exhaust valve	
25	70241528	4	SEAT, exhaust valve (standard size)	
	70241538	4	SEAT, exhaust valve (oversize)	
26	70241527	4	VALVE, exhaust	

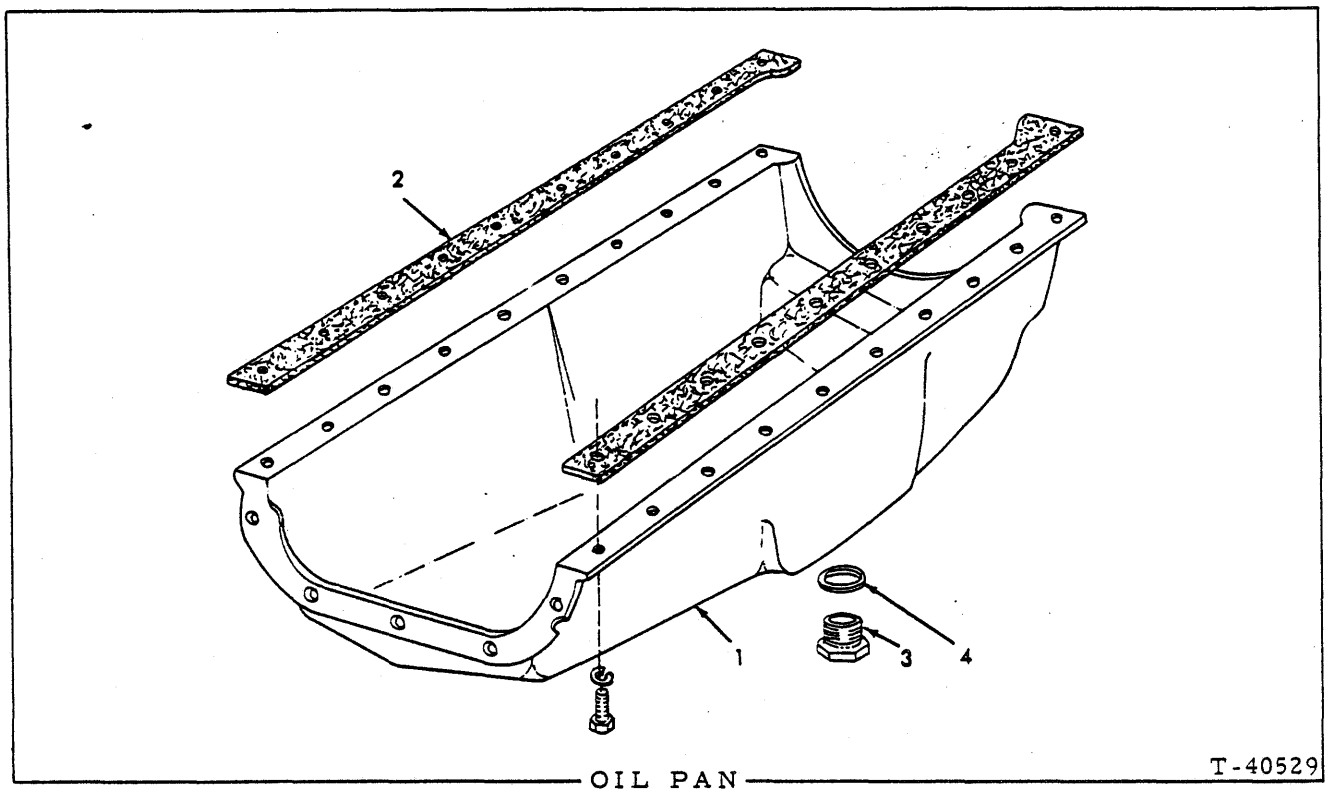

OIL PAN

USAGE: Diesel-powered, effective serial No. 24A00201, 56Y02201

ITEM	PART NO.	QTY.	DESCRIPTION
1	74512669	1	PAN, oil
	70915408	22	CAPSCREW, 3/8"NC x 3/4"
	70904206	22	LOCKWASHER, 3/8"
2	74501199	2	GASKET, oil pan
3	70226408	1	PLUG, oil drain
4	70226012	1	GASKET, oil drain plug

(Revised June 1977)

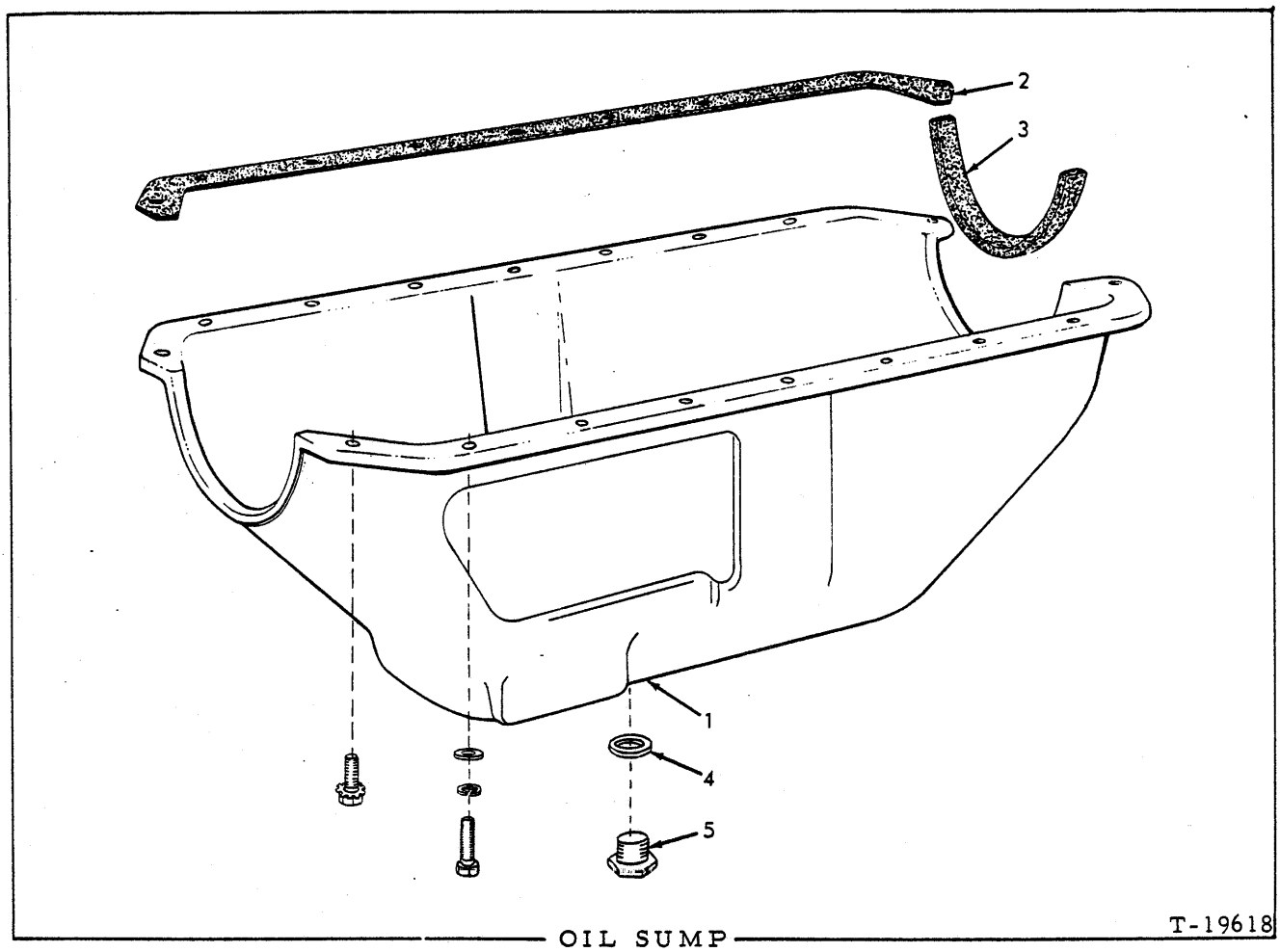

T-19618

OIL SUMP

USAGE: Gas - powered, effective serial No. 75Y00201

ITEM	PART NO.	QTY.	DESCRIPTION
1	70229334	1	SUMP, oil
	70920997	16	CAPSCREW, 5/16"NC x 3/4" (Includes lockwasher)
	70914392	2	CAPSCREW, 5/16"NC x 1" } Also attach
	70904205	2	LOCKWASHER, 5/16" } generator
	70901165	2	WASHER, plain, U.S. std., 5/16" } bracket
2	70233602	2	□GASKET, side
3	70236660	2	□GASKET, end
4	70226012	1	GASKET, oil drain plug
5	70226408	1	PLUG, oil drain

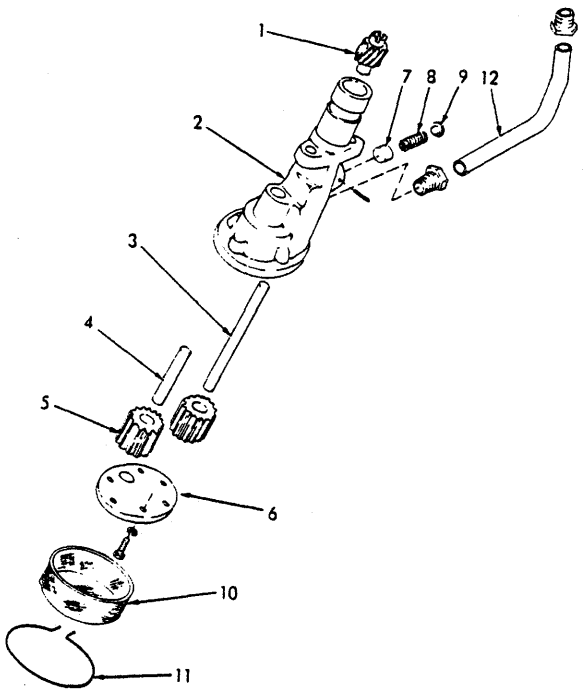

T-40535

OIL PUMP

USAGE: Diesel-powered, effective Serial No. 24A00201 thru 24A22727

ITEM	PART NO.	QTY.	DESCRIPTION
-	--------	1	PUMP ASSY. (Consists of items 1 thru 9)(Order 1 PUMP ASSY. 74517145)
	70914499	2	CAPSCREW, 3/8"NC x 1-5/8"
	70904206	2	LOCKWASHER, 3/8"
1	74506927	1	GEAR, drive
2	--------	1	BODY, pump (Order 1 PUMP ASSY. 74517145)
3	--------	1	SHAFT, drive } Order 1 each SHAFT AND GEAR
4	--------	1	SHAFT, idler gear } ASSYS. 74517143 and 74517144
5	--------	2	GEAR, pumping }
6	74506926	1	COVER, pump body
	70903625	6	CAPSCREW, 1/4"NC x 3/4"
	70904204	6	LOCKWASHER, 1/4"
7	74513162	1	PISTON, pressure relief valve
8	74513163	1	SPRING, pressure relief
9	74513164	1	RETAINER, pressure relief spring
	70915711	1	PIN, spring, 3/16" x 7/8"
10	74510693	1	SCREEN, oil
11	74371122	1	WIRE, retaining, oil strainer
12	74514991	1	TUBE, oil discharge
	70918872	2	NUT, hi-duty, 5/8" tube

(Revised September 1976)

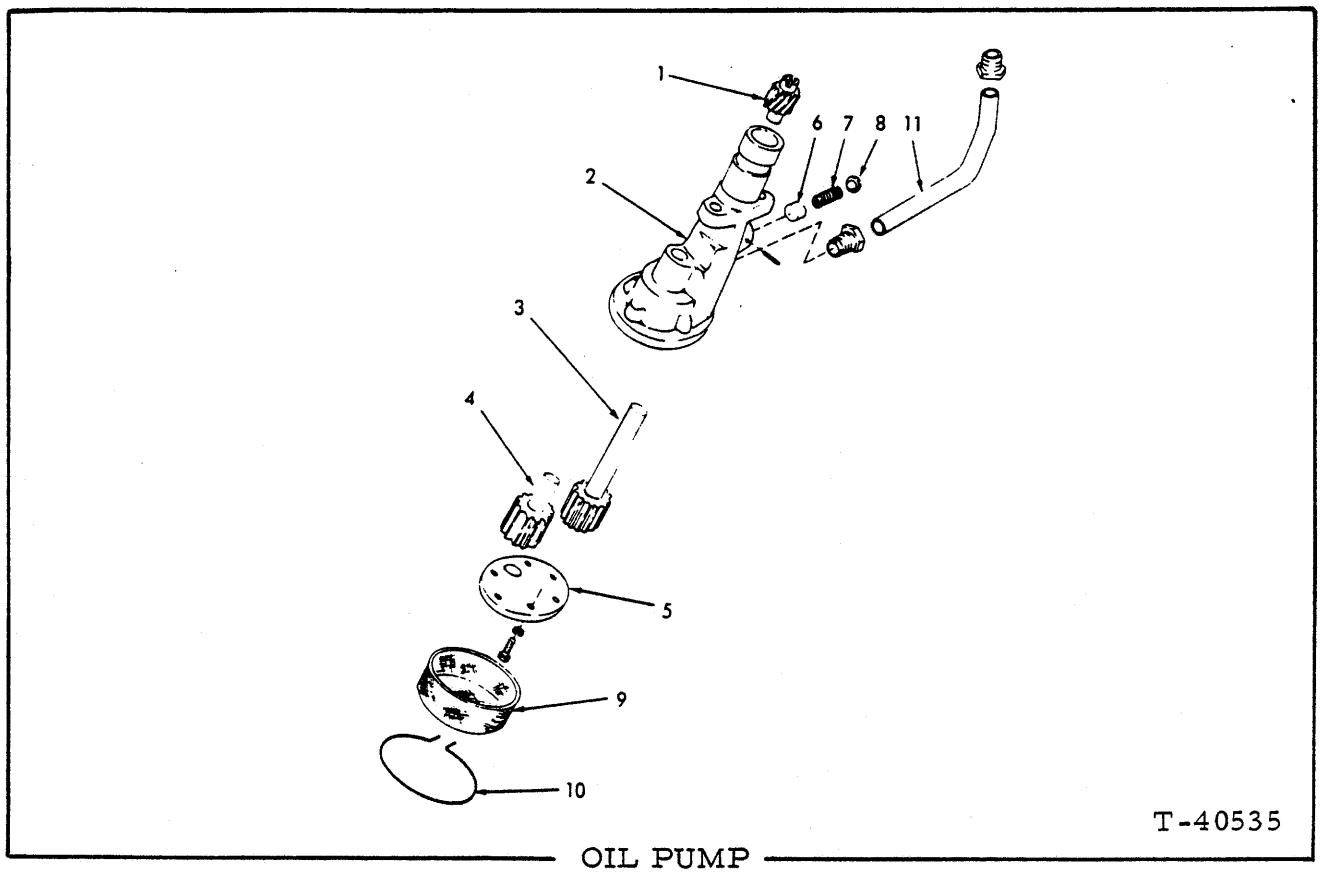

OIL PUMP

USAGE: Diesel-powered, effective Serial No. 24A22728, 56Y02201 and up

ITEM	PART NO.	QTY.	DESCRIPTION
-	74517145	1	PUMP ASSY. (Consists of items 1 thru 8)
	70914499	2	CAPSCREW, 3/8"NC x 1-5/8"
	70904206	2	LOCKWASHER, 3/8"
1	74517130	1	GEAR, drive
2	74517137	1	BODY, pump
3	74517143	1	SHAFT AND GEAR, drive
4	74517144	1	SHAFT AND GEAR, idler
5	74506926	1	COVER, pump body
	70903625	6	CAPSCREW, 1/4"NC x 3/4"
	70904204	6	LOCKWASHER, 1/4"
6	74513162	1	PISTON, pressure relief valve
7	74513163	1	SPRING, pressure relief
8	74513164	1	RETAINER, pressure relief spring
	70915711	1	PIN, spring, 3/16" x 7/8"
9	74510693	1	SCREEN, oil
10	74371122	1	WIRE, retaining, oil strainer
11	74514991	1	TUBE, oil discharge
	70918872	2	NUT, hi-duty, 5/8" tube

(Revised June 1977)

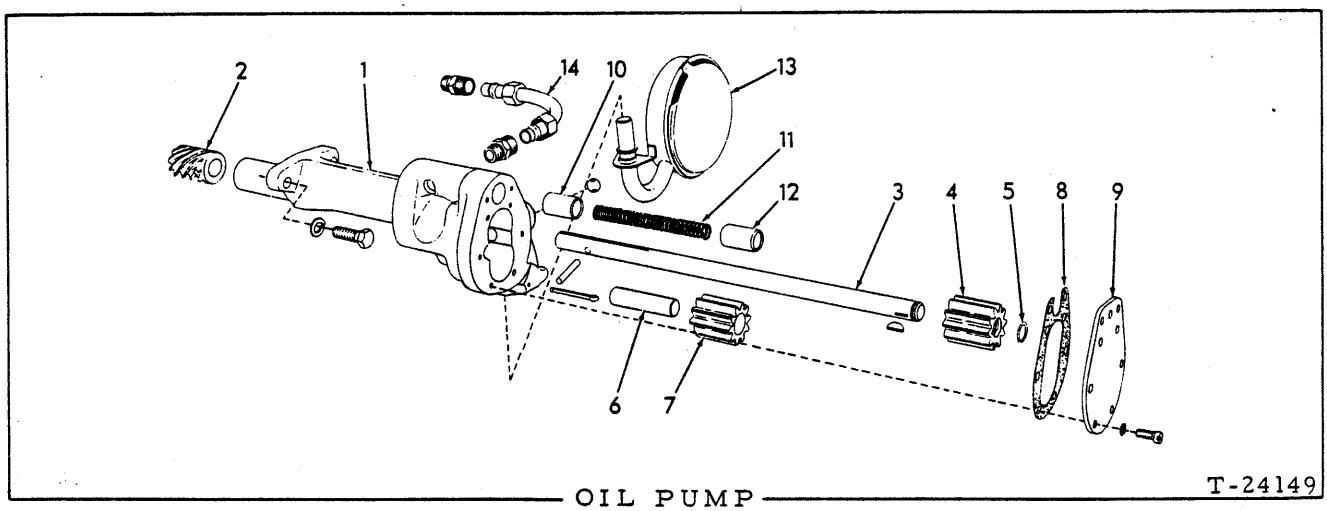

OIL PUMP

USAGE: Gas - powered, effective serial No. 75Y00201

ITEM	PART NO.	QTY.	DESCRIPTION
-	70232554	1	PUMP ASSY. (Consists of items 1 and 3 thru 12)
	70903772	2	CAPSCREW, 5/16"NC x 1"
	70904205	2	LOCKWASHER, 5/16"
1	-------	1	BODY (Not serviced separately)
	70917579	1	BALL, steel, 7/16" diam.
2	70232436	1	GEAR, pump drive (9 spiral teeth)
	70921460	1	PIN, spring, 3/16" x 15/16"
3	70226389	1	SHAFT, drive
4	70212435	1	GEAR, drive shaft
	70910173	1	KEY, #2 woodruff, 3/32" x 1/2"
5	70226388	1	RING, snap, drive shaft
6	70212442	1	PIN, idler gear
7	70212436	1	GEAR, idler
8	70232434	1	GASKET, body cover
9	70232435	1	COVER, body
	70901781	8	SCREW, machine, fil-hd., #10-32NF x 1/2"
	70904203	8	LOCKWASHER, #10
10	70232431	1	PLUNGER, pressure relief valve
11	70232433	1	SPRING, relief valve
12	70232432	1	SLEEVE, spring retaining
13	70229541	1	SCREEN, oil
	70900807	1	PIN, cotter, 1/8" x 1-1/4"
14	70230806	1	TUBE, discharge
	70915263	2	CONNECTOR, compression, 7/16" tube, 1/4"NPT male (Includes NUT and SLEEVE listed below)
	70912844	2	NUT, compression fitting, 7/16" tube
	70911436	2	SLEEVE, compression fitting, 7/16" tube

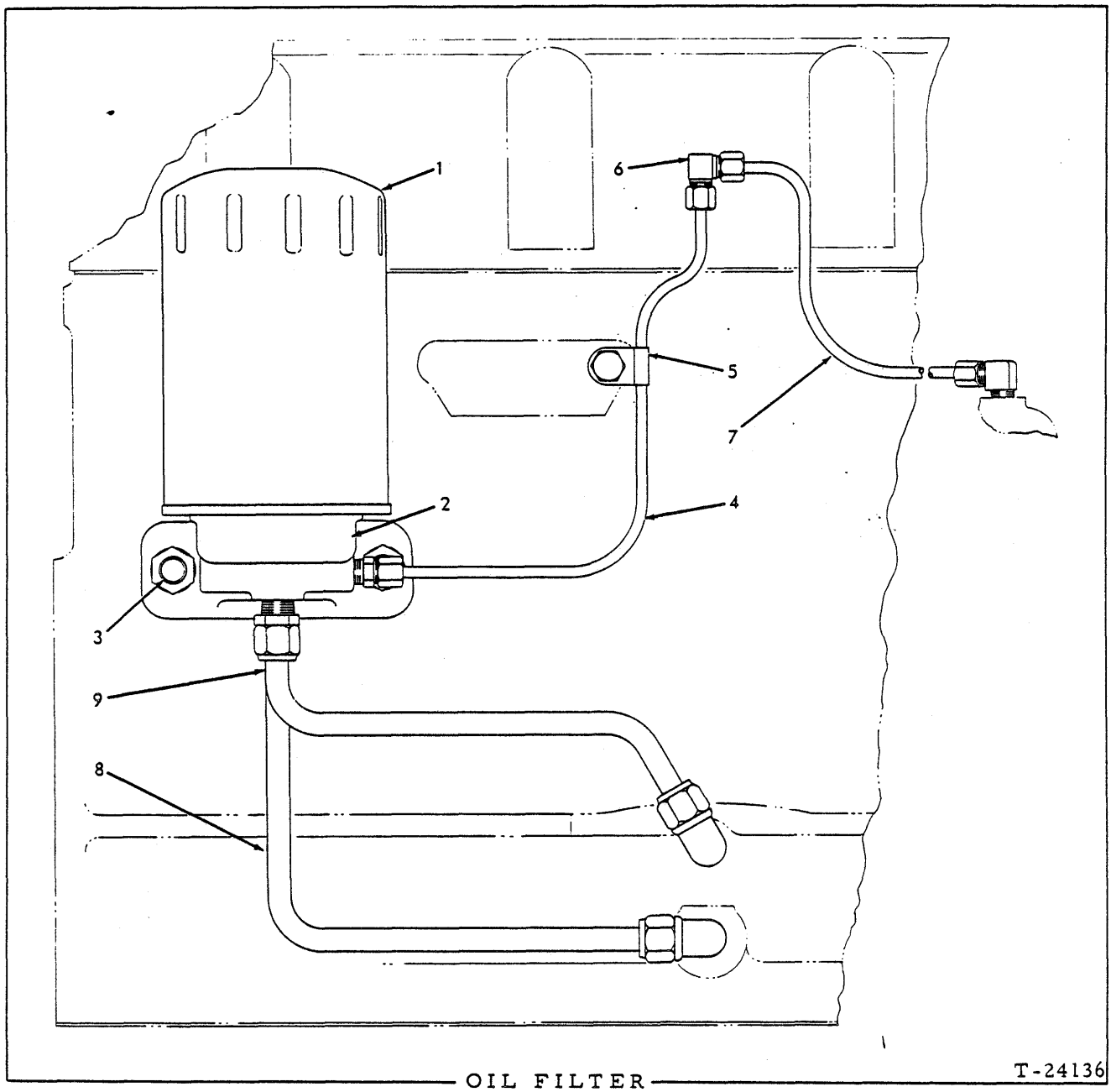

OIL FILTER

USAGE: Gas - powered, effective serial No. 75Y00201

ITEM	PART NO.	QTY.	DESCRIPTION
1	70237000	1	FILTER ASSY., oil (Includes instruction transfer)
2	70232426	1	BASE, oil filter
3	70229474	2	STUD, base to block
	70904207	2	LOCKWASHER, 7/16"
	70912201	2	NUT, 7/16"NC
4	70232424	1	TUBE, oil, filter to head
	70910126	1	CONNECTOR, compression, 3/16" tube, 1/8"NPT male (Includes NUT and SLEEVE listed below)
	70912064	1	NUT, compression fitting, 3/16" tube
	70912367	1	SLEEVE, compression fitting, 3/16" tube

(Continued)

OIL FILTER (Continued)

ITEM	PART NO.	QTY.	DESCRIPTION
5	70232422	1	CLIP, oil tube supporting
6	70231585	1	TEE, oil tube (Includes NUTS and SLEEVES indented below)
	70912064	2	NUT, compression fitting, 3/16" tube
	70912367	2	SLEEVE, compression fitting, 3/16" tube
7	70229402	1	TUBE, oil, cylinder head to governor
	70910129	1	ELBOW, compression, 3/16" tube, 1/8"NPT male (Includes NUT and SLEEVE listed below)
	70912064	1	NUT, compression fitting, 3/16" tube
	70912367	1	SLEEVE, compression fitting, 3/16" tube
8	70232425	1	TUBE, oil, filter supply
	70917948	1	CONNECTOR, compression, 3/8" tube, 1/4"NPT male (Includes NUT and SLEEVE listed below)
	70917817	1	ELBOW, compression, 3/8" tube, 1/4"NPT male (Includes NUT and SLEEVE listed below)
	70917810	2	NUT, compression fitting, 3/8" tube
	70917807	2	SLEEVE, compression fitting, 3/8" tube
9	70232423	1	TUBE, oil return, filter to block
	70917948	1	CONNECTOR, compression, 3/8" tube, 1/4"NPT male (Includes NUT and SLEEVE listed below)
	70917817	1	ELBOW, compression, 3/8" tube, 1/4"NPT male (Includes NUT and SLEEVE listed below)
	70917810	2	NUT, compression fitting, 3/8" tube
	70917807	2	SLEEVE, compression fitting, 3/8" tube

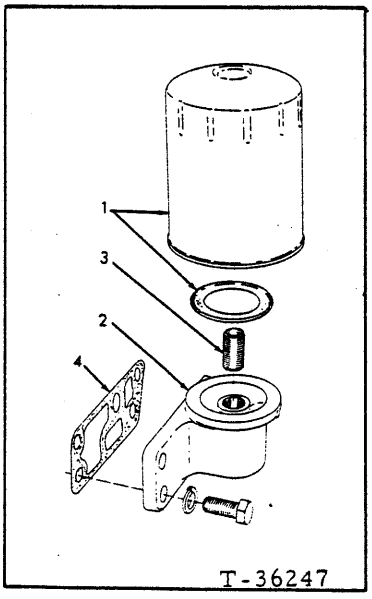

OIL FILTER

USAGE: Diesel-powered, effective Serial No. 24A00201, 56Y02201

ITEM	PART NO.	QTY.	DESCRIPTION
1	74027979	1	FILTER ASSY. (Includes gasket)
2	74513273	1	BASE, filter
	70916311	4	CAPSCREW, 1/2"NC x 1-1/4"
	70904208	4	LOCKWASHER, 1/2"
3	74513414	1	NIPPLE, filter base
4	74511964	1	GASKET, filter base

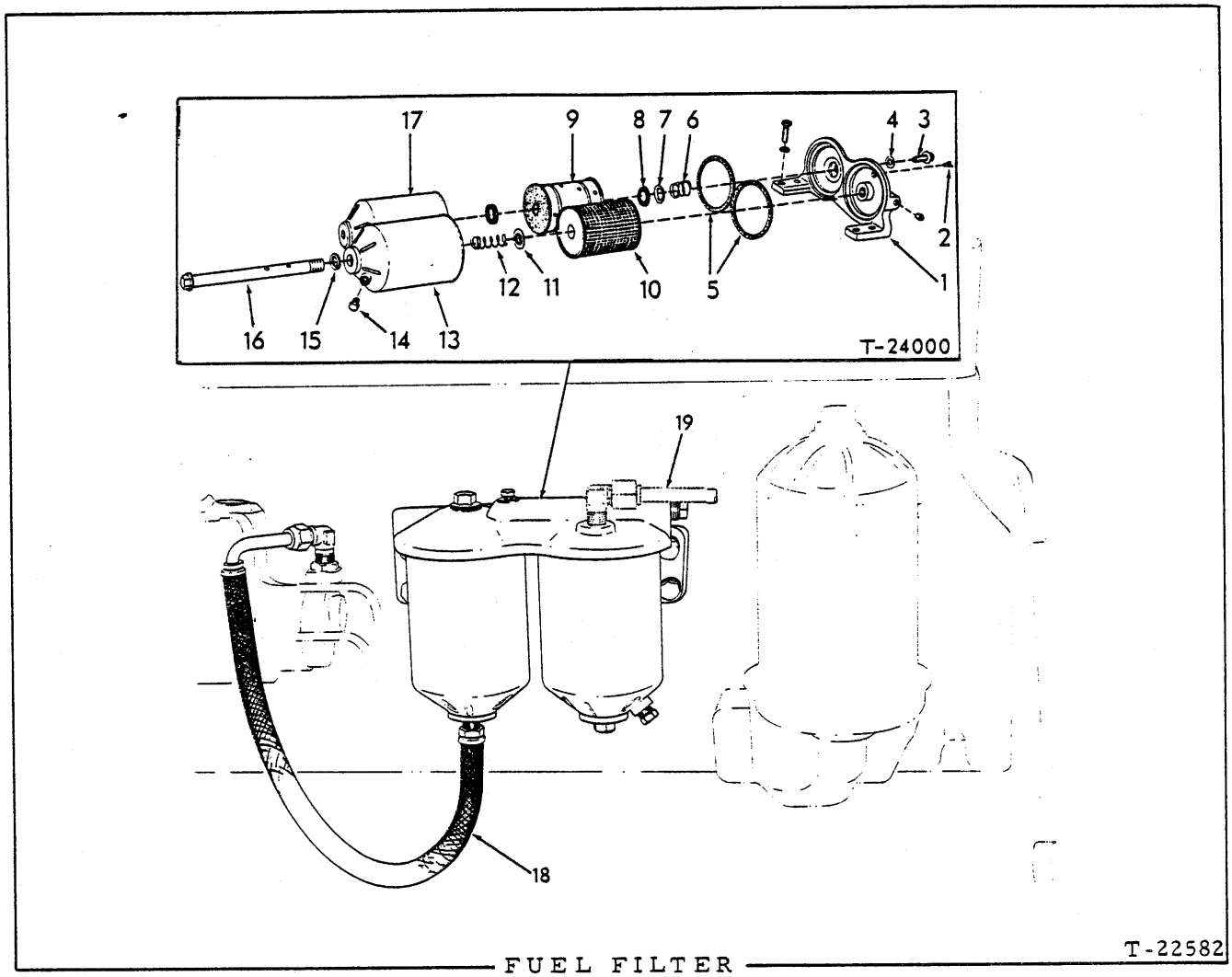

FUEL FILTER

USAGE: Diesel-powered, effective Serial No. 24A00201, 56Y02201

ITEM	PART NO.	QTY.	DESCRIPTION
1	74512787	1	HEAD, fuel filter
	70919840	1	PLUG, pipe, hex-hd., 1/4"NPT
	70916272	4	CAPSCREW, 3/8"NC x 1-1/4"
	70904206	4	LOCKWASHER, 3/8"
2	70919134	1	PLUG, venting (1/8"NPT)
3	74506163	1	CAPSCREW, body retaining, second stage filter
4	74506164	1	GASKET, body retaining capscrew
5	74048787	2	GASKET, filter body
6	74048793	1	SPRING, second stage filter
7	74048794	1	RETAINER, second stage filter spring

(Continued)

(Revised June 1977)

FUEL FILTER (Continued)

ITEM	PART NO.	QTY.	DESCRIPTION
8	74041209	2	GASKET, second stage filter cartridge
9	74048796	1	CARTRIDGE, second stage filter (Includes items 5 and 8)
10	74048789	1	CARTRIDGE, first stage filter (Includes item 5)
11	74506918	1	WASHER, cartridge spring, first stage filter
12	74048790	1	SPRING, first stage filter cartridge
13	74048788	1	BODY, first stage filter
14	70917426	1	PLUG, drain, first stage filter
15	74048791	1	GASKET, retaining bolt
16	74048792	1	BOLT, retaining, first stage filter body
17	74048797	1	BODY, second stage filter
18	74511514	1	HOSE ASSY., filter to pump
	70919135	1	ELBOW, flare type, 90°, 3/8" tube, 1/4"NPT male
19	-------	1	TUBE ASSY., tank to filter (See FUEL TANK AND LINES)

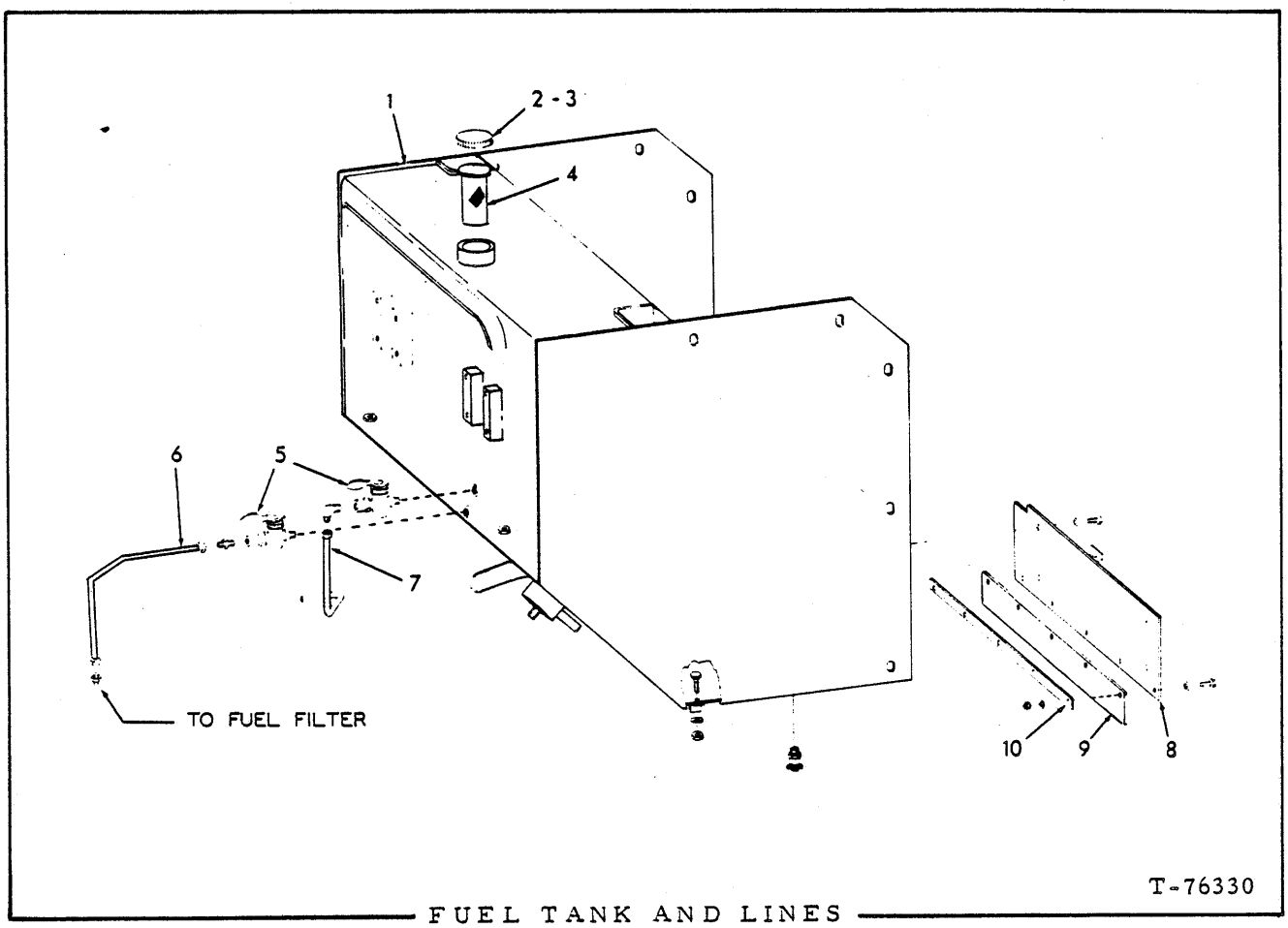

FUEL TANK AND LINES

USAGE: Diesel-powered, effective Serial No. 24A00201, 56Y02201

ITEM	PART NO.	QTY.	DESCRIPTION
1	70693237	1	SEAT AND TANK (Also see Hydraulic tank)
	70920584	4	CAPSCREW, 1/2"NC x 1-5/8"
	70928460	4	WASHER, plain
	70928188	8	WASHER, plain (Use as required)
	70911028	4	NUT, 1/2"NC
	70918769	1	COCK, drain, 3/8"NPT
2	70206622	1	CAP ASSY., fuel tank (Includes item 3)
3	70208065	1	GASKET, cap
4	70651081	1	STRAINER, fuel
5	70099433	2	COCK, fuel shut-off (1/4"NPT male and female)
6	70674308	1	TUBE ASSY., fuel supply (Includes nuts and sleeves)
	70919062	2	CONNECTOR, flare type, 3/8" tube, 1/4"NPT male
7	70674307	1	TUBE ASSY., fuel return (Includes nut and sleeve)
	70919546	1	ELBOW, flare type, 1/4" tube, 1/4"NPT male
8	70675607	1	COVER, front closure
	70922925	4	CAPSCREW, 5/16"NC x 3/4"
	70910335	4	WASHER, plain

(Continued)

FUEL TANK AND LINES (Continued)

ITEM	PART NO.	QTY.	DESCRIPTION
9	77109555	1	STRIP, sealing. front closure (rubber)
	70921566	5	CAPSCREW, 5/16"NC x 1"
	70910335	10	WASHER. plain SAE std., 5/16"
	70911025	5	NUT, 5/16"NC
10	77109554	1	STRIP, re-enforcing, sealing strip (steel)

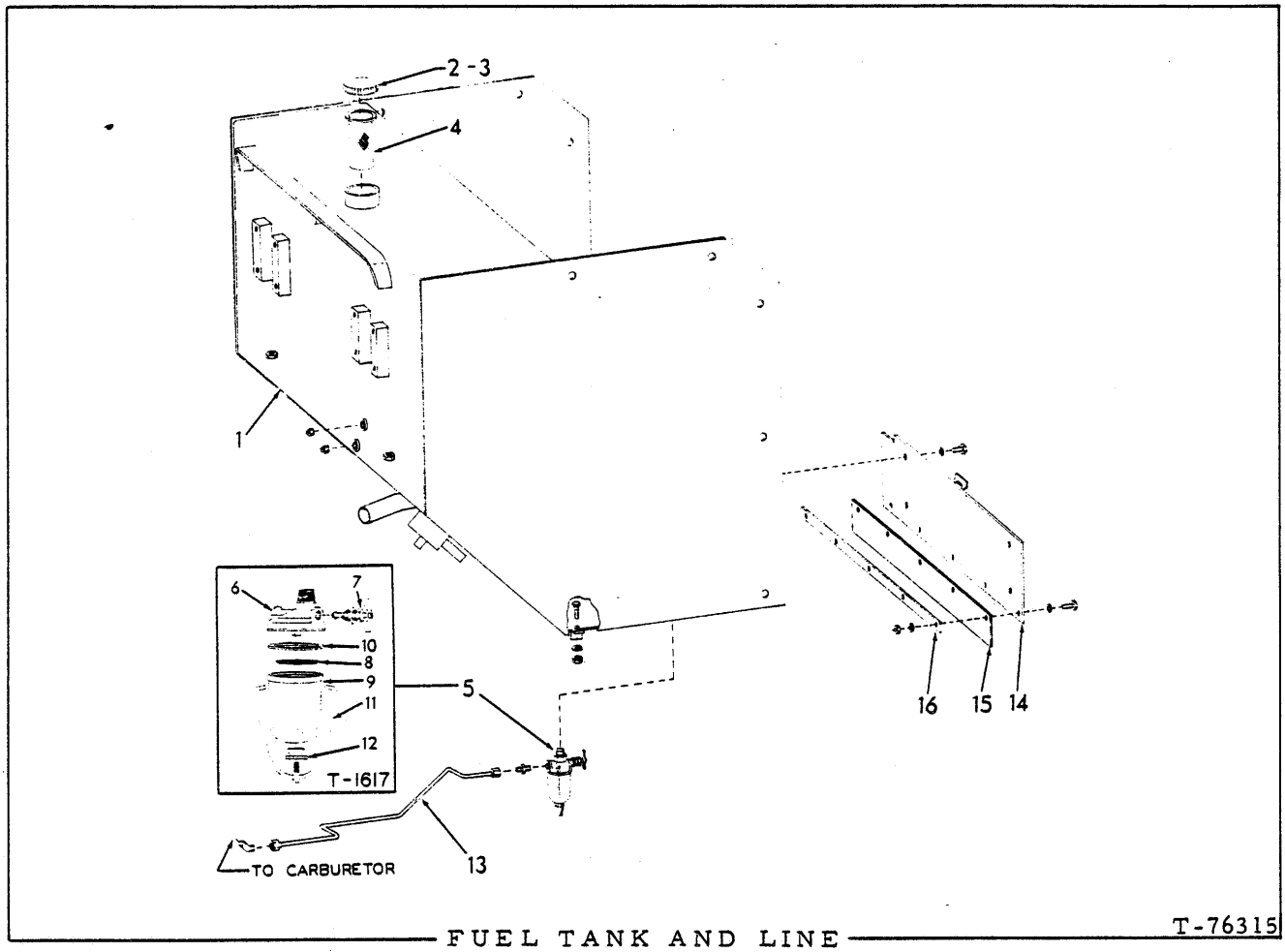

FUEL TANK AND LINE

USAGE: Gas - powered, effective serial No. 75Y00201

ITEM	PART NO.	QTY.	DESCRIPTION
1	70674950	1	SEAT AND TANK
	70920582	4	CAPSCREW, 1/2"NC x 1-1/4"
	70910244	6	WASHER, plain, SAE std., 1/2"
	70911028	4	NUT, 1/2"NC
	70901652	2	PLUG, pipe, 1/8"NPT
2	70206622	1	CAP ASSY., fuel tank (Includes item 3)
3	70208065	1	GASKET, cap
4	70651081	1	STRAINER, fuel
5	70237946	1	FILTER ASSY., fuel (Includes items 6 thru 12)
6	-------	1	HEAD (Not serviced separately)
7	70223255	1	VALVE ASSY., shut-off (Serviced only as a unit)
8	70208325	1	SCREEN, sediment
9	70237947	1	BOWL, glass (standard)
	70217264	1	BOWL, metal (special)

(Continued)

FUEL TANK AND LINE (Continued)

ITEM	PART NO.	QTY.	DESCRIPTION
10	70208137	1	GASKET, sediment bowl
11	70223248	1	BAIL ASSY. (Includes item 12)
12	70044925	1	CUP ASSY. (Includes nut)
13	70673634	1	TUBE ASSY., filter to carburetor (Includes nuts)
	70919767	1	ELBOW, flare type, 5/16" tube, 1/8"NPT
	70919766	1	CONNECTOR, flare type, 5/16" tube, 1/8"NPT male
14	70675607	1	COVER, front closure
	70922925	4	CAPSCREW, 5/16"NC x 3/4"
	70910335	4	WASHER, plain, SAE std., 5/16 "
15	77109555	1	STRIP, sealing, front closure (rubber)
	70921566	5	CAPSCREW, 5/16"NC x 1"
	70910335	10	WASHER, plain, SAE std., 5/16"
	70911025	5	NUT, 5/16"NC
16	77109554	1	STRIP, re-enforcing, sealing strip (steel)

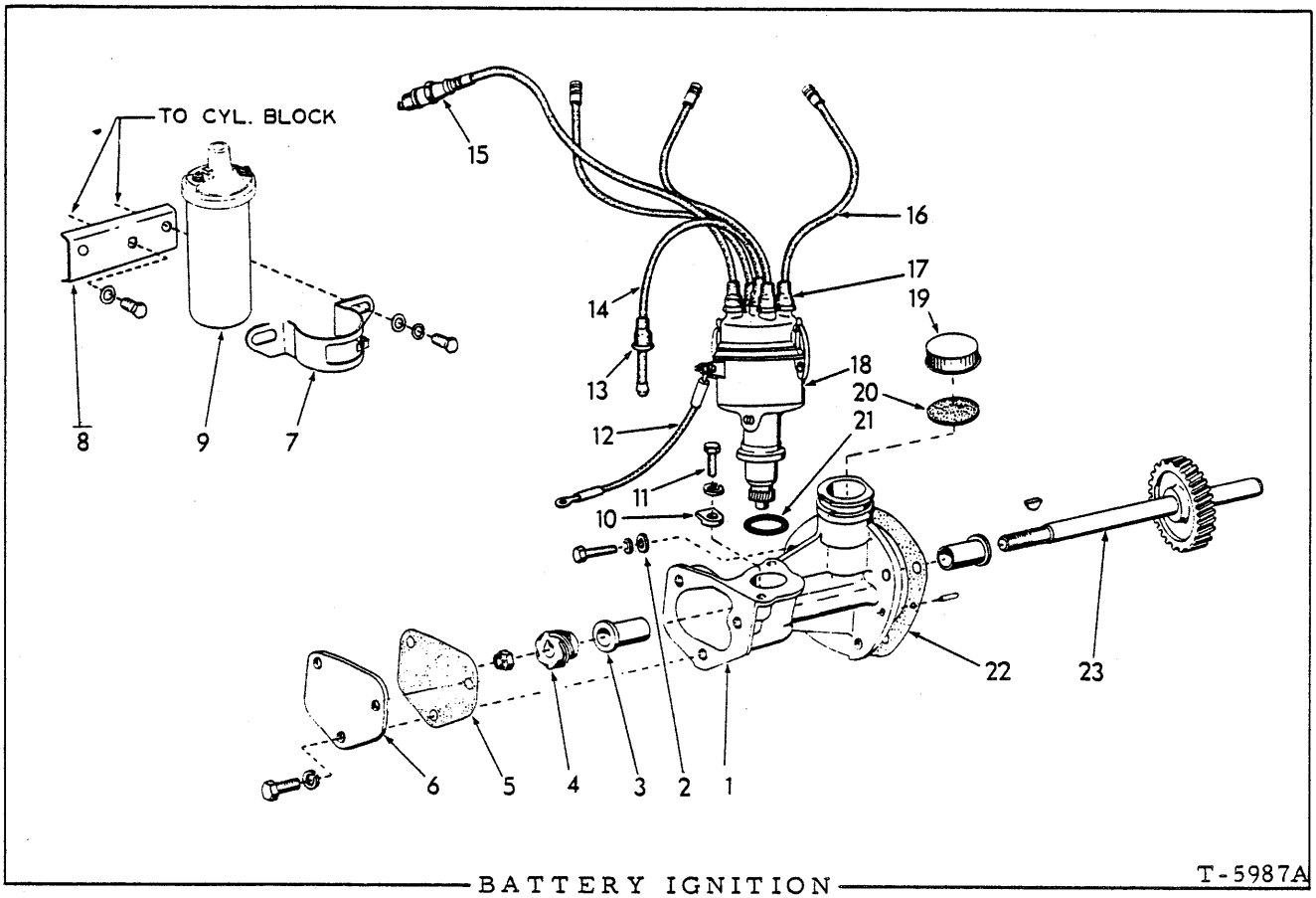

BATTERY IGNITION T-5987A

USAGE: Gas - powered, effective serial No. 75Y00201

ITEM	PART NO.	QTY.	DESCRIPTION
1	70226100	1	HOUSING ASSY., distributor drive (Includes item 3)
	70910146	1	PIN, straight, round end, 1/4" x 3/4"
	70903630	1	CAPSCREW, 3/8"NC x 1"
	70904206	1	LOCKWASHER, 3/8"
2	70225771	1	WASHER, plain
3	70226236	2	BUSHING, drive housing
4	70225078	1	GEAR, distributor drive
	70910173	1	KEY, #2 woodruff, 3/32" x 1/2"
	70915652	1	NUT, self-locking, 7/16"NF
5	70226117	1	□ GASKET, distributor housing cover
6	70226116	1	COVER, distributor housing
	70903626	3	CAPSCREW, 5/16"NC x 3/4"
	70904205	3	LOCKWASHER, 5/16"
7	70225606	1	CLAMP ASSY., ignition coil (Includes screw and nut. Serviced only as a unit)
	70905661	2	CAPSCREW, 5/16"NC x 5/8"
	70904205	2	LOCKWASHER, 5/16"
	70910335	2	WASHER, plain, SAE std., 5/16"
8	70229517	1	BRACKET, coil mounting
	70903629	1	CAPSCREW, 3/8"NC x 3/4"
	70911115	1	WASHER, plain, SAE std., 3/8"

(Continued)

BATTERY IGNITION (Continued)

ITEM	PART NO.	QTY.	DESCRIPTION
9	74515665	1	COIL ASSY., ignition (Includes item 7)
10	70225344	2	CLAMP, distributor retaining
11	70226683	2	CAPSCREW, retaining clamp (Includes lockwasher)
12	70228131	1	CABLE, primary, distributor to coil
13	70225073	1	NIPPLE, coil cable
14	-------	1	CABLE, secondary, coil to distributor (Order item 24)
15	70232560	4	PLUG, spark (3/4" reach)(A-C)
	70232977	4	PLUG, spark (3/4" reach)(Champion)
16	-------	2	CABLE, spark plug (9" long) } Order item 24
	-------	1	CABLE, spark plug (13" long) } Order item 24
	-------	1	CABLE, spark plug (17-1/2" long) } Order item 24
17	70225484	5	NIPPLE, distributor cable
18	-------	1	DISTRIBUTOR ASSY. (See page 51)
19	70226376	1	CAP, oil filler (Includes item 20)
20	70226374	1	GASKET, oil filler cap
21	70233211	1	□GASKET, distributor base
22	70233217	1	□GASKET, distributor drive housing
23	-------	1	SHAFT ASSY., drive (See GOVERNOR)
24	70229867	1	CABLE SET (Includes items 13, 14, 16 and 17)(Not illustrated)

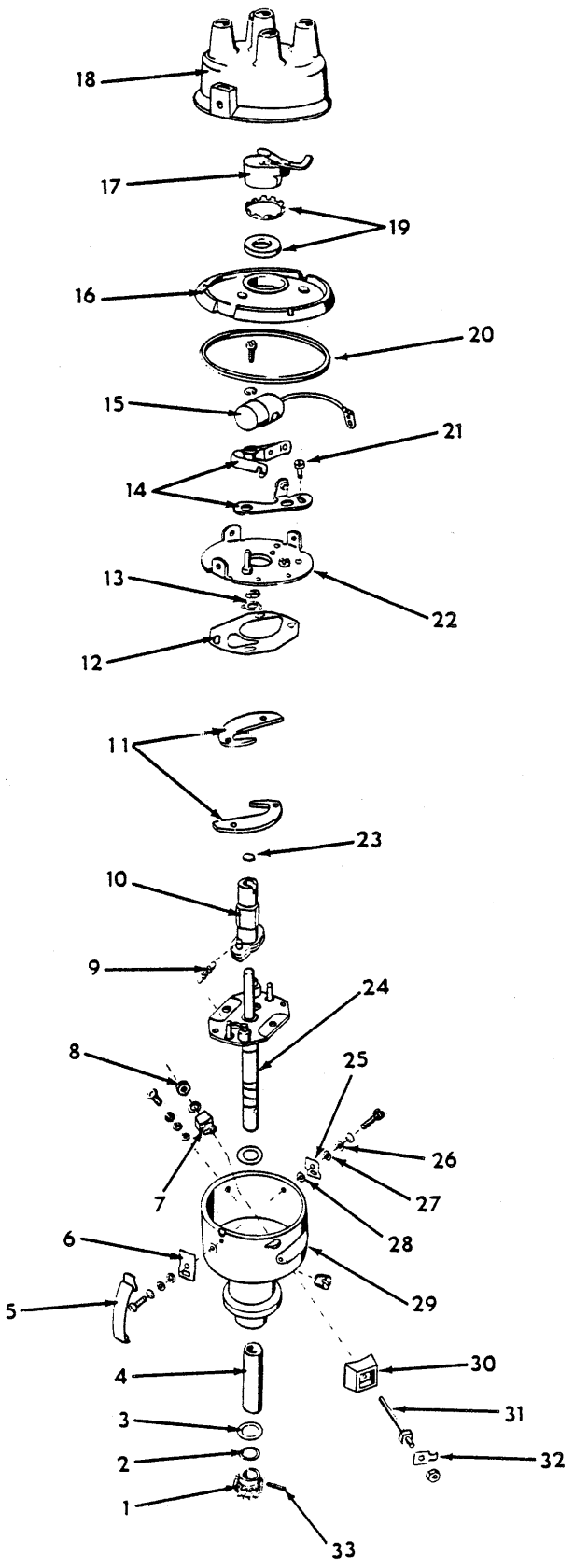

T-3489

DISTRIBUTOR

DISTRIBUTOR

USAGE: Gas - powered, effective serial No. 75Y00201. See page 48

ITEM	PART NO.	QTY.	DESCRIPTION
-	70231769	1	DISTRIBUTOR ASSY. (Includes items 1 thru 33)
1	70226019	1	GEAR (12 teeth)
2	70225797	1	SHIM, driven gear (.005" thick. Use as req'd.)
3	70250977	2	WASHER, thrust
4	70225773	1	BUSHING
5	70225774	2	CLIP, cap retaining
6	70225775	1	SUPPORT, cap retaining clip, long
7	70225793	1	INSULATOR, primary terminal stud, inside
8	70917385	1	NUT, primary terminal stud, inside
	70906964	1	LOCKWASHER, #8
9	70232829	2	SPRING, advance weight
10	70232827	1	CAM ASSY., circuit breaker (Serviced only as a unit)
11	70232828	2	WEIGHT, timing advance
12	70225789	1	PLATE, weight retaining
	70910251	2	NUT, #10-32NF
13	70922711	2	WASHER, weight retaining plate nut
14	70225785	1	POINT SET, breaker (Serviced only as a unit)
15	70225739	1	CONDENSER
	70915966	1	SCREW, machine, #8NC x 3/16"
	70906964	1	LOCKWASHER, #8
16	70225734	1	COVER ASSY., circuit breaker (Includes items 19 and 20)
17	70225736	1	ROTOR
18	70225733	1	CAP ASSY. (Includes center contact button)
19	70225781	1	SEAL KIT, camshaft (1 seal and 1 retainer)
20	70225735	1	GASKET, distributor cap
21	74050086	1	SCREW, distributor point locking
22	70225778	1	PLATE ASSY., breaker point (Serviced only as a unit)
	70912731	1	SCREW, machine, #8NC x 5/16"
	70900553	2	SCREW, machine, #8NC x 1/2"
	70912739	3	LOCKWASHER, #8
23	70225784	1	WICK, camshaft oiling

(Continued)

DISTRIBUTOR (Continued)

ITEM	PART NO.	QTY.	DESCRIPTION
24	70232826	1	SHAFT ASSY. (Serviced only as a unit)
25	70225776	1	SUPPORT, cap retaining clip, short
26	70225780	3	RETAINER, breaker point plate screw gasket
27	70225779	3	GASKET, breaker point plate screw
28	70225777	2	GASKET, cap retaining clip support
29	70225772	1	HOUSING ASSY. (Includes item 4 and PLUG indented below)
30	70225794	1	INSULATOR, primary terminal stud, outside
31	70225791	1	STUD, primary terminal
	70907154	1	NUT, #8NC
32	70225795	1	LOCK, primary terminal outside nut
33	70225798	1	PIN, driven gear

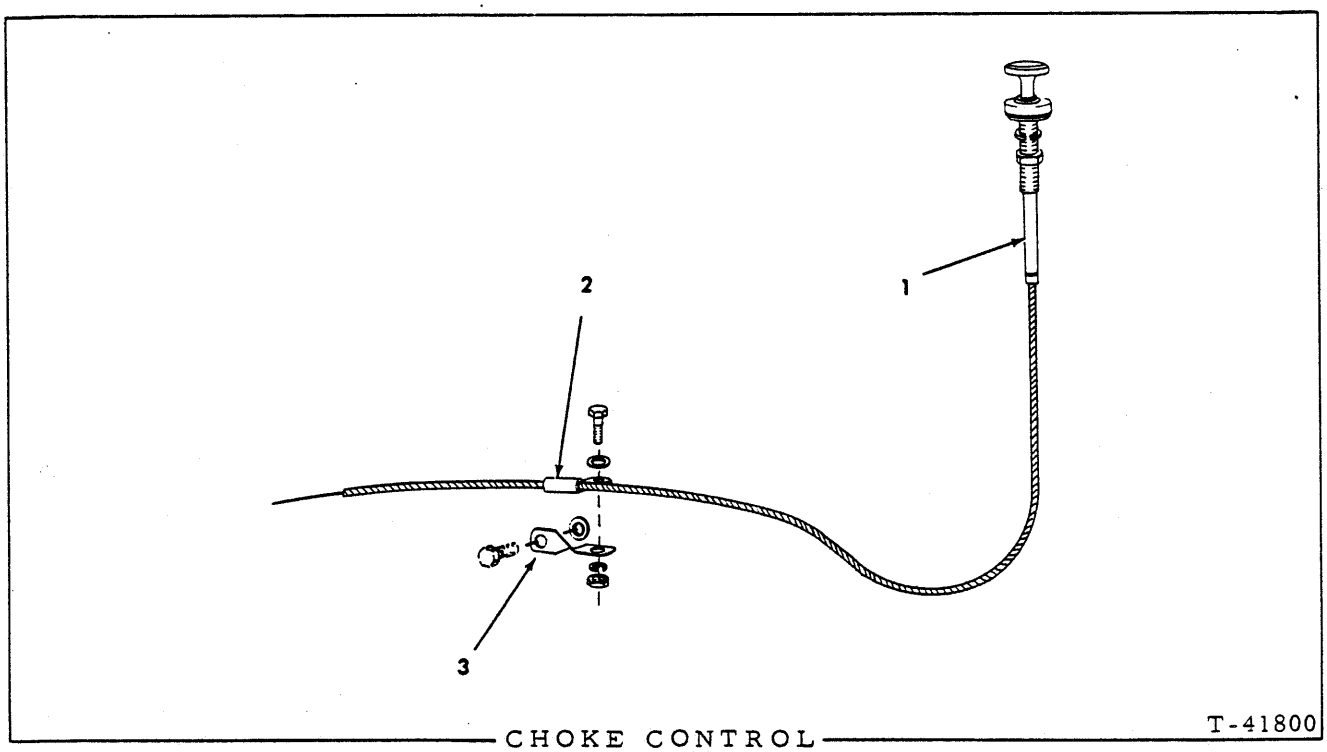

T-41800

CHOKE CONTROL

USAGE: Gas - powered, effective serial No. 75Y00201

ITEM	PART NO.	QTY.	DESCRIPTION
1	70641329	1	CONTROL, flexible cable
	70911041	1	NUT, 3/8"NF
	70910287	1	LOCKWASHER, 3/8"
2	70200479	1	CLIP, cable supporting
	70922262	1	CAPSCREW, 3/8"NC x 3/4"
	70911115	1	WASHER, plain
	70910287	1	LOCKWASHER, 3/8"
	70911026	1	NUT, 3/8"NC
3	70083530	1	BRACKET, cable supporting
	70912476	1	WASHER, spacing

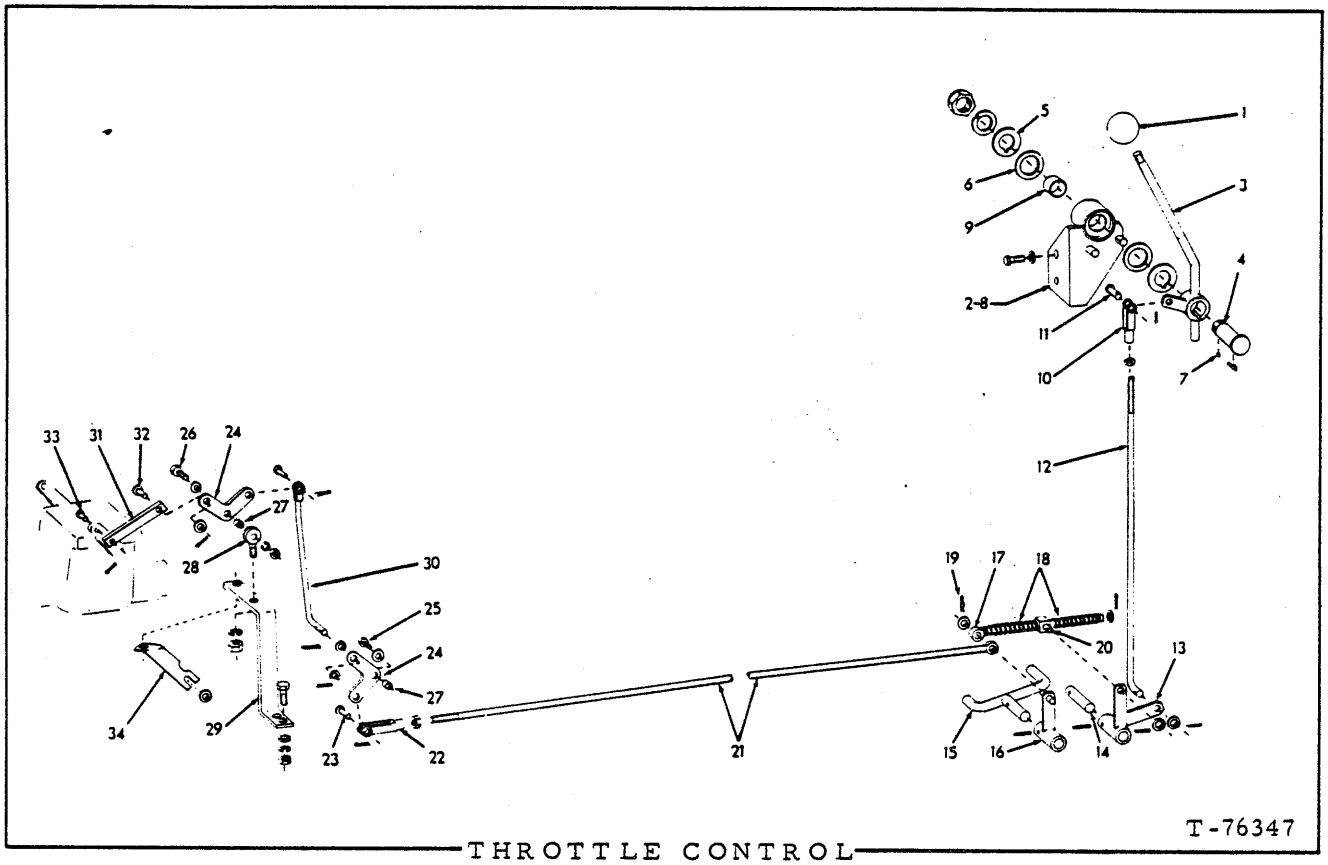

THROTTLE CONTROL

THROTTLE CONTROL

USAGE: Diesel-powered, effective Serial No. 24A00201, 56Y02201

ITEM	PART NO.	QTY.	DESCRIPTION
1	70091862	1	KNOB, operating lever
2	70673708	1	FRICTION ASSY. (Includes items 3 thru 9)
	70922763	2	CAPSCREW, 3/8"NC x 1"
	70910287	2	LOCKWASHER, 3/8"
3	70673582	1	LEVER, operating
	70923280	1	KEY, hi-pro 3/16" x 3/4"
4	70655535	1	SHAFT, operating lever
	70904369	1	LOCKWASHER, 3/4"
	70914452	1	NUT, elastic stop, 3/4"NF
5	70632710	2	WASHER, friction
6	70632747	2	DISC, friction
7	70632716	1	KEY, friction washer
8	-------	1	HOUSING ASSY., friction (Order item 2)
9	70632752	1	BUSHING, friction housing
10	70628736	1	YOKE, upper rod
11	70078810	1	PIN, yoke, control rod
	70900942	1	PIN, cotter, 3/32" x 5/8"
12	77108940	1	ROD, vertical
	70910123	1	NUT, 3/8"NF
	70911115	1	WASHER, plain, SAE std., 3/8"
	70900805	1	PIN, cotter, 1/8" x 3/4"
13	70673408	1	BELLCRANK, vertical rod
	70916937	1	PIN, spring, 1/4" x 1-1/4"
14	70673472	1	SHAFT, bellcrank
15	70673473	1	PEDAL, accelerator
16	70673407	1	LEVER, pedal
	70916937	1	PIN, spring, 1/4" x 1-1/4"
17	70673527	1	ROD, horizontal
18	70630745	2	SPRING, horizontal rod
	70911115	2	WASHER, plain, SAE std., 3/8"
	70900805	1	PIN, cotter, 1/8" x 3/4"
19	70918195	1	PIN, retaining, horizontal rod
20	70673583	1	EYE, swivel, horizontal rod
	70911115	1	WASHER, plain, SAE std., 3/8"
	70900942	1	PIN, cotter, 3/32" x 5/8"
21	70674078	1	ROD, horizontal, rear
	70911048	1	NUT, jam, 3/8"NF

(Continued)

(Revised June 1977)

THROTTLE CONTROL (Continued)

ITEM	PART NO.	QTY.	DESCRIPTION
22	70621415	1	YOKE, horizontal rod, rear
23	70640190	1	PIN, yoke
	70900801	1	PIN, cotter, 3/32" x 3/4"
24	70674080	2	BELLCRANK, front control rod
25	70927338	1	CAPSCREW, 1/4"NC x 7/8"
26	70921383	1	CAPSCREW, 1/4"NC x 1-1/2"
	70911114	2	WASHER, plain, SAE std., 1/4"
	70910285	1	LOCKWASHER, 1/4"
	70911024	1	NUT, 1/4"NC
27	70681820	2	SPACER
28	70674079	1	EYE, pivot
	70910287	1	LOCKWASHER, 3/8"
	70911026	1	NUT, 3/8"NC
29	70673763	1	BRACKET, supporting
	70922763	2	CAPSCREW, 3/8"NC x 1"
	70911115	2	WASHER, plain, SAE std., 3/8"
	70910287	2	LOCKWASHER, 3/8"
	70911026	2	NUT, 3/8"NC
30	70674076	1	ROD, vertical, rear
	70917645	1	PIN, yoke, upper
	70910335	2	WASHER, plain, SAE std., 5/16"
	70900801	3	PIN, cotter, 3/32" x 3/4"
31	70673838	1	LINK
32	70917645	1	PIN, link (large)
	70910335	1	WASHER, plain, SAE std., 5/16"
	70900801	1	PIN, cotter, 3/32" x 3/4"
33	70917644	1	PIN, link (small)
	70900970	1	PIN, cotter, 1/16" x 1/2"
34	70684043	1	BRACKET, stabilizing
	70929156	1	WASHER, plain

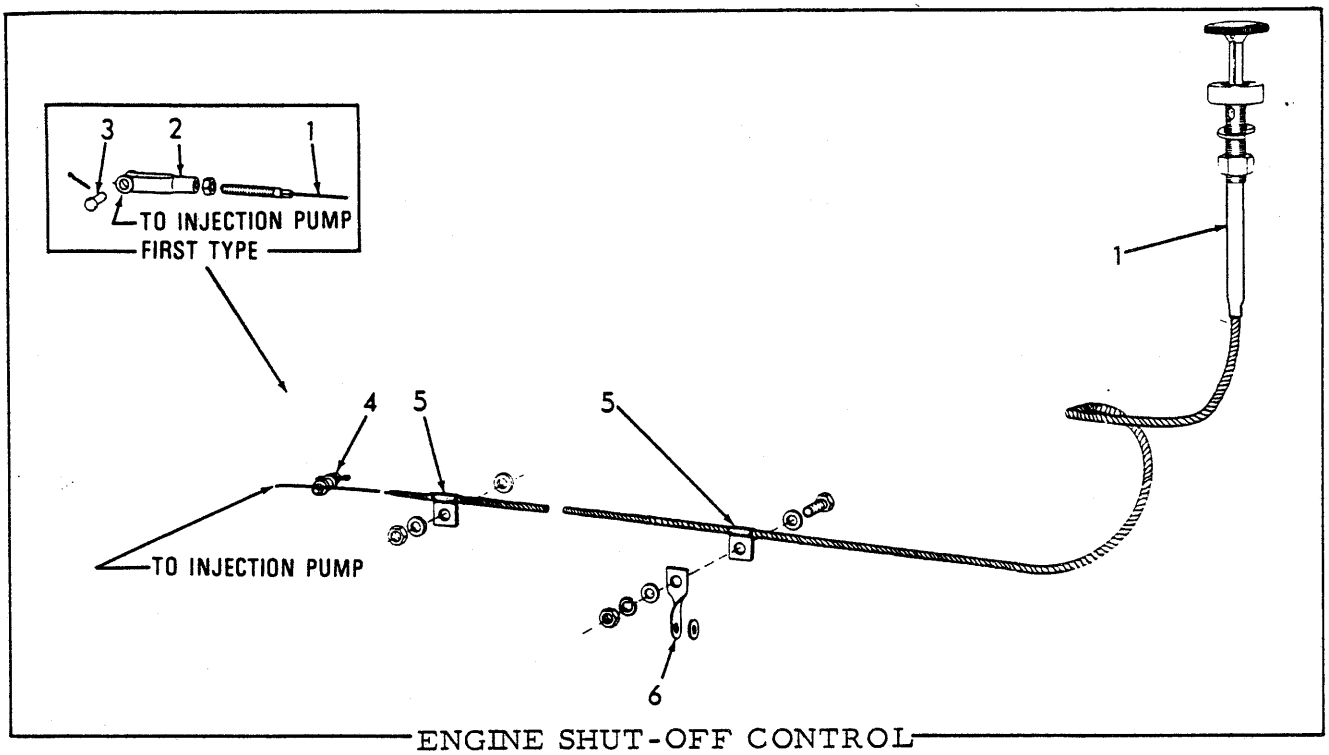

ENGINE SHUT-OFF CONTROL

USAGE: Diesel powered

* Graders prior to serial No. 24A01500
** Graders serial No. 24A01500, 56Y02201 and up

ITEM	PART NO.	QTY. *	QTY. **	DESCRIPTION
1	---------	1	-	CABLE ASSY. (Order CABLE 70694384, SWIVEL ASSY. 70694383, 2 CLIP 70640677, 2 WASHER 70928190 and 1 NUT 70910880)
	70694384	-	1	CABLE, control
	70911040	1	-	NUT, 1/4"NF (cable end)
	70911041	1	1	NUT, 3/8"NF } Control mounting
	70910287	1	1	LOCKWASHER, 3/8" } Control mounting
2	70628737	1	-	YOKE, push-pull control
3	70628738	1	-	PIN
	70900970	1	-	PIN, cotter, 1/16" x 1/2"
4	70694383	-	1	SWIVEL ASSY. (Serviced only as a unit)
5	70200479	2	-	CLIP
	70640677	-	2	CLIP
	70922262	2	1	CAPSCREW, 3/8"NC x 5/8"
	70911115	3	2	WASHER
	70910287	2	1	LOCKWASHER, 3/8"
	70900367	2	1	NUT, 3/8"NC
	70928190	-	2	WASHER
	70910880	-	1	NUT, 1/4"NC
6	70083530	1	1	BRACKET
	70912476	1	1	WASHER

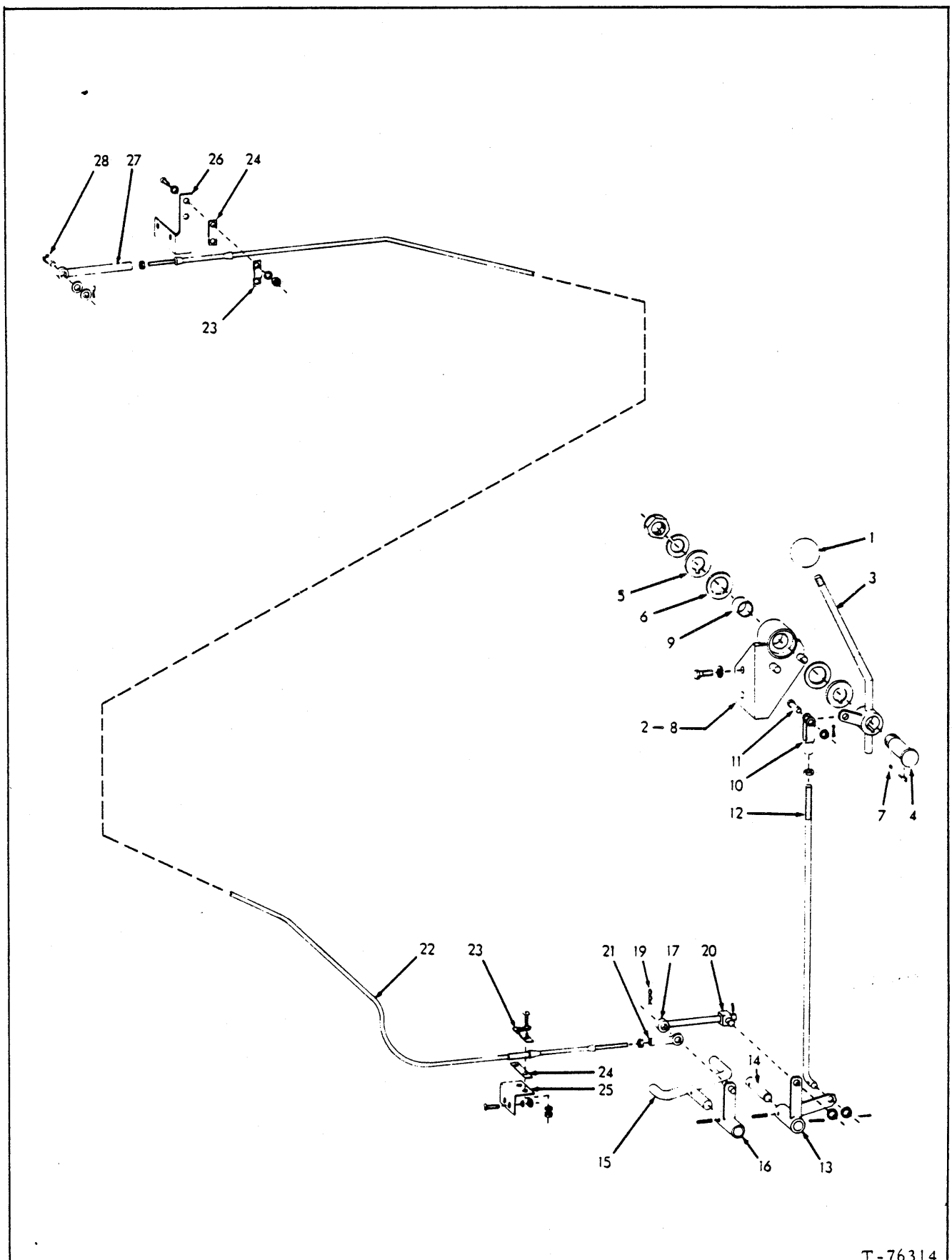

THROTTLE CONTROL

THROTTLE CONTROL

USAGE: Gas - powered, effective serial No. 75Y00201

ITEM	PART NO.	QTY.	DESCRIPTION
1	70091862	1	KNOB, operating lever
2	70673708	1	FRICTION ASSY. (Includes items 3 thru 9)
	70922763	2	CAPSCREW, 3/8"NC x 1"
	70910287	2	LOCKWASHER, 3/8"
3	70673582	1	LEVER, operating
	70923280	1	KEY, hi-pro, 3/16" x 3/4"
4	70655535	1	SHAFT, operating lever
	70904369	1	LOCKWASHER, 3/4"
	70914452	1	NUT, elastic stop, 3/4"NF
5	70632710	2	WASHER, friction
6	70632747	2	DISC, friction
7	70632716	1	KEY, friction washer
8	-------	1	HOUSING ASSY., friction (Order item 2)
9	70632752	1	BUSHING, friction housing
10	70628736	1	YOKE, upper rod
11	70078810	1	PIN, yoke, control rod
	70900942	1	PIN, cotter, 3/32" x 5/8"
12	77108940	1	ROD, vertical
	70910123	1	NUT, 3/8"NF
	70911115	1	WASHER, plain, SAE std., 3/8"
	70900805	1	PIN, cotter, 1/8" x 3/4"
13	70673408	1	BELLCRANK, vertical rod
	70916937	1	PIN, spring, 1/4" x 1-1/4"
14	70673472	1	SHAFT, bellcrank
15	70673473	1	PEDAL, accelerator
16	70673407	1	LEVER, pedal
	70916937	1	PIN, spring, 1/4" x 1-1/4"
17	70680606	1	ROD, horizontal
	70916018	1	PIN, spring, 3/32" x 5/8"
19	70918195	1	PIN, retaining, horizontal rod
20	70673583	1	EYE, swivel, horizontal rod
	70911115	1	WASHER, plain, SAE std., 3/8"
	70900942	1	PIN, cotter, 3/32" x 5/8"
21	70677178	1	END, rod, control cable (pedal end)
22	70677180	1	CABLE ASSY., control (Includes nuts)

(Continued)

THROTTLE CONTROL (Continued)

ITEM	PART NO.	QTY.	DESCRIPTION
23	70243388	2	CLAMP, cable (top)
	70901173	4	SCREW, machine, #10-NC x 5/8"
	70910243	4	WASHER, plain
	70910284	4	LOCKWASHER, #10
	70901310	4	NUT, #10-NC
24	70243387	2	CLAMP, cable (bottom)
25	70677177	1	ANGLE, cable supporting
	70901173	2	SCREW, machine, #10-NC x 5/8"
	70910284	2	LOCKWASHER, #10
	70901310	2	NUT, #10-NC
26	70677176	1	BRACKET, cable supporting
27	70677179	1	END, rod, control cable (engine end)
28	70917645	1	PIN, cable rod end
	70910335	2	WASHER, plain, SAE std., 5/16"
	70900801	1	PIN, cotter, 3/32" x 3/4"

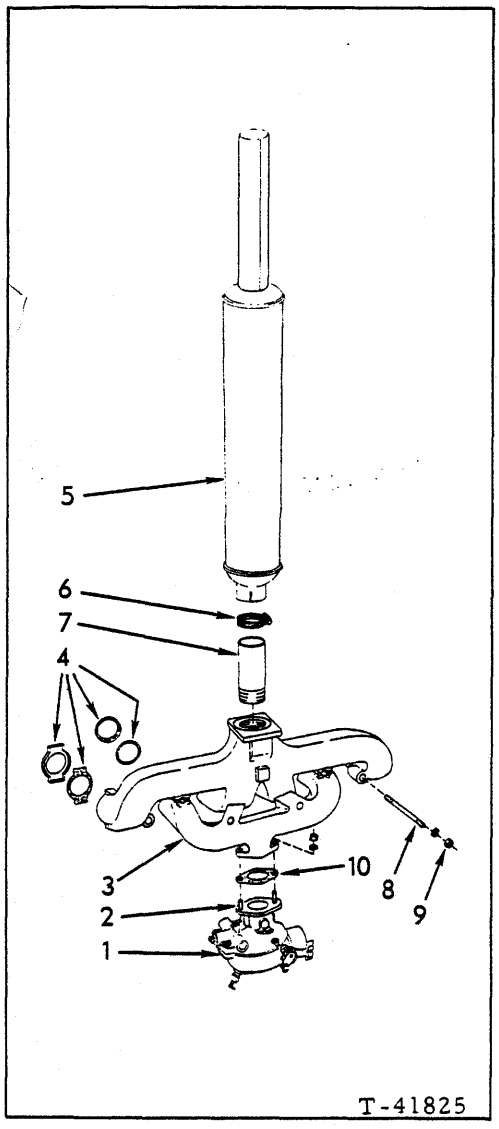

MANIFOLD AND CARBURETOR

USAGE: Gas - powered, effective serial No. 75Y00201

ITEM	PART NO.	QTY.	DESCRIPTION
1	70239961	1	CARBURETOR ASSY. (Marvel-Schebler. See page 63 for parts)
2	70230917	2	STUD, carburetor attaching
	70904205	2	LOCKWASHER, 5/16"
	70900366	2	NUT, 5/16"NC
3	70230807	1	MANIFOLD, intake and exhaust
4	70229958	1	□GASKET SET, manifold (6 gaskets and 6 retainers)
5	70234494	1	MUFFLER, exhaust (4-1/4" diam.)
6	70245444	1	CLAMP ASSY., muffler (Includes bolt and nut)
7	70234541	1	PIPE, exhaust manifold
8	70229339	6	STUD, manifold
	70911998	6	WASHER, plain
9	70229340	6	NUT, manifold stud (elastic stop, 7/16"NF)
10	70233209	1	□GASKET, carburetor to manifold

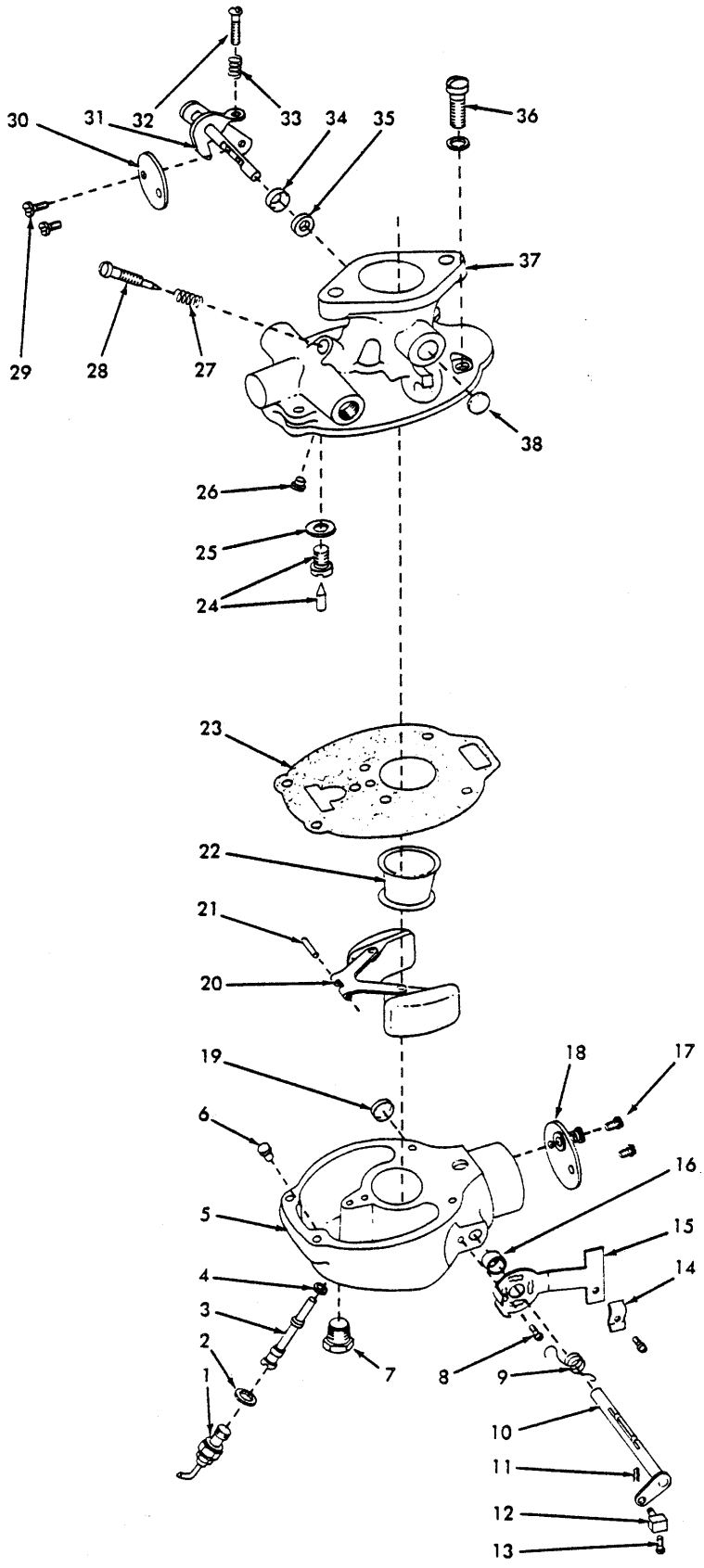

CARBURETOR ASSEMBLY 70239961

T-41824

CARBURETOR ASSEMBLY 70239961
(Marvel-Schebler)

USAGE: Gas - powered, effective serial No. 75Y00201. See page 61

ITEM	PART NO.	QTY.	DESCRIPTION
1	70226479	1	NEEDLE and SEAT ASSY., main adjustment
2	70226466	1	GASKET, seat, main adjustment
3	70226460	1	NOZZLE
4	70226468	1	GASKET, nozzle
5	-------	1	BOWL (Not serviced separately)
6	70226469	1	□JET, power
7	70224061	1	PLUG, drain
8	74046824	1	SCREW, choke bracket
9	74046828	1	SPRING, choke return
10	71119445	1	SHAFT ASSY., choke
11	70222069	1	SPRING, swivel retaining
12	70237177	1	SWIVEL, choke shaft
13	70222045	1	SCREW, choke shaft swivel
14	70237169	1	CLIP, choke bracket
	70901211	1	SCREW, machine, fil-hd., #8-32NC x 3/8"
15	70237168	1	BRACKET ASSY., choke (Includes items 8 and 14)
16	70219969	1	□PACKING, choke shaft
17	70226444	2	□SCREW, choke plate (Includes lockwasher)
18	70226453	1	PLATE ASSY., choke (Includes poppet valve, spring and retainer)
19	70219992	1	CUP, closure, choke shaft hole
20	70226456	1	FLOAT and LEVER ASSY.
21	70226457	1	□SHAFT, float lever
22	70226448	1	VENTURI
23	70226452	1	GASKET, fuel bowl
24	70226458	1	□VALVE ASSY., float (Includes seat and gasket)
25	70219998	1	GASKET, valve float
26	70220006	1	□JET, idling
27	70219978	1	SPRING, idle adjustment needle
28	70219987	1	□NEEDLE, idle adjustment

□Components of item 40

(Continued)

CARBURETOR ASSEMBLY 70239961 (Continued)

ITEM	PART NO.	QTY.	DESCRIPTION
29	74054544	2	SCREW, throttle plate (Includes lockwasher)
30	70226443	1	PLATE, throttle
31	70231437	1	□SHAFT ASSY., throttle (Includes items 32 and 33)
32	70220000	1	SCREW, stop, throttle
33	70219977	1	SPRING, throttle stop
34	70226447	1	□RETAINER, throttle shaft seal
35	70226446	1	□SEAL, throttle shaft
36	70226451	4	SCREW, bowl (Includes lockwasher)
37	-------	1	BODY (Not serviced separately)
38	70240952	1	PLUG, throttle shaft hole
39	70226470	1	□GASKET SET (Includes items 2, 4, 23 and 25; also new carburetor flange gasket)(Not illustrated)
40	70231439	1	CARBURETOR KIT (Includes items 6, 16, 17, 21, 24, 26, 28, 31, 34, 35 and 39)(Not illustrated)

□Components of item 40

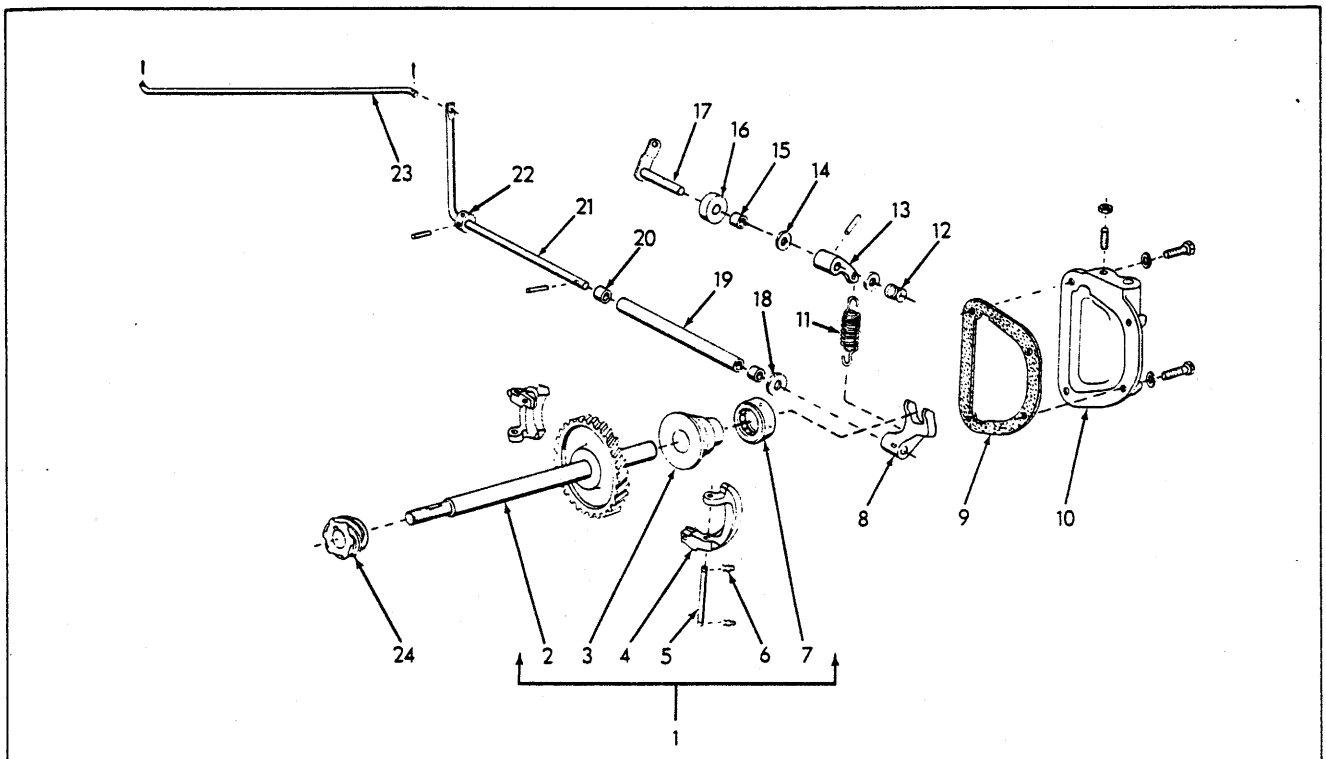

T-19616

GOVERNOR

USAGE: Gas - powered, effective serial No. 75Y00201

ITEM	PART NO.	QTY.	DESCRIPTION
1	70225077	1	GOVERNOR ASSY. (Consists of items 2 thru 7)
2	70225074	1	SHAFT ASSY. (Includes gear and pin. Serviced only as a unit)
3	70226237	1	CARRIER, thrust bearing
4	70229980	2	WEIGHT ASSY. (Includes wear pin. Serviced only as a unit)
5	70211368	2	PIN, weight pivot
6	70207719	4	CLIP, spring, weight pivot pin
7	70215242	1	BEARING, ball, weight thrust
8	70203094	1	LEVER, forked
	70901357	1	PIN, taper, #0 x 3/4"
9	70233215	1	□GASKET, governor cover
10	70229230	1	COVER, governor
	70921382	2	CAPSCREW, 1/4"NC x 1-1/4"
	70921383	2	CAPSCREW, 1/4"NC x 1-1/2"
	70230308	4	WASHER, plain (copper)
	70917099	1	SETSCREW, hex-socket, cup-pt., 5/16"NC x 1"
	70914321	1	NUT, jam, 5/16"NC
11	70229519	1	SPRING ASSY. (Includes plunger. Serviced only as a unit)
12	70208662	1	SPRING, control shaft

(Continued)

GOVERNOR (Continued)

ITEM	PART NO.	QTY.	DESCRIPTION
13	70208817	1	LEVER, control
	70901357	1	PIN, taper, #0 x 3/4"
14	70208566	2	WASHER, control shaft (steel)
15	70203097	1	BUSHING, control shaft
16	70206072	1	SEAL, oil, control shaft
17	70229231	1	SHAFT, control
18	70218445	-	WASHER, cross shaft (.018" thick. Use as required)
	70208566	-	WASHER, cross shaft (.037" thick. Use as required)
	70218444	-	WASHER, cross shaft (.1/16" thick. Use as required)
19	70203096	1	TUBE, cross shaft
20	70203097	2	BUSHING, cross shaft
21	70203095	1	SHAFT, operating
22	70203098	1	COLLAR, cross shaft
	70901357	1	PIN, taper, #0 x 3/4"
23	70237203	1	LINK, carburetor
	70900970	2	PIN, cotter, 1/16" x 1/2"
24	-------	1	GEAR, distributor drive (See BATTERY IGNITION)

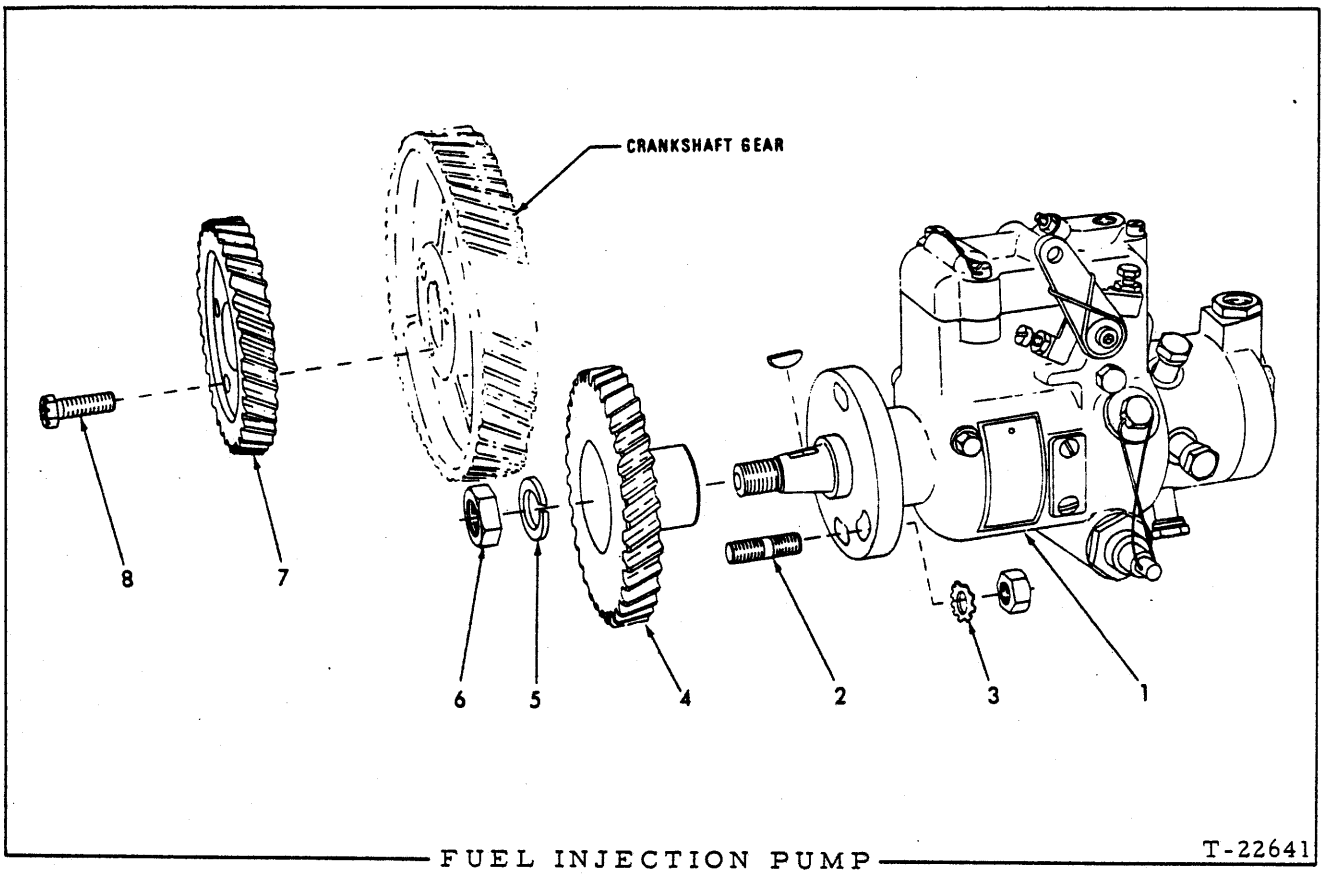

FUEL INJECTION PUMP T-22641

USAGE: Diesel-powered, effective Serial No. 24A00201, 56Y02201

ITEM	PART NO.	QTY.	DESCRIPTION
1	74516526	1	PUMP ASSY., fuel injection (Includes items 5 and 6)
2	74515490	2	STUD (3/8"NC x 3/8"NF x 1-3/16")
	70910123	2	NUT, 3/8"NF
3	74371718	2	WASHER, serrated
4	74507469	1	GEAR, fuel pump
	70910224	1	KEY, #6 woodruff, 5/32" x 5/8"
5	74048598	1	LOCKWASHER, pump shaft nut
6	74048597	1	NUT, pump shaft
7	74516087	1	GEAR, pump driving
8	74255723	3	BOLT, retaining (self-locking)

(Revised June 1977)

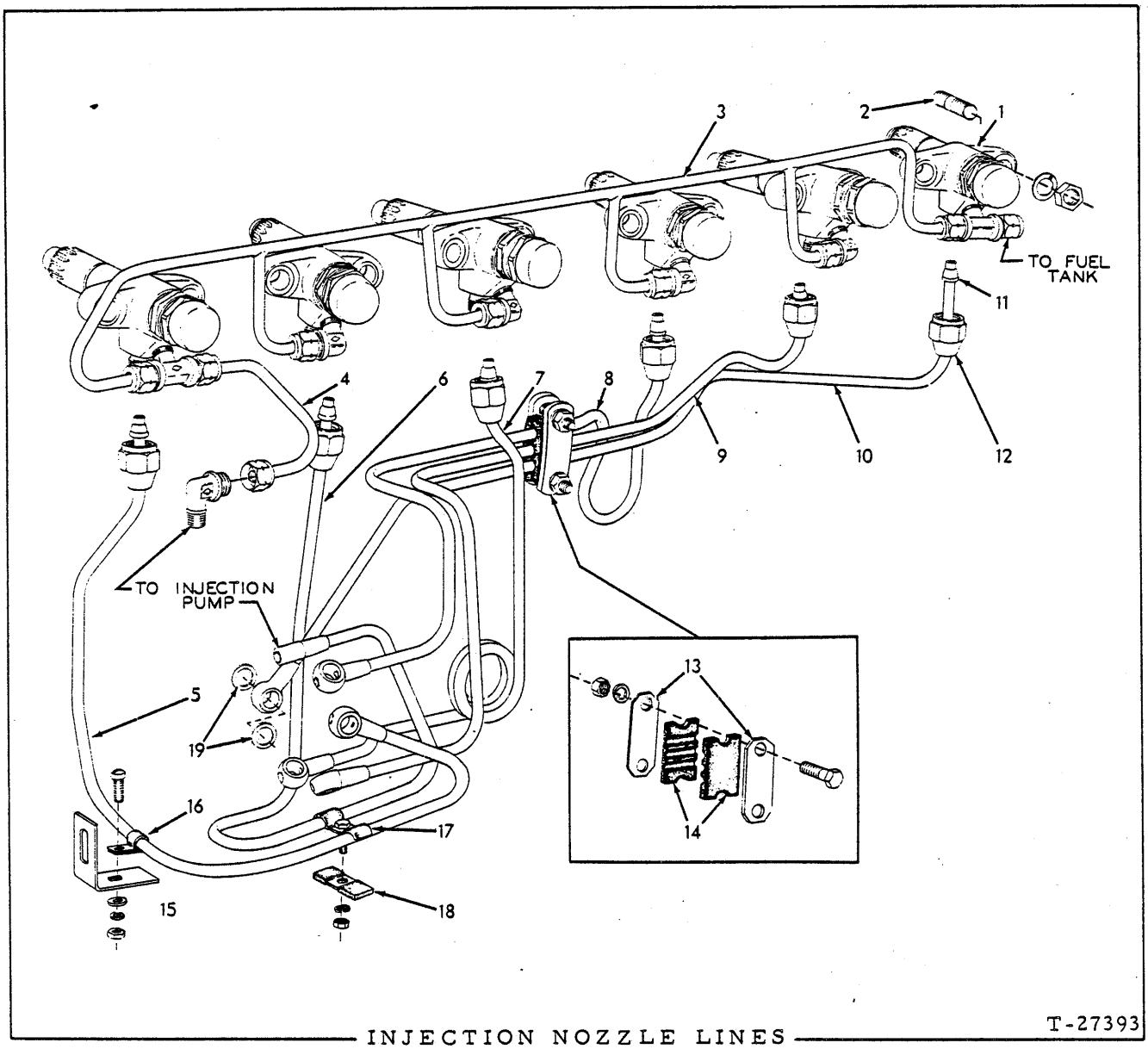

INJECTION NOZZLE LINES

USAGE: Diesel-powered, effective Serial No. 24A00201, 56Y02201

ITEM	PART NO.	QTY.	DESCRIPTION
1	-------	6	HOLDER ASSY., nozzle (See page 70)
2	74513810	12	STUD (3/8" diam.)
	70904206	12	LOCKWASHER, 3/8"
	70910123	12	NUT, 3/8"NF
3	74508951	1	MANIFOLD, fuel return
	70917809	6	NUT, Imperial, 1/4" tube
	70917806	6	SLEEVE, Imperial, 1/4" tube
	70919040	4	ELBOW, Imperial, 90°, 1/4" tube, 1/8"NPT male
	70919041	2	TEE, Imperial, 1/4" tube, 1/8"NPT male side

(Continued)

INJECTION NOZZLE LINES (Continued)

ITEM	PART NO.	QTY.	DESCRIPTION
4	74512688	1	TUBE, fuel overflow
	70917809	2	NUT, Imperial, 1/4" tube
	70917806	2	SLEEVE, Imperial, 1/4" tube
	70919040	1	ELBOW, Imperial, 90°, 1/4" tube, 1/8"NPT male
5	74514526	1	LINE, fuel, #1 cylinder
6	74515586	1	LINE, fuel, #2 cylinder
7	74514528	1	LINE, fuel, #3 cylinder
8	74514529	1	LINE, fuel #4 cylinder
9	74514530	1	LINE, fuel, #5 cylinder
10	74514531	1	LINE, fuel, #6 cylinder
11	74501149	6	SLEEVE, fuel line
12	74504409	6	NUT, fuel line
13	74507415	2	PLATE, fuel line clamping
	70918237	2	CAPSCREW, 1/4"NC x 1-1/4" (1 less used on engines #D-20577 and up)
	70910898	1	CAPSCREW, 1/4"NC x 1-3/4" (Engine #D-20577 and up)
	70904204	2	LOCKWASHER, 1/4"
	70910880	2	NUT, 1/4"NC
14	74507359	2	SPACER, fuel line (rubber)
15	74513539	1	BRACKET, supporting, #1 fuel line
16	74513538	1	CLIP, #1 fuel line
	70901216	1	SCREW, machine, fil-hd., #10-24NC x 1/2"
	70904203	1	LOCKWASHER, #10
	70901310	1	NUT, #10-24NC
	70911982	1	WASHER, plain
17	74513552	1	CLAMP, #1 and #2 fuel lines
	70903572	1	SCREW, machine, fil-hd., 5/16"NC x 5/8"
	70904205	1	LOCKWASHER, 5/16"
	70910323	1	NUT, 5/16"NC
18	74513553	1	PLATE, fuel line clamp
19	74027748	12	WASHER, fuel line

(Revised June 1977)

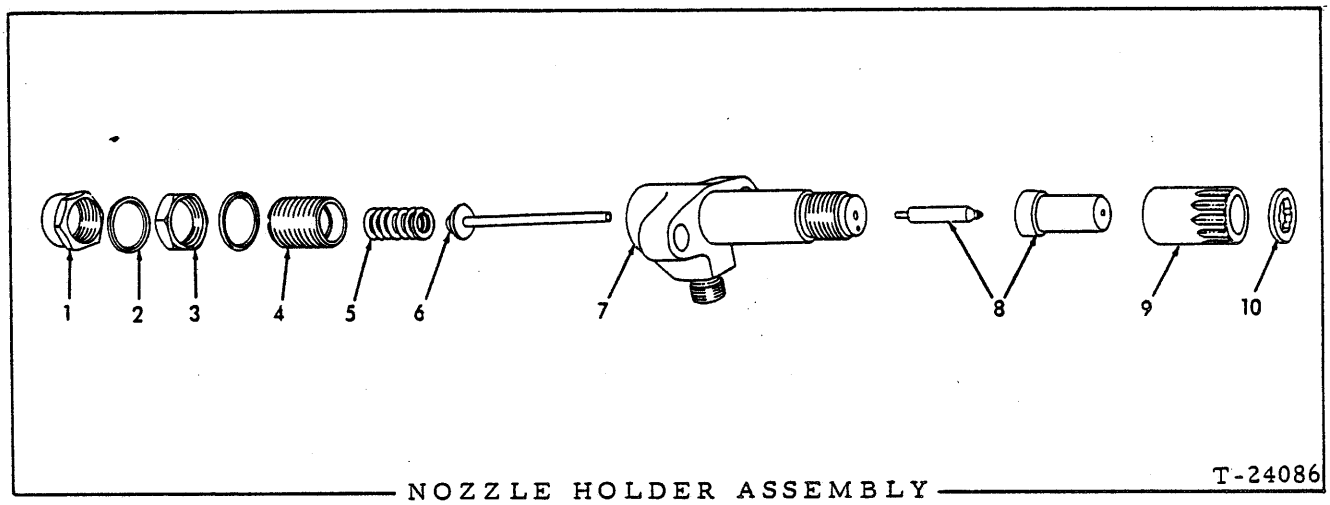

NOZZLE HOLDER ASSEMBLY T-24086

USAGE: See page 68

NOTE: Quantities indicated are for one (1) Holder Assy. only

ITEM	PART NO.	QTY.	DESCRIPTION
-	74516394	1	HOLDER ASSY., injection nozzle (Includes items 1 thru 10)
1	74511215	1	NUT, cap
2	74511243	2	GASKET, cap nut
3	74511213	1	NUT, adjusting screw
4	74378033	1	SCREW, adjusting
5	74380652	1	SPRING, spindle rod
6	74511208	1	ROD, spindle
7	-------	1	BODY, nozzle holding (Not serviced separately)
8	74516393	1	NOZZLE ASSY. (Consists of 1 body, 1 valve and item 10)
9	74511217	1	NUT, nozzle retaining
10	74511204	1	□GASKET, nozzle holder to cylinder head

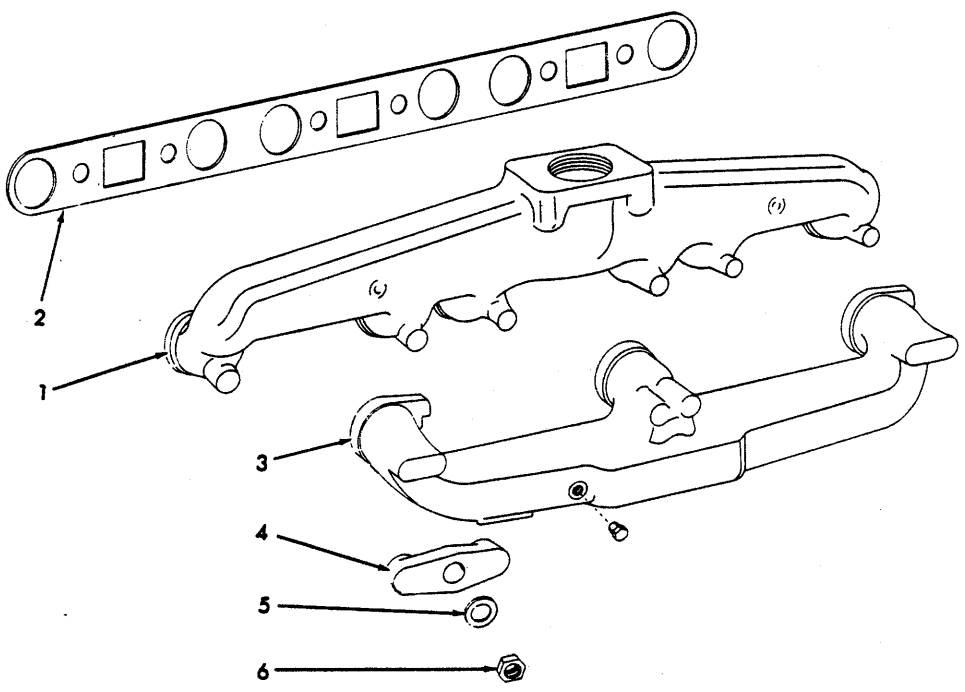

MANIFOLDS T-40536

USAGE: Diesel-powered, effective Serial No. 24A00201, 56Y02201

ITEM	PART NO.	QTY.	DESCRIPTION
1	74513497	1	MANIFOLD, exhaust
2	74504562	1	GASKET, manifolds to cylinder head
3	74506404	1	MANIFOLD, intake
	70919840	1	PLUG, pipe, hex-hd., 1/4"NPT
4	74508883	6	CLAMP, manifold
5	70914678	6	WASHER, manifold nut
6	74117050	6	NUT, manifold stud

(Revised June 1977)

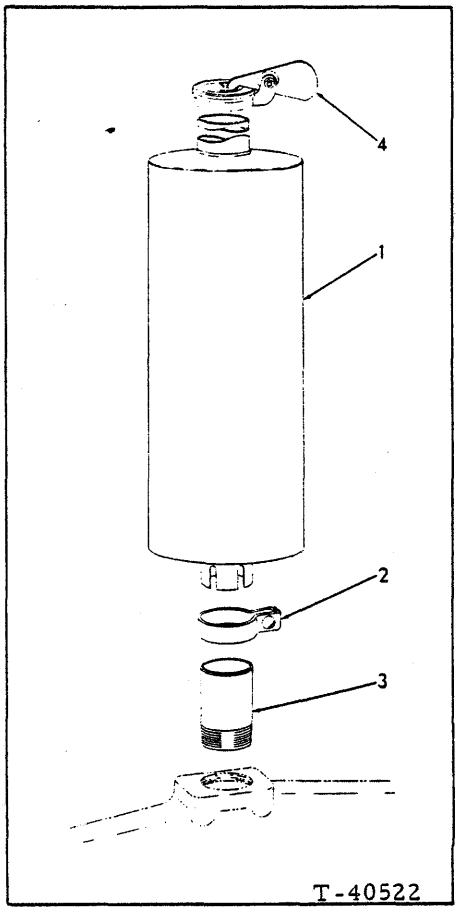

MUFFLER

USAGE: Diesel-powered, effective serial No. 24A00201 and 56Y02201.

ITEM	PART NO.	QTY.	DESCRIPTION
1	70237290	1	MUFFLER, exhaust
2	70694905	1	CLAMP ASSY., muffler (Includes bolt)
3	74513471	1	PIPE, muffler adapting
4	70236922	1	RAINCAP (Special equipment)

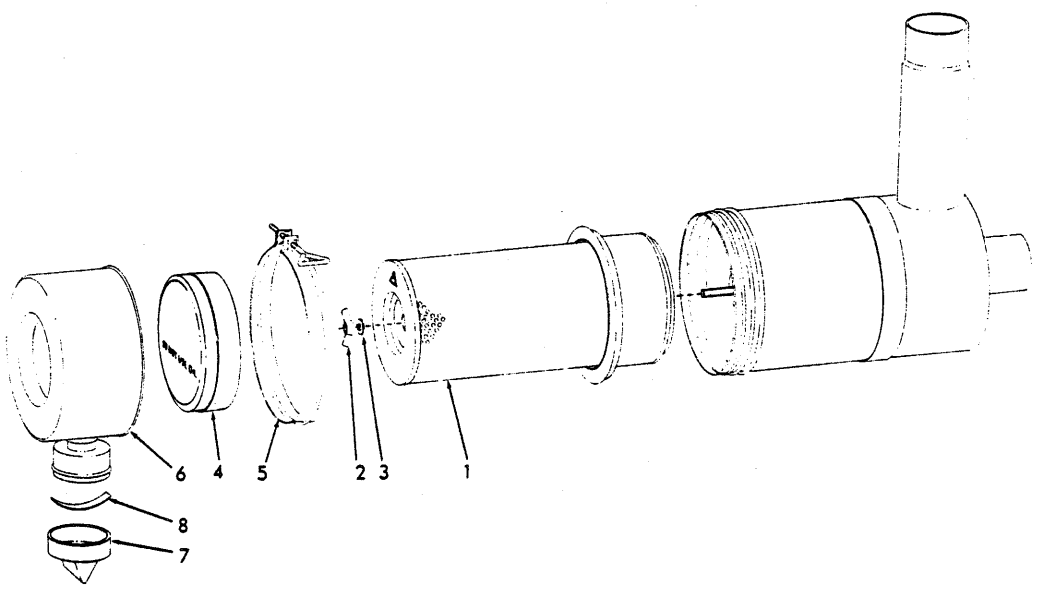

T-76327

AIR CLEANER ASSEMBLY
(Dry-type)

USAGE: See page 75

ITEM	PART NO.	QTY.	DESCRIPTION
–	70674953	1	CLEANER ASSY., air (Includes items 1 thru 8)
1	70243163	1	ELEMENT, air cleaner (Includes item 3)
2	70239517	1	NUT ASSY., element retaining (Includes item 3)
3	-------	1	GASKET, element retaining nut
4	70640658	1	BAFFLE, air (rubber)
5	74996247	1	CLAMP ASSY., sediment cup (Includes screw)
6	70677804	1	CUP, sediment
7	70197810	1	VALVE, unloading
8	70677805	1	SPRING, unloading valve

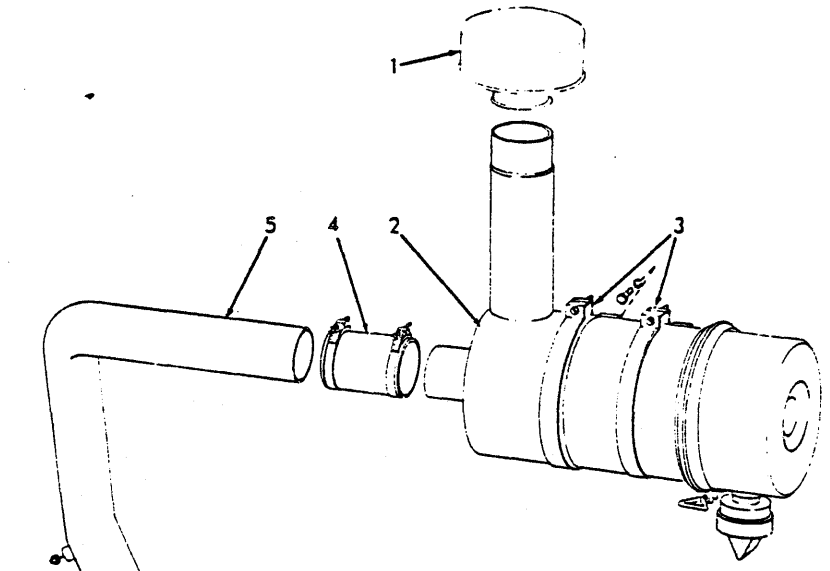

DIESEL POWERED UNITS

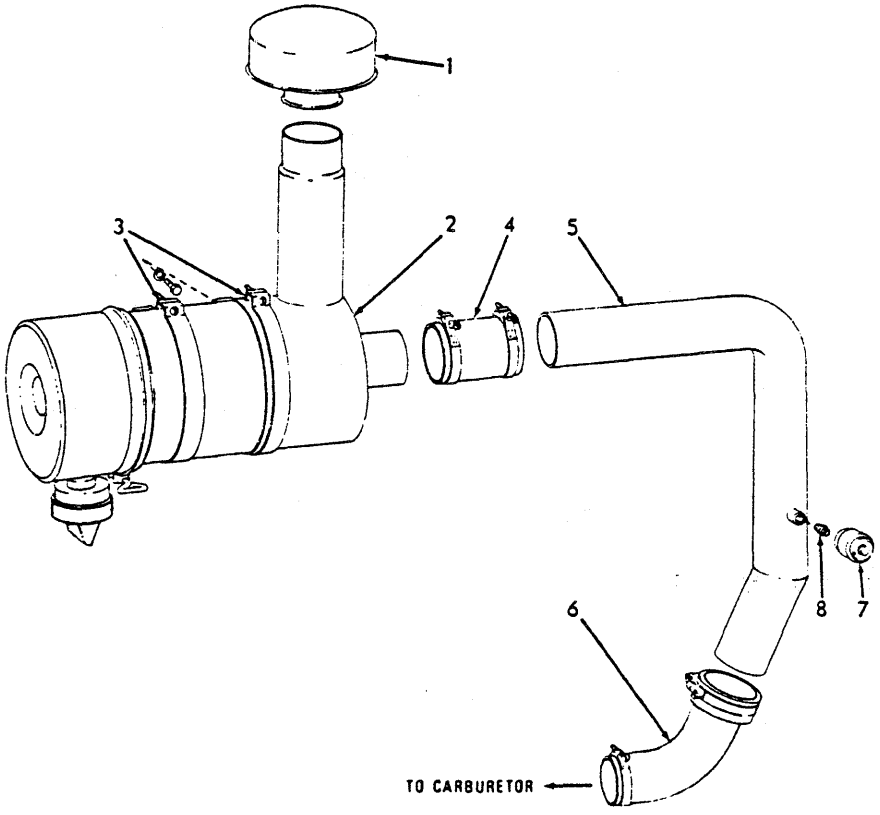

GAS POWERED UNITS

T-76316

AIR CLEANER (Dry-type)

AIR CLEANER
(Dry-type)

USAGE: Standard, See page 77 for optional oil-bath cleaner

ITEM	PART NO.	QTY.	DESCRIPTION	
1	73024261	1	CAP, rain	
2	-------	1	CLEANER ASSY., air (See page 73)	
3	70622619	2	BAND, mounting	
	70927400	4	CAPSCREW, 3/8"NC x 5/8"	
	70910287	4	LOCKWASHER, 3/8"	
4	70040144	1	HOSE, upper	
	70926041	2	CLAMP, hose, 2-1/2" to 2-13/16" diam.	
5	70674427	1	TUBE, (Effective on S/N 24A00201, 56Y02201)	
	70901652	1	PLUG, pipe, sq-hd., 1/4"NPT (Not used when engine primer is installed)	
	70677134	1	TUBE, (Effective on S/N 75Y00201)	
	70901651	1	PLUG, pipe, 1/8"NPT (Not used when Air Restriction Indicator is installed)	
6	70040144	1	HOSE, lower (Effective on S/N 24A00201, 56Y02201)	
	70926041	2	CLAMP, hose, 2-1/2" to 2-13/16" diam.	
	70676814	1	HOSE, lower (Effective on S/N 75Y00201)	
	70926041	1	CLAMP, hose, 2-1/2" to 2-13/16" diam.	
	70927140	1	CLAMP, hose, 2-1/8" to 2-7/16" diam.	
7	74021600	1	INDICATOR ASSY., filter (Serviced only as a unit) (Special equipment)	
8	70622447	1	FITTING, connector, filter indicator (Includes filter)	
9	74513924	1	HOUSING, air inlet	Effective on S/N 24A00201, 56Y02201
	70910014	1	PLUG, expansion, 1-1/2" diam.	
	70916271	2	CAPSCREW, 3/8"NC x 1"	
	70904206	2	LOCKWASHER, 3/8"	
10	74513809	1	GASKET, air inlet housing	

(Revised June 1977)

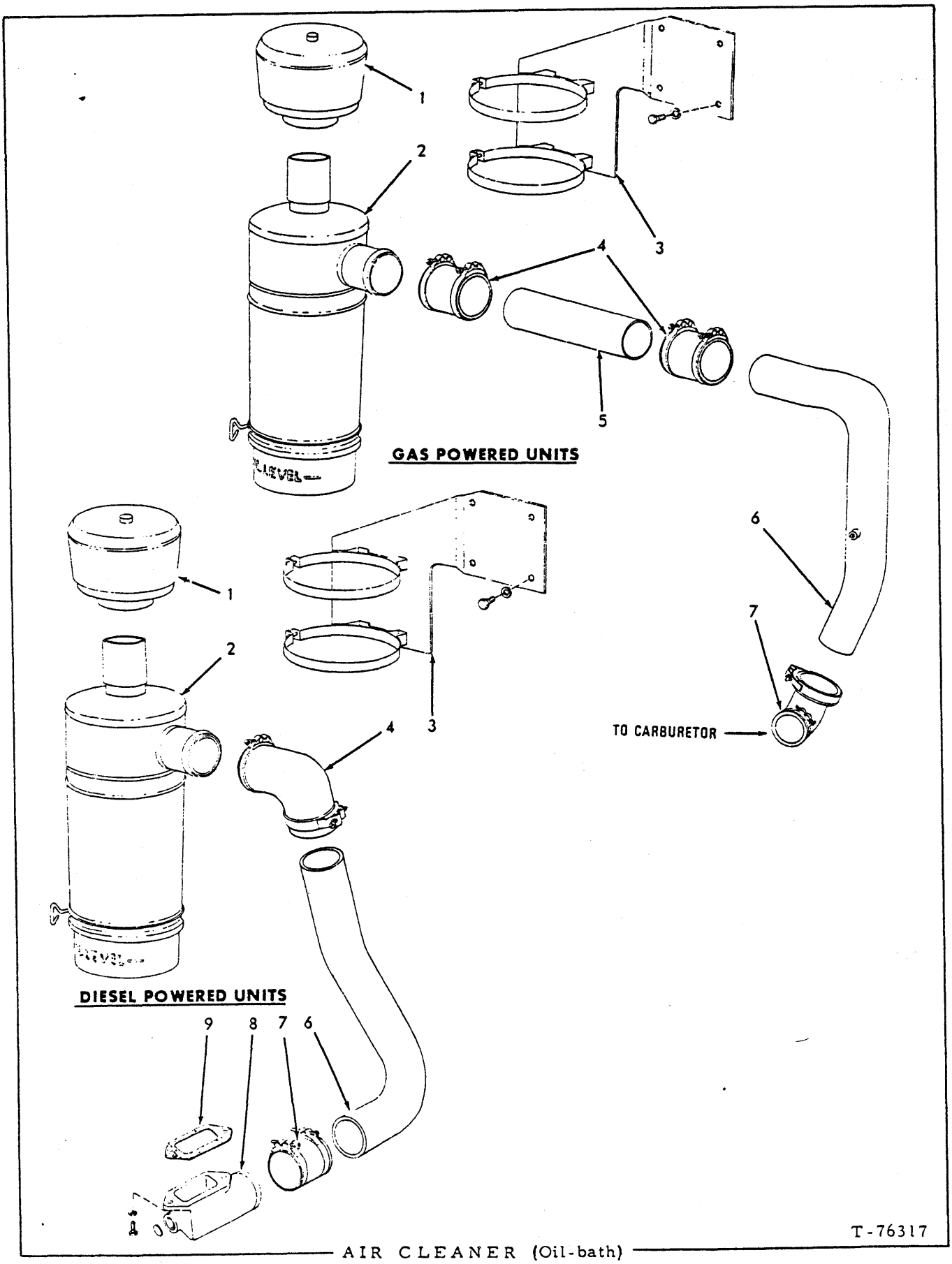

AIR CLEANER (Oil-bath)

AIR CLEANER (Oil-bath)

USAGE: Optional equipment

ITEM	PART NO.	QTY.	DESCRIPTION	
1	-------	1	PRE-CLEANER ASSY., air (See page 78)	
2	-------	1	CLEANER ASSY., air (See page 78)	
3	70677584	1	BRACKET, mounting	
	70922763	4	CAPSCREW, 3/8"NC x 5/8"	
	70910287	4	LOCKWASHER, 3/8"	
4	70235371	1	HOSE, upper (Effective on S/N 24A00201, 56Y02201)	
	70040144	2	HOSE, upper (Effective on S/N 75Y00201)	
	70926041	4	CLAMP, hose, 2-1/2" to 2-13/16" diam.(Two less used on diesel-powered units)	
5	70677585	1	TUBE, horizontal	
6	70640725	1	TUBE, vertical (Effective on S/N 24A00201, 56Y02201)	
	70901652	1	PLUG, pipe, sq-hd., 1/4"NPT	
	70677134	1	TUBE, vertical (Effective on S/N 75Y00201)	
	70901651	1	PLUG, pipe, 1/8"NPT	
7	70040144	1	HOSE, lower (Effective on S/N 24A00201, 56Y02201)	
	70926041	2	CLAMP, hose, 2-1/2" to 2-13/16" diam.	
	70676814	1	HOSE, lower (Effective on S/N 75Y00201)	
	70926041	1	CLAMP, hose, 2-1/2" to 2-13/16" diam.	
	70927140	1	CLAMP, hose, 2-1/8" to 2-7/16" diam.	
8	74513924	1	HOUSING, air inlet	Effective on S/N 24A00201, 56Y02201
	70910014	1	PLUG, expansion, 1-1/2" diam.	
	70916271	2	CAPSCREW, 3/8"NC x 1"	
	70904206	2	LOCKWASHER, 3/8"	
9	74513809	1	GASKET, air inlet housing	

(Revised June 1977)

PRE-CLEANER ASSEMBLY

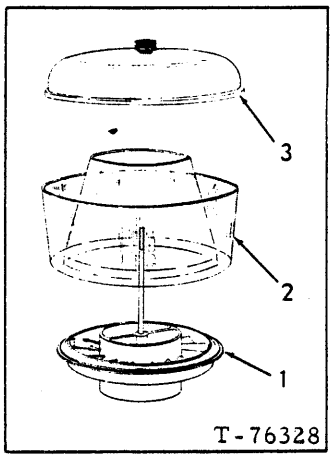

USAGE: See page

ITEM	PART NO.	QTY.	DESCRIPTION
-	70655289	1	PRE-CLEANER ASSY., air (Includes item 1 thru 3)
1	70657284	1	SLEEVE ASSY., pre-cleaner (Includes stud)
2	70629117	1	BOWL, pre-cleaner
3	70629118	1	COVER ASSY., pre-cleaner (Includes nut)

AIR CLEANER ASSEMBLY

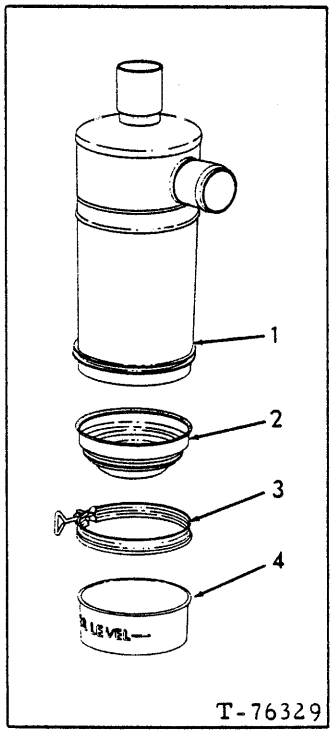

USAGE: See page

ITEM	PART NO.	QTY.	DESCRIPTION
-	70655468	1	CLEANER ASSY., air)Includes items 1 thru 4)
1	-------	1	BODY, air cleaner (Not serviced separately)
2	70656649	1	CUP ASSY., air cleaner, inner (Includes gasket)
3	70656643	1	CLAMP ASSY., air cleaner, oil cup (Includes screw)
4	71123855	1	CUP, air cleaner, outer

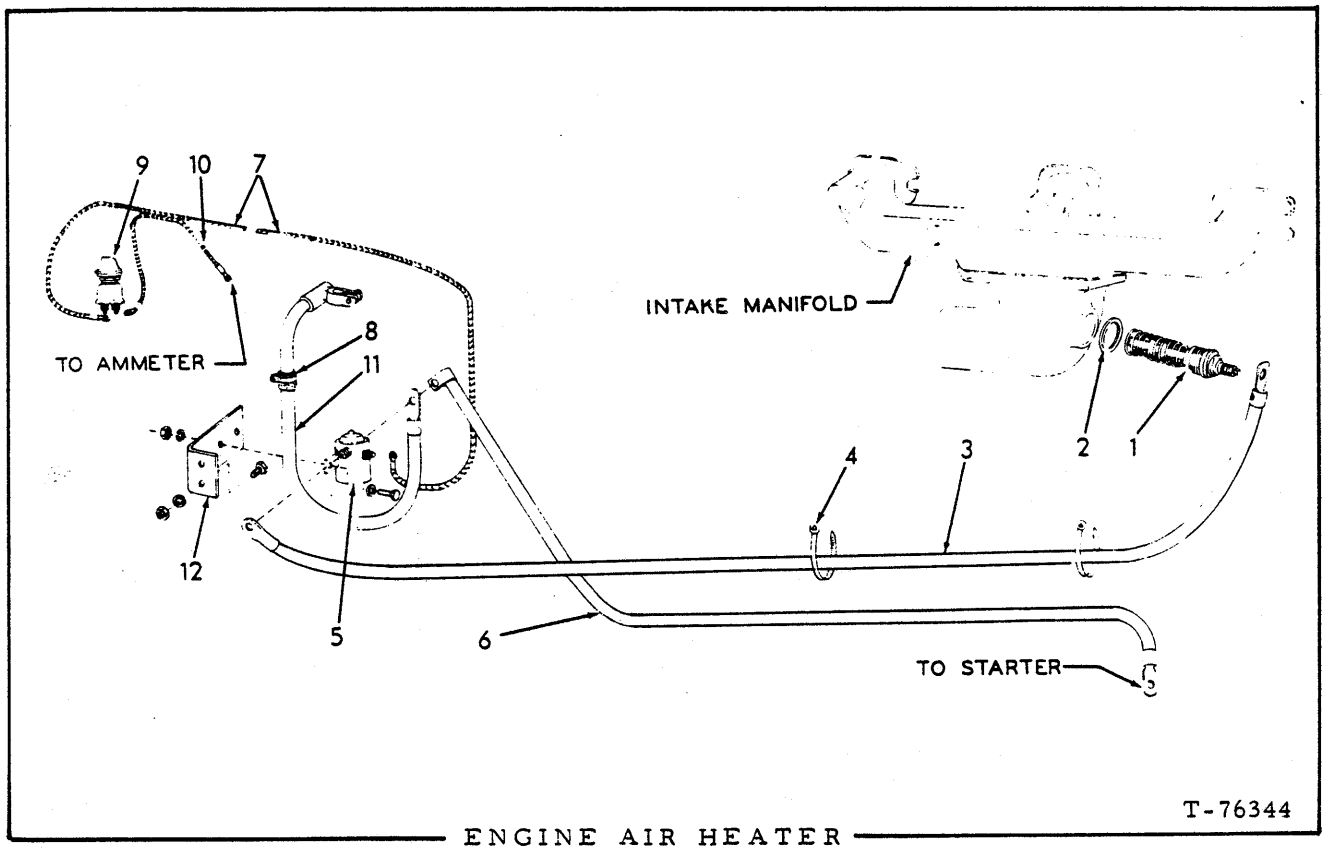

ENGINE AIR HEATER

USAGE: Special equipment, Diesel-powered, effective serial No. 24A00201, 56Y02201

ITEM	PART NO.	QTY.	DESCRIPTION
1	74516760	1	ELEMENT ASSY., heating (Includes item 2)
2	74512343	1	GASKET, heating element
3	70677813	1	CABLE, magnetic switch to heating element
4	73044015	7	TIE, cable supporting
5	74749701	1	SWITCH, magnetic
	70900574	2	SCREW, rd.-hd., 1/4"NC x 1/2" (Graders prior to unit #01528)
	70927338	2	CAPSCREW, 1/4"NC x 7/8" (Graders unit #01528 and up)
	70928190	2	WASHER, plain
	70910285	2	LOCKWASHER, 1/4"
	70911024	2	NUT, 1/4"NC
6	70624336	1	CABLE, magnetic switch to starter
7	70677795	1	CABLE, push-button switch to magnetic switch
8	70076469	1	BOOT, cable protecting
	70922660	1	CLAMP
9	70240962	1	SWITCH, push-button (Includes mounting nut)
10	70677794	1	CABLE, switch to ammeter
11	70031719	1	CABLE, battery to magnetic switch
12	70693845	1	ANGLE, switch mounting (Graders unit #01528 and up)
	70927338	2	CAPSCREW, 1/4"NC x 7/8"
	70910285	2	LOCKWASHER, 1/4"
	70911024	2	NUT, 1/4"NC

(Revised June 1977)

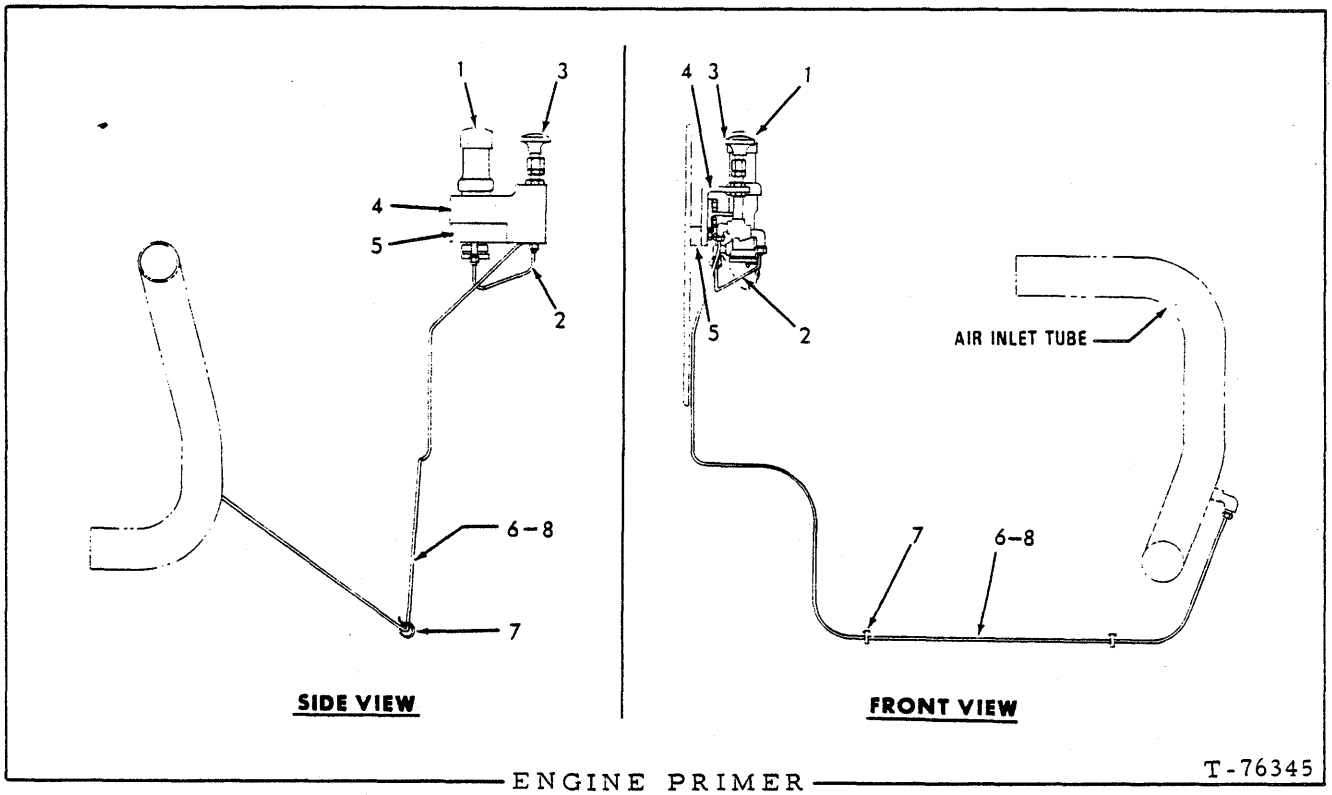

ENGINE PRIMER

USAGE: Special equipment. Diesel-powered, effective Serial No. 24A00201, 56Y02201

ITEM	PART NO.	QTY.	DESCRIPTION
1	-------	1	DISPENSER ASSY., priming fuel (See page 81)
	70925085	3	SCREW, thread-forming, #10 x 1/2"
	70925086	1	SCREW, thread-forming, #10 x 3/4"
2	70095020	1	TUBE ASSY., dispenser to pump
	70919093	2	ELBOW, flare type, 90°, 1/8" tube, 1/8"NPT male
3	-------	1	PUMP ASSY., (See page 82)
4	70671885	1	BRACKET, mounting
	70922300	2	CAPSCREW, 3/8"NC x 3/4"
	70910287	2	LOCKWASHER, 3/8"
5	70620956	1	BLOCK, tapped (Requires welding to install)
6	-------	1	TUBE, pump to air inlet tube (Order item #8)
	70919100	1	NUT, flare type, 1/8" tube
	70919099	1	SLEEVE, flare type, 1/8" tube
	70919093	1	ELBOW, flare type, 90°, 1/8" tube, 1/8"NPT male
7	73044015	2	TIE, tube supporting
8	70066253	-	TUBING, copper, 1/8"O.D., 10ft. roll (Use as required)

(Revised June 1977)

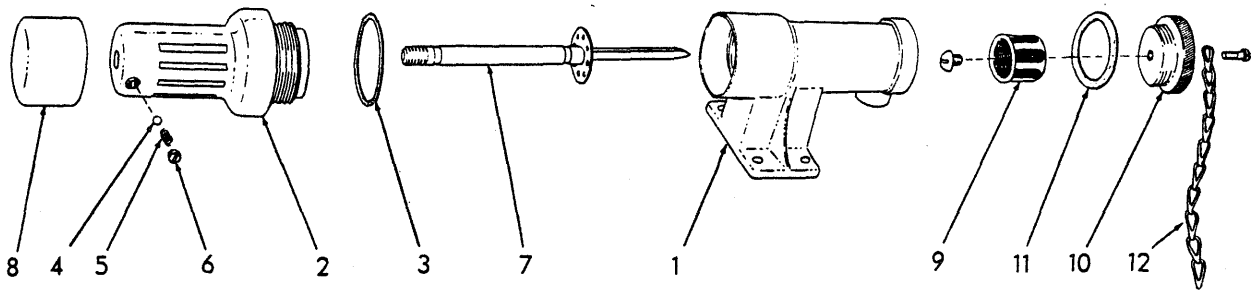

DISPENSER ASSEMBLY T-2211

USAGE: See page 80

ITEM	PART NO.	QTY.	DESCRIPTION
-	70075771	1	DISPENSER ASSY. (Includes items 1 thru 12)
1	70068878	1	BODY, fuel dispenser
2	70068879	1	CHAMBER, fuel dispenser
3	70069164	1	GASKET, fuel dispenser chamber
4	70905357	1	BALL, steel, 3/16" diam.
5	70066251	1	SPRING, plunger locking ball
6	70066252	1	PLUG, retaining, locking ball spring
7	70066255	1	PLUNGER, fuel dispenser
8	70068881	1	KNOB, fuel dispenser plunger
9	70068875	1	STRAINER, fuel dispenser
	70915432	1	SCREW, machine, rd-hd., 1/4"NC x 5/16"
10	70075770	1	PLUG, fuel dispenser strainer
11	70068876	1	GASKET, fuel dispenser strainer plug
12	70075769	1	CHAIN, strainer plug retaining
	70901781	1	SCREW, machine, fil-hd., #10-32NF x 1/2"

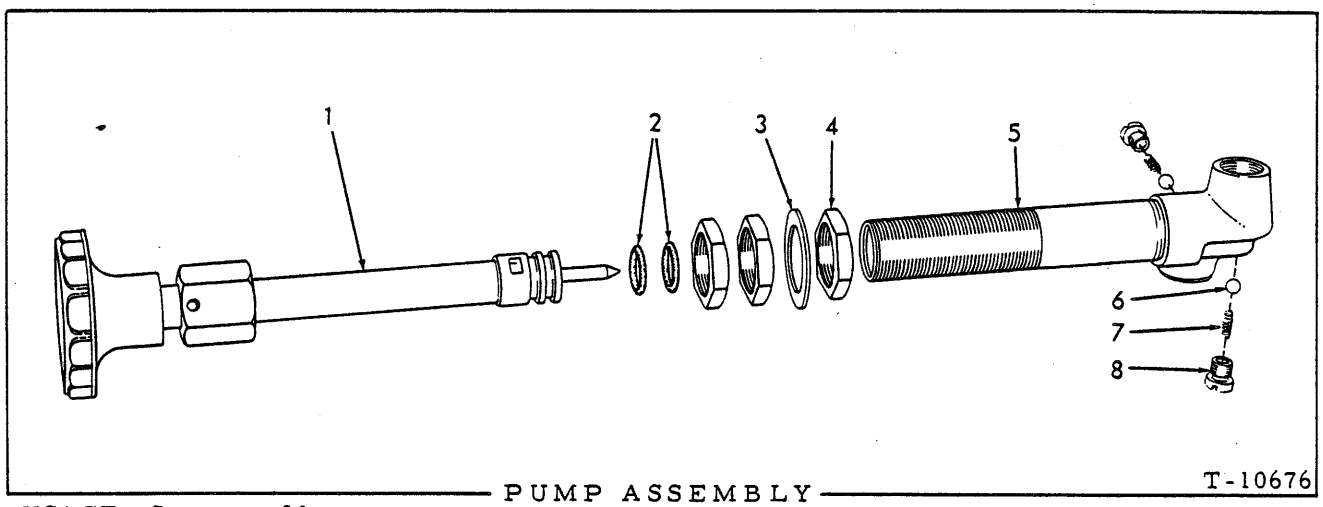

PUMP ASSEMBLY

USAGE: See page 80

ITEM	PART NO.	QTY.	DESCRIPTION
-	70092160	1	PUMP ASSY. (Includes items 1 thru 8)
1	-------	1	PISTON ASSY. (Not serviced separately)
2	70923560	2	O-RING, plunger
3	70066873	1	WASHER, mounting
4	70066872	3	NUT, mounting
5	-------	1	BARREL ASSY. (Not serviced separately)
6	70066876	2	BALL, check valve (5/32" diam.)
7	70066875	2	SPRING, check valve
8	70066874	2	RETAINER, check valve

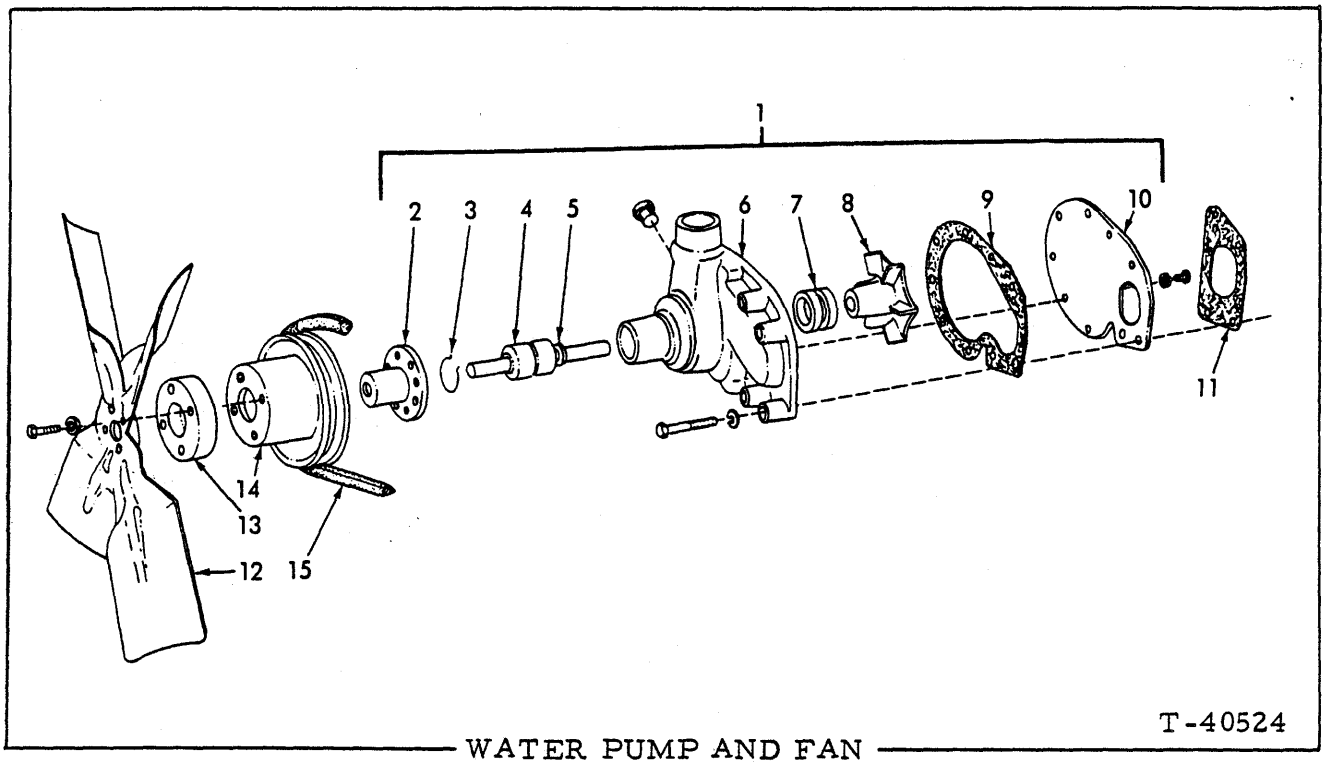

WATER PUMP AND FAN

USAGE: Diesel-powered, effective Serial No. 24A00201, 56Y02201

ITEM	PART NO.	QTY.	DESCRIPTION
-	74512756	1	REPAIR KIT, water pump (Consists of items 3, 4, 7, 8, 9 and 11)
1	74516961	1	PUMP ASSY., water (Consists of items 2 thru 10)
	70910948	4	CAPSCREW, 3/8"NC x 2"
	70904206	4	LOCKWASHER, 3/8"
2	74513380	1	HUB, pulley
3	74507090	1	WIRE, snap, bearing retaining
4	--------	1	BEARING ASSY. (Includes item 5)(Order REPAIR KIT 74512756)
5	74507084	1	SLINGER, water
6	74513632	1	BODY, water pump
	70920416	1	PLUG, pipe, hex-hd., brass, 1/2"NPT
7	74507091	1	SEAL ASSY., water pump (Serviced only as a unit)
8	74514799	1	IMPELLER ASSY. (Includes ceramic insert)
9	74512144	1	GASKET, pump cover
10	74512143	1	COVER, water pump
	70915813	5	CAPSCREW, 5/16"NC x 7/8"
	70904205	5	LOCKWASHER, 5/16"
11	74512212	1	□GASKET, pump to cylinder block
12	70633382	1	BLADE ASSY., fan (Graders prior to unit #02133)
	70698026	1	BLADE ASSY., fan (Grader unit #02133 and up)
	70923124	4	CAPSCREW, 5/16"NC x 2" (Graders prior to unit #02133)
	70922286	4	CAPSCREW, 5/16"NC x 1-3/4" (Graders unit #02133 and up)
	70910286	4	LOCKWASHER, 5/16"
13	70633383	1	SPACER, fan blade (Graders prior to unit #02133)
	70698025	1	SPACER, fan blade (Grader unit #02133 and up)
14	74508486	1	PULLEY
15	--------	1	BELT, fan and alternator drive (See ALTERNATOR)

(Revised June 1977)

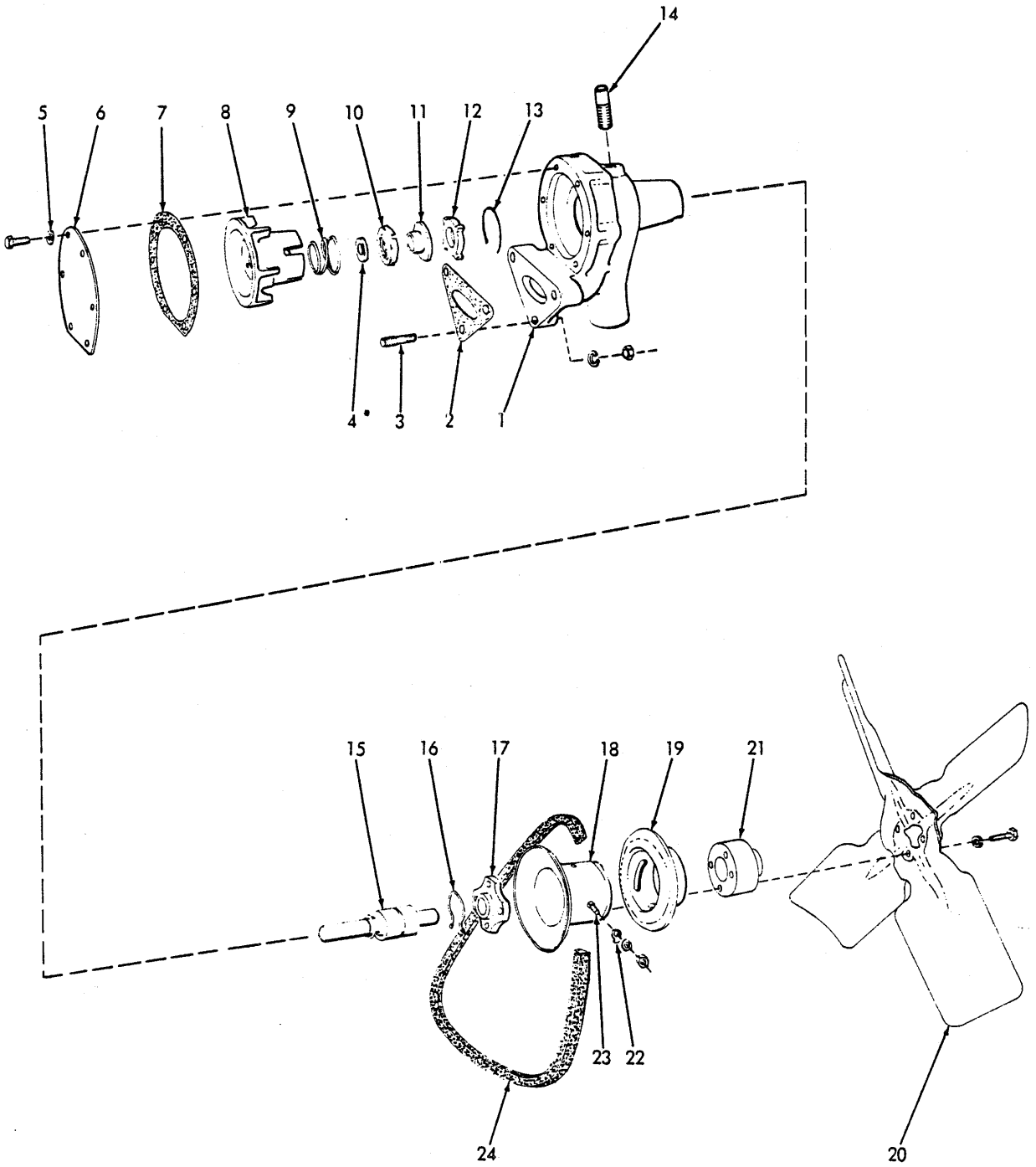

WATER PUMP AND FAN

WATER PUMP AND FAN

USAGE: Gas - powered, effective serial No. 75Y00201

ITEM	PART NO.	QTY.	DESCRIPTION
-	70250396	1	PUMP ASSY., water (Consists of all items listed below except 2, 3, 20, 21, 24 and 25)
1	70226314	1	BODY, water pump
2	70203061	1	□GASKET, pump to cylinder block
3	70230302	3	STUD, pump attaching
	70904206	3	LOCKWASHER, 3/8"
	70910324	3	NUT, 3/8"NC
4	70207824	1	□RING, clamp, water pump shaft seal
5	70230308	6	WASHER, cover capscrew
6	70210829	1	COVER, pump body
	70916284	6	CAPSCREW, 1/4"NC x 1/2"
7	70210830	1	□GASKET, pump body cover
8	70210831	1	IMPELLER, water pump
9	70207825	1	□SPRING, pump shaft seal
10	70207826	1	□GUIDE, pump shaft seal spring
11	70207823	1	□SEAL, water pump shaft (rubber)
12	70207827	1	□WASHER, pump shaft seal (carbon)
13	70207828	1	□RING, snap, impeller seal retaining
14	-------	1	PIPE, water by-pass (See WATER OUTLET CONNECTION)
15	70207822	1	BEARING ASSY., water pump (Includes shaft and slinger)
16	70207829	1	□RING, snap, pump body
17	70233697	1	HUB, pulley
18	70229840	1	FLANGE, pulley, rear half
19	70207831	1	FLANGE, pulley, front half
20	70235753	1	BLADE ASSY., fan
	70922286	4	CAPSCREW, 5/16"NC x 5/8"
	70910286	4	LOCKWASHER, 5/16"
21	70677217	1	SPACER, fan blade
22	70203135	2	WASHER, flange locking screw
23	70203141	2	SCREW, flange locking
	70904204	2	LOCKWASHER, 1/4"
	70900365	2	NUT, 1/4"NC
24	70604929	1	BELT, fan and generator driving
25	70225750	1	SEAL KIT (Includes items 2, 4, 7, 9 thru 13 and 16)(Not Illustrated)

□Components of item 25

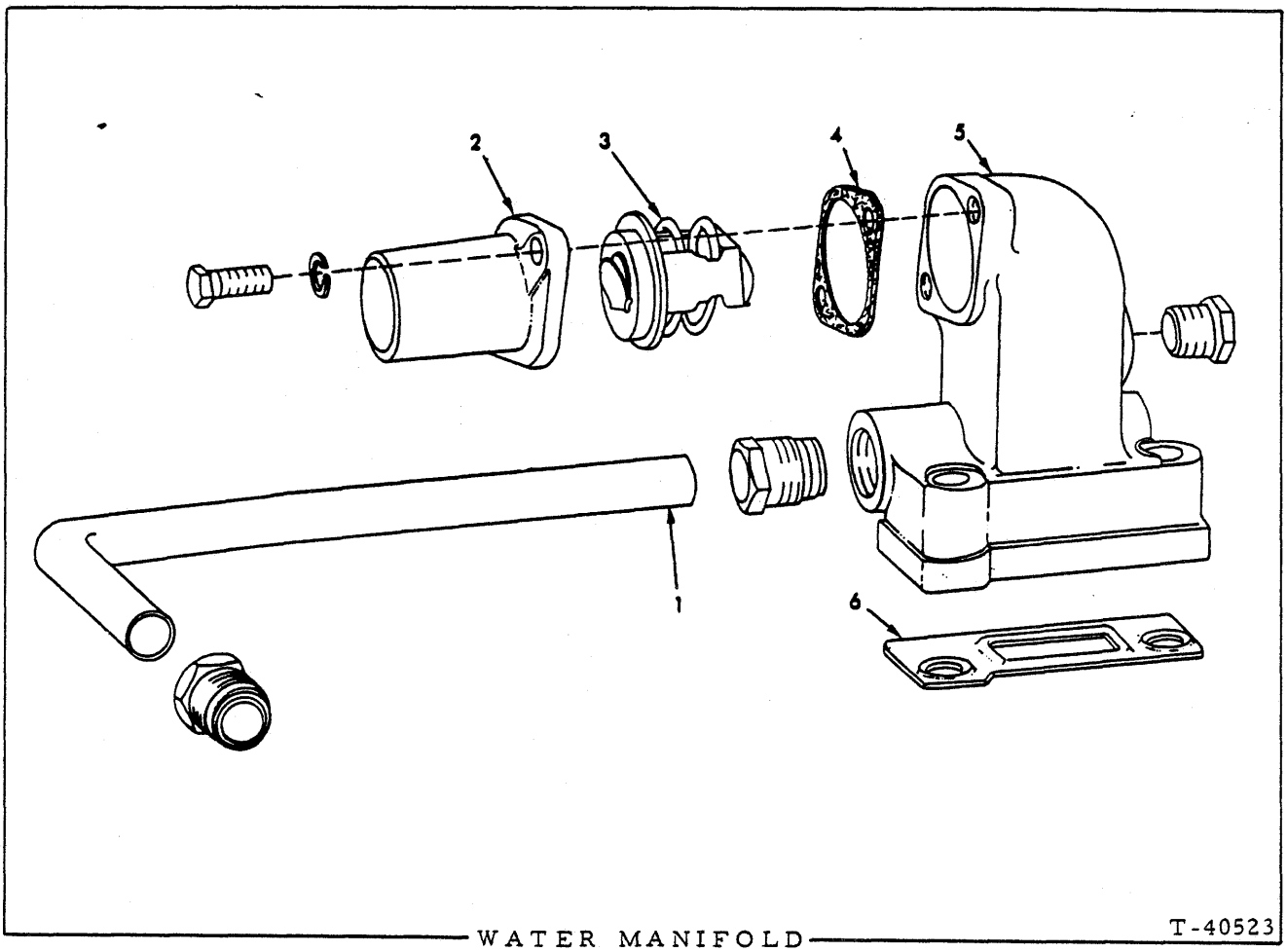

WATER MANIFOLD T-40523

USAGE: Diesel-powered, effective Serial No. 24A00201, 56Y02201

ITEM	PART NO.	QTY.	DESCRIPTION
1	74513630	1	TUBE, water by-pass
	70921331	2	NUT, hy-duty, 3/4" tube
2	74513526	1	PIPE, water outlet
	70903630	2	CAPSCREW, 3/8"NC x 1"
	70904206	2	LOCKWASHER, 3/8"
3	74513524	1	THERMOSTAT
4	74513527	1	□GASKET, water outlet pipe
5	74513523	1	HOUSING, thermostat
	70920416	2	PLUG, pipe, hex-hd., 1/2"NPT
6	74513722	1	□GASKET, thermostat housing

(Revised June 1977)

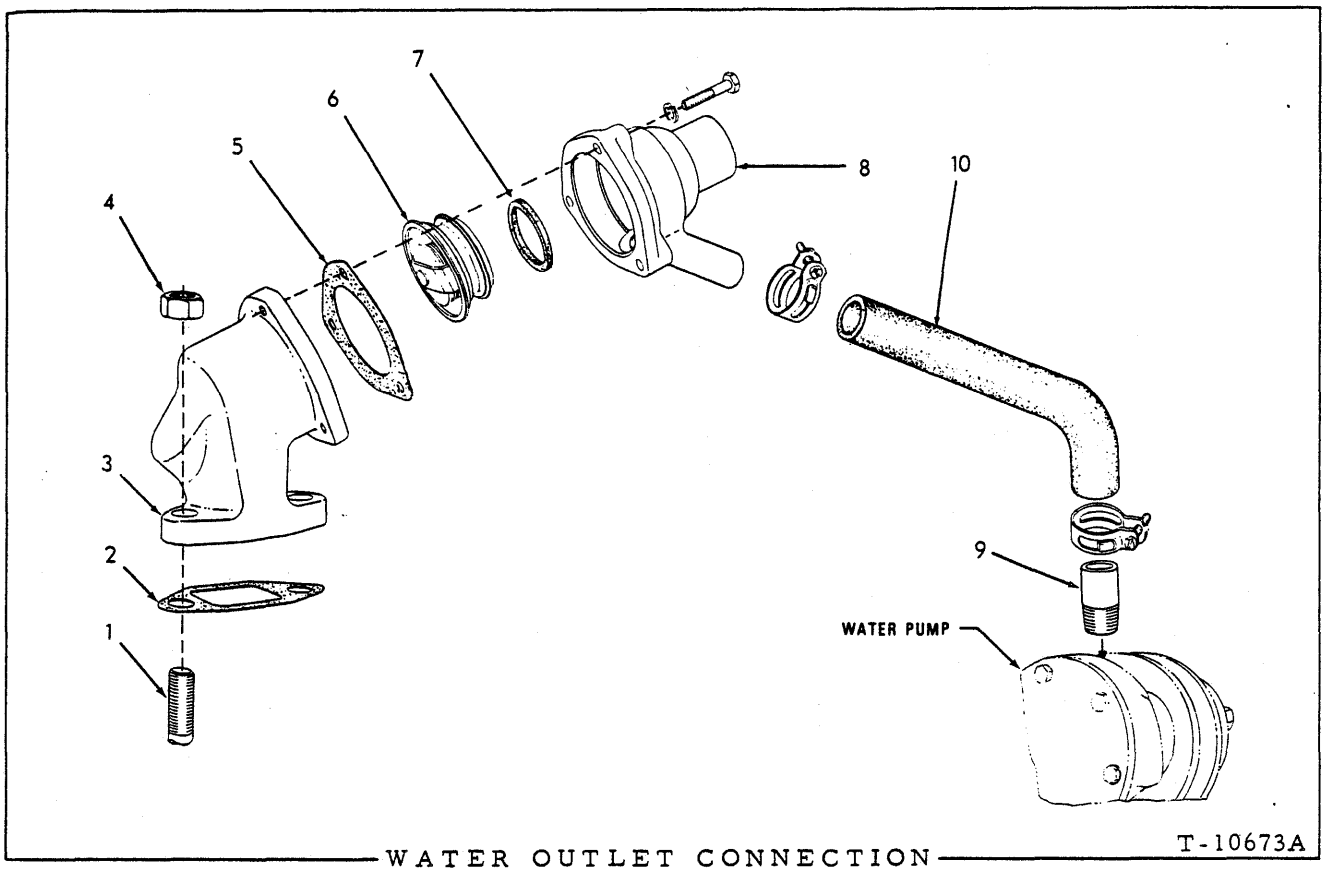

WATER OUTLET CONNECTION

USAGE: Gas - powered, effective serial No. 75Y00201

ITEM	PART NO.	QTY.	DESCRIPTION
1	-------	2	STUD (See CYLINDER HEAD)
2	70233218	1	□GASKET, thermostat cover
3	70225035	1	HOUSING, thermostat
4	-------	2	NUT (See CYLINDER HEAD)
5	70210158	1	□GASKET, thermostat cover
6	70228543	1	THERMOSTAT KIT (Includes item 7)(Opens at 160°)
7	70230643	1	□GASKET, thermostat
8	70231440	1	COVER, thermostat
	70905658	3	CAPSCREW, 1/4"NC x 1-1/4"
	70904204	3	LOCKWASHER, 1/4"
9	70226315	1	PIPE, water by-pass
10	70227018	1	HOSE, water by-pass pipe
	70911301	2	CLAMP, hose, 3/4" diam.

NOTE: See page 197 for special water by-pass pipe and hose used with Cab Heater

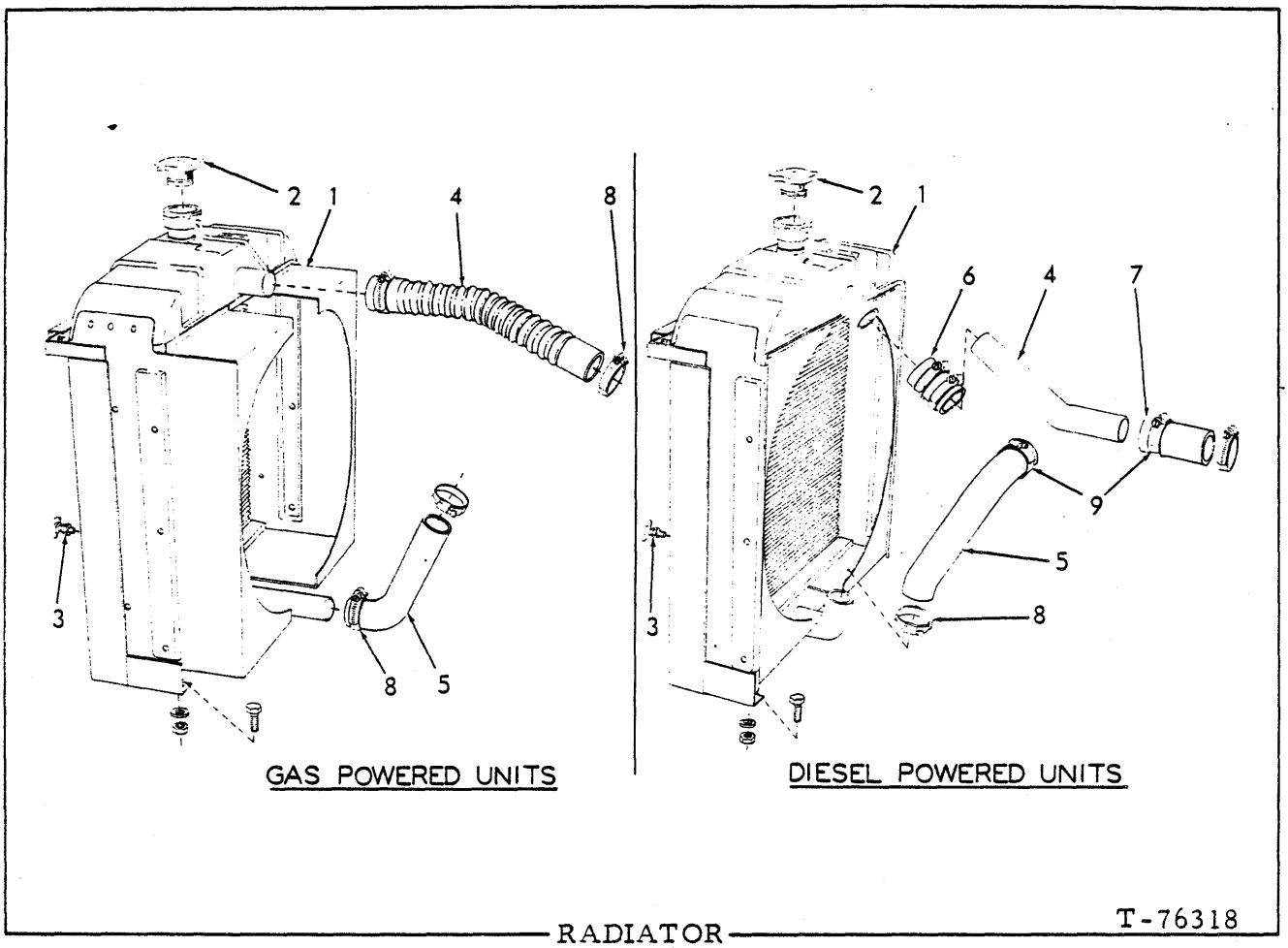

RADIATOR

*Gas - powered, effective serial No 75Y00201
**Diesel - powered, effective serial No. 24A00201, 56Y02201

ITEM	PART NO.	QTY. *	QTY. **	DESCRIPTION	
1	70677333	1	-	RADIATOR ASSY.	Includes item 2
	70675266	-	1	RADIATOR ASSY. (Graders prior to unit #02171)	
	73108226	-	1	RADIATOR ASSY. (Grader unit #02171 and up)	
	70920574	2	2	CAPSCREW, 1/2"NC x 1-3/8"	
	70677008	2	2	WASHER	
	70911028	2	2	NUT, 1/2"NC	
2	71007609	1	1	CAP, radiator	
3	70079751	1	1	COCK, drain, 1/4"NPT	
4	70677312	1	-	HOSE, upper	
	70096026	-	1	PIPE, upper	
5	70677311	1	-	HOSE, lower	
	70643036	-	1	HOSE, lower	
6	70226863	-	1	HOSE, upper	
7	70606384	-	1	HOSE, upper	
8	70921912	4	1	CLAMP, hose, 1-1/16" to 2" diam.	
9	70921913	-	5	CLAMP, hose, 1-13/16" to 2-3/4" diam.	

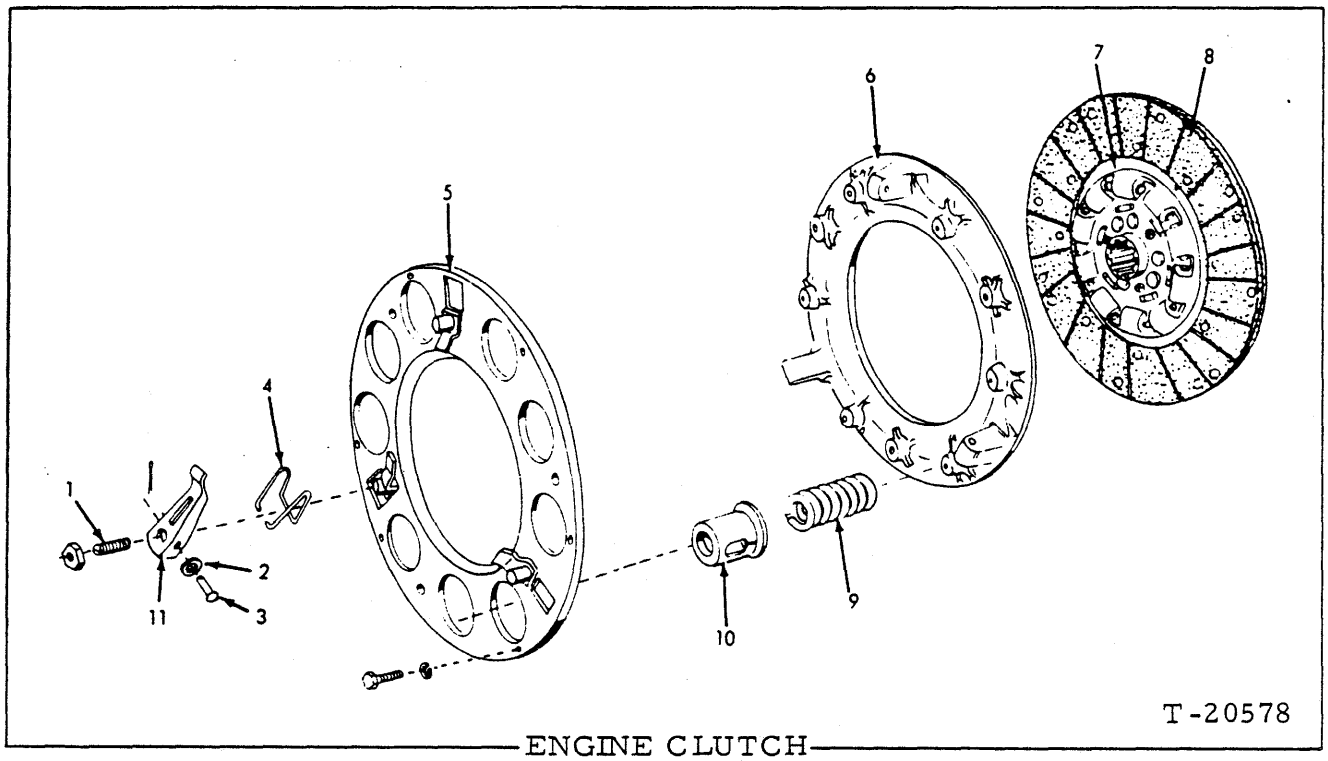

ENGINE CLUTCH
(Rockford)

ITEM	PART NO.	QTY.	DESCRIPTION
-	70229344	1	PLATE ASSY., pressure (Includes items 1 thru 6 and 9 thru 11)
	70923390	6	CAPSCREW, 12 pt., 3/8"NC x 7/8" (Graders prior to unit #01684)
	70910287	6	LOCKWASHER, 3/8"
	70922262	6	CAPSCREW, 3/8"NC x 7/8" (Grader unit #01684 and up)
1	70229601	3	SCREW, release lever adjusting
	70910876	3	NUT, jam, 7/16"NF
2	70229814	3	WASHER, release lever pin
3	70229603	3	PIN, release lever
	70900942	3	PIN, cotter, 3/32" x 5/8"
4	70229604	3	SPRING, release lever
5	70229595	1	PLATE ASSY., back (Serviced only as a unit)
6	70229602	1	PLATE, pressure
7	70681436	1	DISC ASSY., driven (Includes item 8)
8	70232872	1	FACING KIT, clutch driven disc (Includes facings and RIVETS indented below)
	70233470	20	RIVET, tubular, steel, fl-hd., 3/16" x 5/16"
9	70228947	9	SPRING, pressure plate
10	70204844	9	CUP, pressure plate spring
11	70229600	3	LEVER, release

(Revised May 1976)

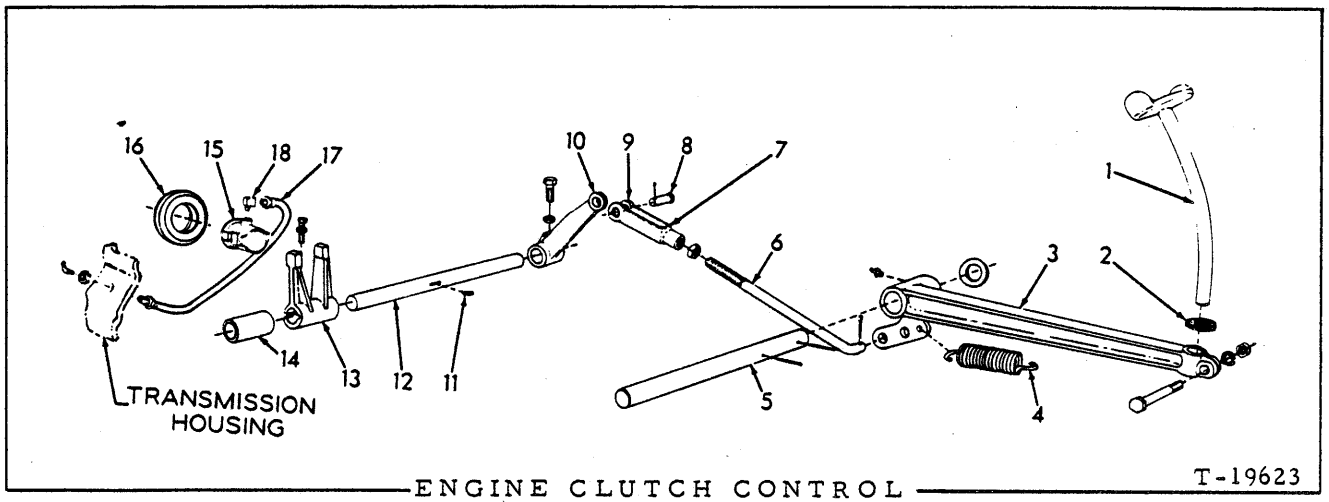

ENGINE CLUTCH CONTROL T-19623

ITEM	PART NO.	QTY.	DESCRIPTION
1	70065855	1	PEDAL, clutch operating
2	70605785	1	BUMPER, clutch pedal arm (rubber)
3	70065856	1	LEVER, clutch pedal
	70912808	1	FITTING, lubricating, straight, 1/4"NF taper thd.
	70927236	1	CAPSCREW, 1/2"NF x 2"
	70912441	1	LOCKWASHER, 1/2"
	70911043	1	NUT, 1/2"NF
4	70051193	1	SPRING, pedal retracting
5	70065853	1	SHAFT, pedal lever (Standard on graders prior to unit #00642. Not for graders equipped with Wheel Brakes)
	70683925	1	SHAFT, pedal lever (Standard on graders unit #00642 and up equipped with Wheel Brakes)
	70067839	1	SHAFT, pedal lever (Special equipment on graders prior to unit #00642. For graders equipped with Wheel Brakes)
	70904381	1	PIN, cotter, 3/16" x 2-1/4"
	70911159	1	WASHER, plain, SAE std., 1"
	70900811	1	PIN, cotter, 3/16" x 1-1/2"
6	70094963	1	ROD, clutch control
	70918454	1	PIN, cotter, 1/8" x 1-1/2"
	70911049	1	NUT, jam, 5/8"NF
7	70628730	1	YOKE, control rod
8	70052671	1	PIN, control rod yoke
	70918454	1	PIN, cotter, 1/8" x 1-1/2"
9	70065854	1	LEVER, clutch shifter
10	70228248	1	SETSCREW, clutch shifter lever
	70911036	1	NUT, jam, 5/8"NC
11	70036997	1	KEY, clutch shifter shaft

(Continued)

ENGINE CLUTCH CONTROL (Continued)

ITEM	PART NO.	QTY.	DESCRIPTION	
12	70065852	1	SHAFT, clutch shifter	
13	70095566	1	FORK, clutch shifter	
	70923192	1	CAPSCREW, 7/16"NC x 1-1/2"	
	70914678	1	LOCKWASHER, 7/16"	
14	70061046	2	BUSHING, clutch shifter shaft	
15	70241874	1	SHIFTER, clutch (Graders prior to unit #01137)	
	70686922	1	CARRIER, bearing (Graders unit #01137 and up)	
16	70235079	1	BEARING, ball, clutch shifter (Graders prior to unit #01137)	
	70649821	1	BEARING, ball, clutch throwout (Graders unit #01137 and up)	
17	70686889	1	HOSE, bearing lubricating	Graders unit #01137 and up
	70927381	1	WASHER, plain	
	70906907	1	NUT, jam, 5/8"NF	
	70915273	1	FITTING, lubricating, 30°, 1/8"NPT	
18	70605794	1	ELBOW, hose	

(Revised July 1973)

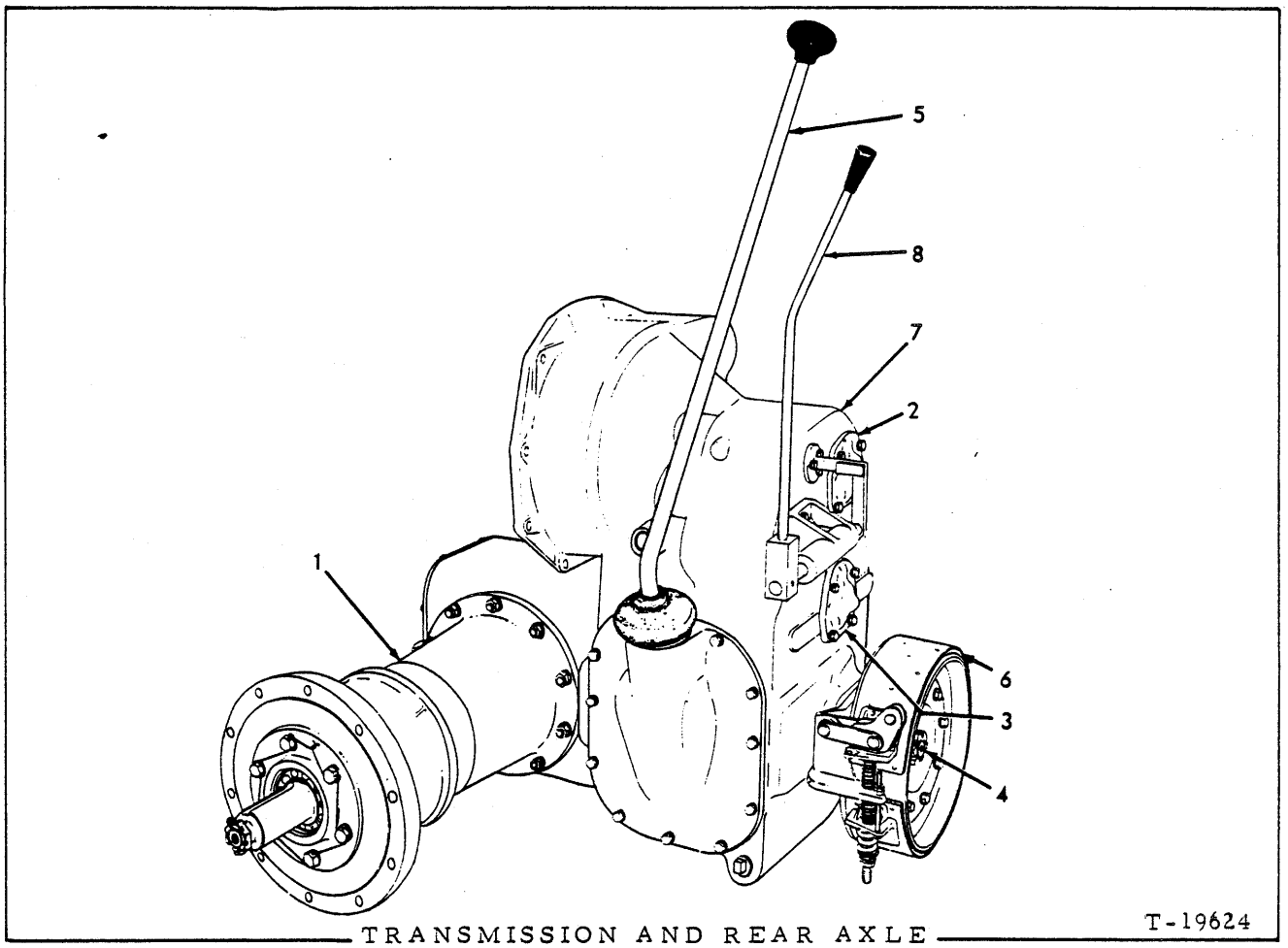

TRANSMISSION AND REAR AXLE

ITEM	PART NO.	QTY.	DESCRIPTION	
-	77108728	1	TRANSMISSION AND REAR AXLE ASSY. (Used prior to Graders Unit No. 00647; also used on Graders Unit No. 00652 thru 00693; 00695, 00715, 00721 and units No. 00728 thru 00737)	Each consists of items 1 thru 8
-	77113398	1	TRANSMISSION AND REAR AXLE ASSY. (Effective on Graders Unit No. 00647 thru 00651; 00694 thru 00727 excluding Nos. 00695, 00715, 00721; also units No. 00738 and up)	
1	-------	-	See REAR AXLE	
2	-------	-	See TOP SHAFT	
3	-------	-	See INTERMEDIATE SHAFT	
	-------	-	See REVERSE SHAFT	
4	-------	-	See PINION SHAFT	
5	-------	-	See GEAR SHIFT	
6	-------	-	See BRAKE	
7	-------	-	See TRANSMISSION HOUSING	
8	-------	-	See DIRECTIONAL CONTROL	

(Revised October 1973)

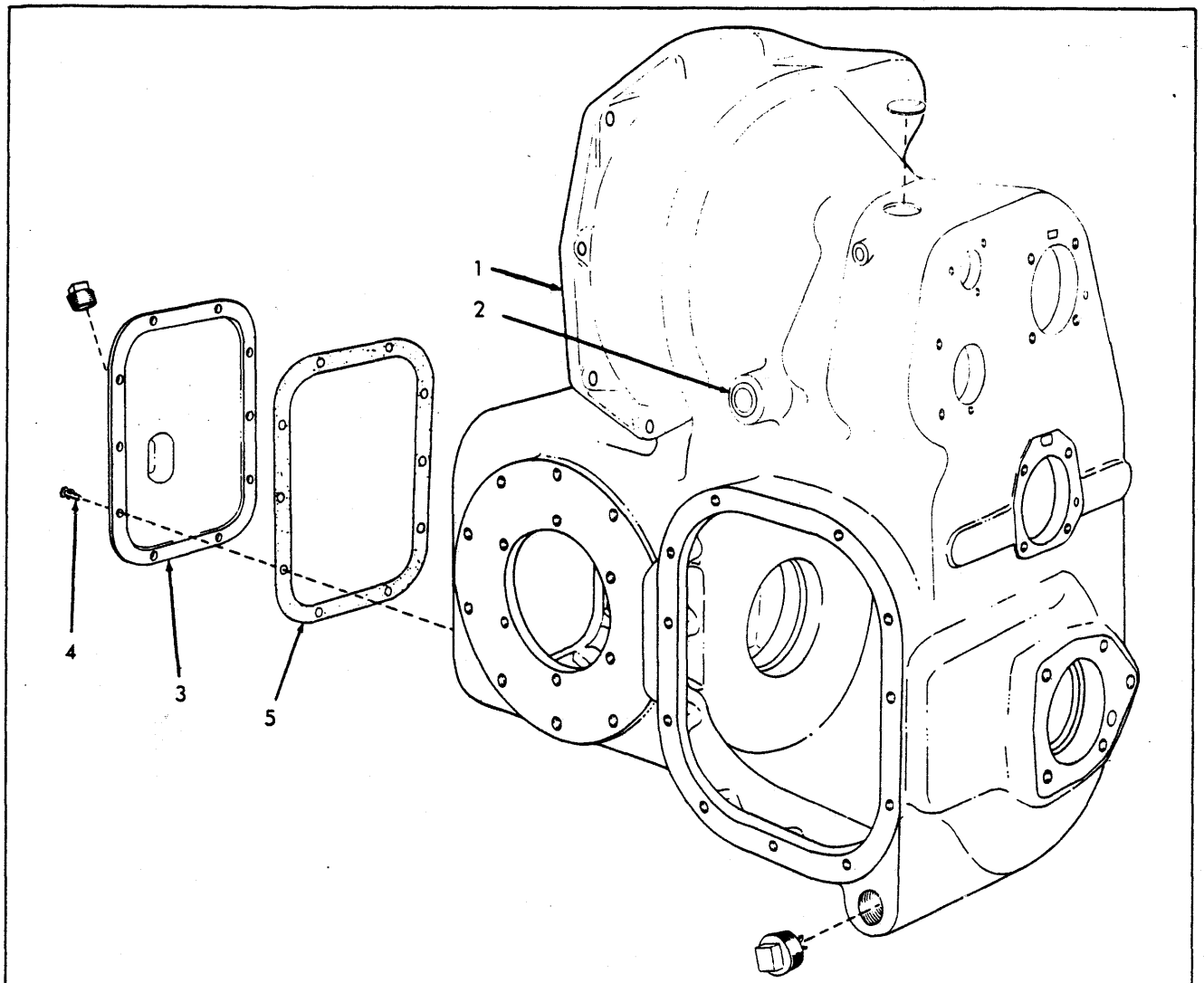

TRANSMISSION HOUSING

ITEM	PART NO.	QTY.	DESCRIPTION
1	77109089	1	HOUSING ASSY., transmission (Includes item 2)(Used prior to graders unit No. 00647; also used on graders unit No. 00652 thru 00693, 00695, 00715, 00721 and units No. 00728 thru 00737)
	77113400	1	HOUSING ASSY., transmission (Includes item 2)(Effective on graders unit No. 00647 thru 00651; 00694 thru 00727 excluding Nos. 00695, 00715, 00721; also units No. 00738 and up)
	77118363	1	PLUG, expansion (Late units)
	74612178	1	PLUG, drain, 1"NPT (magnetic)
2	-------	2	BUSHING, transmission housing (See ENGINE CLUTCH CONTROL)
3	70059931	1	PLATE, cover, rear
	70912768	1	PLUG, pipe, 1"NPT
4	70922763	10	CAPSCREW, 3/8"NC x 1"
	70910287	10	LOCKWASHER, 3/8"
5	70059932	1	GASKET, rear cover plate

(Revised October 1973)

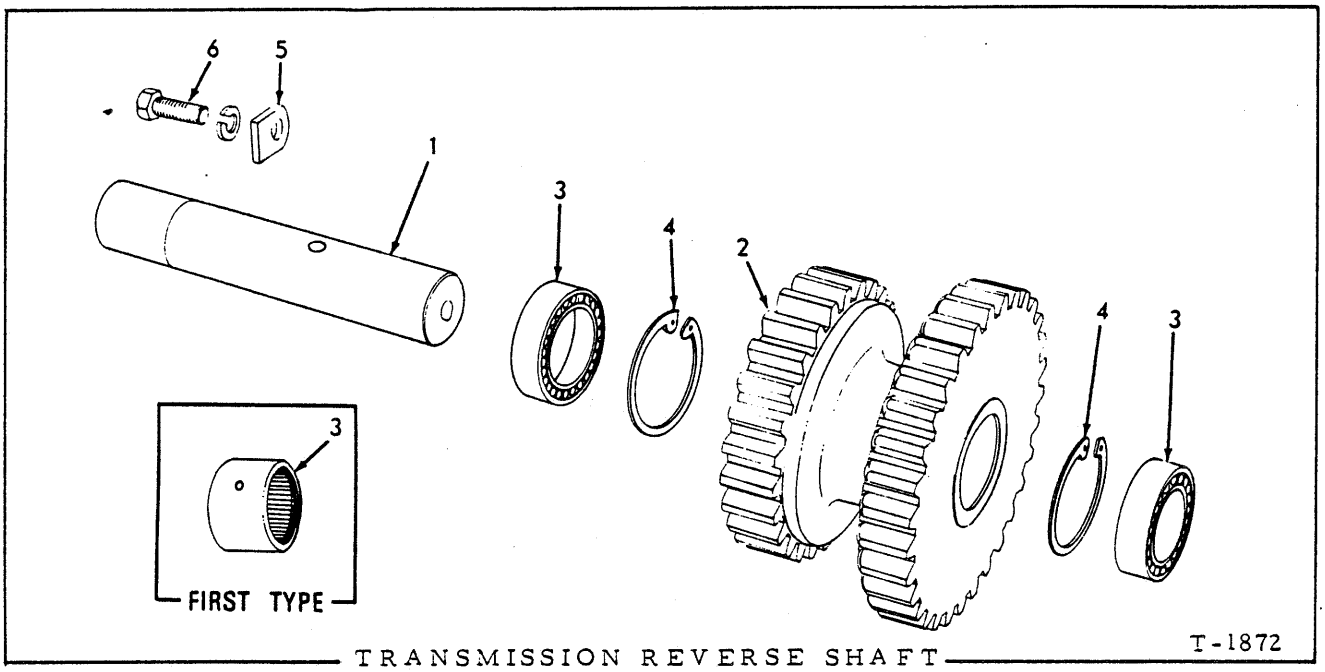

TRANSMISSION REVERSE SHAFT

* Used prior to Graders Unit No. 00647; also used on Graders Unit No. 00652 thru 00693, 00695, 00715, 00721 and Units No. 00728 thru 00737.

** Effective on Graders Unit No. 00647 thru 00651; 00694 thru 00727 excluding Nos. 00695, 00715, 00721; also Units No. 00738 and up.

ITEM	PART NO.	QTY. *	QTY. **	DESCRIPTION
1	77109015	1	-	SHAFT (1-1/4" diam.)
	77113401	-	1	SHAFT (1" diam.)
2	77125423	1	-	GEAR (26 and 31 teeth) (1-1/2" hole diam.)
	77113404	-	1	GEAR (26 and 31 teeth) (2-7/16" hole diam.)
3	70604435	2	-	BEARING, needle, reverse gear
	77113402	-	2	BEARING, roller, reverse gear
4	77113403	-	2	RING, snap
5	70059939	1	1	LOCK, reverse gear shaft
6	70922763	1	1	CAPSCREW, 3/8"NC x 1"
	70910287	1	1	LOCKWASHER, 3/8"

(Revised October 1973)

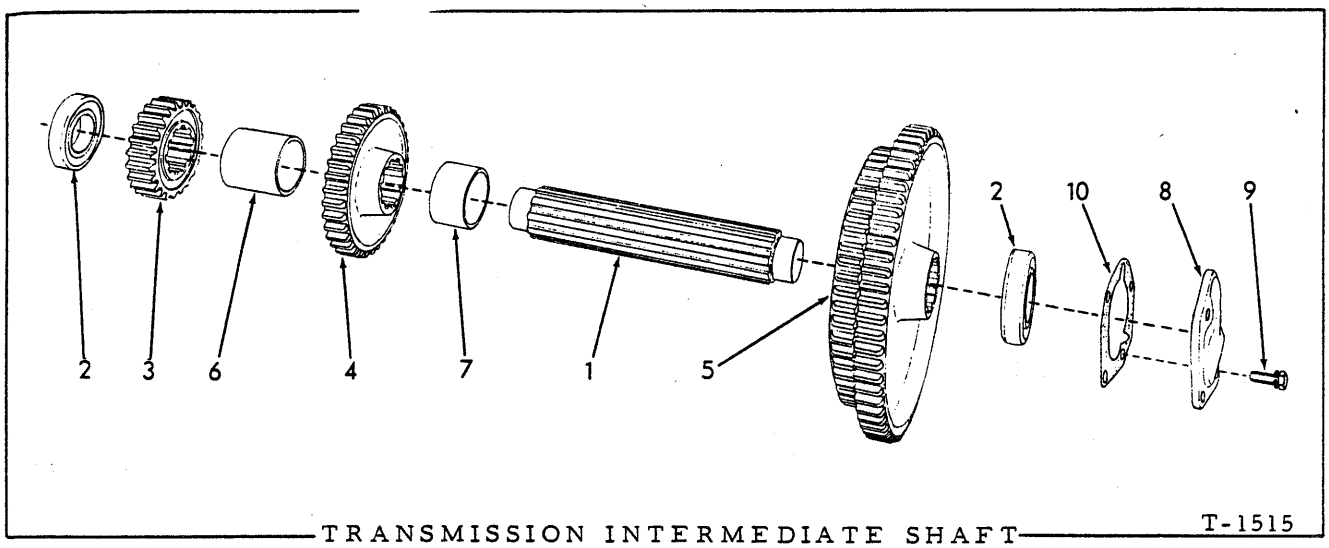

TRANSMISSION INTERMEDIATE SHAFT T-1515

ITEM	PART NO.	QTY.	DESCRIPTION
1	70059930	1	SHAFT
2	70698633	2	BEARING, ball
3	77125419	1	GEAR (20 teeth)
4	70059962	1	GEAR (34 teeth)
5	77125421	1	GEAR (53 and 64 teeth)
6	70059927	1	SPACER, gear (2-15/32" long)
7	70059961	1	SPACER, gear (1-3/8" long)
8	70059955	1	*CAP, front bearing
9	70922763	4	*CAPSCREW, 3/8"NC x 1"
	70910287	4	*LOCKWASHER, 3/8"
10	70059956	1	GASKET, front bearing cap

*Not used with Auxiliary Creeper Transmission.

(Revised May 1976)

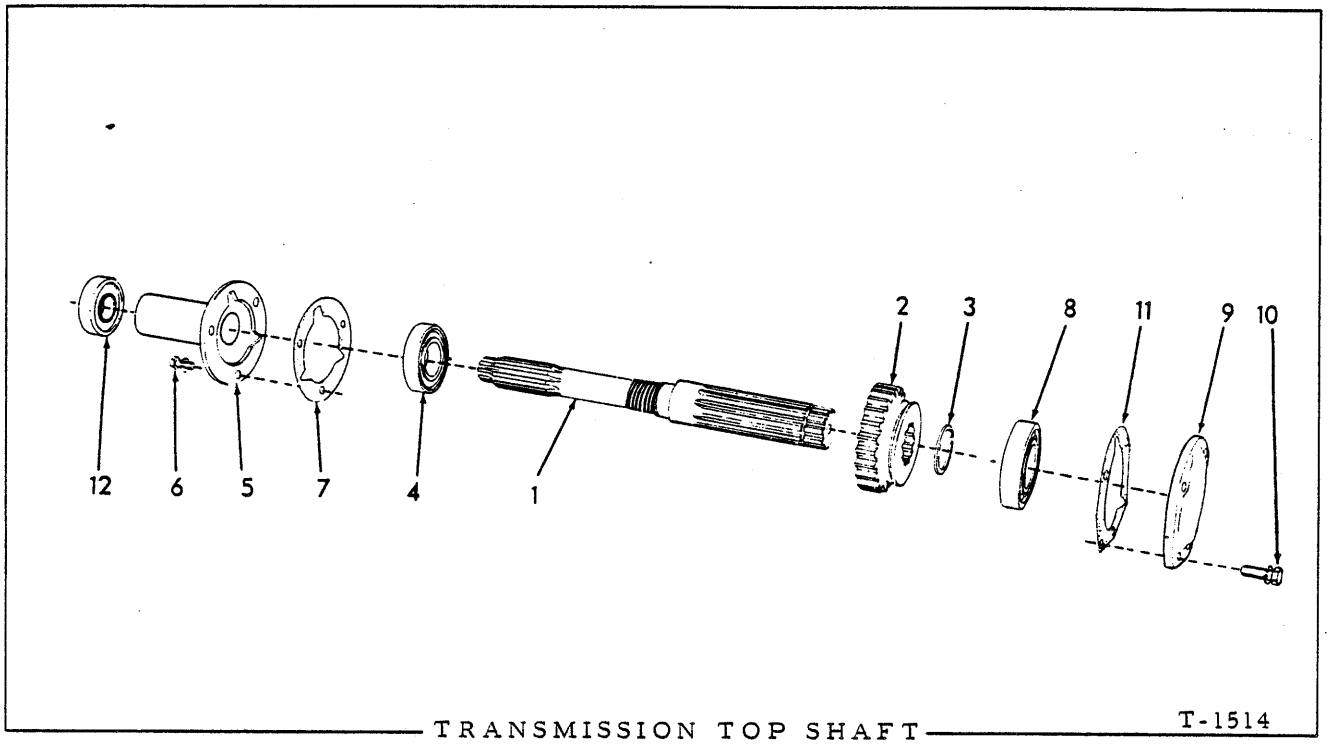

TRANSMISSION TOP SHAFT T-1514

ITEM	PART NO.	QTY.	DESCRIPTION
1	77125424	1	*SHAFT
2	77109018	1	*GEAR (24 teeth)
3	77118331	1	*RING, snap, gear retaining
4	74253907	1	BEARING, ball, intermediate
5	70096789	1	CAP, intermediate bearing
6	70922763	3	CAPSCREW, 3/8"NC x 1"
	70910287	3	LOCKWASHER, 3/8"
7	70059923	1	GASKET, intermediate bearing cap
8	70698633	1	*BEARING, ball, front
9	70059955	1	*CAP, front bearing
10	70922763	4	*CAPSCREW, 3/8"NC x 1"
	70910287	4	*LOCKWASHER, 3/8"
11	70059956	1	GASKET, front bearing cap
12	70226859	1	BEARING, ball, rear (In flywheel)

*Not used with auxiliary Creeper Transmission.

(Revised May 1976)

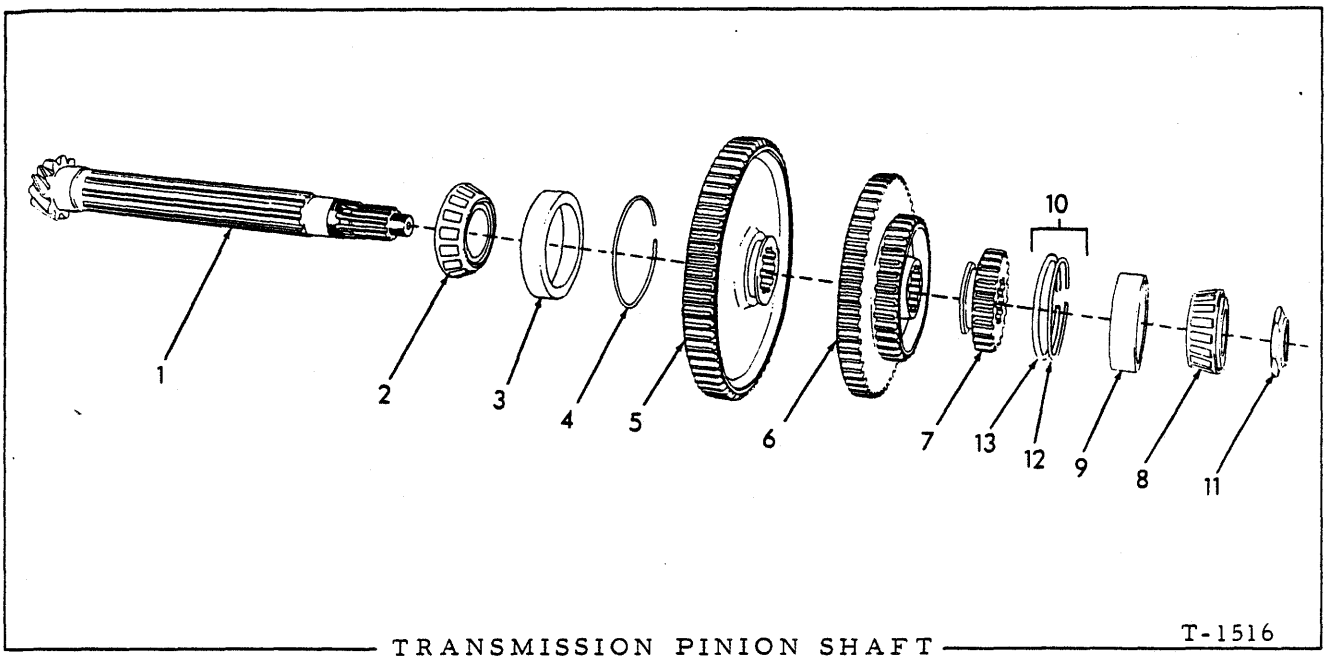

TRANSMISSION PINION SHAFT — T-1516

ITEM	PART NO.	QTY.	DESCRIPTION
1	-------	1	□SHAFT, pinion (Serviced only with matched bevel gear. Order GEAR SET 70077951)
2	70059934	1	CONE ASSY., pinion shaft bearing, rear
3	70059935	1	CUP, pinion shaft bearing, rear
4	70059936	1	RING, snap, rear pinion shaft bearing
5	77125420	1	GEAR (67 teeth)
6	70059942	1	GEAR (53 and 34 teeth)
7	70059943	1	GEAR (23 teeth)
8	70059954	1	CONE ASSY., pinion shaft bearing, front
9	70066741	1	CUP, pinion shaft bearing, front
10	70699169	1	RING KIT (Includes items 12 and 13)
11	70059946	1	NUT, adjusting, front pinion shaft bearing
12	70699095	1	RING, snap (.064" thick) } See item 10. Use as required
13	70699096	2	RING, snap (.072" thick) }

(Revised May 1976)

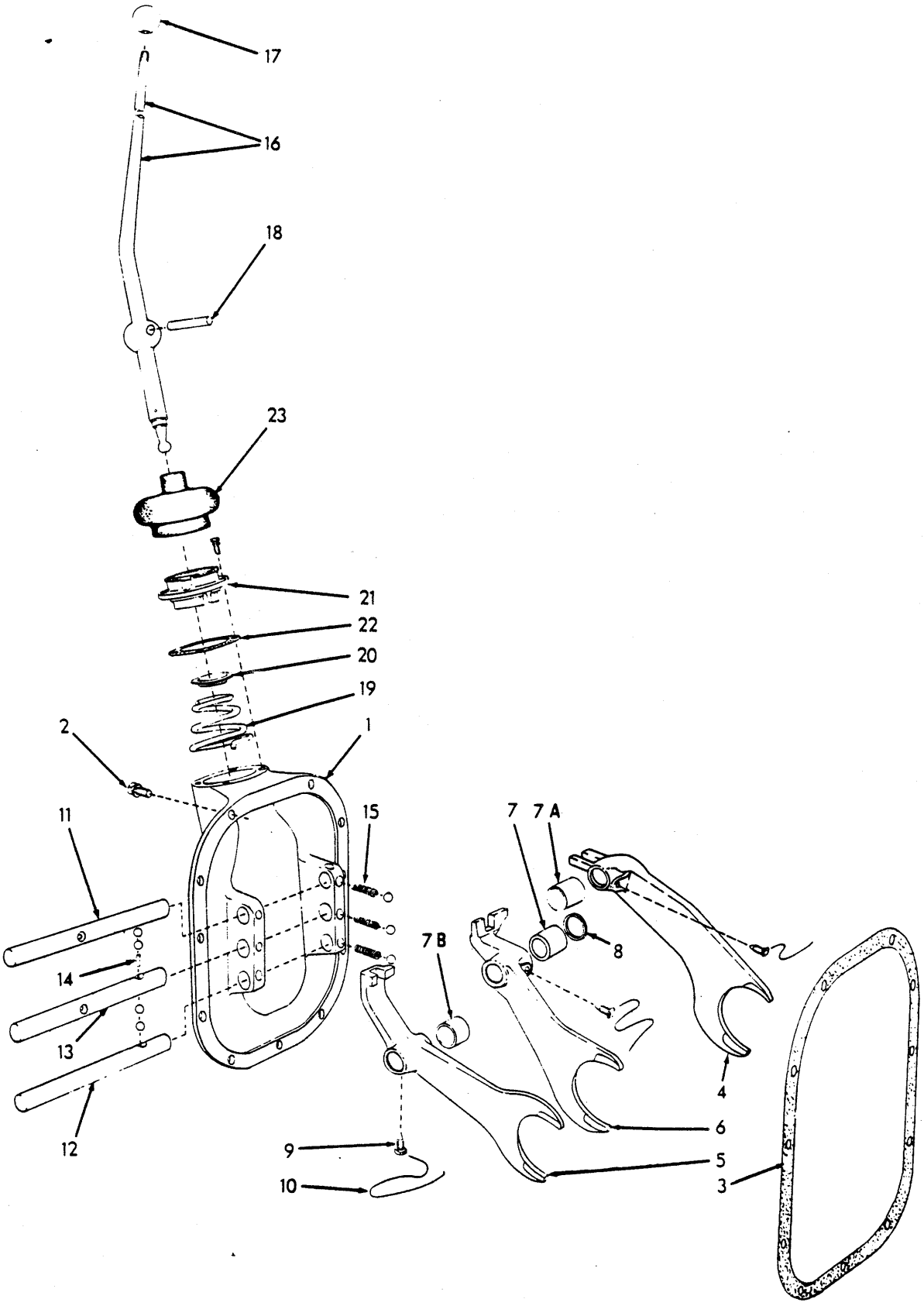

GEAR SHIFT

(Revised October 1973)

GEAR SHIFT

ITEM	PART NO.	QTY.	DESCRIPTION	
1	70059976	1	COVER, gear shift	
2	70922763	11	CAPSCREW, 3/8"NC x 1"	
	70910287	11	LOCKWASHER, 3/8"	
3	70059977	1	GASKET, gear shift cover	
4	70059989	1	FORK, first and reverse	
5	70059986	1	FORK, second and third	
6	70059988	1	FORK, fourth	
7	70068922	1	SPACER, shifting fork, fourth gear	
7A	77114841	1	SPACER, shifting fork, first and reverse gear	Late units
7B	77114842	1	SPACER, shifting fork, second and third gear	Late units
8	70097464	2	WASHER, spacing (Use as required)	
9	70202864	3	SETSCREW, shifting fork	
10	70023633	3	WIRE, locking, 1/16" x 12"	
11	70059990	1	ROD, gear shifting, first and reverse	
12	70059985	1	ROD, gear shifting, second and third	
13	70059987	1	ROD, gear shifting, fourth	
14	70059996	1	PIN, interlocking, shifting rod	
	70905361	4	BALL, steel, 7/16" diam.	
15	70059994	3	SPRING, shifting rod interlock	
	70905361	3	BALL, steel, 7/16" diam.	
16	77110421	1	LEVER, shifting	
17	70091862	1	KNOB, shifting lever	
18	70059993	1	PIN, shifting lever	
19	70059991	1	SPRING, shifting lever	
20	70059992	1	WASHER, shifting lever spring	
21	70073303	1	RETAINER, shifting lever	
	70915343	4	CAPSCREW, 1/4"NC x 5/8"	
	70910285	4	LOCKWASHER, 1/4"	
22	70059965	1	GASKET, gear shifting lever retainer	
23	70069920	1	BOOT, gear shifting lever	

(Revised October 1973)

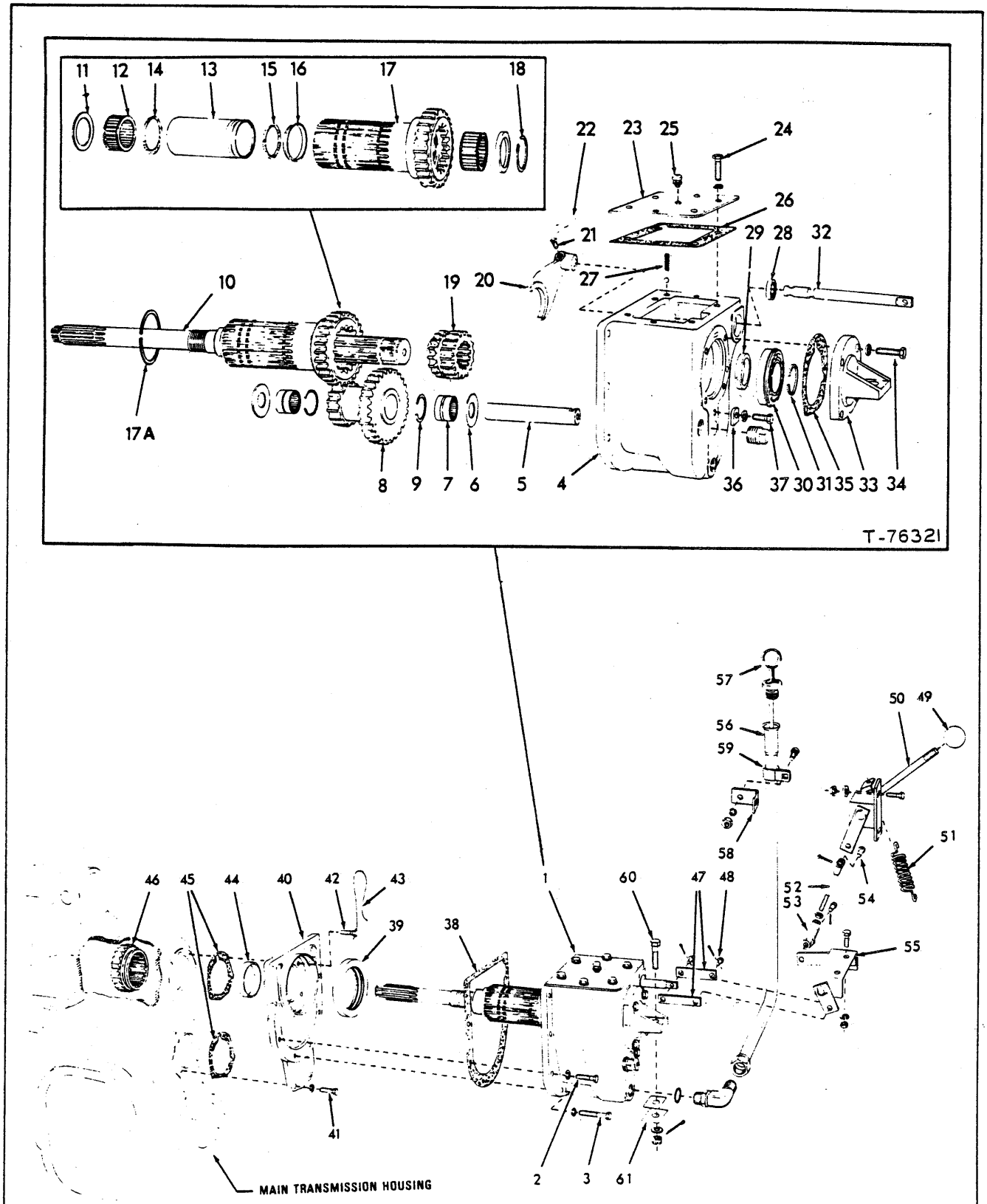

AUXILIARY CREEPER TRANSMISSION

(Revised May 1978)

AUXILIARY CREEPER TRANSMISSION

USAGE: Special equipment. Provides additional range of speeds one-third of standard

ITEM	PART NO.	QTY.	DESCRIPTION
1	70685887	1	TRANSMISSION ASSY., auxiliary (Consists of items 4 thru 37)
2	70921076	5	CAPSCREW, 3/8"NC x 1-1/4"
3	70920995	2	CAPSCREW, 3/8"NC x 2"
	70910287	7	LOCKWASHER, 3/8"
4	70677997	1	HOUSING transmission
	70912726	1	PLUG, pipe, 3/4"NPT
5	70088162	1	SHAFT, bottom
6	70098571	2	WASHER, bottom shaft
7	70676118	2	BEARING, roller, bottom shaft gear
8	70674802	1	GEAR, bottom shaft
9	70095868	2	RING, snap, bottom shaft gear
10	70677821	1	SHAFT, top
11	70088513	2	WASHER, top shaft
12	70508828	2	BEARING, roller, top shaft gear
13	70677820	1	SPACER, top shaft gear bearing
14	70654803	1	O-RING, bearing spacer (outer)
15	70654804	1	O-RING, bearing spacer (inner)
16	70650510	1	RING, bearing spacer
17	70685885	1	GEAR, top shaft
17A	70090485	1	RING, snap (Effective March 1975)
18	70050293	1	RING, snap, top shaft
19	70674803	1	GEAR, sliding, top shaft
20	70088163	1	FORK, shifting
21	70202864	1	SETSCREW
22	70023633	1	WIRE, locking, 1/16" x 12"
23	70677993	1	COVER, top
24	70922300	6	CAPSCREW, 3/8"NC x 3/4"
	70910287	6	LOCKWASHER, 3/8"
25	70634161	1	VENT, filler pipe
26	70088164	1	GASKET, top cover
27	70224925	1	SPRING, shifting fork shaft locking ball
28	70088778	1	SEAL, oil, shifting fork shaft
29	70088514	1	WASHER, bearing spacing

(Continued)

(Revised June 1975)

AUXILIARY CREEPER TRANSMISSION (Continued)

ITEM	PART NO.	QTY.	DESCRIPTION
30	70088551	1	BEARING, ball, top shaft
31	70051344	1	RING, snap, top shaft
32	70088154	1	SHAFT, shifting fork
	70905360	1	BALL, steel, 3/8" diam.
33	70088153	6	CAP, top shaft
34	70921076	4	CAPSCREW, 3/8"NC x 1-1/4"
	70910287	4	LOCKWASHER, 3/8"
35	70088152	1	GASKET, top shaft cap
36	70059939	1	LOCK, bottom shaft
37	70922763	1	CAPSCREW, 3/8"NC x 1"
	70910287	1	LOCKWASHER, 3/8"
38	70088150	1	GASKET, auxiliary transmission to adapter
39	70654805	1	SEAL, oil (5/8" wide)
40	70686277	1	ADAPTER ASSY. (Includes item 44)
41	70921076	2	CAPSCREW, 3/8"NC x 1-1/4"
	70910287	2	LOCKWASHER, 3/8"
42	70929069	4	CAPSCREW, drilled-hd., 3/8"NC x 1"
43	70023756	1	WIRE, locking, 1/16" x 26"
44	70686114	1	SLEEVE, pilot
45	70059956	2	GASKET, adapter to main transmission housing
46	70677822	1	GEAR, coupling (24 teeth)
47	70089668	2	LINK, control
48	70627451	2	PIN, control link
	70900942	2	PIN, cotter, 3/32" x 5/8"
49	70091862	1	KNOB, control rod
50	70678003	1	BRACKET AND LEVER, control (upper)
	70927173	2	CAPSCREW, 3/8"NC x 1-1/8"
	70677006	2	WASHER, plain
	70911026	2	NUT, 3/8"NC
51	70634503	1	SPRING
52	70678017	1	ROD, control
	70911048	1	NUT, jam, 3/8"NF
53	70628736	1	YOKE, control rod

(Continued)

AUXILIARY CREEPER TRANSMISSION (Continued)

ITEM	PART NO.	QTY.	DESCRIPTION
54	70078810	2	PIN, control rod
	70900942	2	PIN, cotter, 3/32" x 5/8"
55	70678001	1	BRACKET AND LEVER, control (lower)
	70922763	2	CAPSCREW, 3/8"NC x 1"
	70910287	2	LOCKWASHER, 3/8"
	70911026	2	NUT, 3/8"NC
56	70674034	1	TUBE ASSY., dipstick (Includes item 57)
	70924026	1	ELBOW, adjustable, 90°, flare type, 1" tube, 1-1/16"NF male end (Includes washer, nut and O-RING)
	70921206	1	O-RING, elbow
57	70678590	1	DIPSTICK, oil level
58	70678018	1	ANGLE, tube supporting
59	70621451	1	CLIP, tube supporting
	70922300	1	CAPSCREW, 3/8"NC x 3/4"
	70910287	1	LOCKWASHER, 3/8"
	70911026	1	NUT, 3/8"NC
60	70012466	1	CAPSCREW, transmission mounting
	70910244	1	WASHER, plain, SAE std., 1/2"
	70910867	1	NUT, slotted, 1/2"NF
	70910147	1	PIN, cotter, 3/32" x 1-1/8"
61	70059832	8	SHIM, alignment (Use as required)

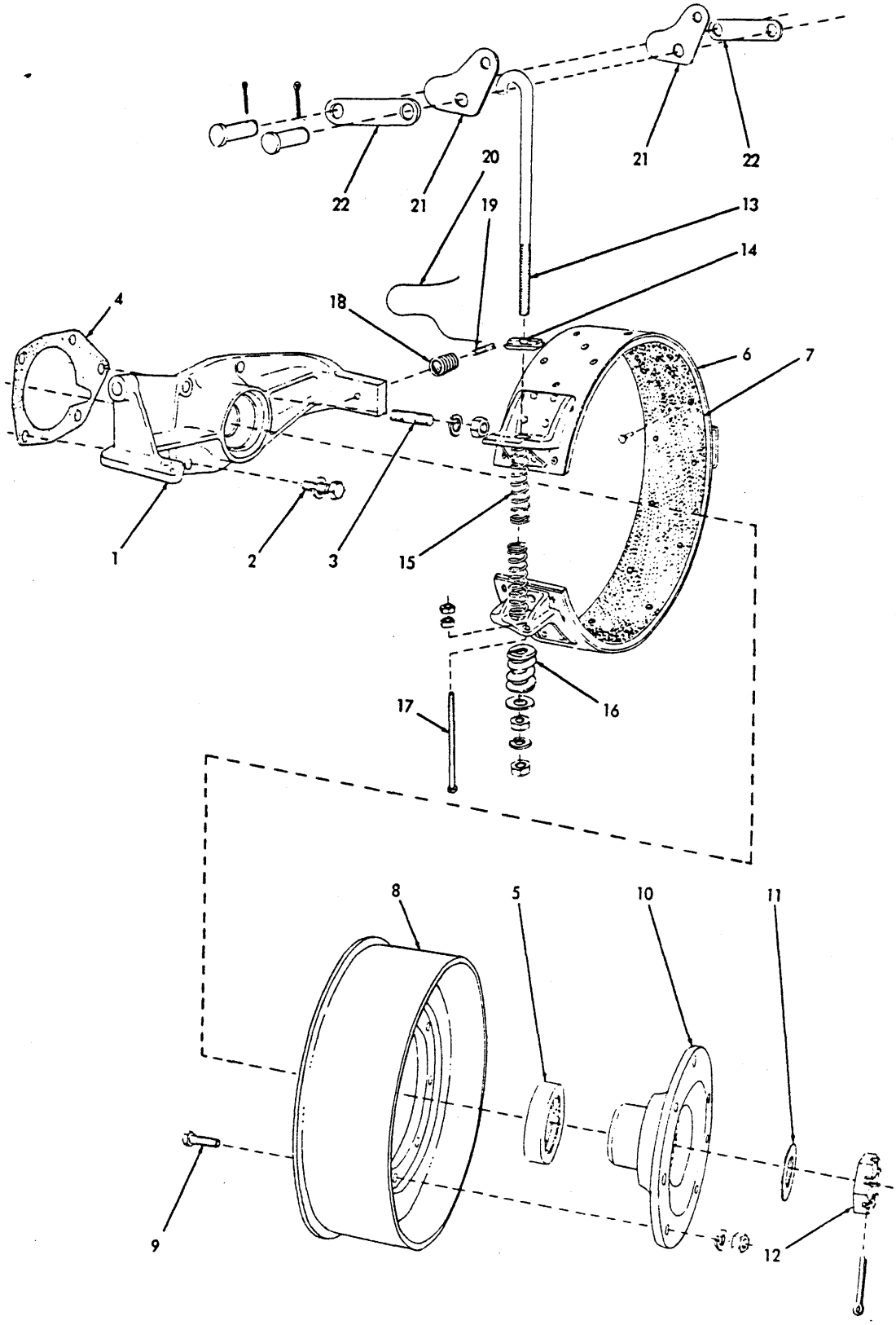

T-1517

TRANSMISSION BRAKE

TRANSMISSION BRAKE

ITEM	PART NO.	QTY.	DESCRIPTION
1	70059945	1	BRACKET, mounting
2	70920582	4	CAPSCREW, 1/2"NC x 1-1/4"
	70912441	4	LOCKWASHER, 1/2"
3	70059982	1	STUD (1/2" diam.)
	70912441	1	LOCKWASHER 1/2"
	70911043	1	NUT, 1/2"NF
4	70059944	1	GASKET, mounting bracket
5	70059947	1	SEAL, oil, mounting bracket
6	70059948	1	BAND ASSY. (Includes item 7)
7	70066856	1	LINING, band
	70911004	28	RIVET, tubular, brass, flat-hd., 9/64" x 3/8"
8	70059949	1	DRUM, brake
9	70923193	8	CAPSCREW, 3/8"NF x 1-1/4"
	70910287	8	LOCKWASHER, 3/8"
	70911041	8	NUT, 3/8"NF
10	70059951	1	FLANGE, drum mounting
11	70059953	1	WASHER, flange retaining
12	70059952	1	NUT, slotted
	70900808	1	PIN, cotter, 1/8" x 1-1/2"
13	70059974	1	BOLT, band adjustment
	70910244	2	WASHER, plain, SAE std., 1/2"
	70914678	1	LOCKWASHER, 7/16"
	70914879	2	NUT, jam, 7/16"NC
14	70059973	1	SHOE, cam lever
15	70059975	2	SPRING, band expanding
16	70059979	1	SPRING, band adjustment bolt
17	70059978	1	SCREW, band supporting
	70911024	2	NUT, 1/4"NC
18	70059981	1	SPRING, band centering
19	70059980	1	SCREW, band centering
20	70023633	1	WIRE, locking, 1/16" x 12"
21	70059969	2	LEVER, cam (When special Wheel Brakes are installed this part is assembled in reverse of position illustrated)
22	70059971	2	LINK, operating (Not used when grader is equipped with special Wheel Brakes)
	70083122	2	LINK, operating (For graders with special Wheel Brakes)
	70917648	2	PIN, yoke, 1/2" diam.
	70900806	2	PIN, cotter, 1/8" x 1"

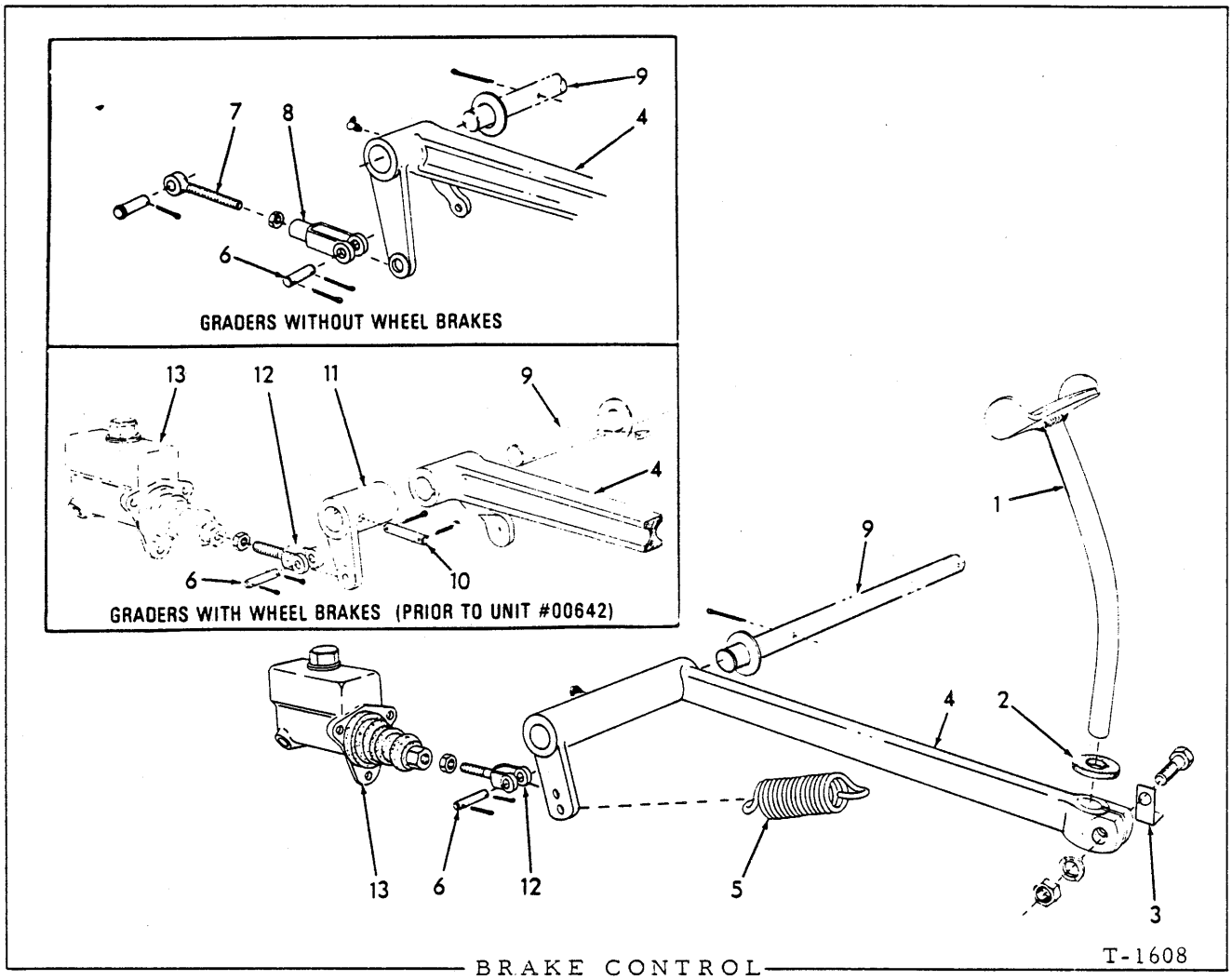

BRAKE CONTROL

*Graders not equipped with Wheel Brakes
**Graders equipped with Wheel Brakes

ITEM	PART NO.	QTY. *	QTY. **	DESCRIPTION
1	70065855	1	1	PEDAL, operating lever
2	70605785	1	1	BUMPER, pedal (rubber)
3	70068372	1	1	ANGLE, operating, stop light switch
4	70065857	1	-	LEVER, operating pedal
	70915019	1	-	FITTING, lube, 90°, 1/4"NF taper thd.
	70067849	-	1	LEVER, operating pedal (Graders prior to unit #00642)
	70683901	-	1	LEVER, operating pedal (Graders unit #00642 and up)
	70915019	-	1	FITTING, lubricating, 90°, 1/4"NF taper thd.
	70911159	1	1	WASHER, plain, SAE std., 1"
	70900811	1	1	PIN, cotter, 3/16" x 1-1/2"
	70927236	1	1	CAPSCREW, 1/2"NF x 2"
	70912441	1	1	LOCKWASHER, 1/2"
	70911043	1	1	NUT, 1/2"NF
	70905126	-	1	KEY, #15 woodruff, 1/4" x 1"

(Continued)

BRAKE CONTROL (Continued)

ITEM	PART NO.	QTY. *	QTY. **	DESCRIPTION	
5	70051193	1	1	SPRING, pedal lever retracting	
6	70605983	1	1	PIN, adjusting yoke	
	70900801	2	2	PIN, cotter, 3/32"x 3/4"	
7	70080704	1	-	EYE-BOLT, brake operating	
	70911048	1	-	NUT, jam, 3/8"NF	
	70078810	1	-	PIN, yoke, 3/8" diam.	
	70900801	1	-	PIN, cotter, 3/32" x 3/4"	
8	70604718	1	-	YOKE, adjusting	
9	-------	1	1	SHAFT (See ENGINE CLUTCH CONTROL)	
10	70601935	-	1	PIN, lever retaining	Graders prior to unit #00642
	70900805	-	1	PIN, cotter, 1/8" x 1"	
11	70067840	-	1	LEVER, operating, master cylinder	
12	70067834	-	1	YOKE, operating, master cylinder	
	70911042	-	1	NUT, 7/16"NF	
13	-------	-	1	MASTER CYLINDER (See WHEEL BRAKES)	

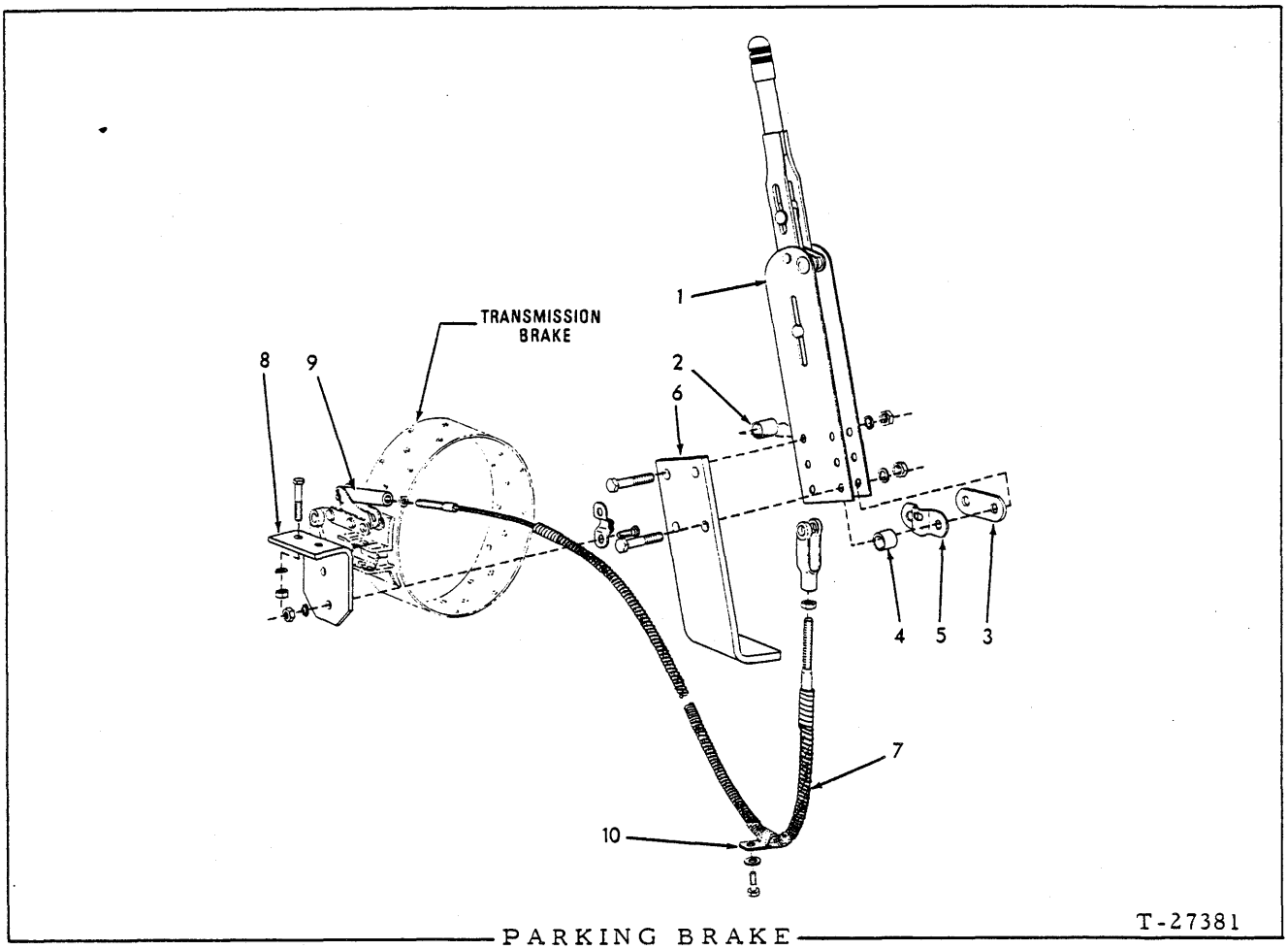

PARKING BRAKE

USAGE: Special Equipment

ITEM	PART NO.	QTY.	DESCRIPTION
1	70083850	1	LEVER ASSY., operating (Serviced only as a unit)
	70923124	4	CAPSCREW, 5/16"NC x 2"
	70910286	4	LOCKWASHER, 5/16"
	70911025	4	NUT, 5/16"NC
2	70083847	2	SPACER, lever mounting (1" long)
3	70083851	1	SPACER, cable clamp
4	70083849	2	SPACER, lever mounting (1/2" long)
5	70083848	2	CLAMP, cable supporting
	70914392	-	CAPSCREW, 5/16"NC x 1"
	70927373	2	CAPSCREW, 5/16"NC x 7/8"
	70910286	2	LOCKWASHER, 5/16"
	70911025	2	NUT, 5/16"
6	70083653	1	BRACKET, lever mounting (Welded to frame)
7	77109935	1	CABLE ASSEMBLY (Includes housing)
	70628736	1	YOKE, rod end (adjustable, 3/8"NF)
	70911048	1	NUT, jam 3/8"NF

(Continued)

PARKING BRAKE (Continued)

ITEM	PART NO.	QTY.	DESCRIPTION
8	70083654	1	BRACKET, cable supporting
	70920660	2	CAPSCREW, 5/16"NC x 1-1/2"
	70910286	2	LOCKWASHER, 5/16"
	70911025	2	NUT, 5/16"NC
9	70083652	1	LINK, operating cable
	70078810	1	PIN, yoke (3/8" diam.)
	70900801	1	PIN, cotter, 3/32" x 3/4"
10	70094527	2	CLIP, cable supporting
	70927484	2	CAPSCREW, 3/8"NC x 1/2"
	70911115	2	WASHER, plain, SAE std., 3/8"

MEMO

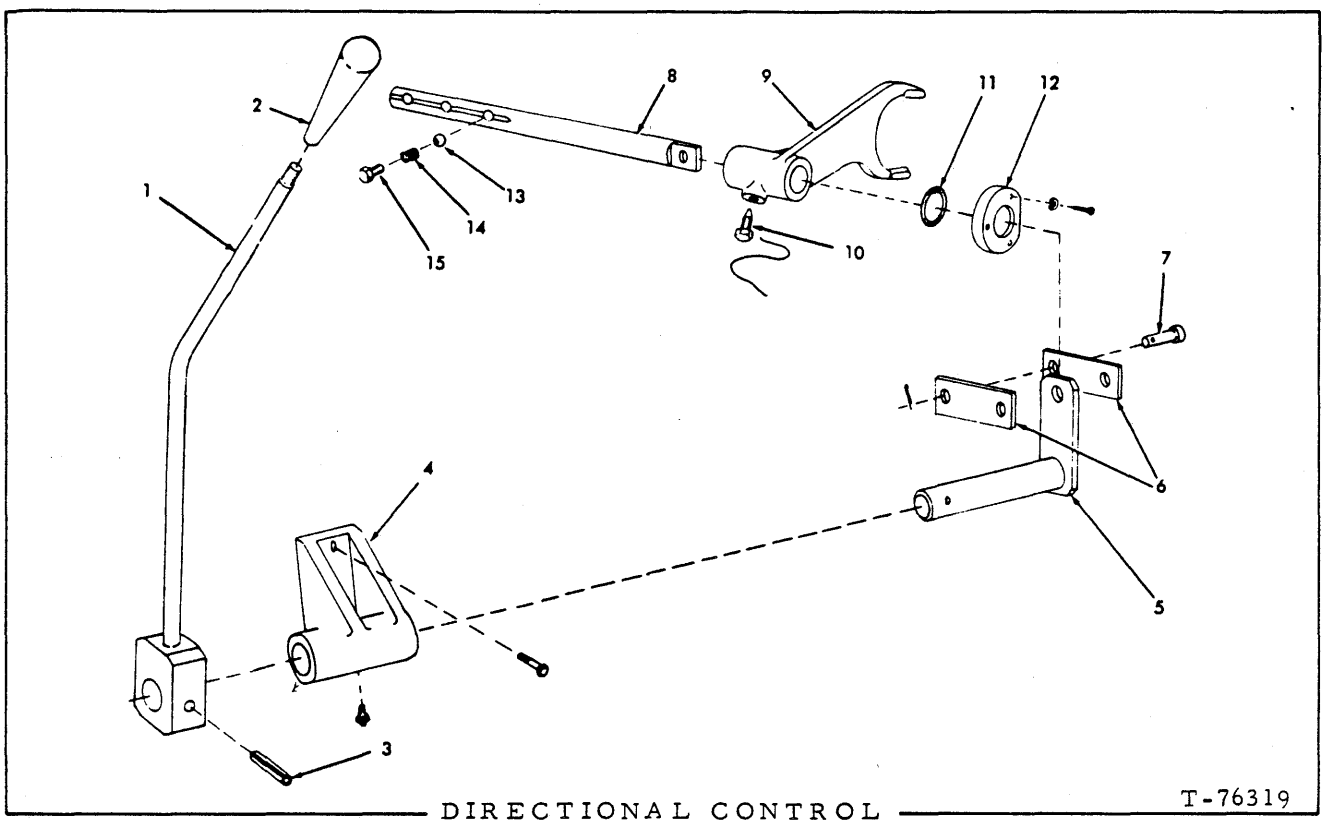

DIRECTIONAL CONTROL

ITEM	PART NO.	QTY.	DESCRIPTION
1	77110411	1	LEVER, shifting (First type. Used prior to June 1971)
	77112070	1	LEVER, shifting (Second type. Effective June 1971)
2	77110365	1	KNOB, shifting lever
3	70915523	1	PIN, spring
4	77109023	1	BRACKET (First type. Used prior to June 1971)
	77112069	1	BRACKET (Second type. Effective June 1971)
	70914465	1	FITTING, lubricating, straight, 1/8"NPT (For second type BRACKET only)
	70916272	2	SCREW, 3/8"NC x 1-1/4"
5	77109020	1	SHAFT, shifting (4-1/2" lever)(Used prior to June 1971)
	77112071	1	SHAFT, shifting (6" lever)(Effective June 1971)
6	77109019	2	LINK, shifting shaft
7	70917646	2	PIN, shifting link
	70912364	2	PIN, cotter, 3/32" x 3/4"
8	77109016	1	SHAFT, shifting fork
9	77109017	1	FORK, shifting
10	70202864	1	SCREW, shifting fork
	70023633	1	WIRE, locking, 1/16" x 12"
11	77125234	1	O-RING
12	77109014	1	CAP
	70916282	3	SCREW, 1/4"NC x 7/8"
	70910285	3	LOCKWASHER, 1/4"
13	70905361	1	BALL, steel
14	70059994	1	SPRING
15	70920603	1	SCREW, 1/2"NF x 1-1/8"

(Revised October 1973)

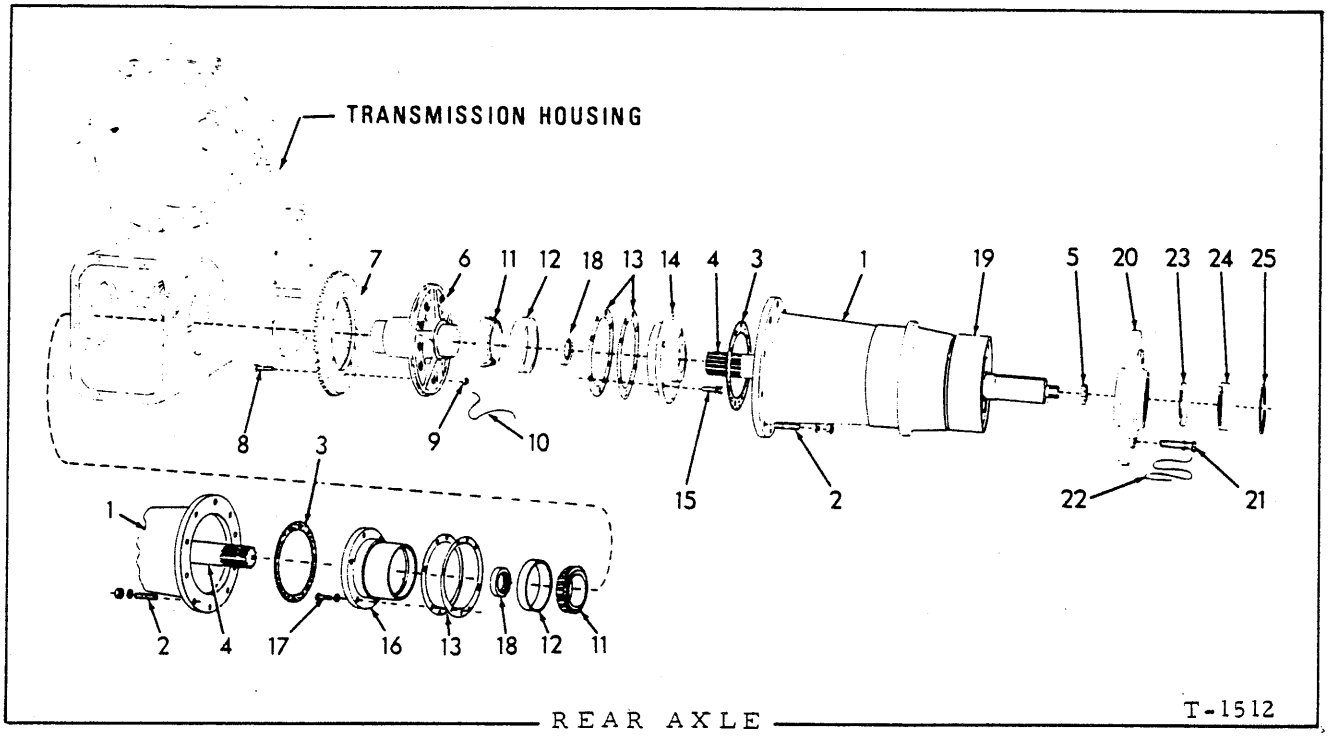

REAR AXLE

T-1512

ITEM	PART NO.	QTY.	DESCRIPTION
1	70076382	2	HOUSING
2	70059914	20	STUD (1/2" diam.)
	70912441	20	LOCKWASHER, 1/2"
	70911043	20	NUT, 1/2"NF
3	77113071	2	GASKET, housing
4	73107899	2	SHAFT
5	-------	-	NUT, shaft (See TANDEMS)
6	70059921	1	HUB, bevel gear
7	-------	1	GEAR, bevel (Serviced only with matched pinion shaft. Order GEAR SET 70077951)
8	70063994	12	CAPSCREW, drilled end, 7/16"NF x 1-1/2"
9	70063995	12	NUT, castle, 7/16"NF
10	70023633	6	WIRE, locking, 1/16" x 12"
11	70210732	2	CONE ASSY., bevel gear hub bearing
12	70061090	2	CUP, bevel gear hub bearing
13	70059915	4	SHIM, bearing adjusting (.010" thick. Use as required)
	70067276	2	SHIM, bearing adjusting (.007"thick. Use as required)
	70059916	4	SHIM, bearing adjusting (.004" thick. Use as required)
14	70059922	1	CAGE, bevel gear hub right bearing
15	70921569	6	CAPSCREW, 7/16"NC x 1-1/4"
	70914678	6	LOCKWASHER, 7/16"

(Continued)

(Revised September 1976)

ITEM	PART NO.	QTY.	DESCRIPTION
16	70059917	1	CAGE, bevel gear hub left bearing
17	70921569	6	CAPSCREW, 7/16"NC x 1-1/4"
	70914678	6	LOCKWASHER, 7/16"
18	70068513	2	SEAL, oil, bearing cage
19	70054297	2	BUSHING, housing
20	70076381	2	CAP, housing end
21	70041266	12	CAPSCREW, 5/8"NC x 2"
	70912942	12	LOCKWASHER, 5/8"
22	70023765	2	WIRE, locking, 1/16" x 26"
23	70054295	2	SEAL, oil, housing end cap
24	73107208	2	BEARING, ball, housing end cap
25	70054296	2	RING, snap, housing end cap bearing

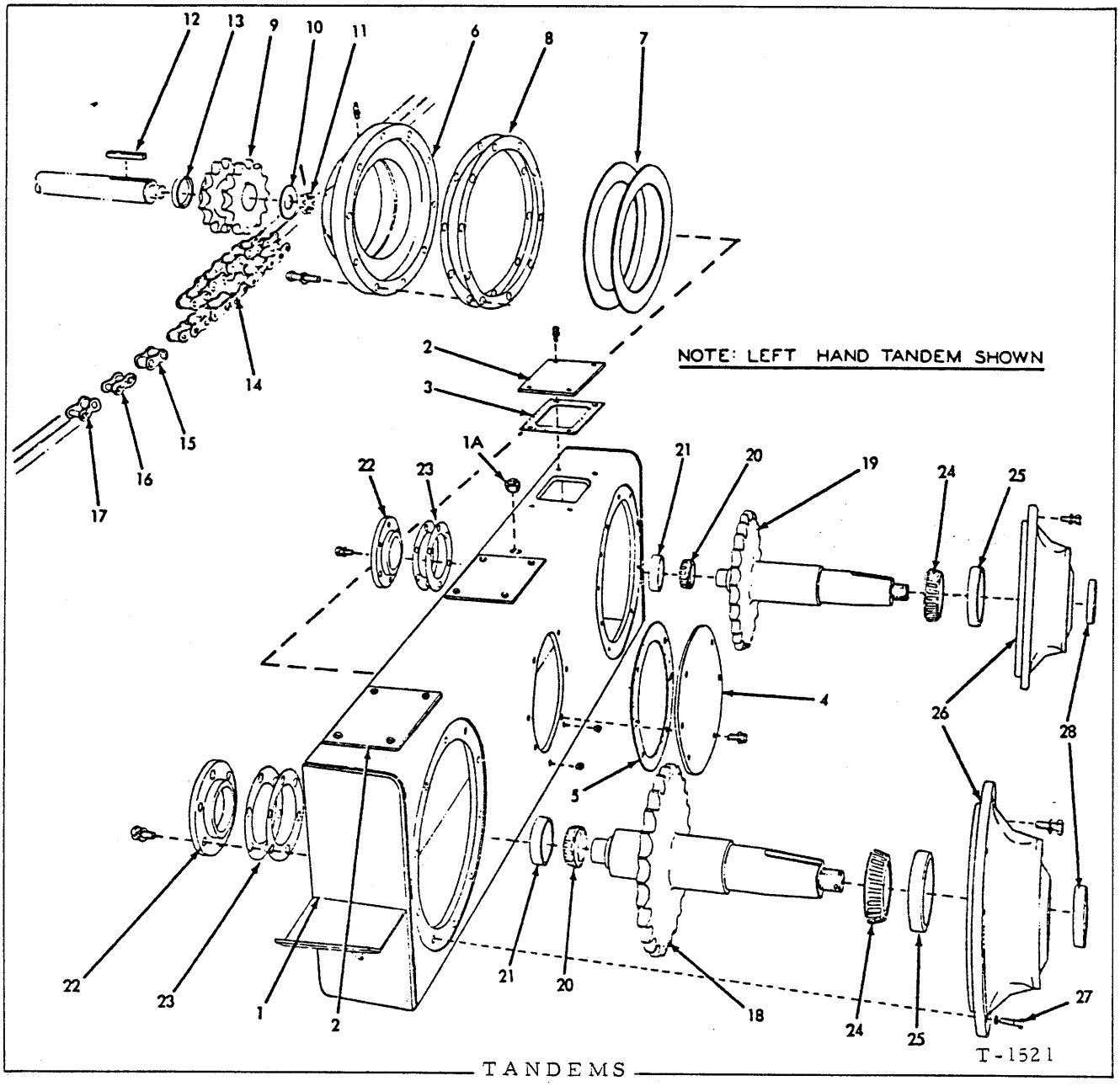

TANDEMS

ITEM	PART NO.	QTY.	DESCRIPTION
1	77109364	1	CASE, tandem (left) (Graders prior to unit #01299)
	70687945	1	CASE, tandem (left)(Grader unit #01299 and up)
	77109365	1	CASE, tandem (right)(Graders prior to unit #01299)
	70687946	1	CASE, tandem (right)(Grader unit #01299 and up)
	70901652	4	PLUG, pipe, 1/4"NPT
1A	70051094	2	PLUG, vent (3/4"NPT)
2	70054755	6	COVER, case access hole, top
	70922262	24	CAPSCREW, 3/8"NC x 7/8"
	70910287	24	LOCKWASHER, 3/8"
3	70054756	6	GASKET, top access hole cover
4	70054757	2	COVER, case access hole, side
	70922262	12	CAPSCREW, 3/8"NC x 7/8"
	70910287	12	LOCKWASHER, 3/8"

(Continued)

ITEM	PART NO.	QTY.	DESCRIPTION
5	70054758	2	GASKET, side access hole cover
6	70054774	2	HUB, case
	70924864	12	CAPSCREW, 1/2"NC x 2-1/4" (Upper)
	70924865	8	CAPSCREW, Nylok, 1/2"NC x 2-1/4" (Lower)
	70912441	20	LOCKWASHER, 1/2"
	70914465	2	FITTING, lubricating, straight, 1/8"NPT
7	70054764	4	WASHER, hub thrust
8	70054766	18	SHIM, case hub (.010" thick) } Use as required
	70054763	14	SHIM, case hub (.005" thick) } Use as required
	70647947	4	SHIM, case hub (.003" thick) } Use as required
9	70646974	2	SPROCKET, drive (9-tooth)
10	70040101	2	WASHER
11	70058028	2	NUT (slotted)
	70900808	2	PIN, cotter, 1/8" x 1-1/2"
12	70646973	2	KEY, drive sprocket
13	70054754	2	SPACER, drive sprocket
14	70623645	4	CHAIN, driving (42 links. Includes items 15 and 16)(Graders prior to #01299)
	70687949	4	CHAIN, driving (44 links. Includes item 15 and 16)(Graders unit #01299 and up)
15	70623646	-	LINK, roller, driving chain service (1-1/2" pitch)
16	70623647	-	LINK, connecting, driving chain service (1-1/2" pitch)
17	70624428	-	LINK, offset, driving chain (2 pitches. Used to alter length of chain 1-1/2". Requires use of extra connecting link)
18	70623654	2	SHAFT AND SPROCKET, front wheel
19	70623652	1	SHAFT AND SPROCKET, right rear wheel
	70623650	1	SHAFT AND SPROCKET, left rear wheel (Has tapped holes for driving odometer)
20	70209889	4	CONE ASSY., wheel shaft inner bearing
21	70209890	4	CUP, wheel shaft inner bearing
22	70054765	4	RETAINER, wheel shaft inner bearing (See page 190 for special retainer used when ODOMETER is installed)
	70920582	24	CAPSCREW, 1/2"NC x 1-1/4"
	70912441	24	LOCKWASHER, 1/2"
23	70054752	32	SHIM, wheel shaft bearing (.010" thick) } Use as required
	70054753	32	SHIM, wheel shaft bearing (.005" thick) } Use as required
24	70066128	4	CONE ASSY., wheel shaft outer bearing
25	70066129	4	CUP, wheel shaft outer bearing
26	70054775	4	RETAINER, wheel shaft outer bearing (Graders prior to unit #00642)
	70083096	4	RETAINER, wheel shaft outer bearing (Grader unit #00642 and up; also graders prior to unit #00642 if equipped with Wheel Brakes)
	70920582	24	CAPSCREW, 1/2"NC x 1-1/4"
	70912441	40	LOCKWASHER, 1/2"
27	70643392	16	CAPSCREW, Nylok, 1/2"NC x 1-1/8"
28	70048703	4	SEAL, oil wheel shaft

MEMO

(Revised January 1975)

MEMO

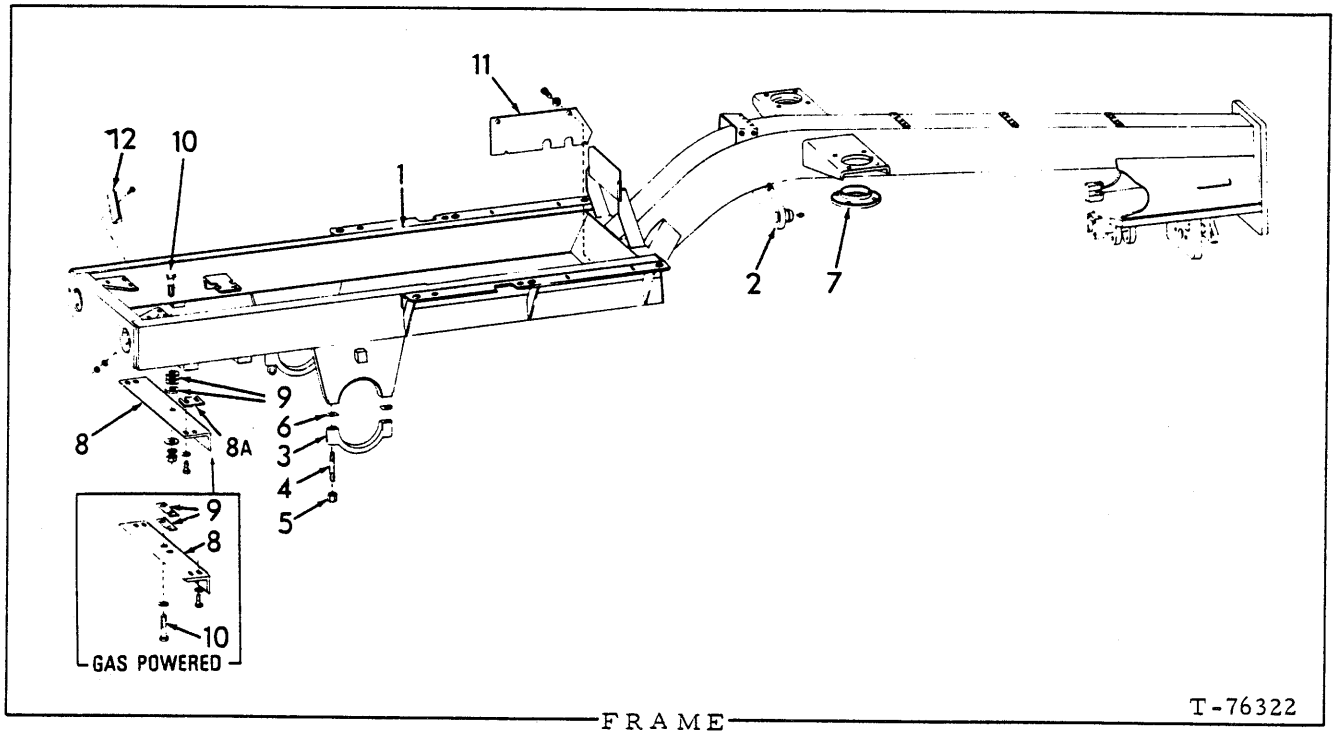

FRAME

FRAME

* Diesel-powered, effective serial No. 24A00201, 56Y02201
** Gas-powered, effective serial No. 75Y00201

ITEM	PART NO.	QTY. *	QTY. **	DESCRIPTION	
1	70684357	1	1	FRAME ASSY. (Graders prior to unit #01528)	Each includes items 2 thru 7
	70693133	1	1	FRAME ASSY. (Grader unit #01528 and up)	
	70914465	1	1	FITTING, lubricating, straight, 1/8"NPT	
2	70620204	1	1	△BRACKET, side shift	
3	70066179	2	2	CAP, trunnion	
4	70050913	4	4	STUD (3/4" diam.)	
5	70012767	4	4	NUT, high, 3/4"NF	
6	70055062	24	24	SHIM, trunnion cap (Use as required)	
7	70658497	2	2	△SOCKET, lift cylinder	
				△Requires welding to install	
8	77108679	1	-	ANGLE, engine rear support	
	70677225	-	1	ANGLE, engine rear support	
	70920582	4	4	CAPSCREW, 1/2"NC x 1-1/4"	
	70928188	4	4	WASHER, plain, SAE std., 1/2"	
8A	70693642	4	-	SHIM, aligning (Use as required)	
9	70067924	3	-	WASHER, engine shimming	Use as required
	70086961	1	-	WASHER, engine shimming	
	70203159	-	6	SHIM, engine aligning	
	70203165	-	5	SHIM, engine aligning	
10	70921173	1	-	CAPSCREW, engine mounting (5/8"NC x 2-1/2")	
	70677010	1	-	WASHER, plain	
	70915256	1	-	NUT, 5/8"NC	
	70925135	-	2	CAPSCREW, engine mounting (1/2"NC x 3-1/4")	
	70677008	-	2	LOCKWASHER, 1/2"	
11	70673821	1	1	PLATE, enclosure	
	70927541	4	4	CAPSCREW, 1/4"NC x 3/4"	
	70677004	4	4	WASHER, plain	
12	70683911	1	1	COVER, tail light hole (Effective with grader unit #00642. Not used when special Tail Lights are installed)	
	70922763	1	1	CAPSCREW, 3/8"NC x 1"	
	70677006	1	1	WASHER, plain	
	70911026	1	1	NUT, 3/8"NC	

(Revised June 1977)

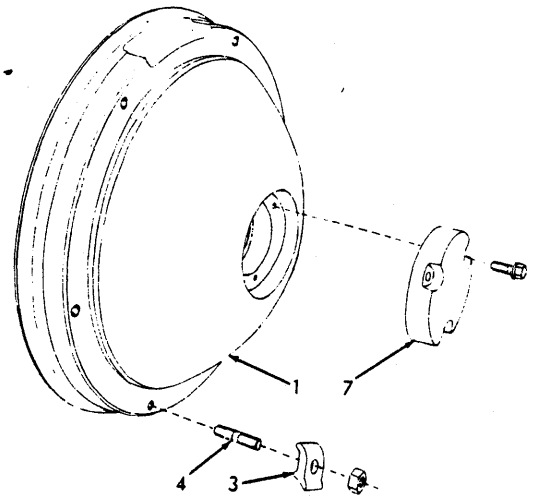

For 7.50 and 15.00 Tires T-1619

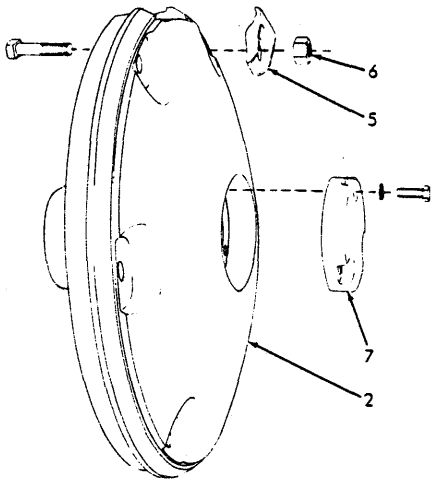

For 8.25 Tires T-11290

FRONT WHEELS

*Standard prior to Unit No. 01278. For 7.50 Tires when using drop-center rims.
**Special prior to Unit No. 01278; Standard thereafter. For 8.25 Tires when using flat-base rims
***Special equipment. For 15.00 tires when using flat-base rims

ITEM	PART NO.	QUANTITY *	**	***	DESCRIPTION
1	70685801	2	-	-	WHEEL, front (For first replacement on units prior to #00694 also order 6 - CLAMP 70685799, 6 - STUD 70603488 and 6 - NUT 70601405)
	70688396	-	-	2	WHEEL, front
2	70079635	-	2	-	WHEEL, front
3	70685799	12	-	12	CLAMP, wheel rim (For first replacement on units prior to #00694 with 7.50 tires also order 1 - STUD 70603488 and 1 - NUT 70601405)
4	70054882	12	-	-	STUD (1/2"NC)(Graders prior to unit #00694)
	70603488	12	-	12	STUD (5/8"NC)(Graders unit #00694 and up; also used on all graders with 15.00 tires)
	70907517	12	-	-	NUT, cd.-pltd, 1/2"NC
	70601405	12	-	12	NUT (5/8"NC)
5	70604361	-	12	-	CLAMP, wheel rim
	70913956	-	12	-	BOLT, machine, 5/8"NC x 2-1/2"
6	70601405	-	12	-	NUT, wheel rim bolt
7	70603954	2	2	2	CAP, hub
	70922763	6	6	6	CAPSCREW, 3/8"NC x 1"
	70910287	6	6	6	LOCKWASHER, 3/8"

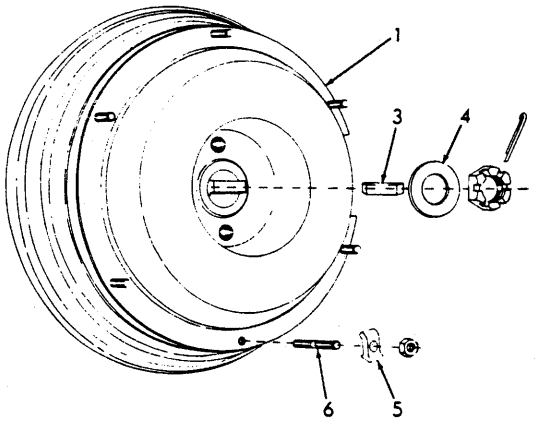

For 7.50 Tires T-76392

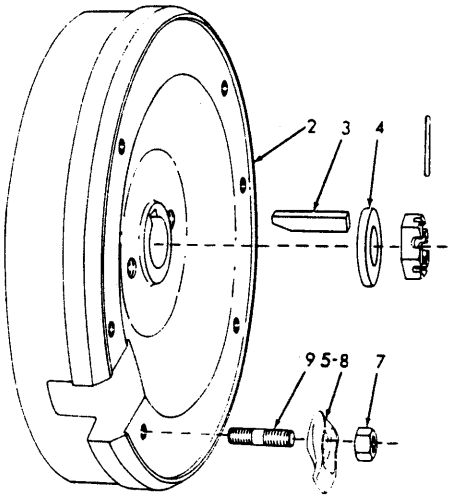

For 8.25 and 15.00 Tires T-12012

REAR WHEELS

*Standard on graders prior to Unit No. 01278. For 7.50 tires when used with drop-center rims.
**Special on graders prior to Unit No. 01278; Standard thereafter. For 8.25 tires when used with flat-base rims.
***Special equipment. For 15.00 tires when used with flat-base rims.

ITEM	PART NO.	QUANTITY *	**	***	DESCRIPTION
1	70675109	4	-	-	WHEEL, rear (Units without wheel brakes)
	70685800	4	-	-	WHEEL, rear (Units with wheel brakes)(If for first replacement on units prior to #00694 also order 6 - CLAMP 70685799, 6 - STUD 70603488 and 6 - NUT 70601405)
2	70676602	-	4	-	WHEEL, rear (Units without wheel brakes)
	70676603	-	4	-	WHEEL, rear (Units with wheel brakes)
	70688400	-	-	4	WHEEL, rear
3	70054888	4	4	4	KEY, rear wheel
4	70053606	4	4	4	WASHER, rear wheel retaining
	70913527	4	4	4	NUT, jam, slotted, 1-1/2"NF
	70900813	4	4	4	PIN, cotter, 3/16" x 2"
5	70685799	24	-	24	CLAMP, wheel rim (For first replacement on units prior to #00694 with 7.50 tires also order 1 - STUD 70603488 and 1 - NUT 70601405)
6	70054882	24	-	-	STUD (1/2"NC)(Graders prior to unit #00694)
	70603488	24	-	24	STUD (5/8"NC)(Graders unit #00694 and up; also used on all graders with 15.00 tires)
	70907517	24	-	-	NUT, cd.-pltd., 1/2"NC
	70601405	24	-	-	NUT (5/8"NC)
7	70601405	-	24	24	NUT, wheel rim
8	70604361	-	24	-	CLAMP, wheel rim
9	70090418	-	24	-	STUD, rim clamp

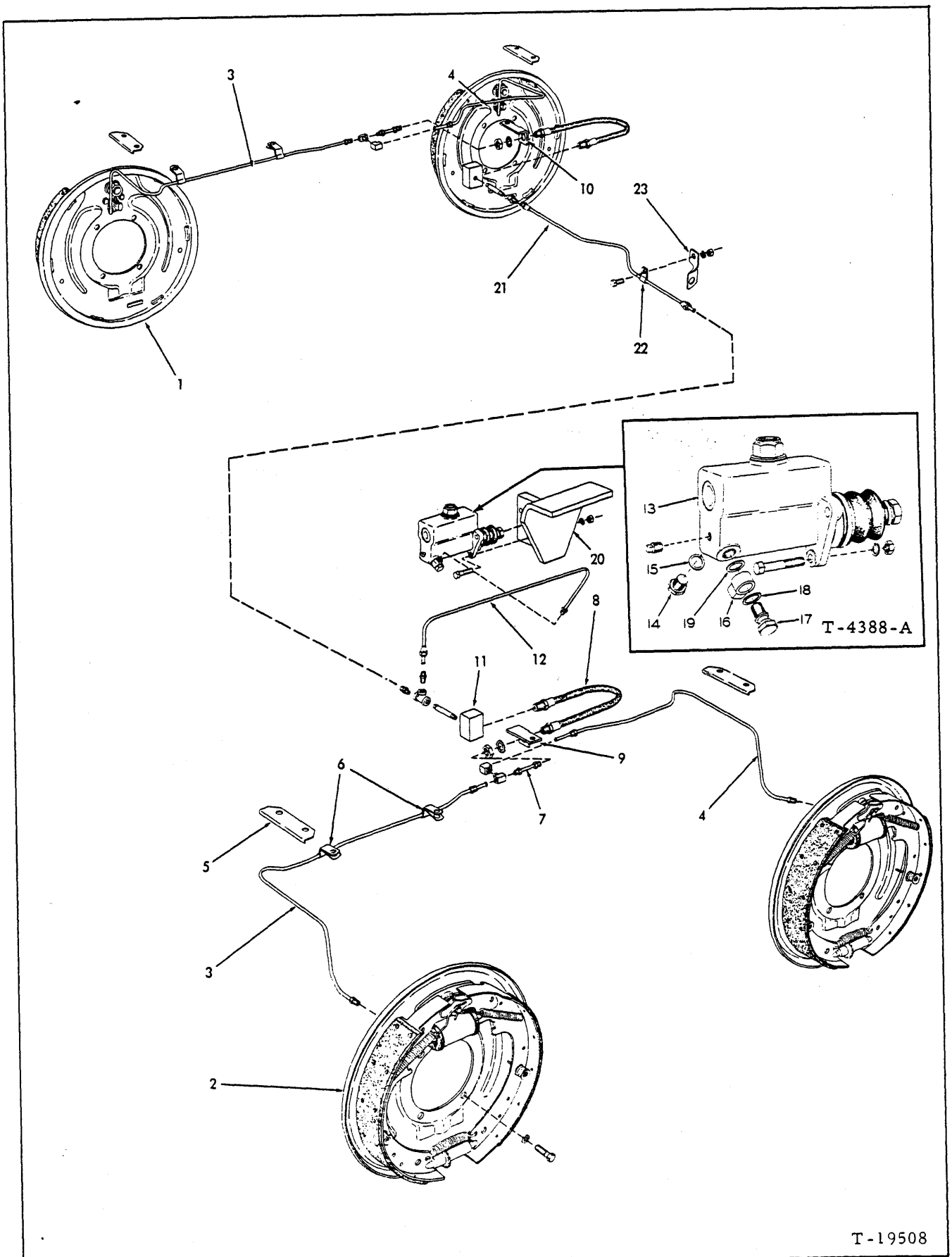
3
4
10
23
21
22
1
13
15
14
19
16
18
17
T-4388-A
20
8
12
11
9
6
7
5
4
3
2
T-19508

WHEEL BRAKES

USAGE: Special equipment on Graders prior to serial No. 24 A00642 and 75 Y00642; Standard thereafter.

ITEM	PART NO.	QTY.	DESCRIPTION
1	-------	2	BRAKE ASSEMBLY, left wheels (See page 126)
	70927172	8	CAPSCREW, 1/2"NC x 1-1/8"
	70931523	8	WASHER
2	-------	2	BRAKE ASSEMBLY, right wheels (See page 126))
	70927172	8	CAPSCREW, 1/2"NC x 1-1/8"
	70931523	8	WASHER
3	70083600	2	TUBE ASSEMBLY, rear brakes (Each includes 2 NUTS 70913536) (To be formed at assembly)
	70913536	4	NUT, inverted flare type, 1/4" tube
	70915841	2	TEE, inverted flare type, 1/4" tube, 1/8"NPT male
	70915842	2	ELBOW, inverted flare type, 1/4" tube, 1/8"NPT male
4	70083601	2	TUBE ASSEMBLY, front brakes (Each includes 2 NUTS 70913536) (To be formed at assembly)
	70913536	4	NUT, inverted flare type, 1/4" tube, 1/8"NPT male
5	70067836	4	SHIELD, brakes tubes
6	70067835	4	CLIP, supporting, brake tubes
7	70068479	2	TUBE ASSEMBLY, tee to hose (Each includes 2 NUTS 70913536)
	70913536	4	NUT, inverted flare type, 1/4" tube, 1/8"NPT male
8	70600675	2	HOSE, connecting, brake tubes (17-1/4"long)
	70910543	2	LOCKWASHER, external teeth, 5/8"
	70911049	2	NUT, jam, 5/8"NF
9	70067837	1	BRACKET, hose supporting, right side
10	70067838	1	BRACKET, hose supporting, left side
11	70083140	2	BLOCK, hose connecting (welded to frame)
	70901470	2	NIPPLE, pipe, 1/8"NPT x 2-1/2"
12	70083564	1	TUBE ASSEMBLY, master cylinder (Includes 1 NUT 70910136 and 1 NUT 70913536)
	70910136	1	NUT, flare type, long, 1/4" tube
	70913536	1	NUT, inverted flare type, 1/4" tube, 1/8"NPT male
	70901702	1	TEE, pipe, 1/8"NPT
	70910141	1	CONNECTOR, flare type, 1/4" tube, 1/8"NPT male
13	-------	1	CYLINDER ASSY., master (See page 125)
	70901651	1	PLUG, pipe, 1/8"NPT
	70927322	3	CAPSCREW, 3/8"NF x 2"
	70910287	3	LOCKWASHER, 3/8"
	70911041	3	NUT, 3/8"NF
14	70067508	1	PLUG, master cylinder outlet
15	70067507	1	GASKET, master cylinder outlet plug
16	70059229	1	CONNECTOR, master cylinder
17	70059224	1	SCREW
18	70059225	1	GASKET, attaching screw

(Continued)

WHEEL BRAKES (Continued)

ITEM	PART NO.	QTY.	DESCRIPTION
19	70059220	1	GASKET, master cylinder connector
20	70083563	1	BRACKET, master cylinder mounting (Requires welding to frame)(Graders prior to unit #00642 only)
21	70083565	1	TUBE ASSEMBLY, master cylinder to left brakes (Includes 2 NUTS 70910136)
	70910136	2	NUT, flare type, long, 1/4" tube
	70910141	1	CONNECTOR, flare type, 1/4" tube, 1/8"NPT male
	70913036	1	CONNECTOR, flare type, 1/4" tube, 1/8"NPT female
22	70235794	1	CLIP, tube supporting
	70922300	1	CAPSCREW, 3/8"NC x 3/4"
	70910287	1	LOCKWASHER, 3/8"
	70911026	1	NUT, 3/8"NC
23	70083530	1	BRACKET, clip attaching

TIRES, TUBES AND RIMS
(Not Illustrated)

ITEM	PART NO.	QTY.	DESCRIPTION
1	70672211	6	RIM, 5.50F - 20" (Electric Wheel No. 03-12308-00 or Motor Wheel No. 50702-A)(Used with 7.50 tire)
	70079630	6	RIM, 6.00 - 20" (Goodyear No. 860 or Firestone No. 237R5-1) (Used with 8.25 tire)
	70688571	6	RIM, 11.75 - 19.5 (Used with 15.00 tire)
2	--------	6	TIRE, 7.50 - 20", 6 ply rating, tubeless (with flap)
	--------	6	TIRE, 8.25 - 20", 6 ply rating, tube type (with flap)
	--------	6	TIRE, 8.25 - 20", 10 ply rating, tube type (with flap)
	--------	6	TIRE, 15.00 - 19.5", 10 ply rating, tubeless (with flap)
3	--------	6	TUBE, 8.25 - 20", with TR-218 valve
4	--------	6	VALVE, rim, TR-618 (For 7.50 tubeless tires)
	70688406	6	VALVE, rim, TR-513 (For 15.00 tubeless tires)

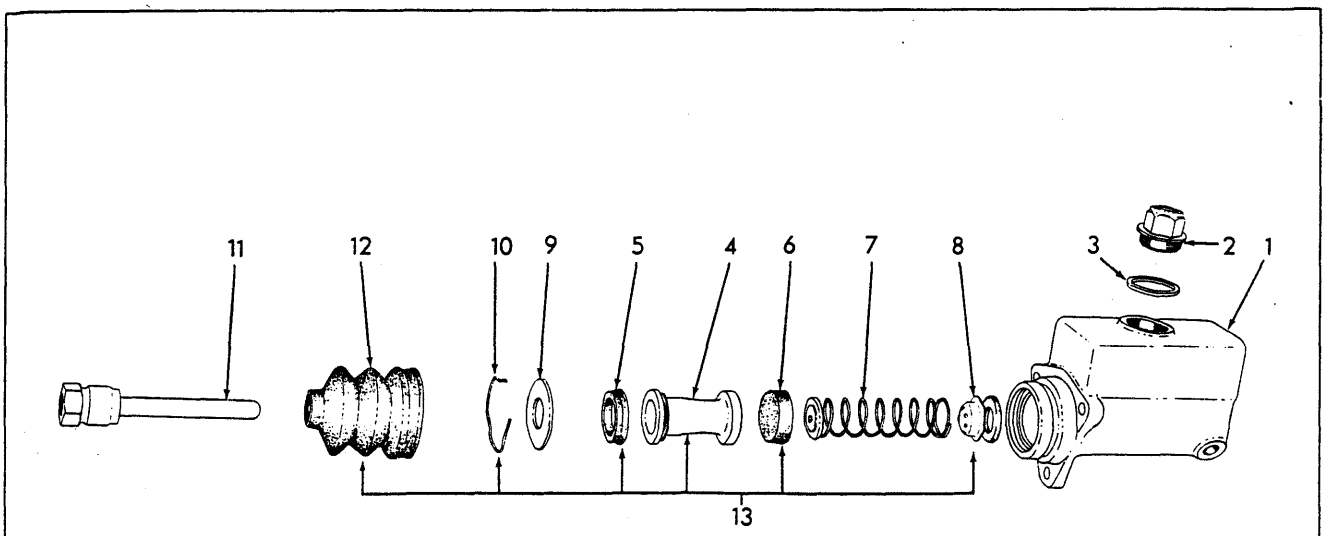

BRAKE MASTER CYLINDER PARTS T-4361A

USAGE: See page 123

ITEM	PART NO.	QTY.	DESCRIPTION
-	70067005	1	CYLINDER ASSY., master (Includes item 1 thru 13)
1	--------	1	TANK, supply (Not serviced separately)
2	70074349	1	CAP ASSY., filler (Serviced only as a unit)
3	70076486	1	GASKET, filler cap
4	-------	1	PISTON (Not serviced separately. Order item 13)
5	70067608	1	CUP, secondary
6	70067492	1	CUP, primary
7	70067493	1	SPRING ASSEMBLY, piston return (Includes end washer. Serviced only as a unit)
8	70091602	1	VALVE AND SEAT ASSEMBLY, check (Serviced only as a unit)
9	70067490	1	PLATE, piston stop
10	70067488	1	WIRE, piston stop plate retaining
11	70067486	1	ROD, push
12	70067487	1	BOOT, push rod
13	70067498	1	REPAIR KIT (Consists of items 4 thru 6, 8, 10 and 12)

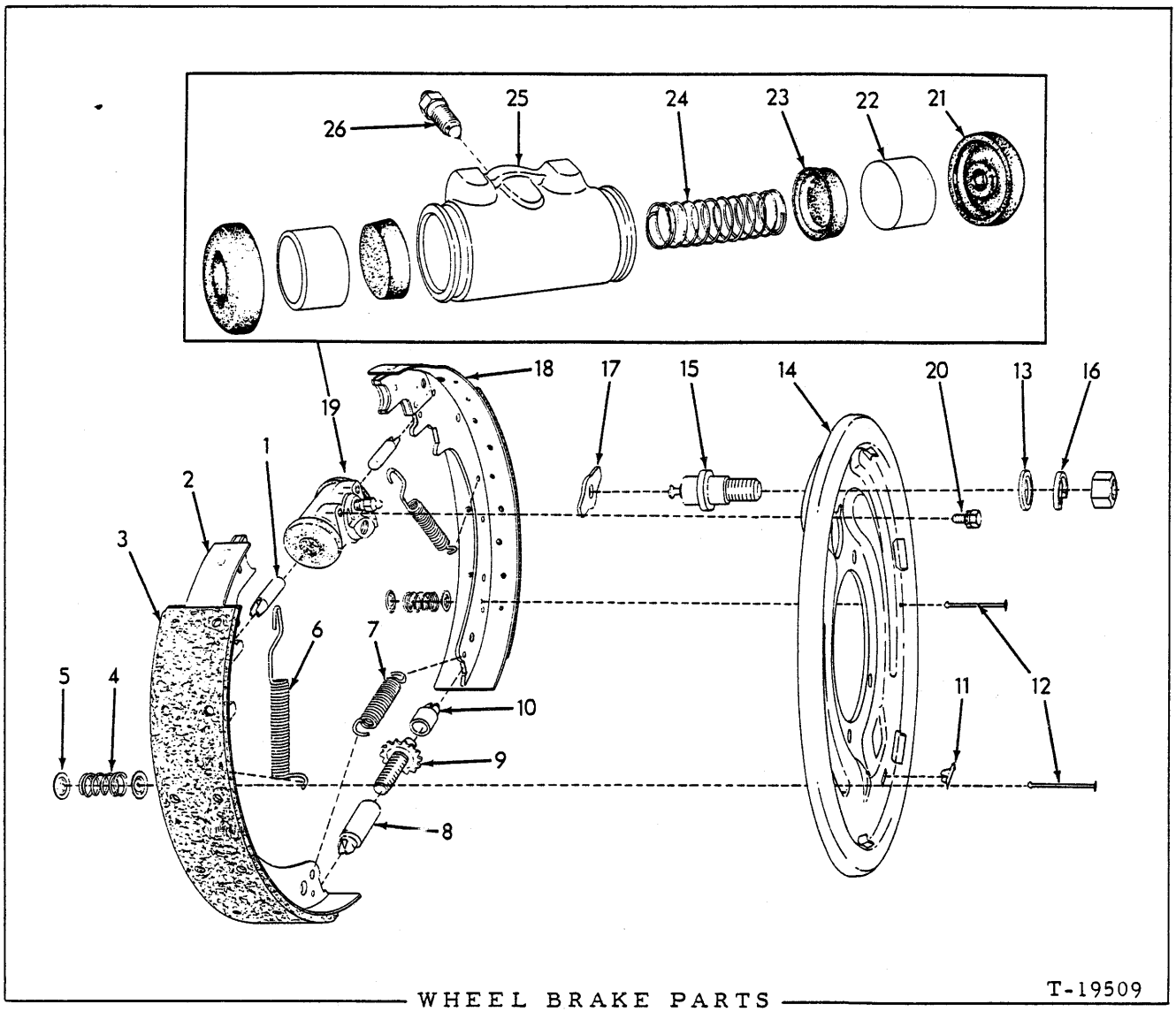

WHEEL BRAKE PARTS T-19509

USAGE: See page 123

*Left Wheels
**Right Wheels

ITEM	PART NO.	QTY. *	QTY. **	DESCRIPTION
-	70083401	1	-	BRAKE ASSY., left wheel } Each includes items 1 thru 26
-	70083402	-	1	BRAKE ASSY., right wheel } Each includes items 1 thru 26
				NOTE: Quantities indicated are for one (1) Brake Assembly only
1	70087444	1	1	LINK, brake cylinder
2	70087449	1	1	SHOE ASSY., rear (Includes lining)
3	70094337	1	1	LINING KIT (Consists of 4 linings and 44 rivets. Complete set for two wheels)
4	70087438	2	2	SPRING, shoe retaining
5	70087439	4	4	CUP, shoe retaining spring

(Continued)

WHEEL BRAKE PARTS (Continued)

ITEM	PART NO.	QTY. *	QTY. **	DESCRIPTION	
6	70087443	2	2	SPRING, shoe retracting, upper	
7	70087440	1	1	SPRING, shoe retracting, lower	
8	70087446	1	1	NUT, brake adjustment	
9	70087448	1	1	SCREW, brake adjustment	
10	70087447	1	1	SOCKET, brake adjustment	
11	70087437	1	1	COVER, back plate adjustment hole	
12	70087441	2	2	PIN, shoe retaining	
13	70087452	1	1	WASHER, spring anchor pin	
14	70088644	1	1	PLATE, back	
15	70087451	1	1	PIN, spring anchor	
16	70059041	1	1	LOCKWASHER, 3/4"	
	70911045	1	1	NUT, 3/4"NF	
17	70087442	1	1	PLATE, guide, brake shoe	
18	70087450	1	1	SHOE ASSEMBLY, front (Includes lining)	
19	70088673	1	-	CYLINDER ASSEMBLY, left brake	Each consists of items 21 thru 26
	70088674	-	1	CYLINDER ASSEMBLY, right brake	
20	70087445	2	2	SCREW ASSEMBLY (Includes lockwasher)	
21	70095248	2	2	BOOT, brake cylinder	
22	70095249	2	2	PISTON, brake cylinder	
23	70095250	2	2	CUP, brake cylinder (rubber)	
24	70095251	1	1	SPRING, brake cylinder	
25	-------	1	1	CYLINDER, (Not serviced separately)	
26	70095252	1	1	SCREW, bleed, brake cylinder	

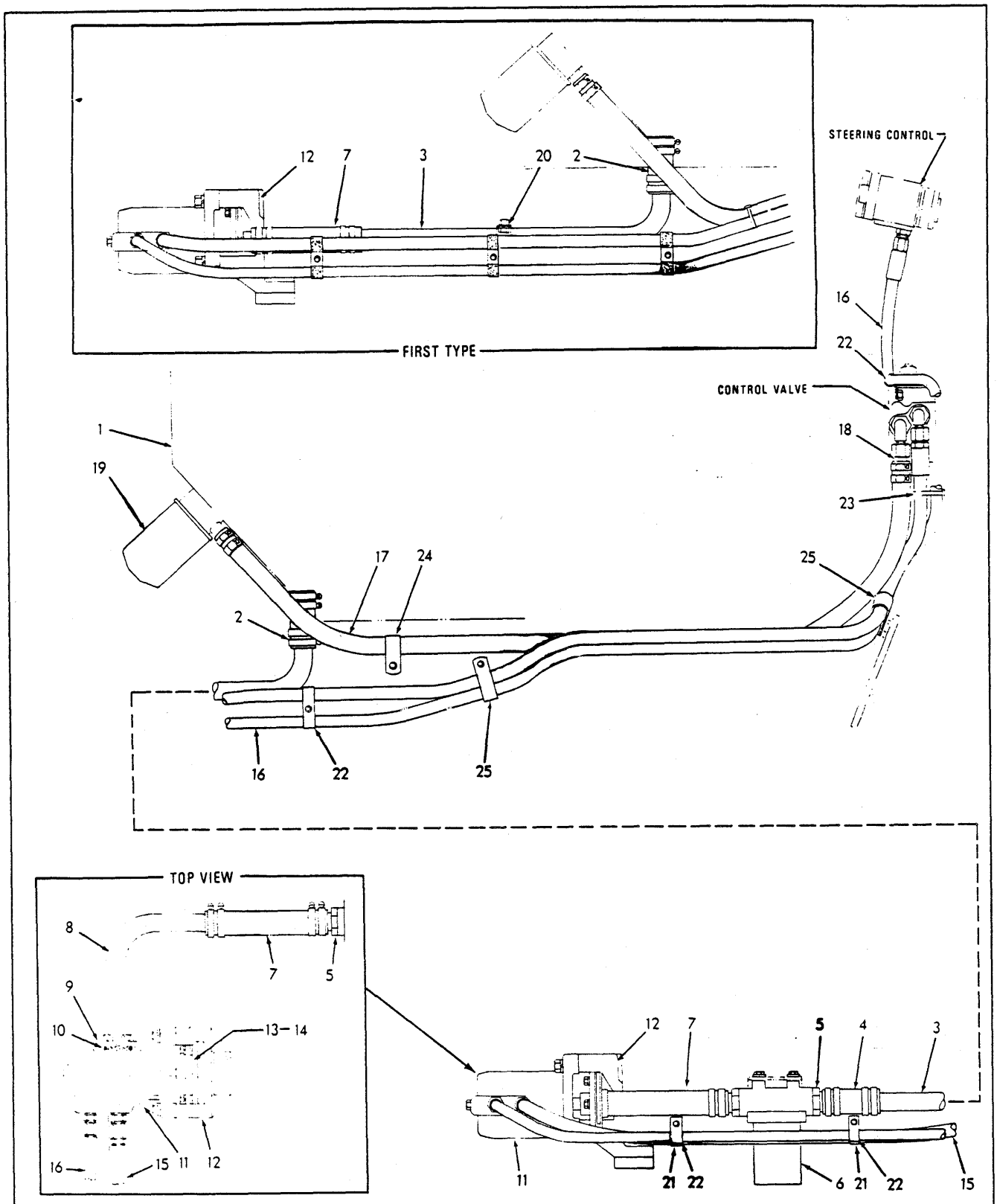

T-76352

HYDRAULIC PUMP LINES

(Revised April 1972)

HYDRAULIC PUMP LINES

ITEM	PART NO.	QTY.	DESCRIPTION
1	-------	1	RESERVOIR (See FUEL TANK)
2	70630636	1	HOSE, suction line, front
	70921912	4	CLAMP, hose
3	70673509	1	TUBE, suction line, front (Graders prior to unit #00602)
	70683116	1	TUBE, suction line, front (Grader unit #00602 and up)
4	70630636	1	HOSE, suction line, intermediate
	70921912	4	CLAMP, hose
5	70683128	2	ADAPTER ASSY., hose (Includes O-RING)
	70921214	2	O-RING, adapter
6	-------	1	STRAINER ASSY., oil (See page 130A)
	70922262	2	CAPSCREW, 3/8"NC x 7/8"
	70677006	2	WASHER, plain
7	70681595	1	HOSE, suction line, rear (Effective on S/N 75Y00201)
	70676326	1	HOSE, suction line, rear (Effective on S/N 24A00201, 56Y02201)
	70921912	4	CLAMP, hose
8	70673511	1	TUBE, suction line, rear
9	70921118	2	FLANGE, split
	70920582	4	CAPSCREW, 1/2"NC x 1-1/4"
	70912441	4	LOCKWASHER, 1/2"
10	70923578	1	O-RING, tube connection
11	-------	1	PUMP ASSY., oil (See page 132 and 133A)
	70927531	4	CAPSCREW, 7/16"NC x 2"
	70914678	4	LOCKWASHER, 7/16"
12	70689868	1	BRACKET, mounting (Also used for engine mounting) (Not for Diesel-powered units)
13	70698825	1	ADAPTER ASSY., pump (Includes item 14)
	70928306	6	CAPSCREW, 5/16"NF x 1-1/2"
	70910286	6	LOCKWASHER, 5/16"
	70911422	6	WASHER, plain
14	74994157	6	BUSHING, adapter
15	70677231	1	HOSE, pump to control valve (See HOSE PARTS)(Effective on S/N 75Y00201)
	70673124	1	HOSE, pump to control valve (See HOSE PARTS)(Effective on S/N 24A00201, 56Y02201)
	70921325	1	ELBOW, flare type, swivel nut, 5/8" tube
	70924023	2	CONNECTOR, flare type, 5/8" tube, 1-1/16" male end (Includes O-RING)
	70921206	2	O-RING, connector

Grader unit #00602 and up

(Continued)

(Revised June 1977)

HYDRAULIC PUMP LINES (Continued)

ITEM	PART NO.	QTY.	DESCRIPTION
16	70677232	1	HOSE, pump to steering control (See HOSE PARTS)(Effective on S/N 75Y00201)
	70673122	1	HOSE, pump to steering control (See HOSE PARTS)(Effective on S/N 24A00201, 56Y02201)
	70924403	1	CONNECTOR, flare type, 1/2" tube, 9/16"NF male end (Includes O-RING)
	70921409	1	CONNECTOR, flare type, 1/2" tube, 3/4"NF male end (Includes O-RING)
	70921885	1	O-RING, connector (5/8"O.D.)
	70921349	1	O-RING, connector (13/16"O.D.)
17	70674313	1	HOSE, control valve to reservoir
	70921912	4	CLAMP, hose
18	77109940	1	TUBE, hose connection
	77109939	1	ELBOW, 90°, swivel nut
	70924984	1	CONNECTOR, flare type, 7/8" tube, 1-1/16"male end (Includes O-RING)
	70921206	1	O-RING, connector
19	74511629	1	FILTER, oil
20	77100059	1	CLIP, tube supporting (Graders prior to unit #00602)
	70922262	1	CAPSCREW, 3/8"NC x 7/8"
	70911115	1	WASHER, plain, SAE std., 3/8"
	70910287	1	LOCKWASHER, 3/8"
	70911026	1	NUT, 3/8"NC
21	70622992	3	CLIP, hose supporting
	70922300	3	CAPSCREW, 3/8"NC x 3/4"
	70910287	3	LOCKWASHER, 3/8"
	70911115	3	WASHER, plain, SAE std., 3/8"
22	70094467	4	CLIP, hose supporting
23	70196765	1	TIE, hose
24	70095869	1	CLIP, hose supporting
	70922300	1	CAPSCREW, 3/8"NC x 3/4"
	70910287	1	LOCKWASHER, 3/8"
	70911115	1	WASHER, plain, SAE std., 3/8"
25	70644708	2	CLIP, hose supporting
	70927400	1	CAPSCREW, 3/8"NC x 5/8"
	70911115	1	WASHER, plain, SAE std., 3/8"

(Revised June 1977)

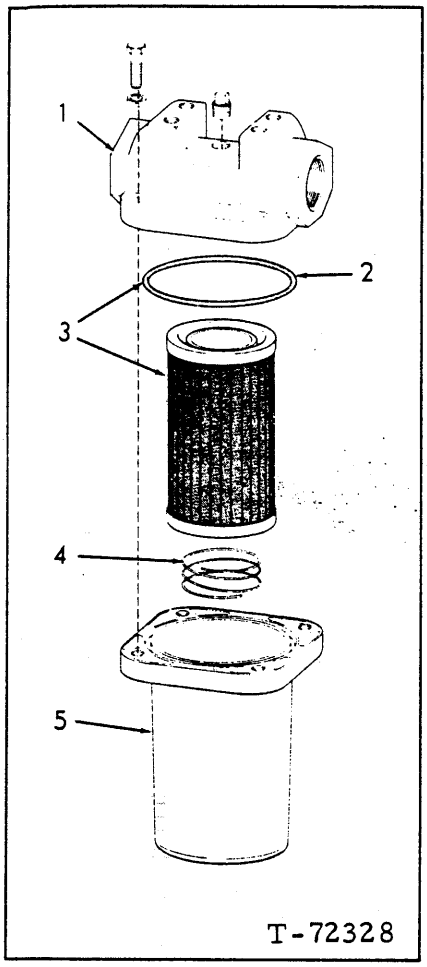

OIL STRAINER ASSEMBLY

USAGE: See page 129

ITEM	PART NO.	QTY.	DESCRIPTION
-	70651388	-	STRAINER ASSY., oil (Includes items 1 thru 5)
1	70651387	1	HEAD ASSY. (Includes PLUG indented below)
	70901651	1	PLUG, pipe, 1/8"NPT
	70927401	4	CAPSCREW, 1/4"NC x 1"
	70906958	4	LOCKWASHER, 1/4"
2	70651385	1	O-RING, body
3	70651506	1	ELEMENT KIT (Includes item 2)
4	70651384	1	SPRING, element
5	70651373	1	BODY, oil strainer

(Revised May 1976)

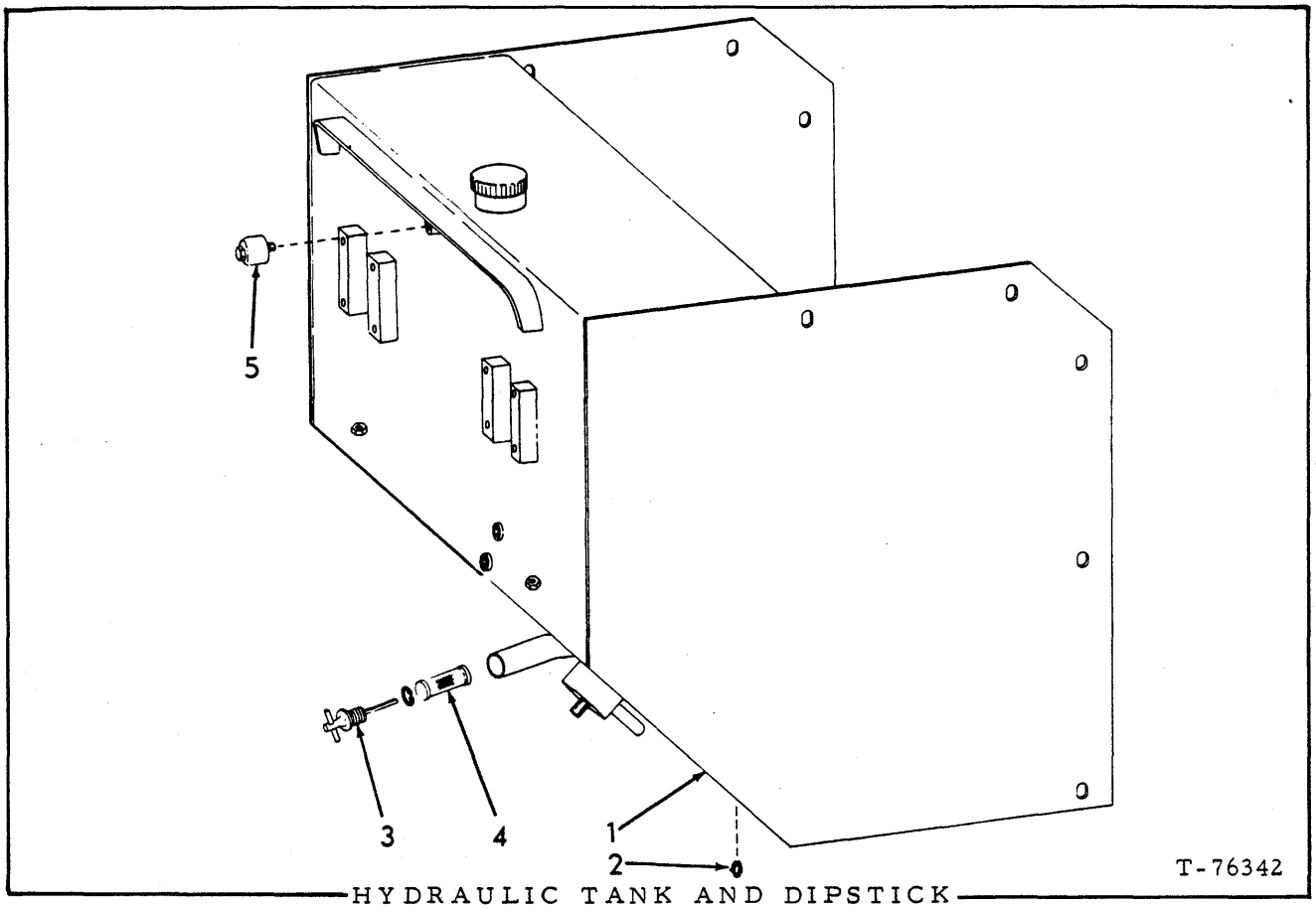

HYDRAULIC TANK AND DIPSTICK

ITEM	PART NO.	QTY.	DESCRIPTION
1	70693237	1	SEAT AND TANK (Also see FUEL TANK and LINES)
2	70606961	1	PLUG, pipe, magnetic
3	--------	1	DIPSTICK (3" long)(Early units. Order 1 DIPSTICK 70681442 and 1 SCREEN 70681443)
	70681442	1	DIPSTICK (6" long)(Late units)
4	--------	1	SCREEN (3" long)(Early units. Order 1 DIPSTICK 70681442 and 1 SCREEN 70681443)
	70681443	1	SCREEN (5-1/2" long)(Late units)
	70927692	1	RING, snap, screen retaining
5	70050748	1	BREATHER

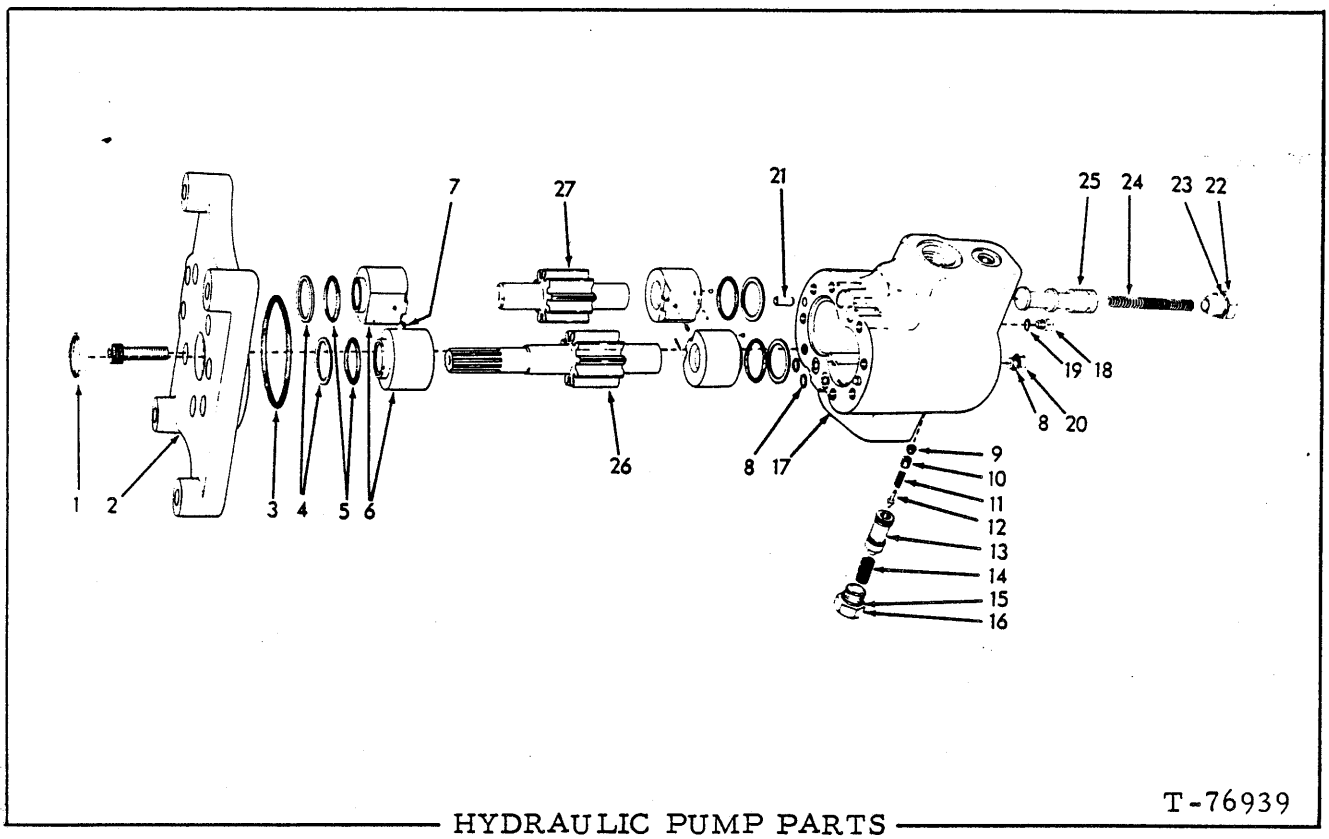

HYDRAULIC PUMP PARTS

USAGE: Used on Graders prior to unit #02130. See page 129

* Used prior to Grader unit #01886 excluding #01755 (Early design)
** Used prior to Grader unit #01886 excluding #01755 (Late design)
*** Effective Graders unit #01886 thru #02129 including #01755

ITEM	PART NO.	QUANTITY *	**	***	DESCRIPTION
-	70684019	1	1	-	PUMP ASSY., hydraulic (Includes items 1 thru 27)
	70698723	-	-	1	PUMP ASSY., hydraulic (Includes items 1 thru 27)
1	74906382	1	1	1	SEAL, front
2	74994008	1	-	-	FLANGE, mounting
	70697416	-	1	1	FLANGE, mounting
	70920269	8	8	8	CAPSCREW, hex-socket, 3/8"NF x 1-1/4"
3	74255396	1	-	-	O-RING, body (large)
	70931238	-	1	1	O-RING, body (large)
4	74999827	4	4	4	RING, back-up
5	74255398	4	4	4	O-RING, bushing
6	74905001	4	4	-	BUSHING (Includes pins and balls)
	70698750	-	-	4	BUSHING
7	74993823	2	2	2	DOWEL, bushing
8	74906386	3	2	2	O-RING, body (small)
9	74905004	1	1	1	SETSCREW (1/4"NF x 3/16")
10	74906381	1	1	1	SETSCREW (nylok, 1/4" NF x 1/4")
11	74999536	1	1	1	SPRING, relief valve cone
12	74999535	1	1	1	CONE, relief valve
13	74905005	1	1	1	SPOOL
14	74905240	1	1	1	SPRING, relief

(Continued)

(Revised September 1976)

HYDRAULIC PUMP PARTS (Continued)

ITEM	PART NO.	QUANTITY *	QUANTITY **	QUANTITY ***	DESCRIPTION
15	74906383	1	-	-	O-RING
	70697409	-	1	1	O-RING
16	74905006	1	-	-	PLUG, relief port
	70697410	-	1	1	PLUG, relief port
17	--------	1	1	1	BODY ASSY. (Includes roll pins and balls)(Not serviced separately)
18	70922874	1	-	-	PLUG, 5/16" straight thread (Includes item 19)
19	70921881	1	-	-	O-RING, plug
20	74905243	1	-	-	PLUG
21	74993825	2	2	2	DOWEL, body
22	74906387	1	1	1	PLUG
23	74906384	1	1	1	O-RING, plug
24	74994011	1	1	1	SPRING, valve spool
25	74905003	1	1	1	SPOOL, priority valve
26	74993758	1	1	1	GEAR, drive
27	74993759	1	1	1	GEAR, idler

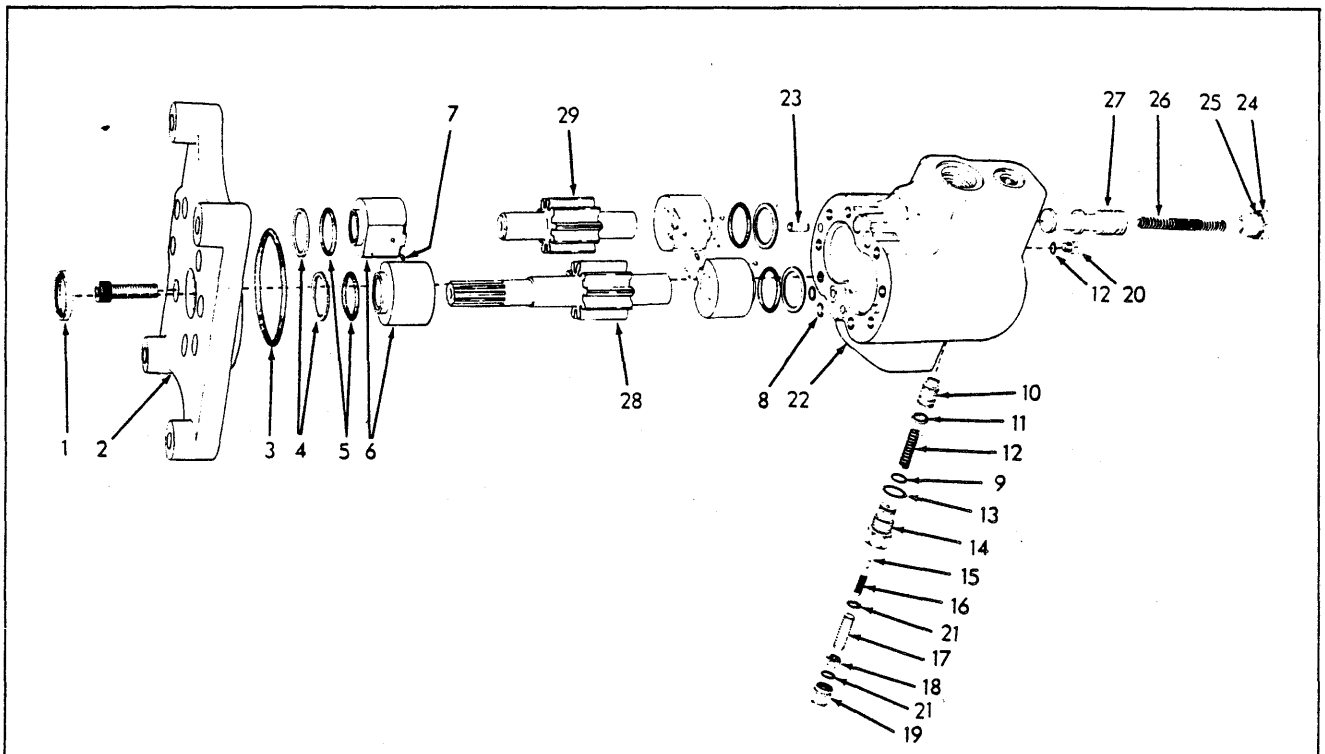

HYDRAULIC PUMP PARTS

USAGE: Effective Grader unit #02130 and up. See page 129

ITEM	PART NO.	QTY.	DESCRIPTION	
-	73108134	1	PUMP ASSY., hydraulic (Includes items 1 thru 27)	
1	74906382	1	SEAL, front	
2	70697416	1	FLANGE, mounting	
	70920269	8	CAPSCREW, hex-socket, 3/8"NF x 1-1/4"	
3	70931238	1	O-RING, body (large)	
4	74999827	4	RING, back-up	
5	74255398	4	O-RING, bushing	
6	70698750	4	BUSHING (Includes pins and balls)	
7	74993823	2	DOWEL, bushing	
8	74906386	2	O-RING, body (small)	
9	70923841	2	O-RING	
10	--------	1	SPOOL	Not Serviced See item 30
11	--------	1	RING, back-up	
12	--------	1	SPRING	
13	--------	1	O-RING	
14	--------	1	PLUG	
15	--------	1	CONE	
16	--------	1	SPRING	
17	--------	1	SETSCREW	
18	--------	1	NUT	
19	--------	1	NUT	
20	--------	1	PLUG, 5/16" straight thread (Includes item 19)	

(Continued)

(Added September 1976)

HYDRAULIC PUMP PARTS (Continued)

ITEM	PART NO.	QTY.	DESCRIPTION	
21	70928241	2	O-RING	
22	--------	1	BODY ASSY. (Includes roll pins and balls)(Not serviced separately)	
23	74993825	2	DOWEL, body	
24	--------	1	PLUG	Not serviced
25	--------	1	O-RING, plug	Not serviced
26	--------	1	SPRING, valve spool	See item 31
27	--------	1	SPOOL, priority valve	See item 31
28	74993758	1	GEAR, drive	
29	74993759	1	GEAR, idler	
30	73108411	1	KIT, relief valve (Includes items 10 thru 20)	
31	73108412	1	KIT, flow divider (Includes items 24 thru 27)	

(Added September 1976)

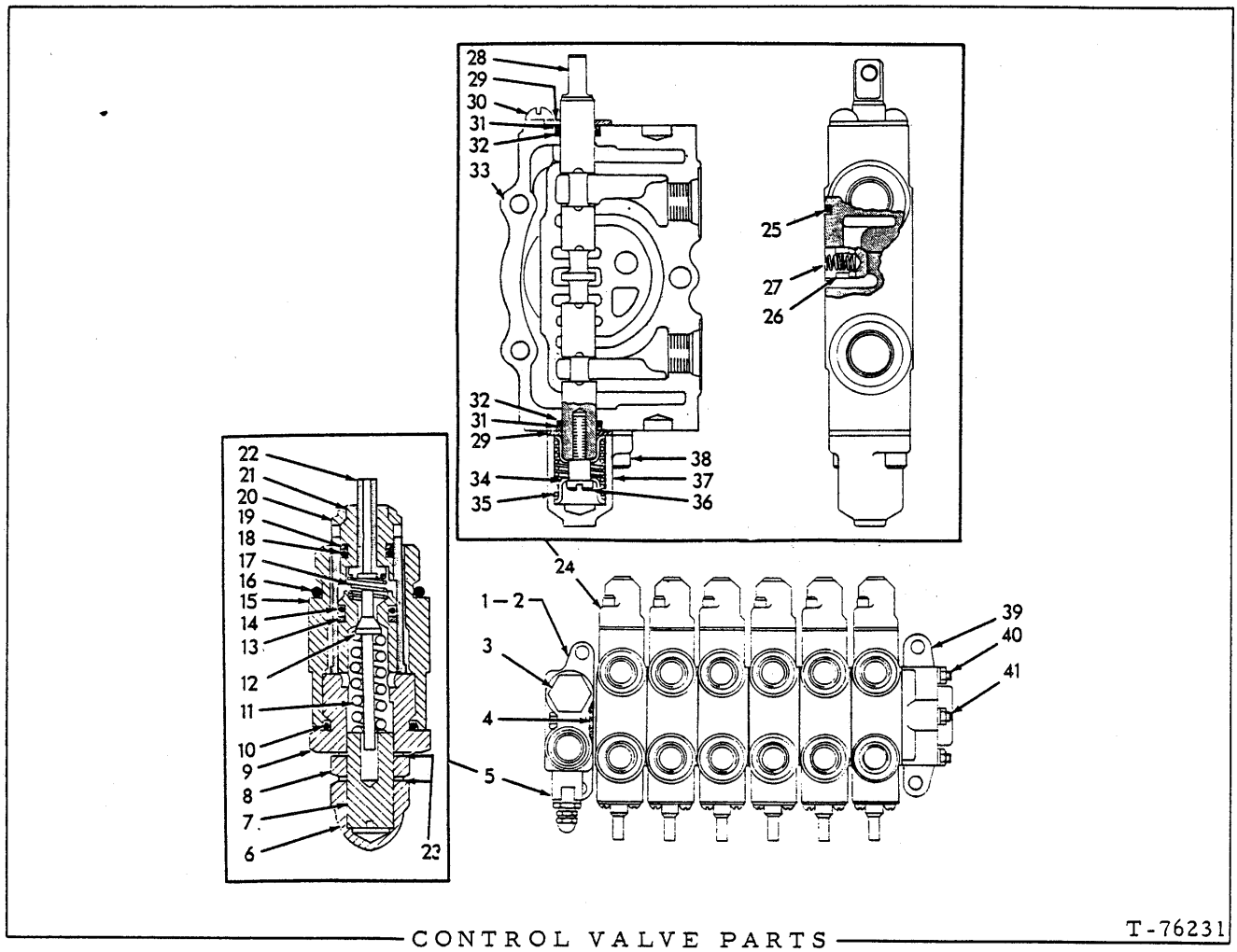

CONTROL VALVE PARTS T-76231

USAGE: See page 136

ITEM	PART NO.	QUANTITY			DESCRIPTION	
-	77108616	1	-	-	VALVE ASSY., control (4 section. Standard)	Each includes items 1 thru 41
-	77108618	-	1	-	VALVE ASSY., control (5 section. Special)	
-	77108619	-	-	1	VALVE ASSY., control (6 section. Special)	
1	77108877	1	1	1	HOUSING ASSY., inlet (Includes items 2 thru 23)	
2	-------	1	1	1	HOUSING, inlet (Not serviced; order item 1)	
3	70920107	1	1	1	PLUG, 7/8"NF (Includes O-RING)	
	70921205	1	1	1	O-RING, plug	
4	74253818	1	1	1	O-RING, mounting	
5	74995186	1	1	1	VALVE ASSY., relief (Includes items 6 thru 23)	
6	74131659	1	1	1	NUT, acorn	
7	74995197	1	1	1	SCREW, pressure adjusting	

(Continued)

(Revised March 1972)

CONTROL VALVE PARTS (Continued)

ITEM	PART NO.	QUANTITY			DESCRIPTION
8	74995188	1	1	1	NUT, jam, 3/8"NF
9	74995191	1	1	1	PLUG, poppet valve
10	74988677	1	1	1	O-RING
11	74995195	1	1	1	SPRING, pressure regulating
12	74995193	1	1	1	POPPET, valve
13	74995198	1	1	1	RING, back-up
14	74253928	1	1	1	O-RING
15	74995190	1	1	1	CAP
16	74988668	1	1	1	O-RING
17	74995196	1	1	1	SPRING
18	74251986	1	1	1	O-RING
19	74995199	1	1	1	RING, back-up
20	74995192	1	1	1	POPPET
21	74995320	1	1	1	POPPET
22	74995194	1	1	1	PISTON
23	74995189	2	2	2	WASHER
24	74995335	4	5	6	PLUNGER AND HOUSING ASSY. (Includes items 25 thru 38)
25	74253818	4	5	6	O-RING, mounting
26	74995321	4	5	6	POPPET
27	74995328	4	5	6	SPRING, poppet
28	-------	4	5	6	PLUNGER (Order item 24)
29	74995322	8	10	12	PLATE, seal retaining
30	70901164	8	10	12	SCREW, machine, 1/4"NC x 3/8"
31	74995327	8	10	12	WIPER, plunger
32	74253169	8	10	12	O-RING, plunger
33	-------	4	5	6	HOUSING (Order item 24)
34	74995323	8	10	12	SEAT, spring
35	74995324	4	5	6	SPRING, plunger
36	74995325	4	5	6	CAPSCREW, shoulder
37	74995326	4	5	6	CAP, end, plunger
38	70912261	8	10	12	CAPSCREW, socket-hd., 1/4"NC x 3/4"
39	74995181	1	1	1	HOUSING, outlet
40	70242555	2	-	-	ROD, tie
	77109514	-	2	-	ROD, tie
	77109516	-	-	2	ROD, tie
	70910323	4	4	4	NUT, 5/16"NC
41	70242558	1	-	-	ROD, tie
	77109515	-	1	-	ROD, tie
	77109517	-	-	1	ROD, tie
	70910123	2	2	2	NUT, 3/8"NF

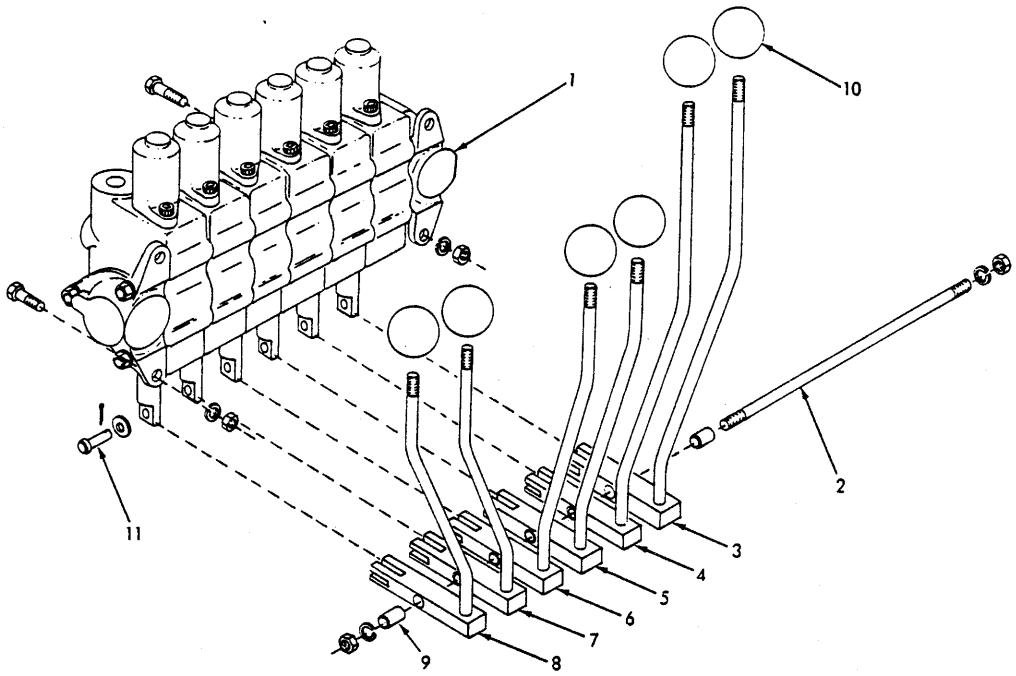

HYDRAULIC CONTROLS T-76349

* 4 section valve. Standard
** 5 section valve. Special
*** 6 section valve. Special

ITEM	PART NO.	QUANTITY *	**	***	DESCRIPTION	
1	---------	1	1	1	VALVE ASSY., control (See page 134)	
	70927173	3	3	3	CAPSCREW, 3/8"NC x 1-1/8"	
	70921565	1	1	1	CAPSCREW, 3/8"NC x 1-1/2"	
	70910287	4	4	4	LOCKWASHER, 3/8"	
	70911026	1	1	1	NUT, 3/8"NC	
2	70679080	1	1	1	SHAFT, lever pivot	
	70910287	2	2	2	LOCKWASHER, 3/8"	
	70911026	2	2	2	NUT, 3/8"NC	
3	70679103	1	1	1	LEVER ASSY., moldboard lift control (right)	Each Includes Item 9
4	70673139	1	1	1	LEVER ASSY., moldboard lift control (left)	
5	70673137	1	1	1	LEVER ASSY., wheel lean control	
6	70679102	1	1	1	LEVER ASSY., power circle turn control	
7	70679097	-	1	1	LEVER ASSY., fifth section control	
8	70679098	-	-	1	LEVER ASSY., sixth section control	
9	70679078	4	5	6	BUSHING, lever	
10	70091862	4	5	6	KNOB	
11	70922868	4	5	6	PIN, yoke	
	70911114	4	5	6	WASHER, plain, SAE std., 1/4"	
	70904001	4	5	6	PIN, cotter, 3/32" x 1/2"	

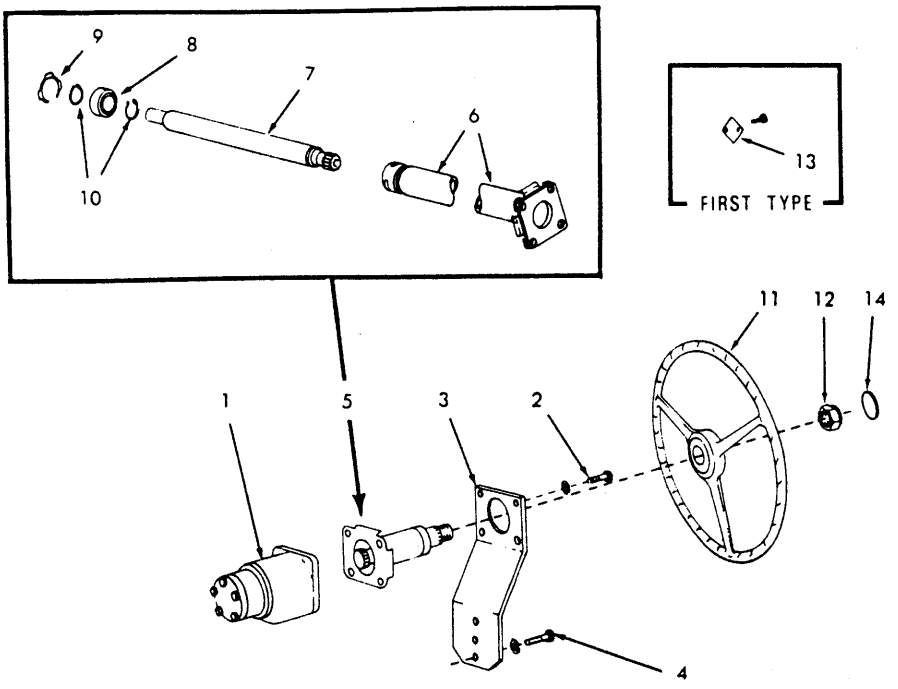

STEERING WHEEL AND MOUNTING

ITEM	PART NO.	QTY.	DESCRIPTION
1	-------	1	CONTROL ASSY., steering (See page 138)
2	70922287	4	CAPSCREW, 3/8"NC x 1-3/4"
	70910287	4	LOCKWASHER, 3/8"
3	70686083	1	SUPPORT, gear steering
4	70927204	2	CAPSCREW, 1/2"NF x 1"
	70912441	2	LOCKWASHER, 1/2"
5	71006535	1	COLUMN ASSY., steering (Includes items 6 thru 10)
6	71134827	1	TUBE, mounting
7	71134829	1	SHAFT, steering
8	74994913	1	BEARING, shaft
9	74995371	1	RING, retaining
10	71134841	2	RING, snap
11	70639984	1	WHEEL, steering (Graders prior to unit #01736)
	70698431	1	WHEEL, steering (Grader unit #01736 and up)
12	70208584	1	NUT, wheel attaching
13	70246724	1	EMBLEM, trademark ("Allis-Chalmers" logo) } Graders prior to unit #01736
	70694683	1	EMBLEM, trademark ("Fiat-Allis" logo) } Graders prior to unit #01736
	70918698	2	SCREW, thread-cutting, #8 x 1/2"
14	70698432	1	CAP (Grader unit #01736 and up)

NOTE: See PAINTING AND MARKING for transfer

(Revised July 1975)

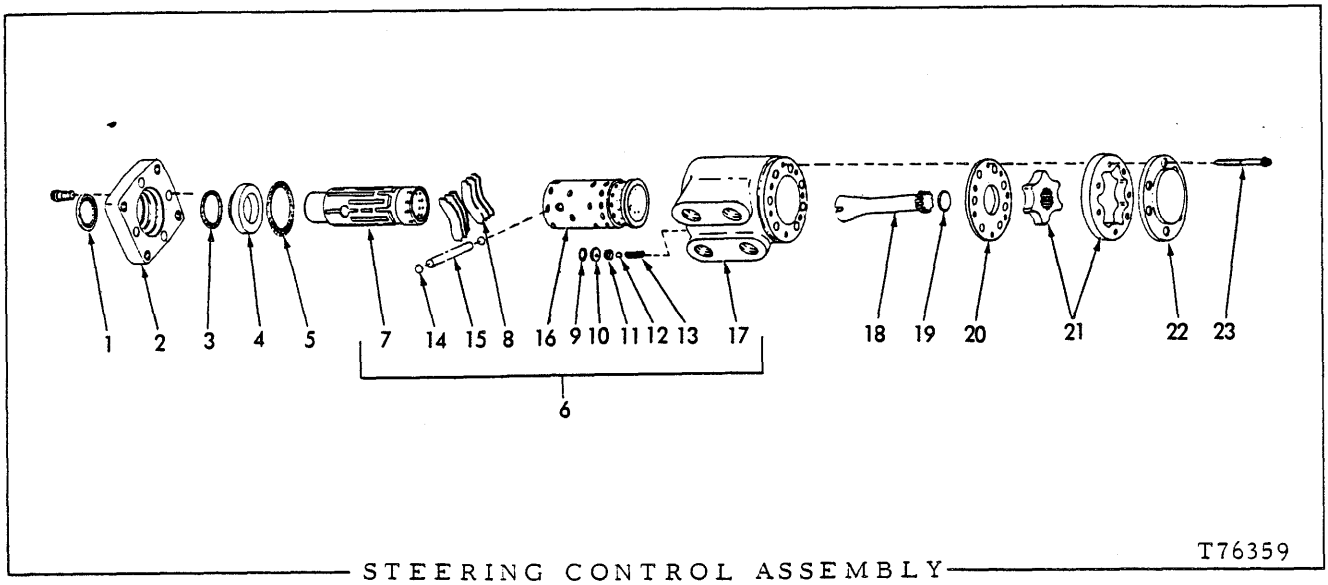

STEERING CONTROL ASSEMBLY

USAGE: See page 137

ITEM	PART NO.	QTY.	DESCRIPTION
-	70675501	1	CONTROL ASSY, steering (Includes items 1 thru 23)
1	73005895	1	SEAL, control spool (outer)
2	70239181	1	PLATE,
	70923334	4	CAPSCREW, 12-pt., 5/16"NC x 5/8"
3	70239191	1	SEAL, control spool (inner)
4	70239183	1	BUSHING, control spool
5	70239192	1	SEAL, bushing
6	70679188	1	HOUSING ASSY. (Includes items 7 thru 17)
7	-------	1	SPOOL, control (Not serviced separately. Order item 6)
8	70239197	6	SPRING, centering
9	70923559	1	O-RING, plug
10	70239195	1	PLUG, seat retaining
11	70239189	1	SEAT, check ball
12	70921874	1	BALL, check
13	70239188	1	SPRING, compression
14	70679184	2	DISC, cross pin
15	70239176	1	PIN, cross
16	-------	1	SLEEVE, control (Not serviced separately. Order item 6)
17	-------	1	HOUSING, main (Not serviced separately. Order item 6)
18	71132770	1	SHAFT, drive
19	70679187	1	SPACER, shaft

(Continued)

STEERING CONTROL ASSEMBLY (Continued)

ITEM	PART NO.	QTY.	DESCRIPTION
20	74998258	1	PLATE, wear
21	70679185	1	GEROTOR SET (Serviced only as a unit)
22	74998320	1	CAP, rear
23	70679186	7	SCREW, cap attaching

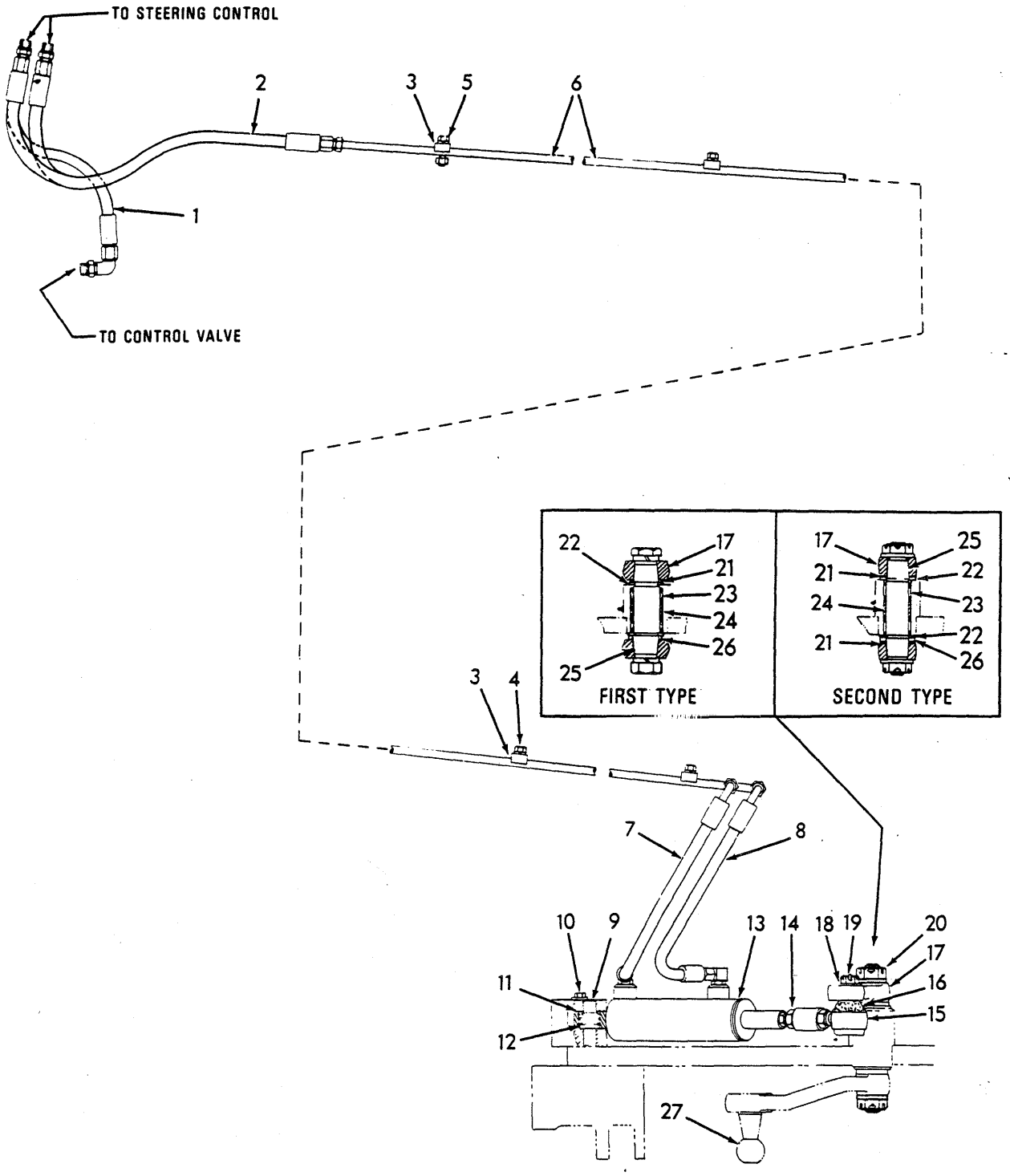

T-76355

POWER STEERING LINES

(Revised January 1979)

POWER STEERING LINES

ITEM	PART NO.	QTY.	DESCRIPTION
1	70673120	1	HOSE, control to valve (See HOSE PARTS)
	70921409	1	CONNECTOR, flare type, 1/2" tube, 3/4"NF male end (Includes O-RING)
	70924786	1	ELBOW, adjustable, 90°, flare type, 1/2" tube, 7/8"NF male end (Includes O-RING)
	70921349	1	O-RING, connector
	70921205	1	O-RING, elbow
2	70673121	2	HOSE, control to cylinder (upper)(See HOSE PARTS)
	70921409	2	CONNECTOR, flare type, 1/2" tube, 3/4"NF male end (Includes O-RING)
	70921349	2	O-RING, connector
3	77109141	4	BLOCK, tube supporting
4	70927173	3	CAPSCREW, 3/8"NC x 1-1/8"
5	70921565	1	CAPSCREW, 3/8"NC x 1-1/2"
	70910287	4	LOCKWASHER, 3/8"
	70911026	1	NUT, 3/8"NC
6	70673117	2	TUBE, control to cylinder
7	70673119	1	HOSE, control to cylinder (Lower. Cylinder extend) (See HOSE PARTS)
	70921402	1	ELBOW, adjustable, 90°, flare type, 1/2" tube, 3/4"NF male end (Includes washer, nut and O-RING)
	70921349	1	O-RING, elbow
8	70673118	1	HOSE, control to cylinder (Lower. Cylinder retract) (See HOSE PARTS)
	70921402	1	ELBOW, adjustable, 90°, flare type, 1/2" tube, 3/4"NF male end (Includes washer, nut and O-RING)
	70921349	1	O-RING, elbow
9	77108282	1	PIN, cylinder mounting
10	70922925	1	CAPSCREW
	70911986	1	WASHER
11	77103616	1	BEARING, cylinder pivot
12	70677422	1	SPACER, bearing
13	--------	1	CYLINDER ASSY. (See pages 142A, 143)
	70914465	1	FITTING, lubricating, 1/8"NPT
	70901421	1	NUT, jam, 7/8"NC
14	70677421	1	ADAPTER, cylinder to socket
15	70677397	1	SOCKET ASSY. (Includes items 16 and 19)
	70906909	1	NUT, jam, 7/8"NF
	70900807	1	PIN, cotter, 1/8" x 1-1/4"
16	70677396	1	BOOT, dust shield
17	70677447	1	ARM, steering (upper)
18	70912018	1	WASHER, upper steering arm
19	70917362	1	NUT, socket attaching (5/8"NF)
20	70906911	2	NUT, arm retaining (1-1/8"NF) } Graders prior to unit #02306
	73110742	2	WASHER }
	70925101	2	NUT, arm retaining (1-1/8" slotted jam) } Grader unit #02306 and up
	70926206	2	WASHER }
	70904002	2	PIN, cotter, 1/8" x 2" }

(Continued)

POWER STEERING LINES (Continued)

ITEM	PART NO.	QTY.	DESCRIPTION
21	73117550	2	SHIM (.008" thk.) }
	73117551	2	SHIM (.020" thk.) } Use as required
	73117552	2	SHIM (.040" thk.) }
	73117553	2	SHIM (.080" thk.) }
22	70682990	2	WASHER, wear
23	70066362	2	BEARING, needle
24	77109848	1	SPACER, bearing
25	--------	1	SHAFT, arm pivot (non-drilled ends)(Graders prior to unit #02306. Order 1 SHAFT 73108563, 2 each NUT 70925101, WASHER 70929704 and PIN 70904002)
	73117149	1	SHAFT, arm pivot (drilled ends)(Grader unit #02306 and up)
26	73117555	1	WASHER, spacing
27	--------	1	ARM, steering (lower)(See FRONT WHEEL SPINDLES AND LINKAGE)

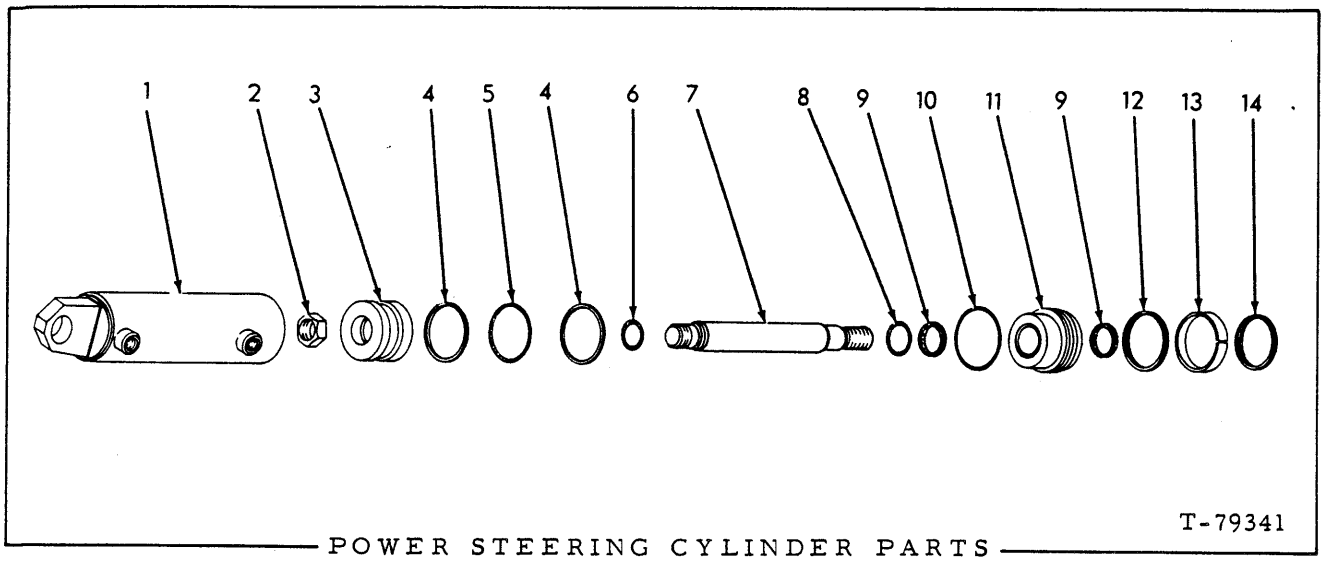

POWER STEERING CYLINDER PARTS

USAGE: Graders, serial No. 24A01654, 56Y02001 and up. See page 141.

ITEM	PART NO.	QTY.	DESCRIPTION
-	70692964	1	CYLINDER ASSY. (Includes items 1 thru 11)
1	70695549	1	TUBE, cylinder
2	70695545	1	NUT
3	70695543	1	PISTON
4	70695546	2	□ WASHER, back-up
5	70923651	1	□ O-RING, piston
6	70923574	1	□ O-RING, rod
7	70695548	1	ROD
8	70923648	1	□ O-RING
9	70695547	2	□ WIPER, rod
10	70924158	1	□ O-RING, head
11	70695544	1	HEAD (Includes bushing)
12	70927819	1	RING, snap
13	70695428	1	SPACER
14	70930922	1	RING, snap
15	73112072	1	REPAIR KIT, cylinder (Includes items 4 thru 6 and 8 thru 10)

□ Components of item 15

(Revised May 1978)

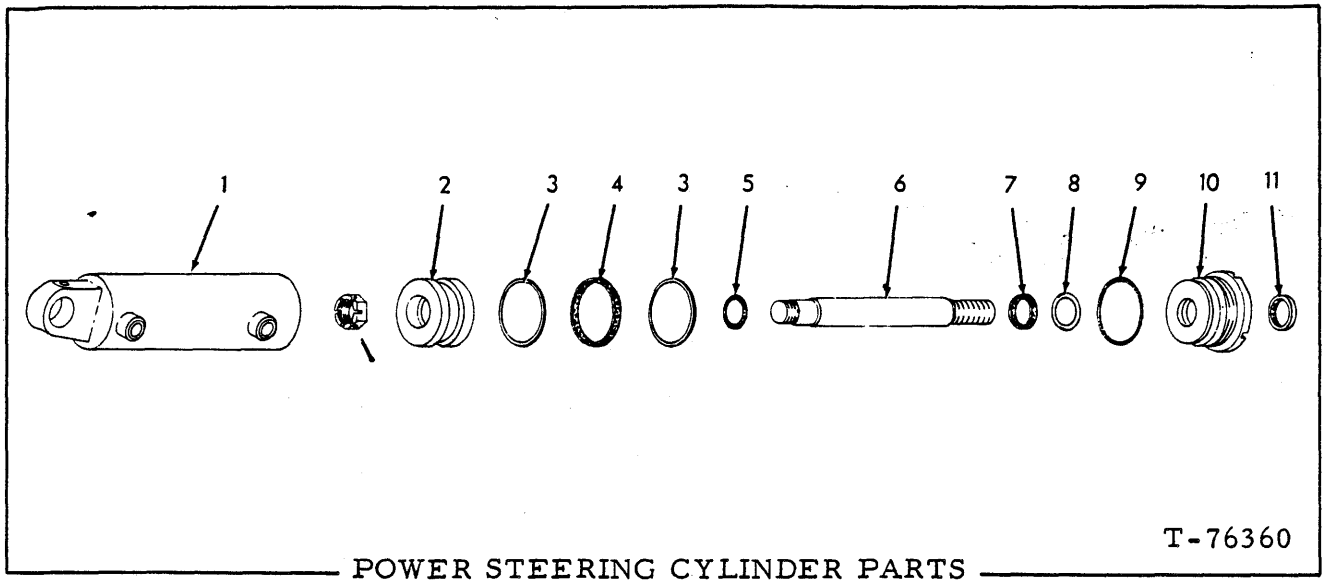

POWER STEERING CYLINDER PARTS

USAGE: See page 141. All Graders serial No. 75Y00201 and up; also Graders prior to serial No. 24A01654.

ITEM	PART NO.	QTY.	DESCRIPTION
-	70675502	1	CYLINDER ASSY. (Includes items 1 thru 11) (Original equipment. Order CYLINDER ASSY. 70692964)
1	70675554	1	TUBE, cylinder (Order CYLINDER ASSY. 70692964)
2	74753035	1	PISTON
3	74753046	2	□WASHER, back-up
4	74753045	1	□RING, sealing
5	70923934	1	□O-RING, piston
6	74753064	1	ROD, plunger (Order CYLINDER ASSY. 70692964)
	70925103	1	NUT, slotted, 7/8"NC
	70910320	1	PIN, cotter, 5/32" x 1-1/2"
7	74753044	1	□RING, sealing
8	74752722	1	WASHER, back-up
9	70923814	1	□O-RING, gland nut
10	74753063	1	NUT, glant
11	73112087	1	□RING, wiper
12	73112074	1	REPAIR KIT, cylinder (Includes items 3 thru 5, 7, 9 and 11)

□Components of item 12

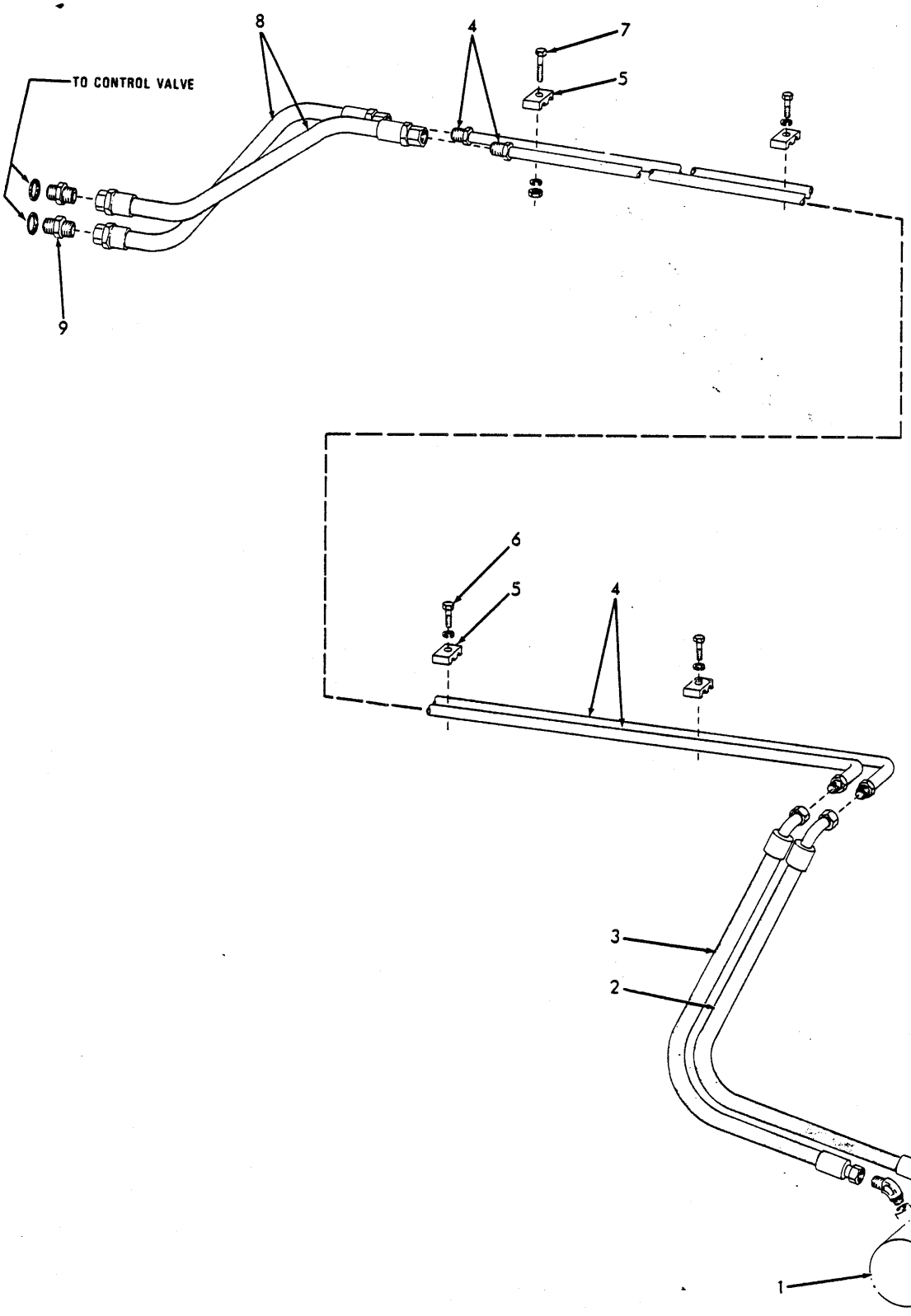

WHEEL LEAN PIPING

WHEEL LEAN PIPING

ITEM	PART NO.	QTY.	DESCRIPTION
1	-------	1	See FRONT AXLE AND WHEEL LEAN
2	70673118	1	HOSE, front (cylinder extend)(See HOSE PARTS)
	70921402	1	ELBOW, adjustable, 90°, flare type, 1/2" tube, 3/4"NF male end (Includes washer, nut and O-RING)
	70921349	1	O-RING, elbow
3	70673119	1	HOSE, front (cylinder retract)(See HOSE PARTS)
	70922507	1	ELBOW, adjustable, 45°, flare type, 1/2" tube, 3/4"NF male end (Includes washer, nut and O-RING)
	70921349	1	O-RING, elbow
4	70673116	2	TUBE, valve to cylinder
5	77109141	4	CLAMP, tube supporting
6	70927173	3	CAPSCREW, 3/8"NC x 1-1/8"
7	70921565	1	CAPSCREW, 3/8"NC x 1-1/2"
	70910287	4	LOCKWASHER, 3/8"
	70911026	1	NUT, 3/8"NC
8	70673120	2	HOSE, rear (See HOSE PARTS)
9	70661828	2	CONNECTOR, rear hose (restricted)
	70921349	2	O-RING, connector

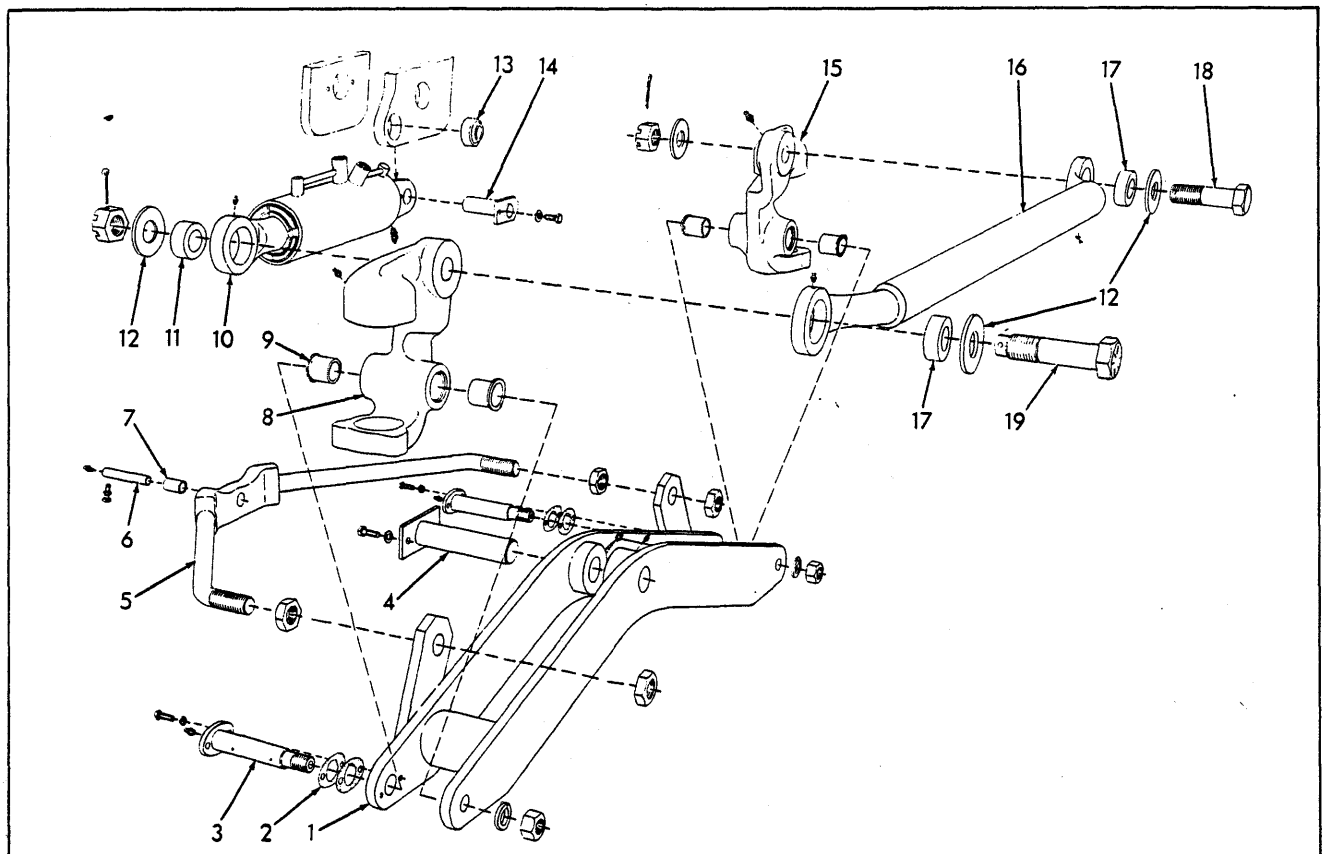

FRONT AXLE AND WHEEL LEAN — T-12577

ITEM	PART NO.	QTY.	DESCRIPTION
1	77109186	1	AXLE, front
	70914465	2	FITTING, lubricating, straight, 1/8"NPT
2	70052960	10	SHIM, knuckle pivot bolt (Use as required)
3	70082111	2	BOLT, pivot wheel lean knuckle
	70914465	2	FITTING, lubricating, straight, 1/8"NPT
	70914728	2	LOCKWASHER, 1"
	70911047	2	NUT, 1"NF
	70923276	4	CAPSCREW, 3/8"NF x 1-1/8"
	70910287	4	LOCKWASHER, 3/8"
4	70082123	1	PIN, front axle pivot
	70927173	2	CAPSCREW, 3/8"NC x 1"
	70677006	2	WASHER, plain, SAE std., 3/8"
5	70681251	1	ROD ASSY., radius (Includes item 7)
	70912251	4	NUT, jam, 1-1/4"NF
6	70073485	1	PIN, front axle radius rod
	70901279	1	SETSCREW, sq-hd., cup-pt., 3/8"NC x 1-1/4"
	70911034	1	NUT, jam, 3/8"NC
	70914465	1	FITTING, lubricating, straight, 1/8"NPT
7	70082766	1	BUSHING, radius rod

(Continued)

FRONT AXLE AND WHEEL LEAN (Continued)

ITEM	PART NO.	QTY.	DESCRIPTION
8	70082122	1	KNUCKLE ASSY., right (Includes item 9)
	70914465	1	FITTING, lubricating, straight, 1/8"NPT
9	70084629	4	BUSHING, wheel lean knuckle
10	-------	1	CYLINDER ASSY., wheel lean (See page 150)
	70912808	1	FITTING, lubricating, straight, 1/4"NF
11	70082176	1	SPACER, connecting link capscrew (1" long)
12	70054889	4	WASHER, connecting link capscrew
13	70078852	1	BEARING, cylinder pivot pin
	70915274	1	FITTING, lubricating, 45°, 1/8"NPT (Screws into frame)
14	70082155	1	PIN, pivot wheel lean cylinder
	70922262	1	CAPSCREW, 3/8"NC x 3/4"
	70677006	1	WASHER, plain, SAE std., 3/8"
15	70082121	1	KNUCKLE ASSY., left (Includes item 9)
	70914465	1	FITTING, lubricating, straight, 1/8"NPT
16	70082113	1	LINK, connecting, wheel lean knuckles
	70912808	1	FITTING, lubricating, straight, 1/4"NF
	70919186	1	FITTING, lubricating, 45°, 1/4"NF
17	70601966	2	SPACER, connecting link capscrew (3/4"long)
18	70082175	1	CAPSCREW, left connecting link
	70911061	1	NUT, slotted, 1-1/4"NC
	70901344	1	PIN, cotter, 1/4" x 2"
19	70082174	1	CAPSCREW, right connecting link
	70911061	1	NUT, slotted, 1-1/4"NC
	70901344	1	PIN, cotter, 1/4" x 2"

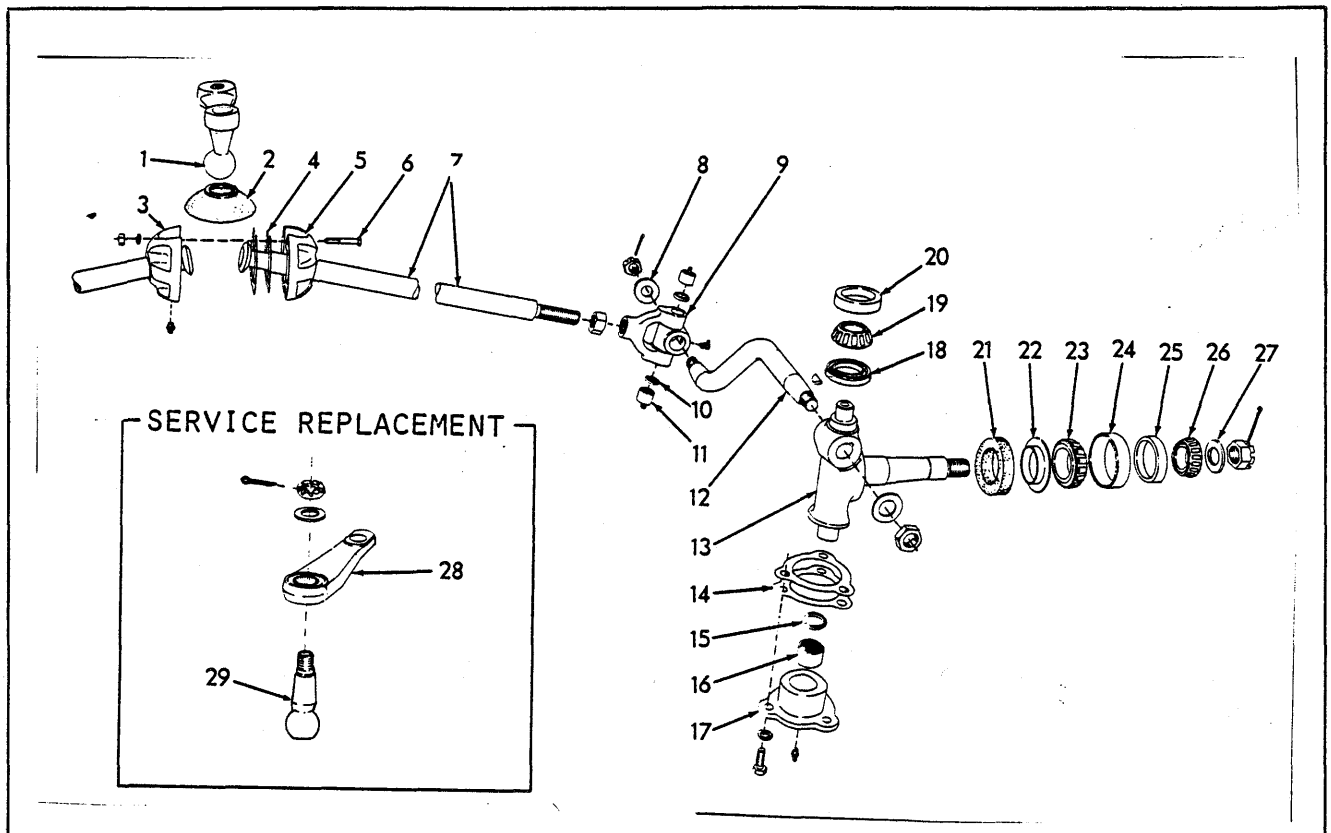

FRONT WHEEL SPINDLES AND LINKAGE

ITEM	PART NO.	QTY.	DESCRIPTION
1	--------	1	ARM, steering (Original equipment. Order items 28,29 and 2 LINK 73115007)
2	70604289	1	SHIELD, steering arm ball pin (neoprene)
3	70653877	1	CAP, steering arm ball pin, right
	70914465	1	FITTING, lubricating, straight, 1/8"NPT
4	70604290	18	SHIM, ball pin cap (Use as required)
5	70653879	1	CAP, steering arm ball pin, left
6	70920995	4	CAPSCREW, ball pin cap (3/8"NC x 2")
	70910287	4	LOCKWASHER, 3/8"
	70910324	4	NUT, 3/8"NC
7	73115007	2	LINK, drag
	70911046	2	NUT, 7/8"NF
8	70602068	2	WASHER, spindle arm (plain)
	70912331	2	NUT, slotted, 3/4"NF
	70900807	2	PIN, cotter, 1/8" x 1-1/4"
9	70080862	2	SWIVEL ASSY., drag link (Each consists of 1 Yoke, 1 Swivel, 1 Pin and items 10 and 11)
	70915019	2	FITTING, lubricating, 90°, 1/4"NF
10	70052662	2	SEAL, oil, drag link swivel
11	70080857	4	BEARING, needle, drag link swivel yoke

(Continued)

FRONT WHEEL SPINDLES AND LINKAGE (Continued)

ITEM	PART NO.	QTY.	DESCRIPTION
12	77109179	2	ARM, steering, front spindle
	70905126	2	KEY, #15 woodruff, 1/4" x 1"
	70911116	2	WASHER, plain, SAE std., 7/8"
	70914101	2	NUT, jam, 7/8"NF
13	73114437	1	SPINDLE, left front wheel
	73114438	1	SPINDLE, right front wheel
	70911057	2	NUT, castle, 1"NF
	70900809	2	PIN, cotter, 1/8" x 1-3/4"
14	70078854	2	SHIM, needle bearing retainer (.005" thick. Use as required)
	70082108	16	SHIM, needle bearing retainer (.010" thick. Use as required)
15	70053243	2	SEAL, dust, spindle needle bearing
16	70604435	2	BEARING, needle, wheel spindle, lower
17	70082107	2	RETAINER, spindle needle bearing
	70914465	2	FITTING, lubricating, straight, 1/8"NPT
	70920582	6	CAPSCREW, 1/2"NC x 1-1/4"
	70912441	6	LOCKWASHER, 1/2"
18	70082179	2	SEAL, dust, spindle upper bearing
19	70604382	2	CONE ASSY., spindle upper bearing
20	70604383	2	CUP, spindle upper bearing
21	70200050	2	WASHER, spindle (felt)
22	70205430	2	WASHER, felt washer retaining
23	70210548	2	CONE ASSY., spindle inner bearing
24	70210550	2	CUP, spindle inner bearing
25	70210551	2	CUP, spindle outer bearing
26	70210549	2	CONE ASSY., spindle outer bearing
27	70200103	2	WASHER, spindle end
28	73113646	1	ARM
29	73113647	1	BALL
	70927382	1	WASHER
	70900988	1	NUT, slotted, 3/4"NF
	70900813	1	PIN, cotter

Service replacement

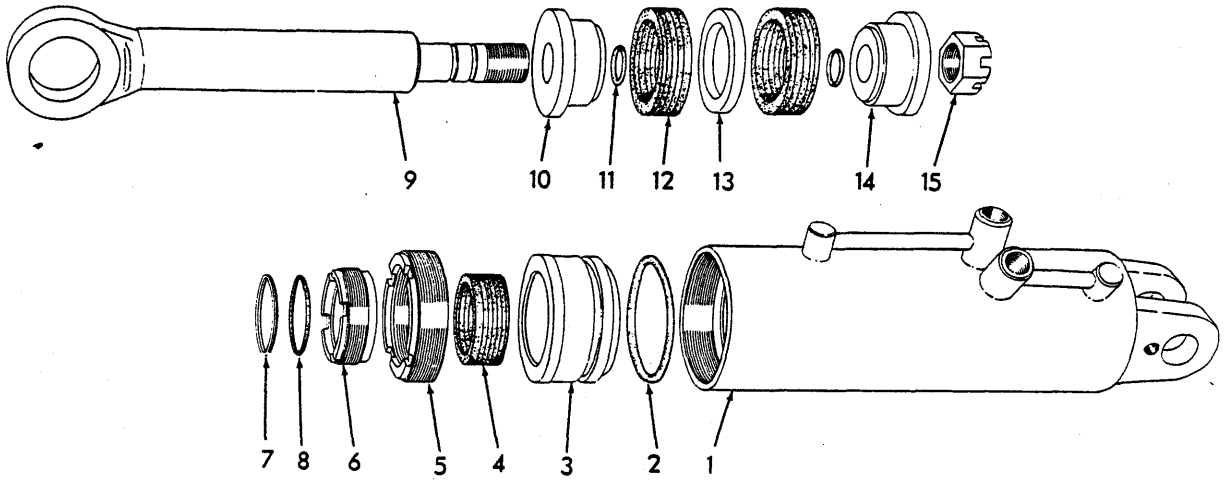

WHEEL LEAN CYLINDER PARTS

USAGE: See page 146. First type.

ITEM	PART NO.	QTY.	DESCRIPTION
-	70675520	1	CYLINDER ASSY., wheel lean (Includes items 1 thru 15)(Original equipment. Order CYLINDER ASSY. 70692962)
1	70675518	1	TUBE, cylinder
2	70923830	1	□O-RING, stuffing box
3	70083551	1	BOX, stuffing
4	70083552	1	□PACKING ASSY., stuffing box
5	70083554	1	NUT, stuffing box retaining
6	70083637	1	NUT, packing adjustment
7	70080283	1	□RING, piston rod wiping
8	70923579	1	□O-RING, piston rod
9	70083560	1	ROD, piston (Order CYLINDER ASSY. 70692962)
10	70083548	1	PISTON, front
11	70923575	2	□O-RING, piston
12	70083547	2	□PACKING ASSY., piston
13	70083558	1	WASHER, piston
14	70083546	1	PISTON, rear
15	70912841	1	NUT, slotted, 1-1/4"NF
16	73112077	1	REPAIR KIT, cylinder (Includes items 2, 4, 7, 8, 11 and 12)

□Components of item 16

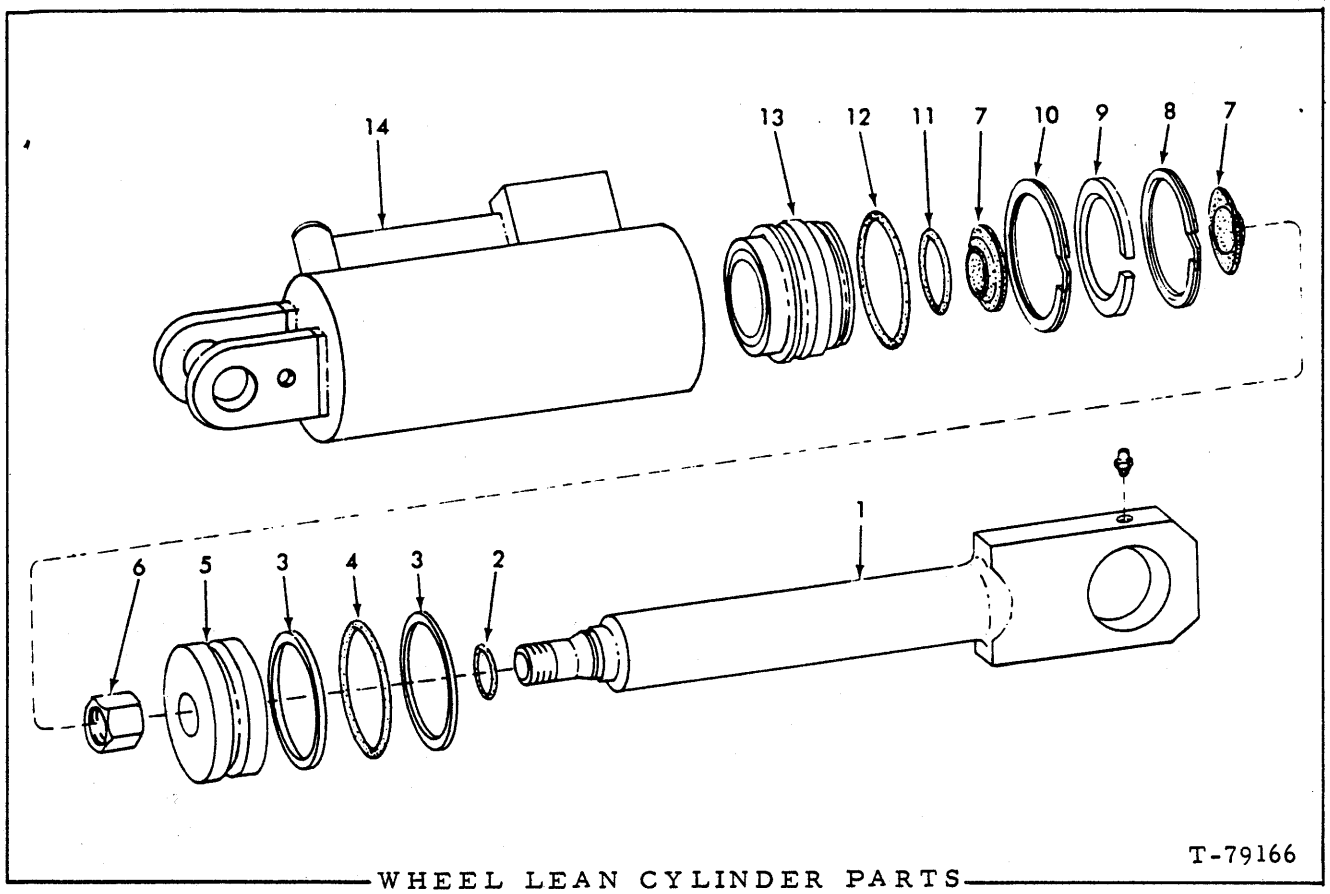

WHEEL LEAN CYLINDER PARTS

USAGE: See page 146. Second type

ITEM	PART NO.	QTY.	DESCRIPTION
-	70692962	1	CYLINDER ASSY., wheel lean (Includes items 1 thru 14)
1	70695447	1	ROD, piston
	70912808	1	FITTING, lubricating, straight, 1/4"NF
2	70923648	1	□ O-RING, piston rod
3	70695445	2	□ WASHER
4	70923830	1	□ O-RING, piston
5	70695442	1	PISTON
6	70692599	1	NUT
7	70695446	2	□ WASHER
8	70930930	1	RING, snap
9	70695444	1	SPACER
10	70930929	1	RING, snap
11	70923579	1	□ O-RING
12	70924840	1	□ O-RING
13	70695443	1	HEAD ASSY. (Includes bushing which is not serviced separately)
14	70695448	1	TUBE, cylinder
15	73112075	1	REPAIR KIT, cylinder (Includes items 2 thru 4, 7, 11 and 12)

□Components of item 15

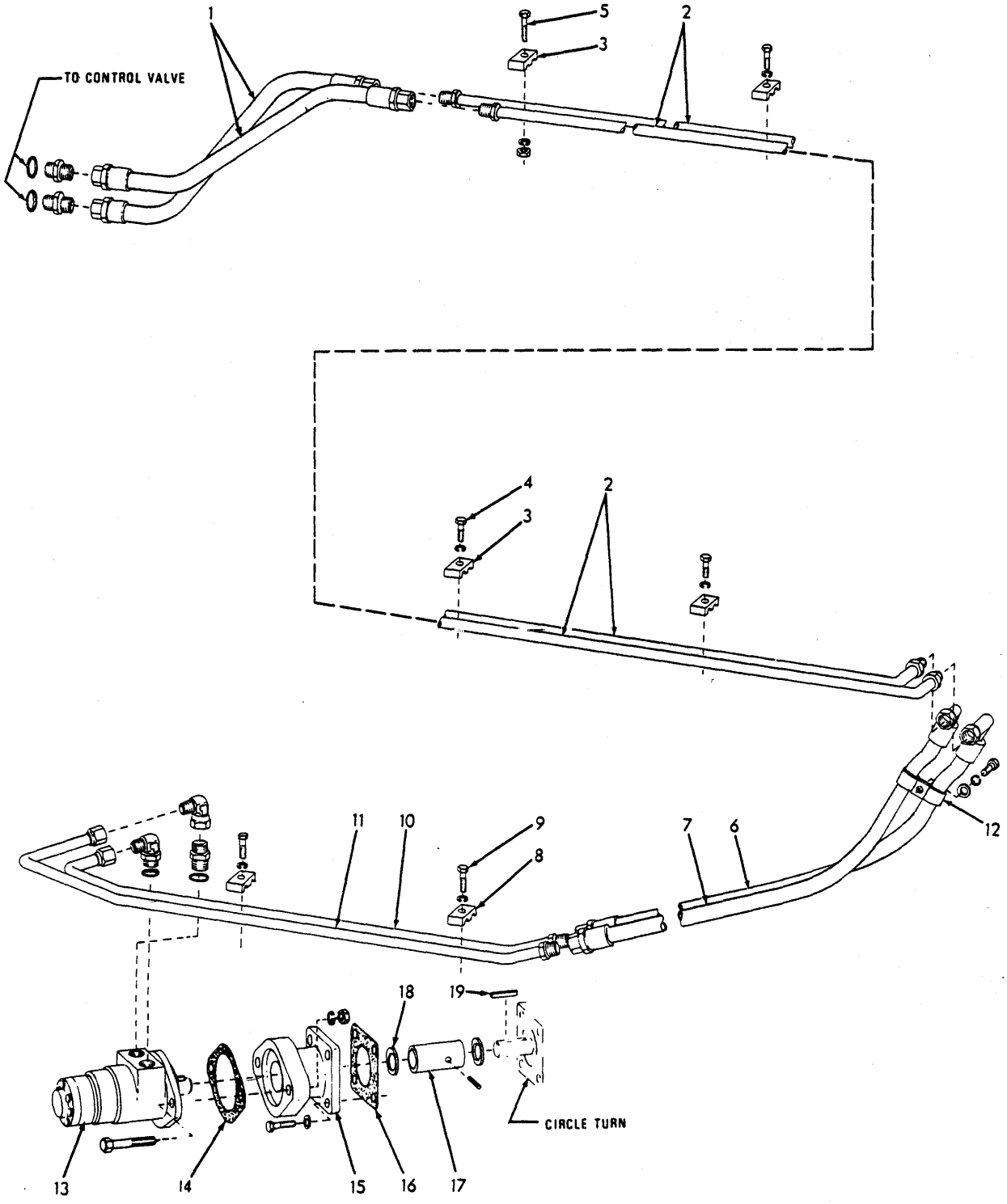

T-76351

CIRCLE TURN HYDRAULICS

(Revised June 1977)

CIRCLE TURN HYDRAULICS

ITEM	PART NO.	QTY.	DESCRIPTION
1	70673120	2	HOSE, rear (20-1/2" long)(See HOSE PARTS)
	70921409	2	CONNECTOR, flare type, 1/2" tube, 3/4"NF male end (Includes O-RING)
	70921349	2	O-RING, connector
2	70673116	2	TUBE, valve to hydraulic motor (upper)
3	77109141	4	BLOCK, tube supporting
4	70927173	3	CAPSCREW, 3/8"NC x 1-1/8"
5	70921565	1	CAPSCREW, 3/8"NC x 1-1/2"
	70910287	4	LOCKWASHER, 3/8"
	70911026	1	NUT, 3/8"NC
6	70675542	1	HOSE, front (32" long)(See HOSE PARTS)
7	70675541	1	HOSE, front (31" long)(See HOSE PARTS)
8	70623355	2	CLAMP, tube supporting
9	70927173	2	CAPSCREW, 3/8"NC x 1-1/8"
	70910287	2	LOCKWASHER, 3/8"
10	70675504	1	TUBE, valve to hydraulic motor (lower)(short)
	70924786	1	ELBOW, adjustable, 90°, flare type, 1/2" tube 7/8"NF male end (Includes O-RING)
	70921205	1	O-RING, elbow
11	70675505	1	TUBE, valve to hydraulic motor (lower)(long)
	70921279	1	ELBOW, flare type, swivel nut, 1/2" tube
	70923717	1	CONNECTOR, flare type, 1/2" tube, 7/8"NF male end (Includes O-RING)
	70921205	1	O-RING, connector
12	70094467	2	CLIP, hose supporting
	70922300	1	CAPSCREW, 3/8"NC x 3/4"
	70910287	1	LOCKWASHER, 3/8"
	70911115	1	WASHER, plain, SAE std., 3/8"
13	--------	1	MOTOR ASSY. (See page 154)
	70920585	2	CAPSCREW, 1/2"NC x 1-3/4" } Graders prior to unit #00679
	70912441	2	LOCKWASHER, 1/2" } Graders prior to unit #00679
	70924864	2	CAPSCREW, 1/2"NC x 2-1/4" } Grader unit #00679 and up
	70912441	2	LOCKWASHER, 1/2" } Grader unit #00679 and up
	70911048	2	NUT, 1/2"NC } Grader unit #00679 and up
14	70674961	1	GASKET, motor to adapter
15	70675353	1	ADAPTER, motor to circle turn (Graders prior to unit #00679)
	70681423	1	ADAPTER, motor to circle turn (Grader unit #00679 and up)
	70921076	4	CAPSCREW, 3/8"NC x 1-1/4"
	70910287	4	LOCKWASHER, 3/8"
16	70675475	1	GASKET, adapter to circle turn
17	70671531	1	COUPLING, shaft
	70916171	1	PIN, spring, 1/4" x 1-1/2"
18	70675022	2	WASHER
19	70905126	1	KEY, #9 woodruff, 3/16" x 3/4"

(Revised June 1977)

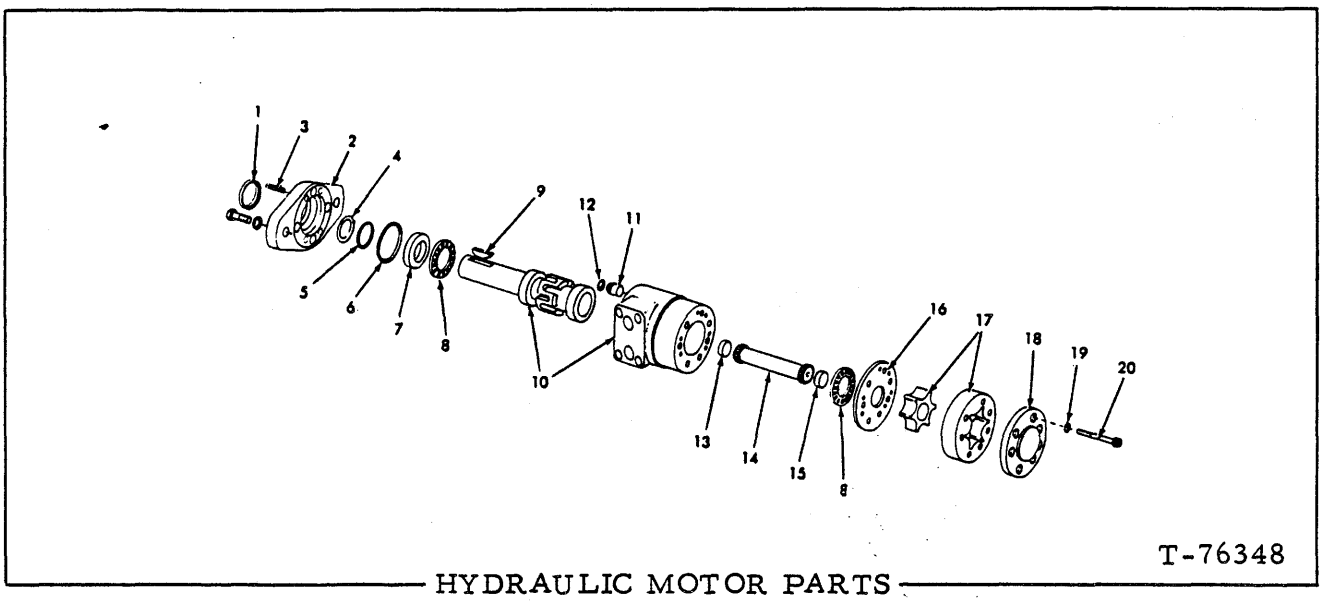

HYDRAULIC MOTOR PARTS

USAGE: Graders prior to approximately October 1974. See page 153

ITEM	PART NO.	QTY.	DESCRIPTION
-	70675608	1	MOTOR ASSY., hydraulic (Includes items 1 thru 20)
1	--------	1	□SEAL, shaft
2	70678938	1	FLANGE, mounting
	70669660	4	CAPSCREW, 12-pt., 5/16"NF
	70669667	4	LOCKWASHER, internal tooth, 5/16"
3	70916227	4	PIN, spring, 1/4" x 1"
4	--------	1	□WASHER, back-up
5	--------	1	□SEAL, adapter
6	--------	1	□SEAL, adapter to housing
7	70669650	1	RACE, bearing
8	70669653	2	BEARING, thrust
9	70905126	1	KEY, #9 woodruff, 3/16" x 3/4"
10	70669647	1	HOUSING ASSY. (Consists of matched HOUSING and SHAFT)(Serviced only as a unit)
11	70669648	1	PLUG, housing
12	--------	1	□O-RING, plug
13	70669649	1	SPACER, shaft (front)
14	70669654	1	SHAFT, drive
15	70239179	1	SPACER, shaft (rear)
16	74998258	1	PLATE, spacing
17	70678939	1	GEROTOR SET
18	74998320	1	CAP, end
19	--------	7	□WASHER, sealing
20	70678940	7	CAPSCREW, 12-pt., 5/16"NC x 2-1/4"
21	70669706	1	REPAIR KIT, motor (Includes items 1, 4 thru 6 12 and 19)

□Components of item 21

(Revised June 1977)

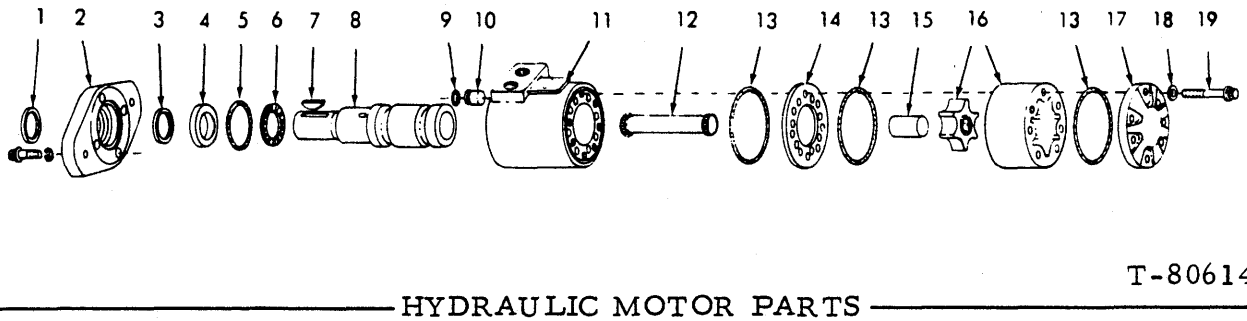

T-80614

HYDRAULIC MOTOR PARTS

USAGE: Effective approximately October 1974. See page 153

ITEM	PART NO.	QTY.	DESCRIPTION
-	73110300	1	MOTOR ASSY., hydraulic (Includes items 1 thru 19)
1	--------	1	□SEAL
2	73110294	1	FLANGE
	70669660	4	CAPSCREW, 12-pt., 5/16"NF
3	--------	1	□SEAL
4	73110291	1	RACE
5	--------	1	□O-RING
6	73110295	1	BEARING
7	70932825	1	KEY
8	73110301	1	SHAFT, output
9	--------	1	□O-RING
10	70669648	1	PLUG
11	73110302	1	HOUSING
12	70669654	1	SHAFT, drive
13	--------	3	□O-RING
14	73110296	1	PLATE
15	73066939	1	SPACER
16	73110297	1	GEROTOR SET
17	73110298	1	CAP, end
18	--------	7	□WASHER
19	70678940	7	CAPSCREW, 12-pt., 5/16"NC x 2-1/4"
20	73110299	1	REPAIR KIT, motor (Includes items 1,3,5,9,13 and 18)

□Components of item 20

(Revised June 1977)

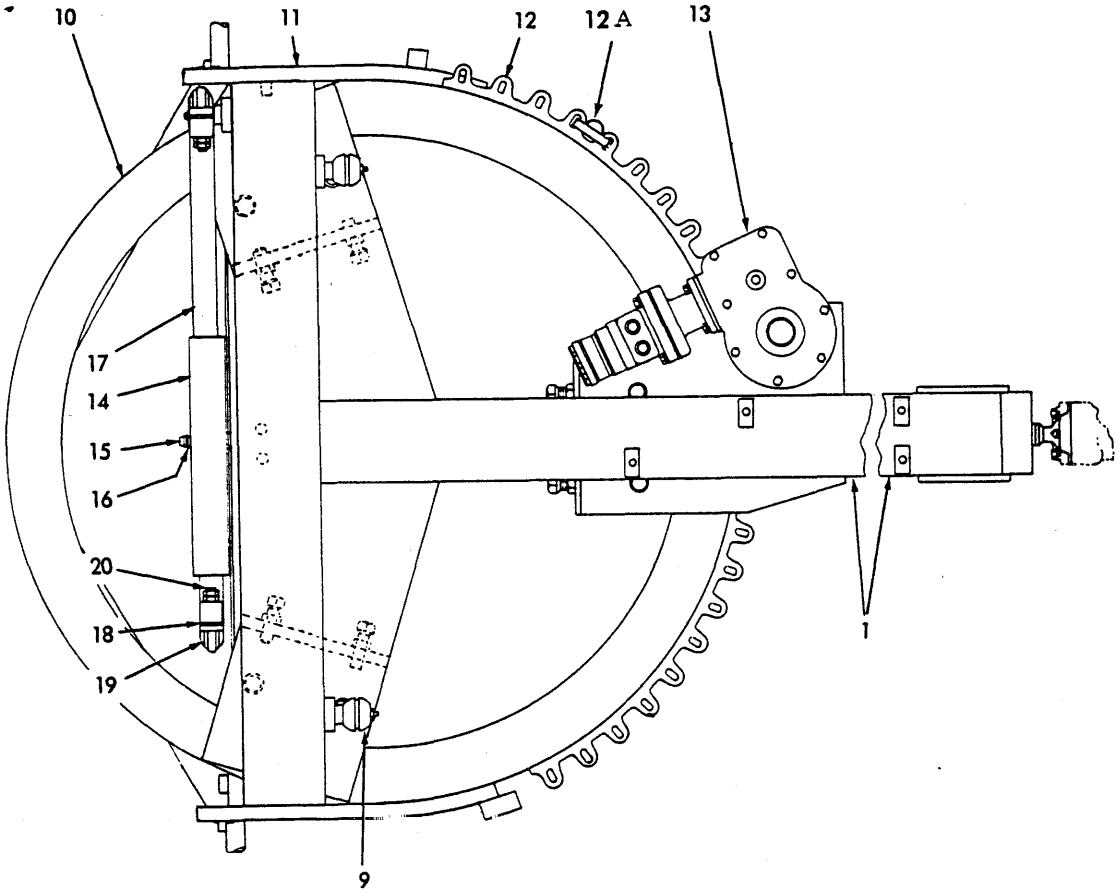

TOP VIEW

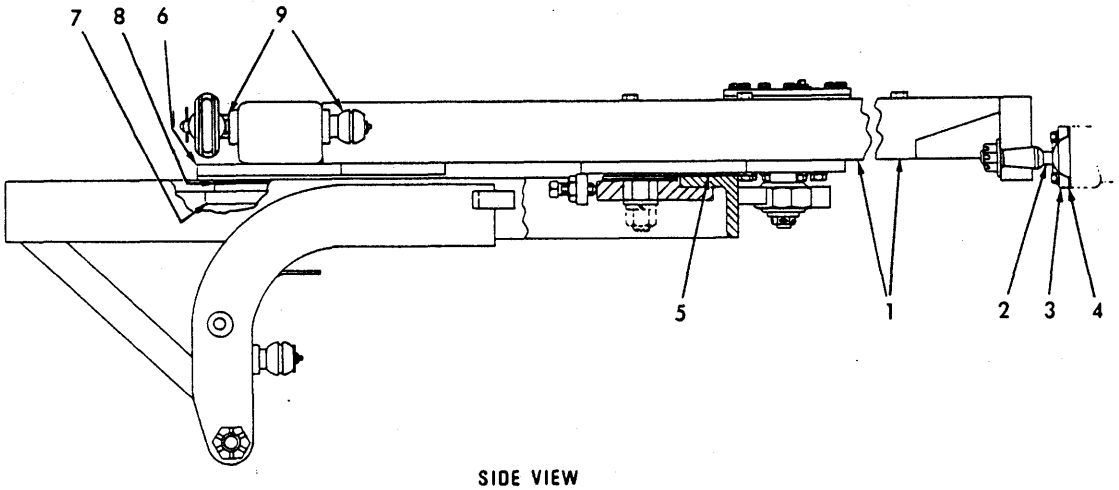

SIDE VIEW

MOLDBOARD DRAWBAR AND CIRCLE

T-76354

(Revised May 1971)

MOLDBOARD DRAWBAR AND CIRCLE

ITEM	PART NO	QTY	DESCRIPTION	
1	70673319	1	DRAWBAR, moldboard (Includes item 9 ; also 6 NUTS 70906441)	
	70925671	6	CAPSCREW, 7/8" NC x 2-1/2"	
	70901421	6	NUT, jam 7/8"NC	
2	70673320	1	PIN, ball	
	70900822	1	WASHER, plain	
	70924447	1	NUT, slotted, 1"NF	
	70900813	1	PIN, cotter	
3	77125076	1	CAP, ball pin	Graders prior to unit #01373
	70920582	4	CAPSCREW, 1/2"NC x 1-1/4"	
	70691327	1	CAP, ball pin	Graders unit #01373 and up
	70920585	4	CAPSCREW, 1/2"NC x 1-3/4"	
	70912441	4	LOCKWASHER, 1/2"	
	70914465	1	FITTING, lubricating, straight, 1/8"NPT	
4	77125077	10	SHIM, ball pin adjusting (Use as required)	
5	70079187	1	PLATE, wear, front	
6	70055484	2	PLATE, wear, rear	
7	70055482	3	GUIDE, circle	
	70602663	6	WASHER, plain	
	70914729	6	LOCKWASHER, 1-1/8"	
	70906441	6	NUT, 1-1/8"	
8	70055472	39	SHIM, circle guide (Use as req'd)	
9	70643997	3	BALL, moldboard lift and side shift (Requires welding to drawbar)	
	70914465	3	FITTING, lubricating, straight, 1/8"NPT	
10	70675498	1	CIRCLE, moldboard (Includes items 11 and 12)	
	70915276	1	FITTING, lubricating, 90°, 1/8"NPT	
11	70656852	1	ARM, left	Requires welding to install
	70082548	1	ARM, right	
12	70078434	3	SEGMENT, circle rack (8 teeth)	
12A	70682172	1	STOP	
13	-------	1	CIRCLE TURN ASSY. (See page 158)	
	70921535	5	CAPSCREW, 5/8"NC x 1-3/4"	
	70912942	5	LOCKWASHER, 5/8"	
14	70061851	1	LINK, shifting	
15	70602224	1	PIN, coupling, shifting linkage	
16	70617855	1	CLIP, retaining, coupling linkage pin	
17	70061852	1	ROD, shifting	
18	70053992	16	SHIM, shifting linkage cap (Use as required)	
19	70053986	2	CAP, shifting linkage	
20	70605665	2	U-BOLT	
	70911049	8	NUT, jam, 5/8"NF	

(Revised May 1978)

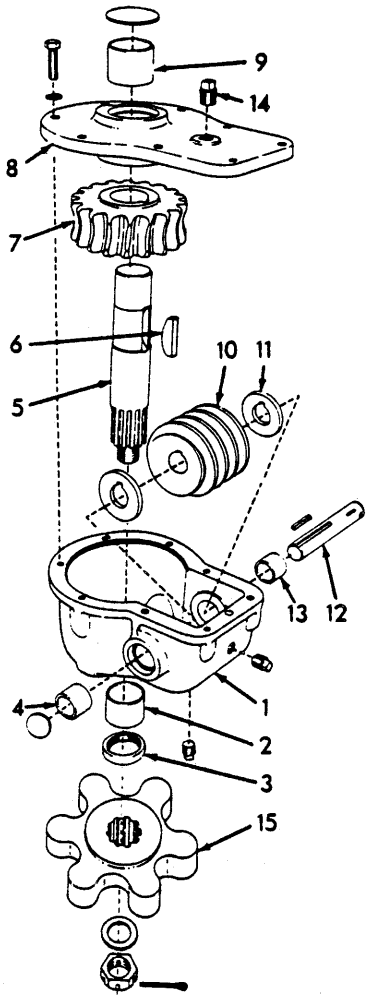

T-5937

CIRCLE TURN PARTS

USAGE: See page 157

ITEM	PART NO.	QTY.	DESCRIPTION
-	70675480	1	CIRCLE TURN ASSY. (Includes items 1 thru 14) (Graders prior to unit #02016)
-	70699270	1	CIRCLE TURN ASSY. (Includes items 1 thru 14) (Grader unit #02016 and up)
1	70675479	1	HOUSING ASSY. (Includes items 2 and 4)
	70901653	2	PLUG, pipe, 3/8"NPT
	70910014	1	PLUG, expansion, 1-1/2" diam.
2	70078422	1	BUSHING, worm gear shaft
3	70078502	1	SEAL, oil, worm gear shaft
4	70078424	1	BUSHING, worm shaft
5	70645060	1	SHAFT, worm gear (Graders prior to unit #02016)
	70699269	1	SHAFT, worm gear (Grader unit #02016 and up)
6	70078431	1	KEY, worm gear
7	70078425	1	GEAR, worm

(Continued)

CIRCLE TURN PARTS (Continued)

ITEM	PART NO.	QTY.	DESCRIPTION	
8	70079277	1	COVER ASSEMBLY (Includes item 9)	
	70910015	1	PLUG, expansion, 2-1/8" diam.	
	70921076	8	CAPSCREW, 3/8"NC x 1-1/4"	
	70910287	8	LOCKWASHER, 3/8"	
9	70078423	1	BUSHING, housing cover	
10	70078426	1	WORM	
11	70078419	2	WASHER, thrust	
12	70675093	1	SHAFT, worm	
	70905857	1	KEY, straight, 1/4" x 1/4" x 1-3/4"	
13	70078424	1	BUSHING, worm shaft	
14	70605207	1	PLUG, vent	
15	70645059	1	PINION	Not included in CIRCLE TURN ASSY.
	70602094	1	WASHER, plain	
	70911174	1	NUT, slotted, 1"NF	
	70918463	1	PIN, cotter, 1/4" x 2"	

(Revised May 1976)

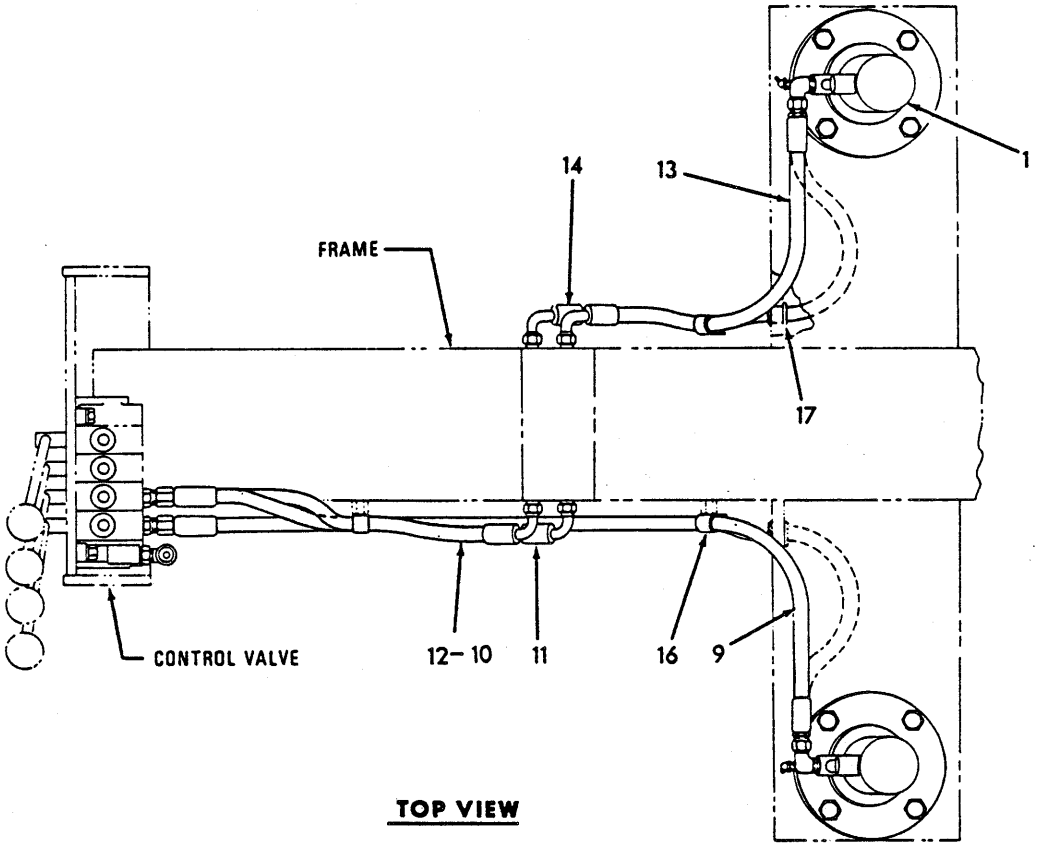

TOP VIEW

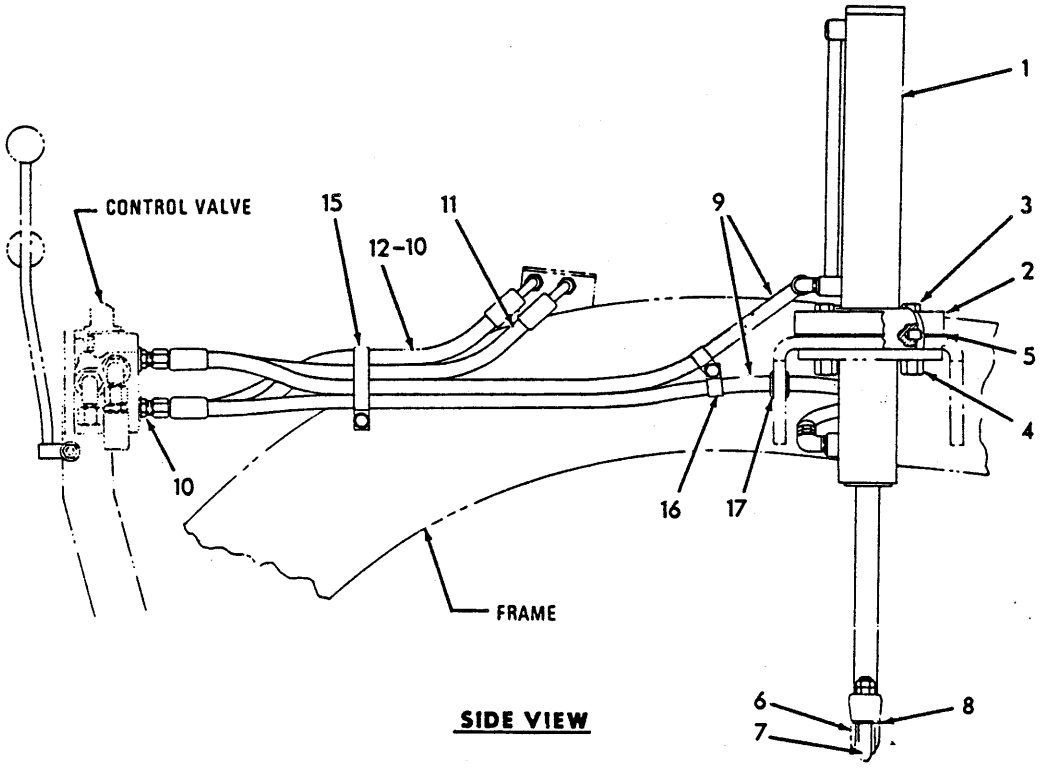

SIDE VIEW

T-76353

MOLDBOARD LIFT

MOLDBOARD LIFT

ITEM	PART NO.	QTY.	DESCRIPTION
1	--------	2	CYLINDER ASSY., hydraulic (See pages 170 and 171)
2	70065819	2	CAP, pivot
	70915275	2	FITTING, lubricating, 65°, 1/8"NPT
3	70927532	8	CAPSCREW, 5/8"NF x 3-1/2"
4	70072366	8	NUT, high, 5/8"NF
5	70065818	16	SHIM, pivot cap (1/32" thick) } Use as required
	70639069	4	SHIM, pivot cap (.020" thick) } Use as required
6	70053986	2	CAP, ball
7	70605665	2	U-BOLT, 5/8"NF
	70911049	8	NUT, jam, 5/8"NF
8	70053992	16	SHIM, ball cap (1/32" thick. Use as required)
9	70673123	2	HOSE, right cylinder (See HOSE PARTS)
	70919206	2	ELBOW, flare type, 1/2" tube, 3/8"NPT male)(Graders prior to unit #01625)
	70921402	2	ELBOW, adjustable, 90°, flare type, 1/2" tube, 3/4"NF male end (Grader unit #01625 and up)
	70921409	1	CONNECTOR, flare type, 1/2" tube, 3/4"NF male end (Includes O-RING)
	70921349	1	O-RING, connector
10	77108993	2	CONNECTOR, restricted (Includes O-RING)
	70921349	2	O-RING, connector
11	70649623	1	HOSE, frame to valve, left cylinder (drop)(See HOSE PARTS)
	70921409	1	CONNECTOR, flare type, 1/2" tube, 3/4"NF male (Includes O-RING)
	70921349	1	O-RING, connector
12	70649629	1	HOSE, frame to valve, left cylinder (lift)(See HOSE PARTS)
13	70649623	1	HOSE, left cylinder to frame (drop)(See HOSE PARTS)
	70919206	1	ELBOW, flare type, 1/2" tube, 3/8"NPT male (Graders prior to #01625)
	70921402	1	ELBOW, adjustable, 90°, flare type, 1/2" tube, 3/4"NF male end (Includes washer, nut and O-RING)(Graders unit #01625 and up)
	70921349	1	O-RING, connector
14	70649622	1	HOSE, left cylinder to frame (lift)(See HOSE PARTS)
	70919206	1	ELBOW, flare type, 1/2" tube, 3/8"NPT male (Graders prior to #01625)
	70921402	1	ELBOW, adjustable, 90°, flare type, 1/2" tube, 3/4"NF male end (Includes washer, nut and O-RING)(Graders unit #01625 and up)
	70921349	1	O-RING, connector
15	70621543	1	CLIP, hose supporting (multiple. For 3/4" diam. hose)
	70922300	1	CAPSCREW, 3/8"NC x 3/4"
	70910287	1	LOCKWASHER, 3/8"
	70911115	1	WASHER, plain, SAE std., 3/8"
16	70094467	4	CLIP, hose supporting (single, 3/4" diam.)
	70922300	2	CAPSCREW, 3/8"NC x 3/4"
	70910287	2	LOCKWASHER, 3/8"
	70911115	2	WASHER, plain, SAE std., 3/8"
17	70621542	2	GROMMET, lower hose (rubber)

(Revised July 1975)

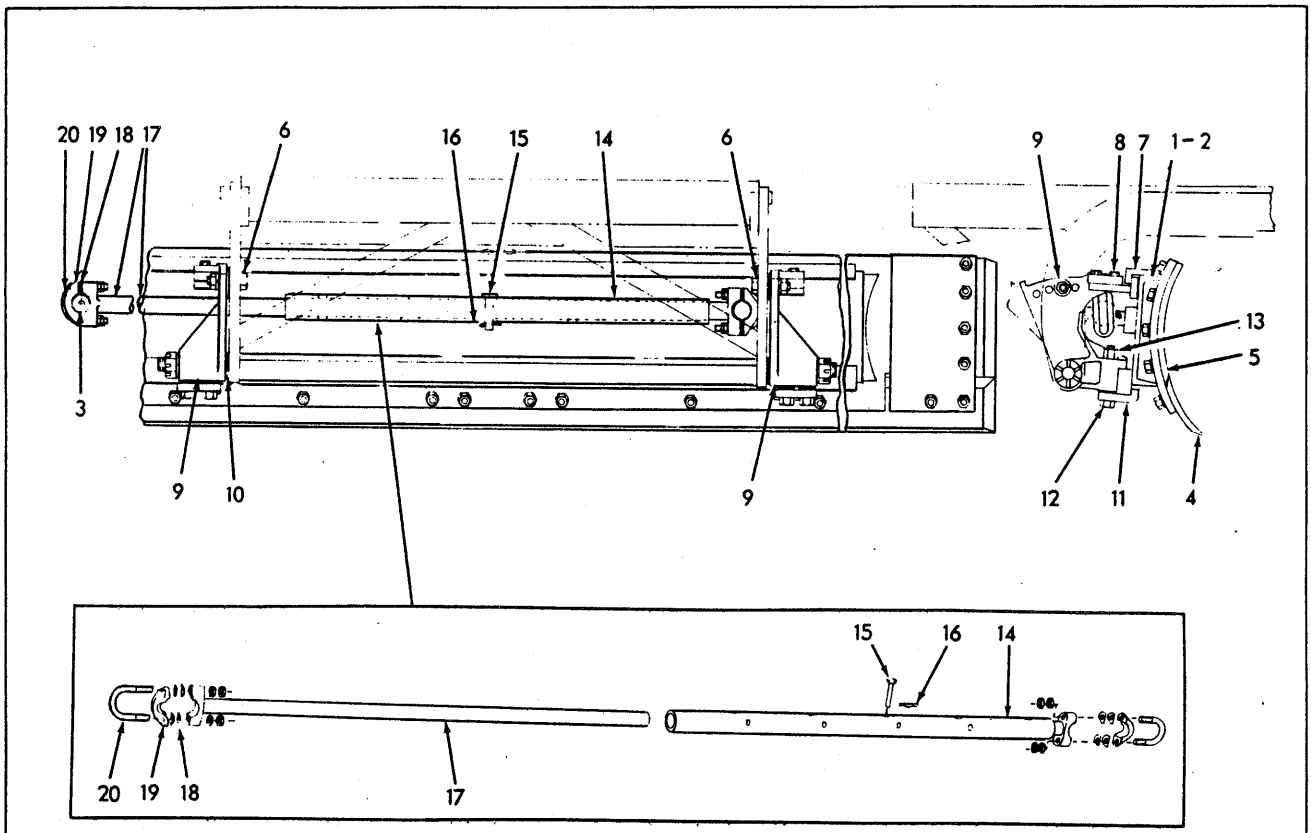

MOLDBOARD T-76358

* 10 ft. Standard equipment
** 12 ft. Optional equipment

ITEM	PART NO.	QTY. *	QTY. **	DESCRIPTION	
1	70673327	1	-	MOLDBOARD ASSY.	Each consists of items 2 thru 5
	70677308	-	1	MOLDBOARD ASSY.	
2	70673324	1	-	MOLDBOARD, only	Each includes item 3
	70677307	-	1	MOLDBOARD, only	
3	70082532	1	1	BALL, shifting (Requires welding to moldboard)	
	70914465	1	1	FITTING, lubricating, straight, 1/8"NPT	
4	70601530	1	-	EDGE, cutting, right hand (5 ft.)	
	70601531	1	-	EDGE, cutting, left hand (5 ft.)	
	70601532	-	1	EDGE, cutting, right hand (6 ft.)	
	70601533	-	1	EDGE, cutting, left hand (6 ft.)	
	70617125	14	16	BOLT, plow, 5/8"NC x 2"	
	70911029	14	16	NUT, 5/8"NC	

(Continued)

MOLDBOARD (Continued)

ITEM	PART NO.	QTY. *	QTY. **	DESCRIPTION	
5	77109478	2	2	BIT, end	
	70911633	8	8	BOLT, plow, 5/8"NC x 2-1/4"	
	70912942	8	8	LOCKWASHER, 5/8"	
	70911029	8	8	NUT, 5/8"NC	
6	70922789	2	2	CAPSCREW, pitch bracket	
	70914726	2	2	LOCKWASHER, 3/4"	
	70910923	2	2	NUT, 3/4"NC	
7	70081170	2	2	GUIDE, moldboard slide	
8	70921411	4	4	CAPSCREW, 5/8"NC x 1-1/2"	
9	70082225	1	1	BRACKET, pitch, left side	
9	70082226	1	1	BRACKET, pitch, right side	
	70912841	2	2	NUT, slotted, 1-1/4"NF	
	70901344	2	2	PIN, cotter, 1/4" x 2"	
10	70082604	4	4	WASHER, spacing, moldboard support (Use as required)	
11	70081175	2	2	BRACKET, moldboard slide	
	70915874	28	28	WASHER, spacing (Use as required)	
12	70927423	4	4	CAPSCREW, 3/4"NF x 5"	
13	70012767	4	4	NUT, high, 1"NF	
14	77109457	1	1	TUBE, shifting	Not used on units equipped with Hydraulic Shiftable Moldboard
15	70602224	1	1	PIN, coupling, shifting linkage	
16	70617855	1	1	CLIP, retaining, linkage coupling pin	
17	70674935	1	1	LINK, shifting	
18	70053992	16	16	SHIM, shifting linkage cap (Use as required)	
19	70053986	2	2	CAP, shifting linkage	
20	70605665	2	2	U-BOLT	
	70911049	8	8	NUT, jam, 5/8"NF	

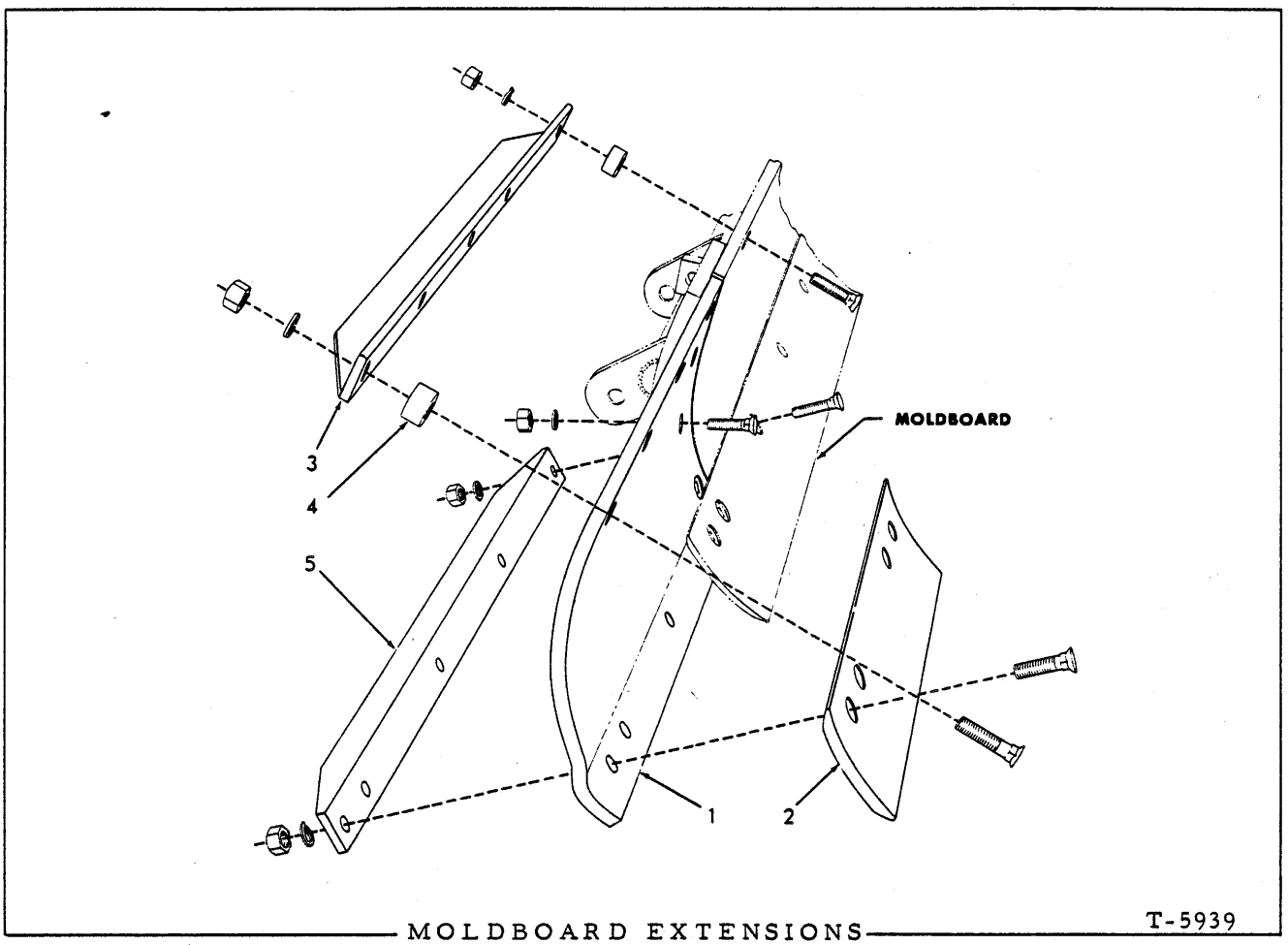

T-5939

MOLDBOARD EXTENSIONS

USAGE: Special equipment

ITEM	PART NO.	QTY.	DESCRIPTION
1	70677364	1	EXTENSION, moldboard, right hand
	70677363	1	EXTENSION, moldboard, left hand
	70911633	6	BOLT, plow, 5/8"NC x 2-1/4"
	70912942	6	LOCKWASHER, 5/8"
	70911029	6	NUT, 5/8"NC
2	70601603	2	EDGE, cutting
	70913648	6	BOLT, plow, 5/8"NC x 2-3/4"
	70912942	6	LOCKWASHER, 5/8"
	70911029	6	NUT, 5/8"NC
3	70079164	1	ANGLE, top reinforcing, right hand
	70079163	1	ANGLE, top reinforcing, left hand
	70913648	10	BOLT, plow, 5/8"NC x 2-3/4"
	70912942	10	LOCKWASHER, 5/8"
	70911029	10	NUT, 5/8"NC
4	70602449	8	SPACER, top reinforcing angle

(Continued)

MOLDBOARD EXTENSIONS (Continued)

ITEM	PART NO.	QTY.	DESCRIPTION
5	70079166	1	ANGLE, bottom reinforcing, right hand
	70079165	1	ANGLE, bottom reinforcing, left hand
	70913648	4	BOLT, plow, 5/8"NC x 2-3/4"
	70912942	4	LOCKWASHER, 5/8"
	70911029	4	NUT, 5/8"NC

NOTE: See PAINTING AND MARKING for transfer

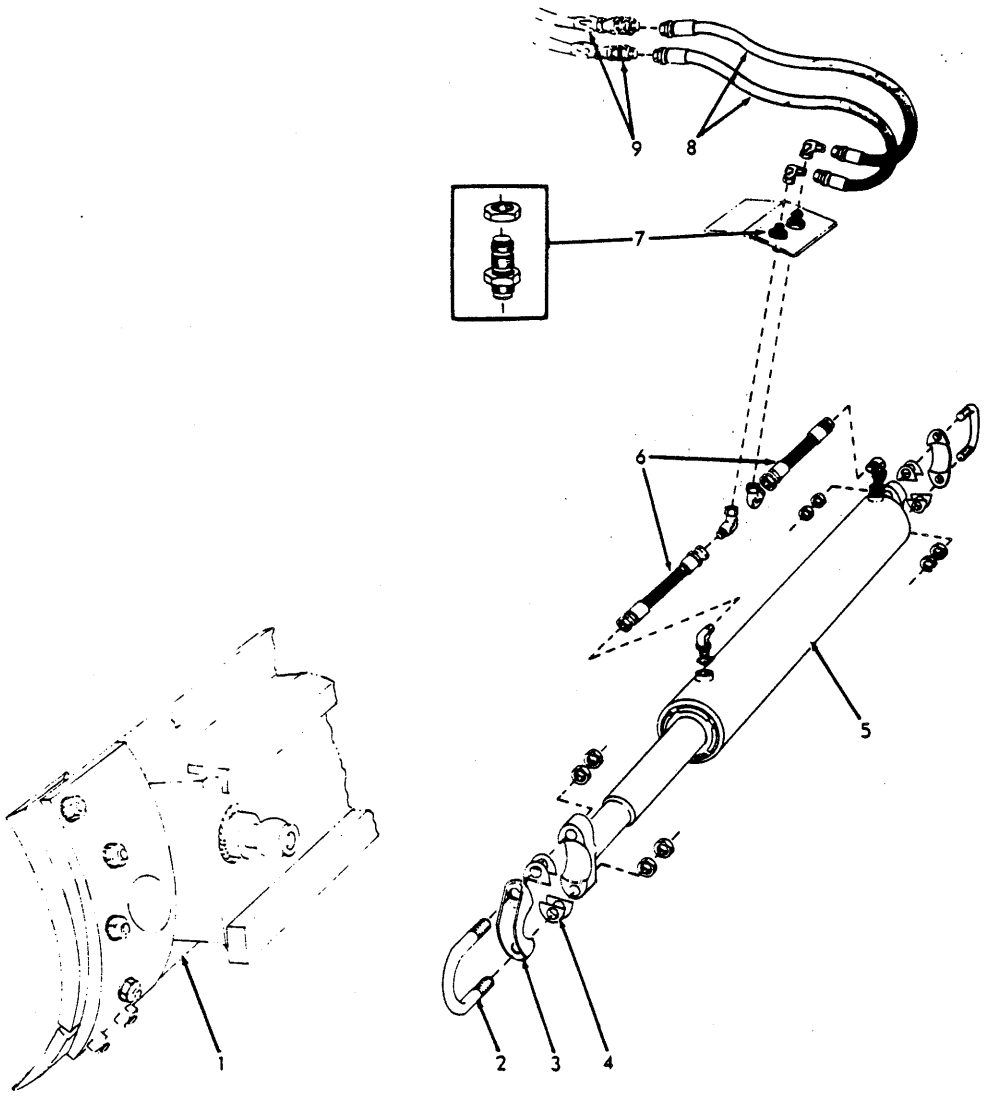

T-76357

MOLDBOARD POWER SHIFT

USAGE: Special equipment

ITEM	PART NO.	QTY.	DESCRIPTION
1	--------	1	MOLDBOARD (See MOLDBOARD)
2	70605665	2	U-BOLT, cylinder end cap
	70911049	8	NUT, jam, 5/8"NF
3	70053986	2	CAP, cylinder end
4	70053992	16	SHIM, cylinder end cap (Use as required)
5	--------	1	CYLINDER ASSY., moldboard (See pages 170 and 170A)
6	70649639	2	HOSE, lower (See HOSE PARTS)
	70919206	2	ELBOW, flare type, 1/2"tube, 3/8"NPT male (cylinder connection, First type)
	70921402	2	ELBOW, adjustable, 90°, flare type, 1/2" tube, 3/4"NF (Includes washer, nut and O-RING)(cylinder connection Second type)
	70921279	2	ELBOW, flare type, swivel nut, 1/2" tube
	70921349	2	O-RING, elbow

MOLDBOARD POWER SHIFT (Continued)

ITEM	PART NO.	QTY.	DESCRIPTION
7	70622836	2	ADAPTER, bulkhead (Includes nuts)
8	70649631	2	HOSE, connecting (See HOSE PARTS)
	70921279	2	ELBOW flare type, swivel nut, 1/2" tube
9	-------	2	TUBE (See MOLDBOARD POWER SHIFT PIPING)

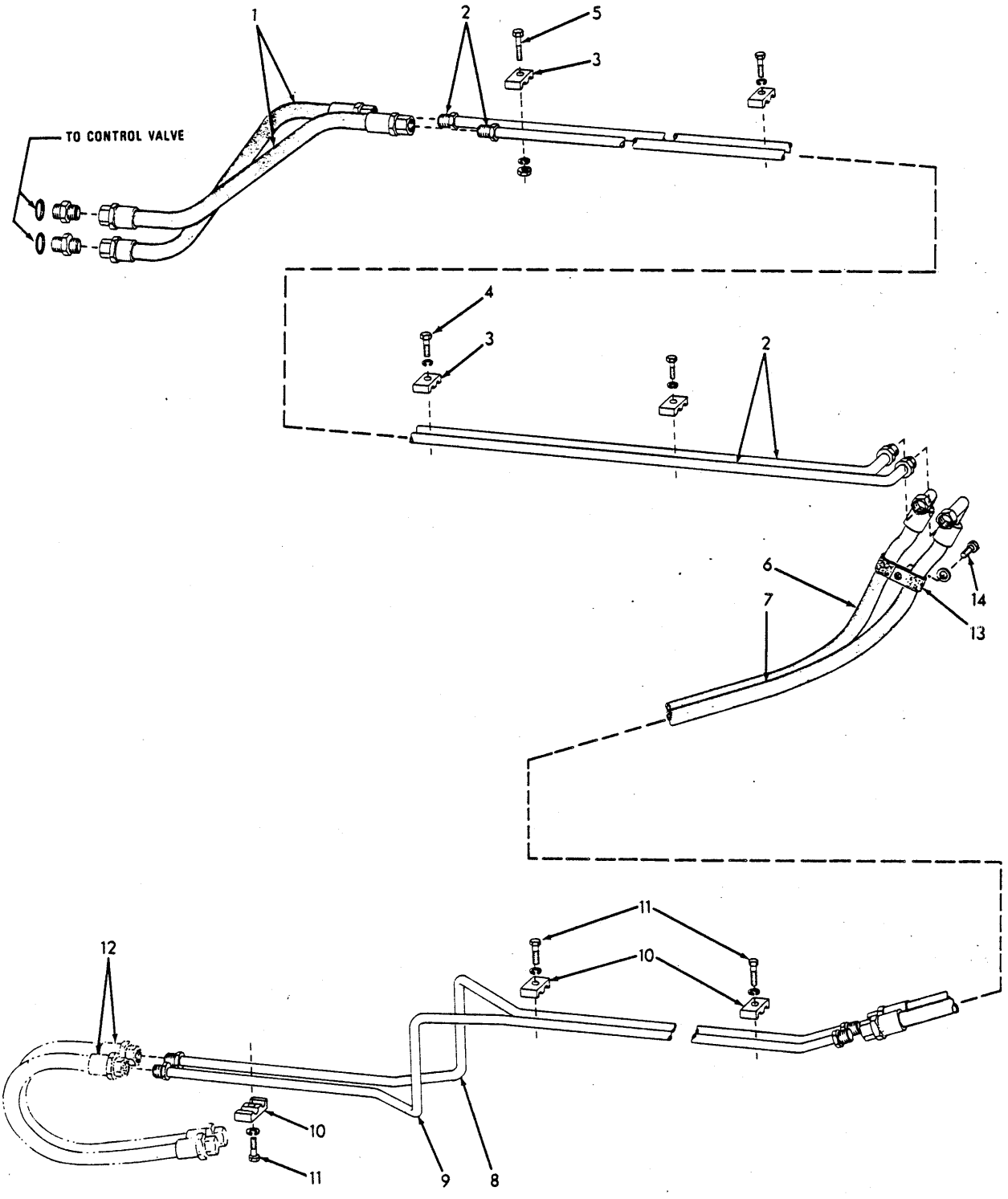

T-76356

MOLDBOARD POWER SHIFT PIPING

MOLDBOARD POWER SHIFT PIPING

USAGE: Special equipment

ITEM	PART NO.	QTY.	DESCRIPTION
1	70673120	2	HOSE, upper (See HOSE PARTS)
	70921409	2	CONNECTOR, flare type, 1/2" tube, 3/4"NF male end (Includes O-RING)
	70921349	2	O-RING, connector
2	70673117	2	TUBE, upper
3	77109141	4	BLOCK, tube supporting
4	70923470	3	CAPSCREW, 3/8"NC x 1-1/2"
5	70921565	1	CAPSCREW, 3/8"NC x 1-1/2"
	70910287	4	LOCKWASHER, 3/8"
	70911026	1	NUT, 3/8"NC
6	70675541	1	HOSE, lower (left)(See HOSE PARTS)
7	70675542	1	HOSE, lower (right)(See HOSE PARTS)
8	70676180	1	TUBE, lower (left)
9	70676181	1	TUBE, lower (right)
10	70623355	3	BLOCK, tube supporting
11	70923470	3	CAPSCREW, 3/8"NC x 1-1/2"
	70910287	3	LOCKWASHER, 3/8"
12	-------	2	HOSE (See MOLDBOARD POWER SHIFT)
13	70094467	2	CLIP, hose supporting
14	70922300	1	CAPSCREW, 3/8"NC x 3/4"
	70911115	1	WASHER, plain, SAE std., 3/8"

(Revised May 1976)

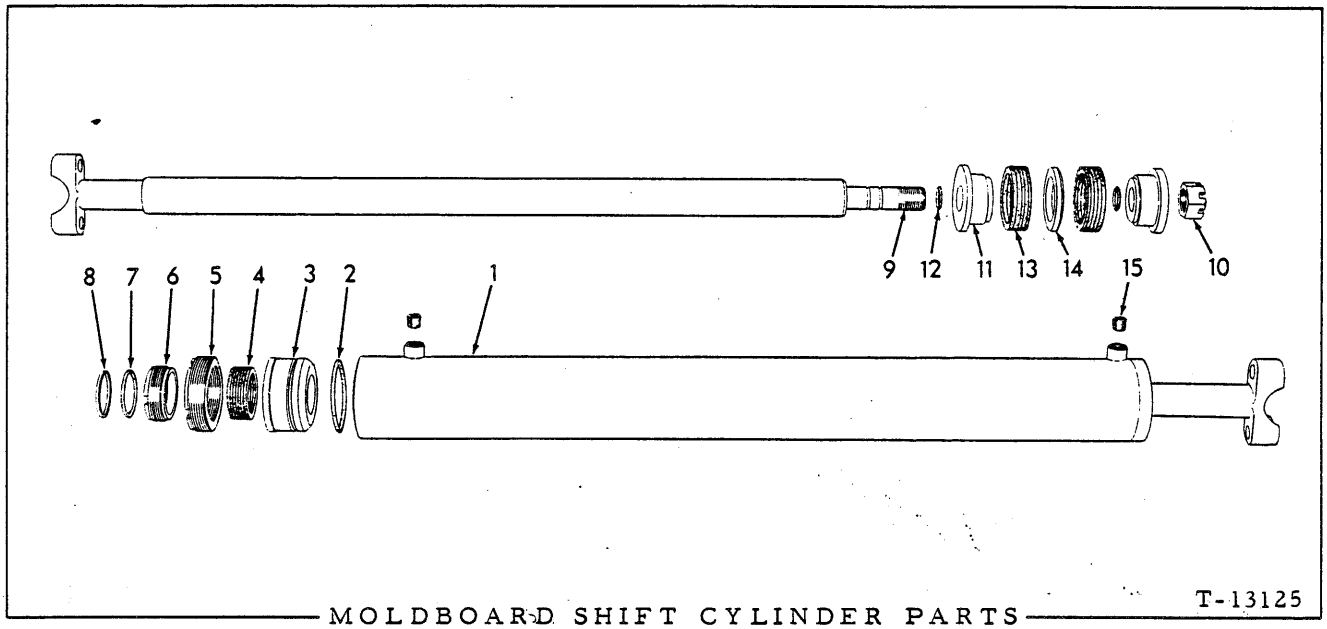

MOLDBOARD SHIFT CYLINDER PARTS

USAGE: See page 166. First type

ITEM	PART NO.	QTY.	DESCRIPTION
-	70096096	1	CYLINDER ASSY., moldboard shift (Includes items 1 thru 15)
1	70083641	1	TUBE, cylinder
2	70923830	1	□O-RING, stuffing box
3	70083551	1	BOX, stuffing
4	70083552	1	□PACKING ASSEMBLY, stuffing box (7 rings)
5	70083554	1	NUT, stuffing box retaining
6	70083637	1	NUT, packing adjustment
7	70923579	1	□O-RING, piston rod
8	70080283	1	□RING, piston rod wiping
9	70096097	1	ROD, piston
10	70912841	1	NUT, slotted, 1-1/4"NF
11	70083548	2	PISTON
12	70923575	2	□O-RING, piston
13	70083547	2	□PACKING ASSEMBLY, piston (5 rings)
14	70083558	1	WASHER, piston
15	-------	2	PLUG, shipping
16	73112077	1	REPAIR KIT, cylinder (Includes items 2, 4, 7, 8, 12 and 13

□Components of item 16

(Revised May 1978)

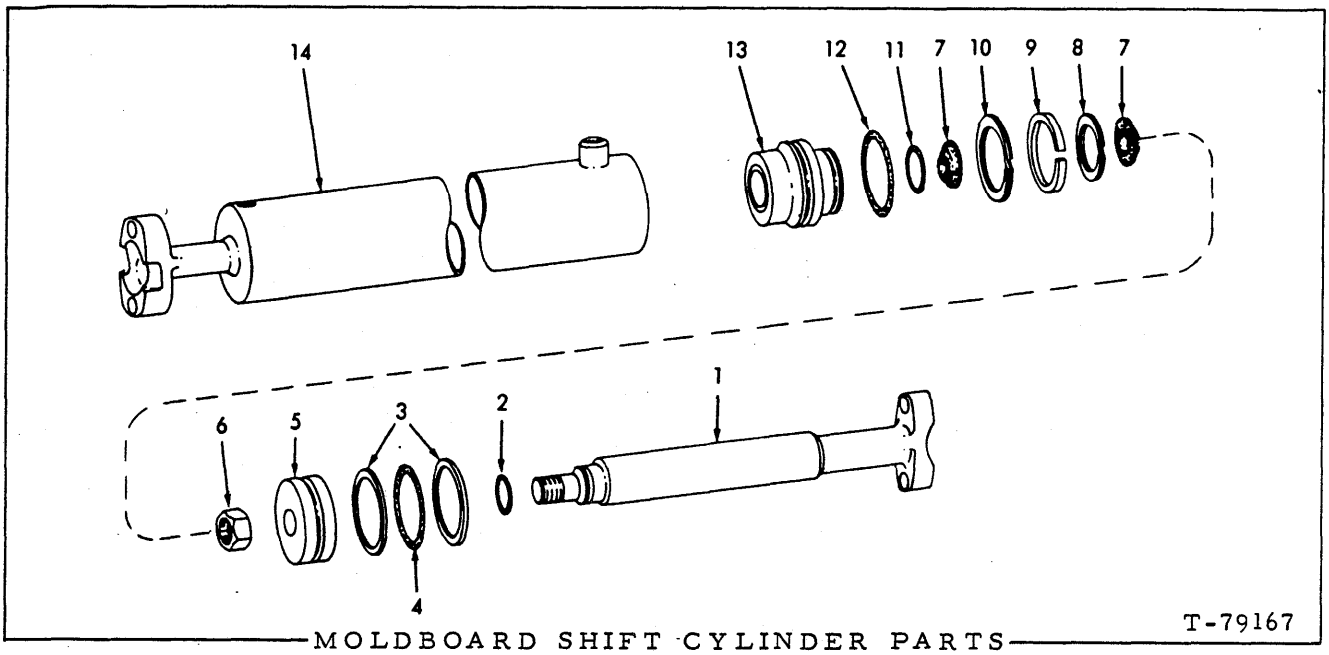

MOLDBOARD SHIFT CYLINDER PARTS

USAGE: See page 166. Second type

ITEM	PART NO.	QTY.	DESCRIPTION
-	70692963	1	CYLINDER ASSY., moldboard shift (Includes items 1 thru 14)
1	70695511	1	ROD, piston
2	70923649	1	□O-RING, piston rod
3	70695445	2	□WASHER
4	70923830	1	□O-RING, piston
5	70695514	1	PISTON
6	70695513	1	NUT
7	70695446	2	□WASHER
8	70930930	1	RING, snap
9	70695444	1	SPACER
10	70930929	1	RING, snap
11	70923579	1	□O-RING
12	70924840	1	□O-RING
13	70695443	1	HEAD ASSY. (Includes bushing which is not serviced separately)
14	70695512	1	TUBE, cylinder
15	73112075	1	REPAIR KIT, cylinder (Includes items 2 thru 4, 7, 11 and 12)
			□Components of item 15

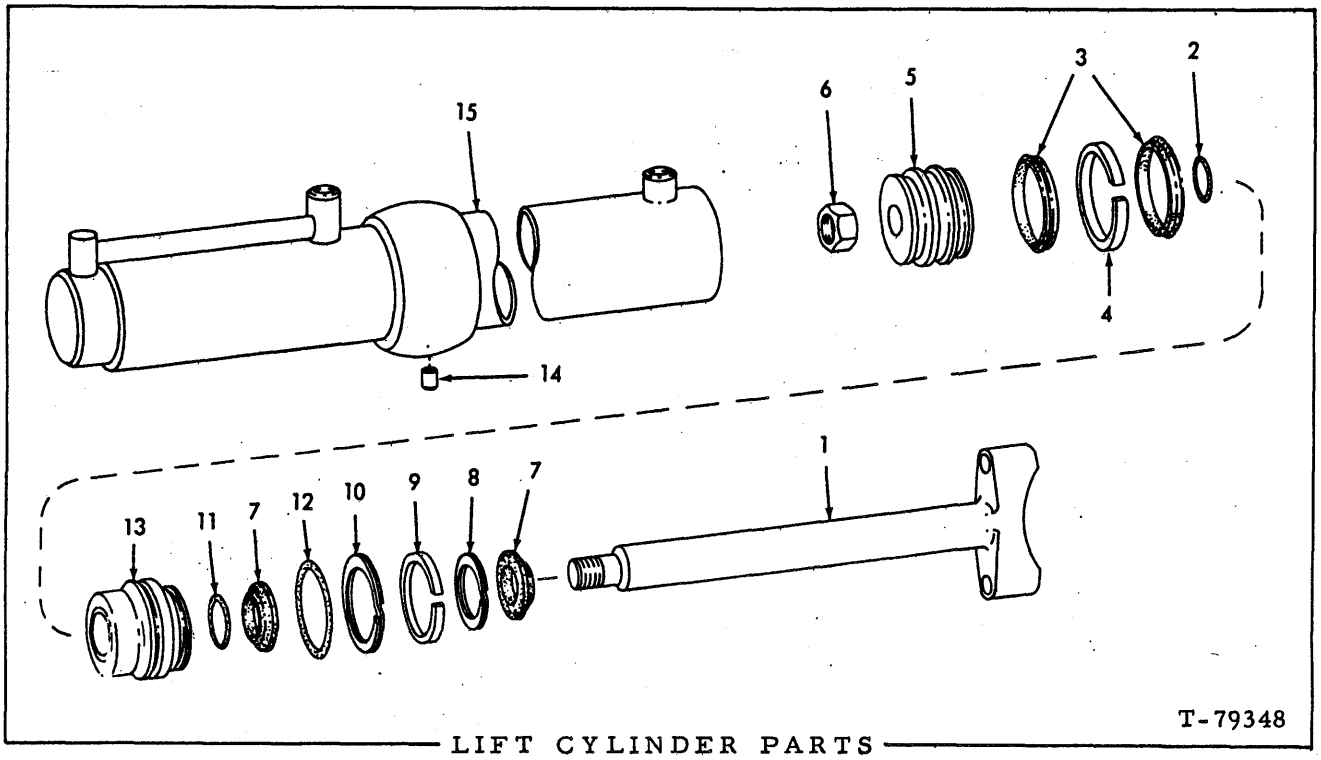

LIFT CYLINDER PARTS

USAGE: Second type.

*Moldboard Lift Cylinder (See page 161)
**Scarifier Lift Cylinder (See page 199)

ITEM	PART NO.	QTY. *	QTY. **	DESCRIPTION
-	70692960	1	-	CYLINDER ASSY. (Includes items 1 thru 15)
-	70692961	-	1	CYLINDER ASSY. (Includes items 1 thru 15)
1	70695425	1	1	ROD, piston
2	70923649	1	1	□O-RING, piston rod
3	70695423	2	2	□SEAL, piston
4	70695424	1	1	□RING, wear
5	70695422	1	1	PISTON
6	70695545	1	1	NUT
7	70695427	2	2	□WIPER, rod
8	70930922	1	1	RING, snap
9	70695428	1	1	SPACER
10	70927819	1	1	RING, snap
11	70923664	1	1	□O-RING
12	70924158	1	1	□O-RING
13	70695426	1	1	HEAD ASSY. (Includes bushing which is not serviced separately)
14	70065823	1	1	PIN, cylinder guide
15	70693691	1	-	TUBE, cylinder
15	70695421	-	1	TUBE, cylinder
16	73112076	1	1	REPAIR KIT, cylinder (Includes items 2 thru 4, 7, 11 and 12)

□Components of item 16

(Revised January 1979)

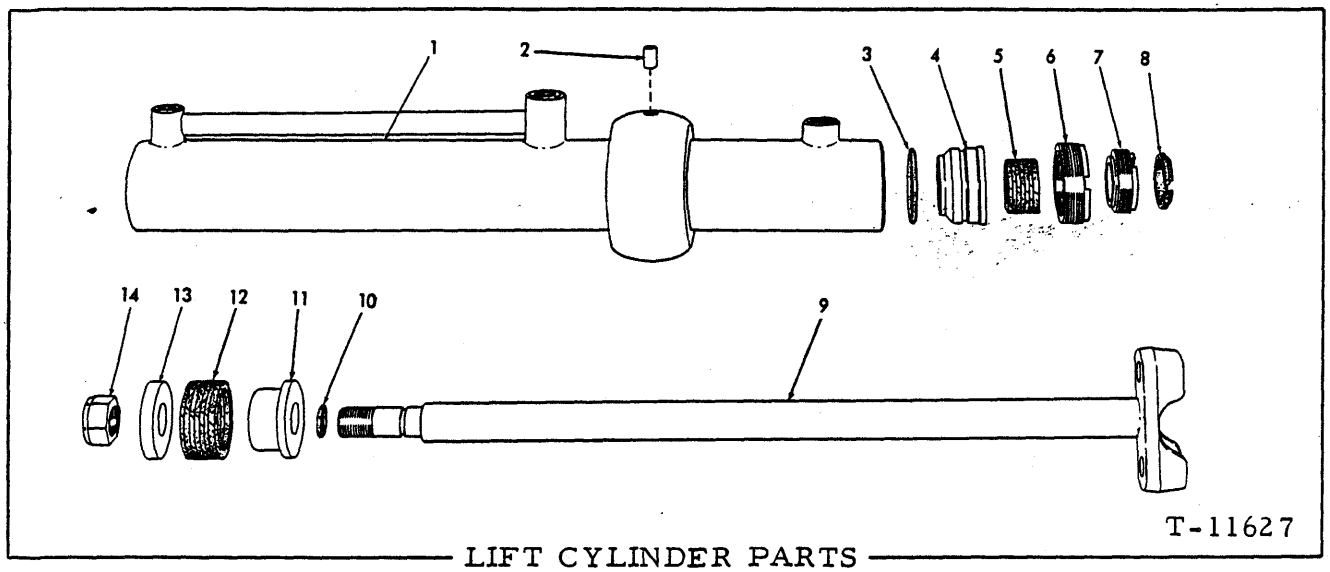

LIFT CYLINDER PARTS

USAGE: First type

*Moldboard Lift Cylinder. (See page 161)
**Scarifier Lift Cylinder. (See page 199)

ITEM	PART NO.	QTY. *	QTY. **	DESCRIPTION	
-	70629729	1	-	CYLINDER ASSY., moldboard lift (Order Cylinder Assy. 70692960 and 2 Elbows 70921402)	Each includes items 1 thru 14
-	70073842	-	1	CYLINDER ASSY., moldboard lift (Order Cylinder Assy. 70692691, 1 Elbow 70921402 and 1 Elbow 70922507)	
1	70629727	1	-	TUBE ASSY., cylinder (Includes item 2)(Order Cylinder Assy. 70692960 and 2 Elbow 70921402)	
	70080102	-	1	TUBE ASSY., cylinder (Includes item 2)(Order Cylinder Assy. 70692691, 1 Elbow 70921402 and 1 Elbow 70922507)	
2	70065823	1	1	PIN, cylinder guide	
3	70923814	1	1	□O-RING, stuffing box	
4	70079810	1	1	BOX, stuffing	
5	70080005	1	1	□PACKING ASSY., stuffing box (7 rings)	
6	70079812	1	1	NUT, stuffing box retaining	
7	70079811	1	1	NUT, packing adjustment	
8	70080006	1	1	□STRIP, piston rod wiping	
9	70079814	1	1	ROD, piston	
10	70923574	1	1	□O-RING, piston	
11	70079808	1	1	PISTON	
12	70080004	1	1	□PACKING ASSY., piston (7 rings)	
13	70079809	1	1	WASHER, piston	
14	70917777	1	1	NUT, self-locking, 1"NF	
15	73112071	1	1	REPAIR KIT, cylinder (Includes items 3, 5, 8, 10 and 12)	

NOTE: Quantities indicated above are for one (1) cylinder only.

□Components of item 15

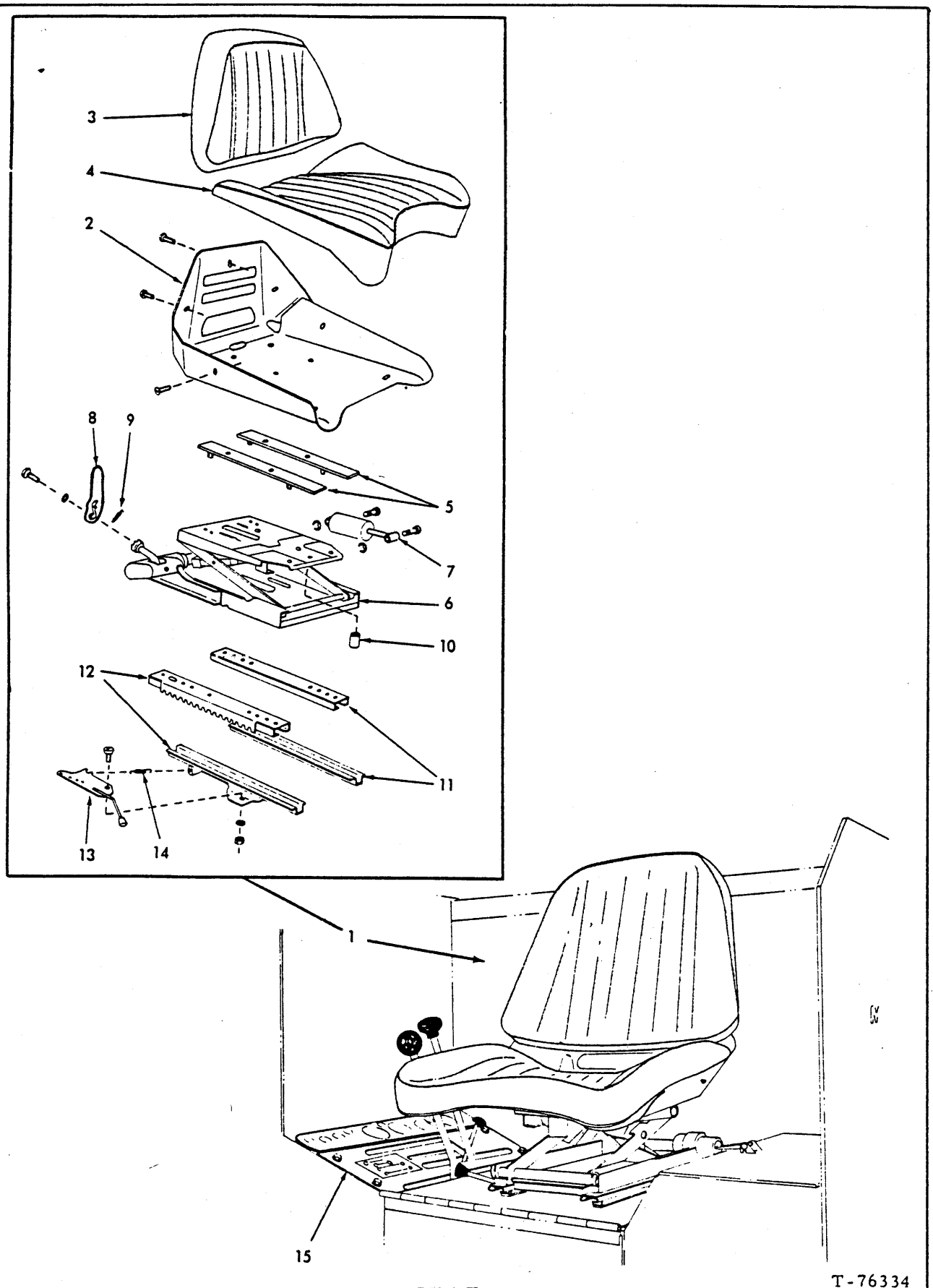

SEAT

SEAT

ITEM	PART NO.	QTY.	DESCRIPTION
1	77108686	1	SEAT ASSY. (Includes items 2 thru 14)
	70922925	4	CAPSCREW, 5/16"NC x 3/4"
	70910286	4	LOCKWASHER, 5/16"
	70911025	4	NUT, 5/16"NC
2	77110371	1	BUCKET-SEAT
3	77110372	1	CUSHION, backrest
	70916081	3	SCREW, 1/4"NC x 1/2"
4	77110373	1	CUSHION, seat
	70916081	4	SCREW, 1/4"NC x 1/2"
5	-------	2	SUPPORT, bucket-seat (Order item 17)
	77110369	4	SCREW
	70917356	4	LOCKWASHER, 5/16"
	77106256	4	NUT
6	77110375	1	SUSPENSION ASSY. (Includes items 7 thru 10)
7	77110376	1	SHOCK-ABSORBER
	-------	2	PIN } Not serviced. Order item 6
	-------	2	RING, retaining pin }
8	77110379	1	LEVER, adjusting suspension
	70918228	1	SCREW, 3/8"NC x 5/8"
	70926189	1	WASHER, plain
9	77110380	1	SPRING
10	77110381	1	BLOCK, stop
11	-------	1	SLIDE, adjusting L.H.
	-------	2	SCREW
	-------	2	LOCKWASHER, 1/4"
12	-------	1	SLIDE, adjusting R.H.
	-------	2	SCREW
	-------	2	LOCKWASHER, 1/4"
13	-------	1	LATCH
	-------	1	SCREW, special
	-------	1	LOCKWASHER, 1/4"
	-------	1	NUT
14	-------	1	SPRING, latch

Items 11 thru 14: Not serviced separately. Order item 17.

15	70674542	1	GUIDE, gear shift lever
	70922925	4	CAPSCREW, 5/16"NC x 3/4"
	70910335	4	WASHER, plain, SAE std., 5/16"
16	70680080	1	BELT, safety (Not illustrated)
17	70689008	1	RAIL ASSY., adjusting slide (Includes items 5, 11 thru 14) (Serviced only as a unit)

(Revised April 1973)

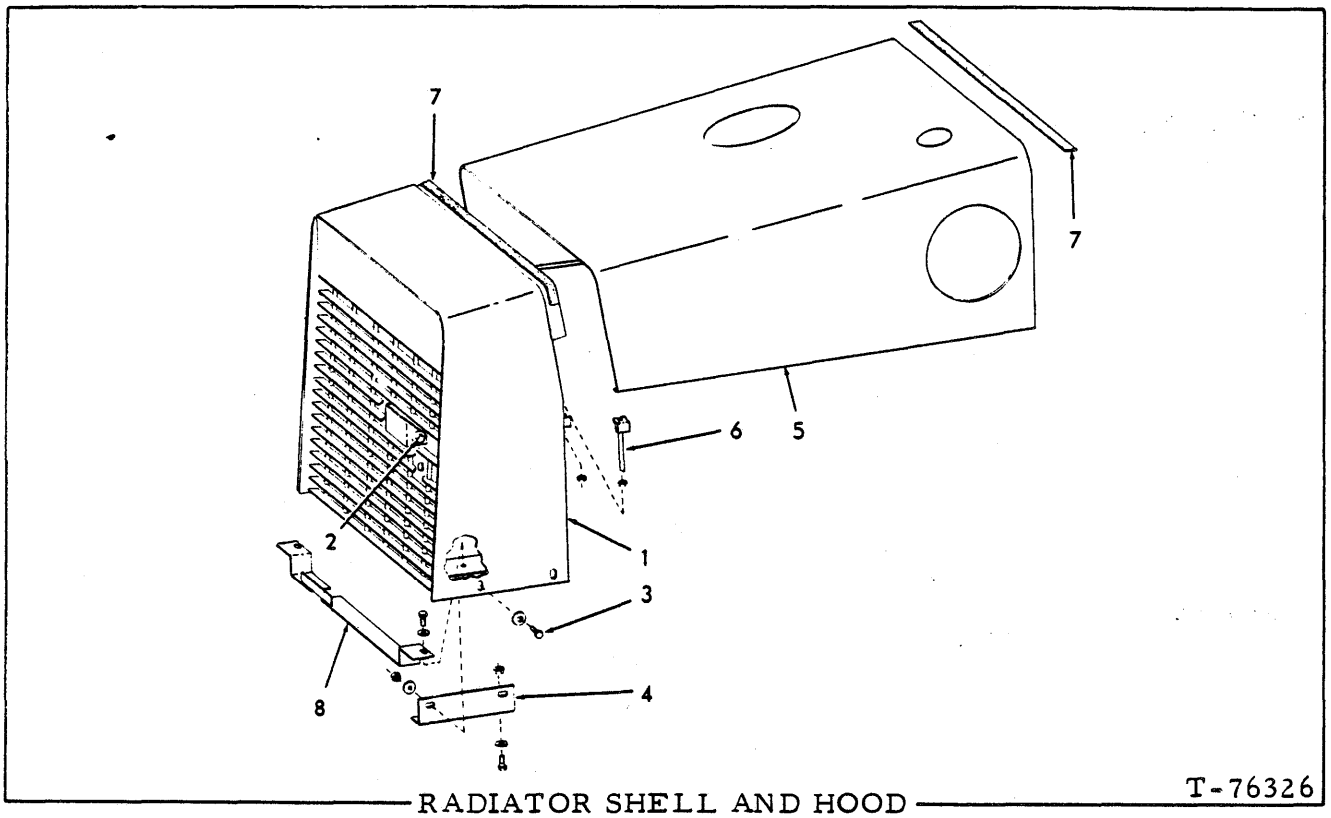

T-76326

RADIATOR SHELL AND HOOD

ITEM	PART NO.	QTY.	DESCRIPTION	
1	70674424	1	SHELL, radiator (Graders prior to unit #02171)	
	73108007	1	SHELL, radiator (Grader unit #02171 and up)	
2	70927612	6	CAPSCREW, 5/16"NC x 5/8"	
3	70922763	4	CAPSCREW, 3/8"NC x 1"	
	70677005	6	WASHER	
	70677006	8	WASHER	
	70910286	6	LOCKWASHER, 5/16"	
	70906652	6	NUT, jam, 5/16"NC	
	70911026	4	NUT, 3/8"NC	
4	77109094	1	ANGLE, shell supporting (right)	
	77109084	1	ANGLE, shell supporting (left)	
	70927173	4	CAPSCREW, 3/8"NC x 1-1/8"	
	70677006	4	WASHER	
	70911026	4	NUT, 3/8"NC	
5	70674425	1	HOOD, engine (Standard)	} Effective on S/N 24A00201, 56Y02201
	70677587	1	HOOD, engine (Optional. Units with oil-bath air cleaner)	
	70677310	1	HOOD, engine (Standard)	} Effective on S/N 75Y00201
	70677586	1	HOOD, engine (Optional, Units with oil-bath air cleaner)	
6	70605956	4	BOLT, hood latching	
	70911026	6	NUT, 3/8"NC	
	70910287	2	LOCKWASHER, 3/8" (left side only)	
7	77109639	2	CUSHION, hood	
8	73107996	1	PLATE	} Grader unit #02171 and up
	70922763	2	CAPSCREW, 3/8"NC x 1"	
	70677006	2	WASHER	

PAINTING AND MARKING

ITEM	PART NO.	QTY.	DESCRIPTION
			NOTE: Approximately 5 gallons required for spraying
1	70925108	-	ENAMEL, yellow, 12 oz. aerosol spray can
	70698037	-	ENAMEL, yellow orange, 12 oz. aerosol spray can
2	70925109	-	ENAMEL, yellow, quart can
3	70925110	-	ENAMEL, yellow, gallon can
	70698038	-	ENAMEL, yellow orange, gallon can
			NOTE: All plates and decals listed below are English language unless otherwise indicated.
4	70677558	1	DECAL, lube and service guide (Gas powered units)
	70668272	1	DECAL, lube and service guide (Diesel powered units) (Used prior to approximately September 1975)
	70697896	1	□DECAL, lube and service guide (Diesel powered units)(Effective approximately September 1975)
	70698755	1	DECAL, lube and service guide (Spanish)
	70698756	1	DECAL, lube and service guide (Portuguse)
	70698757	1	DECAL, lube and service guide (French)
	70698943	1	DECAL, lube and service guide (Italian)
	70699005	1	DECAL, lube and service guide (German)(See NOTE below reguarding all of item 4)
			NOTE: Left or right side of seat.
5	73109131	1	□DECAL, "INSTRUCTION MANUAL" (Top of fuel and hydraulic tank behind seat)
6	73107882	1	□DECAL, danger, "FLAMMABLE VAPORS" (Left side of seat)
7	73107884	1	□DECAL, danger "FLUID PRESSURE" (Top of radiator shell)
8	73107881	2	□DECAL, warning "BLADES AND BELTS" (Sides of radiator shell)
9	73107897	1	□DECAL, warning, "BRAKES" (Control valve mounting plate)
10	73109134	1	□DECAL, warning "DISCONNECT BATTERY CABLES" (Left side of seat)
11	73107895	1	□DECAL, warning "DO NOT START"
	73109135	1	DECAL, warning "DO NOT START" (Italian)
	73109136	1	DECAL, warning "DO NOT START" (Spanish)
	73109137	1	DECAL, warning (DO NOT START" (German)
	73109138	1	DECAL, warning "DO NOT START" (French)
	73109139	1	DECAL, warning "DO NOT START" (Portuguese)
			} Left side of seat
12	73107894	1	□DECAL, warning "ELEMENT CLEANING" (Top of air cleaner)
13	73108820	1	□DECAL, warning "MASTER CYLINDERS" (Left side of seat)
14	73108720	1	□DECAL, warning "OPERATIONS" (Left side of seat)
15	73107889	1	□DECAL, warning "PRESSURE LEAKS" (Right side of seat)

(Continued)

PAINTING AND MARKING (Continued)

ITEM	PART NO.	QTY.	DESCRIPTION
16	73107890	4	□DECAL, warning "SCISSORS POINT" (Top of drawbar, scarifier and front axle)
17	73108722	1	□DECAL, warning "STARTING FLUID" (Side of air intake pipe)
18	70698968	1	□DECAL, warning "SHIFT" (Top of shift tower)
19	73108716	1	□DECAL, warning "START-UP, SHUT DOWN" (Left side of seat)
20	70621393	1	□DECAL "CIRCLE TURN" } Control valve mounting plate
21	70621394	1	□DECAL, "WHEEL LEAN" } Control valve mounting plate
22	70621395	2	□DECAL, "CIRCLE LIFT" } Control valve mounting plate
23	70621396	1	□DECAL, "SIDE SHIFT" } Control valve mounting plate
24	70621397	1	□DECAL, "SCARIFIER" } Control valve mounting plate
25	77109648	1	□DECAL, "SHIFT DIAGRAM" (Top of shift tower)
26	70658690	1	DECAL, "AIR CLEANER" (Side of Oil Bath Air Cleaner)
	70661524	1	□DECAL, "AIR CLEANER" (Side of Dry Type Air Cleaner)
27	70621342	1	DECAL, "ENGINE PRIMER" (Right side of seat)
28	70697909	1	□DECAL, "OIL FILTER" (Hydraulic tank oil filter)
29	73113253	1	□DECAL, "AIR HEATER DANGER" (Right side of seat)
30	--------	1	DECAL, "ROPS" (Upper right hand front corner of frame or cab)(Order from local Fiat-Allis dealer)
31	70678589	2	DECAL, "M65" (Early units) } Sides of hydraulic and fuel tank
	70697290	2	□DECAL, "65" (Late units) } Sides of hydraulic and fuel tank
32	70694440	1	□DECAL "F-A" (Center of steering wheel cap)
33	70694421	2	□DECAL, "F-A" (Sides of radiator shell)
34	70694424	1	□DECAL, "F-A" (Front of frame)
35	70694435	1	□DECAL, "FIAT-ALLIS" (Rear of frame)
36	70694437	2	□DECAL, "FIAT-ALLIS" (Sides of frame)
37	73062870	-	□DECAL, multiple strip (25 ft. roll)(Use as required)
38	73109372	1	DECAL KIT (Includes items 4 thru 26, 28, 29 and 31 thru 37)
			□Components of item 38

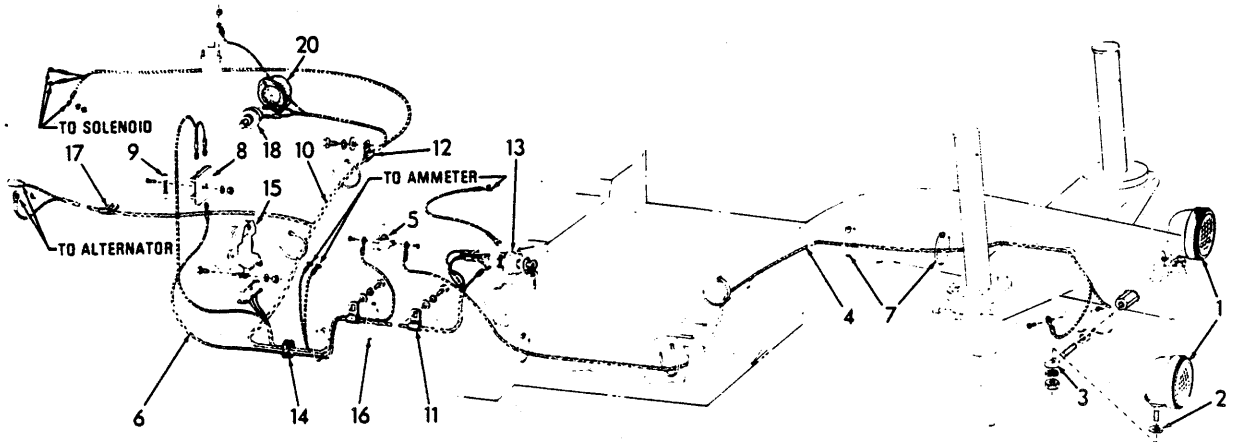

Graders Prior To Serial No. 24A01528 and 75Y01528

T-76339

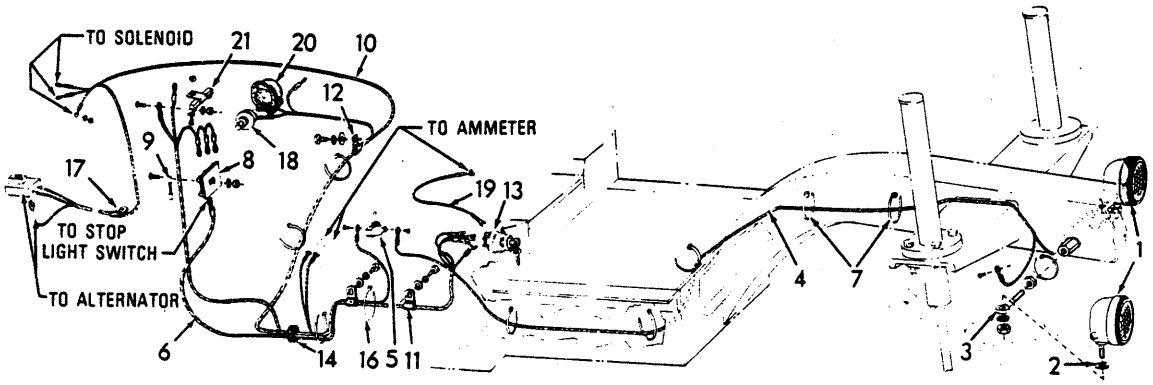

Graders Serial No. 24A01528 , 56Y02201 and up

T-79329

LIGHTS AND WIRING

*Graders prior to serial No. 24A01528 and 75Y01528
**Graders serial No. 24A01528, 56Y02201 and up

ITEM	PART NO.	QTY. *	QTY. **	DESCRIPTION
1	--------	2	2	△LIGHT ASSY., head (See page 178)
	70912441	2	2	LOCKWASHER, 1/2"
	70911043	2	2	NUT, 1/2"NF
2	70677008	2	2	△WASHER, plain
3	70065935	2	2	△BOLT, eye, light mounting
	70911035	2	2	NUT, jam, 1/2"NC
	70646661	2	2	NUT (Requires welding to install)
4	70675304	1	1	△CABLE, head light to switch
5	70639726	1	1	△SWITCH, light
	70922667	1	1	SCREW, machine, rd-hd., #5-40NC x 1/4"
6	70675235	1	-	△CABLE, switch to fuse block
	70693458	-	1	△CABLE, switch to fuse block
7	73044015	8	-	△CLIP, tie supporting
8	70066487	1	1	BLOCK, fuse
	70900496	2	1	SCREW, machine, flt-hd., #6-32NC x 3/4"
	70910243	2	1	WASHER, plain
	70901309	2	1	NUT, #6-32NC
9	70208960	3	3	FUSE, 20 amp. (1/4" x 1-1/4")
10	70691715	1	-	HARNESS, wiring (Eff. on S/N24A00201) — First replacement on graders prior to unit # 01156 also order item 18
	70691716	1	-	HARNESS, wiring (Eff. on S/N75Y00201) — First replacement on graders prior to unit # 01156 also order item 18
	70693461	-	1	HARNESS, wiring — First replacement on graders prior to unit # 01156 also order item 18
	70922097	1	-	LOCKWASHER, #8 — Connects harness to Starter Effective on S/N 75Y00201
	70917385	1	-	NUT, #8-32NC — Connects harness to Starter Effective on S/N 75Y00201
	70915365	1	-	LOCKWASHER, #12 — Connects harness to Alternator
	70917376	1	-	NUT, #12-24NC — Connects harness to Alternator
11	70094422	2	2	CLIP, harness supporting
	70927400	2	2	CAPSCREW, 3/8"NC x 5/8"
	70910287	2	-	LOCKWASHER, 3/8"
	70911115	2	-	WASHER, plain
	70630753	-	2	WASHER, plain
12	70094527	1	1	CLIP, harness supporting
	70927400	1	1	CAPSCREW, 3/8"NC x 5/8"
	70910287	1	-	LOCKWASHER, 3/8"
	70911115	-	1	WASHER, plain
	70630753	-	1	WASHER, plain
13	70641683	1	1	SWITCH ASSY., starting switch (Includes key)
	70693857	1	1	KEY, starting switch

△Special Equipment

(Continued)

ITEM	PART NO.	QTY. *	QTY. **	DESCRIPTION
14	70180554	1	1	GROMMET, harness protecting
15	74789143	1	-	REGULATOR, voltage and current (Delco-Remy #1119507. Order parts from local Agency)
	70927541	3	-	CAPSCREW, 1/4"NC x 3/4"
	70910285	3	-	LOCKWASHER, 1/4"
	70911024	3	-	NUT, 1/4"NC
	73057441	-	1	RESISTOR
	70928182	-	1	CAPSCREW, 1/4"NC x 1/2"
	70677004	-	1	WASHER, plain
16	70196765	2	7	STRAP, harness supporting (1 less used on Diesel powered units)
17	70041262	1	1	CLIP, harness supporting (Eff. on S/N 24A00201 also 56Y02201)
	70639314	1	1	CLIP, harness supporting (Effective on S/N 75Y00201)
18	70660694	1	1	SWITCH, pressure
19	70674954	1	1	CABLE, ammeter to starting switch
20	70632706	1	1	BOOT, switch protecting
21	73057441	-	1	RESISTOR
	70913532	-	2	SCREW, #7 x 1/2" rd-hd., self tapping
	70917459	-	2	LOCKWASHER, #6
	70924606	-	2	NUT, #6 (speed-nut)
	70928182	-	1	CAPSCREW, 1/4"NC x 1/2"
	70677004	-	1	WASHER, plain

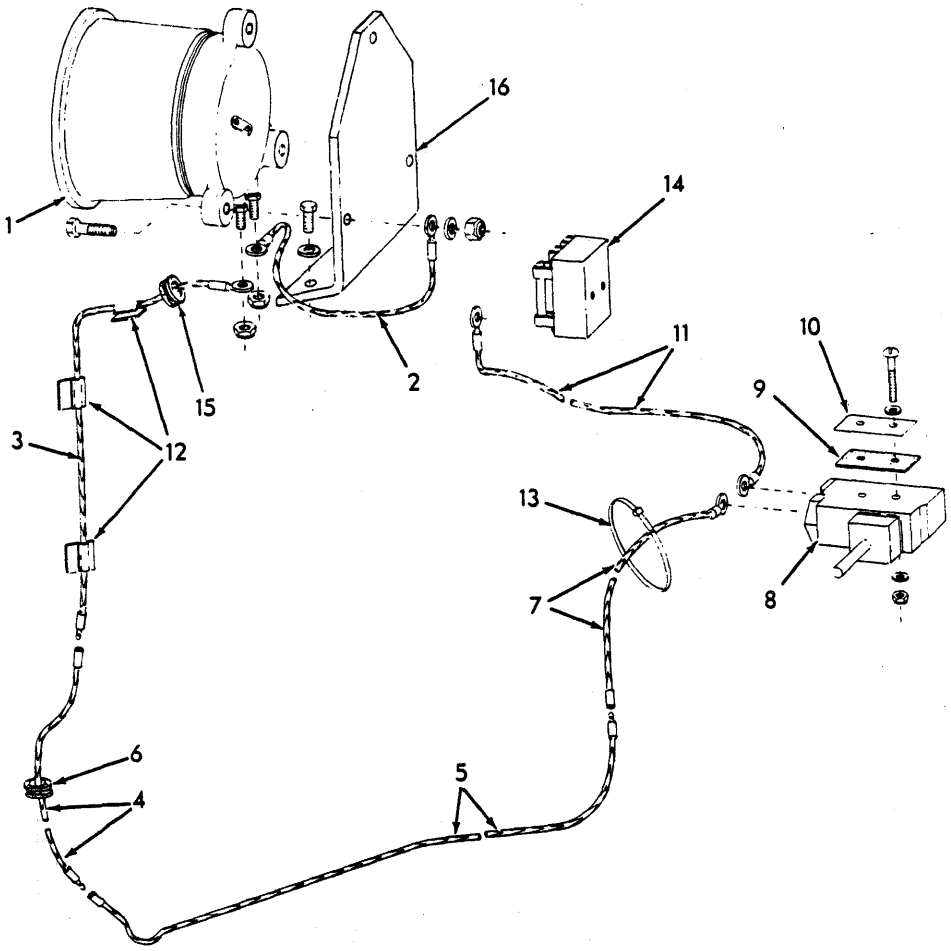

REVERSE ALARM

USAGE: Special equipment prior to March 1977; standard thereafter.

ITEM	PART NO.	QTY.	DESCRIPTION
1	70699053	1	HORN (Includes washers and nuts)
	70921382	3	CAPSCREW, 1/4"NC x 1-1/4"
	70911114	1	WASHER
	70917730	3	NUT, 1/4"NC
2	70671763	1	CABLE, ground
3	73109776	1	CABLE
4	70699372	1	CABLE
5	70699371	1	CABLE
6	70023176	1	GROMMET
7	70699370	1	CABLE
8	73104543	1	SWITCH ASSY. (Includes hardware indented below)
	70925654	2	SCREW, rd-hd., #6-32 x 1-1/2"
	70188136	4	WASHER
	70926284	2	NUT, #6-32
9	70699367	1	GASKET
10	70699292	1	PLATE
11	70699369	1	CABLE (Switch to fuse block)
12	73059884	3	CLIP (Adhesive backing)(Early units)
13	70196765	14	STRAP, tee

(Continued)

REVERSE ALARM (Continued)

ITEM	PART NO.	QTY.	DESCRIPTION
14	--------	1	BLOCK, fuse (See page 177)
15	70083987	2	GROMMET (Late units)
16	70699374	1	PLATE
	70927541	2	CAPSCREW, 1/4"NC x 3/4"
	70928190	2	WASHER

(Added January 1979)

TURN SIGNAL WIRING (Continued)

ITEM	PART NO.	QTY.	DESCRIPTION
8	70639314	1	CLIP
	70927484	1	CAPSCREW, 3/8"NC x 1/2"
	70929156	1	WASHER
9	70699387	1	ANGLE
	70920995	2	CAPSCREW, 3/8"NC x 2"
	70910287	2	LOCKWASHER, 3/8"
10	70695361	1	TUBE
	70922510	1	CAPSCREW, 1/2"NC x 2-3/4"
	70928188	1	WASHER
	70911028	1	NUT, 1/2"NC
11	70699378	1	CABLE
12	70699379	1	CABLE
13	70699373	1	HARNESS
14	70640677	1	CLIP
	70922763	1	CAPSCREW, 3/8"NC x 1"
	70929156	2	WASHER
	70911026	1	NUT, 3/8"NC
15	70023176	2	GROMMET
16	70639388	1	CLIP
	70922763	1	CAPSCREW, 3/8"NC x 1"
	70929156	2	WASHER
	70911026	1	NUT, 3/8"NC
17	70699391	1	SUPPORT
	70920582	2	CAPSCREW, 1/2"NC x 1-1/4"
	70677008	2	WASHER
18	70083683	1	GROMMET
19	70196765	32	STRAP, tie
20	--------	-	HARNESS, main wiring

(Added May 1976)

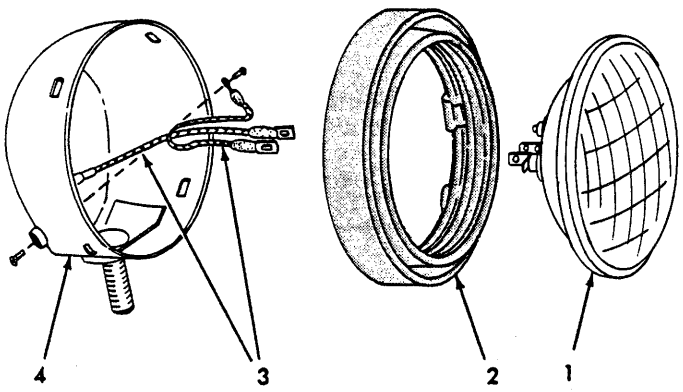

LIGHT ASSEMBLY T-76341

USAGE: See page 177

ITEM	PART NO.	QTY.	DESCRIPTION
-	70621854	2	LIGHT ASSY., head (Includes items 1 thru 4)
1	70621853	2	SEALED BEAM
2	70621428	2	RETAINER, sealed beam (rubber)
3	70621724	4	CABLE, head light
	70912731	2	SCREW, terminal, #8-32NC x 5/16"
4	-------	2	SHELL, head light cable(Not serviced seperately)
	70912731	2	SCREW, terminal, #8-32NC x 5/16"

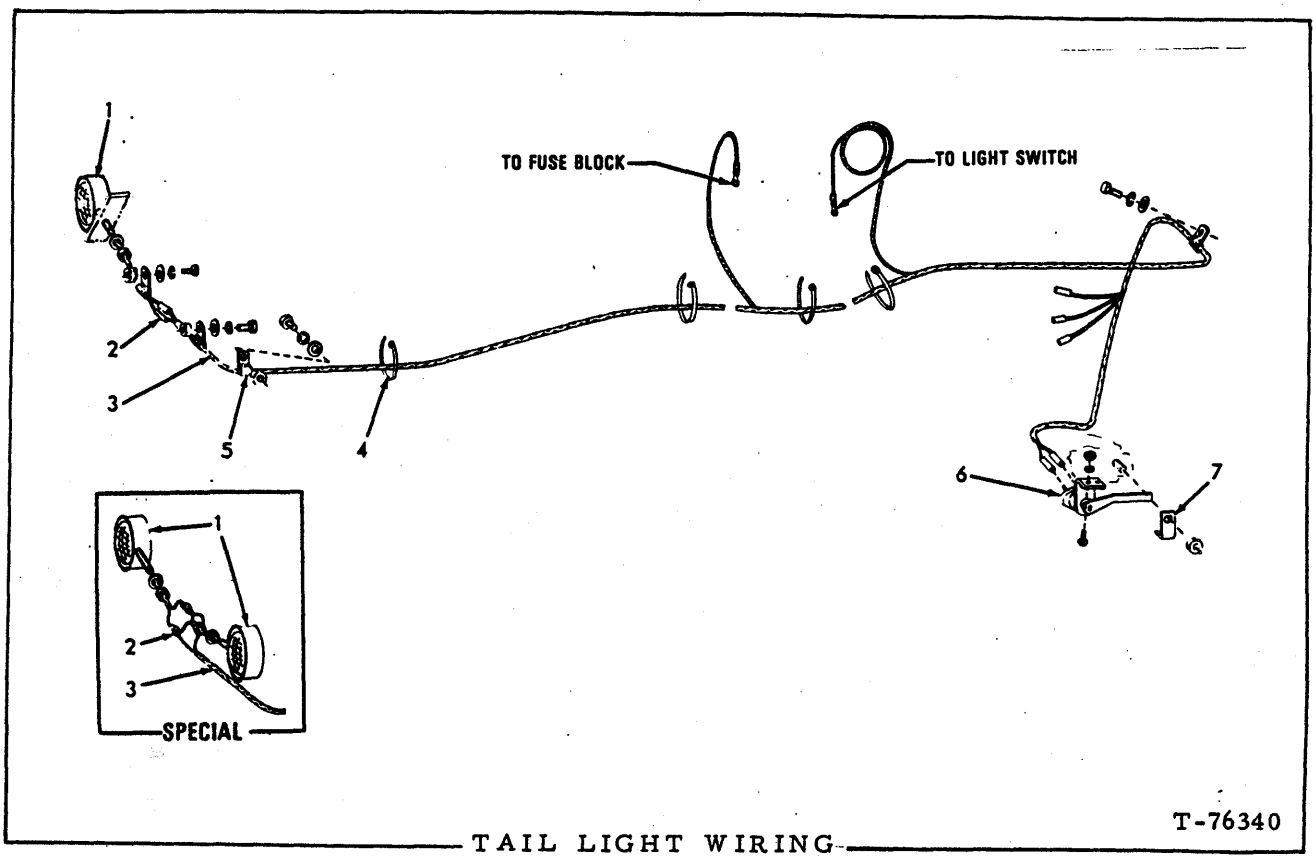

TAIL LIGHT WIRING

ITEM	PART NO.	QTY.	DESCRIPTION
1	--------	1	LIGHT ASSY., tail (See pages 180, 180A)(One additional used on units equipped with special Head Lights)
2	70048142	2	CONNECTOR, wiring harness (two-line)(Standard. Units not equipped with head lights)
	70048137	2	CONNECTOR, wiring harness (three line)(Special. Units equipped with headlights)
3	70674955	1	HARNESS, wiring (Graders prior to unit #01528)
	70693460	1	HARNESS, wiring (Grader unit #01528 and up)
4	70196765	5	STRAP, harness supporting (2 less used on Diesel powered unit)
5	70640677	6	CLIP, harness supporting
	70927400	6	CAPSCREW, 3/8"NC x 5/8" } 2 less used on Graders prior to unit #01528
	70630753	6	WASHER
6	70648427	1	SWITCH, stop light
	70900558	2	SCREW, machine, #10-32NF x 1/2"
	70910284	2	LOCKWASHER, #10
	70910251	2	NUT, #10-32NF
7	70068372	1	ANGLE, switch supporting

(Revised January 1979)

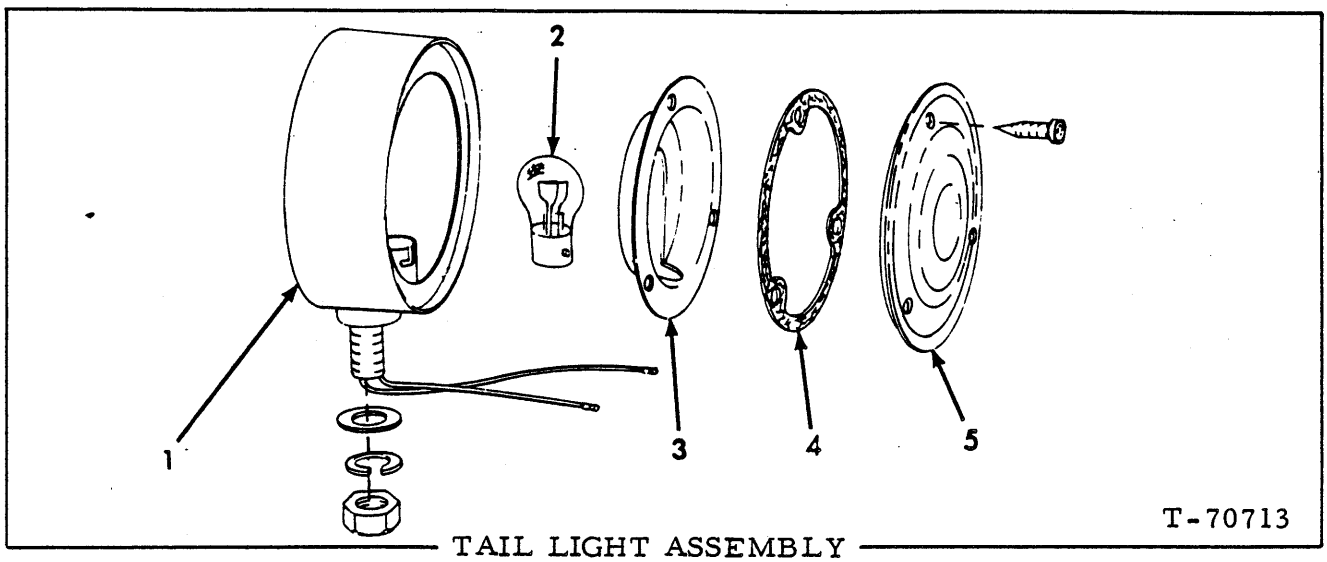

TAIL LIGHT ASSEMBLY

USAGE: First type. Use 3 Mounting Screws. See page 179.

ITEM	PART NO.	QTY.	DESCRIPTION
-	73044502	1	LIGHT ASSY. (Includes items 1 thru 5)
1	--------	1	BODY ASSY., tail light (Not serviced separately)
2	73038887	1	BULB, 12 volt
3	73036242	1	REFLECTOR, tail light
4	73036241	1	GASKET, lens
5	73036240	1	LENS, tail light (red glass)

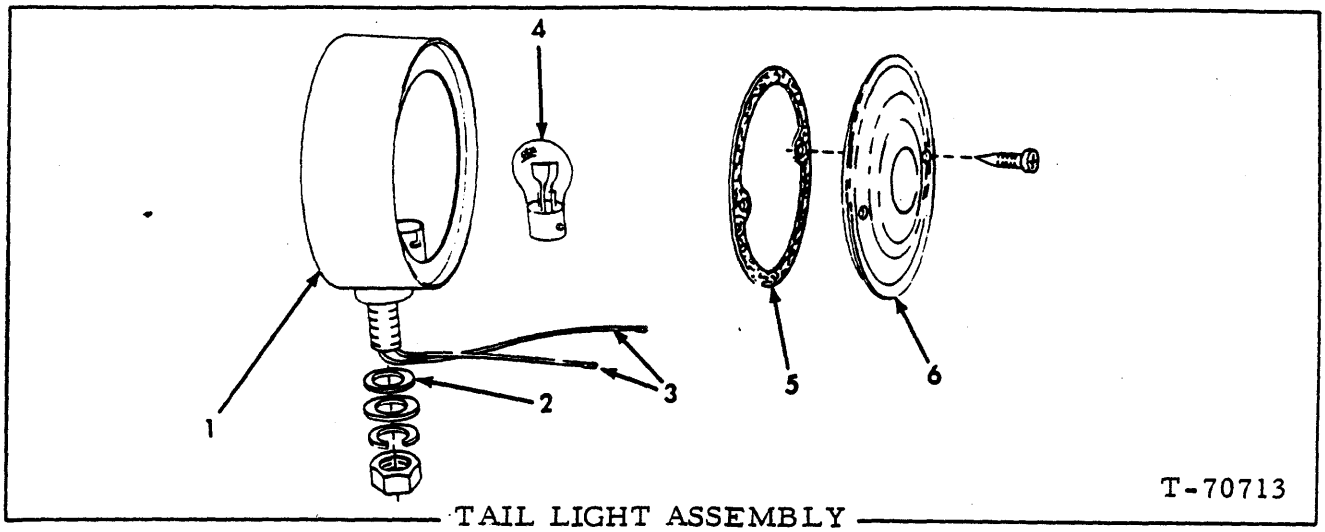

TAIL LIGHT ASSEMBLY

USAGE: Second type. Use 2 Lens Mounting Screws. See page 179.

ITEM	PART NO.	QTY.	DESCRIPTION
-	73069237	1	LIGHT ASSY. (Includes items 1 thru 6)
	70906985	1	WASHER, 7/16"
	70914678	1	LOCKWASHER, 7/16"
	70912201	1	NUT, 7/16"NC
1	--------	1	BODY (Order LIGHT ASSY.)
2	73069241	1	PAD
3	73069240	1	WIRE ASSY. (Includes teminals)
4	70928348	1	BULB, 12 volt
5	73069196	1	GASKET
6	73069239	1	LENS

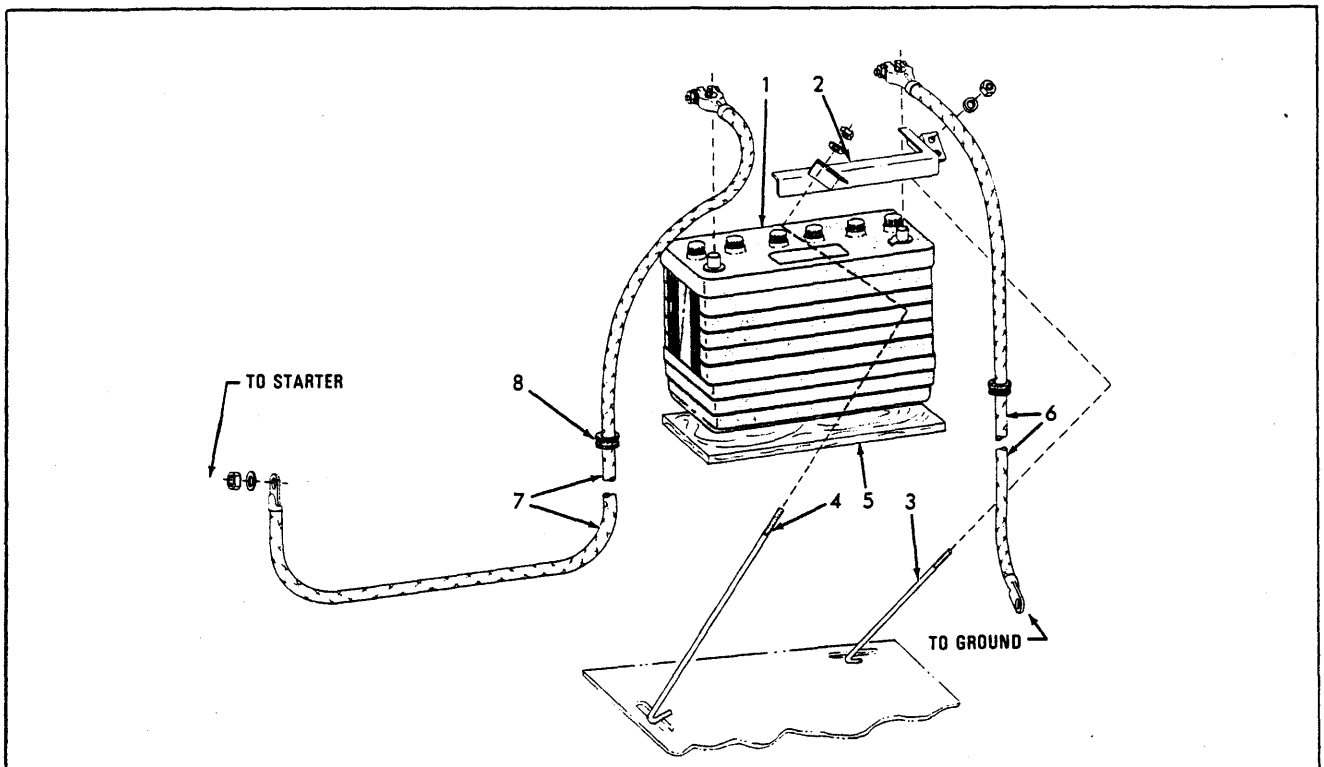

BATTERIES AND CABLES

ITEM	PART NO.	QTY.	DESCRIPTION
1	70695469	1	BATTERY, storage, 12 - volt, dry-charged (Requires 6.72 quarts electrolyte)
1A	70243526	1	ELECTROLYTE ("Z" pack - 6.1 quarts)
	70243527	1	ELECTROLYTE ("F" pack - 5 gallons
1B	70243528	1	HOSE, electrolyte dispensing (For use with 5 gallon pack)
2	77108779	1	HOLD-DOWN, battery
3	77108777	1	ROD, battery hold-down (short)
	70911114	1	WASHER, plain, SAE std., 1/4"
	70911024	1	NUT, 1/4"NC
4	77108778	1	ROD, battery hold-down (long)
	70911114	1	WASHER, plain, SAE std., 1/4"
	70911024	1	NUT, 1/4"NC
5	-------	1	BOARD, battery spacing (Procure locally)
6	70674414	1	CABLE, battery to ground
7	70674415	1	CABLE, battery to starter (Eff. on S/N 24A00201 also 56Y02201) (Not used on units equipped with Air Heater)
	70677349	1	CABLE, battery to starter (Effective on S/N 75Y00201)
	70919312	1	LOCKWASHER, plated, 3/8"
	70917421	1	NUT, 3/8"NC
8	70036888	2	GROMMET, cable protecting (one less used on Diesel - powered units equipped with Air Heater)

Not illustrated

(Revised May 1978)

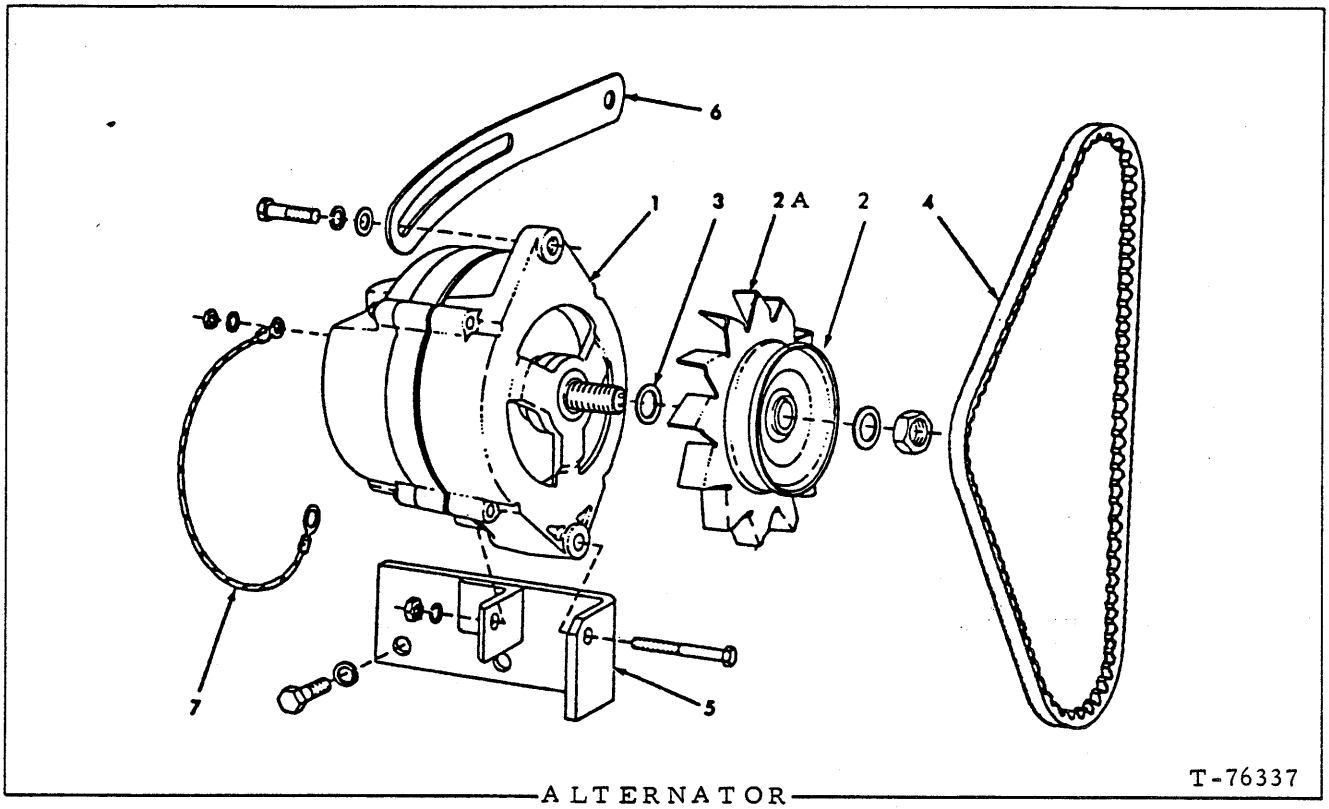

ALTERNATOR

USAGE: Diesel-powered, effective serial No. 24A00201 thru 24A01527

ITEM	PART NO.	QTY.	DESCRIPTION
1	70669277	1	ALTERNATOR ("Delco-Remy" #1100805)(Order parts from local service agency)
	70922848	1	CAPSCREW, 3/8"NC x 3-1/4"
	70910287	1	LOCKWASHER, 3/8"
	70911026	1	NUT, 3/8"NC
2	74848486	1	PULLEY, only (Graders unit #01511 and up)
	74750014	1	PULLEY (Has integral Fan)(Graders prior to unit #01511)
2A	73057632	1	FAN, alternator cooling (Graders unit #01511 and up)
3	70912021	1	WASHER, spacing
4	70665318	1	BELT, alternator drive
5	74789809	1	BRACKET, alternator mounting
	70921175	2	CAPSCREW, 1/2"NC x 1"
	70912441	2	LOCKWASHER, 1/2"
6	74023007	1	BRACE, alternator adjustment
	70921566	1	CAPSCREW, 5/16"NC x 1"
	70910286	1	LOCKWASHER, 5/16"
	70901165	1	WASHER, plain, U.S. std., 5/16"
7	70671693	1	CABLE, alternator ground
	70910284	1	LOCKWASHER, #10
	70910251	1	NUT, #10 NF

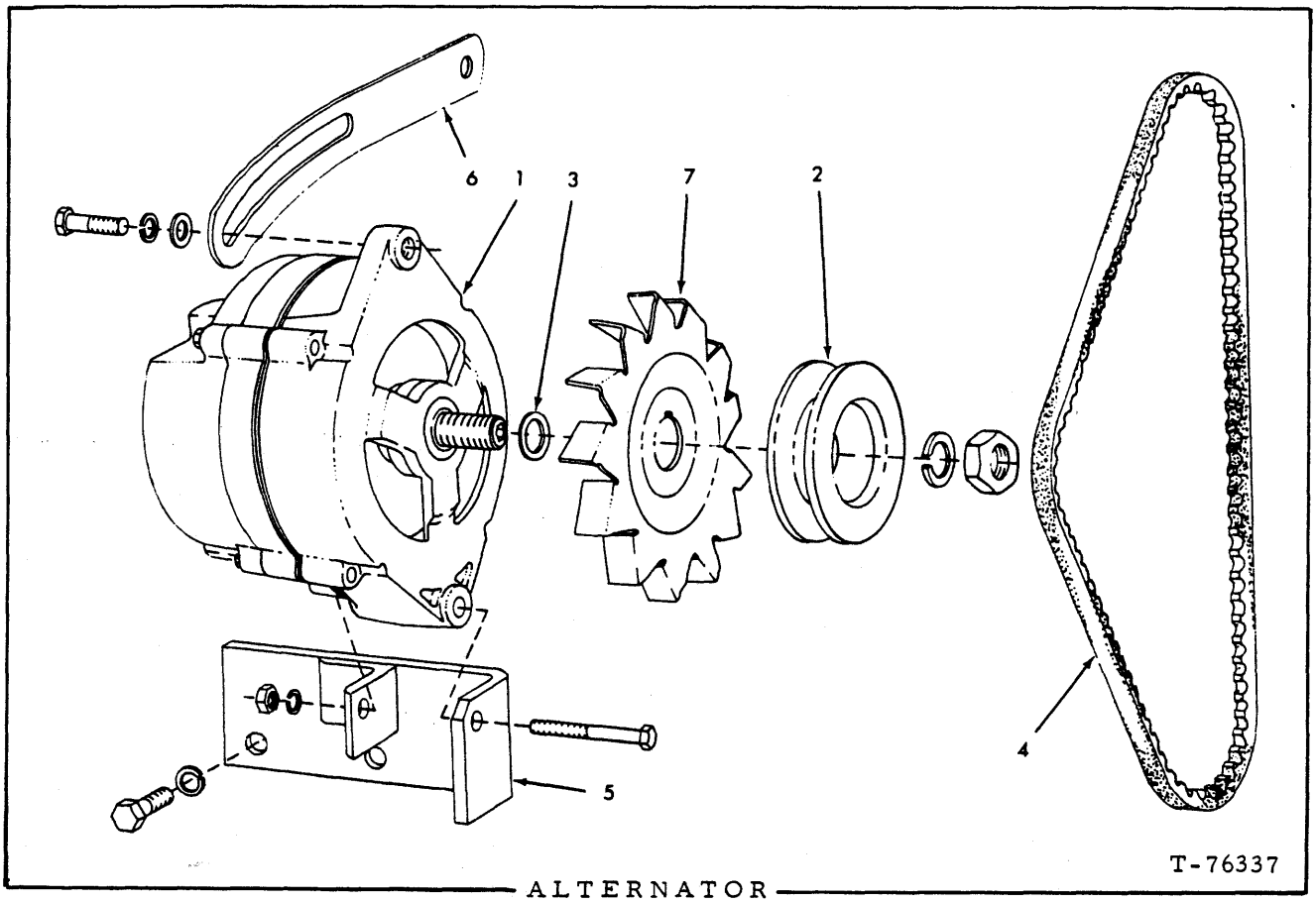

ALTERNATOR

USAGE: Diesel-powered effective serial No. 24A01528, 56Y02201

ITEM	PART NO.	QTY.	DESCRIPTION	
1	73057631	1	ALTERNATOR (Standard, 37 amp.) (Delco-Remy #1100578)	Each includes regulator. Order parts from local Service Agency.
	73058328	1	ALTERNATOR (Heavy-duty, 61 amp.) (Delco-Remy #1100581)	
	70922848	1	CAPSCREW, 3/8"NC x 3-1/4"	
	70910287	1	LOCKWASHER, 3/8"	
	70911026	1	NUT, 3/8"NC	
2	74848486	1	PULLEY	
3	70912021	1	WASHER, spacing	
4	70665318	1	BELT, alternator drive	
5	74789809	1	BRACKET, alternator mounting	
	70921175	2	CAPSCREW, 1/2"NC x 1"	
	70912441	2	LOCKWASHER, 1/2"	
6	74023007	1	BRACE, alternator adjustment	
	70921566	1	CAPSCREW, 5/16"NC x 1"	
	70910286	1	LOCKWASHER, 5/16"	
	70901165	1	WASHER, plain, U.S. std., 5/16"	
7	73057632	1	FAN, alternator cooling	

(Revised May 1978)

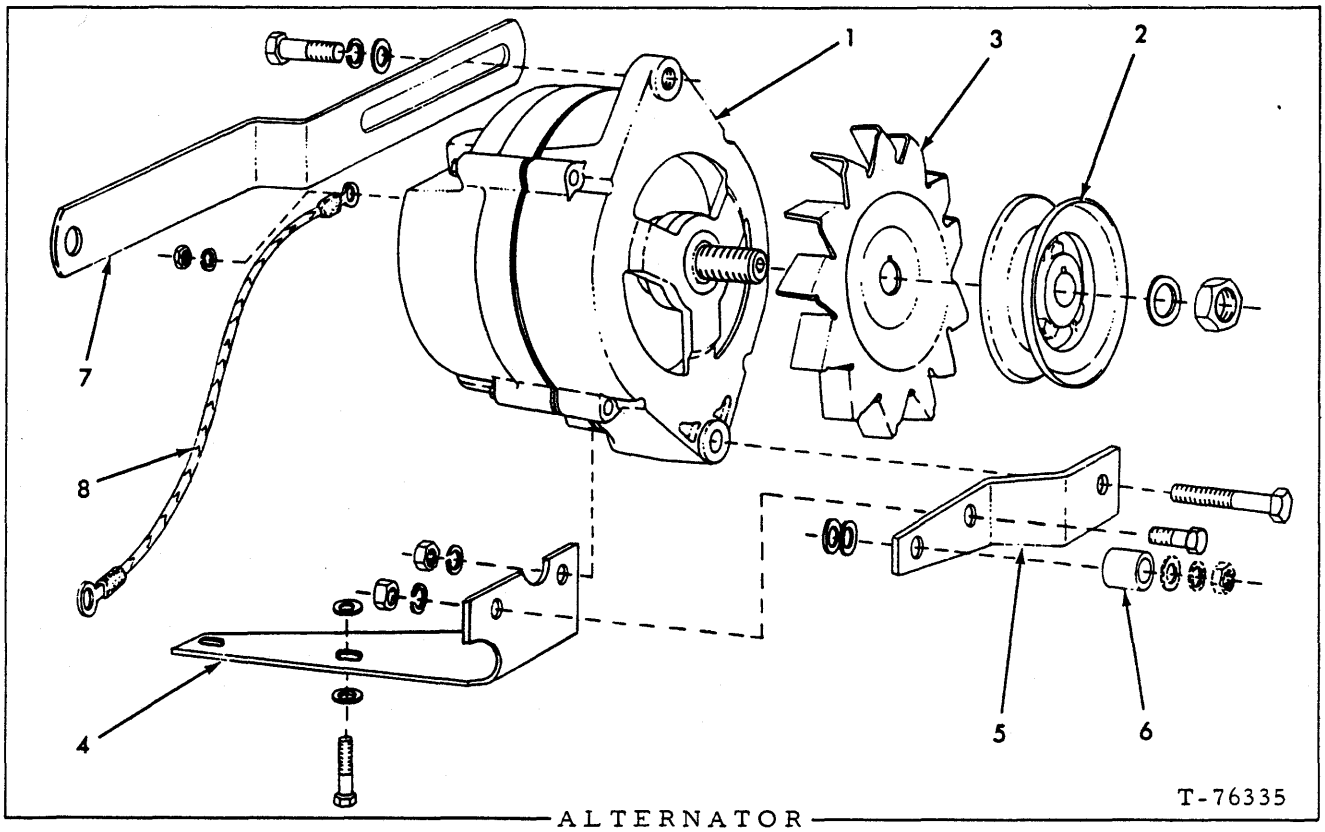

ALTERNATOR

USAGE: Gas-powered, effective serial No. 75Y00201

ITEM	PART NO.	QTY.	DESCRIPTION
1	70669277	1	ALTERNATOR, ("Delco-Remy" #1100805)(Order parts from local service agency)
	70922848	1	CAPSCREW, 3/8"NC x 3-1/4"
	70910287	1	LOCKWASHER, 3/8"
	70911026	1	NUT, 3/8"NC
2	70665025	1	PULLEY
3	70239967	1	FAN
4	70685430	1	BRACKET, alternator mounting
	70921977	2	CAPSCREW, 5/16"NC x 1"
	70677005	4	WASHER, spacing (Use as required)
5	70665324	1	BRACE, mounting bracket
	70922763	1	CAPSCREW, 3/8"NC x 1"
	70910287	1	LOCKWASHER, 3/8"
	70911026	1	NUT, 3/8"NC
	70929156	2	WASHER, spacing (Use as required)
6	70227309	1	BLOCK, spacing
7	70665323	1	BRACE, alternator adjustment
	70921566	1	CAPSCREW, 5/16"NC x 1"
	70910286	1	LOCKWASHER, 5/16"
	70901165	1	WASHER, plain, U.S. std., 5/16"
8	70671693	1	CABLE, alternator ground
	70910284	1	LOCKWASHER, #10
	70910251	1	NUT, #10NF

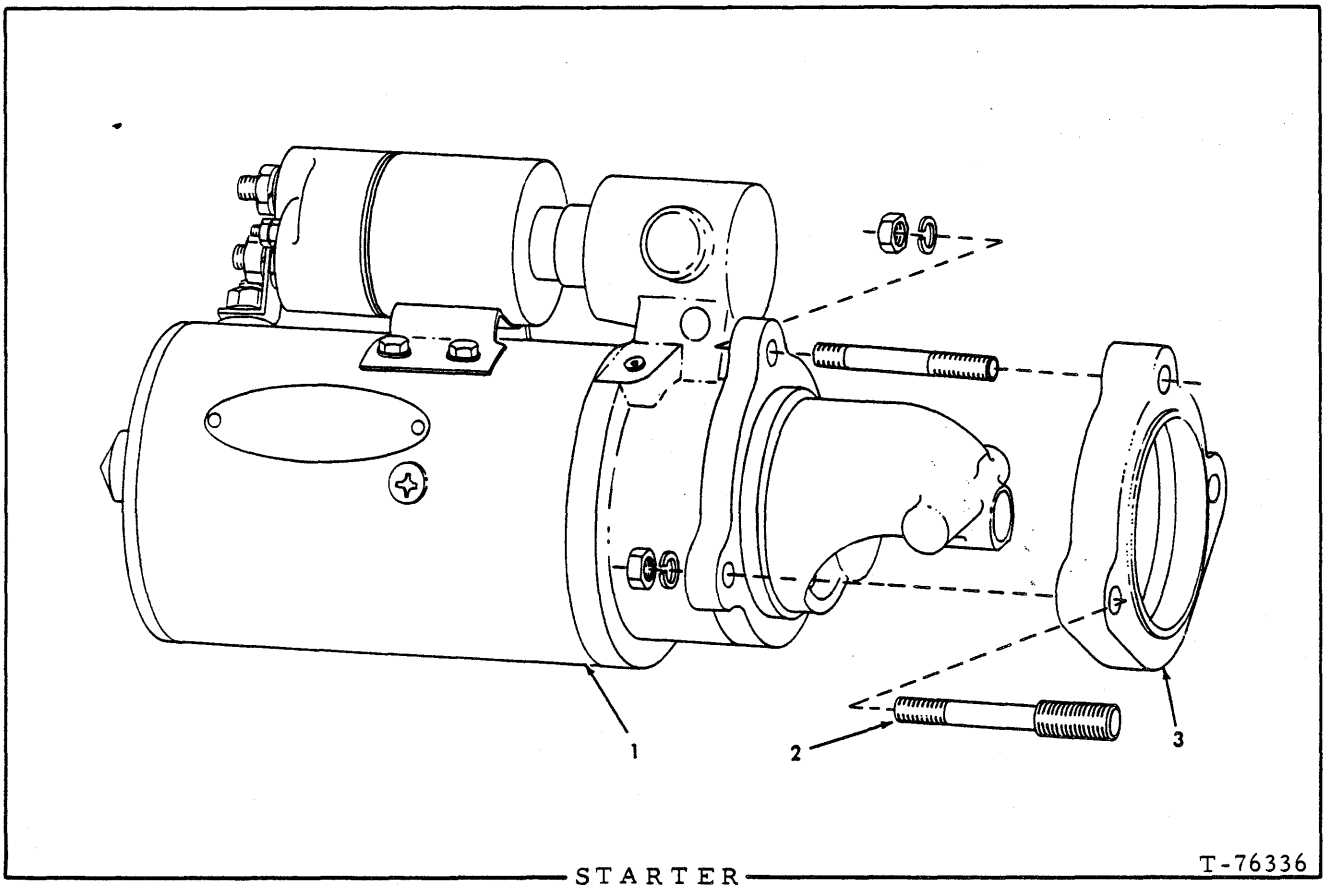

STARTER T-76336

* Diesel - powered, effective serial No. 24A00201, 56Y02201
** Gas - powered, effective serial No. 75Y00201

ITEM	PART NO.	QTY. *	QTY. **	DESCRIPTION
1	70677277	1	-	MOTOR, starting ("Delco-Remy" #1113215)
	70242136	-	1	MOTOR, starting ("Delco-Remy" #1107356)
	70921565	2	-	CAPSCREW, 3/8"NC x 1-1/2" (Graders prior to unit #00351)
	70681804	2	-	STUD, 3/8"NC x 3" (Graders unit #00351 and up)
	70922763	-	3	CAPSCREW, 3/8"NC x 1"
	70910287	2	3	LOCKWASHER, 3/8"
	70910324	2	-	NUT, 3/8"NC (Graders unit #00351 and up)
2	77125010	1	-	STUD (2-3/8" long)(Graders prior to unit #00351)
	70681805	1	-	STUD (3-3/4" long)(Graders unit #00351 and up)
	70910287	1	-	LOCKWASHER, 3/8"
	70910324	1	-	NUT, 3/8"NC
3	70681807	1	-	ADAPTER, starting motor (Effective with grader unit #00351)

NOTE: Order starter parts from local United Motors Service Agency.

(Revised May 1978)

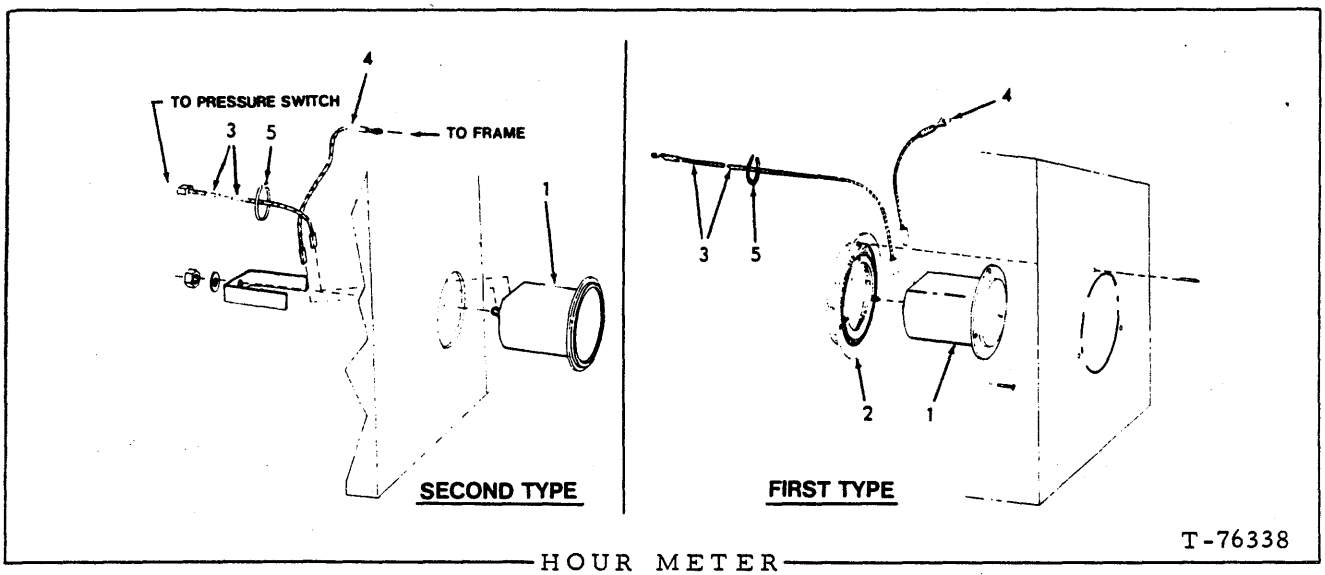

HOUR METER

USAGE: Special equipment

ITEM	PART NO.	QTY.	DESCRIPTION
1	70650299	1	METER, hour (Graders prior to unit #01370 including unit #01425) (See NOTE below)
	70918210	3	SCREW, thread-cutting, #6 x 1/2" (Includes lockwasher)
	70691930	1	METER, hour (Graders unit #01370 and up excluding unit #01425) (See NOTE below)
			NOTE: Meter carries manufacturer's warranty and in case of failure should not be returned to Fiat-Allis. Return "Hobbs" meter to nearest "Stewart-Warner" agency. Return "Hamilton" meter to Hamilton Watch Co., Industrial Products Division, Lancaster, Pennsylvania.
2	70066467	1	DAMPER, vibration (Grader prior to unit #01370 including unit #01425)
	70918210	3	SCREW, thread-cutting, #6 x 1/2" (Includes Lockwasher)
3	70675305	1	CABLE, meter to pressure switch
4	70675306	1	CABLE, meter ground
5	73044015	3	TIE, cable supporting

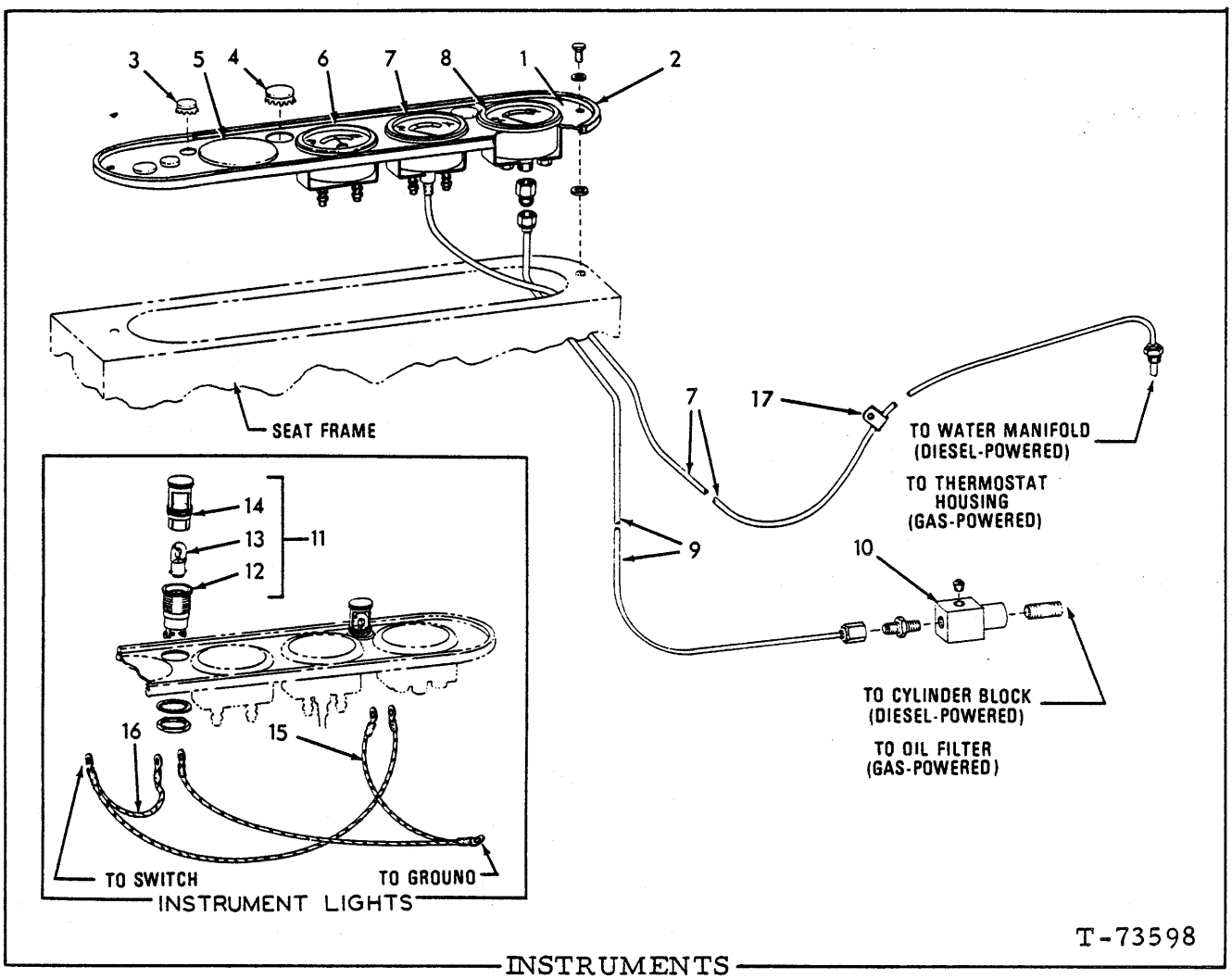

INSTRUMENTS

ITEM	PART NO.	QTY.	DESCRIPTION
1	70674796	1	PANEL, instrument
	70928138	2	CAPSCREW, 1/4"NC x 5/8"
	70918264	2	WASHER, plain, SAE, std., 1/4"
	70924817	2	WASHER
2	70674795	1	SEAL, weather, instrument panel
3	70922803	1	PLUG, button, cd-pltd., 1/2" hole-diam. (Not used on units equipped with lights)
4	70921191	4	PLUG, button, cd-pltd., 11/16" hole-diam. (2 less used on units equipped with dash lights)
5	70921193	1	PLUG, button, cd-pltd., 2-3/32" hole-diam. (Not used on Diesel Powered units equipped with pressure gauge)
6	70658348	1	AMMETER (Includes mounting clamp)(Graders prior to unit #02010)
	70695983	1	AMMETER (Includes mounting clamp)(Grader unit #02010 and up)
7	70658620	1	GAUGE, engine temperature (Includes mounting clamp) (Graders prior to unit #02010)
	70697262	1	GAUGE, engine temperature (Includes mounting clamp) (Grader unit #02010 and up)

(Continued)

INSTRUMENTS (Continued)

ITEM	PART NO.	QTY.	DESCRIPTION
8	70658293	1	GAUGE, engine oil pressure (Includes mounting clamp) (Graders prior to unit #02010)
	70691745	1	GAUGE, engine oil pressure (Includes mounting clamp) (Graders unit #02010 and up)
9	70095858	1	TUBE ASSY., oil pressure gauge (Includes nuts)(Effective on S/N 24A00201 also 56Y02201)
	70659109	1	TUBE ASSY., oil pressure gauge (Includes nuts)(Effective on S/N 75Y00201)
	70919827	1	CONNECTOR, flare type, 3/16" tube, 1/8"NPT Female
	70919244	1	CONNECTOR, flare type, 3/16" tube, 1/8"NPT male
10	70094450	1	TEE, pressure switch connection
	70901651	1	PLUG, pipe, 1/8"NPT
	70904273	1	NIPPLE, pipe, 1/8"NPT x 1"
11	73023024	2	LIGHT ASSY., panel (Consists of items 12 thru 14)
12	--------	2	BASE ASSY. (Not serviced separately)
13	73046487	2	BULB, incandescent, 12 volt
14	73037183	2	SHIELD, panel light
15	70675236	1	CABLE, panel lights to ground
16	70671737	1	CABLE, switch to panel lights
17	70200479	1	CLIP

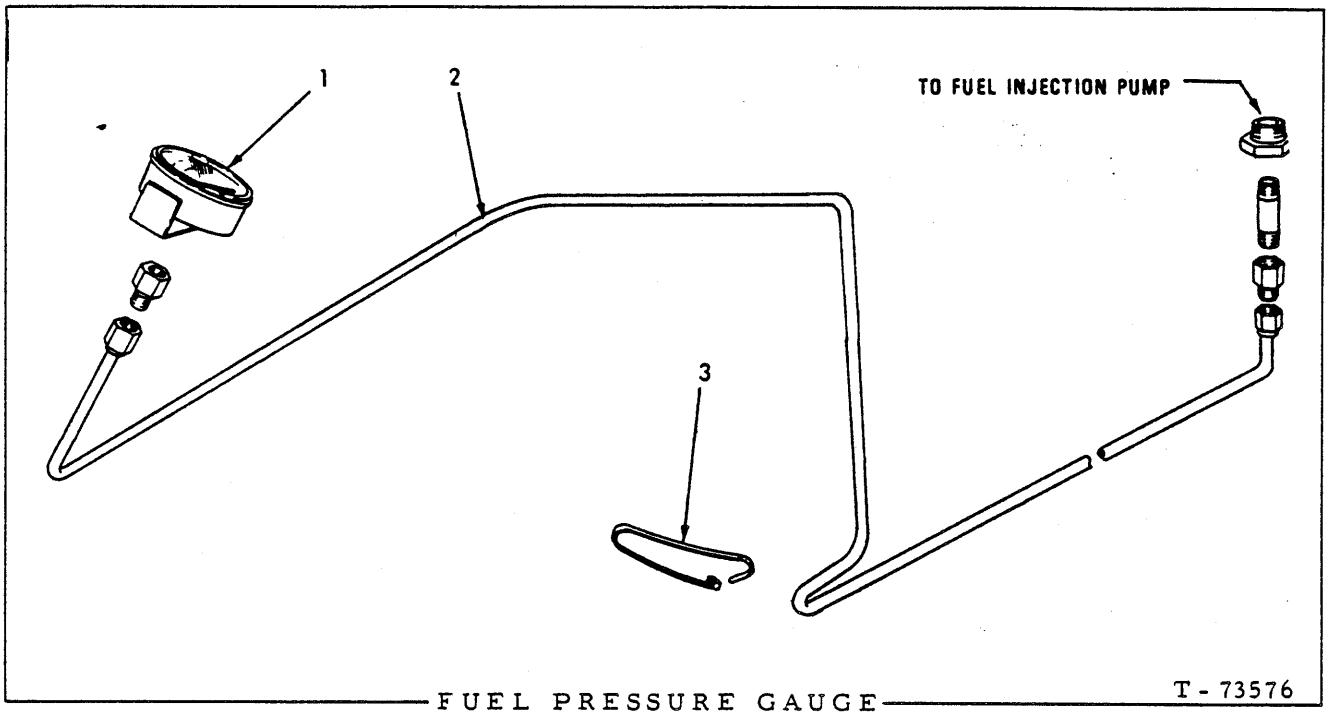

FUEL PRESSURE GAUGE

USAGE: Special equipment. Diesel - powered, effective serial No. 24A00201, 56Y02201

ITEM	PART NO.	QTY.	DESCRIPTION
1	70658356	1	GAUGE, fuel pressure (Includes mounting clamp)
2	70094665	1	TUBE ASSY. (Includes nuts)
	70919827	2	CONNECTOR, flare type, 3/16" tube, 1/8"NPT female
	70901468	1	NIPPLE, pipe, 1/8"NPT x 1-1/2"
3	73044015	1	TIE, tube supporting

(Revised May 1978)

CAB

USAGE: Special Equipment

ITEM	PART NO.	QTY.	DESCRIPTION
-	70695224	1	CAB ASSY. (Includes items 1 thru 42)(Non ROPS)
	70921076	6	CAPSCREW, 3/8"NC x 1-1/4" } Cab to Tank
	70900817	12	WASHER, plain } Cab to Tank
	70911026	6	NUT, 3/8"NC } Cab to Tank
-	70692351	1	CAB ASSY. (Includes items 1 thru 43) } ROPS
-	70693777	1	CAB, only (Stripped of all removable parts) } ROPS
	70921566	10	CAPSCREW, 5/16"NC x 1" } Cab-to-Seat
	70901165	20	WASHER, plain } Cab-to-Seat
	70911025	10	NUT, 5/16"NC } Cab-to-Seat
	70921565	4	CAPSCREW, 3/8"NC x 1-1/2" } Sill-to-Fender (ROPS)
	70677006	8	WASHER, plain } Sill-to-Fender (ROPS)
	70911026	4	NUT, 3/8"NC } Sill-to-Fender (ROPS)
1	--------	2	GLASS, side panel (Part No. 70681432. See Note below)
2	70079919	4	SEAL, side panel and upper door glass
3	70079921	4	STRIP, expanding, side panel and upper door glass seal
4	--------	1	GLASS, lower front panel (Part No. 70681427. See Note below)
5	70077783	3	SEAL, front panel and lower door glass
6	70077765	3	STRIP, expanding, front panel and lower door glass seal
7	70681457	1	RETAINER, front panel
	70918155	8	SCREW, truss-hd., 1/4"NC x 1/2"
	70921880	8	LOCKWASHER, ext. tooth, 1/4"
	70916205	8	NUT, speed, 1/4"NC
8	70681456	1	SEAL
9	70681426	1	SEAL, front panel (canvas)
	70918155	9	SCREW, truss-hd., 1/4"NC x 1/2"
	70921880	9	LOCKWASHER, ext. tooth 1/4"
	70916205	9	NUT, speed, 1/4"NC
10	70681458	1	BAR, seal
11	70681342	1	FRAME, windshield (Non-ROPS)
11	70693778	1	FRAME, windshield (ROPS)
	70918157	6	SCREW, truss-hd., 1/4"NC x 3/4"
	70911114	6	WASHER, plain, SAE std., 1/4"
	70904204	6	LOCKWASHER, 1/4"
	70911024	6	NUT, 1/4"NC
12	70681349	1	STRIP, windshield and rear window frame hinge
13	--------	1	GLASS, windshield (Part No. 70681343. See Note Below)
14	70663246	1	SEAL, windshield and rear window glass
15	70663233	1	STRIP, filler, windshield and rear window glass
16	70642526	7	SEAL
17	70641974	2	ARM, windshield adjustment } Non ROPS
17	70900806	2	PIN, cotter, 1/8" x 1" } Non ROPS
17	70910244	2	WASHER, plain, 1/2" } Non ROPS
17	70915018	2	NUT, wing, 1/2"NC } Non ROPS
17	70690506	2	ARM, windshield adjustment } ROPS
17	70900806	2	PIN, cotter, 1/8" x 1" } ROPS
17	70693813	4	SPACER, inner } ROPS
17	70641961	2	SPACER, outer } ROPS
17	70915018	2	NUT, wing, 1/2"NC } ROPS

(Continued)

(Revised May 1978)

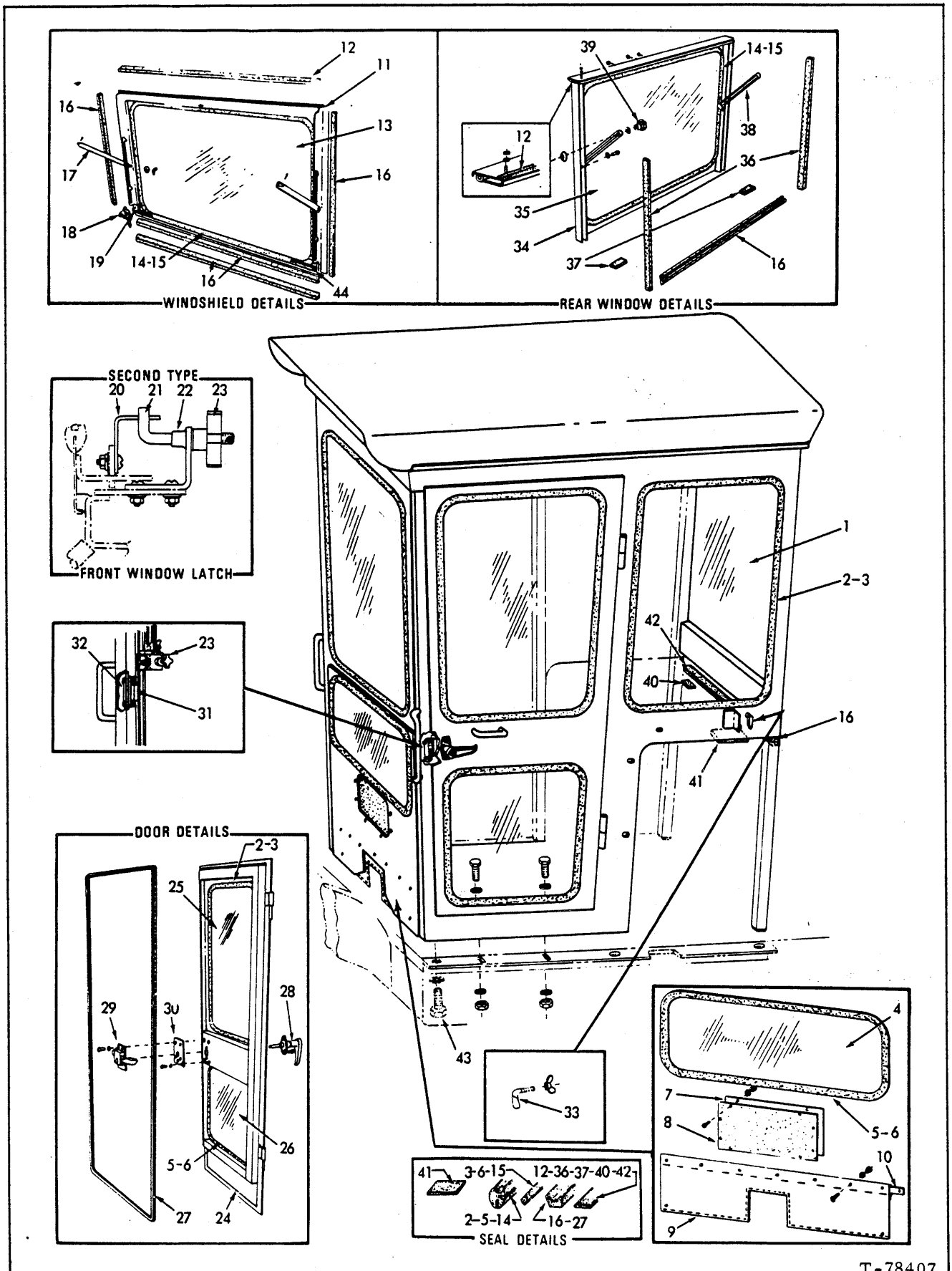

CAB

(Revised July 1975)

ITEM	PART NO.	QTY.	DESCRIPTION	
18	70681439	1	CATCH ASSY., windshield, left (Serviced only as a unit)	Early Type
	70681440	1	CATCH ASSY., windshield, right (Serviced only as a unit)	
	70918157	6	SCREW, truss head, 1/4"NC x 3/4"	
	70911114	6	WASHER, plain, 1/4"	
	70904204	6	LOCKWASHER, 1/4"	
	70911024	6	NUT, 1/4"NC	
19	70681344	2	PLATE, windshield (Early type)	
	70918157	4	SCREW, truss head, 1/4"NC x 3/4"	
	70904204	4	LOCKWASHER, 1/4"	
	70911114	4	WASHER, plain, 1/4"	
20	70693141	1	BRACKET, left	
	70693142	1	BRACKET, right	
	70918157	4	SCREW, truss-head, 1/4"NC x 3/4"	
	70911114	4	WASHER, plain, SAE std., 1/4"	
	70904204	4	LOCKWASHER, 1/4"	
	70911024	4	NUT, 1/4"NC	
21	70693144	2	HOOKBOLT	
22	70693140	2	BRACKET	
	70918157	6	SCREW, truss-hd., 1/4"NC x 3/4"	
	70911114	6	WASHER, plain, SAE std., 1/4"	
	70904204	6	LOCKWASHER, 1/4"	
	70911024	6	NUT, 1/4"NC	
23	70693145	2	KNOB, windshield hookbolt	
	70900817	2	WASHER, plain, 3/8"	
24	70681351	1	DOOR, left (Cabs prior to #230201)	Stripped of all removable parts
	70681352	1	DOOR, right (Cabs prior to #230201)	
	70682537	1	DOOR, left (Cabs #230201 thru #242900)	
	70682538	1	DOOR, right (Cabs #230201 thru #242900)	
	70693335	1	DOOR, left (Cabs #242901 and up)	
	70693336	1	DOOR, right (Cabs #242901 and up)	
25	--------	2	GLASS, door, upper (Part No. 70681437)	See Note Below
26	--------	2	GLASS, door, lower (Part No. 70681438)	
27	70642528	2	SEAL, door	
28	70681453	2	HANDLE, door, outside (Cabs prior to #230201)	
	70918155	4	SCREW, truss-hd., 1/4"NC x 1/2"	
	70921880	4	LOCKWASHER, ext-tooth, 1/4"	
	70682591	2	HANDLE, door, outside (Cabs #230201 thru #A242900)	
	70918147	4	SCREW, truss-hd., #10NF x 1/2"	
	70914193	4	LOCKWASHER, int-tooth, #10	
	70690876	2	HANDLE, door, outside (locking type. Includes item 28A) (Cabs #A242901 and up)	
	70918149	4	SCREW, truss-hd., #10-32NF x 3/4"	
	70910243	4	WASHER, plain, SAE std., #10	
	70919415	4	NUT, #10-32NF (plated)	
28A	73108930	2	KEY (Not illustrated)	

(Continued)

ITEM	PART NO.	QTY.	DESCRIPTION	
29	70669589	1	LATCH, left door	
	70669590	1	LATCH, right door	
	70918147	12	SCREW, truss-hd., #10-32NF x 1/2"	
	70904203	12	LOCKWASHER, #10	
30	70693337	1	PLATE, mounting, left door latch	Cabs #242901 and up
	70693338	1	PLATE, mounting, right door latch	Cabs #242901 and up
31	70633545	2	PLATE, striker, door latch	Non ROPS
	70918157	4	SCREW, truss-hd., 1/4"NC x 3/4"	Non ROPS
	70914194	4	LOCKWASHER, int-ext-tooth, 1/4"	Non ROPS
	70694629	2	PLATE, striker, door latch	ROPS
	70918156	4	SCREW, truss-hd., 1/4"NC x 5/8"	ROPS
	70914105	4	LOCKWASHER, ext-tooth, 1/4"	ROPS
32	70669585	4	NUT, strike plate screw (twin pilot)	
33	70681455	2	HOOK, door hold-back	
	70681569	2	NUT, wing, 5/8"NC	
34	70681350	1	FRAME, rear window (Non ROPS)	
	70693779	1	FRAME, rear window (ROPS)	
	70918249	12	SCREW, truss-hd., 5/16"NC x 3/4"	
	70904205	12	LOCKWASHER, 5/16"	
	70910323	12	NUT, 5/16"NC	
35	--------	1	GLASS, rear window (Part No. 70681353. See Note below)	
36	70694634	2	SEAL, rear window (1" x 18")	
37	70681348	2	SEAL, rear window (3/4" x 1-1/4")	
38	70695508	2	ARM, rear window adjustment	
	70911114	2	WASHER, plain, SAE std., 1/4"	
	70910297	2	RIVET, truss head, 1/4" x 5/8"	
39	70695507	2	KNOB, rear window adjustment	
	70910335	2	WASHER, plain, 5/16"	
	70681358	2	WASHER, plain	
40	70682557	2	SEAL, corner (1" x 1-1/4")	
41	70695504	2	SEAL, corner (3-5/8" x 3-5/8")	
42	70694635	1	SEAL,	
43	70926785	6	CAPSCREW, 1"NC x 2-3/4"	ROPS
	70928452	6	WASHER, plain	ROPS
44	70697102	1	SEAL	

NOTE: Glass must be procured locally. See CAB GLASS DATA CATALOG for pattern.

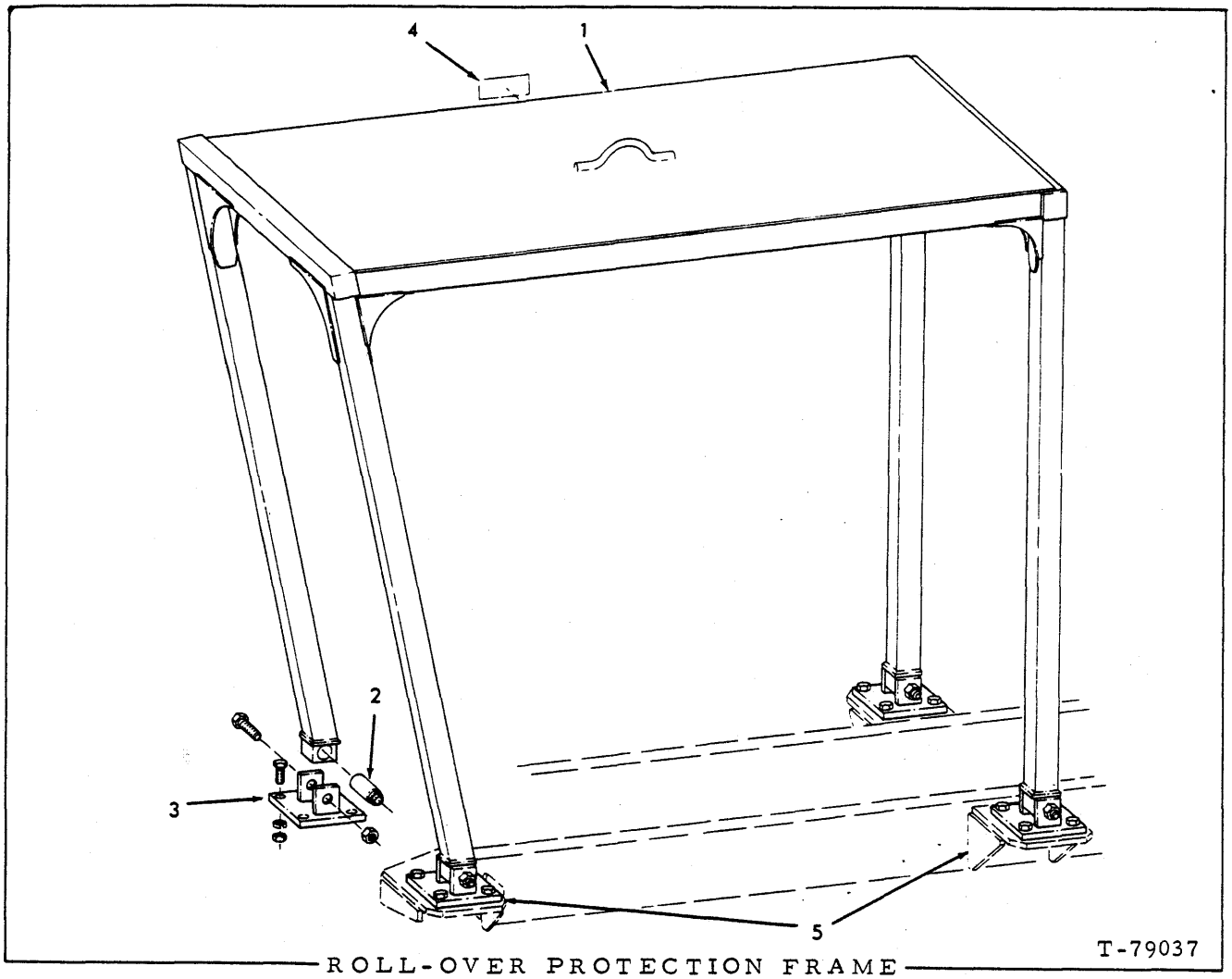

ROLL-OVER PROTECTION FRAME
(Bracket-mounted)

USAGE: Special Equipment All graders serial No. 75Y00201 and up; also graders prior to serial No. 24A01528

ITEM	PART NO.	QTY.	DESCRIPTION
1	70685389	1	FRAME
	70921241	4	CAPSCREW, 1"NC x 6"
	70912845	4	NUT, elastic stop, 1"NC
2	70685147	4	BUSHING, corner block
3	70685208	4	BRACKET
	70927015	16	CAPSCREW, 1"NC x 3"
	70914728	16	LOCKWASHER, 1"
	70911032	16	NUT, 1"NC
4	70694786	1	DECAL, "ROPS"
5	--------	-	BRACKET (See ROPS MOUNTING BRACKETS)

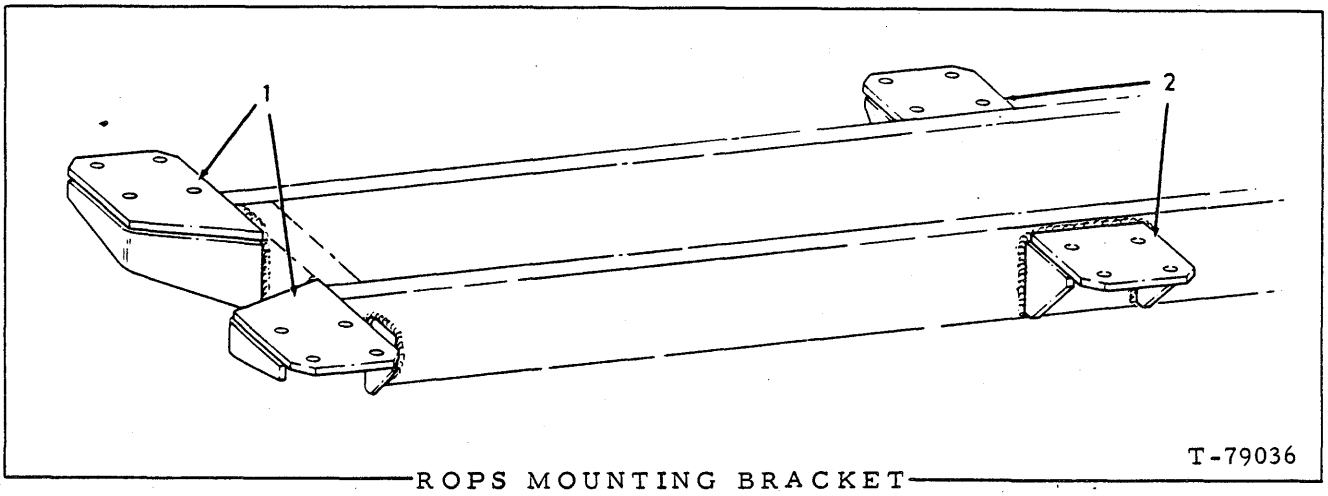

ROPS MOUNTING BRACKET

USAGE: Special equipment. For mounting ROPS canopy on all Graders serial No. 75Y00201 and up; also Graders prior to serial No. 24A01528.

ITEM	PART NO.	QTY.	DESCRIPTION	
1	70680797	1	BRACKET, left front	Requires welding to install
1	70680798	1	BRACKET, right front	Requires welding to install
2	70680802	2	BRACKET, rear	Requires welding to install

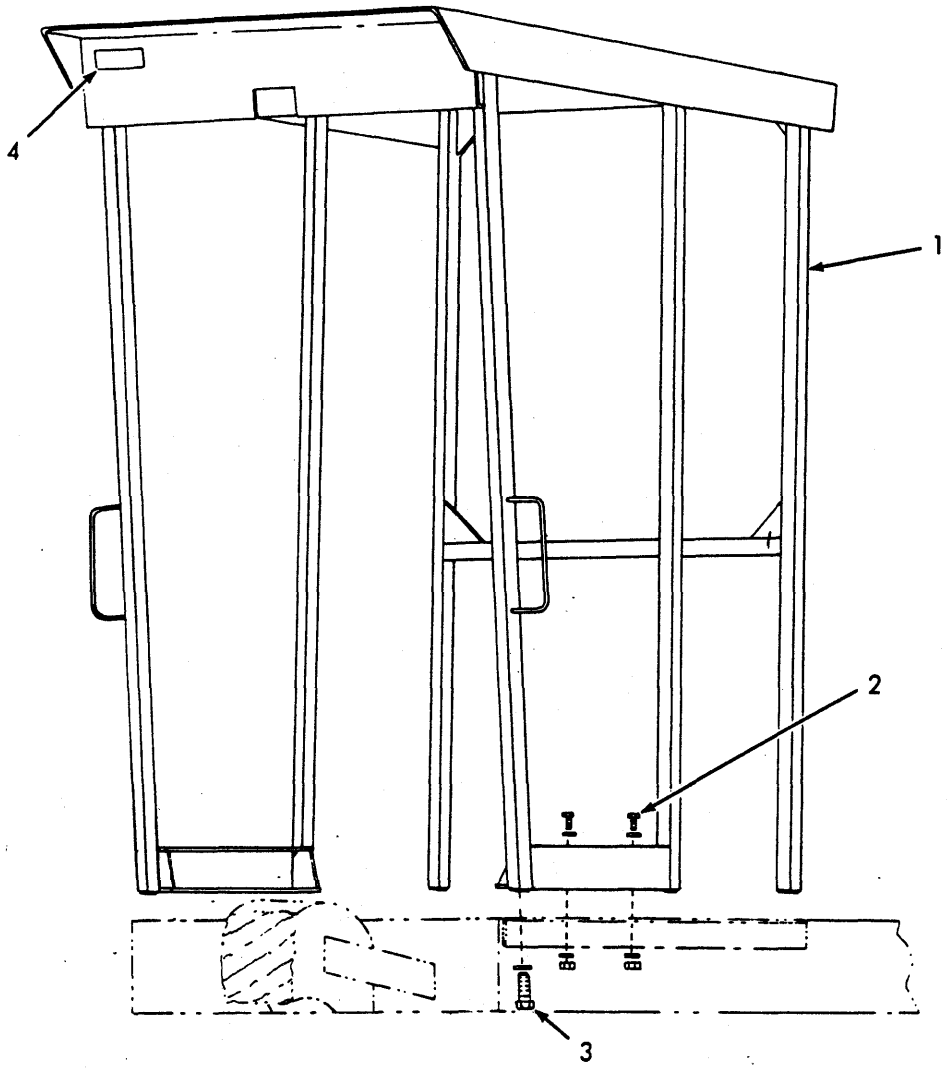

ROLL-OVER PROTECTION FRAME
(Frame mounted)

USAGE: Special equipment. Graders serial No. 24A01528, 56Y02201 and up.

ITEM	PART NO.	QTY.	DESCRIPTION
1	70692352	1	FRAME
2	70921565	4	CAPSCREW, 3/8"NC x 1-1/2"
	70677006	8	WASHER, plain
	70911026	4	NUT, 3/8"NC
3	70926785	6	CAPSCREW, 1"NC x 2-3/4"
	70928452	6	WASHER, plain
4	70693833	1	DECAL, "ROPS"

(Revised May 1978)

TIRE PUMP
(Not illustrated)

USAGE: Special equipment

ITEM	PART NO.	QTY.	DESCRIPTION
1	70076599	1	PUMP ASSY., tire (Model #127-12 volt. Order service parts from Johnson Service Co., 507 E. Michigan, Milwaukee, Wisconsin 53202) (Includes mounting hardware)

(Revised May 1978)

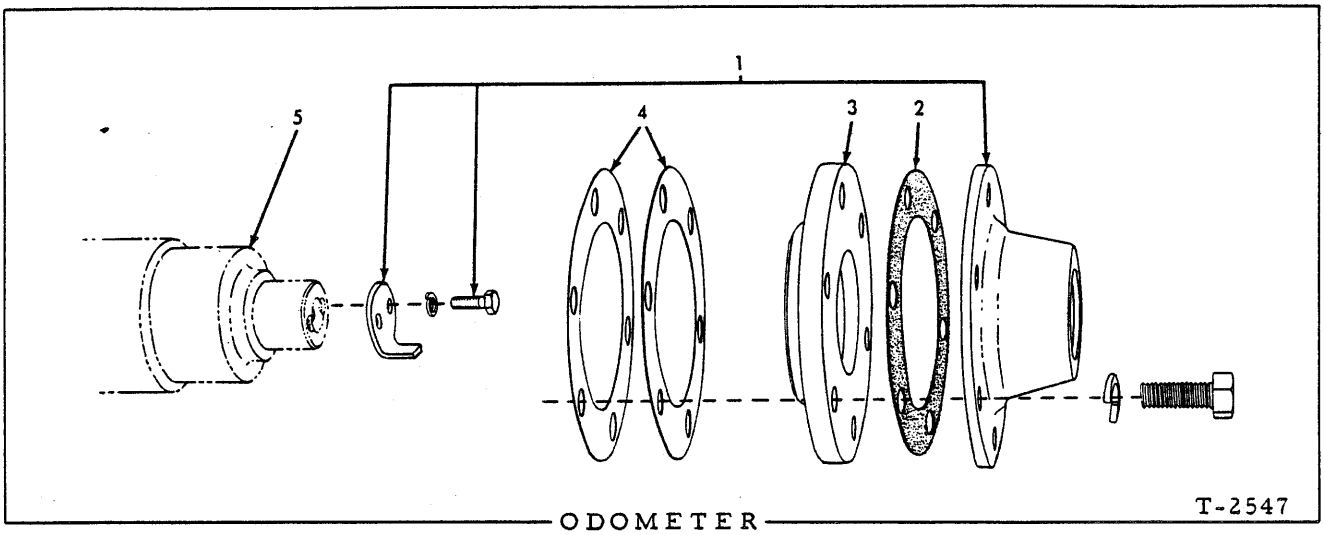

ODOMETER

USAGE: Special equipment.

ITEM	PART NO.	QTY.	DESCRIPTION
1	70068349	1	ODOMETER ASSY. (registers miles)(Includes driving LUGS. Veeder-Root #W-74030-1. Order service parts from Veeder-Root Incorporated, Hartford, Connecticut)
	70068954	1	ODOMETER ASSY. (registers kilometers)(Includes driving LUGS. Veeder-Root #W-74030-1. Order service parts from Veeder-Root Incorporated, Hartford, Connecticut)
	70920583	5	CAPSCREW, 1/2"NC x 1-1/2"
	70023416	1	CAPSCREW, drilled-hd., 1/2"NC x 1-1/2"
	70912441	6	LOCKWASHER, 1/2"
2	70645318	1	GASKET, odometer
3	70068352	1	RETAINER, wheel shaft inner bearing
4	70054752	16	SHIM, wheel shaft bearing adjustment (.010" thick. Use as req'd)
	70054753	16	SHIM, wheel shaft bearing adjustment (.005" thick. Use as req'd)
5	-------	1	SPROCKET AND SHAFT, left rear wheel (See TANDEMS)

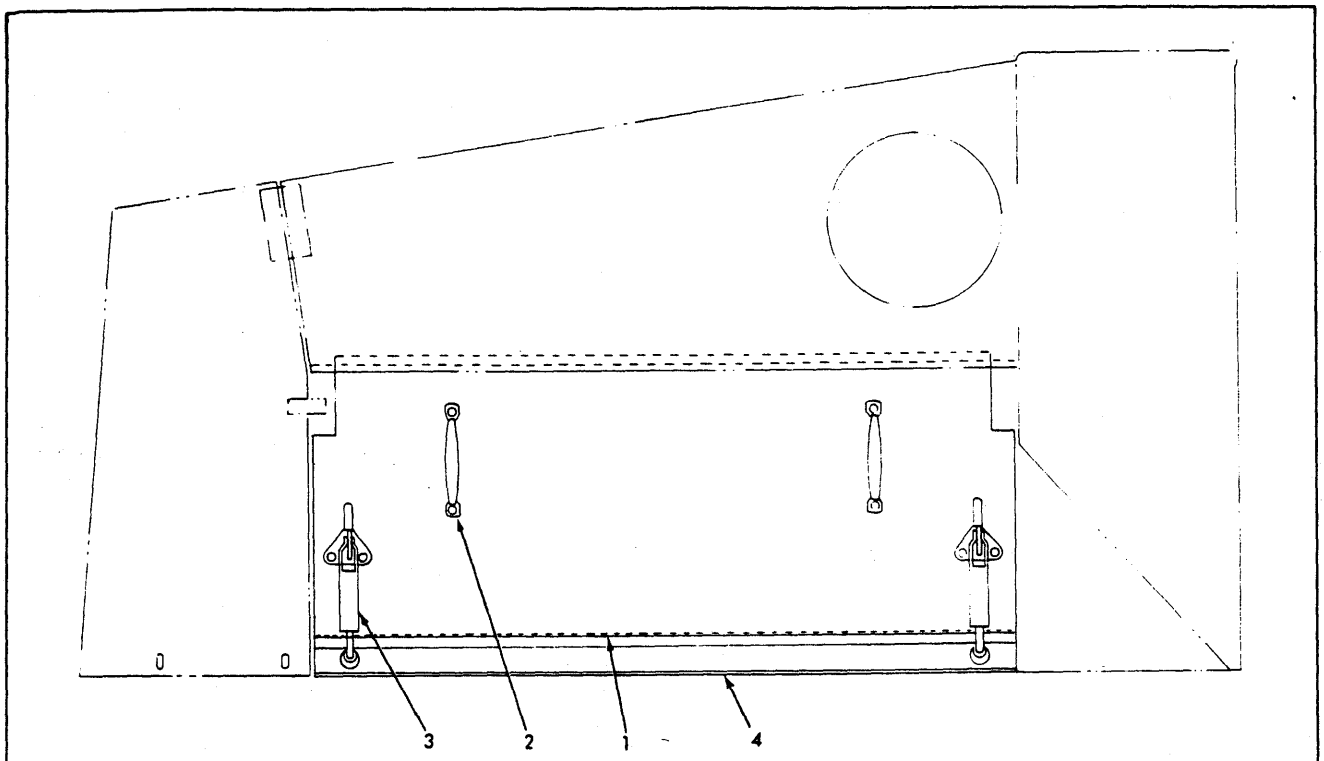

HOOD SIDE PLATES T-76346

ITEM	PART NO.	QTY.	DESCRIPTION
1	70676628	2	PLATE ASSY. (Includes items 2 and 3)
2	70032834	4	HANDLE, lifting
	70900764	8	RIVET, flat-hd., 3/16" x 1/2"
3	70033060	4	FASTENER, hood latching
	70900764	12	RIVET, flat-hd., 3/16" x 1/2"
4	70676626	2	ANGLE, hood latching (Requires welding to install)

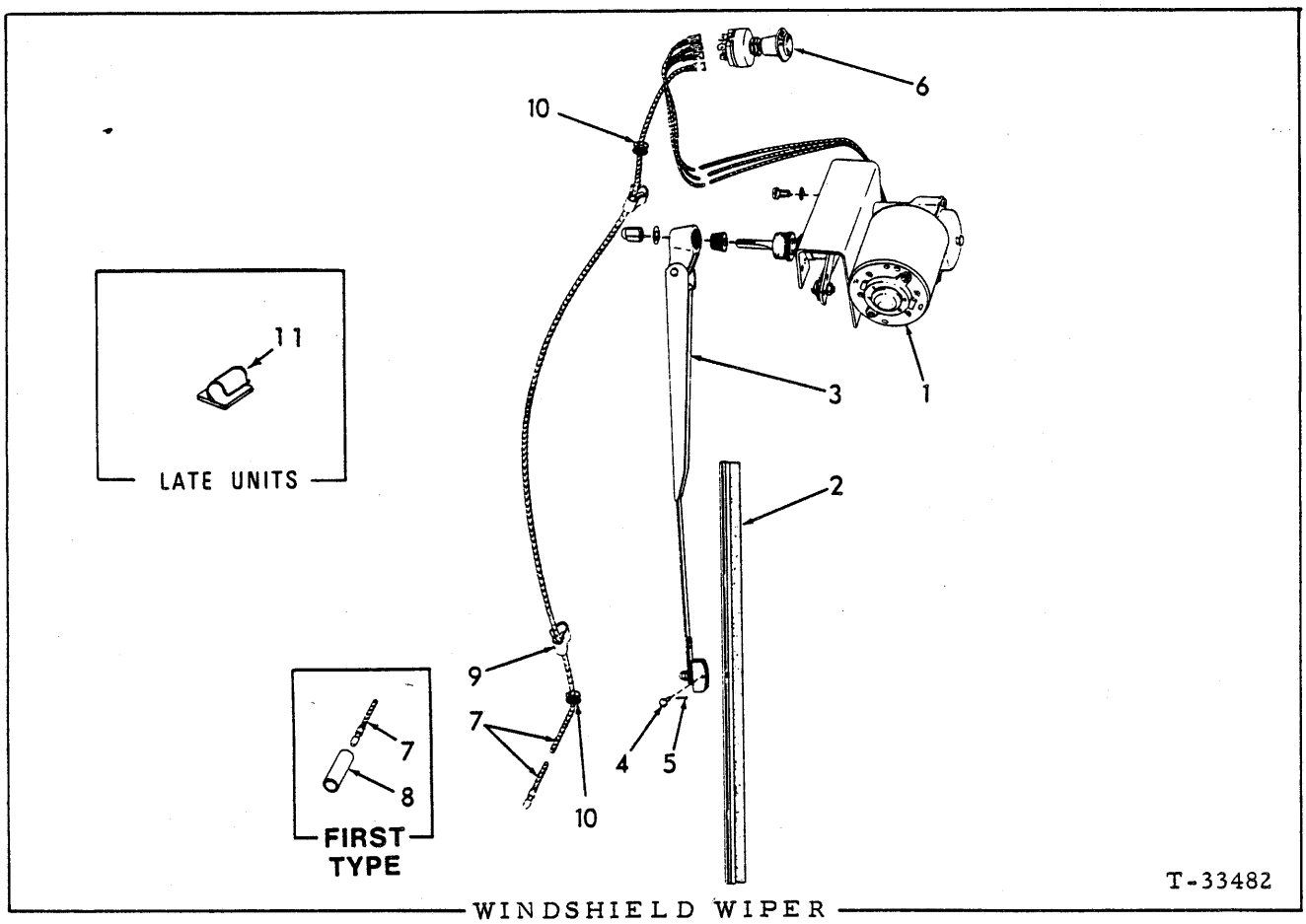

WINDSHIELD WIPER

USAGE: Special equipment on graders equipped with stand-up type cab

*Prior to September 1974 with Dougles terminals
**Effective September 1974 with blade terminals

ITEM	PART NO.	QTY. *	QTY. **	DESCRIPTION	
1	70659545	1	-	MOTOR, windshield wiper (American Bosch Model WWC-12K-2612-118)	Includes Adapter, Washer and Nut. Order service parts from nearest authorized service agency
	70694297	-	1	MOTOR, windshield wiper (American Bosch Model WWC-12L-2612-118)	
	70928575	2	2	CAPSCREW, 1/4"NF x 1/2"	
	70910285	2	2	LOCKWASHER, 1/4"	
2	70628866	1	1	BLADE, wiping	
3	70628867	1	1	ARM ASSY., wiping blade (Includes items 4 and 5)	
4	62582	1	1	PIN, clevis, blade attaching	Order service parts from local ANCO dealer
5	61910	1	1	PIN, cotter, clevis pin	
6	70628508	1	-	SWITCH ASSY., motor (Includes mounting nuts)	
	70688313	-	1	SWITCH ASSY., motor (Includes mounting nuts)	
7	70079354	1	-	CABLE, switch to connector (110" long)	
	70694323	-	1	CABLE, switch to connector (110" long)	
8	70048142	1	-	CONNECTOR (two-way)	
9	70638986	7	7	CLIP, cable supporting	
10	70023176	-	2	GROMMET (ROPS Cab) (Early units)	
11	73059884	-	7	CLIP, adhesive back (Late units)	

(Revised May 1976)

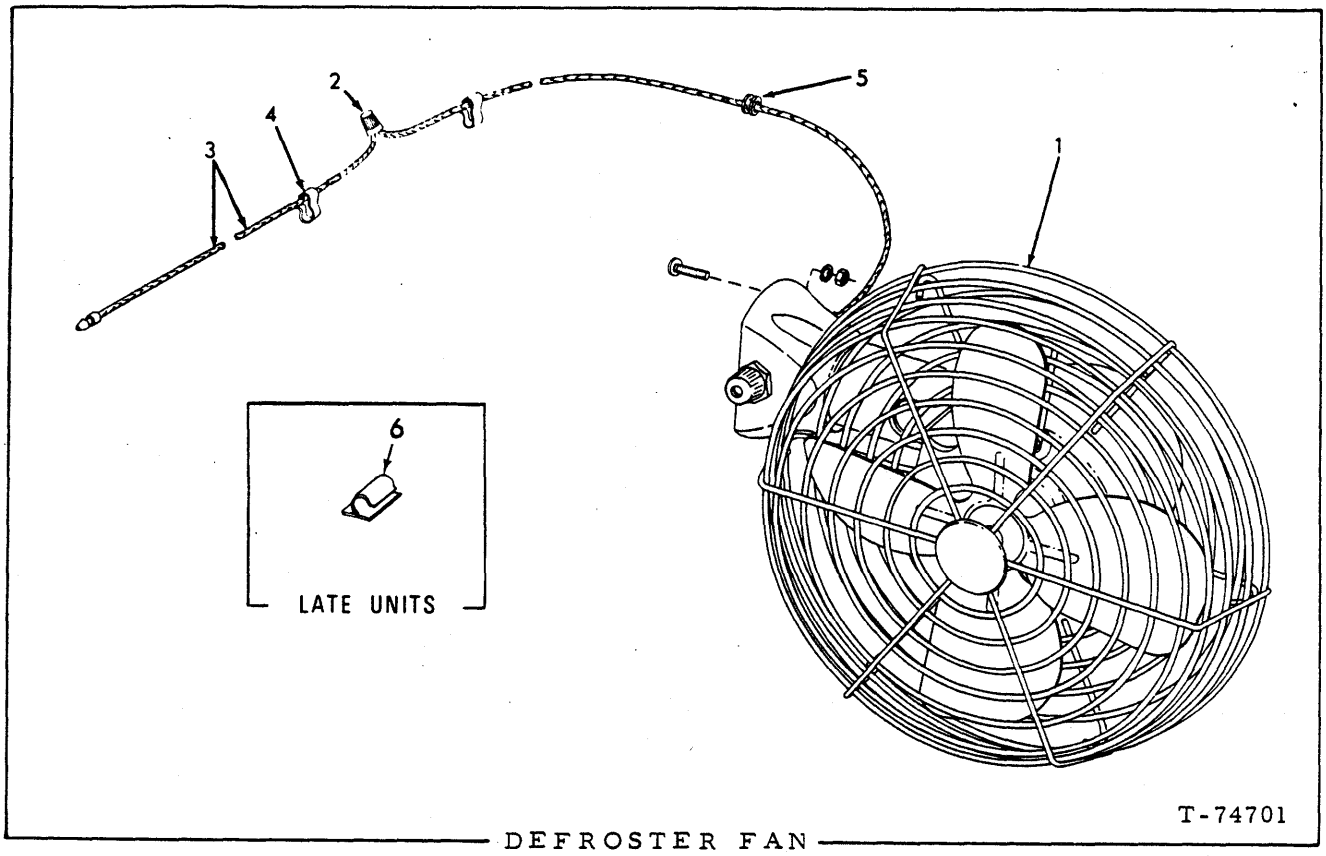

DEFROSTER FAN

USAGE: Special equipment

ITEM	PART NO.	QTY.	DESCRIPTION
1	70685913	1	FAN ASSY. (Includes motor, guard, pedestal, switch and wiring. Vendor's No. 96-12. Order parts from Perfection Division of Hupp Corporation, 1135 Ivanhoe Road, Cleveland Ohio 44110)
	70900555	4	SCREW, machine, #8-32NC x 3/4"
	70910283	4	LOCKWASHER, #8
	70907154	4	NUT, #8-32NC
2	70679148	1	NUT, wire
3	70694301	1	CABLE (89" long)
4	70638986	5	CLIP, cable supporting
5	70023176	2	GROMMET, corner post (Early units)
6	73059884	7	CLIP, adhesive back (Late units)

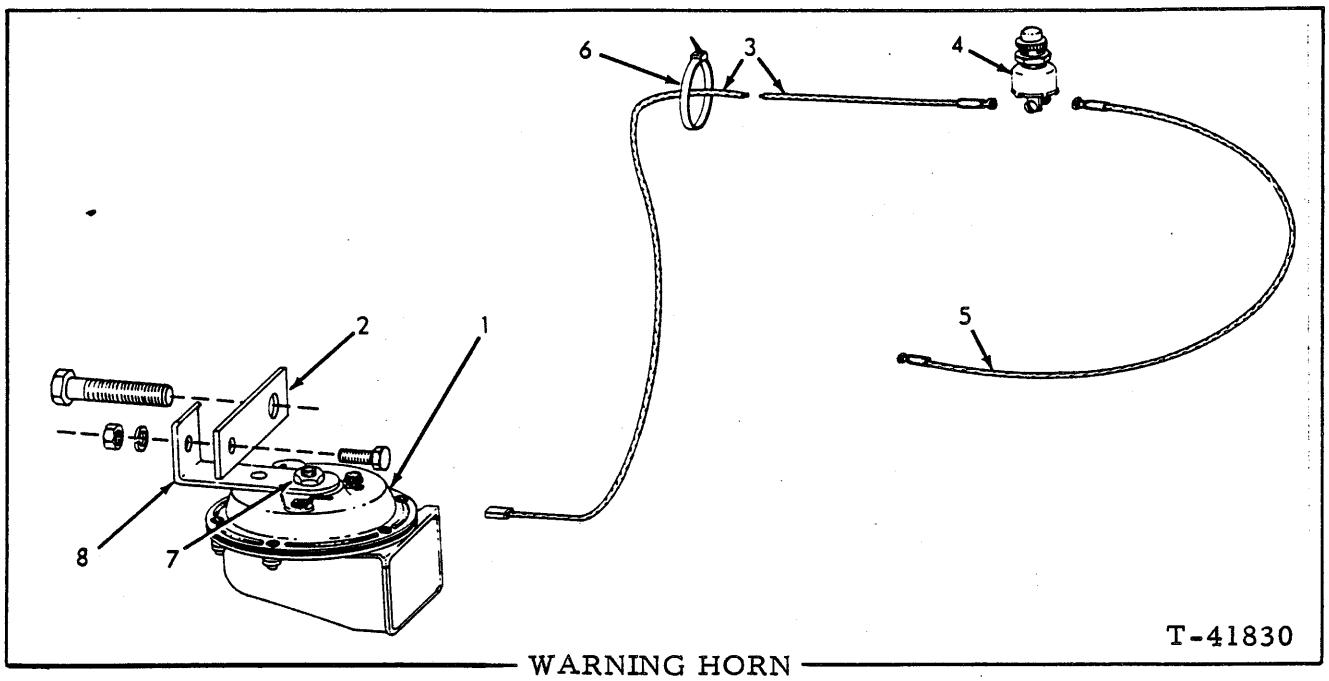

WARNING HORN

USAGE: Special equipment on graders prior to unit #00642; standard thereafter.

ITEM	PART NO.	QTY.	DESCRIPTION
1	73114177	1	HORN ASSY. (12-volt)(Includes items 7 and 8)
	70922925	1	CAPSCREW, 5/16"NC x 3/4"
	70910286	1	LOCKWASHER, 5/16"
	70911025	1	NUT, 5/16"NC
2	70641694	1	PLATE, mounting
	70924864	1	CAPSCREW, 1/2"NC x 2-1/4"
3	73110111	1	CABLE, horn to switch
4	70031337	1	SWITCH, push-button
5	70676797	1	CABLE, switch to ammeter
6	70196765	1	STRAP, cable supporting
7	73042966	1	NUT
8	73109986	1	BRACKET

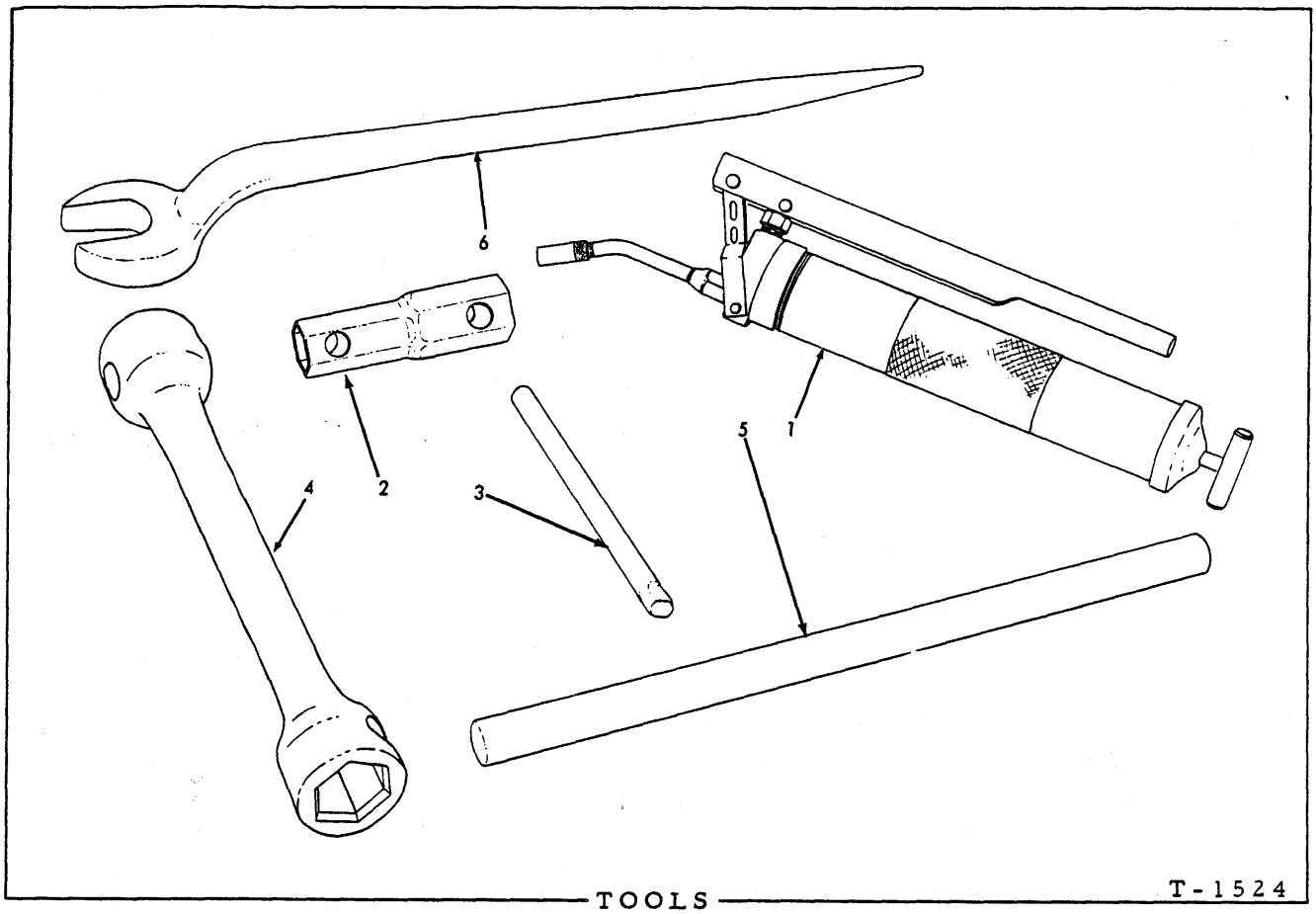

TOOLS T-1524

USAGE: Special equipment

ITEM	PART NO.	QTY.	DESCRIPTION	
1	70073735	1	GUN, grease (Serviced only as a unit)	
2	70207466	1	WRENCH, spark plug	Not for Diesel powered units
3	70207467	1	HANDLE, spark plug wrench	
4	70603723	1	WRENCH, socket, rim nut	
5	70604048	1	HANDLE, rim nut socket wrench	
6	70912554	1	WRENCH, structural, 1-1/16" opening	

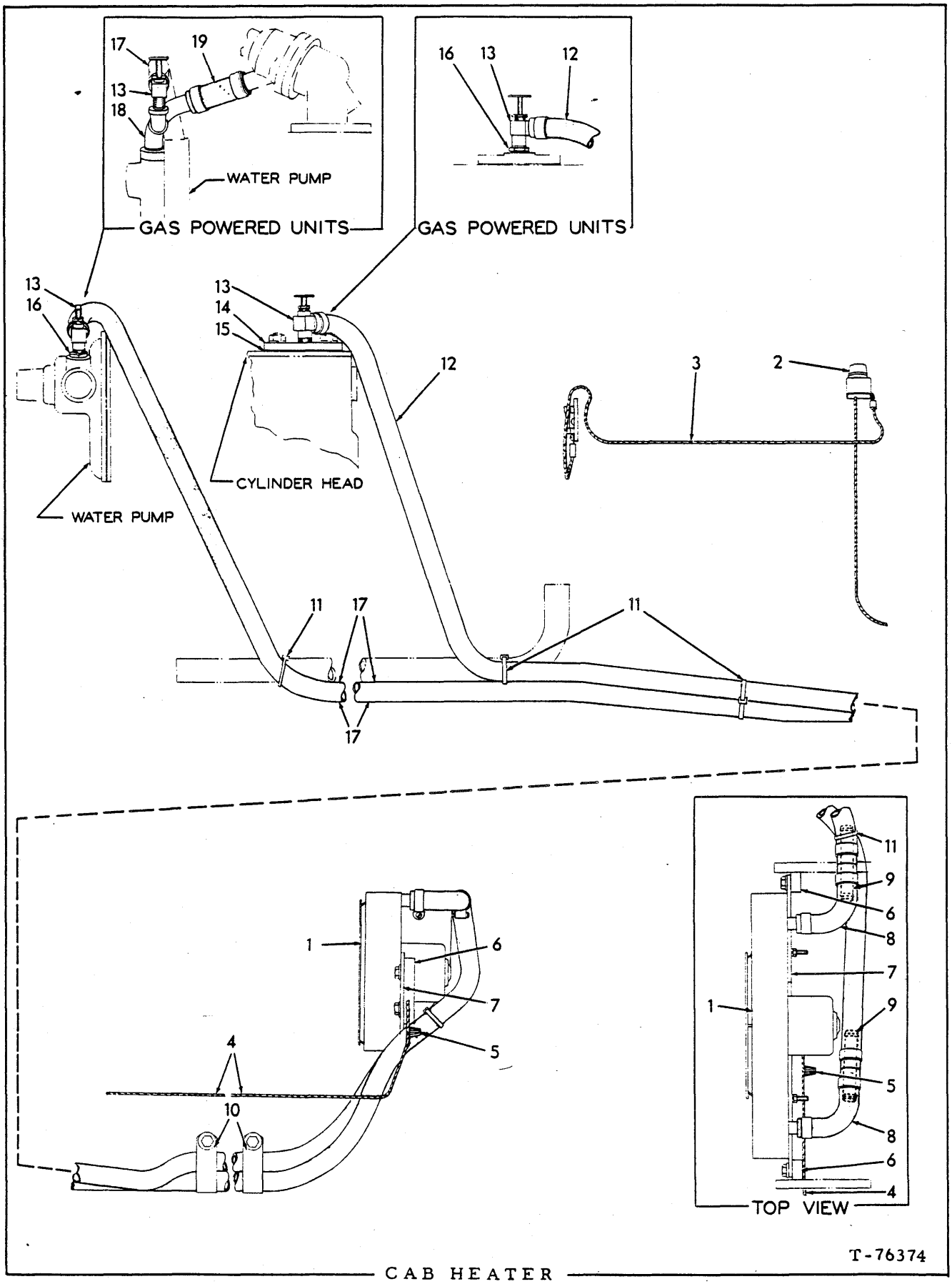
17
19
13
18
WATER PUMP
GAS POWERED UNITS
16
13
12
GAS POWERED UNITS
13
16
WATER PUMP
13
14
15
CYLINDER HEAD
12
3
2
11
17
11
17
1
6
7
5
4
10
11
9
6
8
7
1
9
5
8
6
4
TOP VIEW
T-76374

CAB HEATER

CAB HEATER

USAGE: Special equipment

ITEM	PART NO.	QTY.	DESCRIPTION	
1	70679096	1	HEATER ASSY. (Model U52-12V. Order parts from Perfection Division, Hupp Corp., 1135 Ivanhoe Road, Cleveland, Ohio 44110)	
	70915365	2	LOCKWASHER, #12	
	70908865	2	NUT, #12-24NC	
2	70679104	1	SWITCH, heater	
3	70693459	1	CABLE, switch to fuse block	
4	70679061	1	CABLE, switch to heater	
5	70679148	1	NUT, wire	
6	70653831	2	BLOCK, plate mounting (Requires welding to install)	
7	70679088	1	PLATE, heater mounting	
	70922262	4	CAPSCREW, 3/8"NC x 7/8"	
	70677006	4	WASHER, plain	
8	70679106	2	ELBOW, hose	
	70921911	4	CLAMP, hose	
9	70679105	2	TUBE, hose connecting	
10	70060525	2	CLIP, hose supporting	
	70922300	2	CAPSCREW, 3/8"NC x 3/4"	
	70910287	2	LOCKWASHER, 3/8"	
	70911115	2	WASHER, plain, SAE std., 3/8"	
11	70196765	4	STRAP, tie	
12	70679107	1	HOSE, heater to cylinder head	
	70921911	2	CLAMP, hose	
13	70605525	2	VALVE, water shut-off (angle type, 3/8"NPT)	
14	70639224	1	COVER, cylinder head water hole (Replaces std. COVER 74513529)	Not used on Gas powered units
15	74513723	1	GASKET, cover	
16	70904271	1	BUSHING, pipe reducing, 1/2"NPT to 3/8"NPT	
17	70679108	1	HOSE, heater to water pump	
	70921911	2	CLAMP, hose	
18	70079860	1	PIPE, water by-pass (Replaces std. PIPE 70226315)	Not used on Diesel powered units
	70901723	1	ELBOW, street, 90°, 3/8"NPT	
19	70226316	1	HOSE, water by-pass (Replaces std. HOSE 70227018)	
	70921911	2	CLAMP, hose	

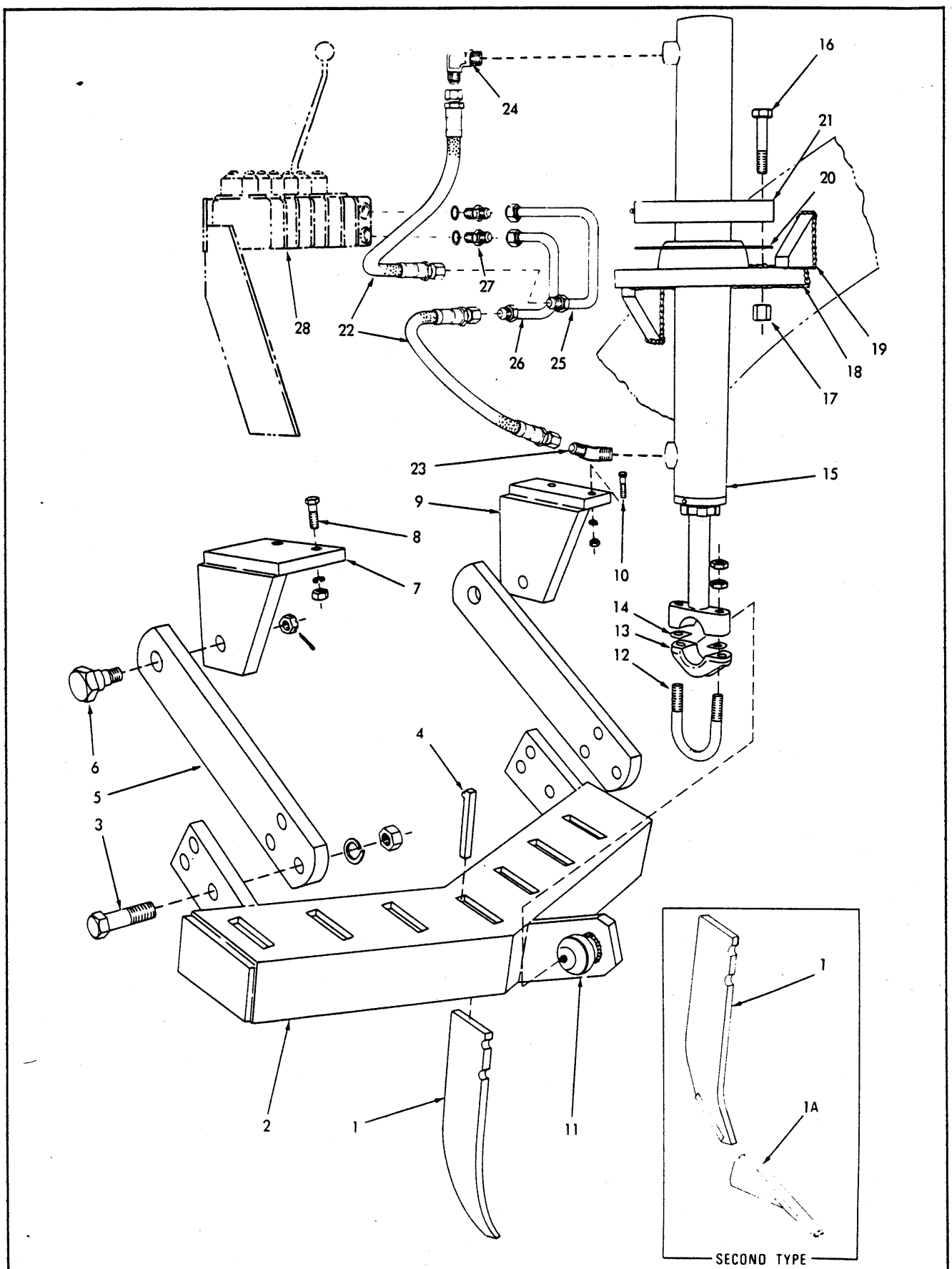

SCARIFIER

(Revised June 1977)

SCARIFIER

USAGE: Special Equipment

ITEM	PART NO.	QTY.	DESCRIPTION
1	70601160	7	TOOTH (Not used on Grader unit #01886, 01901, 01908, 01909 and 01912 thru 01914)
	70685435	7	SHANK ASSY. (Includes item 1A)(Grader unit #01886, 01901, 01908, 01909 and 01912 thru 01914 only)
1A	70685436	7	POINT (Requires welding)(Grader unit #01886, 01901, 01908, 01909 and 01912 thru 01914 only)
2	70067306	1	FRAME (Includes item 11)
	70914465	1	FITTING, lubricating, straight, 1/8"NPT
3	70925431	4	CAPSCREW, 1"NF x 3-1/4"
	70914728	4	LOCKWASHER, 1"
	70912908	4	NUT, 1"NF
4	70603247	7	KEY, tooth retaining
5	70067460	2	BAR, frame pivot
6	70064851	2	PIN, frame pivot
	70902277	2	NUT, slotted, 1"NC
	70900812	2	PIN, cotter, 3/16" x 1-3/4"
7	70067301	1	BRACKET, frame pivot, right
8	70922544	2	CAPSCREW, 3/4"NC x 2-3/4"
	70914726	2	LOCKWASHER, 3/4"
	70910923	2	NUT, 3/4"NC
9	70067302	1	BRACKET, frame pivot, left
10	70922544	2	CAPSCREW, 3/4"NC x 2-3/4"
	70914726	2	LOCKWASHER, 3/4"
	70910923	2	NUT, 3/4"NF
11	70643997	1	BALL (Requires welding to scarifier frame)
12	70605665	1	U-BOLT, ball cap
	70911049	4	NUT, jam, 5/8"NC
13	70053986	1	CAP, ball
14	70053992	8	SHIM, ball cap (1/32" thick. Use as required)
15	--------	1	CYLINDER ASSY. (See pages 170B and 171)
16	70927659	4	CAPSCREW, 5/8"NF x 3-1/4"
17	70072366	4	NUT, high, 5/8"NF
18	70620205	1	PLATE, cylinder mounting (Welded to frame)
19	70620206	2	GUSSET, mounting plate (Welded to frame)
20	70067297	8	SHIM, cylinder pivot cap (1/32" thick) Use as
	70643627	4	SHIM, cylinder pivot cap (.020" thick) required
21	70067321	1	CAP, cylinder pivot
	70915275	1	FITTING, lubricating, 65°, 1/8"NPT
22	70649639	2	HOSE, valve to cylinder (See HOSE PARTS)
23	70921038	1	ELBOW, flare type, 45°, 1/2" tube, 1/2"NPT male (First type cylinder)
	70922507	1	ELBOW, 45°, adjustable, 1/2" tube, 3/4"NF ma (Includes washer, nut and O-RING)(Second type cylinder)
24	70919195	1	ELBOW, flare type, 90°, 1/2" tube, 1/2"NPT male (First type cylinder)
	70921402	1	ELBOW, 37°, adjustable, 1/2" tube, 3/4"NF (Includes washer, nut and O-RING)(Second type cylinder)
	70921349	2	O-RING

(Continued)

SCARIFIER (Continued)

ITEM	PART NO.	QTY.	DESCRIPTION
25	* 70661837	1	TUBE, valve to cylinder (upper)
	70921409	1	CONNECTOR, flare type, 1/2" tube, 3/8"NF male end (Includes O-RING)
	70921349	1	O-RING
26	70661836	1	TUBE, valve to cylinder (lower)
27	77108993	1	CONNECTOR, restricted (Includes O-RING)
	70921349	1	O-RING, connector
28	--------	1	VALVE (See page 136)

(Revised June 1977)

VANDALISM PREVENTION PARTS

USAGE: Special Equipment

* Diesel-powered units
** Gasoline-powered units

ITEM	PART NO.	QTY. *	QTY. **	DESCRIPTION	
1	70677941	1	1	△GUARD, instrument panel	
2	70659203	1	1	LATCH, park guard (Graders prior to unit #01746)	Not used on units equipped with Cab
	70922300	1	1	CAPSCREW, 3/8"NC x 3/4"	
	70697300	1	1	STRIP (Grader unit #01746 and up)	
	70917453	1	1	SCREW, 1/4"NC x 1-1/2"	
	70928190	1	1	WASHER	
	70918470	1	1	NUT, wing, 1/4"NC	
3	70677797	1	1	△ANGLE	
4	70677776	1	1	COVER, hour meter	
5	70660380	1	-	CLAMP, engine oil filler tube	
	70660381	-	1	CLAMP, engine oil breather tube	
	70921382	1	1	CAPSCREW, 1/4"NC x 1-1/2"	
	70911114	2	2	WASHER, plain, SAE std., 1/4"	
	70911024	1	1	NUT, 1/4"NC	
6	70659512	2	-	ANGLE, engine oil filler tube	
	70660405	-	2	ANGLE, engine oil breather tube	
	70924838	2	2	RIVET, drive, 5/16" x 1-3/16" (plated)	
7	70659486	-	1	ANGLE, engine oil filler closure	
	70924838	-	1	RIVET, drive, 5/16" x 1-3/16" (plated)	
8	70659423	-	1	ANGLE, engine oil filler closure	
	70924838	-	1	RIVET, drive, 5/16" x 1-3/16" (plated)	
9	70659537	-	1	ANGLE, engine oil filler closure	
10	70660377	1	1	CHAIN, retaining, engine oil dipstick	
	70922262	1	-	CAPSCREW, 3/8"NC x 7/8"	
	70911115	1	-	WASHER, plain, SAE std., 3/8"	
	70927373	-	1	CAPSCREW, 5/16"NC x 7/8"	
	70901165	-	1	WASHER, plain, U.S. std., 5/16"	
11	70677913	1	1	CLAMP, hydraulic oil filler tube	
	70921382	1	1	CAPSCREW, 1/4"NC x 1-1/2"	
	70911114	2	2	WASHER, plain, SAE std., 1/4"	
	70911024	1	1	NUT, 1/4"NC	
12	70677799	1	1	LATCH, hydraulic oil filler tube	
	70924838	1	1	RIVET, drive, 5/16" x 1-3/16" (plated)	
13	70677899	1	1	COVER, radiator cap	
	70924838	1	1	RIVET, drive, 5/16" x 1-3/16" (plated)	
	70910335	2	2	WASHER, plain, U.S. std., 5/16"	
14	70656763	3	3	△LUG, radiator cap cover	
15	70677982	1	1	CAP, fuel tank (Includes keys)	
16	70928052	-	-	PADLOCK (Use as required)(Not illustrated)	

△Requires welding to install

(Revised May 1978)

NUMERICAL INDEX

Part No.	Page
70012767	119
70012767	163
70023176	177
70023176	192
70023176	193
70023416	190
70023633	99
70023633	101
70023633	105
70023633	111
70023633	112
70023756	102
70023765	113
70031337	194
70031719	79
70032834	191
70033060	191
70036888	181
70036997	90
70040101	115
70040144	75
70040144	77
70041262	177
70041266	113
70044925	47
70048137	179
70048142	179
70048142	192
70048703	115
70050293	101
70050748	131
70050913	119
70051094	114
70051193	90
70051193	107
70051344	102
70052662	148
70052671	90
70052960	146
70053243	149
70053606	121
70053986	157
70053986	161
70053986	163
70053986	166
70053986	199
70053992	157
70053992	161
70053992	163
70053992	166
70053992	199
70054295	113
70054296	113
70054297	113
70054752	115
70054752	190
70054753	115
70054753	190
70054754	115
70054755	114
70054756	114
70054757	114
70054758	115
70054763	115
70054764	115
70054765	115
70054766	115
70054774	115
70054775	115
70054882	121
70054888	121
70054899	147
70055062	119
70055472	157
70055482	157
70055484	157
70058028	115
70059041	127
70059220	124
70059224	123
70059225	123
70059229	123
70059832	103
70059914	112
70059915	112
70059916	112
70059917	113
70059921	112
70059922	112
70059923	96
70059927	95
70059930	95
70059931	93
70059932	93
70059934	97
70059935	97
70059936	97
70059939	94
70059939	102
70059942	97
70059943	97
70059944	105
70059945	105
70059946	97
70059947	105
70059948	105
70059949	105
70059951	105
70059952	105
70059953	105
70059954	97
70059955	95
70059955	96
70059956	95
70059956	96
70059956	102
70059961	95
70059962	95
70059965	99
70059969	105
70059971	105
70059973	105
70059974	105
70059975	105
70059976	99
70059977	99
70059978	105
70059979	105
70059980	105
70059981	105
70059982	105
70059985	99
70059986	99
70059987	99
70059988	99
70059989	99
70059990	99
70059991	99
70059992	99
70059993	99
70059994	99
70059994	111
70059996	99
70060525	197
70061046	91
70061090	112
70061851	157
70061852	157
70063994	112
70063995	112
70064851	199
70065818	161
70065819	161
70065823	170
70065823	171
70065852	91
70065853	90
70065854	90
70065855	90
70065855	106
70065856	90
70065857	106
70065935	177
70066128	115
70066129	115
70066179	119
70066251	81
70066252	81
70066253	80
70066255	81
70066362	142
70066467	185
70066487	177
70066741	97
70066856	105
70066872	82
70066873	82
70066874	82
70066875	82
70066876	82
70067005	125
70067276	112
70067297	199
70067301	199
70067302	199
70067306	199
70067321	199
70067460	199
70067486	125
70067487	125
70067488	125
70067490	125
70067492	125
70067493	125
70067498	125
70067507	123
70067508	123
70067608	125
70067834	107
70067835	123
70067836	123
70067837	123
70067838	123
70067839	90
70067840	107
70067849	106
70067924	119
70068349	190
70068352	190
70068372	106
70068372	179
70068479	123
70068513	113
70068875	81
70068876	81
70068878	81
70068879	81
70068881	81
70068922	99
70068954	190
70069164	81
70069920	99
70072366	161
70072366	199
70073303	99
70073485	146
70073735	195
70073842	171
70074349	125
70075769	81
70075770	81
70075771	81
70076381	113
70076382	112
70076469	79
70076486	125
70076599	189
70077765	188
70077783	188
70077951	8
70078419	159
70078422	158
70078423	159
70078424	158
70078424	159
70078425	158
70078426	159
70078431	158
70078434	157
70078502	158
70078810	55
70078810	59
70078810	103
70078810	107
70078810	109
70078852	147
70078854	149
70079163	164
70079164	164
70079165	165
70079166	165
70079187	157
70079277	159
70079354	192
70079630	124
70079751	88
70079808	171
70079809	171
70079810	171
70079811	171
70079812	171
70079814	171
70079860	197
70079919	188
70079921	188
70080004	171
70080005	171
70080006	171
70080102	171
70080283	150
70080283	170
70080704	107
70080857	148
70080862	148
70081170	163
70081175	163
70082107	149
70082108	149
70082111	146
70082113	147
70082121	147
70082122	147
70082123	146
70082155	147
70082174	147
70082175	147
70082176	147
70082179	149
70082225	163
70082226	163
70082532	162
70082548	157
70082604	163
70082766	146
70083096	115
70083122	105
70083140	123
70083401	126
70083402	126
70083530	53
70083530	57
70083530	124
70083546	150
70083547	150
70083547	170
70083548	150
70083548	170
70083551	150
70083551	170
70083552	150
70083552	170
70083554	150
70083554	170
70083558	150
70083558	170
70083560	150
70083563	124
70083564	123
70083565	124
70083600	123
70083601	123
70083637	150
70083637	170
70083641	170
70083652	109
70083653	108
70083654	109
70083683	177
70083683	177
70083847	108
70083848	108
70083849	108
70083850	108
70083851	108
70084629	147
70086961	119
70087437	127
70087438	126
70087439	126
70087440	127

NUMERICAL INDEX

Part No.	Page
70087441	127
70087442	127
70087443	127
70087444	126
70087445	127
70087446	127
70087447	127
70087448	127
70087449	126
70087450	127
70087451	127
70087452	127
70088150	102
70088152	102
70088153	102
70088154	102
70088162	101
70088163	101
70088164	101
70088513	101
70088514	101
70088551	102
70088644	127
70088673	127
70088674	127
70088778	101
70089668	102
70090418	121
70090485	101
70091602	125
70091862	55
70091862	59
70091862	99
70091862	102
70091862	136
70092160	82
70094337	126
70094422	177
70094450	187
70094467	130
70094467	153
70094467	161
70094467	169
70094527	109
70094527	177
70094665	188
70094963	90
70095020	80
70095248	127
70095249	127
70095250	127
70095251	127
70095252	127
70095566	91
70095858	187
70095868	101
70095869	130
70096026	88
70096096	170
70096097	170
70096789	96
70097464	99
70098571	101
70099433	44
70180554	177
70188136	177
70196765	130
70196765	177
70196765	177
70196765	177
70196765	179
70196765	194
70196765	197
70197810	73
70200050	149
70200103	149
70200479	53
70200479	57
70200479	187
70202532	13
70202532	19
70202532	26
70202864	99
70202864	101
70202864	111
70203009	35
70203011	35
70203017	27
70203018	27
70203036	9
70203052	23
70203061	9
70203061	85
70203094	65
70203095	66
70203096	66
70203097	66
70203097	66
70203098	66
70203132	35
70203135	85
70203141	85
70203159	119
70203165	119
70203176	9
70203196	35
70203461	31
70204014	19
70204844	89
70205430	149
70205834	9
70206072	66
70206622	44
70206622	46
70206876	35
70206879	35
70207435	23
70207466	195
70207467	195
70207719	65
70207822	85
70207823	85
70207824	85
70207825	85
70207826	85
70207827	85
70207828	85
70207829	85
70207831	85
70207872	25
70208049	35
70208065	44
70208065	46
70208137	47
70208325	46
70208566	66
70208566	66
70208584	137
70208662	65
70208817	66
70208960	177
70209099	35
70209103	35
70209862	35
70209889	115
70209890	115
70210158	9
70210158	87
70210548	149
70210549	149
70210550	149
70210551	149
70210732	112
70210829	85
70210830	85
70210831	85
70211368	65
70212004	35
70212435	39
70212436	39
70212442	39
70215242	65
70217264	46
70218444	66
70218445	66
70218604	9
70219969	63
70219977	64
70219978	63
70219987	63
70219992	63
70219998	63
70220000	64
70220006	63
70222045	63
70222069	63
70223248	47
70223255	46
70223527	25
70224061	63
70224620	23
70224729	31
70224731	31
70224733	35
70224915	21
70224925	101
70224926	35
70225019	35
70225035	87
70225073	49
70225074	65
70225077	65
70225078	48
70225344	49
70225484	49
70225606	48
70225688	27
70225689	27
70225733	51
70225734	51
70225735	51
70225736	51
70225738	51
70225750	85
70225771	21
70225771	48
70225772	52
70225773	51
70225774	51
70225775	51
70225776	52
70225777	52
70225778	51
70225779	52
70225780	52
70225781	51
70225784	51
70225785	51
70225789	51
70225791	52
70225793	51
70225794	52
70225795	52
70225797	51
70225798	52
70225893	35
70226012	36
70226012	37
70226019	51
70226100	48
70226116	48
70226117	9
70226117	48
70226236	48
70226237	65
70226314	85
70226315	87
70226316	197
70226374	49
70226376	49
70226388	39
70226389	39
70226408	36
70226408	37
70226443	64
70226444	63
70226446	64
70226447	64
70226448	63
70226451	64
70226452	63
70226453	63
70226456	63
70226457	63
70226458	63
70226460	63
70226466	63
70226468	63
70226469	63
70226470	64
70226477	9
70226477	9
70226477	35
70226479	63
70226620	9
70226620	25
70226638	9
70226683	49
70226830	25
70226859	96
70226893	88
70227018	87
70227038	27
70227120	9
70227307	21
70227309	183
70227500	23
70227636	35
70228131	49
70228248	90
70228394	21
70228543	87
70228722	88
70228947	89
70229171	19
70229172	19
70229173	19
70229174	19
70229177	9
70229178	9
70229178	19
70229179	19
70229230	65
70229231	66
70229334	37
70229337	9
70229338	9
70229339	61
70229340	61
70229344	89
70229370	19
70229402	41
70229406	9
70229406	31
70229408	35
70229409	31
70229410	31
70229474	40
70229517	48
70229519	65
70229537	23
70229537	23
70229538	23
70229541	39
70229595	89
70229600	89
70229601	89
70229602	89
70229603	89
70229604	89
70229706	21
70229715	19
70229718	23
70229814	89
70229840	85
70229860	9
70229867	49
70229904	35
70229911	35
70229953	27
70229955	27
70229958	9
70229958	61
70229980	65
70230066	19
70230086	23
70230091	23
70230217	25
70230302	85
70230308	65
70230308	85
70230331	19
70230357	31
70230392	21
70230577	23
70230643	9
70230643	87
70230806	39
70230807	61
70230917	61

NUMERICAL INDEX

Part No.	Page
70231125	23
70231126	23
70231127	23
70231437	64
70231439	64
70231440	87
70231585	41
70231769	51
70232422	41
70232423	41
70232424	40
70232425	41
70232426	40
70232431	39
70232432	39
70232433	39
70232434	39
70232435	39
70232436	39
70232443	23
70232444	25
70232449	9
70232449	35
70232545	19
70232554	39
70232560	49
70232569	23
70232826	52
70232827	51
70232828	51
70232829	51
70232872	89
70232926	35
70232977	49
70233155	31
70233209	9
70233209	61
70233211	9
70233211	49
70233214	9
70233214	21
70233215	9
70233215	65
70233216	9
70233216	31
70233217	9
70233217	49
70233218	9
70233218	87
70233228	9
70233239	9
70233470	89
70233602	9
70233602	37
70233697	85
70234177	25
70234178	25
70234226	21
70234468	25
70234469	25
70234470	25
70234471	25
70234494	61
70234541	61
70235079	91
70235371	77
70235753	85
70235794	124
70236531	31
70236580	27
70236660	9
70236660	37
70236922	72
70237000	40
70237168	63
70237169	63
70237177	63
70237203	66
70237290	72
70237946	46
70237947	46
70239176	138
70239179	154
70239181	138
70239183	138
70239188	138
70239189	138
70239191	138
70239192	138
70239195	138
70239197	138
70239517	73
70239961	61
70239967	183
70240952	64
70240962	79
70241291	25
70241294	25
70241524	31
70241527	35
70241528	35
70241535	35
70241536	35
70241538	35
70241874	91
70242136	184
70242555	135
70242558	135
70243163	73
70243387	60
70243388	60
70243526	181
70243527	181
70243528	181
70245444	61
70246724	137
70250396	85
70250977	51
70283605	23
70283730	23
70508828	101
70600675	123
70601160	199
70601405	121
70601405	121
70601530	162
70601531	162
70601532	162
70601533	162
70601603	164
70601935	107
70601966	147
70602068	148
70602094	159
70602224	157
70602224	163
70602449	164
70602663	157
70603247	199
70603488	121
70603723	195
70604048	195
70604289	148
70604290	148
70604361	121
70604382	149
70604383	149
70604435	94
70604435	149
70604718	107
70604929	85
70605207	159
70605525	197
70605665	157
70605665	161
70605665	163
70605665	166
70605665	199
70605785	90
70605785	106
70605794	91
70605956	174
70605983	107
70606384	88
70606961	131
70617125	162
70617264	142
70617855	157
70617855	163
70620204	119
70620205	199
70620206	199
70620956	80
70621342	175
70621393	175
70621394	175
70621395	175
70621396	175
70621397	175
70621415	56
70621428	178
70621451	103
70621542	161
70621543	161
70621724	178
70621853	178
70621854	178
70622447	75
70622619	75
70622836	167
70622992	130
70623355	153
70623355	169
70623645	115
70623646	115
70623647	115
70623650	115
70623652	115
70623654	115
70624336	79
70624428	115
70627451	102
70628508	192
70628730	90
70628736	55
70628736	59
70628736	102
70628736	108
70628737	57
70628738	57
70628866	192
70628867	192
70629117	78
70629118	78
70629727	171
70629729	171
70630636	129
70630636	129
70630745	55
70630753	177
70630753	179
70632706	177
70632710	55
70632710	59
70632716	55
70632716	59
70632747	55
70632747	59
70632752	55
70632752	59
70633382	83
70633383	83
70633545	188
70634161	101
70634503	102
70638986	192
70638986	193
70639069	161
70639224	197
70639314	177
70639314	177
70639388	177
70639726	177
70639984	137
70640190	56
70640658	73
70640677	57
70640677	177
70640677	179
70640725	77
70641329	53
70641683	177
70641692	194
70641694	194
70641961	188
70641974	188
70642526	188
70642528	188
70643036	88
70643392	115
70643627	199
70643997	157
70643997	199
70644708	130
70645059	159
70645060	158
70645318	190
70646661	177
70646973	115
70646974	115
70647445	13
70647947	115
70648427	179
70649622	6
70649622	161
70649623	6
70649623	161
70649623	161
70649629	6
70649629	161
70649631	6
70649631	167
70649639	6
70649639	166
70649639	199
70649821	91
70650299	185
70650510	101
70651081	44
70651081	46
70651373	130
70651384	130
70651385	130
70651387	130
70651388	130
70651506	130
70653831	197
70653877	148
70653879	148
70654803	101
70654804	101
70654805	102
70655289	78
70655468	78
70655535	55
70655535	59
70656643	78
70656649	78
70656763	201
70656852	157
70657284	78
70658293	187
70658348	186
70658356	188
70658497	119
70658620	186
70658690	175
70659109	187
70659203	201
70659423	201
70659486	201
70659512	201
70659537	201
70659545	192
70660377	201
70660380	201
70660381	201
70660405	201
70660694	177
70661524	175
70661828	145
70661836	199
70661837	199
70663233	188
70663246	188
70665025	183
70665318	182
70665318	182
70665323	183
70665324	183
70667147	177
70668272	175
70669277	182
70669277	183
70669585	188
70669589	188
70669590	188
70669647	154
70669648	154
70669648	155

NUMERICAL INDEX

Part No.	Page
70669649	154
70669650	154
70669653	154
70669654	154
70669654	155
70669660	154
70669660	155
70669667	154
70669706	154
70671531	153
70671693	182
70671693	183
70671737	187
70671763	177
70671885	80
70672211	124
70673077	149
70673078	149
70673116	145
70673116	153
70673117	141
70673117	169
70673118	6
70673118	141
70673118	145
70673119	6
70673119	141
70673119	145
70673120	6
70673120	141
70673120	145
70673120	153
70673120	169
70673121	6
70673121	141
70673122	6
70673122	130
70673123	6
70673123	161
70673124	6
70673124	129
70673137	136
70673139	136
70673319	157
70673320	157
70673324	162
70673327	162
70673407	55
70673407	59
70673408	55
70673408	59
70673472	55
70673472	59
70673473	55
70673473	59
70673509	129
70673511	129
70673527	55
70673582	55
70673582	59
70673583	55
70673583	59
70673634	47
70673708	55
70673708	59
70673763	56
70673821	119
70673838	56
70674034	103
70674076	56
70674078	55
70674079	56
70674080	56
70674307	44
70674308	44
70674313	130
70674414	181
70674415	181
70674424	174
70674425	174
70674427	75
70674542	173
70674795	186
70674796	186
70674802	101
70674803	101
70674935	163
70674950	46
70674953	73
70674954	177
70674955	179
70674961	153
70675022	153
70675093	159
70675109	121
70675235	177
70675236	187
70675266	88
70675304	177
70675305	185
70675306	185
70675353	153
70675475	153
70675479	158
70675480	158
70675498	157
70675501	138
70675502	143
70675504	153
70675505	153
70675518	150
70675520	150
70675541	6
70675541	153
70675541	169
70675542	6
70675542	153
70675542	169
70675554	143
70675607	44
70675607	47
70675608	154
70676118	101
70676180	169
70676181	169
70676326	129
70676602	121
70676603	121
70676626	191
70676628	191
70676797	194
70676814	75
70676814	77
70677004	119
70677004	177
70677005	174
70677005	183
70677006	102
70677006	119
70677006	129
70677006	146
70677006	147
70677006	174
70677006	188
70677006	188
70677006	197
70677008	88
70677008	119
70677008	177
70677008	177
70677010	119
70677134	75
70677134	77
70677176	60
70677177	60
70677178	59
70677179	60
70677180	59
70677214	25
70677217	85
70677225	119
70677231	6
70677231	129
70677232	6
70677232	130
70677257	13
70677277	184
70677307	162
70677308	162
70677310	174
70677311	88
70677312	88
70677333	88
70677345	19
70677349	181
70677363	164
70677364	164
70677396	141
70677397	141
70677421	141
70677422	141
70677447	141
70677469	148
70677558	175
70677584	77
70677585	77
70677586	174
70677587	174
70677776	201
70677794	79
70677795	79
70677797	201
70677799	201
70677804	73
70677805	73
70677813	79
70677820	101
70677821	101
70677822	102
70677899	201
70677913	201
70677941	201
70677982	201
70677993	101
70677997	101
70678001	103
70678003	102
70678017	102
70678018	103
70678589	175
70678590	103
70678938	154
70678939	154
70678940	154
70678940	155
70679061	197
70679078	136
70679080	136
70679088	197
70679096	197
70679097	136
70679098	136
70679102	136
70679103	136
70679104	197
70679105	197
70679106	197
70679107	197
70679108	197
70679148	193
70679148	197
70679184	138
70679185	139
70679186	139
70679187	138
70679188	138
70680080	173
70680606	59
70680797	188
70680798	188
70680802	188
70681251	146
70681342	188
70681344	188
70681348	188
70681349	188
70681350	188
70681351	188
70681352	188
70681358	188
70681423	153
70681426	188
70681436	89
70681439	188
70681440	188
70681442	131
70681443	131
70681453	188
70681455	188
70681456	188
70681457	188
70681458	188
70681569	188
70681595	129
70681804	184
70681805	184
70681807	184
70681820	56
70682172	157
70682537	188
70682538	188
70682557	188
70682591	188
70683116	129
70683128	129
70683901	106
70683911	119
70683925	90
70684019	132
70684043	56
70684357	119
70685147	188
70685208	188
70685389	188
70685430	183
70685435	199
70685436	199
70685799	121
70685800	121
70685885	101
70685887	101
70685913	193
70686083	137
70686114	102
70686277	102
70686889	91
70686922	91
70687945	114
70687946	114
70687949	115
70688313	192
70688400	121
70688406	124
70688571	124
70689008	173
70689868	129
70690506	188
70690876	188
70691327	157
70691715	177
70691716	177
70691745	187
70691930	185
70692351	188
70692352	188
70692599	151
70692960	170
70692961	170
70692962	151
70692963	170
70692964	142
70693133	119
70693140	188
70693141	188
70693142	188
70693144	188
70693145	188
70693237	44
70693237	131
70693335	188
70693336	188
70693337	188
70693338	188
70693458	177
70693459	197
70693460	179
70693461	177
70693642	119
70693691	170
70693777	188
70693778	188
70693779	188
70693813	188
70693833	188
70693845	79
70693857	177
70694297	192
70694301	193
70694323	192
70694383	57

NUMERICAL INDEX

Part No.	Page
70694384	57
70694421	175
70694424	175
70694435	175
70694437	175
70694440	175
70694629	188
70694634	188
70694635	188
70694683	137
70694786	188
70694905	72
70695224	188
70695359	177
70695361	177
70695421	170
70695422	170
70695423	170
70695424	170
70695425	170
70695426	170
70695427	170
70695428	142
70695428	170
70695442	151
70695443	151
70695443	170
70695444	151
70695444	170
70695445	151
70695445	170
70695446	151
70695446	170
70695447	151
70695448	151
70695469	181
70695504	188
70695507	188
70695508	188
70695511	170
70695512	170
70695513	170
70695514	170
70695543	142
70695544	142
70695545	142
70695545	170
70695546	142
70695547	142
70695548	142
70695549	142
70695983	186
70697102	188
70697262	186
70697290	175
70697300	201
70697409	133
70697410	133
70697416	132
70697416	133
70697896	175
70697909	175
70698025	83
70698026	83
70698037	175
70698038	175
70698208	25
70698431	137
70698432	137
70698633	95
70698633	96
70698723	132
70698750	132
70698750	133
70698755	175
70698756	175
70698757	175
70698825	129
70698943	175
70698968	175
70699005	175
70699053	177
70699095	97
70699096	97
70699169	97
70699269	158
70699270	158
70699292	177
70699367	177
70699369	177
70699370	177
70699371	177
70699372	177
70699373	177
70699376	177
70699378	177
70699379	177
70699380	177
70699385	177
70699386	177
70699387	177
70699389	177
70699391	177
70699396	177
70900365	85
70900366	61
70900367	21
70900367	57
70900496	177
70900553	51
70900555	193
70900558	179
70900574	79
70900764	191
70900801	56
70900801	60
70900801	107
70900801	109
70900805	55
70900805	59
70900805	107
70900806	105
70900806	188
70900807	35
70900807	39
70900807	141
70900807	148
70900808	105
70900808	115
70900809	149
70900811	90
70900811	106
70900812	199
70900813	121
70900813	157
70900817	30
70900817	33
70900817	188
70900817	188
70900822	157
70900942	55
70900942	55
70900942	59
70900942	59
70900942	89
70900942	102
70900942	103
70900970	56
70900970	57
70900970	66
70901164	135
70901165	37
70901165	182
70901165	182
70901165	183
70901165	188
70901165	201
70901173	60
70901211	63
70901216	69
70901279	146
70901309	177
70901310	60
70901310	69
70901344	147
70901344	163
70901357	65
70901357	66
70901421	141
70901421	157
70901468	188
70901470	123
70901651	75
70901651	77
70901651	123
70901651	130
70901651	187
70901652	46
70901652	75
70901652	77
70901652	114
70901653	158
70901702	123
70901723	197
70901781	39
70901781	81
70902277	199
70903572	69
70903625	38
70903625	38
70903626	48
70903629	48
70903630	48
70903630	86
70903772	39
70904001	136
70904002	141
70904203	39
70904203	69
70904203	188
70904204	38
70904204	38
70904204	69
70904204	85
70904204	87
70904204	188
70904204	188
70904205	19
70904205	37
70904205	39
70904205	48
70904205	61
70904205	69
70904205	83
70904205	188
70904206	20
70904206	21
70904206	23
70904206	30
70904206	36
70904206	38
70904206	38
70904206	42
70904206	48
70904206	68
70904206	75
70904206	77
70904206	83
70904206	85
70904206	86
70904207	40
70904208	19
70904208	25
70904208	26
70904208	41
70904260	15
70904271	197
70904273	187
70904369	55
70904369	59
70904381	90
70905126	106
70905126	149
70905126	153
70905126	154
70905261	31
70905357	81
70905360	102
70905361	99
70905361	111
70905658	87
70905661	48
70905845	24
70905845	33
70905857	159
70906441	157
70906652	174
70906907	91
70906909	141
70906911	141
70906958	130
70906964	51
70907154	52
70907154	193
70907517	121
70907863	33
70908865	197
70910011	19
70910014	15
70910014	75
70910014	77
70910014	158
70910015	159
70910123	20
70910123	30
70910123	33
70910123	35
70910123	55
70910123	59
70910123	67
70910123	68
70910123	135
70910126	40
70910129	41
70910136	123
70910136	124
70910141	123
70910141	124
70910146	48
70910147	103
70910153	15
70910173	39
70910173	48
70910184	25
70910184	27
70910224	67
70910243	60
70910243	177
70910243	188
70910244	46
70910244	103
70910244	105
70910244	188
70910251	51
70910251	179
70910251	182
70910251	183
70910283	193
70910284	60
70910284	179
70910284	182
70910284	183
70910285	56
70910285	79
70910285	99
70910285	111
70910285	177
70910285	192
70910286	83
70910286	85
70910286	108
70910286	109
70910286	129
70910286	173
70910286	174
70910286	182
70910286	182
70910286	183
70910286	194
70910287	53
70910287	55
70910287	56
70910287	57
70910287	59
70910287	75
70910287	77
70910287	80
70910287	89
70910287	93
70910287	94
70910287	95
70910287	96
70910287	99
70910287	101
70910287	102
70910287	103
70910287	105
70910287	114
70910287	123
70910287	124

NUMERICAL INDEX

Part No.	Page
70910287	130
70910287	136
70910287	137
70910287	141
70910287	145
70910287	146
70910287	148
70910287	153
70910287	159
70910287	161
70910287	169
70910287	174
70910287	177
70910287	177
70910287	182
70910287	182
70910287	183
70910287	184
70910287	197
70910297	188
70910320	143
70910323	69
70910323	135
70910323	188
70910324	21
70910324	85
70910324	148
70910324	184
70910335	44
70910335	45
70910335	47
70910335	48
70910335	56
70910335	60
70910335	173
70910335	188
70910335	201
70910345	27
70910543	123
70910867	103
70910876	89
70910880	57
70910880	69
70910898	69
70910923	163
70910923	199
70910948	83
70911004	105
70911024	56
70911024	79
70911024	105
70911024	177
70911024	177
70911024	181
70911024	188
70911024	188
70911024	201
70911025	45
70911025	47
70911025	108
70911025	109
70911025	173
70911025	188
70911025	194
70911026	53
70911026	56
70911026	102
70911026	103
70911026	119
70911026	124
70911026	130
70911026	136
70911026	141
70911026	145
70911026	153
70911026	169
70911026	174
70911026	177
70911026	177
70911026	182
70911026	182
70911026	183
70911026	188
70911026	188
70911028	13
70911028	26
70911028	44
70911028	46
70911028	88
70911028	177
70911029	162
70911029	163
70911029	164
70911029	165
70911032	188
70911034	146
70911035	177
70911036	25
70911036	90
70911040	57
70911041	53
70911041	57
70911041	105
70911041	123
70911042	107
70911043	90
70911043	105
70911043	106
70911043	112
70911043	177
70911045	127
70911046	148
70911047	146
70911048	55
70911048	102
70911048	107
70911048	108
70911048	153
70911049	90
70911049	123
70911049	157
70911049	161
70911049	163
70911049	166
70911049	199
70911057	149
70911061	147
70911114	56
70911114	136
70911114	177
70911114	181
70911114	188
70911114	188
70911114	188
70911114	201
70911115	35
70911115	48
70911115	53
70911115	55
70911115	56
70911115	57
70911115	59
70911115	109
70911115	130
70911115	153
70911115	161
70911115	169
70911115	177
70911115	197
70911115	201
70911116	149
70911159	90
70911159	106
70911174	159
70911301	87
70911422	129
70911436	39
70911633	163
70911633	164
70911982	69
70911986	141
70911998	61
70912018	141
70912021	182
70912021	182
70912064	40
70912064	41
70912201	40
70912251	146
70912261	135
70912331	148
70912364	111
70912367	40
70912367	41
70912415	15
70912441	13
70912441	26
70912441	90
70912441	105
70912441	106
70912441	112
70912441	115
70912441	123
70912441	129
70912441	137
70912441	149
70912441	153
70912441	153
70912441	157
70912441	177
70912441	182
70912441	182
70912441	190
70912476	53
70912476	57
70912554	195
70912726	101
70912731	51
70912731	178
70912739	51
70912768	93
70912794	35
70912808	90
70912808	147
70912808	151
70912841	150
70912841	163
70912841	170
70912844	39
70912845	188
70912908	199
70912942	113
70912942	157
70912942	163
70912942	164
70912942	165
70913036	124
70913039	33
70913040	33
70913526	35
70913527	121
70913532	177
70913536	33
70913536	123
70913648	164
70913648	165
70914101	149
70914105	188
70914193	188
70914194	188
70914321	65
70914392	37
70914392	108
70914452	55
70914452	59
70914465	111
70914465	115
70914465	119
70914465	141
70914465	146
70914465	147
70914465	148
70914465	149
70914465	157
70914465	157
70914465	162
70914465	199
70914499	38
70914499	38
70914590	32
70914678	71
70914678	91
70914678	105
70914678	112
70914678	113
70914678	129
70914726	163
70914726	199
70914728	146
70914728	188
70914728	199
70914729	157
70914879	105
70915018	188
70915019	106
70915019	148
70915256	119
70915263	39
70915273	91
70915274	147
70915275	161
70915275	199
70915276	157
70915343	99
70915365	177
70915365	197
70915408	20
70915408	36
70915432	81
70915523	111
70915652	23
70915652	48
70915711	38
70915711	38
70915813	83
70915841	123
70915842	123
70915874	163
70915966	51
70916018	59
70916081	173
70916171	153
70916205	188
70916227	154
70916269	20
70916271	75
70916271	77
70916272	20
70916272	42
70916272	111
70916274	20
70916277	16
70916282	111
70916284	85
70916311	41
70916937	55
70916937	59
70917099	65
70917148	27
70917299	15
70917330	16
70917356	173
70917362	141
70917376	177
70917385	51
70917385	177
70917421	181
70917426	43
70917453	201
70917459	177
70917539	20
70917539	26
70917579	39
70917644	56
70917645	56
70917645	60
70917646	111
70917648	105
70917730	177
70917777	171
70917806	68
70917806	69
70917807	41
70917809	68
70917809	69
70917810	41
70917817	41
70917948	41
70918147	188
70918147	188
70918149	188
70918155	188
70918155	188
70918156	188
70918157	188
70918157	188
70918157	188
70918195	55
70918195	59
70918210	185

NUMERICAL INDEX

Part No.	Page
70918210	185
70918228	173
70918237	69
70918249	188
70918264	186
70918454	90
70918454	90
70918463	159
70918470	201
70918683	26
70918698	137
70918769	44
70918851	29
70918872	38
70918872	38
70919015	21
70919040	68
70919040	69
70919041	68
70919062	44
70919076	6
70919081	6
70919093	80
70919099	80
70919100	80
70919134	15
70919134	42
70919135	43
70919158	6
70919186	147
70919195	199
70919206	161
70919206	166
70919218	6
70919227	33
70919244	187
70919312	181
70919415	188
70919469	6
70919546	44
70919766	47
70919767	47
70919827	187
70919827	188
70919840	15
70919840	19
70919840	42
70919840	71
70920107	134
70920269	132
70920269	133
70920303	6
70920333	15
70920416	83
70920416	86
70920574	19
70920574	88
70920582	46
70920582	105
70920582	115
70920582	119
70920582	129
70920582	149
70920582	157
70920582	177
70920583	13
70920583	190
70920584	44
70920585	153
70920585	157
70920603	111
70920660	109
70920726	6
70920752	13
70920850	6
70920851	6
70920855	6
70920865	6
70920872	6
70920995	101
70920995	148
70920995	177
70920997	37
70921038	199
70921046	6
70921076	101
70921076	102
70921076	153
70921076	159
70921076	188
70921118	129
70921173	119
70921175	182
70921175	182
70921191	186
70921193	186
70921205	134
70921205	141
70921205	153
70921206	103
70921206	129
70921206	130
70921214	129
70921241	188
70921279	153
70921279	166
70921279	167
70921325	129
70921331	86
70921349	130
70921349	141
70921349	145
70921349	153
70921349	161
70921349	166
70921349	169
70921349	199
70921349	199
70921382	65
70921382	177
70921382	201
70921383	56
70921383	65
70921402	141
70921402	145
70921402	161
70921402	166
70921402	199
70921409	130
70921409	141
70921409	153
70921409	161
70921409	169
70921409	199
70921411	163
70921460	39
70921535	157
70921556	13
70921556	19
70921556	26
70921565	136
70921565	141
70921565	145
70921565	153
70921565	169
70921565	184
70921565	188
70921565	188
70921566	45
70921566	47
70921566	182
70921566	182
70921566	183
70921566	188
70921569	112
70921569	113
70921874	138
70921880	188
70921880	188
70921881	133
70921885	130
70921911	197
70921912	88
70921912	129
70921912	130
70921913	88
70921977	183
70922097	177
70922262	53
70922262	57
70922262	89
70922262	114
70922262	129
70922262	130
70922262	147
70922262	197
70922262	201
70922286	83
70922286	85
70922287	137
70922300	80
70922300	101
70922300	103
70922300	124
70922300	130
70922300	153
70922300	161
70922300	169
70922300	197
70922300	201
70922507	145
70922507	199
70922510	13
70922510	177
70922526	13
70922544	199
70922660	79
70922667	177
70922711	51
70922763	55
70922763	56
70922763	59
70922763	77
70922763	93
70922763	94
70922763	95
70922763	96
70922763	99
70922763	102
70922763	103
70922763	119
70922763	174
70922763	177
70922763	177
70922763	183
70922763	184
70922789	163
70922803	186
70922848	182
70922848	182
70922848	183
70922868	136
70922874	133
70922925	44
70922925	47
70922925	141
70922925	173
70922925	194
70923124	83
70923124	108
70923192	91
70923193	105
70923276	146
70923280	55
70923280	59
70923334	138
70923390	89
70923470	169
70923470	169
70923559	138
70923560	82
70923574	142
70923574	171
70923575	150
70923575	170
70923578	129
70923579	150
70923579	151
70923579	170
70923579	170
70923648	142
70923648	151
70923649	170
70923649	170
70923651	142
70923664	170
70923717	153
70923719	8
70923814	143
70923814	171
70923830	150
70923830	151
70923830	170
70923830	170
70923841	133
70923934	143
70924023	129
70924026	103
70924158	142
70924158	170
70924403	130
70924447	157
70924606	177
70924786	141
70924786	153
70924817	186
70924838	201
70924840	151
70924840	170
70924864	13
70924864	26
70924864	115
70924864	153
70924864	194
70924865	115
70924984	130
70925085	80
70925086	80
70925101	141
70925103	143
70925108	175
70925109	175
70925110	175
70925135	119
70925431	199
70925654	177
70925671	157
70926041	75
70926041	77
70926189	173
70926284	177
70926785	188
70926785	188
70927015	188
70927140	75
70927140	77
70927172	123
70927173	102
70927173	136
70927173	141
70927173	145
70927173	146
70927173	153
70927173	174
70927173	177
70927204	137
70927236	90
70927236	106
70927322	123
70927338	56
70927338	79
70927373	108
70927373	201
70927381	91
70927400	75
70927400	179
70927400	130
70927400	177
70927401	130
70927423	163
70927484	109
70927484	177
70927531	129
70927532	161
70927541	119
70927541	177
70927541	177
70927612	174
70927659	199
70927692	131
70927819	142
70927819	170
70928052	201
70928138	186
70928182	177
70928188	44
70928188	119
70928188	177
70928190	57
70928190	79

NUMERICAL INDEX

Part No.	Page
70928190	177
70928190	201
70928241	133
70928306	129
70928452	188
70928452	188
70928460	44
70928575	192
70929069	102
70929156	56
70929156	177
70929156	177
70929156	183
70929704	141
70930202	29
70930922	142
70930922	170
70930929	151
70930929	170
70930930	151
70930930	170
70931238	132
70931238	133
70932825	155
71006535	137
71119445	63
71123855	78
71132770	138
71134827	137
71134829	137
71134841	137
73005895	138
73023024	187
73024261	75
73036240	180
73036241	180
73036242	180
73037183	187
73038887	180
73044015	79
73044015	80
73044015	177
73044015	185
73044015	188
73044471	194
73044502	180
73046487	187
73057441	177
73057631	182
73057632	182
73057632	182
73058328	182
73059884	177
73059884	192
73059884	193
73062870	175
73066939	155
73104543	177
73107208	113
73107881	175
73107882	175
73107884	175
73107889	175
73107890	175
73107894	175
73107895	175
73107897	175
73107899	112
73107996	174
73108007	174
73108007	174
73108226	88
73108411	133
73108412	133
73108563	142
73108716	175
73108720	175
73108721	175
73108722	175
73108820	175
73108930	188
73109131	175
73109134	175
73109135	175
73109136	175
73109137	175
73109138	175
73109139	175
73109372	175
73110291	155
73110294	155
73110295	155
73110296	155
73110297	155
73110298	155
73110299	155
73110300	155
73110301	155
73110302	155
73110742	141
73112071	171
73112072	142
73112074	143
73112075	151
73112075	170
73112076	170
73112077	150
73112077	170
73112087	143
74001304	32
74021600	75
74022129	15
74023007	182
74023007	182
74027748	69
74027979	41
74041209	43
74046824	63
74046828	63
74048597	67
74048598	67
74048787	42
74048788	43
74048789	43
74048790	43
74048791	43
74048792	43
74048793	42
74048794	42
74048796	43
74048797	43
74050086	51
74054544	64
74061112	16
74105451	8
74105451	30
74117050	71
74131659	134
74250723	30
74251986	135
74253169	135
74253346	30
74253348	30
74253818	134
74253818	135
74253907	96
74253928	135
74254594	26
74255396	132
74255398	132
74255398	133
74255723	67
74353139	29
74356080	29
74371122	38
74371122	38
74371718	67
74372864	29
74378033	70
74380652	70
74500176	33
74500231	15
74500300	26
74500327	15
74500332	16
74500967	30
74501050	29
74501149	69
74501177	32
74501178	32
74501199	36
74501211	32
74502009	30
74502408	33
74502467	33
74502468	33
74502930	26
74503956	8
74503956	16
74504052	33
74504350	30
74504409	69
74504454	30
74504475	29
74504562	8
74504562	71
74505260	32
74506163	42
74506164	42
74506404	71
74506593	16
74506607	16
74506918	43
74506926	38
74506926	38
74506927	38
74506946	30
74507084	83
74507090	83
74507091	83
74507127	22
74507343	30
74507359	69
74507374	15
74507375	16
74507386	30
74507415	69
74507469	67
74507505	8
74507505	20
74507673	15
74507700	24
74507710	8
74507710	22
74508061	33
74508186	8
74508186	20
74508465	8
74508465	16
74508486	83
74508872	8
74508877	26
74508883	71
74508897	26
74508941	8
74508951	68
74509242	16
74510693	38
74510693	38
74510817	8
74510817	16
74510833	33
74511159	15
74511204	8
74511204	70
74511208	70
74511213	70
74511215	70
74511217	70
74511243	70
74511246	15
74511248	15
74511250	15
74511252	15
74511258	24
74511514	43
74511629	130
74511664	8
74511822	15
74511964	41
74512143	83
74512144	83
74512212	8
74512212	83
74512343	79
74512402	20
74512483	24
74512669	36
74512688	69
74512756	83
74512787	62
74512820	24
74512982	33
74513139	29
74513162	38
74513162	38
74513163	38
74513163	38
74513164	38
74513164	38
74513206	32
74513273	41
74513354	29
74513380	83
74513383	20
74513414	41
74513421	29
74513471	72
74513482	8
74513482	29
74513497	71
74513523	86
74513524	86
74513526	86
74513527	8
74513527	86
74513529	29
74513538	69
74513539	69
74513552	69
74513553	69
74513575	15
74513621	20
74513630	86
74513632	83
74513721	29
74513722	8
74513722	86
74513723	8
74513723	29
74513723	197
74513809	8
74513809	75
74513809	77
74513810	68
74513811	29
74513812	29
74513813	29
74513924	75
74513924	77
74514000	16
74514023	15
74514024	15
74514025	15
74514031	33
74514034	20
74514110	15
74514297	29
74514298	29
74514299	29
74514311	29
74514380	29
74514381	29
74514386	29
74514398	8
74514398	29
74514400	29
74514402	29
74514526	69
74514528	69
74514529	69
74514530	69
74514531	69
74514580	8
74514586	8
74514586	22
74514615	8
74514615	16
74514789	29
74514799	83
74514813	26
74514843	16
74514844	16
74514845	16
74514846	16
74514847	16
74514848	16
74514849	16
74514850	16
74514851	16

NUMERICAL INDEX

Part No.	Page
74514852	16
74514853	16
74514854	16
74514855	16
74514856	16
74514857	16
74514858	15
74514859	15
74514860	15
74514861	15
74514862	15
74514863	22
74514864	22
74514865	22
74514866	22
74514867	22
74514963	15
74514991	38
74514991	38
74515070	22
74515119	22
74515486	20
74515490	67
74515586	69
74515665	49
74516085	33
74516087	67
74516088	33
74516393	70
74516394	70
74516486	26
74516525	12
74516526	67
74516559	26
74516585	29
74516589	29
74516606	8
74516606	16
74516660	26
74516738	8
74516738	22
74516760	79
74516821	22
74516864	8
74516864	22
74516867	8
74516868	8
74516961	83
74517036	32
74517130	38
74517137	38
74517143	38
74517144	38
74517145	38
74517196	12
74612178	93
74749701	79
74750014	182
74752722	143
74753035	143
74753044	143
74753045	143
74753046	143
74753063	143
74753064	143
74789143	177
74789809	182
74789809	182
74848486	182
74848486	182
74905003	133
74905004	132
74905005	132
74905006	133
74905240	132
74905243	133
74906381	132
74906382	132
74906382	133
74906383	133
74906384	133
74906386	132
74906386	133
74906387	133
74988668	135
74988677	135
74993758	133
74993758	133
74993759	133
74993759	133
74993823	132
74993823	133
74993825	133
74993825	133
74994008	132
74994011	133
74994157	129
74994913	137
74995181	135
74995186	134
74995188	135
74995189	135
74995190	135
74995191	135
74995192	135
74995193	135
74995194	135
74995195	135
74995196	135
74995197	134
74995198	135
74995199	135
74995320	135
74995321	135
74995322	135
74995323	135
74995324	135
74995325	135
74995326	135
74995327	135
74995328	135
74995335	135
74995371	137
74996247	73
74998258	139
74998258	154
74998320	139
74998320	154
74999535	132
74999536	132
74999827	132
74999827	133
77100059	130
77103616	141
77106256	173
77108282	141
77108616	134
77108618	134
77108619	134
77108679	119
77108686	173
77108728	92
77108777	181
77108778	181
77108779	181
77108877	134
77108940	55
77108940	59
77108993	161
77108993	199
77109014	111
77109015	94
77109016	111
77109017	111
77109018	96
77109019	111
77109020	111
77109023	111
77109082	148
77109084	174
77109089	93
77109094	174
77109141	141
77109141	145
77109141	153
77109141	169
77109179	149
77109186	146
77109240	142
77109242	142
77109243	142
77109244	142
77109245	142
77109364	114
77109365	114
77109457	163
77109478	163
77109514	135
77109515	135
77109516	135
77109517	135
77109554	45
77109554	47
77109555	45
77109555	47
77109639	174
77109648	175
77109848	142
77109935	108
77109939	130
77109940	130
77110365	111
77110369	173
77110371	173
77110372	173
77110373	173
77110375	173
77110376	173
77110379	173
77110380	173
77110381	173
77110411	111
77110421	99
77112069	111
77112070	111
77112071	111
77113071	112
77113398	92
77113400	93
77113401	94
77113402	94
77113403	94
77113404	94
77114841	99
77114842	99
77118331	96
77118363	93
77125010	184
77125012	26
77125076	157
77125077	157
77125234	111
77125419	95
77125420	97
77125421	95
77125423	94
77125424	96