RUTHZIL TRATOR COMERCIAL DE PEÇAS LTDA 11 97083-6812 ROLANDO CITRANGULO

SETEMBRO 2021 MARÇO 2022

MANITOU

HANDLING YOUR WORLD

MBLX900 GBLX900
MBLX920 GBLX920

INDIA

53114888EN

MBL-X-900/GBL-X-900
MBL-X-920/GBL-X-920

REPAIR MANUAL
(ORIGINAL INSTRUCTIONS)

MANITOU

HANDLING YOUR WORLD

53114888EN

MBL-X-900/GBL-X-900
MBL-X-920/GBL-X-920

REPAIR MANUAL

(ORIGINAL INSTRUCTIONS)

EDITION DATE	OBSERVATION
2021/09	-1st Issue
2022/03	-2nd Issue

Manitou Equipment India (P) LTD.
Plot no. 22, Udyog Vihar, Greater Noida,
P.O. Surjapur, Gautham Budha Nagar,
U.P. 201306. INDIA
www.manitou.com

This manual is for information purposes only. Any reproduction, copy, representation, recording, transfer, distribution or other, in part or in whole, in any format is prohibited. The plans, designs, views, commentaries and instructions, even the document organization that are found in this document, are the intellectual property of MANITOU. Any violation of the aforementioned may lead to civil and criminal prosecution. The logos as well as the visual identity of the company are the property of MANITOU and may not be used without express and formal authorization.

All rights are reserved.

GENERAL CHARACTERISTICS AND SAFETY 00
ENGINE 10
TRANSMISSION 20
AXLE 30
BRAKE 40
BOOM 50
HYDRAULIC 70
ELECTRICITY 80
DRIVER'S CAB 85
FRAME - BODY 90
OPTIONS - ATTACHMENTS 110

ABBREVIATIONS

S.N.	UNIT	FULL NAME
1	Kg	Kilogram
2	m	Meter
3	Lts / LTR	Litre
4	Ar	Average revenue
5	Kw	Kilowatt
6	Nm / N.m	Newton meter
7	RPM	Revolution per minute
8	V	Volt
9	AH	Ampere hour
10	mm	Millimeter
11	IN/INS	Inch
12	ft	Foot
13	FT-IN	Foot/inch
14	km	Kilometer
15	A	Ampere
16	sec	Second
17	H	Hour
18	N	Newton
19	rad/s	Radian/second
20	t	Metric ton
21	tr/min	Tour per minute
22	°C	Celsius degree
23	cm3	Centimeter cube
24	cv	Chevaux vapeur
25	Bar	Bar
26	g	Gram
27	km/h	Kilometer per hour
28	ml	Millilitre
29	µm	Micrometer
30	°F	Fahrenheit degree
31	cu.in.	Cubic inches
32	hp	Horsepower
33	psi	Pound-force/square inch
34	oz	Ounces
35	lb	Pound
36	mph	Miles per hour
37	gal US	US gallon
38	qt US	Quart US gallon
39	fl oz	Fluid ounce
40	mil	Thousands of an inch
41	lbf	Pound-force
42	ft-lb	Pound-force-foot
43	°	Angle degree
44	rad	Radian
45	mol	Mole
46	cd	Candela
47	K	Kelvin
48	sy	Square yard
49	htr	Hectare

00

GENERAL CHARACTERISTICS AND SAFETY

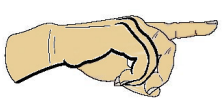

Intentionally Left Blank

TABLE OF CONTENTS

00.1 IMPORTANT SAFETY INFORMATION 4
00.2 PROTECTIVE EQUIPMENTS 5
00.3 MOUNTING & DISMOUNTING 5
00.4 LIFTING 5
00.5 HOT FLUIDS & PARTS 6
00.6 BATTERIES 6
00.7 PRESSURIZED ITEMS 6
00.8 GENERAL HAZARD INFORMATION 7
00.9 CRUSHING PREVENTION AND CUTTING PREVENTION 7
00.10 INTRODUCTION TO TORQUE 8
00.11 TORQUE TURN 8
00.12 TORQUE SEQUENCE 8
00.13 METRIC (ISO) FASTENERS 9
00.14 METRIC (ISO) MACHINE SCREWS 9
00.15 HEX BUTTON HEAD SCREW AND SET SCREWS 10
00.16 ENGLISH (SAE) FASTENERS 10
00.17 FLARE FITTINGS 11
00.18 HOSE CLAMPS 11

00.1 IMPORTANT SAFETY INFORMATION

Most accidents that involve products operation, maintenance and repair are caused by failure to observe basic safety rules or precautions. An accident can often be avoided by recognizing potentially hazardous situations before an accident occurs. A person must be alert to potential hazards. This person should also have the necessary training, skills and tools to perform these functions properly.

Improper operation, lubrication, maintenance or repair on this product can be dangerous and could result in injury or death.

Do not operate or perform any lubrication, maintenance or repair on this product, until you have read and understood the operation, lubrication, and maintenance and repair information.

Safety precautions and warnings are provided in this manual and on the product. It these hazard warnings are not heeded, bodily injury or death could occur to you or to other persons.

The hazards are identified by the safety alert symbols and followed by a signal work such as DANGER, WARNING or CAUTION.

Manitou cannot anticipate every possible circumstance that might involve a potential hazard. The warnings in this publication and on the product are, therefore, not all inclusive. If a tool, procedure, work method or operating technique that is not specifically recommended by Manitou is used, you must satisfy yourself that it is safe for you and for others. You should also ensure that the product will not be damaged or be made unsafe by the operation, lubrication, maintenance or repair procedures that you choose.

The information, specification and illustration in this publication are on the basis of information that was available at the time that the publication was written. The specifications, torques, pressures, measurements, adjustments, illustrations and other items can change at any time. These changes can affect the service that is given to the product. Obtain the complete and most current information before you start any job. Manitou dealers have the most current information.

When replacement parts are required for this product, Manitou recommends using Manitou replacement parts or parts with equivalent specifications including, but not limited to physical dimensions, type, strength and material.

Failure to heed this warning can lead to premature failure, product damage, personal injury or death.

Safety information

Introduction

Proper repair is important to the safe operation and the reliable operation of this machine. This document outlines basic recommended procedures. Some of the procedures require special tools, devices or work methods.

Before you perform any repairs or before you perform any maintenance, read all safety information. Understand all safety information before you perform any repairs or before you perform any maintenance.

Safety information can be found in this document and the following documents for your machine.

- Operation and maintenance section
- Testing and adjusting section
- Disassembly and assembly section
- Warning labels that are located on the machine

If these hazard warnings are not heeded,bodily injury or death could occur to you or other persons.

Basic precautions

Always observe the list of basic precautions that follows

Safety messages

There are several specific safety messages on this machine. The exact location of the hazards and the description of the hazards are reviewed in this section. Please become familiarized with all safety messages

Make sure that all of the safety messages are legible. Clean the safety messages or replace the safety messages if you cannot read the words. Replace the illustrations if the illustrations are not legible. When you clean the safety messages, use a cloth, water and soap. Do not use solvent, diesel or other harsh chemicals to clean the safety messages. Solvents, diesel or harsh chemicals could loosen the adhesive that secures the safety messages. Loose adhesive will allow the safety messages to fall.

Replace any safety message that is damaged or missing. If a safety message is attached to a part that is replaced, install a safety message on the replacement parts.

Any Manitou dealer can provide new safety messages.

00.2 PROTECTIVE EQUIPMENTS

When you work around the machine, always wear protective equipment that is required by the job conditions. Protective equipment includes the items that follow: hard hot, protective glasses and protective shoes. In particular, wear protective glasses when you use a hammer or when you use a sledge hammer. When you weld use the appropriate protective equipment that is required by the job conditions. Protective equipment for welding includes the items that follow: gloves, welding hood, goggles, and apron. Do not wear loose clothing or jewelry that can catch on parts of the machine.



00.3 MOUNTING & DISMOUNTING

Use steps and handholds whenever you mount the machine. Use steps and handholds whenever you dismount the machine. Before you mount the machine, clean the steps and the handholds. Inspect the step and handholds. Make all necessary repairs.

Face the machine whenever you mount the machine and whenever you dismount the machine. Maintain a three point contact with the step and with handholds.

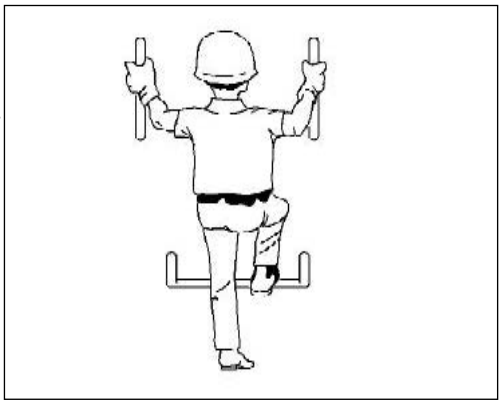

NOTE

Three point contacts can be two feet and one hand. Three point contacts can also be one foot and two hands.

Do not mount a moving machine. Do not dismount a moving machine. Never jump off the machine. Do not try to mount the machine when you carry tools or supplies.

Do not try to dismount the machine when you are carrying tools or supplies. Use a hand line to pull equipment onto the platform. Do not use any controls as handholds when you enter the operator station or when you exit the operator station.

00.4 LIFTING

If any component that weighs more than 23 kg is lifted, a hoist should be used. If any component is difficult to move due to the size, the grip or any other difficulties, a hoist should be used.

Specifications for cables, chains and lifting devices

Use approved cables, chains and lifting devices in order to lift components. Refer to the manufacturer's weights in order to determine the application when you select the following items: cable, chain and lifting devices. When you lift a component, the lift angle is critical. Refer to the illustration that follows in order to see the effect to the lift angle on the working load limit.

NOTE

The lifting devices that are shown in this publication are not Manitou parts.

Make sure that all chains, hooks, slings and any other lifting devices are in good condition.
Ensure that the hooks are equipped with a safety latch. Do not place a side load on the lifting eyes during a lifting operation.

Lifting angles for lifting slings

A. The load capacity is 100% of the working load limit for the sling
B. The load capacity is 86% of the working load limit for the sling
C. The load capacity is 70% of the working load limit for the sling
D. The load capacity is 50% of the working load limit for the sling

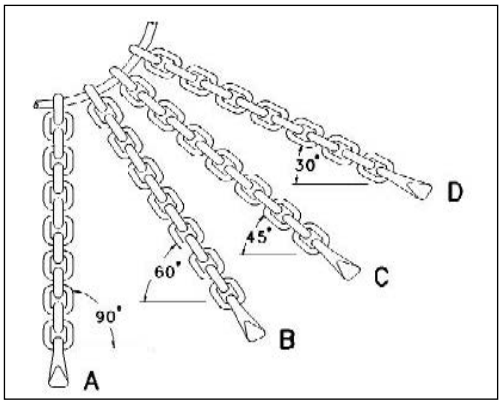

00.5 HOT FLUIDS & PARTS

To avoid burns, be alert for hot parts on machines which have just been stopped and hot fluids in lines, tubes and compartments.
Be careful when you remove filler caps, breathers and plugs on the machine. Hold a rag over the cap or plug in order to prevent being sprayed by pressurized liquids. When the machine has just been stopped, the possibility of hot fluids is greater.

00.6 BATTERIES

Do not smoke when an inspection of the battery electrolyte level is made. Never disconnect any charging unit circuit or battery circuit cable from the battery when the charging unit is operating. A spark can cause an explosion from the flammable vapor mixture of hydrogen and oxygen that is released from the electrolyte through the battery outlets. Do not allow battery electrolyte to make contact with the skin or with the eyes. Battery electrolyte is an acid.
In case of contact with battery electrolyte, immediately wash the skin with soap and water. For contact with eyes, flush with large amount of water for at least 15 minutes. Seek medical attention.

00.7 PRESSURIZED ITEMS

Pressure can be trapped in a hydraulic system. Releasing trapped pressure can cause sudden machine movement or attachment movement. Use caution if you disconnect hydraulic lines or fittings. High pressure oil that is released can cause a hose to whip. High pressure oil that is released can cause oil to spray. Fluid penetration can cause serious injury and possible death.

Pressure can be trapped in the hydraulic circuit long after the engine has been stopped. The pressure can cause hydraulic fluid or items such as pipe plugs to escape rapidly if the pressure is not relieved correctly.

Do not remove any hydraulic components or parts until pressure has been relieved or personal injury may occur. Do not disassembly any hydraulic components or parts until pressure has been relieved or personal injury may occur. Refer to the service manual for nay procedures that are required to relieve the hydraulic pressure.

Always use a board or a piece of cardboard when you check for a leak. Leaking fluid under pressure can penetrate body tissue. Fluid penetration can cause serious injury and possible death. A pin hole leak can cause severe injury. If fluid is injected into your skin, you must get treatment immediately. Seek treatment from a doctor that is familiar with this type of injury.

Relieve all pressure in air, oil or water systems before any lines, fittings or related items are disconnected or removed, always make sure that all raised components are blocked correctly. Be alert for possible pressure when you disconnect any device from a system that utilizes pressure.

Fuel lines that are damaged and fuel lines that are loose may leak. This could result in a fire if the fluid comes in contact with a source of ignition. Lubrication lines that are damaged and lubrication lines that are loose can leak. This could result in a fire if the fluid comes in contact with a source of ignition. Hydraulic lines, tubes and hoses that are damaged can leak. This could result in fire if the fluid comes in contact with a source of ignition. Hydraulic line, tubes and hoses that are loose can leak. This could result in a fire if the fluid comes in contact with a source of ignition. Do not bend or strike high pressure lines. Do not install lines which have been bent or damaged. Check lines, tubes and hoses carefully. Do not use your bare hand to check for leaks. If fluids are injected into your skin, you must get treatment immediately. Seek treatment from a doctor that is familiar with this type of injury.

Pressure air or water can cause personal injury. When pressure air or water is used for cleaning, wear a protective face shield, protective clothing and protective shoes. The maximum air pressure for cleaning purposes must be below 30 psi. When you use a pressure washer, keep in mind that the nozzle pressures are very high. The nozzle pressures are frequently above 2000 psi. Follow all of the recommended practices that are provided by the manufacturer of the pressure washer.

00.8 GENERAL HAZARD INFORMATION

Attach a DO NOT OPERATE warning tag or similar warning tag to the start switch or to the controls before you service the equipment or before you repair the equipment.

When possible, make all repairs with the machine parked on a level, hard surface. The machine should be blocked in order to prevent the machine from rolling.

Know the width of your equipment in order to maintain proper clearance when you operate the equipment near fence or near boundary obstacles.

Be aware of high voltage power lines and power cables that are buried. If the machine comes in contact with these hazards, serious injury or death may occur from electrocution.

Make sure that all protective guards and all covers are secured in place on the equipment. If a guard, a cover or a shield must be removed in order to perform the repair work, use extra caution.

Keep sure that all protective guards and all covers are secured in place on the equipment. If a guard, a cover or a shield must be removed in order to perform the repair work, use extra caution.

Keep the equipment free from foreign material. Remove debris, oil, tools and other items from the deck from walkways and from steps.

Secure all loose items such as lunch boxes, tools and other items that are not a part of the equipment.

Know the appropriate work site hand signals and the personnel that are authorized to give the hand signals. Accept hand signals from one person only.

Do not smoke when you service an air conditioner. Also, do not smoke if refrigerant gas may be present. Inhaling the fumes that are released from a flame that contacts air conditioner refrigerant can cause bodily harm or death. Inhaling gas from air conditioner refrigerant through a lighted cigarette can cause bodily harm or death.

Do not allow unauthorized personnel on the equipment.

Disconnect the battery and discharge any capacitors before starting work on the machine.

Do not work on any machine that is supported only by lift jacks or a hoist. Always use blocks or jacks stands in order to support the machine before performing any service of disassembly.

Make sure that the work area around the. machine is safe and be aware of any hazardous conditions that may exist. If an engine is started inside an enclosure, make sure that the engine's exhaust is properly vented.

Always use tools that are in good working condition. Ensure that you understand the proper use of the tools before performing any service work.

Replace all fasteners with the same part numbers. Do not use a lesser quality fastener if replacements are necessary.

You should be prepared to stop an engine that has been recently overhauled. You should also be prepared to stop the machine if the fuel system has been recently worked on. If the engine has not been assembled correctly or if the fuel setting is not adjusted properly, the engine can possibly over speed. This may cause bodily injury, death or properly damage. You should be prepared to shut off the fuel and air supply to the engine in order to stop the engine.

Caution should be used when any cover plate is removed. Slowly back off the last two bolts or the last two nuts that are located at opposite ends of the cover or device. Then, pry the cover loose in order to relieve any spring or other pressure, before removing the last two bolts or nuts completely.

Repairs that require welding should be performed only with the benefit of the appropriate reference information. Repairs that require welding should be performed only by personal that are adequately trained and knowledgeable in welding procedures.

00.9 CRUSHING PREVENTION AND CUTTING PREVENTION

Support the equipment properly before you perform any work or maintenance beneath that equipment. Do not depend on the hydraulic cylinders to hold up the equipment. Equipment can fall if a control is moved, or if a hydraulic line breaks.

Do not work beneath the machine components of the machine unless the machine components is properly supported.

Unless you are instruction otherwise, never attempt adjustments while the machine or while the engine is running.

Never jump across the starter solenoid terminals in order to start the engine. Unexpected machine movement could result.

Whenever there are equipment controls linkages the clearance in the linkage area will change with the movement of the equipment or the machine. Stay clear of areas that may have a sudden change in clearance with machine movement or

equipment movement.

Stay clear of all rotating and moving parts.

If it is necessary to remove guards in order to perform maintenance, always install the guards after maintenance is performed.

Keep objects away from moving fan blades. The fan blades will throw objects or cut objects.

Do not use a kinked wire cable or a frayed wire cable. Wear gloves when you handle wire cable.

When you strike a retainer pin with force, the retainer pin can fly out. The loose retainer pin can injure personnel. Make sure that the area is clear of people when you strike a retainer pin. To avoid injury to your eyes, wear protective glasses when you strike a retainer pin.

Chips or other debris can fly off an object when you strike the object. Make sure that no one can be injured by flying debris before striking any object.

00.10 INTRODUCTION TO TORQUE

Torque" is measure in terms of force and distance. Force is the amount of pushing or pulling applied at the end of the lever. Distance is the length of the lever that is being used. Torque values are given the following units. NEWTON meter (Nm), pound inches (lb.in) and pound feet (lb.ft).

This manual is intended to provide the operator with a reference. This manual will provide the standard torque settings for the following: bolts, nuts, plugs, fittings and clamps.

Exceptions to this torques are given in the service manual, if necessary.

Be sure to use a torque wrench that has the proper range. Torque wrenches must be used properly in order to ensure that the correct torque is applied. Always use a smooth pull for torque wrenches. Do not jerk a torque wrench. Do not use adapters that change the length of the torque wrench. For the correct use of your torque wrench, refer to the instructions that were packaged with your torque wrench.

Prior to installation of any hardware, ensure that components are in near new condition. Bolts and threads must not be worn or damaged. Threads must not have burrs or nicks. Hardware must be free of rust and corrosions. Clean reused fasteners with a noncorrosive cleaner. Lightly lubricate the threads of reused fasteners. Lightly lubricate the mating surface of the head of reused fasteners. Other applications for lubricating fasteners may also be specified in the service manual. The service manual may also specify the use of sealants and compounds.

⚠ NOTE

Do not use sealants that not specified in the service manual. Do not use compounds that are not specified in the service manual. Clean oil compound from the bold and from the hole before installation.

00.11 TORQUE TURN

The torque turn method is used when precise control over clamping force is required. There is an initial torque and an additional turn. The initial torque is required to bring all parts of the joint into contact. The additional turn provides the desired clamping force. Ensure that all fasteners have been torque before you perform the additional turns. Turn the fastener according to the specified amount. The specified amount will normally be equal to or greater than 90^0. The specified amount will normally be in 30^0 increments. Turns of 120^0 or 180^0 are preferred. Turns of 120^0 or 180^0 are easily measured by the points of the hex head of the fasteners. Lubrication may be specified in order to reduce the effort that is required for the final turn. The use of the torque turn method will allow the following-

- Increase the life of the fastener
- Maximize the potential clamping force of a fastener

⚠ NOTE

Too much tension on the bolts will cause the bolt to be stretched beyond the point of yield. The bolt will be permanently stretched. The bolt will loosen the grip on the parts that are being fastened. If the bolt is tightened again, the bolt will break. Do not reuse bolts that have been permanently stretched.

00.12 TORQUE SEQUENCE

Unless the bolt tightening sequence is specified by the service manual, the fasteners should be tightened in a cross pattern. Use step 1 through step 5 unless the tightening sequence is specified-

1. Hand tightens all fasteners. Larger fasteners may require the use of a small hand wrench.
2. Torque all fasteners to 40% of full torque.
3. Torque all fasteners to 70% of full torque.
4. Torque all fasteners to full torque by using a cross pattern. Large flanges may require additional passes.
5. Apply at least one final full torque to all fasteners in a clockwise direction until all torque is uniform. Large flanges may require additional passes.

00.13 METRIC (ISO) FASTENERS

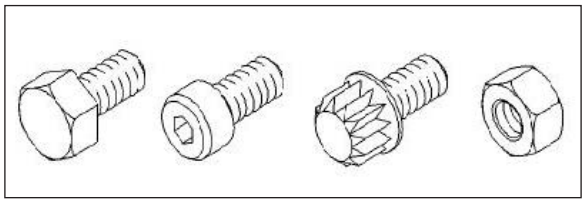

The following table has the recommended standard torque values for metric nuts and bolts for use on all Manitou equipments-

Thread size (mm)	Torque (Nm)
M6	12 ± 3
M8	28 ± 7
M10	55 ± 19
M12	100 ± 20
M14	160 ± 30
M16	240 ± 40
M 20	460 ± 60
M 24	800 ± 100
M30	1600 ± 200
M36	2700 ± 300

00.14 METRIC (ISO) MACHINE SCREWS

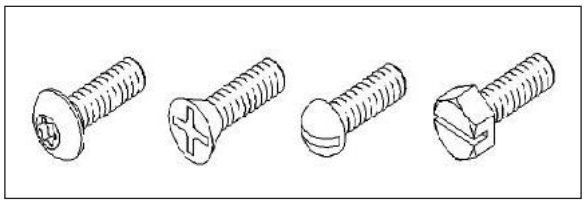

Thread size (mm)	Torque (Nm)
M1.6	0.10 ± 0.01
M2	0.15 ± 0.01
M2.5	0.35 ± 0.05
M3	0.50 ± 0.05
M4	1.70 ± 0.25
M5	2.25 ± 0.25

00.15 HEX BUTTON HEAD SCREW AND SET SCREWS

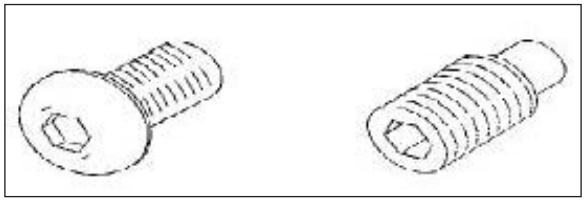

Thread size (mm)	Torque (Nm)
M3	0.6 ± 0.1
M4	2 ± 0.3
M5	4 ± 0.5
M6	6 ± 1
M8	15 ± 3
M10	30 ± 7
M12	50 ± 10
M14	80 ± 15
M16	125 ± 20
M20	250 ± 40
M24	425 ± 50
M 30	850 ± 100
M36	1500 ± 200

00.16 ENGLISH (SAE) FASTENERS

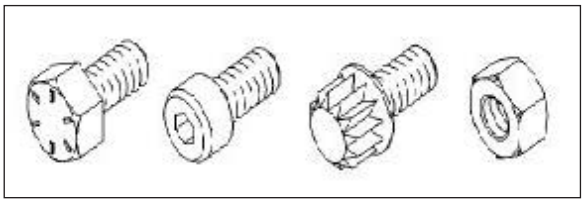

Thread size (inch)	Torque (Nm)
5/16	6 ± 1
3/8	8 ± 1
7/16	14 ± 1.5
1/2	17 ± 2
9/16	22 ± 2
11/16	31 ± 3
3/4	37 ± 4
13/16	40 ± 4
7/8	44 ± 4
1	61 ± 6
1 1/16	70 ± 7
1 3/16	91 ± 10
1 7/16	125 ± 12
1 5/8	150 ± 15
1 11/16	150 ± 15
1 7/8	155 ± 15
2	170 ± 17
2 ½	220 ± 20

00.17 FLARE FITTINGS

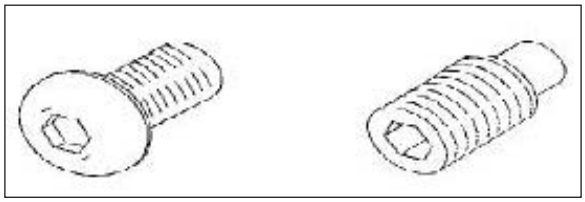

Nut for 37 degree flare fittings		
Nominal outer diameter of the tune (mm)	**Thread size (inch)**	**Torque (Nm) Tolerance (+ 10% - 0 %)**
3.18	5/16	5
4.76	3/8	11
6.35	7/16	16
7.94	1/2	20
9.52	9/16	27
12.7	3/4	58
15.88	7/8	74
19.05	1 1/16	108
22.22	1 3/16	135
25.4	1 5/16	156
31.75	1 5/8	217
38.1	1 7/8	251
50.8	2 1/2	339

00.18 HOSE CLAMPS

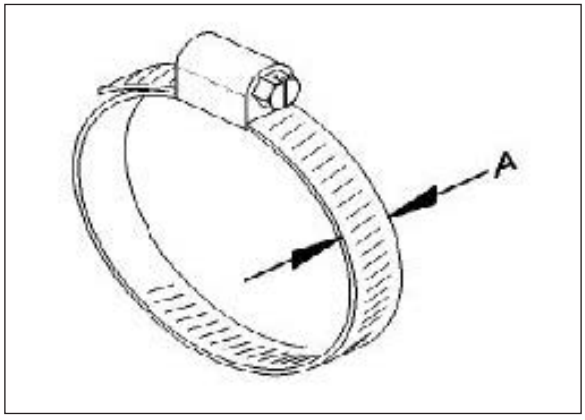

Worm drive band type clamps

Width (A) of clamp (mm)	Torque (Nm) for new hose
7.9	0.9 ± 0.2
13.5	4.5 ± 0.5
15.9	7.5 ± 0.5

Width (A) of clamp (mm)	Torque (Nm) for reused hose
7.9	0.7 ± 0.2
13.5	3.0 ± 0.5
15.9	4.5 ± 0.5

10

ENGINE



Intentionally Left Blank

TABLE OF CONTENTS

10.1 ENGINE SPECIFICATIONS 4
10.2 ENGINE DESCRIPTION 5
10.3 ENGINE LIFTING DEVICE 6
10.4 LUBE OIL SYSTEM 6
10.5 FUEL SYSTEM 7
10.6 REMOVAL & INSTALLATION OF ENGINE 7
10.7 TIGHTENING TORQUE 11

10.1 ENGINE SPECIFICATIONS

FOR 4R1040TA

S. NO.	PARAMETER		UNIT	VALUE
1.1	Engine Model		--	4R1040TA
1.2	Emission compliance		--	BS III
1.3	Bore x Stroke		mm	105 x 120
1.4	No. of cylinders		-	4
1.5	Total displacement		cc	4160
1.6	Valves per cylinder – intake/exhaust		-	4
1.7	Compression ratio		-	17:1
1.8	Firing order (starting from flywheel end)		-	1-3-4-2
1.9	Combustion system		-	Direct Injection
1.10	Aspiration		-	Turbocharged, After cooled
1.11	Engine crankcase vent system		-	Available
1.12	Rated speed		rpm	2200 -2500
1.13	Rated Power Rated Torque Production Tolerance : ± 5% Rating as per ISO3046		HP (kW) Nm	90 (67.1) @ 2200 rpm 375Nm
1.14	Low idle speed		rpm	900 +/- 50
1.15	Max. No Load speed		rpm	2250+/-50
1.16	B.M.E.P	At Rated Power at Max Torque	Bar	10.3 9.5

10.2 ENGINE DESCRIPTION

FOR ENGINE ILLUSTRATION 4R1040TA

Air Inlet Manifold Side

S.N.	DESCRIPTION
1	Air cleaner
2	Aircleaner hose
3	Adaptor plate
4	F. W. E. Mtg. foot
5	Crank case
6	Dipstick
7	G. E. Mtg. foot
8	Spin-on lube oil filter
9	Stopping lever
10	Feed pump
11	Gear casing
12	Fuel pump
13	Air inlet manifold
14	H. P. Pipes
15	Fuel filter - Pre
16	Fuel filter - Micro
17	Restriction indicator

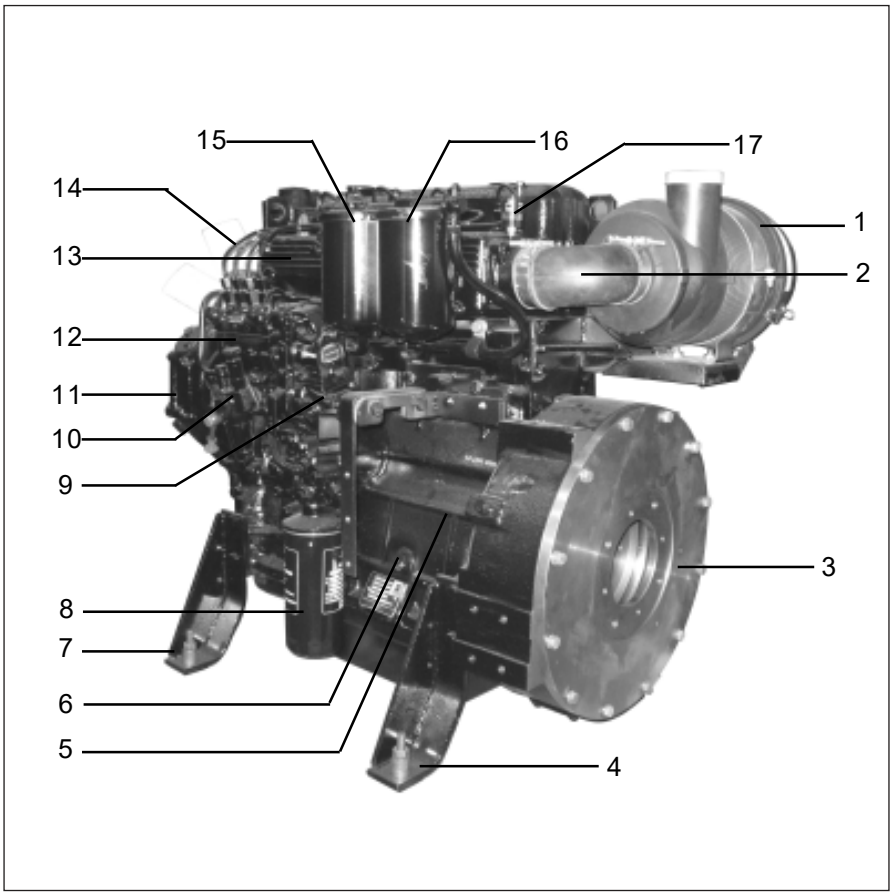

Exhaust Manifold Side

S.N.	DESCRIPTION
18	Thermostat / Thermostat Hsg.
19	Radiator cooling fan
20	Tension adjusting lever
21	V - Belt
22	Crankpulley
23	Lube oil sump
24	Breather tube
25	Starter
26	Flywheel Housing
27	Charging alternator
28	Vacuator Valve
29	Exhaust manifold
30	Rocker cover
31	Lube Oil filling point

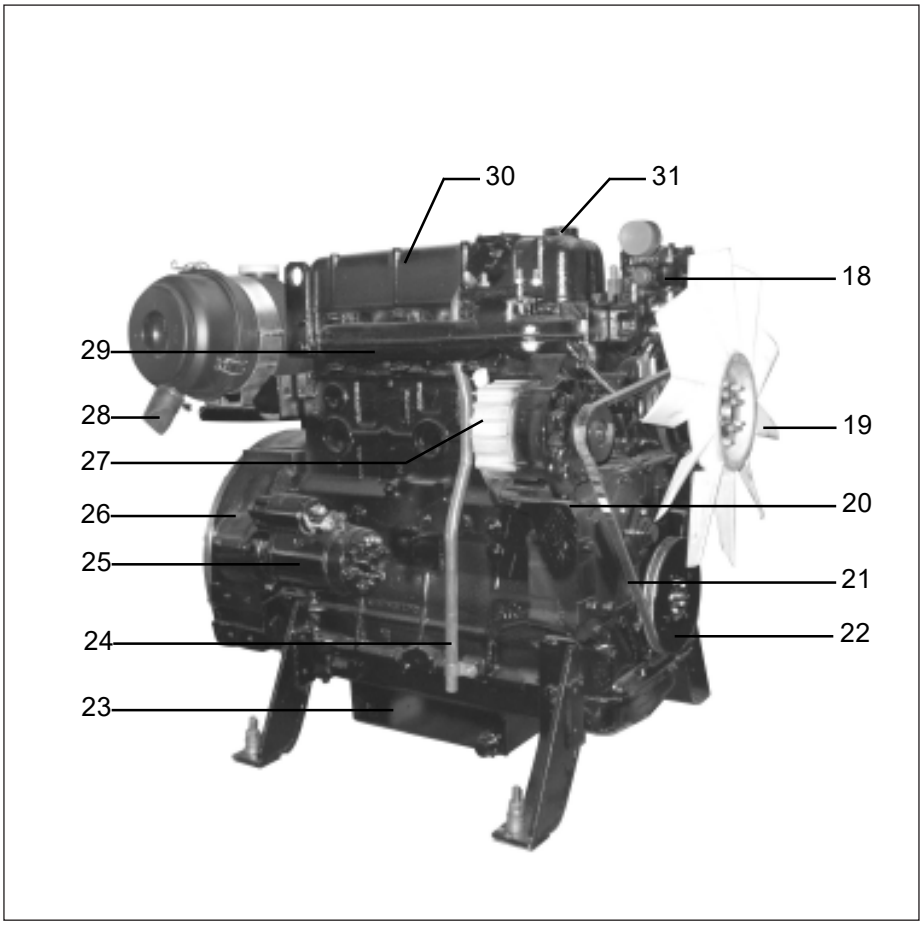

10.3 ENGINE LIFTING DEVICE

For Bare Engine 4R1040TA

1. Before lifting the engine first fix the lifting hooks on the engine and then lift the engine.
2. The lifting hooks provided on the engine are meant for lifting bare engine only.
3. Use of engine lifting hooks for lifting engine + equipment must be avoided as it can cause damage to engine or equipment in the event of breakage

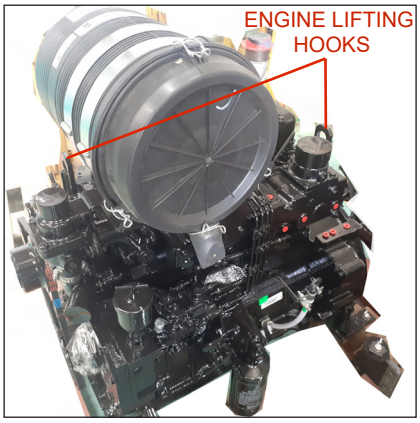

10.4 LUBE OIL SYSTEM

LUBE OIL CIRCUIT

Force feed lubrication is provided by a 'G' rotor type pump to main bearings, large end bearings, camshaft journals, valve gear etc. Other components like connecting rod small end bushes, cylinder liners and gear train are splash lubricated. Oil supply to valve gear is achieved through rocker shaft core hole; the oil supply is controlled to the valves and rocker arm by oil metering screw, which Results into lower oil consumption and lower carbon deposition. The system includes adequate filtering by replaceable 'Spin-on' filter cartridge. The water-cooled lube oil cooler is provided to maintain the oil temperature within limits. A relief valve controls the maximum oil pressure, which is provided on delivery side of the lube oil pump.

Lubrication System for 4R1040TA Series Engines

1	LUBE OIL SUMP
2	SUCTION TUBE
3	LUBE OIL PUMP
4	PRESSURE RELIEF VALVE
5	DELIVERY PIPE
6	DELIVERY BODY
7	PLATE TYPE OIL COOLER
8	LUBE OIL FILTER
9	SAFETY VALVE (NOT SHOWN) (IN-BUILT IN LUBE OIL FILTER)
10	OIL GALLERY(MAIN)
11	MAIN BEARING
12	LARGE END BEARING
13	CAMSHAFT BEARING
14	TAPPET
15	PUSH ROD
16	ROCKER ARM BEARING
17	METERING PLUG
18	ROCKER SHAFT
19	OIL PASSAGE IN CYLINDER HEAD
20	OIL SPRAY NOZZLE FOR PISTON COOLING (NOT SHOWN) (USED ON TURBO CHARGED & TURBO CHARGED AFTER COOLED ENGINES ONLY)
21	FUEL PUMP CONNECTED TO LUBE OIL CIRCUIT

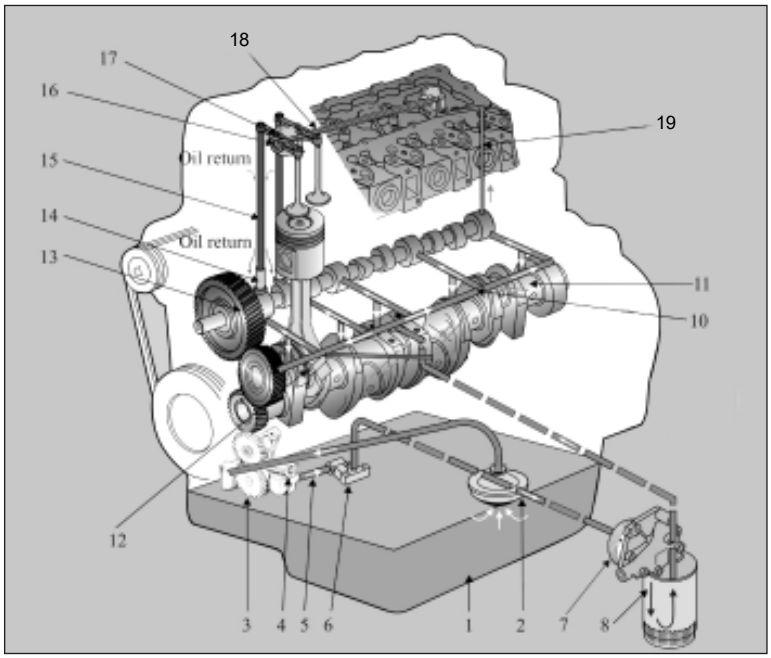

10.5 FUEL SYSTEM

FUEL INJECTION SYSTEM

Fuel is supplied to high pressure fuel pump through fuel tank and spin on pre-filter ensures supply of clean fuel and common rail ensures equal pressures are maintained at each nozzle.
The schematic diagram shows the complete fuel circuit of the engine.
The fuel tank is to be installed as per engineering guidelines mentioned during first firing of the engine.

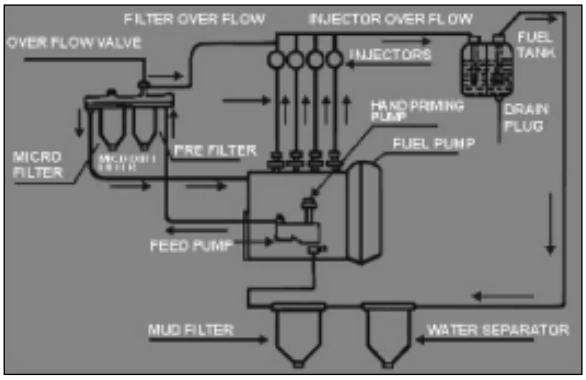

10.6 REMOVAL & INSTALLATION OF ENGINE

1. Remove the bonnet assembly (Refer Frame section for detailed process).
2. Untie the tie clips (1) attaching the two transmission cooler pipes (3). Remove the jublie clip (2) & pull out the two transmission cooler pipes (3) from the cooling pack assembly.



> ⚠ **NOTE**
> Do not forget to plug the hoses after removal.

3. Untie the tie clips attaching the two hydraulic cooler pipes (4). Remove the jublie clip & pull out the hydraulic cooler pipes (4) from the cooling pack assembly.
4. Remove the Radiator- in (5) & Radiator-out (6) hoses from the cooling pack assembly.



> ⚠ **NOTE**
> Do not forget to plug the hoses after removal.

5. Remove both the CAC pipes (7) from the cooling pack assembly.



> ⚠ **NOTE**
> Do not forget to plug the hoses after removal.

6. Remove the mounting bolts (8) from both sides of cooling pack assembly.
7. Use suitable lifting device to remove the cooling pack assembly carefully.



> **⚠ NOTE**
> Make sure the fan blades do not get damaged when lifting,

8. Remove all the wiring harness attached to the engine assembly.



9. Remove hoses (9) attached to the fuel filter present both sides.



> **⚠ NOTE**
> Do not forget to plug the hoses after removal.

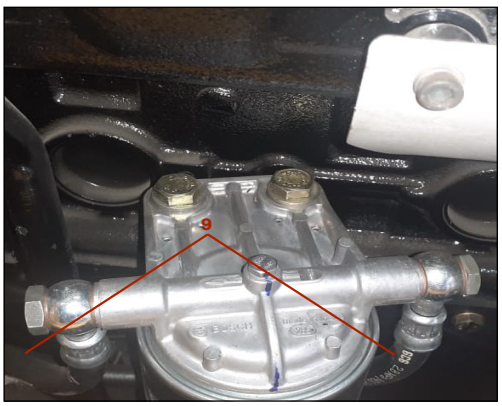

10. Loosen the jublie clip (10) to remove the pre cleaner assembly (11).
11. Remove the jublie clip present to the top & bottom side of pre cleaner hose (12).
12. Remove the pre cleaner hose (12).
13. Remove the jublie clip present to the top & bottom side of air hose (13).
14. Remove the air hose (13).



> **⚠ NOTE**
> Do not forget to plug the hoses after removal.

15. Unscrew the bolts (14) & washers (15) to remove the exhaust silencer (16).
16. Remove exhaust silencer (17) by removing the nut (18) & bolt attached to it.

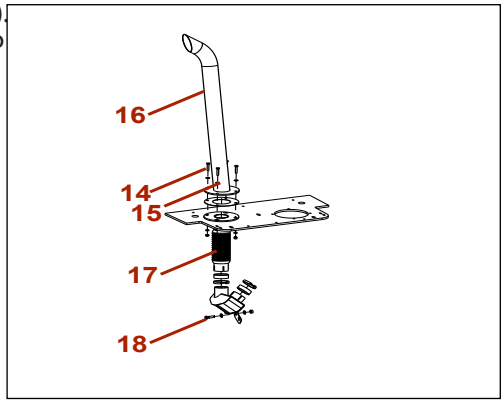

17. Remove the fan by unmounting 4 fan mounting bolts (19).



18. Unscrew the engine mounting bolts (20) from both sides.

> **⚠ NOTE**
> Do not remove the bolts. Remove the nuts and left the loosen bolts in the mounting section only.

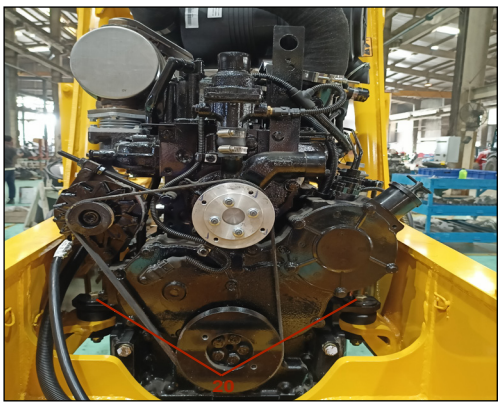

19. Remove the rear drive shaft (21) from the transmission (22).
Also remove the front drive shaft from the transmission (22).

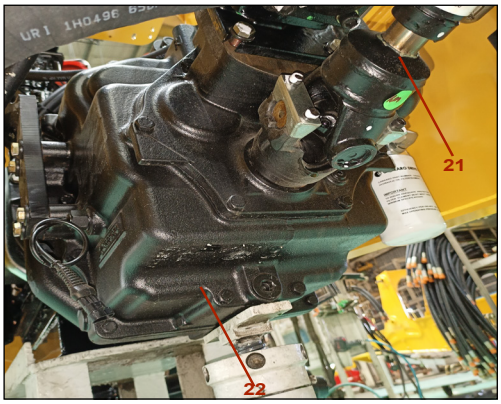

20. Place a screw jack below the transmission (22) to provoide support.



21. Remove the transmission mounting bolts (23).
22. Decouple the transmission (22) from the engine assembly.
23. Remove the torque converter.



24. Attach the sling chain in the engine hooks & remove the engine.

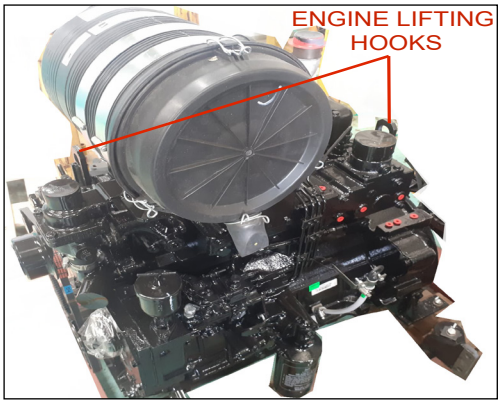

⚠ NOTE

Carefully lift the engine. Approx. weight of the engine is 550 Kg.

INSTLLATION

Installaton is the reversal of removal.

10.7 TIGHTENING TORQUE

To prevent faulty assembly, following information on tightening of high tensile bolts is important. The bolts are to be tightened in stages as specified in the table below. For connecting rod bolt and main bearing cap bolt use angle torque method with the help of goniometer. The tightening angles for these two bolts are particularly important, hence figure below indicates the various angles can be readily obtained by comparison with a clock face.
Tommy bar is to be clamped in the tool slot and specified angle is to be turned with reference to the initial graduation on outer dial of the tool or a relation of hex head of bolt can be referred.

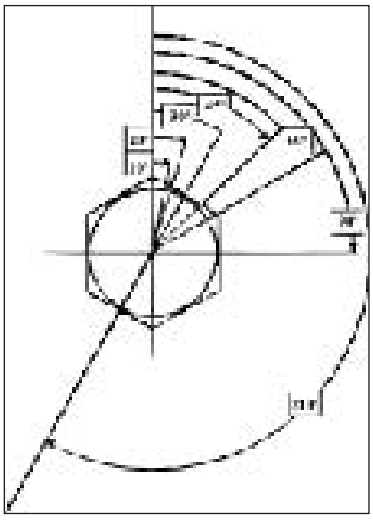

NOTE:
1. Lubricate threads and seating face of bolt with engine oil before it is assembled.
2. Screw the bolt by hand till it is engaged up to the seating face.
3. Apply initial torque and tighten the bolts according to the angles/torques in stages as specified in the "Tightening table".
4. In case of replacing main and big end bearings/overhaul/piston seizures, fit new bolts for main bearing cap, connecting rod cap, balance weight & cylinder head.
   1 Nm = 0.102 kgm = 0.74 lb.ft.

10.7.1 Tightening Torque Table for fasteners

S.N.	Description	Initial Torque kgm	Tightening Method angle/kgm			Total Angle Torque
			Stage 1	Stage 2	Stage 3	
1	Bolt for balance weight (M12x1.75x60mm long, 10.9 grade)	3	30º	30º	-	60º
2	Bolt for main bearing cap (M14x2x128 mm long, 10.9 grade)	3	60º	45º	-	105º
3	Bolt for Connecting rod (M12x1.5x55mm long, 10.9 grade)	3	30º	60º	-	90º
4	Bolt for Crank pulley (M24x2x100 mm long, 10.9 grade) without power take off	5	25 kgm	48 kgm	-	48 kgm
5	Bolt for flywheel (M10x1x45mm long, 10.9 grade)	3	30º	60º	-	90º
6	Bolt for flywheel housing (M10x1.5x40mm long, 10.9 grade)	5	-	-	-	5 kgm
7	Nut for injector stud M10	3	-	-	-	3 kgm
8	Nut for fuel pump hub M14	8	-	-	-	8 kgm
9	Bolt for cylinder head (M12x1.75) for sequence of 3 6kgm 10kgm 12kgm 12 kgm tightening torque	3	6kgm	10kgm	12kgm	12 kgm
10	All M8x1.25 screws & bolts 8.8	2.5	-	-	-	2.5 kgm
11	All M10x1.5 screws & bolts 8.8	3.5	-	-	-	3.5 kgm

10.7.2 Tightening torque sequence

Tightening torque sequence for cylinder head bolts for R1040 / R1080 / K1080 Engines is shown below-

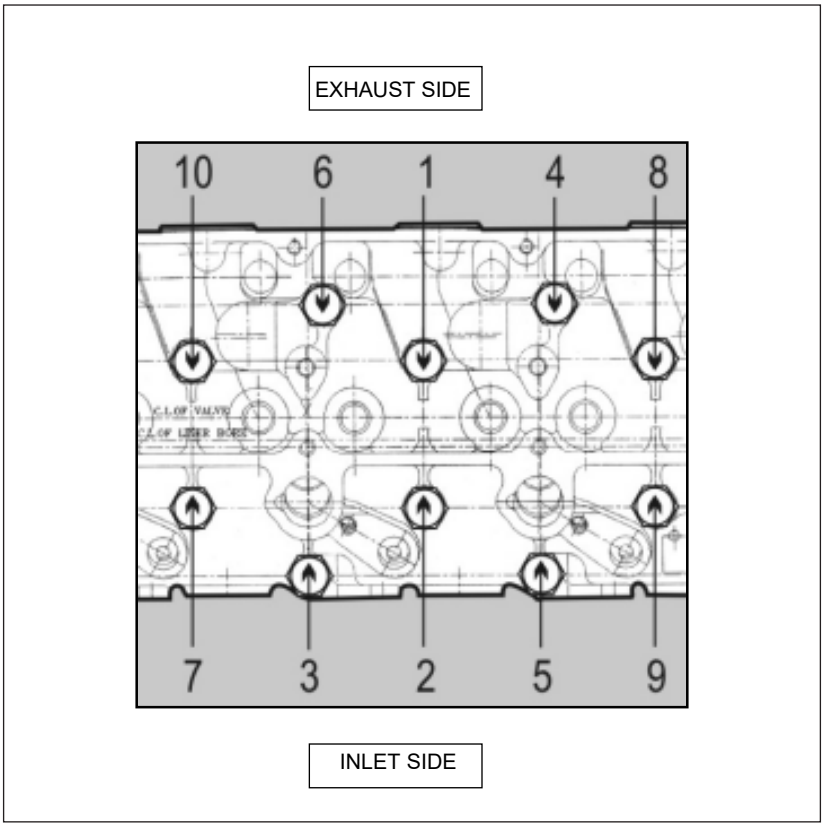

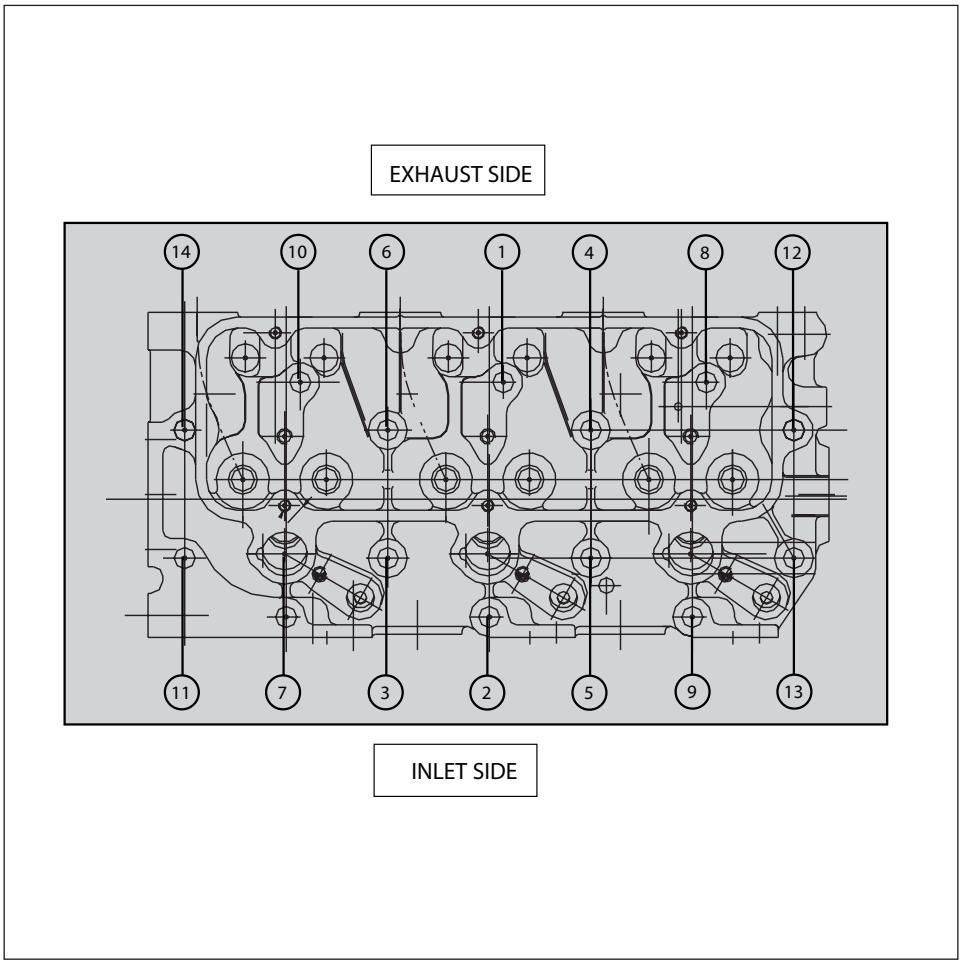

EXHAUST SIDE

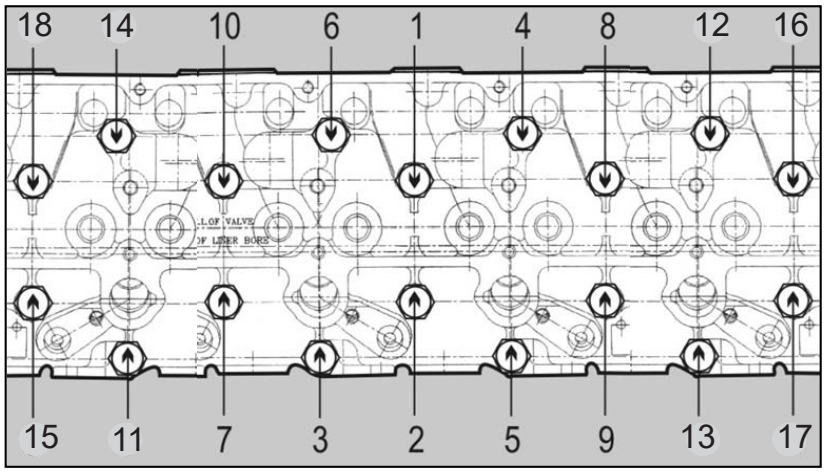

INLET SIDE

EXHAUST SIDE

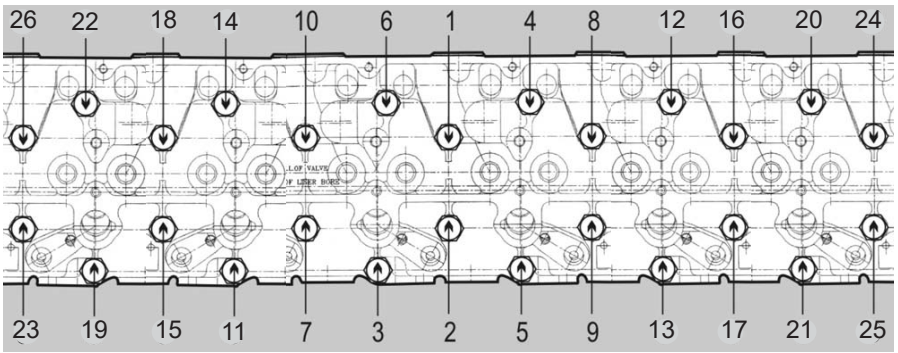

INLET SIDE



Intentionally Left Blank

20

TRANSMISSION

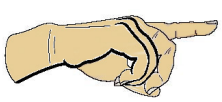

Intentionally Left Blank

TABLE OF CONTENTS

20.1 SAFETY RECOMMENDATIONS 4

20.2 GENERAL SPECIFICATIONS 5

20.2.1 TECHNICAL SPECIFICATIONS 5

20.2.2 MAIN POINT NOMENCLATURE 6

20.3 MAINTENANCE 8

20.4 RECOMMENDED SEALANT 8

20.5 TIGHTENING TORQUE 11

20.6 REMOVAL & INSTALLATION OF TRANSMISSION 14

20.7 TORQUE CONVERTER REMOVAL & INSTALLATION 18

20.8 TRANSMISSION DISASSEMBLY & ASSEMBLY 19

20.9 DISASSEMBLY & ASSEMBLY OF OIL PUMP 25

20.10 REMOVAL & INSTALLATION OF PIPE 28

20.11 DISASSEMBLY & ASSEMBLY OF HYDRAULIC CONTROL VALVE 28

20.12 DISASSEMBLY & ASSEMBLY OF TRANSMISSION HOUSING 44

20.13 DISASSEMBLY & ASSEMBLY OF INPUT SHAFT 67

20.14 REVERSE IDLER SHAFT 83

20.15 DISASSEMBLY & ASSEMBLY OF MAIN SHAFT 85

20.16 DISASSEMBLY & ASSEMBLY OF SPEED CONTROLS 102

20.17 SYSTEM OPERATION 108

20.18 TESTING & ADJUSTING 109

20.19 TROUBLE SHOOTING 110

20.1 SAFETY RECOMMENDATIONS

⚠ NOTE

Before proceeding with any operations please read this chapter very carefully

Safety Precautions : Correct use and repair of axles and of their components is very important for security and reliability. Recommendations and all described procedures given in this manual have been experimented and hence are effective operational methods. Please follow every procedure. Use the text as well as the illustrations. Certain procedures show use of special tools, designed so that the operations can be carried out in a clear and correct manner.
Special tools must be used when a particular operation is being carried out.
It is impossible to advise every working method or know all possible methodologies for carrying it out or to predict risky consequences of each operation. Hence performing procedures or using instruments which have not been advised coulbd be dangerous for the operator/mechanic as well as the vehicle.

Danger : Safety goggles must be worn while carrying out every assembling or disassembling operations.



Safety symbols : This is the safety alarm symbol whenever you find it in the manual or see it on the machine, you are being warned about potential danger of accidents or harm to personnel. Follow the DO's and DON'T's to operate in total safety.

Understanding written warnings

DANGER	WARNING	CAUTION

Written warning (danger, warning or caution) is used along with an alarm symbol. Danger or Warning signs are used near danger zones, while caution sign indicates general precaution.

Follow safety instructions : Unauthorized changes could endanger the functioning work safety and work span. If you do not understand this instruction manual, contact the nearest sales representative.

General Precautions : Observe safety instruction, accident prevention rules and all general safety regulations in each and every step at work. Before going ahead with maintenance or repair work ensure that all the tools, the supporting bench stands, levers, extractors and spanners are in good condition so that the work can be carried out easily. Risks to various parts and components will also be reduced in this way and working condition for the operator will also be safer. Manitou declines any responsibility in case of an accident or damage resulting due to changes made arbitrarily on product. The product is used for any other purpose different from the one foreseen, than Manitou declines any responsibility. In this case all consequences will be at the customer's expense.

Safety maintenance rules :
- Operate in a clean and dry environment.
- Do not lubricate, handle or adjust the group underway.
- Keep off your hands, feet, and clothing from moving parts.
- Be always prepared for fires. Keep the extinguisher and the first aid kit within reach.
- Keep the phone number of a doctor of an ambulance of a hospital and of the fire department within reach near the telephone set.
- Wear suitable clothing and protections as overalls, safety gloves and ear safety devices.
- Use suitable ear protection like ear plugs to keep out noise and prevent injury to the ears.
- Prolonged exposure to noise can damage your hearing.
- The technician must be very careful with the equipment. Do not use headphone to listen music while you are working on the product or on the group.

Residual risk elimination :
- Risk of squashing and shearing due to the presence of moving parts.
- Carry out all maintenance operations when the machine is stationary.
- Risk due to inhalation of poison gases that can be produced by heating the varnishes during any welding.
- Use work stations equipped with dust and fume discharging systems.
- Let the fumes disperse for at least 15 minutes before welding or reheating or working on the group again.
- Risk of fire due to the solvents used and to the oil in the axle.
- Keep off any heat sources from the working area. When solvents or paint removers are used, they should be removed with soap and water before welding.
- Remove any containers of solvent, paint remover or any other inflammable products from the working area.
- Risk due to fall, drop or violent ejection of objects or oil from the axle.

These residual risks and the suitable relative procedures to eliminate them completely are pointed out in detail in the assembly and disassembly procedures. During maintenance follow carefully all the safety procedures indicated in the manual.

20.2 GENERAL SPECIFICATIONS

This transmission has been designed and manufactured to be mounted on industrial machines.
The transmission is a component that transmits the power from the engine to the wheels with an assigned transmission ratio.
The transmission named also "TLB" is manufactured according to the customer's technical specifications. Never mount this transmission on machines different from the ones for which it has been designed and manufactured. If the transmission is used for any other purpose than the one foreseen, declines any responsibility regarding damages or accidents caused by it. All consequences will be at the expense of the customer.
However, when used as foreseen, operational formalities as well as regular maintenance repair specifications given by are to be observed strictly.

Warning : The Transmission has been designed to deliver power to rear and front axle by the engagement of the 4WD PTO (easy shift). For any Vehicle check, the procedure to test each machine running on the stabilizers and front bucket must be performing as follows:

1. Run just rear wheels at maximum Transmission shaft rear output of 500 RPM for a short time (4WD PTO disengage - Do Not engage 4WD PTO).
2. Run both rear and front wheels running at any RPM and any time (4WD PTO engage starting from Transmission output shafts at 0 RPM).
3. Avoid 4WD engagement with rear wheels running at high Transmission shaft rear output RPM and front wheels at 0 RPM: see below for the max. Speed difference allowable.
   Important: The Transmission 4WD PTO has been designed to engage (without damage) at a maximum rear to front output speed difference of 250 RPM, which is more than adequate for the normal use of the machine (i.e. machine running on the ground). Any 4WD engagement at speed difference over 250 delta RPM, causes serious damages or failure to the 4WD PTO.

20.2.1 TECHNICAL SPECIFICATIONS

TECHNICAL FEATURE	DESCRIPTION VALUES
Transmission dry weight	208 Kg
Speed n° (hydraulic piloted speeds with hydraulic reverse)	4
Transmission ratios	Forward
1st speed	5.603
2nd speed	3.48
3rd speed	1.584
4th speed	0.793
Transmission ratios	Reverse
1st speed	5.603
2nd speed	3.48
3rd speed	1.584
4th speed	0.793
Max engine power	81 kW @ 2200 rpm
Max input speed transmission	3000 rpm
Converter stall torque ratio	3.01
Suction oil filtering capacity	250 µm

20.2.2 MAIN POINT NOMENCLATURE

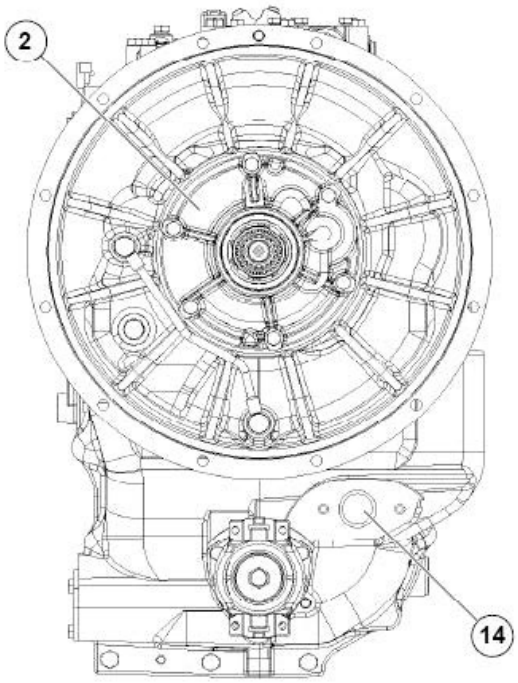

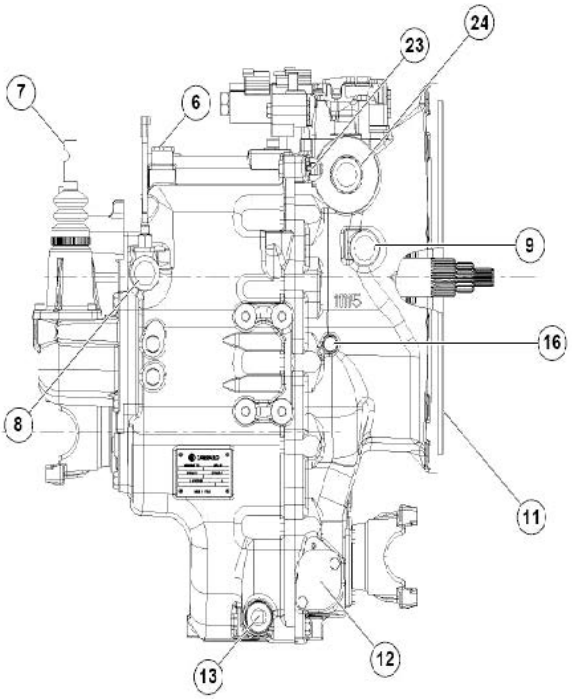

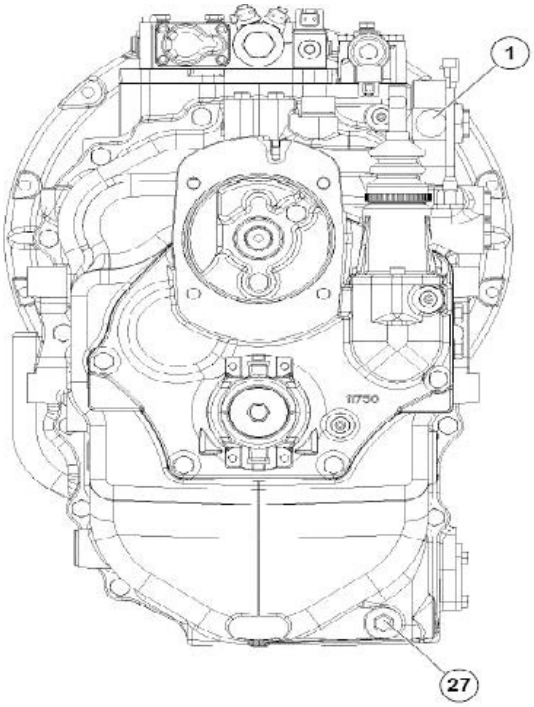

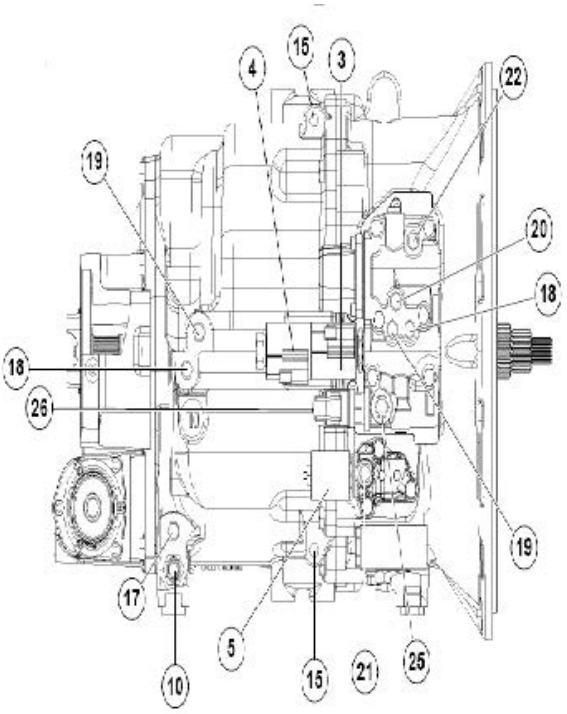

MAIN POINT NOMENCLATURE

1 (b)	Spin-on filter oil delivery attachment(nom. 10 µm)
2 (c)	Oil pump group: max pressure 16 bar
3 (c)	Forward shift solenoid valve 28W-12V D.C.
4 (c)	Reverse shift solenoid valve 28W-12V D.C.
5 (c)	4WD shift solenoid valve 24W-12V D.C.
6	Breather plug
7	Speed shift lever
8	Oil inlet port from cooler
9	Oil outlet port to cooler
10	Oil thermostat
11	SAE 3 torque converter bell housing
12	Suction filter (nom. 250 µm)
13	Magnetic oil drain plug (SW 1/2")
14	Dipstick fitting hole
15	Holes eyebolt for lifting attachment
16	4th gear lock out
17 (a)	Oil cooler back pressure check point (0.5÷3.5 bar on FWD/RVS clutch position and 0.5÷5.0 bar on NEUTRAL clutch position).
18 (a)	FWD clutch pressure check point (11.0÷13.0 bar)max pressure in NEUTRAL (0.3 bar)
19 (a)	RVS clutch pressure check point (11.0÷13.0 bar)max pressure in NEUTRAL (0.3 bar)
20 (a)	FWD/RVS clutch pressure check point (11.0÷13.0 bar)max pressure in neutral (0.3 bar)
21	4WD pressure check point at 900 RPM (13.0÷14.0 bar)at 2200 RPM (13.0÷15.5 bar)
22 (a)	Converter pressure check point (0.5÷9.0 bar)
23	Oil outlet port to brake
24	Spin-on filter oil return attachment
25	Oil out/inlet port to hidraulic diff. lock.
26 (d)	Hidraulic diff. lock valve
27	Oil inlet port from brake
a	Measure at 900÷2200 engine rpm with oil temperature 80°C (9/16" - 18 UNF - 2B port)
b	Acceptance criteria on bench test19 Lt. min. total pump flow at 900 rpm measure before spin-on filter
c	Solenoid integrate valve diode (see C.10.2)
d	Solenoid integrate valve diode (see C.10.3)

20.3 MAINTENANCE

The oil quantity for the correct operation of the transmission is obtained by combining one volume check and level check.

Correct determination of oil on the vehicle (in the factory)
Carry out the following instructions:
- Fill the transmission with a measured volume W of oil, about 19.5 liters.
- Apply the parking brake.
- Keep the shuttle shaft control in the NEUTRAL position.
- Start the engine by keeping the slow running of 800-1000 rpm for about one minute.
- Stop the engine.
- Drain the oil from transmission by unscrewing the oil drain plug. Let drip for some minutes.
- Measure the oil discharged quantity Z liters.
- Calculate the X quantity of oil to fill the first installation where X = W - Z liters.
- Screw again oil drain plug.
- Fill the transmission with the oil volume suggested of 16 liters.
- Start the engine by keeping the slow running of 800-1000 rpm until an oil temperature higher than 25°C is obtained.
- Check that the transmission oil level is 200 mm from the transmission inlet axis (axis A).
- If necessary, top up with oil to keep to the previous reference value.

20.3.1 First installation filling

Carry out the following instructions:
1. Fill the transmission with a volume of oil of about 16+ X liters, where X has been previously calculated.
2. Apply the parking brake.
3. Keep the shuttle shaft control in NEUTRAL range.
4. Start the engine by keeping the slow running of 800-1000 rpm until an oil temperature higher than 25°C is obtained.
5. Check that the transmission oil level is 200 mm from the transmission inlet axis (axis A).
6. If necessary, top up with oil to keep to the previous reference value.

20.3.2 Scheduled maintenance filling

Carry out the following instructions:
1. Fill the transmission with a volume of oil of about 16 liters.
2. Apply the parking brake.
3. Keep the shuttle shaft control in NEUTRAL range.
4. Start the engine by keeping the slow running of 800-1000 rpm until an oil temperature higher than 25°C is obtained.
5. Check that the transmission oil level is 200 mm from the transmission inlet axis (axis A).
6. If necessary, top up with oil to keep to the previous reference value.

20.4 RECOMMENDED SEALANT

Adhesive/ sealant application

Chart reference	Adhesive	Technical characteristics	Strength
A 1 High	Loctite 510	Flat surface sealing	High
A 2 Low	Loctite 573	Flat surface sealing	Low
A 3 High	Loctite 539	Uneven surface sealing	High
A 4	Loctite 5205	Even surface sealing with possibility of micro movement	High

Thread parts sealant

Chart reference	Adhesive	Technical characteristics	Strength
B 1	Loctite 542	Locking of threaded parts	Medium
B 2	Loctite 270	Locking of threaded parts	High
B 3	Loctite 438	Locking of threaded parts	High, special application

Fixing parts sealant

Chart reference	Adhesive	Technical characteristics	Strength
C 1	Loctite 405	Fixing adhesive	Medium bond
C 2	Loctive 638	Fixing adhesive	Strong bond
C 3	Loctite 542	Fixing adhesive	Medium bond
C 4	Loctite 496	Rubber fixing adhesive	Strong bond

Sealing compounds and adhesives

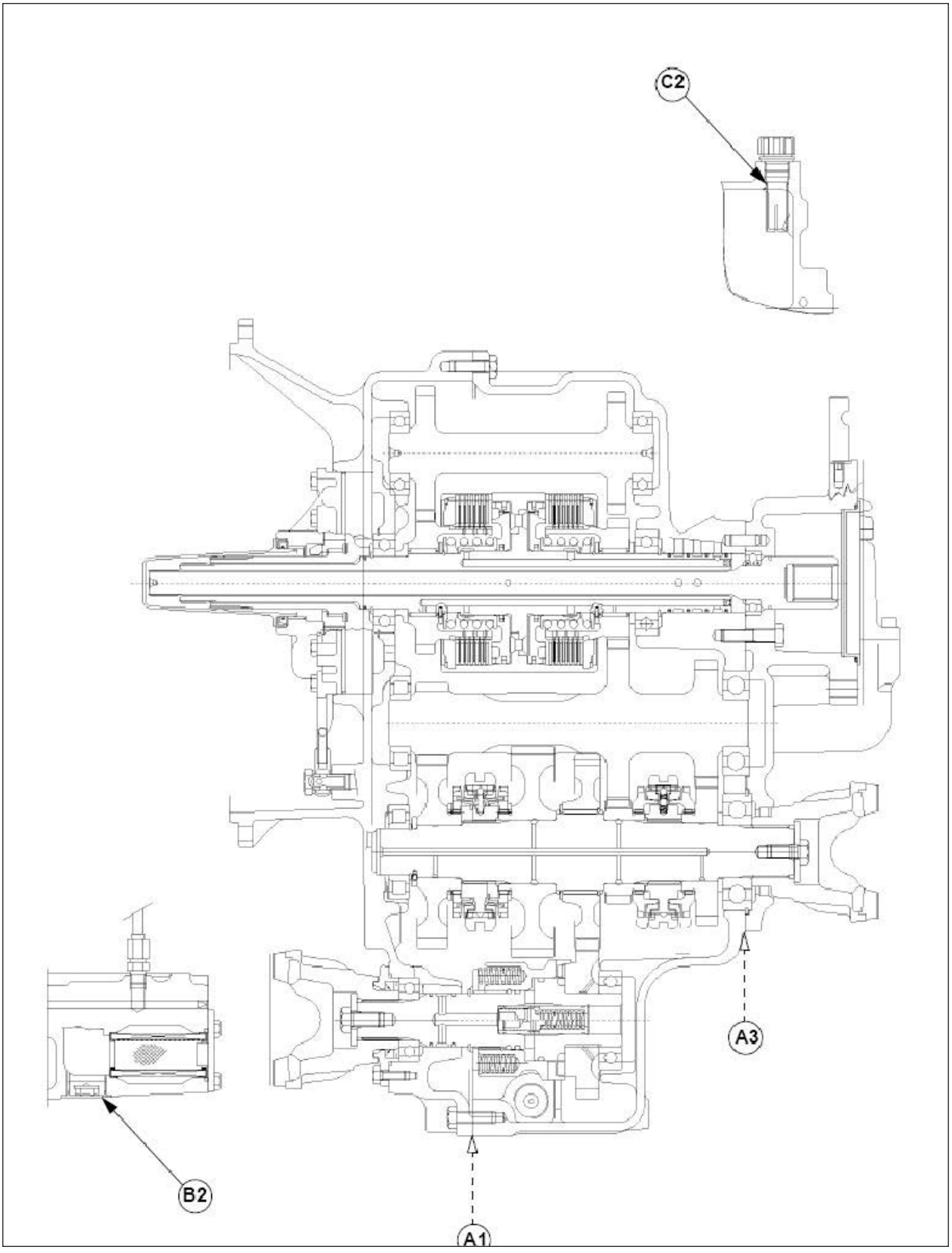

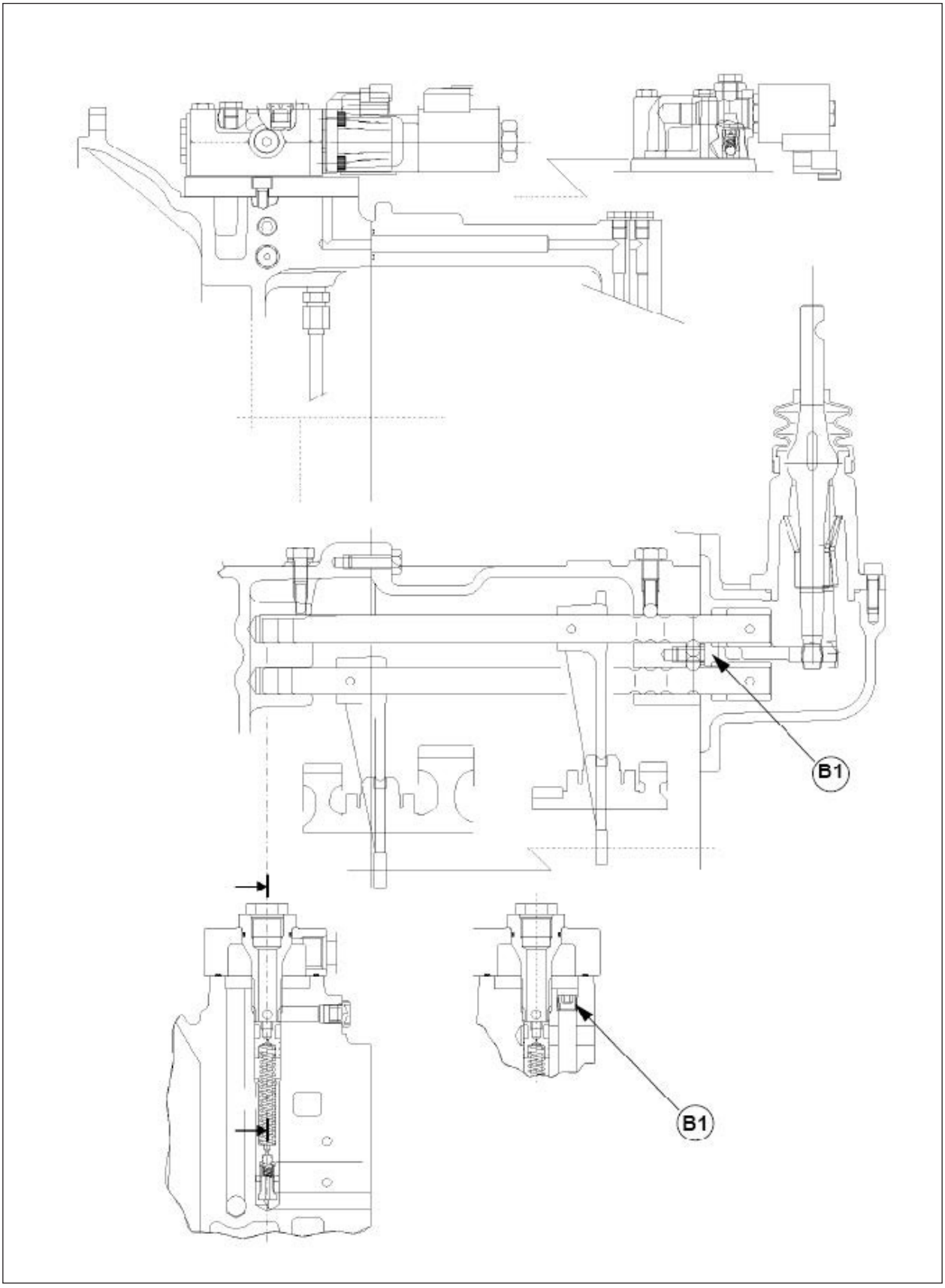
B1
B1

20.5 TIGHTENING TORQUE

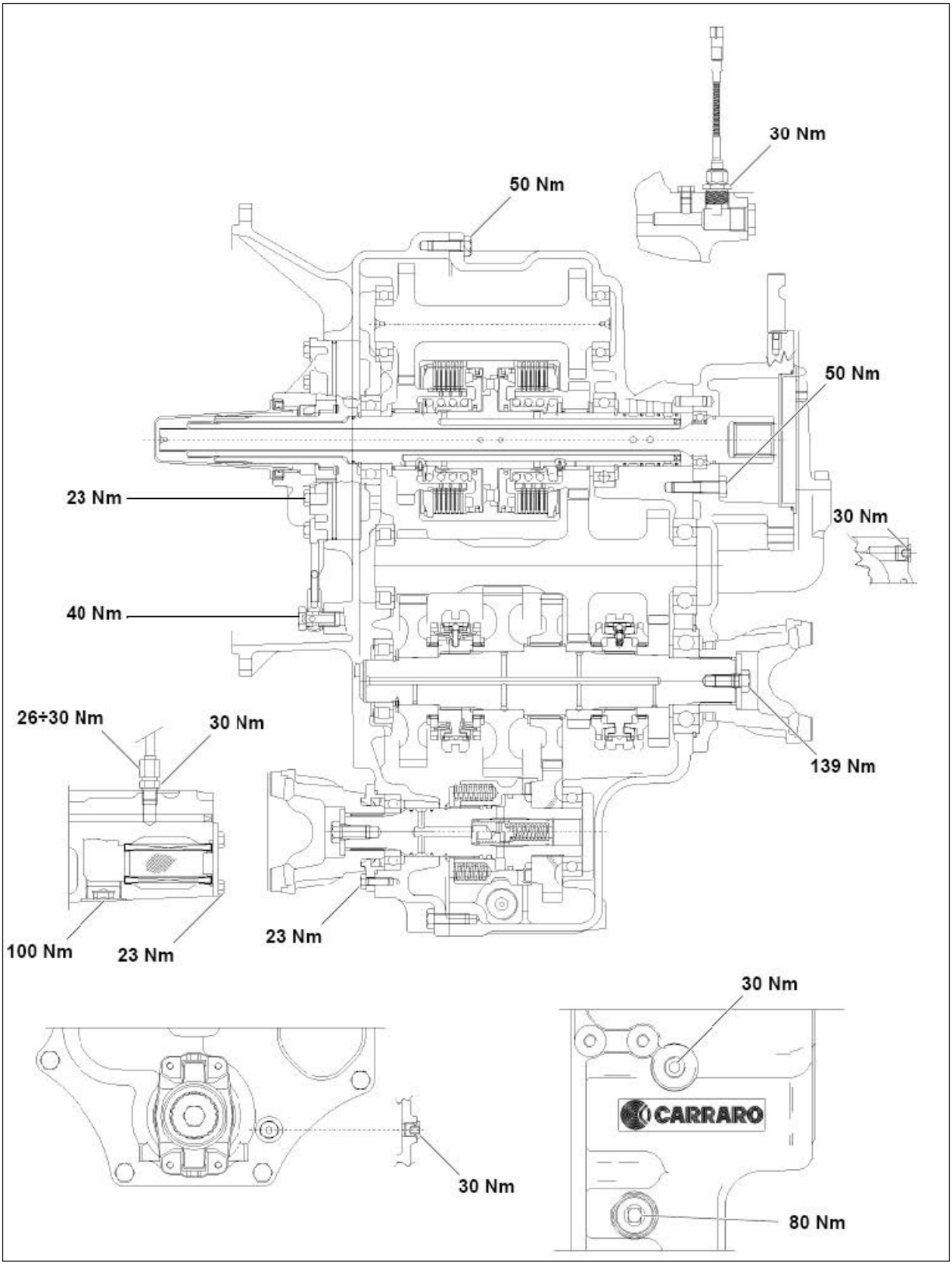

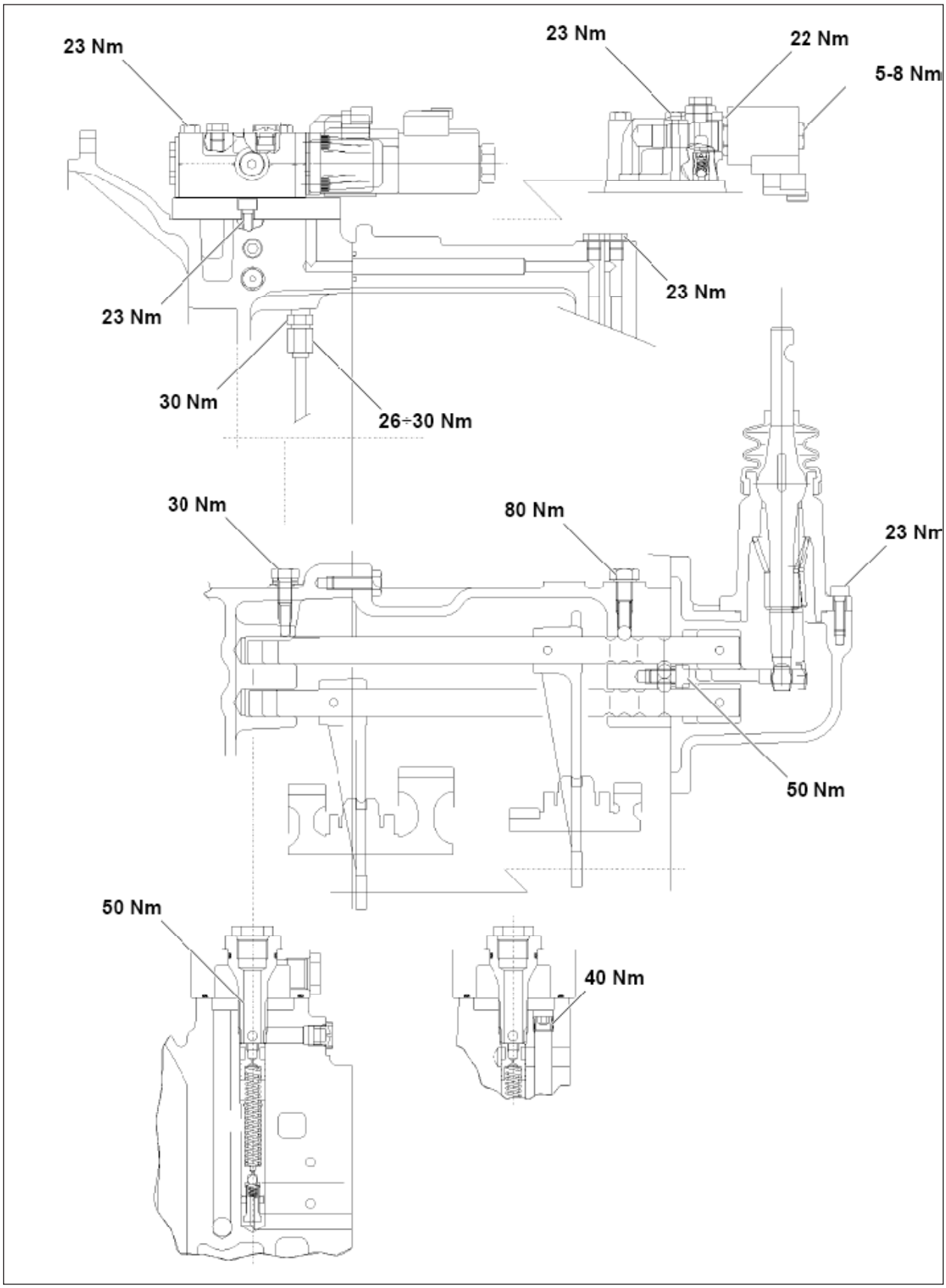
23 Nm
23 Nm
22 Nm
5-8 Nm
23 Nm
23 Nm
30 Nm
26÷30 Nm
30 Nm
80 Nm
23 Nm
50 Nm
50 Nm
40 Nm

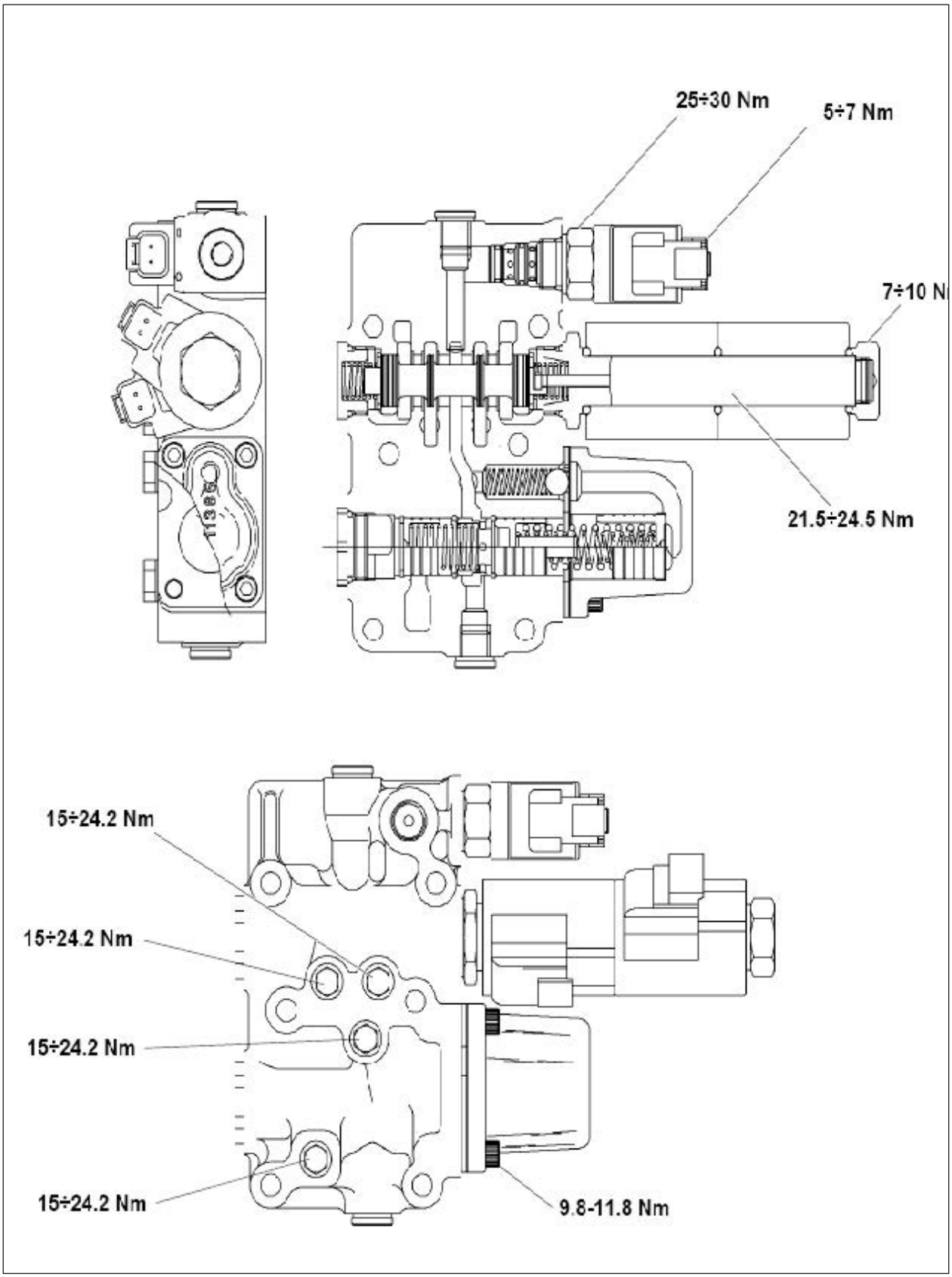
25÷30 Nm
5÷7 Nm
7÷10 N
21.5÷24.5 Nm
15÷24.2 Nm
15÷24.2 Nm
15÷24.2 Nm
15÷24.2 Nm
9.8-11.8 Nm

20.6 REMOVAL & INSTALLATION OF TRANSMISSION

REMOVAL PROCEDURE

1. Park the machine on level surface.
2. Position suitable size of wooden blocks under each rear tyre and raise both the stabilizers. There must be a minimum of 915 mm clearance between the ground and lower rail of the back frame.
3. Raise the loader arm and fit the safety struts. Position the loader bucket in the dump.
4. Stop the engine and release hydraulic pressures from the hydraulic system.
5. Switch off the battery disconnect switch and remove the battery negative terminal from the battery.

⚠ NOTE
Disconnect always the negative (-) terminal from the battery.

6. Remove any one rear tyre assembly for better access to disconnect the transmission.
7. Remove the cabin floor mat in the cabin, and remove the floor plate (3) bolts (1) & washer (2) and remove the floor plate (3).
8. Remove the rivet (4) and holder (5) from the gear lever boot (6) and slide the boot up the gear lever (7).

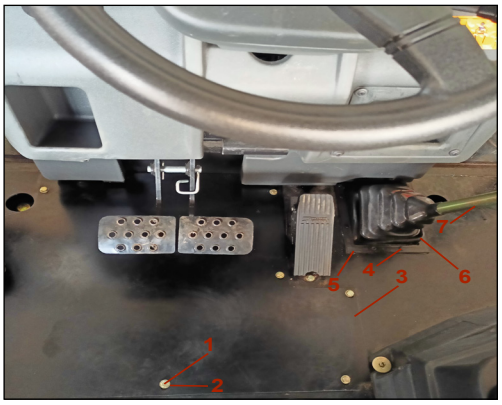

9. Disconnect the clutch switch wiring connection (9) and remove the spring (8) from the gear lever (7).
   Remove the bolt (10) and the nut (11) from the gear lever (7) and remove the lever from the transmission.
   Remove spring holder bolt (12) from the transmission rear cover.

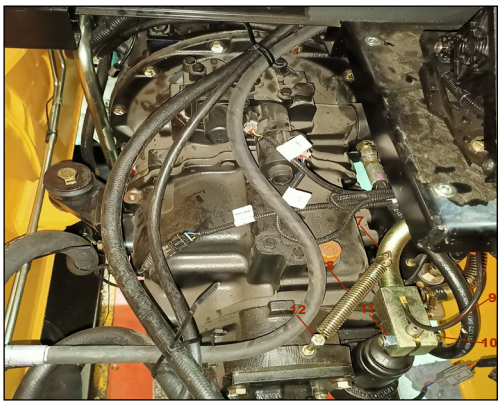

10. Disconnect the wiring harness connector from the transmission direction control solenoid valves (Reverse & Forwards) (13), oil temperature sensor (14), speed sensor connector (15) & 4wd solenoid connector (in case of 4wd only) from the transmission.

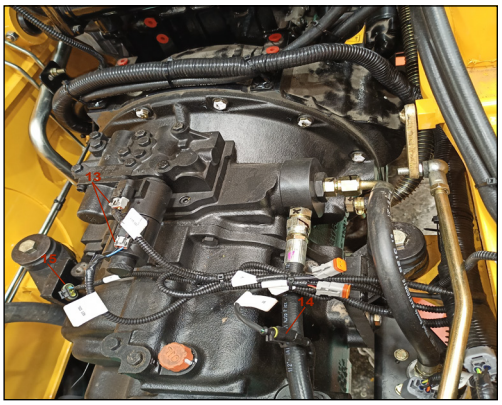

11. Remove the rear drive shaft allen key screw (08 Nos) (16) and bearing strap (04 nos) (17) from the transmission side and rear axle side and disconnect the rear drive shaft (18) from both sides. Lower the rear drive shaft (18) and make sure the needle roller bearing cups are taped to the joint.
12. Remove the front drive shaft allen key screw (04 nos) and bearing strap (02 nos) from the transmission side and disconnect the front shaft from transmission. Lower the drive shaft and make sure the needle roller bearing cups are taped to the joint.

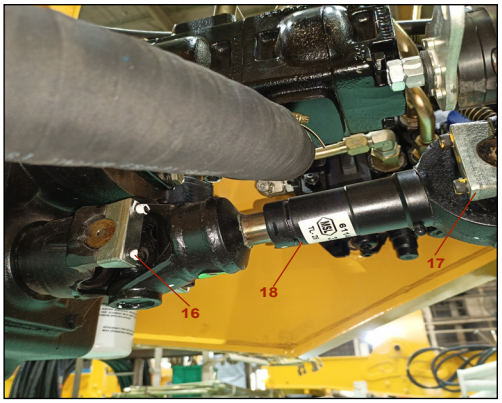

13. Put the oil tray below the machine to collect the oil.
14. Remove the drive clips (19) of the transmission oil cooler input & output (20) hoses and disconnect the hoses from the transmission.



15. Remove the bolts (21) & washers (22) (02 nos, 13mm) of the transmission filter mounting bracket (23) and disconnect the filter hoses (24) from the transmission and disconnect the transmission filter bracket assembly with filter.

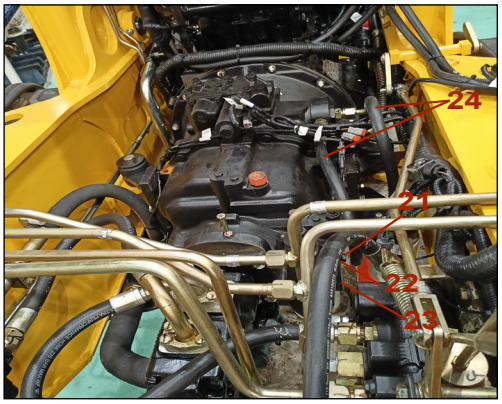

16. Disconnect the hydraulic pump hose P1 (25) from the loader valve block and P2 hose (26) from the priority valve.

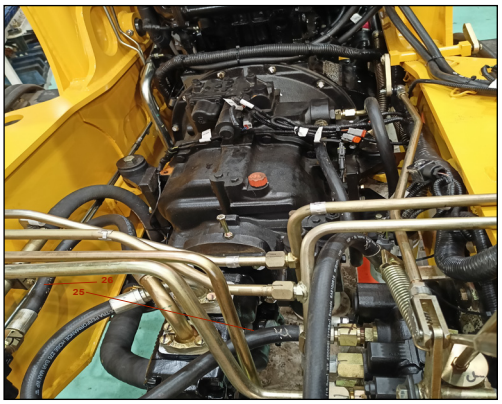

⚠ NOTE

Do not forget to plug the hoses after removal.

17. Remove the drive clip (27) of the suction hose (28) from the hydraulic pump suction elbow side and disconnect the suction hose (28). Hold the suction hose top side with the help of any rope or strap.

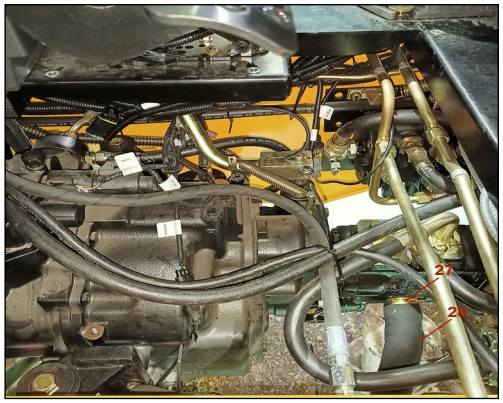

> **⚠ NOTE**
>
> Do not forget to plug the hoses after removal.

18. Remove the bolts (29) and washers (30) of the hydraulic pump (31) from the transmission rear cover and disconnect the hydraulic pump (31) from the transmission.Pull out the transmission dipstick gauge from the dipstic

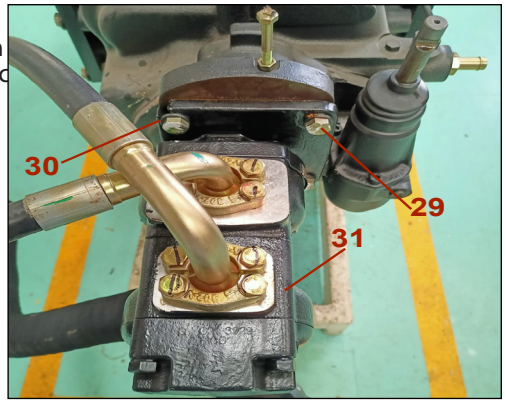

19. Remove the magnetic oil drain plug (32) of the transmission to drain the transmission oil and clean the drain plug (32) and install it back.

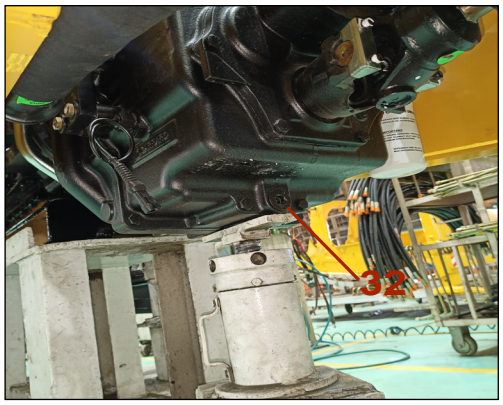

20. Disconnect the dipstick pipe (33) using mounting bolt & nut from engine flywheel housing and remove the bolts (34) and washers (35) (2 nos.,13mm) of the dipstick pipe (33) from the transmission.
21. Put a hydraulic jack below the engine sump, raise the jack and support the engine.
22. Put a suitable hydraulic trolley jack under the transmission and raise the jack to support the transmission.



23. Remove the bolts (36) (12 nos, 17mm) from the transmission and engine flywheel housing to disconnect the engine flywheel and transmission housing. Do not lift the transmission.
24. Unmount the transmission mounting bolts (37) & nuts (24mm, 02 nos), and remove the mounting bolt and pads (38) from the both sides in transmission mounting.

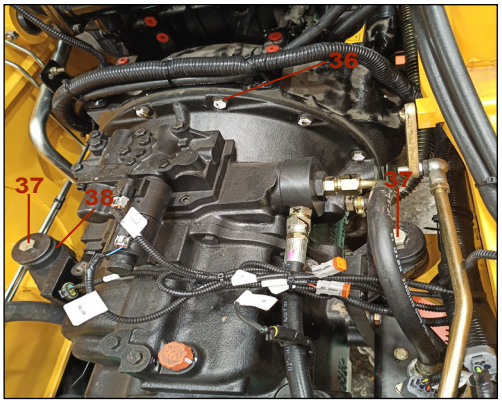

25. Move the hydraulic trolley along with the transmission towards the rear axle to disengage the torque converter lugs and transmission input shafts from the torque converter assembly.

⚠ NOTE

Make sure that the transmission does not slip on the jack when moving. This may cause damage to the torque converter and flywheel. Lower the transmission and remove from the chassis.

Installation procedure

1. Install the transmission in the reverse order of the removal but note the following.
2. Using a trolley jack move the transmission under the chassis
3. Make sure that the torque converter is fitted correctly on the transmission input shaft.
4. When assembling the engine and transmission make sure that the torque converter drive spigots are in mesh with the spigots on the transmission oil pump. To check, rotate the torque converter whilst bolting the gear box bell housing
5. **Note :** If you are unable to rotate the torque converter, you must stop tightening the gear box to the bell housing or you will damage the oil pump drive. Remove the gear box and realign the torque converter drive spigot with the spigots of the transmission oil pump.
6. Install the bolts (37) and the nuts (38) in the bell housing (39) in the position marked during the removal procedure. Tighten the bolts (37) and the nuts (38) by hand. Do not torque the hardware until the transmission is installed in its mountings
7. Torque the bell housing bolts (37) and nuts (38) to 140 Nm. Torque the transmission mounting centre bolts (36) and nut (34) to 395 Nm.
8. Install the new transmission oil filter. Turn the filter until the seal is in contact with the filter body and tighten the filter a further half turn by hand.
9. Torque bolts (18) to 41 Nm.
10. Install the eight bolts and nuts (1 and 3) in coupling flange (2). Torque the bolts (27) and the nuts (28) to 48 Nm.
11. Connect all the battery cable, wiring harness and hoses in their respective locations.
12. Fill the transmission with specified oil.
13. After transmission oil replenishment, start the engine and check all transmission oil pipe for leaks.
14. For a few minutes' drive the machine in 1st and 2nd gear and then stop the engine.
15. Raise the backhoe stabilizer and remove the packing pieces.
16. Carryout a functional test of the transmission.
17. Check for oil leaks and rectify any faults if found.

20.7 TORQUE CONVERTER REMOVAL & INSTALLATION

Removal procedure

1. Remove the transmission assembly. Refer transmission removal and installation guide in this earlier part of the manual.

2. Remove the eight engine flywheel to torque converter bolts (18) and the washers (19) from the torque converter flexible plate assembly (20) and remove the torque converter.

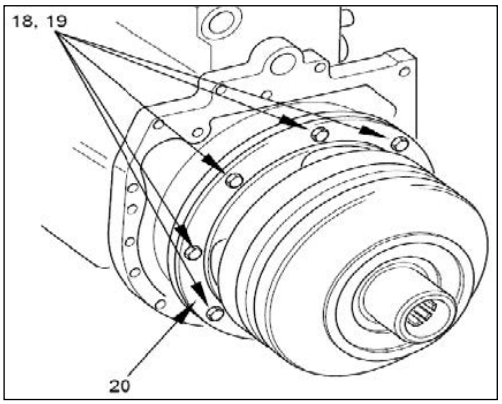

Installation procedure

Procedure for installing the torque converter and transmission together on to the engine.

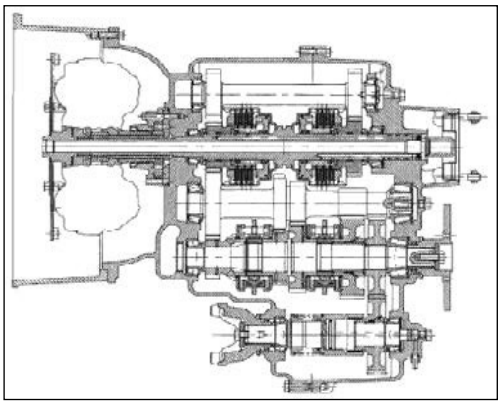

Attached a dial indicator to the engine flywheel and check whether the run out of the flywheel housing bore diameter and the housing mounting face is within 0.008 inches. With the dial indicator attached to the flywheel housing, check the run out of the flywheel pilot bore not exceed 0.005 inches (Refer appropriate engine service manual for correct procedure for checking run out).

Loosely assemble the drive plate to the converter. Check that the outer bolt circle of the circle plate is concentric to the converter pilot pin within 0.015 inches. Then torque the bolts to _____ Nm.

Apply an anti seize compound to the pilot pin of the converter.
Ensure that the converter drive lugs are correctly aligned with transmission pump lugs, then assemble the torque converter and drive plate assembly onto the transmission. Take care not to damage the pump oil seal or support bush. Rotate the converter assembly to check that it is correctly engaged in the pump.

Assemble the transmission and converter assembly onto the engine and tighten the bell housing bolts. Loosely fit the drive plate to flywheel bolts and rotate the converter several times to seat it, then torque the bolts.

Procedure for installing the torque converter and transmission separately.

If the above procedure cannot be followed due to absence of an access hole in the flywheel housing, then the converter and drive plate assembly need to be fitted to the engine first. This method however is not recommended as the possibility of damaging the transmission pump or oil seal are high.

If this method must be used, then the following check should be done:

With the converter fitted to the engine attach a dial indicator to the flywheel housing and check that the run out of the converter drive hub does not exceed 0.008 inches.

20.8 TRANSMISSION DISASSEMBLY & ASSEMBLY

Disassembly procedure

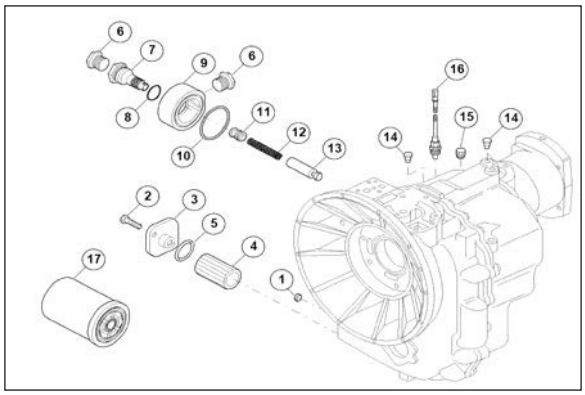

1. Install the transmission on a suitable support.

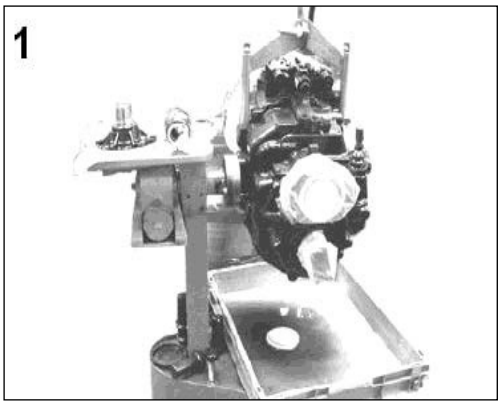

2. Remove the drain plug (1) and drain the oil from the transmission.

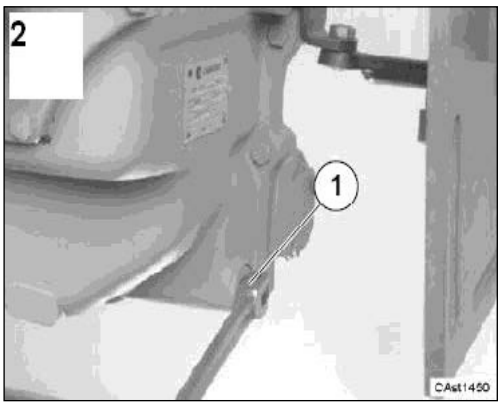

3. Remove the two cap screws (2) which fasten the cover for the oil screen. Remove the cover (3).

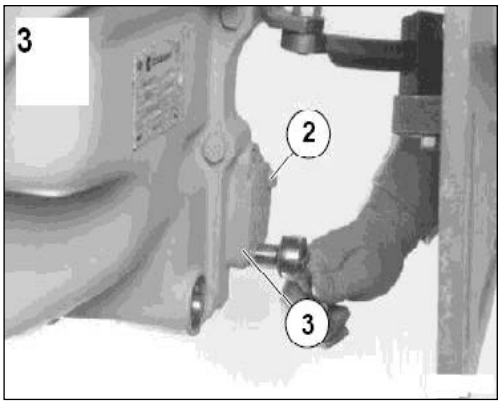

4. Remove the oil screen (4) and the O-ring (5).

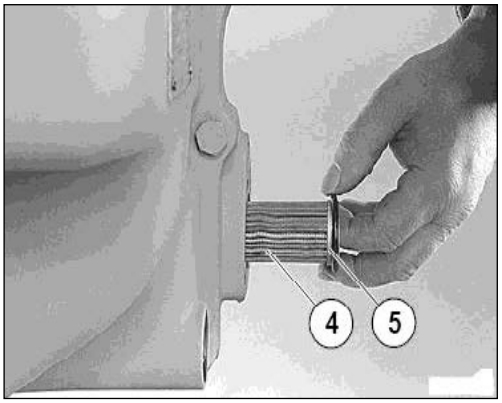

5. Remove the connector for the oil filter (7) and its elements, plug (6) and cover (9).

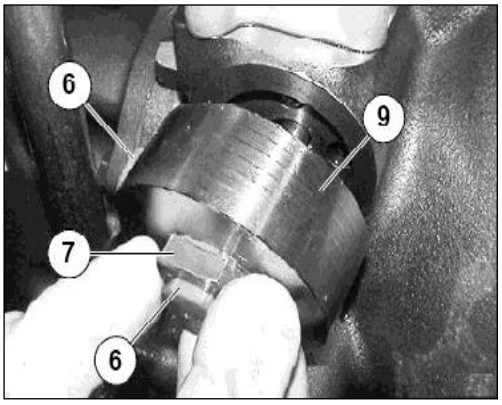

6. Remove the connector (7) from the cover (9). Remove the O ring (8).

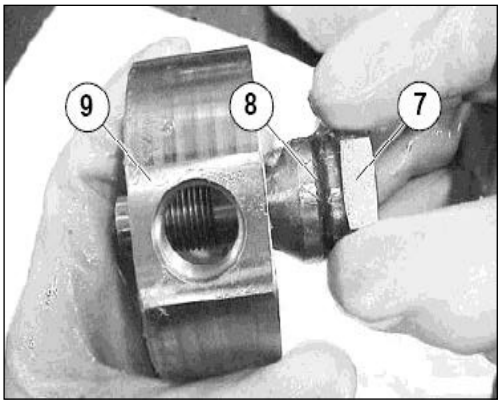

7. Remove O ring (10) from cover (9).

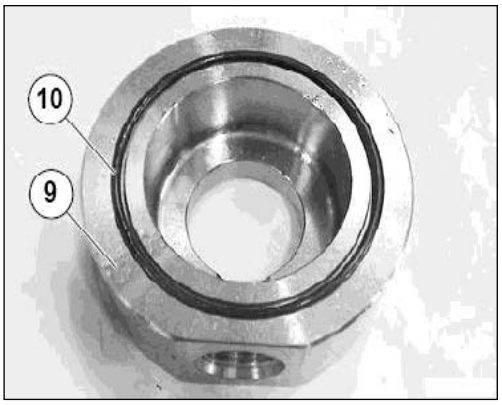

8. Remove the spool (11).

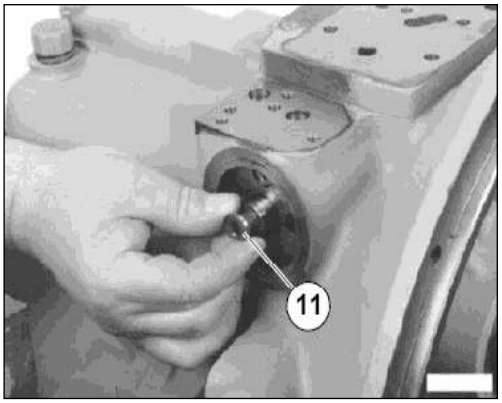

9. Remove the spring (12)

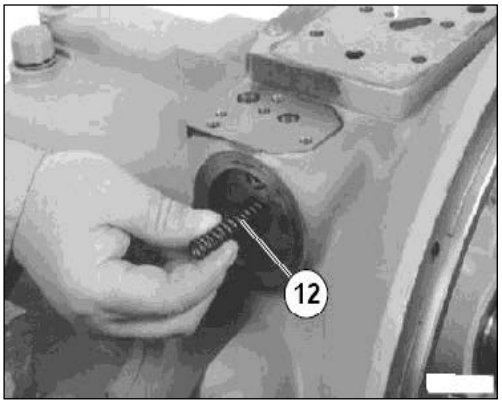

10. Use a puller to remove the regulator pressure valve (13).

⚠ NOTE

The valve is adjusted at the factory. DO NOT try to disassembly or adjust the four wheel drive priority valve, if any of the parts are damaged, use a new valve.

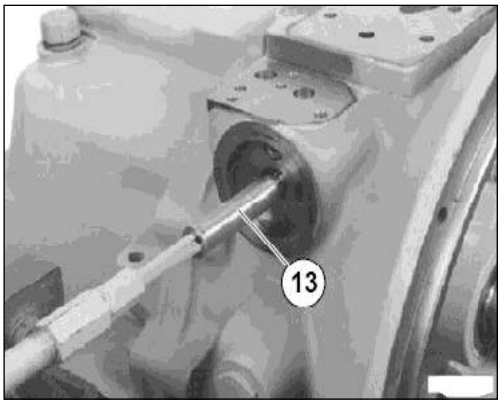

11. It is not necessary to remove the port plugs (14), the breather (15) or the oil temperature sensor (16) unless these parts are leaking or damaged.

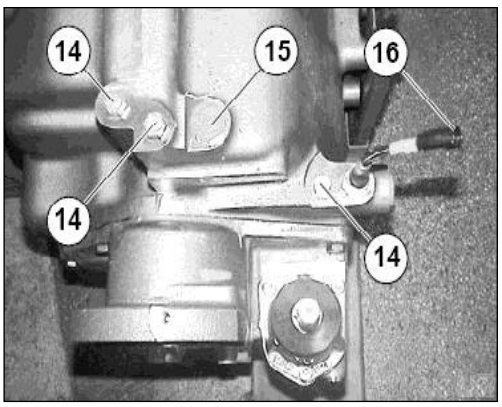

Assembly

1. Assemble the port plugs (14), the breather (15) and the oil temperature sensor (16).

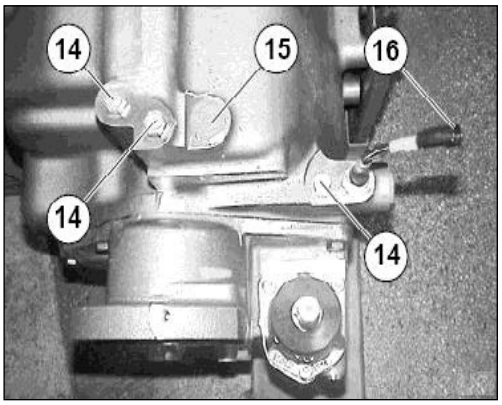

2. Assemble valve (13).

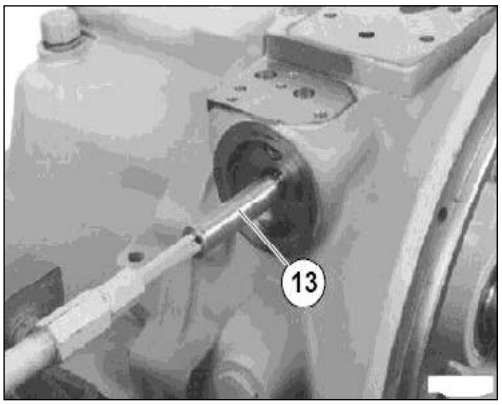

3. Assemble spring (12).

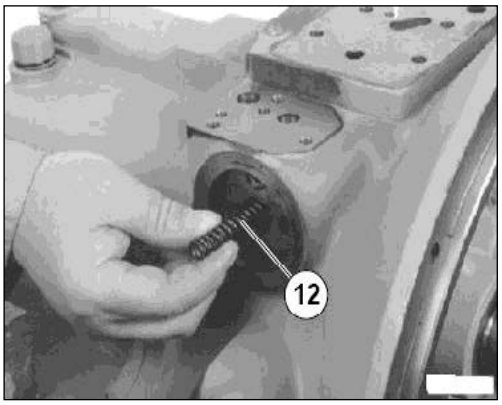

4. Assemble spool (11).

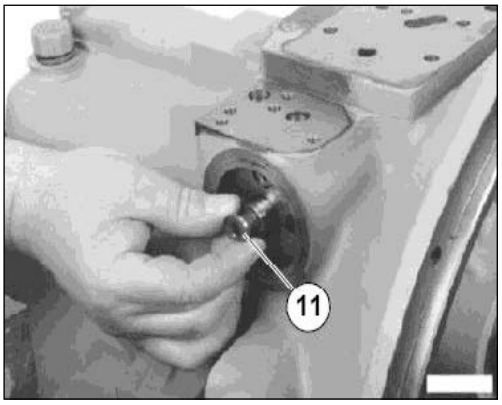

5. Assemble O ring (10) on the cover (9).

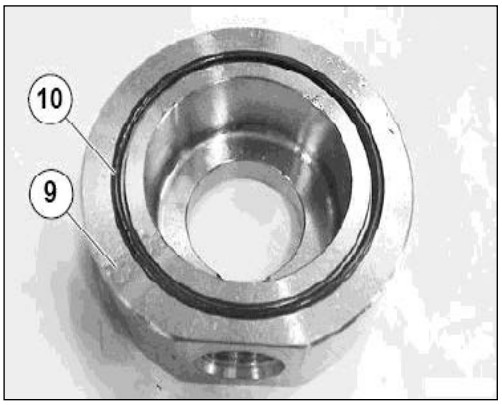

6. Assemble O ring (8) on the connector (7), and the connector on the cover (9).

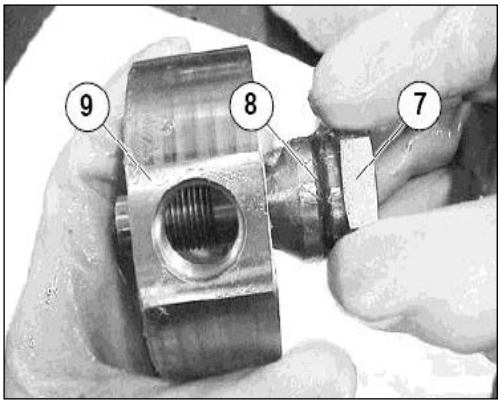

7. Assemble the connector (7) and plugs (6). See tightening torque.

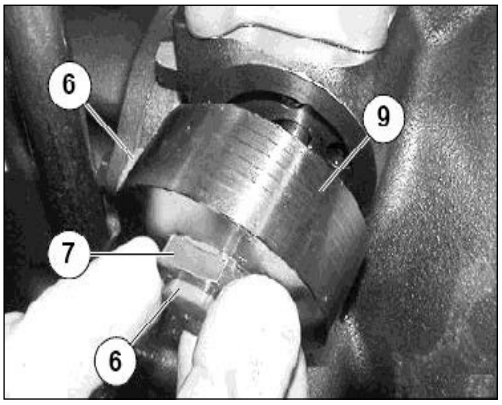

8. Assemble filter (4) and O ring (5) after having washed or replaced it.

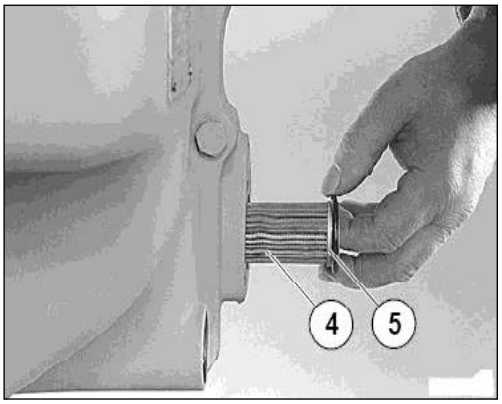

9. Assemble cover (3) and screws (2). Tightening torque see C9.

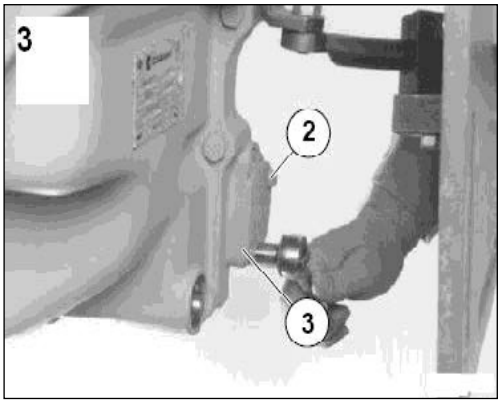

10. Assemble plug (1). Tightening torque see C9.

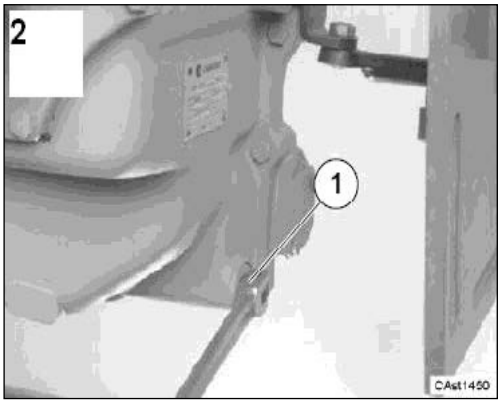

11. Check the oil filter (17) assembly. Lubricate the filter gasket and screw in clockwise until the gasket makes contact with the base then screw in again the filter 2/3 turn.

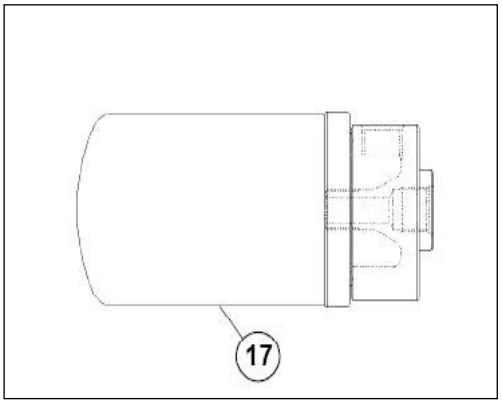

20.9 DISASSEMBLY & ASSEMBLY OF OIL PUMP

DISASSEMBLY

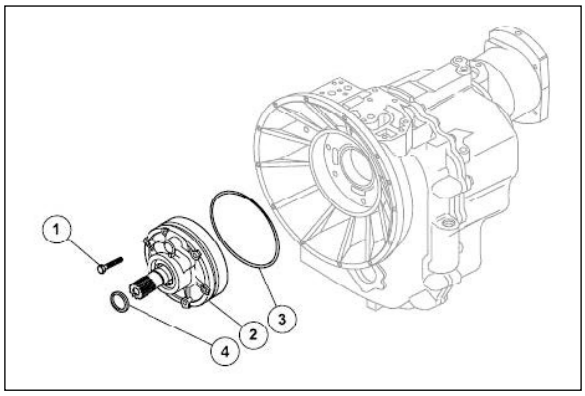

1. Drain oil from transmission hydraulic circuit. Remove the bolts (1).

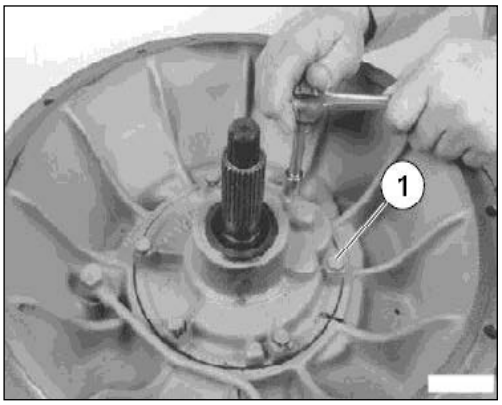

> **⚠ WARNING**
> Make reference mark on the pump bell housing before removing tightening the screws.

2. Remove the pump by means of two levers.

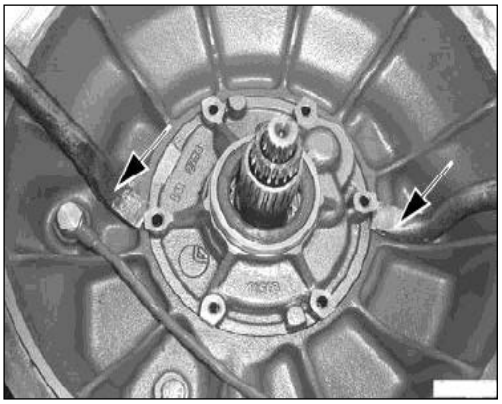

3. Remove the oil pump (2).

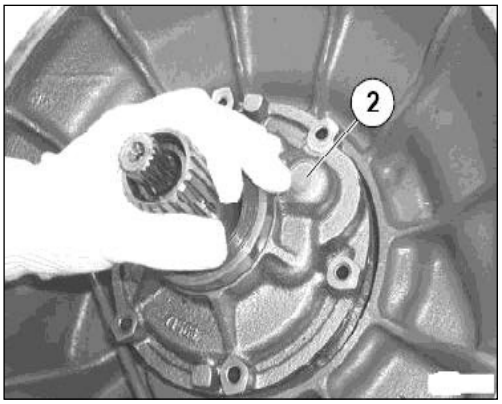

> **⚠ WARNING**
> Oil pump seal ring can be damaged during this operation.

4. If replacement is necessary, remove O ring (3).

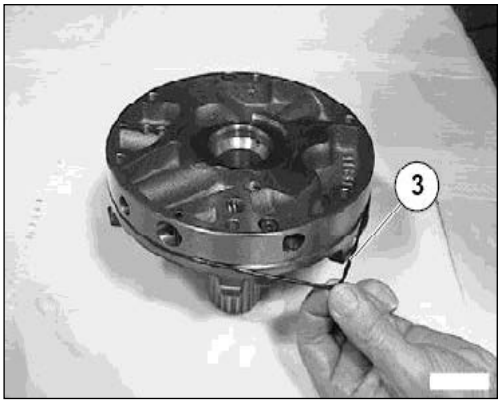

> **⚠ WARNING**
> Do not open/disassemble the pump or its operation may be compromised. Special tools are required for reassembly.

5. Check the condition of the seal ring (4) on oil pump. remove and replace the seal if damaged. See next step.

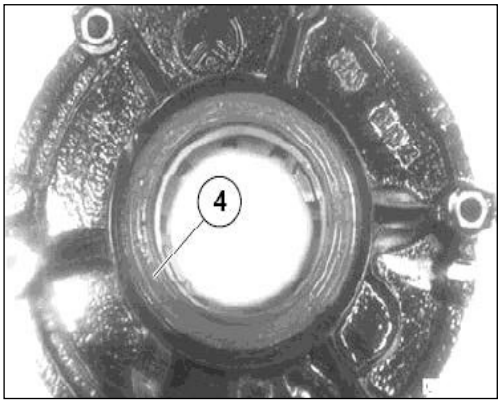

Assembly

1.

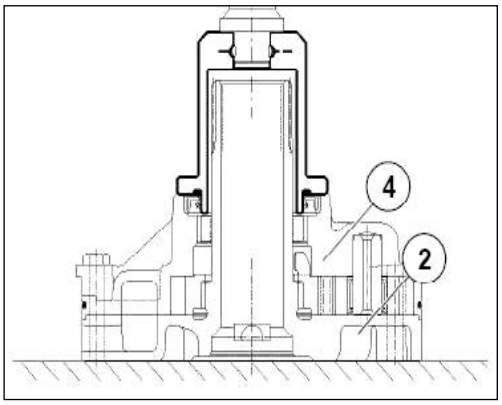

> **⚠ NOTE**
> Assembly scheme of the new seal ring (4) on oil pump (2) with special tool CA715409 and a hammer. Lubricate with polymer 400L grease the lip of the seal ring.

2. Assemble O ring (3)

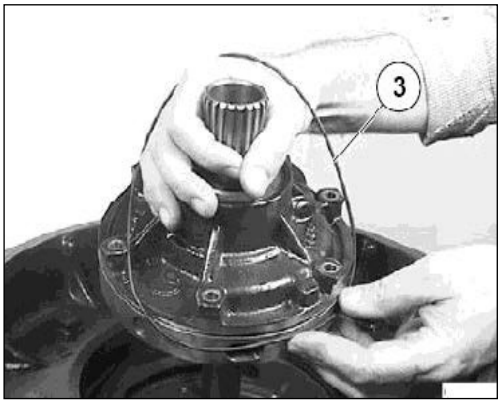

3.

⚠ WARNING

Before oil pump assembly (if new), check that oil passage holes between pump and half case or the visual marks coincide.

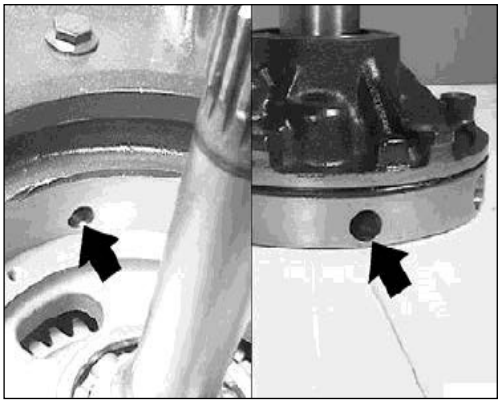

4. Grease the ring to keep it centred/coaxial with respect to the shaft slot centre line and to make the introduction onto the pump easier.



5. Apply a thin film of grease on the coupling seat with the front half case. Assemble the oil pump (2).

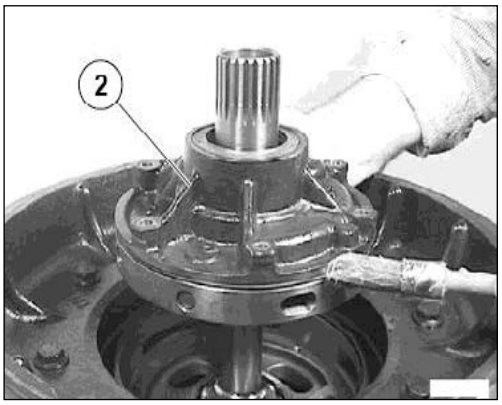

6. Fit screw (1). See tighten torque

⚠ WARNING

Carefully check that marks on the oil pump and on the bell housing coincide.

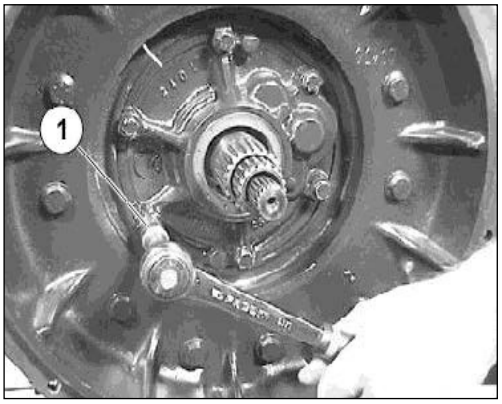

20.10 REMOVAL & INSTALLATION OF PIPE

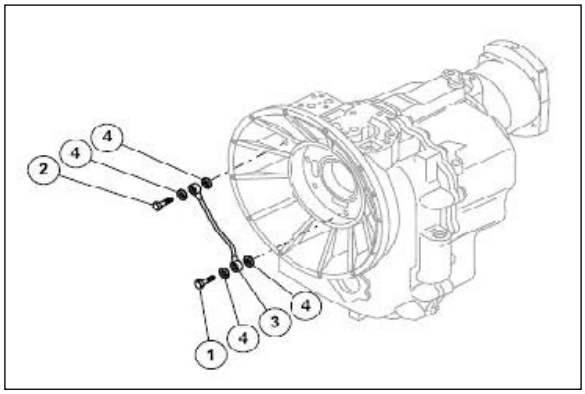

REMOVAL

Drain oil from transmission hydraulic circuit and remove screws (1) and (2). Remove pipe (3). Collect gaskets (4).

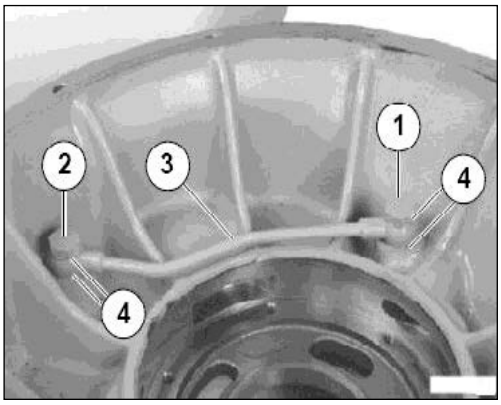

INSTALLATION

Assemble pipe (3), screws (1) and (2).

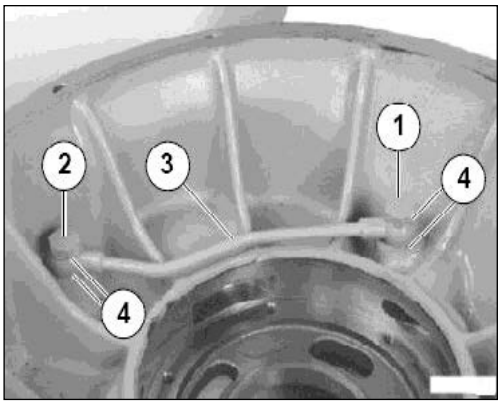

⚠ WARNING

Replace gaskets (4). See tightening torque.

20.11 DISASSEMBLY & ASSEMBLY OF HYDRAULIC CONTROL VALVE

DISASSEMBLY

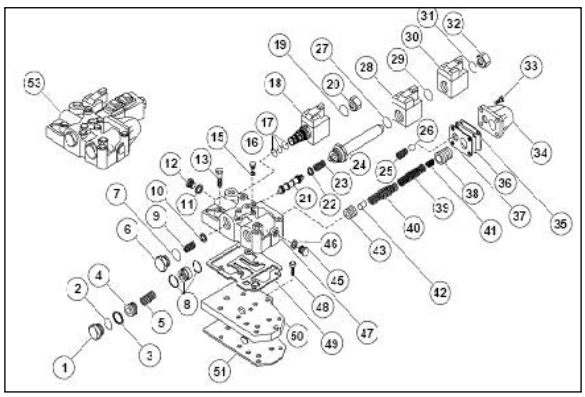

1. Before removing hydraulic control valve disconnect all electrical wires and drain the hydraulic oil from the transmission. Remove the screws(13) and remove the control valve (53).

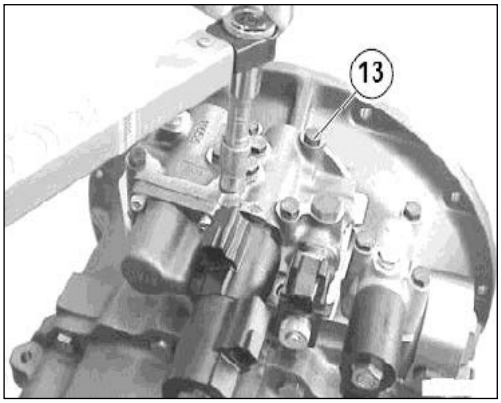

2. Remove the gasket.

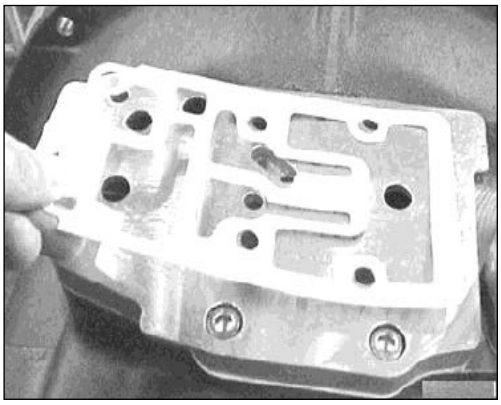

3. Remove the screw (48) and the plate (50).

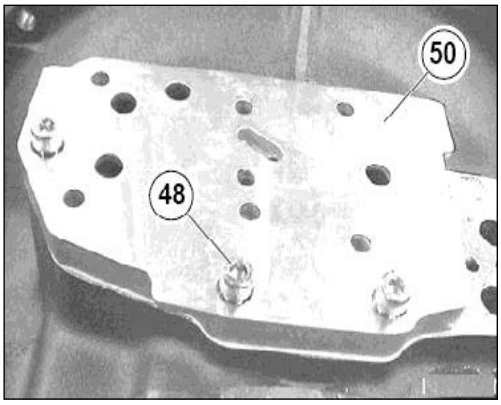

4. Remove the gasket (51).

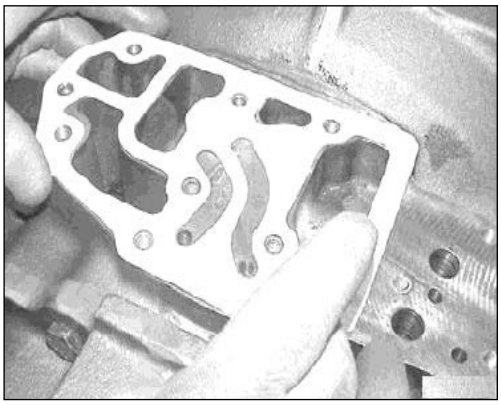

5. Lock the control valve (53) with a clamp.

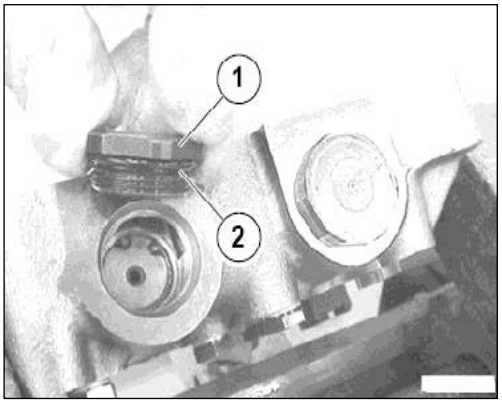

6. Remove the plug (1). Remove the O ring (2).

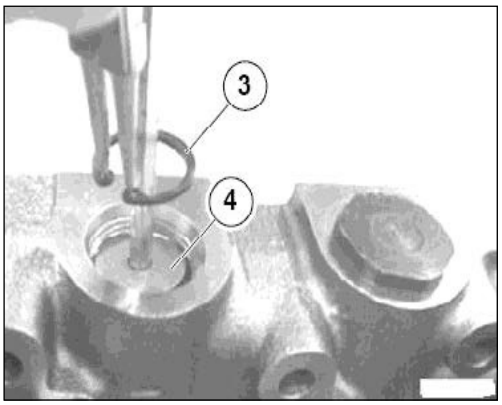

7. Remove the piston (4) and the spring (5).

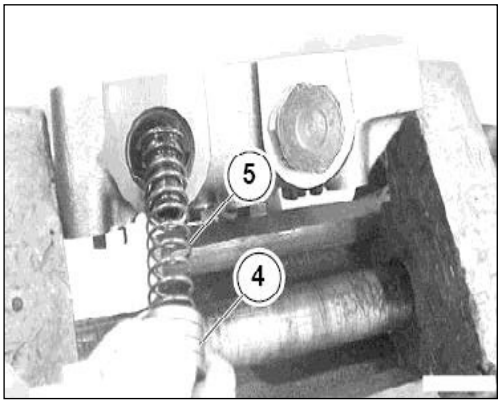

8. Check the wear conditions of removed parts

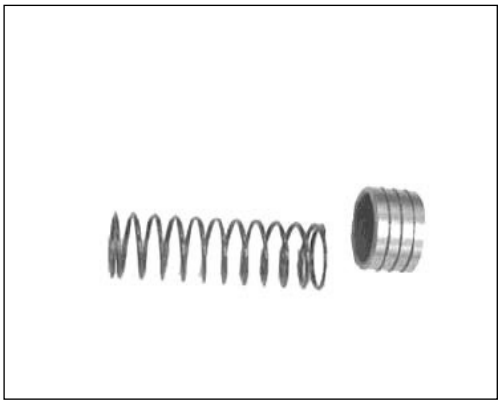

9.

⚠ WARNING

Do not remove from control valve (47) piston (8). If piston (8) is removed the control valve body (47) has to be replaced with a new one.

⚠ WARNING

If the piston (8) has to be replaced, order the control valve body kit (47).

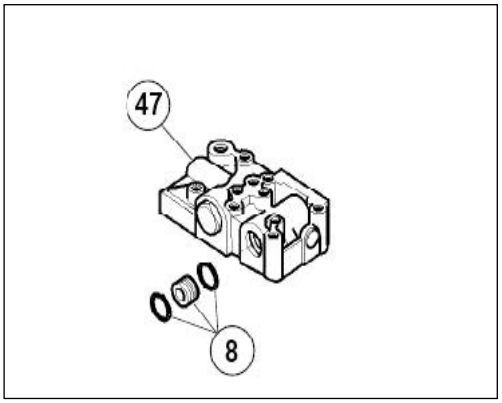

10. Remove the plug (6). Remove the O ring (7).

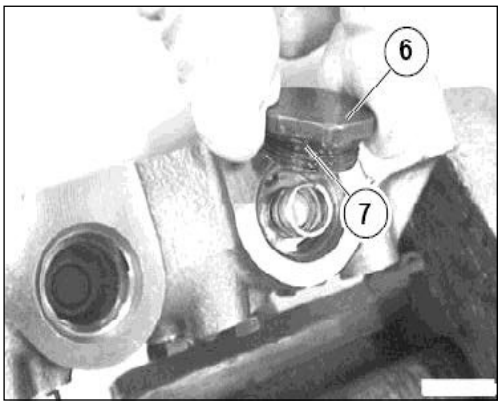

11. Remove spring (9).

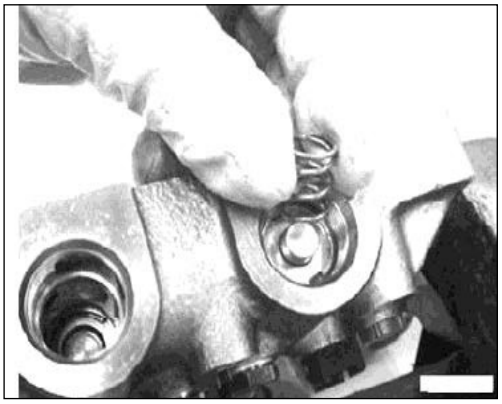

12. Remove thrust washer (10).

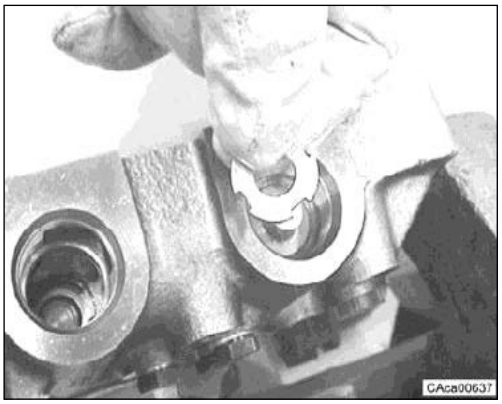

13. Turn the control valve (47). Remove the screw (33).

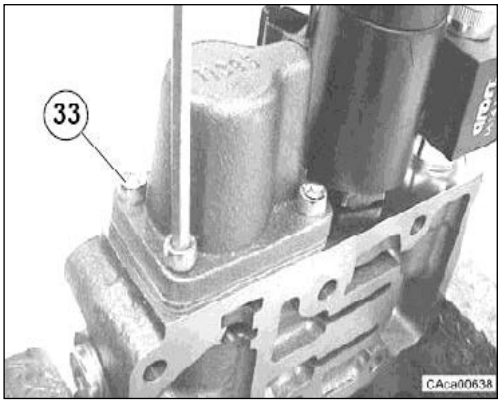

14. Remove the valve cover (34).

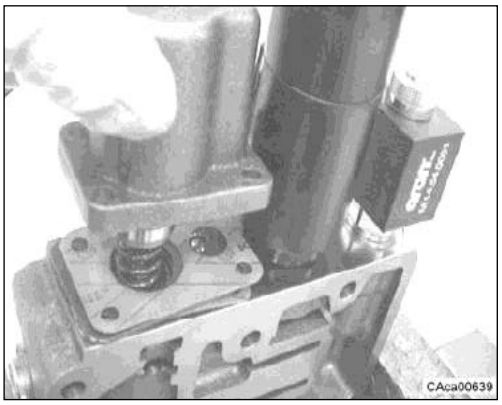

15. Remove the plate gasket (35).

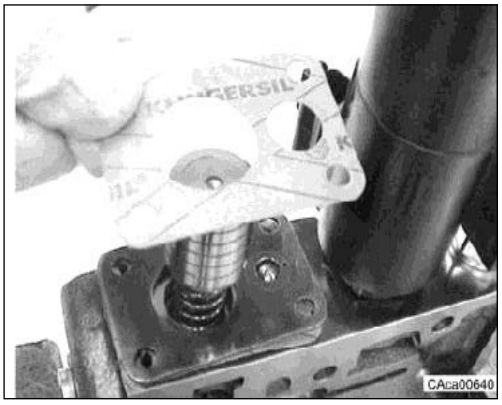

16. Remove the plate (36).

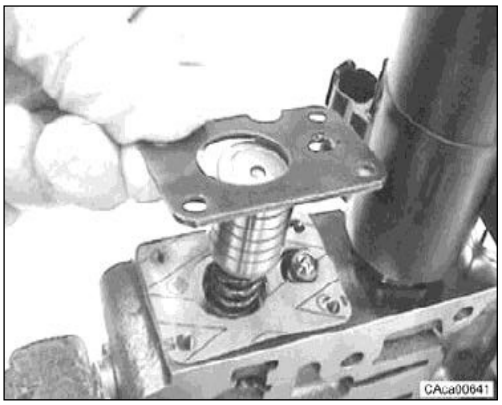

17. Remove the outward piston (38), the springs (39, 40,41), the pin (42) and the inward piston (43).

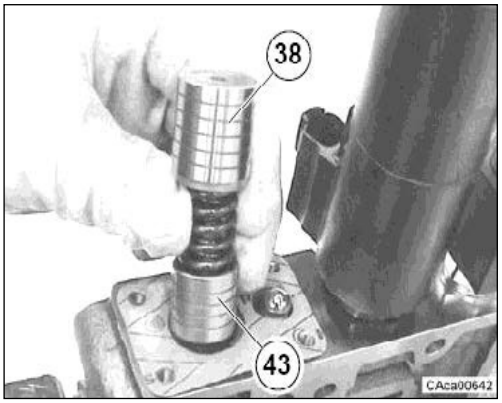

18. Check the wear conditions of removed parts.

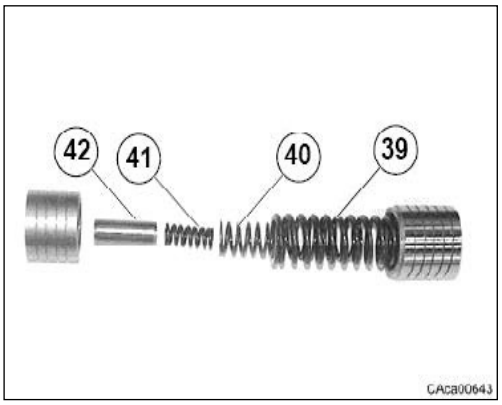

19. Remove the plate gasket (37).

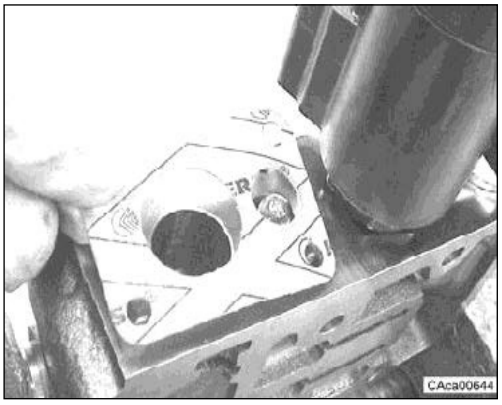

20. Remove the ball (26).

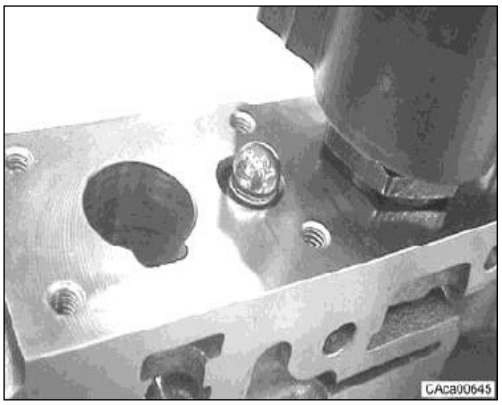

21. Remove the spring (25).

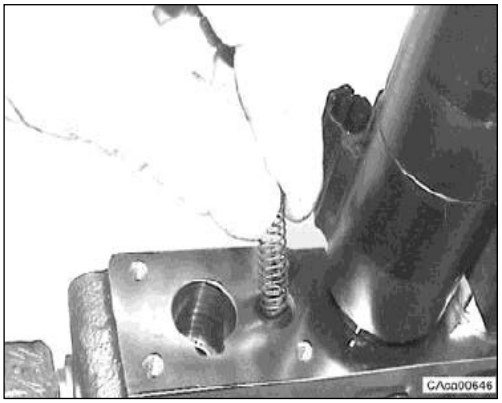

22. Remove the plug (32). Remove the O ring (31).

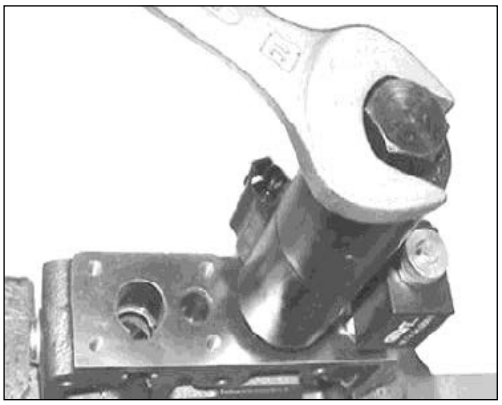

23. Remove the solenoid (30) and O ring (29).

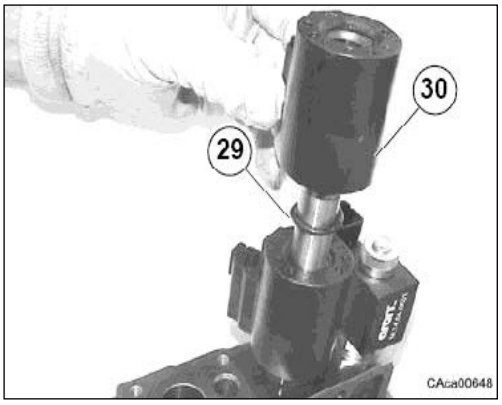

24. Remove the solenoid (28) and O ring (27).

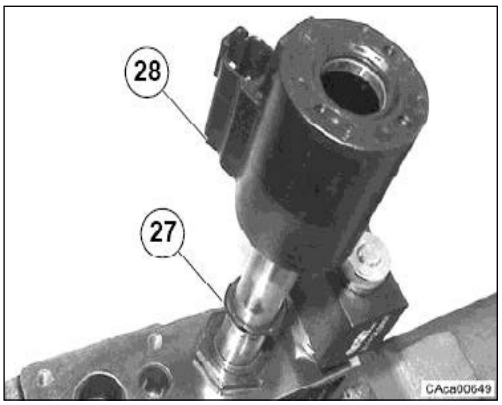

25. Unscrew the solenoid tube (24).

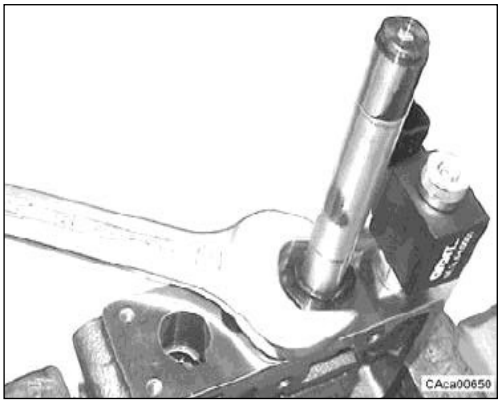

26. Remove the solenoid pipe (24) with spool (21).

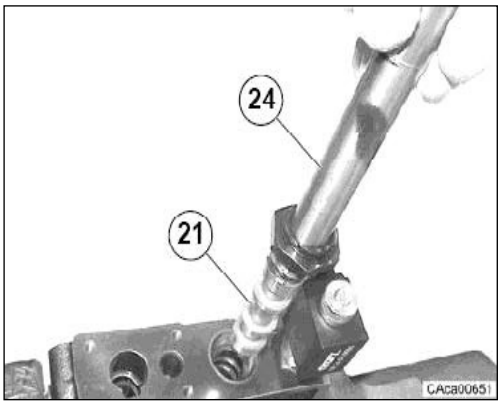

27. Disassemble the spool (21) from the solenoid tube (24).

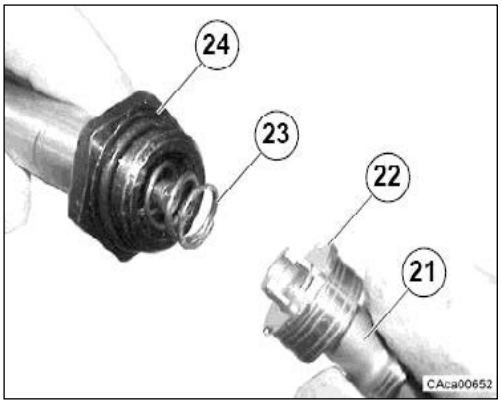

28. Remove the spring (23) and the thrust washer (22). Check the wear conditions of removed parts.

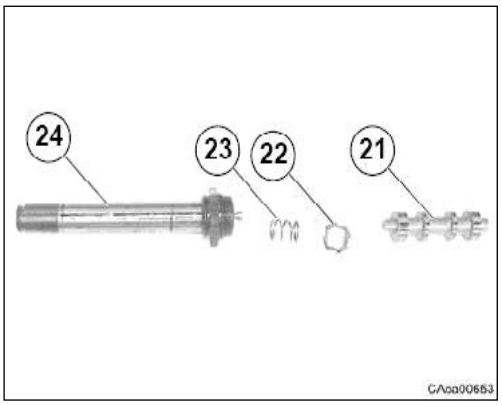

29. Unscrew the nut (20).



30. Remove the O ring (19), solenoid (18) and O ring (17).

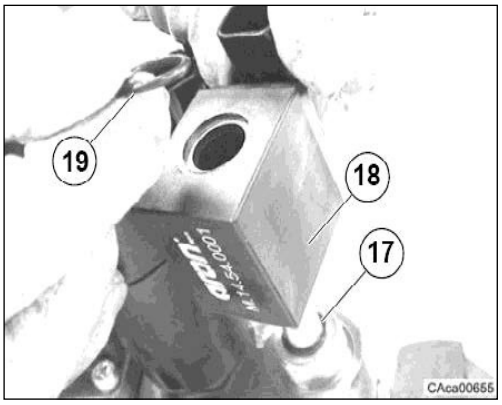

31. Unscrew the solenoid tube (18).

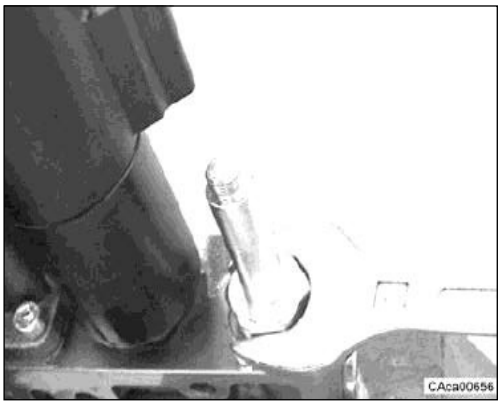

32. Remove the O ring (17).

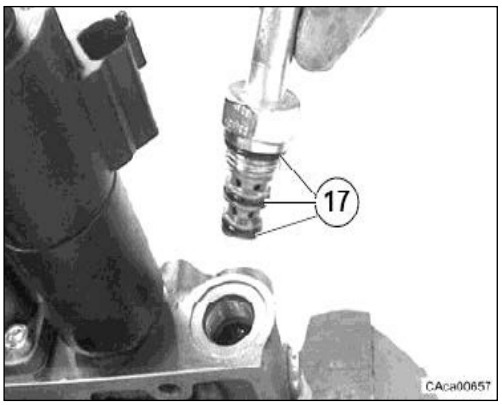

33. Check the wear conditions of the removed parts.

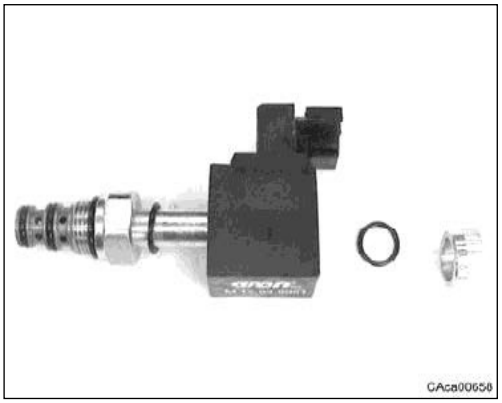

ASSEMBLY

1. Assemble the O rings (17).

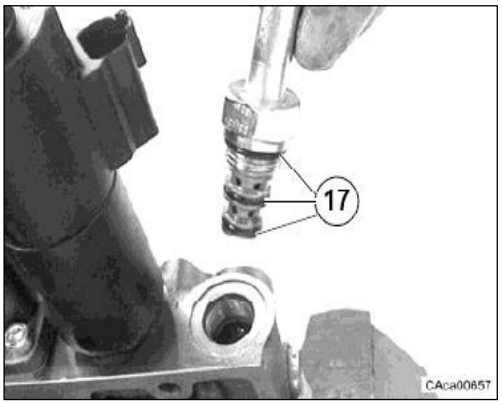

2. Assemble the solenoid tube (18). See tightening torque.

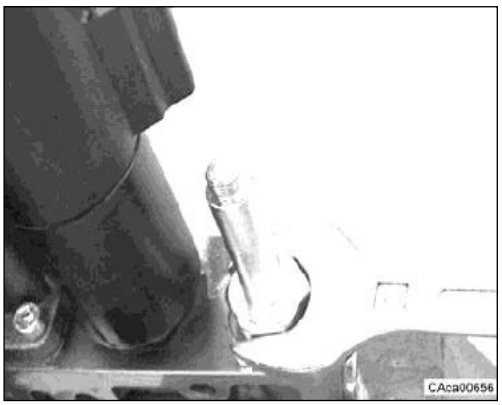

3. Assemble the O ring (17), solenoid (18) and O ring (19).

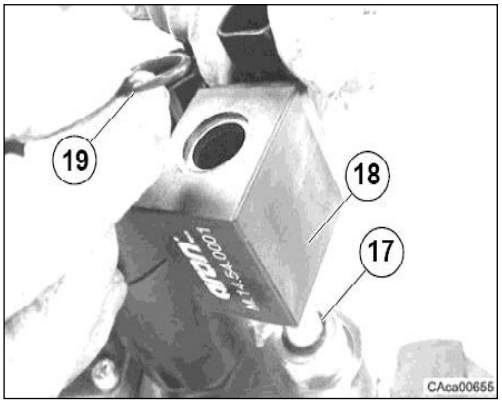

4. Assemble the nut (20). See tightening torque.



5. Assemble the solenoid tube (24) and spring (23) at the spool (21) and thrust washer (22).

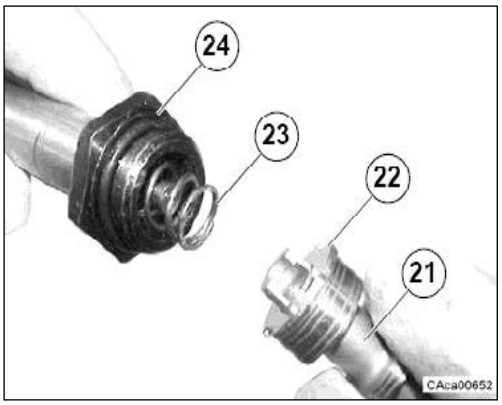

6. Assemble the solenoid pipe (24) with spool (21) to the control valve.

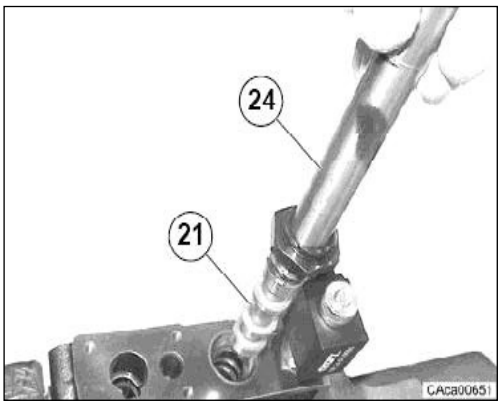

7. Screw the solenoid tube (24). Tightening torque see C9.

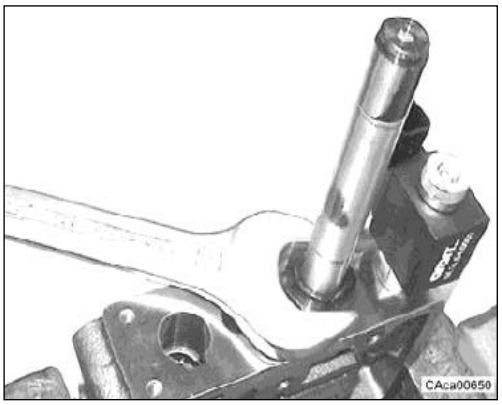

8. Assemble the O ring (27) and solenoid (28).

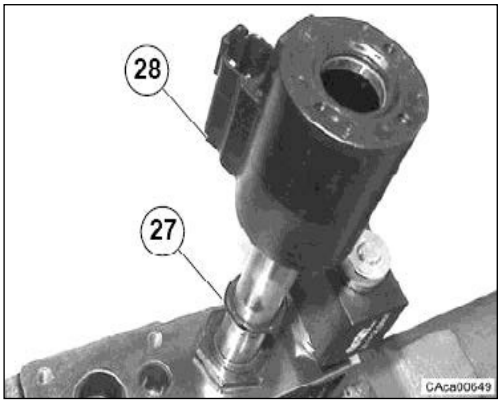

9. Assemble the O ring (29) and solenoid (30).

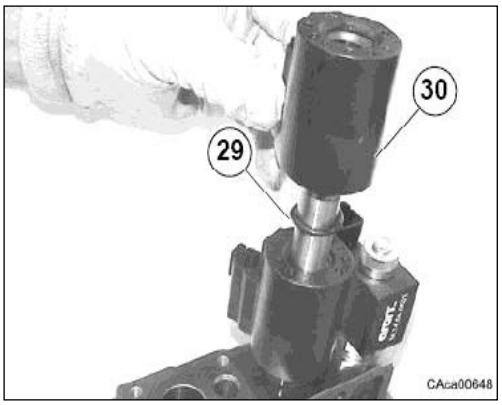

10. Assemble the O ring (31) on the plug.
Assemble the plug (32). See tightening torque.

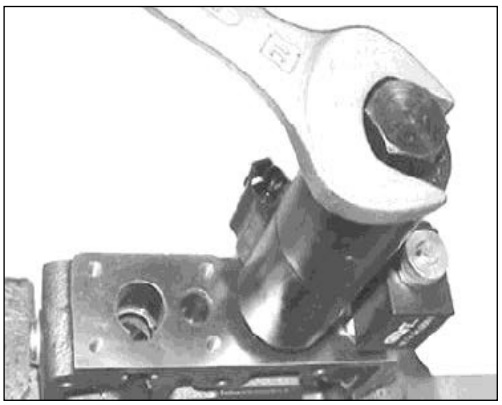

11. Assemble the spring (25).

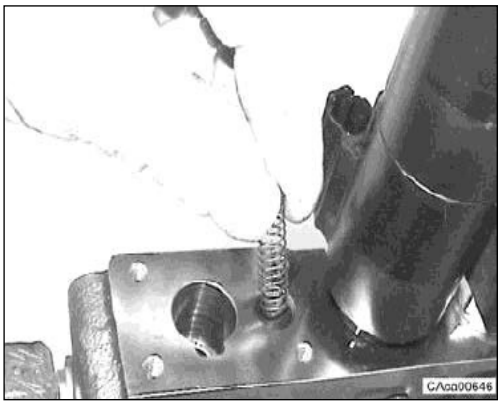

12. Position the ball (26).

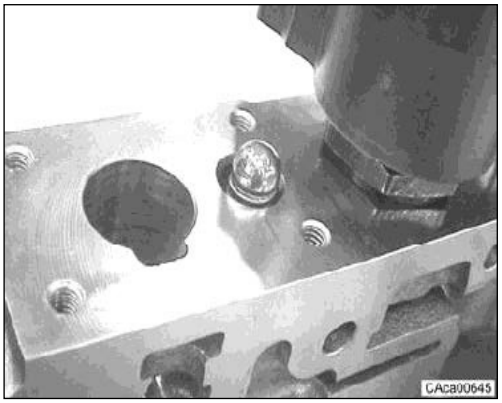

13. Assemble the plate gasket (37).

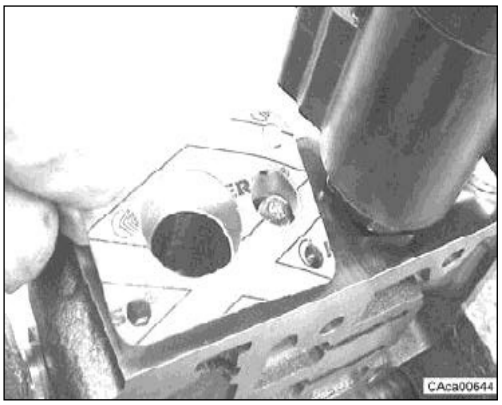

14. Preassemble the components.

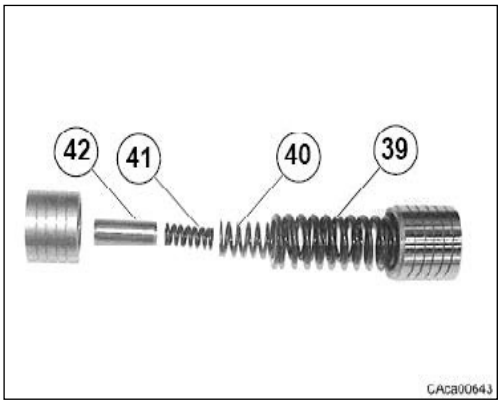

15. Assemble the outward piston (38), the springs (39,40,41), the pin (42) and the inward piston (43).

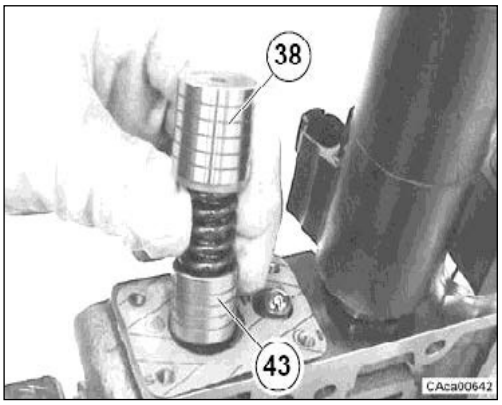

16. Assemble the plate (36).

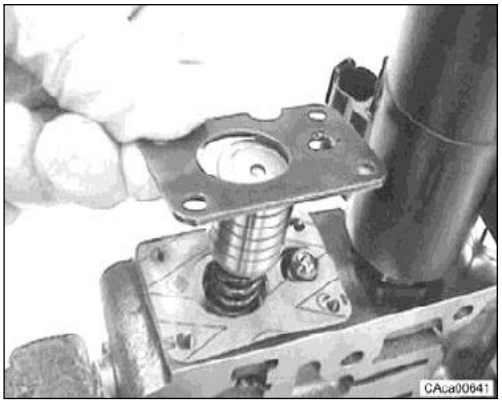

17. Assemble the plate gasket (35).

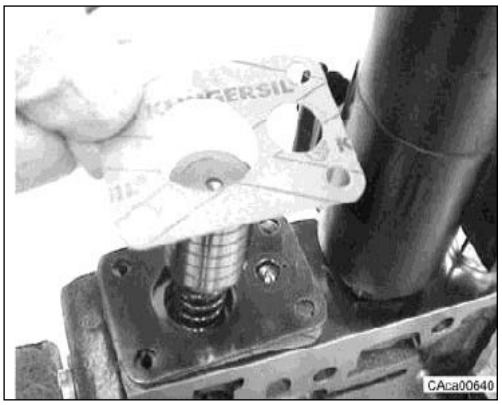

18. Assemble the valve cover (34).

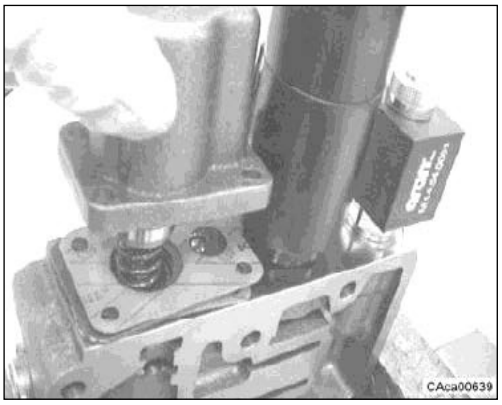

19. Assemble the screws (33). See tightening torque.

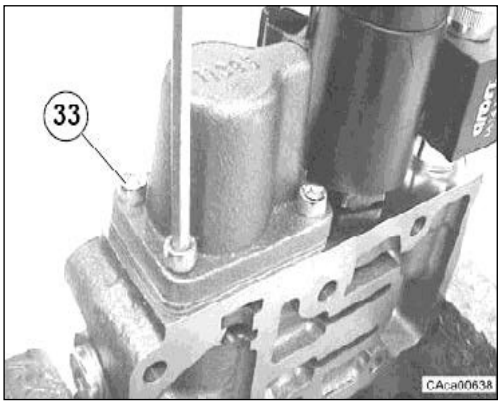

20. Turn the control valve (47). Assemble the thrust washer (10).

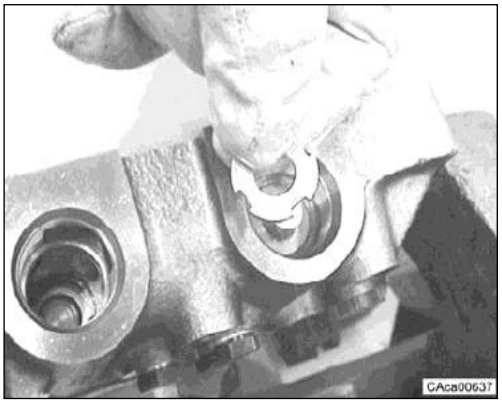

21. Assemble the O ring (7) on the plug.
Assemble the plug (6). See tightening torque.

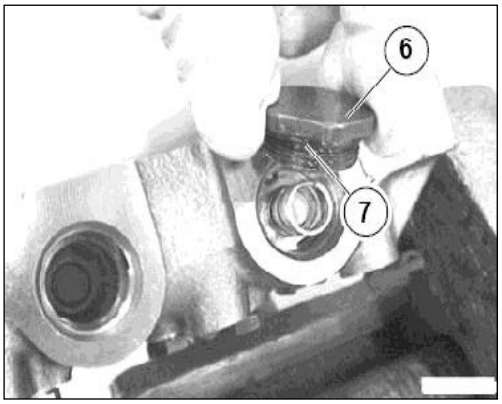

22. Assemble the O ring (7) on the plug.
Assemble the plug (6). See tightening torque.

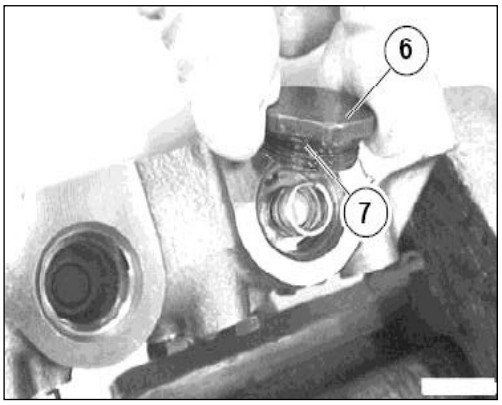

23. Assemble the piston (4) and the spring (5).

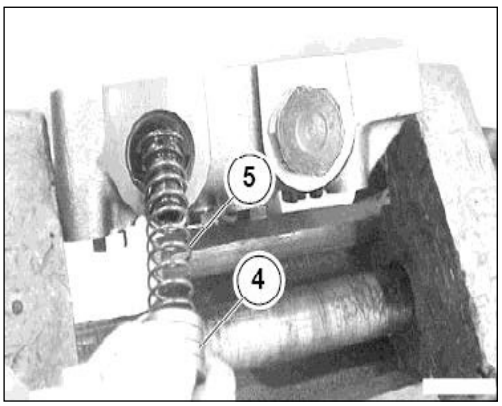

24. Push down the piston (4) then assemble the snap ring (3) in its seat.

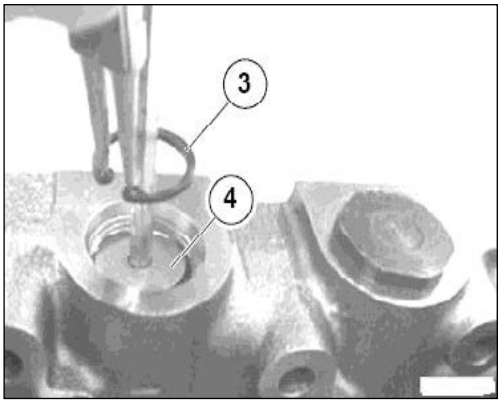

25. Assemble the O ring (2) on the plug. Assemble the plug (1).
See tightening torque.

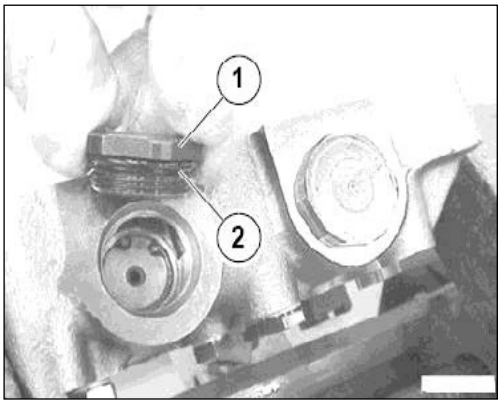

26. Assemble the gasket (51) on the transmission.

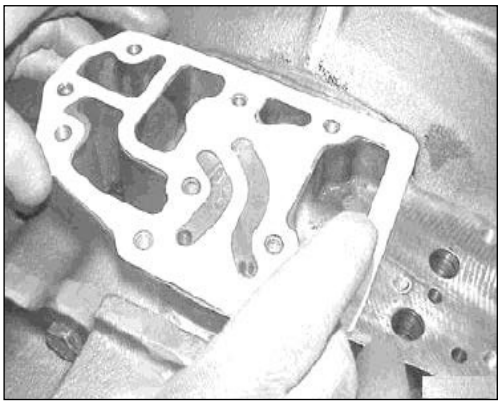

27. Assemble the plate (50) and the screws (48). See tightening torque.

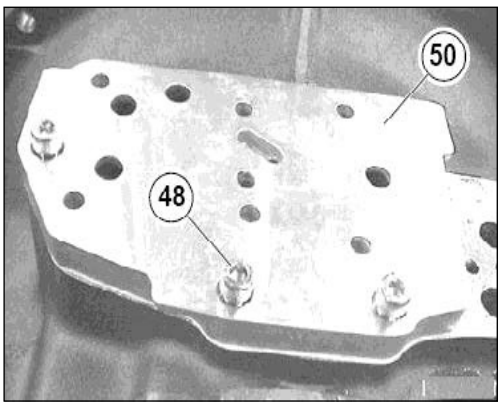

28. Assemble the gasket (49).

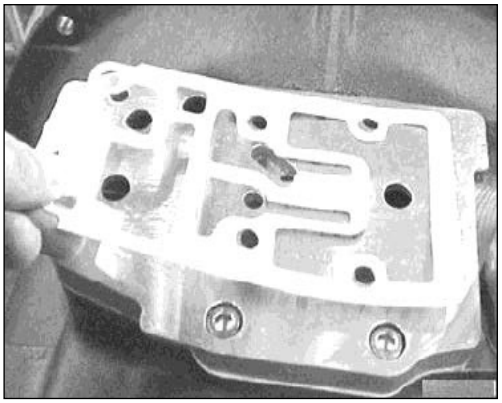

29. Assemble the control valve (53) and the screws (13). See tightening torque.

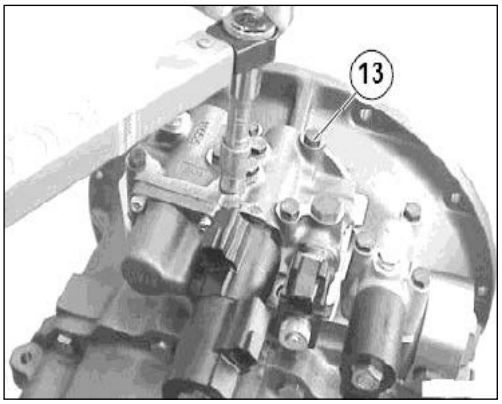

20.12 DISASSEMBLY & ASSEMBLY OF TRANSMISSION HOUSING

DISASSEMBLY

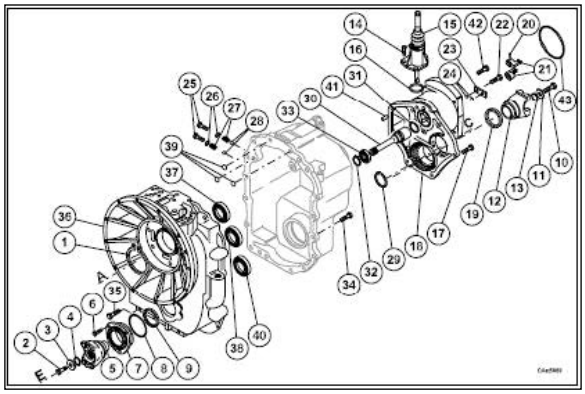

1. Remove bearing snap ring (1).

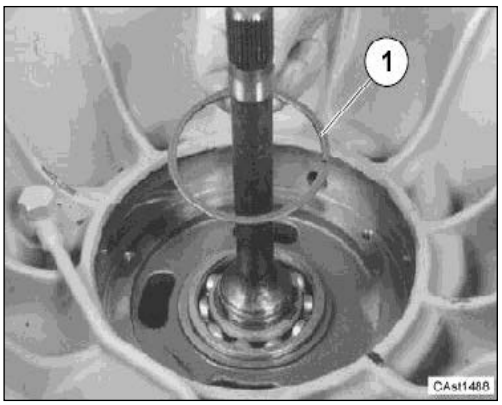

2. Loosen and remove flange retaining screw (2). Use a screw driver and two screws to avoid flange rotation.

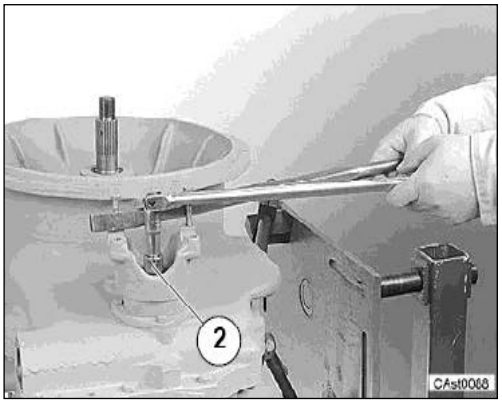

3. Remove washer (3).

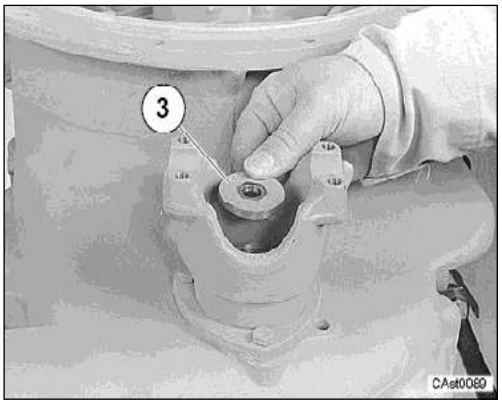

4. Remove flange (5) and O ring (4).

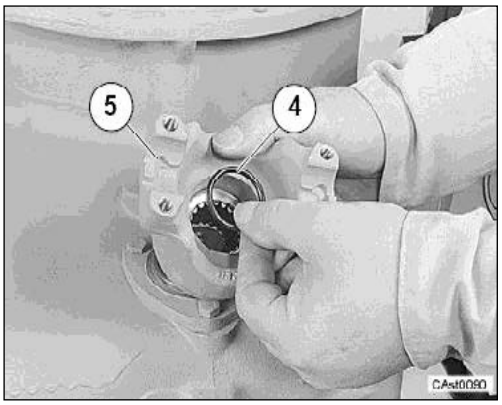

5. Remove the three cap screws (6).

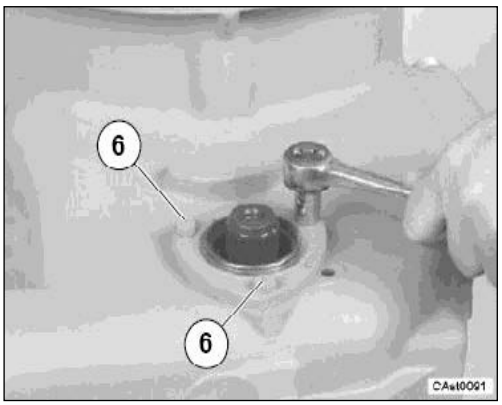

6. Remove the cover (7).

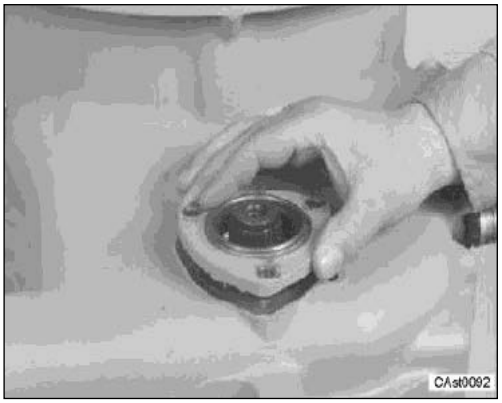

7. If damaged remove the O ring (8) from the cover (7).

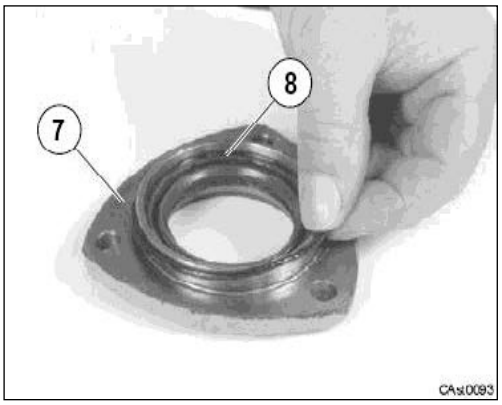

8. If damaged remove the seal (9) from the cover (7).



9. Loosen and remove flange retaining screw (10). Use a screw driver and two screws to avoid flange rotation.

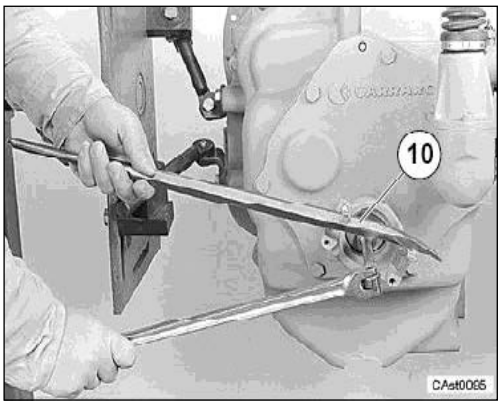

10. Remove washer (11).

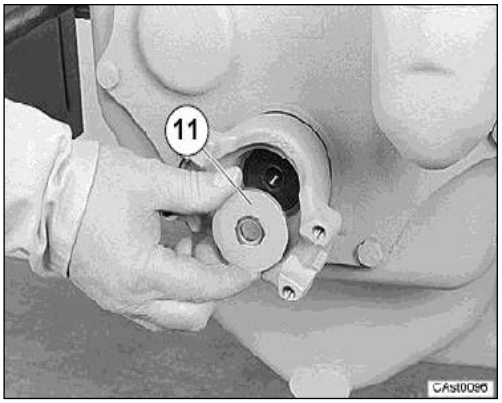

11. Remove flange (12) and O ring (13).

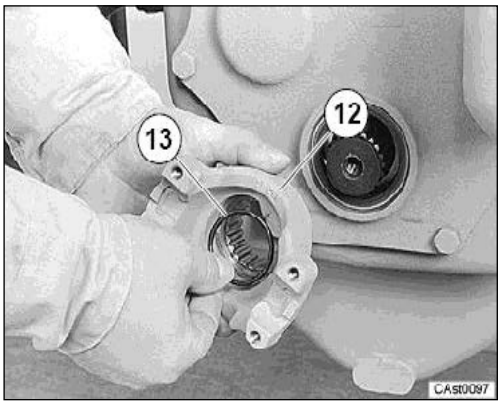

12. Remove the three cap screws (14).

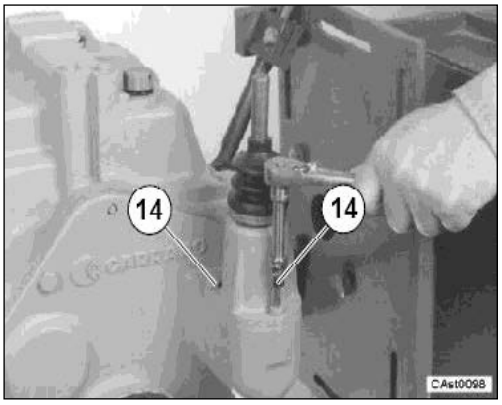

13. Remove the shift tower assembly (15) and the O ring (16).

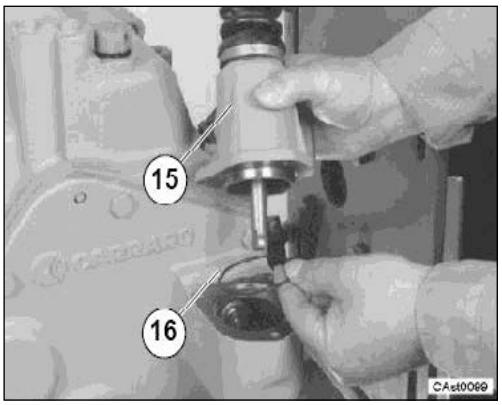

14. Remove the O ring (43). Remove the six cap screws (17) and the two cap screws (42) which fasten the rear cover (18) to the rear half housing.

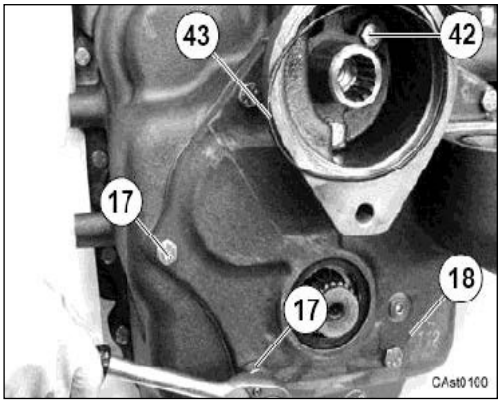

15. Use a pry bar to loosen the rear cover from the housing. Remove the rear cover (18).

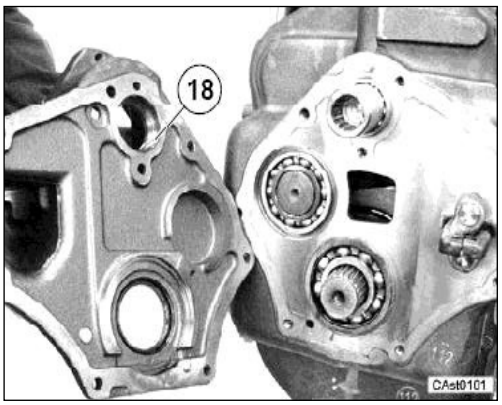

16. If damaged remove the seal (19) from the rear cover.

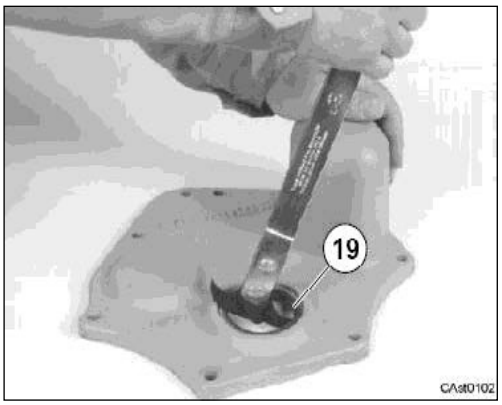

17. Use a punch to remove the pins (20) which fasten the shift collar to the shift rods and centering pins (41).

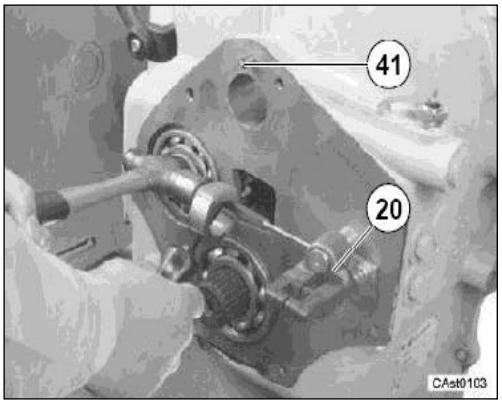

18. Remove the shift collar (21).

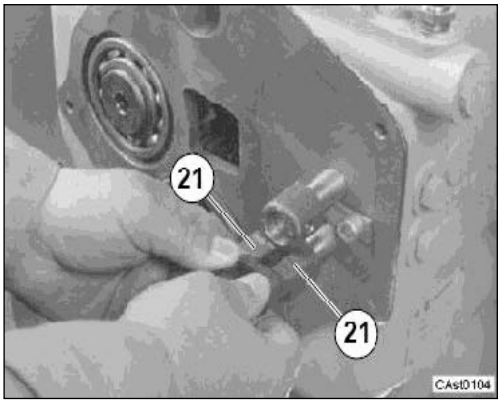

19. Remove the two screws (22) which hold the plate between the two shift rods.

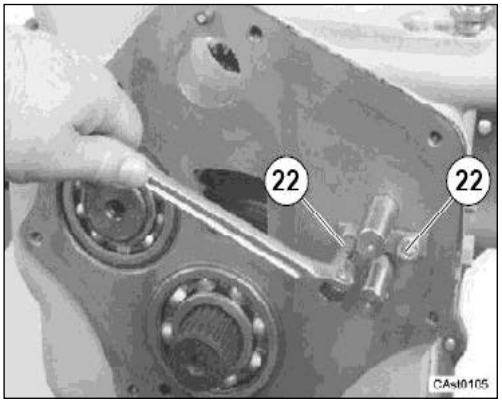

20. Remove the plate (23).



21. Remove the two detent balls (24) from the groove between the two shift rods.

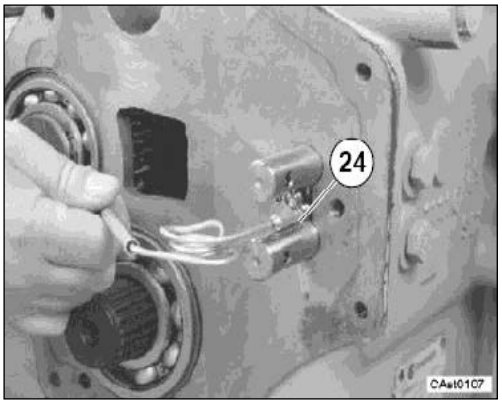

22. Loosen and remove screws (25) and washers (26).

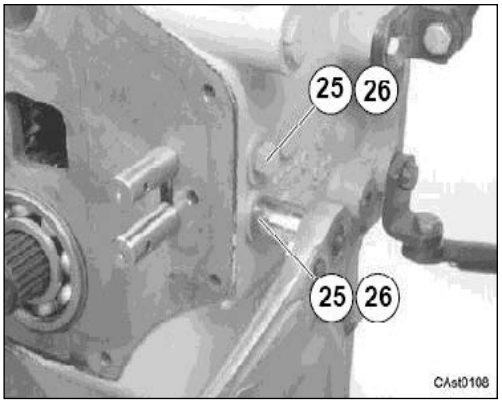

23. Remove springs (27).

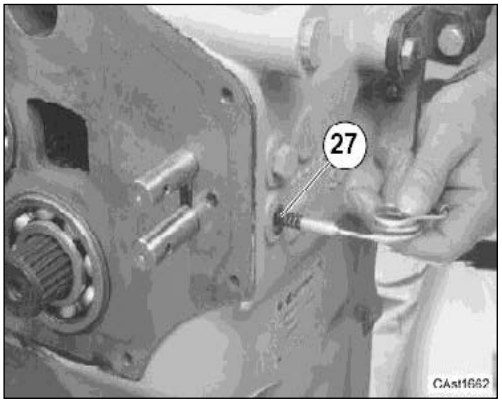

24. Remove ball (28).

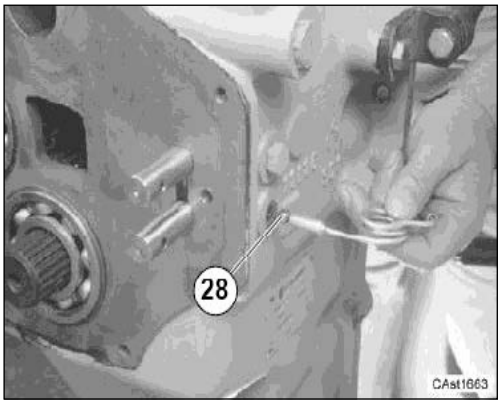

25. Pull the secondary shaft to the rear so that there is clearance between the snap ring and the rear housing. Remove the snap ring (29).

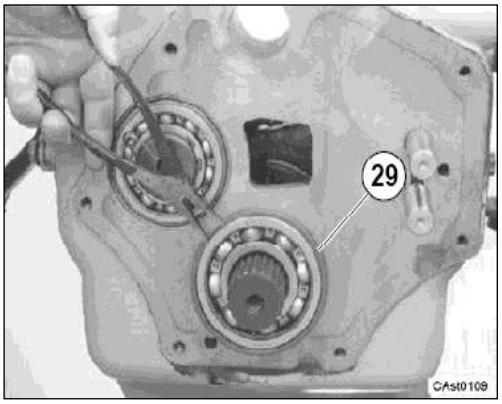

26. Remove the transmission shaft PTO (30) by pushing lightly on the opposite side.

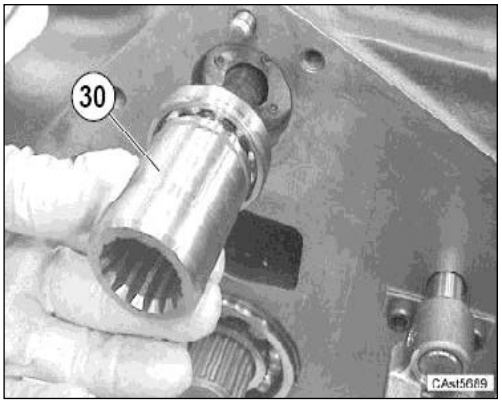

27. If to be replaced, remove Teflon seal ring (31) by cutting it.

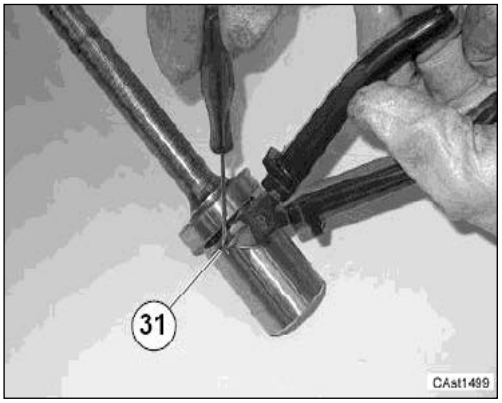

28. Remove snap ring (32).

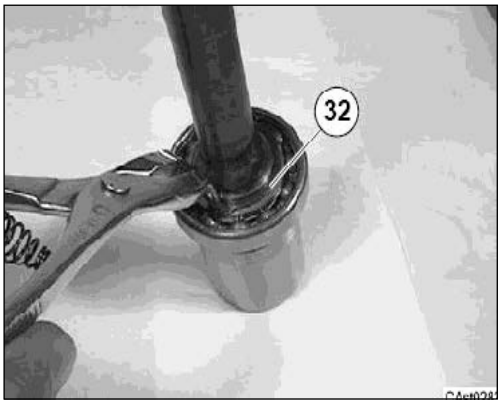

29. Extract bearing (33) with tool CA715004.

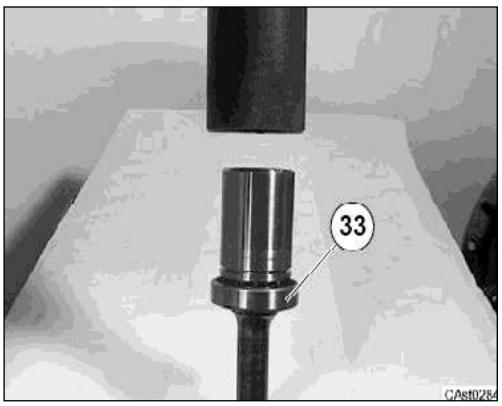

30. Remove screws (34).

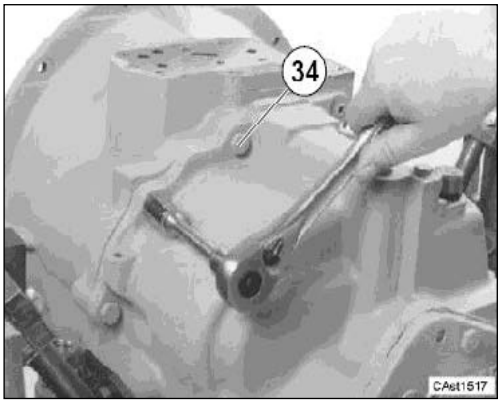

31. Remove screws (35).

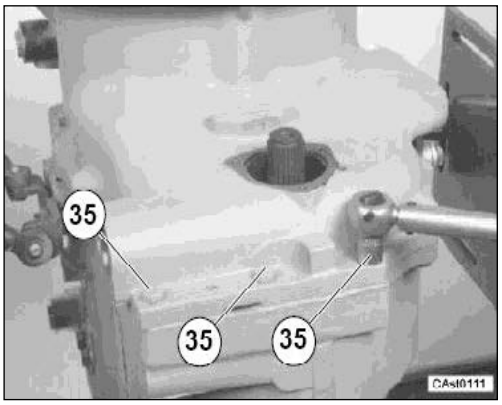

32. Use lever to remove the front half housing (36). Lift the front half housing by means of two hooks.

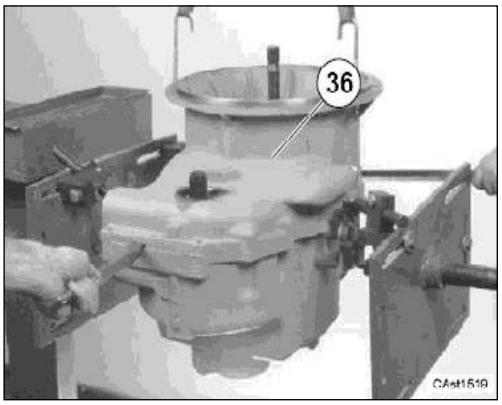

33. Use a plastic mallet to detach the half housing if necessary.

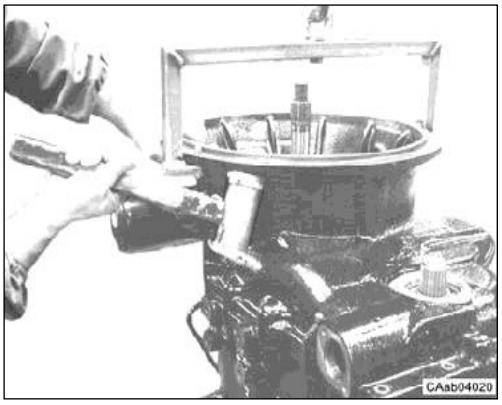

⚠ WARNING

Do not lift the shafts of the transmission, remove the shaft from relative seats could produce seal rings damage.

34. The outer rings of the bearings for the primary shaft (37) and for the secondary shaft (38) can stay with either the shafts or the front housing.

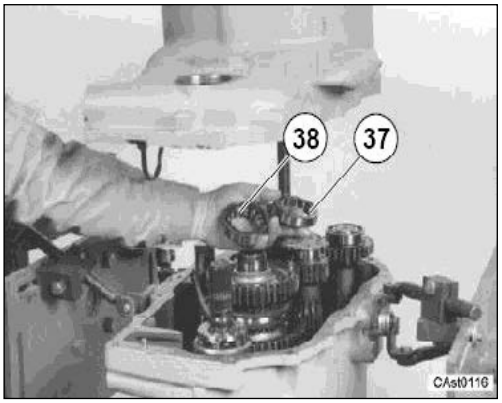

35. Remove the bearings of the primary shaft (37), and secondary shaft (38) from the front half housing and assemble all the bearings on the relative shaft.

⚠ WARNING

Do not overturn the bearings, the bearings must be assembled in the same position.

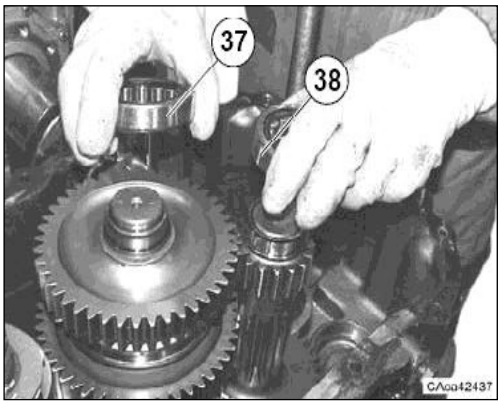

36. Remove the 4WD shaft (E) with a plastic mallet.

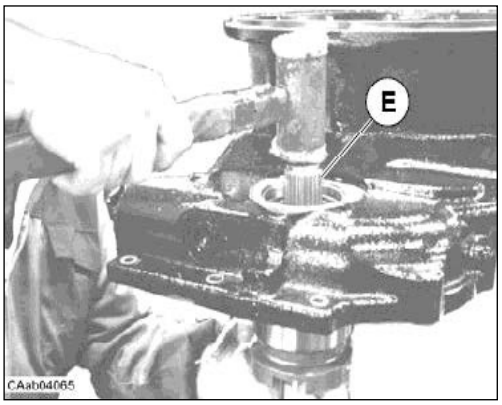

37. Remove bearing (40).

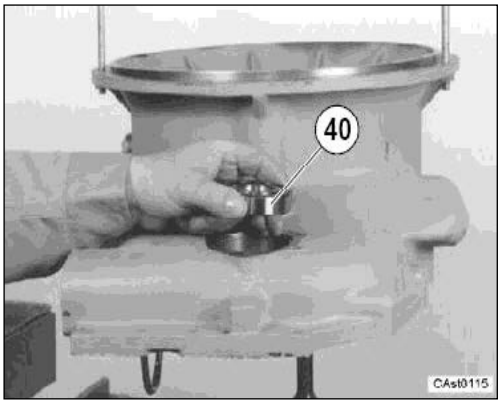

38. Replace O rings (39) if necessary.

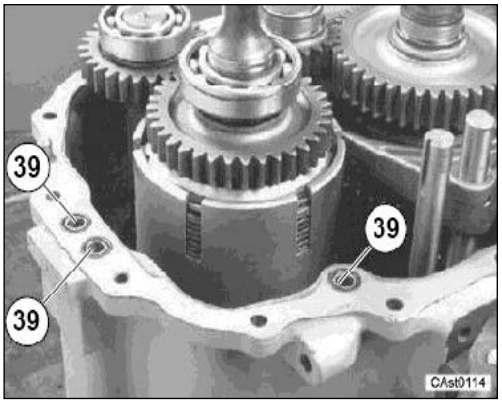

39. Close all oil pipe holes with rubber plugs.

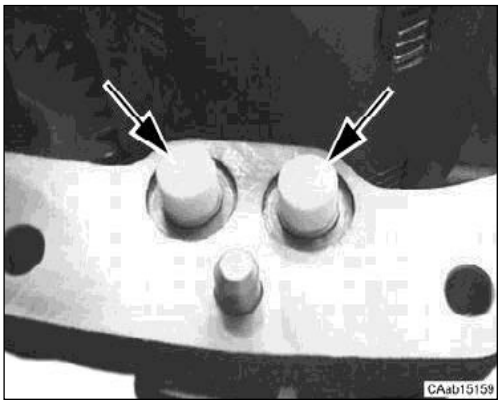

Assembly

1. Push the secondary shaft towards the rear housing so that there is clearance between the snap ring groove and the rear housing. Install the snap ring (29).

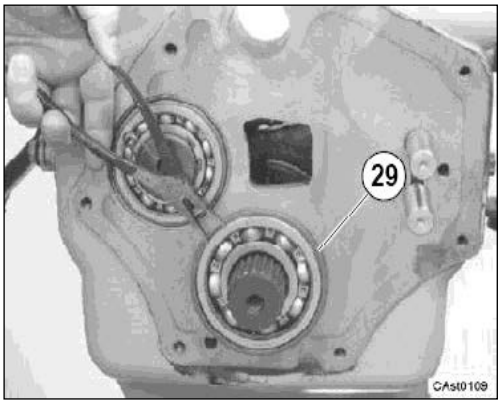

2. Remove the oil from the rear housing (16) edge. Examine with care the housing and the inner parts to check the presence of any impurity (dirty, file dust or chips). Clean with care to remove all the impurities.

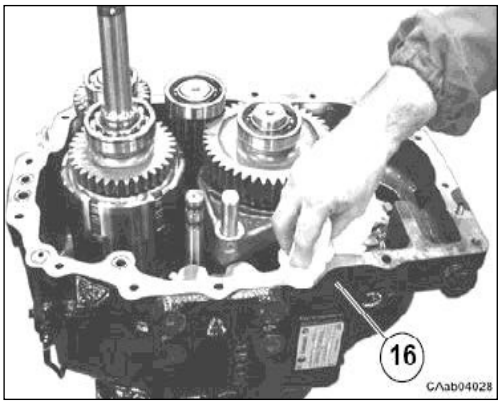

3. Remove all the old sealant from the rear housing (16) coupling surface with suitable scraper.

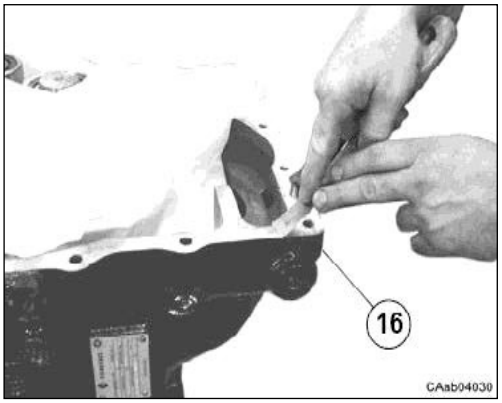

⚠ WARNING

Only after a deep inspection of the transmission is possible assembly the removed parts as follows.

4. It is advisable use a sealant solvent.

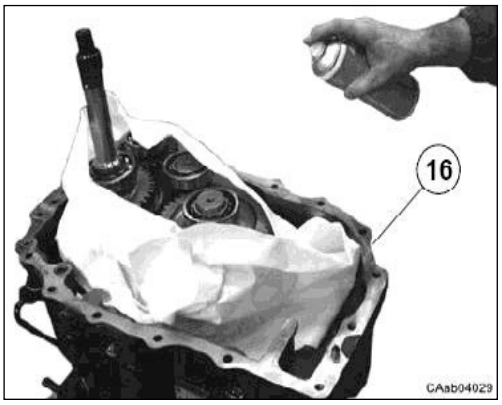

5. Clean with care the O ring seats.

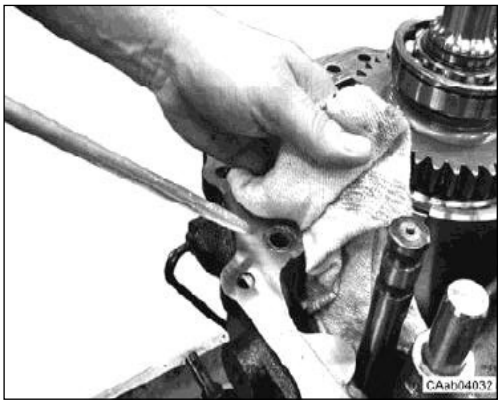

6. Degrease and dry the coupling surface of the rear housing.

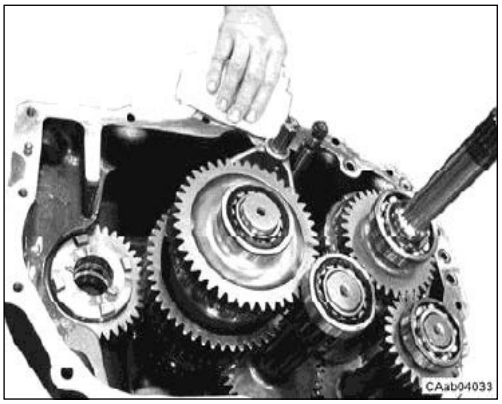

⚠ NOTE

It is advisable use a suitable solvent.

7. Apply the prescribed sealant on the coupling surface of the rear housing (16).

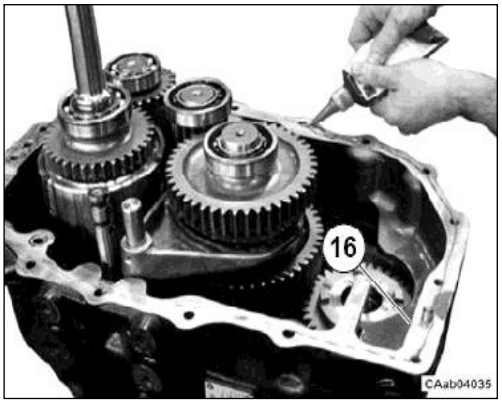

8. Spread the sealant in a film of uniform thickness.

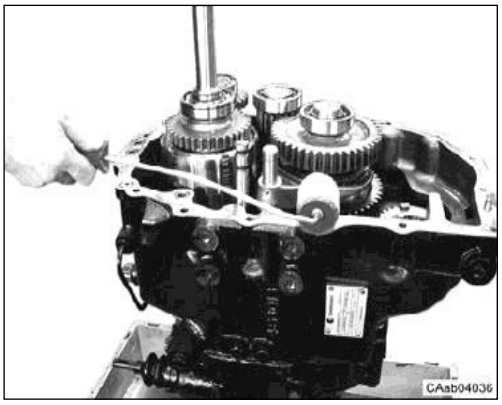

9.

⚠ NOTE

Do not put the sealant in the O ring seats.

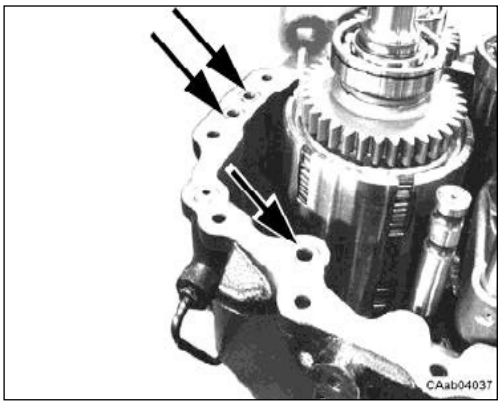

10. Clean with care the O ring seats.

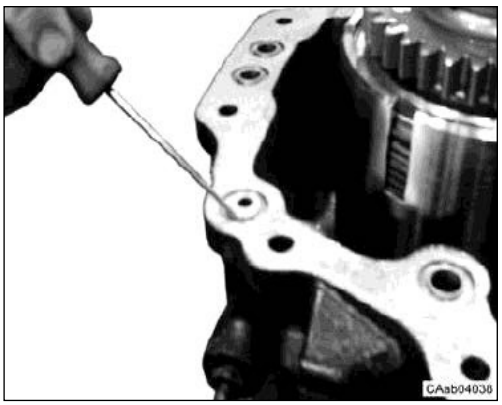

11. Assemble the three O rings (15).

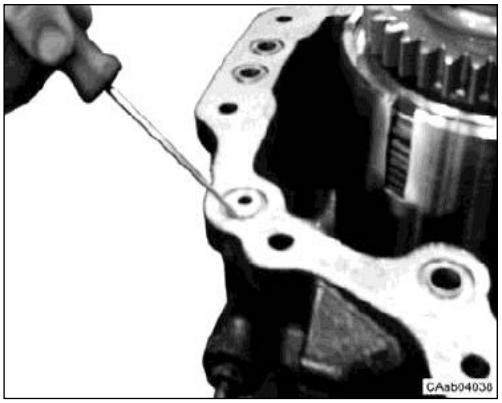

12. Push the three O rings (15) into their seats with a pad.

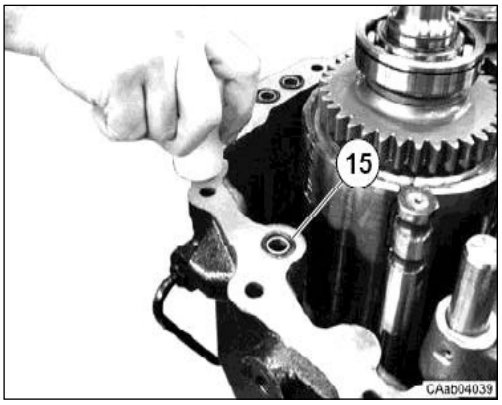

13. Clean with care and assemble the 4WD shaft (4).

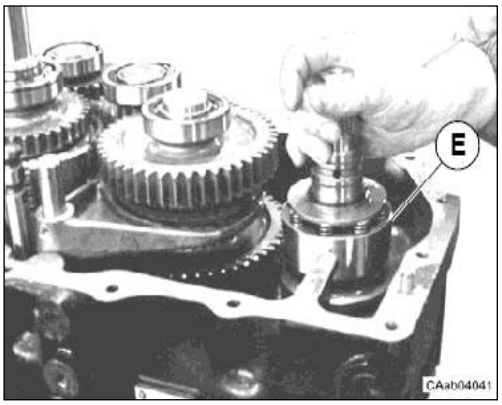

14. Use clean transmission oil to lubricate the bearing for the primary shaft (37) and the bearing for the secondary shaft (38). Install the bearings.

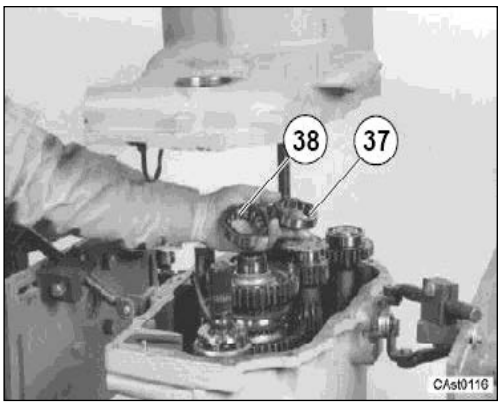

15. Install the front half housing (36) on the rear half housing. Make sure that the bearings on the shafts go straight into the bores in the front half housing. Push the front half housing all the way down on the rear half housing.

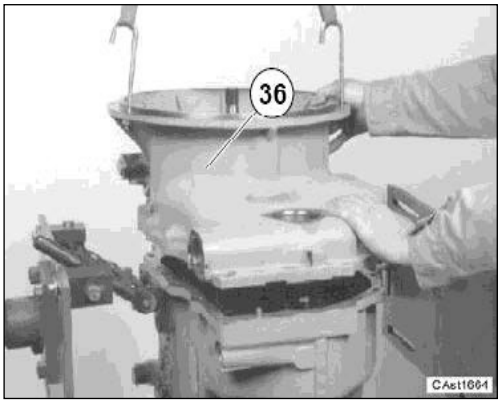

16. Assemble screws (34). See tightening torque.

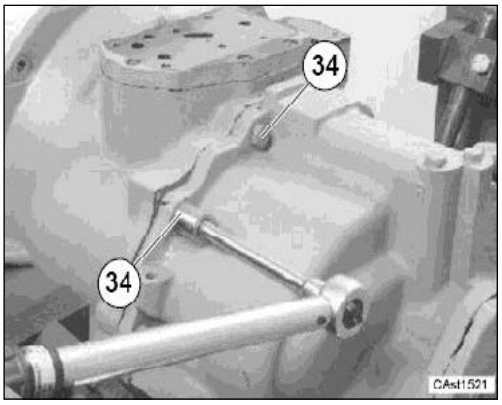

17. Assemble screws (35). See tightening torque.

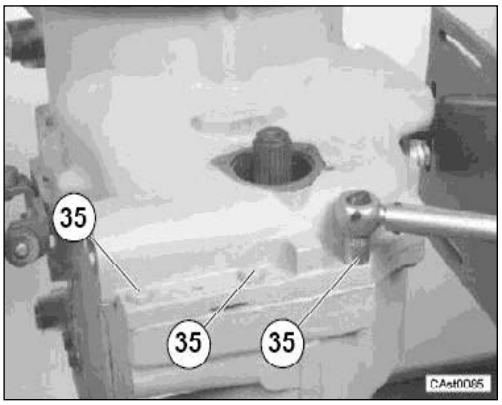

18. Use clean transmission oil to lubricate the bearing for the 4WD shaft. Install the bearing (40) on the 4WD shaft. Use tool CA715623.

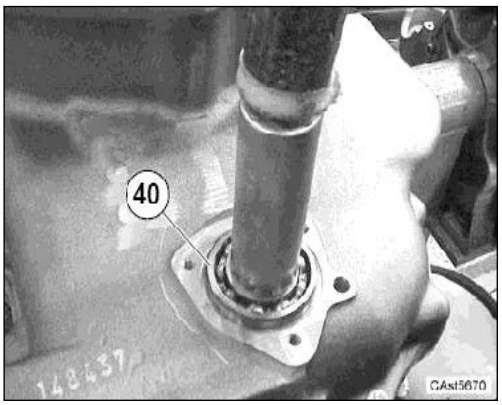

19. The seal ring (9) must be installed to the end of its seat into the cover, if necessary push the seal ring to the end of its seat with the special tool CA715354 and a hammer. See next figure.

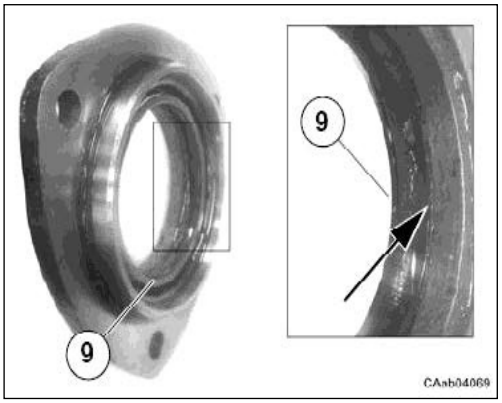

20. Use the special tool CA715354 and a hammer to install a new seal (9) in the cover (7). Assembly scheme in the next step.

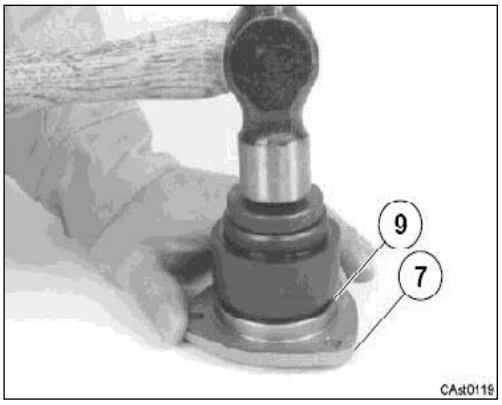

21. Use the special tool CA715354 to push seal just to the end.

⚠ NOTE

1. Do not use excessive force.
2. After assembly, lubricate the seal ring lip with grease.

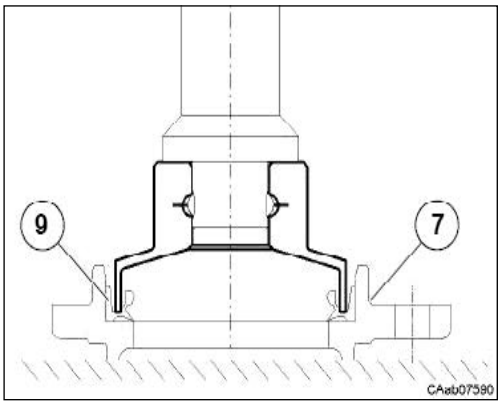

22. Assemble a new O ring (8).

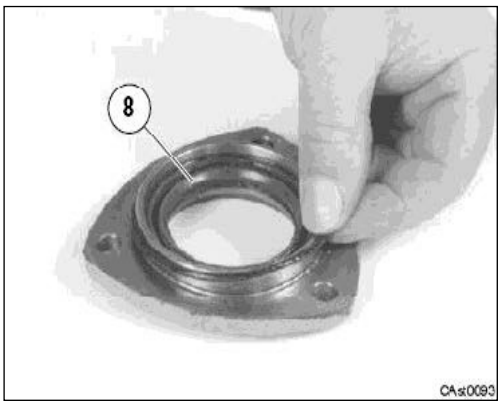

23. Install the cover (7) in the front housing.

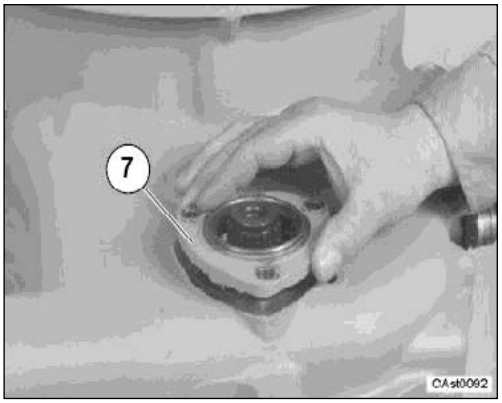

24. Install the three cap screws (6) which fasten the cover to the front housing. See tightening torque.

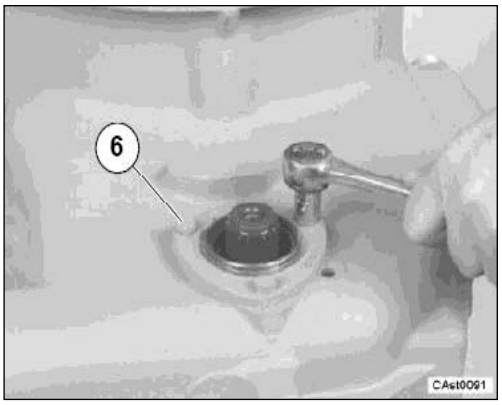

25. Install a new O ring (4) in the four wheel drive flange. Use clean transmission oil to lubricate the O ring.

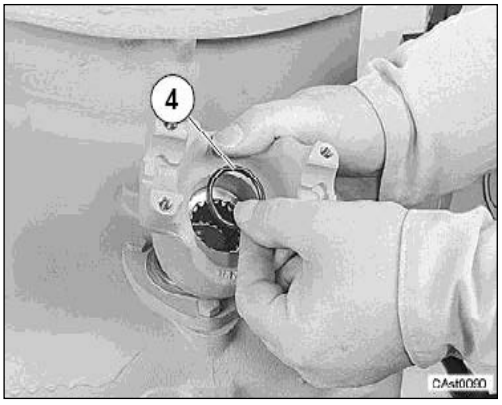

26. Install the four wheel drive flange (5) on the four wheel drive shaft.

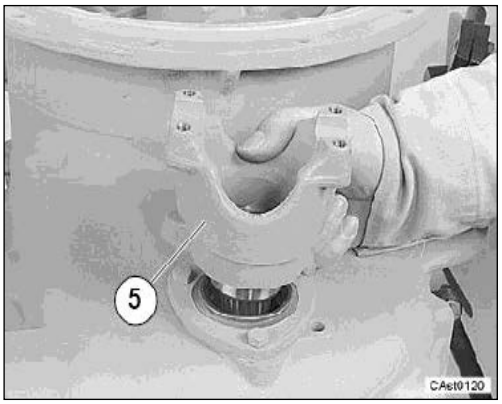

27. Install the washer (3).

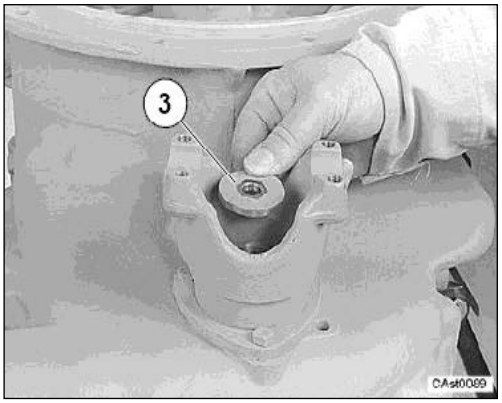

28. Assemble screw (2). Use screwdriver to avoid flange rotation. See tightening torque.

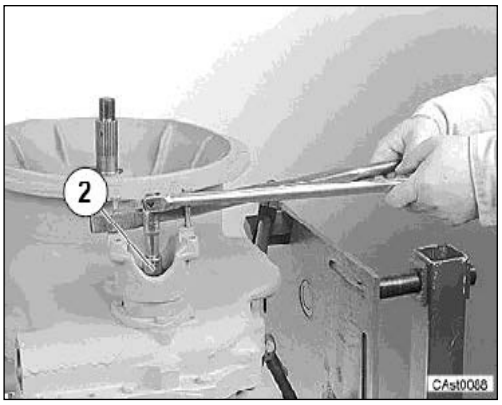

29. Assemble snap ring (1).

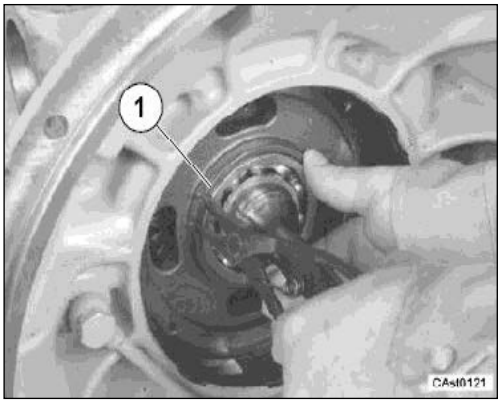

30. Assemble ball (28).

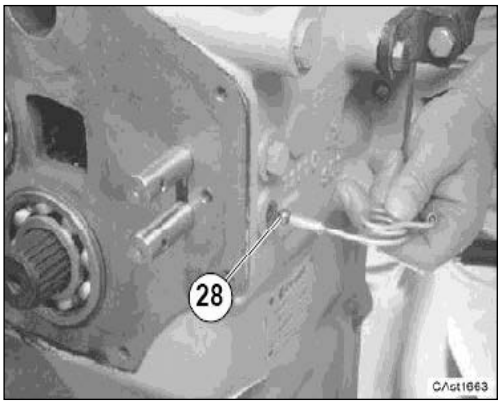

31. Assemble spring (27).

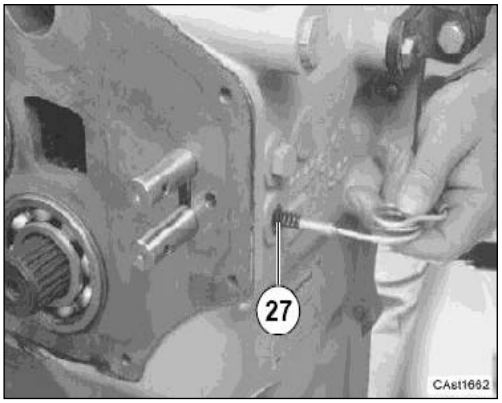

32. Assemble washer (26) and screw (25). See tightening torque.

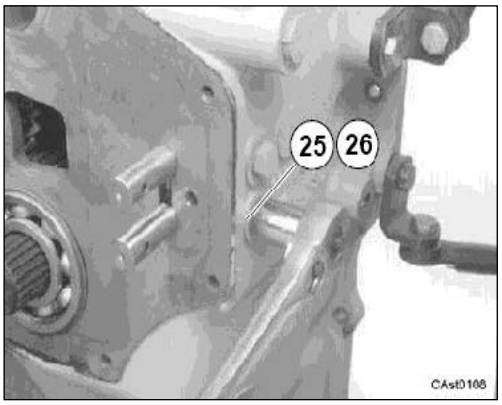

33. Follow the earlier step to install the upper detent ball and spring. Assemble screw (25) and washer (26). See tightening torque.

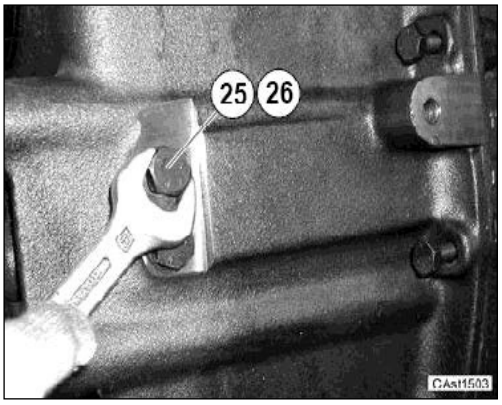

34. Assemble bearing (33) on transmission shaft PTO(30).

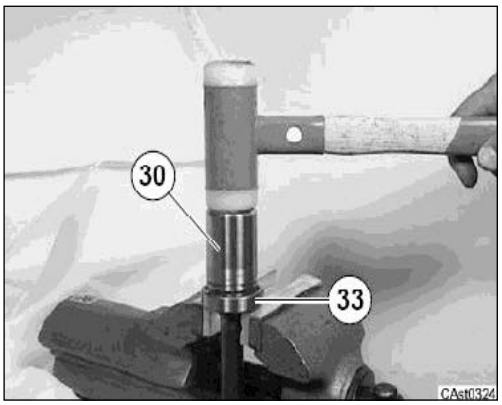

35. Assemble snap ring (32).



36. For the assembly of Teflon seal ring (31).

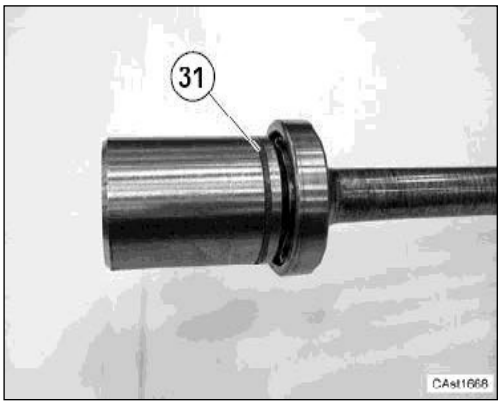

37. Insert transmission shaft PTO (30) to the strode.

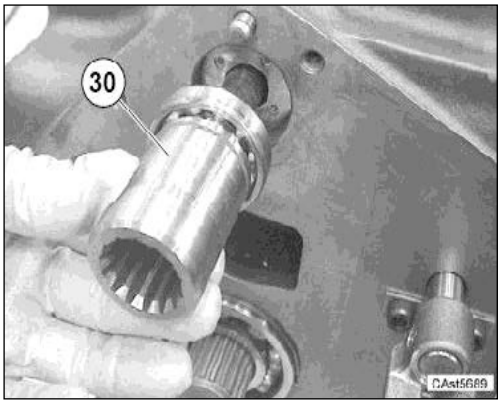

38. Grease the balls. Install the two detent balls (24).

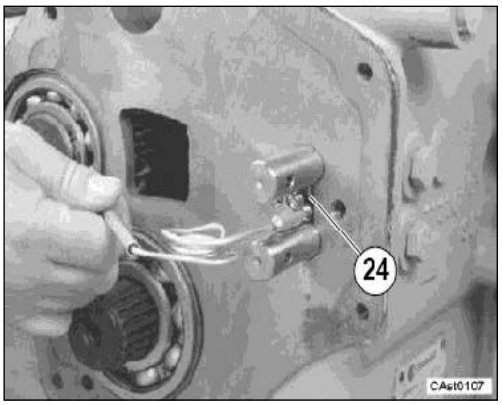

39. Install the plate (23).

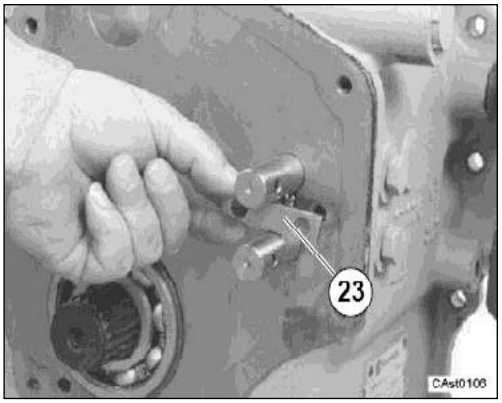

40. Apply sealant to the treads of the two allen head screws. Install the two allen head screws (22) to fasten the plate in position. See tightening torque.

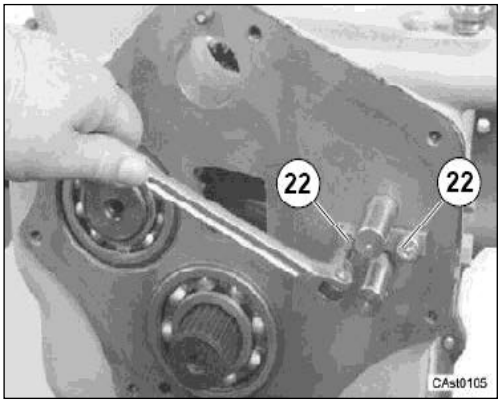

41. Install shift collar (21) on the shift rods.

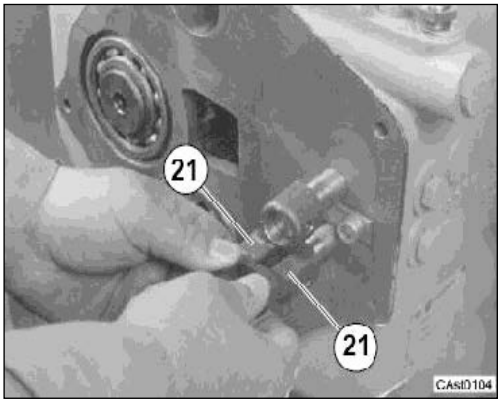

42. Install the pins (20) to fasten the shift collars to the shift rods, and the centering pins (41).

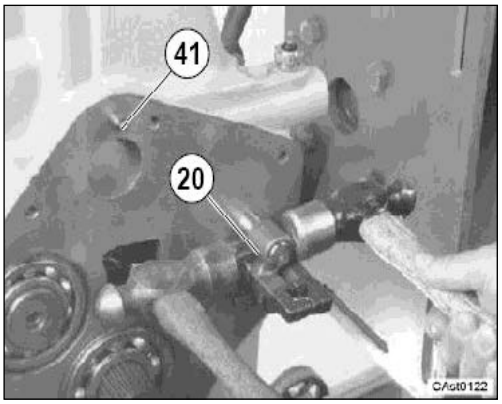

43. Use the CA715501 special tool to install a new seal (19) in the rear cover. Push the seal just until the seal makes contact with the lip in the bore.

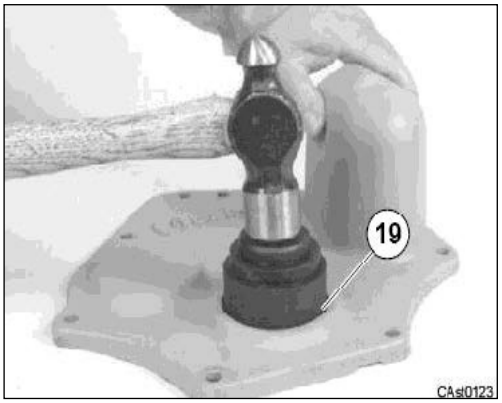

44. Put the rear cover (18) in position. Make sure that the pin (41) is correctly installed both in the rear housing and through the hole in the rear cover. Install the six cap screws (17) and the two caps screws (42) to fasten the cover to the rear half housing. If necessary, tap the rear cover with a soft faced hammer to close the gap between the rear half housing and the rear cover before tightening the cap screw. Assemble the O ring (43).

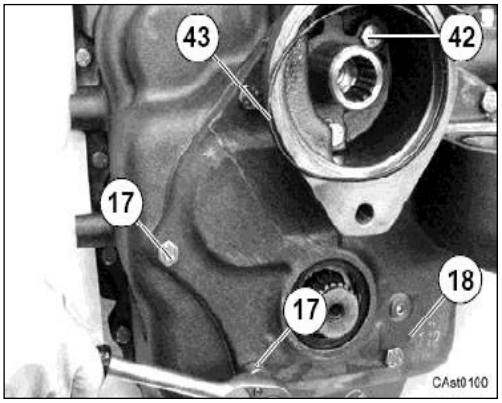

45. Install a new O ring (16) on the shift tower assembly (15). Use clean oil to lubricate the O ring and assembly it on the rear housing.

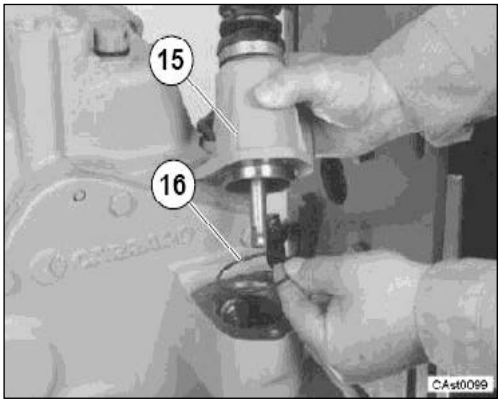

46. Install the three allen head screws (14) to fasten the shift tower assembly to the rear cover. See tightening torque.

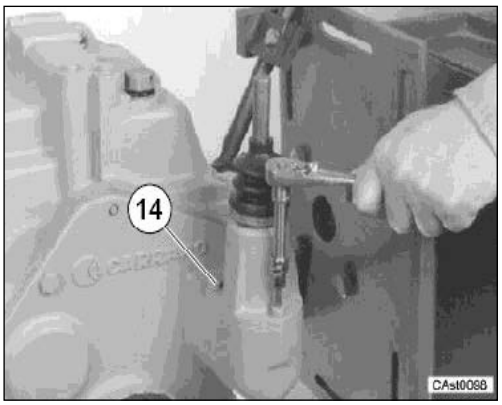

47. Install a new O ring (13) in the output flange (12). Use clean oil to lubricate the O ring.

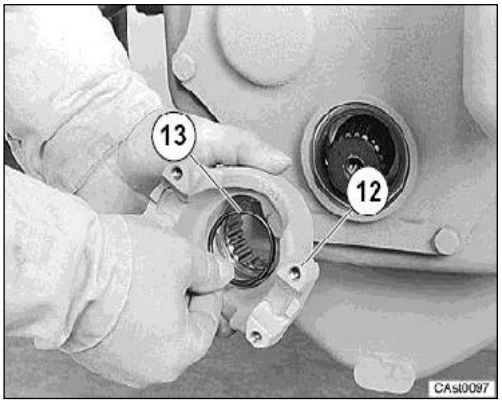

48. Install the washer (11)

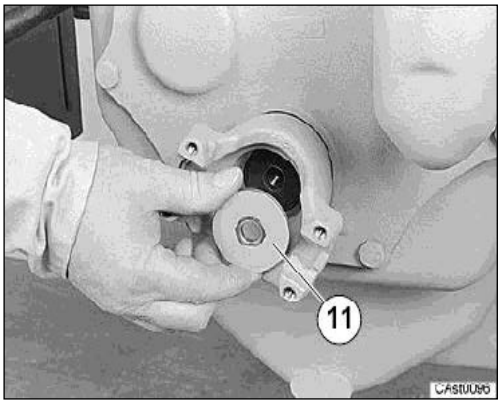

49. Use a pry bar between the two cap screws to hold the output flange while you tighten the cap screw (10) in the secondary shaft. See tightening torque.

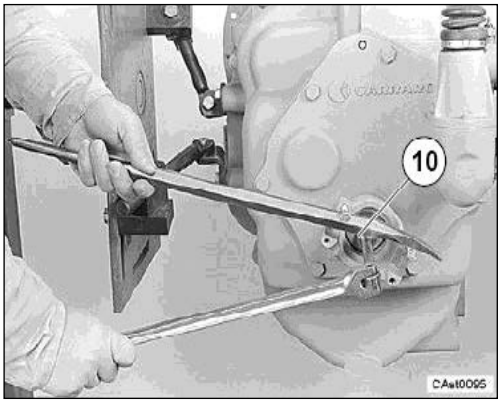

20.13 DISASSEMBLY & ASSEMBLY OF INPUT SHAFT

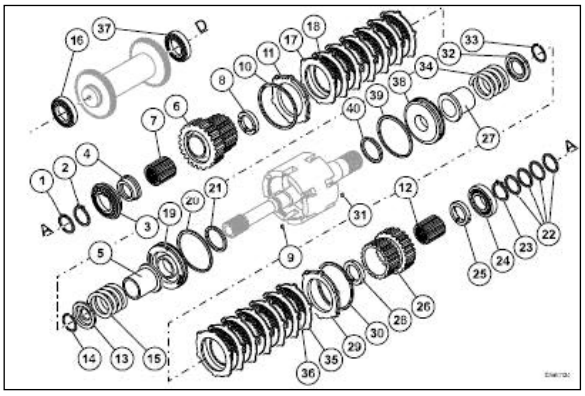

1. Grasp with pliers the input shaft assembly A. remove with shaft assembly D and lift.

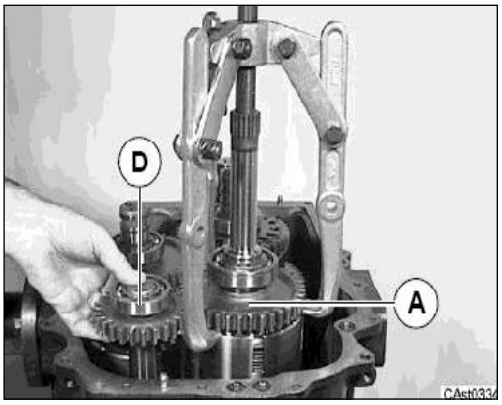

2. If to be replaced, remove the Teflon seal ring (1).

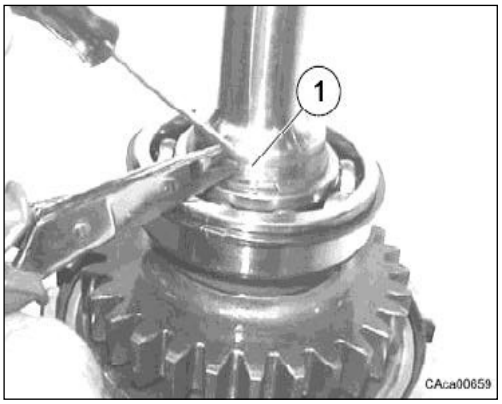

3. Remove snap ring (2).

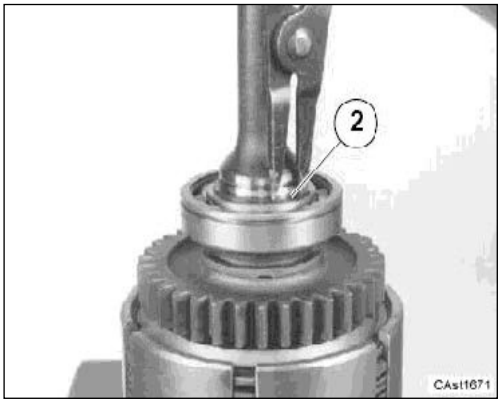

4. Install a bearing separator under the gear as shown (do not install the bearing separator between the gear and the bearing). Use a puller on the bearing separator and insert a shaft protector between the puller and the end of the input shaft. By means of puller which operates between bearings separator and shaft protector pull only until the bearing is free. Pulling any farther can damage the parts.

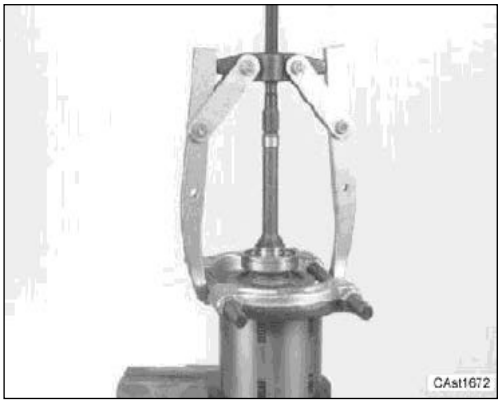

5. Remove bearing (3).

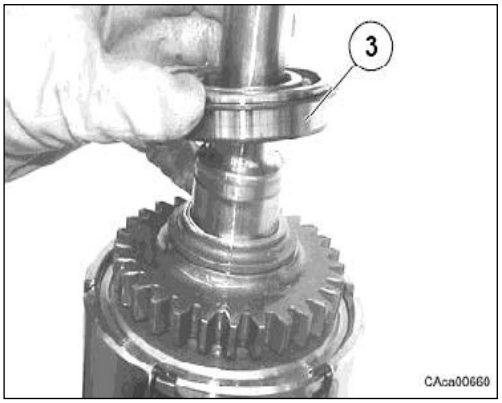

6. Remove the spacer (4).

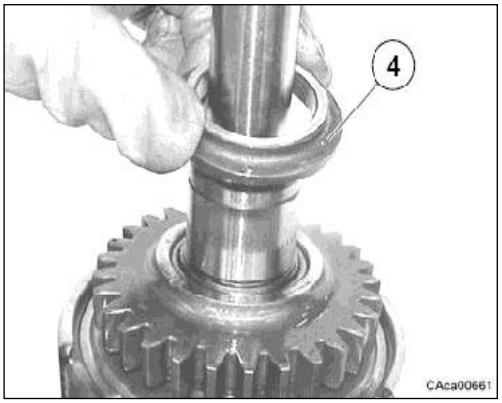

7. Remove the gear (6).

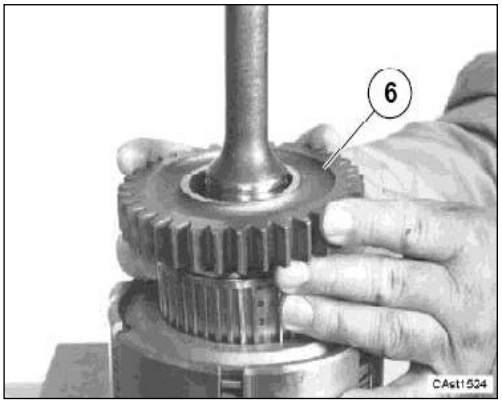

8. Remove the needle cage(7).

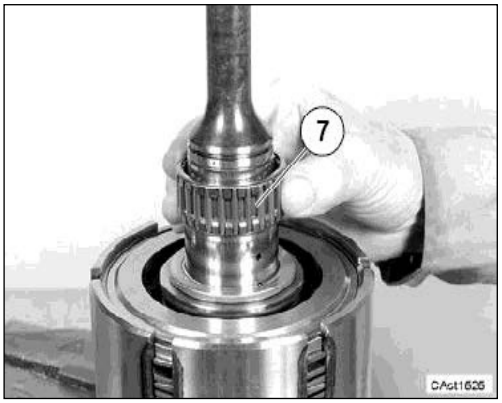

9. Remove thrust washer (8).



10. Remove split pin (9).

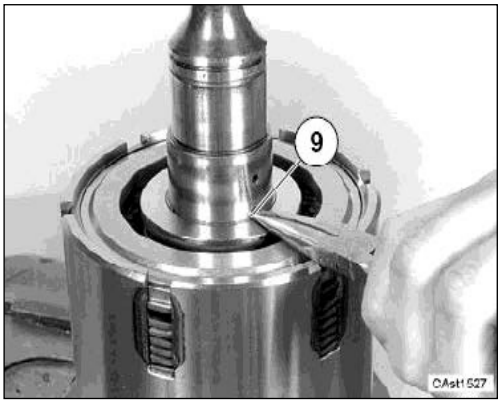

11. Remove lock ring (10).

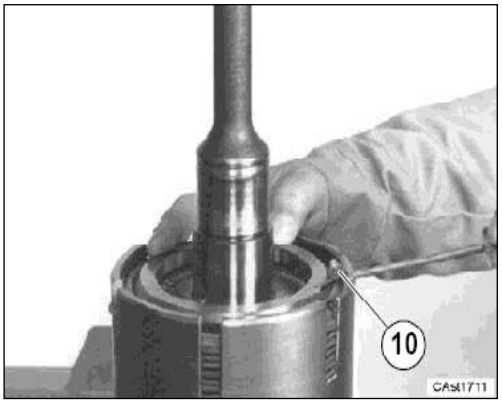

12. Use pry bar to lift and to remove the clutch plate lock ring (11) evenly.

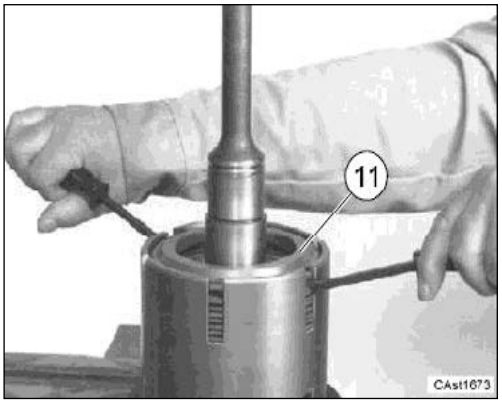

13. Remove the clutch plates (18) and the clutch plates (17).

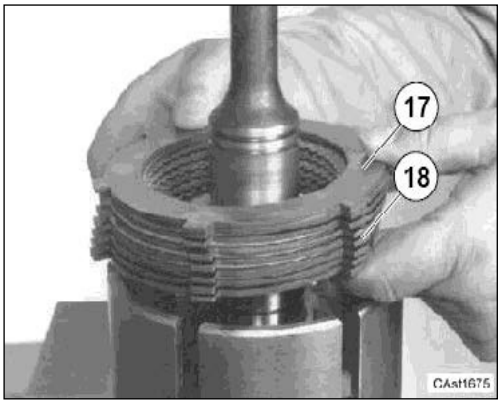

14. Place a mark below the grove on the friction bell.

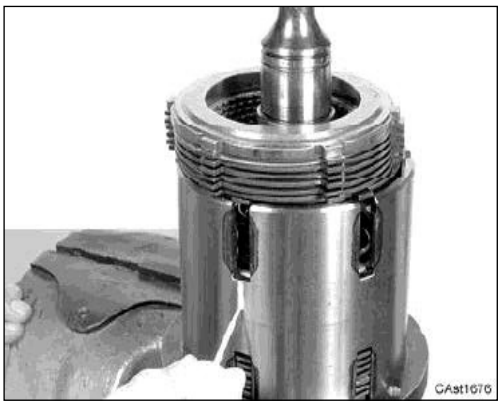

15. Place a mark on each clutch plate lock ring (11), clutch plate (18) and clutch drive plate (17). These marks will be used for reference during the reassembly procedure.



16. Lower lock spring cover (13). Use tool CA715358.

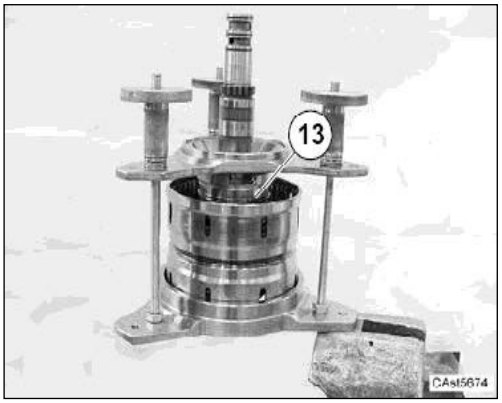

17. Remove snap ring (14).

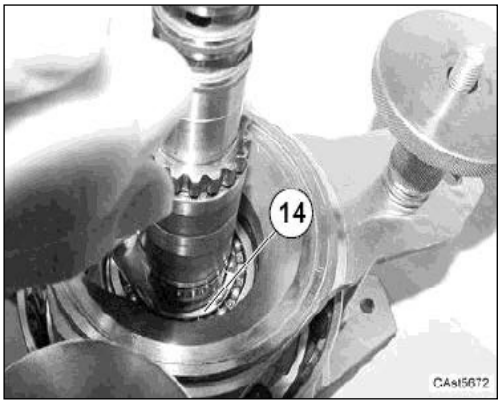

18. Loosen the handles of the threaded rods to release the tension from the spring.
Remove the top piece of the CA715358 special tool.

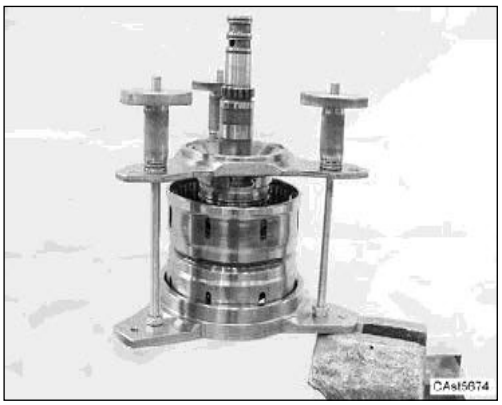

19. Remove lock spring cover (13) and spring (15).

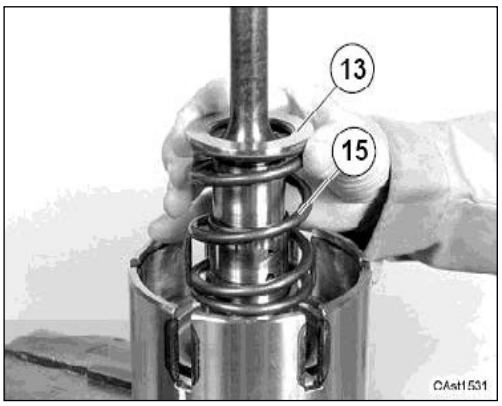

20. Remove the sleeve (5).

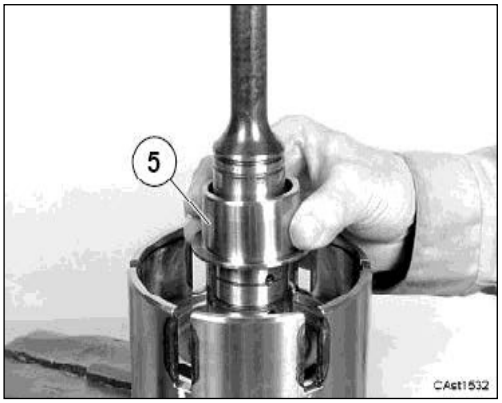

21. Remove the clutch piston (19) by blowing in compressed air through the delivery hole.

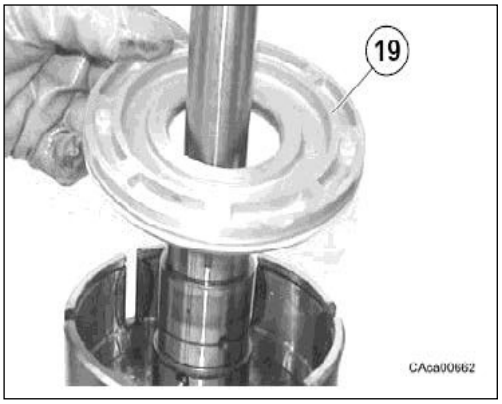

22. If to be replaced, remove Teflon seal ring (20) and relevant inner O ring (20) from outer seat of piston and Teflon seal rings (21) and relevant inner O ring (21) from inner of piston. To remove the rings it is necessary to cut them.

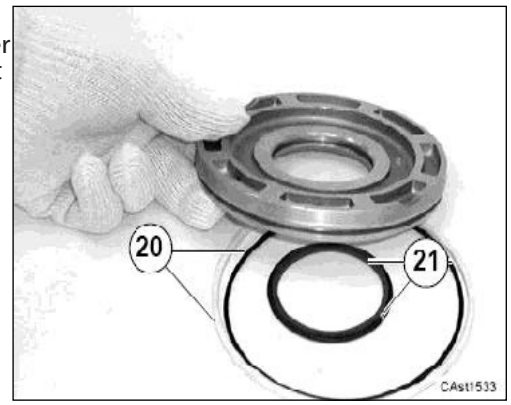

23. Turn the shaft. If to be replaced, remove Teflon seal rings (22) by cutting them.

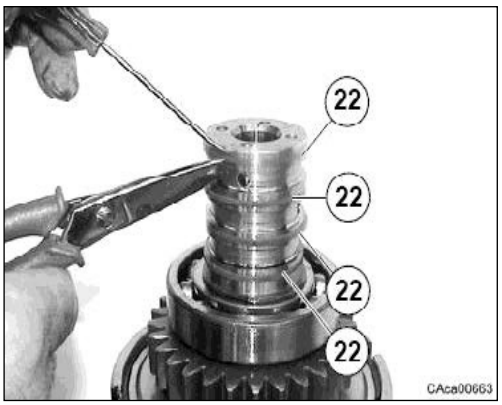

24. Remove snap ring (23).

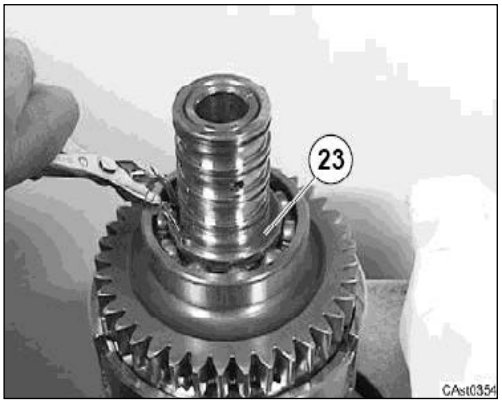

25. Remove bearing (24) by means of an extractor.



26. Remove bearing (24) and thrust washer (25).

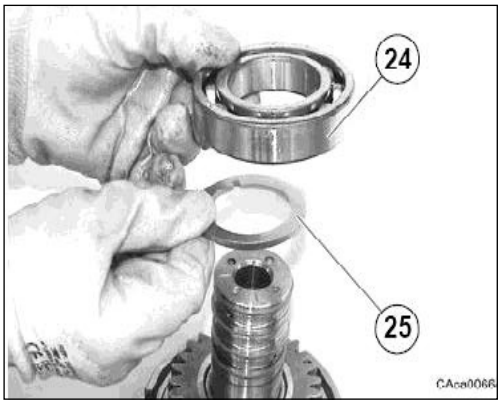

27. Remove gear (26) and needle cage (12).

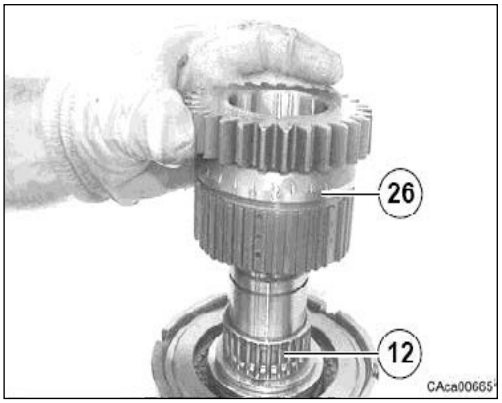

28. For the disassembly of the other parts, repeat the operation from the earlier steps.
Check the sealing ring grooves (large and small) for wear and damage if necessary. Use new parts as required
Check on the output shaft for wear and damage. Check oil passage in the output shaft to be sure that the passages are open and free of foreign material. Use new parts as required.
Check the ball bearings and the needle bearings for flat areas, pitting and other damage. Use new parts as required.



29. If the clutch discs are to be used again, keep the clutch packs in the same previous assembly order separate and record which clutch pack goes with each clutch.
Use new parts as required.

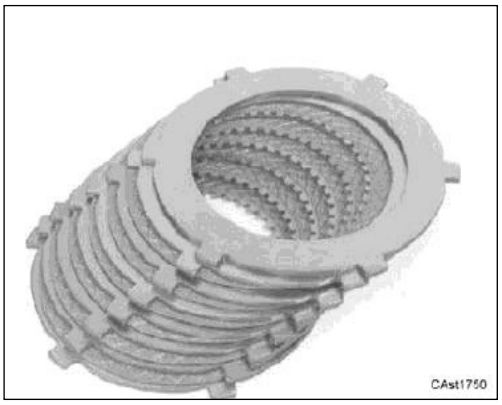

30. Use a straight edge to check each clutch drive plate (17) and each clutch plate (18) to be sure each part is flat. If they are not flat a new part must be installed during assembly. If the clutch plates (18) are smooth or almost smooth, use new parts during assembly. If the friction materials is damaged or appears burned, use new parts during assembly. Also, check the splines for wear. Inspect the clutch drive plates (17) for pitting, scoring or other damage. If there is any damage, use new parts during assembly. If you will be using new clutch plates, soak the clutch plates in clean transmission oil for at least an hour before assembly. If you are using the old clutch plates, make sure that the contact surfaces are coated with transmission oil before assembly, check the wear condition (see chart below). If it is 50% compared to the nominal value it is suggested its replacement.
Inspect the bore and the shaft in the input shaft housing for damage that will cause leakage when the clutch is assembled. Check the slots in the side of the input shaft housing for damage from the tangs on the clutch drive plates. Use new parts as required during assembly

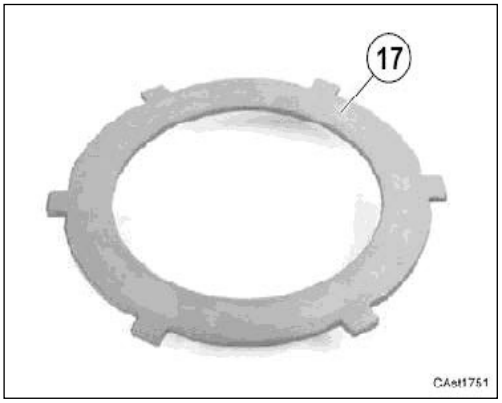

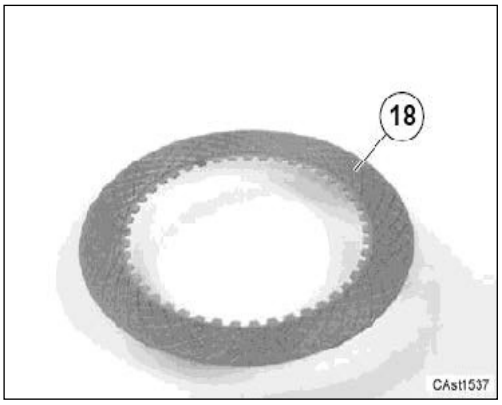

Number of clutch plate (each side)	6
Number of clutch steel plate (each side)	6
Nominal clutch plate thickness	2.40 ± 0.05 mm
Nominal clutch kit thickness	29.00 – 29.20 mm
Maximum clutch plate wearing (each side)	0.25 mm
Maximum clutch kit wear	3.0 mm

31. Remove bearing (16) of shaft D by means of an extractor.

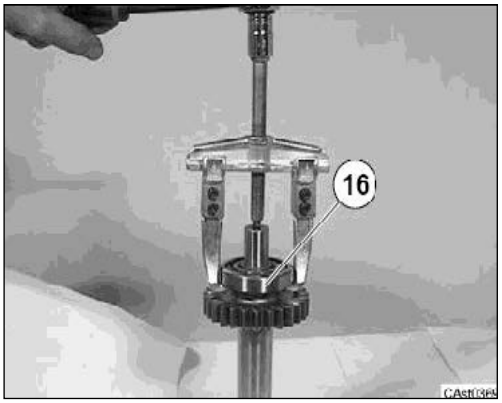

32. Remove bearing (37) of shaft D by means of an extractor.

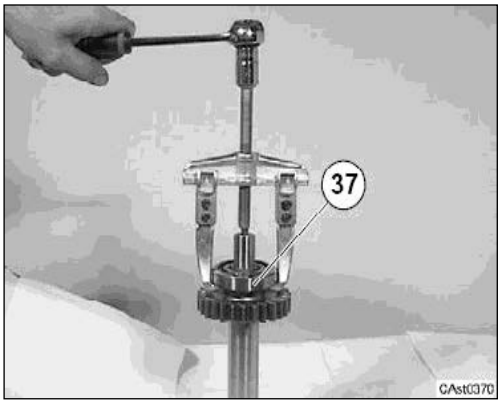

ASSEMBLY

1. Assemble new teflon ring (20) and relevant inner O rings (20), new teflon ring (21) and relevant inner O rings (21) respectively into the piston outer and inner seats.

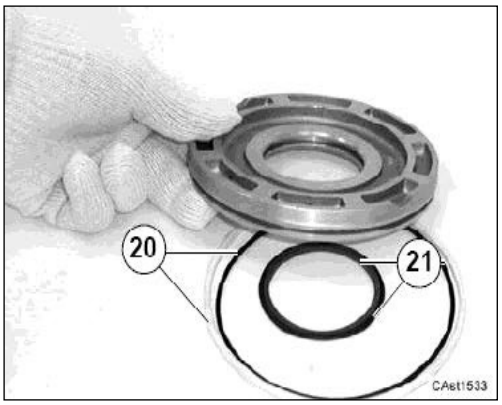

2. Apply a thin film of grease on the sealing rings just inserted.



3. Insert clutch piston (19) with special tool (a) CA715499 as protection of seal rings (21).

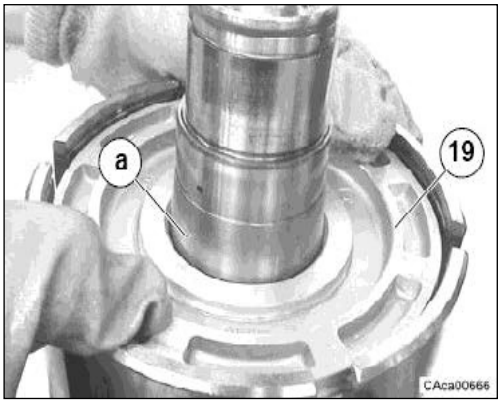

4. Assemble sleeve (5).

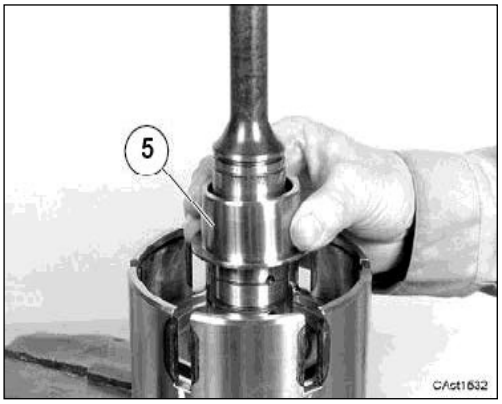

5. Assemble spring (15) and lock spring cover (13).

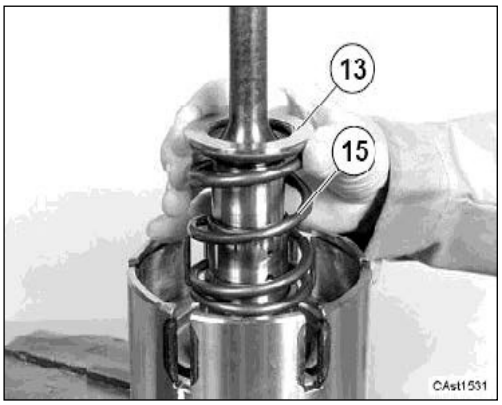

6. Lower the lock spring cover (13). Insert lock ring (14). Use tool CA715358.

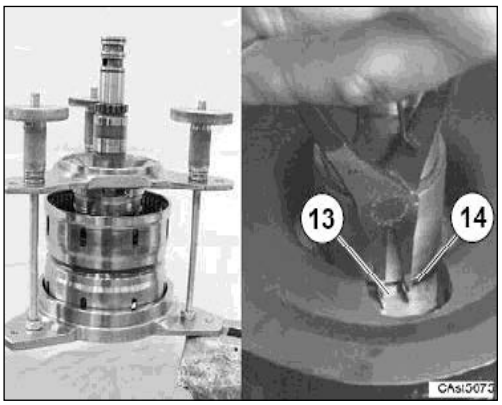

7. Remove tool CA715358 and assemble split pin (9).

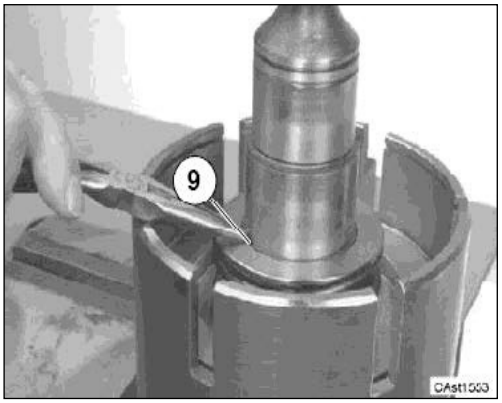

8. Insert thrust washer (8).

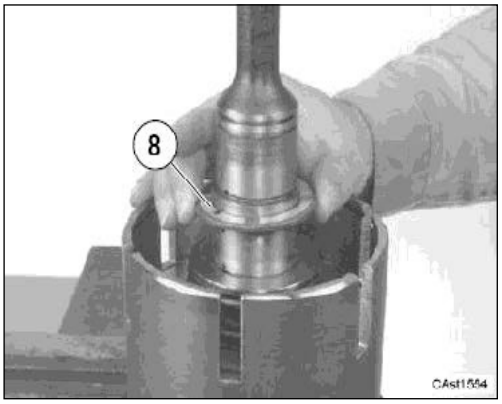

9. Insert needle cage (7).

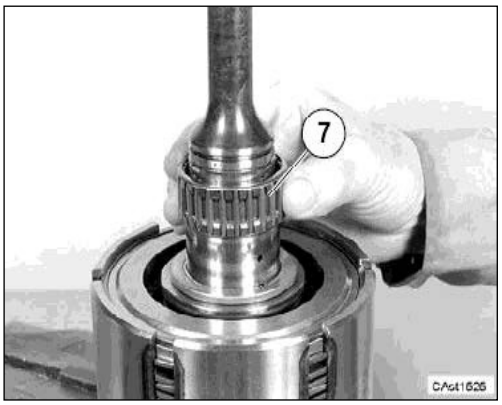

10. To assemble the clutch pack, start with gear (6) on the bench. Install the clutch plate lock ring (11) so that the reference mark on top of the plate made during disassembly is facing towards the gear.

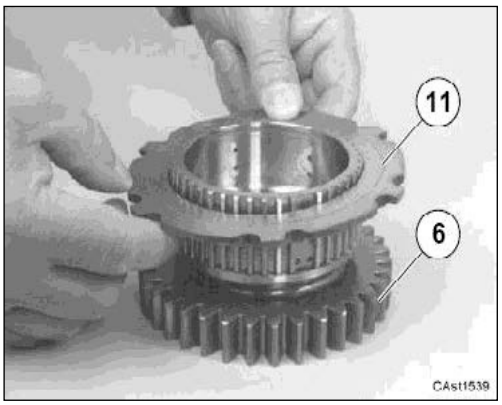

11. Assemble clutch plates (18) and clutch drive plates (17) on the gear (6). The assembled clutch pack must contain seven clutch drive plates and six clutch plates.

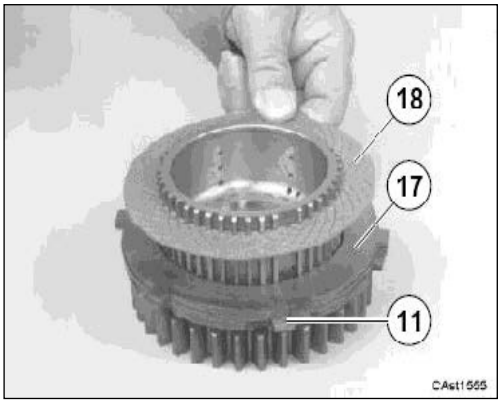

12. Locate the pack assembly by means of two screwdrivers.

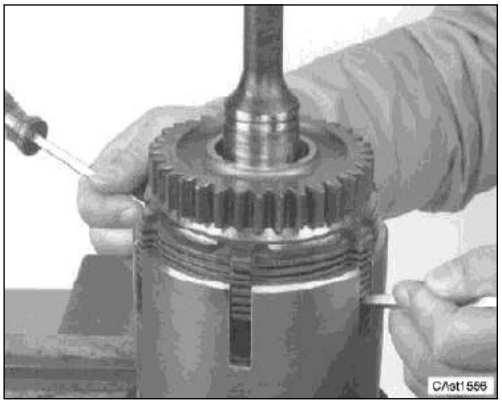

13. Assemble lock ring (10).

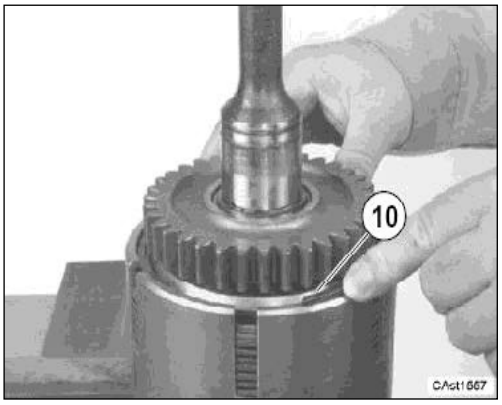

14. Assemble washer (4).

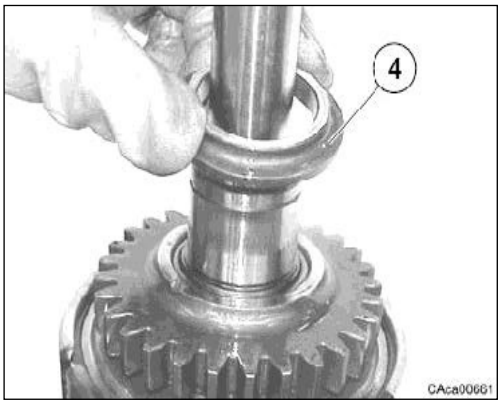

15. Heat bearing (3) to 80 – 100 ^{0}C and assemble. Use tool CA715004.

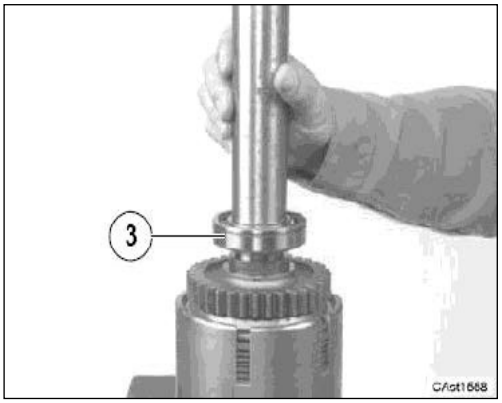

16. Install the snap ring (2).
Note: For clarity of the Teflon sealing ring installation procedure the following p
spacer, bearing, and snap ring installed on the input shaft.

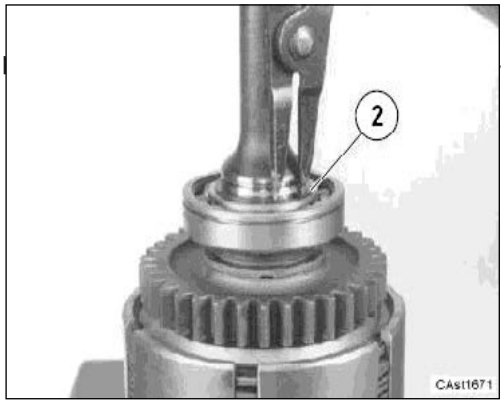

17. Insert the Teflon seal ring (1) as follows.

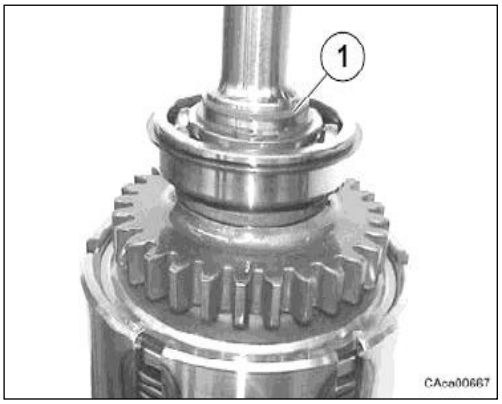

18. Install the CA715415/7 spacer onto the input shaft with the chamfered end facing in.

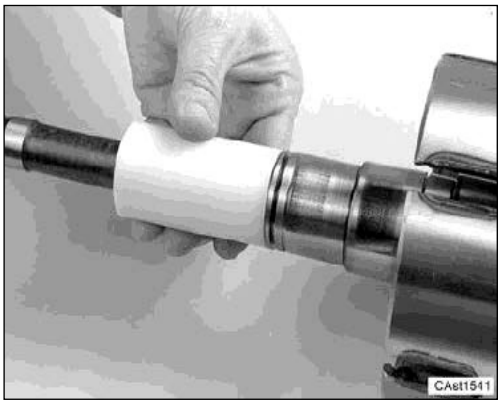

19. Slide the CA7155495 expander/protector onto the input shaft and over the spacer. The expander/protector will stop in the correct position to install the seal ring in the groove.



20. Heat the Teflon seal ring to 60^0 - 80^0C for 5 minutes. Install the Teflon seal ring onto the expander/protector.



21. Install the CA715497 pusher over the expander/protector and slide the seal ring until it reaches the groove in the shaft.
Remove the pusher, expander and spacer from the shaft.



22. Install the end of the CA715356 seal compressor with the deep chamfer onto the shaft and over the seal ring. Use a back and forth twisting motion to allow the seal compressor slip over the top of the sealing ring and seat the seating ring into the groove. Be careful not to damage the sealing ring. After the sealing ring is seated in the groove, remove the seal compressor from the shaft.



23. Turn the seal compressor around and slide the end with the narrow chamfer over the shaft and over the seal ring. Leave the seal compressor in place for 15 minutes until the sealing ring has cooled and is properly sized and seated in the groove. After the seal ring has cooled, remove the seal compressor from the shaft.

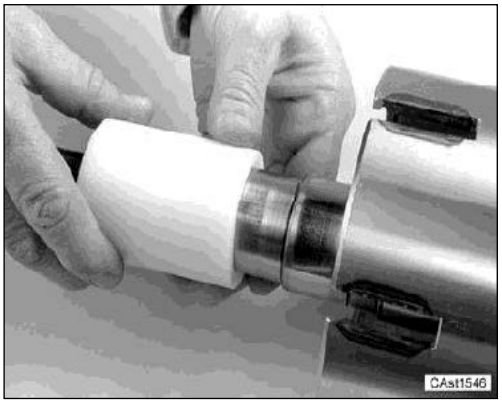

24. Measure the clutch discs clearance for each clutch assembly. The clutch plate lock ring must be all the way up against the lock ring. Use a feeler gauge to measure the distance between the clutch plate lock ring and the first clutch drive plate. The distance must be 2.3 to 4.3 mm. if the distance is not within specification, the clutch is probably assembled wrong.

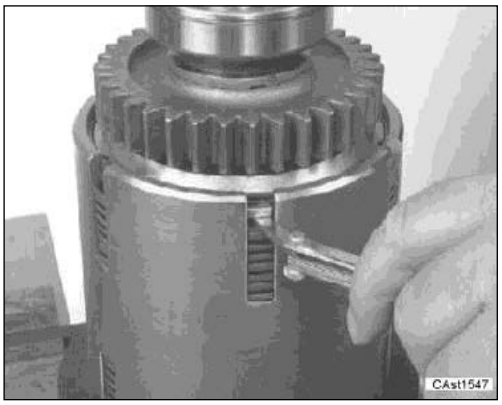

25. Note: Overturn the shaft and execute the operations from the sequence 1 oil to lubricate the thrust washer (25). Install the thrust washer so that th Make sure that the side with the oil grooves is down

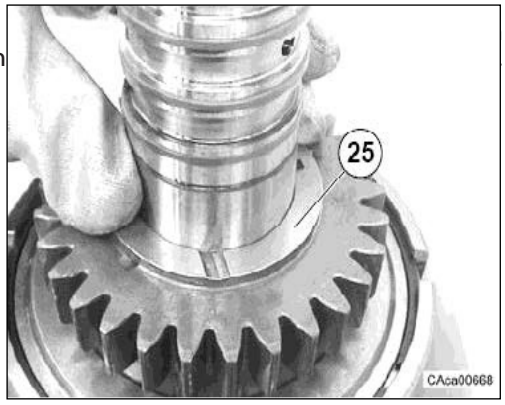

26. Heat the bearing (24) to 80 - 100^{0}C. use driver CA715046 to drive the bearing (24) onto the input shaft until the bearing makes contact with the thrust washer.

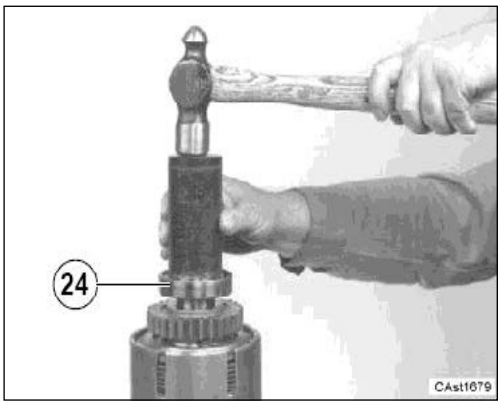

27. Assemble snap ring (23).

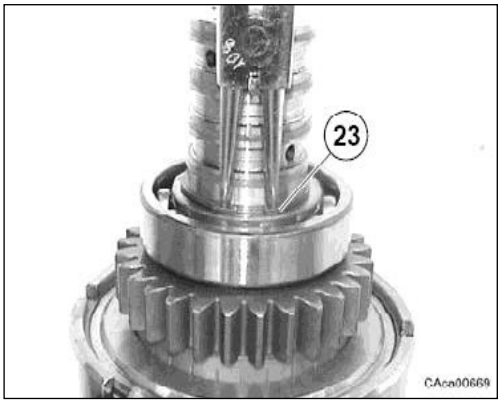

28. Assemble the Teflon seal rings (23) as follows. Place the CA715743/1 spacer into the CA715743 expander.

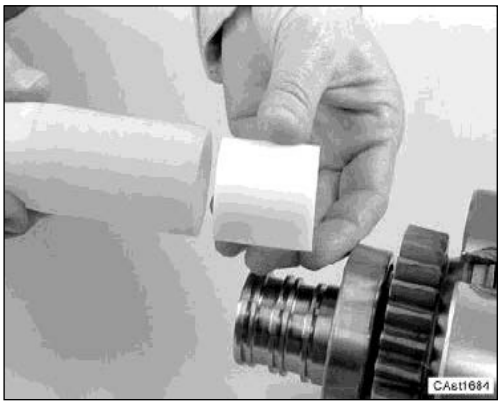

29. Slide the CA715743 expander and the spacer onto the shaft. The expander will stop in the correct position to install the seal ring in the groove.

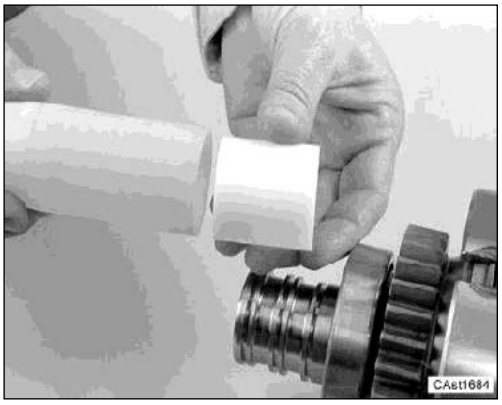

30. Heat the Teflon seal ring to 60 - 80^{0}C for 5 minutes. Install the Teflon seal ring onto the expander.

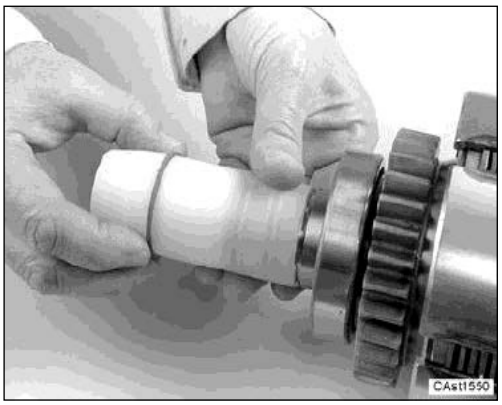

31. Install the CA715746 pusher over the expander and slide the seal ring until it reaches the groove in the shaft. Remove the pusher, expander and spacer from the shaft.

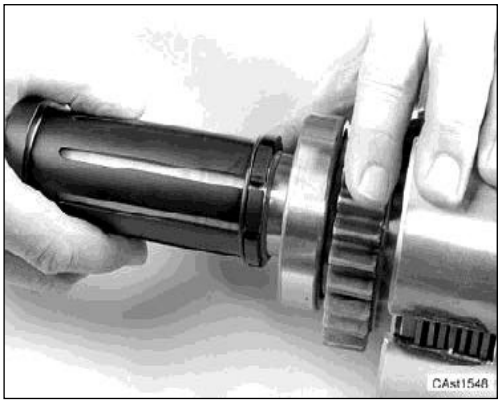

32. Install the end of the CA715745 seal compressor with the deep chamfer onto the shaft and over the sealing ring. Use a back and forth twisting motion to allow the seal compressor to slip over the top of the sealing ring and seat the sealing ring into the groove. Be careful not to damage the seal ring. After the sealing ring is seated in the groove, remove the seal compressor from the shaft.

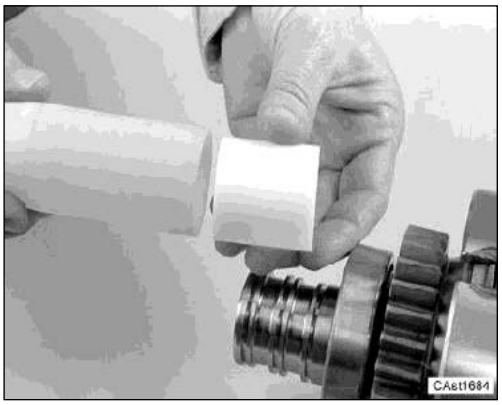

33. Turn the seal compressor around and slide the end with the narrow chamfer over the shaft and over the seal ring. Leave the seal compressor in place for 15 minutes until the sealing ring has cooled and is properly sized and seated in the groove. After the seal ring has cooled, remove the seal compressor from the shaft.
For the introduction of the other 3 teflon rings, repeat the operation as stated above.

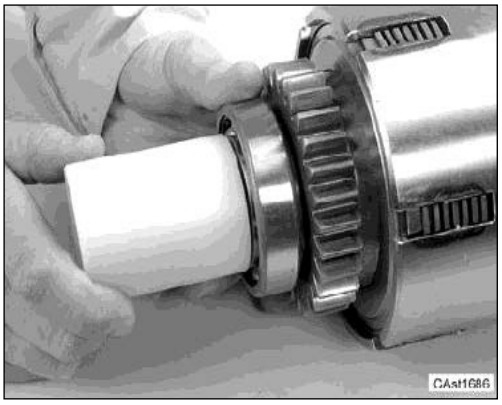

20.14 REVERSE IDLER SHAFT

1. Lubrication oil passage
2. Forward clutch passage
3. Reverse clutch passage
4. Forward gear
5. Forward clutch pack
6. Reverse clutch pack
7. Reverse gear
8. Input shaft

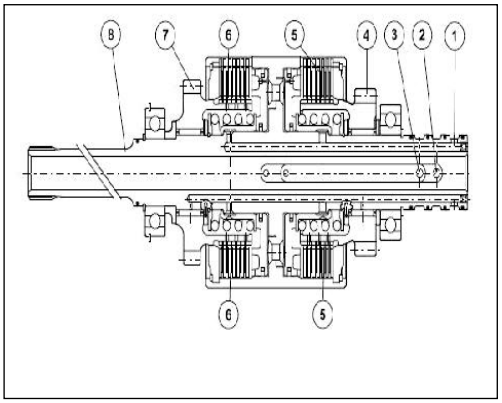

See the illustration.
Apply compressed air of approximately 6 bar to the forward clutch passage. Listen to hear the forward piston moving to lock the forward clutch pack. Try to move the forward gear. The forward gear must not turn on the input shaft. Try to move the reverse gear. The reverse gear must turn freely on the input shaft. If the clutches do not work correctly, disassemble the clutches to find the problem.
Apply compressed air of approximately 6 bar to the reverse clutch passage. Listen to hear the reverse piston moving to lock the reverse clutch pack. Try to move the reverse gear. The reverse gear must not turn on the input shaft. Try to move the forward gear. The forward gear must turn freely on the input shaft. If the clutches do not work correctly, disassemble the clutches to find the problem.

1. Assemble D shaft bearing (16). Use tool CA715623.

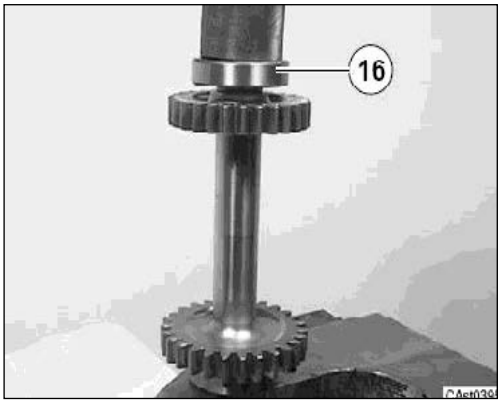

2. Assemble D shaft bearing (37). Use tool CA715623.

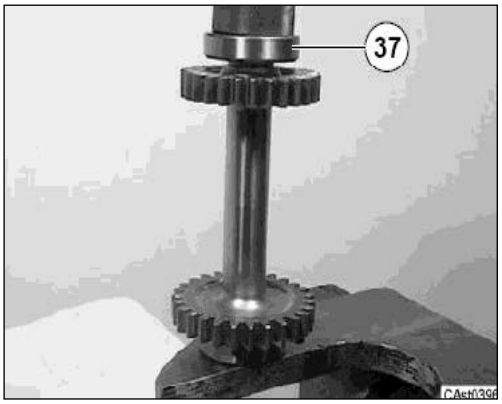

3. Lubricate with oil the shaft seat A.

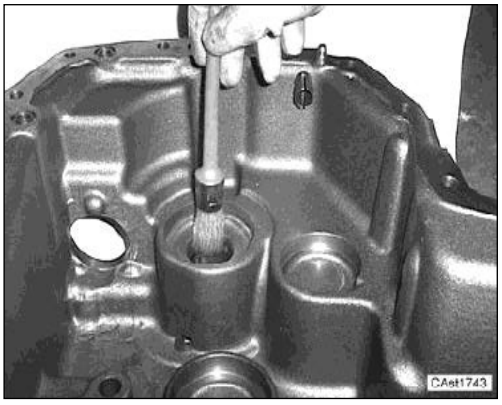

4. Fit shaft assembly D and shaft assembly A. the operation is correct only if the two shafts are fitted at the same time



20.15 DISASSEMBLY & ASSEMBLY OF MAIN SHAFT

DISASSEMBLY

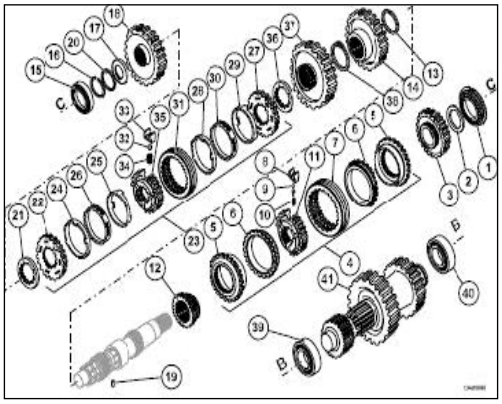

1. Remove the shaft B and C with special tool CA715496.

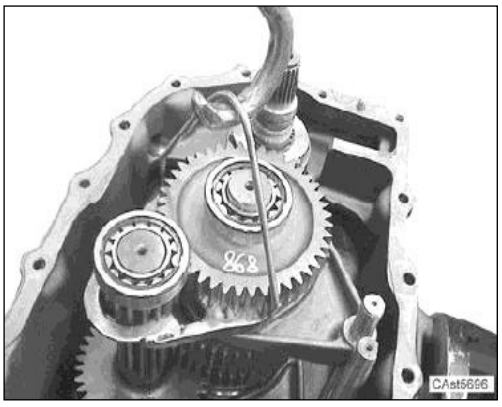

2. Remove the gear control fork.

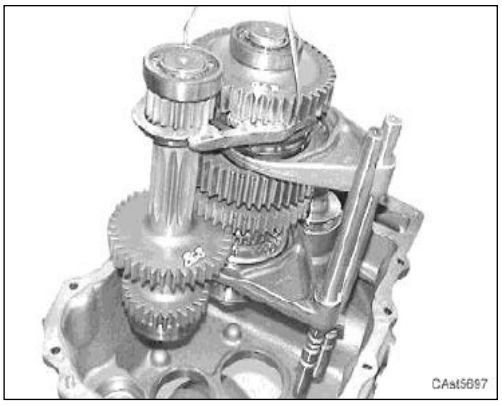

3. Remove bearing (1) by means of an extractor.

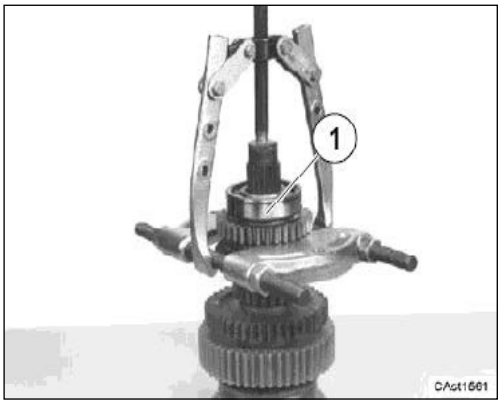

4. Remove thrust washer (2) and third speed gear (3).

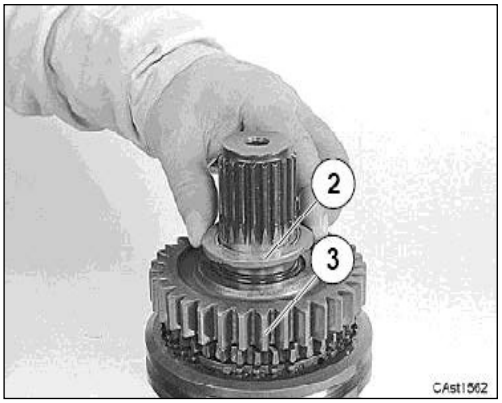

5. Remove the third/fourth speed synchronizer assembly (4).

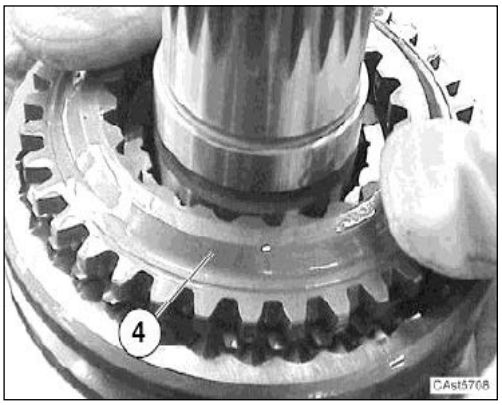

6. Remove the clutch ring (5) from each side of the synchronizer assembly.

⚠ NOTE

The synchronizer assembly component parts are serviced as a complete unit. The synchronizer assembly may be disassembled for inspection and cleaning. If any of the parts are damaged, the entire synchronizer assembly must be replaced. Use new parts as required.

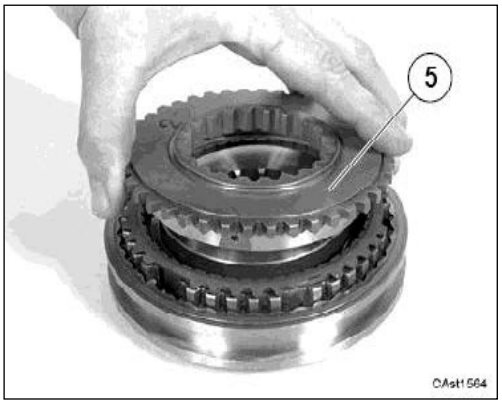

7. Use a feeler gauge to measure the clearance between the bottom of the teeth on the synchronizer ring and the edge of the sleeve on the outside of the synchronizer assembly.
The clearance should be approximately 1.0 mm with used parts in good condition.
If the clearance is 0.5 mm or less, use a new synchronizer assembly.
Repeat the measurement for the opposite side of the synchronizer assembly before disassembly.

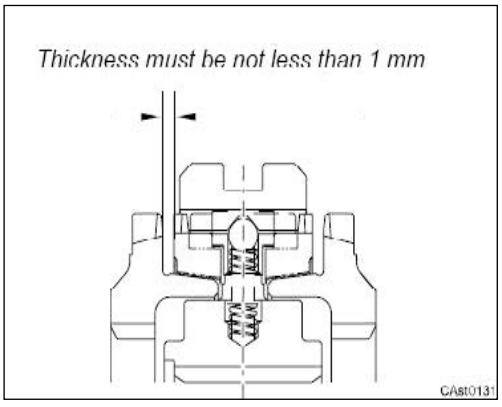

8. Remove the tapered friction ring (6) from each side of the synchronizer assembly.

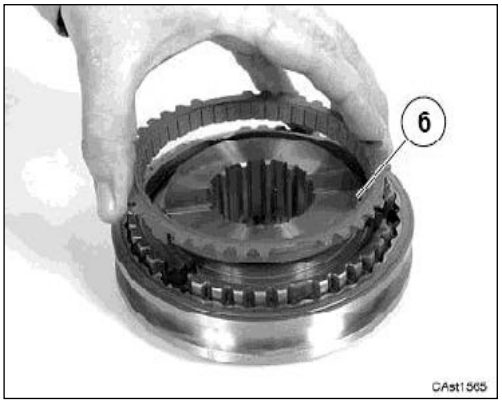

9. Remove the sleeve (7) from the synchronizer hub. When the sleeve is removed from the synchronizer hub the spring plates, hub pins and hub springs will be released from the synchronizer hub.
Warning: Do not lose any of these parts.

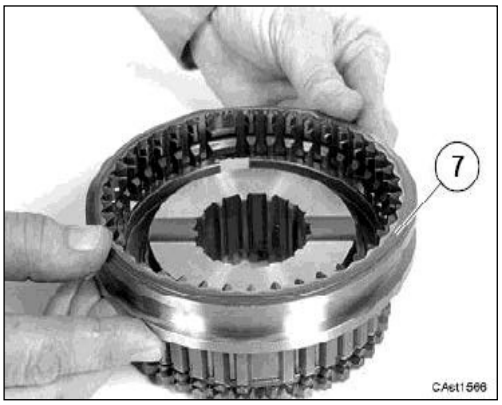

10. Photo shows the relationship between the plates (8), the balls (9), the hub springs (10) and the synchronizer hub (11). The synchronizer hub contains 3 plates (8), 3 balls (9) and 3 hub springs (10).

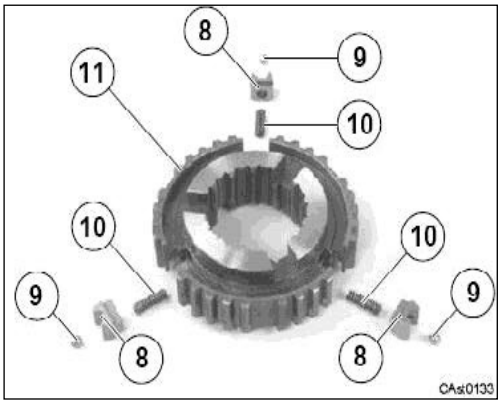

11. Remove the fourth gear (12).

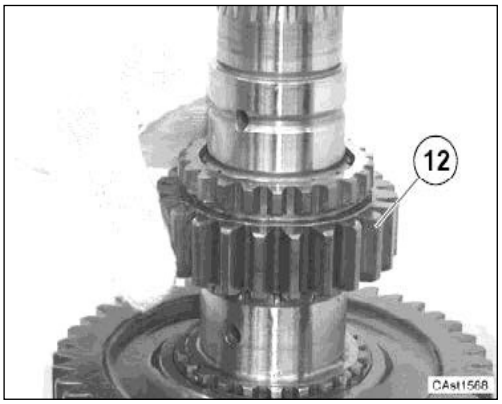

12. Turn the shaft. Remove the outer race bearings (15).

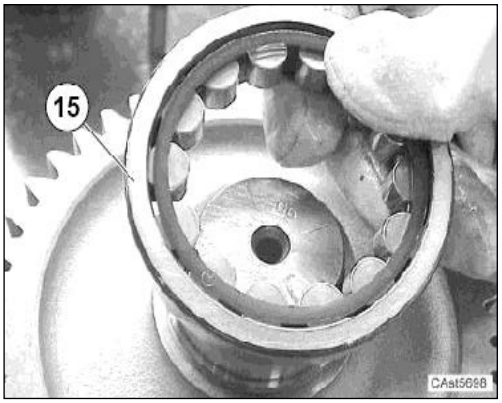

13. Remove the inner race bearings (15) with a suitable extractor.
Note:

⚠ NOTE

Do not try to remove the bearing pulling the gear since it is locked by snap ring (16).

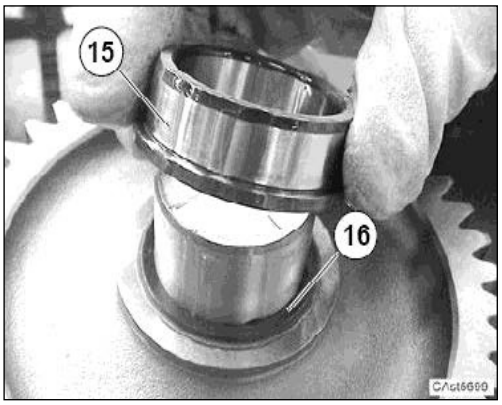

14. Remove snap ring (16).

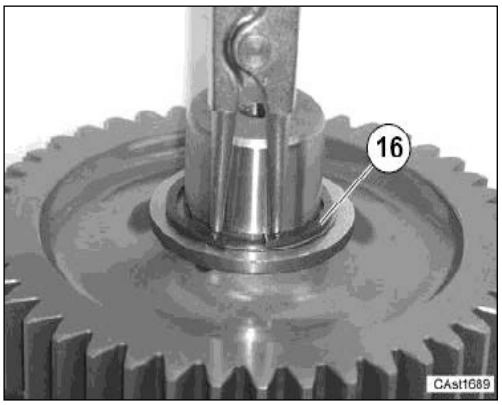

15. Remove the shims (20) and the thrust washer (17).

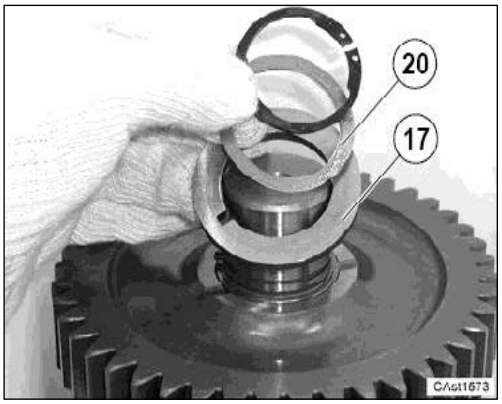

16. Remove split pin (19).

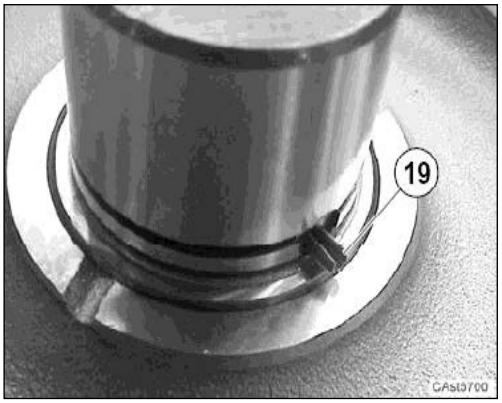

17. Remove second speed gear (19).

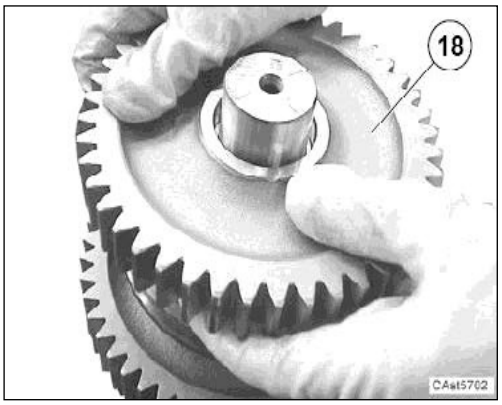

18. Remove the spacer (21).

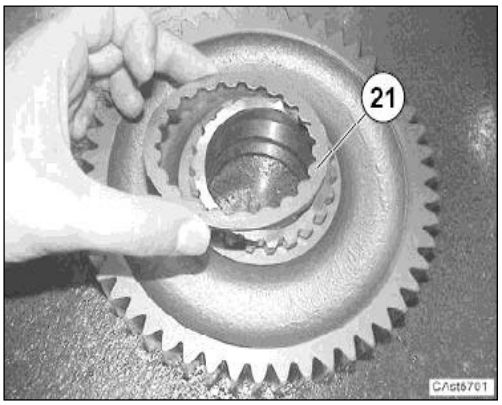

19. Remove the first/second synchronizer assembly (23). Remove synchronizer ring (22).

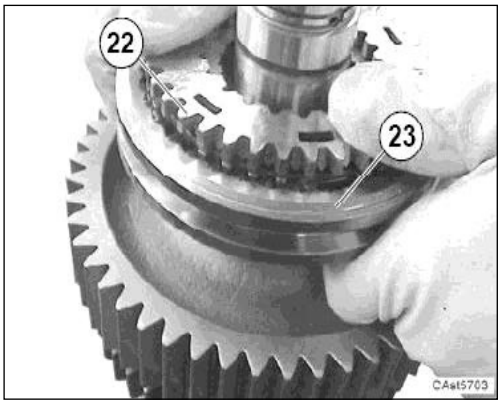

20. Remove the steel ring (24) and the sintered ring (25) together. Install the synchronizer on top of the synchronizer assembly. Use a feeler gauge to measure the clearance between the bottom of the teeth on the synchronizer ring and the edge of the sleeve on the outside of the synchronizer assembly.

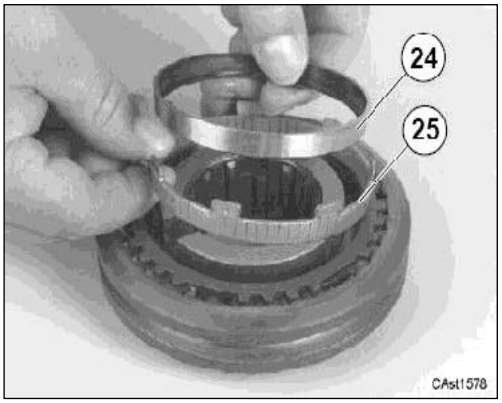

21. This clearance should be approximately 1.0 mm with used parts in good condition. if the clearance is 0.5 mm or less, use a new synchronizer assembly. Repeat the measurement for the opposite side of the synchronizer assembly before disassembly.

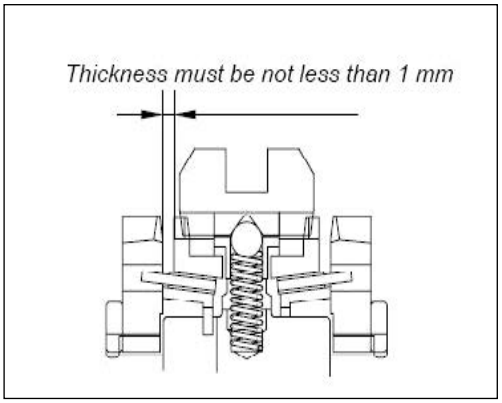

22. Remove the tapered friction ring (26).

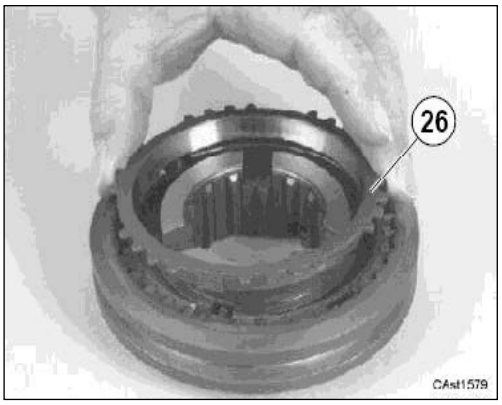

23. Turn the synchronizer assembly (23) over and remove the synchronizer ring (27) from the other side.

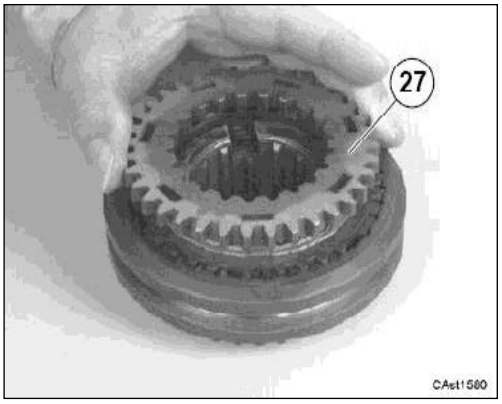

24. Remove the steel ring (28) and the sintered ring (29) together.

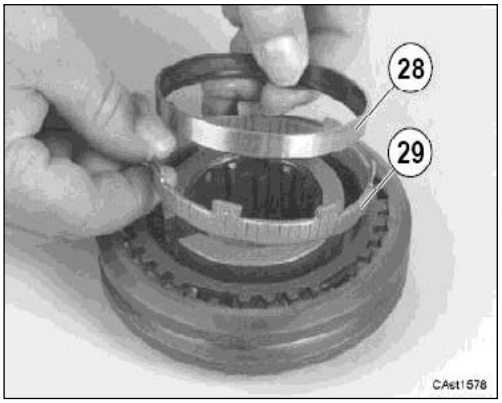

25. Remove the tapered friction ring (30).

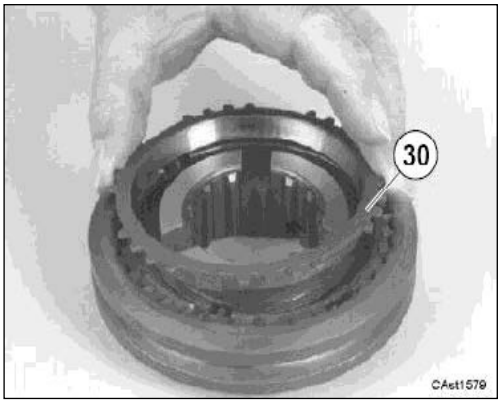

26. Support the sleeve on blocks. Push down on the hub while you use a punch to push the detent assemblies out of the sleeve and hub. Remove the sleeve (31) from the hub.

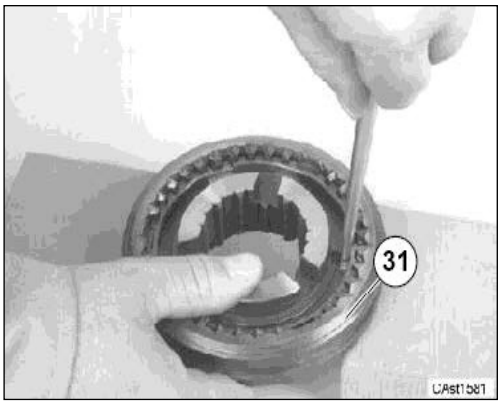

27. This photo shows the relationship between the balls (32), the plates (33), the springs (34) and the hub (35).

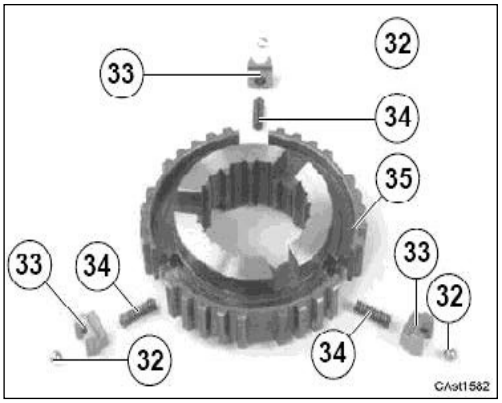

28. Remove spacer (36).

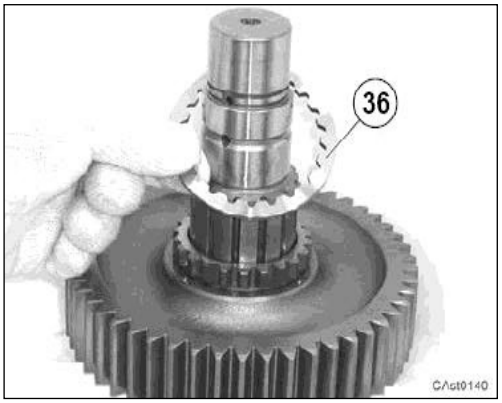

29. Remove the first speed gear (37).

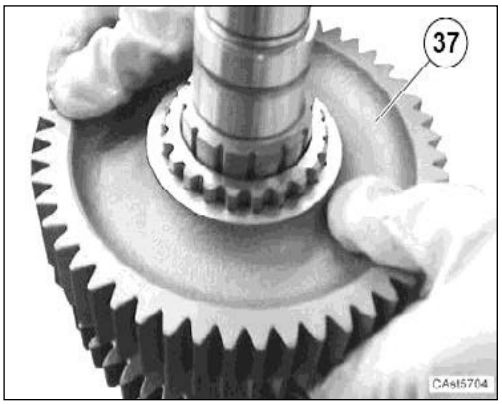

30. Remove snap ring (38).

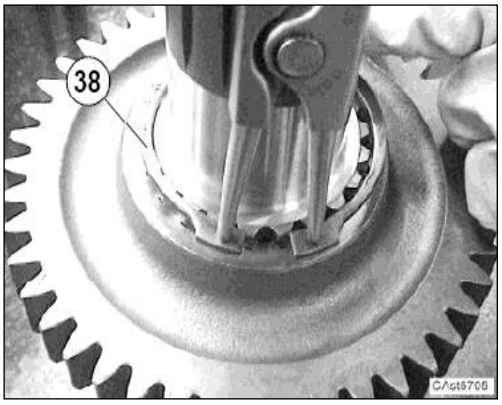

31. Remove the 4WD gear (14) if equipped.

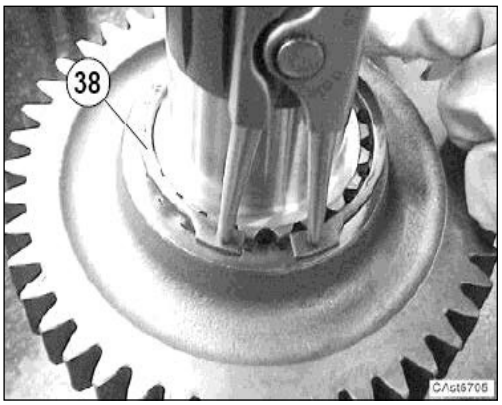

32. Remove the snap ring (13).

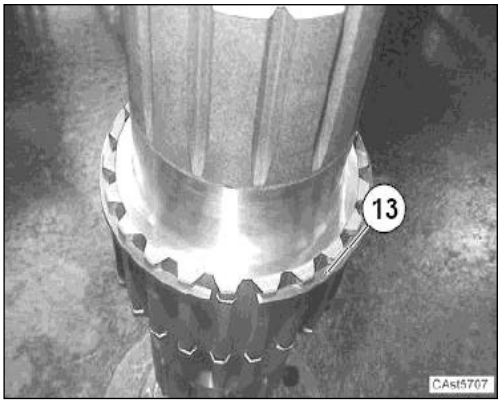

33. Remove the inner race bearing (39) with an extractor.

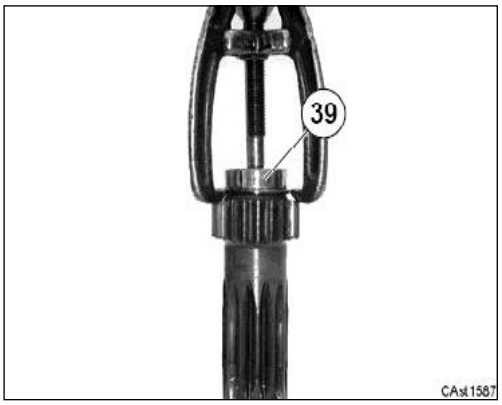

34. Turn the shaft (41). Remove bearing (40).



ASSEMBLY

1. Put the secondary shaft on the bench so that the first-second gear end is up. You can use a vise with soft jaws to hold the secondary shaft in position. Install the snap ring (13) as shown.

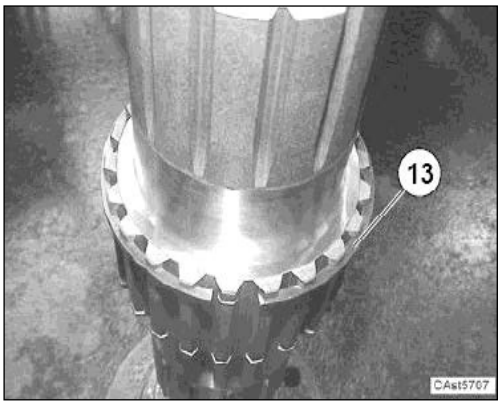

2. Assemble 4WD gear (14).

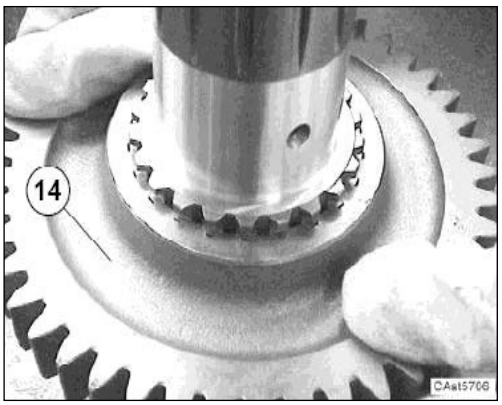

3. Assemble snap ring (38).

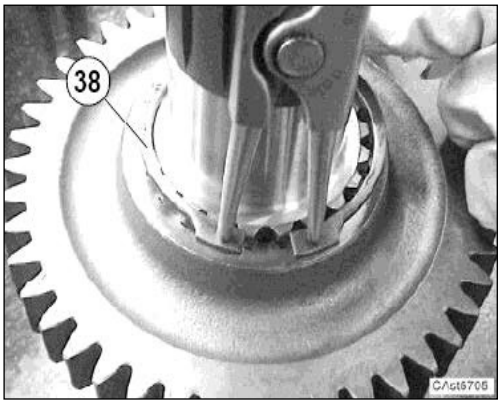

4. Assemble the first speed gear (37).

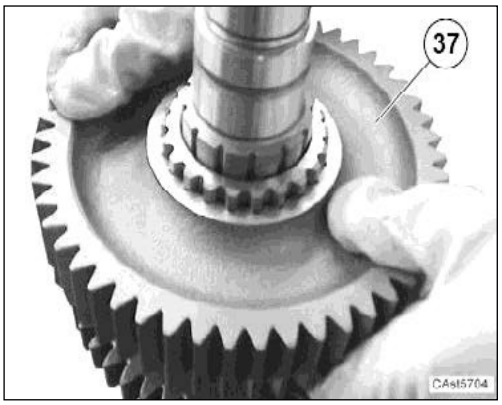

5. Assemble spacer (36).

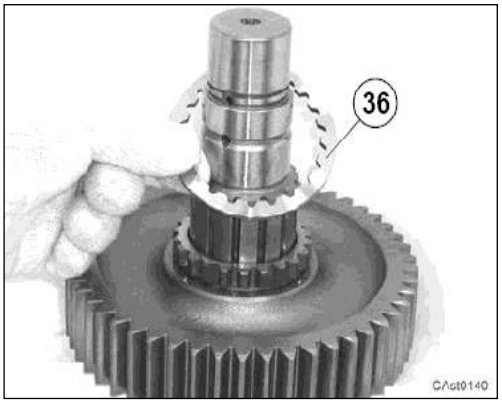

6. Assemble the first/second speed synchronizer (23). This photo shows the correct positions of the hub (35), the sleeve (31), the springs (34), the plates (33), and the balls (32) prior to final assembly. The springs are installed in the hub, and the plates are on the springs.
The plates are not yet pushed down into he sleeve and are holding he hub up out of the sleeve. The balls are loose in the recesses of the plates.

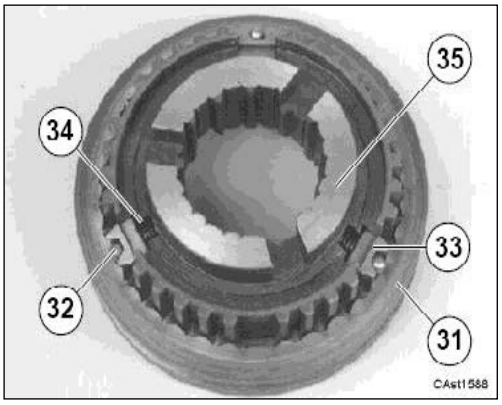

7. Use a punch or screwdriver to push the balls (32) into the plates and to push the plates down so that the balls are on the flat faces of the teeth, nut not into the detent grooves. When al the balls are in position, push the hub and the plates down until the balls move into the detent groove.



8. Install the tapered friction ring (30) on the synchronizer assembly

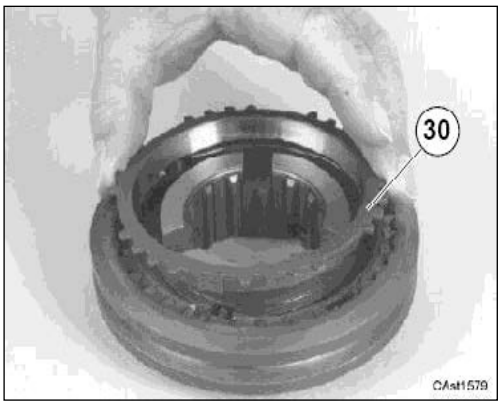

9. Use clean transmission oil to lubricate the sintered ring (29) and the steel ring (28). Install the sintered ring (29) and the steel ring (28) as shown.

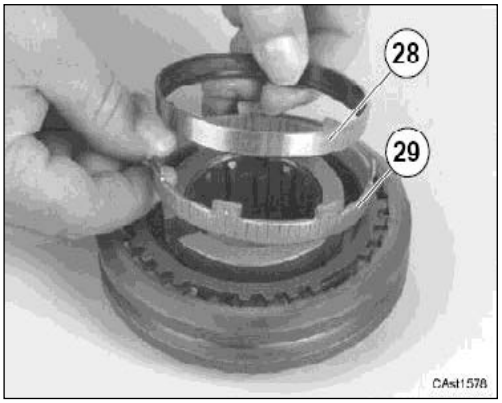

10. Install the synchronizer ring (27) as shown. The flat sides of the teeth must be up.

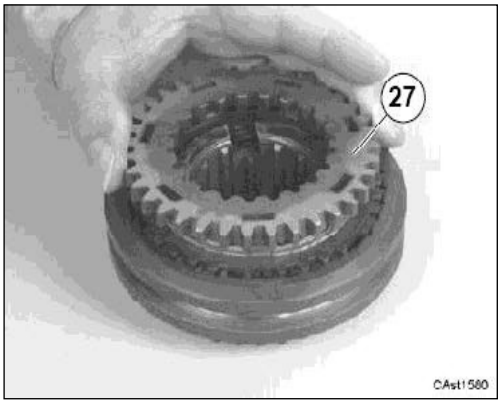

11. Turn the synchronizer assembly over and install the tapered friction ring (26) on the other side.

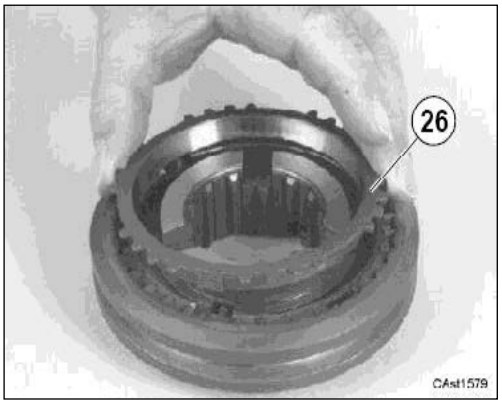

12. Use clean transmission oil to lubricate the sintered ring (25) and the steel ring (24). Install the sintered ring (25) and the steel ring (24) as shown.
Install the top synchronizer ring on the synchronizer assembly. Make sure that the teeth on the top synchronizer ring are aligned with the teeth on the inside of the sleeve. Push the sleeve up until the sleeve engages the teeth on the top synchronizer ring. To do this, you must use enough force to overcome the strength of the detent springs and balls. When the synchronizer ring and the sleeve are completely engaged, the detent must hold the sleeve in this position. Push the sleeve back down to the neutral position, turn the synchronizer assembly over, and repeat the procedure with the bottom synchronizer ring. If the sleeve does not engage the teeth smoothly or does not stay in position when move to any of the three positions, the synchronizer assembly has damaged parts or was or assembled correctly. Disassemble the synchronizer assembly to find the problem.

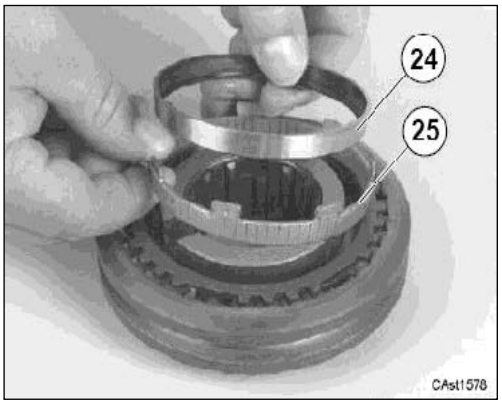

13. Install the top synchronizer ring (22) so that the flat sides of the teeth are up. Install the first/second speed synchronizer assembly (23).

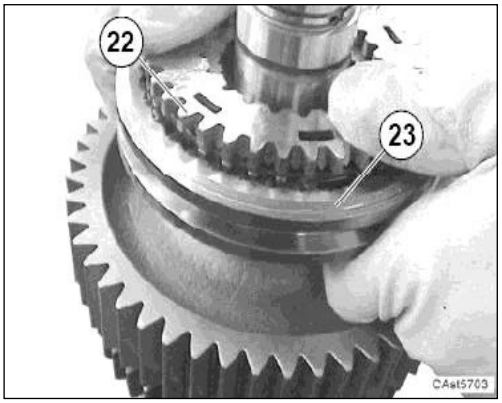

14. Install the spacer (21) on the second speed gear (18). The teeth in the inside diameter of the spacer must engage the teeth on the bottom of the second speed before second speed gear is installed.

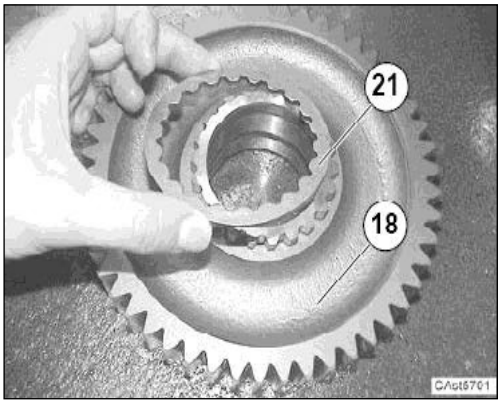

15. Assemble the second speed gear (18).

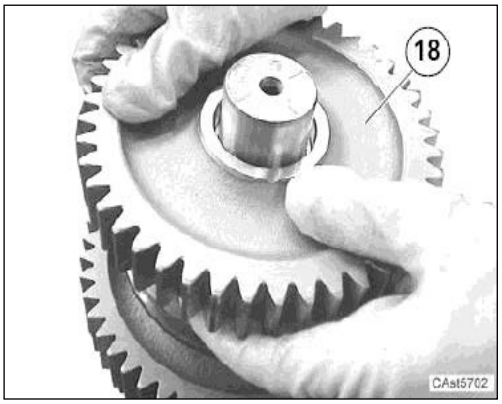

16. Assemble split pin (19).

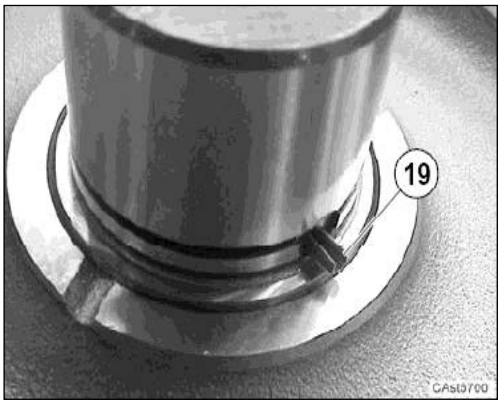

17. Assemble thrust washer (17) and shims (20).

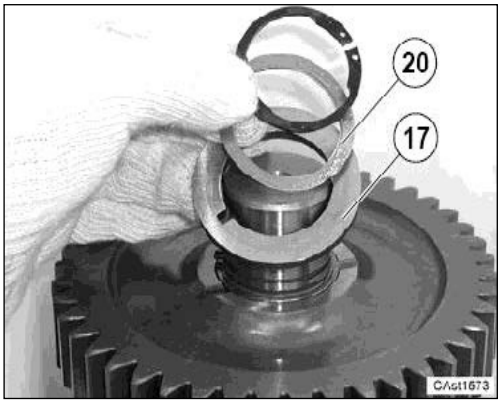

18. Assemble snap ring (16). Measure the backlash X between gear *18) and thrust washer (17), the value must be between 0.2 – 0.42 mm.

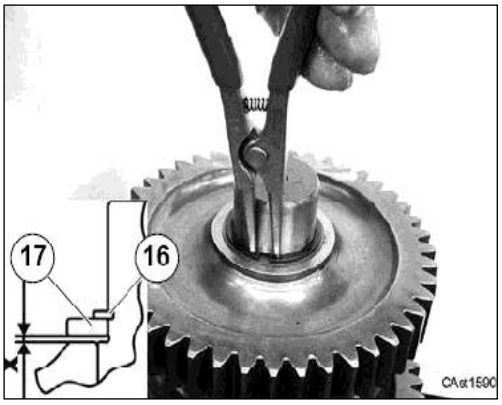

19. Use a thickness gauge

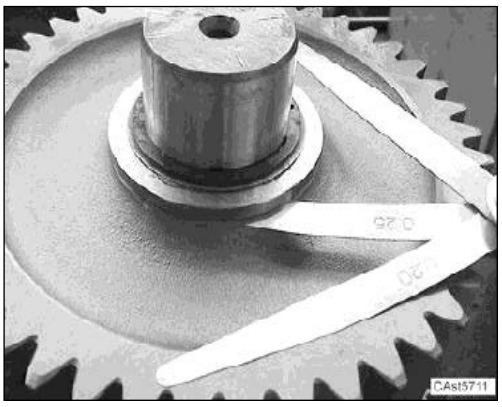

20.

Shims Range				
Thick. Mm	0.05	0.1	0.3	0.5

If backlash X is more than the value prescribed remove the snap ring and the washer from their seat and using the shims shown in the chart reach the prescribed value. Assemble shims (20) between thrust washer (17) and snap ring (16).

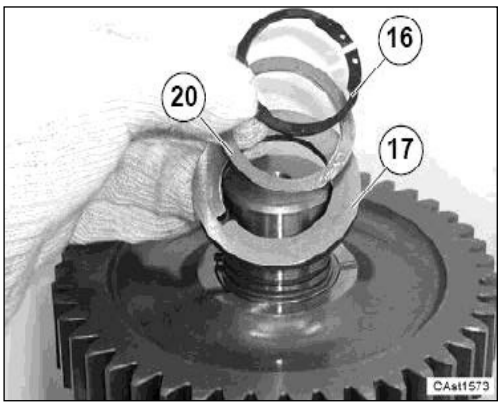

21. Heat the inner race of the bearing (15) to 80 – 100 ^{0}C. Assemble the inner race of the bearing (15). Use tool CA715149.

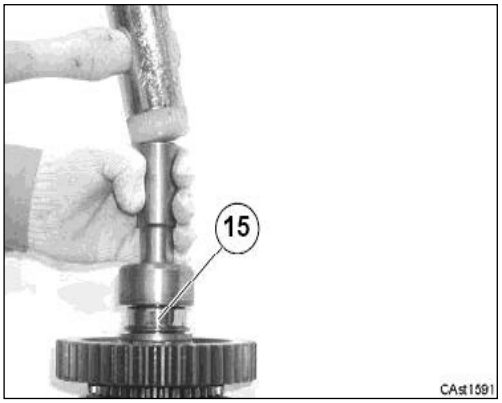

22. Assemble the outer race of the bearing (15).

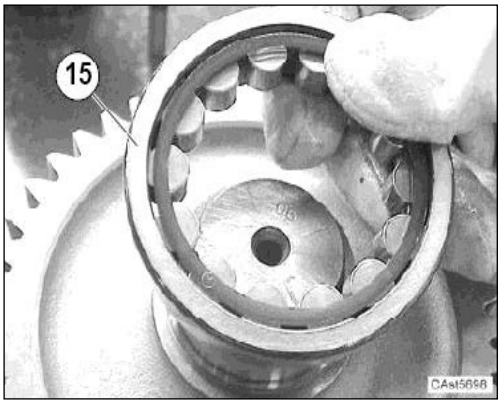

23. Turn the shaft. Assemble the fourth speed gear (12).

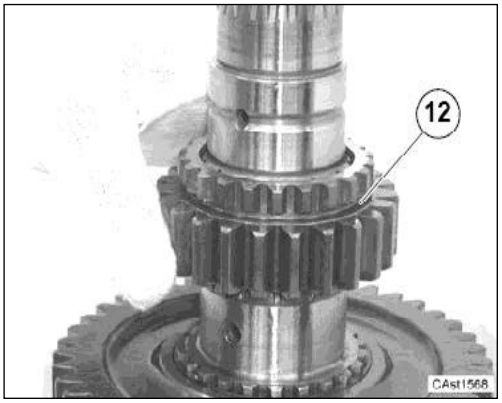

24. Assemble the third/fourth speed synchronizer (4). This photo shows the correct positions of the hub (11), the sleeve (7), the springs (10), the plates (8), and the balls (9) prior to the final assembly. The springs are installed in the hub, and the plates are on the springs. The plates are not yet pushed down into the sleeve and are holding the hub up out of the sleeve. The balls are lose in the recesses of the plates.

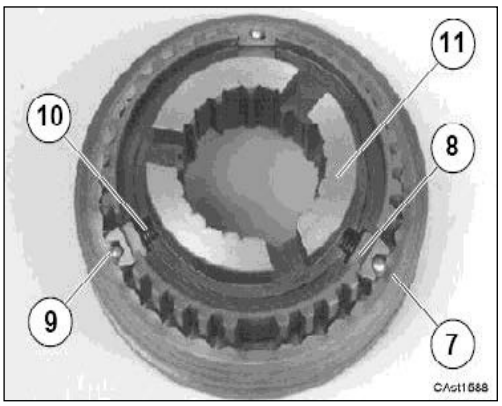

25. Install the 3 sets of hub springs (8), hub pins (9) and spring plates (10) into the synchronizer hub (11). Use a punch or screwdriver to push the spring plates as the synchronizer hub is installed into the sleeve (7). Be sure that the spring plates are aligned with the groove in the sleeve.

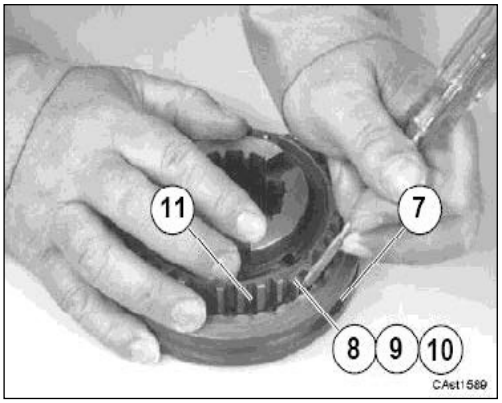

26. Install the tapered friction ring (6) on each side the synchronizer assembly.

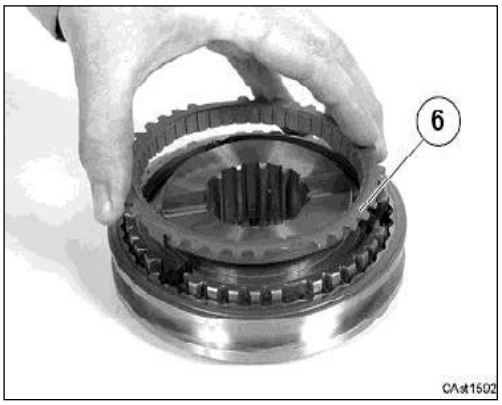

27. Use clean transmission oil to lubricate and install the clutch ring (5) on each side of the synchronizer assembly. Install the top synchronizer ring on the synchronizer assembly.
Make sure that the teeth on the top synchronizer ring are aligned with the teeth on the inside of the sleeve. Push sleeve up until the sleeve engages the teeth on the top synchronizer ring. To do this, you must use enough force to overcome the strength of the detent springs and balls. When the synchronizer ring and the sleeve are completely engaged, the detent must hold the sleeve in this position. Push the sleeve back down to the neutral position, turn the synchronizer assembly over, and repeat the procedure with the bottom synchronizer ring. If the sleeve does not engage the teeth smoothly or does not stay in position when moved to any of the three positions, the synchronizer assembly has damaged parts or was not assembled correctly. Disassemble the synchronizer assembly to find the problem.

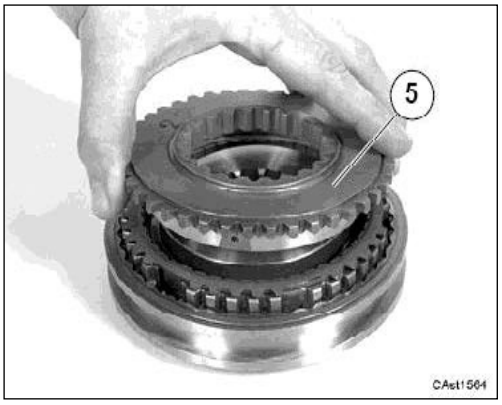

28. Install the third/.fourth speed synchronizer assembly (4) onto the shaft.

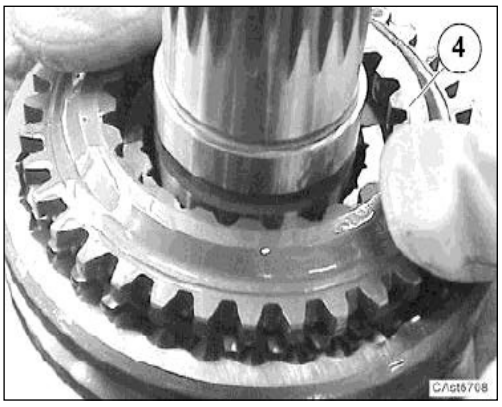

29. Use clean transmission oil to lubricate the thrust washer (2). Assemble third speed gear (3) and the thrust washer (2) onto the shaft.

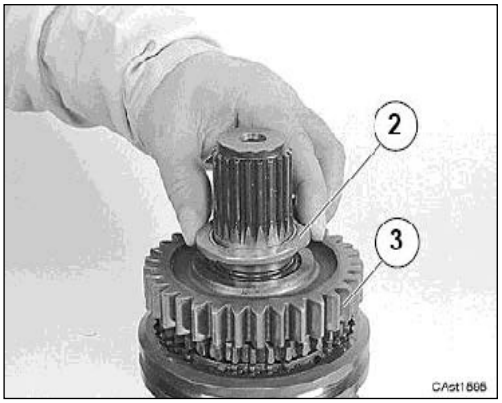

30. Heat the bearing (1) to 80 – 100°C.
Assemble bearing (1) using tool CA715004.

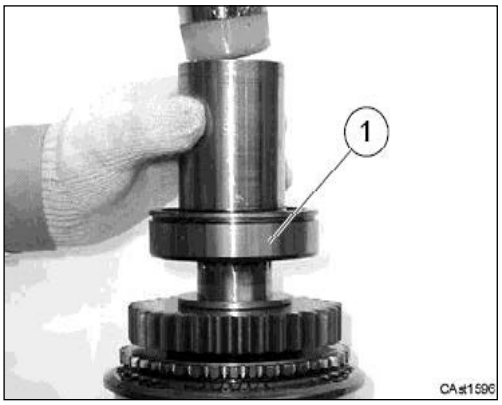

31. Heat the inner face of the bearing (39) to 80-100°C. Assemble the inner race of the bearing (39). Use tool CA715149.

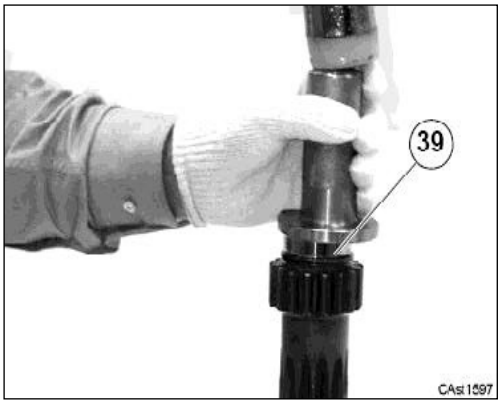

32. Turn the shaft (41). Heat the bearing to 80- 100°C. Assemble bearing (40). Use tool CA715004.

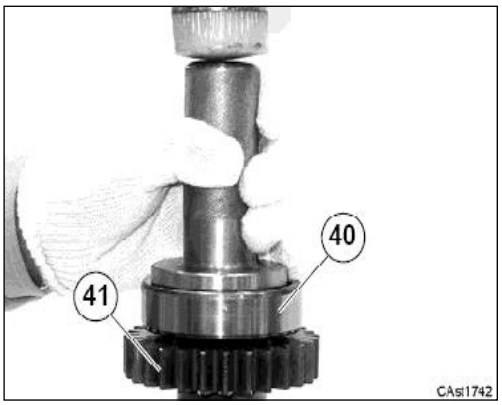

33. Reposition shaft assemblies B and C into the half box. Use tool CA715496.

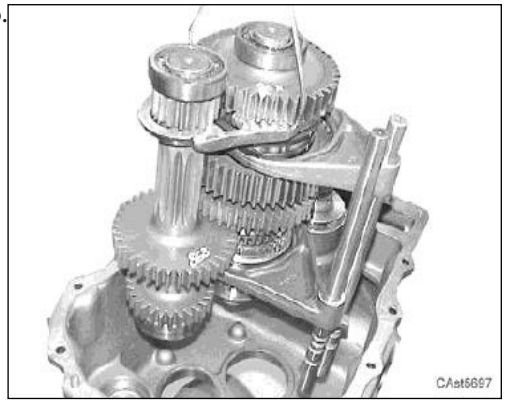

> **⚠ WARNING**
> Install shaft assemblies with pins and forks. Fit the pre-assembled forks 3rd and 4th speed and 1st and 2nd as shown in the photo.

34.

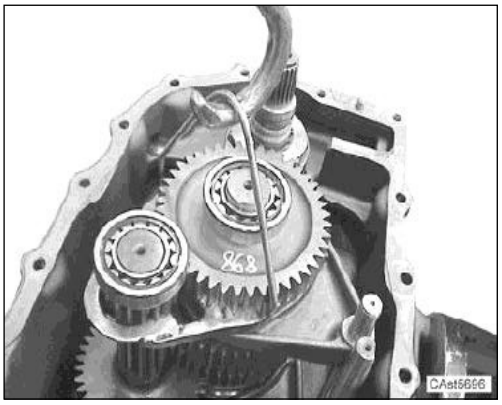

> **⚠ WARNING**
> Position the group with care paying attention to the location of fork pins in their seats.

20.16 DISASSEMBLY & ASSEMBLY OF SPEED CONTROLS

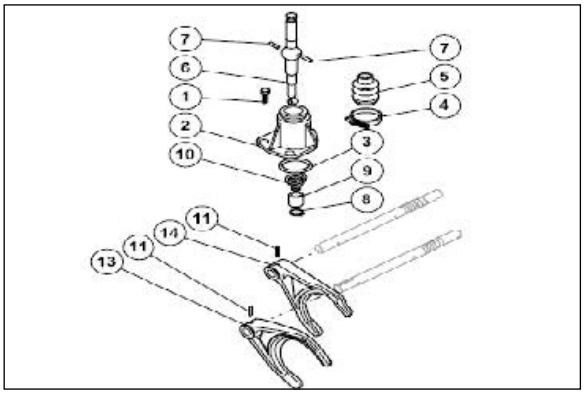

DISASSEMBLY

1. Loosen and remove the screws (1).

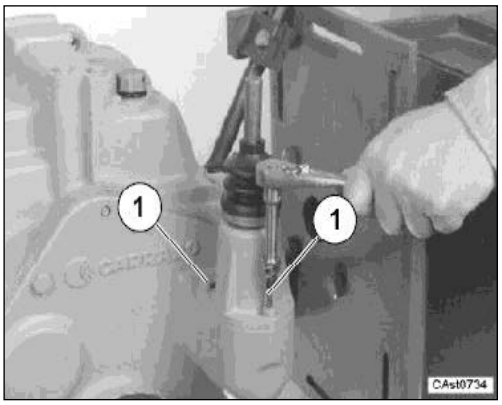

> **⚠ WARNING**
> For the disassembly of the two half boxes it is necessary to remove the shift tower assembly.

2. Remove shift tower assembly (2) and O ring (3).

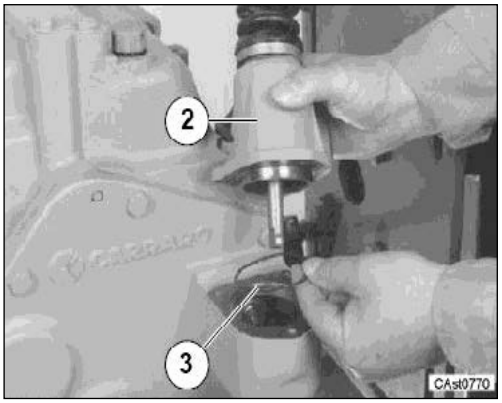

3. Use side cutters as shown to release the catch on the band which fastens the boot. Remove the band (4)

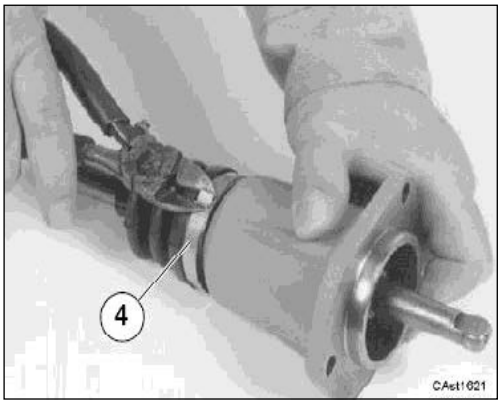

4. Remove the boot (5).

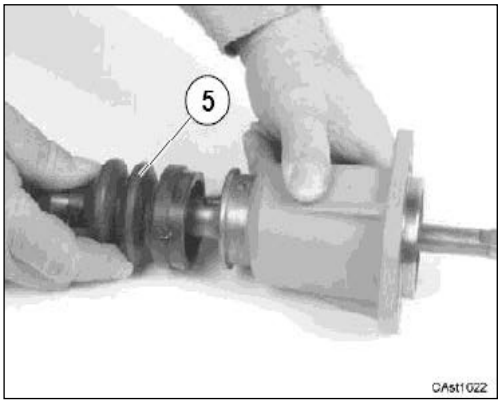

5. Remove the two pins (7).

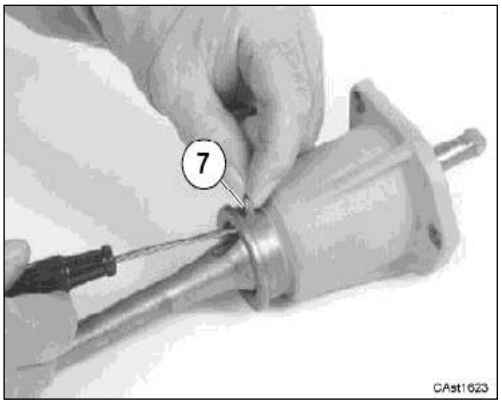

6. Remove the snap ring (8) from the shift lever.

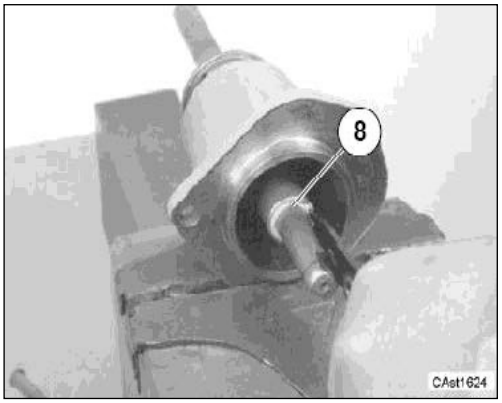

7. Remove the bushing (9) from the shift lever.

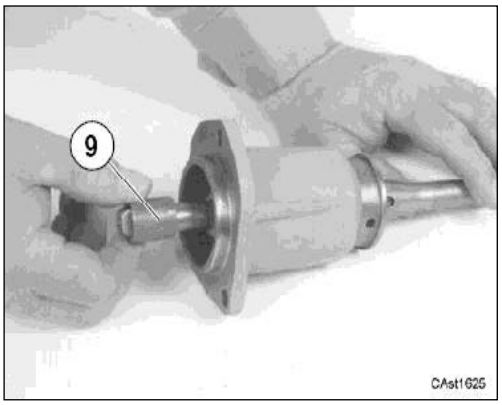

8. Remove the spring (10).

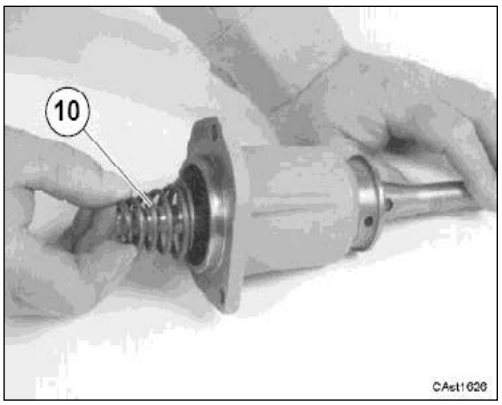

9. Remove the shift lever (6).

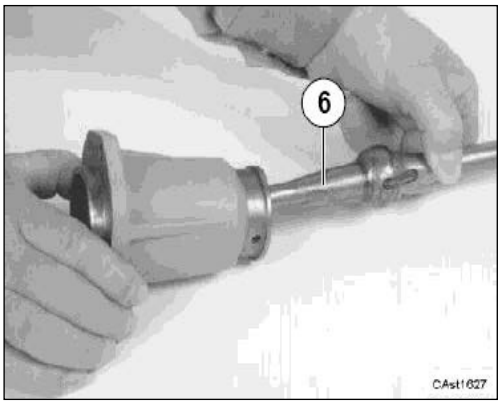

10. If disassembly is required, remove the pins (11) and separate the shift forks from the shift rods. Make sure that you remember how the parts are assembled and which parts go together. Except for the pins, none of the parts are interchangeable. Inspect all parts for burrs and excessive wear. Assembly is the reverse of disassembly.

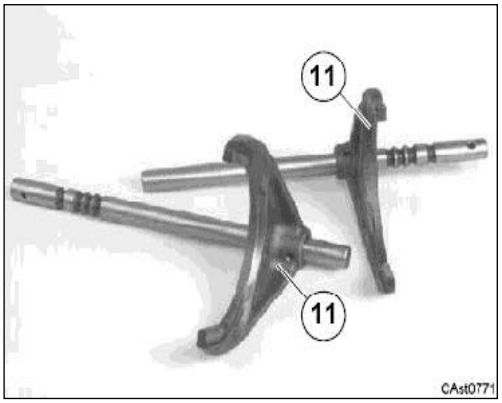

ASSEMBLY

1. Apply grease to the ball of the shift lever. Install the shift lever (6).

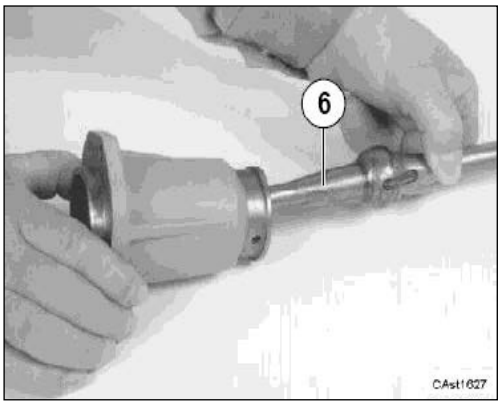

2. The picture shows the correct position of the lever (6) respect to the cover (2). The cavity (A) of the lever must be towards the rounded edge (B) of the cover. The slot (C) must be aligned with the holes (D) of the cover.

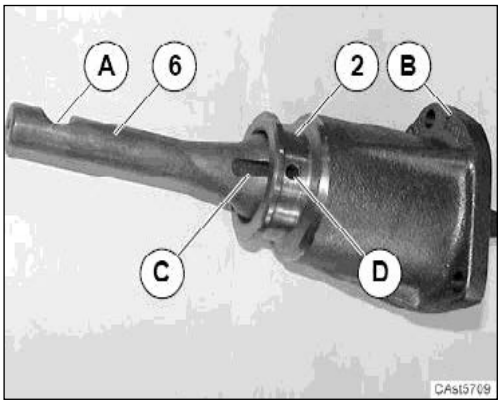

3. Install the spring (10).

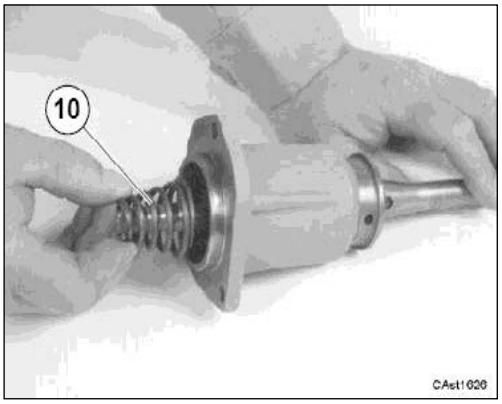

4. Install the bushing (9).

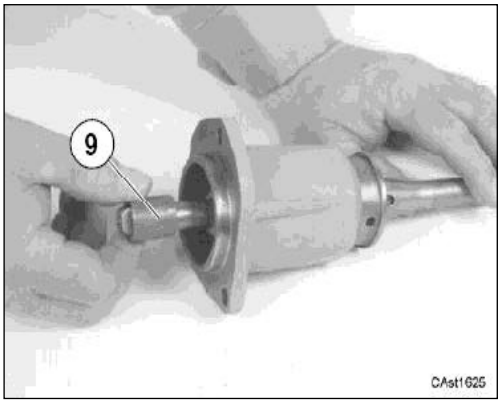

5. Install the pins (7) through the holes in the cover flange so that the pins engage the slots in the shift lever.

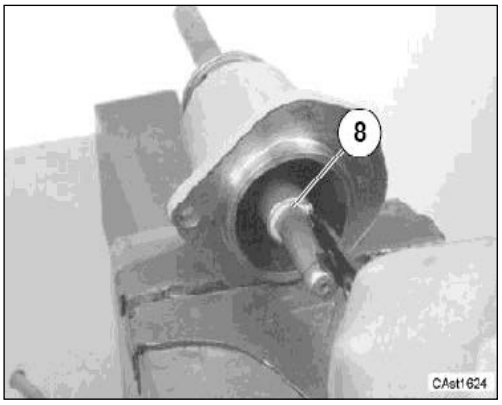

6. Install the boot (5) so that the end of the boots fits over the ends of the pins. Be careful so that the pins do not fall out during this step.

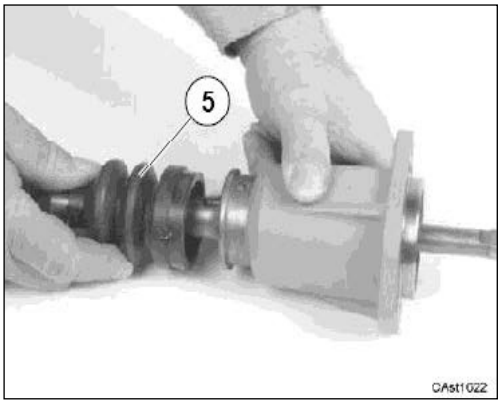

7. Install the band (4) on the boot as shown. Use the side cutter to engage the catch on the band.

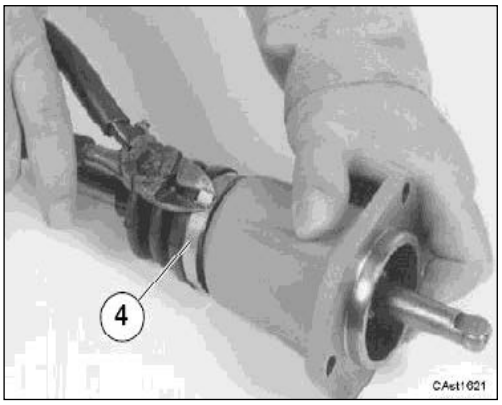

8. Install a new O ring (3) into flange cover seat. Use clean oil to lubricate the O ring. Put the shift tower assembly into position on the rear cover.

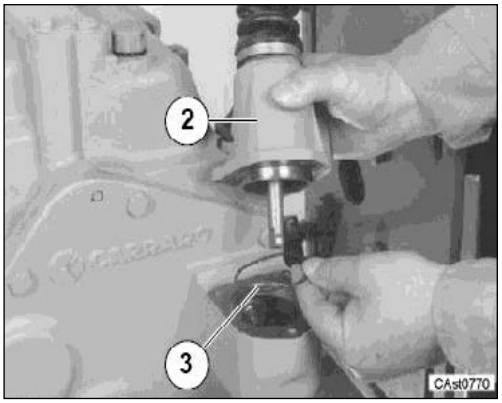

9. Assemble screws (1). See tighten torque.

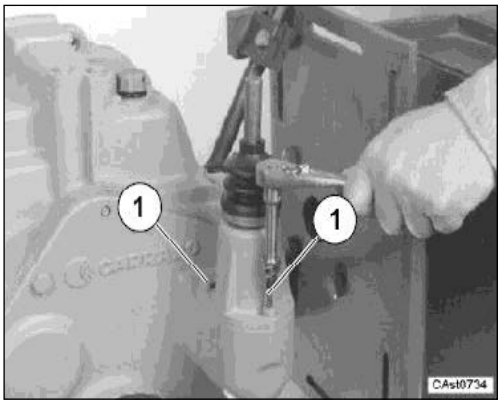

10. Fit the two pins (11) to lock gear control fork 3rd and 4th speed (13) and
11. gear control fork 1st and 2nd speed (14).

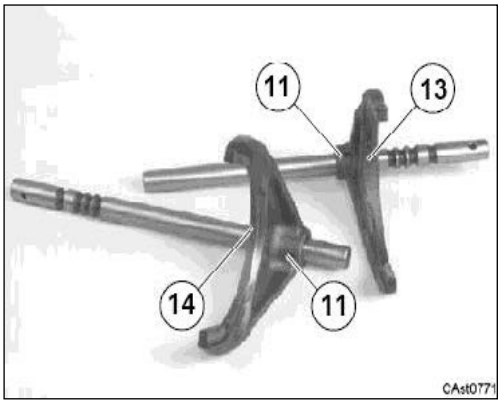

20.17 SYSTEM OPERATION

TRANSMISSION HYDRAULICS SYSTEM OPERATION

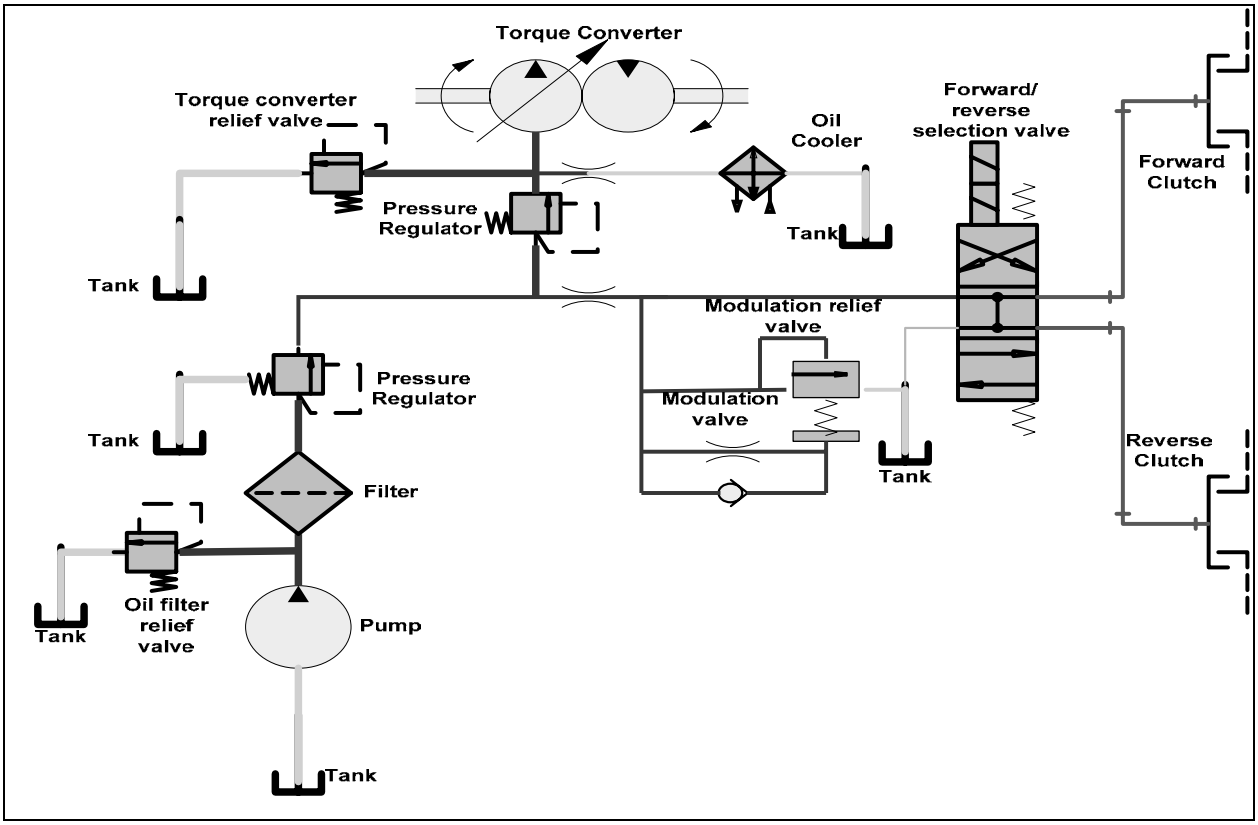

Suction filter (1), (2) transmission oil pump, (3) spin on delivery filter, (4) pressure regulator, (5) oil filter relief valve, (6) 4WD disengagement solenoid valve, (7) "easyshift" 4WD engage/disengage, (8) torque converter pressure relief valve, (9) torque converter, (10) oil cooler, (11) oil cooler back temperature thermostat port, (12) oil flow divider/pressure regulator valve, (13) forward/reverse modulating valve, (14) modulation relief valve, (15) forward/reverse selection valve, (16) forward clutch, (17) reverse clutch, (18) forward/reverse shaft lubrication, (20) 4WD pressure check port, (21) torque converter pressure check port, (22) oil cooler back shaft lubrication pressure check port, (23) forward/reverse main pressure check port, (24) forward pressure check port, (25) reverse pressure check port, (26) hydraulic differential lock engagement/disengagement, (27) hydraulic differential lock solenoid valve, (28) oil outlet port to brake, (29) brake oil port return to sump

This schematic shows the valve position and oil flow with the engine started and the transmission is in NEUTRAL. In NEUTRAL, pump (2) sucks oil from the sump through a suction strainer (1) and flows through transmission oil filter (3) to pressure regulating valve (4) and to oil flow diverting valve (12). The clutch pressure regulating valve (4) acts a main pressure relief valve for the total transmission hydraulic system. The oil flow from the pressure regulating valve (4) passes through the oil flow diverting valve (12) in which the part of the oil flow is being supplied to torque converter operation and to forward / reverse modulation valve (13) and to control valve (15) and to the clutches (16) and (17). During cold start condition, the cold start relief valve (5) dumps excess oil to the sump at 23 bar due to high viscosity of the oil. The flow diverting valve (12) maintains a constant flow to the torque converter operation. A torque converter pressure relief valve (8) maintains the pressure inside the torque converter.

Forward/reverse operation

When the transmission is selected in forward direction, the forward/reverse control solenoid is energized and shifts the forward/reverse control valve (15) shifts opening the passage from the pressure regulating valve (4) to the forward clutch piston and simultaneously the passage from the forward/reverse control valve (15) to the sump is blocked. This blockage will cause the pressure to increase before the forward/reverse control valve (15) and the oil passage through the orifice in the modulation valve (13) and it assists in increasing the modulation relief valve pressure (14) in additional to the spring force. The excess oil flow passing after the orifice in the modulation valve (13) flows back to the main supply line through the check valve in the modulation valve (13). This process will result in delay in clutch engagement timing for smother engagement of clutch.

20.18 TESTING & ADJUSTING

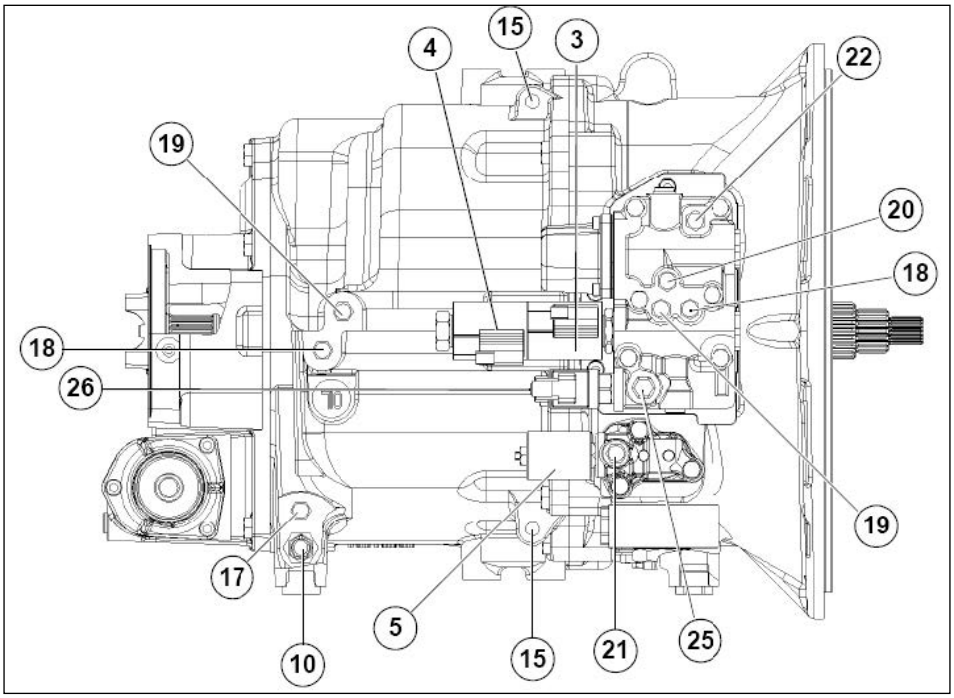

PRESSURE CHECK POINTS

Check point	System	Specification	Actual	Remarks
17	Oil cooler back pressure	5 bar		Transmission in neutral
18	Forward clutch pressure	13 bar		Transmission in forward
19	Reverse clutch pressure	13 bar		Transmission in reverse
20	Forward/reverse clutch pressure	13 bar		Transmission in neutral
21	4WD clutch pressure	15.5 bar		4WD engaged
22	Torque converter pressure	9 bar		Transmission in neutral

⚠ NOTE

All the pressure need to be check with engine at high idle and transmission oil temperature at minimum 80 ^{0}C.

20.19 TROUBLE SHOOTING

Introduction

This list of possible failures and remedies provides no more than indication of what the problem might be and how to fix it.
It should be remembered that problems are not caused by just one part, but by that part's interaction with other elements accordingly, additional action over and above the steps described is frequently required.
This list may not cover all possible problems and remedies.
Trained personnel must identify the problem and its cause and then proceed with necessary repairs.

Checks and tests

Always check the correct oil level and correct oil specifications.

Pressure check
Several transmission breakdowns can be identified by running pressure check. Irregular measurements might indicate that there is a problem, which trained personnel must identify.

Stall test
In order to create ideal conditions for troubleshooting, the converter stall procedure must be performed first. The purpose of this test is to determine whether the torque converter and hydraulic clutch units are operating correctly. This operation will also bring the oil up to its working temperature of 80 ^{0}C allowing any problems in the engine, converter or transmission to be identified.

Problem	Cause	Action
Machine does not move	Faulty supply to solenoid valves	Check / replace
	Damaged wiring connections	Repair / replace
	Loose/ break wiring connections	Check / repair
	Damaged solenoid	Replace
	Incorrect oil level	Top up
	Check for leaks	Repair
	Blocked intake filter	Clean
	Damaged oil pump	Replace
	Damaged oil pump relief valve	Replace oil pump
	Chocked transmission filter	Replace
	Damaged torque converter	Replace
	Damaged clutch seals	Replace
	Damaged synchronizers	Replace
	Worn clutch pack	Replace
Machine has reduced power	Transmission oil overheating	Restore acceptable temperature value
	Incorrect operating pressure	Check hydraulic circuit and repair accordingly
	Damaged converter	Replace
	Incorrect oil level	Top up
	Worn clutch unit	Replace
	Overheating solenoid	Replace
	Damaged transmission harness	Repair / replace
Overheating	Damaged hydraulic oil cooler	Repair
	Dirty heat exchanger	Clean
	Parking brake inadvertently activated	Release
	Excessive dirt on axle wheel hub	Clean
	Parts seizing	Check/repair/replace
	Clutch plate drag	Repair/replace
	Damaged torque converter	Replace
	Damaged oil thermostat	Replace
	Incorrect oil level	Top up

	Worn oil pump	Replace
Wheel rotate when the vehicle is raised	Clutch plate drag	Repair/replace
	Low oil temperature	Wait for oil to reach working temperature
	Incorrect oil specifications	Replace oil and filters
	Damaged control valve	Replace
	Faulty reverser locking	Repair/replace
Noise	Damaged torque converter	Replace
	Damagedoil pump	Replace
	Aeration / cavitation	Check oil level
	Parts seizure	Check/repair/replace
	Worn clutch plates	Replace
	Worn synchronizer actuation unit	Replace
Irregular actuation	Damaged control valve	Replace
	Electrical system fault	Repair/replace
	Worn clutch plates	Replace
	Damaged torque converter	Replace
	Low oil temperature	Wait for oil temperature to raise
	Overheating	See overheating
	Damaged hydraulic system	Repair / replace
Gear remains engaged	Damaged shuttle shaft lever	Repair
	Damaged synchronizer	Repair / replace
Gear shift won't engage	Damaged shifter	Replace
	Damaged synchronizer	Replace
	Damaged clutch unit	Repair
	Damaged hydraulic system	Repair
	Damaged control valve	Replace

30

AXLE

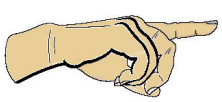

Intentionally Left Blank

TABLE OF CONTENTS

30.1 GENERAL DESCRIPTION 4
30.2 SPECIFICATIONS 5
30.3 ADHESIVES AND TIGHTENING TORQUES 6
30.4 PARKING BRAKE - DISASSEMBLY & ASSEMBLY PROCEDURE 10
30.4.1 PARKING BRAKE-DISASSEMBLY 10
30.4.2 PARKING BRAKE-ASSEMBLY 11
30.4.3 PARKING BRAKE CALLIPER 13
30.4.4 BALL & CAM REPLACEMENT 13
30.4.5 LINING REPLACEMENT 14
30.4.6 SLEEVE SEAL REPLACEMENT 14
30.4.7 BRACKET CABLE RETENTION REPLACEMENT 14
30.5 REAR AXLE - DISASSEMBLY PROCEDURE 14
30.6 PLANETARY GEAR - ASSEMBLY PROCEDURE 15
30.7 WHEEL HUB GROUP - DISASSEMBLY & ASSEMBLY PROCEDURE 17
30.7.1 WHEEL HUB- DISASSEMBLY 17
30.7.2 WHEEL HUB- ASSEMBLY 19
30.8 AXLE BEAM TRUMPET GROUP - DISASSEMBLY & ASSEMBLY PROCEDURE 21
30.8.1 AXLE BEAM TRUMPET GROUP-DISASSEMBLY 21
30.8.2 AXLE BEAM TRUMPET GROUP-ASSEMBLY 22
30.9 BRAKE GROUP - ASSEMBLY PROCEDURE 24
30.10 DIFFERENTIAL SUPPORT GROUP - DISASSEMBLY & ASSEMBLY PROCEDURE 28
30.10.1 DIFFERENTIAL SUPPORT GROUP -DISASSEMBLY 28
30.10.2 DIFFERENTIAL SUPPORT GROUP -ASSEMBLY 30
30.11 DIFFERENTIAL GROUP - DISASSEMBLY & ASSEMBLY PROCEDURE 34
30.11.1 DIFFERENTIAL GROUP -DISASSEMBLY 34
30.11.2 DIFFERENTIAL GROUP -ASSEMBLY 35
30.12 PINION GROUP - DISASSEMBLY & ASSEMBLY PROCEDURE 37
30.12.1 PINION GROUP -DISASSEMBLY 37
30.12.2 PINION GROUP -ASSEMBLY 39
30.13 REMOVAL & INSTALLATION OF FRONT AXLE 44
30.14 TROUBLESHOOTING 46

30.1 GENERAL DESCRIPTION

The axle described in this manual designed and manufacture following the customer's requests, consists of a beam casing, housing the differential in the middle and a wheel hub unit at each end. The differential – mechanical lock, hydraulically controlled – is supported by two bearings mounted on a suitable structure allowing the bevel gear set to be adjusted. The ring bevel gear is adjusted by means of two ring nuts located opposite each other. The position of the bevel pinion, supported by two bearings is adjusted by inserting adjusting shims. The wheel hub containing the epicyclical reduction gears are supported by two tapered roller bearings. Furthermore the axle has a braking system fitted with a hydraulic drive for service braking and mechanical control for parking brake.

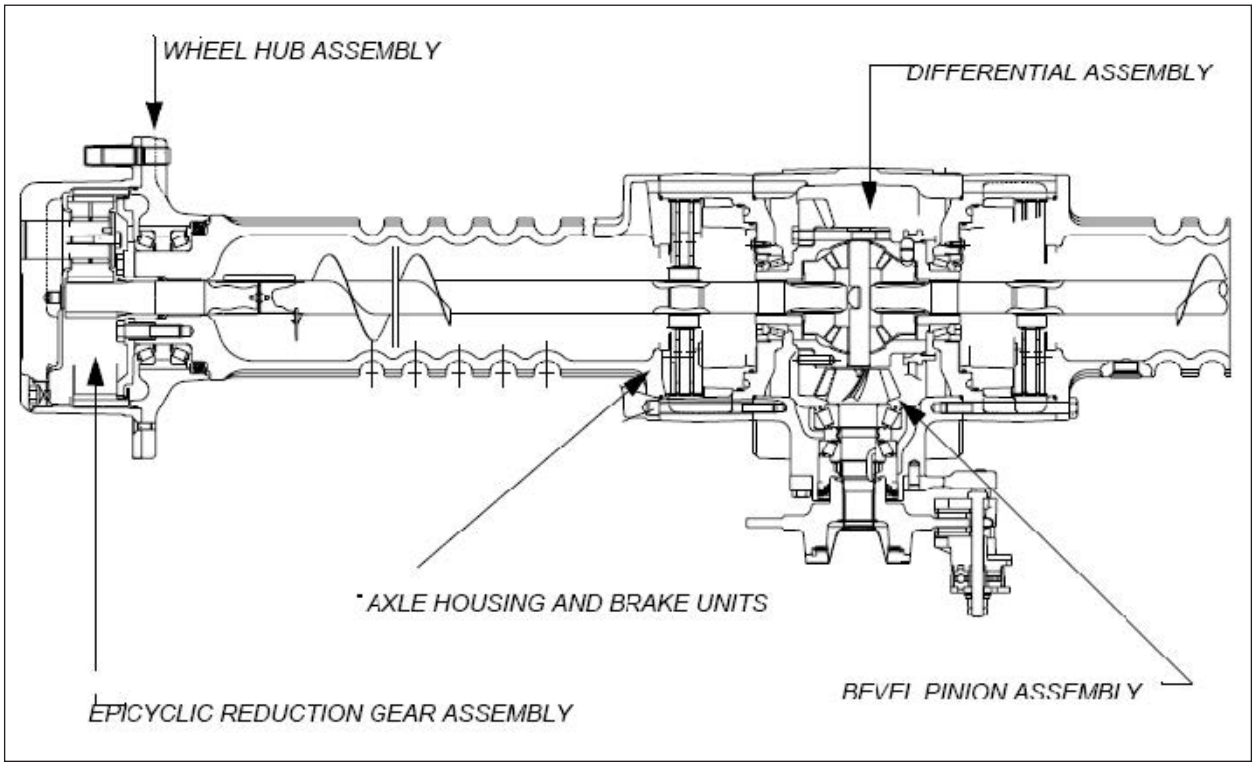

30.2 SPECIFICATIONS

Description	Value
Axle code	CA 146157
Axle model	28.43 FR
Differential type	Standard
Bevel gear ratio	2.33 / 1
Epicyclical ratio	6.923 / 1
Total ratio	16.13 / 1
Dry weight	413 kilo grams
Input rotation	Clockwise
Oil specification	SAE 80W 90 EP
Differential oil capacity	14.5 liter
Grease Polymer	400/L
Bevel gear set backlash	0.20 ÷ 0.30 mm
Pinion bearing preload "p" (measured D=34.87 mm without seal)	T=(P+1.6)÷(P+2.4) daN
Type of brake	Wet discs brake
Number of brake disc (each side)	2
Number of brake counter disc (each side)	3
Nominal brake disc thickness	4.83 mm
Nominal brake counter disc thickness	5/10.8/9 mm
Maximum brake disc wearing (each side)	0.15 mm
Oil specification for brake activation	Mineral oil
Oil displacement for brake actuation	12 cc + 12 cc
Flange type	End yoke 1410

30.3 ADHESIVES AND TIGHTENING TORQUES

Adhesive/ sealant application

Chart reference	Adhesive	Technical characteristics	Strength
A 1	Loctite 510	Flat surface sealing	High
A 2	Loctite 573	Flat surface sealing	Low
A 3	Loctite 539	Uneven surface sealing	High
A 4	Loctite 5205	Even surface sealing with possibility of micro movement	High

Thread parts sealant

Chart reference	Adhesive	Technical characteristics	Strength
B 1	Loctite 542	Locking of threaded parts	Medium
B 2	Loctite 270	Locking of threaded parts	High
B 3	Loctite 438	Locking of threaded parts	High, special application

Fixing parts sealant

Chart reference	Adhesive	Technical characteristics	Strength
C 1	Loctite 405	Fixing adhesive	Medium bond
C 2	Loctite 638	Fixing adhesive	Strong bond
C 3	Loctite 542	Fixing adhesive	Medium bond
C 4	Loctite 496	Rubber fixing adhesive	Strong bond

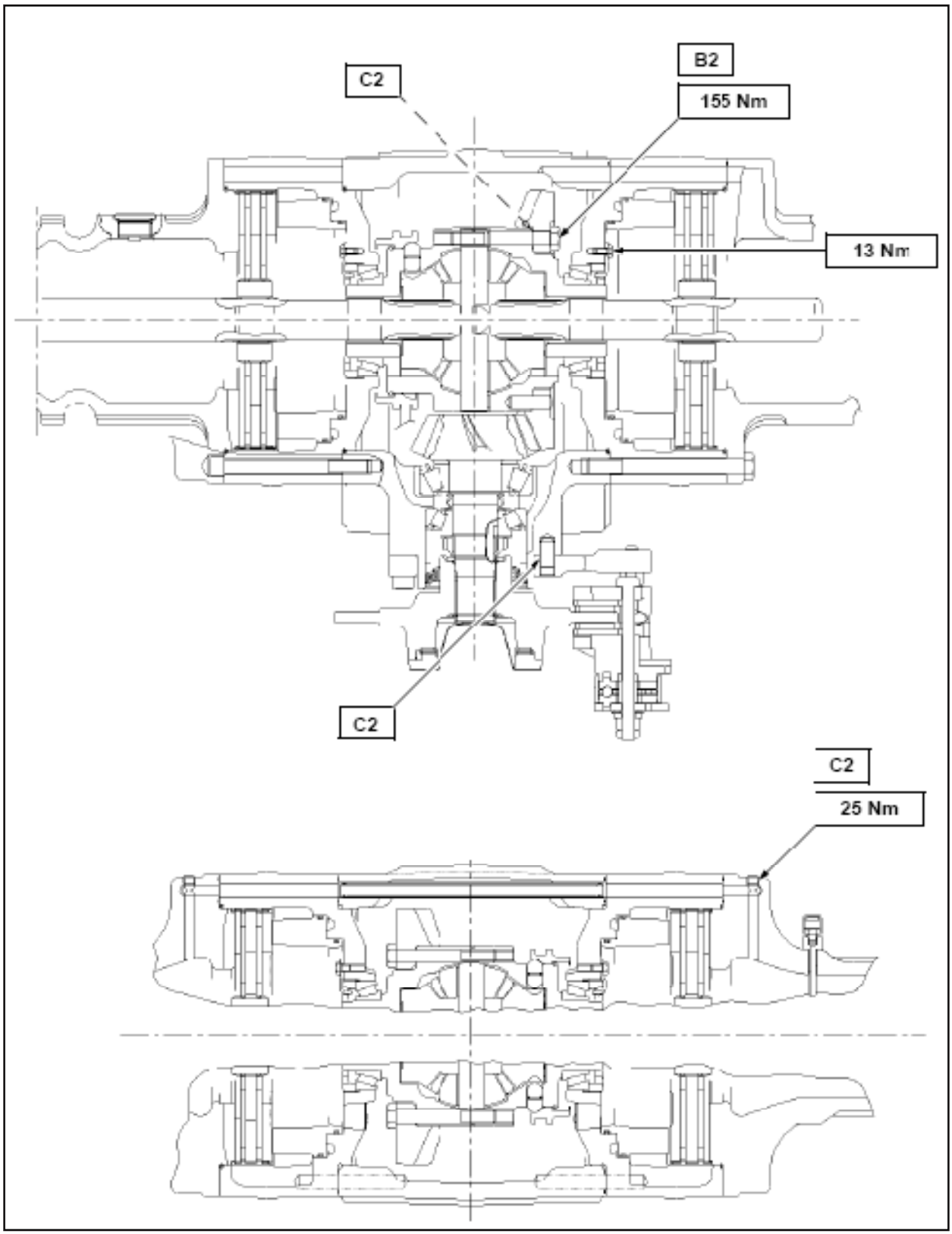
C2
B2
155 Nm
13 Nm
C2
C2
25 Nm

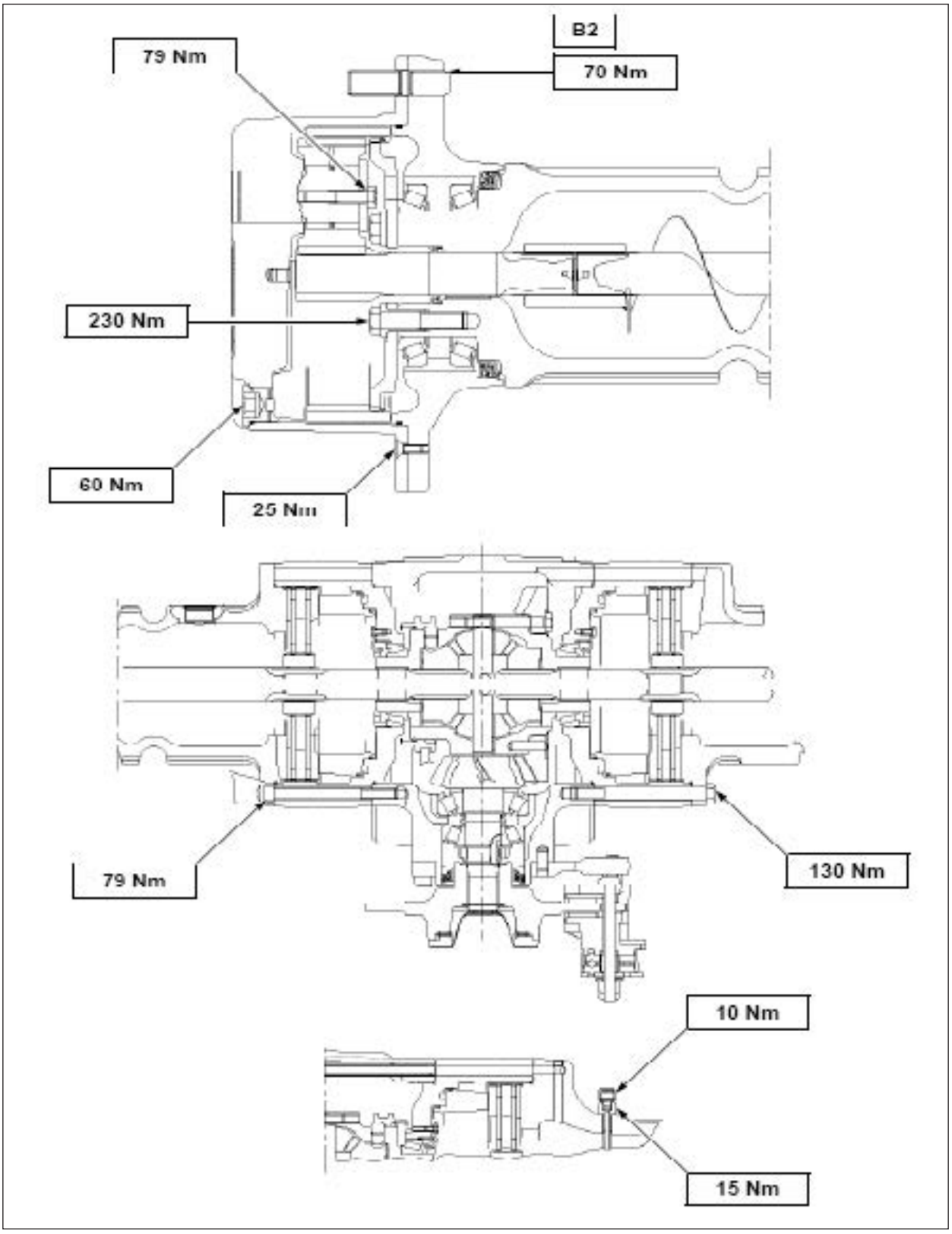
B2
79 Nm
70 Nm
230 Nm
60 Nm
25 Nm
79 Nm
130 Nm
10 Nm
15 Nm

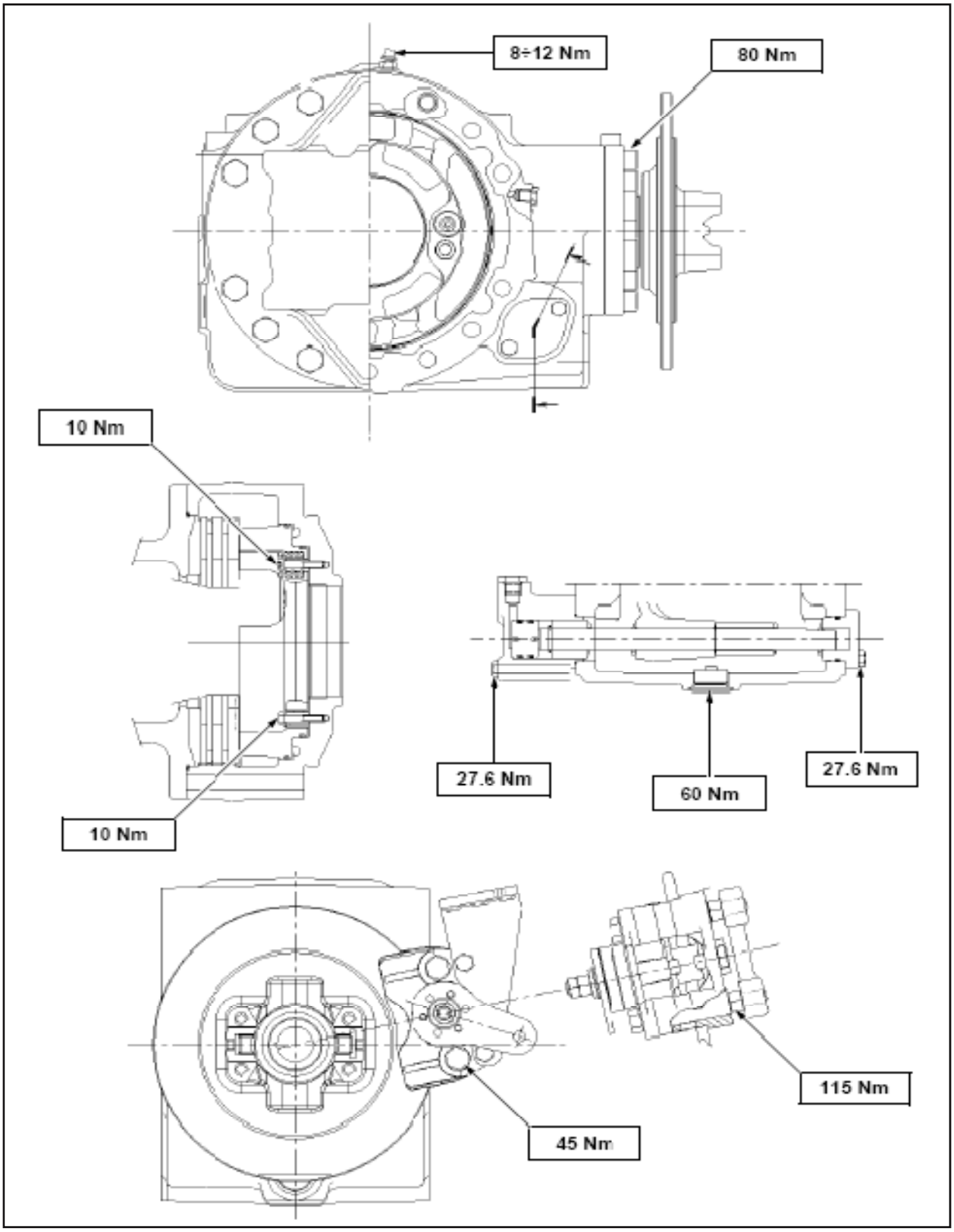
8÷12 Nm
80 Nm
10 Nm
10 Nm
27.6 Nm
60 Nm
27.6 Nm
45 Nm
115 Nm

30.4 PARKING BRAKE - DISASSEMBLY & ASSEMBLY PROCEDURE

30.4.1 PARKING BRAKE-DISASSEMBLY

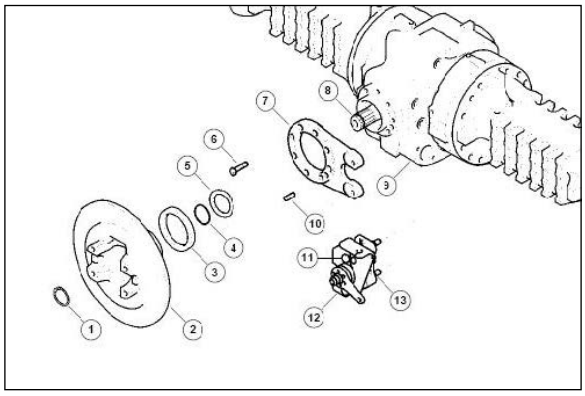

1. Loose the two nuts (13).

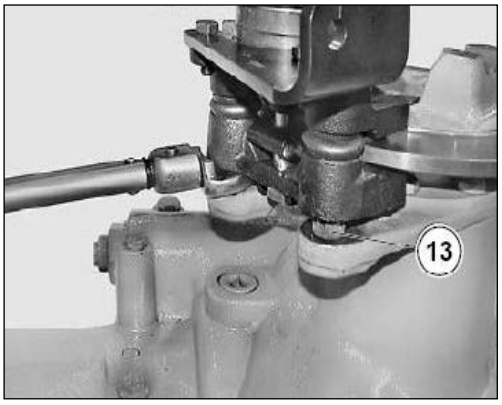

2. Unscrew the two screws (11).

> **⚠ WARNING**
> To operate with care to avoid damage to the brake pads.

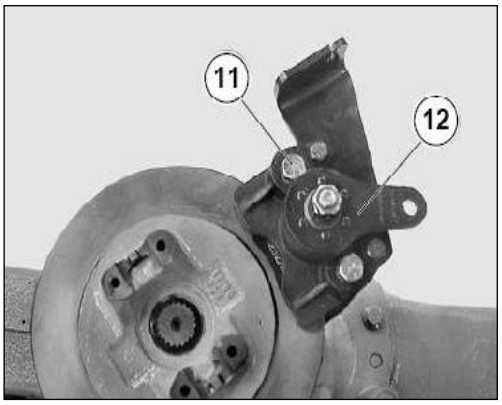

3. Remove the brake caliper (12).

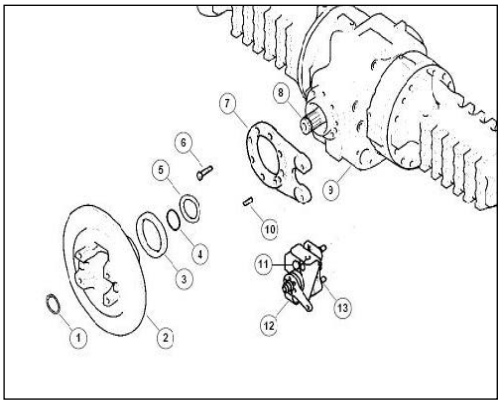

4. Remove the snap ring (1) and the input flange (2). Remove the O ring (4) and collect the spacer (5).

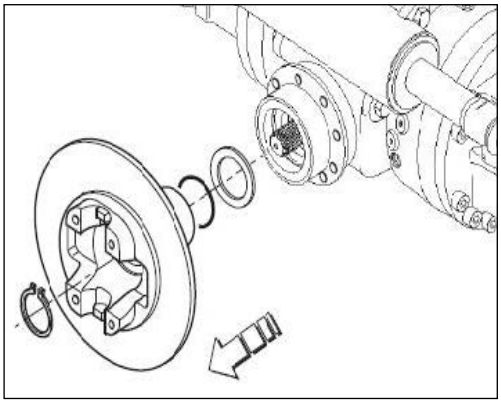

> **NOTE**
> Destructive operation for the O ring (4), the O ring must be replaced.

5. Unscrew and remove the fastening screws (6) of the brake caliper support (7). Remove the brake caliper support (7) from the central body.

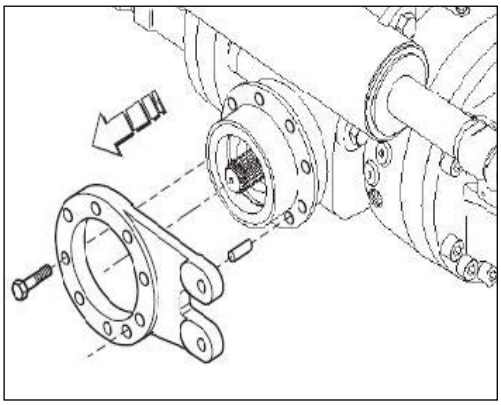

6. Remove the seal (3) from the central housing (9) with a puller.

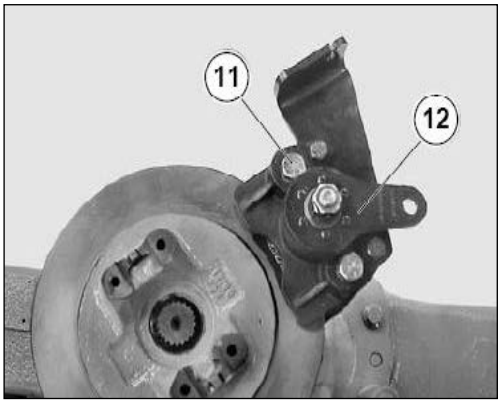

> **NOTE**
> Destructive operation for the seal ring (3), the seal ring must be replaced.

30.4.2 PARKING BRAKE-ASSEMBLY

1. Install a new seal (3) into to the central body by using the special tool CA715550.

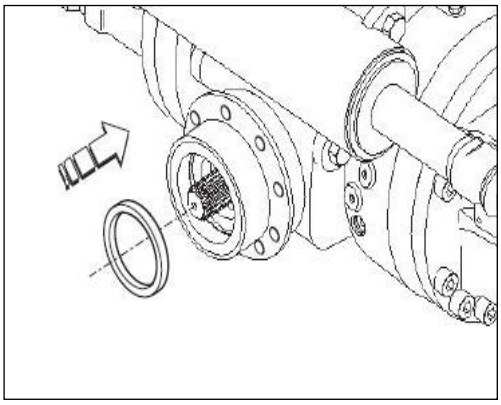

> **NOTE**
> Lubricate the seal lip (3).

2. Insert the dowel pin (10) and the brake caliper support (7) on the central body (9). Screw and tightening screws (6) to the requested torque.

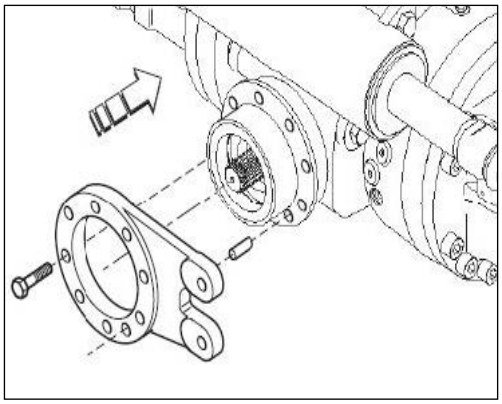

3. Grease the new O ring (4). Insert the washer (5) on the splined pinion end, the O ring (4), the input flange (2) and the lock ring (1).

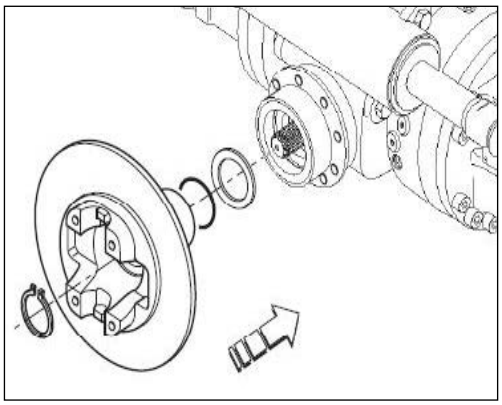

4. Position the brake caliper (12) on the flange disc (2).

⚠ WARNING

Proceed with care, in order to avoid damaging the brake pads.

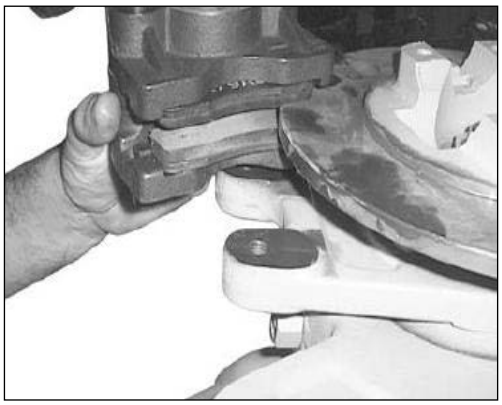

5. Screw in the bolts (11) and tighten the nuts (13) to the prescribed torque.

⚠ WARNING

After tightening the nuts, make sure that a space of 1 ± 0.5 mm is left between the nuts (13) and the spacers shown in figure.

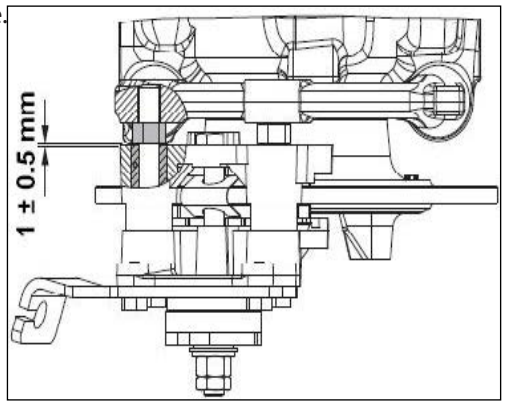

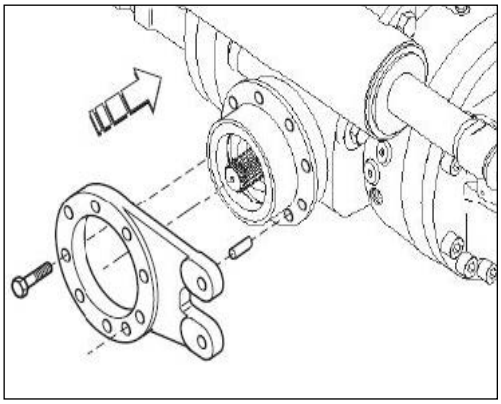

30.4.3 PARKING BRAKE CALLIPER

The parking brake assembly is a ball and cam, sliding caliper brake designed for use primarily as a parking brake with some service brake capability.
The brake has an open caliper design to facilitate changing linings, along with a retention spring to reduce drag from the brake pads and the disc.

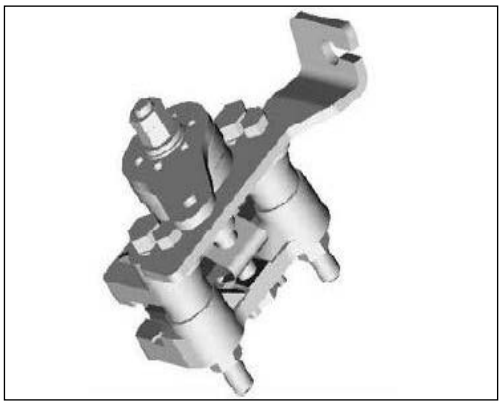

Mounting procedure

1. Insert mounting bolts through sleeves (9) and thread brake mounting locking nuts as far as possible on mounting bolts.
   This is not required if brake assembly comes with sleeve/bolt sub assembly (9). Position the brake over disc align with mounting holes in the mounting bracket.
2. Thread mounting bolts (9) into mounting bracket, adjusting bolts until a 0.5 – 1.5 mm exists between the sleeves and the locking nuts. Tighten the locking nuts to 115 Nm or torque against the bracket.
3. Refer to adjustment procedure to set backlash of installed brake assembly.

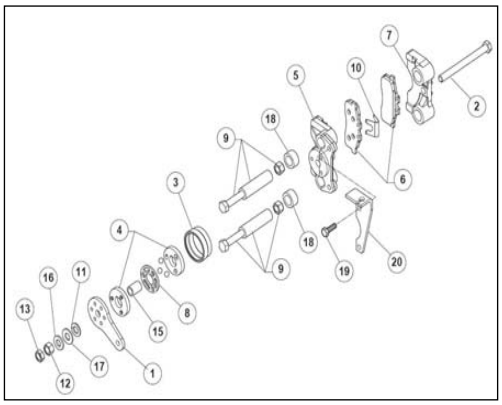

Adjustment procedure

1. Loosen two adjustment locking nuts (12) & (13).
2. Tighten inner adjustment nut (12) until firm contact is made with the disc by the linings. Torque to 13 – 14 Nm.
3. Back off inner adjustment nut (12) 4 to 6 flats (1/2 to 1 turn) and check that disc is free to move.
4. Tighten outer locking nut (13) against inner adjustment nut (12) to lock adjustment bolt (2) in place. Torque to 61 – 74 Nm.

30.4.4 BALL & CAM REPLACEMENT

1. Remove ball adjustment locking nuts (12) & (13), thrust, stainless steel and hardened washer (11), (16) & (17). Lever (1) and boot (3) from adjustment bolts (2).
2. Remove outer cam (4) and ball assembly (8) from adjustment bolt (2).
3. Use a screwdriver or similar tool to gently pry inner cam (4) protrusions on back of cam, loosen from torque plate (5) and remove from adjustment bolt (2). Remove seal (15) from adjustment bolt (2).
4. Install new seal (15) on adjusting bolt (2) inserting through inner cam (4) until seal (15) bottoms out on torque plate

⚠ NOTE

Prior the installation of the cams (4), it is recommended to apply anti seize and lubricating compound to ramp areas of the cams.

5. Install new cam (4) on adjustment bolt (2) taking care to orient protrusion into holes in torque plate (5).
6. Install ball assembly (8) onto adjusting bolt (2) orienting balls into pockets of inner cam (4). Install outer cam balls of balls assembly (8). Install boot (3) over cam assembly.
7. Install lever (1) using protrusions on back of outer cam (4) and holes in lever (1) to orient lever to proper operating position
8. Install remaining washer and nuts and follow adjustment procedure in section 4.

⚠ NOTE

Make sure to orient coated face of thrust washer (11) towards stainless steel washer (17).

30.4.5 LINING REPLACEMENT

1. Loosen two adjustment locking nuts (12), (13) enough to remove each torque plate (5) & (7) away from disc far enough to provide backlash to remove oil carrier and lining assemblies and install new ones. (it may be necessary to remove one or both nuts).
2. Collapse the two lining retraction spring (10) and remove them from brake head assembly.
3. Remove torque plate (5) & (7) away from disc, move carrier and lining assemblies (6) out of pockets, and remove from the brake bead assembly from the side.

⚠ NOTE

Prior to the installation of the new linings, it is recommended that a coating of grease be applied to the interface of the sleeve (9) and the calipers (5) and (7). After grease has been applied, remove calipers back and forth on sleeve as far as possible to insure that the grease has been introduced into the bores of the calipers.

4. Install new carrier and lining assemblies (6) in each torque plate (5) & (7).
5. Install the two lining retention spring (10) into brake head assembly. Be sure springs "feet" are positioned properly in holes in both lining carrier assemblies (6).
6. Adjust brake per section (4).

30.4.6 SLEEVE SEAL REPLACEMENT

1. Loose the two locking nuts on the mounting bolts and remove the mounting bolt/sleeve assembly (9) from the brake.
2. Insert sleeve seals (18) between the torque (5) & (7) and align with the sleeve bores.

⚠ NOTE

Prior to the installation of the mounting bolt and sleeve assembly, it is recommended that "alpha 2000" grease (anti seize and lubricating compound) manufactured by chemtool, be applied to the sleeve and bores of the torque plates.

3. Insert mounting bolt and sleeve assembly through the front torque plate (5) sleeve seal (18) and back torque plate (7).
4. For mounting and adjustment procedure of brake refer early part of the manual.

30.4.7 BRACKET CABLE RETENTION REPLACEMENT

Remove the screws (19) of the bracket (20) from the front torque plate (5). Remove the bracket (20).
Position the bracket (20) in correspondence with the threaded holes of the pad support (5). Fix the bracket (20) to the front torque plate (5) with the appropriate screws (19). Tighten the screws to 45 Nm.

30.5 REAR AXLE - DISASSEMBLY PROCEDURE

1. Unscrew the plug (1) and drain the oil completely from the epicyclical reduction gear.

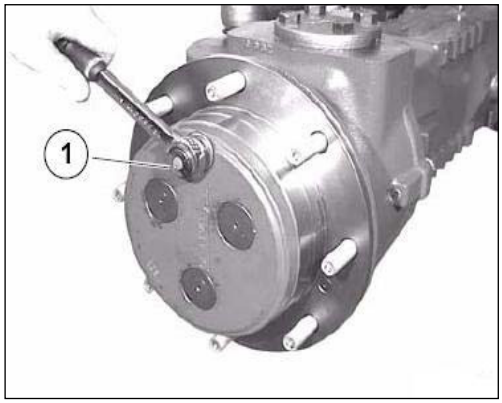

2. Unscrew the fastening screws (3) of the planetary carrier (2).

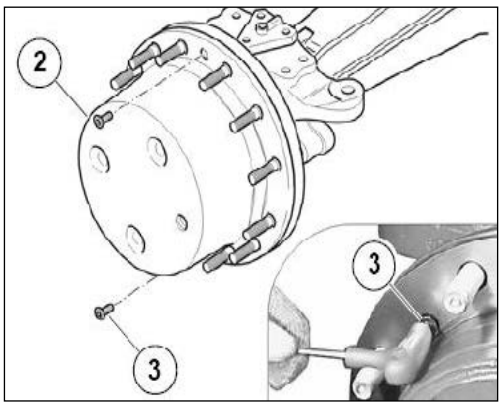

3. Remove the planetary carrier (2) from the wheel hub (14) and remove the relative O ring (13).

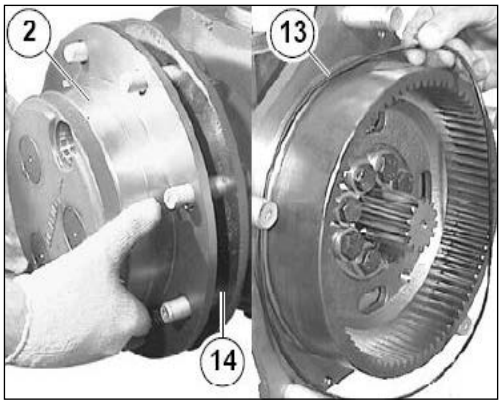

> **NOTE**
>
> Destructive operation for the O ring (13), the O ring must be replaced. Position the planetary carrier (2) on a work-bench and check its wear condition.

4. Remove the short half shaft (12) from the wheel hub (14).

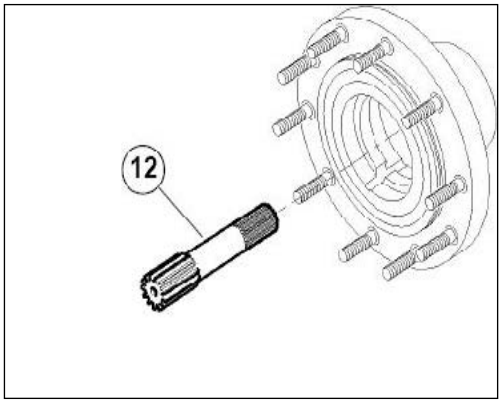

If required replace the planetary gears (8) as follows:

- Remove the fastening bolts (11) on every pin (4).
- Remove the washer (10).
- Remove the planetary gears (8) from the pins.
- Collect the needle bearing (6) and (9) and washer (7).
- Collect the thrust washer (4).

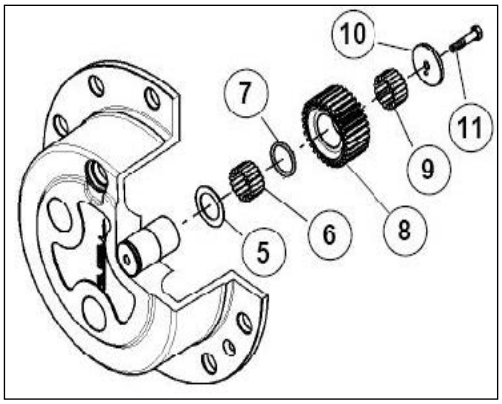

30.6 PLANETARY GEAR - ASSEMBLY PROCEDURE

1. Position the planetary carrier (2) on a workbench. Insert the thrust washer (5) on every pin.

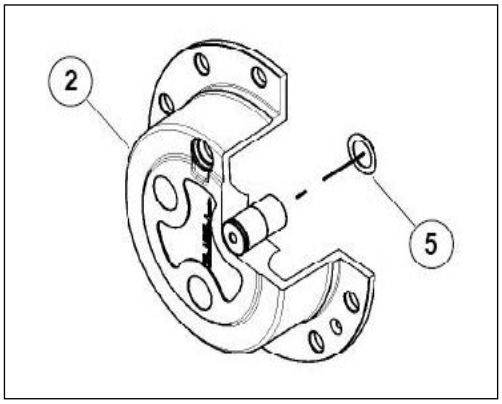

2. Insert the needles (6), the thrust washer (7) and the needles (9) into the planetary gears (8).

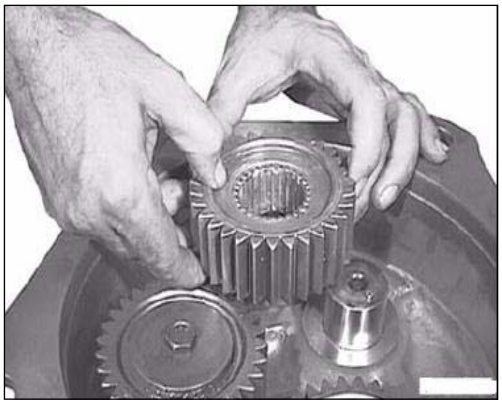

NOTE

Grease well the needle bearings (6) and (9). Insert the gears (8) with assembled needles on the pins (4).

3. Fit the thrust washer (10) to the pins (4).

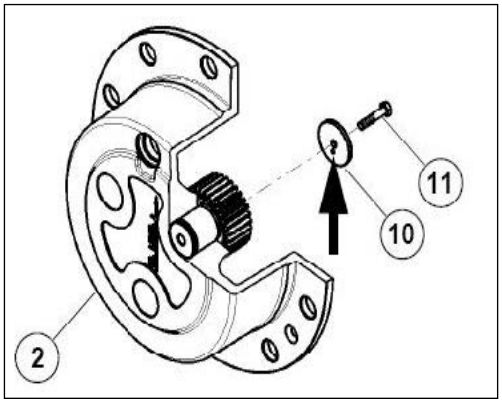

NOTE

The pin on thrust washers (7) must be fitted into the hole of the pins (4).

Assemble the fastening bolts (11) and tighten them to the requested torque.

4. Assemble the short half-shaft (12) to the epicyclical reduction gear (2).

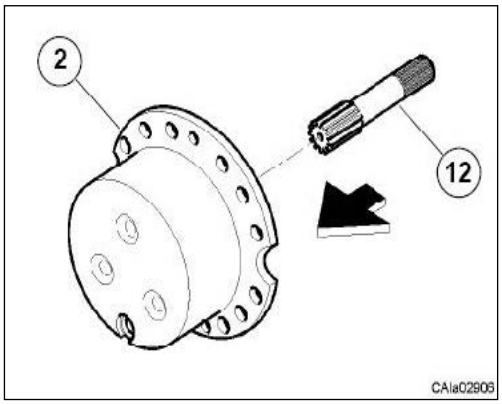

5. Assemble a new lubricated O ring (13) on the wheel hub (14).

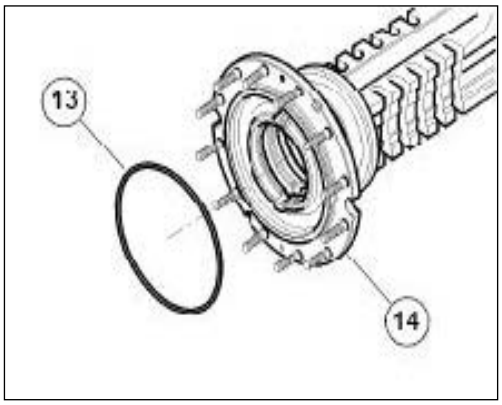

6. Align the epicyclical reduction gear group to the wheel hub (14) using an appropriate lifting device.

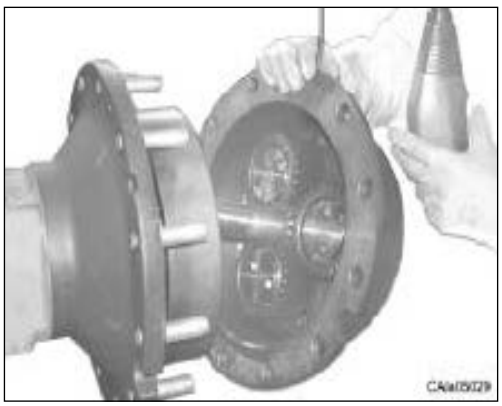

7. Fit the epicyclical reduction gear group to the wheel hub (14). Assemble the fastening screws (3) and tighten them to the prescribed torque.

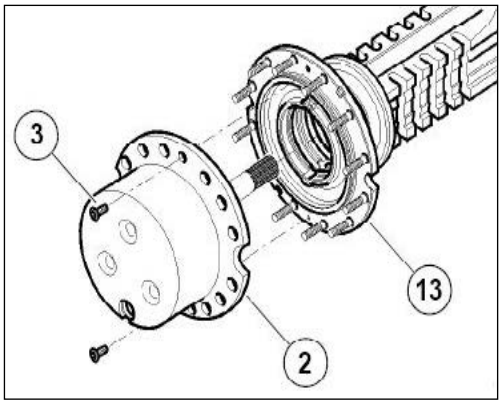

8. Top up the specified oil into the epicyclical reduction gear. Fit the plug (1) on the epicyclical reduction gear (2) and tighten to the prescribed torque.

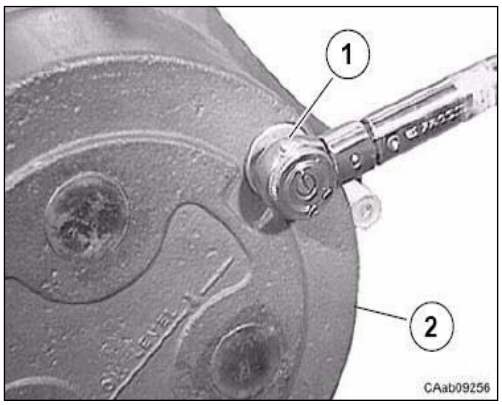

30.7 WHEEL HUB GROUP - DISASSEMBLY & ASSEMBLY PROCEDURE

30.7.1 WHEEL HUB- DISASSEMBLY

1. Remove the epicyclical reduction gear group before disassembling the wheel hub ground.

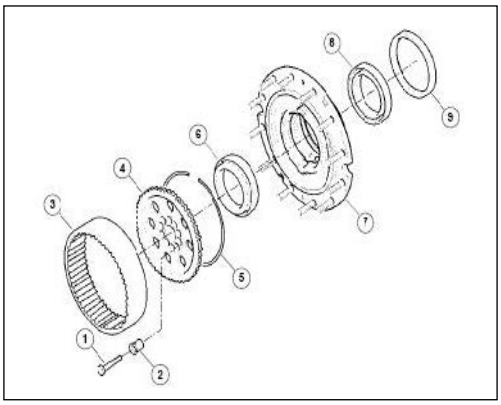

2. Slide the short half shaft from the axle beam trumpet. Unscrew and remove the fastening bolts (1) from the wheel carrier (4).

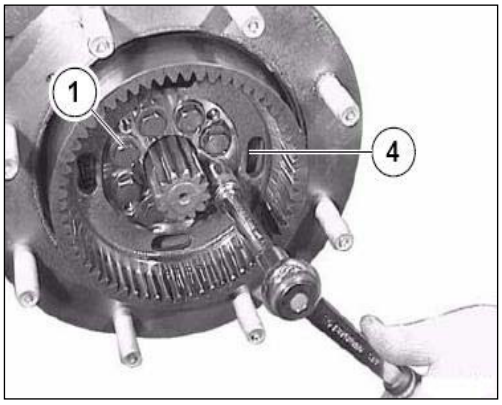

3. To remove the wheel carrier (4), screw two of the just removed bolts (1) in the threaded holes. Remove the wheel carrier (4) and the ring gear (3).

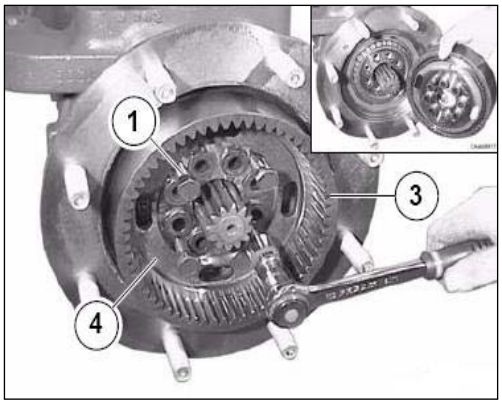

4. Remove the steel lock ring (5) from the epicyclical ring gear (3). Check the wear conditions of the components. Only if necessary, remove the centering bushes (2) of the wheel carrier (4) with a hammer and the special tool CA7 15027.

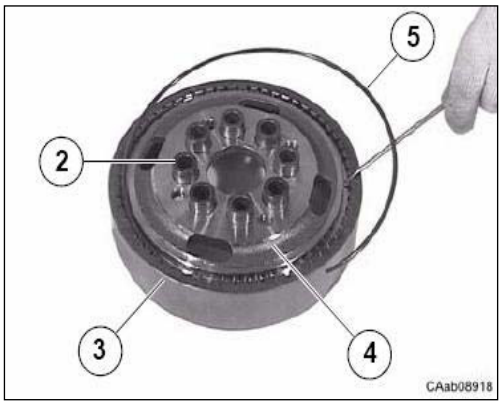

5. Remove the wheel hub (7) using levers and a hammer to facilitate the operation.

⚠ NOTE

Collect the bearing cone (6).

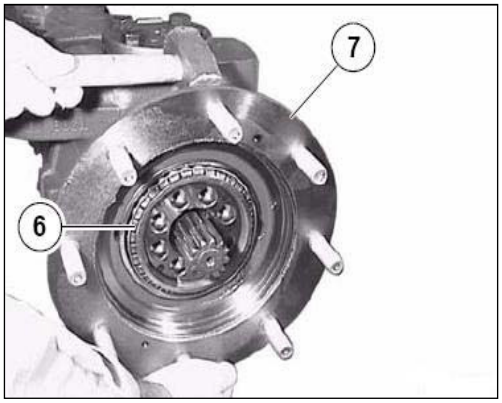

6. Position the wheel hub (7) on a flat surface and remove the seal ring (9) with a lever.

⚠ NOTE

Destructive operation for the seal ring (9), the seal ring must be replaced.

Remove the bearing cups (6) and (8) on both sides of the wheel hub (7) using a hammer and a suitable drift. Remove the bearing cones (8) from the axle beam trumpet end by using a suitable extractor.

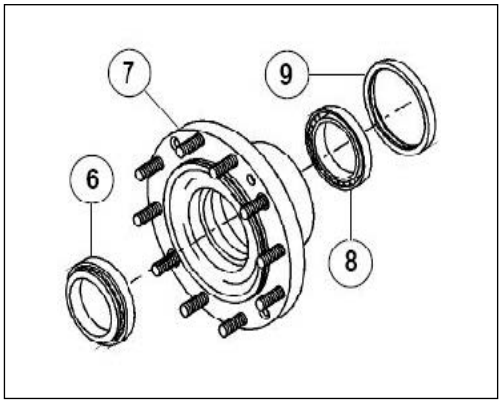

30.7.2 WHEEL HUB- ASSEMBLY

1. Force both bearing cups (6) and (8) to their wheel hub (7) housings, using special tool CA715026 under a press or with a hammer.
   Next step: Insert a new seal ring (9) into the wheel hub (7) with the specia tool CA119143 and a hammer.

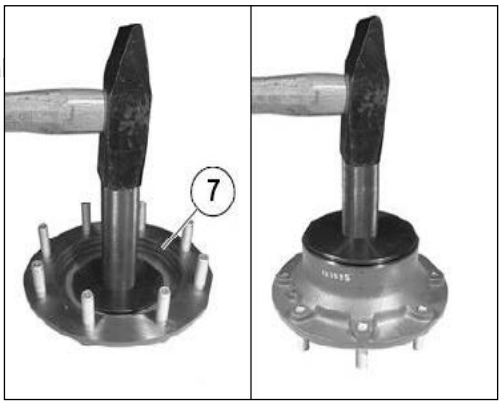

2. The special operation "Set Right" of the bearing (6) and (8) does not require preload or backlash adjustment. Anyway, before assembling new components check the indicated dimensions.
   A = 17.950 – 18.000mm
   B = 64.335 – 64.385mm
   C = 23.072 – 23.173mm

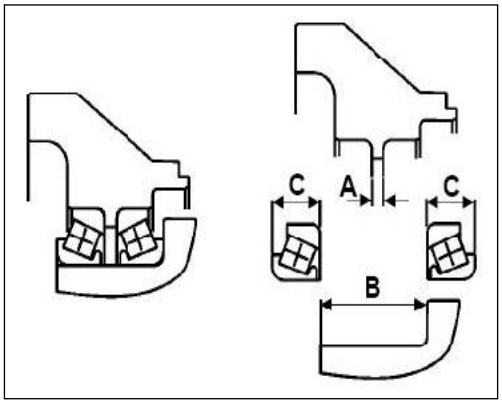

3. Assemble the bearing cone (8) on the axle beam trumpet end. Assemble the wheel hub (7) on the axle and fit the bearing cone (6) in position.

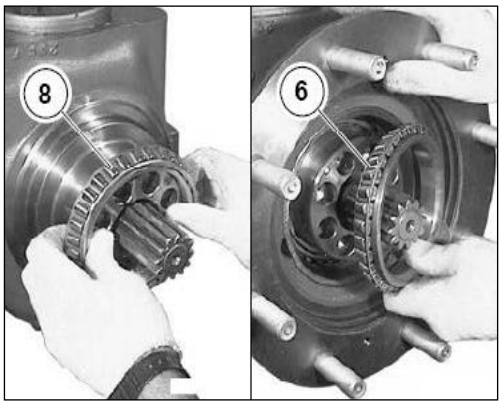

4. Position the wheel carrier (4) on a workbench and force the bushes (2) to the carrier surface level with special tool CA715027. At least two bushes (2) (diametrically opposed) must be set slightly higher than the carrier surface level to be used as dowel pins.

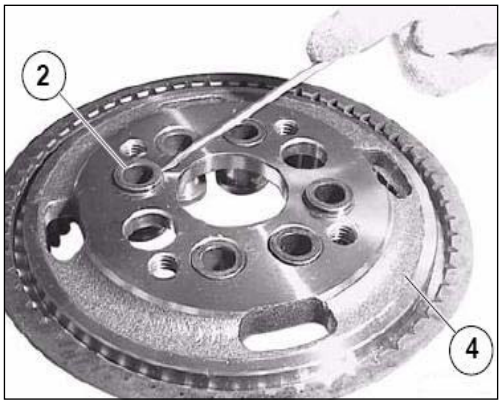

5. Preassemble the wheel carrier (4) and the epicyclical ring gear (3) with the locking ring (5).

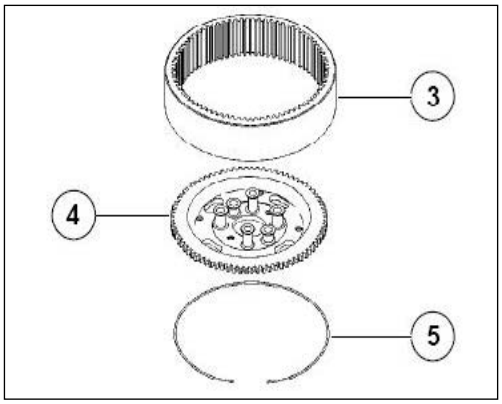

6. Assemble the wheel carrier group on the wheel hub (7) using the two projecting bushes (2) as dowel pins and screw the relative bolts (1) in order to put in contact the wheel carrier (4) with the wheel hub (7).

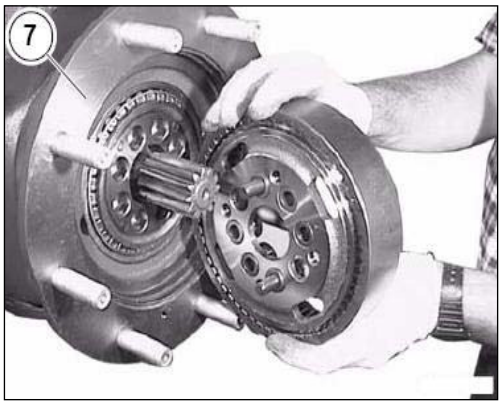

7. Force all the hub dowel bushes (2) completely with the special tool CA715027 and a hammer. Screws the fastenings bolt (1) and tighten them to the requested torque. Insert the half shaft in the axle beam.

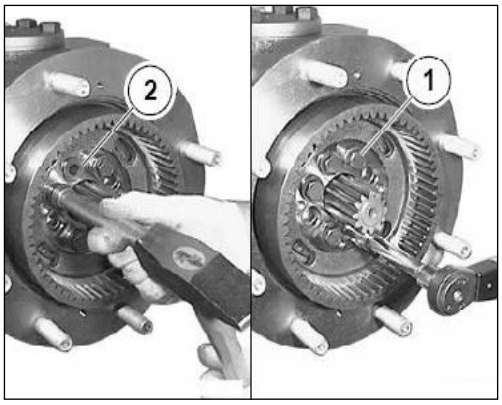

30.8 AXLE BEAM TRUMPET GROUP - DISASSEMBLY & ASSEMBLY PROCEDURE

30.8.1 AXLE BEAM TRUMPET GROUP-DISASSEMBLY

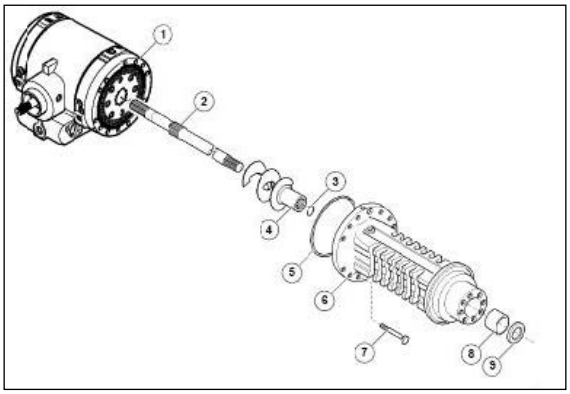

1. Remove the wheel hub group before disassembling the axle beam trumpet group.
   Remove the seal ring (9) from the beam trumpet (6).

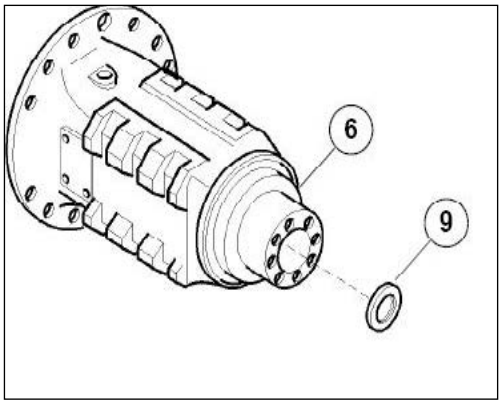

⚠ NOTE

Destructive operation for the seal ring (9), the seal ring must be replaced.

2. Put alignment marks on the beam trumpets, on the brake cylinder and on the central body, in order to be absolutely sure to identify the coupled parts.

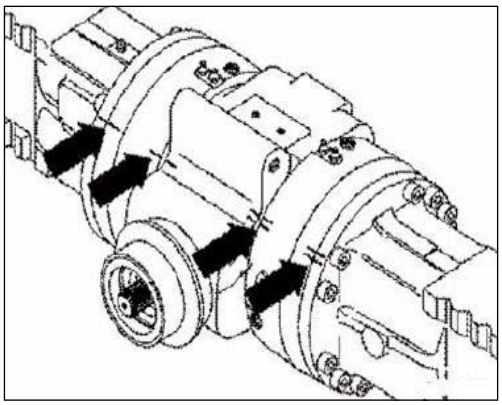

3.

⚠ WARNING

Position the axle on supports fitted to hold both the central body and the two beam trumpets, even after their disjunction, or secure the disjointed groups to lifting device with ropes or belts.

Unscrew and remove the fastening screws (7)

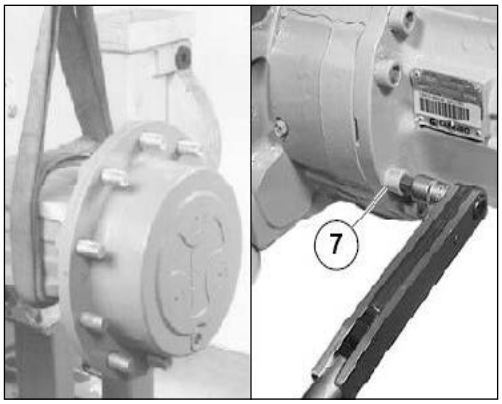

4. Remove the beam trumpet (6) and remove. the O ring (5).

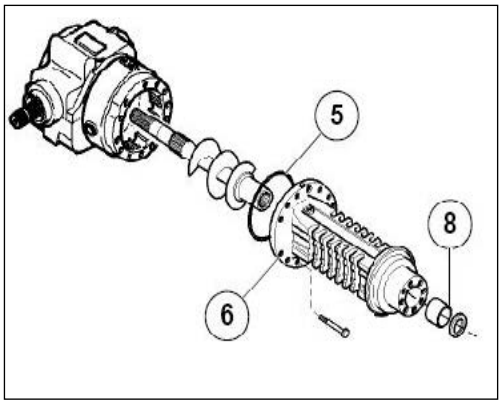

NOTE

Destructive operation for the O ring (4), the O ring must be replaced.

WARNING

Once the beam trumpet has been removed, the long half shaft (2) is free.

Remove the bush (8) from the beam trumpet (6) only if the wear conditions require this.

WARNING

Be careful not to damage the bush seat.

5. Remove the shaft (2) and the auger (4). Only if necessary remove the snap ring (3) from the auger.

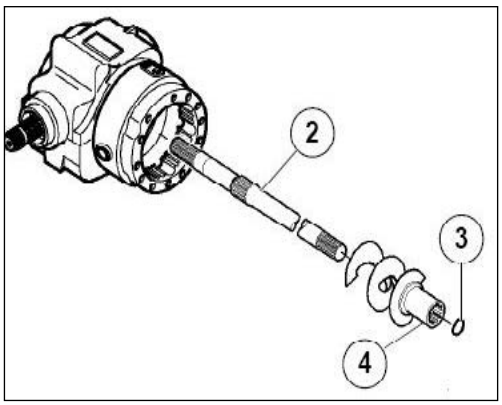

30.8.2 AXLE BEAM TRUMPET GROUP-ASSEMBLY

1. Assemble the brake group before assembling the axle beam trumpets group. Check that the snap ring (3) is already assembled in the auger (4). Assemble the auger (4) to the shaft (2). Insert the shaft on the central body (1) as in figure.

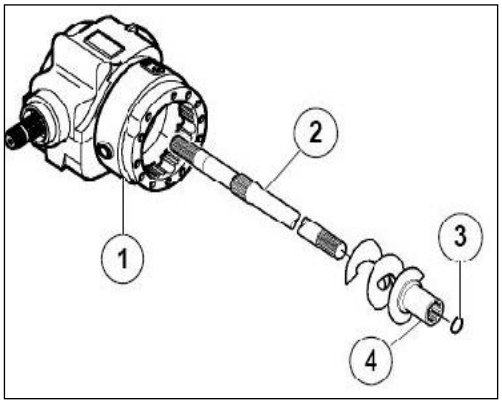

2. Assemble on the beam trumpet (6) the bush (8) with the special tool CA119187 and a hammer. Assemble a new O ring (5) into the beam trumpet.

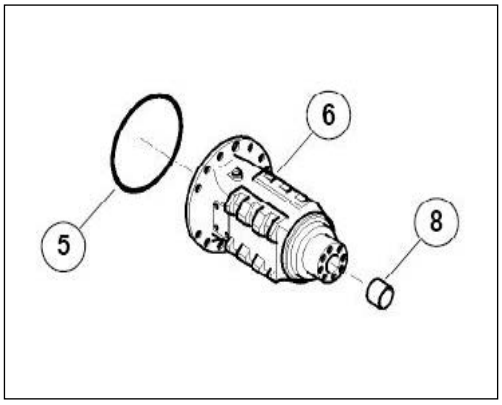

3. Assemble the beam trumpet on the central body (1) using the reference marks carried out during disassembly.

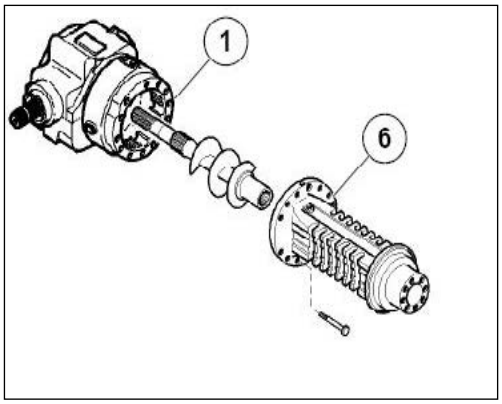

> **⚠ WARNING**
> Support the groups properly as already pointed out for disassembly phase.

4. Screw in the fastening bolts (7) to the requested torque. For correct bolt (7) assembly follow the tighten procedure shown at the next step.

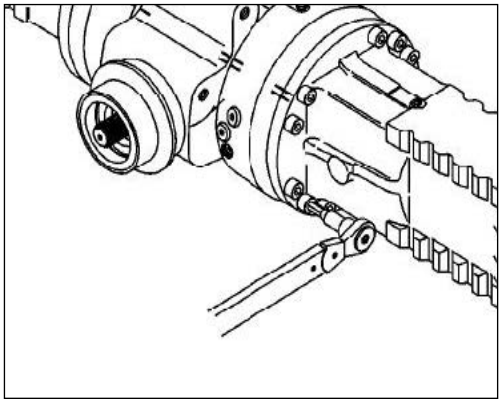

5. Tighten the fastening screws (7) according to the sequence shown in figure.

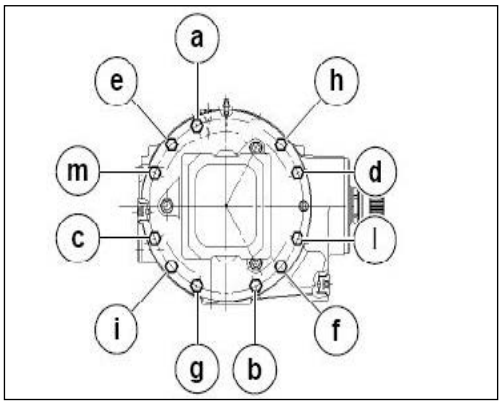

6. Assemble a new seal ring (9) in the beam trumpet (6) by using the special tool CA715532 and a hammer.

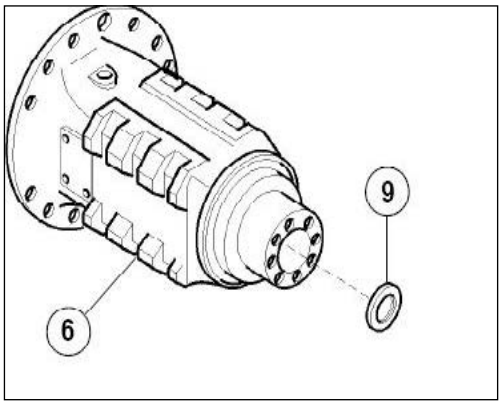

30.9 BRAKE GROUP - ASSEMBLY PROCEDURE

1. Collect the brake piston (4). With the special tool CA715033 and a hammer, push the bushes into the self adjust housings till they are aligned with the piston supporting inner surface.

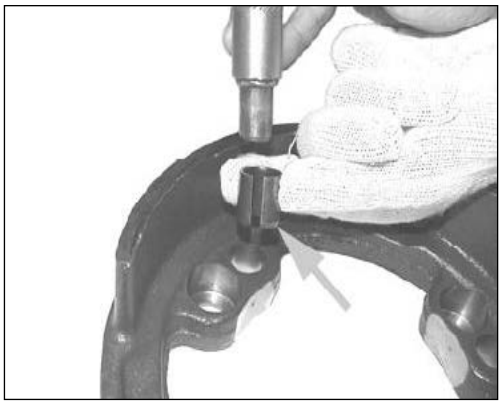

2. The bush must be aligned with the piston supporting inner surface.



3. Assemble two new O rings (2) and (3) to the brake piston (4). Lubricate the O rings.

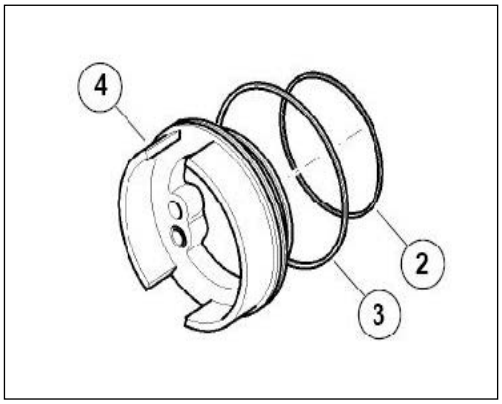

4. Insert the piston (4) into the brake cylinder (1).

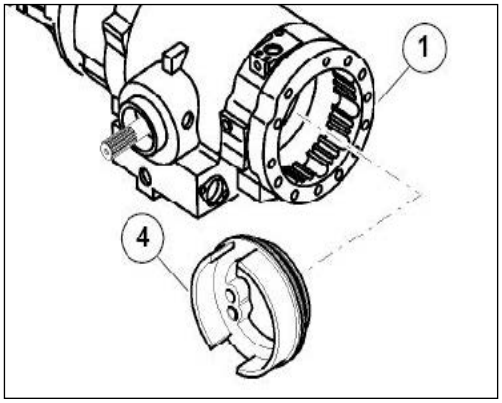

5. Position the special tool CA715056 on the piston (4).



NOTE

Position the brake piston (4) with a slot aligned with the hydraulic connection or with the inspection hole on the brake cylinder (5).

WARNING

Do not damage the O rings.

With a lever anchored to an eyebolt, exert a pressure just enough to insert the piston into the brake flange.

6. Insert the large spring, the small spring and the bush of the brake mechanism return kit (6) in the largest hole of the brake piston.

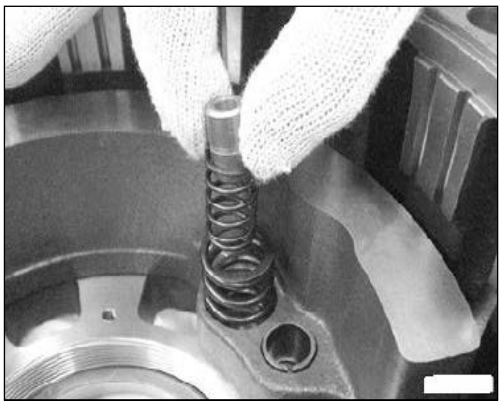

7. Assemble the spring cover and the screw of the brake mechanism return kit (6).

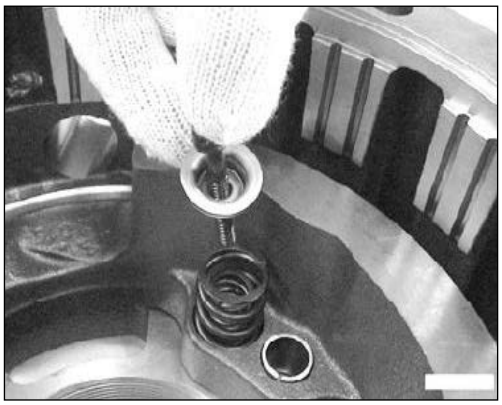

8. Assemble the bush, the washer and the screw of the self adjust kit (5).

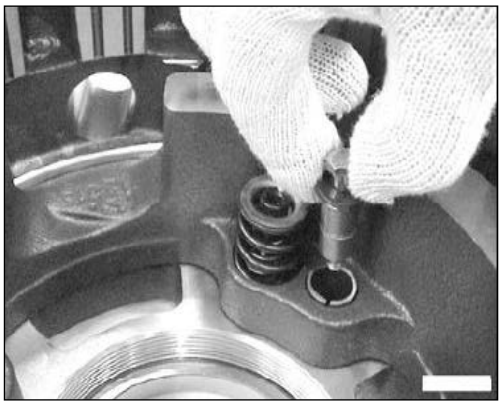

9. Screw the fastening screws of both kits and tighten them to the prescribed torque.



10. The brake piston must be pushed in the original position if worn brake discs are replaced by new discs. Remove straight threads, bleeds or plugs from the service brake oil port.

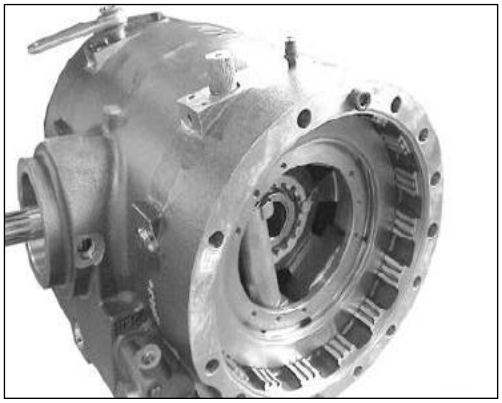

11. Push the brake piston (4) at the end of stroke by using the special tool CA715056 and a hammer.

> **⚠ WARNING**
> Position the special tool with accuracy to do not damage the brake piston.

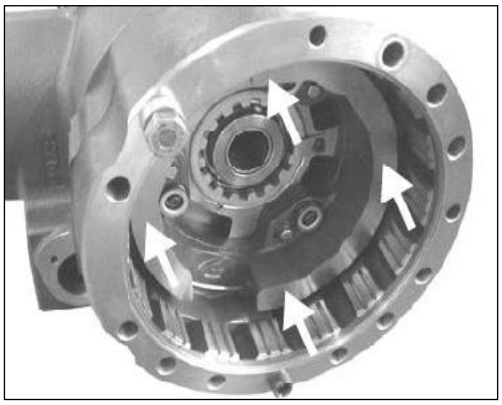

12. Check that the brake plate and the brake drive plate do not present any sign of burning, otherwise replace them. Furthermore check the brake plate wear and replace them if necessary.

> **⚠ NOTE**
> If new brake plates are installed, before assembling they should be dipped into the prescribed oil.

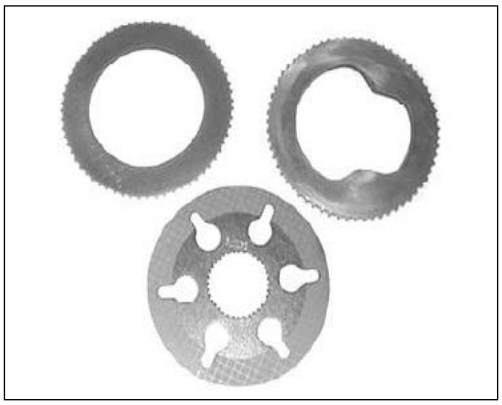

13. Check that the brake plate and the brake drive plate do not present any sign of burning, otherwise replace them. Furthermore check the brake plate wear and replace them if necessary .

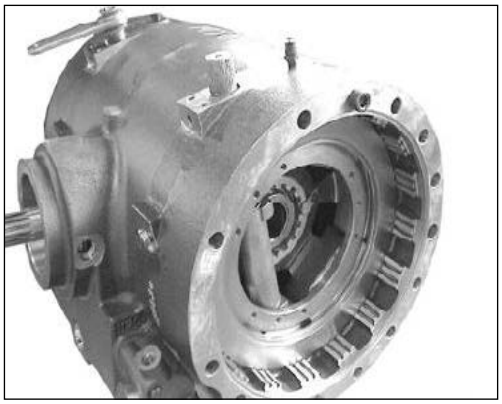

NOTE

If new brake plates are installed, before assembling they should be dipped into the prescribed oil.

14. Reassemble all the components of the brake group as is shown in figure. The brake counter plate (7), the brake plate (8) and (11), the brake disc carrier gear (9), the brake counter plate (10) and the brake counter plate (12).

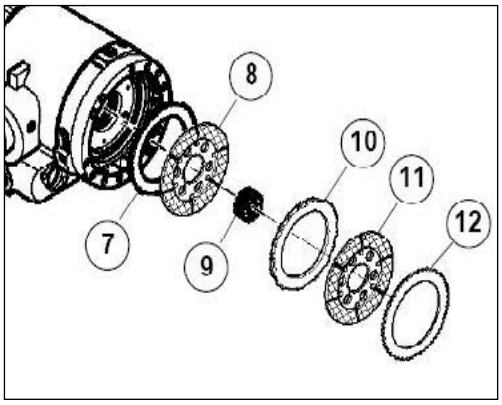

WARNING

Place the brake disc carrier (26) as shown at the next step, assemble brake disc with holes aligned.

15.

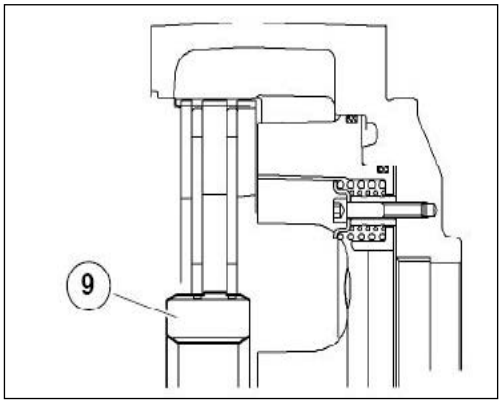

WARNING

This is the correct position of the teeth on the external surfaces of the brake disc carrier (9).

16. Assemble the beam trumpet and the long half shaft.

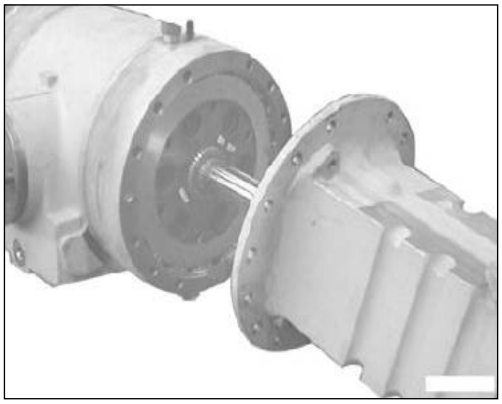

30.10 DIFFERENTIAL SUPPORT GROUP - DISASSEMBLY & ASSEMBLY PROCEDURE

30.10.1 DIFFERENTIAL SUPPORT GROUP-DISASSEMBLY

1. Remove the brake disc and counter discs.

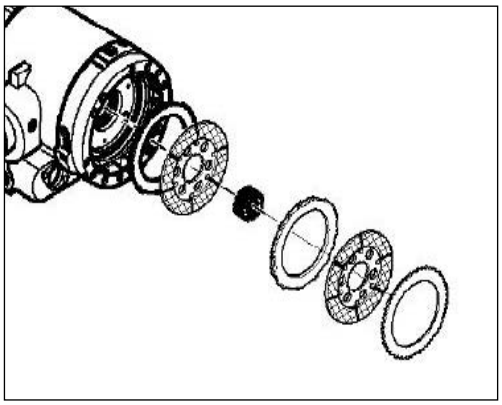

2. Measure the starting total preload TO of the bearings (pinion-crown gear system) using a dynamometer whose cord is wound on the pinion splined end. Note the valve TO that is necessary in the bearings reassembly.

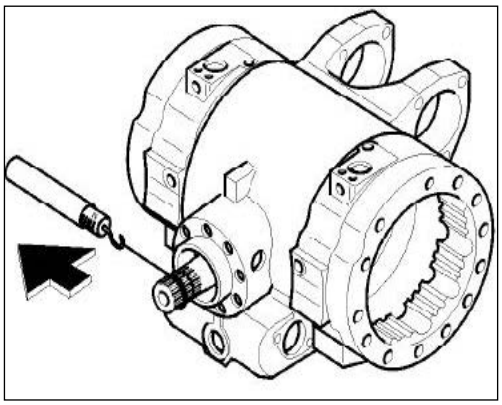

3. Secure the brake cylinder (9) to a hoist with ropes or safety belts. Remove the fastening screw (13).

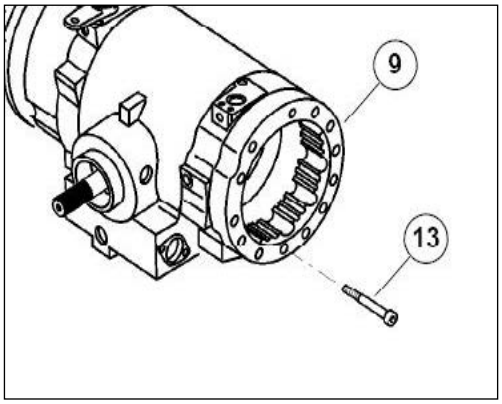

4. Remove the brake cylinder.

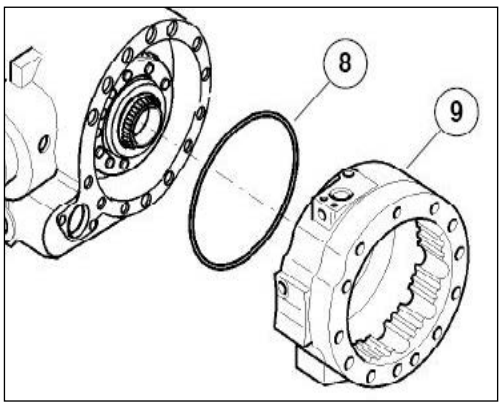

⚠ WARNING

The differential box is free. Remove the O ring (8) from the brake cylinder (9).

5. Remove the differential housing (6).

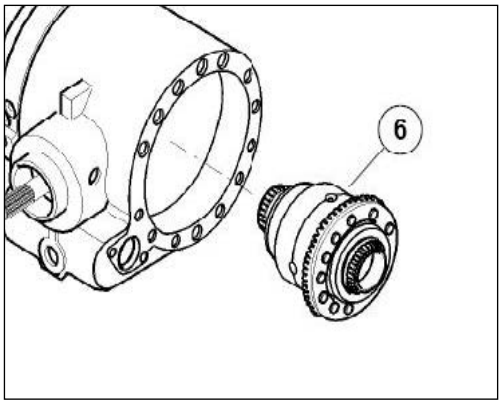

6. Remove the O ring (5) from the central body (1). Extract the pipe (3) from the central body (1). Remove the O ring (2) and (4) from the pipe (3).

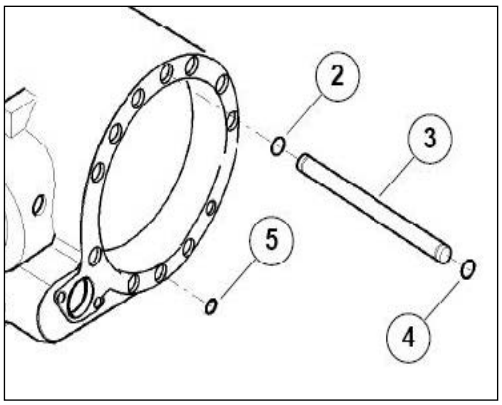

7. Unscrew and remove the screw (12) and the ring nut retainer (11) from the brake cylinder (12).

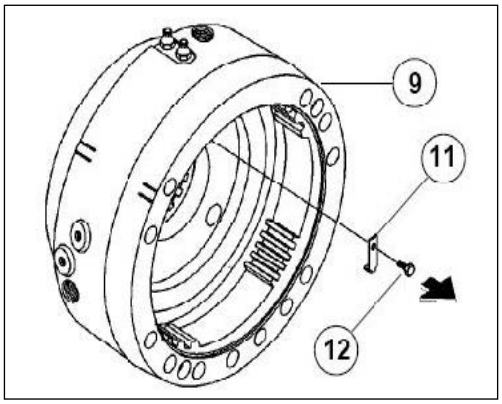

8. Unscrew and remove the adjuster ring nut (10) from the brake cylinder (9) with the special tool CA715265.

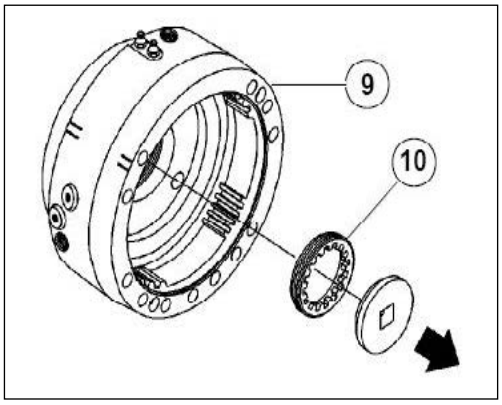

9. Use a driver and a hammer to remove the bearing cup (7) from the brake cylinder (9).

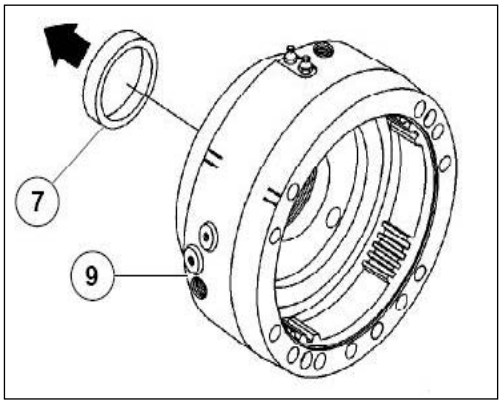

⚠ WARNING

Do not invert the bearings cups if the bearings are not replaced.

30.10.2 DIFFERENTIAL SUPPORT GROUP-ASSEMBLY

1. Assemble the pinion group before assemble the differential support group.

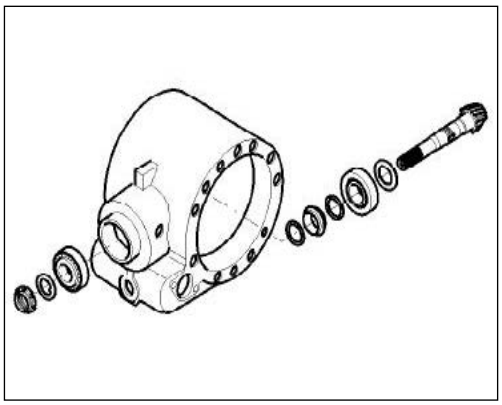

2. Lubricate and assemble two new O rings (2) and (4) o the pipe (3). Insert the pipe (3) into the central body (1). Lubricate and assemble new O ring (5) on every side of the central body (1).

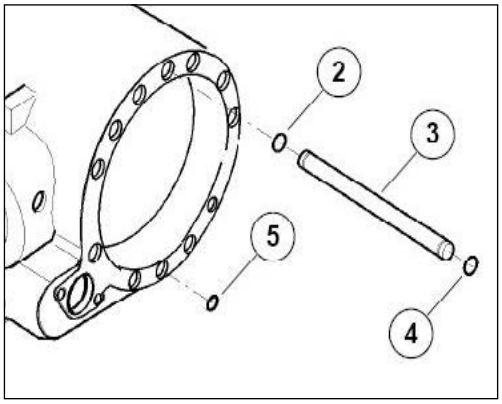

3. Position the brake cylinder (9) on a flat surface and force the bearing cup (7) using the special tool CA715391.

⚠ WARNING

Do not invert the bearings cups if the bearings are not replaced.



4. Measure the external diameter C of the bevel crown gear assembled to differential housing.

   Calculate the value:
   R = C / 2 mm

⚠ NOTE

This value is necessary to measure the backlash between pinion and crown.

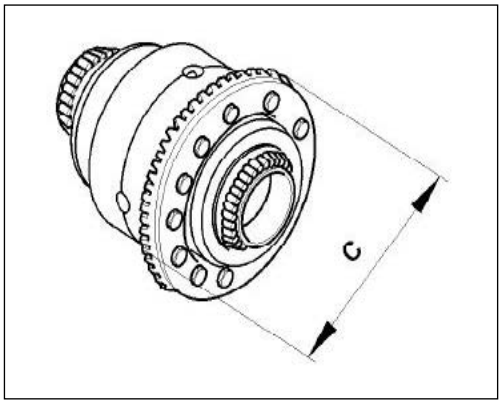

5. Assemble new, well lubricated O ring (8) on the brake cylinder (9) housing. First assemble the right brake cylinder (Rh) to the central body (1). Insert the differential group into the central body (1).

⚠ WARNING

The bevel gear must be placed on the left side (Lh). Assemble the left brake cylinder (Lh).

⚠ NOTE

Check that the reference marks make during the disassemble between the brake cylinders and the central body coincide.

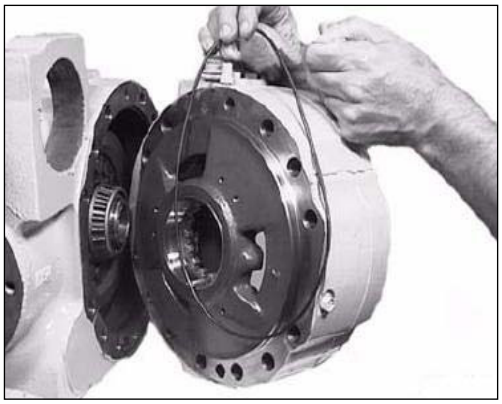

6. Assemble the fastening screws (13). Tighten the fastening screws to the requested torque. Assemble in the shown position a fastening screws M14 X 120 mm to torque of 79 Nm on both sides.

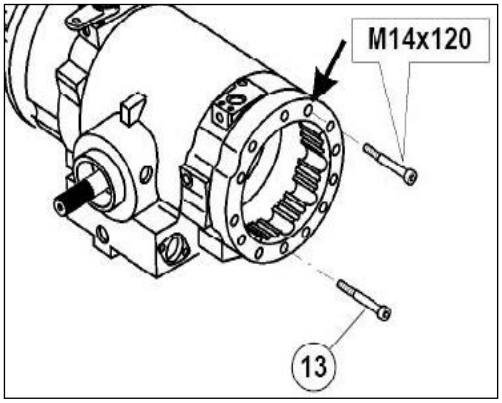

7. Screw both adjuster ring nuts (10) using the tool CA715265 till the backlash is eliminated and the differential bearings are slightly loaded.

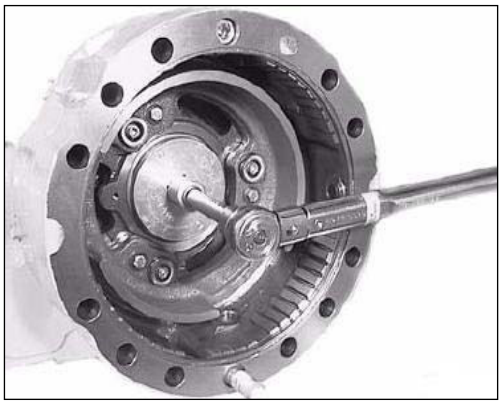

8. Assemble the special tool CA715456 on the differential housing hole. Position a comparator with the feeler in contact with and at 90° respect to the surface of the special tool bracket, in correspondence with the reference R value.

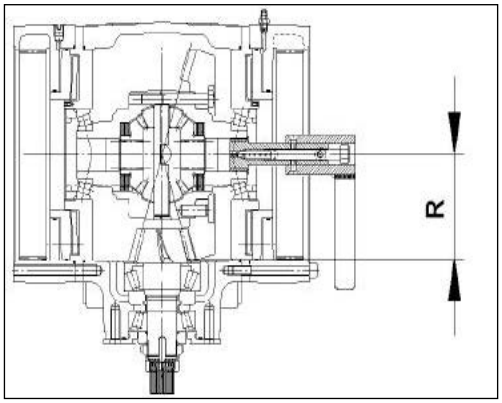

9. Move the bracket of the tool CA715456 installed on the differential housing hole alternately by hand. Measure the backlash between pinion and crown. Check if the measured backlash value is within the prescribed range:0.18 – 0.28 mm.
Set the backlash by turning the adjusting ring nuts (10) using the wrench CA715265.

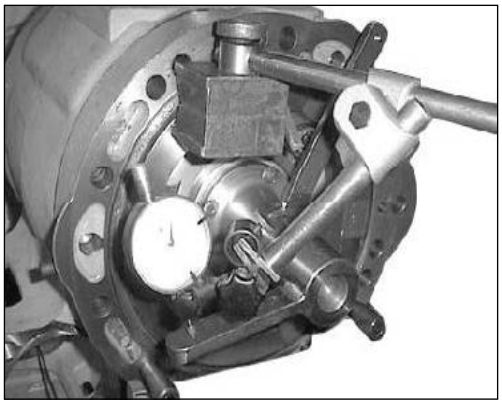

10. Adjust the ring nuts (10), remembering that:
If the measured backlash is less than the given tolerance range screw the ring nut from the side opposite to the ring gear and unscrew the opposite one of the same measure (A).
If measured backlash is greater than the given tolerance range, screw the ring nut from the side of the ring gear and unscrew the opposite one of the same measure (B).

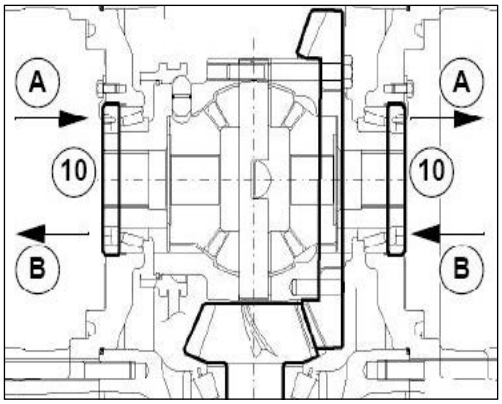

11. Once the adjustment of the pinion bevel gear backlash has been carried out, check also that there is a minimum preloading on the differential housing bearings.
Repeat the whole sequence of the above mentioned operations till the indicated conditions are reached.

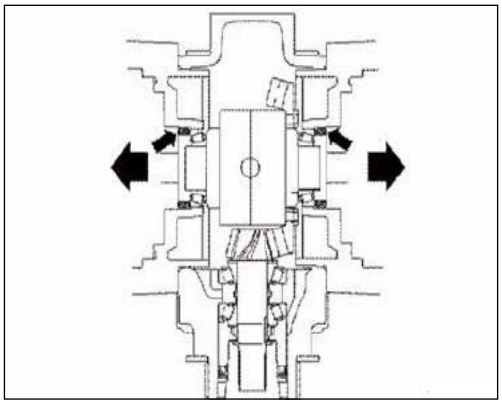

12. Once the pinion ring gear backlash has been established, if the bearings have been not replaced, measure the total preloading Tm of the bearings (pinion crown bevel gear system), using a dynamometer whose cord is wound on the pinion splined end.

⚠ NOTE

Do not use this method with new bearings, if the bearings have been replaced see next step.

Measured value should must be the starting value Tm = To.

⚠ WARNING

All the preloads should be measure without the seal rings.
Follow the operating procedures in next step.

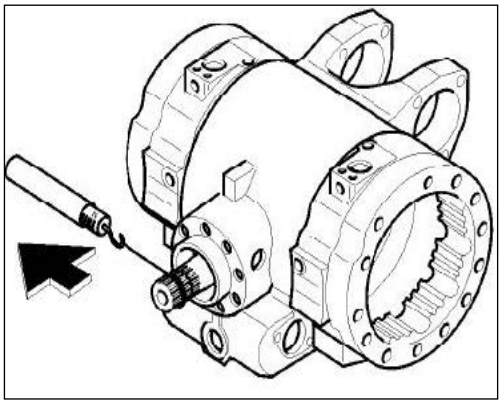

13. If the bearings have been replaced, measure the total preloading T of the bearings with a dynamometer whose cord is wound on the special tool CA715706 inserted on the end of the pinion shaft.

⚠ WARNING

All the preloads should be measure without the seal rings.

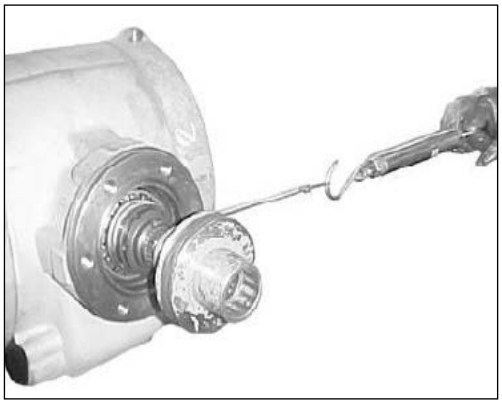

14. The total preloading Tm is measured on the special tool CA715706 (gauge diameter Dm = 104.4 mm).
The measured value should be within the following range:
Tm = (Pm + 12.3) – (Pm + 18.6) N
Where Pm is the effectively preloading measured on the special tool CA715706 (gauge diameter Dm = 104.4 mm).

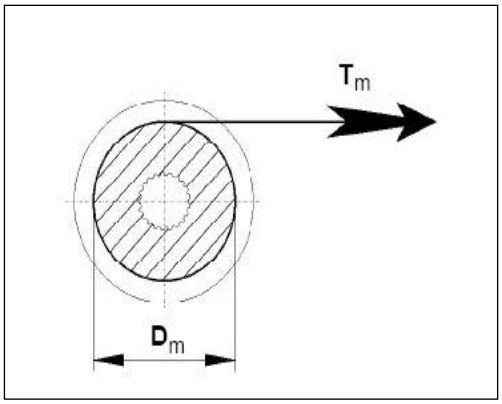

15. Once the pinion ring gear backlash has been established, instead proceed with the earlier steps, measure the total rolling torque (TT) of the bearings (pinion crown bevel gear system) with a torque meter and the special wrench CA715022.

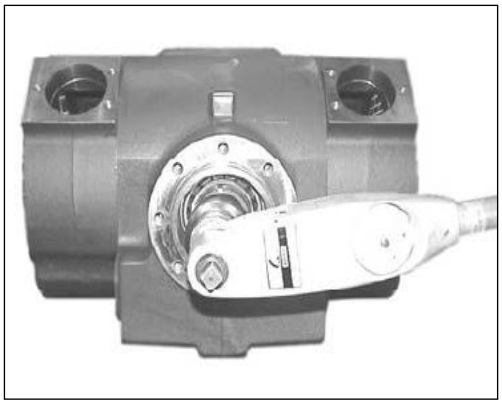

> **⚠ WARNING**
> All the preloads should be measure without the seal installed.

16. The total rolling torque TT must be within the following range.
TT = (Tp + 0.65) – Tp + 0.97) Nm
where Tp is the pinion bearings preloading.

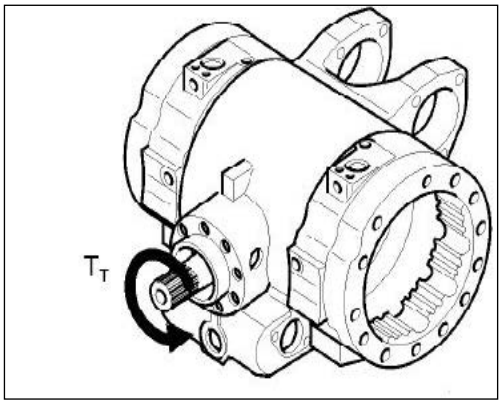

17. If the measurement is not within the requested range, check well the assembly of each component and operate on the adjusted ring nuts (10) of the differential support:
If the total preloading is less than the given range, screw in both adjuster ring nuts by the same measure, keeping the pinion ring gear backlash value unchanged (A).
If the total preloading is greater than the given range, unscrew both adjuster ring nuts by the same measure, keeping the pinion ring gear backlash value unchanged (B).

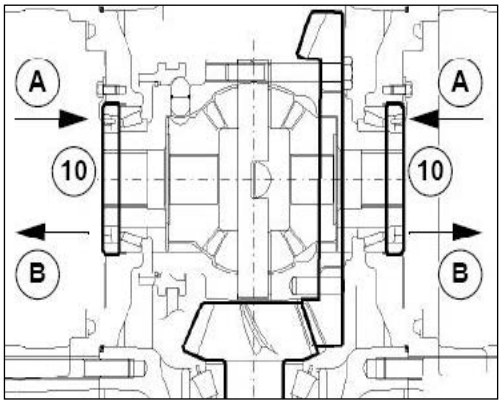

18. Once all the adjustment operations have been completed, fit the adjuster ring nut retainers (11) and their respective screws (12), tightening them to the requested torque.

> **⚠ WARNING**
> Turn the adjuster ring nuts (10) slightly in order to allow the assembly. Remove the fastening screws M14 X 120 mm on both sides.

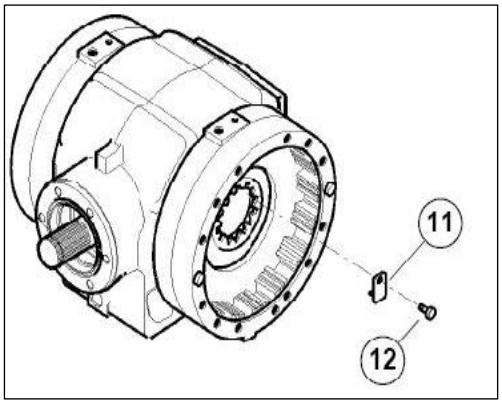

30.11 DIFFERENTIAL GROUP - DISASSEMBLY & ASSEMBLY PROCEDURE

30.11.1 DIFFERENTIAL GROUP-DISASSEMBLY

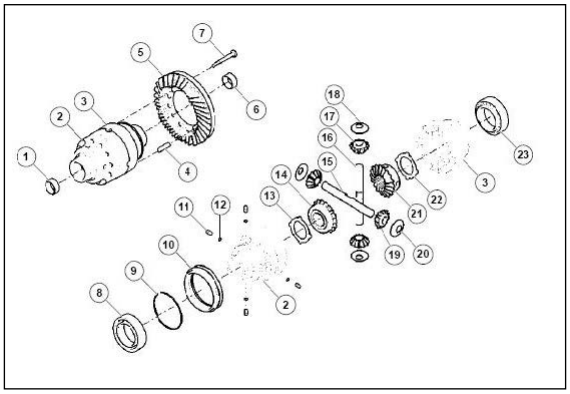

1. Remove the differential from the differential support group. Remove the lock ring (9).
   Remove the sleeve (10) and pins (11) from the differential housing (12).

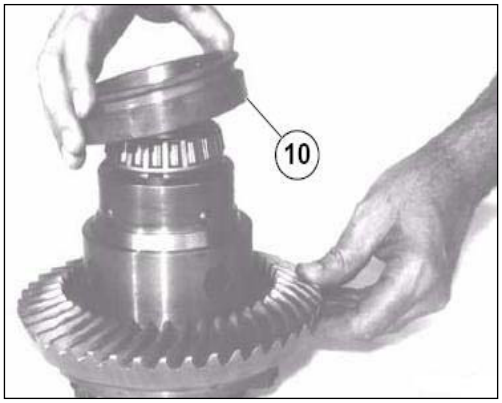

2. Lock the differential with a clamp. Unscrew the fastening screws (7) and remove the bevel gear (5).

> **⚠ WARNING**
> This will make both differential half boxes (2) and (3) free, so take care not to drop the internal components.



3. Make alignments marks on the half boxes before splitting them. Disassemble the differential half boxes (2) and (3) with the relative components. Disassemble all the components. Check the operating and wear conditions of the components.

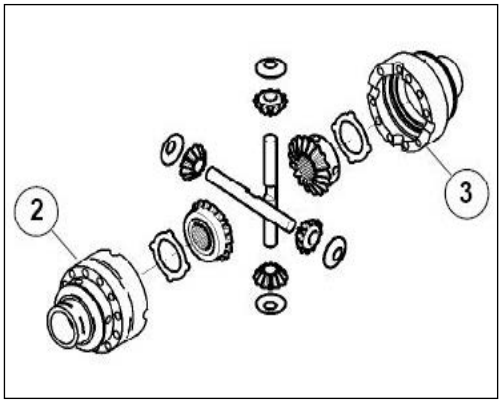

4. Collect the pins (11) and remove the respective O rings (12).

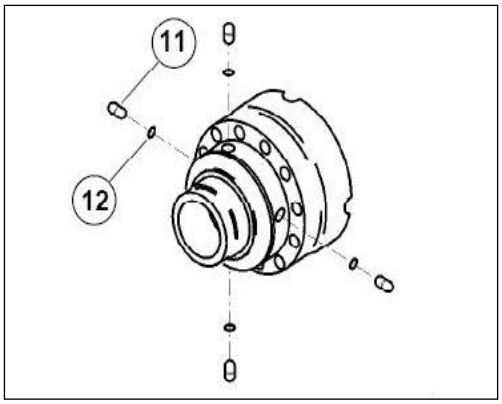

5. Remove the bearing cones (8) and (23) of the half boxes (2) and (3) using two levers or a three hold extractor.

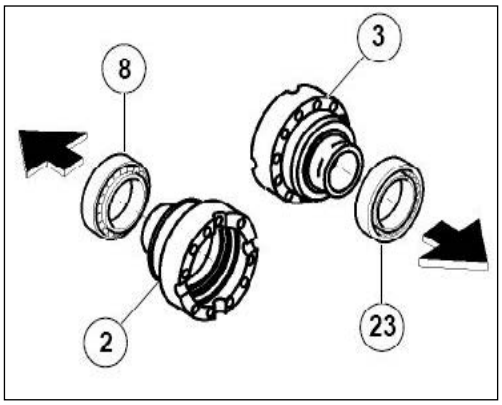

6. Remove the bush (1) and (6) from the half boxes (2) and (3) only if the wear condition require this.

⚠ WARNING

Do not to damage the bush seat.

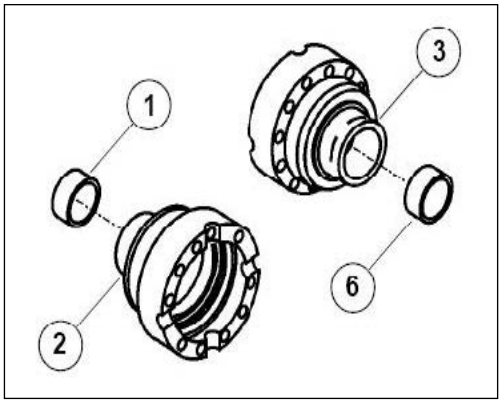

30.11.2 DIFFERENTIAL GROUP-ASSEMBLY

1. If previously removed, assemble the bushes (1) and (6) to the half housings (2) and (3) with the special tool CA715172 and a hammer.

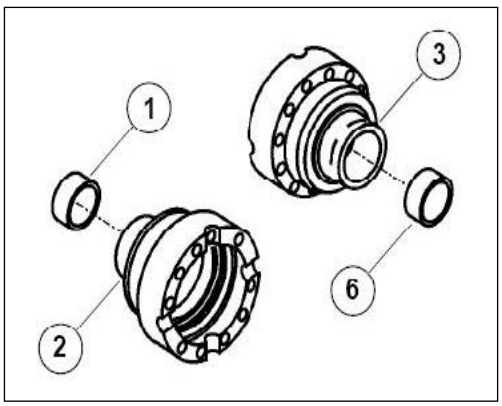

2. Assemble the bearing cones (8) and (23) on the half housings (2) and (3), using the special tool CA119226 and a hammer.

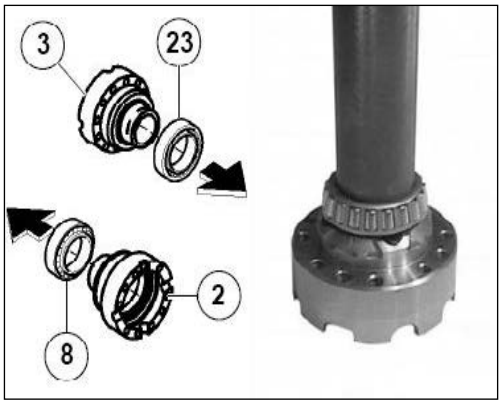

3. Position the half housing (2) on a workbench and assemble all inner components as shown in figure. Join the two half boxes, aligning the reference marks make in disassembly.

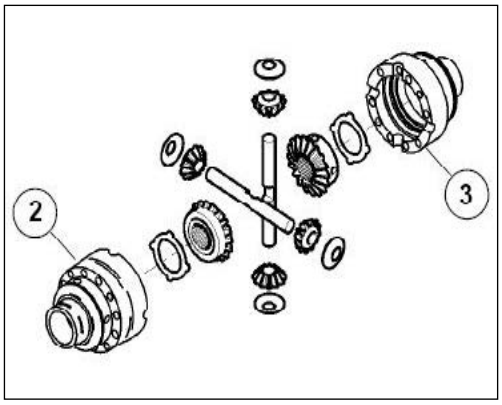

4. Before matching surfaces, make sure that they are perfectly clean, degrease and clean them with appropriate detergents. Spread a film of sealant on the contact surface between the bevel gear (5) and the differential half box (3). Position the bevel crown gear (5) on the half box (3).

NOTE

Check dowel pin (4) position. Apply the specified sealant on the threads and tighten the bolts (7) to the requested torque.

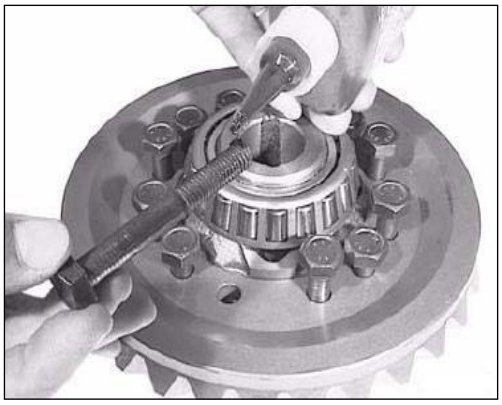

5. Assemble a new well lubricated O ring (12) on every pin (11).

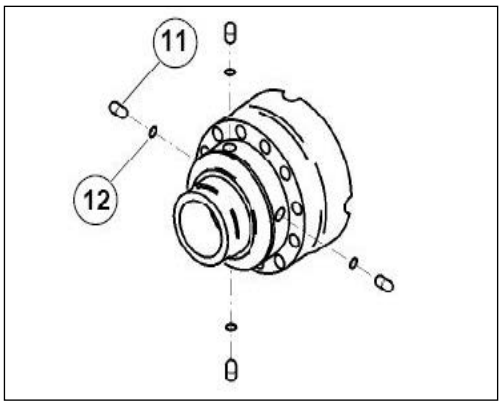

6. Insert the pins (11) into their seats.

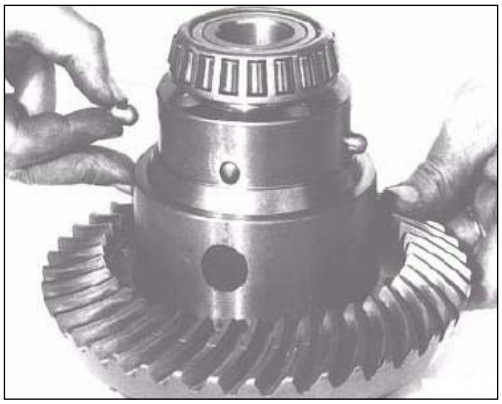

7. Assemble the sleeve (10) on the differential housing (2).

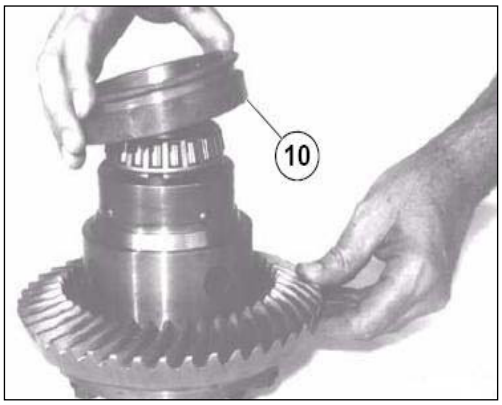

⚠ WARNING

Take care to assemble it in the correct position. Assemble the lock ring (9) to the differential housing (2).

30.12 PINION GROUP - DISASSEMBLY & ASSEMBLY PROCEDURE

30.12.1 PINION GROUP-DISASSEMBLY

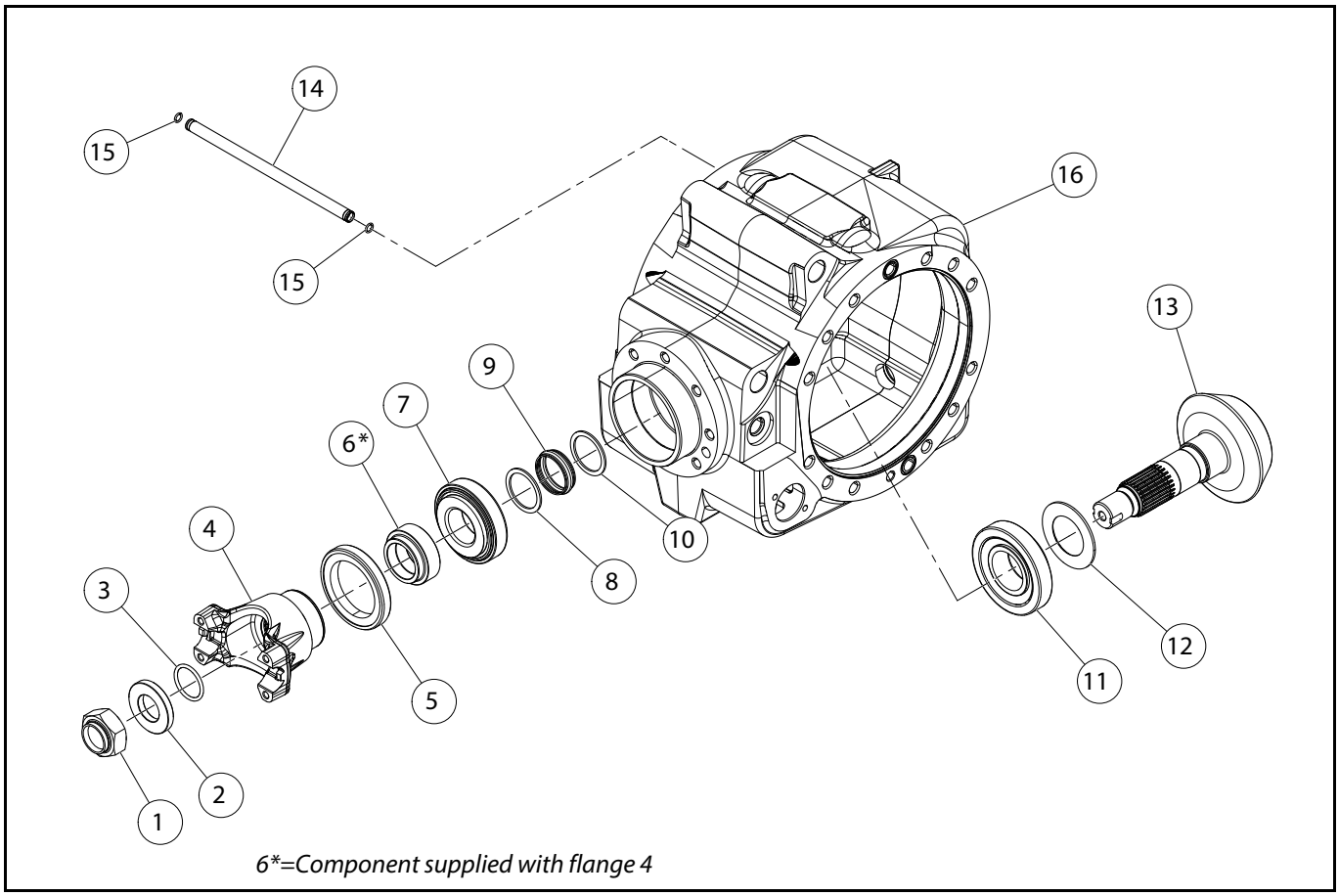

6=Component supplied with flange 4*

⚠ IMPORTANT

If it is necessary replace only the seal ring (5), proceed like described in 30.4

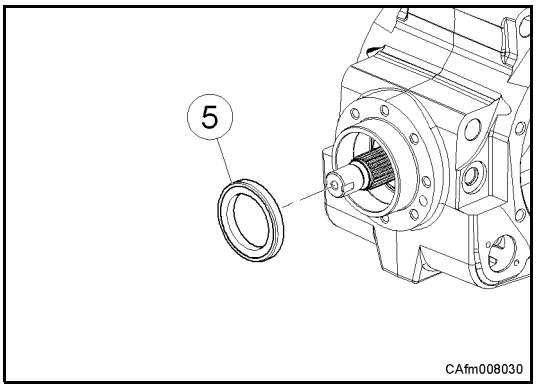

1.Unscrew the pinion locking nut (1) using a commercial wrench. Lock the rotation of the flange (4) using the tool (t1).
Remove the washer (3) and collect the O-Ring (2).
Remove the flange (4).

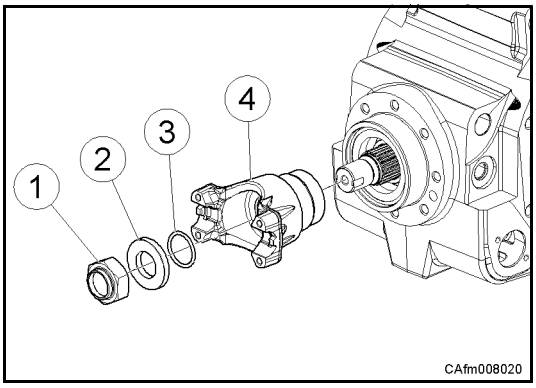

2.Remove the seal ring (5) from the central housing (16) with a puller.

⚠ NOTE

Seal may get damaged.

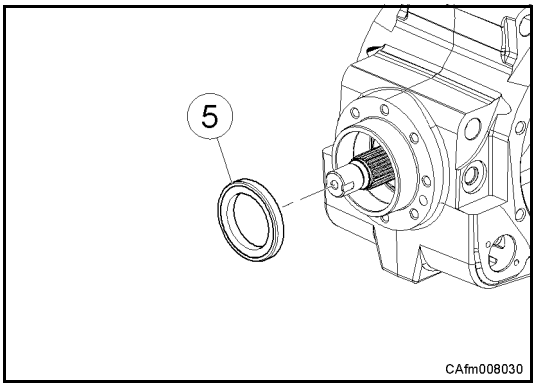

3.Tap the end shaft with a soft hammer to remove the bevel pinion (13). Collect the bearing cone (7).

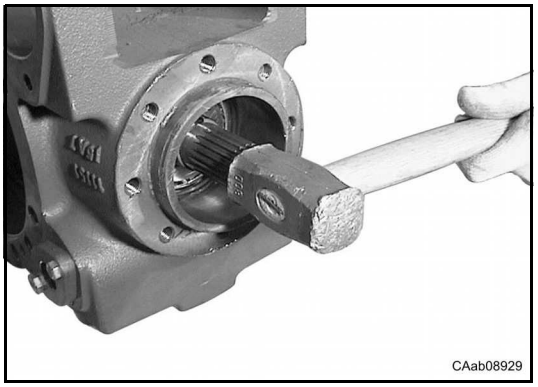

4. Once the bevel pinion (13) has been removed, collect the washer (8), the collapsible spacer (9) and the washer (10).

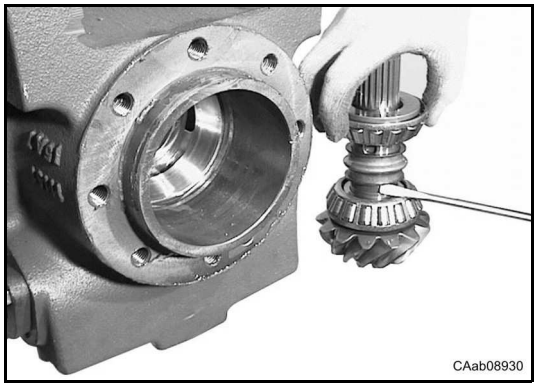

⚠ WARNING

The collapsible spacer (9) must be replaced when reassembling the unit.

5. Check the bearing cups wear condition.
If bearings replacement is necessary, remove bearing cups (7) and (11) from central body with a drift and a hammer.

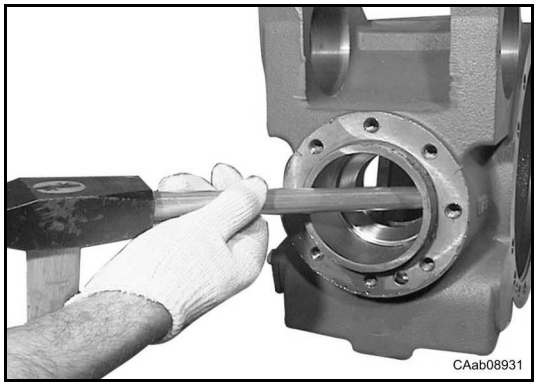

6. Remove the bearing cone (11) of the bevel pinion (13) with a standard extractor. Collect the shim (12).

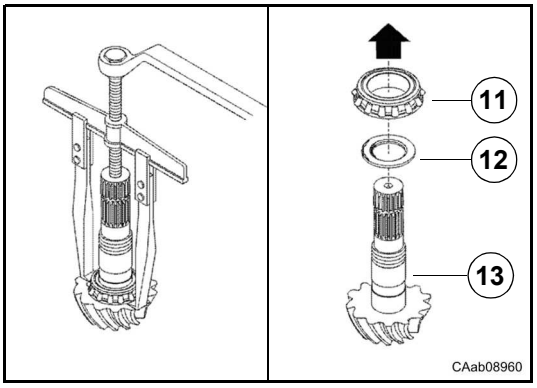

7. Remove the pipe (14) and remove o-Rings (15).

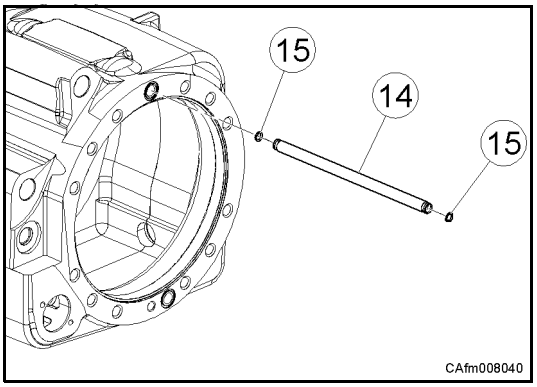

⚠ NOTE

O-rings may get damaged.

2. Use the special tools false pinion CA715128 and false differential box CA715388 to measure the conic distance.
Insert into the seats the bearing cups (3) and (8) and the false pinion.
Tighten the ring nut (10) to eliminate the backlash.

8. Check all pinion components for wear.

NOTE

The nut (1), the O-Ring (3), the seal ring (5) and the collapsible spacer (9) must be replaced when reassembling the unit.

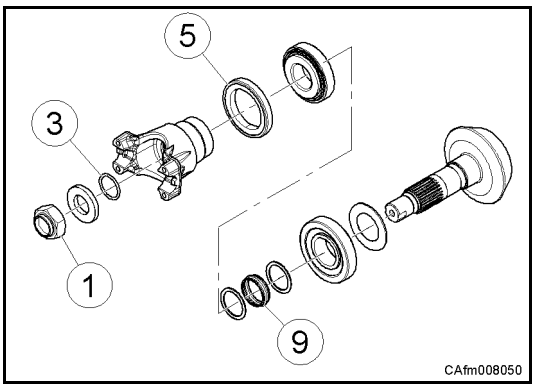

30.12.2 PINION GROUP-ASSEMBLY

1.Position the central body (16) on a workbench.

Fit the bearing cups (7) and (11) into their seats using the special tools kit (t2).

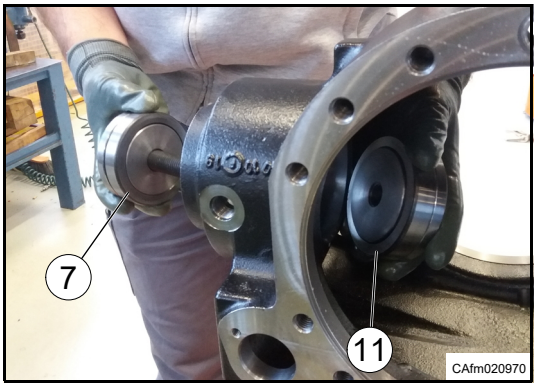

2.Use the special tools false pinion (t3) and false differential box (t4) to measure the conic distance. Insert into the seats the bearing cups (7) and (11) and the false pinion. Tighten the ring nut to eliminate the backlash.

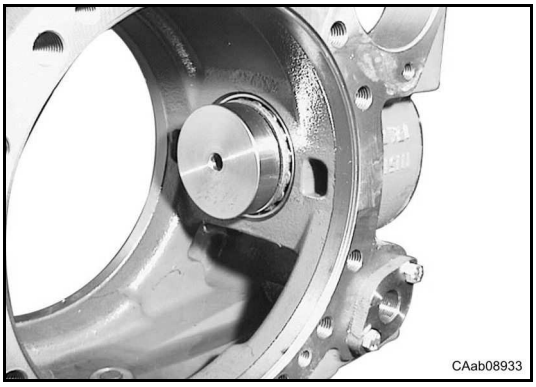

3. False pinion installation.

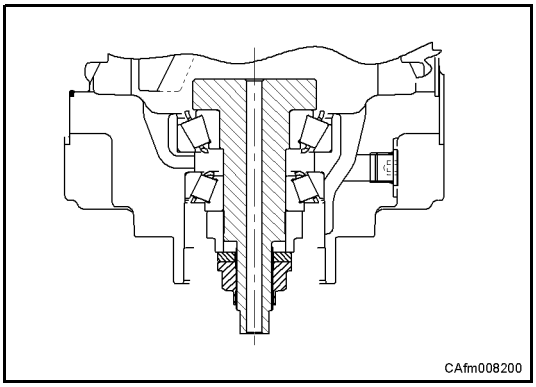

4. Insert the false differential box (t4) into the central body (16). Check that the false differential box is inserted in both differential support housings.

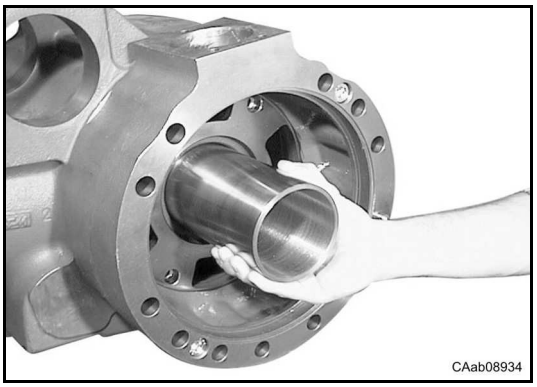

5. To adjust bevel gear/pinion measure the distance “A” with a depth gauge.
Calculate the value “X” as follows:
X=(A+C)-B mm
where “B” and “C” are known.

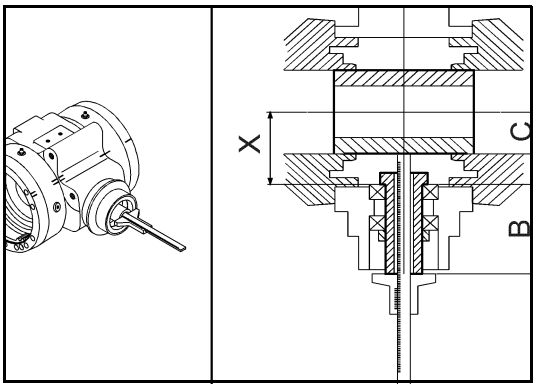

6. From the value “X” deduct the value “V” (stamped on the pinion head) to get the value “S”.
S=X-V mm

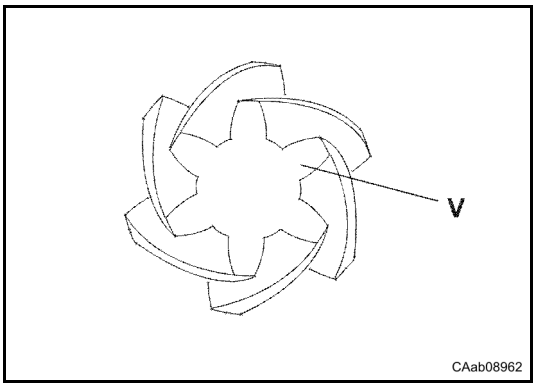

7. Choose the shim (12) with thickness value (S) among the available shims range.

SHIMS RANGE

Thick. - mm	2.5	2.6	2.7	2.8	2.9	3.0	3.1	3.2	3.3	3.4
Quantity	---	---	---	---	---	---	---	---	---	---

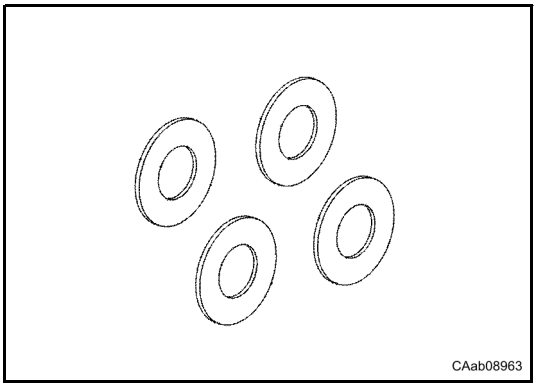

8. Loosen and remove the ring nut, remove the false pinion (t3) and the bearing cones (7) and (11) from the central body (16).
Disassemble the false differential box (t4) from the brake cylinders and then unscrew the screws to remove the brake cylinders.

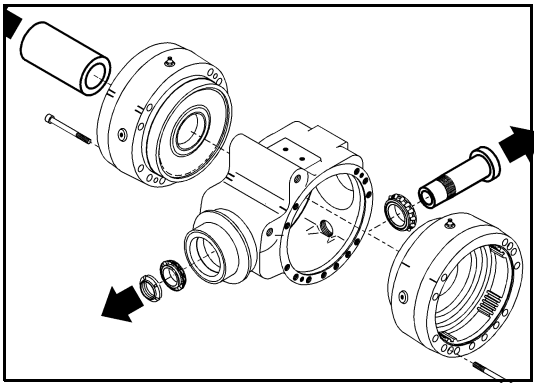

9. Once you have chosen the suitable shim (12), insert it on the pinion shaft with the chamfer against the pinion head, as shown in figure.

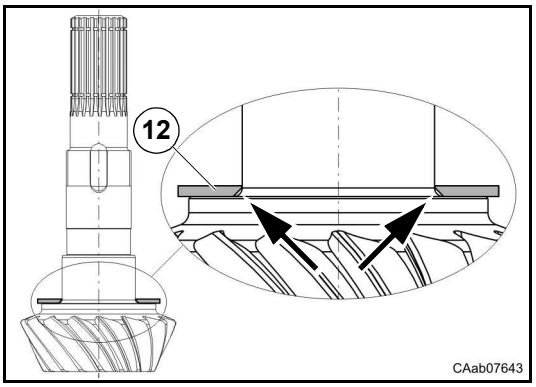

10. Insert the chosen shim (12) with the chamfer against the gear into the pinion shaft (13).
Force the bearing (11) into the pinion shaft (13) with the special tool (t5) under a press, making sure that it is well set.
Insert the shims (8) and (10) and a new collapsible spacer (9).

NOTE

Use always a new collapsible spacer (9).

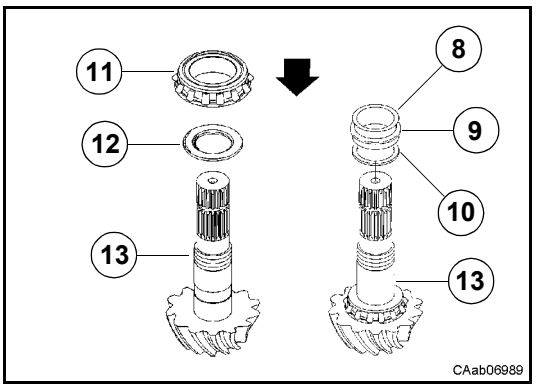

NOTE

Check the right assembly sequence.

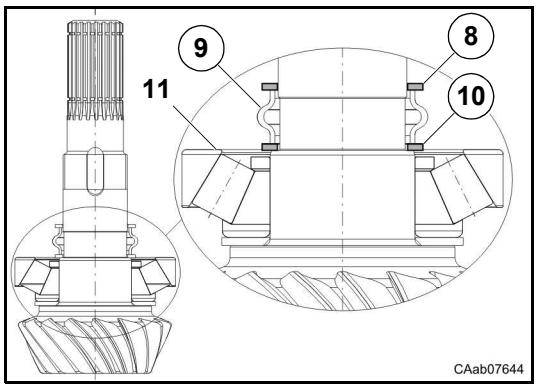

11.Insert the bevel pinion (13) unit into the central body (16) and the bearing (7) into the pinion shaft, as shown in figure. Force the bearing (7) in position with the special tool (t5) and a hammer.

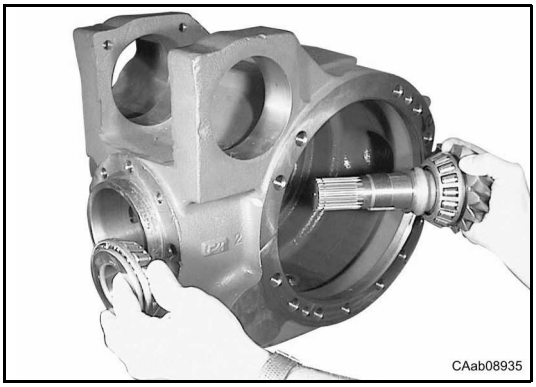

NOTE

Push the pinion against the central body to perform this operation.

12. Assemble seal ring (5) using the pad (t6) and a hammer.

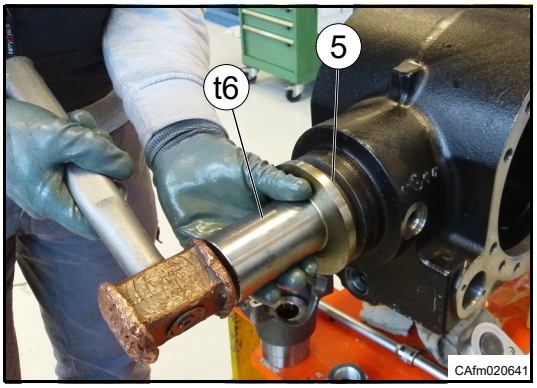

13. Assemble flange (4), O-ring (3), washer (2) and nut (1). Screw nut (1) without tightening.

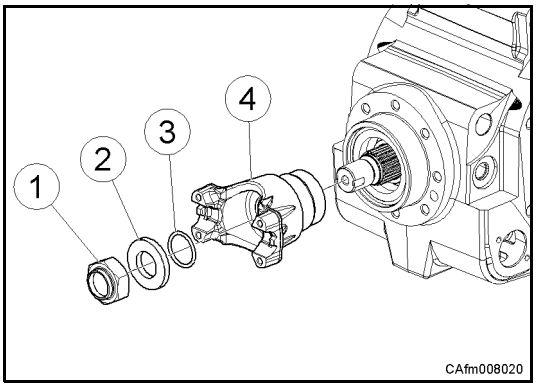

14. Turn the nut without exceeding using a wrench available on the market.
Insert two screws (TE 5/16”-24UNF 2B) and a lever on the tool (t1) for locking the flange.

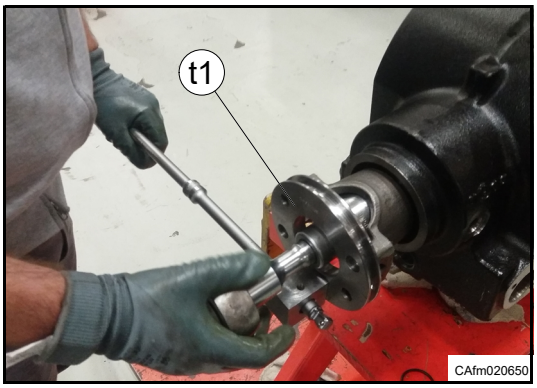

15. The effectively pre-loading Pm is measured on the special tool (t1)(gauge diameter Dm = 125 mm).
The measured value should be within the following range:
FPmin < FPm < FPmax [N]

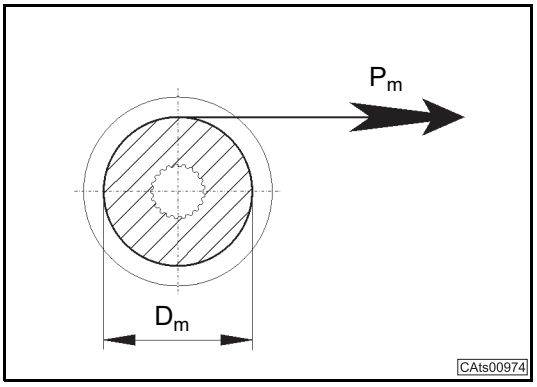

16. Usage of special tool (t1)

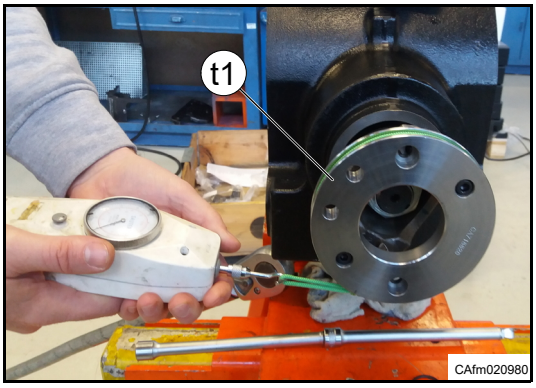

17.Measure the diameter Dm (Diameter of measurement) of the special tool (t7) and diameter of the pinion end DP (diameter of pinion), then calculate the ratio R between the diameters:
R= Dm/DP
The measured value of preloading must be within the following range:
FPmin/R < FPm < FPmax/R [N]

See: values FPmin and FPmax indicated in Product Data.

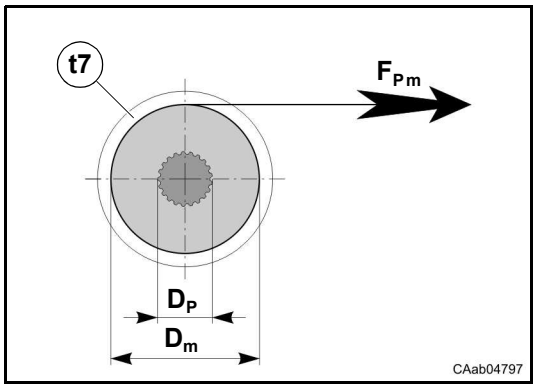

18. Example Data measured: Dm= 100.0 mm, DP= 29.75 mm
Example Product Data: FPmin= 107.6 N FPmax= 161.3 N
Calculate R= 100.0/29.75= 3.36
then (107.6/3.36) < FPm < (161.3/3.36),
in this case the measured preload value must be within the range
32 < FPm < 48 N

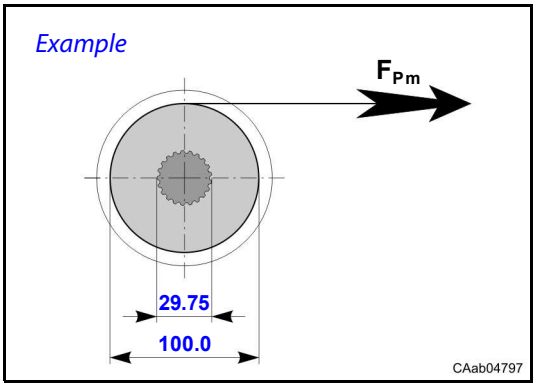

19. Measure the pinion shaft bearings (7) and (11) rolling torque MP with a torque-meter.
The adjustment is carried out by increasing the nut (1) torque gradually, being careful not to exceed.

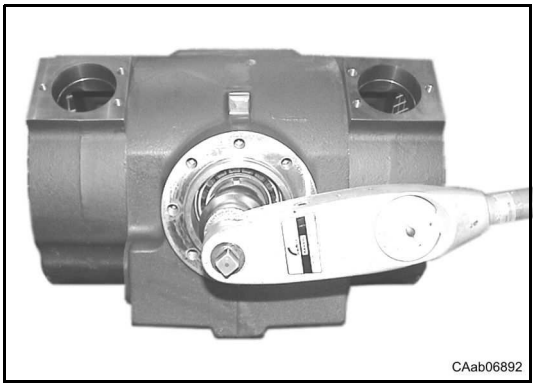

▲ NOTE

All pre loadings must be measured with the seal ring.

20.The measured value MP must be within the following range:
MPmin < MP < MPmax [Nm]
See: C.4 Technical Features and Product Data.

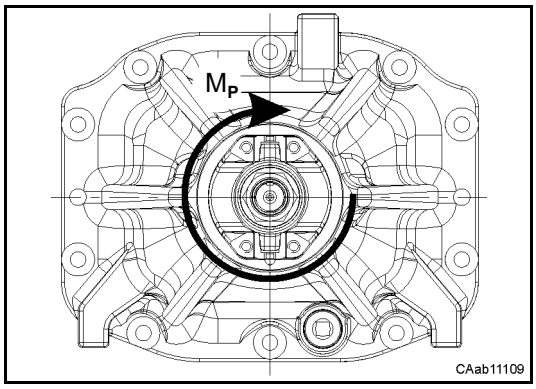

21.Once you got the requested pre-loading value, caulk the nut (1) on two side using a hammer and a punch.

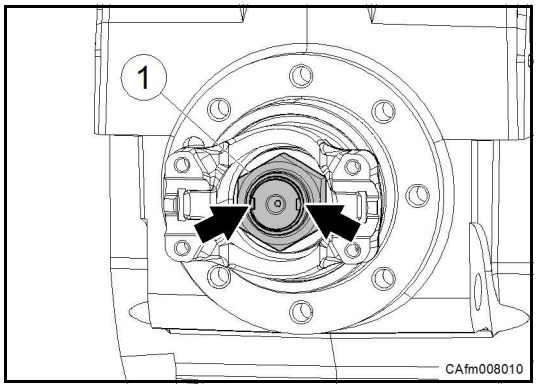

▲ NOTE

Tools required for the assembly/disassembly operations in the present section.

Position	**Special Tools** Description
(**t1**)	Flange locking wrench
(**t2**)	Driver for pinion bearings
(**t3**)	False pinion
(**t4**)	False differential box
(**t5**)	Driver for pinion bearing cone
(**t6**)	Driver for pinion seal
See: reference numbers of the Carraro Drive Tech tools in Product Data section.	

30.13 REMOVAL & INSTALLATION OF FRONT AXLE

1. Unscrew the 6 nos. Of wheel mounting bolts (2) and remove both left and right wheel assemblies (1).



2. Make sure that front axle (3) is properly supported by screw jacks (4).

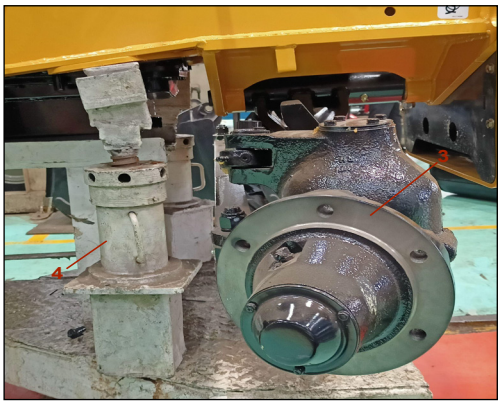

3. Remove the hydraulic hoses (5 & 6) from the steering cylinder (7).
4. Plug the open ports of steering cylinder(7).

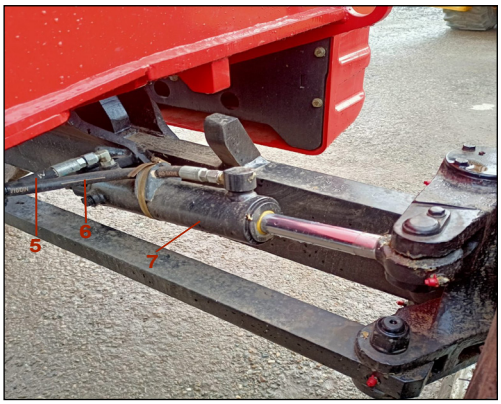

> **⚠ NOTE**
> Do not forget to plug the hydraulic hoses.

5. Unscrew the cotter bolts (8 & 9) and uninstall the steering cylinder mounting pins (10 & 11).

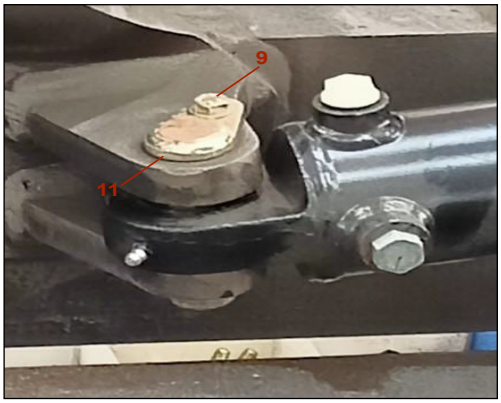

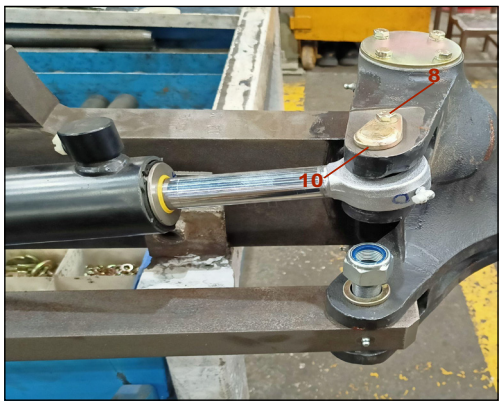

6. Unscrew the lock nut (12) at both left and right ends to uninstall tie rod (13).

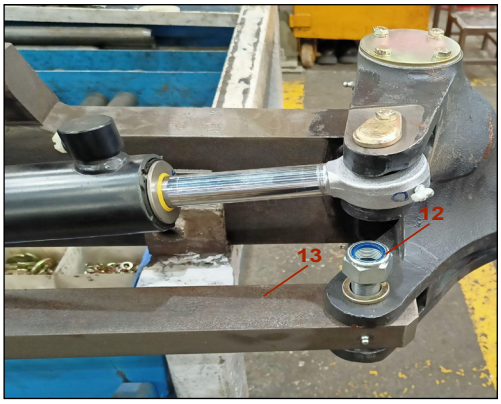

7. Unscrew the lock nut (14) of front axle mounting pin (15).
8. Pull the mounting pin (15) to uninstall the front axle (3) from the main frame(16) .
9. Bring down the front axle (3) carefully on the ground with the help of screw jack .

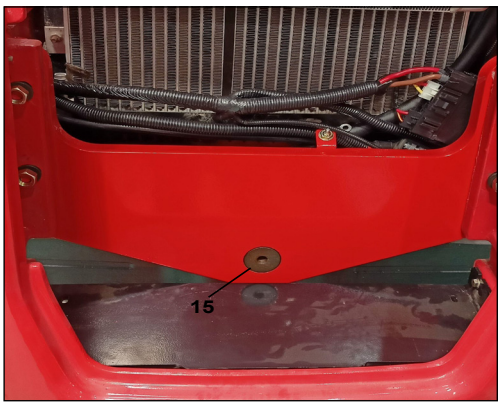

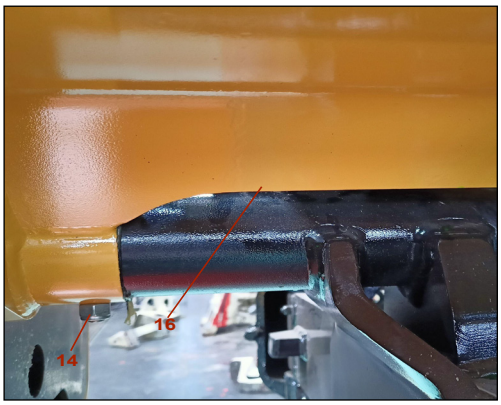

⚠ NOTE
Installation is reverse of the removal.

30.14 TROUBLESHOOTING

Problems	Possible Causes										
	1	2	3	4	5	6	7	8	9	10	11
Wheel vibration, front tire resistance, half shaft breakage	*	*	*		*						*
Steering is difficult, vehicle goes straight while its turning	*	*	*	*							*
No differential action, jamming while steering	*	*	*	*	*		*		*		*
Uneven wear of tire	*	*	*	*	*	*	*				*
Friction noise	*			*	*			*	*	*	*
Vibration during forward drive, intermittent noise	*	*	*		*						*

1. Incorrect installation / defective axle – Correct installation or repair or replace the differential in case it does not survive any one of the test phases.
2. Overloading / incorrect weight distribution – Remove excessive weight and redistribute load, following instruction related to the vehicle.
3. Different rotation radius of the tires – If one tire has a smaller radius, it will cause partial wheel slipping when force is applied. The other tire with bigger radius will have to support all the work. Replace the tire or adjust pressure to have same radius on both tires.
4. Broken half shaft – It is not advisable to operate the vehicle with a broken half shaft. It is acceptable to move vehicle (engine off unloaded) a few meters away only.
5. Bent half shaft – Replace half shaft.
6. Blocked differential – Abnormal functioning of the differential or breakage / blockage of command device. Verify assembly and all components. Vehicles with wide steering angle may proceed with kicks have steering difficulty or cause pneumatic wearing at sharp turn. Reduce the steering angle to minimum and decelerate when the vehicle beings to kick.
7. Incorrect wheel adjustment – Verify group integrity and wheel side bearings. Adjust accordingly.
8. Spoiled or worn out axle parts – Check the condition of ring gear, pinion gear, bearings etc. replace whenever necessary.
9. Contamination in the axle box or incorrect assembly of parts – Look for foreign particles. Check assembly of the various parts of the axle.
10. Incorrect adjustment of bevel gear set – Parts of the transmission worn out. (transmission gears, U joints etc).
11. Incorrect use of the product – See the vehicle producer's instruction once again.

Problem	Cause	Action
Ring gear tooth broken at the outer side	Excessive gear load compared to the one foreseen Incorrect gear adjustment (excessive backlash) Pinion nut loosened	Replace bevel gear site. Follow carefully the recommended operations for the adjustment of bevel gear set backlash
Ring gear tooth broken side	Load bump Incorrect gear adjustment (insufficient backlash) Pinion nut loosened	Replace bevel gear set. Follow carefully the recommended operations for the adjustment of bevel gear set backlash
Pinion or ring gear teeth or worn	Insufficient lubrication Contaminated oil Incorrect lubrication or depleted additives Worn out pinion bearings that cause an incorrect pinion axle backlash and wrong contact between pinion and ring	Replace bevel gear set. Follow carefully the recommended operations for the adjustment of bevel gear set backlash. Use correct lubricants, fill up to the right levels and replace according to the recommended program
Overheated ring and pinion teeth. See if gear teeth have faded	Prolonged functioning at high temperature Incorrect lubrication Low oil level Contaminated oil	Replace bevel gear set. Use proper lubrication, fill up to right level and replace at recommended program
Pinion teeth pitting	Excessive use Insufficient lubrication	Replace bevel gear set. Use correct lubrication, fill up to the right level and substitute at recommended intervals
Axle beam body bent	Vehicle over loaded Vehicle accident Load bump	Replace axle beam body
Worn out or pitted bearings	Insufficient lubrication Contaminated oil Excessive use Normal wear out Pinion nut loosed	Replace bearings. Use correct lubrication fill up to the right level and replace at recommended intervals
Oil leakage from gaskets and seals	Prolonged functioning at high temperature of oil Oil gasket assembled incorrectly Seal lip damaged Contaminated oil	Replace the gasket or seal and matching surface if damaged. Use correct lubrication and replace at recommended intervals
Excessive wearing out of input flange spline	Exhaustive use Pinion nut loosened Pinion axle backlash	Replace the flange. Check that the pinion spline not excessively work out. Replace bevel gear set if required
Fatigue failure of pinion teeth. See if the fracture line is well defined (wave lines, beach lines)	Exhaustive use Continuous overload	Replace bevel gear set
Pinion and ring teeth breakage	Crash load of differential components	Check and / or replace other differential components
Side gear spline worn out. Replace all scratched washers (excessive backlash)	Excessive use	Replace differential gear group. Replace half shaft if required
Thrust washer surface worn out or scratched	Insufficient lubrication Incorrect lubrication Contaminated oil	Use correct lubrication and fill up to right level. Replace at intervals recommended. Replace all scratched washers and those with 0.1mm thickness lower than the new ones
Inner diameter of tapered roller bearing worn out	Excessive use Excessive pinion axial backlash Insufficient lubrication Contaminated oil	Replace bearing. Check pinion axial backlash. Use proper lubrication fill up to right level and replace at recommended intervals
Bent or broken half shaft	Vehicle intensively operated or overloaded	Replace
Half shaft broken at wheel side	Wheel support loosened Beam body bent	Replace. Check that wheel support is not worn out or wrongly adjusted

Troubleshooting axle operational problems

Problem	Cause	Action
Noise while driving	Excessive backlash between pinion and ring gear	Adjust
	Worn out pinion and gear ring	Replace
	Worn out pinion bearings	Replace
	Pinion bearings loosened	Adjust
	Excessive axial pinion backlash	Adjust
	Worn out differential bearings	Replace
	Differential bearings loosened	Adjust
	Ring gear out of roundness	Adjust
	Low lubricant level	Oil level
	Poor or wrong lubricant	Replace
	Bent half shaft	Replace
Noise while driving in neutral	Noise coming from axle are usually heard when vehicle moves in neutral gear but are not loud	Replace or adjust (see above)
	Incorrect backlash between pinion and ring (sound heard while decelerating disappears while increasing the speed)	Replace
	Pinion or input flange worn out	Adjust
Intermittent noise	Ring gear damaged	Replace bevel gear set
	Differential box bolts loosened	Tighten to torque
Constant noise	Ring gear teeth or pinion damaged	Replace bevel gear se
	Worn out bearings	Replace
	Pinion spline worn out	Replace
	Bent half shaft	Replace
Bent half shaft	Worn out differential gears	Replace
	Worn out differential box or spider	Replace
	Differential thrust washers worn out	Replace
	Half shaft spline worn out	Replace

40

BRAKES

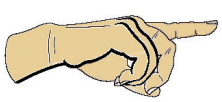

Intentionally Left Blank

TABLE OF CONTENTS

40.1 REMOVAL & INSTALLATION OF BRAKE MASTER CYLINDER 4

40.2 MASTER CYLINDER OPERATION 4

40.3 DISASSEMBLY & ASSEMBLY OF PARKING BRAKE MECHANICAL CALLIPER 5

40.3.1 DISASSEMBLY 5

40.3.2 ASSEMBLY 6

40.4 TESTING & ADJUSTING 7

40.4.1 CHECK & ADJUSTING THE BRAKES 7

40.4.2 BRAKE AIR PURGING 7

40.4.3 PARKING BRAKE-ADJUST 8

40.4.4 PARKING BRAKE ADJUSTMENT 8

40.5 TROUBLESHOOTING 9

40.1 REMOVAL & INSTALLATION OF BRAKE MASTER CYLINDER

REMOVAL

⚠ NOTE

There are two master cylinders, connected by a balance tube and compensator valves. Removal of one master cylinder is described here.

1. Park the machine on level surface. Raise the loader and lock the support
2. strut to hold the loader. Place the blocks under the rear wheels and stop
3. the engine.
4. Open the hood.
5. Inside the can, remove the trim panels from around the brake pedals to
6. access the brake master cylinders (1).
7. Remove the clevis pin (9) that fastens the clevis (10) on to the master
8. cylinder (1) to the brake pedal.
9. Clamp the flexible hose (2) between the brake reservoir and the inlet
10. pipe assembly (3).
11. Release the hose clip (4) and pull the flexible hose (2) from the inlet pipe
12. assembly (3).
13. Disconnect the inlet unions (5) from both master cylinders (1).
14. Remove the inlet pipe assembly (3).
15. Disconnect the pipe (6) from the pressure port of the master cylinder (1)
16. to be removed.
17. Disconnect the balance pipe (7) from both master cylinder (1).
18. Remove the 2 nylon nuts (8) and the master cylinder (1).

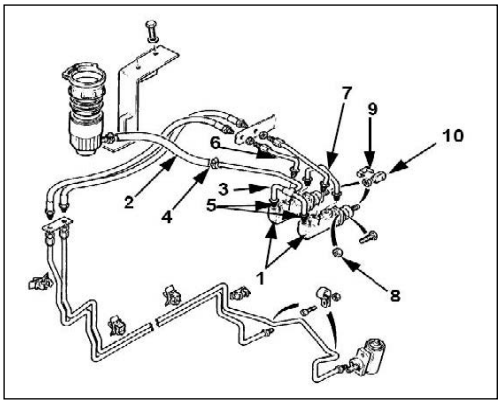

INSTALLATION

1. Set the clearance of the master cylinder push rod, so that when the brake pedal is against its return. Stop push rod does not pre-load the brake master cylinder.
2. Replenish the brake reservoir with the correct grade of fluid.
3. Adjust the brake.
4. Purge air from the brake system.

40.2 MASTER CYLINDER OPERATION

In backhoe loader, there are pedals for the brakes on the left and right side. Both the left and right side master cylinders are same and they are linked.

Fluid from the brake fluid reservoir enters each master cylinder through the supply port and fills the spring chamber and supply line to the brakes. The spring holds the plunger and the valve stem in a neutral position. When one brake pedal is engaged, the push rod moves against the plunger. The plunger moves to the left trapped oil inside the plunger moves the valve stem to the left. The valve stem blocks the supply port and fluid pressure in the spring chamber increases. The pressurized fluid flows behind the piston for the brakes. The brakes engage. The pressure increase unseats the compensation valve. Oil flows through the bridge pipe to the other master cylinder. If the other brake is not engaged, the compensation valve in the other master cylinder will block the oil.

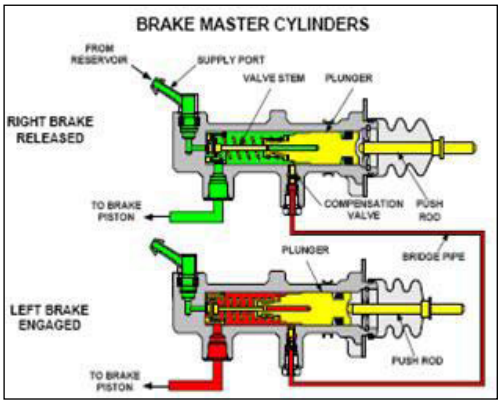

When both brakes are engaged, the compensation valve in both master cylinders opens. The two spring chambers are linked and the pressure equalizes. Brake engagement is equal on both sides.
When the brakes are released, the spring in the master cylinder moves the valve stem away from the inlet port. The high pressure pushes the plunger back and the pressure equalizes again.

40.3 DISASSEMBLY & ASSEMBLY OF PARKING BRAKE MECHANICAL CALLIPER

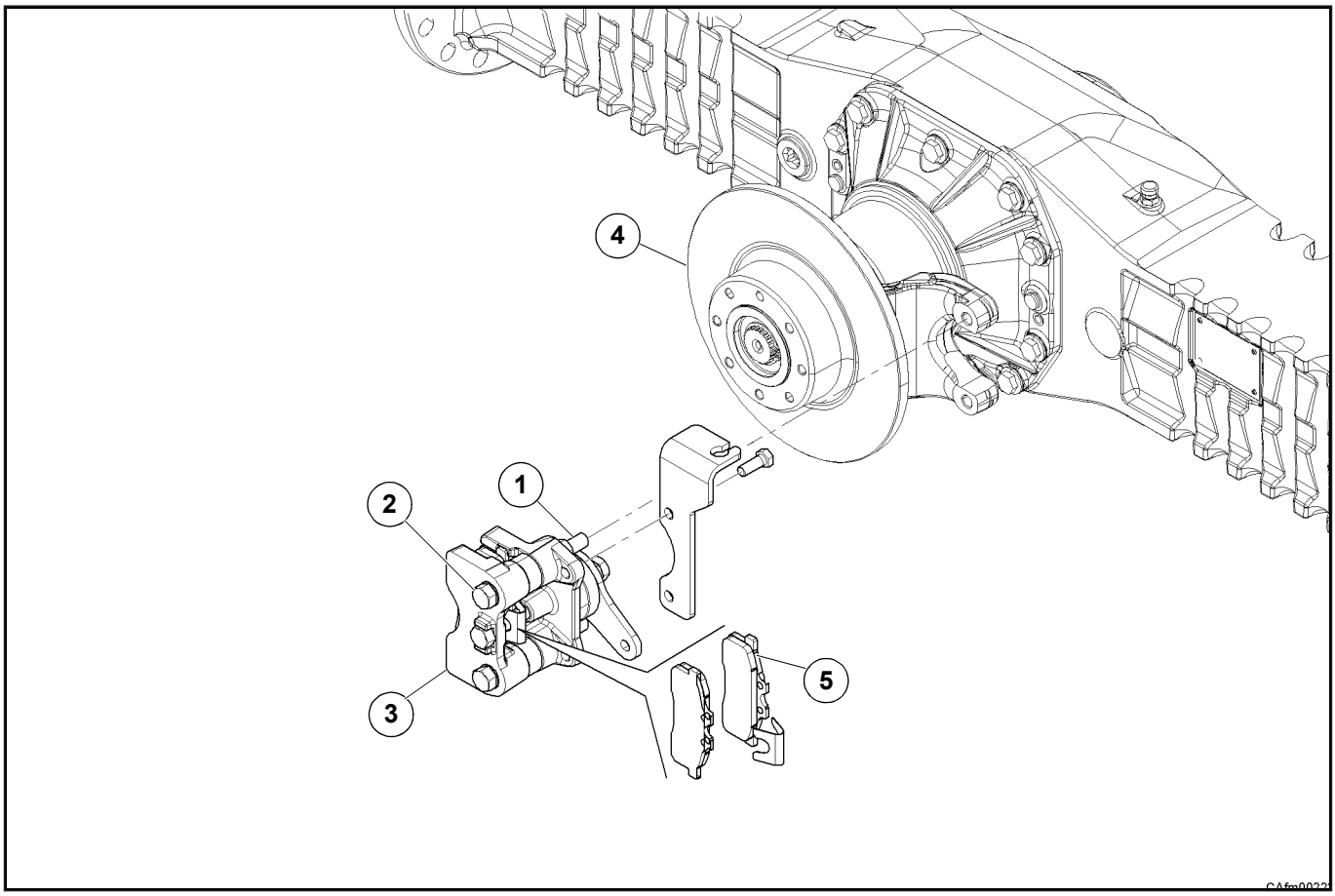

DISASSEMBLY

1. Loosen the two nuts (1).
   Unscrew the two screws (2).

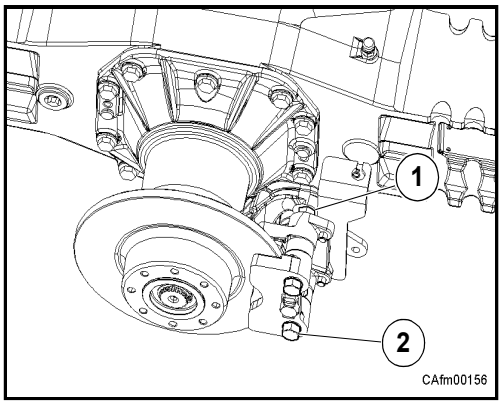

⚠ NOTE

To operate with care to avoid damages to the brake pads.

2. Remove the two screws (2).

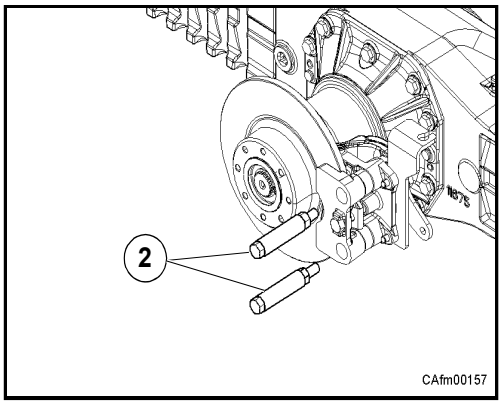

3. Remove the brake caliper (3) from the brake disc (4).
Only if necessary remove the two brake pads (5).

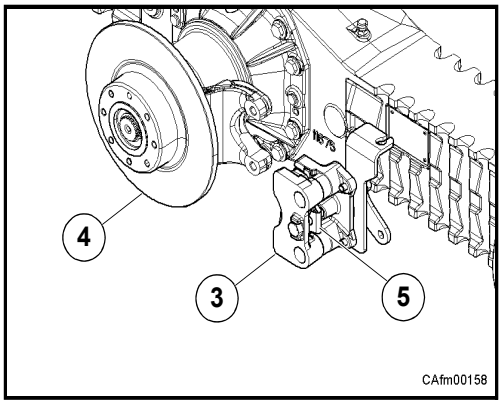

ASSEMBLY

1. Position the brake caliper (3), with relative pads (5), on the flange disc (4).

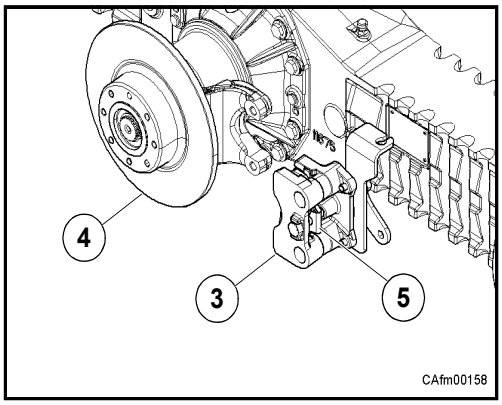

NOTE

Proceed with care, in order to avoid damaging the brake pads.

WARNING

Do not invert the brake pads position if the brake pads are not replaced; the brake efficiency would be compromised.

2. Assemble the two screws (2) and tighten the nuts (1) to the torque of 115 Nm.

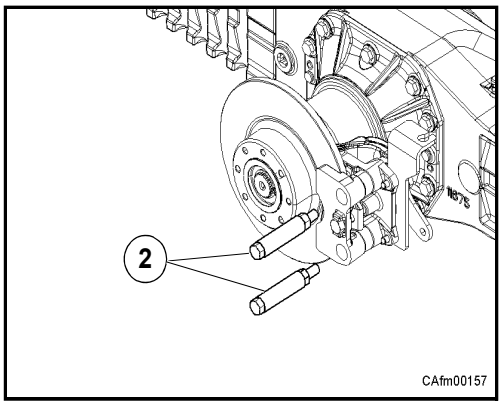

3.

NOTE

After tightening the nuts, make sure that is present a space of 1.5 ± 1 mm between the nuts (1) and the caliper as shown in figure; if necessary adjust the position of the nuts.

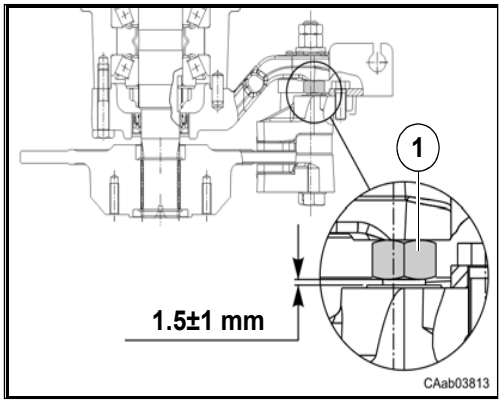

40.4 TESTING & ADJUSTING

40.4.1 CHECK & ADJUSTING THE BRAKES

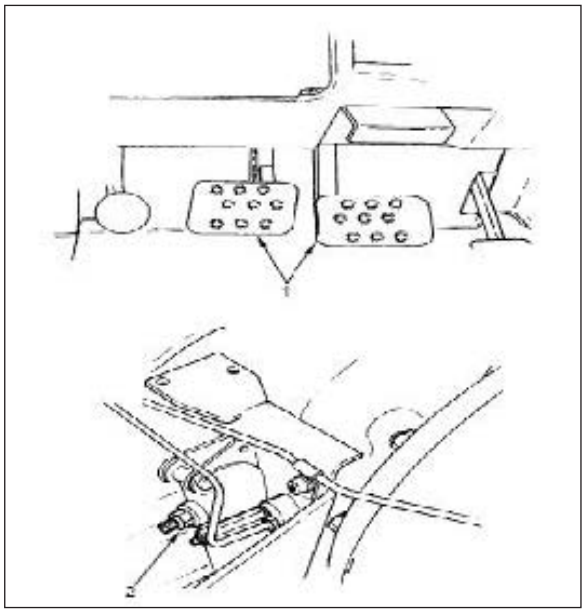

1. Repeat the procedure on the other wheel.
2. Re-latch the brake pedals
3. Engage the parking brake
4. Start the engine, use the stabilizers to lift the machine and remove the stands or blocks
5. Use the stabilizer to lower the machine to the ground.
6. Return the stabilizer legs to the fully extracted position.
7. Do a functional test of the brakes before putting the machine back in service.
8. Part the machine on level surface.
9. Lower the bucket until flat on the ground and shift the gear lever to NEUTRAL position.
10. Block both the front wheels and release the parking brake.
11. Use the stabilizers to lift both the rear wheels of the ground. Lower machine on to stands or wooden blocks with rear wheels off clear of the ground
12. Stop the engine.
13. Unlatch both brake pedals (1) and press firmly on each pedal in turn.

⚠ NOTE

Do steps 7 through 9 if, the stroke of either pedal exceeds 90 mm measure from the centre of one pedal to the centre of the other and/or either pedal touches the trim panel.

14. Starting on one side, tighten the adjusting nut (2) by hand until brake just locks the wheel.
15. Loosen the adjusting nut 1.5 turns. Make sure the wheel turns freely. Turn the nut clockwise to reduce brake travel and anti clockwise to increase brake travel.

40.4.2 BRAKE AIR PURGING

1. Park the machine on flat level ground.
2. Fully dump the loader bucket and lower it to the ground.
3. Lower the backhoe stabilizers and raise the rear wheels above the ground.
4. Stop the engine.
5. Ensure the brake pedals are adjusted correctly.
6. Check and correct the brake system fluid level.
7. Connect clear plastic tube to the both left and right vent screws and position the other end into a suitable container.
8. Open the left and right side vent screws.
9. Allow the brake fluid to drain into the container until an air free flow of brake oil is obtained. Note: This procedure may be aided by pumping the brake fluid by pressing latched together and that the brake fluid in the reservoir remains within the specified level at all times.
10. Unlatch the brake pedals and close the left vent screw.
11. Press and release the right brake pedal five times.
12. Close the right vent screw and open the left vent screw.
13. Depress the left brake pedal 12 to 15 mm and hold in this position.
14. Press and release the right brake pedal five times or until an air free flow of brake fluid is obtained from the left vent screw. Close the left vent screw
15. Operate the left and right brake pedals. Make sure the operation is firm and not spongy.
16. Repeat steps 17 through 21 if the operation of the pedals is not yet firm.
17. Press the left brake pedal.
18. Open the left vent screw until the flow of brake fluid stops.
19. Close the left vent screw and release the left brake pedal.
20. Repeat steps 17 through 19 until the left brake pedal is form.
21. Repeat steps 17 through 20 on the right hand side brake.
22. Latch the left and right brake pedal.
23. Remove the plastic tubes and the container.
24. Check the brake system fluid level.

40.4.3 PARKING BRAKE-ADJUST

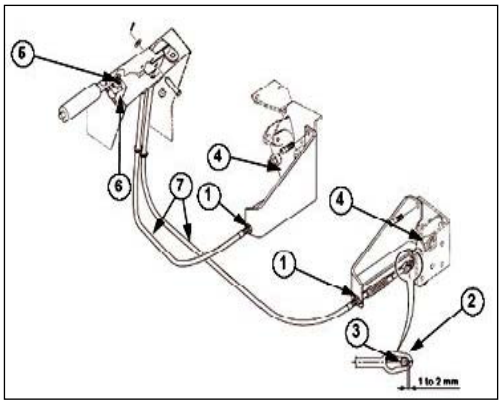

1. Park the machine on hard level ground, lower the loader bucket to the ground and place blocks under the rear wheels.
2. Release the parking brake and shut off the engine.
3. Make sure the cables (7) are correctly attached to the parking brake lever.
4. Adjust the lock nut (1) on the cables so that the play between the end of the cable eyes (2) and the brake lever pins (3) and (4) measure 1 to 2 mm.

⚠ NOTE

The cables must not be taut.

40.4.4 PARKING BRAKE ADJUSTMENT

Park the machine on flat level ground with loader beam 30 cm above the ground. Make sure that the backhoe boom locking device is engaged.
Use the stabilizer to raise the rear wheels.
Use suitable stand or wooden blocks to support the rear of the machine so that the rear wheels are off the ground.
Lower the loader arms to the ground, stop the engine remove the ignition key and release the parking brake.

Loosen the lock nut (1) and adjuster nut (2).

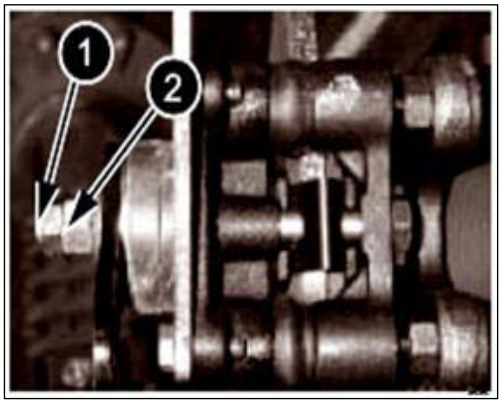

Hold bolt (3) and tighten inner adjuster nut (2) until brake linings are in firm contact with brake disc. Torque to 100 lbs/in. Make sure operating lever (4) is in correct position.

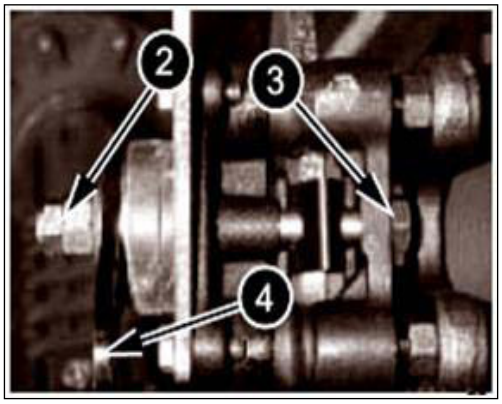

Tighten outer locking nut (1) to inner adjuster nut (2) and torque to 45 to 55 lbs/in.

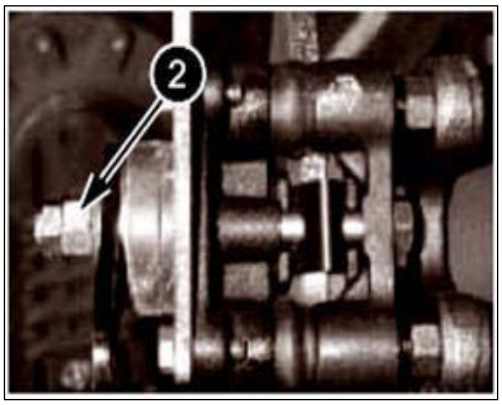

⚠ NOTE

Make sure inner adjuster nut (2) does not turn relative to bolt (3).

Start the engine and raise the loader bucket 30 cm above the ground. Use the stabilizers to raise the rear of the machine. Remove the rear support, lower the machine to the ground and stop the engine.

40.5 TROUBLESHOOTING

Complaint	Probable Causes	Remedy
Brake pedal spongy	Air in the system	Bleed the system thoroughly
Brake pedal hard to press	Brake pedal binding on the cross shaft	Clean and lubricate
Machine steams to the side in normal condition	1. Master cylinder plunger not returned back to its original position. 2. Improper adjustment of parking brake	1. Lubricate the pedal overhaul the master cylinder 2. Adjust parking brake as per procedure
Longer brake pedal travel	1. Master cylinder push rod clevis hole oblong 2. Plunger jam in cylinder bore	1. Check and replace the push rod assembly 2. Overhaul the master cylinder

50

LIFT STRUCTURE

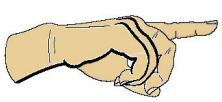

Intentionally Left Blank

TABLE OF CONTENTS

50.1 INTRODUCTION 4
50.2 REMOVAL & INSTALLATION OF LOADER BUCKET 4
50.3 REMOVAL & INSTALLATION OF LOADER BEAM CYLINDERS 5
50.4 REMOVAL & INSTALLATION OF LOADER BEAM 6
50.5 REMOVAL & INSTALLATION OF BACKHOE BUCKET 6
50.6 REMOVAL & INSTALLATION OF DIPPER ASSEMBLY 7
50.7 REMOVAL & INSTALLATION OF BOOM ASSEMBLY 8
50.8 REMOVAL & INSTALLATION OF BOOM SWING TOWER 9
50.9 REMOVAL & INSTALLATION OF STABILIZER CYLINDER 10
50.10 BOOM LATCH CABLE ADJUSTMENT 11
50.11 ADJUSTMENT OF ANTI ROLLBACK 11
50.12 ADJUSTING THE STABILIZER WEAR PADS 12

50.1 INTRODUCTION

The loader beam consists of two, fabricated angled beams, joined together to one end by a fabricated cross member, to make a single beam assembly.
One end of the loader beam is attached to the chassis at the front of the machine and the beam can be raised and lowered using two hydraulic cylinders, one mounted on either side of the machine.
Fabricated links are attached to the loader beam cross member and to the bucket or the quick attach unit. The links support hydraulic cylinder which is used to raise or loser which ever item of equipment is attached to the loader beam.
The optional quick attach unit can be fitted directly onto the loader beam and enables buckets and other equipment to be quickly attached to, or detached from the machine.
A multipurpose bucket incorporating a hydraulically operated clam shell, can be attached to the loader beam or used with the quick attach unit, instead of the standard loader bucket.
An optional fork kit can be fitted to the multipurpose bucket.

50.2 REMOVAL & INSTALLATION OF LOADER BUCKET

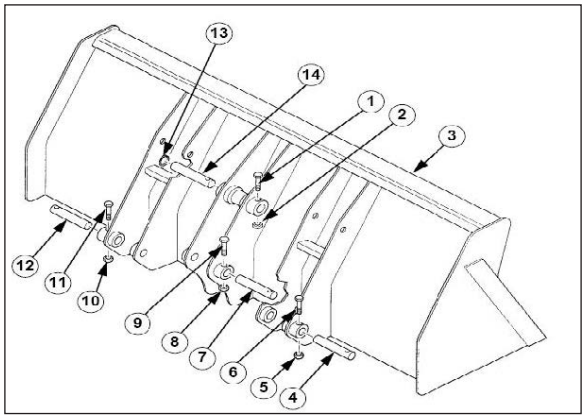

Park the machine on a level surface.
Lower the loader beam and position the bucket flat on the ground.
Switch off the engine.
Remove the bolts (1) and the lock nut (2) securing the link attachment pin (14) to the bucket (3). Discard the lock nut (2). When installing, install a new locknut (2) on the bolt (1) and tighten the bolt (1) to a torque of 60 Nm.
Remove the snap ring (13) and from the pin (14).
Using a hammer and a soft metal drift, remove the pin (14) from the bucket (3).
Support the weight of the bucket cylinder with a rope or webbing sling.
Remove the pin (7) from the bucket (3).
Remove the bolts (6) and (11) and the locknuts (5) and (10), securing the beam attachment pins (4) and (12) to the bucket (3). Discard the locknuts (5) and (10). When installing, install new locknuts (5) and (10) on the bolts (6) and (11) and tighten the bolts (6) and (11) to a torque of 60 Nm.
Remove the pins (4) and (12) from the bucket (3).
Start the engine and retract the bucket cylinder (3).
Reverse the machine short distance away from the loader bucket. Insert a robust bar through the loader beams, the bucket links and the rod end of the bucket cylinder.

⚠ WARNING

Do not operate the bucket function while the bucket cylinder is restrained by the bar or you will damage the bucket links and the loader beams.

⚠ NOTE

install the standard loader bucket in the reverse order from that of removal.

After installation, make sure that the loader bucket operates correctly.

50.3 REMOVAL & INSTALLATION OF LOADER BEAM CYLINDERS

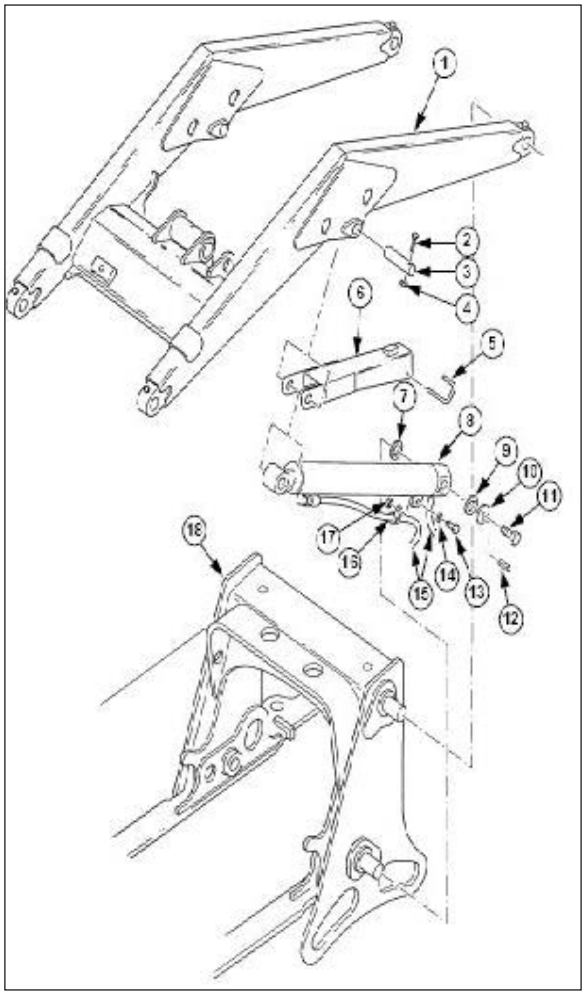

REMOVAL

1. Park the machine on a level surface.
2. Fully crowd the loader bucket and lower the loader beam until the bucket is flat on the ground.
3. Release the hydraulic pressure in the system.
4. Fit the identification tags to the hydraulic hoses (15) as an aid to installation.
5. Place a suitable drainage container beneath the hose connections.
6. Disconnect the hydraulic hoses (!5) from the loader beam cylinder (8).
7. Fit blanks to the hose connections and to cylinder connections.
8. Remove the nut (17), the washer (14) and both (13) and the clip (16) attaching the front hydraulic hose (15) to the loader beam cylinder (8).

⚠ NOTE

When installing, tighten the bolt (13) to a torque of 30 Nm.

9. Attach suitable lifting equipment to the loader beam cylinder.

⚠ NOTE

The safety strut (6) is only installed on the left side loader beam cylinder.

10. Release the pin (5) attaching the safety strut (6) to the loader beam (1).
11. Remove the locknut (4) and the bolt (2) securing the pin (3) to the loader beam (1). Discard the locknut (4).

⚠ NOTE

When installing, install a new locknut (4) and tighten the bolt (2) to a torque of 60 Nm.

12. Remove the pin (3) from the loader beam (1) and from the loader beam cylinder (8).
13. Remove the safety strut (6) from the loader beam cylinder (8).
14. Remove the bolt (11), the washer (10) and the thrust washer (9) attaching the loader cylinder (8) to the chassis (18).

⚠ NOTE

When installing, tighten the bolt (11) to a torque of 230 Nm.

15. Remove the loader cylinder (8) from the pin on the chassis (18).
16. Remove the thrust washer (7) from the chassis (18).

Installation

Install the loader beam cylinder in the reverse order from that of removal but note the following:

1. After installation, make sure that the loader beam cylinder operates correctly.
2. After installation, check the oil level, replenish if necessary.

50.4 REMOVAL & INSTALLATION OF LOADER BEAM

REMOVAL

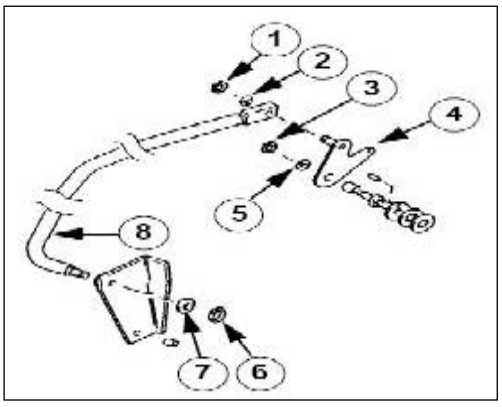

1. Park the machine on a level surface.
2. Remove the loader bucket.
3. Remove the bucket cylinder and links.
4. If fitted, remove the quick attach unit.
5. Remove the loader beam cylinders.
6. Remove the snap ring (1) and the washer (2) from the top pivot pin of the feedback link (8).
7. Remove the snap ring (6) and the washer (7) from the bottom pivot pin of the feedback link (8).
8. Remove the feedback link (8).
9. Remove the nut (3) and the washer (5) and slide the bell crank (4) from the pivot pin.
10. Fit identification tags to the hydraulic pipes (13) and (15) as an aid to installation.
11. Place suitable drainage container beneath the pipe connections.
12. Disconnect the hydraulic pipes (13) and (15) from the hydraulic hoses (12).
13. Fit blanks to the pipe connections and to hose connections.
14. Attach suitable lifting equipment to the loader beam (14). Make sure the two front slings are approximately 800 mm longer than the rear pair.
15. Remove the locknuts (11) and the bolts (9) which secure the pins (10) to the chassis. Discard the locknuts (11).

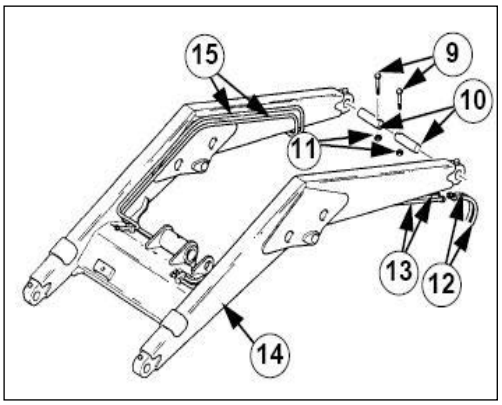

⚠ NOTE

When installing, install new locknuts (11) and tighten the bolts (9) to a torque of 60 Nm.

16. Carefully remove the pins (10) that attach the loader beam (14) to the chassis.
17. Lift the loader beam (14) clear of the machine. If the loader beams (14) grip the tower and make removal difficult, use the loader beam expander to jack the loader beams apart to aid their removal.

INSTALLATION

Install the loader beam in the reverse order from that of removal but note the following:

1. Shims are only fitted adjacent to the outer face of the beam pivot. The self locking nut and bolt which retain the inner end of each beam pivot pin should be tightened to 67 Nm.
2. The bolts on the outer ends of the loader beam pivots must be tightened to 230 Nm.
3. The self locking nut and bolt, which retain the pivot pin for the rod end of each beam lift cylinder, should be tightened to 48 Nm.

50.5 REMOVAL & INSTALLATION OF BACKHOE BUCKET

REMOVAL



1. Park the machine on flat, level ground.
2. Lower the stabilizers until the rear wheel are just clean of the ground.
3. Place the bucket flat on the ground.
4. Stop the engine, engage parking brake and remove the starter switch key.
5. Remove the snap ring and the connecting rod/bucket linkage pin.
6. Start the engine.
7. Retract the bucket cylinder rod.
8. Operate the attachment controls so that the dipper/ bucket linkage pin is not under load from the dipper.
9. Stop the engine, engage the parking brake and remove the starter switch key.

10. Remove the snap ring and the dipper/bucket linkage pin.
11. Start the engine.
12. Operate the attachment controls so as to disconnect the dipper from the bucket.

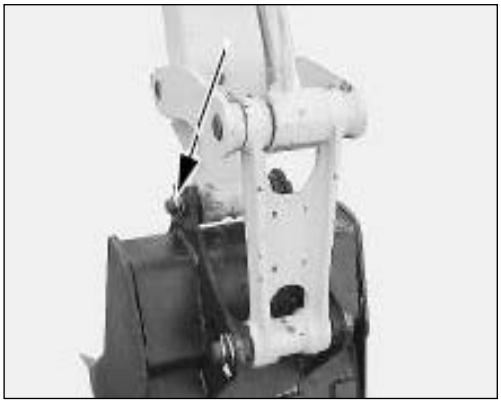

INSTALLATION



1. Start the engine.
2. Extend the bucket cylinder rod to bring the connecting rod into its housing.
3. Install the connecting rod / bucket linkage pin and install the snap ring.
4. Slightly raise the attachment and then operate the bucket and dipper control to bring the dipper lugs in line with the bucket lugs
5. Install the dipper/bucket linkage pin and install the snap ring.

50.6 REMOVAL & INSTALLATION OF DIPPER ASSEMBLY

REMOVAL

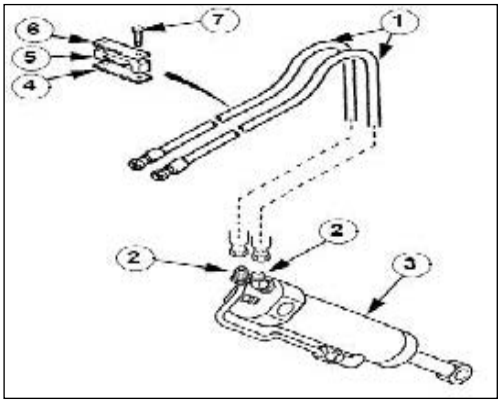

1. Remove the backhoe bucket and secure the bucket linkage to prevent movement.
2. Lower the stabilizers but DO NOT lift the machine.
3. Position the boom at 90^0 to the back frame and fully extend the dipper.
4. Lower the boom onto a suitable support and lower the dipper to the ground.
5. Release the pressure from the hydraulic system.
6. Put suitable drainage tray below the boom and the dipper.
7. Remove the bolts (7), the clamping plates (6), the clamps (5) and the pads (4) attaching the bucket cylinder hoses (1) to the dipper.
8. Disconnect the hoses (1) from the elbows (2) of the bucket cylinder (3). Put identification labels on the hoses (1) to aid installation.
9. Put caps on the hoses (1) and the elbows (2).
10. Secure the hoses (1) clear of the dipper with temporary ties.

⚠ WARNING

The dipper is very heavy. Make sure slings and lifting equipment are adequate. Injury or death may be caused if the dipper falls from the lifting equipment.

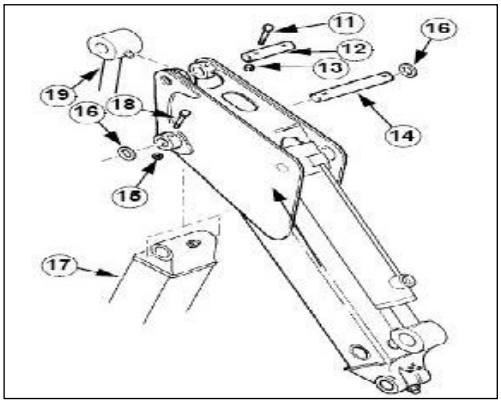

11. Attach suitable slings and lifting equipment to the dipper. Take the weight of the dipper on the lifting equipment but DO NOT lift the machine.
12. Remove the lock nuts (13) and the bolts (11).
13. Use a hammer and a soft metal drift to remove the pin (12) and disconnect the dipper cylinder (19) from the dipper.
14. Remove the lock nut (15) and the bolts (18).
15. Use a hammer and a soft metal drift to remove pin (14) and disconnect the dipper from the boom (17).
16. Remove the washer (16).
17. Use the lifting equipment to remove the dipper from the machine.

INSTALLATION

Install the dipper in the reverse order of the removal but note the following:
1. Before installation, lubricate the pin (12) and the pin (14) with the specified grease.
2. Torque tighten the nuts (13) and the nuts (15) to 60 Nm.
3. Torque tighten the bolts (7) to 30 Nm.

4. After installation, lubricate the boom (17), the dipper stick, the bucket linkage and the bucket with specified grease.
5. Check and replenish the hydraulic oil level.
6. Start the engine and operate the backhoe controls. Make sure the backhoe operates correctly and there is no leaks from the hose connections which have been disturbed.

50.7 REMOVAL & INSTALLATION OF BOOM ASSEMBLY

REMOVAL

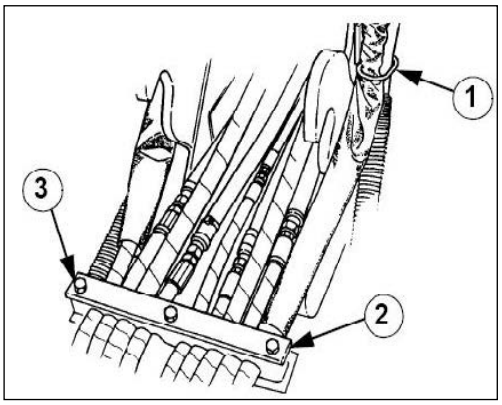

⚠ NOTE

Put identification tags on all disconnected hoses and tubes. Protect open disconnected hoses, tubes and fittings with caps and plugs.

1. Park the machine on a level surface.
2. Lower the stabilizer legs.
3. Remove the backhoe buckets.
4. Position the boom at 90^0 to the back frame, extend the dipper fully and lower it to the ground.
5. Release the pressure from the hydraulic system.
6. Remove the hook (1) from each of the boom side plates.
7. Remove the bolts (3) which secure the hose clamps (2) on the boom assembly. Remove the steel bar and plastic clamp.
8. If a rock breaker is attached, there are two brackets (5) each side, at the base of the boom which must be removed, there are two bolts (4) in each bracket.
9. Label each of the hoses (6) and (9) attached to the dipper cylinder and remove the hoses.
10. Label and then disconnect the hoses from the boom cylinder.
11. Label and then disconnect the hoses to the bucket cylinder at the unions (7) at the base of the boom.
12. Label and then disconnect the dipper hoses.

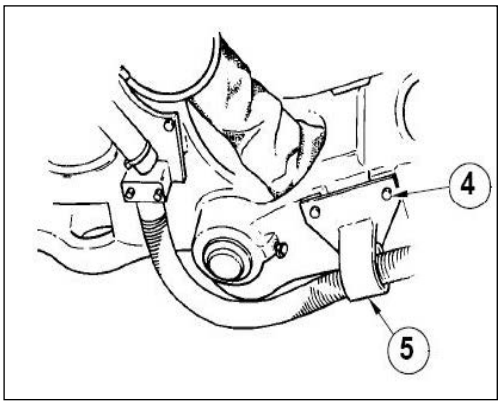

⚠ WARNING

The boom/dipper assembly is very heavy. Make sure the slings and lifting equipment are adequate. Injury or death may be caused if the boom/dipper assembly fails from the lifting equipment.

13. Attach suitable lifting equipment with a spreader and slings (11) to support the boom/dipper assembly.
14. Fit a block of wood (13) under the boom cylinder and use wedges to bridge any gap remaining between the wood and the cylinder (12).
15. Remove the bolt and locknut (14) which retains the pivot pin (16) for the boom cylinder rod end.
16. Use a hammer and soft punch to drive the pivot pin (16) out of the boom cylinder (12).
17. Take the weight on the boom (15) and the dipper assembly on the hoist.
18. Remove the snap ring (17) from the boom pivot pin. Use a large hammer and soft punch to drive out the boom pivot pin (19).
19. Move the boom and dipper assembly (20) away from the swing casting (18).

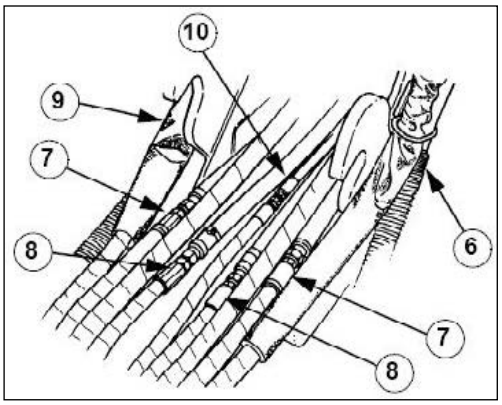

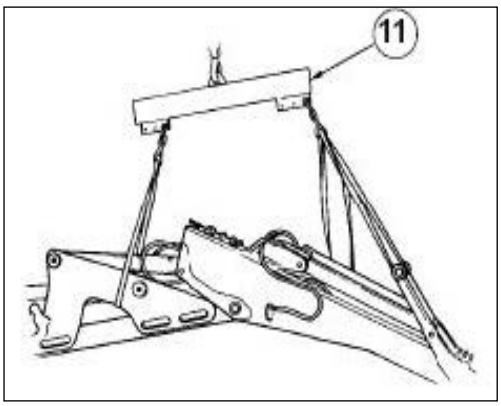

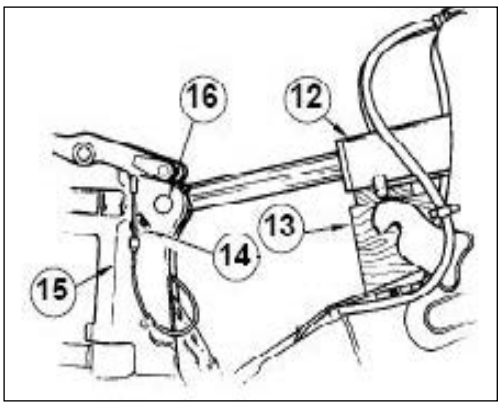

INSTALLATION

Install the boom in the reverse order of the removal, but note the following:

1. Make sure that the hoses are correctly reconnected with no twist or kinks.
2. Do a complete functional test of the backhoe to check the correctness of the hose routing.
3. Check the level of the fluid in the hydraulic system.

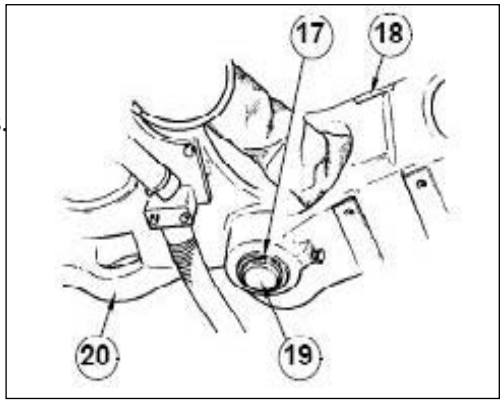

50.8 REMOVAL & INSTALLATION OF BOOM SWING TOWER

REMOVAL

1. Remove the boom/dipper assembly.
2. Remove the two bolts (1) from the location bar/hose bracket (2) and remove the bracket from the slew/swing cylinder pivot pins (3).
3. Remove and discard the split pin (9).
4. Remove the clevis pin (4) and the washer (8) and disconnect the cable (7) from the transport bracket (10).
5. Remove the nut (5) from the "P" clip (6) and release the cable (7).
6. Remove the snap ring (11) from the pins (12). Remove the pins (12) and the transport bracket (10).

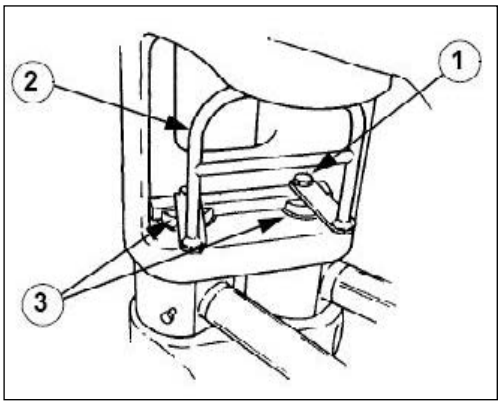

⚠ WARNING

The boom swing tower is very heavy. Make sure the slings and lifting equipment are adequate. Injury or death may be caused if the slew casting fails from the lifting equipment.

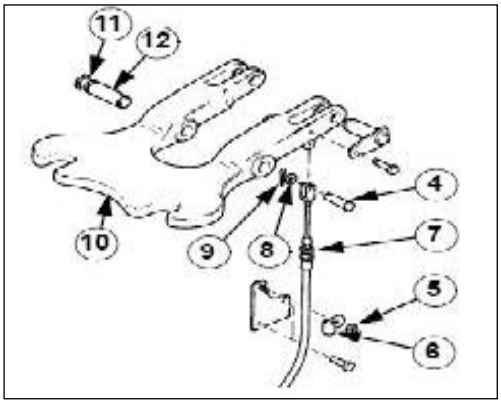

7. Remove the snap ring (16) from the top and bottom of both slew cylinder pivot pins (15) and remove the pins (15).
8. Attach a suitable sling and host to take the weight of the swing casting.
9. Note the position of the thrust washers (17) on the lower pivot.
10. Remove the bolt (19) from the lower swing pivot pin.
11. Remove the lower swing pivot pin (18) from the casting.
12. Ensure that the weight of the swing casting is fully supported by the hoist, and then remove the upper swing pivot retaining bolt (13).
13. Remove the upper swing pivot pin (14).
14. Carefully feed the hoses through the swing post as it is withdrawn from the mast casting or centre pivot.

INSTALLATION

Install the boom tower in the reverse order of the removal but note the following:

1. Before installation, apply the specified grease to the upper and lower swing pivot pins (14) and (18) and the pins (15).
2. Install a new split pin (9).

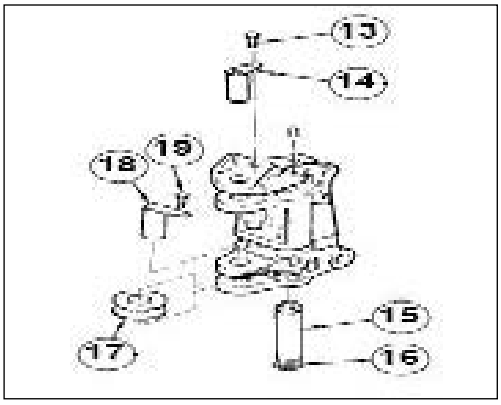

50.9 REMOVAL & INSTALLATION OF STABILIZER CYLINDER

The below procedure is for a left hand stabilizer hydraulic cylinder. The procedure for a right hand stabilizer cylinder is identical.

REMOVAL

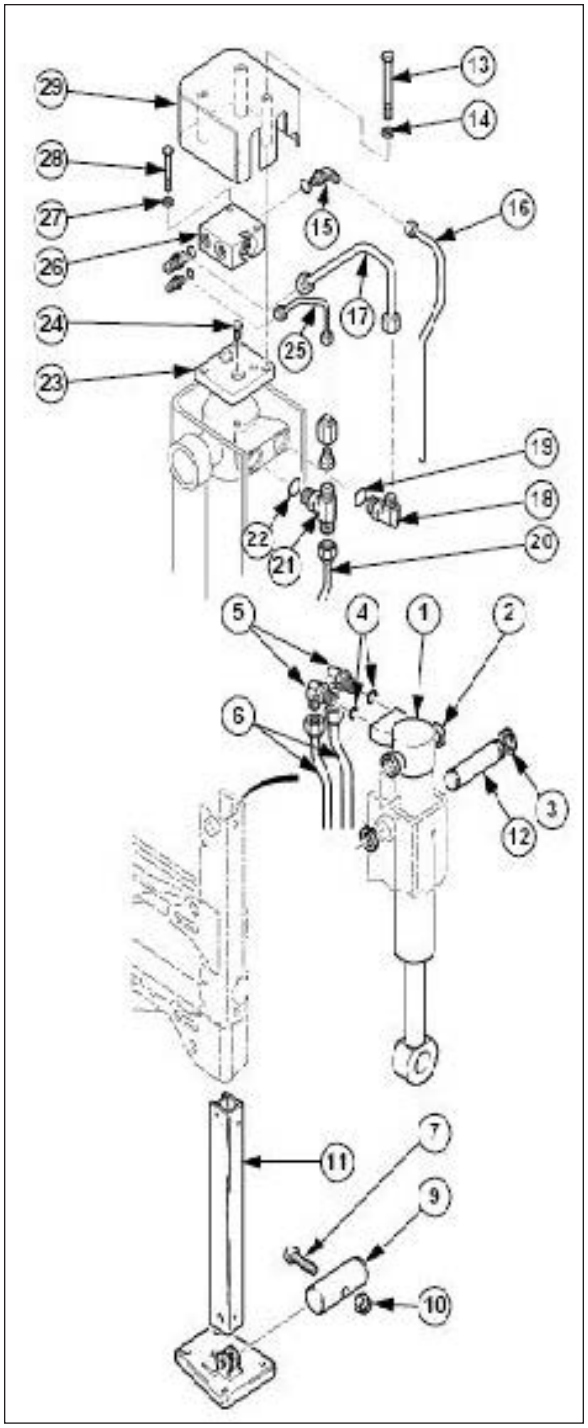

1. Park the machine on firm, level ground and lower the stabilizer legs. Make sure the machine is not raised from the ground.
2. Release the pressure from the hydraulic system.
3. Place a suitable container below the hydraulic lines.
4. Note the positions, remove and discard the tie wraps (1) which attach the electrical harness to the hydraulic lines.
5. Note the positions. Remove the bolts (2), the clamps (3), the plates (4) and spacers (5).
6. Only carry out step 7 and 8 on machines with no safety valve (6) fitted.
7. Disconnect the pipes (7) and (8) from the elbows (9) and (10).
8. Remove the elbows (9) and (10). Remove and discard the O ring seals (11) and (12).
9. Only carry out steps 10 and 15 on machines with a safety valve (6) fitted.
10. Remove the pipes (7) and (8) from the elbows (13) and T pieces (14).
11. Disconnect the pipes (!5) and (16) from the elbows (17) and (18).
12. Disconnect the pipes (15) from the nuts (19).
13. Disconnect the pipes (16) from the elbows (20).
14. Remove the elbows (13), (17), (18) and (20). Remove and discard the O ring seals (21), (22), (23) and (24).

15. Remove the T pieces (7) and (8) from the adaptors (27). Remove the discard the O ring seals (26).
16. Disconnect the pipes (7) and (8) from the adaptor (27). Remove the pipes (7) and (8).
17. Remove the adaptor (27). Remove and discard the O ring seals (28).
18. Put caps on the open ends of the pipes, the elbows, the T pieces and the adaptors

INSTALLATION

Install typical stabilizer hydraulic lines in the reverse order from that of removal but note the following:
1. Install new O rings seals (28) on the adaptors (27).
2. Install new O ring seals (11) and (12) on the elbows (9) and (11).
3. Install new O rings seals (26) on the T pieces (14).
4. Install new O ring seals (21), (22), (23) and (24) on the elbows (13), (17), (18) and (20).
5. After installation, replenish the hydraulic system.
6. After installation, carry out an operational test of the stabilizer hydraulic system. Make sure there is no leaks from the hydraulic lines and connections that have been disturbed.

50.10 BOOM LATCH CABLE ADJUSTMENT

1. Make sure the cable is correctly fixed to the boom latch control lever (1).
2. Adjust the cable sheath stop (2) on the latch side of the boom, so the cable is slightly slack.
3. Try the boom latch a few times. If the catch (3) does not engage in its housing, slacken the cable by moving the cable sheath stop (2) towards the boom.

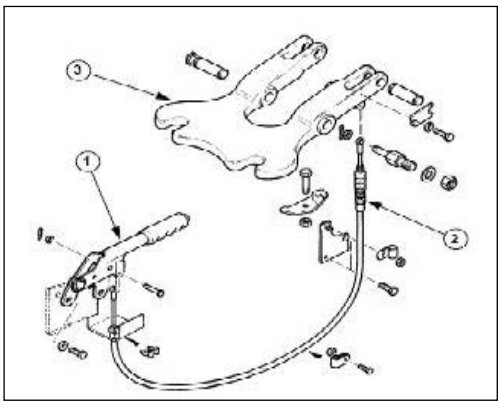

50.11 ADJUSTMENT OF ANTI ROLLBACK

1. Park the machine on a level surface.
2. Ensure the loader controls are set orrectly.
3. Check the gas strut (1) length 610 mm.
4. Check the rod assembly (2) length 723 mm.
5. Position the bucket/lift arm pivot pin 675 mm above ground.
6. Roll back the bucket until contact stops on the lift arm (fully crowded).
7. Ensure the link assembly (2) is in contact with the bucket link.
8. Ensure the lever (4) just makes contact with the disc (5) on the bucket control rod (6) in neutral position.
9. Position the lever (7) to suit
10. Release the spring (8) to allow the lever (4) to stop on the plate (9). Check that the lever (7) does not foul the can cross member.
11. Lower the lift arm to ground.
12. Raise the lift arm until the bucket commences to self level.
13. Check the height of the bucket (lift arm pivot above ground 640 to 710 mm).
14. If outside range, reposition the lever (7) by one spline. Repeat until self leveling is obtained.

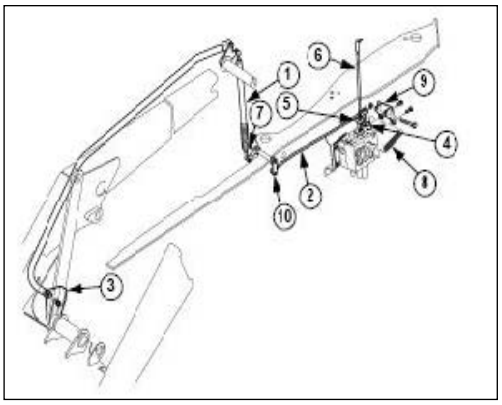

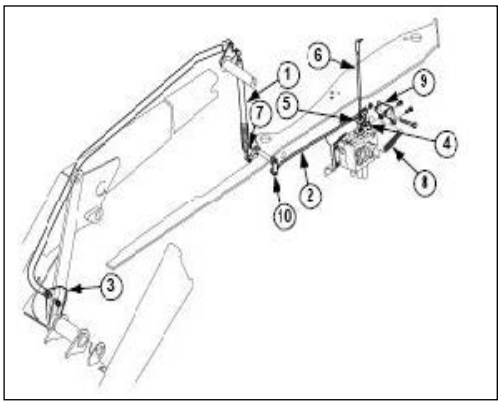

⚠ NOTE

Bucket position when leveling. Adjust the lever (7) relative to the arm (10) to obtain leveling angles.

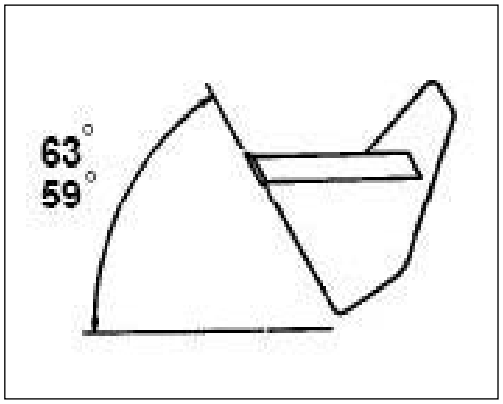

50.12 ADJUSTING THE STABILIZER WEAR PADS

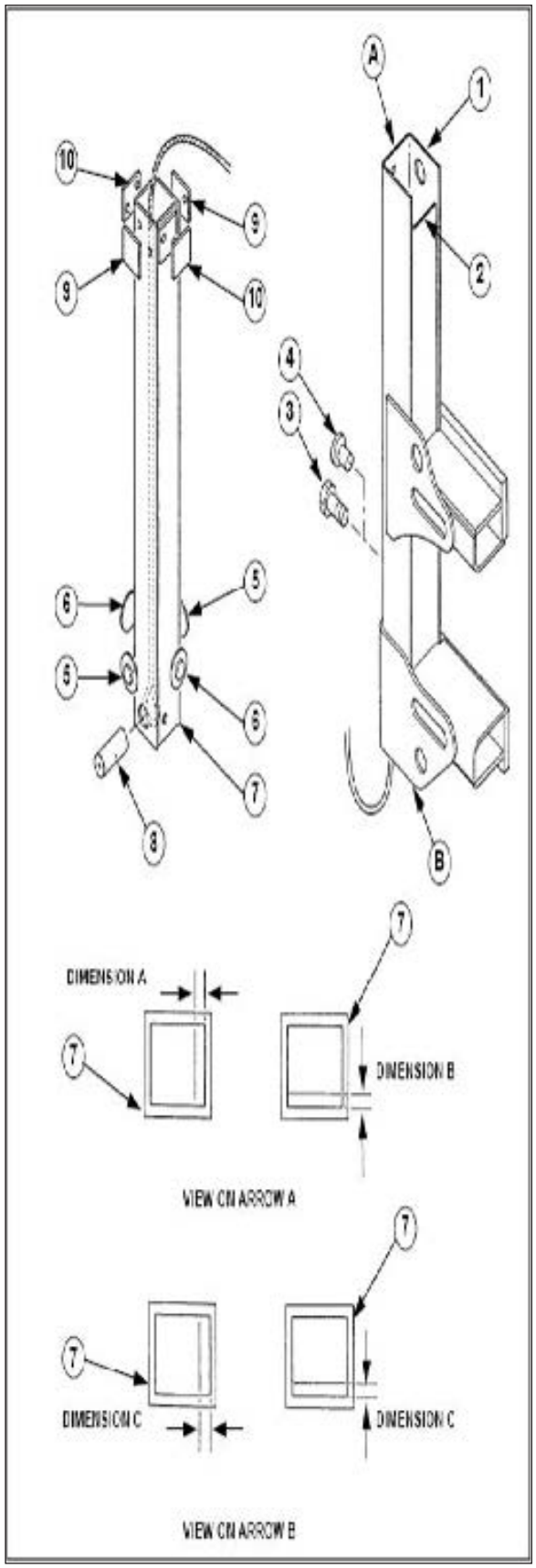

1. Park the machine on firm, level ground and low the stabilizer leg (7) to a convenient working height. Make sure the foot of the stabilizer is not on the ground.
2. Remove the plastic plug (4) from the boss on the stabilizer post (1).
3. Screw a suitable bolt (3) into the boss on the stabilizer post (1) and clamp the stabilizer leg (7) to the stabilizer post (1).
4. Release the pressure from the hydraulic system.
5. Remove the stabilizer hydraulic cylinder.
6. Insert a suitable short pin (8) into the stabilizer leg (7). Make sure the short pin (8) short pin passes only through the stabilizer leg (7) and does not touch the inner surfaces of the stabilizer post (1).

7. Route a suitable length of rope or chain down through the stabilizer leg (1) and attach it to the short pin (8).
8. Remove the bolt (3) from the boss on the stabilizer post (1).
9. Pull the rope and raise the stabilizer leg (7) to access the upper wear pads (9) and (10) and the lower wear pads (5) and (6).
10. Remove the upper wear pads (9) and (10) from the stabilizer leg (7).
11. Remove the lower wear pads (5) and (6) from the stabilizer post (1).
12. Remove any debris from the spigot holes in the stabilizer leg (7) and the stabilizer post (1). Make sure there is no debris between the inner surfaces of the stabilizer post (1) and the outer surface of the stabilizer leg (7).
13. Inspect the lower parts of the stabilizer leg (7) and the stabilizer post (1) for damage. Make sure all welds are in good condition and the bottoms of the stabilizer leg (7) and the stabilizer post (1) are not flared.
14. If necessary, fully remove the stabilizer leg (7) to repair any damage found during step 13. Note: It is not possible to remove the stabilizer leg through the bottom of the stabilizer post. It must be lifted out through the top of the stabilizer post
15. Only carry out step 16 if you fully removed the stabilizer leg (7).
16. Put the stabilizer leg (7) in position and lower it into the stabilizer post (1).
17. Lower the stabilizer leg (7) until its top aligns with the top of the inboard face (2) of the stabilizer post (1).
18. Position the stabilizer leg (7) with one of its outer surfaces touching the corresponding inner surfaces of the stabilizer post (1).
19. Measure and note the clearance between the opposite outer surface of the stabilizer leg (7) and the corresponding inner surface of the stabilizer post (1) (Dimension A).
20. Carry out steps 18 and 19 again on the outer surface of the stabilizer leg (7) adjacent to the surface positioned during step 18 (Dimension B).
21. Determine the thickness of the replacement upper wear pads (9) required by dividing Dimension A by two. Determine the thickness of the replacement upper wear pads (10) required by divided Dimension B by two.
22. Raise the stabilizer leg (7) to access the holes for the wear pad spigots.
23. Select and install the replacement upper wear pads (9) and (10) in the stabilizer leg (7).
24. Lower the stabilizer leg (7) until its bottom aligns with the bottom of the stabilizer post (1).
25. Position the stabilizer leg (7) with one of its outer surfaces touching the corresponding inner surface of the stabilizer post (1).
26. Measure and note the clearance between the opposite surface of the stabilizer leg (7) and the corresponding inner surface of the stabilizer post (1). (Dimension C).
27. Carry out steps 25 and 26 again on the outer surface of the stabilizer leg (7) adjacent to the surface positioned during step 25 (Dimension D).
28. Determine the thickness of the replacement lower wear pads (5) required by dividing Dimension C by two. Determine the thickness of the replacement lower wear pads (6) required by dividing Dimension D by two.
29. Raise the stabilizer leg (7) to access the holes for the wear pads spigots.
30. Select and install the replacement lower wear pads (9) and (10) in the stabilizer post (1).
31. Position the stabilizer leg (7) at a convenient working height.
32. Screw a suitable bolt (3) into the boss on the stabilizer post (1) and clamp the stabilizer leg (7) to the stabilizer post (1).
33. Remove the short pin (8) and the length of rope. You could be injured if you remove the bolt (3) before making sure the stabilizer leg (7) is in contact with the ground.
34. Remove the bolt (3) and install the plastic plug (4).
35. Install the stabilizer hydraulic cylinder.

⚠ NOTE

Replacement of lower and upper wear pads are colored coded by thickness.

Color	Thickness (mm)
Yellow	4.5
Black	5
Grey	5.5
Neutral	6
Red	6.5

70

HYDRAULICS

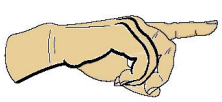

Intentionally Left Blank

TABLE OF CONTENTS

70.1 REMOVAL OF HYDRAULIC PUMP 4
70.2 DISASSEMBLY OF HYDRAULIC PUMP 4
70.3 INSPECTION OF HYDRAULIC PUMP 5
70.4 ASSEMBLY OF HYDRAULIC PUMP 5
70.5 REMOVAL OF LOADER CONTROL VALVE 6
70.6 INSTALLATION OF LOADER CONTROL VALVE 7
70.7 DISASSEMBLY OF LOADER CONTROL VALVE 8
70.8 INSPECTION OF LOADER CONTROL VALVE 9
70.9 ASSEMBLY OF LOADER CONTROL VALVE 9
70.10 REMOVAL OF BACKHOE CONTROL VALVE 10
70.11 INSTALLATION OF BACKHOE CONTROL VALVE 10
70.12 DISASSEMBLY OF BACKHOE CONTROL VALVE 11
70.13 INSPECTION OF BACKHOE CONTROL VALVE 12
70.14 ASSEMBLY OF BACKHOE CONTROL VALVE 12
70.15 REMOVAL OF MAST LOCK PISTON SEALS 14
70.16 INSTALLATION OF MAST LOCK PISTON SEALS 14
70.17 TERMINOLOGY FOR VARIOUS COMPLAINTS ON HYDRAULIC CYLINDER PERFORMANCE 15
70.18 DO'S & DON'TS ON HYDRAULIC CYLINDERS 15
70.19 DISASSEMBLY & ASSEMBLY PROCEDURE 16
70.19.1 DISASSEMBLY PROCEDURE OF SLEW CYLINDERSS 16
70.19.2 ASSEMBLY PROCEDURE OF SLEW CYLINDERS 17
70.19.3 DISASSEMBLY PROCEDURE OF OTHER CYLINDERS 17
70.19.4 ASSEMBLY PROCEDURE OF OTHER CYLINDERS 18
70.19.5 CYLINDER PERFORMANCE CHECK 18
70.20 HYDRAULIC CIRCUIT 19
70.20.1 SYSTEM OPERATION (NEUTRAL) 21
70.20.2 LOADER LIFT OPERATED 21
70.20.3 UNLOADER & STEERING PRIOPRITY VALVE 22
70.20.4 MAST SIDE SHIFT OPERATIONS 23
70.21 TESTING & ADJUSTING 24
70.21.1 MAIN RELIEF VALVE PRESSURE TEST (OPEN CENTRE PORT) 24
70.21.2 RELEASING PRESSURE IN HYDRAULIC SYSTEM 25
70.21.3 HYDRAULIC PUMP FLOW TEST 25
70.22 FLUSHING THE HYDRAULIC SYSTEM 27
70.23 TROUBLESHOOTING 28
70.24 HYDRAULIC SCHEMATIC SYMBOLS 30
70.25 REMOVAL OF STEERING PRIORITY VALVE 35
70.26 DISASSEMBLY & ASSEMBLY OF STEERING PRIORITY VALVE 35
70.27 REMOVAL & INSTALLATION OF STEERING CONTROL VALVE 36
70.28 REMOVAL & INSTALLATION OF STEERING COLUMN & FRONT INSTRUMENT PANEL 37
70.29 DISASSEMBLY & ASSEMBLY OF STEERING CONTROL VALVE (OGNIBENE) 38
70.30 STEERING SYSTEM OPERATION 52
70.31 STEERING METERING PUMP 52
70.32 SPOOL AND SLEEVE 53
70.33 PUMP GEARS IN THE PUMP SECTION 53
70.34 TESTING & ADJUSTING 53
70.35 TROUBLESHOOTING 54

70.1 REMOVAL OF HYDRAULIC PUMP

REMOVAL

1. Park the machine on a level surface.
2. Fully raise the loader beam, dump the loader bucket and install the safety strut.
3. Remove the hydraulic reservoir cap.
4. Move all the backhoe and the loader control levers in all directions several times until the loader and the backhoe are fully settled.
5. Refit the hydraulic reservoir cap.
6. Remove the hydraulic tank drain plug and drain the hydraulic oil from tank into a suitable container. Install the drain plug.
7. Remove the cabin floor plate to get access to the pump.
8. Thoroughly clean the pump and the hoses before start removing.
9. Disconnect the delivery hoses (8) and suction hose (4).
10. Remove the pump retaining bolts (14) 4 Nos and remove the pump from its mounting.

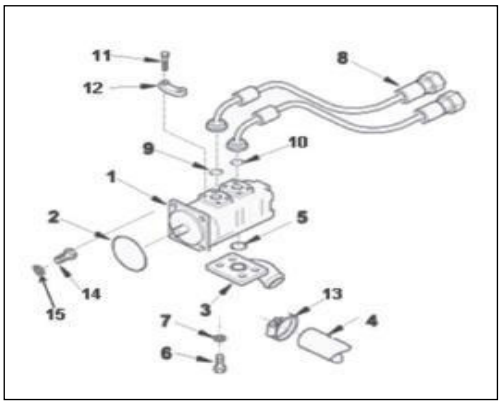

70.2 DISASSEMBLY OF HYDRAULIC PUMP

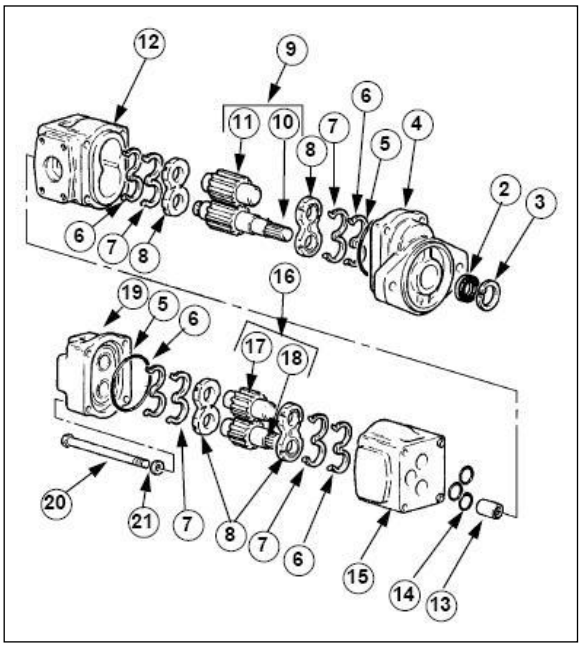

1. Thoroughly clean the outside of the pump and the work area before starting work.
2. Mark the end cover (19), the outer pump body (15), the inner pump body (12) and mounting flange (4) as an aid to assembling.
3. Remove the screws (20) and the washers (21).
4. Remove the end cover (19) from the outer pump body (15). It may be necessary to use a soft faced mallet to separate the components.
5. Remove and discard the O ring seal (5) from the end cover (19).
6. Note the position of the gears (17) and (18) and the bearing plates (7) and (8) as an aid to assembling.
7. Remove the ring (6), the backup ring (7) and the bearing plate (8) from the outer pump body (15).
8. Remove the drive gear (18) and the drive gear (17) from the outer pump body (15).
9. Remove the bearing plate (8), the backup ring (7) and the ring (6) from the outer pump body (15) from the inner pump body (12). It may be necessary to use a soft faced mallet to separate the components.
10. Remove the spindle coupling (13) from the outer pump body (15).
11. Remove and discard the O ring seals (14) from the outer pump body (15).
12. Remove the mounting flange (4) from the inner pump body (12). It may be necessary to use a soft faced mallet to separate the components.
13. Remove and discard the O ring seal (5) from the mounting flange (4).
14. Remove the snap ring (3) and the shaft seal (2) from the mounting flange (4). Discard the shaft seal (2).
15. Note the position of the gears (11) and (10) and the bearing plates (8) as an aid to assembling 16. Remove the ring (6), the backup ring (7) and the bearing plate (8) from the inner pump body (12).
16. Remove the driven gear (11) and the drive gear (10) from the inner pump body (12).
17. Remove the bearing plate (8), the backup ring (7) and the ring (6) from the inner pump body (12).
18. Remove all sealant from the inner pump body (12), the mounting flange (4), the outer pump body (15) and the end cover (19).

70.3 INSPECTION OF HYDRAULIC PUMP

⚠ NOTE

If the hydraulic pump fails any of the following inspections, it must be replaced.

Inspect he mounting flange (4) and the end cover (19) for damage to the groove for the O ring seals (5).
Inspect the mounting flange (4) for damage to the seal (2) groove.
Inspect the outer pump body (15) for damage to the groove for the O ring seal (14).
Inspect the faces of the inner pump body (12) and the outer pump body (15) which contact the O rings (5) for damage.
Inspect the low pressure side of theinner pump body (12) for a gear cut in that is deeper than 0.15 mm or if the body has scored or matt appearance.
Inspect the side faces of the drive gears (11)and (17) and the drive gears (10) and (18) for scoring and wear.
Inspect the contact faces of the bearing plates (8) for wear.
Inspect the drive gear (10) and (18) for wear on the bearing surfaces.
Inspect the splines of the drive gears (10) and (18) and the coupling (13) for wear or damage.
Inspect the bearing surfaces of the bearing plates (8) for wear or damage.
Inspect the bolt (20) for damage, distortion and security of attachment.

70.4 ASSEMBLY OF HYDRAULIC PUMP

1. Thoroughly clean all components and the work area before starting work.
2. Inspect the hydraulic pump as stated above.
3. Before assembling, lubricate each component with fresh hydraulic oil.
4. Fit the ring (6) and the backup ring (7) into the bearing plate (8).
5. Install the bearing plate (8) into the inner pump body (12) in the position noted during dismantling.
6. Make sure that the two small holes in the bearing plate (8) are adjacent to the low pressure side C of the inner pump body (12) and that the gaps in the ring (6) and the backup ring (7) are adjacent to the inlet port.
7. Install the driven gear (11) and the drive gear (10) in the positions noted during dismantling.
8. Install the bearing plate (8) into the inner pump body (12) in the position noted during dismantling.
9. Make sure that the two small holes in the bearing plate (8) are adjacent to the low pressure side of the inner pump body (12).
10. Fit the backup ring (7) and the ring (6) into the bearing plate (8).
11. Fit a new shaft seal (2) into the mounting flange (4) with the integral spring facing inwards.
12. Secure the shaft seal (2) in the mounting flange (4) using the snap ring (3).
13. Fit a new O ring (5) into the groove in the mounting flange (4).
14. Apply a small amount of sealant to the joint face of the mounting flange (4).
15. Install the mounting flange (4) onto the inner pump body (12) in the position marked during dismantling.
16. Make sure that the drain hole in the rear face of the mounting flange (4) is adjacent to the low pressure side of the inner pump body (12).
17. Fit new O ring (14) into the outer pump body (15).
18. Fit the spindle coupling (13) into the outer pump body (15).
19. Install the outer pump (15) onto inner pump body(12) in the position marked during dismantling.
20. Fit the ring (6) and the backup ring (7) into the bearing plate (8).
21. Install the bearing plate (8) into the outer pump body (15) in the position noted ruing dismantling.
22. Make sure that the two small holes in the bearing plate (8) are adjacent to the low pressure side of the outer pump body (15). Note: The low pressure side of the outer pump body (!5) is the side without a port.
23. Install the driven gear (17) and the drive gear (18) in the positions noted during dismantling.
24. Make sure that the drive gear (18) is correctly engaged with the spindle coupling (13).
25. Install the bearing plate (8) into the outer pump body (15) in the position noted during dismantling.
26. Make sure that the two small holes in the bearing plate (8) are adjacent to the low pressure side of the outer pump body (15).
27. Fit the backup ring (7) and the ring (6) into the bearing plate (8).
28. Fit a new O ring into the groove in the end cover (19).
29. Apply a small amount of sealant to the joint face of the end cover (19).
30. Install the end cover (19) onto the outer pump body (15) in the position marked during dismantling.
31. Mount the screws (20) and the washers (21) in the pump assembly.
32. Pour a small amount of the hydraulic oil into the ports and make sure that the drive shaft rotates easily and freely.

70.5 REMOVAL OF LOADER CONTROL VALVE

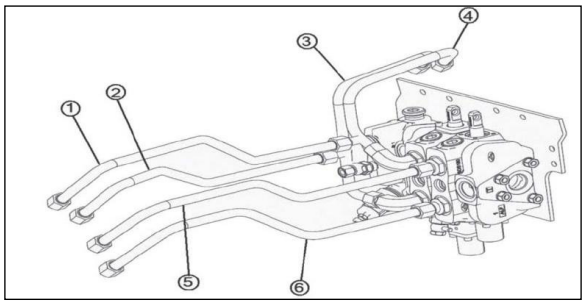

1. Remove the cabin floor plate to get access to the loader control valve.
2. Put identification marks on all hose assemblies, on all wires and on all tube assemblies for installation purpose. Plug all hoses assemblies and all tube assemblies. This helps to prevent fluid loss and this helps to keep contaminants from entering the system.
3. Drain hydraulic oil from tank.
4. Disconnect all the hoses and tube assemblies.
5. Remove the lock ring (23) and the clevis pin (8) and disconnect the control linkage from the valve spool.

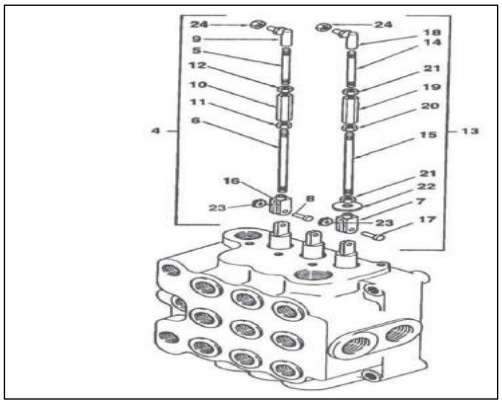

6. Install a suitable lift to the control valve and slowly remove the bolts (22). Remove the control valve from its mounting.

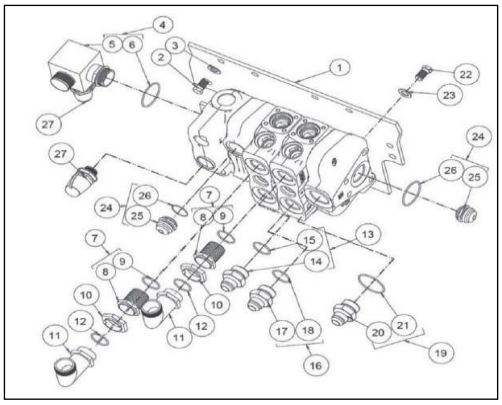

70.6 INSTALLATION OF LOADER CONTROL VALVE

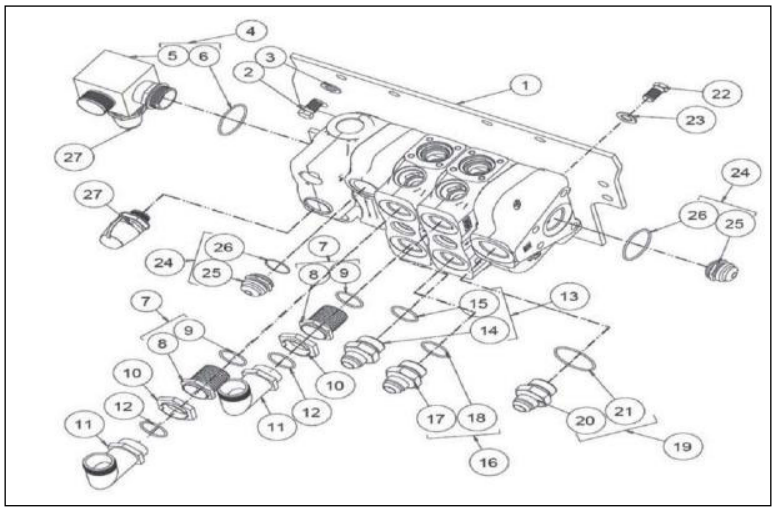

1. Clean the loader control valve mounting area thoroughly from mud and debris.
2. With help of suitable lift, position the valve in the mounting plate and install the bolts (22). Tighten the bolts (22) to the specified torque.
3. Connect all the pipe assemblies and hose assemblies in their respective locations as marked before removal.

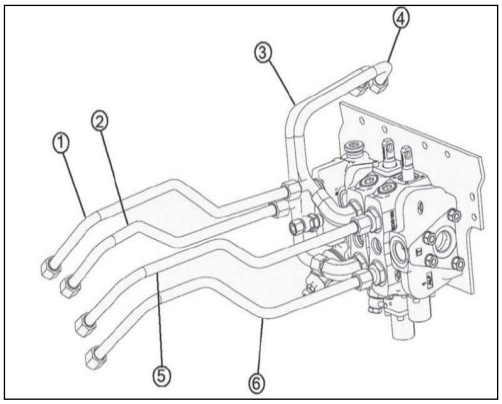

4. Position the control linkage in the correct location and install the clevis pins (8) and lock ring (23). Check for the free movement of the control linkages.

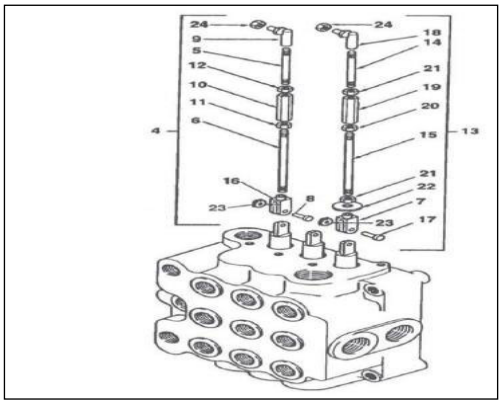

70.7 DISASSEMBLY OF LOADER CONTROL VALVE

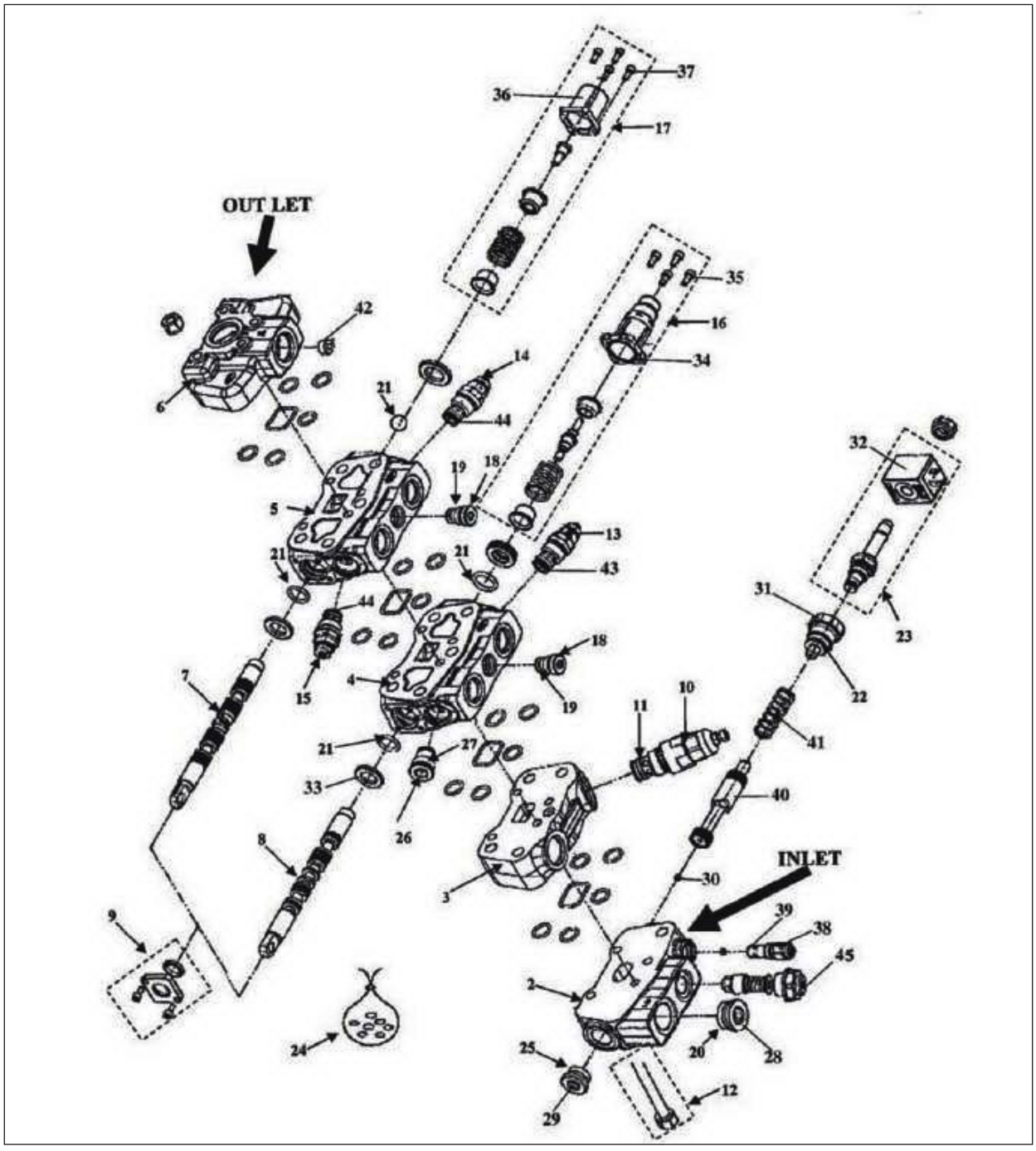

1. Place the control valve on a work bench.
2. Thoroughly clean all components and the work area before starting work.
3. Remove the tie rod (12) and separate the valve block one by one.
4. Remove all the seals installed in between the blocks. Inspect the seal and replace if it is damaged or hardened.

Un-loader valve block

5. Remove the solenoid retaining nut and remove the coil assemble (32).
6. Remove solenoid valve assemble (23). Check the condition of the seals and replace if found to be defective.
7. Remove the plug (31), spring (41) and un-loader spool (40).
8. Remove the plug (29).
9. Remove the un-loader relief valve (38).
10. Remove the check valve (45).
11. Remove the dummy plug (28).

Inlet block

12. Remove the main relief valve (10) from the inlet block (3).

Loader lift control block

13. Remove the spool cover retaining bolt (35) and remove the spool cover (34).
14. Remove the detent kit (16) and seal (21) from the valve block (3).
15. Remove the control spool cover (9) from the block and remove the spool (8).
16. Remove the spacer (33) and seal (21).
17. Remove the load check valve (18).
18. Remove the plug (26).
19. Remove the relief valve (13).

Loader tilt control block

20. Remove the spool cover retaining bolt (37) and remove the spool cover (36).
21. Remove the tilt control kit (17).
22. Remove seal (21).
23. Remove the relief valve (14) & (15).
24. Remove the load check valve (18).

70.8 INSPECTION OF LOADER CONTROL VALVE

⚠ NOTE

If any of the components fail the following inspection, they must be replaced.

1. Inspect the valve bodies for damage to the bores and valve seats and particularly to the threads.
2. Inspect the plugs for wear or damage, particularly to the threads.
3. Inspect the springs for any damage.
4. Inspect the valves, spool, the poppet and the seats for wear and damage.

70.9 ASSEMBLY OF LOADER CONTROL VALVE

Assemble the loader valve assembly in the reverse order of the disassembly but note the following:

1. Thoroughly clean all components and the work area before starting work.
2. Inspect the loader valve block.
3. Lubricate each component with fresh hydraulic oil.
4. Use new seals and O rings.

Un-loader valve block

5. Install the un-loader spool (40) in the bore and ensure it moves freely in the bore.
6. Install the spring (41), plug (22) and solenoid valve assembly (23).
7. Install the solenoid assembly (32) and install the retaining nut.
8. Install the plug (29) and torque to 24 Nm.
9. Install the plug (28) and torque to 42 Nm.
10. Install the check valve assembly (45) and torque to 24 Nm.
11. Install the un-loader relief valve assembly (38) and torque to 24 Nm.

Inlet block

12. Install the main relief valve assembly (10) and torque to 42 Nm.

Loader lift control block

13. Install the spool (8) in the bore. Check whether the spool is not binding and it is moving freely.
14. Install the cover and retaining bolts (9) and torque to 10 Nm.
15. Install the detent kit (16).
16. Install the spool cover (34) and its retaining bolts (35) and torque to 10 Nm.
17. Install the plug (26) and torque to 42 Nm.
18. Install the auxiliary relief valve (13) and torque to 42 Nm.
19. Install the load check valve (18) and torque to 42 Nm.

Loader tilt control block

20. Install the spool (7) in the bore. Check whether the spool is not binding and it is moving freely.
21. Install the cover and retaining bolts (9) and torque to 10 Nm.
22. Install the tilt control kit (17).
23. Install the spool cover (36) and retaining bolt (37) and torque to 10 Nm.

24. Install the relief valve (14) & (15) and torque to 42 Nm.
25. Install the load check valve (18) and torque to 42 Nm.

Assemble

26. Install new seals in between the blocks.
27. Align the un-loader block (2), inlet block (3) loader lift control block (4), loader tilt control block (5) and outlet block (6) in a straight line and install the tie rod and nut (12). Tighten the nut to 40 N.

70.10 REMOVAL OF BACKHOE CONTROL VALVE

1. Place a suitable oil container below the valve block to collect the oil.
2. Dismantle all the hoses and tubes and control levers as attached to the valve block by removing the clip and clevis pins.



3. Plug all the open ports of valve block adapters and the dismantled hoses & tubes so that contaminants do not enter.
4. Use any suitable sling rope to hang the valve block. Gradually lower, the digger valve block assy. on the ground.
5. Remove the bolt, washer, nut of the valve block mounting bracket assembly from the digger chassis.
6. Remove the bolt , washer of the valve block mounting from the mounting bracket assembly as attached the digger valve block.
7. Remove pin (20) and knob (17).
8. Remove bolt (16) and boot (15).
9. Remove the bolt (23) and console (21).
10. Remove the lock ring (8) and pin (7).

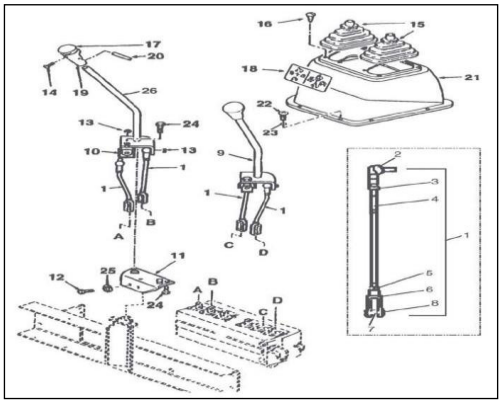

70.11 INSTALLATION OF BACKHOE CONTROL VALVE

1. Attached the valve block in mounting bracket assembly 1B0167 with the help of four screw and washer.
2. Use any suitable sling rope to raise the valve block up to the chassis.
3. Match the bracket assembly of digger valve mounting holes and use the mounting bolt, washer and nut to mount the bracket assembly of digger valve on the chassis.
4. Re-fit the all hoses and tubes of the valve block.
5. Connect the control levers attached to the valve block spools by the clip and clevis pins.
6. Position the control linkage in its location and install pin (8) and lock ring (7).
7. Install the console assembly (21) and install the bolts (22) and washer (23)
8. Install the boot (15) and install bolt (16).
9. Install the knows (17) and retaining bolt (14).

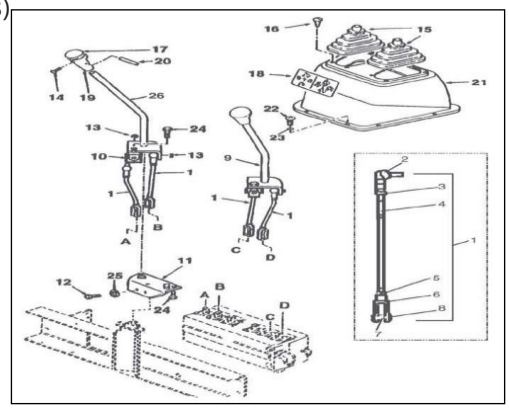

70.12 DISASSEMBLY OF BACKHOE CONTROL VALVE

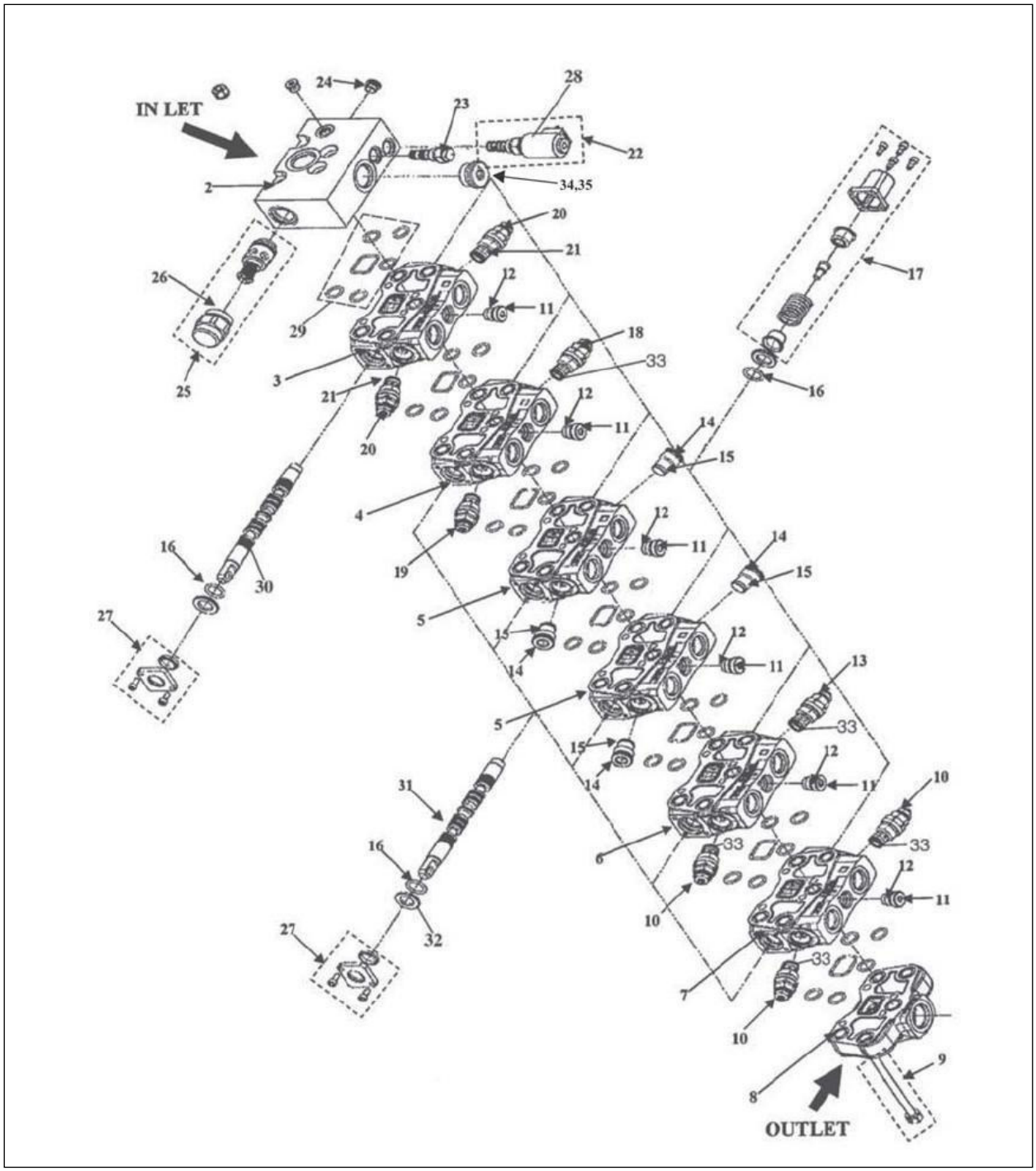

1. Place the control valve on a work bench.
2. Thoroughly clean all the components and the work area before starting the work.
3. Remove the tie rod (9) and separate the valve blocks one by one.
4. Remove the seals installed in between the blocks. Inspect the seal and replace if it is damaged or hardened

Inlet block (2)

5. Remove the valve cover (26) and remove the regeneration valve (25).
6. Remove the mast lock check valve (23).
7. Remove the mast lock solenoid assembly (28).
8. Remove plug (24).

Swing block (3)

9. Remove the auxiliary relief valve (20).
10. Remove the load check valve (11).
11. Remove the spool cover (27).
12. Remove the swing control kit (17) along with the springs and the retainers.
13. Remove the swing control spool (30).

Boom block (4)

14. Remove the auxiliary relief valve (18) and (19).
15. Remove the load check valve (11).
16. Remove the spool cover (27).
17. Remove the boom control kit (17) along with the springs and the retainers.
18. Remove the boom control spool (31).

Stabilizer block RHS (5)

19. Remove the plugs (14).
20. Remove the load check valve (11).
21. Remove the spool cover (27).
22. Remove the stabilizer control kit (17) along with the springs and the retainers.
23. Remove the RHS stabilizer control spool (31).

Stabilizer block LHS (6)

24. Remove the plugs (14).
25. Remove the load check valve (11).
26. Remove the spool cover (27).
27. Remove the stabilizer control kit (17) along with the springs and the retainers.
28. Remove the LHS stabilizer control spool (31).

Dipper block (6)

29. Remove the auxiliary relief valves (13) and (10).
30. Remove the load check valve (11).
31. Remove the dipper control kit (17).
32. Remove the spool cover (27).
33. Remove the dipper control spool (31).

Bucket block (7)

34. Remove the auxiliary relief valves (10).
35. Remove the load check valve (11).
36. Remove the bucket control kit (17).
37. Remove the bucket control spool (31).

70.13 INSPECTION OF BACKHOE CONTROL VALVE

⚠ NOTE

If any of the components fail the following inspection, they must be replaced.

1. Inspect the valve bodies for damage to the bores and valve seats and particularly to the threads.
2. Inspect the plugs for wear or damage, particularly to the threads.
3. Inspect the springs for any damage.
4. Inspect the valves, spool, the poppet and the seats for wear and damage.

70.14 ASSEMBLY OF BACKHOE CONTROL VALVE

Assemble the backhoe control valve assembly in the reverse order of the disassembly and note the following:

1. Thoroughly clean all components and the work area before starting work
2. Inspect the backhoe valve block.
3. Lubricate each component with fresh hydraulic oil.
4. Use new seals and O rings.

Inlet block (2)

5. Install the regeneration valve (25) and tighten to torque of 42 Nm.
6. Install the mast lock check valve (23) and tighten to torque of 24 Nm.
7. Install the mast control solenoid valve (28).
8. Install plug (34) and tighten to torque of 42 Nm.

Swing block (3)

9. Install the swing control spool (30).
10. Install the spool cover (27) and tighten bolts to 10 Nm.
11. Install the swing control kit (17) and tighten to torque 10 Nm.
12. Install the auxiliary relief valves (20) and tighten to torque 42 Nm.

13. Install the load check valve (11) and tighten to torque 42 Nm.

Boom block (4)

14. Install the boom control spool (31).
15. Install the spool cover (27) and tighten bolts to 10 Nm.
16. Install the load check valve (11) and tighten to torque 42 Nm.
17. Install the boom control kit (17) and tighten bolts to torque 10 Nm.
18. Install the auxiliary relief valve (18) and (19) and tighten to torque 42 Nm.

Stabilizer block RHS (5) and LHS (6)

19. Install the control spool (31).
20. Install the spool cover (27) and tighten the retaining bolt to torque 10 Nm.
21. Install the stabilizer control kit (17) and tighten retaining bolt to torque 10 Nm.
22. Install the plugs (14) and tighten to torque 42 Nm.
23. Install load check (11) and tighten to torque of 42 Nm.

Dipper block (6)

24. Install the control spool (31).
25. Install the spool cover (27) and tighten the retaining bolts to torque 10 Nm.
26. Install dipper control kit (17) and tighten retaining bolt to torque 10 Nm.
27. Install auxiliary relief valve (10) and (13) and tighten to 42 Nm.
28. Install load check valve (11) and tighten to torque 42 Nm.

Bucket block (7)

29. Install the control spool (31).
30. Install the spool cover (27) and tighten the retaining bolts to torque 10 Nm.
31. Install bucket control kit (17) and tighten retaining bolt to torque 10 Nm.
32. Install auxiliary relief valve (10) and tighten to 42 Nm.
33. Install load check valve (11) and tightento torque 42 Nm.

Assemble

34. Install new seals in between the blocks
35. Align the blocks in a straight line and install the tie rod and nut (9). Tighten the nut to torque 40 Nm

70.15 REMOVAL & INSTALLATION OF MAST LOCK PISTON SEALS

⚠ WARNING

During this procedure the boom assembly will be disconnected from the machine. It must be supported by lifting equipment or support frames at a dipper pivot and the swing casting.

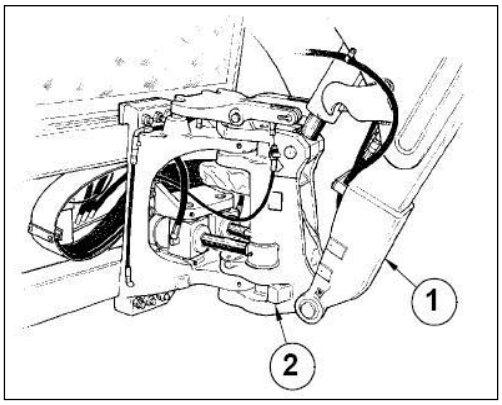

1. Park the machine on the firm, level ground.
2. Slew the backhoe until it is in line with the machine.
3. Extend the backhoe to between half and three quarter full reach and ground the bucket (1).
4. Release the side shift clamp.
5. Lower the stabilizers to the ground but DO NOT raise the machine.
6. Stop the engine.
7. Release the pressure in the hydraulic system.
8. Use a suitable lifting equipment to support the boom at the dipper pivot and boom pivot.
9. Put a trolley jack under the slew casting (2) and raise the casting off the back frame. DO NOT lift the machine from the ground.
10. Remove the six bolts (9), the washer (8) and (3) and nuts (4) in the lower plates (7). Remove the six bolts (10), the washers (3) and (11) and the nuts (4) in the upper plates (12).

⚠ NOTE

When installing, torque tighten the bolts (9) and (10) and the nuts (4) to 1065 Nm.

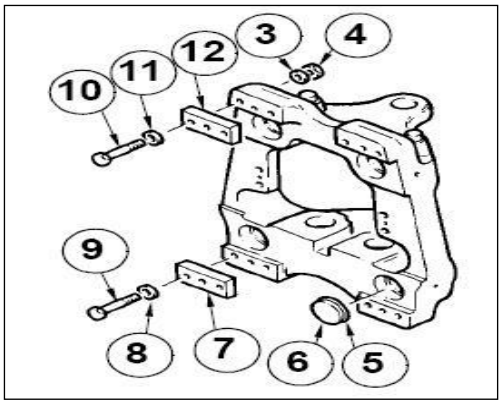

⚠ WARNING

Make sure that the backhoe will not move before starting work on the clamp pistons and seals.

11. Start the engine and raise the stabilizer legs, use the trolley jack to raise or lower the mast casting (2).
12. Drive the machine forward slowly until there is approximately 125 mm between the back frame and the mast casting.
13. Remove the pistons (6).
14. Remove the seals (5).

⚠ NOTE

The installation of the clamp seals is the reverse of the removal.

Inspection

1. Clean the area around the seals (5).
2. Inspect the machines faces of the casting for burs or damage. Remove the burs and sharp edges.

70.16 REMOVAL & INSTALLATION OF MAST LOCK PISTON SEALS

Install the mast casting in the reverse order of the removal, but note the following:

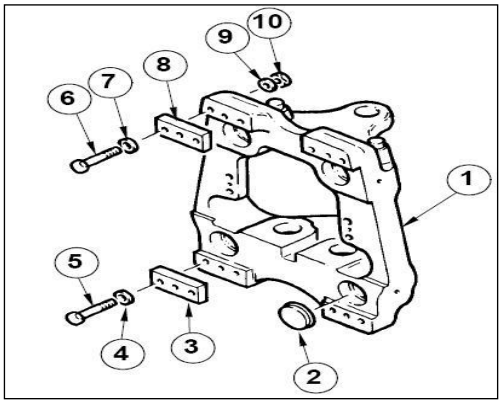

1. Make sure the clamp seals (2) do not become dislodged from the mast assembly during installation on the back frame.
2. Torque tighten the bolts (5) and (6) and the nuts (10) to 1065 Nm.
3. After installation, check the hydraulic oil level.
4. After installation, grease the back frame pivot pins.
5. After installation, do a functional test of the backhoe and side shift.

70.17 TERMINOLOGY FOR VARIOUS COMPLAINTS ON HYDRAULIC CYLINDER PERFORMANCE

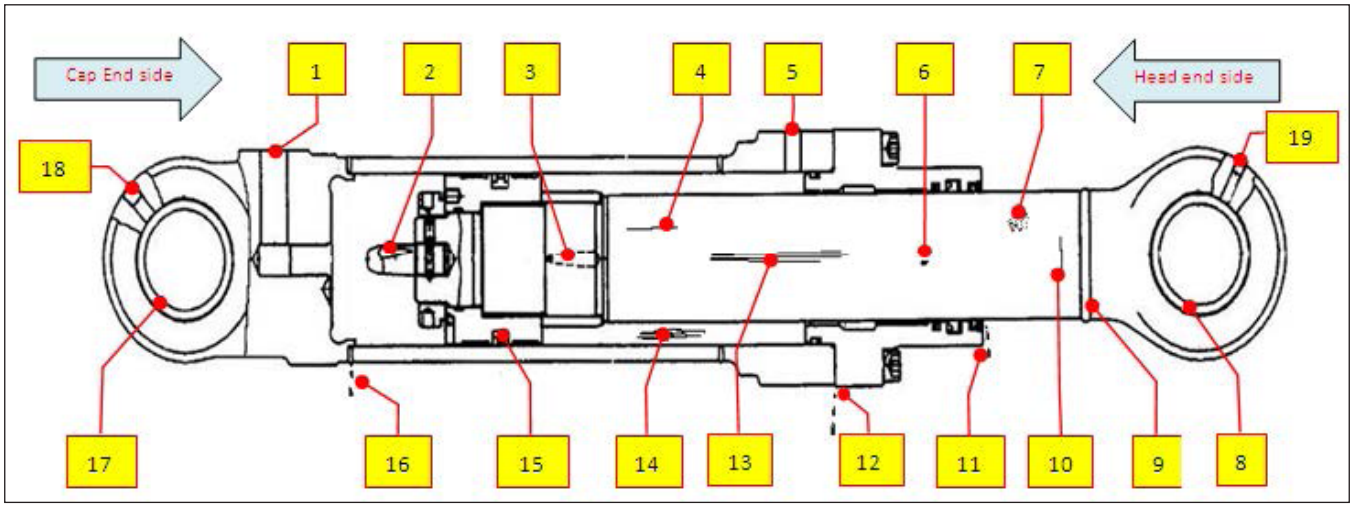

1. Leakage from Cap end cover (CEC) port
2. Cushioning plunger scored / damaged
3. Cushioning ring damaged / wrongly assembled
4. Longitudinal crack on Piston rod
5. Leakage from Head end cover (HEC) port
6. Pin hole on piston rod
7. Pit mark on piston rod
8. Rod eye bore under size / over size
9. Piston rod broken from piston rod – Rod eye joint
10. Transverse crack on piston rod
11. Rod seal leakage
12. Leakage from HEC O-ring
13. Scoring lines on piston rod
14. Scoring lines on tube ID
15. Piston seal damage / Internal leakage
16. Leakage from Tube – CEC weld joint
17. CEC bore under size / over size
18. CEC grease nipple thread damage
19. Rod eye grease nipple thread damage

70.18 DO'S & DON'TS ON HYDRAULIC CYLINDERS

Do's

1. Use soft lint-free cloth, never use cotton waste it may contain metal chips which will damage working surface of the components
2. Periodically clean the dust / mud accumulated on Wiper seals
3. Use recommended tools to service hydraulic cylinder
4. Clean the stabilizer box periodically
5. Ensure that the oil is in cold condition before opening the cylinder
6. Ensure that the cylinder is assembled and disassembled in clean dust free atmosphere
7. Ensure usage proper lifting tackles (Rope, Belts, etc.) while handling the cylinder
8. Apply hand brake while excavation
9. Apply grease on extended piston rod, if any welding is being carried out near the cylinder. This is to avoid welding spatters from getting stuck on the piston rod surface. Wipe off the grease after welding is completed
10. Before replacing new rubber components like O-ring and seals, immerse in hydraulic oil and then replace
11. Use only the specified grade (ISO VG-46) of oil to avoid malfunctioning of the product and for optimum safety and performance
12. Use Grease gun to ensure proper greasing and apply grease at all the greasing points periodically
13. Ensure that there are no obstructions at the working area like electrical line, inflammable material, etc.
14. Check and tighten the hydraulic fittings, bolts and nuts periodically
15. Check the hydraulic oil contamination and change if required. Maximum oil contamination allowed in system is NAS 11 or ISO 20/17
16. Check the filter elements and change if necessary
17. Check the oil level in the hydraulic tank regularly and fill it to the recommended level, if required

Don'ts

1. Don't operate the machine beyond the specified load / pressure limit
2. Don't use the bucket to push rocks, boulders, etc.
3. Don't move the machine when the stabilizer cylinders are in extended position
4. Don't load the bucket unevenly
5. Don't work under an unsupported Shovel
6. Don't use the Hydraulic cylinder as a conductor for welding purpose.
7. If you have to weld on structure connect earth wire to the structure only not on the chassis
8. Earth must be given close to the point of welding
9. Don't paint on the working surface of the piston rods and wiper seal
10. Don't change the relief pressure setting on the control valve
11. Don't operate on uneven and soft ground
12. Don't heat hydraulic cylinder while dismantling
13. Don't open hydraulic connections without releasing the system pressure
14. Don't carry out welding without removing the battery terminals

70.19 DISASSEMBLY & ASSEMBLY PROCEDURE

70.19.1 DISASSEMBLY PROCEDURE OF SLEW CYLINDERS

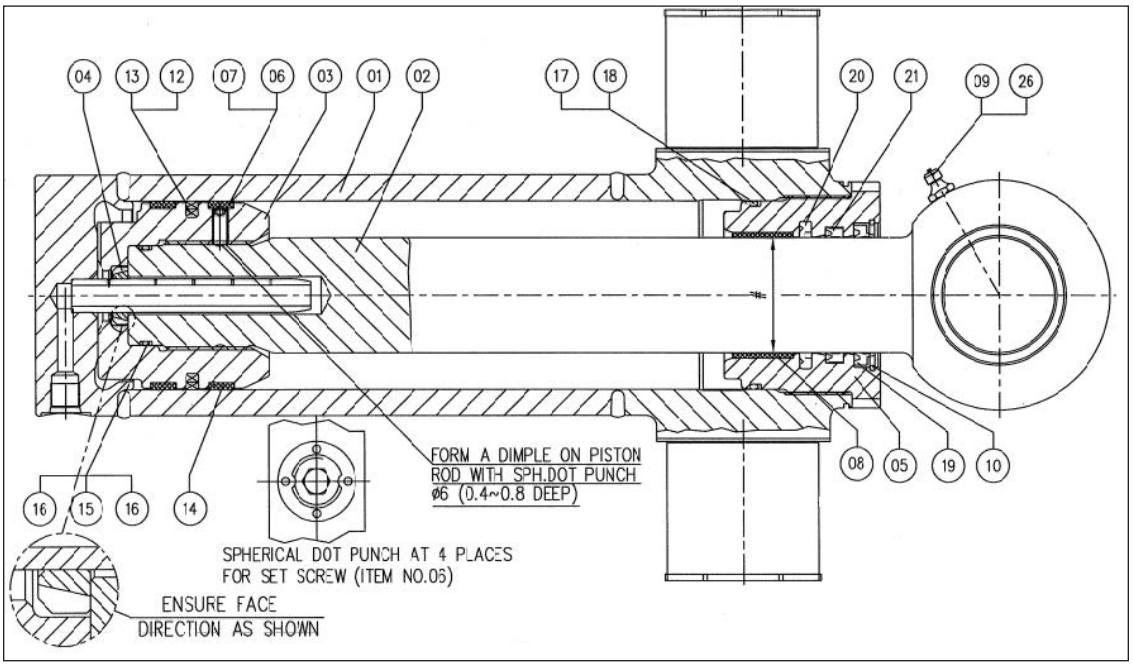

1. Remove the cylinder from the Equipment.
2. Clean the cylinder using good clean cloth. Ensure that dirt does not go inside the cylinder through ports.
3. Hold the cylinder on a Bench vise firmly with proper support by using Rein on the outer surface to prevent any damages on the outer tube. Mark a straight line on tube and HEC before disassembly to make the reassembly easy.
4. Use blunt chisel and remove Head end cover caulking.
5. Unscrew the Head end cover (5) by using adjustable hoot spanner.
6. Gently pull out the piston rod (2) along with Head end cover from the tube s/a (1).
7. Hold the piston rod s/a on a Bench vise firmly with proper support by using Rexin.
8. Remove the piston seals (12,13&14) gently by using bend screwdriver and unscrew the grub screw (6) by using Allen key.
9. De-torque and remove the piston (3) by using torque wrench after removing the grub screw (6) and steel ball (7).
10. Remember the direction of cushioning ring (4) and gently remove the same from piston groove.
11. Remove the head end cover (5) from the piston rod gently.
12. Remove the snap ring (10), wiper (19), primary rod seal (20), secondary rod seal (21), O-ring (17) and backup ring (18) from head end cover (5) by using bend screwdriver.
13. Remove the O-ring (15) and back up ring (16) by using the screw driver.

Inspection and cleaning procedure

1. Clean all the components by using good clean cloth and hydraulic oil. Any rust on the components should be removed by smooth emery sheet.
2. Ensure that head end cover seal grooves, piston rod end threads and port threads are cleaned properly.
3. Check the piston rod for any dents, scoring lines or any other abnormalities, if found piston rod needs to be replaced along with piston.
4. Check for any scoring lines or damages in tube Id. If found tube s/a needs to be replaced.
5. Check head end cover for damages or dents. Small dents / damages can be removed by polishing. However if the damages are heavy, components need to be replaced.

6. Check and ensure that port threads and piston rod threads are not damaged
7. Once dismantled seal kit should be replaced with a new one

70.19.2 ASSEMBLY PROCEDURE OF SLEW CYLINDERS

1. Assemble the rod seals, wiper, O-ring and back up ring on the head end cover. Ensure that seal lips face against pressure side.
2. Smear little hydraulic oil inside the head end cover (at seal kit and wiper area). Gently insert sub-assembled HEC on to the Piston rod. Ensure that seal lip is not reversed or twisted during assembly. Check for smooth movement of head end cover on piston rod.
3. Place the cushioning ring in piston, apply Loctite 262 / Ana bond 115 on piston threads, then engage the piston with Piston rod threads and tighten the same to the specified torque by using torque wrench.
4. Place steel ball, apply Loctite 242/ Ana bond 118 on grub screw and tighten the same on piston. Assemble the piston seals and bearing strips. Ensure that during assembly piston seal is not expanded more.
5. Hold the tube s/a on Bench wise, smear little hydraulic oil inside the tube s/a.
6. Apply hydraulic oil on piston seals and Petroleum jelly on head end cover O-ring and insert the piston rod s/a into the tube s/a. Tap the head end cover gently during entry into the tube. Ensure that head end cover O-ring is not cut during entry.
7. Tighten the head end cover by using adjustable hook spanner to the previously marked position.
8. Caulk the head end cover effectively.

70.19.3 DISASSEMBLY PROCEDURE OF OTHER CYLINDERS

Follow the procedure below for servicing loader lift, loader tilt, stabilizer, boom, stick and bucket cylinders:

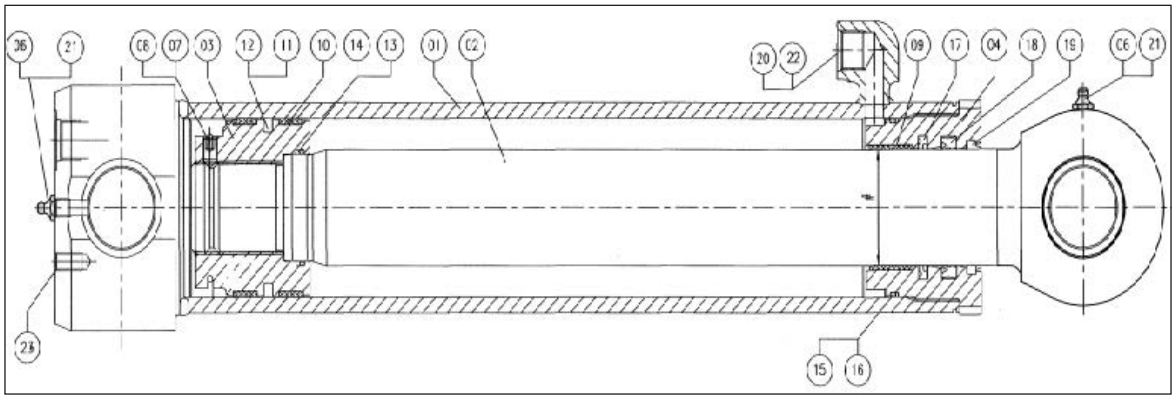

1. Remove the cylinder from the Equipment.
2. Clean the cylinder using good clean cloth. Ensure that dirt does not go inside the cylinder through ports.
3. Hold the cylinder on a Bench vise firmly with proper support by using Rexin on the outer surface to prevent any damages on the outer tube. Mark a straight line on tube and HEC before disassembly to make the reassembly easy.
4. Use blunt chisel and remove head end cover caulking.
5. Unscrew the Head end cover (4) by using adjustable hoot spanner.
6. Gently pull out the piston rod (2) along with head end cover from the tube s/a (1).
7. Hold the piston rod s/a on a Bench vise firmly with proper support by using Rexin.
8. Remove the piston seals (10,11,&12) gently by using bend screw driver.
9. Remove the snap ring (8) by using screw driver and unscrew the grub screw (7) by using Allen key.
10. De-torque the piston (3) by using torque wrench and remove the same from piston rod.
11. Remove the head end cover (4) from the piston rod gently.
12. Remove the wiper (19), primary rod seal (17), secondary rod seal (18), O-ring (15) and backup ring (16) from head end cover (4) by using bend screw driver.
13. Remove the O-ring (13) and back up ring (14) from the piston by using the bend screw driver.

INSPECTION & CLEANING PROCEDURE

1. Clean all the components by using good clean cloth and hydraulic oil. Any rust on the components should be removed by smooth emery sheet.
2. Ensure that head end cover seal grooves, piston rod end threads and port threads are cleaned properly.
3. Check the piston rod for any dents, scoring lines or any other abnormalities, if found piston rod needs to be replaced along with piston.
4. Check for any scoring lines or damages in tube Id. If found tube s/a needs to be replaced.
5. Check head end cover for damages or dents. Small dents / damages can be removed by polishing. However if the damages are heavy, components need to be replaced.
6. Check and ensure that port threads and piston rod threads are not damaged.
7. Once dismantled seal kit should be replaced with a new one.

70.19.4 ASSEMBLY PROCEDURE OF OTHER CYLINDERS

1. Assemble the rod seals, wiper, O-ring and back up ring in the head end cover. Ensure that seal lips face against pressure side.
2. Smear little hydraulic oil inside the head end cover (at seal kit and wiper area). Gently insert sub-assembled HEC on to the Piston rod. Ensure that seal lip is not reversed or twisted during assembly. Check for smooth movement of head end cover on piston rod.
3. Apply Loctite 262 / Ana bond 115 on piston threads, engage the sub-assembled piston with Piston rod threads and tighten the same to the specified torque by using torque wrench.
4. Apply Loctite 242/ Ana bond 118 on grub screw and tighten the same on piston. Fix the snap ring by using screw driver.
5. Assemble the piston seals and bearing strips on piston. Ensure that during assembly piston seal is not expanded more.
6. Hold the tube s/a on Bench wise, smear little hydraulic oil inside the tube s/a
7. Apply hydraulic oil on piston seals and Petroleum jelly on head end cover O-ring and insert the piston rod s/a into the tube s/a. Tap the head end cover gently during entry into the tube. Ensure that head end cover O-ring is not cut during entry.
8. Tighten the head end cover by using adjustable hook spanner to the previously marked position.
9. Caulk the head end cover effectively.

70.19.5 CYLINDER PERFORMANCE CHECK

1. Pull the piston rod and push it back to check the smoothness of assembly.
2. Mount the cylinder on to the equipment and operate at idle speed, to check for leakages.
3. Ensure that the air is not trapped in the cylinder by cycling the cylinder at low Idle for 2 minutes.

70.20 HYDRAULIC CIRCUIT ( )

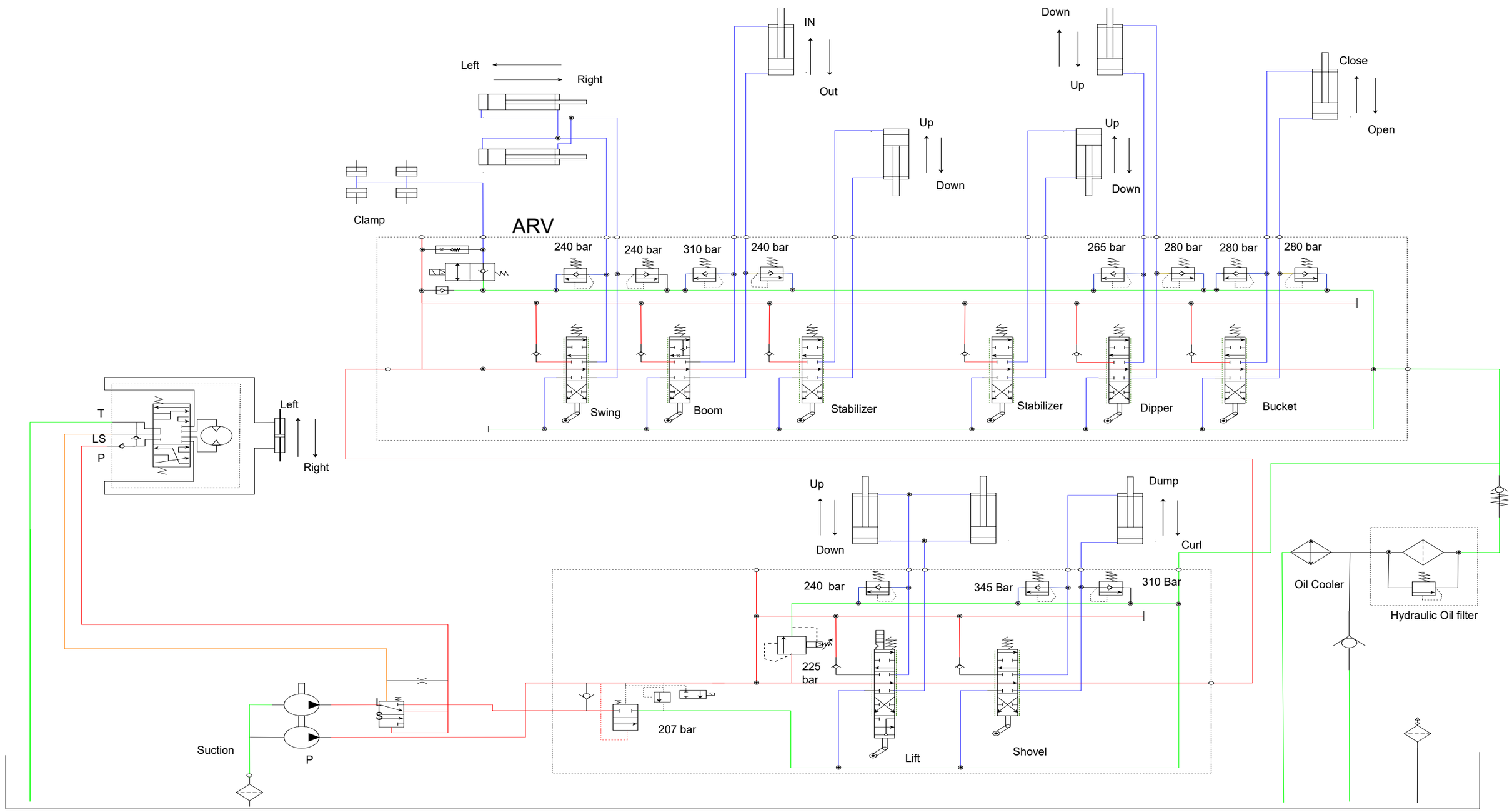

HYDRAULIC CIRCUIT CENTER MOUNT

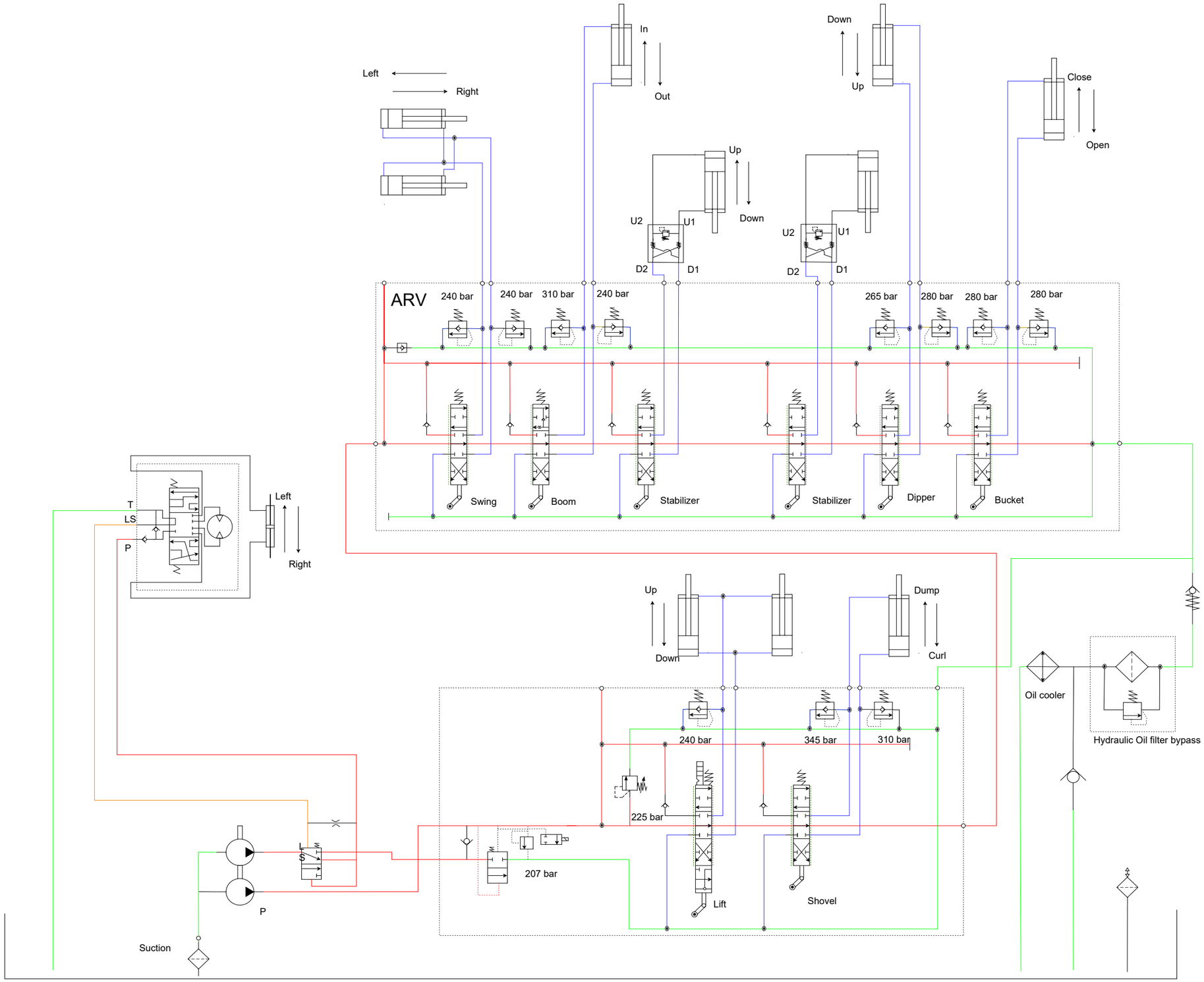

70.20.1 SYSTEM OPERATION (NEUTRAL)

1. Oil is drawn from the reservoir through a strainer into the tandem gear pumps.
2. Oil from inner gear pump flows to steering priority flow valve.
3. If the steering orbital valve is in neutral, the oil is directed to the loader control valve. As the oil enters the control valve the flow is restricted by a bypass compensating spool which is in the closed position, at this point the pressure begins to rise and opens the spool against 20 bar rated spring allowing the oil to enter the loader control valve block.
4. The open centre loader control valve is a two spool multi-sectional block which supplies oil to the loader lift and bucket tilt (shovel) functions.
5. Oil from outer pump flows through the un-loader valve and joins flow from the inner pump prior to the oil flowing to the loader control valve and the backhoe valve.
6. The 6 spool backhoe control valve is of the open centre type. If all spools are in the neutral position oil passes through a parallel gallery through a return line having a check valve (6 Bar) and then to the return line filter and cooler and finally back to tank.
7. The back pressure valve keeps pressure in circuit for operation of backhoe / loader functions.
8. When a backhoe function is operated, a spool is actuated in the backhoe control valve, flow is blocked to tank. A load sensing signal is sent to the loader control valve, which closes the loader control valve and allows all pump flow to the backhoe valve.
9. If loader function are operated, oil is present at the loader valve.

70.20.2 LOADER LIFT OPERATED

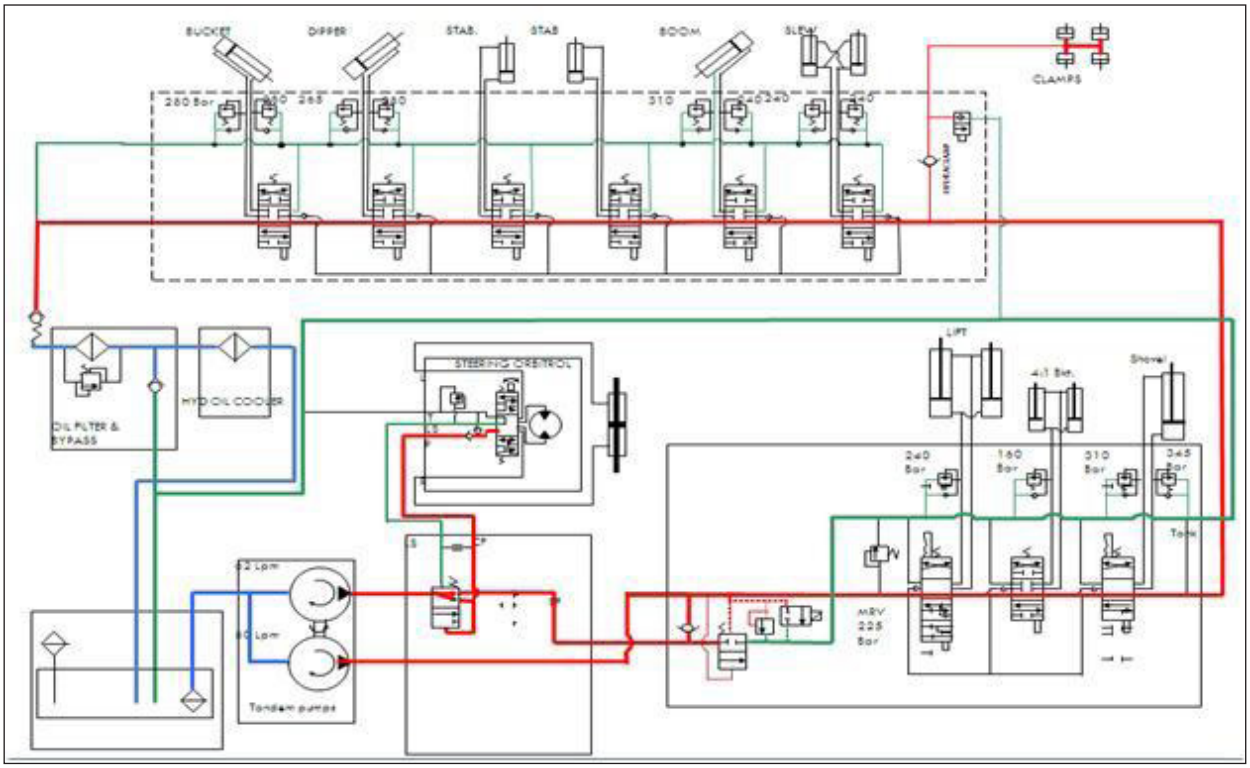

System operation (loader lift spool selected)

Operation of the loader spool closes the open centre gallery and directs the flow of oil along the pressure gallery into the loader lift port. A check valve in the pressure gallery prevents movement of the service until residual pressure in the loader service has been overcome by pump pressure.
Oil from lift cylinder's rod end passes through the spool to the return gallery. This oil then return to tank through the backhoe control valve opening the 6 bar check valve and allows the oil to pass through the return line filter and cooler back to tank.
When the system pressure exceeds the un-loader relief valve setting of 190 bar , the un-loader valve opens and allows the oil from the pump P2 to discharge directly back to the reservoir. The pump P1 will continue to supply the implement until the pressure reaches 225 bar at point which the main relief valve in the loader control valve opens.

70.20.3 UNLOADER & STEERING PRIOPRITY VALVE

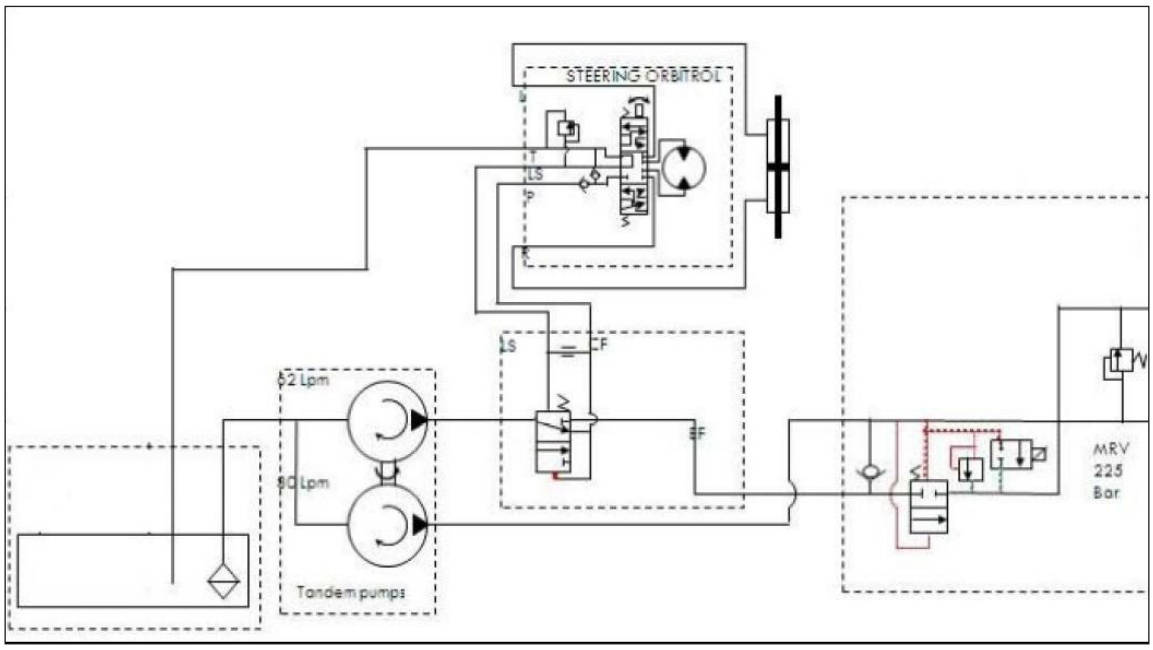

The backhoe loader is fitted with the steering priority valve and un-loader valve which uses the oil flow from P2 pump. At peak system pressure of 225 bar (MRV valve setting), the power needed to drive both pumps may exceed the available engine horsepower. An unloading valve is used to divert 100% of P2 pump flow to hydraulic tank whenever the system pressure reached the unloader relief valve pressure setting of 190 bar. The hydraulic services still continue to work at a reduced speed using the flow from the pump P1.
The output flow from pump P2 initially flow's to the steering priority valve. The steering priority valve delivers oil to a steering orbital unit according to the demand of the steering system. When the steering is Neutral, the priority valve shifts to divert oil from pump P2 to combine with the flow from pump P1 through unloader valve and this combined flow is supplied to the main hydraulic functions.

Un-loader valve operations

Oil from steering priority valve enters the unloader valve. The unloader spool blocks the oil flow to hydraulic tank and this causes the oil to open the check valve and combines with flow from pump P1. Now the combined flow of pump P1 and pump P2 are available for both loader and backhoe operation. When the system pressure exceeds the unloader relief valve pressure, the unloader relief valve open's, causing the unloader spool to open the port to hydraulic tank. This causes the oil flow from pump P2 to flow to hydraulic tank thereby reducing the load on the engine. The hydraulic service still continues to work at a reduced speed using the flow from the pump P1.

Unloader solenoid operation

When the operator switch's ON the unloader control, the solenoid get activated causing the unloader spool to shift's, opening the passage for the pump P2 to flow to the tank thereby reducing the load on the engine. The hydraulic service still continues to work at a reduced speed using the flow from the pump P1.

70.20.4 Mast side shift operations



Locking operation

The side shift lock solenoid is mounted in the inlet block of the backhoe valve. Solenoid valve is controlled by the switch (indicated by arrow) for the mast side shift lock. In order to de-energize the side shift lock solenoid, the mast switch must be switched ON. The solenoid is not energized in the locked position. Oil from the hydraulic pump causes check valve to move to the right. When the check valve moves the oil that is in line flows past the check valve. Then the oil flows into the piston for the slide lock. Piston moves towards the slide rails of the stabilizer frame. When the piston forces the slide rails to contact slide bars, this prevents the slide frame from moving during operations.

Unlocking operation

When the backhoe attachment needs to be positioned, the pressure on the piston of slide lock must be released. When the operator switch's ON the mast lock switch, mast lock solenoid is energized. When the solenoid is energized, the so-lenoid valve allows the oil from the pump to drain to hydraulic tank. This releases the pressure on the mast lock piston.

70.21 TESTING & ADJUSTING

70.21.1 Main relief valve pressure test (Open centre port)

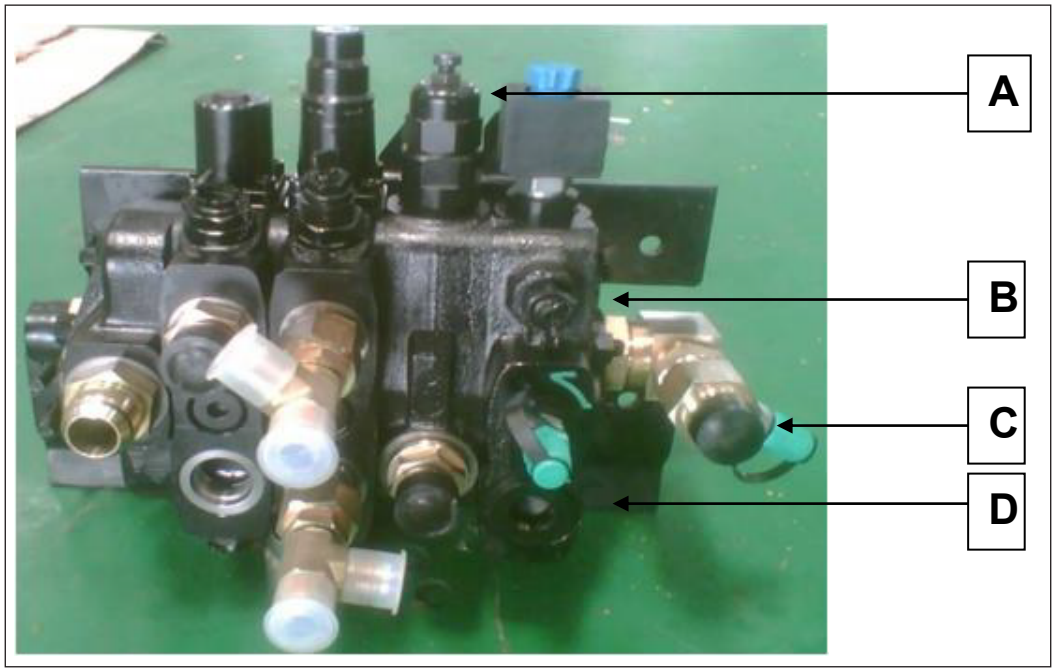

1. Work the machine until hydraulic oil temperature is at 50°C. Park the machine at level ground.
2. Lock the backhoe attachment in transport position and lower loader bucket to ground. Shut off the engine.
3. Connect a pressure gauge 0 - 400 bar at test port C and at D.
4. Port C will indicate the un-loader pressure setting and Port D will indicate the main pressure relief valve setting.
5. Clear personnel away from machine, start the engine and run at 2200 rpm. Keep all the implements in neutral position and read the pressure gauge and the pressure should be 0 psi (0 bar) or near to 0 psi (0 bar).
6. Operate stabilizer either LHS or RHS function to bottom out a cylinder. Pressure should be 3250 psi (225 bar) at port D and the pressure at port C should reach 3000 psi 207 bar (844S) / 190 bar (740S) then drop off to 0 psi.
7. Remove the pressure gauge from the test port C & D and install the test port cover.

Sl.No	System	Condition	Specification	Adjustment
1	Main relief valve	Engine at high idle and lock either stabilizer in fully raised position	225 bar	Adjust pressure setting screw
2	Un-loader relief valve	Engine at high idle and lock either stabilizer in fully raised position Should reach	190/207 bar and then drops to 0 bar	Adjust pressure setting screw
3	Backhoe boom raise	Engine at high idle and lock boom in fully raised position	310 bar	No adjustment. Replace ARV
4	Backhoe boom lower	Engine at high idle and lock boom in fully lowered position	240 bar	No adjustment. Replace ARV
5	Stick IN	Engine at high idle and lock stick in fully IN position	280 bar	No adjustment. Replace ARV
6	Stick OUT	Engine at high idle and lock stick in fully OUT position	265 bar	No adjustment. Replace ARV
7	Bucket close	Engine at high idle and lock bucket in fully closed position	280 bar	No adjustment. Replace ARV
8	Bucket open	Engine at high idle and lock bucket in fully open position	280 bar	No adjustment. Replace ARV
9	Loader raise	Engine at high idle and lock loader in fully raised position	240 bar	No adjustment. Replace ARV
10	Loader dump	Engine at high idle and lock loader in fully dump position	310 bar	No adjustment. Replace ARV
11	Loader tilt back	Engine at high idle and lock loader in full tilt back position	345 bar	No adjustment. Replace ARV
12	Steering system	Engine at high idle and lock steering cylinder fully turned to right side	175 bar	No adjustment. Replace ARV
13	Swing (LHS/RHS)	Engine at high idle and lock swing either in LHS/RHS direction	240 bar	No adjustment. Replace ARV

70.21.2 Releasing pressure in hydraulic system

Park the machine on a level ground.
Lower the loader and the backhoe attachments to the ground and raise the stabilizer off the ground.
Shut off the engine.
Remove the hydraulic tank fill cap.
Move all the loader and backhoe control levers in all direction several times until the loader and the backhoe are fully rested on the ground.
Refit the hydraulic tank fill cap.

70.21.3 Hydraulic pump flow test

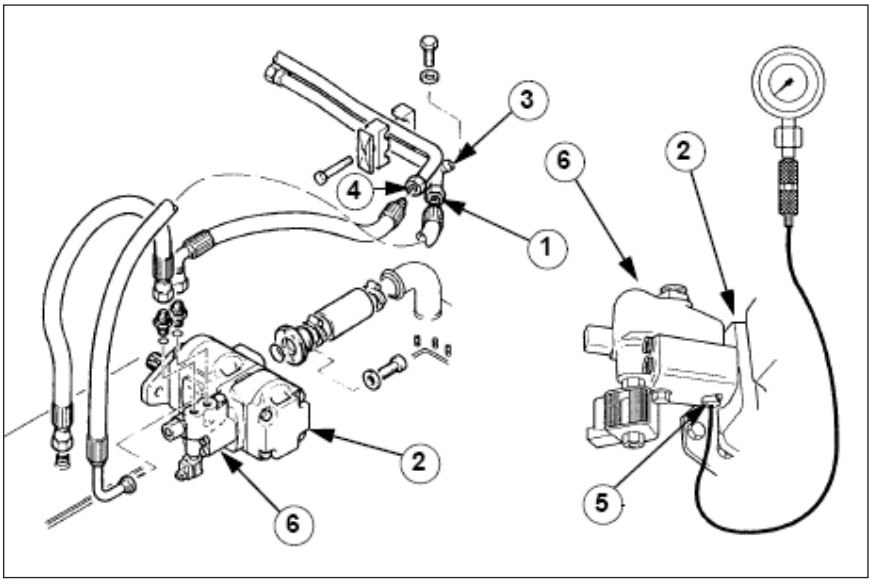

1. Park the machine on a level surface.
2. Work the machine until the hydraulic oil temperature reaches 50°C.
3. Raise the loader beam and install the safety strut and stop the engine.
4. Release the pressure from hydraulic system.
5. Remove the operator's cabin floor plate.
6. Connect the flow meter to the outlet port (1) of the inner (80 l/min) section of the hydraulic pump.
7. Connect the pressure gauge to the test port in the pump outlet piping.
8. Start the engine and run at 2200 rpm.
9. Check that the pump outlet pressure (225 bar) and flow (80 l/min) are within specification.
10. If the pump flow rate is less than the specification, replace the pump.
11. Stop the engine and release the pressure in hydraulic system.
12. Remove the test equipments from inner pump.
13. Install the test equipment to the outer pump port (4).
14. Connect the pressure gauge to the test port (5).
15. Start the engine and run it at 2200 rpm.
16. Check that the pump outlet pressure (207 bar) and flow (62 l/min) are within specification.

17. If the pump flow rate is less than the specification, replace the pump.
18. Slowly raise the loader beam till the cylinder is completely retracted. This will raise the system pressure until the un-loader valve operates.
19. Record the un-loader valve operating pressure.
20. When the un-loader valve operates, check that the pump outlet pressure is within 0 to 5 bar and that the outlet flow is 0 l/min.
21. Check that the un-loader valve operating pressure is within specification.
22. If the un-loader valve operating pressure is outside the specified limits, replace the unloader valve.
23. Slowly increase the pressure to 175 bar and check that the flow rate for the outer pump (62 l/min) section of the pump has been restored.
24. Remove the test equipment and install the operator's cabin floor plate.

Pump flow test chart

P1 - 80 LMP @ 2200 engine RPM and 225 b ar pressure / 60^0 C oil temperature

Specification		**Actual**		
Engine RPM	**Flow (LPM)**	**Flow (LPM)**	**Difference (F3 - F2)**	**Pump efficiency (F3/F2)* 100**
(F1)	**(F2)**	**(F3)**	**(F4)**	**(F5)**
1000	34			
1500	51			
1800	62			
2200	76			
Average				

P2 - 62 LMP @ 2200 engine RPM and 225 bar pressure / 60^0 C oil temperature

Specification		**Actual**		
Engine RPM	**Flow (LPM)**	**Flow (LPM)**	**Difference (F8 - F7)**	**Pump efficiency (F8/F7)* 100**
(F6)	**(F7)**	**(F8)**	**(F9)**	**(F10)**
1000	20			
1500	30			
1800	35			
2200	43			
Average				

⚠ NOTE

Pump efficiency should be more than 80% of a new pump flow rate.

70.22 FLUSHING THE HYDRAULIC SYSTEM

Follow this procedure during the below said conditions:

1. Water entry in the system.
2. Topping of wrong grade of oil by over sight.
3. Failures of major components like pump, control valve etc.
    1) Start and run the engine at 1500 rpm.
    2) Completely retract the cylinders of all attachments on the machine.
        A. If retracting the cylinder rods causes the attachment to be raised, block the attachment in place before proceeding to the next step.
        B. Any attachment or part of an attachment that is raised must be supported with acceptable equipment to prevent the attachment from falling.
    3) Loosen and remove the hydraulic tank filler cap.
    4) Drain the hydraulic oil from the reservoir.
        A. The reservoir holds approximately 45 liters of oil.
        B. Have available acceptable equipment to drain the hydraulic oil.
        C. Remove the drain plug from the bottom of the reservoir.
    5) Remove the hydraulic oil filter.
    6) Install a new hydraulic oil filter.
    7) Install the drain plug.
    8) Fill the hydraulic reservoir with 43 liters of Manitou hydraulic fluid.
    9) Move each control lever in both directions to release pressure in the hydraulic circuits.
    10) Disconnect the line from the rod end and closed end of each cylinder.
    11) Be sure all control levers are in the NEUTRAL position.
    12) Start the engine and run the engine at low idle.

⚠ NOTE

Check the oil level in the hydraulic reservoir frequently while doing step 13. Have another person hold a container under the hydraulic lines while you do step 13.

    13) Slowly move each control lever in both directions until oil begins to flow from the open line. Hold the control lever in place until clean flows from the open line.
    14) Stop the engine.

⚠ NOTE

Any attachment or part of an attachment that is raised must be supported with acceptable equipment to prevent the attachment from falling.

    15) Connect the line to the closed end of each cylinder.
    16) Start the engine and run the engine at low idle.
    17) Slowly and completely extend all cylinders. As the piston rod comes out of the cylinder oil will be pushed out of the rod end of the cylinder.
    18) Support the loader frame so that the loader frame will stay in the raised position.
    19) Stop the engine.
    20) Connect the lines to the rod end of the cylinders.
    21) Check the oil lever in the hydraulic reservoir. All oil as required.
    22) Install the filler cap for the reservoir.

70.23 TROUBLESHOOTING

Cylinders troubleshooting and probable causes

Problem	Cause	Remedy
Rod seal leakage	• Excessive Seal wear • Piston rod scored • Weld arcing • Seal assembled wrongly • Piston rod bend • Oil temperature high	• Check oil contamination and change, if required • Apply emery, if scoring is mild. Replace the piston rod, if the scoring is deep • Replace the piston rod* • Replace the seal kit and assemble the seal in right direction* • Reset the system pressure, if it is malfunctioning and replace the piston rod* • Air bleed the system properly and change the oil if contaminated*
Internal Leakage	• Scoring in tube ID • Tube ID rusting • External damage • Air in hydraulic circuit • Piston seal damaged	• Check for side loads on cylinder (Wear on rod eye / CEC face) and adjust alignment suitably. Change tube s/a if badly scored* • Remove the rust with emery, change tube s/a, if rust is more • Replace the outer tube • Air bleed the hydraulic system* • Replace the complete seal kit*
Tube ID scored	• External damage on tube • Piston rod bend • Foreign particles in the system • Filter ineffective / clogged • Excessive clearance at mountings	• Replace the tube s/a and other damaged components • Check the system pressure and replace the PR s/a* • Check the filter and oil, replace if required • Replace the filter • Add shims and align the axis suitably
External leakage (Other than Rod seal)	• Seal wrongly assembled • Weld leakage • Leakage through casting • Ineffective sealing due to rust in the cylinder ID	• Change the seal kit* • Rework or replace the component, if it is not reworkable* • Change the defective component* • Rework by emery or replace the failure component
Piston rod bend / Break	• Excessive system pressure • More than recommended load applied • Excessive side loads • External damage	• Check and reset the system pressure, if required* • Use the system within recommended load. Educate the driver • Check the condition of bushes, pins, shims and replace if required • Change the piston rod assembly*
Plating Defects	• Rust on rod due to accumulation of mud on piston rod • Peel off due to piston rod exposure to chemical environment • Weld Arcing	• Clean the mud periodically from the piston rod • Protect the piston rods from chemical attach. Apply petroleum jelly when the machine is not in use for more period • Apply grease on piston rod when carry out welding near rod
Hydraulic system operation slow or not taking load	• Low oil level • Engine RPM incorrect • Low system pressure • Faulty hydraulic pump	
Anyone of the implement is slow	• Control lever binding or not adjusted correctly • Low system pressure	
Hydraulic system pressure low	• Low oil level • Fault temperature sender • Fault temperature indicator bulb • Faulty hydraulic oil cooler • Wrong hydraulic system pressure setting • Contamination in the system	
Anyone one of the implement is drifting	• Control lever is binding or not adjusted correctly • Low system pressure • Fault hydraulic cylinder	

Hydraulic system pressure is within specification but the system operates slow	• Wrong un-loader valve pressure setting • Un-loader valve faulty • Un-loader solenoid faulty • Un-loader control circuit wiring faulty • Faulty hydraulic pump	
Engine lugs while operating loader attachment	• Faulty dump fuse • Wrong setting of un-loader pressure • Faulty un-loader valve • Faulty un-loader solenoid • Faulty un-loader solenoid control wiring	
Only backhoe operation slow	• Loose dummy plug at the loader control valve outlet block	

70.24 HYDRAULIC SCHEMATIC SYMBOLS

Symbol	Description
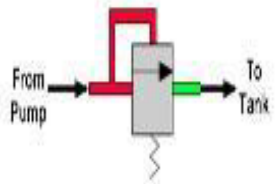	Relief valve closed position
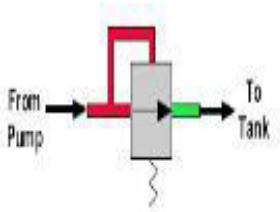	Relief valve open position
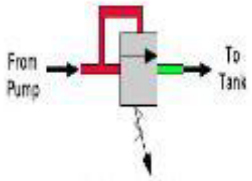	Relief valve adjustable
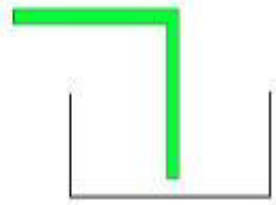	Hydraulic tank – ventilated
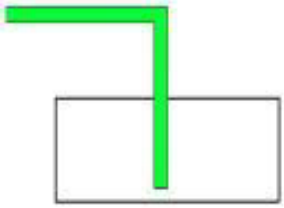	Hydraulic tank – pressurized
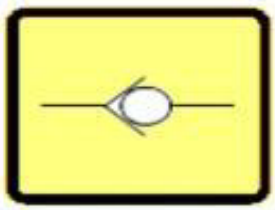	Non return check valve

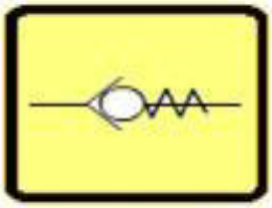	Non return check valve with back pressure spring
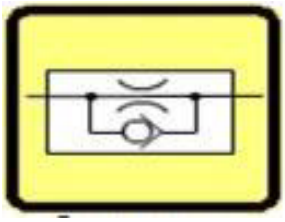	One way restrictor
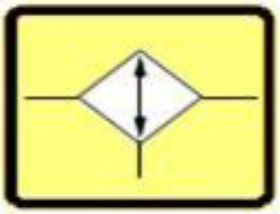	Heat exchanger
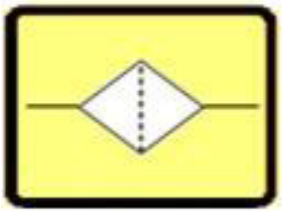	Strainer or filter
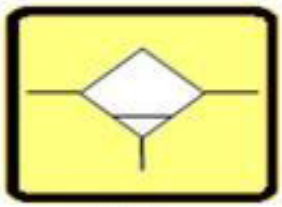	Water separator
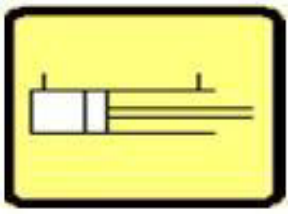	Single acting cylinder
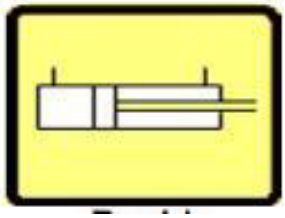	Double acting cylinder

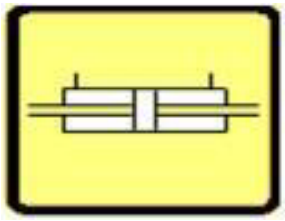	Double sided cylinder
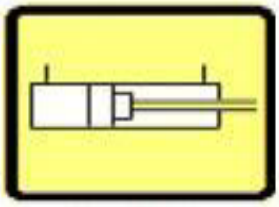	Double acting cylinder with rod end dampening
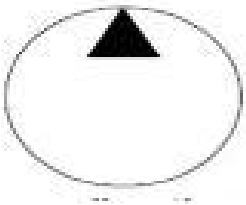	Mono directional fixed displacement pump
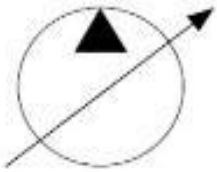	Mono directional variable displacement pump
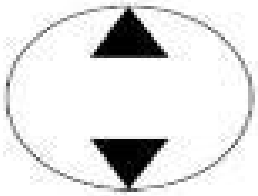	Bi directional fixed displacement pump
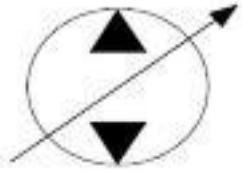	Bi directional variable displacement pump
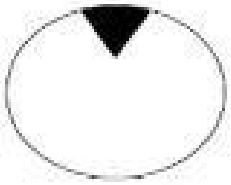	Mono directional fixed displacement motor

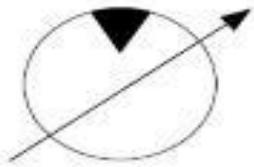	Mono directional variable displacement motor
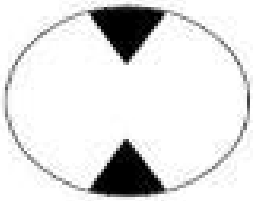	Bi directional fixed displacement motor
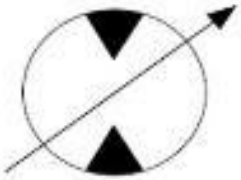	Bi directional variable displacement motor
	One position control spool
	Two position control spool
	Three position control spool
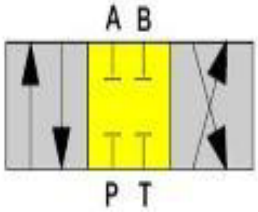	Closed centre port control spool

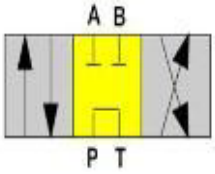	Tandem centre control spool
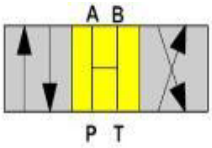	Open centre port control spool
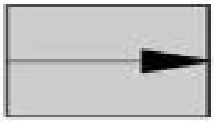	Flow in one direction
	Flow in either direction
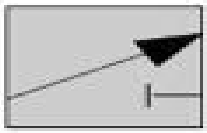	Three way flow path
	Four way flow path
	Six way flow path
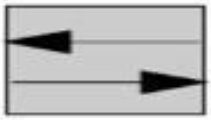	Parallel flow path
	Cross flow path
	Blocked flow

70.25 REMOVAL OF STEERING PRIORITY VALVE

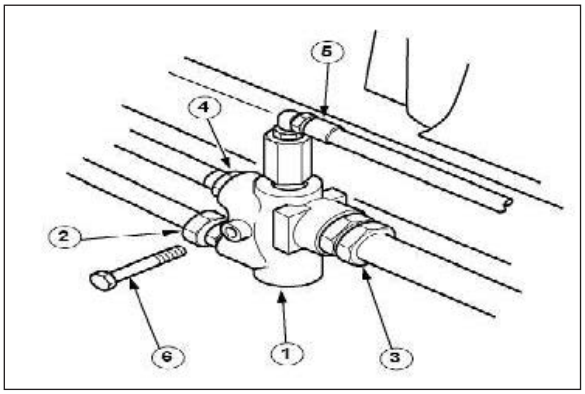

NOTE

The valve is fitted on the left hand side of the chassis next to the gear box.

1. Park the machine on a level surface. Lower the loader bucket to the floor and stop the engine.
2. Depressurize the hydraulic system.
3. Remove the front floor mate and remove the transmission inspection floor plate.
4. Place a suitable tray under the valve (1).
5. Remove the pipe connections (2), (3) and hose connections (4) and (5).
6. Support the valve (1) and remove bolt (6).

NOTE

The installation of the priority valve is the reverse of the removal. After installation, carry out a functional test of the machine steering and hydraulic system. Check for leakage at the pipe connections. Check the hydraulic oil level in the reservoir, top up if necessary.

70.26 DISASSEMBLY & ASSEMBLY OF STEERING PRIORITY VALVE

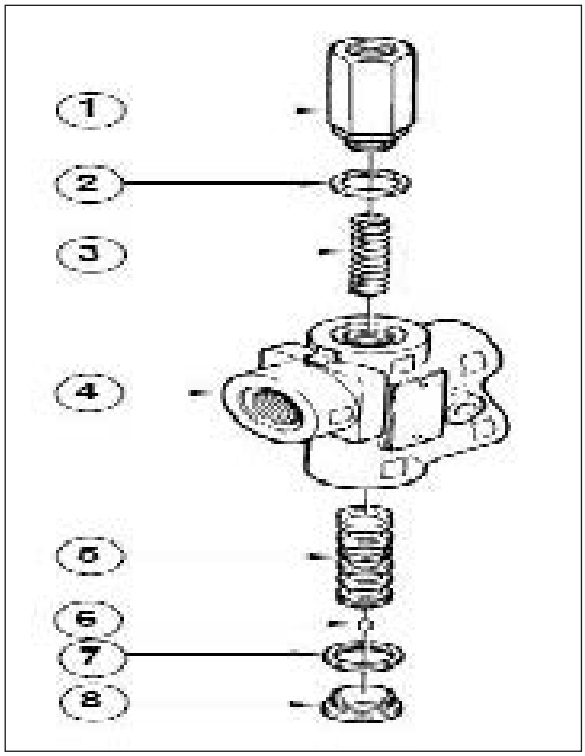

1. Remove the adapter (1) and discard the seal (2).
2. Remove the control spring (3).
3. Remove the plug (8) and the seal (7) from the opposite end of the valve body (4) and push out the spool (5).

NOTE

The valve (6) should only be removed from the spool (5) if it is damaged.

⚠ NOTE

1. The assembly of the priority valve is the reverse of disassembly.
2. For assembly, lubricate all parts with clean hydraulic oil.

Inspection

1. Thoroughly clean and dry all parts with a suitable solvent.
2. Use low pressure air to make sure that the orifice in valve (6) is clear.
3. Check that the cross drawing in spool is clear.
4. Check the spool (5) and the valve body (4) for scratches or wear. The complete valve must be replaced if there is damage to either port.
5. Inspect the control spring (3) for cracks or wear.

70.27 REMOVAL & INSTALLATION OF STEERING CONTROL VALVE

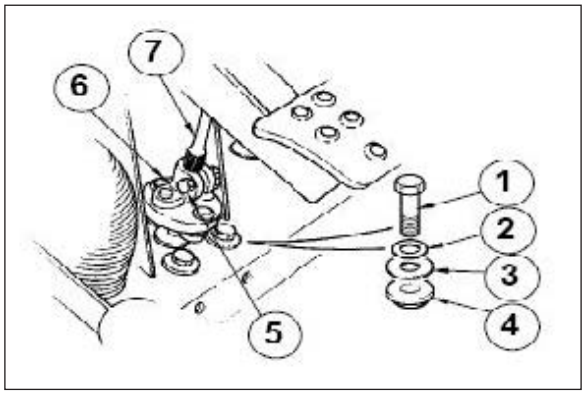

70.27.1 REMOVAL

1. Park the machine on flat, level ground.
2. Dump the bucket, raise the loader beam and install the safety strut.
3. Lower the backhoe stabilizer legs to the ground. Do not lift the machine.
4. Release pressure in the hydraulic system.
5. Remove the can front mat and the floor plate.
6. Remove the can front mat and floor plate.
7. Identify each hose on the orbitrol steering valve.
8. Disconnect the hoses.
9. Remove the plastic covers from the bulkhead.
10. Release the four mounting screws (1) the lock washers (2), the washers (3) and the runner mountings (4) inside the cab ROPS and lower the valve away from the bulkhead.

70.27.2 INSTALLATION

Install the unit in the reverse order from that of removal but note the following:

1. Install the runner mountings (4) with the large diameter upwards.
2. Release the bolt (5) on the steering unit coupling (6) to slide the coupling up the shaft (7).
3. Engage the coupling end spline in the steering unit with 1 to 2 mm of the spline above the steering unit coupling.
4. Start the engine and carry out step 5 through to 9.
5. Release the loader beam safety strut.
6. Lower the loader beam and backhoe stabilizers and raise the machine clear of the ground.
7. Operate the steering to check correct function and check for leaks.
8. Stop the engine.
9. Check the hydraulic oil level.

70.28 REMOVAL & INSTALLATION OF STEERING COLUMN & FRONT INSTRUMENT PANEL

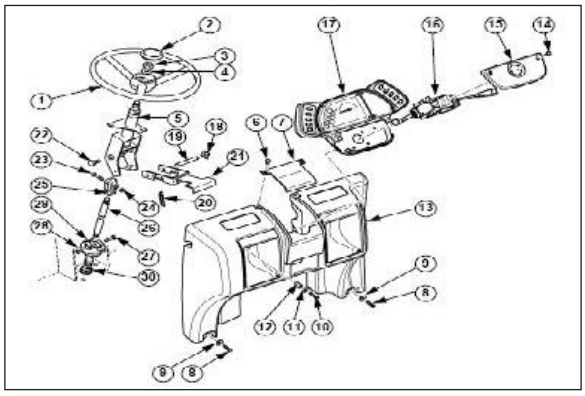

REMOVAL

1. Park the machine on a level surface and apply the parking brake.
2. Lower the loader bucket and the backhoe stabilizers sufficiently to raise all the wheel from the ground.
3. Remove the cover (2) from the centre of the steering wheel (1).
4. Loosen and remove the nut (3) that holds the steering wheel (1) in place and remove the washer (4).
5. Use a suitable puller to remove the steering wheel (1).

⚠ NOTE

When installing, put the steering wheel (1) on the steering column (5) so that the splines in the steering wheel mesh correctly with those on the steering column.

6. Loosen and remove the two screws (6) from the plate (7) and remove the plate (7).
7. Raise the floor mat, then loosen and remove the mounting screw (8) and washers (9) holding the lower part of the console (13). Loosen and remove the mounting screws (10), washers (11) and spacers (13) holding the upper part of the console (13). Remove the console.
8. Loosen and remove the two screws (14) from the cover (15) and remove the cover (!5).
9. Loose and remove the four screws of the front console and remove the front console.
10. Loosen and remove the three screws of the front console binnacle and remove the front console binnacle.
11. Disconnect the connector from the transmission shift lever.
12. Disconnect the connectors from the direction indicator switch.
13. Disconnect the connectors from the rocker switches from the instrument panel.
14. Loosen and remove the three mounting screws from the instrument panel (17).
15. Loose and remove the three mounting screws holding the forward/reverse control lever and direction indicator assembly (16) to the steering column (5). Remove the assembly (16) along with the steering column.
16. Disconnect the contact switch from the brake pedal.
17. Remove the two clips (18) from the pin (19), remove the spring (20), then remove the adjustment handle assembly (21).
18. Loosen and remove the screw (27) and the nut (28) from the drive dog (29).
19. Loose and remove the two maintaining screws (22) from the steering column (5) and remove the steering column (5) with the steering column shaft (26) from the drive dog.

INSTALLATION

When installing, follow the procedure in the reverse order from that of removal.

70.29 DISASSEMBLY & ASSEMBLY OF STEERING CONTROL VALVE (OGNIBENE)

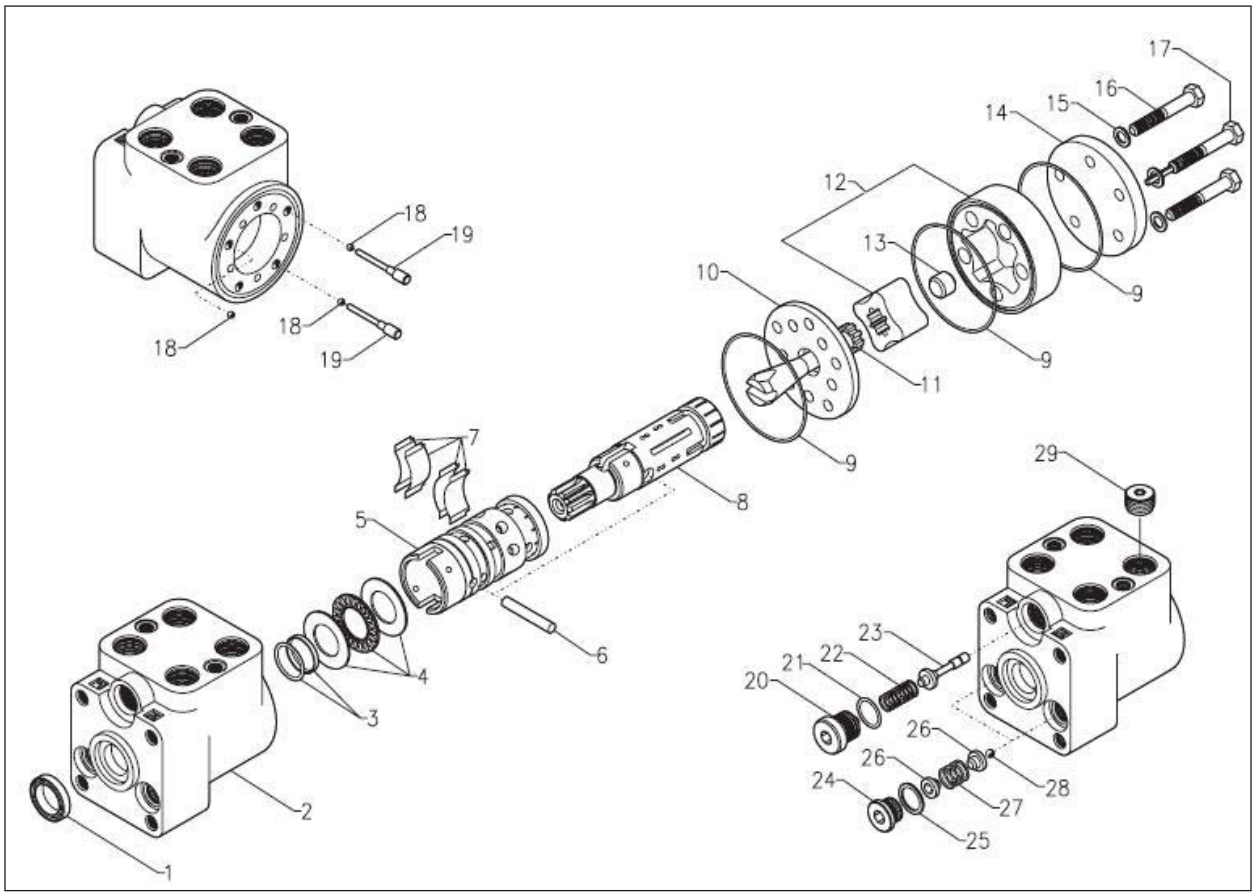

DISASSEMBLY

1. Place the steering unit the holding block as shown in the figure. Unscrew the screws in the end cover (4 + 1 special).



2. Remove the end cover. Take out the O ring and the spacer (if present).



3. Lift the gerotor set off the unit.

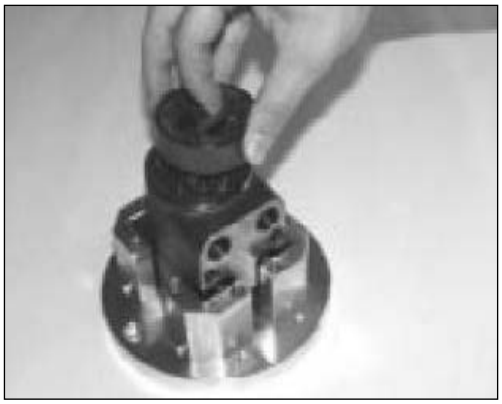

4. Remove the small flange.

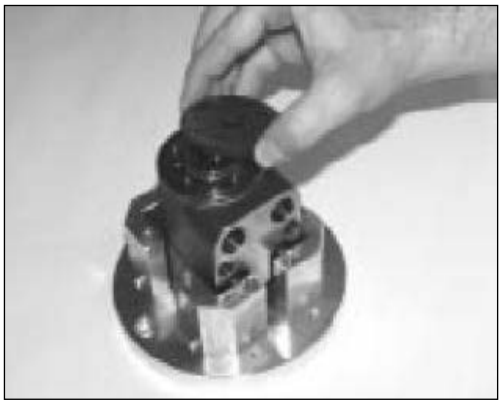

5. Remove the cardan shaft.



6. Remove O ring.

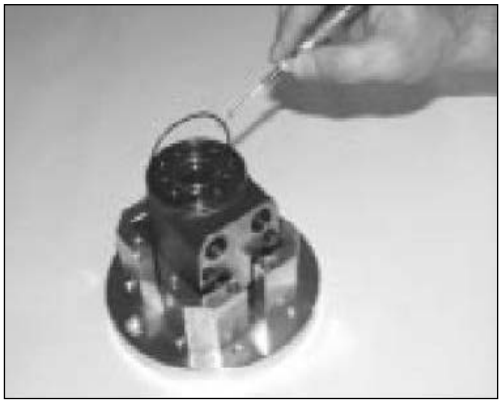

7. Shake out the check valve ball.



8. Hold the steering unit in horizontal position and press the spool carefully, in order to make the spool/sleeve assembly come out of the housing. Remove the spool/sleeve assembly completely. During this operation, keep the cross pin horizontal, to avoid the cross pin from getting stuck in the body.

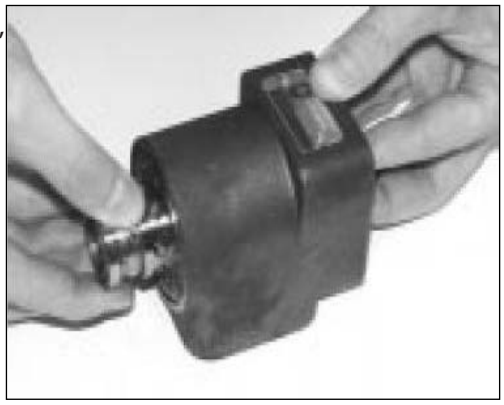

9. Remove the bearing assembly. Check that all bearing assembly (two bearing races and one roller bearing) has come out completely from the MST body).



10. Press out the cross pin. Use the special screw from the end cover.



11. In order to reassembly the unit correctly, a mark is to be left on the sleeve and spool before dismantling this part.



12. Press the spool carefully out of the sleeve.



13. Press the springs out of their slots in the spool.



14. Remove dust seal and rotary seal from the housing.

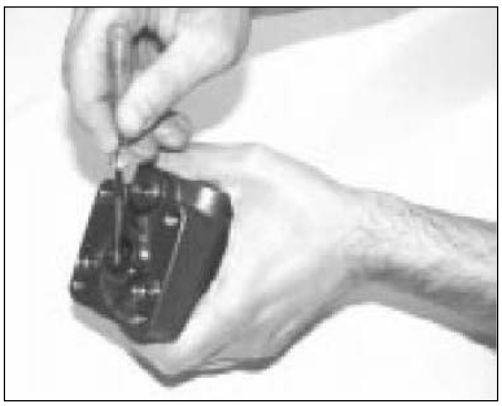

15. Remove plugs from shock valves using a 6 mm hexagon socket spanner.



16. Remove seal washers.



17. Shake out the two springs, the ball guides and the two valve balls.
The valve sets are bonded into the housing and cannot be removed.

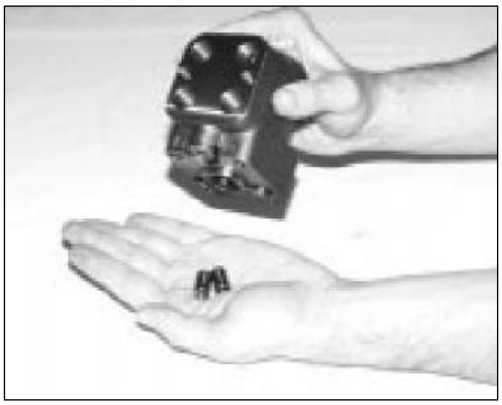

18. The anti shock valves are now dismantled.

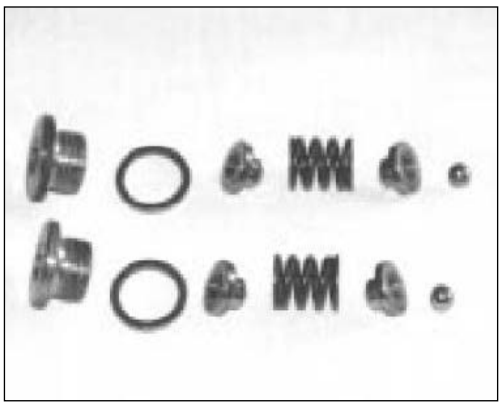

19. Screw out the plug using a 6 mm hexagon socket spanner. Remove the seal washer.



20. Shake out spring and piston. The valve seat is bonded to the housing and therefore cannot be removed.

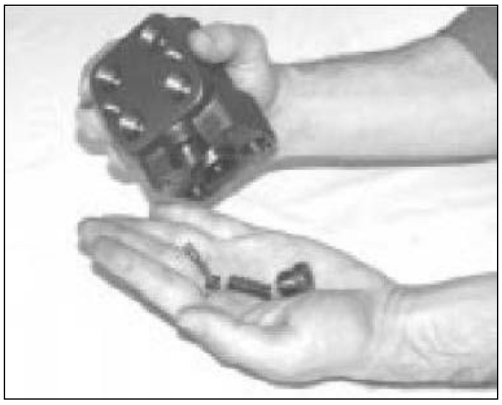

21. The relief valve is now disassembled.

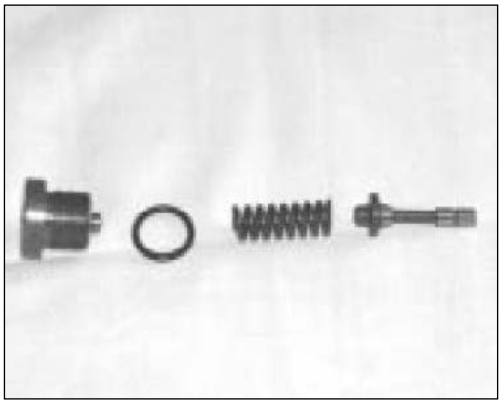

22. The LS steering unit is now completely disassembled.



Assemble

Clean all parts carefully in solvent. Replace all seals and washers. Check all parts carefully, if needed, carry out further replacements.

Before assembling, lubricate all parts with fresh hydraulic oil.

1. Guide the spool into the sleeve. Make sure that spool and sleeve are placed correctly in relation to each other (see point 11 in disassembly procedure).



2. Insert the tool as shown in the figure in the spring slot.



3. Assemble the springs as shown in the picture. Insert the springs in the slot of the tool and press them together using the pullers.

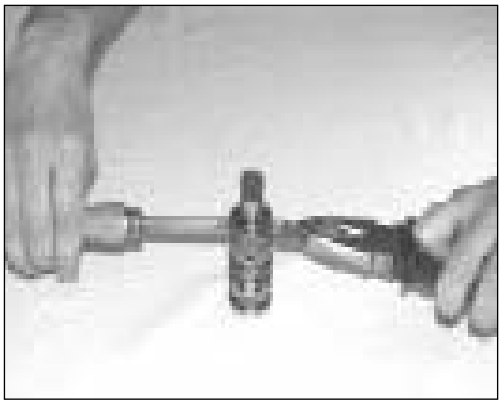

4. Push the neutral position springs into place in the sleeve.

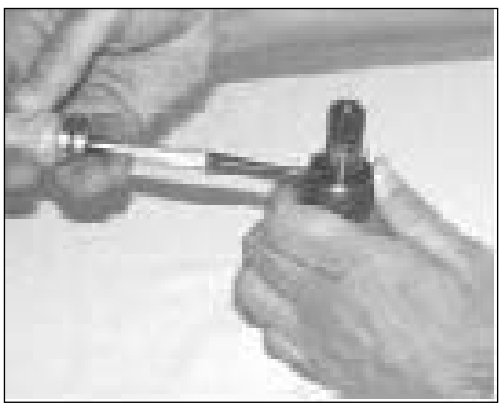

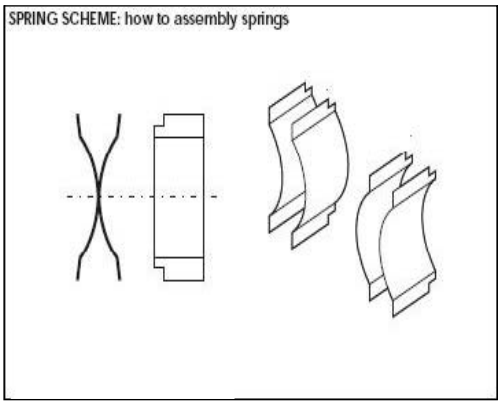

5. Fit the cross pin into spool and sleeve.



6. Insert the bearings package.

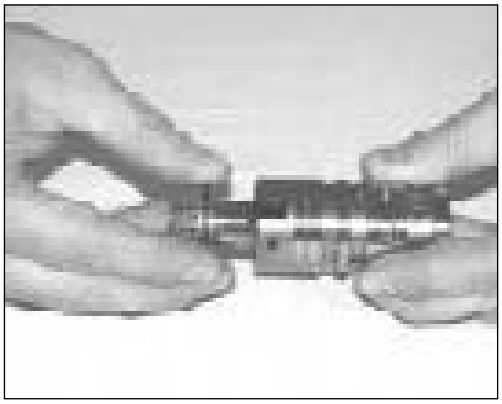

7. Assembly pattern for bearings.
   1. Bearing rage
   2. Needle bearing
   3. Bearing race
   4. Spool
   5. Sleeve

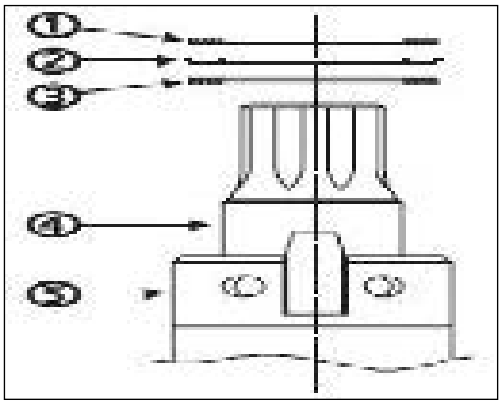

NOTE

The two races (1) and (3) are identical.

8. Grease rotary seal with hydraulic oil.

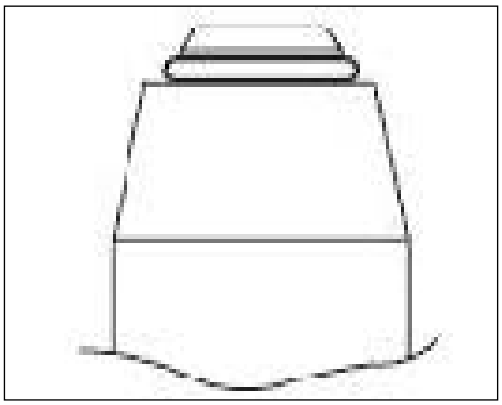

9. Place the steering unit with the bore in horizontal. With a rotating movement, guide the outer part of the assembly tool into the bore for spool/sleeve.



10. Unthread the rotary seal from the internal part of the tool in the housing, holding the outer part of the tool against the body of the steering unit and then guide the inner part of the tool right to the bottom.



11. With a light rotating movement, guide the lubricated spool and sleeve set into the lubricated bore. Make sure that the spool and sleeve are fully in contact with the bearing assembly and totally inserted in the body. Warning:

⚠ WARNING

Fit the spool and sleeve set while holding the cross pin horizontally.



12. Turn the unit so as to position the bore vertically again and make sure that spool and sleeve do not stick out of the housing. Put the check valve ball into the hole pointed by the arrow.

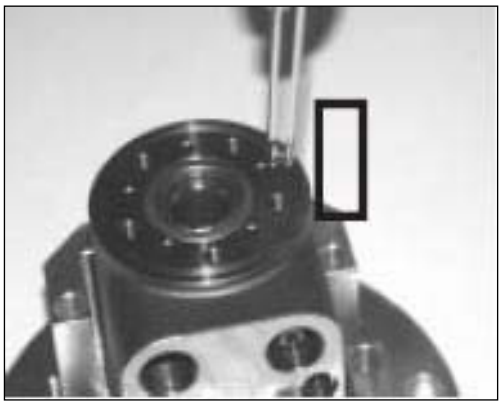

13. Place the two balls in the holes as pointed by the arrows.

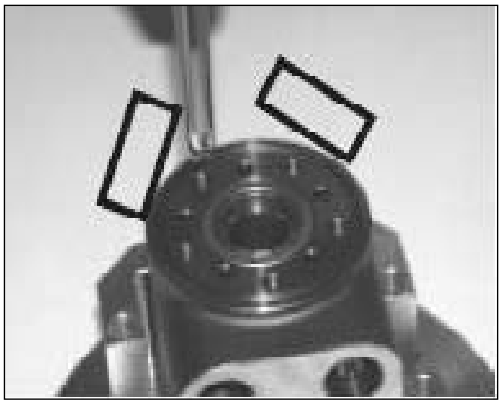

14. Place the two pins in the same two holes.

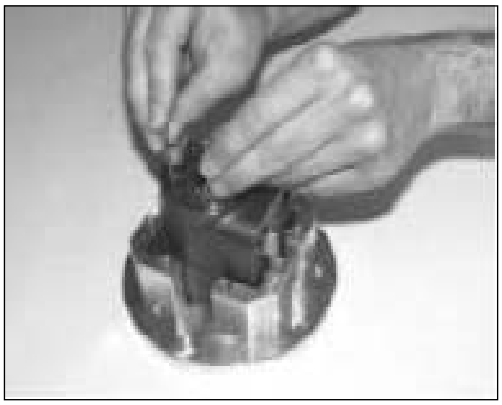

15. Lubricate the O ring with hydraulic oil and place it in the groove.

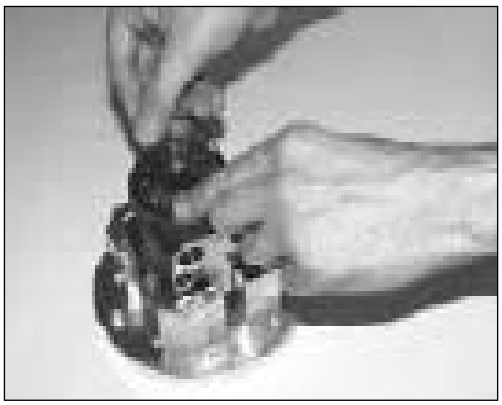

16. Drive the cardan shaft down into the bore together with the pin son that the slot and the pin itself are normal with the oil port flange.



17. Place the small flange so that the channel holes match the holes in the housing.



18. Lubricate the two O rings with hydraulic oil and place them in the two grooves in the gerotor. Fit the gerotor on the cardan shaft.



19. Fit the gerotor and cardan shaft so that the cross pin takes the position indicated in the drawing.

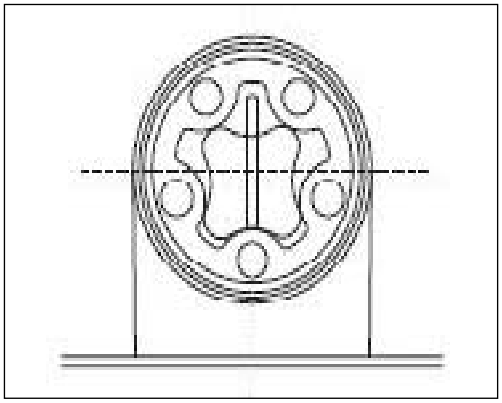

20. Fit the space if necessary.



21. Place the end cover in position.



22. Lubricate and insert the special screw with the new washer and place it in the indicated hole.



23. Drive the four screws with washers into the holes. Cross tighten all the screws with a torque of 13 Nm.



24. Cross tightening of screws and accurate torque is a key factor for good working of the steering unit.

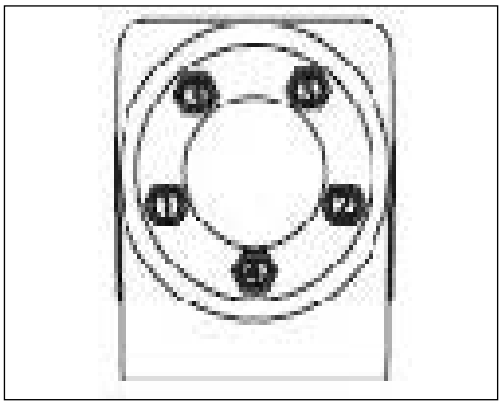

25. Check the free rotation of the spool with the tool. In case the necessary torque for rotation is higher than then the resistance of the spring (2.2 Nm), loosen the five screws and repeat the tightening.



26. Place the dust seal in the housing with the tool using the plastic hammer.



27. Insert the piston and verify the correct position in the seat.

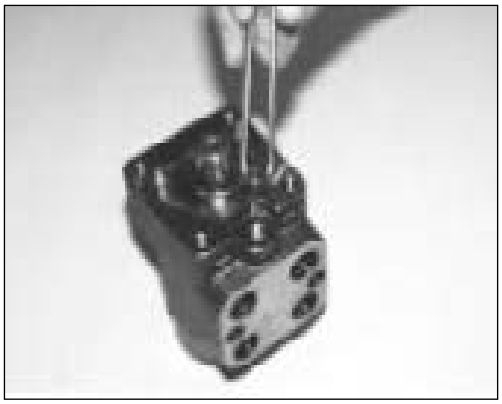

28. Insert the spring centered on the piston.



29. Screw plug with a new seal washer into the housing using a 6 mm hexagon socket spanner with a tightening torque of 20 Nm.

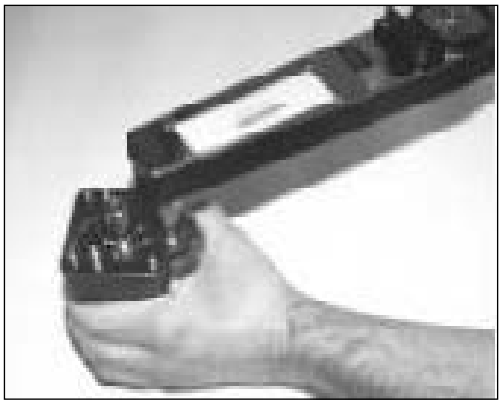

30. Put the balls in the two holes indicated by the arrows.

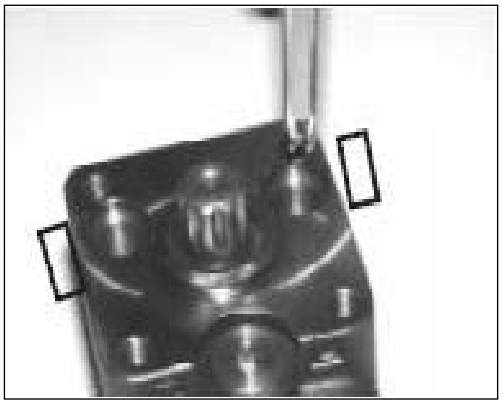

31. Place springs and valve cones over the two balls.

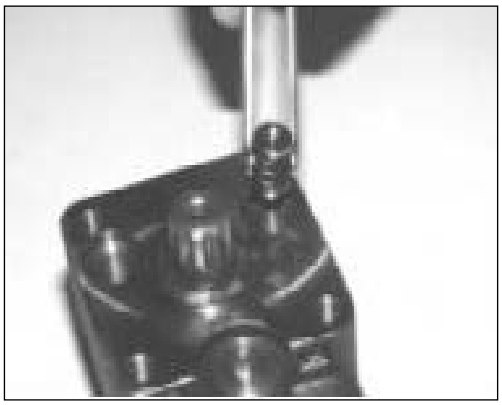

32. Screw the plugs with seal into the two anti shock valves and tighten them with a torque of 20 Nm using a 6 mm hexagon socket spanner.



70.30 STEERING SYSTEM OPERATION

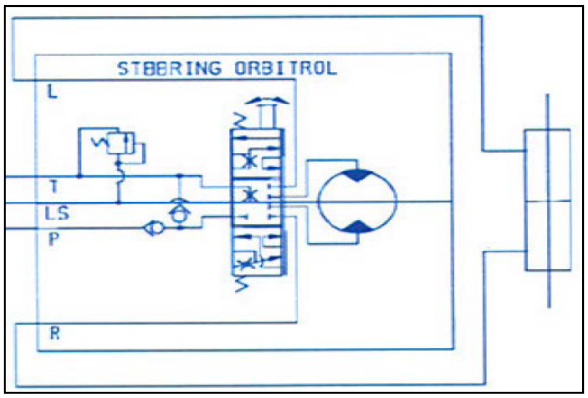

The steering system is a closed centre system. The steering system is part of the main hydraulic system. Hydraulic tank provides oil for both the steering and implement hydraulic system. The oil than returns to the tank is first filter, cooled before returning to the hydraulic tank. If you operate the machine, oil flows from the hydraulic tank to the hydraulic pump. The oil then flows into the priority valve. The oil that is not used by the steering system flows to the loader/backhoe control valve. The priority valve contains the spool for the priority valve. The steering orbital valve is located behind a panel in the operator station. The steering orbital valve is connected to the steering column. Oil flows from the priority valve into the steering orbital through an inlet check valve.

When the steering wheel is not turning, the oil from pump P1 flows to the loader / backhoe control valve and back to tank. An inlet check valve in the metering pump (steering) prevents steering kickback in the event of external forces. The check valve is between the pump supply and the ports for return oil. The two check valves allow steering capability when the engine is not running. The check valve allows oil to flow from the hydraulic tank. This oil flows to the inlet for the metering pump. The oil flows in order to re-circulate between the metering pump and the steering cylinder.

Front steering cylinder is located on the front axle. The cylinder has one piston and the cylinder is double ended with two rod ends. When you turn the steering wheel, the metering pump directs oil to one site of the piston.

70.31 STEERING METERING PUMP

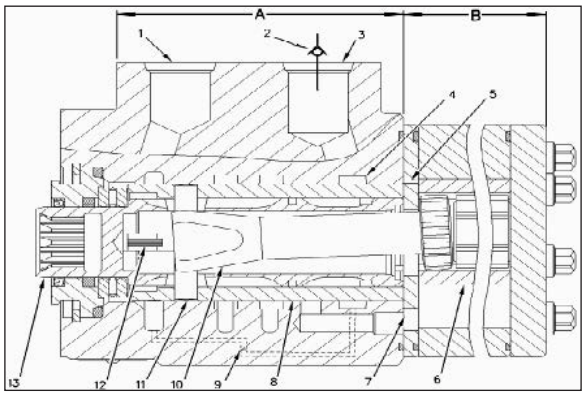

The metering pump has two main section, control section (A) and pump section (B). These two sections work together in order to send oil to the steering cylinder. The metering pump is located in the front of the can behind a panel near the steering column. Both the direction of a turn and the speed of a turn are controlled by the metering pump. As the steering wheel is turned faster, there is an increase in the flow of oil to the steering cylinder. The increased flow of oil to the steering cylinder causes the steering cylinder to move farther. The increased flow oil also causes the steering cylinder to move faster. This causes the machine to turn faster.

When the steering wheel is not being turned, control section (A) is in the NEUTRAL position. The metering pump is a closed centre valve so there is no alignment between the passages in the spool and orifice in the sleeve in this position. In the neutral position, the oil that flows into control sections (A) flows through orifices to the hydraulic tank. This allows cooler oil to enter the metering pump. The pump has a port for the load sensing signal. The line from this port is connected to the priority valve. Some of the flow of the inlet oil that is in the neutral position also flows back to the priority valve. This oil keeps the spool in the priority valve slightly open. This oil keeps the spool ready for a quick response to the steering demands.

When the steering wheel is turned for a right turn, pump oil opens check valve (2) and flows into the metering pump through inlet (3) and passage (4). The oil flows from passage (4) into gerotor (6) through passage (7). As the steering wheel turns, gerotor pump (6) turns. This causes the flow of oil from the pump. The oil flows through passage (5). The oil is then directed to the steering cylinders through the right turn port. As the oil flows out to the cylinder through the right port for a right turn, return oil from the cylinder is coming back into the metering pump through the left port. This oil is sent to the tank through outlet (1). When the steering wheel starts to turn, shaft spool (13) drive pin (11) and drive (10) also start to turn. Sleeve (8) does not start to turn at the same time as the spool because the diameter of the holes in the sleeve

is slightly larger than the diameter of the drive pin (11). This allows shaft spool (13) to turn inside sleeve (8). As the shaft turns, small holes align with the grooves. The alignment of these holes and grooves provides the path for oil flow to gerotor (6) and to the steering cylinder. Centering springs (12) are compressed, when the spool moves in relation to the sleeve. When the steering wheel is not turning, centering springs move the spool to a neutral position. When the rotation of the steering wheel is stopped, the wheels stay in that position. The steering wheel must be turned in the opposite direction in order to make a left turn. The steering wheel must be turned in the opposite direction for travel that is straight.

70.32 SPOOL AND SLEEVE

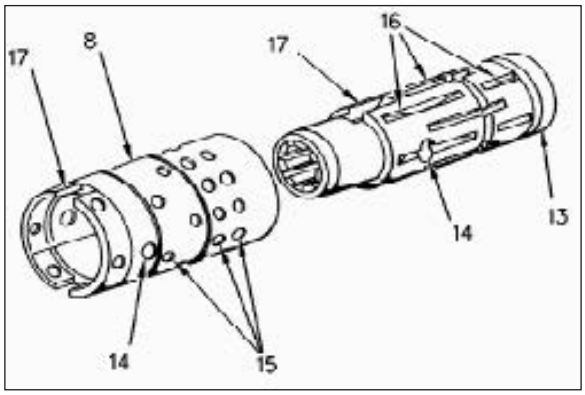

When the steering wheel is turned for a left turn, oil flows into inlet (3). Oil flows through passage (4) and oil flows through passage (7) into gerotor (6). Oil flows from gerotor (6) through passage (5) and oil flows through sleeve. Oil flows through the combination of the shaft and spool. The sleeve and the shaft spool are turned in the opposite direction of the right hand turn. The movement in the opposite direction allows a different allows a different set of holes to line up. The movement in the opposite direction provides a path for oil to the left turn port. Oil flows from the left turn port to the steering cylinder.

70.33 PUMP GEARS IN THE PUMP SECTION

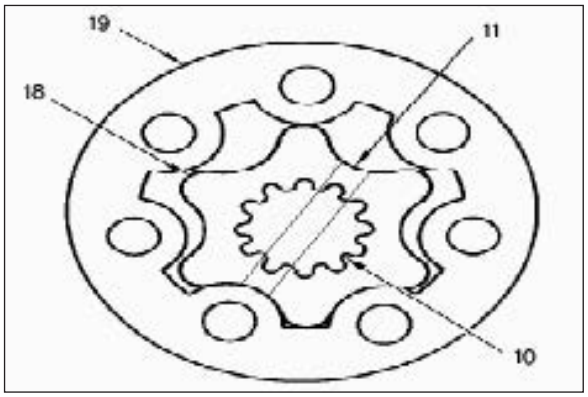

If the unit is taken apart for any reason, drive pin (11) and rotor (18) must be aligned, before the unit is reassembled.

70.34 TESTING & ADJUSTING

NOTE

At 2000 engine rpm with 23 Deg C (approx) ambient temperature , the steering wheel has 5-7 degrees of free play when it is measured during the start of the steering wheel actuation in normal operating condition in a 4WD / standard tyre machine.

STEERING SYSTEM PRESSURE CHECK

1. Work the machine until the temperature of the hydraulic oil reaches 50^{0}C.
2. Park the machine on firm and flat ground.
3. Dump the bucket, raise the loader beam and install the safety strut.
4. Stop the engine and release the pressure from the hydraulic system.
5. Open the hood.
6. Install a pressure gauge 0 – 400 bar at test port D.
7. Start the engine and run at 2200 rpm.
8. Turn the steering wheel to full lock on either directions and check the relief pressure setting. The pressure gauge should read 170 to 175 bar.
9. Adjust the relief valve in the orbital steering unit if the pressure is not within specification.

ADJUSTMENT

NOTE

The relief valve need not to be adjusted unless the steering system pressure is not correct on test. The valve can be adjusted on the machine or on a test bench. This instruction describes setting on the machine.

1. Park the machine on firm level ground.
2. Fully crowd the bucket, raise the loader beam and install the safety strut.
3. Lower the backhoe stabilizer to the ground. Do not raise the machine.
4. Stop the engine and release pressure from hydraulic system.
5. Install the test equipment.
6. Remove the plug (1) from the steering unit (4) and turn the setting plug (3) in or out by one turn.

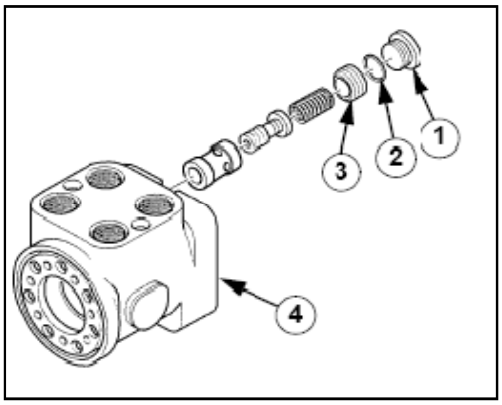

NOTE

To increase system pressure, screw the setting plug (3) in. To reduce system pressure, screw the setting plug (3) out.

7. Install the plug (1) in the steering unit and carry out the relief valve test.
8. Note the change in pressure and carryout further adjustments to set the correct pressure if required.
9. After the final adjustment, install a new O ring seal (2) on the plug (1) and install the plug (1).
10. Remove the test equipment.

70.35 TROUBLESHOOTING

Problem	Possible cause	Corrective actions
Oil leaking from circuit	1. Non efficient seals of the steering unit 2. Oil leakage from the oil port of the distributor, either of pump or of steering cylinders	1. Replace the seals 2. Tighten the fittings according to torque. If necessary, replace the oil seals
Hard steering	1. Air in the circuit 2. Incorrect setting of relief valve 3. Circuit contaminated 4. Too low input pressure from the pump 5. Too low oil level 6. Throat on the suction pipe	1. Vent the circuit 2. Correct setting, clean anti shock valve 3. Flux circuit, clean anti shock valves 4. Check and eventually replace the pump 5. Fill up to the correct oil level 6. Change the pipe run and eventually replace it
Noise in the power steering system	1. Too little oil in the system 2. Air in the circuit 3. Loose fittings on suction line	1. Refill with recommended oil to correct oil level, then continue to let out air 2. Vent the circuit 3. Fasten plugs according to recommended torque
Stuck steering unit	1. Unclean oil 2. Overheated oil	1. Replace steering unit and eliminate the causes for overheating and/or the origin of contamination
The steering wheel is turning by its own and constant correction of driving wheel is necessary	1. Defected neutral position springs	1. Replace the neutral position springs
Impossible to bring the steering wheel in neutral position	1. Impurities between spool and sleeve	1. Clean spool and sleeve
Oscillation of wheels	1. Air in the circuit 2. Wearing of ball joint and of driving wheel bearings	1. Vent the circuit 2. Replace the defected parts
Turning the steering wheel makes no steering or there is no stop at the end of the steering	1. Steering cylinder with worn piston bearings 2. Worn gerotor group	1. Replace seals 2. Replace internal gerotor group
Wheels are turning jerky	1. Incorrect setting between sleeve and internal gear of the steering unit	1. Remake setting

80

ELECTRICITY

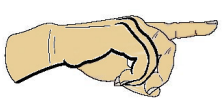

Intentionally Left Blank

TABLE OF CONTENTS

80.1 STARTER MOTOR 5
80.2 WINDSCREEN WIPER MOTOR 5
80.3 REMOVAL & INSTALLATION OF BATTERY 6
80.4 FRONT WORKLIGHT BULB 7
80.5 REAR WORK LIGHT 7
80.6 REPLACEMENT OF FRONT & REAR WORK LIGHT BULB 8
80.7 FRONT HEAD LIGHT 8
80.8 TAIL LAMP 9
80.9 INSTRUMENTS & CONTROLS 9
80.10 FORWARD/REVERSE SWITCH 10
80.11 ALTERNATOR 10
80.12 TESTING & ADJUSTING 10
80.13 GENERAL DIAGNOSIS 11
80.14 TESTING CABLE CONTINUITY 11
80.15 TESTING THE VOLTAGE REGULATOR 11
80.16 TESTING THE VOLTAGE DROP 12
80.17 TESTING THE ALTERNATOR OUTPUT 12
80.18 TESTING THE BATTERY VOLTAGE UNDER LOAD 12
80.19 TESTING THE STARTER MOTOR TERMINAL VOLTAGE UNDER LOAD 13
80.20 TESTING THE VOLTAGE DROP ON THE INSULATED LINE 13
80.21 TESTING THE VOLTAGE DROP ACROSS THE SOLENOID CONTACTS 13
80.22 TESTING THE VOLTAGE DROP IN EARTH LINE 13
80.23 TESTING THE CONTINUITY OF CONTACTS 14
80.24 TESTING THE VOLTAGE DROP ACROSS THE CONTACTS 14
80.25 TESTING THE OPEN CIRCUIT VOLTAGE (BATTERY) 14
80.26 DIAGNOSTIC TEST WITH THE BATTERY FITTED ON THE MACHINE 15
80.27 ELECTRICAL HARNESS 16

80.27.1 LEFT HEAD LAMP HARNESS (KIRLOSKAR & PERKINS) 17
80.27.2 RIGHT HEAD LAMP HARNESS (KIRLOSKAR & PERKINS) 18
80.27.3 RELAY & FUE BOX W/H KOEL WITH MBF EASY MANAGER (KIRLOSKAR) 19
80.27.4 FRONT CONSOLE HARNESS (KIRLOSKAR) 20
80.27.5 SIDE CONSOLE HARNESS (KIRLOSKAR & PERKINS) 21
80.27.6 CHASSIS HARNESS- KIRLOSKAR BSIII 22
80.27.7 ROOF HARNESS-KIRLOSKA 23
80.27.8 PIGTAIL COLD START HARNESS-KIRLOSKAR 24
80.27.9 ENGINE HARNESS -PERKINS 25
80.27.10 RELAY & FUE BOX W/H KOEL WITH MBF EASY MANAGER (PERKINS) 26
80.27.11 WIRING HARNESS-ROOF (PERKINS) 27
80.27.12 FRONT CONSOLE HARNESS (PERKINS) 28
80.27.13 CHASSIS HARNESS WITHOUT AIRCON (PERKINS) 29
80.27.14 WIRING HARNESS -ROCK BREAKER 32

80.28 ELECTRICAL SCHEMATIC 33

80.28.1 STARTING CIRCUIT-KIRLOSKAR 33
80.28.2 FRONT & SIDE INSTRUMENT CLUSTER-KIRLOSKAR 34
80.28.3 SPEEDOMETER -KIRLOSKAR 35
80.28.4 AIR CONDITIONING -KIRLOSKAR..... 36
80.28.5 FORWARD /REVERSE -KIRLOSKAR 37
80.28.6 HORN , CAB LIGHT & CAB FAN -KIRLOSKAR 38
80.28.7 DIFF LOCK , 4WD & CLAMP -KIRLOSKAR 39
80.28.8 HEAD LIGHT LH & RH -KIRLOSKAR 40
80.28.9 REAR WORKING LIGHT -KIRLOSKAR 41
80.28.10 BRAKE LIGHT -KIRLOSKAR 42
80.28.11 FRONT WORKING LIGHT -KIRLOSKAR 43
80.28.12 RADIO -KIRLOSKAR 44
80.28.13 WIPER MOTOR -KIRLOSKAR 45
80.28.14 STARTING CIRCUIT-PERKINS 46
80.28.15 SPEEDOMETER -PERKINS 47
80.28.16 SIDE INSTRUMENT PACK-PERKINS 48
80.28.17 GLOW PLUG- PERKINS. 49
80.28.18 AIR CONDITIONING -PERKINS 50
80.28.19 HORN , CAB LIGHT & CAB FAN -PERKINS 51
80.28.20 4WD & CLAMP -PERKINS 52
80.28.21 FORWARD /REVERSE -PERKINS 53
80.28.22 FRONT WORKING LIGHT-PERKINS 54
80.28.23 REAR WORKING LIGHT -PERKIN..... 55
80.28.24 HEAD LIGHT LH & RH-PERKINS 56
80.28.25 BRAKE LIGHT -PERKINS 57
80.28.26 INDICATORS & HAZARD LIGHT-PERKINS 58
80.28.27 WIPER MOTOR -PERKINS..... 59
80.28.28 RADIO-PERKINS 60

80.1 STARTER MOTOR

REMOVAL

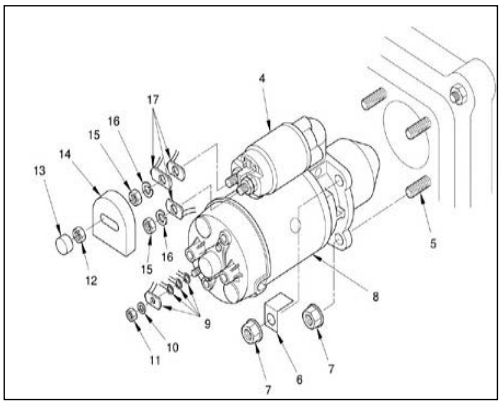

1. Disconnect the battery.
2. Make sure the key is removed from the start switch on the side console.
3. Remove the protective cover (13), the nut (12) and the cover (14) from the solenoid (4).
4. Note the installed position of the electrical cables (9) and (17).
5. Remove the nut (11), the washer (10) and disconnect the four electrical cables (9) from the starter motor (8).
6. Remove the two nuts (15), the two washers (16) and disconnect the three electrical cables (17) from the solenoid (4).
7. Attach the electrical cables (9) and (17) to the structure of the engine with temporary ties.
8. Support the starter motor (8) and solenoid (4). Remove the three nuts(7) and the P clip mounting bracket (6) from the studs (5).
9. Slide the starter motor (8) together with the solenoid (4) from the studs (5) and remove from the engine.
10. Put a warning sing in the can to tell persons not to start the engine.

INSTALLATION

⚠ NOTE

The installation of the starter motor is the reverse of the removal procedure.

Install the starter motor in the reverse order of the removal but note the following:

- Torque tighten the nuts (12) to 12 Nm
- Torque tighten the nut (11) to 6 Nm

Tightening torque	Nm
Solenoid main	6
Cable fixing nut	9
Solenoid terminal M8 nut	6
Solenoid terminal M10	9
Starter terminal ¼ nut	12
Solenoid end cover screws	2
Solenoid unit screw	6
Starter earth nuts	8
Through bolts	11

80.2 WINDSCREEN WIPER MOTOR

REMOVAL

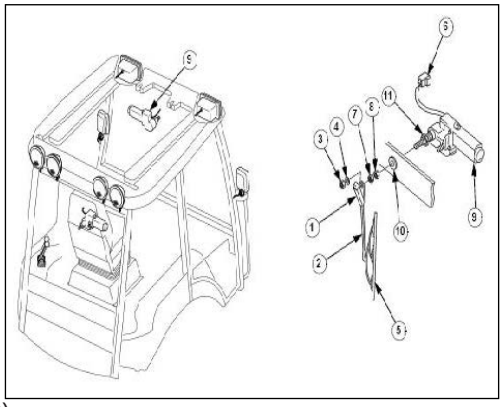

1. Remove the front windscreen motor as follows-
2. On the front cluster, set the front windscreen wiper switch to the off position.
3. Pull back the spring loaded cover (1) of the wiper arm (2).
4. Remove the nut (3) and the lock washer (4).
5. Remove the wiper arm (2) and the wiper blade (5).
6. Pull down the visor for access
7. Remove the screws and the washers of the front roof. Move the front roof to access the wiper motor (9).
8. Disconnect the washer tube from the rear of the washer jet. Blank off the washer tube.
9. Disconnect the electrical connector (6) from the wiper motor.
10. Remove the nut (7) and (8).
11. Carefully pull the drive shaft of the wiper motor through the grommet(10).
12. Not the position of the nut (11) on the drive shaft of the wiper motor (9).

INSTALLATION

⚠ NOTE

The installation of the front windscreen wiper motor is the reverse of the removal.

After installation, check the operation and range of movement of the front windscreen wiper

⚠ NOTE

To prevent damage to the wiper blade (5), do not operate the windscreen wiper over a dry wind screen.

80.3 REMOVAL & INSTALLATION OF BATTERY

1. Unlock the grill lock (1) by turning the key in counter clock direction .
2. Remove the bonnet grill (2)



3. Unlock the battery cover plate lock (3) with key (4) .
4. Key is provided with the machine keys .



5. Battery is secured by 2 J-bolts (5) and L-bracket (6) .
6. Remove the battery cables.
7. Remove the battery carefully.



⚠ NOTE

Installation is reverse of the removal.

80.4 FRONT WORK LIGHT BULB

REMOVAL

⚠ NOTE

The information given is applicable to the front left work light. The procedure for the front right work light is identical to the front left work light. Front right work light components are identified in parentheses after the front left work light components.

1. Remove the screw (1).
2. Release the work light (3) from the structure.
3. Disconnect the electrical connector (4).
4. Remove the work light from the machine.

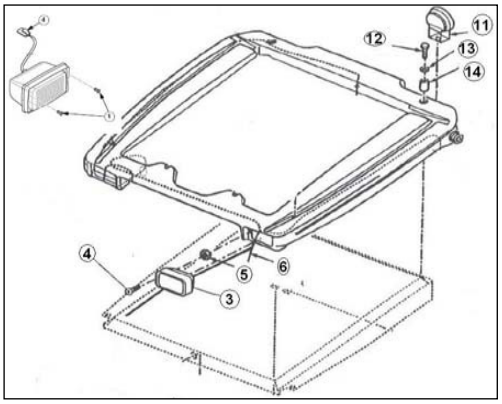

INSTALLATION

⚠ NOTE

The installation of a front work light is the reverse of the removal.

After installation, on the side console, operate the front work light switch. Make sure the front work lights (2) operate correctly.

80.5 REAR WORK LIGHT

REMOVAL

⚠ NOTE

The information given is applicable to the rear left work light. The procedure for the rear right work light is identical to the rear left work light. Rear right work light components are identified in parentheses after the rear left work light components.

1. Support the work light (11) and remove the bolt (12), washer (13) and nut (14).
2. Disconnect the electrical connector (4).
3. Remove the work light (11) from the machine.

INSTALLATION

Install a rear work light in the reverse order of the removal but note the following:

1. After installation, on the side console, operate the rear work light switch. Make sure the rear work lights operate correctly.
2. If necessary, loosen the nut (14) and set the angle of the work light to required position.

80.6 REPLACEMENT OF FRONT & REAR WORK LIGHT BULB

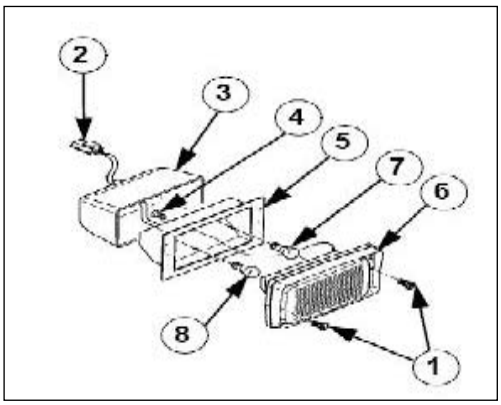

1. Make sure the applicable front work light is set to off.
2. Remove the screw (1).
3. Disconnect the electrical connect (2).
4. Disengage the runner cover (3).
5. Remove the screw (4), separate the reflector (5) and the cover (6).
6. Hold the replacement bulb (7) or (8) in a clean cloth or paper tissue, connect the electrical leads. Install the bulb (7) or (8) in the reflector (5).

> **NOTE**
> You must not touch the quartz halogen bulbs. Fingerprints will blacken the bulb and reduce the light output.

7. Put the reflector (5) and the cover (6) in position and install the screw (4).
8. Install the rubber cover (3).
9. Connect the electrical connector (2).
10. Install the front light to the structure.
11. Set the applicable front work light switch to on. Make sure the applicable front work light comes on. Set the applicable front work light switch to off. Make sure .the applicable front work light goes out

80.7 FRONT HEAD LIGHT

REMOVAL

The information given is applicable to the left front head light. The procedure for the right front light is identical to the left front head light components are identified in parentheses after the left front head light components.

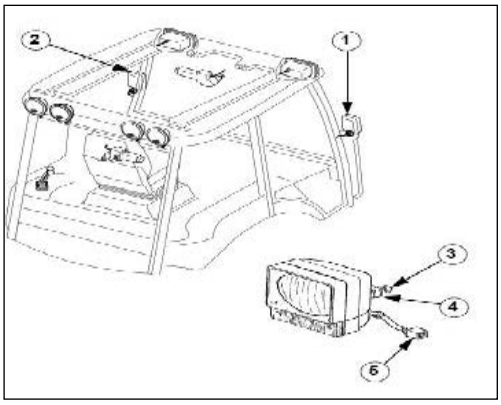

Support the front light (1), (2) and remove the nut (3) and the washer (4).
Disconnect the electrical connector (5).
Remove the front light (1), (2) from the machine.

INSTALLATION

Install the front head light in the reverse order the removal but note the following:
1. After installation, operate the switch indicator. Make sure the front light (1) and (2) operate correctly.
2. If necessary, loosen the nut (3) and set the angle of the light (1), (2) to the required position and tighten the nut (3).

REPLACEMENT

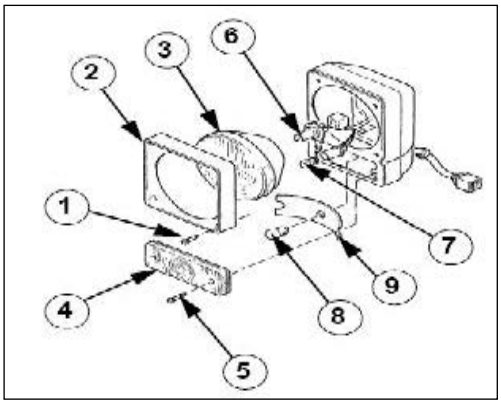

This information is applicable to all front light.
1. Make sure the switch indicator is set to off.
2. Remove the screws (1), the bezel (2) and the reflector (3).
3. Remove the screws (5) and the lens (4).
4. Hold the replacement bulb dip beam/main beam (6) in a clean cloth or paper tissue, connect the electrical lead. Install the bulb (6) in the reflector (3).
5. Hold the replacement bulb light front (7) or the bulb turn indicator (8) in a clean cloth or paper tissue, install the bulb (7) in a reflector (3) and the bulb (8) in a reflector (9).

> **NOTE**
> You must not touch the quartz halogen bulbs. Fingerprints will blacken the bulb and reduce the light output.

6. Put the lens (4) in position and install the screw (5).
7. Put the reflector (3) and the bezel (2) and install the screws (1).
8. Set the switch indicator to on. Make sure the dip beam, main beam, light and turn indicator comes on. Set the switch indicator to off. Make sure the dip beam, main beam, light and turn indicator goes out.

80.8 TAIL LAMP

REMOVAL

⚠ NOTE

The information given is applicable to the left tail lamp. The procedure for the right tail lamp is identical to the left tail lamp.

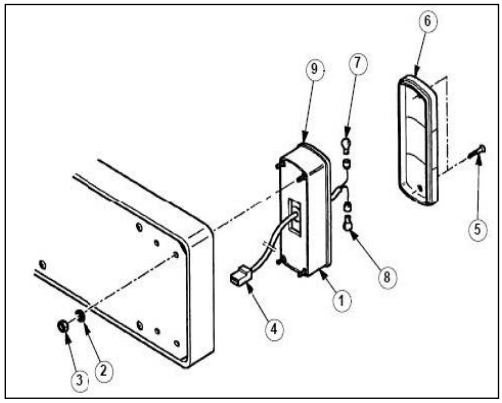

1. Support the tail lamp (1) and remove the nut (3) and the washer (2).
2. Disconnect the tail lamp harness connector (4).
3. Remove the tail lamp (1) from the machine.

INSTALLATION

⚠ NOTE

The installation of a rear light is the reverse of the removal.

After installation, operate the switch operator (light and turn indicator) and the stop light switch (stop light). Make sure the rear light operate correctly.

REPLACEMENT

Make sure the switch indicator and the stop light are set to off.
Remove the screws (5) and the lens (6).
Hold the replacement stop and light bulb (8) and turn indicator bulb (7) in a clean cloth or paper tissue. Install the bulb (7) and (8) in the reflector (9).

80.9 INSTRUMENTS & CONTROLS

REMOVAL

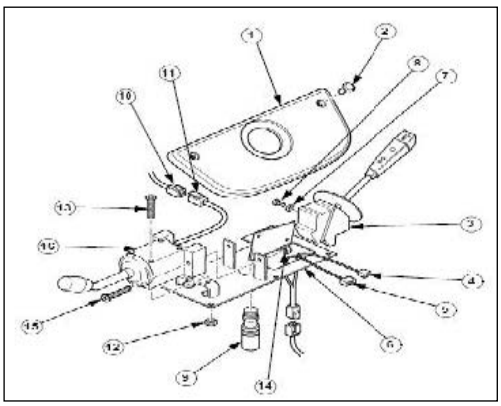

Removing the combination switch as follows:

1. Remove the steering wheel.
2. Remove the screws (2).
3. Remove the panel (1) of the steering column (9) to access the combination switch (3).
4. Remove the screws (8) and the washers (7) and move the combination switch (3) away from the bracket (6).
5. Note the positions and disconnect the electrical connectors (4) and (5) from the combination switch (3). Attach the electrical connectors (4) and (5) to the bracket (6) with temporary ties.

INSTALLATION

⚠ NOTE

The installation of the combination switch is the reverse of the removal.

After installation, do operational checks of the functions of the combination switch (3).

80.10 FORWARD/REVERSE SWITCH

REMOVAL

Remove the forward/reverse switch as follows:

1. Remove the steering wheel.
2. Remove the screw (2).
3. Remove the panel (1) of the steering column (9) for access.
4. Disconnect the electrical connector (10) from the electrical connector (11). Attach the electrical connector (10) to the structure with temporary ties.
5. Remove the nuts (12) and the screws (13).
6. Remove the nuts (14) and the screws (15) and the forward/reverse switch (16).

INSTALLATION

NOTE

The installation of the forward/reverse switch is the reverse of the removal.

After installation, do operational test of the function of the forward/reverse switch (16).

80.11 ALTERNATOR

REMOVAL

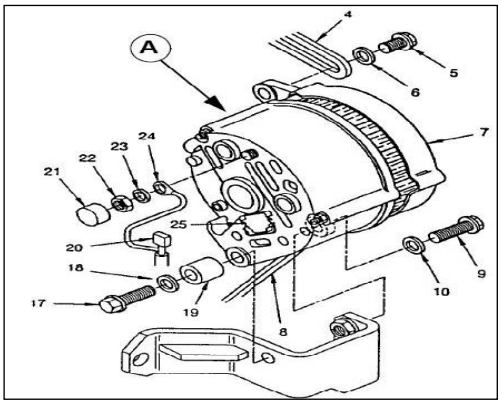

1. Disconnect the battery.
2. Note the installed positions of the electrical cables.
3. Release the connector clip (25) and disconnect the electrical connector (20) from the alternator (7).
4. Remove the protective cap (21), the nut (22) and the washer (23). Disconnect the electrical cables (@4) from the alternator (7).
5. Attach the disconnected electrical cables to the structure of the engine with temporary ties.
6. Remove the bolts (5)and the washer (6) from the lever (4) and the alternator (7).
7. Loosen the bolts (9) and (17)
8. Turn the alternator (7) until you can slide the fan belt (8) from the pulley of the alternator.
9. Support the alternator and remove the bolts (9) and (17), the washers (10) and (18) and the spacer (19).
10. Lift the alternator (7) from the machine. Put a warning sign in the cab to tell persons not to start the engine.

INSTALLATION

Install the alternator in the reverse order of the removal but note the following:

1. After installation, adjust the belt tension.
2. After installation and electrical connection, test the alternator output.

80.12 TESTING & ADJUSTING

Preliminary testing of the charging circuit

NOTE

Preliminary testing may rectify a fault in the charging circuit and prevent the requirement to carry out other tests contained in this section.

Test the charging circuit as follows:

1. Open the hood.
2. Examine the circuit cables connections. Make sure the connections are clean and tight.
3. Examine the components and wiring of the circuit. Make sure there are no sign of damage or overheating.
4. Examine the battery and the battery connections. Make sure the battery and the battery connections are in good condition.
5. If the above preliminary tests do not rectify the fault, continue the fault diagnosis process.
6. When the fault is rectified, close the hood.

80.13 GENERAL DIAGNOSIS

Battery indicator lights stays out under all conditions	
Flat battery	Test battery
Bad connection or broken cables	Continuity test
Blown bulb or faulty switch	Continuity test
Battery indicator light stays on under all conditions	
Internal short circuit	To test diode, wire into a battery circuit (two wires and a 5 watt bulb. When the terminal is connected to positive and the body to negative, the bulb should not light. If it does, fit a new diode. The bulb should light when the connector are reversed
Battery indicator light stays on (dims as engine speed increased, goes out at high engine speed	
Short circuit to earth	Continuity test. Voltage drop test
Slack fan belt	Retighten or replace
Battery not charging	
Battery in poor condition	Test open circuit voltage. Charge/replace battery as necessary
Battery overcharging (early bulb failure, high consumption of distilled water	
Voltage control	Voltage regulator test. Change regulator
Battery indicator light on when engine stationary (dims at cut in speed and remains dim at high speed)	
Internal short circuit	Maximum output test. Service or change the alternator

80.14 TESTING CABLE CONTINUITY

1. Open the hood.
2. If necessary, remove the protective cap from the main stud terminal (7).
3. Set the start switch (2) to the run position and check that the warning light (1) illuminates.
4. Using a voltmeter, check for battery voltage at the alternator main output lead (5) or the main stud terminal (7). If the voltmeter shows a low or zero voltage, inspect the electrical wiring for damage and the connections for security.
5. Use a voltmeter, check for battery voltage at the indicator cable (6). If the voltmeter shows a low or zero voltage, inspect the electrical wiring for damage and the connections for security.
6. Set the start switch to off.
7. Remove the voltmeter.
8. If necessary, install the protective cap on the main stud terminal (7).
9. Close the hood.

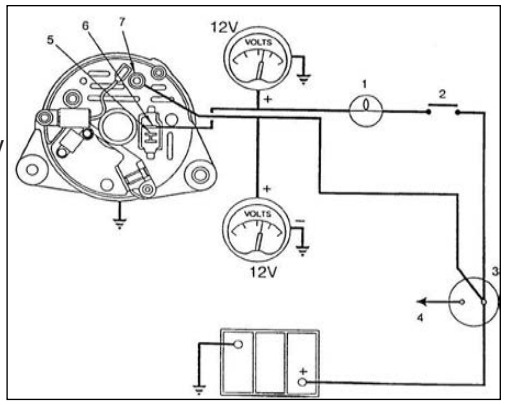

80.15 TESTING THE VOLTAGE REGULATOR

1. Make sure, before you test the voltage regulator, that a well charged battery is installed on the machine.
2. Open the hood.
3. If necessary, remove the protective cap from the main stud terminal (6).
4. Disconnect the battery earth cable.
5. Connect an ammeter in series with the main output lead (5) or the main stud terminal (6) form the alternator. Connect a voltmeter across the battery terminals.
6. Reconnect the battery earth cable.
7. Start and run the engine at maximum speed unit the ammeter reading is less than 10A.
8. Set the engine speed to 1000 RPM. Make sure the voltmeter shows a reading between 14.0 to 14.4V. if the reading is higher, there is a high resistance in the circuit.
9. If necessary, locate and rectify the high resistance in the circuit.
10. Switch the engine off.
11. Remove the voltmeter and ammeter from the machine.
12. If necessary, install the protective cap on the main stud terminal (6).
13. Close the hood.

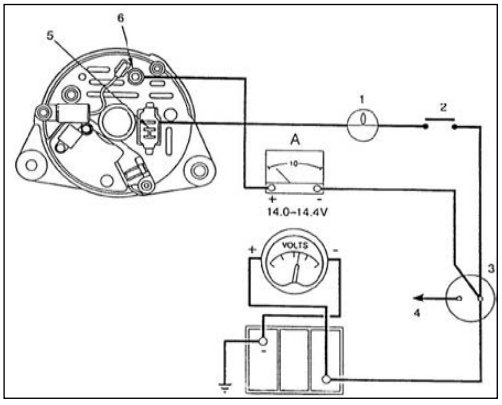

80.16 TESTING THE VOLTAGE DROP

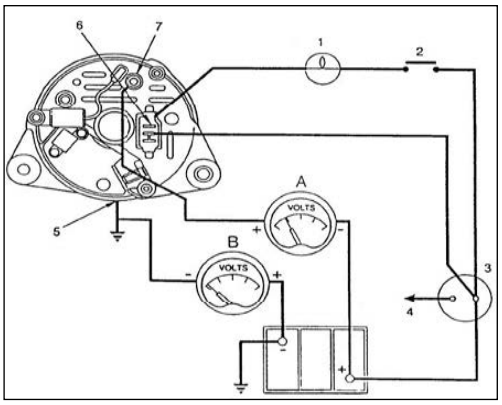

1. Open the hood.
2. If necessary, remove the protective cap from the main stud terminal (7).
3. Connect a voltmeter between the battery positive terminal and the alternator main output lead (6) or the main stud terminal (7).
4. Start and run the engine at maximum speed.
5. Switch on all vehicle electrical loads. Make sure the voltmeter (A) reading is not more than 0.5V.
6. Switch the engine off.
7. Disconnect the voltmeter.
8. Connect the voltmeter between the battery earth terminal and the alternator body (5).
9. Start and run the engine at maximum speed. Switch on all vehicle electrical loads. Make sure the voltmeter (8) reading is not more than 0.25V.
10. Switch the engine off.
11. Remove the voltmeter from the machine.
12. If necessary, install the protective cap on the main stud terminal (6).
13. Close the hood.

80.17 TESTING THE ALTERNATOR OUTPUT

⚠ NOTE

This test can be done while the alternator is still installed on the machine, but you must disconnect all the vehicle wiring from the alternator and use the slave leads, the battery and the bulb.

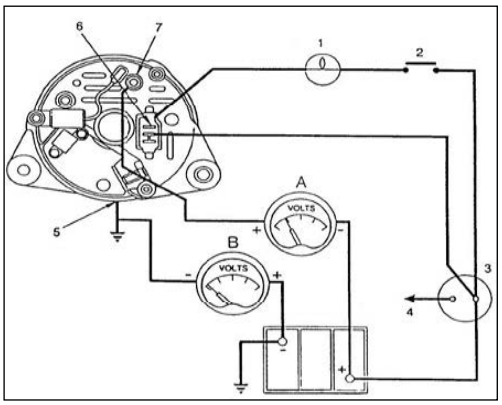

1. Connect the alternator into the circuit shown, but do not start the engine or run the alternator.
2. Adjust the variable resistance (1) until the ammeter registers equal to or just above the alternator maximum rated output.
3. Start the engine.
4. Slowly increase the speed of the alternator.
5. Use the photo tachometer to set the engine speed to 542 RPM or set the alternator speed to 1500 RPM. Make sure the voltmeter shows a reading of 13.5 V and the warning light (2) goes off.
6. Use the photo tachometer to set the engine speed to 2168 RPM or set the alternator speed to 6000 RPM. Make sure the ammeter A1 shows a reading of 70A.
7. If the ammeter A1 readings are not correct, stop the engine/alternator. If installed, remove the suppression capacitor and do the step 3 through 7 again.
8. If the ammeter A1 readings are still not correct, examine and test the rectifier diodes, the rotor resistance and the stator windings as necessary..
9. Install the suppression capacitor.
10. Start the engine.
11. Use the photo tachometer to set the engine speed to 2168 RPM or set the alternator speed to 6000 RPM until the ammeter A1 shows a reading of less than 10A. Make sure the voltmeter (V) shows a reading between 13.6 to 14.4V 12.
12. If the voltmeter reading is not within the limits, stop the engine and service the alternator.
13. Disconnect the alternator from the test circuit.
14. Connect vehicle wiring.

80.18 TESTING THE BATTERY VOLTAGE UNDER LOAD

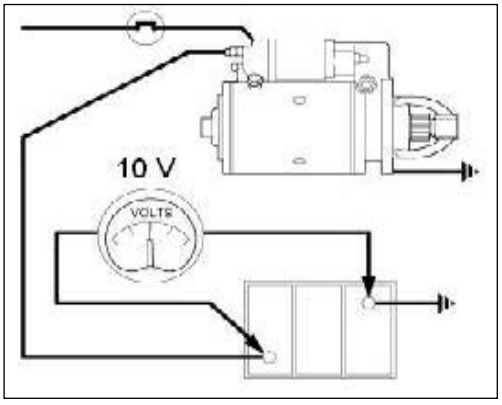

1. Check the condition of battery.
2. Open the hood.
3. Hold the engine shut off lever in off position.
4. Connect the voltmeter across the terminals as shown and crank the engine.
5. The voltmeter should read approximately 10V. A low voltage reading indicates excessive current flow in the circuit due to low resistance.
6. Remove the test equipment and close the hood.

80.19 TESTING THE STARTER MOTOR TERMINAL VOLTAGE UNDER LOAD

1. Open the hood.
2. Remove the protective cover (13) the nut (12) and the cover (14).
3. Hold the engine shut off lever in off position.
4. Connect the voltmeter between the starter input terminal and earth. Crank the engine with the fuel cut off. The voltmeter reading should not be more than 0.5V lower than in the battery voltage under load test.
5. A low reading (more than 0.5V during the test) indicates high resistance in cables or contacts.
6. High readings indicate high resistance in the starter motor itself.
7. Remove the test equipment and install the cover (14), the nut (12) and the protective cover (13).
8. Close the hood.

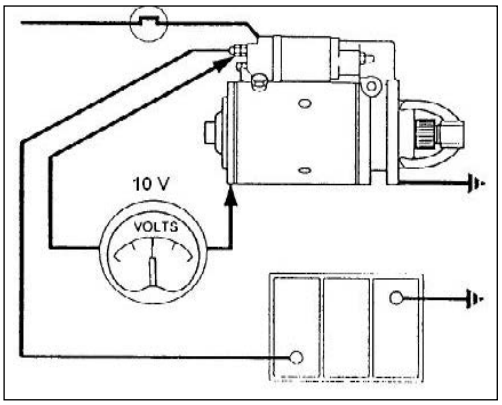

80.20 TESTING THE VOLTAGE DROP ON THE INSULATED LINE

1. Open the hood.
2. Connect the voltmeter between the starter terminal and the battery terminal.
3. When the starter switch is open, the voltmeter should register battery voltage. When the starter switch is open, the voltmeter should register battery voltage. When the starter switch is closed, the voltmeter should read practically zero.
4. A high voltmeter reading indicates a high resistance in the starter circuit. Check all the insulated connections.
5. Do the voltage drop across the solenoid contacts test.

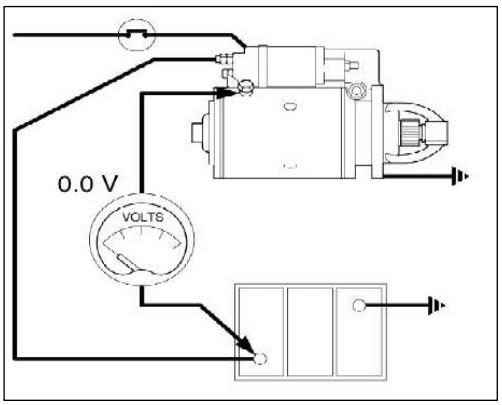

80.21 TESTING THE VOLTAGE DROP ACROSS THE SOLENOID CONTACTS

1. Remove the protective cover (13), the nut (12) and the cover (14).
2. Connect voltmeter across the two main solenoid terminals.
3. When the starter switch is open, the voltmeter should register battery voltage. When the starter switch is closed the reading should be zero or fractional value.
4. A zero or fractional reading indicates that the high resistance deduced in the voltage drop on the insulated line test must be due to either to high resistance in the starter cables or soldered connections. A high reading i ndicates a faulty solenoid or connection.
5. Install the cover (14), the nut (12) and the protective cover (13).
6. Close the hood.

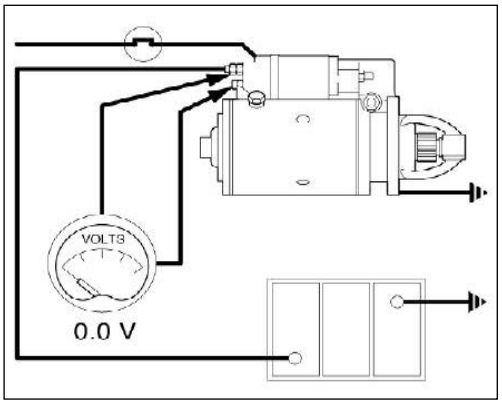

80.22 TESTING THE VOLTAGE DROP IN THE EARTH LINE

1. Open the hood.
2. Connect voltmeter between the battery earth terminal and the starter earth.
3. When the starter switch is closed the voltmeter should read practically zero.
4. If reading is high, clean and tighten all earth connections and check bonding strap.
5. Close the hood.

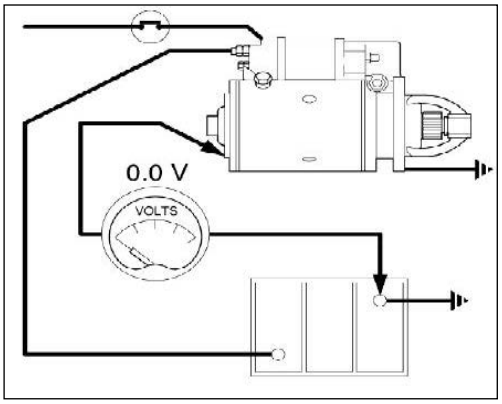

80.23 TESTING THE CONTINUITY OF CONTACTS

1. Open the hood.
2. Remove the protective cover.
3. Connect the voltmeter between motor and solenoid negative terminals and operate starter switch.
4. No voltage indicates a faulty solenoid. Replace the solenoid.
5. 12V registered but motor fails to operate indicates faulty motor. Replace the starter motor.
6. 12V registered and motor operates, test the voltage drop across the contact.

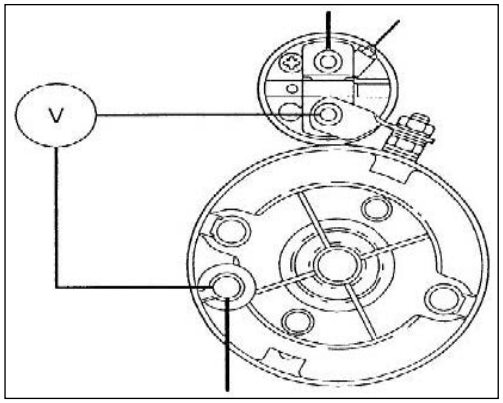

80.24 TESTING THE VOLTAGE DROP ACROSS THE CONTACTS

1. Connect the voltmeter across the solenoid terminals and operate starter switch.
2. Voltage across the terminals should be zero, if more, the solenoid is faulty and must be changed.
3. If the solenoid is satisfactory, service the starter motor.

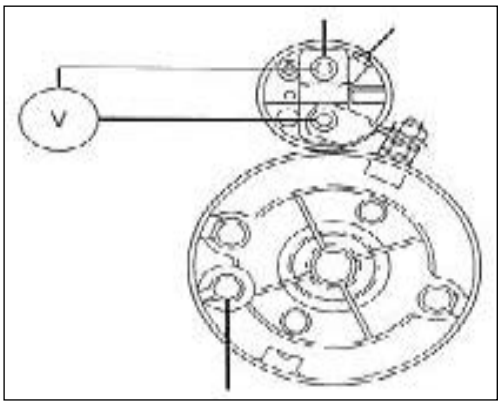

80.25 TESTING THE OPEN CIRCUIT VOLTAGE (BATTERY)

1. The engine must be stopped and all electrical circuit switched off for this test.
2. Measure the open circuit voltage of the battery only if it has not been charged or discharged in the past 16 hours. If the machine has recently been started, switch on the head lights for 15 seconds then wait one minute before testing.
3. Connect the voltmeter directly across both battery terminals and note the voltage. 12.5V or above no action required. Below 12.5V, recharge the battery.

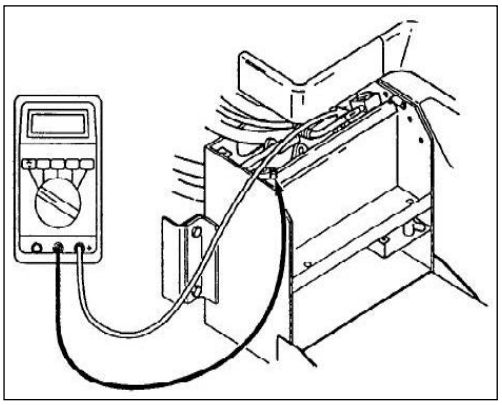

Diagnostic test with the battery fitted on the machine

Fault : Battery performance seems poor

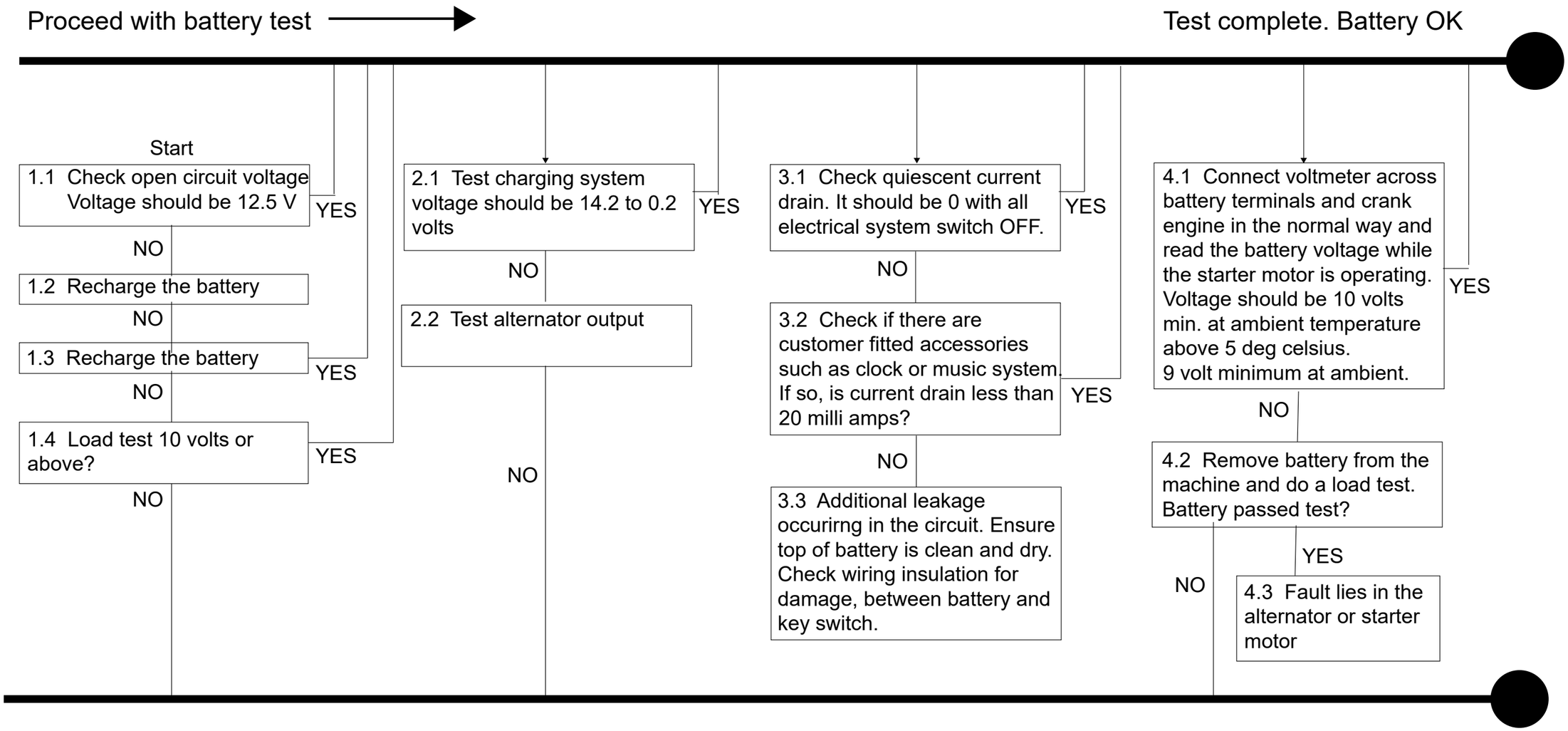

80.27 ELECTRICAL HARNESS

CODE	COLOR NAME
R	RED
B	BLACK
Y	YELLOW
G	GREEN
Gr	GRAY
Br	BROWN
L	BLUE
W	WHITE
O	ORANGE
V	VIOLET
P	PINK
Lg	LIGHT GREEN

SYMBOL	DESCRIPTION
	FEMALE BULLET WITH CAP
	MALE BULLET WITH CAP
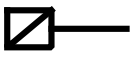	FEMALE LUCAR WITH CAP
	170037-2 TERMINAL
	EYE TERMINAL (BOLT SIZE)
	FULL TAPING
	DOUBLE TAPING
	POINT TAPING
	TUBE
	CORRUGATED TUBE
	PART CODE
	CIRCUIT NUMBER
	MALE CONNECTOR
	FEMALE CONNECTOR

80.27.1 RIGHT HEAD LAMP HARNESS (PERKINS & KIRLOSKAR)
P.N. 1D0085

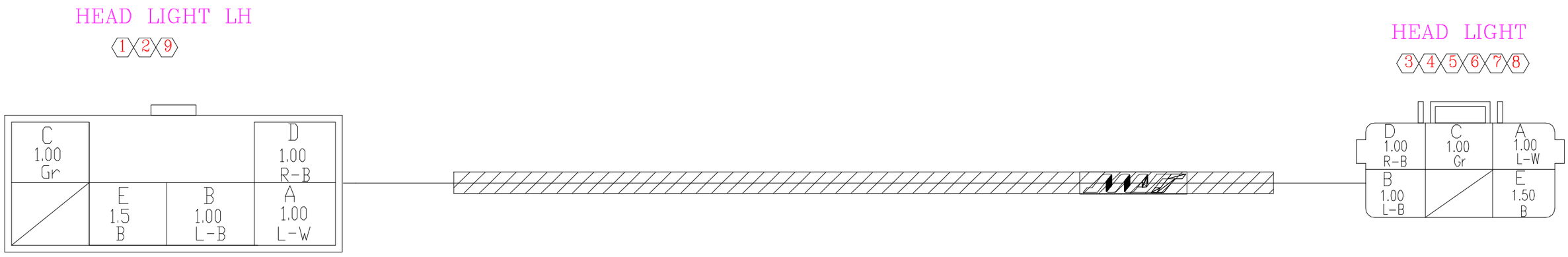

CKT No.	WIRE SIZE	WIRE COLOUR	FROM	TO
E	1.50	B	W/H CHASSIS	TO HEAD LAMP
D	1.00	R-B	W/H CHASSIS	TO HEAD LAMP
C	1.00	Gr	W/H CHASSIS	TO HEAD LAMP
B	1.00	L-B	W/H CHASSIS	TO HEAD LAMP
A	1.00	L-W	W/H CHASSIS	TO HEAD LAMP

80.27.2 LEFT HEAD LAMP HARNESS (PERKINS & KIRLOSKAR)
P.N. 1D0086

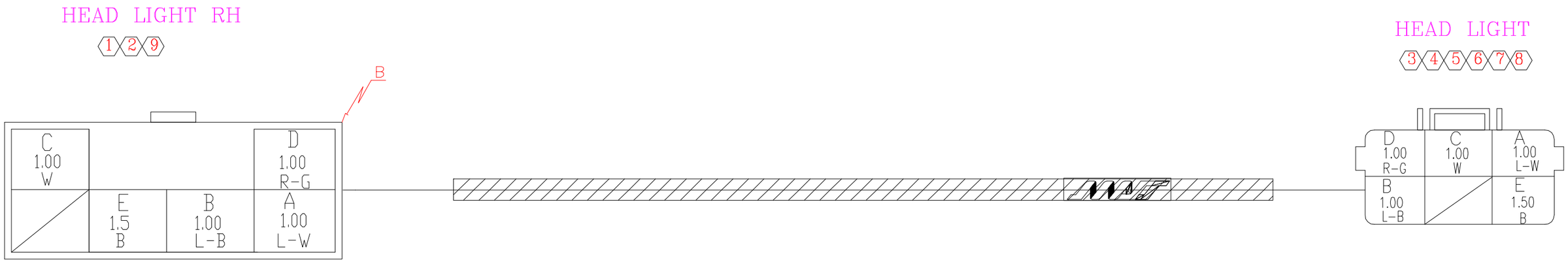

CKT No.	WIRE SIZE	WIRE COLOUR	FROM	TO
E	1.50	B	W/H CHASSIS	TO HEAD LAMP
D	1.00	R-G	W/H CHASSIS	TO HEAD LAMP
C	1.00	W	W/H CHASSIS	TO HEAD LAMP
B	1.00	L-B	W/H CHASSIS	TO HEAD LAMP
A	1.00	L-W	W/H CHASSIS	TO HEAD LAMP

80.27.3 RELAY & FUSE BOX W/H WITH MBF EASYMANAGER (KIRLOSKAR)
P.N. 53112343

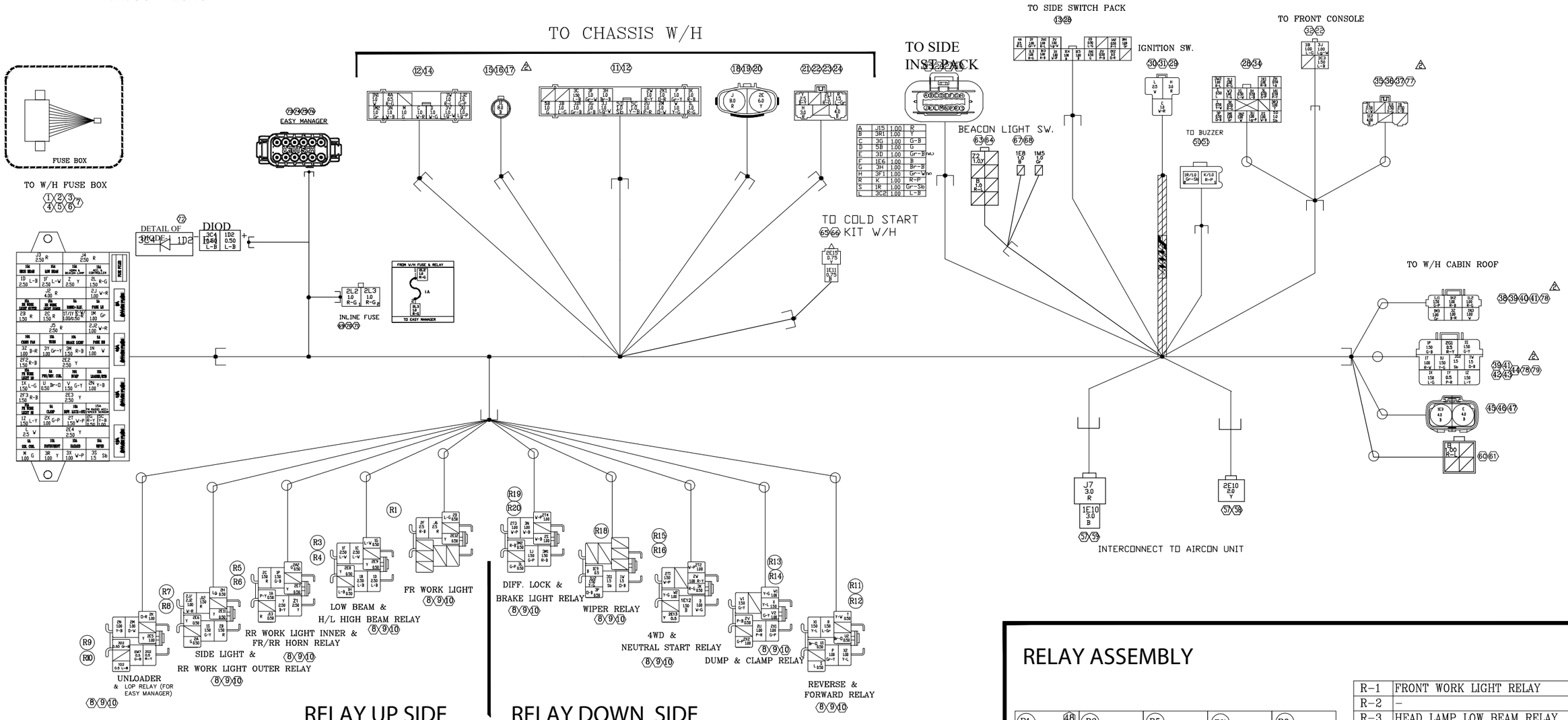

RELAY ASSEMBLY

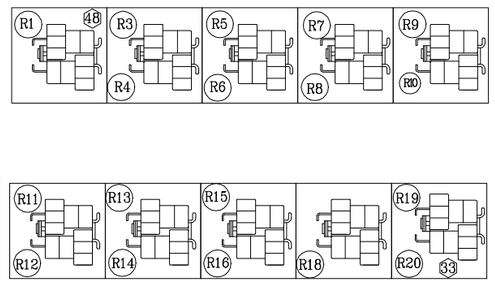

R-1	FRONT WORK LIGHT RELAY
R-2	–
R-3	HEAD LAMP LOW BEAM RELAY
R-4	HEAD LAMP HIGH BEAM RELAY
R-5	REAR WORK LIGHT RELAY-INNER
R-6	FRONT/ REAR HORN RELAY
R-7	SIDE LIGHT RELAY
R-8	REAR WORK LIGHT RELAY-OUTER
R-9	UNLOADER RELAY
R-10	LOP RELAY (FOR EASY MANAGER)
R-11	REVERSE SOLENOID
R-12	FORWARD SOLENOID
R-13	DUMP RELAY
R-14	CLAMP RELAY
R-15	4WD RELAY
R-16	NEUTRAL START RELAY
R-17	–
R-18	WIPER MOTOR RELAY
R-19	DIFF.LOCK RELAY
R-20	BRAKE LIGHT RELAY

80.27.4 FRONT CONSOLE HARNESS (KIRLOSKAR)
P.N. 1D0351

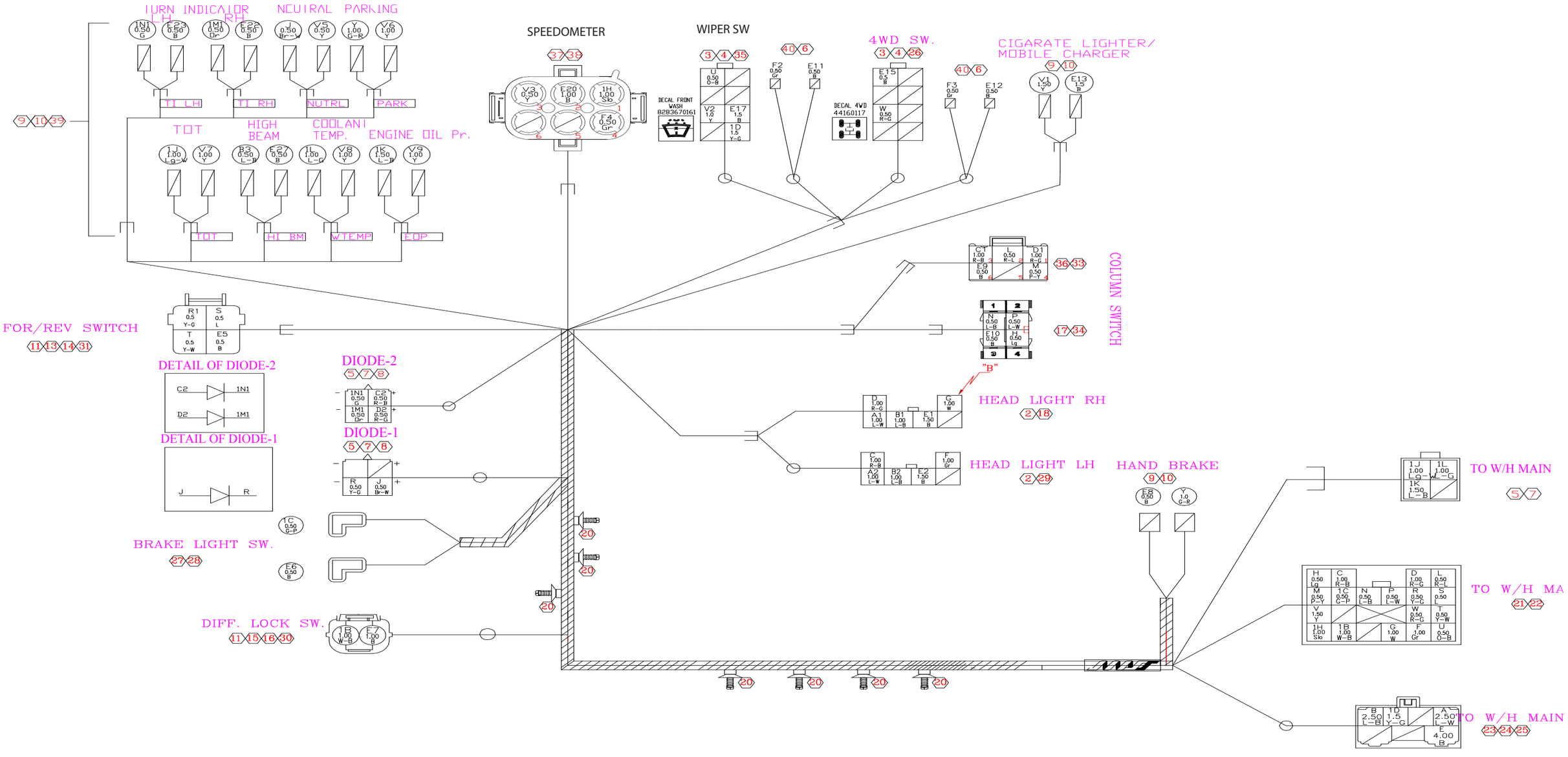

80.27.5 SIDE CONSOLE HARNESS (KIRLOSKAR & PERKINS)
P.N. 1TD0004M91

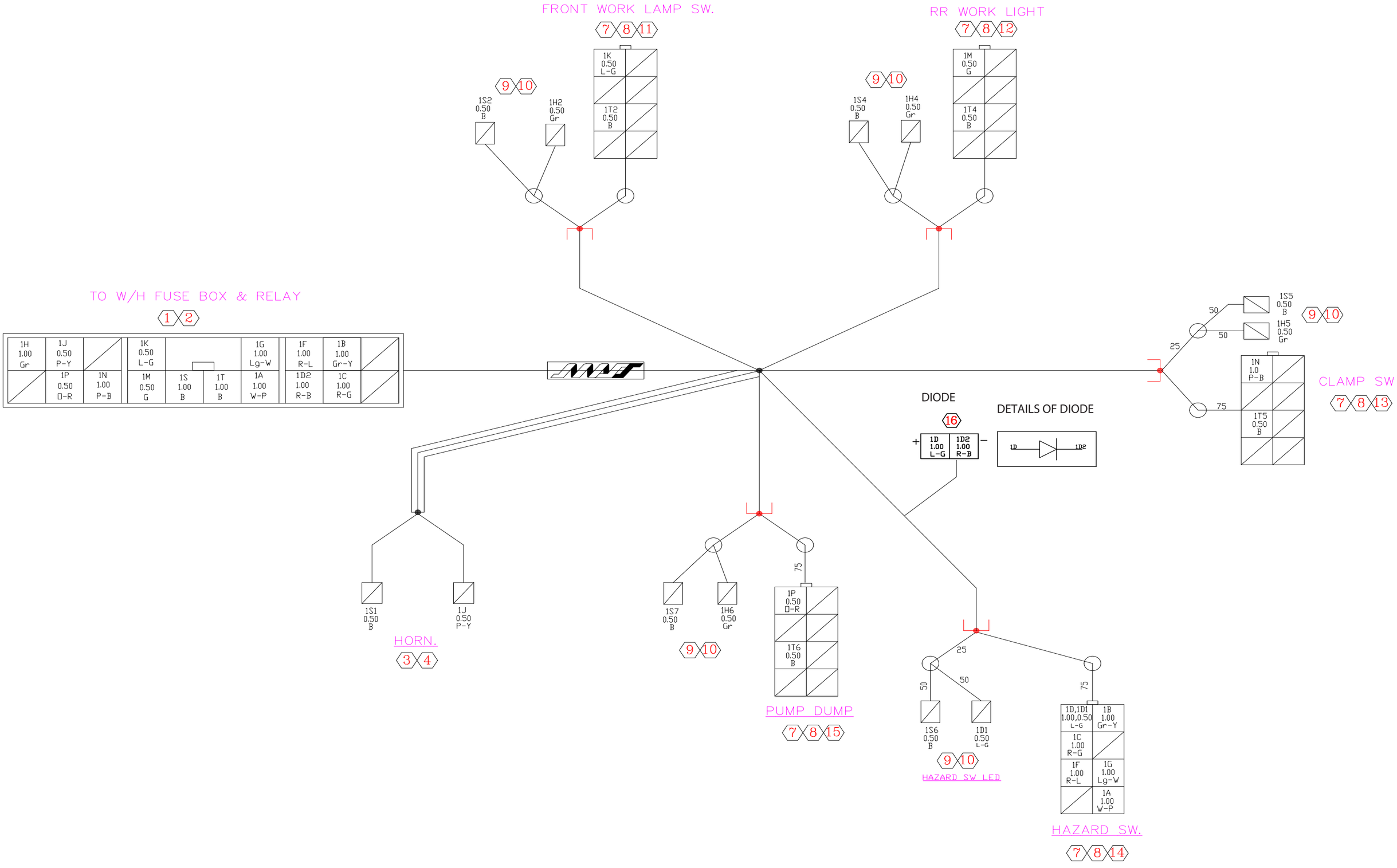

80.27.6 CHASSIS HARNESS- KIRLOSKAR BSIII
P.N. 1D0352

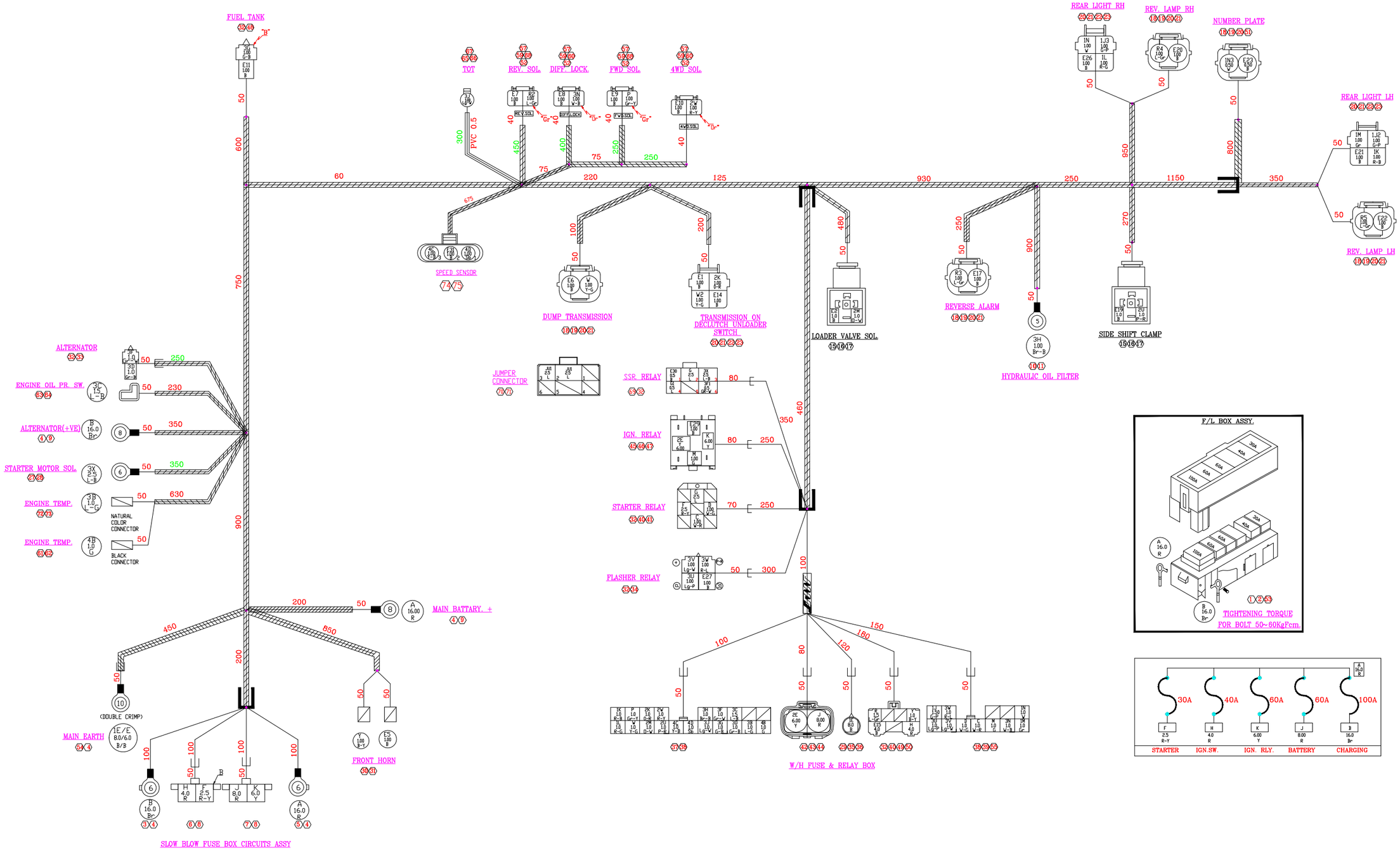

80.27.7 ROOF HARNESS- KIRLOSKAR
P.N. 53112516

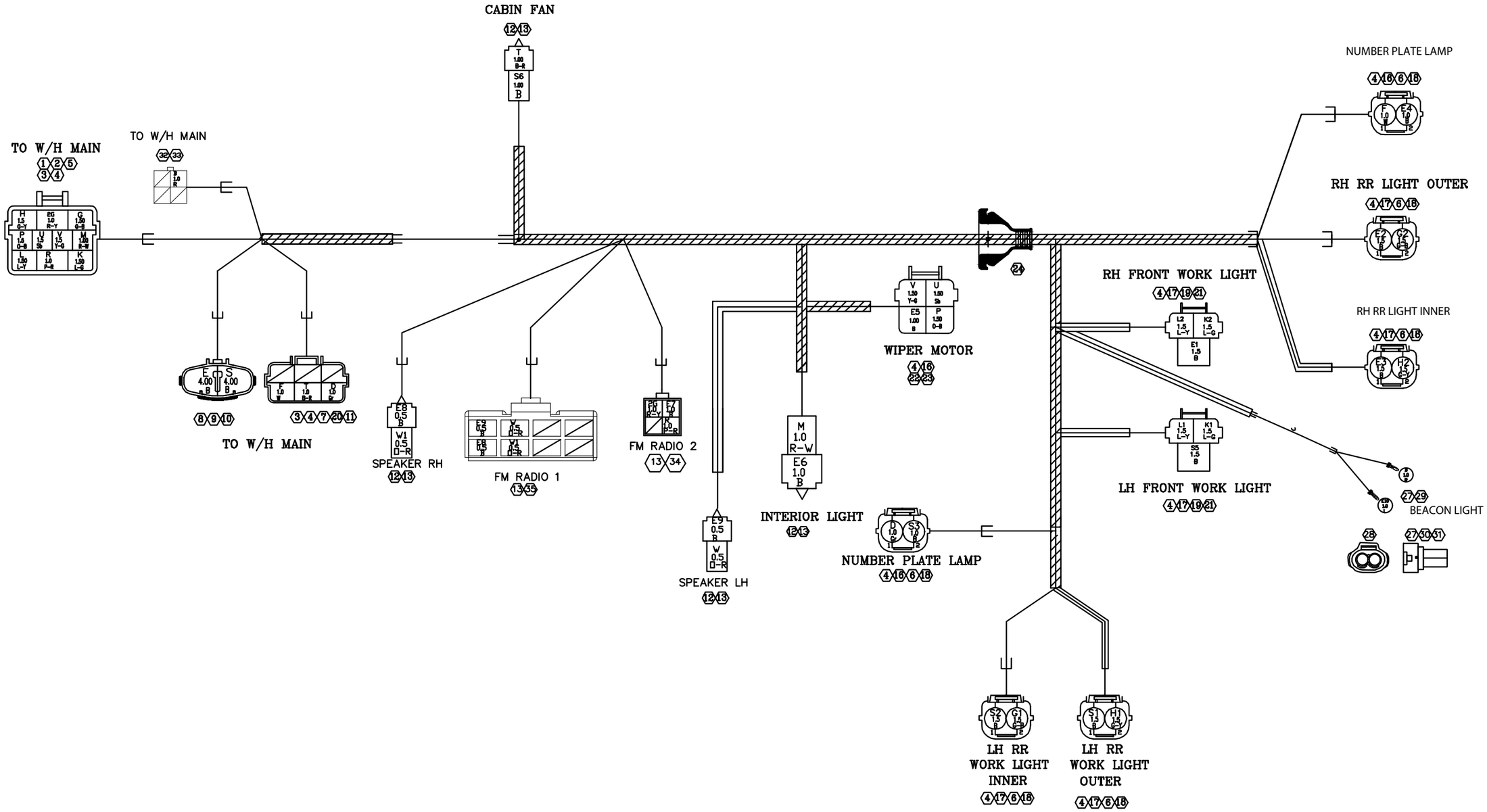

80.27.8 PIGTAIL COLD START HARNESS- KIRLOSKAR (OPTIONAL)
P.N. 53101718

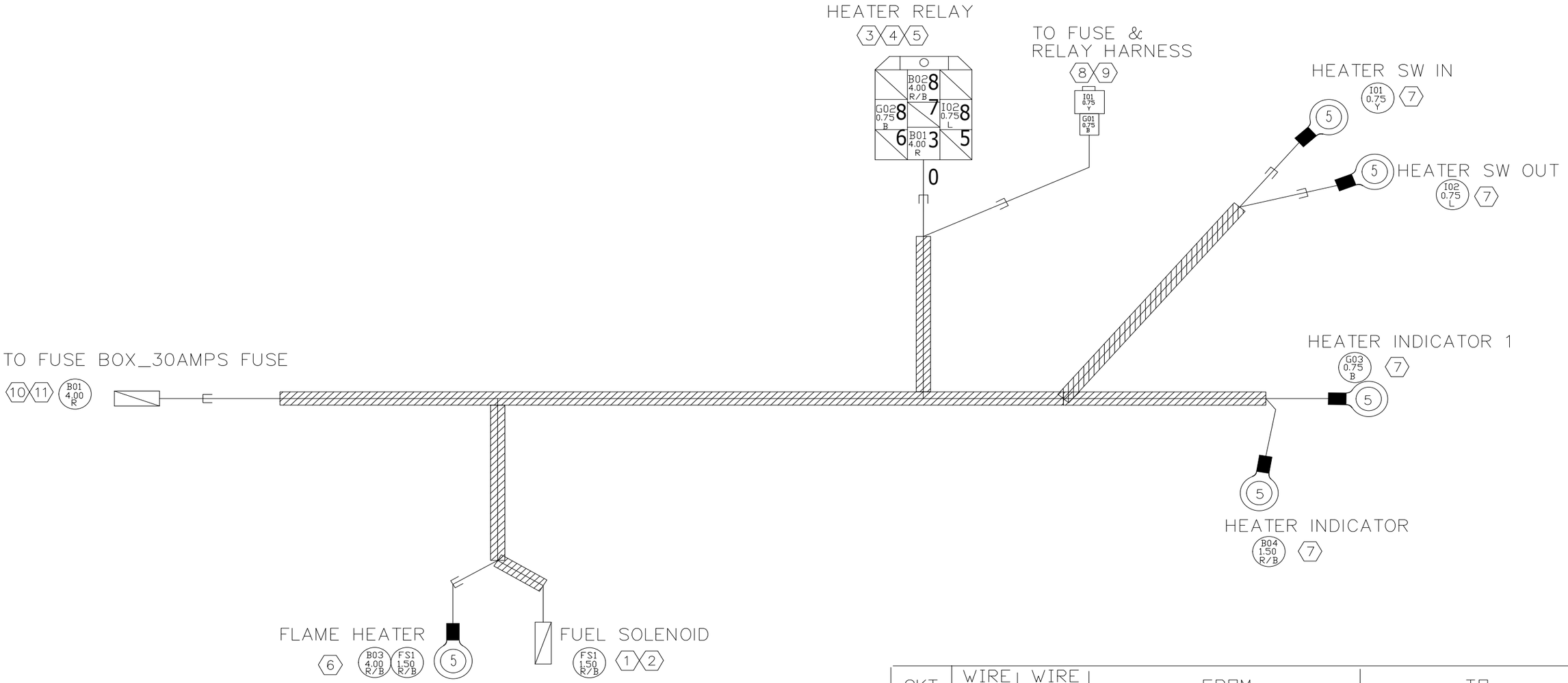

CKT.	WIRE SIZE	WIRE COLOR	FROM	TO
FS1	1.50	R/B	FLAME HEATER	FUEL SOLENOID
G03	0.75	B	SPLICE 02	HEATER INDICATOR 1
G02	0.75	B	SPLICE 02	HEATER RELAY
G01	0.75	B	TO FUSE & RELAY HARNESS	SPLICE 02
I02	0.75	L	HEATER SW OUT	HEATER RELAY
I01	0.75	Y	TO FUSE & RELAY HARNESS	HEATER SW IN
B04	1.50	R/B	SPLICE 01	HEATER INDICATOR
B03	4.00	R/B	SPLICE 01	FLAME HEATER
B02	4.00	R/B	HEATER RELAY	SPLICE 01
B01	4.00	R	TO FUSE BOX_40AMPS FUSE	HEATER RELAY

80.27.9 ENGINE HARNESS (PERKINS)
P.N. 1D0928

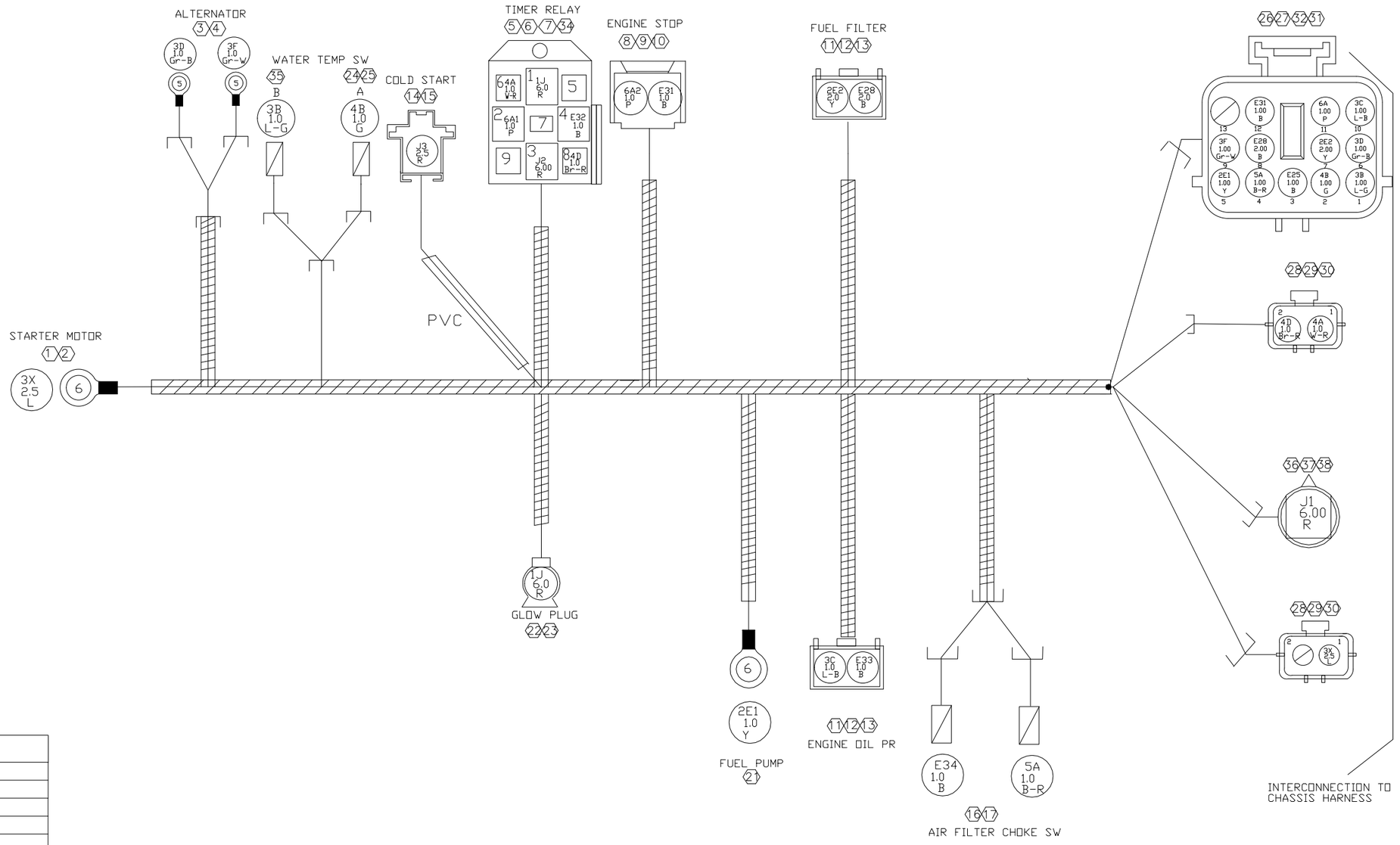

CKT NO	WIRE SIZE	WIRE COLOUR	FROM	TO
6A2	1.0	P	SPLICE-J3	ENGINE STOP SOL
6A1	1.0	P	SPLICE-J3	TIMER RELAY 86
6A	1.0	P	I/C TO CHASSIS HARNESS	SPLICE-J3
5A	1.0	B-R	I/C TO CHASSIS HARNESS	AIR FILTER
4D	1.0	Br-R	I/C TO CHASSIS HARNESS	TIMER RELAY 7
4B	1.0	G	I/C TO CHASSIS HARNESS	WATER TEMP SWITCH
4A	1.0	W-R	I/C TO CHASSIS HARNESS	TIMER RELAY 50
3X	2.5	L	I/C TO CHASSIS HARNESS	STARTER MOTOR
3F	1.0	Gr-W	I/C TO CHASSIS HARNESS	ALTERNATOR W+
3D	1.0	Gr-B	I/C TO CHASSIS HARNESS	ALTERNATOR D+
3C	1.0	L-B	I/C TO CHASSIS HARNESS	ENGINE OIL PR
3B	1.0	L-G	I/C TO CHASSIS HARNESS	WATER TEMP SWITCH
2E2	2.0	Y	I/C TO CHASSIS HARNESS	FUEL FILTER
2E1	1.0	Y	I/C TO CHASSIS HARNESS	FUEL FUMP
1J	6.0	R	TIMER RELAY 87	GLOW PLUG
J3	2.5	R	SPLICE-J2	COLD START SW
J2	6.0	R	SPLICE-J2	TIMER RELAY 30
J1	6.0	R	I/C TO CHASSIS HARNESS	SPLICE-J2
E34	1.0	B	SPLICE-J1	AIR FILTER
E33	1.0	B	SPLICE-J1	EOP
E32	1.0	B	SPLICE-J1	TIMER RELAY 85
E31	1.0	B	I/C TO CHASSIS HARNESS	ENGINE STOP SOL
E28	2.0	B	I/C TO CHASSIS HARNESS	FUEL FILTER
E25	1.0	B	I/C TO CHASSIS HARNESS	SPLICE-J1

80.27.10 FUSE & RELAYBOX HARNESS WITH EASYMANAGER (PERKINS)
P.N. 53111190

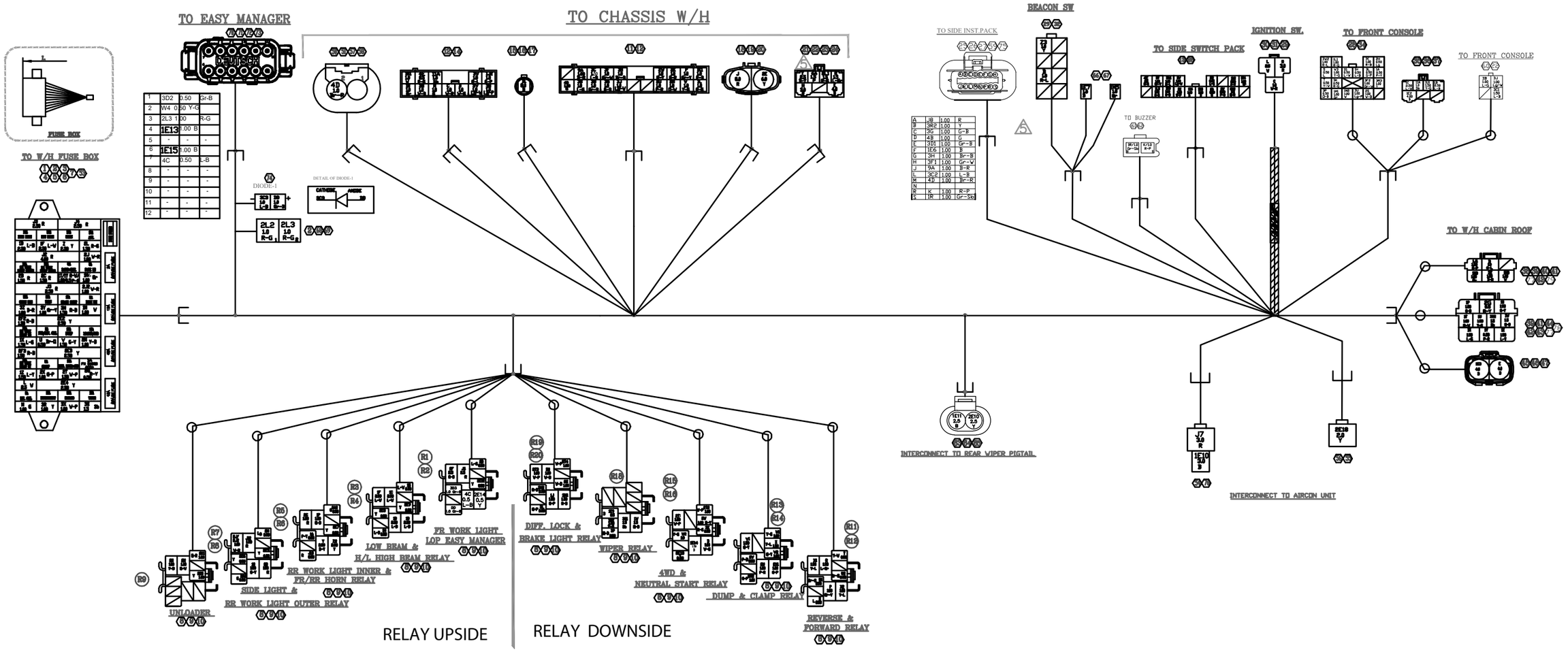

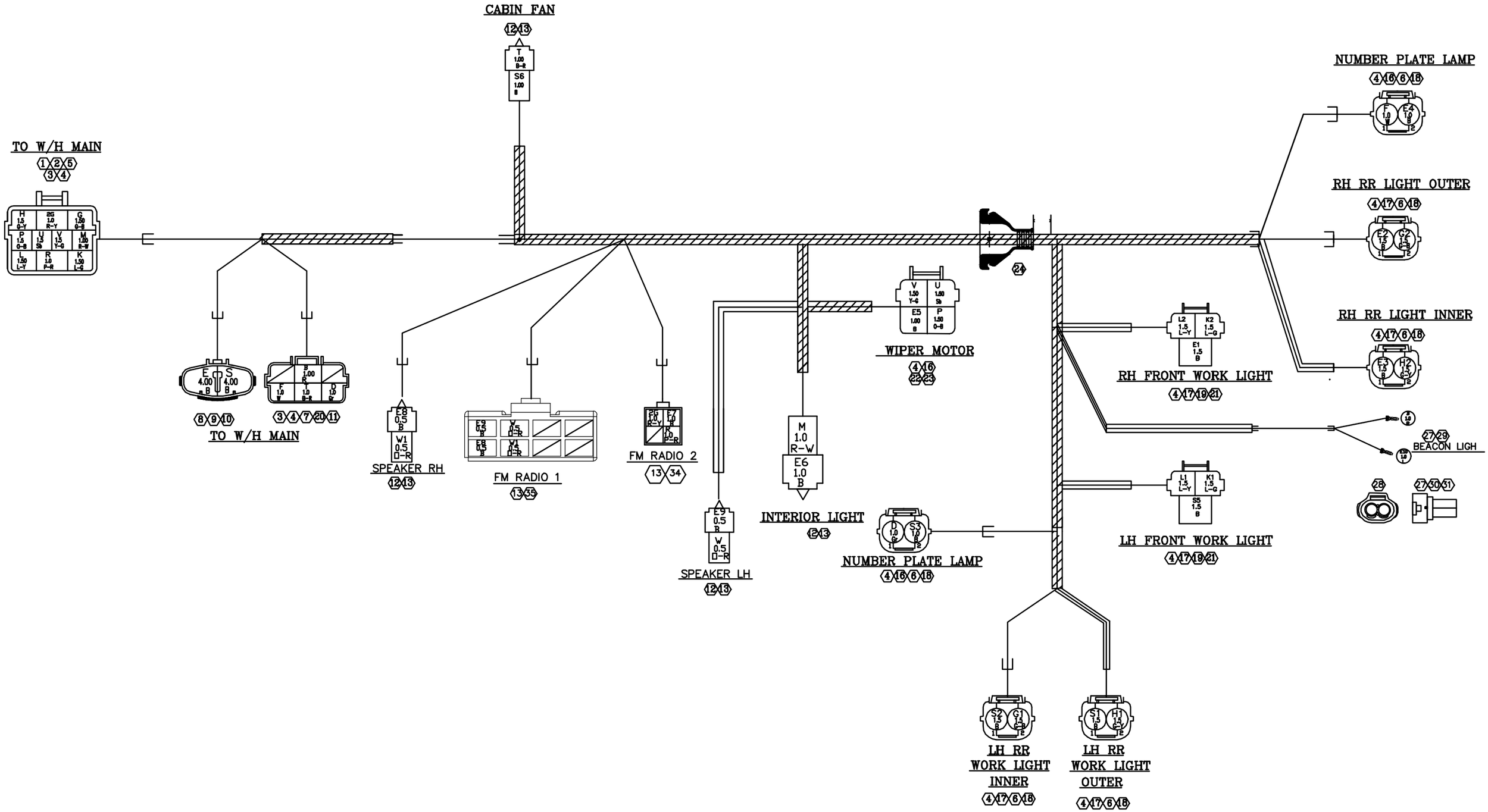
CABIN FAN
12 13
T 1.00 B-R
S6 1.00 B
TO W/H MAIN
1 2 5 3 4
H 1.5 G-Y
BG 1.0 R-Y
G 1.50 G-B
P 1.5 G-B
U 1.5 Sb
V 1.5 Y-G
M 1.50 R-W
L 1.50 L-Y
R 1.0 P-R
K 1.50 L-G
NUMBER PLATE LAMP
4 16 6 18
F 1.0 W
E4 1.0 B
1 2
RH RR LIGHT OUTER
4 17 6 18
E2 1.5 B
G2 1.5 G-B
1 2
RH RR LIGHT INNER
4 17 6 18
E3 1.5 B
H2 1.5 L-Y
1 2
24
V 1.50 Y-G
U 1.50 Sb
E5 1.00 B
P 1.50 G-B
WIPER MOTOR
4 16 22 23
L2 1.5 L-Y
K2 1.5 L-G
E1 1.5 B
RH FRONT WORK LIGHT
4 17 19 21
E 4.00 B
S 4.00 B
8 9 10
TO W/H MAIN
B 1.00 B-R
F 1.0 W
D 1.5 G
3 4 7 20 11
E8 0.5 B
W1 0.5 O-R
SPEAKER RH
12 13
E9 0.5 B
W 0.5 O-R
E8 0.5 B
W1 0.5 O-R
FM RADIO 1
13 35
E6 1.0 R-Y
E7 1.0 B
R 1.0 P-R
FM RADIO 2
13 34
E9 0.5 B
W 0.5 O-R
SPEAKER LH
12 13
M 1.0 R-W
E6 1.0 B
INTERIOR LIGHT
12 13
D 1.0 R
S3 1.0 B
1 2
NUMBER PLATE LAMP
4 16 6 18
L1 1.5 L-Y
K1 1.5 L-G
S5 1.5 B
LH FRONT WORK LIGHT
4 17 19 21
27 29
BEACON LIGH
28
27 30 31
S2 1.5 B
G1 1.5 L-B
1 2
LH RR WORK LIGHT INNER
4 17 6 18
S1 1.5 B
H1 1.5 L-Y
1 2
LH RR WORK LIGHT OUTER
4 17 6 18

80.27.12 WIRING HARNESS -FRONT CONSOLE (PERKINS)
P.N. 53101170

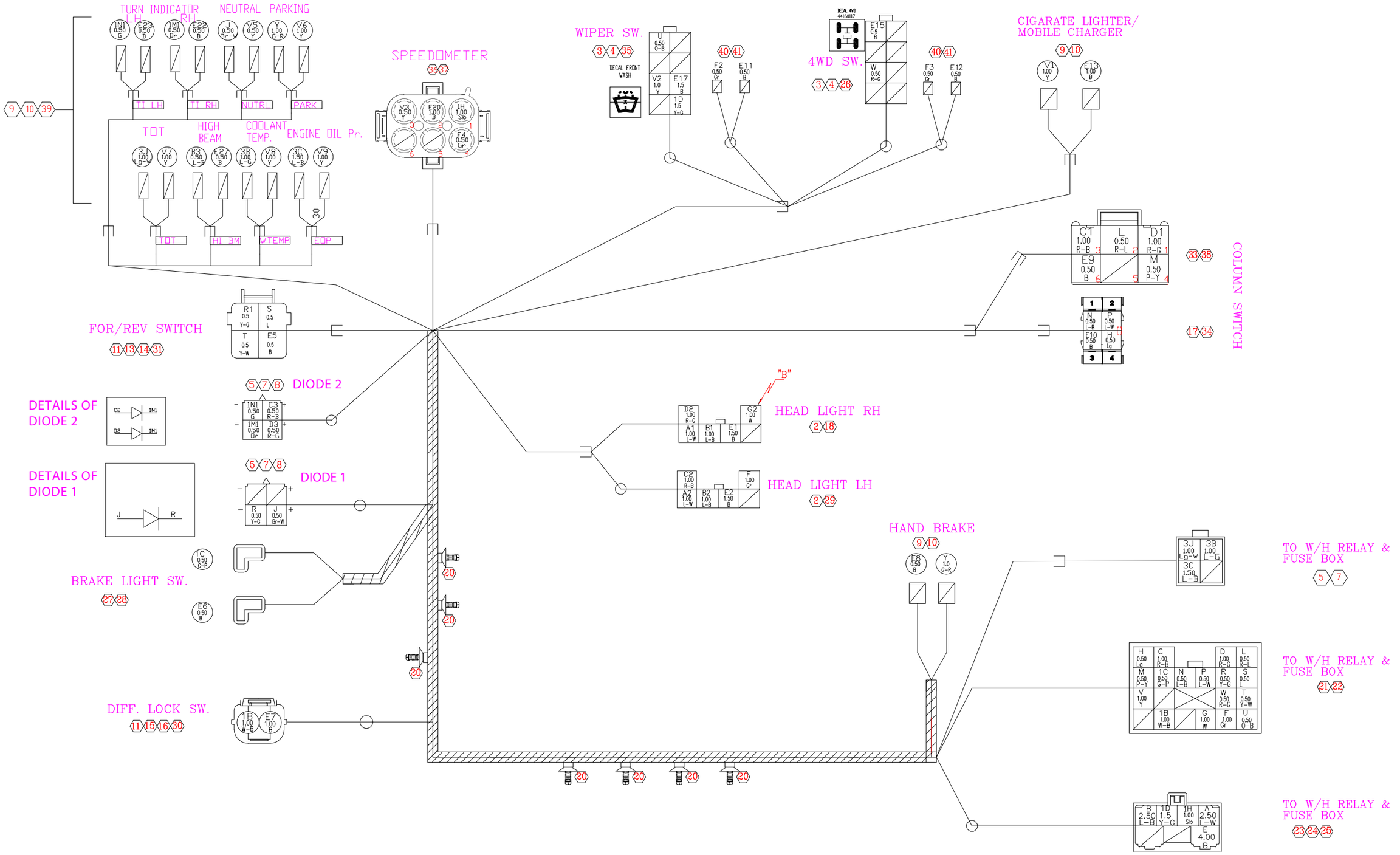

80.27.13 WIRING HARNESS -CHASSIS WITHOUT AIRCON (PERKINS)
P.N. 1D0929

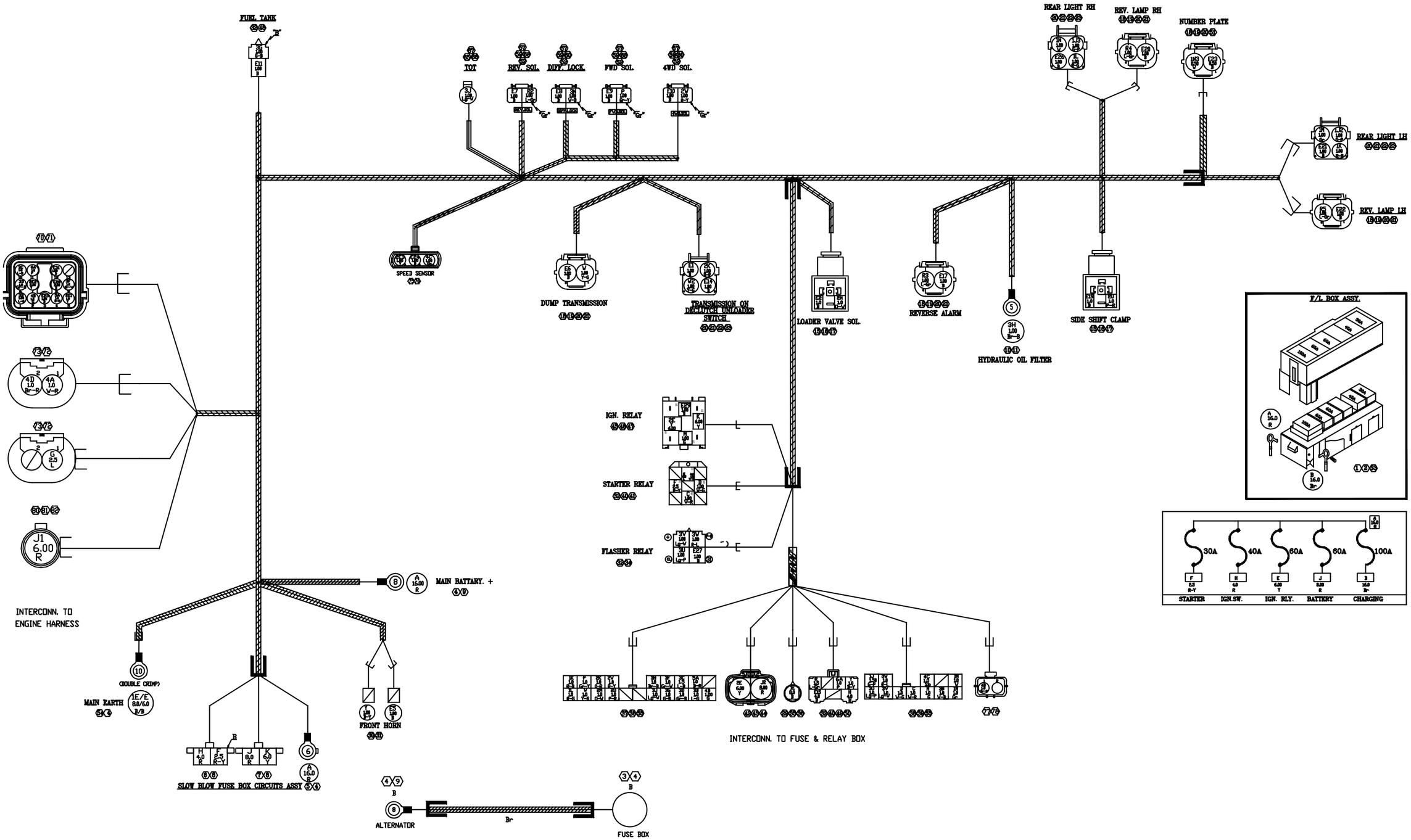

CKT No..	WIRE SIZE	WIRE COLOR	FROM	TO
A	16.0	R	BATTERY	FUSE BOX -100A
B	16.0	Br	FUSE BOX O/P	ALTERNATOR
C	1.0	W-R	STARTER RELAY-85	TO WIRING HARNESS FUSE & RELAY BOX
D	1.0	W-G	STARTER RELAY-86	TO WIRING HARNESS FUSE & RELAY BOX
E	6.0	B	MAIN EARTH	SPLICE J1
E1	1.0	B	SPLICE J1	TRANSMISSION ON DECLUTCH
E2	1.0	B	SPLICE J1	LOADER VALVE SOLENOID
E5	1.0	B	SPLICE J1	FRONT HORN
E6	1.0	B	SPLICE J1	TRANSMISSION DUMP SOLENOID
E7	1.0	B	SPLICE J1	REVERSE SOLENOID
E8	1.0	B	SPLICE J1	DIFFERENTIAL LOCK SOLENOID
E9	1.0	B	SPLICE J1	FORWARD SOLENOID
E10	1.0	B	SPLICE J1	4WD SOLENOID
E11	1.0	B	SPLICE J1	FUEL TANK SENDER
E14	1.0	B	SPLICE J1	TRANSMISSION ON DECLUTCH
E15	4.0	B	SPLICE J1	TO FUSE BOX & RELAY ASSEMBLY
E17	1.0	B	SPLICE J1	REVERSE ALARM
E19	1.0	B	SPLICE J1	SIDESHIFT CLAMP SOLENOID
E20	1.0	B	SPLICE J1	REVERSE LAMP RH
E21	1.0	B	SPLICE J1	REAR LIGHT LH
E22	1.0	B	SPLICE J1	REVERSE LAMP LH
E23	0.5	B	SPLICE J1	NUMBER PLATE
E24	1.0	B	SPLICE J1	SPEED SENSOR
E25	1.0	B	SPLICE J1	I/C TO ENGINE HARNESS
E26	1.0	B	SPLICE J1	REAR LIGHT RH
E27	1.0	B	SPLICE J1	FLASHER RELAY (31)
E28	2.0	B	SPLICE J1	I/C TO ENGINE HARNESS
E29	1.0	B	SPLICE J1	IGNITION RELAY-86
E31	1.0	B	SPLICE J1	I/C TO ENGINE HARNESS
F	2.5	R-Y	FUSE BOX O/P-30A	STARTER RELAY-30
G	2.5	L	STARTER RELAY-87	I/C TO ENGINE HARNESS
H	4.0	R	FUSE BOX O/P- 40A	TO W/H FUSE & RELAY BOX
J	8.0	R	FUSE BOX O/P -60A	SPLICE
J1	6.0	R	SPLICE	I/C TO ENGINE HARNESS
J2	8.0	R	SPLICE	TO W/H FUSE & RELAY BOX
K	6.0	Y	FUSE BOX O/P -60A	IGNITION RELAY -30A
M	1.0	G	IGNITION RELAY	TO W/H FUSE & RELAY BOX
P	1.0	Gr-Y	TO W/H FUSE & RELAY BOX	FORWARD SOLENOID
R	1.5	L-Gr	SPLICE J2	TO W/H FUSE & RELAY BOX
R2	1.0	L-Gr	SPLICE J2	REVERSE SOLENOID
R3	1.0	L-Gr	SPLICE J2	REVERSE ALARM
R4	1.0	L-Gr	SPLICE J2	REVERSE LAMP - RH
R5	1.0	L-Gr	SPLICE J2	REVERSE LAMP - LH
W	1.0	Y-G	TO W/H FUSE & RELAY BOX	TRANSMISSION DUMP
W2	1.0	Y-G	SPLICE J3	TRANSMISSION ON DECLUTCH
Y	1.0	B-Y	FRONT HORN	TO W/H FUSE & RELAY BOX
1E	8.0	B	MAIN EARTH	TO W/H FUSE & RELAY BOX
1J	1.5	G-P	SPLICE J6	TO W/H FUSE & RELAY BOX
1J2	1.0	G-P	SPLICE J6	REAR LIGHT LH- STOP LAMP
1J3	1.0	G-P	SPLICE J6	REAR LIGHT RH-STOP LAMP
1K	1.0	R-B	TO W/H FUSE & RELAY BOX	REAR LIGHT LH- LH INDICATOR
1L	1.0	R-G	TO W/H FUSE & RELAY BOX	REAR LIGHT RH-RH INDICATOR
1M	1.0	Gr	TO W/H FUSE & RELAY BOX	REAR LIGHT LH-PARK
1N	1.0	W	TO W/H FUSE & RELAY BOX	REAR LIGHT RH-PARK
1N3	0.5	W	SPLICE J7	NUMBER PLATE
2E	6.0	Y	IGNITION RELAY -87	TO W/H FUSE & RELAY BOX

CKT No..	WIRE SIZE	WIRE COLOR	FROM	TO
2E1	1.0	Y	SPLICE 2E	I/C TO ENGINE HARNESS
2E2	2.0	Y	SPLICE 2E	I/C TO ENGINE HARNESS
2E3	1.0	Y	SPLICE 2E	SPEED SENSOR
2K	1.0	O-R	TO W/H FUSE & RELAY BOX	TO UNLOADER SW W/H
2M	1.0	O-W	TO W/H FUSE & RELAY BOX	LOADER VALVE SOLENOID
2U	1.0	P-R	TO W/H FUSE & RELAY BOX	SIDE SHIFT CLAMP SOLENOID
2W	1.0	R-Y	TO W/H FUSE & RELAY BOX	4WD SOLENOID
3B	1.0	L-G	I/C TO ENGINE HARNESS	TO W/H FUSE & RELAY BOX
3C	1.5	L-B	I/C TO ENGINE HARNESS	TO W/H FUSE & RELAY BOX
3D	1.0	Gr-B	I/C TO ENGINE HARNESS	TO W/H FUSE & RELAY BOX
3F	1.0	Gr-W	I/C TO ENGINE HARNESS	TO W/H FUSE & RELAY BOX
3G	1.0	G-B	FUEL TANK	TO W/H FUSE & RELAY BOX
3H	1.0	Br-B	HYDRAULIC OIL FILTER	TO W/H FUSE & RELAY BOX
3J	1.0	Lg-W	TRANSMISSION OIL TEMP	TO W/H FUSE & RELAY BOX
3N	1.0	W-P	TO W/H FUSE & RELAY BOX	TO DIFF LOCK SOLENOID
3U	1.0	Lg-P	FLASHER RELAY (CL)	TO W/H FUSE & RELAY BOX
3V	1.0	Lg-W	FLASHER RELAY(+)	TO W/H FUSE & RELAY BOX
3W	1.0	R-L	FLASHER RELAY (P-R)	TO W/H FUSE & RELAY BOX
4A	1.0	W-R	TO W/H FUSE & RELAY BOX	STARTER RELAY 87
4B	1.0	G	ENGINE HARNESS I/F	TO W/H FUSE & RELAY BOX
4C	1.0	Sb	SPEED SENSOR	TO W/H FUSE & RELAY BOX
4D	1.0	Br-R	I/C TO ENGINE HARNESS	TO W/H FUSE & RELAY BOX
5A	1.0	B-R	I/C TO ENGINE HARNESS	TO W/H FUSE & RELAY BOX
6A	1.0	P	I/C TO ENGINE HARNESS	TO W/H FUSE & RELAY BOX

1D0256

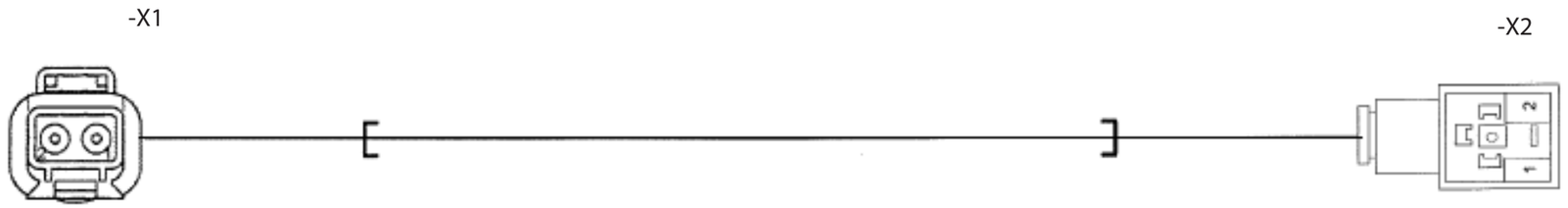

-X1 : Jumper Conn to differential solenoid in chassis wiring harness

1- GND - Black
2- Breaker valve - White Black

-X2 : Rock Breaker valve

1- GND - Black
2- Breaker valve - White Black

1D0258

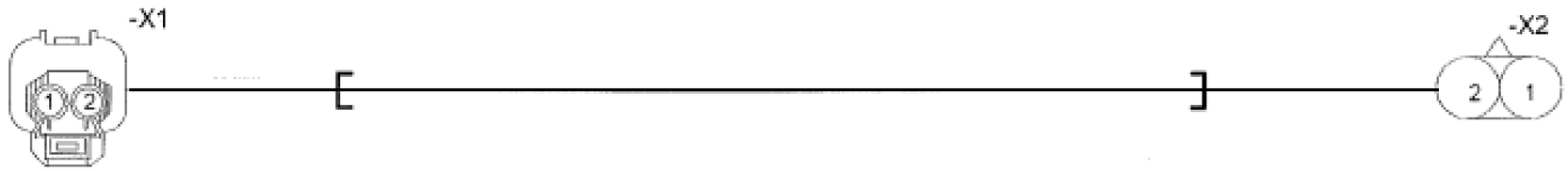

-X1 : Jumper Conn to differential lock switch in Front console wiring harness

1- GND - Black
2- Pedal Switch - White Black

-X2 : Pedal Switch

1- GND - Black
2- Pedal Switch - White Black

80.28 ELECTRICAL SCHEMATIC

80.28.1 STARTING CIRCUIT (KIRLOSKAR)

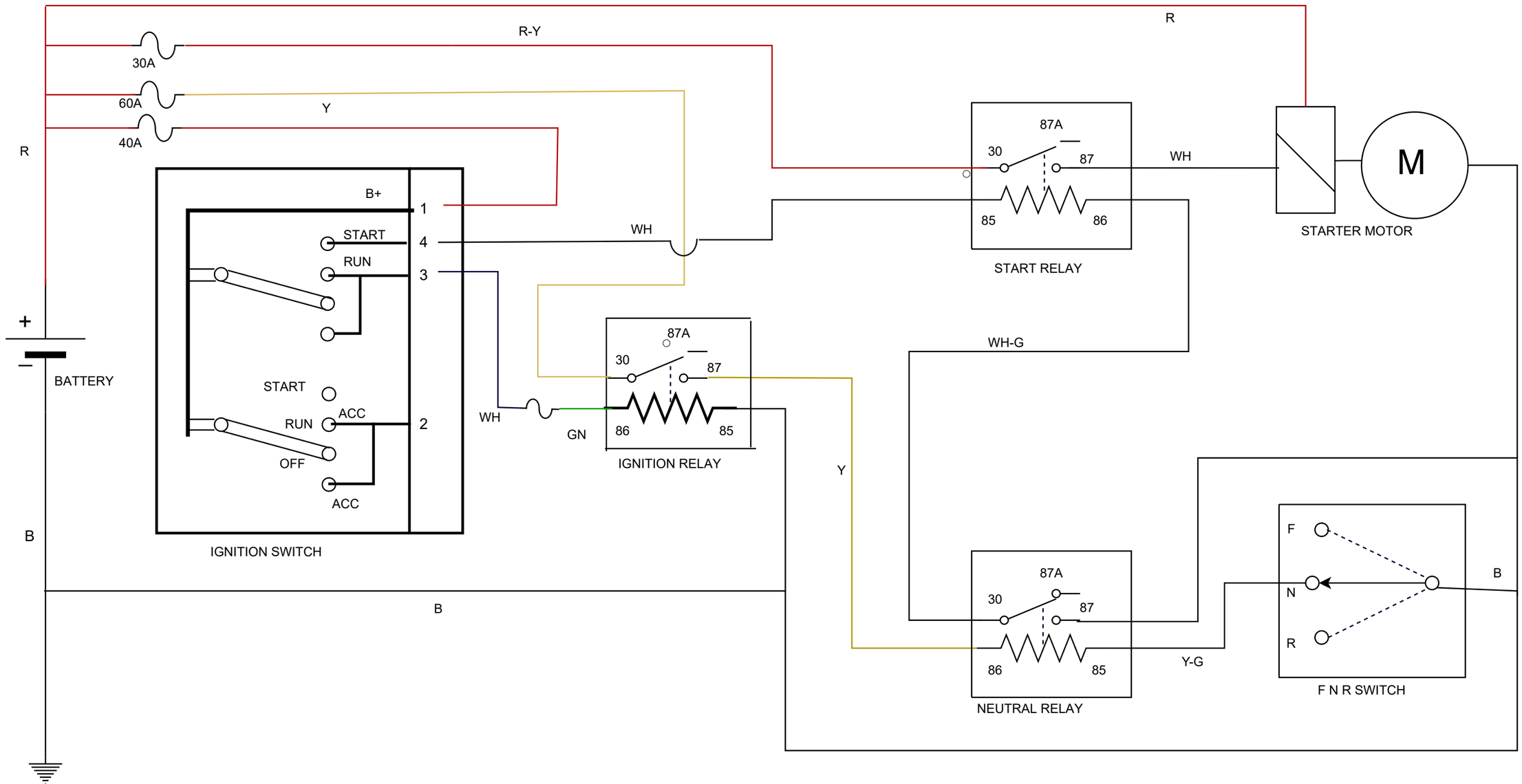

80.28.2 FRONT & SIDE INSTRUMENT CLUSTER (KIRLOSKAR)

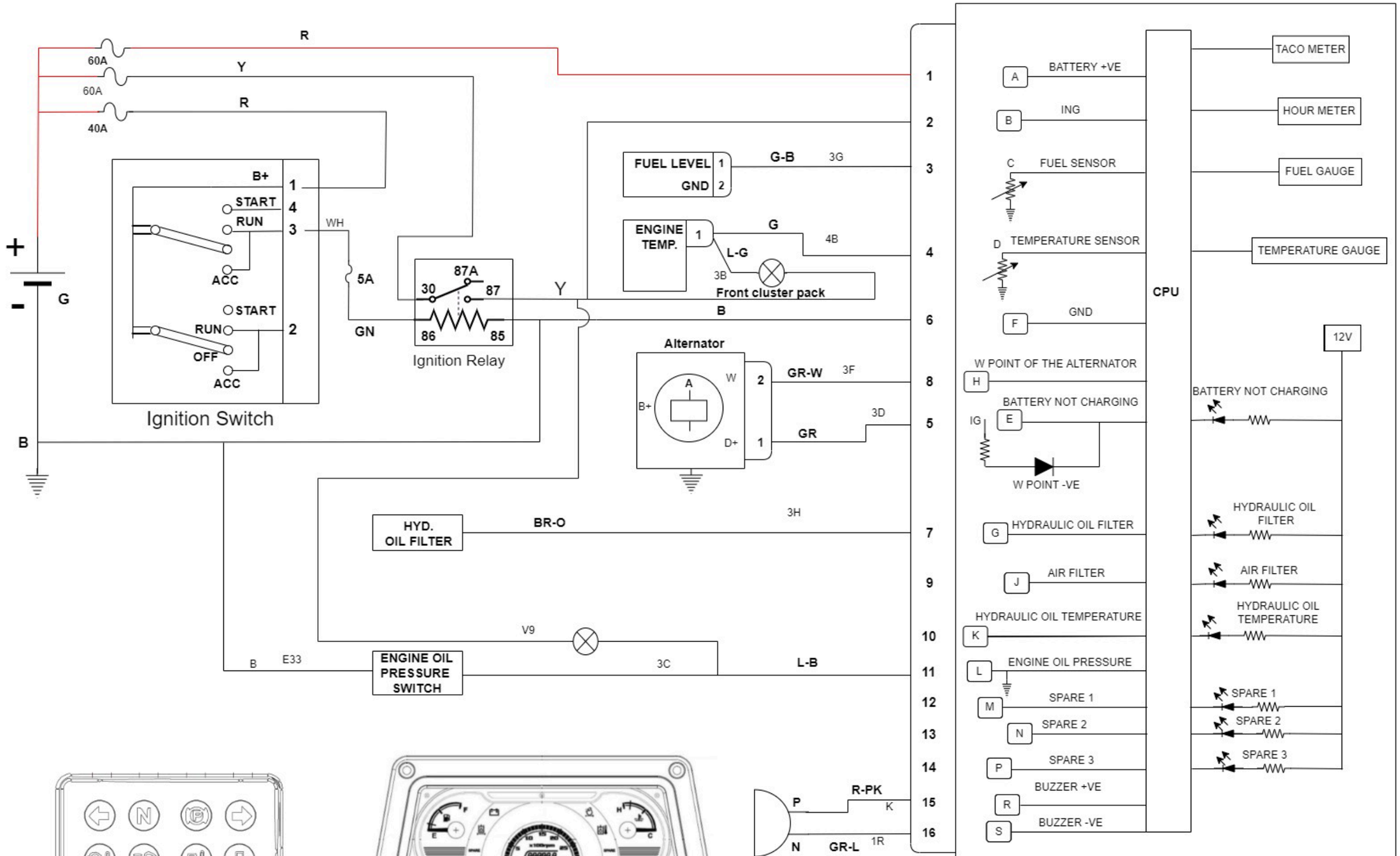

Front cluster pack

Instrument cluster

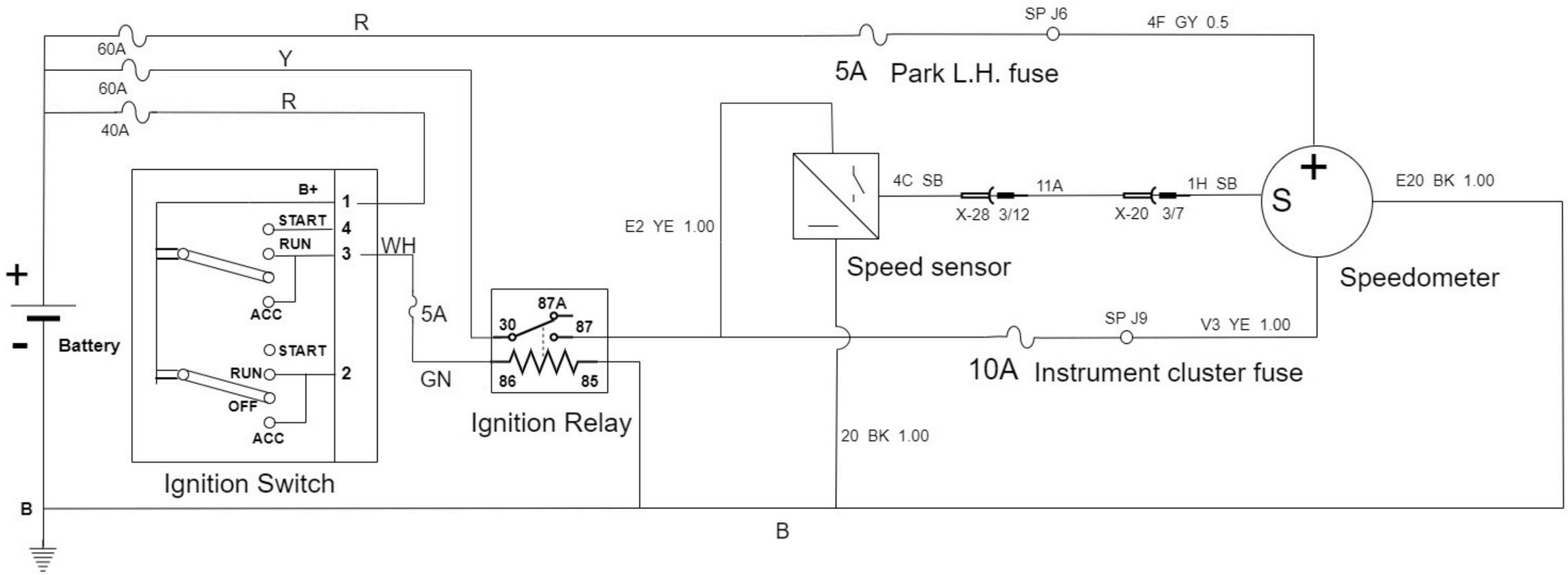
R
60A
Y
60A
R
40A
SP J6
4F GY 0.5
5A Park L.H. fuse
B+
1
START
4
RUN
3
WH
ACC
START
RUN
2
OFF
ACC
Ignition Switch
5A
GN
87A
30
87
86
85
Ignition Relay
E2 YE 1.00
4C SB
11A
X-28 3/12
X-20 3/7
1H SB
Speed sensor
S
+
E20 BK 1.00
Speedometer
SP J9
V3 YE 1.00
10A Instrument cluster fuse
20 BK 1.00
+
Battery
-
B
B

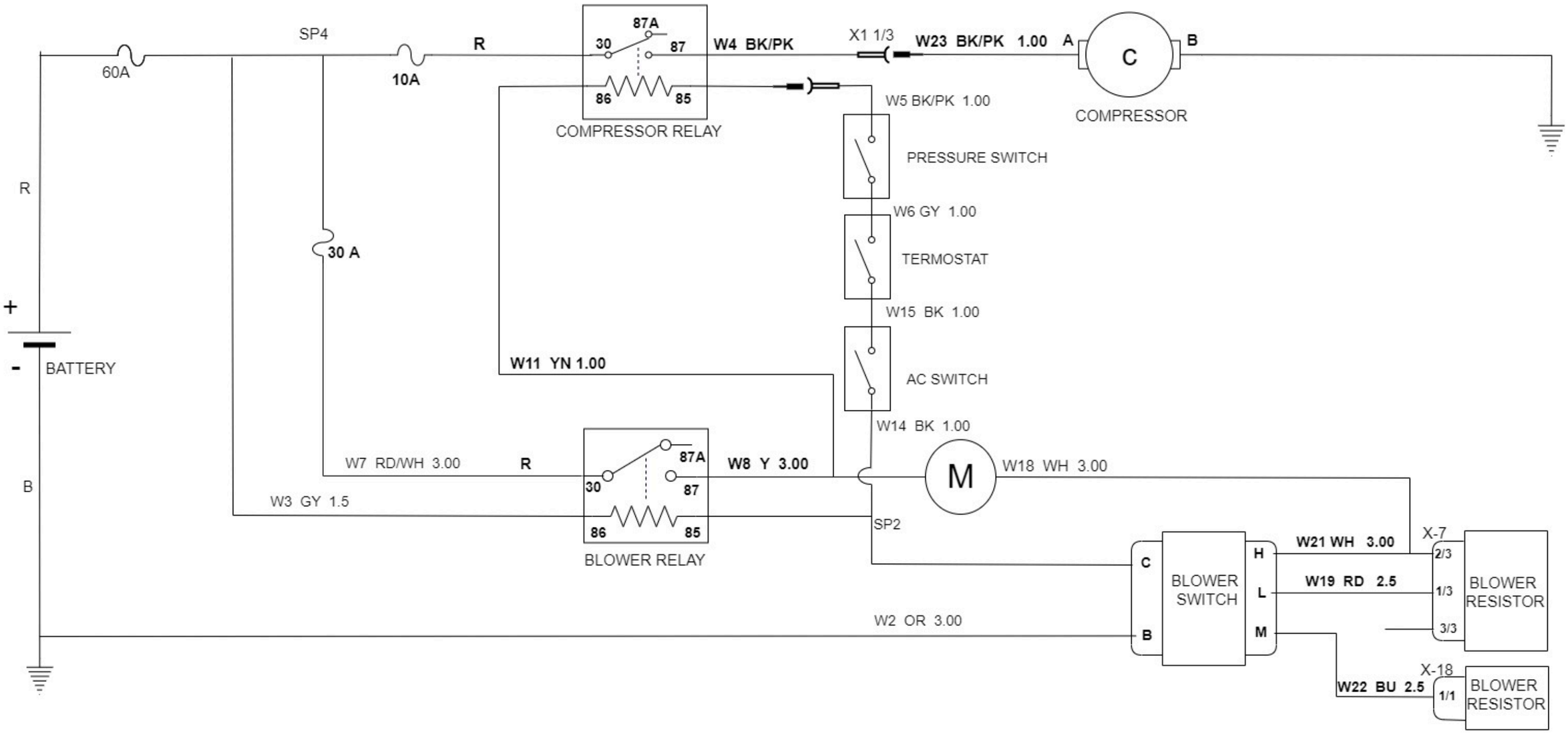
SP4
60A
10A
R
87A
30
87
W4 BK/PK
X1 1/3
W23 BK/PK 1.00
A
C
B
86
85
COMPRESSOR RELAY
COMPRESSOR
W5 BK/PK 1.00
PRESSURE SWITCH
W6 GY 1.00
TERMOSTAT
W15 BK 1.00
AC SWITCH
W14 BK 1.00
M
W18 WH 3.00
R
30 A
+
-
BATTERY
B
W11 YN 1.00
W7 RD/WH 3.00
R
W8 Y 3.00
W3 GY 1.5
SP2
BLOWER RELAY
C
B
BLOWER SWITCH
H
L
M
W21 WH 3.00
W19 RD 2.5
X-7
2/3
1/3
3/3
BLOWER RESISTOR
W2 OR 3.00
X-18
W22 BU 2.5
1/1
BLOWER RESISTOR

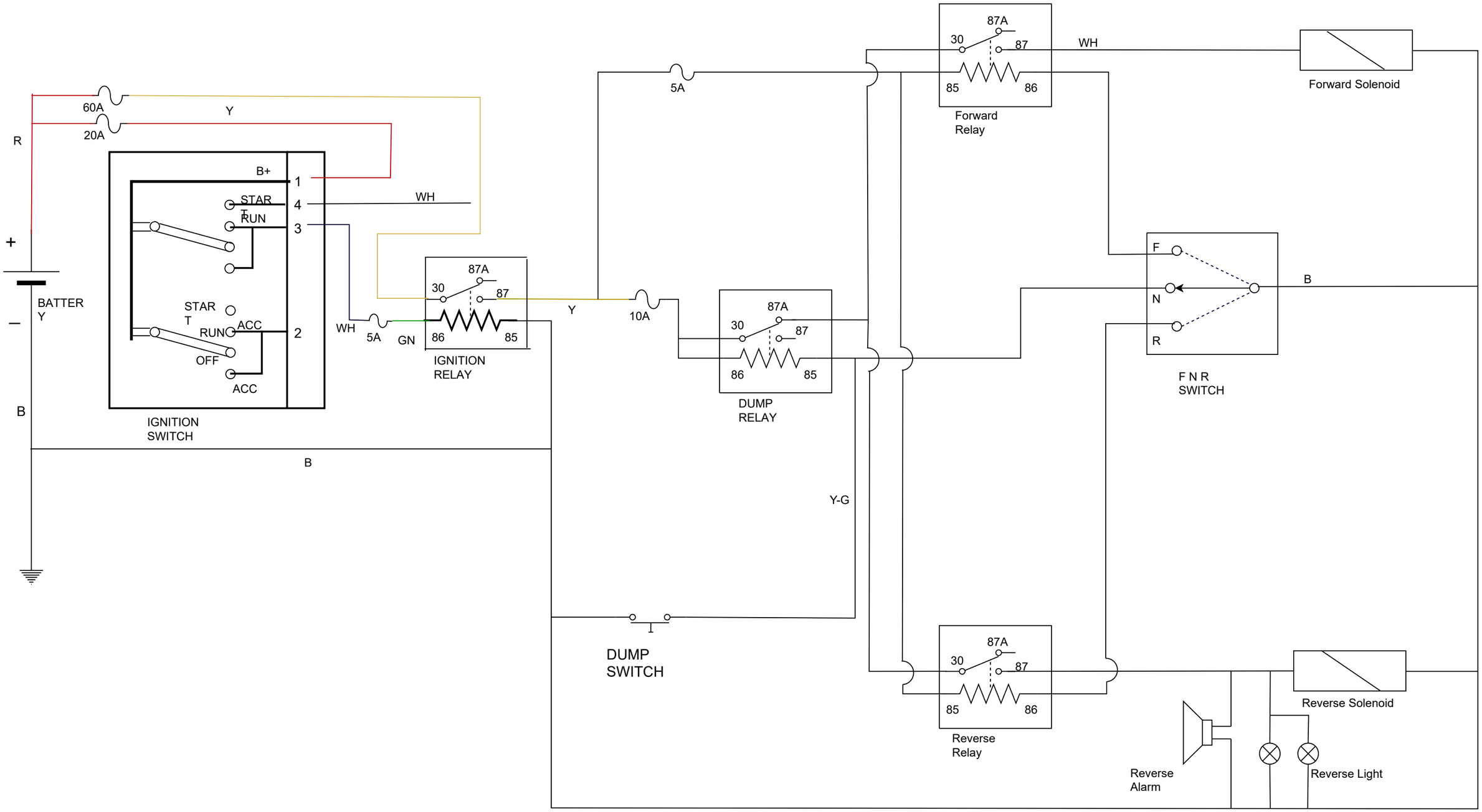
60A
20A
R
Y
+
BATTER
Y
–
B
B+
STAR
T
RUN
ACC
OFF
1
4
3
2
IGNITION
SWITCH
WH
5A
GN
87A
30
87
86
85
IGNITION
RELAY
Y
10A
5A
DUMP
RELAY
DUMP
SWITCH
Y-G
Forward
Relay
WH
Forward Solenoid
F
N
R
B
F N R
SWITCH
Reverse
Relay
Reverse Solenoid
Reverse
Alarm
Reverse Light

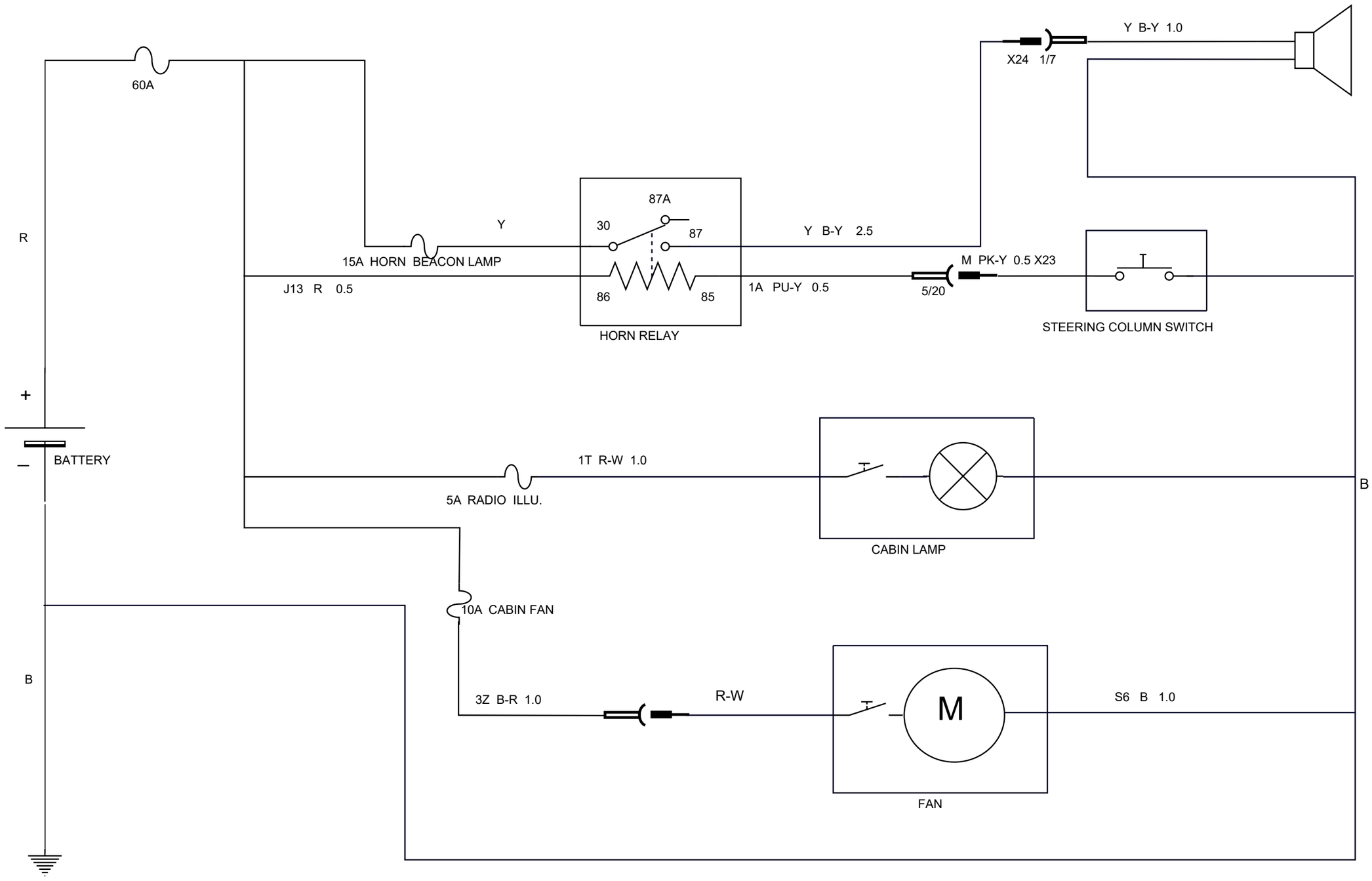
60A
R
Y
15A HORN BEACON LAMP
J13 R 0.5
87A
30
87
86
85
HORN RELAY
Y B-Y 2.5
1A PU-Y 0.5
5/20
M PK-Y 0.5 X23
X24 1/7
Y B-Y 1.0
STEERING COLUMN SWITCH
+
BATTERY
–
B
1T R-W 1.0
5A RADIO ILLU.
CABIN LAMP
B
10A CABIN FAN
3Z B-R 1.0
R-W
M
S6 B 1.0
FAN

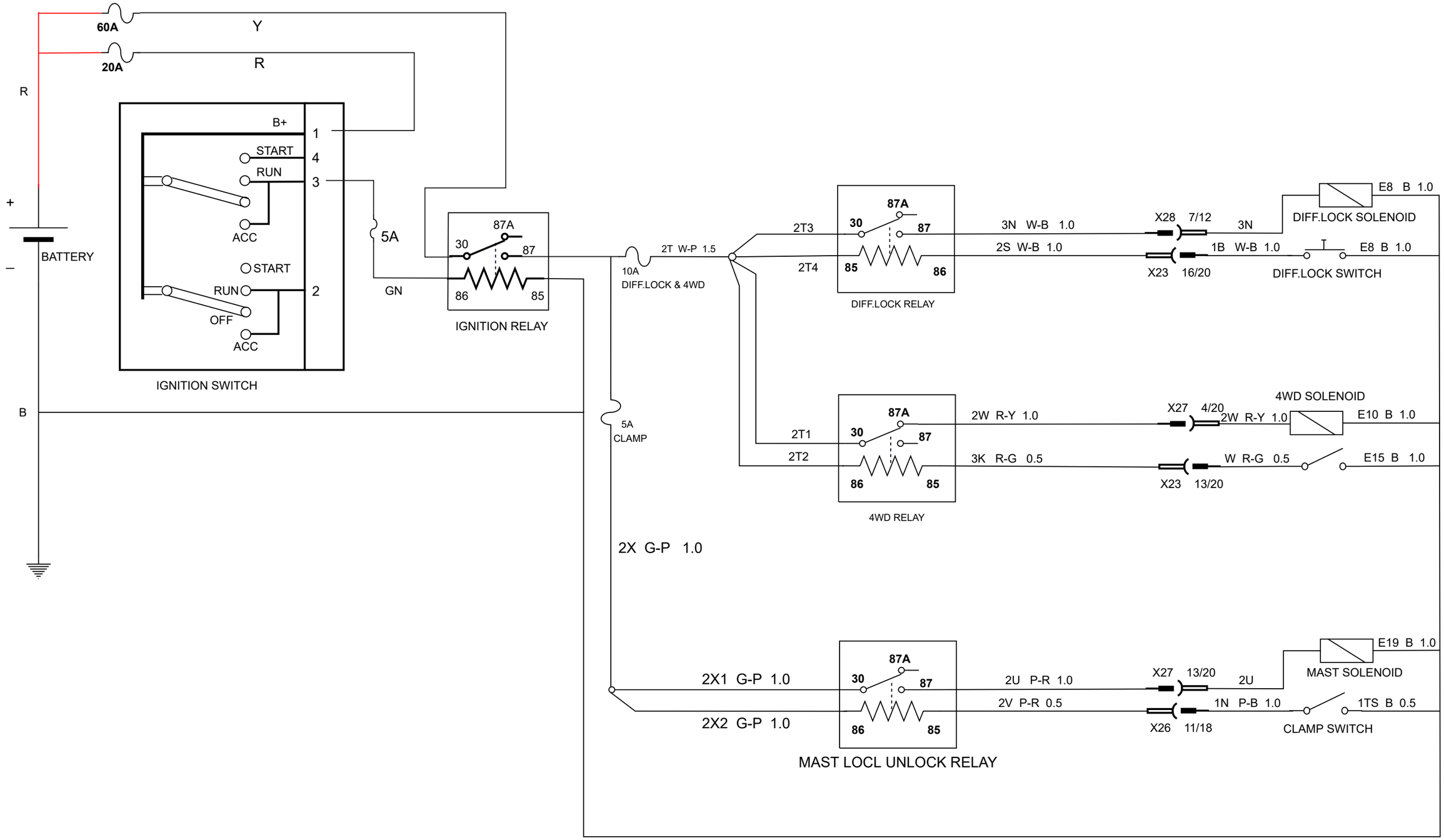
60A
Y
20A
R
R
+
BATTERY
–
B
B+
START
RUN
ACC
START
RUN
OFF
ACC
1
4
3
2
IGNITION SWITCH
5A
GN
87A
30
87
86
85
IGNITION RELAY
2T W-P 1.5
10A
DIFF.LOCK & 4WD
5A
CLAMP
2X G-P 1.0
2T3
2T4
87A
30
87
85
86
DIFF.LOCK RELAY
3N W-B 1.0
2S W-B 1.0
X28 7/12
3N
1B W-B 1.0
X23 16/20
E8 B 1.0
DIFF.LOCK SOLENOID
E8 B 1.0
DIFF.LOCK SWITCH
2T1
2T2
87A
30
87
86
85
4WD RELAY
2W R-Y 1.0
3K R-G 0.5
X27 4/20
2W R-Y 1.0
4WD SOLENOID
E10 B 1.0
X23 13/20
W R-G 0.5
E15 B 1.0
2X1 G-P 1.0
2X2 G-P 1.0
87A
30
87
86
85
MAST LOCL UNLOCK RELAY
2U P-R 1.0
2V P-R 0.5
X27 13/20
2U
E19 B 1.0
MAST SOLENOID
X26 11/18
1N P-B 1.0
1TS B 0.5
CLAMP SWITCH

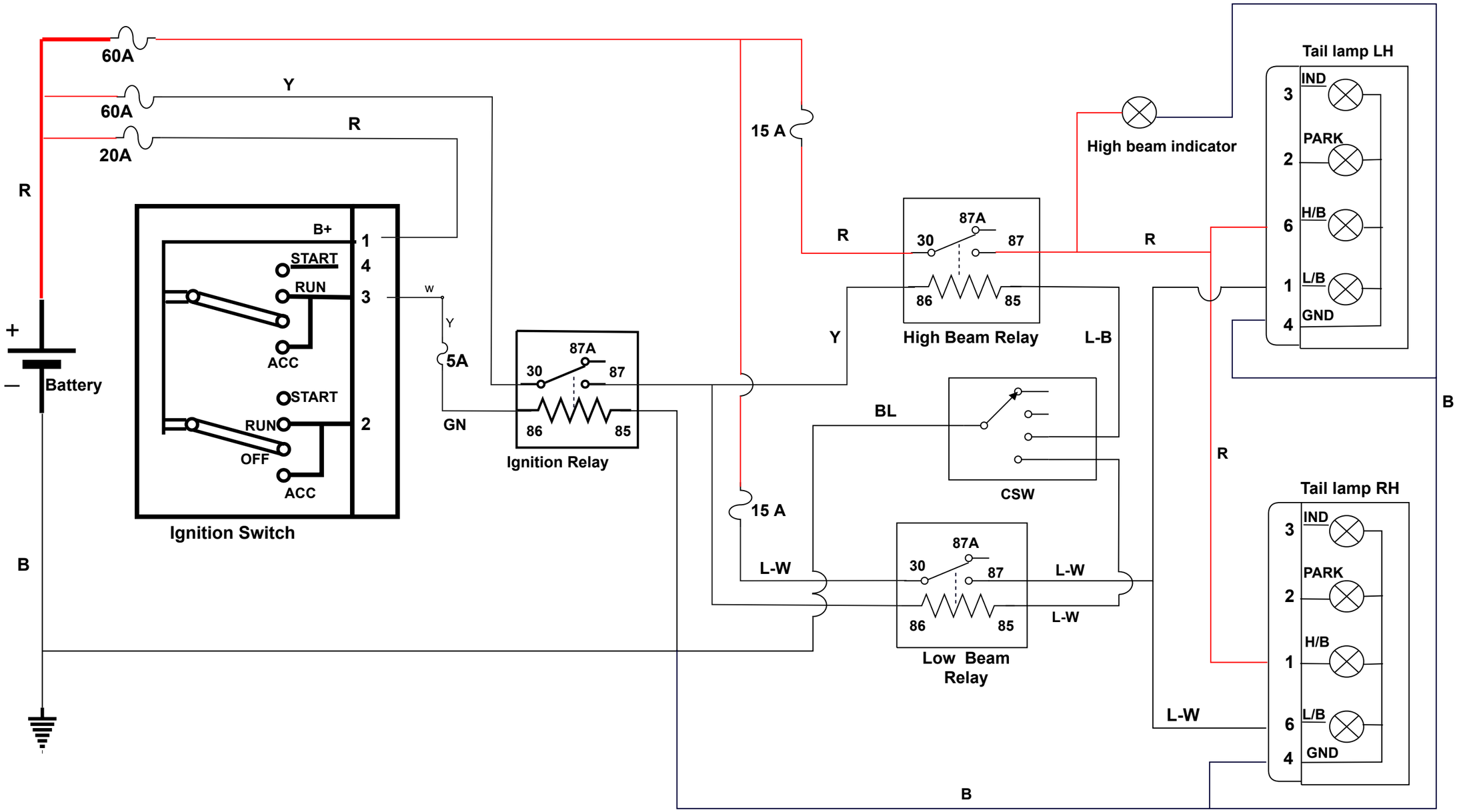
60A
60A
20A
Y
R
R
+
Battery
—
B
B+
START
RUN
ACC
START
RUN
OFF
ACC
1
4
3
2
Ignition Switch
W
Y
5A
GN
87A
30
87
86
85
Ignition Relay
15 A
15 A
L-W
L-W
L-W
L-W
87A
30
87
86
85
Low Beam Relay
R
87A
30
87
86
85
High Beam Relay
Y
L-B
BL
CSW
High beam indicator
R
R
R
B
B
L-W
Tail lamp LH
IND
PARK
H/B
L/B
GND
3
2
6
1
4
Tail lamp RH
IND
PARK
H/B
L/B
GND
3
2
1
6
4

80.28.9 REAR WORKING LIGHT (KIRLOSKAR)

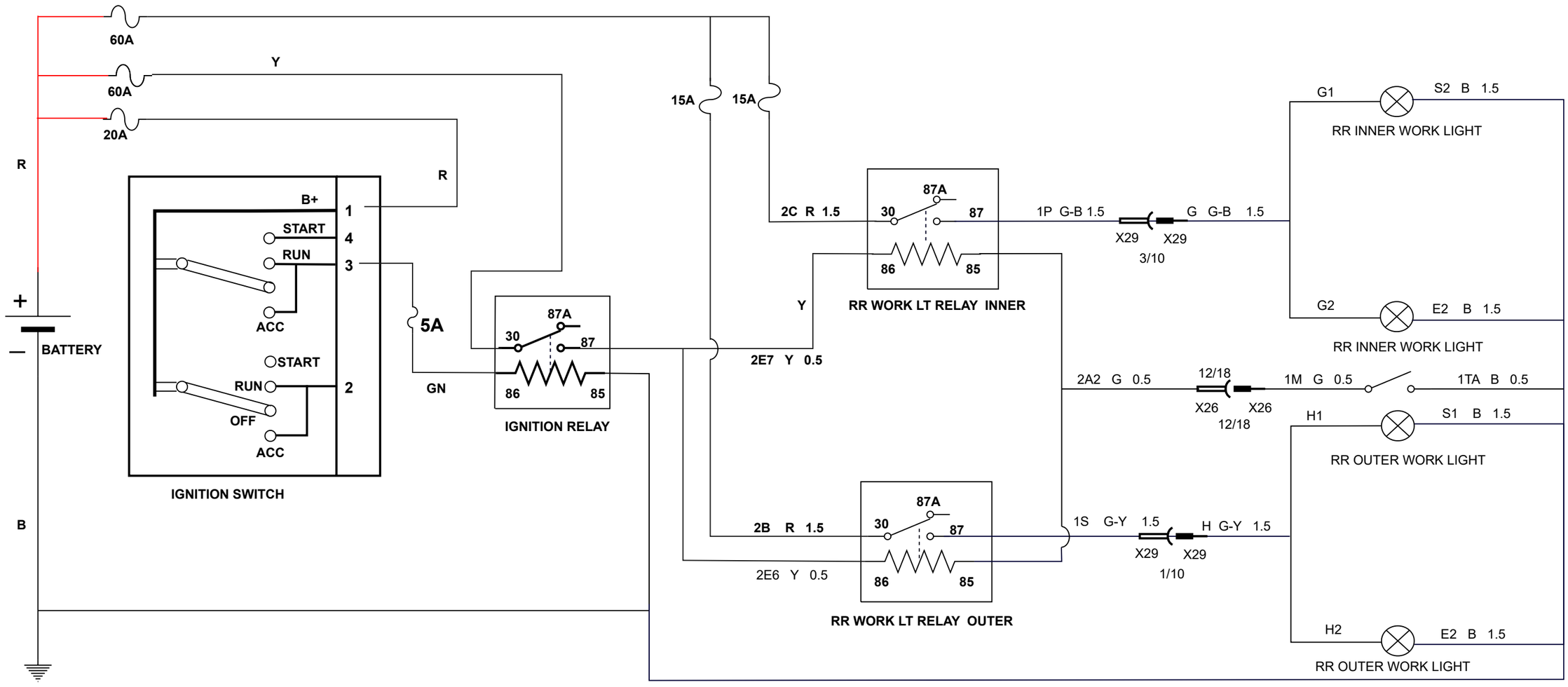

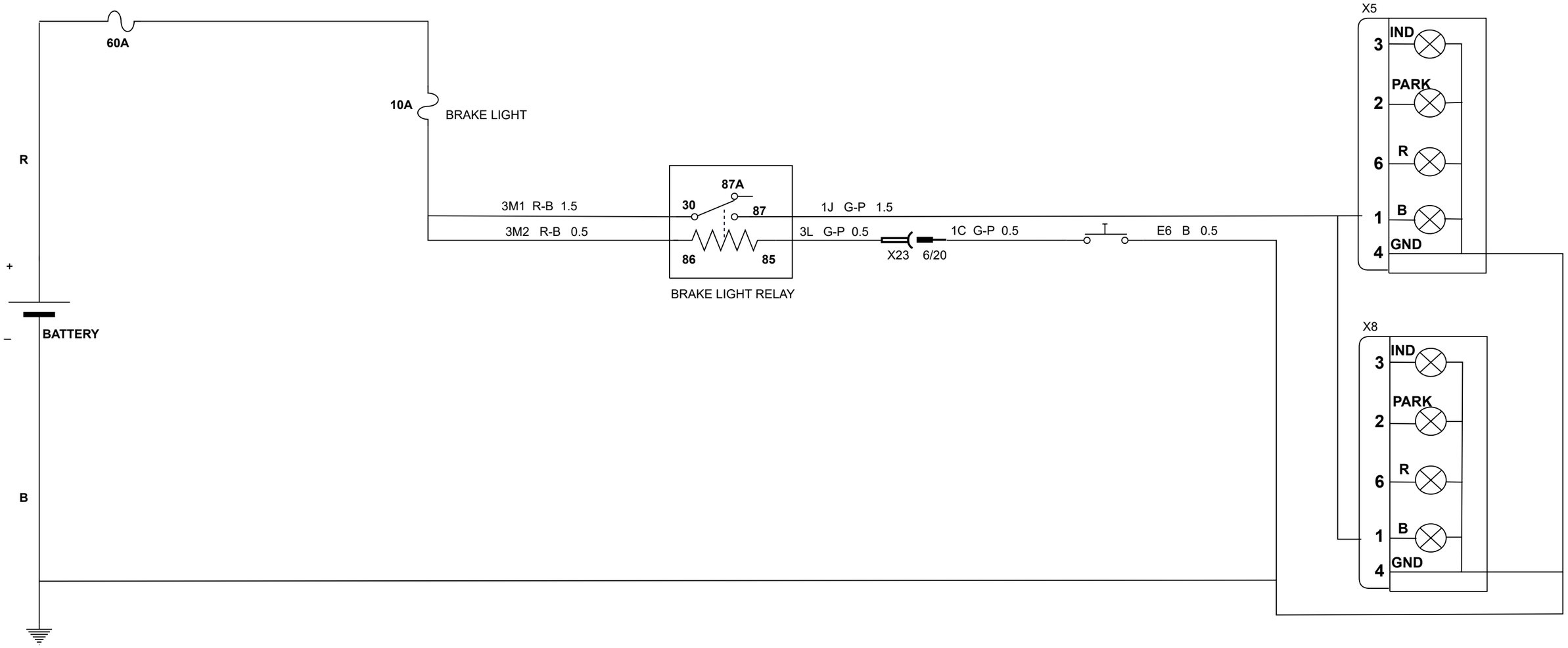
60A
10A
BRAKE LIGHT
R
+
BATTERY
–
B
87A
30
87
86
85
3M1 R-B 1.5
3M2 R-B 0.5
BRAKE LIGHT RELAY
1J G-P 1.5
3L G-P 0.5
X23 6/20
1C G-P 0.5
E6 B 0.5
X5
3
IND
2
PARK
6
R
1
B
4
GND
X8
3
IND
2
PARK
6
R
1
B
4
GND

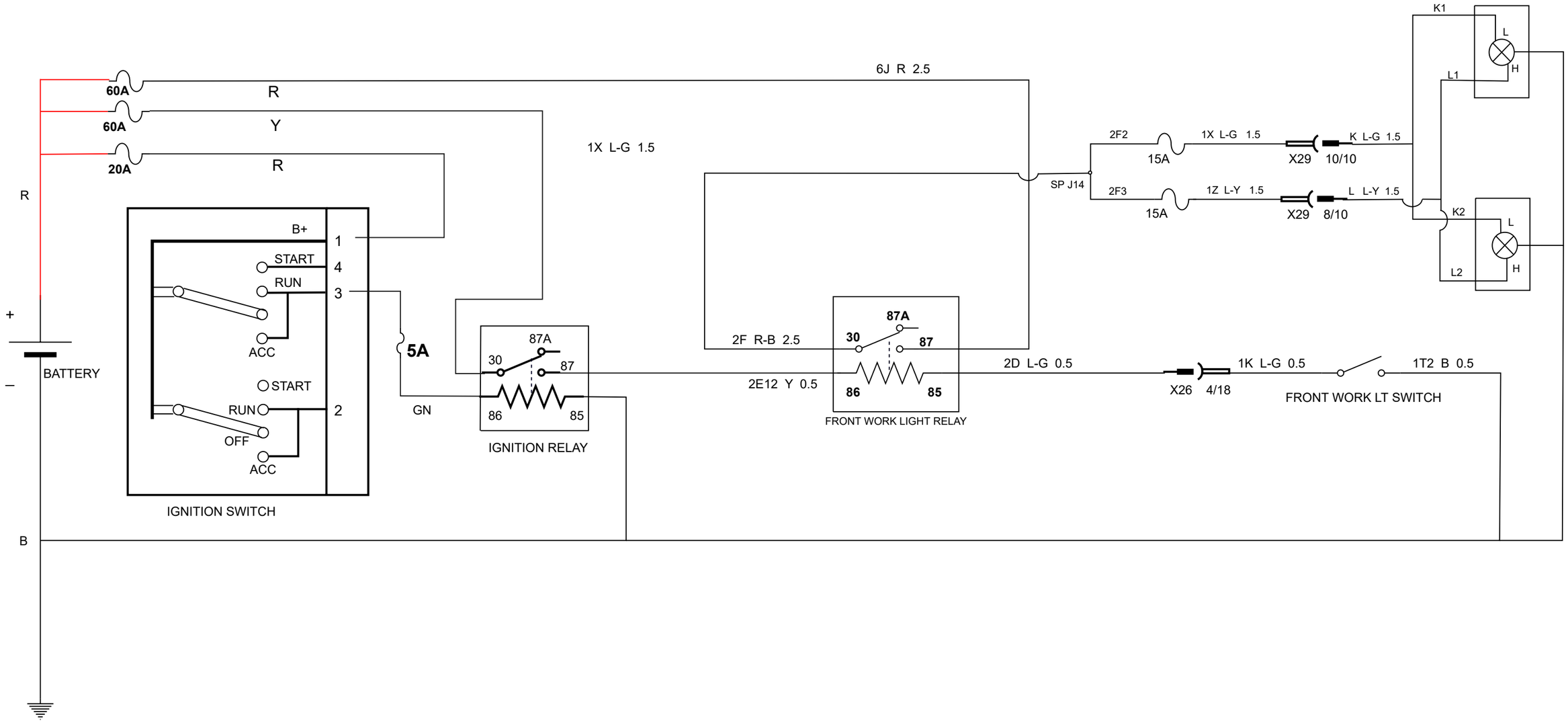
60A
60A
20A
R
Y
R
R
6J R 2.5
1X L-G 1.5
B+
START
RUN
ACC
START
RUN
OFF
ACC
1
4
3
2
IGNITION SWITCH
+
BATTERY
–
B
5A
GN
87A
30
87
86
85
IGNITION RELAY
2F R-B 2.5
2E12 Y 0.5
87A
30
87
86
85
FRONT WORK LIGHT RELAY
SP J14
2F2
15A
1X L-G 1.5
X29
10/10
K L-G 1.5
2F3
15A
1Z L-Y 1.5
X29
8/10
L L-Y 1.5
K1
L
H
L1
K2
L
H
L2
2D L-G 0.5
X26
4/18
1K L-G 0.5
1T2 B 0.5
FRONT WORK LT SWITCH

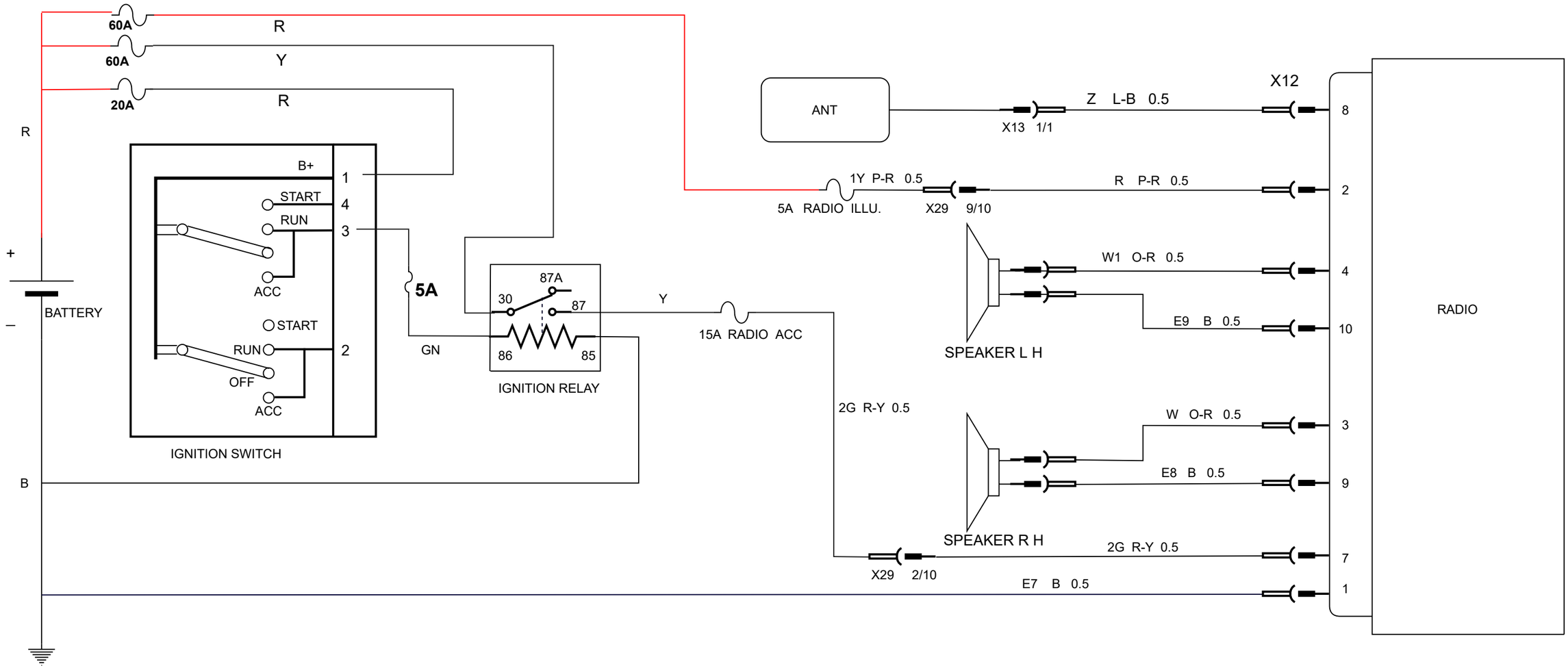
60A
60A
20A
R
Y
R
R
+
BATTERY
–
B+
START
RUN
ACC
START
RUN
OFF
ACC
1
4
3
2
IGNITION SWITCH
5A
GN
87A
30
87
86
85
IGNITION RELAY
Y
15A RADIO ACC
2G R-Y 0.5
B
ANT
X13 1/1
Z L-B 0.5
1Y P-R 0.5
5A RADIO ILLU.
X29 9/10
R P-R 0.5
W1 O-R 0.5
E9 B 0.5
SPEAKER L H
W O-R 0.5
E8 B 0.5
SPEAKER R H
X29 2/10
2G R-Y 0.5
E7 B 0.5
X12
8
2
4
10
3
9
7
1
RADIO

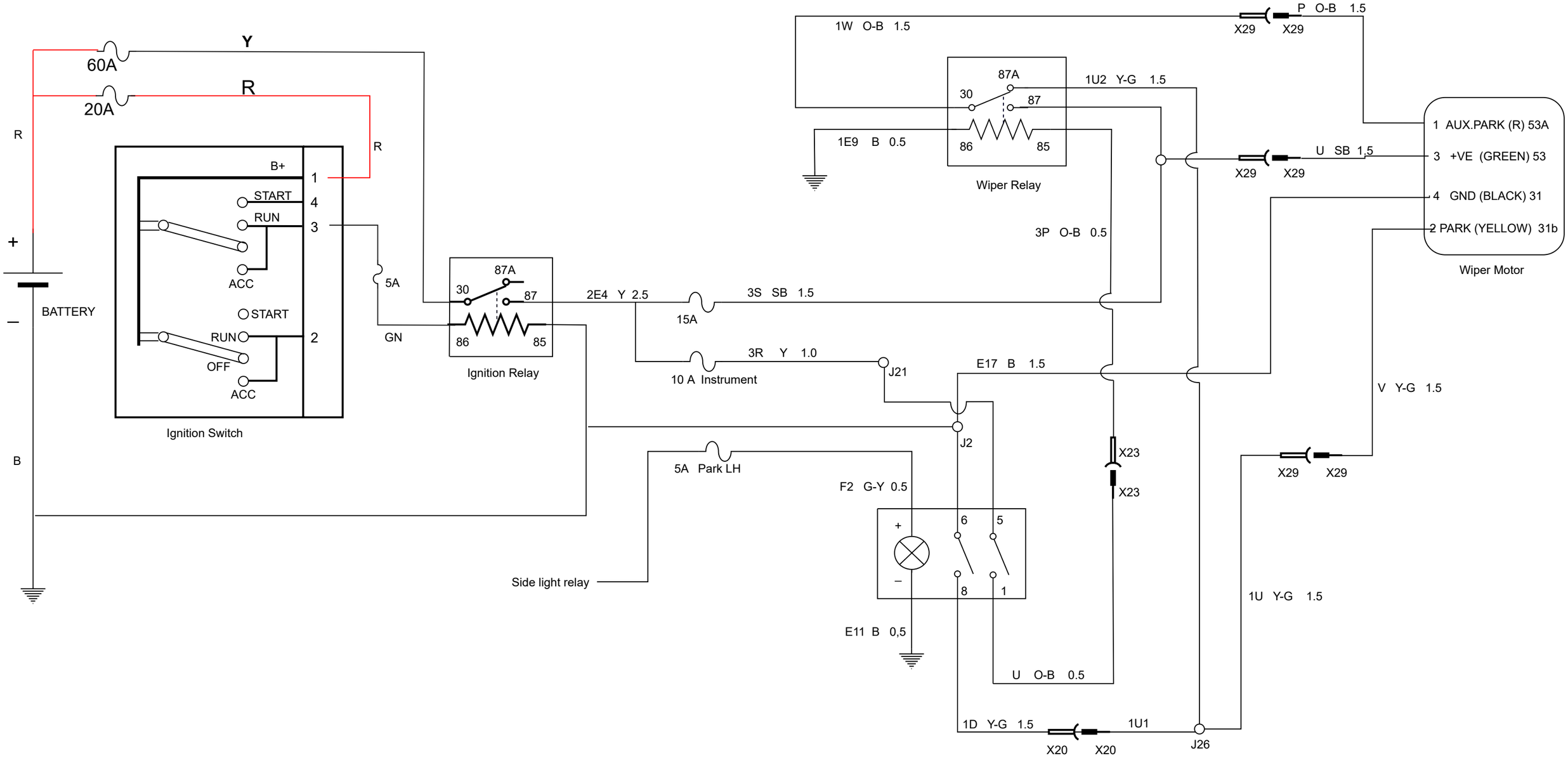
Y
60A
R
20A
R
R
+
BATTERY
–
B
B+
1
START
4
RUN
3
ACC
START
RUN
2
OFF
ACC
Ignition Switch
5A
GN
87A
30
87
86
85
Ignition Relay
2E4 Y 2.5
15A
3S SB 1.5
3R Y 1.0
10 A Instrument
J21
1W O-B 1.5
X29
X29
P O-B 1.5
87A
30
87
86
85
1E9 B 0.5
Wiper Relay
1U2 Y-G 1.5
3P O-B 0.5
X29
X29
U SB 1,5
1 AUX.PARK (R) 53A
3 +VE (GREEN) 53
4 GND (BLACK) 31
2 PARK (YELLOW) 31b
Wiper Motor
V Y-G 1.5
X29
X29
E17 B 1.5
J2
X23
X23
5A Park LH
F2 G-Y 0.5
Side light relay
+
–
6
5
8
1
E11 B 0,5
U O-B 0.5
1U Y-G 1.5
1D Y-G 1.5
X20
X20
1U1
J26

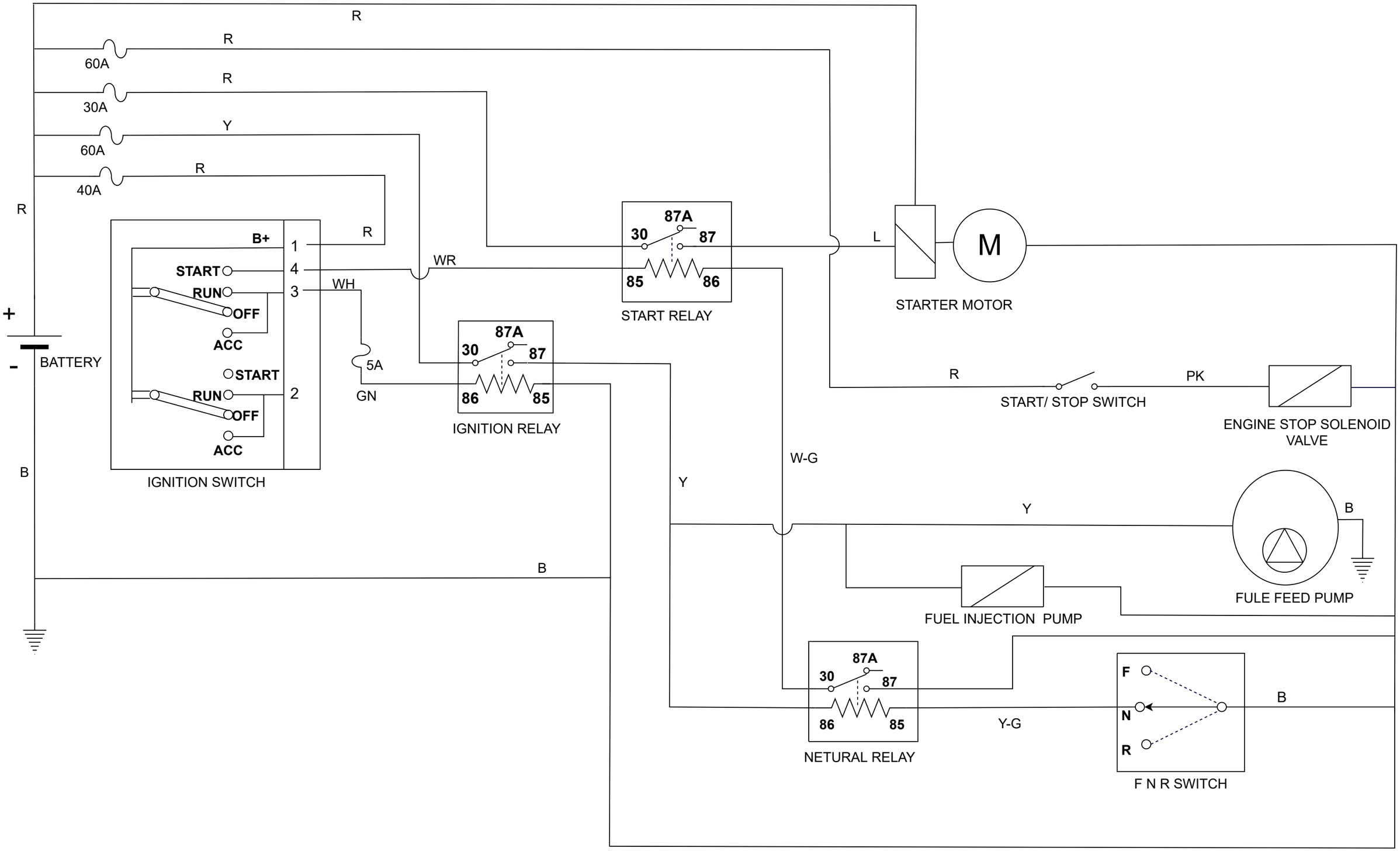
R
R
60A
R
30A
Y
60A
R
40A
R
R
B+
1
START
4
RUN
3
OFF
ACC
START
RUN
2
OFF
ACC
IGNITION SWITCH
WR
WH
5A
GN
87A
30
87
85
86
START RELAY
87A
30
87
86
85
IGNITION RELAY
L
M
STARTER MOTOR
R
START/ STOP SWITCH
PK
ENGINE STOP SOLENOID VALVE
W-G
Y
Y
B
FUEL INJECTION PUMP
FULE FEED PUMP
87A
30
87
86
85
NETURAL RELAY
F
N
R
B
Y-G
F N R SWITCH
+
BATTERY
-
B
B

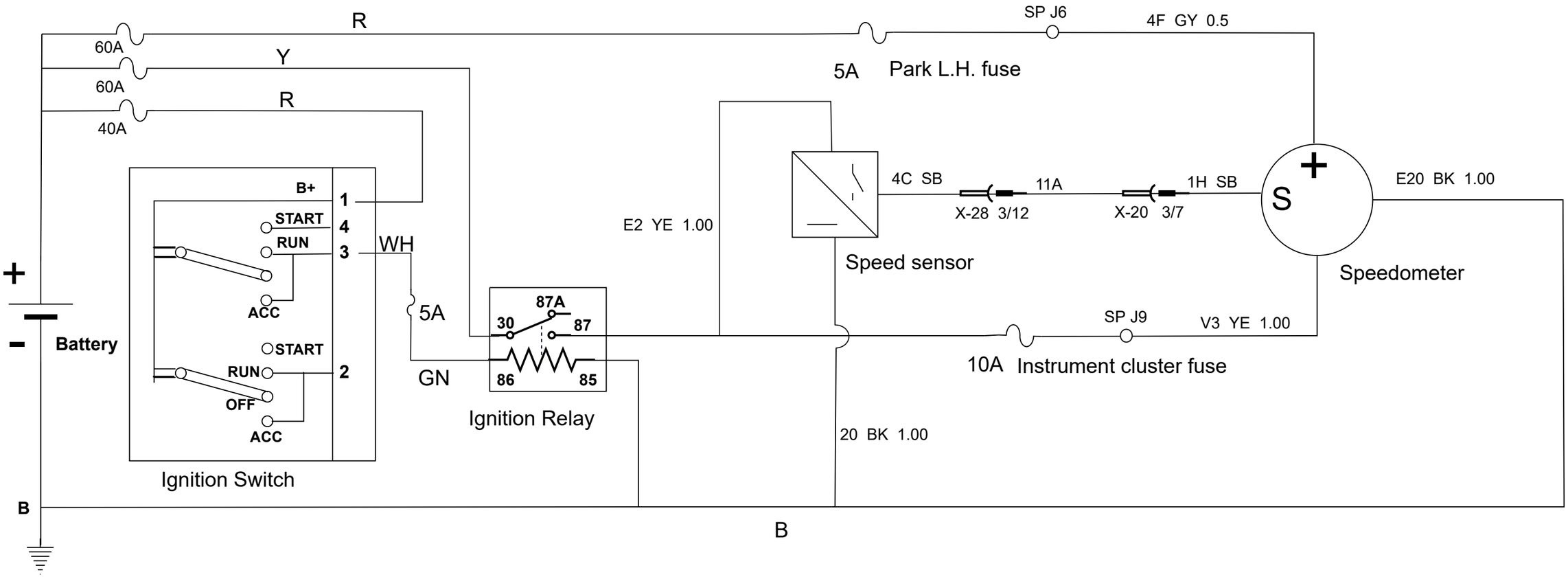
R
60A
Y
60A
R
40A
SP J6
4F GY 0.5
5A
Park L.H. fuse
B+
1
START
4
RUN
3
ACC
WH
5A
E2 YE 1.00
4C SB
11A
1H SB
X-28 3/12
X-20 3/7
S
E20 BK 1.00
Speed sensor
Speedometer
87A
30
87
SP J9
V3 YE 1.00
10A
Instrument cluster fuse
+
Battery
-
START
RUN
2
OFF
ACC
GN
86
85
Ignition Relay
20 BK 1.00
Ignition Switch
B
B

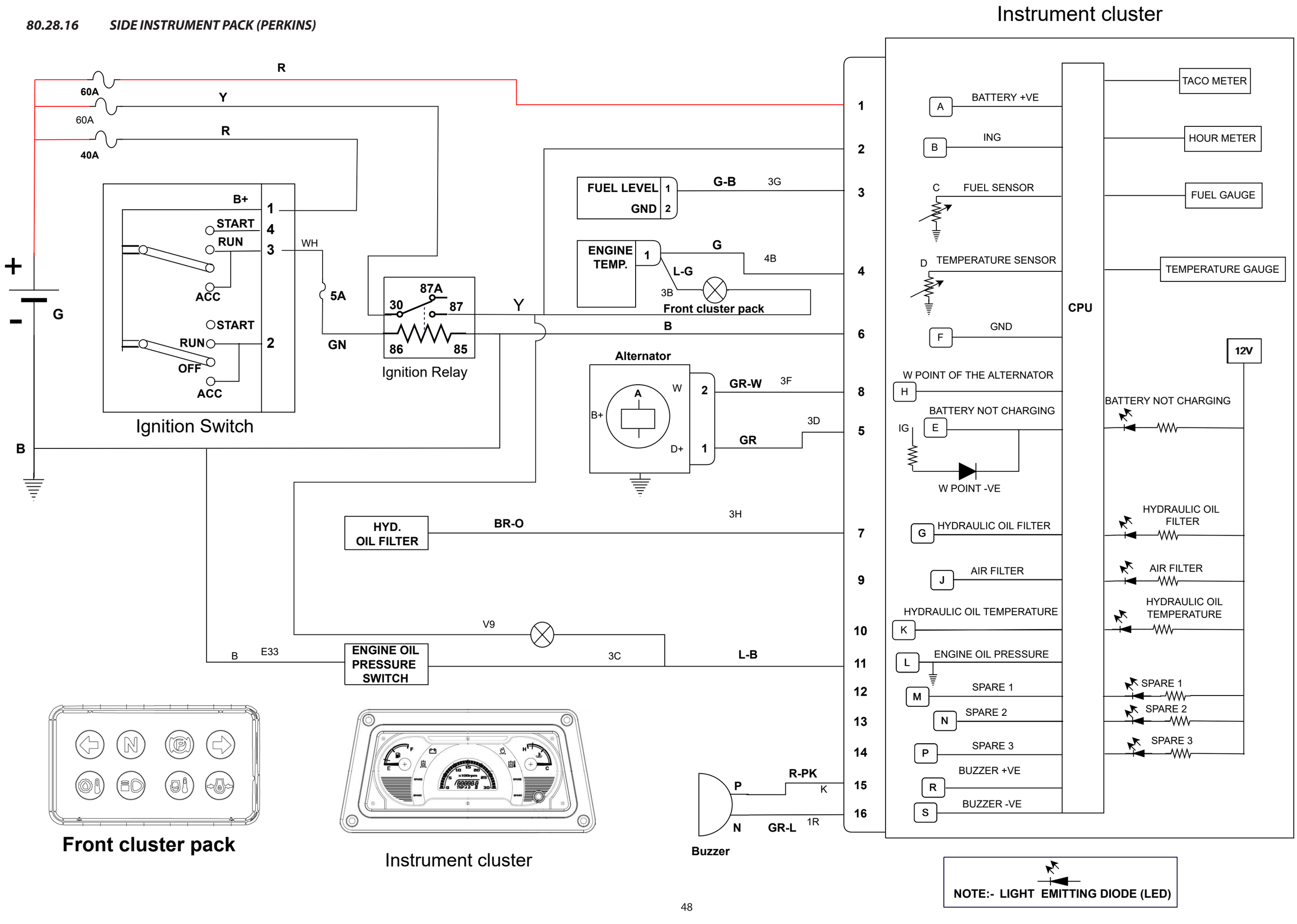

Front cluster pack

Instrument cluster

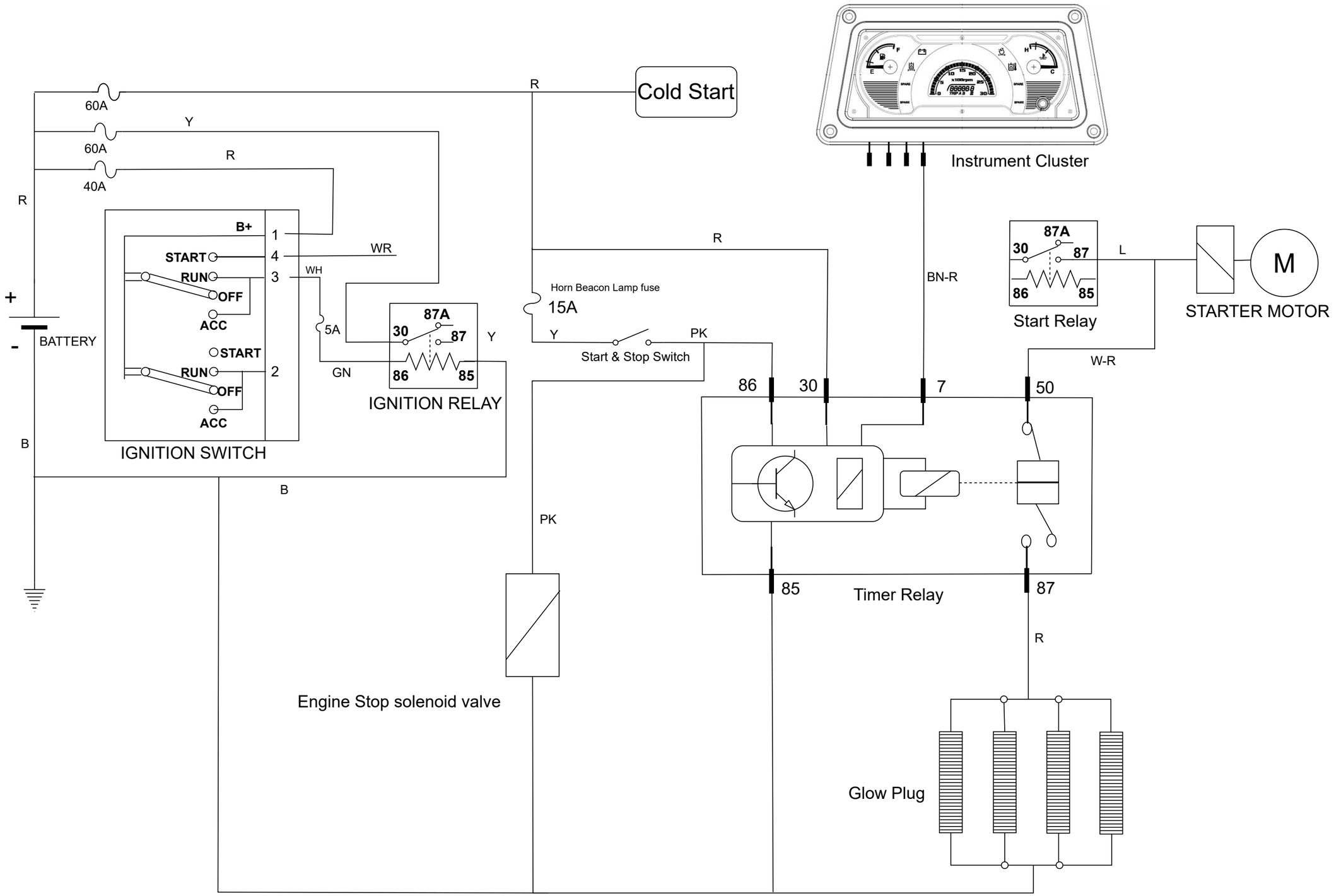
Cold Start
R
60A
Y
60A
R
40A
R
B+
START
RUN
OFF
ACC
START
RUN
OFF
ACC
1
4
3
2
WR
WH
5A
87A
30
87
86
85
Y
GN
IGNITION RELAY
IGNITION SWITCH
B
B
+
-
BATTERY
Horn Beacon Lamp fuse
15A
Y
PK
Start & Stop Switch
PK
Engine Stop solenoid valve
Instrument Cluster
R
BN-R
87A
30
87
86
85
L
Start Relay
M
STARTER MOTOR
W-R
86
30
7
50
85
87
Timer Relay
R
Glow Plug

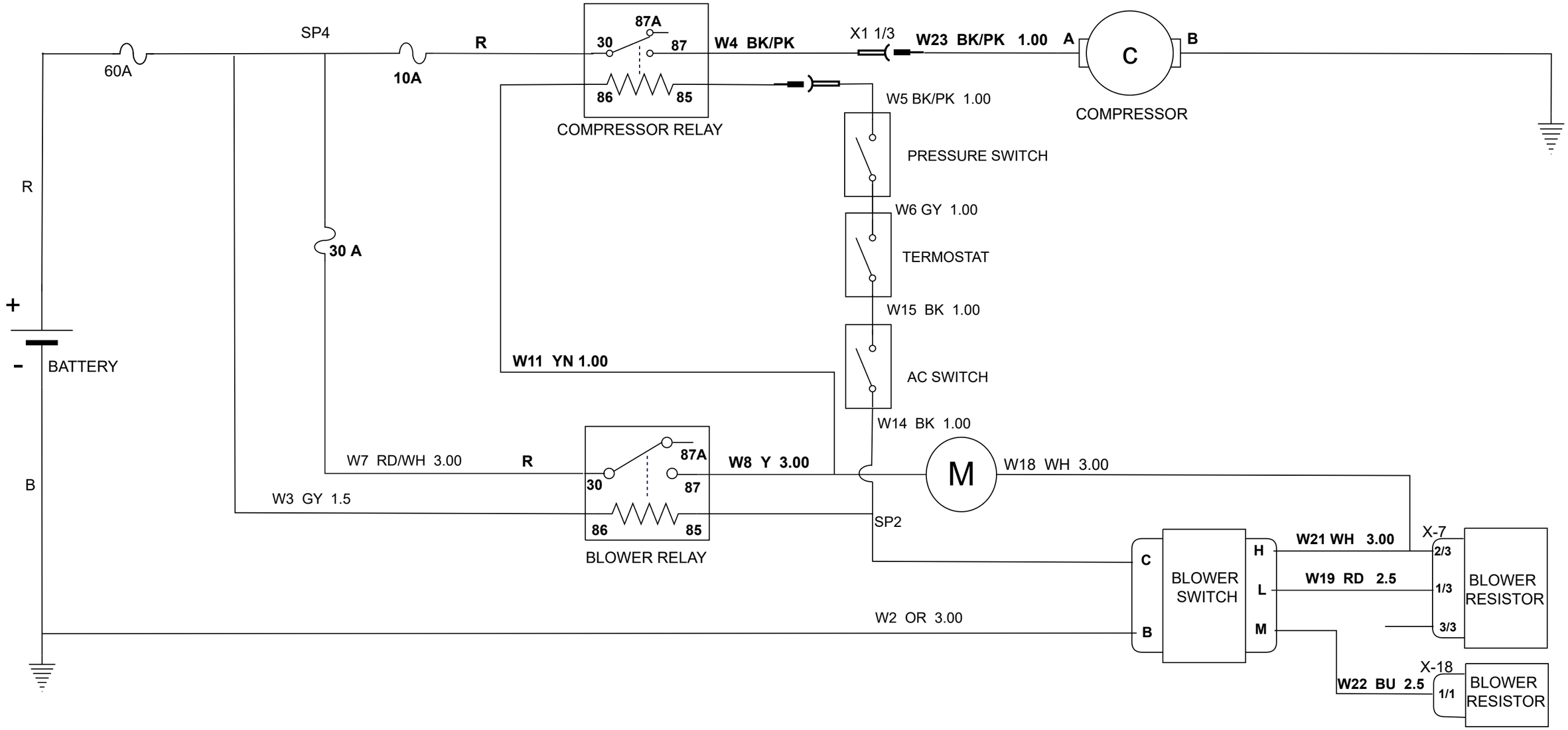
SP4
60A
10A
R
87A
30
87
W4 BK/PK
X1 1/3
W23 BK/PK 1.00
A
B
C
COMPRESSOR
86
85
COMPRESSOR RELAY
W5 BK/PK 1.00
PRESSURE SWITCH
W6 GY 1.00
TERMOSTAT
W15 BK 1.00
AC SWITCH
W14 BK 1.00
R
30 A
+
-
BATTERY
W11 YN 1.00
W7 RD/WH 3.00
R
W8 Y 3.00
M
W18 WH 3.00
W3 GY 1.5
SP2
B
BLOWER RELAY
C
B
BLOWER SWITCH
H
L
M
W21 WH 3.00
W19 RD 2.5
X-7
2/3
1/3
3/3
BLOWER RESISTOR
W2 OR 3.00
X-18
W22 BU 2.5
1/1
BLOWER RESISTOR

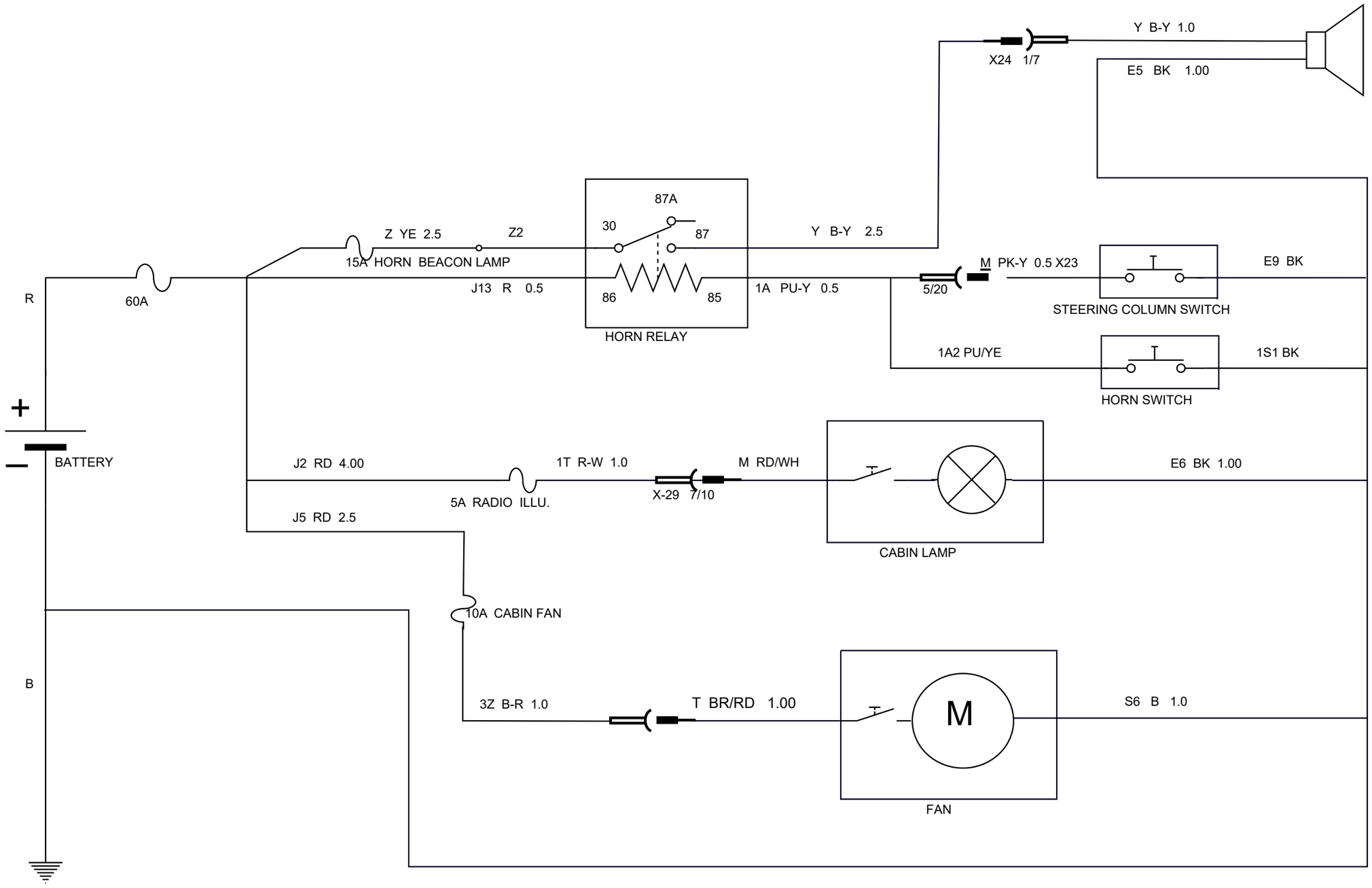
Y B-Y 1.0
X24 1/7
E5 BK 1.00
87A
30
87
Z YE 2.5
Z2
Y B-Y 2.5
15A HORN BEACON LAMP
J13 R 0.5
86
85
1A PU-Y 0.5
M PK-Y 0.5 X23
5/20
E9 BK
STEERING COLUMN SWITCH
HORN RELAY
R
60A
1A2 PU/YE
1S1 BK
HORN SWITCH
+
BATTERY
J2 RD 4.00
1T R-W 1.0
M RD/WH
5A RADIO ILLU.
X-29 7/10
E6 BK 1.00
B
J5 RD 2.5
CABIN LAMP
10A CABIN FAN
B
3Z B-R 1.0
T BR/RD 1.00
M
S6 B 1.0
FAN

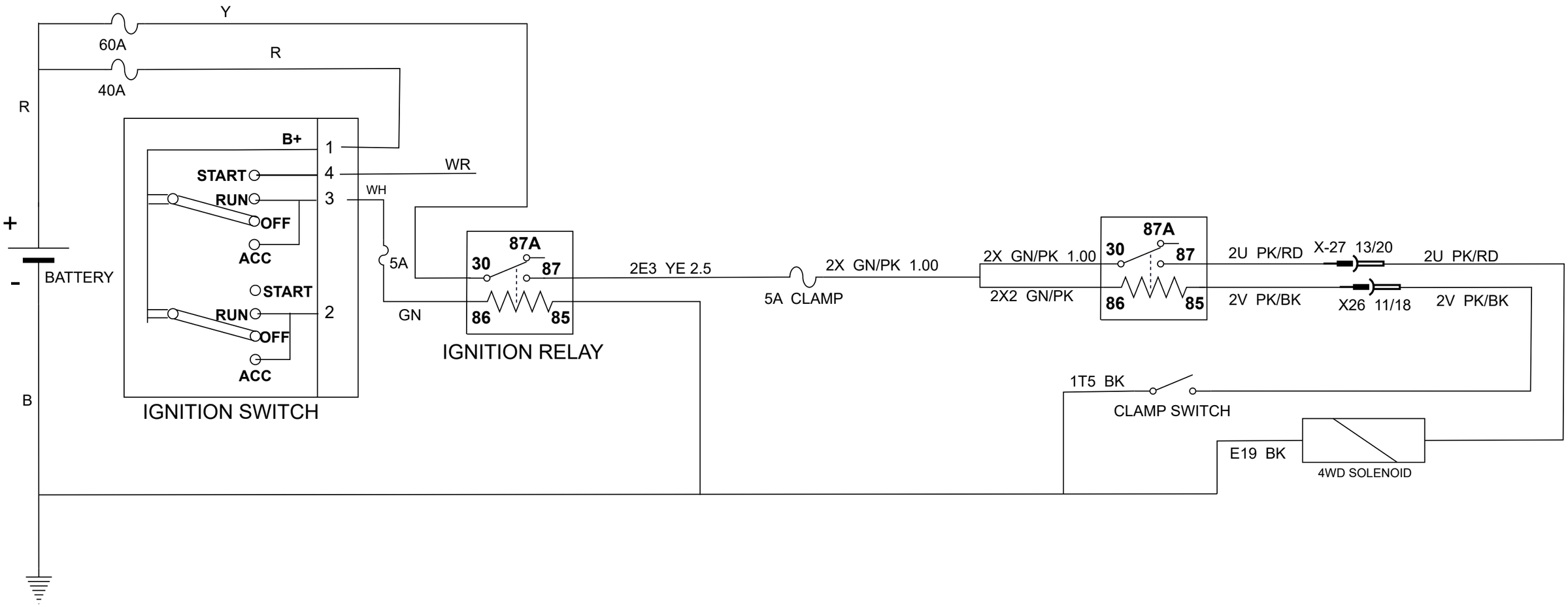
Y
60A
R
40A
R
B+
1
START
4
WR
RUN
3
WH
OFF
ACC
+
BATTERY
-
START
RUN
2
OFF
ACC
B
IGNITION SWITCH
5A
87A
30
87
GN
86
85
IGNITION RELAY
2E3 YE 2.5
5A CLAMP
2X GN/PK 1.00
2X GN/PK 1.00
87A
30
87
2X2 GN/PK
86
85
2U PK/RD
X-27 13/20
2U PK/RD
2V PK/BK
X26 11/18
2V PK/BK
1T5 BK
CLAMP SWITCH
E19 BK
4WD SOLENOID

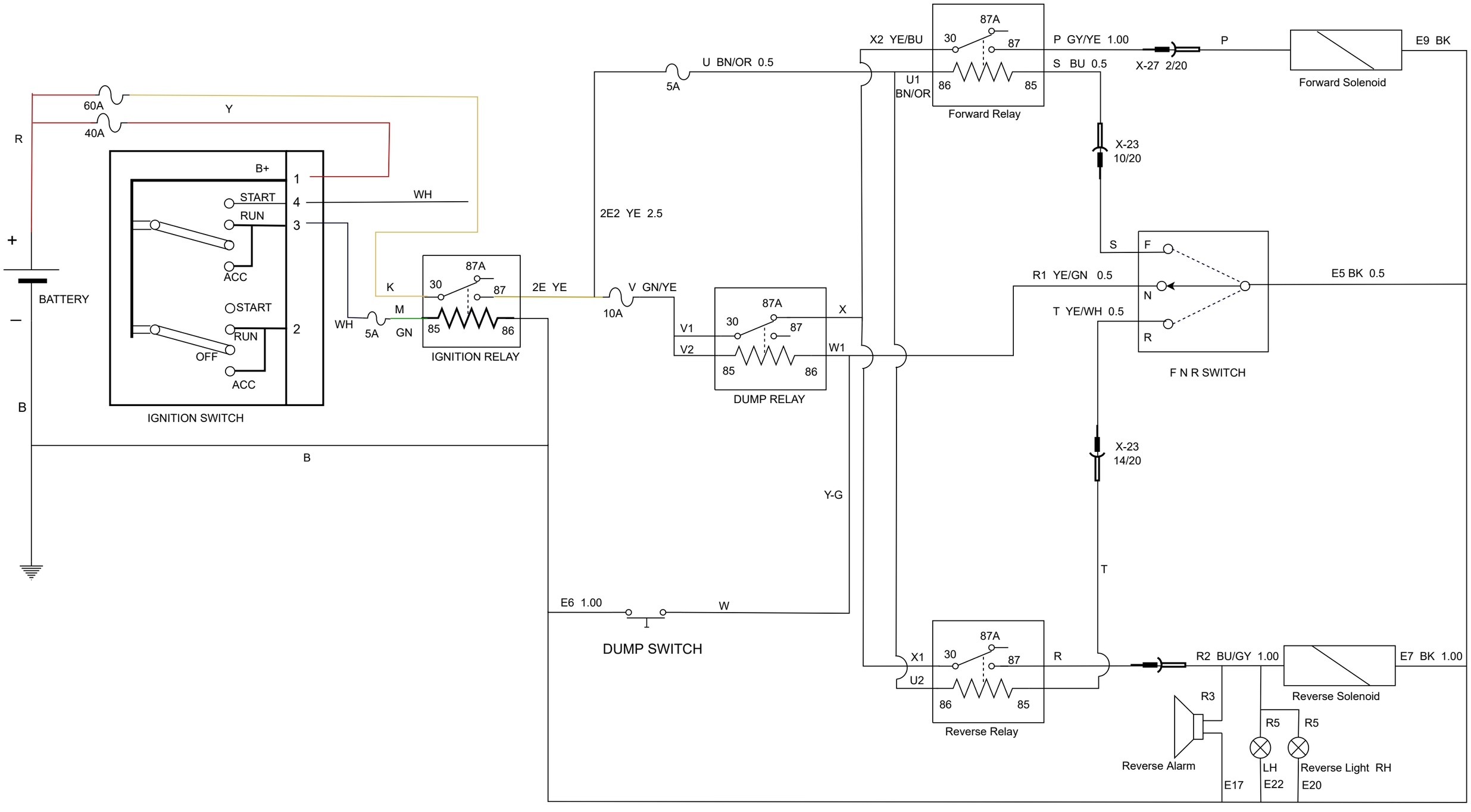
60A
40A
Y
R
+
BATTERY
–
B
B+
START
RUN
ACC
START
RUN
OFF
ACC
1
4
3
2
IGNITION SWITCH
B
WH
K
M
WH
5A
GN
87A
30
87
85
86
IGNITION RELAY
2E YE
2E2 YE 2.5
U BN/OR 0.5
5A
V GN/YE
10A
V1
V2
87A
30
87
85
86
DUMP RELAY
X
W1
Y-G
E6 1.00
W
DUMP SWITCH
X2 YE/BU
87A
30
87
U1
BN/OR
86
85
Forward Relay
P GY/YE 1.00
S BU 0.5
X-27 2/20
P
Forward Solenoid
E9 BK
X-23
10/20
S
F
R1 YE/GN 0.5
N
E5 BK 0.5
T YE/WH 0.5
R
F N R SWITCH
X-23
14/20
T
X1
U2
87A
30
87
R
86
85
Reverse Relay
R2 BU/GY 1.00
Reverse Solenoid
E7 BK 1.00
R3
Reverse Alarm
R5
R5
LH
E22
Reverse Light RH
E20
E17

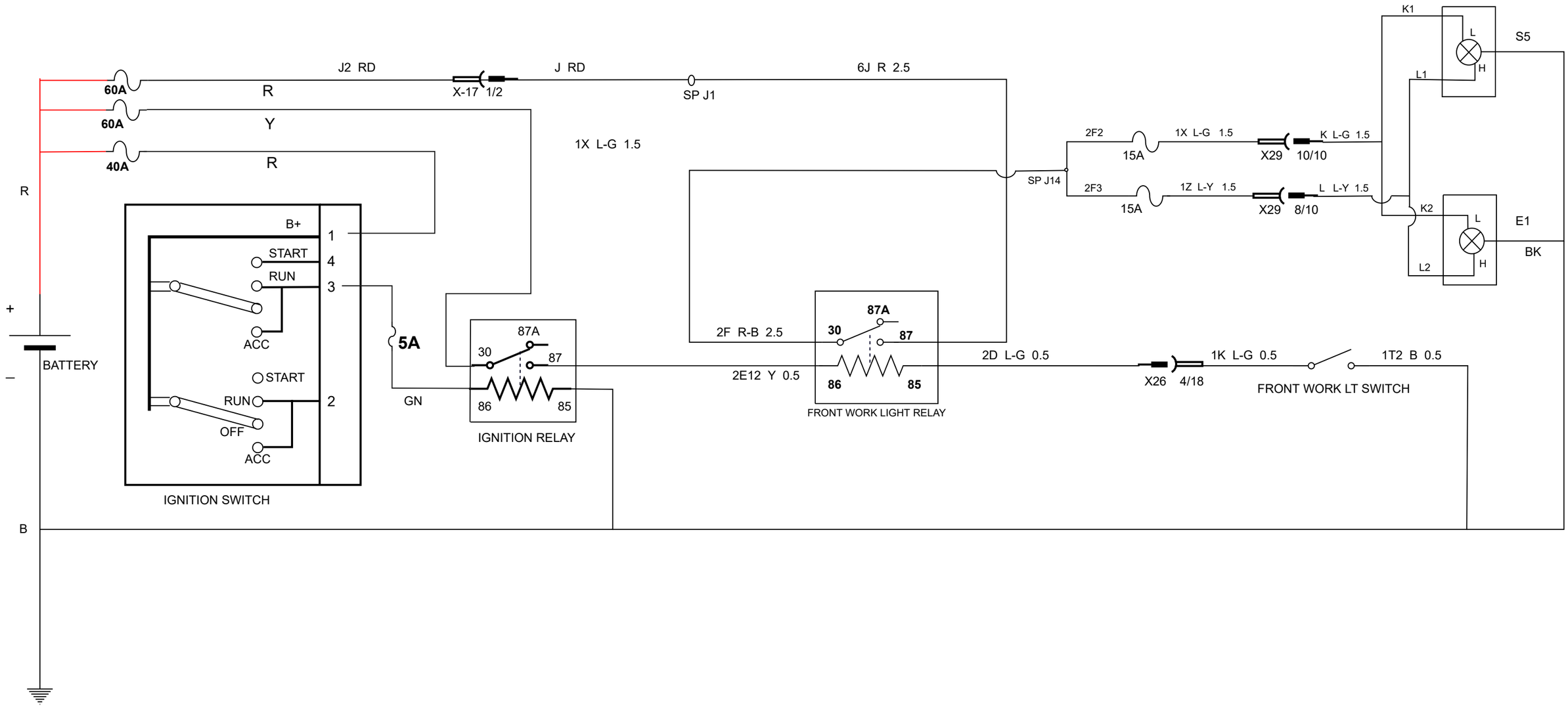
60A
60A
40A
R
J2 RD
R
X-17 1/2
J RD
SP J1
6J R 2.5
Y
R
1X L-G 1.5
SP J14
2F2
15A
1X L-G 1.5
X29 10/10
K L-G 1.5
2F3
15A
1Z L-Y 1.5
X29 8/10
L L-Y 1.5
K1
L
H
L1
S5
K2
L
H
L2
E1
BK
R
+
BATTERY
–
B+
START
RUN
ACC
START
RUN
OFF
ACC
1
4
3
2
IGNITION SWITCH
5A
GN
87A
30
87
86
85
IGNITION RELAY
2F R-B 2.5
2E12 Y 0.5
87A
30
87
86
85
FRONT WORK LIGHT RELAY
2D L-G 0.5
X26 4/18
1K L-G 0.5
1T2 B 0.5
FRONT WORK LT SWITCH
B

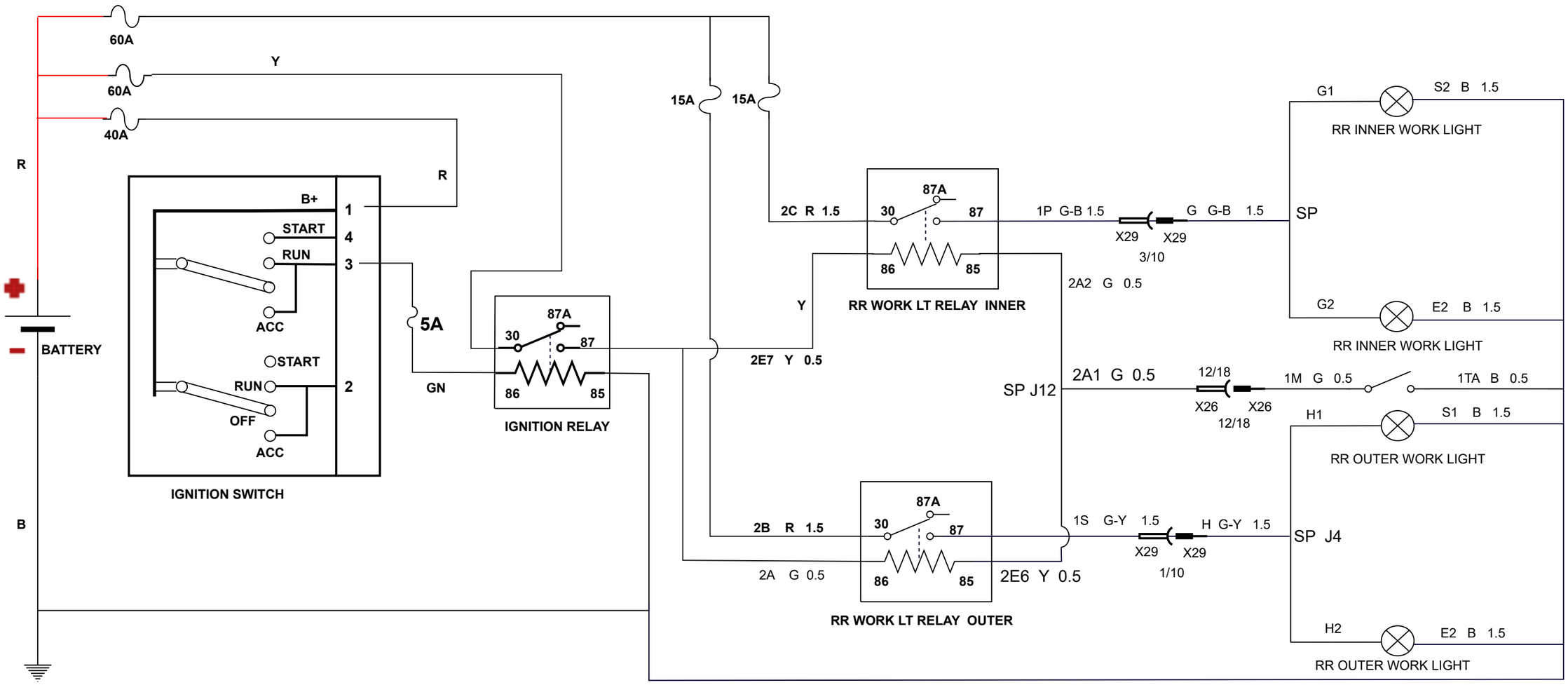
60A
60A
40A
Y
R
R
B+
START
RUN
ACC
START
RUN
OFF
ACC
1
4
3
2
IGNITION SWITCH
BATTERY
B
5A
GN
87A
30
87
86
85
IGNITION RELAY
15A
15A
2C R 1.5
Y
2E7 Y 0.5
87A
30
87
86
85
RR WORK LT RELAY INNER
1P G-B 1.5
X29
X29
3/10
G G-B 1.5
SP
2A2 G 0.5
G1
S2 B 1.5
RR INNER WORK LIGHT
G2
E2 B 1.5
RR INNER WORK LIGHT
SP J12
2A1 G 0.5
12/18
X26
X26
12/18
1M G 0.5
1TA B 0.5
H1
S1 B 1.5
RR OUTER WORK LIGHT
2B R 1.5
2A G 0.5
87A
30
87
86
85
RR WORK LT RELAY OUTER
2E6 Y 0.5
1S G-Y 1.5
X29
X29
1/10
H G-Y 1.5
SP J4
H2
E2 B 1.5
RR OUTER WORK LIGHT

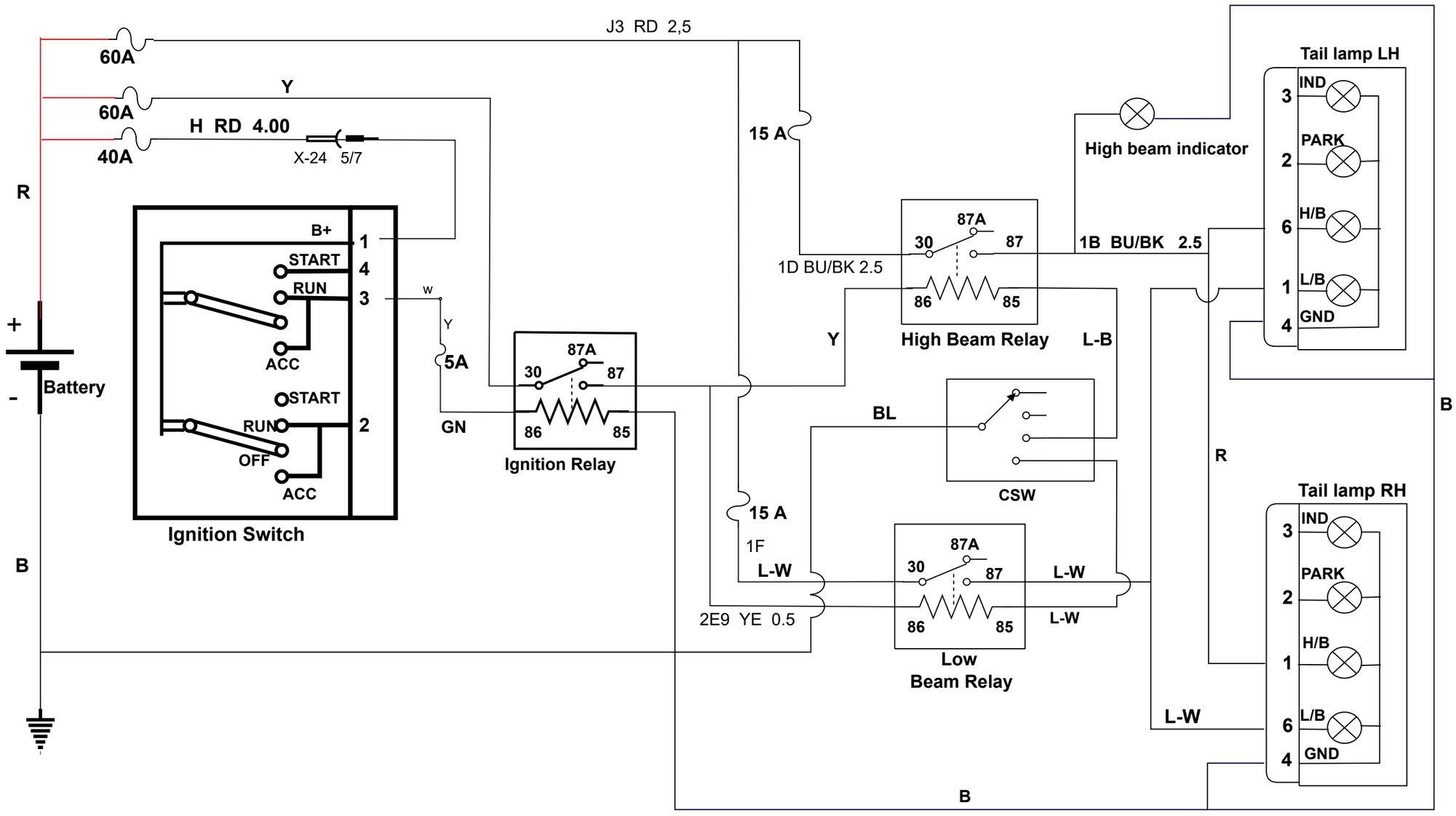
J3 RD 2,5
60A
Y
60A
H RD 4.00
40A
X-24 5/7
R
B+
1
START
4
RUN
3
ACC
START
RUN
2
OFF
ACC
Ignition Switch
+
Battery
-
B
w
Y
5A
GN
87A
30
87
86
85
Ignition Relay
15 A
1F
L-W
2E9 YE 0.5
15 A
1D BU/BK 2.5
87A
30
87
86
85
High Beam Relay
Y
L-B
BL
CSW
87A
30
87
86
85
Low
Beam Relay
L-W
L-W
High beam indicator
1B BU/BK 2.5
Tail lamp LH
3
IND
2
PARK
6
H/B
1
L/B
4
GND
B
R
Tail lamp RH
3
IND
2
PARK
1
H/B
6
L/B
4
GND
L-W
B

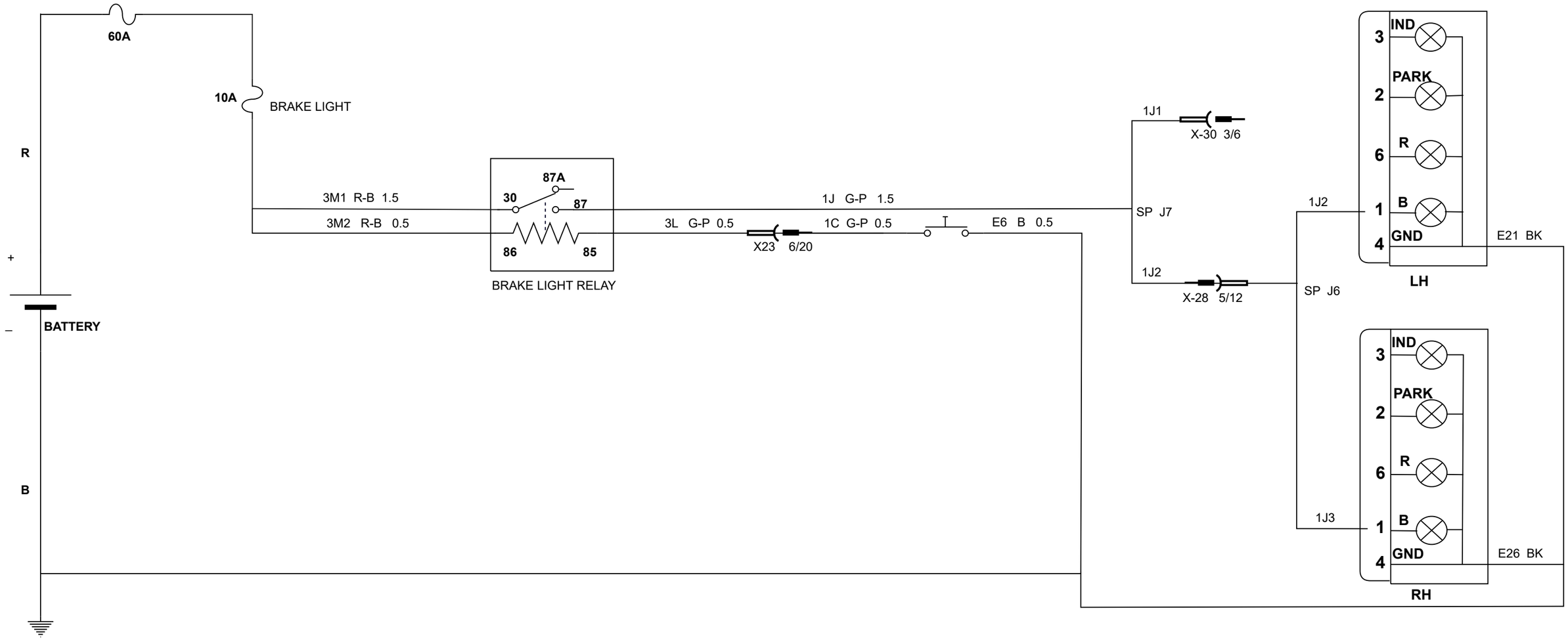
60A
10A
BRAKE LIGHT
R
+
BATTERY
–
B
3M1 R-B 1.5
3M2 R-B 0.5
87A
30
87
86
85
BRAKE LIGHT RELAY
1J G-P 1.5
3L G-P 0.5
X23 6/20
1C G-P 0.5
E6 B 0.5
1J1
X-30 3/6
SP J7
1J2
X-28 5/12
1J2
SP J6
1J3
IND
PARK
R
B
GND
3
2
6
1
4
LH
RH
E21 BK
E26 BK

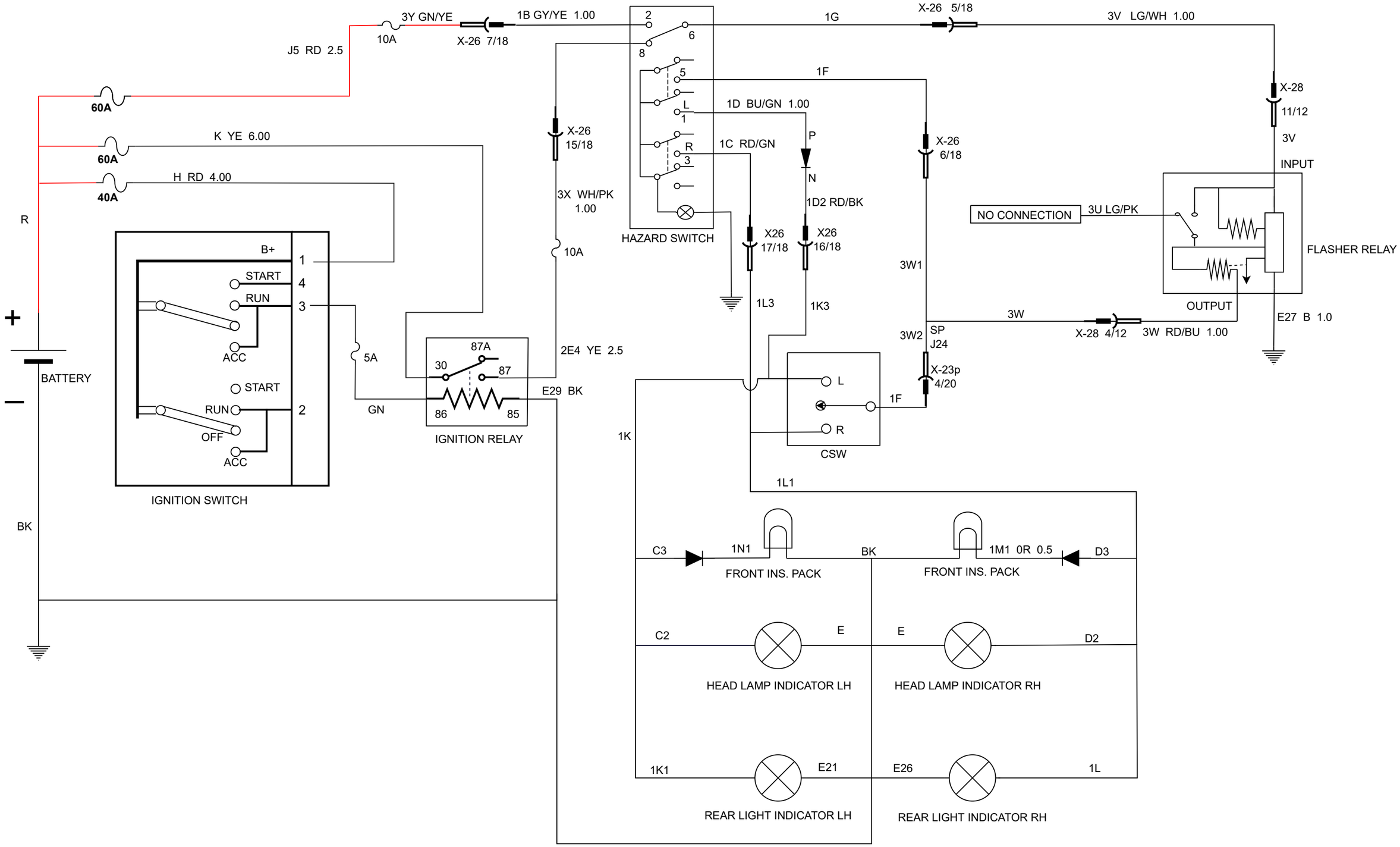
3Y GN/YE
10A
X-26 7/18
1B GY/YE 1.00
J5 RD 2.5
60A
K YE 6.00
60A
H RD 4.00
40A
R
+
BATTERY
BK
B+
START
RUN
ACC
START
RUN
OFF
ACC
1
4
3
2
5A
IGNITION SWITCH
87A
30
87
86
85
IGNITION RELAY
2E4 YE 2.5
E29 BK
GN
2
6
8
5
L
1
R
3
HAZARD SWITCH
X-26 15/18
3X WH/PK 1.00
10A
1G
X-26 5/18
1F
1D BU/GN 1.00
1C RD/GN
P
N
1D2 RD/BK
X26 17/18
X26 16/18
1L3
1K3
3W1
3W2
SP
J24
X-23p 4/20
L
R
1F
CSW
1K
X-26 6/18
3V LG/WH 1.00
X-28 11/12
3V
INPUT
NO CONNECTION
3U LG/PK
FLASHER RELAY
OUTPUT
3W
X-28 4/12
3W RD/BU 1.00
E27 B 1.0
1L1
C3
1N1
FRONT INS. PACK
BK
1M1 0R 0.5
D3
FRONT INS. PACK
C2
E
HEAD LAMP INDICATOR LH
E
D2
HEAD LAMP INDICATOR RH
1K1
E21
REAR LIGHT INDICATOR LH
E26
1L
REAR LIGHT INDICATOR RH

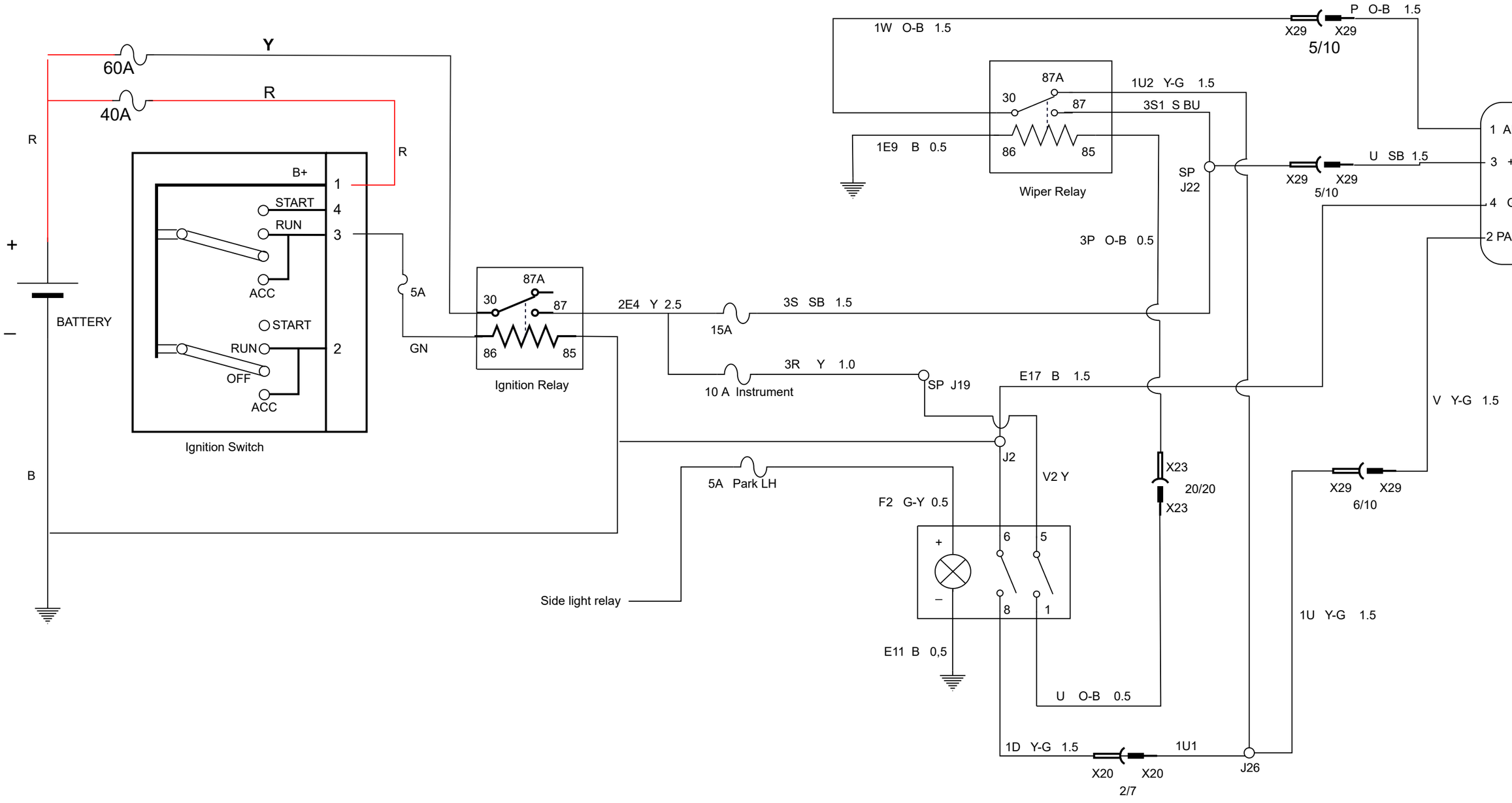
Y
60A
R
40A
R
R
B+
1
START
4
RUN
3
ACC
START
RUN
2
OFF
ACC
Ignition Switch
+
BATTERY
–
B
5A
GN
87A
30
87
86
85
Ignition Relay
2E4 Y 2.5
15A
3S SB 1.5
3R Y 1.0
10 A Instrument
SP J19
1W O-B 1.5
1E9 B 0.5
87A
30
87
86
85
Wiper Relay
1U2 Y-G 1.5
3S1 S BU
3P O-B 0.5
SP
J22
P O-B 1.5
X29
X29
5/10
U SB 1.5
X29
X29
5/10
1 AUX.PARK (R) 53A
3 +VE (GREEN) 53
4 GND (BLACK) 31
2 PARK (YELLOW) 31b
Wiper Motor
V Y-G 1.5
X29
X29
6/10
E17 B 1.5
J2
V2 Y
X23
20/20
X23
5A Park LH
F2 G-Y 0.5
Side light relay
+
–
6
5
8
1
E11 B 0,5
U O-B 0.5
1U Y-G 1.5
1D Y-G 1.5
X20
X20
2/7
1U1
J26

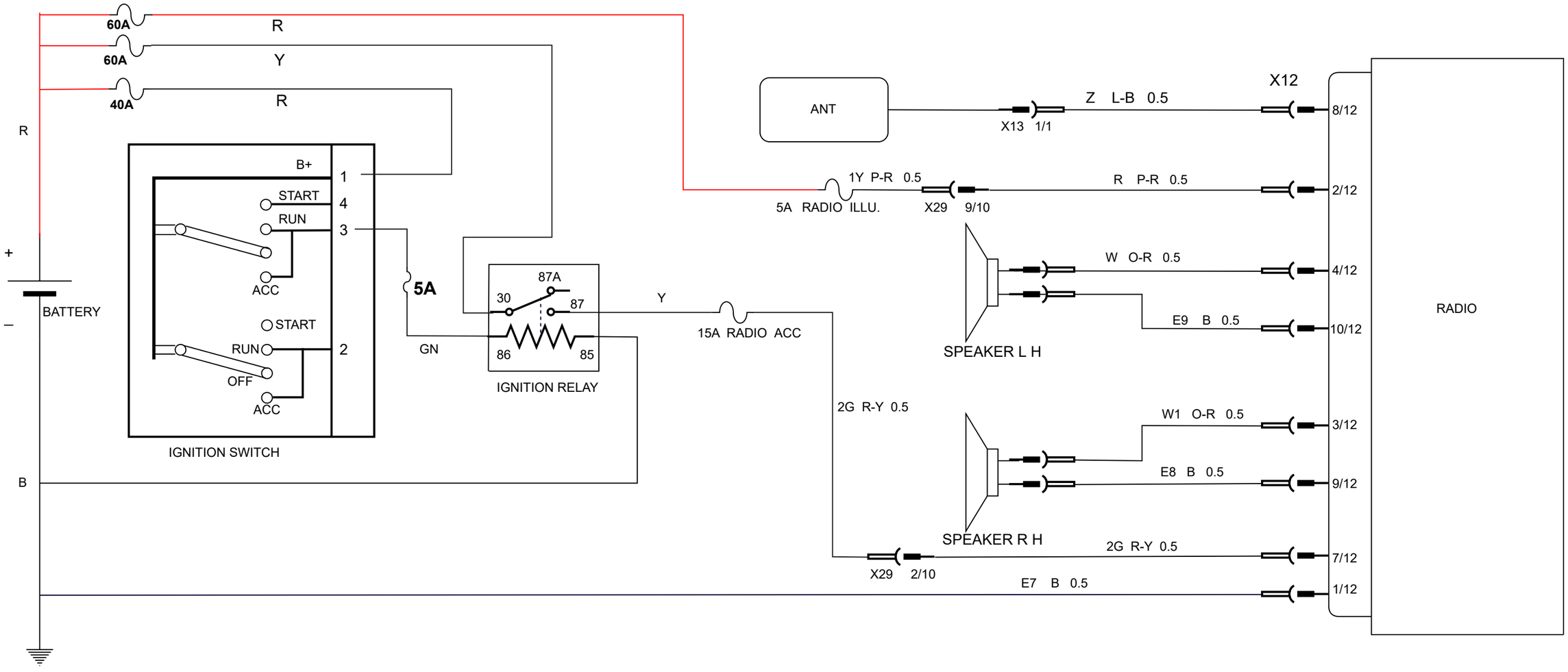
60A
60A
40A
R
R
Y
R
R
B+
START
RUN
ACC
START
RUN
OFF
ACC
1
4
3
2
IGNITION SWITCH
5A
GN
87A
30
87
86
85
IGNITION RELAY
Y
15A RADIO ACC
+
BATTERY
–
B
ANT
X13 1/1
Z L-B 0.5
X12
8/12
1Y P-R 0.5
5A RADIO ILLU.
X29 9/10
R P-R 0.5
2/12
W O-R 0.5
4/12
E9 B 0.5
10/12
SPEAKER L H
RADIO
2G R-Y 0.5
W1 O-R 0.5
3/12
E8 B 0.5
9/12
SPEAKER R H
2G R-Y 0.5
7/12
X29 2/10
E7 B 0.5
1/12



Intentionally Left Blank

85

DRIVER'S CAB

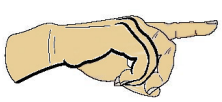

Intentionally Left Blank

TABLE OF CONTENTS

85.1 REMOVAL & INSTALLATION OF CABIN 4
85.2 REMOVAL & INSTALLATION OF OPERATOR SEAT 5

85.1 REMOVAL & INSTALLATION OF CABIN

1. Unscrew the bolts (1) & nuts (2).
2. Attach a suitable sling rope to the cabin (3).
3. Remove the bolts (1).
4. Remove out the cabin (3) carefully.

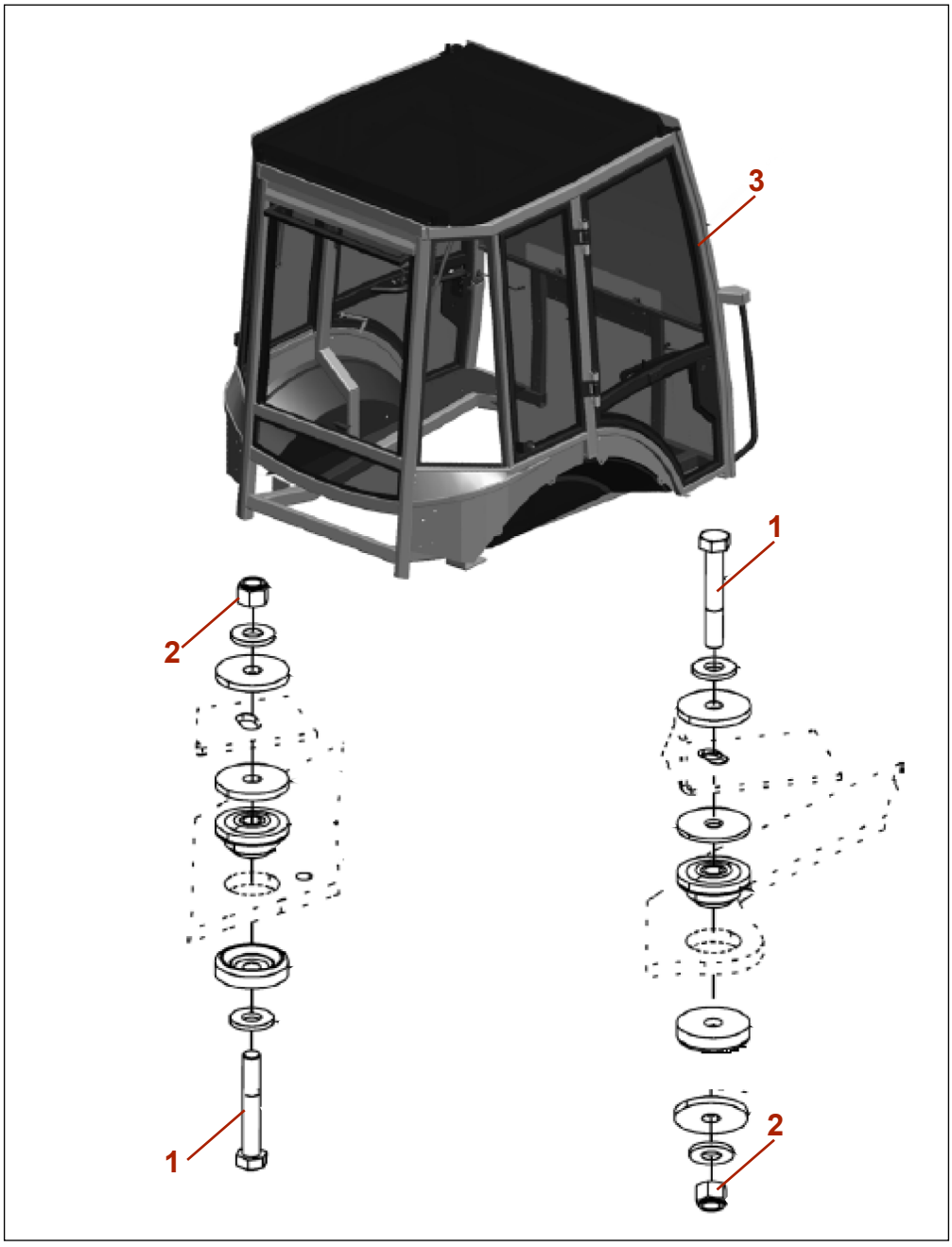

NOTE

Installation is reverse of the removal.

85.2 REMOVAL & INSTALLATION OF SEAT

1. Uninstall the 4 bolts (1) and washers (2).
2. Remove the seat (2).

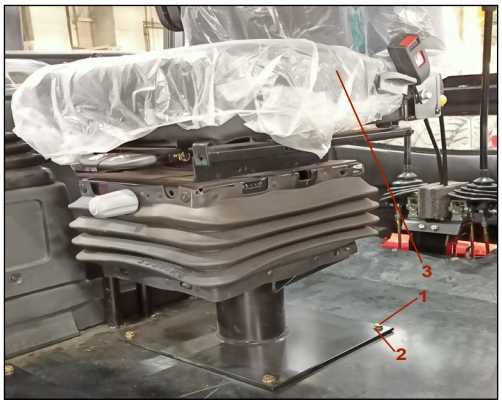

⚠ NOTE

Installation is reverse of the removal.

90

FRAME

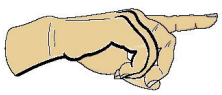

Intentionally Left Blank

TABLE OF CONTENTS

90.1 REMOVAL & INSTALLATION OF FUEL TANK..... 4
90.2 REMOVAL & INSTALLATION OF HYDRAULIC TANK..... 6
90.3 REMOVAL & INSTALLATION OF FENDERS..... 7
90.4 DISMANTLING OF BONNNET ASSEMBLY..... 8
90.5 REMOVAL OF FRONT BONNET COVER..... 10

90.1 REMOVAL & INSTALLATION OF FUEL TANK

1. Remove the bolts (1) and washers (2) from the fender (3).
2. Uninstall the fender (3).

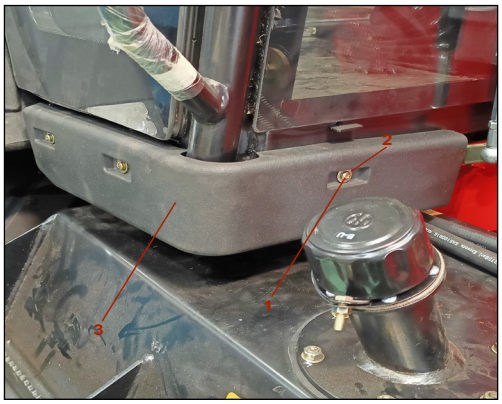

3. Place a suitable container below the fuel tank and empty the fuel tank by opening the drain plug (4).

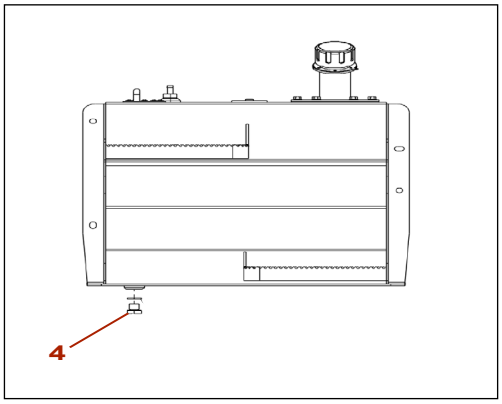

4. Remove the two fuel hoses (5) attached with the help of jublie clips (6).

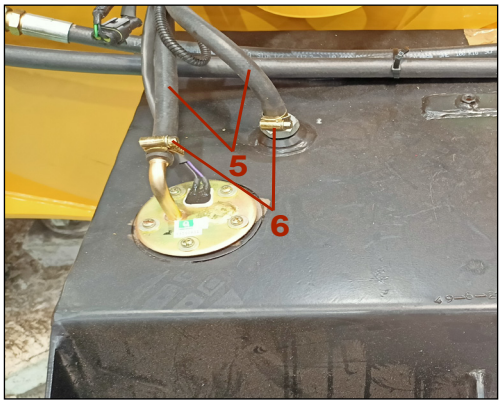

5. Unscrew the bolt (7) of hydraulic hoses clamp (8).



6. Remove the 4 mounting bolts (9) from the fuel tank (10).

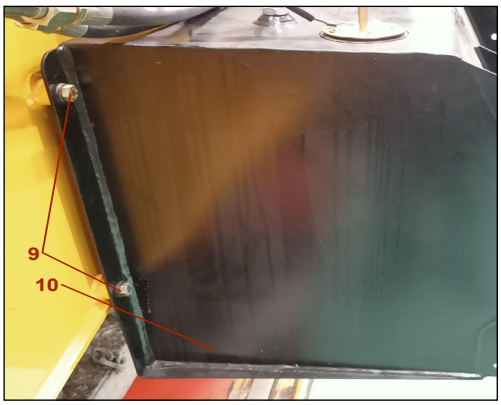

⚠ NOTE

Make sure the fuel tank is well supported before removing the mounting bolts.

⚠ NOTE

Installation is reverse of the removal.

90.2 REMOVAL & INSTALLATION OF HYDRAULIC TANK

1. Remove the bolts and washers from the fender.
2. Uninstall the fender.
3. Place a suitable container below the hydraulic tank (1) and empty the hydraulic tank (1) by opening the drain plug (2).

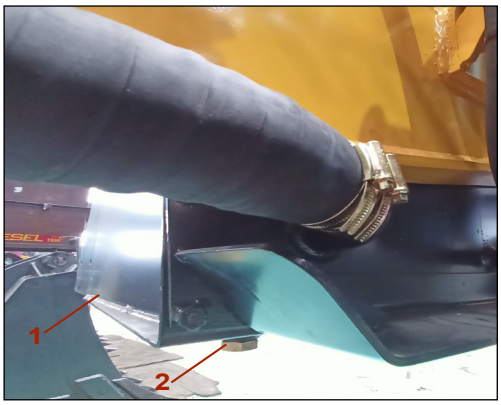

4. Remove the suction hose (3) and return hoses (4) attached with the help of jublie clips (5).

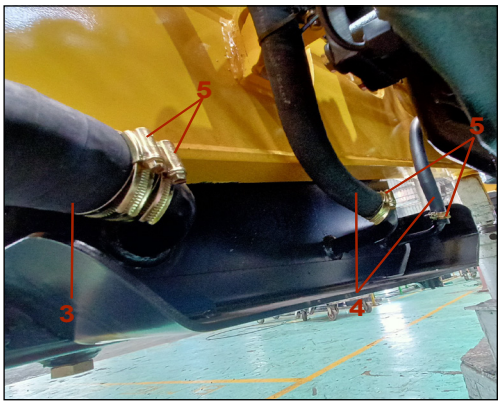

5. Remove the mounting bolts (6) from the hydraulic tank (1).

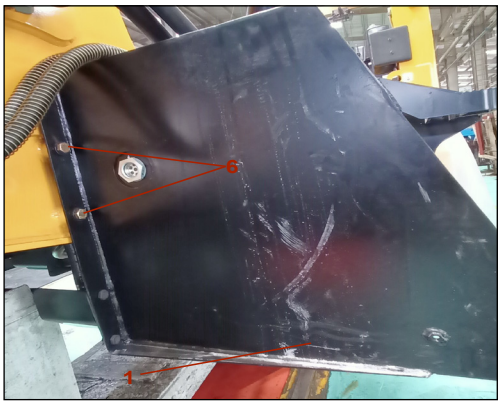

⚠ NOTE

Make sure the hydraulic tank is well supported before removing the mounting bolts.

⚠ NOTE

Installation is reverse of the removal.

90.3 REMOVAL & INSTALLATION OF FENDERS

1. Remove the screws (1).
2. Remove the fenders (2).

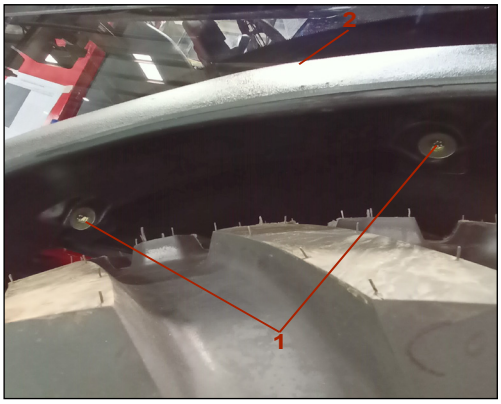

NOTE

Installation is reverse of the removal.

90.4 DISMANTLING OF BONNET ASSEMBLY

1. Unscrew the bolt (1) to uninstall the bonnet cable(2).

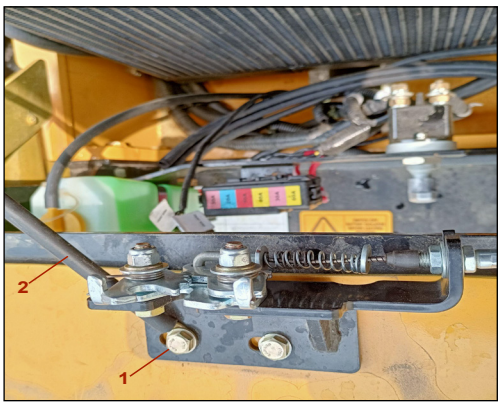

2. Uninstall the pre-cleaner assembly (3) by loosening the worm drive clip (4).



3. Remove the top rear cover (5) by unscrewing the mounting bolts (6).

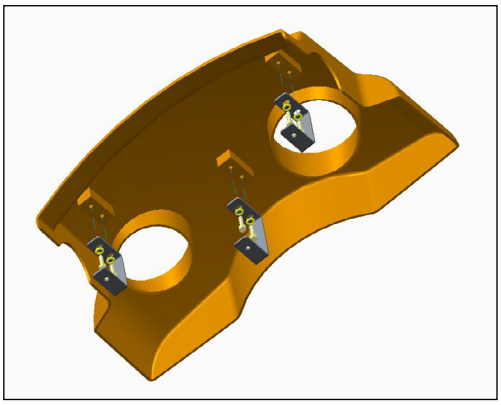

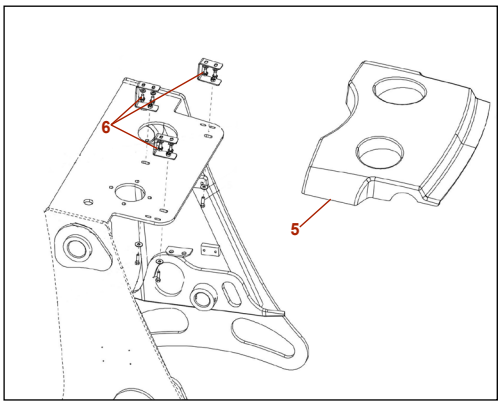

4. Unscrew the 4 nos. of screw (8) to uninstall the exhaust stack pipe (7).

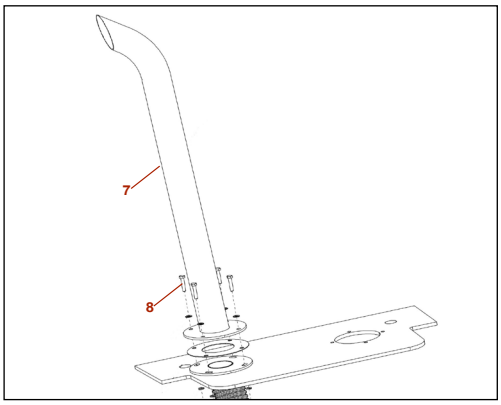

5. Unscrew the bolts (10) and worm drive clip (11) to remove the intake pipe w/a (9).

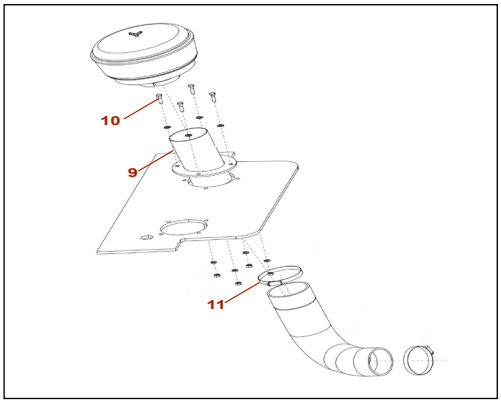

6. Unscrew the bolts (12) to uninstall the hinge block (13) on both sides of the bonnet.

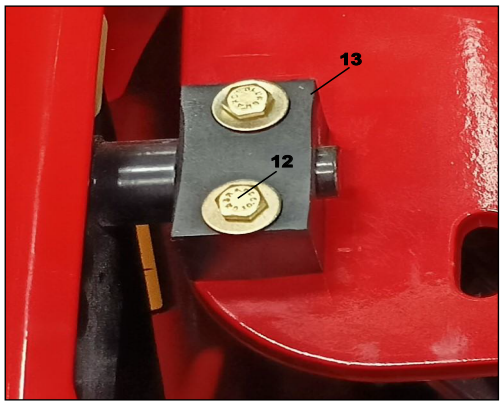

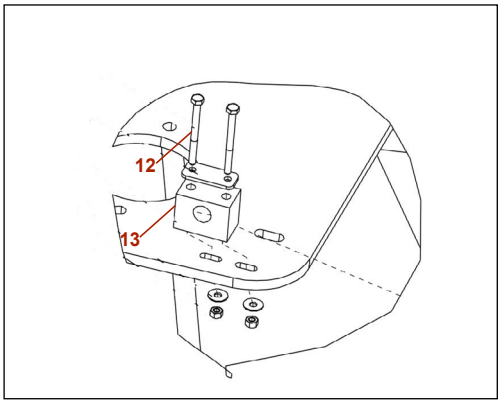

7. Unscrew the nuts (14) to uninstall the 2 nos. of bonnet gas strut (15).



8. Remove the bonnet assembly (16) carefully from the chassis with the help of any suitable sling rope .

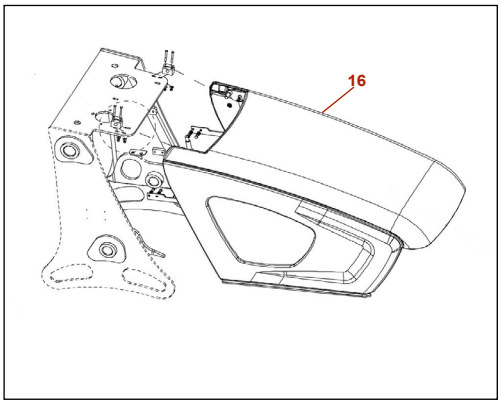

90.5 REMOVAL OF FRONT BONNET COVER

1. Open the grill lock (17) using the key and remove the grill (18).



2. Remove the battery (19) . Refer to the battery removal instructions in ELECTRICAL Section .



3. Remove the overflow pipe (20) from the cap of the expansion bottle (21).
4. Unscrew the bolt (22) to uninstall the horn (23) .
5. Remove the wiring harness connector (24).

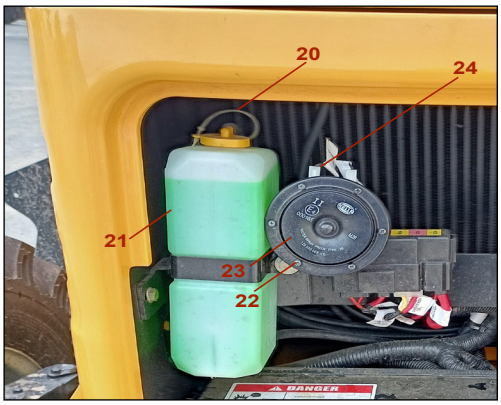

6. Unscrew the mounting bolts (26) to remove the expansion bottle (25).

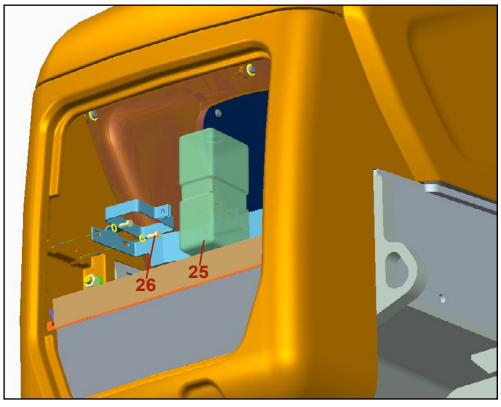

7. Unscrew the mounting bolts (27) to uninstall the bracket (28).

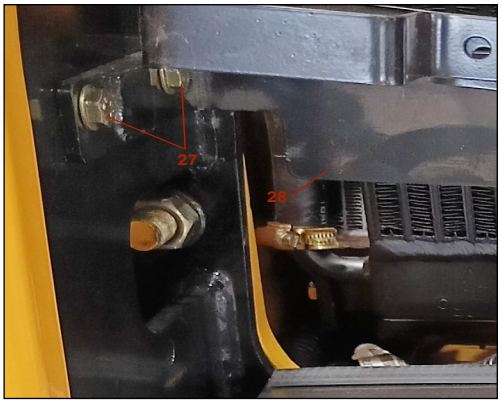

8. Unscrew the mounting nuts (29) (4 nos.) to uninstall the front bonnet cover (hard nose) (30).

⚠ NOTE

Ensure that front bonnet cover (hard nose) (30) is properly supported from the bottom .

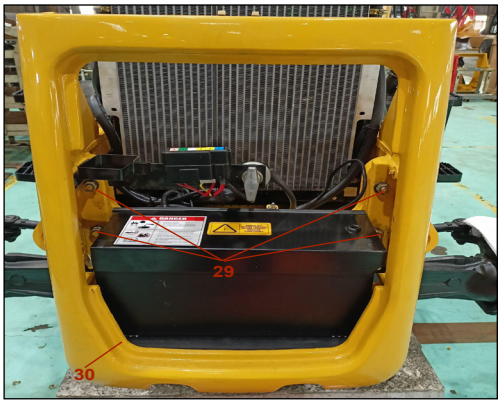

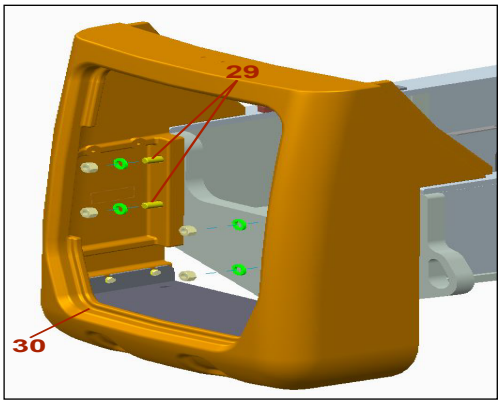

110

OPTIONS & ATTACHMENTS

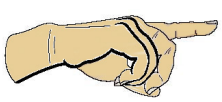

Intentionally Left Blank

TABLE OF CONTENTS

110.1 REMOVAL & INSTALLATION OF LOADER BUCKET 4
110.2 REMOVAL & INSTALLATION OF BACKHOE BUCKET 5
110.3 ROCK BREAKER ASSEMBLY INSTALLATION 6
110.3.1 PREINSTALLATION 6
110.3.2 DISMANTLING OF 6 SPOOL VALVE BLOCK 7
110.3.3 ASSEMBLING OF 7 SPOOL VALVE BLOCK 7

110.1 REMOVAL & INSTALLATION OF LOADER BUCKET

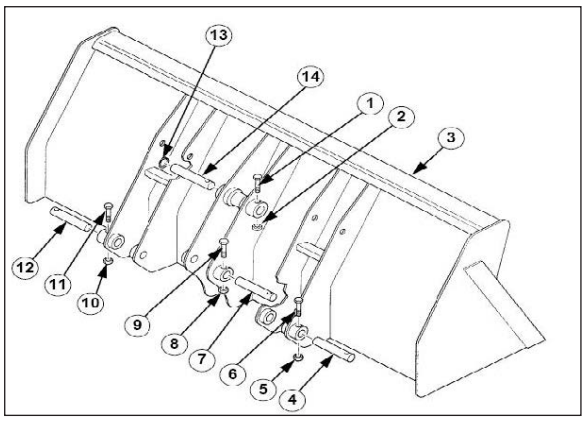

Park the machine on a level surface.
Lower the loader beam and position the bucket flat on the ground.
Switch off the engine.
Remove the bolts (1) and the lock nut (2) securing the link attachment pin (14) to the bucket (3). Discard the lock nut (2).
When installing, install a new locknut (2) on the bolt (1) and tighten the bolt (1) to a torque of 60 Nm.
Remove the snap ring (13) and from the pin (14).
Using a hammer and a soft metal drift, remove the pin (14) from the bucket (3).
Support the weight of the bucket cylinder with a rope or webbing sling.
Remove the pin (7) from the bucket (3).
Remove the bolts (6) and (11) and the locknuts (5) and (10), securing the beam attachment pins (4) and (12) to the bucket (3). Discard the locknuts (5) and (10). When installing, install new locknuts (5) and (10) on the bolts (6) and (11) and tighten the bolts (6) and (11) to a torque of 60 Nm.
Remove the pins (4) and (12) from the bucket (3).
Start the engine and retract the bucket cylinder (3).
Reverse the machine short distance away from the loader bucket. Insert a robust bar through the loader beams, the bucket links and the rod end of the bucket cylinder.

⚠ WARNING

Do not operate the bucket function while the bucket cylinder is restrained by the bar or you will damage the bucket links and the loader beams.

⚠ NOTE

install the standard loader bucket in the reverse order from that of removal.

After installation, make sure that the loader bucket operates correctly.

110.2 REMOVAL & INSTALLATION OF BACKHOE BUCKET

REMOVAL

1. Park the machine on flat, level ground.
2. Lower the stabilizers until the rear wheel are just clean of the ground.
3. Place the bucket flat on the ground.
4. Stop the engine, engage parking brake and remove the starter switch key.
5. Remove the snap ring and the connecting rod/bucket linkage pin.
6. Start the engine.
7. Retract the bucket cylinder rod.
8. Operate the attachment controls so that the dipper/ bucket linkage pin is not under load from the dipper.
9. Stop the engine, engage the parking brake and remove the starter switch key.
10. Remove the snap ring and the dipper/bucket linkage pin.
11. Start the engine.
12. Operate the attachment controls so as to disconnect the dipper from the bucket.



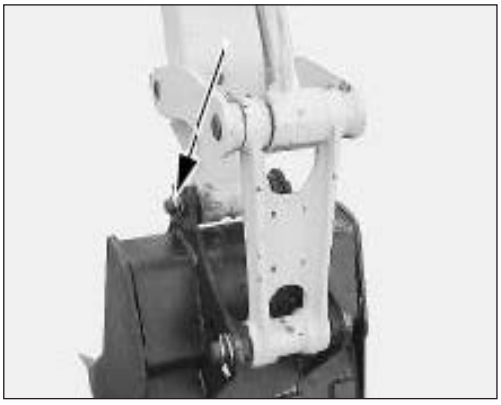

INSTALLATION

1. Start the engine.
2. Extend the bucket cylinder rod to bring the connecting rod into its housing.
3. Install the connecting rod / bucket linkage pin and install the snap ring.
4. Slightly raise the attachment and then operate the bucket and dipper control to bring the dipper lugs in line with the bucket lugs
5. Install the dipper/bucket linkage pin and install the snap ring.



110.3 ROCK BREAKER ASSEMBLY INSTALLATION

110.3.1 PRE-INSTALLATION

1. Place the machine on a flat, horizontal surface.
2. Put the loader bucket and backhoe bucket at the ground.



3. Raise the machine height, by extending both LH and RH stabilizer cylinders, to such an extent that excavator valve block can easily be accessed.
4. Switch off the engine.
5. Set the battery cut-off switch to OFF position.



6. Dismantle the rear panel.

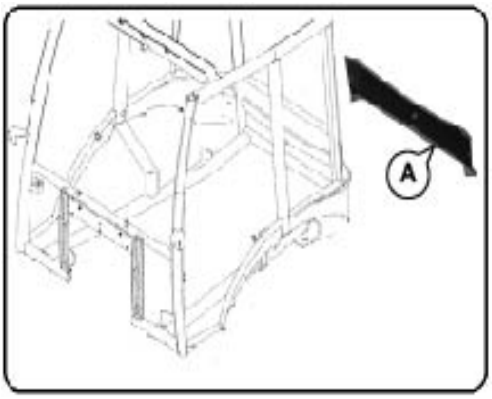

110.3.2 DISMANTLING OF 6 SPOOL VALVE BLOCK

1. Place a suitable oil container below the valve block to collect the oil.
2. Dismantle all the hoses, tubes and control levers as attached to the valve block by removing the clips and clevis pins.
3. Plug all the open ports of valve block adapters and the dismantled hoses & tubes so that contaminants do not enter.
4. Use any suitable sling rope to hang the valve block. Gradually lower the digger valve block assembly to the ground.
5. Remove the bolt (04 nos.), washer (04 nos.) and nut (04 nos.) of the 6 spool valve block mounting bracket assembly from the digger chassis.
6. Remove the bolt (04 nos.)and washer (04 nos.) of the 6 spool valve block mounting from the mounting bracket assembly as attached to the 6 spool digger valve block.

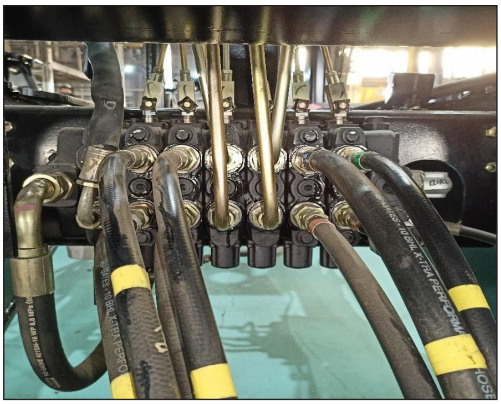

110.3.3 ASSEMBLING OF 7 SPOOL VALVE BLOCK

1. Attached the 7 spool valve block in mounting bracket assembly with the help of four screw and washer.
2. Use any suitable sling rope to raise the 7–spool valve block up to the chassis.
3. Match the bracket assembly of digger valve mounting holes and use the mounting bolt, washer and nut to mount the bracket assembly of digger valve on the chassis.
4. Re-fit all the hoses and tubes of the 7–spool valve block.
5. Connect the control levers attached to the valve block spools by the clips and the clevis pins.
6. Install the adaptor assembly with O-Ring in the Rock Breaker Section.
7. Remove the P2 hose (1) connected between hydraulic pump and priority valve. Fit the test adaptor (2) in priority valve and fit the connector (3) in the test adaptor (2) and reconnect the P2 hose (1).

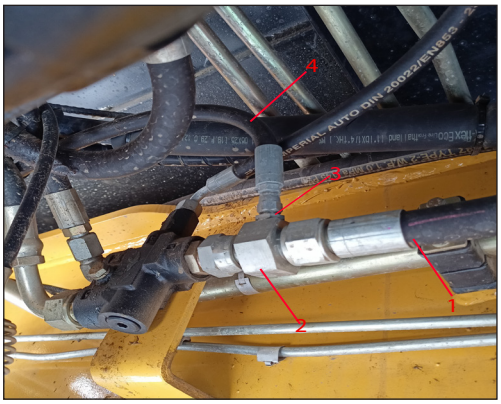

8. Connect the pressure line hose (4) with connector (3). Connect the other end of hose (4) from priority valve to rock breaker solenoid valve (5) with connector (3) for the supply of hydraulic oil.

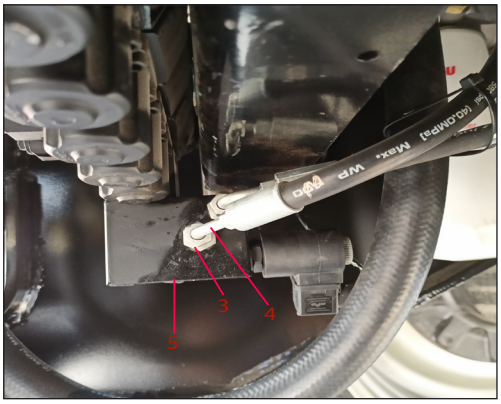

9. Remove the tube assembly (6) from the hydraulic filter return line (7) and remove the connector (8) from filter head. Install the Adaptor assembly (9) to filter head and reconnect the tube (6). Fit the dummy plug (02 Nos) (10) & O–Ring (02 Nos) and fit the connector (11).

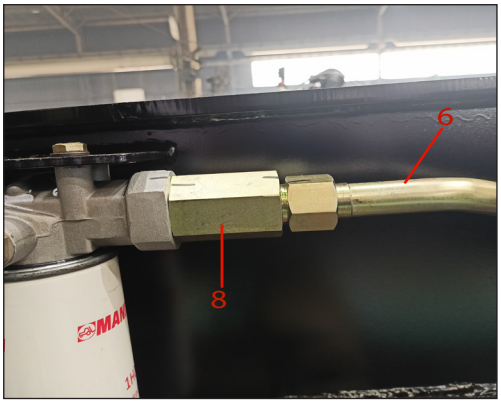

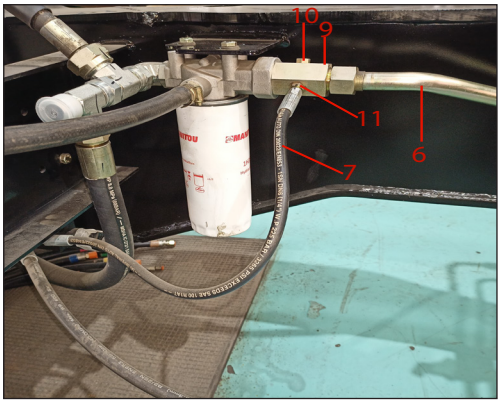

10. Connect the return hose (12) with connector (3) to connect the rock breaker solenoid valve (5) for hydraulic oil filter return.

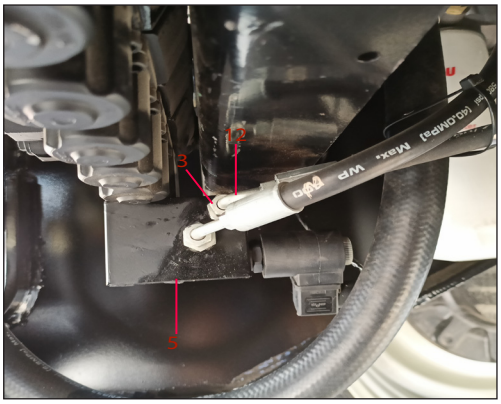

11. Disconnect the loader valve block return hose (13), the excavator valve block return hose (14) and T-Connector (15).

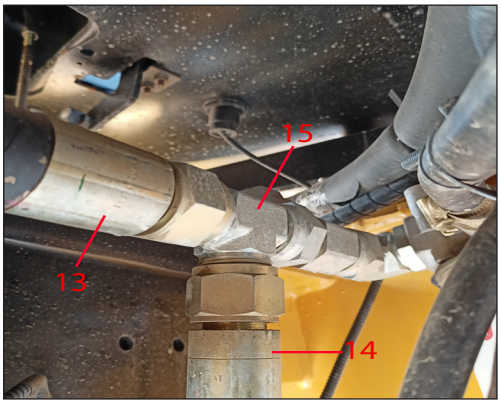

12. Install the new T-Connector (16) to connect the rock breaker return line hose (17) and reconnect the loader valve block return hose (13) & the excavator valve block return hose (14).

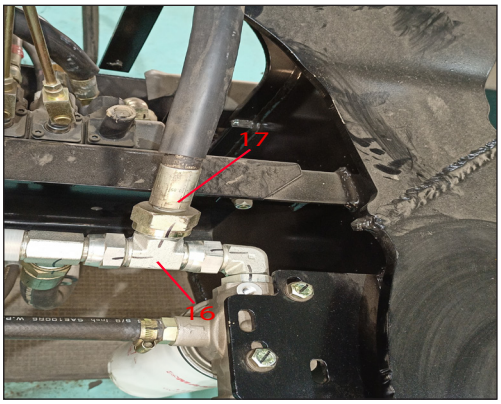

13. Connect the rock breaker solenoid harness (18) to solenoid coil (19) and connect the other end of rock breaker solenoid harness (18) to differential lock solenoid connector (20) in chassis harness.





14. Connect the rock breaker paddle harness (22) at differential lock switch connector (21) in front console harness and connect the other end of harness through connector (23) to switch paddle rock breaker harness through connector (24).

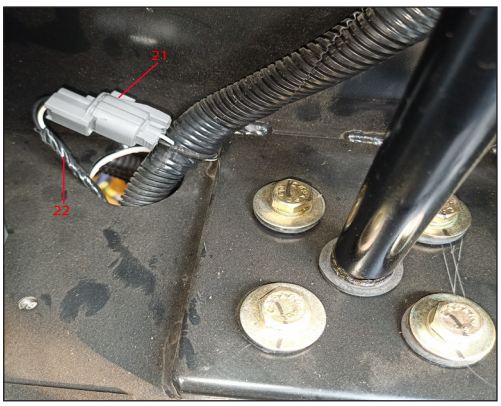

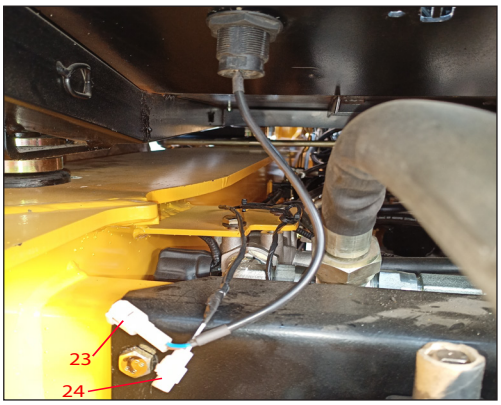

15. Insert a relay in differential lock relay base at R-19 location.
16. Fit the pressure line hose (25) in the adaptor (26) passing through split plate.

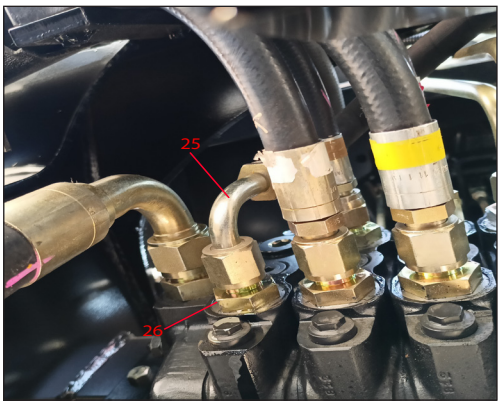

17. Connect other end of the hose (25) with pressure line hose (27).
18. Fit the hose hoop RHS (28) to hold the pressure line hose (27).



19. Fit the pressure line tube assembly (28) at the boom assembly using tube clamp bottom (04 Nos) (29), tube clamp (04 Nos) (30), lock washer (08 Nos) (31) and hex bolt (04 Nos) (32). Now connect the one end of tube assembly with pressure line hose (27).



20. Connect the other end of pressure line tube assembly (28) to hose (33).

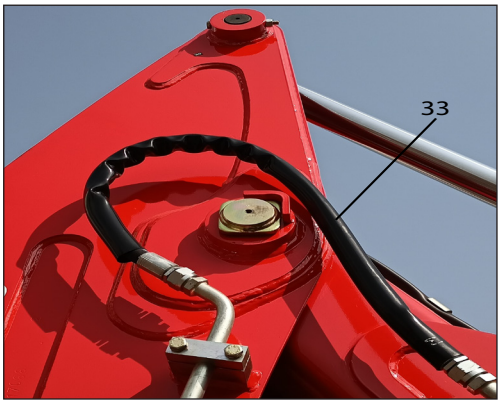

21. Fit the pressure line tube assembly (34) in the dipper assembly using tube clamp bottom (04 Nos) (29), tube clamp (04 Nos) (30), lock washer (08 Nos) (31) and hex bolt (04 Nos) (32).
22. Fit the adaptor (35) in tube assembly to connect the quick coupling male (36). Connect the other end of tube assembly with pressure line hose (33).

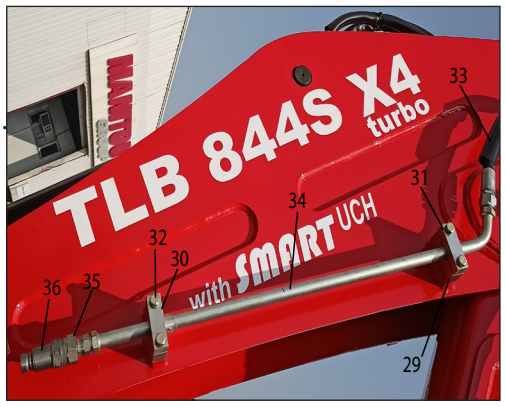

23. Fit the other end of return line hose (17) with the return line hose (37). Fit the hose hoop LHS (38) to hold the return line hose (37).

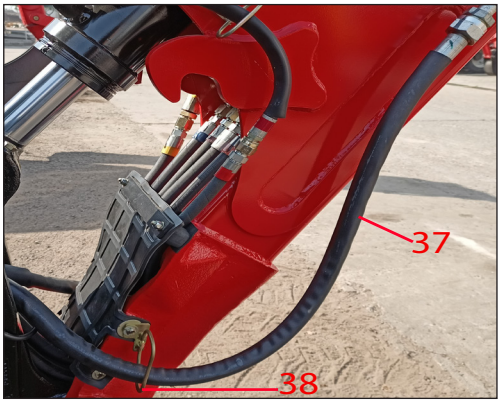

24. Fit the return line tube assembly (39) in the boom assembly using tube clamp bottom (04 Nos) (40), tube clamp (04 Nos) (41), lock washer (08 Nos) and hex bolt (04 Nos).



25. Connect the tube (39) with return line hose and return line hose (42).

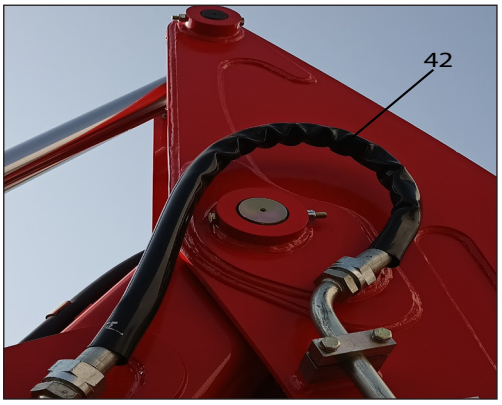

26. Fit the return line tube assembly (43) in the dipper assembly using tube clamp bottom (04 Nos) (40), tube clamp (04 Nos) (41), lock washer (08 Nos) and hex bolt (04 Nos).
27. Fit the adaptor assembly (44) in return line tube assembly (41) to connect the female coupling (45). Connect the other end of tube (43) with return line hose (42).



28. Fit the rock breaker assembly in machine with the help of rock breaker mounting plate, pins, mounting nuts and bolts.
29. Attach the both hoses main and return of rock breaker assembly in male and female coupling as attached with the rock breaker circuit. Start the machine and check the leakage, abnormal sound and hydraulic pressure if all right we can operate the rock breaker system.

YOUR DEALER

MANITOU
HANDLING YOUR WORLD

MANITOU EQUIPMENT INDIA PVT. LTD.
Plot No. 22, Udyog Vihar, Greater Noida, P.O. Surajpur, Gautam Budh Nagar, U.P.-201306, INDIA
Email: mei.marketing@manitou-group.com • www.manitou-group.com