RUTHZIL TRATOR COMERCIAL DE PEÇAS LTDA 11 97083-6812 ROLANDO CITRANGULO

MANITOU

HANDLING YOUR WORLD

MBLX900

53112685EN

MBL X 900

PART'S MANUAL

(ORIGINAL MANUAL)

TABLE OF CONTENTS

00-GENERAL & SAFETY

DECAL 3
BRANDING DECAL 9
SERVICE PARTS
FILTERS & BELTS 15

10-ENGINE

ENGINE ASSEMBLY
ADAPTOR FOR INLET MANIFOLD 19
ADAPTOR FOR LUBE OIL PRESSURE GAUGE 21
CLAMP FOR RAISED DIPSTICK GUIDE 23
DIPSTICK 25
CRANK PULLEY 27
CRANKSHAFT 29
CRANKCASE 31
CYLINDER HEAD ASSEMBLY 35
CYLINDER LINER 39
DELIVERY BODY 41
FLYWHEEL 43
FLYWHEEL HOUSING 45
FRONT COVER 47
GEAR END FOOT 49
GEAR CASING 51
CAMSHAFT & GEAR ASSEMBLY 53
INTERMEDIATE GEAR & SUPPORT 55
LUB OIL COOLER & SPIN ON FILTER 57
LUB OIL PUMP 59
LUB OIL SUMP 61
LUB OIL SUPPLY & DRAIN LINES 63
OIL FILLER 65
OIL SEAL HOUSING (FLYWHEEL END) 67
ROCKER COVER 69
ROCKER SUPPORT ASSEMBLY 71
SET OF JOINTS, WASHERS & RINGS 73
SET OF BEARINGS 77
PUSH ROD & TAPPETS 79
PISTON & CONNECTING ROD 81
ENGINE PACKING FOOT 83
OIL PUMP SUCTION TUBE 85

ENGINE INSTALLATION
ENGINE INSTALLATION 87

AIR INDUCTION SYSTEM
AIR FILTRATION 89

EXHAUST SYSTEM
EXHAUST SYSTEM 91

FUEL SYSTEM
FUEL SYSTEM 93
FUEL TANK 95

COOLING SYSTEM
RADIATOR & OIL COOLER 97
AFTERCOOLER 99
COOLING PACK 101
COOLING PACK 103

ENGINE CONTROLS
THROTTLE CABLE 105

MISCELLANEOUS
ENGINE NAME PLATE 107
LIFTING HOOK 109
PLUG ON HEADER 111

20-TRANSMISSION

TRANSMISSION HYDRAULIC LINES....115
TORQUE CONVERTER....117
CHARGE PUMP....119
TRANSMISSION OIL FILTERS....121
TRANSMISSION MOUNTING....123
TRANSMISSION DIPSTICK....125

TRANMISSION

HOUSING....127
INPUT& PTO SHAFT....129
REVERSE & PRIMARY SHAFT....131
FRONT OUTPUT SHAFT....133
REAR OUTPUT SHAFT....135
FRONT DRIVE SHAFT....137
CHARGE PUMP....139
SPEED CONTROL....141
CONTROL VALVE....143
SOLENOID VALVE....145
CONTROL LEVER....147

DRIVE SHAFTS

FRONT DRIVE SHAFT....149
FRONT AXLE GUARD....151
REAR DRIVE SHAFT....153

30-AXLE

FRONT AXLE-2WD

INSTALLATION....157
WHEEL HUB....159
WHEELS....163
WHEEL-HEAVY DUTY....165

FRONT AXLE-4WD

INSTALLATION....167
HOUSING....169
PIVOT....171
AXLE SHAFT....173
BEVEL GEAR....175
DIFFERENTIAL....177
PLANETARY CARRIER....179
WHEEL HUB....181

FRONT AXLE -4WD (AXLE SR No. 01000876 ONWARDS)

INSTALLATION....183
BEVEL GEAR....185
DIFFERENTIAL....187
FINAL REDUCTION....189
SWIVEL HOUSING & STEERING CYLINDER....191
WHEE HUB....193

REAR AXLE

INSTALLATION....195
AXLE HOUSING....197
BEVEL GEAR SET....199
DIFFERENTIAL....201
WHEEL HUB....203
FINAL REDUCTION....205
BRAKES....207
BRAKE CALIPER....209
REAR WHEELS....211

40-BRAKE

PARKING BRAKE CABLE....215
BRAKE INSTALLATION....217
CONTROL BOX....219

50-LIFT SRTUCTURE

LOADER END

LOADER ARM....223
LOADER LINK....225
LOADER SAFETY STRUT....227

SELF LEVELLING MECHANISM 229
SELF LEVELLING MECHANISM 231
LOADER BUCKET-STANDARD 233
BACKHOE END
BOOM 235
DIPPER 237
MAST FRAME 241
SWING PIVOT CASTING 243
SWING PIVOT-CENTERMOUNT 245
STABILIZER INSTALLATION-CENTERMOUNT 247
PROTECTION COVER-STABILIZER CYLINDER 249
BACKHOE BUCKET LINKAGE 251
BACKHOE BUCKET VARIANTS 253
BOOM LOCKING CABLE-SIDE SHIFT 255
BOOM LOCKING CABLE-CENTERMOUNT 257
70-HYDRAULICS
HYDRAULIC LAYOUT 261
HYDRAULIC TANK 265
HYDRAULIC PUMP 267
HYDRAULIC OIL FILTER 269
LOADER HYDRAULIC
2 SPOOL VALVE BLOCK 271
3 SPOOL VALVE BLOCK 273
2 SPOOL VALVE BLOCK -EXPLODED 275
3 SPOOL VALVE BLOCK -EXPLODED 279
LOADER HYDRAULIC TUBES- 2 SPOOL 283
LOADER HYDRAULIC TUBES- 3 SPOOL 285
LOADER CONTROL -2 SPOOL VALVE BLOCK 287
LOADER CONTROL-3 SPOOL VALVE BLOCK 289
LOADER CONTROL 291
AUXILIARY HYDRAULIC CIRCUIT 293
LIFT CYLINDER 295
LIFT CYLINDER INSTALLATION 297
TILT CYLINDER 299
TILT CYLINDER INSTALLATION 301
DIGGER HYDRAULICS
BACKHOE HYDRAULICS-SIDE SHIFT ATTACHMENT 305
SWING CYLINDER 307
STABILIZER CYLINDER-SIDE SHIFT 309
STABILIZER CYLINDER-CENTERMOUNT 311
BOOM CYLINDER 313
DIPPER CYLINDER 315
BUCKET CYLINDER 317
SWING CYLINDER INSTALLATION-SIDE SHIFT 319
STABILIZER CYLINDER INSTALLATION-SIDE SHIFT 321
STABILIZER CYLINDER INSTALLATION-CENTERMOUNT 323
STABILIZER CYLINDER LOCKOUT VALVE-CENTERMOUNT 325
BOOM CYLINDER INSTALLATION 327
DIPPER CYLINDER INSTALLATION 329
BUCKET CYLINDER INSTALLATION 331
SIDE SHIFT CLAMP INSTALLATION 333
6 SPOOL VALVE BLOCK 335
6 SPOOL VALVE BLOCK-EXPLODED 337
BACKHOE HYDRAULIC CONTROL-CROSS PATTERN 341
BACKHOE HYDRAULIC CONTROL-PLUS PATTERN 343
BACKHOE CONTROL-STABILIZER 345
STEERING SYSTEM
STEERING WHEEL & COLUMN 347
STEERING SYSTEM-2WD
STEERING CYLINDER 349
HYDRAULIC CIRCUIT 351
STEERING SYSTEM-4WD
HYDRAULIC CIRCUIT 353

80-ELECTRICAL
HEAD LIGHTS 357
COMBINATION SWITCH INSTALLATION 359
CABIN-FRONT CONSOLE 361
SIDE CONSOLE-FUSE & RELAY BOARD 363
SIDE CONSOLE-INSTRUMENT PANEL/SWITCH PACK 365
CABIN-SIDE CONSOLE 367
TAIL LIGHTS 369
BATTERY CABLE 371
CHASSIS ELECTRICS 373
WIPER MOTOR INSTALLATION 375
85-OPERATOR STATION
CABIN-FRAME & GLASS 379
CAB TINTED GLASS INSTALLATION 381
CABIN ASSY. INSTALLATION NON AIRCON (WITH CLEAR GLASS)-CM 383
CABIN ASSY. INSTALLATION NON AIRCON (WITH TINTED GLASS)-CM 387
CABIN ASSY. INSTALLATION NON AIRCON-SS 391
ENTRY DOOR LH INSTALLATION 395
ENTRY DOOR RH INSTALLATION 397
REAR WINDOW 399
EMERGENCY WINDOW LH INSTALLATION 401
EMERGENCY WINDOW RH INSTALLATION 403
INNER ROOF 405
OUTER ROOF 407
OPERATOR SEAT 409
CABIN MOUNTING 411
CABIN-FRONT CONSOLE 413
CABIN-SIDE CONSOLE 415
FLOOR PLATE & MAT 417
EASY MANAGER 419
90-CHASSIS
SIDE SHIFT 423
BONNET INSTALLATION 425
BONNET ASSEMBLY 427
HARDNOSE INSTALLATION 429
FENDERS 431
BATTERY BOX WITH COUNTER WEIGHT 433
SIDE SHIFT MUD GUARD 435
REAR LEGS 437
110-ADDITIONAL EQUIPMENT
7 IN 1 LOADER BUCKET
7 IN 1 BUCKET 441
7 IN 1 BUCKET CYLINDER 443
EXTENDABLE DIPPER
EXTENDABLE DIPPER 445
EXTENDABLE DIPPER HYDRAULICS-SS 449
EXTENDABLE DIPPER HYDRAULICS-CM 451
EXTENDABLE DIPPER-CONTROL LEVER 453
AIR CONDITIONING SYSTEM
CABIN ASSY. INSTALLATION (WITH CLEAR GLASS)-SS 455
CABIN ASSY. INSTALLATION (WITH TINTED GLASS)-SS 459
CABIN ASSY. INSTALLATION (WITH CLEAR GLASS)-CM 463
CABIN ASSY. INSTALLATION (WITH TINTED GLASS)-CM 467
AIRCON INSTALLATION_1 471
AIRCON INSTALLATION_2 473
AIRCON INSTALLATION_3 475
AIRCON COMPRESSOR BRACKET 477
AIRCON UNIT 479
HVAC
HVAC INSTALLATION_1 481
HVAC INSTALLATION_2 483
HEATER
HEATER INSTALLATION_1 485

ROCK BREAKER

MAIN BODY 487
FRAME 491
ROCK BREAKER BRACKET-DIRECT MOUNT TYPE 493
ROCK BREAKER CIRCUIT-SS 495
ROCK BREAKER CIRCUIT-CM 499
ROCK BREAKER ELECTRICAL CIRCUIT 503

ADDITIONAL EQUIPMENT

FRONT TYRE FENDER ASSEMBLY LH 505
FRONT TYRE FENDER ASSEMBLY RH 507
DITCH CLEANING BUCKETS 509
FORK ON STANDARD LOADER BUCKET 511
FORK ON MULTIPURPOSE LOADER BUCKET 513
PAPER GRAPPLE BUCKET 515
BUCKET CYLINDER-GRAPPLE BUCKET 517
BEACON LIGHT 519
STABILIZER CYLINDER (WITH PROTECTION GUARD)-CM 521
STREET PAD SS INSTALLATION 523

GENERAL & SAFETY

GENERAL & SAFETY

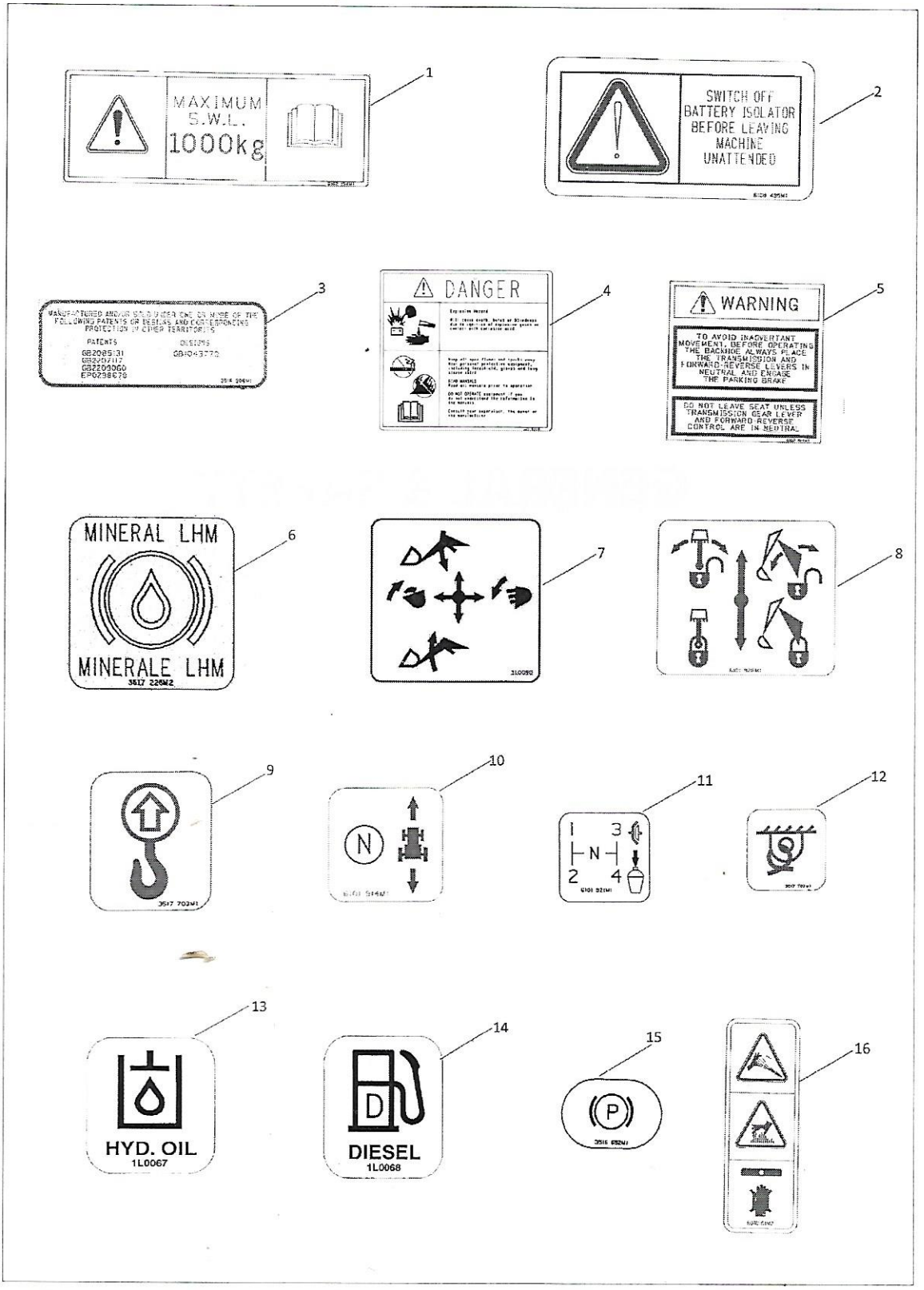
1
MAXIMUM
S.W.L.
1000kg
2
SWITCH OFF
BATTERY ISOLATOR
BEFORE LEAVING
MACHINE
UNATTENDED
3
MANUFACTURED AND/OR SOLD UNDER ONE OR MORE OF THE
FOLLOWING PATENTS OR DESIGNS, AND CORRESPONDING
PROTECTION IN OTHER TERRITORIES
PATENTS
DESIGNS
GB2085131
GB2207117
GB2209060
EP0238670
GB1043770
4
DANGER
5
WARNING
TO AVOID INADVERTANT
MOVEMENT, BEFORE OPERATING
THE BACKHOE ALWAYS PLACE
THE TRANSMISSION AND
FORWARD-REVERSE LEVERS IN
NEUTRAL AND ENGAGE
THE PARKING BRAKE
DO NOT LEAVE SEAT UNLESS
TRANSMISSION GEAR LEVER
AND FORWARD-REVERSE
CONTROL ARE IN NEUTRAL
6
MINERAL LHM
MINERALE LHM
3517 226M2
7
8
9
10
N
11
1
3
N
2
4
12
13
HYD. OIL
1L0067
14
D
DIESEL
1L0068
15
P
16

Item	Part No.	Name	Qty	Remarks
1	6102194M1	DECAL SAFE WORKING LOAD	4	
2	6108495M1	DECAL BATTERY ISOLATED	1	
3	3516906M1	DECAL - PATENT	1	
4	3216714	DECAL BATTERY	1	
5	6102184M1	DECAL WARNING (ENGLISH)	1	
6	3517225M2	DECAL BRAKE FLUID	1	
7	1L0090	DECAL STD LOADER CONTROLS	1	
8	6101928M1	DECAL TRANSPORT LOCK	1	
9	3517703M1	DECAL LIFTING	4	
10	6101914M1	DECAL FWD /REV	1	
11	6101921M1	DECAL GEAR CHANGE	1	
12	3517702M1	DECAL TIE DOWN	4	
13	1L0067	DECAL HYDRAULIC	1	
14	1L0068	DECAL DIESEL	1	
15	3516652M1	DECAL HANDBRAKE	1	
16	6010161M2	DECAL-COOLANT COVER	1	
17	6101952M2	DECAL AVOID CRUSHING	1	
18	6102056M1	DECAL AVOID CRUSHING	2	
19	6101950M2	DECAL SECURE LIFTING CYL.	1	
20	6101951M2	DECAL START ENGINE	1	
21	6010164M1	DECAL-MAIN FRAME	2	
22	6010160M2	DECAL-RADIATOR	2	
23	1B0157	DECAL - STAB CONTROLS & DIGGER CONTROLS	1	
24	6101949M1	DECAL STAY A SAFE DISTANCE	4	
25	3517593M1	DECAL - EXHAUST WARNING	2	
26	1L0001	DECAL - WARNING BIG-LH	1	
27	1L0081	DECAL - WARNING BIG-RH	1	
28	1L0082	DECAL - WARNIING SMALL-RH	2	
29	1L0002	STICKER WARNING	2	
30	1L0142	DECAL TOLL FREE NO	1	
31	50112476	DATA PLATE - GEHL	1	
32	50112477	DATA PLATE - MANITOU	1	
33	53110112	DECAL-TANK INSPECTION	1	
34	53110583	GREEN STICKER	1	

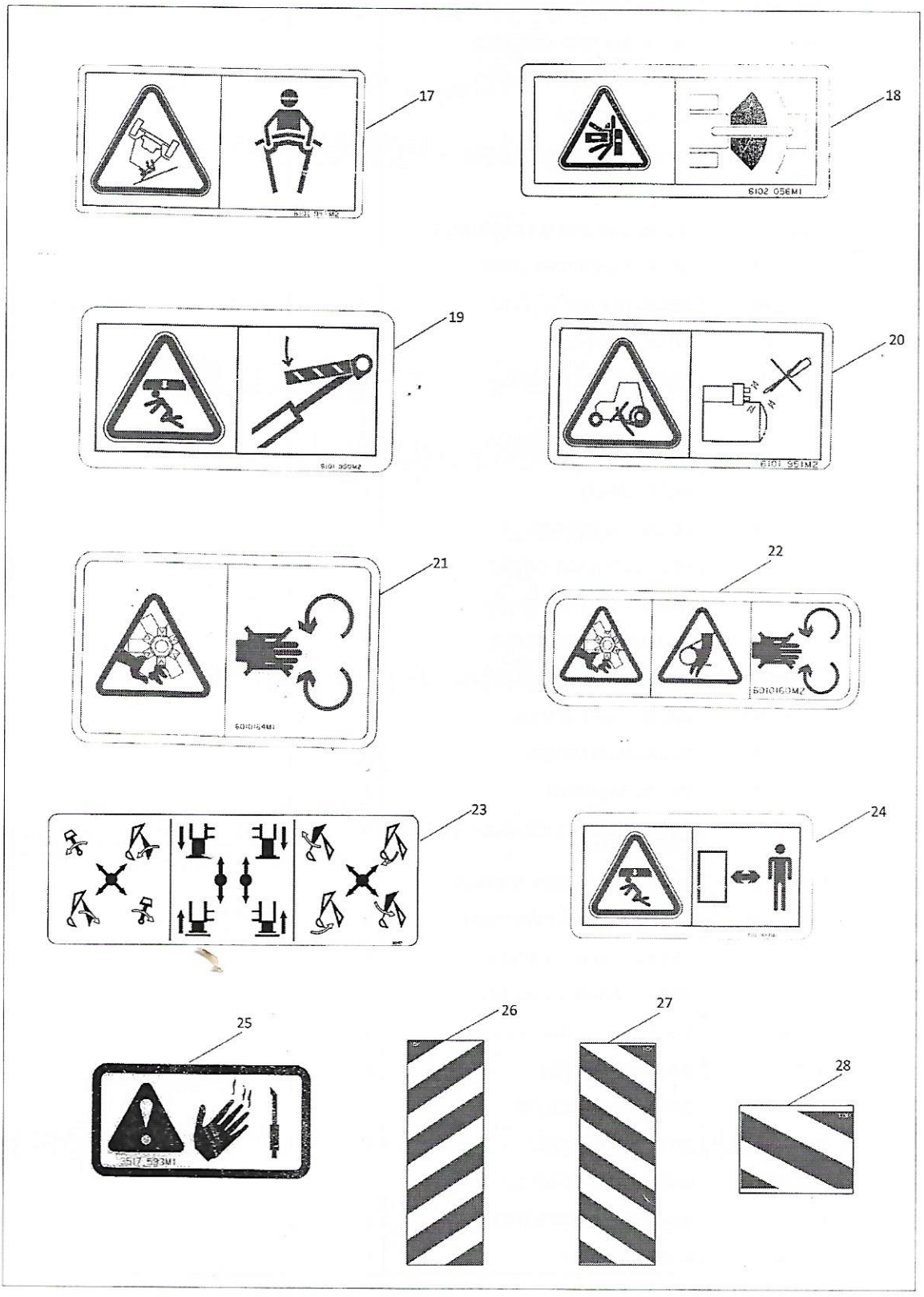
17
18
6102 056M1
19
20
21
22
23
24
25
26
27
28

Item	Part No.	Name	Qty	Remarks
1	6102194M1	DECAL SAFE WORKING LOAD	4	
2	6108495M1	DECAL BATTERY ISOLATED	1	
3	3516906M1	DECAL - PATENT	1	
4	3216714	DECAL BATTERY	1	
5	6102184M1	DECAL WARNING (ENGLISH)	1	
6	3517225M2	DECAL BRAKE FLUID	1	
7	1L0090	DECAL STD LOADER CONTROLS	1	
8	6101928M1	DECAL TRANSPORT LOCK	1	
9	3517703M1	DECAL LIFTING	4	
10	6101914M1	DECAL FWD /REV	1	
11	6101921M1	DECAL GEAR CHANGE	1	
12	3517702M1	DECAL TIE DOWN	4	
13	1L0067	DECAL HYDRAULIC	1	
14	1L0068	DECAL DIESEL	1	
15	3516652M1	DECAL HANDBRAKE	1	
16	6010161M2	DECAL-COOLANT COVER	1	
17	6101952M2	DECAL AVOID CRUSHING	1	
18	6102056M1	DECAL AVOID CRUSHING	2	
19	6101950M2	DECAL SECURE LIFTING CYL.	1	
20	6101951M2	DECAL START ENGINE	1	
21	6010164M1	DECAL-MAIN FRAME	2	
22	6010160M2	DECAL-RADIATOR	2	
23	1B0157	DECAL - STAB CONTROLS & DIGGER CONTROLS	1	
24	6101949M1	DECAL STAY A SAFE DISTANCE	4	
25	3517593M1	DECAL - EXHAUST WARNING	2	
26	1L0001	DECAL - WARNING BIG-LH	1	
27	1L0081	DECAL - WARNING BIG-RH	1	
28	1L0082	DECAL - WARNIING SMALL-RH	2	
29	1L0002	STICKER WARNING	2	
30	1L0142	DECAL TOLL FREE NO	1	
31	50112476	DATA PLATE - GEHL	1	
32	50112477	DATA PLATE - MANITOU	1	
33	53110112	DECAL-TANK INSPECTION	1	
34	53110583	GREEN STICKER	1	

29

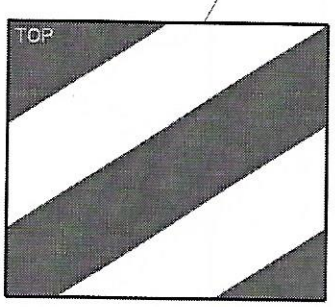

30

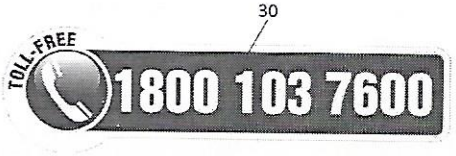

31

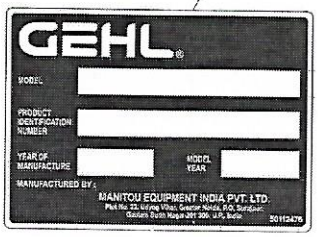

32

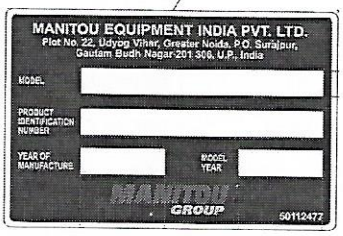

33

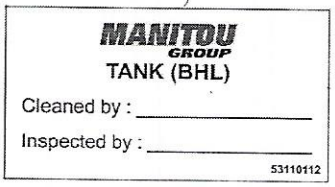

34

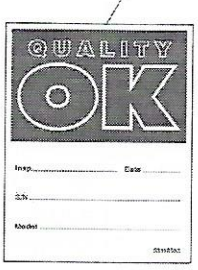

Item	Part No.	Name	Qty	Remarks
1	6102194M1	DECAL SAFE WORKING LOAD	4	
2	6108495M1	DECAL BATTERY ISOLATED	1	
3	3516906M1	DECAL - PATENT	1	
4	3216714	DECAL BATTERY	1	
5	6102184M1	DECAL WARNING (ENGLISH)	1	
6	3517225M2	DECAL BRAKE FLUID	1	
7	1L0090	DECAL STD LOADER CONTROLS	1	
8	6101928M1	DECAL TRANSPORT LOCK	1	
9	3517703M1	DECAL LIFTING	4	
10	6101914M1	DECAL FWD /REV	1	
11	6101921M1	DECAL GEAR CHANGE	1	
12	3517702M1	DECAL TIE DOWN	4	
13	1L0067	DECAL HYDRAULIC	1	
14	1L0068	DECAL DIESEL	1	
15	3516652M1	DECAL HANDBRAKE	1	
16	6010161M2	DECAL-COOLANT COVER	1	
17	6101952M2	DECAL AVOID CRUSHING	1	
18	6102056M1	DECAL AVOID CRUSHING	2	
19	6101950M2	DECAL SECURE LIFTING CYL.	1	
20	6101951M2	DECAL START ENGINE	1	
21	6010164M1	DECAL-MAIN FRAME	2	
22	6010160M2	DECAL-RADIATOR	2	
23	1B0157	DECAL - STAB CONTROLS & DIGGER CONTROLS	1	
24	6101949M1	DECAL STAY A SAFE DISTANCE	4	
25	3517593M1	DECAL - EXHAUST WARNING	2	
26	1L0001	DECAL - WARNING BIG-LH	1	
27	1L0081	DECAL - WARNING BIG-RH	1	
28	1L0082	DECAL - WARNIING SMALL-RH	2	
29	1L0002	STICKER WARNING	2	
30	1L0142	DECAL TOLL FREE NO	1	
31	50112476	DATA PLATE - GEHL	1	
32	50112477	DATA PLATE - MANITOU	1	
33	53110112	DECAL-TANK INSPECTION	1	
34	53110583	GREEN STICKER	1	

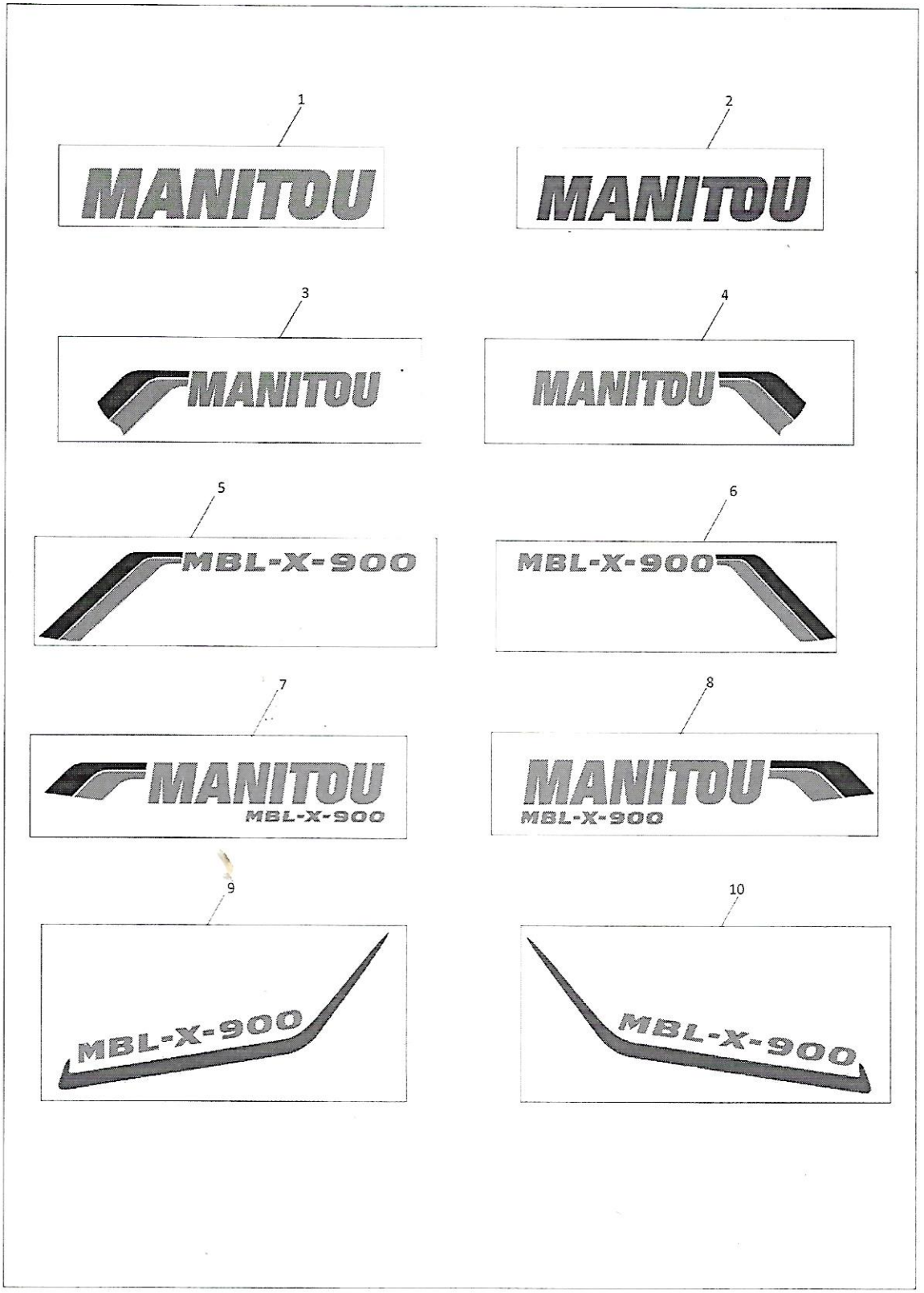
1
MANITOU
2
MANITOU
3
MANITOU
4
MANITOU
5
MBL-X-900
6
MBL-X-900
7
MANITOU
MBL-X-900
8
MANITOU
MBL-X-900
9
MBL-X-900
10
MBL-X-900

Item	Part No.	Name	Qty	Remarks
1	6102194M1	DECAL SAFE WORKING LOAD	4	
2	6108495M1	DECAL BATTERY ISOLATED	1	
3	3516906M1	DECAL - PATENT	1	
4	3216714	DECAL BATTERY	1	
5	6102184M1	DECAL WARNING (ENGLISH)	1	
6	3517225M2	DECAL BRAKE FLUID	1	
7	1L0090	DECAL STD LOADER CONTROLS	1	
8	6101928M1	DECAL TRANSPORT LOCK	1	
9	3517703M1	DECAL LIFTING	4	
10	6101914M1	DECAL FWD /REV	1	
11	6101921M1	DECAL GEAR CHANGE	1	
12	3517702M1	DECAL TIE DOWN	4	
13	1L0067	DECAL HYDRAULIC	1	
14	1L0068	DECAL DIESEL	1	
15	3516652M1	DECAL HANDBRAKE	1	
16	6010161M2	DECAL-COOLANT COVER	1	
17	6101952M2	DECAL AVOID CRUSHING	1	
18	6102056M1	DECAL AVOID CRUSHING	2	
19	6101950M2	DECAL SECURE LIFTING CYL.	1	
20	6101951M2	DECAL START ENGINE	1	
21	6010164M1	DECAL-MAIN FRAME	2	
22	6010160M2	DECAL-RADIATOR	2	
23	1B0157	DECAL - STAB CONTROLS & DIGGER CONTROLS	1	
24	6101949M1	DECAL STAY A SAFE DISTANCE	4	
25	3517593M1	DECAL - EXHAUST WARNING	2	
26	1L0001	DECAL - WARNING BIG-LH	1	
27	1L0081	DECAL - WARNING BIG-RH	1	
28	1L0082	DECAL - WARNIING SMALL-RH	2	
29	1L0002	STICKER WARNING	2	
30	1L0142	DECAL TOLL FREE NO	1	
31	50112476	DATA PLATE - GEHL	1	
32	50112477	DATA PLATE - MANITOU	1	
33	53110112	DECAL-TANK INSPECTION	1	
34	53110583	GREEN STICKER	1	

Item	Part No.	Name	Qty	Remarks
1	53111962	DECAL BONNET FRONT	2	
2	53111979	DECAL CABIN ROOF	2	
3	53111980	DECAL BOOM LH	2	FOR RED MACHINES
4	53111981	DECAL BOOM RH	2	FOR RED MACHINES
5	53112446	DECAL DIPPER LH (MBL -X-900)	1	
6	53112447	DECAL DIPPER RH (MBL -X-900)	1	
7	53112448	DECAL LOADER ARM RH (MBL -X-900)	1	
8	53112449	DECAL LOADER ARM LH (MBL -X-900)	1	
9	53112450	DECAL CABIN RH BOTTOM (MBL -X-900)	1	
10	53112451	DECAL CABIN LH BOTTOM (MBL -X-900)	1	
11	53111975	DECAL CABIN LH TOP 1	2	
12	53111971	DECAL CABIN RH TOP 1	2	
13	53111977	DECAL BONNET LH	2	
14	53111974	DECAL BONNET RH	2	
15	53111972	DECAL CABIN RH TOP 2	2	
16	53111978	DECAL CABIN LH TOP 2	2	

Item	Part No.	Name	Qty	Remarks
1	53111962	DECAL BONNET FRONT	2	
2	53111979	DECAL CABIN ROOF	2	
3	53111980	DECAL BOOM LH	2	FOR RED MACHINES
4	53111981	DECAL BOOM RH	2	FOR RED MACHINES
5	53112446	DECAL DIPPER LH (MBL -X-900)	1	
6	53112447	DECAL DIPPER RH (MBL -X-900)	1	
7	53112448	DECAL LOADER ARM RH (MBL -X-900)	1	
8	53112449	DECAL LOADER ARM LH (MBL -X-900)	1	
9	53112450	DECAL CABIN RH BOTTOM (MBL -X-900)	1	
10	53112451	DECAL CABIN LH BOTTOM (MBL -X-900)	1	
11	53111975	DECAL CABIN LH TOP 1	2	
12	53111971	DECAL CABIN RH TOP 1	2	
13	53111977	DECAL BONNET LH	2	
14	53111974	DECAL BONNET RH	2	
15	53111972	DECAL CABIN RH TOP 2	2	
16	53111978	DECAL CABIN LH TOP 2	2	

SERVICE PARTS

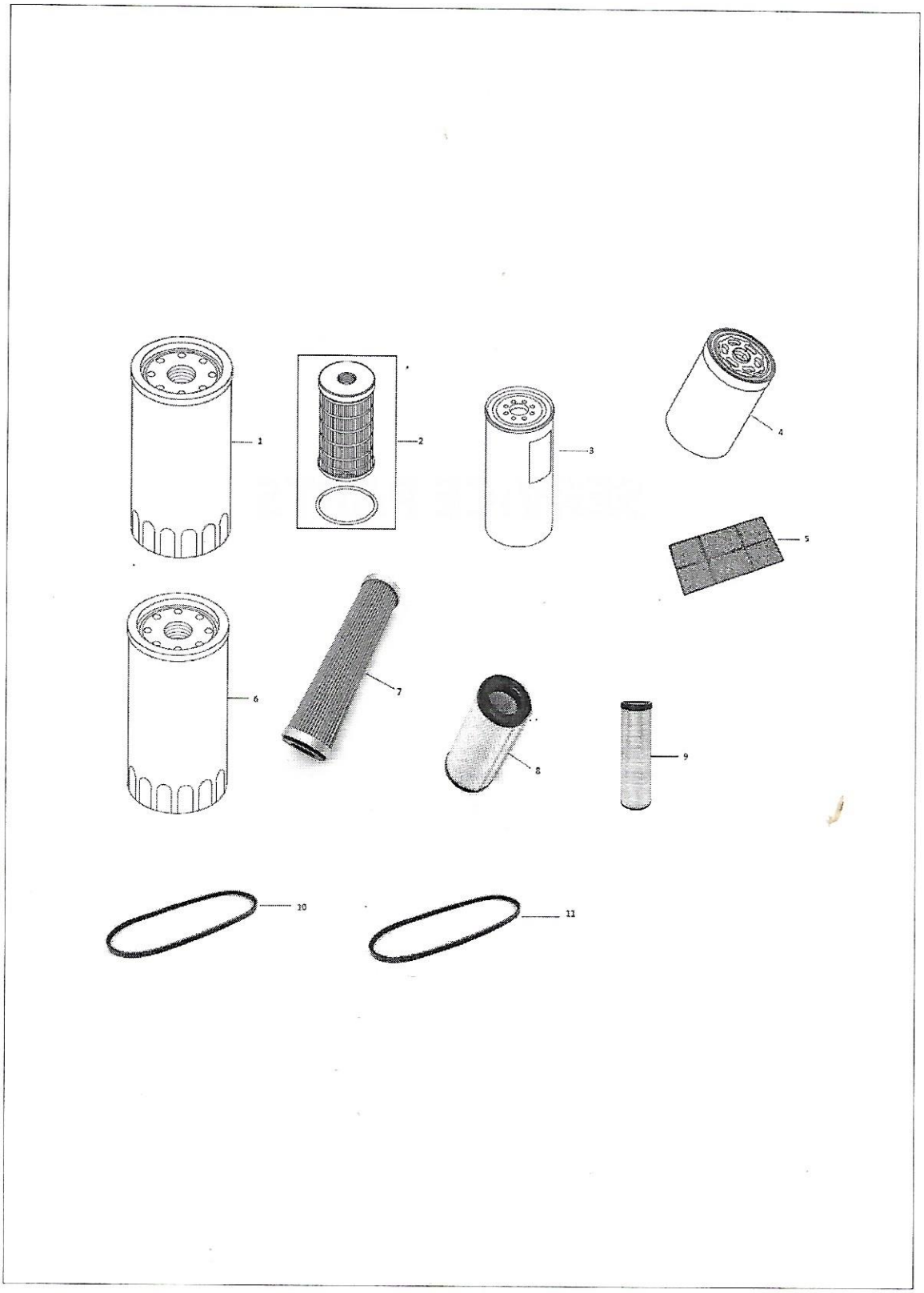
1
2
3
4
5
6
7
8
9
10
11

Item	Part No.	Name	Qty	Remarks
1	53100183	ENGINE OIL FILTER	1	
2	53100311	FUEL FILTER PRIMARY	1	
3	53100309	FUEL FILTER CATRIDGE	1	
4	6112184M1	GEAR BOX OIL FILTER	1	
5	10X3423	AIR CON FILTER ASSY	1	
6	1H0519	HYDRAULIC FILTER	1	
7	3515254M1	ELEMENT - SUCTION	1	
8	53100299	PRIMARY ELEMENT	1	
9	53100298	SAFETY ELEMENT	1	
10	53100250	ALTERNATOR BELT	1	
11	53110115	COMPRESSOR BELT	1	

ENGINE

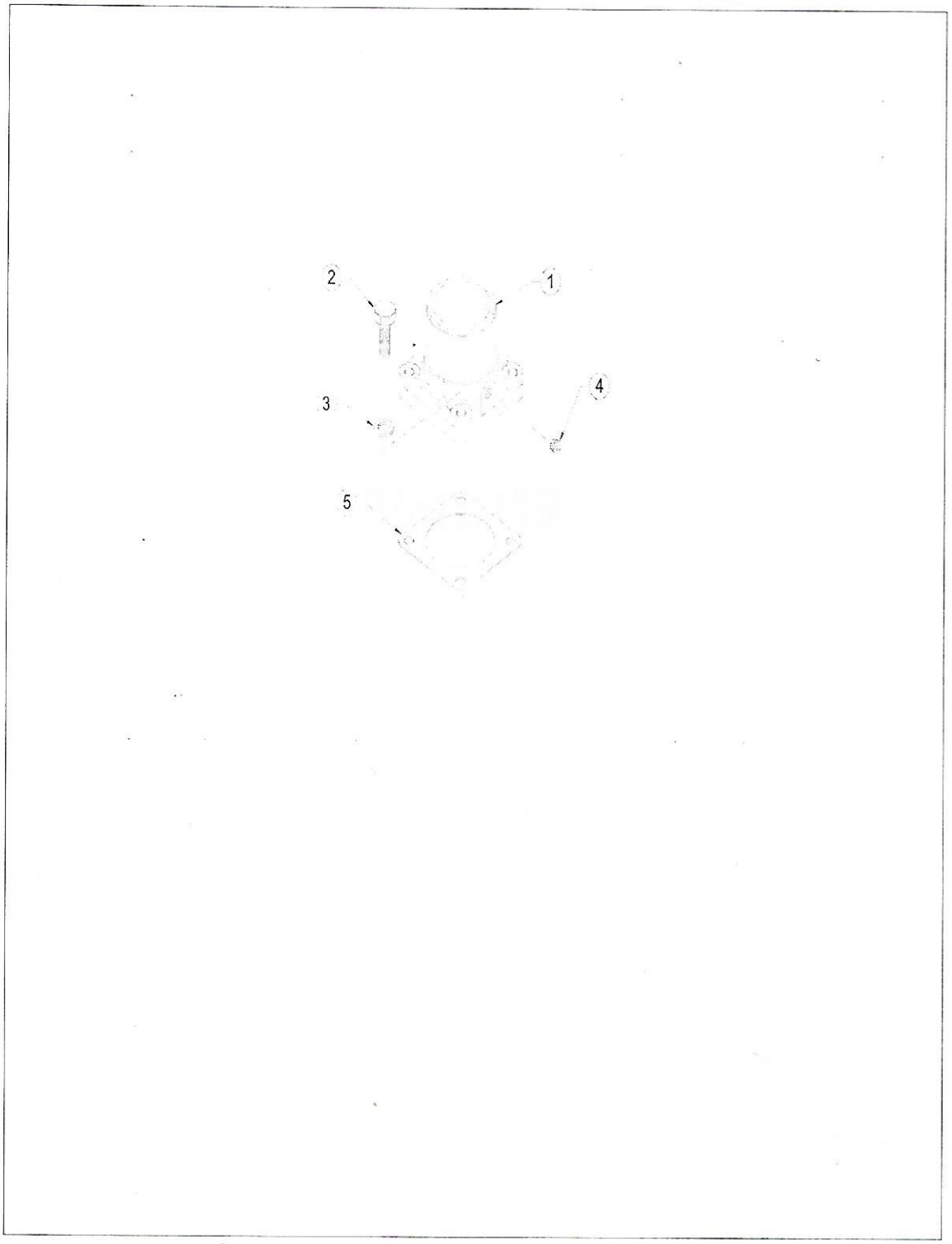
2
1
3
4
5

Item	Part No.	Name	Qty	Remarks
1	53100317	ADAPTOR FOR AIR CLEANER	1	
2	53100337	SET SCREW M8X1.25X30 - 8.8	4	
3	53100751	PLAIN MACHINED WASHER - M8	4	
4	53100323	HEADLESS PIPE PLUG 1/8"-27 NPTF	1	
5	53100187	JOINT (FOR AIR PIPE)	1	

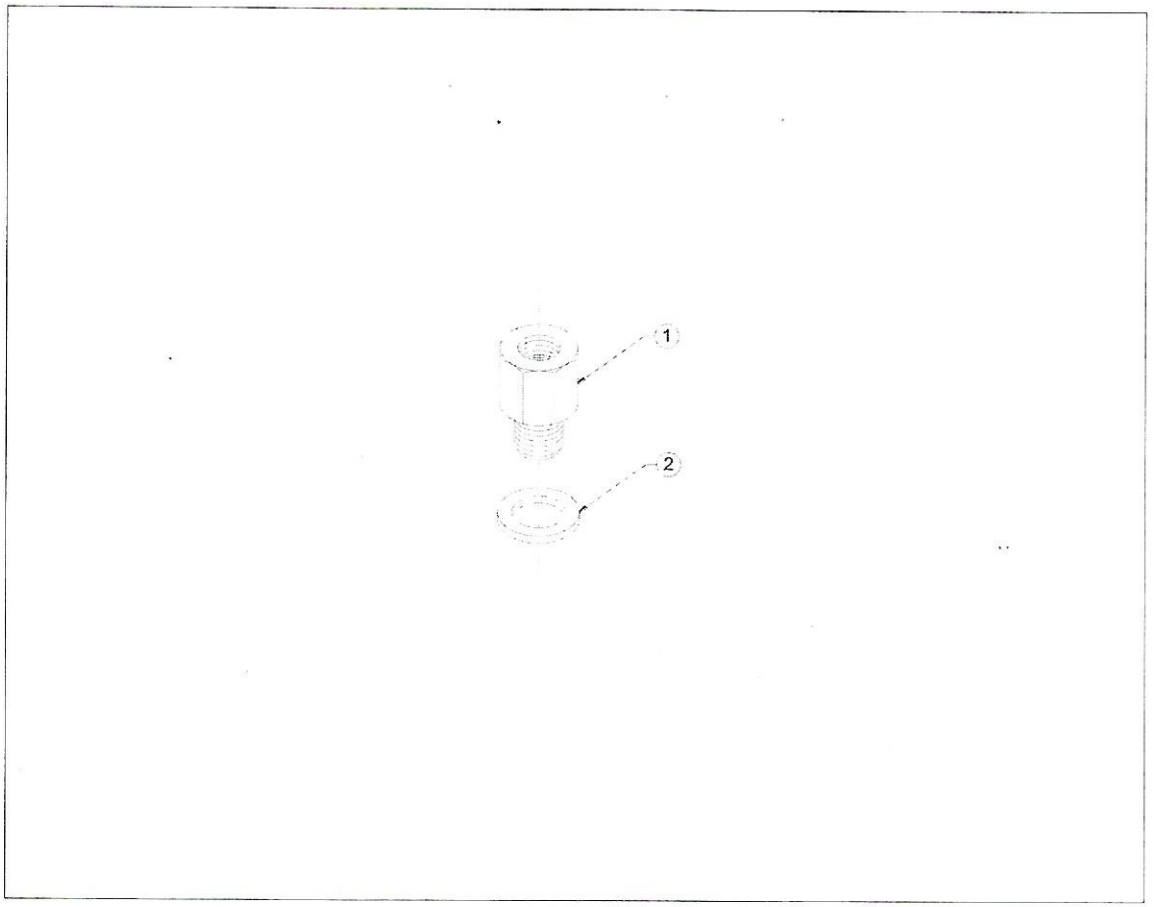
1
2

Item	Part No.	Name	Qty	Remarks
1	53100302	ADAPTOR FOR LUB OIL SENDER	1	
2	53100758	COPPER WASHER 12X18	1	

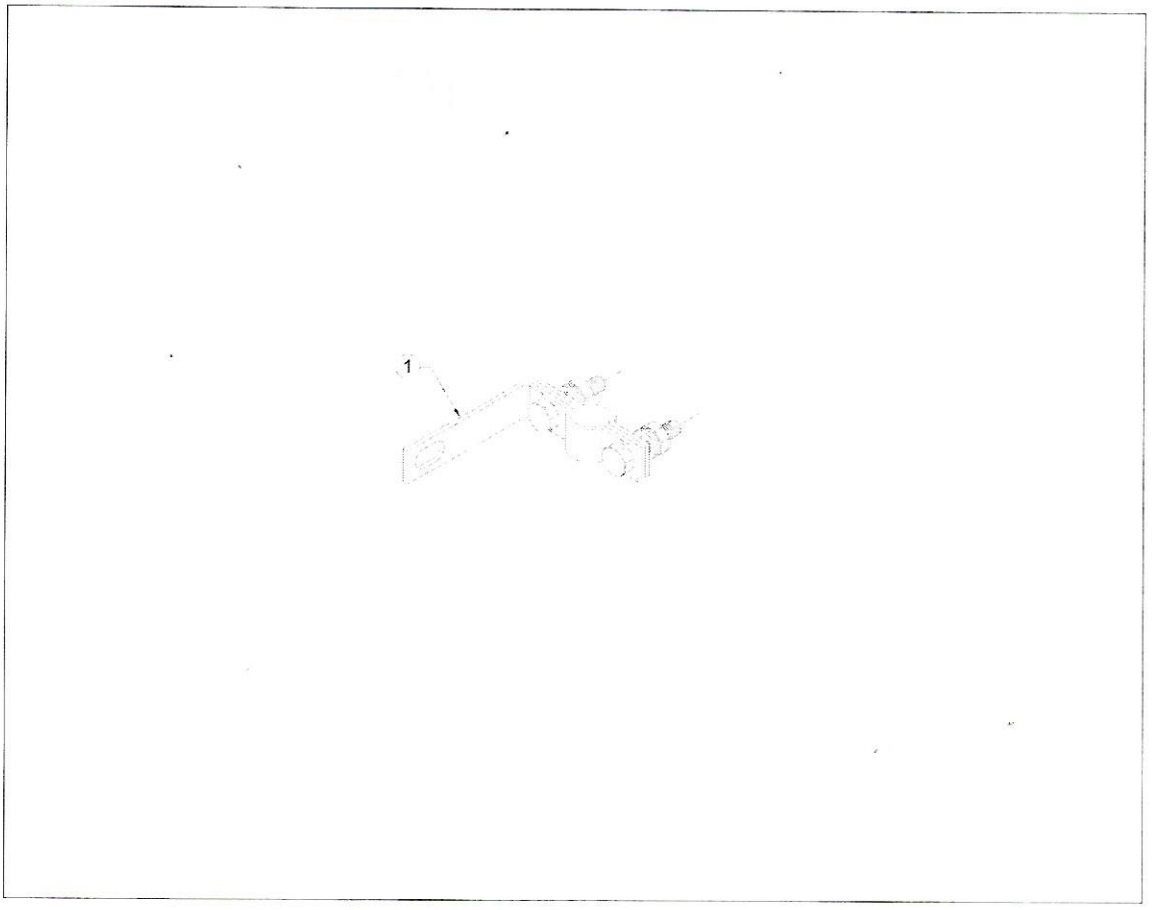
1

Item	Part No.	Name	Qty	Remarks
1	53100294	CLAMP FOR RAISED DIP STICK GUIDE	1	

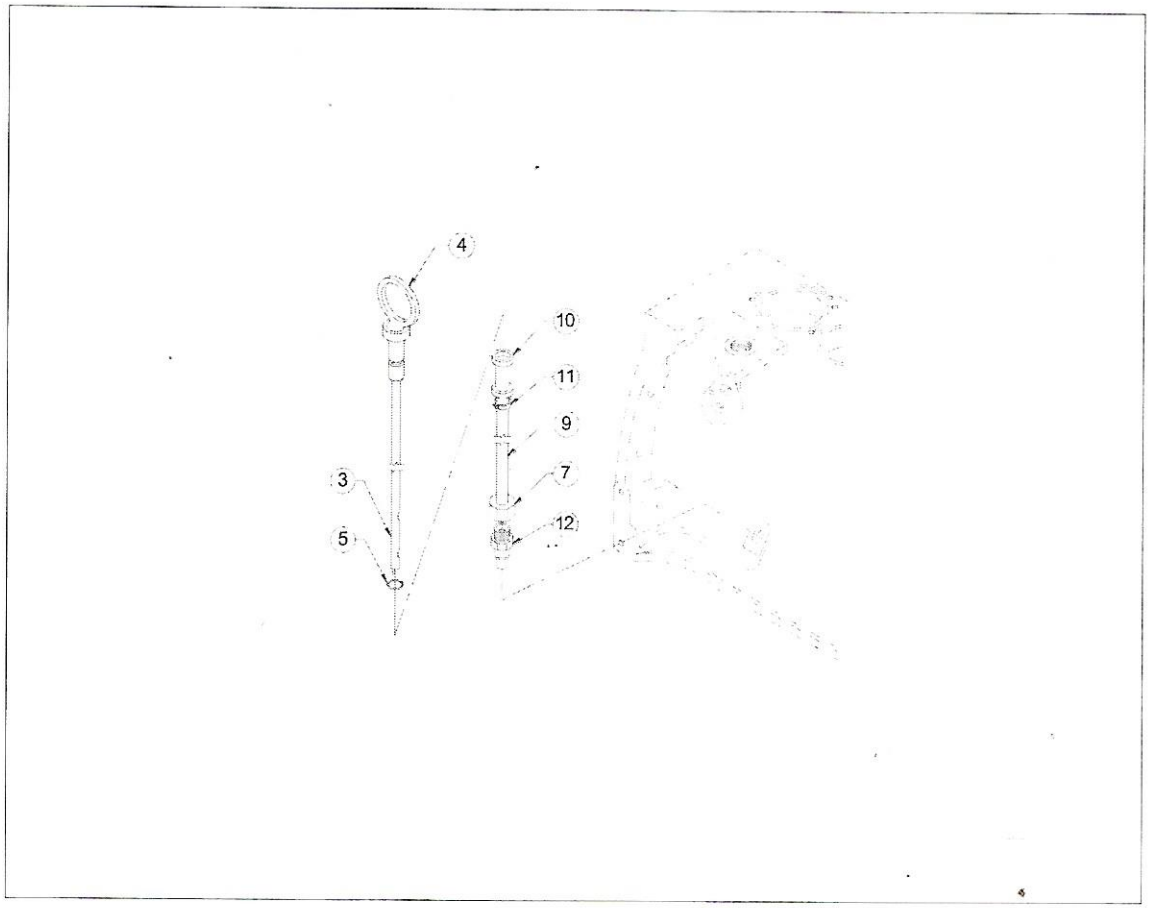
4
10
11
9
7
12
3
5

Item	Part No.	Name	Qty	Remarks
Not Shown	53100145	DIPSTICK ASSEMBLY COMPLETE	1	CONSISTING OF SR. NO. 2, 5 & 6
Not Shown	53100675	SUB ASSLY OF DIPSTICK STRIP 350 MM S.F.35 DEG SUMP	1	
3	NSS	STRIP FOR RAISED DIPSTICK (350 MM, S.F. 35 DEG SUMP)	1	
4	53100613	KNOB FOR FLEX.DIP STICK - HA394	1	
5	53100146	RUBBER O RING	1	
6	53100717	SUB ASSEMBLY OF GUIDE TUBE FOR DIPSTICK 350 MM	1	
7	NSS	UNION NUT FOR DIPSTICK GUIDE	1	NOT SUPPLIED LOOSE
9	NSS	NYLON TUBE FOR 350 MM DIPSTICK	1	NOT SUPPLIED LOOSE
10	NSS	GUIDE	1	NOT SUPPLIED LOOSE
11	53100147.	WORM DRIVE HOSE CLIP (12 MM)	2	
12	53100090	ADAPTOR FOR DIPSTICK (BAR)	1	

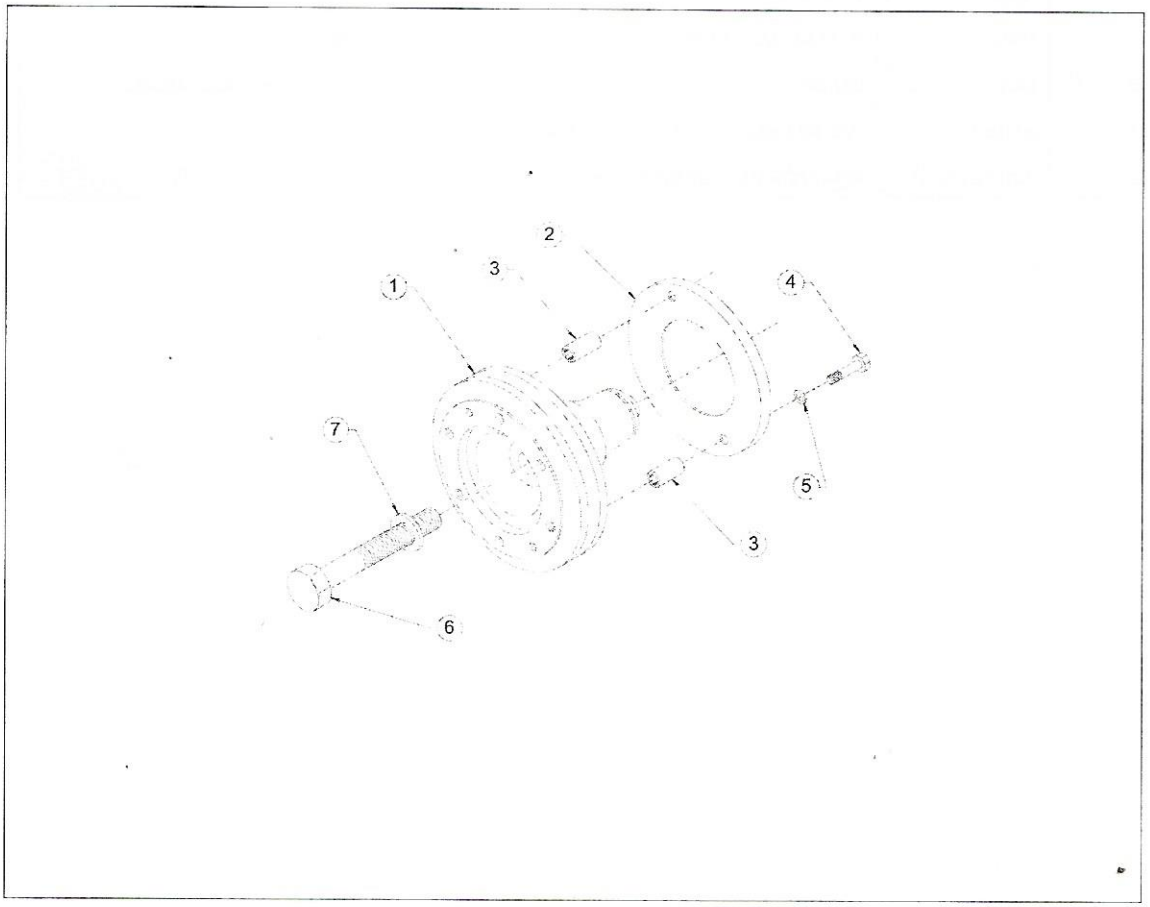
2
3
1
4
7
5
3
6

Item	Part No.	Name	Qty	Remarks
1	53100148	CRANK PULLEY (FINISH)	1	
2	53100149	MUD SLINGER	1	
3	53100150	SPACER FOR MUD SLINGER	2	
4	53100727	SET BOLT M8X1.25X50 - 8.8	2	
5	53100151	SPL.PLAIN WASHER	2	
6	53100152	CRANK PULLY BOLT-UPDATED	1	
7	53100153	WASHER (FOR CRANK PULLY BOLT)-UPDATED	1	

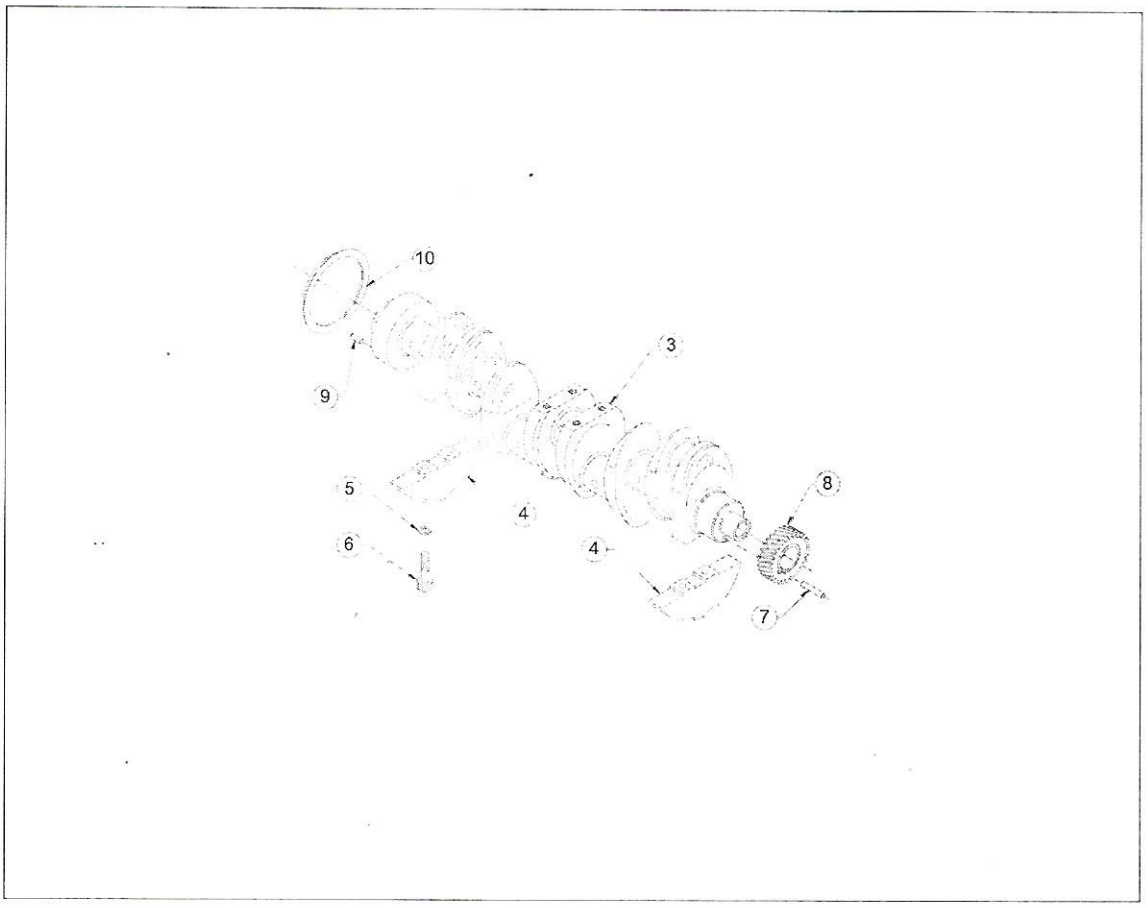
10
3
9
5
4
8
6
4
7

Item	Part No.	Name	Qty	Remarks
Not Shown	53100095	CRANKSHAFT GEAR ASSY	1	CONSISTING OF SR. NO. 2, 3 & 4
Not Shown	NSS	CR'SHAFT ASSLY.W/O CR'GEAR (UPDATED)	1	
3	NSS	CRANK SHAFT	1	
4	NSS	BALANCE WT.	4	
5	53100604	WASHER	8	
6	53100616	SOCKET HEAD BOLT - M12X1.75X60 - 10.9	8	
7	53100096	DOWEL PIN 8X60	1	
8	53100097	CRANK SHAFT GEAR (FINISH)	1	NOT SUPPLIED LOOSE
9	53100098.	DOWEL PIN 8X25	1	
10	53100099	DEFLECTOR FOR OIL SEAL	1	

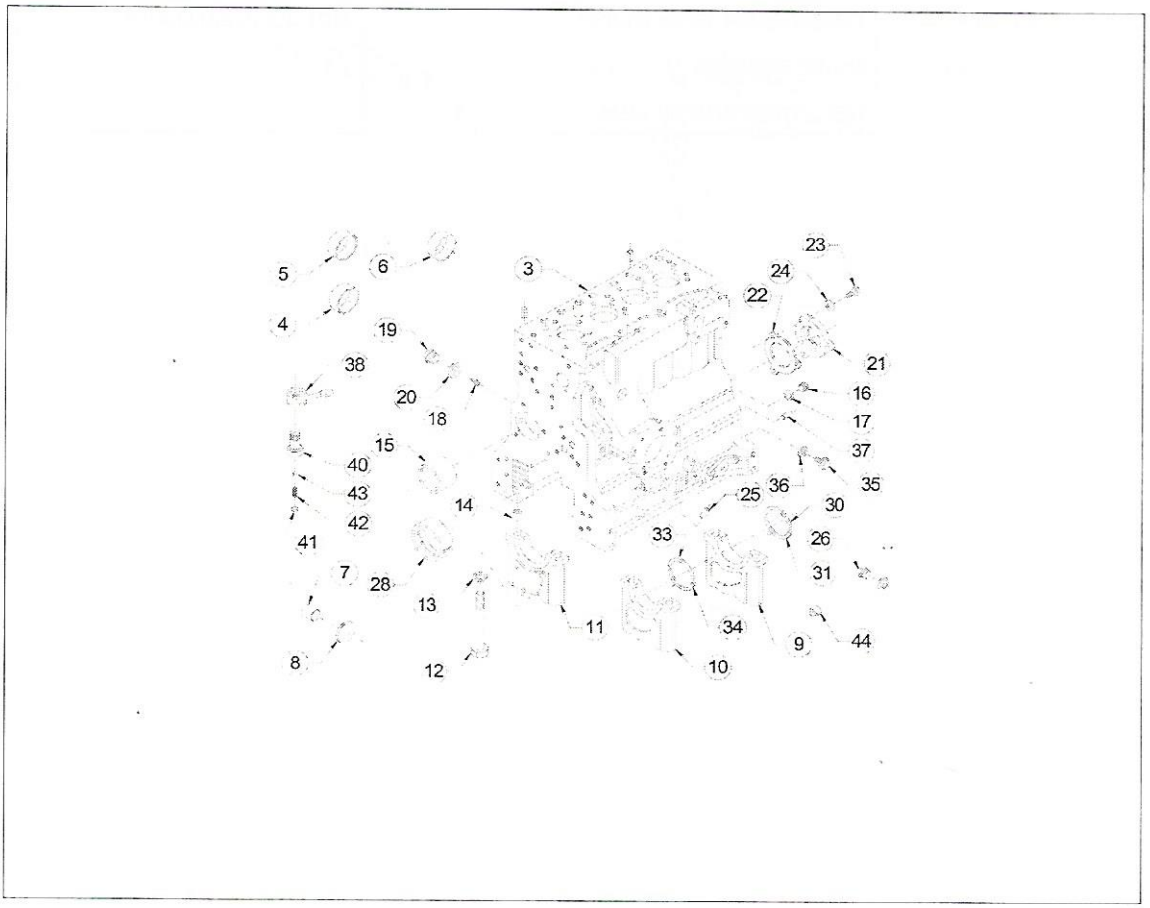
5
6
3
23
24
22
4
19
21
38
16
20
17
18
37
15
40
36
35
43
25
30
14
42
33
26
41
31
7
28
13
11
34
9
44
8
12
10

Item	Part No.	Name	Qty	Remarks
Not Shown	53100321	CRANKCASE ASSLY.WITHOUT BEARINGS	1	CONSISTING OF SR. NO. 2, 15 TO 26
Not Shown	NSS	CRANKCASE (LINE BORING OPERATION)	1	CONSISTING OF SR. NO. 3 TO 14
3	NSS	CRANKCASE (TURBOCHARGED ENGINE)	1	NOT SUPPLIED LOOSE
4	53100077	SEALING CAP	5	
5	53100078	SEALING CAP 40 DIN 443	2	
6	53100079	SEALING CAP	3	
7	53100080	CRANK SHAFT PLUG - ALUMINIUM	2	
8	53100081	WASHER FOR ALU.PLUG.	2	
9	NSS	M.B.CAP (FWE)16.99 DIA.DOWEL HOLE	1	NOT SUPPLIED LOOSE
10	NSS	M.B.CAP (KHD)16.99DIA DOWEL HOLES	3	NOT SUPPLIED LOOSE
11	NSS	BEARING CAP(GEAR END)(FINISH)	1	NOT SUPPLIED LOOSE
12	53100082	BOLT FOR MB CAP(HEX HEAD) M14X2X128	10	
13	53100083	SPECIAL WASHER FOR M14 BOLT	10	
14	53100782	HOLLOW DOWEL (M.B.CAP)	10	
15	53100084	CAM BUSH	1	
16	53100085	PRECOATED SCREW PLUG	1	
17	53100765	COPPER WASHER (20X26)	1	
18	53100086	SLOTTED PIN	5	
19	53100088	BLANKING PLATE FOR CAM BORE	6	
20	53100758	COPPER WASHER 12X18	6	
21	53100088	BLANKING PLATE FOR CAM BORE	1	
22	53100089	JOINT FOR CAM BORE BLANKING PLATE	1	
23	53100336.	SET SCREW - M8X1.25X25 - 8.8	3	
24	53100750.	PLAIN MACHINED WASHER - M8	3	
25	53100606	DIPSTICK GUIDE	1	
26	53100772	CORE PLUG	1	
Not Shown	53100071	MAIN BRG TOP & BOTTOM	5	
28	NSS	MAIN BEARING HALF(STANDARD)	2	
Not Shown	53100072	THRUST RING PAIR-DRIVE & GEAR END,102 DIA.)	1	
30	NSS	THRUST WASHER -DRIVE END,TOP	1	
31	NSS	THRUST WASHER (DRIVE END,BOTTOM)	1	

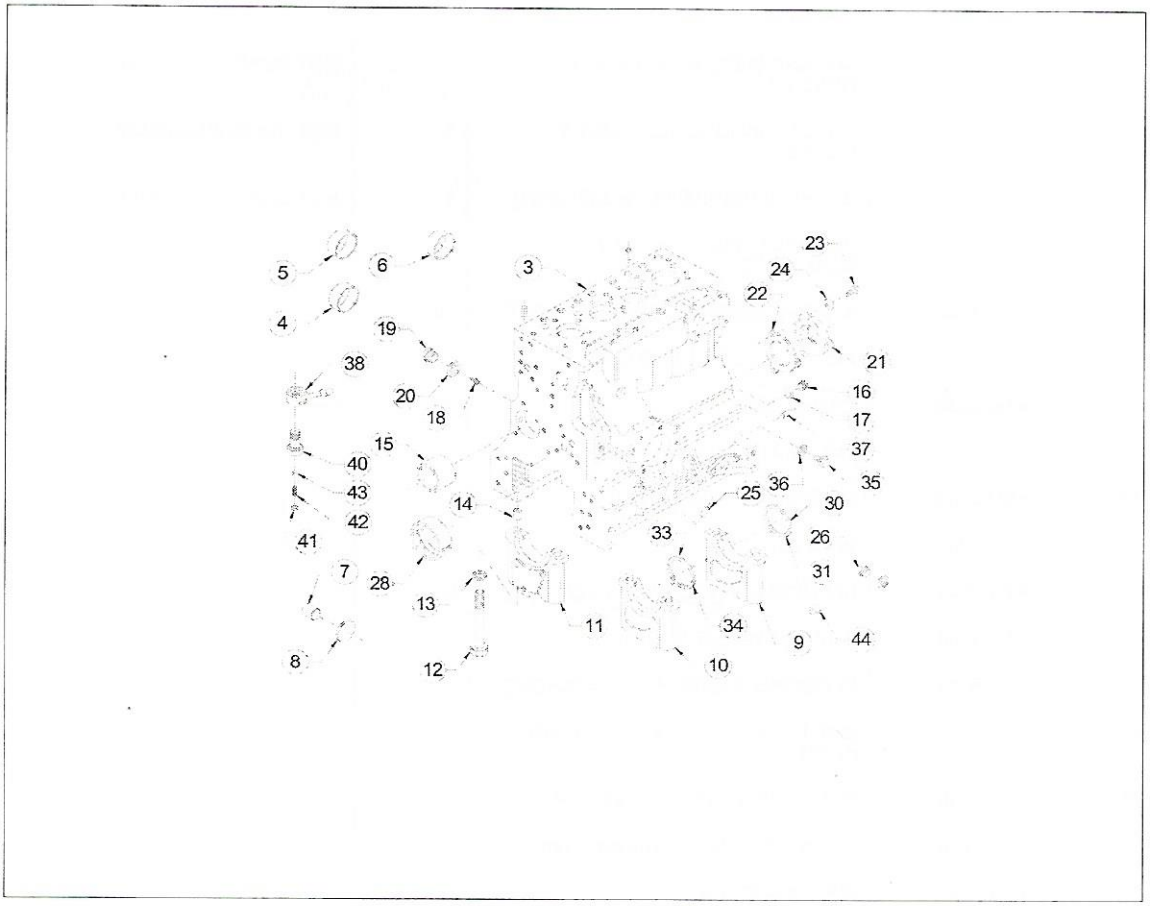
5
6
3
23
24
22
4
19
21
38
16
20
17
18
15
37
40
35
43
25
36
30
14
42
33
26
41
31
7
28
13
11
34
9
44
8
12
10

Item	Part No.	Name	Qty	Remarks
Not Shown	NSS	THRUST RING PAIR-G.E.	1	CONSISTING OF SR. NO. 33, 34
33	NSS	THRUST RING HALF(G.E.-TOP)	1	
34	NSS	THRUST RING HALF(G.E.- BOTTOM)	1	
35	53100073.	PLUG (M14X1.5)	1	
36	53100760	COPPER WASHER 14X20	1	
37	53100074.	DOWEL	2	
38	53100075	OIL SPRAY NOZZLE (MODIFIED)	4	
Not Shown	53100076	SUB. ASSEMBLY OF SPECIAL BANJO BOLT	4	CONSISTING OF SR. NO. 40 TO 43
40	NSS	BANJO BOLT	1	
41	NSS	CLOSING BUTTON (FOR OIL SPRAY BANJO BOLT)	1	
42	NSS	SPRING	1	
43	NSS	STEEL BALL	1	
44	53100091	PLUG FOR DIP STICK HOLE	1	

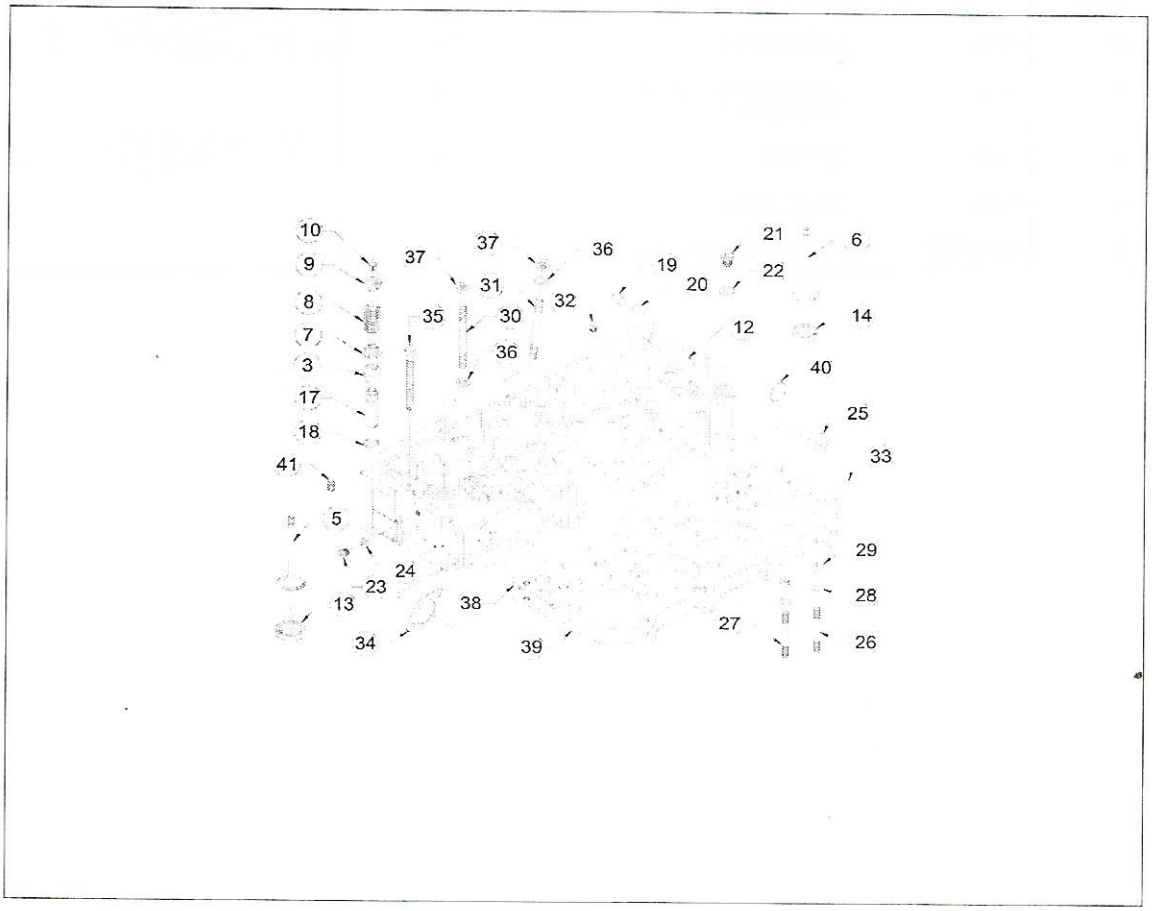
10
9
8
7
3
17
18
41
5
13
34
23
24
37
37
31
35
30
36
36
32
19
20
21
22
6
14
12
40
25
33
29
28
26
27
38
39

Item	Part No.	Name	Qty	Remarks
1	53100687	CYLINDER HEAD ASSLY COMPLETE	1	
2	NSS	CYL.HEAD ASSLY WITH VALVES & SPRINGS	1	CONSISTING OF SR. NO. 3 TO 11
3	53100154	VALVE SEAL	8	
4	53100155	INLET & EXHAUST VALVE PAIR	1	CONSISTING OF SR. NO. 5 & 6
5	53100684	INLET VALVE	4	
6	53100685	EXHAUST VALVE	4	
7	53100156	CUP FOR VALVE SPRING	8	
8	53100157	VALVE SPRING	8	
9	53100158	VALVE CUP	8	
10	53100159	VALVE COLLET(3-GROOVE)	16	
11	NSS	CYLINDER HEAD (P TYPE INJECTOR) ASSEMBLY WITH VS INSERT & VG	1	CONSISTING OF SR. NO. 12 TO 15 & 19 TO 25
12	NSS	CYLINDER HEAD (FINISH) WITH P TYPE INJECTOR (SINGLE JACKET)	1	
13	53100682	VALVE SEAT INSERT (INLET) SEMIFINISH	4	
14	53100683	VALVE SEAT INSERT (EXHAUST) SEMI-FINISH	4	
15	NSS	ASSEMBLY OF SEMIFINISH VALVE GUIDE & SNAP RING	8	CONSISTING OF SR. NO. 17, 18
16	NSS	ASSEMBLY OF SEMIFINISH VALVE GUIDE & SNAP RING	1	CONSISTING OF SR. NO. 17, 18
17	53100160	VALVE GUIDE (SEMI-FINISH)	1	
18	53100161	WIRE SNAP RING	1	
19	53100080	CRANK SHAFT PLUG - ALUMINIUM	5	
20	53100081	WASHER FOR ALU.PLUG.	5	
21	53100773	CORE PLUG-HEXAGONAL SOCKET HEAD (DIN-908)	1	
22	53100763	COPPER WASHER 18X22	1	
23	53100774	CORE PLUG	3	
24	53100767	COPPER WASHER 26X32	3	
25	53100162	SEALING CAP	3	
26	53100745	STUD M8X1.25X120 - 8.8	5	
27	53100163.	STUD	3	
28	53100164.	SPRING WASHER - M8	8	
29	53100165.	NUT- M8X1.25 - GR.8	8	
30	53100166.	STUD - M10X1.5X75 - 8.8	4	
31	53100167.	STUD - M10X1.5X50 - 8.8	4	
32	53100658	CORE PLUG (FOR CYL.HEAD)	1	
33	53100756.	COPPER WASHER (12X16)	1	

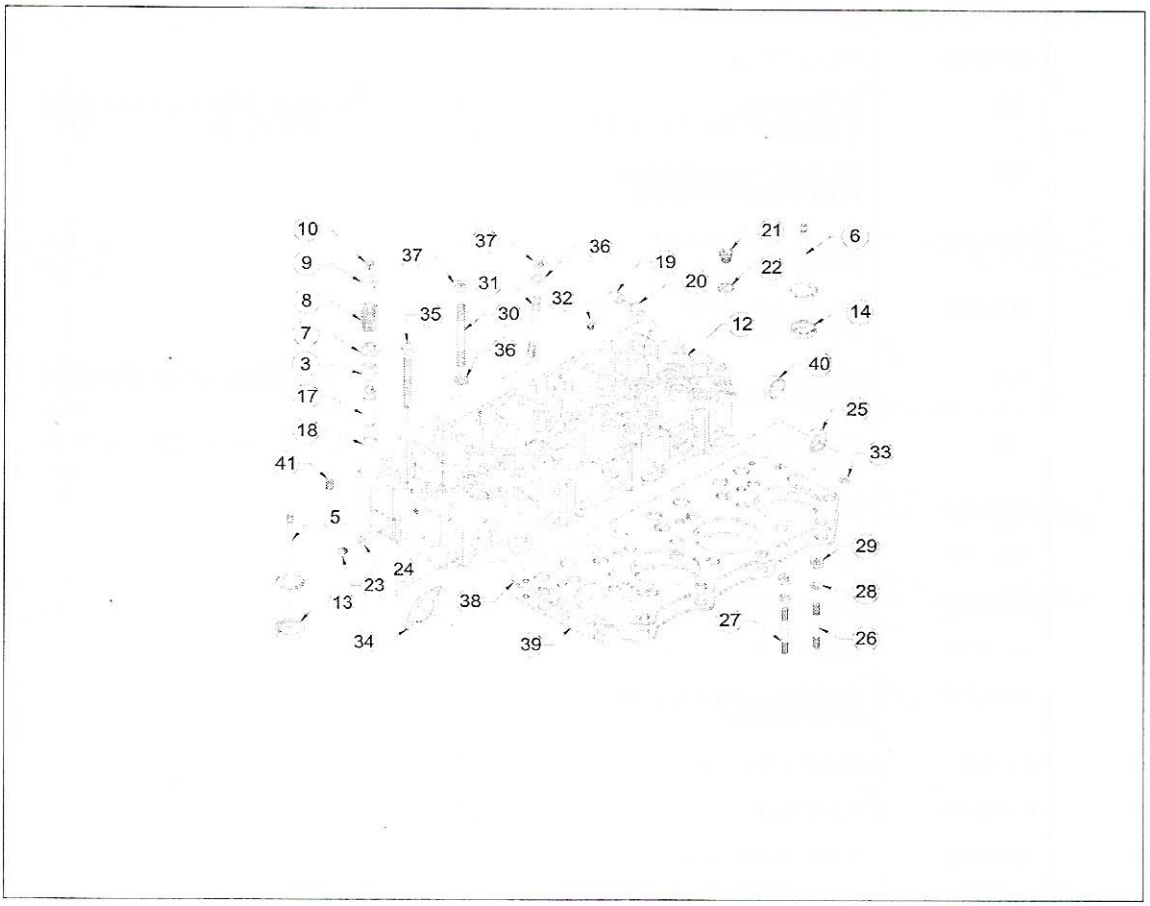
10
9
8
7
3
17
18
41
5
13
34
24
23
38
39
37
37
31
35
30
36
36
32
19
20
21
22
12
6
14
40
25
33
29
28
26
27

Item	Part No.	Name	Qty	Remarks
34	53100168	JOINT FOR WATER OUTLET MANIFOLD	1	
35	53100169	BOLT FOR CYLINDER HEAD.	18	
36	53100170	WASHER	8	
37	53100171.	NUT - M10X1.5 - GR.8	8	
38	53100172	GASKET FOR CYLINDER HEAD (THICKNESS 1.22)	1	
39	53100173	GASKET FOR CYLINDER HEAD (THICKNESS 1.10)	1	
40	53100078	SEALING CAP 40 DIN 443	2	
41	53100657	SLOTTED HEAD GRUB SCREW	1	

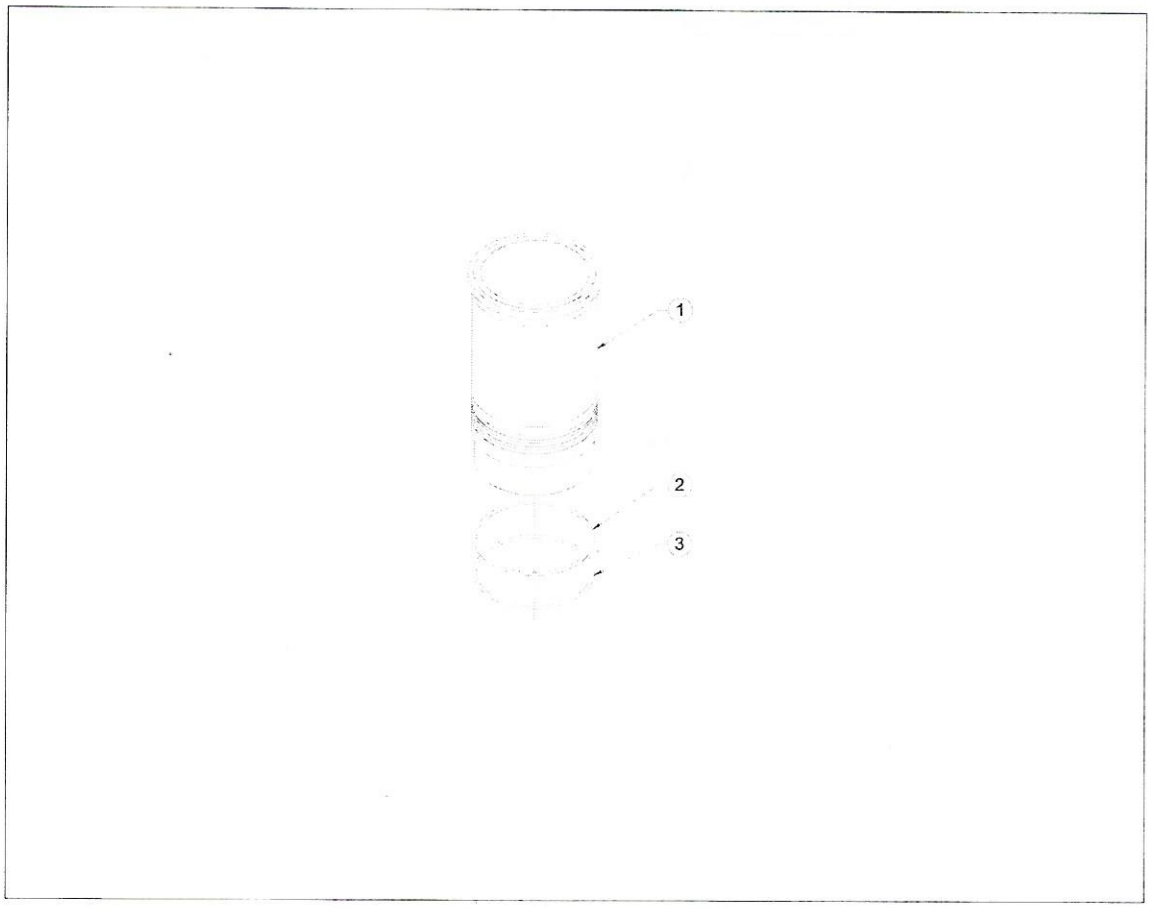
1
2
3

Item	Part No.	Name	Qty	Remarks
1	53100092	CYLINDER LINER WITH 'JOINT' RING	1	
2	53100093	O RING (FOR CYL.LINER)	2	
3	53100094	O RING FOR CYLINDER LINER	1	

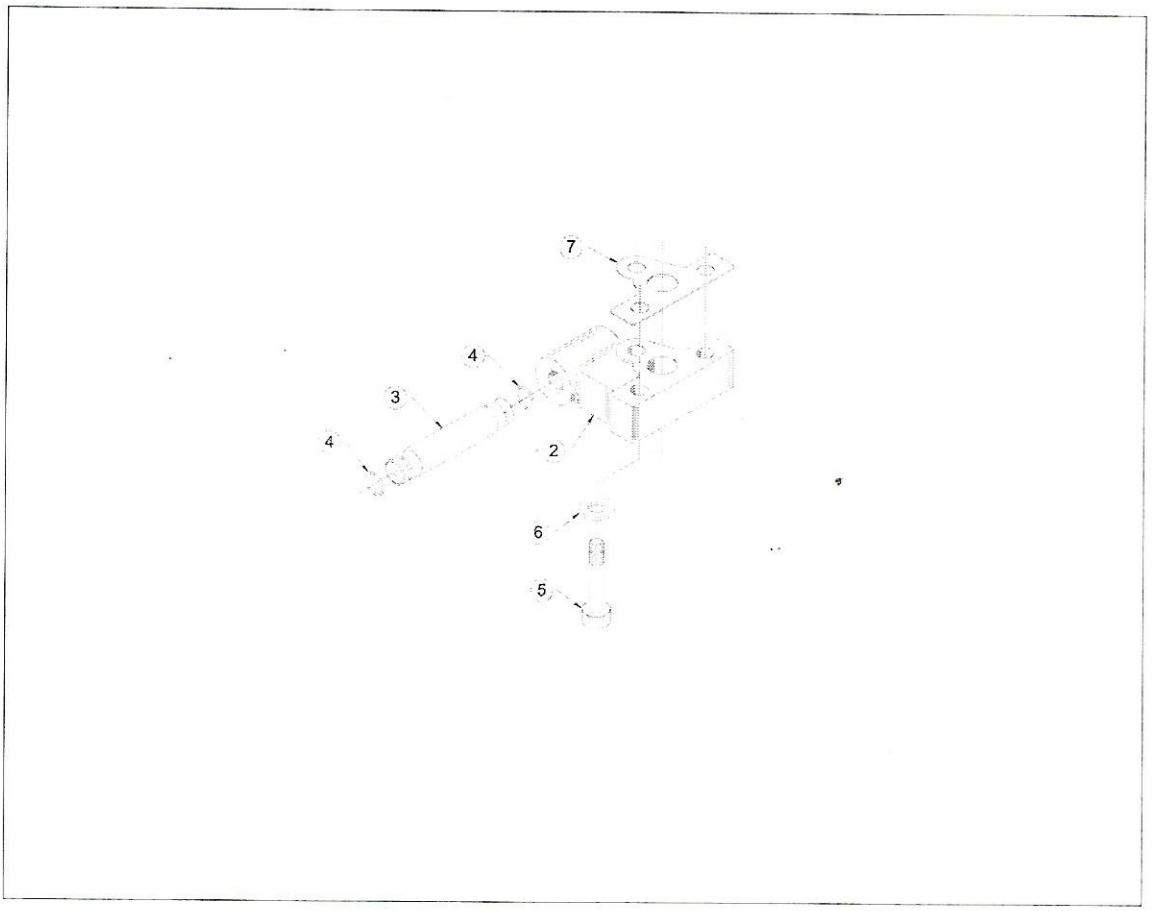
7
4
3
4
2
6
5

Item	Part No.	Name	Qty	Remarks
1	53100117	DELIVERY BODY ASSEMBLY	1	CONSISTING OF SR.NO. 2 TO 4
2	53100118	DELIVERY BODY(FINISH)	1	
3	53100119	DELIVERY TUBE	1	
4	53100120	O RING(FOR DELIVERY TUBE)	2	
5	53100725.	SET BOLT - M8X1.25X45 - 8.8	3	
6	53100750.	PLAIN MACHINED WASHER - M8	3	
7	53100121	JOINT FOR DELIVERY BODY	1	

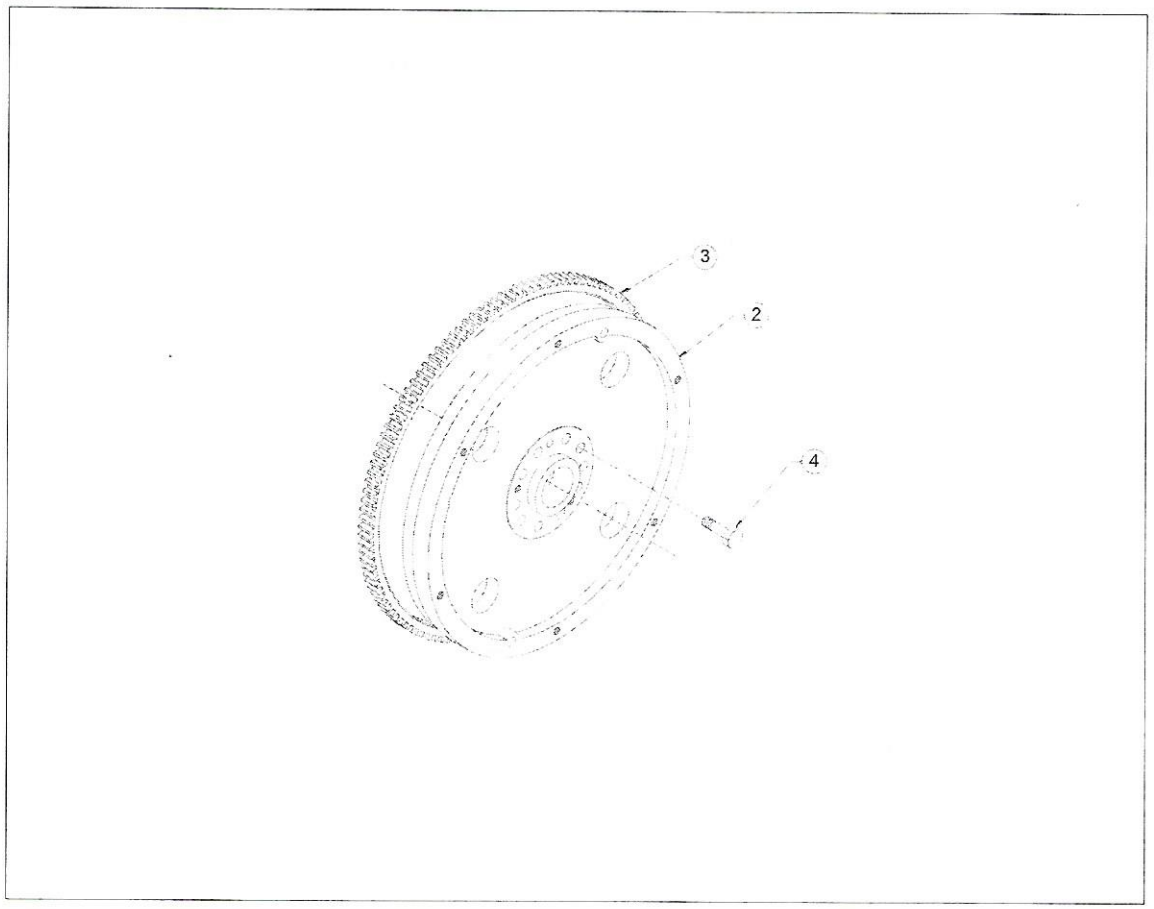
3
2
4

Item	Part No.	Name	Qty	Remarks
1	53100266	FLYWHEEL ASSEMBLY	1	CONSISTING OF SR. NO. 2, 3
2	NSS	FLYWHEEL	1	
3	53100267	STARTER RING HA	1	
4	53100268	BOLT FOR FLYWHEEL M10X35 LONG	10	

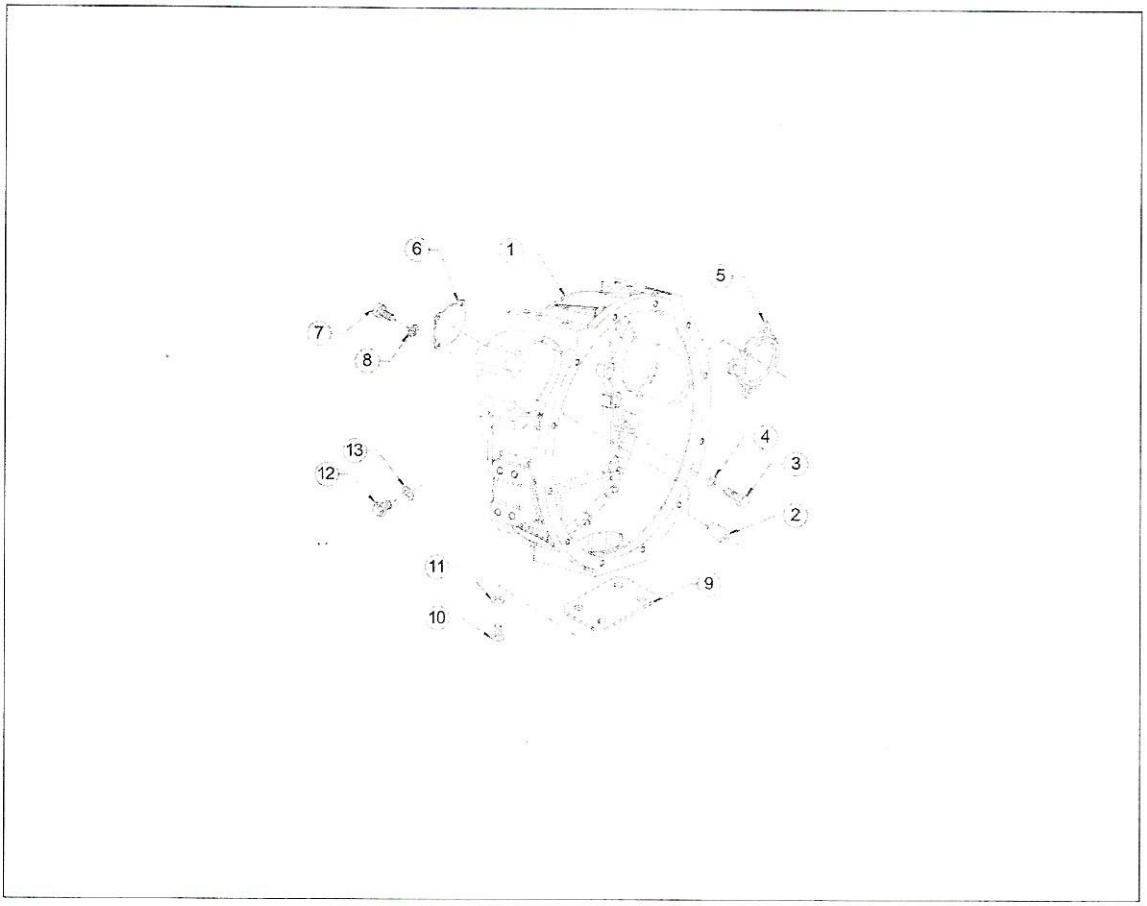
6
1
5
7
8
4
3
13
12
2
11
9
10

Item	Part No.	Name	Qty	Remarks
1	53100259	FLYWHEEL HOUSING (SAE 3-144.5)	1	
2	53100260	HOLLOW DOWEL (16 DIA)	2	
3	53100261	SET BOLT M10X30-10.9	8	
4	53100262	WASHER	8	
5	53100263	FLANGE FOR STARTER	1	
6	53100264	BLANKING PLATE	1	
7	53100326	SET SCREW - M10X1.5X20 - 8.8	9	
8	53100752	PLAIN MACHINED WASHER - M10	9	
9	53100265	COVER FOR FLY WHEEL HSG	1	
10	53100334	SET SCREW - M8X1.25X16 - 8.8	4	
11	53100751	PLAIN MACHINED WASHER - M8	4	
12	53100771	CORE PLUG 16X1.5	1	
13	53100762	COPPER WASHER 17X23	1	

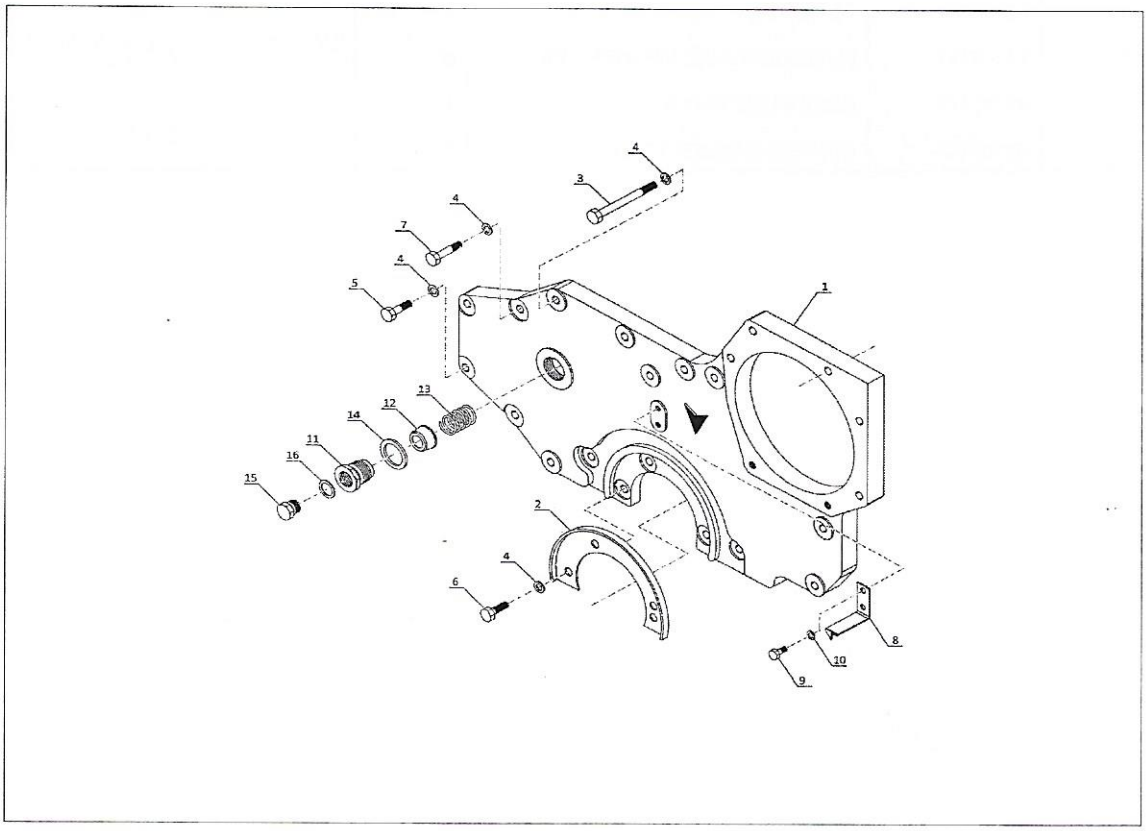
4
3
4
7
4
5
1
13
12
14
11
16
15
2
4
6
8
10
9

Item	Part No.	Name	Qty	Remarks
1	53100282	FRONT COVER	1	
2	53100283	MUD SLINGER (TOP SIDE)	1	
3	53100736	SET BOLT - M8X1.25X100 - 8.8	4	
4	53100751	PLAIN MACHINED WASHER - M8	18	
5	53100722	SET BOLT M8X1.25X30 - 8.8	5	
6	53100336	SET SCREW M8X1.25X25 - 8.8	5	
7	53100723	SET BOLT - M8X1.25X35 - 8.8	4	
8	53100284	TIMING POINTER	1	
9	53100331	SET SCREW - M6X1X12 - 8.8	2	
10	53100749	PLAIN MACHINED WASHER - M6	2	
11	53100285	ADAPTOR (FOR TACHODRIVE)	1	
12	53100287	CUP FOR SPRING	1	
13	53100286	SPRING	1	
14	53100764	COPPER WASHER 18X24	1	
15	53100643	COPPER WASHER 24X29	1	
16	53100643	COPPER WASHER 24X29	1	

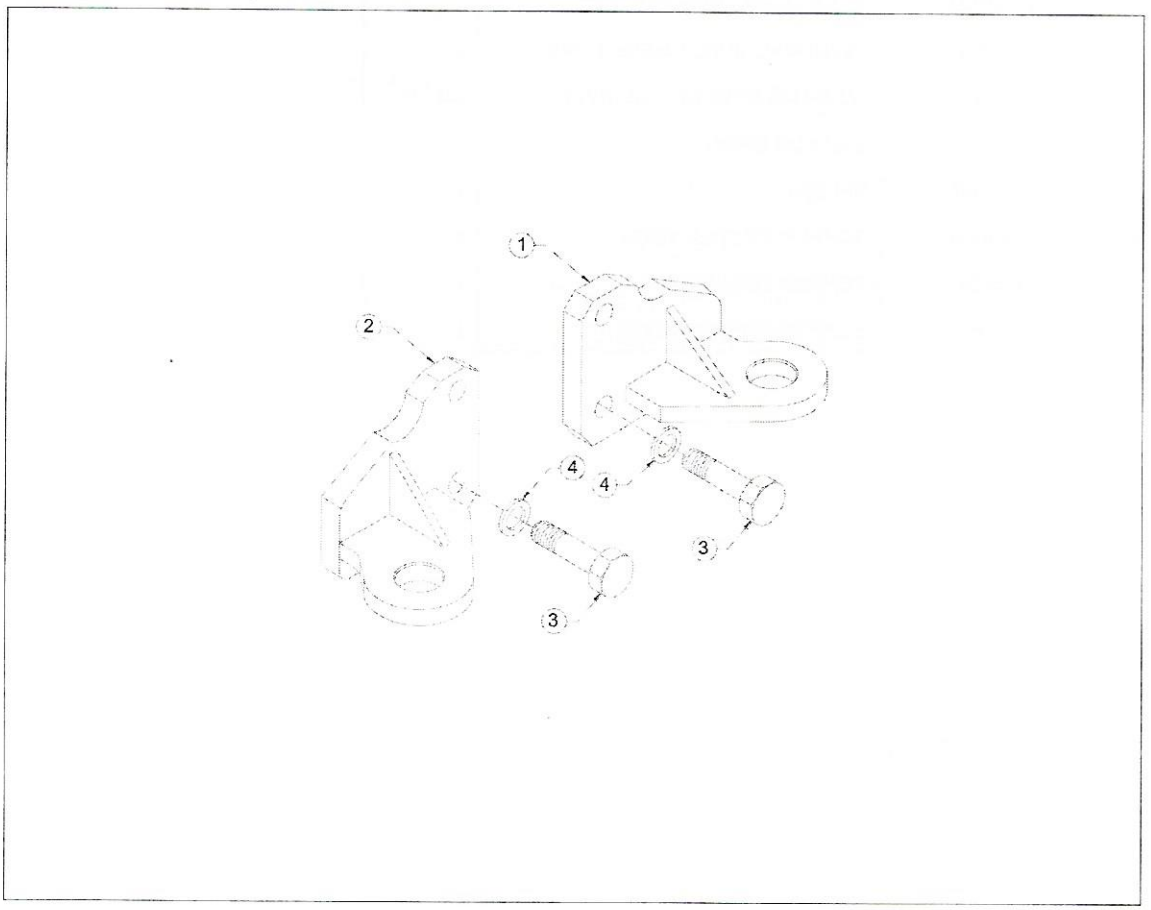
1
2
4
4
3
3

Item	Part No.	Name	Qty	Remarks
1	53100277	GEAR END FOOT	1	
2	53100278	GEAR END FOOT	1	
3	53100279.	SET BOLT M14 GR.10.9	4	
4	53100083	SPECIAL WASHER FOR M14 BOLT	4	

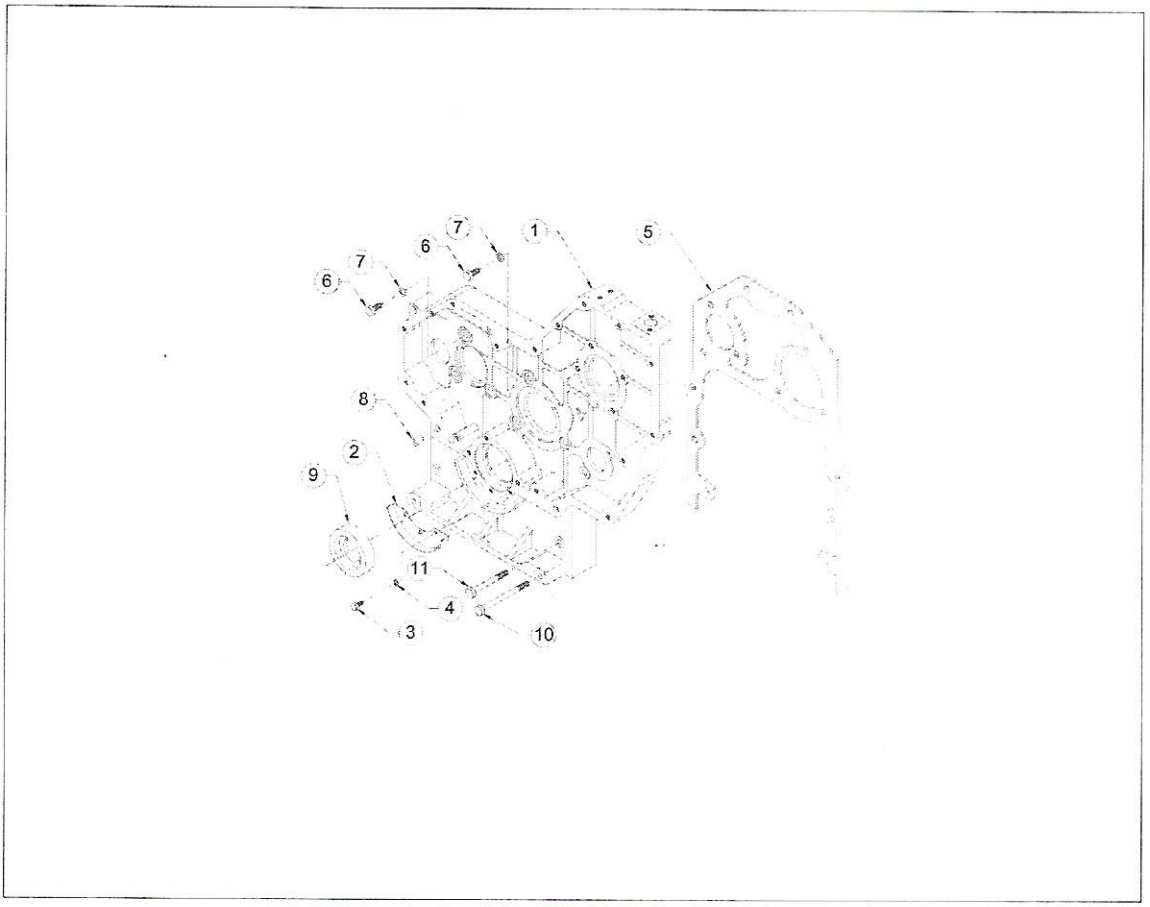
7
1
5
6
7
6
8
2
9
11
4
3
10

Item	Part No.	Name	Qty	Remarks
1	53100100	GEAR CASING FOR ROTARY FIP MTG	1	
2	53100101	MUD SLINGER (BOTTOM SIDE)	1	
3	53100331.	SET SCREW - M6X1X12 - 8.8	3	
4	53100749	PLAIN MACHINED WASHER - M6	3	
5	53100102	JOINT FOR GEAR COVER	1	
6	53100336.	SET SCREW - M8X1.25X25 - 8.8	6	
7	53100750.	PLAIN MACHINED WASHER - M8	10	
8	53100103	DOWEL FOR GEAR CASING	2	
9	53100104	OIL SEAL 65X85X13	1	
10	53100737	SET BOLT – M8X1.25X105 – 8.8	2	
11	53100733	SET BOLT M8X1.25X80 - 8.8	2	

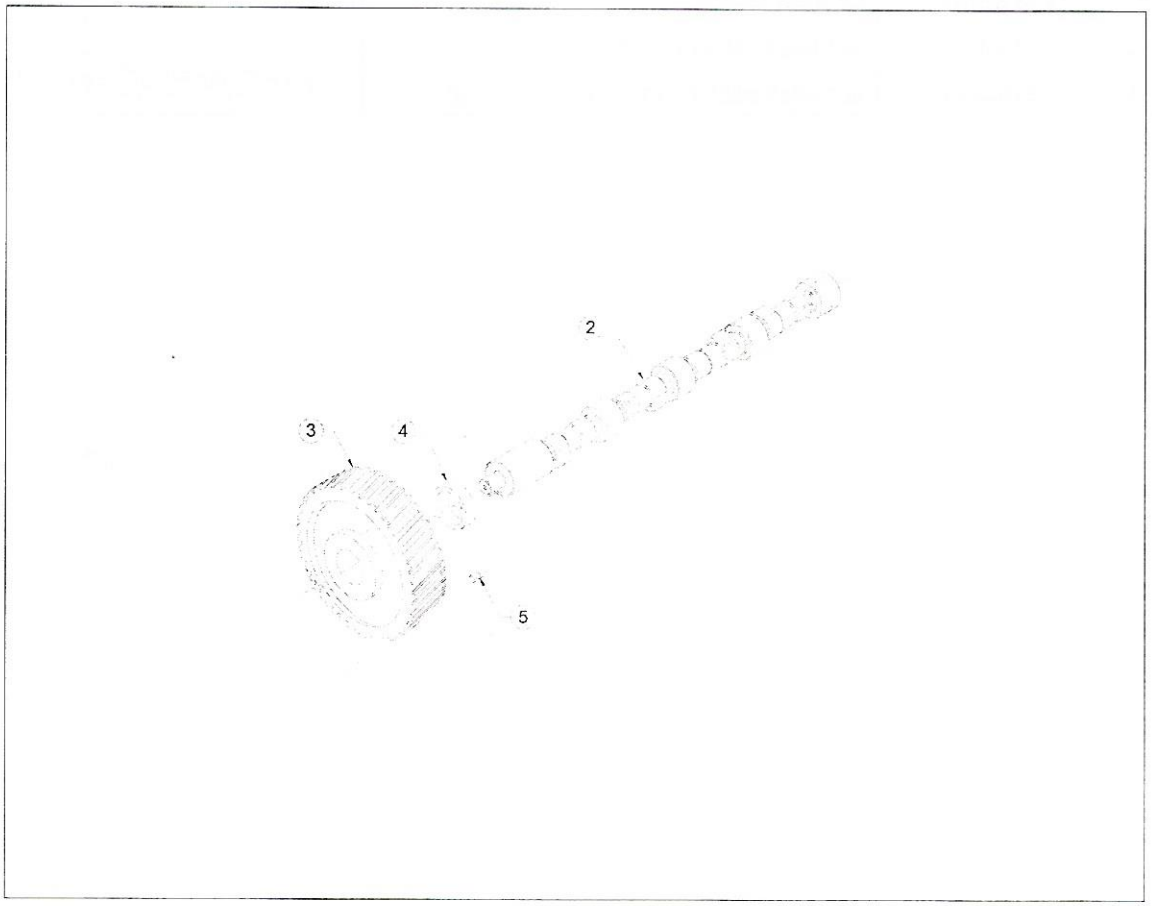
2
3
4
5

Item	Part No.	Name	Qty	Remarks
1	53100319	CAM SHAFT SUB ASSEMBLY	1	
2	NSS	INTERNAL EGR CAMSHAFT	1	
3	53100130	CAM SHAFT GEAR	1	
4	53100131	THRUST WASHER FOR CAM SHAFT	1	
5	53100132	PIN	1	

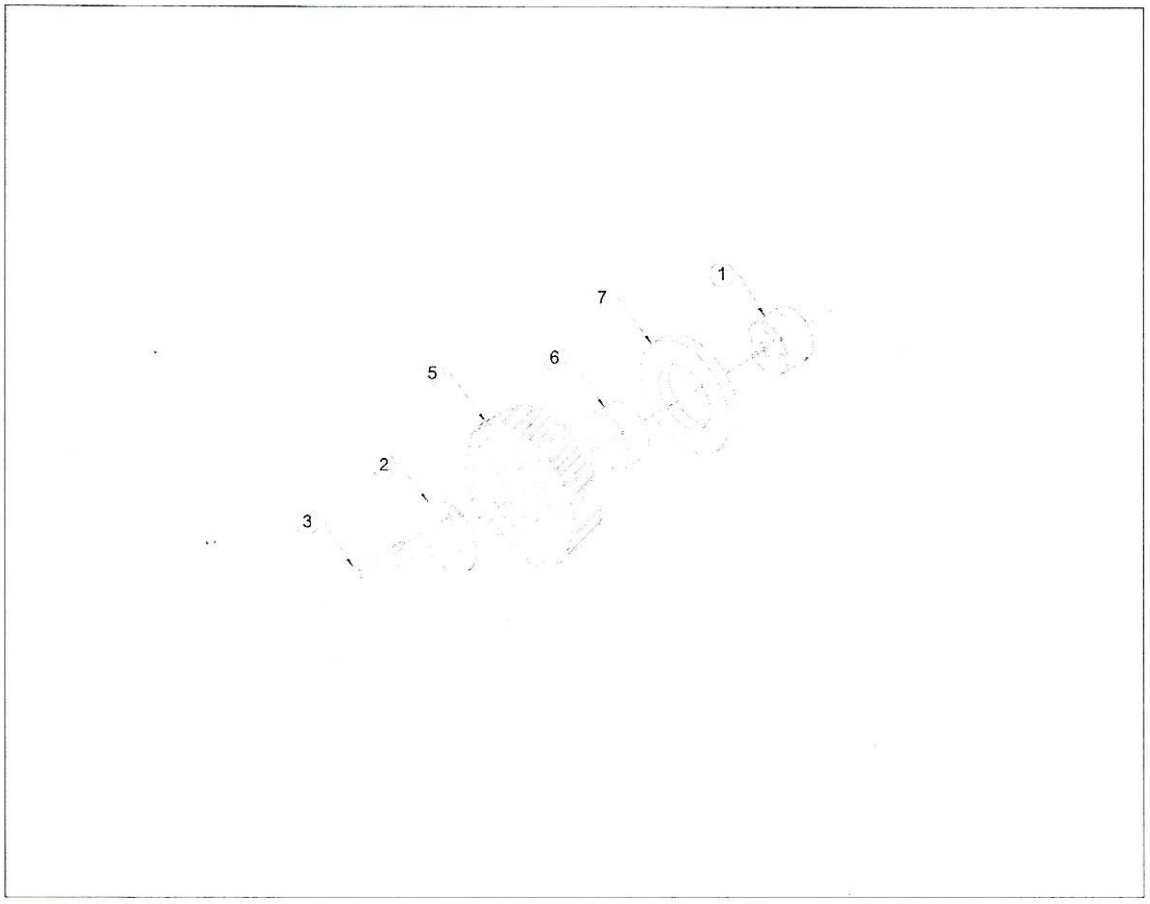
1
7
6
5
2
3

Item	Part No.	Name	Qty	Remarks
1	53100133	INTERMEDIATE GEAR SUPPORT	1	
2	53100134	RETAINING PLATE	1	
3	53100731	SET BOLT - M8X1.25X70 - 8.8	3	
4	53100135	ASSY OF INTERMEDIATE GEAR & BUSH	1	"CONSISTING OF SR NO. 5 TO 6
5	NSS	INTERMEDIATE GEAR(FINISH)	1	"NOT SUPPLIED LOOSE
6	53100634	BUSH FOR INTERMEDIATE GEAR	1	
7	53100136	THRUST WASHER	1	

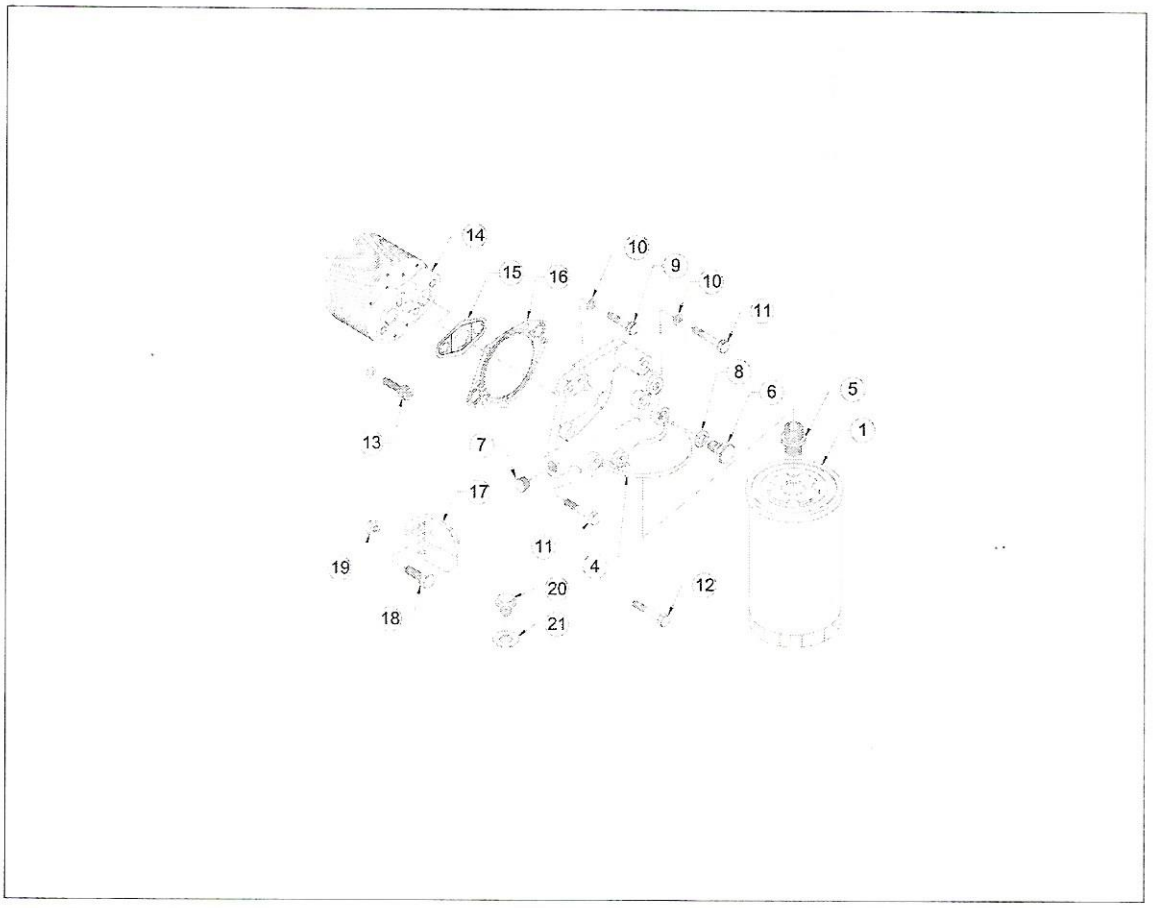
14
15
16
10
9
10
11
8
6
5
1
13
7
17
11
19
4
20
12
18
21

Item	Part No.	Name	Qty	Remarks
1	53100183	ENGINE OIL FILTER	1	
2	53100324	L.O.COOLER & HEADER ASSY	1	CONSISTING OF SR. NO. 3 & 9 TO 15
3	NSS	HEADER SUB ASSLY(L.O.FILTER)	1	
4	53100322	HEADER (FOR L.O.AND SPIN ON FILTER)	1	
5	53100177	ADAPTOR FOR SPIN ON FILTER	1	
6	53100178	PRECOATED PLUG (FOR OIL GALLERY)	1	
7	53100179.	HEADLESS PIPE PLUG 1/2"-14 NPTF	2	
8	53100755	COPPER WASHER (10X16)	1	
9	53100731	SET BOLT - M8X1.25X70 - 8.8	1	
10	53100750.	PLAIN MACHINED WASHER - M8	6	
11	53100734	SET BOLT M8X1.25X90 - 8.8	4	
12	53100737	SET BOLT – M8X1.25X105 – 8.8	1	
13	53100180.	SOCKET HEAD SCREW	4	
14	53100325	LUB OIL COOLER	1	
15	53100181	JOINT FOR LUB OIL COOLER (NON ASBESTOS GASKET)	2	
16	53100184	JOINT FOR HEADER	1	
17	53100395	REAR SUPPORT BRACKET FOR BOSCH	1	
18	53100335.	SET SCREW - M8X1.25X20 - 8.8	1	
19	53100165.	NUT- M8X1.25 - GR.8	1	
20	53100770	CORE PLUG	1	
21	53100755	COPPER WASHER (10X16)	1	

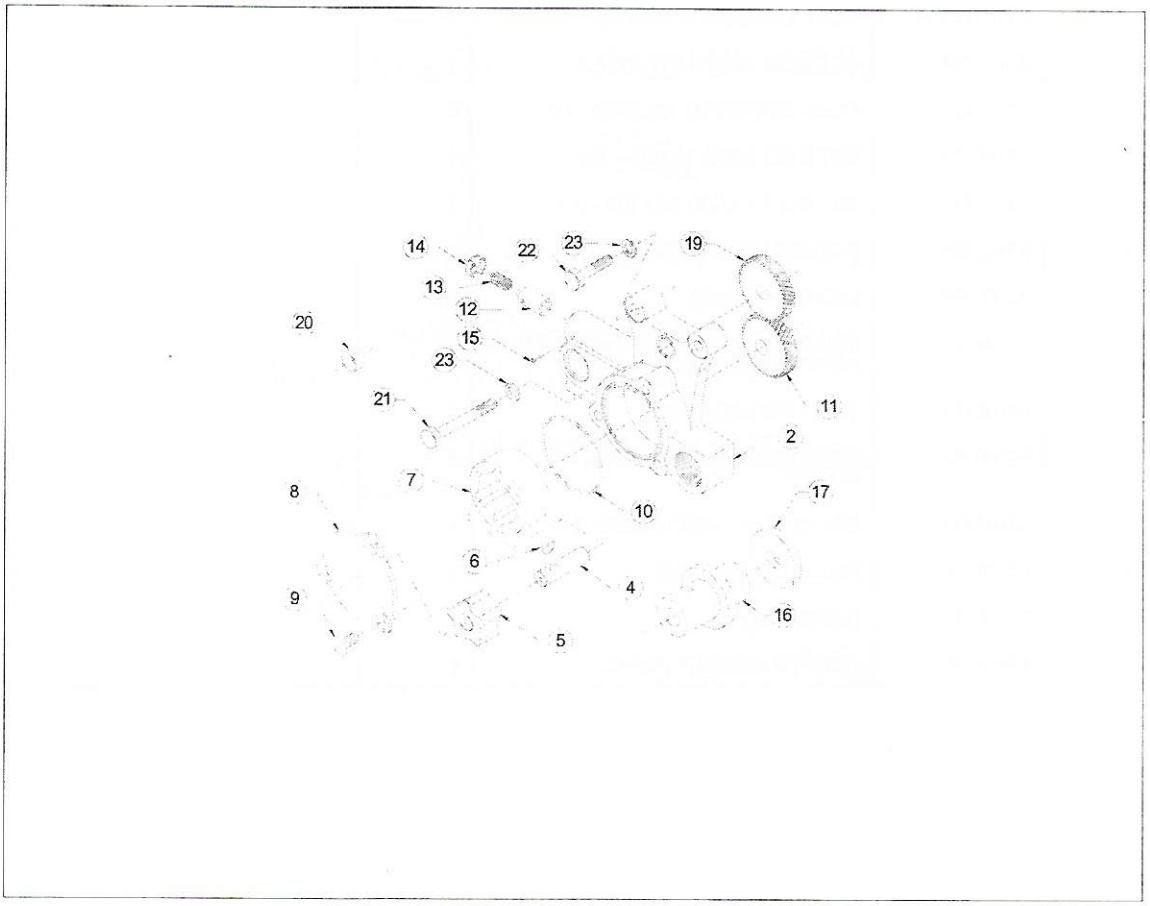
14
22
23
19
13
12
20
15
23
21
11
2
7
8
17
10
6
4
9
16
5

Item	Part No.	Name	Qty	Remarks
1	53100105	LUBE OIL PUMP ASSEMBLY	1	CONSISTING OF SR. NO. 2,3 & 7 TO 17
2	53100775	SUB. ASSEMBLY OF L.O.PUMP BODY & BUSH	1	
3	53100630	ROTOR ASSLY	1	
4	53100627	SHAFT	1	
5	53100628	INNER ROTOR	1	
6	53100748	WOODRUFF KEY	1	
7	53100629	OUTER ROTOR	1	
8	53100626	COVER PLATE	1	
9	53100625	COUNTER SUNK SOCKET HEAD SCREW	3	
10	53100106	O RING - L.O.PUMP	1	
11	53100649	LUB.OIL PUMP DRIVING GEAR (FINISH)	1	
12	53100107	RELIEF VALVE	1	
13	53100611	SPRING FOR RELIEF VALVE	1	
14	53100612	CUP FOR SPRING	1	
15	53100108	SPLIT COTTER PIN 1/8"X1-1/2"	1	
16	53100109	SHAFT FOR LUB OIL PUMP (INTERMEDIATE GEAR)	1	NOT SUPPLIED LOOSE
17	53100110	HARD WASHER (FOR INT. GEAR)	1	
*18	53100111	S/A OF L.O.PUMP INT.GEAR AND BUSH	1	CONSISTING OF SR. NO. 19, 20
19	53100648	INTERMEDIATE GEAR (FOR L.O.PUMP) (FINISH)	1	
20	53100644	BUSH FOR LEVER	1	
22	53100732	SET BOLT M8X1.25X75 - 8.8	1	
23	53100723	SET BOLT - M8X1.25X35 - 8.8	2	
24	53100751	PLAIN MACHINED WASHER - M8	3	

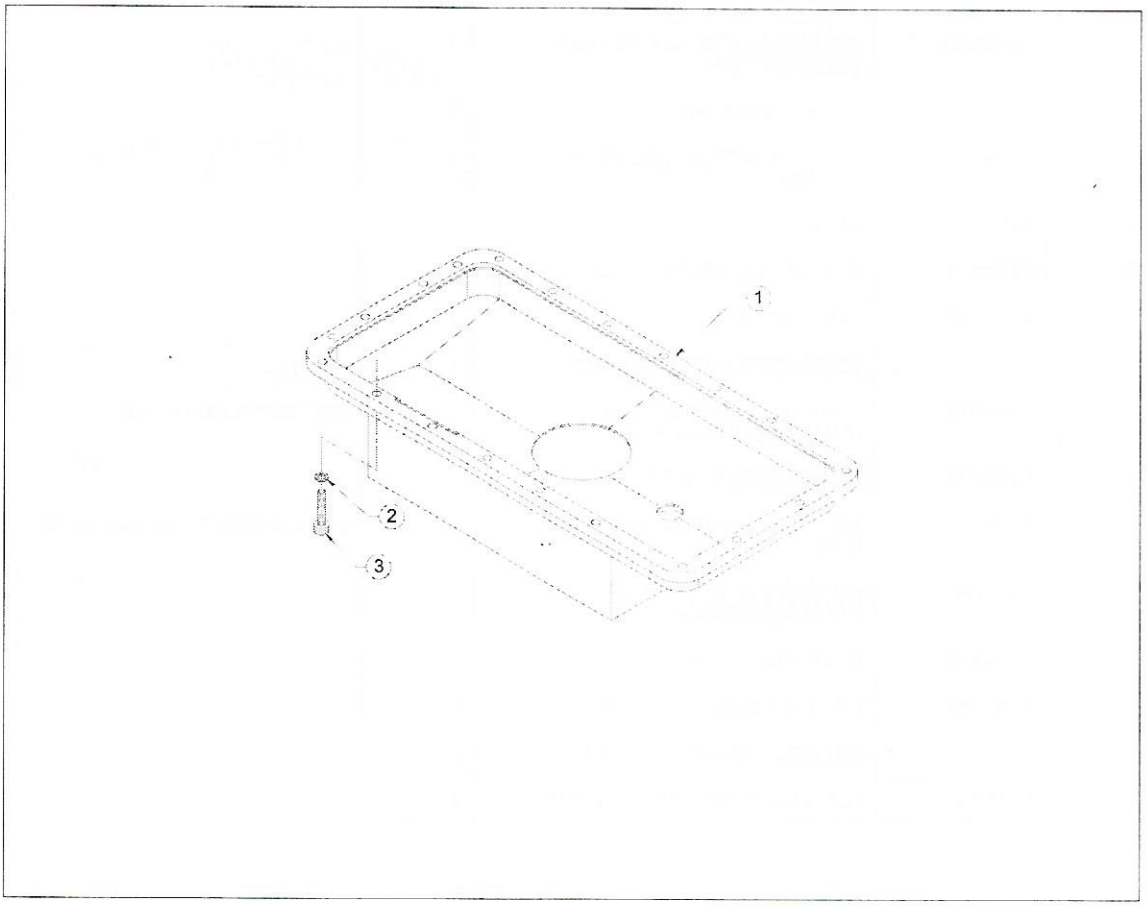
1
2
3

Item	Part No.	Name	Qty	Remarks
1	53100122	LUB OIL SUMP (FABRICATED)	1	
2	53100123	WASHER (SHEET METAL L.O. SUMP)	20	
3	53100124.	SOCKET HEAD SCREW	20	

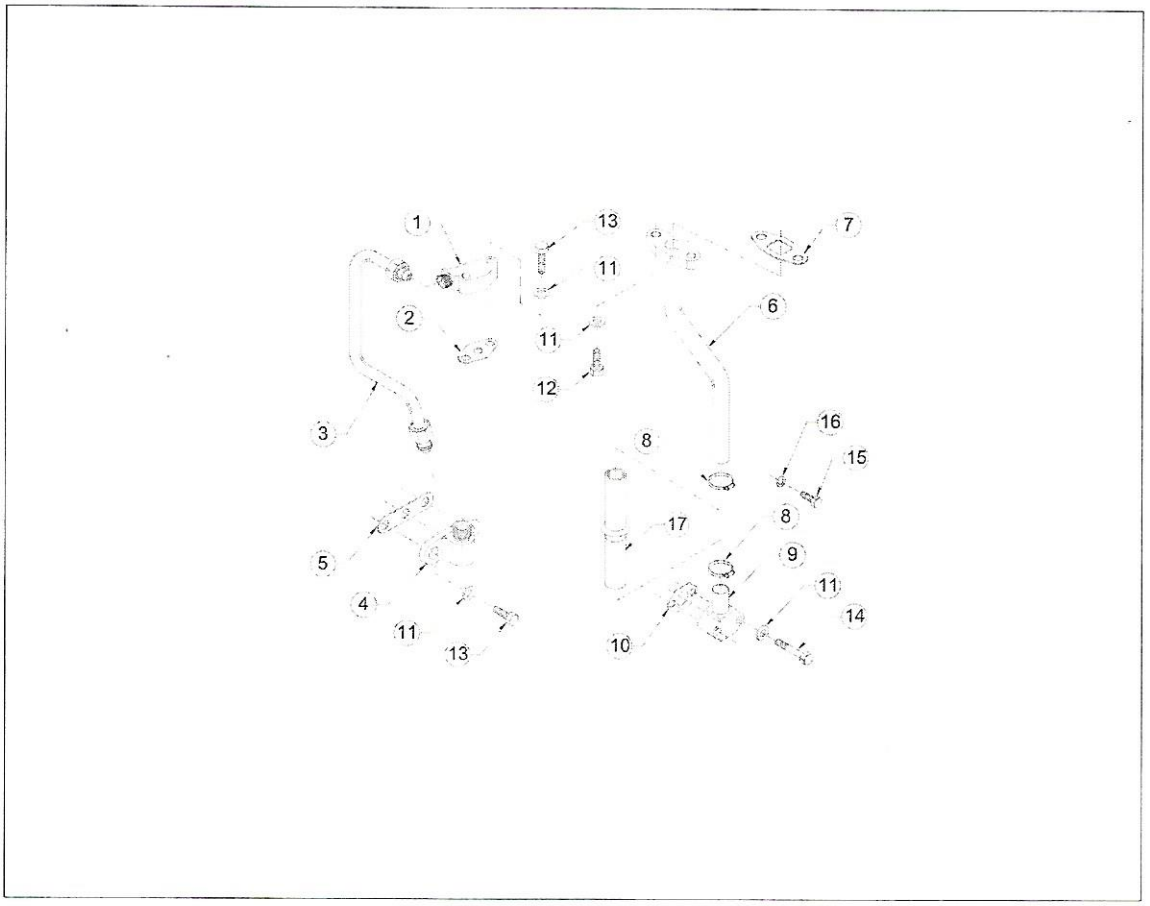
1
13
7
11
2
6
11
12
3
16
8
15
8
17
5
9
11
4
14
11
13
10

Item	Part No.	Name	Qty	Remarks
1	53100238	ADAPTOR FOR OIL SUPPLY	1	
2	53100239	JOINT FOR ADAPTOR (TURBO SIDE)	1	
3	53100240	ASSLY OF LUB OIL INLET PIPE	1	
4	53100241	ADAPTOR (CRANKCASE SIDE)	1	
5	53100242	JOINT FOR ADAPTOR (CRANKCASE SIDE)	1	
6	53100243	L.O.DRAIN ARRANGEMENT	1	
7	53100244	JOINT FOR LUB OIL DRAIN PIPE	1	
8	53100769	WORM DRIVE HOSE CLIP (30 MM)	2	
9	53100677	ADAPTOR FOR TURBO DRAIN (CRANKCASE SIDE)	1	
10	53100245	JOINT FOR ADAPTOR CRANKCASE SIDE	1	
11	53100750.	PLAIN MACHINED WASHER - M8	8	
12	53100335.	SET SCREW - M8X1.25X20 - 8.8	2	
13	53100337.	SET SCREW - M8X1.25X30 - 8.8	2	
14	53100725.	SET BOLT - M8X1.25X45 - 8.8	2	
15	53100334.	SET SCREW - M8X1.25X16 - 8.8	2	
16	53100164.	SPRING WASHER - M8	2	
17	53100246	HOSE	1	

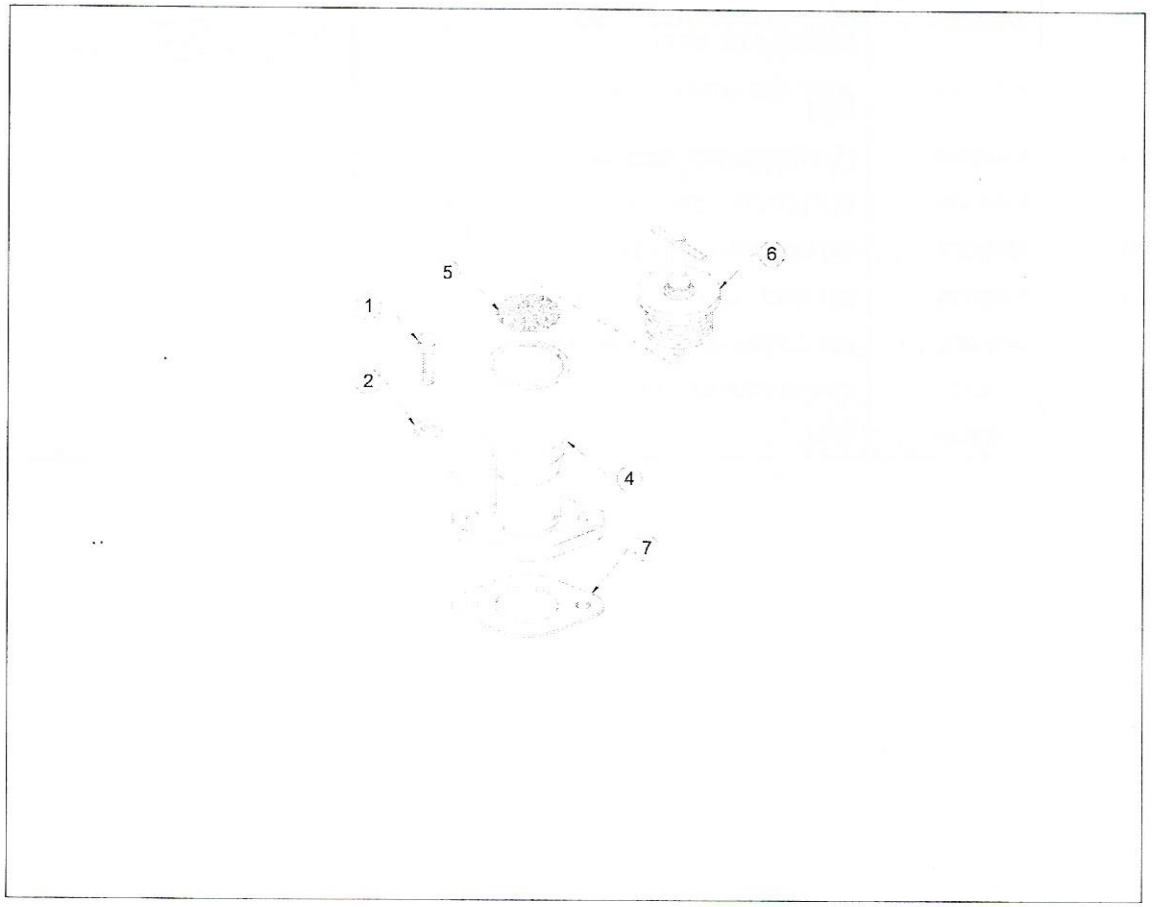
6
5
1
2
4
7

Item	Part No.	Name	Qty	Remarks
1	53100336.	SET SCREW - M8X1.25X25 - 8.8	2	
2	53100750.	PLAIN MACHINED WASHER - M8	2	
3	53100251	OIL FILLING BODY SUB ASSY	1	CONSISTING OF SR.NO. 4 TO 6
4	53100672	OIL FILLING BODY	1	
5	53100254	PERFORATED DISC.	1	
6	53100252	CAP ASSY	1	
7	53100255	JOINT FOR OIL FILLING BODY	1	

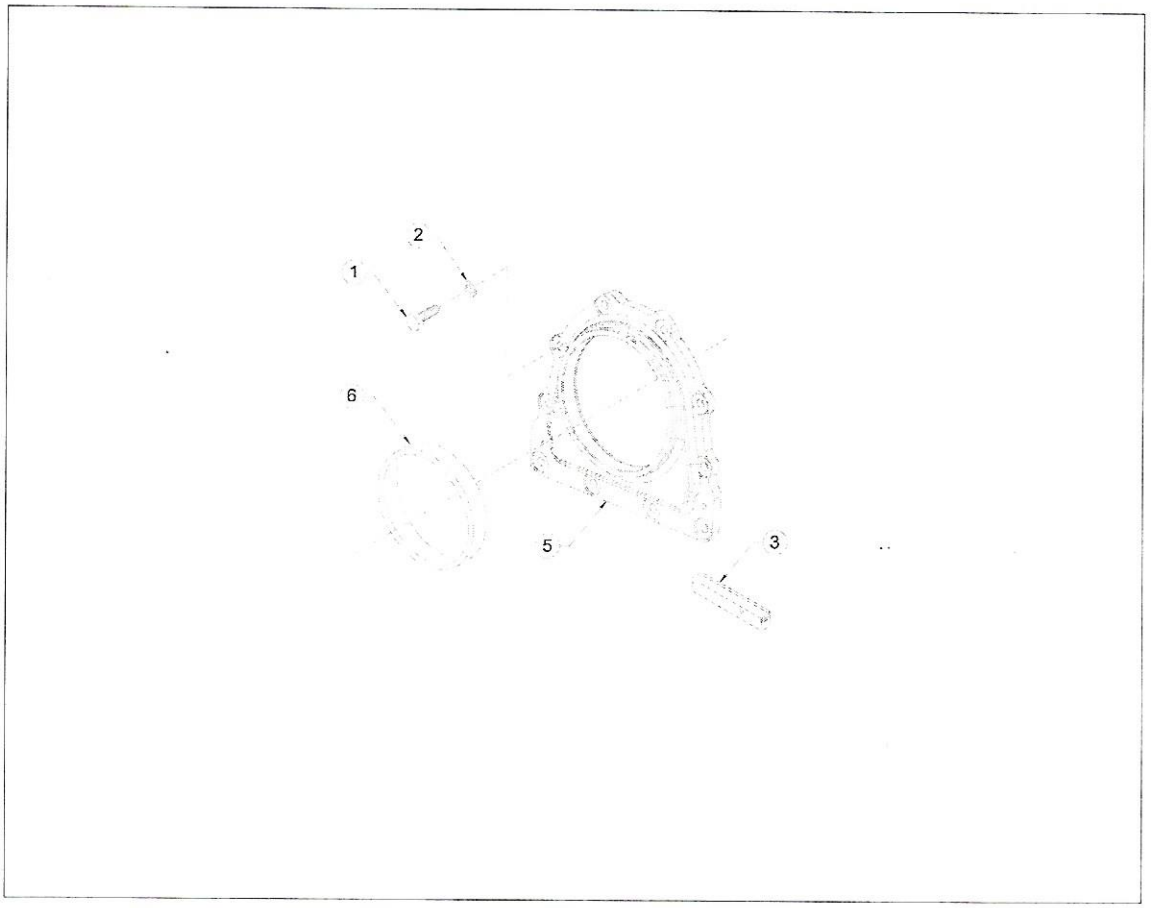
2
1
6
5
3

Item	Part No.	Name	Qty	Remarks
1	53100335	SET SCREW - M8X1.25X20 - 8.8	10	
2	53100751	PLAIN MACHINED WASHER - M8	10	
3	53100635	PLATE(WITH RUBBER MOULDING)	1	
4	53100642	SUB ASSEMBLY OF OIL SEAL HOUSING	1	
5	53100211	OIL SEAL HSG.(F.W.E.)	1	
6	53100212	OIL SEAL(115X140X12)	1	

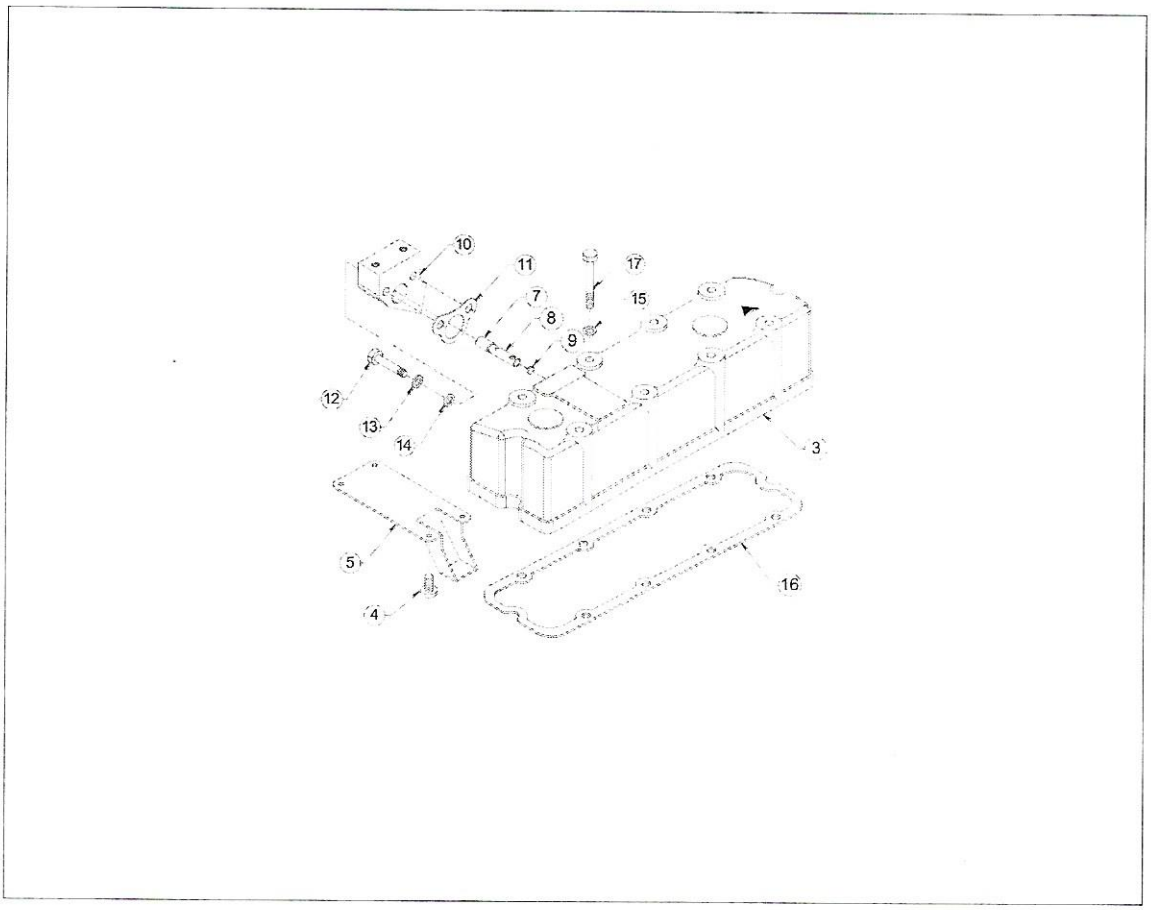
10
11
17
7
15
8
9
12
13
14
3
5
16
4

Item	Part No.	Name	Qty	Remarks
1	53100207	ASSLY.OF ROCKER COVER & BREATHER TUBE	1	
2	NSS	SUB.ASSLY.OF ROCKER COVER.	1	
3	NSS	ROCER COVER (FINISH)	1	
4	53100633	P K DRIVE SCREW 1/8"X3/8" (RIVET)	4	
5	NSS	DEFLECTOR PLATE	1	
6	53100676	BREATHER TUBE SUB ASSEMBLY	1	
7	NSS	ADAPTOR (FOR BREATHER TUBE)	1	
8	NSS	BREATHER TUBE.	1	
9	NSS	CLOSING BUTTON	1	
10	53100715	ADAPTOR (FOR BREATHER PIPE)	1	
11	53100208	JOINT FOR BREATHER PIPE	1	
12	53100725	SET BOLT - M8X1.25X45 - 8.8	2	
13	53100164	SPRING WASHER M8	2	
14	53100750	PLAIN MACHINED WASHER - M8	2	
15	53100750	PLAIN MACHINED WASHER - M8	8	
16	53100209	ROCKER COVER JOINT METTALIC	1	
17	53100735	SET BOLT - M8X1.25X100 - 8.8	8	

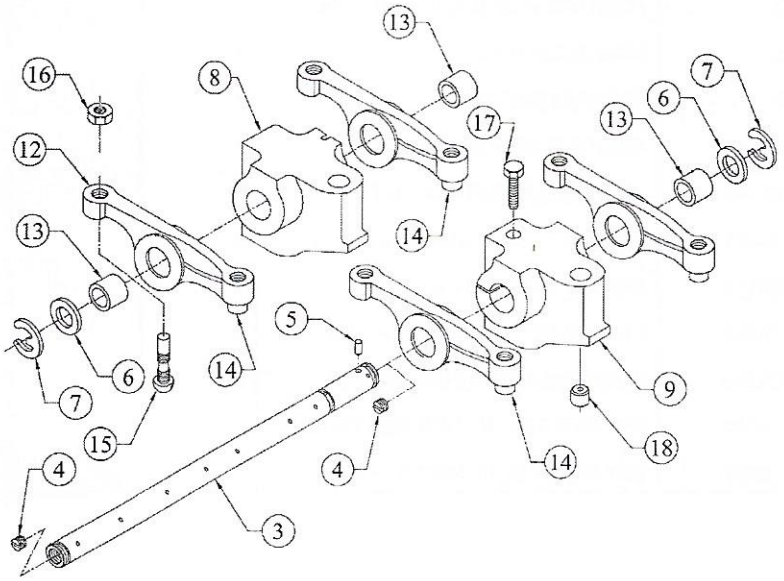
13
16
8
17
7
6
13
12
14
13
5
14
6
9
7
15
18
4
4
14
3

Item	Part No.	Name	Qty	Remarks
*1	53100202	ROCKER SUPPORT ASSEMBLY COMPLETE	1	CONSISTING OF SR. NO. 2, 6 TO 10 & 17
*2	53100694	ROCKER SHAFT SUB ASSLY	1	
3	53100691	ROCKER SHAFT	1	
4	53100746	SOCKET HEAD GRUB SCREW M12X10	2	
5	53100662	GROOVED SOCKET PIN	1	
6	53100639	WASHER(FOR ROCKER ARM)	8	
7	53100768	E TYPE CIRCLIP-EXTERNAL 15 DIA	8	
8	53100689	ROCKER SUPPORT (FWE)	1	
9	53100690	ROCKER SUPPORT	3	
*10	53100693	ROCKER LEVER SUB ASSLY	8	
*11	53100692	ROCKER LEVER ASSEMBLY	1	
12	53100688	ROCKER ARM (FINISH)	1	
13	53100605	V.R. BUSH (SEMI FINISH)		
14	53100203	V.R.TOE	1	NOT SUPPLIED LOOSE
15	53100204	ROCKER-ARM ADJ. SCREW	1	
16	53100205	NUT FOR ROCKER ADJ.SCREW	1	
17	53100337	SET SCREW M8X1.25X30 - 8.8	3	
18	53100206	OIL METERING ORIFICE	1	

Item	Part No.	Name	Qty	Remarks
1	53100712	SET OF JOINTS	1	
2	53100197	JOINT FOR FEED PUMP	1	
3	53100102	JOINT FOR GEAR COVER	1	
4	53100121	JOINT FOR DELIVERY BODY	1	
5	53100195	JOINT FOR COVER FOR FUEL PUMP GEAR	1	
6	53100181	JOINT FOR LUB OIL COOLER (NON ASBESTOS GASKET)	2	
7	53100184	JOINT FOR HEADER	1	
8	53100218	JOINT FOR BEARING HOUSING	2	
9	53100089	JOINT FOR CAM BORE BLANKING PLATE	1	
10	53100173	GASKET FOR CYLINDER HEAD (THICKNESS 1.10)	1	
11	53100172	GASKET FOR CYLINDER HEAD (THICKNESS 1.22)	1	
12	53100209	ROCKER COVER JOINT METTALIC	1	
13	53100217	JOINT FOR DELIVERY VOLUTE	2	
14	53100168	JOINT FOR WATER OUTLET MANIFOLD	2	
15	53100255	JOINT FOR OIL FILLING BODY	1	
16	53100186	JOINT FOR AIR INLET MANIFOLD	2	
17	53100225	JOINT FOR W.I. CONN. & THERMO. HSG	2	
18	53100673	JOINT FOR THERMOSTAT COVER	1	
19	53100237	JOINT FOR ADAPTOR RING	2	
20	53100239	JOINT FOR ADAPTOR (TURBO SIDE)	1	
21	53100242	JOINT FOR ADAPTOR (CRANKCASE SIDE)	1	
22	53100244	JOINT FOR LUB OIL DRAIN PIPE	1	
23	53100245	JOINT FOR ADAPTOR CRANKCASE SIDE	1	
24	53100208	JOINT FOR BREATHER PIPE	1	
25	53100236	GASKET FOR TURBOCHARGER	1	
26	53100187	JOINT (FOR AIR PIPE)	1	
27	53100230	JOINT FOR EXHAUST MANIFOLD	4	
28	53100713	SET OF WASHERS	1	
29	53100755	COPPER WASHER (10X16)	3	
30	53100756.	COPPER WASHER (12X16)	3	
31	53100758	COPPER WASHER 12X18	6	
32	53100759	COPPER WASHER (14X18)	13	

Item	Part No.	Name	Qty	Remarks
33	53100760	COPPER WASHER 14X20	5	
34	53100761	COPPER WASHER 16X22	1	
35	53100762	COPPER WASHER 17X23	1	
36	53100763	COPPER WASHER 18X22	2	
37	53100764	COPPER WASHER 18X24	1	
38	53100765	COPPER WASHER (20X26)	1	
39	53100766	COPPER WASHER (24X29)	1	
40	53100767	COPPER WASHER 26X32	6	
41	53100714	SET OF 'O' RINGS	1	
42	53100146	RUBBER O RING	1	
43	53100106	O RING - L.O.PUMP	1	
44	53100093	O RING (FOR CYL.LINER)	8	
45	53100094	O RING FOR CYLINDER LINER	4	
46	53100120	O RING(FOR DELIVERY TUBE)	2	
47	53100126	O-RING FOR DRAIN PLUG	2	

Item	Part No.	Name	Qty	Remarks
1	53100071	MAIN BRG TOP & BOTTOM	1	
2	53100786	MAIN BEARING HA	1	
3	53100787	MAIN BEARING HA	1	
4	53100788	MAIN BEARING HA	1	
5	53100789	MAIN BEARING HA	1	
6	53100790	MAIN BEARING HA	1	
7	53100791	MAIN BEARING HA	1	
8	53100144	CONNECTING ROD BIG END BEARING(NA)	1	
9	53100776	CONROD BEARING HA	1	
10	53100777	CONROD BEARING HA	1	
11	53100778	CONROD BEARING HA	1	
12	53100779	CONROD BEARING HA	1	
13	53100780	CONROD BEARING HA	1	
14	53100781	CONROD BEARING HA	1	
15	53100072	THRUST RING PAIR-DRIVE & GEAR END,102 DIA.)	1	

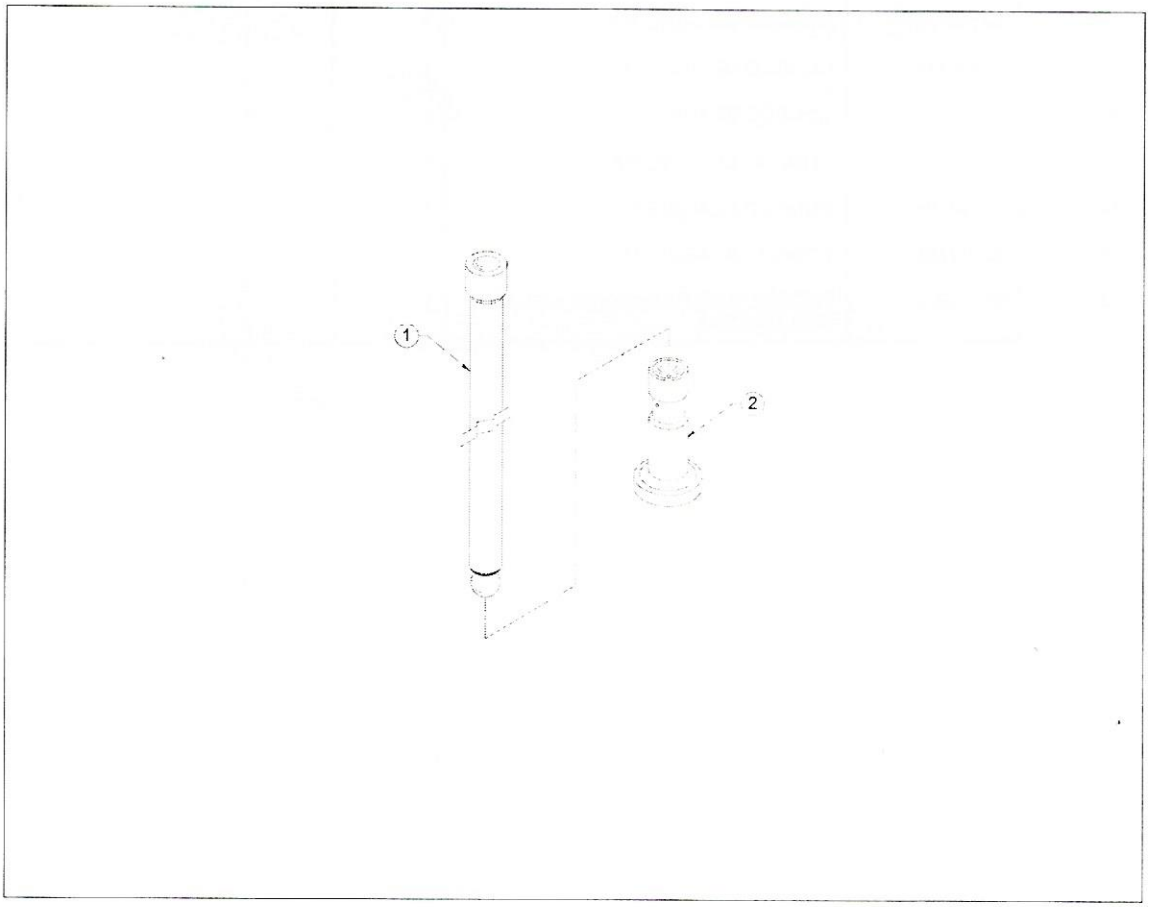
1
2

Item	Part No.	Name	Qty	Remarks
1	53100127	PUSH ROD WELDED	2	
2	53100128	VALVE TAPPET	2	

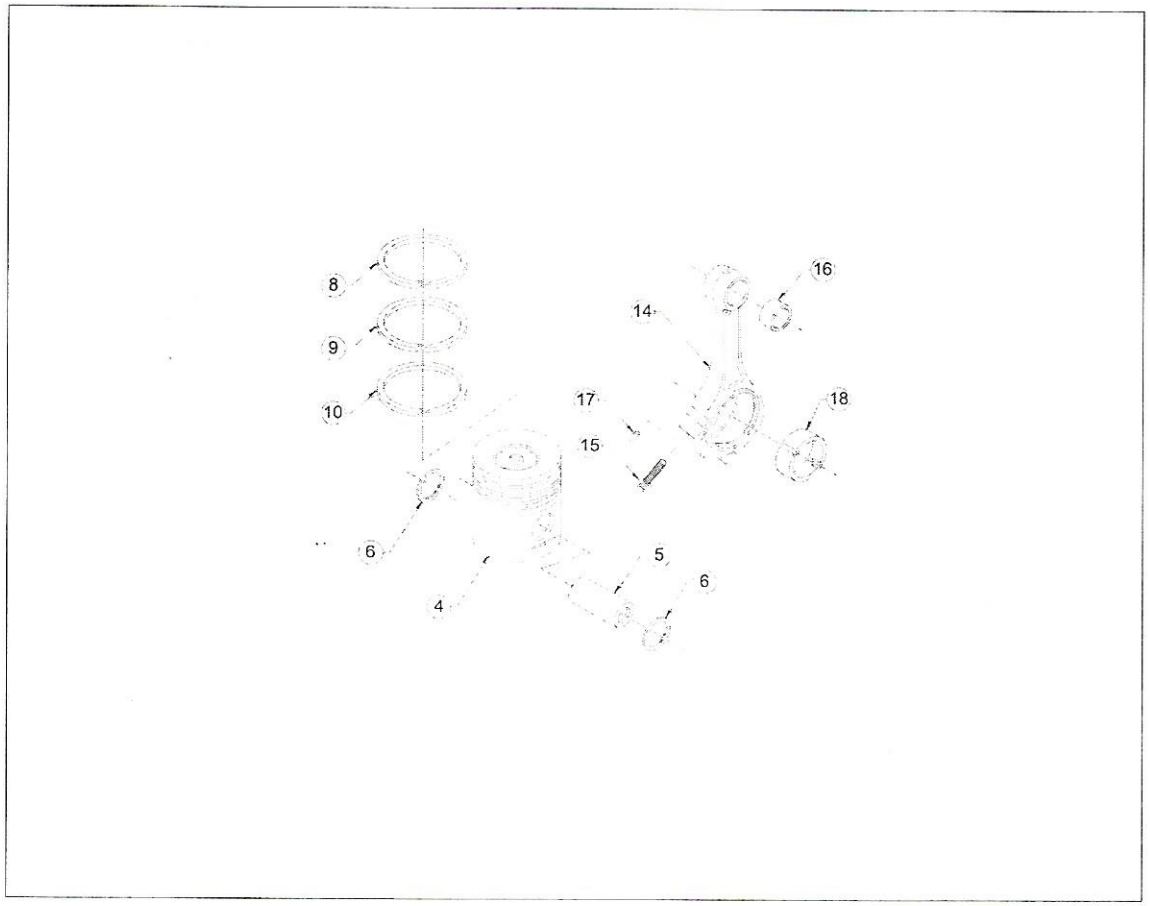
8
9
10
6
4
5
6
14
16
17
18
15

Item	Part No.	Name	Qty	Remarks
1	NSS	PISTON AND CONROD ASSLY (TURBOCHARGED ENGINE)	1	
2	53100137	PISTON ASSEMBLY COMPLETE	1	
3	53100701	PISTON WITH PIN	1	CONSISTING OF SR. NO.4 TO 6
4	NSS	PISTON (TURBOCHARGED ENGINE)	1	
5	53100138	PISTON PIN	1	
6	53100139.	CIRCLIP (INTERNAL)-35 MM	2	
7	53100140	PISTON RING SET (105 DIA.)	1	CONSISTING OF SR. NO. 8 TO 10
8	NSS	TOP RING (105 DIA)	1	NOT SUPPLIED LOOSE
9	NSS	COMPRESSION RING (105 DIA)	1	NOT SUPPLIED LOOSE
10	NSS	OIL CONTROL RING (105 DIA)	1	NOT SUPPLIED LOOSE
11	NSS	CONNECTING ROD	1	CONSISTING OF SR. NO.12
12	NSS	CONNECTING ROD ASSEMBLY	1	CONSISTING OF SR. NO. 13 & 18
13	53100141	CON ROD ASSEMBLY (WITHOUT LE BEARING)	1	CONSISTING OF SR. NO.14 TO 17
14	NSS	CONNECTING ROD MACHINING	1	NOT SUPPLIED LOOSE
15	53100142	CONNECTING ROD BOLT	2	
16	53100143	SMALL END BUSH (S/F)	1	
17	53100747	DOWEL PIN	2	
18	53100144	CONNECTING ROD BIG END BEARING(NA)	2	

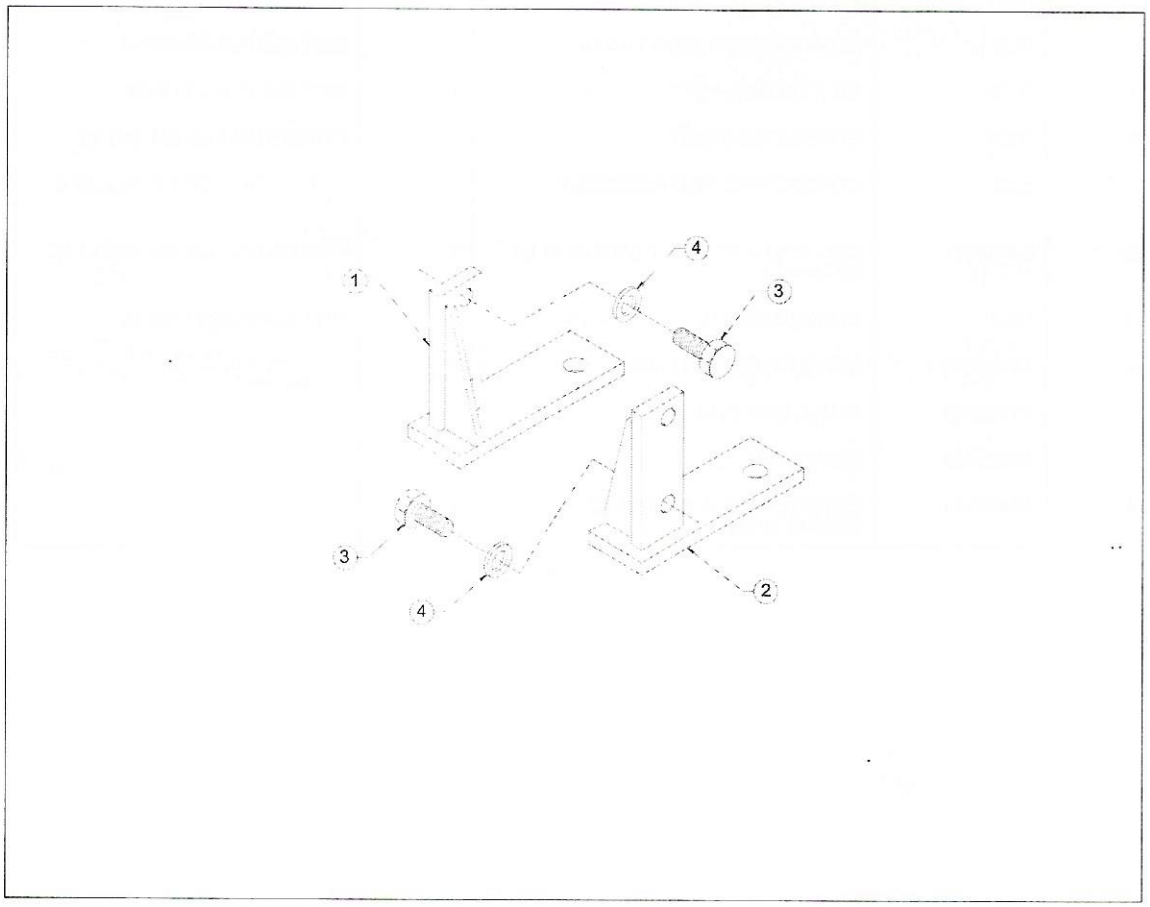
4
1
3
3
2
4

Item	Part No.	Name	Qty	Remarks
1	53100280	PACKING FOOT (FWE,FIP SIDE)	1	
2	53100281	PACKING FOOT	1	
3	53100329	SET SCREW - M12X1.75X30 - 8.8	4	
4	53100753	PLAIN MACHINED WASHER - M12	4	

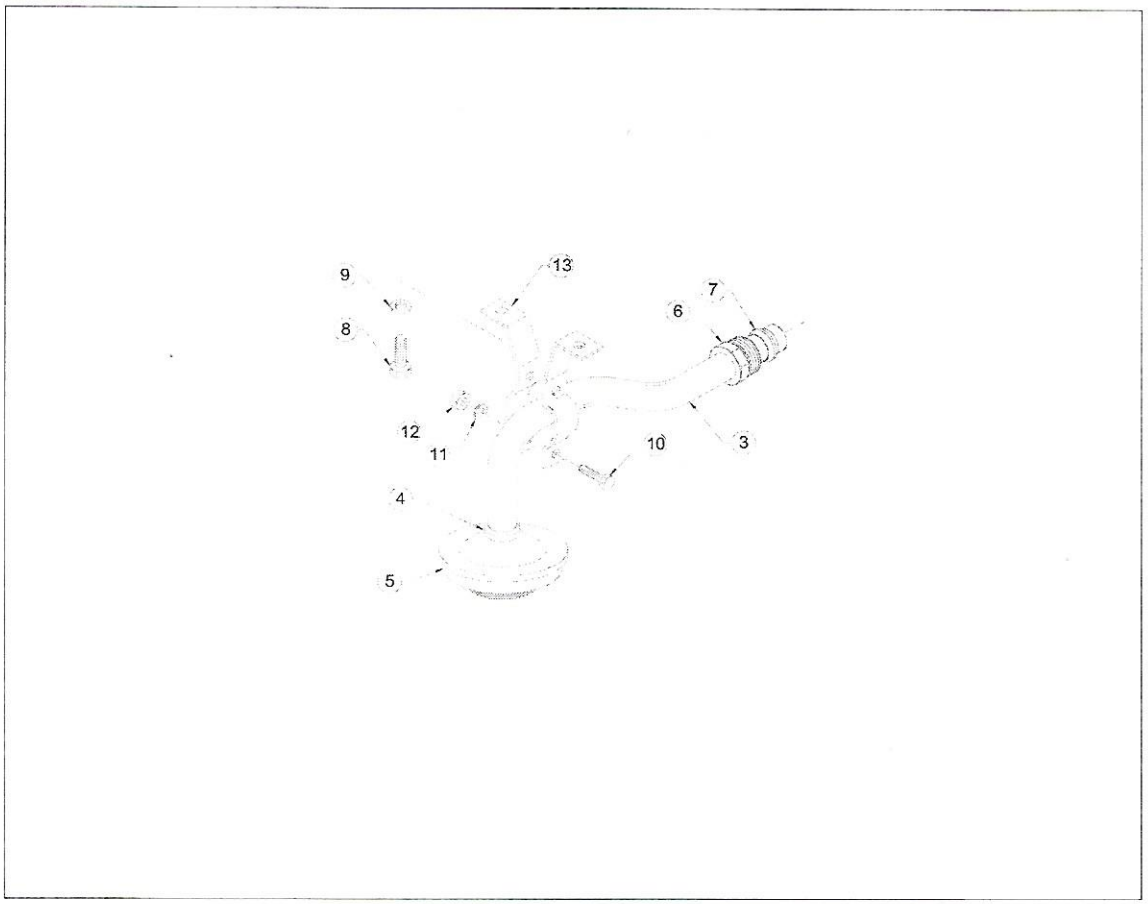
9
13
7
6
8
12
11
10
3
4
5

Item	Part No.	Name	Qty	Remarks
1	NSS	ASSEMBLY OF SUCTION TUBE	1	
2	53100112	SUB ASSEMBLY OF SUCTION TUBE	1	
3	NSS	PIPE FOR SUCTION TUBE	1	
4	53100624	FUNNEL	1	
5	53100618	STRAINER BASKET	1	
6	53100113	UNION SCREW	1	
7	53100114	DOUBLE CONE RING	1	
8	53100334.	SET SCREW - M8X1.25X16 - 8.8	2	
9	53100750.	PLAIN MACHINED WASHER - M8	2	
10	53100331.	SET SCREW - M6X1X12 - 8.8	2	
11	53100749	PLAIN MACHINED WASHER - M6	2	
12	53100116.	NUT - M6X1 - GR.8.8	2	

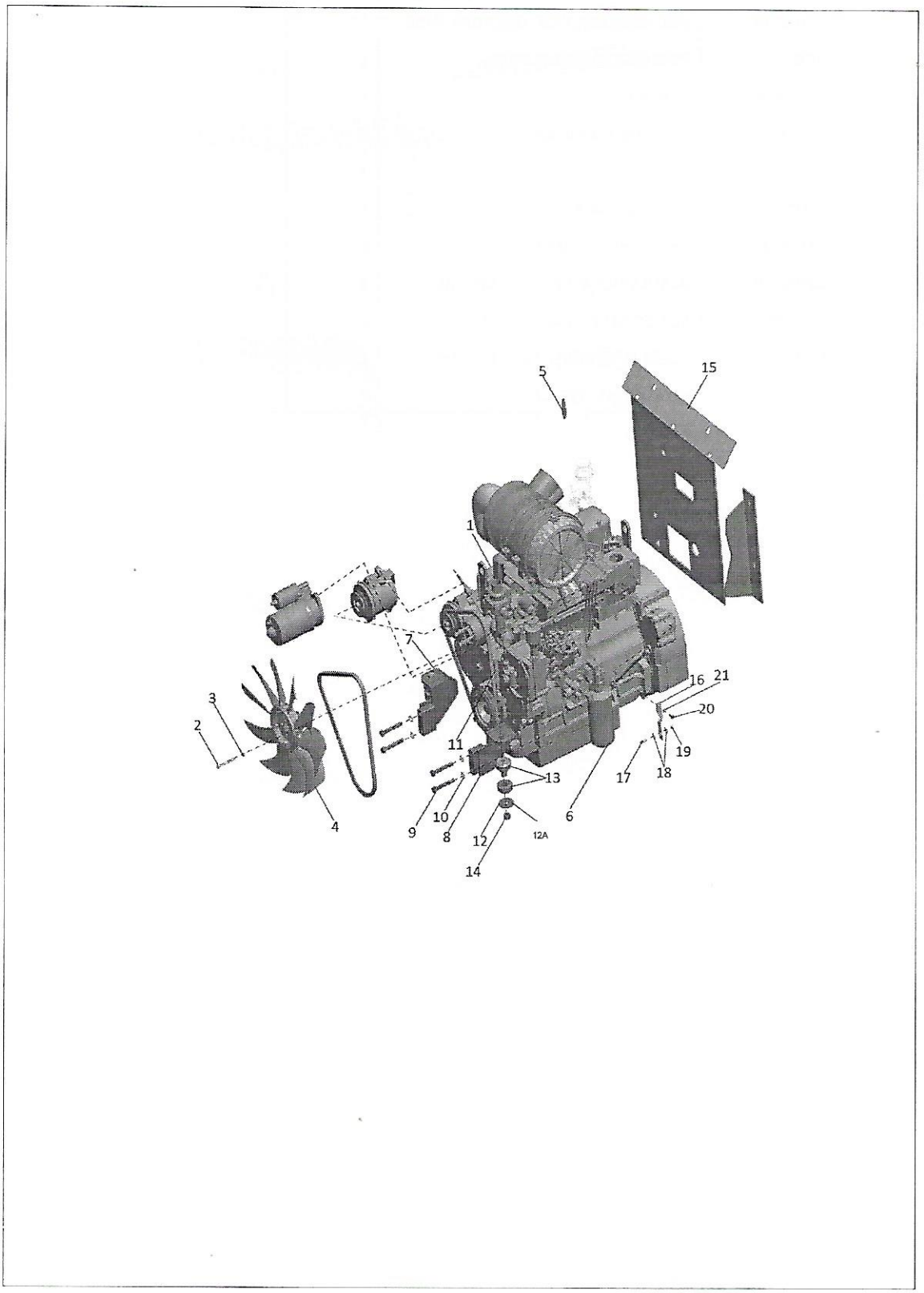
5
15
1
7
3
2
16
21
20
11
19
13
17
18
4
9
10
8
12
12A
6
14

Item	Part No.	Name	Qty	Remarks
1	1A0910	ENGINE ASSEMBLY	1	
2	339337X1	HEX BOLT M8x30 GRADE 8.8	4	
3	339374X1	LOCK WASHER M8	4	
4	1A0909	FAN - 96HP - WING FAN	1	
5	1D0061	TEMP. SENSOR	1	
6	53100183	ENGINE OIL FILTER	1	
7	1TA0014M1	ENG MOUNT BKT RH	1	
8	1TA0015M1	ENG MOUNT BKT LH	1	
9	1TA0038M1	BOLT M14	4	
10	1A0028	SPRING WASHER	4	
11	6007821M1	BOLT	2	
12	6106849M1	WASHER - REBOUND	6	
13	6106848M91	MOUNT TRANS	2	
14	1442739X1	M16 NYLOC NUT	2	
15	1J0255	HEAT SHIELD - GLASS WOOL	1	
16	1A0138	DIPSTICK MTG. BRACKET	1	
17	339123X1	HEX BOLT M8X20 GR 8.8	1	
18	391039X1	WASHER	2	
19	394367X1	NUT	1	
20	339124X1	HEX BOLT M8X16 GR 8.8	1	
21	390972X1	WASHER M8 - STD	1	

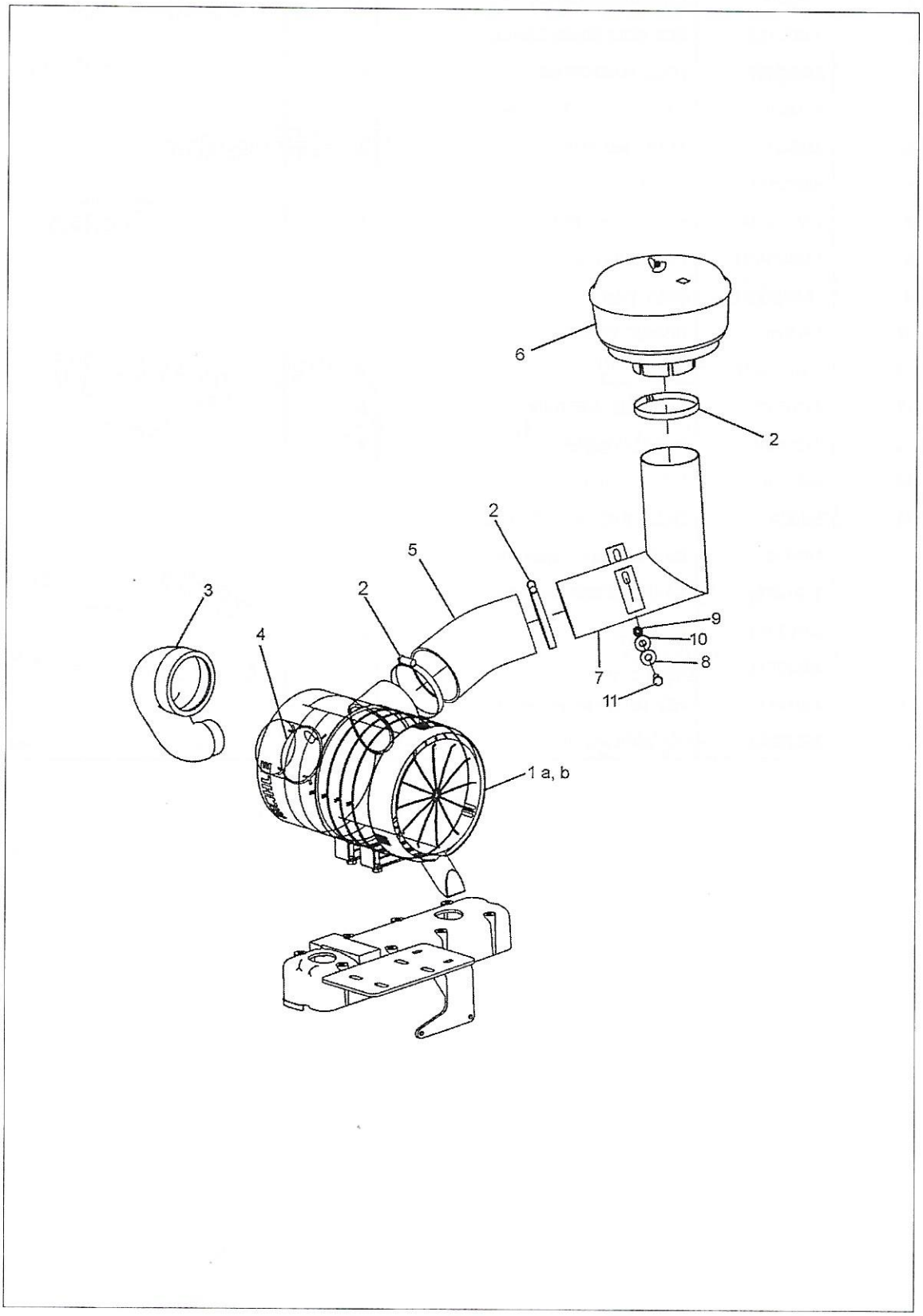
6
2
2
5
2
3
4
9
10
8
7
11
1 a, b

Item	Part No.	Name	Qty	Remarks
1	53100297	AIR CLEANER ASSEMBLY	1	CONSISTING OF SR. NO. 2, 3, NOT SUPPLIED LOOSE
2	3517729M1	WORM DRIVE CLIP COMPOSITE	3	
3	53100305	HOSE	1	
4	53100307	CLAMP	1	
5	1A0904	HOSE - AIR INTAKE	1	
6	10X1942	AIR- PRECLEANER	1	
7	1A0905	PIPE - AIR INTAKE	1	
8	3009492X1	HEX BOLT M10X25 GR 8.8	2	
9	1440329X1	NUT NYLOCK M10	2	
10	390597X1	WASHER M10 - LRG	4	
11	3009492X1	HEX BOLT M10X25 GR 8.8	2	

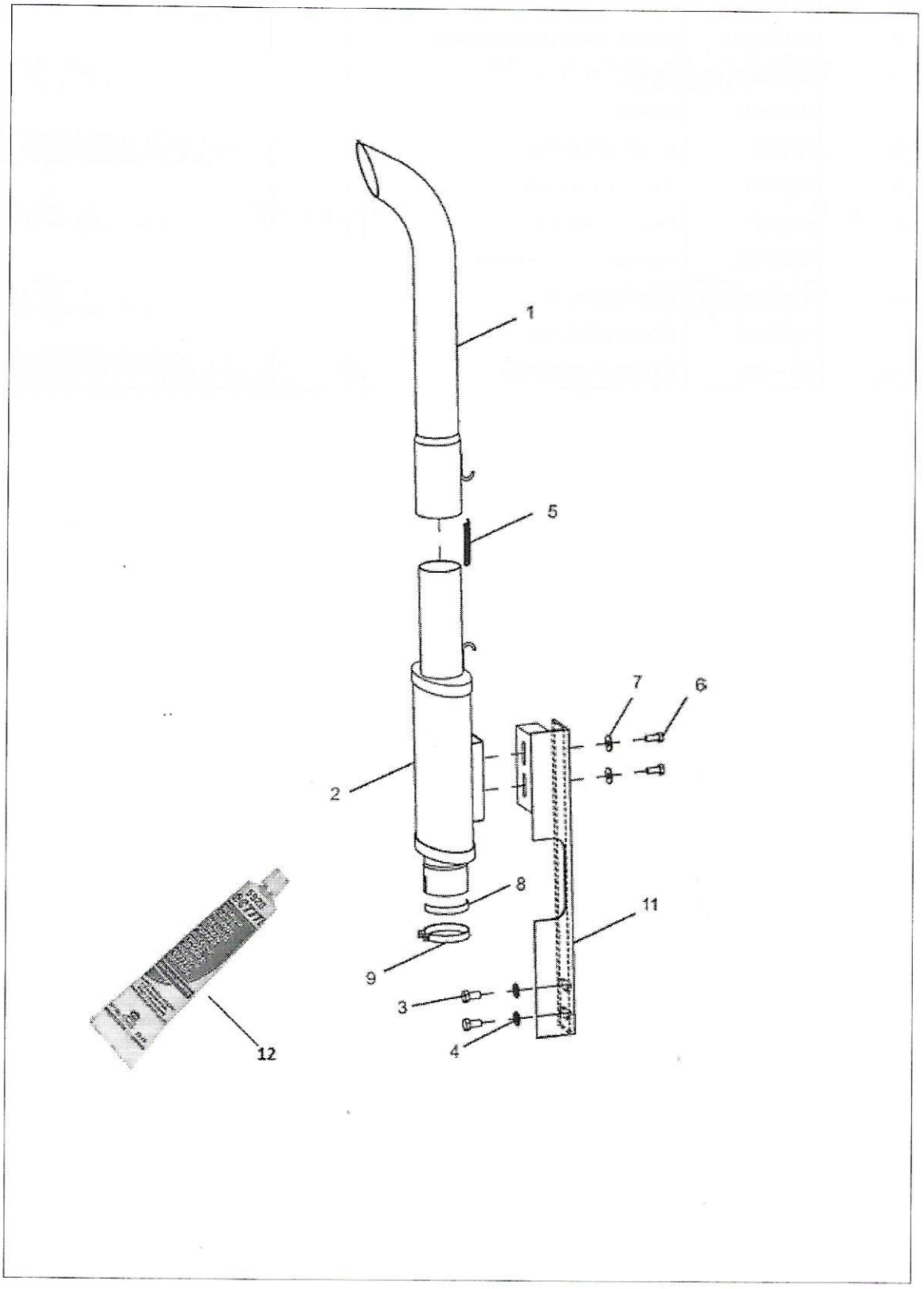
1
5
7
6
2
8
11
9
3
4
12

EXHAUST SYSTEM

Item	Part No.	Name	Qty	Remarks
1	6111832M1	STACK WELDED ASSEMBLY	1	
2	1A0133	SILENCER WELD ASSY	1	
3	339081X1	BOLT M10-20	2	
4	390734X1	WASHER M10-STD	2	
5	3522399M1	EXTENSION SPRING	1	
6	339123X1	HEX BOLT M8X20 GR 8.8	2	
7	391039X1	WASHER	2	
8	1A0150	GASKETING FABRIC	1	
9	50112003	SILENCER CLAMP	1	
11	6112813M1	SILENCER MTG. BKT	1	
12	53111113	LOCTITE SI-5920	30 ML	

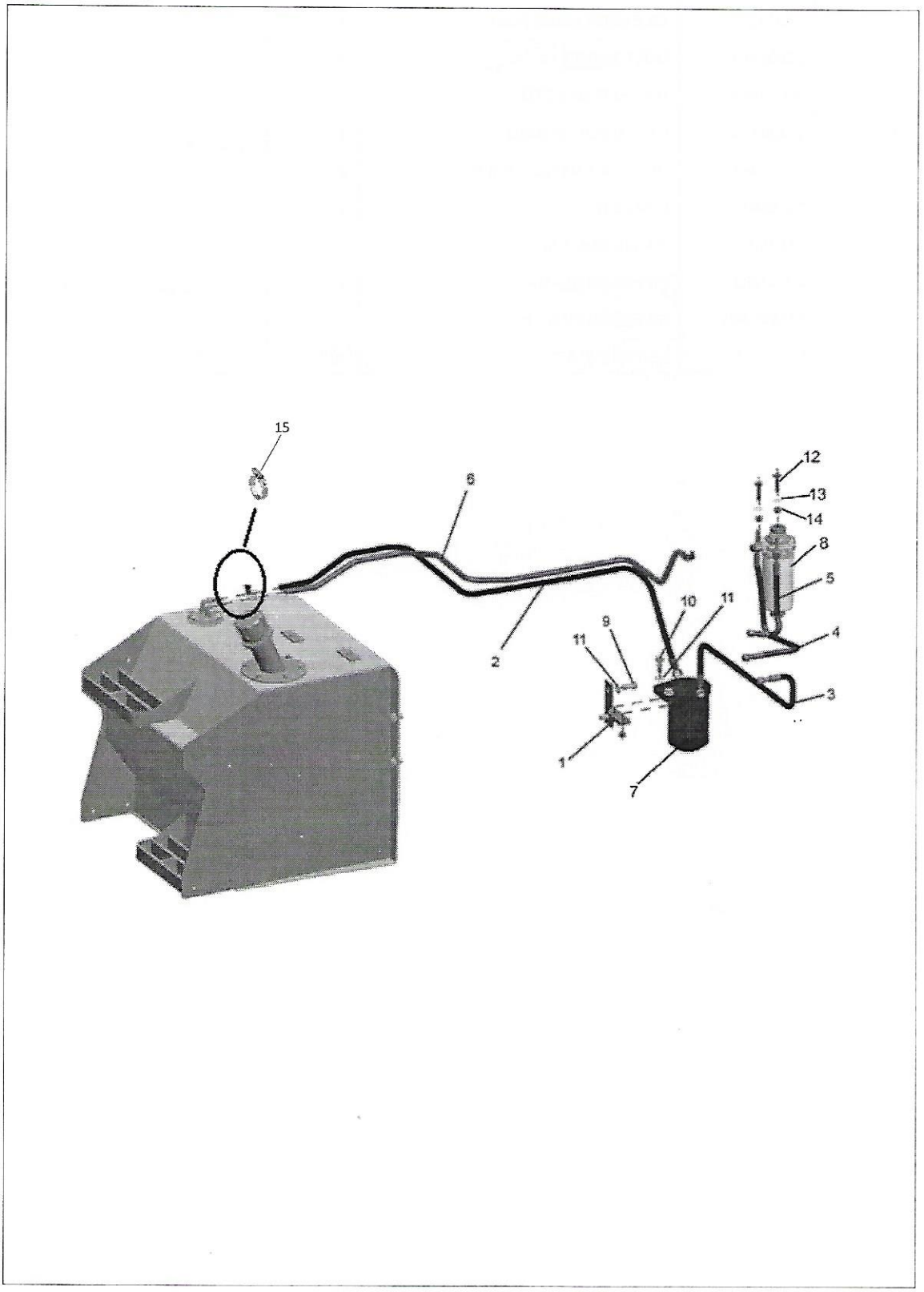
15
6
2
12
13
14
8
5
4
3
10
11
9
11
1
7

Item	Part No.	Name	Qty	Remarks
1	1A0326	MTG. BKT-WATER SEPARATOR	1	
2	1A0903	HOSE FUEL TANK TO MUD SEPERATOR	1	
3	6113814M91	HOSE MUD FILTER FEED PUMP	1	
4	1A0972	HOSE FEED PUMP TO FILTER	1	
5	1A0974	HOSE FILTER TO FIP	1	
6	6113815M91	HOSE RETURN	1	
7	53100311	FUEL FILTER PRIMARY	1	
8	53100309	FUEL FILTER CATRIDGE	1	
9	3009506X1	BOLT	2	
10	3019851X1	BOLT M12-45 P8S	2	
11	390735X1	WASHER	4	
12	3516013M1	BOLT M10x40	2	
13	390734X1	WASHER M10-STD	4	
14	1440329X1	NUT NYLOCK M10	2	
15	3517409M1	WORM DRIVE CLIP COMPOSITE (SIZE = 8-16)	2	

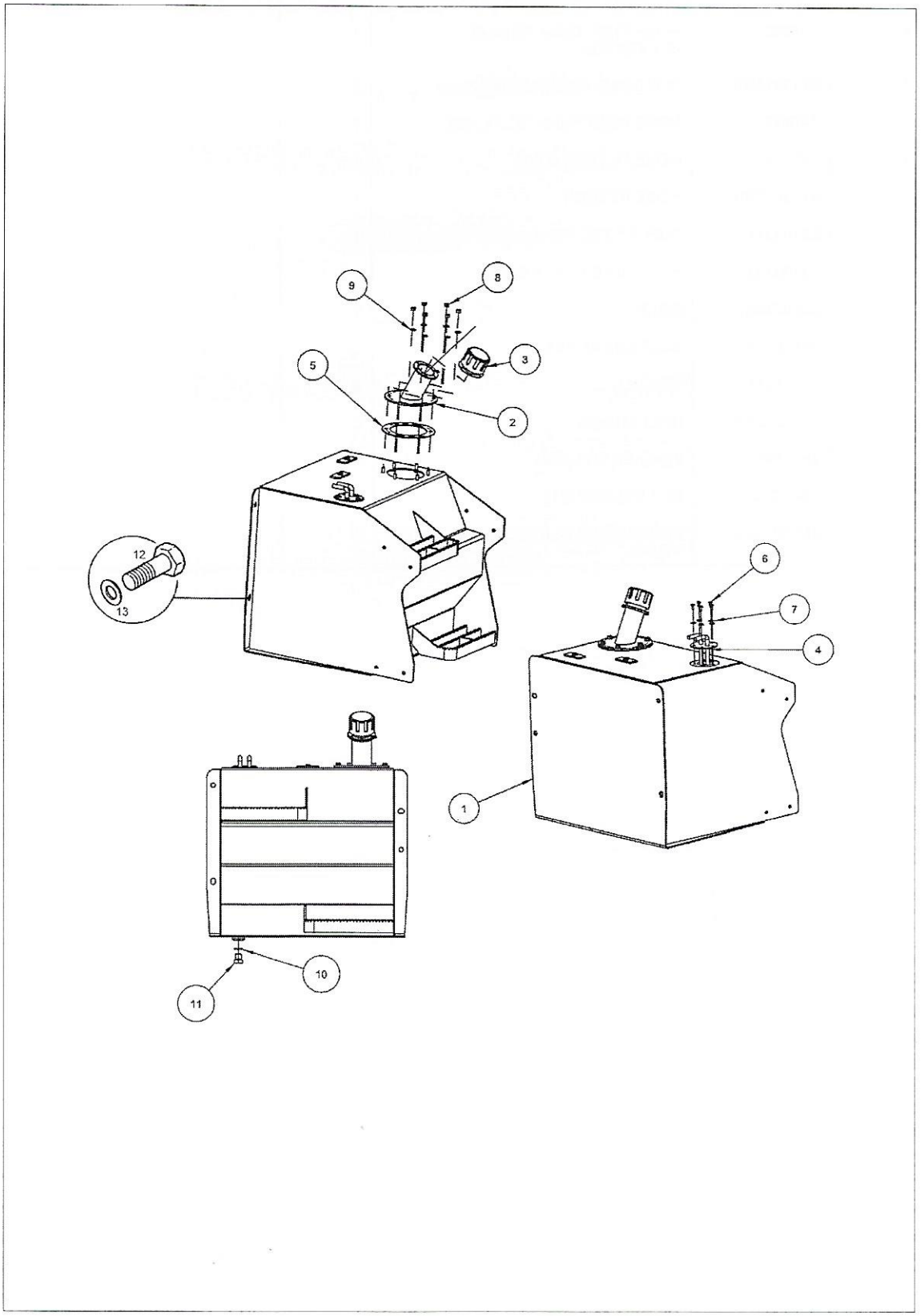
9
8
5
3
2
12
13
6
7
4
1
10
11

Item	Part No.	Name	Qty	Remarks
1	53100373	FUEL TANK W/ASSY	1	
2	53100374	FILLER NECK W/ASSY	1	
3	1B0560	CAP - HYD. N FUEL TANK	1	
3A	53110701	Strainer	1	
4	1D0221	FUEL LEVEL SENSOR	1	
5	1H0125	GASKET	1	
6	3001163X1	MACHINE SCREW PAN HEAD M5x16	5	
7	3019560X1	WASHER M5	5	
8	339169X1	HEX NUT M8X1.25	6	
9	390972X1	WASHER M8 - STD	6	
10	1476281x1	SEAL	1	
11	376501X1	PLUG DRAIN	1	
12	6007796M1	HEX HEAD BOLT M12x1.75, 25 MM LONG, CLASS 10.9	4	
13	385363X1	WASHER M12 - CHAM	4	

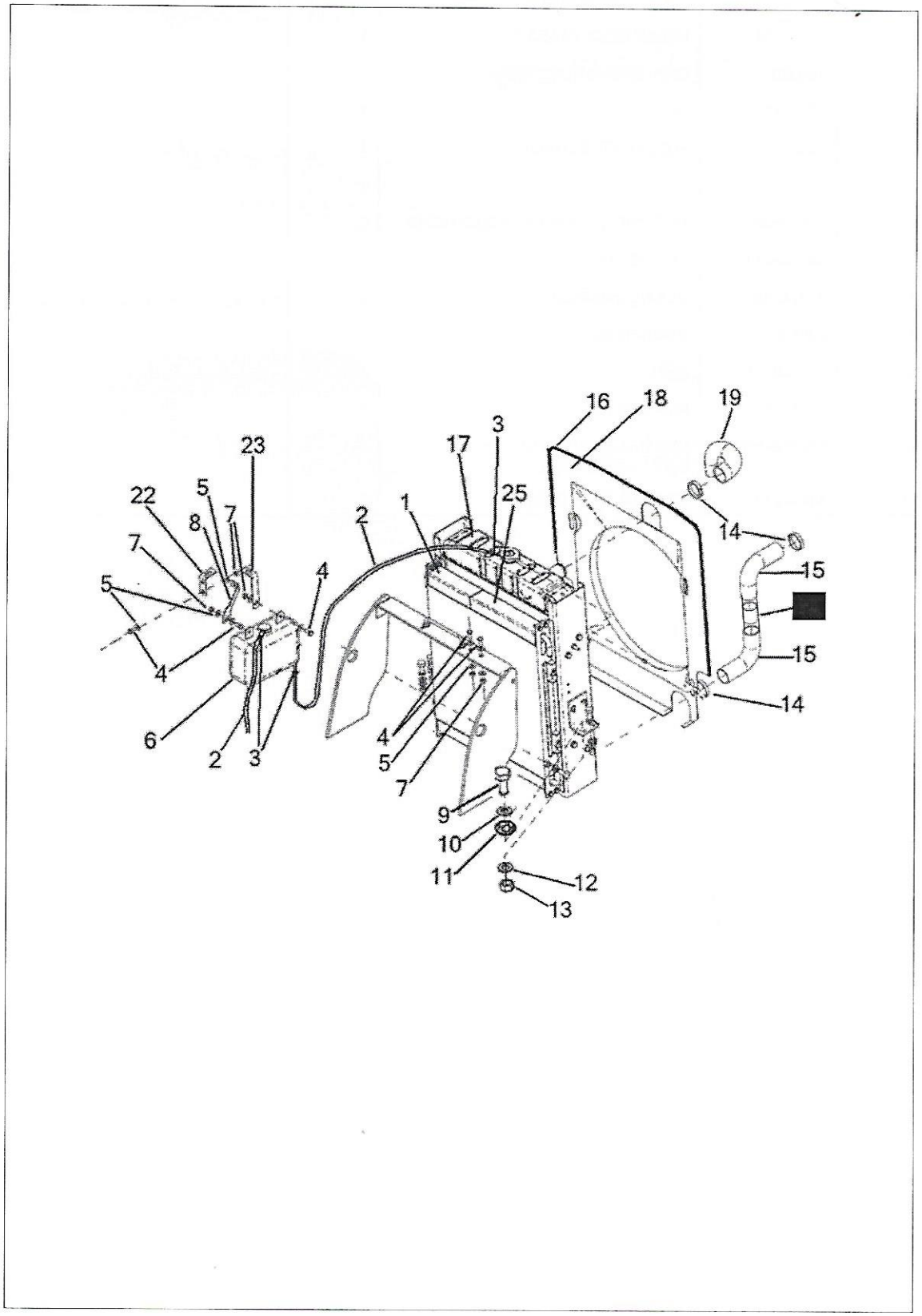
16
18
19
3
17
23
22
5
8
7
25
2
1
14
7
15
5
4
15
6
2
3
4
5
7
14
9
10
11
12
13

Item	Part No.	Name	Qty	Remarks
1	1A0837	OIL COOLER ASSY	1	
2	53101003	OVERFLOW HOSE	2	
3	6013103M1	CLAMP	3	
4	339761X1	BOLT M8-25 Z5F	6	
5	391039X1	WASHER	12	
6	1A0451	EXPANSION BOTTLE	1	
7	394367X1	NUT	6	
8	1A0134	TIE STRAP	1	
9	3009497X1	HEX BOLT M GRADE 8.8	4	
10	385362X1	WASHER M10 - CHAM	4	
11	1A0450	RUBBER PAD	2	
12	390597X1	WASHER M10 - LRG	8	
13	1440329X1	NUT NYLOCK M10	4	
14	3517413M1	WORM DRIVE CLIP COMPOSITE (SIZE 40-60)	6	
15	1A0742	RADIATOR BOTTOM HOSE	1	
16	1A0172	RUBBER BEADING	1	
17	53100796	RADIATOR ASSY	1	COOLING PACK -NON AIRCON
17	53107777	RADIATOR ASSY	1	COOLING PACK - AIR CON
18	53107461	FAN COWL-FRP -DIA 530	1	FOR NON AIRCON COOLING PACK
18	53113344	FAN COWL -AIR CON -KOEL		
19	1A0741	RADIATOR INLET HOSE	1	FOR AIR CON COOLING PACK
22	1A0474	PLATE	1	
23	1TA0029M1	STRAP	1	
25	10X0356	RADIATOR CAP	1	

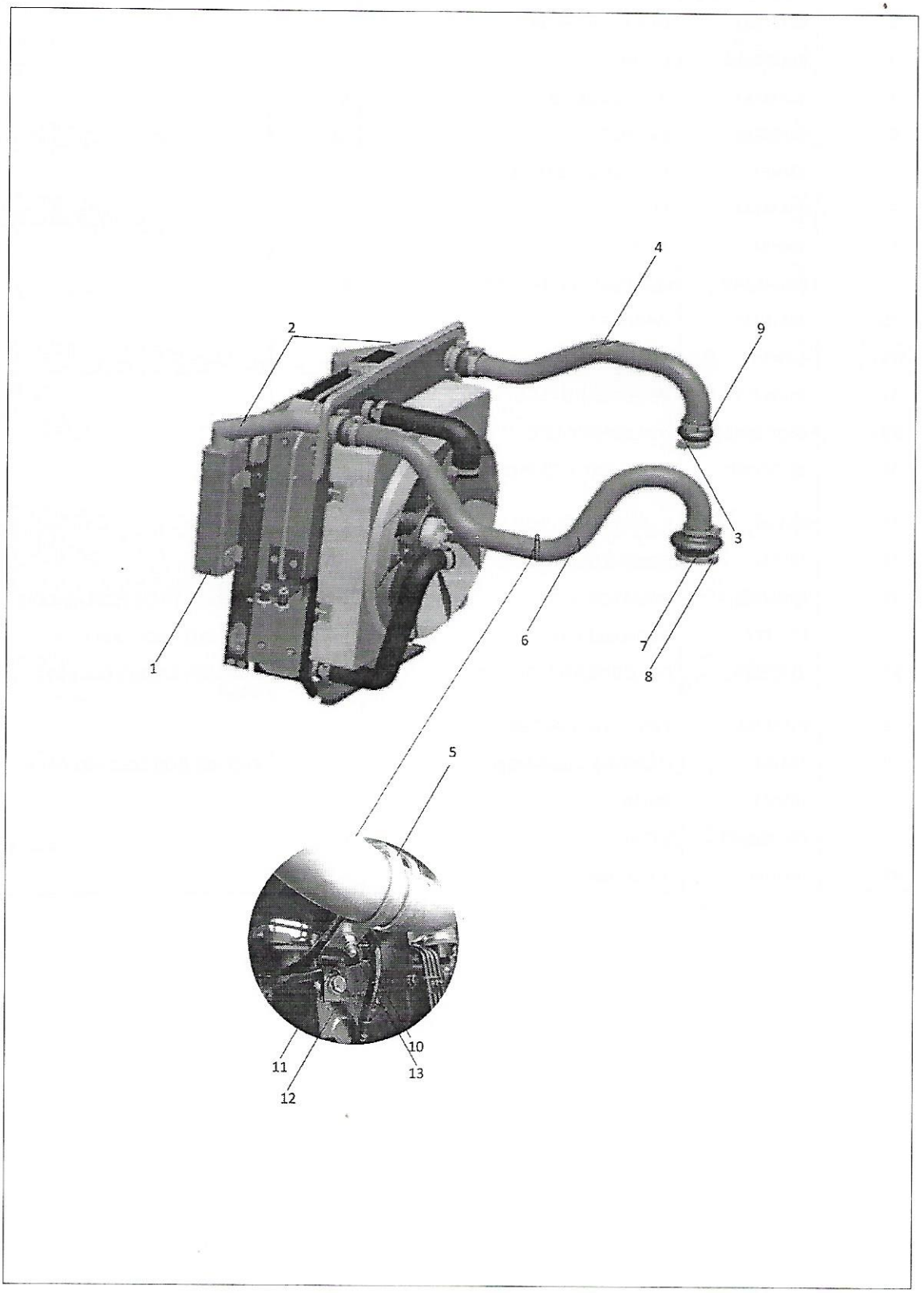
4
2
9
3
1
6
7
8
5
11
12
10
13

Item	Part No.	Name	Qty	Remarks
1	1A0437	CHARGE AIR COOLER	1	FROM 5255 TO 12226, FROM 5255 To 12226
1	10X3629	CHARGE AIR COOLER	1	FROM 12227 To 13937, FROM 12227 TO 13937
1	53107776	CHARGE AIR COOLER	1	EFFECTIVE FROM 13938
2	1A0752	HOSE	2	
3	1A0929	RUBBER HOSE	1	
4	1A0926	CAC INLET PIPE	1	
5	1A0440	CLAMP CAC PIPE	1	
6	1A0951	CAC-OUTLET PIPE	1	
7	1A0930	RUBBER HOSE	1	
8	3517416M1	WORM DRIVE CLIP COMPOSITE	1	
9	3517414M1	WORM DRIVE CLIP COMPOSITE	7	
10	339761X1	BOLT M8-25 Z5F	1	
11	394367X1	NUT	1	
12	1A0380	LOCK PLATE	1	
13	390972X1	WASHER M8 - STD	2	

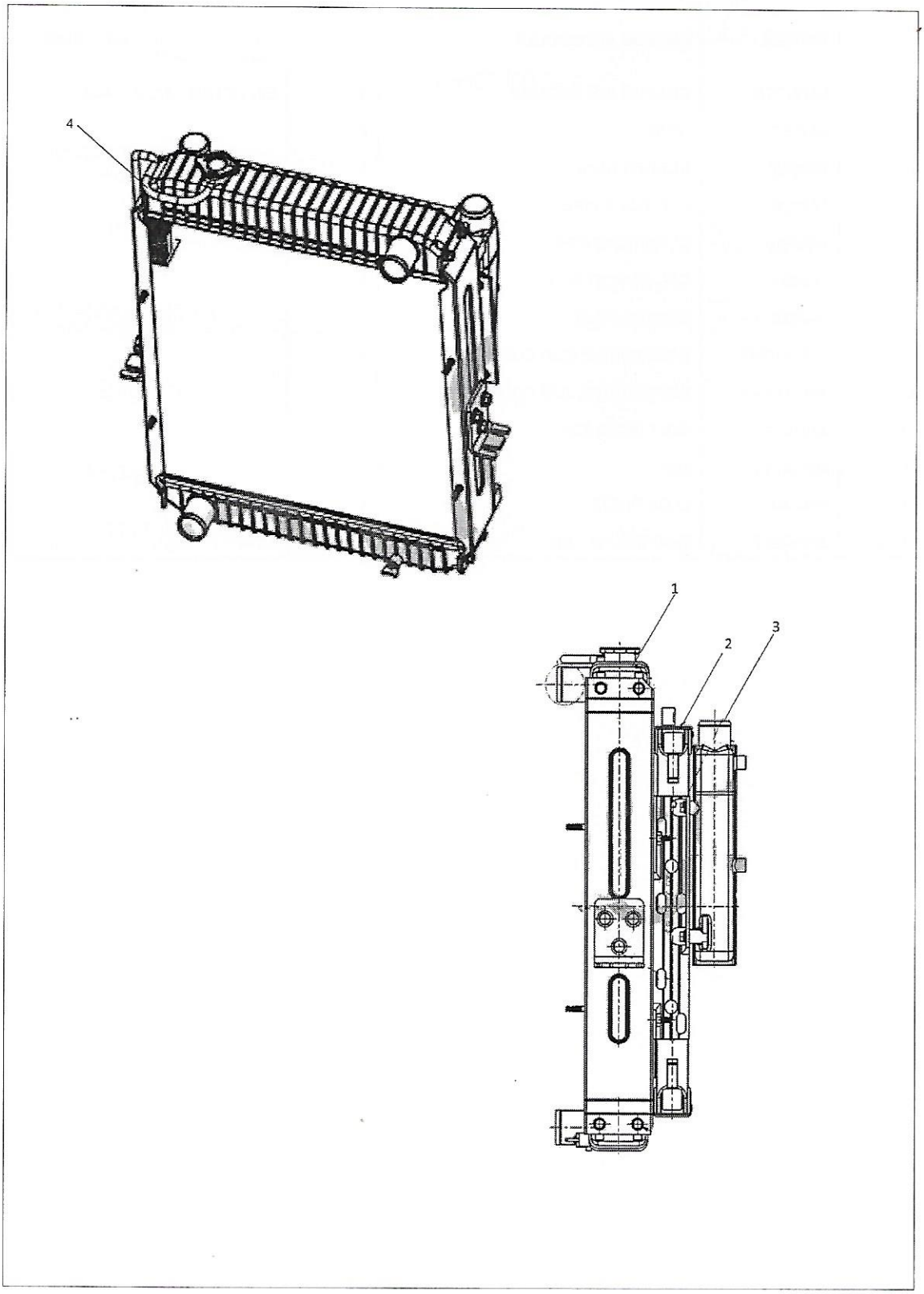
4
1
2
3

Item	Part No.	Name	Qty	Remarks
1	53100796	RADIATOR ASSY	1	
2	1A0837	OIL COOLER ASSY	1	
3	1A0834	CHARGE AIR COOLER	1	
4	53101003	OVERFLOW HOSE	1	

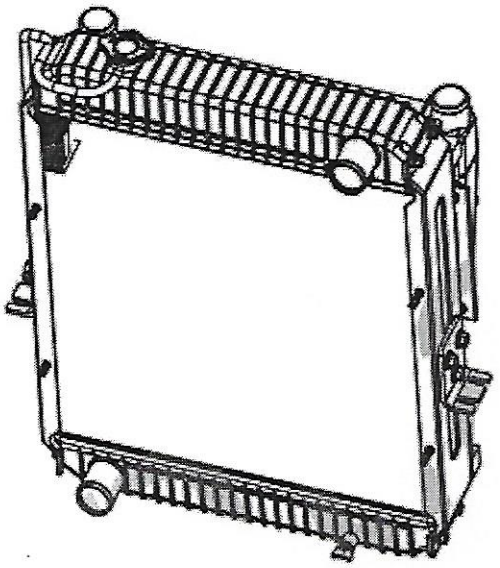

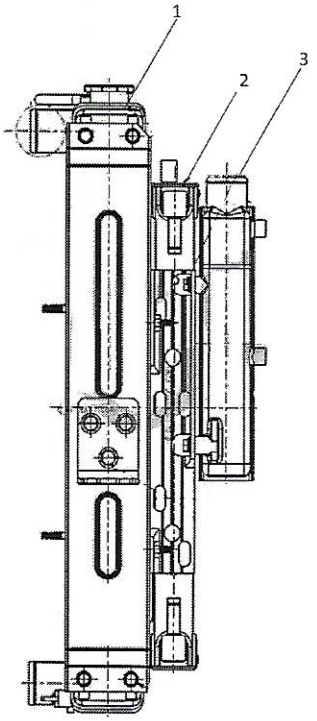
1
2
3

Item	Part No.	Name	Qty	Remarks
0	1A0847	COOLING PACK	1	
1	53107777	RADIATOR ASSY	1	
2	1A0837	OIL COOLER ASSY	1	
3	1A0834	CHARGE AIR COOLER	1	

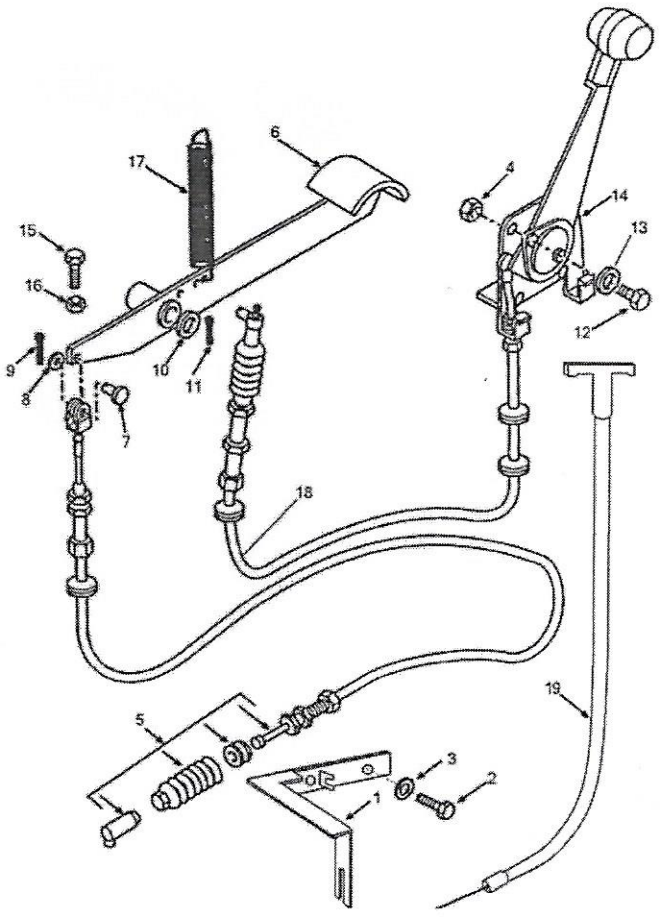
17
6
15
16
9
8
7
10
11
4
14
13
12
18
19
5
3
2
1

Item	Part No.	Name	Qty	Remarks
1	1A0094	Mount Bracket	1	
2	1440433X1	HEX HEAD BOLT M10X1.5-L-16	2	
3	390971X1	WASHER M6 - STD	2	
4	339030X1	HEX NUT M6	4	
5	1A0901	Foot Throttle Cable	1	
6	1B0394	Pedal Assy	1	
7	195446M1	PIN 3/16 CLEVIS	1	
8	353753X1	Washer	1	
9	354039X1	SPLIT PIN	1	
10	390735X1	WASHER	1	
11	1442965X1	Pin Split	1	
12	339666X1	BOLT M6-40 Z5S LK	4	
13	339375X1	WASHER M6 LOCK Z	4	
14	1Z0159	Hand Th. Assy.	1	
15	339337X1	HEX BOLT M8x30 GRADE 8.8	1	
16	392309X1	THIN NUT	1	
17	1470592M1	Spring	1	
18	1Z0155	Cable Assy	1	
19	1A0031	STOP CABLE	1	

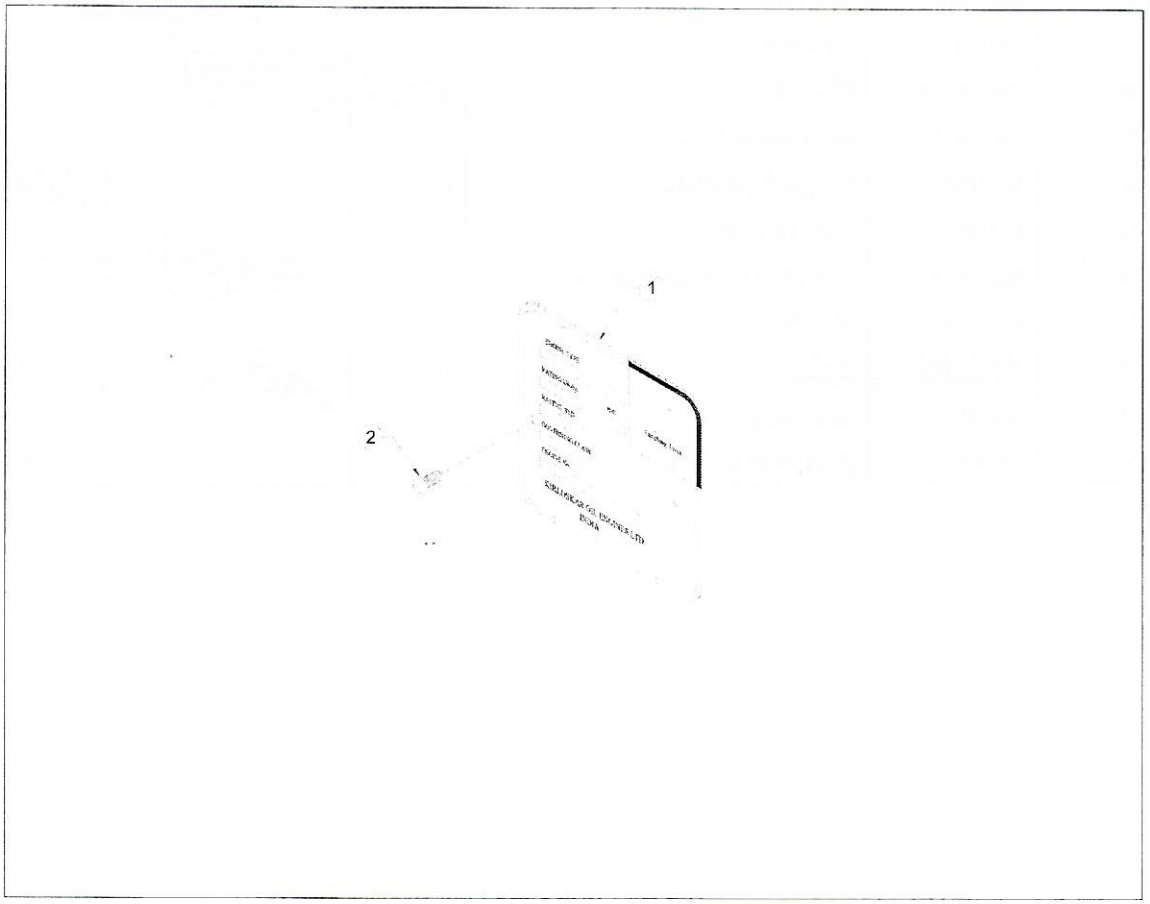
1
2

Item	Part No.	Name	Qty	Remarks
1	NSS	NAME PLATE	1	
2	53100633	P K DRIVE SCREW 1/8"X3/8" (RIVET)	2	

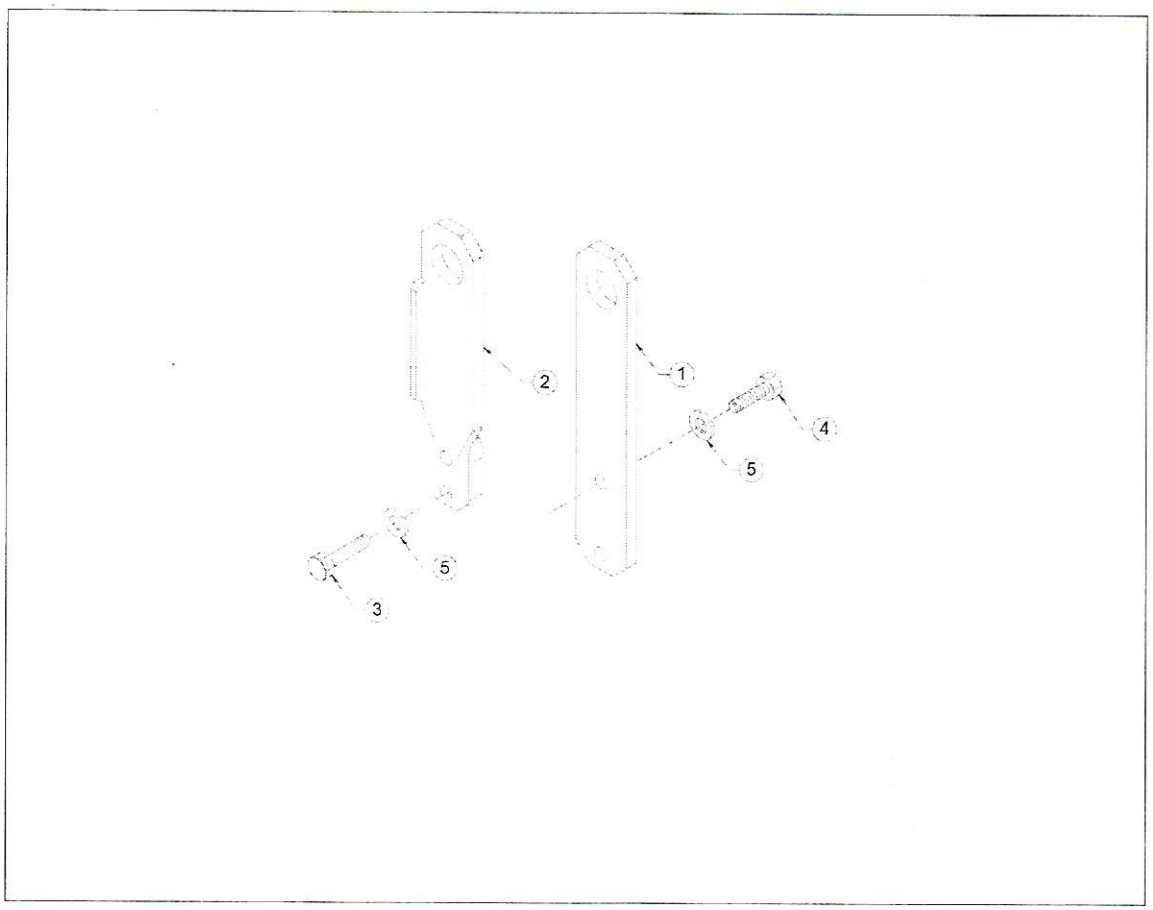
2
1
4
5
5
3

Item	Part No.	Name	Qty	Remarks
1	53100213	LIFTING HOOK (FWE)	1	
2	53100214	LIFTING HOOK (G.E.)	1	
3	53100740	SET BOLT M10X1.5X40 - 8.8	1	
4	53100327.	SET SCREW - M10X1.5X25 - 8.8	2	
5	53100752	PLAIN MACHINED WASHER - M10	4	

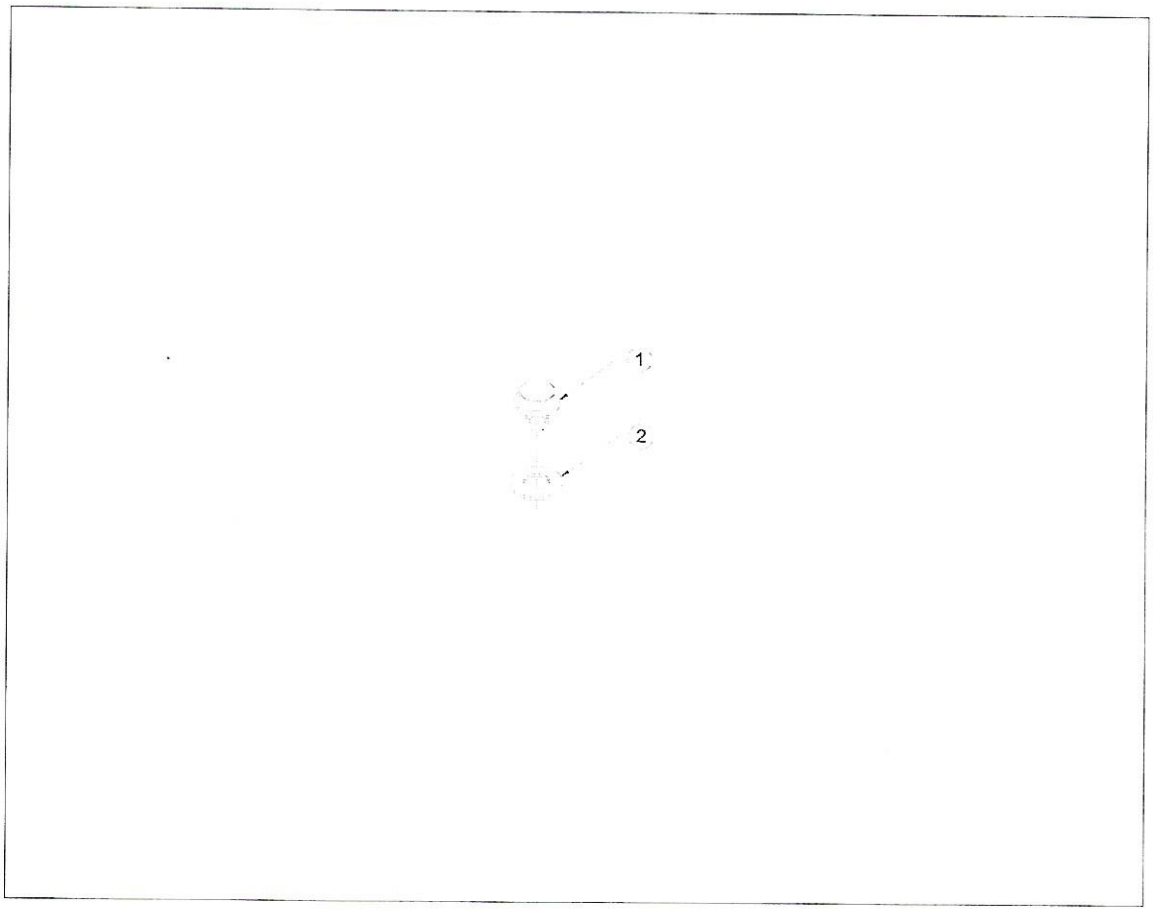
1
2

Item	Part No.	Name	Qty	Remarks
1	53100770	CORE PLUG	1	
2	53100755	COPPER WASHER (10X16)	1	

TRANSMISSION

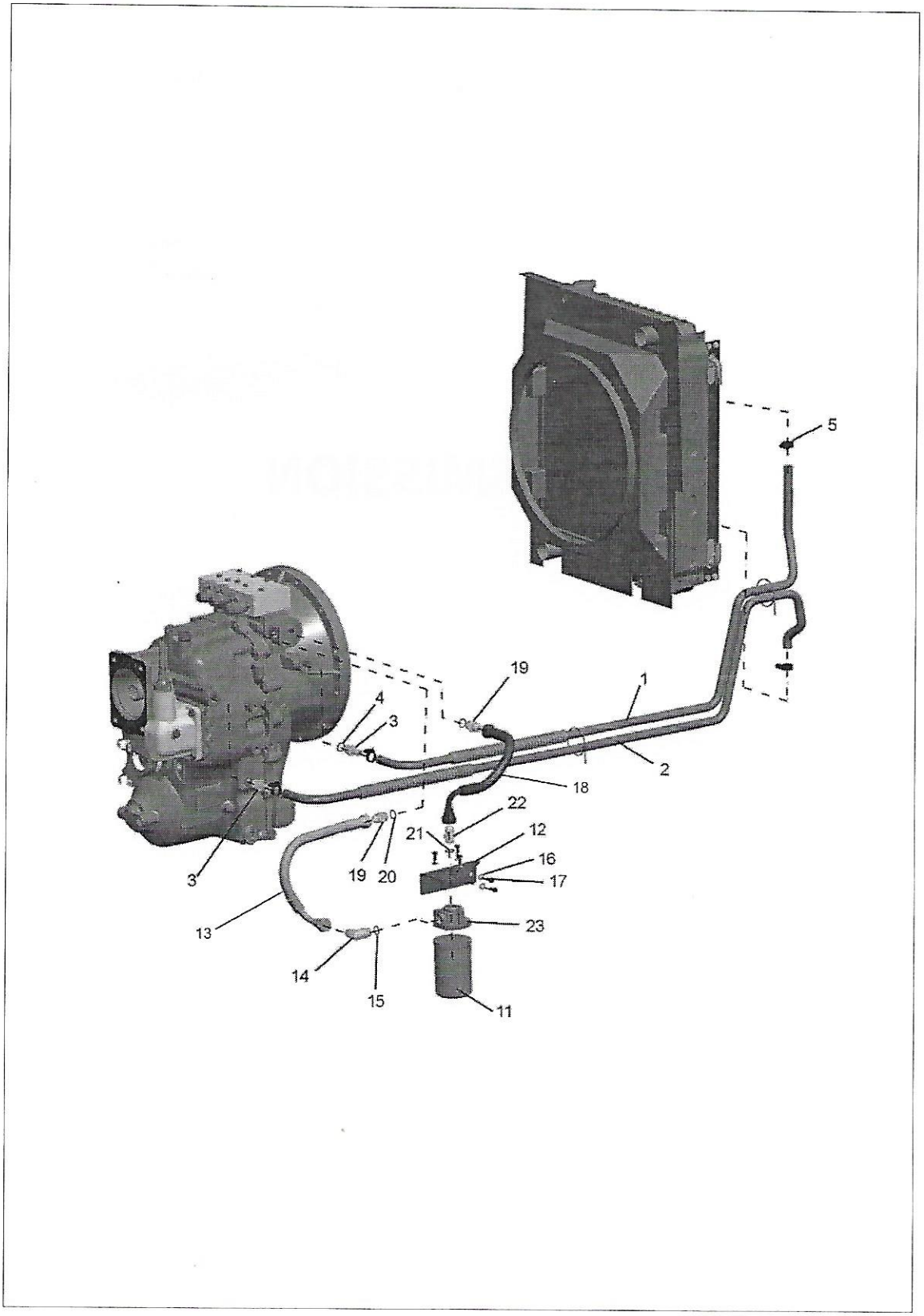
5
19
1
4
3
2
18
22
21
12
16
17
19
20
3
13
23
14
15
11

Item	Part No.	Name	Qty	Remarks
1	1TA0033M1	TRANSMISSION TOP HOSE	1	
2	1TA0034M1	TRANS BOTTOM HOSE	1	
3	6107562M92	ADAPTOR	2	
4	835024M1	O-RING	2	
5	3517410M1	WORM DRIVE CLIP COMPOSITE	4	
11	6112184M1	GEAR BOX OIL FILTER	1	
12	6110580M1	FILTER BRACKET	1	
13	6110581M91	HOSE ASSY. REMOTE FILTER	1	
14	835007M1	ELBOW 90 DEGREE ADJUST	1	
15	835024M1	O-RING	1	
16	390972X1	WASHER M8 - STD	5	
17	339123X1	HEX BOLT M8X20 GR 8.8	5	
18	6110582M91	HOSE ASSY. REMOTE FILTER	1	
19	358735X1	CONNECTOR	2	
20	835024M1	O-RING	2	
21	835024M1	O-RING	1	
22	358735X1	CONNECTOR	1	
23	6112185M1	FILTER HEAD	1	
24	10X3357	SPEED SENSOR	1	NOT SHOWN IN DRAWING

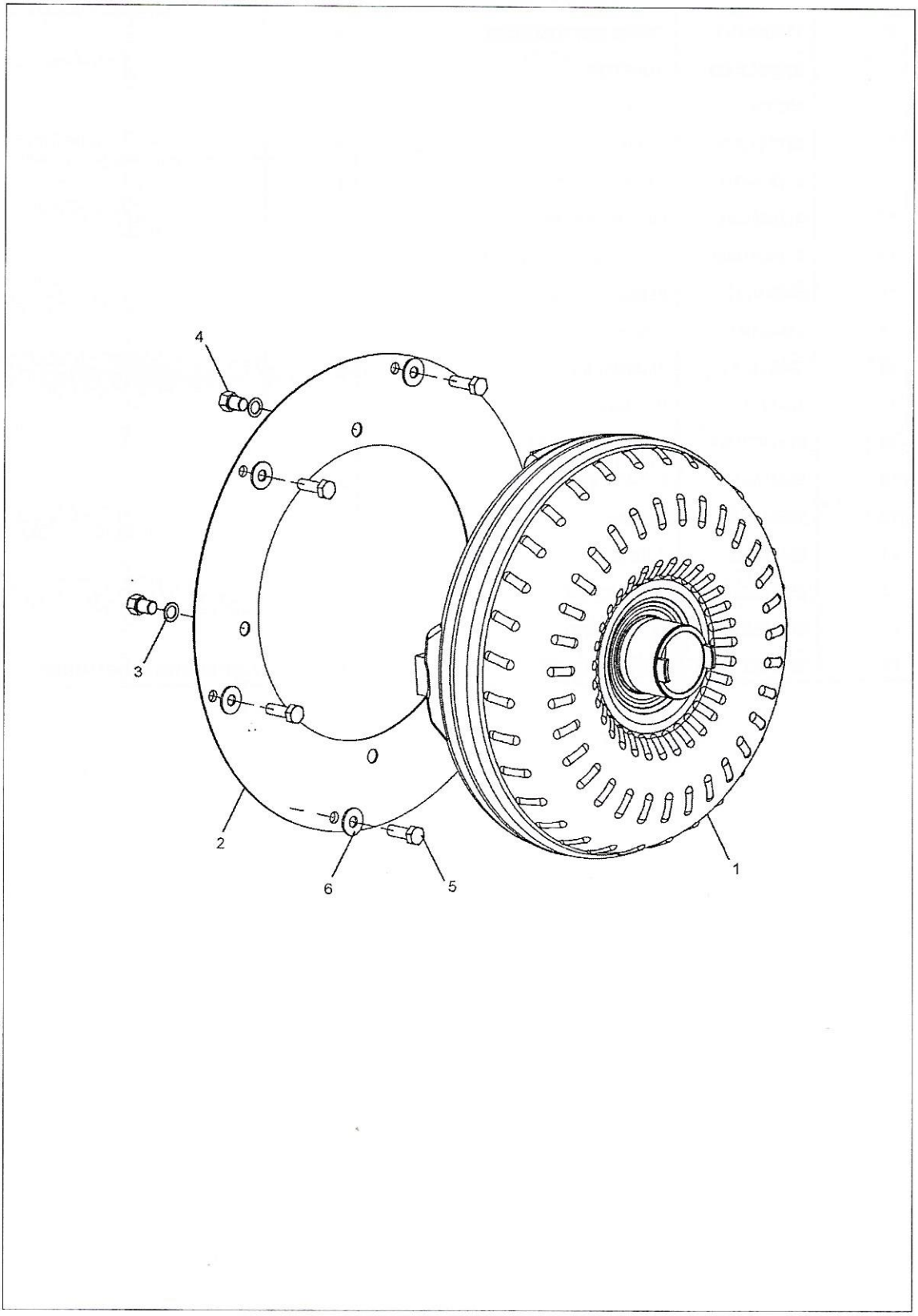
4
3
2
6
5
1

Item	Part No.	Name	Qty	Remarks
1	1K0162	TORQUE CONVERTER	1	
2	1K0111	DRIVE PLATE	1	
3	353756X1	WASHER	4	
4	354228X1	BOLT	4	
5	3508576X1	BOLT	8	
6	2757286M1	WASHER	8	

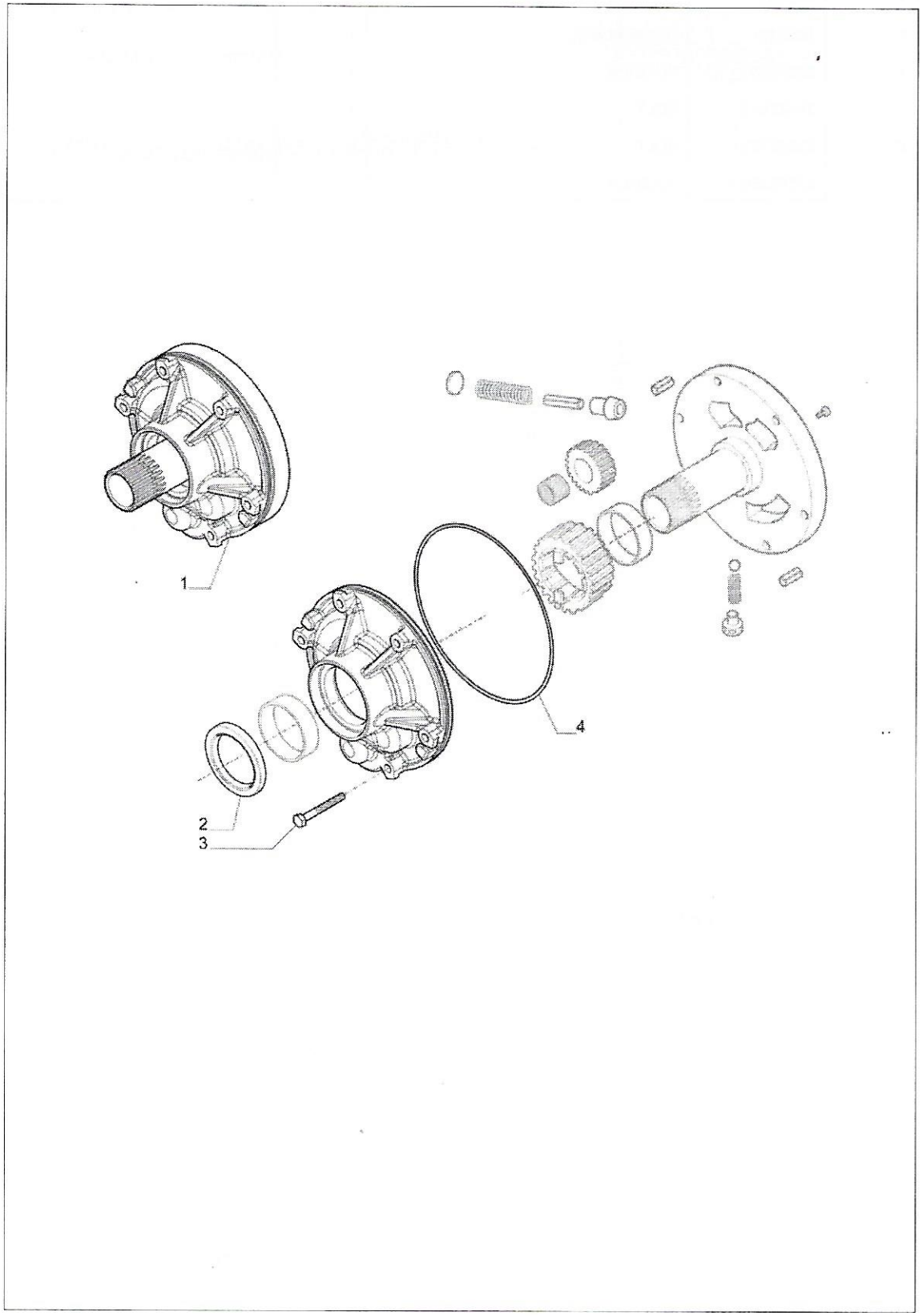
1
2
3
4

Item	Part No.	Name	Qty	Remarks
1	6194309M91	PUMP ASSY	1	
2	6194307M1	SEAL RING	1	
3	6194308M1	BOLT M8X60	6	
4	6194310M1	O-RING	1	

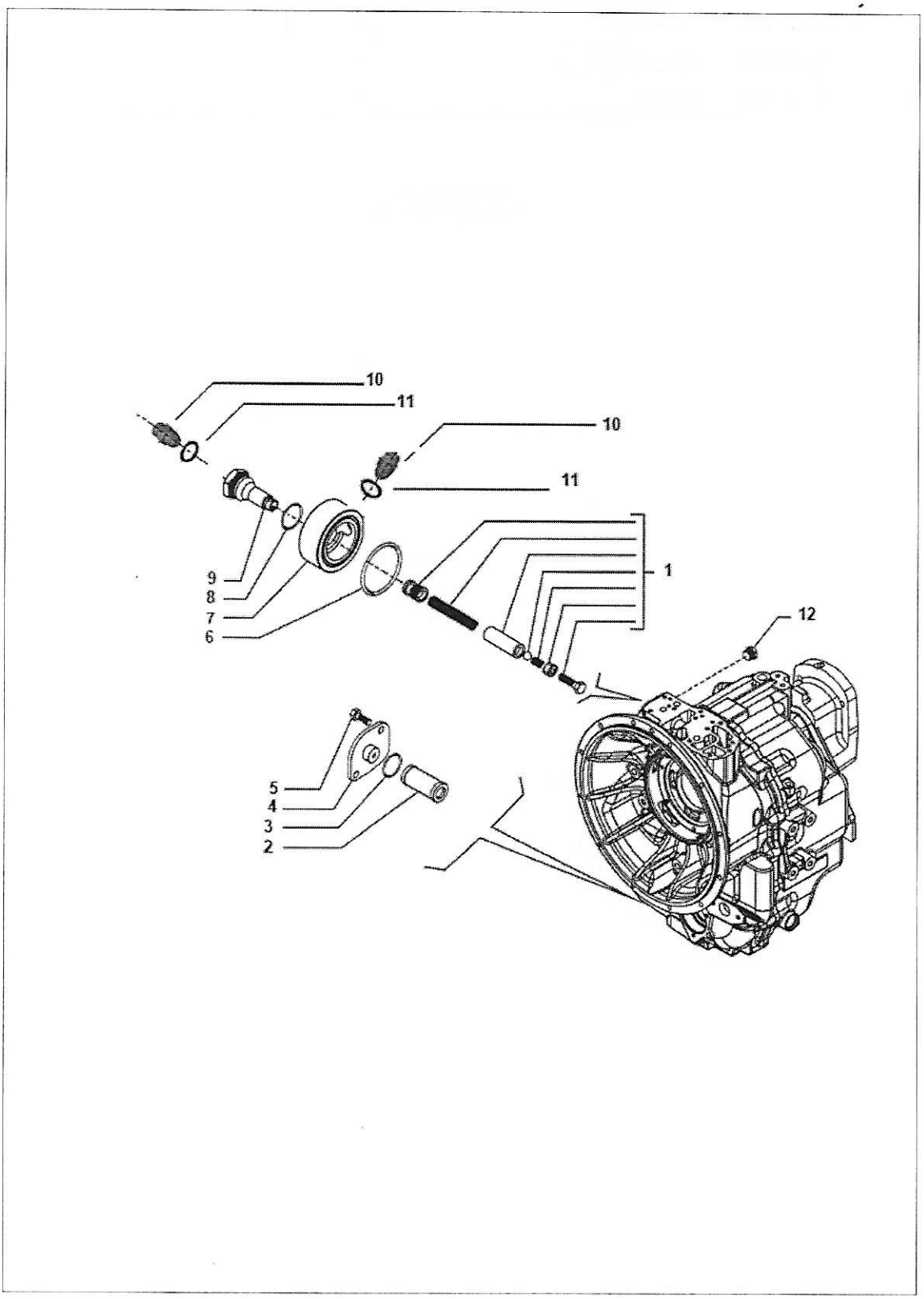
10
11
10
11
9
8
7
6
1
12
5
4
3
2

Item	Part No.	Name	Qty	Remarks
1	6194312M91	VALVE KIT	1	
2	6194313M1	OIL FILTER	1	
3	6194314M1	O- RING	1	
4	6194315M1	COVER	1	
5	6194316M1	BOLT M8X18	2	
6	6194317M1	O-RING	1	
7	6194318M1	COVER	1	
8	6194319M1	O-RING	1	
9	6194320M1	OIL FILTER CONNECTION	1	
10	358735X1	CONNECTOR	2	
11	835024M1	O-RING	2	
12	6193381M1	PLUG	2	

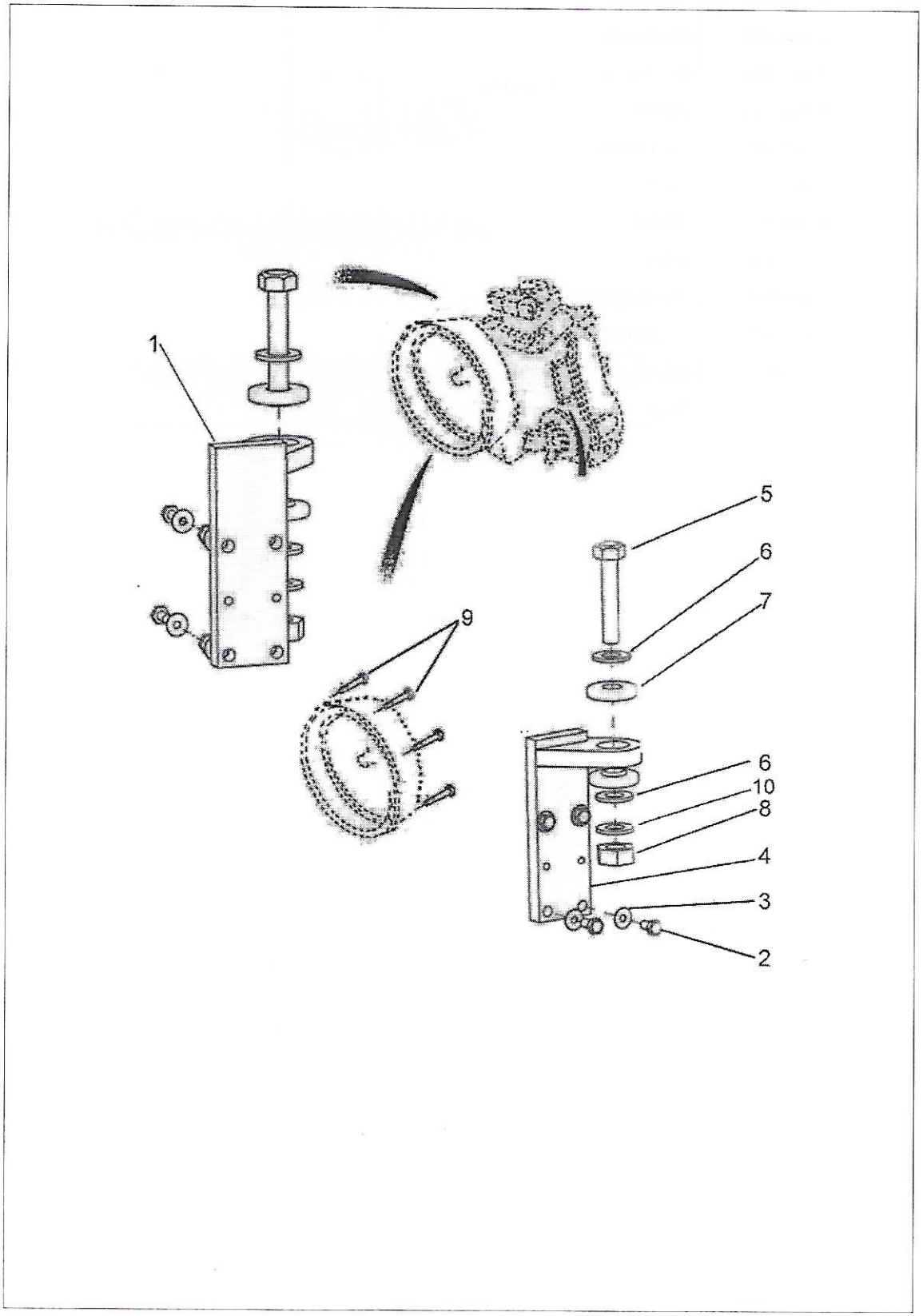
1
5
6
7
9
6
10
8
4
3
2

Item	Part No.	Name	Qty	Remarks
1	6112194M1	TRANS MOUNT BRACKET RH	1	
2	1440717X1	BOLT M12 X 40LG, CLASS 10.9	8	
3	3516702M1	HARDENED WASHER SPECIAL	8	
4	6112193M1	TRANS MOUNT BRACKET LH	1	
5	6007822M1	BOLT- M16 X 120LG-10.9	4	
6	6106849M91	WASHER	4	
7	6106848M91	MOUNT TRANS	2	
8	1442739X1	M16 NYLOC NUT	2	
9	3009494X1	HEX BOLT M10x35 GRADE 8.8	12	
10	1A0415	WASHER	2	

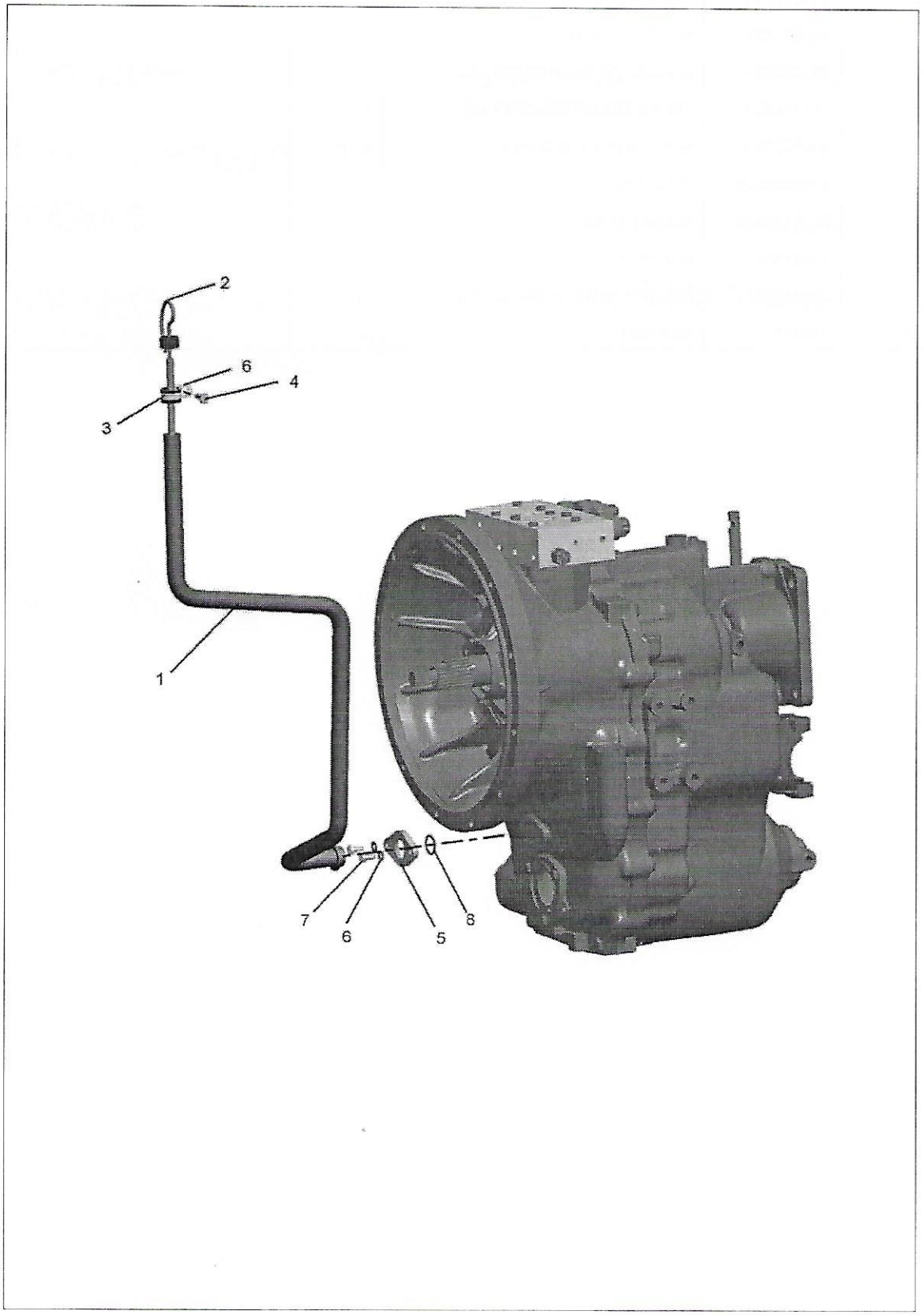
2
6
4
3
1
7
6
5
8

Item	Part No.	Name	Qty	Remarks
1	53110324	FILLER TUBE	1	
2	1TA0037M91	DIP STICK	1	
3	360643X1	P CLIP	1	
4	339123X1	HEX BOLT M8X20 GR 8.8	1	
5	6111931M1	FLANGE	1	
6	390972X1	WASHER M8 - STD	3	
7	3391123X1	BOLT	2	
8	3007117X1	O-RING	1	

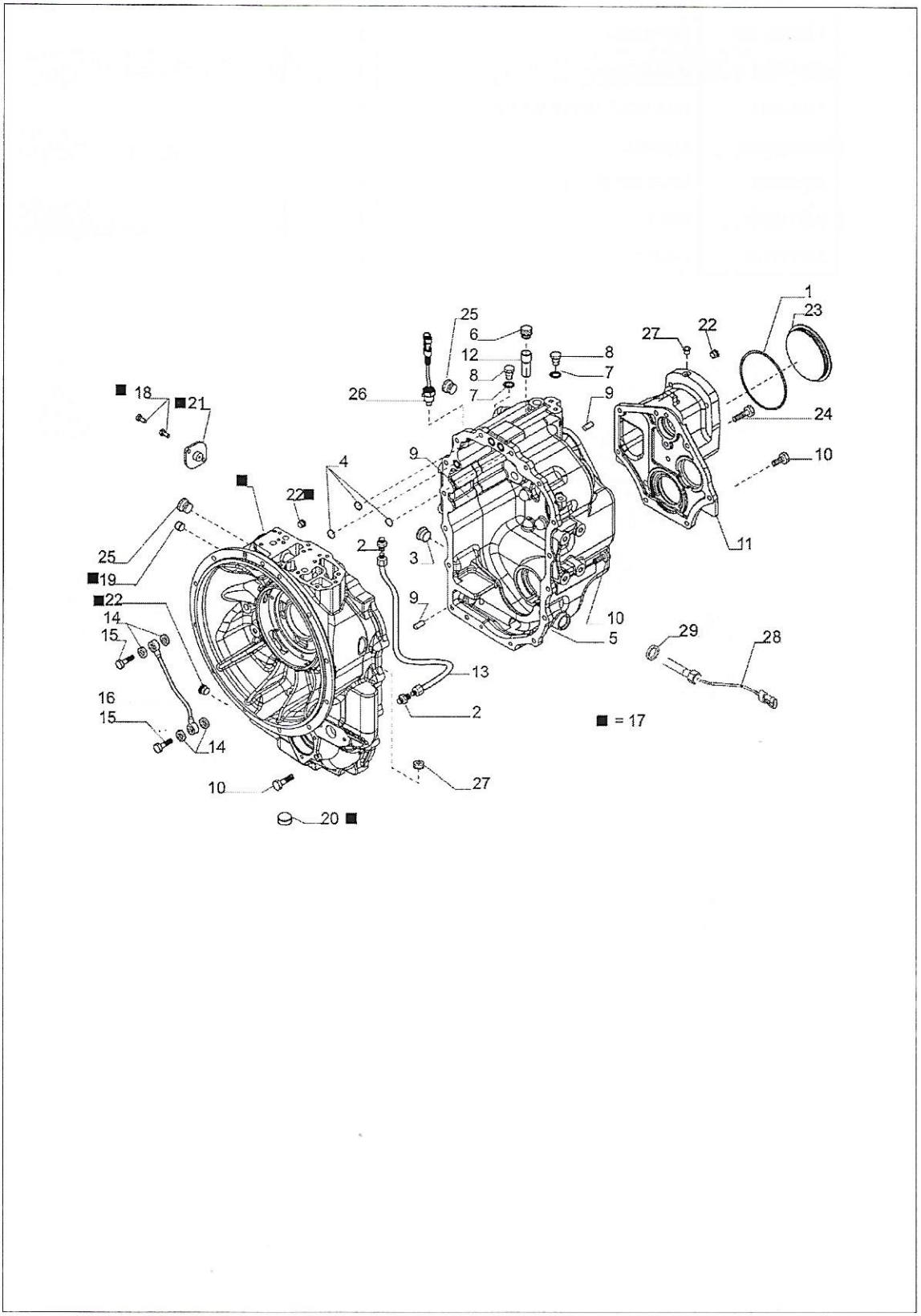
1
23
27
22
25
6
12
8
8
7
7
26
9
24
10
9
4
22
2
3
11
25
19
22
14
15
9
10
5
29
28
13
16
15
2
■ = 17
14
10
27
20

Item	Part No.	Name	Qty	Remarks
1	6194332M1	O-RING	1	
2	6194731M91	CONNECTION	2	
3	3523632M1	PLUG M30X2	1	
4	6194325M1	O.RING	3	
5	6194324M1	Housing	1	
6	6194326M1	BREATHER	1	
7	6194329M1	SEAL WASHER DIN 7603 10X1	3	
8	6194328M1	PLUG	3	
9	6194330M1	PIN D10X25	3	
10	6194334M1	BOLT M10X30	22	
11	53109337	Cover	1	
12	6194327M1	TUBE SFIATO OLIO	1	
13	6194730M91	Pipe	1	
14	6194339M1	COPPER GASKET	4	
15	6194338M1	BOLT M14X1,5	2	
16	6194340M1	LUBRICATION PIPE	1	
17	53109338	Front Housing Kit	1	
18	6194316M1	BOLT M8X18	2	
19	53109339	Plug M14x1.5	1	
20	53109340	Plug	1	
21	53109300	Cover	1	
22	6194311M1	PLUG	2	
23	53109304	PLUG D127,5	1	
24	6194333M1	BOLT M10X45	2	
25	6194321M1	PLUG	2	
26	53109303	SENSOR	1	
27	6193381M1	PLUG	3	
28	10X3357	SPEED SENSOR	1	
29	10X3358	WASHER	1	

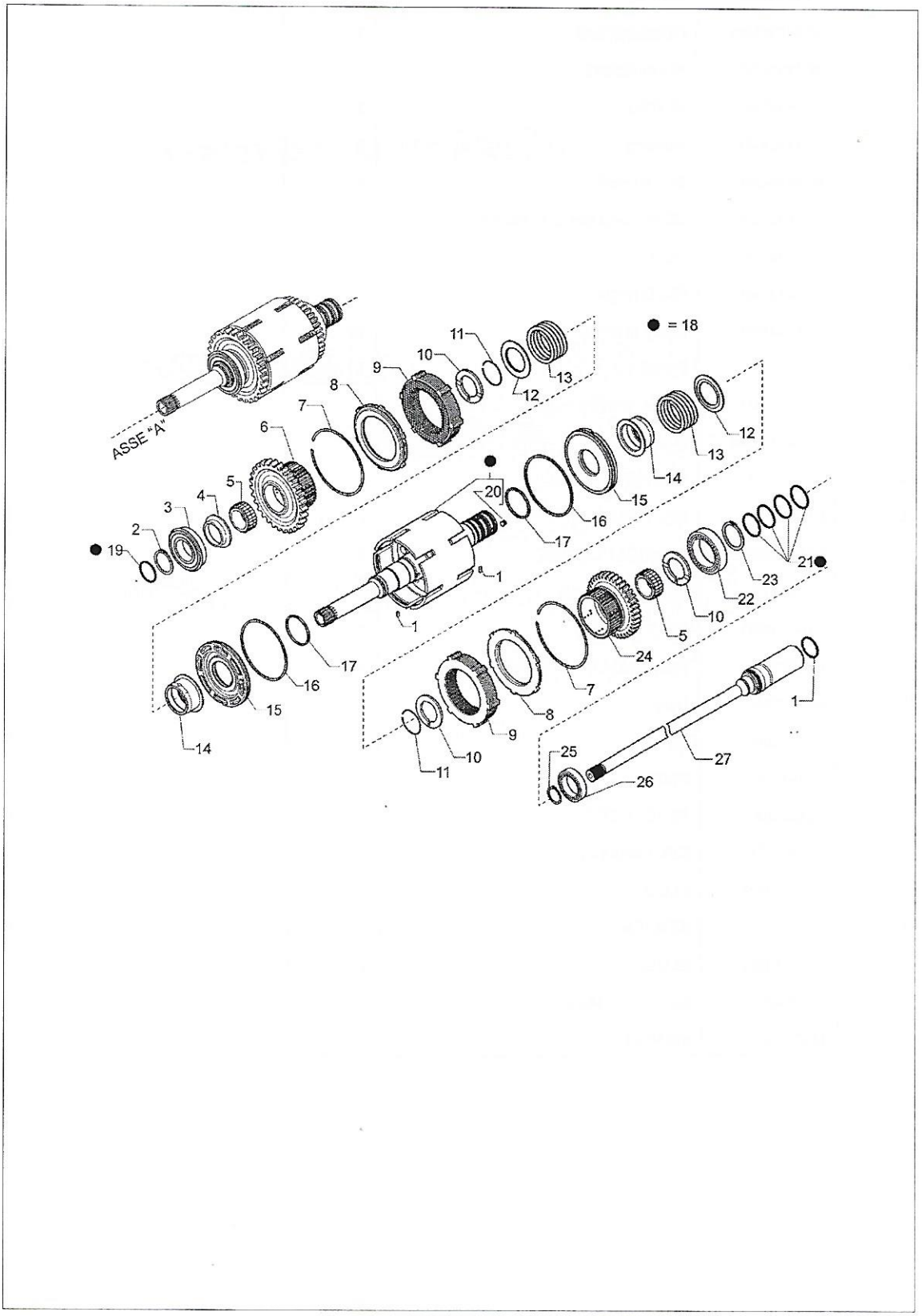
ASSE "A"
● = 18
1
2
3
4
5
6
7
8
9
10
11
12
13
14
15
16
17
19
20
21
22
23
24
25
26
27

Item	Part No.	Name	Qty	Remarks
1	6194365M1	SPLIT PIN D3 X 8	2	
2	6190292M1	CIRCLIP	1	
3	6194345M1	BEARING	1	
4	6194346M1	SPACER 68X45X105	1	
5	6194347M1	NEEDLE CAGE	2	
6	6194348M1	GEAR Z35	1	
7	6194349M1	SNAP RING	2	
8	6194350M1	CLUTCH PLATE LOCKRING	2	
9	6194957M91	CLUTCH DISCS/COUNTERPLATES ASSY	2	
10	6194351M1	SPACER 60X50X4	3	
11	6194495M1	CIRCLIP D50	2	
12	6194355M1	LOCK-SPRING COVER	2	
13	6194354M1	SPRING	2	
14	6194357M1	CLUTCH SLEEVE	2	
15	6194358M1	CLUTCH PISTON	2	
16	6194359M1	SEAL RING	2	
17	6194360M1	SEAL RING D55	2	
18	6194496M91	INNER SHAFT (ASSY)	1	
19	6194343M1	SEAL RING D45	2	
20	6194497M1	RIVET D6X5,84	4	
21	6194363M1	SEAL RING D50	4	
22	6194364M1	BALL BEARING	1	
23	6194356M1	CIRCLIP D50	1	
24	6194362M1	GEAR Z29 (FWD)	1	
25	6194368M1	CIRCLIP D30	1	
26	6194367M1	BEARING	1	
27	6194732M1	PTO TRANMISSION SHAFT	1	

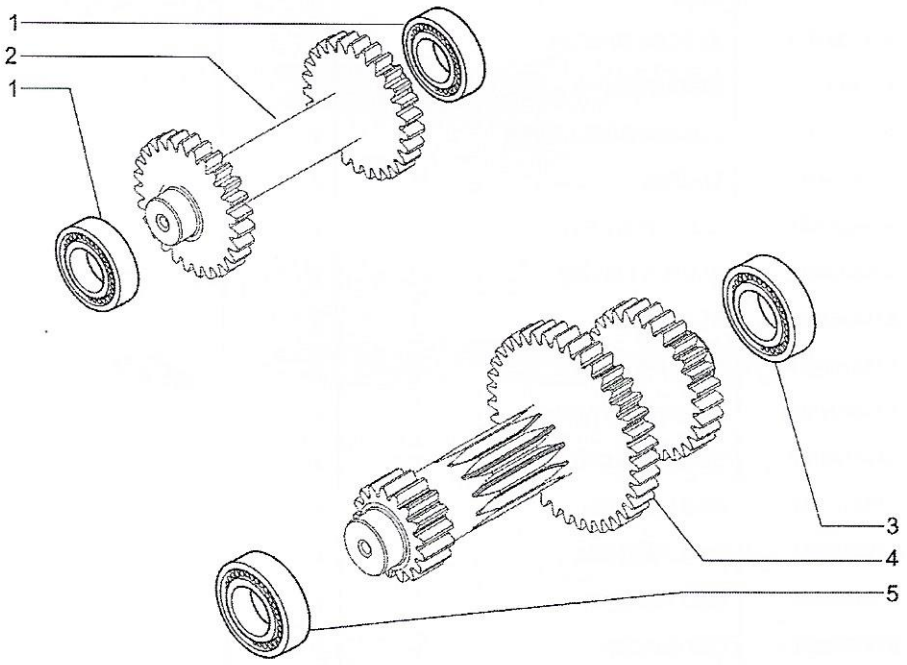
1
2
1
3
4
5

Item	Part No.	Name	Qty	Remarks
1	6194369M1	BEARING	2	
2	6194370M1	REVERSE SHAFT Z=27	1	
3	6194371M1	BEARING	1	
4	6194372M1	PRIMARY SHAFT	1	
5	6194373M1	BEARING	1	

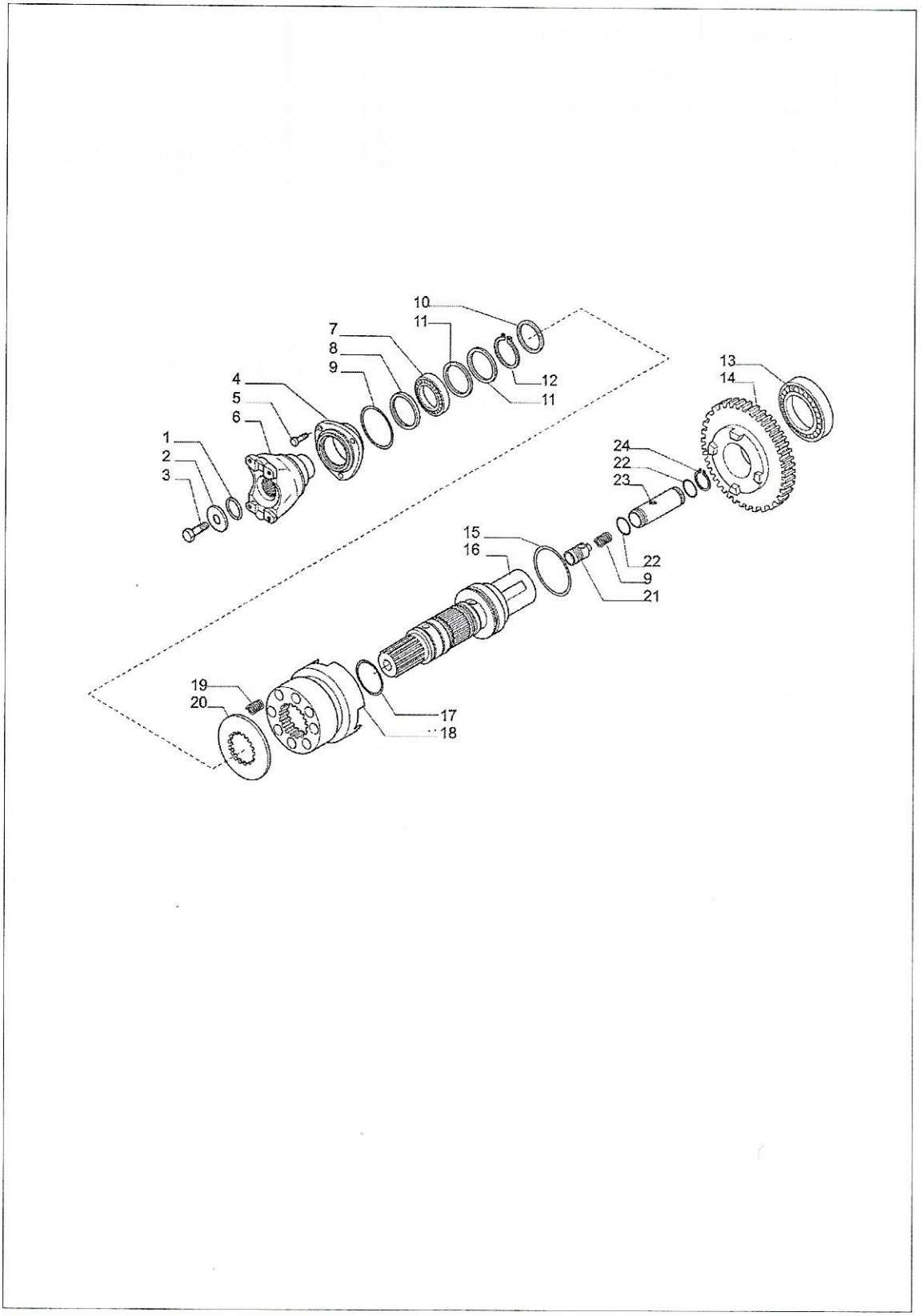
10
11
7
8
9
4
5
6
1
2
3
12
11
13
14
24
22
23
15
16
22
9
21
19
20
17
18

Item	Part No.	Name	Qty	Remarks
1	6193384M1	O-Ring	1	
2	6194414M1	Washer 44x12.5x5	1	
3	6194403M1	BOLT	1	
4	6194415M1	COVER	1	
5	6194416M1	Bolt M8x22	3	
6	6194417M1	FLANGE	1	
7	6194369M1	BEARING	1	
8	6194418M1	Seal ring 50x65x8	1	
9	6194419M1	O-RING	1	
10	6194420M1	Washer	1	
11	6194343M1	SEAL RING D45	2	
12	6193699M1	Snap ring D45	1	
13	6194421M1	Bearing	1	
14	6194422M1	Gear Z=36	1	
15	6194423M1	O-RING	1	
16	6194424M1	Output Shaft	1	
17	6194425M1	O- RING	1	
18	6194426M1	Sleeve	1	
19	6194427M1	Spring	8	
20	6194428M1	Spacer	1	
21	6194722M1	Valve	1	
22	6194720M1	O-RING	2	
23	6194721M1	Cylinder	1	
24	6194719M1	Snap ring	1	

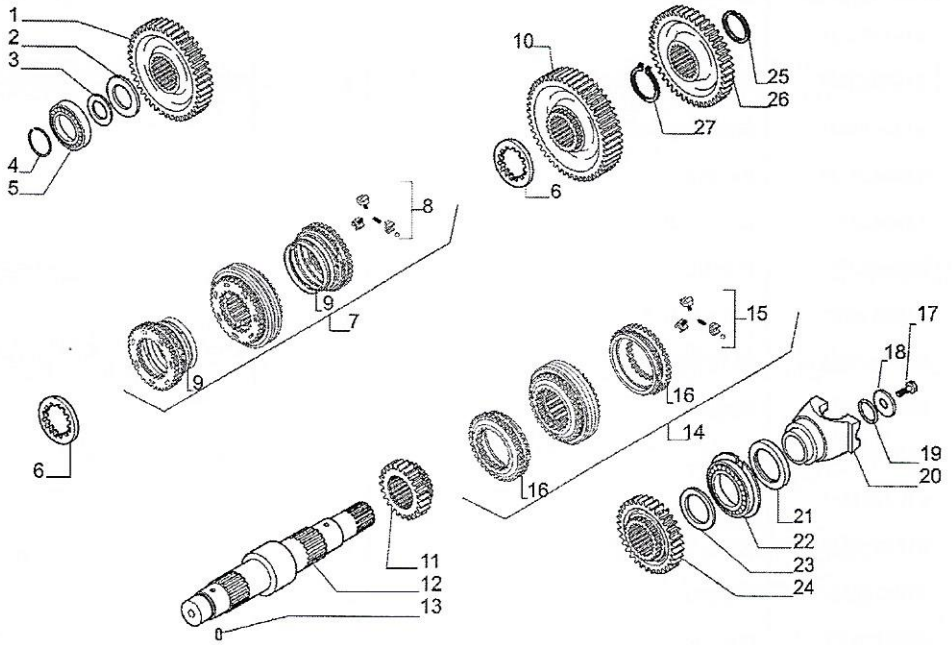
1
2
3
4
5
6
7
8
9
10
11
12
13
14
15
16
17
18
19
20
21
22
23
24
25
26
27

Item	Part No.	Name	Qty	Remarks
1	6194374M1	GEAR	1	
2	6194375M1	WASHER, THRUST	1	
3	6194376M1	SHIM	-	
3	6194377M1	SHIM	-	
3	6194378M1	SHIM	-	
3	6194379M1	SHIM	-	
4	6194380M1	RING, RETAINING	1	
5	6194373M1	BEARING	1	
6	6194381M1	SPACER	2	
7	6194391M1	Synchronizing Kit	1	
8	53109305	SPRING KIT	1	
9	53109306	RINGS KIT	1	
10	6194392M1	GEAR	1	
11	6194393M1	GEAR	1	
12	6194394M1	SHAFT	1	
13	6194365M1	SPLIT PIN D3 X 8	1	
14	6194402M91	KIT, SYNCHRO	1	
15	53109308	SPRING KIT	1	
16	53109307	RINGS KIT	1	
17	6194403M1	BOLT	1	
18	6194404M1	WASHER	1	
19	6194405M1	O-RING	1	
20	6194406M1	FLANGE	1	
21	6194407M1	SEAL, OIL	1	
22	6194408M1	BEARING	1	
23	6194409M1	WASHER, THRUST	1	
24	6194412M1	Gear Z45	1	
25	6194413M1	RING, RETAINING	1	
26	53109309	GEAR Z45	1	
27	6194411M1	RING, RETAINING	1	

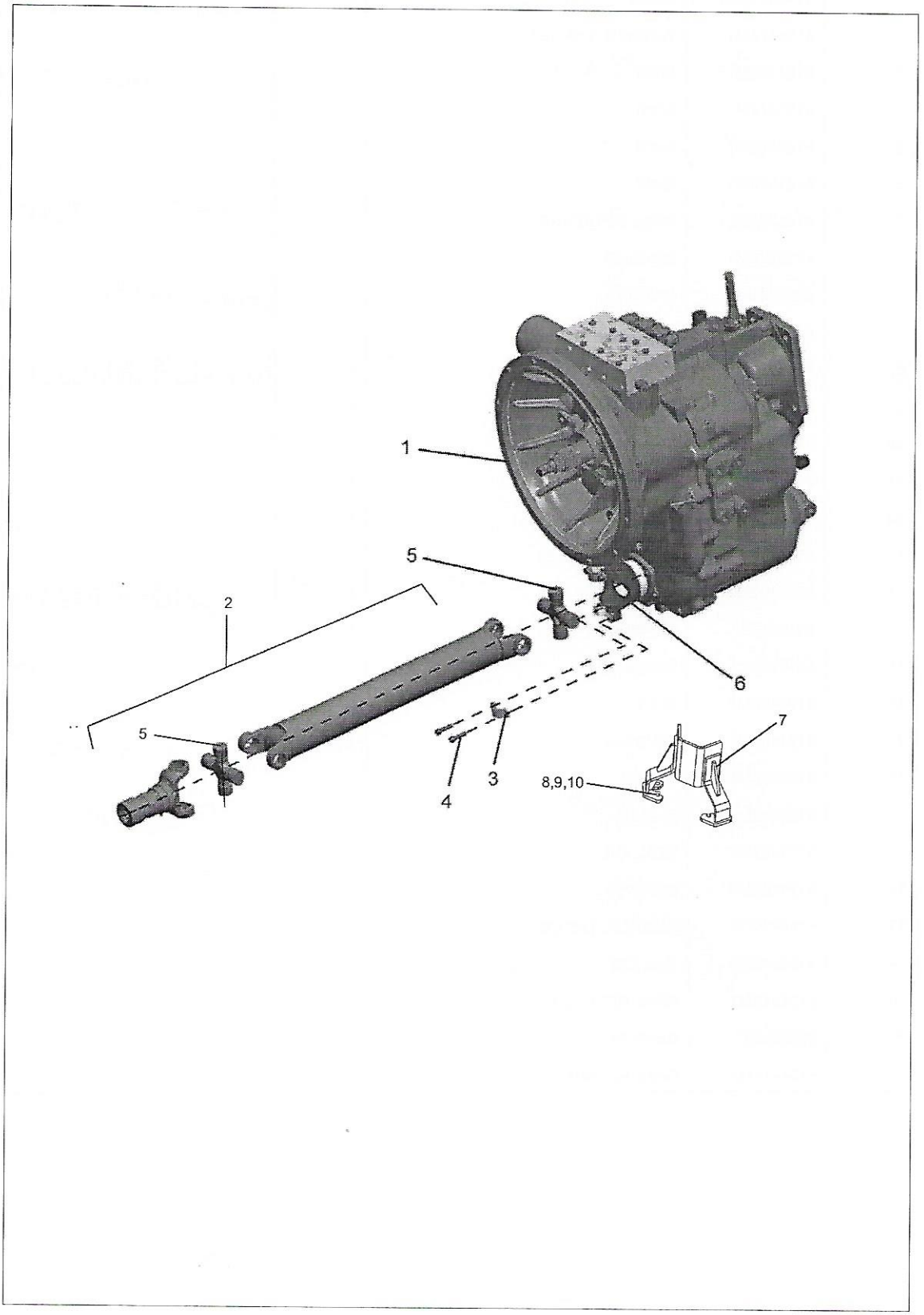
1
5
2
6
5
7
3
4
8,9,10

Item	Part No.	Name	Qty	Remarks
1	1K0299	TLB1 TRANSMISSION-4WD (SPEED SENSOR)	1	EFFECTIVE FROM 11560 TO 14161, OIL FILTER ON THE GEAR BOX
1	1K0263	TRANSMISSION -4WD (SPEED SENSOR)	1	EFFECTIVE 14162 , OIL FILTER IN REMOTE LOCATION
2	1K0201	FRONT DRIVE SHAFT	1	
3	53102212	BEARING STRAP	4	
4	53110588	BOLT DRIVE SHAFT - ALLEN KEY	8	
5	10X0344	UJ KIT-DRIVE SHAFT	2	
6	6194417M1	FLANGE	1	
7	1K0276	FRONT AXLE GUARD	1	
8	1K0296	BOLT	4	
9	390735X1	WASHER	4	
10	339369X1	LOCK WASHER	4	

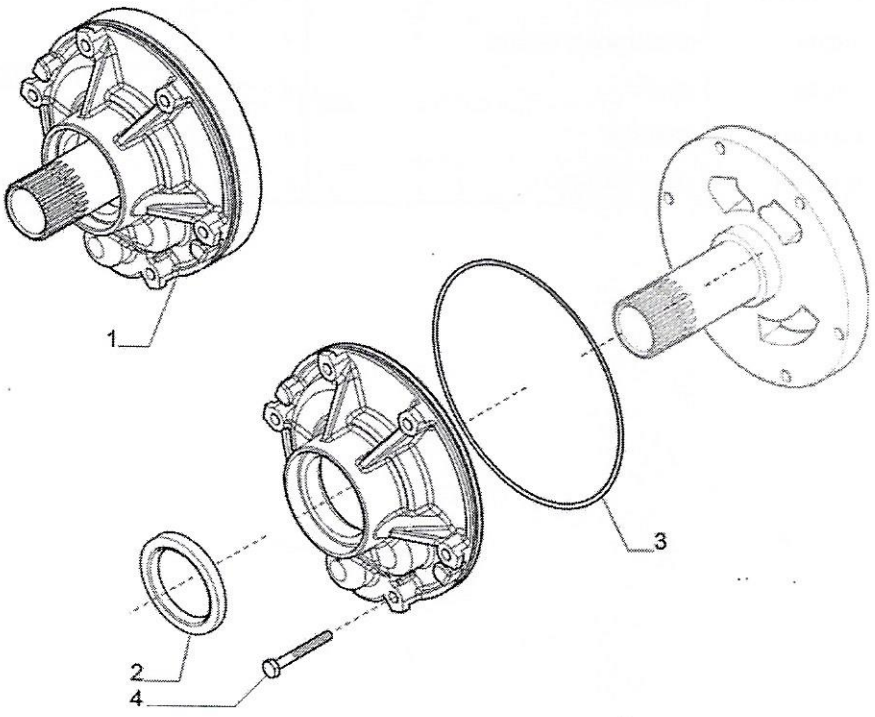
1
2
3
4

Item	Part No.	Name	Qty	Remarks
1	6194309M91	PUMP ASSY	1	
2	6194307M1	SEAL RING	1	
3	6194310M1	O-RING	1	
4	6194308M1	BOLT M8X60	6	

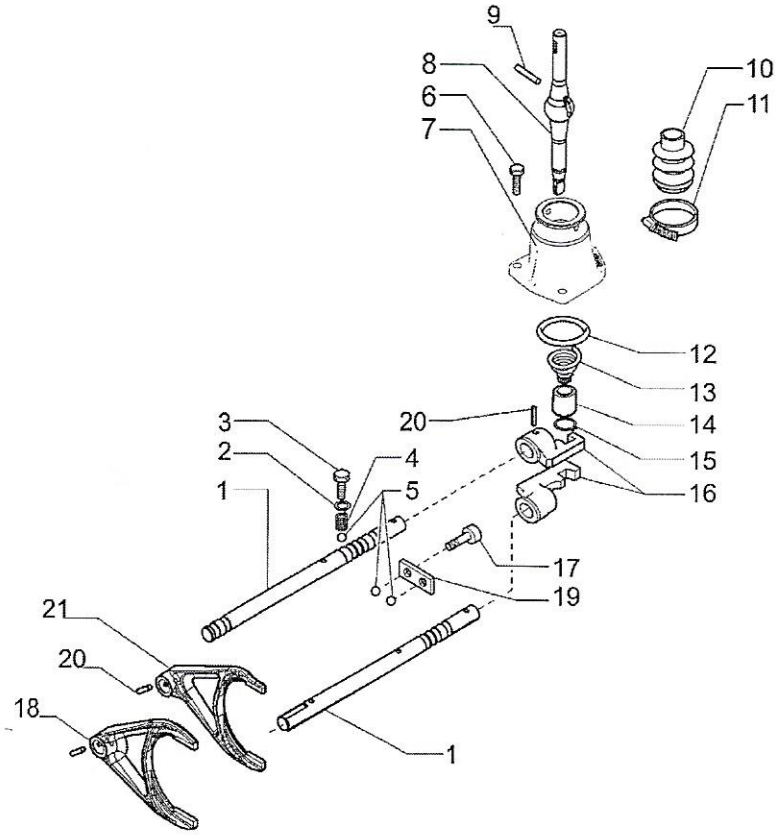
9
8
6
7
10
11
12
13
14
15
16
3
2
1
20
4
5
17
19
21
20
18
1

Item	Part No.	Name	Qty	Remarks
1	53109310	CONTROL PIN	2	
2	6194430M1	WASHER	2	
3	6194431M1	BOLT	2	
4	6194432M1	SPRING	2	
5	6194433M1	BALL	4	
6	6194434M1	BOLT	3	
7	6194435M1	COVER	1	
8	53109341	Control Lever	1	
9	53109342	Pin D6x46	2	
10	6194438M1	BOOT	1	
11	6194439M1	CLAMP	1	
12	6194440M1	O-RING	1	
13	6194441M1	SPRING	1	
14	6194442M1	BUSH	1	
15	6194443M1	RING, SNAP	1	
16	6194444M1	SELECTOR	2	
17	6194445M1	BOLT	2	
18	6194449M1	FORK, SHIFTER	1	
19	6194450M1	PLATE	1	
20	6194447M1	PIN	4	
21	6194448M1	FORK, SHIFTER	1	

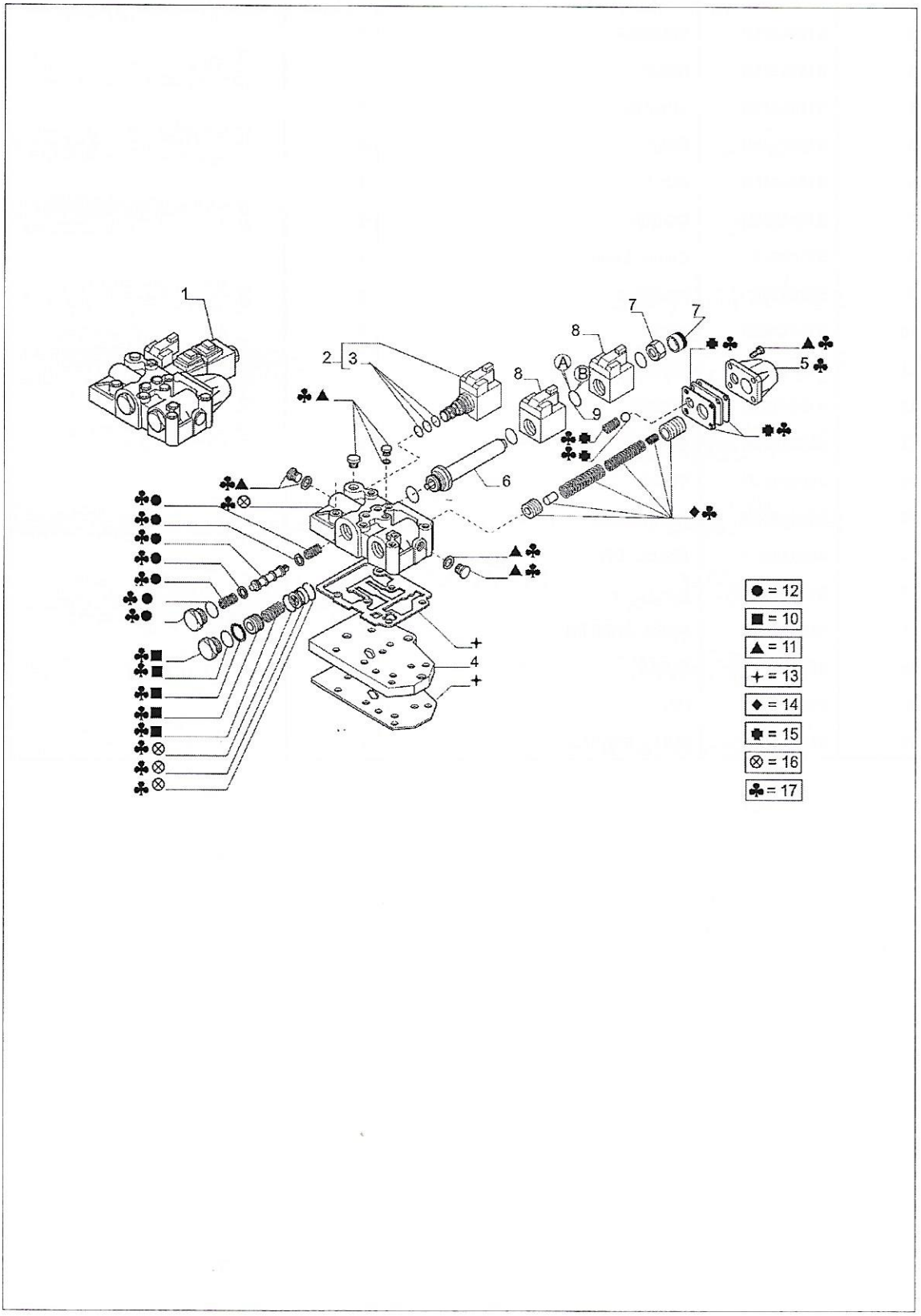
1
2
3
4
5
6
7
7
8
8
9
A
B
● = 12
■ = 10
▲ = 11
+ = 13
◆ = 14
✽ = 15
⊗ = 16
♣ = 17

Item	Part No.	Name	Qty	Remarks
1	6194733M91	Control Valve	1	
2	6194452M91	ELECTRO-VALVE	1	
3	6194453M1	SEAL KIT	1	
4	6194467M1	FEEDING PLATE	1	
5	6194479M1	VALVE COVER	1	
6	6194486M1	SOLENOID PIPE	1	
7	6194482M1	PLUG	1	
8	6194483M1	ELECTR-VALVE COIL	2	
9	53109335	O-RING	4	A
10	53109343	FLOW DIVIDER PISTON KIT	1	
11	53109344	BOLTS KIT	1	
12	53109345	FWD/RVS SPOOL KIT	1	
13	6194738M91	GASKETS KIT	1	
14	53109346	MODULATION VALVE KIT	1	
15	53109347	PLATE KIT	1	
16	53109348	CONTROL VALVE BODY KIT	1	
17	53109349	BODY VALVE ASSY	1	

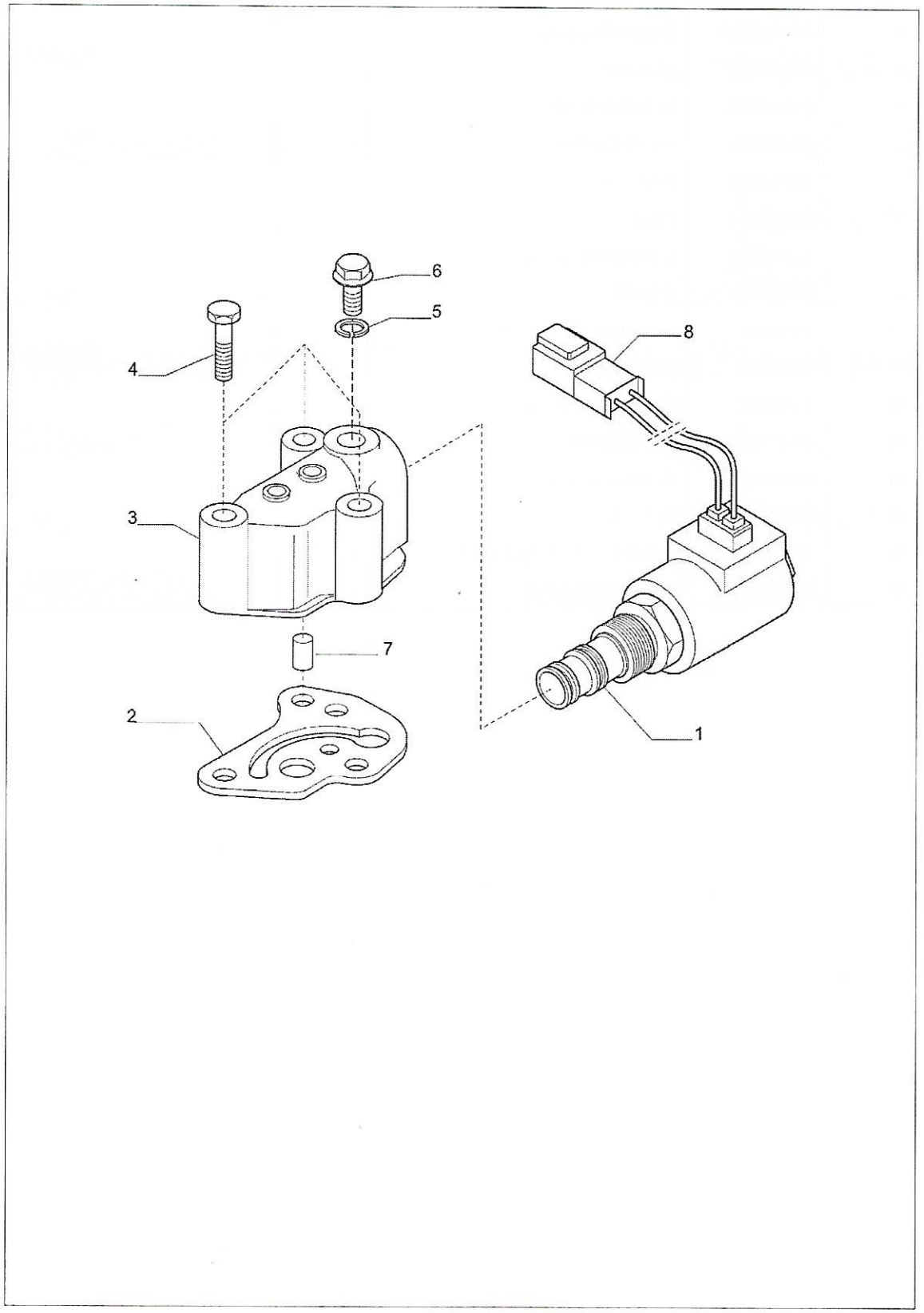
6
5
4
8
3
7
2
1

Item	Part No.	Name	Qty	Remarks
1	6194488M1	Valve, Solenoid	1	
2	6194489M1	Gasket	1	
3	6194490M1	Sleeve	1	
4	6194308M1	BOLT M8X60	3	
5	6194329M1	SEAL WASHER DIN 7603 10X1	1	
6	6194328M1	PLUG	1	
7	53109350	Valvola	1	
8	53109351	Protective Covering	1	

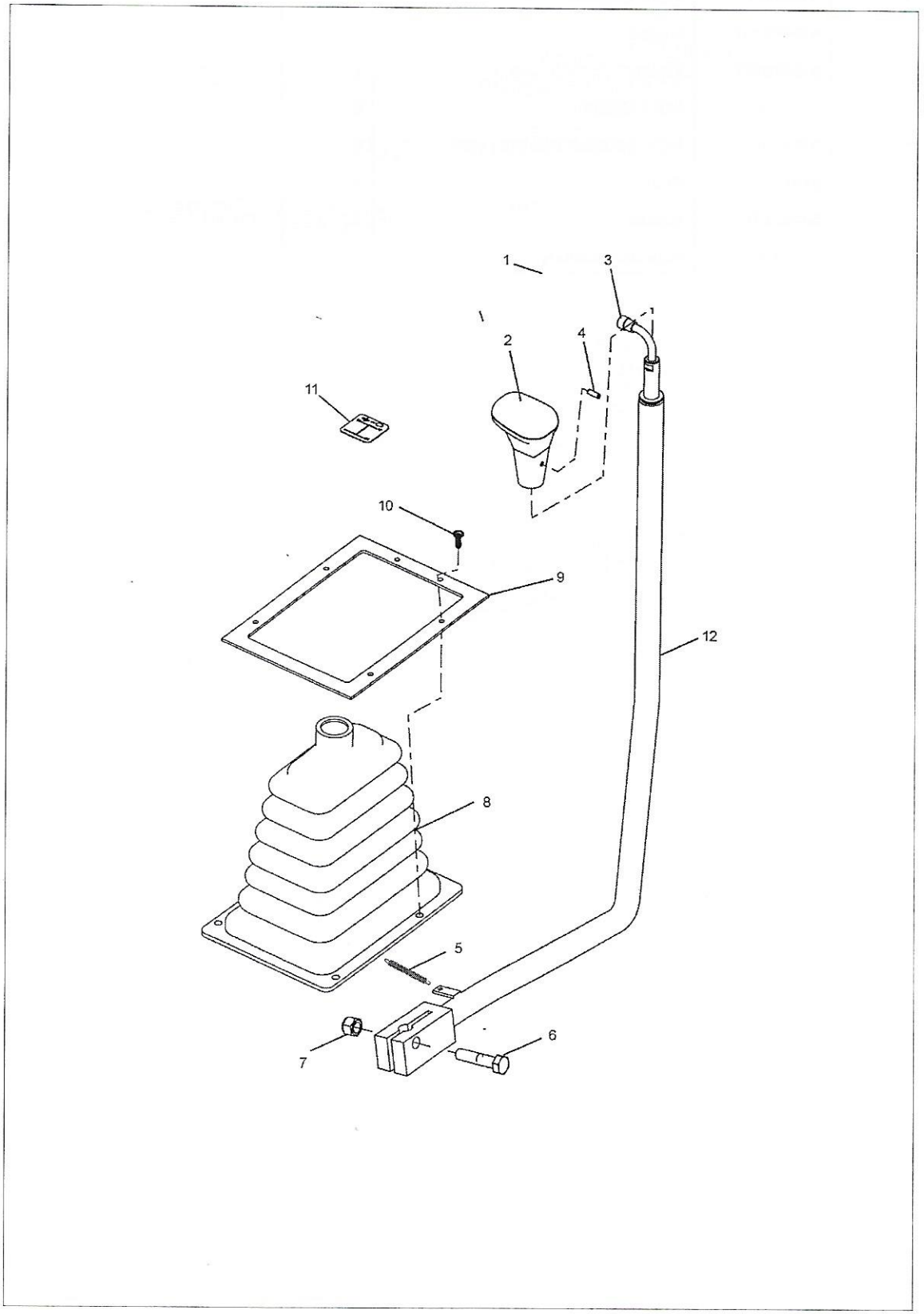
1
3
2
4
11
10
9
12
8
5
7
6

Item	Part No.	Name	Qty	Remarks
1	1D0068	GEAR LEVER KNOB	1	
2	1D0122	KNOB BASE	1	
3	1D0121	Micro Sw. Assy	1	
4	3009429X1	SCREW M6X10	1	
5	1475805M1	SPRING	1	
6	3009511X1	Bolt	1	
7	1440330X1	M12 NYLOC NUT	1	
8	6101248M2	GEAR LEVER BELLOW	1	
9	6101249M2	Retainer	1	
10	3521303M3	FIR TREÉ BUTTON	6	
11	6101921M1	DECAL GEAR CHANGE	1	
12	6112800M91	Gear Lever Weld Assy	1	

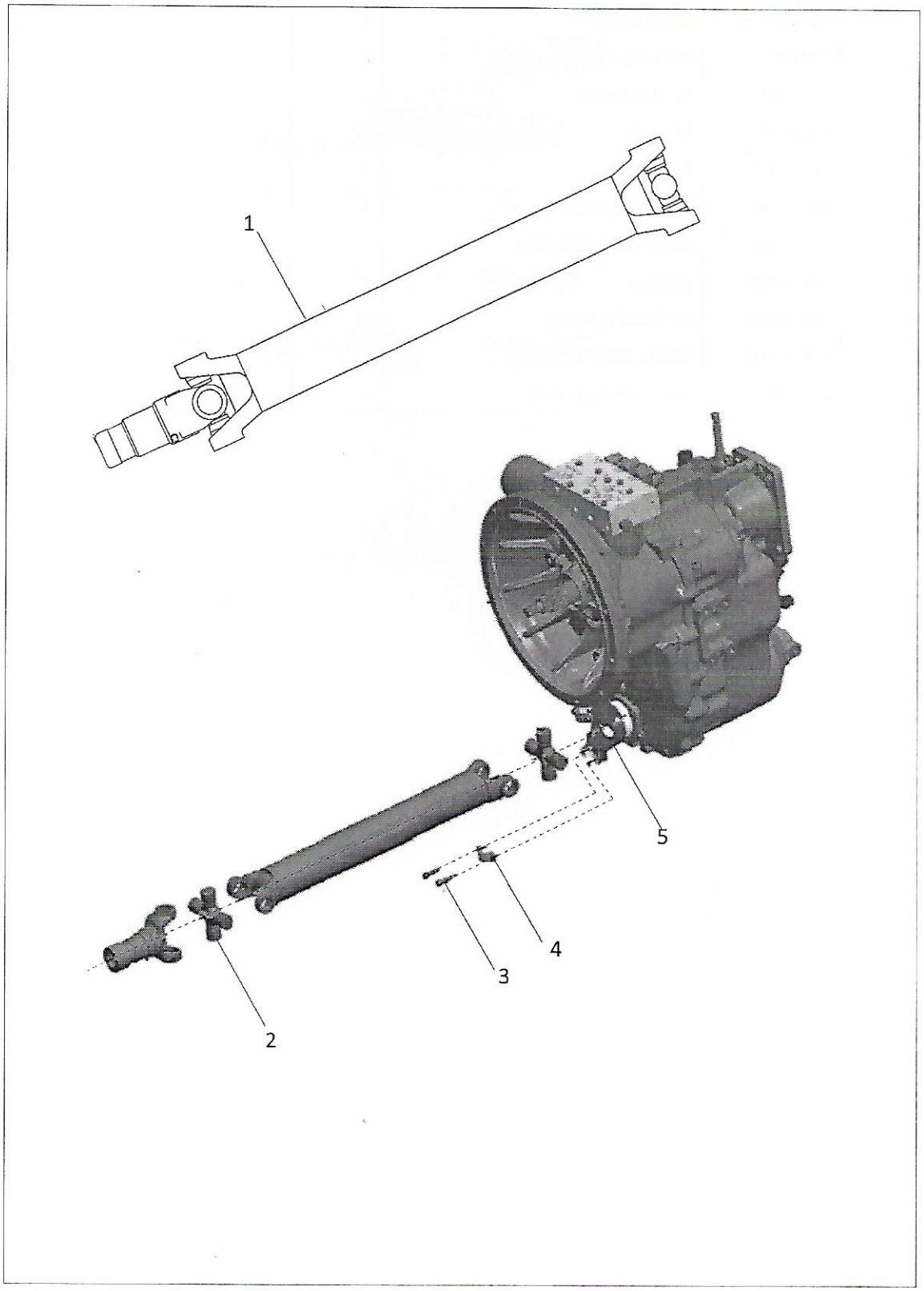
1
2
3
4
5

Item	Part No.	Name	Qty	Remarks
1	1K0201	FRONT DRIVE SHAFT	1	
2	10X0344	UJ KIT-DRIVE SHAFT	2	
3	53110588	BOLT DRIVE SHAFT - ALLEN KEY	8	
4	53102212	BEARING STRAP	4	
5	6194417M1	FLANGE	1	


1
2
3
4

Item	Part No.	Name	Qty	Remarks
1	1K0276	FRONT AXLE GUARD	1	
2	1K0296	BOLT	4	
3	390735X1	WASHER	4	
4	339369X1	LOCK WASHER	4	

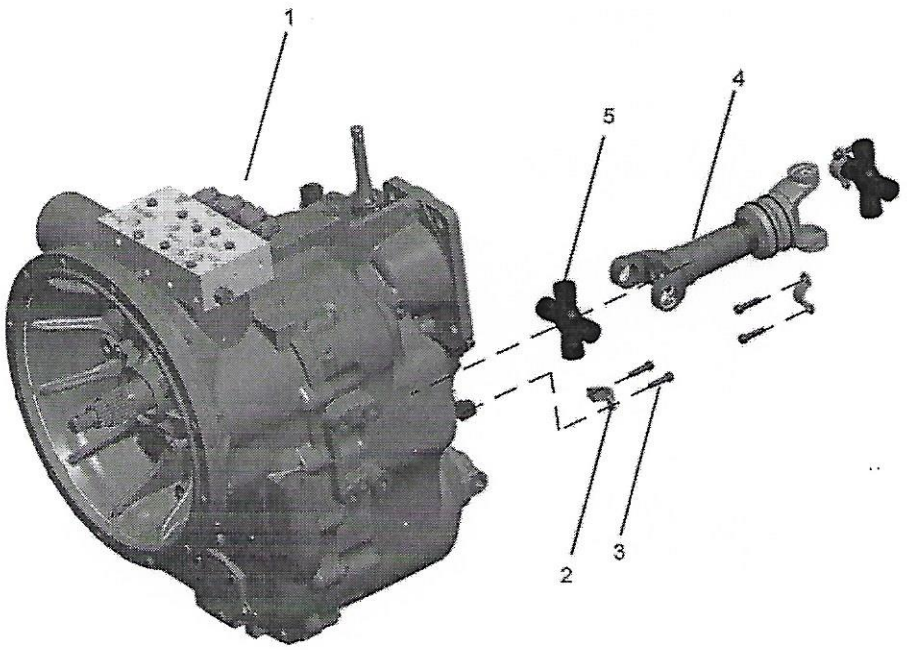
1
5
4
2
3

Item	Part No.	Name	Qty	Remarks
1	1K0275	TLB1 TRANSMISSION-2WD (SPEED SENSOR)	1	
2	53102212	BEARING STRAP	4	
3	53110588	BOLT DRIVE SHAFT - ALLEN KEY	8	
4	6106483M92	DRIVE SHAFT REAR	1	
5	10X0344	UJ KIT-DRIVE SHAFT	2	

AXLE

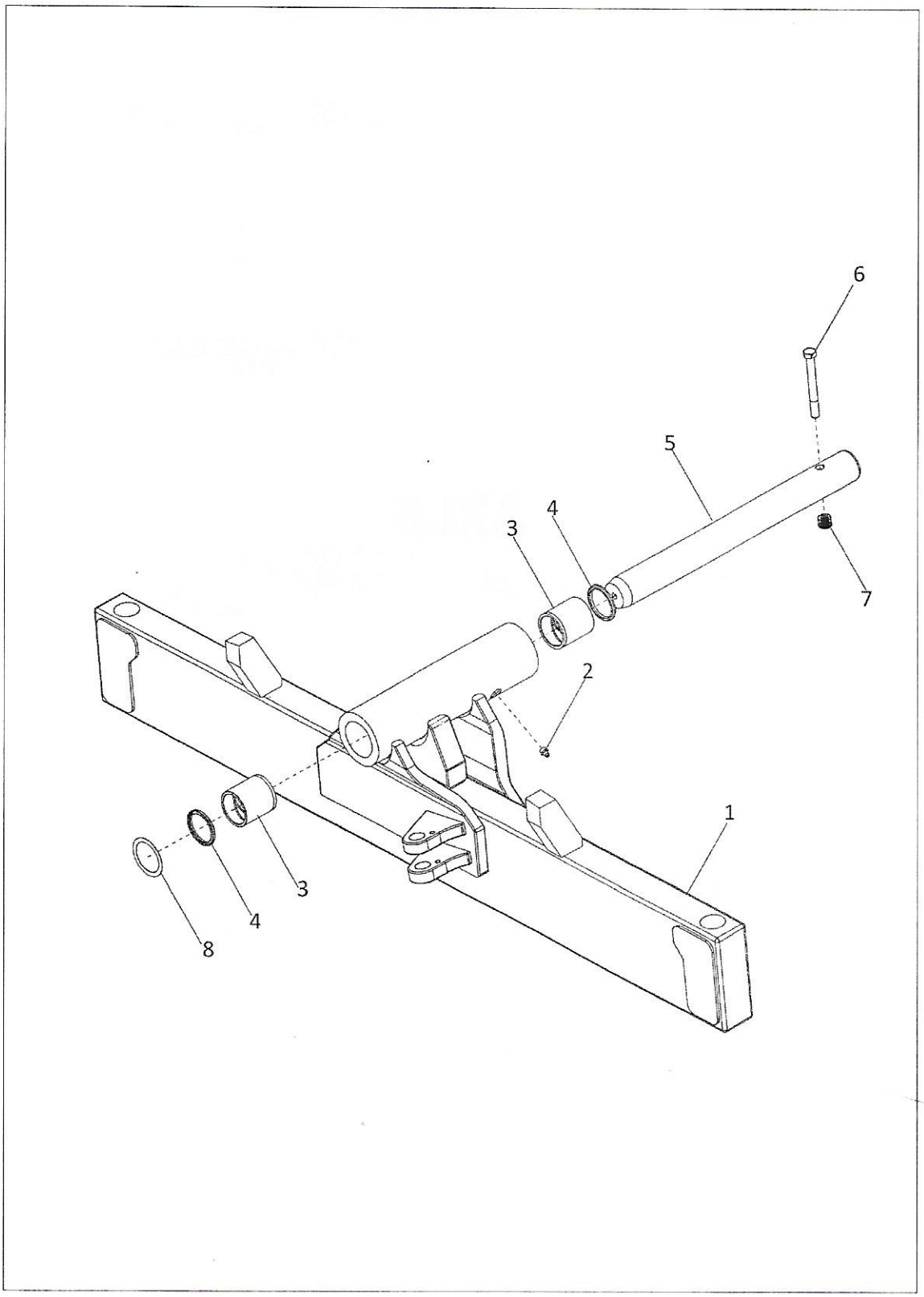
6
5
4
3
7
2
1
3
4
8

Item	Part No.	Name	Qty	Remarks
1	53100379	2WD FRONT AXLE W/A	1	
2	339608X1	FITTING	1	
3	1TK0004M1	BUSH	2	
4	1TK0005M1	SEAL	2	
5	1B1094	PIN AXLE PIVOT	1	
6	3009518X1	HEX BOLT M12X110	1	
7	1440330X1	M12 NYLOC NUT	1	
8	1K0041	SHIM	UAR	
8	1K0043	SHIM	UAR	
8	1K0046	SHIM	UAR	

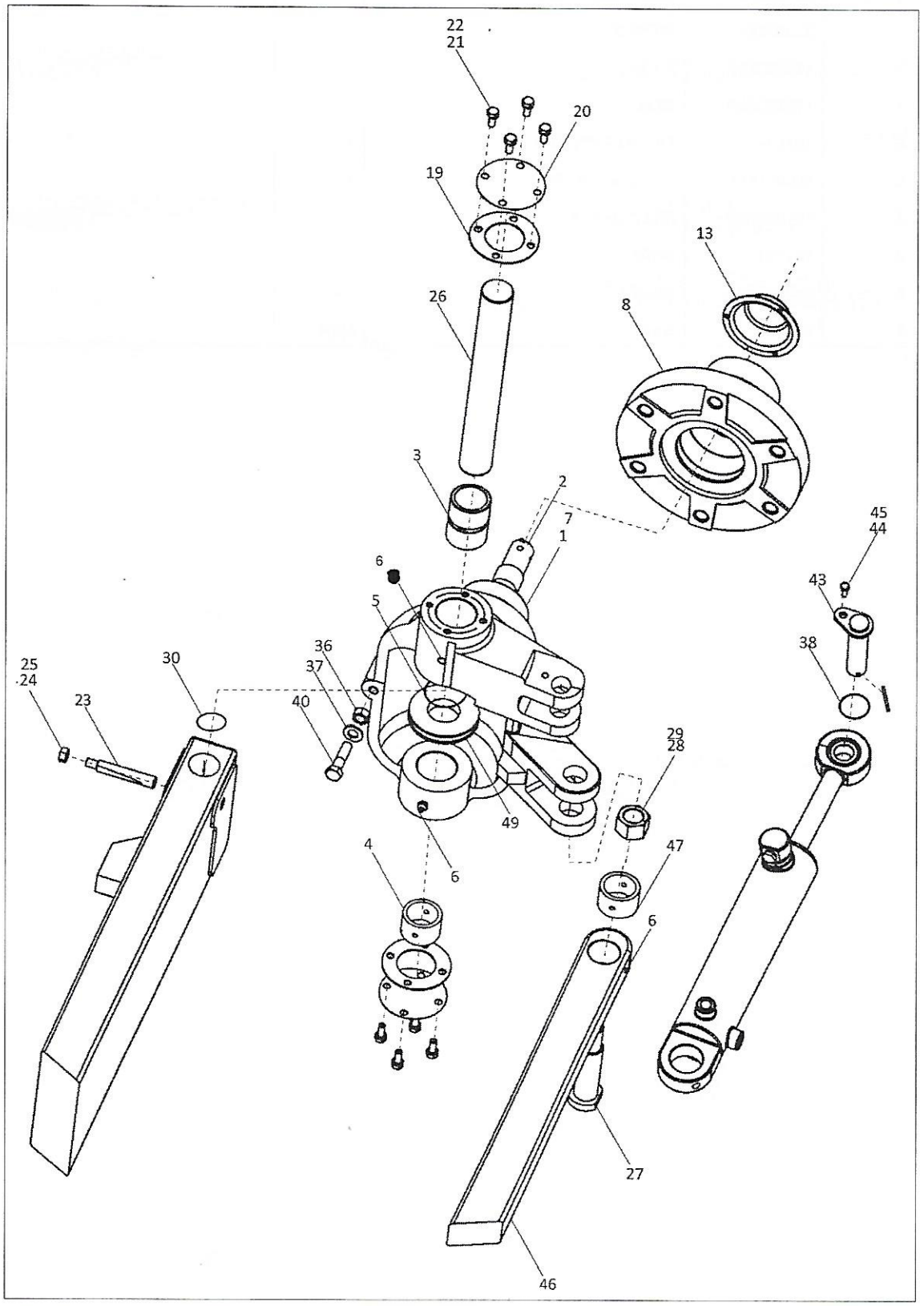
22
21
20
19
13
26
8
3
2
7
1
45
44
6
43
5
36
37
38
25
24
30
23
40
29
28
49
4
6
47
6
27
46

Item	Part No.	Name	Qty	Remarks
1	53112507	STUB AXLE CARRIER LHS-BLACK	1	Old reference number - 1K0126
2	1K0284	STUD-STUB AXLE CARRIER	2	
3	1K0150	BUSH TOP - STUB AXLE CARRIER	2	
4	1K0151	BUSH BOTTOM - STUB AXLE CARRIER	2	
5	3019957X1	OIL SEAL	2	
6	1441858X1	GREASE FITTING	6	
7	53112506	STUB AXLE CARRIER RHS-BLACK	1	Old reference number 1K0127
8	53112505	WHEEL HUB MACHINING-BLACK	2	Old reference number 1K0285
9	1K0283	TAPER ROLLER BEARING DIA 40	2	
10	1K0211	TAPER ROLLER BEARING DIA 50	2	
11	3019968X1	RADIAL OIL SEAL	2	
12	1K0020	SLEEVE	2	
13	1K0288	COVER HUB	2	
14	339721X1	BOLT	6	
15	1440312X1	LOCK WASHER - M5	6	
16	1K0074	HEXAGONAL NUT SLOTTED	2	
17	339037X1	SPLIT PIN	2	
18	1K0286	WASHER WHEEL HUB	2	
19	1K0149	GASKET CARRIER CASTING	4	
20	1K0130	PLATE	4	
21	339374X1	LOCK WASHER M8	16	
22	339123X1	HEX BOLT M8X20 GR 8.8	16	
23	1K0089	COTTER PIN	2	
24	390744X1	PLAIN WASHER	2	
25	390881X1	NUT	2	
26	1K0128	KING PIN	2	
27	1K0014	PIN TRACKROD	2	
28	1440867X1	NYLOC NUT	2	
29	339379X1	SPRING WASHER M24	2	
30	1K0041	SHIM	UAR	
30	1K0042	SHIM WHEEL HUB	UAR	
30	1K0043	SHIM	UAR	
30	1K0044	SHIM WHEEL HUB	UAR	
30	1K0045	SHIM WHEEL HUB	UAR	
30	1K0046	SHIM	UAR	
36	3019407X1	HEX HEAD NUT M12	2	

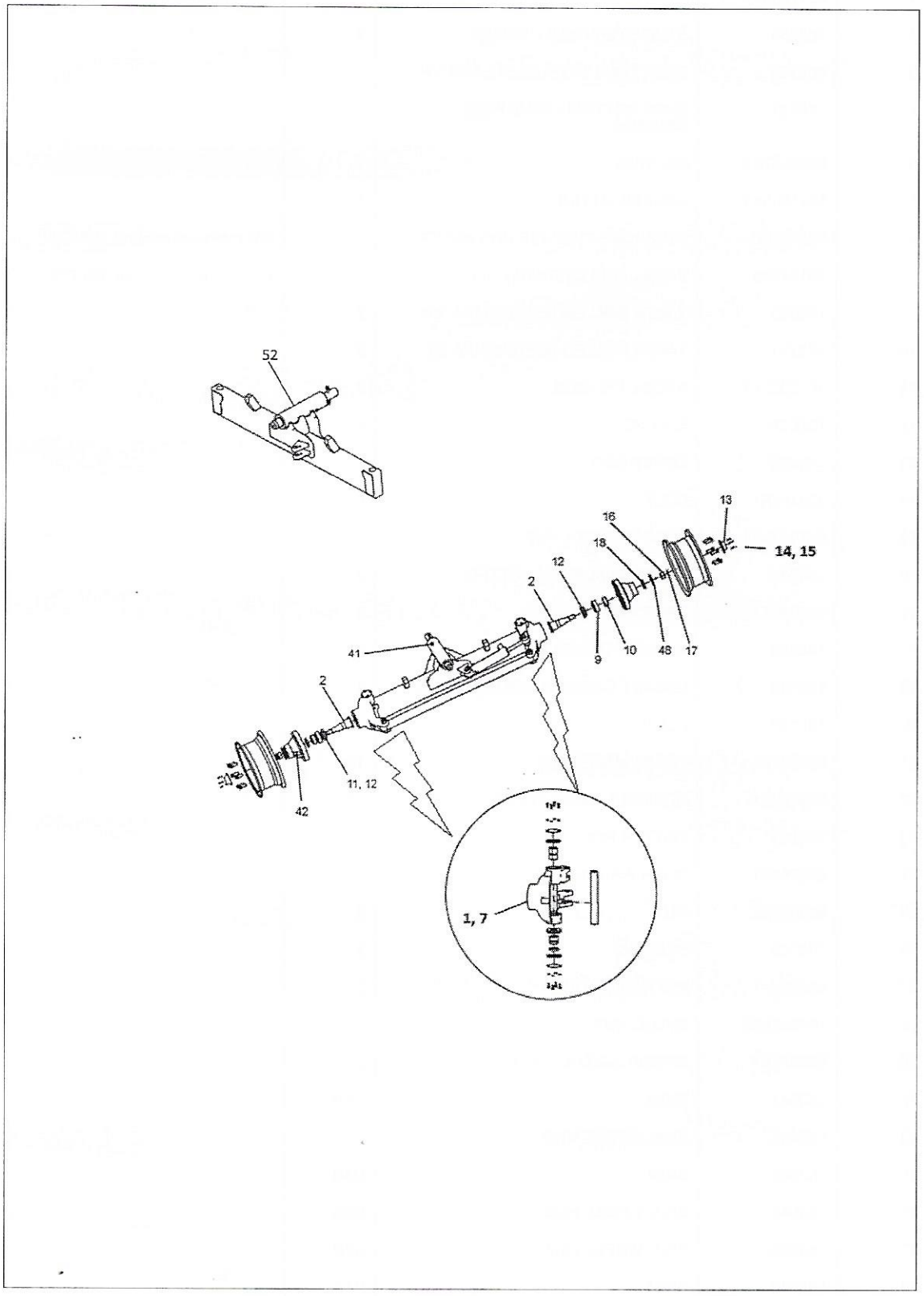
52
13
16
18
14, 15
12
2
41
9
10
48
17
2
11, 12
42
1, 7

Item	Part No.	Name	Qty	Remarks
37	390735X1	WASHER	4	
38	1K0065	SHIM STEERING RAM SIDE	UAR	
40	390887X1	HEX SCREW M12X50	2	
41	1441858X1	GREASE FITTING	4	
42	1K0303	GREASE NIPPLE	2	
43	1K0115	PIVOT PIN STEERING CYLINDER	2	
44	339123X1	HEX BOLT M8X20 GR 8.8	2	
45	390972X1	WASHER M8 - STD	2	
46	1K0012	TRACK ROD	1	
47	1K0152	BUSH - TRACK ROD	2	
48	1K0289	GASKET WHEEL HUB	2	
49	1K0137	BUSH	2	
50	1K0037	HEX SCREW M18	12	
51	339448X1	CONICAL WASHER	12	
52	53100379	2WD FRONT AXLE W/A	1	

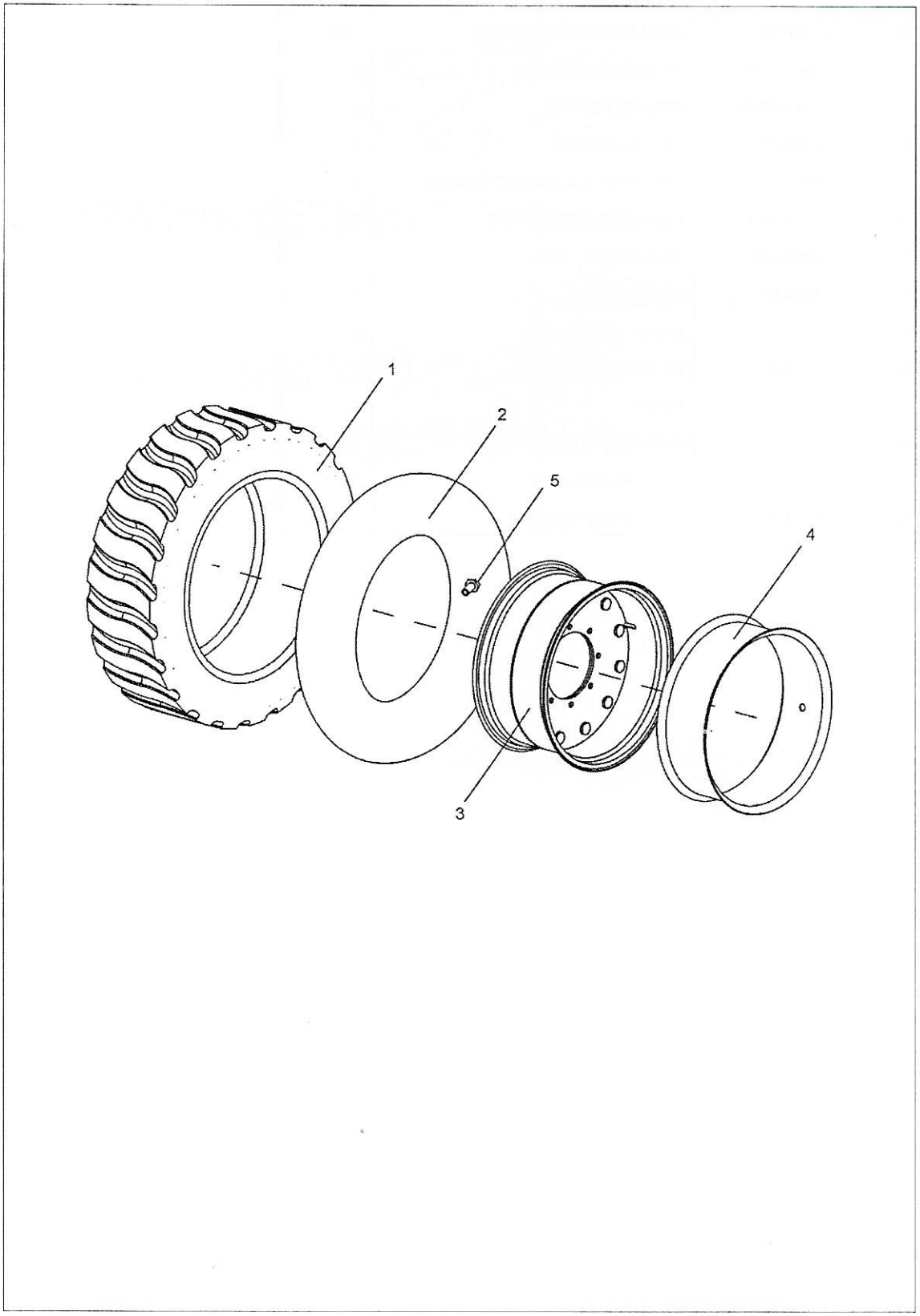
1
2
5
4
3

Item	Part No.	Name	Qty	Remarks
1	1F0008	TYRE 12.5-18	2	
2	1F0013	TUBE - 12.5X18	2	
3	1K0035	WHEEL RIM-FRONT FOR 12.5 X 18 TYRE (WHITE)	2	
3	53109069	WHEEL RIM-FRONT FOR 12.5 X 18 TYRE (SILVER)	2	
3	6112810M1	FRONT WHEEL RIM W11-4WD (WHITE)	2	
3	53109070	FRONT WHEEL RIM W11-4WD (SILVER)	2	
4	1F0012	FLAP 9 X 16	2	
1	1F0004	TYRE 9 X 16	2	
2	1F0011	TUBE 9 X 16	2	
3	1K0061	RIM 9 X 16	2	
3	53108727	RIM 9 X 16 (SILVER)	2	
4	1F0012	FLAP 9 X 16	2	
1	1F0058	TYRE - TUBELESS	2	
5	1K0252	VALVE - TUBELESS TYRE	2	

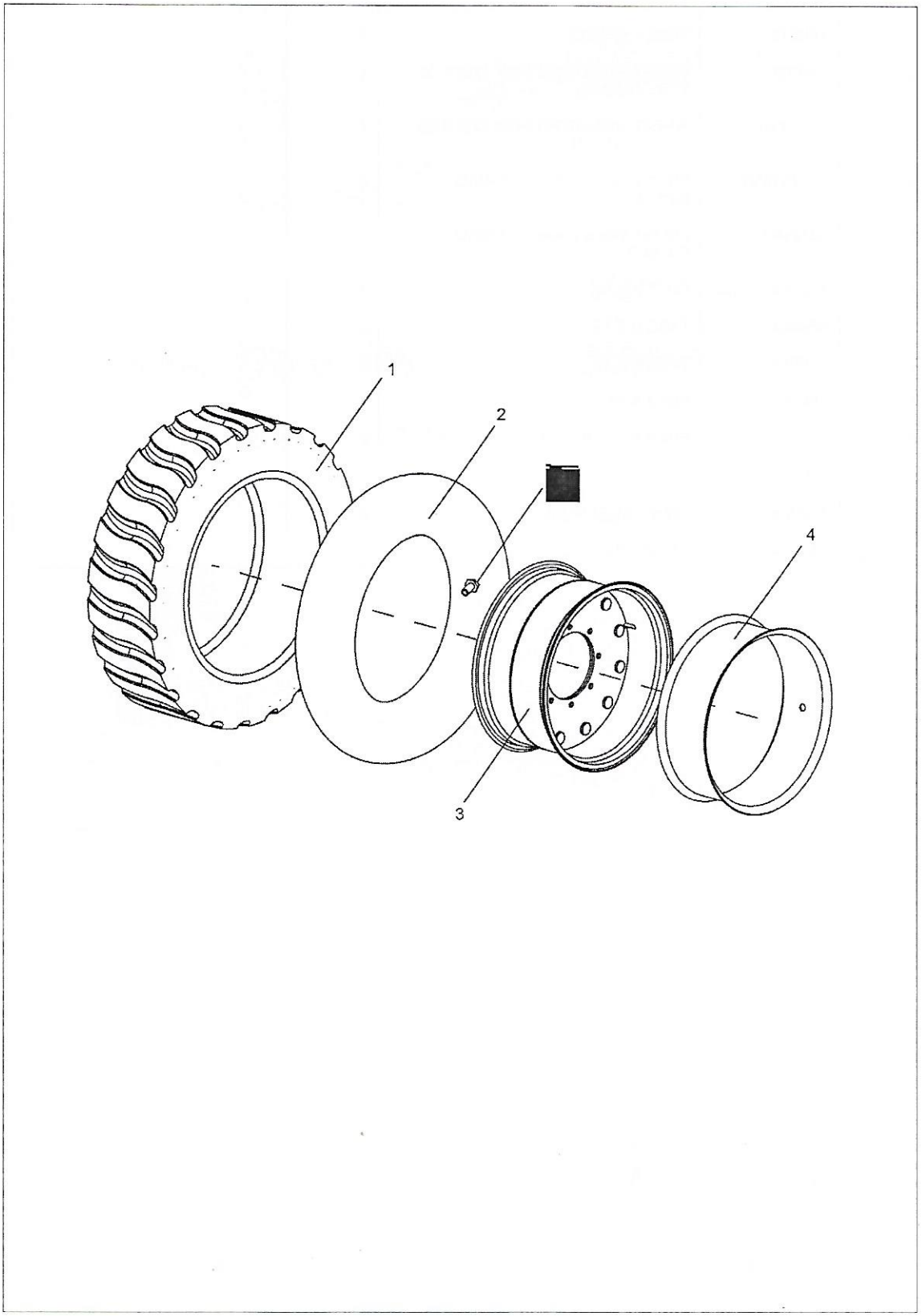
1
2
3
4

Item	Part No.	Name	Qty	Remarks
1	1F0004	TYRE 9 X 16	2	
2	1F0011	TUBE 9 X 16	2	
3	1K0061	RIM 9 X 16	2	
4	1F0012	FLAP 9 X 16	2	

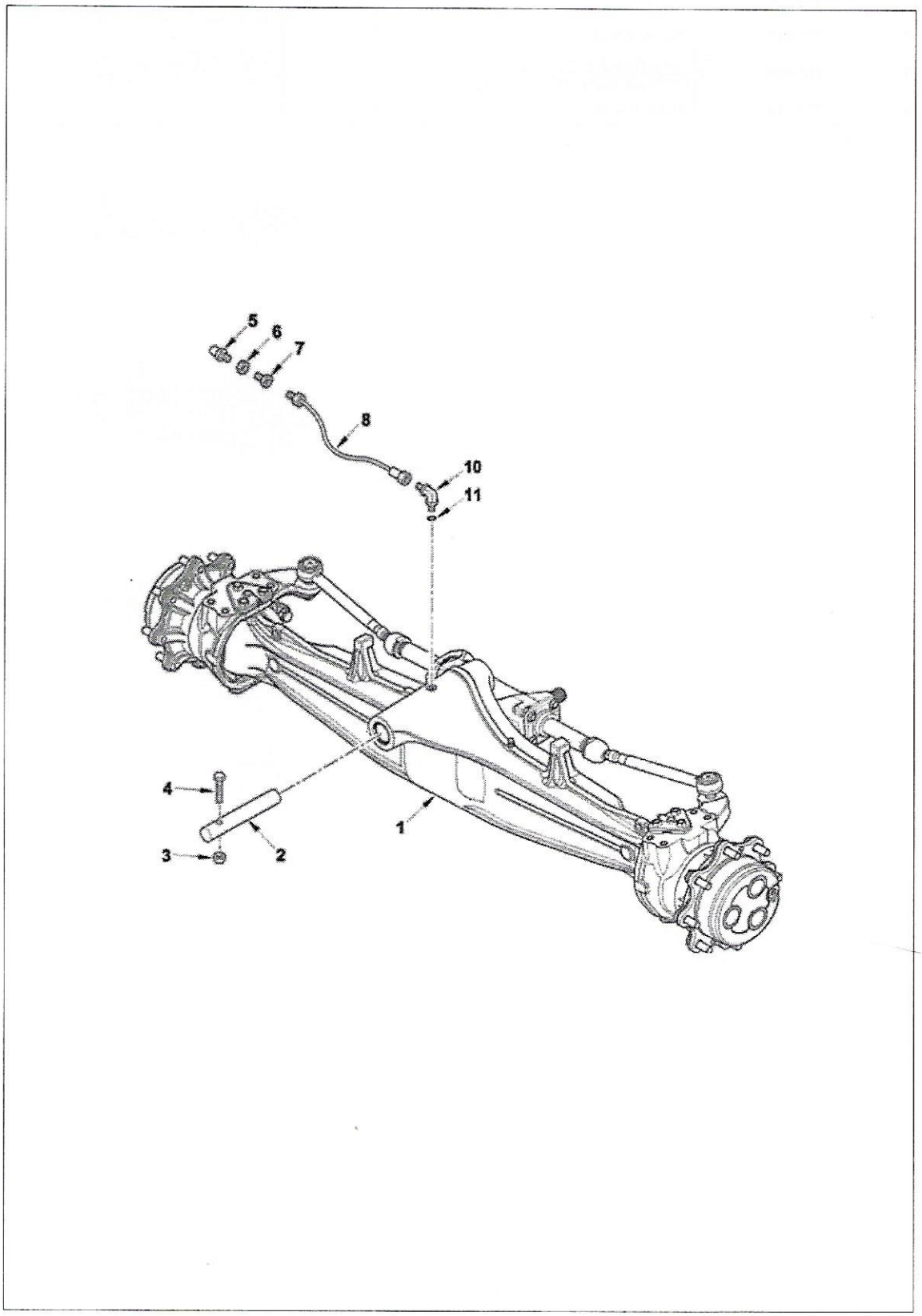
5
6
7
8
10
11
4
3
2
1

Item	Part No.	Name	Qty	
1	53100382	AXLE ASSY. FRONT	1	
2	1B1094	PIN AXLE PIVOT	1	
3	1440330X1	M12 NYLOC NUT	1	
4	3009518X1	HEX BOLT M12X110	1	
5	1441858X1	GREASE FITTING	1	
6	3009694X1	NUT M10 Z1 THIN	1	
7	3521240M1	BULKHEAD UNION	1	
8	6110197M1	HOSE ASSY	1	
10	358760X91	ELBOW 90#7/16-7/16	1	
11	831495M1	O-RING	1	

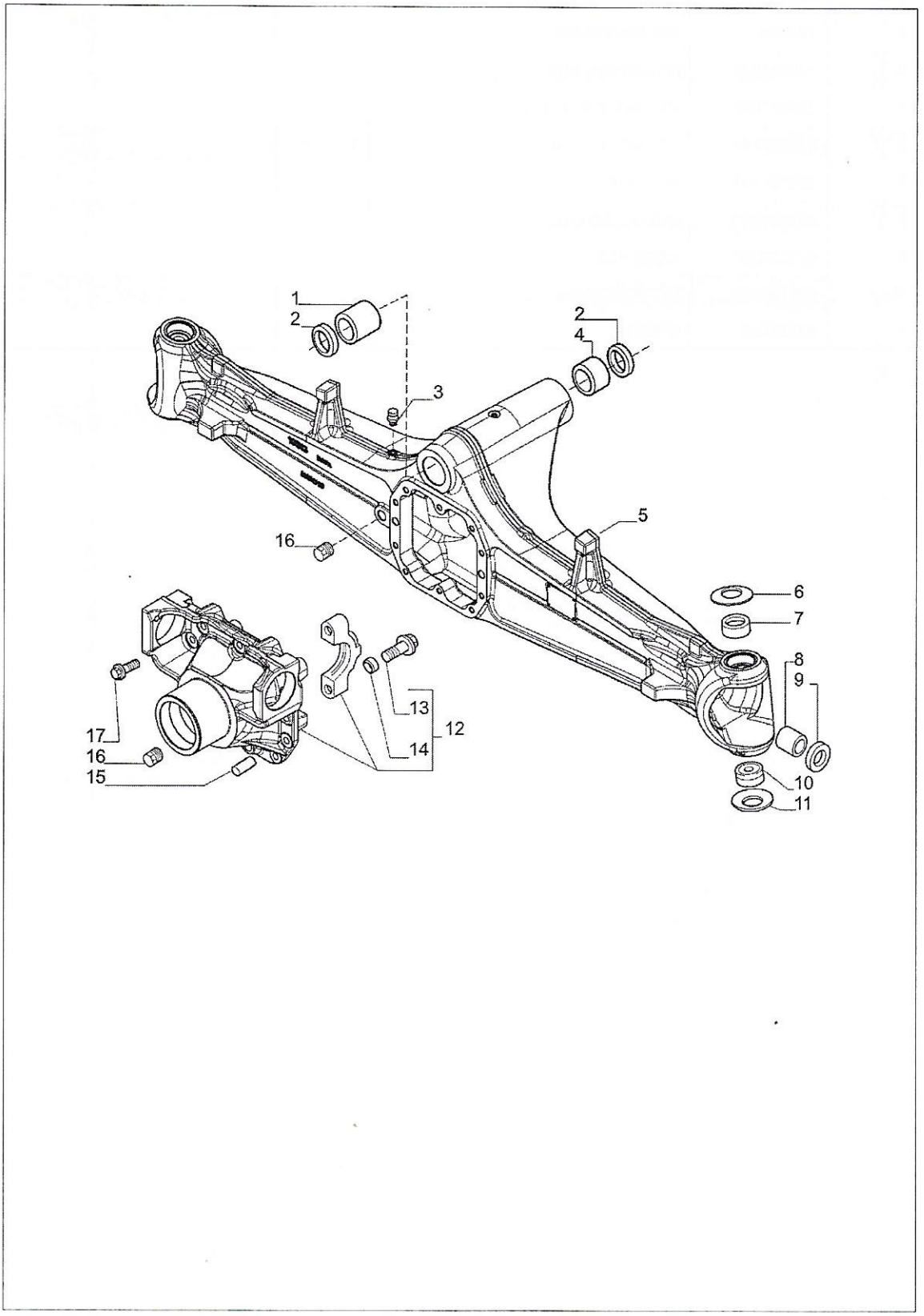
1
2
2
4
3
5
16
6
7
8
9
13
12
14
17
16
15
10
11

Item	Part No.	Name	Qty	Remarks
1	6194021M1	Bush	1	
2	6194017M1	Seal, Oil	2	
3	3475328M1	BREATHER M10X1	1	
4	6194022M1	Bush	1	
5	6194902M1	Housing, Axle	1	
6	3523545M1	Washer	2	
7	6194030M1	Bush	2	
8	3475535M1	Bushing	2	
9	6194903M1	Seal, Oil	2	
10	3523057M1	Bushing	2	
11	3523555M1	Washer	2	
12	6194018M91	Support Assy	2	
13	3523068M1	Screw	4	
14	3475335M1	Bushing	4	
15	3475341M1	Pin	2	
16	3475329M1	Plug	2	
17	3523067M1	Screw	10	

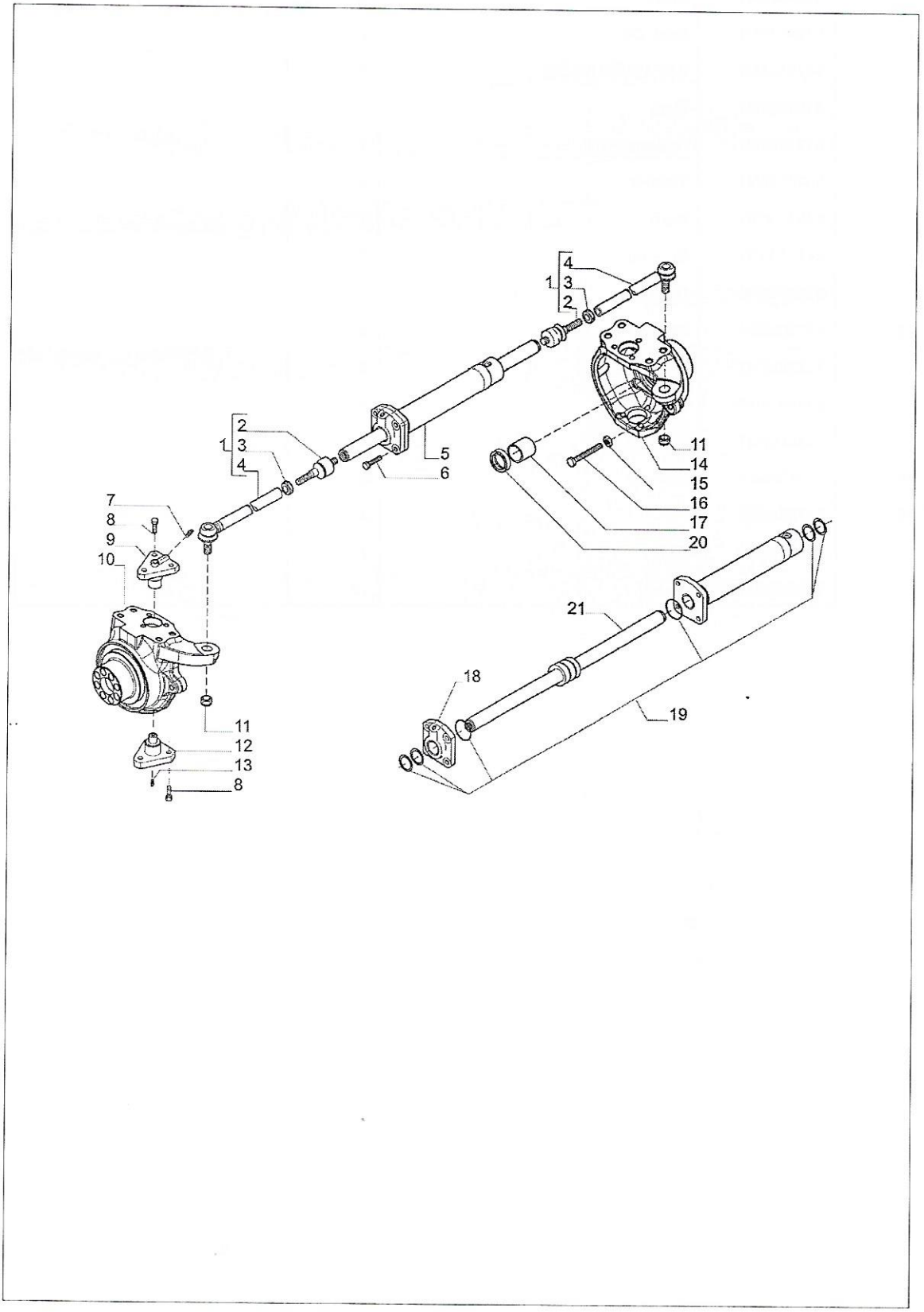
4
1
3
2
2
1
3
4
5
6
11
14
15
16
17
20
7
8
9
10
11
12
13
8
21
18
19

Item	Part No.	Name	Qty	Remarks
1	6112445M91	STEERING ARM ASSY	2	
2	6194904M91	BALL JOINT	2	
3	6193677M1	NUT M24	2	
4	6193678M1	ROD TIE	2	
5	6112444M91	STEERING CYLINDER	1	
6	6194024M1	BOLT M12 X 45	4	
7	6190567M1	Fitting, Grease	2	
8	3523548M1	SCREW	12	
9	6190565M1	PIN	2	
10	6194905M91	HOUSING SWIVEL	1	
11	6190221M1	NUT M20	2	
12	6190566M1	PIN	2	
13	6194111M1	FITTING GREASE	2	
14	6194906M91	HOUSING,SWIVEL	1	
15	6194005M1	NUT M16	2	
16	6194907M1	BOLT M16 X 75	2	
17	6194908M1	BUSH	2	
18	6194909M1	HEAD CYLINDER	1	
19	6194910M91	SEAL KIT	1	
20	6194911M1	OIL SEAL	2	
21	6194912M91	ROD	1	

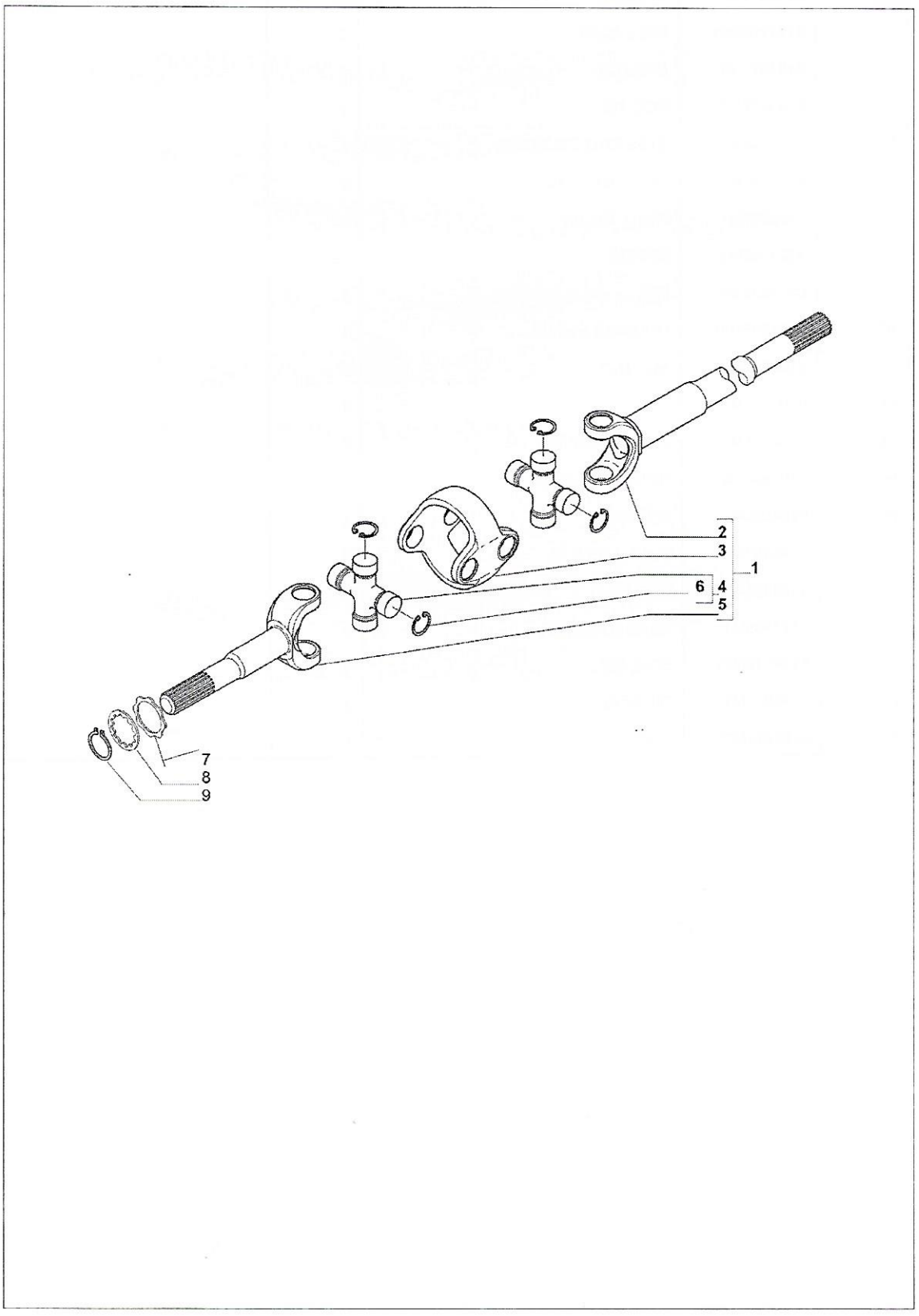
1
2
3
4
5
6
7
8
9

Item	Part No.	Name	Qty	Remarks
1	6194913M91	AXLE SHAFT	2	
2	6194914M1	SHAFT	2	
3	6194915M1	CLEVIS	2	
4	6190253M91	SPIDER ASSY	4	
5	6194916M1	SHAFT	2	
6	6194917M1	SNAP RING	16	
7	6194918M1	WASHER	2	
8	6194919M1	WASHER	2	
9	6193699M1	Snap ring D45	2	

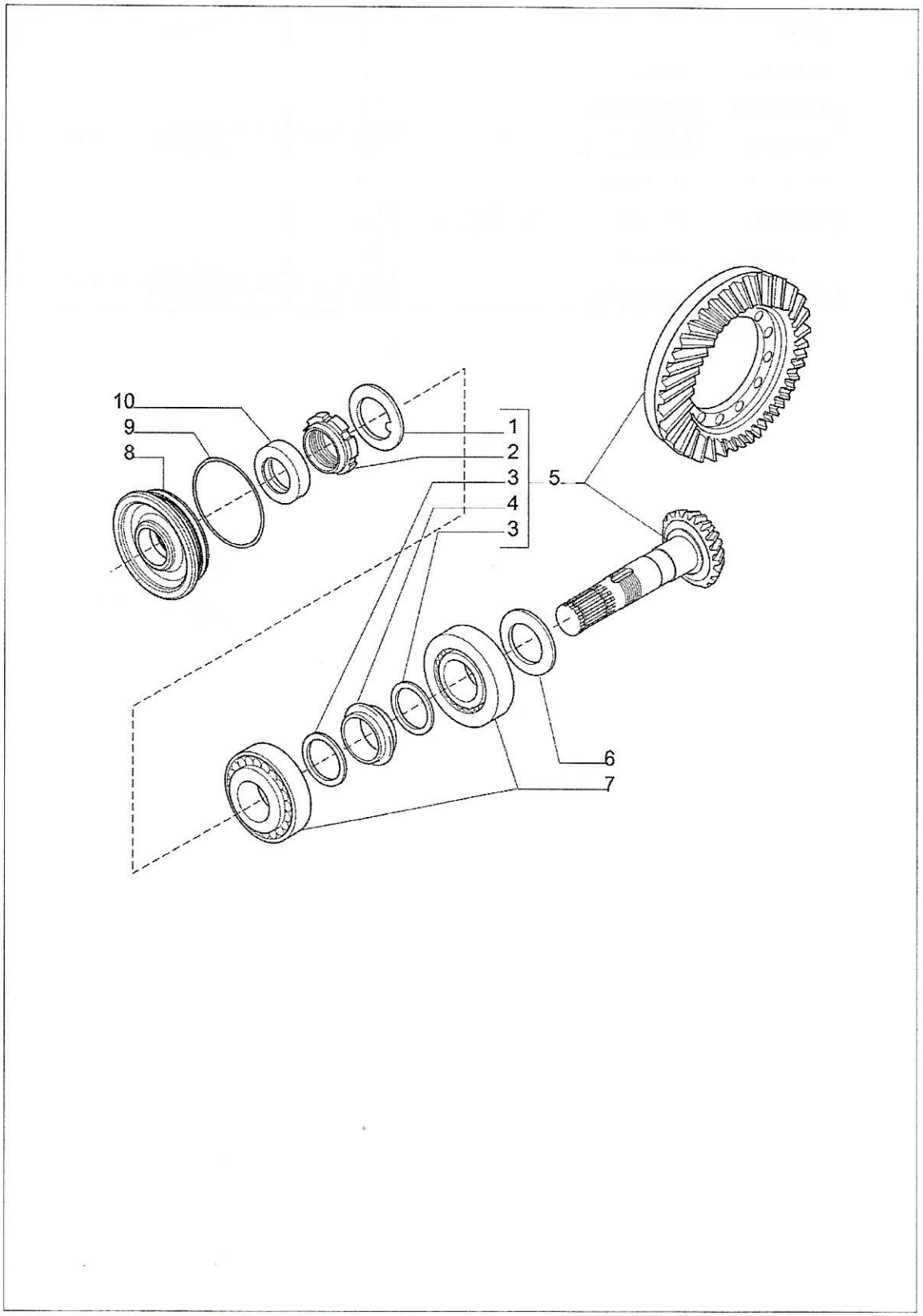
10
9
8
1
2
3
4
3
5
6
7

Item	Part No.	Name	Qty	Remarks
1	3475569M1	WASHER LOCK	1	
2	3475570M1	NUT	1	
3	3523082M1	WASHER	2	
4	3523083M1	SPACER	1	
5	6194506M91	KIT CROWNWHEEL	1	
6	6190197M1	Shim	-	2.5 mm
6	6190198M1	Shim	-	2.6 mm
6	6190199M1	Shim	-	2.7 mm
6	6190200M1	Shim	-	2.8 mm
6	6190201M1	Shim	-	2.9 mm
6	6190202M1	Shim	-	3.0 mm
6	6190203M1	Shim	-	3.1 mm
6	6190204M1	Shim	-	3.2 mm
6	6190205M1	Shim	-	3.3 mm
6	6190206M1	Shim	-	3.4 mm
7	3475567M1	BEARING	2	
8	6194025M1	Cover	1	
9	6194006M1	O-Ring	1	
10	6193433M1	Seal, Oil	1	

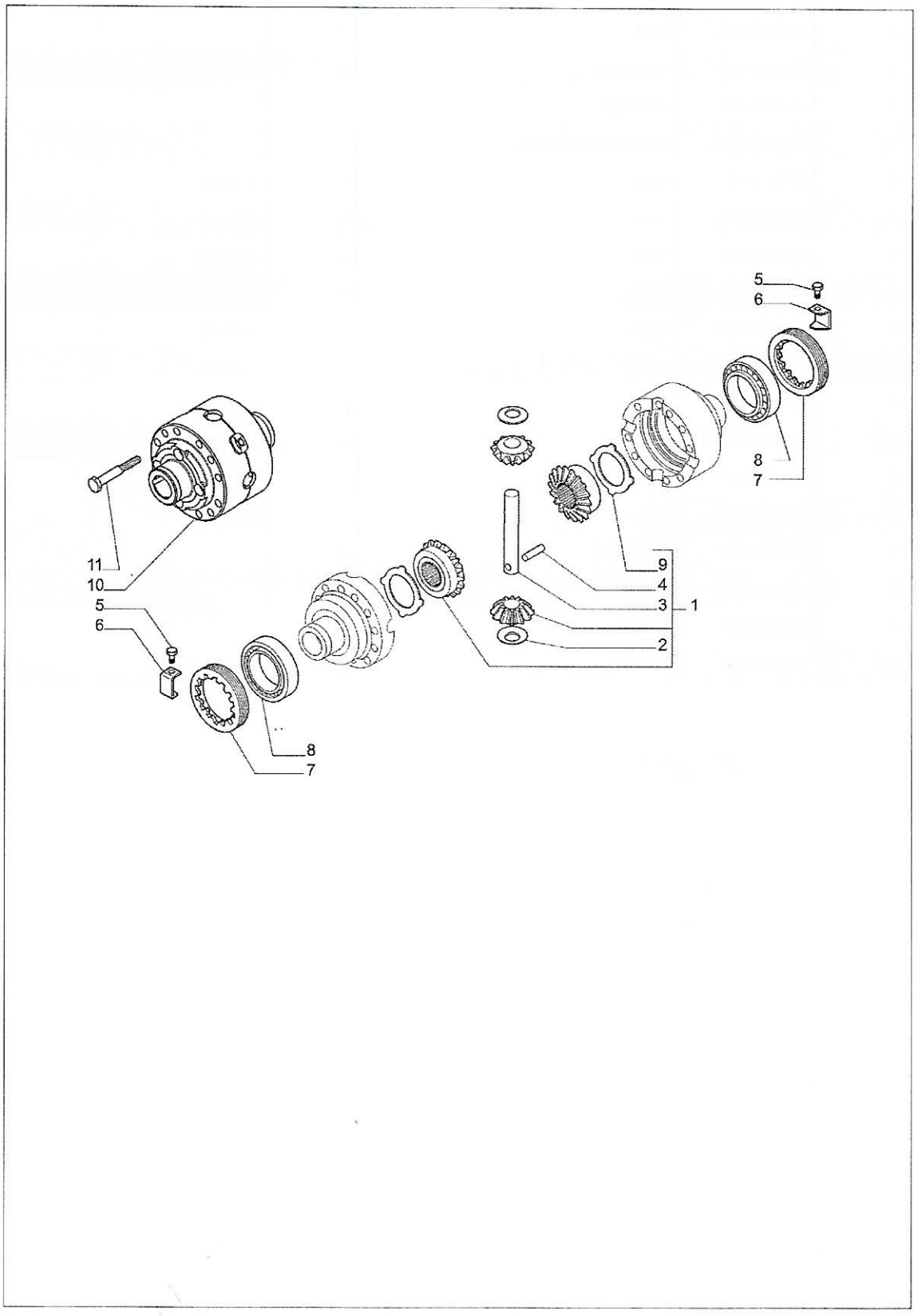
5
6
8
7
9
4
3
1
2
11
10
5
6
8
7

Item	Part No.	Name	Qty
1	6190225M91	Kit, Dierential	1
2	3475579M1	THRUST WASHER	2
3	3523085M1	Shaft	1
4	3523088M1	PIN DOWEL	1
5	3523583M1	BOLT M6X40	2
6	3475583M1	PLATE	2
7	3475584M1	RING NUT	2
8	3475585M1	BEARING ROLLER	2
9	3475581M1	Washer, Thrust	2
10	6190815M91	Housing Assy	1
11	3523086M1	SCREW	12

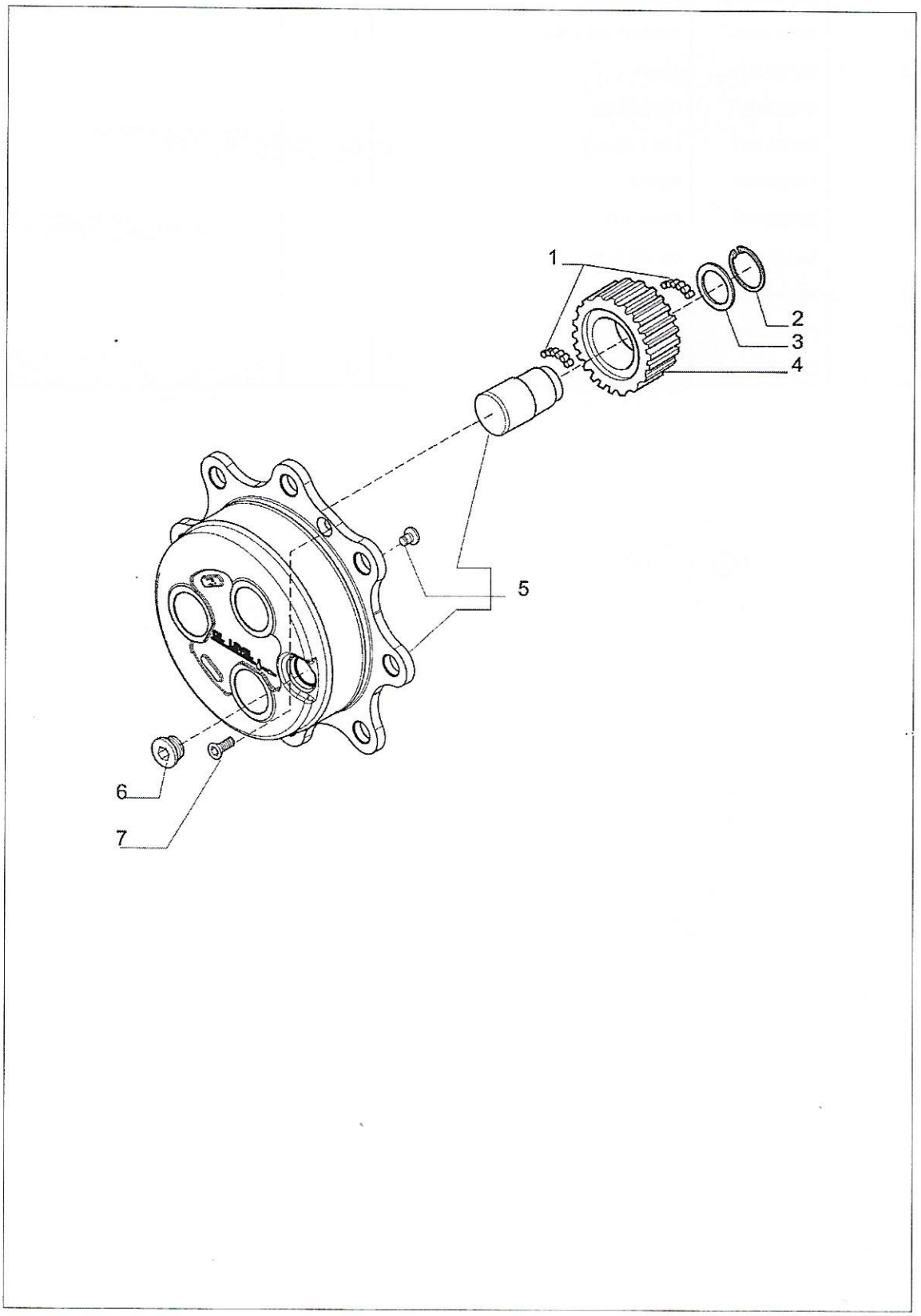
1
2
3
4
5
6
7

Item	Part No.	Name	Qty	Remarks
1	6193417M1	NEEDLE	336	
2	6194928M1	SNAP RING	6	
3	6194929M1	WASHER	6	
4	6194930M1	Gear	6	
5	6194931M91	Kit, Planetary Carrier	2	
6	3523632M1	PLUG M30X2	2	
7	6190282M1	BOLT M8X20	4	

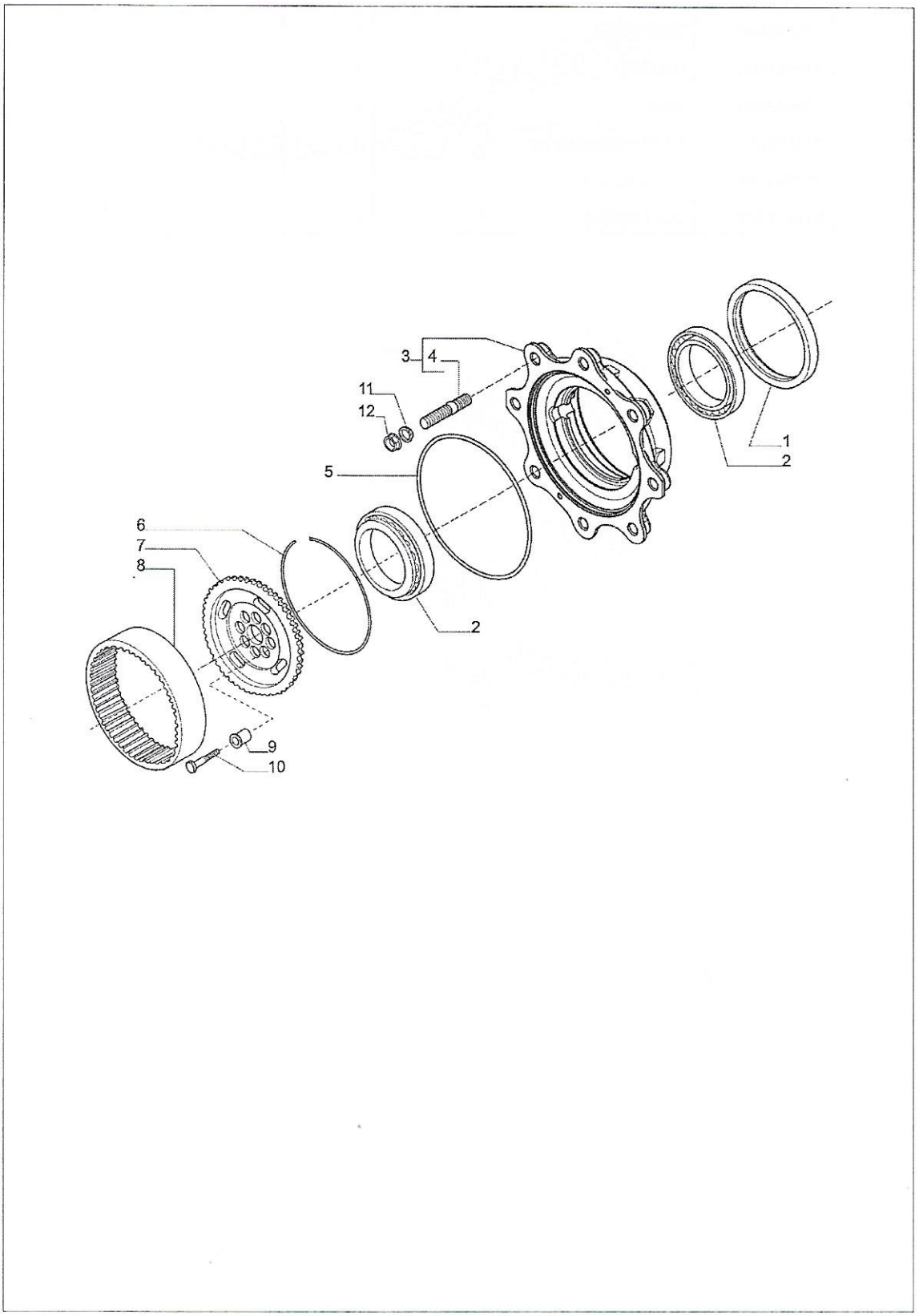
3
4
11
12
5
6
7
8
9
10
2
1
2

Item	Part No.	Name	Qty	Remarks
1	6193704M1	CASSETTE SEAL 150 180 14,5/16	2	
2	3475599M1	BEARING	4	
3	6194920M91	Kit, Wheel Hub	2	
4	6194921M1	Stud	16	
5	6194922M1	O-RING	2	
6	6194923M1	RING	2	
7	53108530	HUB RING KIT	2	
8	NSS	CROWN GEAR Z60	2	
9	6194926M1	BUSH	16	
10	6194927M1	SCREW M12 X 45	16	
11	3475615M1	WASHER	16	
12	3475616M1	NUT	16	

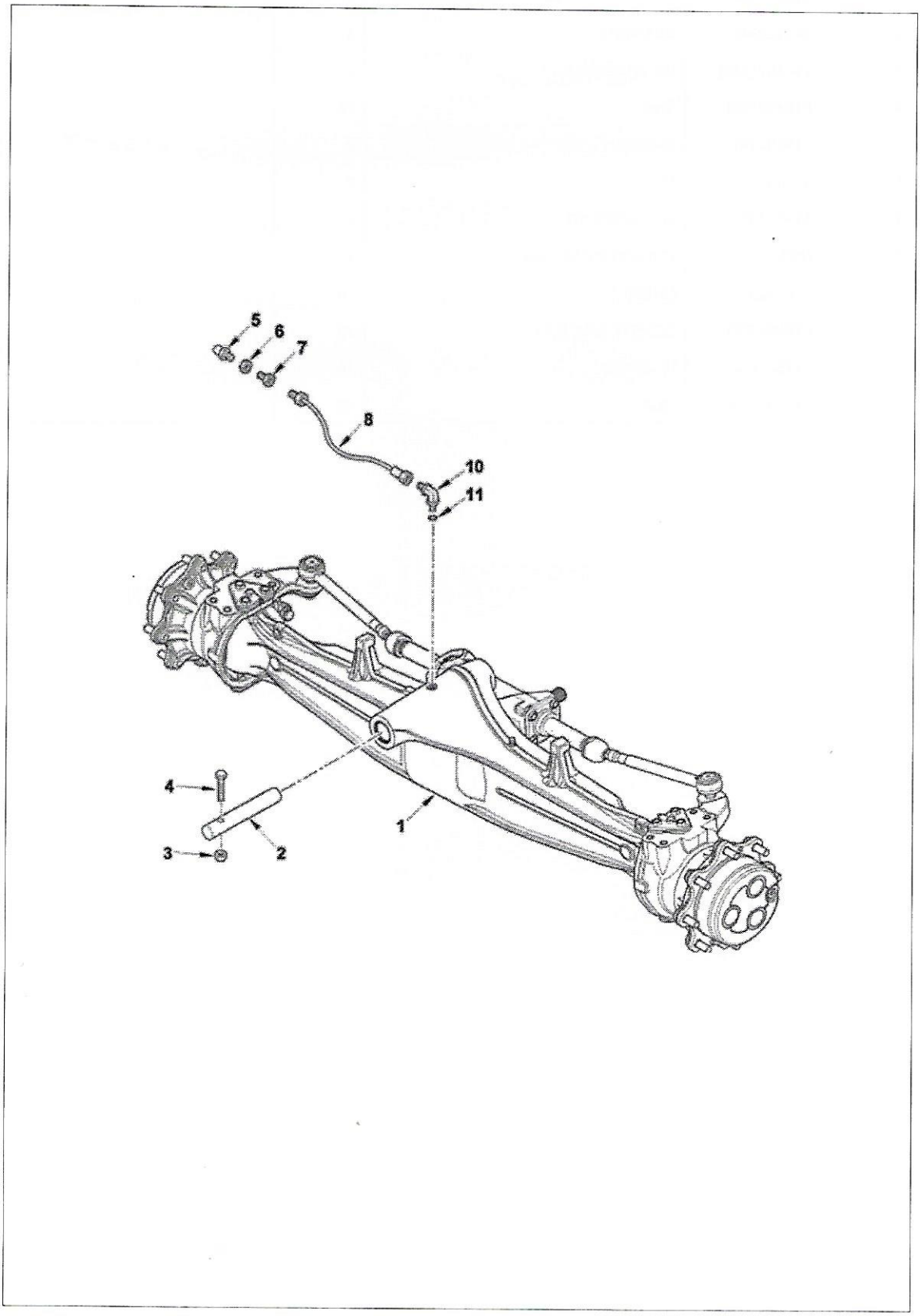
5
6
7
8
10
11
4
3
2
1

Item	Part No.	Name	Qty	
1	53100382	AXLE ASSY. FRONT	1	
2	1B1094	PIN AXLE PIVOT	1	
3	1440330X1	M12 NYLOC NUT	1	
4	3009518X1	HEX BOLT M12X110	1	
5	1441858X1	GREASE FITTING	1	
6	3009694X1	NUT M10 Z1 THIN	1	
7	3521240M1	BULKHEAD UNION	1	
8	6110197M1	HOSE ASSY	1	
10	358760X91	ELBOW 90#7/16-7/16	1	
11	831495M1	O-RING	1	

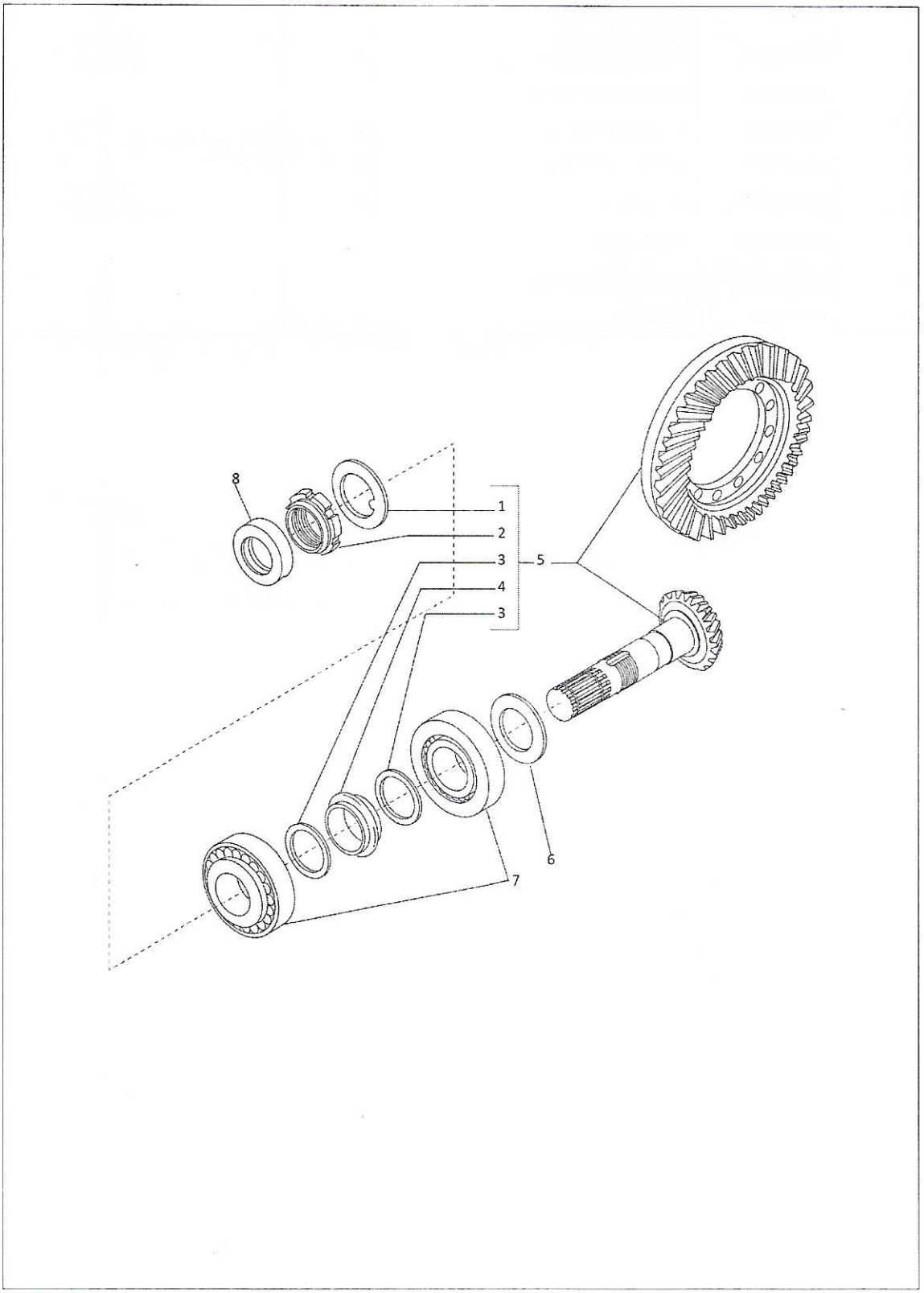
8
1
2
3
4
3
5
6
7

Item	Part No.	Name	Qty	Remarks
1	3475569M1	WASHER LOCK	1	
2	3475570M1	NUT	1	
3	3523082M1	WASHER	2	
4	3523083M1	SPACER	1	
5	6194506M91	KIT CROWNWHEEL	1	
6	53110356	SHIM KIT 2.50 TO 3.40MM	1	
7	3475567M1	BEARING	2	
8	53110357	SEAL	1	

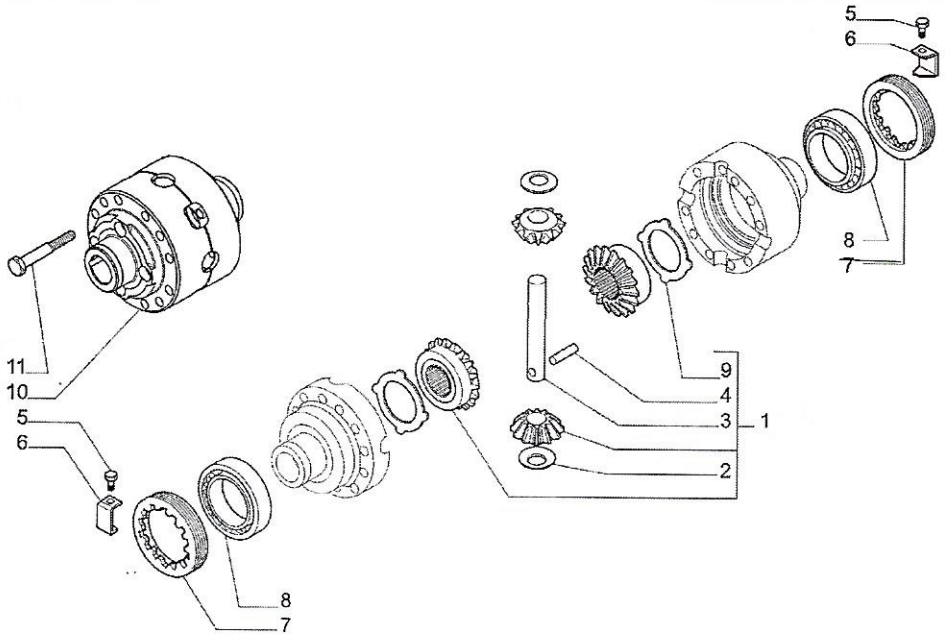
5
6
8
7
9
4
3
1
2
11
10
5
6
8
7

Item	Part No.	Name	Qty
1	53110358	DIFFERENTIAL KIT	1
2	3475579M1	THRUST WASHER	2
3	53110360	SHAFT	2
4	3523088M1	PIN DOWEL	1
5	3523583M1	BOLT M6X40	2
6	3475583M1	PLATE	2
7	3475584M1	RING NUT	2
8	3475585M1	BEARING ROLLER	2
9	53110359	DRIVE PLATE	2
10	53110361	HOUSING ASSY	1
11	3523086M1	SCREW	12

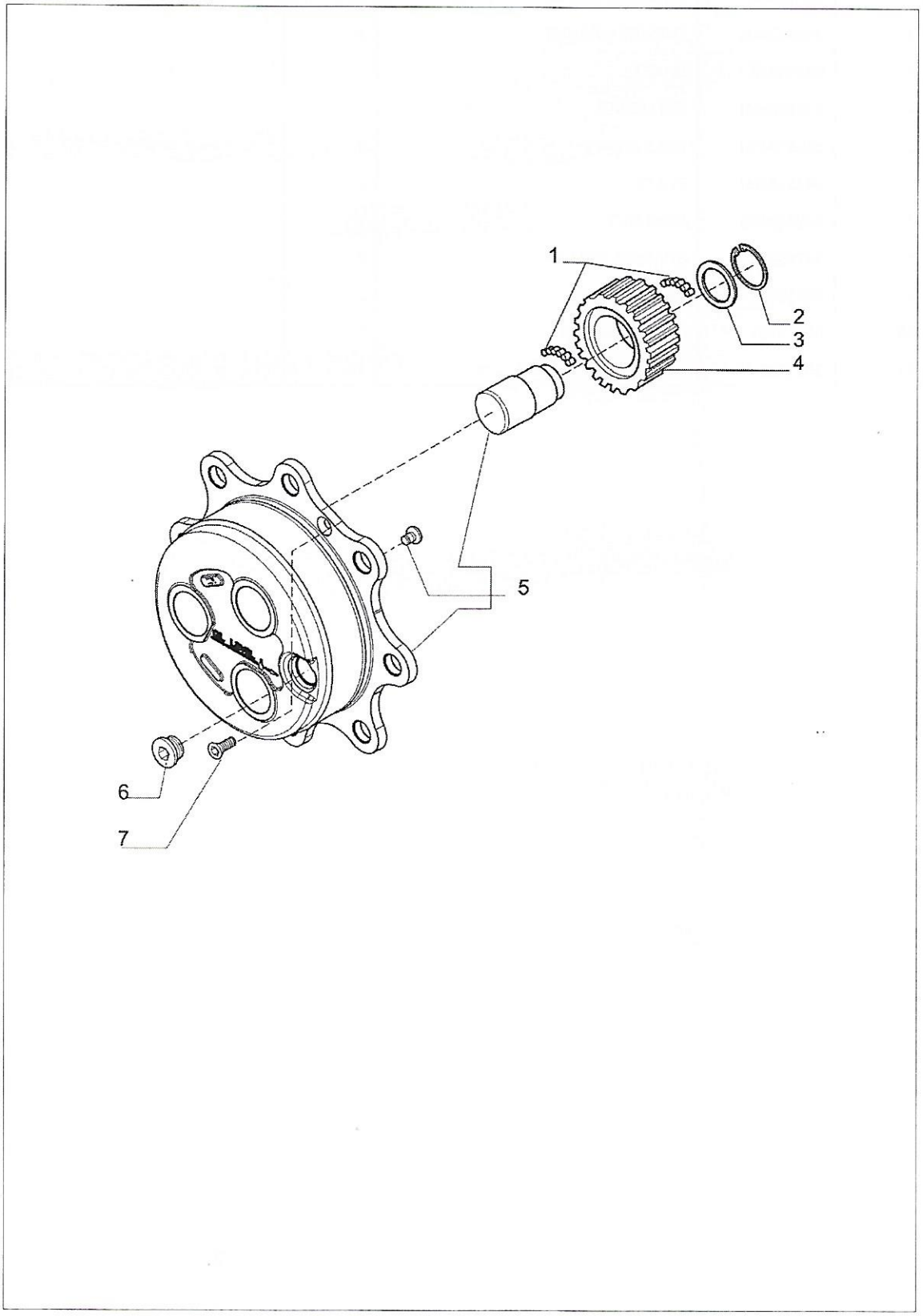
1
2
3
4
5
6
7

Item	Part No.	Name	Qty	Remarks
1	6193417M1	NEEDLE	336	
2	6194928M1	SNAP RING	6	
3	6194929M1	WASHER	6	
4	53110365	GEAR Z23	6	
5	53110364	PLANETARY CARRIER ASSY	2	
6	3523632M1	PLUG M30X2	2	
7	6190282M1	BOLT M8X20	4	

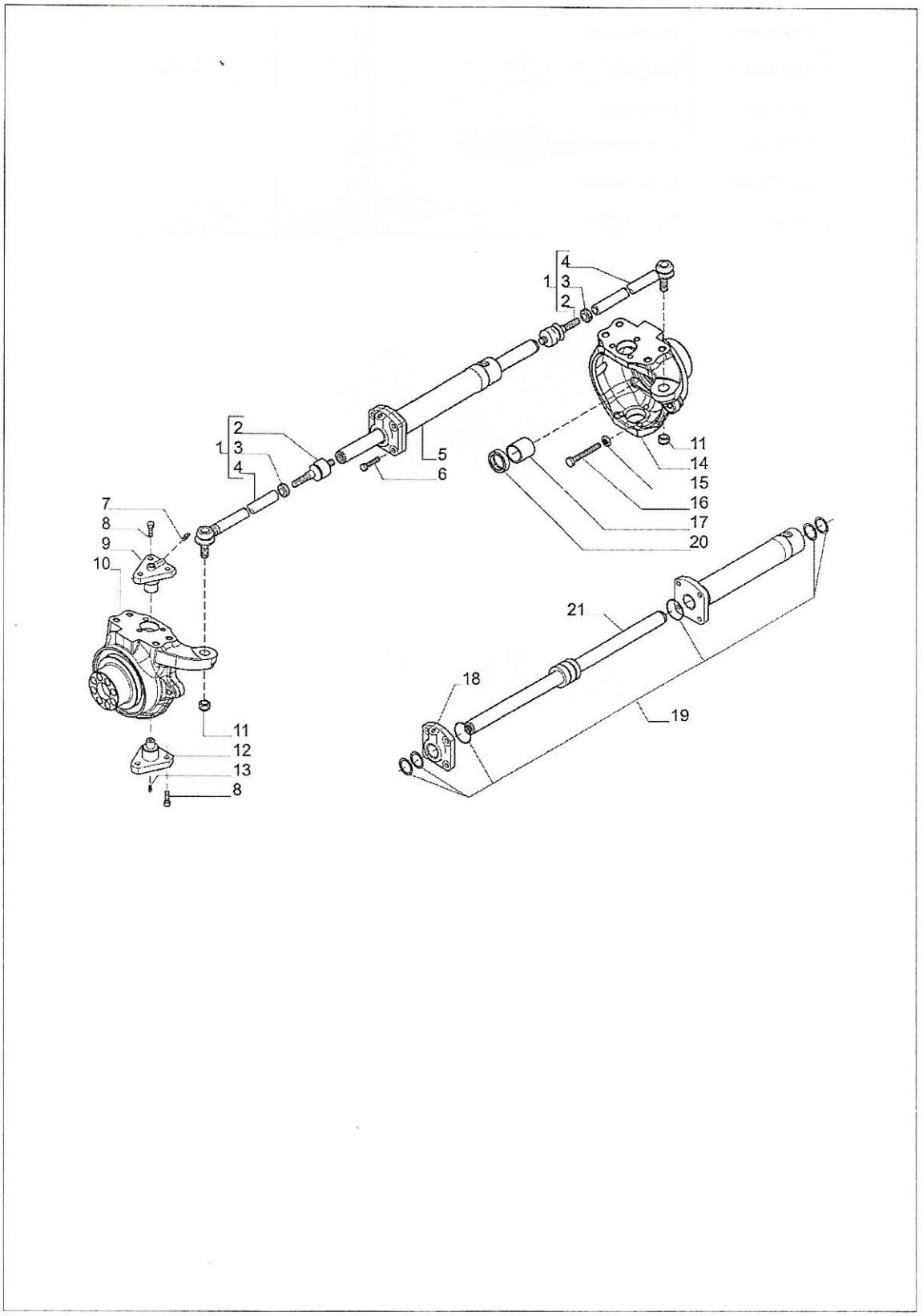
4
1
3
2
2
1
3
4
5
6
11
14
15
16
17
20
7
8
9
10
11
12
13
8
21
18
19

Item	Part No.	Name	Qty	Remarks
1	6112445M91	STEERING ARM ASSY	2	
2	6194904M91	BALL JOINT	2	
3	6193677M1	NUT M24	2	
4	6193678M1	ROD TIE	2	
5	6112444M91	STEERING CYLINDER	1	
6	6194024M1	BOLT M12 X 45	4	
7	53110355	GREASE NIPPLE M6	2	
8	3523548M1	SCREW	12	
9	6190565M1	PIN	2	
10	6194905M91	HOUSING SWIVEL	1	
11	6190221M1	NUT M20	2	
12	6190566M1	PIN	2	
13	6194111M1	FITTING GREASE	2	
14	6194906M91	HOUSING,SWIVEL	1	
15	6194005M1	NUT M16	2	
16	6194907M1	BOLT M16 X 75	2	
17	6194908M1	BUSH	2	
18	6194909M1	HEAD CYLINDER	1	
19	6194910M91	SEAL KIT	1	
20	6194911M1	OIL SEAL	2	
21	6194912M91	ROD	1	

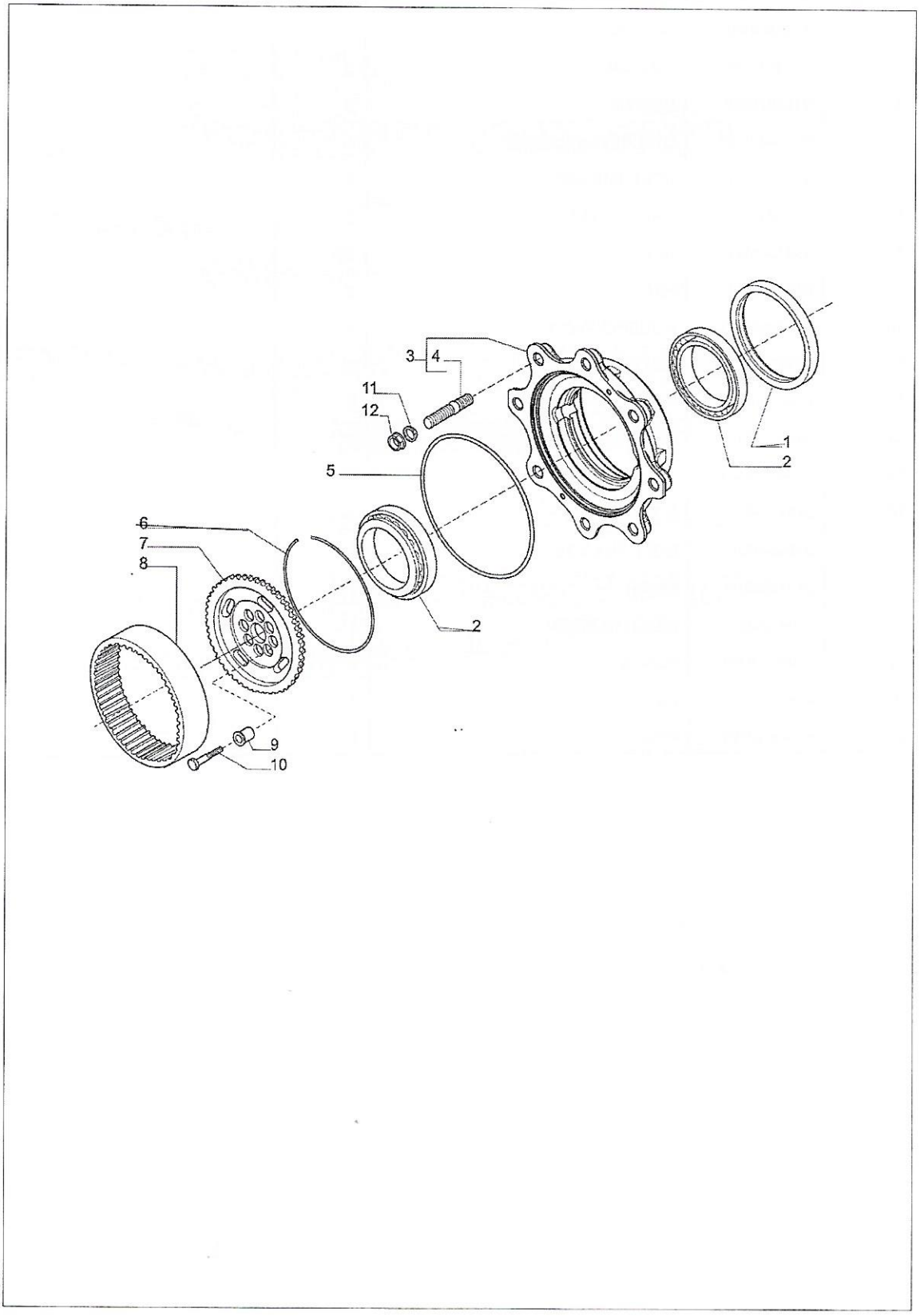
3
4
11
12
5
6
7
8
9
10
2
1
2

Item	Part No.	Name	Qty	Remarks
1	6193704M1	CASSETTE SEAL 150 180 14,5/16	2	
2	3475599M1	BEARING	4	
3	53110362	WHEEL HUB KIT	2	
4	53110363	STUD FOR FRONT AXLE 4WD	16	
5	6194922M1	O-RING	2	
6	6194923M1	RING	2	
7	53108530	HUB RING KIT	2	
8	NSS	CROWN GEAR Z60	2	
9	6194926M1	BUSH	16	
10	6194927M1	SCREW M12 X 45	16	
11	3475615M1	WASHER	16	
12	3475616M1	NUT	16	

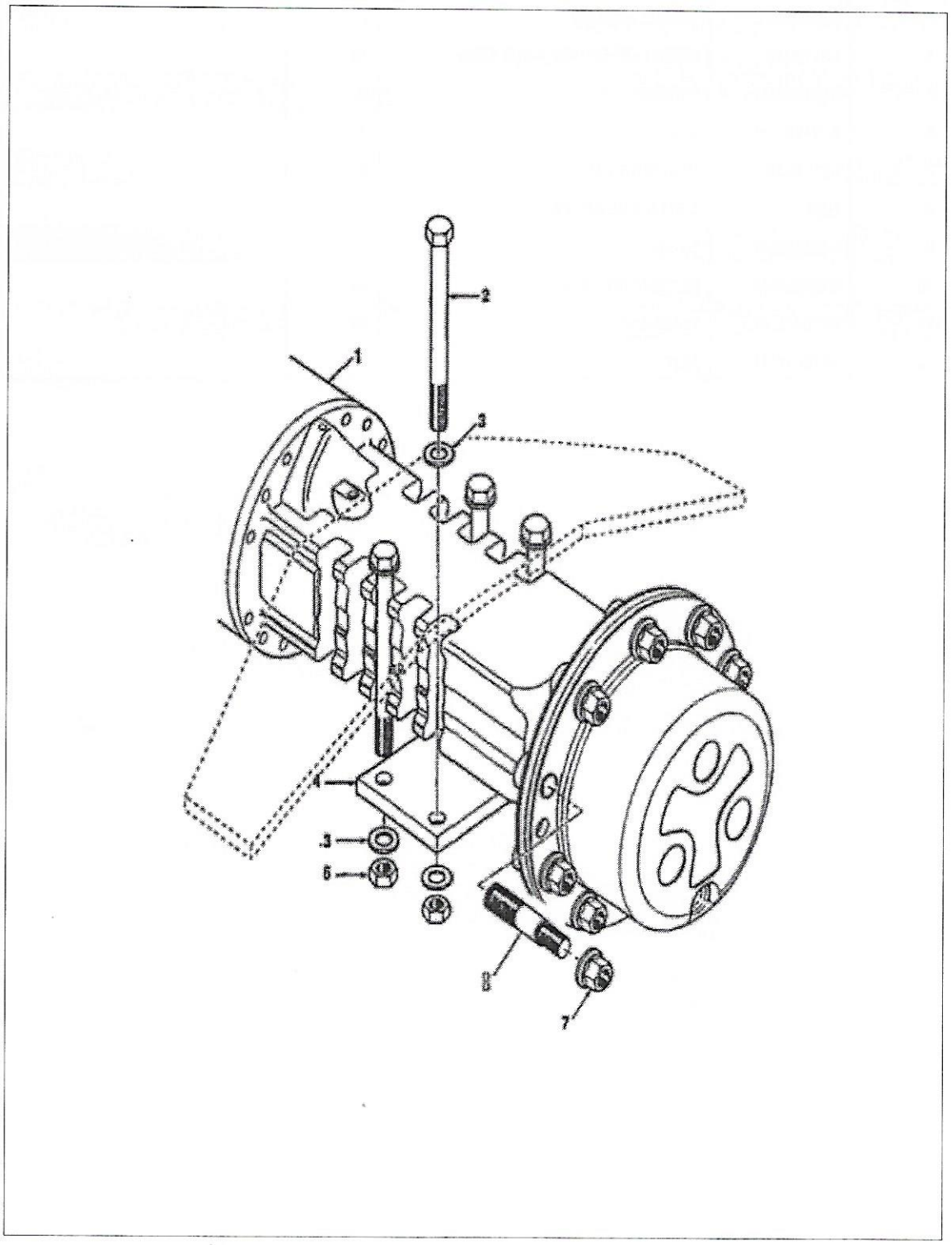
1
2
3
4
5
6
7
8

Item	Part No.	Name	Qty	Remarks
1	53112733	REAR AXLE (28.43)	1	
2	1K0177	M20 BOLT	8	
3	385365X1	WASHER M20 - CHAM	16	
4	6106096M1	PLATE - CLAMP	2	
6	1K0163	NUT LYLOC-M20	8	
7	6106829M91	WHEEL NUT	20	
8	1K0048	STUDM22X1.5 M22X2.5X90LG GRADE 10.9	20	

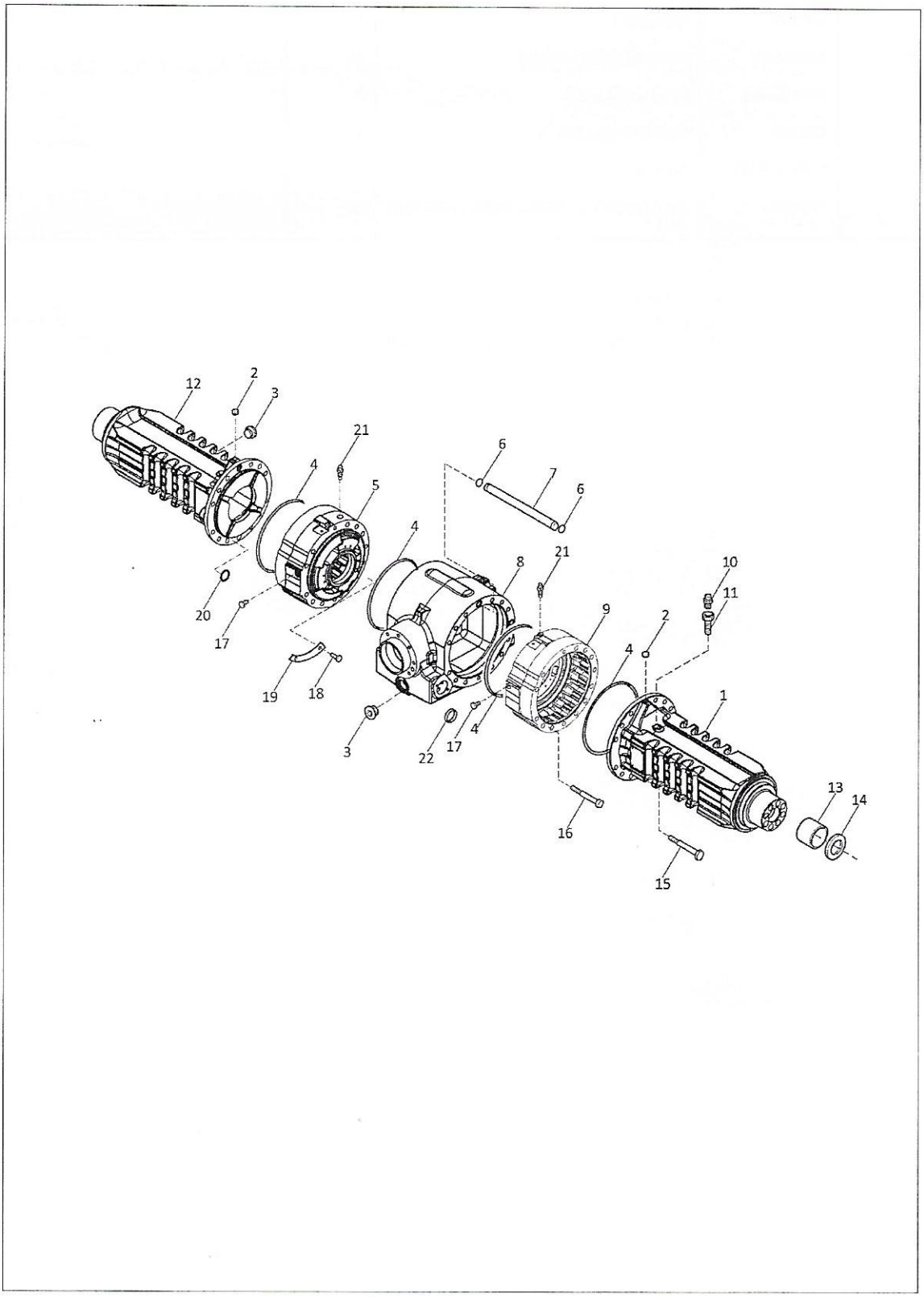
12
2
3
21
6
4
5
7
6
4
8
21
10
11
20
17
9
2
4
19
18
1
3
22
17
4
13
14
16
15

Item	Part No.	Name	Qty	Remarks
1	53113013	RH BEAM TRUMPET	1	
2	3523998M1	PLUG M10X1	2	
3	3523632M1	PLUG M30X2	2	
4	6193333M1	O-RING	4	
5	53113014	LH BRAKE CYLINDER	1	
6	3523630M1	O-RING	2	
7	6193335M1	PIPE	1	
8	6193336M1	CENTRAL BODY	1	
9	53113015	RH BRAKE CYLINDER	1	
10	3475328M1	BREATHER M10X1	1	
11	6193338M1	BREATHER PIPE	1	
12	53113016	LH BEAM TRUMPET	1	
13	6193340M1	BUSH	2	
14	6193341M1	SEAL RING	2	
15	6193342M1	BOLT M14X140	22	
16	6193343M1	BOLT M12X130	2	
17	10X2037	PLUG	2	
18	6193345M1	RIVET 4.8X6	4	
19	6193346M1	PLATE	2	
20	6193347M1	O-RING	8	
21	6190624M1	BREATHER M10X1	2	
22	10X3364	PLUG	2	

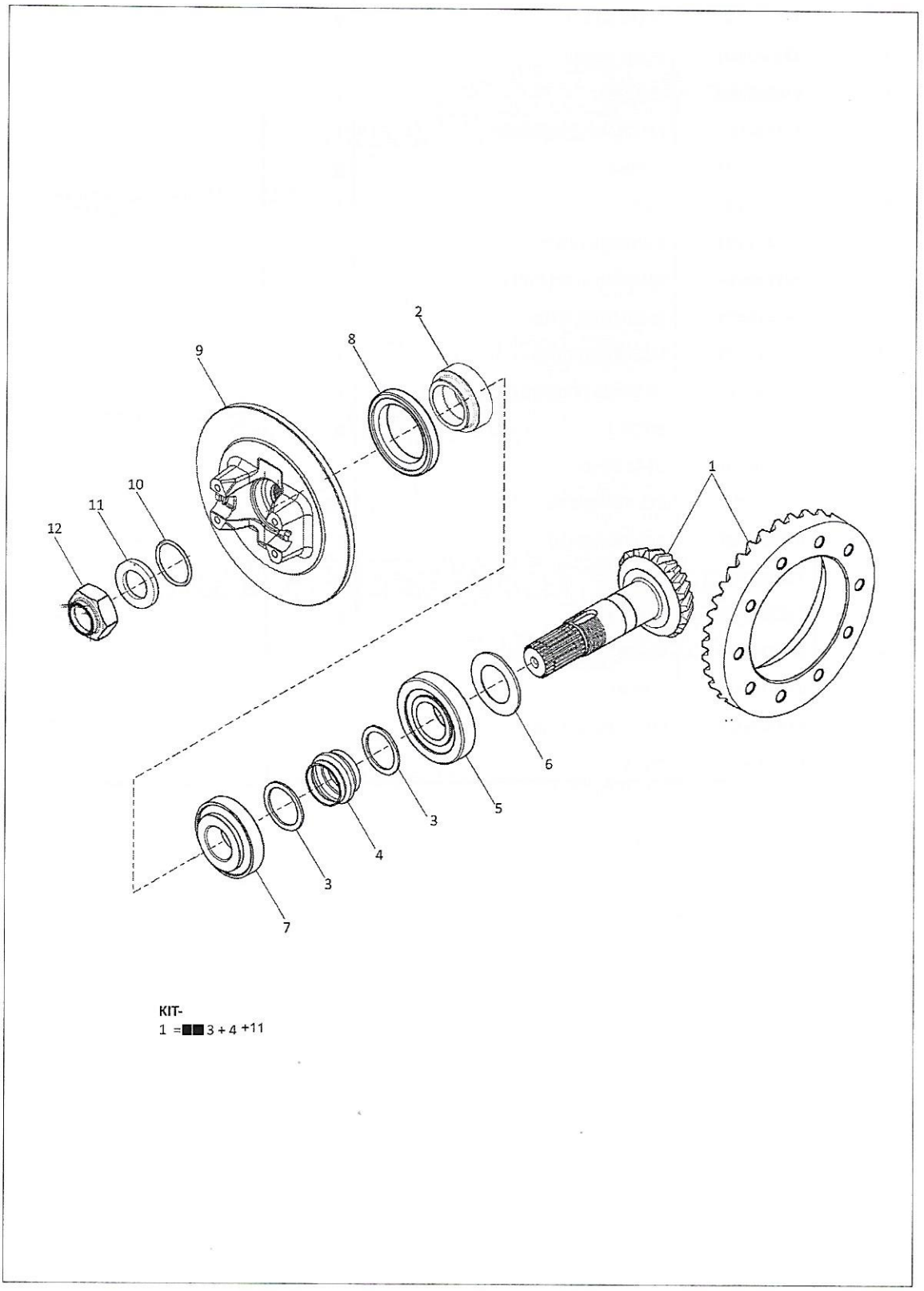

KIT-
1 = ■■ 3 + 4 +11

Item	Part No.	Name	Qty	Remarks
1	10X3365	BEVELGEAR/PINION Z=15/37	1	
2	10X3403	SPACER	1	
3	3523082M1	WASHER	2	
4	6193350M1	COLLAPSIBLE SPACER	1	
5	6193361M1	BEARING	1	
6	53113288	SHIMS KIT	1	
7	3475567M1	BEARING	1	
8	6193363M1	OIL SEAL 65X92X14	1	
9	10X3366	FLANGE	1	
10	10X3367	O.RING	1	
11	10X3368	WASHER	1	
12	10X3369	NUT M30X2	1	

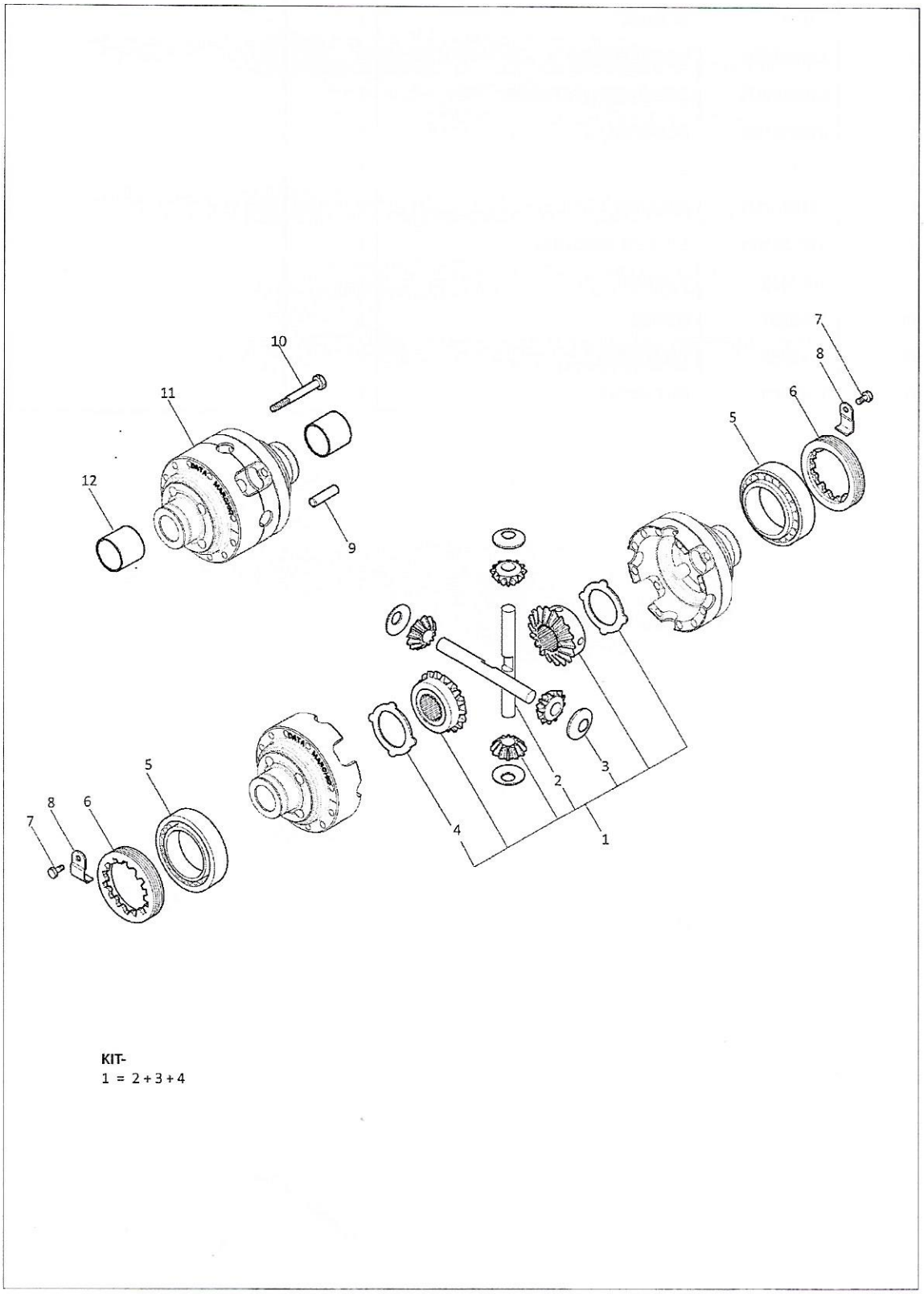

KIT-
1 = 2 + 3 + 4

Item	Part No.	Name	Qty	Remarks
1	10X3370	DIFFERENTIAL KIT	1	
2	6193367M1	SHAFT	2	
3	6193368M1	THRUST WASHER	4	
4	6193369M1	DRIVE PLATE	2	
5	6193375M1	BEARING	2	
6	6193374M1	RING NUT	2	
7	3523583M1	BOLT M6X40	2	
8	6193373M1	PLATE LOCKING	2	
9	6193377M1	PIN D12X40	2	
10	6193379M1	BOLT M12X1.5X90	10	
11	53109352	DIFFERENTIAL HOUSING	1	
12	6193376M1	BUSHING	2	

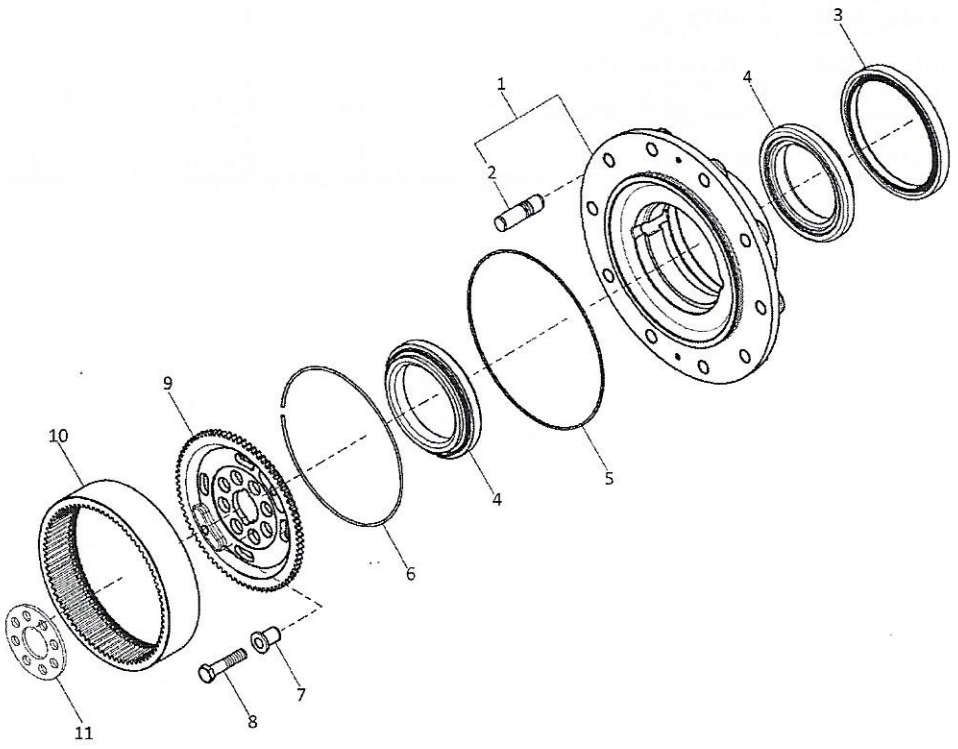

KIT-
1 = 1 + 2

Item	Part No.	Name	Qty	Remarks
1	6194284M91	WHEEL HUB KIT	2	
2	53109354	STUD	20	
3	6193704M1	CASSETTE SEAL 150 180 14,5/16	2	
4	53109355	BEARING	4	
5	6193409M1	O-RING	2	
6	6193705M1	LOCKRING	2	
7	10X1825	CENTERING BUSH	16	
8	3475604M1	BOLT M14X65	16	
9	6193411M1	WHEEL CARRIER	2	
10	6193410M1	CROWN GEAR Z77	2	
11	10X1824	THRUST WASHER	2	

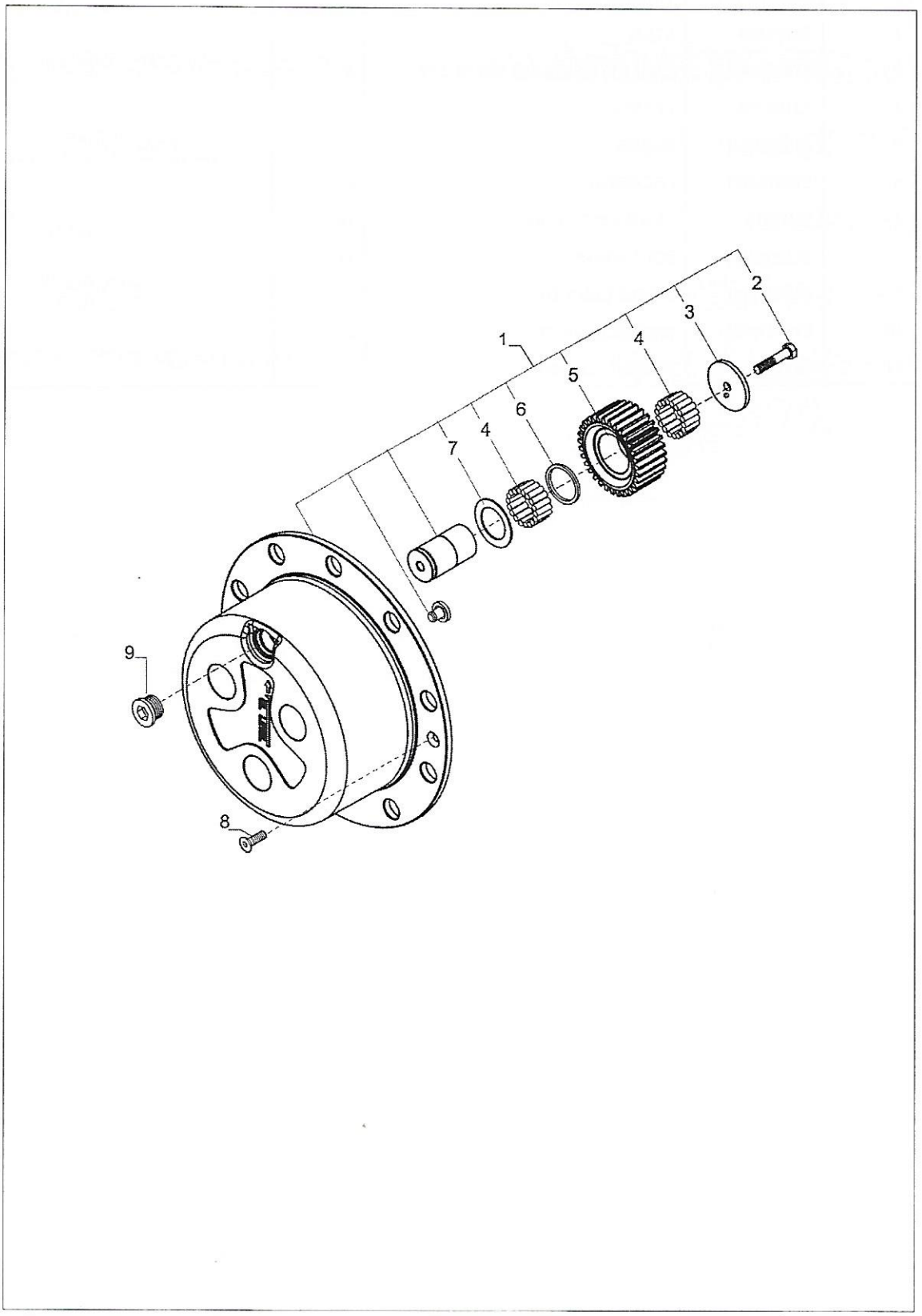
1
2
3
4
5
6
4
7
9
8

Item	Part No.	Name	Qty	Remarks
1	53113259	PLANETARY CARRIER ASSY	2	
2	6190283M1	BOLT M10X50	6	
3	10X1817	THRUST WASHER	6	
4	10X1814	NEEDLE	372	
5	6193419M1	GEAR Z31	6	
6	6193413M1	THRUST WASHER	6	
7	6193413M1	THRUST WASHER	6	
8	6190282M1	BOLT M8X20	4	
9	3523632M1	PLUG M30X2	2	

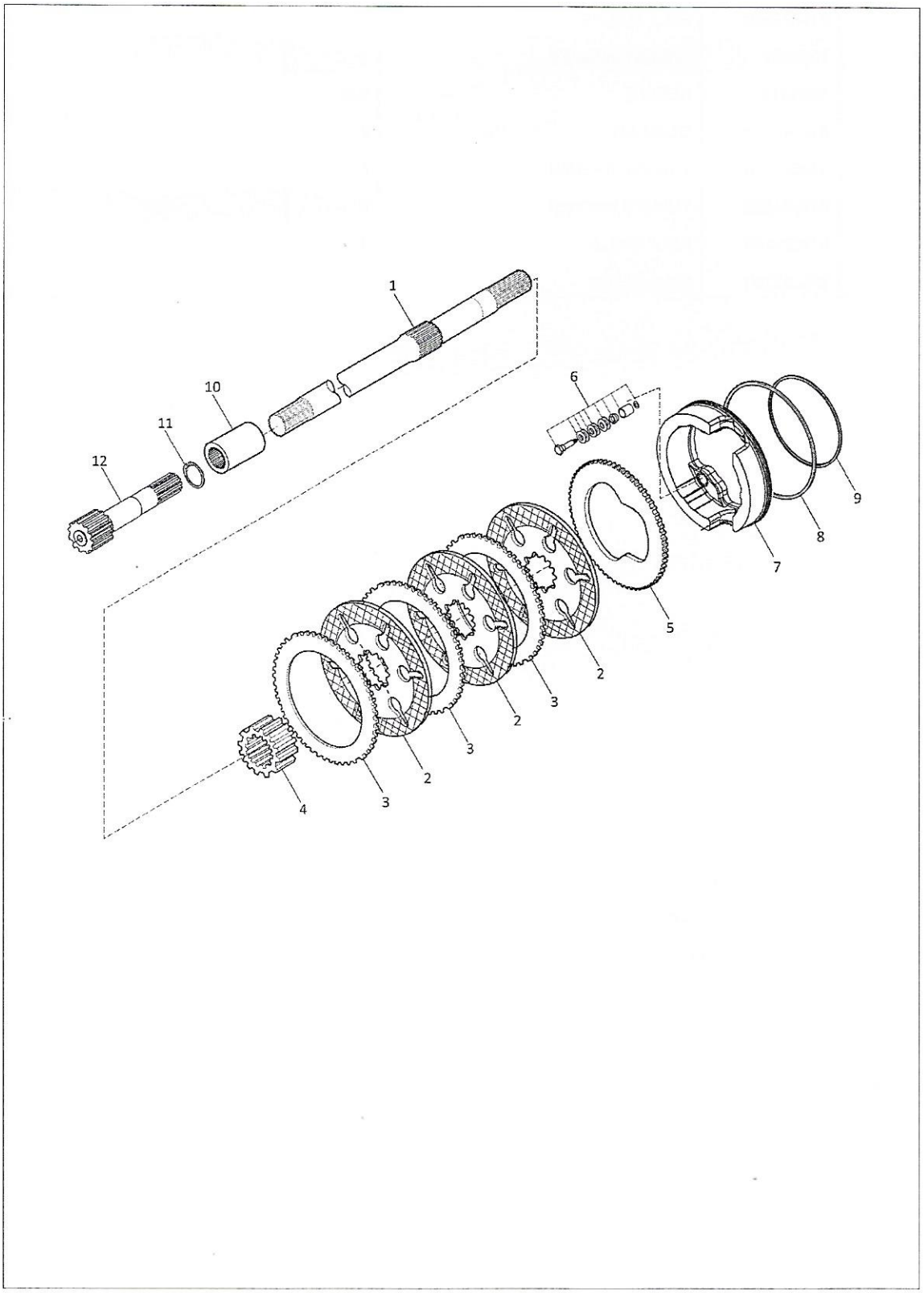
1
10
11
12
6
9
8
7
5
2
3
2
3
2
3
4

Item	Part No.	Name	Qty	Remarks
1	6193404M1	HALF SHAFT	2	
2	6193395M1	BRAKE DISC	6	
3	6193397M1	DRIVE PLATE	6	
4	53113019	SLEEVE	2	
5	6193399M1	BRAKE DRIVE PLATE	2	
6	53113020	SELF-ADJUST KIT	2	
7	53113021	BRAKE PISTON	2	
8	53113289	O-RING	2	
9	53113290	O-RING	2	
10	6193420M1	CONNECTING BUSHING	2	
11	6193421M1	SNAP RING D36	2	
12	53109353	SHAFT	2	

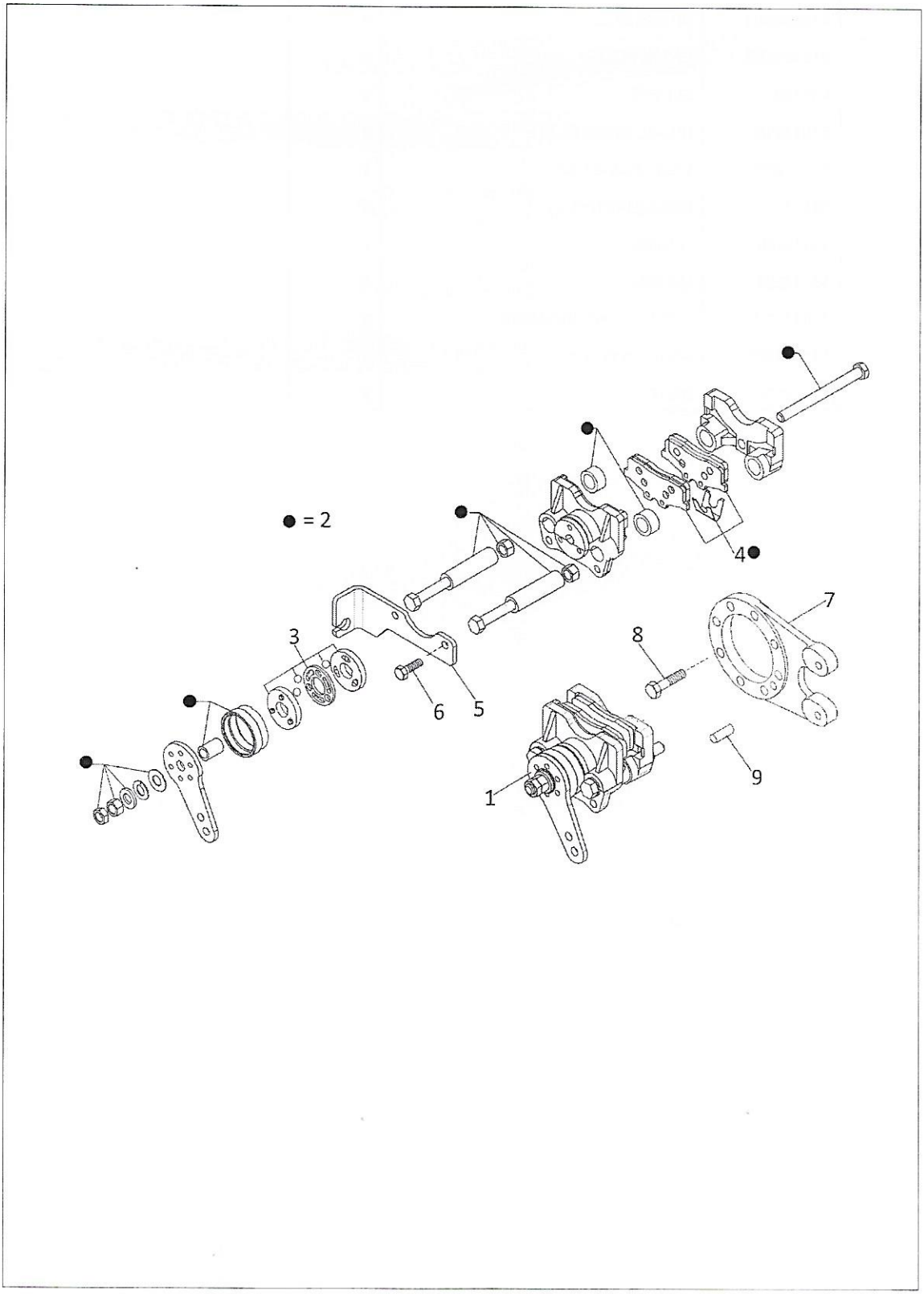
● = 2
1
3
4
5
6
7
8
9

Item	Part No.	Name	Qty	Remarks
1	53113023	BRAKE CALIPER	1	
2	53113024	BRAKE REPAIR KIT	1	
3	53113025	CAM REPAIR KIT	1	
4	53113026	PAD KIT	1	
5	53113027	CABLE BRACKET	1	
6	53113028	BOLT 8.8	2	
7	53113295	FLANGE	1	
8	6194512M1	BOLT M12X35	8	
9	6193426M1	PIN D12X25	1	

Heavy Duty Tyre

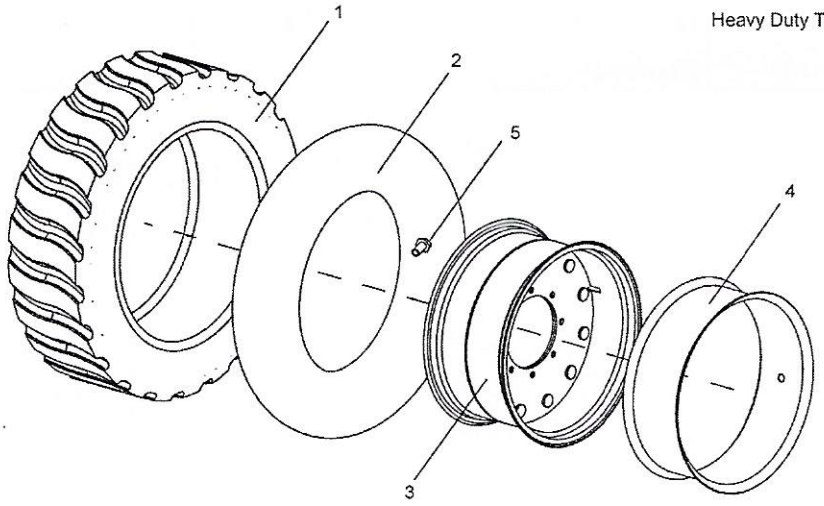

Standard tyre

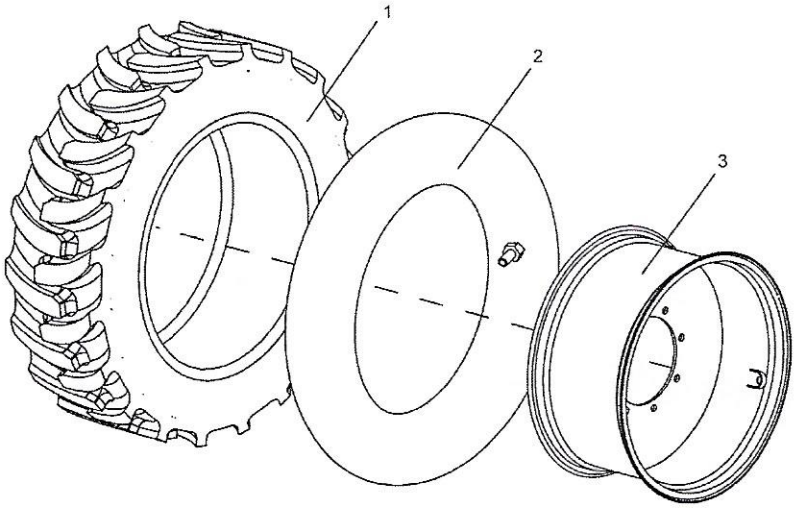

Item	Part No.	Name	Qty	Remarks
0	6103241M91W 01	TYRE REAR RH (16.9.28)	1	
0	6103242M91W 01	W/T LH,W15X28,16.9/14 10P	1	
1	1F0005	REAR TYRE -16.9 X 28	2	
1	1F0006	REAR TYRE- 14.00 X 25	2	
2	1F0015	TUBE- 16.9 X 28	2	
2	1F0017	TUBE - 14.00 X25	2	
3	1F0003	WHEEL RIM- 16.9.28 TYRE (WHITE)	2	
3	53109068	WHEEL RIM - 16.9 X 28 TYRE (SILVER)	2	
3	53108894	WHEEL RIM - 16.9 X 28 TYRE (YELLOW)	2	
3	1F0021	WHEEL RIM -14.00 X 25 TYRE (WHITE)	2	
3	53108726	WHEEL RIM - 14.00 X 25 TYRE (SILVER)	2	
3	53109072	WHEEL RIM - 14.00 X 25 TYRE (YELLOW)	2	
4	1F0016	FLAP - 16.9X28	2	
4	1F0018	FLAP - 14.00X25	2	
5	1K0252	VALVE - TUBELESS TYRE	2	



BRAKES

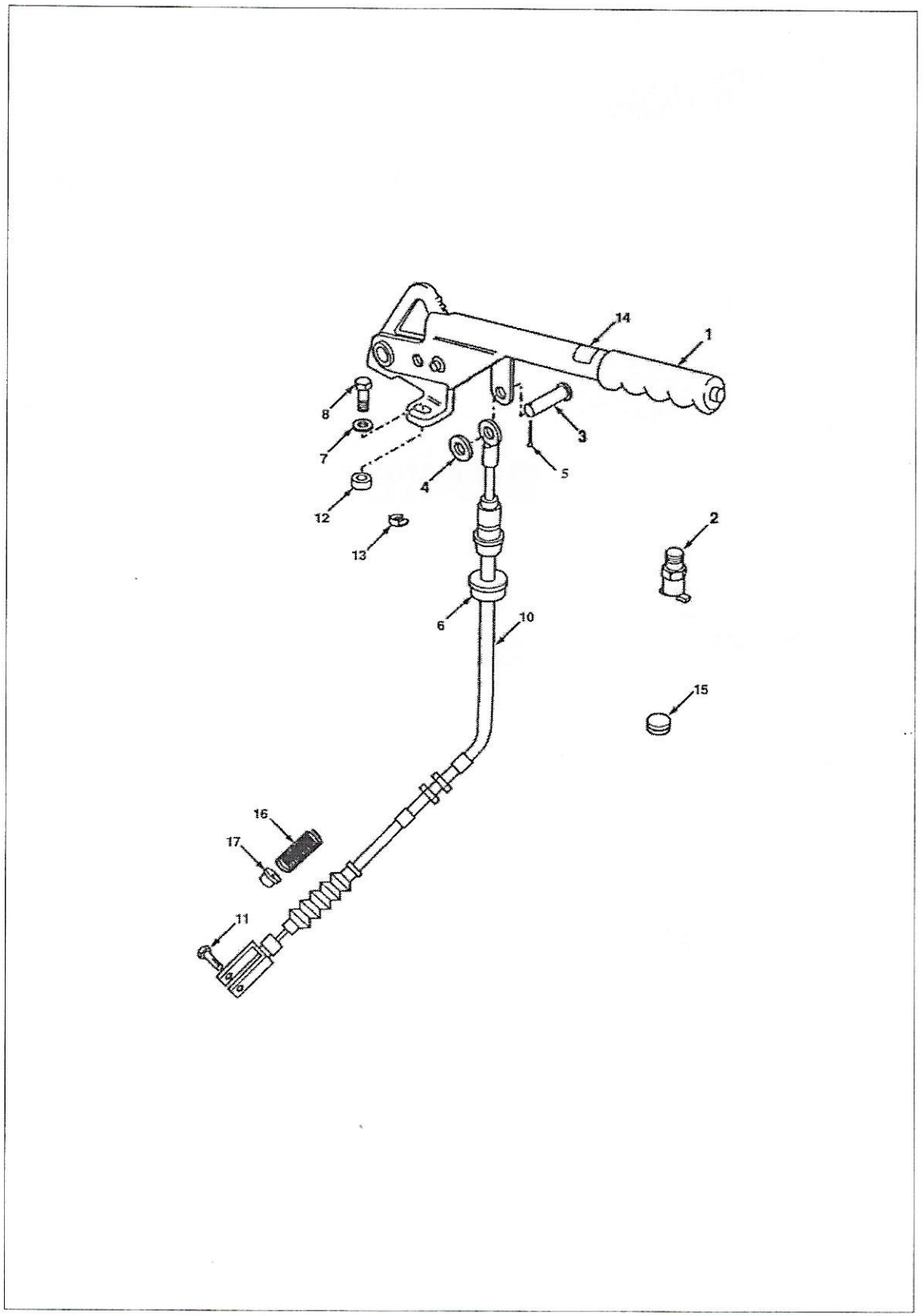
14
1
8
7
12
13
4
3
5
2
6
10
15
16
17
11

Item	Part No.	Name	Qty	Remarks
1	1K0269	HAND BRAKE LEVER	1	
2	1D0190	BRAKE LIGHT SWITCH	1	
3	1K0271	PIN CLEVIS	1	
4	385361X1	WASHER M8 HARDENED	1	
5	1442992X1	PIN COTTER 3-16	1	
6	6102367M1	SPLIT GROMMET	1	
7	390734X1	WASHER M10-STD	2	
8	3009492X1	HEX BOLT M10X25 GR 8.8	2	
10	6107032M91	CABLE ASSY HAND BRAKE	1	
11	6107031M1	PIN	1	
12	3516293M1	SPACER HANDBRAKE LEVER	2	
13	1696650M1	CLIP	1	
14	3516652M1	DECAL HANDBRAKE	1	
15	3516323M1	BLING GROMMET COMPOSITE	2	
16	3518052M2	SPRING	1	
17	3518051M1	SPRING RETAINER	1	

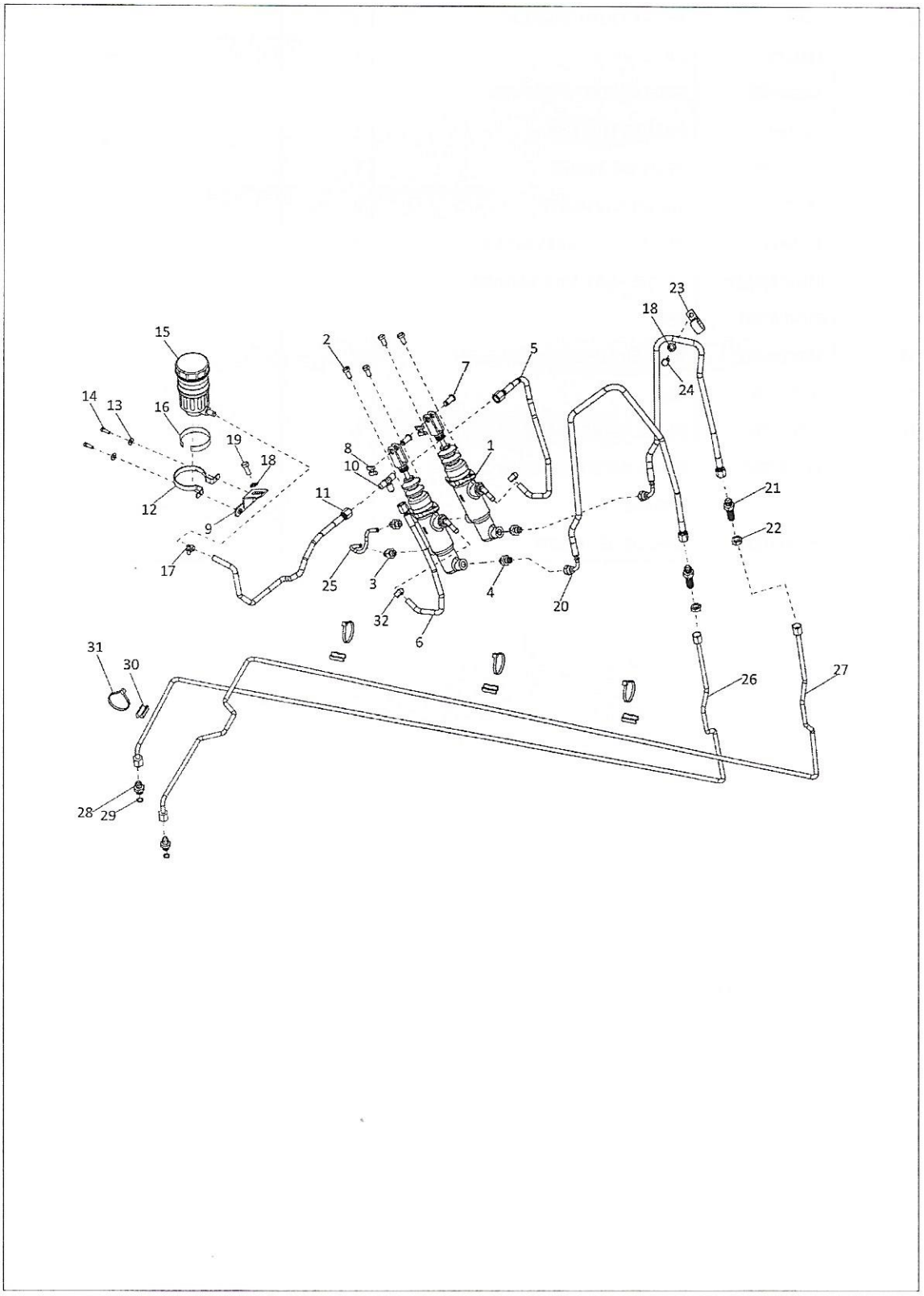
23
18
15
2
5
7
24
14
13
16
19
8
10
1
18
21
11
12
9
22
17
25
3
4
20
32
6
31
30
26
27
28
29

Item	Part No.	Name	Qty	Remarks
1	53110015	MASTER CYLINDER	2	
2	339124X1	HEX BOLT M8X16 GR 8.8	4	
3	53112899	ADAPTOR	2	
4	53108856	ADAPTOR	2	
5	53108857	HOSE ASSY BRAKE FEED	1	
6	53108858	HOSE ASSY BRAKE FEED	1	
7	1B0158	CLEVIS PIN	2	
8	3521461M1	SAFETY FASTNER COMPOSITE	2	
9	1A0140	BRACKET	1	
10	356559X1	UNION-TEE	1	
11	1H0033	Hose Assy.	1	
12	6106033M1	BRACKET - RESERVOIR MOUNTING	1	
13	3019560X1	WASHER M5	2	
14	339721X1	BOLT	2	
15	1H0329	RESERVOIR ASSY BRAKE FLUID	1	
16	1A0192	BRAKE RESERVOIR FOAM	1	
17	3517409M1	WORM DRIVE CLIP COMPOSITE (SIZE = 8-16)	1	
18	390972X1	WASHER M8 - STD	2	
19	339123X1	HEX BOLT M8X20 GR 8.8	1	
20	6106506M91	HOSE ASSY BRAKES	2	
21	356265X1	UNION-BULKHEAD TUBE	2	
22	356613X1	NUT- 1/2-20 UNF BULKHEAD	2	
23	360643X1	P CLIP	1	
24	339761X1	BOLT M8-25 Z5F	1	
25	53108859	TUBE ASSY BRIDGE	1	
26	53112813	TUBE ASM LH	1	
27	53112814	TUBE ASM RH	1	
28	6106477M91	STRAIGHT CONN.	2	
29	831495M1	O-RING	2	
30	1H0308	TUBE CLAMP	4	
31	1664405M1	CABLE TIE	4	
32	6013103M1	CLAMP	2	

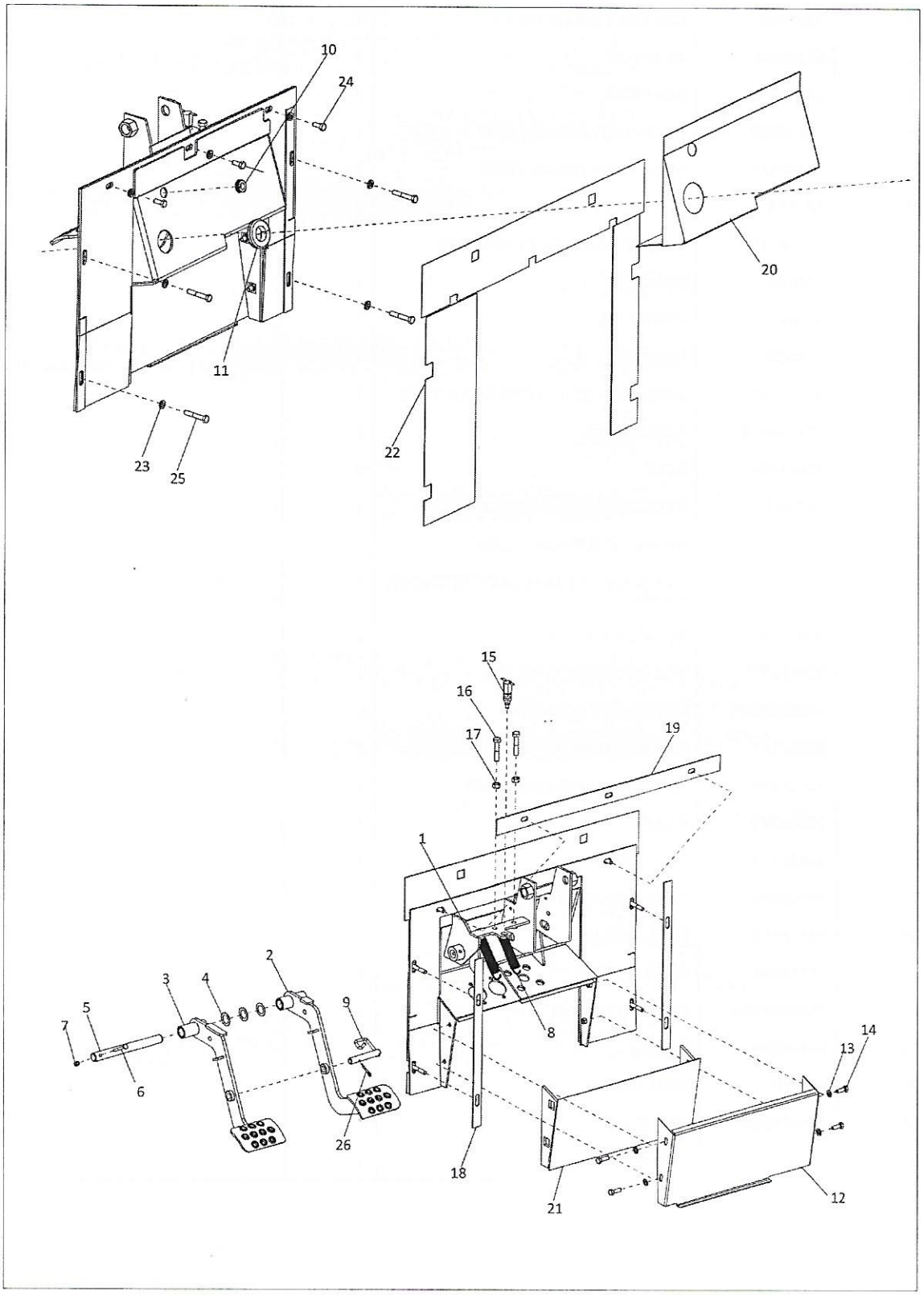
10
24
20
11
22
23
25
15
16
17
19
1
2
3
4
5
6
7
8
9
26
18
21
12
13
14

Item	Part No.	Name	Qty	Remarks
1	53110673	CONTROL BOX W/A	1	
2	53110675	BRAKE PEDAL W/A RH	1	
3	53110676	BRAKE PEDAL W/A LH	1	
4	339574X1	WASHER	3	
5	53109472	PIN	1	
6	391244X1	HEX BOLT M6x45 GRADE 8.8	1	
7	1441500X11	M6 NYLOC NUT	1	
8	1680157M2	SPRING	2	
9	53109452	PIN W/ASSY	1	
10	53110335	SPLIT GROMMET	1	
11	53110336	SPLIT GROMMET	1	
12	53110677	CONTROL BOX COVER	1	
13	390972X1	WASHER M8 - STD	4	
14	339761X1	BOLT M8-25 Z5F	4	
15	1D0189	BRAKE LIGHT SWITCH	1	
16	3009497X1	HEX BOLT M GRADE 8.8	2	
17	3009693X1	HEX NUT M10	2	
18	53109557	GASKET CONTROL BOX	2	
19	53109558	GASKET CONTROL BOX	1	
20	53110680	HEAT SHIELD ASSY.	1	
21	53109584	HEAT SHIELD ASSY.	1	
22	53109673	HEAT SHIELD ASSY	1	
23	385361X1	WASHER M8 HARDENED	7	
24	339123X1	HEX BOLT M8X20 GR 8.8	3	
25	339168X1	HEX BOLT M8x50 GRADE 8.8	4	
26	390494X1	SPLIT PIN 5X25	1	

LIFT STRUCTURE

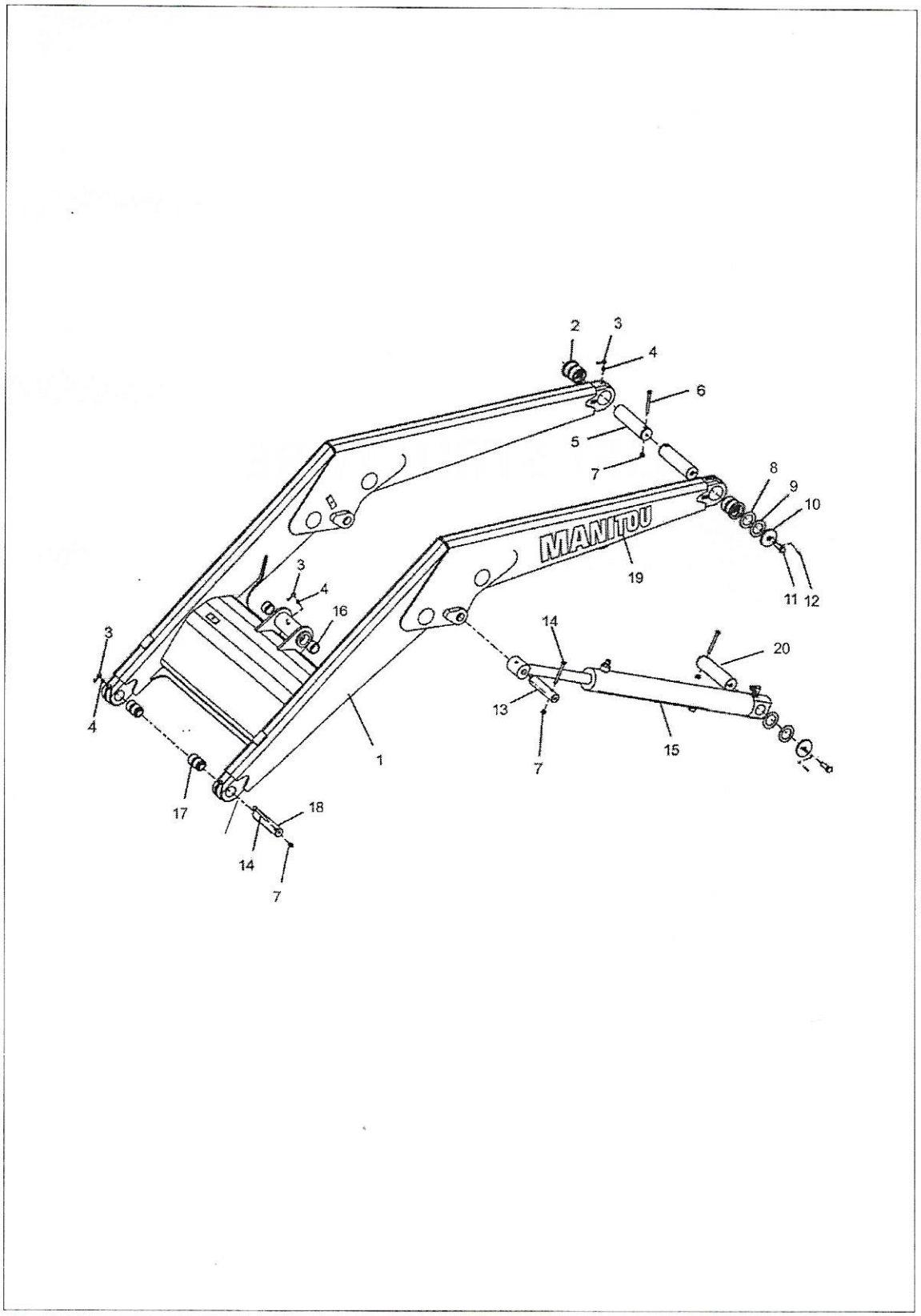
2
3
4
6
5
7
8
9
10
MANITOU
19
11
12
3
4
16
3
4
14
20
13
7
15
1
17
18
14
7

Item	Part No.	Name	Qty	Remarks
1	53102527	LOADER BEAM- ø 60MM-YELLOW	1	
1	53102526	LOADER BEAM - ø 60MM-RED	1	
2	1B1136	BUSH	2	
3	3516180M2	GREASE NIPPLE CAP (GENERAL)	5	
4	339608X1	FITTING	5	
5	1B1143	PIN	2	
6	3501289M1	HEX BOLT M10X110 GR 8.8	4	
7	1440329X1	NUT NYLOCK M10	8	
8	1B1144	THRUST WASHER	2	
9	1B1145	THRUST WASHER	2	
10	53101383	WASHER	2	
11	339613X1	HEX BOLT M16x25 GRADE 8.8	3	
12	1441736X1	PIN SPIROL 5-26	4	
13	1B1092	PIN LOADER TO LOADER CYL (LH)	1	
13	1B1093	PIN LOADER TO LOADR CYL (RH)	1	
14	3516014M1	BOLT (SPECIAL) COMPOSITE [DIM=90]	4	
15	53108845	BUCKET LIFT CYLINDER - BLACK	2	Grey color -1H0157
16	3520032M1	BUSH	2	
17	3522862M2	BUSH	2	
18	1B1070	PIN LOADER	2	
19	53102505	DECAL - BOOM AND LOADER - BLACK	2	
19	53102506	DECAL-LOADER ARM-WHITE	2	
20	1B1112	PIN	2	
21	53109630	SHIM (6 MM THICK)	UAR	
21	53109631	SHIM (5 MM THICK)	UAR	
21	53109632	SHIM (4 MM THICK)	UAR	
21	53109633	SHIM (3 MM THICK)	UAR	

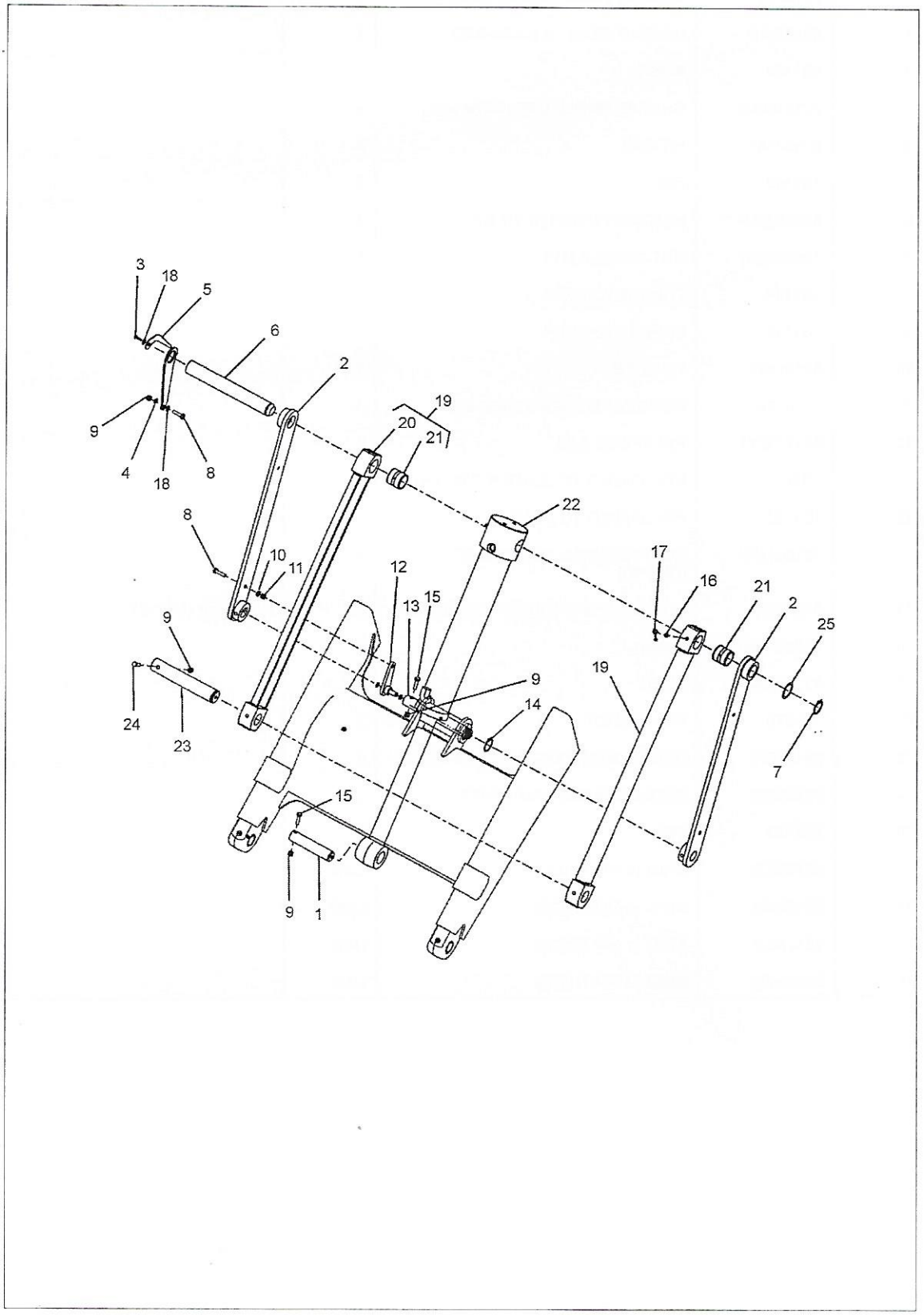
3
18
5
6
2
19
20
21
9
4
18
8
22
8
10
11
12
13
15
17
16
21
2
25
9
24
23
9
14
19
7
15
9
1

Item	Part No.	Name	Qty	Remarks
1	1B1091	PIN	1	
2	53102610	BUCKET LINK	2	
2	53102611	BUCKET LINK	2	
3	339081X1	BOLT M10-20	1	
4	339376X1	LOCK_WASHER	2	
5	3516352M1	POINTER RTD	1	
6	1B1079	PIN W/A	1	
7	391129X1	CIRCLIP	2	
8	3516013M1	BOLT M10x40	2	
9	1440329X1	NUT NYLOCK M10	5	
10	3516762M1	CIRCLIP HEAVY DUTY	1	
11	339300X1	WASHER	1	
12	3521757M93	PIVOT W/A	1	
13	1B1073	PIN	1	
14	339820X1	CIRCLIP EXT	1	
15	3516014M1	BOLT (SPECIAL) COMPOSITE [DIM=90]	2	
16	339608X1	FITTING	2	
17	3516180M2	GREASE NIPPLE CAP (GENERAL)	2	
18	390734X1	WASHER M10-STD	2	
19	NSS	CHANNEL LINK ASSY.	2	
20	53102612	CHANNEL LINK W/A	2	
20	53102613	CHANNEL LINK W/A	2	
21	3521716M1	BUSH	2	
22	53108846	BUCKET TILT CYLINDER - BLACK	1	GREY COLOR - 1H0147
23	1B1077	PIN	1	
24	3501289M1	HEX BOLT M10X110 GR 8.8	1	
25	1B0022	SHIM COMPOSITE	2	

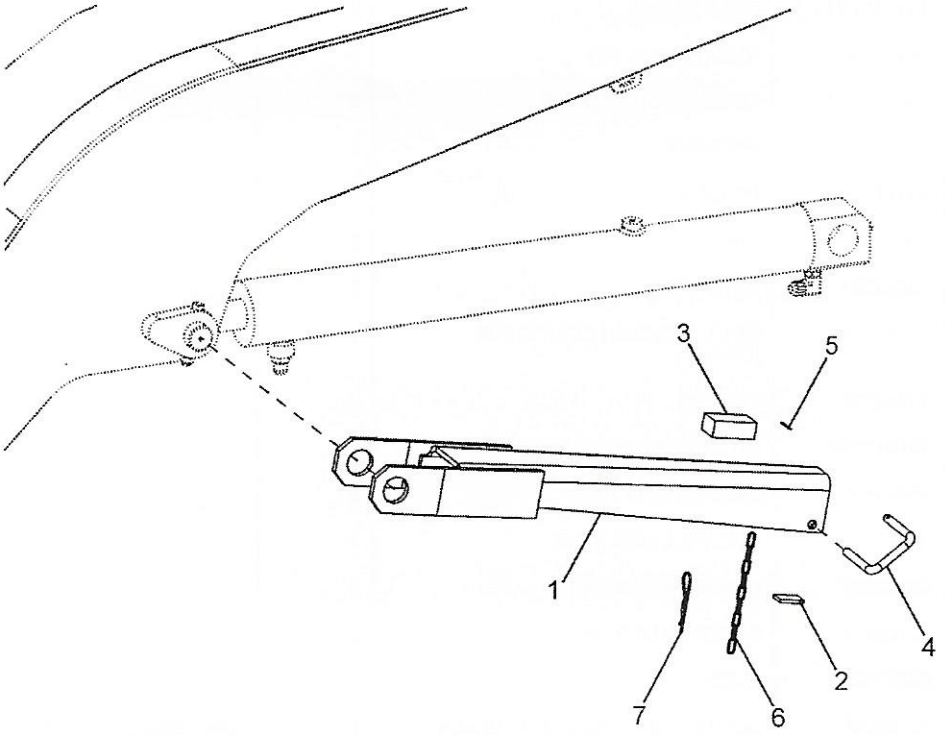
3
5
1
4
2
7
6

Item	Part No.	Name	Qty	Remarks
1	6101162M92	SAFETY ARM W/ASSY	1	
2	1471300M1	PAD COMPOSITE [DIM=5]	1	
3	1458633M3	PAD	1	
4	3521910M2	DOUBLE PIN	1	
5	1442994X1	PIN	1	
6	3517165M1	CHAIN	1	
7	377165X1	HAIR PIN	1	

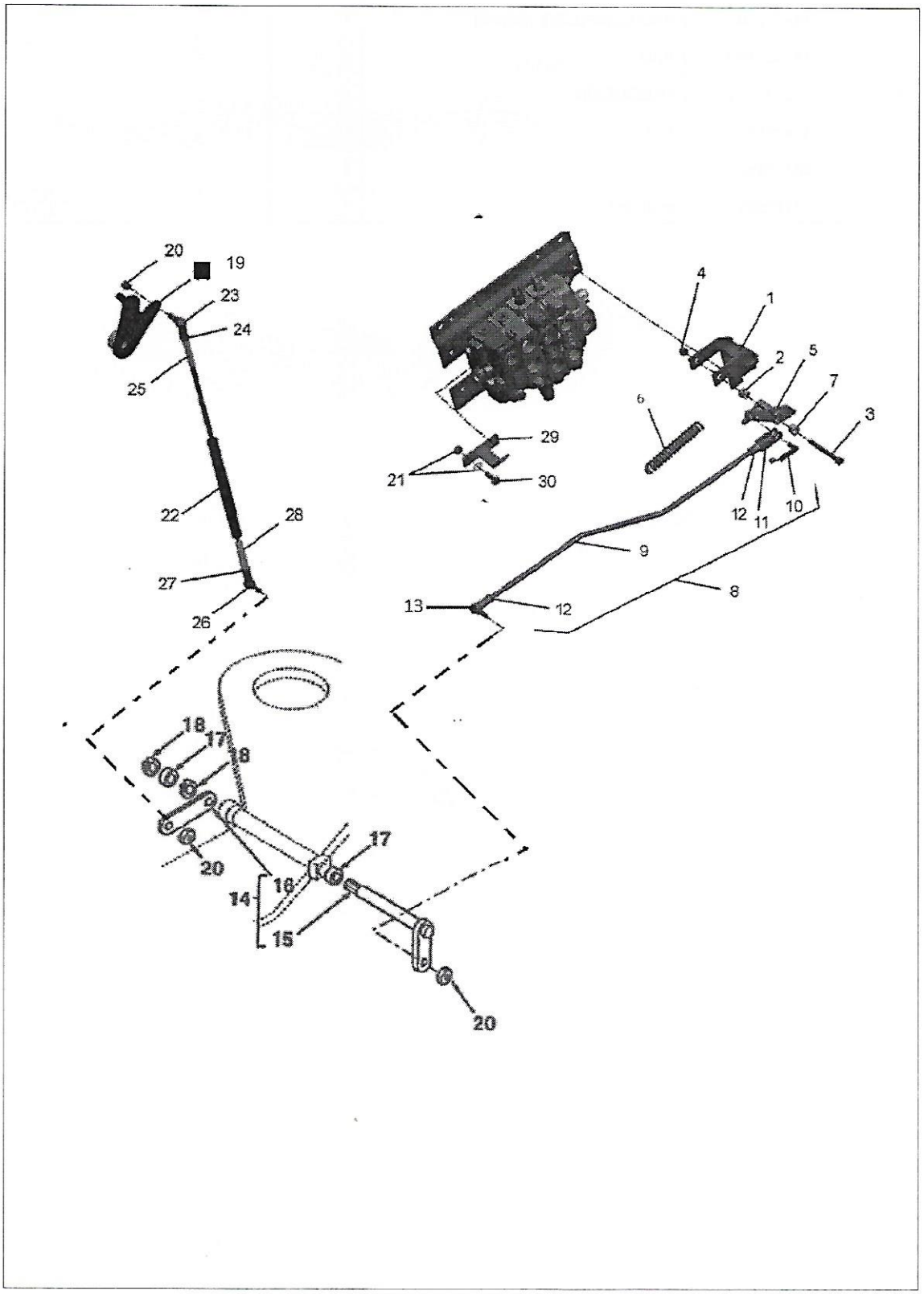
20
19
23
24
25
22
28
27
26
29
21
30
4
1
2
5
7
3
6
12
11
10
9
13
12
8
18
17
18
20
14
16
17
15
20

Item	Part No.	Name	Qty	Remarks
1	1B0166	MTG BRACKET W/A	1	
2	1440329X1	NUT NYLOCK M10	2	
3	3009517X1	HEX BOLT M12X100 GRADE 8.8	1	
4	1440330X1	M12 NYLOC NUT	1	
5	6106694M91	LEVER W/ASSY	1	
6	3519680M2	SPRING	1	
7	1B0260	BUSHING	2	
8	6106691M92	ROD ASSY	1	
9	6106692M2	ROD SELF LEVEL	1	
10	3521834M1	SPRING PIN	1	
11	3521833M1	CLEVIS	1	
12	3009693X1	HEX NUT M10	2	
13	3521794M91	BALL JOINT	1	
14	6109072M91	LEVER / ARM ASSY	1	
15	3519123M92	ARM	1	
16	3518960M1	LEVER	1	
17	3521514M5	BUSH	2	
18	339710X1	CIRCLIP EXT 11MM	2	
19	3516765M91	ARM ASSY	1	
20	1440329X1	NUT NYLOCK M10	3	
21	385362X1	WASHER M10 - CHAM	2	
22	1J0222	GAS STRUT	1	
23	3521889M91	BALL JOINT	1	
24	6107340M1	HEX NUT M10 LH	1	
25	6106241M1	TURNBUCKLE	1	
26	3521794M91	BALL JOINT	1	
27	3009693X1	HEX NUT M10	1	
28	6106240M1	TURNBUCKLE	1	
29	1B0206	HYD BOTTOM HOSE	1	
30	3009492X1	HEX BOLT M10X25 GR 8.8	2	

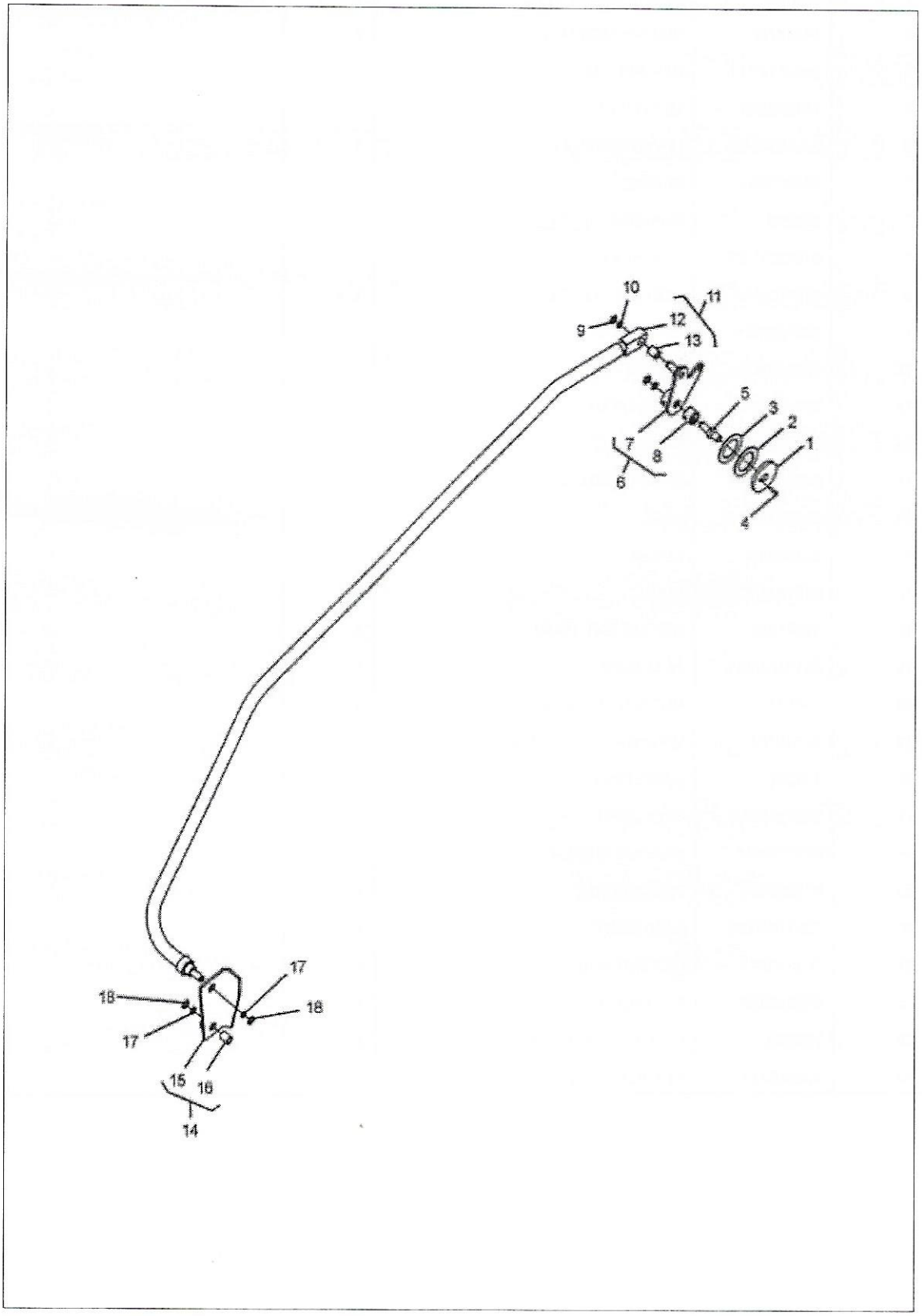
10
11
9
12
13
5
3
2
1
7
8
6
4
17
18
18
17
15
16
14

Item	Part No.	Name	Qty	Remarks
1	3522963M1	THRUST WASHER COMPOSITE (DIM=3.69/3.64)	1	
2	3522962M1	THRUST WASHER COMPOSITE	1	
3	3522717M3	WASHER	1	
4	1441736X1	PIN SPIROL 5-26	1	
5	3521799M5	PIVOT SHAFT	1	
6	3516765M91	ARM ASSY	1	
7	3521773M94	ARM W/A	1	
8	3516761M1	BUSH	1	
9	3516762M1	CIRCLIP HEAVY DUTY	2	
10	339300X1	WASHER	2	
11	6107911M91	LINK ASSY	1	
12	6107910M91	LINK W/A.	1	
13	3516761M1	BUSH	1	
14	6100971M91	LINK ASSY	1	
15	6100972M1	LINK WA	1	
16	3516761M1	BUSH	1	
17	339300X1	WASHER	2	
18	3516762M1	CIRCLIP HEAVY DUTY	2	

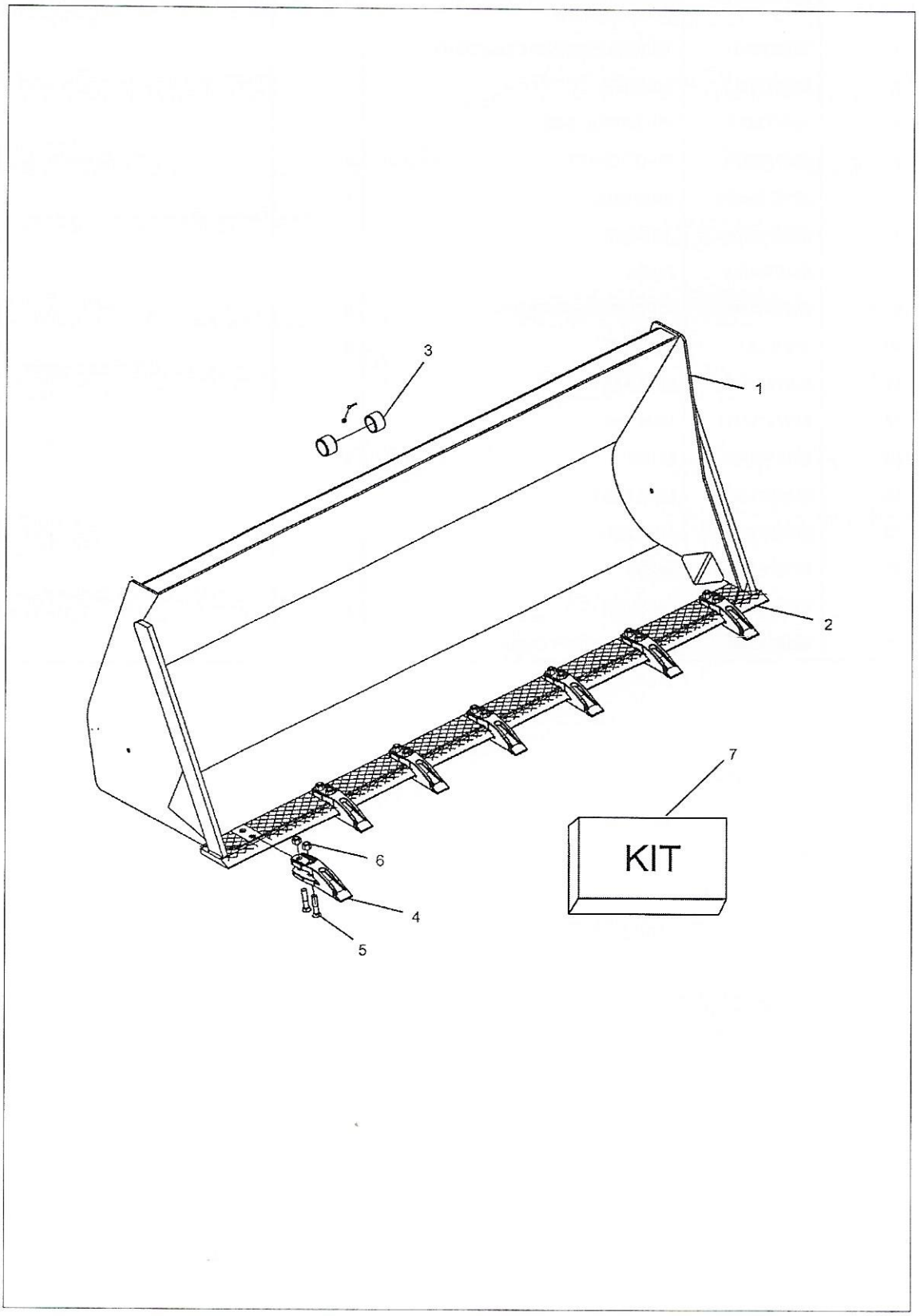
3
1
2
7
KIT
6
4
5

Item	Part No.	Name	Qty	Remarks
1	1C0303	BUCKET W/A 1CuM.	1	
2	1C0081	BUCKET BLADE	1	
3	3520033M1	BUSHING	2	
4	1C0189	TOOTH	7	
5	1C0135	PLOW BOLT M16	14	
6	1442739X1	M16 NYLOC NUT	14	
7	10X3624	TOOTH KIT-LOADER BUCKET	1	

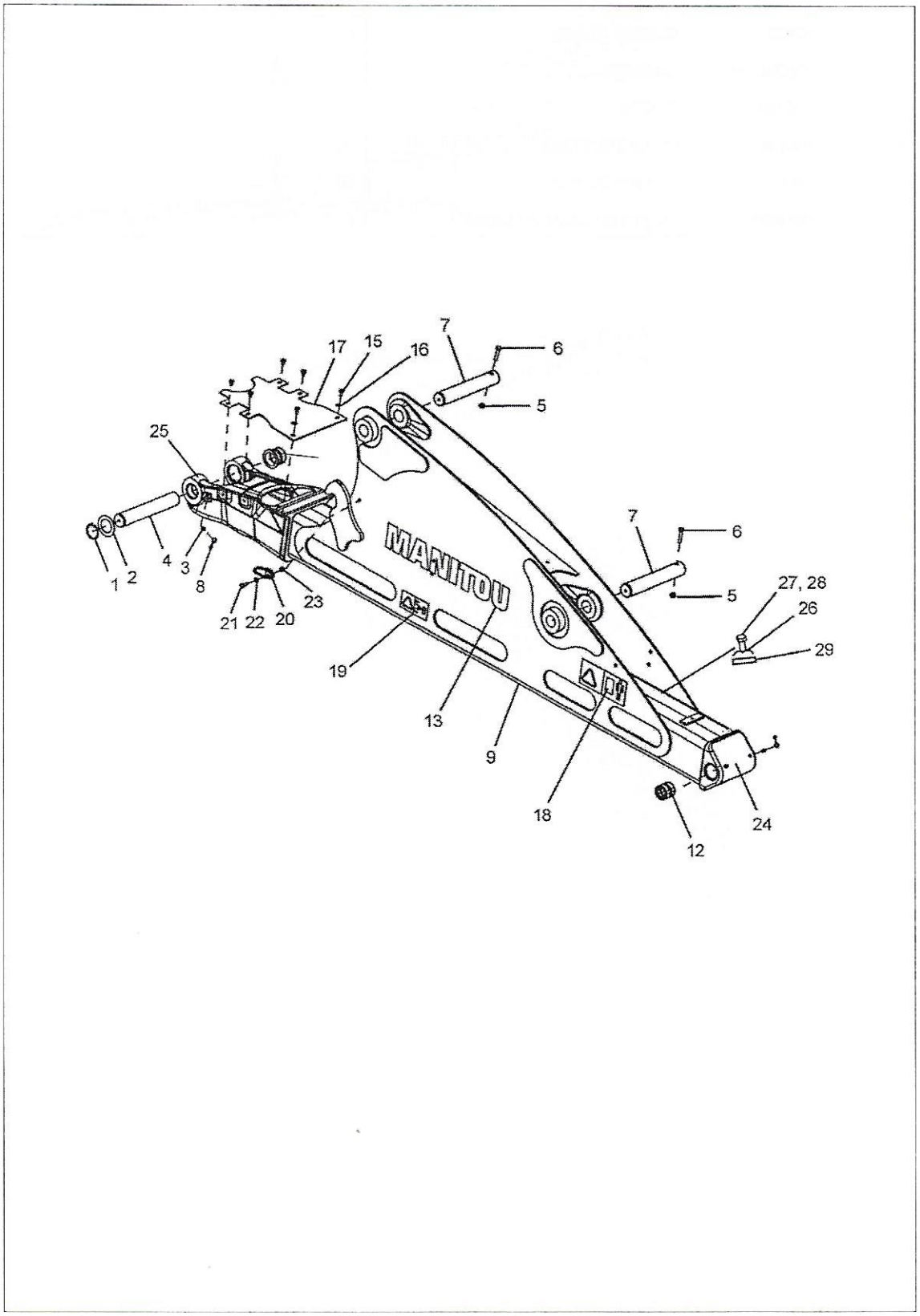
MANITOU
1
2
4
3
8
21
22
20
23
25
17
15
16
7
6
5
19
13
9
18
12
24
7
6
5
27, 28
26
29

Item	Part No.	Name	Qty	Remarks
1	391129X1	CIRCLIP	2	
2	3519378M1	WASHER	2	
3	339608X1	FITTING	3	
4	1B1084	PIN BOOM PIVOT	1	
5	1440329X1	NUT NYLOCK M10	2	
6	3501289M1	HEX BOLT M10X110 GR 8.8	2	
7	1B1090	PIN	2	
8	3516180M2	GREASE NIPPLE CAP (GENERAL)	3	
9	1B0563	BOOM ASSY ø 45MM-GREY	1	UP TO 14014
9	1B0563YL	BOOM ASSY ø 45MM-YELLOW	1	UP TO 14014
9	1B0562	BOOM ASSY ø 45MM-RED	1	UP TO 14014
9	53102520	BOOM ASSY ø 60MM-RED	1	
9	53102521	BOOM ASSY ø 60MM DIA-YELLOW	1	
11	3501015M2	BUSHING	2	
12	1B0711	BUSH	2	
12	1B1202	BUSHING	2	
13	53102505	DECAL - BOOM AND LOADER - BLACK	2	
13	53102506	DECAL-LOADER ARM-WHITE	2	
15	339228X1	BOLT M8-12 Z5F	4	
16	391039X1	WASHER	4	
17	1B1314	MUD PROTECTION COVER	1	
18	6101949M1	DECAL STAY A SAFE DISTANCE	2	
19	6102056M1	DECAL AVOID CRUSHING	2	
20	6101491M91	HOSE HOOP ASSY	2	
21	339761X1	BOLT M8-25 Z5F	4	
22	390972X1	WASHER M8 - STD	4	
23	394367X1	NUT	4	
24	NSS	DIPPER PIVOT CASTING	1	
25	NSS	BOOM PIVOT CASTING	1	
26	6101228M1	CLAMP TUBE ASSEMBLY	1	
27	339761X1	BOLT M8-25 Z5F	1	
28	339374X1	LOCK WASHER M8	1	
29	6106109M1	RUBBER PAD	1	
28	339374X1	LOCK WASHER M8	1	
29	6106109M1	RUBBER PAD	1	

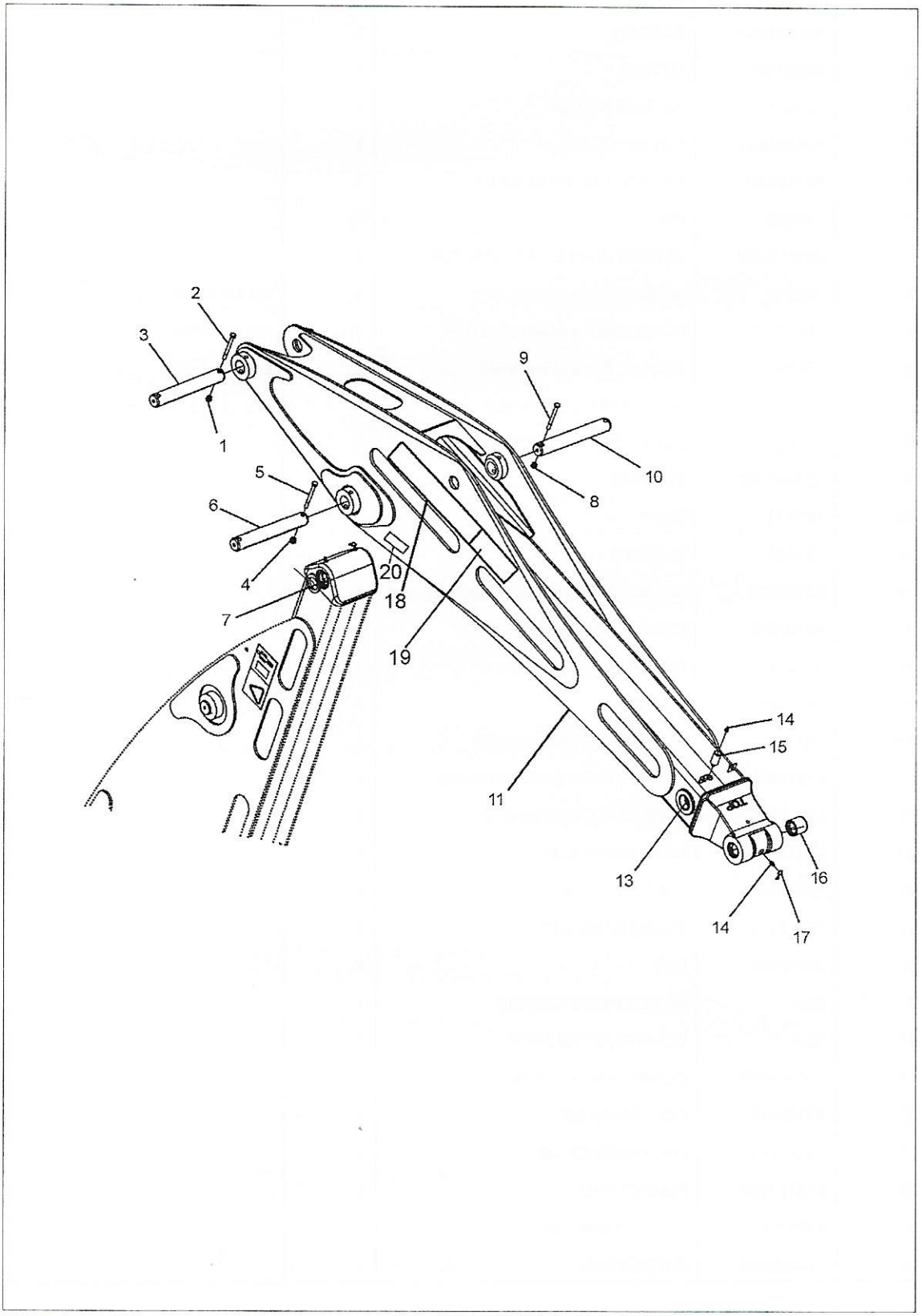
2
3
1
9
10
8
5
6
4
7
20
18
19
14
15
11
13
16
14
17

Item	Part No.	Name	Qty	Remarks
1	1440329X1	NUT NYLOCK M10	2	
2	3501289M1	HEX BOLT M10X110 GR 8.8	2	
3	1B1066	PIN	1	
4	1440329X1	NUT NYLOCK M10	2	
5	3501289M1	HEX BOLT M10X110 GR 8.8	1	
5	6007788M1	SCREW	1	
6	1B1067	PIN W/A	1	UP TO 14014
6	1B1212	PIN W/A	1	
7	3501027M1	WASHER	2	UP TO 14014
7	1B1215	WASHER	2	
8	1440329X1	NUT NYLOCK M10	1	
9	3501289M1	HEX BOLT M10X110 GR 8.8	1	
10	1B1081	PIN	1	
11	1B0640	DIPPER W/A - ø 45MM-GREY	1	UP TO 14014
11	1B0576	DIPPER W/A - ø 45MM-RED	1	UP TO 14014
11	1B0576YL	DIPPER W/A - ø 45MM-YELLOW	1	UP TO 14014
11	53102522	DIPPER W/A - ø 60MM-RED	1	
11	53102523	DIPPER W/A- ø 60MM-YELLOW	1	
12	1B0019	SHIM 1MM	UAR	
12	1B0020	SHIM 2MM	UAR	
12	1B0021	SHIM 3MM	UAR	
12	53108741	SHIM 1MM	UAR	
12	53108742	SHIM 2MM	UAR	
12	53108743	SHIM 3MM	UAR	
13	1B0711	BUSH	2	
14	339608X1	FITTING	2	
15	3504012M1	ADAPTOR-LUB.FITTING COMPOSITE 59.5	1	
16	1B0711	BUSH	2	
17	3516180M2	GREASE NIPPLE CAP (GENERAL)	2	
18	1L0064	DECAL-DIPPER-WHITE	2	TLB844S-WHITE
18	1L0085	DECAL-DIPPER	2	TLB844S-BLACK
18	1L0122	DECAL--DIPPER BLACK	2	TLB 844S X4- BLACK
18	1L0018	DECAL- DIPPER	2	TLB 844S X4- WHITE
19	1L0136	DECAL-DIPPER-WHITE	2	
19	1L0137	DECAL- DIPPER BLACK	2	
20	1L0134	DECAL- DIPPER WHITE	2	

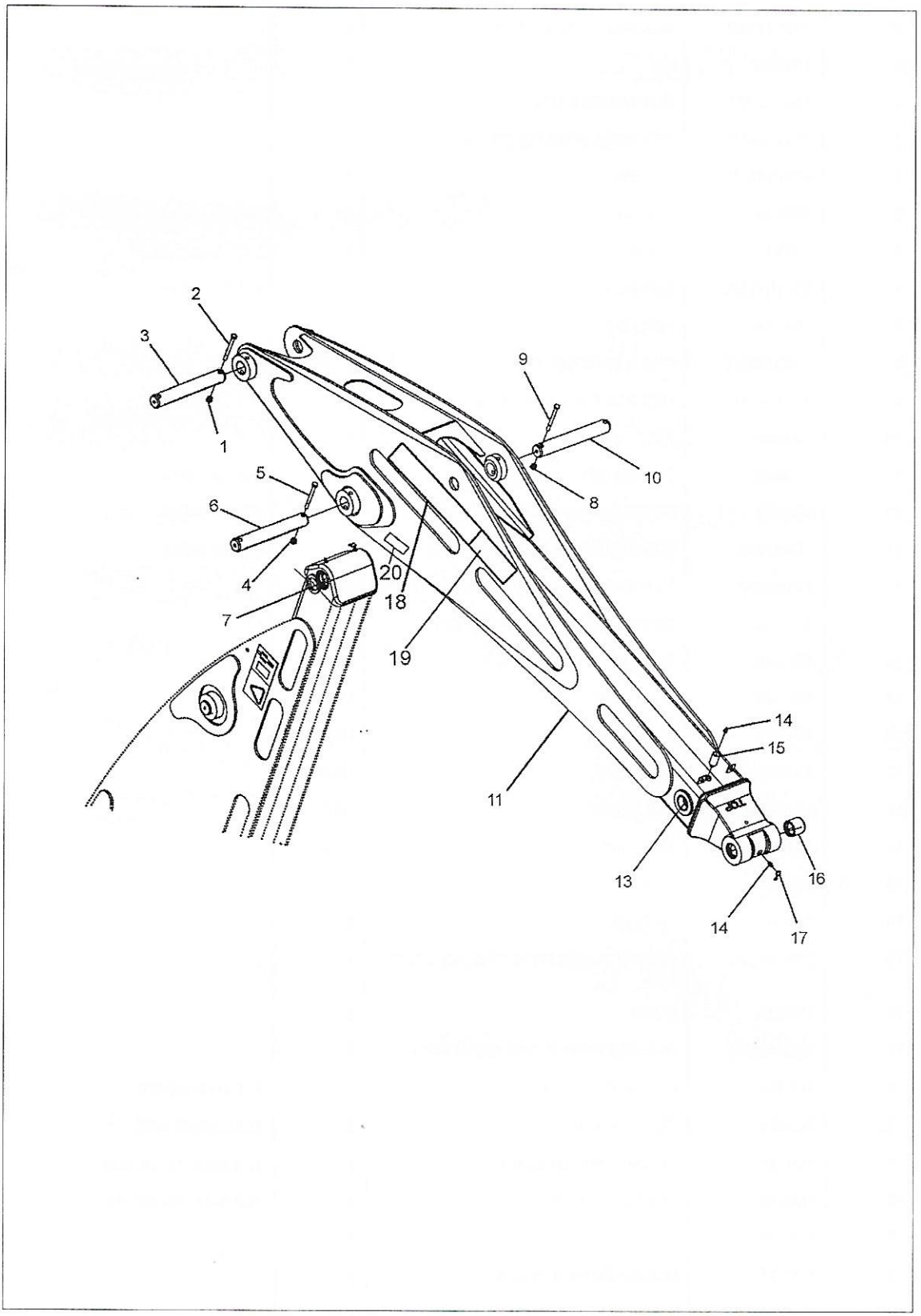
2
3
1
9
10
8
5
6
4
7
20
18
19
14
15
11
13
16
14
17

Item	Part No.	Name	Qty	Remarks
20	1L0135	DECAL- DIPPER BLACK	2	

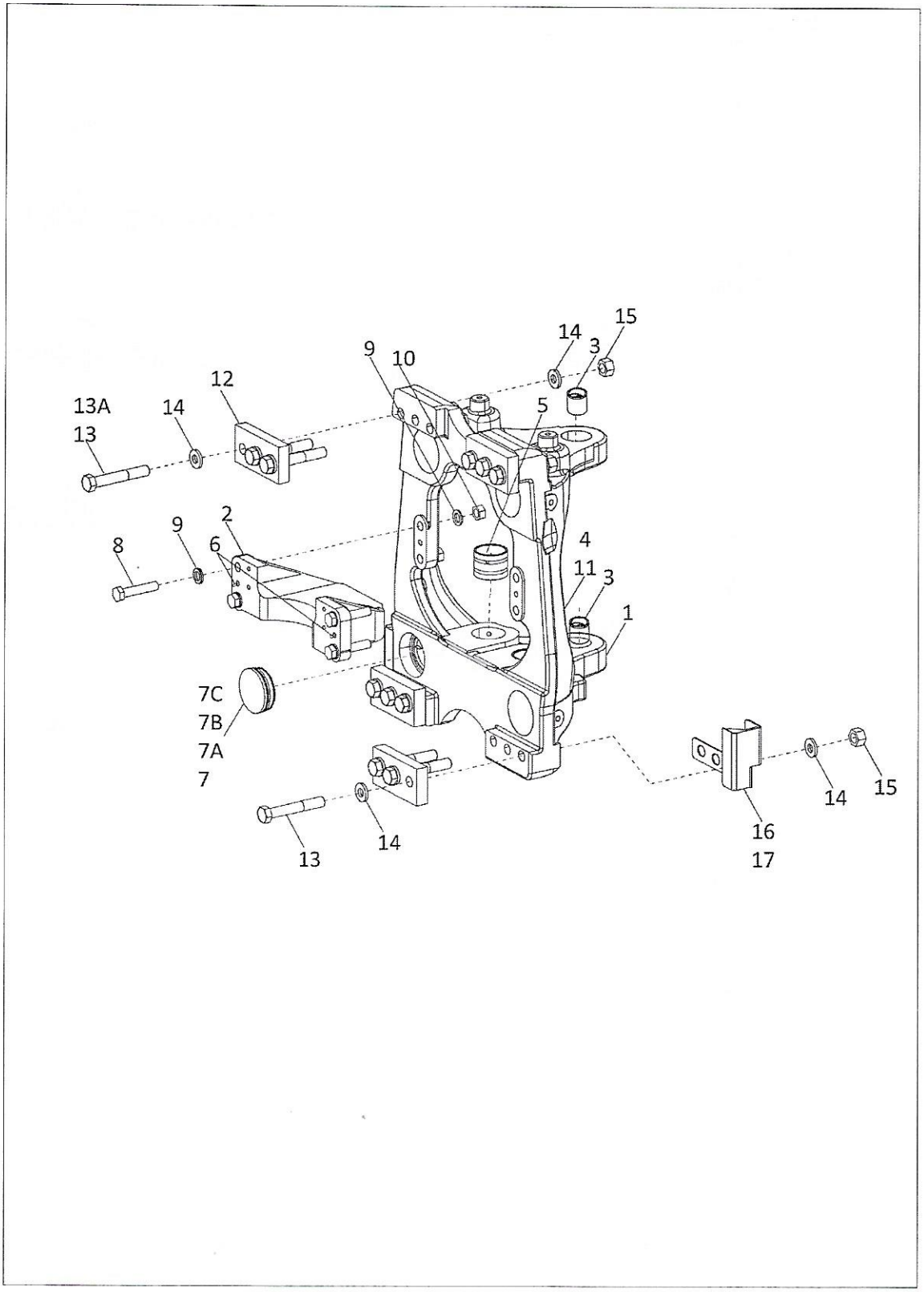
15
14
3
9
10
12
13A
14
13
5
2
9
8
6
4
11
3
1
7C
7B
7A
7
13
14
16
17
14
15

Item	Part No.	Name	Qty	Remarks
1	53100390	MAST FRAME	1	OLD PART NO. 1B0391
2	53112504	CASTING MOUNTING SWING CYL. MACHINED.	1	
3	3500312M3	BUSH SWING PIVOT	2	
4	339608X1	FITTING	2	
5	3521388M5	BUSH SWING CYL PIVOT	4	
6	3522954M1	DOWEL	2	
7	6110790M91	HYDRA CLAMP SEAL ASSY	4	
7A	1H0666	PISTON HYDRA CLAMP SEAL	4	
7B	6110789M1	SEAL-RING MAST PISTON	4	
7C	1H0667	O-RING MAST PISTON	4	
8	3522187M2	M20 BOLT COMPOSITE	4	
9	385365X1	WASHER M20 - CHAM	8	
10	3522225M3	M20 NUT	4	
11	3516180M2	GREASE NIPPLE CAP (GENERAL)	2	
12	3521610M1	CLAMP PLATE	4	
13	1B0514	BOLT M24X155	10	
13A	3522254M2	BOLT INNER M24X140	2	
14	3517388M1	WASHER M24	24	
15	3522257M4	M24 NUT	12	
16	1B0413	SAFE GUARD RH	1	
17	1B0412	SAFE GUARD LH	1	

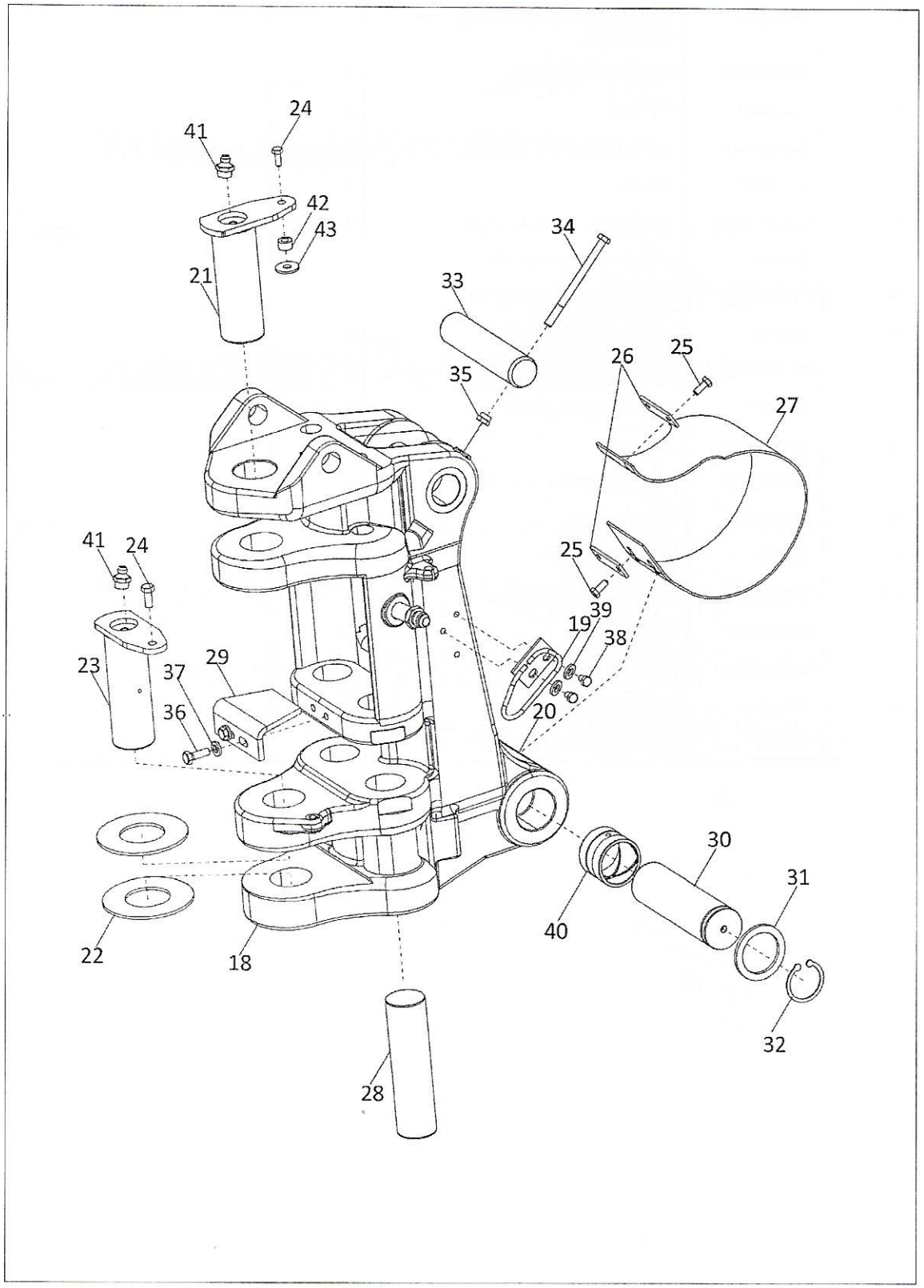
24
41
42
43
34
21
33
26
25
35
27
41
24
25
39
19
38
23
37
29
36
20
30
31
40
22
18
32
28

Item	Part No.	Name	Qty	Remarks
18	53100389	SWING PIVOT CASTING	1	OLD PART No. 1B0218
19	6101491M91	HOSE HOOP ASSY	2	
20	339608X1	FITTING	1	
21	1B1086	PIN ASSY SWING PIVOT- TOP	1	
22	3521389M1	WASHER THRUST	2	
23	1B1075	PIN ASSY SWING PIVOT-BOTTOM	1	
24	3009492X1	HEX BOLT M10X25 GR 8.8	4	
25	339123X1	HEX BOLT M8X20 GR 8.8	4	
26	6101936M1	CLAMPING PLATE	2	
27	1C0054	HOSE PROTECTION STRIP	1	
28	1B1089	PIN(SWING CYLINDER)	2	
29	6102858M5	ANGLE (PIN RETAINER)	1	
30	1B1084	PIN BOOM PIVOT	1	
31	3519378M1	WASHER	2	
32	391129X1	CIRCLIP	2	
33	1B1083	PIN BOOM CYL	1	
34	339649X1	BOLT M 10	1	
35	1440329X1	NUT NYLOCK M10	1	
36	6007776M1	BOLT M10x30 GRADE 10.9	2	
37	385362X1	WASHER M10 - CHAM	2	
38	339124X1	HEX BOLT M8X16 GR 8.8	4	
39	390972X1	WASHER M8 - STD	4	
40	3500047M4	BUSH BOOM PIVOT	2	
41	339608M1	GREASE NIPPLE, M10	2	
42	6111417M1	PIN LOCATION BOSS	1	
43	339735X1	WASHER M10	1	

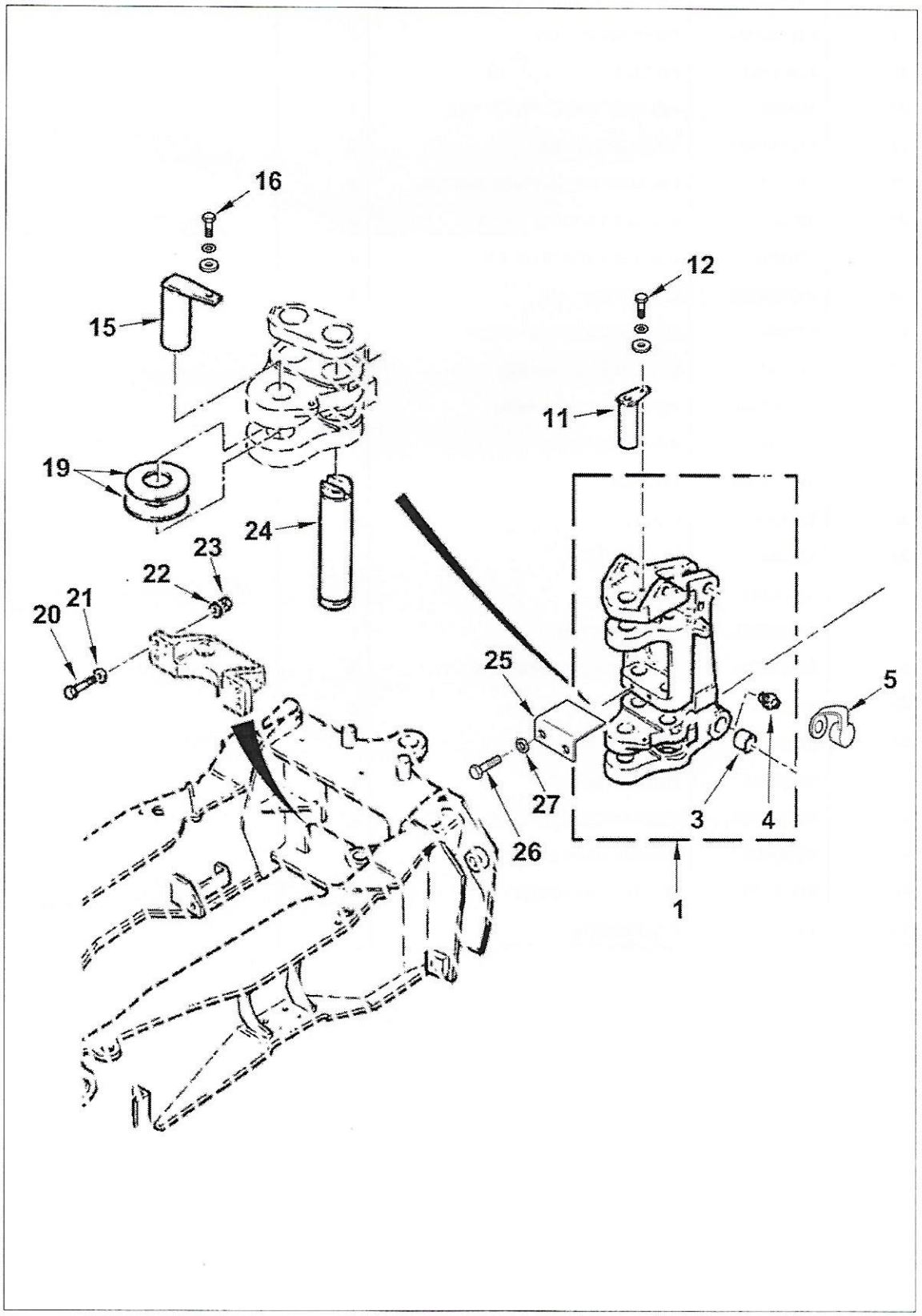
16
15
12
11
19
24
23
22
21
20
25
5
27
26
3
4
1

Item	Part No.	Name	Qty	Remarks
1	3517861M95	SWING PIVOT ASSY.	1	
3	3500047M4	BUSH BOOM PIVOT	2	
4	339608X1	FITTING	1	
5	3516180M2	GREASE NIPPLE CAP (GENERAL)	1	
11	1B1086	PIN ASSY SWING PIVOT- TOP	1	
12	3009493X1	HEX BOLT M10X30 GR 8.8	1	
15	1B1075	PIN ASSY SWING PIVOT-BOTTOM	1	
16	3009493X1	HEX BOLT M10X30 GR 8.8	1	
19	3521389M1	WASHER THRUST	2	
20	3517442M1	BOLT	4	
21	385365X1	WASHER M20 - CHAM	4	
22	385365X1	WASHER M20 - CHAM	4	
23	3522225M3	M20 NUT	4	
24	1B1089	PIN(SWING CYLINDER)	2	
25	6102858M5	ANGLE (PIN RETAINER)	1	
26	6007776M1	BOLT M10x30 GRADE 10.9	2	
27	385362X1	WASHER M10 - CHAM	2	

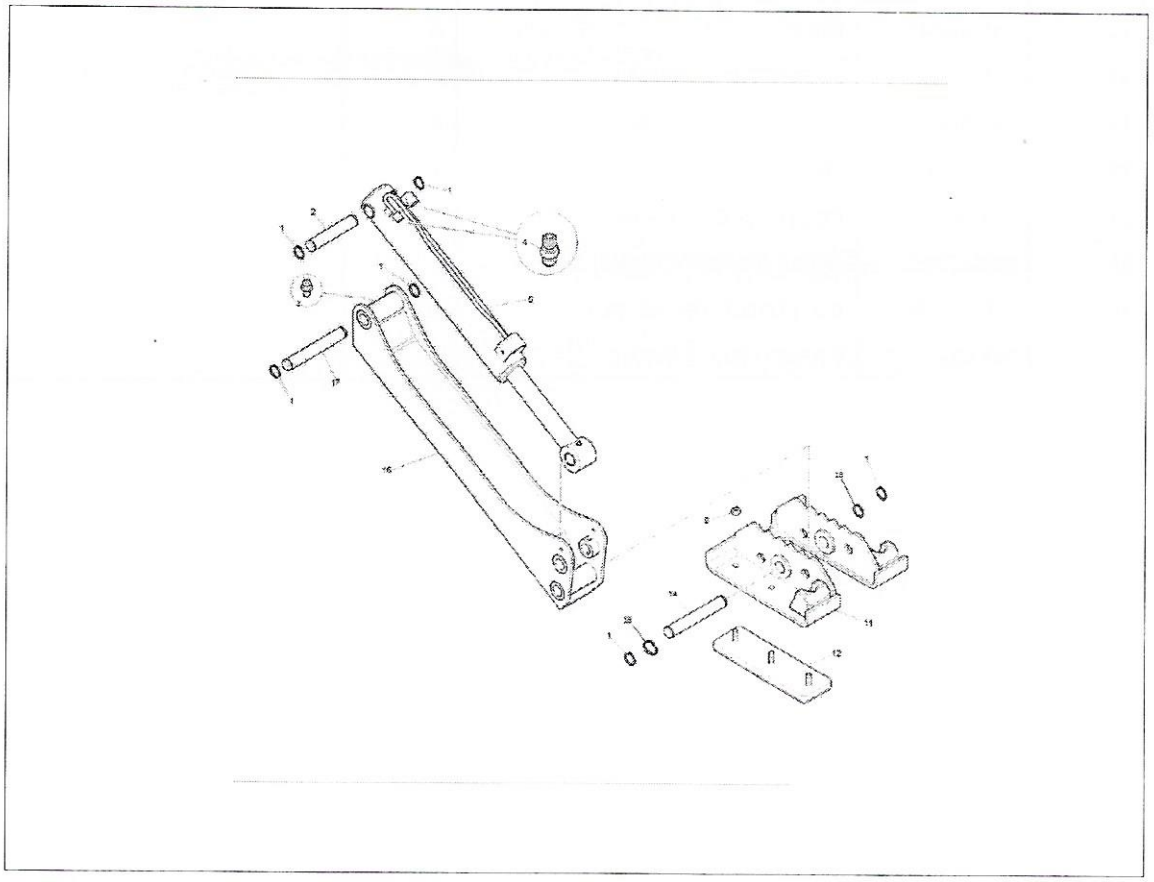

Item	Part No.	Name	Qty	Remarks
1	3517790M1	CIRCLIP	8	
2	3519722M1	PIN	2	
3	339608X1	FITTING	2	
4	3519179M91	CONNECTOR	8	
6	53101330	STABILIZER CYLINDER	2	GREY COLOR -1H0555
6	53108757	STABILIZER CYLINDER-CM	2	SUITABLE FOR ATTACHING PROTECTION GUARD
9	1442739X1	M16 NYLOC NUT	12	
11	6111337M91	FLIP OVER	2	
12	6111339M91	STREET PAD ASSY	4	OPTIONAL
14	3517331M3	PIN	2	
16	3519717M91	STABILIZER LEG	2	
17	3517333M2	PIN	2	
18	53107329	SHIM- 1MM	UAR	
18	53107330	SHIM-2 MM	UAR	

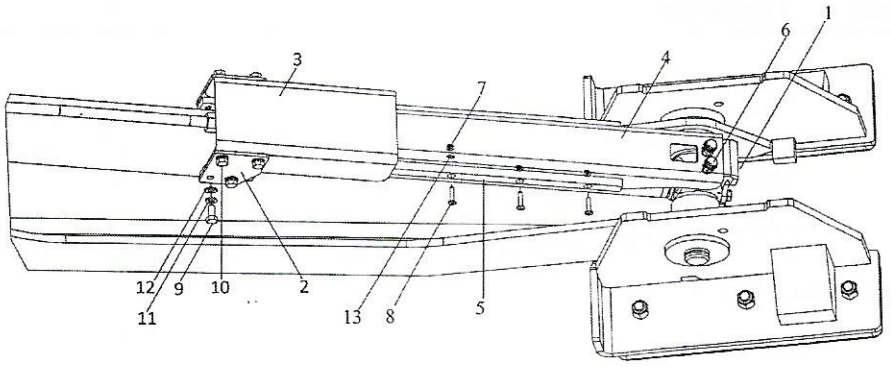
1
6
3
4
7
12
9
10
2
11
13
8
5

Item	Part No.	Name	Qty	Remarks
1	53107719	SUPPORT PLATE	1	
2	53107720	OUTER GUARD MTG BKT	2	
3	53107723	OUTER GUARD W/A	1	
4	53107724	INNER GUARD	1	
5	53107725	NYLON STRIP	2	
6	1440329X1	NUT NYLOCK M10	2	
7	1451500X1	M6 NYLOC NUT	8	
8	3008342X1	MACHINE SCREW PAN HEAD M6x25	8	
9	3009491X1	HEX BOLT M10x20 GRADE 8.8	8	
10	3009492X1	HEX BOLT M10X25 GR 8.8	4	
11	339376X1	LOCK_WASHER	8	
12	390734X1	WASHER M10-STD	14	
13	390971X1	WASHER M6 - STD	8	

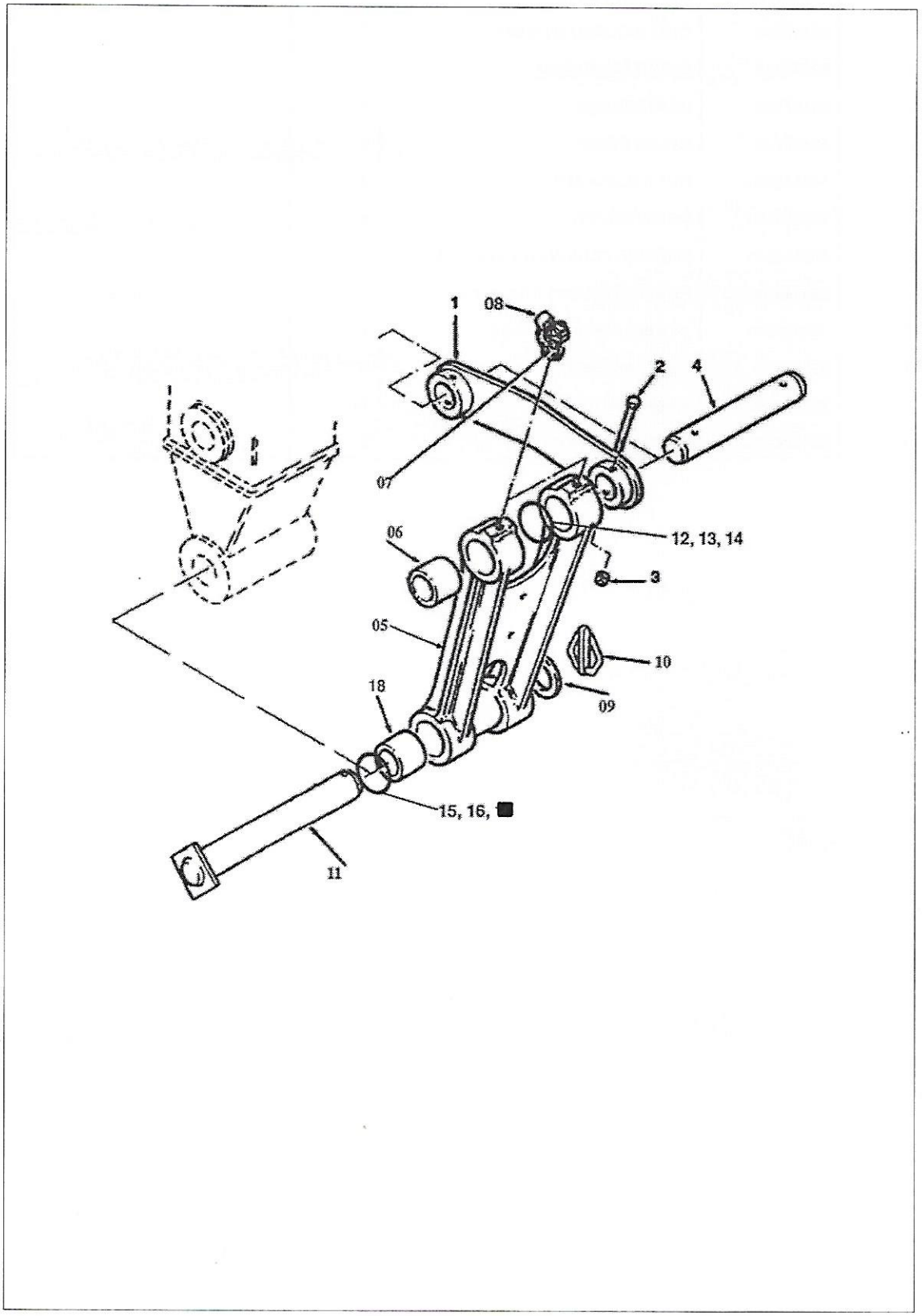
1
08
2
4
07
06
12, 13, 14
3
05
10
18
09
15, 16, ■
11

Item	Part No.	Name	Qty	Remarks
1	53102605	PIVOT LINK W/A-YELLOW	2	
1	53102606	PIVOT LINK W/A-RED	2	
1	53112513	PIVOT LINK W/A-BLACK	2	Old reference number 1B0449
2	1441106X1	BOLT M10 - 100 Z5S	4	
3	1440329X1	NUT NYLOCK M10	4	
4	1B1069	PIN PIVOT LINK	2	
5	53109563	BUCKET LINK-YELLOW	1	
5	53107332	BUCKET LINK -RED	1	
5	53112503	BUCKET LINK-BLACK	1	
6	1B0711	BUSH	2	
7	339608X1	FITTING	4	
8	3516180M2	GREASE NIPPLE CAP (GENERAL)	4	
9	3501790M1	WASHER	2	
10	3516522M91	SAFETY LINCH PIN	2	
11	1B1071	PIN W/ASSY (DIGGER BUCKETS)	2	
12	1B0019	SHIM 1MM	UAR	
13	1B0020	SHIM 2MM	UAR	
14	1B0021	SHIM 3MM	UAR	
18	1B0711	BUSH	2	

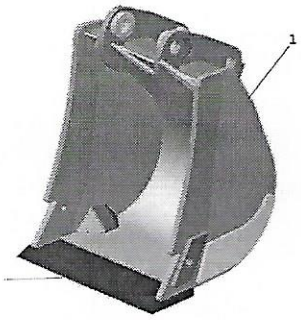
1

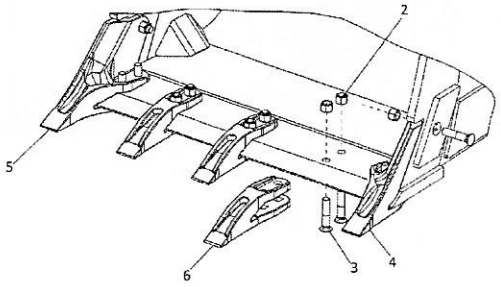
2
5
6
3
4

Item	Part No.	Name	Qty	Remarks
1	53102211	BUCKET W/A - 305MM	1	0.08 CuM
1	53101156	BUCKET W/A - 457MM	1	0.10 CuM
1	53101153	BUCKET W/A - 600MM	1	0.15 CuM
1	1C0307	BUCKET W/A-722 MM	1	0.18 CuM
1	53108595	HD BUCKET W/A-724.4 MM	1	0.20 CuM
1	1C0308	BUCKET W/A-892 MM	1	0.24 CuM
1	53109670	BUCKET W/A -808.5MM -DEEP PROFILE	1	0.24 CuM
1	1C0309	BUCKET W/A-972 MM	1	0.27 CuM
1	1C0310	BUCKET W/A-1082 MM	1	0.31 CuM
1	53109650	BUCKET W/A -888.5MM -DEEP PROFILE	1	0.27 CuM
2	1442739X1	M16 NYLOC NUT	UAR	
3	1C0135	PLOW BOLT M16	UAR	
4	1C0190	SIDE TOOTH RH	UAR	
5	1C0191	SIDE TOOTH LH	UAR	
6	1C0189	TOOTH	UAR	

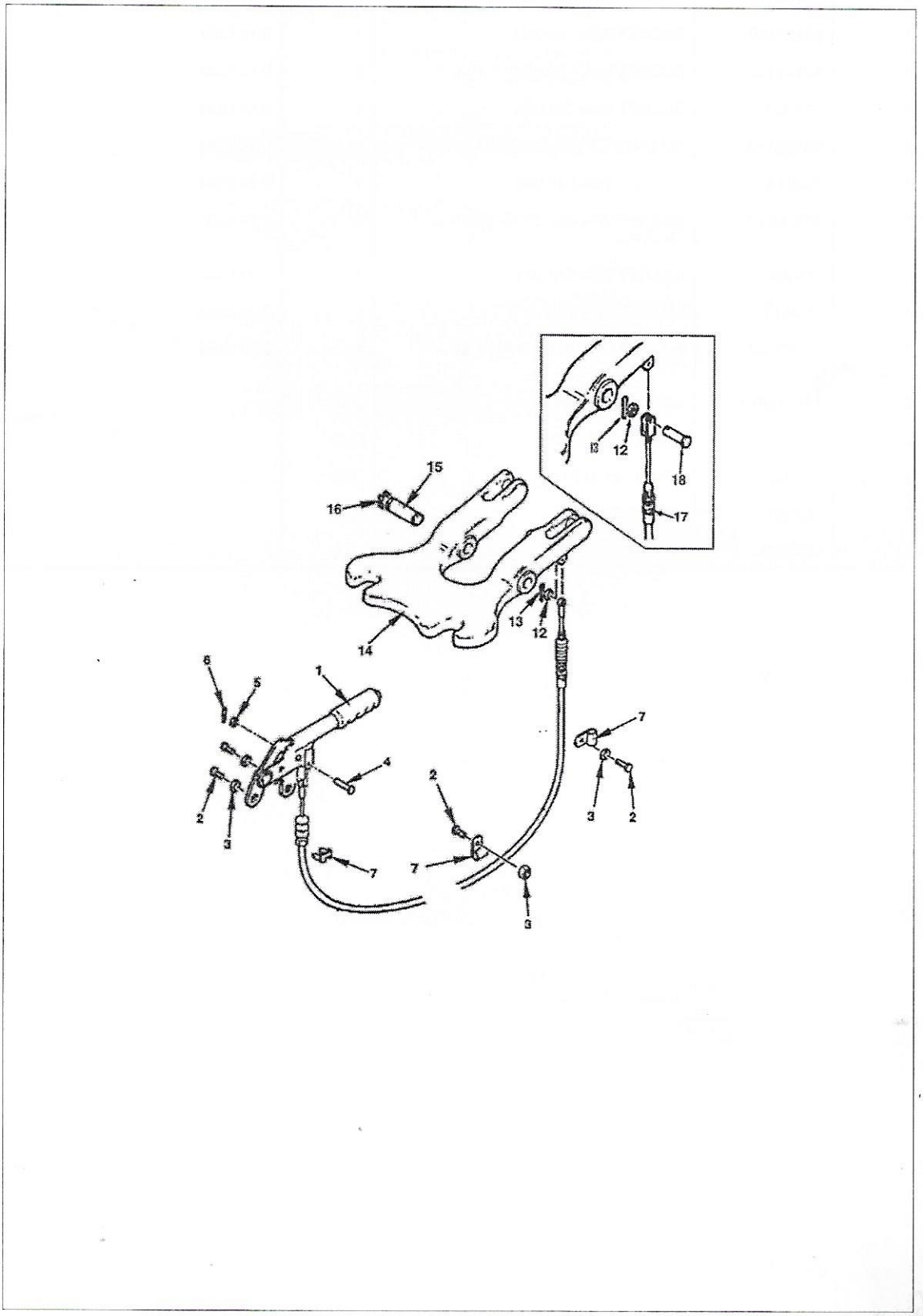
15
16
14
13
12
18
17
6
5
1
4
2
3
7
2
7
7
3
2
3

Item	Part No.	Name	Qty	Remarks
1	3522379M92	HAND BRAKE ASSY - BOOM	1	
2	339124X1	HEX BOLT M8X16 GR 8.8	4	
3	390972X1	WASHER M8 - STD	4	
4	376401X1	PIN CLEVIS 3/8X1	1	
5	385361X1	WASHER M8 HARDENED	1	
6	1442864X1	PIN CLEVIS	1	
7	53113860	P CLIP	2	
12	385361X1	WASHER M8 HARDENED	2	
13	1442864X1	PIN CLEVIS	2	
14	3521747M6	CASTING TRANSPORT LOCK	1	
15	1B1078	PIVOT PIN	2	
16	392758X1	CIRCLIP O30 ZN	4	
17	53110144	CABLE TRANSPORT LOCK--S/SHIFT	1	
18	376401X1	PIN CLEVIS 3/8X1	1	

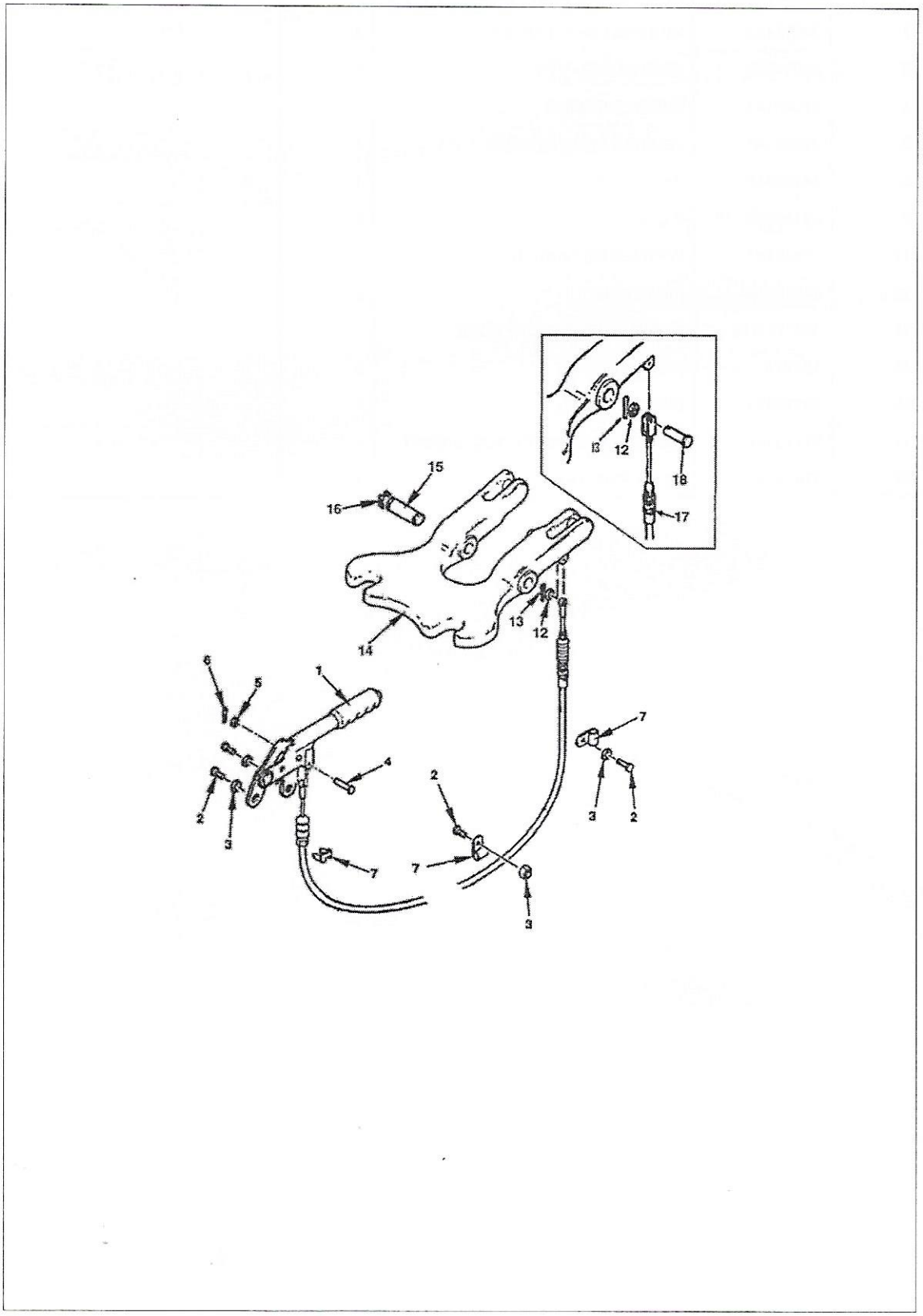
15
16
14
13
12
18
17
6
5
1
4
2
3
7
2
7
7
3
7
3
2

Item	Part No.	Name	Qty	Remarks
1	3522379M92	HAND BRAKE ASSY - BOOM	1	
2	339124X1	HEX BOLT M8X16 GR 8.8	4	
3	390972X1	WASHER M8 - STD	4	
4	376401X1	PIN CLEVIS 3/8X1	1	
5	385361X1	WASHER M8 HARDENED	1	
6	1442864X1	PIN CLEVIS	1	
7	53113860	P CLIP	2	
12	385361X1	WASHER M8 HARDENED	2	
13	1442864X1	PIN CLEVIS	2	
14	3521747M6	CASTING TRANSPORT LOCK	1	
15	1B1078	PIVOT PIN	2	
16	392758X1	CIRCLIP O30 ZN	4	
17	53111871	CABLE TRANSPORT LOCK-CM	1	
18	376401X1	PIN CLEVIS 3/8X1	1	

HYDRAULICS

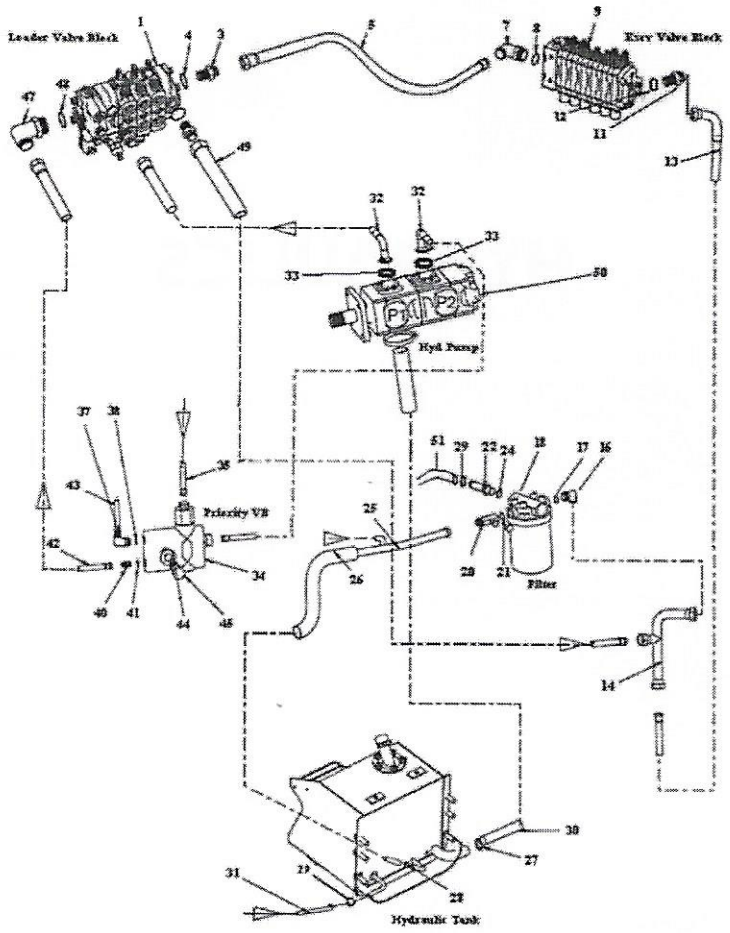
Loader Valve Block
Exev Valve Block
Hyd Pump
Priority Vlv
Filter
Hydraulic Tank

Item	Part No.	Name	Qty	Remarks
1	1H0507	2 SPOOL VALVE BLOCK	1	
3	1H0208	ADAPTOR	1	
4	835026M1	O-RING	1	
5	1H0246	H P C O HOSE ASSY.	1	
7	1H0310	ADJUSTABLE ELBOW 1-5/16, 1-1/16	1	
8	835026M1	O-RING	1	
9	53112900	6 SPOOL VALVE BLOCK (WALVOIL)-NEW GEN	1	
9	53112901	7 SPOOL VALVE BLOCK (EXTENDED DIPPER)-NEW GEN	1	
9	53112902	7 SPOOL VALVE BLOCK ROCK BREAKER (NEW GEN)	1	
9	53112903	8 SPOOL VALVE BLOCK (EXTENDED DIPPER WITH ROCK BREAKER)-NEW GEN	1	
11	358738X1	FITTING	1	
12	835026M1	O-RING	1	
13	1H0097	HOSE EXCAVATOR RETURN	1	
14	1H0215	TUBE ASSY	1	
16	358757X1	ADAPTOR	1	
17	835026M1	O-RING	1	
18	1H0520	HYDRAULIC FILTER HEAD	1	
20	1H0247	CONNECTOR	1	
21	835026M1	O-RING	1	
22	6107562M92	ADAPTOR	1	
24	835024M1	O-RING	1	
25	1H0107	TUBE ASSY RETURN TO TANK	1	
32	6112853M91	HOSE ASSY	2	
26	6112871M1	HOSE ASSY	2	
27	3517413M1	WORM DRIVE CLIP COMPOSITE (SIZE 40-60)	2	
28	3517738M1	CLIP WORM DRIVE	2	
29	3517410M1	WORM DRIVE CLIP COMPOSITE	1	
30	1H0496	SUCTION HOSE HYDRAULIC	1	
31	1TA0035M1	HOSE ASSY	1	
33	359300X1	O-RING	2	
34	1H0448	PRIORITY VALVE BLOCK - OGNIBENE	1	
35	1H0062	HOSE ASSY. LS TO PRIORITY	1	
37	358753X1	FITTING	1	
38	831497M1	O-RING	1	

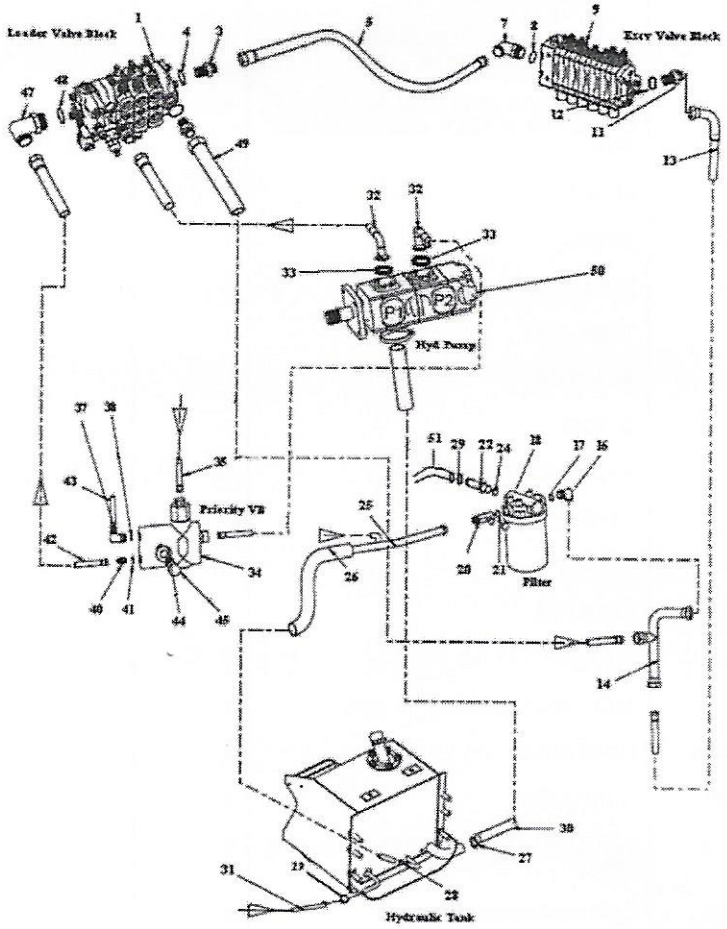
Loader Valve Block
Excv Valve Block
P1
P2
Hyd. Pump
Priority VB
Filter
Hydraulic Tank

Item	Part No.	Name	Qty	Remarks
40	3517854M1	CONNECTOR	1	
41	835024M1	O-RING	1	
42	1H0548	HOSE ASSEMBLY	1	
43	1H0099	HOSE ASSY	1	
44	339369X1	LOCK WASHER	1	
45	339368X1	HEX BOLT M8X60 GRADE 8.8	1	
47	1H0266	ADJUSTABLE ELBOW 1-5/16, 1-1/16	1	
48	835026M1	O-RING	1	
49	1H0200	HOSE ASSY	1	
51	1H0030	HOSE	1	

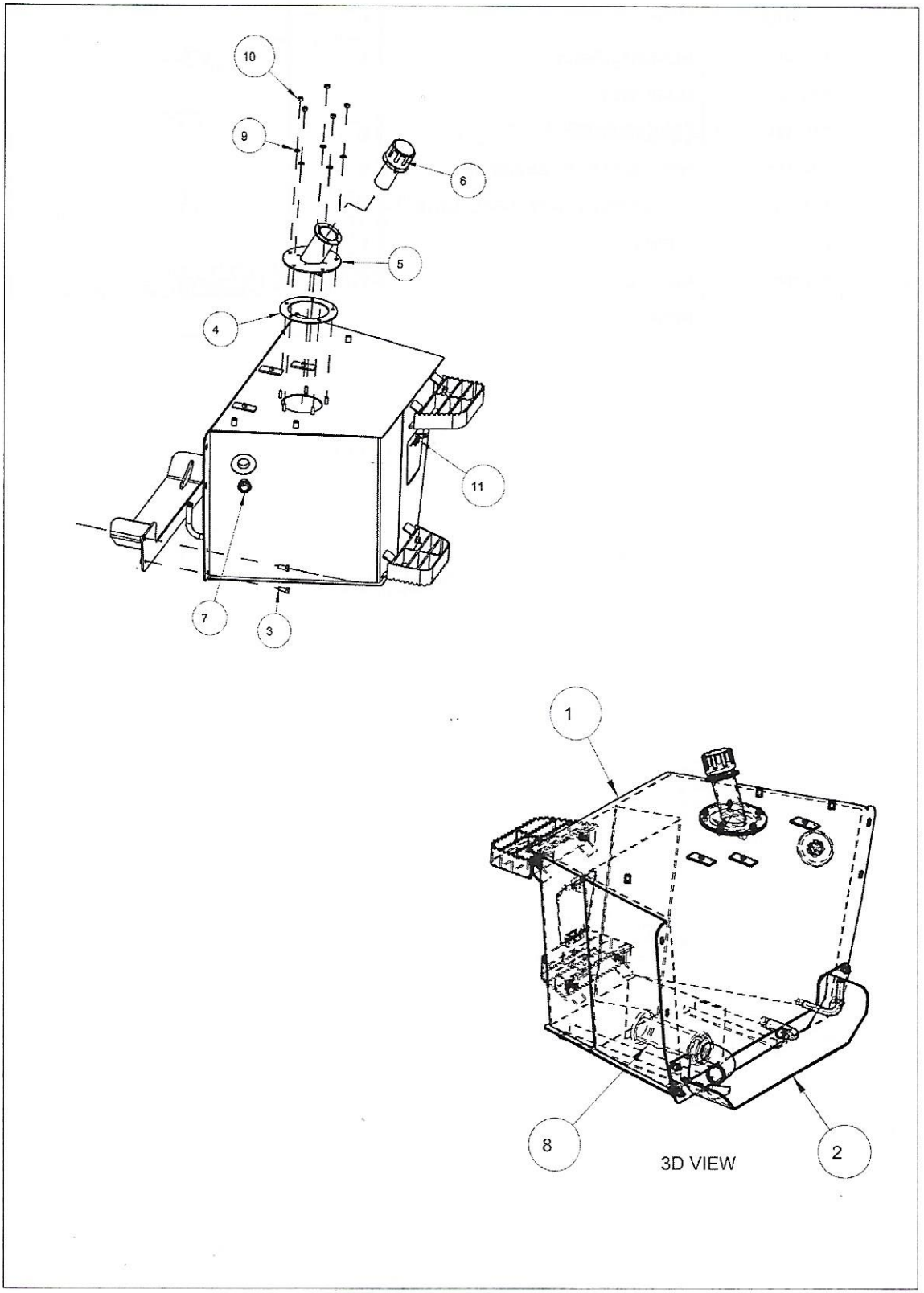
10
9
6
5
4
11
7
3
1
8
2
3D VIEW

Item	Part No.	Name	Qty	Remarks
0	53111135	HYDRAULIC TANK ASSEMBLY-EXPORT	1	
1	1B1306	HYDRAULIC TANK ASSY	1	
2	53110690	GUARD HYD TANK PIPES	1	
3	3009492X1	HEX BOLT M10X25 GR 8.8	4	
4	6100975M2	GASKET	1	
5	53100376	FILLER NECK	1	
6	1B0560	CAP - HYD. N FUEL TANK	1	
7	1H0637	SIGHT GLASS LEVEL INDICATOR	1	
8	3515254M1	ELEMENT - SUCTION	1	
9	390972X1	WASHER M8 - STD	5	
10	339169X1	HEX NUT M8X1.25	5	
11	53110189	HAIR PIN	1	Modified from machine serial no. 15381

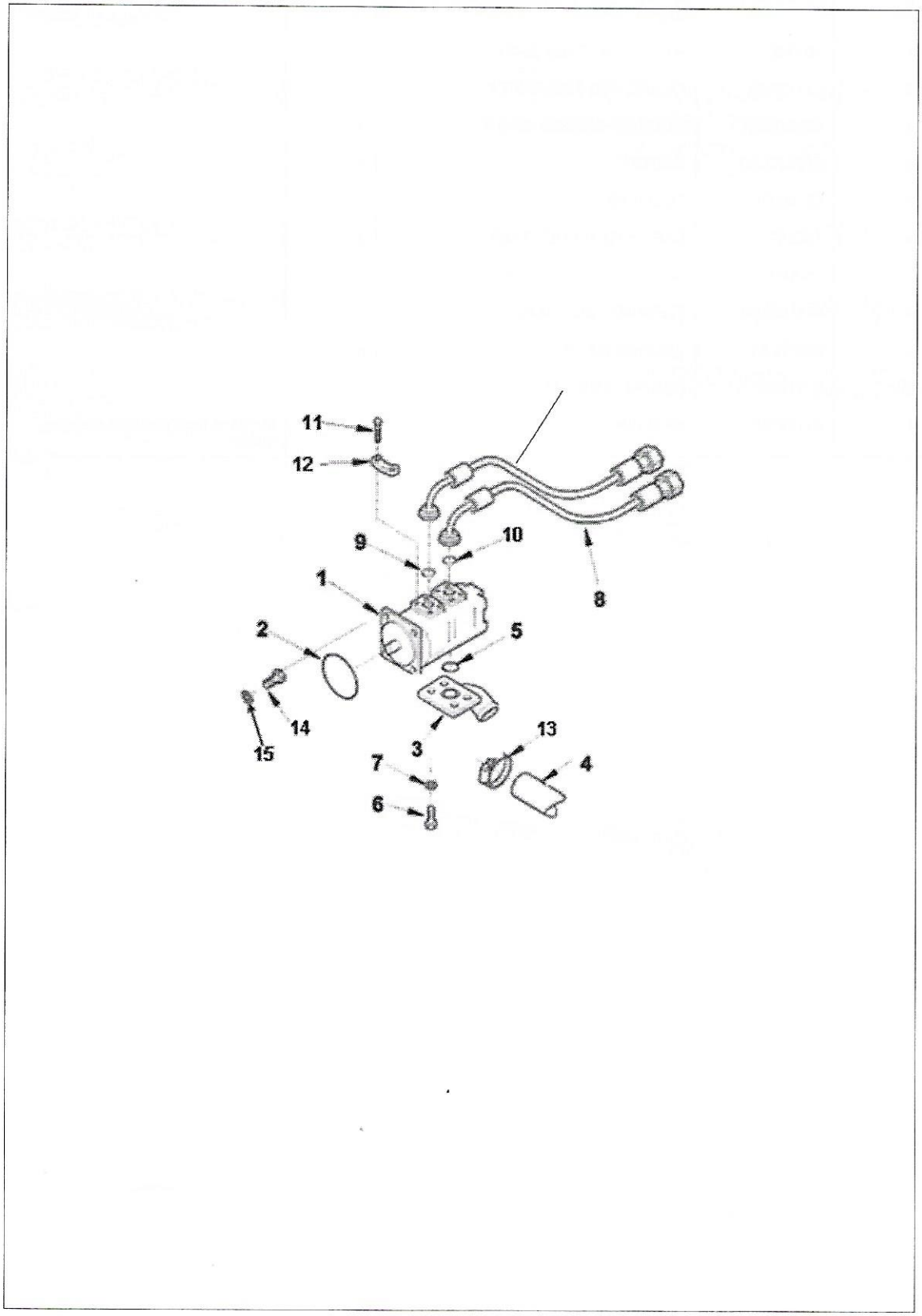
11
12
9
10
1
8
2
5
14
15
3
13
7
4
6

Item	Part No.	Name	Qty	Remarks
1	1H0470	HYD PUMP ASSY	1	
2	6194332M1	O-RING	1	
3	6109377M1	ELBOW SUCTION	1	
4	1H0496	SUCTION HOSE HYDRAULIC	1	
5	6110711M1	O RING	1	
6	1440356X1	HEX SKT HD CAP M12X1.75, L-30	4	
7	339369X1	LOCK WASHER	4	
8	6112853M91	HOSE ASSY	1	
9	359300X1	O-RING	1	
10	359300X1	O-RING	1	
11	3009493X1	HEX BOLT M10X30 GR 8.8	8	
12	3521551M1	BRACKET CLAMP	4	
13	3517413M1	WORM DRIVE CLIP COMPOSITE (SIZE 40-60)	1	
14	3019978X1	HEX BOLT M12X1.25X30	4	
15	385363X1	WASHER M12 - CHAM	4	
16	1H0528	HOSE ASSY P1	1	

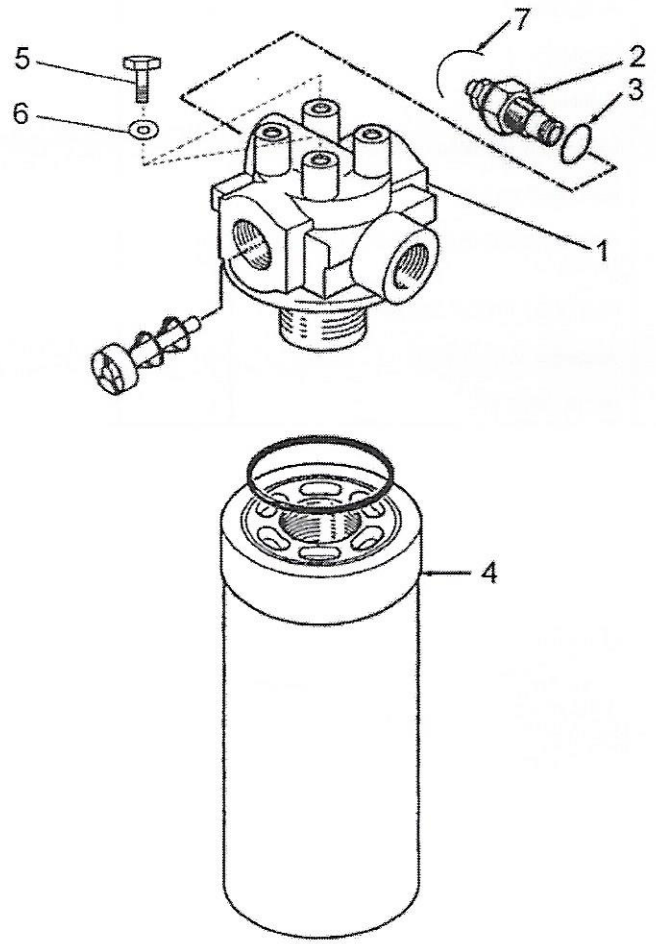
7
5
2
3
6
1
4

Item	Part No.	Name	Qty	Remarks
1	1H0520	HYDRAULIC FILTER HEAD	1	
2	1H0522	PRESSURE SWITCH	1	
3	3523725M1	O-RING	1	
4	1H0519	HYDRAULIC FILTER	1	
5	3009492X1	HEX BOLT M10X25 GR 8.8	2	
6	385362X1	WASHER M10 - CHAM	2	
7	1H0527	RUBBER BOOT	1	

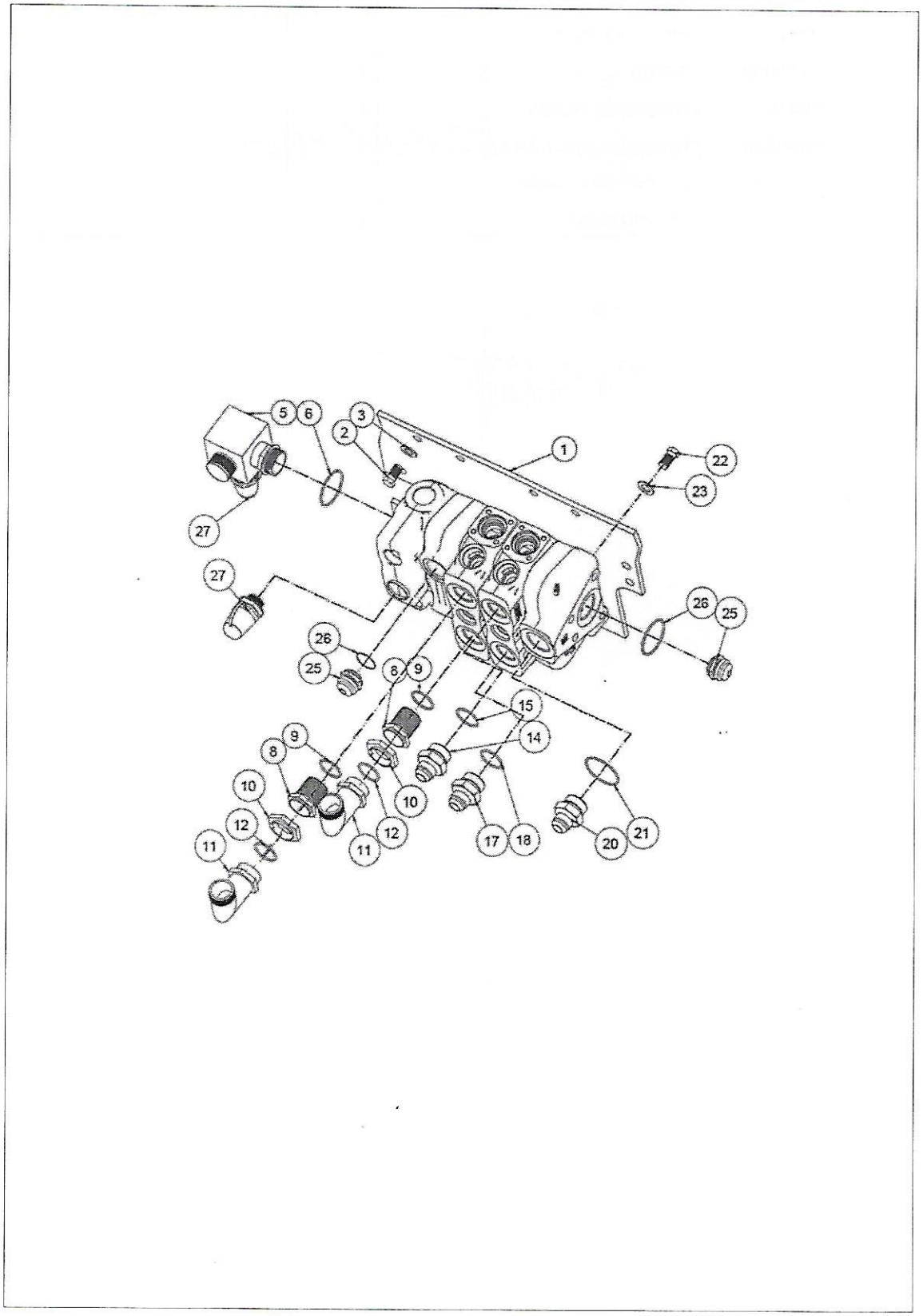
1
2
3
5
6
8
9
10
11
12
14
15
17
18
20
21
22
23
25
26
27

Item	Part No.	Name	Qty	Remarks
0	1H0507	2 SPOOL VALVE BLOCK	1	
1	1B0163	MTG. PLATE W.ASSY	1	
2	3009492X1	HEX BOLT M10X25 GR 8.8	3	
3	339123X1	HEX BOLT M8X20 GR 8.8	3	
5	1H0266	ADJUSTABLE ELBOW 1-5/16, 1-1/16	1	
6	835026M1	O-RING	1	
8	1H0173	ADAPTOR	2	
9	835025M1	O-RING	2	
10	1H0244	SLEEVE	2	
11	835007M91	ELBOW 90 DEGREE ADJUST	2	
12	835024X1	O-RING	2	
14	358736X1	FITTING	1	
15	835025M1	O-RING	1	
17	1H0165	ADAPTOR	1	
18	835025M1	O-RING	1	
20	358738X1	FITTING	1	
21	835026M1	O-RING	1	
22	3009492X1	HEX BOLT M10X25 GR 8.8	4	
23	339376X1	LOCK_WASHER	4	
25	1H0208	ADAPTOR	2	
26	835026M1	O-RING	2	
27	1H0240	MINIMESS TEST COUPLING	2	

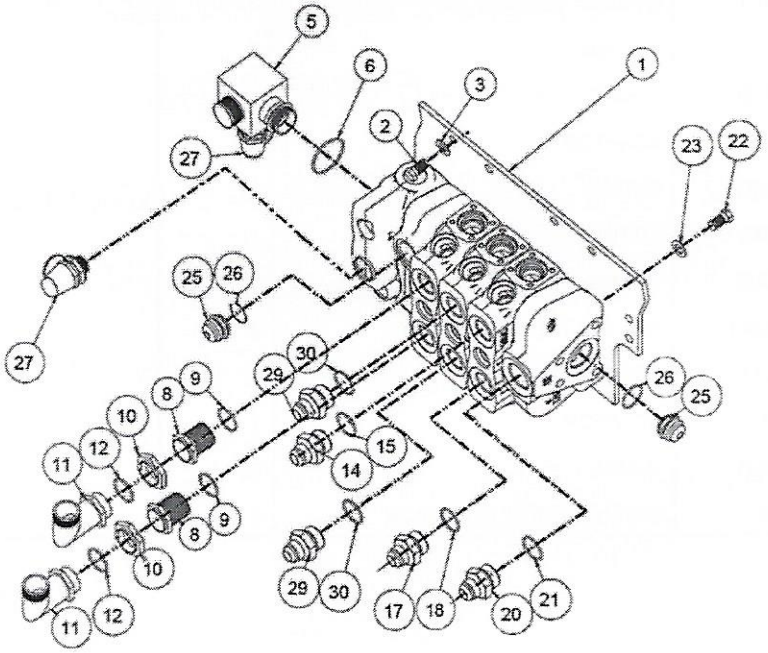
5
6
3
1
2
27
23
22
27
25
26
30
29
8
9
10
12
11
15
14
26
25
8
9
10
12
11
29
30
17
18
20
21

Item	Part No.	Name	Qty	Remarks
1	1B0163	MTG. PLATE W.ASSY	1	
2	3009492X1	HEX BOLT M10X25 GR 8.8	3	
3	339123X1	HEX BOLT M8X20 GR 8.8	3	
5	1H0266	ADJUSTABLE ELBOW 1-5/16, 1-1/16	1	
6	835026M1	O-RING	1	
8	1H0173	ADAPTOR	2	
9	835025M1	O-RING	2	
10	1H0244	SLEEVE	2	
11	835007M91	ELBOW 90 DEGREE ADJUST	2	
12	835024X1	O-RING	2	
14	358736X1	FITTING	1	
15	835025M1	O-RING	1	
17	1H0165	ADAPTOR	1	
18	835025M1	O-RING	1	
20	358738X1	FITTING	1	
21	835026M1	O-RING	1	
22	3009492X1	HEX BOLT M10X25 GR 8.8	4	
23	339376X1	LOCK_WASHER	4	
25	1H0208	ADAPTOR	2	
26	835026M1	O-RING	2	
27	1H0240	MINIMESS TEST COUPLING	2	
29	1H0165	ADAPTOR	2	
30	835025M1	O-RING	2	

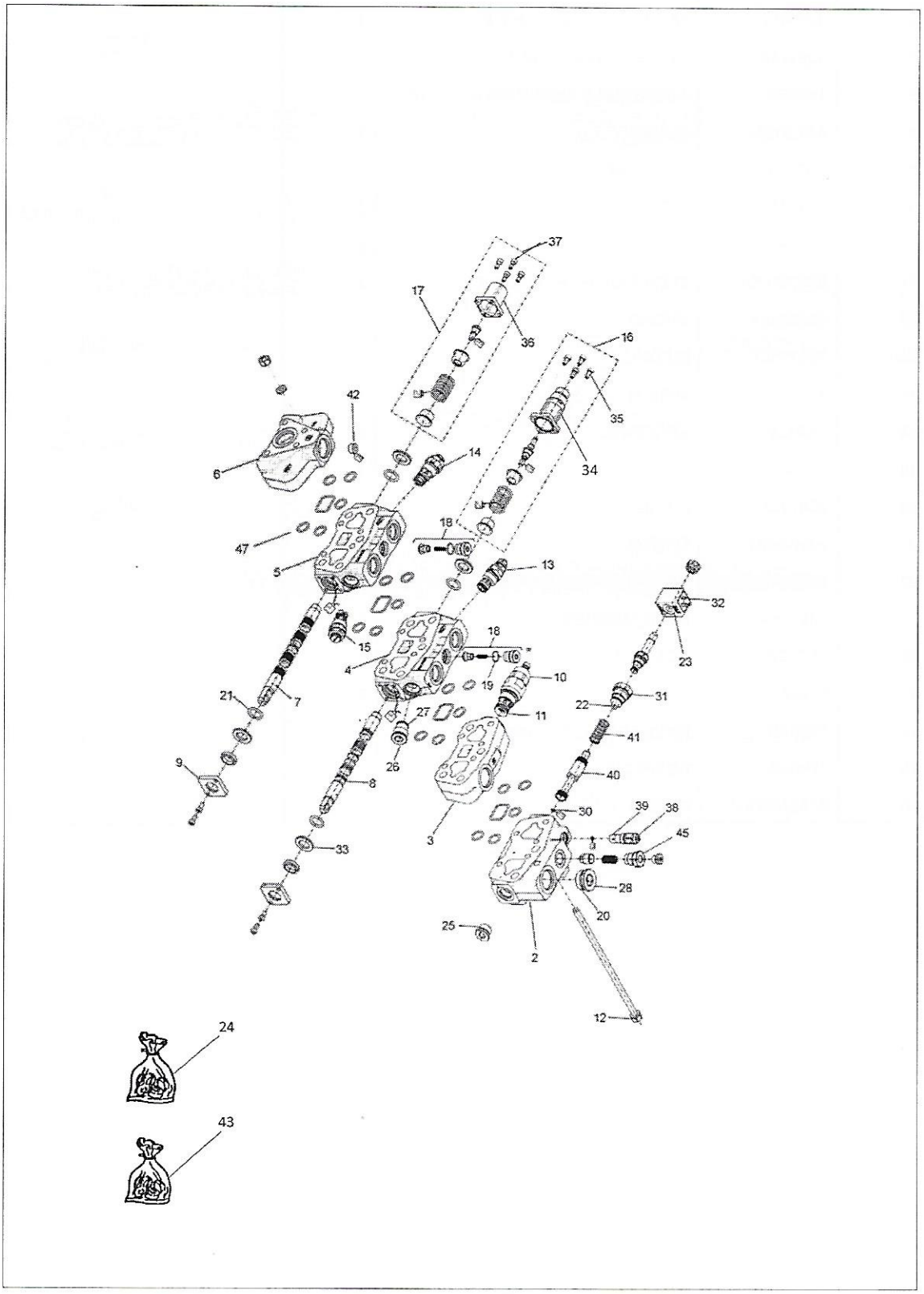
37
17
36
16
35
34
42
6
14
47
5
18
13
32
23
18
4
15
19
10
21
7
22
31
27
11
41
9
26
8
40
30
39
38
45
3
33
28
20
25
2
12
24
43

Item	Part No.	Name	Qty	Remarks
0	1H0507	2 SPOOL VALVE BLOCK	1	
2	10X1355	INLET COVER	1	
3	10X1356	INTERMEDIATE INLET SECTION	1	
4	10X2885	LIFT SECTION	1	
5	10X2884	TILT SECTION	1	
6	10X1359	OUTLET COVER	1	
7	10X1361	DIPPER / BUCKET SPOOL	1	
8	10X1362	LIFT SPOOL	1	
9	10X1365	MAECHANICAL DUST PROOF COVER FOR SPOOL	2	
10	10X1363	MAIN RELIEF VALVE SET AT 225 BAR	1	
11	10X1420	H SEAL KIT FOR MRV	1	
12	10X1367	TIE ROD KIT	4	
13	10X2888	ARV-240 BAR	1	
14	10X2886	ARV-310 BAR	1	
15	10X2887	ARV 340 BAR	1	
16	10X1372	LIFT CONTROL KIT WITH DETENT FOR FLOAT	1	
17	10X1368	TILT CONTROL KIT	1	
18	10X1366	LOAD DROP CHECK VALVE	2	
19	10X1433	O-RING FOR LOAD DROP CHECK VALVE	1	
20	10X1434	O-RING FOR INLET ALLEN PLUG	1	
21	10X1431	O-RING	4	
22	10X1430	O-RINGS FOR UNLOADER PLUG	1	
23	10X1373	UNLOADER SOLENOID VALVE	1	
24	10X1360	COMPLETE SEAL KIT	1	
25	10X1435	O-RING	1	
26	10X3337	KIT FOR PLUG	1	
27	10X2881	O-RING	1	
28	10X1456	PLUG	1	
30	10X1457	UNLOADER ORIFICE	1	
31	10X1458	PLUG	1	
32	10X1459	UNLOADER SOLENOID COIL	1	
33	10X1460	SPOOL SEAL	4	
34	10X1461	SPOOL CAP	1	
35	10X1462	CAP ALLEN BOLT	4	
36	10X1463	SPOOL CAP	1	

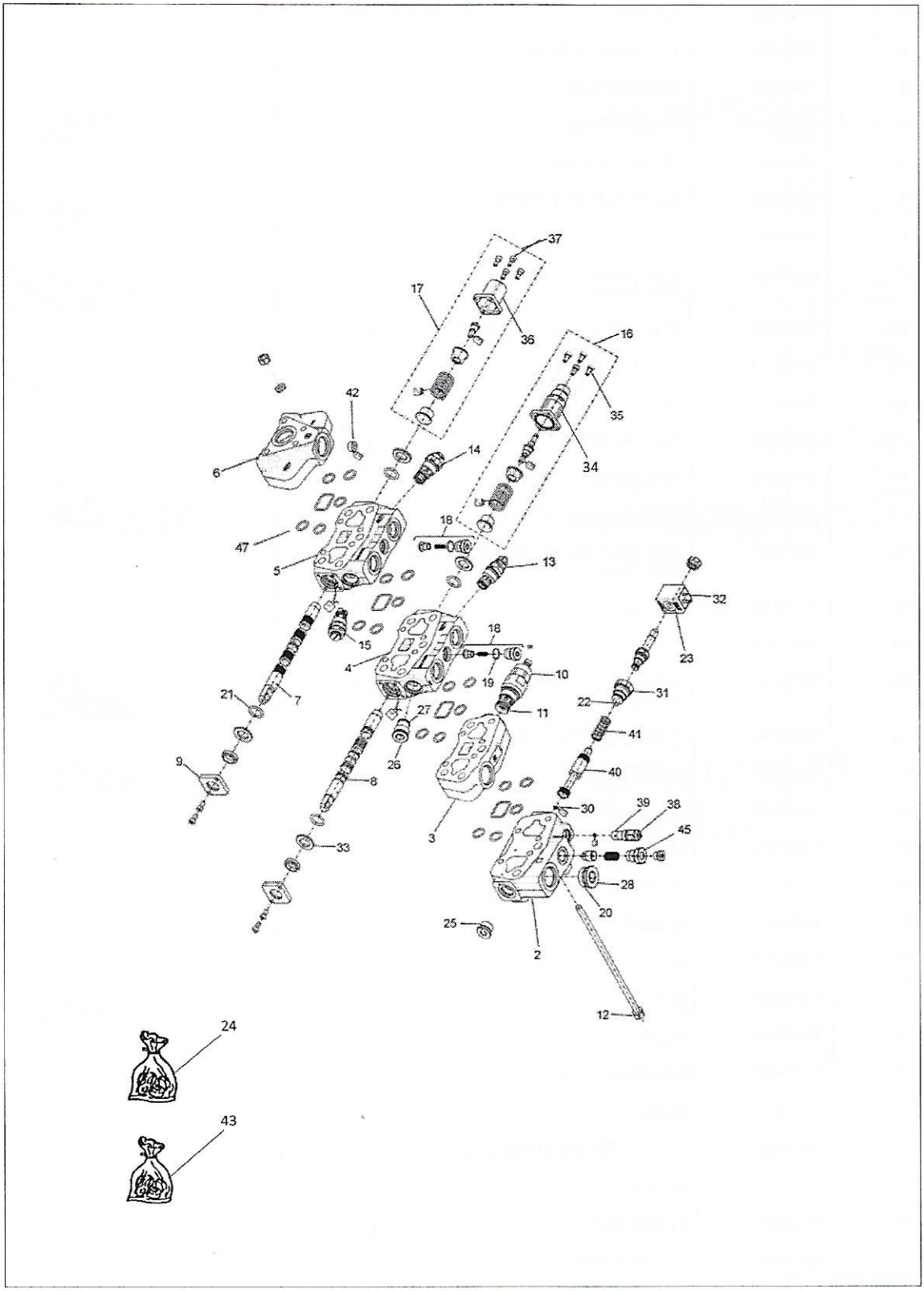
37
17
36
16
35
34
42
6
14
47
18
5
13
15
4
18
19
10
21
7
27
11
26
9
8
3
33
30
39
38
45
28
20
25
2
12
32
23
22
31
41
40
24
43

Item	Part No.	Name	Qty	Remarks
37	10X1464	CAP ALLEN BOLT	4	
38	10X1439	UNLOADER RELIEF VALVE	1	
39	10X1432	O-RING FOR LS RELIEF VALVE	1	
40	10X1468	UNLOADER SPOOL	1	
41	10X1467	SPRING FOR UNLOADER SPOOL	1	
42	10X1469	CARRY OVER PLUG	1	
43	10X1470	PILOT ARV O RING KIT	1	
45	10X1876	CHECK VALVE	1	
47	10X1419	H SEAL KIT FOR BETWEEN SECTIONS/SDS180	2	

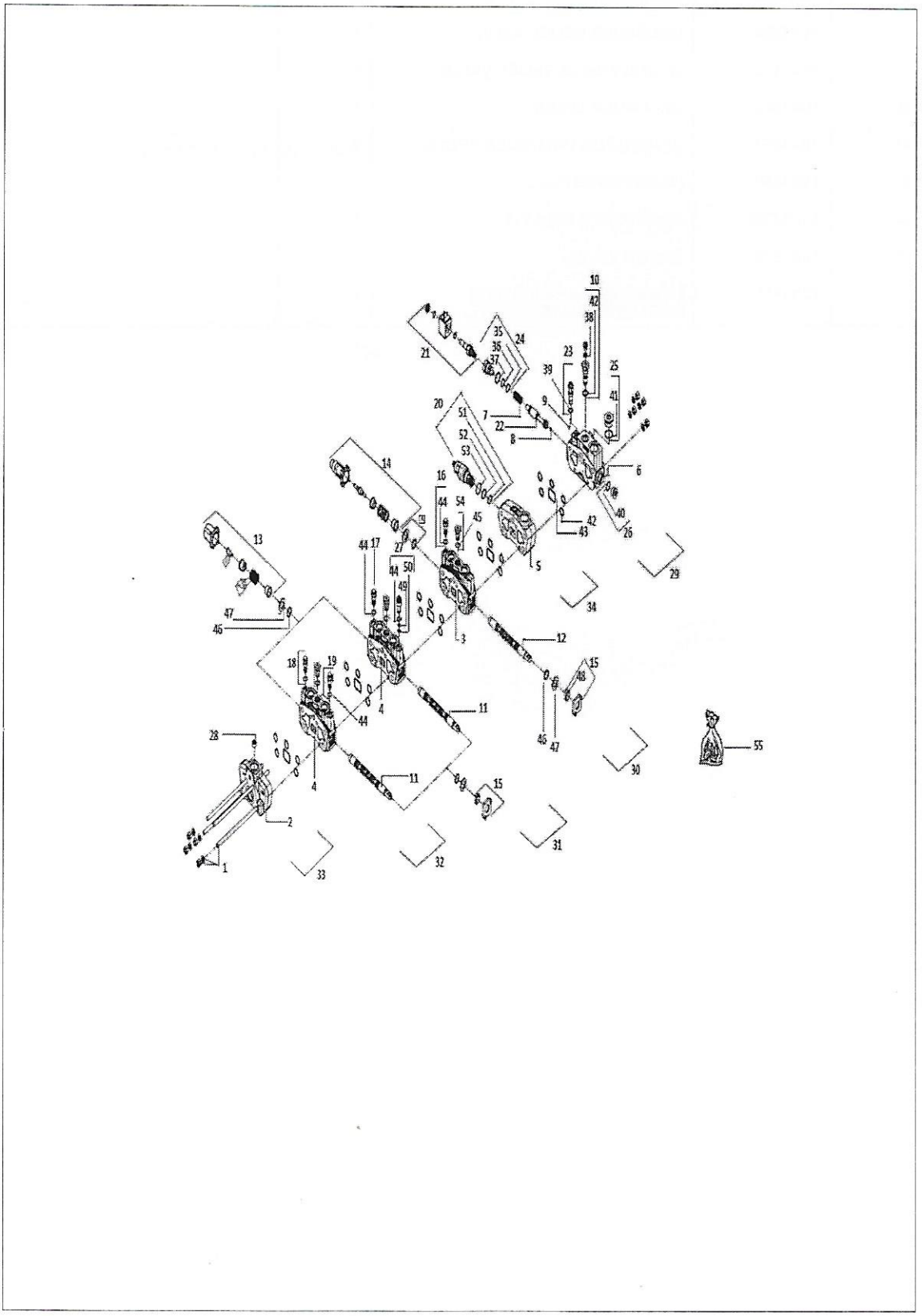

Item	Part No.	Name	Qty	Remarks
1	53110404	TIE ROD KIT	1	
2	53110405	OUTLET COVER CASTING	1	
3	53110406	LIFT SECTION	1	
4	10X3496	TILT SECTION	2	
5	53110407	INTERMEDIATE INLET SECTION	1	
6	53110408	INLET SECTION	1	
7	53110409	SPRING	1	
8	10X3300	ORIFICE	1	
9	53110410	SCREW M6 x 4.5	1	
10	53110411	CHECK VALVE KIT	1	
11	10X3325	SPOOL	2	
12	10X1332	SPOOL LOADER LIFT	1	
13	53110412	CONTROL KIT	2	
14	53110413	CONTROL KIT	1	
15	10X3329	KIT FOR SPOOL CAP	3	
16	10X2888	ARV-240 BAR	1	
17	53110414	ARV-160 BAR	1	
18	10X2886	ARV-310 BAR	1	
19	10X2887	ARV 340 BAR	1	
20	53110415	MAIN RELIEF VALVE	1	
21	53110416	UNLOADER SOLENOID VALVE	1	
22	10X1468	UNLOADER SPOOL	1	
23	10X3295	UNLOADER RELIEF VALVE	1	
24	53110417	JUNCTION PLUG ASSY	1	
25	53110418	PLUG ASSY	1	
26	53110419	PLUG ASSY	1	
27	53110420	PLUG ASSY	1	
28	10X1469	CARRY OVER PLUG	1	
29	53110421	INLET COVER ASSY	1	
30	53110422	LIFT SECTION ASSY	1	
31	53110423	AUX SECTION ASSY	1	
32	53110424	TILT SECTION ASSY	1	
33	53110425	OUTLET COVER ASSY	1	
34	53110426	INTERMEDIATE SECTION ASSY	1	
35	53110427	O-RING	1	
36	10X3344	O-RING	1	

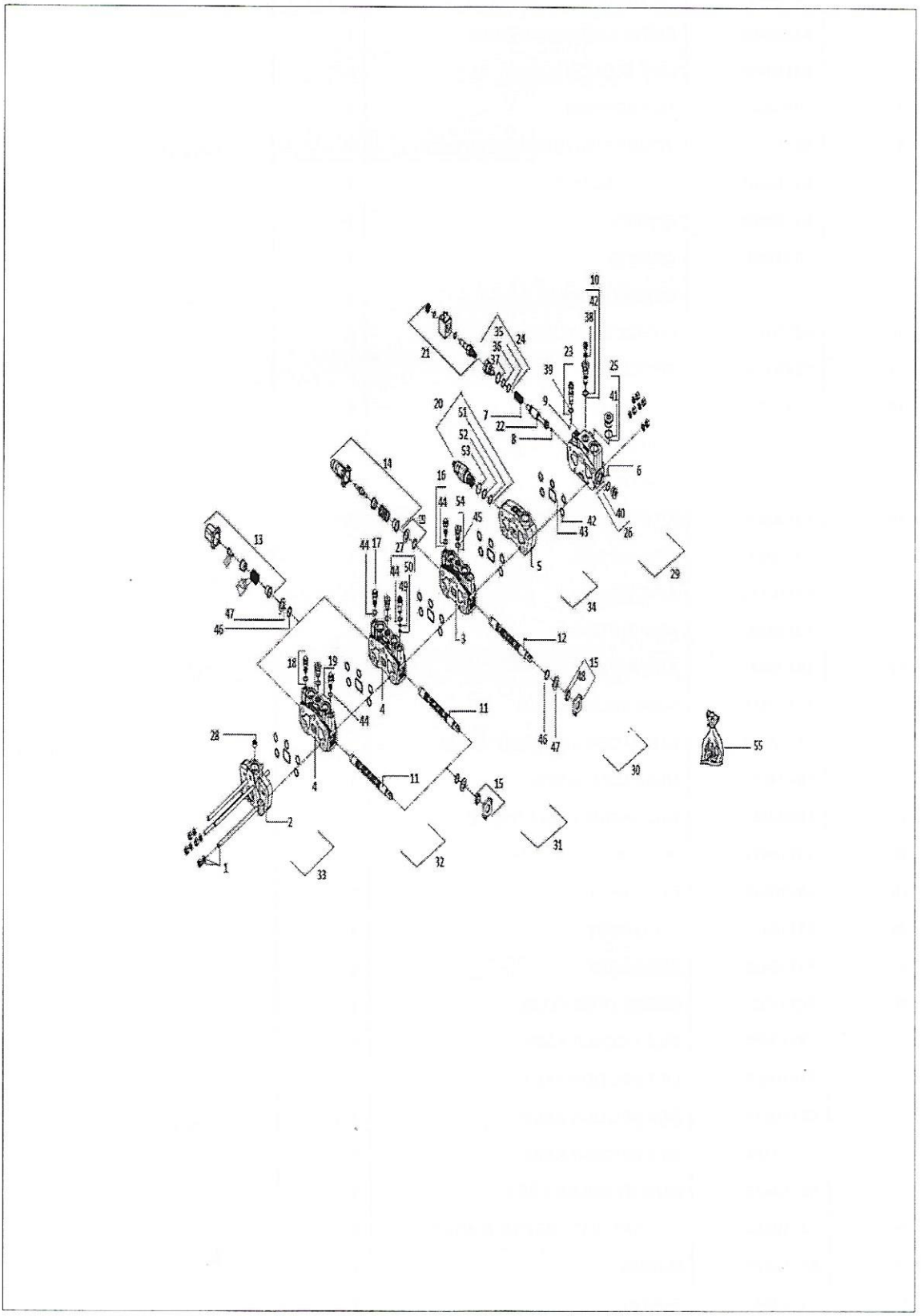

Item	Part No.	Name	Qty	Remarks
37	10X1435	O-RING	1	
38	53110428	O-RING	1	
39	10X3310	O-RING SEAL	1	
40	53110429	O-RING	1	
41	10X1428	O-RING	1	
42	10X3339	O-RING	26	
43	10X3338	O-RING	5	
44	10X3340	O-RING	5	
45	10X3348	O-RING	3	
46	10X1431	O-RING	6	
47	10X3342	SPACER	6	
48	10X3343	DUST SEAL	3	
49	53110430	O-RING	1	
50	53110431	O-RING	1	
51	53110432	O-RING	1	
52	53110433	O-RING	1	
53	10X3351	O-RING	1	
54	10X3337	KIT FOR PLUG	3	
55	53110434	COMPLETE SEAL KIT FOR VALVE BLOCK	1	

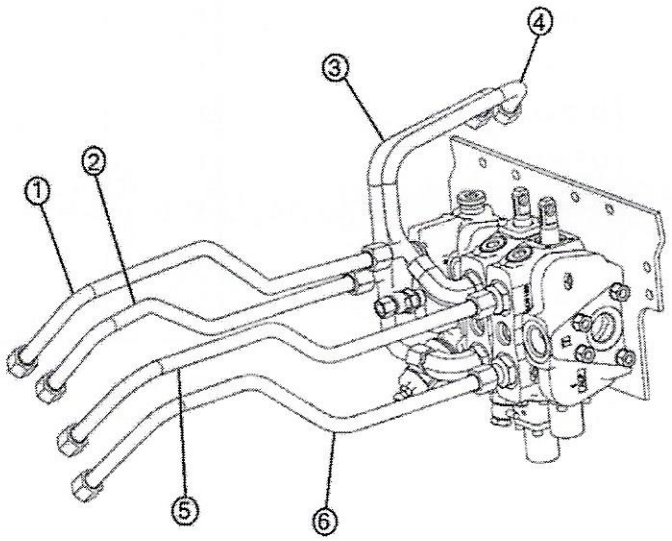
1
2
3
4
5
6

Item	Part No.	Name	Qty	Remarks
1	1TH0026M1	TUBE ASSY	1	
2	1TH0027M1	TUBE ASSY	1	
3	1TH0022M1	TUBE ASSY	1	
4	1TH0023M1	TUBE ASSY	1	
5	1TH0029M1	TUBE ASSY	1	
6	1TH0028M1	TUBE ASSY	1	

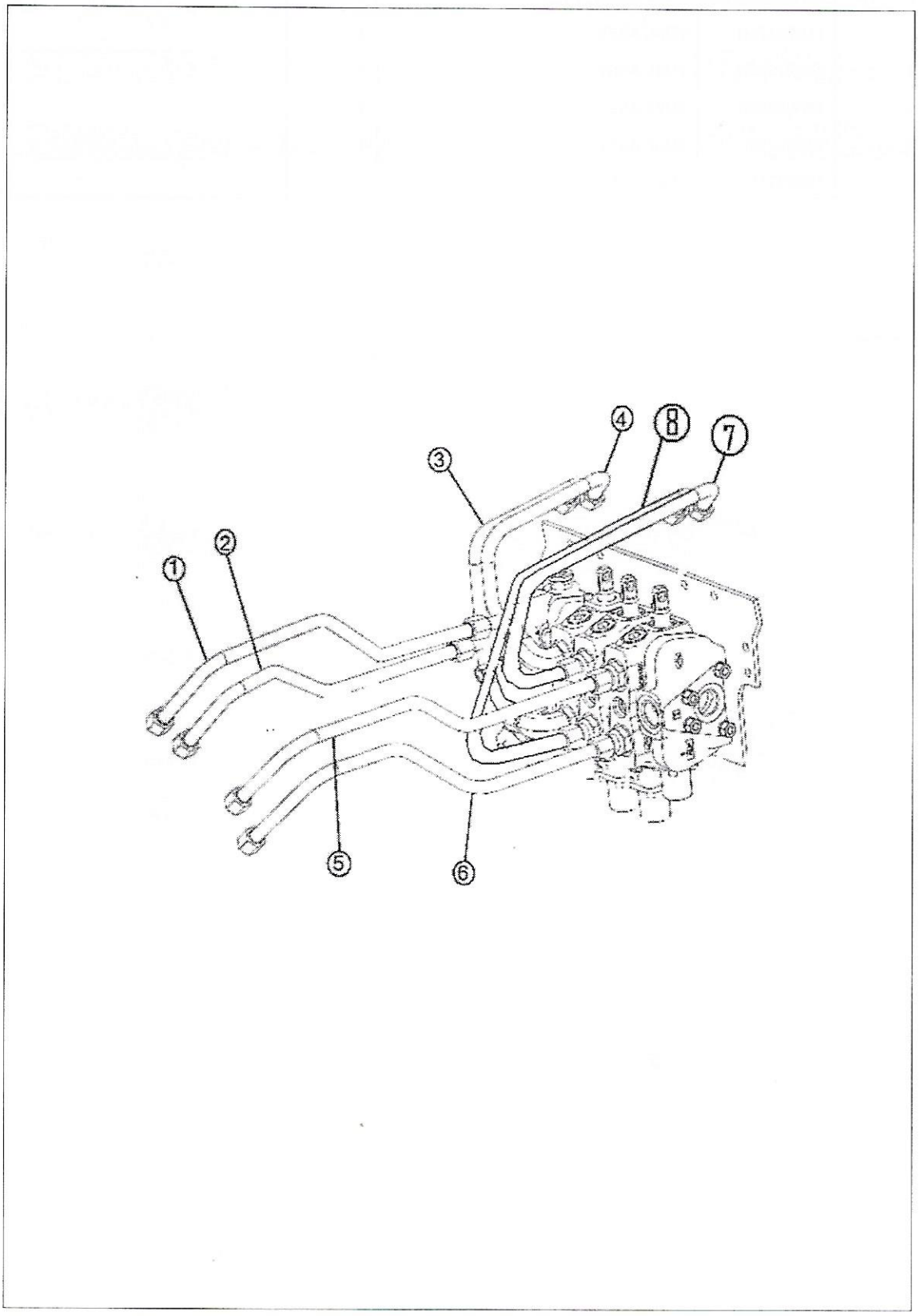
4
8
7
3
2
1
5
6

Item	Part No.	Name	Qty	Remarks
1	1TH0026M1	TUBE ASSY	1	
2	1TH0027M1	TUBE ASSY	1	
3	1TH0022M1	TUBE ASSY	1	
4	1TH0023M1	TUBE ASSY	1	
5	1TH0028M1	TUBE ASSY	1	
6	1TH0029M1	TUBE ASSY	1	
7	1TH0025M1	FEED PIPE	1	
8	1TH0024M1	FEED PIPE	1	

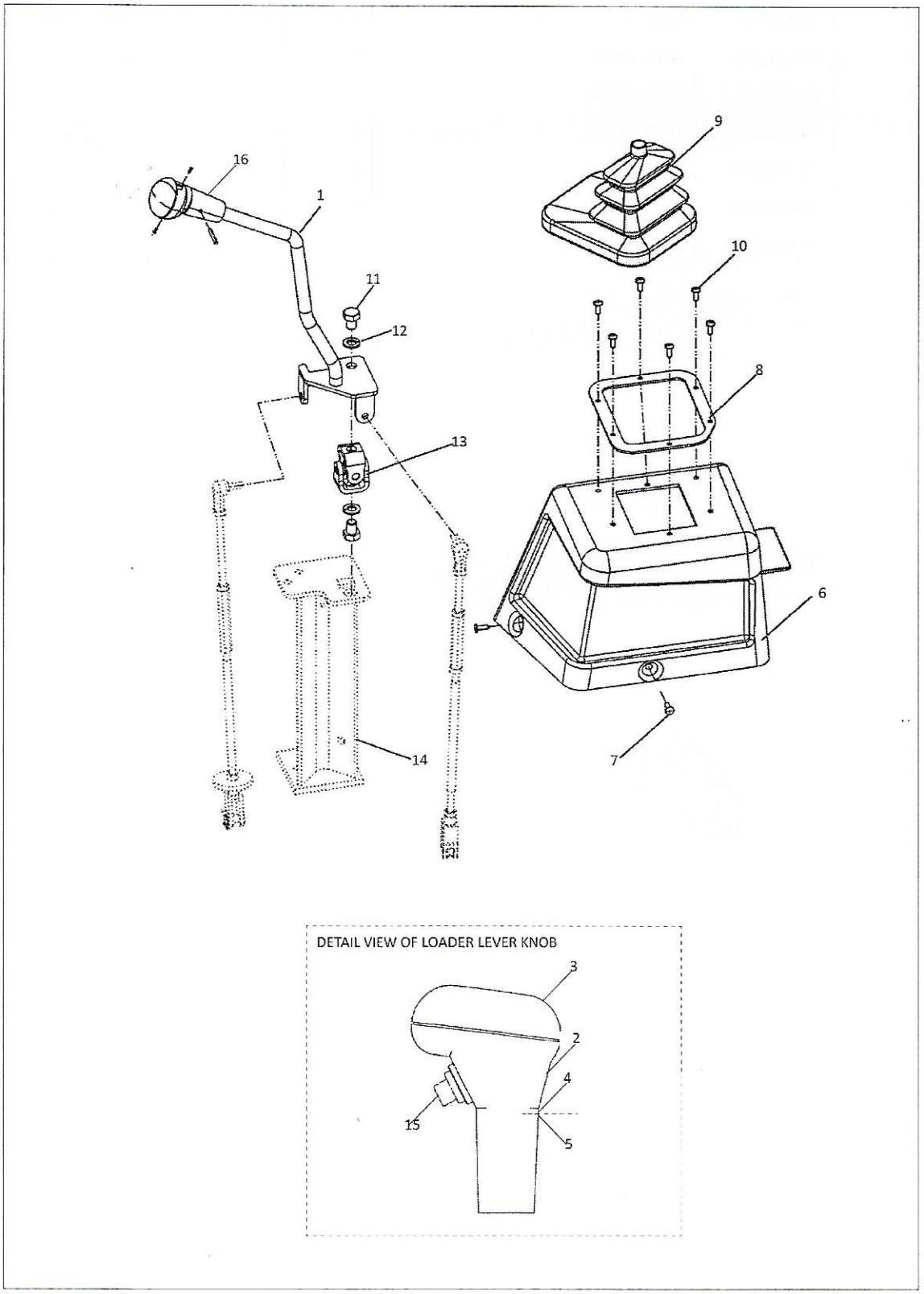
16
1
11
12
13
14
9
10
8
6
7
DETAIL VIEW OF LOADER LEVER KNOB
3
2
4
15
5

Item	Part No.	Name	Qty	Remarks
1	1B0467	LEVER W/A - 2 SPOOL	1	
2	1D0122	KNOB BASE	1	
3	1D0123	KNOB TOP	1	
4	1D0188	INSERT M6	1	
5	3009429X1	SCREW M6X10	1	
6	1J0426	CONSOLE	1	
7	6101591M1	RIVET	3	
8	3516856M3	PLATE - GAITER LOADER CONTROLS	1	
9	3519697M1	BOOT	1	
10	3521303M3	FIR TREE BUTTON	6	
11	354742X1	BOLT 1/2 -.625	2	
12	359369X1	WASHER LOCK	2	
13	3521075M91	YOKE ASSY	1	
14	1B0291	LOADER CONTROL COLUMN ASSY.	1	
15	53112939	SWITCH ASSY. LOADER KNOB	1	
16	53112744	LOADER LEVER KNOB ASSEMBLY	1	

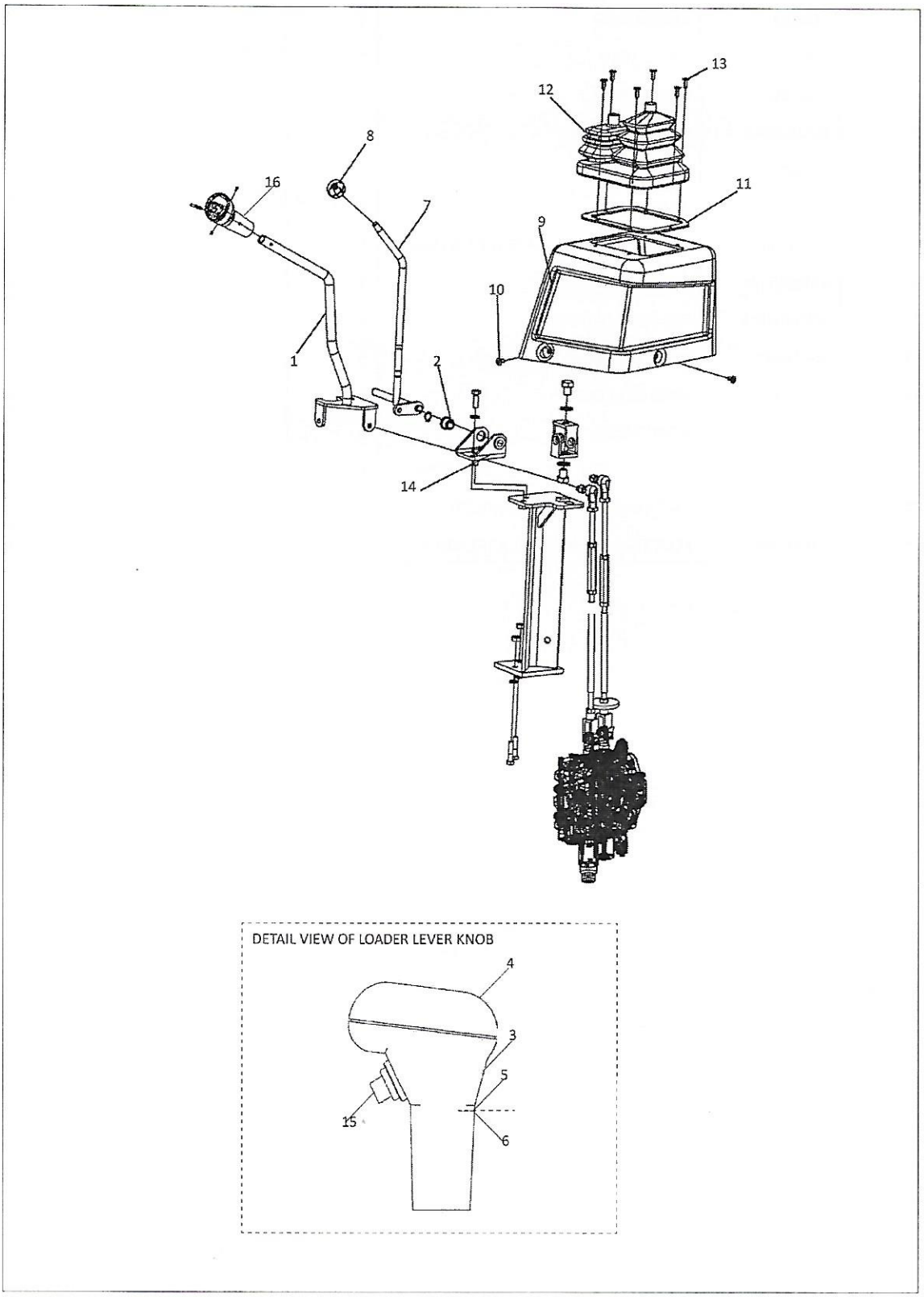
13
12
8
16
11
7
9
10
1
2
14
DETAIL VIEW OF LOADER LEVER KNOB
4
3
5
15
6

Item	Part No.	Name	Qty	Remarks
1	1B0298	LEVER W/A	1	
2	6106560M1	BUSH	4	
3	1D0122	KNOB BASE	1	
4	1D0123	KNOB TOP	1	
5	1D0188	INSERT M6	1	
6	3009429X1	SCREW M6X10	1	
7	1B0289	LEVER W/ASSY	1	
8	3517899M1	KNOB YELLOW SCREW ON	1	
9	1J0426	CONSOLE	1	
10	6101591M1	RIVET	3	
11	3516856M3	PLATE - GAITER LOADER CONTROLS	1	
12	3519696M1	BOOT	1	
13	3521303M3	FIR TREE BUTTON	6	
14	1B0292	PLATE	1	
15	53112939	SWITCH ASSY. LOADER KNOB	1	
16	53112744	LOADER LEVER KNOB ASSEMBLY	1	

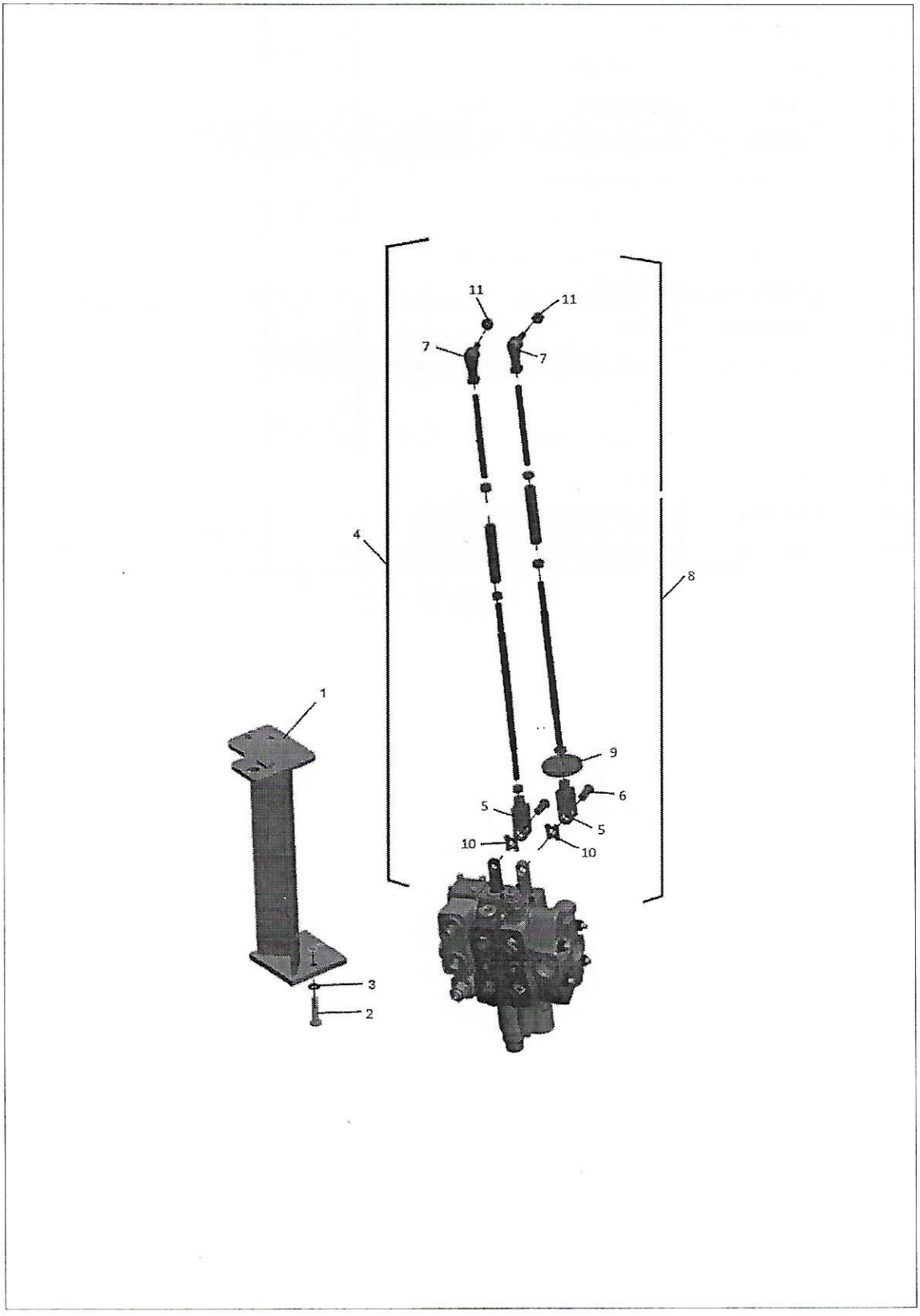
11
11
7
7
4
8
1
9
6
5
5
10
10
3
2

Item	Part No.	Name	Qty	Remarks
1	1B0291	LOADER CONTROL COLUMN ASSY.	1	
2	339009X1	HEX BOLT M8x35 GRADE 8.8	3	
3	359369X1	WASHER LOCK	3	
4	1B0160	ROD ASSY	1	
5	1B0139	CLEVIS	2	
6	1B0158	CLEVIS PIN	2	
7	3517518M1	BALL JOINT COMP.	2	
8	1B0159	ROD ASSY	1	
9	3518878M3	WASHER	1	
10	3521461M1	SAFETY FASTNER COMPOSITE	2	
11	394367X1	NUT	2	

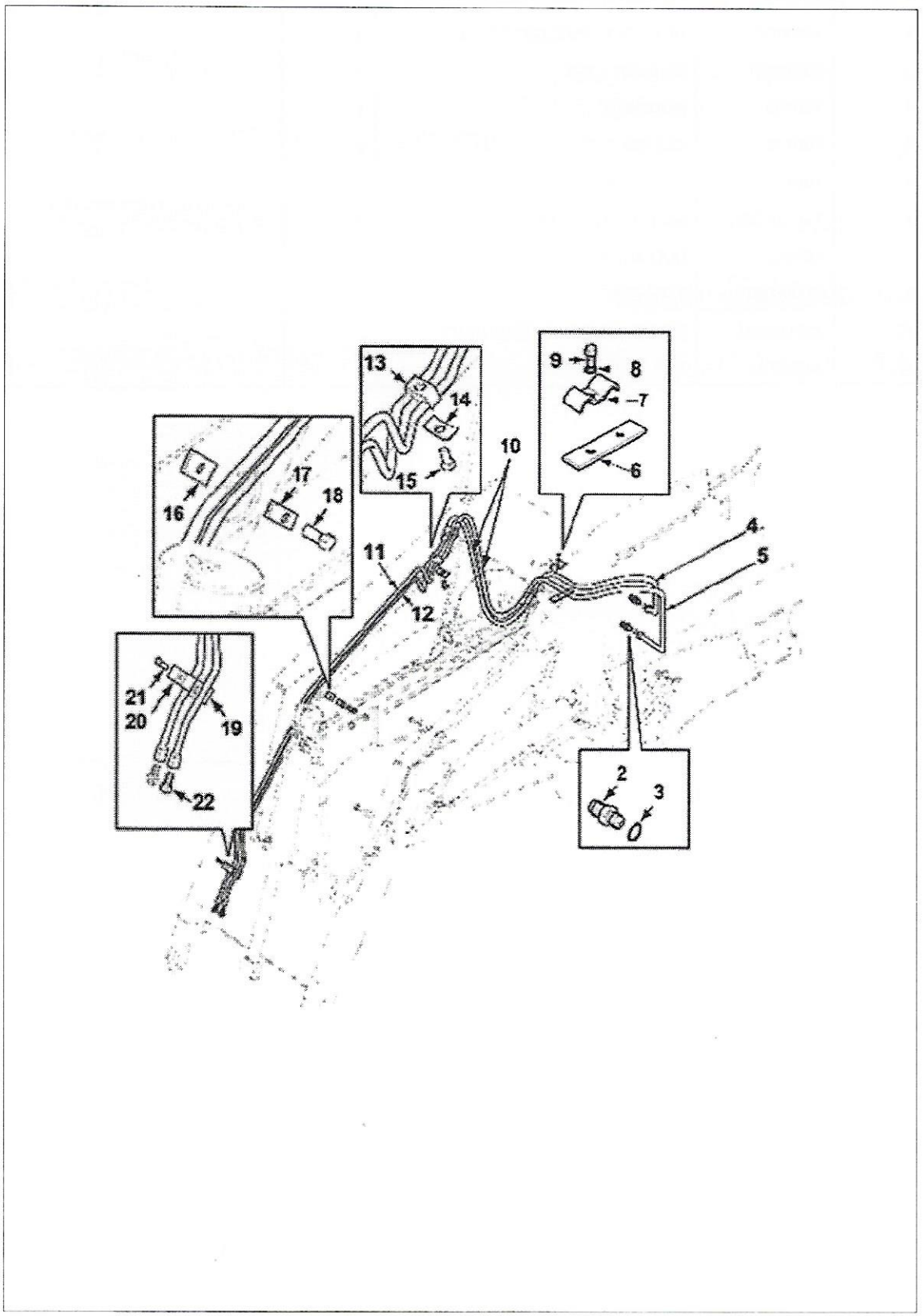
13
14
15
9
8
7
6
10
16
17
18
11
12
4
5
21
20
19
22
2
3

Item	Part No.	Name	Qty	Remarks
2	1H0165	ADAPTOR	2	
3	835025M1	O-RING	2	
4	1TH0025M1	FEED PIPE	1	
5	1TH0024M1	FEED PIPE	1	
6	6101897M1	PAD, RUBBER	1	
7	6101228M1	CLAMP TUBE ASSEMBLY	1	
8	385361X1	WASHER M8 HARDENED	1	
9	339124X1	HEX BOLT M8X16 GR 8.8	1	
10	6112867M91	HOSE ASSY	2	
11	6101234M91	TUBE ASSEMBLY	1	
12	6101236M91	TUBE ASSEMBLY 7 IN 1 BUCKET	1	
13	3520528M2	CLAMP	1	
14	3520534M1	CLAMP-PIPE LOADER BEAM	1	
15	339291X1	HEX HEAD BOLT M8X1.25X55	1	
16	6106109M1	RUBBER PAD	1	
17	3520534M1	CLAMP-PIPE LOADER BEAM	1	
18	339337X1	HEX BOLT M8x30 GRADE 8.8	1	
19	6106109M1	RUBBER PAD	1	
20	6101228M1	CLAMP TUBE ASSEMBLY	1	
21	339009X1	HEX BOLT M8x35 GRADE 8.8	1	
22	356447X1	PLUG 37 FLARE	2	

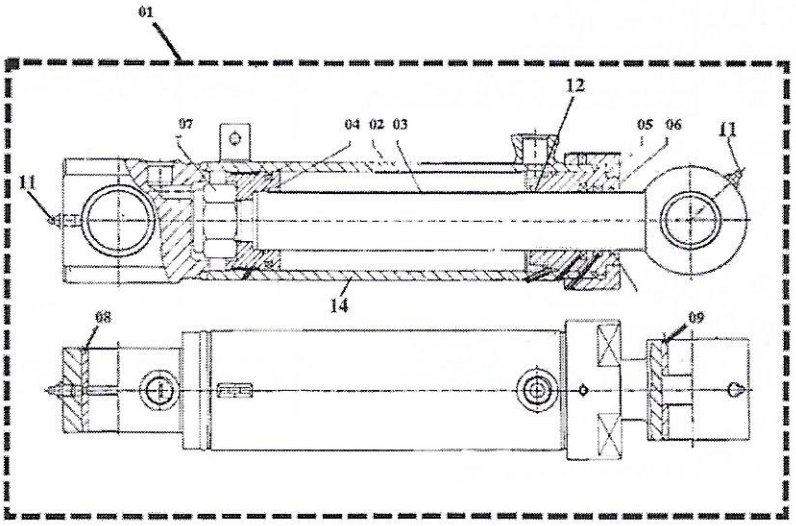
01
12
07
04 02 03
05 06
11
11
14
08
09

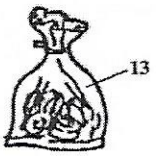
13

Item	Part No.	Name	Qty	Remarks
1	53108845	BUCKET LIFT CYLINDER - BLACK	2	Grey color -1H0157
2	53101285	TUBE ASSY	1	Grey color- 10X1438
3	53101280	PISTON ROD	1	Grey color - 10X0200
4	10X0201	Piston	1	
5	10X0202	Retainer	1	
6	53101284	HEAD END COVER	1	Grey color -10X1351
7	10X0204	Nyloc Nut	1	
8	10X0205	Bush Clevis	1	
9	10X0206	Bush, R.E.	1	
11	10X1352	Grease Nipple	2	
12	10X1353	Bi metalic Bush	1	
13	10X1354	Seal Kit	1	

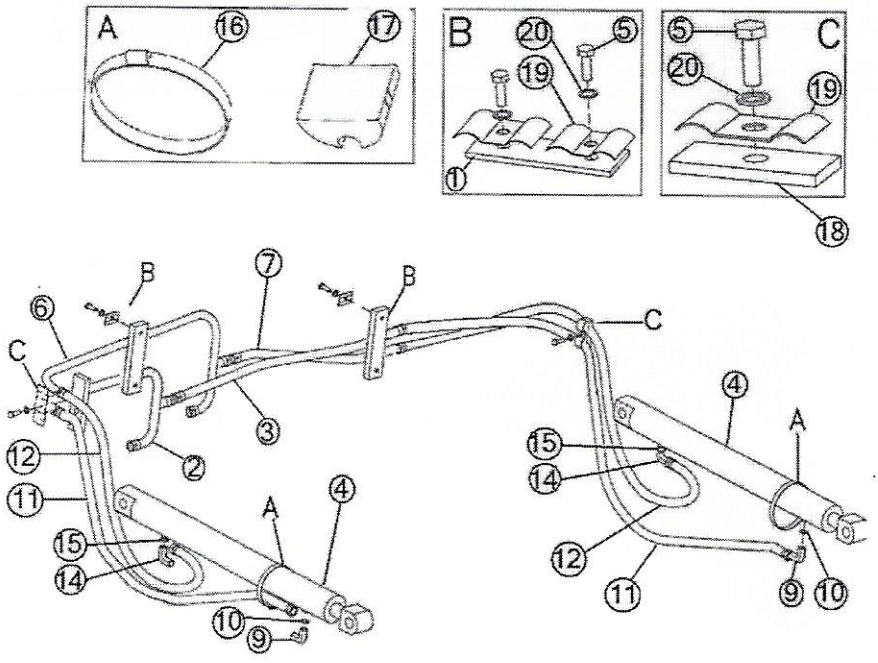
A
16
17
B
20
5
19
1
C
5
20
19
18
B
7
B
6
C
C
4
A
3
15
12
14
2
11
4
A
15
14
12
11
9
10
10
9

Item	Part No.	Name	Qty	Remarks
1	6101897M1	PAD, RUBBER	2	
2	1TH0022M1	TUBE ASSY	1	
3	1TH0027M1	TUBE ASSY	1	
4	53108845	BUCKET LIFT CYLINDER - BLACK	2	Grey color -1H0157
5	339124X1	HEX BOLT M8X16 GR 8.8	2	
6	1TH0023M1	TUBE ASSY	1	
7	1TH0026M1	TUBE ASSY	1	
9	835007M91	ELBOW 90 DEGREE ADJUST	2	
10	835025M1	O-RING	1	
11	1TH0030M1	HOSE ASSY	2	
12	1TH0031M1	HOSE ASSY	2	
14	835007M91	ELBOW 90 DEGREE ADJUST	2	
15	835024M1	O-RING	2	
16	3517731M1	WORM DRIVE CLIP	2	
17	L79937	GROMMET	2	
18	6106109M1	RUBBER PAD	2	
19	6101228M1	CLAMP TUBE ASSEMBLY	2	
20	339374X1	LOCK WASHER M8	2	

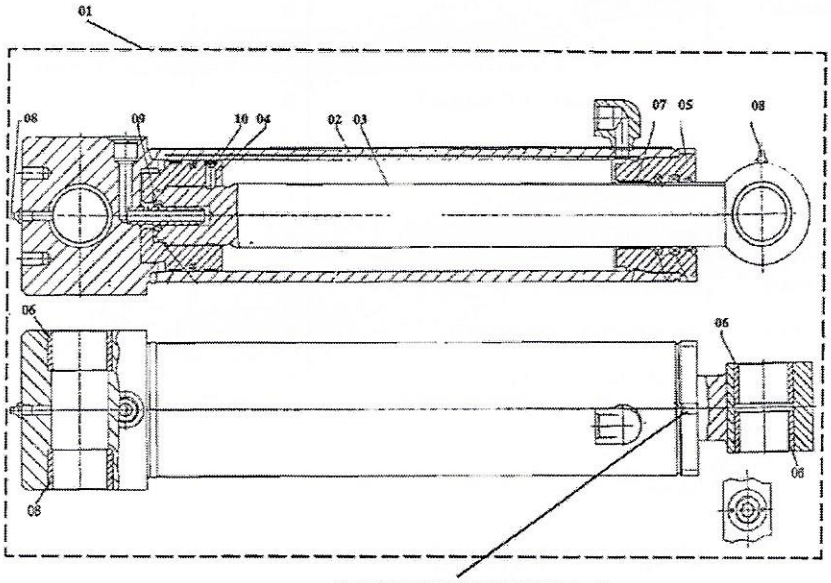

AFTER ASSEMBLY CAULK AT ONE PLACE



Item	Part No.	Name	Qty	Remarks
1	53108846	BUCKET TILT CYLINDER - BLACK	1	GREY COLOR - 1H0147
2	53101274	TUBE S/A	1	Grey color- 10X0136
3	53101275	PISTON ROD S/A	1	Grey color- 10X0137
4	10X0138	Piston	1	
5	53101276	H.E. COVER	1	Grey color - 10X0139
6	10X0140	Bush	4	
7	10X0162	Bimetal Bush	1	
8	10X0142	Grease Nipple	2	
9	10X0143	Cushion Ring	1	
10	10X0144	Hex, Soc., Set. Screw	1	
11	10X0155	Seal Kit	1	

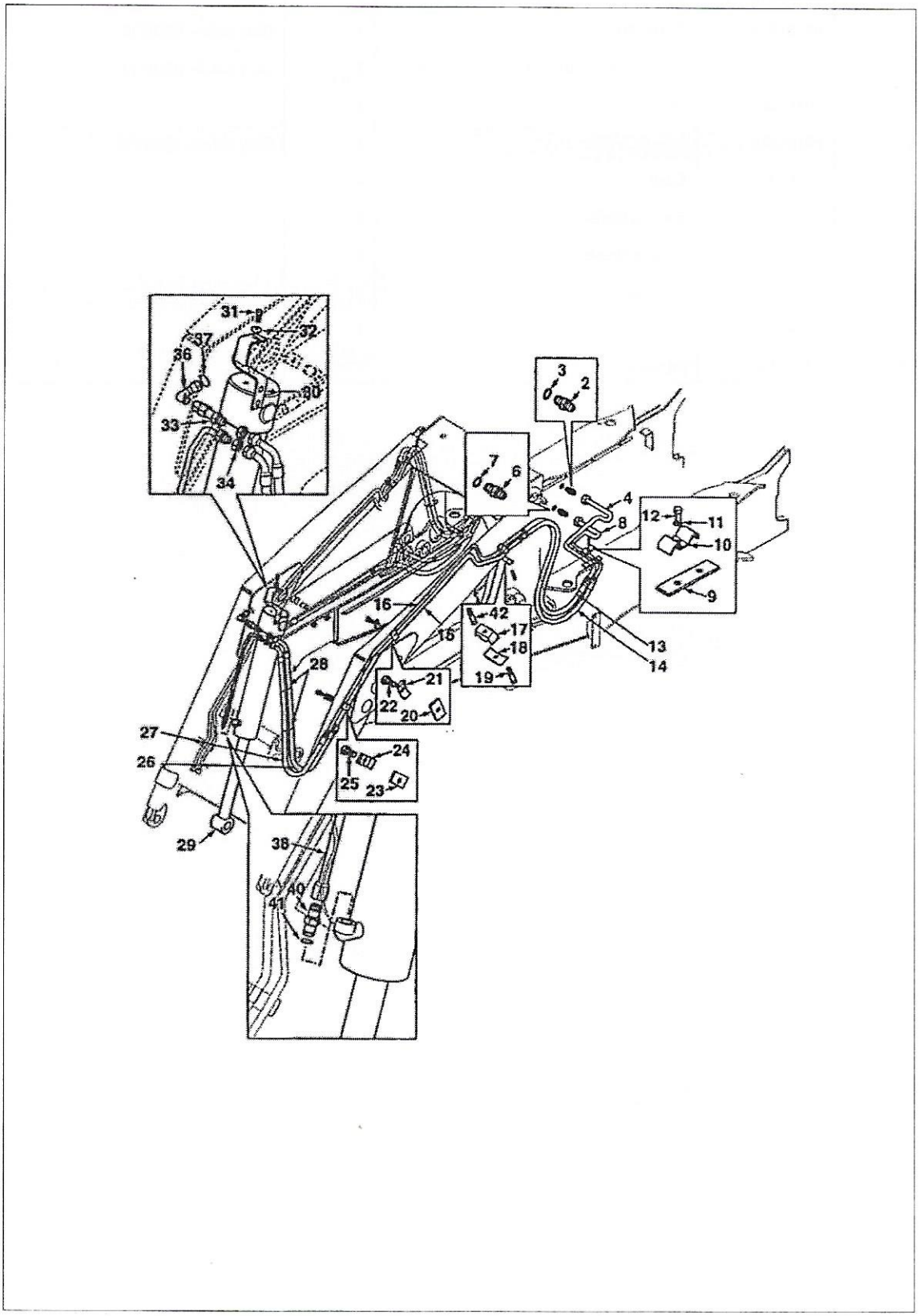
31
32
37
36
30
33
34
3
2
7
6
4
8
12
11
10
9
16
42
17
18
19
15
13
14
28
21
22
20
27
26
24
25
23
29
38
40
41

Item	Part No.	Name	Qty	Remarks
2	358736X1	FITTING	1	
3	835025M1	O-RING	1	
4	1TH0029M1	TUBE ASSY	1	
6	1H0165	ADAPTOR	1	
7	835025M1	O-RING	1	
8	1TH0028M1	TUBE ASSY	1	
9	6101897M1	PAD, RUBBER	1	
10	6101228M1	CLAMP TUBE ASSEMBLY	1	
11	385361X1	WASHER M8 HARDENED	1	
12	339124X1	HEX BOLT M8X16 GR 8.8	1	
13	1TH0034M91	HOSE ASSY	1	
14	6112867M91	HOSE ASSY	1	
15	6102461M91	TUBE ASSY	1	
16	6102463M91	TUBE ASSY	1	
17	3520538M2	CLAMP	1	
18	3520534M1	CLAMP-PIPE LOADER BEAM	1	
19	339291X1	HEX HEAD BOLT M8X1.25X55	1	
20	6106109M1	RUBBER PAD	1	
21	3520534M1	CLAMP-PIPE LOADER BEAM	1	
22	339337X1	HEX BOLT M8x30 GRADE 8.8	1	
23	6106109M1	RUBBER PAD	1	
24	3520534M1	CLAMP-PIPE LOADER BEAM	1	
25	339337X1	HEX BOLT M8x30 GRADE 8.8	1	
26	6102384M91	HOSE ASSY	1	
27	6102383M91	HOSE ASSY	1	
28	1876229M1	TIE/CABLE .19X7.50	UAR	
29	53108846	BUCKET TILT CYLINDER - BLACK	1	GREY COLOR - 1H0147
30	6102378M91	BRACKET	1	
31	3009505X1	HEX HEAD BOLT M12X1.75-LONG 25	1	
32	385363X1	WASHER M12 - CHAM	1	
33	6100591M91	TUBE ASSY	1	
34	355574X1	LOCK NUT	2	
36	835007M91	ELBOW 90 DEGREE ADJUST	1	
37	835025M1	O-RING	1	
38	6102381M91	TUBE ASSY	1	
40	358735X1	CONNECTOR	1	

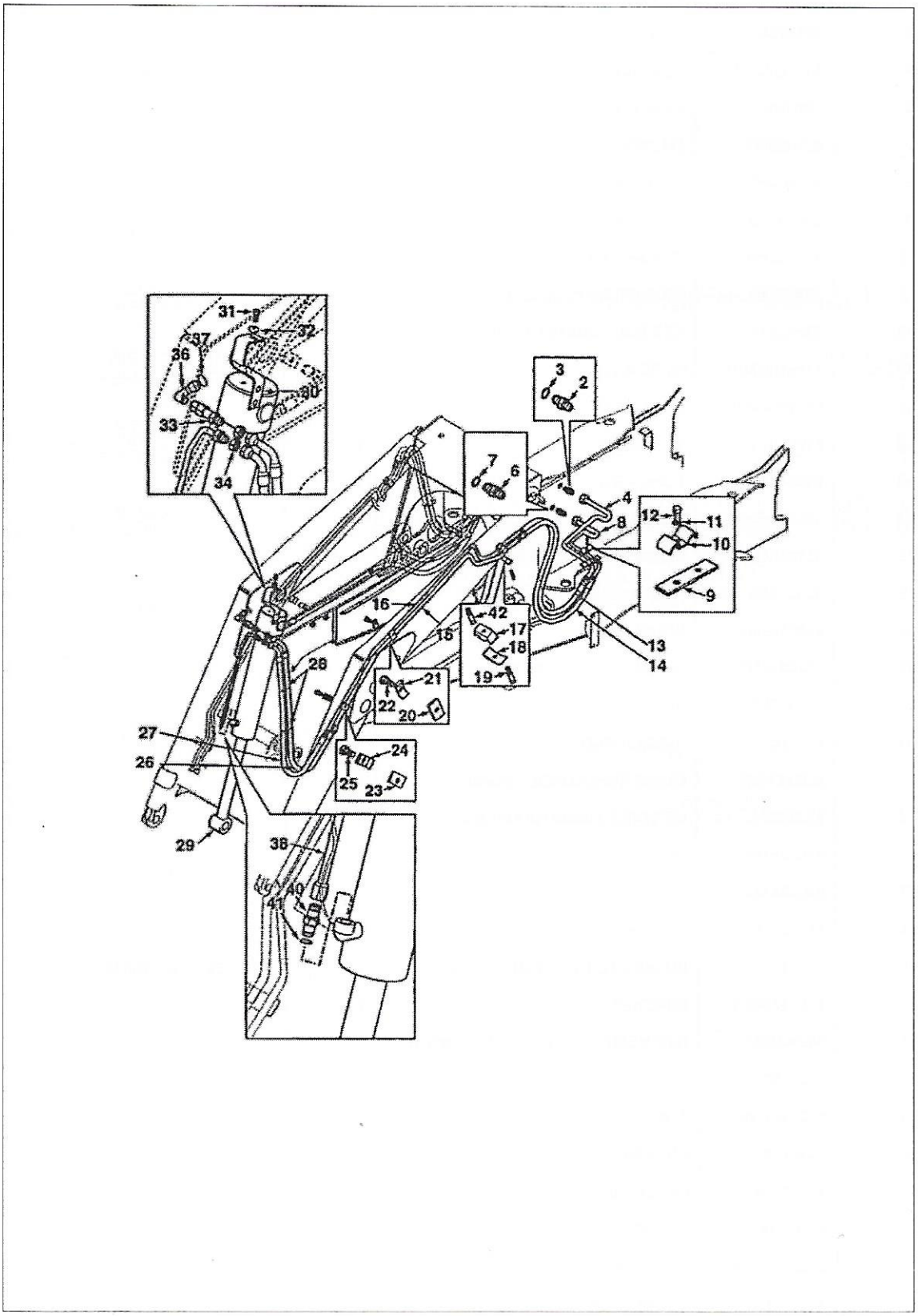
31
32
37
36
30
33
34
3
2
7
6
4
8
12
11
10
9
16
42
17
18
19
15
13
14
28
21
22
20
27
26
24
25
23
29
38
40
41

Item	Part No.	Name	Qty	Remarks
41	835024M1	O-RING	1	
42	6101690M1	Rivet Nut	1	

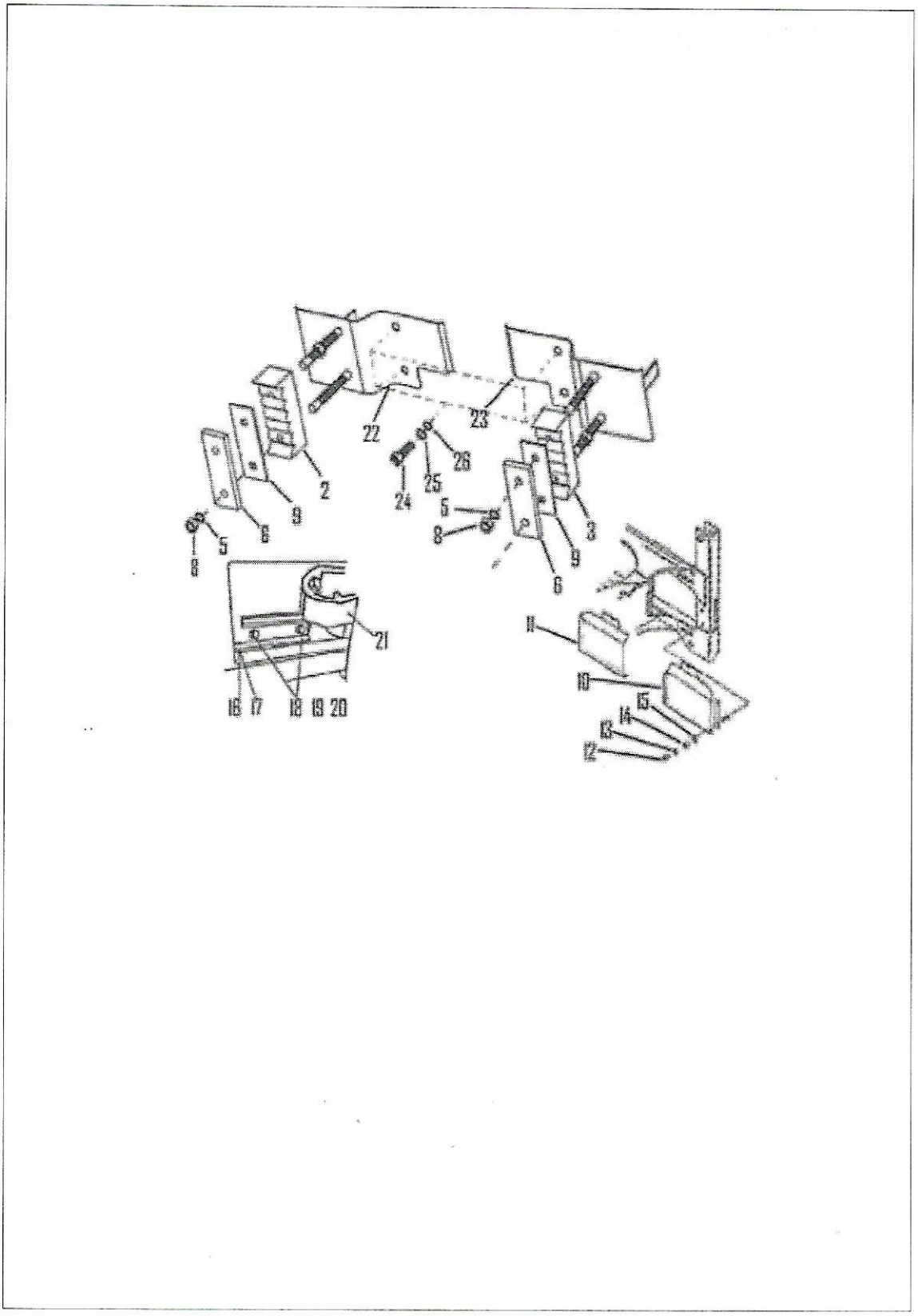
22
23
26
25
24
2
9
6
5
8
5
8
6
9
3
21
11
10
15
14
13
12
16
17
18
19
20

Item	Part No.	Name	Qty	Remarks
2	6101859M1	CLAMP RH	2	
3	6101216M1	CLAMP LH	2	
5	390972X1	WASHER M8 - STD	6	
6	6101215M1	PLATE	4	
8	394367X1	NUT	6	
9	6102197M1	RUBBER PAD	4	
10	1H0145	MUD GUARD RH	1	
11	1H0146	MUD GUARD LH	1	
12	339123X1	HEX BOLT M8X20 GR 8.8	2	
13	390597X1	WASHER M10 - LRG	2	
14	6101892M1	SPACER	8	
15	390735X1	WASHER	8	
16	1H0250	ANGLE PLATE LH	1	
17	1H0251	ANGLE PLATE RH	1	
18	339376X1	LOCK_WASHER	8	
19	1440329X1	NUT NYLOCK M10	4	
20	339081X1	BOLT M10-20	4	
21	1H0162	HOSE CHAIN	2	
22	1H0474	BRACKET PLATE RH	1	
23	1H0475	BRACKET PLATE LH	1	
24	3009492X1	HEX BOLT M10X25 GR 8.8	4	
25	339376X1	LOCK_WASHER	4	
26	390734X1	WASHER M10-STD	4	

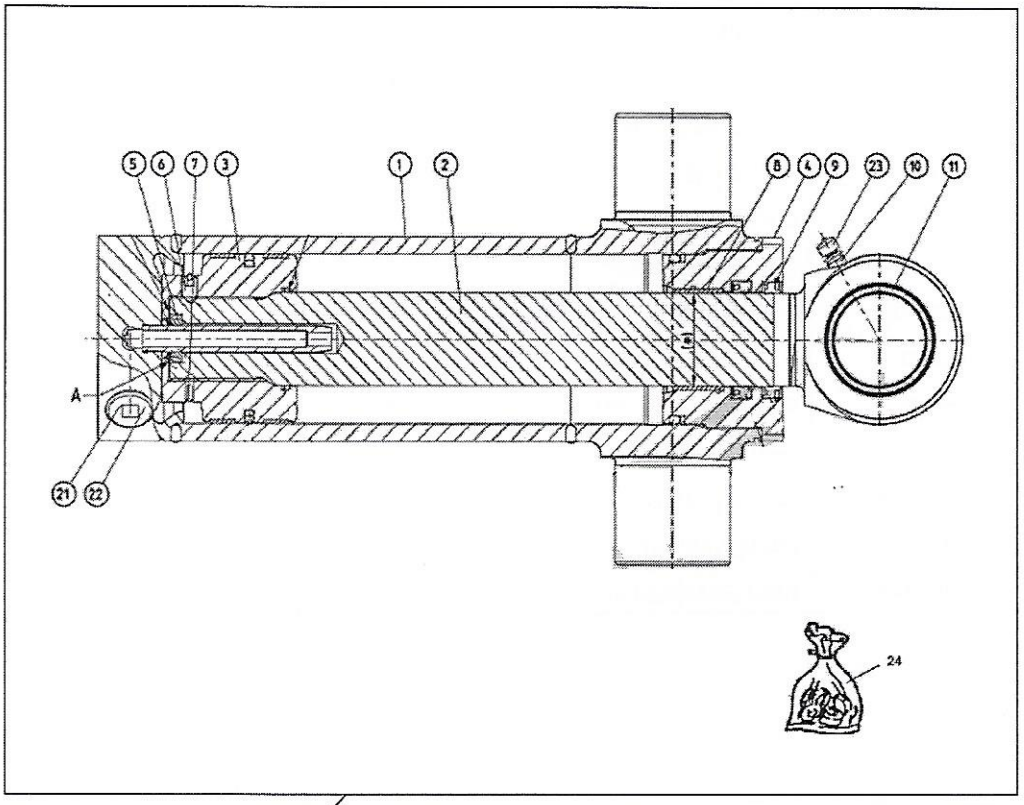

A

Item	Part No.	Name	Qty	Remarks
A	53108837	SLEW CYLINDER 100X55 -BLACK	2	GREY COLOUR- 1H0559
1	53101311	TUBE S/A	1	Grey color- 10X3204, GREY COLOUR- 10X3204
2	53101312	PISTON ROD S/A	1	GREY COLOUR - 10X3205
3	10X3206	PISTON	1	
4	53101313	H.E. COVER	1	GREY COLOUR- 10X3707, Grey color- 10X3707
5	10X3037	CUSHION RING	1	
6	10X3210	SET SCREW	1	
7	10X1625	SNAP RING	1	
8	10X3208	BIMETAL BUSH	1	
9	10X3212	SNAP RING	1	
10	10X3044	GREASE NIPPLE	1	
11	10X3209	BUSH	1	
12	10X3213	PLUG	3	
13	10X3214	O RING	3	
14	10X1628	GREASE NIPPLE PROTECTION CAP	1	
15	10X3211	SEAL KIT	1	

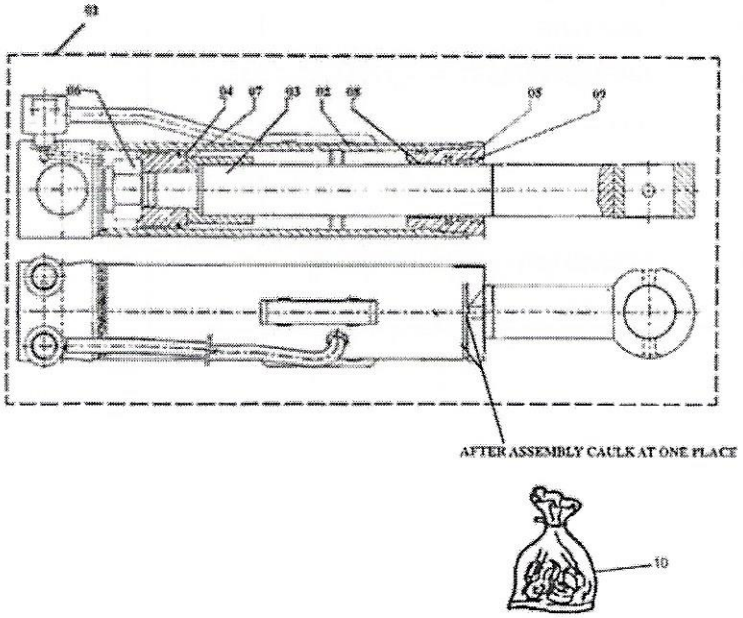
01
06
04
07
03
02
08
05
09
AFTER ASSEMBLY CAULK AT ONE PLACE
10

Item	Part No.	Name	Qty	Remarks
1	53108844	STABILIZER CYLINDER-BLACK	2	Grey color -1TH0041M91
2	53101272	TUBE S/A	1	Grey color- 10X0051
3	53101273	PISTON ROD S/A	1	Grey color- 10X0052
4	10X0053	Piston	1	
5	53101291	H.E. COVER	1	Grey color - 10X1782
6	10X0055	Nyloc Nut	1	
7	10X0056	Stop Tube	1	
8	10X0057	Bimetal Bush	1	
9	10X0058	Snap Ring	1	
10	10X1783	Seal Kit	1	

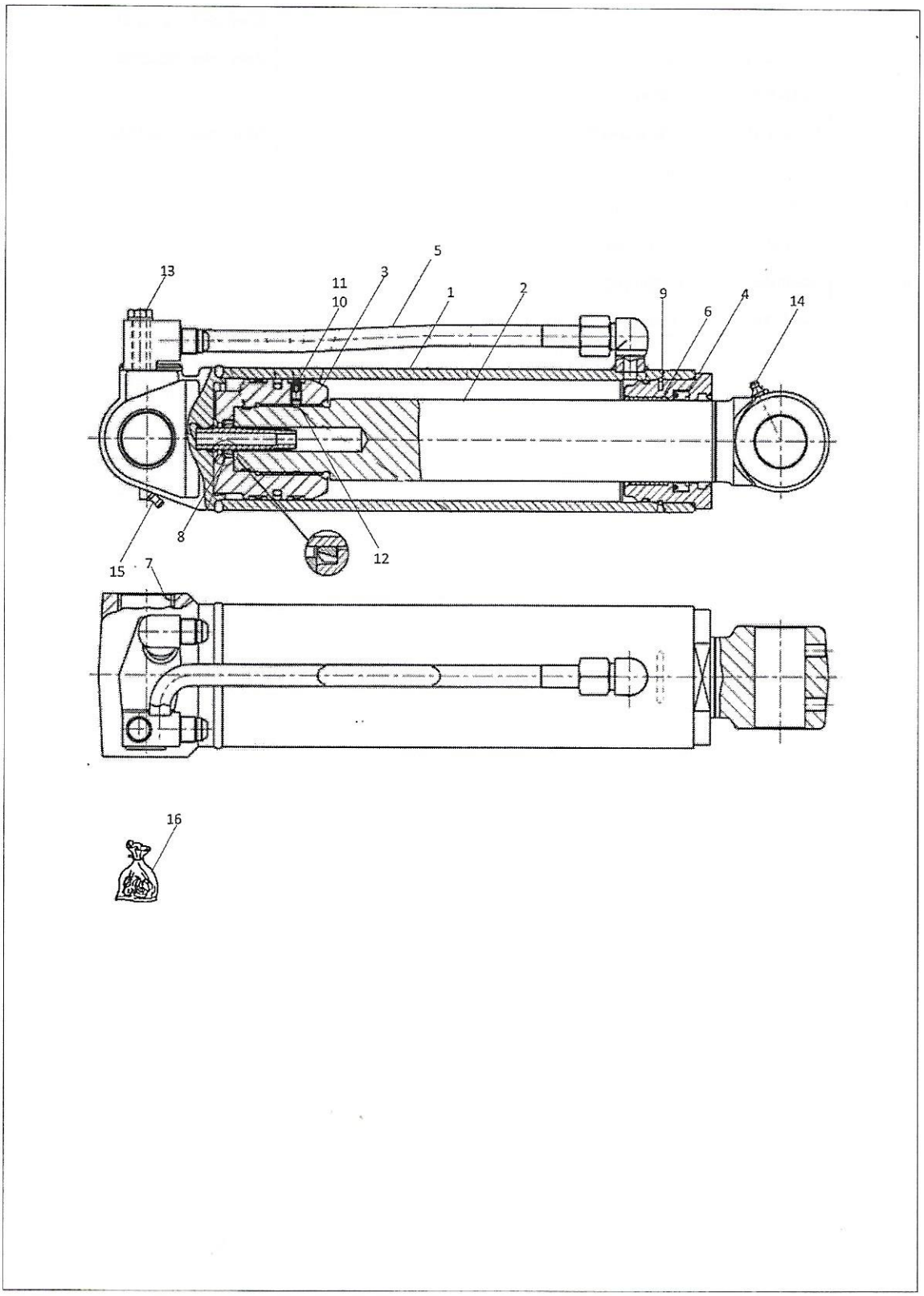
13
11
3
5
10
1
2
9
6
4
14
8
12
15
7
16

Item	Part No.	Name	Qty	Remarks
0	53101330	STABILIZER CYLINDER	1	GREY COLOR -1H0555
1	10X3440	TUBE S/A	1	
2	10X3441	PISTON ROD	1	
3	10X3032	PISTON	1	
4	10X3033	HEAD END COVER	1	
5	10X3442	PIPE S/A	1	
6	10X3035	BI-METAL BUSH	1	
7	10X3036	BUSH	1	
8	10X3037	CUSHION RING	1	
9	10X3038	RETAINING RING	1	
10	10X3039	HEX.SOC.SET SCREW	1	
11	10X3040	CH.ALLOY STEEL BALL	1	
12	10X3041	HEX. HD. BOLT	1	
13	10X3042	SPRING WASHER	1	
14	10X3043	GREASE NIPPLE	1	
15	10X3044	GREASE NIPPLE	1	
16	10X3045	SEAL KIT	1	

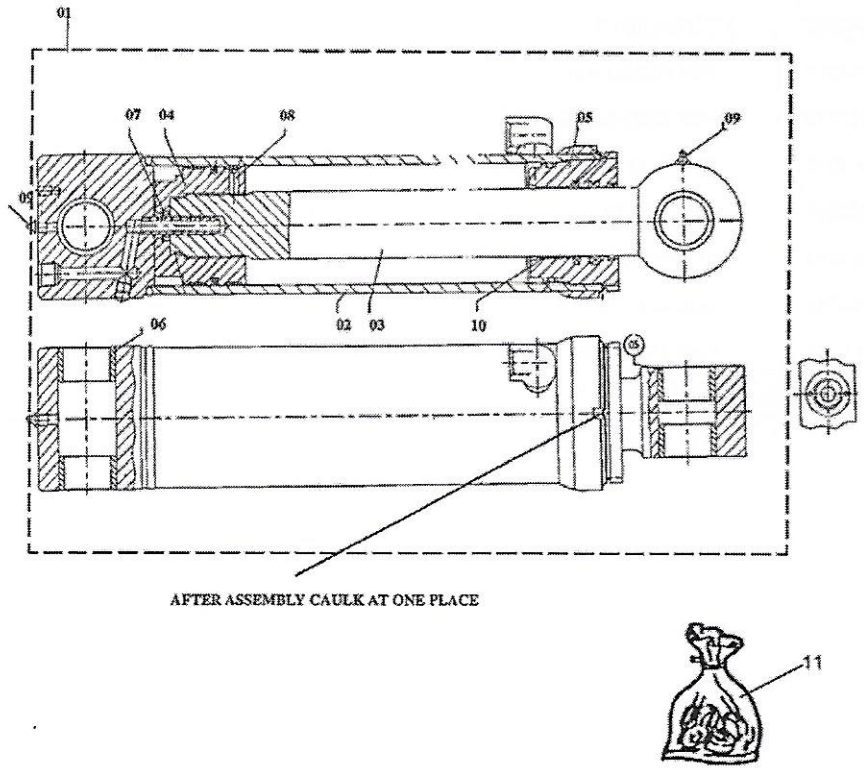
01
07
04
08
05
09
02
03
10
06
AFTER ASSEMBLY CAULK AT ONE PLACE
11

Item	Part No.	Name	Qty	Remarks
1	53108842	BOOM CYLINDER - BLACK	1	Grey Color-1H0013
2	53101277	TUBE S/A	1	Grey color- 10X0178
3	53101278	PISTON ROD S/A	1	Grey color - 10X0179
4	10X0180	Piston	1	
5	53101279	H.E. COVER	1	Grey color - 10X0181
6	10X0160	Bush	4	
7	10X0183	Cushion Ring	1	
8	10X0184	Set Screw	1	
9	10X0185	Grease Nipple	1	
10	10X0230	Bimetal Bush	1	
11	10X0197	Seal Kit	1	

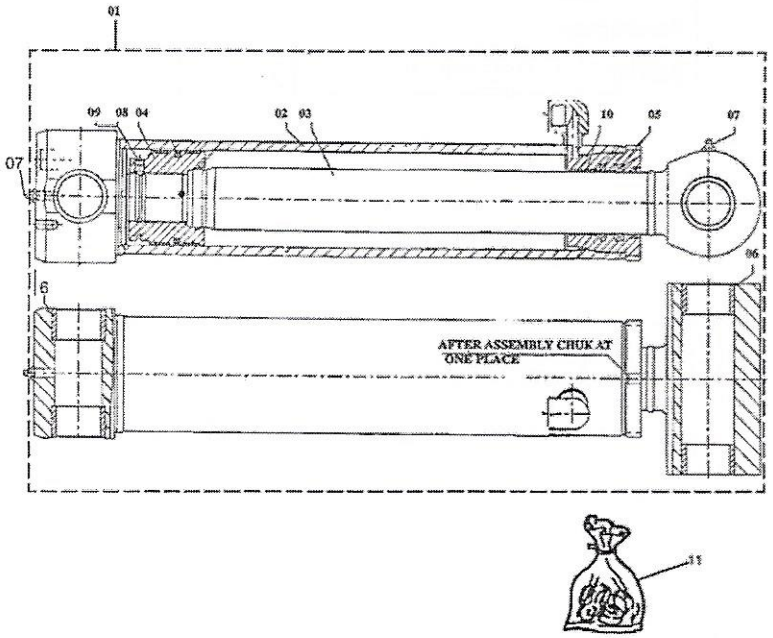
01
09
08
04
02
03
10
05
07
07
06
6
AFTER ASSEMBLY CHUK AT ONE PLACE
11

Item	Part No.	Name	Qty	Remarks
1	53108843	DIPPER CYLINDER-BLACK	1	Grey Color-1H0014
2	53101281	TUBE S/A	1	Grey color- 10X0222
3	53101282	PISTON ROD ASSY .	1	Grey color- 10X0223
4	10X0224	Piston	1	
5	53101283	H.E. COVER	1	Grey color- 10X0225
6	10X0160	Bush	4	
7	10X0227	Grease Nipple	2	
8	10X0228	Set Screw	1	
9	10X0229	Snap Ring	1	
10	10X0230	Bimetal Bush	1	
11	10X0241	Seal Kit	1	

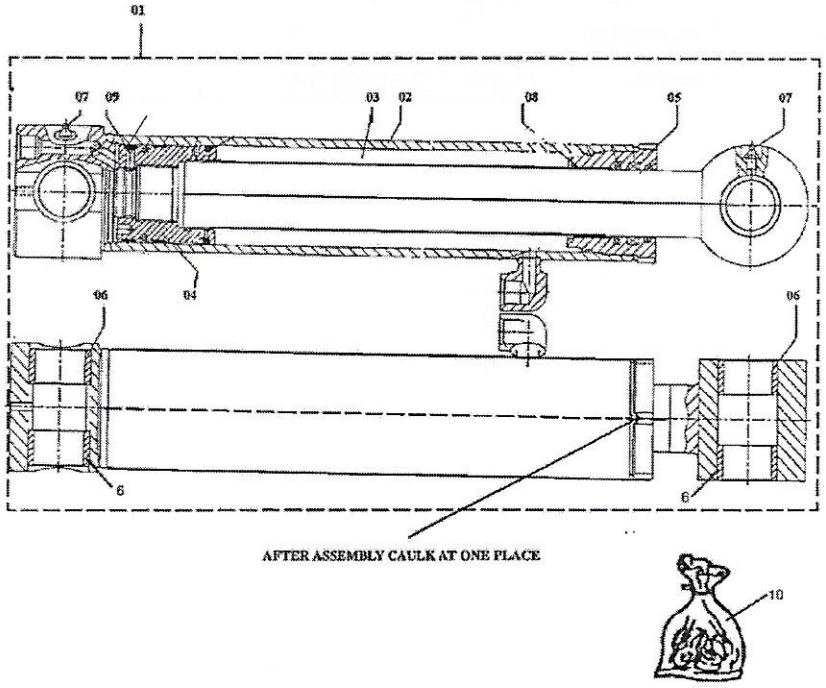
01
07
09
03
02
08
05
07
04
06
06
6
6
AFTER ASSEMBLY CAULK AT ONE PLACE
10

Item	Part No.	Name	Qty	Remarks
1	53108847	BUCKET CYLINDER - BLACK	1	Grey Color- 1H0306
2	53101286	TUBE S/A	1	Grey color - 10X1691
3	53101287	PISTON ROD S/A	1	Grey color- 10X1692
4	10X1693	Piston	1	
5	53101288	H.E. COVER	1	Grey color- 10X1694
6	10X0160	Bush	4	
7	10X0161	Grease Nipple	1	
8	10X1697	Bimetal Bush	1	
9	10X1695	Set. Screw	1	
10	10X1700	Seal Kit	1	
11	10X1696	Snap Ring (at Piston)	1	

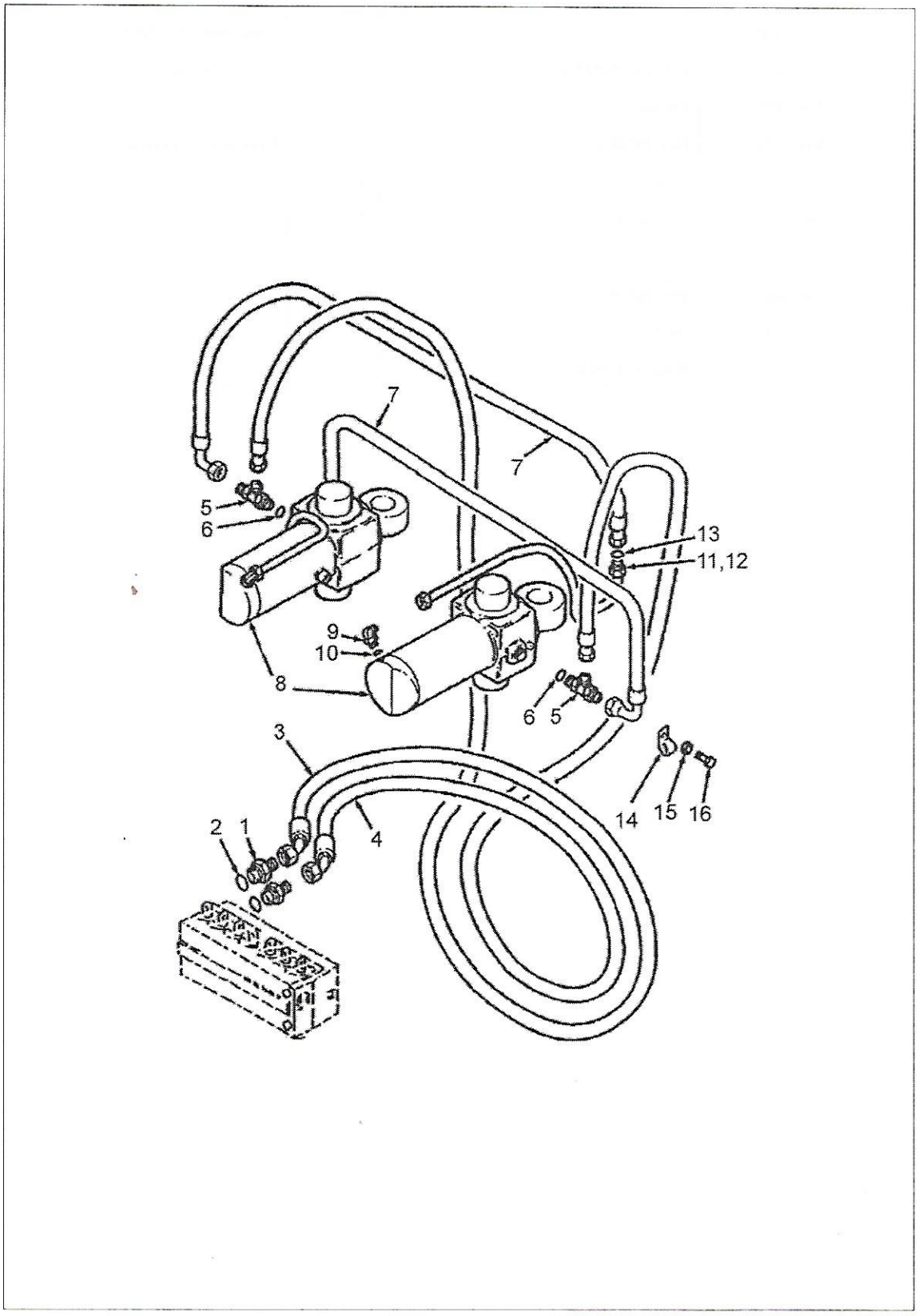
7
7
5
6
13
11,12
9
10
8
6
5
3
2
1
4
14
15
16

Item	Part No.	Name	Qty	Remarks
1	358735X1	CONNECTOR	2	
2	835024M1	O-RING	2	
3	6107455M91	HOSE ASSY - RH SWING	1	
4	6107456M91	HOSE ASSY - LH SWING	1	
5	358728X91	TEE	2	
6	831497M1	O-RING	2	
7	53108585	HOSE.ASSY SLEW TRANSFER	2	
8	53108837	SLEW CYLINDER 100X55 -BLACK	2	GREY COLOUR- 1H0559
9	365065X91	CONNECTOR 7/16X9/16	2	
10	831452M1	O-RING	1	
11	53108586	TUBE ASSY SLEW TRANSFER -LH	1	
12	53108587	TUBE ASSY SLEW TRANSFER-RH	1	
13	1850747M2	O-RING	1	
14	3517114M1	P CLIP	2	
15	390972X1	WASHER M8 - STD	2	
16	339228X1	BOLT M8-12 Z5F	2	

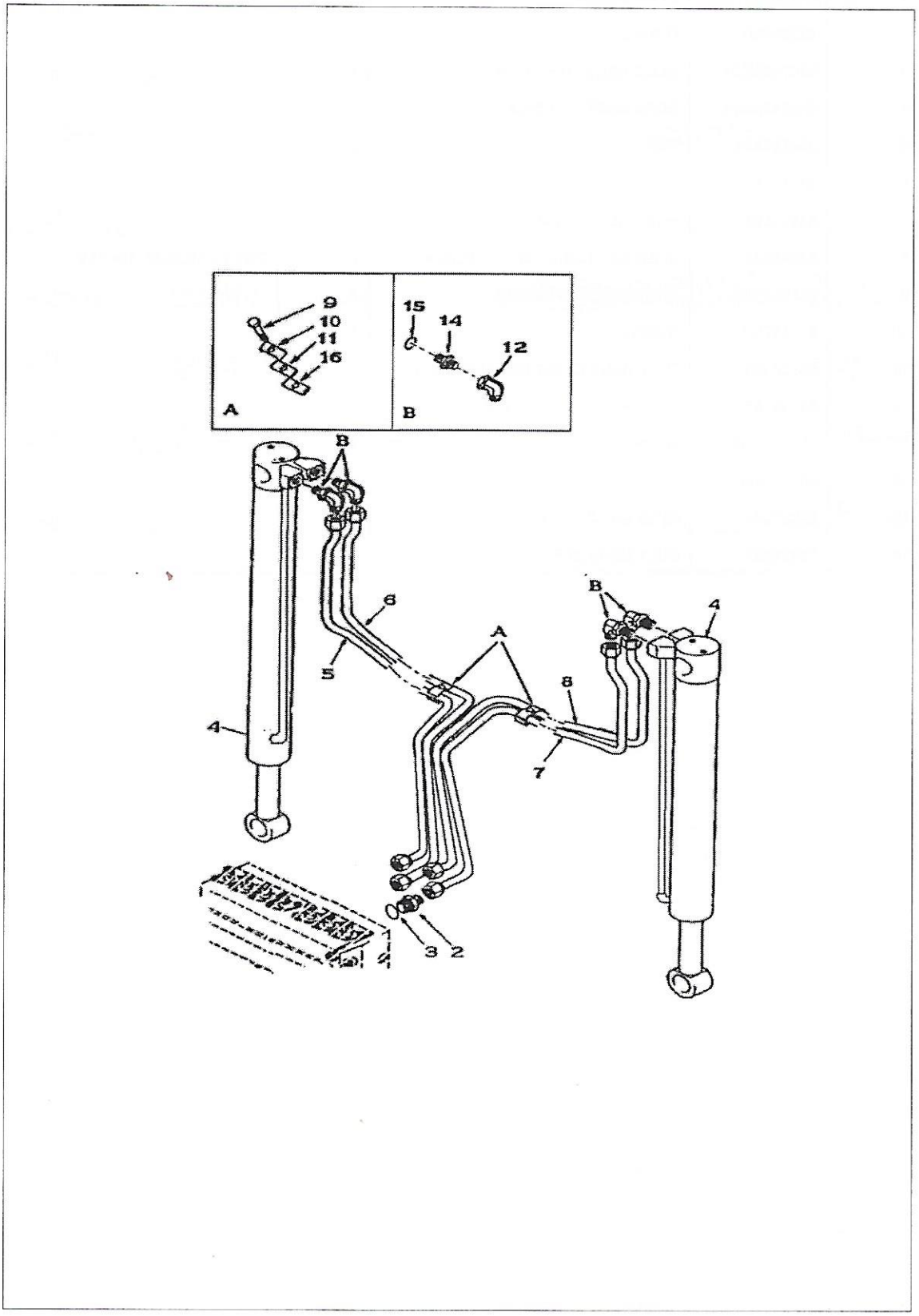
9
10
11
16
A
15
14
12
B
B
6
5
A
B
4
8
7
4
3
2

Item	Part No.	Name	Qty	Remarks
2	1H0195	ADAPTOR	4	
3	835025M1	O-RING	4	
4	53108844	STABILIZER CYLINDER-BLACK	2	Grey color -1TH0041M91
5	6112877M91	TUBE ASSY LH STAB LEG	1	
6	6112879M91	TUBE ASSY STAB RH	1	
7	6112876M91	TUBE ASSY STAB LH	1	
8	6112878M91	TUBE ASSY STAB RH	1	
9	339228X1	BOLT M8-12 Z5F	2	
10	3518910M1	TUBE CLAMP (STAB-CYLS)	2	
11	1458385M1	STRIP	2	
12	365233X1	ELBOW SWIVEL	4	
14	832158M1	FITTING	4	
15	835024M1	O-RING	4	
16	390972X1	WASHER M8 - STD	2	

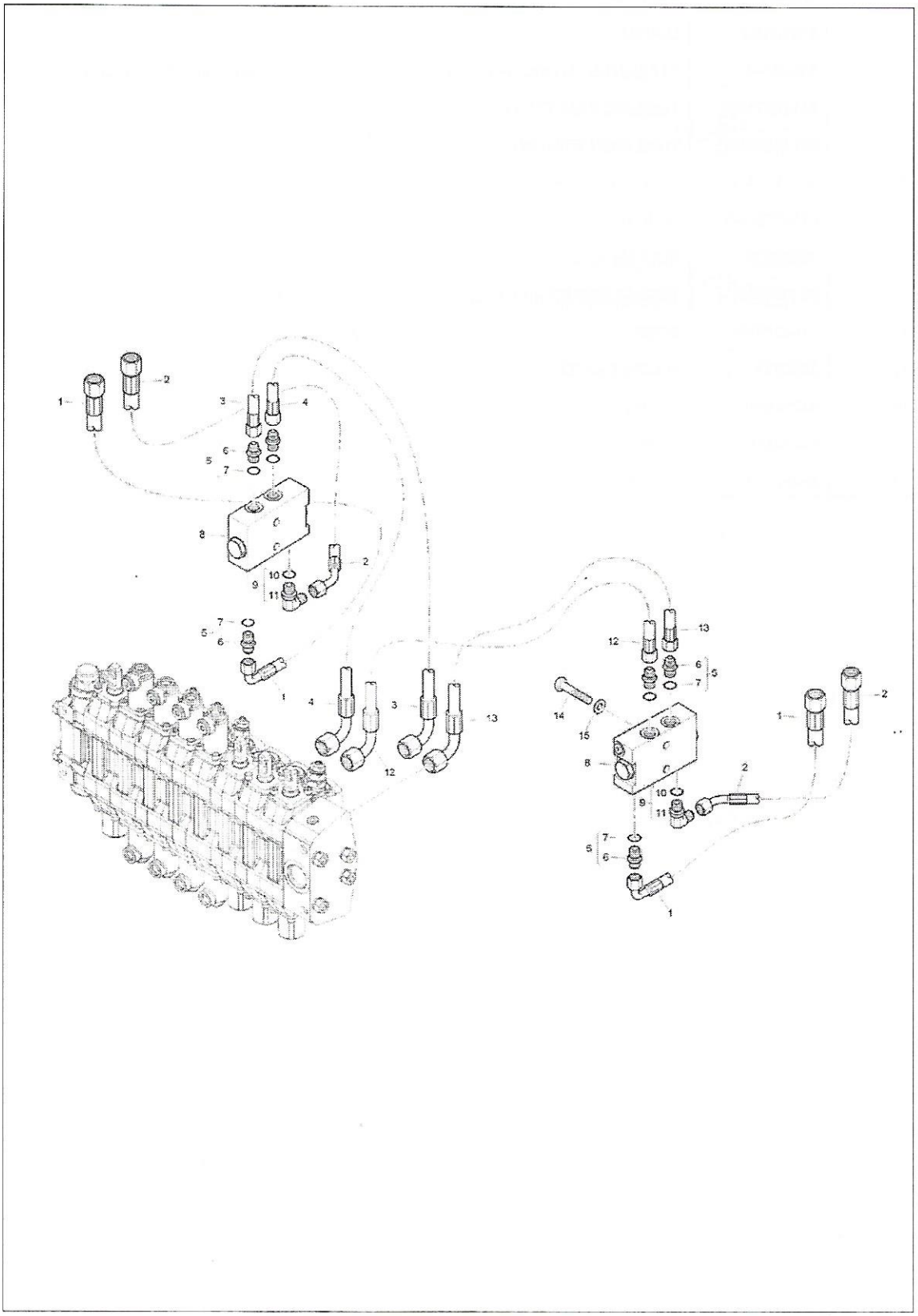

Item	Part No.	Name	Qty	Remarks
1	1H0557	HOSE	2	
2	1H0557	HOSE	2	
3	3H0437	HOSE	1	
4	3H0437	HOSE	1	
5	3519179M91	CONNECTOR	8	
7	831452M1	O-RING	8	
8	1H0556	LOCK OUT VALVE	2	
9	357197X91	ELBOW 9/16	2	
10	831452M1	O-RING	1	
12	3H0437	HOSE	1	
13	3H0437	HOSE	1	
14	3009497X1	HEX BOLT M GRADE 8.8	4	
15	390734X1	WASHER M10-STD	4	

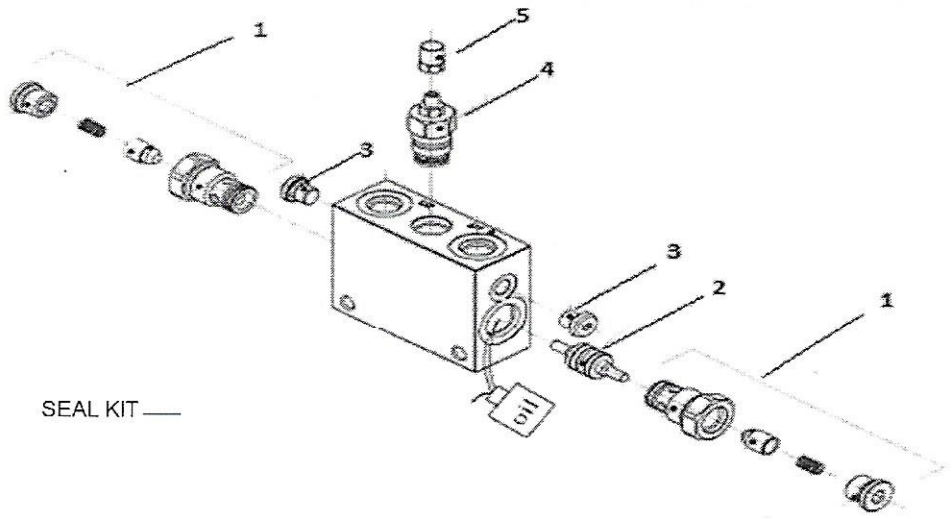
1
5
4
3
3
2
1
SEAL KIT

Item	Part No.	Name	Qty	Remarks
1	53108948	Cartridge Kit	2	
2	53108949	Piston	1	
3	53108951	Plug	2	
4	53108950	Valve	1	
5	53108952	Tamper Proof	1	
6	53108947	Seal Kit -Stab Lock Out Valve	1	

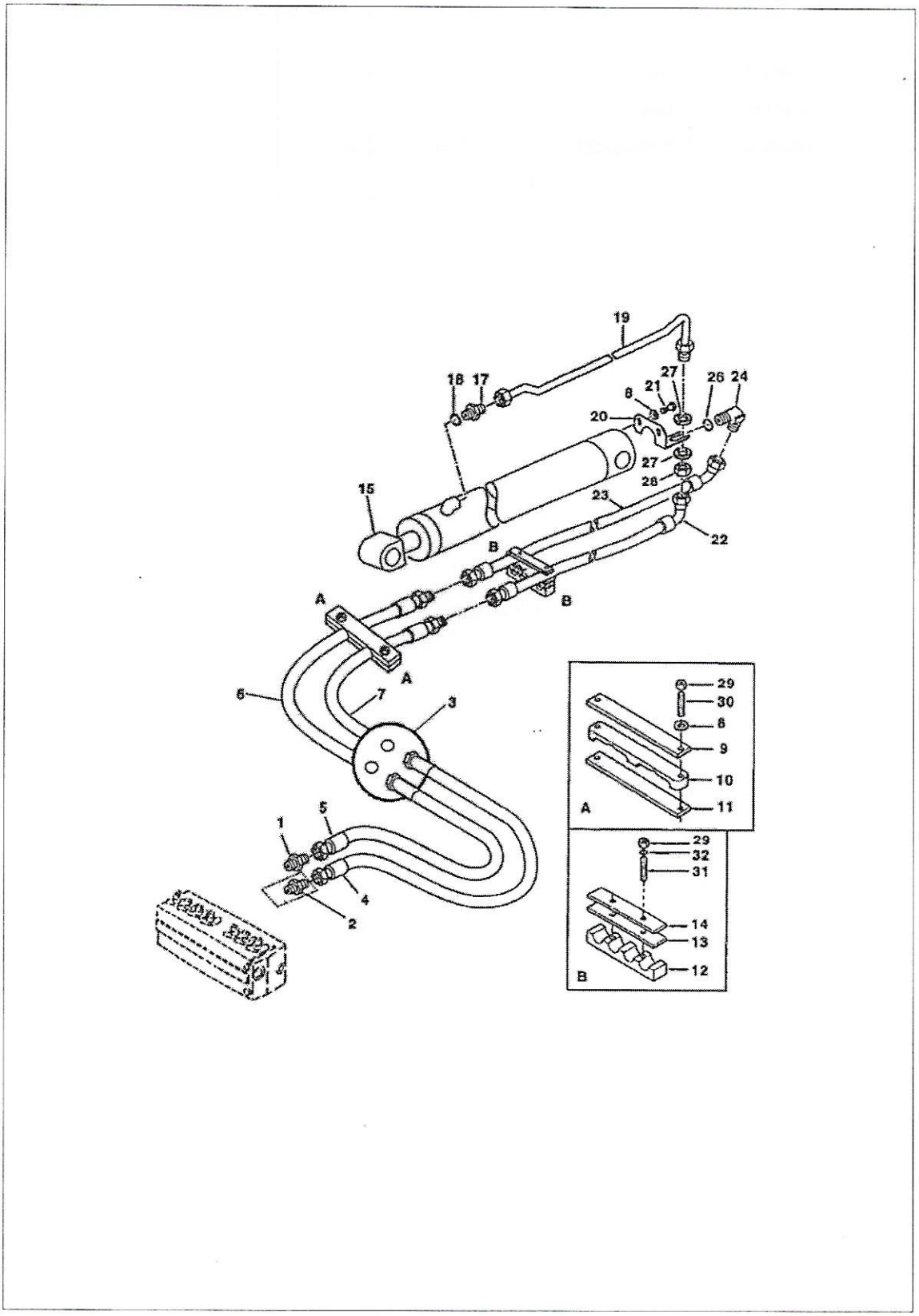
19
18
17
27
21
26
24
8
20
9
27
28
15
23
22
B
A
B
A
6
7
3
1
5
4
2
29
30
8
9
10
11
A
29
32
31
14
13
12
B

Item	Part No.	Name	Qty	Remarks
1	1H0165	ADAPTOR	1	
2	1H0254	RESTRICTOR ASSY. BOOM	1	
3	1B0541	PLATE ASSY - SPLIT HOSES	1	
4	1H0286	HOSE ASSY FR. BOOM HD	1	
5	1H0284	HOSE ASSY FR. BOOM HD	1	
6	53109927	HOSE ASSY RR. BOOM HD	1	
7	53109928	HOSE ASSY RR. BOOM HD	1	
8	390972X1	WASHER M8 - STD	2	
9	6102130M1	CLAMP PLATE BASE OF BOOM	1	
10	6102122M1	CLAMP	1	
11	6102128M1	PAD	1	
12	6102126M1	CLAMP	2	
13	6102145M1	PAD	2	
14	6102124M1	PLATE . TOP .	2	
15	53108842	BOOM CYLINDER - BLACK	1	Grey Color-1H0013
17	358735X1	CONNECTOR	1	
18	835024M1	O-RING	1	
19	6100855M91	TUBE ASSY BOOM CYL	1	
20	6100883M1	BRACKET BOOM CYL.	1	
21	339124X1	HEX BOLT M8X16 GR 8.8	2	
22	6101735M92	HOSE ASSY BOOM CYLINDER ROD	1	
23	6101736M92	HOSE ASSY BOOM CYLINDER HEAD	1	
24	835007M91	ELBOW 90 DEGREE ADJUST	1	
26	835024M1	O-RING	1	
27	3519378X1	WASHER	6	
28	355574X1	LOCK NUT	2	
29	394367X1	NUT	4	
30	3019070X1	STUD	2	
31	1B0396	STUD	2	
32	390972X1	WASHER M8 - STD	2	

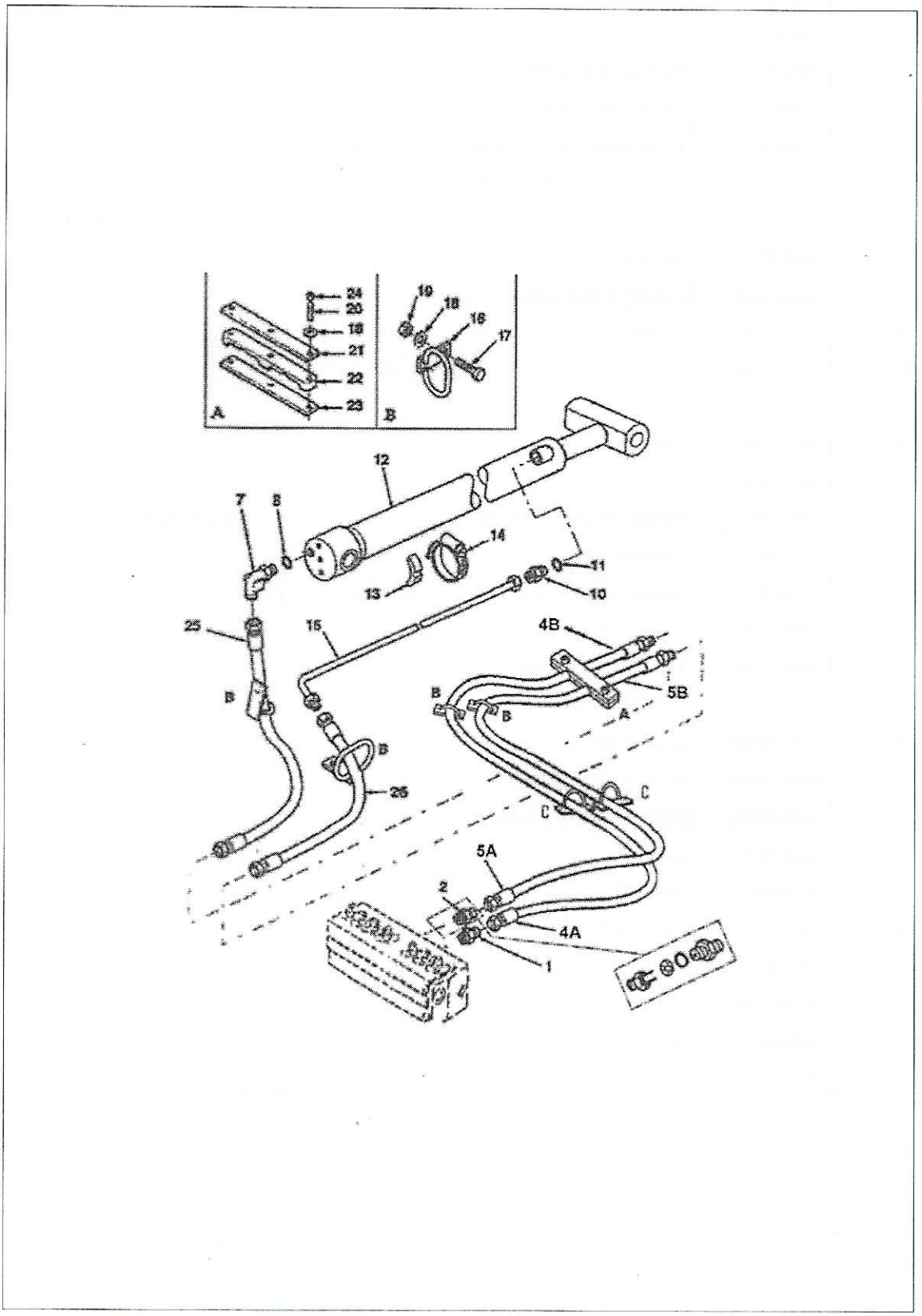
24
20
19
21
22
23
A
19
18
16
17
B
12
7
8
14
13
11
10
25
15
4B
5B
B
A
26
C
5A
2
4A
1

Item	Part No.	Name	Qty	Remarks
1	1H0165	ADAPTOR	1	
2	1H0193	RESTRICTOR ASSY DIGGER VALVE	1	
4A	1H0450	HOSE ASSY FR. DIPPER HD	1	
4B	53109931	HOSE ASSY RR. DIPPER HD	1	
5A	1H0451	HOSE ASSY FR. DIPPER ROD	1	
5B	53109932	HOSE ASSY RR. DIPPER ROD	1	
7	6101624M91	90 DEG ELBOW (LONG)	1	
8	835024M1	O-RING	1	
10	358735X1	CONNECTOR	1	
11	835024M1	O-RING	1	
12	53108843	DIPPER CYLINDER-BLACK	1	Grey Color-1H0014
13	L79937	GROMMET	1	
14	3517733M91	CLAMP	1	
15	6100976M92	TUBE ASSY DIPPER CYL .	1	
16	6101491M91	HOSE HOOP ASSY	4	
17	339761X1	BOLT M8-25 Z5F	2	
18	390972X1	WASHER M8 - STD	12	
19	394367X1	NUT	2	
20	3019070X1	STUD	2	
21	6102130M1	CLAMP PLATE BASE OF BOOM	1	
22	6102122M1	CLAMP	1	
23	6102128M1	PAD	1	
24	394367X1	NUT	2	
25	6101738M91	HOSE ASSY DIPPER HEAD	1	
26	6101737M91	HOSE ASSY DIPPER ROD	1	

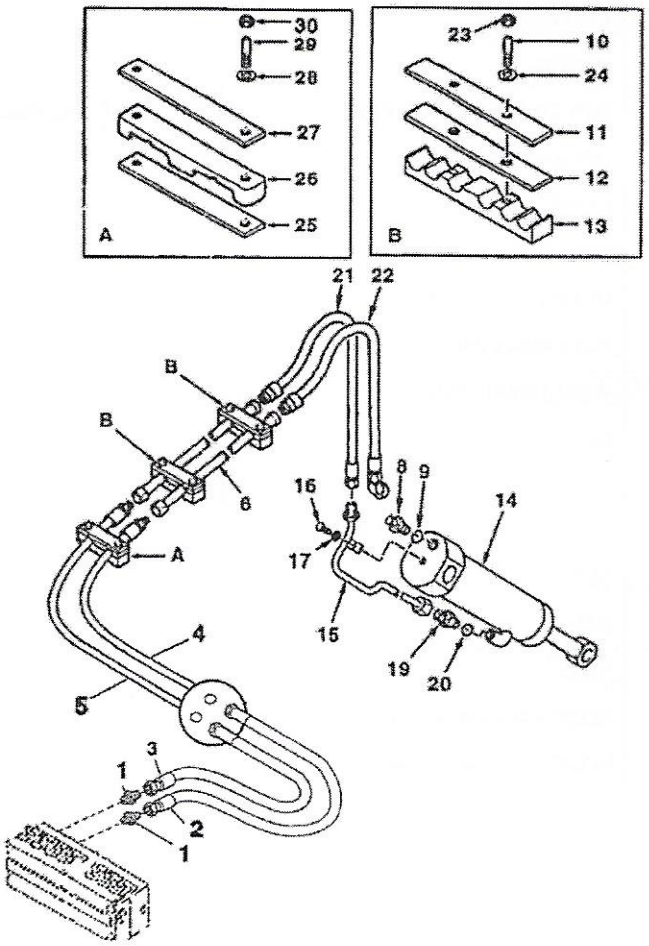
30
29
28
27
26
25
A
23
10
24
11
12
13
B
21
22
B
B
6
A
16
17
8
9
14
15
19
20
4
5
3
1
2
1

Item	Part No.	Name	Qty	
1	1H0165	ADAPTOR	2	
2	1H0288	HOSE ASSY FR. BUCKET HD	1	
3	1H0290	HOSE ASSY FR. BUCKET ROD	1	
4	53109929	HOSE ASSY RR. BUCKET HD	1	
5	53109930	HOSE ASSY RR. BUCKET ROD	1	
6	6101771M91	TUBE ASSY- BKT 4.5M BOOM	2	
8	358735X1	CONNECTOR	1	
9	835024M1	O-RING	1	
10	3019070X1	STUD	4	
11	6102124M1	PLATE . TOP .	2	
12	6102145M1	PAD	2	
13	6102126M1	CLAMP	2	
14	53108847	BUCKET CYLINDER - BLACK	1	Grey Color- 1H0306
15	1H0302	TUBE DIGGER BUCKET CYL.	1	
16	339124X1	HEX BOLT M8X16 GR 8.8	1	
17	390972X1	WASHER M8 - STD	1	
19	1H0395	CONNECTOR-LONG	1	
20	835024M1	O-RING	1	
21	6102309M91	HOSE ASSY BUCKET ROD STD.	1	
22	1H0305	HOSE ASSY	1	
23	394367X1	NUT	2	
24	390972X1	WASHER M8 - STD	2	
25	6102128M1	PAD	1	
26	6102122M1	CLAMP	1	
27	6102130M1	CLAMP PLATE BASE OF BOOM	1	
28	390972X1	WASHER M8 - STD	2	
29	3516075M1	STUD (COMPOSITE)	2	
30	394367X1	NUT	2	

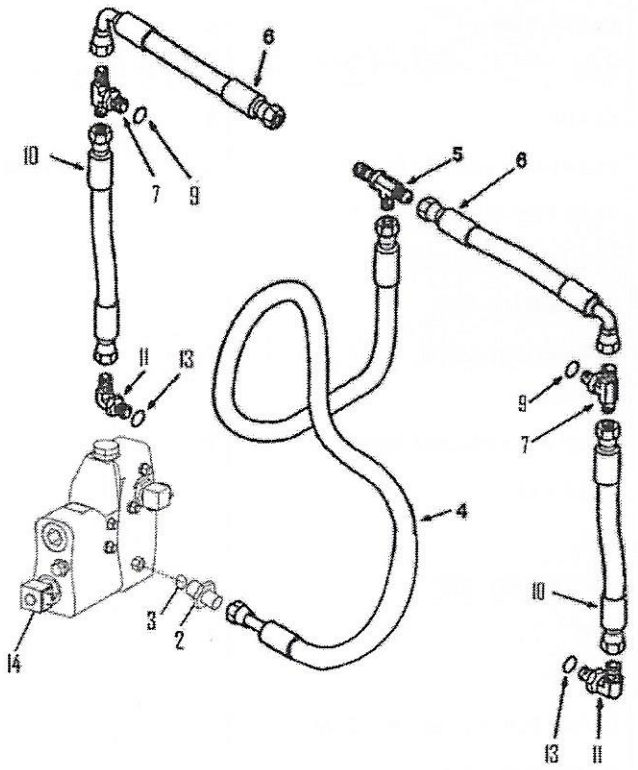
6
10
7
9
5
6
11
13
9
7
4
10
3
2
14
13
11

Item	Part No.	Name	Qty
2	365107X1	ADAPTOR	1
3	831452M1	O-RING	1
4	3519344M91	HOSE ASSEMBLY	1
5	356558X1	TEE	1
6	3521878M93	HOSE ASSY	2
7	1H0658	TEE	2
9	394923X1	O-RING	2
10	3521882M94	HOSE ASSEMBLY	2
11	358761X91	ELBOW 90 DEG	2
13	394923X1	O-RING	2
14	10X1393	SIDE SHIFT SOLENIOD VALVE	1

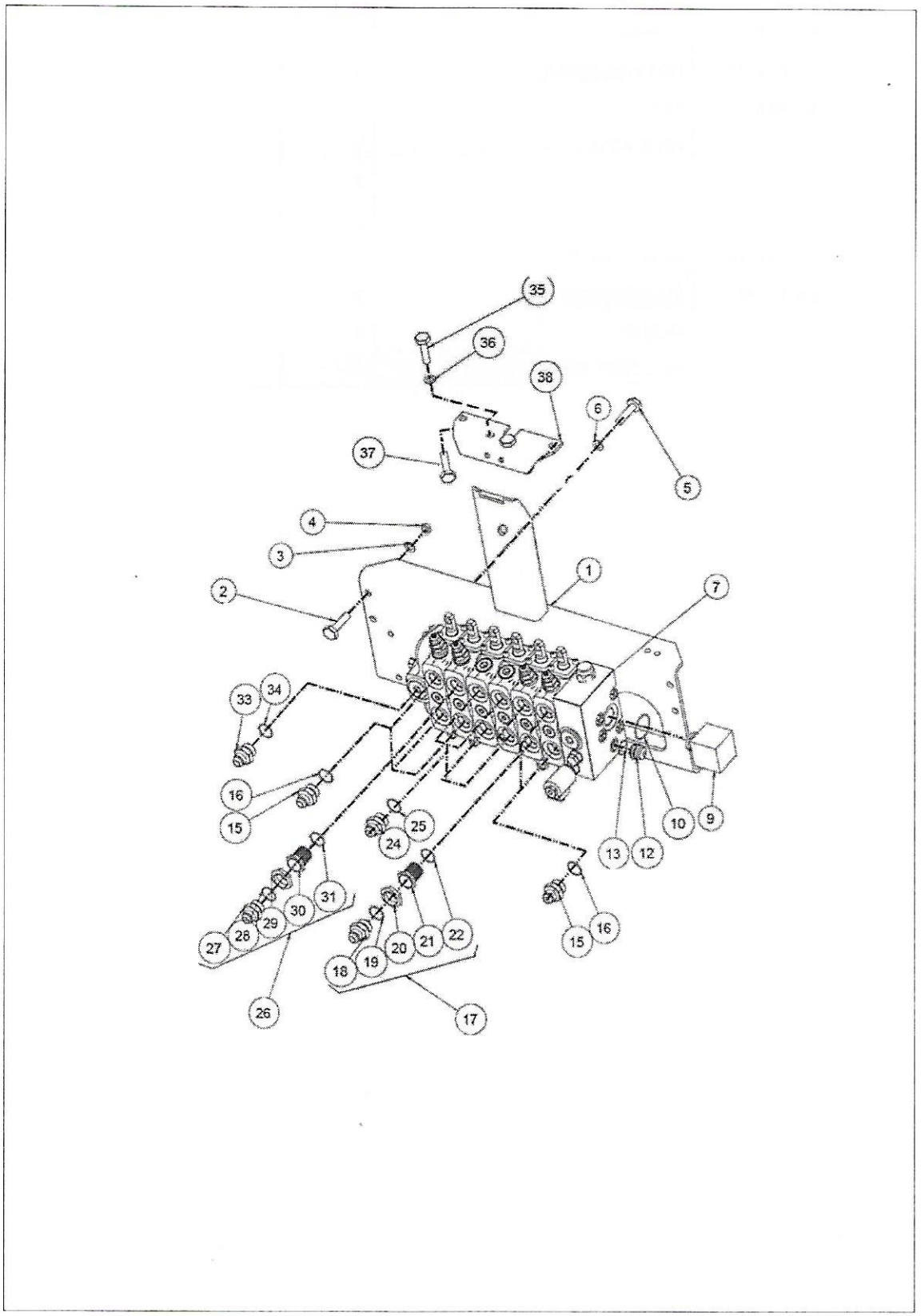
35
36
38
6
37
5
4
3
1
7
2
33
34
16
15
25
24
10
9
13
12
31
30
29
28
27
26
22
21
20
19
18
17
15
16

Item	Part No.	Name	Qty	Remarks
1	1B0167	BKT W/A DIGGER VALVE	1	
2	3009493X1	HEX BOLT M10X30 GR 8.8	4	
3	385362X1	WASHER M10 - CHAM	4	
4	1440329X1	NUT NYLOCK M10	4	
5	3009492X1	HEX BOLT M10X25 GR 8.8	4	
6	339376X1	LOCK_WASHER	4	
7	53112900	6 SPOOL VALVE BLOCK (WALVOIL)-NEW GEN	1	
9	1H0310	ADJUSTABLE ELBOW 1-5/16, 1-1/16	1	
10	835026M1	O-RING	1	
12	365107X1	ADAPTOR	1	
13	831452M1	O-RING	1	
15	1H0165	ADAPTOR	6	
16	835025M1	O-RING	6	
17	1H0254	RESTRICTOR ASSY. BOOM	1	
18	1H0233	ADAPTOR	1	
19	835024M1	O-RING	1	
20	1H0244	SLEEVE	1	
21	1H0173	ADAPTOR	1	
22	835025M1	O-RING	1	
24	1H0195	ADAPTOR	4	
25	835025M1	O-RING	4	
26	1H0193	RESTRICTOR ASSY DIGGER VALVE	1	
27	1H0233	ADAPTOR	1	
28	835024M1	O-RING	1	
29	1H0232	SLEEVE	1	
30	1H0173	ADAPTOR	1	
31	835025M1	O-RING	1	
33	358738X1	FITTING	1	
34	835026M1	O-RING	1	
35	339124X1	HEX BOLT M8X16 GR 8.8	4	
36	339374X1	LOCK WASHER M8	4	
37	354742X1	BOLT 1/2 -.625	2	
38	1B0414	BKT. W/A CONTROLS	1	

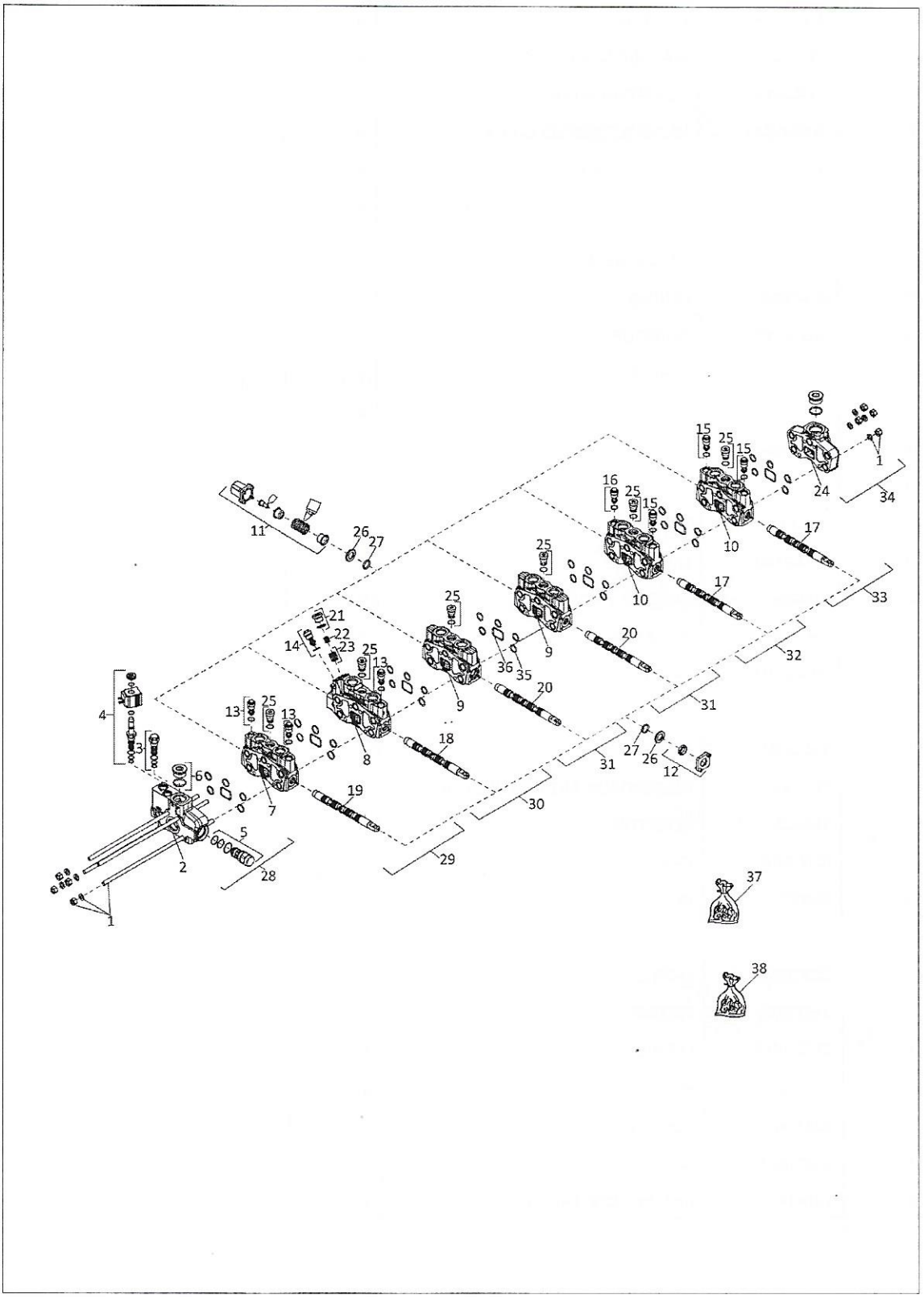
1
2
3
4
5
6
7
8
9
10
11
12
13
14
15
16
17
18
19
20
21
22
23
24
25
26
27
28
29
30
31
32
33
34
35
36
37
38

Item	Part No.	Name	Qty	Remarks
1	10X3317	TIE ROD KIT-S70	1	
2	53113261	INLET COVER	1	
3	53113262	CARTRIDGE	1	
4	53113263	SOLENOID VALVE	1	
5	53113264	MAIN RELIEF VALVE	1	
6	53113265	PLUG	2	
7	10X3319	SLEW SECTION	1	
8	53113266	BOOM SECTION	1	
9	10X3320	STABILIZER SECTION	2	
10	53113267	DIPPER / BUCKET SECTION	2	
11	10X1399	CONTROL KIT	6	
12	10X1365	MAECHANICAL DUST PROOF COVER FOR SPOOL	6	
13	53101801	ARV 240 BAR	3	
14	53113268	ARV 310 BAR	1	
15	53113269	ARV 280 BAR	3	
16	53113270	ARV 270 BAR	1	
17	10X1361	DIPPER / BUCKET SPOOL	2	
18	53113271	BOOM SPOOL	1	
19	10X3327	SLEW SPOOL	1	
20	53102614	STABILIZER SPOOL	2	
21	53113272	PLUG	1	
22	53113273	CENTRAL SPRING	1	
23	53113274	POPPET	1	
24	53113275	OUTLET SECTION	1	
25	53113276	LOAD HOLD CHECK VALVE	6	
26	10X3342	SPACER	12	
27	10X1431	O-RING	12	
28	53113277	INLET COVER ASSEMBLY	1	
29	53101802	SLEW SECTION ASSEMBLY	1	
30	53113278	BOOM SECTION ASSEMBLY	1	
31	53113279	STABILIZER SECTION ASSEMBLY	2	
32	53113280	DIPPER SECTION ASSEMBLY	1	
33	53113281	BUCKET SECTION ASSEMBLY	1	
34	53113282	OUTLET SECTION ASSEMBLY	1	
35	10X3339	O-RING	35	
36	10X3338	O-RING	7	

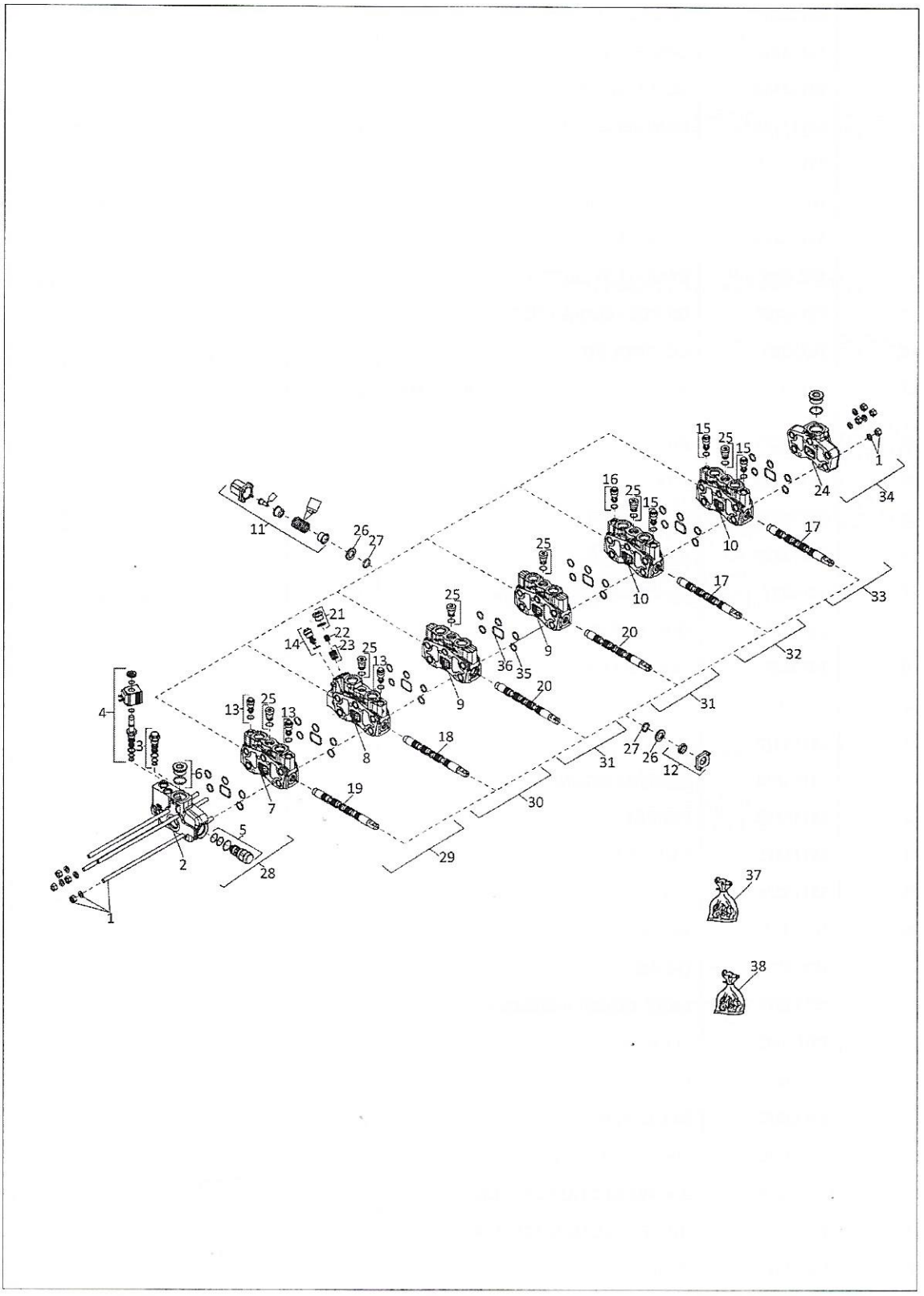
1
2
3
4
5
6
7
8
9
10
11
12
13
14
15
16
17
18
19
20
21
22
23
24
25
26
27
28
29
30
31
32
33
34
35
36
37
38

Item	Part No.	Name	Qty	Remarks
37	53113283	INTERFACE SEAL KIT	1	
38	53113284	SEAL KIT	1	

BACKHOE HYDRAULIC CONTROL-CROSS PATTERN

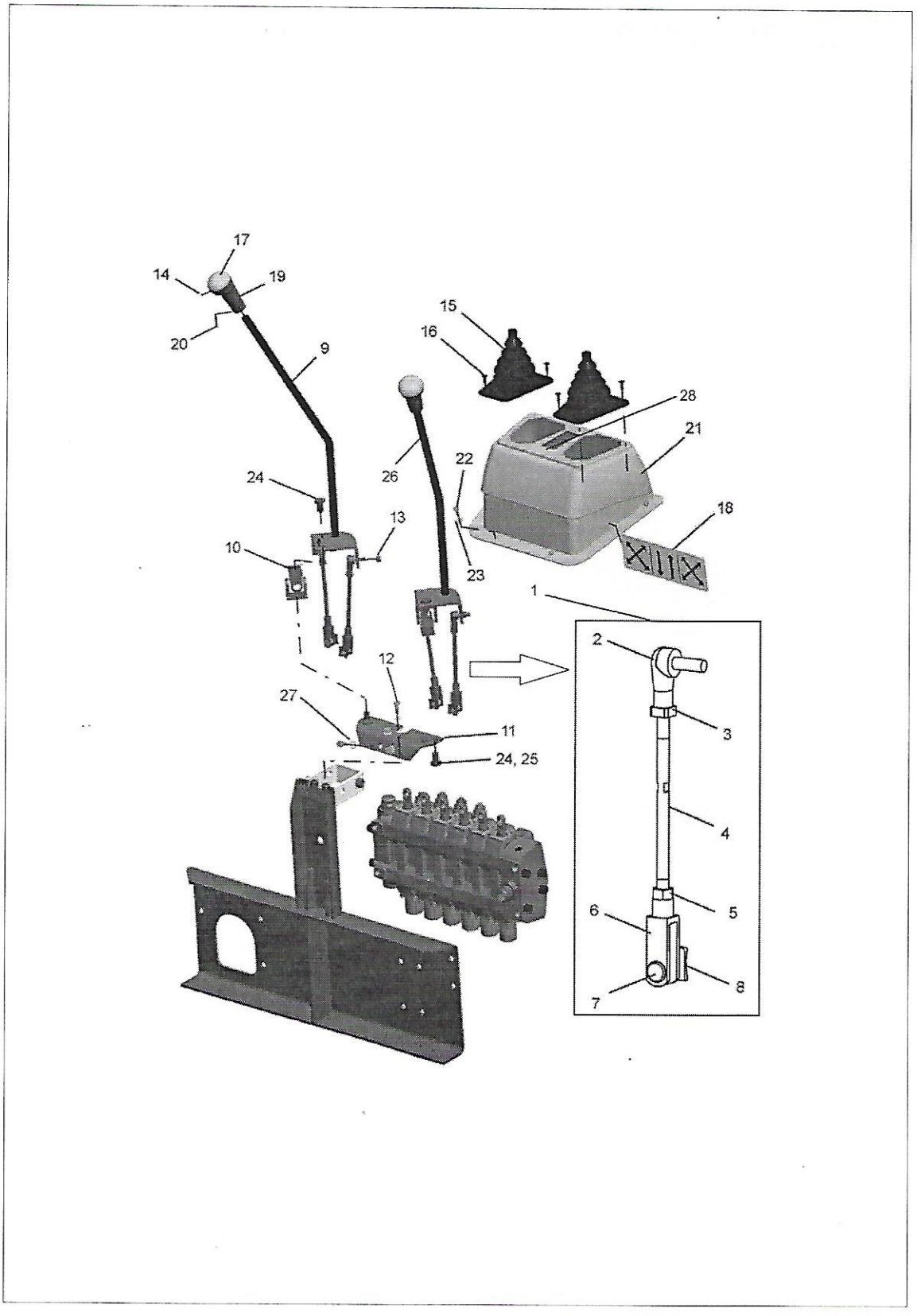

Item	Part No.	Name	Qty	Remarks
1	1B0140	ROD ASSY.	4	
2	3517518M1	BALL JOINT COMP.	4	
3	339169X1	HEX NUT M8X1.25	4	
4	6106906M1	ROD	4	
5	3519650M1	HEX NUT M8 L.H.	4	
6	1B0139	CLEVIS	4	
7	1B0158	CLEVIS PIN	4	
8	3521461M1	SAFETY FASTNER COMPOSITE	4	
9	6107173M91	LEVER W/ASSY LH CONTROLS	1	
10	3521075M91	YOKE ASSY	2	
11	1B0414	BKT. W/A CONTROLS	1	
12	339123X1	HEX BOLT M8X20 GR 8.8	4	
13	394367X1	NUT	4	
14	3516886M1	SCREW	4	
15	3522855M2	GAITER F . DIGGER	2	
16	3521303M3	FIR TREE BUTTON	8	
17	3522669M3	KNOB TOP DIGG CNT (Y)	2	
18	1B0157	DECAL - STAB CONTROLS & DIGGER CONTROLS	1	
19	3522621M5	CONTROL KNOB BASE	2	
20	3319531X1	PIN,ROLL	2	
21	1J0388	DIGGER BOX	1	
22	339560X1	SCREW	6	
23	391038X1	WASHER M6 LARGE	6	
24	354742X1	BOLT 1/2 -.625	4	
25	359369X1	WASHER LOCK	4	
26	6107172M91	LEVER W/ASSY RH CONTROLS	1	
27	390972X1	WASHER M8 - STD	4	
28	1J0681	BEADING DIGGER BOX	1	

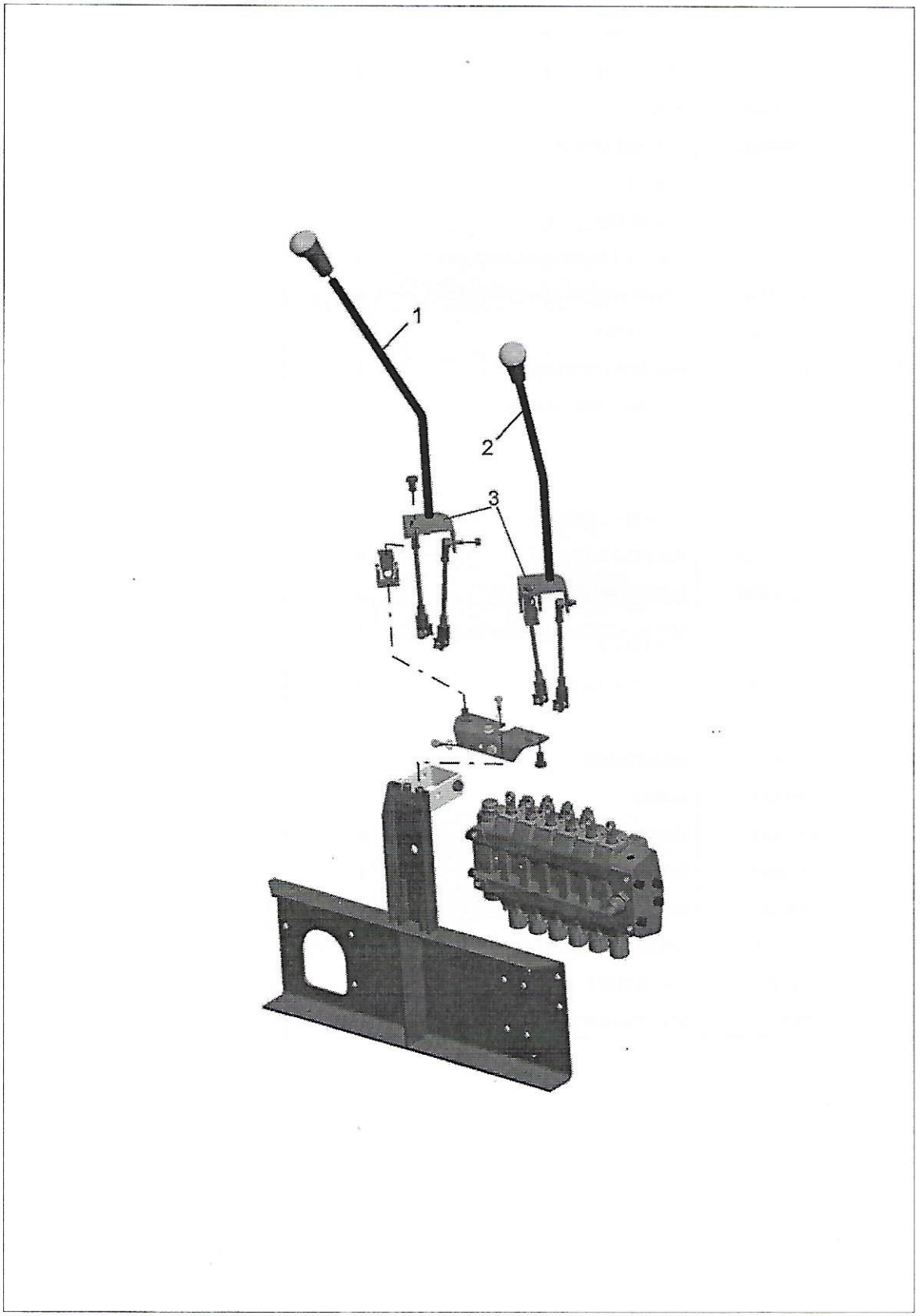
1
2
3

Item	Part No.	Name	Qty	Remarks
1	1B0972	LEVER W/ASSY RH CONTROLS	1	
2	1B0973	LEVER W/ASSY LH CONTROLS	1	
3	1B414	BRACKET	2	

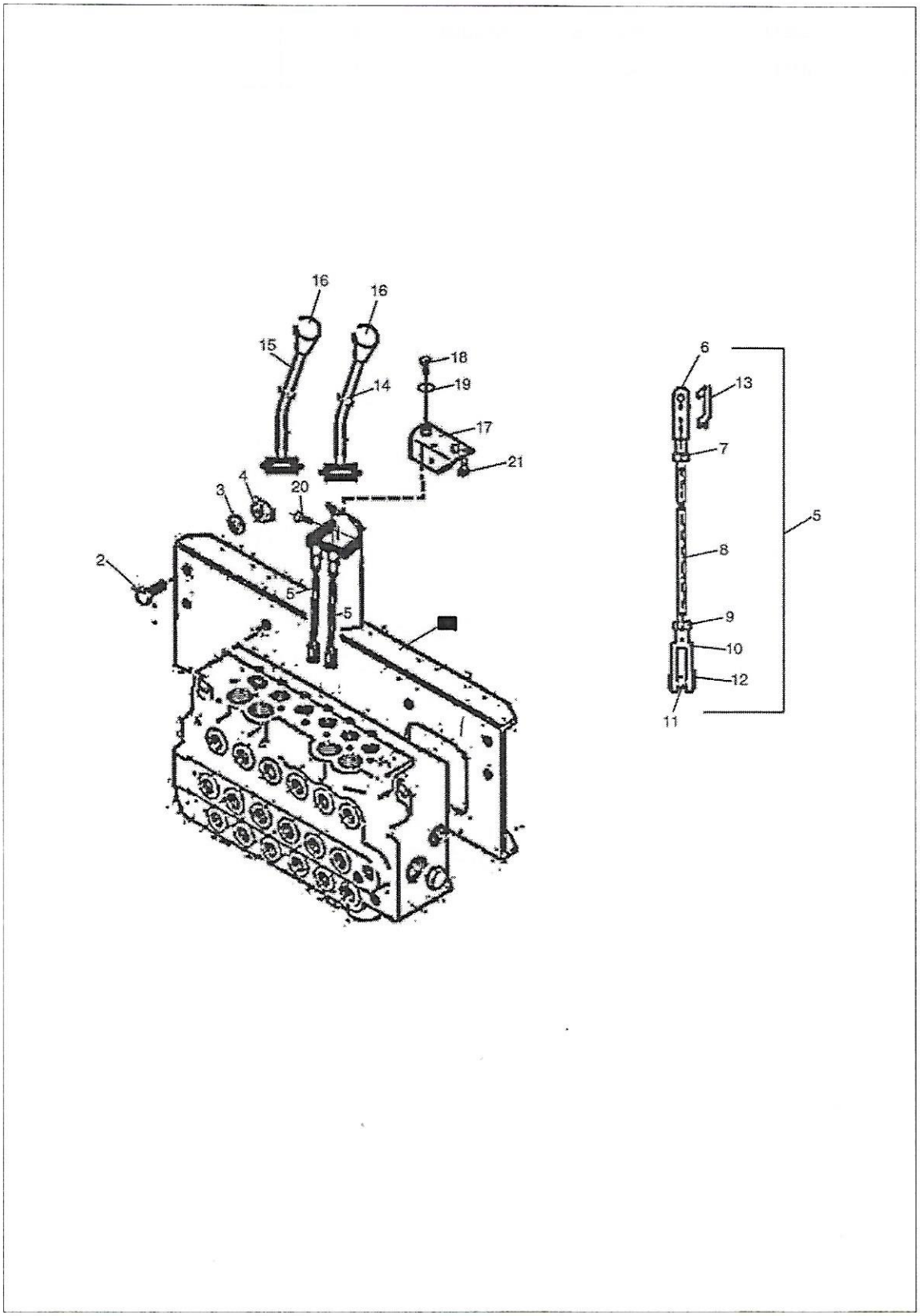
16
16
15
18
19
14
17
21
3
4
20
2
5
5
6
13
7
5
8
9
10
12
11

Item	Part No.	Name	Qty	Remarks
1	1B0167	BKT W/A DIGGER VALVE	1	
2	3009493X1	HEX BOLT M10X30 GR 8.8	4	
3	385362X1	WASHER M10 - CHAM	4	
4	1440329X1	NUT NYLOCK M10	4	
5	1B0141	ROD ASSY	2	
6	1B0172	CLEVIS	2	
7	3519650M1	HEX NUT M8 L.H.	2	
8	1B0097	ROD	2	
9	351969X1	HEX NUT	2	
10	1B0139	CLEVIS	2	
11	1B0158	CLEVIS PIN	2	
12	3531461M1	SPRING CLIP	2	
13	3520666M1	PIN CLEVIS	2	
14	1B0173	HANDLE ASSY LH	1	
15	1B0174	HANDLE ASSY RH	1	
16	3517899M1	KNOB YELLOW SCREW ON	2	
17	1B0414	BKT. W/A CONTROLS	1	
18	339123X1	HEX BOLT M8X20 GR 8.8	4	
19	390972X1	WASHER M8 - STD	4	
20	3009516X1	HEX BOLT M12X90 GRADE 8.8	2	
21	354742X1	BOLT 1/2 -.625	4	

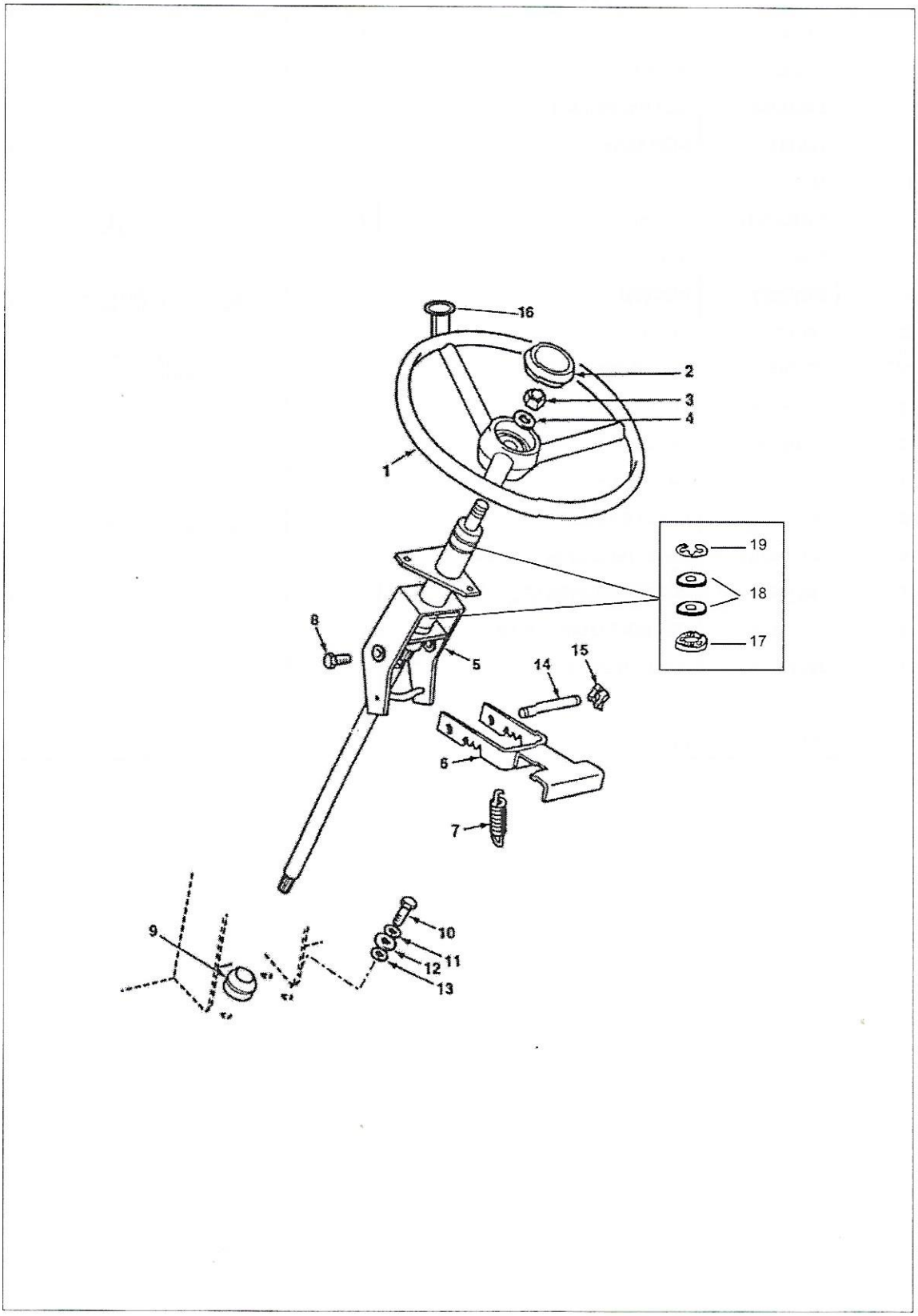
16
2
3
4
1
19
18
17
8
5
14
15
6
7
9
10
11
12
13

Item	Part No.	Name	Qty	Remarks
1	53110941	STEERING WHEEL (MANITOU)	1	
1	53110940	STEERING WHEEL (GEHL)	1	
2	NSS	CAP	1	
3	1441246X1	NUT M20 Z2 THIN	1	
4	392913X1	WASHER	1	
5	1J0008	STEERING COLUMN W/ASSY.	1	Changed from machine serial no. 15126.
6	53101399	BRACKET	1	
7	3522399M1	EXTENSION SPRING	1	
8	1611049M1	PIN - PIVOT	2	
9	1471979M1	SEAL	1	
10	3009494X1	HEX BOLT M10x35 GRADE 8.8	4	
11	339376X1	LOCK_WASHER	4	
12	390597X1	WASHER M10 - LRG	4	
13	3507736M1	MOUNTING	4	
14	3521918M2	SHAFT	1	
15	3521461M1	SAFETY FASTNER COMPOSITE	2	
16	1J0003	SPINNER KNOB ASSY COMPLETE	1	
17	6113771M1	BEARING -STEERING ROD	2	
18	10X1860	SHIM	4	
19	10X1859	LOCK	2	

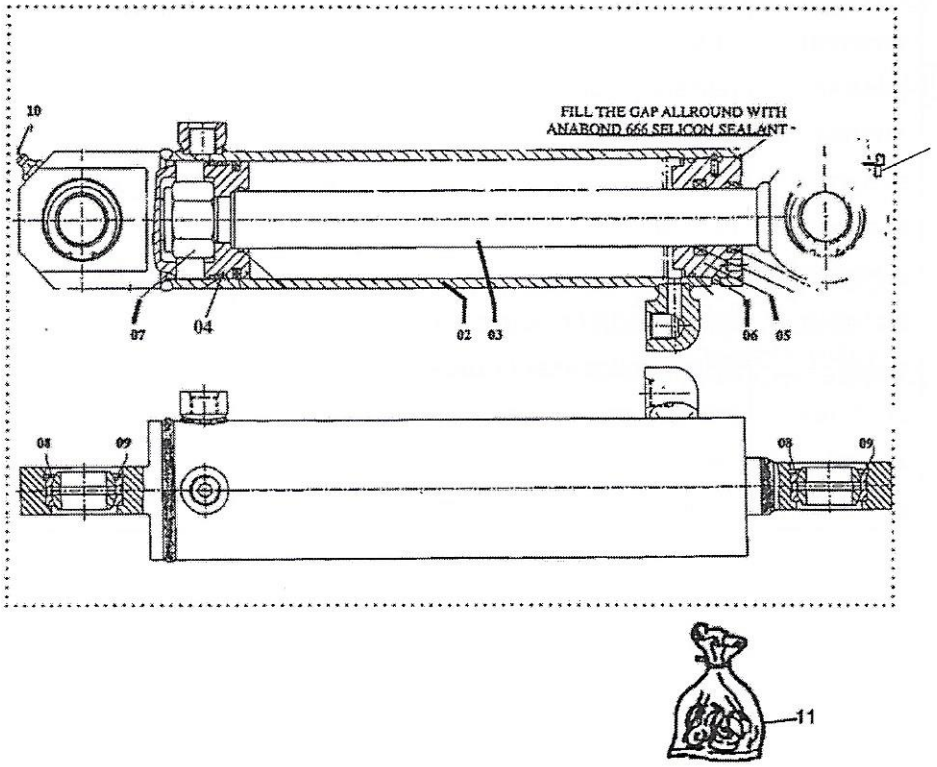
10
FILL THE GAP ALLROUND WITH
ANABOND 666 SELICON SEALANT
07
04
02
03
06
05
08
09
08
09
11

Item	Part No.	Name	Qty	Remarks
1	53101327	STEERING CYLINDER	1	
3	53101290	PISTON ROD ASSY.	1	
4	10X1772	PISTON	1	
5	53101289	H.E. COVER	1	
6	10X1767	SEGGER RING	1	
7	10X1773	NUT	1	
8	10X1768	BALL JOINT	1	
9	10X1769	SEGGER RING	2	
10	10X1775	GREASE NIPPLE	2	
11	10X1776	SEAL KIT	1	
12	10X1774	GREASE NIPPLE 90 DEG	1	

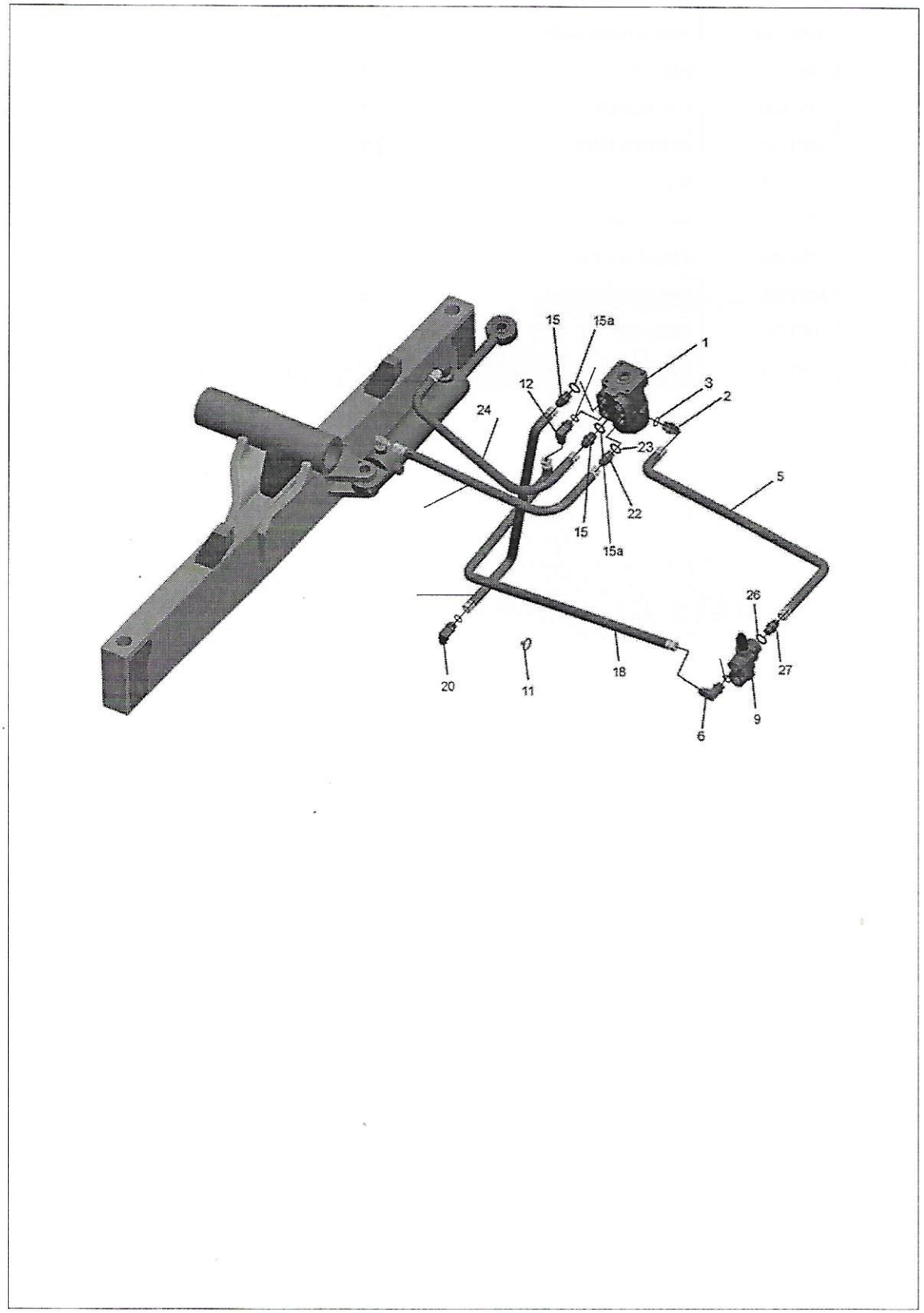
15
15a
1
12
3
2
24
23
5
22
15
15a
26
20
11
18
27
9
6

Item	Part No.	Name	Qty	Remarks
1	1H0447	STEERING UNIT - OGNIBENE	1	
2	1H0100	ADAPTOR STEERING LS	1	
3	53109440	FLAT O-RING	1	
5	1H0062	HOSE ASSY. LS TO PRIORITY	1	
6	358762X91	ELBOW	1	
6A	831497M1	O-RING	1	
9	1H0448	PRIORITY VALVE BLOCK - OGNIBENE	1	
10	1H0099	HOSE ASSY	1	
11	1876229M1	TIE/CABLE .19X7.50	UAR	
12	1H0078	ELBOW 90 STEERING UNIT	1	
12A	831497M1	O-RING	1	
15	1H0075	ADAPTOR STEERING UNIT	2	
16	53109439	FLAT O-RING	2	
18	6107537M91	HOSE ASSY	1	
20	365233X1	ELBOW SWIVEL	1	
21	6107102M91	HOSE ASSY STEER SYSTEM	1	
22	1H0077	ADAPTOR STEERING UNIT	1	
23	53109439	FLAT O-RING	1	
24	1H0032	HOSE ASSY STEERING SYSTEM	1	
26	835024M1	O-RING	1	
27	3517854M1	CONNECTOR	1	

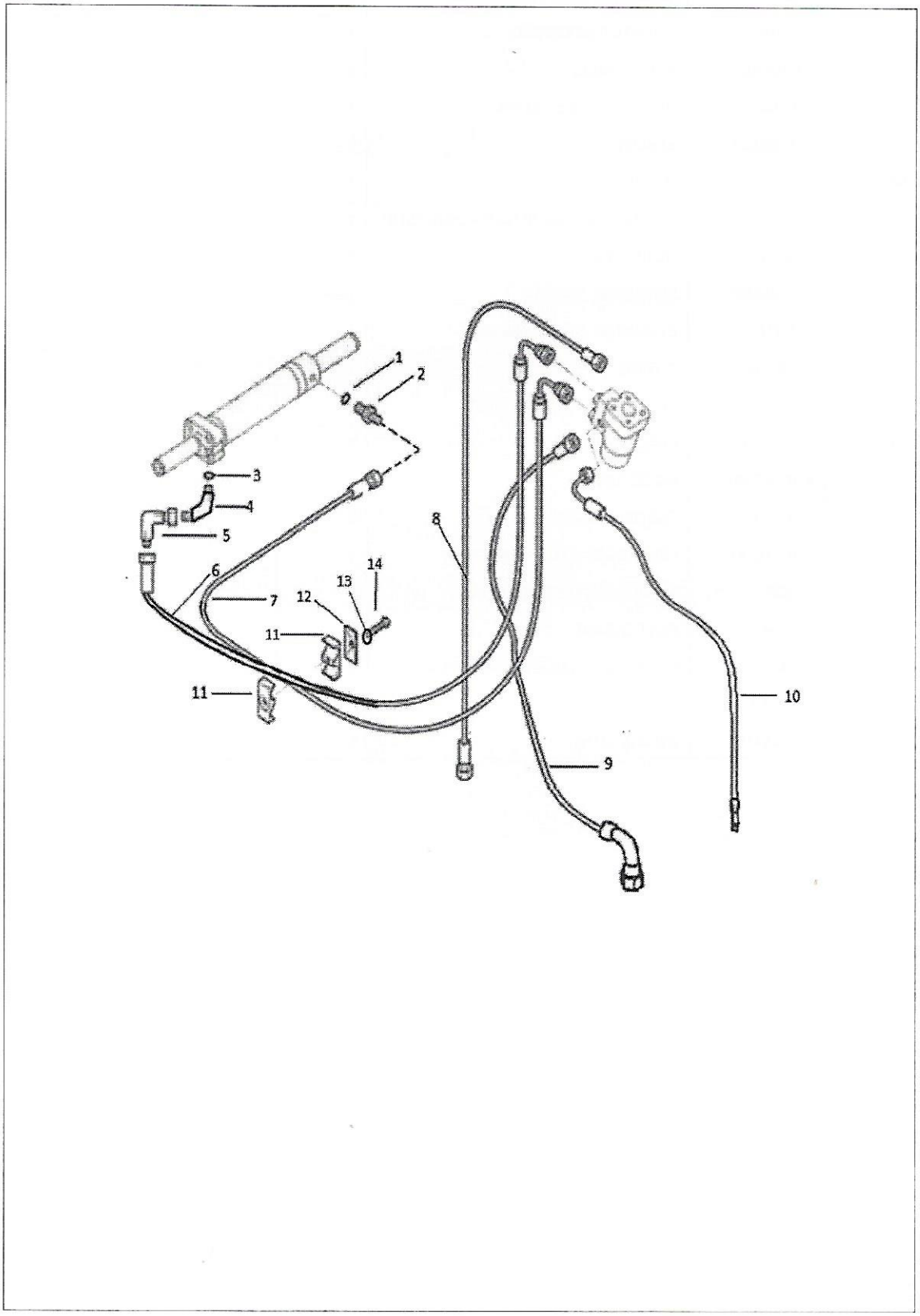
1
2
3
4
5
6
7
8
9
10
11
11
12
13
14

Item	Part No.	Name	Qty	Remarks
1	831452M1	O-RING	1	
2	358733X1	Union	1	
3	831452M1	O-RING	1	
4	358781X91	Elbow 45°	1	
5	364603X1	Elbow	1	
6	1H0032	HOSE ASSY STEERING SYSTEM	1	
7	6107102M91	HOSE ASSY STEER SYSTEM	1	
8	610753M91	HOSE ASSY.	1	
9	1H0099	HOSE ASSY	1	
10	1H0062	HOSE ASSY. LS TO PRIORITY	1	
11	6101228M1	CLAMP TUBE ASSEMBLY	1	
12	6106109M1	RUBBER PAD	1	
13	390972X1	WASHER M8 - STD	1	
14	339169X1	HEX NUT M8X1.25	1	

ELECTRICAL

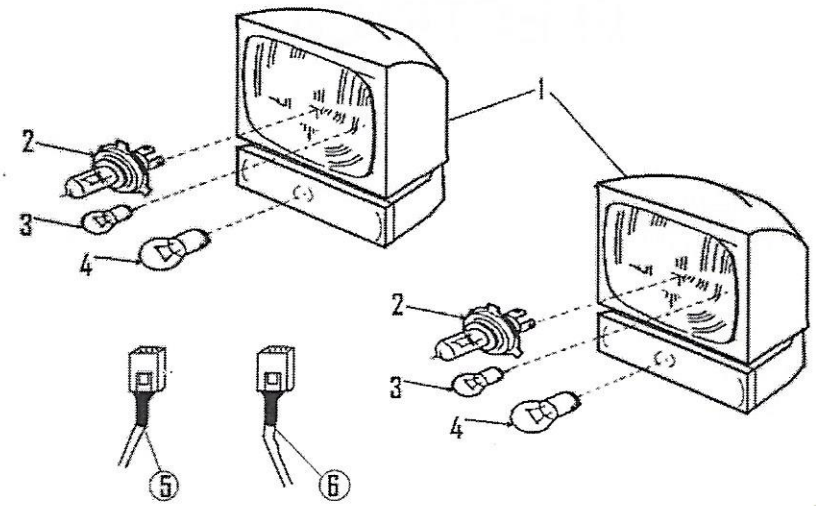
1
2
3
4
2
3
4
5
6

Item	Part No.	Name	Qty	Remarks
1	1D0208	HEAD LAMP ASSY	2	
2	3523444M1	BULB	2	
3	1D0135	PARKING LIGHT BULB FRONT	2	
4	3523687M1	BULB	2	
5	1D0085	RIGHT HEAD LAMP HARNESS	1	
6	1D0086	LEFT HEAD LAMP HARNESS	1	

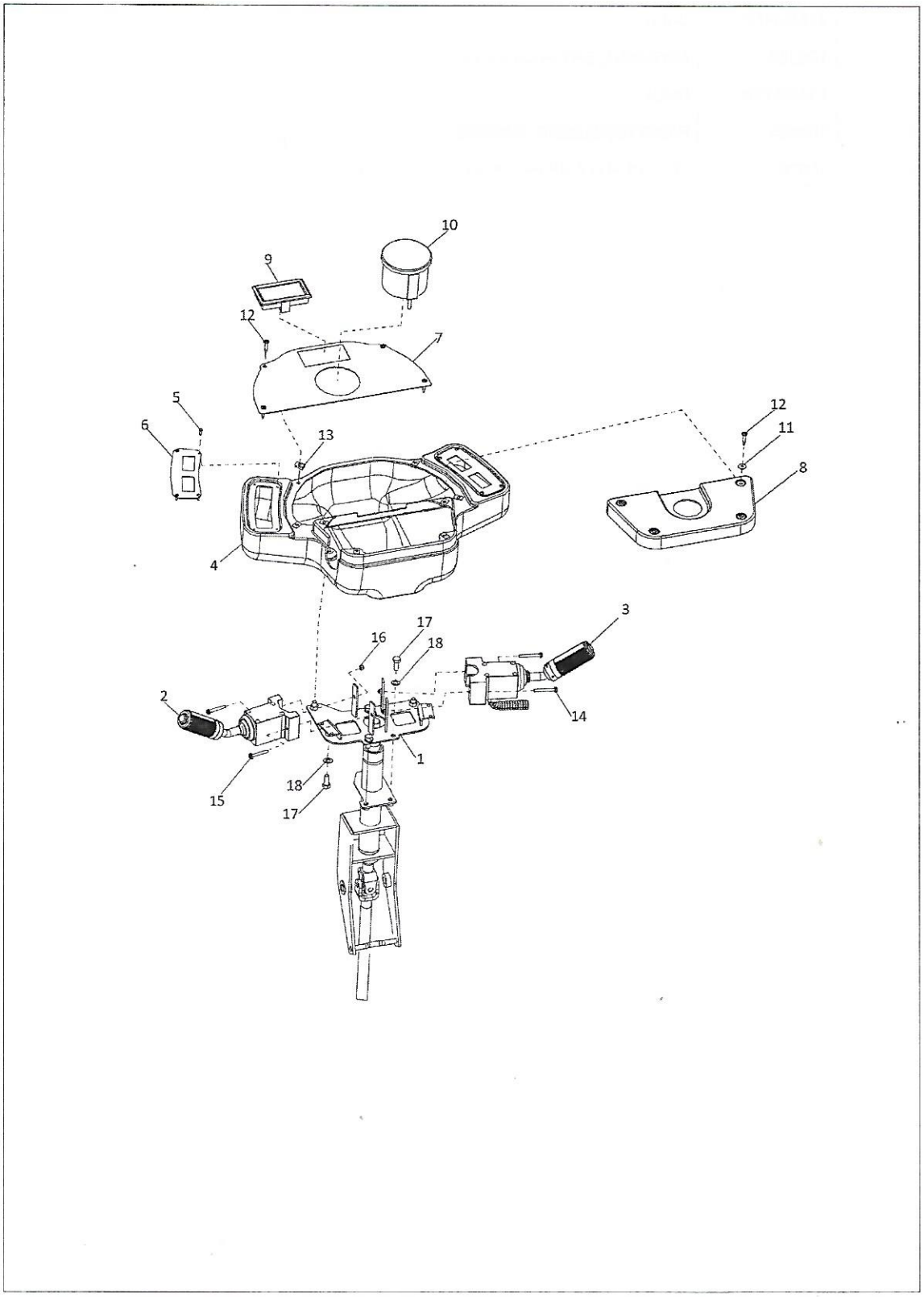
10
9
12
7
5
6
13
12
11
8
4
3
17
16
18
2
14
1
18
15
17

Item	Part No.	Name	Qty	Remarks
1	53107745	BRACKET ASSEMBLY	1	
2	1D0066	FWD-REV-SWITCH ASSEMBLY.	1	
3	53110188	COMBINATION SWITCH	1	
4	53108964	FRONT INSTRUMENT COVER	1	
5	53101871	SCREW NO.8 PAN HD	8	
6	1D0064	BEZEL SWITCH MTG BRKT	2	
7	53108965	FRONT CLUSTER PLATE	1	
8	53108963	COVER INSTRUMENT PANEL	1	
9	53108355	WARNING LIGHT PACK-FRONT	1	
10	6113722M1	GAUGE-SPEEDOMETER	1	
11	1J0670	WASHER M5 - LRG	4	
12	50111275	SCREW NO. 10 PAN HD	8	
13	6101590M1	M4 U NUT	8	
14	3009539X1	PAN HEAD SCREW M5X40	2	
15	3009538X1	PAN HEAD SCREW M5X35	2	
16	1441494X	M5 NYLOC NUT	4	
17	339123X1	HEX BOLT M8X20 GR 8.8	6	
18	390972X1	WASHER M8 - STD	6	

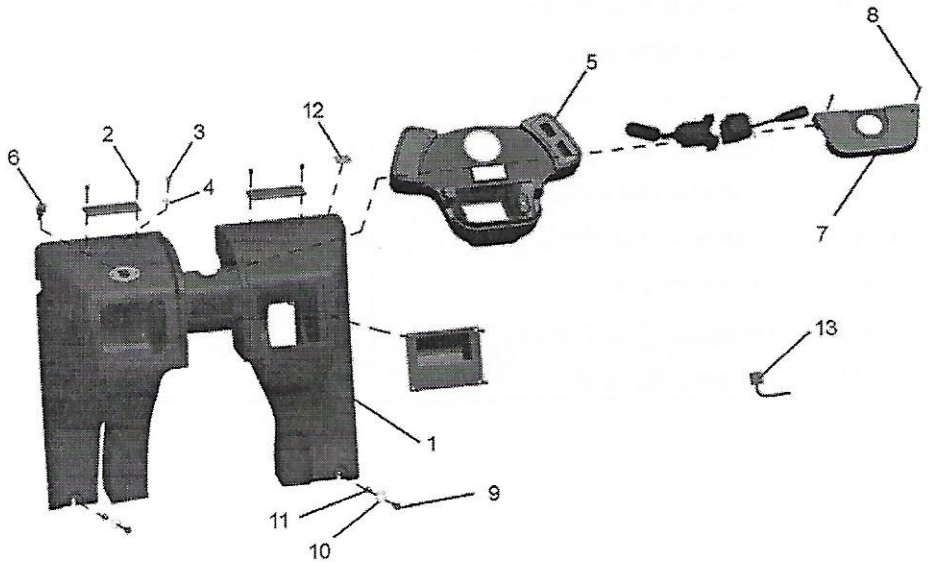
8
5
12
2
3
6
4
7
13
1
9
11
10

Item	Part No.	Name	Qty	Remarks
1	1J0373	SINGLE WALL FRONT CONSOLE	1	
2	3522735M4	SELF-TAP SCREW CSK HD COMPOSITE	4	
3	391039X1	WASHER	2	
4	339123X1	HEX BOLT M8X20 GR 8.8	2	
5	1J0583	FRONT INSTRUMENT COVER	1	
6	6113723M1	MOBILE CHARGING UNIT	1	
7	1J0377	COVER INSTRUMENT PANEL	1	
8	6101591M1	RIVET	6	
9	339891X1	HEX BOLT M8X80 GRADE 8.8	2	
10	391039X1	WASHER	2	
11	6101730M1	SPACER COMPOSITE	2	
12	6101914M1	DECAL FWD /REV	1	
13	1D0351	Harness, Front Console	1	

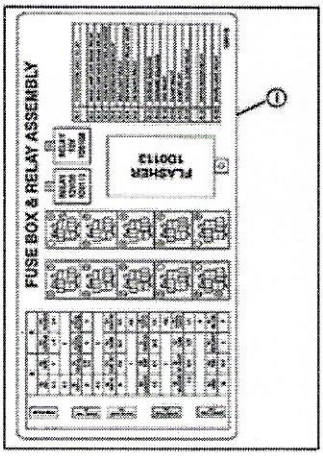
FUSE BOX & RELAY ASSEMBLY
FLASHER
100113
1

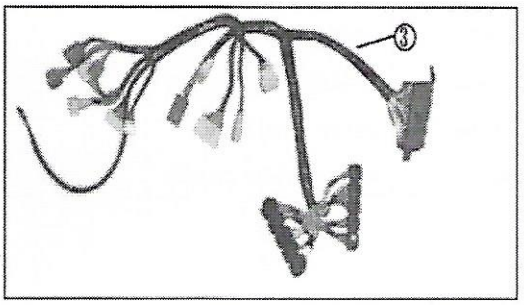
3

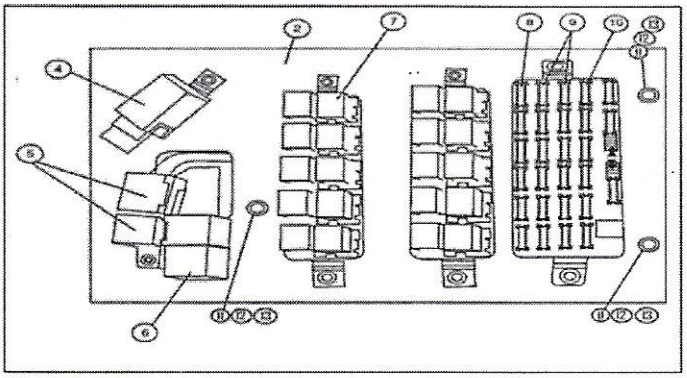
2
7
8
9
10
12
4
5
6
11
13
14
15

Item	Part No.	Name	Qty	Remarks
1	1D0110	DECAL RELAY FUSE BOARD	1	
2	1TD0007M1	PLATE	1	
3	1D0363	RELAY AND FUSE BOX W/H KOEL WITH AIRCON	1	
4	1D0113	RELAY FLASHER	1	
5	1D0108	RELAY	1	
6	1D0112	RELAY 30 AMP	1	
7	1D0107	RELAY	15	
8	1D0126	FUSE 5AMPS	6	
9	1D0127	FUSE 10 AMPS	9	
10	1D0128	FUSE 15AMPS	9	
11	3507736M1	MOUNTING	3	
12	394367X1	NUT	3	
13	390992X1	HEX BOLT M8x50 GRADE 8.8	3	

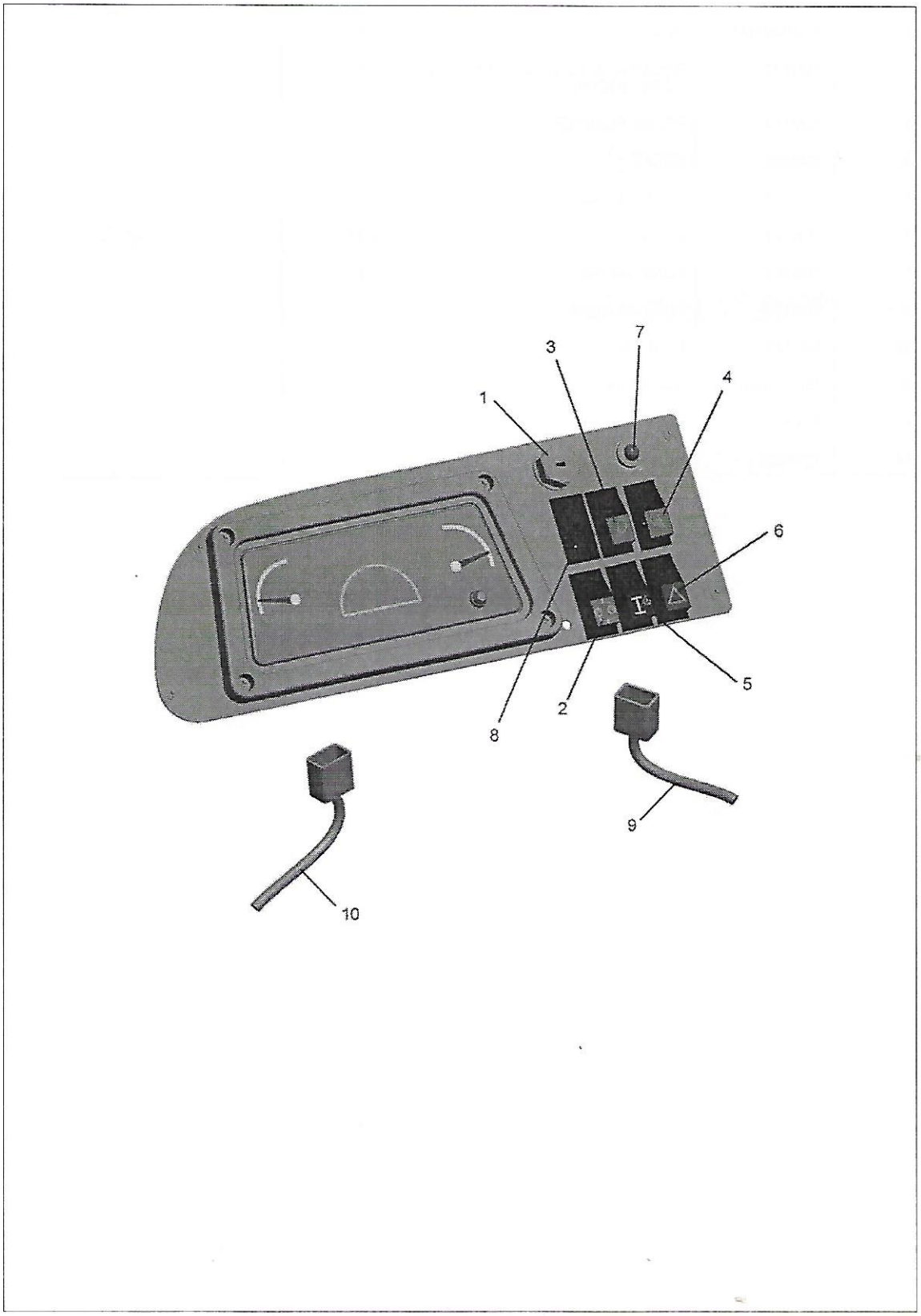
1
3
7
4
6
5
2
8
9
10

Item	Part No.	Name	Qty	Remarks
1	1D0316	IGNITION SWITCH	1	
2	53101020	HYDRAULIC PUMP SWITCH	1	
3	53101015	FRONT WORK LAMP SWITCH	1	
4	53101016	REAR WORK LAMP SWITCH	1	
5	53101018	SIDE SHIFT CLAMP SWITCH	1	
6	53101017	HAZARD WARNING SWITCH	1	
7	1D0073	PUSH STARTER SWITCH ASSY	1	
8	53102186	BLANK SWITCH	1	
9	1D0363	RELAY AND FUSE BOX W/H KOEL WITH AIRCON	1	
10	1TD0004M91	SIDE CONSOLE W/H	1	

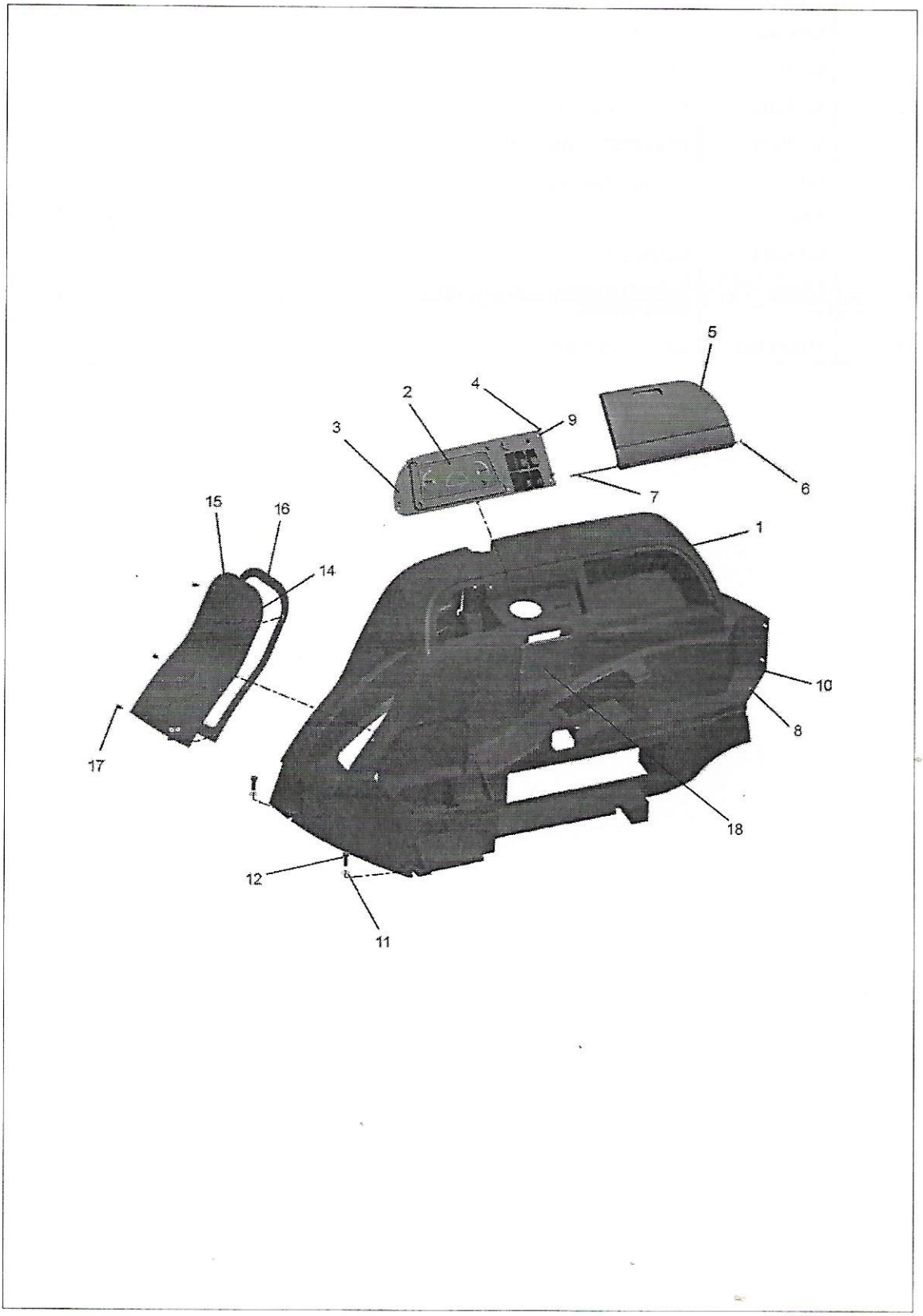
5
2
4
9
3
6
7
15
16
1
14
10
8
17
18
12
11

Item	Part No.	Name	Qty	Remarks
1	1J0616	SIDE CONSOLE	1	Changed from machine serial no. 15228.
2	6113895M1	SIDE INSTRUMENT CLUSTER	1	
3	1J0541	SIDE CLUSTER PLATE	1	
4	365919X1	Screw	8	
5	1J0381	GLOVE BOX LID	1	
6	3000115X1	CIRCLIP	1	
7	6101630M1	HINGE ROD	1	
8	6101591M1	RIVET	13	
9	391038X1	WASHER M6 LARGE	1	
10	339560X1	SCREW	1	
11	3516109M1	WASHER	2	
12	339804X1	BOLT M6X25	2	
14	1D0110	DECAL RELAY FUSE BOARD	1	
15	1J0382	COVER RHS CONSOLE	1	
16	6102504M1	GASKET COVER RHS CONSOLE	1	
17	6102921M1	PAN HEAD SCREW (COMPOSITE) [L-20]	6	
18	1J0596	HAND THROTTLE COVER	1	

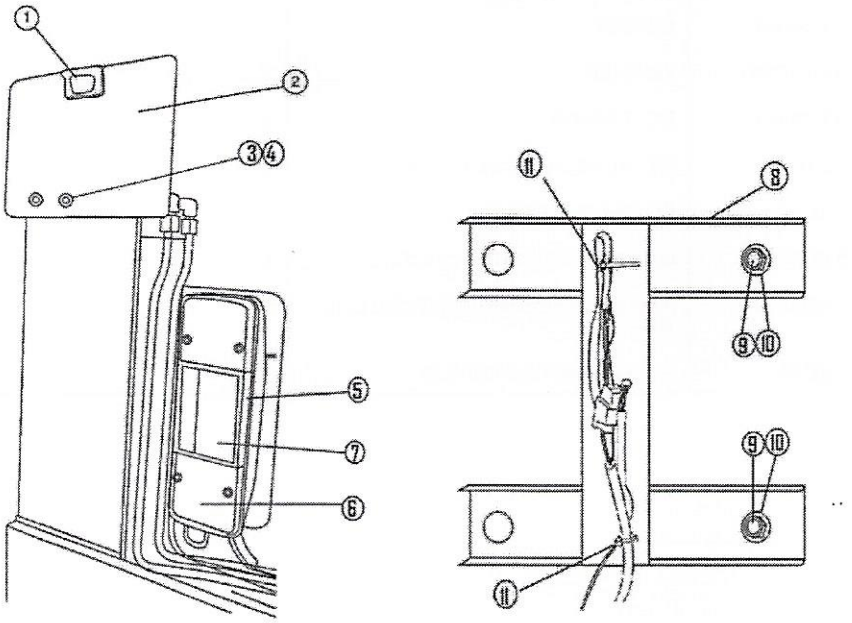
1
2
3 4
5
7
6
11
8
9 10
9 10
11

Item	Part No.	Name	Qty	Remarks
1	1D0205	NUMBER PALTE LAMP	1	
2	1D0181	NUMBER PLATE	1	
3	339124X1	HEX BOLT M8X16 GR 8.8	2	
4	390972X1	WASHER M8 - STD	2	
5	1D0194	FOUR CHAMBER TAIL LAMP-RH	1	
5	1D0233	FOUR CHAMBER TAIL LAMP-LH	1	
6	1D0141	TAIL LAMP BRAKE BULB	2	
7	1D0137	TAIL LAMP PARKING BULB	2	
8	1B0111	TAIL LAMP MTG. BRACKET	2	
9	339124X1	HEX BOLT M8X16 GR 8.8	2	
10	390972X1	WASHER M8 - STD	2	
11	1A0134	TIE STRAP	2	

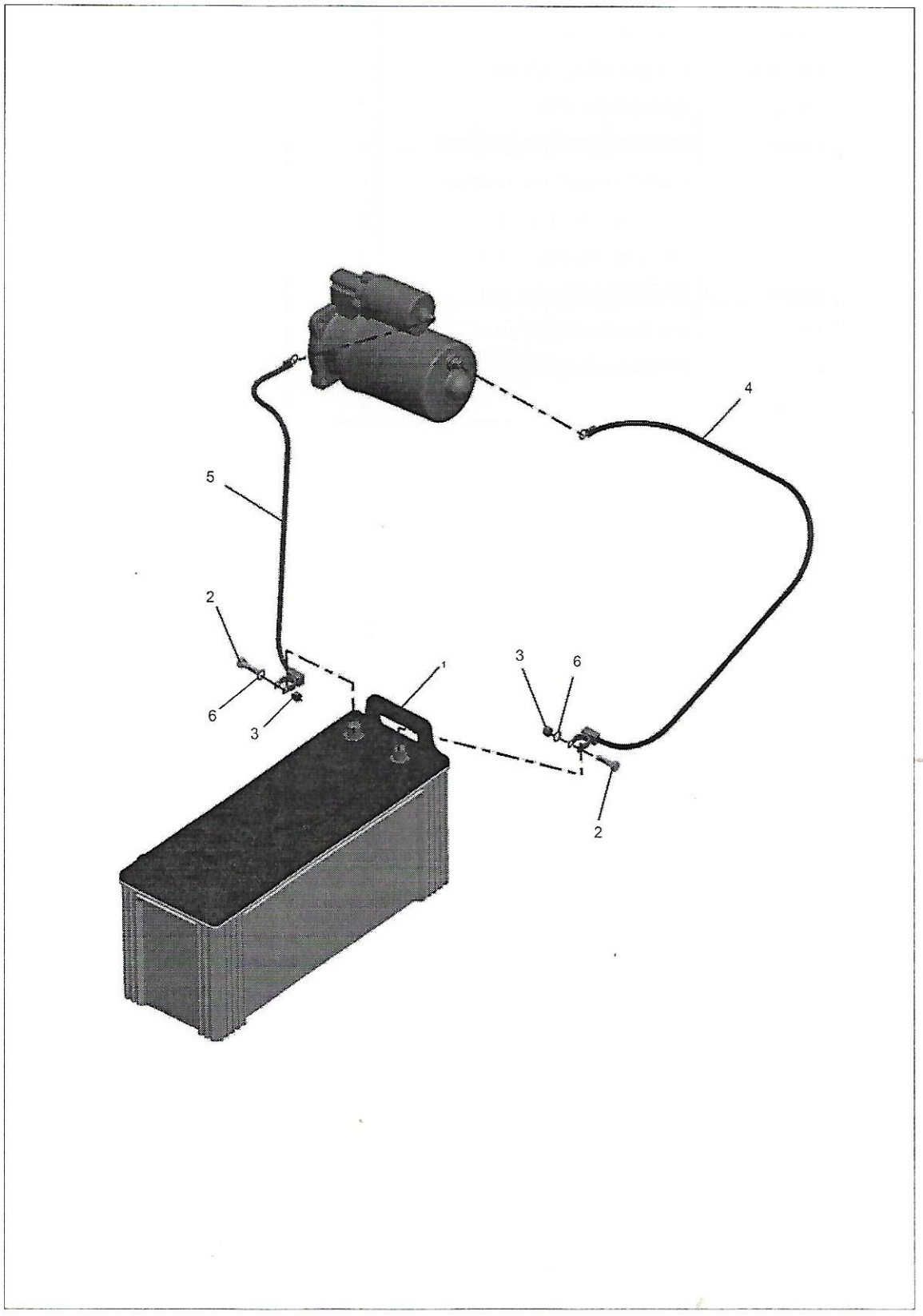
4
5
2
6
3
1
3
6
2

Item	Part No.	Name	Qty	Remarks
1	1D0001	BATTERY	1	
2	339666X1	BOLT M6-40 Z5S LK	2	
3	1441500X1	M6 NYLOC NUT	2	
4	1TD0015M91	BATTERY CABLE NEGATIVE	1	
5	1TD0014M91	Cable Assy (+ve)	1	
6	390972X1	WASHER M8 - STD	4	

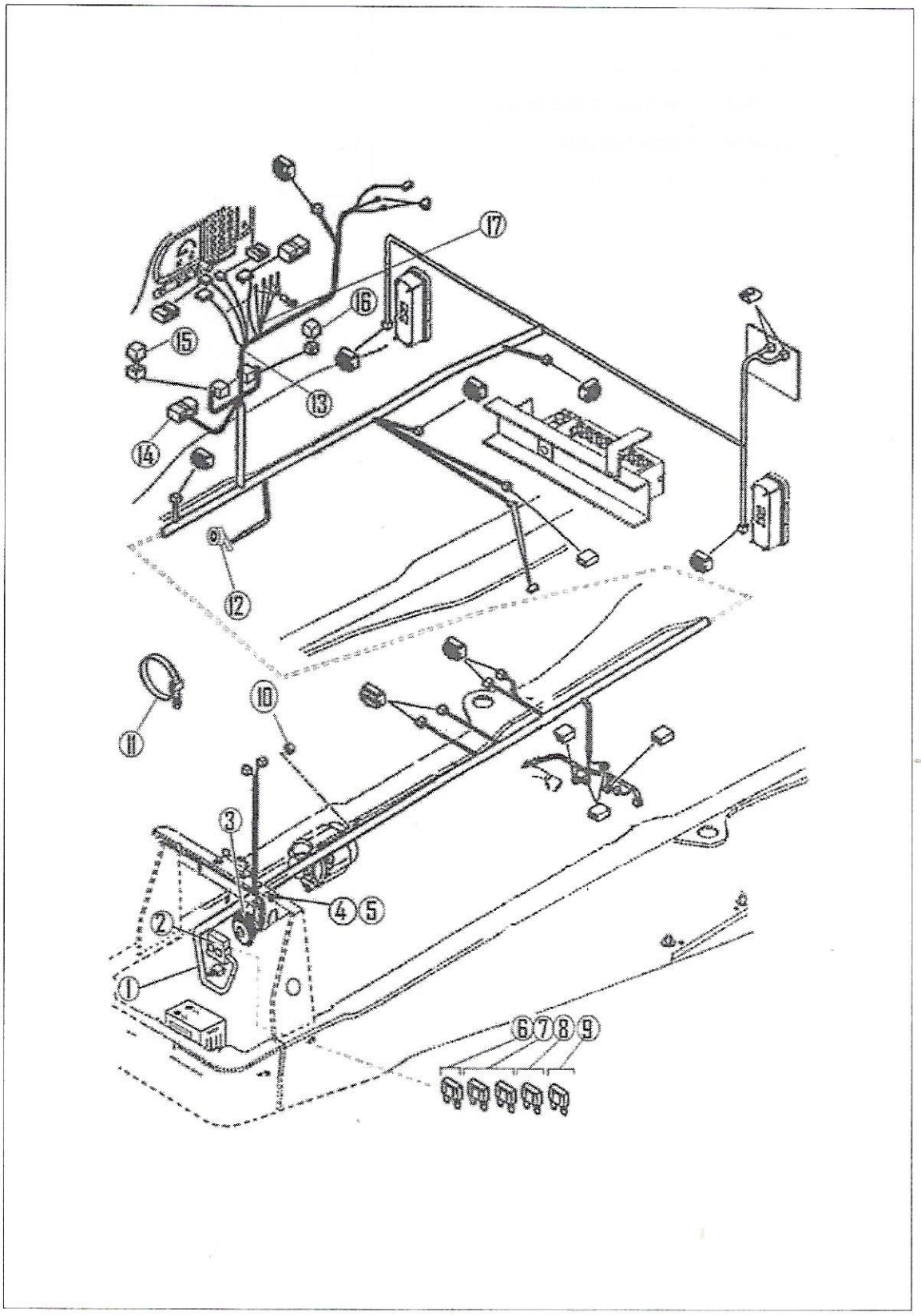
17
16
15
13
14
12
10
11
3
4
5
2
1
6
7
8
9

Item	Part No.	Name	Qty	Remarks
1	1D0352	Harness Assy	1	
2	1D0054	FUSE BOX	1	
3	6108843M1	HORN ASSY	1	
4	394367X1	NUT	1	
5	339123X1	HEX BOLT M8X20 GR 8.8	1	
6	1D0132	FUSE 100 AMPS	1	
7	1D0131	FUSE 60 AMPS	2	
8	1D0130	FUSE 40 AMPS	1	
9	1D0129	FUSE 30 AMPS	1	
10	339030X1	HEX NUT M6	1	
11	1664405M1	CABLE TIE	UAR	
12	1D0040	REVERS ALARM	1	
13	1D0363	RELAY AND FUSE BOX W/H KOEL WITH AIRCON	1	
14	1D0113	RELAY FLASHER	1	
15	1D0112	RELAY 30 AMP	1	
16	1D0108	RELAY	1	
17	1TD0004M91	SIDE CONSOLE W/H	1	

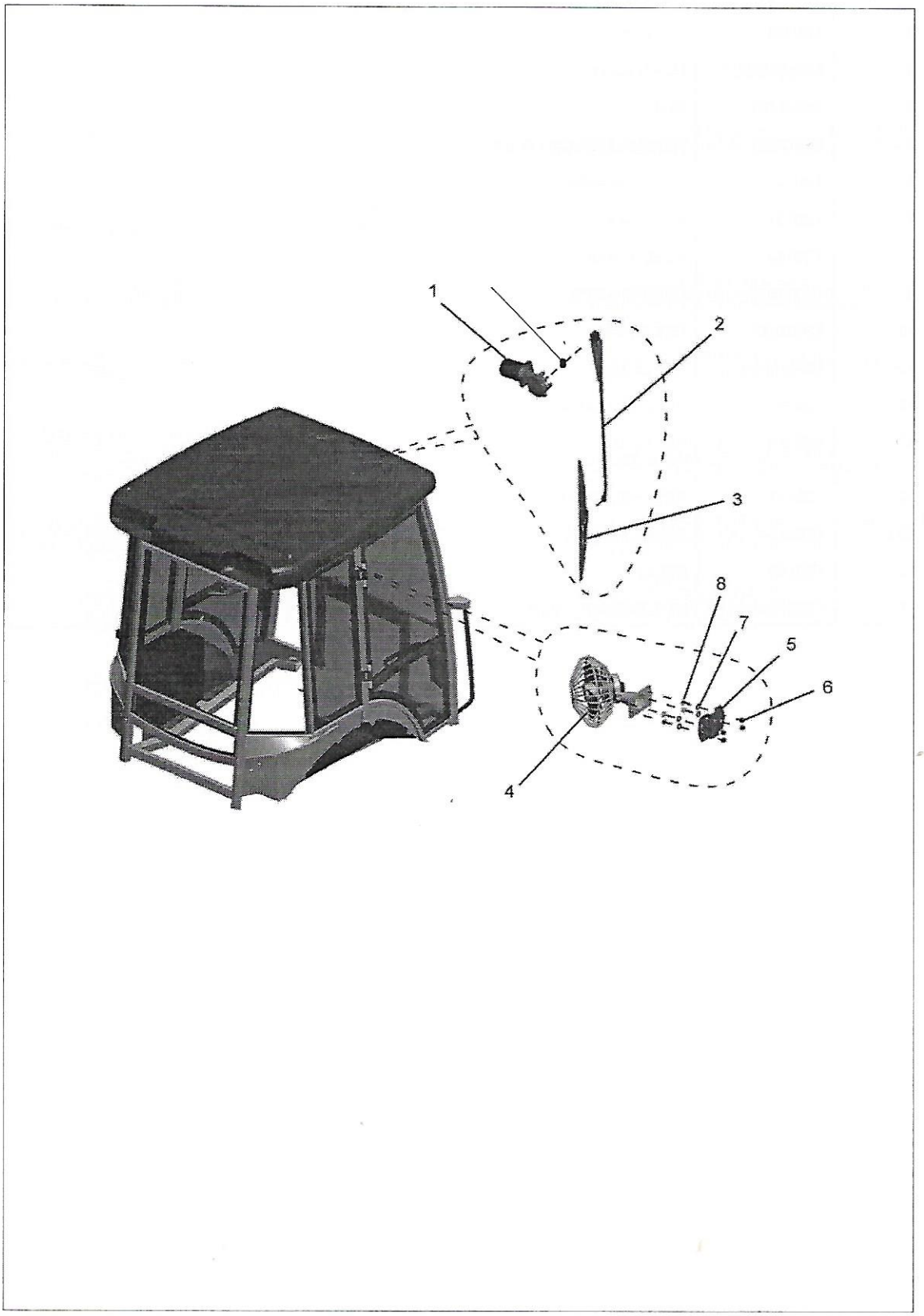
1
2
3
4
5
6
7
8

Item	Part No.	Name	Qty	Remarks
1	53102494	WIPER MOTOR ASSEMBLY	1	
1A	53108067	WIPER MOTOR	1	
2	53110016	WIPER ARM	1	
3	53108068	WIPER BLADE-17"	1	
4	1D0358	FAN	1	
5	1D0038	FAN MTG BRACKET	1	
6	1441500X1	M6 NYLOC NUT	4	
7	390971X1	WASHER M6 - STD	4	
8	359560X1	BOLT	4	
9	53102692	BOSS-WIPER MOTOR	1	

OPERATOR STATION

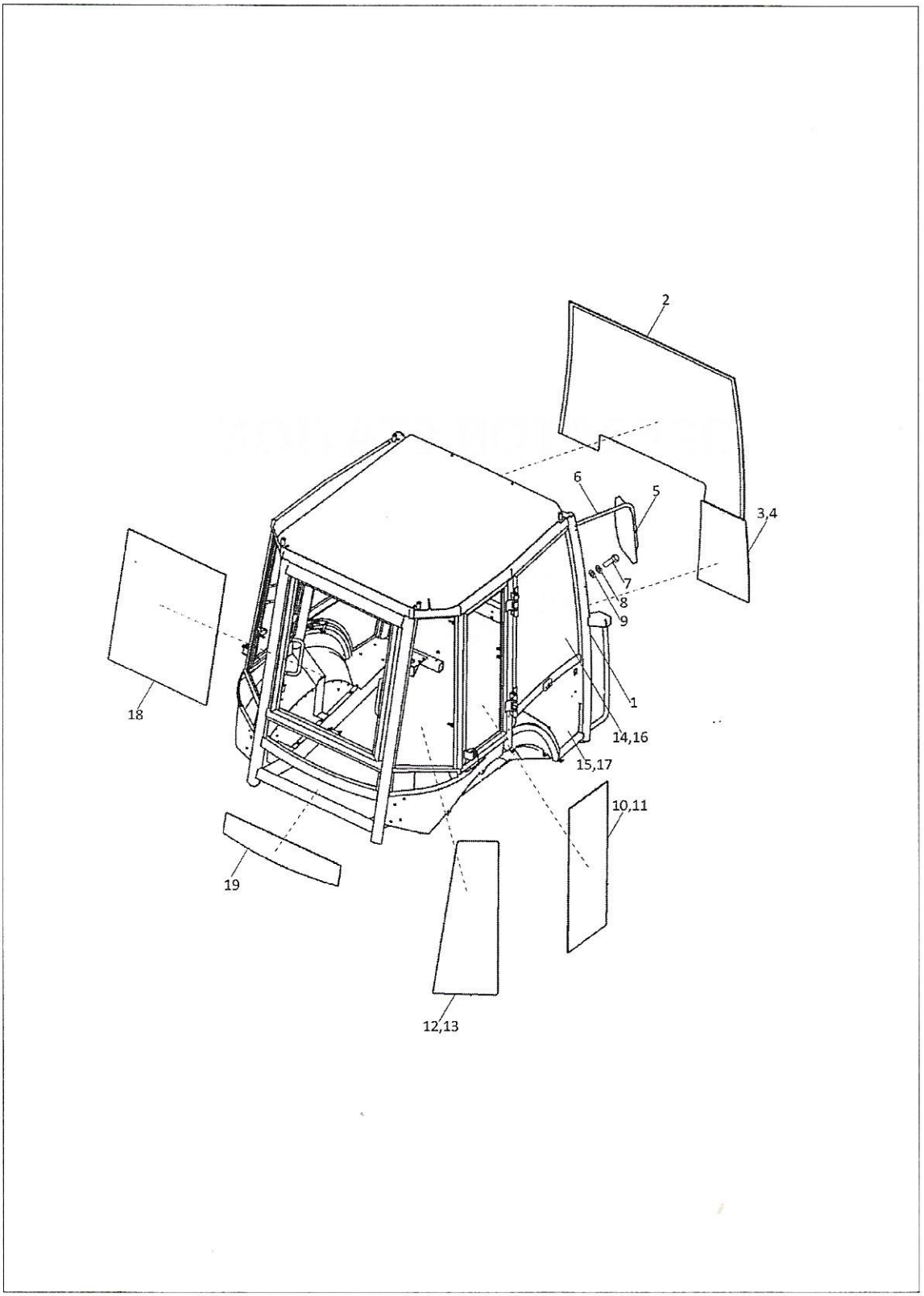
2
6
5
3,4
7
8
9
1
14,16
15,17
10,11
18
19
12,13

Item	Part No.	Name	Qty	Remarks
1	53111238	CAB ASSY INST.	1	
2	53110180	WINDSHIELD	1	
3	6099902M1	GLASS LOWER LH	1	
4	6099903M1	GLASS LOWER RH	1	
5	1D0029	REAR VIEW MIRROR	1	
5	1D0255	REAR VIEW MIRROR - L.H	1	
6	53111127	MIRROR ARM W/A-LH	1	
6	53111129	MIRROR ARM W/A -RH	1	
7	339123X1	HEX BOLT M8X20 GR 8.8	4	
8	339374X1	LOCK WASHER M8	4	
9	390972X1	WASHER M8 - STD	4	
10	53109258	SIDE WINDOW GLASS-RH	1	
11	53109438	SIDE WINDOW LH GLASS	1	
12	53109403	CURVED QUARTER GLASS RH	1	
13	53109404	CURVED QUARTER GLASS LH	1	
14	53109272	DOOR UPPER GLASS RH	1	
15	53109273	DOOR LOWER GLASS RH	1	
16	53109436	DOOR UPPER GLASS LH	1	
17	53109437	DOOR LOWER GLASS LH	1	
18	53109207	REAR WINDOW GLASS	1	
19	1TJ0005M1	REAR LOWER GLASS	1	

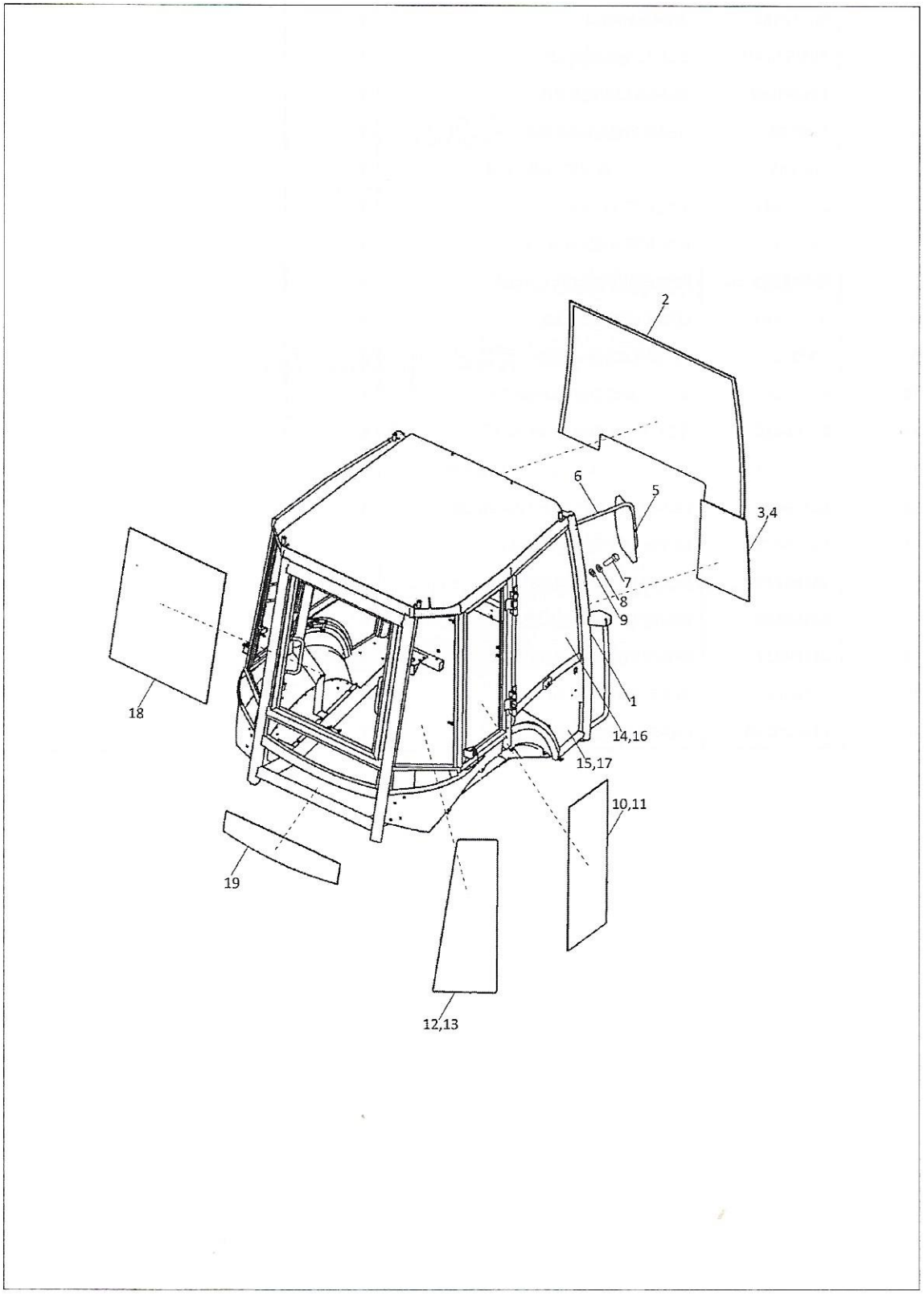
2
6
5
3,4
7
8
9
1
14,16
15,17
10,11
18
19
12,13

Item	Part No.	Name	Qty	Remarks
1	53111238	CAB ASSY INST.	1	
2	53110180	WINDSHIELD	1	
3	1J0405	GLASS LOWER RH	1	
4	1J0406	GLASS LOWER LH	1	
5	1D0029	REAR VIEW MIRROR	1	
5	1D0255	REAR VIEW MIRROR - L.H	1	
6	53111127	MIRROR ARM W/A-LH	1	
6	53111129	MIRROR ARM W/A -RH	1	
7	339123X1	HEX BOLT M8X20 GR 8.8	4	
8	339374X1	LOCK WASHER M8	4	
9	390972X1	WASHER M8 - STD	4	
10	53112153	SIDE WINDOW GLASS-RH	1	
11	53112154	SIDE WINDOW LH GLASS	1	
12	53112151	CURVED QUARTER GLASS RH	1	
13	53112152	CURVED QUARTER GLASS LH	1	
14	53112147	DOOR UPPER GLASS RH	1	
15	53112148	DOOR LOWER GLASS RH	1	
16	53112149	DOOR UPPER GLASS LH	1	
17	53112150	DOOR LOWER GLASS LH	1	
18	53112155	REAR WINDOW GLASS	1	
19	1J0397	REAR LOWER GLASS	1	

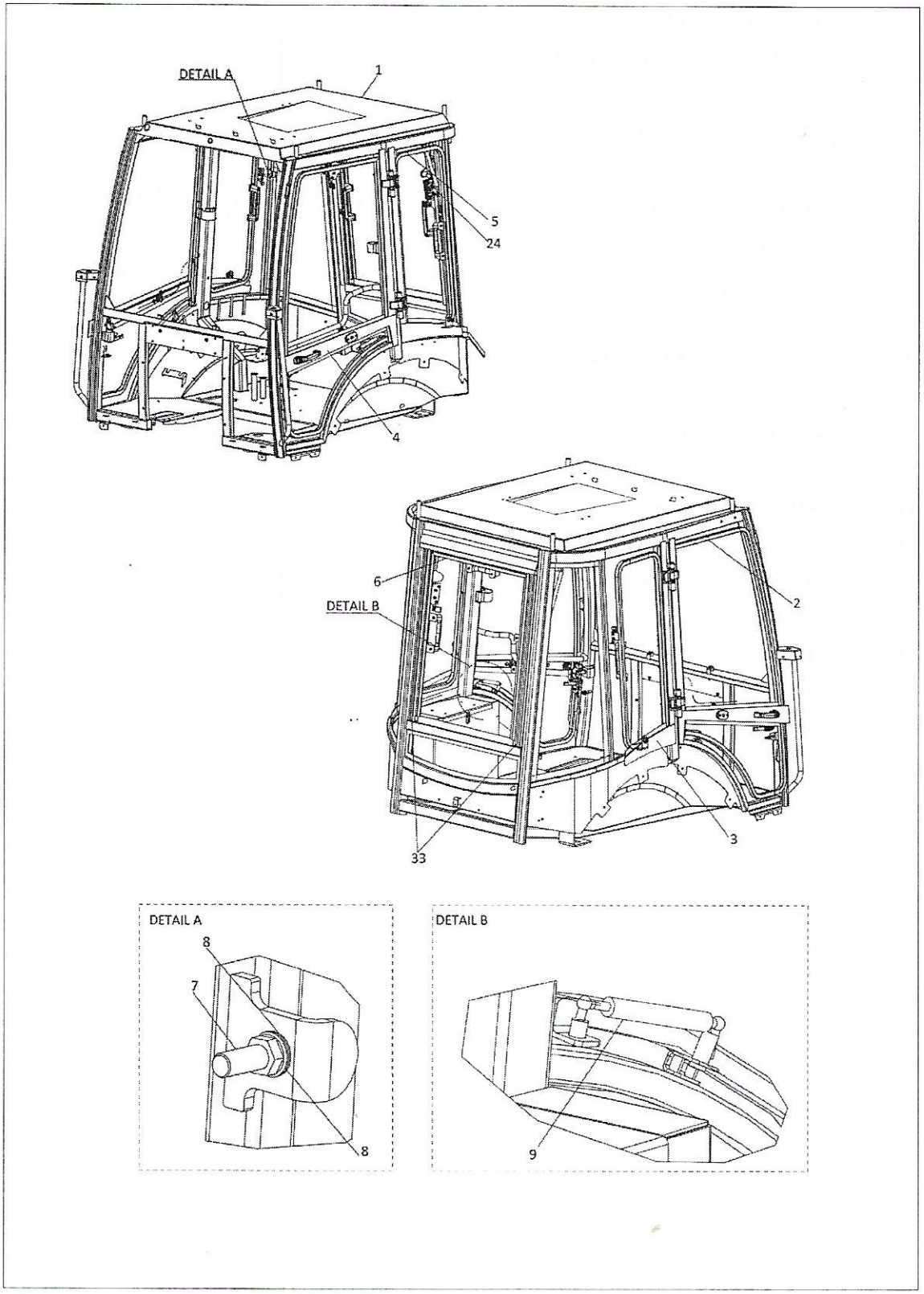
DETAIL A
1
5
24
4
6
DETAIL B
2
3
33
DETAIL A
8
7
8
DETAIL B
9

OPERATOR STATION CABIN ASSY. INSTALLATION NON AIRCON (WITH CLEAR GLASS)-CM

Item	Part No.	Name	Qty	Remarks
1	53111232	CAB WELDED-CM NON AIRCON	1	
2	53113195	ENTRY DOOR RH INST.	1	
3	53113197	EMERGENCY WINDOW RH INST.	1	
4	53113196	ENTRY DOOR LH INST.	1	
5	53113198	EMERGENCY WINDOW LH INST.	1	
6	53113199	REAR WINDOW INST.	1	
7	53108874	STRIKER BOLT (EMERGENCY WINDOW)	2	
8	53113322	WASHER M8 - STD	8	
9	1J0220	ENTRY DOOR GAS STRUT (DUMMY)	2	
10	53108756	HINGE PIN	4	
11	53108754	HINGE BUSH SMALL	8	
12	53108755	HINGE BUSH LARGE	8	
13	53113323	WASHER	4	
14	3006693X1	RETAINING RING EXT.	4	
15	53109212	SLIDE LINK ASSY LH	1	
16	53109213	SLIDE LINK ASSY RH	1	
17	53109202	STRIKER BOLT (REAR WINDOW)	4	
18	53101889	WASHER M10 - STD	2	
19	3521461M1	SAFETY FASTNER COMPOSITE	2	
20	53113169	HEX BOLT M16X60 GRADE 8.8	2	
21	53113170	WASHER M16 - STD	2	
22	53113171	M16 NYLOC NUT	2	
23	1J0259	STRAP CAB DOOR	2	
24	392309X1	THIN NUT	4	
25	53113172	WASHER	2	
26	53108869	STRKIER BOLT (ENTRY DOOR)	2	
27	53113332	HEX NUT M12	2	
28	53110100	REAR DOOR GAS STRUT (DUMMY)	2	
29	53113331	WASHER M12 - CHAM	2	
30	53112580	DOOR STRAP PIN	4	
31	1440522X1	RETAINING RING EXT.	4	
32	53112586	BEADING - REAR WINDOW	1	
33	53112585	BEADING - SLIDING RAIL	2	
34	53113348	NYLON BUSH	2	

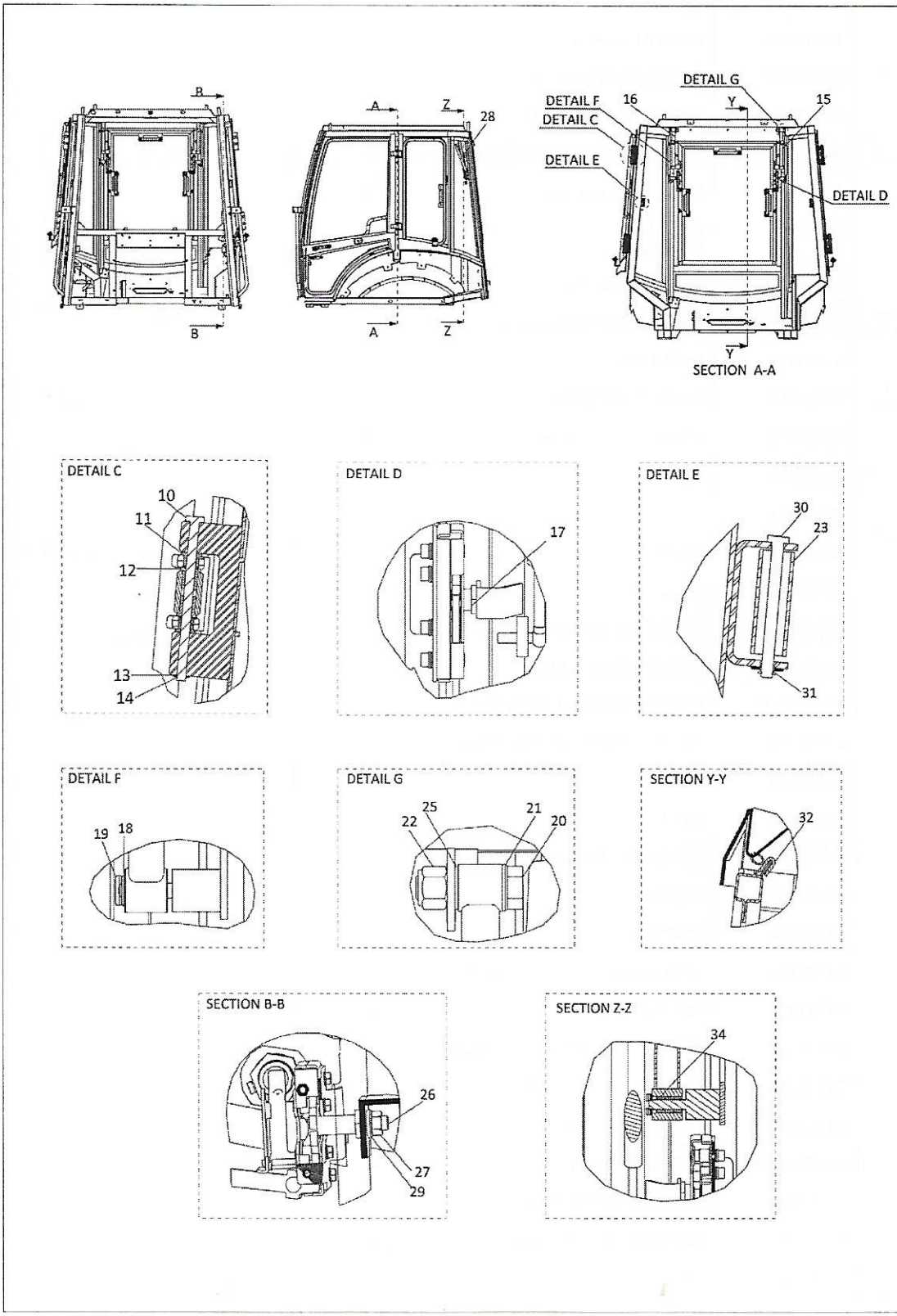
B
B
A
Z
28
A
Z
DETAIL G
DETAIL F
16
Y
15
DETAIL C
DETAIL E
DETAIL D
Y
SECTION A-A
DETAIL C
10
11
12
13
14
DETAIL D
17
DETAIL E
30
23
31
DETAIL F
19
18
DETAIL G
25
22
21
20
SECTION Y-Y
32
SECTION B-B
26
27
29
SECTION Z-Z
34

OPERATOR STATION CABIN ASSY. INSTALLATION NON AIRCON (WITH CLEAR GLASS)-CM

Item	Part No.	Name	Qty	Remarks
1	53111232	CAB WELDED-CM NON AIRCON	1	
2	53113195	ENTRY DOOR RH INST.	1	
3	53113197	EMERGENCY WINDOW RH INST.	1	
4	53113196	ENTRY DOOR LH INST.	1	
5	53113198	EMERGENCY WINDOW LH INST.	1	
6	53113199	REAR WINDOW INST.	1	
7	53108874	STRIKER BOLT (EMERGENCY WINDOW)	2	
8	53113322	WASHER M8 - STD	8	
9	1J0220	ENTRY DOOR GAS STRUT (DUMMY)	2	
10	53108756	HINGE PIN	4	
11	53108754	HINGE BUSH SMALL	8	
12	53108755	HINGE BUSH LARGE	8	
13	53113323	WASHER	4	
14	3006693X1	RETAINING RING EXT.	4	
15	53109212	SLIDE LINK ASSY LH	1	
16	53109213	SLIDE LINK ASSY RH	1	
17	53109202	STRIKER BOLT (REAR WINDOW)	4	
18	53101889	WASHER M10 - STD	2	
19	3521461M1	SAFETY FASTNER COMPOSITE	2	
20	53113169	HEX BOLT M16X60 GRADE 8.8	2	
21	53113170	WASHER M16 - STD	2	
22	53113171	M16 NYLOC NUT	2	
23	1J0259	STRAP CAB DOOR	2	
24	392309X1	THIN NUT	4	
25	53113172	WASHER	2	
26	53108869	STRKIER BOLT (ENTRY DOOR)	2	
27	53113332	HEX NUT M12	2	
28	53110100	REAR DOOR GAS STRUT (DUMMY)	2	
29	53113331	WASHER M12 - CHAM	2	
30	53112580	DOOR STRAP PIN	4	
31	1440522X1	RETAINING RING EXT.	4	
32	53112586	BEADING - REAR WINDOW	1	
33	53112585	BEADING - SLIDING RAIL	2	
34	53113348	NYLON BUSH	2	

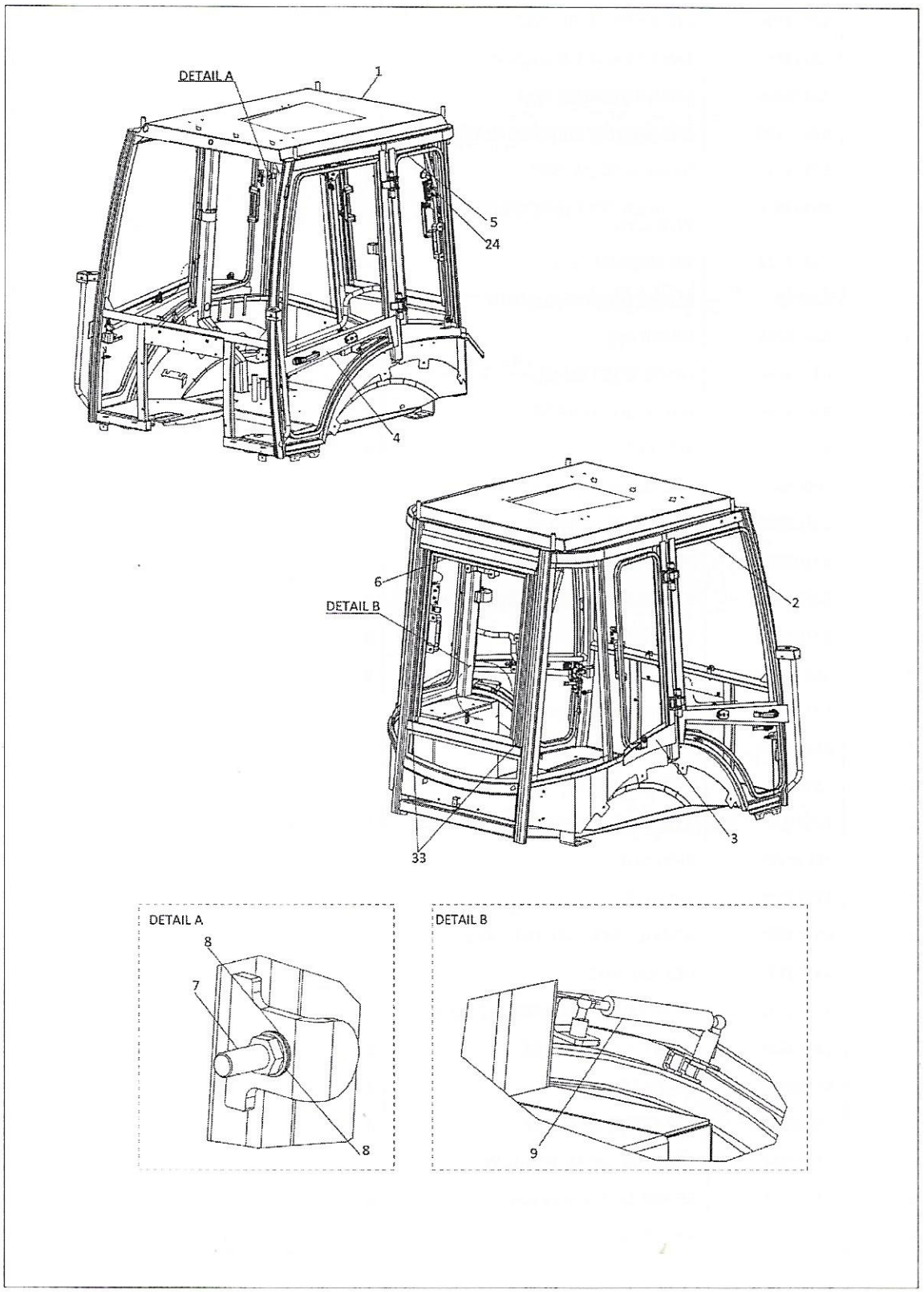
DETAIL A
1
5
24
4
6
DETAIL B
2
3
33
DETAIL A
8
7
8
DETAIL B
9

OPERATOR STATION CABIN ASSY. INSTALLATION NON AIRCON (WITH TINTED GLASS)-CM

Item	Part No.	Name	Qty	Remarks
1	53111232	CAB WELDED-CM NON AIRCON	1	
2	53111462	ENTRY DOOR RH INST.	1	
3	53111463	EMERGENCY WINDOW RH INST.	1	
4	53111464	ENTRY DOOR LH INST.	1	
5	53111465	EMERGENCY WINDOW LH INST.	1	
6	53111466	REAR WINDOW INST.	1	
7	53108874	STRIKER BOLT (EMERGENCY WINDOW)	2	
8	53113322	WASHER M8 - STD	8	
9	1J0220	ENTRY DOOR GAS STRUT (DUMMY)	2	
10	53108756	HINGE PIN	4	
11	53108754	HINGE BUSH SMALL	8	
12	53108755	HINGE BUSH LARGE	8	
13	53113323	WASHER	4	
14	3006693X1	RETAINING RING EXT.	4	
15	53109212	SLIDE LINK ASSY LH	1	
16	53109213	SLIDE LINK ASSY RH	1	
17	53109202	STRIKER BOLT (REAR WINDOW)	4	
18	53101889	WASHER M10 - STD	2	
19	3521461M1	SAFETY FASTNER COMPOSITE	2	
20	53113169	HEX BOLT M16X60 GRADE 8.8	2	
21	53113170	WASHER M16 - STD	2	
22	53113171	M16 NYLOC NUT	2	
23	1J0259	STRAP CAB DOOR	2	
24	392309X1	THIN NUT	4	
25	53113172	WASHER	2	
26	53108869	STRKIER BOLT (ENTRY DOOR)	2	
27	53113332	HEX NUT M12	2	
28	53110100	REAR DOOR GAS STRUT (DUMMY)	2	
29	53113331	WASHER M12 - CHAM	2	
30	53112580	DOOR STRAP PIN	4	
31	1440522X1	RETAINING RING EXT.	4	
32	53112586	BEADING - REAR WINDOW	1	
33	53112585	BEADING - SLIDING RAIL	2	
34	53113348	NYLON BUSH	2	

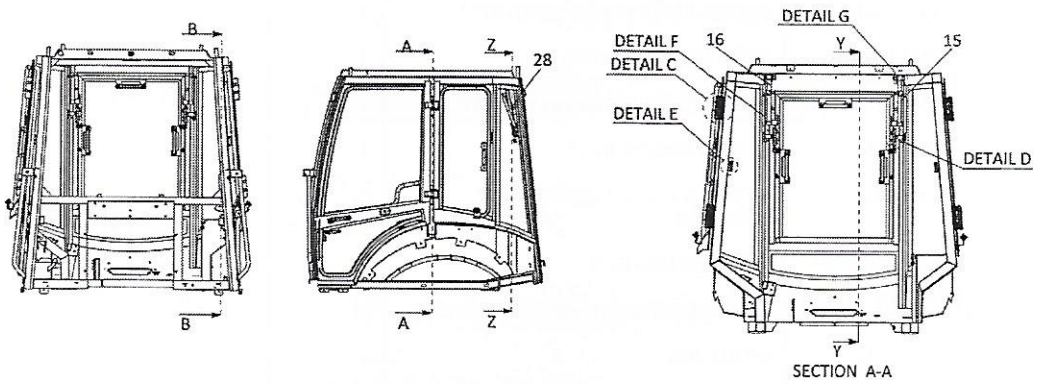
B
B
A
Z
28
A
Z
DETAIL G
DETAIL F
16
Y
15
DETAIL C
DETAIL E
DETAIL D
Y
SECTION A-A

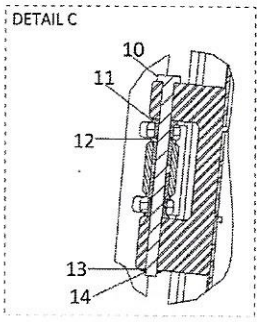
DETAIL C
10
11
12
13
14

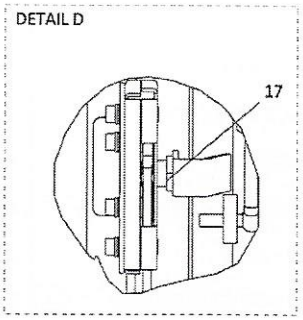
DETAIL D
17

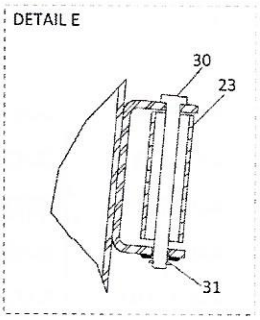
DETAIL E
30
23
31

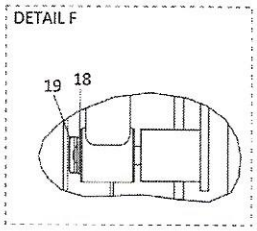
DETAIL F
19
18

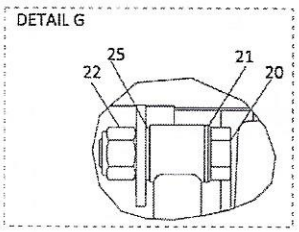
DETAIL G
25
22
21
20

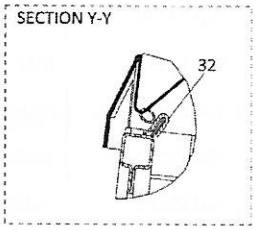
SECTION Y-Y
32

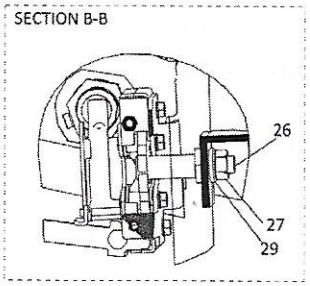
SECTION B-B
26
27
29

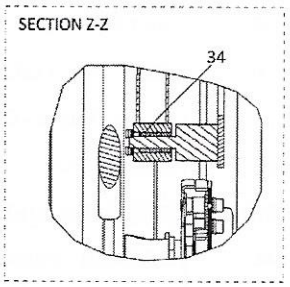
SECTION Z-Z
34

OPERATOR STATION CABIN ASSY. INSTALLATION NON AIRCON (WITH TINTED GLASS)-CM

Item	Part No.	Name	Qty	Remarks
1	53111232	CAB WELDED-CM NON AIRCON	1	
2	53111462	ENTRY DOOR RH INST.	1	
3	53111463	EMERGENCY WINDOW RH INST.	1	
4	53111464	ENTRY DOOR LH INST.	1	
5	53111465	EMERGENCY WINDOW LH INST.	1	
6	53111466	REAR WINDOW INST.	1	
7	53108874	STRIKER BOLT (EMERGENCY WINDOW)	2	
8	53113322	WASHER M8 - STD	8	
9	1J0220	ENTRY DOOR GAS STRUT (DUMMY)	2	
10	53108756	HINGE PIN	4	
11	53108754	HINGE BUSH SMALL	8	
12	53108755	HINGE BUSH LARGE	8	
13	53113323	WASHER	4	
14	3006693X1	RETAINING RING EXT.	4	
15	53109212	SLIDE LINK ASSY LH	1	
16	53109213	SLIDE LINK ASSY RH	1	
17	53109202	STRIKER BOLT (REAR WINDOW)	4	
18	53101889	WASHER M10 - STD	2	
19	3521461M1	SAFETY FASTNER COMPOSITE	2	
20	53113169	HEX BOLT M16X60 GRADE 8.8	2	
21	53113170	WASHER M16 - STD	2	
22	53113171	M16 NYLOC NUT	2	
23	1J0259	STRAP CAB DOOR	2	
24	392309X1	THIN NUT	4	
25	53113172	WASHER	2	
26	53108869	STRKIER BOLT (ENTRY DOOR)	2	
27	53113332	HEX NUT M12	2	
28	53110100	REAR DOOR GAS STRUT (DUMMY)	2	
29	53113331	WASHER M12 - CHAM	2	
30	53112580	DOOR STRAP PIN	4	
31	1440522X1	RETAINING RING EXT.	4	
32	53112586	BEADING - REAR WINDOW	1	
33	53112585	BEADING - SLIDING RAIL	2	
34	53113348	NYLON BUSH	2	

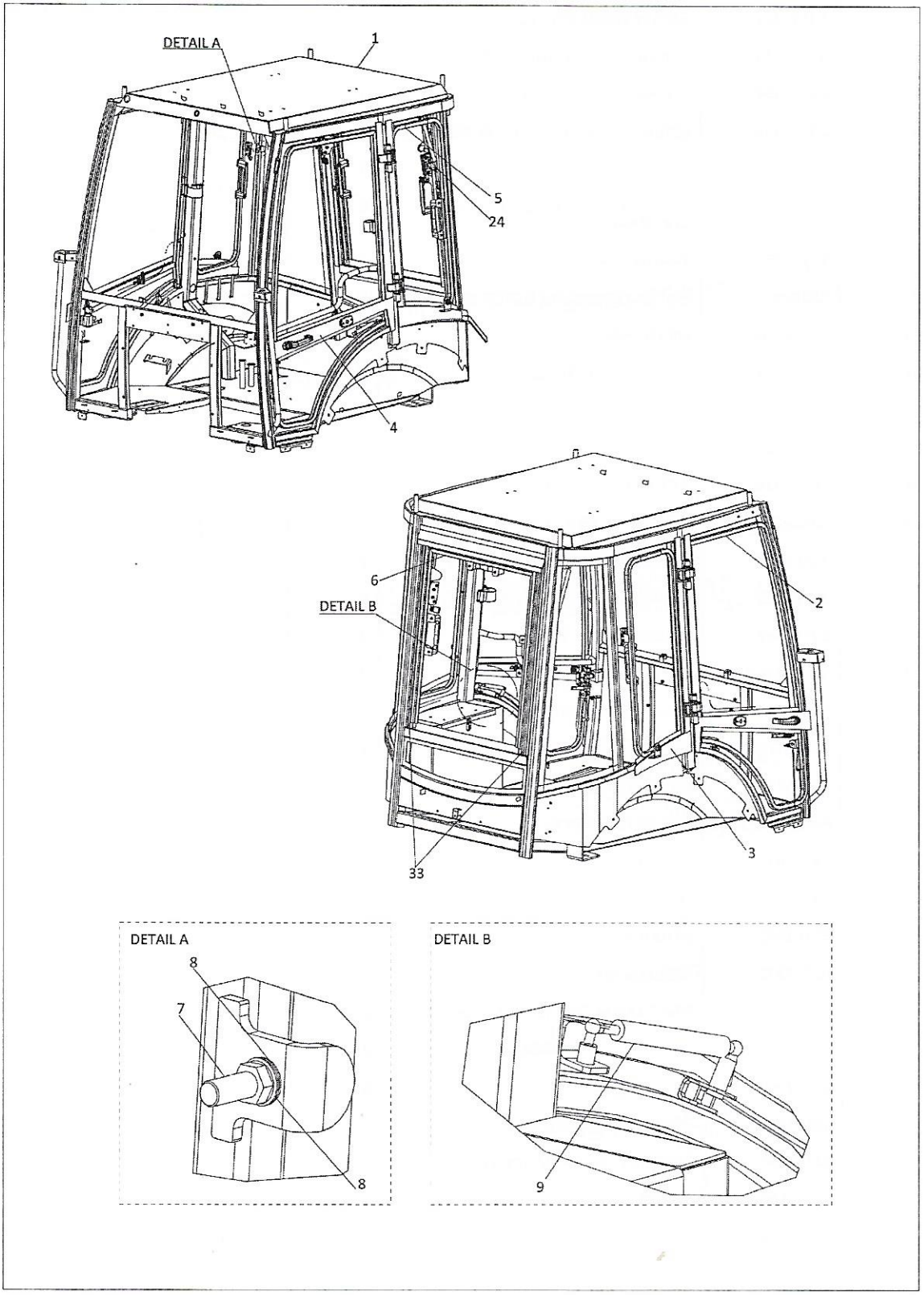
DETAIL A
1
5
24
4
6
DETAIL B
2
3
33
DETAIL A
8
7
8
DETAIL B
9

Item	Part No.	Name	Qty	Remarks
1	53110240	CAB WELDED STD	1	
2	53111462	ENTRY DOOR RH INST.	1	
3	53111463	EMERGENCY WINDOW RH INST.	1	
4	53111464	ENTRY DOOR LH INST.	1	
5	53111465	EMERGENCY WINDOW LH INST.	1	
6	53111466	REAR WINDOW INST.	1	
7	53108874	STRIKER BOLT (EMERGENCY WINDOW)	2	
8	390972X1	WASHER M8 - STD	8	
9	1J0220	ENTRY DOOR GAS STRUT (DUMMY)	2	
10	53108756	HINGE PIN	4	
11	53108754	HINGE BUSH SMALL	8	
12	53108755	HINGE BUSH LARGE	8	
13	391579X1	WASHER	4	
14	3006693X1	RETAINING RING EXT.	4	
15	53109212	SLIDE LINK ASSY LH	1	
16	53109213	SLIDE LINK ASSY RH	1	
17	53109202	STRIKER BOLT (REAR WINDOW)	4	
18	390734X1	WASHER M10-STD	2	
19	3521461M1	SAFETY FASTNER COMPOSITE	2	
20	339881X1	HEX BOLT M16x60 GRADE 8.8	2	
21	1441664X1	WASHER M16 - STD	2	
22	1442739X1	M16 NYLOC NUT	2	
23	1J0259	STRAP CAB DOOR	2	
24	392309X1	THIN NUT	2	
25	1443769X1	WASHER	2	
26	53108869	STRKIER BOLT (ENTRY DOOR)	2	
27	3019407X1	HEX HEAD NUT M12	2	
28	53110100	REAR DOOR GAS STRUT (DUMMY)	2	
29	385363X1	WASHER M12 - CHAM	2	
30	53112580	DOOR STRAP PIN	4	
31	1440522X1	RETAINING RING EXT.	4	
32	53112586	BEADING - REAR WINDOW	1	
33	53112585	BEADING - SLIDING RAIL	2	
34	1TJ0166M1	NYLON BUSH	6	

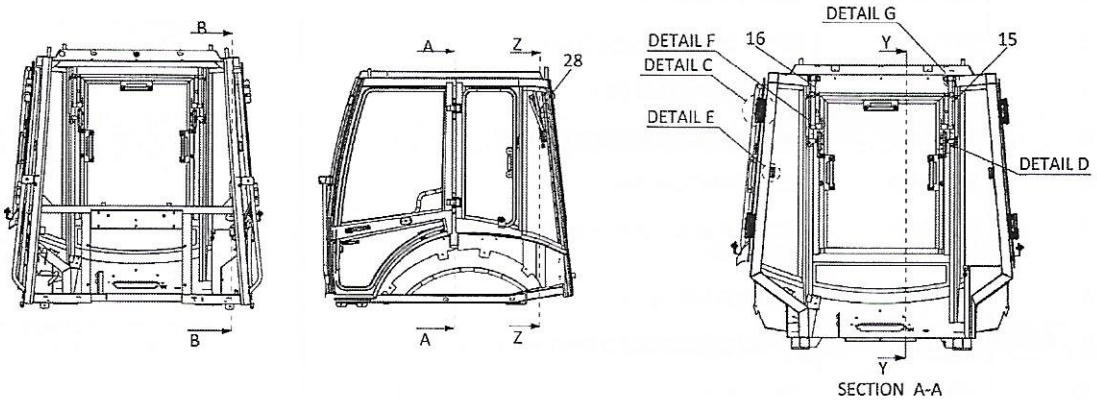
B
B
A
Z
28
A
Z
DETAIL G
DETAIL F
16
Y
15
DETAIL C
DETAIL E
DETAIL D
Y
SECTION A-A

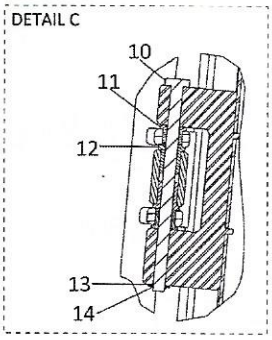
DETAIL C
10
11
12
13
14

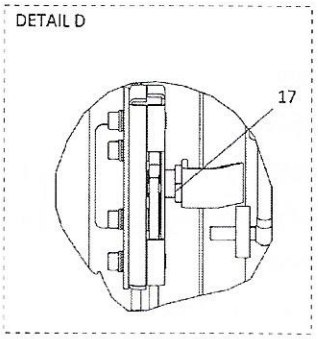
DETAIL D
17

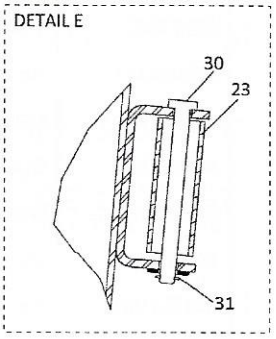
DETAIL E
30
23
31

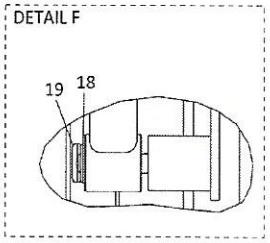
DETAIL F
19
18

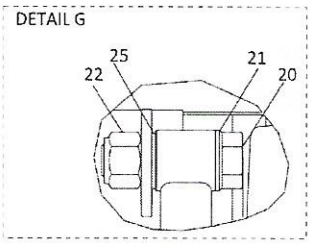
DETAIL G
25
22
21
20

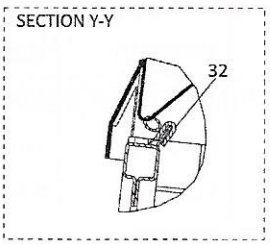
SECTION Y-Y
32

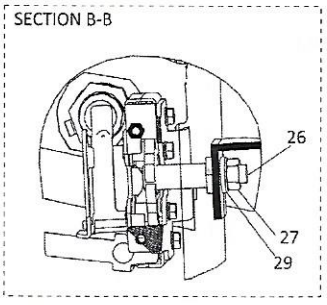
SECTION B-B
26
27
29

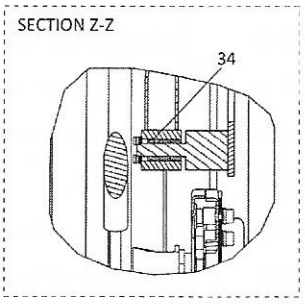
SECTION Z-Z
34

Item	Part No.	Name	Qty	Remarks
1	53110240	CAB WELDED STD	1	
2	53111462	ENTRY DOOR RH INST.	1	
3	53111463	EMERGENCY WINDOW RH INST.	1	
4	53111464	ENTRY DOOR LH INST.	1	
5	53111465	EMERGENCY WINDOW LH INST.	1	
6	53111466	REAR WINDOW INST.	1	
7	53108874	STRIKER BOLT (EMERGENCY WINDOW)	2	
8	390972X1	WASHER M8 - STD	8	
9	1J0220	ENTRY DOOR GAS STRUT (DUMMY)	2	
10	53108756	HINGE PIN	4	
11	53108754	HINGE BUSH SMALL	8	
12	53108755	HINGE BUSH LARGE	8	
13	391579X1	WASHER	4	
14	3006693X1	RETAINING RING EXT.	4	
15	53109212	SLIDE LINK ASSY LH	1	
16	53109213	SLIDE LINK ASSY RH	1	
17	53109202	STRIKER BOLT (REAR WINDOW)	4	
18	390734X1	WASHER M10-STD	2	
19	3521461M1	SAFETY FASTNER COMPOSITE	2	
20	339881X1	HEX BOLT M16x60 GRADE 8.8	2	
21	1441664X1	WASHER M16 - STD	2	
22	1442739X1	M16 NYLOC NUT	2	
23	1J0259	STRAP CAB DOOR	2	
24	392309X1	THIN NUT	2	
25	1443769X1	WASHER	2	
26	53108869	STRKIER BOLT (ENTRY DOOR)	2	
27	3019407X1	HEX HEAD NUT M12	2	
28	53110100	REAR DOOR GAS STRUT (DUMMY)	2	
29	385363X1	WASHER M12 - CHAM	2	
30	53112580	DOOR STRAP PIN	4	
31	1440522X1	RETAINING RING EXT.	4	
32	53112586	BEADING - REAR WINDOW	1	
33	53112585	BEADING - SLIDING RAIL	2	
34	1TJ0166M1	NYLON BUSH	6	

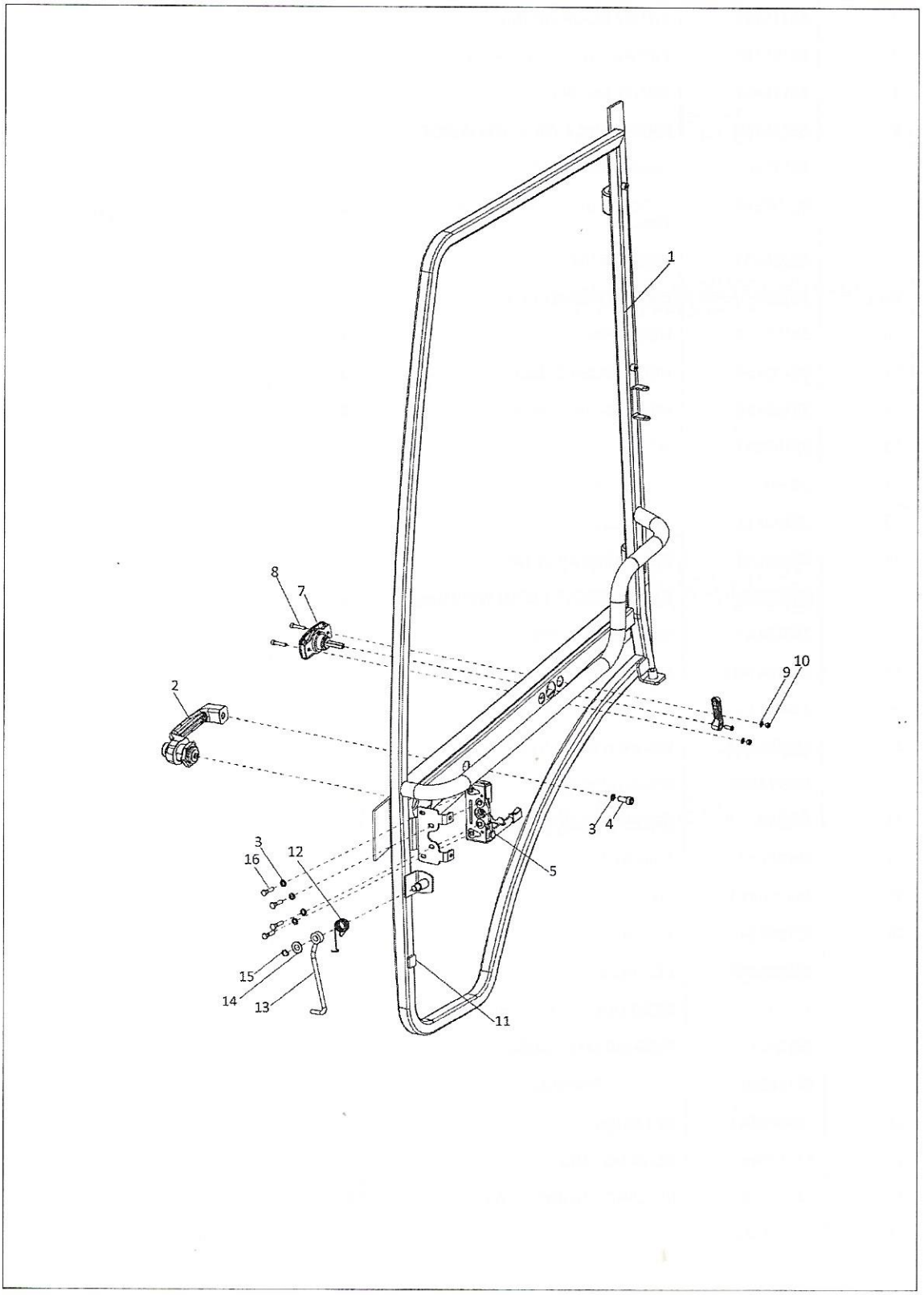
1
2
3
4
5
7
8
9
10
11
12
13
14
15
16

Item	Part No.	Name	Qty	Remarks
1	53109418	DOOR W/A LH	1	
2	50111365	ACTUATOR	1	
3	390971X1	WASHER M6 - STD	5	
4	391989X1	MACHINE SCREW HEX SOCKET CAP HDM8x20	1	
5	53108830	ENTRY DOOR LATCH LH	1	
7	53108753	DOOR LOCK BACK	1	
8	3009274X1	HEX SOCKET HEAD CAP SCREW M5X25	2	
9	390469X1	WASHER M5 - STD	2	
10	390995X1	HEX NUT M5	2	
11	53108751	STAY BAR REST PAD	1	
12	53108750	SPRING LH	1	
13	53108791	STAY BAR SUB ASSY	1	
14	1441516X1	WASHER	1	
15	339422X1	RETAINING RING EXT.	1	
16	339804X1	BOLT M6X25	4	

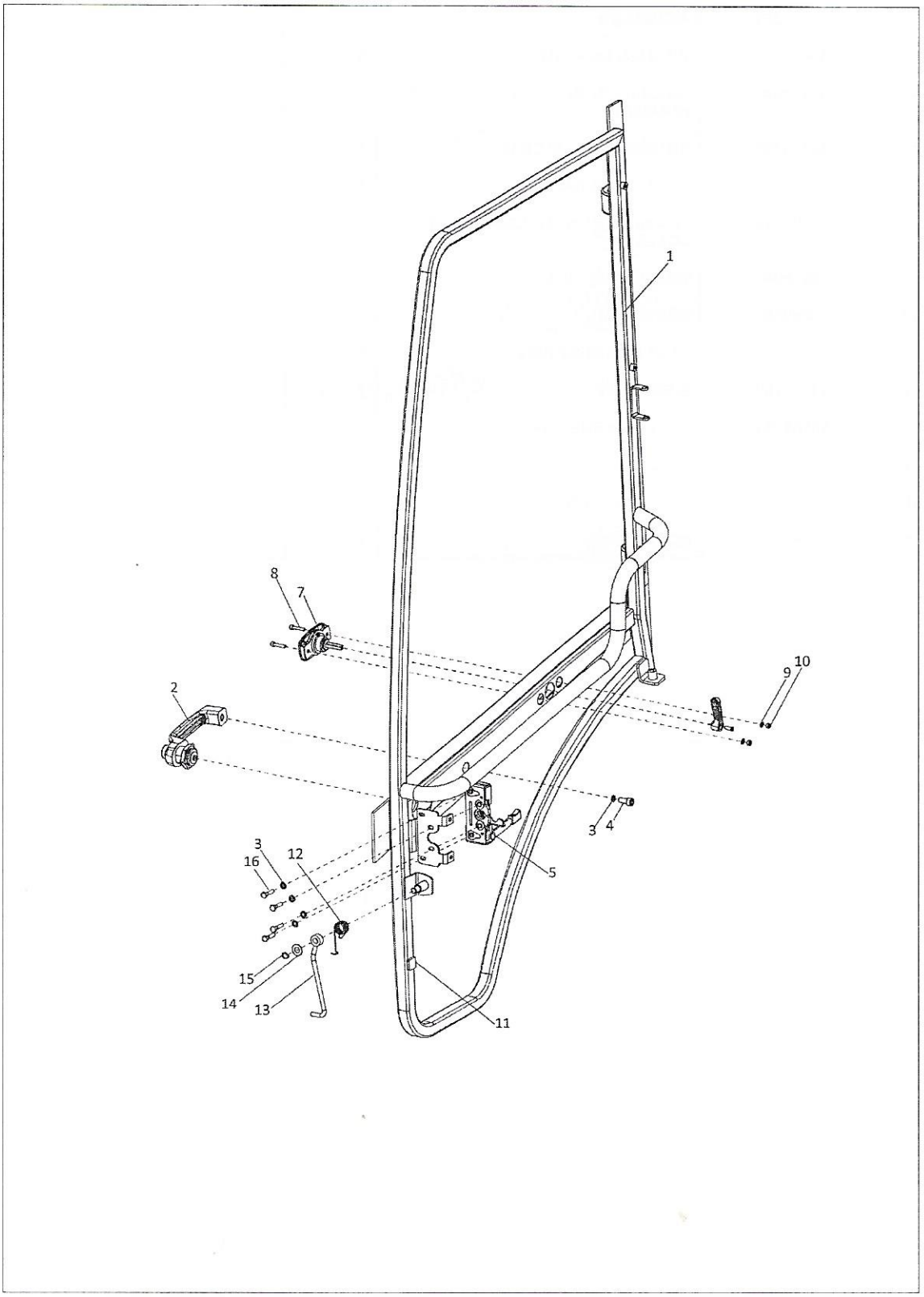
1
2
3
4
5
7
8
9
10
11
12
13
14
15
16

Item	Part No.	Name	Qty	Remarks
1	53109225	DOOR W/A RH	1	
2	50111365	ACTUATOR	1	
3	390971X1	WASHER M6 - STD	5	
4	391989X1	MACHINE SCREW HEX SOCKET CAP HDM8x20	1	
5	53109286	ENTRY DOOR LATCH RH	1	
7	53108753	DOOR LOCK BACK	1	
8	3009274X1	HEX SOCKET HEAD CAP SCREW M5X25	2	
9	390469X1	WASHER M5 - STD	2	
10	390995X1	HEX NUT M5	2	
11	53108751	STAY BAR REST PAD	1	
12	53109506	SPRING RH	1	
13	53108791	STAY BAR SUB ASSY	1	
14	1441516X1	WASHER	1	
15	339422X1	RETAINING RING EXT.	1	
16	339804X1	BOLT M6X25	4	

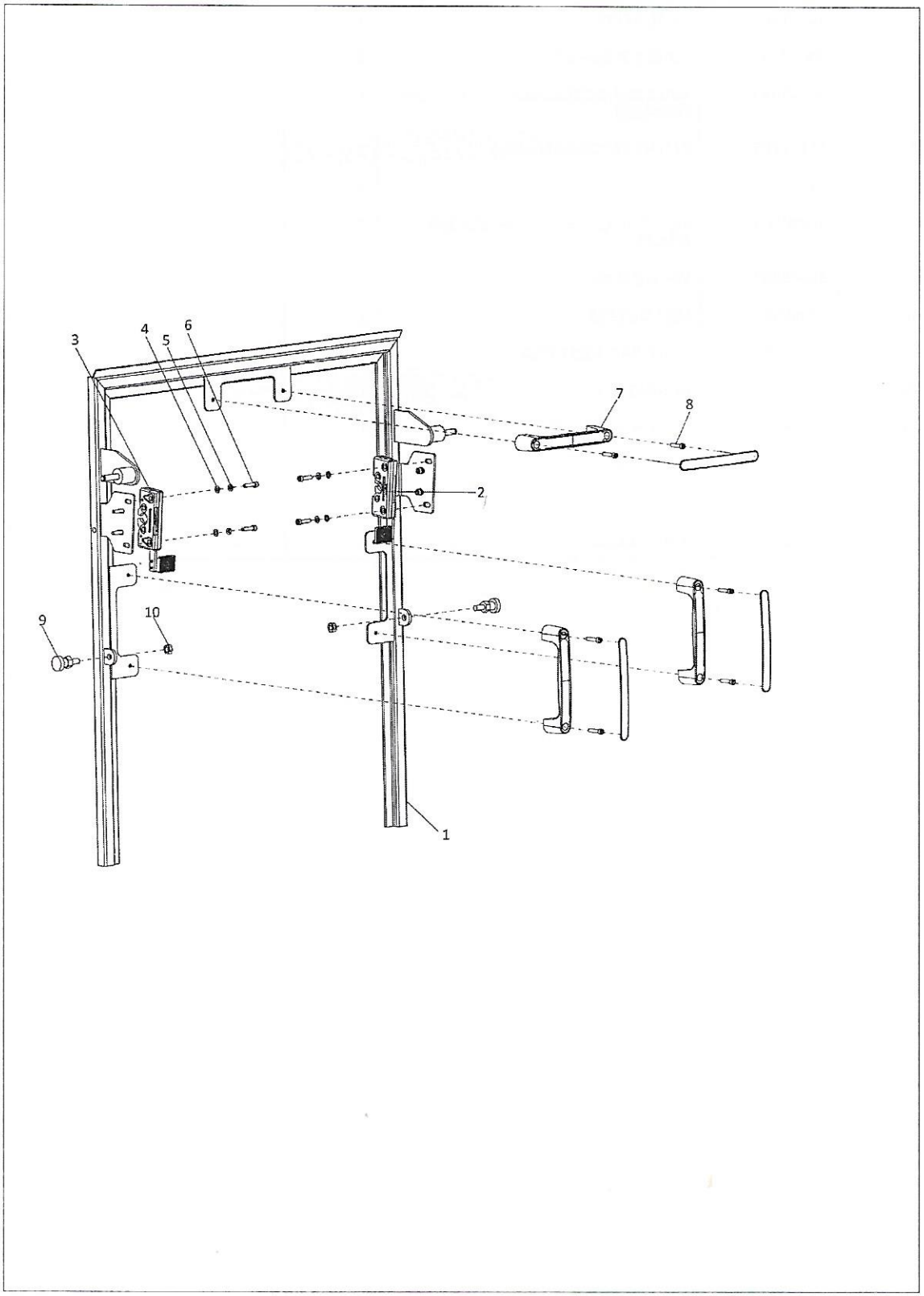
3
4
5
6
7
8
2
9
10
1

Item	Part No.	Name	Qty	Remarks
1	53109189	REAR WINDOW W.A	1	
2	53109291	RH LATCH ASSEMBLY	1	
3	53109292	REAR WINDOW ROTARY	1	
4	390971X1	WASHER M6 - STD	8	
5	339375X1	WASHER M6 LOCK Z	8	
6	3009282X1	HEX SOCKET HEAD CAP SCREW M6X25	8	
7	50110325	HANDLE	3	
8	3009283X1	HEX SOCKET HEAD CAP SCREW M6X30	6	
9	1TJ0167M1	BEARING ASSY	2	
10	3009693X1	HEX NUT M10	2	

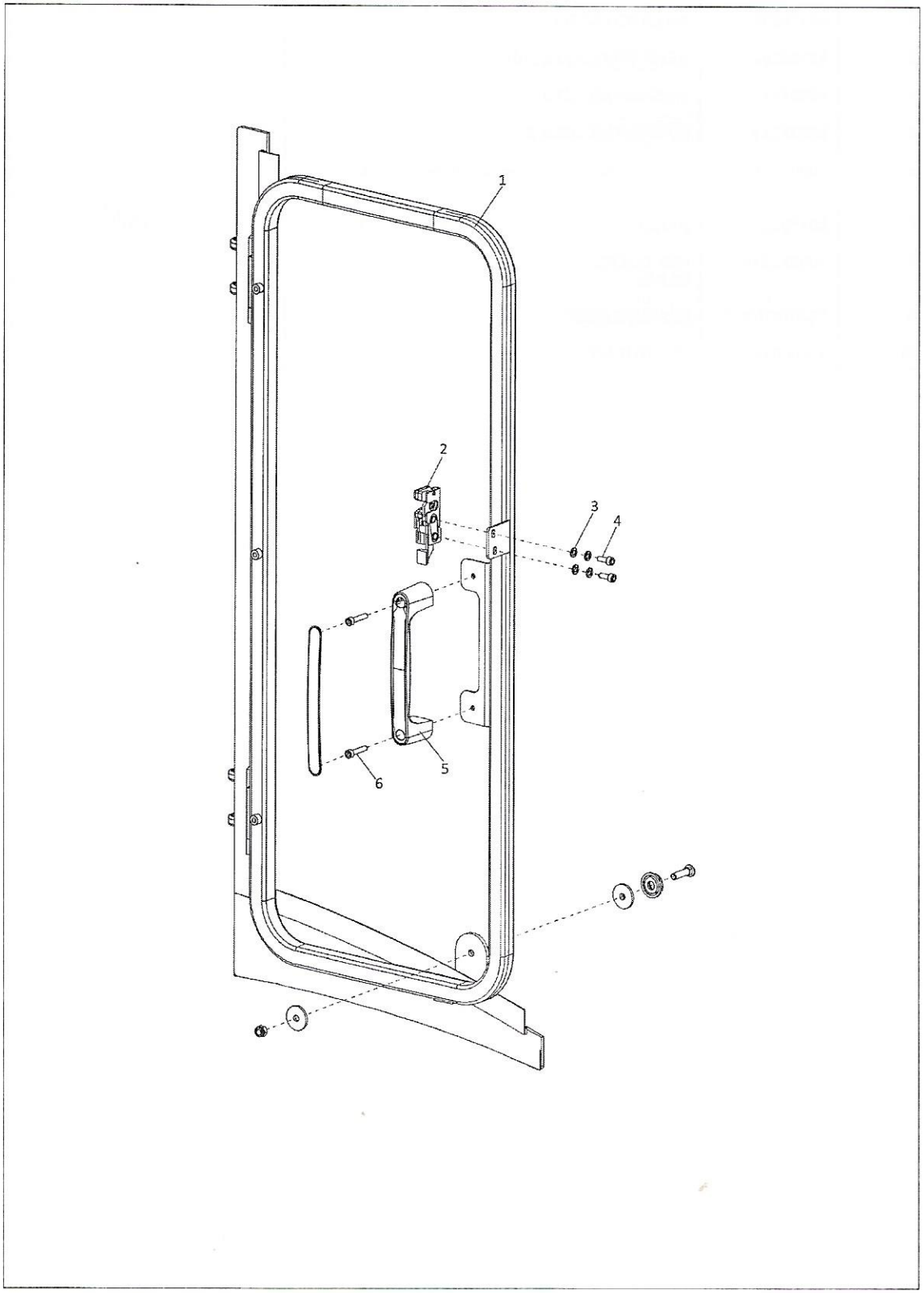
1
2
3
4
5
6

Item	Part No.	Name	Qty	Remarks
1	53109419	EMERGENCY WINDOW W/A RH	1	
2	53108831	ROTARY LATCH SIDE WINDOW LH	1	
3	390971X1	WASHER M6 - STD	4	
4	3009281X1	HEX SOCKET HEAD CAP SCREW M6X16	2	
5	50110325	HANDLE	1	
6	3009283X1	HEX SOCKET HEAD CAP SCREW M6X30	2	

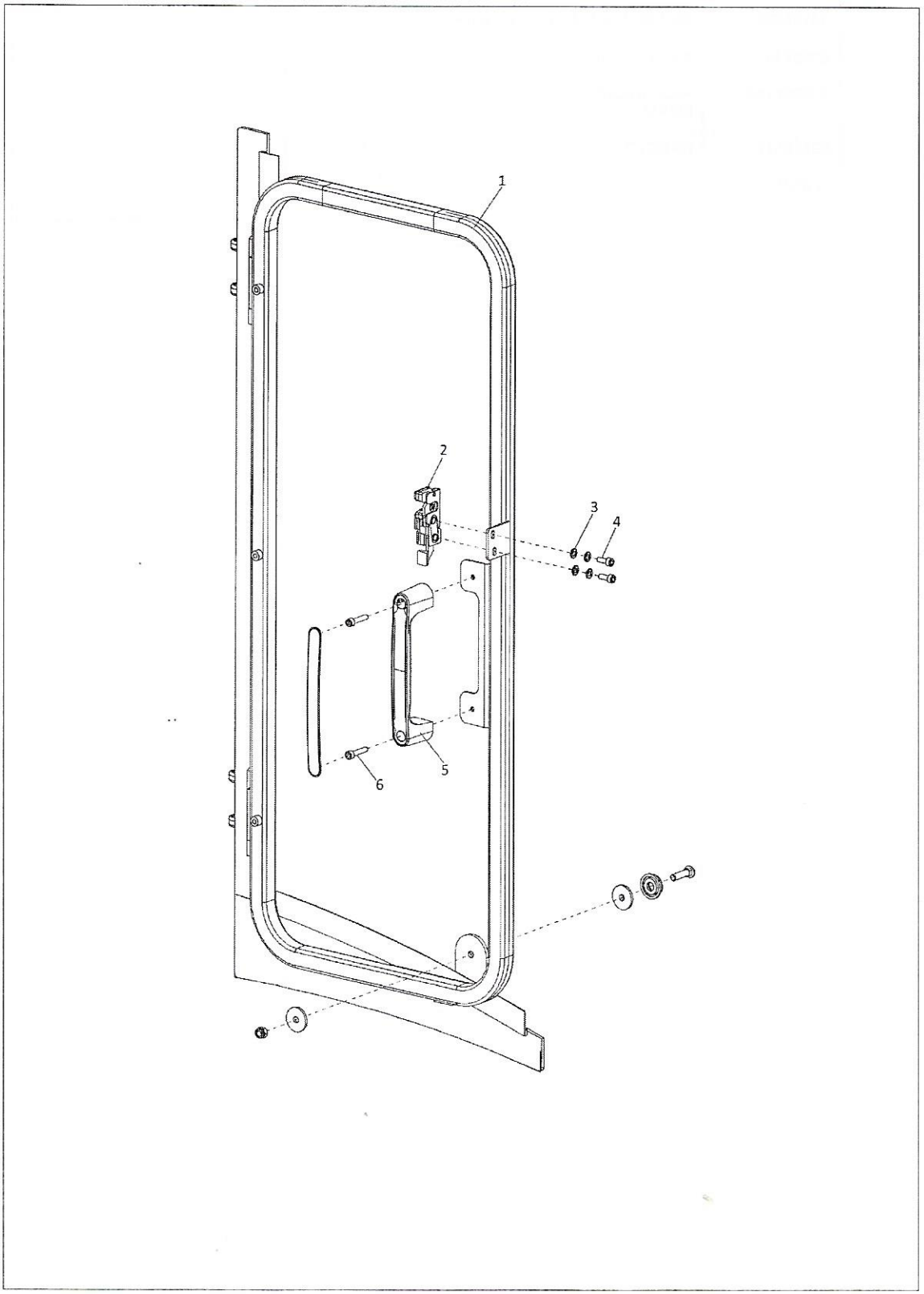
1
2
3
4
5
6

Item	Part No.	Name	Qty	Remarks
1	53109244	EMERGENCY WINDOW W/A RH	1	
2	53109287	ROTARY LATCH SIDE WINDOW RH	1	
3	390971X1	WASHER M6 - STD	4	
4	3009281X1	HEX SOCKET HEAD CAP SCREW M6X16	2	
5	50110325	HANDLE	1	
6	3009283X1	HEX SOCKET HEAD CAP SCREW M6X30	2	

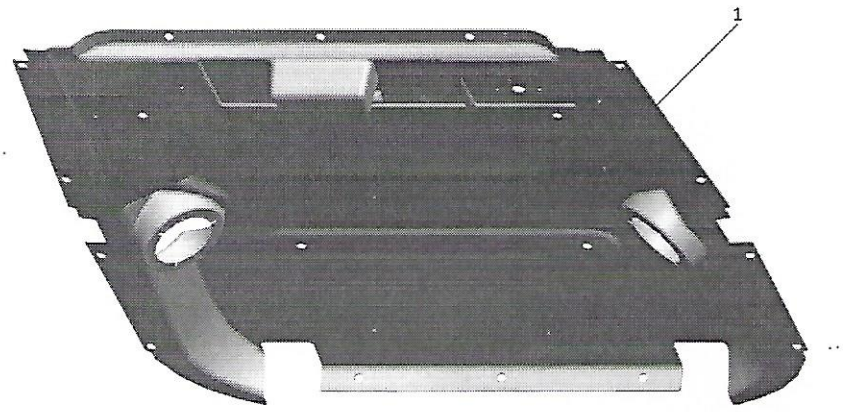
1

Item	Part No.	Name	Qty	Remarks
1	53112331	INNER ROOF	1	

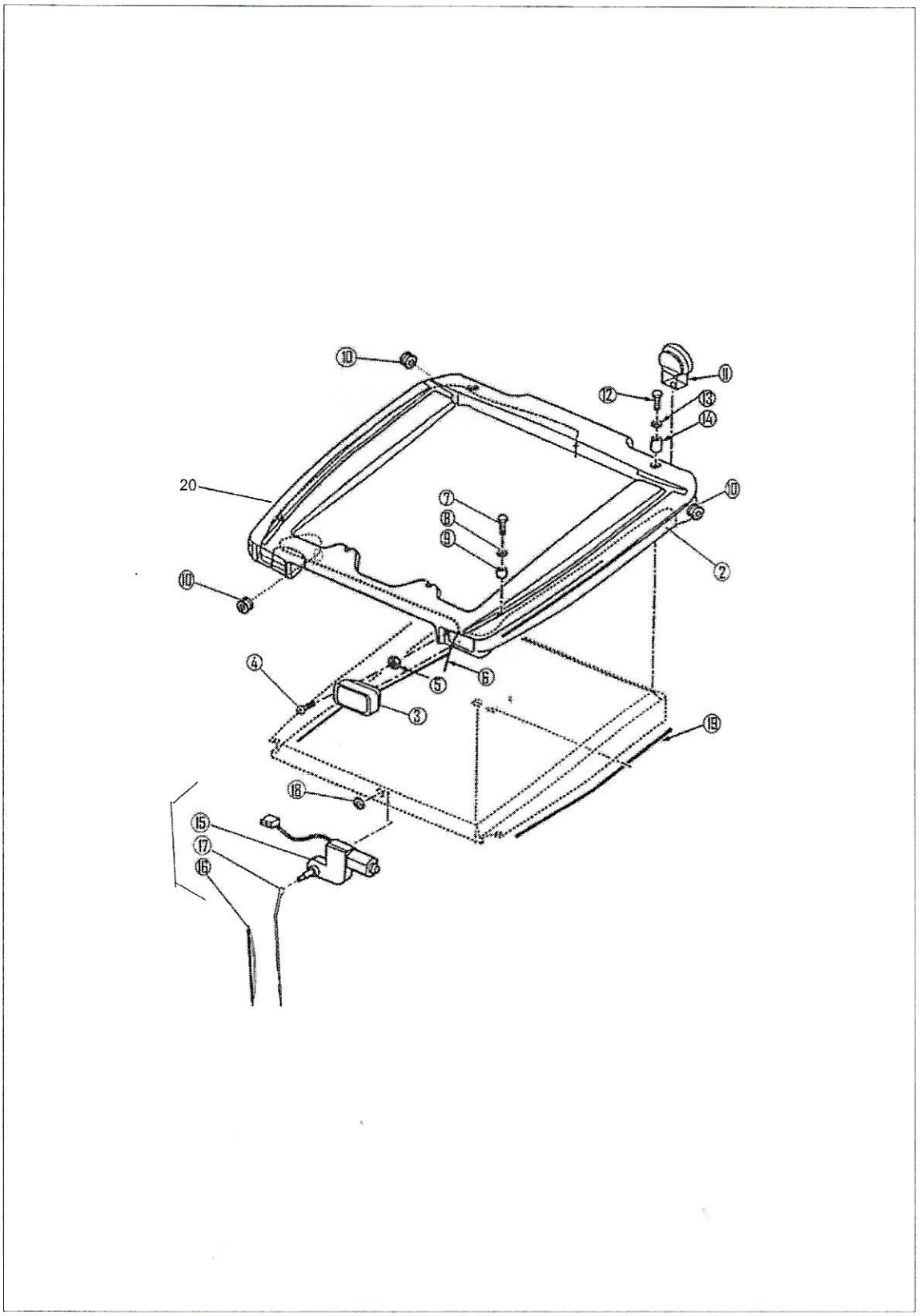
20

Item	Part No.	Name	Qty	Remarks
2	53100388	OUTER ROOF	1	
3	1D0204	FRONT WORK LIGHT	2	
4	6099456M1	SCREW	4	
5	6101590M1	M4 U NUT	4	
6	1TD0010M91	WIRING HARNESS - ROOF	1	Changed from machine serial no. 14607
7	3009505X1	HEX HEAD BOLT M12X1.75-LONG 25	2	
8	3512620M1	WASHER (DOORSTAY)	2	
9	1J0080	PLAIN WASHER	2	
10	1J0016	GROMMET Q40 CABIN	3	
11	1D0203	REAR WORK LAMP - HILUX	4	
12	3009509X1	HEX SCREW M12 X 1.75	4	
13	1J0080	PLAIN WASHER	4	
14	6099564M1	SPIROL SPACERS	2	
15	53102494	WIPER MOTOR ASSEMBLY	1	
15A	53108067	WIPER MOTOR	1	
16	53108068	WIPER BLADE-17"	1	
17	53110016	WIPER ARM	1	
18	3019881X1	WASHER, LOCK	4	
19	1J0208	MOUSE TAPE (20 X25MM)	4	
20	1D0206	REFLECTOR AMBER	2	
20	1D0296	REFLECTOR RED	2	
20	1D0207	REFLECTOR WHITE	2	


1
2
3
4
5

Item	Part No.	Name	Qty	Remarks
1	1J0764	OPERATOR SEAT - SUSP. TYPE	1	
2	339124X1	HEX BOLT M8X16 GR 8.8	4	
3	390972X1	WASHER M8 - STD	4	
4	10X3502	SPRING	1	
5	10X3577	SEAT CUSHION	1	

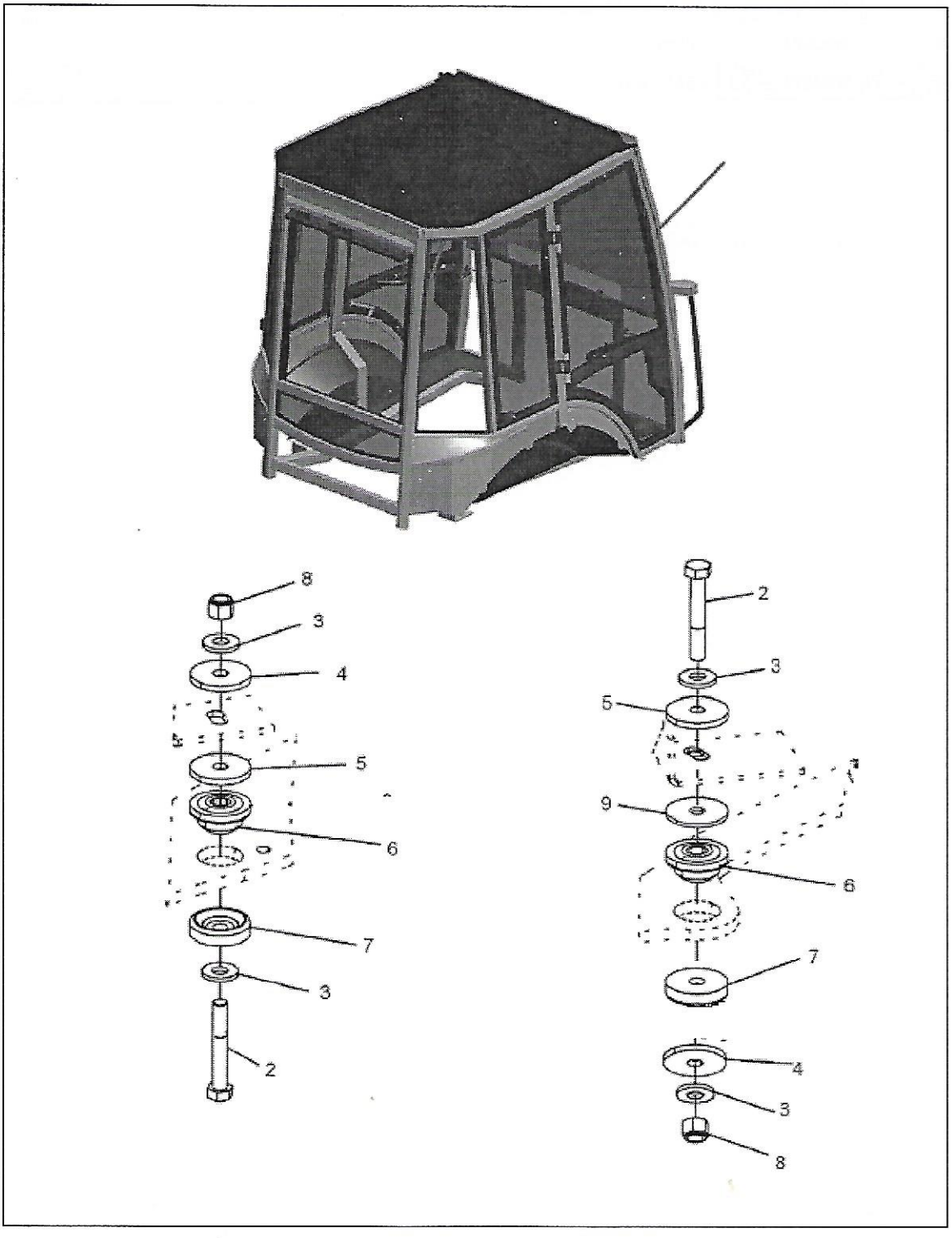
8
3
4
5
6
7
3
2
2
3
5
9
6
7
4
3
8

Item	Part No.	Name	Qty	Remarks
1	1TJ0028M91	CAB ASSY.	1	
2	1442669X1	HEX BOLT M20x120 GRADE 10.9	4	
3	385365X1	WASHER M20 - CHAM	8	
4	3521648M3	WASHER - CAB	4	
5	6101687M1	WASHER - CAB TOP	4	
6	1J0240	RUBBER MOUNTING UPPER	4	
7	1J0241	RUBBER MOUNTING LOWER	4	
8	339035X1	NUT M20	4	
9	1J0001	WASHER - CAB TOP	4	

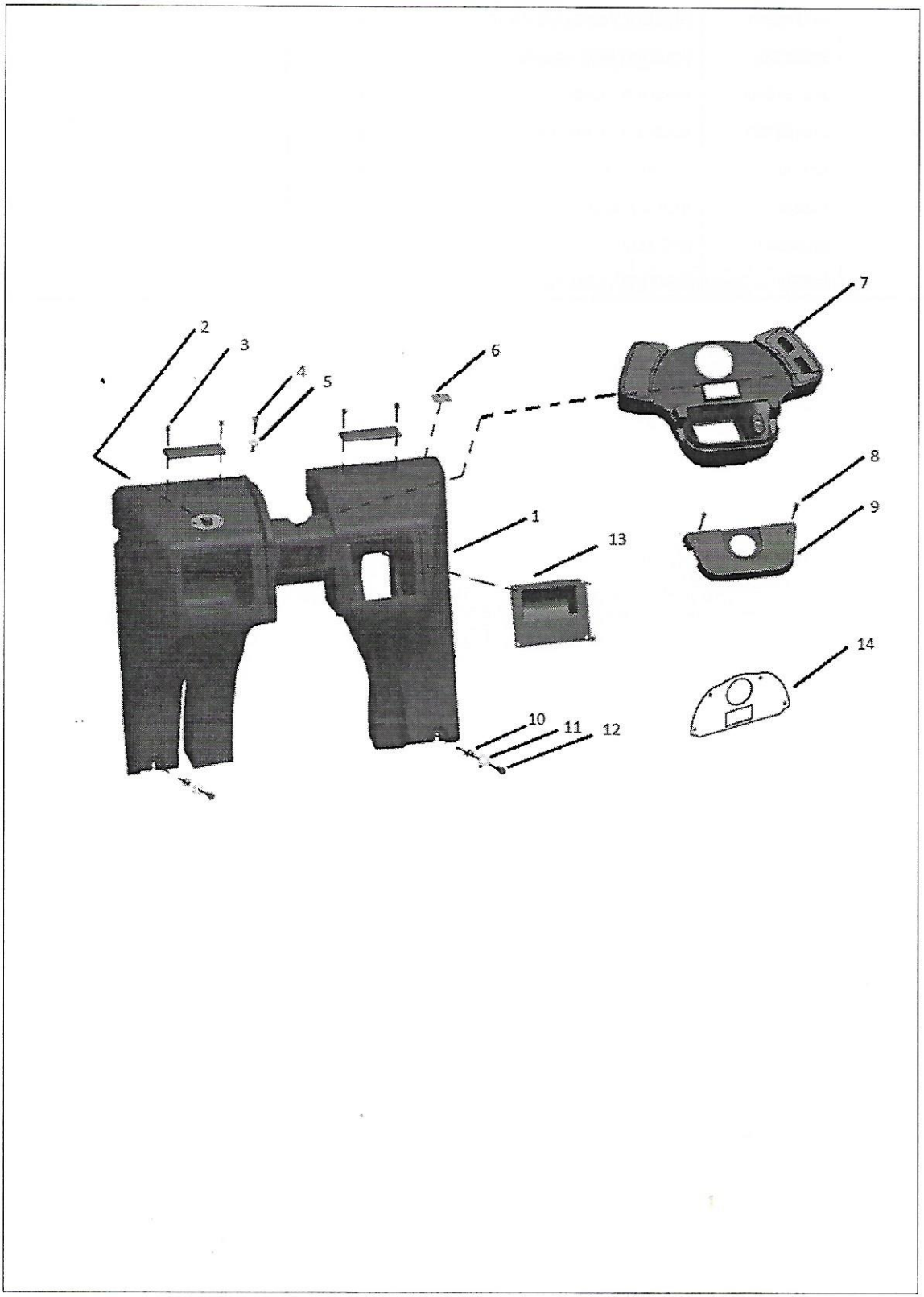
2
3
4
5
6
7
8
9
1
13
14
10
11
12

Item	Part No.	Name	Qty	Remarks
1	53110093	FRONT CONSOLE-BSIV	1	
2	53101870	PLATE	1	
3	3522735M4	SELF-TAP SCREW CSK HD COMPOSITE	4	
4	53101877	BOLT	2	
5	391039X1	WASHER	2	
6	6101914M1	DECAL FWD /REV	1	
7	1J0583	FRONT INSTRUMENT COVER	1	
8	53101871	SCREW NO.8 PAN HD	4	
9	1J0377	COVER INSTRUMENT PANEL	1	
10	6101730M1	SPACER COMPOSITE	2	
11	391039X1	WASHER	2	
12	339891X1	HEX BOLT M8X80 GRADE 8.8	2	
13	53110232	POCKET COVER FRONT CONSOLE	1	
14	1J0542	FRONT CLUSTER PLATE	1	

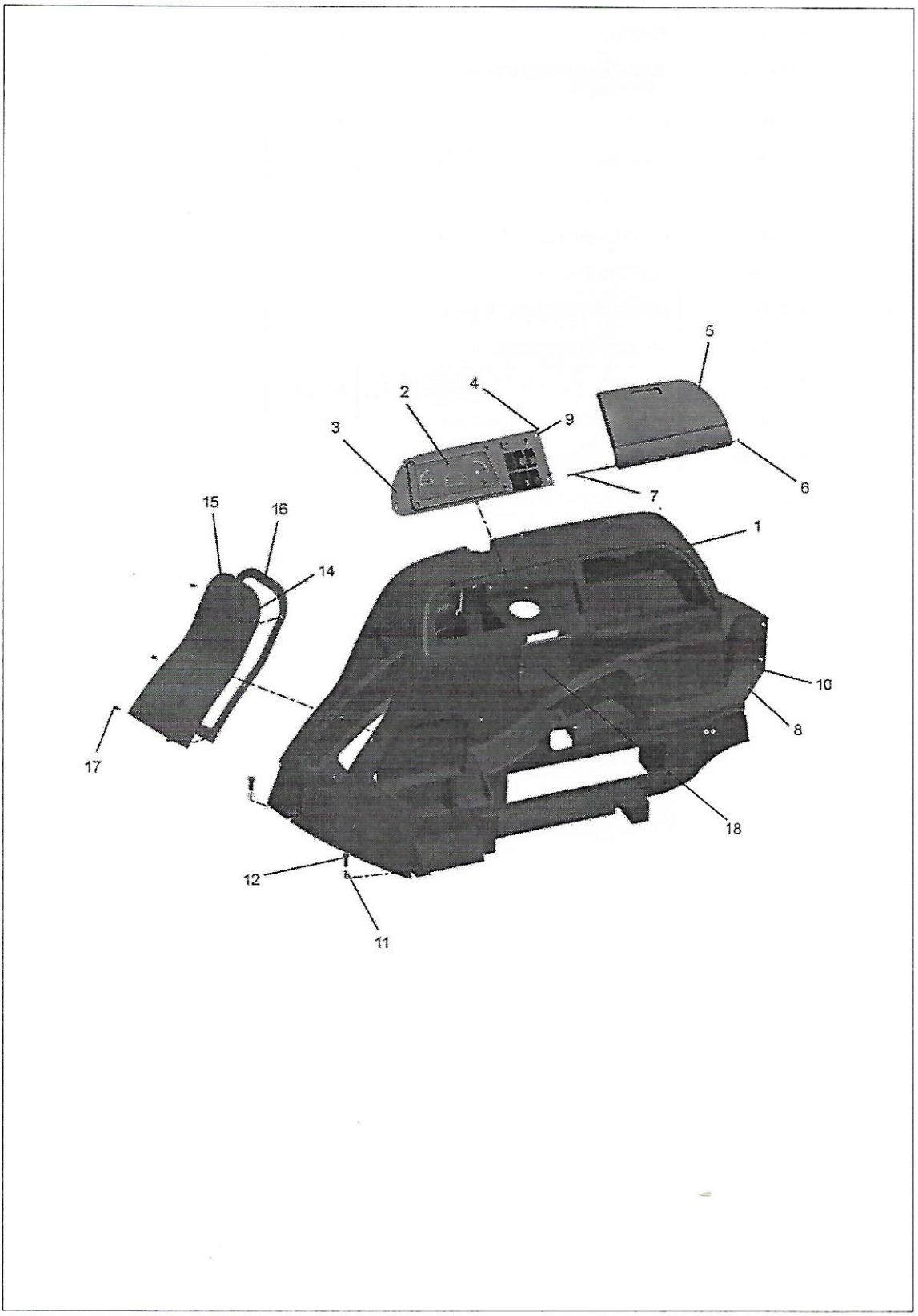
5
2
4
9
3
6
7
15
16
1
14
10
8
17
18
12
11

Item	Part No.	Name	Qty	Remarks
1	53110755	RHS CONSOLE-BSIV	1	
2	53109726	INSTRUMENT CLUSTER	1	
3	53109731	SIDE CLUSTER PLATE	1	
4	53101871	SCREW NO.8 PAN HD	4	
5	1J0381	GLOVE BOX LID	1	
6	3000115X1	CIRCLIP	1	
7	6101630M1	HINGE ROD	1	
8	6101591M1	RIVET	13	
9	53101887	WASHER M6 LARGE	1	
10	53101874	SCREW	1	
11	3516109M1	WASHER	2	
12	339804X1	BOLT M6X25	2	
13	1472524M2	PAN HEAD TAPPING SCREW(COMP) 10	2	
14	1D0110	DECAL RELAY FUSE BOARD	1	
15	1J0382	COVER RHS CONSOLE	1	
16	6102504M1	GASKET COVER RHS CONSOLE	1	
17	6102921M1	PAN HEAD SCREW (COMPOSITE) [L-20]	6	
18	53110339	HAND THROTTLE COVER	1	

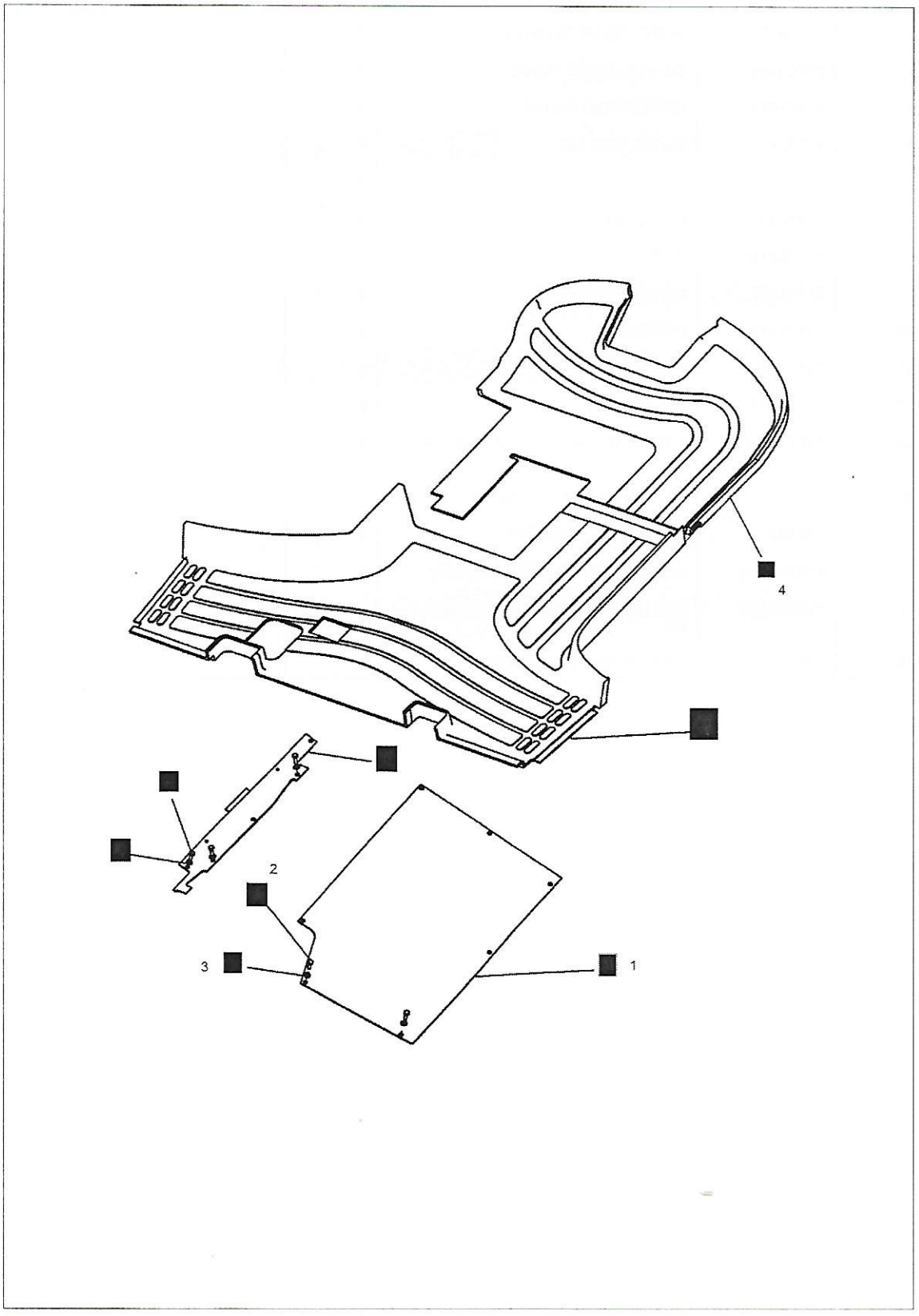
4
2
3
1

Item	Part No.	Name	Qty	Remarks
1	53110899	FLOOR PLATE CENTRE BS IV	1	
2	339123X1	HEX BOLT M8X20 GR 8.8	8	
3	390972X1	WASHER M8 - STD	8	
4	53110218	FLOOR MAT, BS-IV	1	

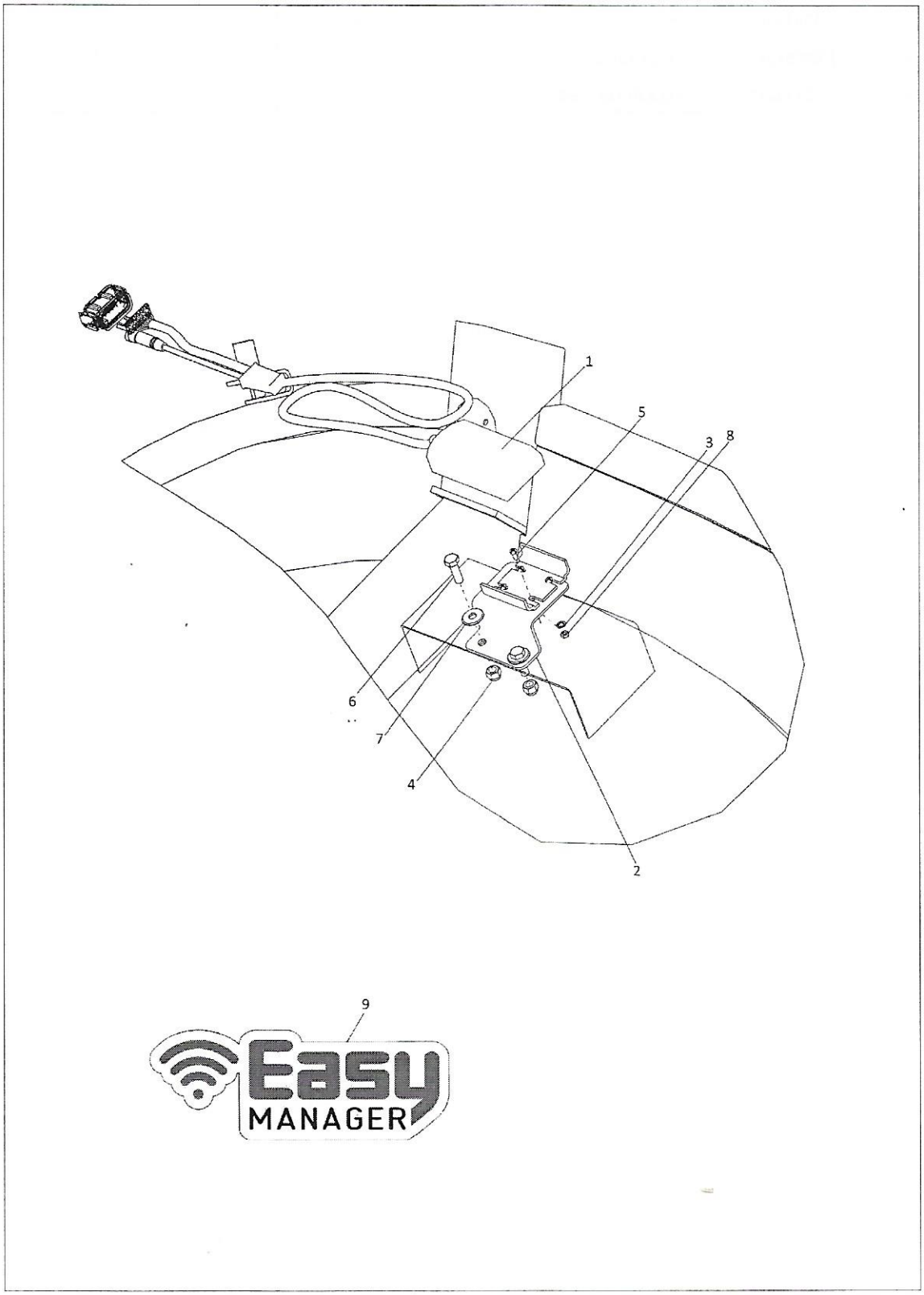
1
5
3
8
6
7
4
2
9
Easy
MANAGER

Item	Part No.	Name	Qty	Remarks
1	52641208	BOX	1	
2	53110929	EASY MANAGER MOUNTING PLATE	1	
3	1420532M1	HSP LW #6 F-Z	4	
4	1441500X1	M6 NYLOC NUT	2	
5	339367X1	PHMS M3X8L	4	
6	339666X1	BOLT M6-40 Z5S LK	2	
7	391038X1	WASHER M6 LARGE	2	
8	391216X1	HEX NUT M3	4	
9	53113349	EASY MANAGER DECAL	1	

CHASSIS

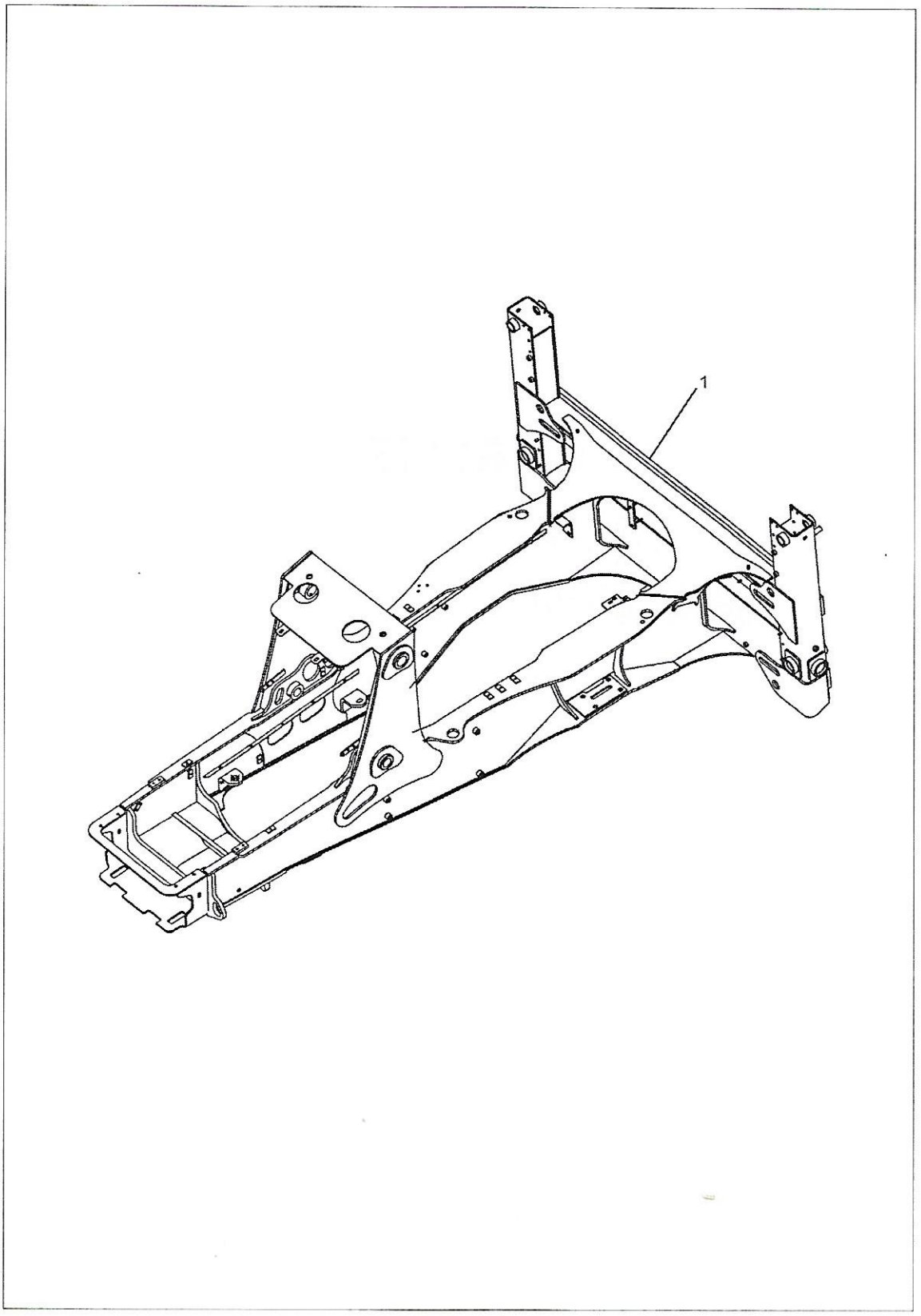
1

Item	Part No.	Name	Qty	Remarks
1	53101171	Chassis-2WD	1	
1	53101177	Chassis-4WD	1	

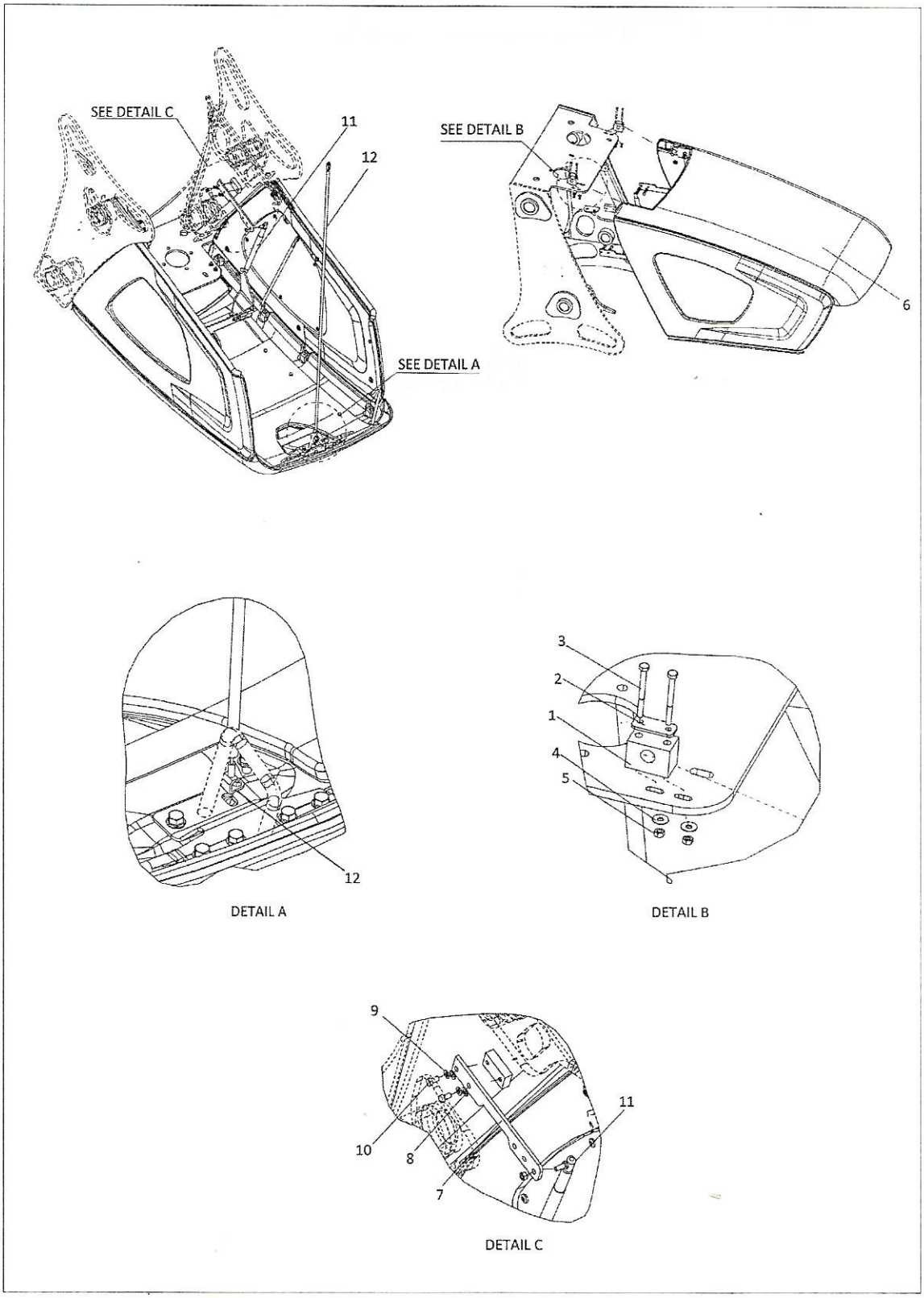
SEE DETAIL C
11
12
SEE DETAIL B
6
SEE DETAIL A
12
DETAIL A
3
2
1
4
5
6
DETAIL B
9
11
10
8
7
DETAIL C

Item	Part No.	Name	Qty	Remarks
1	6102086M1	BLOCK HINGE	2	
2	1462583M1	CLAMP PLATE	2	
3	53108733	HEX BOLT M6x65 GRADE 8.8	4	
4	391038X1	WASHER M6 LARGE	4	
5	339030X1	HEX NUT M6	4	
6	53102601	BONNET ASSY.(RED)	1	
6	53113550	BONNET ASSY.(YELLOW)	1	
7	53108879	GAS STRUT BRACKET	2	
8	390972X1	WASHER M8 - STD	4	
9	339374X1	LOCK WASHER M8	4	
10	339124X1	HEX BOLT M8X16 GR 8.8	4	
11	53108864	GAS STRUT	2	
12	53106832	BONNET CABLE	1	

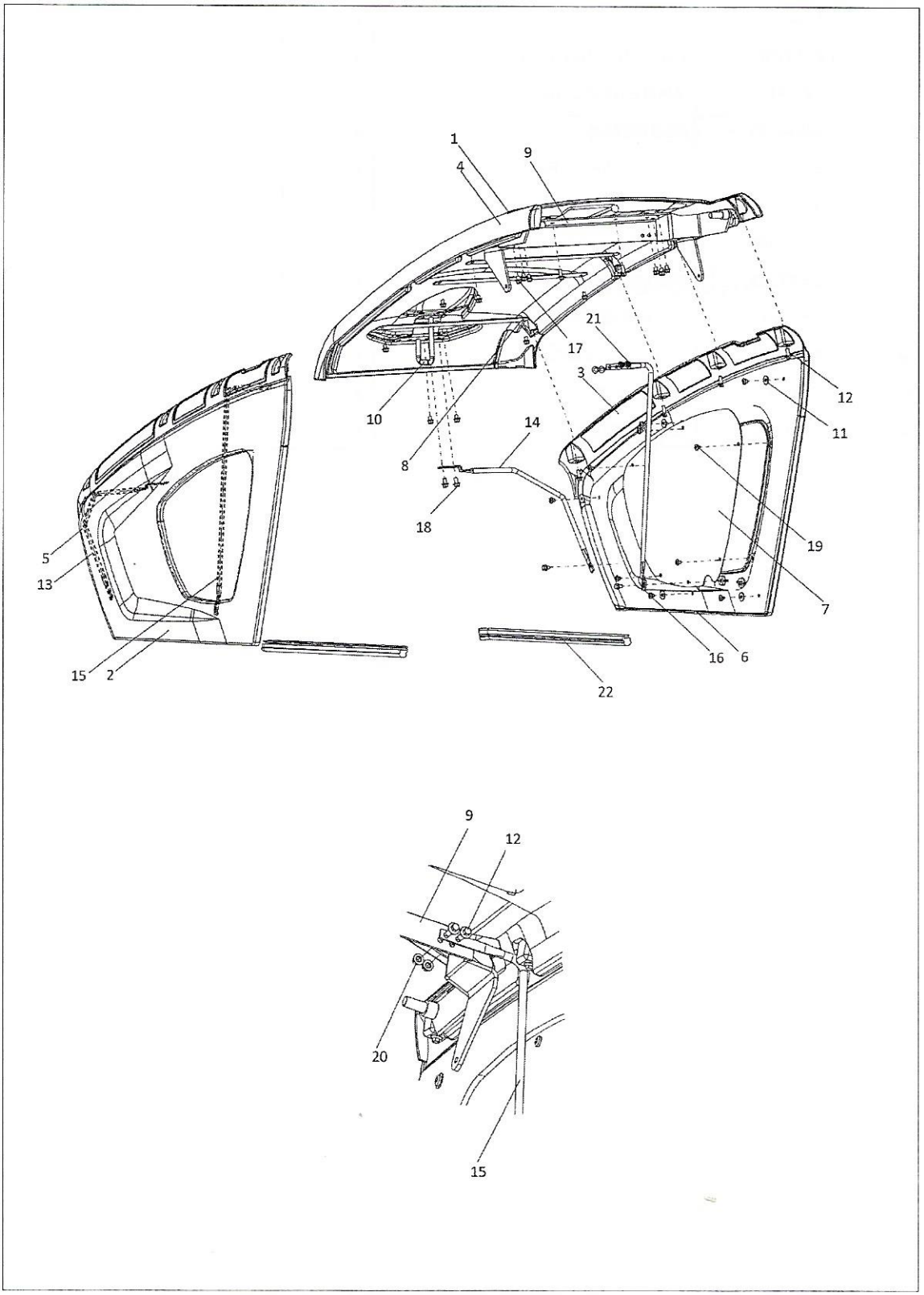
1
4
9
21
17
3
12
11
10
14
8
18
19
5
13
7
16
6
15
2
22
9
12
20
15

Item	Part No.	Name	Qty	Remarks
1	53102546	BONNET TOP PANEL - RED	1	
2	53102547	SIDE PANEL LH- RED	1	
3	53102548	SIDE PANEL RH- RED	1	
4	53106862	SOUND INSULATION TOP PANEL	1	
5	53106863	SOUND INSULATION SIDE PANEL LH	1	
6	53106864	SOUND INSULATION SIDE PANEL RH	1	
7	53102534	SIDE GRILL	2	
8	53106859	INSULATION BRACKET	3	
9	53102560	HINGE W/ASSY	1	
10	53106836	STRIKER BRACKET W/A	1	
11	391039X1	WASHER	10	
12	3009193X1	HEX FLANGEBOLT M8x20	14	
13	53102539	FRONT STIFFNER LH	1	
14	53102540	FRONT STIFFNER RH	1	
15	53102537	REAR STIFFNER LH	1	
16	53102538	REAR STIFFNER RH	1	
17	53108566	HEX FLANGE BOLT M8X10	16	
18	53108567	HEX FLANGE BOLT M8X15	4	
19	53106856	MACHINE SCREW PAN HEAD M8x8	20	
20	53106831	HEX FLANGE BOLT M8X12	2	
21	3019124X1	M8 HEX NUT FLANGE	4	
22	53102672	SEAL - BONNET	1	

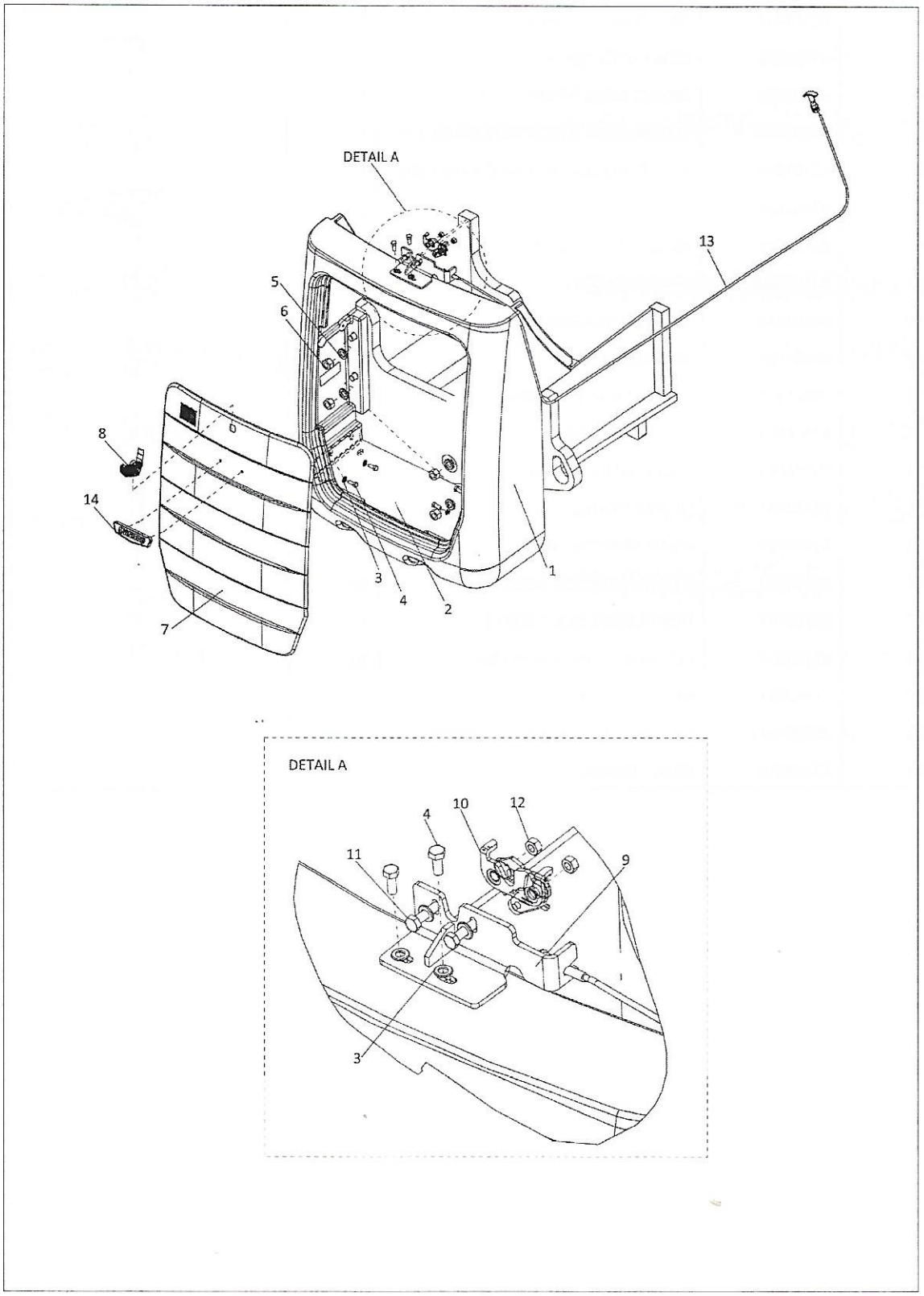
DETAIL A
13
5
6
8
14
7
3
4
2
1
DETAIL A
4
10
12
11
9
3

Item	Part No.	Name	Qty	Remarks
1	53102675	HARDNOSE MACHINED- RED	1	
1	53102673	HARDNOSE MACHINED- YELLOW	1	
2	53106833	BATTERY BASE W/A ASSY	1	
3	390972X1	WASHER M8 - STD	8	
4	339123X1	HEX BOLT M8X20 GR 8.8	6	
5	3019575X1	WASHER M16 - CHAM	4	
6	339034X1	HEX NUT M16	4	
7	53106840	FRONT GRILL W/A	1	
8	53106853	FRONT GRILL LOCK	1	
9	53102557	LATCH BRACKET W/A	1	
10	53108860	BONNET LATCH	1	
11	339337X1	HEX BOLT M8x30 GRADE 8.8	2	
12	339169X1	HEX NUT M8X1.25	2	
13	53108784	BONNET LATCH-OPENING CABLE	1	
14	53114052	FRONT GRILL LOGO -MANITOU	1	

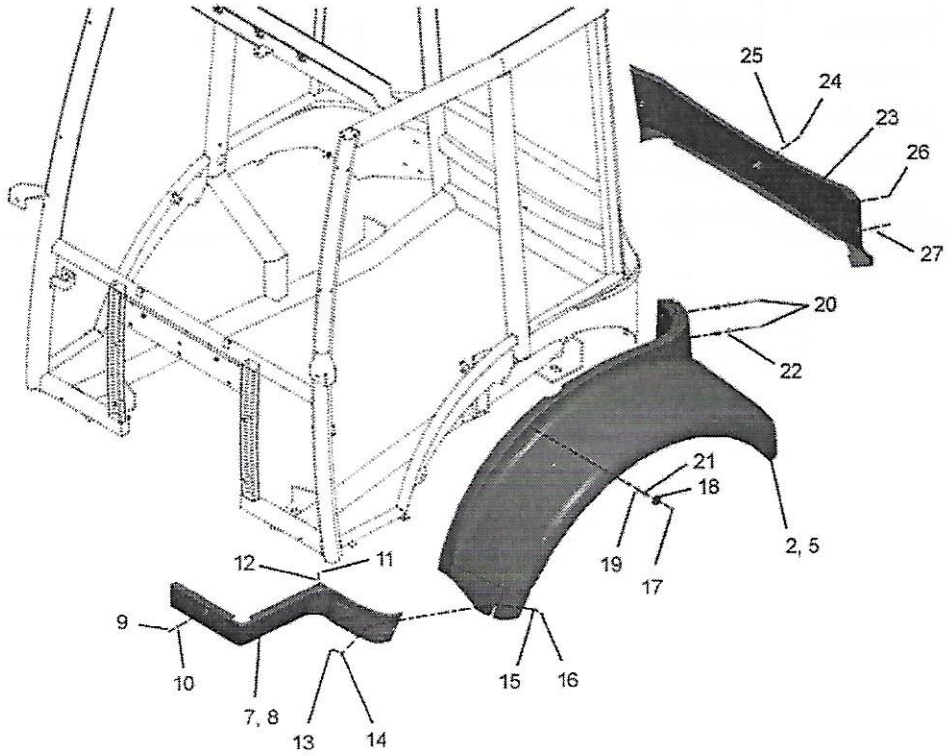
25
24
23
26
27
20
22
21
18
19
17
2, 5
12
11
9
10
7, 8
13
14
15
16

Item	Part No.	Name	Qty	Remarks
1	1D0207	REFLECTOR WHITE	2	
2	53100384	FENDER LH	1	
3	6106468M1	AVD LM8 NUT	6	
5	53100383	FENDER RH	1	
7	53109871	Z FENDER LH	1	
8	53109870	Z FENDER RH	1	
9	8401620	SCREW	2	
10	391038X1	WASHER M6 LARGE	2	
11	6108652M1	CSK SCREW M6 X 20LG POSI HEAD	2	
12	391038X1	WASHER M6 LARGE	2	
13	8401620	SCREW	9	
14	391038X1	WASHER M6 LARGE	2	
15	6102079M1	WASHER	2	
16	1441500X1	M6 NYLOC NUT	2	
17	339010X1	HEX BOLT M8x40 GRADE 8.8	8	
18	1H0259	WASHER - SIDE FENDER	8	
19	6101730M1	SPACER COMPOSITE	8	
20	339891X1	HEX BOLT M8X80 GRADE 8.8	2	
21	391039X1	WASHER	6	
22	6101732M2	SPACER COMPOSITE	2	
23	53100387	CENTER PANEL OUTSIDE	1	
24	3009547X1	PAN HEAD SCREW M8X35	1	
25	390972X1	WASHER M8 - STD	1	
26	8401620	SCREW	4	
27	391038X1	WASHER M6 LARGE	4	

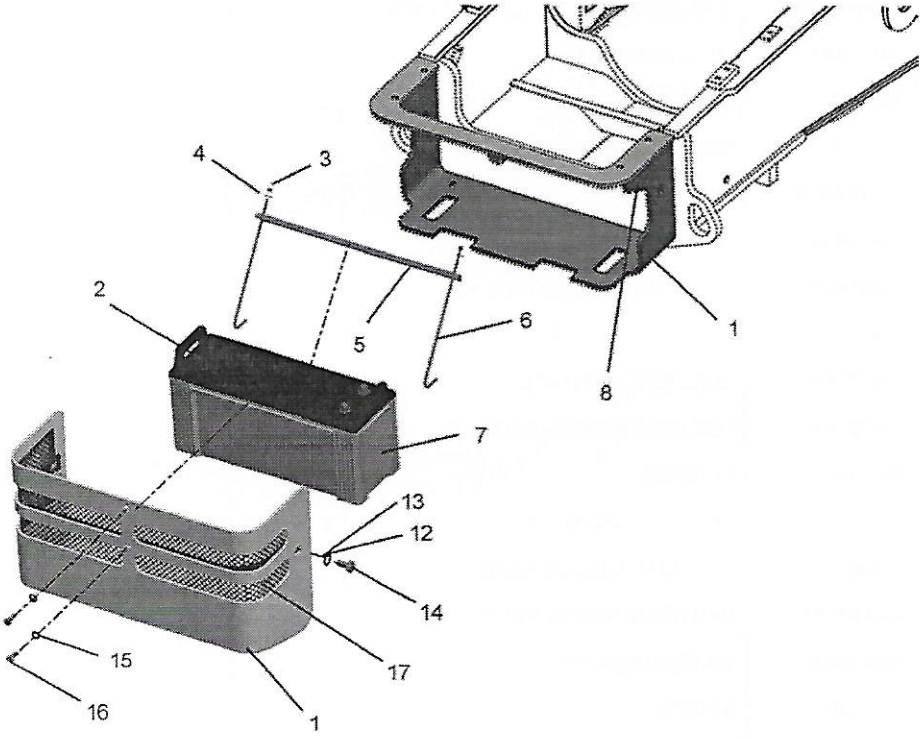
4
3
2
5
6
1
8
7
13
12
14
15
17
16
1

Item	Part No.	Name	Qty	Remarks
1	1A0336	BATTERY BOX W/ASSY	1	
2	1A0461	Cover Plate	1	
3	1441500X1	M6 NYLOC NUT	2	
4	391038X1	WASHER M6 LARGE	2	
5	6112094M1	L BRACKET BATTERY MOUNT	1	
6	1A0464	J-Bolt	2	
7	1D0001	BATTERY	1	
8	1A0338	Bracket	1	
12	1441664X1	WASHER M16 - STD	4	
13	339034X1	HEX NUT M16	4	
14	391334X1	HEX BOLT M16x50 GRADE 8.8	4	
15	390734X1	WASHER M10-STD	4	
16	3009492X1	HEX BOLT M10X25 GR 8.8	4	
17	1A0174	GRILLE	1	

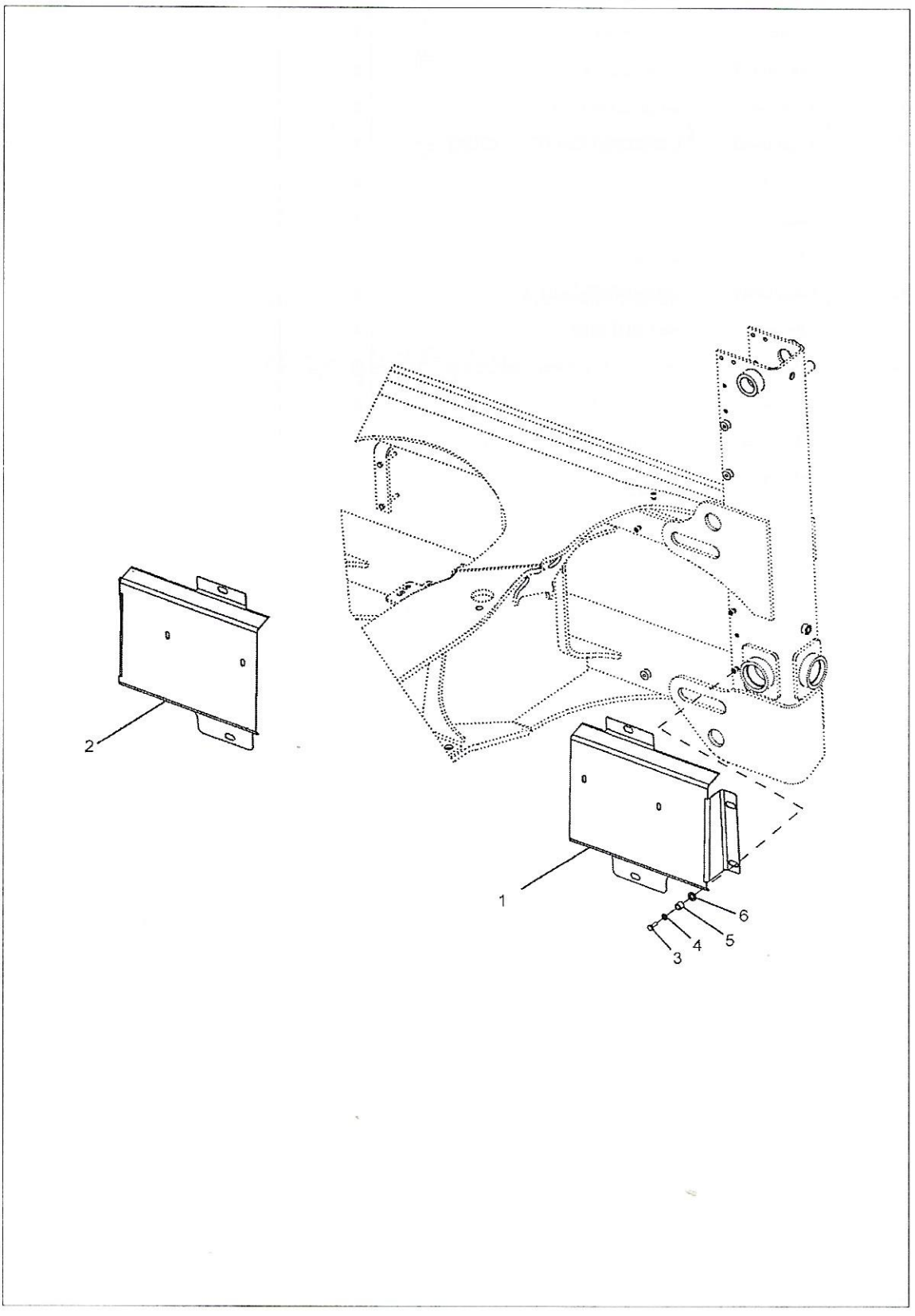
2
1
6
5
4
3

Item	Part No.	Name	Qty	Remarks
1	53112511	MUDGUARD LH BLACK	1	Old reference number 1H0145
2	53112510	MUDGUARD RH BLACK	1	Old reference number 1H0146
3	339761X1	BOLT M8-25 Z5F	8	
4	390972X1	WASHER M8 - STD	8	
5	6101892M1	SPACER	8	
6	390735X1	WASHER	8	

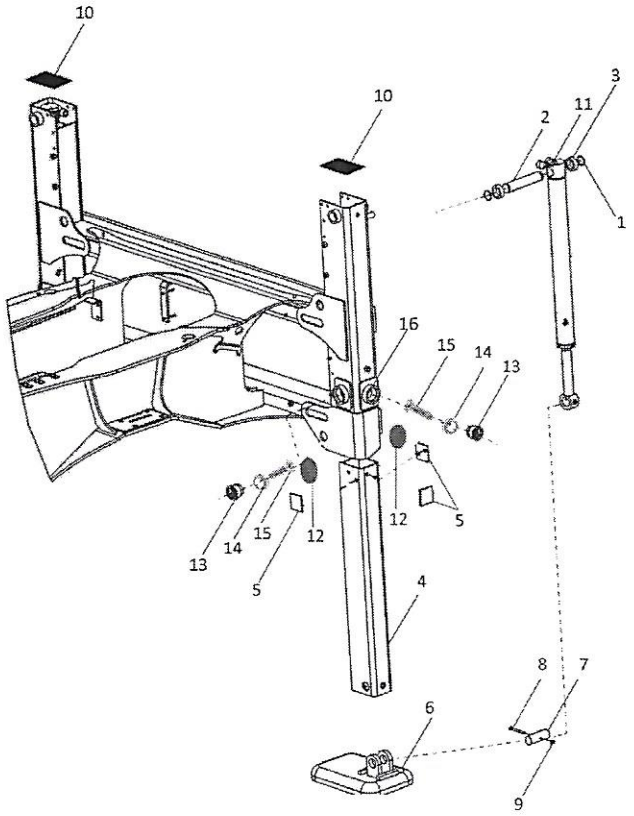
10
10
3
11
2
1
16
15
14
13
12
5
13
14
15
12
5
4
8
7
6
9

Item	Part No.	Name	Qty	Remarks
1	1440478X1	CIRCLIP	4	
2	1B1074	PIN STABILIZER CYLINDER	2	
3	3521279M2	SPACER	4	
4	6112163M91	INNER LEG WA	2	UPTO MACHINE No. 15418
4	53109613	INNER LEG WA	2	
5	3516684M2	WEAR PAD -YELLOW 4.5 MM	4	
5	3521199M3	WEAR PAD -BLACK 5.0 MM	4	
5	3517077M1	WEAR PAD-GREY 5.5 MM	4	
5	3518965M1	WEAR PAD -NATURAL 6.0 MM	4	
5	3518936M1	WEAR PAD -RED 6.5 MM	4	
5	6108416M1	WEAR PAD -BLUE 4.0 MM	4	
5	6108417M1	WEAR PAD -GREEN 3.6 MM	4	
6	53112512	STABILIZER FOOT BLACK	2	GREY COLOR- 1B0578
6	53109615	STABILIZER FOOT BLACK	2	
7	1B1085	PIN STAB FOOT	2	
8	1442169X1	SCREW	2	
9	1440329X1	NUT NYLOCK M10	2	
10	1B0579	OUTER LEG COVER	2	
10A	339666X1	BOLT M6-40 Z5S LK	8	
10B	391038X1	WASHER M6 LARGE	8	
11	53108844	STABILIZER CYLINDER-BLACK	2	Grey color -1TH0041M91
12	3519712M1	WEAR PAD -YELLOW 4.5 MM	2	
12	3519713M1	WEAR PAD -BLACK 5.0 MM	2	
12	3519714M1	WEAR PAD -GREY 5.5 MM	2	
12	3519715M1	WEAR PAD -NATURAL 6.0 MM	2	
12	3519716M1	WEAR PAD -RED 6.5 MM	2	
12	6108418M1	WEAR PAD -BLUE 4.0 MM	2	
12	6108419M1	WEAR PAD -GREEN 3.6 MM	2	
13	1B0731	THREADED PLUG	6	
14	1B0732	WEAR PAD	6	
15	6108652M1	CSK SCREW M6 X 20LG POSI HEAD	12	
16	1B0730	THREADED PLUG BUSH	6	

ADDITIONAL EQUIPMENT

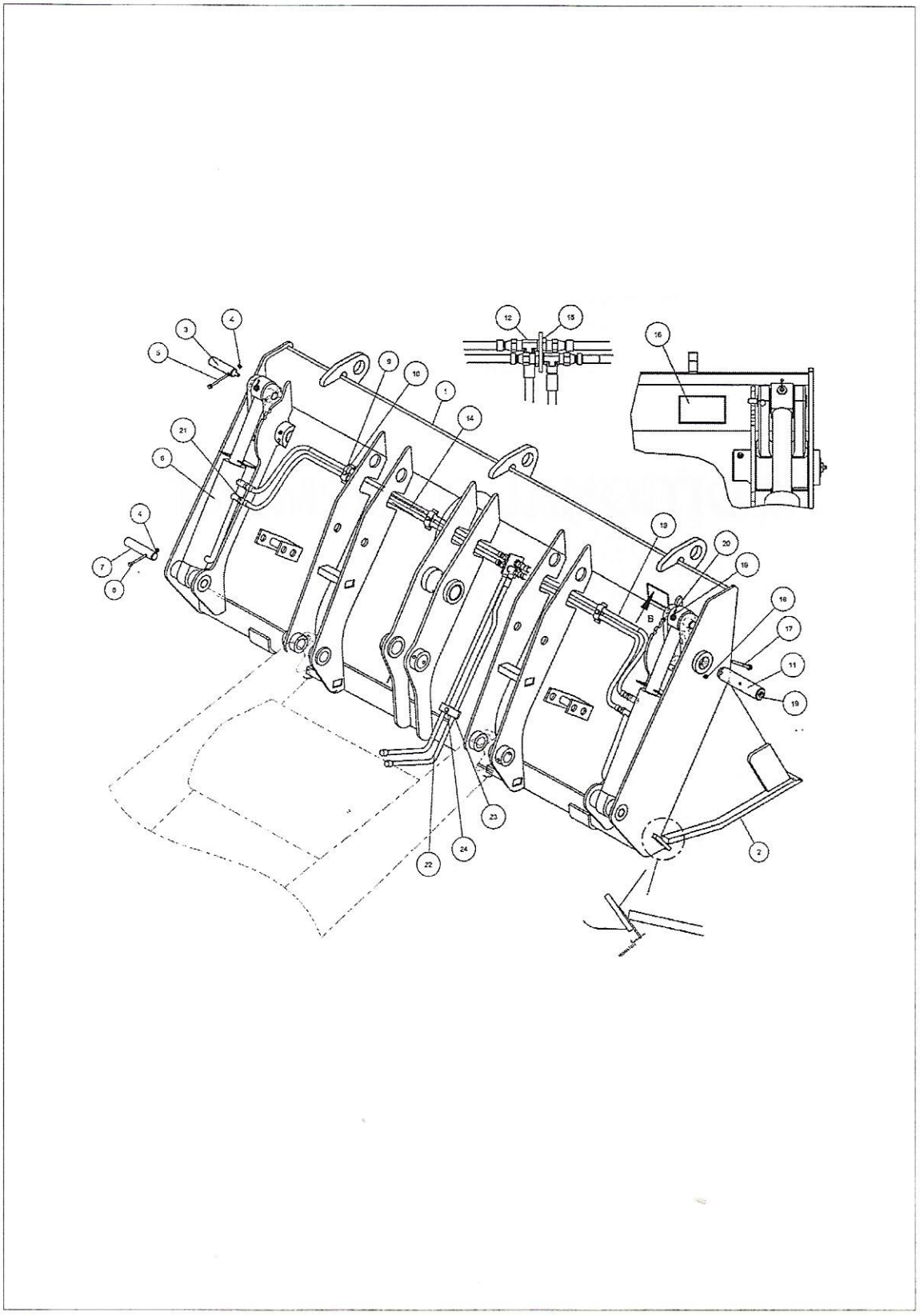
12
13
16
3
4
5
9
10
1
14
21
6
4
7
8
18
20
19
B
18
17
11
19
23
22
24
2

Item	Part No.	Name	Qty	Remarks
A	1B0227	BUCKET ASSY 1.0M3	1	
1	1C0314	BACK BLADE W/A	1	
2	1C0313	CLAM W/A COMPOSITE	1	
3	6106215M1	PIN	2	
4	394367X1	NUT	4	
5	39891X1	Bolt M7 X 80 Lg	2	
6	53108838	BUCKET CYLINDER 7 IN 1 - BLACK	2	
7	3517159M1	PIN	2	
8	390246X1	BOLT	2	
9	3522094M2	HOSE CLAMP	3	
10	339761X1	BOLT M8-25 Z5F	3	
11	3507539M1	PIN - MAIN PIVOT	2	
12	1H0253	T-BULKHEAD	2	
13	6106212M91	HOSE ASSY	2	
14	6106213M91	HOSE ASSY	2	
15	356614X1	NUT BULK HEAD	2	
16	6106223M1	NAME PLATE	1	
17	3009504X1	SCREW	2	
18	1440329X1	NUT NYLOCK M10	2	
19	365572X1	FITTING GREASE	4	
20	3516180M2	GREASE NIPPLE CAP (GENERAL)	2	
21	835091M91	CONNECTOR 9/16 UNF	4	
22	6106214M91	HOSE ASSY.	2	
23	53108774	CLAMP UPPER	2	
24	339010X1	HEX BOLT M8x40 GRADE 8.8	2	

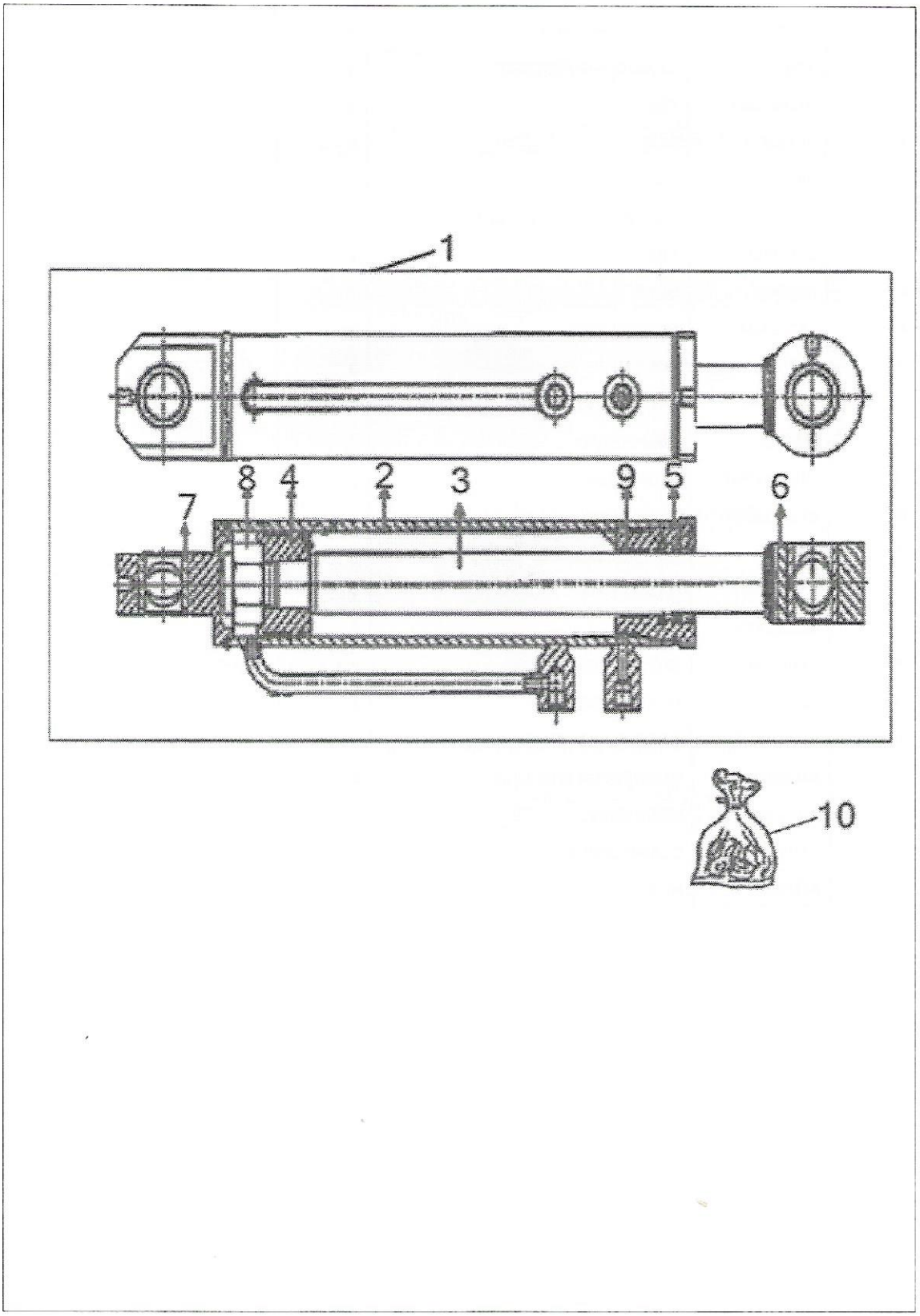
1
8
4
2
3
9
5
6
7
10

Item	Part No.	Name	Qty	Remarks
1	53108838	BUCKET CYLINDER 7 IN 1 - BLACK	1	
2	10X1476	TUBE S/A	1	
3	10X1477	PISTON ROD	1	
4	10X1478	PISTON	1	
5	10X1479	H.E. COVER	1	
6	10X1480	BUSH (R.E.)	1	
7	10X1481	BUSH (CLEVIS)	1	
8	10X1482	NYLOCK NUT	1	
9	10X1483	BI-METAL BUSH	1	
10	10X1484	SEAL KIT	1	

EXTENDABLE DIPPER

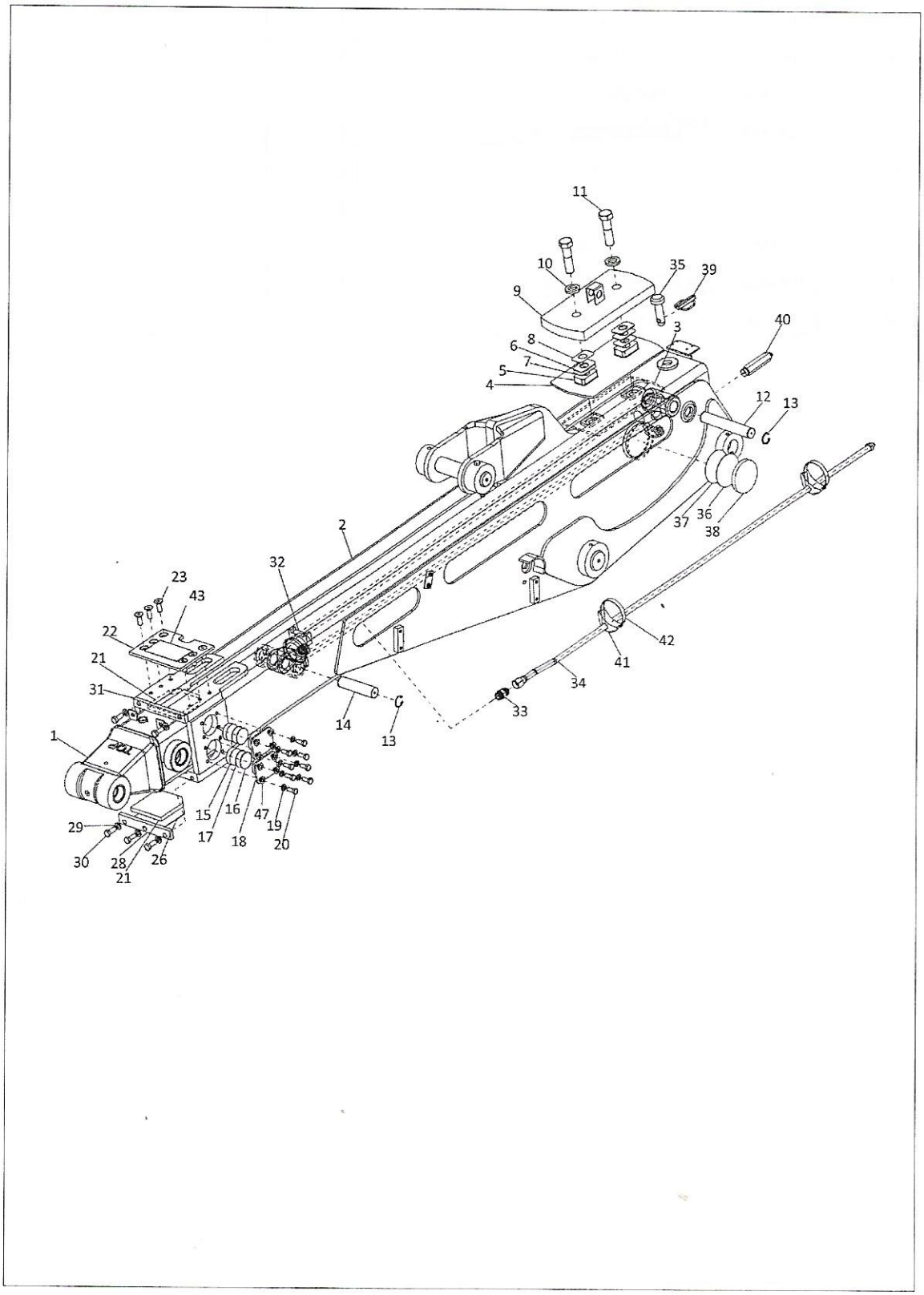

Item	Part No.	Name	Qty	Remarks
1	3504158M98	TELESCOPIC EXTN. W/ASSY	1	
2	53108002	HOUSING W/A	1	
3	6102559M1	WEAR PAD	1	
4	6102518M1	WEAR PAD	1	
5	3501655M2	SPACER, PADS	2	
6	3502976M2	SHIM 3.0 THK	2	
7	3502975M2	SHIM 2.0 THK	2	
8	3501975M2	SHIM 1.0 THK	2	
9	6102519M91	COVER PLATE	1	
10	3517388M1	WASHER M24	2	
11	3517491M1	BOLT M24-90 10.9	2	
12	3501624M1	PIN CYLINDER (HEAD END)	1	
13	355973X1	SNAP RING	4	
14	3501625M1	PIN CYLINDER (ROD END)	1	
15	3502475M2	WEAR PAD	4	
16	3502476M1	SHIM	4	
17	3510645M1	SHIM	2	
18	6106121M2	WEAR PAD HOUSING	4	
19	339376X1	LOCK_WASHER	16	
20	3009492X1	HEX BOLT M10X25 GR 8.8	16	
21	3501658M2	WEAR PAD	2	
22	6111887M1	COLLAR COVER PLATE	1	
23	3009464X1	SCREW SOCKET FLAT HD M12X35	6	
24	3502938M1	SHIM - 4.0 MM	1	
25	3502939M1	SHIM - 2.0 MM	1	
26	3502940M1	SHIM - 1.0 MM	2	
27	3510862M1	SHIM - 0.5 MM	1	
28	6106164M1	SCRAPER PLATE	1	
29	339369X1	LOCK WASHER	5	
30	6007797M1	HEX BOLT M12X30 GR 10.9	5	
31	6102971M1	TOP WEAR PAD RETAINER	1	
32	6111074M91	CYLINDER EXTENDER	1	
33	835013M91	CONNECTOR	1	
34	6100599M91	TUBE ASSY	1	
35	6108900M1	PIN-TRANSPORT	1	
36	3502477M1	SHIM	2	

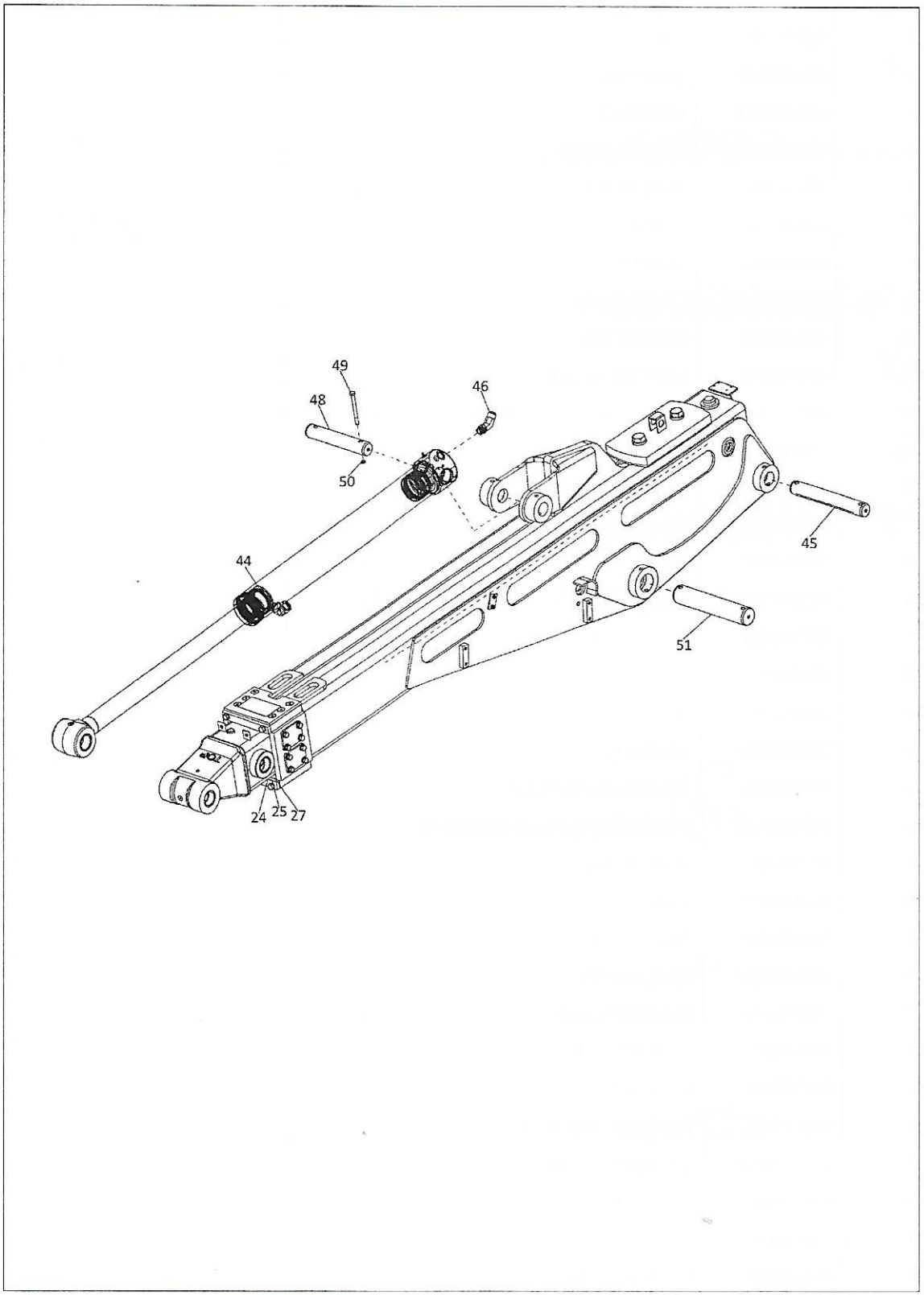
49
48
46
50
44
45
51
24
25
27

EXTENDABLE DIPPER

Item	Part No.	Name	Qty	Remarks
37	3510644M1	SHIM	2	
38	3502473M2	WEAR PAD INNER	2	
39	1B1263	SAFETY LINCH	1	
40	6100603M91	CONNECTOR	1	
41	D142787	SADDLE	2	
42	3517728M1	HOSE CLAMP	2	
43	6108692M1	DECAL OPER INST BOOK	1	
44	53102621	BUCKET CYLINDER	1	
45	1B1262	PIN	1	
46	835010M91	ELBOW 7/8	1	
47	390744X1	PLAIN WASHER	16	
48	3522720M2	PIN COMPOSITE	1	
49	3501289M1	HEX BOLT M10X110 GR 8.8	1	
50	1440329X1	NUT NYLOCK M10	1	
51	53107749	PIN	1	

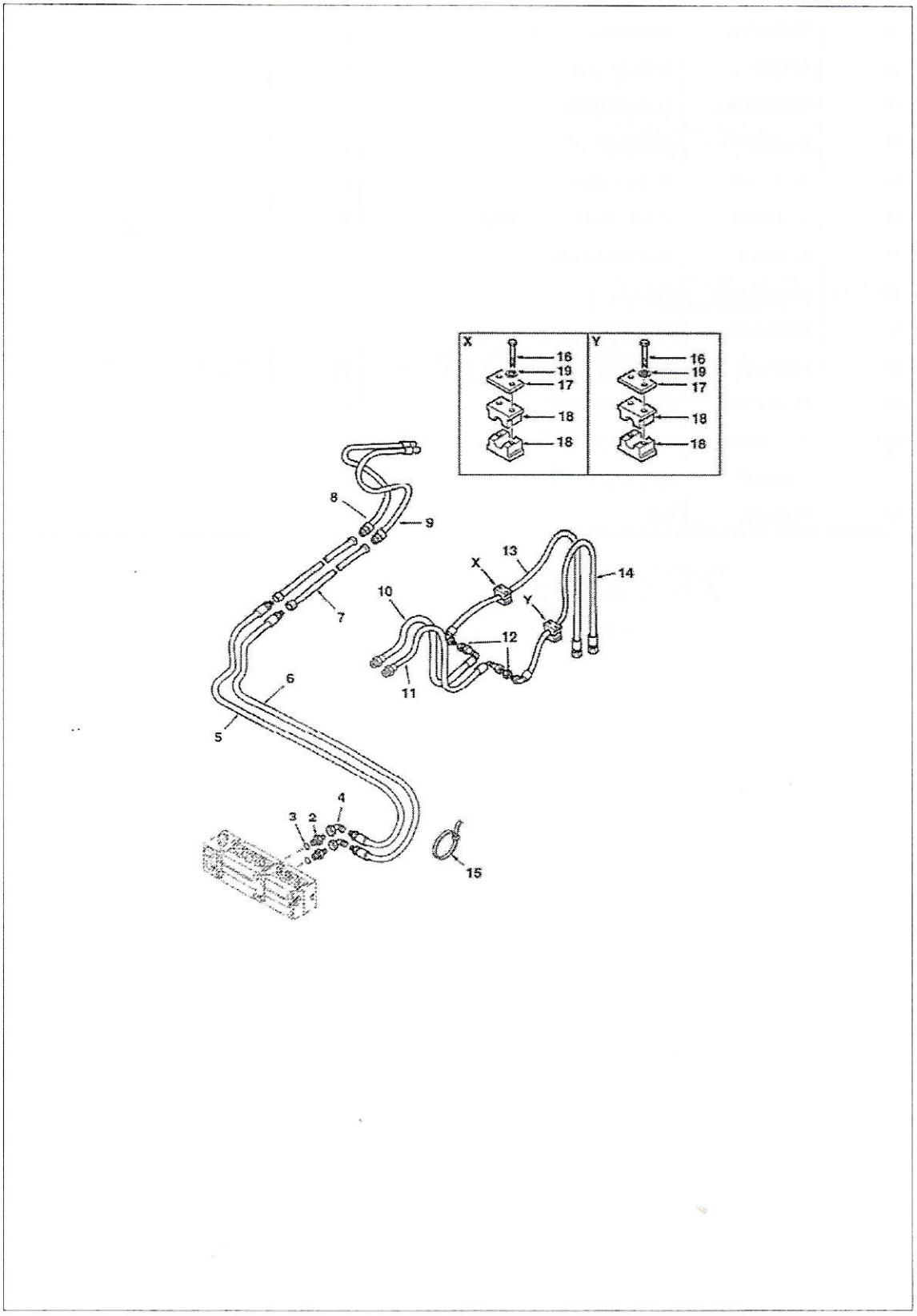
X
Y
16
19
17
18
18
16
19
17
18
18
8
9
7
6
5
10
11
12
13
14
X
Y
4
3
2
15

Item	Part No.	Name	Qty	Remarks
2	365716X1	Connector	1	
3	835025M1	O-RING	1	
4	373784X1	Elbow 45 Deg	2	
5	6108764M91	Hose Assy Dark Green	1	
6	6108765M91	Hose Assy Black	1	
7	6101773M91	TUBE ASSY EX'HOE 4.5M BOOM	2	
8	6101741M91	HOSE-EX'HOE HEAD	1	
9	6101757M91	HOSE-EX'HOE ROD	1	
10	6101739M91	HOSE-BUCKET ROD	1	
11	6101740M91	HOSE-BUCKET HEAD	1	
12	355574X1	LOCK NUT	2	
13	6101007M91	HOSE-CYLINDER-BUCKET	1	
14	6101008M91	HOSE-CYLINDER-BUCKET	1	
15	1664405M1	CABLE TIE	2	
16	1440922X1	BOLT	4	
17	1462583M1	CLAMP PLATE	2	
18	3520340M3	TUBE CLAMP O/DIA 1 TUBE	4	
19	390971X1	WASHER M6 - STD	4	

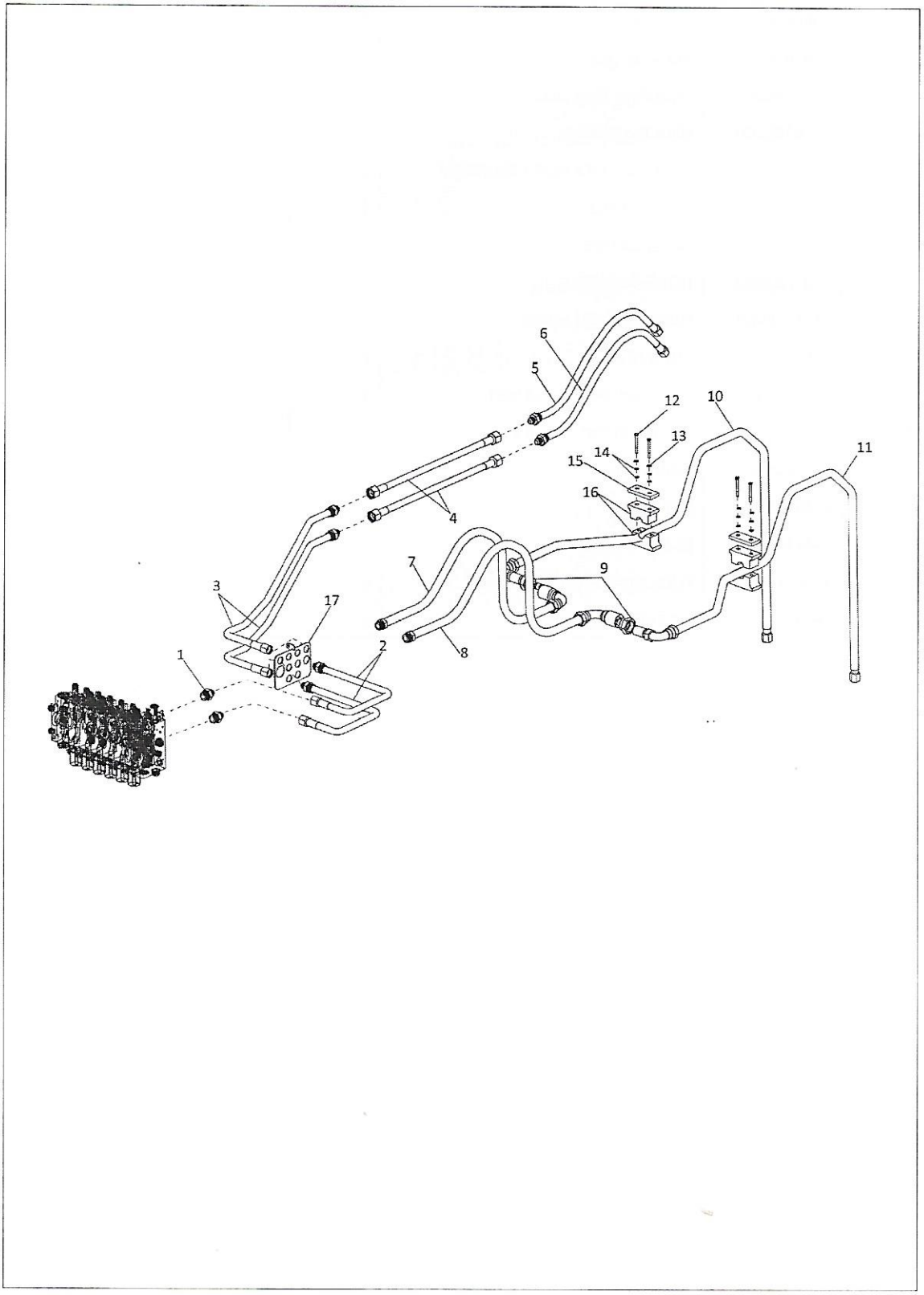
6
5
12
10
13
14
15
16
11
4
7
9
3
17
2
1
8

Item	Part No.	Name	Qty	Remarks
1	1H0183	ADAPTOR ASSY	2	
2	53109534	HOSE ASSY FR. DIPPER ROD	2	
3	53109932	HOSE ASSY RR. DIPPER ROD	2	
4	6101773M91	TUBE ASSY EX'HOE 4.5M BOOM	2	
5	6101741M91	HOSE-EX'HOE HEAD	1	
6	6101757M91	HOSE-EX'HOE ROD	1	
7	6101739M91	HOSE-BUCKET ROD	1	
8	6101740M91	HOSE-BUCKET HEAD	1	
9	355574X1	LOCK NUT	2	
10	6101007M91	HOSE-CYLINDER-BUCKET	1	
11	6101008M91	HOSE-CYLINDER-BUCKET	1	
12	1440922X1	BOLT	4	
13	339375X1	WASHER M6 LOCK Z	4	
14	3512395M1	WASHER COMPOSITE	8	
15	1462583M1	CLAMP PLATE	2	
16	3520340M3	TUBE CLAMP O/DIA 1 TUBE	4	
17	53109237	PLATE ASSY- SPLIT HOSES	1	

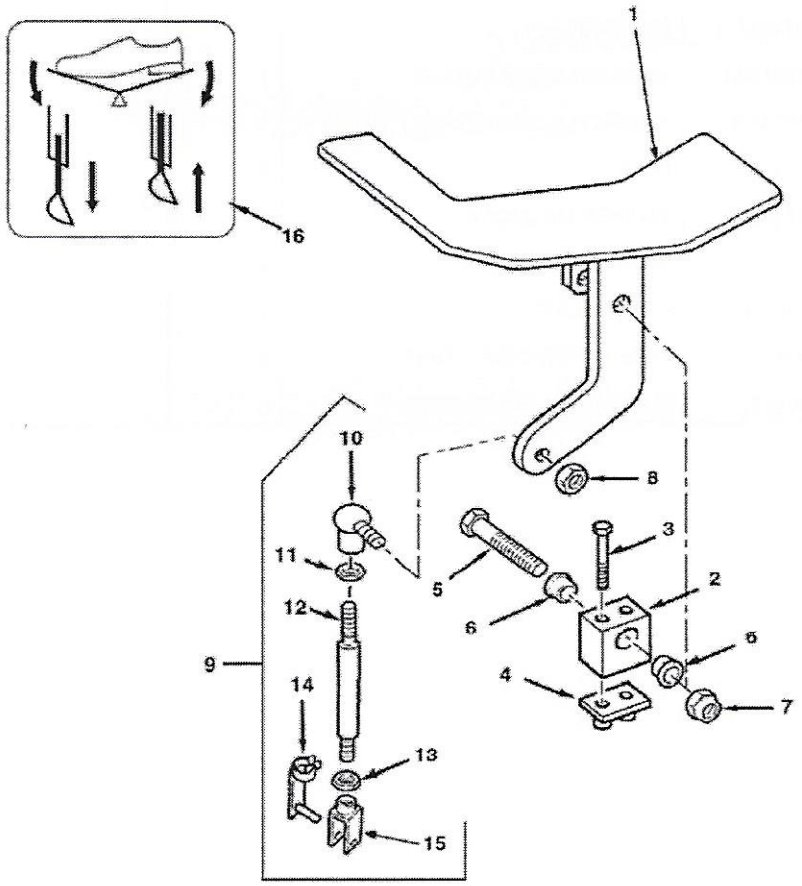
1
16
10
8
11
5
3
12
6
2
9
6
14
4
7
13
15

Item	Part No.	Name	Qty	Remarks
1	6106874M91	Pedal-Ext. Hoe	1	
2	6106734M1	Block-Nylon Pivot	1	
3	3001758X1	Screw Hex	2	
4	3519538M1	Plate Base	1	
5	339679X1	Bolt	1	
6	6106866M1	Bush-Ext. Hoe	2	
7	1440329X1	NUT NYLOCK M10	1	
8	394367X1	NUT	1	
9	6106724M92	Rod-Ext. Hoe	1	
10	3517518M1	BALL JOINT COMP.	1	
11	339169X1	HEX NUT M8X1.25	1	
12	6106725M1	Rod	1	
13	3519650M1	HEX NUT M8 L.H.	1	
14	3521124M1	Spring Pin	1	
15	6108405M1	Clevis LH Thread	1	
16	6101865M2	Decal-Ext. Hoe	1	

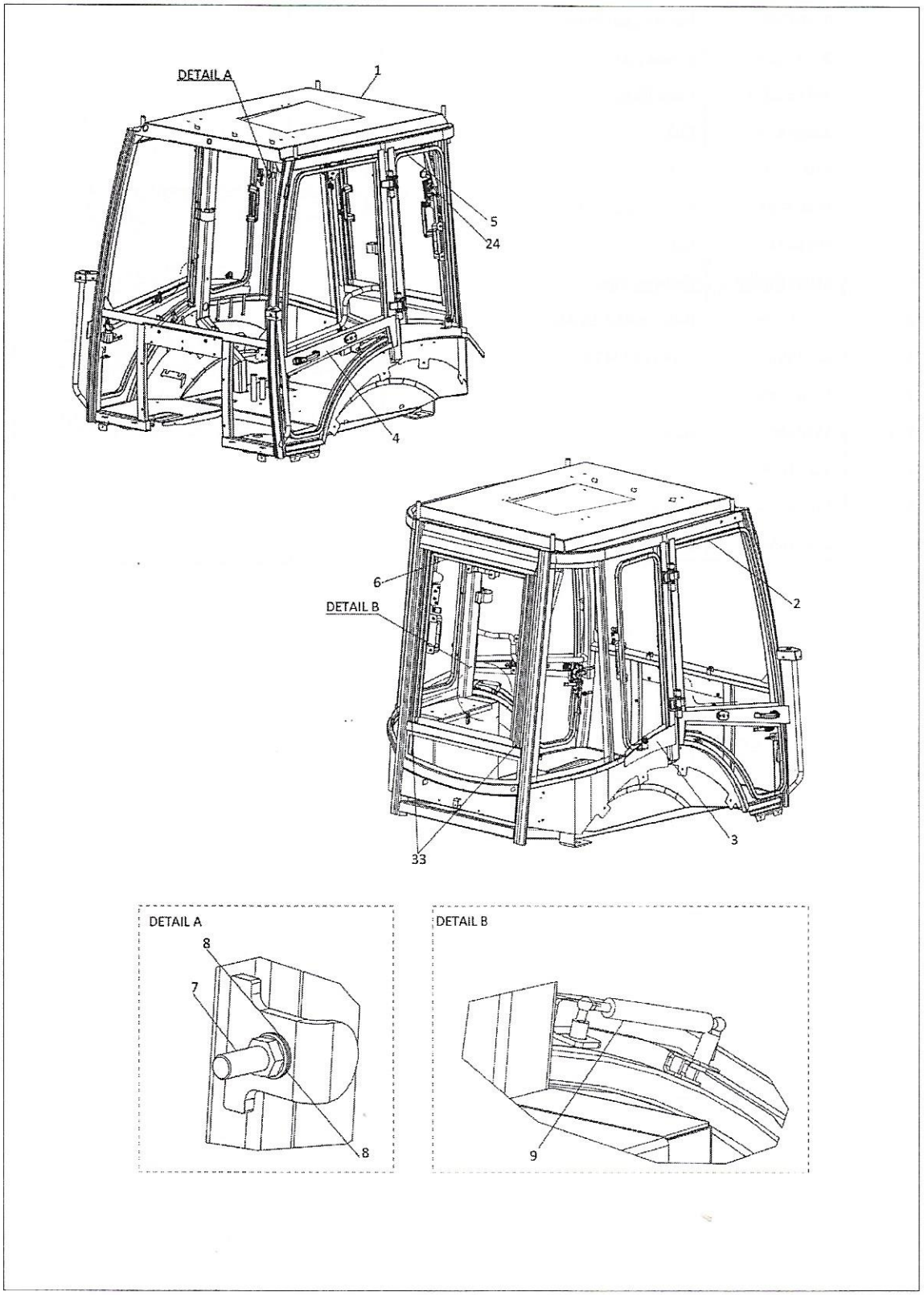
DETAIL A
1
5
24
4
6
DETAIL B
2
3
33
DETAIL A
8
7
8
DETAIL B
9

Item	Part No.	Name	Qty	Remarks
1	53111221	CAB WELDED - AIRCON	1	
2	53113449	ENTRY DOOR RH INST. - AIRCON (CLEAR GLASS)	1	
3	53113197	EMERGENCY WINDOW RH INST.	1	
4	53113450	ENTRY DOOR LH INST. - AIRCON (CLEAR GLASS)	1	
5	53113198	EMERGENCY WINDOW LH INST.	1	
6	53113199	REAR WINDOW INST.	1	
7	53108874	STRIKER BOLT (EMERGENCY WINDOW)	2	
8	53113322	WASHER M8 - STD	8	
9	1J0220	ENTRY DOOR GAS STRUT (DUMMY)	2	
10	53108756	HINGE PIN	4	
11	53108754	HINGE BUSH SMALL	8	
12	53108755	HINGE BUSH LARGE	8	
13	53113323	WASHER	4	
14	3006693X1	RETAINING RING EXT.	4	
15	53109212	SLIDE LINK ASSY LH	1	
16	53109213	SLIDE LINK ASSY RH	1	
17	53109202	STRIKER BOLT (REAR WINDOW)	4	
18	53101889	WASHER M10 - STD	2	
19	3521461M1	SAFETY FASTNER COMPOSITE	2	
20	53113169	HEX BOLT M16X60 GRADE 8.8	2	
21	53113170	WASHER M16 - STD	2	
22	53113171	M16 NYLOC NUT	2	
23	1J0259	STRAP CAB DOOR	2	
24	392309X1	THIN NUT	4	
25	53113172	WASHER	2	
26	53108869	STRKIER BOLT (ENTRY DOOR)	2	
27	53113332	HEX NUT M12	2	
28	53110100	REAR DOOR GAS STRUT (DUMMY)	2	
29	53113331	WASHER M12 - CHAM	2	
30	53112580	DOOR STRAP PIN	4	
31	1440522X1	RETAINING RING EXT.	4	
32	53112586	BEADING - REAR WINDOW	1	
33	53112585	BEADING - SLIDING RAIL	2	
34	53113348	NYLON BUSH	2	

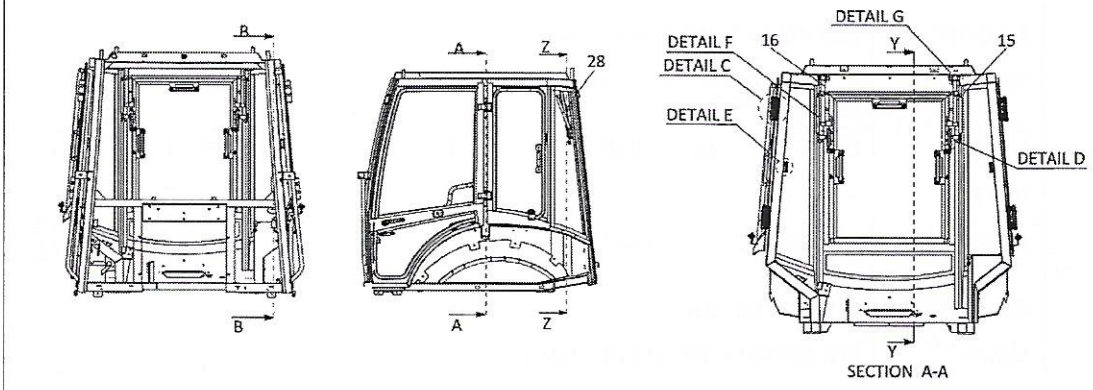
B
B
A
Z
28
A
Z
DETAIL G
DETAIL F
16
Y
15
DETAIL C
DETAIL E
DETAIL D
Y
SECTION A-A

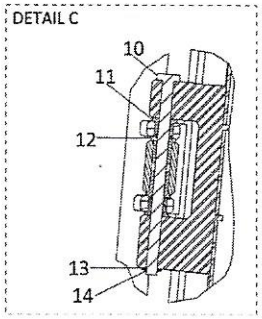
DETAIL C
10
11
12
13
14

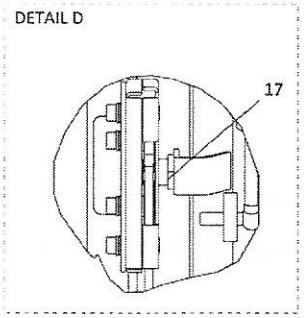
DETAIL D
17

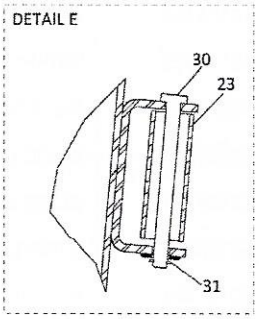
DETAIL E
30
23
31

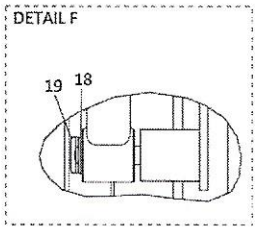
DETAIL F
19
18

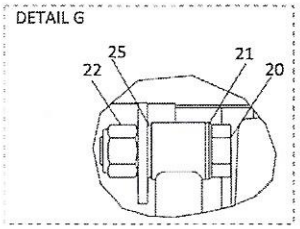
DETAIL G
25
22
21
20

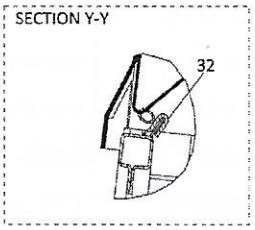
SECTION Y-Y
32

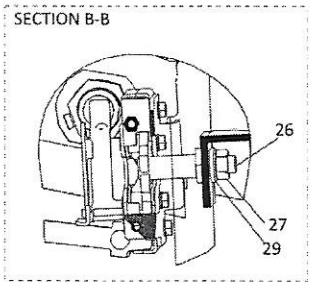
SECTION B-B
26
27
29

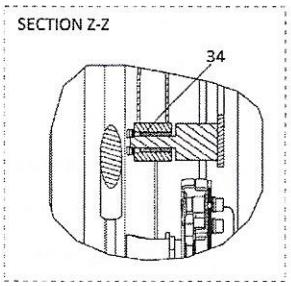
SECTION Z-Z
34

Item	Part No.	Name	Qty	Remarks
1	53111221	CAB WELDED - AIRCON	1	
2	53113449	ENTRY DOOR RH INST. - AIRCON (CLEAR GLASS)	1	
3	53113197	EMERGENCY WINDOW RH INST.	1	
4	53113450	ENTRY DOOR LH INST. - AIRCON (CLEAR GLASS)	1	
5	53113198	EMERGENCY WINDOW LH INST.	1	
6	53113199	REAR WINDOW INST.	1	
7	53108874	STRIKER BOLT (EMERGENCY WINDOW)	2	
8	53113322	WASHER M8 - STD	8	
9	1J0220	ENTRY DOOR GAS STRUT (DUMMY)	2	
10	53108756	HINGE PIN	4	
11	53108754	HINGE BUSH SMALL	8	
12	53108755	HINGE BUSH LARGE	8	
13	53113323	WASHER	4	
14	3006693X1	RETAINING RING EXT.	4	
15	53109212	SLIDE LINK ASSY LH	1	
16	53109213	SLIDE LINK ASSY RH	1	
17	53109202	STRIKER BOLT (REAR WINDOW)	4	
18	53101889	WASHER M10 - STD	2	
19	3521461M1	SAFETY FASTNER COMPOSITE	2	
20	53113169	HEX BOLT M16X60 GRADE 8.8	2	
21	53113170	WASHER M16 - STD	2	
22	53113171	M16 NYLOC NUT	2	
23	1J0259	STRAP CAB DOOR	2	
24	392309X1	THIN NUT	4	
25	53113172	WASHER	2	
26	53108869	STRKIER BOLT (ENTRY DOOR)	2	
27	53113332	HEX NUT M12	2	
28	53110100	REAR DOOR GAS STRUT (DUMMY)	2	
29	53113331	WASHER M12 - CHAM	2	
30	53112580	DOOR STRAP PIN	4	
31	1440522X1	RETAINING RING EXT.	4	
32	53112586	BEADING - REAR WINDOW	1	
33	53112585	BEADING - SLIDING RAIL	2	
34	53113348	NYLON BUSH	2	

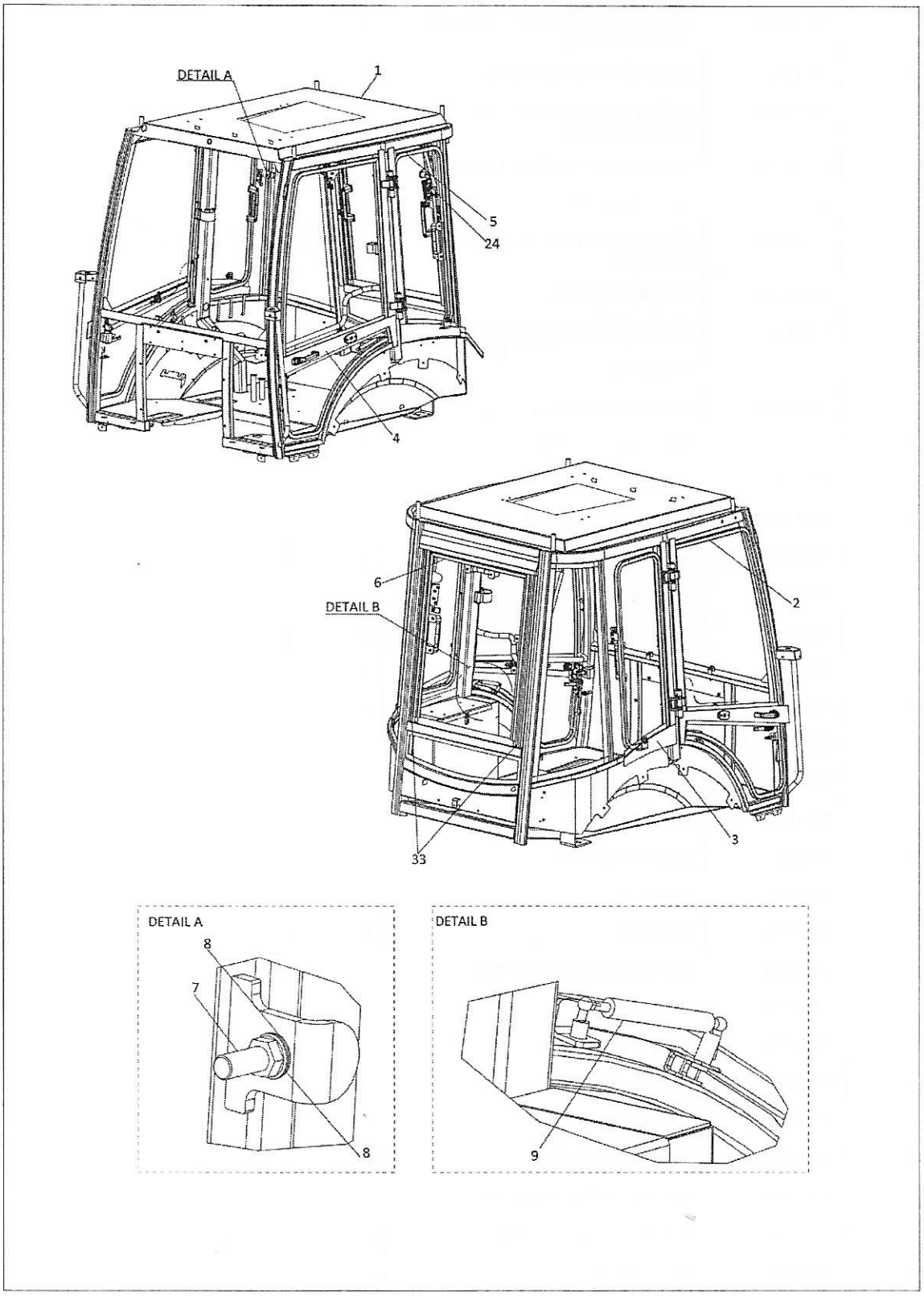
DETAIL A
1
5
24
4
6
DETAIL B
2
3
33
DETAIL A
8
7
8
DETAIL B
9

Item	Part No.	Name	Qty	Remarks
1	53111221	CAB WELDED - AIRCON	1	
2	53112199	ENTRY DOOR RH INST - AIRCON (TINTED GLASS)	1	
3	53111463	EMERGENCY WINDOW RH INST.	1	
4	53112200	ENTRY DOOR LH INST.- AIRCON (TINTED GLASS)	1	
5	53111465	EMERGENCY WINDOW LH INST.	1	
6	53111466	REAR WINDOW INST.	1	
7	53108874	STRIKER BOLT (EMERGENCY WINDOW)	2	
8	53113322	WASHER M8 - STD	8	
9	1J0220	ENTRY DOOR GAS STRUT (DUMMY)	2	
10	53108756	HINGE PIN	4	
11	53108754	HINGE BUSH SMALL	8	
12	53108755	HINGE BUSH LARGE	8	
13	53113323	WASHER	4	
14	3006693X1	RETAINING RING EXT.	4	
15	53109212	SLIDE LINK ASSY LH	1	
16	53109213	SLIDE LINK ASSY RH	1	
17	53109202	STRIKER BOLT (REAR WINDOW)	4	
18	53101889	WASHER M10 - STD	2	
19	3521461M1	SAFETY FASTNER COMPOSITE	2	
20	53113169	HEX BOLT M16X60 GRADE 8.8	2	
21	53113170	WASHER M16 - STD	2	
22	53113171	M16 NYLOC NUT	2	
23	1J0259	STRAP CAB DOOR	2	
24	392309X1	THIN NUT	4	
25	53113172	WASHER	2	
26	53108869	STRKIER BOLT (ENTRY DOOR)	2	
27	53113332	HEX NUT M12	2	
28	53110100	REAR DOOR GAS STRUT (DUMMY)	2	
29	53113331	WASHER M12 - CHAM	2	
30	53112580	DOOR STRAP PIN	4	
31	1440522X1	RETAINING RING EXT.	4	
32	53112586	BEADING - REAR WINDOW	1	
33	53112585	BEADING - SLIDING RAIL	2	
34	53113348	NYLON BUSH	2	

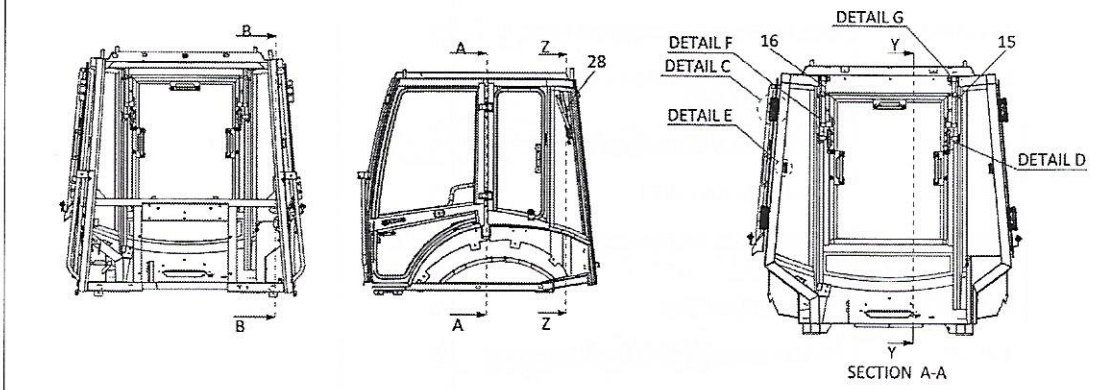
B
B
A
Z
28
A
Z
DETAIL G
DETAIL F
16
Y
15
DETAIL C
DETAIL E
DETAIL D
Y
SECTION A-A

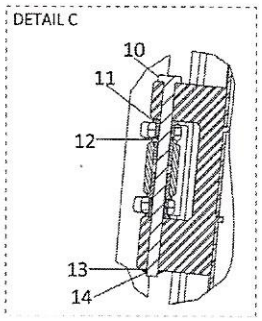
DETAIL C
10
11
12
13
14

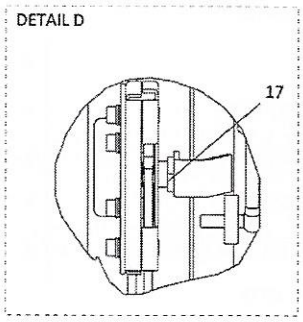
DETAIL D
17

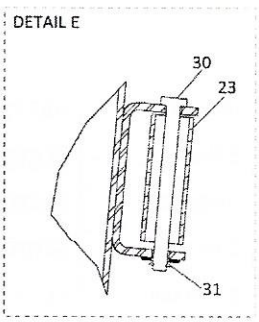
DETAIL E
30
23
31

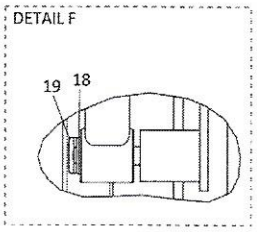
DETAIL F
19
18

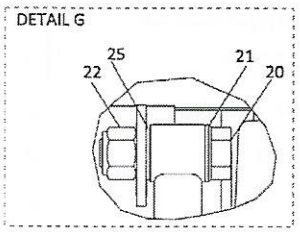
DETAIL G
25
22
21
20

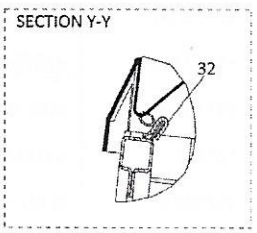
SECTION Y-Y
32

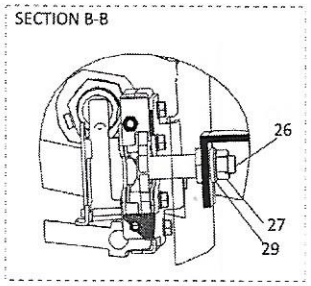
SECTION B-B
26
27
29

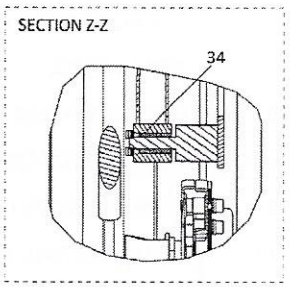
SECTION Z-Z
34

Item	Part No.	Name	Qty	Remarks
1	53111221	CAB WELDED - AIRCON	1	
2	53112199	ENTRY DOOR RH INST - AIRCON (TINTED GLASS)	1	
3	53111463	EMERGENCY WINDOW RH INST.	1	
4	53112200	ENTRY DOOR LH INST.- AIRCON (TINTED GLASS)	1	
5	53111465	EMERGENCY WINDOW LH INST.	1	
6	53111466	REAR WINDOW INST.	1	
7	53108874	STRIKER BOLT (EMERGENCY WINDOW)	2	
8	53113322	WASHER M8 - STD	8	
9	1J0220	ENTRY DOOR GAS STRUT (DUMMY)	2	
10	53108756	HINGE PIN	4	
11	53108754	HINGE BUSH SMALL	8	
12	53108755	HINGE BUSH LARGE	8	
13	53113323	WASHER	4	
14	3006693X1	RETAINING RING EXT.	4	
15	53109212	SLIDE LINK ASSY LH	1	
16	53109213	SLIDE LINK ASSY RH	1	
17	53109202	STRIKER BOLT (REAR WINDOW)	4	
18	53101889	WASHER M10 - STD	2	
19	3521461M1	SAFETY FASTNER COMPOSITE	2	
20	53113169	HEX BOLT M16X60 GRADE 8.8	2	
21	53113170	WASHER M16 - STD	2	
22	53113171	M16 NYLOC NUT	2	
23	1J0259	STRAP CAB DOOR	2	
24	392309X1	THIN NUT	4	
25	53113172	WASHER	2	
26	53108869	STRKIER BOLT (ENTRY DOOR)	2	
27	53113332	HEX NUT M12	2	
28	53110100	REAR DOOR GAS STRUT (DUMMY)	2	
29	53113331	WASHER M12 - CHAM	2	
30	53112580	DOOR STRAP PIN	4	
31	1440522X1	RETAINING RING EXT.	4	
32	53112586	BEADING - REAR WINDOW	1	
33	53112585	BEADING - SLIDING RAIL	2	
34	53113348	NYLON BUSH	2	

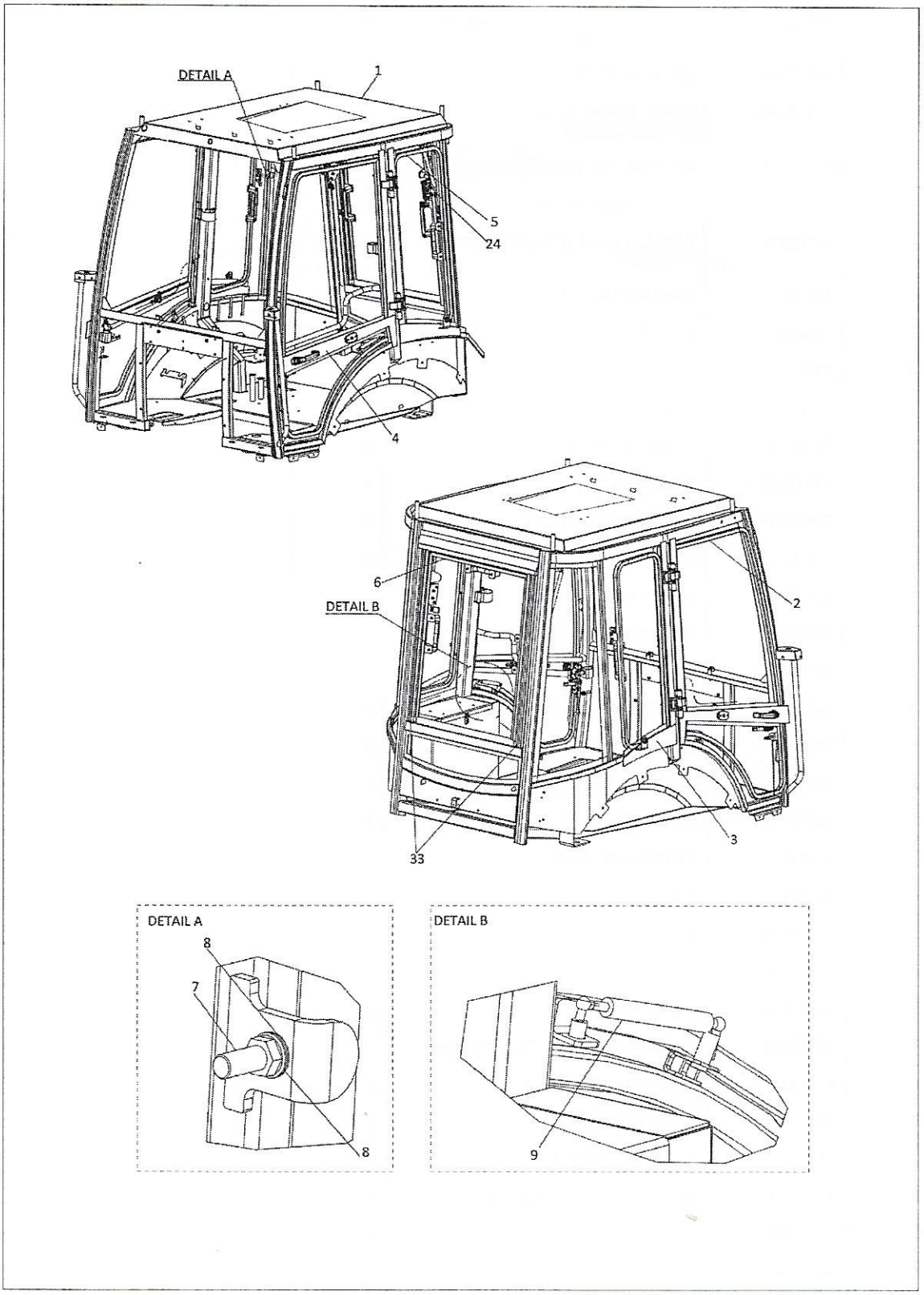
DETAIL A
1
5
24
4
6
DETAIL B
2
3
33
DETAIL A
8
7
8
DETAIL B
9

Item	Part No.	Name	Qty	Remarks
1	53111233	CAB WELDED- CM AIRCON	1	
2	53113449	ENTRY DOOR RH INST. - AIRCON (CLEAR GLASS)	1	
3	53113197	EMERGENCY WINDOW RH INST.	1	
4	53113450	ENTRY DOOR LH INST. - AIRCON (CLEAR GLASS)	1	
5	53113198	EMERGENCY WINDOW LH INST.	1	
6	53113199	REAR WINDOW INST.	1	
7	53108874	STRIKER BOLT (EMERGENCY WINDOW)	2	
8	53113322	WASHER M8 - STD	8	
9	1J0220	ENTRY DOOR GAS STRUT (DUMMY)	2	
10	53108756	HINGE PIN	4	
11	53108754	HINGE BUSH SMALL	8	
12	53108755	HINGE BUSH LARGE	8	
13	53113323	WASHER	4	
14	3006693X1	RETAINING RING EXT.	4	
15	53109212	SLIDE LINK ASSY LH	1	
16	53109213	SLIDE LINK ASSY RH	1	
17	53109202	STRIKER BOLT (REAR WINDOW)	4	
18	53101889	WASHER M10 - STD	2	
19	3521461M1	SAFETY FASTNER COMPOSITE	2	
20	53113169	HEX BOLT M16X60 GRADE 8.8	2	
21	53113170	WASHER M16 - STD	2	
22	53113171	M16 NYLOC NUT	2	
23	1J0259	STRAP CAB DOOR	2	
24	392309X1	THIN NUT	4	
25	53113172	WASHER	2	
26	53108869	STRKIER BOLT (ENTRY DOOR)	2	
27	53113332	HEX NUT M12	2	
28	53110100	REAR DOOR GAS STRUT (DUMMY)	2	
29	53113331	WASHER M12 - CHAM	2	
30	53112580	DOOR STRAP PIN	4	
31	1440522X1	RETAINING RING EXT.	4	
32	53112586	BEADING - REAR WINDOW	1	
33	53112585	BEADING - SLIDING RAIL	2	
34	53113348	NYLON BUSH	2	

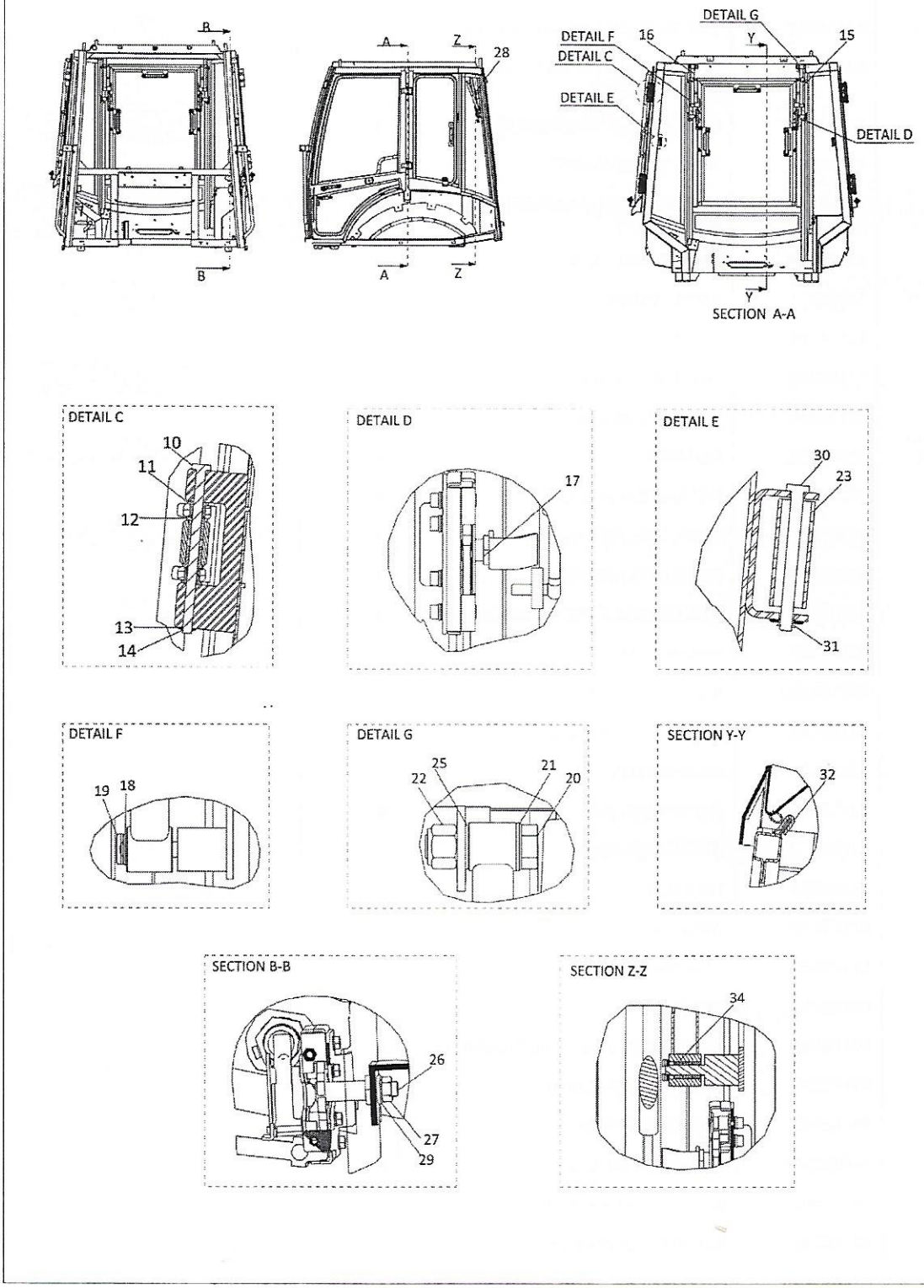
B
B
A
Z
28
A
Z
DETAIL G
DETAIL F
16
Y
15
DETAIL C
DETAIL E
DETAIL D
Y
SECTION A-A
DETAIL C
10
11
12
13
14
DETAIL D
17
DETAIL E
30
23
31
DETAIL F
19
18
DETAIL G
25
22
21
20
SECTION Y-Y
32
SECTION B-B
26
27
29
SECTION Z-Z
34

Item	Part No.	Name	Qty	Remarks
1	53111233	CAB WELDED- CM AIRCON	1	
2	53113449	ENTRY DOOR RH INST. - AIRCON (CLEAR GLASS)	1	
3	53113197	EMERGENCY WINDOW RH INST.	1	
4	53113450	ENTRY DOOR LH INST. - AIRCON (CLEAR GLASS)	1	
5	53113198	EMERGENCY WINDOW LH INST.	1	
6	53113199	REAR WINDOW INST.	1	
7	53108874	STRIKER BOLT (EMERGENCY WINDOW)	2	
8	53113322	WASHER M8 - STD	8	
9	1J0220	ENTRY DOOR GAS STRUT (DUMMY)	2	
10	53108756	HINGE PIN	4	
11	53108754	HINGE BUSH SMALL	8	
12	53108755	HINGE BUSH LARGE	8	
13	53113323	WASHER	4	
14	3006693X1	RETAINING RING EXT.	4	
15	53109212	SLIDE LINK ASSY LH	1	
16	53109213	SLIDE LINK ASSY RH	1	
17	53109202	STRIKER BOLT (REAR WINDOW)	4	
18	53101889	WASHER M10 - STD	2	
19	3521461M1	SAFETY FASTNER COMPOSITE	2	
20	53113169	HEX BOLT M16X60 GRADE 8.8	2	
21	53113170	WASHER M16 - STD	2	
22	53113171	M16 NYLOC NUT	2	
23	1J0259	STRAP CAB DOOR	2	
24	392309X1	THIN NUT	4	
25	53113172	WASHER	2	
26	53108869	STRKIER BOLT (ENTRY DOOR)	2	
27	53113332	HEX NUT M12	2	
28	53110100	REAR DOOR GAS STRUT (DUMMY)	2	
29	53113331	WASHER M12 - CHAM	2	
30	53112580	DOOR STRAP PIN	4	
31	1440522X1	RETAINING RING EXT.	4	
32	53112586	BEADING - REAR WINDOW	1	
33	53112585	BEADING - SLIDING RAIL	2	
34	53113348	NYLON BUSH	2	

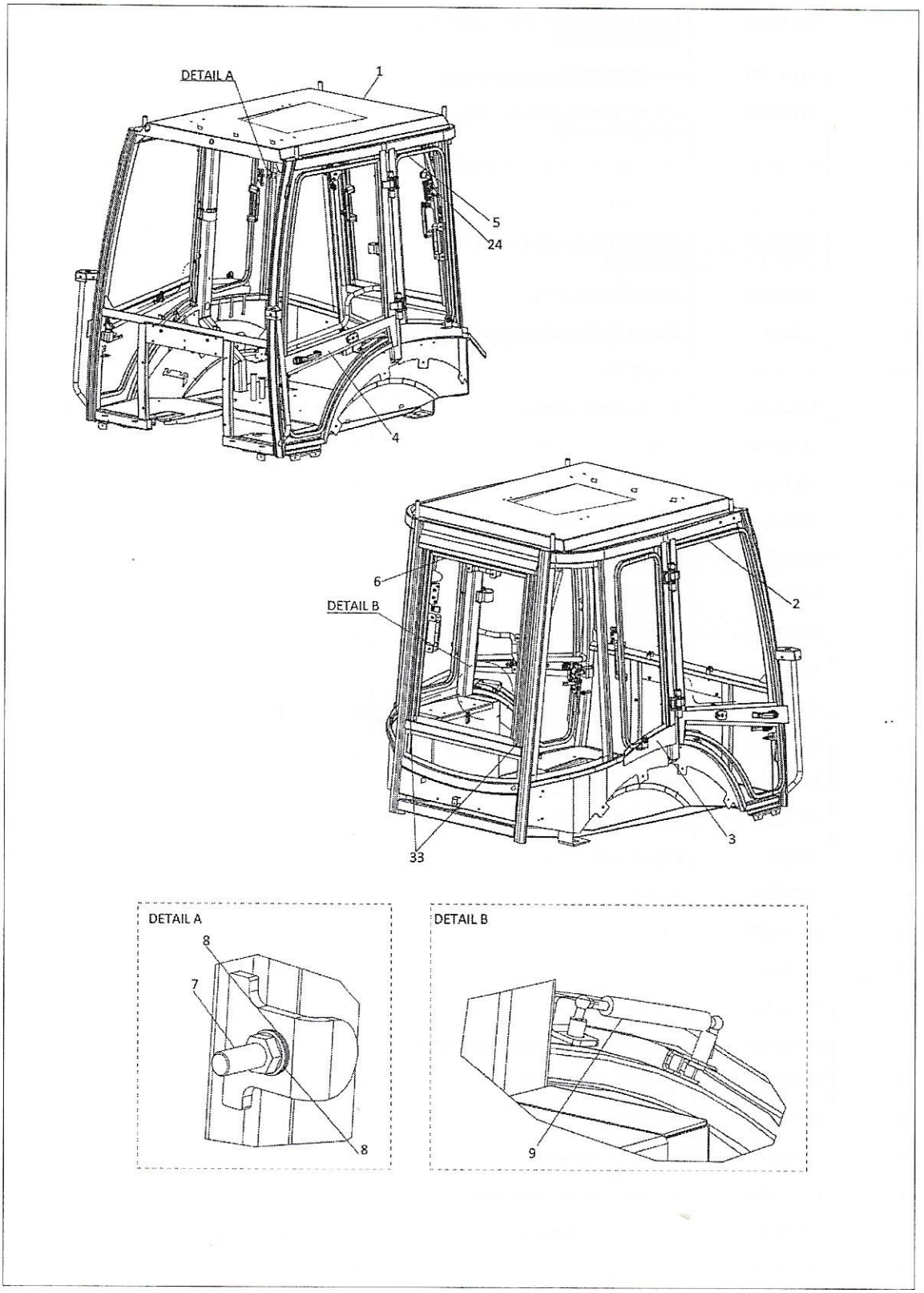
DETAIL A
1
5
24
4
6
DETAIL B
2
3
33
DETAIL A
8
7
8
DETAIL B
9

Item	Part No.	Name	Qty	Remarks
1	53111233	CAB WELDED- CM AIRCON	1	
2	53112199	ENTRY DOOR RH INST - AIRCON (TINTED GLASS)	1	
3	53111463	EMERGENCY WINDOW RH INST.	1	
4	53112200	ENTRY DOOR LH INST.- AIRCON (TINTED GLASS)	1	
5	53111465	EMERGENCY WINDOW LH INST.	1	
6	53111466	REAR WINDOW INST.	1	
7	53108874	STRIKER BOLT (EMERGENCY WINDOW)	2	
8	53113322	WASHER M8 - STD	8	
9	1J0220	ENTRY DOOR GAS STRUT (DUMMY)	2	
10	53108756	HINGE PIN	4	
11	53108754	HINGE BUSH SMALL	8	
12	53108755	HINGE BUSH LARGE	8	
13	53113323	WASHER	4	
14	3006693X1	RETAINING RING EXT.	4	
15	53109212	SLIDE LINK ASSY LH	1	
16	53109213	SLIDE LINK ASSY RH	1	
17	53109202	STRIKER BOLT (REAR WINDOW)	4	
18	53101889	WASHER M10 - STD	2	
19	3521461M1	SAFETY FASTNER COMPOSITE	2	
20	53113169	HEX BOLT M16X60 GRADE 8.8	2	
21	53113170	WASHER M16 - STD	2	
22	53113171	M16 NYLOC NUT	2	
23	1J0259	STRAP CAB DOOR	2	
24	392309X1	THIN NUT	4	
25	53113172	WASHER	2	
26	53108869	STRKIER BOLT (ENTRY DOOR)	2	
27	53113332	HEX NUT M12	2	
28	53110100	REAR DOOR GAS STRUT (DUMMY)	2	
29	53113331	WASHER M12 - CHAM	2	
30	53112580	DOOR STRAP PIN	4	
31	1440522X1	RETAINING RING EXT.	4	
32	53112586	BEADING - REAR WINDOW	1	
33	53112585	BEADING - SLIDING RAIL	2	
34	53113348	NYLON BUSH	2	

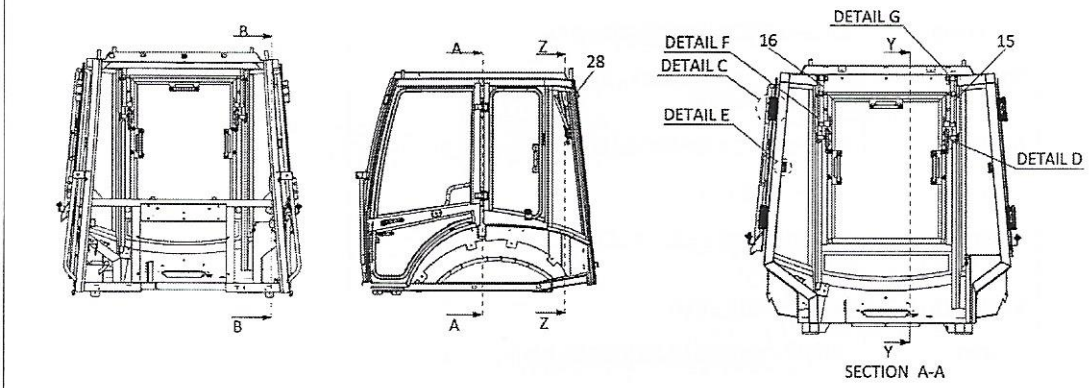
B
B
A
Z
28
A
Z
DETAIL G
DETAIL F
16
Y
15
DETAIL C
DETAIL E
DETAIL D
Y
SECTION A-A

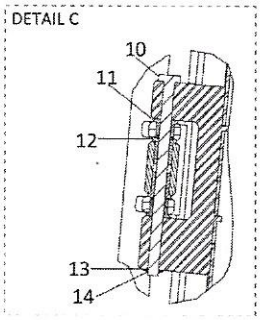
DETAIL C
10
11
12
13
14

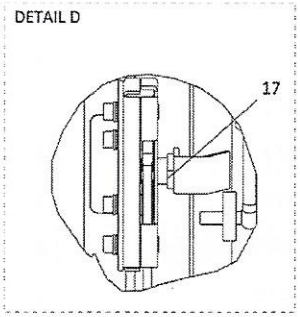
DETAIL D
17

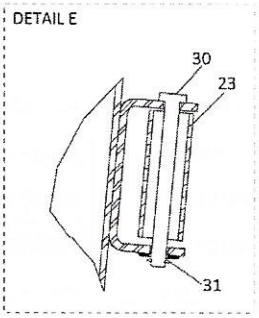
DETAIL E
30
23
31

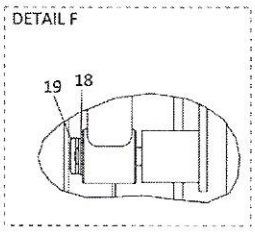
DETAIL F
19
18

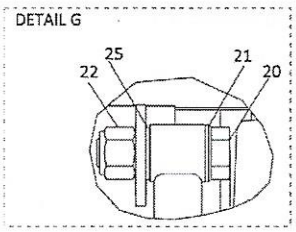
DETAIL G
25
22
21
20

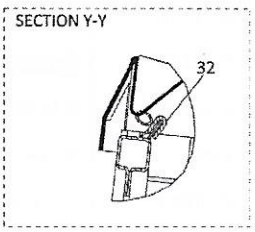
SECTION Y-Y
32

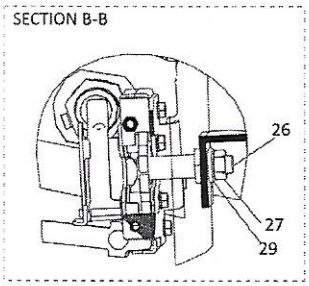
SECTION B-B
26
27
29

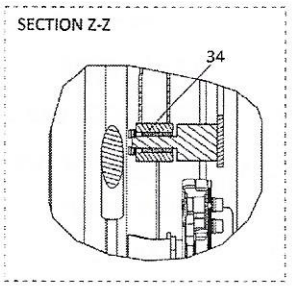
SECTION Z-Z
34

Item	Part No.	Name	Qty	Remarks
1	53111233	CAB WELDED- CM AIRCON	1	
2	53112199	ENTRY DOOR RH INST - AIRCON (TINTED GLASS)	1	
3	53111463	EMERGENCY WINDOW RH INST.	1	
4	53112200	ENTRY DOOR LH INST.- AIRCON (TINTED GLASS)	1	
5	53111465	EMERGENCY WINDOW LH INST.	1	
6	53111466	REAR WINDOW INST.	1	
7	53108874	STRIKER BOLT (EMERGENCY WINDOW)	2	
8	53113322	WASHER M8 - STD	8	
9	1J0220	ENTRY DOOR GAS STRUT (DUMMY)	2	
10	53108756	HINGE PIN	4	
11	53108754	HINGE BUSH SMALL	8	
12	53108755	HINGE BUSH LARGE	8	
13	53113323	WASHER	4	
14	3006693X1	RETAINING RING EXT.	4	
15	53109212	SLIDE LINK ASSY LH	1	
16	53109213	SLIDE LINK ASSY RH	1	
17	53109202	STRIKER BOLT (REAR WINDOW)	4	
18	53101889	WASHER M10 - STD	2	
19	3521461M1	SAFETY FASTNER COMPOSITE	2	
20	53113169	HEX BOLT M16X60 GRADE 8.8	2	
21	53113170	WASHER M16 - STD	2	
22	53113171	M16 NYLOC NUT	2	
23	1J0259	STRAP CAB DOOR	2	
24	392309X1	THIN NUT	4	
25	53113172	WASHER	2	
26	53108869	STRKIER BOLT (ENTRY DOOR)	2	
27	53113332	HEX NUT M12	2	
28	53110100	REAR DOOR GAS STRUT (DUMMY)	2	
29	53113331	WASHER M12 - CHAM	2	
30	53112580	DOOR STRAP PIN	4	
31	1440522X1	RETAINING RING EXT.	4	
32	53112586	BEADING - REAR WINDOW	1	
33	53112585	BEADING - SLIDING RAIL	2	
34	53113348	NYLON BUSH	2	


3
4
1
5
2
7
8
10
6
9

Item	Part No.	Name	Qty	Remarks
1	1J0554	FRP ROOF COVER	1	
2	1J0625	INNER ROOF-FRP	1	
3	1A0619	COMPRESSOR (AIRCON UNIT)	1	
4	1J0548	CAB WELDMENT	1	Changed from machine serial no. 15163
5	1J0628	BRACKET ASSEMBLY -AIRCON UNIT	1	
6	1J0764	OPERATOR SEAT - SUSP. TYPE	1	
7	1J0557	SLIDE LINK ASSY-RH	1	
8	1J0556	SLIDE LINK ASSY-LH	1	
9	1J0555	REAR WINDOW W/ASSY	1	
10	1J0619	GROMMET	2	

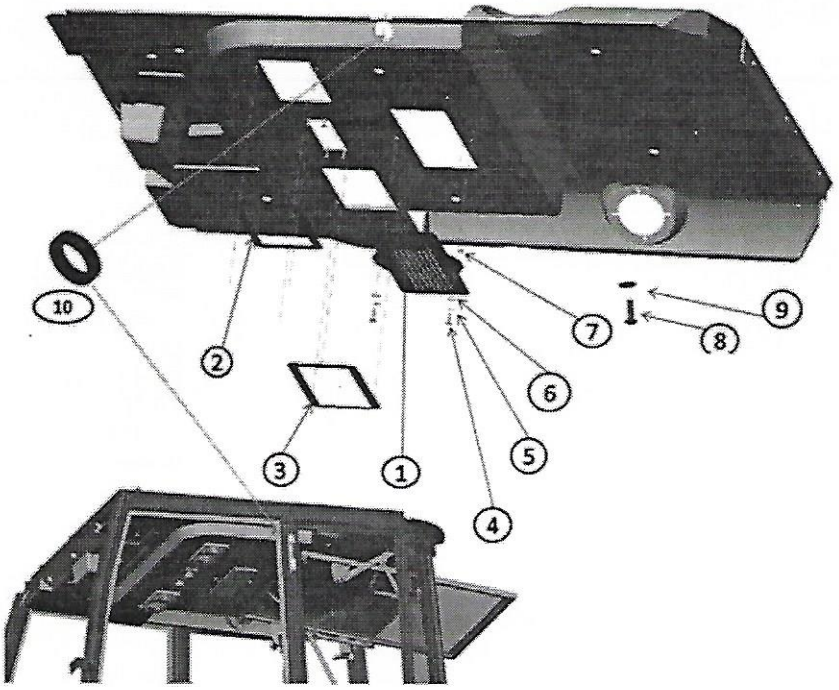
10
2
3
1
4
5
6
7
8
9

Item	Part No.	Name	Qty	Remarks
1	1J0620	PLATE VENT	1	
2	1J0621	BOX VENT - LH	1	
3	1J0622	BOX VENT - RH	1	
4	3008229X1	MACHINE SCREW PAN HEAD M6x30	12	
5	3516109M1	WASHER	12	
6	391038X1	WASHER M6 LARGE	12	
7	1441500X1	M6 NYLOC NUT	12	
8	1J0629	HEX SCREW	6	
9	1J0630	WASHER	6	
10	1J0016	GROMMET Q40 CABIN	2	

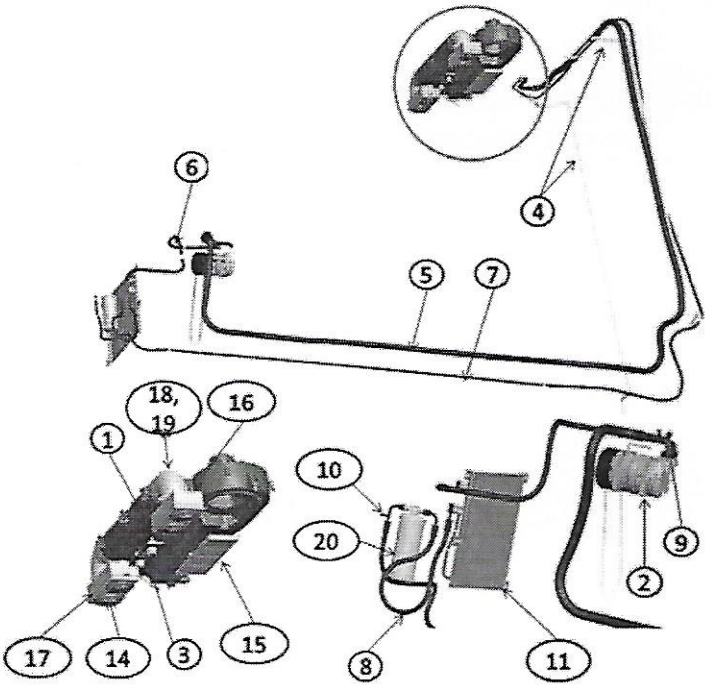
6
4
5
7
18,
19
16
1
10
20
9
2
17
14
3
15
8
11

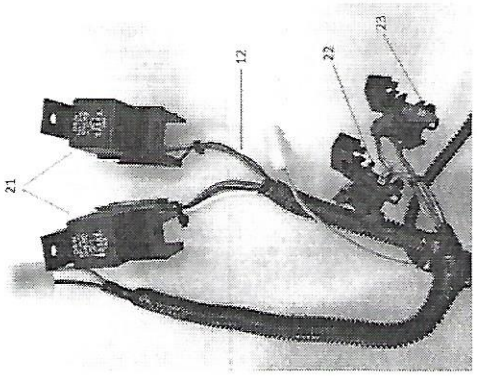
12
22
23
21

Item	Part No.	Name	Qty	Remarks
1	10X3409	AC UNIT	1	
1A	53106884	FAN & MOTOR ASSY	1	
2	10X3410	COMPRESSOR	1	
3	10X3411	CONTROL PANEL	1	
4	10X3412	DRAIN HOSE	2	
5	10X3413	SUCTION HOSE	1	
6	1A0724	DISCHARGE HOSE	1	
7	10X3415	L HOSE ASSEMBLY	1	
8	10X3416	L HOSE ASSEMBLY CONDENSER	1	
9	10X3417	PIPE ASSEMBLY	1	
10	10X3418	PIPE ASSEMBLY WITH BINARY SWITCH	1	
11	10X3419	CONDENSER	1	
12	10X3420	MAIN WIRE HARNESS	1	
13	10X3421	SUB WIRE HARNESS	1	
14	10X3422	LOUVERS FOR DUCTING	4	
15	10X3423	AIR CON FILTER ASSY	1	
16	10x3424	LOUVER HOUSING- LH	1	
17	10X3425	LOUVER HOUSING- RH	1	
18	10X3426	DUCT	2	
19	10X3427	CLAMP (FOR DUCT HOLDING)	4	
20	10X3428	RD BOTTLE	1	
21	53106894	RELAY	2	
22	1D0127	FUSE 10 AMPS	1	
23	53109990	FUSE 30 AMP	1	

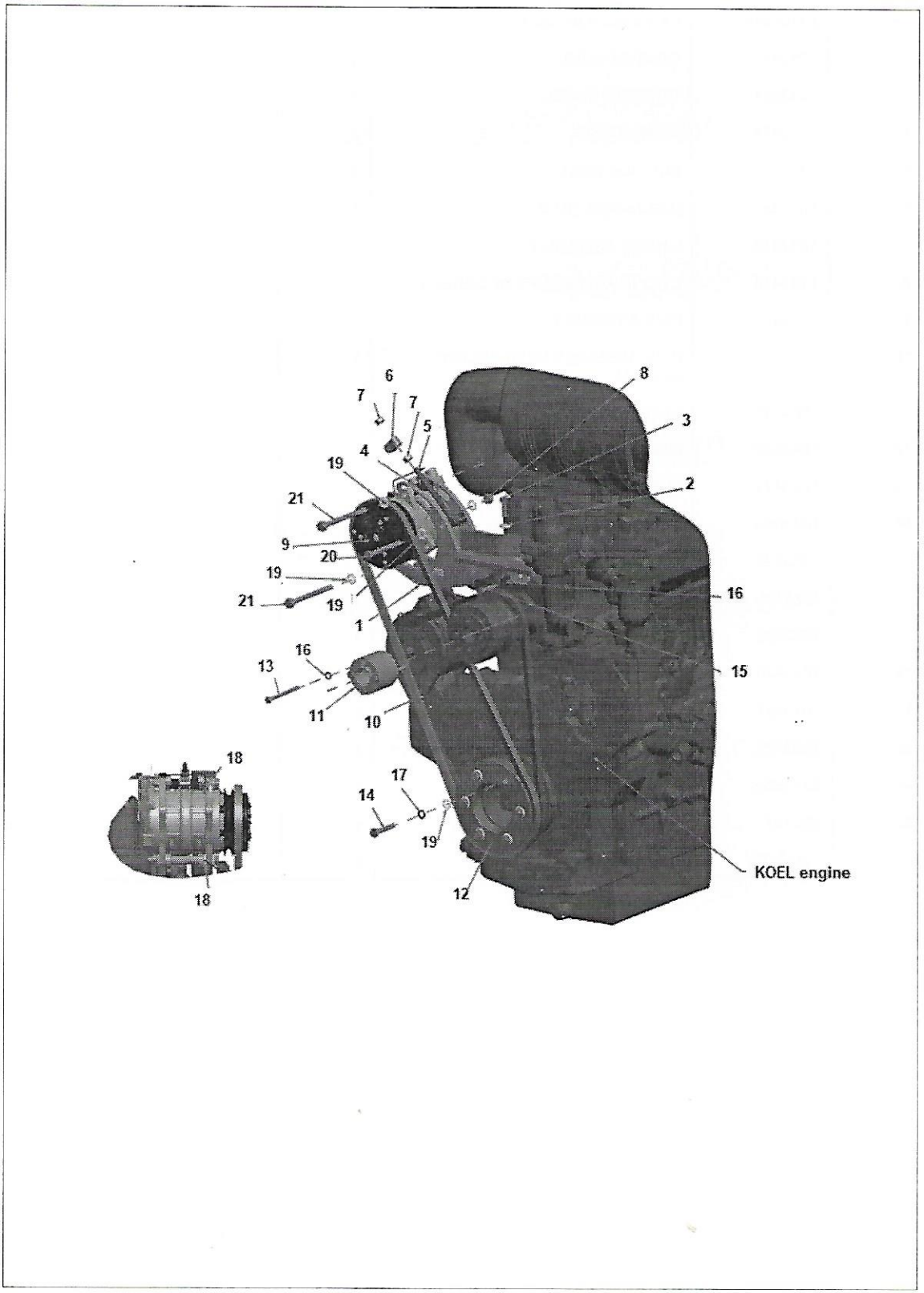
6
7
7
5
4
19
21
9
20
19
21
19
1
16
13
11
10
18
18
8
3
2
16
15
17
14
19
12
KOEL engine

Item	Part No.	Name	Qty	Remarks
1	53112625	COMPRESSOR BRACKET ASSY - KOEL	1	
2	50112484	LOCK WASHER M10	2	
3	6007777M1	HEX HD BOLT	2	
4	53101938	SPACER	4	
5	53101939	M10 BOLT	1	
6	53101946	2 WAY BUSH	1	
7	3019406X1	HEX NUT M10X1.5	2	
8	1440329X1	NUT NYLOCK M10	3	
9	10X3410	COMPRESSOR	1	
10	53110115	COMPRESSOR BELT	1	
11	1A0760	ADAPTER - WING FAN	1	
12	1A0784	CRANK PULLEY	1	
13	1A0794	BOLT M8x90 GRADE 10.9	4	
14	1A0795	HEX HEAD BOLT M10 LONG 55	6	
15	6007776M1	BOLT M10x30 GRADE 10.9	2	
16	339374X1	LOCK WASHER M8	4	
17	339376X1	LOCK_WASHER	6	
18	385362X1	WASHER M10 - CHAM	2	
19	390734X1	WASHER M10-STD	14	
20	6007786M1	BOLT M10x90 GRADE 10.9	1	
21	6007787M1	BOLT M10x120 GRADE 10.9	2	

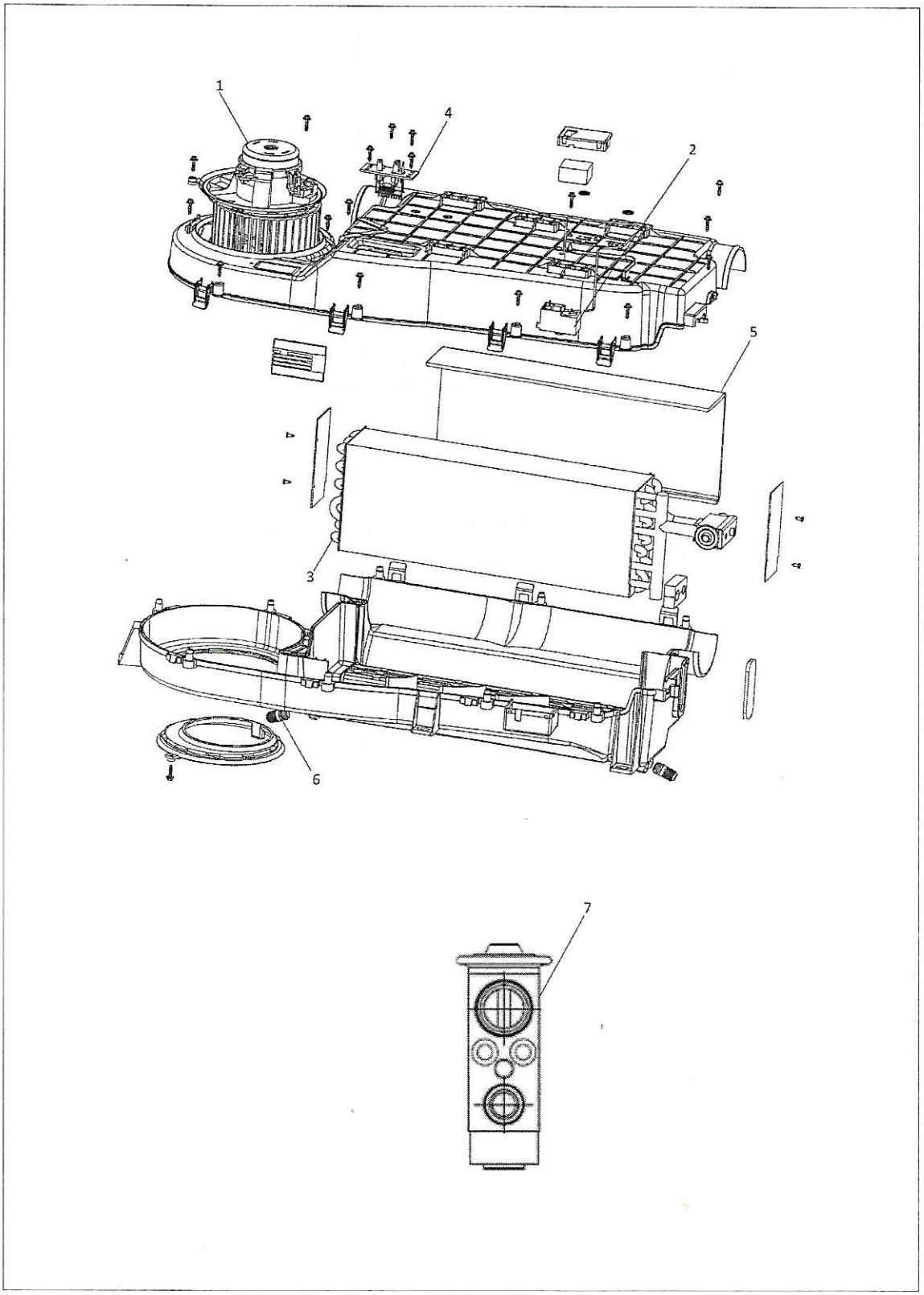
1
4
2
5
3
6
7

Item	Part No.	Name	Qty	Remarks
1	53106884	FAN & MOTOR ASSY	1	
2	53114936	MECHANICAL THERMOSTAT	1	
3	53114937	EVAPORATOR COIL	1	
4	53114938	4-SPEED RESISTOR	1	
5	53114939	ANTI-SPITTING FOAM	1	
6	53114940	DRAIN NIPPLE	2	
7	53113298	EXPANSION VALVE	1	


1
2
3
4
5
6
7
8
9
10

Item	Part No.	Name	Qty	Remarks
1	1J0554	FRP ROOF COVER	1	
2	1J0625	INNER ROOF-FRP	1	
3	53106803	HVAC	1	
4	1J0548	CAB WELDMENT	1	Changed from machine serial no. 15163
5	1J0553	BRACKET ASSEMBLY	1	
6	1J0764	OPERATOR SEAT - SUSP. TYPE	1	
7	1J0557	SLIDE LINK ASSY-RH	1	
8	1J0556	SLIDE LINK ASSY-LH	1	
9	1J0555	REAR WINDOW W/ASSY	1	
10	1J0619	GROMMET	2	

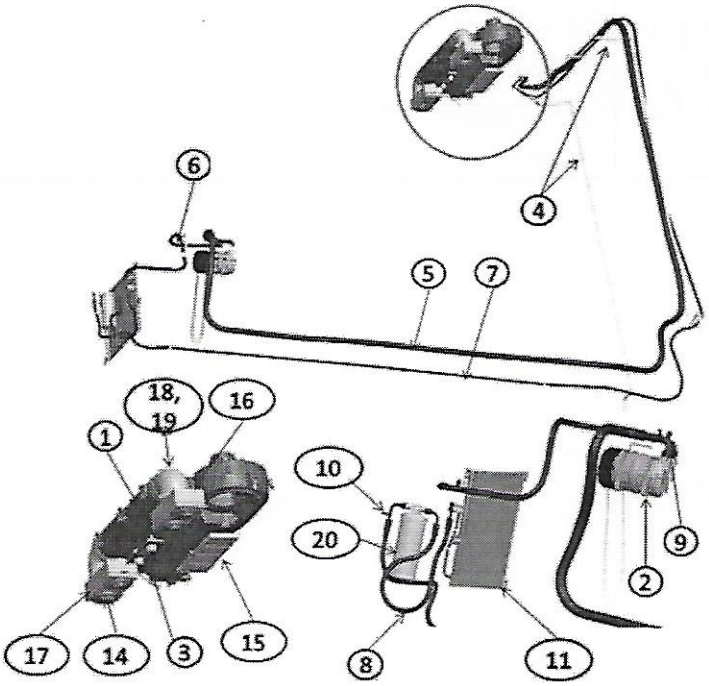
6
4
5
7
18,
19
16
1
10
20
9
2
17
14
3
15
8
11

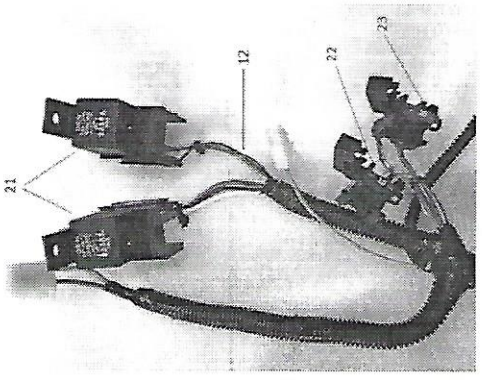
12
22
23
21

Item	Part No.	Name	Qty	Remarks
1	53106803	HVAC	1	
2	10X3410	COMPRESSOR	1	
3	53107773	CONTROL PANEL	1	
4	10X3412	DRAIN HOSE	2	
5	10X3413	SUCTION HOSE	1	
6	10X3414	DISCHARGE HOSE	1	
7	10X3415	L HOSE ASSEMBLY	1	
8	10X3416	L HOSE ASSEMBLY CONDENSER	1	
9	10X3417	PIPE ASSEMBLY	1	
10	10X3418	PIPE ASSEMBLY WITH BINARY SWITCH	1	
11	10X3419	CONDENSER	1	
12	53107774	MAIN WIRE HARNESS	1	
13	10X3421	SUB WIRE HARNESS	1	
14	10X3422	LOUVERS FOR DUCTING	4	
15	10X3423	AIR CON FILTER ASSY	1	
16	10x3424	LOUVER HOUSING- LH	1	
17	10X3425	LOUVER HOUSING- RH	1	
18	10X3426	DUCT	2	
19	10X3427	CLAMP (FOR DUCT HOLDING)	4	
20	10X3428	RD BOTTLE	1	
21	53106894	RELAY	2	
22	1D0127	FUSE 10 AMPS	1	
23	53109990	FUSE 30 AMP	1	


1
2
3
4
5
6
7
8
9
10

Item	Part No.	Name	Qty	Remarks
1	1J0554	FRP ROOF COVER	1	
2	1J0625	INNER ROOF-FRP	1	
3	53106804	HEATER UNIT	1	
4	1J0548	CAB WELDMENT	1	Changed from machine serial no. 15163
5	1J0553	BRACKET ASSEMBLY	1	
6	1J0764	OPERATOR SEAT - SUSP. TYPE	1	
7	1J0557	SLIDE LINK ASSY-RH	1	
8	1J0556	SLIDE LINK ASSY-LH	1	
9	1J0555	REAR WINDOW W/ASSY	1	
10	1J0619	GROMMET	2	

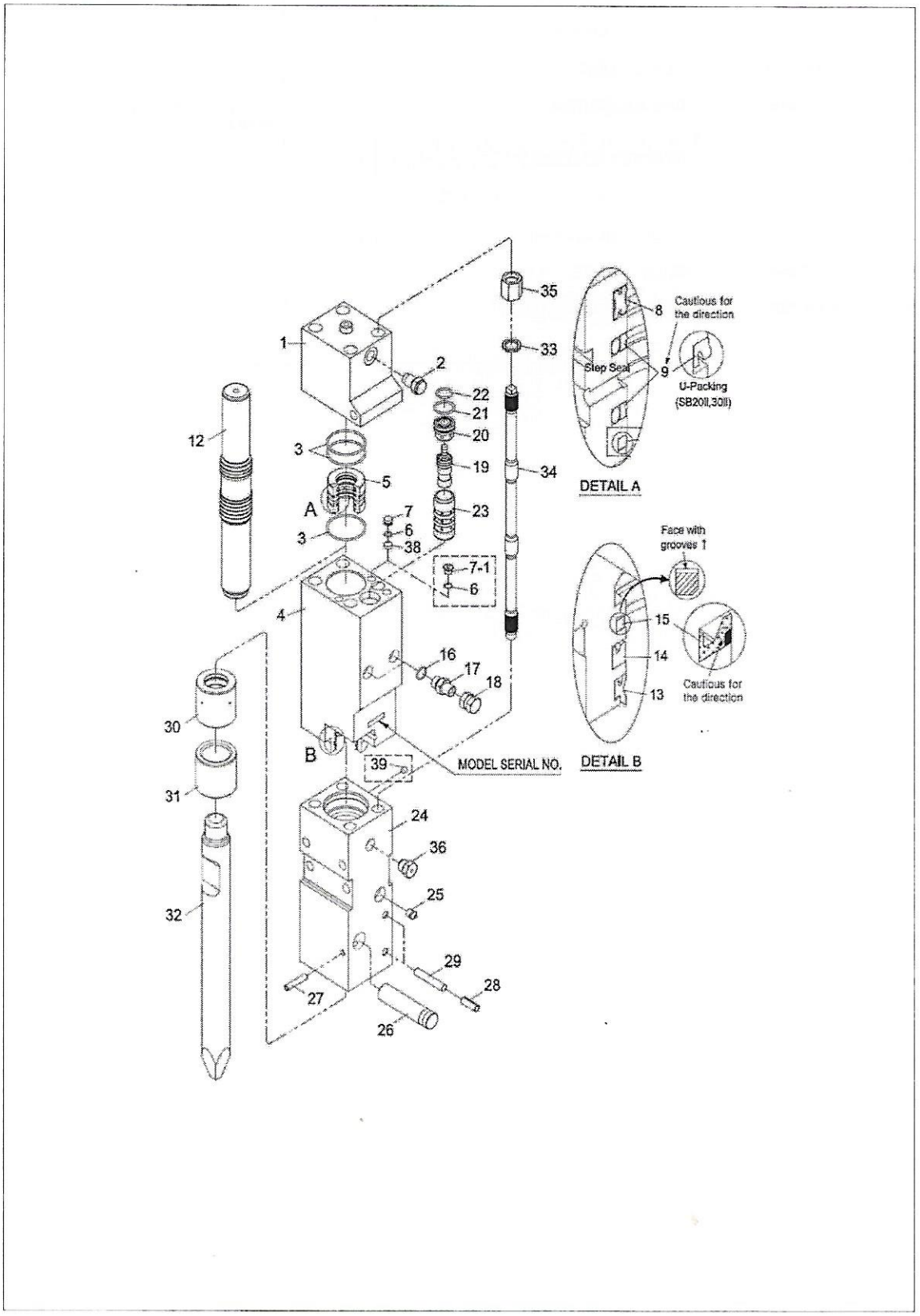
1
2
3
4
5
6
7
7-1
8
9
12
15
16
17
18
19
20
21
22
23
24
25
26
27
28
29
30
31
32
33
34
35
36
38
39
A
B
Step Seal
Cautious for the direction
U-Packing (SB20II,30II)
DETAIL A
Face with grooves 1
Cautious for the direction
DETAIL B
MODEL SERIAL NO.

Item	Part No.	Name	Qty	Remarks
1	10X2434	Back Head	1	
2	10X2435	Charging Valve	1	
3	10X2436	O-Ring	3	
4	10X2437	Cylinder	1	
5	10X2438	Seal Retainer	1	
6	10X2439	O-Ring	3	
7	10X2440	Plug	3	
8	10X2441	Gas Seal	1	
9	10X2442	Step Seal	2	
12	10X2443	Piston	1	
13	10X2444	Dust Seal	1	
14	10X2445	U-Packing	1	
15	10X2446	Buer Seal	1	
16	10X2447	O-Ring	2	
17	10X2448	Adapter	2	
18	10X2449	Union Cap	2	
19	10X2450	Valve	1	
20	10X2451	Valve Plug	1	
21	10X2452	O-Ring	1	
22	10X2453	O-Ring	1	
23	10X2454	Valve Sleeve	1	
24	10X2455	Front Head	1	
25	10X2456	Grease Nipple	1	
26	10X2457	Rod Pin	1	
27	10X2458	Spring Pin	1	
28	10X2459	Spring Pin	4	
29	10X2460	Stop Pin	2	
30	10X2461	Ring Bush	1	
31	10X2462	Thrust Bush	1	
32	10X2463	ROD (MOIL POINT)	1	
32	10X2523	Rod (Universal Type)	1	
32	10X2522	Rod (V-Wedge)	1	
32	10X2521	CHIESEL	1	
32	10X2524	Rod (Flat)	1	
33	10X2464	Washer	4	
34	10X2465	Through Bolt	4	

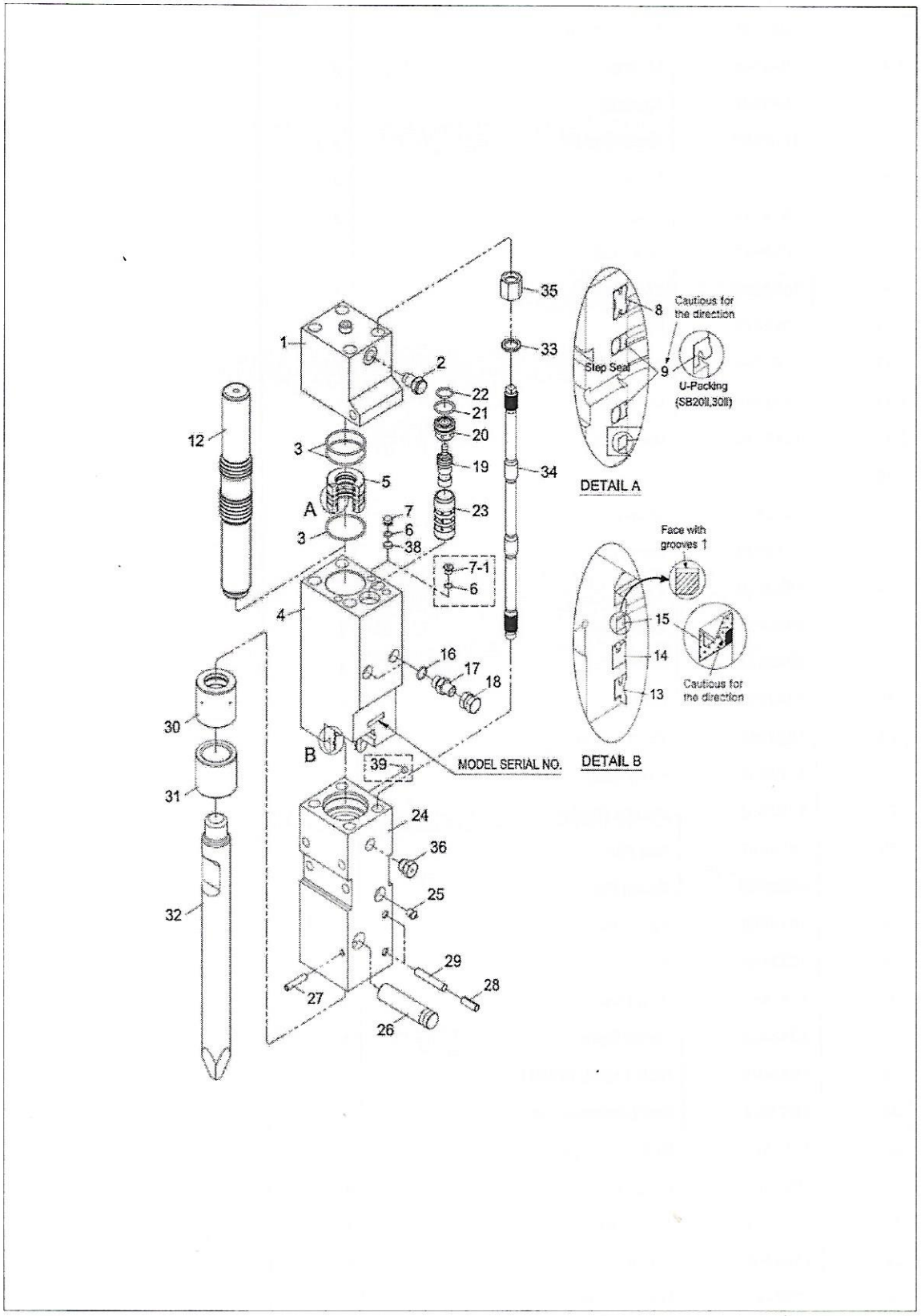
1
2
3
4
5
6
7
7-1
8
9
12
15
16
17
18
19
20
21
22
23
24
25
26
27
28
29
30
31
32
33
34
35
36
38
39
A
B
Step Seal
Cautious for the direction
U-Packing (SB20II,30II)
DETAIL A
Face with grooves ↑
Cautious for the direction
DETAIL B
MODEL SERIAL NO.

Item	Part No.	Name	Qty	Remarks
35	10X2466	Hex Nut	4	
36	10X2467	Air Check Valve	1	
Not Shown	10x2469	Seal Kit	1	

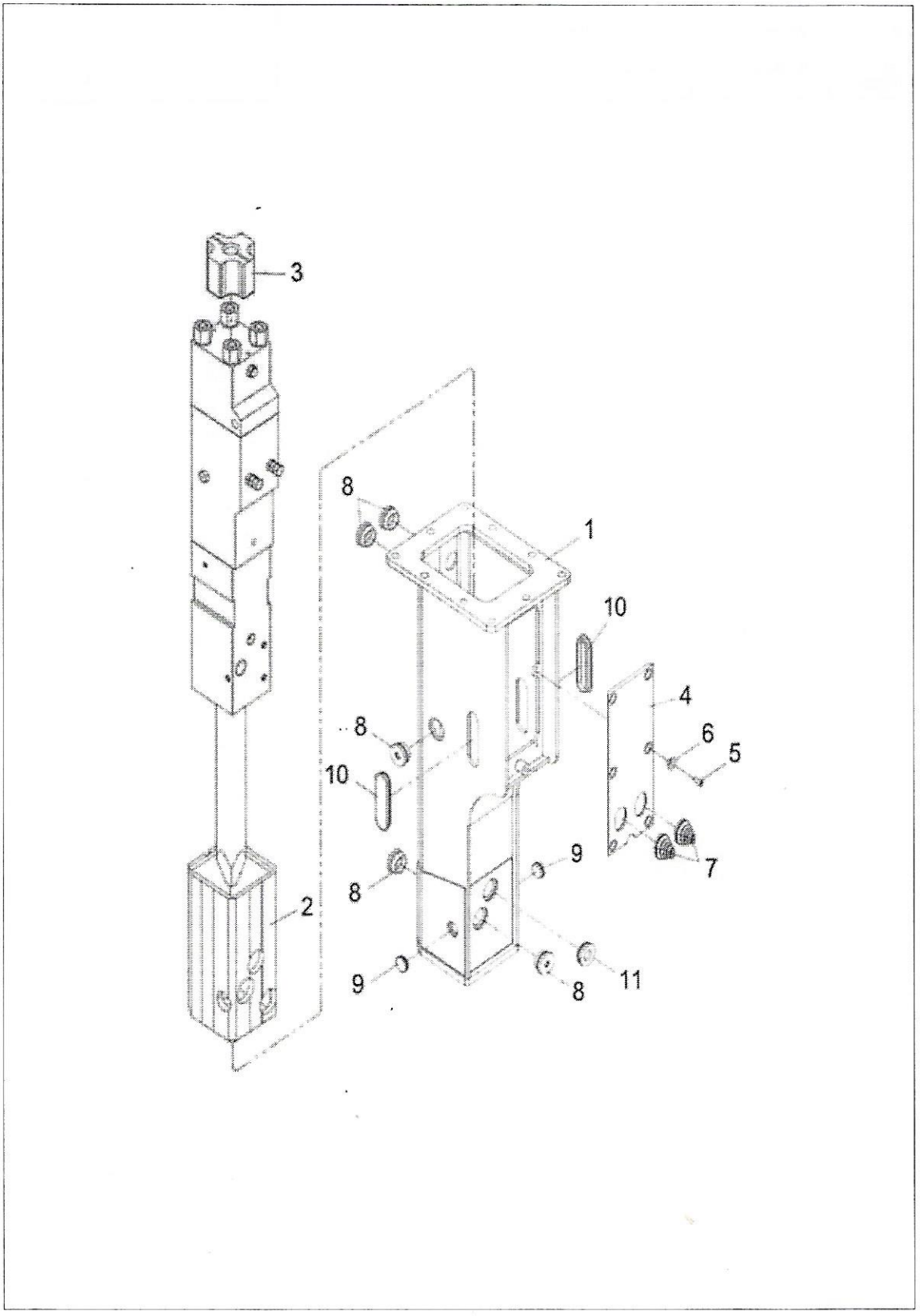
3
8
1
10
4
8
6
5
10
9
7
8
2
9
8
11

Item	Part No.	Name	Qty	Remarks
1	10X2470	Frame	1	
2	10X2473	Down Cushion	1	
3	10X2471	Upper Cushion	1	
4	10X2472	Window Cover	1	
5	10X2474	Socket Bolt	6	
6	10X2475	Washer	6	
7	10X2476	Hose Cover	2	
8	10X2477	Sound Plug-1	5	
9	10X2478	Sound Plug-2	2	
10	10X2479	Sound Plug-3	2	
11	10X2480	Sound Plug-4	1	

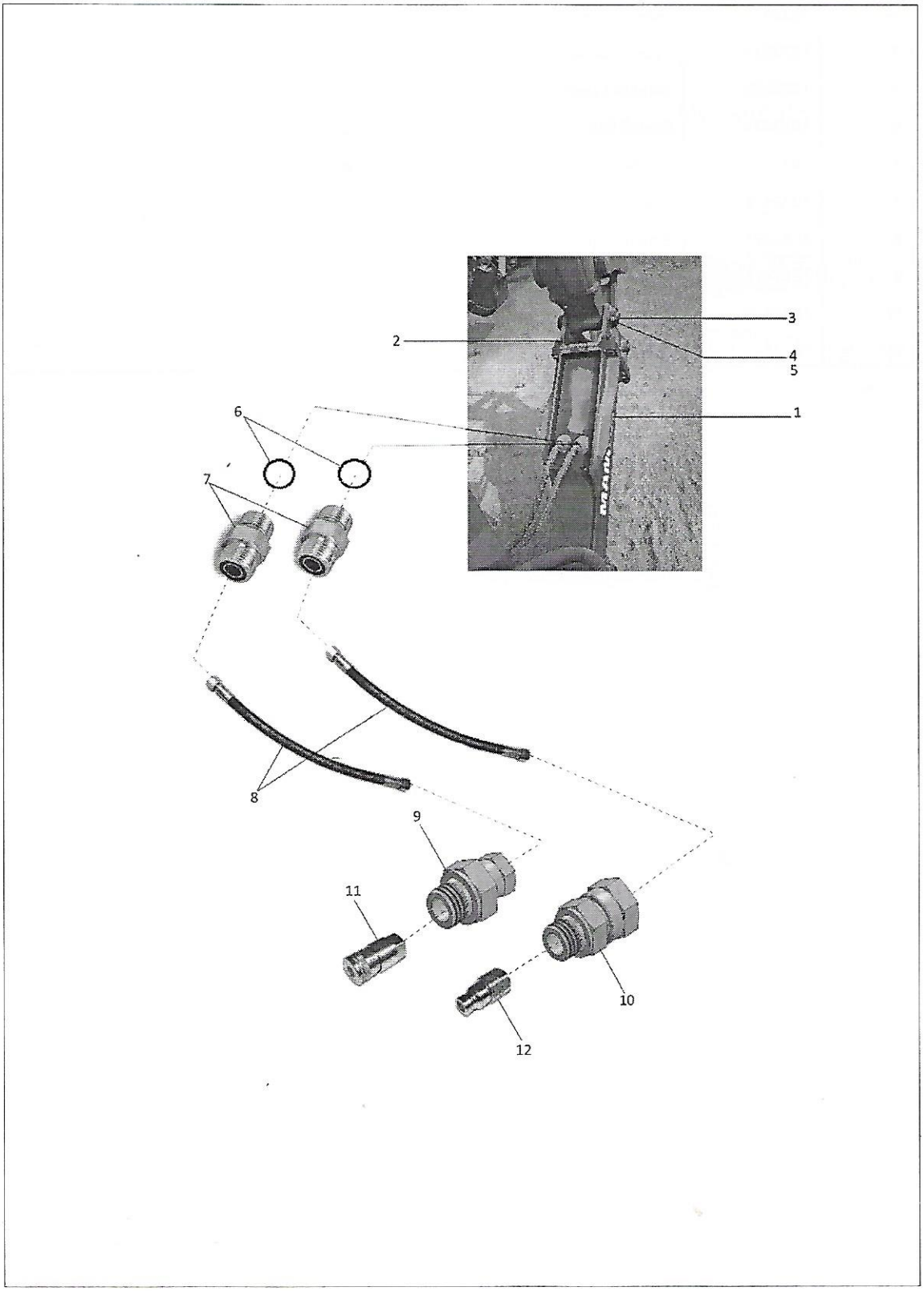
1
2
3
4
5
6
7
8
9
10
11
12

Item	Part No.	Name	Qty	Remarks
1	10X2401	ROCK BREAKER (TXI - 430-KS)	1	
2	1B1025	MOUNTING BRACKET - STRAIGHT	1	
3	10X2643	MOUNTING PIN - TOP BRAKCET	2	
4	1441106X1	BOLT M10 - 100 Z5S	2	
5	1440329X1	NUT NYLOCK M10	2	
6	835024M1	O-RING	2	
7	3H1016	ADAPTOR	2	
8	53106868	HOSE ASSY ROCK BREAKER	2	
9	53111864	ADAPTOR PRESSURE LINE	1	
10	53111865	ADAPTOR RETURN LINE	1	
11	3H0993	FLAT FACE QUICK COUPLING FEMALE	1	
12	3H0994	QUICK COUPLING MALE	1	

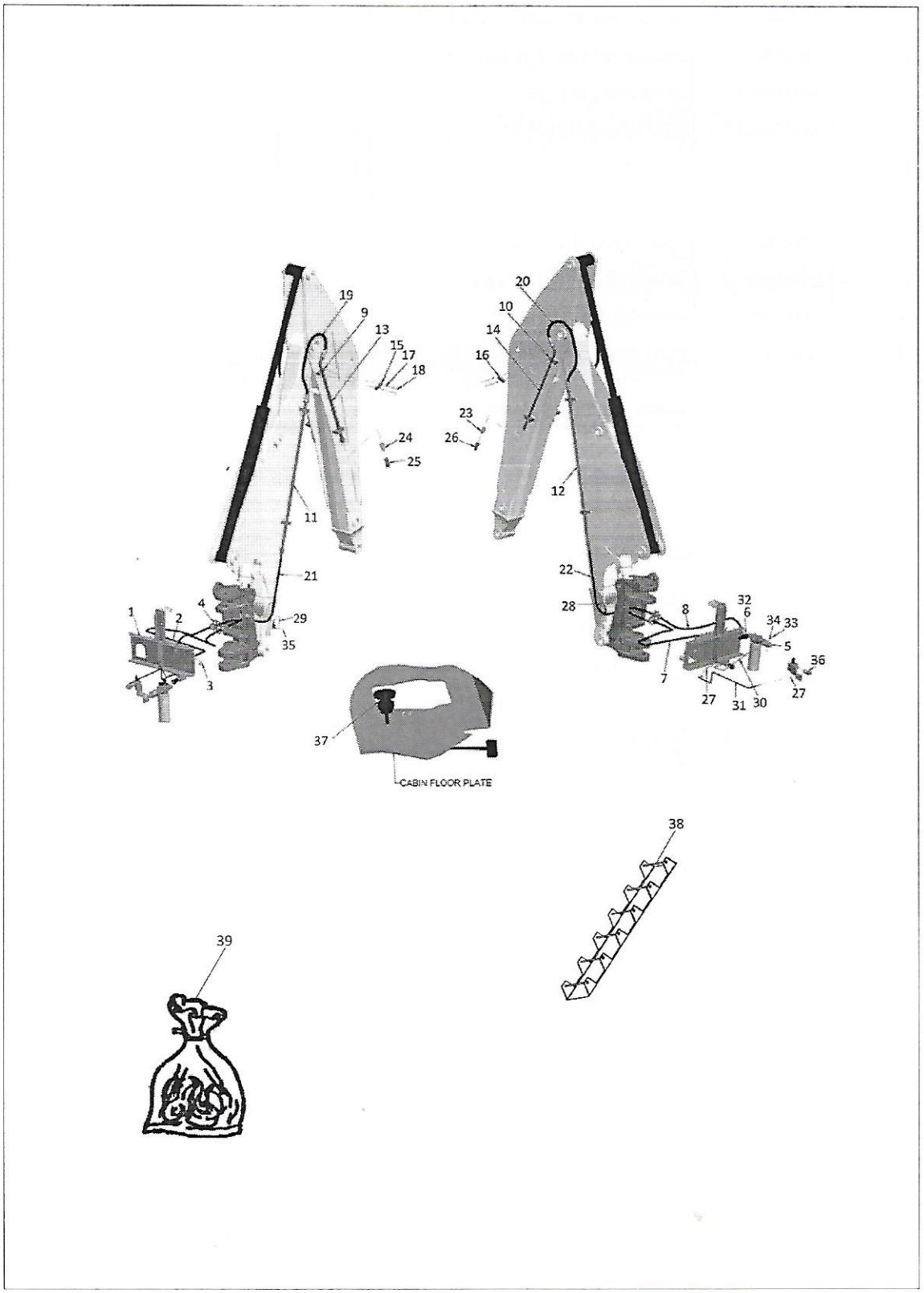
19
9
13
15
17
18
24
25
11
21
1
2
4
29
35
3
20
10
14
16
23
26
12
22
28
8
32
6
34
33
5
36
7
27
31
30
27
37
CABIN FLOOR PLATE
38
39

Item	Part No.	Name	Qty	Remarks
1	1B0167	BKT W/A DIGGER VALVE	1	
2	53112902	7 SPOOL VALVE BLOCK ROCK BREAKER (NEW GEN)	1	
3	1H0183	ADAPTOR ASSY	1	
3A	835025M1	O-RING	1	
4	1B0643	PLATE ASSY - SPLIT HOSES	1	
5	53101364	ADAPTOR ASSY	1	
5A	831503M1	O-RING	1	
6	1H0480	T-CONNECTOR (RETURN LINE	1	
7	1H0481	HOSE ASSY	1	Changed from machine serial no. 15235
8	1H0484	HOSE ASSY	1	Changed from machine serial no. 15235
9	53109608	TUBE CLAMP BOTTOM	4	
10	53109607	TUBE CLAMP BOTTOM	4	
11	53109620	TUBE ASSY - RETURN LINE	1	
12	53109619	TUBE ASSY - PRESSURE LINE	1	
13	1H0631	TUBE ASSY - RETURN LINE	1	
14	1H0630	TUBE ASSY - PRESSURE LINE	1	
15	53109910	TUBE CLAMP TOP	4	
16	53109909	TUBE CLAMP TOP	4	
17	339376X1	LOCK_WASHER	16	
18	3009501X1	HEX BOLT M10X70 GRADE 8.8	16	
19	1H0633	HOSE ASSY. - RETURN LINE	1	
20	1H0632	HOSE ASSY. - PRESSURE LINE	1	
21	53111903	HOSE ASSY - RETURN LINE	1	
22	53111902	HOSE ASSY. - PRESSURE LINE	1	
23	53111864	ADAPTOR PRESSURE LINE	1	
24	53111865	ADAPTOR RETURN LINE	1	
25	3H0993	FLAT FACE QUICK COUPLING FEMALE	2	
26	3H0994	QUICK COUPLING MALE	2	
27	1H0495	CONNECTOR	3	
27A	10X1492	COPPER WASHER	3	
28	53101368	HOSE HOOP ASSY RH	1	
29	53101370	HOSE HOOP ASSY LH	1	
30	53100008	HOSE ASSEMBLY	1	
31	1H0706	HOSE ASSEMBLY	1	

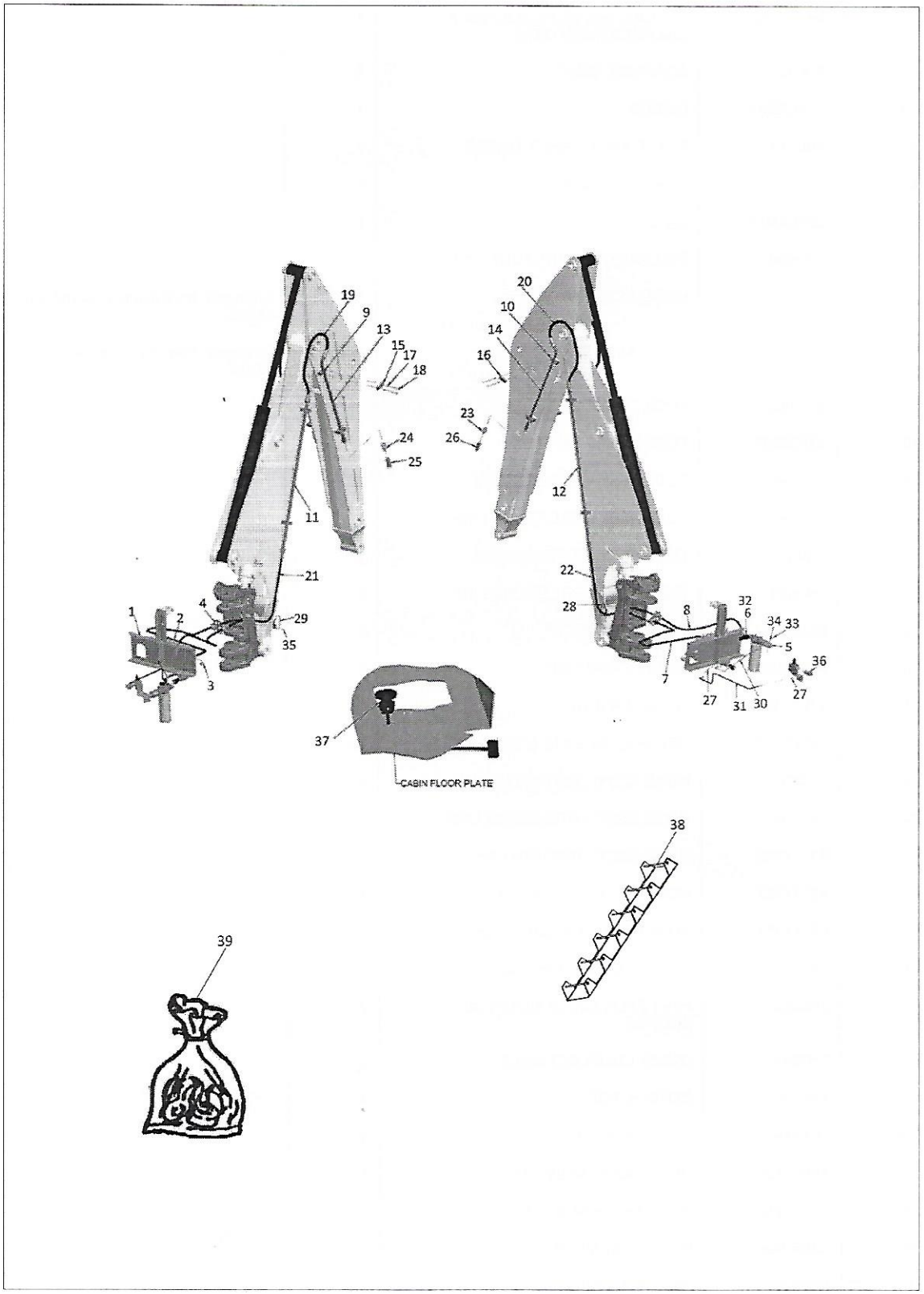
19
9
13
15
17
18
24
25
11
21
1
2
4
29
35
3
20
10
14
16
23
26
12
22
28
8
32
6
34
33
5
36
7
27
31
30
27
37
CABIN FLOOR PLATE
38
39

Item	Part No.	Name	Qty	Remarks
32	358741X91	CONNECTOR	1	
33	358713X1	FITTING	2	
34	831495M1	O-RING	3	
35	339123X1	HEX BOLT M8X20 GR 8.8	2	
35A	391039X1	WASHER	2	
36	1H0241	TEST ADAPTOR	1	
37	1D0257	SWITCH ROCK BREAKER	1	
38	53101092	HOSE CHAIN	1	
39	1B0652	SEAL KIT	1	

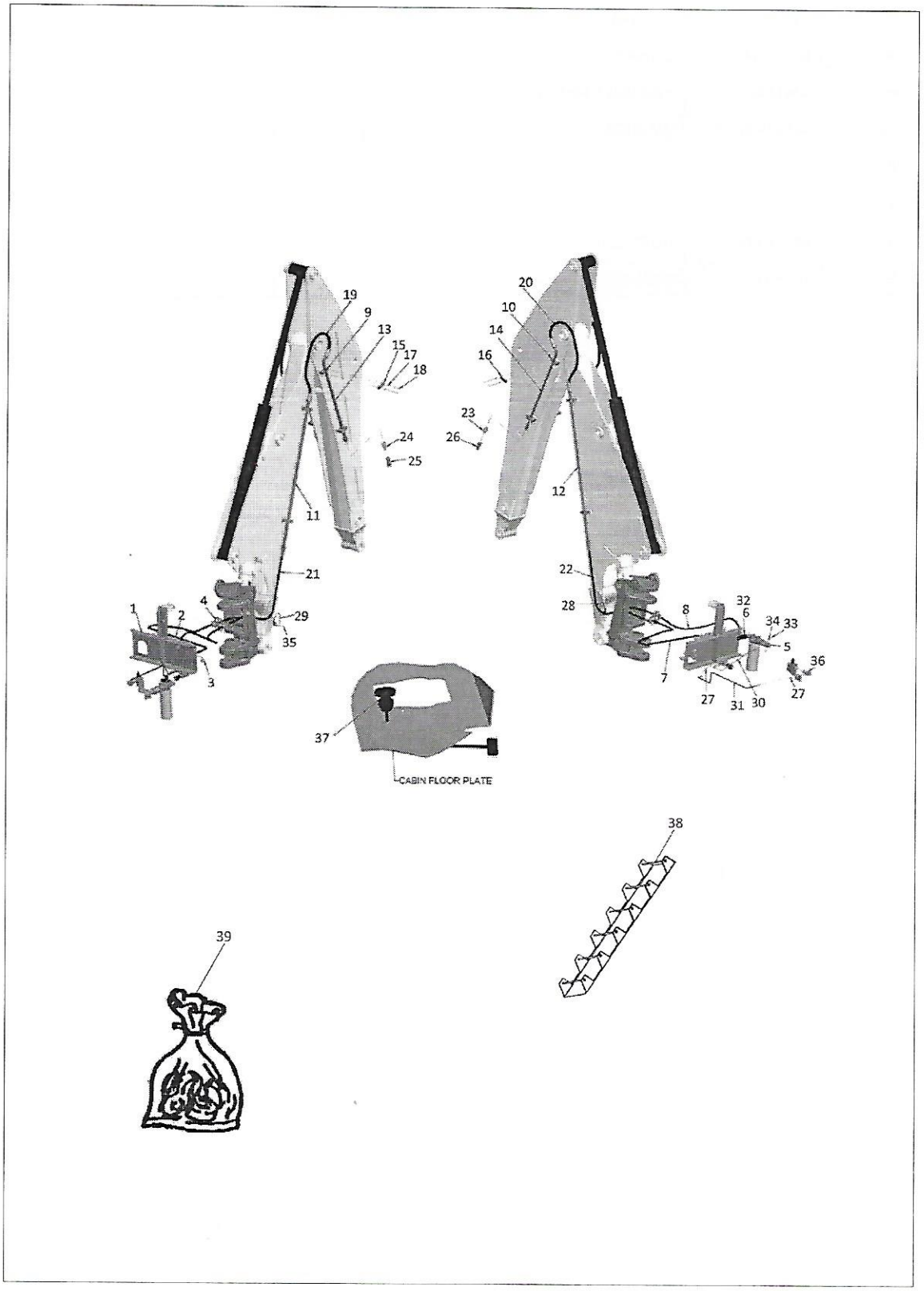
19
9
13
15
17
18
24
25
11
21
1
2
4
29
35
3
20
10
14
16
23
26
12
22
28
8
32
6
34
33
5
36
7
27
31
30
27
37
CABIN FLOOR PLATE
38
39

Item	Part No.	Name	Qty	Remarks
1	1B0167	BKT W/A DIGGER VALVE	1	
2	53112902	7 SPOOL VALVE BLOCK ROCK BREAKER (NEW GEN)	1	
3	1H0183	ADAPTOR ASSY	1	
3A	835025M1	O-RING	1	
4	53109237	PLATE ASSY- SPLIT HOSES	1	
5	53101364	ADAPTOR ASSY	1	
5A	831503M1	O-RING	1	
6	1H0480	T-CONNECTOR (RETURN LINE	1	
7	1H0662	HOSE ASSY	1	
8	1H0663	HOSE ASSY	1	
9	53109608	TUBE CLAMP BOTTOM	4	
10	53109607	TUBE CLAMP BOTTOM	4	
11	53109620	TUBE ASSY - RETURN LINE	1	
12	53109619	TUBE ASSY - PRESSURE LINE	1	
13	1H0631	TUBE ASSY - RETURN LINE	1	
14	1H0630	TUBE ASSY - PRESSURE LINE	1	
15	53109910	TUBE CLAMP TOP	4	
16	53109909	TUBE CLAMP TOP	4	
17	339376X1	LOCK_WASHER	16	
18	3009501X1	HEX BOLT M10X70 GRADE 8.8	16	
19	1H0633	HOSE ASSY. - RETURN LINE	1	
20	1H0632	HOSE ASSY. - PRESSURE LINE	1	
21	53111903	HOSE ASSY - RETURN LINE	1	
22	53111902	HOSE ASSY. - PRESSURE LINE	1	
23	53111864	ADAPTOR PRESSURE LINE	1	
24	53111865	ADAPTOR RETURN LINE	1	
25	3H0993	FLAT FACE QUICK COUPLING FEMALE	2	
26	3H0994	QUICK COUPLING MALE	2	
27	1H0495	CONNECTOR	3	
27A	10X1492	COPPER WASHER	3	
28	53101368	HOSE HOOP ASSY RH	1	
29	53101370	HOSE HOOP ASSY LH	1	
30	53100008	HOSE ASSEMBLY	1	
31	1H0706	HOSE ASSEMBLY	1	
32	358741X91	CONNECTOR	1	

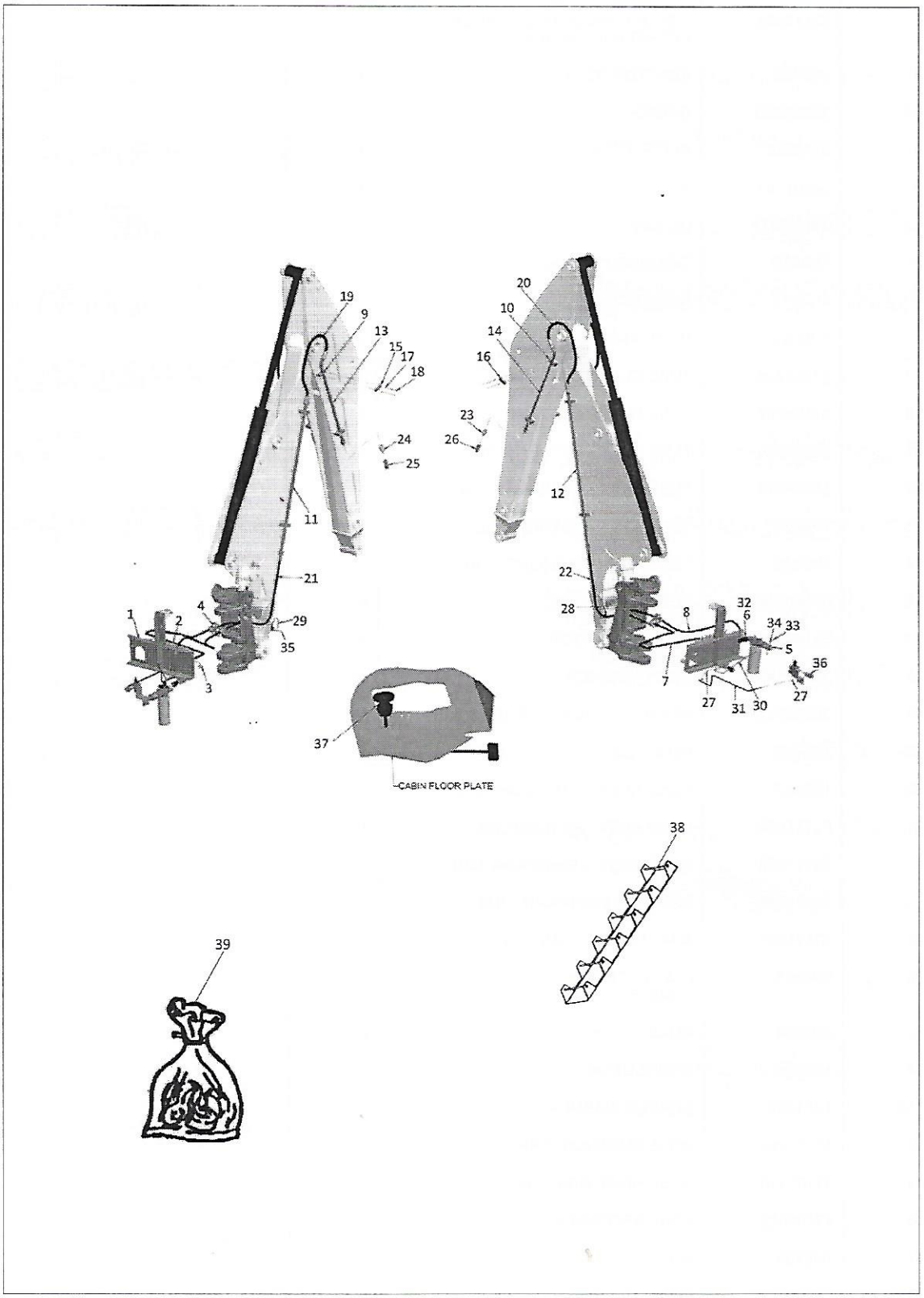
19
9
13
15
17
18
24
25
11
21
1
4
2
29
35
3
20
10
14
16
23
26
12
22
28
8
32
6
34
33
5
36
7
27
31
30
27
37
CABIN FLOOR PLATE
38
39

Item	Part No.	Name	Qty	Remarks
33	358713X1	FITTING	2	
34	831495M1	O-RING	3	
35	339123X1	HEX BOLT M8X20 GR 8.8	2	
35A	391039X1	WASHER	2	
36	1H0241	TEST ADAPTOR	1	
37	1D0257	SWITCH ROCK BREAKER	1	
38	53101092	HOSE CHAIN	1	
39	1B0652	SEAL KIT	1	

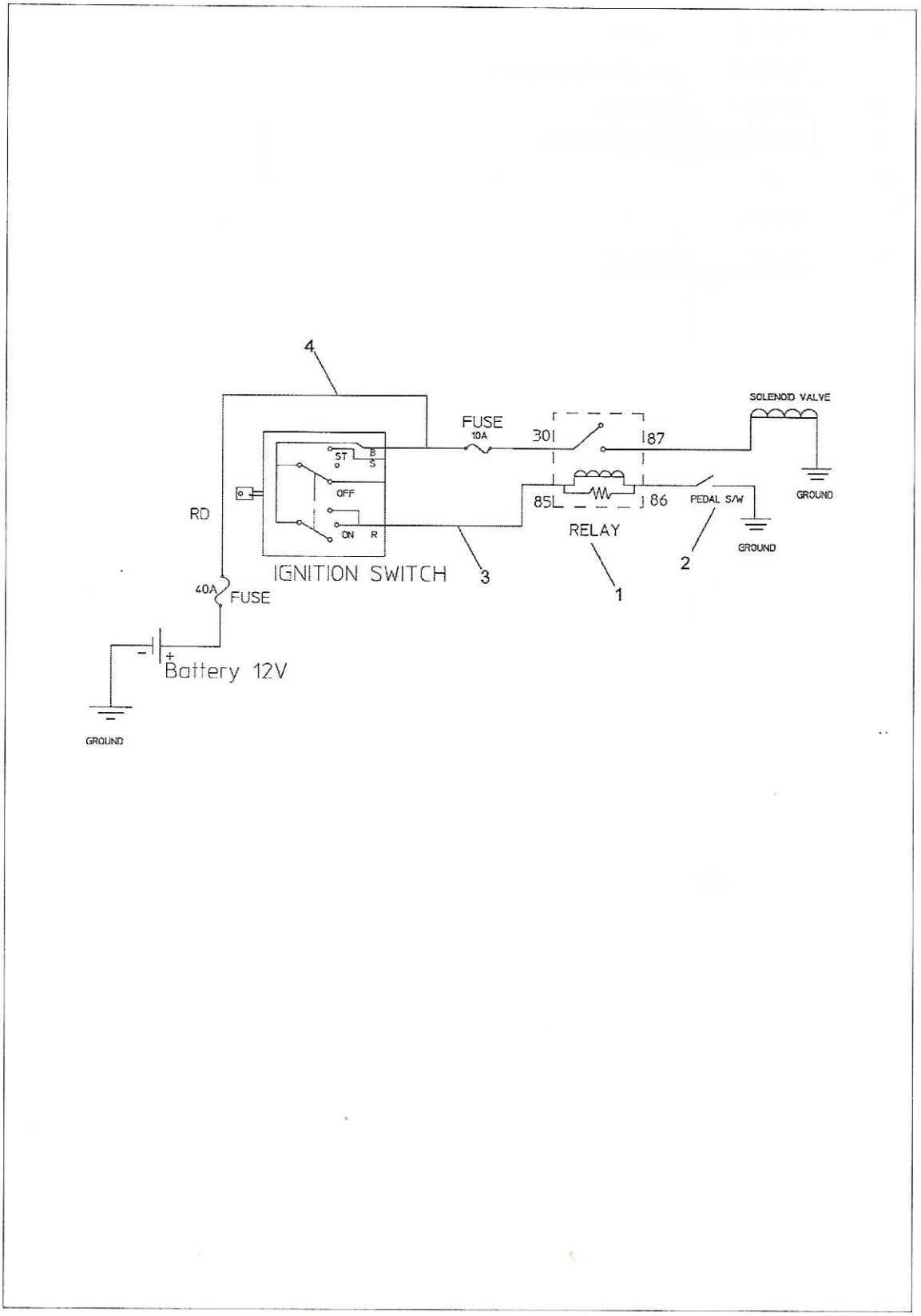
4
FUSE
10A
30
87
SOLENOID VALVE
ST
B
S
OFF
ON
R
RD
85
86
PEDAL S/W
GROUND
GROUND
RELAY
IGNITION SWITCH
3
2
1
40A
FUSE
Battery 12V
GROUND

Item	Part No.	Name	Qty	Remarks
1	1D0107	RELAY	1	
2	1D0257	SWITCH ROCK BREAKER	1	
3	1D0256	HARNESS-ROCK BREAKER	1	
4	1D0258	HARNESS-ROCK BREAKER	1	

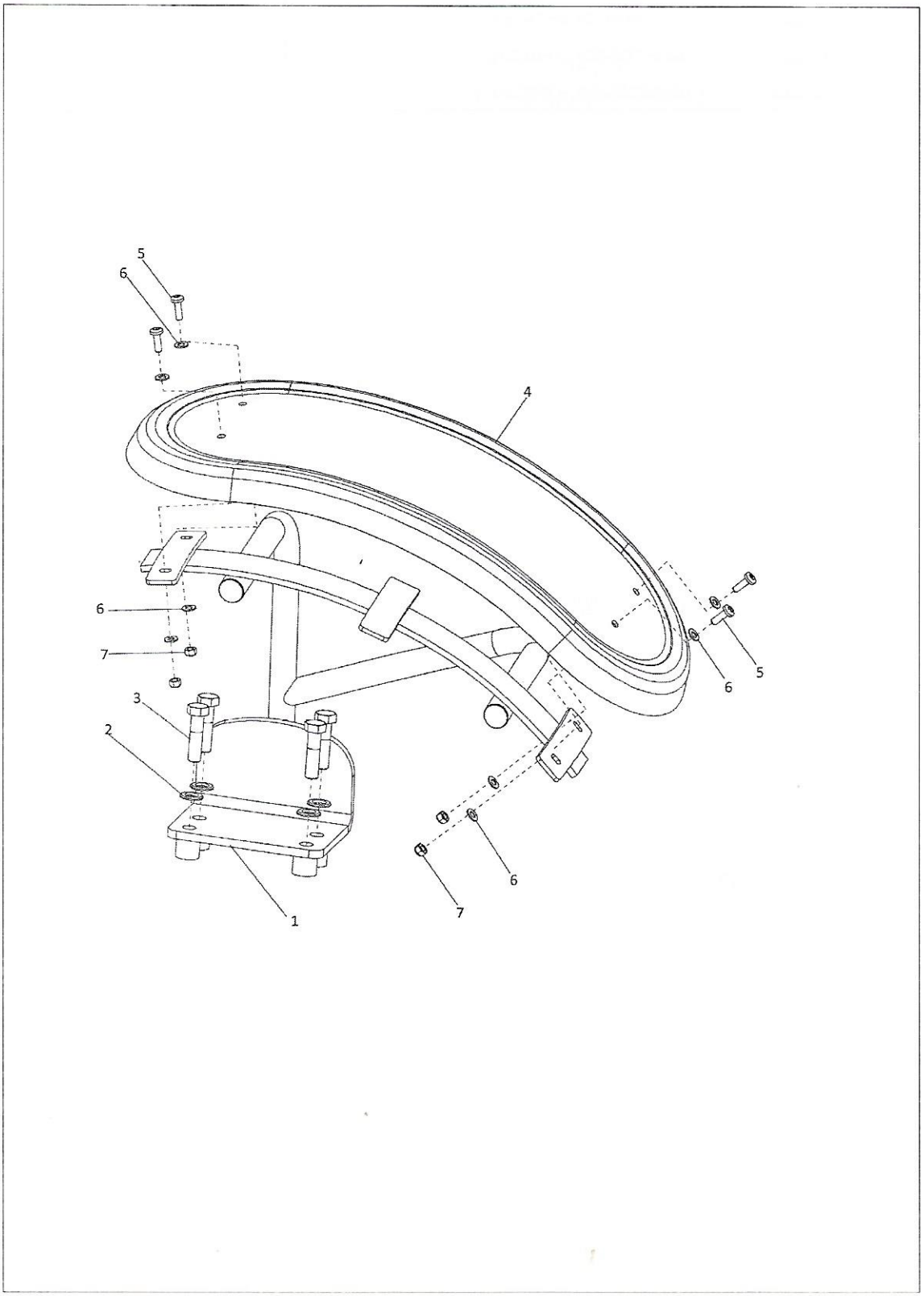
5
6
4
6
7
3
2
1
6
7
6
5

Item	Part No.	Name	Qty	Remarks
1	53107035	TUBE AND BRACKET W/ASSY LH	1	
2	1441664X1	WASHER M16 - STD	4	
3	339881X1	HEX BOLT M16x60 GRADE 8.8	4	
4	53107049	COVER - FENDER	1	
5	53108138	MACHINE SCREW PAN HEAD M8x25	4	
6	53108137	WASHER M8	8	
7	394367X1	NUT	4	

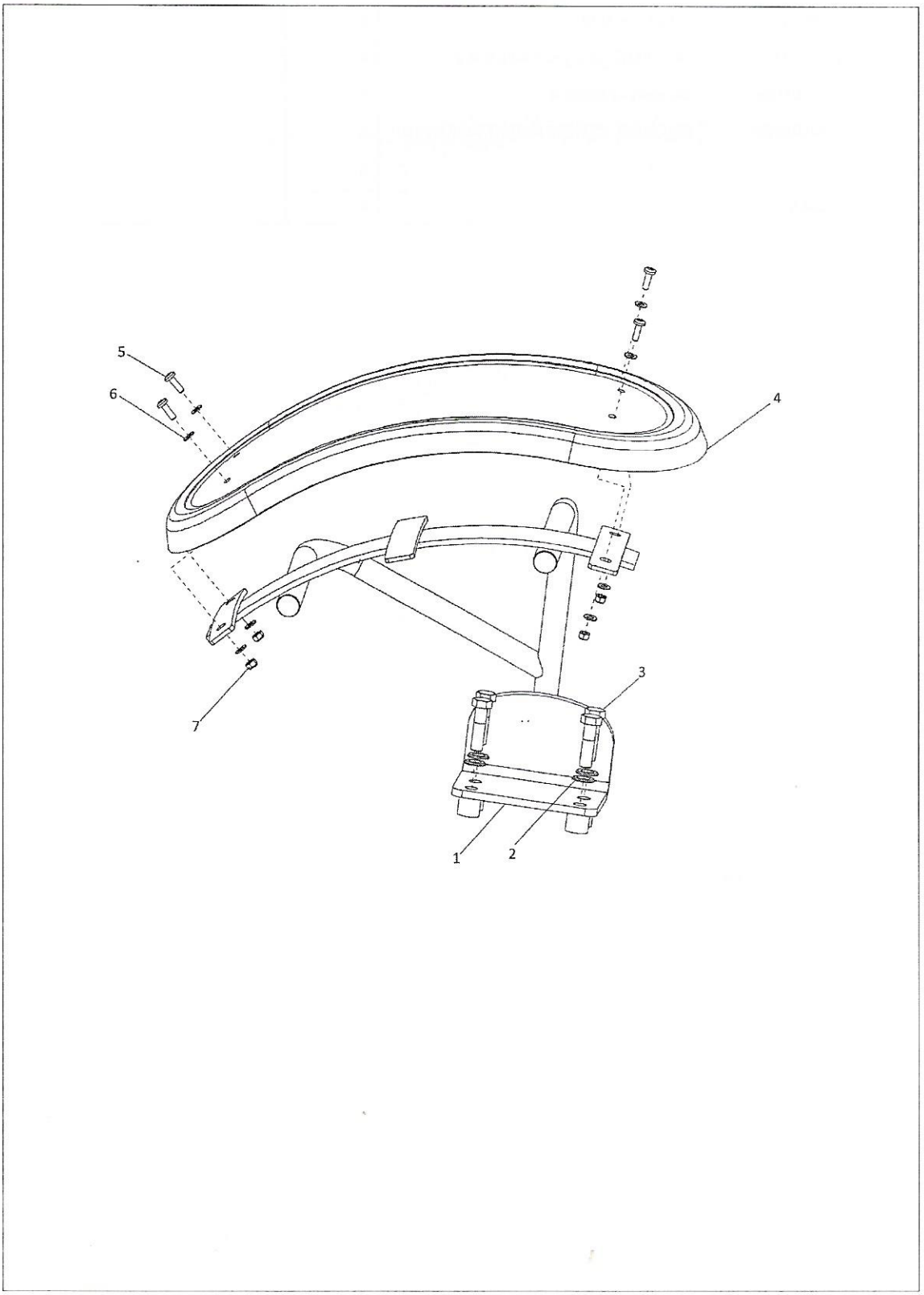
5
6
4
3
7
1
2

Item	Part No.	Name	Qty	Remarks
1	53107036	TUBE AND BRACKET W/ASSY RH	1	
2	1441664X1	WASHER M16 - STD	4	
3	339881X1	HEX BOLT M16x60 GRADE 8.8	4	
4	53107049	COVER - FENDER	1	
5	53108138	MACHINE SCREW PAN HEAD M8x25	4	
6	53108137	WASHER M8	8	
7	394367X1	NUT	4	

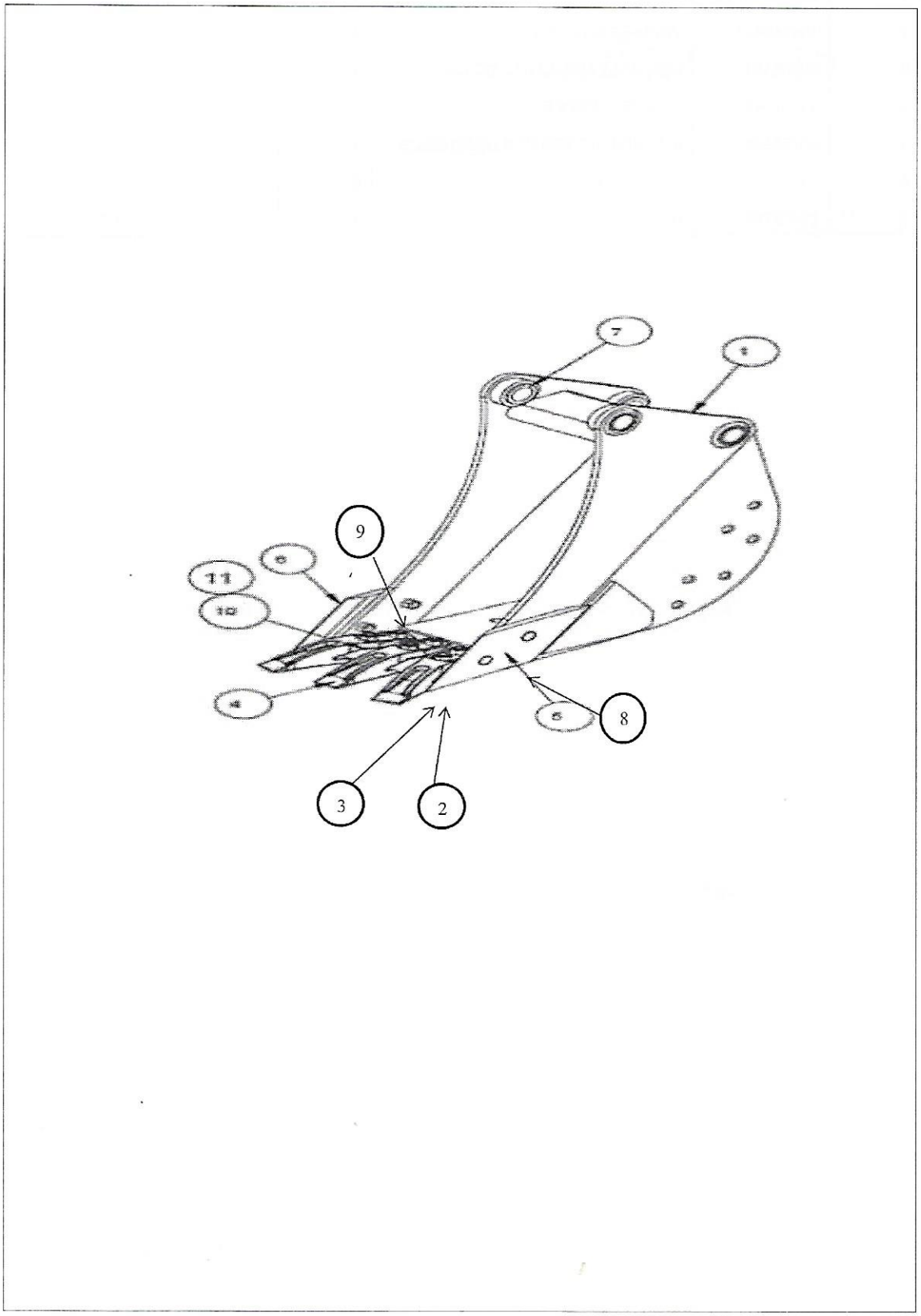
7
1
9
6
11
10
4
5
8
3
2

Item	Part No.	Name	Qty	Remarks
0	53101254	DITCH CLEANING BUCKET ASSY.	1	
1	53101253	DITCH CLEANING BUCKET W/A-PAINTED	1	
2	1442739X1	M16 NYLOC NUT	6	
3	1C0135	PLOW BOLT M16	6	
4	1C0189	TOOTH	3	
5	3500531M1	SIDE CUTTER LH	1	
6	3500532M1	SIDE CUTTER RH	1	
7	3501770M2	BUSH	4	
8	353422X1	PLOW BOLT OF SIDE CUTTER	4	
9	353427X1	HEX NUT OF SIDE CUTTER	4	
10	862738M1	SHIM (21-SWG)	UAR	
11	862739M2	SHIM (16-SWG)	UAR	

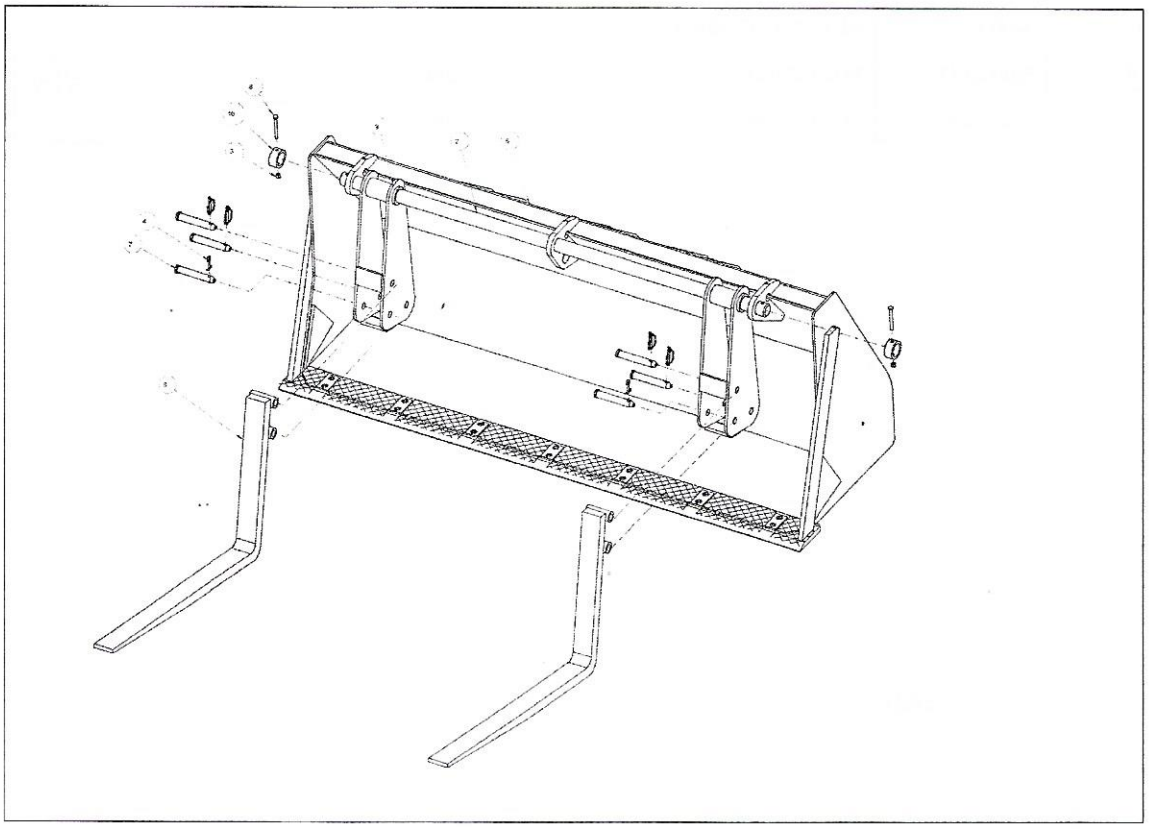

Item	Part No.	Name	Qty	Remarks
0	53101046	FORK LOADER BUCKET (STD) 1.0 CuM.	1	
1	53101044	LINCH PIN AND RING	4	
2	53101045	BAR – FORK PIVOT	1	
3	1441932X1	NUT LOCK	2	
4	1442984X1	PIN COTTER	2	
5	53101047	FORK BUCKET W/ASSY.	1	
6	3009503X1	BOLT	2	
7	3507537M1	PIVOT PIN	6	
8	3519728M91	FORK ARM	2	
9	6103661M92	FORK PIVOT ASSY.	2	
10	6103668M1	BOSS	2	

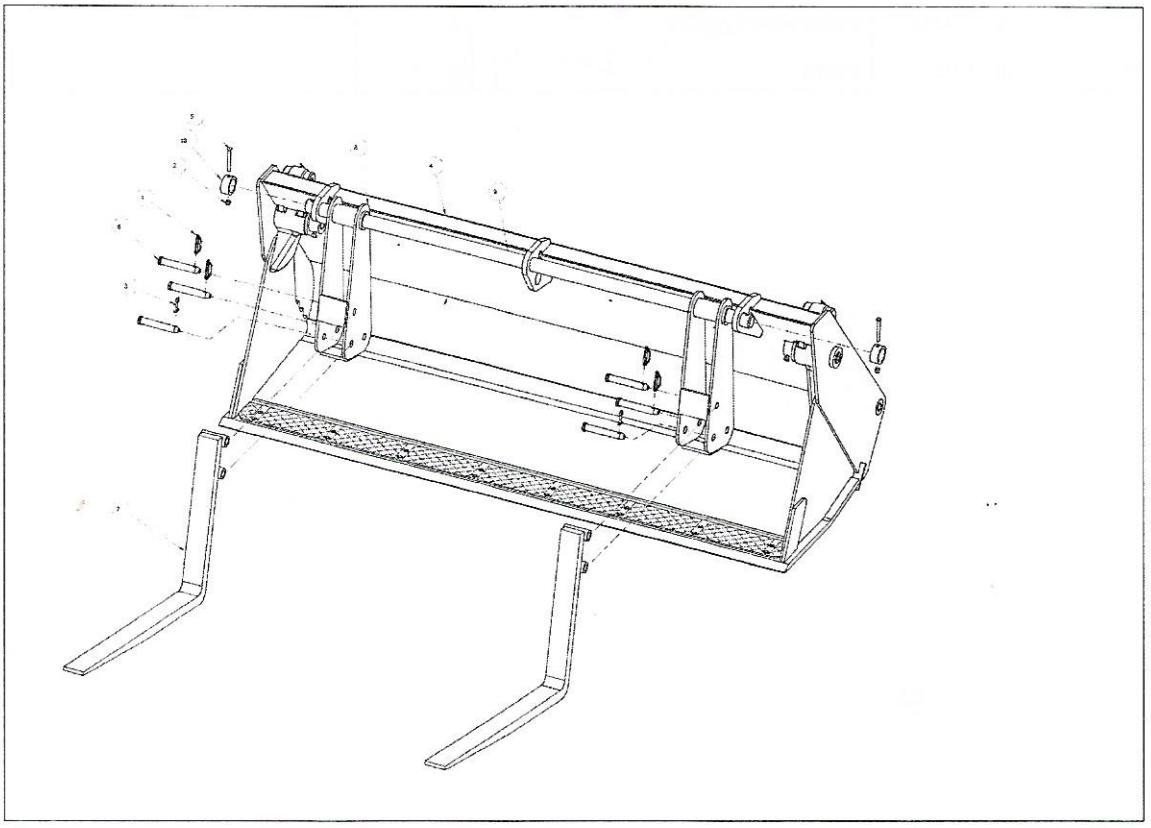

Item	Part No.	Name	Qty	Remarks
0	53101048	FORK LOADER BUCKET (7 IN 1) 1.0 CuM	1	
1	53101044	LINCH PIN AND RING	4	
2	1441932X1	NUT LOCK	2	
3	1442984X1	PIN COTTER	2	
4	1C0304	FORK BUCKET W/ASSY.	1	
5	3009503X1	BOLT	2	
6	3507537M1	PIVOT PIN	6	
7	3519728M91	FORK ARM	2	
8	6103661M92	FORK PIVOT ASSY.	2	
9	53101045	BAR – FORK PIVOT	1	
10	6103668M1	BOSS	2	

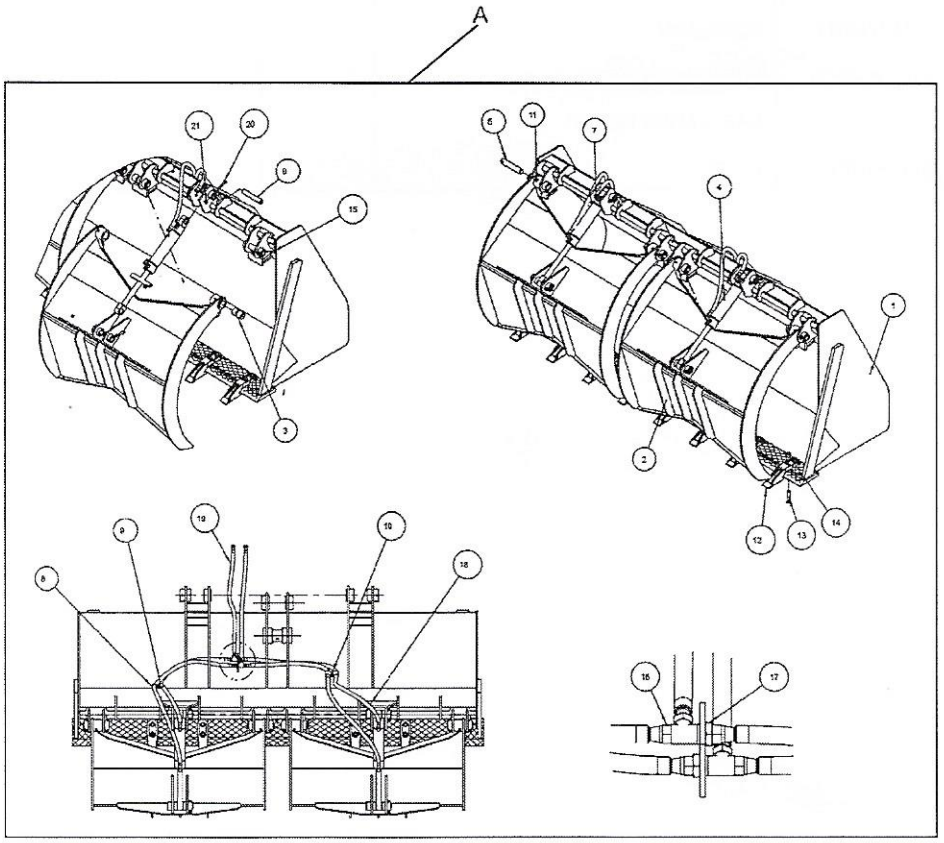
A
21
20
9
15
3
6
11
7
4
1
2
12
13
14
9
10
10
18
8
16
17

Item	Part No.	Name	Qty	Remarks
A	53108321	PAPER GRAPPLE ASSY.	1	
1	53108322	PAPER GRAPPLE W/ASSY.	1	
2	53108331	GRAPPLE ASSEMBLY	2	
3	53102684	INNER BUSH	4	
4	3B0713	HYD CYLINDER ASSEMBLY	2	
5	53108338	PIN	4	
6	53108341	PIN	4	
7	357197X91	ELBOW 9/16	4	
8	6106109M1	RUBBER PAD	2	
9	6101228M1	CLAMP TUBE ASSEMBLY	2	
10	339123X1	HEX BOLT M8X20 GR 8.8	2	
11	339608X1	FITTING	8	
12	1C0189	TOOTH	8	
13	1C0135	PLOW BOLT M16	16	
14	1442739X1	M16 NYLOC NUT	16	
15	6007783M1	HEX BOLT M10X65 GRADE 10.9	4	
16	1H0253	T-BULKHEAD	2	
17	356614X1	NUT BULK HEAD	2	
18	3H0969	HOSE ASSY.	4	
19	6106214M91	HOSE ASSY.	2	
20	6007782M1	HEX BOLT M10X60 GRADE 10.9	4	
21	1440329X11	M10 NYLOC NUT	8	

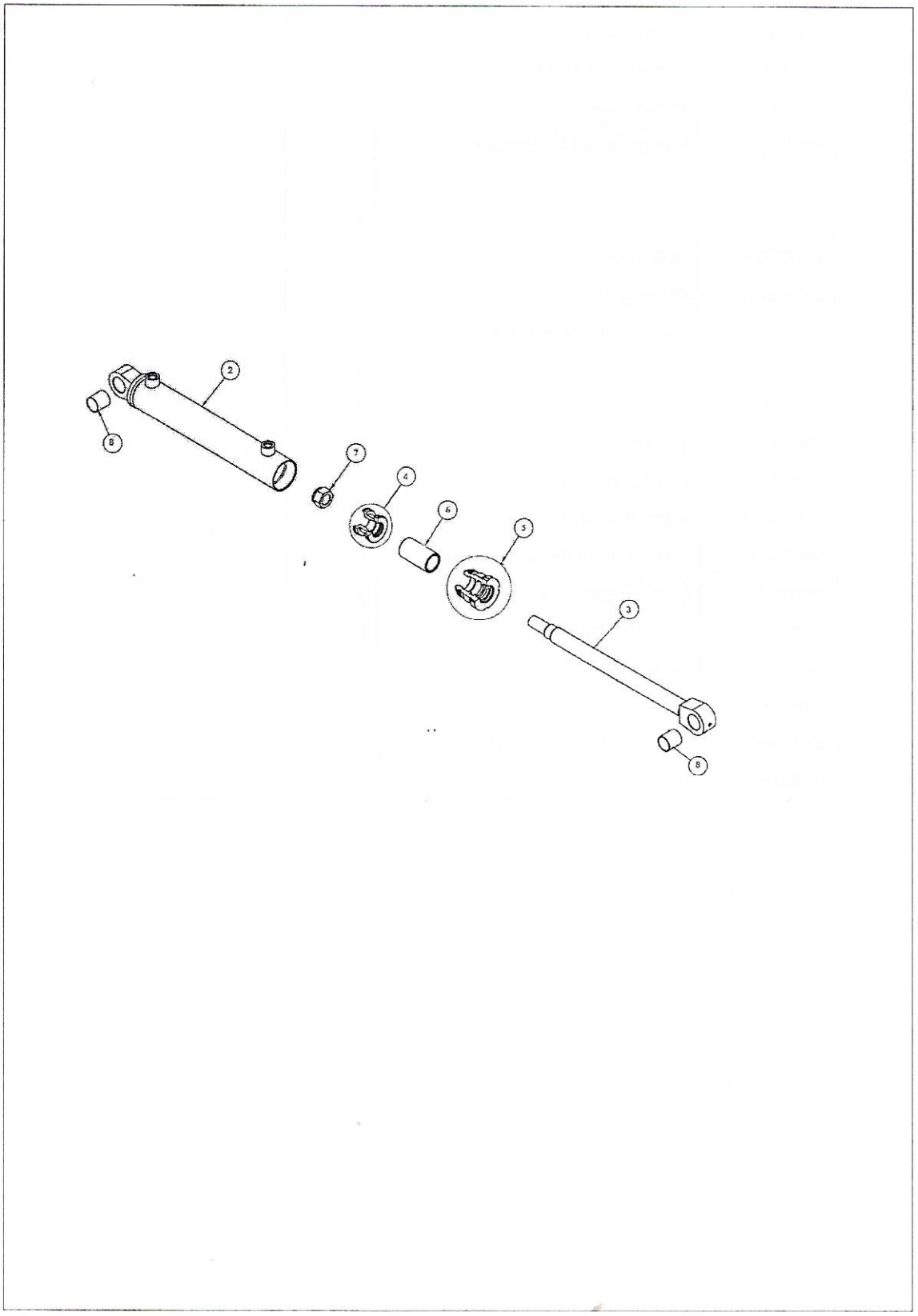
2
8
7
4
6
5
3
8

Item	Part No.	Name	Qty	Remarks
0	3B0713	HYD CYLINDER ASSEMBLY	1	
2	10X2644	TUBE MACHINING	1	
3	10X2645	PISTON ROD	1	
4	10X2647	PISTON	1	
5	10X2646	GLAND	1	
6	53110017	SPACER	1	
7	53110018	NYLOCK NUT	1	
8	10X2649	DU BUSH	2	
9	10X2648	SEAL KIT	1	

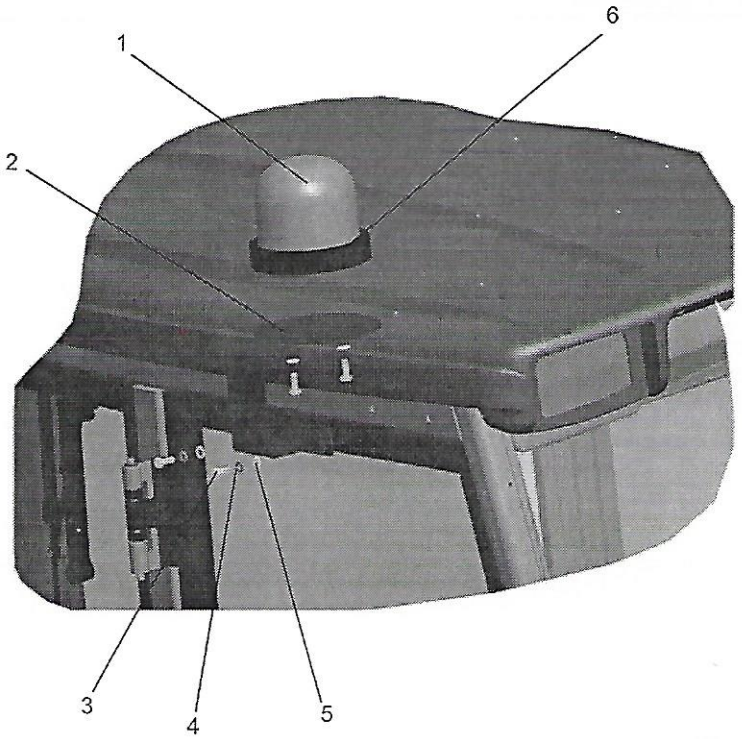
1
2
3
4
5
6

Item	Part No.	Name	Qty	Remarks
1	53101255	BEACON	1	
2	53101072	BRACKET ASSY	1	
3	339761X1	BOLT M8-25 Z5F	2	
4	390972X1	WASHER M8 - STD	2	
5	339374X1	LOCK WASHER M8	2	
6	1J0753	GROMMET	2	

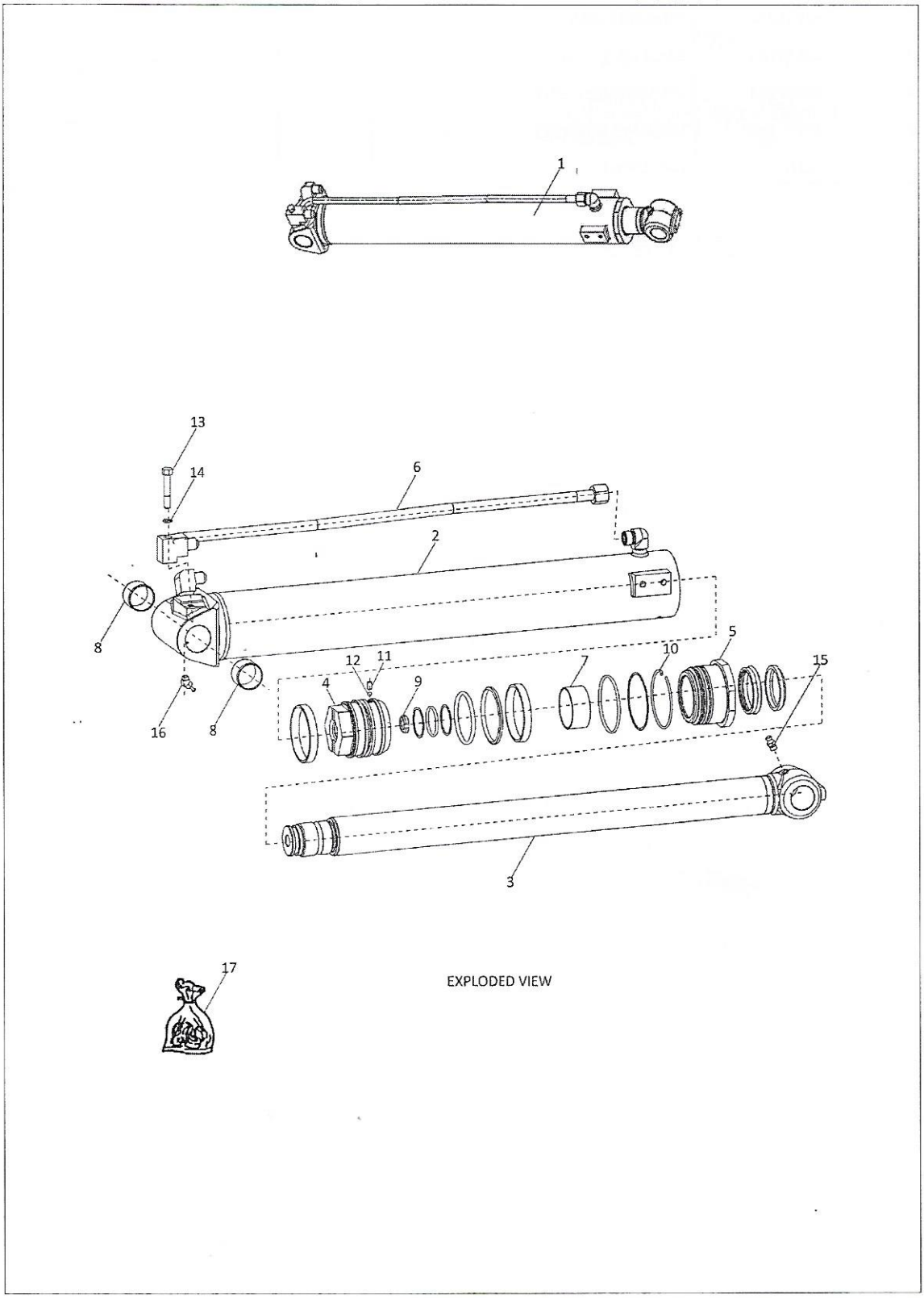

EXPLODED VIEW

Item	Part No.	Name	Qty	Remarks
1	53108757	STABILIZER CYLINDER-CM	1	SUITABLE FOR ATTACHING PROTECTION GUARD
2	53112647	TUBE S/A	1	
3	53112648	PISTON ROD S/A	1	
4	10X3032	PISTON	1	
5	10X3033	HEAD END COVER	1	
6	10X3442	PIPE S/A	1	
7	10X3443	BIMETAL BUSH	1	
8	10X3036	BUSH	2	
9	10X3037	CUSHION RING	1	
10	10X3038	RETAINING RING	1	
11	10X3039	HEX.SOC.SET SCREW	1	
12	10X3040	CH.ALLOY STEEL BALL	1	
13	10X3041	HEX. HD. BOLT	1	
14	10X3042	SPRING WASHER	1	
15	10X3044	GREASE NIPPLE	1	
16	10X3043	GREASE NIPPLE	1	
17	10X3045	SEAL KIT	1	

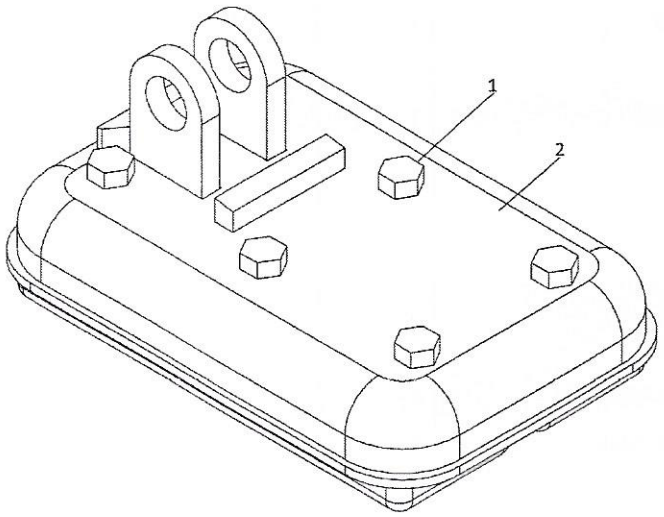

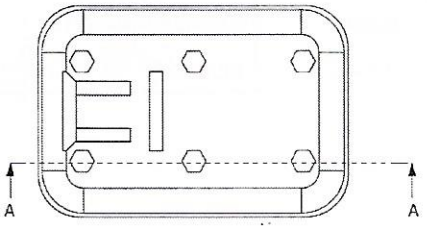

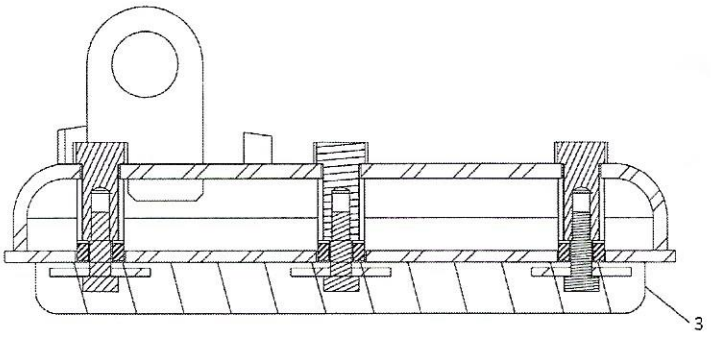

SECTION A-A

Item	Part No.	Name	Qty	Remarks
1	53101354	BOLT M16X2	6	
2	53101356	STAB FOOT W/ASSY	1	OPTIONAL FOR STREET PAD ARRANGEMENT
3	6111339M91	STREET PAD ASSY	2	OPTIONAL