RUTHZIL TRATOR COMERCIAL DE PEÇAS LTDA 11 97083-6812 ROLANDO

VOLVO CONSTRUCTION EQUIPMENT

MC60C-MCT95C

PARTS CATALOG

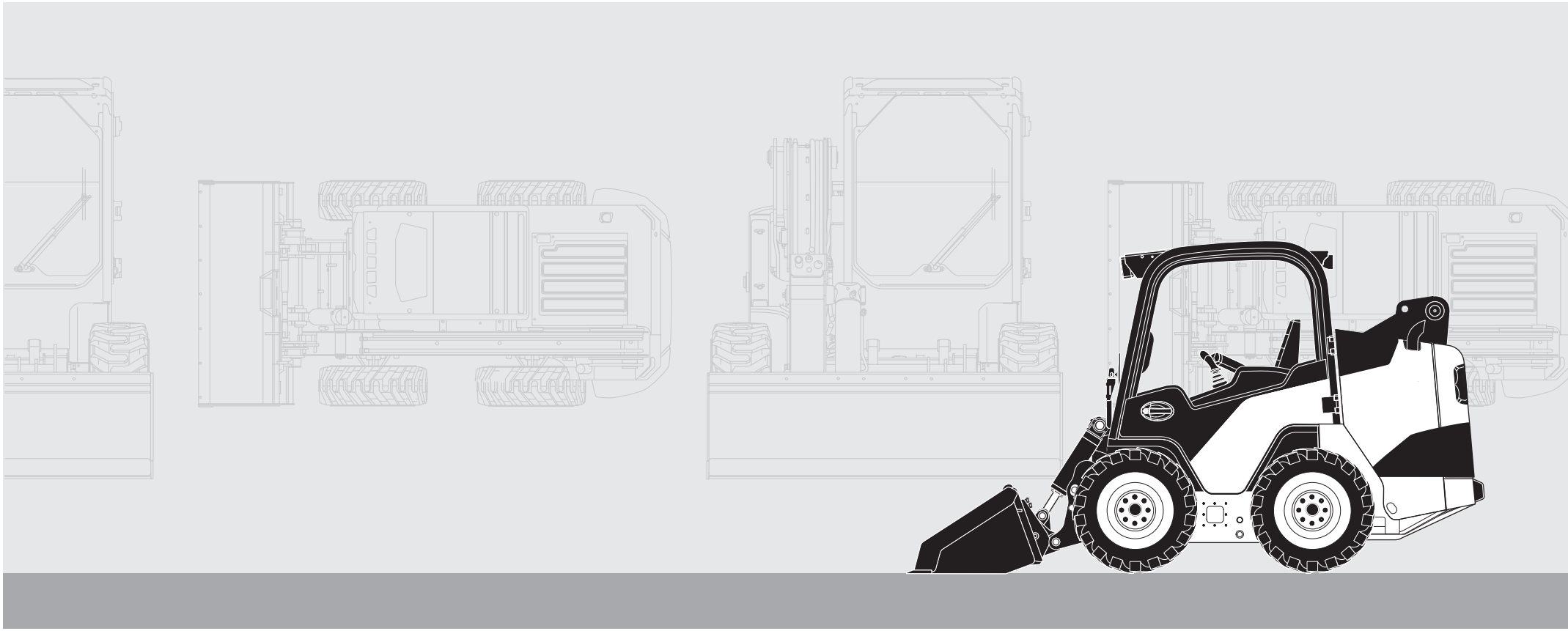

Publ. No. PUB 20030904-B



Volvo Construction Equipment
www.volvoce.com

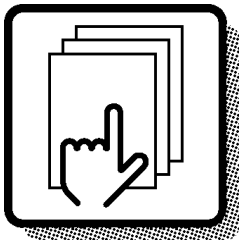

1

Preface and instructions
Prefacio e instrucciones
Prefácio e instruções
Préface et instructions

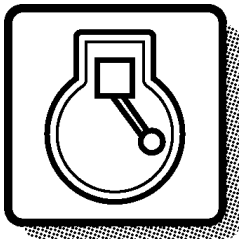

2

Engine
Motor
Motor
Moteur

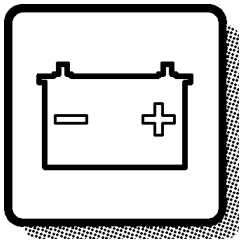

3

Electrical systems and instruments
Sistema eléctrico e instrumentos
Sistema elétrico e instrumentos
Système électrique et instruments

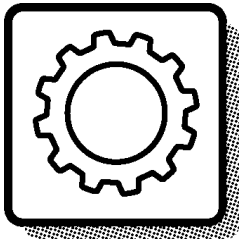

4

Power transmission
Transmisión de fuerza
Transmissão de força
Transmission de force

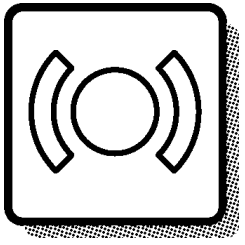

5

Brakes
Frenos
Freios
Freins

Steering system
Sistema de dirección
Sistema de direção
Systèm de direction

6

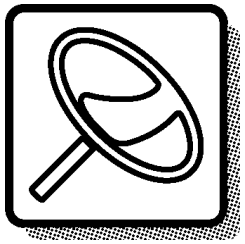

Frame and wheels
Bastidor y ruedas
Quadro e rodas
Bâti et roues

7

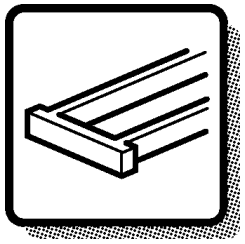

Body with associated parts
Carroceria con detalles
Carroceria com peças agregadas
Carrosserie avec détails

8

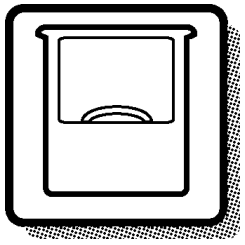

Miscellaneous equipment
Equipo diverso
Equipamentos diversos
Equipments divers

9

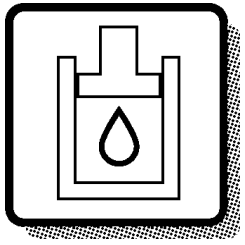

Numerical index
Indice numérico
Índice numérico
Répertoire numérique

10

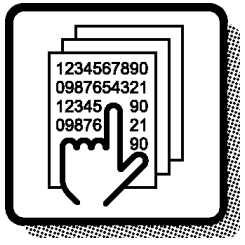

Only genuine parts are presented in this catalogue. These parts have been subjected to the necessary function and endurance tests, and they comply with the high quality and safety requirements that have been set for Volvo Construction Equipment. You should note that warranties do not cover damages that are caused or aggravated by the fact that a non-genuine part was fitted.

The illustrations shown in the catalogues should not be used as assembly or workshop instructions. Separate literature for the various specific subject areas is available for that purpose.

The owner of the machine or equipment should state the model designation, manufacturing number, part number, quantity, and the name, or description, of the part when ordering parts.

For location of the model and engine designation plates,
etc, see page 4-5.

Market-adapted equipment entered in catalogue, can be seen on page 26.

See page 13 for a ”Catalogue Guide” on how to use the parts catalogue.

See page 22 for table of abbreviations.

This catalogue has been produced by Volvo Construction Equipment. If you have any point of views regarding the catalogue, or if you detect any errors in the catalogue, please send a mail to:
E-mail: vce.parts.catalog@volvo.com

Skid steer loaders: Volvo
MC60C
MC70C
MC85C
MC95C
MC105C
MCT70C
MCT85C
MCT95C

ESP

En los catálogos de repuestos se presentan únicamente piezas originales que han sido sometidas a las necesarias pruebas de funcionamiento y duración y que cumplen las elevadas exigencias de seguridad y calidad de Volvo Construction Equipment. Recuerde que las garantías no cubren los daños ocasionados o agravados por no haber montado una pieza original.

Las ilustraciones del catálogo no deben utilizarse como base para el montaje ni como instrucciones de taller. Para ello recomendamos utilizar los manuales de taller editados a propósito.

Al hacer el pedido de repuestos, el propietario de la máquina debe indicar el modelo de la misma, su número de fabricación, la referencia de la pieza, la cantidad y la denominación.

La ubicación de letreros con las denominaciones de modelo y motor, etc., puede verse en la página 4-5.

La lista de equipos de adaptación según mercado, introducidos en el catálogo, puede verse en la página 26.

Guía para el uso del catálogo, puede verse en la página 13.

La tabla de abreviaturas puede verse en la página 22.

Este catálogo ha sido producido por Volvo Construction Equipment. Si tiene algún comentario que hacer sobre el catálogo, o detecta algún error, le rogamos que haga una copia de la página en cuestión y nos la remita junto con sus comentarios a:
E-mail: vce.parts.catalog@volvo.com

Minicargadoras compactas: Volvo
MC60C
MC70C
MC85C
MC95C
MC105C
MCT70C
MCT85C
MCT95C

Este catálogo mostra unicamente peças genuínas. Essas peças foram submetidas aos testes de funcionamento e de durabilidade necessários, e satisfazem os elevados requisitos de qualidade e segurança determinados pela Volvo Construction Equipment. Observe que as garantias não cobrem danos causados ou agravados pelo uso de peças não genuínas.

As ilustrações do catálogo não devem ser usadas como instruções de montagem ou de reparo. Está disponível literatura específica para cada área de aplicação.

O proprietário da máquina ou equipamento deve indicar a designação do modelo, número de série, número de peça, a quantidade e o nome ou descrição da peça quando encomendar peças.

Para conhecer a localização das placas de modelo e designação do motor, etc., veja na pág.4-5.

Equipamento adaptado a mercado inserido no catálogo, pode ser visto na página 26.

Veja na página 13 o ”Guia do Catálogo” informando como usá-lo.

Uma tabela de abreviações encontra-se na página 22.

Este catálogo foi produzido pela Volvo Construction Equipment. Caso tenha algum comentário a fazer ou detecte erros no catálogo, favor enviar um e-mail para:
E-mail: vce.parts.catalog@volvo.com

Minicarregadeiras: Volvo
MC60C
MC70C
MC85C
MC95C
MC105C
MCT70C
MCT85C
MCT95C

FRA

Seules les pièces d'origine sont présentées dans les catalogues des pièces de rechange. Toutes ces pièces ont été soumises à des tests de fonctionnement et de longévité pour être conformes aux exigences sévères de qualité et de sécurité posées par Volvo Construction Equipment. Notez que les garanties ne couvrent pas les dégâts et les dommages causés par le montage de pièces autres que des pièces d'origine.

Les illustrations dans le catalogue ne doivent pas être utilisées comme notice de montage ni comme instructions d'atelier. Pour ceci, nous vous renvoyons à la documentation spécifiquement éditée dans ce but.

Pour toute commande de pièces de rechange, indiquez la désignation du modèle, le numéro de fabrication, le numéro de référence, la quantité ainsi que la désignation de la pièce.

Le placement des plaques de désignation de modèle et de moteur etc. ressort de la figure ci-contre 4-5.

Equipment adapté au marché et indiqué dans la catalogue, prière de voir la liste en page 26.

Guide pour l'utilisation de catalogues de pièces de rechange, voir page 13.
Pour la liste des abréviations employées, prière de

voir en page 22.

Ce catalogue est édité par Volvo Construction Equipment. Si vous avez des commentaires ou si vous découvrez des erreurs dans ce catalogue, nous vous serions reconnaissants de bien vouloir nous envoyer un courriel à :
E-mail: vce.parts.catalog@volvo.com

Chargeuses compactes : Volvo
MC60C
MC70C
MC85C
MC95C
MC105C
MCT70C
MCT85C
MCT95C

Fig.	Part No.	Quantity 1	2	3	PS	KIT	Description	Dénomination	Bezeichnung	Denominatición	Notes
1		1	2		NS		Steering Column	Colonne Volant	Lenksäule	Columna Direcci	CPL
2	**VOE 13960151**	2	3				••Washer	••Rondelle	••Scheibe	••Arandela	(ZM 2099130) BRB 34X62X
3	**ZM 2099140**	2	3				••Gasket	••Joint	••Dichtung	••Junta	G8x6
4	**ZM 2120650**	6	3		SS		•Housing	•Carter	•Gehäuse	•Carter	1) CPL
5	**ZM 2099180**	1	1				••Spring Ring	••Annea.elastique	••Federring	••Anillo Elastico	
6	**ZM 2099190**	2	2				••Needle Holder	••Porte-aiguille	••Nadelkäfig	••Portaagujas	
7	**ZM 2099650**	1	1				Steering Wheel	Volant	Lenkrad	Volante	



1) **GB:** Replacement version **FR:** Version piéce de rechange. **DE:** Ersatzteil-ausführung. **ES:** Versión piezas de repuesto.

1	**1800001**	**1800199**
2	**1810001**	
3		
4		
5		

Columna de dirección, montaje
Lenksäule, Einbauteilen
Colonne de direction, montage
Steering column, assembly

Catalogue id **07501**	Group **641**
Illustr. No **1000351**	Section **100**
Issue **VOE64A9907501**	Page **423**

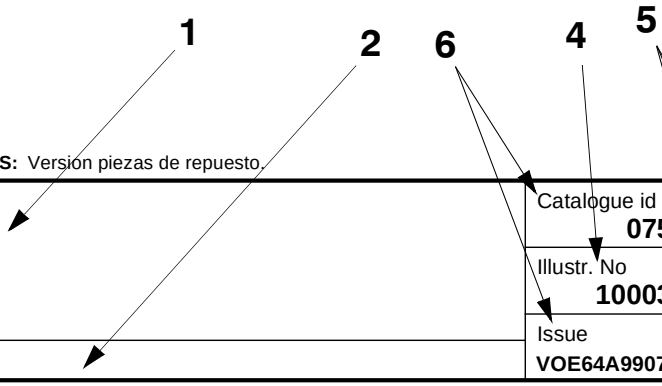

VOLVO

In addition to part numbers, the Parts Catalogue also includes a vast amount of essential information which you, the operator, should be acquainted with.
With the ”Catalogue Guide”, we want to show clearly how the catalogues are arranged and what sort of information is presented therein.

Group 1 Preface and Instructions
Here you can find the following information:
- Title page and publication number
- Group index
- Product signs
- Preface
- List of items of equipment adapted to market requirements that have been introduced
- Catalogue Guide
- Table of abbreviations

Group 2 - 9 Text and illustration pages

- The table of contents shows the division of the main groups into sub-groups, with reference to page number and section.
- Illustration page. The position number of the illustration refers to the text page.
- Text page
  1. Heading.
  2. Additional text which limits the validity of the section. An example is information relating to manufacturing numbers and equipment adapted to market requirements.
  3. Designation for quantity columns.
  4. Illustrations.
  5. Group, section, page, which you should use when you search for information in the catalogue.
  6. Catalogue identification and issue designation.
  7. Position number of the part on the associated drawing.
  8. Part number
  9. Quantity. The column designation indicates the version which is shown in each column. The quantity stated refers to the quantity for each machine or, where appropriate, for each complete unit.
     ”REQ” refers to the required amount. See also ”Notes” column.
  10. PS (Parts Status) indicates the status code of the part.
      ”NS” means that the part is not kept in stock.
      ”OP” means that the part is no longer in stock.
      ”SE” means that an alternative part shall be used.
      ”SS” means that the part has been replaced.
      Refer to Group 10 Replaced parts for further information.
  11. KIT. Parts that are marked with a ”K” are included in a kit. The number of the kit is often indicated after other part numbers.
  12. Description. The indentations indicate if one or more parts are included in the assembled unit described above. The parts are included when a complete unit is ordered.
  13. Notes. Other information relating to a particular part is given here.
      - Footnote number (963 for example) is given at the bottom of the page.
      - Replaced parts (955884, for example).
      - Product or manufacturing number.
      - Abbreviations and technical information.
      - Reference to page and group.

Group 10 Replaced parts / Number index

- Replaced parts. The part numbers of parts marked with ”SS” (in the PS column) are indicated here, together with their replacement numbers.
  The replacement parts may in turn be also replaced, and so on.
- Number index. All parts included in the catalogue are indicated here, together with a reference to group, section and page.

Continued improvements and successes in design could result in modifications to your equipment which are not covered by this publication. Each publication is revised when required to include these modifications in later issues.

Any unauthorized reproduction of any part of this document would be in violation of Volvo Construction Equipment rights and will be prosecuted to the fullest extent allowed by law. We reserve the right to make changes without prior notice.

Fig.	Part No.	Quantity 1	2	3	PS	KIT	Description	Dénomination	Bezeichnung	Denominatición	Notes
1		1	2		NS		Steering Column	Colonne Volant	Lenksäule	Columna Direcci	CPL
2	**VOE 13960151**	2	3				••Washer	••Rondelle	••Scheibe	••Arandela	(ZM 2099130) BRB 34X62X
3	**ZM 2099140**	2	3				••Gasket	••Joint	••Dichtung	••Junta	G8x6
4	**ZM 2120650**	6	3		SS		•Housing	•Carter	•Gehäuse	•Carter	1) CPL
5	**ZM 2099180**	1	1				••Spring Ring	••Annea.elastique	••Federring	••Anillo Elastico	
6	**ZM 2099190**	2	2				••Needle Holder	••Porte-aiguille	••Nadelkäfig	••Portaagujas	
7	**ZM 2099650**	1	1				Steering Wheel	Volant	Lenkrad	Volante	



1) **GB:** Replacement version **FR:** Version piéce de rechange. **DE:** Ersatzteil-ausführung. **ES:** Versión piezas de repuesto.

1	**1800001**	**1800199**
2	**1810001**	
3		
4		
5		

Columna de dirección, montaje
Lenksäule, Einbauteilen
Colonne de direction, montage
Steering column, assembly

Catalogue id **07501**	Group **641**
Illustr. No **1000351**	Section **100**
Issue **VOE64A9907501**	Page **423**

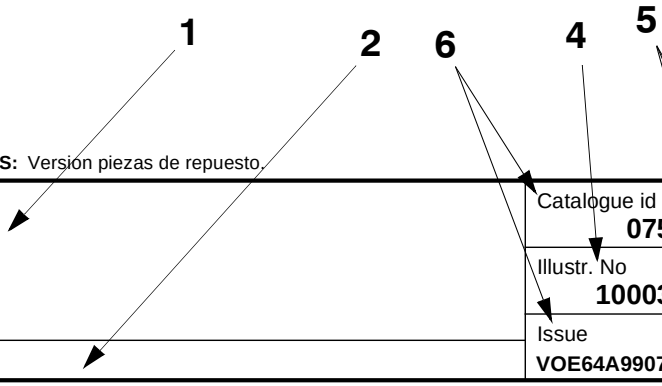

VOLVO

En el catálogo de repuestos se incluye, además de los números de artículo, numerosa información muy útil.
El propósito de la guía es explicar la estructura de los catálogos y la información que se ofrece en los mismos.

Grupo 1 Prefacio e instrucciones
Se encontrará aquí:
- El título y el número de publicación
- El índice de grupos
- Los letreros de producto
- El prefacio
- Una lista sobre los equipos adaptados a los mercados
- La guía al catálogo
- Una tabla de abreviaturas

Grupo 2 - 9 páginas con texto e ilustraciones

- El índice muestra la clasificación de los grupos principales en subgrupos con remisiones a páginas y secciones.
- Página de ilustraciones. Los números de posición de las ilustraciones. Remisiones a páginas de texto.
- Páginas de texto
  1. Rúbrica
  2. Texto adicional que delimita la validez de la sección, por ejemplo, información sobre números de fabricación y equipos según mercado.
  3. Designación para columnas de cantidades.
  4. Número de ilustración.
  5. Grupo, sección, página. Se utilizan al manejar el catálogo
  6. Identificación e indicación de la edición del catálogo.
  7. Números de posición en la ilustración correspondiente.
  8. Números de artículo
  9. Cantidad. Se indica en esta columna la ejecución. El número indicado se refiere a la cantidad por máquina o, si procede, por unidad completa. ”REQ” significa la cantidad necesaria, véase la columna de las notas.

  10. PS (Parts Status) indica el código de estado del artículo.
  -”NS” indica que el artículo no se tiene en stock.
”OP” significa que ya no se mantiene la pieza en stock.
”SE” significa que se puede usar una pieza alternativa.
-”SS” indica que el artículo ha sido sustituido.
Para más información, véase el grupo 10, artículos sustituidos.
  11. KIT. Los artículos marcados con una ”K” forman parte de un juego. El número de juego suele indicarse detrás de los demás números de artículo.
  12. Denominación. El desplazamiento indica que en la unidad indicada se incluyen uno o varios artículos. Estos se incluyen en la unidad completa pedida.
  13. Notas. Aparecen aquí diversas informaciones relativas a los artículos:
  - Números de notas de pie de página; ej. 963) aparece al final de la página.
  - Artículos sustituidos. Ej. (955884)
  - Números de producto o fabricación.
  - Abreviaturas e información técnica.
  - Remisiones a páginas y grupos.

Grupo 10 Artículos sustituidos/Índice de números

- Artículos sustituidos. Se marcan aquí con ”SS” (en la columna PS) los números de artículo con sus sustituciones. Los artículos sustituidos, a su vez, pueden haber sido sustituidos, etc.
- Índice de números. Aparecen aquí todos los artículos existentes en el catálogo con remisión a grupo, sección y página.

En su modelo de máquina pueden haberse introducido mejoras que no aparecen en esta publicación. Las publicaciones son revisadas para incluir las mejoras en ediciones posteriores.

Este documento está protegido por los derechos de autor y por lo tanto está prohibida su copia, impresión o cualquier otro tipo de reproducción indebida. La infracción de esta prohibición será penalizada. Reservado el derecho a introducir modificaciones.

Fig.	Part No.	Quantity 1	2	3	PS	KIT	Description	Dénomination	Bezeichnung	Denominatición	Notes
1		1	2		NS		Steering Column	Colonne Volant	Lenksäule	Columna Direcci	CPL
2	**VOE 13960151**	2	3				••Washer	••Rondelle	••Scheibe	••Arandela	(ZM 2099130) BRB 34X62X
3	**ZM 2099140**	2	3				••Gasket	••Joint	••Dichtung	••Junta	G8x6
4	**ZM 2120650**	6	3		SS		•Housing	•Carter	•Gehäuse	•Carter	1) CPL
5	**ZM 2099180**	1	1				••Spring Ring	••Annea.elastique	••Federring	••Anillo Elastico	
6	**ZM 2099190**	2	2				••Needle Holder	••Porte-aiguille	••Nadelkäfig	••Portaagujas	
7	**ZM 2099650**	1	1				Steering Wheel	Volant	Lenkrad	Volante	



1) **GB:** Replacement version **FR:** Version piéce de rechange. **DE:** Ersatzteil-ausführung. **ES:** Versión piezas de repuesto.

1	**1800001**	**1800199**
2	**1810001**	
3		
4		
5		

Columna de dirección, montaje
Lenksäule, Einbauteilen
Colonne de direction, montage
Steering column, assembly

Catalogue id **07501**	Group **641**
Illustr. No **1000351**	Section **100**
Issue **VOE64A9907501**	Page **423**

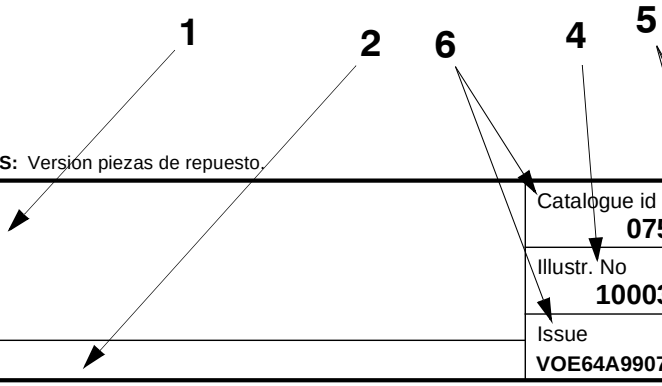

VOLVO

Além dos números de peça, o catálogo de peças contém muita informação essencial com que o operador deve estar familiarizado.
Com o ”Guia do Catálogo” queremos expor claramente como o catálogo está estruturado e qual tipo de informação ele contém.

Grupo 1 Prefácio e instruções
Informação contida:
- Página do rubro e número de publicação
- Índice do grupo
- Sinais convencionais do produto
- Prefácio
- Lista de ítens de equipamento inseridos na adaptação ao mercados
- Guia do Catálogo
- Tabela de abreviações

Grupo 2 - 9 Páginas de texto e ilustrações

- O índice mostra a divisão dos grupos principais em sub-grupos, com indicação do número da página e da seção.
- Página de ilustração. O número de posição na ilustração refere-se à página de texto.
- Página de texto
  1. Título.
  2. Informação adicional sobre os limites de validade da seção. Como exemplo, temos a informação referente aos números de fabrico e equipamento adaptados aos requisitos de mercados específicos.
  3. Designação de colunas de quantidade.
  4. Ilustrações.
  5. Grupo, seção, página a usar nas buscas no catálogo.
  6. Identificação do catálogo e número de edição.
  7. Posição da peça no desenho associado.
  8. Número de peça
  9. Quantidade. A designação da coluna indica a versão contida em cada coluna. A quantidade indicada refere-se a uma máquina ou, eventualmente, a uma unidade completa.
     ”REQ” indica a quantidade necessária. Ver também a coluna ”Notas”.
  10. PS (Parts Status) indica o código de status da peça.
      ”NS” significa que a peça não é mantida em estoque .
      ”OP” significa que a peça foi descontinuada.
      ”SE” significa que deve ser usada uma peça em alternativa.
      ”SS” significa que a peça foi substituída.
      Ver grupo 10 Peças substituídas para mais informação.
  11. KIT. Peças marcadas ”K” são incluídas num kit. O número do kit é geralmente indicado após outros números de peça.
  12. Descrição. Os entalhes indicam se tem uma ou mais peças incluídas na unidade montada, descrita acima. As peças são incluídas se for pedida uma unidade completa.
  13. Notas. Contém outras informações sobre uma peça específica.
      - O número de nota de roda-pé (p. ex. 963) vem ao fundo da página.
      - Peças descontinuadas (p. ex. 955884).
      - Número de produto ou de série.
      - Abreviações e informação técnica.
      - Indicação de página e número.

Grupo 10 Peças descontinuadas / índice numérico

- Peças substituídas. O número de peça das peças assinaladas com ”SS” (na coluna PS) são indicadas aqui, junto com os números das peças de substituição. As peças de substituição também podem ser descontinuadas, etc.
- Índice numérico. Todas as peças mencionadas no catálogo são incluídas, com indicação do grupo, seção e página.

As continuadas melhorias e progressos construtivos podem resultar em modificação de seu equipamento não consideradas nesta publicação. Cada publicação é revisada sempre que seja necessário para que as mencionadas alterações constem de edições posteriores.

Toda a reprodução não autorizada deste documento, total ou parcial, representa uma violação dos direitos da Volvo Construction Equipment, e será objeto de medidas judiciais, na medida do possível. Nos reservamos o direito de introduzir alterações sem aviso prévio.

Fig.	Part No.	Quantity 1	2	3	PS	KIT	Description	Dénomination	Bezeichnung	Denominatición	Notes
1		1	2		NS		Steering Column	Colonne Volant	Lenksäule	Columna Direcci	CPL
2	**VOE 13960151**	2	3				••Washer	••Rondelle	••Scheibe	••Arandela	(ZM 2099130) BRB 34X62X
3	**ZM 2099140**	2	3				••Gasket	••Joint	••Dichtung	••Junta	G8x6
4	**ZM 2120650**	6	3		SS		•Housing	•Carter	•Gehäuse	•Carter	1) CPL
5	**ZM 2099180**	1	1				••Spring Ring	••Annea.elastique	••Federring	••Anillo Elastico	
6	**ZM 2099190**	2	2				••Needle Holder	••Porte-aiguille	••Nadelkäfig	••Portaagujas	
7	**ZM 2099650**	1	1				Steering Wheel	Volant	Lenkrad	Volante	



1) **GB:** Replacement version **FR:** Version piéce de rechange. **DE:** Ersatzteil-ausführung. **ES:** Versión piezas de repuesto.

1	**1800001**	**1800199**
2	**1810001**	
3		
4		
5		

Columna de dirección, montaje
Lenksäule, Einbauteilen
Colonne de direction, montage
Steering column, assembly

Catalogue id **07501**	Group **641**
Illustr. No **1000351**	Section **100**
Issue **VOE64A9907501**	Page **423**

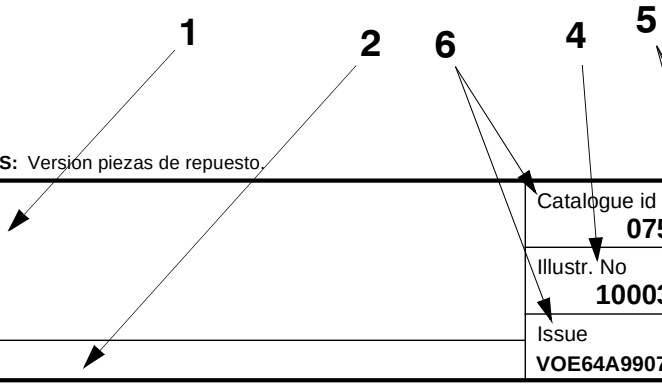

VOLVO

FRA

Le catalogue de pièces de rechange présente, non seulement les numéros de référence, mais également d'autres informations qu'un opérateur se doit de connaître. Ce guide de catalogue vous indique, d'une façon générale, comment sont conçus nos catalogues et quelles informations ils vous apportent.

Groupe 1 Avant-propos et instructions
Sous ce groupe, vous trouvez :
- La page de titre avec le numéro de publication
- Le registre des groupes
- Les plaques de produit
- Un avant-propos
- Une liste des équipements introduits suivant les pays
- Un guide de catalogue
- Un tableau des abréviations

Groupes 2 - 9 Pages de texte et d'illustration
- Le sommaire indique la division des groupes principaux en sous-groupes avec des renvois aux pages et aux sections.
- La page d'illustration. L'illustration donne les numéros de position qui renvoient à la page de texte.
- La page de texte
  1. Rubrique
  2. Texte supplémentaire qui limite la validité de la section, par exemple numéro de série et équipements adaptés aux pays
  3. Désignation des modèles pour les différentes colonnes
  4. Illustrations
  5. Groupe, section, page utilisés pour la recherche dans le catalogue
  6. Identification du catalogue et de l'édition
  7. Numéro de position de la pièce sur l'illustration afférente
  8. Numéro de référence
  9. Quantité. La désignation des colonnes indique le modèle qui se réfère à chaque colonne. La quantité indiquée correspond à la quantité par engin ou, suivant les cas, par unité complète. ”REQ” signifie quantité nécessaire, voir la colonne Notes
  10. PS (Parts Status) indique le code d'état de la pièce.
  -”NS” signifie que la pièce n'existe pas en magasin.
  ”OP” signifie que la pièce n¿est plus en magasin.
  ”SE” signifie qu¿une autre pièce devrait être employée. .
  ”SS” signifie que la pièce a été remplacée.
  Voir le groupe 10, pièces remplacées, pour de plus amples informations.
  11. KIT. Les pièces marquées ”K” font partie d'un kit. Le numéro du kit est le plus souvent indiqué après les autres numéros de référence.
  12. Description. Le décalage indique si une ou plusieurs pièces font partie de l'unité complète indiquée au-dessus. Ces pièces sont envoyées pour une commande d'une unité complète.
  13. Notes (Remarques). Diverses informations relatives à une pièce sont notées ici.
  - Un numéro de note de bas de page (par exemple 963) est donné au bas de la page.
  - Pièces remplacées (par exemple 955884).
  - Numéro de produit ou numéro de fabrication.
  - Abréviations et explications techniques.
  - Renvoi aux pages et aux groupes.

Groupe 10 Pièces remplacées/Registre des numéros

- Pièces remplacées. Les numéros de référence marquées ”SS” (dans la colonne PS) sont repris ici avec leur numéro de remplacement. Ces pièces remplacées peuvent, à leur tour, être remplacées par d'autres, etc.
- Registre des numéros. Tous les numéros de référence du catalogue se retrouvent ici avec un renvoi au groupe, à la section et à la page.

Les perfectionnements continus et les progrès réalisés dans la conception peuvent entraîner, sur votre engin, des modifications qui ne sont pas prises en compte dans cette publication. Chaque publication est remise à jour suivant les besoins pour inclure toutes ces modifications dans les dernières éditions.

La reproduction non autorisée de toute partie de ce document constitue une violation des droits d'auteur de Volvo Construction Equipment, et entraînera des poursuites aux termes de la loi. Nous nous réservons le droit d'apporter des modifications sans préavis.

TABLE OF ABBREVIATION

PABLO DE ABREVIATIONS

TABELA DE ABREVIATURAS

POUR LA LISTE DES ABRÉVIATIONS EMPLOYÉES

ABBREVIATION	ENGLISH	ESPAÑOL	PORTUGUÊS BRASILEIRO	FRANÇAIS
A	ampere	amperio	ampère	Ampères
AC	Alternating Current	Corriente alterna	Corrente alternada	Courant alternatif
ALT	alternative	alternativa	Alternativa	alternative
AWD	All Wheel Drive	Tracción en las todas las ruedas	Tração em todas as rodas	Toutes roues motrices
AX ####-	as from axle No.	a partir del eje nro	A partir do eixo n°.	à partir du N° d'essieu
AX - ####	up to and incl. axle No.	hasta el eje nro	Até ao eixo n°.	jusqu'au N° d'essieu
BL	black	negro	Preto	noir
BLUE	blue	azul	Azul	bleu
BR	brown	marrón	Marrom	brun
BRA	Brazil	Brasil	Brasil	Brésil
CAB #### -	as from cab No.	a partir de la cabina	A partir da cabine n°.	à partir du N° de cabine
CAB - ####	up to and incl. cab No.	hasta la cabina nro	Até a cabine n°.	jusqu'au N° de cabine
CAN	Canada	Canadá	Canadá	Canada
CENT	centre	central	Central	au milieu
CHN	China	China	China	Chine
CIN	component identification number	Número de identificación del componente	Número de identificação de componente	Numéro de référence de sous-ensemble
CPL	complete	completo	Completo	complet
m3 (CU M)	cubic metre	metro cúbico	Metro cúbico	mètre cube
Cu Yd	Cubic Yard	Yarda cúbica	Jarda cúbica	Yard cube
DC	Direct Current	Corriente continua	Corrente contínua	Courant continu
DEG	numbers of degrees, C°	numero de grado de calor, C°	Número de graus, C°	nombres de degré de chaleur, C°
DELETED	deleted	Retirado	Descontinuada	supprimé
DEU	Germany	Alemania	Alemanha	Allemagne
DNK	Denmark	Dinamarca	Dinamarca	Danemark
EEC	European Economic Community (EEC)	el mercado común (EEC)	Mercado Comum Europeu (EEC)	pays du marche commun (EEC)
ENG	Engine	motor	motor	moteur
ENG #### -	as from engine No.	a partir del motor nro	A partir do motor n°.	à partir du N° de moteur
ENG - ####	up to and incl. engine No.	hasta el motor nro	Até ao motor n°.	jusqu'au N° de moteur
E PROD	early production	producción anterior	Modelo anterior	production antérieure
ESP	Spain	España	Espanha	Espagne
EU	European Union	Unión Europea	União Européia	Union Européenne
EXC ### -	as from excavator unit No.	a partir de agregado excavador nro	A partir da unidade escavadeira n°.	à partir du N° d'excavateur

ABBREVIATION	ENGLISH	ESPAÑOL	PORTUGUÊS BRASILEIRO	FRANÇAIS
EXC - ###	up to and incl. excavator unit No.	hasta el agregado excavador nro	Até a unidade escavadeira n°.	jusqu'au N° d'excavateur
EXCL	excluding	exclusivo	Exclusivo	exclus
FIN	Finland	Finlandia	Finlândia	Finlande
F-N-R	Forward-Neutral-Reverse	Adelante - Punto muerto - Atrás	Frente-Neutral-Ré	Marche avant-Point mort-Marche arrière
FOPS	Falling Object Protection System	Sistema de protección contra caída de objetos	Sistema de proteção contra objetos em queda	Système de protection contre la chute d'objets
FORW	forward	delante	Avante	avant
FRA	France	Francia	França	France
GBR	Great Britain	Inglaterra	Inglaterra	Angleterre
g (GRAM)	gram	gramo	Grama	gramme
GREEN	green	verde	Verde	vert
GREY	grey	gris	Cinza	gris
HD	Heavy Duty	Heavy Duty	Serviço pesado	Heavy Duty
HT #### -	as from hydraulic transmission No.	a partir de transmisión hidráulico nro	A partir da transmissão hidráulica n°.	à partir du transmission hydraulique Nº
HT - ####	up to and incl. hydraulic transmission No.	hasta el transmisión hidráulico nro	Até a transmissão hidráulica n°.	jusqu'au transmission hydraulique Nº
ID	diameter, inner	diámetro, interior	Diâmetro interno	diamètre, intérieur
IN	inch(es)	pulgada	Polegada	pouce
INCL	inclusive	inclusive	Inclusive	inclus
INCL IN	included in	forma parte de	Faz parte de	inclus dans
INLET	inlet	entrada	Admissão, entrada	entrée
INNER	inner	interior	Interior	intérieur
IRN	Iran	Iran	Irã	Iran
ITA	Italy	Italia	Itália	Italie
ITEM NO	see item No.	véase posición	Ver posição número	voir position
K	included in parts kits	forma parte del juego por juego	Incluído no kit	fait partie du jeu complet de réparation
KOR	Korea	Corea	Coréia	Corée
L	litre, length	litros, longitud	Litro, comprimento	litre, longueur
LH	left	izquierdo	Esquerdo	gauche
LOAD #### -	as from loading unit No.	a partir du unibad carga nro	Até a unidade escavadeira n°.	à partir du N° de chargeur
LOAD - ####	up to and incl. loading unit No.	hasta unidad carga nro	Até a unidade escavadeira n°.	jusqu'au N° de chargeur
LOW	lower	inferior	Inferior	dessous

TABLE OF ABBREVIATION

PABLO DE ABREVIATIONS

TABELA DE ABREVIATURAS

POUR LA LISTE DES ABRÉVIATIONS EMPLOYÉES

ABBREVIATION	ENGLISH	ESPAÑOL	PORTUGUÊS BRASILEIRO	FRANÇAIS
m (M)	metric	métrico	metro	mètre
MARKED	marked	marcado	Marcado com	marque de
MEX	Mexico	México	México	Mexique
MODEL	model designation	Designación de modelo	Designação de modelo	Désignation de modèle
ml (ML)	millilitre	milílitro	Mililitro	millilitre
mm (MM)	millimetre	milimetros	Milímetro	millimètre
NLD	Netherlands	Holanda	Holanda	Pays-Bas
NO	number	número	Número	numéro
NOR	Norway	Noruega	Noruega	Norvège
NS	part not stocked as spare part	no disponible como repuesto pieza de repuesto	Peça não estocada como	n`est pas stocké comme pièce de rechange
OP	The part is no longer in stock	El artículo no se mantiene ya en stock	A peça foi descontinuada no estoque	La pièce n'est plus en stock
O SZ	over size	sobredimensión	Superdimensionado	côte supérieur
OD	diameter, outer	diámetro, exterior	Diâmetro externo	diamètre extérieur
OR	orange	naranja	Alaranjado	orange
ORDER	order	hacer un pedido	Encomendar	commander
OUTER	outer	exterior	Externo	extérieur
OUTLET	outlet	escape	Escapamento, saída	échappement
PAGE	see page	véase página	Ver a página	voir page
PAIR	pair	par	Par	paire
PCS	piece(s)	cada uno	Unidade	pièce
PIN	product identification number	Número de identificación del producto	Número de identificação de produto	Numéro d'identification de produit
PINK	pink	rosa	Cor-de-rosa	rose
POL	Poland	Polonia	Polônia	Pologne
PROD NO	product No.	nro de producto	Número de produto	Nº de produit
PRT	Portugal	Portugal	Portugal	Portugal
Q	Quantity l/min	Cantidad l/min	Quantidade l/min	Quantité l/min
REAR	rear	detrás	Atrás	arrière
RED	red	rojo	Vermelho	rouge
REPL BY -	replaced by	substituido por	Substituído por	remplacé par
REQ	order as required	cantidad necesaria	Quantidade necessária	quantité nécessaire
RH	right	derecha	Direito	droite
ROPS	Roll-Over Protection System	Sistema de protección antivuelco	Sitema de proteção contra tombamento	Système de protection en cas de retournement
RPM	revolutions per minute	revoluciones por minuto	giros por minuto	tours par minute
SE	alternative spare part version exists	Existen otras versiones de las piezas de repuesto	Existe modelo alternativo de peça de reposição	une version pièce de rechange existe également

ABBREVIATION	ENGLISH	ESPAÑOL	PORTUGUÊS BRASILEIRO	FRANÇAIS
SEE GROUP	see group	véase grupo	Ver o grupo	voir groupe
SEE SB	see Service Bulletin	ver boletin de servicio	Ver o boletim de serviço	voir bulletin de service
SER NO # -	as from serial No.	a partir de fabric. nro	A partir do n°. de série	à partir du N° de fabrication
SER NO - #	up to and incl.serial No.	hasta el fabric. nro	Até ao n°. de série	jusqu'au N° de fabrication
SMV	slow-moving vehicle	Vehículo lento	veículo lento	véhicule lent
S/N #### -	as from serial No.	a partir de fabricación nro.	A partir do n°. de série	à partir du N° de série
S/N - ####	up to and incl. serial No.	hasta el fabricación nro.	Até ao n°. de série	jusqu'au N° de série
SUPPL	supplementary details, no spare part	parte completar	Dado complementar	indication compléter
SPECIAL	special model	modelo especial	Modelo especial	construction spéciale
mm2 (SQ MM)	square millimeters	milimetros cuadrados	Milímetros quadrados	millimètre carré
SS	superseded part	pieza substituida	Peça substituída	pièce remplacée
STD	standard version	versión standard	Modelo padrão	version standard
STD SZ	standard size	dimensión standard	Dimensão padrão	dimension standard
SWE	Sweden	Suecia	Suécia	Suède
THICK	thickness	espesor	Espessura	épaisseur
TM NO # -	as from transmission No.	a partir de transmisión nro	A partir da transmissão n°.	à partir du N° de transmission
TM NO - #	up to and incl. transmission No.	hasta el de transmisión nro	Até a transmissão n°.	jusqu'au N° de transmission
UPPER	upper	superior	Superior	supérieur
USA	United States of America	Estados Unidos	Estados Unidos	États-Unis
U SZ	under size	subdimensión	Subdimensionado	côte interieur
V	volt	voltio	Volt	volt
VIOL	violet	violeta	Violeta	violet
VPM	vibrations per minute	Vibraciones por minuto	vibrações por minuto	vibrations par minute
W	Watt	watio	Watt	watt
WHITE	white	blanco	Branco	blanc
WID	width	ancho	Largura	largeur
YELL	yellow	amarillo	Amarelo	jaune
ZAF	South Africa	Sudáfrica	África do Sul	Afrique du Sud



Volvo Construction Equipment
www.volvoce.com

GROUP		Section	Page
210	Engine 35.7KW MC60C	100	33
210	Engine 44.7KW MC70C-MC105C, MCT70C-MCT95C	200	35
210	Lifting eye MC60C-MC105C, MCT70C-MCT95C	700	37
211	Cylinder head 35.7KW MC60C	100	39
211	Cylinder head 44.7KW MC70C-MC105C, MCT70C-MCT95C	150	41
211	Cylinder head MC60C-MC105C, MCT70C-MCT95C	200	43
211	Rocker shaft MC60C-MC105C, MCT70C-MCT95C	300	45
211	Valve cover 35.7KW MC60C	400	47
211	Valve cover 35.7KW MC60C	450	49
211	Valve cover 44.7KW MC70C-MC105C, MCT70C-MCT95C	500	51
212	Cylinder block MC60C-MC105C, MCT70C-MCT95C	100	53
212	Cylinder block MC60C-MC105C, MCT70C-MCT95C	150	55
212	Cold start MC60C-MC105C, MCT70C-MCT95C	200	57
213	Connecting rod and piston 35.7KW MC60C	100	59
213	Connecting rod and piston 44.7KW MC70C-MC105C, MCT70C-MCT95C	150	61
215	Camshaft 35.7KW MC60C	100	63
215	Camshaft 44.7KW MC70C-MC105C, MCT70C-MCT95C	150	65
216	Crankshaft and related parts MC60C-MC105C, MCT70C-MCT95C	100	67
216	Crankshaft and related parts MC60C-MC105C, MCT70C-MCT95C	150	71
216	Timing gear casing MC60C-MC105C, MCT70C-MCT95C	300	73
216	Timing gear casing MC60C-MC105C, MCT70C-MCT95C	350	75
216	Timing gear casing MC60C-MC105C, MCT70C-MCT95C	400	77
216	Timing gear casing MC60C-MC105C, MCT70C-MCT95C	450	79
216	Timing gear casing 35.7KW MC60C	500	81
216	Timing gear casing 44.7KW MC70C-MC105C, MCT70C-MCT95C	550	83
216	Flywheel MC70C-MC105C, MCT70C-MCT95C	600	85
216	Flywheel MC70C-MC105C, MCT70C-MCT95C	650	87
216	Flywheel MC60C-MC105C, MCT70C-MCT95C	700	89
216	Flywheel housing MC60C-MC105C, MCT70C-MCT95C	750	91
217	Oil dipstick MC60C-MC105C, MCT70C-MCT95C	100	93
217	Oil dipstick MC60C-MC105C, MCT70C-MCT95C	150	95
217	Oil drain hose MC70C-MC105C, MCT70C-MCT95C	200	97
217	Oil sump MC60C-MC105C, MCT70C-MCT95C	250	99
217	Oil drain MC60C-MC105C, MCT70C-MCT95C	300	101
218	Engine mounting MC70C-MC105C, MCT70C-MCT95C	100	103
218	Engine mounting MC70C-MC105C, MCT70C-MCT95C	150	105
220	Oil pump MC60C-MC105C, MCT70C-MCT95C	100	107
220	Oil pipe MC60C-MC105C, MCT70C-MCT95C	150	109
220	Relief valve MC60C-MC105C, MCT70C-MCT95C	200	111
220	Oilfiller MC60C-MC105C, MCT70C-MCT95C	250	113
222	Oil filter MC60C-MC105C, MCT70C-MCT95C	100	115
223	Oil cooler 35.7KW MC60C	100	117
223	Oil cooler 35.7KW MC60C	150	119
223	Oil cooler 44.7KW MC70C-MC105C, MCT70C-MCT95C	200	121
223	Oil cooler 44.7KW MC70C-MC105C, MCT70C-MCT95C	250	123
233	Fuel pump MC60C-MC105C, MCT70C-MCT95C	100	125
234	Tank Cap MC60C-MC105C, MCT70C-MCT95C	100	127
234	Fuel system MC60C-MC105C, MCT70C-MCT95C	200	129
234	Fuel system MC60C-MC105C, MCT70C-MCT95C	250	131
235	Fuel Lines MC60C-MC105C, MCT70C-MCT95C	100	133
236	Fuel pump 35.7KW MC60C	100	135
236	Fuel pump 44.7KW MC70C-MC105C, MCT70C-MCT95C	150	137
237	Delivery pipe - injector 35.7KW MC60C	100	139
237	Delivery pipe - injector 44.7KW MC70C-MC105C, MCT70C-MCT95C	150	141
237	Fuel system injectors 35.7KW MC60C	200	143
237	Fuel system injectors 44.7KW MC70C-MC105C, MCT70C-MCT95C	250	145
251	Exhaust manifold 35.7KW MC60C	100	147
251	Exhaust manifold 44.7KW MC70C-MC105C, MCT70C-MCT95C	150	149
251	Exhaust manifold 44.7KW MC70C-MC105C, MCT70C-MCT95C	200	151
252	Exhaust system STD MC60C	100	153
252	Exhaust system STD MC60C	150	155

INDEX OF CONTENTS

GROUP		Section	Page
252	Exhaust system STD MC70C-MC105C, MCT70C-MCT95C	200	157
252	Exhaust system STD MC70C-MC105C, MCT70C-MCT95C	250	159
252	Exhaust system, spark arrester MC60C, MC70C, MCT70C	400	161
252	Exhaust system, spark arrester MC60C, MC70C, MCT70C	450	163
252	Exhaust system, spark arrester MC70C-MC105C, MCT70C-MCT95C	500	165
252	Exhaust system, spark arrester MC70C-MC105C, MCT70C-MCT95C	550	167
255	Turbo charger 44.7KW MC70C-MC105C, MCT70C-MCT95C	100	169
255	Turbocharger, oil feed 44.7KW MC70C-MC105C, MCT70C-MCT95C	150	171
256	Induction manifold with fitting parts MC60C	100	173
256	Induction manifold with fitting parts MC70C-MC105C, MCT70C-MCT95C	150	175
256	Induction manifold with fitting parts MC60C-MC105C, MCT70C-MCT95CW	200	177
256	Air filter MC60C-MC105C, MCT70C-MCT95C	300	179
261	Cooler with attaching parts STD MC70C-MC105C, MCT70C-MCT95C	100	181
261	Cooler with attaching parts WIDE MC60C, MC70C, MCT70C	150	183
261	Cooler with attaching parts STD MC70C-MC105C, MCT70C-MCT95C	200	185
261	Cooler with attaching parts WIDE MC60C, MC70C, MCT70C	250	187
261	Cooler with attaching parts STD 135W, MC60C	300	189
261	Cooler with attaching parts STD 135W MC60C	350	191
261	Cross member REAR MC60C-MC105C, MCT85C-MCT95C	400	193
261	Expansion tank MC60C-MC105C, MCT85C-MCT95C	500	195
261	Coolant drainage MC70C-MC105C, MCT70C-MCT95C	600	197
262	Water Pump Assembly MC60C-MC105C, MCT70C-MCT95C	100	199
262	Water pump, Thermostat MC60C-MC105C, MCT70C-MCT95C	200	201
262	Water outlet connection MC60C-MC105C, MCT70C-MCT95C	300	203
263	Hydraulic motor, fan MC60C-MC105C, MCT70C-MCT95C	100	205
263	Hydraulic motor, fan 11CC MC60C-MC105C, MCT85C-MCT95C	150	207
263	Hoses to fan drive MC60C-MC105C, MCT70C-MCT95C	200	209
263	Belt Cover MC60C-MC105C, MCT70C-MCT95C	300	211
263	Drive Belt Assembly MC70C-MC105C, MCT70C-MCT95C	400	213
263	Drive Belt Assembly MC60C-MC105C, MCT70C-MCT95C	450	215
263	Belt transmission, pulley MC60C-MC105C, MCT70C-MCT95C	500	217
263	Cooling fan mounting MC60C-MC105C, MCT70C-MCT95C	600	219
269	Block Heater Installation MC60C-MC105C, MCT70C-MCT95C	200	221
269	Engine block heater 240V, MC60C-MC105C, MCT70C-MCT95C	300	223
269	Engine block heater 240V, MC60C-MC105C, MCT70C-MCT95C	400	225
269	Engine block heater 110V, MC60C-MC105C, MCT70C-MCT95C	500	227
269	Engine block heater 110V, MC60C-MC105C, MCT70C-MCT95C	600	229
271	Foot Pedal Assembly MC60C-MC105C, MCT70C-MCT95C	100	231
272	Hand throttle MC60C-MC105C, MCT70C-MCT95C	100	233
272	Hand throttle 35.7KW MC60C	150	235
272	Hand throttle 44.7KW MC70C-MC105C, MCT70C-MCT95C	200	237
284	Ecu 35.7KW MC60C	100	239
284	Ecu 44.7KW MC70C-MC105C, MCT70C-MCT95C	150	241
284	Throttle Cable Installation 44.7KW MC70C-MC105C, MCT70C-MCT95C	200	243

GRUPO		Sección	Página
210	Motor 35.7KW MC60C	100	33
210	Motor 44.7KW MC70C-MC105C, MCT70C-MCT95C	200	35
210	Soporte elevador MC60C-MC105C, MCT70C-MCT95C	700	37
211	Culata 35.7KW MC60C	100	39
211	Culata 44.7KW MC70C-MC105C, MCT70C-MCT95C	150	41
211	Culata MC60C-MC105C, MCT70C-MCT95C	200	43
211	Eje de balancín MC60C-MC105C, MCT70C-MCT95C	300	45
211	Tapa de válvulas 35.7KW MC60C	400	47
211	Tapa de válvulas 35.7KW MC60C	450	49
211	Tapa de válvulas 44.7KW MC70C-MC105C, MCT70C-MCT95C	500	51
212	Bloque de cilindros MC60C-MC105C, MCT70C-MCT95C	100	53
212	Bloque de cilindros MC60C-MC105C, MCT70C-MCT95C	150	55
212	Arranque en frío MC60C-MC105C, MCT70C-MCT95C	200	57
213	Biela y pistón 35.7KW MC60C	100	59
213	Biela y pistón 44.7KW MC70C-MC105C, MCT70C-MCT95C	150	61
215	Eje de levas 35.7KW MC60C	100	63
215	Eje de levas 44.7KW MC70C-MC105C, MCT70C-MCT95C	150	65
216	Cigüeñal MC60C-MC105C, MCT70C-MCT95C	100	67
216	Cigüeñal MC60C-MC105C, MCT70C-MCT95C	150	71
216	Tapa del engranaje de distribución MC60C-MC105C, MCT70C-MCT95C	300	73
216	Tapa del engranaje de distribución MC60C-MC105C, MCT70C-MCT95C	350	75
216	Tapa del engranaje de distribución MC60C-MC105C, MCT70C-MCT95C	400	77
216	Tapa del engranaje de distribución MC60C-MC105C, MCT70C-MCT95C	450	79
216	Tapa del engranaje de distribución 35.7KW MC60C	500	81
216	Tapa del engranaje de distribución 44.7KW MC70C-MC105C, MCT70C-MCT95C	550	83
216	Volante MC70C-MC105C, MCT70C-MCT95C	600	85
216	Volante MC70C-MC105C, MCT70C-MCT95C	650	87
216	Volante MC60C-MC105C, MCT70C-MCT95C	700	89
216	Carcasa del volante MC60C-MC105C, MCT70C-MCT95C	750	91
217	Varilla de nivel de aceite MC60C-MC105C, MCT70C-MCT95C	100	93
217	Varilla de nivel de aceite MC60C-MC105C, MCT70C-MCT95C	150	95
217	Manguera de vaciado de aceite MC70C-MC105C, MCT70C-MCT95C	200	97
217	Cárter MC60C-MC105C, MCT70C-MCT95C	250	99
217	Vaciado de aceite MC60C-MC105C, MCT70C-MCT95C	300	101
218	Suspensión del motor MC70C-MC105C, MCT70C-MCT95C	100	103
218	Suspensión del motor MC70C-MC105C, MCT70C-MCT95C	150	105
220	Bomba de aceite MC60C-MC105C, MCT70C-MCT95C	100	107
220	Tubo de aceite MC60C-MC105C, MCT70C-MCT95C	150	109
220	Válvula de sobrepresión MC60C-MC105C, MCT70C-MCT95C	200	111
220	Relleno de aceite MC60C-MC105C, MCT70C-MCT95C	250	113
222	Filtro de aceite MC60C-MC105C, MCT70C-MCT95C	100	115
223	Enfriador de aceite 35.7KW MC60C	100	117
223	Enfriador de aceite 35.7KW MC60C	150	119
223	Enfriador de aceite 44.7KW MC70C-MC105C, MCT70C-MCT95C	200	121
223	Enfriador de aceite 44.7KW MC70C-MC105C, MCT70C-MCT95C	250	123
233	Bomba de combustible MC60C-MC105C, MCT70C-MCT95C	100	125
234	Tapón de depósito MC60C-MC105C, MCT70C-MCT95C	100	127
234	Sistema de combustible MC60C-MC105C, MCT70C-MCT95C	200	129
234	Sistema de combustible MC60C-MC105C, MCT70C-MCT95C	250	131
235	Fuel Lines MC60C-MC105C, MCT70C-MCT95C	100	133
236	Bomba de combustible 35.7KW MC60C	100	135
236	Bomba de combustible 44.7KW MC70C-MC105C, MCT70C-MCT95C	150	137
237	Tubo presion - inyector 35.7KW MC60C	100	139
237	Tubo presion - inyector 44.7KW MC70C-MC105C, MCT70C-MCT95C	150	141
237	Tuberías de combustible, inyector 35.7KW MC60C	200	143

INDICE

GRUPO		Sección	Página
237	Tuberías de combustible, inyector 44.7KW MC70C-MC105C, MCT70C-MCT95C	250	145
251	Colector de escape 35.7KW MC60C	100	147
251	Colector de escape 44.7KW MC70C-MC105C, MCT70C-MCT95C	150	149
251	Colector de escape 44.7KW MC70C-MC105C, MCT70C-MCT95C	200	151
252	Sistema de escape STD MC60C	100	153
252	Sistema de escape STD MC60C	150	155
252	Sistema de escape STD MC70C-MC105C, MCT70C-MCT95C	200	157
252	Sistema de escape STD MC70C-MC105C, MCT70C-MCT95C	250	159
252	Sistema de escape, supresor de chispas MC60C, MC70C, MCT70C	400	161
252	Sistema de escape, supresor de chispas MC60C, MC70C, MCT70C	450	163
252	Sistema de escape, supresor de chispas MC70C-MC105C, MCT70C-MCT95C	500	165
252	Sistema de escape, supresor de chispas MC70C-MC105C, MCT70C-MCT95C	550	167
255	Turbocompresor 44.7KW MC70C-MC105C, MCT70C-MCT95C	100	169
255	Turbocompresor, alimentación de aceite 44.7KW MC70C-MC105C, MCT70C-MCT95C	150	171
256	Colector de admision con accesorios de montaje MC60C	100	173
256	Colector de admision con accesorios de montaje MC70C-MC105C, MCT70C-MCT95C	150	175
256	Colector de admision con accesorios de montaje MC60C-MC105C, MCT70C-MCT95CW	200	177
256	Filtro de aire MC60C-MC105C, MCT70C-MCT95C	300	179
261	Radiador con piezas de montaje STD MC70C-MC105C, MCT70C-MCT95C	100	181
261	Radiador con piezas de montaje WIDE MC60C, MC70C, MCT70C	150	183
261	Radiador con piezas de montaje STD MC70C-MC105C, MCT70C-MCT95C	200	185
261	Radiador con piezas de montaje WIDE MC60C, MC70C, MCT70C	250	187
261	Radiador con piezas de montaje STD 135W, MC60C	300	189
261	Radiador con piezas de montaje STD 135W MC60C	350	191
261	Travesaño REAR MC60C-MC105C, MCT85C-MCT95C	400	193
261	Vaso expansion MC60C-MC105C, MCT85C-MCT95C	500	195
261	Vaciado de refrigerante MC70C-MC105C, MCT70C-MCT95C	600	197
262	Montaje de mangueras de agua MC60C-MC105C, MCT70C-MCT95C	100	199
262	Bomba de agua, termostato MC60C-MC105C, MCT70C-MCT95C	200	201
262	Conexión de salida de agua MC60C-MC105C, MCT70C-MCT95C	300	203
263	Motor hidráulico, ventilador MC60C-MC105C, MCT70C-MCT95C	100	205
263	Motor hidráulico, ventilador 11CC MC60C-MC105C, MCT85C-MCT95C	150	207
263	Manguera, accionamiento del ventilador MC60C-MC105C, MCT70C-MCT95C	200	209
263	Guarda de correa MC60C-MC105C, MCT70C-MCT95C	300	211
263	Conjunto de correa de transmisión MC70C-MC105C, MCT70C-MCT95C	400	213
263	Conjunto de correa de transmisión MC60C-MC105C, MCT70C-MCT95C	450	215
263	Correa distribución, correa trapezoidal MC60C-MC105C, MCT70C-MCT95C	500	217
263	Ventilador, montaje MC60C-MC105C, MCT70C-MCT95C	600	219
269	Instalación de calentador de bloque MC60C-MC105C, MCT70C-MCT95C	200	221
269	Calefactor 240V, MC60C-MC105C, MCT70C-MCT95C	300	223
269	Calefactor 240V, MC60C-MC105C, MCT70C-MCT95C	400	225
269	Calefactor 110V, MC60C-MC105C, MCT70C-MCT95C	500	227
269	Calefactor 110V, MC60C-MC105C, MCT70C-MCT95C	600	229
271	Montaje de pedal MC60C-MC105C, MCT70C-MCT95C	100	231
272	Acelerador manual MC60C-MC105C, MCT70C-MCT95C	100	233
272	Acelerador manual 35.7KW MC60C	150	235
272	Acelerador manual 44.7KW MC70C-MC105C, MCT70C-MCT95C	200	237

284 ECU 35.7KW MC60C 100 239
284 ECU 44.7KW MC70C-MC105C, MCT70C-MCT95C 150 241
284 Instalación de cable del acelerador 44.7KW MC70C-MC105C, MCT70C-MCT95C 200 243

ÍNDICE

GRUPO		Seção	Página
210	Motor 35.7KW MC60C	100	33
210	Motor 44.7KW MC70C-MC105C, MCT70C-MCT95C	200	35
210	Alça de içamento MC60C-MC105C, MCT70C-MCT95C	700	37
211	Cabeçote 35.7KW MC60C	100	39
211	Cabeçote 44.7KW MC70C-MC105C, MCT70C-MCT95C	150	41
211	Cabeçote MC60C-MC105C, MCT70C-MCT95C	200	43
211	Eixo oscilante MC60C-MC105C, MCT70C-MCT95C	300	45
211	Tampa das válvulas 35.7KW MC60C	400	47
211	Tampa das válvulas 35.7KW MC60C	450	49
211	Tampa das válvulas 44.7KW MC70C-MC105C, MCT70C-MCT95C	500	51
212	Bloco de cilindros MC60C-MC105C, MCT70C-MCT95C	100	53
212	Bloco de cilindros MC60C-MC105C, MCT70C-MCT95C	150	55
212	Partida a frio MC60C-MC105C, MCT70C-MCT95C	200	57
213	Biela e pistão 35.7KW MC60C	100	59
213	Biela e pistão 44.7KW MC70C-MC105C, MCT70C-MCT95C	150	61
215	Eixo de came 35.7KW MC60C	100	63
215	Eixo de came 44.7KW MC70C-MC105C, MCT70C-MCT95C	150	65
216	Eixo de manivela e peças relacionadas MC60C-MC105C, MCT70C-MCT95C	100	67
216	Eixo de manivela e peças relacionadas MC60C-MC105C, MCT70C-MCT95C	150	71
216	Caixa da engrenagem de distribuição MC60C-MC105C, MCT70C-MCT95C	300	73
216	Caixa da engrenagem de distribuição MC60C-MC105C, MCT70C-MCT95C	350	75
216	Caixa da engrenagem de distribuição MC60C-MC105C, MCT70C-MCT95C	400	77
216	Caixa da engrenagem de distribuição MC60C-MC105C, MCT70C-MCT95C	450	79
216	Caixa da engrenagem de distribuição 35.7KW MC60C	500	81
216	Caixa da engrenagem de distribuição 44.7KW MC70C-MC105C, MCT70C-MCT95C	550	83
216	Volante MC70C-MC105C, MCT70C-MCT95C	600	85
216	Volante MC70C-MC105C, MCT70C-MCT95C	650	87
216	Volante MC60C-MC105C, MCT70C-MCT95C	700	89
216	Carcaça do volante MC60C-MC105C, MCT70C-MCT95C	750	91
217	Vareta de nível do óleo MC60C-MC105C, MCT70C-MCT95C	100	93
217	Vareta de nível do óleo MC60C-MC105C, MCT70C-MCT95C	150	95
217	Mangueira de drenagem de óleo MC70C-MC105C, MCT70C-MCT95C	200	97
217	Cárter de óleo MC60C-MC105C, MCT70C-MCT95C	250	99
217	Drenagem de óleo MC60C-MC105C, MCT70C-MCT95C	300	101
218	Suspensão do motor MC70C-MC105C, MCT70C-MCT95C	100	103
218	Suspensão do motor MC70C-MC105C, MCT70C-MCT95C	150	105
220	Bomba de óleo MC60C-MC105C, MCT70C-MCT95C	100	107
220	Tubo do óleo MC60C-MC105C, MCT70C-MCT95C	150	109
220	Válvula de alívio MC60C-MC105C, MCT70C-MCT95C	200	111
220	Abastecedor de óleo MC60C-MC105C, MCT70C-MCT95C	250	113
222	Filtro de óleo MC60C-MC105C, MCT70C-MCT95C	100	115
223	Refrigerador de óleo 35.7KW MC60C	100	117
223	Refrigerador de óleo 35.7KW MC60C	150	119
223	Refrigerador de óleo 44.7KW MC70C-MC105C, MCT70C-MCT95C	200	121
223	Refrigerador de óleo 44.7KW MC70C-MC105C, MCT70C-MCT95C	250	123
233	Bomba de combustível MC60C-MC105C, MCT70C-MCT95C	100	125
234	Tampa do tanque MC60C-MC105C, MCT70C-MCT95C	100	127
234	Sistema de combustível MC60C-MC105C, MCT70C-MCT95C	200	129
234	Sistema de combustível MC60C-MC105C, MCT70C-MCT95C	250	131
235	Linhas de combustível MC60C-MC105C, MCT70C-MCT95C	100	133
236	Bomba de combustível 35.7KW MC60C	100	135
236	Bomba de combustível 44.7KW MC70C-MC105C, MCT70C-MCT95C	150	137
237	Tubo de alimentação - injetor 35.7KW MC60C	100	139

GRUPO		Seção	Página
237	Tubo de alimentação - injetor 44.7KW MC70C-MC105C, MCT70C-MCT95C	150	141
237	35.7KW MC60C	200	143
237	44.7KW MC70C-MC105C, MCT70C-MCT95C	250	145
251	Coletor de escape 35.7KW MC60C	100	147
251	Coletor de escape 44.7KW MC70C-MC105C, MCT70C-MCT95C	150	149
251	Coletor de escape 44.7KW MC70C-MC105C, MCT70C-MCT95C	200	151
252	Sistema de escape STD MC60C	100	153
252	Sistema de escape STD MC60C	150	155
252	Sistema de escape STD MC70C-MC105C, MCT70C-MCT95C	200	157
252	Sistema de escape STD MC70C-MC105C, MCT70C-MCT95C	250	159
252	Sistema de escape, retentor de faíscas MC60C, MC70C, MCT70C	400	161
252	Sistema de escape, retentor de faíscas MC60C, MC70C, MCT70C	450	163
252	Sistema de escape, retentor de faíscas MC70C-MC105C, MCT70C-MCT95C	500	165
252	Sistema de escape, retentor de faíscas MC70C-MC105C, MCT70C-MCT95C	550	167
255	Turbocompressor 44.7KW MC70C-MC105C, MCT70C-MCT95C	100	169
255	Turbocompressor, alimentação de óleo 44.7KW MC70C-MC105C, MCT70C-MCT95C	150	171
256	MC60C	100	173
256	MC70C-MC105C, MCT70C-MCT95C	150	175
256	MC60C-MC105C, MCT70C-MCT95CW	200	177
256	Filtro de ar MC60C-MC105C, MCT70C-MCT95C	300	179
261	Refrigerador com peças fixação STD MC70C-MC105C, MCT70C-MCT95C	100	181
261	Refrigerador com peças fixação WIDE MC60C, MC70C, MCT70C	150	183
261	Refrigerador com peças fixação STD MC70C-MC105C, MCT70C-MCT95C	200	185
261	Refrigerador com peças fixação WIDE MC60C, MC70C, MCT70C	250	187
261	Refrigerador com peças fixação STD 135W, MC60C	300	189
261	Refrigerador com peças fixação STD 135W MC60C	350	191
261	Travessa REAR MC60C-MC105C, MCT85C-MCT95C	400	193
261	Tanque de expansão MC60C-MC105C, MCT85C-MCT95C	500	195
261	Refrigerante, drenagem MC70C-MC105C, MCT70C-MCT95C	600	197
262	Bomba de água, montagem MC60C-MC105C, MCT70C-MCT95C	100	199
262	Bomba de água, termostato MC60C-MC105C, MCT70C-MCT95C	200	201
262	Conexão de saída da água MC60C-MC105C, MCT70C-MCT95C	300	203
263	Motor hidráulico, ventilador MC60C-MC105C, MCT70C-MCT95C	100	205
263	Motor hidráulico, ventilador 11CC MC60C-MC105C, MCT85C-MCT95C	150	207
263	Mangueiras do acionamento do ventilador MC60C-MC105C, MCT70C-MCT95C	200	209
263	Capa da correia MC60C-MC105C, MCT70C-MCT95C	300	211
263	Correia de acionamento, montagem MC70C-MC105C, MCT70C-MCT95C	400	213
263	Correia de acionamento, montagem MC60C-MC105C, MCT70C-MCT95C	450	215
263	Transmissão por correia, polia MC60C-MC105C, MCT70C-MCT95C	500	217
263	Ventilador de refrigeração, montagem MC60C-MC105C, MCT70C-MCT95C	600	219
269	Aquecedor do bloco, instalação MC60C-MC105C, MCT70C-MCT95C	200	221
269	Aquecedor do bloco do motor 240V, MC60C-MC105C, MCT70C-MCT95C	300	223
269	Aquecedor do bloco do motor 240V, MC60C-MC105C, MCT70C-MCT95C	400	225
269	Aquecedor do bloco do motor 110V, MC60C-MC105C, MCT70C-MCT95C	500	227
269	Aquecedor do bloco do motor 110V, MC60C-MC105C, MCT70C-MCT95C	600	229
271	Pedal de pé, montagem MC60C-MC105C, MCT70C-MCT95C	100	231
272	Mando manual acelerador MC60C-MC105C, MCT70C-MCT95C	100	233

ÍNDICE

GRUPO		Seção	Página
272	Mando manual acelerador 35.7KW MC60C	150	235
272	Mando manual acelerador 44.7KW MC70C-MC105C, MCT70C-MCT95C	200	237
284	Ecu 35.7KW MC60C	100	239
284	Ecu 44.7KW MC70C-MC105C, MCT70C-MCT95C	150	241
284	Cabo do acelerador, instalação 44.7KW MC70C-MC105C, MCT70C-MCT95C	200	243

GROUPE		Section	Page
210	Moteur 35.7KW MC60C	100	33
210	Moteur 44.7KW MC70C-MC105C, MCT70C-MCT95C	200	35
210	Fixation de levage MC60C-MC105C, MCT70C-MCT95C	700	37
211	Culasse 35.7KW MC60C	100	39
211	Culasse 44.7KW MC70C-MC105C, MCT70C-MCT95C	150	41
211	Culasse MC60C-MC105C, MCT70C-MCT95C	200	43
211	Axe de culbuteur MC60C-MC105C, MCT70C-MCT95C	300	45
211	Couvre-culasse 35.7KW MC60C	400	47
211	Couvre-culasse 35.7KW MC60C	450	49
211	Couvre-culasse 44.7KW MC70C-MC105C, MCT70C-MCT95C	500	51
212	Bloc cylindres MC60C-MC105C, MCT70C-MCT95C	100	53
212	Bloc cylindres MC60C-MC105C, MCT70C-MCT95C	150	55
212	Démarrage à froid MC60C-MC105C, MCT70C-MCT95C	200	57
213	Bielle et piston 35.7KW MC60C	100	59
213	Bielle et piston 44.7KW MC70C-MC105C, MCT70C-MCT95C	150	61
215	Arbre à cames 35.7KW MC60C	100	63
215	Arbre à cames 44.7KW MC70C-MC105C, MCT70C-MCT95C	150	65
216	Axe à vilebreguintas MC60C-MC105C, MCT70C-MCT95C	100	67
216	Axe à vilebreguintas MC60C-MC105C, MCT70C-MCT95C	150	71
216	Carter de la distribution MC60C-MC105C, MCT70C-MCT95C	300	73
216	Carter de la distribution MC60C-MC105C, MCT70C-MCT95C	350	75
216	Carter de la distribution MC60C-MC105C, MCT70C-MCT95C	400	77
216	Carter de la distribution MC60C-MC105C, MCT70C-MCT95C	450	79
216	Carter de la distribution 35.7KW MC60C	500	81
216	Carter de la distribution 44.7KW MC70C-MC105C, MCT70C-MCT95C	550	83
216	Volant MC70C-MC105C, MCT70C-MCT95C	600	85
216	Volant MC70C-MC105C, MCT70C-MCT95C	650	87
216	Volant MC60C-MC105C, MCT70C-MCT95C	700	89
216	Carter de volant MC60C-MC105C, MCT70C-MCT95C	750	91
217	Jauge d'huile MC60C-MC105C, MCT70C-MCT95C	100	93
217	Jauge d'huile MC60C-MC105C, MCT70C-MCT95C	150	95
217	Flexible de vidange d'huile MC70C-MC105C, MCT70C-MCT95C	200	97
217	Carter d'huile MC60C-MC105C, MCT70C-MCT95C	250	99
217	Vidange de l'huile MC60C-MC105C, MCT70C-MCT95C	300	101
218	Suspension du moteur MC70C-MC105C, MCT70C-MCT95C	100	103
218	Suspension du moteur MC70C-MC105C, MCT70C-MCT95C	150	105
220	Pompe à huile MC60C-MC105C, MCT70C-MCT95C	100	107
220	Conduit d'huile MC60C-MC105C, MCT70C-MCT95C	150	109
220	Détendeur MC60C-MC105C, MCT70C-MCT95C	200	111
220	Remplissage d'huile MC60C-MC105C, MCT70C-MCT95C	250	113
222	Filtre à huile MC60C-MC105C, MCT70C-MCT95C	100	115
223	Radiateur d 'huile 35.7KW MC60C	100	117
223	Radiateur d 'huile 35.7KW MC60C	150	119
223	Radiateur d 'huile 44.7KW MC70C-MC105C, MCT70C-MCT95C	200	121
223	Radiateur d 'huile 44.7KW MC70C-MC105C, MCT70C-MCT95C	250	123
233	Pompe carburant MC60C-MC105C, MCT70C-MCT95C	100	125
234	Bouchon de réservoir MC60C-MC105C, MCT70C-MCT95C	100	127
234	Système d'alimentation MC60C-MC105C, MCT70C-MCT95C	200	129
234	Système d'alimentation MC60C-MC105C, MCT70C-MCT95C	250	131
235	Conduits d'alimentation en carburant MC60C-MC105C, MCT70C-MCT95C	100	133
236	Pompe carburant 35.7KW MC60C	100	135
236	Pompe carburant 44.7KW MC70C-MC105C, MCT70C-MCT95C	150	137
237	Tuyau refoulement - injecteur 35.7KW MC60C	100	139
237	Tuyau refoulement - injecteur 44.7KW MC70C-MC105C, MCT70C-MCT95C	150	141
237	Canalisations à combustible, injecteur 35.7KW MC60C	200	143
237	Canalisations à combustible, injecteur 44.7KW MC70C-MC105C, MCT70C-MCT95C	250	145
251	Tubulure d'échappement 35.7KW MC60C	100	147

TABLE DES MATIÈRES

GROUPE		Section	Page
251	Tubulure d'échappement 44.7KW MC70C-MC105C, MCT70C-MCT95C	150	149
251	Tubulure d'échappement 44.7KW MC70C-MC105C, MCT70C-MCT95C	200	151
252	Système d'échappement STD MC60C	100	153
252	Système d'échappement STD MC60C	150	155
252	Système d'échappement STD MC70C-MC105C, MCT70C-MCT95C	200	157
252	Système d'échappement STD MC70C-MC105C, MCT70C-MCT95C	250	159
252	Système d'échappement, pare-étincelles MC60C, MC70C, MCT70C	400	161
252	Système d'échappement, pare-étincelles MC60C, MC70C, MCT70C	450	163
252	Système d'échappement, pare-étincelles MC70C-MC105C, MCT70C-MCT95C	500	165
252	Système d'échappement, pare-étincelles MC70C-MC105C, MCT70C-MCT95C	550	167
255	Turbocompresseur 44.7KW MC70C-MC105C, MCT70C-MCT95C	100	169
255	Turbocompresseur, alimentation en huile 44.7KW MC70C-MC105C, MCT70C-MCT95C	150	171
256	Tubulure admission avec pièces de montage MC60C	100	173
256	Tubulure admission avec pièces de montage MC70C-MC105C, MCT70C-MCT95C	150	175
256	Tubulure admission avec pièces de montage MC60C-MC105C, MCT70C-MCT95CW	200	177
256	Filtre à air MC60C-MC105C, MCT70C-MCT95C	300	179
261	Radiateur avec montage parts STD MC70C-MC105C, MCT70C-MCT95C	100	181
261	Radiateur avec montage parts WIDE MC60C, MC70C, MCT70C	150	183
261	Radiateur avec montage parts STD MC70C-MC105C, MCT70C-MCT95C	200	185
261	Radiateur avec montage parts WIDE MC60C, MC70C, MCT70C	250	187
261	Radiateur avec montage parts STD 135W, MC60C	300	189
261	Radiateur avec montage parts STD 135W MC60C	350	191
261	Traverse REAR MC60C-MC105C, MCT85C-MCT95C	400	193
261	Vase expansion MC60C-MC105C, MCT85C-MCT95C	500	195
261	Vidange du liquide de refroidissement MC70C-MC105C, MCT70C-MCT95C	600	197
262	Montage de la pompe à eau MC60C-MC105C, MCT70C-MCT95C	100	199
262	Pompe d'eau, Thermostat MC60C-MC105C, MCT70C-MCT95C	200	201
262	Raccord de sortie d'eau MC60C-MC105C, MCT70C-MCT95C	300	203
263	Moteur hydraulique, ventilateur MC60C-MC105C, MCT70C-MCT95C	100	205
263	Moteur hydraulique, ventilateur 11CC MC60C-MC105C, MCT85C-MCT95C	150	207
263	Commande ventilateur MC60C-MC105C, MCT70C-MCT95C	200	209
263	Protection de courroie MC60C-MC105C, MCT70C-MCT95C	300	211
263	Ensemble courroie d'entraînement MC70C-MC105C, MCT70C-MCT95C	400	213
263	Ensemble courroie d'entraînement MC60C-MC105C, MCT70C-MCT95C	450	215
263	Transmission courroie, courroie trapézoïdale MC60C-MC105C, MCT70C-MCT95C	500	217
263	Ventilateur, montage MC60C-MC105C, MCT70C-MCT95C	600	219
269	Installation du chauffage de bloc MC60C-MC105C, MCT70C-MCT95C	200	221
269	Chauffe-moteur 240V, MC60C-MC105C, MCT70C-MCT95C	300	223
269	Chauffe-moteur 240V, MC60C-MC105C, MCT70C-MCT95C	400	225
269	Chauffe-moteur 110V, MC60C-MC105C, MCT70C-MCT95C	500	227
269	Chauffe-moteur 110V, MC60C-MC105C, MCT70C-MCT95C	600	229
271	Montage de la pédale MC60C-MC105C, MCT70C-MCT95C	100	231
272	Accelerateur manual MC60C-MC105C, MCT70C-MCT95C	100	233
272	Accelerateur manual 35.7KW MC60C	150	235
272	Accelerateur manual 44.7KW MC70C-MC105C, MCT70C-MCT95C	200	237
284	Ecu 35.7KW MC60C	100	239
284	Ecu 44.7KW MC70C-MC105C, MCT70C-MCT95C	150	241

GROUPE		Section	Page	GROUPE		Section	Page
284	Installation de câble de papillon 44.7KW MC70C-MC105C, MCT70C-MCT95C	200	243				

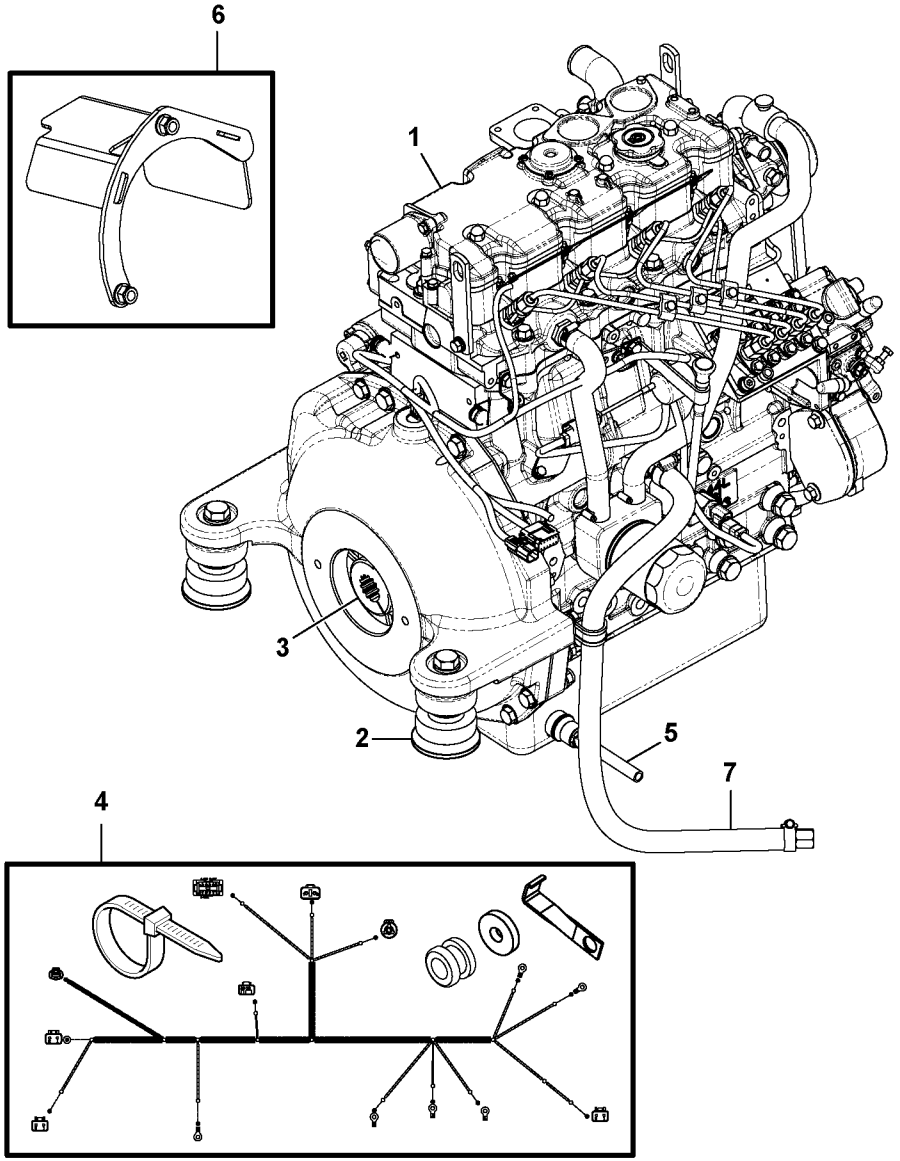
6
1
3
2
5
7
4

Fig.	Part No.	Quantity 1	2	3	PS	KIT	Description	Denominación	Denominação	Dénomination	Notes
1	**VOE 17231035**	1					Engine	Motor	Motor	Moteur	
1			1				Engine	Motor	Motor	Moteur	
2		1	1				Engine Mounting	Fijacion Motor		Silentbl.moteur	See group 218, Page 103
3		1	1				Drive Gear	Pinon	Pinhão	Pignon	See group 216, Page 85
4		1	1				Cable Harness, Engine	Haz De Cables, Motor	Chicote de cabos, motor	Faisceau De Câbles, Mote..	See group 371, Page 315
5		1	1				Remote Oil Drain		Drenagem remota do óleo		See group 217, Page 97
6		1	1		NS		Engine support	Soporte de motor	Suporte do motor	Support de moteur	
7		1	1		NS		Draining Hose	Manguera Drenaj		Durit Drainage	

1	**E PROD (-14/05/2012)**	**Moteur** **Motor** **Motor** **Engine**	Catalogue id **20649**	Group **210**
2	**L PROD (15/05/2012-)**		Illustr. No **1064179**	Section **100**
3			Issue **PUB 20030904-B**	Page **33**
4				
5		**35.7KW MC60C**		

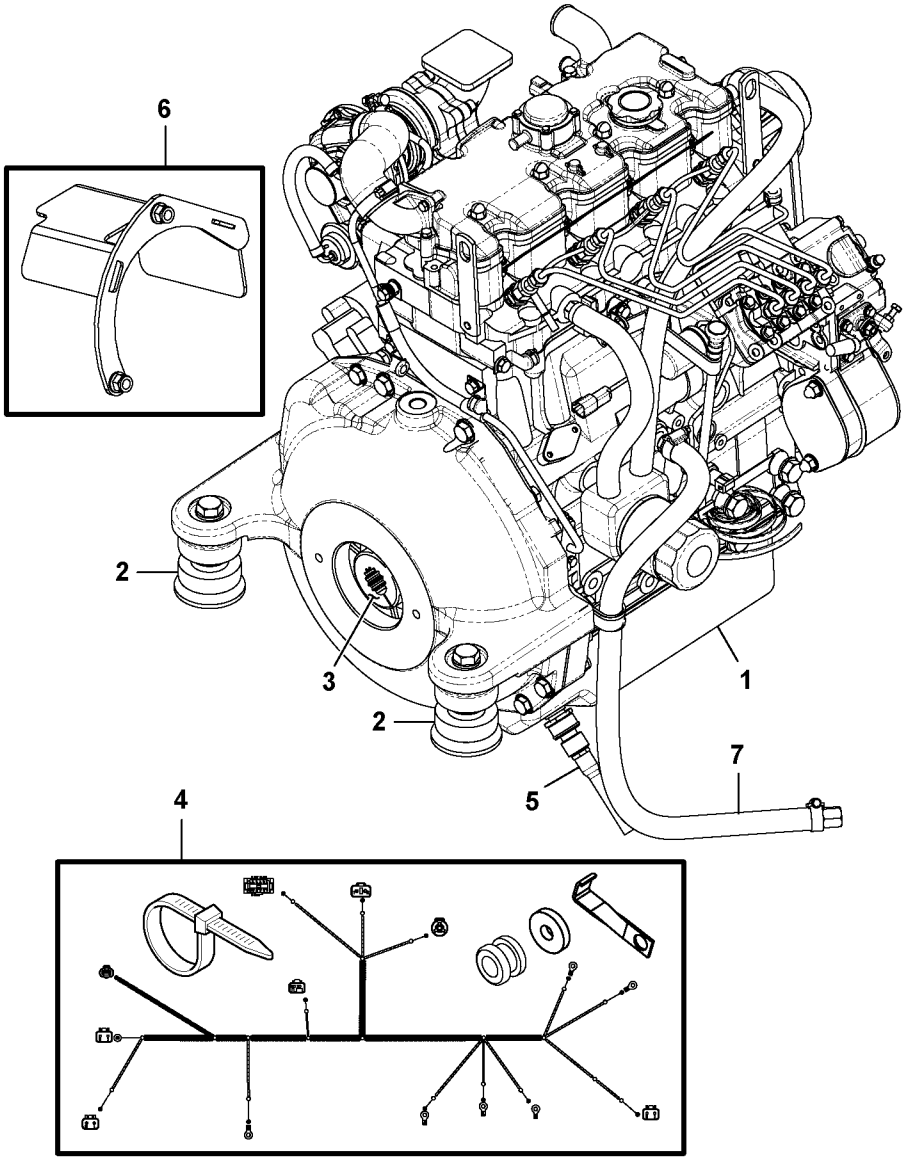

Volvo Construction Equipment
1064168

Fig.	Part No.	Quantity 1	2	3	PS	KIT	Description	Denominación	Denominação	Dénomination	Notes
1	**VOE 17231023**	1					Engine	Motor	Motor	Moteur	
1			1				Engine	Motor	Motor	Moteur	
2		1	1				Engine Mounting	Fijacion Motor		Silentbl.moteur	See group 218, Page 103
3		1	1				Drive Gear	Pinon	Pinhão	Pignon	See group 216, Page 85
4		1	1				Cable Harness, Engine	Haz De Cables, Motor	Chicote de cabos, motor	Faisceau De Câbles, Mote..	See group 371, Page 317
5		1	1				Remote Oil Drain		Drenagem remota do óleo		See group 217, Page 97
6		1	1		NS		Engine support	Soporte de motor	Suporte do motor	Support de moteur	
7		1	1		NS		Draining Hose	Manguera Drenaj		Durit Drainage	

1	**E PROD (-14/05/2012)**	**Moteur** **Motor** **Motor** **Engine**	Catalogue id **20649**	Group **210**
2	**L PROD (15/05/2012-)**		Illustr. No **1064168**	Section **200**
3			Issue **PUB 20030904-B**	Page **35**
4				
5		**44.7KW MC70C-MC105C, MCT70C-MCT95C**		

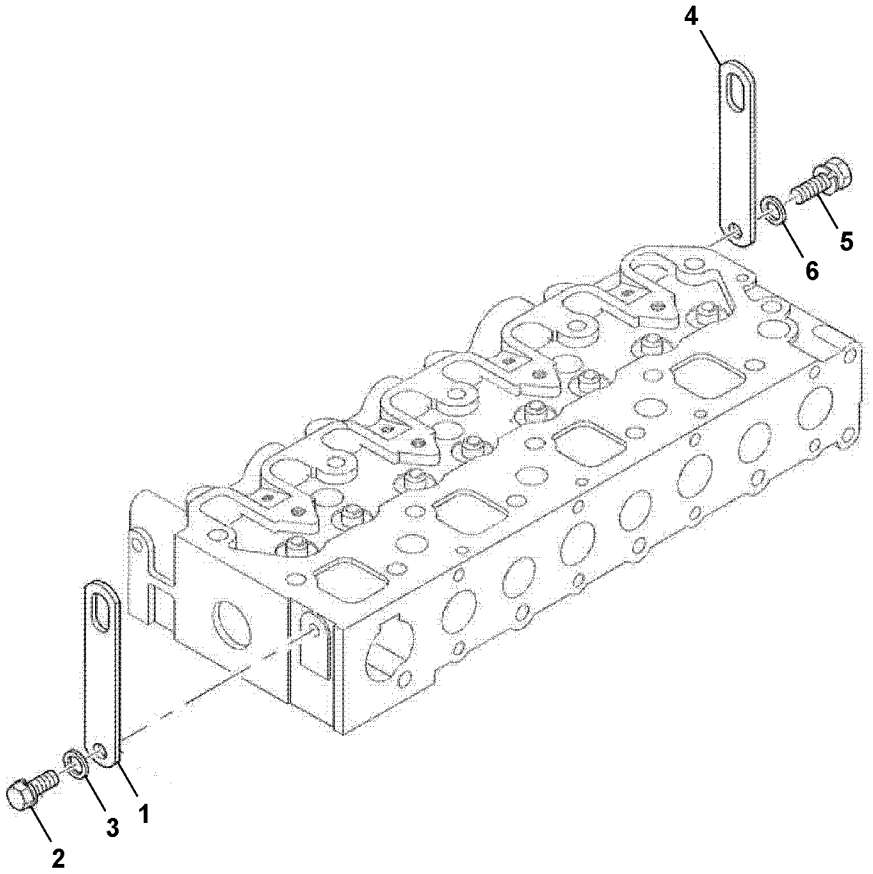
4
5
6
1
3
2

Fig.	Part No.	Quantity 1	2	3	PS	KIT	Description	Denominación	Denominação	Dénomination	Notes
1	**VOE 17224769**	1					Plate	Chapa	Chapa	Tôle	
2	**VOE 17230142**	1					Screw	Tornillo	Parafuso	Vis	
3	**VOE 17223872**	1					Washer	Arandela	Arruela	Rondelle	
4	**VOE 17224769**	1					Plate	Chapa	Chapa	Tôle	
5	**VOE 17230154**	1					Screw	Tornillo	Parafuso	Vis	
6	**VOE 17223872**	1					Washer	Arandela	Arruela	Rondelle	

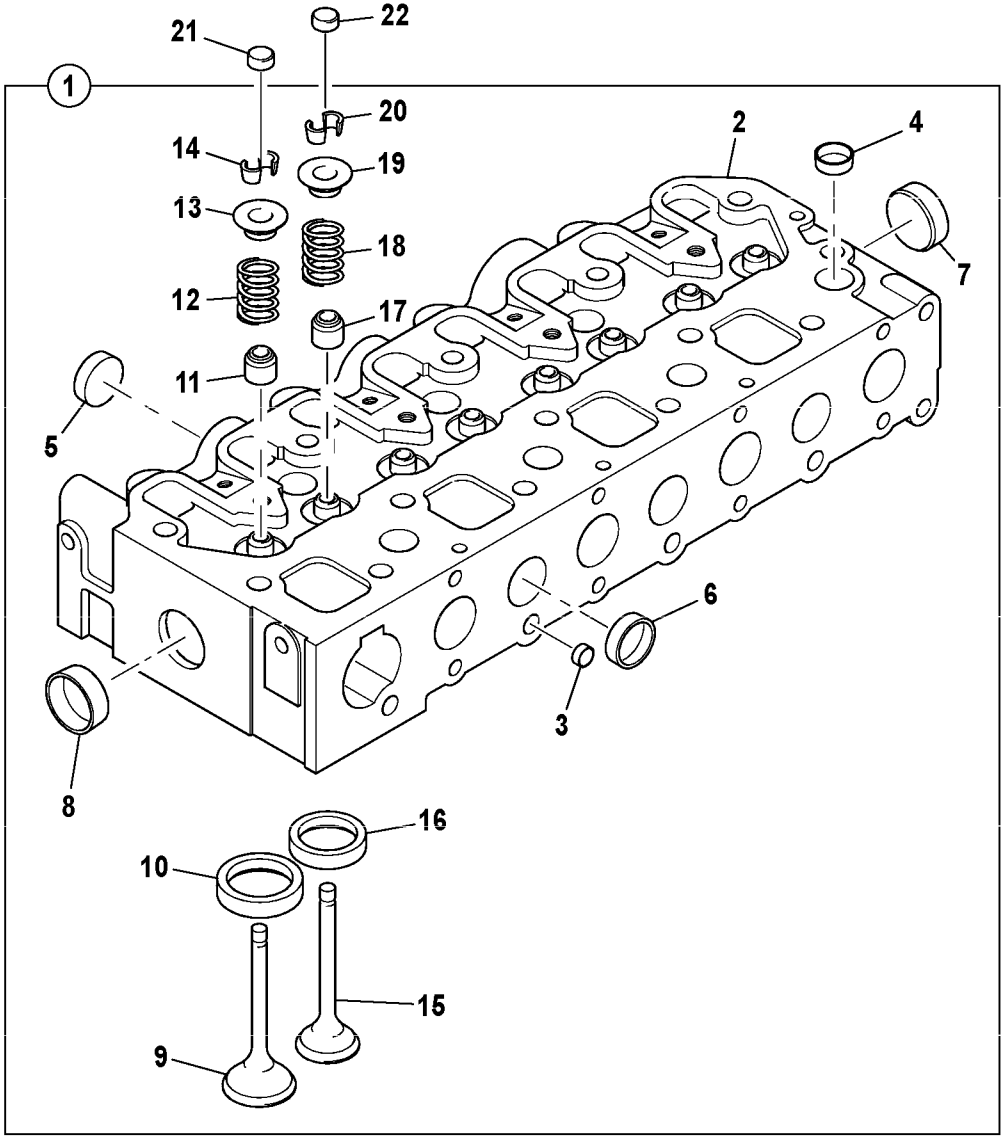
1
2
3
4
5
6
7
8
9
10
11
12
13
14
15
16
17
18
19
20
21
22

Fig.	Part No.	Quantity 1	2	3	PS	KIT	Description	Denominación	Denominação	Dénomination	Notes
1	**VOE 17229381**	1					Cylinder head	Culata	Cabeçote	Culasse	
2		1			NS		•Cylinder head	•Culata	•Cabeçote	•Culasse	
3	**VOE 17228414**	3					•Plug	•Tapón	•Bujão	•Tampon	
4	**VOE 17228384**	7					•Plug	•Tapón	•Bujão	•Tampon	
5	**VOE 17223867**	3					•Plug	•Tapón	•Bujão	•Tampon	
6	**VOE 17223867**	3					•Plug	•Tapón	•Bujão	•Tampon	
7	**VOE 17228177**	1					•Plug	•Tapón	•Bujão	•Tampon	
8	**VOE 17228177**	1					•Plug	•Tapón	•Bujão	•Tampon	
9	**VOE 17230328**	4					•Inlet valve	•Válvula de admisión	•Válvula admissão	•Soupape admission	
10	**VOE 17230347**	1					•Valve seat	•Asiento de válvula	•Assento da válvula	•Siège de soupape	
11	**VOE 17230948**	4					•Valve seal	•Retén válvula	•Retentor da válvula	•Joint soupape	
12	**VOE 17230953**	4					•Valve spring	•Resorte de válvula	•Mola da válvula	•Ressort soupape	
13	**VOE 17230109**	4					•Valve spring washer	•Arandela resorte de válvul	•Arruela pressão válvula	•Coupelle de ressort soup	
14	**VOE 17230117**	4					•Collet	•Manguito tensor	•Luva tensora	•Douille tension	
15	**VOE 17230332**	4			SS		•Exhaust valve	•Válvua de escape	•Válvula de escape	•Soupape d'échappement	
16	**VOE 17230341**	1					•Valve seat	•Asiento de válvula	•Assento da válvula	•Siège de soupape	
17	**VOE 17230952**	4					•Valve seal	•Retén válvula	•Retentor da válvula	•Joint soupape	
18	**VOE 17230953**	4					•Valve spring	•Resorte de válvula	•Mola da válvula	•Ressort soupape	
19	**VOE 17230109**	4					•Valve spring washer	•Arandela resorte de válvul	•Arruela pressão válvula	•Coupelle de ressort soup	
20	**VOE 17230117**	4					•Collet	•Manguito tensor	•Luva tensora	•Douille tension	
21	**VOE 17228982**	4					Cap	Capuchón	Tampa	Capot	
22	**VOE 17228982**	4					Cap	Capuchón	Tampa	Capot	

1		**Culasse** **Cabeçote** **Culata** **Cylinder head**	Catalogue id **20649**	Group **211**
2			Illustr. No **1064266**	Section **100**
3			Issue **PUB 20030904-B**	Page **39**
4				
5		**35.7KW MC60C**		

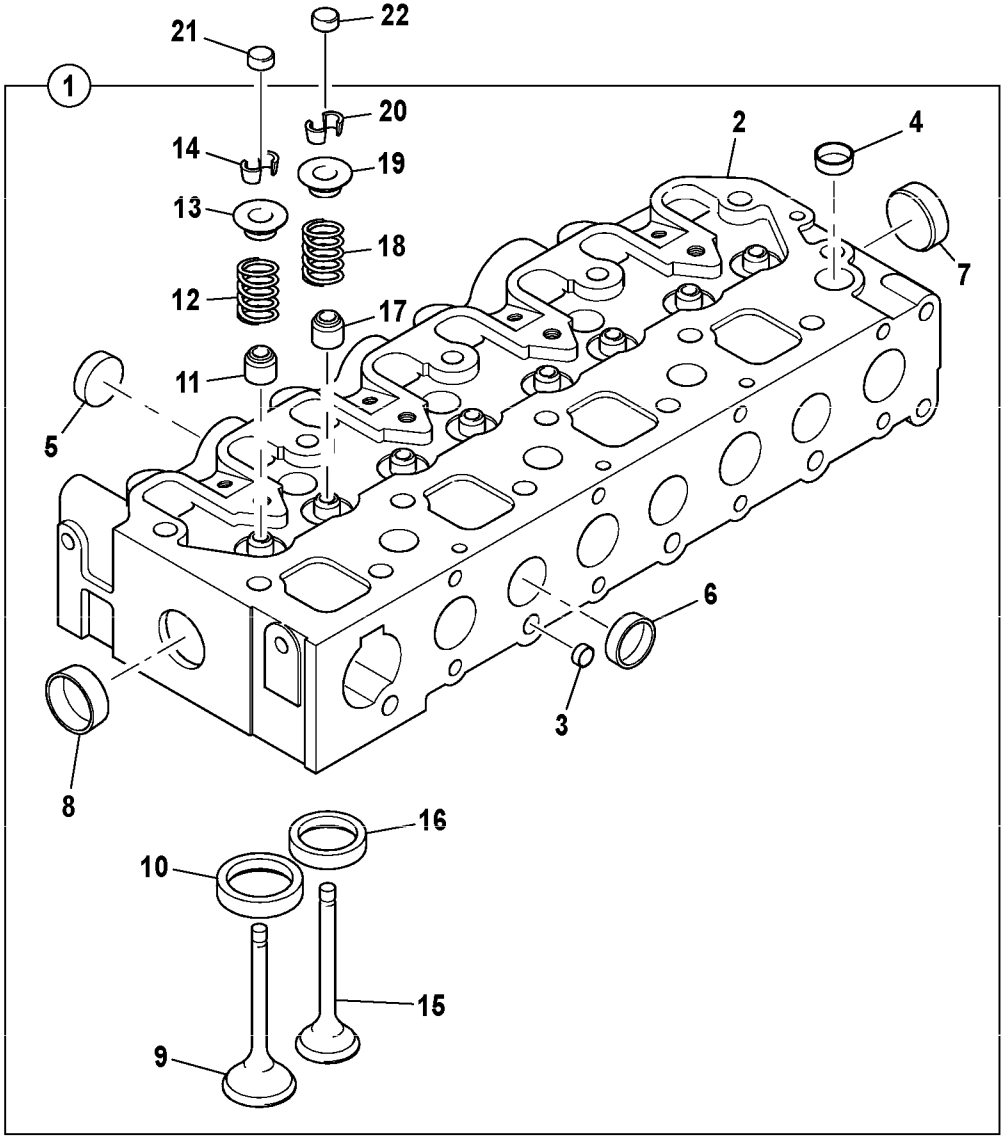
1
2
3
4
5
6
7
8
9
10
11
12
13
14
15
16
17
18
19
20
21
22

Fig.	Part No.	Quantity 1	2	3	PS	KIT	Description	Denominación	Denominação	Dénomination	Notes
1	**VOE 17229383**	1					Cylinder head	Culata	Cabeçote	Culasse	
2		1			NS		•Cylinder head	•Culata	•Cabeçote	•Culasse	
3	**VOE 17228414**	3					•Plug	•Tapón	•Bujão	•Tampon	
4	**VOE 17228384**	7					•Plug	•Tapón	•Bujão	•Tampon	
5	**VOE 17223867**	3					•Plug	•Tapón	•Bujão	•Tampon	
6	**VOE 17223867**	3					•Plug	•Tapón	•Bujão	•Tampon	
7	**VOE 17228177**	1					•Plug	•Tapón	•Bujão	•Tampon	
8	**VOE 17228177**	1					•Plug	•Tapón	•Bujão	•Tampon	
9	**VOE 17230328**	4					•Inlet valve	•Válvula de admisión	•Válvula admissão	•Soupape admission	
10	**VOE 17230347**	4					•Valve seat	•Asiento de válvula	•Assento da válvula	•Siège de soupape	
11	**VOE 17230948**	4					•Valve seal	•Retén válvula	•Retentor da válvula	•Joint soupape	
12	**VOE 17230953**	4					•Valve spring	•Resorte de válvula	•Mola da válvula	•Ressort soupape	
13	**VOE 17230109**	4					•Valve spring washer	•Arandela resorte de válvul	•Arruela pressão válvula	•Coupelle de ressort soup	
14	**VOE 17230117**	4					•Collet	•Manguito tensor	•Luva tensora	•Douille tension	
15	**VOE 17230337**	1					•Valve	•Válvula	•Válvula	•Valve	
16	**VOE 17230341**	4					•Valve seat	•Asiento de válvula	•Assento da válvula	•Siège de soupape	
17	**VOE 17230952**	4					•Valve seal	•Retén válvula	•Retentor da válvula	•Joint soupape	
18	**VOE 17230953**	4					•Valve spring	•Resorte de válvula	•Mola da válvula	•Ressort soupape	
19	**VOE 17230109**	4					•Valve spring washer	•Arandela resorte de válvul	•Arruela pressão válvula	•Coupelle de ressort soup	
20	**VOE 17230117**	4					•Collet	•Manguito tensor	•Luva tensora	•Douille tension	
21	**VOE 17228982**	4					Cap	Capuchón	Tampa	Capot	
22	**VOE 17228982**	4					Cap	Capuchón	Tampa	Capot	

1		**Culasse** **Cabeçote** **Culata** **Cylinder head**	Catalogue id **20649**	Group **211**
2			Illustr. No **1064266**	Section **150**
3			Issue **PUB 20030904-B**	Page **41**
4				
5		**44.7KW MC70C-MC105C, MCT70C-MCT95C**		

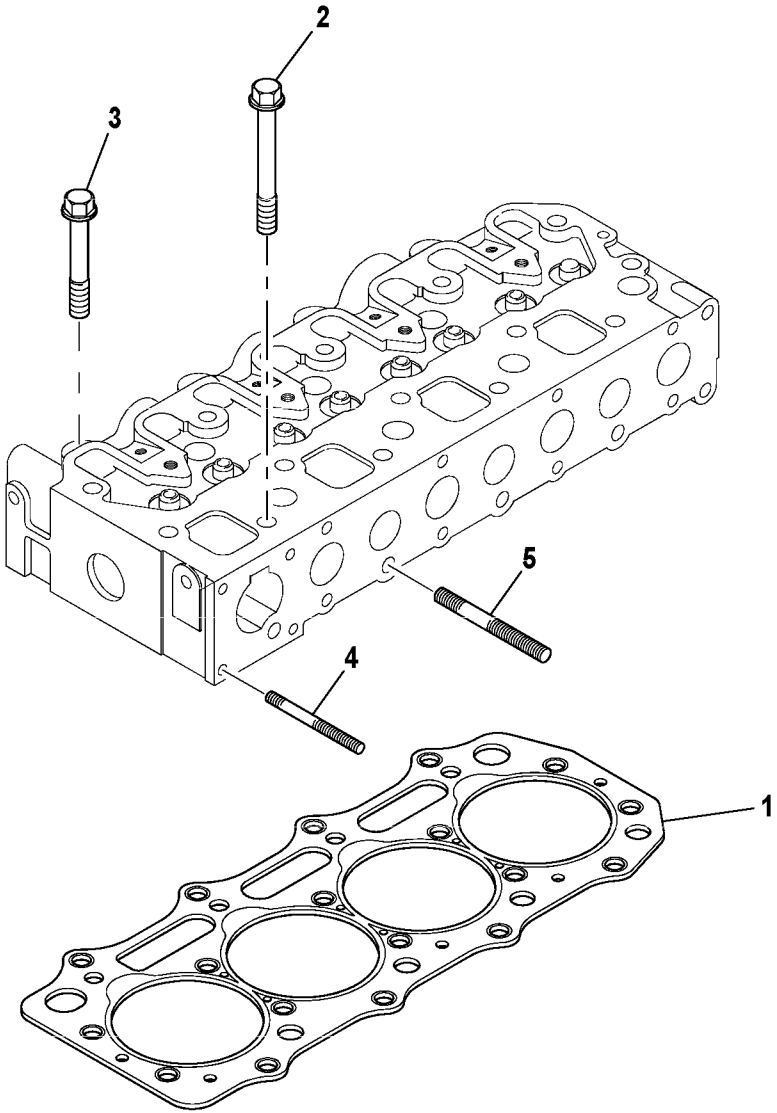

Volvo Construction Equipment
1064267

Fig.	Part No.	Quantity 1	2	3	PS	KIT	Description	Denominación	Denominação	Dénomination	Notes
1	**VOE 17229555**	1					Gasket	Junta	Junta	Joint	THICK = 1.3 MM
1	**VOE 17229558**	1					Gasket	Junta	Junta	Joint	THICK = 1.2 MM
1	**VOE 17229562**	1					Gasket	Junta	Junta	Joint	THICK = 1.1 MM
2	**VOE 17228395**	14					Screw	Tornillo	Parafuso	Vis	
3	**VOE 17228477**	4					Screw	Tornillo	Parafuso	Vis	
4	**VOE 17230330**	2					Stud	Espárrago	Prisioneiro	Goujon	
5	**VOE 17228732**	2					Stud	Espárrago	Prisioneiro	Goujon	

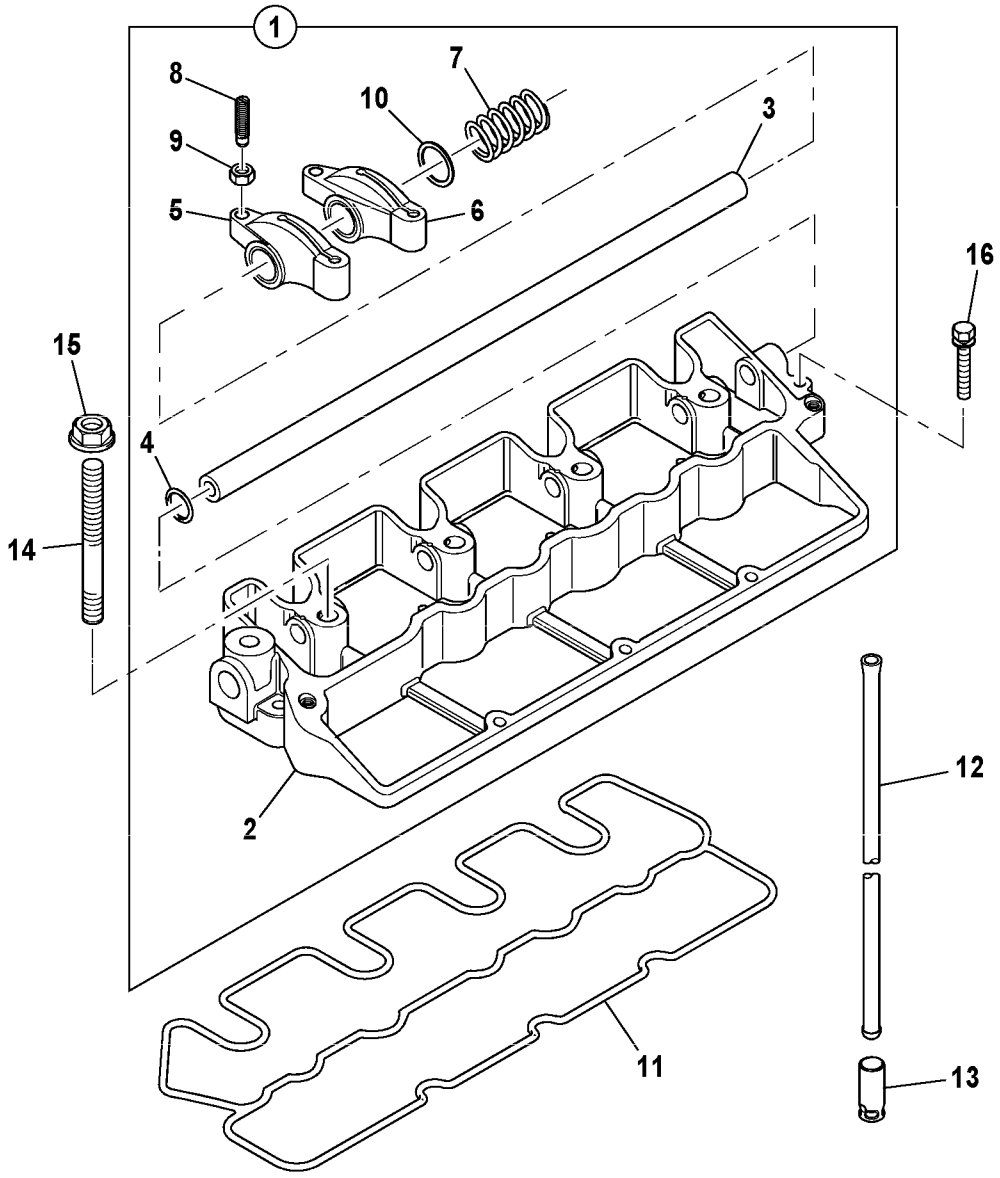
1
8
7
10
3
9
5
6
16
15
4
14
12
2
11
13

Fig.	Part No.	Quantity 1	2	3	PS	KIT	Description	Denominación	Denominação	Dénomination	Notes
1	**VOE 17224725**	1					Rocker switch	Commutador cuna		Commutateur à bascule	
2		1			NS		•Rocker Switch	•Interruptor oscilante	•	•Commutateur à bascule	
3	**VOE 17228573**	1					•Shaft	•Eje	•Eixo	•Arbre	
4	**VOE 17228238**	1					•O-ring	•Anillo tórico	•Anel-o	•Joint torique	
5	**VOE 17228567**	4					•Rocker arm	•Balancín	•Balancim	•Culbuteur	
6	**VOE 17228473**	4					•Lever valve	•Valvula palanca mando	•	•Valve de levier	
7	**VOE 17228470**	3					•Spring	•Resorte	•Mola	•Ressort	
8	**VOE 17228187**	8					•Screw	•Tornillo	•Parafuso	•Vis	
9	**VOE 17228212**	8					•Nut	•Tuerca	•Porca	•Écrou	
10	**VOE 17228455**	6					•Washer	•Arandela	•Arruela	•Rondelle	
11	**VOE 17229504**	1					Gasket	Junta	Junta	Joint	
12	**VOE 17228467**	8					Rod	Barra	Barra	Tige	
13	**VOE 17228225**	8					Tappet	Empujador válvula	Tucho da válvula	Poussoir	
14	**VOE 17228445**	4					Stud	Espárrago	Prisioneiro	Goujon	
15	**VOE 17229614**	4					Nut	Tuerca	Porca	Écrou	
16	**VOE 17230140**	2					Screw	Tornillo	Parafuso	Vis	

1		**Axe de culbuteur** **Eixo oscilante** **Eje de balancín** **Rocker shaft**	Catalogue id **20649**	Group **211**
2			Illustr. No **1064268**	Section **300**
3			Issue **PUB 20030904-B**	Page **45**
4				
5		**MC60C-MC105C, MCT70C-MCT95C**		

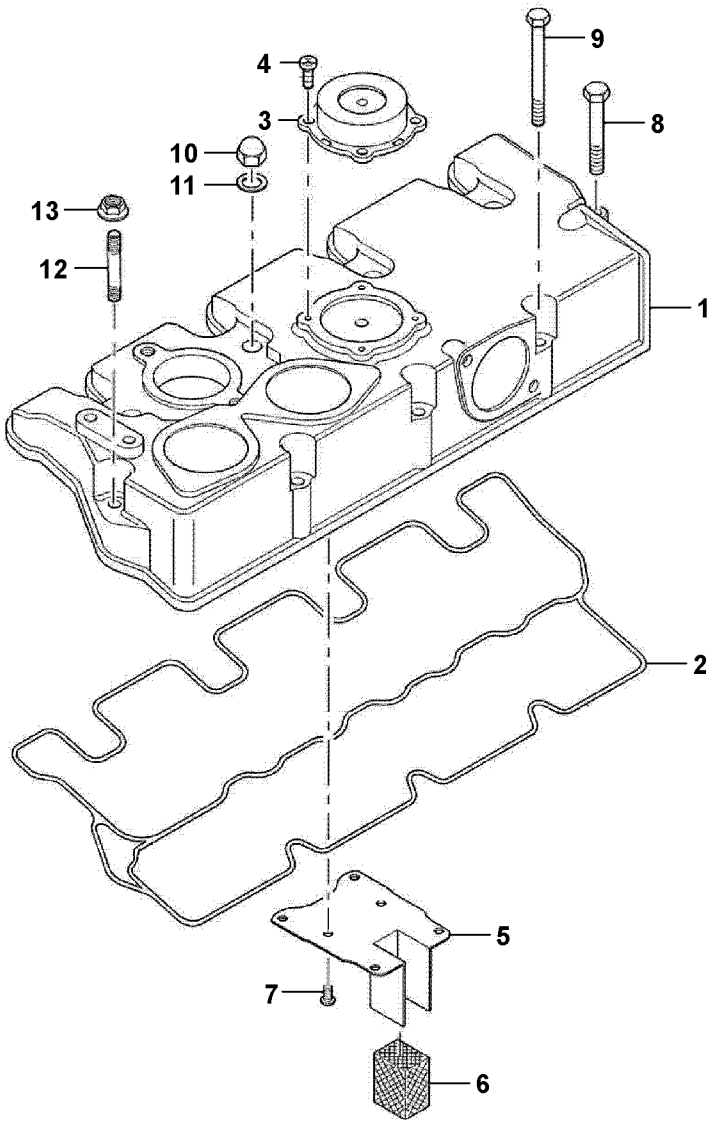

Volvo Construction Equipment
1064433

Fig.	Part No.	Quantity 1	2	3	PS	KIT	Description	Denominación	Denominação	Dénomination	Notes
1		1			NS		Cover	Capó	Capô	Capot	
2	**VOE 17229544**	1					Gasket	Junta	Junta	Joint	
3	**VOE 17230317**	1					Valve cover	Cubierta válvula	Tampa da válvula	Couvre culasse	
4	**VOE 17228808**	4					Bolt	Perno	Parafuso	Boulon	
5		1			NS		Plate	Chapa	Chapa	Tôle	
6	**VOE 17228231**	1					Venting	Purga de aire		Sortie d'air	
7	**VOE 17230144**	6					Screw	Tornillo	Parafuso	Vis	
8	**VOE 17230158**	1					Screw	Tornillo	Parafuso	Vis	
9	**VOE 17230145**	3					Screw	Tornillo	Parafuso	Vis	
10	**VOE 17228709**	4					Nut	Tuerca	Porca	Écrou	
11	**VOE 17228704**	4					Sealing washer	Arandela de retén	Arruela de vedação	Rondelle étanchéité	
12	**VOE 17230340**	1					Stud	Espárrago	Prisioneiro	Goujon	
13	**VOE 17229624**	1					Nut	Tuerca	Porca	Écrou	

1		**Couvre-culasse** **Tampa das válvulas** **Tapa de válvulas** **Valve cover**	Catalogue id **20649**	Group **211**
2			Illustr. No **1064433**	Section **400**
3			Issue **PUB 20030904-B**	Page **47**
4				
5		**35.7KW MC60C**		

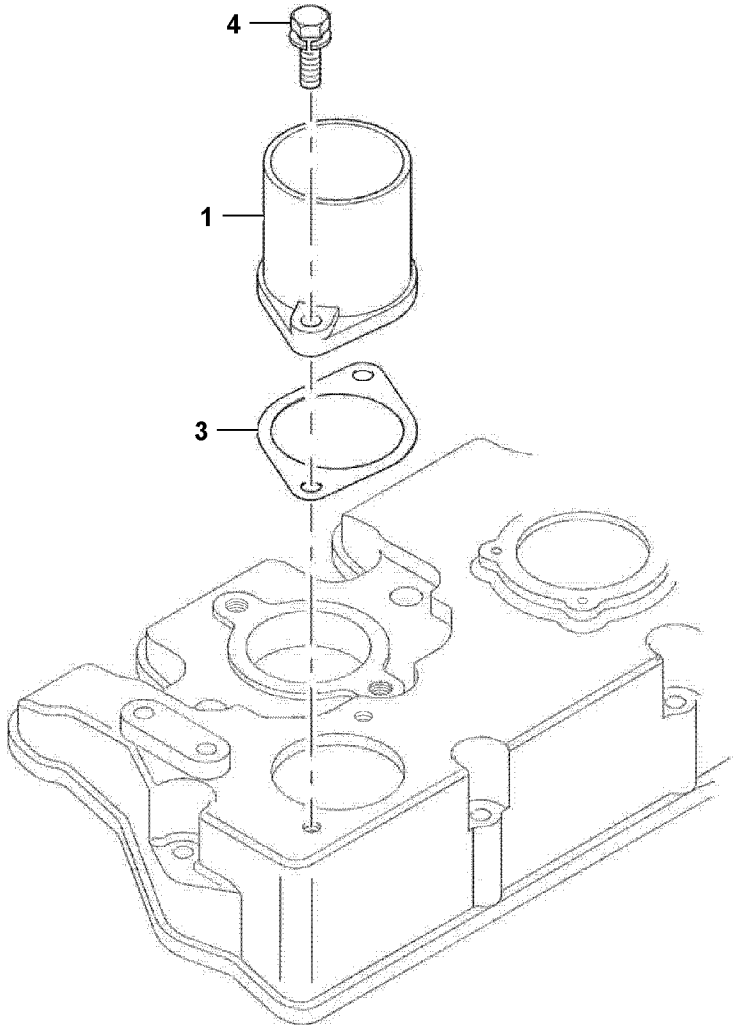
4
1
3

Fig.	Part No.	Quantity 1	2	3	PS	KIT	Description	Denominación	Denominação	Dénomination	Notes
1	**VOE 17228418**	1					Pipe	Tubo	Tubo	Tuyau	
3	**VOE 17229543**	1					Gasket	Junta	Junta	Joint	
4	**VOE 17228717**	2					Screw	Tornillo	Parafuso	Vis	

1		**Couvre-culasse** **Tampa das válvulas** **Tapa de válvulas** **Valve cover**	Catalogue id **20649**	Group **211**
2			Illustr. No **1063987**	Section **450**
3			Issue **PUB 20030904-B**	Page **49**
4				
5		**35.7KW MC60C**		

VOLVO

MC60C-MCT95C

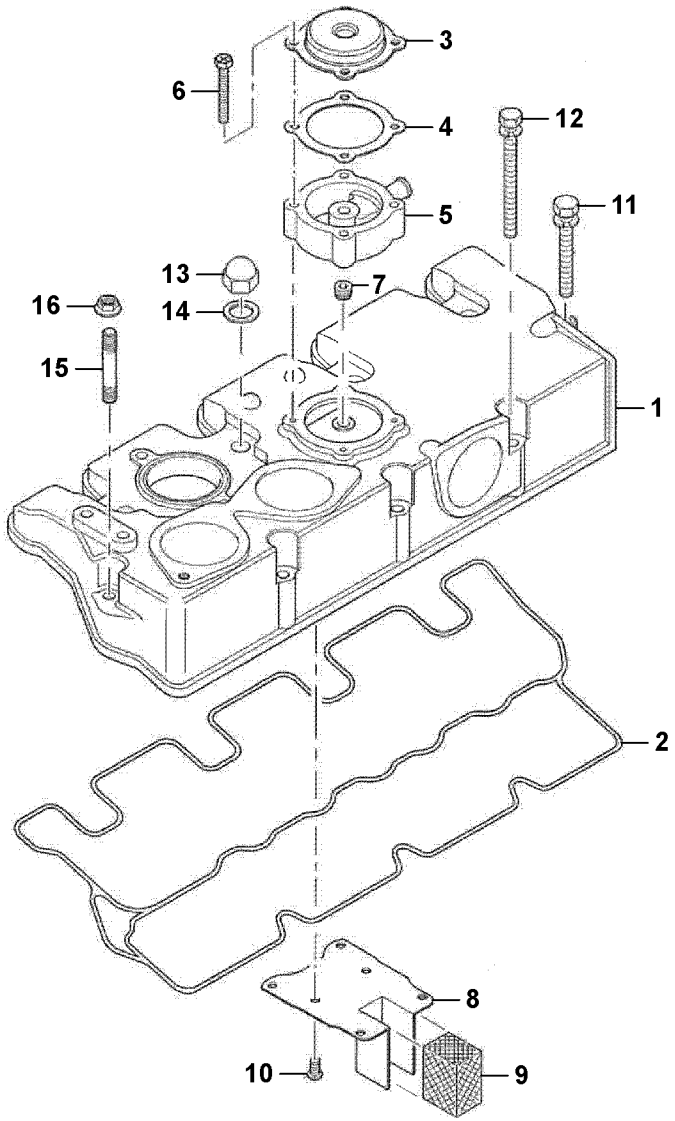
3
6
4
12
5
11
13
7
16
14
15
1
2
8
10
9

Fig.	Part No.	Quantity 1	2	3	PS	KIT	Description	Denominación	Denominação	Dénomination	Notes
1	**VOE 17224797**	1					Cover	Tapa	Tampa	Couvercle	
2	**VOE 17229544**	1					Gasket	Junta	Junta	Joint	
3	**VOE 17230317**	1					Valve cover	Cubierta válvula	Tampa da válvula	Couvre culasse	
4	**VOE 17229548**	1					Gasket	Junta	Junta	Joint	
5	**VOE 17224805**	1					Adapter	Adaptador	Adaptador	Adaptateur	
6	**VOE 17228853**	4					Bolt	Perno	Parafuso	Boulon	
7	**VOE 17228420**	1					Plug	Tapón	Bujão	Tampon	
8		1			NS		Plate	Chapa	Chapa	Tôle	
9	**VOE 17228231**	1					Venting	Purga de aire		Sortie d'air	
10	**VOE 17230144**	6					Screw	Tornillo	Parafuso	Vis	
11	**VOE 17230158**	1					Screw	Tornillo	Parafuso	Vis	
12	**VOE 17230145**	3					Screw	Tornillo	Parafuso	Vis	
13	**VOE 17228709**	4					Nut	Tuerca	Porca	Écrou	
14	**VOE 17228704**	4					Sealing washer	Arandela de retén	Arruela de vedação	Rondelle étanchéité	
15	**VOE 17230340**	1					Stud	Espárrago	Prisioneiro	Goujon	
16	**VOE 17229624**	1					Nut	Tuerca	Porca	Écrou	

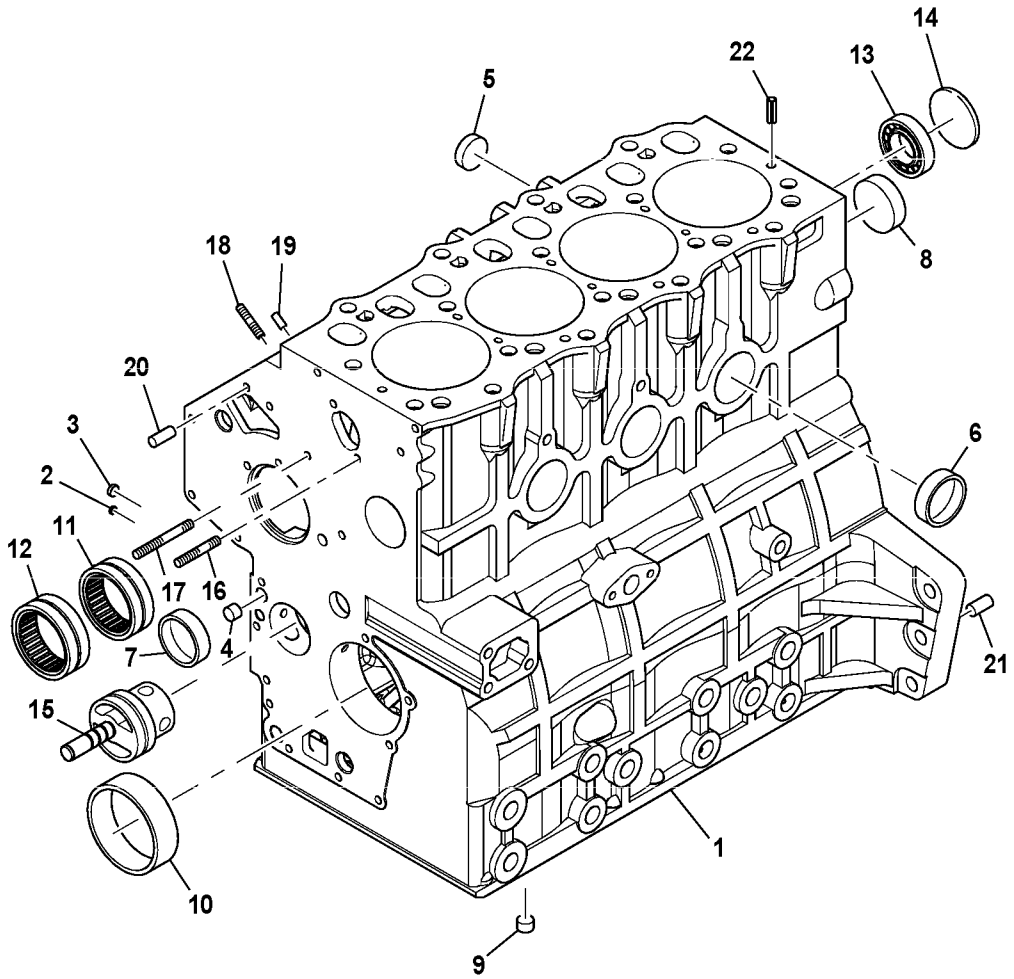
14
13
22
5
8
18
19
20
3
2
6
11
12
17
16
4
7
21
15
1
10
9

Fig.	Part No.	Quantity 1	2	3	PS	KIT	Description	Denominación	Denominação	Dénomination	Notes
1		1			NS		Cylinder Block	Bloque Cilindro	Bloco de cilindros	Bloc-cylindres	
2	**VOE 17228435**	4			SS		Plug	Tapón	Bujão	Tampon	
3	**VOE 17228181**	3					Plug	Tapón	Tampão	Bouchon	
4	**VOE 17228451**	3					Plug	Tapón	Bujão	Tampon	
5	**VOE 17223867**	2					Plug	Tapón	Bujão	Tampon	
6	**VOE 17224720**	3					Plug	Tapón	Bujão	Tampon	
7	**VOE 17224720**	1					Plug	Tapón	Bujão	Tampon	
8	**VOE 17224720**	1					Plug	Tapón	Bujão	Tampon	
9	**VOE 17223856**	2					Plug	Tapón	Bujão	Tampon	
10	**VOE 17223862**	1					Bushing	Casquillo	Bucha	Bague	
10	**VOE 17228852**	1					Bushing	Casquillo	Bucha	Bague	U SZ = -0,25 MM
10	**VOE 17228884**	1					Bushing	Casquillo	Bucha	Bague	U SZ = -0,50 MM
11	**VOE 17228446**	1					Needle bearing	Cojinete de agujas	Rolamento de agulhas	Roulement à aiguilles	
12	**VOE 17228441**	1					Needle bearing	Cojinete de agujas	Rolamento de agulhas	Roulement à aiguilles	
13	**VOE 17228183**	1					Bearing	Cojinete	Mancal	Roulement	
14	**VOE 17228186**	1					Plug	Tapón	Tampão	Bouchon	
15		1			NS		Shaft	Arbol	Eixo	Arbre	
16	**VOE 17230357**	1					Stud	Espárrago	Prisioneiro	Goujon	
17	**VOE 17228214**	1					Stud	Espárrago	Prisioneiro	Goujon	
18	**VOE 17230352**	3					Stud	Espárrago	Prisioneiro	Goujon	
19	**VOE 17228219**	2					Locating pin	Pasador de guía	Pino guia	Axe de fixation	
20	**VOE 17228188**	2					Locating pin	Pasador de guía	Pino guia	Axe de fixation	
21	**VOE 17228193**	2					Locating pin	Pasador de guía	Pino guia	Axe de fixation	
22	**VOE 17228201**	2					Pin	Clavija	Pino	Fiche	

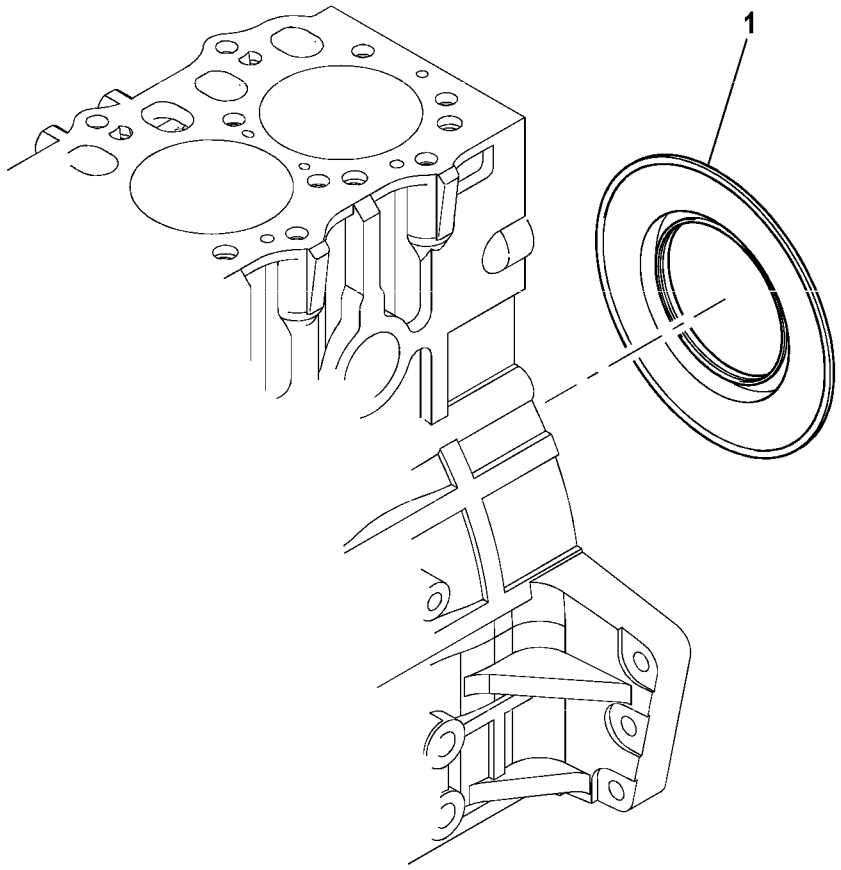
1

Fig.	Part No.	Quantity 1	2	3	PS	KIT	Description	Denominación	Denominação	Dénomination	Notes
1	**VOE 17228411**	1					Sealing ring	Anillo retén	Anel de vedação	Bague étanchéité	
1	**VOE 17228484**	1					Sleeve	Manguito	Luva	Douille	

1		**Bloc cylindres** **Bloco de cilindros** **Bloque de cilindros** **Cylinder block**	Catalogue id **20649**	Group **212**
2			Illustr. No **1064265**	Section **150**
3			Issue **PUB 20030904-B**	Page **55**
4				
5		**MC60C-MC105C, MCT70C-MCT95C**		

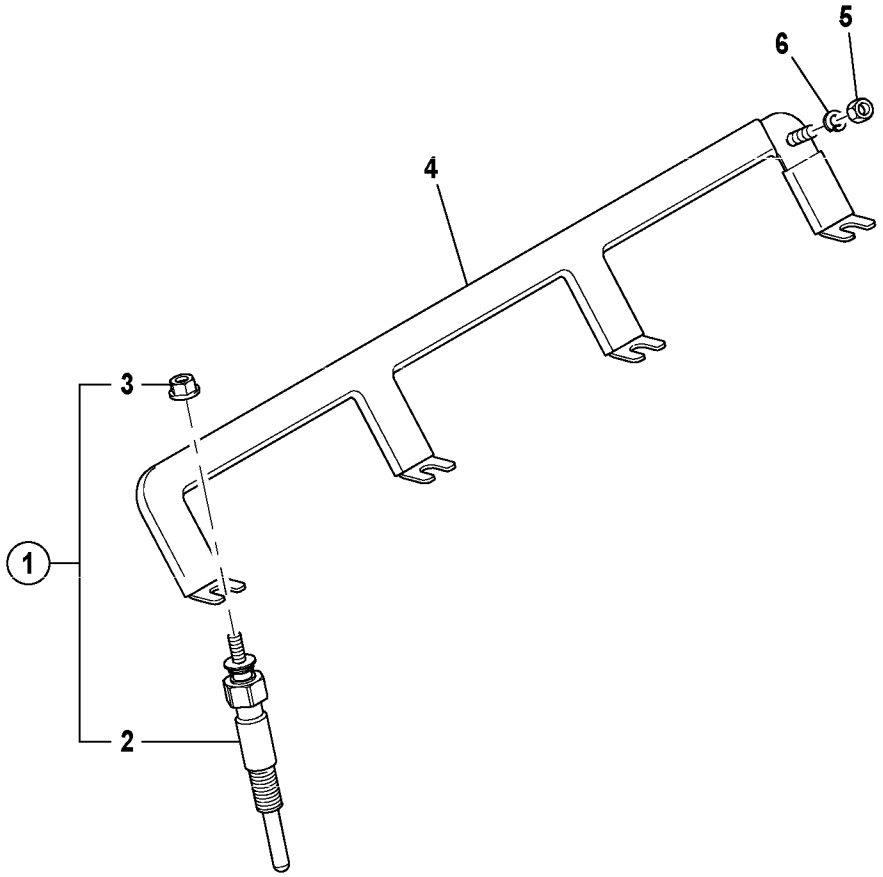
5
6
4
3
1
2

Fig.	Part No.	Quantity 1	2	3	PS	KIT	Description	Denominación	Denominação	Dénomination	Notes
1	**VOE 17230418**	4					Glow plug	Bujía	Bujão luminoso	Bougie de préchauffage	
2		1			NS		Glow plug	Bujia		Bougie de préchauffe	
3		1			NS		Nut	Tuerca	Porca	Ecrou	
4		1			NS		Rail	Rail	Trilho	Rail	
5	**VOE 17228447**	1					Nut	Tuerca	Porca	Écrou	
6		1			NS		Spring Nut	Tuerca Resorte	Porca de mola	Ecrou Ressort	

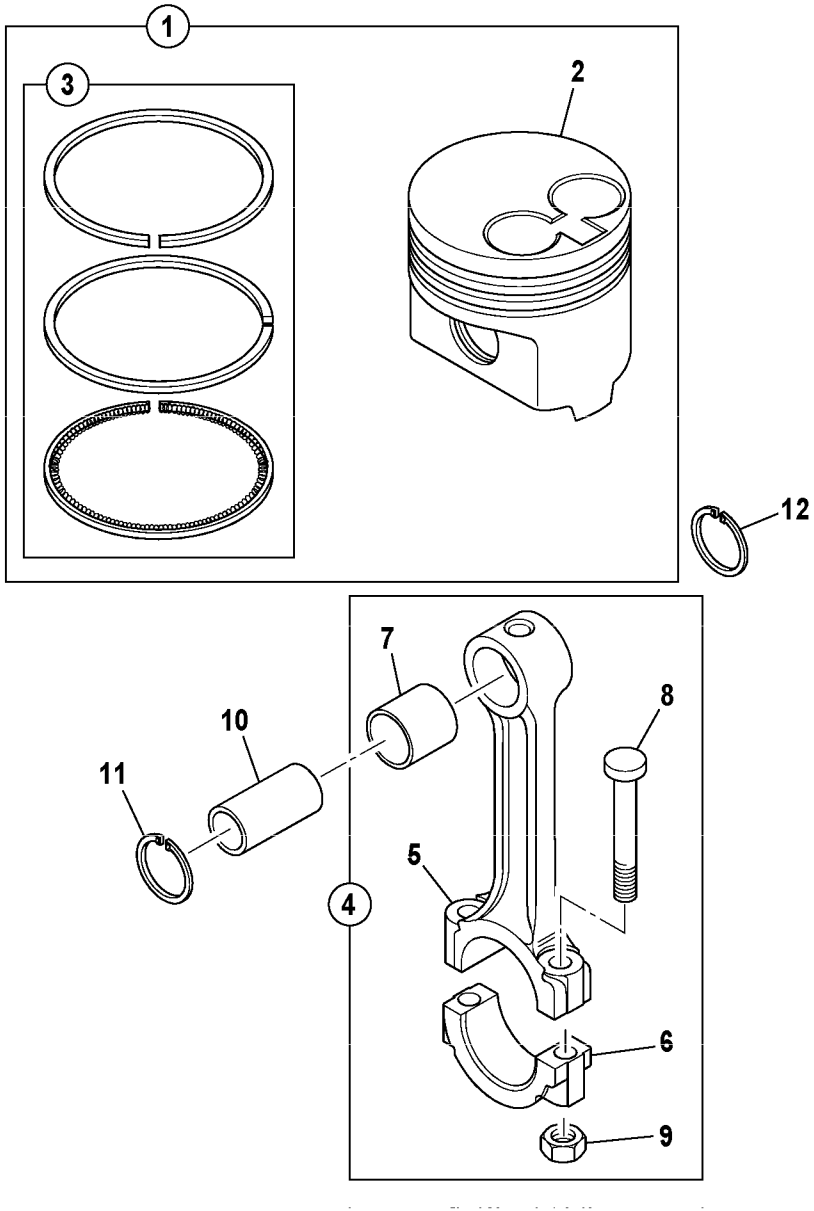

Volvo Construction Equipment
1064264

Fig.	Part No.	Quantity 1	2	3	PS	KIT	Description	Denominación	Denominação	Dénomination	Notes
1	**VOE 17229754**	4					Piston	Pistón	Pistão	Piston	
2		1			NS		Piston	Piston	Pistão	Piston	
3	**VOE 17229598**	1					Piston ring kit	Juego aro de pistón	Jogo aneis pistão	Jeu segments piston	
4	**VOE 17228437**	4					Connecting rod kit	Juego bielas	Jogo de bielas	Jeu de bielles	
5		1			NS		•Connecting Rod	•Biela	•Biela	•Bielle	
6		1			NS		•Connecting Rod	•Biela	•Biela	•Bielle	
7	**VOE 17228458**	1					•Bushing	•Casquillo	•Bucha	•Bague	
8	**VOE 17228463**	2					•Screw	•Tornillo	•Parafuso	•Vis	
9	**VOE 17228465**	2					•Nut	•Tuerca	•Porca	•Écrou	
10	**VOE 17228469**	4					Pin	Pasador	Pino	Goupille	
11	**VOE 17228367**	4					Circlip plier	Alicates aro ranurado	Barra anel ranhurado	Pince à circlips	
12	**VOE 17228367**	4					Circlip plier	Alicates aro ranurado	Barra anel ranhurado	Pince à circlips	

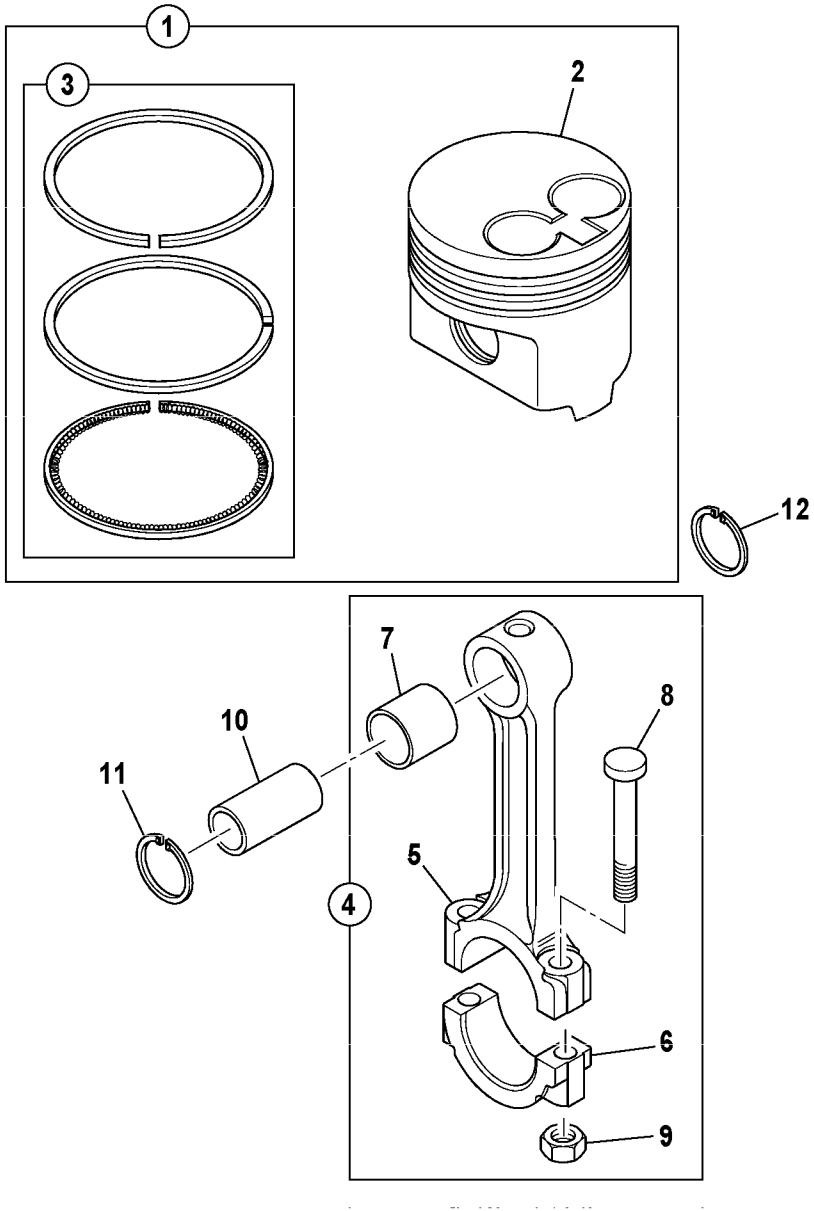

Volvo Construction Equipment
1064264

Fig.	Part No.	Quantity 1	2	3	PS	KIT	Description	Denominación	Denominação	Dénomination	Notes
1	**VOE 17228376**	4					Piston	Pistón	Pistão	Piston	
2		1			NS		Piston	Piston	Pistão	Piston	
3	**VOE 17228479**	1					Kit	Juego	Jogo	Lot	
4	**VOE 17228437**	4					Connecting rod kit	Juego bielas	Jogo de bielas	Jeu de bielles	
5		1			NS		•Connecting Rod	•Biela	•Biela	•Bielle	
6		1			NS		•Connecting Rod	•Biela	•Biela	•Bielle	
7	**VOE 17228458**	1					•Bushing	•Casquillo	•Bucha	•Bague	
8	**VOE 17228463**	2					•Screw	•Tornillo	•Parafuso	•Vis	
9	**VOE 17228465**	2					•Nut	•Tuerca	•Porca	•Écrou	
10	**VOE 17228469**	4					Pin	Pasador	Pino	Goupille	
11	**VOE 17228367**	4					Circlip plier	Alicates aro ranurado	Barra anel ranhurado	Pince à circlips	
12	**VOE 17228367**	4					Circlip plier	Alicates aro ranurado	Barra anel ranhurado	Pince à circlips	

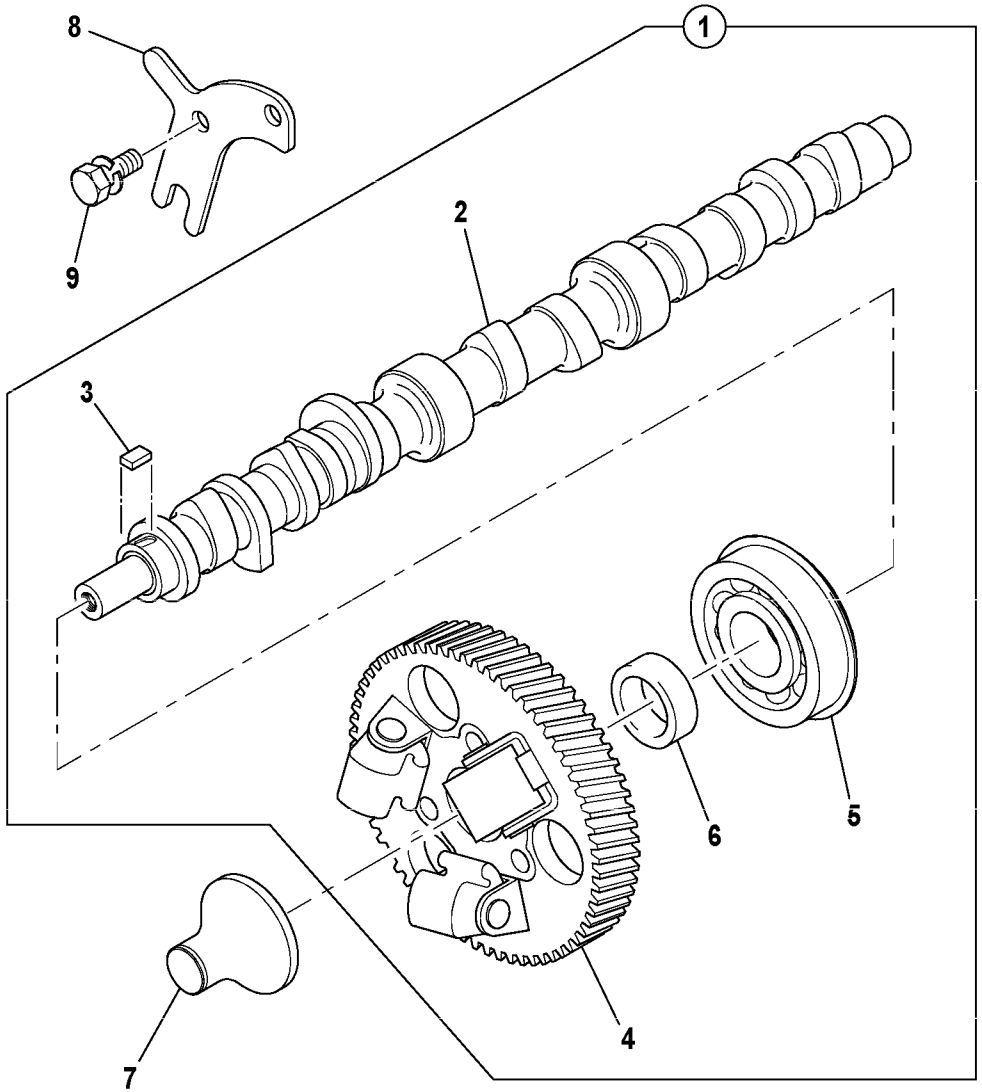
1
2
3
4
5
6
7
8
9

Fig.	Part No.	Quantity 1	2	3	PS	KIT	Description	Denominación	Denominação	Dénomination	Notes
1	**VOE 17228969**	1					Camshaft	Árbol de levas	Arv comando válvulas	Arbre cames	
2		1			NS		•Camshaft	•Eje de levas	•Eixo de came	•Arbre a cames	
3	**VOE 17230925**	1					•Woodruff key	•Chaveta woodruf	•Chaveta meia lua	•Clavette disque	
4		1			NS		•Gear	•Engranaje	•Engrenagem	•Pignon	
5	**VOE 17228459**	1					•Bearing	•Cojinete	•Mancal	•Roulement	
6	**VOE 17223868**	1					•Spacer	•Distanciador	•Espaçador	•Entretoise	
7	**VOE 17224731**	1					Tappet	Empujador válvula	Tucho da válvula	Poussoir	
8		1			NS		Plate	Chapa	Chapa	Tôle	
9	**VOE 17230942**	2					Screw	Tornillo	Parafuso	Vis	

1		**Arbre à cames** **Eixo de came** **Eje de levas** **Camshaft**	Catalogue id **20649**	Group **215**
2			Illustr. No **1064275**	Section **100**
3			Issue **PUB 20030904-B**	Page **63**
4				
5		**35.7KW MC60C**		

VOLVO

MC60C-MCT95C

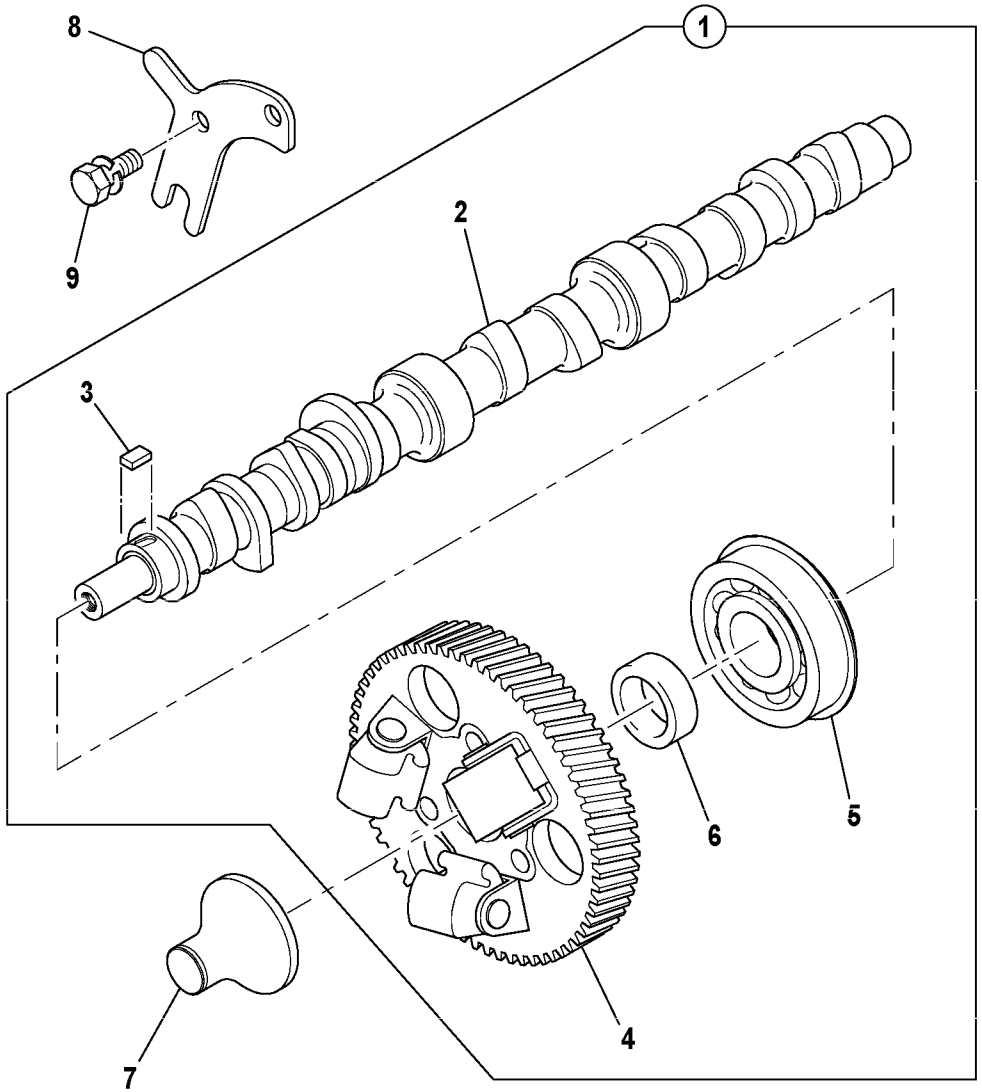
1
2
3
4
5
6
7
8
9

Fig.	Part No.	Quantity 1	2	3	PS	KIT	Description	Denominación	Denominação	Dénomination	Notes
1	**VOE 17228969**	1					Camshaft	Árbol de levas	Arv comando válvulas	Arbre cames	
2		1			NS		•Camshaft	•Eje de levas	•Eixo de came	•Arbre a cames	
3	**VOE 17230925**	1					•Woodruff key	•Chaveta woodruf	•Chaveta meia lua	•Clavette disque	
4		1			NS		•Gear	•Engranaje	•Engrenagem	•Pignon	
5	**VOE 17228459**	1					•Bearing	•Cojinete	•Mancal	•Roulement	
6	**VOE 17223868**	1					•Spacer	•Distanciador	•Espaçador	•Entretoise	
7	**VOE 17230414**	1					Tappet	Empujador válvula	Tucho da válvula	Poussoir	
8		1			NS		Plate	Chapa	Chapa	Tôle	
9	**VOE 17230942**	2					Screw	Tornillo	Parafuso	Vis	

1		**Arbre à cames** **Eixo de came** **Eje de levas** **Camshaft**	Catalogue id **20649**	Group **215**
2			Illustr. No **1064275**	Section **150**
3				
4			Issue **PUB 20030904-B**	Page **65**
5		**44.7KW MC70C-MC105C, MCT70C-MCT95C**		

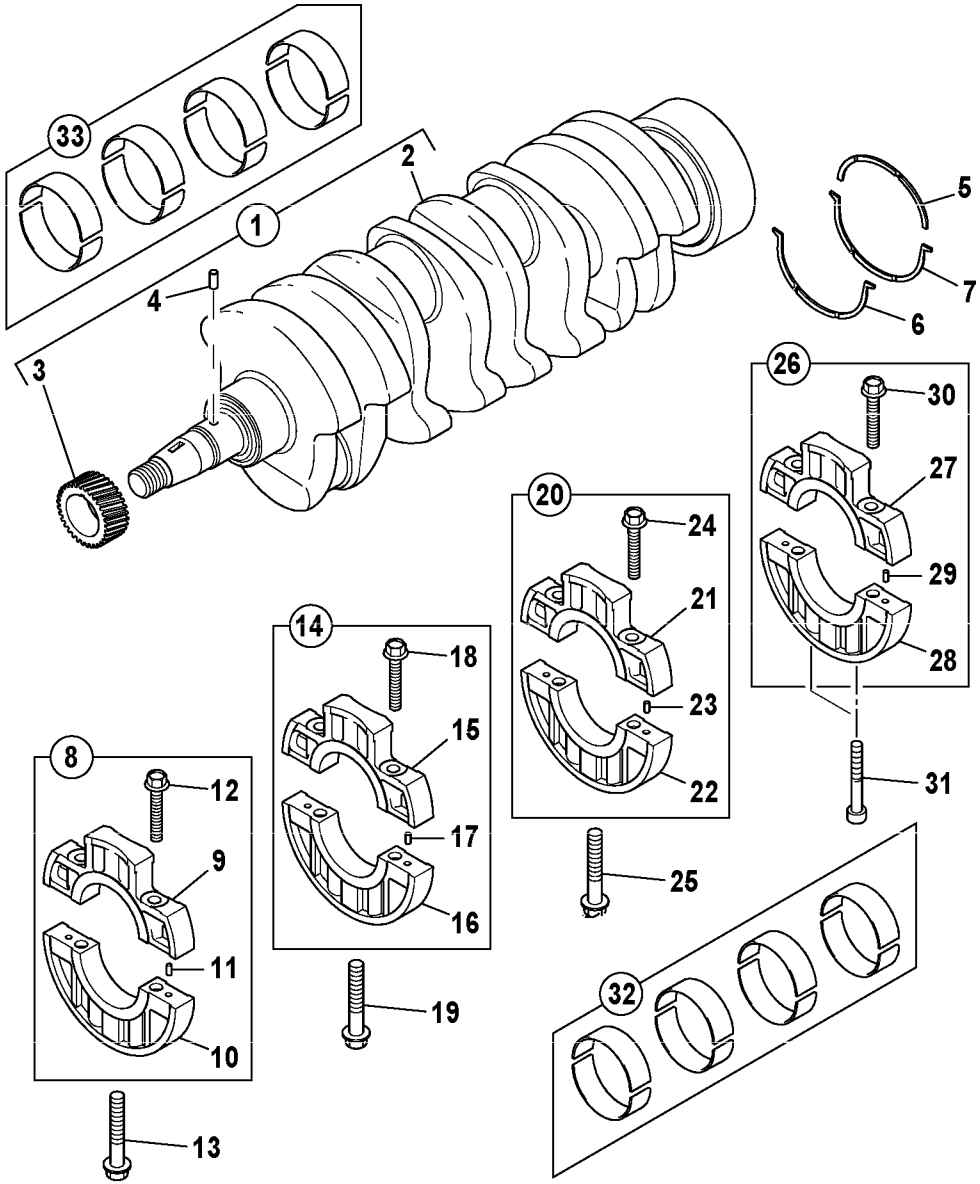
33
1
2
4
3
5
7
6
26
30
27
29
28
31
20
24
21
23
22
25
14
18
15
17
16
19
8
12
9
11
10
13
32

Fig.	Part No.	Quantity 1	2	3	PS	KIT	Description	Denominación	Denominação	Dénomination	Notes
1		1			NS		Crankshaft	Cigüeñal	Eixo de manivelas	Vilebrequin	
2		1					•Crankshaft	•Ciguenal	•Eixo de manivela	•Vilebrequin	
3		1			NS		•Gear	•Engranaje	•Engrenagem	•Pignon	
4	**VOE 17228224**	1					•Key	•Llave	•Chave	•Clé	
5	**VOE 17228431**	1					Washer	Arandela	Arruela	Rondelle	
6	**VOE 17228452**	1					Washer	Arandela	Arruela	Rondelle	
7	**VOE 17228452**	1					Washer	Arandela	Arruela	Rondelle	
8	**VOE 17228678**	1					Cap	Capuchón	Tampa	Capot	
9		1			NS		•Cap	•Caperuza	•Tampa	•Chapeau	
10		1			NS		•Cap	•Caperuza	•Tampa	•Chapeau	
11	**VOE 17228219**	2					•Locating pin	•Pasador de guía	•Pino guia	•Axe de fixation	
12	**VOE 17228684**	2					•Screw	•Tornillo	•Parafuso	•Vis	
13	**VOE 17230147**	1					Screw	Tornillo	Parafuso	Vis	
14	**VOE 17228368**	1					Cap	Capuchón	Tampa	Capot	
15		1			NS		•Cap	•Caperuza	•Tampa	•Chapeau	
16		1			NS		•Cap	•Caperuza	•Tampa	•Chapeau	
17	**VOE 17228219**	2					•Locating pin	•Pasador de guía	•Pino guia	•Axe de fixation	
18	**VOE 17228684**	2					•Screw	•Tornillo	•Parafuso	•Vis	
19	**VOE 17230147**	1					Screw	Tornillo	Parafuso	Vis	
20	**VOE 17228399**	1					Cap	Capuchón	Tampa	Capot	
21		1			NS		•Cap	•Caperuza	•Tampa	•Chapeau	
22		1			NS		•Cap	•Caperuza	•Tampa	•Chapeau	
23	**VOE 17228219**	2					•Locating pin	•Pasador de guía	•Pino guia	•Axe de fixation	
24	**VOE 17228684**	2					•Screw	•Tornillo	•Parafuso	•Vis	
25	**VOE 17230147**	1					Screw	Tornillo	Parafuso	Vis	
26	**VOE 17228402**	1					Cap	Capuchón	Tampa	Capot	
27		1			NS		•Cap	•Caperuza	•Tampa	•Chapeau	
28		1			NS		•Cap	•Caperuza	•Tampa	•Chapeau	
29	**VOE 17228219**	2					•Locating pin	•Pasador de guía	•Pino guia	•Axe de fixation	
30	**VOE 17228684**	2					•Screw	•Tornillo	•Parafuso	•Vis	

1	
2	
3	
4	
5	

Axe à vilebreguintas
Eixo de manivela e peças relacionadas
Cigüeñal
Crankshaft and related parts

MC60C-MC105C, MCT70C-MCT95C

Catalogue id	Group
20649	**216**
Illustr. No	Section
1064263	**100**
Issue	Page
PUB 20030904-B	**67**

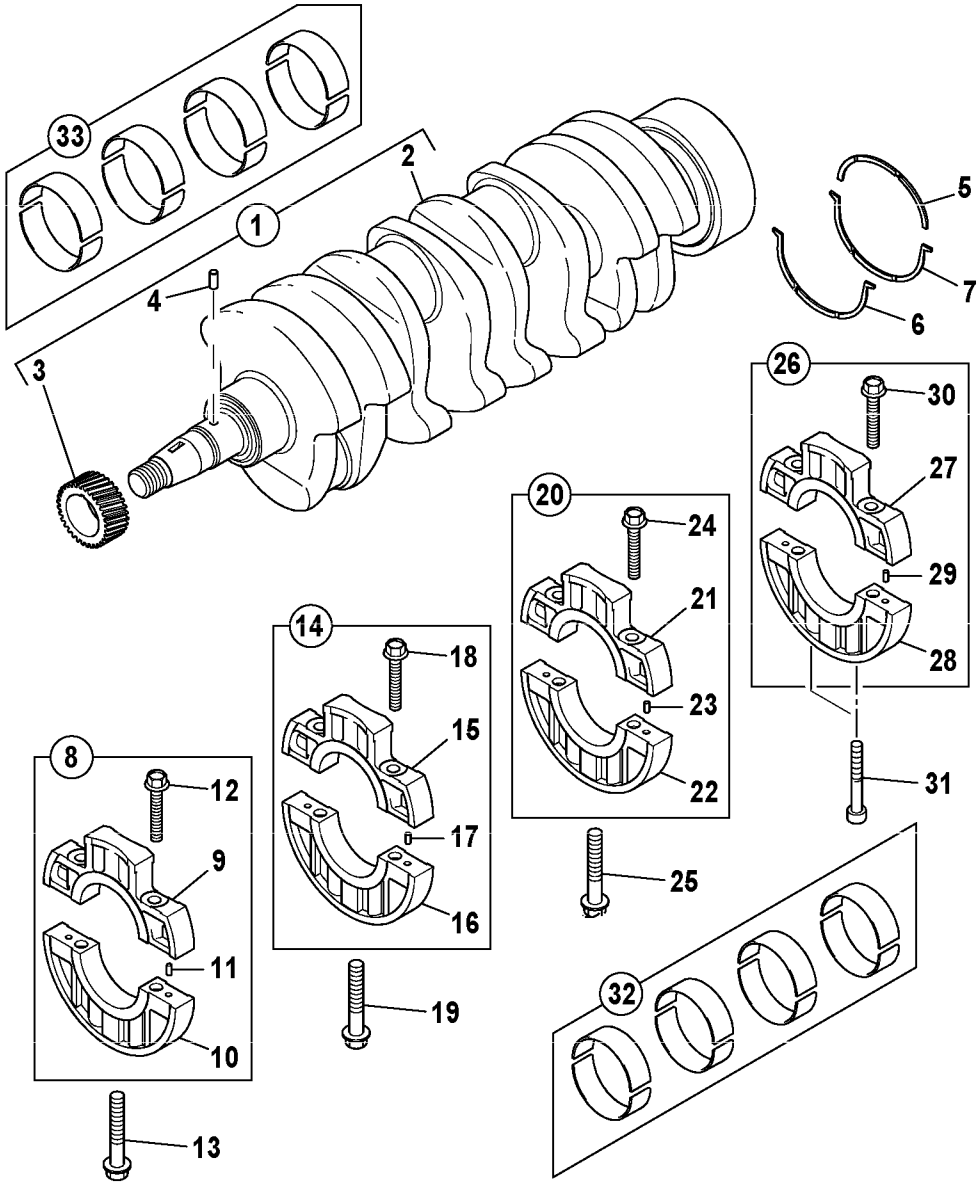
33
1
2
4
3
5
7
6
26
30
27
29
28
31
20
24
21
23
22
25
14
18
15
17
16
19
8
12
9
11
10
13
32

Fig.	Part No.	Quantity 1	2	3	PS	KIT	Description	Denominación	Denominação	Dénomination	Notes
31	**VOE 17230149**	2					Screw	Tornillo	Parafuso	Vis	
32	**VOE 17229591**	1					Main bearing kit	Juego cojinete de bancada	Jogo mancal principal	Kit de palier vilebrequin	
33	**VOE 17229595**	1					Big-end bearing kit	Juego cojinete biela	Jogo bronzinas da biela	Jeu coussinets bielles	

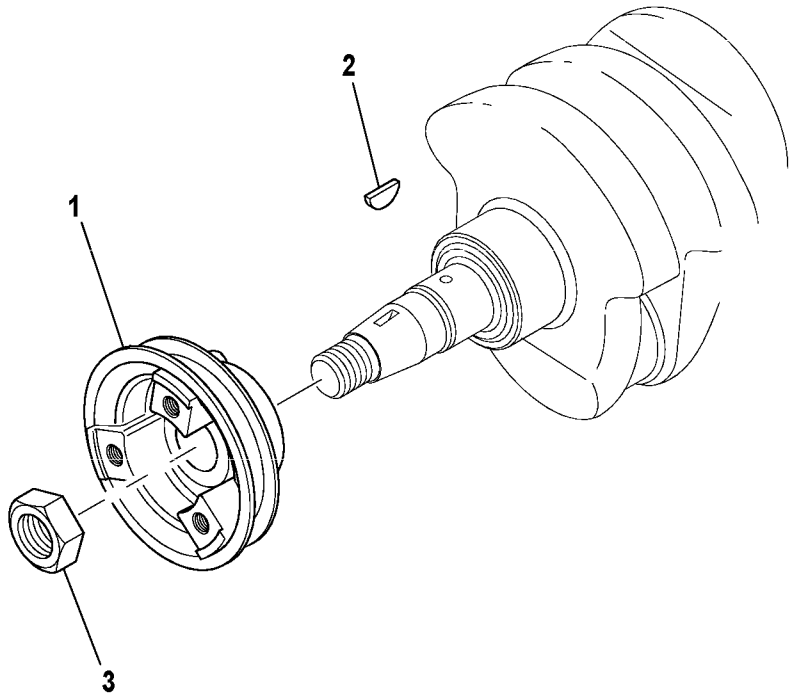
2
1
3

Fig.	Part No.	Quantity 1	2	3	P S	K I T	Description	Denominación	Denominação	Dénomination	Notes
1	**VOE 17230010**	1					Pulley	Polea correa dentada	Polia correia dent	Poulie	
2	**VOE 17230925**	1					Woodruff key	Chaveta woodruf	Chaveta meia lua	Clavette disque	
3	**VOE 17228412**	1					Nut	Tuerca	Porca	Écrou	

1		**Axe à vilebreguintas** **Eixo de manivela e peças relacionadas** **Cigüeñal** **Crankshaft and related parts**	Catalogue id **20649**	Group **216**
2			Illustr. No **1064421**	Section **150**
3			Issue **PUB 20030904-B**	Page **71**
4				
5		**MC60C-MC105C, MCT70C-MCT95C**		

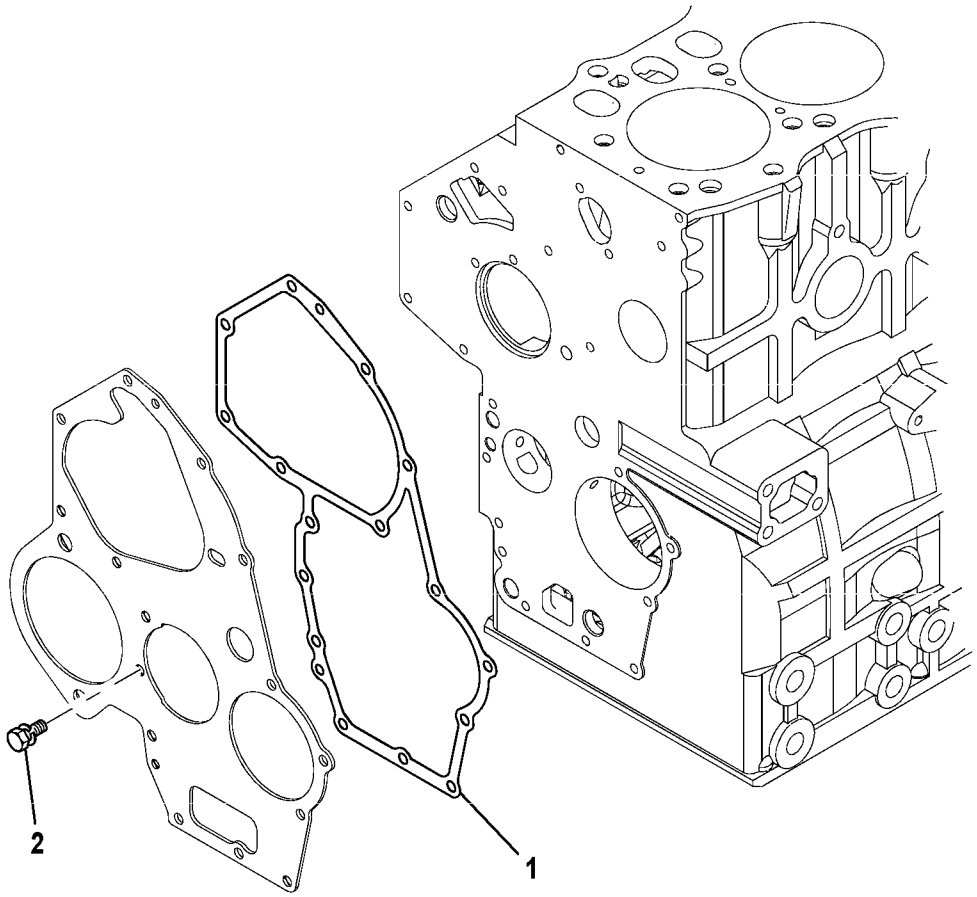
2
1

Fig.	Part No.	Quantity 1	2	3	PS	KIT	Description	Denominación	Denominação	Dénomination	Notes
1	**VOE 17229546**	1					Gasket	Junta	Junta	Joint	
2	**VOE 17230942**	2					Screw	Tornillo	Parafuso	Vis	

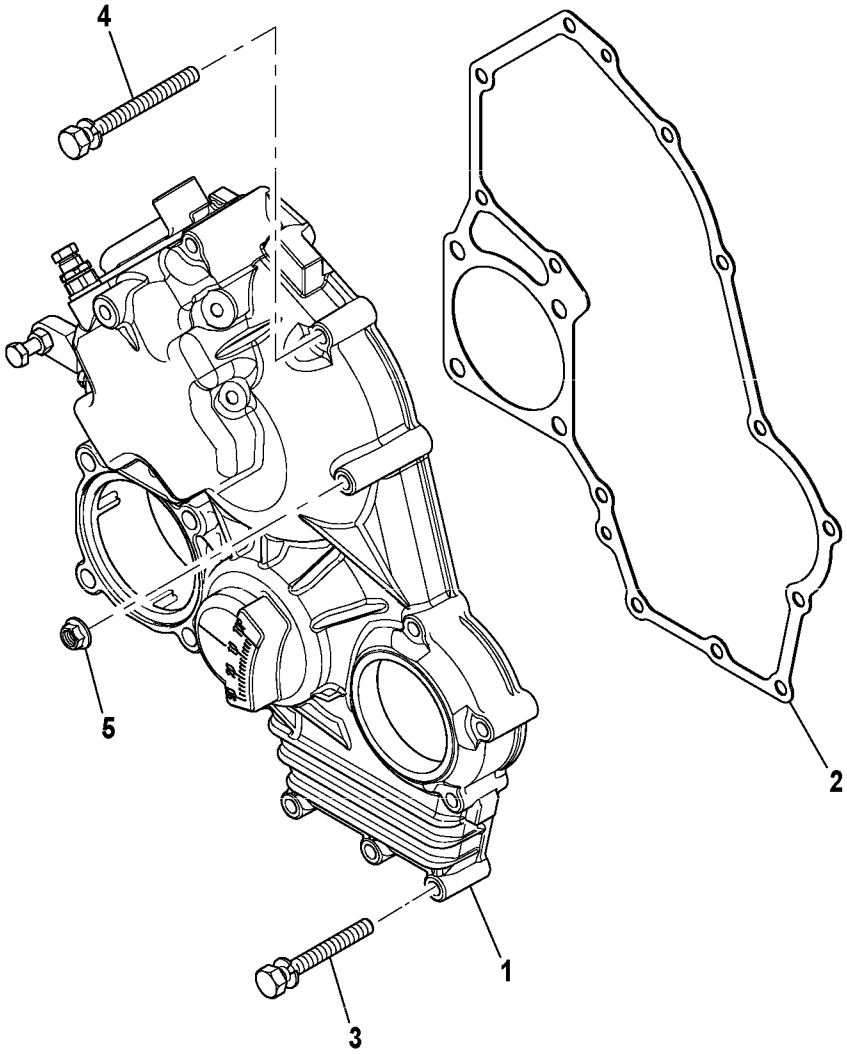

Volvo Construction Equipment
1064271

Fig.	Part No.	Quantity 1	2	3	PS	KIT	Description	Denominación	Denominação	Dénomination	Notes
1	**VOE 17224729**	1					Timing gear casing	Cubierta distribución	Cárter da distribuição	Carter de distribution	
2	**VOE 17229549**	1					Gasket	Junta	Junta	Joint	
3	**VOE 17230158**	7					Screw	Tornillo	Parafuso	Vis	
4	**VOE 17230145**	4					Screw	Tornillo	Parafuso	Vis	
5	**VOE 17229624**	1					Nut	Tuerca	Porca	Écrou	

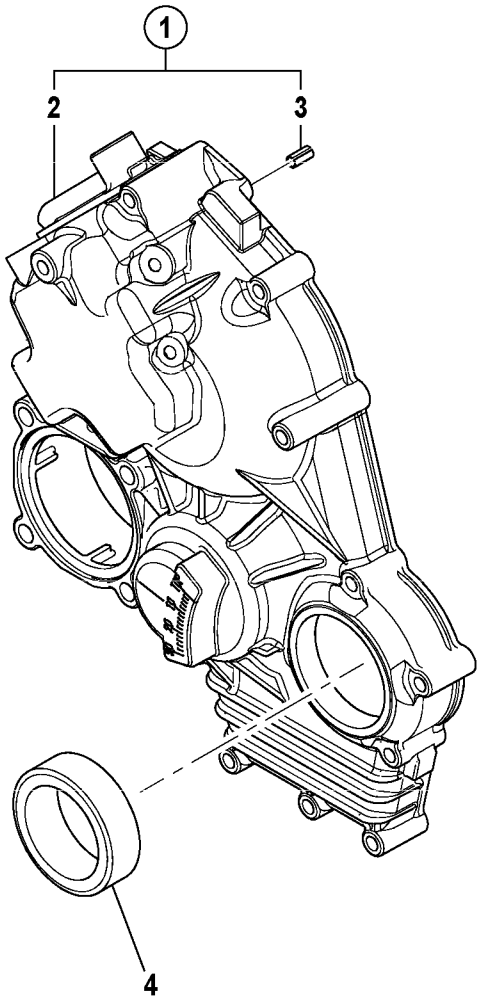
1
2
3
4

Fig.	Part No.	Quantity 1	2	3	PS	KIT	Description	Denominación	Denominação	Dénomination	Notes
1	**VOE 17224729**	1					Timing gear casing	Cubierta distribución	Cárter da distribuição	Carter de distribution	
2		1			NS		•Timing Gear Cas	•Cubierta de la distribución .	•	•Carter de distribution	
3	**VOE 17230936**	1					•Pin	•Pasador	•Pino	•Goupille	
4	**VOE 17228401**	1					Sealing	Junta	Vedação	Étanchéité	

1		**Carter de la distribution** **Caixa da engrenagem de distribuição** **Tapa del engranaje de distribución** **Timing gear casing**	Catalogue id **20649**	Group **216**
2				
3			Illustr. No **1064427**	Section **400**
4				
5		**MC60C-MC105C, MCT70C-MCT95C**	Issue **PUB 20030904-B**	Page **77**

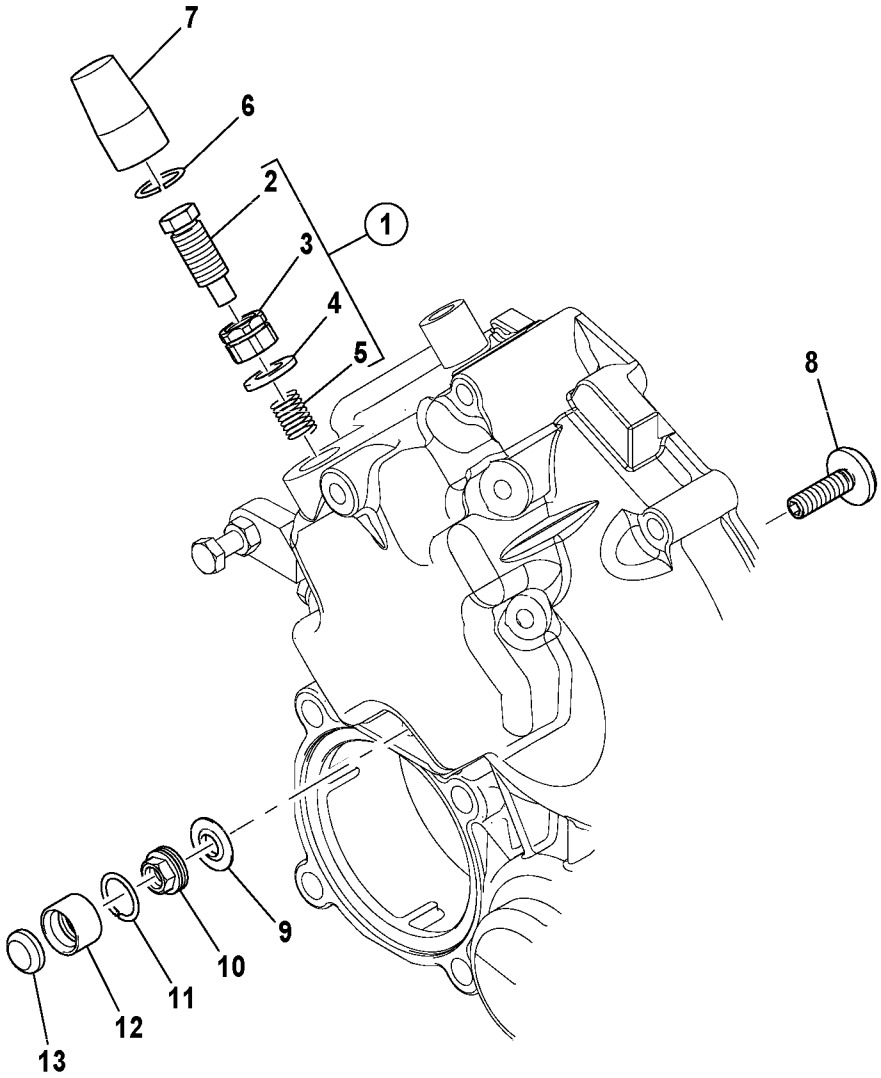
7
6
2
1
3
4
5
8
9
10
11
12
13

Fig.	Part No.	Quantity 1	2	3	PS	KIT	Description	Denominación	Denominação	Dénomination	Notes
1	**VOE 17228856**	1					Bolt	Perno	Parafuso	Boulon	
2		1			NS		•Bolt	•Perno	•Parafuso	•Boulon	
3	**VOE 17229631**	1					•Nut	•Tuerca	•Porca	•Écrou	
4	**VOE 17228258**	1					•Washer	•Arandela	•Arruela	•Rondelle	
5	**VOE 17230262**	1					•Spring	•Resorte	•Mola	•Ressort	
6		1			NS		Ring	Anillo	Anel	Bague	
7		1			NS		Cap	Capuchón	Tampa	Capot	
8	**VOE 17228855**	1					Bolt	Perno	Parafuso	Boulon	
9	**VOE 17228237**	1					Washer	Arandela	Arruela	Rondelle	
10	**VOE 17229617**	1					Nut	Tuerca	Porca	Écrou	
11		1			NS		Ring	Anillo	Anel	Bague	
12		1			NS		Cap	Capuchón	Tampa	Capot	
13		1			NS		Cap	Capuchón	Tampa	Capot	

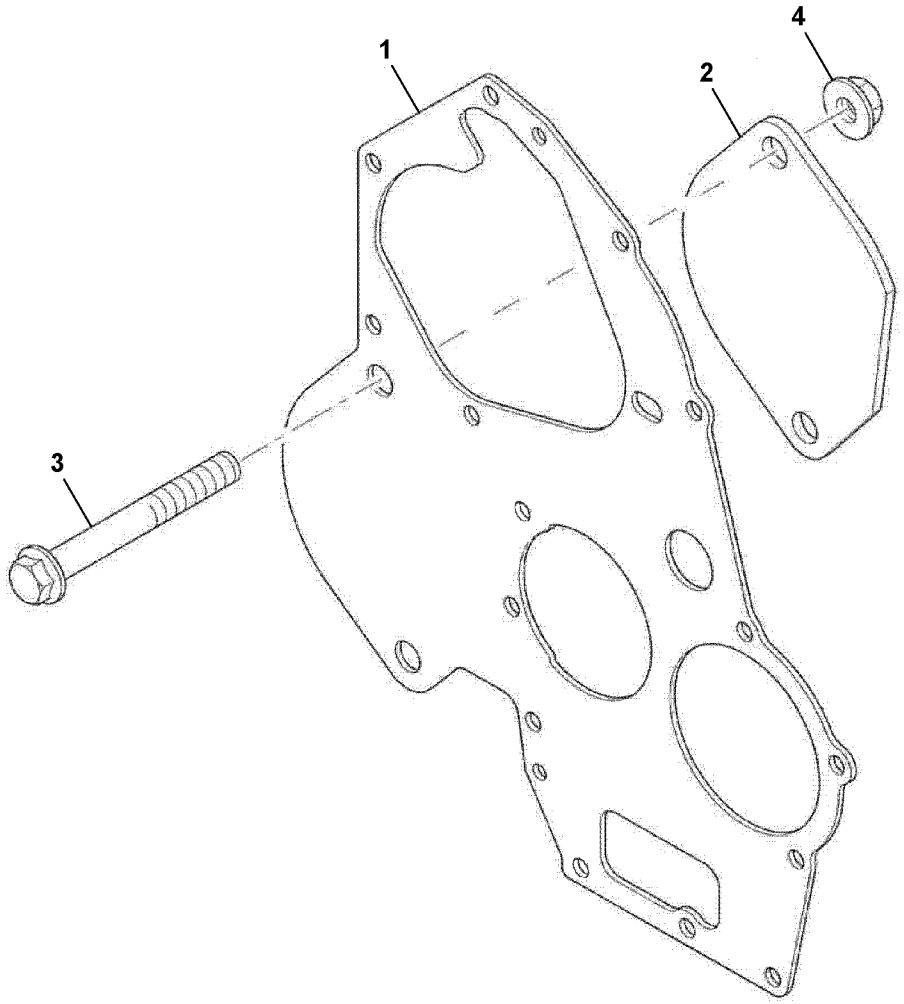
1
2
3
4

Fig.	Part No.	Quantity 1	2	3	PS	KIT	Description	Denominación	Denominação	Dénomination	Notes
1	**VOE 17224732**	1					Plate	Chapa	Chapa	Tôle	
2	**VOE 17224735**	1					Plate	Chapa	Chapa	Tôle	
3	**VOE 17228853**	2					Bolt	Perno	Parafuso	Boulon	
4	**VOE 17228262**	2					Nut	Tuerca	Porca	Écrou	

1		**Carter de la distribution** **Caixa da engrenagem de distribuição** **Tapa del engranaje de distribución** **Timing gear casing**	Catalogue id **20649**	Group **216**
2			Illustr. No **1063975**	Section **500**
3			Issue **PUB 20030904-B**	Page **81**
4				
5		**35.7KW MC60C**		

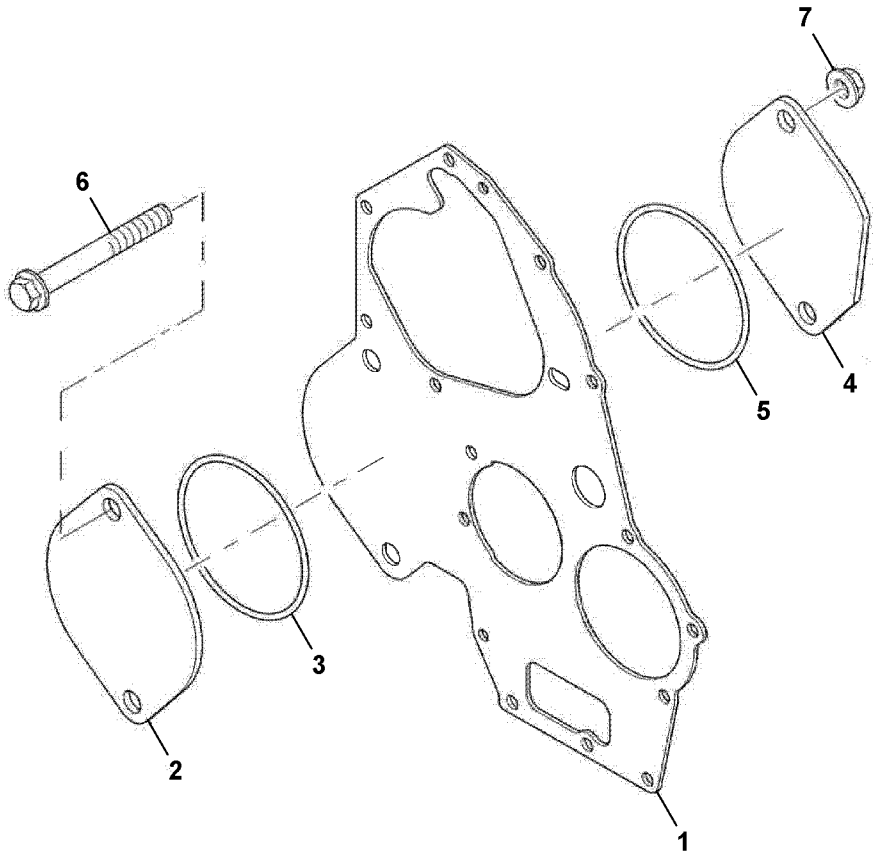
7
6
4
5
3
2
1

Fig.	Part No.	Quantity 1	2	3	PS	KIT	Description	Denominación	Denominação	Dénomination	Notes
1	**VOE 17224732**	1					Plate	Chapa	Chapa	Tôle	
2	**VOE 17224719**	1					Bearing cover	Tapa de cojinete	Tampa rolamento	Couvercle palier	
3	**VOE 17230165**	1					O-ring	Anillo tórico	Anel-o	Joint torique	
4	**VOE 17224735**	1					Plate	Chapa	Chapa	Tôle	
5	**VOE 17230165**	1					O-ring	Anillo tórico	Anel-o	Joint torique	
6	**VOE 17228853**	2					Bolt	Perno	Parafuso	Boulon	
7	**VOE 17228262**	2					Nut	Tuerca	Porca	Écrou	

1		**Carter de la distribution** **Caixa da engrenagem de distribuição** **Tapa del engranaje de distribución** **Timing gear casing**	Catalogue id **20649**	Group **216**
2			Illustr. No **1063982**	Section **550**
3			Issue **PUB 20030904-B**	Page **83**
4				
5		**44.7KW MC70C-MC105C, MCT70C-MCT95C**		

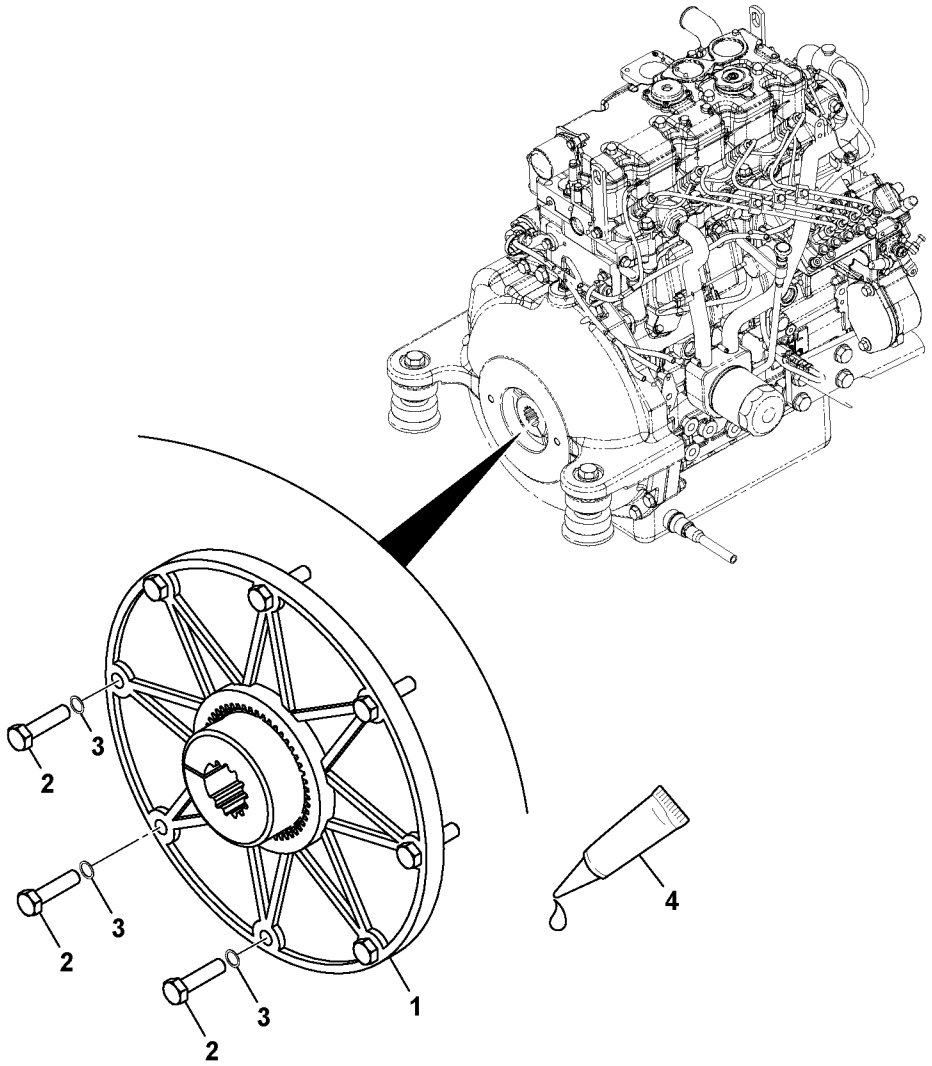
1
2
3
2
3
2
3
4

Fig.	Part No.	Quantity 1	2	3	PS	KIT	Description	Denominación	Denominação	Dénomination	Notes
1	**VOE 17229333**	1					Coupling piece	Pieza de conexión	Peça conexão	Accouplement	
2	**VOE 17228870**	8					Bolt	Perno	Parafuso	Boulon	
3	**VOE 17231004**	8					Washer	Arandela	Arruela	Rondelle	
4		REQ			NS		Adhesive	Adhesivo	Adesivo	Adhesif	

1		**Volant** **Volante** **Volante** **Flywheel**	Catalogue id **20649**	Group **216**
2			Illustr. No **1064066**	Section **600**
3			Issue **PUB 20030904-B**	Page **85**
4				
5		**MC70C-MC105C, MCT70C-MCT95C**		

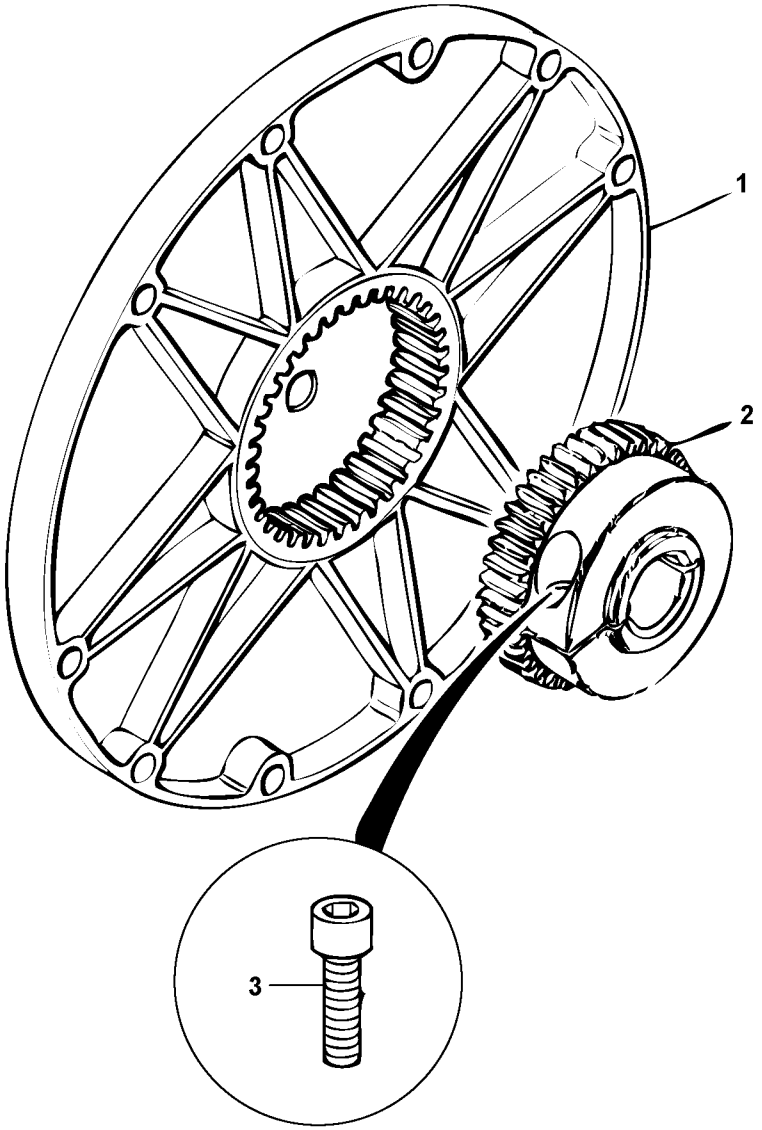

Volvo Construction Equipment
1064064

Fig.	Part No.	Quantity 1	2	3	PS	KIT	Description	Denominación	Denominação	Dénomination	Notes
1	**VOE 17229335**	1			SS		Coupling piece	Pieza de conexión	Peça conexão	Accouplement	
2	**VOE 17229563**	1					Hub	Cubo	Cubo	Moyeu	
3	**VOE 17228833**	1					Screw	Tornillo	Parafuso	Vis	

1		**Volant** **Volante** **Volante** **Flywheel**	Catalogue id **20649**	Group **216**
2			Illustr. No **1064064**	Section **650**
3			Issue **PUB 20030904-B**	Page **87**
4				
5		**MC70C-MC105C, MCT70C-MCT95C**		

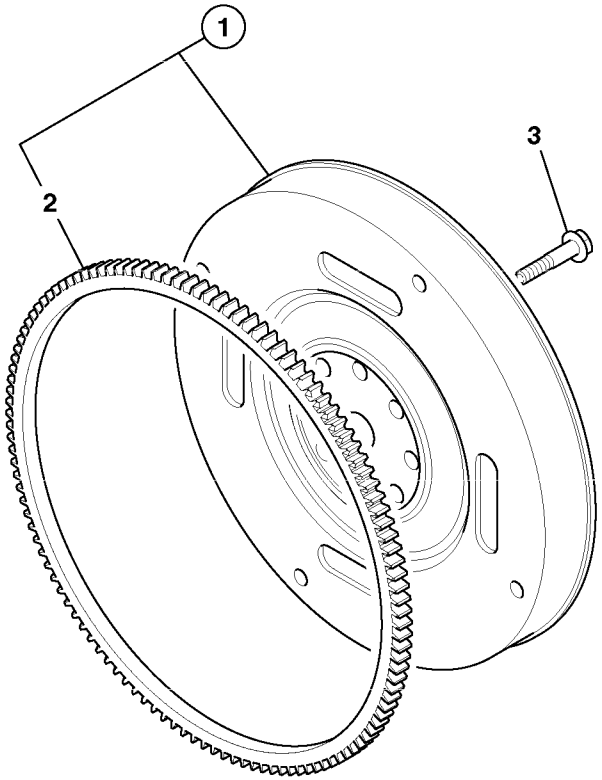
1
2
3

Fig.	Part No.	Quantity 1	2	3	PS	KIT	Description	Denominación	Denominação	Dénomination	Notes
1		1			NS		Flywheel	Volante	Volante do motor	Volant moteur	
2	**VOE 17228665**	1					•Gear ring	•Corona dentada	•Coroa dentada	•Couronne	
3	**VOE 17228409**	6					Bolt	Perno	Parafuso	Boulon	

1		**Volant** **Volante** **Volante** **Flywheel**	Catalogue id **20649**	Group **216**
2			Illustr. No **1064434**	Section **700**
3			Issue **PUB 20030904-B**	Page **89**
4				
5		**MC60C-MC105C, MCT70C-MCT95C**		

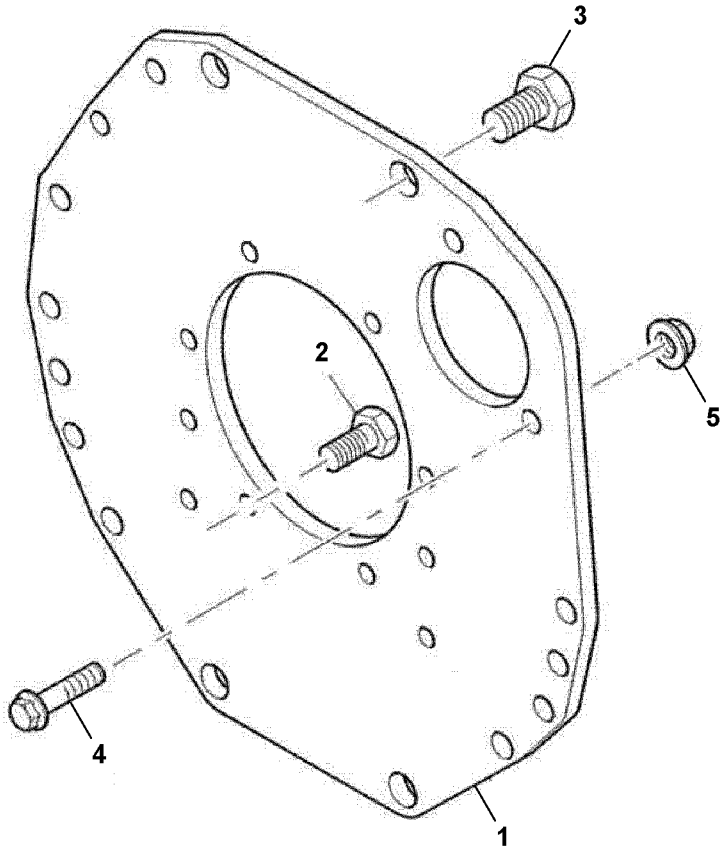
3
2
5
4
1

Fig.	Part No.	Quantity 1	2	3	PS	KIT	Description	Denominación	Denominação	Dénomination	Notes
1		1			NS		Plate	Chapa	Chapa	Tôle	
2	**VOE 17230115**	10					Screw	Tornillo	Parafuso	Vis	
3	**VOE 17230146**	2					Screw	Tornillo	Parafuso	Vis	
4	**VOE 17228837**	2					Bolt	Perno	Parafuso	Boulon	
5	**VOE 17228262**	2					Nut	Tuerca	Porca	Écrou	

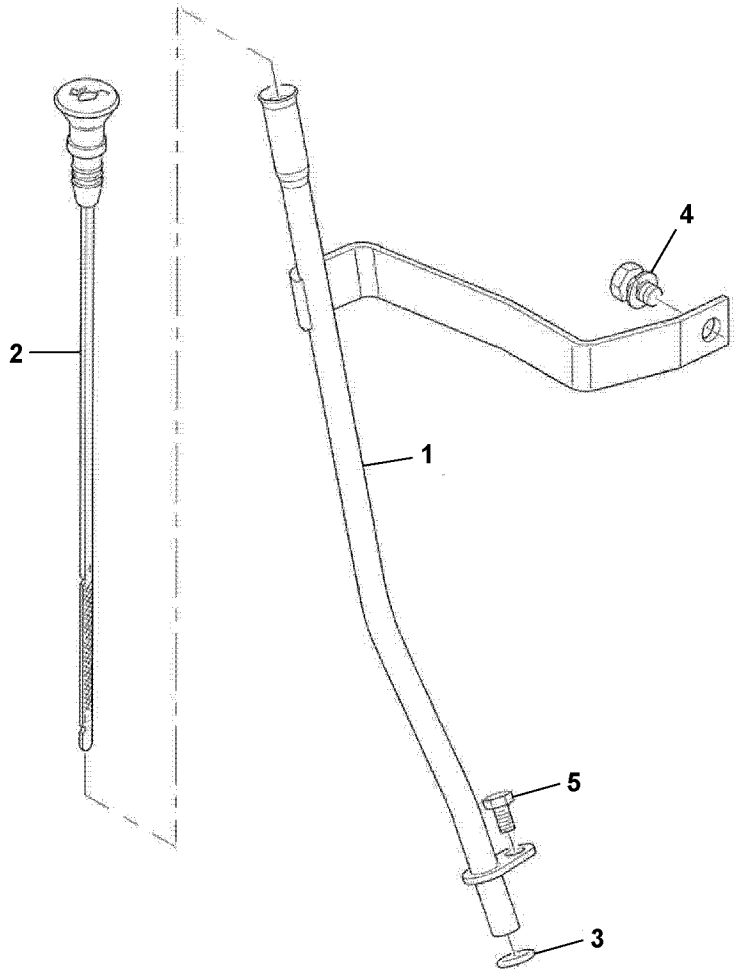

Volvo Construction Equipment
1063973

Fig.	Part No.	Quantity 1	2	3	PS	KIT	Description	Denominación	Denominação	Dénomination	Notes
1	**VOE 17230461**	1					Tube	Tubo	Tubo	Tube	
2	**VOE 17229168**	1					Dipstick	Varilla de medición	Vareta medidora	Jauge	
3	**VOE 17228242**	2					O-ring	Anillo tórico	Anel-o	Joint torique	
4	**VOE 17230153**	1					Screw	Tornillo	Parafuso	Vis	
5	**VOE 17228233**	1					Screw	Tornillo	Parafuso	Vis	

1		**Jauge d'huile** **Vareta de nível do óleo** **Varilla de nivel de aceite** **Oil dipstick**	Catalogue id **20649**	Group **217**
2			Illustr. No **1063973**	Section **100**
3			Issue **PUB 20030904-B**	Page **93**
4				
5		**MC60C-MC105C, MCT70C-MCT95C**		

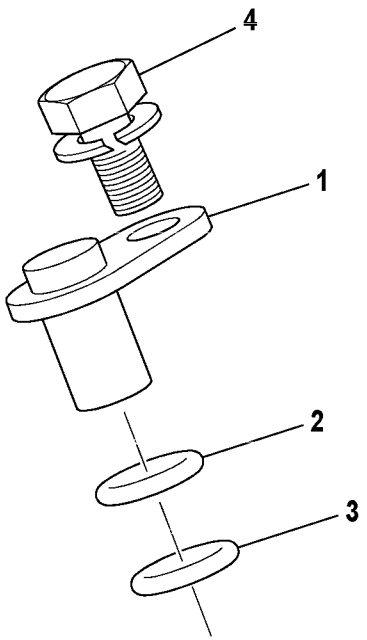
4
1
2
3

Fig.	Part No.	Quantity 1	2	3	PS	KIT	Description	Denominación	Denominação	Dénomination	Notes
1	**VOE 17229928**	1					Plug	Tapón	Bujão	Tampon	
2	**VOE 17228405**	1					Sealing ring	Anillo retén	Anel de vedação	Bague étanchéité	
3	**VOE 17228405**	1					Sealing ring	Anillo retén	Anel de vedação	Bague étanchéité	
4	**VOE 17230942**	1					Screw	Tornillo	Parafuso	Vis	

1		**Jauge d'huile** **Vareta de nível do óleo** **Varilla de nivel de aceite** **Oil dipstick**	Catalogue id **20649**	Group **217**
2			Illustr. No **1064281**	Section **150**
3			Issue **PUB 20030904-B**	Page **95**
4				
5		**MC60C-MC105C, MCT70C-MCT95C**		

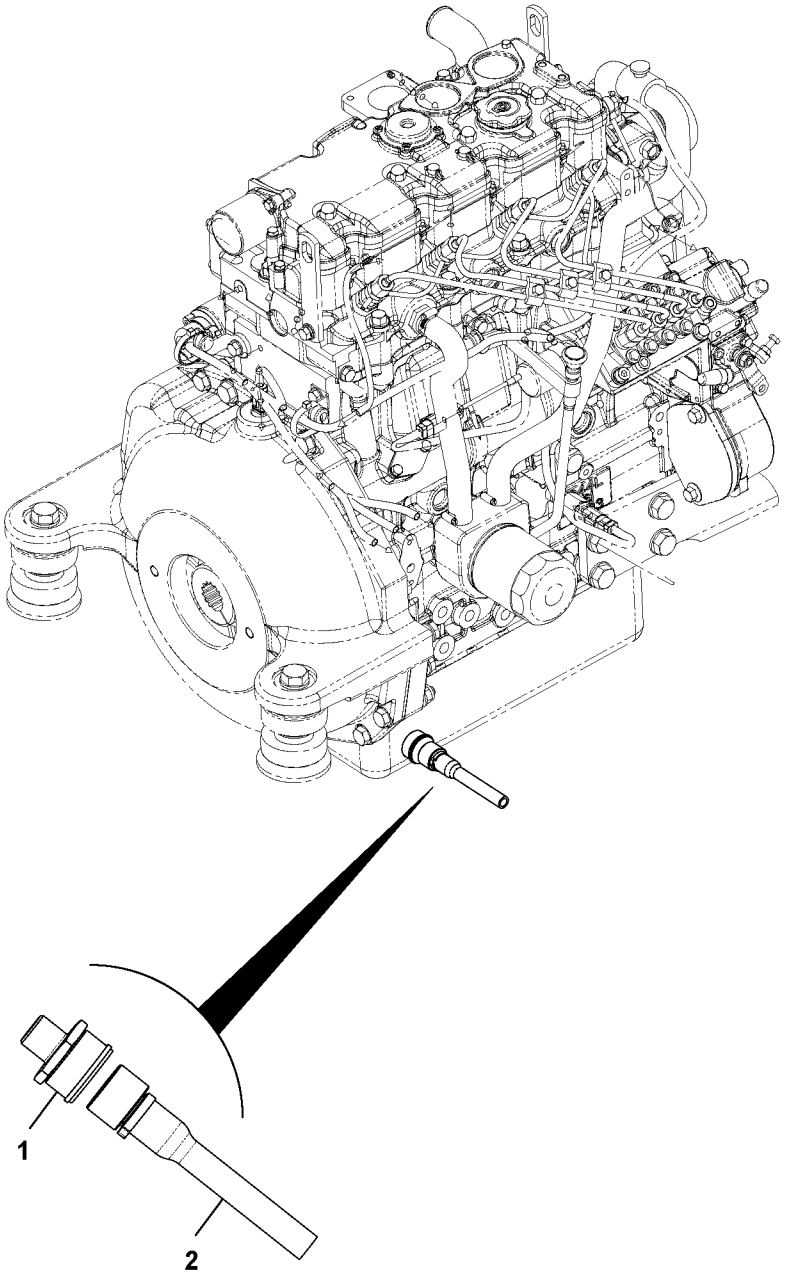
1
2

Fig.	Part No.	Quantity 1	2	3	PS	KIT	Description	Denominación	Denominação	Dénomination	Notes
1	**VOE 17229941**	1					Plug	Tapón	Bujão	Tampon	
2	**VOE 17230361**	1					Sump	Cárter	Carter	Carter d'huile	

1		**Flexible de vidange d'huile** **Mangueira de drenagem de óleo** **Manguera de vaciado de aceite** **Oil drain hose**	Catalogue id **20649**	Group **217**
2				
3			Illustr. No **1064150**	Section **200**
4				
5		**MC70C-MC105C, MCT70C-MCT95C**	Issue **PUB 20030904-B**	Page **97**

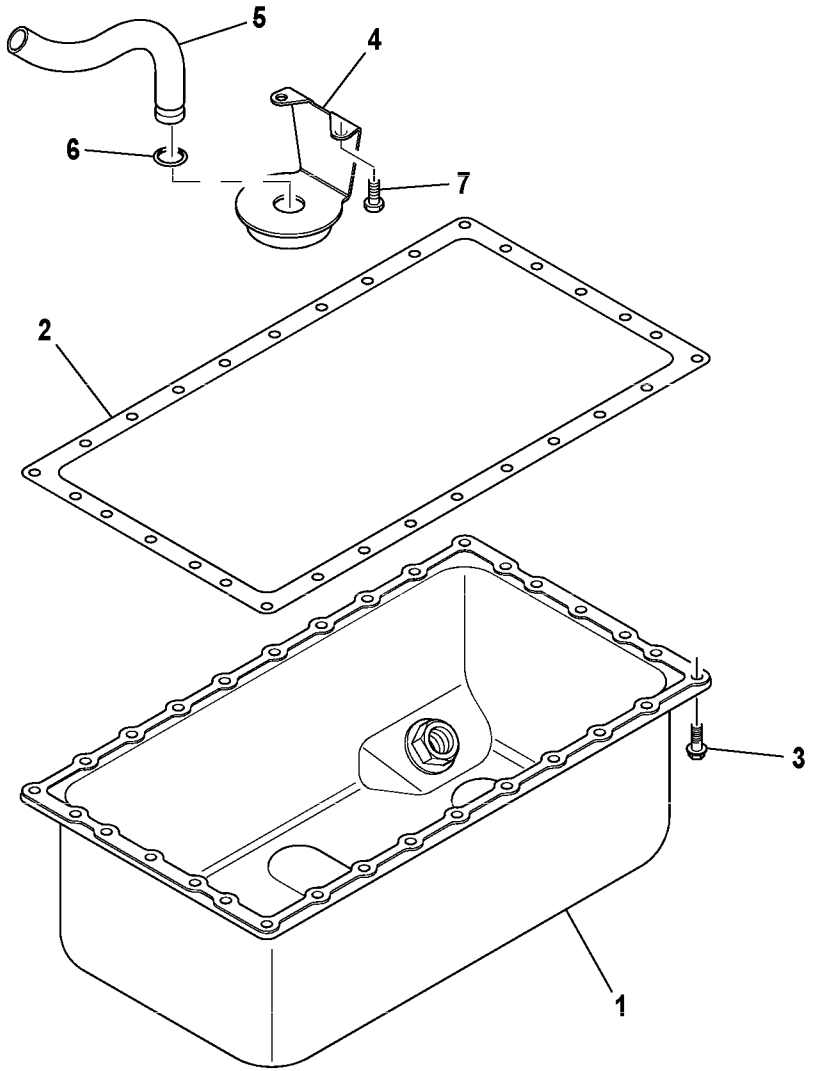
5
4
6
7
2
3
1

Fig.	Part No.	Quantity 1	2	3	PS	KIT	Description	Denominación	Denominação	Dénomination	Notes
1	**VOE 17223869**	1					Sump	Cárter	Carter	Carter d'huile	
2	**VOE 17228676**	1					Gasket	Junta	Junta	Joint	
3	**VOE 17228233**	30					Screw	Tornillo	Parafuso	Vis	
4	**VOE 17230319**	1					Strainer	Colador	Peneira	Crépine	
5	**VOE 17229709**	1					Pipe	Tubo	Tubo	Tuyau	
6	**VOE 17228238**	1					O-ring	Anillo tórico	Anel-o	Joint torique	
7	**VOE 17230942**	2					Screw	Tornillo	Parafuso	Vis	

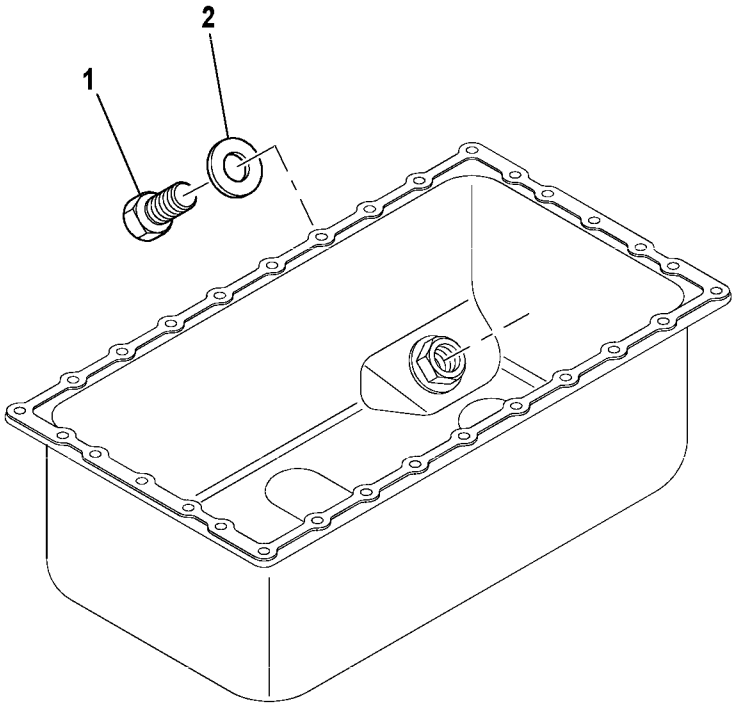
1
2

Fig.	Part No.	Quantity 1	2	3	PS	KIT	Description	Denominación	Denominação	Dénomination	Notes
1	**VOE 17230143**	2					Screw	Tornillo	Parafuso	Vis	
2	**VOE 17228243**	2					Washer	Arandela	Arruela	Rondelle	

1		**Vidange de l'huile** **Drenagem de óleo** **Vaciado de aceite** **Oil drain**	Catalogue id **20649**	Group **217**
2			Illustr. No **1064282**	Section **300**
3			Issue **PUB 20030904-B**	Page **101**
4				
5		**MC60C-MC105C, MCT70C-MCT95C**		

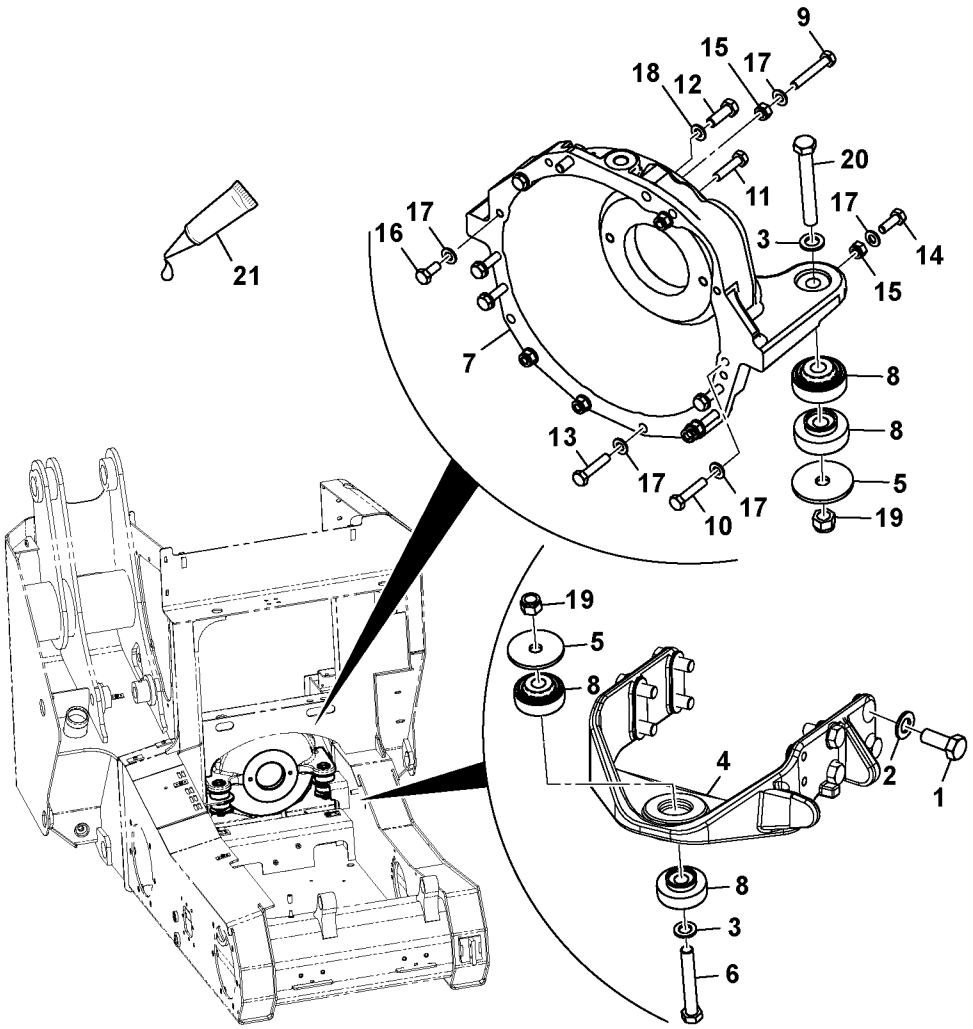
9
15
17
18
12
20
11
17
16
17
3
14
15
7
8
8
13
17
5
10
17
19
19
5
8
4
2
1
8
3
6
21

Fig.	Part No.	Quantity 1	2	3	PS	KIT	Description	Denominación	Denominação	Dénomination	Notes
1	**VOE 17228807**	8					Bolt	Perno	Parafuso	Boulon	
2	**VOE 17231003**	8					Plain washer	Arandela plana	Arruela simples	Rondelle plane	
3	**VOE 16212304**	3					Washer	Arandela	Arruela	Rondelle	
4		1			NS		Mounting	Soporte		Fixation	
5	**VOE 16213336**	3					Plate	Chapa	Chapa	Tôle	
6	**VOE 17205024**	1					Screw	Tornillo	Parafuso	Vis	
7		1			NS		Housing	Carter	Carcaça	Carter	
8		6			NS		Mounting	Soporte		Fixation	
9	**VOE 16212094**	2					Bolt	Perno	Parafuso	Boulon	
10	**VOE 17228890**	4					Bolt	Perno	Parafuso	Boulon	
11	**VOE 16212275**	1					Bolt	Perno	Parafuso	Boulon	
12	**VOE 16212078**	2					Set screw	Tornillo tope	Parafuso batente	Vis butée	
13	**VOE 16212216**	1					Set screw	Tornillo tope	Parafuso batente	Vis butée	
14	**VOE 16212215**	4					Set screw	Tornillo tope	Parafuso batente	Vis butée	
15	**VOE 16212125**	7					Nut	Tuerca	Porca	Écrou	
16	**VOE 16212076**	2					Set screw	Tornillo tope	Parafuso batente	Vis butée	
17	**VOE 16212138**	21			SS		Plain washer	Arandela plana	Arruela simples	Rondelle plane	
18	**VOE 20764147**	2					Washer	Arandela	Arruela	Rondelle	
19	**VOE 16212129**	3					Nut	Tuerca	Porca	Écrou	
20	**VOE 17228950**	2					Bolt	Perno	Parafuso	Boulon	
21		REQ			NS		Adhesive	Adhesivo	Adesivo	Adhesif	

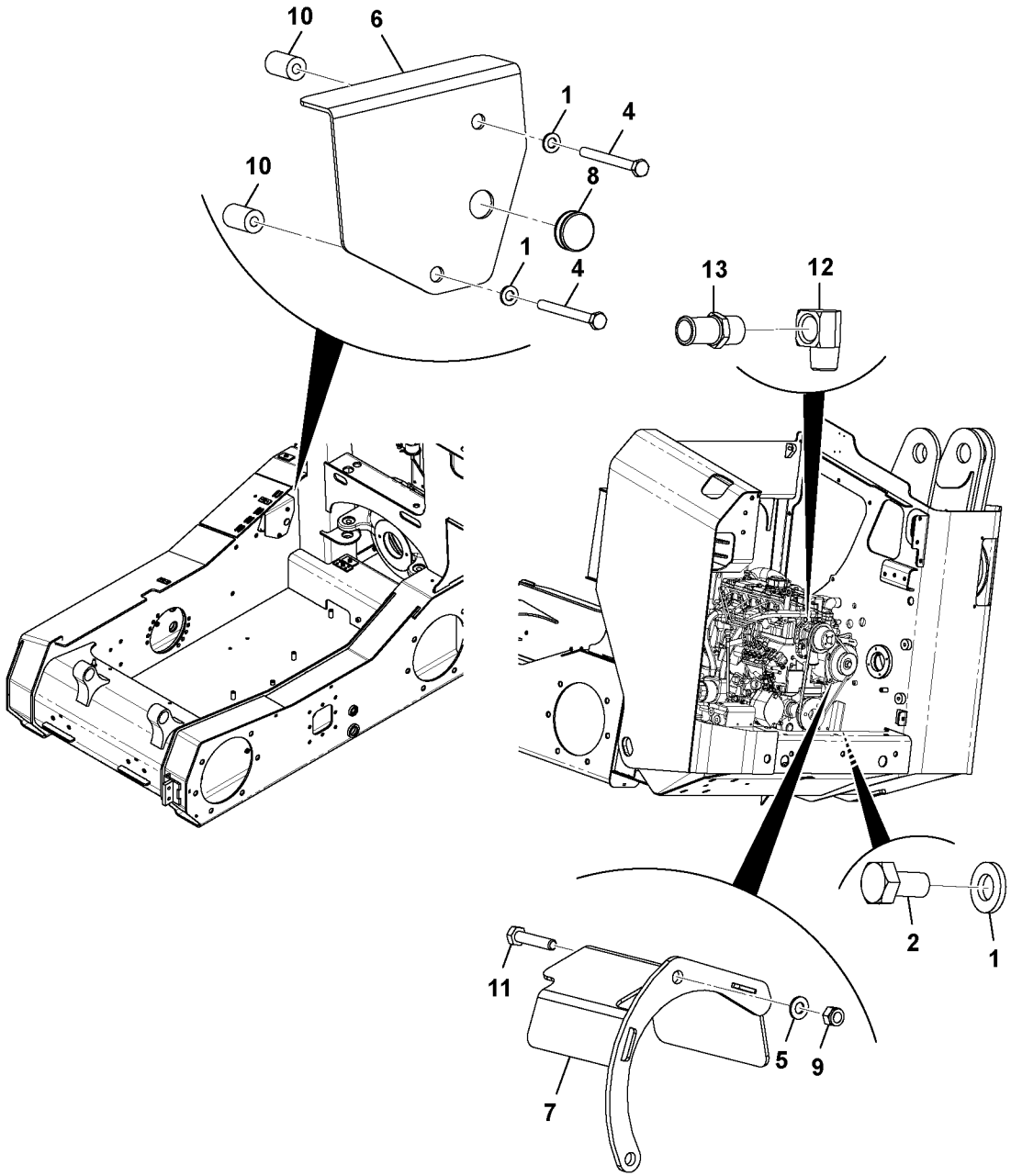

Volvo Construction Equipment
1064051

Fig.	Part No.	Quantity 1	2	3	PS	KIT	Description	Denominación	Denominação	Dénomination	Notes
1	**VOE 973494**	4					Washer	Arandela	Arruela	Rondelle	
2	**VOE 17205091**	2					Set screw	Tornillo tope	Parafuso batente	Vis butée	
4		2			NS		Mount	Soporte		Plot	
5	**VOE 20460127**	1					Washer	Arandela	Arruela	Rondelle	
6		1			NS		Bolt	Perno	Parafuso	Boulon	
7		1			NS		Housing	Carter	Carcaça	Carter	
8	**VOE 17223996**	1					Grommet	Pasaje	Passa muro	Passe fil	
9	**VOE 16212120**	1					Lock nut	Contratuerca	Porca trava	Contre-écrou	
10		2			NS		Bolt	Perno	Parafuso	Boulon	
11		1			NS		Bolt	Perno	Parafuso	Boulon	
12	**VOE 16212078**	1					Set screw	Tornillo tope	Parafuso batente	Vis butée	
13	**VOE 16212216**	2					Set screw	Tornillo tope	Parafuso batente	Vis butée	
14	**VOE 16212215**	1					Set screw	Tornillo tope	Parafuso batente	Vis butée	
15	**VOE 16212125**	1					Nut	Tuerca	Porca	Écrou	
16	**VOE 16212076**	1					Set screw	Tornillo tope	Parafuso batente	Vis butée	
17	**VOE 16212138**	1			SS		Plain washer	Arandela plana	Arruela simples	Rondelle plane	
18	**VOE 20764147**	2					Washer	Arandela	Arruela	Rondelle	
19	**VOE 16212129**	1					Nut	Tuerca	Porca	Écrou	
20	**VOE 17228950**	1					Bolt	Perno	Parafuso	Boulon	
21		2			NS		Adhesive	Adhesivo	Adesivo	Adhesif	

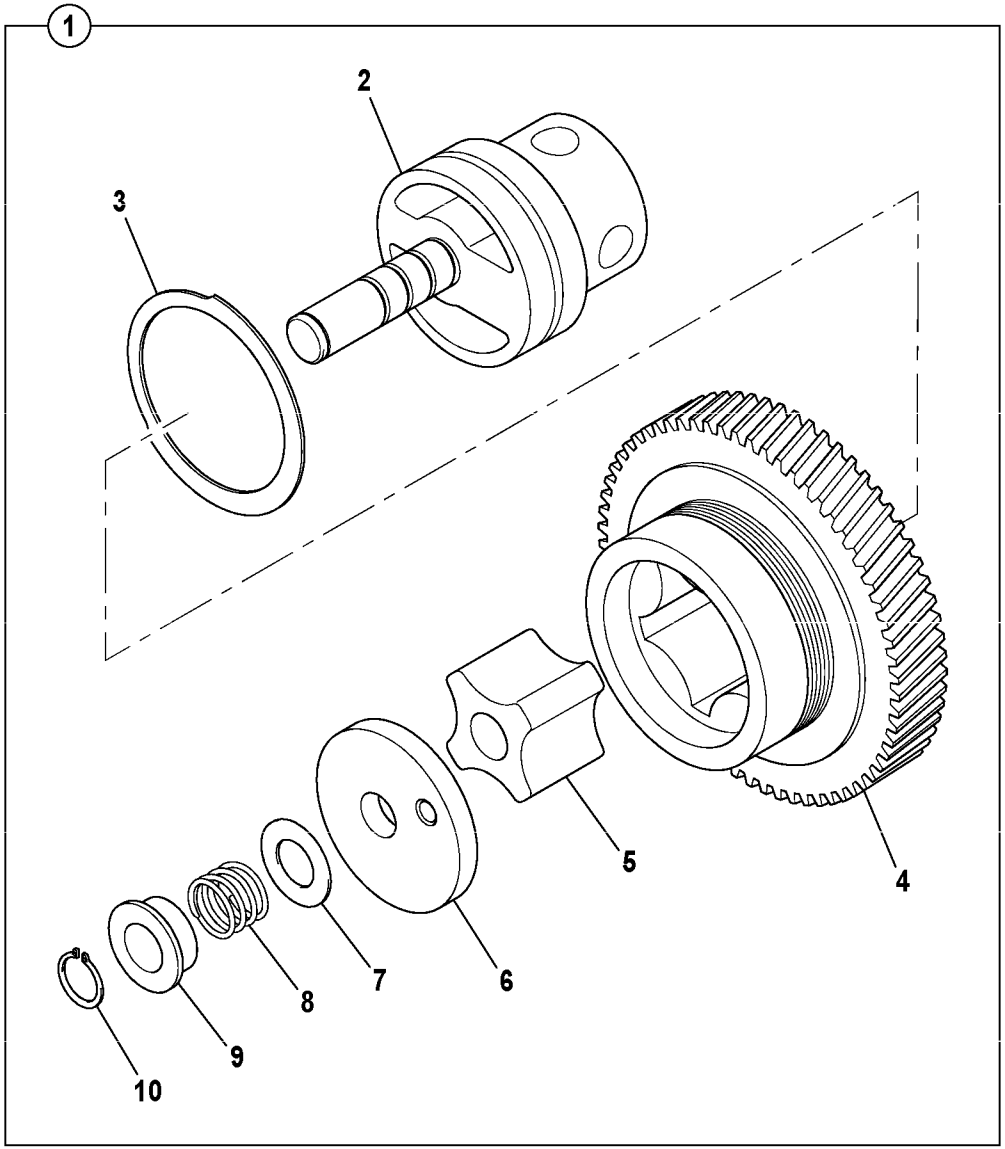
1
2
3
4
5
6
7
8
9
10

Fig.	Part No.	Quantity 1	2	3	PS	KIT	Description	Denominación	Denominação	Dénomination	Notes
1		1			NS		Idler gear, oil pump	Pin.intermed,bomba ac		Pignon fou,pompe huil	
2		1			NS		•Idler gear, oil pump	•Pin.intermed,bomba ac	•	•Pignon fou,pompe huil	
3	**VOE 17231002**	1					•Thrust washer	•Arandela axial	•Arruela trava	•Disque de butée	
4		1			NS		•Idler	•Pinon Intermed	•Pinhão intermediário	•Pignon Fou	
5		1			NS		•Idler	•Pinon Intermed	•Pinhão intermediário	•Pignon Fou	
6		1			NS		•Cover washer	•Arandela de cubierta	•Arruela da tampa	•Rondelle de recouvremen	
7	**VOE 17228244**	1					•Shim	•Laminilla de ajuste	•Calço de ajuste	•Cale réglage	O SZ = 0,10 MM
7	**VOE 17228247**	1					•Shim	•Laminilla de ajuste	•Calço de ajuste	•Cale réglage	O SZ = 0,15 MM
7	**VOE 17228172**	1					•Shim	•Laminilla de ajuste	•Calço de ajuste	•Cale réglage	O SZ = 0,20 MM
7	**VOE 17228182**	1					•Shim	•Laminilla de ajuste	•Calço de ajuste	•Cale réglage	O SZ = 0,50 MM
8	**VOE 17228185**	1					Spring	Resorte	Mola	Ressort	
9	**VOE 17228191**	1					Collar	Collar	Colar	Collerette	
10	**VOE 17228202**	1					Lock ring	Anillo de seguridad	Anel trava	Anneau verrouillage	

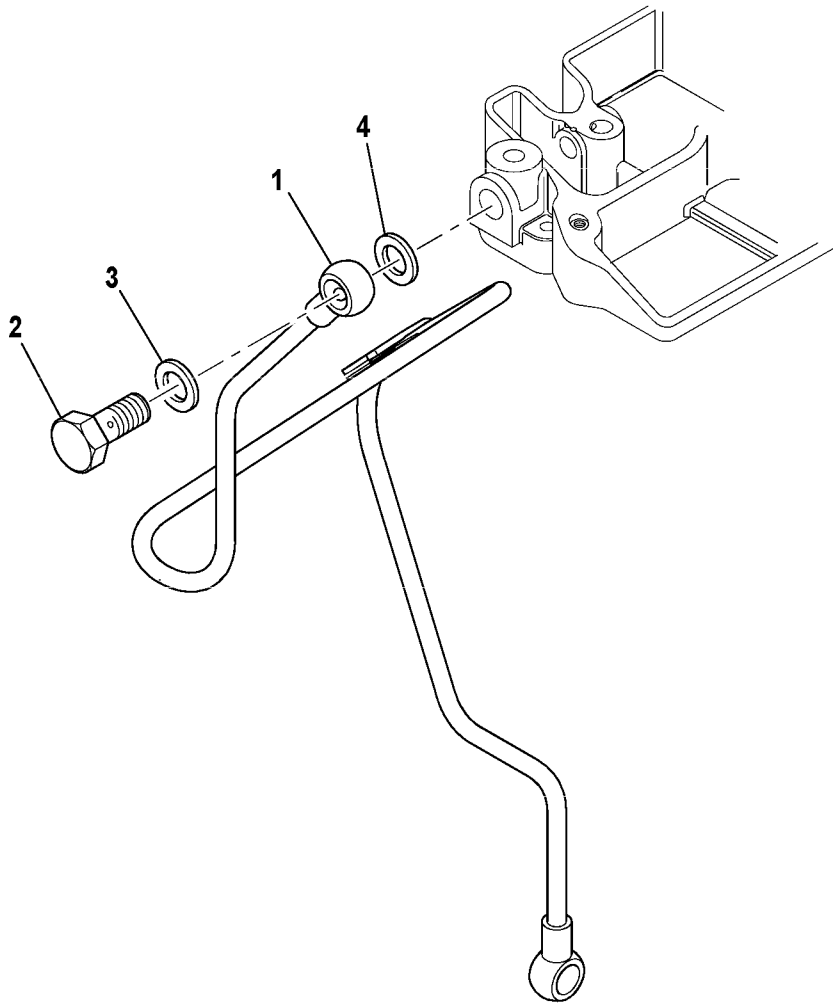
1
2
3
4

Fig.	Part No.	Quantity 1	2	3	PS	KIT	Description	Denominación	Denominação	Dénomination	Notes
1	**VOE 17228691**	1					Pipe line	Tuberia		Conduite tubulaire	
2	**VOE 17228856**	1					Bolt	Perno	Parafuso	Boulon	
3	**VOE 17228417**	1					Washer	Arandela	Arruela	Rondelle	
4	**VOE 17228417**	1					Washer	Arandela	Arruela	Rondelle	

1		**Conduit d'huile** **Tubo do óleo** **Tubo de aceite** **Oil pipe**	Catalogue id **20649**	Group **220**
2			Illustr. No **1064269**	Section **150**
3			Issue **PUB 20030904-B**	Page **109**
4				
5		**MC60C-MC105C, MCT70C-MCT95C**		

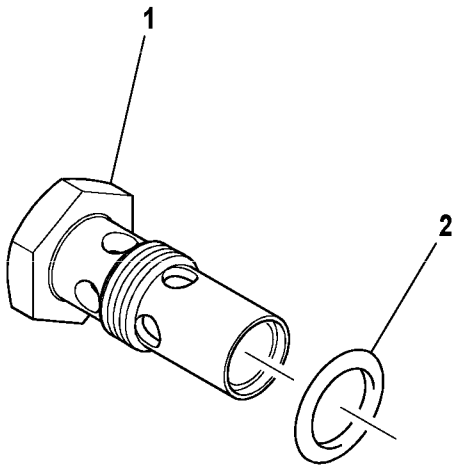
1
2

Fig.	Part No.	Quantity 1	2	3	PS	KIT	Description	Denominación	Denominação	Dénomination	Notes
1	**VOE 17228576**	1					Valve	Válvula	Válvula	Valve	
2	**VOE 17229675**	1					O-ring	Anillo tórico	Anel-o	Joint torique	

1		**Détendeur** **Válvula de alívio** **Válvula de sobrepresión** **Relief valve**	Catalogue id **20649**	Group **220**
2			Illustr. No **1064270**	Section **200**
3			Issue **PUB 20030904-B**	Page **111**
4				
5		**MC60C-MC105C, MCT70C-MCT95C**		

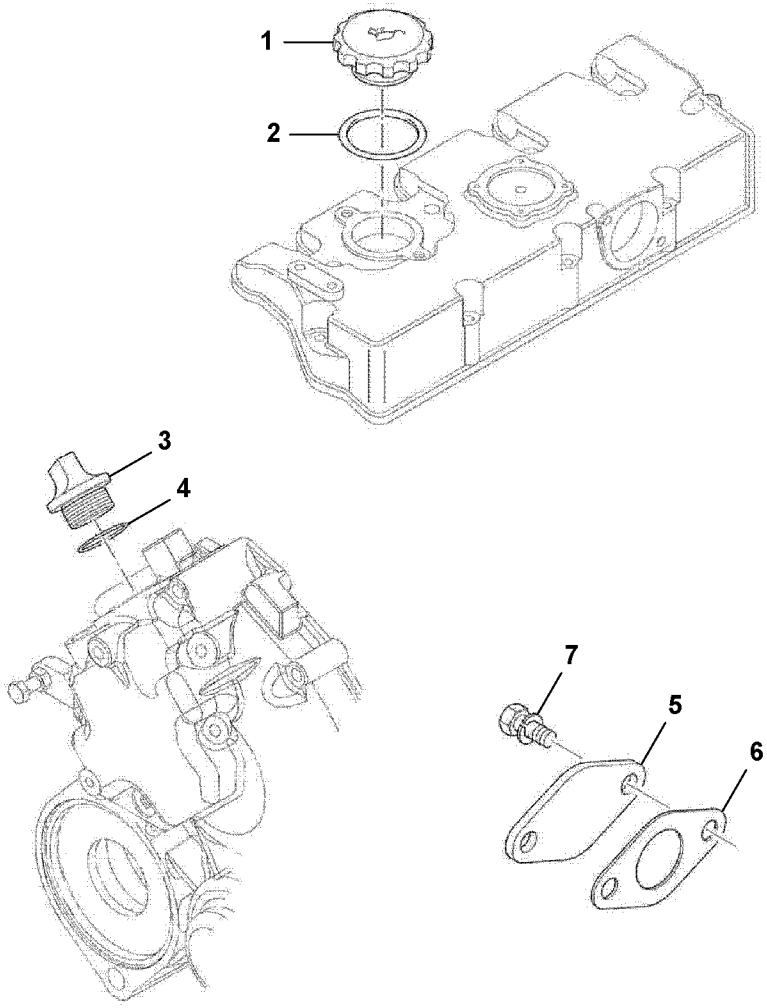
1
2
3
4
7
5
6

Fig.	Part No.	Quantity 1	2	3	PS	KIT	Description	Denominación	Denominação	Dénomination	Notes
1	**VOE 17228427**	1					Cap	Capuchón	Tampa	Capot	
2	**VOE 17228232**	1					Sealing	Junta	Vedação	Étanchéité	
3		1			NS		Cap	Capuchón	Tampa	Capot	
4	**VOE 17230164**	1					O-ring	Anillo tórico	Anel-o	Joint torique	
5		1			NS		Cover plate	Cubierta	Placa tampa	Plaque de recouvrement	
6	**VOE 17229498**	1					Gasket	Junta	Junta	Joint	
7	**VOE 17230942**	2					Screw	Tornillo	Parafuso	Vis	

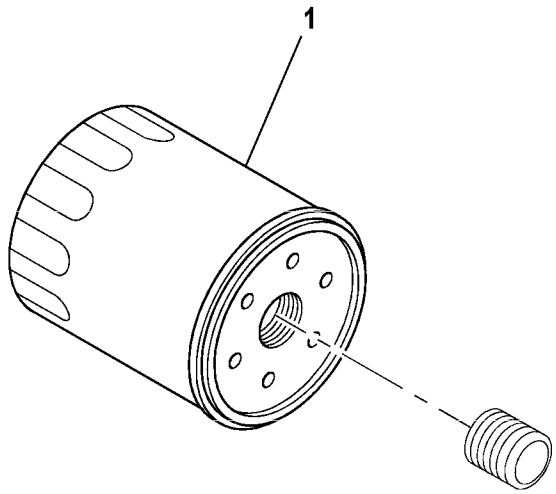
1

Fig.	Part No.	Quantity 1	2	3	PS	KIT	Description	Denominación	Denominação	Dénomination	Notes
1	**VOE 16222227**	1					Oil filter	Filtro de aceite	Filtro de óleo	Filtre à huile	

1		**Filtre à huile** **Filtro de óleo** **Filtro de aceite** **Oil filter**	Catalogue id **20649**	Group **222**
2			Illustr. No **1064283**	Section **100**
3			Issue **PUB 20030904-B**	Page **115**
4				
5		**MC60C-MC105C, MCT70C-MCT95C**		

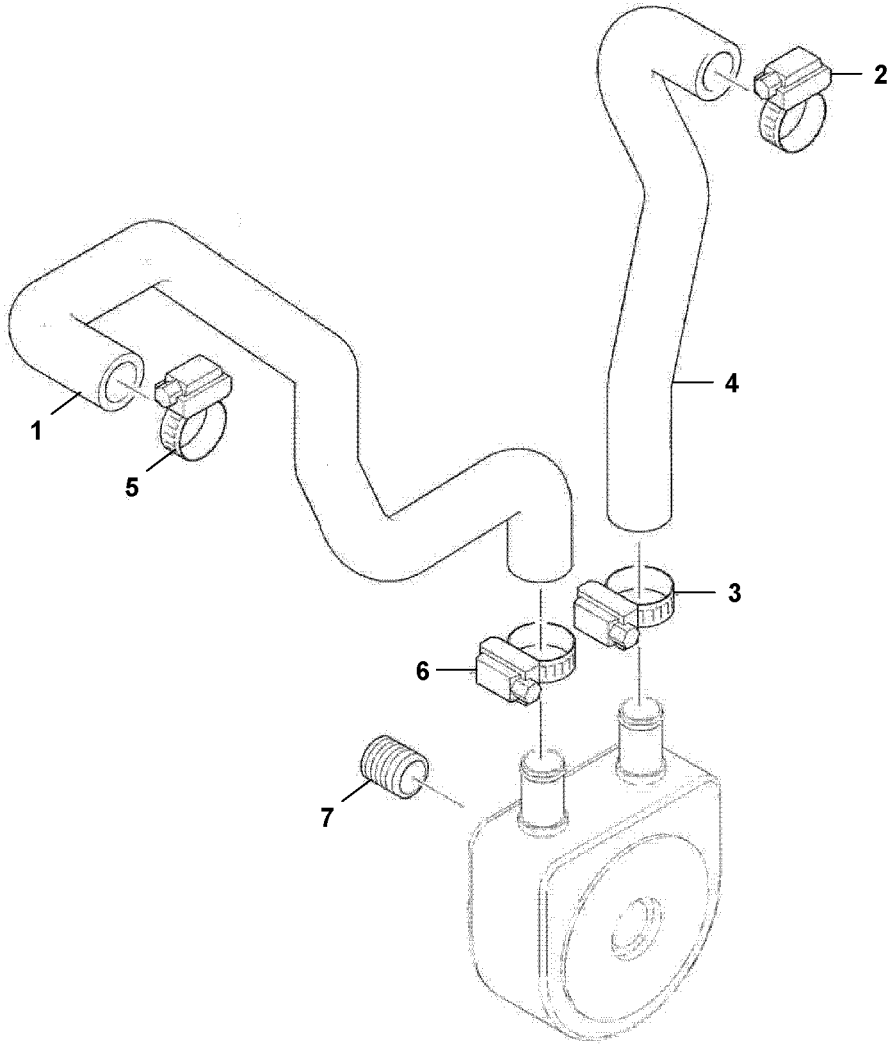
1
2
3
4
5
6
7

Fig.	Part No.	Quantity 1	2	3	PS	KIT	Description	Denominación	Denominação	Dénomination	Notes
1	**VOE 17224762**	1					Hose	Manguera	Mangueira	Flexible	
2	**VOE 17228954**	1					Clip	Clip	Clipe	Clip	
3	**VOE 17228954**	1					Clip	Clip	Clipe	Clip	
4	**VOE 17229174**	1					Hose	Manguera	Mangueira	Flexible	
5	**VOE 17228954**	1					Clip	Clip	Clipe	Clip	
6	**VOE 17228954**	1					Clip	Clip	Clipe	Clip	
7	**VOE 17228229**	1					Connector	Pieza de conexión	Conexão	Pièce connexion	

1		**Radiateur d 'huile** **Refrigerador de óleo** **Enfriador de aceite** **Oil cooler**	Catalogue id **20649**	Group **223**
2			Illustr. No **1063983**	Section **100**
3			Issue **PUB 20030904-B**	Page **117**
4				
5		**35.7KW MC60C**		

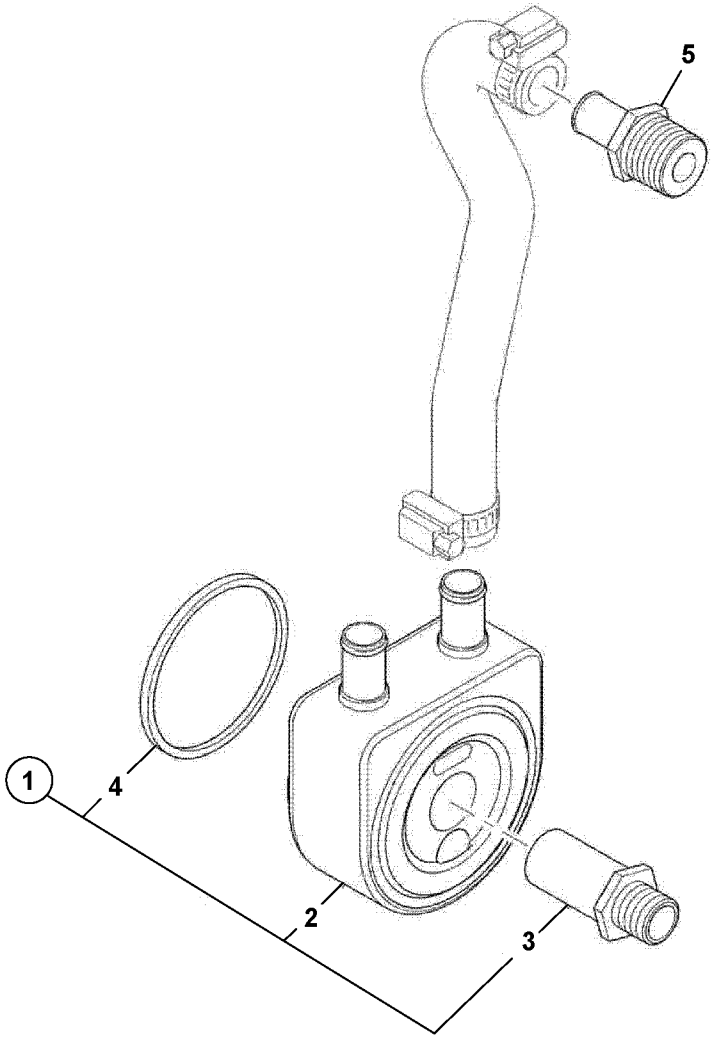
5
1
4
2
3

Fig.	Part No.	Quantity 1	2	3	PS	KIT	Description	Denominación	Denominação	Dénomination	Notes
1	**VOE 17228184**	1					Cooling jacket cap	Tapa camisa agua	Tampa camisa resfriamen	Couvercle de chemise de	
2		1			NS		•Cooling Jacket	•Tapa Camisa Agu	•	•Couvercle De Ch	
3	**VOE 17228900**	1					•Adapter	•Adaptador	•Adaptador	•Adaptateur	
4	**VOE 17228163**	1					•Sealing	•Junta	•Vedação	•Étanchéité	
5	**VOE 17229258**	1					Nipple	Niple	Niple	Raccord	

1		**Radiateur d 'huile** **Refrigerador de óleo** **Enfriador de aceite** **Oil cooler**	Catalogue id **20649**	Group **223**
2			Illustr. No **1063980**	Section **150**
3			Issue **PUB 20030904-B**	Page **119**
4				
5		**35.7KW MC60C**		

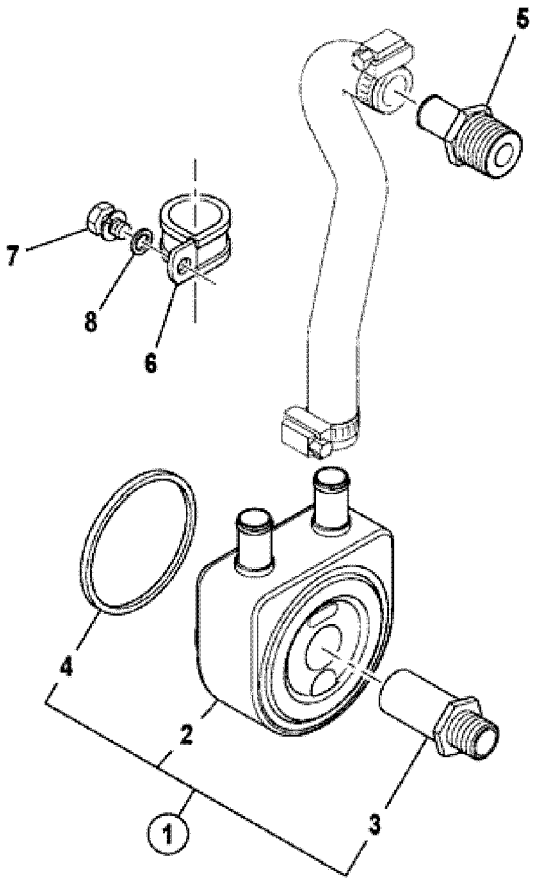
5
7
8
6
4
2
1
3

Fig.	Part No.	Quantity 1	2	3	PS	KIT	Description	Denominación	Denominação	Dénomination	Notes
1	**VOE 17228184**	1					Cooling jacket cap	Tapa camisa agua	Tampa camisa resfriamen	Couvercle de chemise de	
2		1			NS		•Cooling Jacket	•Tapa Camisa Agu	•	•Couvercle De Ch	
3	**VOE 17228900**	1					•Adapter	•Adaptador	•Adaptador	•Adaptateur	
4	**VOE 17228163**	1					•Sealing	•Junta	•Vedação	•Étanchéité	
5	**VOE 17229258**	1					Nipple	Niple	Niple	Raccord	
6	**VOE 17228179**	1					Clip	Clip	Grampo	Clip	
7	**VOE 17230153**	1					Screw	Tornillo	Parafuso	Vis	
8	**VOE 17223872**	1					Washer	Arandela	Arruela	Rondelle	

1		**Radiateur d 'huile** **Refrigerador de óleo** **Enfriador de aceite** **Oil cooler**	Catalogue id **20649**	Group **223**
2			Illustr. No **1064446**	Section **200**
3			Issue **PUB 20030904-B**	Page **121**
4				
5		**44.7KW MC70C-MC105C, MCT70C-MCT95C**		

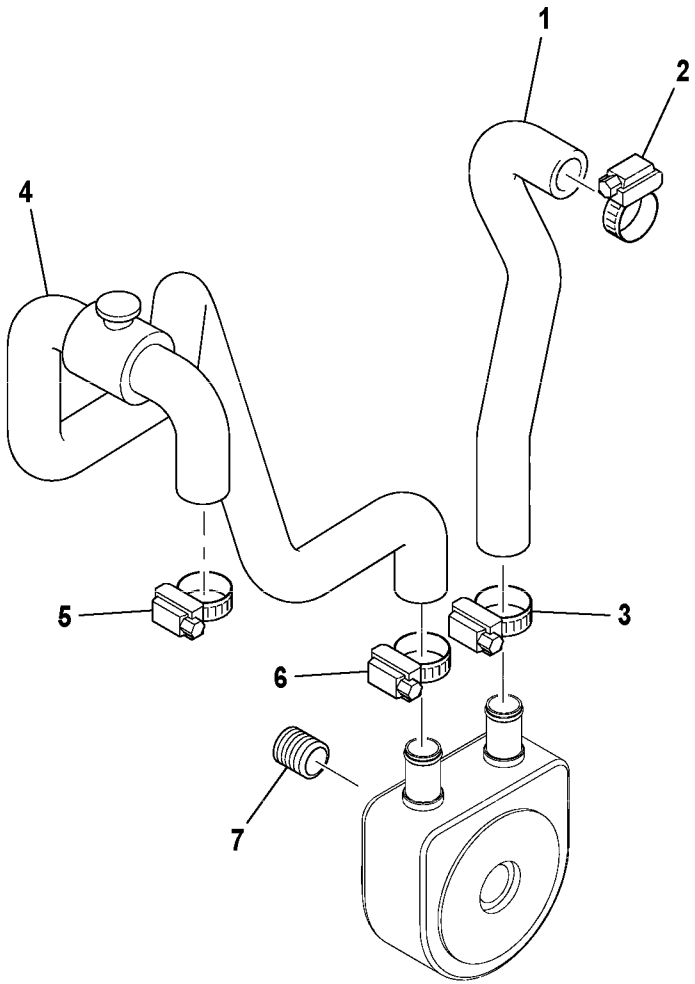
1
2
4
5
3
6
7

Fig.	Part No.	Quantity 1	2	3	PS	KIT	Description	Denominación	Denominação	Dénomination	Notes
1	**VOE 17229174**	1					Hose	Manguera	Mangueira	Flexible	
2	**VOE 17228954**	1					Clip	Clip	Clipe	Clip	
3	**VOE 17228954**	1					Clip	Clip	Clipe	Clip	
4	**VOE 17229180**	1					Hose	Manguera	Mangueira	Flexible	
5	**VOE 17228954**	1					Clip	Clip	Clipe	Clip	
6	**VOE 17228954**	1					Clip	Clip	Clipe	Clip	
7	**VOE 17228229**	1					Connector	Pieza de conexión	Conexão	Pièce connexion	

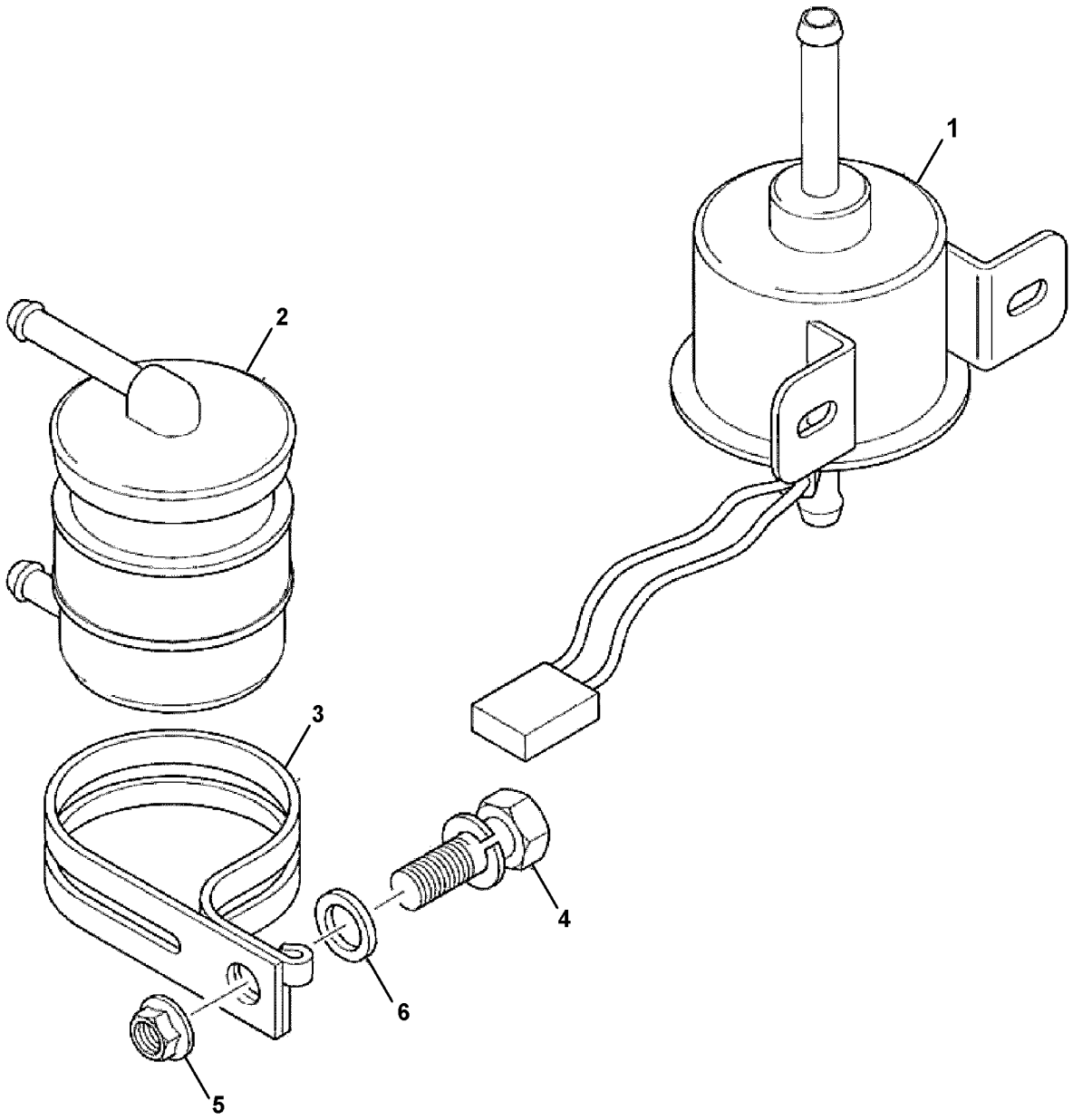

Volvo Construction Equipment
1063976

Fig.	Part No.	Quantity 1	2	3	PS	KIT	Description	Denominación	Denominação	Dénomination	Notes
1	**VOE 17230016**	1					Pump	Bomba	Bomba	Pompe	
2	**VOE 17229421**	1					Filter	Filtro	Filtro	Filtre	
3	**VOE 17237777**	1					Bracket	Consola	Suporte	Console	
4	**VOE 17230142**	1					Screw	Tornillo	Parafuso	Vis	
5	**VOE 17230933**	1					Nut	Tuerca	Porca	Écrou	
6	**VOE 17223872**	1					Washer	Arandela	Arruela	Rondelle	

1		**Pompe carburant** **Bomba de combustível** **Bomba de combustible** **Fuel pump**	Catalogue id **20649**	Group **233**
2			Illustr. No **1063976**	Section **100**
3			Issue **PUB 20030904-B**	Page **125**
4				
5		**MC60C-MC105C, MCT70C-MCT95C**		

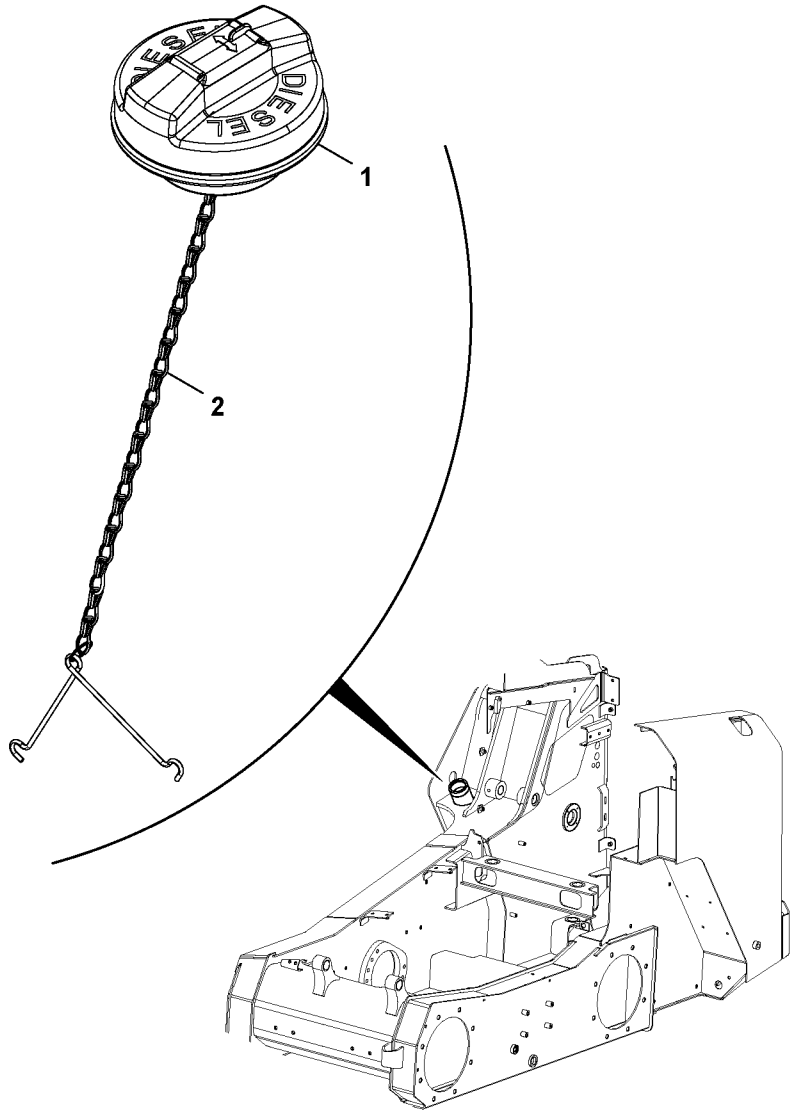

Volvo Construction Equipment
1063992

Fig.	Part No.	Quantity 1	2	3	P S	K I T	Description	Denominación	Denominação	Dénomination	Notes
1	**VOE 17205360**	1					Filler cap	Tapa de llenado	Tampa de enchimento	Bouchon remplissage	
1	**VOE 16213349**	1					Cap	Capuchón	Tampa	Capot	
2	**VOE 17205305**	1					Chain	Cadena	Corrente	Chaîne	

1		**Bouchon de réservoir** **Tampa do tanque** **Tapón de depósito** **Tank Cap**	Catalogue id **20649**	Group **234**
2			Illustr. No **1063992**	Section **100**
3			Issue **PUB 20030904-B**	Page **127**
4				
5		**MC60C-MC105C, MCT70C-MCT95C**		

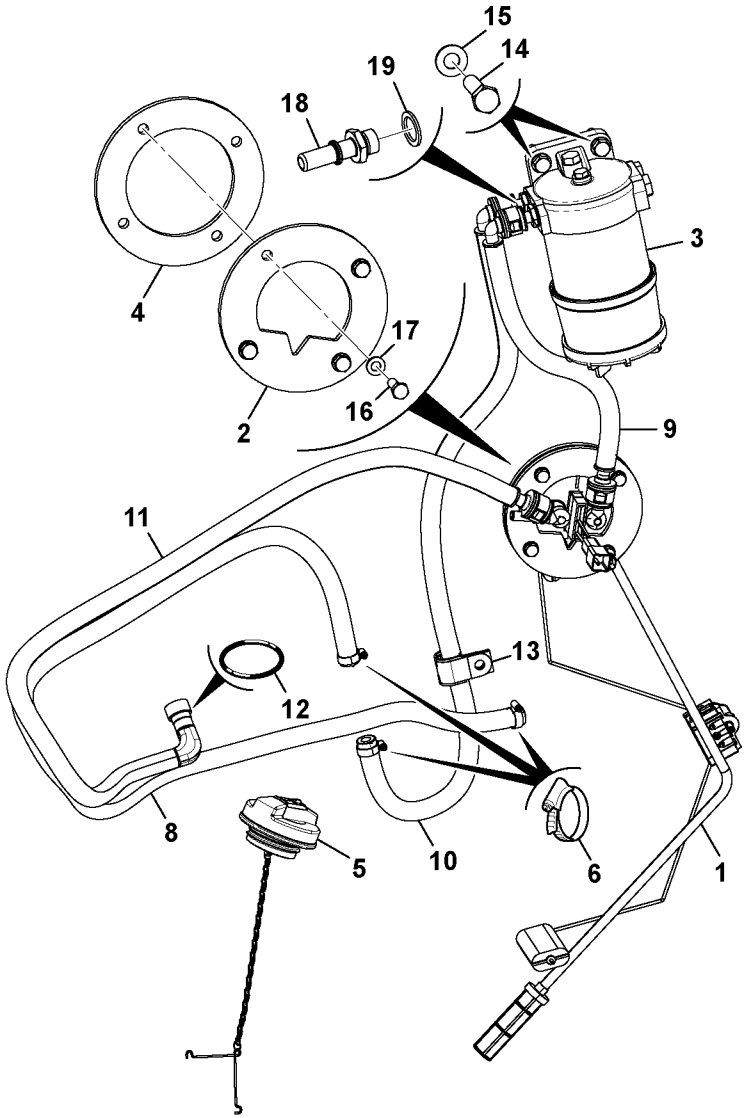
15
14
19
18
3
4
17
16
2
9
11
13
12
8
5
10
6
1

Fig.	Part No.	Quantity 1	2	3	PS	KIT	Description	Denominación	Denominação	Dénomination	Notes
1	**VOE 16213273**	1					Fuel	Combustible	Combustível	Carburant	
2	**VOE 17205116**	1					Plate	Chapa	Chapa	Tôle	
3	**VOE 17229423**	1					Filter	Filtro	Filtro	Filtre	
4	**VOE 17205171**	1					Washer	Arandela	Arruela	Rondelle	
5	**VOE 16213367**	1					Key	Chaveta	Cunha	Clavette	
6	**VOE 17228983**	3					Clip	Clip	Clipe	Clip	
8		1			NS		Hose	Tubo flexible	Mangueira	Durit	
9		1			NS		Hose	Tubo flexible	Mangueira	Durit	
10		1			NS		Hose	Tubo flexible	Mangueira	Durit	
11		1			NS		Hose	Manguera	Mangueira	Flexible	
12	**VOE 17229673**	2					O-ring	Anillo tórico	Anel-o	Joint torique	
13	**VOE 17229171**	1					Clip	Clip	Clipe	Clip	
14	**VOE 16214001**	2					Set screw	Tornillo tope	Parafuso batente	Vis butée	
15	**VOE 20460127**	2					Washer	Arandela	Arruela	Rondelle	
16	**VOE 16212203**	4					Set screw	Tornillo tope	Parafuso batente	Vis butée	
17	**VOE 973494**	4					Washer	Arandela	Arruela	Rondelle	
18	**VOE 17237767**	2					Adapter	Adaptador	Adaptador	Adaptateur	
19		2			NS		Washer	Arandela	Arruela	Rondelle	

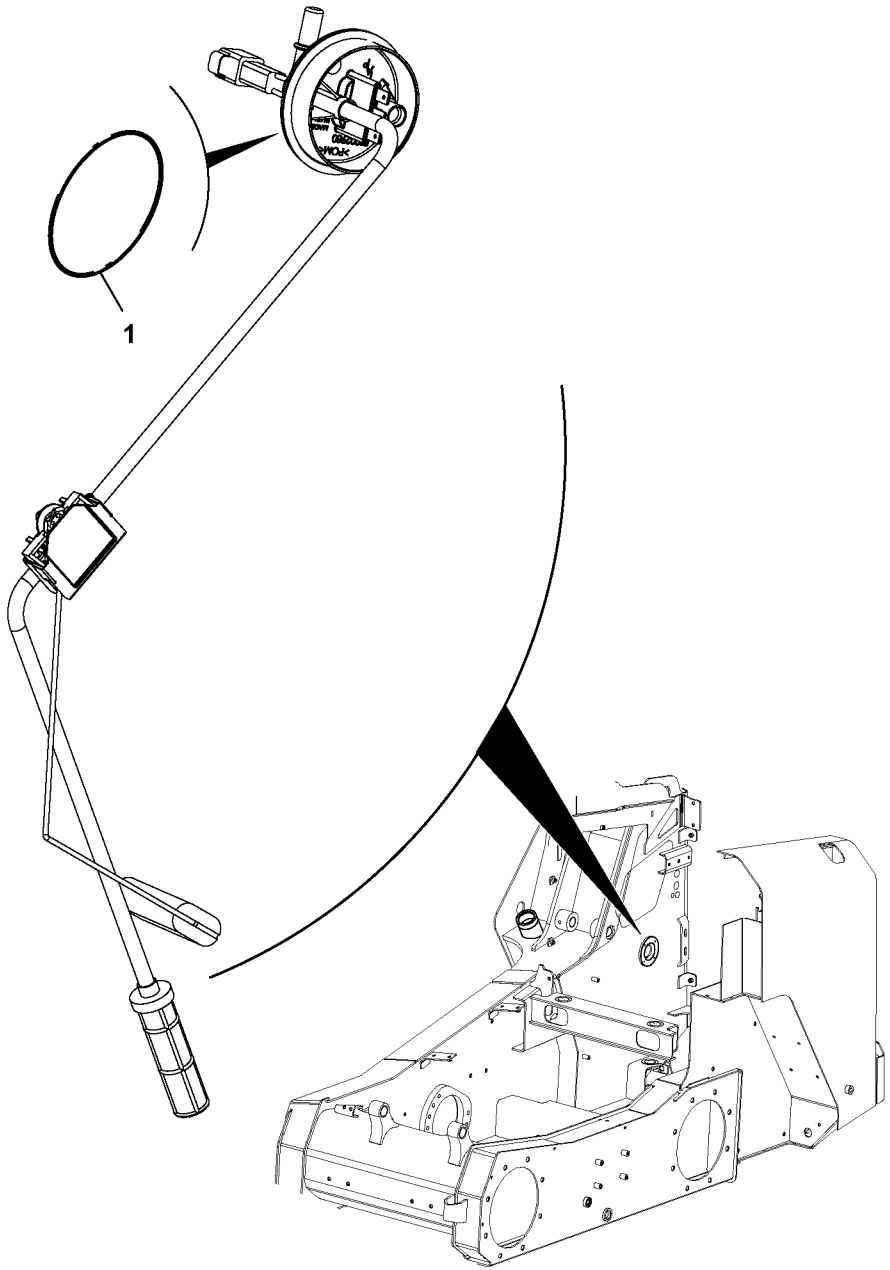
1

Fig.	Part No.	Quantity 1	2	3	PS	KIT	Description	Denominación	Denominação	Dénomination	Notes
	VOE 16213273	1					Fuel	Combustible	Combustível	Carburant	
1	**VOE 16213365**	1					•O-ring	•Anillo tórico	•Anel-o	•Joint torique	

1		**Système d'alimentation** **Sistema de combustível** **Sistema de combustible** **Fuel system**	Catalogue id **20649**	Group **234**
2			Illustr. No **1064065**	Section **250**
3			Issue **PUB 20030904-B**	Page **131**
4				
5		**MC60C-MC105C, MCT70C-MCT95C**		

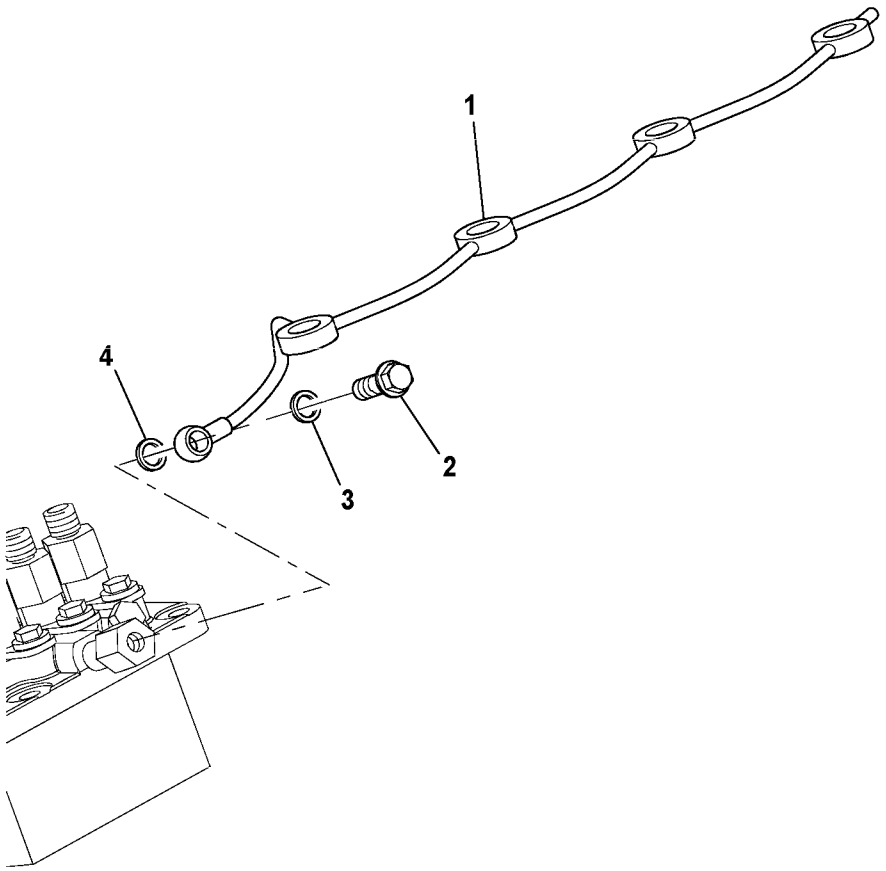
1
2
3
4

Fig.	Part No.	Quantity 1	2	3	PS	KIT	Description	Denominación	Denominação	Dénomination	Notes
1	**VOE 17229703**	1					Fuel pipe	Tubo de combustible	Tubo combustível	Tuyauterie de carburant	
2	**VOE 17228440**	1					Bolt	Perno	Parafuso	Boulon	
3	**VOE 17228449**	1					Washer	Arandela	Arruela	Rondelle	
4	**VOE 17228449**	1					Washer	Arandela	Arruela	Rondelle	

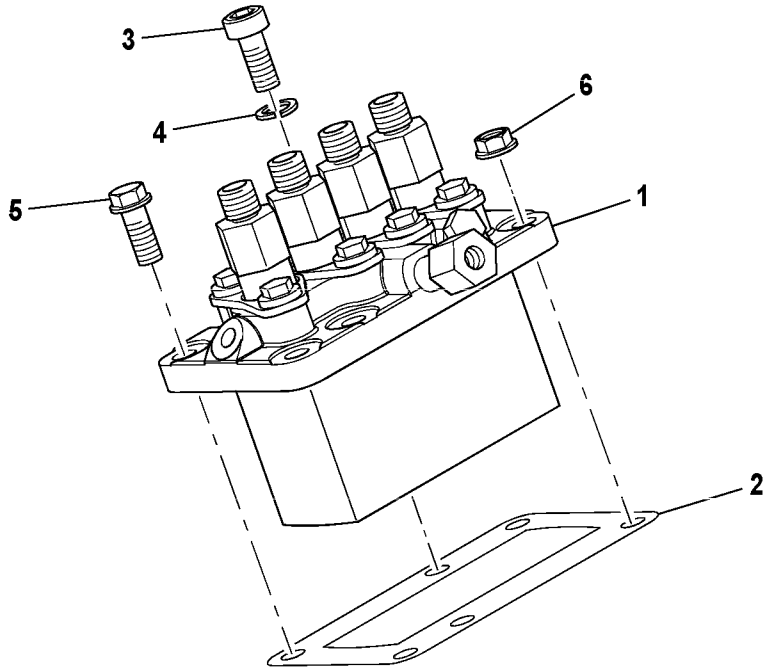
3
4
5
6
1
2

Fig.	Part No.	Quantity 1	2	3	PS	KIT	Description	Denominación	Denominação	Dénomination	Notes
1	**VOE 17230019**	1					Pump	Bomba	Bomba	Pompe	
2	**VOE 17228668**	1					Shim	Laminilla de ajuste	Calço de ajuste	Cale réglage	THICK = 0,2 MM
2	**VOE 17228669**	1					Shim	Laminilla de ajuste	Calço de ajuste	Cale réglage	THICK = 0,25 MM
2	**VOE 17228671**	1					Shim	Laminilla de ajuste	Calço de ajuste	Cale réglage	THICK = 0,35 MM
2	**VOE 17228675**	1					Shim	Laminilla de ajuste	Calço de ajuste	Cale réglage	THICK = 0,3 MM
2	**VOE 17230174**	1					Shim	Laminilla de ajuste	Calço de ajuste	Cale réglage	THICK = 0,4 MM
2	**VOE 17230178**	1					Shim	Laminilla de ajuste	Calço de ajuste	Cale réglage	THICK = 0,5 MM
2	**VOE 17230179**	1					Shim	Laminilla de ajuste	Calço de ajuste	Cale réglage	THICK = 0,5 MM FLAT
3	**VOE 17228178**	2					Screw	Tornillo	Parafuso	Vis	
4	**VOE 17228416**	2					Washer	Arandela	Arruela	Rondelle	
5	**VOE 17228575**	1					Screw	Tornillo	Parafuso	Vis	
6	**VOE 17230933**	3					Nut	Tuerca	Porca	Écrou	

1		**Pompe carburant** **Bomba de combustível** **Bomba de combustible** **Fuel pump**	Catalogue id **20649**	Group **236**
2			Illustr. No **1064276**	Section **100**
3			Issue **PUB 20030904-B**	Page **135**
4				
5		**35.7KW MC60C**		

VOLVO

MC60C-MCT95C

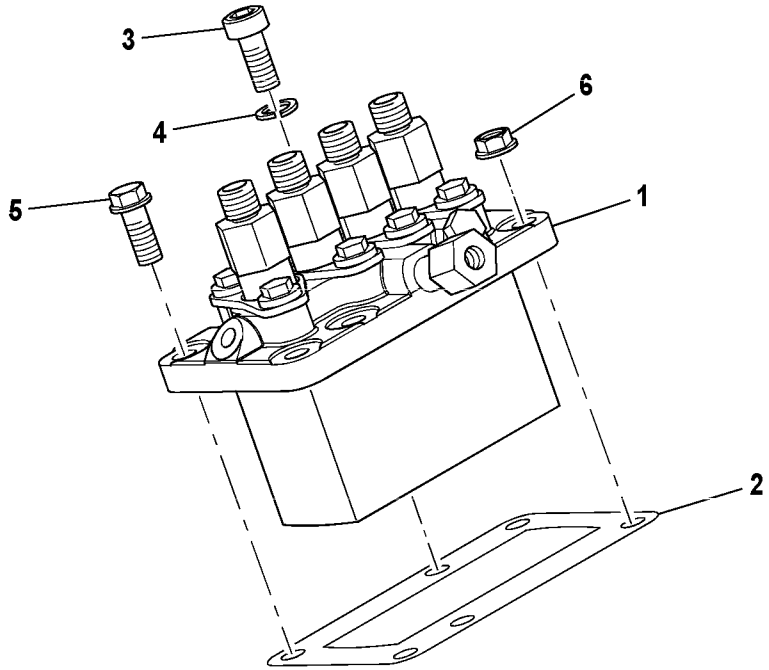
3
4
5
6
1
2

Fig.	Part No.	Quantity 1	2	3	PS	KIT	Description	Denominación	Denominação	Dénomination	Notes
1	**VOE 17230017**	1					Pump	Bomba	Bomba	Pompe	
2	**VOE 17228668**	1					Shim	Laminilla de ajuste	Calço de ajuste	Cale réglage	THICK = 0,2 MM
2	**VOE 17228669**	1					Shim	Laminilla de ajuste	Calço de ajuste	Cale réglage	THICK = 0,25 MM
2	**VOE 17228671**	1					Shim	Laminilla de ajuste	Calço de ajuste	Cale réglage	THICK = 0,35 MM
2	**VOE 17228675**	1					Shim	Laminilla de ajuste	Calço de ajuste	Cale réglage	THICK = 0,3 MM
2	**VOE 17230174**	1					Shim	Laminilla de ajuste	Calço de ajuste	Cale réglage	THICK = 0,4 MM
2	**VOE 17230178**	1					Shim	Laminilla de ajuste	Calço de ajuste	Cale réglage	THICK = 0,5 MM
2	**VOE 17230179**	1					Shim	Laminilla de ajuste	Calço de ajuste	Cale réglage	THICK = 0,5 MM FLAT
3	**VOE 17228178**	2					Screw	Tornillo	Parafuso	Vis	
4	**VOE 17228416**	2					Washer	Arandela	Arruela	Rondelle	
5	**VOE 17228575**	1					Screw	Tornillo	Parafuso	Vis	
6	**VOE 17230933**	3					Nut	Tuerca	Porca	Écrou	

1		**Pompe carburant** **Bomba de combustível** **Bomba de combustible** **Fuel pump**	Catalogue id **20649**	Group **236**
2			Illustr. No **1064276**	Section **150**
3			Issue **PUB 20030904-B**	Page **137**
4				
5		**44.7KW MC70C-MC105C, MCT70C-MCT95C**		

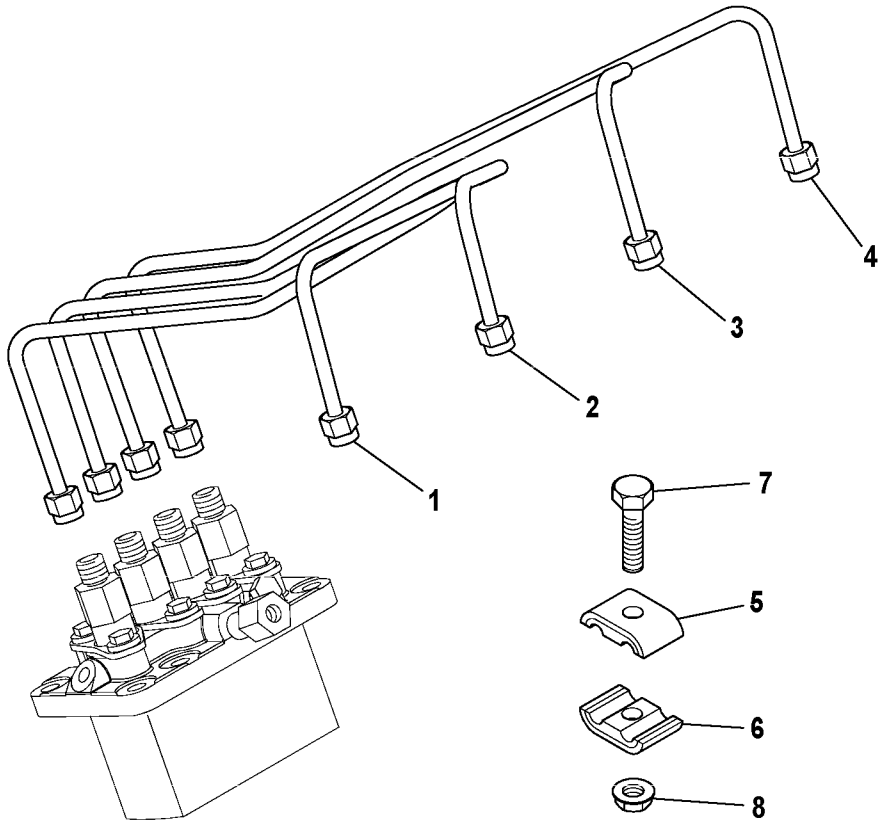
1
2
3
4
5
6
7
8

Fig.	Part No.	Quantity 1	2	3	PS	KIT	Description	Denominación	Denominação	Dénomination	Notes
1	**VOE 17224752**	1					Pipe	Tubo	Tubo	Tuyau	
2	**VOE 17224754**	1					Pipe	Tubo	Tubo	Tuyau	
3	**VOE 17224758**	1					Pipe	Tubo	Tubo	Tuyau	
4	**VOE 17224760**	1					Pipe	Tubo	Tubo	Tuyau	
5	**VOE 17228264**	3					Pad	Suplemento	Base	Support inférieur	
6	**VOE 17228264**	3					Pad	Suplemento	Base	Support inférieur	
7	**VOE 17230141**	3					Screw	Tornillo	Parafuso	Vis	
8	**VOE 17229624**	3					Nut	Tuerca	Porca	Écrou	

1		**Tuyau refoulement - injecteur** **Tubo de alimentação - injetor** **Tubo presion - inyector** **Delivery pipe - injector**	Catalogue id **20649**	Group **237**
2			Illustr. No **1064277**	Section **100**
3			Issue **PUB 20030904-B**	Page **139**
4				
5		**35.7KW MC60C**		

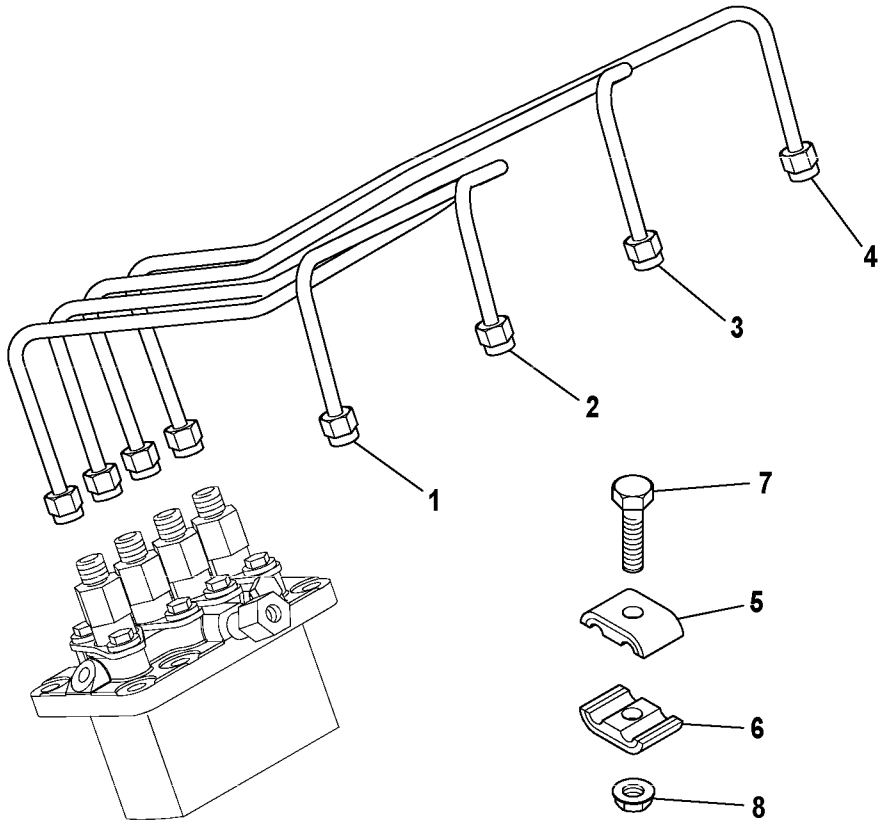
1
2
3
4
5
6
7
8

Fig.	Part No.	Quantity 1	2	3	PS	KIT	Description	Denominación	Denominação	Dénomination	Notes
1	**VOE 17229690**	1					Fuel pipe	Tubo de combustible	Tubo combustível	Tuyauterie de carburant	
2	**VOE 17229694**	1					Fuel pipe	Tubo de combustible	Tubo combustível	Tuyauterie de carburant	
3	**VOE 17229697**	1					Fuel pipe	Tubo de combustible	Tubo combustível	Tuyauterie de carburant	
4	**VOE 17229699**	1					Fuel pipe	Tubo de combustible	Tubo combustível	Tuyauterie de carburant	
5	**VOE 17228264**	3					Pad	Suplemento	Base	Support inférieur	
6	**VOE 17228264**	3					Pad	Suplemento	Base	Support inférieur	
7	**VOE 17230141**	3					Screw	Tornillo	Parafuso	Vis	
8	**VOE 17229624**	3					Nut	Tuerca	Porca	Écrou	

1		**Tuyau refoulement - injecteur** **Tubo de alimentação - injetor** **Tubo presion - inyector** **Delivery pipe - injector**	Catalogue id **20649**	Group **237**
2			Illustr. No **1064277**	Section **150**
3			Issue **PUB 20030904-B**	Page **141**
4				
5		**44.7KW MC70C-MC105C, MCT70C-MCT95C**		

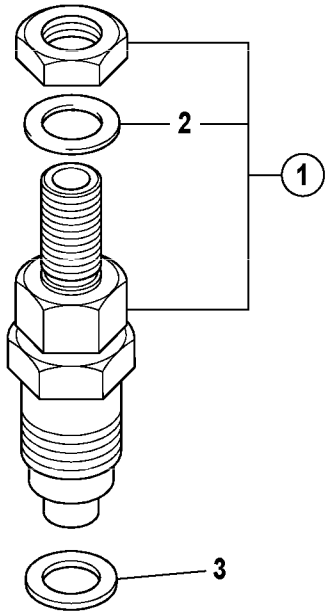
2
1
3

Fig.	Part No.	Quantity 1	2	3	PS	KIT	Description	Denominación	Denominação	Dénomination	Notes
1	**VOE 17231457**	4					Injector	Inyector	Injetor	Injecteur	
2	**VOE 17228462**	1					•Washer	•Arandela	•Arruela	•Rondelle	
3	**VOE 17228415**	4					Washer	Arandela	Arruela	Rondelle	

1		**Canalisations à combustible, injecteur** **Tuberías de combustible, inyector** **Fuel system injectors**	Catalogue id **20649**	Group **237**
2			Illustr. No **1064278**	Section **200**
3			Issue **PUB 20030904-B**	Page **143**
4				
5		**35.7KW MC60C**		

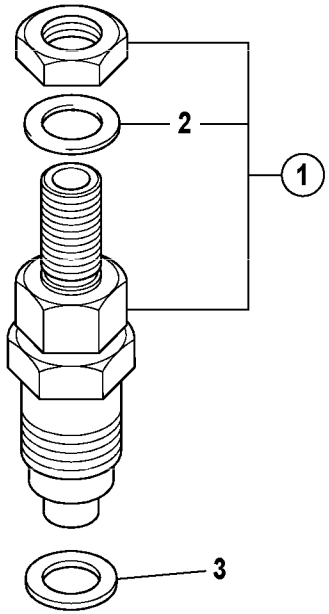
2
1
3

Fig.	Part No.	Quantity 1	2	3	PS	KIT	Description	Denominación	Denominação	Dénomination	Notes
1	**VOE 17229585**	4					Injector	Inyector	Injetor	Injecteur	
2	**VOE 17228462**	1					•Washer	•Arandela	•Arruela	•Rondelle	
3	**VOE 17228415**	4					Washer	Arandela	Arruela	Rondelle	

1		**Canalisations à combustible, injecteur** **Tuberías de combustible, inyector** **Fuel system injectors**	Catalogue id **20649**	Group **237**
2			Illustr. No **1064278**	Section **250**
3			Issue **PUB 20030904-B**	Page **145**
4				
5		**44.7KW MC70C-MC105C, MCT70C-MCT95C**		

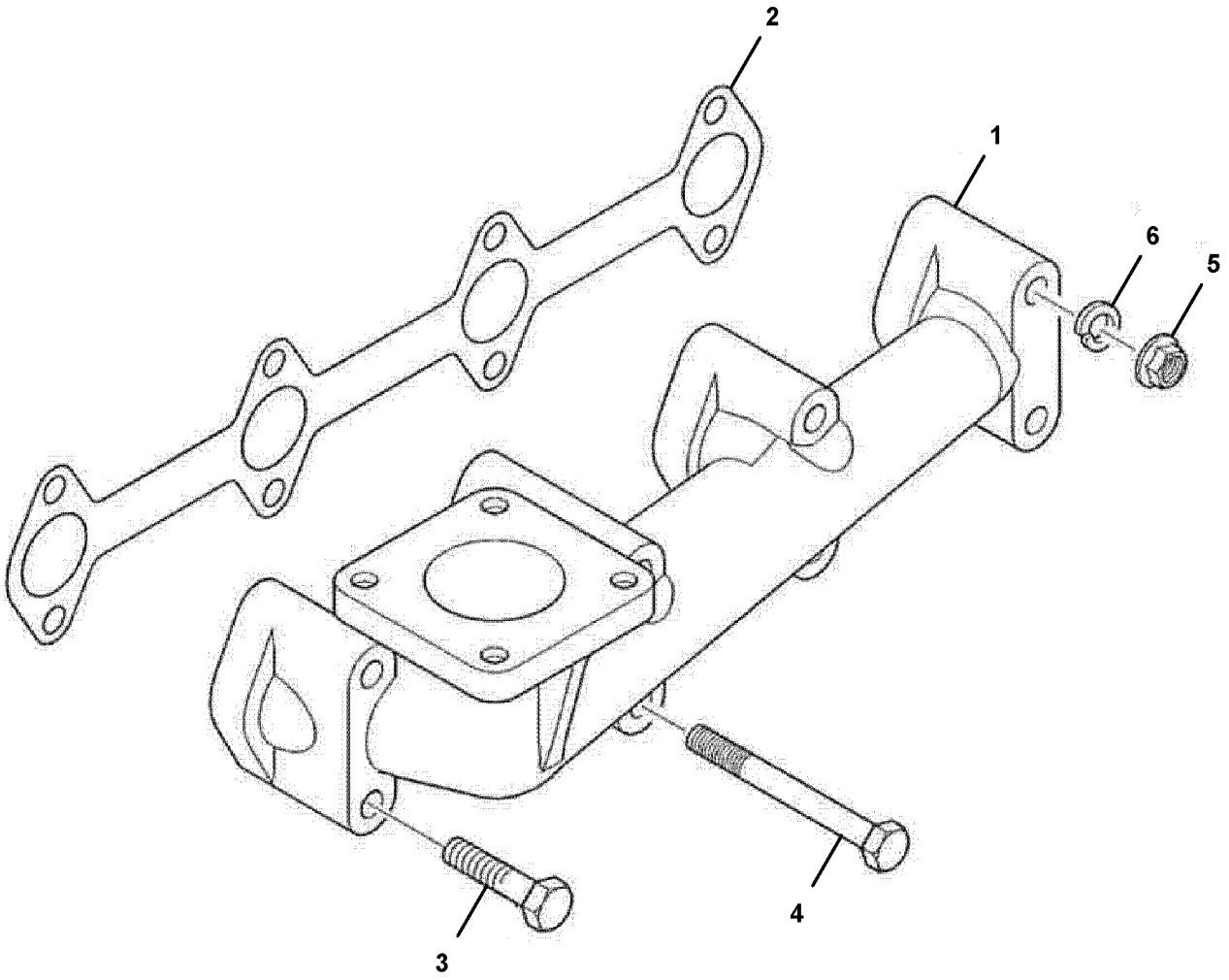

Volvo Construction Equipment
1063977

Fig.	Part No.	Quantity 1	2	3	PS	KIT	Description	Denominación	Denominação	Dénomination	Notes
1	**VOE 17229722**	1					Exhaust manifold	Múltiple escape	Coletor de escape	Collecteur d'échappement	
2	**VOE 17228721**	1					Gasket	Junta	Junta	Joint	
3	**VOE 17228736**	4					Screw	Tornillo	Parafuso	Vis	
4	**VOE 17224767**	2					Screw	Tornillo	Parafuso	Vis	
5	**VOE 17230933**	2					Nut	Tuerca	Porca	Écrou	
6	**VOE 17228416**	2					Washer	Arandela	Arruela	Rondelle	

1		**Tubulure d'échappement** **Coletor de escape** **Colector de escape** **Exhaust manifold**	Catalogue id **20649**	Group **251**
2			Illustr. No **1063977**	Section **100**
3			Issue **PUB 20030904-B**	Page **147**
4				
5		**35.7KW MC60C**		

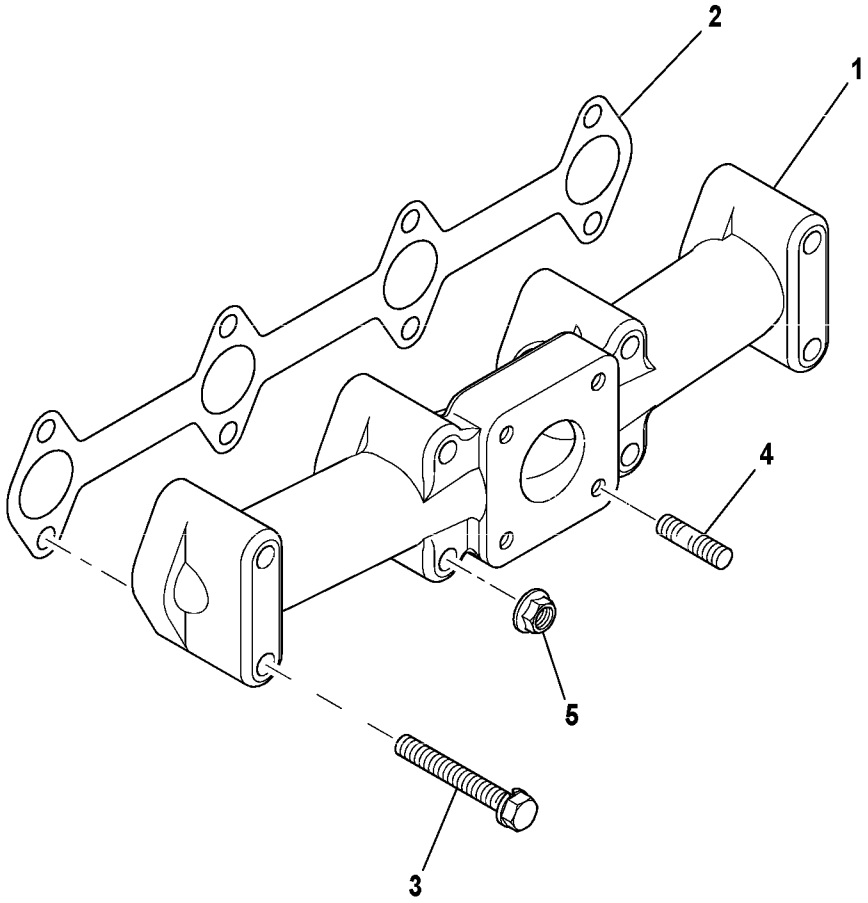
2
1
4
5
3

Fig.	Part No.	Quantity 1	2	3	PS	KIT	Description	Denominación	Denominação	Dénomination	Notes
1	**VOE 17229721**	1					Exhaust manifold	Múltiple escape	Coletor de escape	Collecteur d'échappement	
2	**VOE 17228721**	1					Gasket	Junta	Junta	Joint	
3	**VOE 17228736**	4					Screw	Tornillo	Parafuso	Vis	
4	**VOE 17223878**	4					Stud	Espárrago	Prisioneiro	Goujon	
5	**VOE 17230933**	4					Nut	Tuerca	Porca	Écrou	
6	**VOE 17223872**	4					Washer	Arandela	Arruela	Rondelle	

1		**Tubulure d'échappement** **Coletor de escape** **Colector de escape** **Exhaust manifold**	Catalogue id **20649**	Group **251**
2			Illustr. No **1064432**	Section **150**
3			Issue **PUB 20030904-B**	Page **149**
4				
5		**44.7KW MC70C-MC105C, MCT70C-MCT95C**		

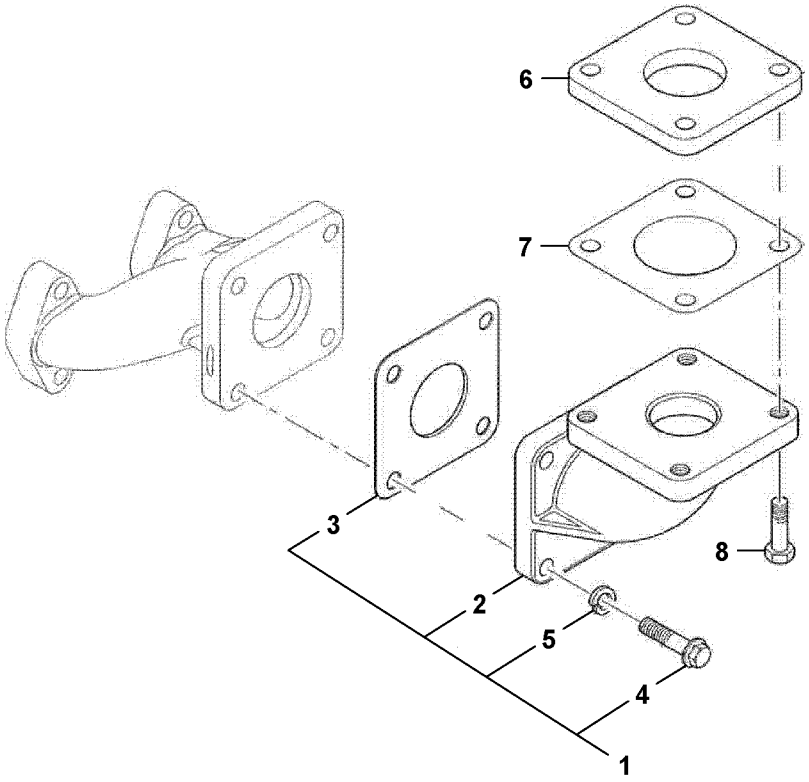
6
7
3
8
2
5
4
1

Fig.	Part No.	Quantity 1	2	3	PS	KIT	Description	Denominación	Denominação	Dénomination	Notes
1	**VOE 17228397**	1					Elbow	Ángulo	Cotovelo	Coude	
2		1			NS		•Elbow	•Tubo acodado	•Cotovelo	•Coude	
3	**VOE 17228413**	1					•Gasket	•Junta	•Junta	•Joint	
4	**VOE 17228400**	4					•Screw	•Tornillo	•Parafuso	•Vis	
5	**VOE 17228416**	4					•Washer	•Arandela	•Arruela	•Rondelle	
6	**VOE 17224824**	1					Flange	Brida	Flange	Bride	
7	**VOE 17228413**	1					Gasket	Junta	Junta	Joint	
8	**VOE 17230154**	4					Screw	Tornillo	Parafuso	Vis	

1		**Tubulure d'échappement** **Coletor de escape** **Colector de escape** **Exhaust manifold**	Catalogue id **20649**	Group **251**
2			Illustr. No **1063967**	Section **200**
3			Issue **PUB 20030904-B**	Page **151**
4				
5		**44.7KW MC70C-MC105C, MCT70C-MCT95C**		

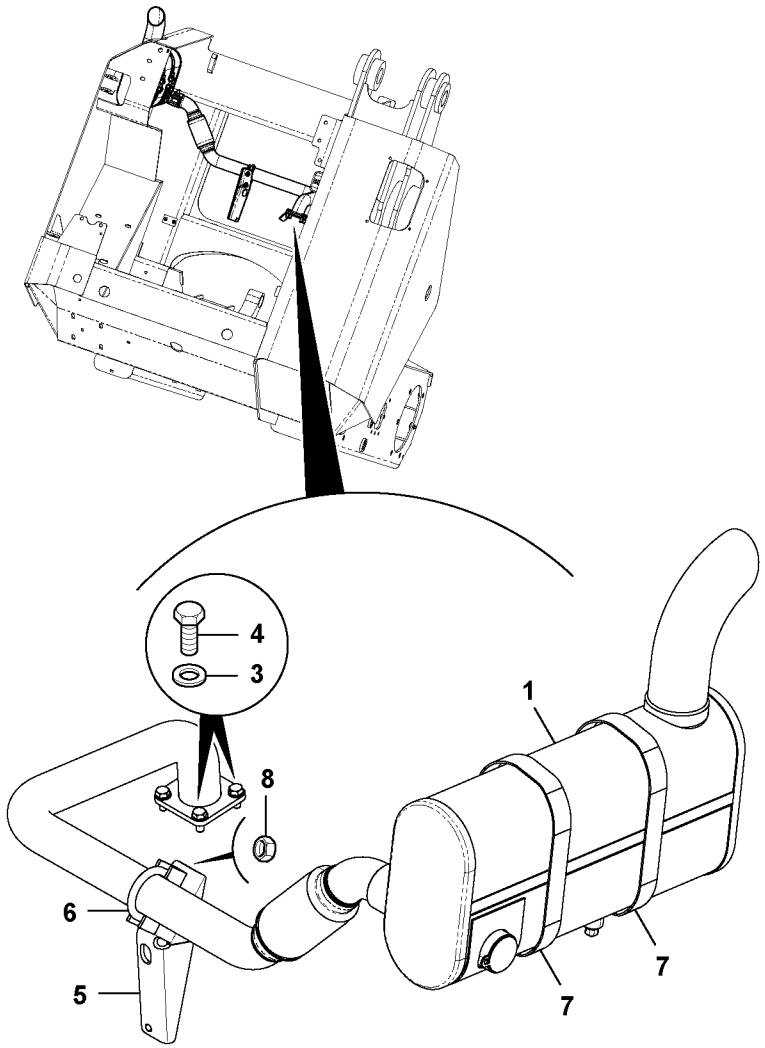

Volvo Construction Equipment
1064123

Fig.	Part No.	Quantity 1	2	3	PS	KIT	Description	Denominación	Denominação	Dénomination	Notes
1	**VOE 17229397**	1					Exhaust system	Sistema de escape	Sistema do escapamento	Système d'échappement	See group 252, Page 155
3	**VOE 20460127**	4					Washer	Arandela	Arruela	Rondelle	
4	**VOE 16213998**	4					Set screw	Tornillo tope	Parafuso batente	Vis butée	
5	**VOE 17232197**	1					Bracket	Consola	Suporte	Console	
6	**VOE 17228952**	1					Clamp	Abrazadera	Braçadeira	Collier serrage	
7	**VOE 16213515**	2					Clamp	Abrazadera	Braçadeira	Collier serrage	
8	**VOE 17229618**	2					Nut	Tuerca	Porca	Écrou	

1		**Système d'échappement** **Sistema de escape** **Sistema de escape** **Exhaust system**	Catalogue id **20649**	Group **252**
2				
3			Illustr. No **1064123**	Section **100**
4				
5		**STD MC60C**	Issue **PUB 20030904-B**	Page **153**

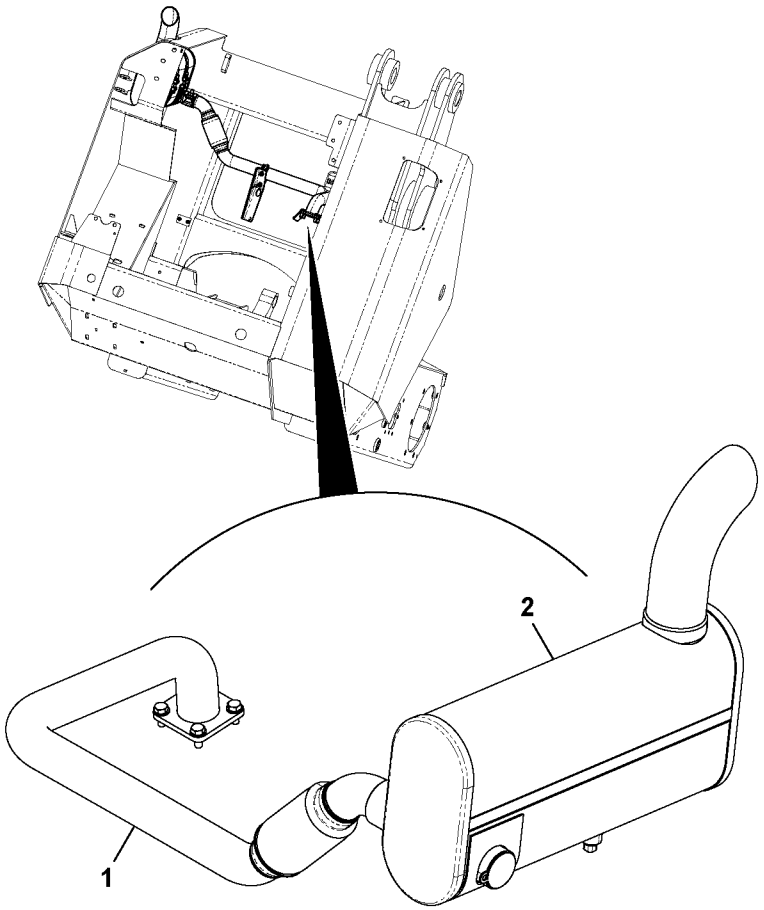
2
1

Fig.	Part No.	Quantity 1	2	3	PS	KIT	Description	Denominación	Denominação	Dénomination	Notes
1	**VOE 17229402**	1					Exhaust pipe	Tubo de escape	Tubo de escape	Tube d'échappement	
2		1			NS		Exhaust System	Sistema Escape		Syst Echappemen	

1		**Système d'échappement** **Sistema de escape** **Sistema de escape** **Exhaust system**	Catalogue id **20649**	Group **252**
2				
3			Illustr. No **1064125**	Section **150**
4				
5		**STD MC60C**	Issue **PUB 20030904-B**	Page **155**

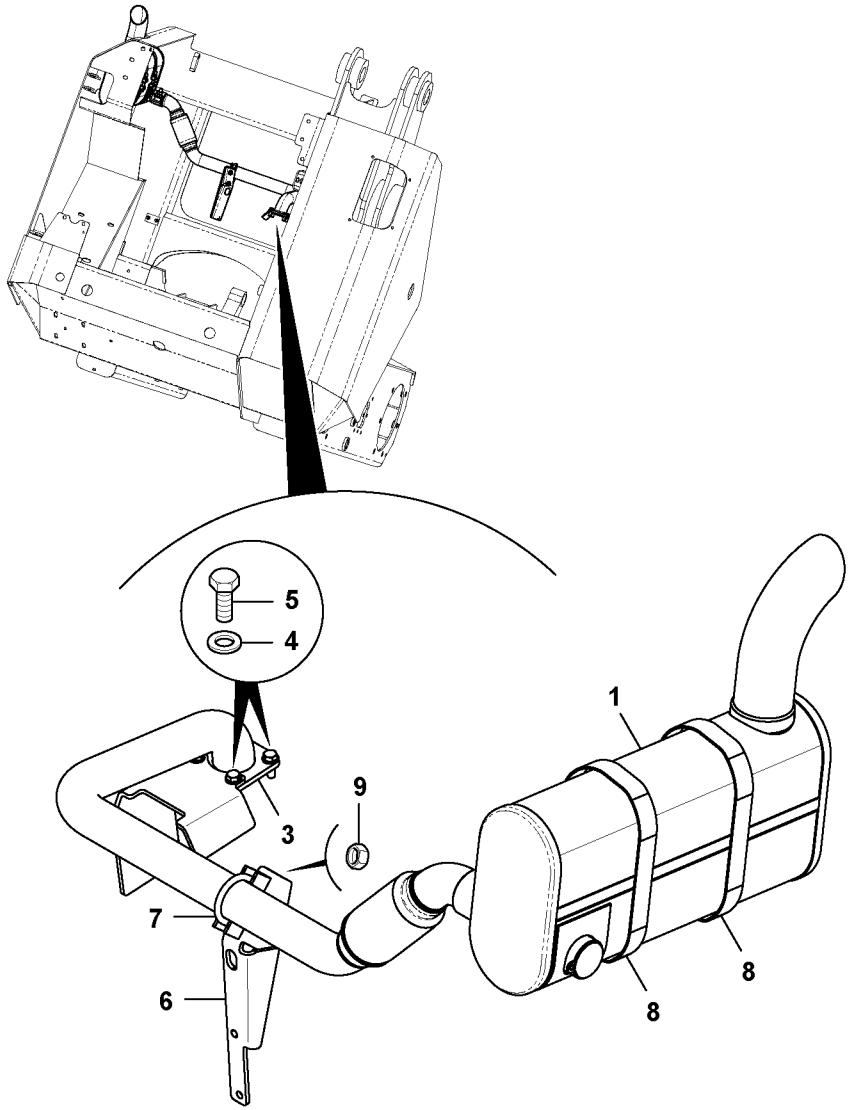

Volvo Construction Equipment
1064207

Fig.	Part No.	Quantity 1	2	3	PS	KIT	Description	Denominación	Denominação	Dénomination	Notes
1	**VOE 17229376**	1					Exhaust system	Sistema de escape	Sistema do escapamento	Système d'échappement	See group 252, Page 159
3	**VOE 17230050**	1					Shield	Defensa	Protetor	Bouclier	
4	**VOE 20460127**	4					Washer	Arandela	Arruela	Rondelle	
5	**VOE 16213999**	4					Set screw	Tornillo tope	Parafuso batente	Vis butée	
6	**VOE 17232197**	1					Bracket	Consola	Suporte	Console	
7	**VOE 17228952**	1					Clamp	Abrazadera	Braçadeira	Collier serrage	
8	**VOE 16213515**	2					Clamp	Abrazadera	Braçadeira	Collier serrage	
9	**VOE 17229618**	2					Nut	Tuerca	Porca	Écrou	

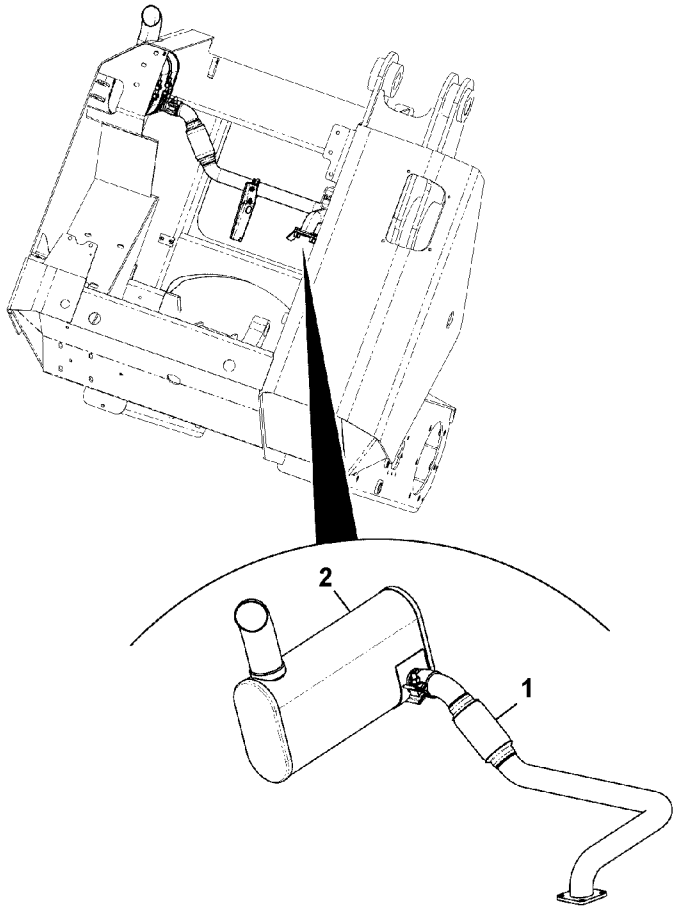
2
1

Fig.	Part No.	Quantity 1	2	3	PS	KIT	Description	Denominación	Denominação	Dénomination	Notes
1	**VOE 17229386**	1					Exhaust pipe	Tubo de escape	Tubo de escape	Tube d'échappement	
2		1			NS		Exhaust System	Sistema Escape		Syst Echappemen	

1		**Système d'échappement** **Sistema de escape** **Sistema de escape** **Exhaust system**	Catalogue id **20649**	Group **252**
2				
3			Illustr. No **1064089**	Section **250**
4			Issue **PUB 20030904-B**	Page **159**
5		**STD MC70C-MC105C, MCT70C-MCT95C**		

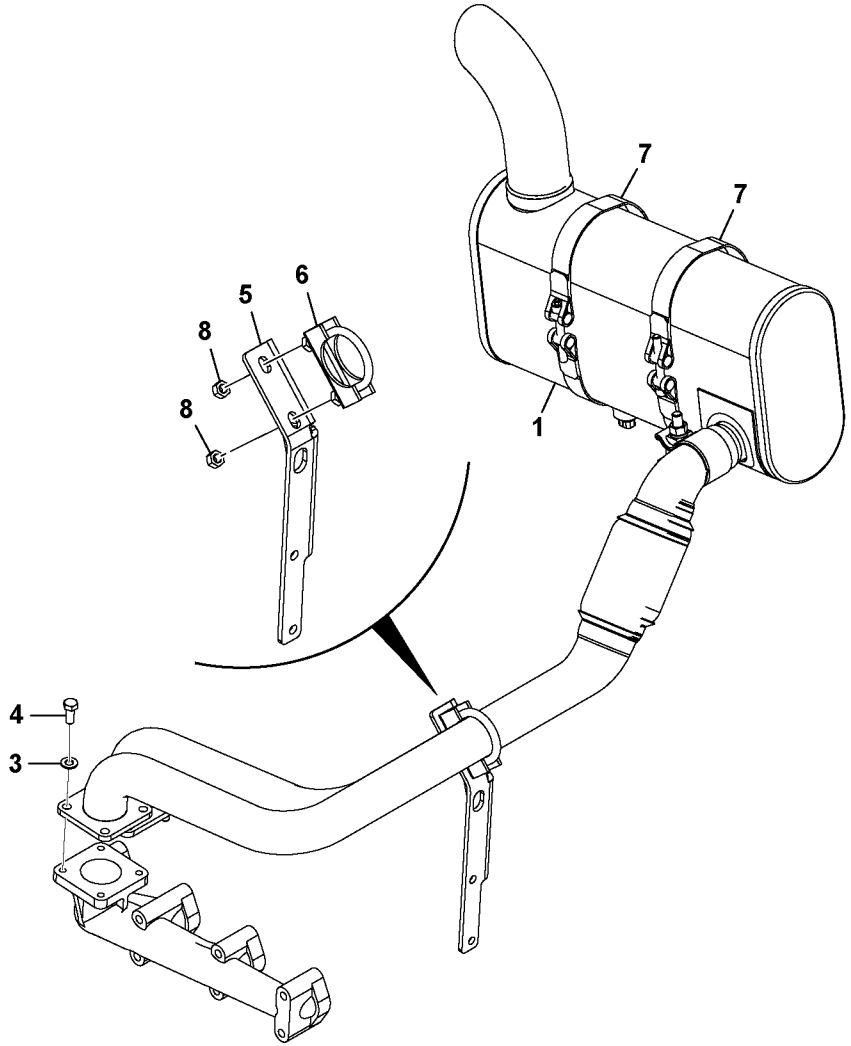
7
7
6
5
8
8
1
4
3

Fig.	Part No.	Quantity 1	2	3	PS	KIT	Description	Denominación	Denominação	Dénomination	Notes
1	**VOE 17229398**	1					Exhaust system	Sistema de escape	Sistema do escapamento	Système d'échappement	See group 252, Page 163
3	**VOE 20460127**	4					Washer	Arandela	Arruela	Rondelle	
4	**VOE 16213998**	4					Set screw	Tornillo tope	Parafuso batente	Vis butée	
5	**VOE 17232197**	1					Bracket	Consola	Suporte	Console	
6	**VOE 17228952**	1					Clamp	Abrazadera	Braçadeira	Collier serrage	
7	**VOE 16213515**	2					Clamp	Abrazadera	Braçadeira	Collier serrage	
8	**VOE 17229618**	2					Nut	Tuerca	Porca	Écrou	

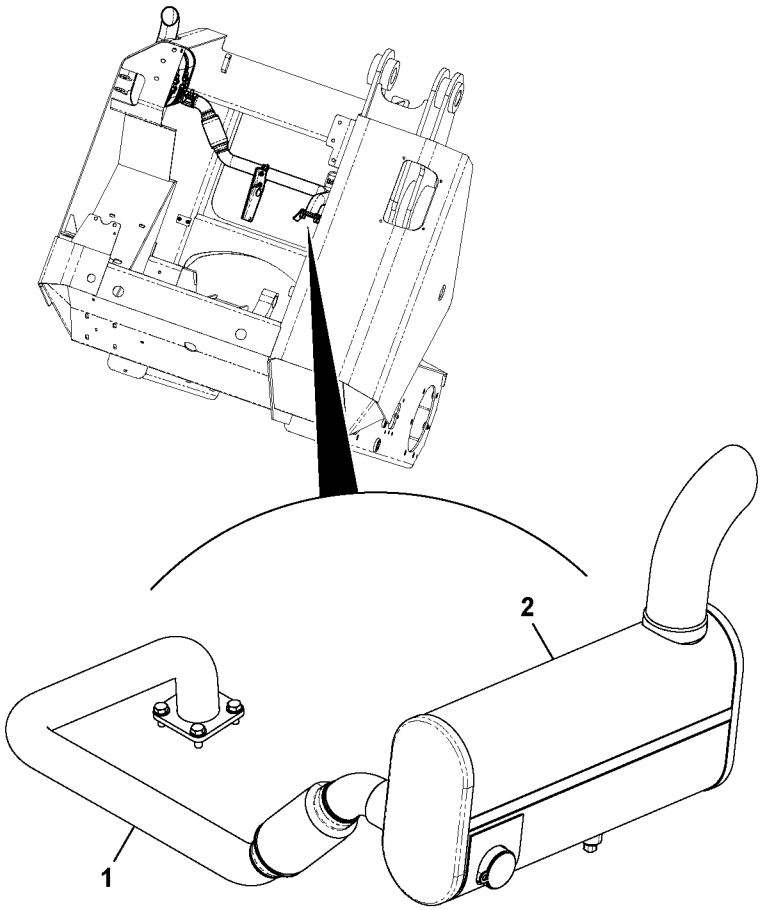
2
1

Fig.	Part No.	Quantity 1	2	3	P S	K I T	Description	Denominación	Denominação	Dénomination	Notes
1	**VOE 17229402**	1					Exhaust pipe	Tubo de escape	Tubo de escape	Tube d'échappement	
2		1			NS		Exhaust System	Sistema Escape		Syst Echappemen	

1		**Système d'échappement, pare-étincelles** **Sistema de escape, retentor de faíscas** **Sistema de escape, supresor de chispas** **Exhaust system, spark arrester**	Catalogue id **20649**	Group **252**
2				
3			Illustr. No **1064125**	Section **450**
4				
5		**MC60C, MC70C, MCT70C**	Issue **PUB 20030904-B**	Page **163**

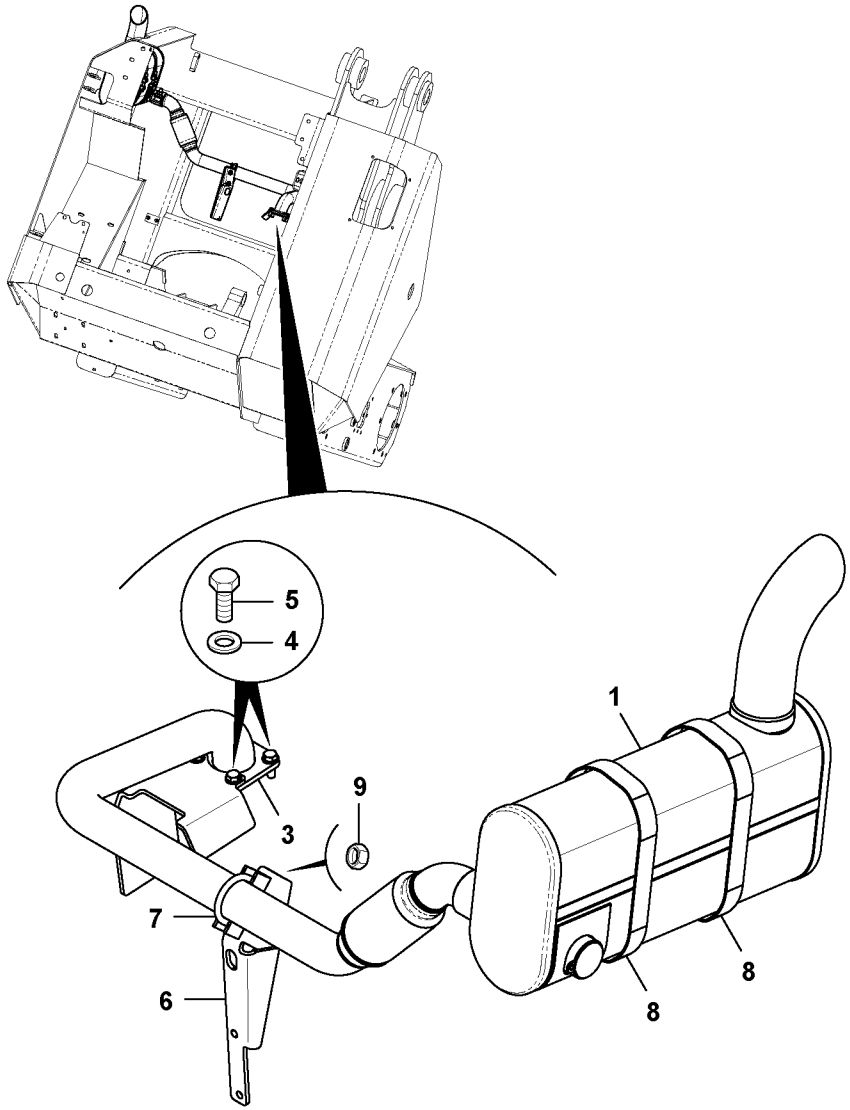

Volvo Construction Equipment
1064207

Fig.	Part No.	Quantity 1	2	3	PS	KIT	Description	Denominación	Denominação	Dénomination	Notes
1	**VOE 17229382**	1					Exhaust system	Sistema de escape	Sistema do escapamento	Système d'échappement	See group 252, Page 167
3	**VOE 17230050**	1					Shield	Defensa	Protetor	Bouclier	
4	**VOE 20460127**	4					Washer	Arandela	Arruela	Rondelle	
5	**VOE 16213999**	4					Set screw	Tornillo tope	Parafuso batente	Vis butée	
6	**VOE 17232197**	1					Bracket	Consola	Suporte	Console	
7	**VOE 17228952**	1					Clamp	Abrazadera	Braçadeira	Collier serrage	
8	**VOE 16213515**	2					Clamp	Abrazadera	Braçadeira	Collier serrage	
9	**VOE 17229618**	2					Nut	Tuerca	Porca	Écrou	

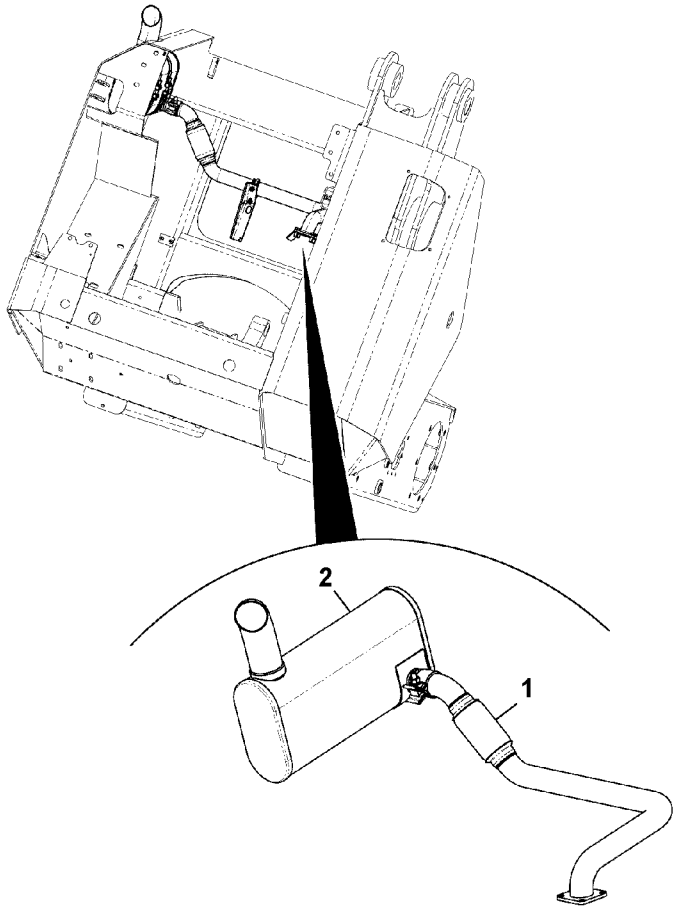
2
1

Fig.	Part No.	Quantity 1	2	3	PS	KIT	Description	Denominación	Denominação	Dénomination	Notes
1	**VOE 17229386**	1					Exhaust pipe	Tubo de escape	Tubo de escape	Tube d'échappement	
2		1			NS		Exhaust System	Sistema Escape		Syst Echappemen	

1		**Système d'échappement, pare-étincelles** **Sistema de escape, retentor de faíscas** **Sistema de escape, supresor de chispas** **Exhaust system, spark arrester**	Catalogue id **20649**	Group **252**
2				
3			Illustr. No **1064089**	Section **550**
4				
5		**MC70C-MC105C, MCT70C-MCT95C**	Issue **PUB 20030904-B**	Page **167**

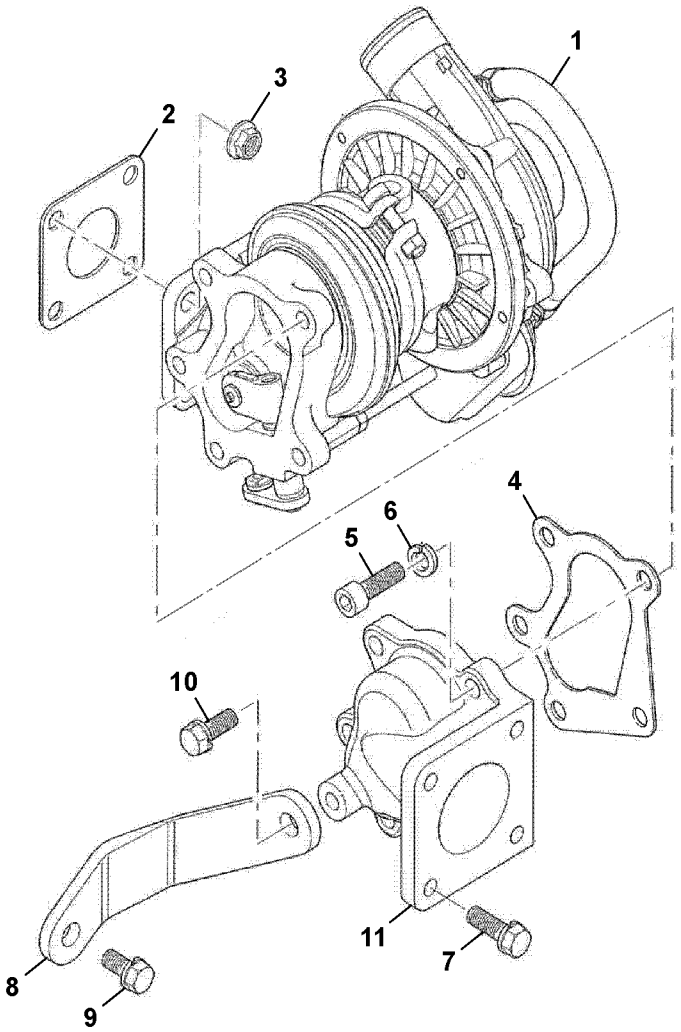
1
2
3
4
5
6
7
8
9
10
11

Fig.	Part No.	Quantity 1	2	3	PS	KIT	Description	Denominación	Denominação	Dénomination	Notes
1	**VOE 17223870**	1					Turbocharger	Turbocompresor	Turbocompressor	Turbocompresseur	
2	**VOE 17223879**	1					Gasket	Junta	Junta	Joint	
3	**VOE 17230933**	4					Nut	Tuerca	Porca	Écrou	
4	**VOE 17229547**	1					Gasket	Junta	Junta	Joint	
5	**VOE 17228837**	5					Bolt	Perno	Parafuso	Boulon	
6	**VOE 17228416**	5					Washer	Arandela	Arruela	Rondelle	
7	**VOE 17230154**	4					Screw	Tornillo	Parafuso	Vis	
8	**VOE 17223877**	1					Bracket	Consola	Suporte	Console	
9	**VOE 17230115**	1					Screw	Tornillo	Parafuso	Vis	
10	**VOE 17230142**	1					Screw	Tornillo	Parafuso	Vis	
11	**VOE 17229582**	1					Exhaust pipe elbow	Codo de escape		Coude d'échappement	

1		**Turbocompresseur** **Turbocompressor** **Turbocompresor** **Turbo charger**	Catalogue id **20649**	Group **255**
2			Illustr. No **1063970**	Section **100**
3				
4			Issue **PUB 20030904-B**	Page **169**
5		**44.7KW MC70C-MC105C, MCT70C-MCT95C**		

VOLVO

MC60C-MCT95C

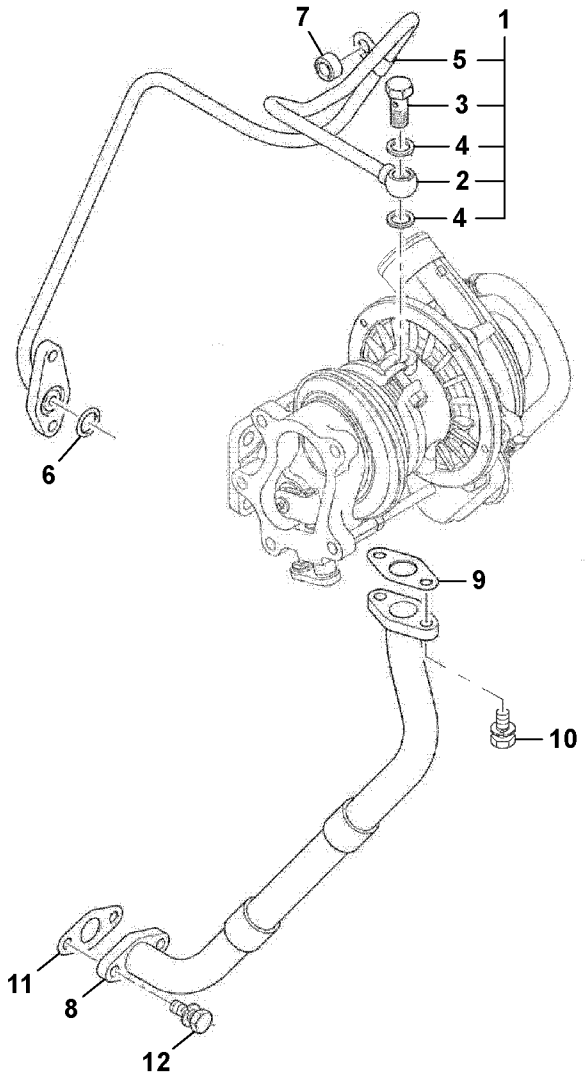
7
1
5
3
4
2
4
6
9
10
11
8
12

Fig.	Part No.	Quantity 1	2	3	PS	KIT	Description	Denominación	Denominação	Dénomination	Notes
1	**VOE 17229705**	1					Oil pipe	Tubo de aceite	Tubo de óleo	Conduit d'huile	
2		1			NS		•Oil Pipe	•Tubo Aceite	•Tubo de óleo	•Conduit Huile	
3	**VOE 17228860**	1					•Bolt	•Perno	•Parafuso	•Boulon	
4	**VOE 17228236**	2					•Washer	•Arandela	•Arruela	•Rondelle	
5	**VOE 17229707**	1					•Clip	•Clip	•Clipe	•Bride	
6	**VOE 17229675**	1					O-ring	Anillo tórico	Anel-o	Joint torique	
7	**VOE 17223876**	1					Spacer	Distanciador	Espaçador	Entretoise	
8	**VOE 17229708**	1					Oil draining pipe	Tubo de vaciado de aceite	Tubo drenagem de óleo	Tube vidange huile	
9	**VOE 17228226**	1					Gasket	Junta	Junta	Joint	
10	**VOE 17228439**	2					Screw	Tornillo	Parafuso	Vis	
11	**VOE 17228226**	1					Gasket	Junta	Junta	Joint	
12	**VOE 17228439**	2					Screw	Tornillo	Parafuso	Vis	

1		**Turbocompresseur, alimentation en huile** **Turbocompressor, alimentação de óleo** **Turbocompresor, alimentación de aceite** **Turbocharger, oil feed**	Catalogue id **20649**	Group **255**
2			Illustr. No **1063969**	Section **150**
3			Issue **PUB 20030904-B**	Page **171**
4				
5		**44.7KW MC70C-MC105C, MCT70C-MCT95C**		

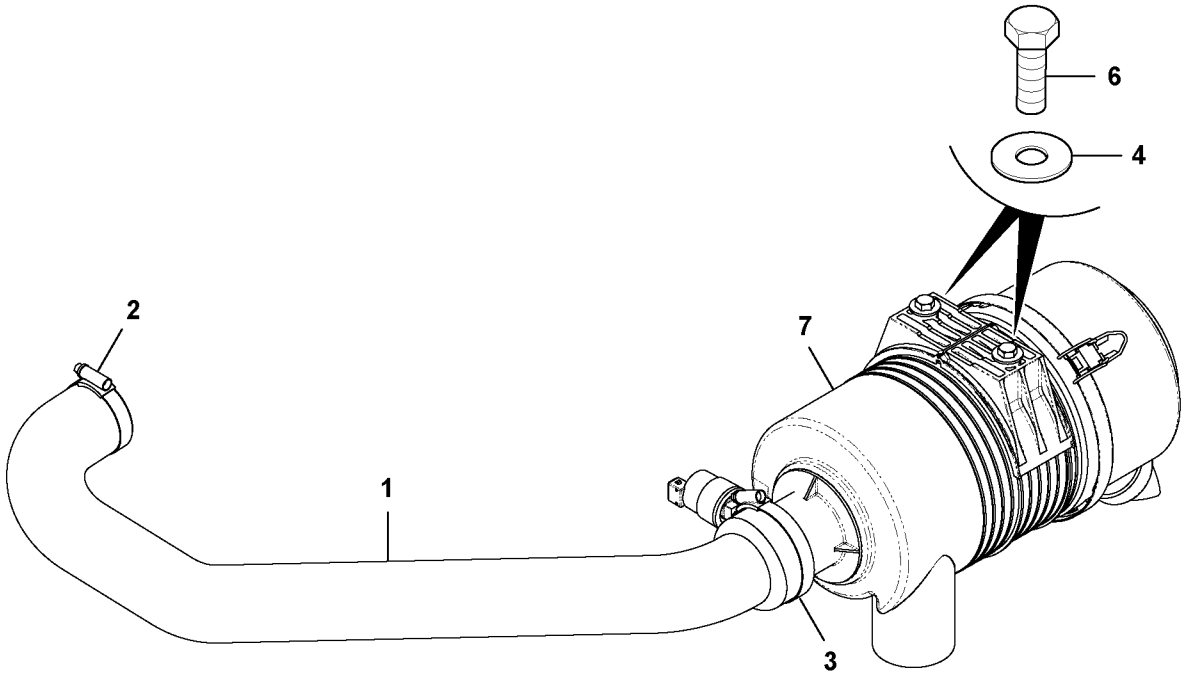
6
4
2
7
1
3

Fig.	Part No.	Quantity 1	2	3	PS	KIT	Description	Denominación	Denominação	Dénomination	Notes
1	**VOE 17229471**	1					Hose	Manguera	Mangueira	Flexible	
2	**VOE 17229134**	1					Clip	Clip	Clipe	Clip	
3	**VOE 16212202**	1					Clip	Clip	Clipe	Clip	
4	**VOE 17205565**	2					Washer	Arandela	Arruela	Rondelle	
6	**VOE 16213998**	2					Set screw	Tornillo tope	Parafuso batente	Vis butée	
7	**VOE 12750614**	1					Air filter	Filtro de aire	Filtro de ar	Filtre à air	

1		**Tubulure admission avec pièces de montage** **Colector de admision con accesorios de montaje** **Induction manifold with fitting parts**	Catalogue id **20649**	Group **256**
2			Illustr. No **1064148**	Section **100**
3			Issue **PUB 20030904-B**	Page **173**
4				
5		**MC60C**		

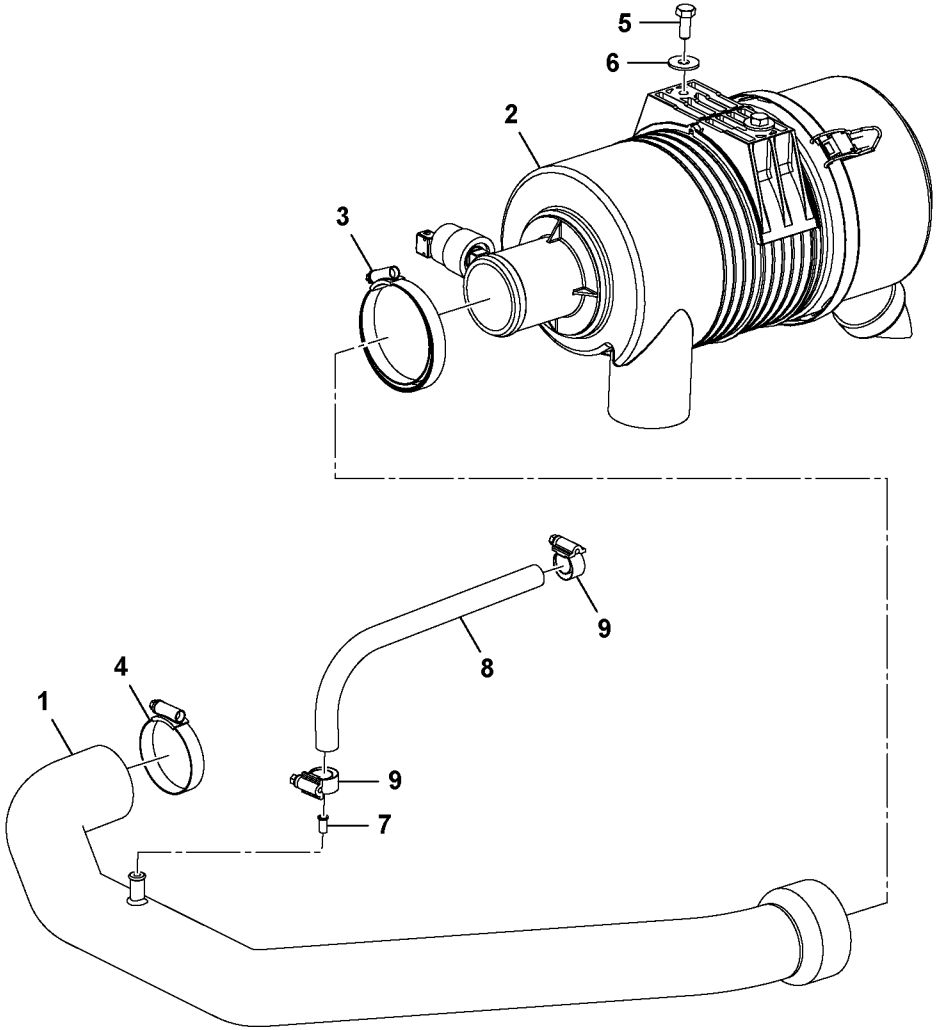

Volvo Construction Equipment
1064206

Fig.	Part No.	Quantity 1	2	3	PS	KIT	Description	Denominación	Denominação	Dénomination	Notes
1	**VOE 17229235**	1					Air hose	Manguera de aire	Mangueira de ar	Durit air	
2	**VOE 12750614**	1					Air filter	Filtro de aire	Filtro de ar	Filtre à air	See group 256, Page 179
3	**VOE 17229134**	1					Clip	Clip	Clipe	Clip	
4	**VOE 16212202**	1					Clip	Clip	Clipe	Clip	
5	**VOE 16213998**	2					Set screw	Tornillo tope	Parafuso batente	Vis butée	
6	**VOE 17205565**	2					Washer	Arandela	Arruela	Rondelle	
7		1			NS		Insert	Elemento	Elemento	Cartouche	
8		1			NS		Hose	Tubo flexible	Mangueira	Durit	
9	**VOE 17229127**	2					Clip	Clip	Clipe	Clip	

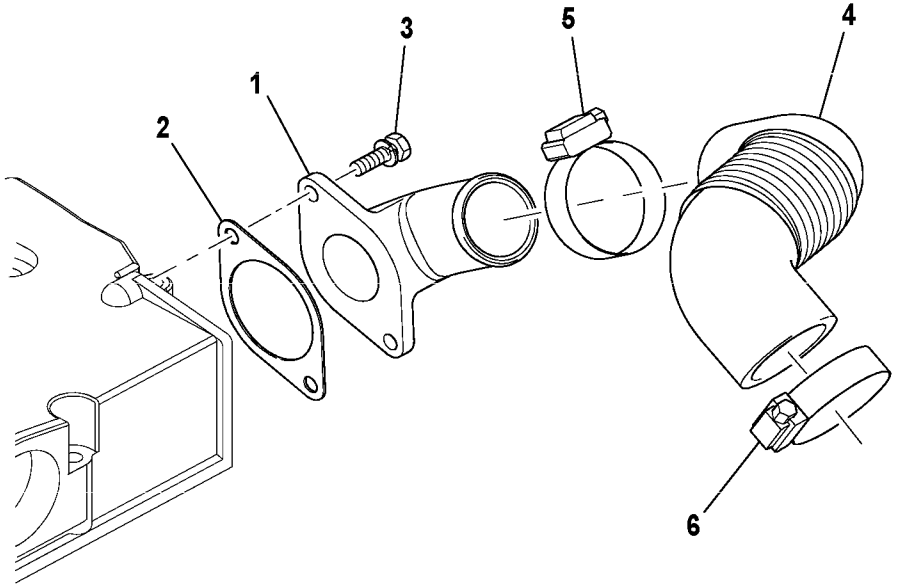
1
2
3
4
5
6

Fig.	Part No.	Quantity 1	2	3	PS	KIT	Description	Denominación	Denominação	Dénomination	Notes
1	**VOE 17224819**	1					Pipe	Tubo	Tubo	Tuyau	
2	**VOE 17229543**	1					Gasket	Junta	Junta	Joint	
3	**VOE 17228717**	2					Screw	Tornillo	Parafuso	Vis	
4	**VOE 17229181**	1					Air hose	Manguera de aire	Mangueira de ar	Durit air	
5	**VOE 17229132**	1					Clip	Clip	Clipe	Clip	
6	**VOE 17229132**	1					Clip	Clip	Clipe	Clip	

1		**Tubulure admission avec pièces de montage** **Colector de admision con accesorios de montaje** **Induction manifold with fitting parts**	Catalogue id **20649**	Group **256**
2			Illustr. No **1064431**	Section **200**
3			Issue **PUB 20030904-B**	Page **177**
4				
5		**MC60C-MC105C, MCT70C-MCT95CW**		

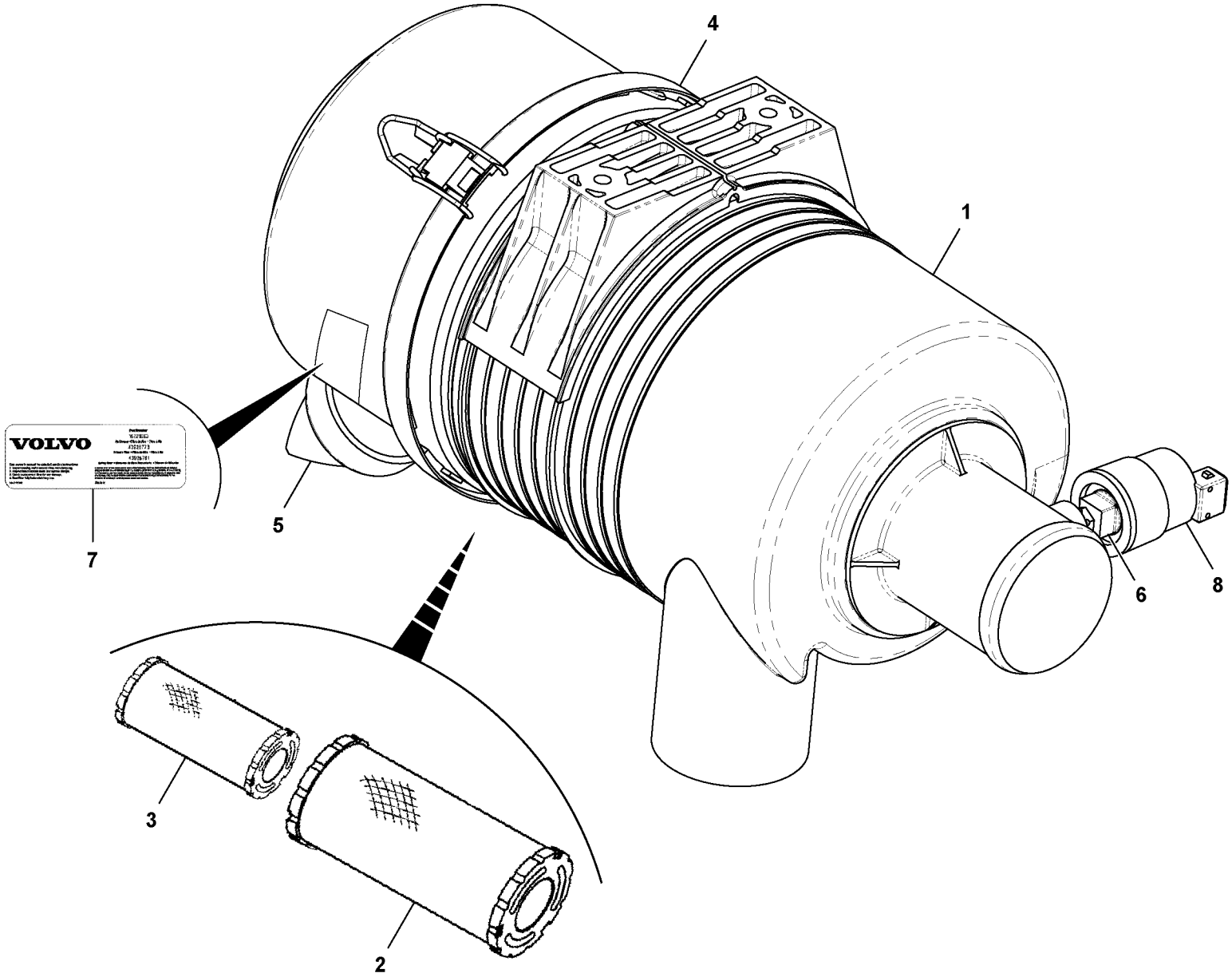

Volvo Construction Equipment
1064182

Fig.	Part No.	Quantity 1	2	3	PS	KIT	Description	Denominación	Denominação	Dénomination	Notes
	VOE 12750614	1					Air filter	Filtro de aire	Filtro de ar	Filtre à air	
1		1			NS		•Filter	•Filtro	•Filtro	•Filtre	
2	**VOE 17229237**	1			SS		•Filter	•Filtro	•Filtro	•Filtre	
3	**VOE 17229342**	1			SS		•Filter	•Filtro	•Filtro	•Filtre	
4		1			NS		•Cover	•Capó	•Capô	•Capot	
5	**VOE 17232208**	1					•Valve	•Válvula	•Válvula	•Valve	
6	**VOE 17229032**	1					•Adapter	•Adaptador	•Adaptador	•Adaptateur	
7		1			NS		•Decal	•Decalcomania	•Adesivo	•Decalcomanie	
8	**VOE 17229580**	1					•Indicator	•Indicador	•Indicador	•Indicateur	

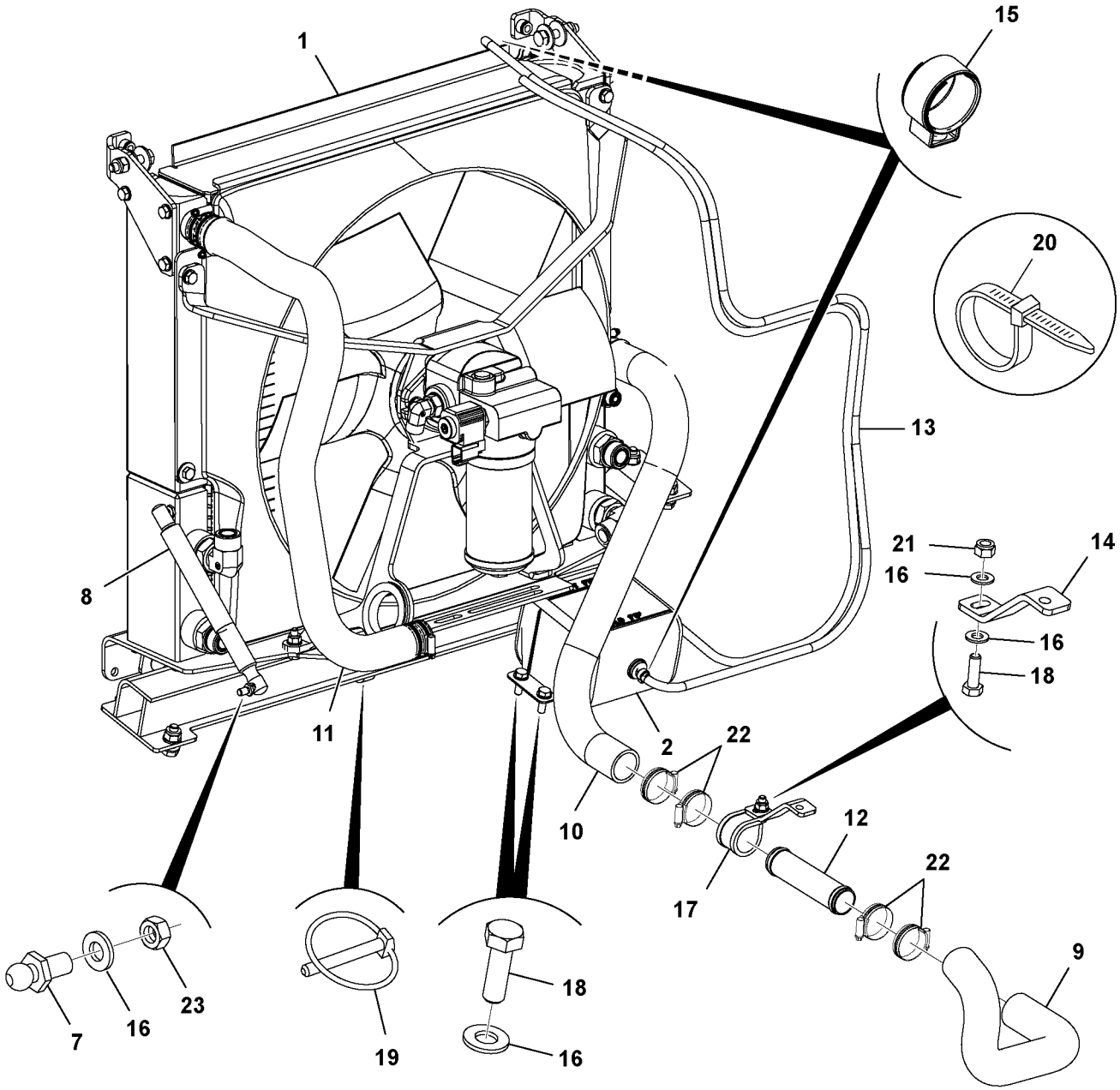

Volvo Construction Equipment
1064208

Fig.	Part No.	Quantity 1	2	3	PS	KIT	Description	Denominación	Denominação	Dénomination	Notes
1		1					Cooling Element	Elemento Enfria		Refroidisseur	See group 261, Page 185
2	**VOE 16213303**	1					Coolant	Anticongelente	Fluido refrigerante	Liquide refroidissement	See group 261, Page 195
7		1			NS		Ball Stud	Gorron De Bola		Axe Bille	
8		1			NS		Gas Strut	Amortiguador de gas		Vérin à gaz	
9	**VOE 17229420**	1					Hose	Manguera	Mangueira	Flexible	
10	**VOE 17229433**	1					Hose	Manguera	Mangueira	Flexible	
11	**VOE 17229236**	1					Radiator hose	Manguera radiador	Mangueira radiador	Durit de radiateur	
12	**VOE 17230062**	1					Pipe	Tubo	Tubo	Tuyau	
13	**VOE 17224715**	2					Hose	Manguera	Mangueira	Flexible	
14		1			NS		Press fitting	Acoplamiento presión	Acoplamento pressão	Accouplement par pressio	
15	**VOE 17210472**	2					Hose clamp	Abrazadera de manguera	Braçadeira da mangueira	Collier durite	
16	**VOE 20460127**	6					Washer	Arandela	Arruela	Rondelle	
17	**VOE 17229238**	1					Clip	Clip	Clipe	Clip	
18	**VOE 16213999**	5					Set screw	Tornillo tope	Parafuso batente	Vis butée	
19	**VOE 17210554**	1					Pin	Pasador	Pino	Goupille	
20	**VOE 17205290**	5					Tie straps	Cinta de atar		Ruban attache	
21	**VOE 16212120**	1					Lock nut	Contratuerca	Porca trava	Contre-écrou	
22	**VOE 16213408**	12					Clip	Clip	Clipe	Clip	
23	**VOE 20405733**	1					Hexagon nut	Tuerca hexagonal	Porca sextavada	Écrou hexagonal	

1		**Radiateur avec montage parts** **Refrigerador com peças fixação** **Radiador con piezas de montaje** **Cooler with attaching parts**	Catalogue id **20649**	Group **261**
2			Illustr. No **1064208**	Section **100**
3			Issue **PUB 20030904-B**	Page **181**
4				
5		**STD MC70C-MC105C, MCT70C-MCT95C**		

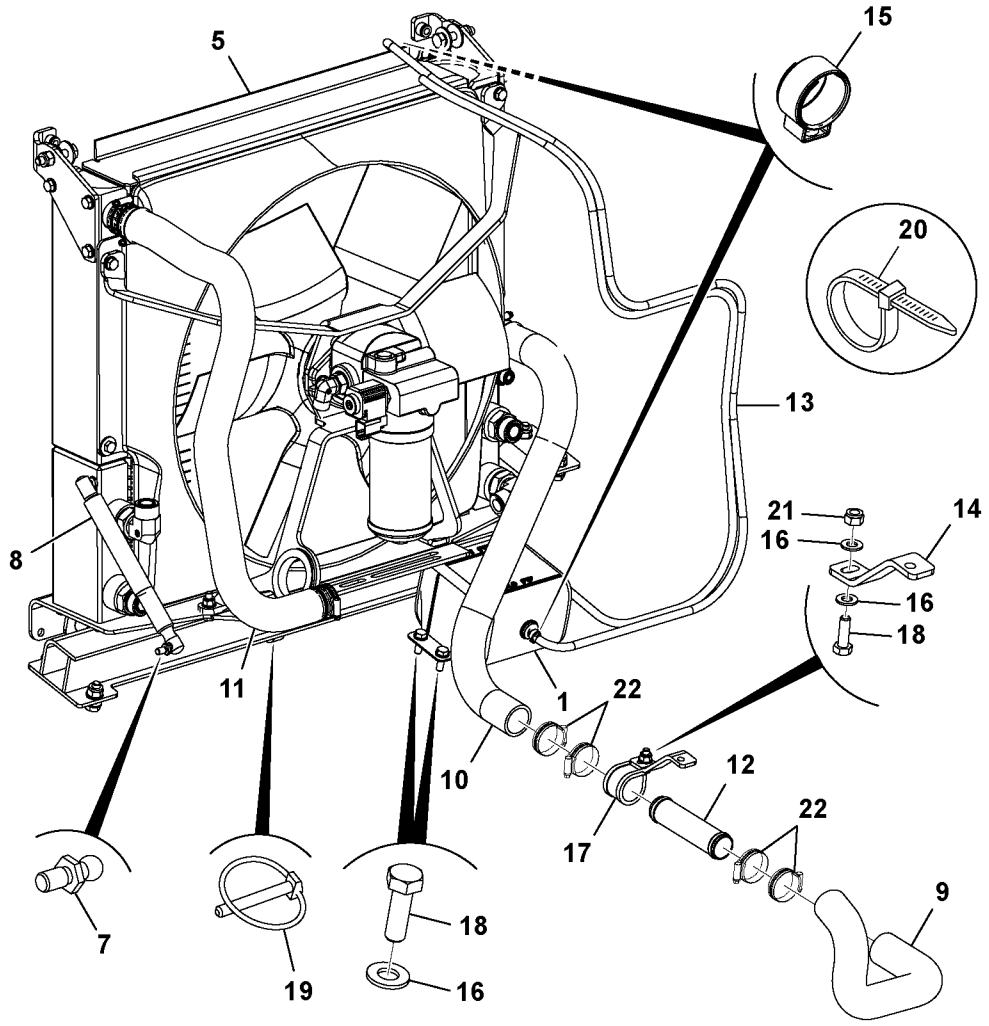
5
15
20
13
21
14
16
8
16
18
11
1
22
10
12
22
17
9
7
19
18
16

Fig.	Part No.	Quantity 1	2	3	PS	KIT	Description	Denominación	Denominação	Dénomination	Notes
1	**VOE 16213303**	1					Coolant	Anticongelente	Fluido refrigerante	Liquide refroidissement	See group 261, Page 195
5		1					Cooling Element	Elemento Enfria		Refroidisseur	See group 261, Page 187
7		1			NS		Ball Stud	Gorron De Bola		Axe Bille	
8		1			NS		Gas Strut	Amortiguador de gas		Vérin à gaz	
9	**VOE 17229420**	1					Hose	Manguera	Mangueira	Flexible	
10	**VOE 17229433**	1					Hose	Manguera	Mangueira	Flexible	
11	**VOE 17229236**	1					Radiator hose	Manguera radiador	Mangueira radiador	Durit de radiateur	
12	**VOE 17230062**	1					Pipe	Tubo	Tubo	Tuyau	
13	**VOE 17224715**	2					Hose	Manguera	Mangueira	Flexible	
14		1			NS		Press fitting	Acoplamiento presión	Acoplamento pressão	Accouplement par pressio	
15	**VOE 17210472**	2					Hose clamp	Abrazadera de manguera	Braçadeira da mangueira	Collier durite	
16	**VOE 20460127**	6					Washer	Arandela	Arruela	Rondelle	
17	**VOE 17229238**	1					Clip	Clip	Clipe	Clip	
18	**VOE 16213999**	5					Set screw	Tornillo tope	Parafuso batente	Vis butée	
19	**VOE 17210554**	1					Pin	Pasador	Pino	Goupille	
20	**VOE 17205290**	5					Tie straps	Cinta de atar		Ruban attache	
21	**VOE 16212120**	1					Lock nut	Contratuerca	Porca trava	Contre-écrou	
22	**VOE 16213408**	12					Clip	Clip	Clipe	Clip	

1		**Radiateur avec montage parts** **Refrigerador com peças fixação** **Radiador con piezas de montaje** **Cooler with attaching parts**		Catalogue id **20649**	Group **261**
2				Illustr. No **1064209**	Section **150**
3				Issue **PUB 20030904-B**	Page **183**
4					
5		**WIDE MC60C, MC70C, MCT70C**			

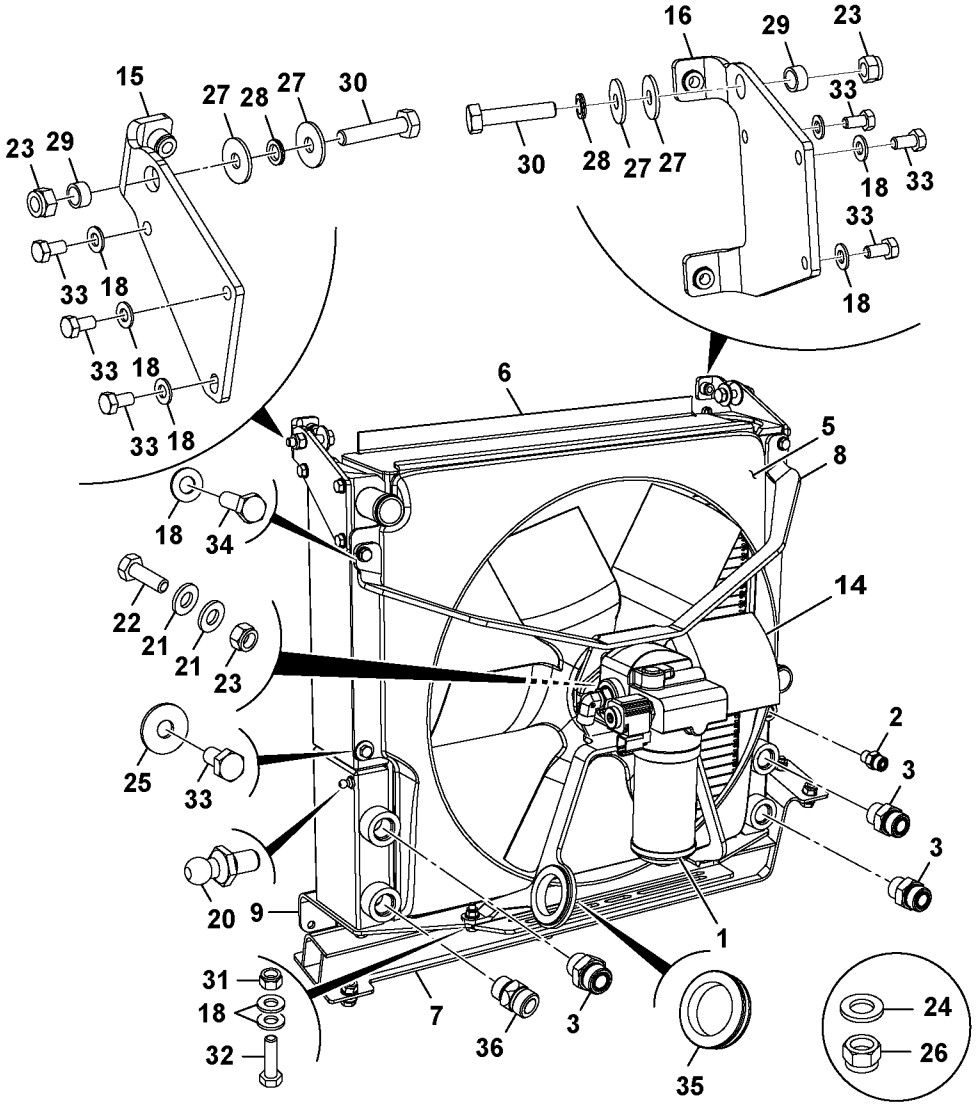

Volvo Construction Equipment
1064084

Fig.	Part No.	Quantity 1	2	3	PS	KIT	Description	Denominación	Denominação	Dénomination	Notes
1		1					Cooling fan, engine	Ventilador, motor	Ventilador de refrigeração,	Ventilateur, moteur	See group 263, Page 205
2	**RM 59922591**	1					Adapter	Adaptador	Adaptador	Adaptateur	
3	**RM 59922591**	3					Adapter	Adaptador	Adaptador	Adaptateur	
5	**VOE 17229403**	1					Fan housing	Caja ventilador	Caixa do ventilador	Boîtier de ventilateur	
6	**VOE 17229320**	1					Cooling element	Elemento enfriador	Elemento de resfriamento	Refroidisseur	
7		1					Support Member	Viga Apoyo		Poutre Support	See group 261, Page 193
8		1			NS		Support	Apoyo	Suporte	Support	
9	**VOE 17230386**	1					Support	Apoyo	Suporte	Support	
14	**VOE 17229414**	1					Fan	Ventilador	Ventilador	Ventilateur	
15		1			NS		Hinge	Bisagra	Dobradiça	Charnière	
16		1			NS		Hinge	Bisagra	Dobradiça	Charnière	
18	**VOE 20460127**	16					Washer	Arandela	Arruela	Rondelle	
20	**VOE 17230344**	1					Stud	Espárrago	Prisioneiro	Goujon	
21	**VOE 16212138**	4			SS		Plain washer	Arandela plana	Arruela simples	Rondelle plane	
22	**VOE 16212077**	2					Set screw	Tornillo tope	Parafuso batente	Vis butée	
23	**VOE 16212125**	4					Nut	Tuerca	Porca	Écrou	
24	**VOE 16212134**	1					Washer	Arandela	Arruela	Rondelle	
25	**VOE 17205565**	2					Washer	Arandela	Arruela	Rondelle	
26	**VOE 17205301**	1					Nut	Tuerca	Porca	Écrou	
27	**VOE 17209640**	4					Washer	Arandela	Arruela	Rondelle	
28	**VOE 17209638**	2					Washer	Arandela	Arruela	Rondelle	
29	**VOE 17210334**	2					Spacer	Distanciador	Espaçador	Entretoise	
30	**VOE 17205121**	2					Bolt	Perno	Parafuso	Boulon	
31	**VOE 16212120**	2					Lock nut	Contratuerca	Porca trava	Contre-écrou	
32	**VOE 16214000**	2					Set screw	Tornillo tope	Parafuso batente	Vis butée	
33	**VOE 16213997**	12					Set screw	Tornillo tope	Parafuso batente	Vis butée	
34	**VOE 16213999**	2					Set screw	Tornillo tope	Parafuso batente	Vis butée	
35	**VOE 17210179**	1					Grommet	Pasaje	Passa muro	Passe fil	
36	**VOE 17230369**	1					Valve control	Reglaje válvula	Regulagem da válvula	Réglage soupape	

1		**Radiateur avec montage parts** **Refrigerador com peças fixação** **Radiador con piezas de montaje** **Cooler with attaching parts**	Catalogue id **20649**	Group **261**
2			Illustr. No **1064084**	Section **200**
3				
4			Issue **PUB 20030904-B**	Page **185**
5		**STD MC70C-MC105C, MCT70C-MCT95C**		

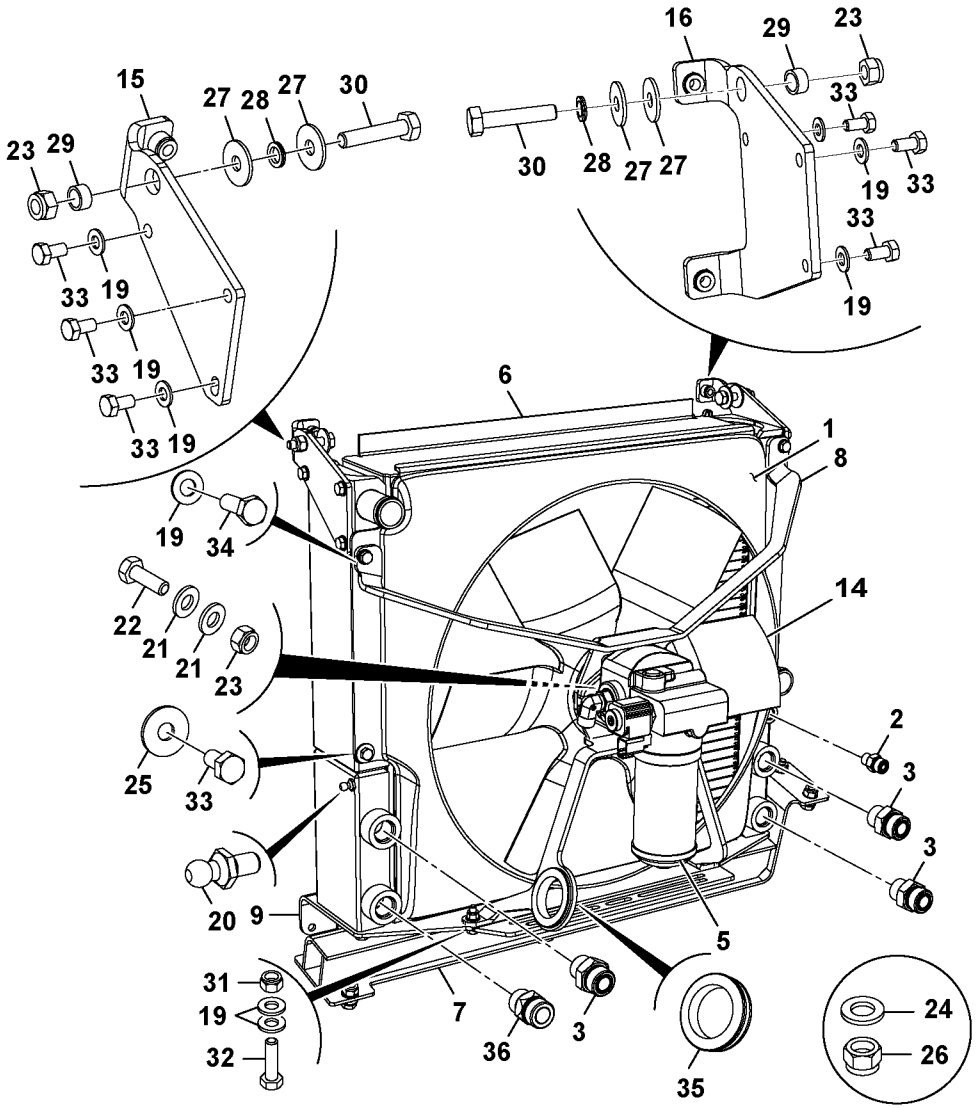

Volvo Construction Equipment
1064083

Fig.	Part No.	Quantity 1	2	3	PS	KIT	Description	Denominación	Denominação	Dénomination	Notes
1	**VOE 17229403**	1					Fan housing	Caja ventilador	Caixa do ventilador	Boîtier de ventilateur	
2	**RM 59919670**	1					Connector	Pieza de conexión	Conexão	Pièce connexion	
3	**RM 59922591**	3					Adapter	Adaptador	Adaptador	Adaptateur	
5		1					Cooling fan, engine	Ventilador, motor	Ventilador de refrigeração, .	Ventilateur, moteur	See group 263, Page 205
6	**VOE 17229325**	1					Cooling element	Elemento enfriador	Elemento de resfriamento ...	Refroidisseur	
7		1					Support Member	Viga Apoyo		Poutre Support	See group 261, Page 193
8		1			NS		Support	Apoyo	Suporte	Support	
9		1			NS		Cooling system	Sistema de refrigeracion		Systeme d refroidissement	
14	**VOE 17229414**	1					Fan	Ventilador	Ventilador	Ventilateur	
15		1			NS		Bracket	Ménsula	Suporte	Console	
16		1			NS		Bracket	Ménsula	Suporte	Console	
19	**VOE 20460127**	16					Washer	Arandela	Arruela	Rondelle	
20	**VOE 17230344**	1					Stud	Espárrago	Prisioneiro	Goujon	
21	**VOE 16212138**	4			SS		Plain washer	Arandela plana	Arruela simples	Rondelle plane	
22	**VOE 16212077**	2					Set screw	Tornillo tope	Parafuso batente	Vis butée	
23	**VOE 16212125**	4					Nut	Tuerca	Porca	Écrou	
24	**VOE 16212134**	1					Washer	Arandela	Arruela	Rondelle	
25	**VOE 17205565**	2					Washer	Arandela	Arruela	Rondelle	
26	**VOE 17205301**	1					Nut	Tuerca	Porca	Écrou	
27	**VOE 17209640**	4					Washer	Arandela	Arruela	Rondelle	
28	**VOE 17209638**	2					Washer	Arandela	Arruela	Rondelle	
29	**VOE 17210334**	2					Spacer	Distanciador	Espaçador	Entretoise	
30	**VOE 17205121**	2					Bolt	Perno	Parafuso	Boulon	
31	**VOE 16212120**	2					Lock nut	Contratuerca	Porca trava	Contre-écrou	
32	**VOE 16214000**	2					Set screw	Tornillo tope	Parafuso batente	Vis butée	
33	**VOE 16213997**	12					Set screw	Tornillo tope	Parafuso batente	Vis butée	
34	**VOE 16213999**	2					Set screw	Tornillo tope	Parafuso batente	Vis butée	
35	**VOE 17210179**	1					Grommet	Pasaje	Passa muro	Passe fil	
36	**VOE 17230369**	1					Valve control	Reglaje válvula	Regulagem da válvula	Réglage soupape	

1		**Radiateur avec montage parts** **Refrigerador com peças fixação** **Radiador con piezas de montaje** **Cooler with attaching parts**	Catalogue id **20649**	Group **261**
2			Illustr. No **1064083**	Section **250**
3			Issue **PUB 20030904-B**	Page **187**
4				
5		**WIDE MC60C, MC70C, MCT70C**		

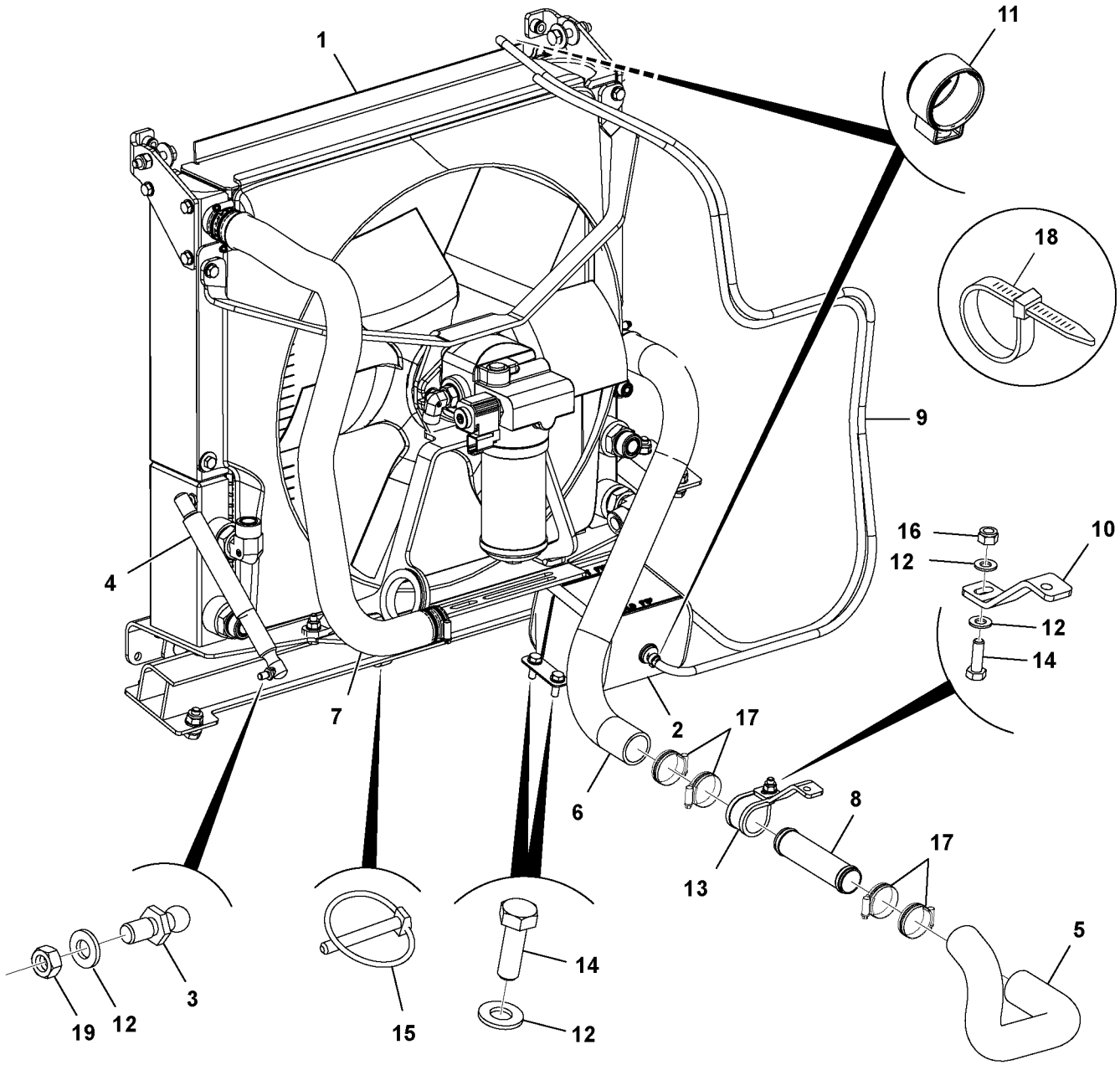

Volvo Construction Equipment
1064142

Fig.	Part No.	Quantity 1	2	3	PS	KIT	Description	Denominación	Denominação	Dénomination	Notes
1		1					Cooling Element	Elemento Enfria		Refroidisseur	See group 261, Page 191
2	**VOE 16213303**	1					Coolant	Anticongelente	Fluido refrigerante	Liquide refroidissement	See group 261, Page 195
3		2			NS		Ball Stud	Gorron De Bola		Axe Bille	
4		1			NS		Gas Strut	Amortiguador de gas		Vérin à gaz	
5	**VOE 17229420**	1					Hose	Manguera	Mangueira	Flexible	
6	**VOE 17229433**	1					Hose	Manguera	Mangueira	Flexible	
7	**VOE 17229236**	1					Radiator hose	Manguera radiador	Mangueira radiador	Durit de radiateur	
8	**VOE 17230062**	1					Pipe	Tubo	Tubo	Tuyau	
9	**VOE 17224715**	2					Hose	Manguera	Mangueira	Flexible	
10		1			NS		Press fitting	Acoplamiento presión	Acoplamento pressão	Accouplement par pressio	
11	**VOE 17210472**	2					Hose clamp	Abrazadera de manguera	Braçadeira da mangueira	Collier durite	
12	**VOE 20460127**	7					Washer	Arandela	Arruela	Rondelle	
13	**VOE 17229238**	1					Clip	Clip	Clipe	Clip	
14	**VOE 16213999**	5					Set screw	Tornillo tope	Parafuso batente	Vis butée	
15	**VOE 17210554**	1					Pin	Pasador	Pino	Goupille	
16	**VOE 16212120**	1					Lock nut	Contratuerca	Porca trava	Contre-écrou	
17	**VOE 16213408**	12					Clip	Clip	Clipe	Clip	
18	**VOE 17205290**	5					Tie straps	Cinta de atar		Ruban attache	
19	**VOE 20405733**	1					Hexagon nut	Tuerca hexagonal	Porca sextavada	Écrou hexagonal	

1		**Radiateur avec montage parts** **Refrigerador com peças fixação** **Radiador con piezas de montaje** **Cooler with attaching parts**		Catalogue id **20649**	Group **261**
2					
3				Illustr. No **1064142**	Section **300**
4					
5		**STD 135W, MC60C**		Issue **PUB 20030904-B**	Page **189**

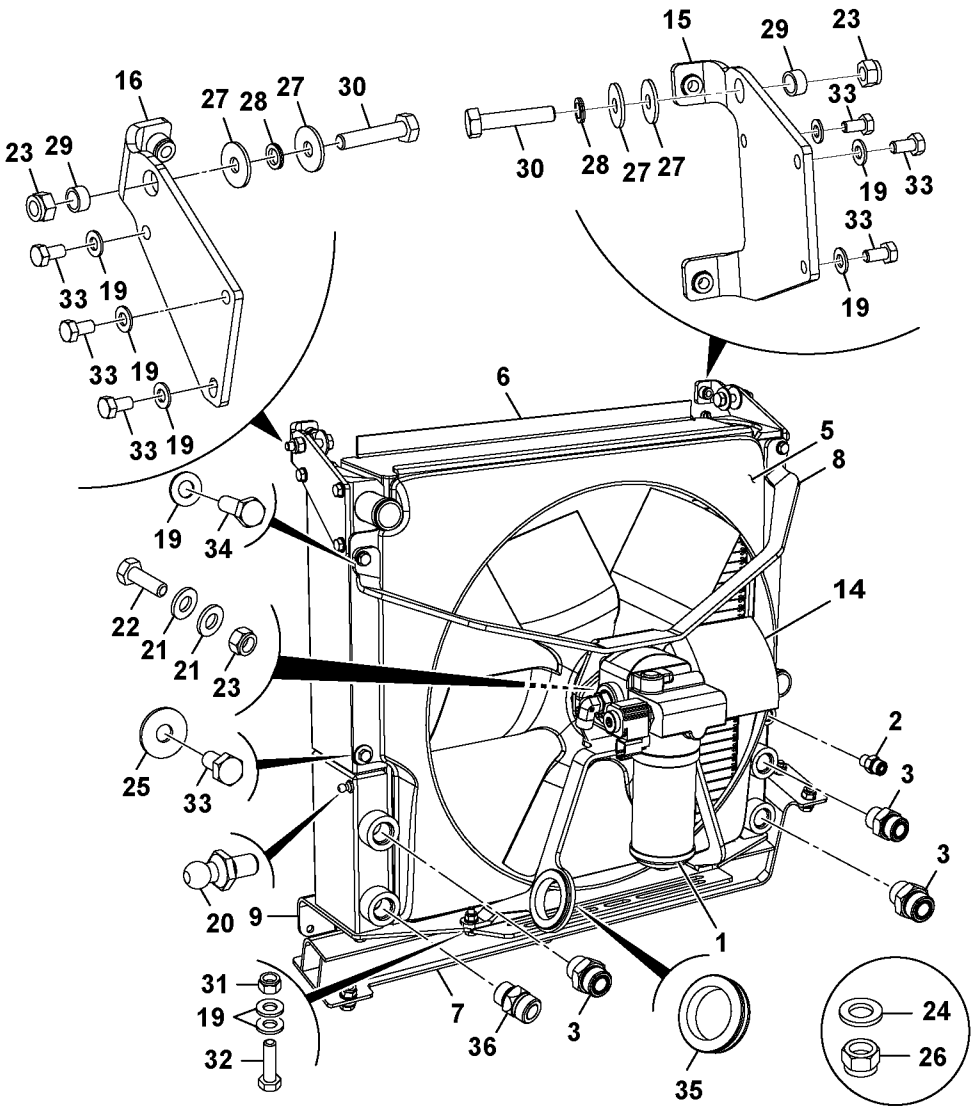

Volvo Construction Equipment
1064259

Fig.	Part No.	Quantity 1	2	3	PS	KIT	Description	Denominación	Denominação	Dénomination	Notes
1		1					Cooling fan, engine	Ventilador, motor	Ventilador de refrigeração,	Ventilateur, moteur	
2	**RM 59919670**	1					Connector	Pieza de conexión	Conexão	Pièce connexion	
3	**RM 59922591**	3					Adapter	Adaptador	Adaptador	Adaptateur	
5	**VOE 17229403**	1					Fan housing	Caja ventilador	Caixa do ventilador	Boîtier de ventilateur	
6		1					Cooling Element	Elemento Enfria		Refroidisseur	
7		1					Support Member	Viga Apoyo		Poutre Support	
8		1			NS		Support	Apoyo	Suporte	Support	
9		1			NS		Support	Apoyo	Suporte	Support	
14	**VOE 17229414**	1					Fan	Ventilador	Ventilador	Ventilateur	
15	**VOE 17210072**	1					Bracket	Consola	Suporte	Console	
16	**VOE 17210081**	1					Bracket	Consola	Suporte	Console	
19	**VOE 20460127**	16					Washer	Arandela	Arruela	Rondelle	
20	**VOE 17230344**	1					Stud	Espárrago	Prisioneiro	Goujon	
21	**VOE 16212138**	4			SS		Plain washer	Arandela plana	Arruela simples	Rondelle plane	
22	**VOE 16212077**	2					Set screw	Tornillo tope	Parafuso batente	Vis butée	
23	**VOE 16212125**	4					Nut	Tuerca	Porca	Écrou	
24	**VOE 16212134**	1					Washer	Arandela	Arruela	Rondelle	
25	**VOE 17205565**	2					Washer	Arandela	Arruela	Rondelle	
26	**VOE 17205301**	1					Nut	Tuerca	Porca	Écrou	
27	**VOE 17209640**	4					Washer	Arandela	Arruela	Rondelle	
28	**VOE 17209638**	2					Washer	Arandela	Arruela	Rondelle	
29	**VOE 17210334**	2					Spacer	Distanciador	Espaçador	Entretoise	
30	**VOE 17205121**	2					Bolt	Perno	Parafuso	Boulon	
31	**VOE 16212120**	2					Lock nut	Contratuerca	Porca trava	Contre-écrou	
32	**VOE 16214000**	2					Set screw	Tornillo tope	Parafuso batente	Vis butée	
33	**VOE 16213997**	12					Set screw	Tornillo tope	Parafuso batente	Vis butée	
34	**VOE 16213999**	2					Set screw	Tornillo tope	Parafuso batente	Vis butée	
35	**VOE 17210179**	1					Grommet	Pasaje	Passa muro	Passe fil	
36	**VOE 17230369**	1					Valve control	Reglaje válvula	Regulagem da válvula	Réglage soupape	

1		**Radiateur avec montage parts** **Refrigerador com peças fixação** **Radiador con piezas de montaje** **Cooler with attaching parts**		Catalogue id **20649**	Group **261**
2					
3				Illustr. No **1064259**	Section **350**
4					
5		**STD 135W MC60C**		Issue **PUB 20030904-B**	Page **191**

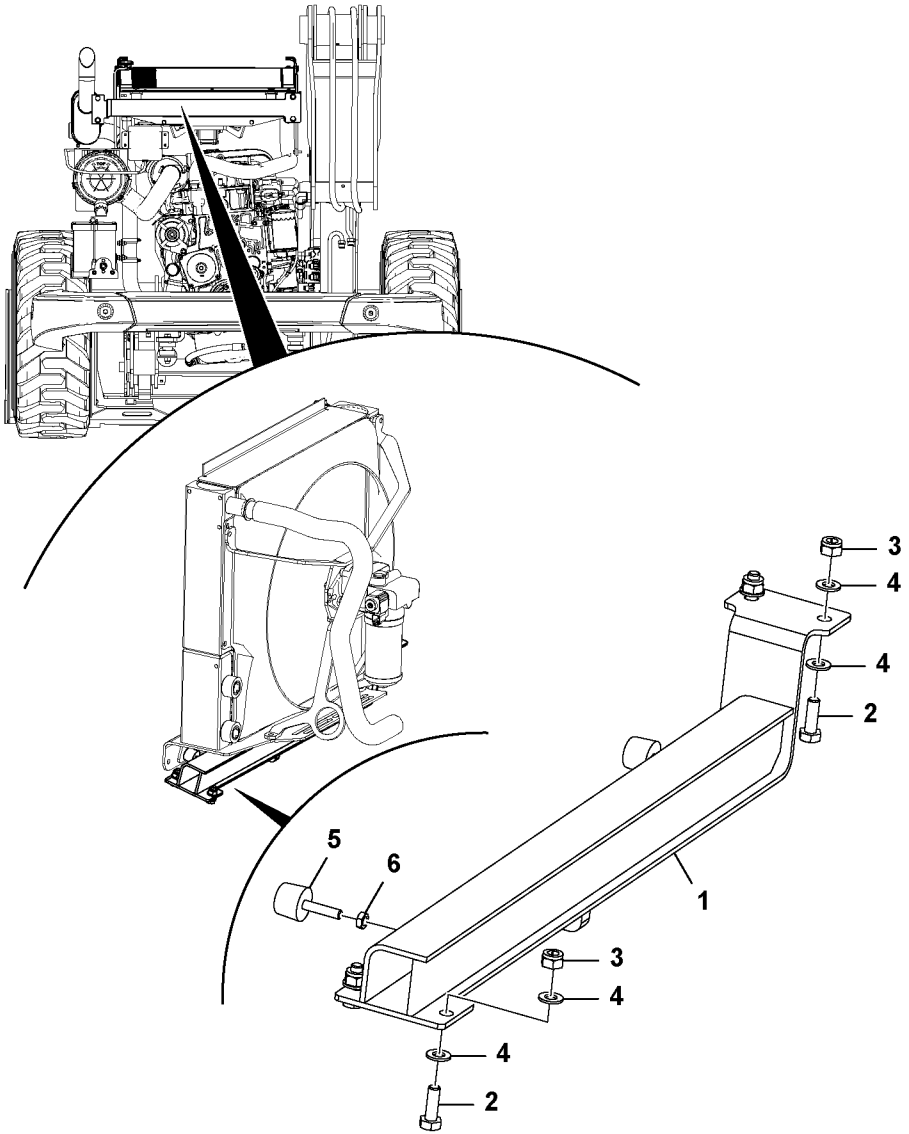

Volvo Construction Equipment
1064169

Fig.	Part No.	Quantity 1	2	3	PS	KIT	Description	Denominación	Denominação	Dénomination	Notes
1		1			NS		Support Member	Viga Apoyo		Poutre Support	
2	**VOE 16212272**	4					Bolt	Perno	Parafuso	Boulon	
3	**VOE 16212125**	4					Nut	Tuerca	Porca	Écrou	
4	**VOE 16212138**	8			SS		Plain washer	Arandela plana	Arruela simples	Rondelle plane	
5	**VOE 16214297**	2					Buffer	Tope de goma	Batente	Butoir	
6	**VOE 16212116**	2					Nut	Tuerca	Porca	Écrou	

1		**Traverse** **Travessa** **Travesaño** **Cross member**	Catalogue id **20649**	Group **261**
2			Illustr. No **1064169**	Section **400**
3			Issue **PUB 20030904-B**	Page **193**
4				
5		**REAR MC60C-MC105C, MCT85C-MCT95C**		

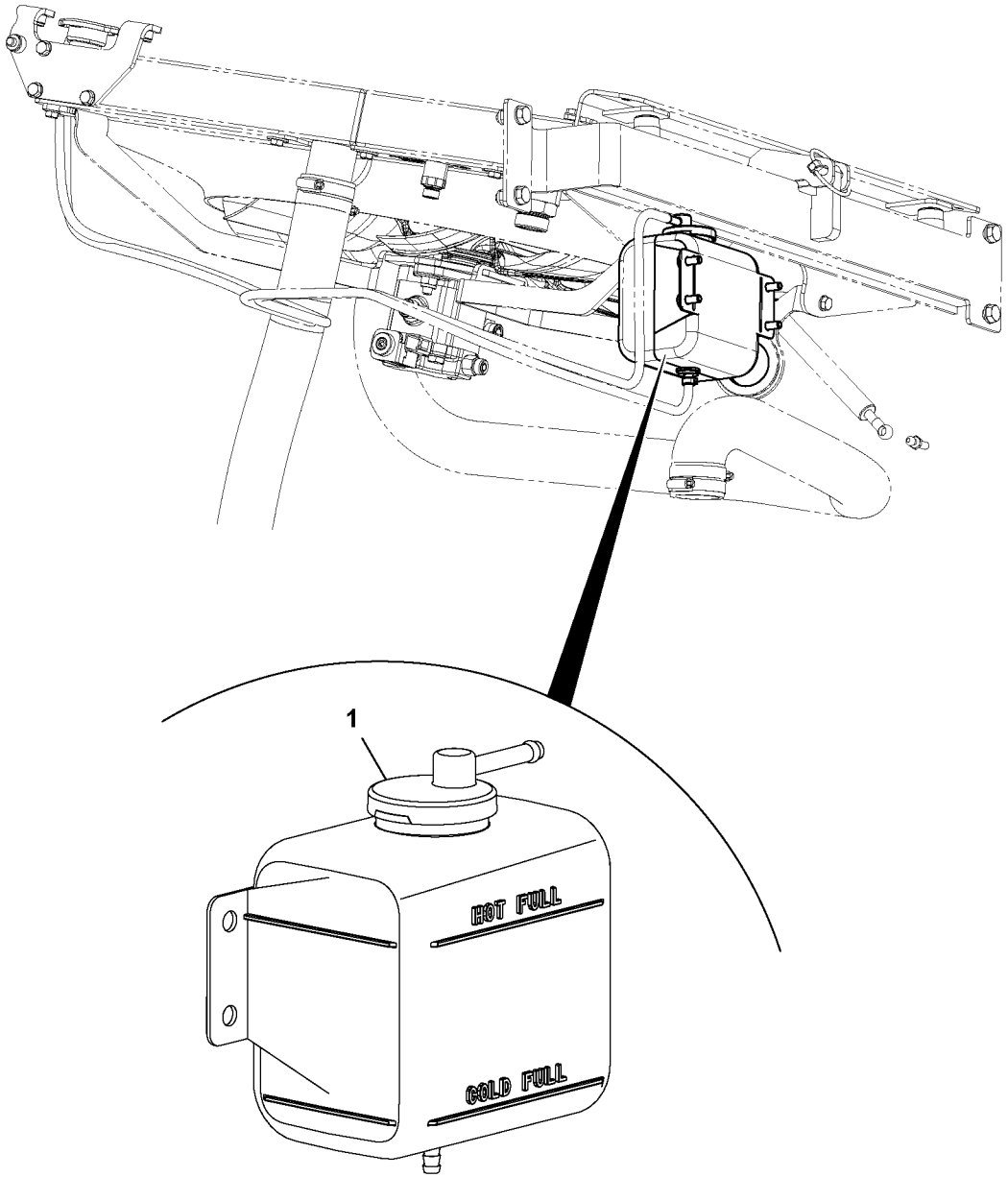

Volvo Construction Equipment
1064200

Fig.	Part No.	Quantity 1	2	3	PS	KIT	Description	Denominación	Denominação	Dénomination	Notes
	VOE 16213303	1					Coolant	Anticongelente	Fluido refrigerante	Liquide refroidissement	
1	**VOE 17210194**	1					•Cap	•Capuchón	•Tampa	•Capot	

1		**Vase expansion** **Tanque de expansão** **Vaso expansion** **Expansion tank**	Catalogue id **20649**	Group **261**
2			Illustr. No **1064200**	Section **500**
3			Issue **PUB 20030904-B**	Page **195**
4				
5		**MC60C-MC105C, MCT85C-MCT95C**		

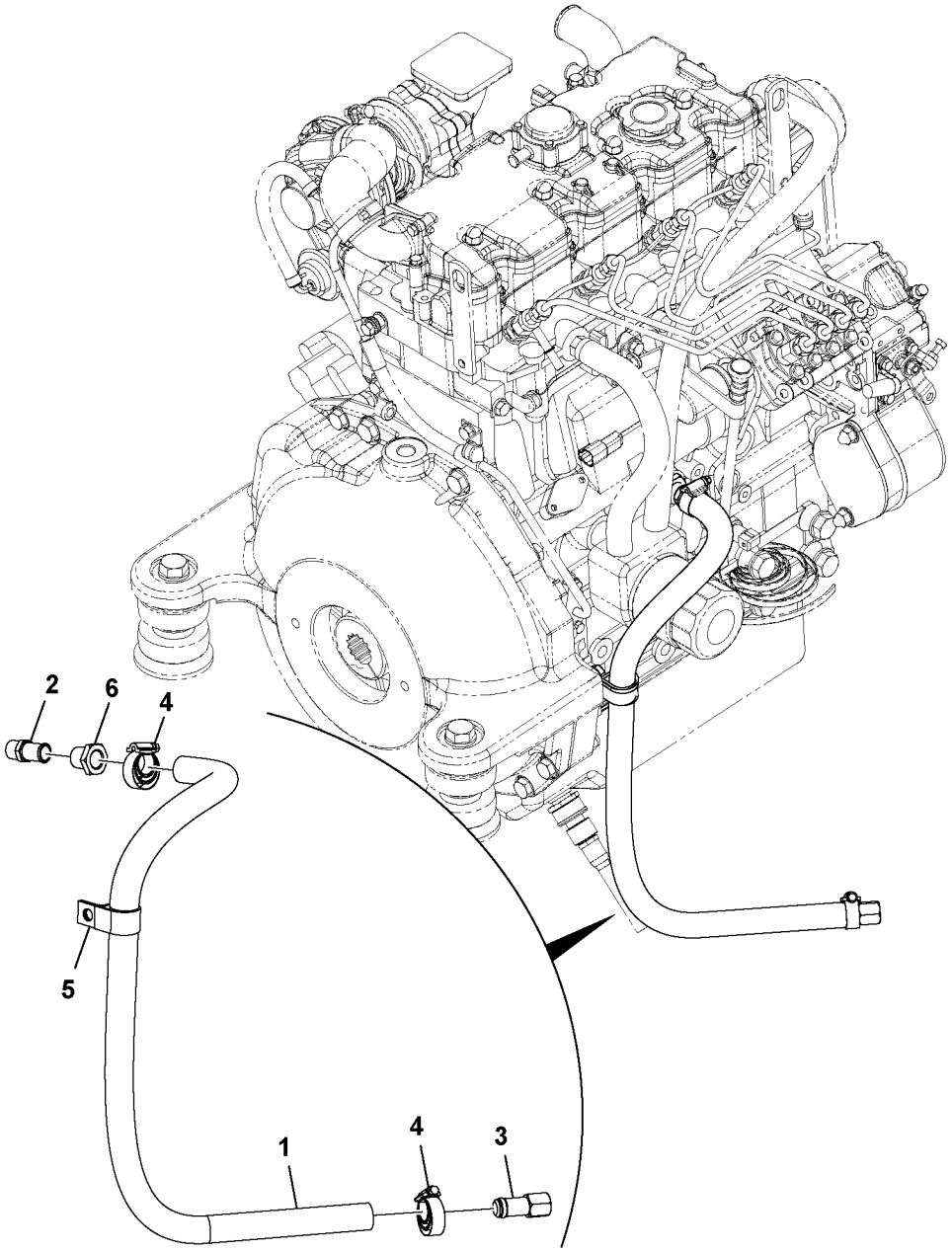

Volvo Construction Equipment
1064056

Fig.	Part No.	Quantity 1	2	3	PS	KIT	Description	Denominación	Denominação	Dénomination	Notes
1		1			NS		Hose	Tubo flexible	Mangueira	Durit	
2		1			NS		Adapter	Adaptador	Adaptador	Raccord Reduct.	
3	**VOE 17204988**	1					Plug tap	Tapón roscado	Bujão roscado	Taraud	
4	**VOE 16213286**	2					Clip	Clip	Clipe	Clip	
5	**VOE 17210500**	1					Cable clamp	Abrazadera de cable	Abraçadeira	Collier	
6		1			NS		Adapter	Adaptador	Adaptador	Raccord Reduct.	

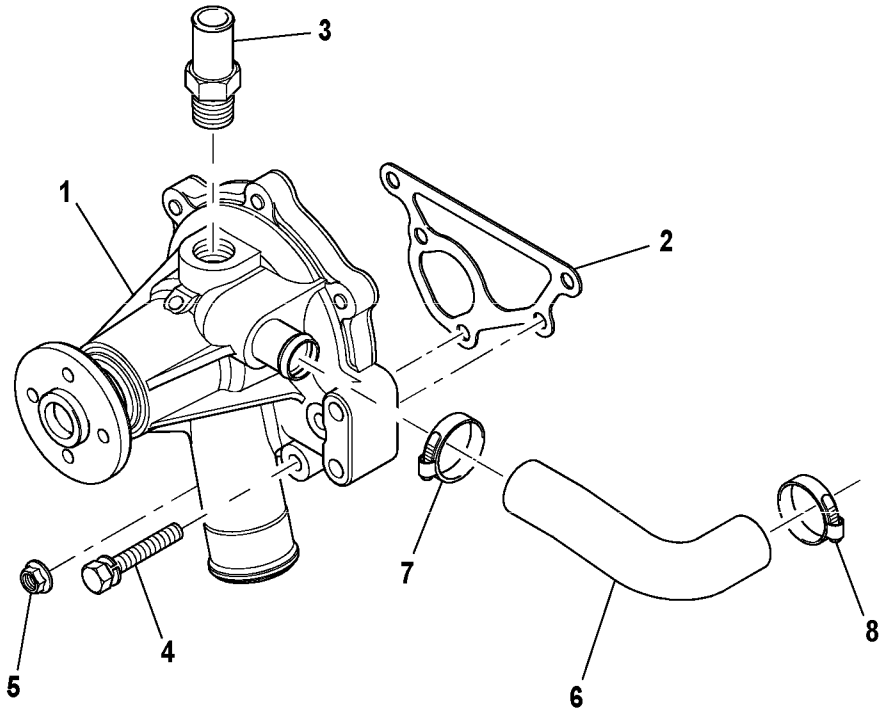
3
1
2
7
8
4
5
6

Fig.	Part No.	Quantity 1	2	3	PS	KIT	Description	Denominación	Denominação	Dénomination	Notes
1	**VOE 17224718**	1					Pump kit	Juego de bomba	Jogo da bomba	Kit pompe	
2	**VOE 17229553**	1					Gasket	Junta	Junta	Joint	
3	**VOE 17228908**	1					Adapter	Adaptador	Adaptador	Adaptateur	
4	**VOE 17230140**	4					Screw	Tornillo	Parafuso	Vis	
5	**VOE 17229624**	1					Nut	Tuerca	Porca	Écrou	
6	**VOE 17228364**	1					Hose	Manguera	Mangueira	Flexible	
7	**VOE 17229127**	1					Clip	Clip	Clipe	Clip	
8	**VOE 17229127**	1					Clip	Clip	Clipe	Clip	

1		**Montage de la pompe à eau** **Bomba de água, montagem** **Montaje de mangueras de agua** **Water Pump Assembly**	Catalogue id **20649**	Group **262**
2			Illustr. No **1064430**	Section **100**
3			Issue **PUB 20030904-B**	Page **199**
4				
5		**MC60C-MC105C, MCT70C-MCT95C**		

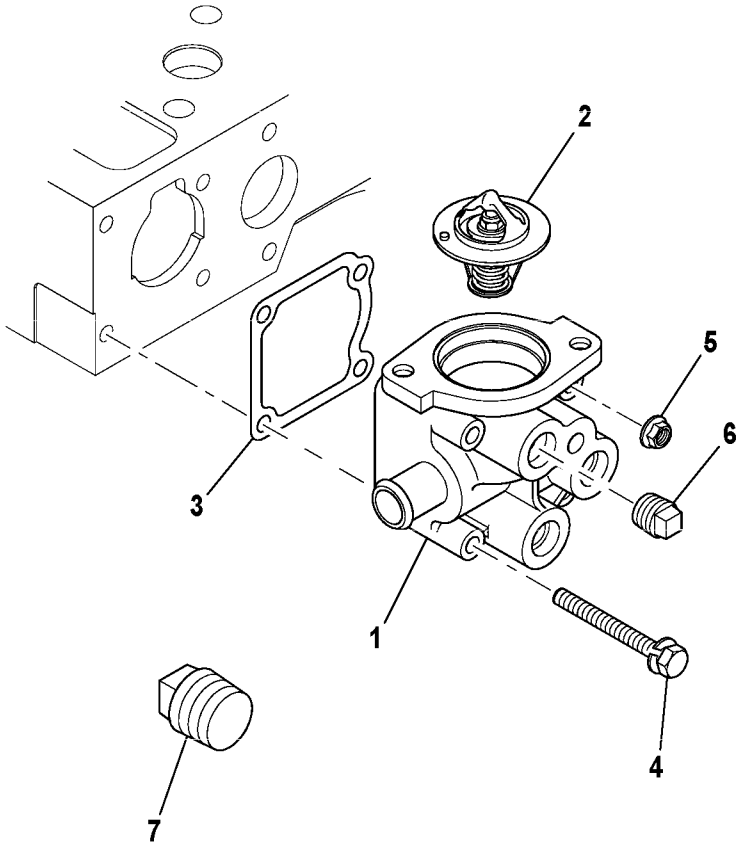
2
5
6
3
1
4
7

Fig.	Part No.	Quantity 1	2	3	PS	KIT	Description	Denominación	Denominação	Dénomination	Notes
1	**VOE 17229541**	1					Housing	Cuerpo	Carcaça	Carter	
2	**VOE 17230423**	1					Thermostat	Termóstato	Termostato	Thermostat	
3	**VOE 17229567**	1					Gasket	Junta	Junta	Joint	
4	**VOE 17228804**	2					Bolt	Perno	Parafuso	Boulon	
5	**VOE 17229624**	2					Nut	Tuerca	Porca	Écrou	
6	**VOE 17229938**	1					Plug	Tapón	Bujão	Tampon	
7	**VOE 17229940**	1					Plug	Tapón	Bujão	Tampon	

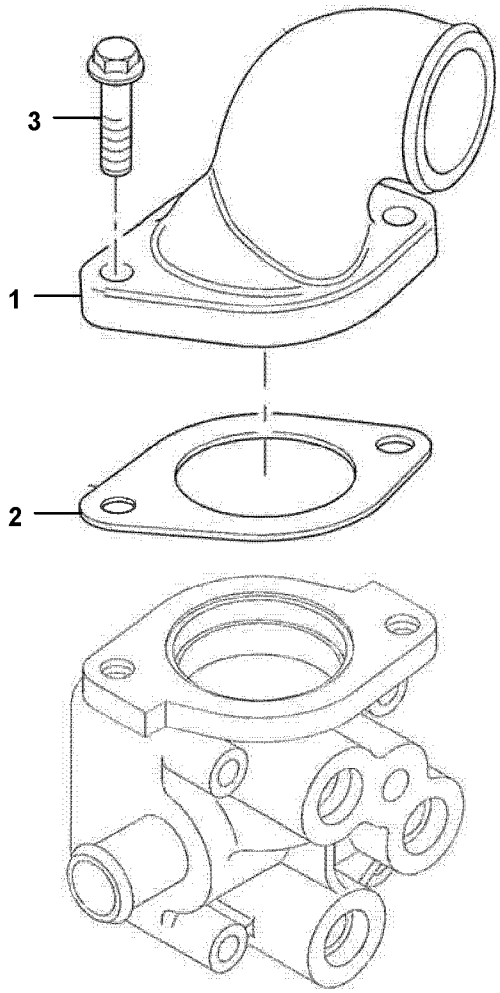
3
1
2

Fig.	Part No.	Quantity 1	2	3	PS	KIT	Description	Denominación	Denominação	Dénomination	Notes
1	**VOE 17224766**	1					Pipe	Tubo	Tubo	Tuyau	
2	**VOE 17228472**	1					Gasket	Junta	Junta	Joint	
3	**VOE 17230154**	2					Screw	Tornillo	Parafuso	Vis	

1		**Raccord de sortie d'eau** **Conexão de saída da água** **Conexión de salida de agua** **Water outlet connection**	Catalogue id **20649**	Group **262**
2			Illustr. No **1063979**	Section **300**
3			Issue **PUB 20030904-B**	Page **203**
4				
5		**MC60C-MC105C, MCT70C-MCT95C**		

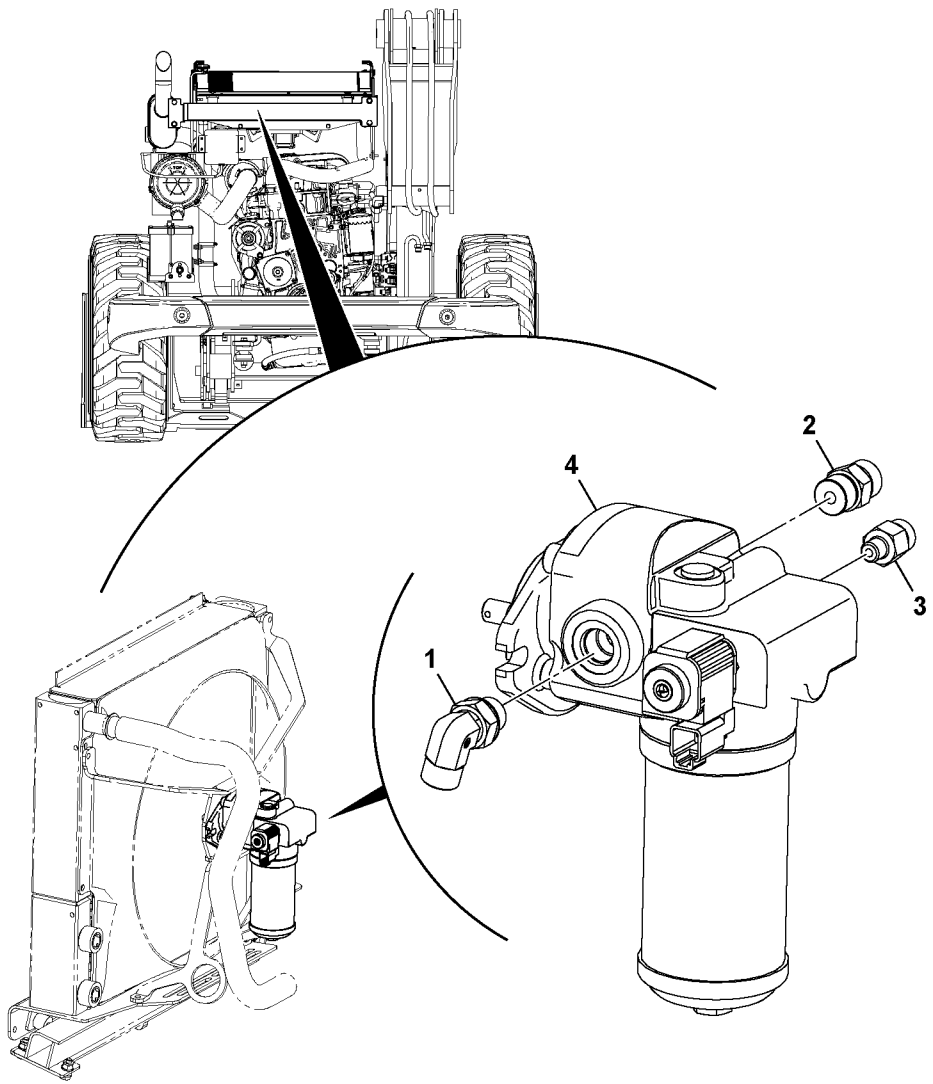

Volvo Construction Equipment
1064082

Fig.	Part No.	Quantity 1	2	3	PS	KIT	Description	Denominación	Denominação	Dénomination	Notes
1	**RM 59922898**	1					Adapter	Adaptador	Adaptador	Adaptateur	
2	**VOE 16212166**	1					Adapter	Adaptador	Adaptador	Adaptateur	
3	**VOE 16212350**	1					Adapter	Adaptador	Adaptador	Adaptateur	
4	**VOE 17230122**	1					Hydraulic motor	Motor hidráulico	Motor hidráulico	Moteur hydraulique	11CC

See group 263, Page 207

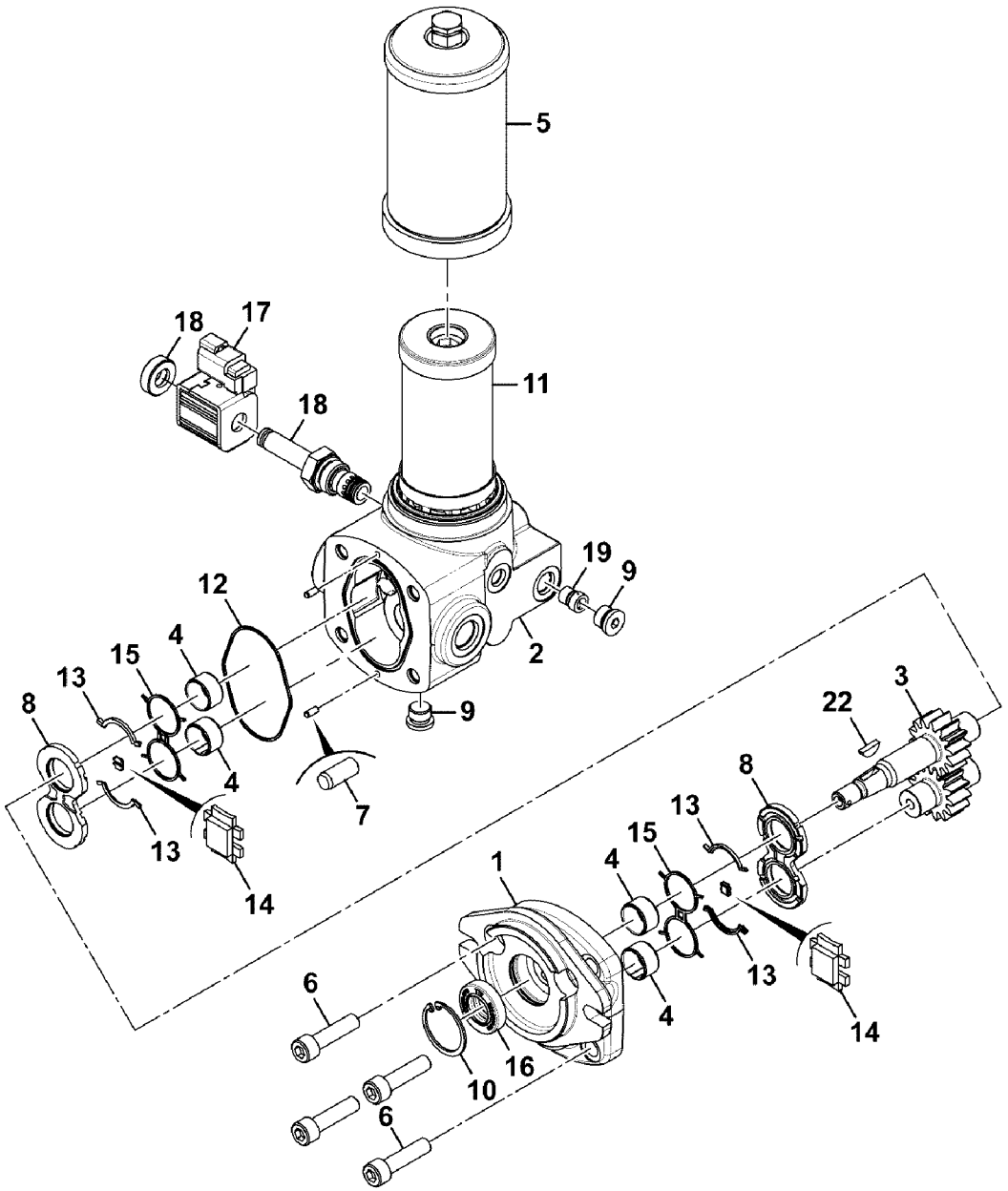
5
18
17
11
18
19
9
12
4
15
13
8
2
9
4
7
13
14
22
3
8
13
15
4
1
6
10
16
6
4
13
14

Fig.	Part No.	Quantity 1	2	3	PS	KIT	Description	Denominación	Denominação	Dénomination	Notes
	VOE 17230122	1					Hydraulic motor	Motor hidráulico	Motor hidráulico	Moteur hydraulique	
1		1			NS		•Flange	•Brida	•Flange	•Flasque	
2		1			NS		•Body	•Cuerpo	•Carroceria	•Carcasse	
3		1			NS		•Shaft	•Arbol	•Eixo	•Arbre	
4		4			NS		•Bush	•Manguito	•Bucha	•Boîte	
5		1			NS		•Cap	•Caperuza	•Tampa	•Chapeau	
6		4			NS		•Capscrew	•	•Parafuso de cabeça	•	
7		2			NS		•Dowel	•pasador	•	•pion	
8		2			NS		•Plate	•Placa	•Placa	•Plaque	
9		2			NS		•Plug	•Tapon	•Bujão	•Bouchon	
10		1			NS		•Retaining ring	•Anillo de apoyo	•Anel retentor	•Bague retenue	
11		1			NS		•Filter	•Filtro	•Filtro	•Filtre	
12		1			NS		•O-ring	•Junta torica	•Anel de vedação-O	•Joint Torique	
13		4			NS		•Seal	•Junta	•Vedação	•Joint	
14		2			NS		•Seal	•Junta	•Vedação	•Joint	
15		2			NS		•Back-up ring	•Anillo Apoyo	•Arruela de apoio	•Rondelle anti-extrusion	
16		1			NS		•Lip seal	•Junta de labio	•	•Joint à lèvre	
17		1			NS		•Coil	•Espiral	•Bobina	•Spirale	
18		1			NS		•Valve	•Valvula	•Válvula	•Soupape	
19		1			NS		•Check valve	•Válvula de retención	•Válv. de retenção	•Valve antiretour	
22		1			NS		•Woodruff Key	•Chaveta Woodruf	•	•Clavet.woodruff	

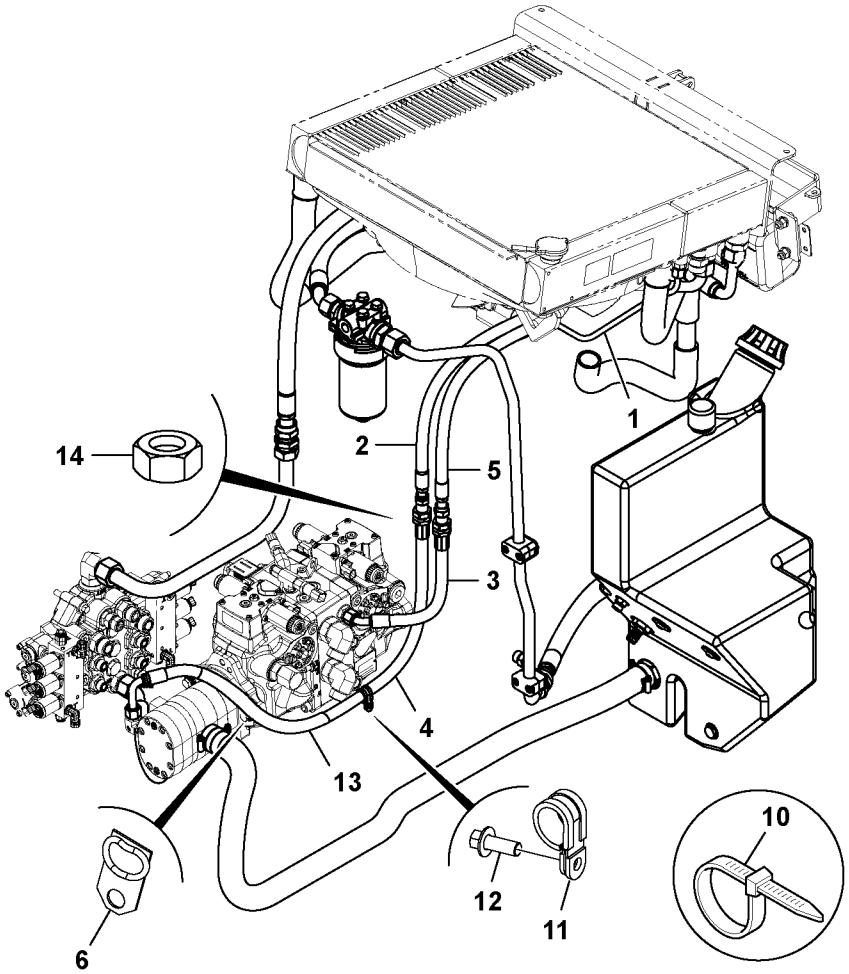
14
2
5
1
3
4
13
6
12
11
10

Fig.	Part No.	Quantity 1	2	3	PS	KIT	Description	Denominación	Denominação	Dénomination	Notes
1	**VOE 17230085**	1					Pipe	Tubo	Tubo	Tuyau	
2		1			NS		Hose	Tubo flexible	Mangueira	Durit	
3	**VOE 17229445**	1					Hose	Manguera	Mangueira	Flexible	
4	**VOE 17229457**	1					Hose	Manguera	Mangueira	Flexible	
5	**VOE 17229450**	1					Hose	Manguera	Mangueira	Flexible	
6	**VOE 17205417**	1					Clip	Clip	Clipe	Clip	
10	**VOE 17205293**	6					Tie straps	Cinta de atar		Ruban attache	
11	**VOE 17204909**	1					Clip	Clip	Clipe	Clip	
12	**VOE 16212101**	1					Bolt	Perno	Parafuso	Boulon	
13	**VOE 17209607**	1					Fan guard	Protección ventilador	Protetor ventilador	Protège-ventilateur	
14	**VOE 17205312**	2					Nut	Tuerca	Porca	Écrou	

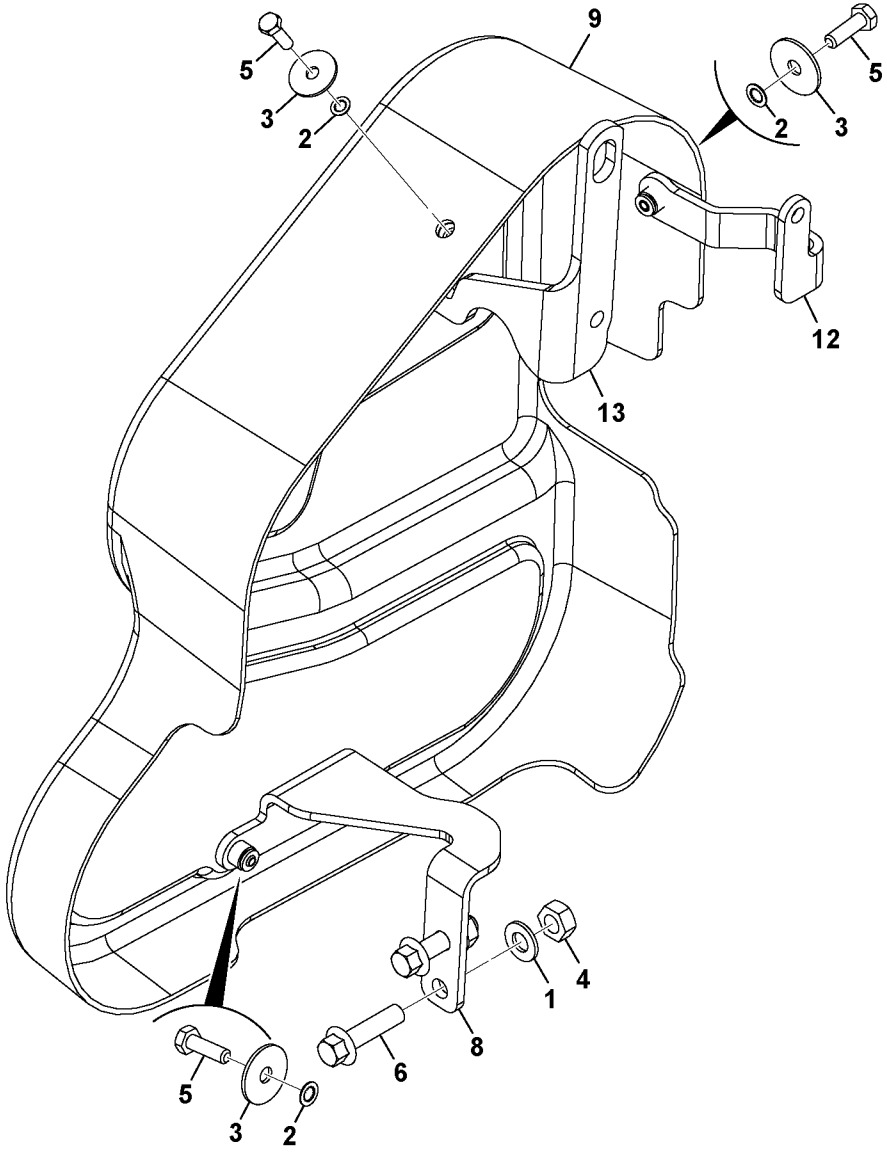
9
5
3
2
5
3
2
12
13
4
1
8
6
5
3
2

Fig.	Part No.	Quantity 1	2	3	PS	KIT	Description	Denominación	Denominação	Dénomination	Notes
1	**VOE 16212138**	2			SS		Plain washer	Arandela plana	Arruela simples	Rondelle plane	
2	**VOE 17205562**	4					Lock washer	Arandela seguridad	Arruela trava	Rondelle verrouillage	
3	**VOE 17205555**	4					Washer	Arandela	Arruela	Rondelle	
4	**VOE 16212122**	2					Nut	Tuerca	Porca	Écrou	
5	**VOE 16212203**	4					Set screw	Tornillo tope	Parafuso batente	Vis butée	
6	**VOE 17228801**	2					Bolt	Perno	Parafuso	Boulon	
8	**VOE 17229370**	1					Cover plate	Cubierta	Placa tampa	Plaque de recouvrement	
9		1			NS		Guard	Proteccion	Protecao	Protection	
12		1			NS		Bracket	Ménsula	Suporte	Console	LH
13		1			NS		Bracket	Ménsula	Suporte	Console	RH

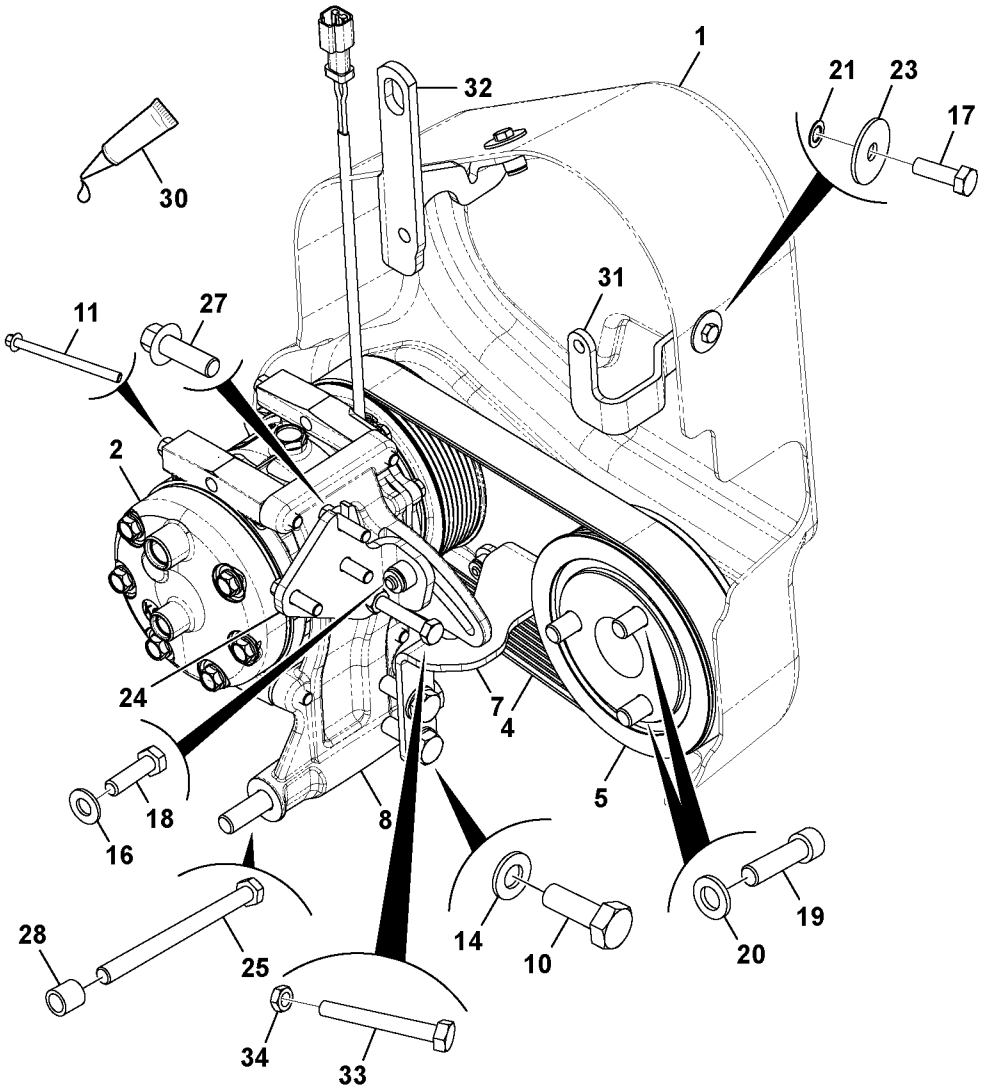

Volvo Construction Equipment
1064211

Fig.	Part No.	Quantity 1	2	3	PS	KIT	Description	Denominación	Denominação	Dénomination	Notes
1		1			NS		Guard	Proteccion	Protecao	Protection	
2	**VOE 16213382**	1					Compressor	Compresor	Compressor	Compresseur	
4	**VOE 17228815**	1					Belt	Correa	Correia	Ceinture	
5	**VOE 17230013**	1					Pulley	Polea	Polia	Poulie	
7	**VOE 17229370**	1					Cover plate	Cubierta	Placa tampa	Plaque de recouvrement	
8		1			NS		Bracket	Ménsula	Suporte	Console	
10	**VOE 16212272**	2					Bolt	Perno	Parafuso	Boulon	
11	**VOE 16212128**	4					Bolt	Perno	Parafuso	Boulon	
14	**VOE 16212138**	2			SS		Plain washer	Arandela plana	Arruela simples	Rondelle plane	
16	**VOE 20460127**	1					Washer	Arandela	Arruela	Rondelle	
17	**VOE 16212203**	4					Set screw	Tornillo tope	Parafuso batente	Vis butée	
18	**VOE 16214000**	1					Set screw	Tornillo tope	Parafuso batente	Vis butée	
19		3			NS		Capscrew		Parafuso de cabeça		
20		3			NS		Washer	Arandela	Arruela	Rondelle	
21	**VOE 17205562**	4					Lock washer	Arandela seguridad	Arruela trava	Rondelle verrouillage	
23	**VOE 17205555**	4					Washer	Arandela	Arruela	Rondelle	
24		1			NS		Bracket	Ménsula	Suporte	Console	
25	**VOE 17228927**	1					Bolt	Perno	Parafuso	Boulon	
27	**VOE 17205128**	3					Bolt	Perno	Parafuso	Boulon	
28	**VOE 17210153**	1					Bushing	Casquillo	Bucha	Bague	
30		REQ			NS		Adhesive	Adhesivo	Adesivo	Adhesif	
31		1			NS		Bracket	Ménsula	Suporte	Console	LH
32		1			NS		Bracket	Ménsula	Suporte	Console	RH
33	**VOE 16212086**	1					Bolt	Perno	Parafuso	Boulon	
34	**VOE 16212116**	1					Nut	Tuerca	Porca	Écrou	

1		**Ensemble courroie d'entraînement** **Correia de acionamento, montagem** **Conjunto de correa de transmisión** **Drive Belt Assembly**	Catalogue id **20649**	Group **263**
2			Illustr. No **1064211**	Section **400**
3				
4			Issue **PUB 20030904-B**	Page **213**
5		**MC70C-MC105C, MCT70C-MCT95C**		

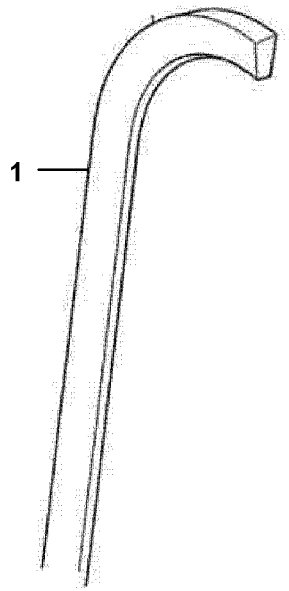
1

Fig.	Part No.	Quantity 1	2	3	PS	KIT	Description	Denominación	Denominação	Dénomination	Notes
1	**VOE 17228410**	1					Fan belt	Correa ventilador	Correia de ventoinha	Courroie de ventilateur	

1		**Ensemble courroie d'entraînement** **Correia de acionamento, montagem** **Conjunto de correa de transmisión** **Drive Belt Assembly**	Catalogue id **20649**	Group **263**
2				
3			Illustr. No **1063981**	Section **450**
4				
5		**MC60C-MC105C, MCT70C-MCT95C**	Issue **PUB 20030904-B**	Page **215**

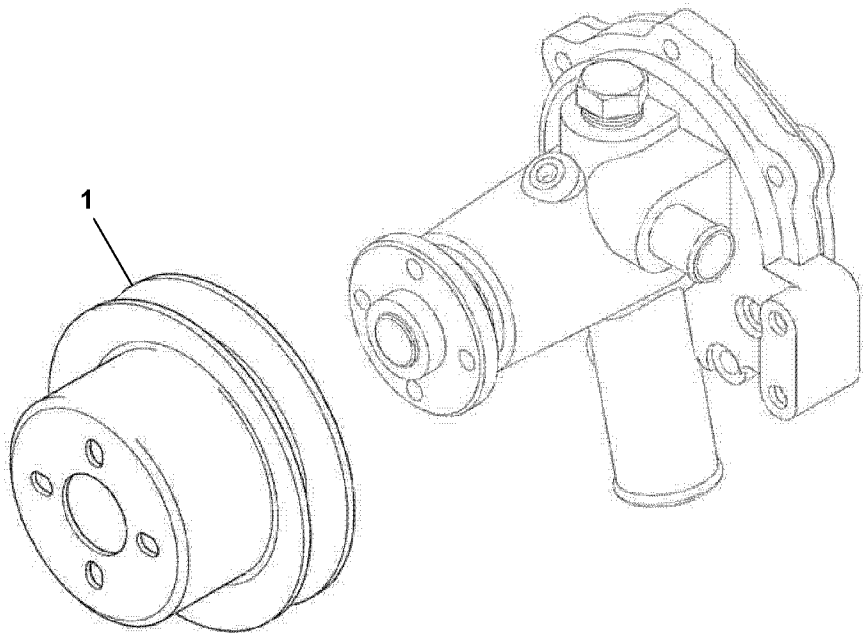
1

Fig.	Part No.	Quantity 1	2	3	PS	KIT	Description	Denominación	Denominação	Dénomination	Notes
1	**VOE 17230011**	1					Pulley	Polea	Polia	Poulie	

1		**Transmission courroie, courroie trapézoïdale** **Transmissão por correia, polia** **Correa distribución, correa trapezoidal** **Belt transmission, pulley**	Catalogue id **20649**	Group **263**
2				
3			Illustr. No **1063972**	Section **500**
4				
5		**MC60C-MC105C, MCT70C-MCT95C**	Issue **PUB 20030904-B**	Page **217**

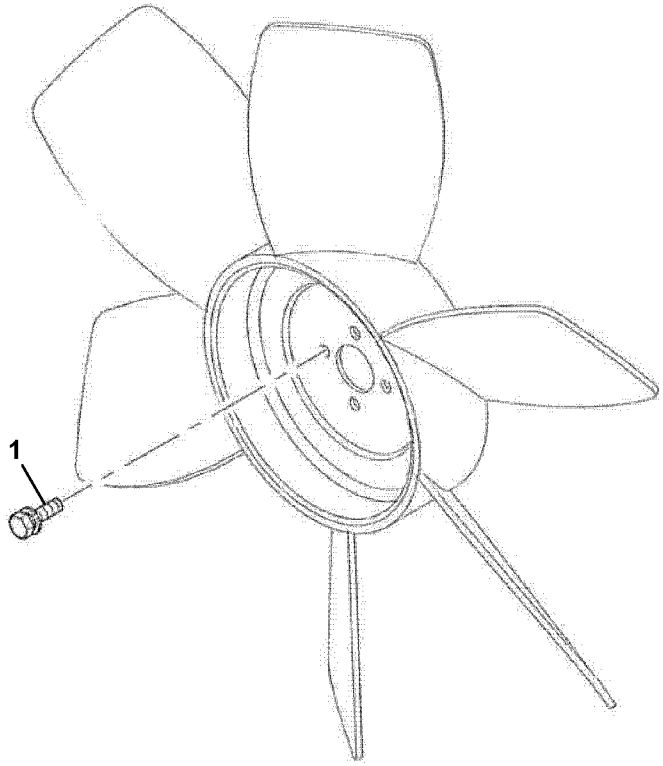
1

Fig.	Part No.	Quantity 1	2	3	PS	KIT	Description	Denominación	Denominação	Dénomination	Notes
1	**VOE 17228717**	4					Screw	Tornillo	Parafuso	Vis	

1		**Ventilateur, montage** **Ventilador de refrigeração, montagem** **Ventilador, montaje** **Cooling fan mounting**	Catalogue id **20649**	Group **263**
2				
3			Illustr. No **1063978**	Section **600**
4				
5		**MC60C-MC105C, MCT70C-MCT95C**	Issue **PUB 20030904-B**	Page **219**

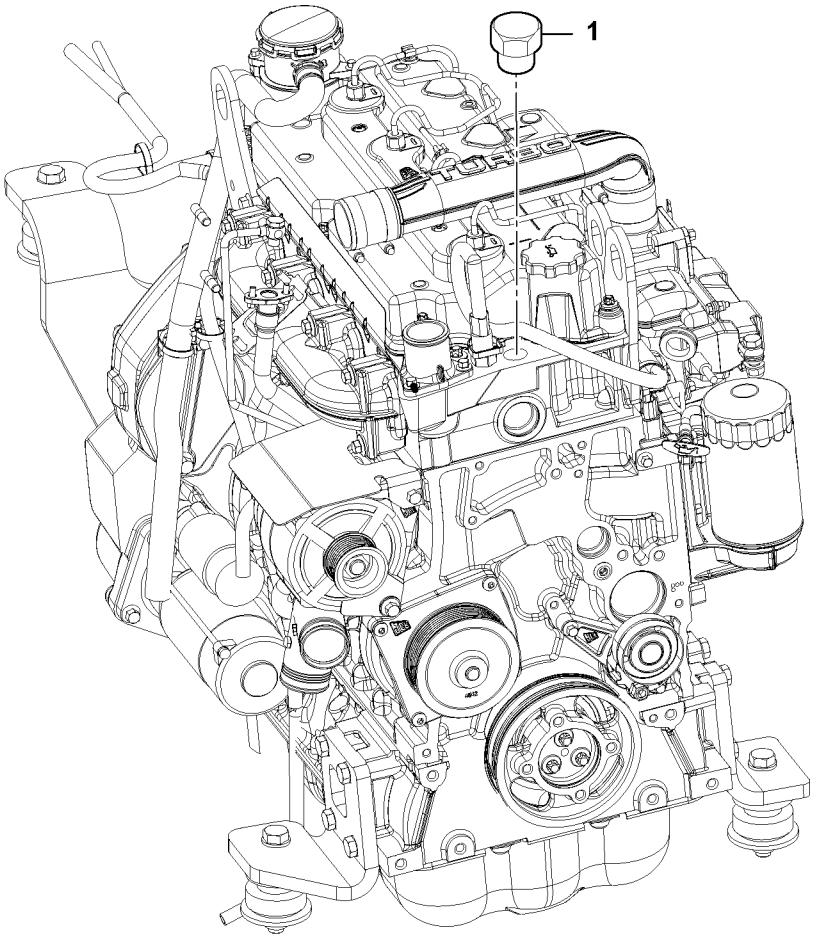
1

Fig.	Part No.	Quantity 1	2	3	PS	KIT	Description	Denominación	Denominação	Dénomination	Notes
1	**VOE 17209842**	1					Tube	Tubo	Tubo	Tube	

1		**Installation du chauffage de bloc** **Aquecedor do bloco, instalação** **Instalación de calentador de bloque** **Block Heater Installation**	Catalogue id **20649**	Group **269**
2				
3			Illustr. No **1064154**	Section **200**
4				
5		**MC60C-MC105C, MCT70C-MCT95C**	Issue **PUB 20030904-B**	Page **221**

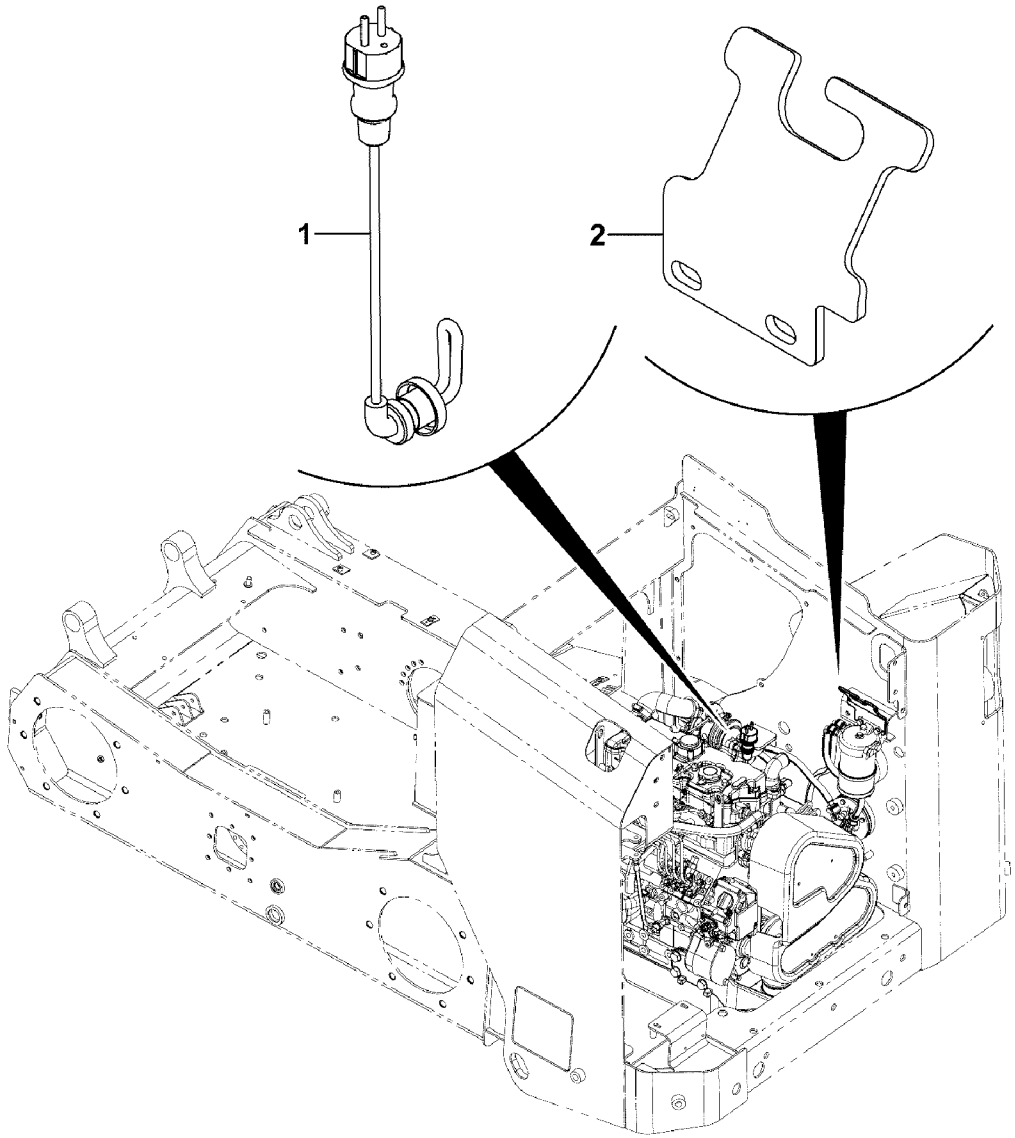
1
2

Fig.	Part No.	Quantity 1	2	3	PS	KIT	Description	Denominación	Denominação	Dénomination	Notes
1		1					Heater	Calefaccion	Aquecedor	Elément de chauffage	See group 269, Page 225
2		1					Bracket	Ménsula	Suporte	Console	

1		**Chauffe-moteur** **Aquecedor do bloco do motor** **Calefactor** **Engine block heater**	Catalogue id **20649**	Group **269**
2			Illustr. No **1064459**	Section **300**
3			Issue **PUB 20030904-B**	Page **223**
4				
5		**240V, MC60C-MC105C, MCT70C-MCT95C**		

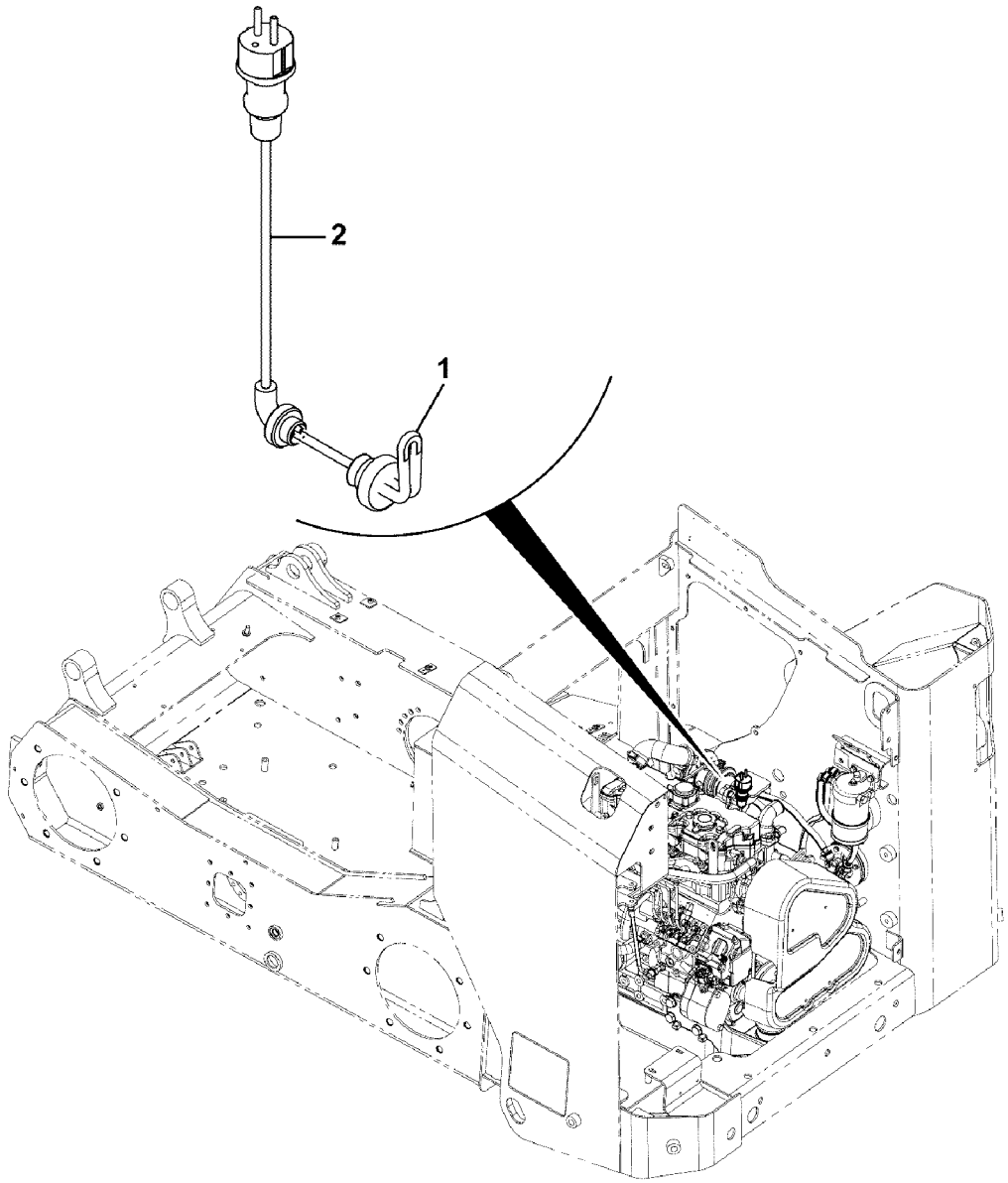

Volvo Construction Equipment
1064460

Fig.	Part No.	Quantity 1	2	3	PS	KIT	Description	Denominación	Denominação	Dénomination	Notes
1		1					Heater	Calefaccion	Aquecedor	Elément de chauffage	
2		1					Cable harness	Manojo cables	Chicote	Faisceau cables	

1		**Chauffe-moteur** **Aquecedor do bloco do motor** **Calefactor** **Engine block heater**	Catalogue id **20649**	Group **269**
2				
3			Illustr. No **1064460**	Section **400**
4			Issue **PUB 20030904-B**	Page **225**
5		**240V, MC60C-MC105C, MCT70C-MCT95C**		

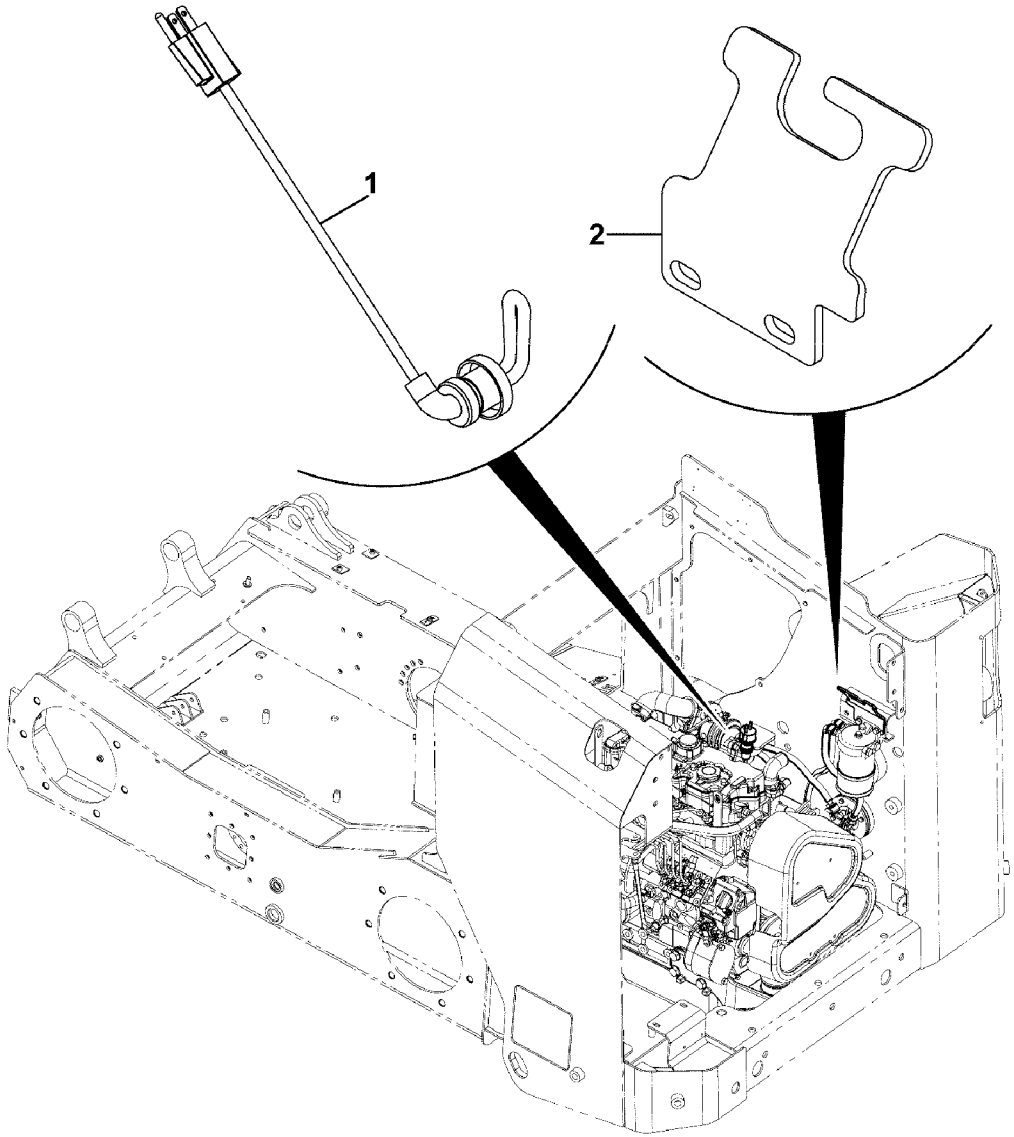

Volvo Construction Equipment
1064461

Fig.	Part No.	Quantity 1	2	3	PS	KIT	Description	Denominación	Denominação	Dénomination	Notes
1		1					Heater	Calefaccion	Aquecedor	Elément de chauffage	See group 269, Page 229
2		1					Bracket	Ménsula	Suporte	Console	

1		**Chauffe-moteur** **Aquecedor do bloco do motor** **Calefactor** **Engine block heater**	Catalogue id **20649**	Group **269**
2				
3			Illustr. No **1064461**	Section **500**
4			Issue **PUB 20030904-B**	Page **227**
5		**110V, MC60C-MC105C, MCT70C-MCT95C**		

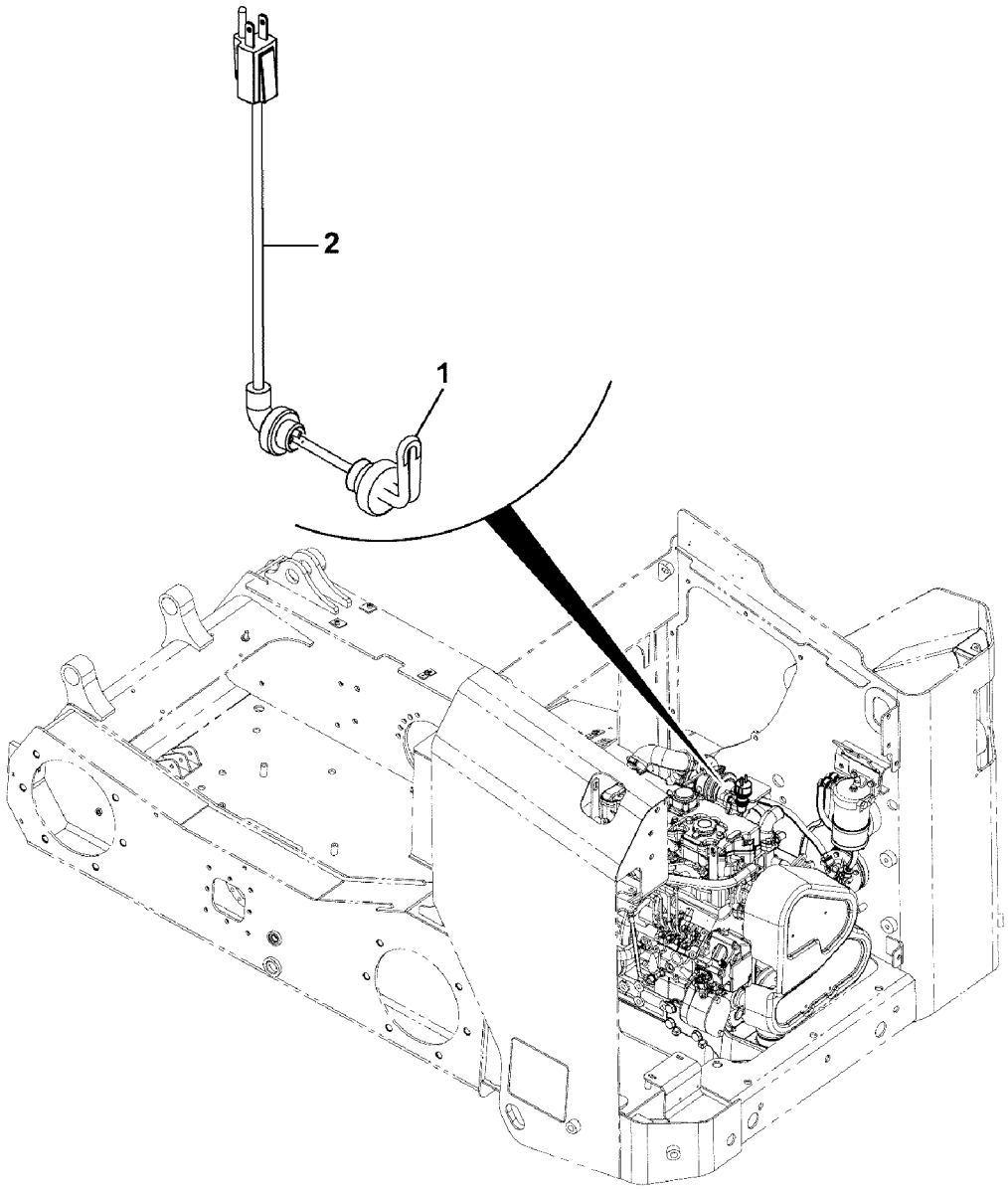

Volvo Construction Equipment
1064462

Fig.	Part No.	Quantity 1	2	3	PS	KIT	Description	Denominación	Denominação	Dénomination	Notes
1		1					Heater	Calefaccion	Aquecedor	Elément de chauffage	
2		1					Cable harness	Manojo cables	Chicote	Faisceau cables	

1		**Chauffe-moteur** **Aquecedor do bloco do motor** **Calefactor** **Engine block heater**	Catalogue id **20649**	Group **269**
2			Illustr. No **1064462**	Section **600**
3				
4			Issue **PUB 20030904-B**	Page **229**
5		**110V, MC60C-MC105C, MCT70C-MCT95C**		

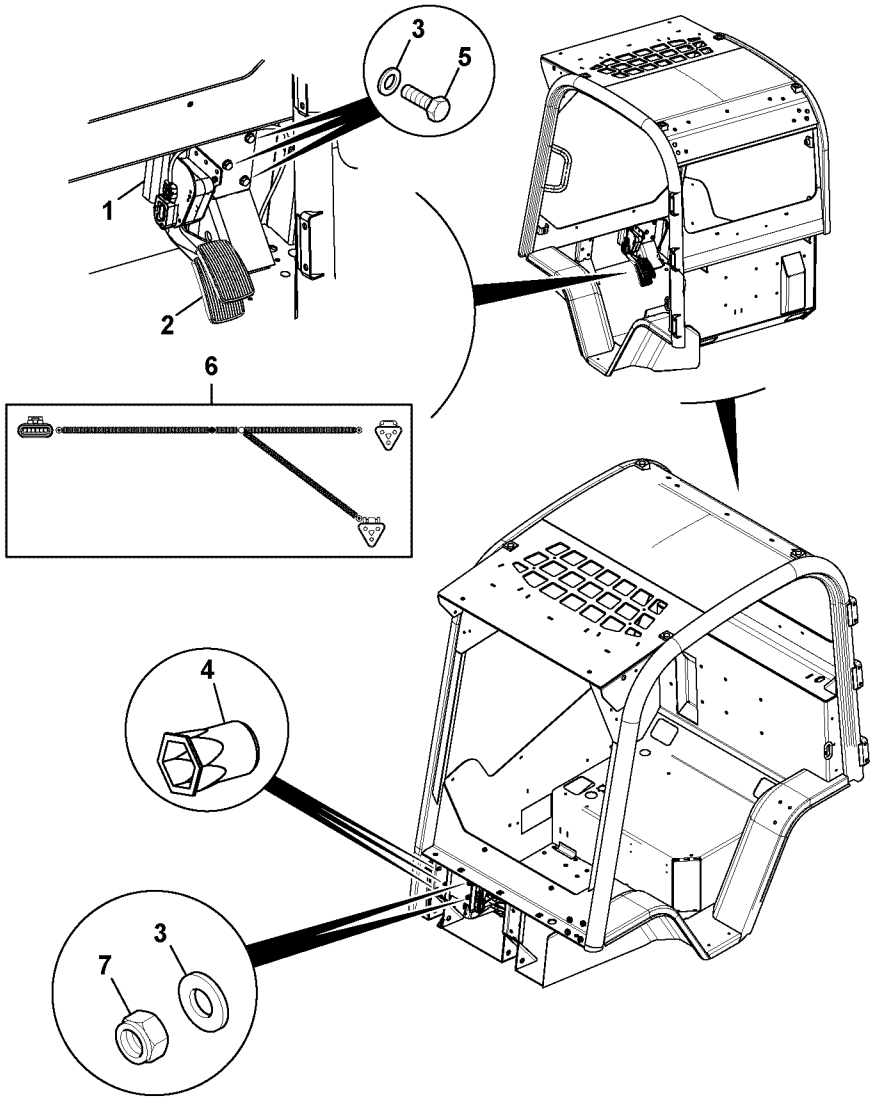
3
5
1
2
6
4
3
7

Fig.	Part No.	Quantity 1	2	3	PS	KIT	Description	Denominación	Denominação	Dénomination	Notes
1	**VOE 17209555**	1					Bracket	Consola	Suporte	Console	
2	**VOE 16213249**	1					Pedal	Pedal	Pedal	Pédale	
3	**VOE 20460127**	5					Washer	Arandela	Arruela	Rondelle	
4	**VOE 17205310**	3					Nut	Tuerca	Porca	Écrou	
5	**VOE 16213999**	3					Set screw	Tornillo tope	Parafuso batente	Vis butée	
6	**VOE 17229658**	1					Cable harness	Manojo cables	Chicote cabos	Faisceau câbles	
7	**VOE 16212120**	2					Lock nut	Contratuerca	Porca trava	Contre-écrou	

1		**Montage de la pédale** **Pedal de pé, montagem** **Montaje de pedal** **Foot Pedal Assembly**	Catalogue id **20649**	Group **271**
2			Illustr. No **1064242**	Section **100**
3			Issue **PUB 20030904-B**	Page **231**
4				
5		**MC60C-MC105C, MCT70C-MCT95C**		

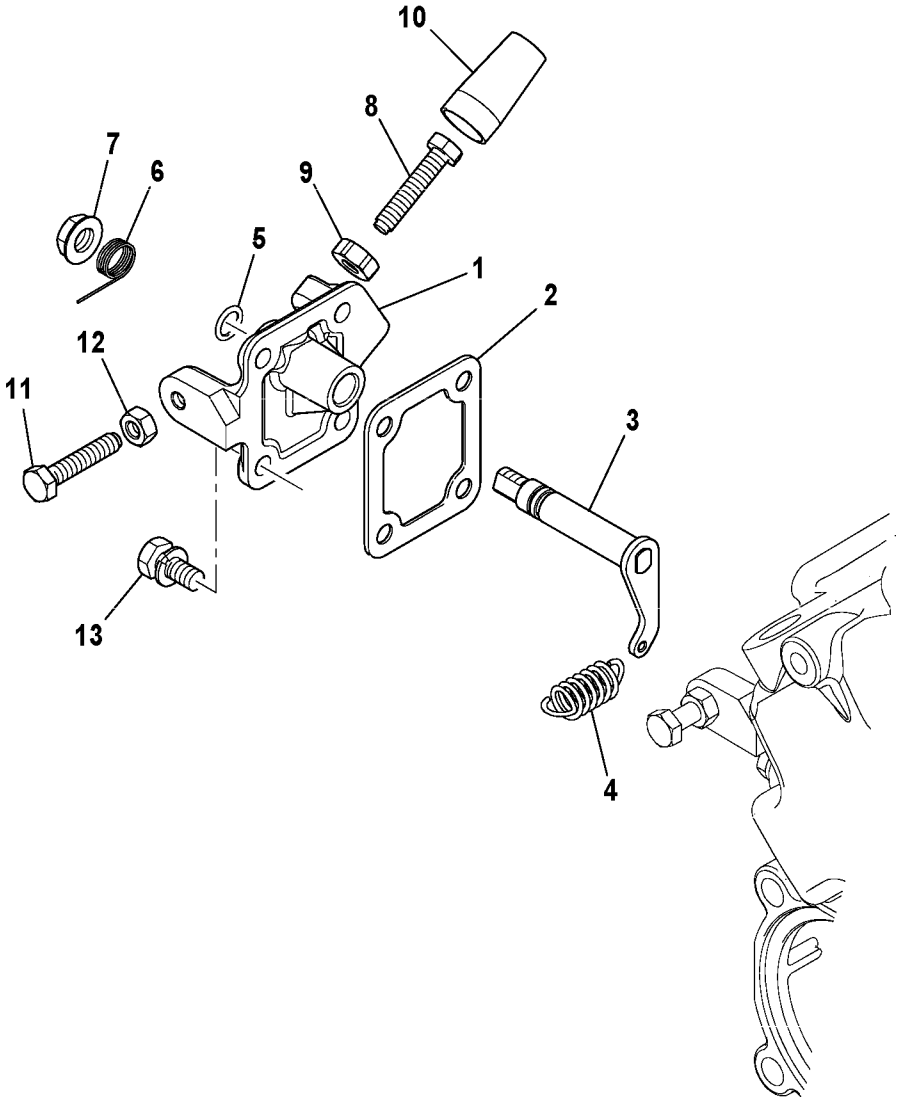
10
8
7
6
9
5
1
2
12
11
3
13
4

Fig.	Part No.	Quantity 1	2	3	PS	KIT	Description	Denominación	Denominação	Dénomination	Notes
1		1			NS		Bracket	Ménsula	Suporte	Console	
2	**VOE 17229551**	1					Gasket	Junta	Junta	Joint	
3		1			NS		Arm	Brazo	Braço	Bras	
4	**VOE 17230247**	1					Spring	Resorte	Mola	Ressort	
5	**VOE 17230935**	1					O-ring	Anillo tórico	Anel-o	Joint torique	
6	**VOE 17230232**	1					Spring	Resorte	Mola	Ressort	
7	**VOE 17230933**	1					Nut	Tuerca	Porca	Écrou	
8	**VOE 17224730**	1					Screw	Tornillo	Parafuso	Vis	
9	**VOE 17229646**	1					Nut	Tuerca	Porca	Écrou	
10		1			NS		Cap	Capuchón	Tampa	Capot	
11	**VOE 17224730**	1					Screw	Tornillo	Parafuso	Vis	
12	**VOE 20460939**	1					Hexagon nut	Tuerca hexagonal	Porca sextavada	Écrou hexagonal	
13	**VOE 17228855**	4					Bolt	Perno	Parafuso	Boulon	

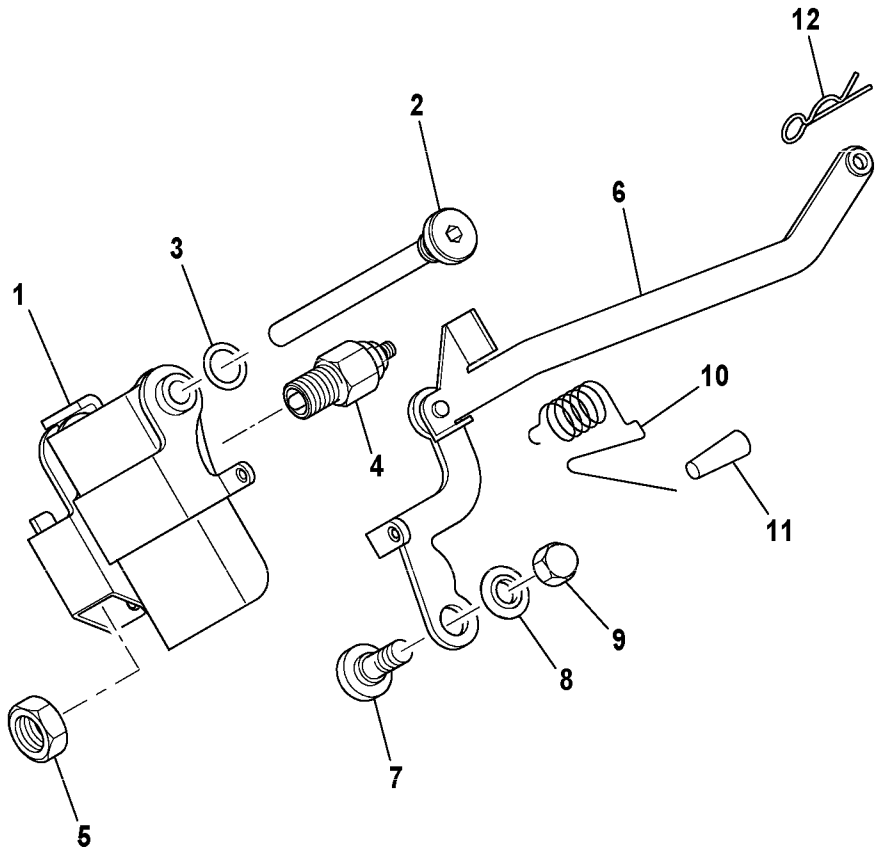
12
2
6
3
1
10
4
11
9
8
7
5

Fig.	Part No.	Quantity 1	2	3	PS	KIT	Description	Denominación	Denominação	Dénomination	Notes
1	**VOE 17224737**	1					Control	Reglaje	Regulagem	Commande	
2	**VOE 17224740**	1					Shaft	Eje	Eixo	Arbre	
3	**VOE 17230166**	1					O-ring	Anillo tórico	Anel-o	Joint torique	
4	**VOE 17230219**	1					Sensor	Sensor	Sensor	Capteur	
5	**VOE 17229615**	1					Nut	Tuerca	Porca	Écrou	
6	**VOE 17229272**	1					Control lever	Palanca mando	Alavanca de comando	Levier de commande	
7	**VOE 17229811**	1					Pivot pin	Eje de articulación	Pino pivô	Axe-guide	
8	**VOE 17228237**	1					Washer	Arandela	Arruela	Rondelle	
9	**VOE 17229616**	1					Nut	Tuerca	Porca	Écrou	
10	**VOE 17230255**	1					Spring	Resorte	Mola	Ressort	
11	**VOE 17229930**	1					Plug	Tapón	Bujão	Tampon	
12	**VOE 17230938**	1					Pin	Pasador	Pino	Goupille	

1		**Accelerateur manual** **Mando manual acelerador** **Acelerador manual** **Hand throttle**	Catalogue id **20649**	Group **272**
2			Illustr. No **1064273**	Section **150**
3			Issue **PUB 20030904-B**	Page **235**
4				
5		**35.7KW MC60C**		

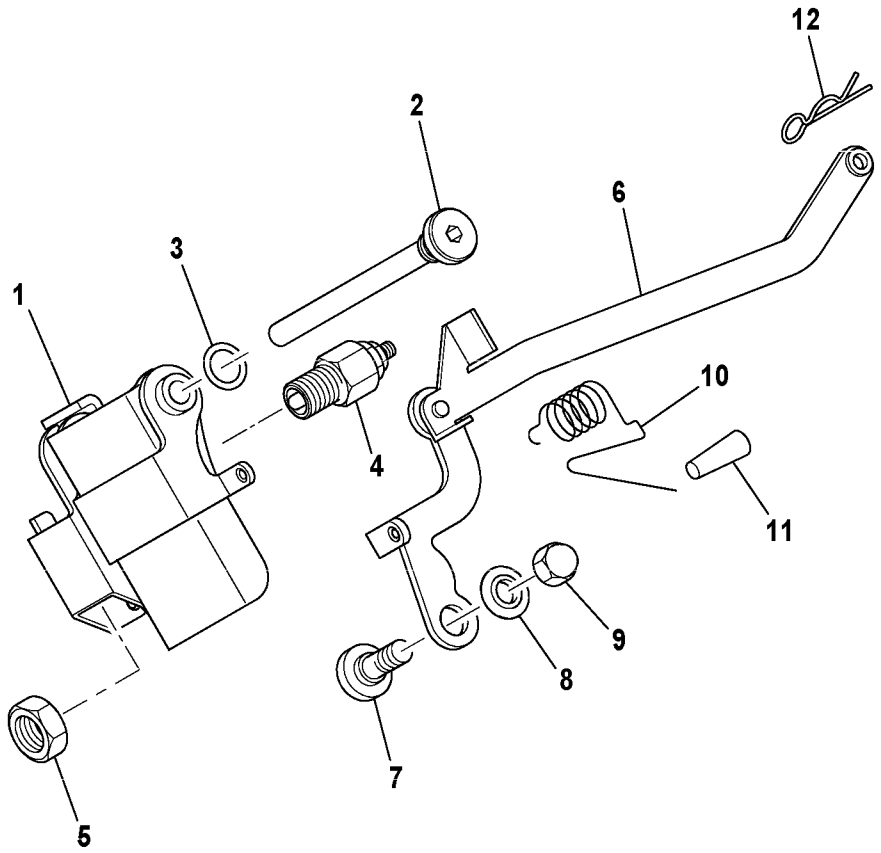
12
2
6
3
1
10
4
11
9
8
7
5

Fig.	Part No.	Quantity 1	2	3	PS	KIT	Description	Denominación	Denominação	Dénomination	Notes
1	**VOE 17224737**	1					Control	Reglaje	Regulagem	Commande	
2	**VOE 17224740**	1					Shaft	Eje	Eixo	Arbre	
3	**VOE 17230166**	1					O-ring	Anillo tórico	Anel-o	Joint torique	
4	**VOE 17230216**	1					Sensor	Sensor	Sensor	Capteur	
5	**VOE 17229615**	1					Nut	Tuerca	Porca	Écrou	
6	**VOE 17229272**	1					Control lever	Palanca mando	Alavanca de comando	Levier de commande	
7	**VOE 17229811**	1					Pivot pin	Eje de articulación	Pino pivô	Axe-guide	
8	**VOE 17228237**	1					Washer	Arandela	Arruela	Rondelle	
9	**VOE 17229616**	1					Nut	Tuerca	Porca	Écrou	
10	**VOE 17230255**	1					Spring	Resorte	Mola	Ressort	
11	**VOE 17229930**	1					Plug	Tapón	Bujão	Tampon	
12	**VOE 17230938**	1					Pin	Pasador	Pino	Goupille	

1		**Accelerateur manual** **Mando manual acelerador** **Acelerador manual** **Hand throttle**	Catalogue id **20649**	Group **272**
2			Illustr. No **1064273**	Section **200**
3			Issue **PUB 20030904-B**	Page **237**
4				
5		**44.7KW MC70C-MC105C, MCT70C-MCT95C**		

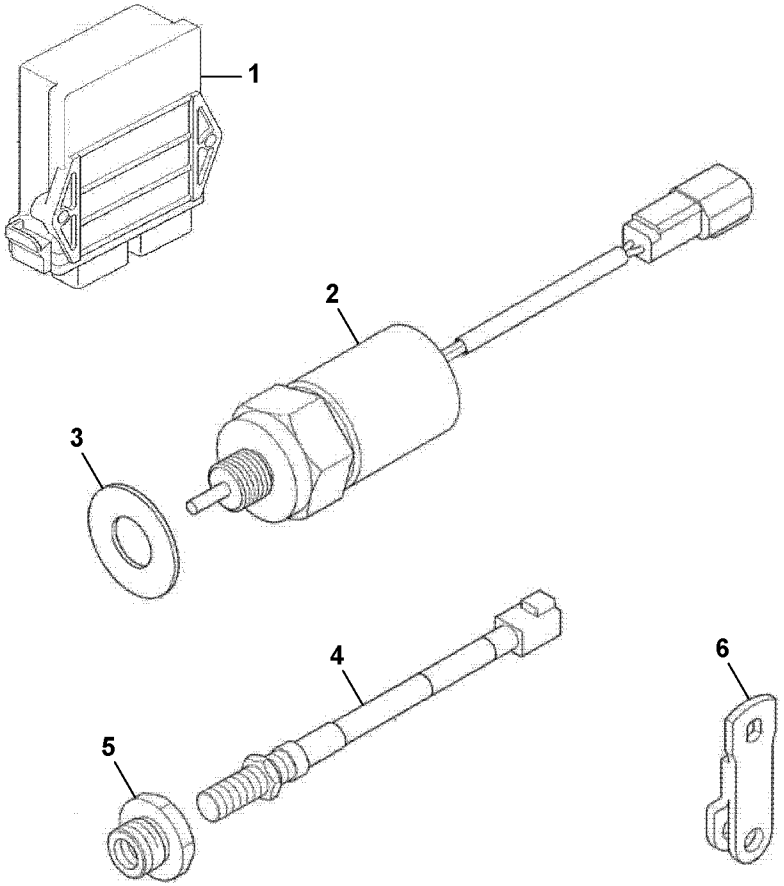
1
2
3
4
5
6

Fig.	Part No.	Quantity 1	2	3	PS	KIT	Description	Denominación	Denominação	Dénomination	Notes
1	**VOE 17224771**	1					Display	Visualizador	Display	Presentoir	
2	**VOE 17224772**	1					Solenoid	Electroimán	Eletroímã	Électro-aimant	
3	**VOE 17224773**	1					Washer	Arandela	Arruela	Rondelle	
4	**VOE 17224775**	1					Screw	Tornillo	Parafuso	Vis	
5	**VOE 17224776**	1					Adapter	Adaptador	Adaptador	Adaptateur	
6		1			NS		Bracket	Consola	Suporte	Console	

1		**Ecu** **Ecu** **ECU** **Ecu**	Catalogue id **20649**	Group **284**
2			Illustr. No **1063985**	Section **100**
3			Issue **PUB 20030904-B**	Page **239**
4				
5		**35.7KW MC60C**		

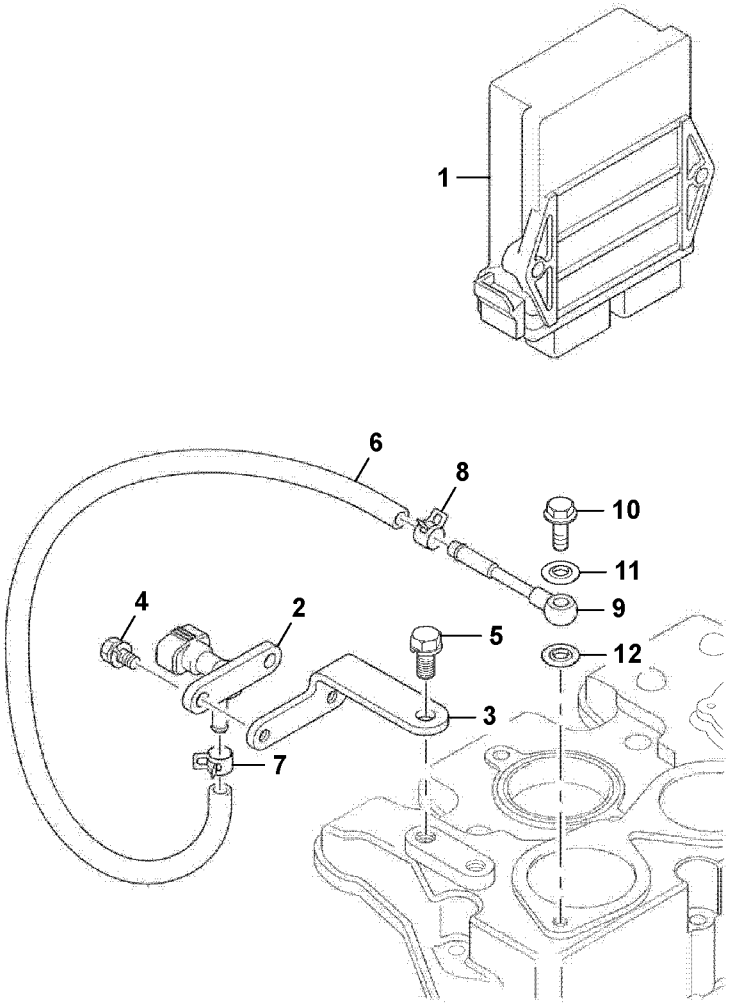
1
6
8
10
11
4
2
9
5
12
3
7

Fig.	Part No.	Quantity 1	2	3	PS	KIT	Description	Denominación	Denominação	Dénomination	Notes
1	**VOE 17224771**	1					Display	Visualizador	Display	Presentoir	
2	**VOE 17224826**	1					Sensor	Sensor	Sensor	Capteur	
3	**VOE 17224829**	1					Sensor	Sensor	Sensor	Capteur	
4	**VOE 17230942**	2					Screw	Tornillo	Parafuso	Vis	
5	**VOE 17230115**	1					Screw	Tornillo	Parafuso	Vis	
6	**VOE 17224831**	1					Pipe	Tubo	Tubo	Tuyau	
7	**VOE 17224832**	1					Clip	Clip	Grampo	Clip	
8	**VOE 17224832**	1					Clip	Clip	Grampo	Clip	
9	**VOE 17224833**	1					Adapter	Adaptador	Adaptador	Adaptateur	
10	**VOE 17228408**	1					Bolt	Perno	Parafuso	Boulon	
11	**VOE 17228237**	1					Washer	Arandela	Arruela	Rondelle	
12	**VOE 17228237**	1					Washer	Arandela	Arruela	Rondelle	

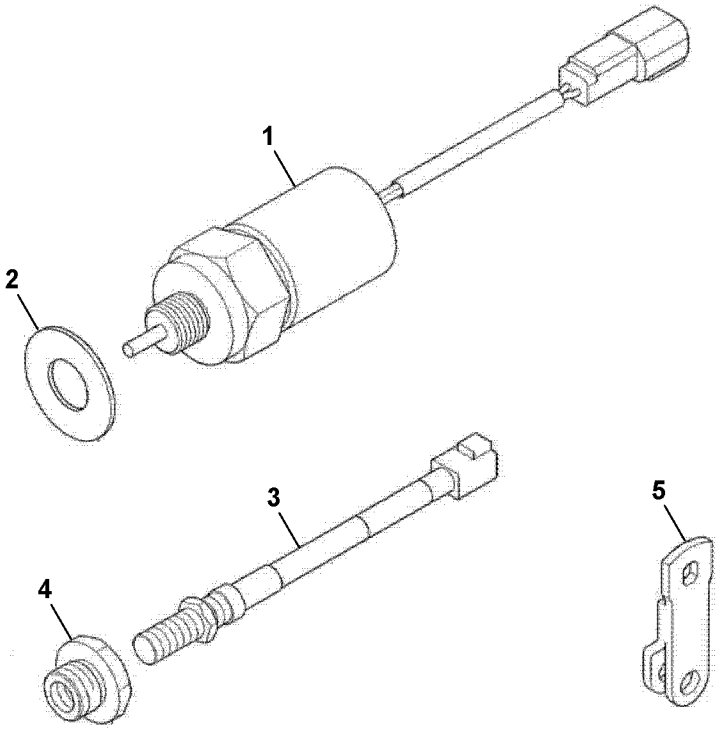
1
2
3
4
5

Fig.	Part No.	Quantity 1	2	3	PS	KIT	Description	Denominación	Denominação	Dénomination	Notes
1	**VOE 17224772**	1					Solenoid	Electroimán	Eletroímã	Électro-aimant	
2	**VOE 17224773**	1					Washer	Arandela	Arruela	Rondelle	
3	**VOE 17224775**	1					Screw	Tornillo	Parafuso	Vis	
4	**VOE 17224776**	1					Adapter	Adaptador	Adaptador	Adaptateur	
5		1			NS		Bracket	Consola	Suporte	Console	

1		**Installation de câble de papillon** **Cabo do acelerador, instalação** **Instalación de cable del acelerador** **Throttle Cable Installation**	Catalogue id **20649**	Group **284**
2			Illustr. No **1063965**	Section **200**
3			Issue **PUB 20030904-B**	Page **243**
4				
5		**44.7KW MC70C-MC105C, MCT70C-MCT95C**		



Volvo Construction Equipment
www.volvoce.com

GROUP		Section	Page
313	Battery with assembling details	100	251
321	Alternator 35.7KW MC60C	100	253
321	Alternator 44.7KW MC70C-MC105C, MCT70C-MCT95C	150	255
331	Starter motor MC60C-MC105C, MCT70C-MCT95C	100	257
350	Headlights MC60C-MC105C, MCT70C-MCT95C	100	259
350	Headlights RH.MC60C-MC105C, MCT70C-MCT95C	150	263
350	Headlights LH.MC60C-MC105C, MCT70C-MCT95C	200	265
352	Turn signal and mirror RH.MC60C-MC105C, MCT70C-MCT95C	100	267
352	Turn signal and mirror LH.MC60C-MC105C, MCT70C-MCT95C	150	269
352	Front Light MC60C-MC105C, MCT70C-MCT95C	200	271
352	Front Light MC60C-MC105C, MCT70C-MCT95C	250	273
354	Lighting, cab MC60C-MC105C, MCT70C-MCT95C	100	275
356	Mounting Work Lights MC60C, MC70C, MCT70C	100	277
356	Mounting Work Lights MC70C, MCT70C	150	279
356	Reflexes MC60C-MC105C, MCT70C-MCT95C	200	281
356	Mounting Work Lights MC60C-MC105C, MCT70C-MCT95C	250	283
362	Reverse Drive Alarm MC60C-MC105C, MCT70C-MCT95C	100	285
362	Reverse Drive Alarm MC60C-MC105C, MCT70C-MCT95C	150	287
362	Rotating beacon MC60C, MC70C, MC95C, MCT70C, MCT85C	200	289
362	Rotating beacon MC60C, MC70C, MC95C, MCT70C, MCT85C	250	291
362	Rotating beacon MC60C, MC70C, MC95C, MCT70C, MCT85C	300	293
363	Wiper motor assembly MC60C-MC105C, MCT70C-MCT95C	100	295
363	Washer bottle installation MC60C-MC105C, MCT70C-MCT95C	150	297
364	Oil pressure switch MC60C-MC105C, MCT70C-MCT95C	100	299
371	Cable harness, cab and frame MC60C, MC70C, MCT70C	100	301
371	Cable harness, cab and frame MC60C-MC105C, MCT70C-MCT95C	150	303
371	Electrical system, cab MC60C-MC105C, MCT70C-MCT95C	200	305
371	Electrical system, cab MC60C-MC105C, MCT70C-MCT95C	250	307
371	Electrical system, cab CANOPY MC60C-MC105C, MCT70C-MCT95C	300	309
371	Electrical system, cab CANOPY MC60C-MC105C, MCT70C-MCT95C	350	311
371	Electrical system, cab MC60C-MC105C, MCT70C-MCT95C	400	313
371	Electrical system - engine harness MC60C	500	315
371	Electrical system - engine harness MC70C-MC105C, MCT70C-MCT95C	550	317
380	Switches in cab with ignition key MC60C-MC105C, MCT70C-MCT95C	100	319
380	Switches in cab with ignition key MC60C-MC105C, MCT70C-MCT95C	200	321
380	Switches in cab with keyless ignition MC60C-MC105C, MCT70C-MCT95C	500	323
380	Switches in cab with keyless ignition MC60C-MC105C, MCT70C-MCT95C	550	325
380	Additional Socket MC70C-MC105C, MCT70C-MCT95C	1000	327
386	Water Temperature MC60C-MC105C, MCT70C-MCT95C	100	329
393	Radio kit MC60C-MC105C, MCT70C-MCT95C	100	331

INDICE

GRUPO		Sección	Página
313	Batería con assesorios de montaje	100	251
321	Alternador 35.7KW MC60C	100	253
321	Alternador 44.7KW MC70C-MC105C, MCT70C-MCT95C	150	255
331	Motor de arranque MC60C-MC105C, MCT70C-MCT95C	100	257
350	Alumbrado de circulación MC60C-MC105C, MCT70C-MCT95C	100	259
350	Alumbrado de circulación RH.MC60C-MC105C, MCT70C-MCT95C	150	263
350	Alumbrado de circulación LH.MC60C-MC105C, MCT70C-MCT95C.	200	265
352	Intermitente y espejo RH.MC60C-MC105C, MCT70C-MCT95C	100	267
352	Intermitente y espejo LH.MC60C-MC105C, MCT70C-MCT95C	150	269
352	Faro delantero MC60C-MC105C, MCT70C-MCT95C	200	271
352	Faro delantero MC60C-MC105C, MCT70C-MCT95C	250	273
354	Alumbrado, cabina MC60C-MC105C, MCT70C-MCT95C	100	275
356	Piezas de fijación para luces de trabajo MC60C, MC70C, MCT70C.	100	277
356	Piezas de fijación para luces de trabajo MC70C, MCT70C	150	279
356	Reflejos MC60C-MC105C, MCT70C-MCT95C	200	281
356	Piezas de fijación para luces de trabajo MC60C-MC105C, MCT70C-MCT95C	250	283
362	Avisador de marcha atrás MC60C-MC105C, MCT70C-MCT95C	100	285
362	Avisador de marcha atrás MC60C-MC105C, MCT70C-MCT95C	150	287
362	Faro de advertencia giratorio MC60C, MC70C, MC95C, MCT70C, MCT85C	200	289
362	Faro de advertencia giratorio MC60C, MC70C, MC95C, MCT70C, MCT85C	250	291
362	Faro de advertencia giratorio MC60C, MC70C, MC95C, MCT70C, MCT85C	300	293
363	Conjunto del motor de las escobillas MC60C-MC105C, MCT70C-MCT95C	100	295
363	Montaje de depósito lavacristales MC60C-MC105C, MCT70C-MCT95C	150	297
364	Interruptor de presión de aceite MC60C-MC105C, MCT70C-MCT95C	100	299
371	Mazo de cables, cabina y bastidor MC60C, MC70C, MCT70C	100	301
371	Mazo de cables, cabina y bastidor MC60C-MC105C, MCT70C-MCT95C	150	303
371	Sistema eléctrico, Cabina MC60C-MC105C, MCT70C-MCT95C	200	305
371	Sistema eléctrico, Cabina MC60C-MC105C, MCT70C-MCT95C	250	307
371	Sistema eléctrico, Cabina CANOPY MC60C-MC105C, MCT70C-MCT95C	300	309
371	Sistema eléctrico, Cabina CANOPY MC60C-MC105C, MCT70C-MCT95C	350	311
371	Sistema eléctrico, Cabina MC60C-MC105C, MCT70C-MCT95C	400	313
371	Sistema eléctrico: cableado del motor MC60C	500	315
371	Sistema eléctrico: cableado del motor MC70C-MC105C, MCT70C-MCT95C	550	317
380	Interruptores en la cabina con llave de encendido MC60C-MC105C, MCT70C-MCT95C	100	319
380	Interruptores en la cabina con llave de encendido MC60C-MC105C, MCT70C-MCT95C	200	321
380	Interruptores en la cabina con encendido sin llave MC60C-MC105C, MCT70C-MCT95C	500	323
380	Interruptores en la cabina con encendido sin llave MC60C-MC105C, MCT70C-MCT95C	550	325
380	Enchufe hembra adicional MC70C-MC105C, MCT70C-MCT95C	1000	327
386	Temperatura del agua MC60C-MC105C, MCT70C-MCT95C	100	329
393	Kit de radio MC60C-MC105C, MCT70C-MCT95C	100	331

GRUPO		Seção	Página
313	Bateria com detalhes de montagem	100	251
321	Alternador 35.7KW MC60C	100	253
321	Alternador 44.7KW MC70C-MC105C, MCT70C-MCT95C	150	255
331	Motor de arranque MC60C-MC105C, MCT70C-MCT95C	100	257
350	Faróis MC60C-MC105C, MCT70C-MCT95C	100	259
350	Faróis RH.MC60C-MC105C, MCT70C-MCT95C	150	263
350	Faróis LH.MC60C-MC105C, MCT70C-MCT95C	200	265
352	Setas de mudança de direção e espelhos RH.MC60C-MC105C, MCT70C-MCT95C	100	267
352	Setas de mudança de direção e espelhos LH.MC60C-MC105C, MCT70C-MCT95C	150	269
352	Lâmpada dianteira MC60C-MC105C, MCT70C-MCT95C	200	271
352	Lâmpada dianteira MC60C-MC105C, MCT70C-MCT95C	250	273
354	Iluminação, cabine MC60C-MC105C, MCT70C-MCT95C	100	275
356	Lâmpadas de trabalho, montagem MC60C, MC70C, MCT70C	100	277
356	Lâmpadas de trabalho, montagem MC70C, MCT70C	150	279
356	Reflexos MC60C-MC105C, MCT70C-MCT95C	200	281
356	Lâmpadas de trabalho, montagem MC60C-MC105C, MCT70C-MCT95C	250	283
362	Alarme de marcha à ré, acionamento MC60C-MC105C, MCT70C-MCT95C	100	285
362	Alarme de marcha à ré, acionamento MC60C-MC105C, MCT70C-MCT95C	150	287
362	Sinalizador rotativo MC60C, MC70C, MC95C, MCT70C, MCT85C	200	289
362	Sinalizador rotativo MC60C, MC70C, MC95C, MCT70C, MCT85C	250	291
362	Sinalizador rotativo MC60C, MC70C, MC95C, MCT70C, MCT85C	300	293
363	Motor do limpador de pára-brisa, montagem MC60C-MC105C, MCT70C-MCT95C	100	295
363	Garrafa do lavador, instalação MC60C-MC105C, MCT70C-MCT95C	150	297
364	Interruptor de pressão do óleo MC60C-MC105C, MCT70C-MCT95C	100	299
371	Chicote de cabos, cabine e chassi MC60C, MC70C, MCT70C	100	301
371	Chicote de cabos, cabine e chassi MC60C-MC105C, MCT70C-MCT95C	150	303
371	MC60C-MC105C, MCT70C-MCT95C	200	305
371	MC60C-MC105C, MCT70C-MCT95C	250	307
371	CANOPY MC60C-MC105C, MCT70C-MCT95C	300	309
371	CANOPY MC60C-MC105C, MCT70C-MCT95C	350	311
371	MC60C-MC105C, MCT70C-MCT95C	400	313
371	Sistema elétrico - chicote de cabos do motor MC60C	500	315
371	Sistema elétrico - chicote de cabos do motor MC70C-MC105C, MCT70C-MCT95C	550	317
380	Interruptores na cabine com chave de ignição MC60C-MC105C, MCT70C-MCT95C	100	319
380	Interruptores na cabine com chave de ignição MC60C-MC105C, MCT70C-MCT95C	200	321
380	Interruptores da cabine com ignição sem chave MC60C-MC105C, MCT70C-MCT95C	500	323
380	Interruptores da cabine com ignição sem chave MC60C-MC105C, MCT70C-MCT95C	550	325
380	Tomada adicional MC70C-MC105C, MCT70C-MCT95C	1000	327
386	Temperatura da água MC60C-MC105C, MCT70C-MCT95C	100	329
393	Kit de rádio MC60C-MC105C, MCT70C-MCT95C	100	331

TABLE DES MATIÈRES

GROUPE		Section	Page
313	Batterie avec pieces de montage	100	251
321	Alternateur 35.7KW MC60C	100	253
321	Alternateur 44.7KW MC70C-MC105C, MCT70C-MCT95C	150	255
331	Démarreur MC60C-MC105C, MCT70C-MCT95C	100	257
350	Éclairage de translation sur route MC60C-MC105C, MCT70C-MCT95C	100	259
350	Éclairage de translation sur route RH.MC60C-MC105C, MCT70C-MCT95C	150	263
350	Éclairage de translation sur route LH.MC60C-MC105C, MCT70C-MCT95C	200	265
352	Indicateur de direction et rétroviseur RH.MC60C-MC105C, MCT70C-MCT95C	100	267
352	Indicateur de direction et rétroviseur LH.MC60C-MC105C, MCT70C-MCT95C	150	269
352	Phare avant MC60C-MC105C, MCT70C-MCT95C	200	271
352	Phare avant MC60C-MC105C, MCT70C-MCT95C	250	273
354	Eclairage, cabine MC60C-MC105C, MCT70C-MCT95C	100	275
356	Fixation Projecteurs de travail MC60C, MC70C, MCT70C	100	277
356	Fixation Projecteurs de travail MC70C, MCT70C	150	279
356	Catadioptres MC60C-MC105C, MCT70C-MCT95C	200	281
356	Fixation Projecteurs de travail MC60C-MC105C, MCT70C-MCT95C	250	283
362	Alarme de recul MC60C-MC105C, MCT70C-MCT95C	100	285
362	Alarme de recul MC60C-MC105C, MCT70C-MCT95C	150	287
362	Avertisseur lumineux à feu tournant MC60C, MC70C, MC95C, MCT70C, MCT85C	200	289
362	Avertisseur lumineux à feu tournant MC60C, MC70C, MC95C, MCT70C, MCT85C	250	291
362	Avertisseur lumineux à feu tournant MC60C, MC70C, MC95C, MCT70C, MCT85C	300	293
363	Moteur d'essuie-glace MC60C-MC105C, MCT70C-MCT95C	100	295
363	Réservoir de lave-glace MC60C-MC105C, MCT70C-MCT95C	150	297
364	Manocontact d'huile MC60C-MC105C, MCT70C-MCT95C	100	299
371	Faisceau de câbles, cabine et châssis MC60C, MC70C, MCT70C	100	301
371	Faisceau de câbles, cabine et châssis MC60C-MC105C, MCT70C-MCT95C	150	303
371	Système électrique, cabine de conducteur MC60C-MC105C, MCT70C-MCT95C	200	305
371	Système électrique, cabine de conducteur MC60C-MC105C, MCT70C-MCT95C	250	307
371	Système électrique, cabine de conducteur CANOPY MC60C-MC105C, MCT70C-MCT95C	300	309
371	Système électrique, cabine de conducteur CANOPY MC60C-MC105C, MCT70C-MCT95C	350	311
371	Système électrique, cabine de conducteur MC60C-MC105C, MCT70C-MCT95C	400	313
371	Système électrique - faisceau de câbles moteur MC60C	500	315
371	Système électrique - faisceau de câbles moteur MC70C-MC105C, MCT70C-MCT95C	550	317
380	Commutateurs dans la cabine et clé de contact MC60C-MC105C, MCT70C-MCT95C	100	319
380	Commutateurs dans la cabine et clé de contact MC60C-MC105C, MCT70C-MCT95C	200	321
380	Commutateurs, cabine dépourvue de serrure de contact MC60C-MC105C, MCT70C-MCT95C	500	323
380	Commutateurs, cabine dépourvue de serrure de contact MC60C-MC105C, MCT70C-MCT95C	550	325
380	Douille supplémentaire MC70C-MC105C, MCT70C-MCT95C	1000	327
386	Température de l'eau MC60C-MC105C, MCT70C-MCT95C	100	329
393	Kit autoradio MC60C-MC105C, MCT70C-MCT95C	100	331



Volvo Construction Equipment
www.volvoce.com

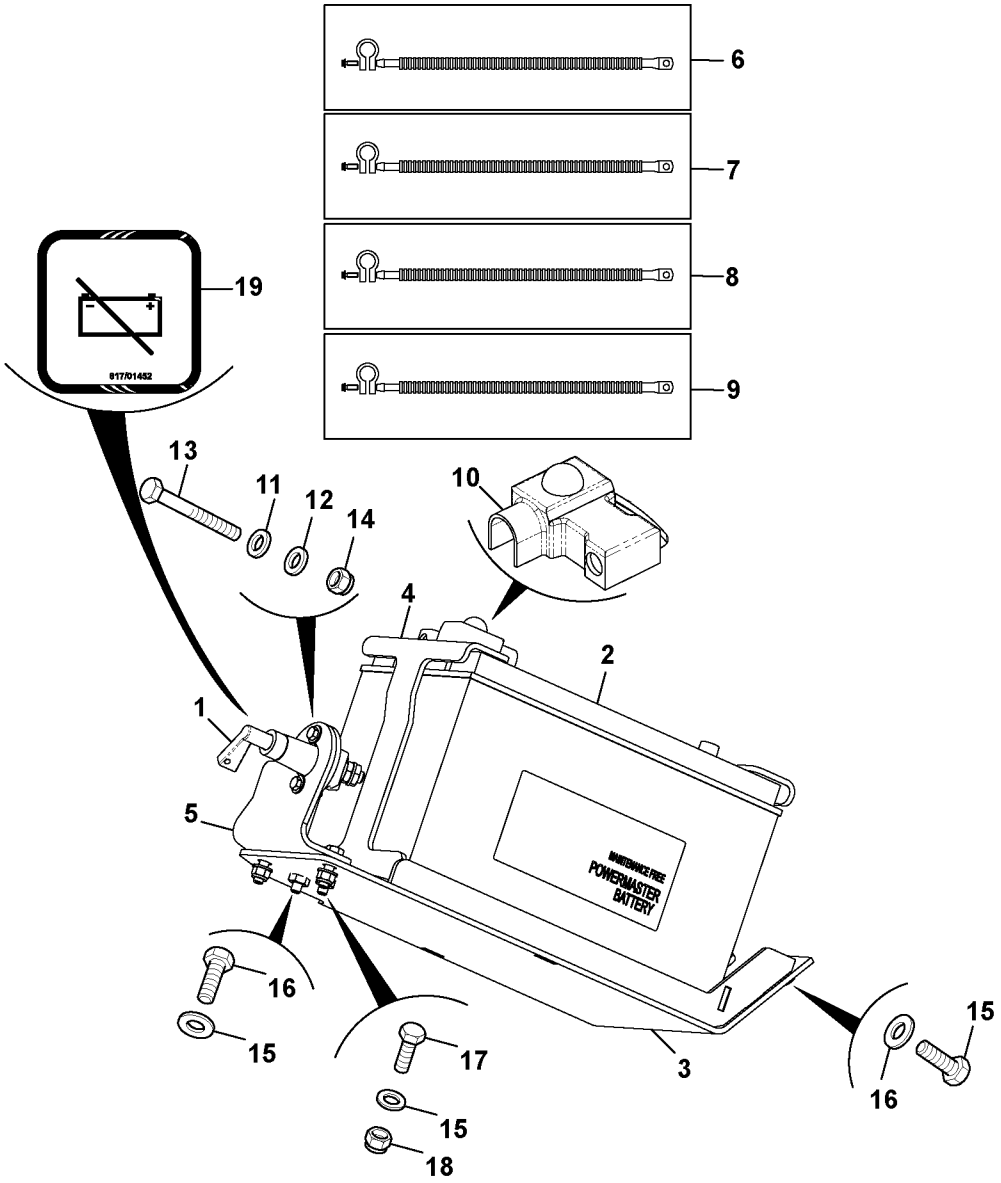
6
7
8
9
19
817/01452
13
11
12
14
10
4
2
1
5
MAINTENANCE FREE
POWERMASTER
BATTERY
16
15
17
3
15
16
15
18

Fig.	Part No.	Quantity 1	2	3	PS	KIT	Description	Denominación	Denominação	Dénomination	Notes
1	**VOE 16213532**	1	1	1			Switch	Interruptor	Interruptor	Interrupteur	
2	**VOE 17228791**	1	1				Battery	Batería	Bateria	Batterie	
2				1	NS		Battery	Bateria	Bateria	Batterie	
3	**VOE 17230458**	1	1	1			Battery shelf	Bandeja de batería	Bandeja da bateria	Support de batterie	
4		1	1	1	NS		Press plate	Placa de presión	Placa prensa	Plaque de pression	
5		1	1	1	NS		Bracket	Ménsula	Suporte	Console	
6	**VOE 17228958**	1	1	1			Battery cable	Cable de batería	Cabo da bateria	Câble de batterie	
7	**VOE 17228962**	1	1	1			Battery cable	Cable de batería	Cabo da bateria	Câble de batterie	
8	**VOE 17228963**	1	1	1			Battery cable	Cable de batería	Cabo da bateria	Câble de batterie	
9	**VOE 17228965**	1	1	1			Cable	Cable	Cabo	Câble	
10	**VOE 17204982**	1	1	1			Terminal casing	Protección terminal	Proteção terminais	Couvre-borne	
11	**VOE 973494**	2	2	2			Washer	Arandela	Arruela	Rondelle	
12	**VOE 17205556**	2	2	2			Washer	Arandela	Arruela	Rondelle	
13	**VOE 16212071**	2	2	2			Set screw	Tornillo tope	Parafuso batente	Vis butée	
14	**VOE 16212115**	2	2	2			Lock nut	Contratuerca	Porca trava	Contre-écrou	
15	**VOE 20460127**	8	8	8			Washer	Arandela	Arruela	Rondelle	
16	**VOE 16213999**	4	4	4			Set screw	Tornillo tope	Parafuso batente	Vis butée	
17	**VOE 17205093**	2	2	2			Bolt	Perno	Parafuso	Boulon	
18	**VOE 16212120**	2	2	2			Lock nut	Contratuerca	Porca trava	Contre-écrou	
19	**VOE 17205234**	2	2	2			Decal	Calcomanía	Decalque	Autocollant	

1	**MC60C-MC105C**
2	**MCT70C-MCT95C**
3	**MC60C**
4	
5	

Batterie avec pieces de montage
Bateria com detalhes de montagem
Batería con assesorios de montaje
Battery with assembling details

Catalogue id **20649**	Group **313**
Illustr. No **1064239**	Section **100**
Issue **PUB 20030904-B**	Page **251**

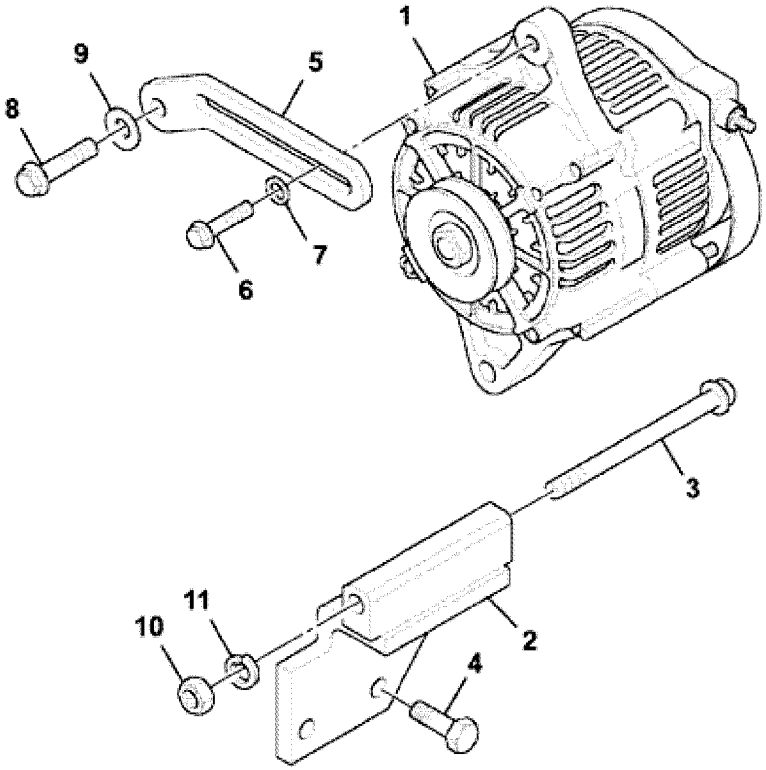
1
9
5
8
7
6
3
11
10
2
4

Fig.	Part No.	Quantity 1	2	3	PS	KIT	Description	Denominación	Denominação	Dénomination	Notes
1	**VOE 17229037**	1					Alternator	Alternador	Alternador	Alternateur	
2		1			NS		Bracket	Consola	Suporte	Console	
3	**VOE 17228268**	1					Screw	Tornillo	Parafuso	Vis	
4	**VOE 17230142**	3					Screw	Tornillo	Parafuso	Vis	
5		1			NS		Alternator anchorage	Fijación de alternador	Fixação alternador	Fixation alternateur	
6	**VOE 17230154**	1					Screw	Tornillo	Parafuso	Vis	
7	**VOE 17223872**	1					Washer	Arandela	Arruela	Rondelle	
8	**VOE 17230154**	1					Screw	Tornillo	Parafuso	Vis	
9	**VOE 17228475**	1					Washer	Arandela	Arruela	Rondelle	
10	**VOE 17230933**	1					Nut	Tuerca	Porca	Écrou	
11	**VOE 17228416**	1					Washer	Arandela	Arruela	Rondelle	

1		**Alternateur** **Alternador** **Alternador** **Alternator**	Catalogue id **20649**	Group **321**
2			Illustr. No **1064447**	Section **100**
3			Issue **PUB 20030904-B**	Page **253**
4				
5		**35.7KW MC60C**		

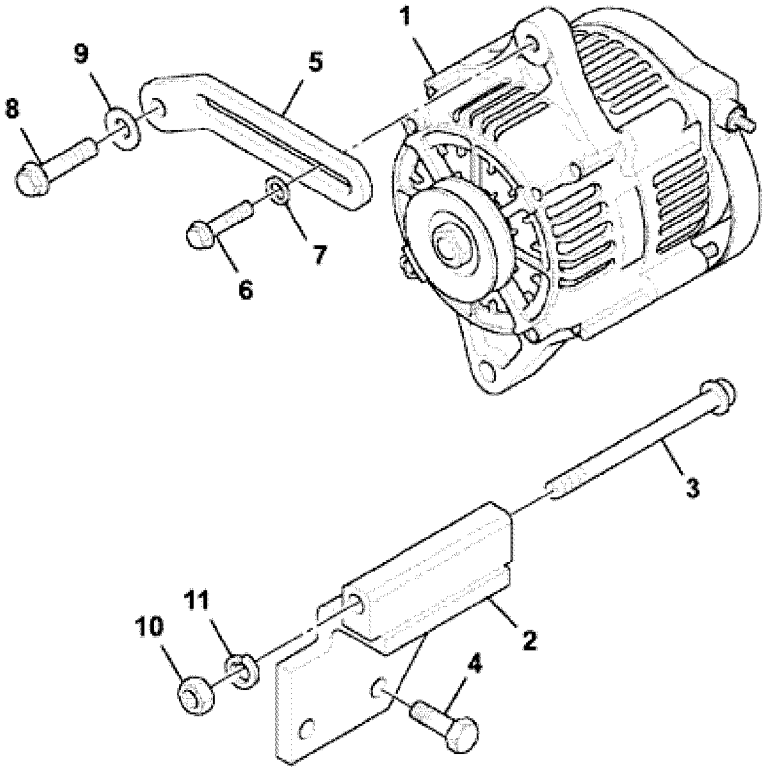
1
9
5
8
7
6
3
11
10
2
4

Fig.	Part No.	Quantity 1	2	3	PS	KIT	Description	Denominación	Denominação	Dénomination	Notes
1	**VOE 17229042**	1					Alternator	Alternador	Alternador	Alternateur	
2		1			NS		Bracket	Consola	Suporte	Console	
3	**VOE 17228268**	1					Screw	Tornillo	Parafuso	Vis	
4	**VOE 17230142**	3					Screw	Tornillo	Parafuso	Vis	
5		1			NS		Bracket	Ménsula	Suporte	Console	
6	**VOE 17230154**	1					Screw	Tornillo	Parafuso	Vis	
7	**VOE 17223872**	1					Washer	Arandela	Arruela	Rondelle	
8	**VOE 17230154**	1					Screw	Tornillo	Parafuso	Vis	
9	**VOE 17228475**	1					Washer	Arandela	Arruela	Rondelle	
10	**VOE 17228434**	1					Nut	Tuerca	Porca	Écrou	
11	**VOE 17228416**	1					Washer	Arandela	Arruela	Rondelle	

1		**Alternateur** **Alternador** **Alternador** **Alternator**	Catalogue id **20649**	Group **321**
2			Illustr. No **1064447**	Section **150**
3			Issue **PUB 20030904-B**	Page **255**
4				
5		**44.7KW MC70C-MC105C, MCT70C-MCT95C**		

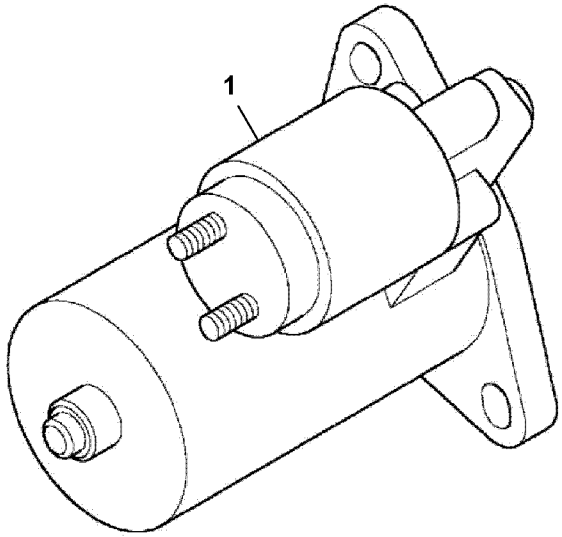
1

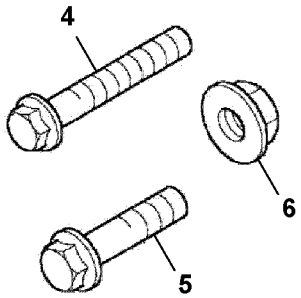
4
6
5

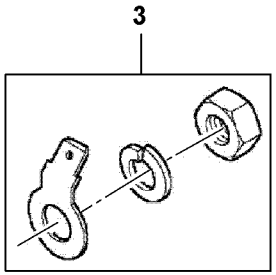
3

Fig.	Part No.	Quantity 1	2	3	PS	KIT	Description	Denominación	Denominação	Dénomination	Notes
1	**VOE 17224716**	1					Starter motor	Motor de arranque	Motor de partida	Démarreur	
3	**VOE 17224717**	1					•Terminal casing	•Protección terminal	•Proteção terminais	•Couvre-borne	
4	**VOE 17228837**	2					•Bolt	•Perno	•Parafuso	•Boulon	
5	**VOE 17228319**	2					•Screw	•Tornillo	•Parafuso	•Vis	
6	**VOE 17228262**	2					•Nut	•Tuerca	•Porca	•Écrou	

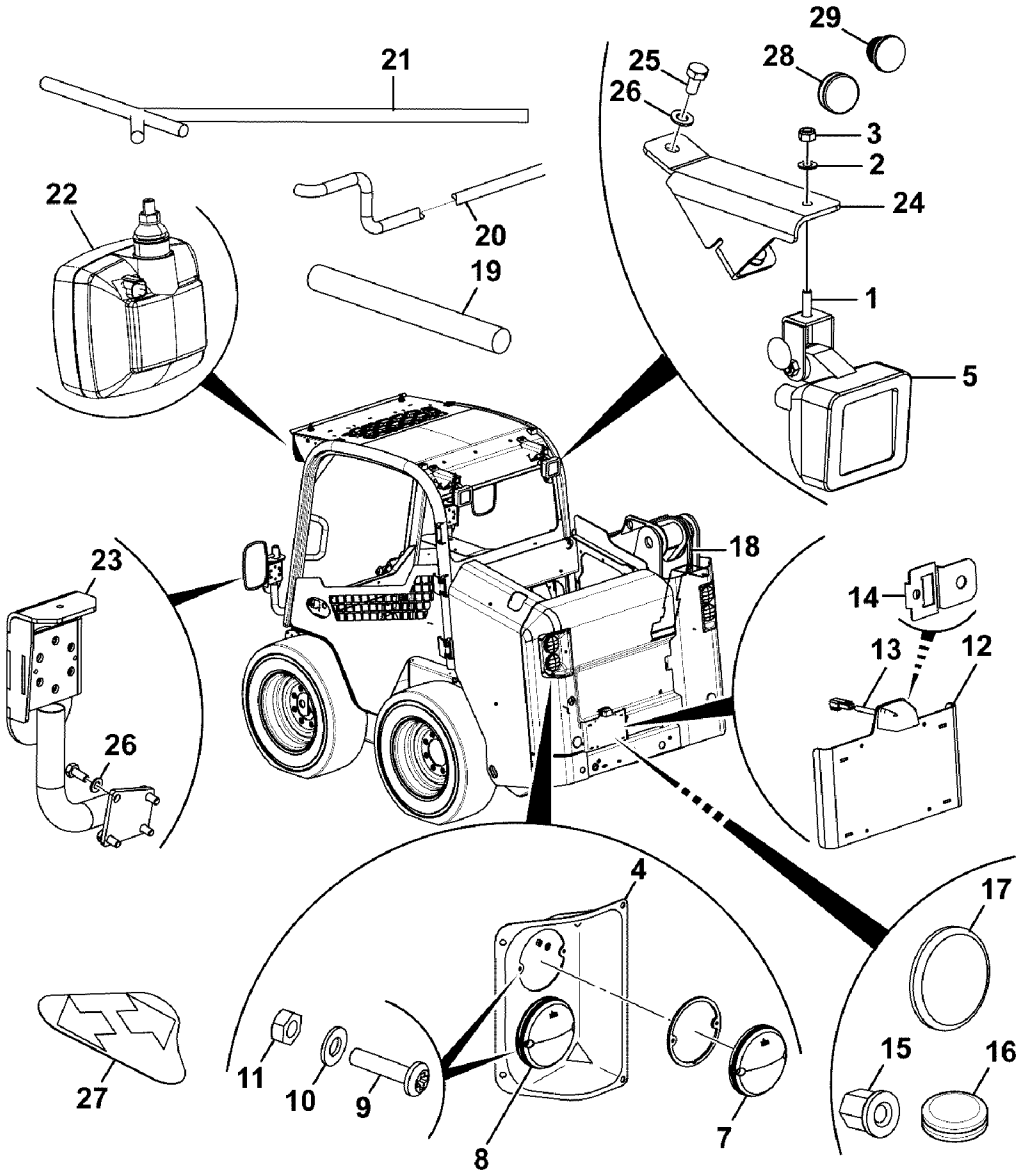
29
21
25
28
26
3
2
24
22
20
19
1
5
18
23
14
13
12
26
4
17
27
11
10
9
8
7
15
16

Fig.	Part No.	Quantity 1	2	3	PS	KIT	Description	Denominación	Denominação	Dénomination	Notes
1	**VOE 16213999**	6	6				Set screw	Tornillo tope	Parafuso batente	Vis butée	
2	**VOE 20460127**	6	6				Washer	Arandela	Arruela	Rondelle	
3	**VOE 16212120**	2	2				Lock nut	Contratuerca	Porca trava	Contre-écrou	
4	**VOE 17209951**	2	2				Housing	Cuerpo	Carcaça	Carter	
5	**VOE 11039856**	2	2				Work lamp	Faro de trabajo	Farolete	Projecteur de travail	
7	**VOE 17210427**	2	2				Tail lamp	Piloto trasero	Lanterna traseira	Feu ar	
8	**VOE 17210430**	2	2				Tail lamp	Piloto trasero	Lanterna traseira	Feu ar	
9	**VOE 17205263**	8	8				Screw	Tornillo	Parafuso	Vis	
10	**VOE 17205564**	8	8				Washer	Arandela	Arruela	Rondelle	
11	**VOE 17205292**	8	8				Nut	Tuerca	Porca	Écrou	
12	**VOE 17209790**	1	1				Plate	Chapa	Chapa	Tôle	
13	**VOE 17204981**	1	1				Number plate lamp	Lámpara de matrícula	Lâmpada, placa licença	Éclairage de plaque d'imm	
14	**VOE 17205354**	1	1				Clip	Clip	Clipe	Bride	
15	**VOE 17205324**	1	1				Nut	Tuerca	Porca	Écrou	
16	**VOE 17205118**	1	1				Plug tap	Tapón roscado	Bujão roscado	Taraud	
17	**VOE 17205282**	2	2				Reflector	Reflector	Refletor	Catadioptre	
18	**VOE 17205430**	1	1				Cable harness	Manojo cables	Chicote cabos	Faisceau câbles	
19	**VOE 17205429**	2	2				Cable harness	Manojo cables	Chicote cabos	Faisceau câbles	
20	**VOE 17205426**	1	1				Cable harness	Manojo cables	Chicote cabos	Faisceau câbles	
21	**VOE 17209689**	1	1				Cable harness	Manojo cables	Chicote cabos	Faisceau câbles	
22	**VOE 17210423**	2					Work lamp	Faro de trabajo	Farolete	Projecteur de travail	See group 352, Page 273
22	**VOE 17210249**		2				Lamp	Lámpara	Lanterna	Lampe	
23		1					Mirror Arm	Marco Espejo	Braço do espelho	Bras Miroir	See group 841, Page 545
23			1				Mirror Arm	Marco Espejo	Braço do espelho	Bras Miroir	See group 841, Page 545
24	**VOE 16213323**	2	2				Bracket	Consola	Suporte	Console	
25	**VOE 16212075**	7	7				Set screw	Tornillo tope	Parafuso batente	Vis butée	
26	**VOE 16212138**	7	7		SS		Plain washer	Arandela plana	Arruela simples	Rondelle plane	
27		1	1				Decal	Decalcomania	Adesivo	Decalcomanie	
28	**VOE 17223997**	2	2				Plug	Tapón	Bujão	Tampon	

2057) **GB:** No Air Conditioner **ES:** Sin acondicionador de aire **BR:** Sem ar condicionado **FR:** Sans climatisation

1	**RH**
2	**LH**
3	
4	
5	

Éclairage de translation sur route
Faróis
Alumbrado de circulación
Headlights

2057) MC60C-MC105C, MCT70C-MCT95C

Catalogue id	Group
20649	**350**
Illustr. No **1064139**	Section **100**
Issue **PUB 20030904-B**	Page **259**

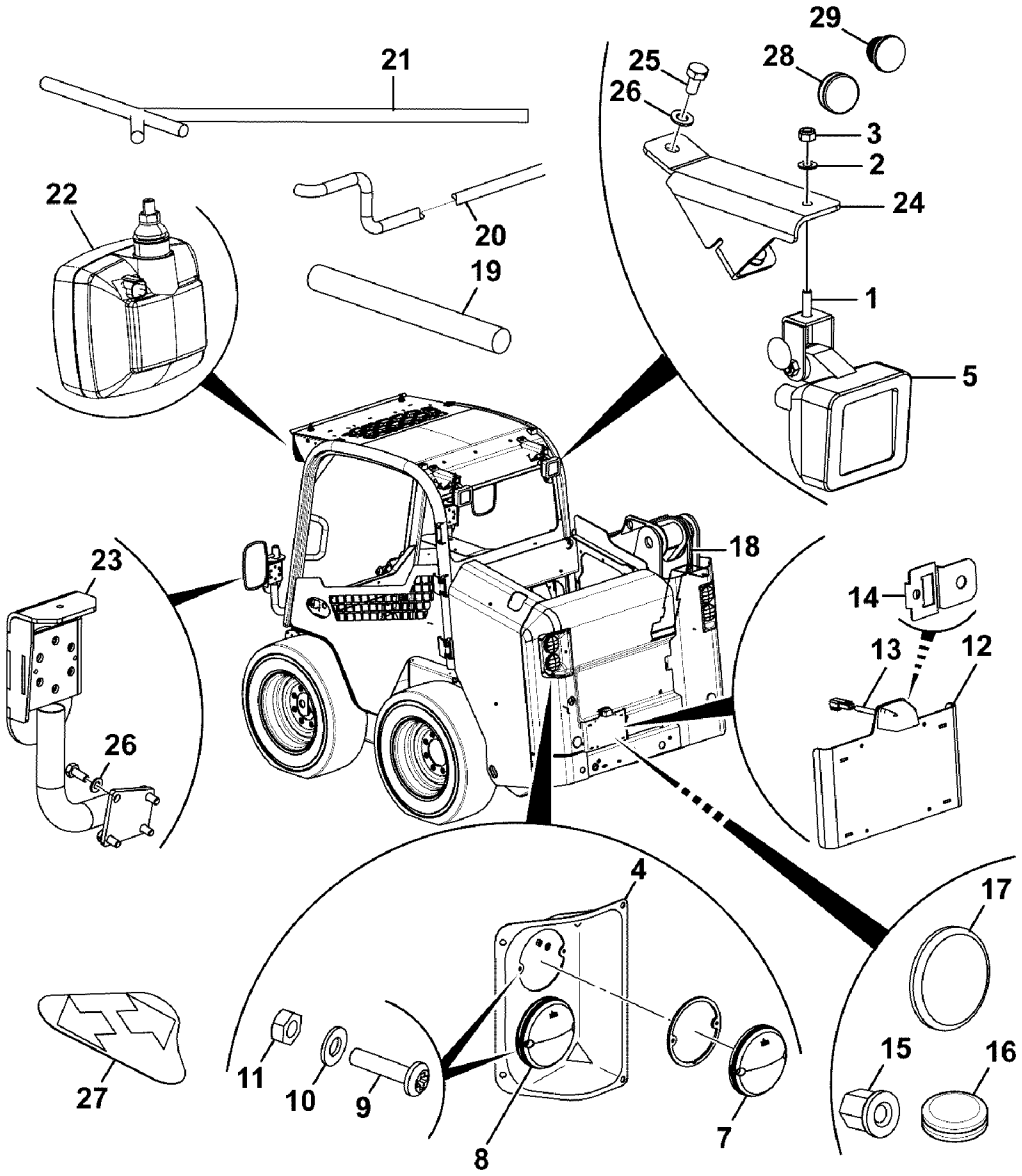
29
21
25
28
26
3
2
24
22
20
19
1
5
18
23
14
13
12
26
4
17
27
11
10
9
8
7
15
16

Fig.	Part No.	Quantity 1	2	3	PS	KIT	Description	Denominación	Denominação	Dénomination	Notes
29	**VOE 17223996**	1	1				Grommet	Pasaje	Passa muro	Passe fil	

2057) **GB:** No Air Conditioner **ES:** Sin acondicionador de aire **BR:** Sem ar condicionado **FR:** Sans climatisation

1	**RH**	**Éclairage de translation sur route** **Faróis** **Alumbrado de circulación** **Headlights**	Catalogue id **20649**	Group **350**
2	**LH**		Illustr. No **1064139**	Section **100**
3			Issue **PUB 20030904-B**	Page **261**
4				
5		**2057) MC60C-MC105C, MCT70C-MCT95C**		

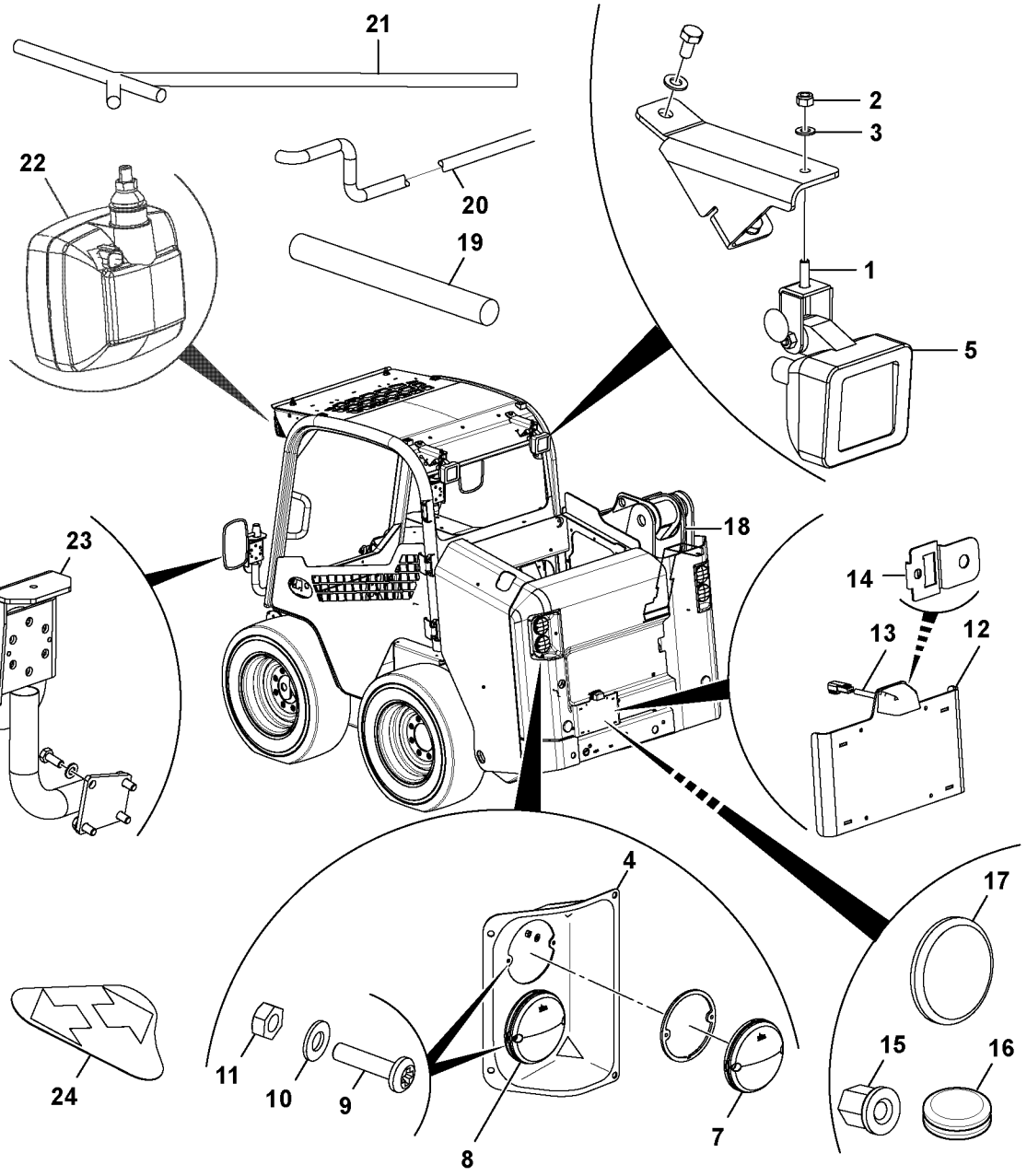
21
22
20
19
2
3
1
5
18
23
14
13
12
4
17
24
11
10
9
8
7
15
16

Fig.	Part No.	Quantity 1	2	3	PS	KIT	Description	Denominación	Denominação	Dénomination	Notes
1	**VOE 16213999**	6					Set screw	Tornillo tope	Parafuso batente	Vis butée	
2	**VOE 16212120**	2					Lock nut	Contratuerca	Porca trava	Contre-écrou	
3	**VOE 20460127**	6					Washer	Arandela	Arruela	Rondelle	
4	**VOE 17209951**	2					Housing	Cuerpo	Carcaça	Carter	
5	**VOE 11039856**	2					Work lamp	Faro de trabajo	Farolete	Projecteur de travail	
7	**VOE 17210427**	2					Tail lamp	Piloto trasero	Lanterna traseira	Feu ar	
8	**VOE 17210430**	2					Tail lamp	Piloto trasero	Lanterna traseira	Feu ar	
9	**VOE 17205263**	8					Screw	Tornillo	Parafuso	Vis	
10	**VOE 17205564**	8					Washer	Arandela	Arruela	Rondelle	
11	**VOE 17205292**	8					Nut	Tuerca	Porca	Écrou	
12	**VOE 17209790**	1					Plate	Chapa	Chapa	Tôle	
13	**VOE 17204981**	1					Number plate lamp	Lámpara de matrícula	Lâmpada, placa licença	Éclairage de plaque d'imm	
14	**VOE 17205354**	1					Clip	Clip	Clipe	Bride	
15	**VOE 17205324**	1					Nut	Tuerca	Porca	Écrou	
16	**VOE 17205118**	1					Plug tap	Tapón roscado	Bujão roscado	Taraud	
17	**VOE 17205282**	2					Reflector	Reflector	Refletor	Catadioptre	
18	**VOE 17205430**	1					Cable harness	Manojo cables	Chicote cabos	Faisceau câbles	
19	**VOE 17205429**	2					Cable harness	Manojo cables	Chicote cabos	Faisceau câbles	
20	**VOE 17205426**	1					Cable harness	Manojo cables	Chicote cabos	Faisceau câbles	
21	**VOE 17209689**	1					Cable harness	Manojo cables	Chicote cabos	Faisceau câbles	
22	**VOE 17210423**	2					Work lamp	Faro de trabajo	Farolete	Projecteur de travail	See group 352, Page 273
23		1					Mirror Arm	Marco Espejo	Braço do espelho	Bras Miroir	See group 841, Page 545
24		1			NS		Decal	Decalcomania	Adesivo	Decalcomanie	

3801) **GB:** With air conditioner **ES:** Con aire acondicionado **BR:** Com ar condicionado **FR:** Avec climatisation

1	
2	
3	
4	
5	

Éclairage de translation sur route
Faróis
Alumbrado de circulación
Headlights

3801) RH.MC60C-MC105C, MCT70C-MCT95C

Catalogue id	Group
20649	**350**
Illustr. No **1064140**	Section **150**
Issue **PUB 20030904-B**	Page **263**

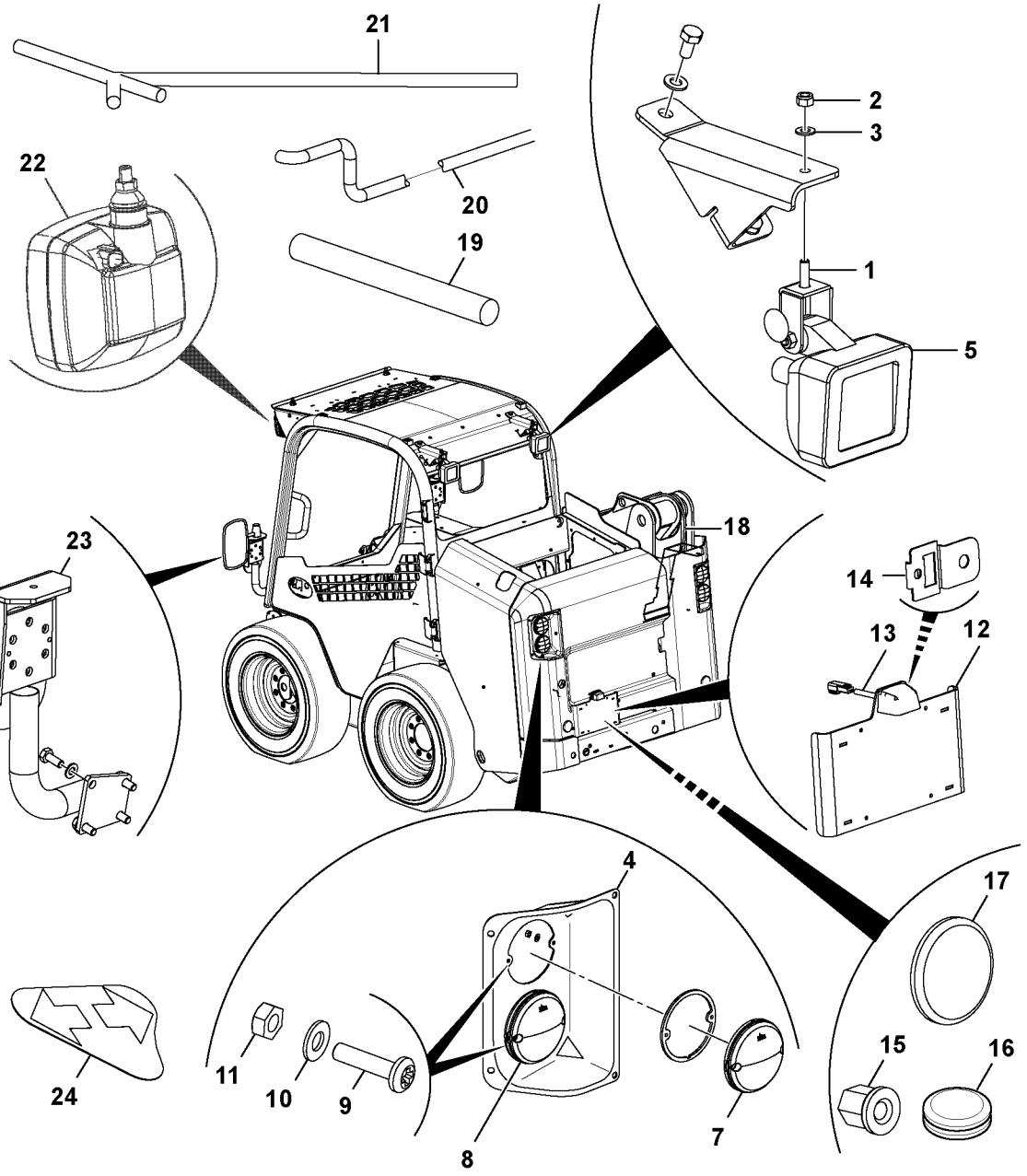
21
22
20
19
2
3
1
5
18
23
14
13
12
4
17
24
11
10
9
8
7
15
16

Fig.	Part No.	Quantity 1	2	3	PS	KIT	Description	Denominación	Denominação	Dénomination	Notes
1	**VOE 16213999**	6					Set screw	Tornillo tope	Parafuso batente	Vis butée	
2	**VOE 16212120**	2					Lock nut	Contratuerca	Porca trava	Contre-écrou	
3	**VOE 20460127**	6					Washer	Arandela	Arruela	Rondelle	
4	**VOE 17209951**	2					Housing	Cuerpo	Carcaça	Carter	
5	**VOE 11039856**	2					Work lamp	Faro de trabajo	Farolete	Projecteur de travail	
7	**VOE 17210427**	2					Tail lamp	Piloto trasero	Lanterna traseira	Feu ar	
8	**VOE 17210430**	2					Tail lamp	Piloto trasero	Lanterna traseira	Feu ar	
9	**VOE 17205263**	8					Screw	Tornillo	Parafuso	Vis	
10	**VOE 17205564**	8					Washer	Arandela	Arruela	Rondelle	
11	**VOE 17205292**	8					Nut	Tuerca	Porca	Écrou	
12	**VOE 17209790**	1					Plate	Chapa	Chapa	Tôle	
13	**VOE 17204981**	1					Number plate lamp	Lámpara de matrícula	Lâmpada, placa licença	Éclairage de plaque d'imm	
14	**VOE 17205354**	1					Clip	Clip	Clipe	Bride	
15	**VOE 17205324**	1					Nut	Tuerca	Porca	Écrou	
16	**VOE 17205118**	1					Plug tap	Tapón roscado	Bujão roscado	Taraud	
17	**VOE 17205282**	2					Reflector	Reflector	Refletor	Catadioptre	
18	**VOE 17205430**	1					Cable harness	Manojo cables	Chicote cabos	Faisceau câbles	
19	**VOE 17205429**	2					Cable harness	Manojo cables	Chicote cabos	Faisceau câbles	
20	**VOE 17205426**	1					Cable harness	Manojo cables	Chicote cabos	Faisceau câbles	
21	**VOE 17209689**	1					Cable harness	Manojo cables	Chicote cabos	Faisceau câbles	
22	**VOE 17210249**	2					Lamp	Lámpara	Lanterna	Lampe	
23		1					Mirror Arm	Marco Espejo	Braço do espelho	Bras Miroir	See group 841, Page 545
24		1			NS		Decal	Decalcomania	Adesivo	Decalcomanie	

3801) **GB:** With air conditioner **ES:** Con aire acondicionado **BR:** Com ar condicionado **FR:** Avec climatisation

1		**Éclairage de translation sur route** **Faróis** **Alumbrado de circulación** **Headlights**	Catalogue id **20649**	Group **350**
2			Illustr. No **1064140**	Section **200**
3				
4			Issue **PUB 20030904-B**	Page **265**
5		**3801) LH.MC60C-MC105C, MCT70C-MCT95C**		

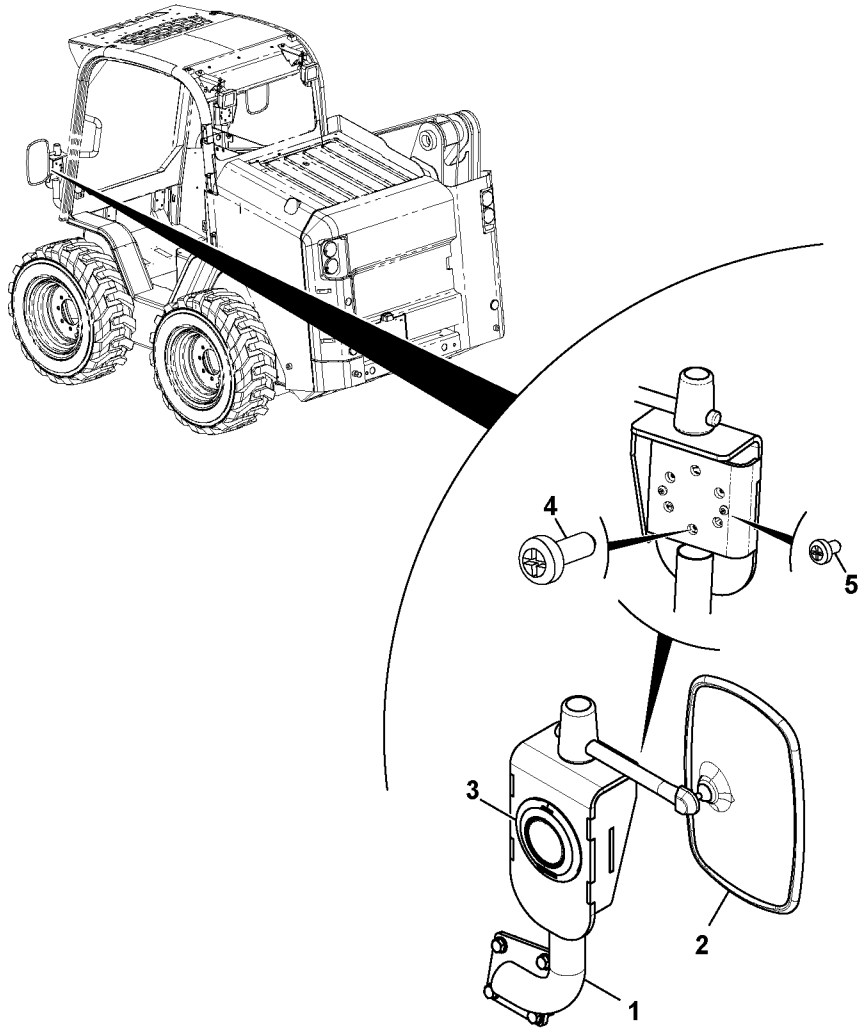
4
5
3
2
1

Fig.	Part No.	Quantity 1	2	3	PS	KIT	Description	Denominación	Denominação	Dénomination	Notes
1	**VOE 17230124**	1					Mounting base	Fundamento	Base de montagem	Fondation	
2	**VOE 16213398**	1					Mirror	Espejo	Espelho	Miroir	See group 841, Page
3	**VOE 17205540**	1					Lamp	Lámpara	Lanterna	Lampe	See group 352, Page 271
4	**VOE 17209630**	3					Screw	Tornillo	Parafuso	Vis	
5	**VOE 17205226**	2					Screw	Tornillo	Parafuso	Vis	

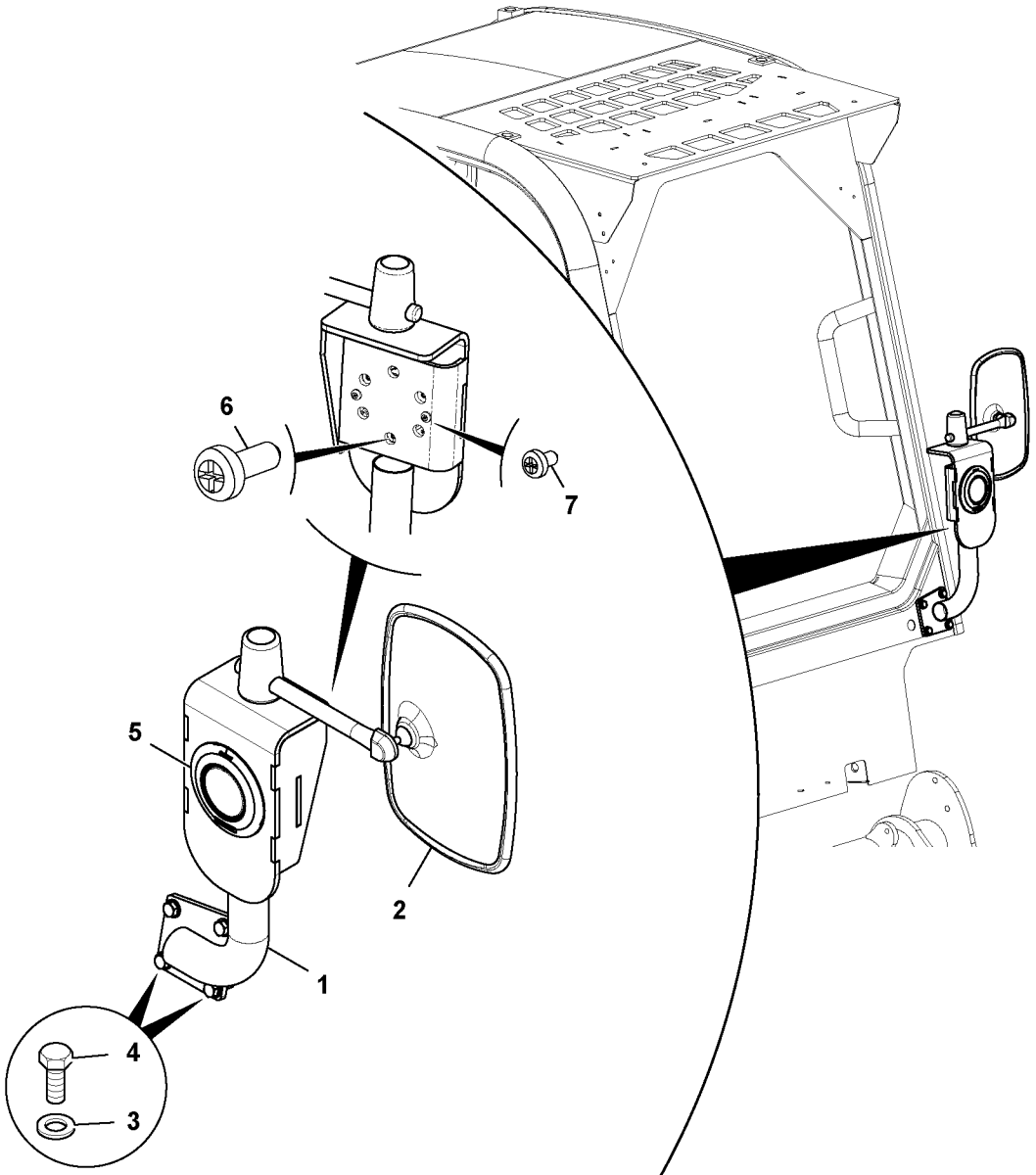

Volvo Construction Equipment
1064018

Fig.	Part No.	Quantity 1	2	3	PS	KIT	Description	Denominación	Denominação	Dénomination	Notes
1	**VOE 16213384**	1					Indicator	Indicador	Indicador	Indicateur	
2	**VOE 16213398**	1					Mirror	Espejo	Espelho	Miroir	See group 841, Page
3	**VOE 16212138**	4			SS		Plain washer	Arandela plana	Arruela simples	Rondelle plane	
4	**VOE 16212076**	4					Set screw	Tornillo tope	Parafuso batente	Vis butée	
5	**VOE 17205540**	1					Lamp	Lámpara	Lanterna	Lampe	See group 352, Page 271
6	**VOE 17209630**	3					Screw	Tornillo	Parafuso	Vis	
7	**VOE 17205226**	2					Screw	Tornillo	Parafuso	Vis	

1		**Indicateur de direction et rétroviseur** **Setas de mudança de direção e espelhos** **Intermitente y espejo** **Turn signal and mirror**	Catalogue id **20649**	Group **352**
2			Illustr. No **1064018**	Section **150**
3			Issue **PUB 20030904-B**	Page **269**
4				
5		**LH.MC60C-MC105C, MCT70C-MCT95C**		

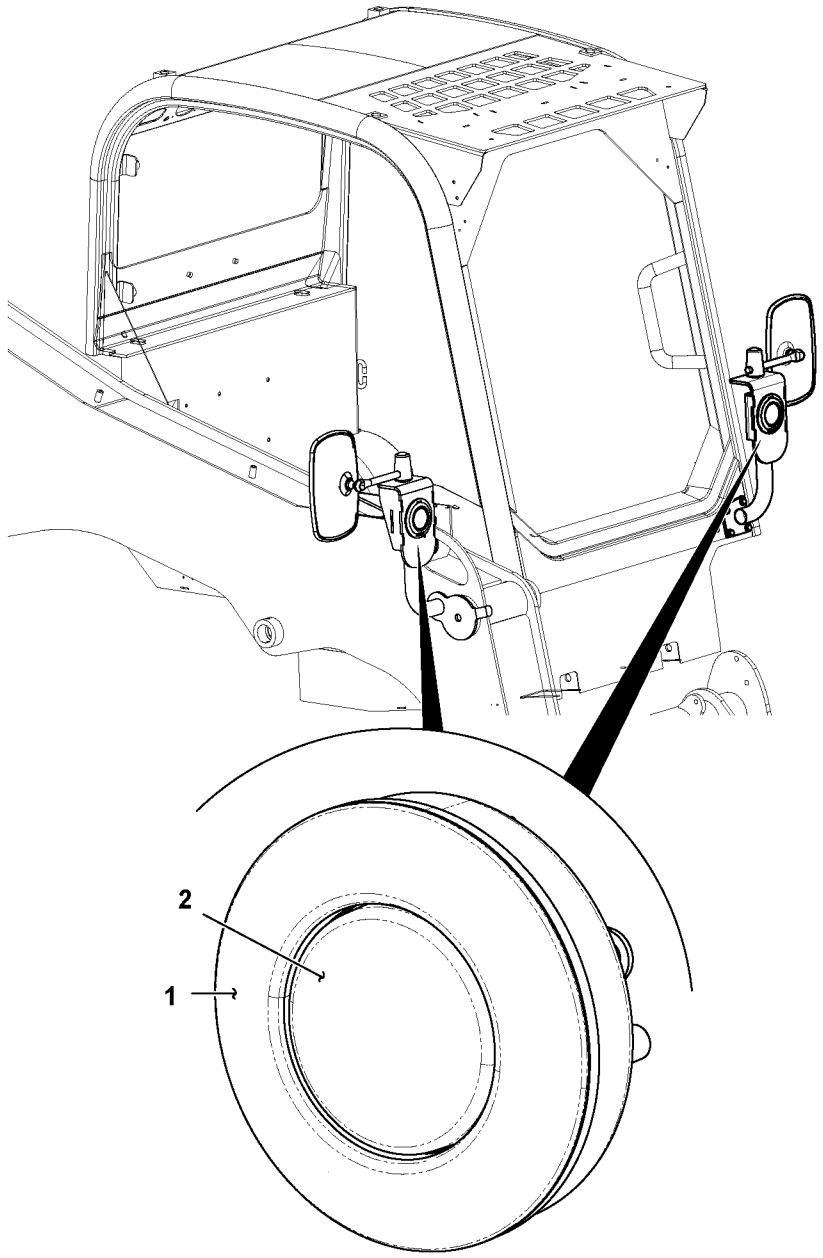

Volvo Construction Equipment
1064062

Fig.	Part No.	Quantity 1	2	3	PS	KIT	Description	Denominación	Denominação	Dénomination	Notes
1	**VOE 17210433**	1					Tail lamp	Piloto trasero	Lanterna traseira	Feu ar	
2	**VOE 17210435**	1					Tail lamp	Piloto trasero	Lanterna traseira	Feu ar	

1		**Phare avant** **Lâmpada dianteira** **Faro delantero** **Front Light**	Catalogue id **20649**	Group **352**
2			Illustr. No **1064062**	Section **200**
3			Issue **PUB 20030904-B**	Page **271**
4				
5		**MC60C-MC105C, MCT70C-MCT95C**		

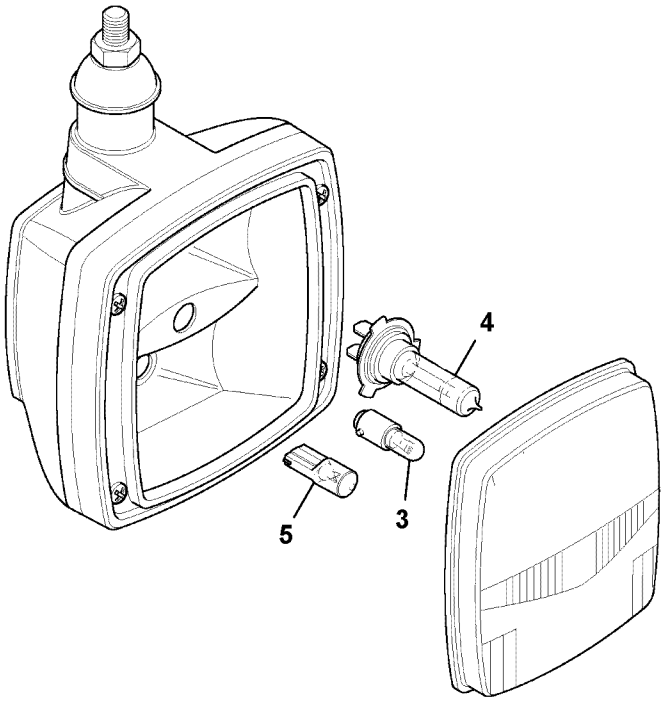
4
5
3

Fig.	Part No.	Quantity 1	2	3	PS	KIT	Description	Denominación	Denominação	Dénomination	Notes
	VOE 17210423	1					Work lamp	Faro de trabajo	Farolete	Projecteur de travail	
3	**VOE 16213337**	1					•Bulb	•Bombilla	•Lâmpada	•Ampoule	12V, 4W
4	**VOE 16213327**	1					•Bulb	•Bombilla	•Lâmpada	•Ampoule	12V, 55W, H7
5	**VOE 16213333**	1					•Bulb	•Bombilla	•Lâmpada	•Ampoule	12V, 55W, H3

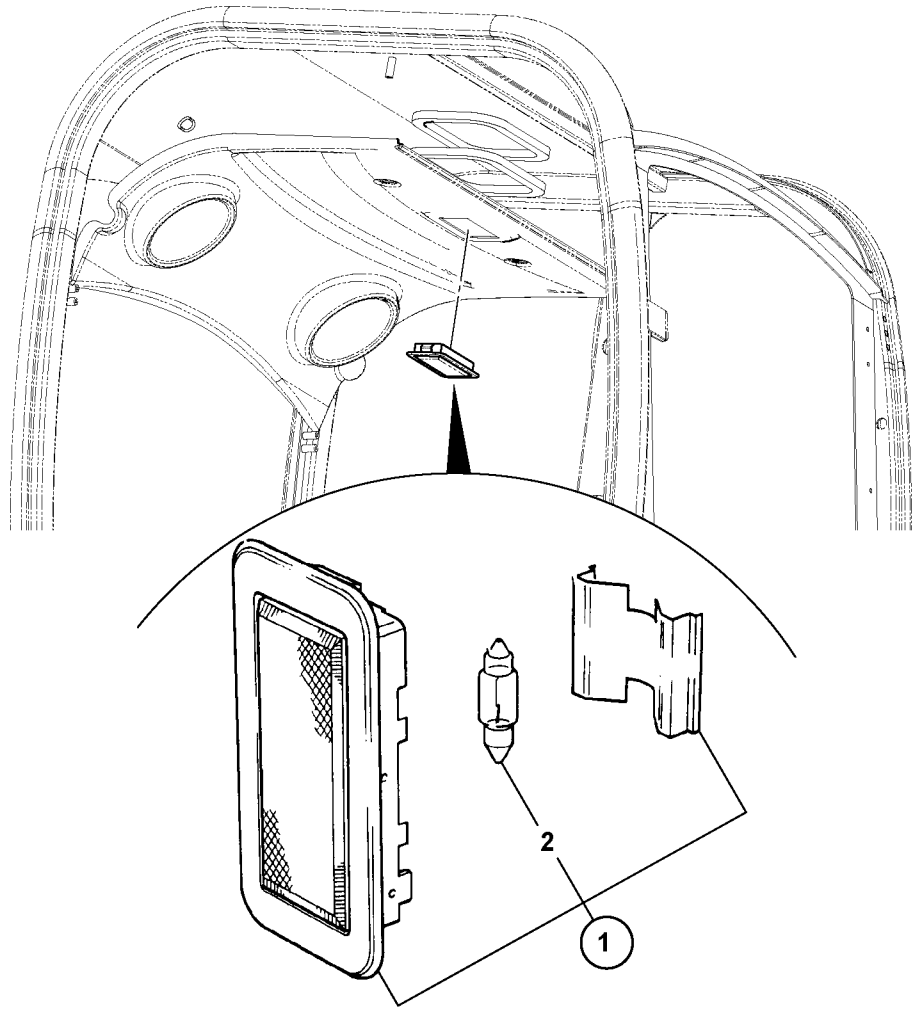
2
1

Fig.	Part No.	Quantity 1	2	3	PS	KIT	Description	Denominación	Denominação	Dénomination	Notes
1	**VOE 17205035**	1					Lamp	Lámpara	Lâmpada	Lampe	
2	**VOE 17205396**	1					•Bulb	•Bombilla	•Lâmpada	•Ampoule	

1		**Eclairage, cabine** **Iluminação, cabine** **Alumbrado, cabina** **Lighting, cab**	Catalogue id **20649**	Group **354**
2			Illustr. No **1064249**	Section **100**
3			Issue **PUB 20030904-B**	Page **275**
4				
5		**MC60C-MC105C, MCT70C-MCT95C**		

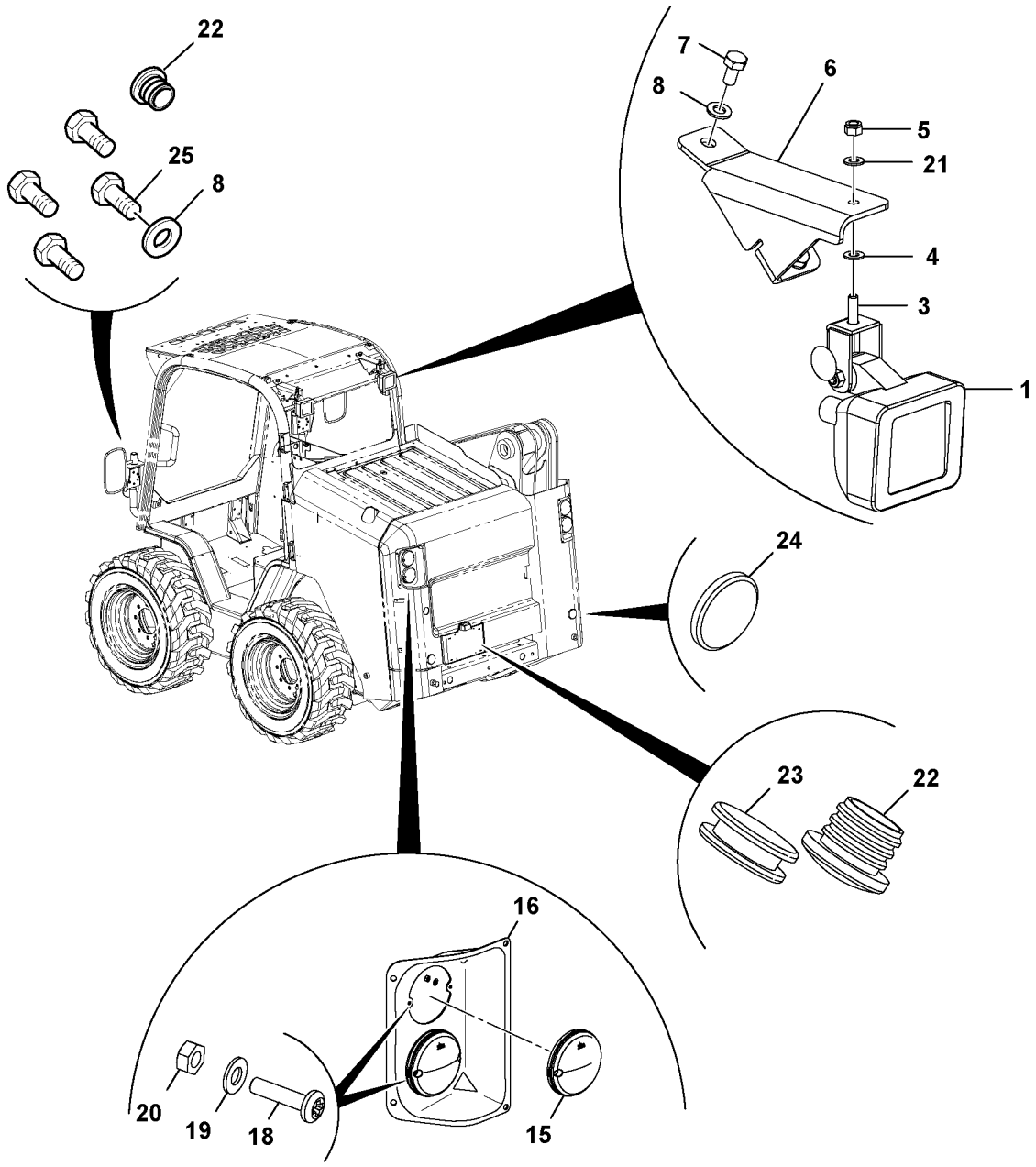
22
25
8
7
8
6
5
21
4
3
1
24
23
22
16
20
19
18
15

Fig.	Part No.	Quantity 1	2	3	PS	KIT	Description	Denominación	Denominação	Dénomination	Notes
1	**VOE 11039856**	4					Work lamp	Faro de trabajo	Farolete	Projecteur de travail	
3	**VOE 17205093**	4					Bolt	Perno	Parafuso	Boulon	
4	**VOE 20460127**	2					Washer	Arandela	Arruela	Rondelle	
5	**VOE 16212120**	4					Lock nut	Contratuerca	Porca trava	Contre-écrou	
6	**VOE 17232190**	2					Mounting base	Fundamento	Base de montagem	Fondation	
7	**VOE 16212075**	7					Set screw	Tornillo tope	Parafuso batente	Vis butée	
8	**VOE 16212138**	11			SS		Plain washer	Arandela plana	Arruela simples	Rondelle plane	
15	**VOE 17229612**	4					Reflector	Reflector	Refletor	Catadioptre	
16	**VOE 17209951**	2					Housing	Cuerpo	Carcaça	Carter	
18	**VOE 17205263**	8					Screw	Tornillo	Parafuso	Vis	
19	**VOE 17205564**	9					Washer	Arandela	Arruela	Rondelle	
20	**VOE 17205292**	8					Nut	Tuerca	Porca	Écrou	
21	**VOE 17205565**	2					Washer	Arandela	Arruela	Rondelle	
22	**VOE 17223997**	3					Plug	Tapón	Bujão	Tampon	
23	**VOE 17223996**	1					Grommet	Pasaje	Passa muro	Passe fil	
24	**VOE 17205282**	2					Reflector	Reflector	Refletor	Catadioptre	
25	**VOE 16212076**	4					Set screw	Tornillo tope	Parafuso batente	Vis butée	

2057) **GB:** No Air Conditioner **ES:** Sin acondicionador de aire **BR:** Sem ar condicionado **FR:** Sans climatisation

1		**Fixation Projecteurs de travail** **Lâmpadas de trabalho, montagem** **Piezas de fijación para luces de trabajo** **Mounting Work Lights**	Catalogue id **20649**	Group **356**
2			Illustr. No **1064015**	Section **100**
3			Issue **PUB 20030904-B**	Page **277**
4				
5		**2057) MC60C, MC70C, MCT70C**		

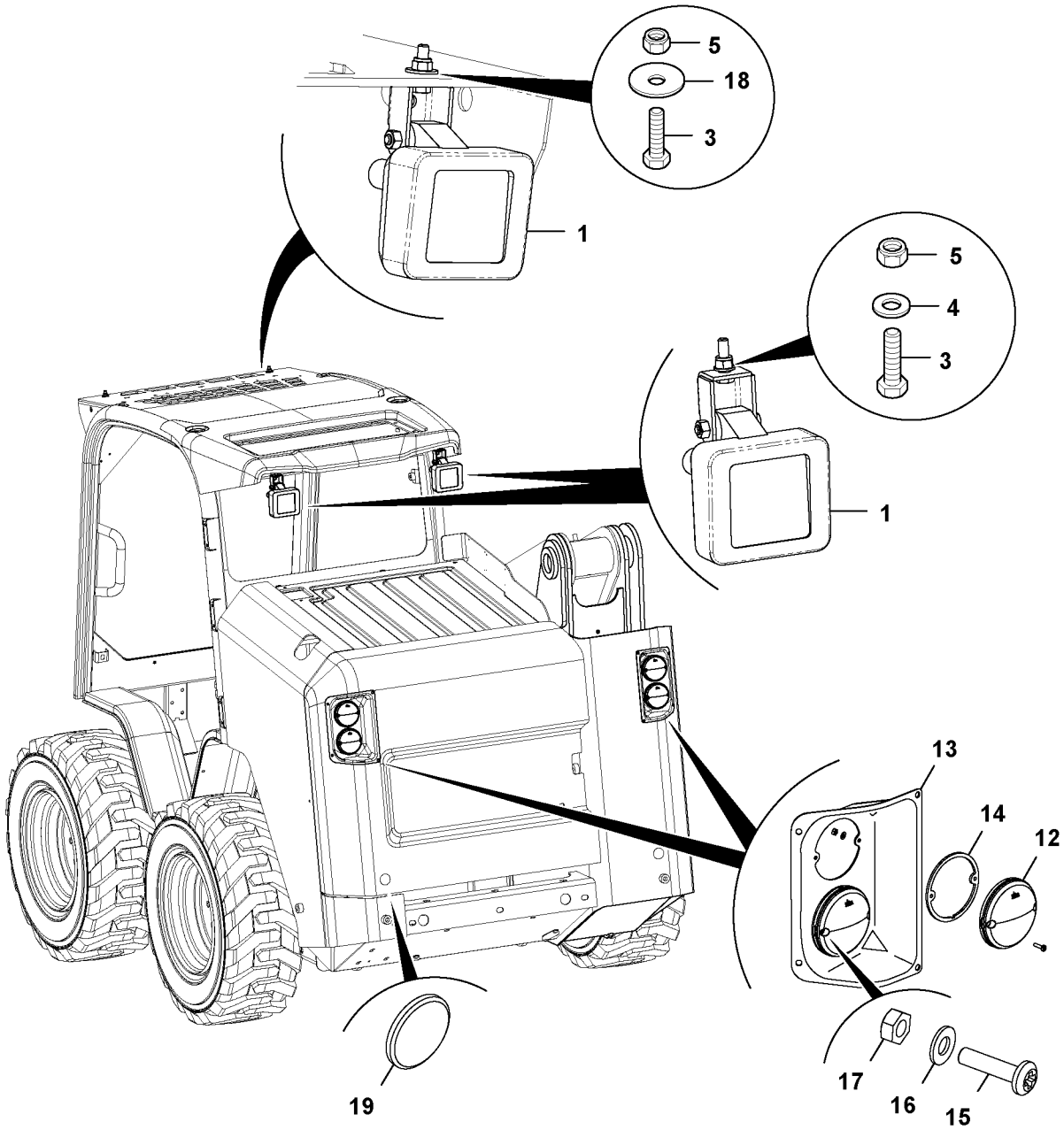

Volvo Construction Equipment
1064016

Fig.	Part No.	Quantity 1	2	3	PS	KIT	Description	Denominación	Denominação	Dénomination	Notes
1	**VOE 11039856**	4					Work lamp	Faro de trabajo	Farolete	Projecteur de travail	
3	**VOE 17205093**	4					Bolt	Perno	Parafuso	Boulon	
4	**VOE 20460127**	2					Washer	Arandela	Arruela	Rondelle	
5	**VOE 16212120**	4					Lock nut	Contratuerca	Porca trava	Contre-écrou	
12	**VOE 17229612**	4					Reflector	Reflector	Refletor	Catadioptre	
13	**VOE 17209951**	2					Housing	Cuerpo	Carcaça	Carter	
15	**VOE 17205263**	8					Screw	Tornillo	Parafuso	Vis	
16	**VOE 17205564**	8					Washer	Arandela	Arruela	Rondelle	
17	**VOE 17205292**	8					Nut	Tuerca	Porca	Écrou	
18	**VOE 17205565**	2					Washer	Arandela	Arruela	Rondelle	
19	**VOE 17205282**	2					Reflector	Reflector	Refletor	Catadioptre	
20	**VOE 16212076**	4					Set screw	Tornillo tope	Parafuso batente	Vis butée	
21	**VOE 16212138**	4			SS		Plain washer	Arandela plana	Arruela simples	Rondelle plane	
22	**VOE 17223997**	1					Plug	Tapón	Bujão	Tampon	

3801) **GB:** With air conditioner **ES:** Con aire acondicionado **BR:** Com ar condicionado **FR:** Avec climatisation

1		**Fixation Projecteurs de travail** **Lâmpadas de trabalho, montagem** **Piezas de fijación para luces de trabajo** **Mounting Work Lights**	Catalogue id **20649**	Group **356**
2			Illustr. No **1064016**	Section **150**
3			Issue **PUB 20030904-B**	Page **279**
4				
5		**3801) MC70C, MCT70C**		

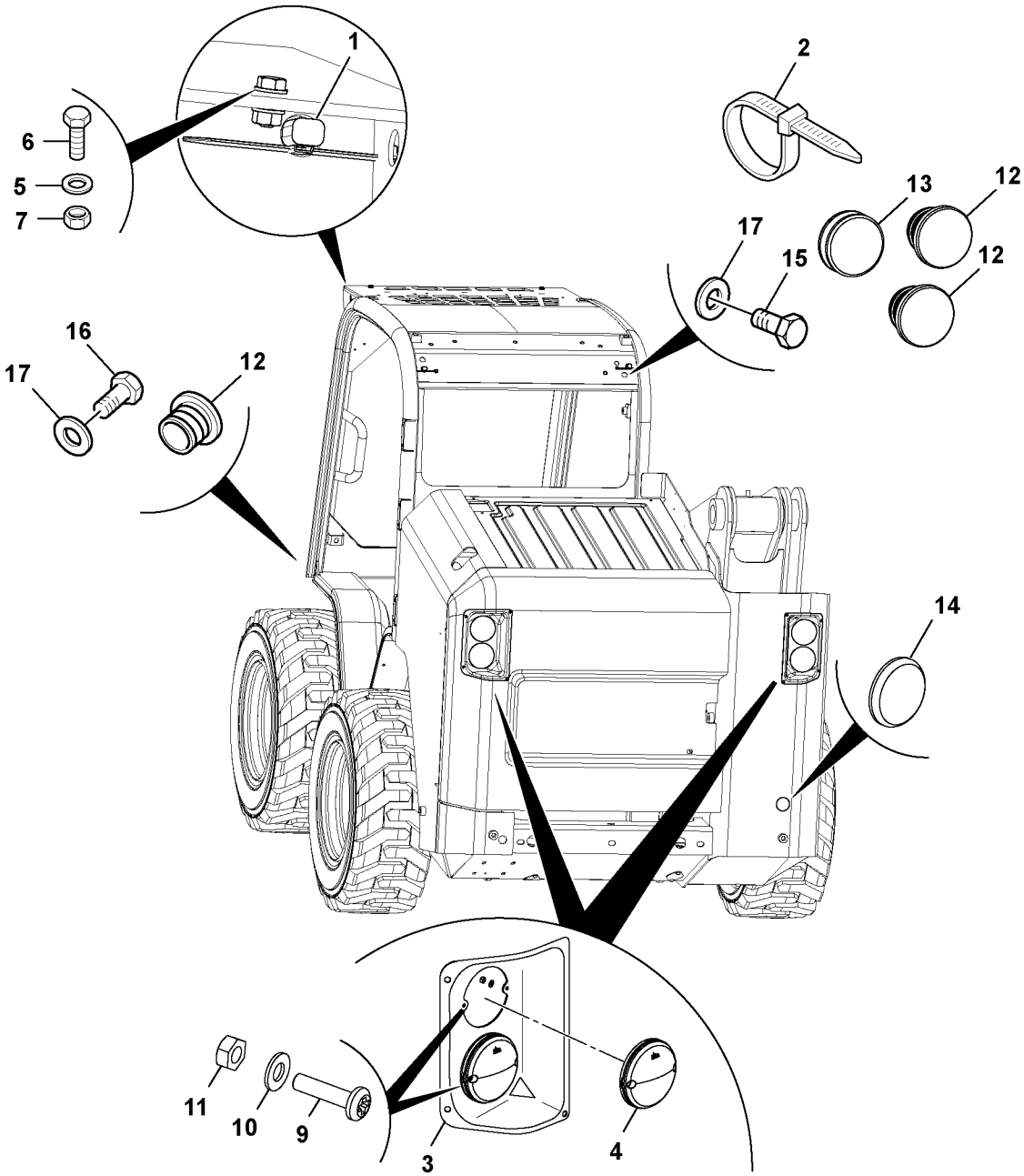
1
2
6
5
7
13
12
17
15
12
16
17
12
14
11
10
9
3
4

Fig.	Part No.	Quantity 1	2	3	PS	KIT	Description	Denominación	Denominação	Dénomination	Notes
1	**VOE 17209804**	4					Plug	Tapón	Tampão	Bouchon	
2	**VOE 17205287**	4					Tie straps	Cinta de atar		Ruban attache	
3	**VOE 17209951**	2					Housing	Cuerpo	Carcaça	Carter	
4	**VOE 17229612**	4					Reflector	Reflector	Refletor	Catadioptre	
5	**VOE 20460127**	4					Washer	Arandela	Arruela	Rondelle	
6	**VOE 17205256**	2					Hexagon screw	Tornillo hexagonal	Parafuso sextavado	Vis à tête hexagonale	
7	**VOE 20405733**	2					Hexagon nut	Tuerca hexagonal	Porca sextavada	Écrou hexagonal	
9	**VOE 17205263**	8					Screw	Tornillo	Parafuso	Vis	
10	**VOE 17205564**	8					Washer	Arandela	Arruela	Rondelle	
11	**VOE 17205292**	8					Nut	Tuerca	Porca	Écrou	
12	**VOE 17223997**	4					Plug	Tapón	Bujão	Tampon	
13	**VOE 17223996**	2					Grommet	Pasaje	Passa muro	Passe fil	
14	**VOE 17205282**	2					Reflector	Reflector	Refletor	Catadioptre	
15	**VOE 16212075**	7					Set screw	Tornillo tope	Parafuso batente	Vis butée	
16	**VOE 16212076**	4					Set screw	Tornillo tope	Parafuso batente	Vis butée	
17	**VOE 16212137**	11					Plain washer	Arandela plana	Arruela simples	Rondelle plane	

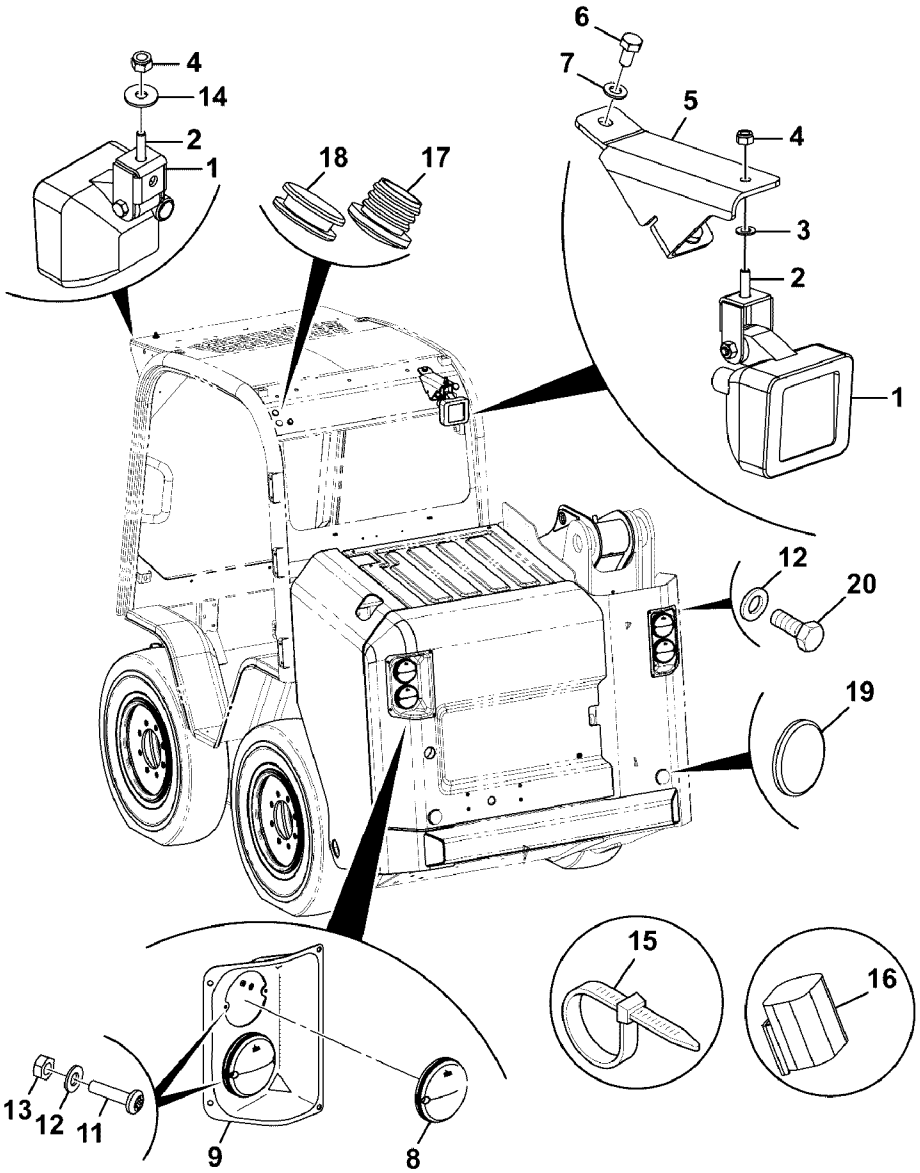
6
7
5
4
3
2
1
4
14
2
1
18
17
12
20
19
15
16
13
12
11
9
8

Fig.	Part No.	Quantity 1	2	3	PS	KIT	Description	Denominación	Denominação	Dénomination	Notes
1	**VOE 11039856**	3					Work lamp	Faro de trabajo	Farolete	Projecteur de travail	
2	**VOE 17205093**	3					Bolt	Perno	Parafuso	Boulon	
3	**VOE 20460127**	1					Washer	Arandela	Arruela	Rondelle	
4	**VOE 16212120**	3					Lock nut	Contratuerca	Porca trava	Contre-écrou	
5	**VOE 17232190**	1					Mounting base	Fundamento	Base de montagem	Fondation	
6	**VOE 16212075**	7					Set screw	Tornillo tope	Parafuso batente	Vis butée	
7	**VOE 16212138**	11			SS		Plain washer	Arandela plana	Arruela simples	Rondelle plane	
8	**VOE 17229612**	4					Reflector	Reflector	Refletor	Catadioptre	
9	**VOE 17209951**	2					Housing	Cuerpo	Carcaça	Carter	
11	**VOE 17205263**	8					Screw	Tornillo	Parafuso	Vis	
12	**VOE 17205564**	8					Washer	Arandela	Arruela	Rondelle	
13	**VOE 17205292**	8					Nut	Tuerca	Porca	Écrou	
14	**VOE 17205565**	2					Washer	Arandela	Arruela	Rondelle	
15	**VOE 17205287**	1					Tie straps	Cinta de atar		Ruban attache	
16	**VOE 17209804**	1					Plug	Tapón	Tampão	Bouchon	
17	**VOE 17223997**	3					Plug	Tapón	Bujão	Tampon	
18	**VOE 17223996**	2					Grommet	Pasaje	Passa muro	Passe fil	
19	**VOE 17205282**	2					Reflector	Reflector	Refletor	Catadioptre	
20	**VOE 16212076**	4					Set screw	Tornillo tope	Parafuso batente	Vis butée	

1		**Fixation Projecteurs de travail** **Lâmpadas de trabalho, montagem** **Piezas de fijación para luces de trabajo** **Mounting Work Lights**	Catalogue id **20649**	Group **356**
2			Illustr. No **1064189**	Section **250**
3				
4			Issue **PUB 20030904-B**	Page **283**
5		**MC60C-MC105C, MCT70C-MCT95C**		

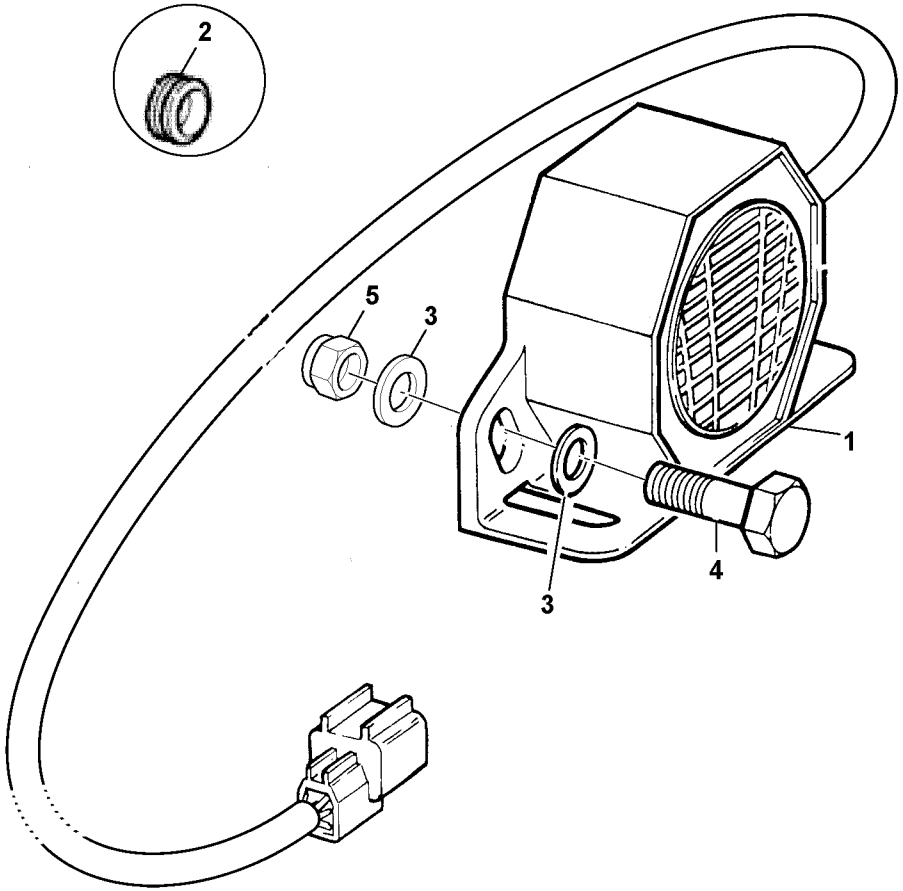
2
5
3
1
3
4

Fig.	Part No.	Quantity 1	2	3	PS	KIT	Description	Denominación	Denominação	Dénomination	Notes
1	**VOE 16213144**	1					Alarm	Alarma	Alarme	Alarme	See group 362, Page 287
2	**VOE 16212365**	1					Grommet	Pasaje	Passa muro	Passe fil	
3	**VOE 973494**	4					Washer	Arandela	Arruela	Rondelle	
4	**VOE 16212203**	2					Set screw	Tornillo tope	Parafuso batente	Vis butée	
5	**VOE 16212115**	2					Lock nut	Contratuerca	Porca trava	Contre-écrou	

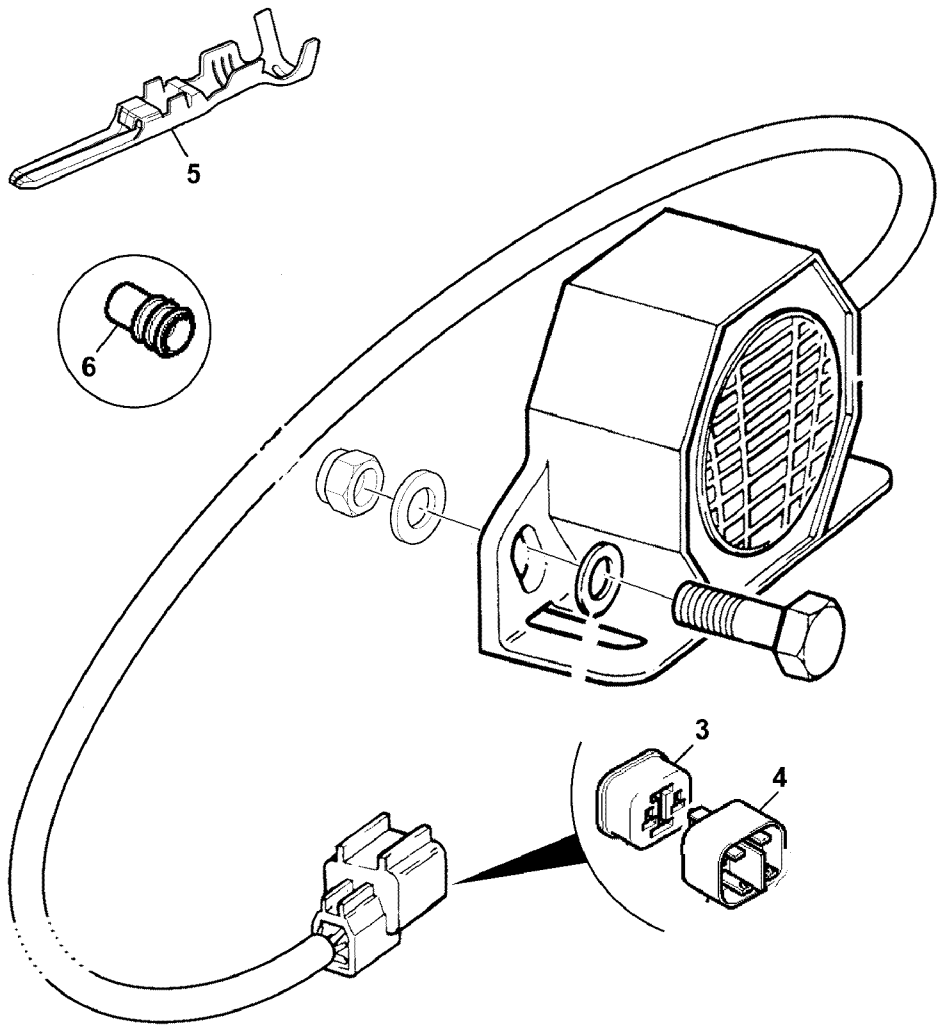
5
6
3
4

Fig.	Part No.	Quantity 1	2	3	PS	KIT	Description	Denominación	Denominação	Dénomination	Notes
	VOE 16213144	1					Alarm	Alarma	Alarme	Alarme	
3		1			NS		•Housing	•Cuerpo	•Carcaça	•Carter	
4	**VOE 17230061**	1					•Connector	•Contactor	•Conector	•Connecteur	
5	**VOE 17229264**	2					•Nipple	•Niple	•Niple	•Raccord	
6	**VOE 17230214**	2					•Sealing wire	•Alambre de precinto	•Arame de vedação	•Fil plombage	

1		**Alarme de recul** **Alarme de marcha à ré, acionamento** **Avisador de marcha atrás** **Reverse Drive Alarm**	Catalogue id **20649**	Group **362**
2			Illustr. No **1064251**	Section **150**
3			Issue **PUB 20030904-B**	Page **287**
4				
5		**MC60C-MC105C, MCT70C-MCT95C**		

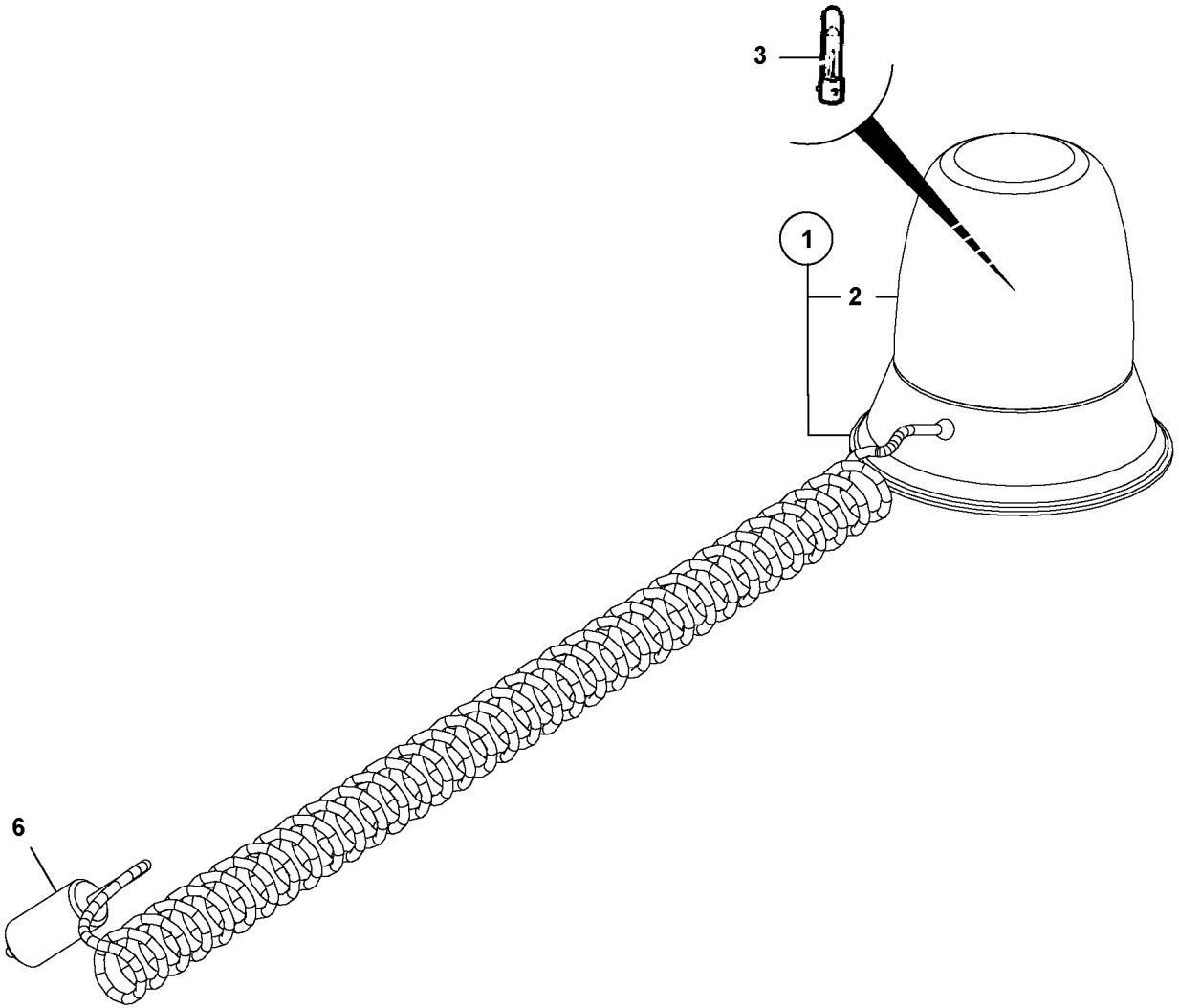

Volvo Construction Equipment
1064196

Fig.	Part No.	Quantity 1	2	3	PS	KIT	Description	Denominación	Denominação	Dénomination	Notes
1	**VOE 17204992**	1			SS		Rotating beacon	Alumbrado rotativo	Farol rotativo	Gyrophare	See group 362, Page 293
2	**VOE 16213406**	1					•Lens	•Cristal	•Lente	•Verre lampe	
3	**VOE 16213331**	1					•Bulb	•Bombilla	•Lâmpada	•Ampoule	
6	**VOE 16213270**	1					•Socket	•Toma de corriente	•Conector	•Socle	

1		**Avertisseur lumineux à feu tournant** **Sinalizador rotativo** **Faro de advertencia giratorio** **Rotating beacon**	Catalogue id **20649**	Group **362**
2			Illustr. No **1064196**	Section **200**
3			Issue **PUB 20030904-B**	Page **289**
4				
5		**MC60C, MC70C, MC95C, MCT70C, MCT85C**		

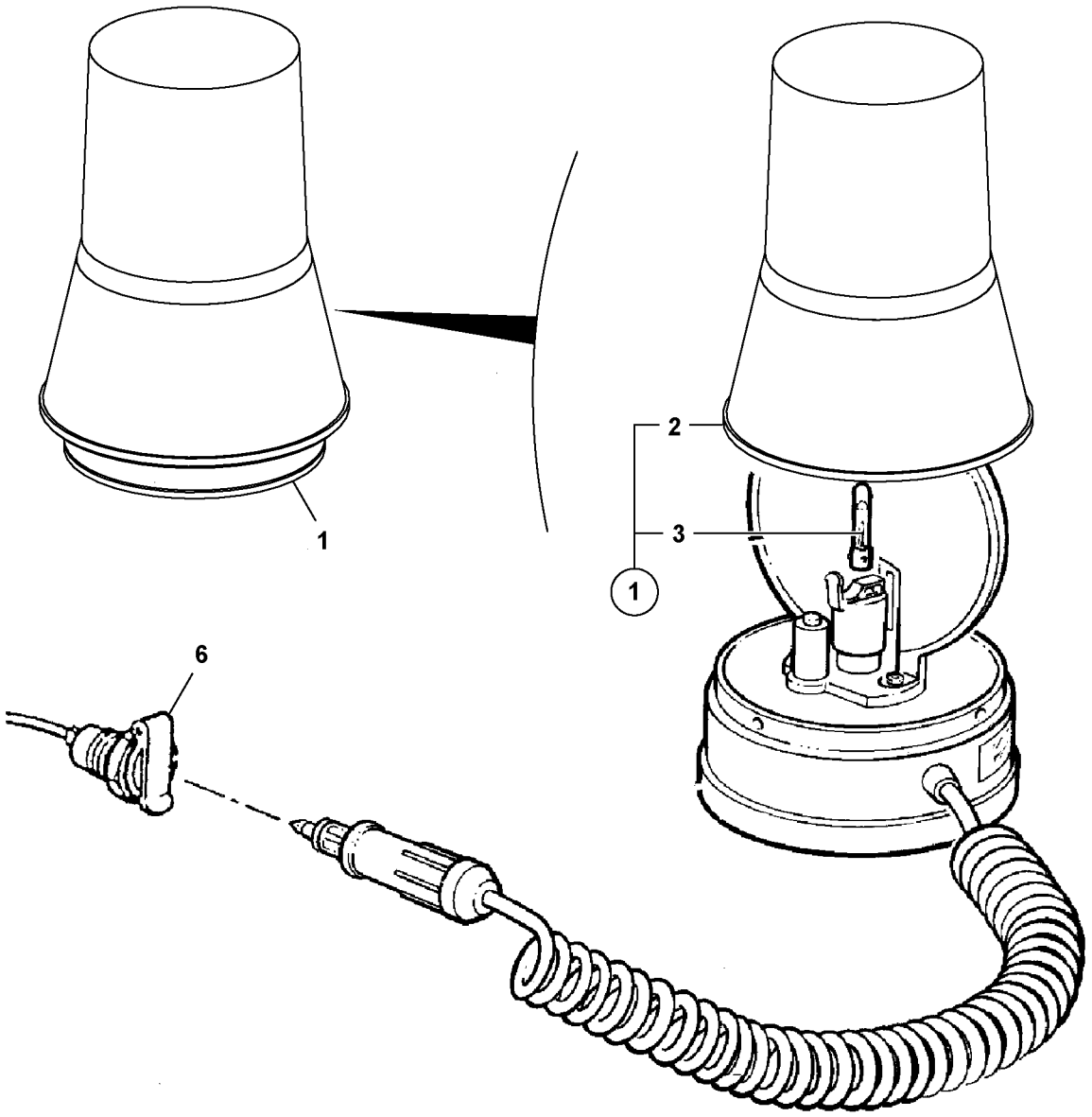

Volvo Construction Equipment
1064199

Fig.	Part No.	Quantity 1	2	3	PS	KIT	Description	Denominación	Denominação	Dénomination	Notes
1	**VOE 16213207**	1					Rotating beacon	Alumbrado rotativo	Farol rotativo	Gyrophare	
2		1					•Lens	•Lente	•	•Lentille	
3	**VOE 16213331**	1					•Bulb	•Bombilla	•Lâmpada	•Ampoule	
6	**VOE 16213270**	1					•Socket	•Toma de corriente	•Conector	•Socle	

1		**Avertisseur lumineux à feu tournant** **Sinalizador rotativo** **Faro de advertencia giratorio** **Rotating beacon**	Catalogue id **20649**	Group **362**
2			Illustr. No **1064199**	Section **250**
3			Issue **PUB 20030904-B**	Page **291**
4				
5		**MC60C, MC70C, MC95C, MCT70C, MCT85C**		

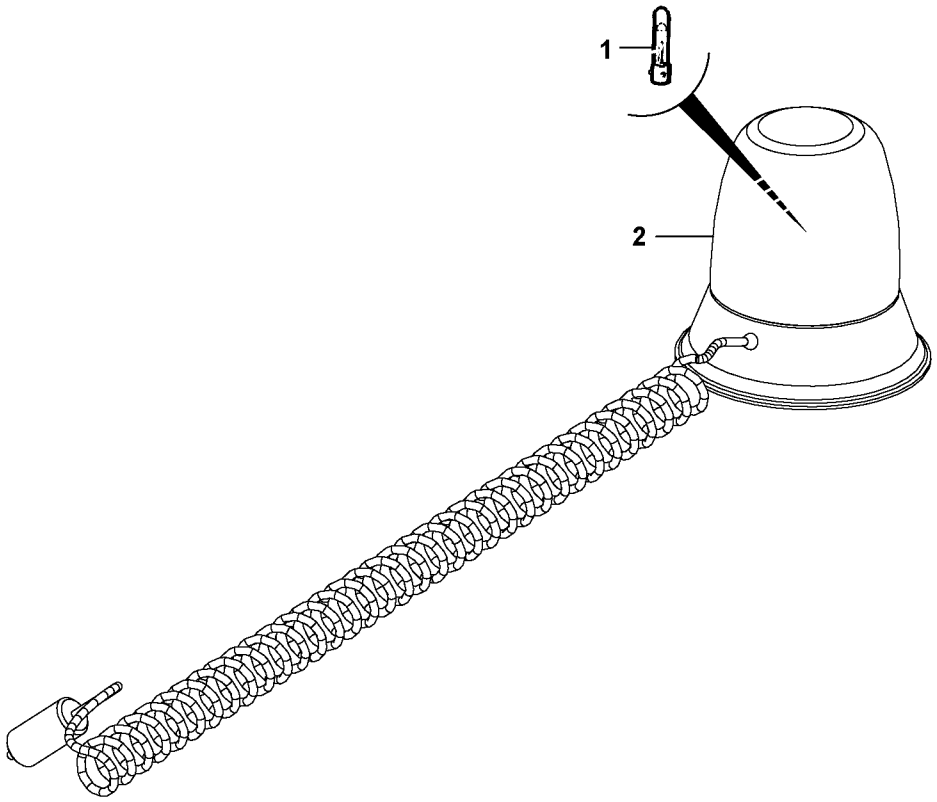
1
2

Fig.	Part No.	Quantity 1	2	3	P S	K I T	Description	Denominación	Denominação	Dénomination	Notes
	VOE 17204992	1			SS		Rotating beacon	Alumbrado rotativo	Farol rotativo	Gyrophare	
1	**VOE 16213331**	1					•Bulb	•Bombilla	•Lâmpada	•Ampoule	
2	**VOE 17204943**	1					•Lens	•Cristal	•Lente	•Verre lampe	

1		**Avertisseur lumineux à feu tournant** **Sinalizador rotativo** **Faro de advertencia giratorio** **Rotating beacon**	Catalogue id **20649**	Group **362**
2			Illustr. No **1064250**	Section **300**
3			Issue **PUB 20030904-B**	Page **293**
4				
5		**MC60C, MC70C, MC95C, MCT70C, MCT85C**		

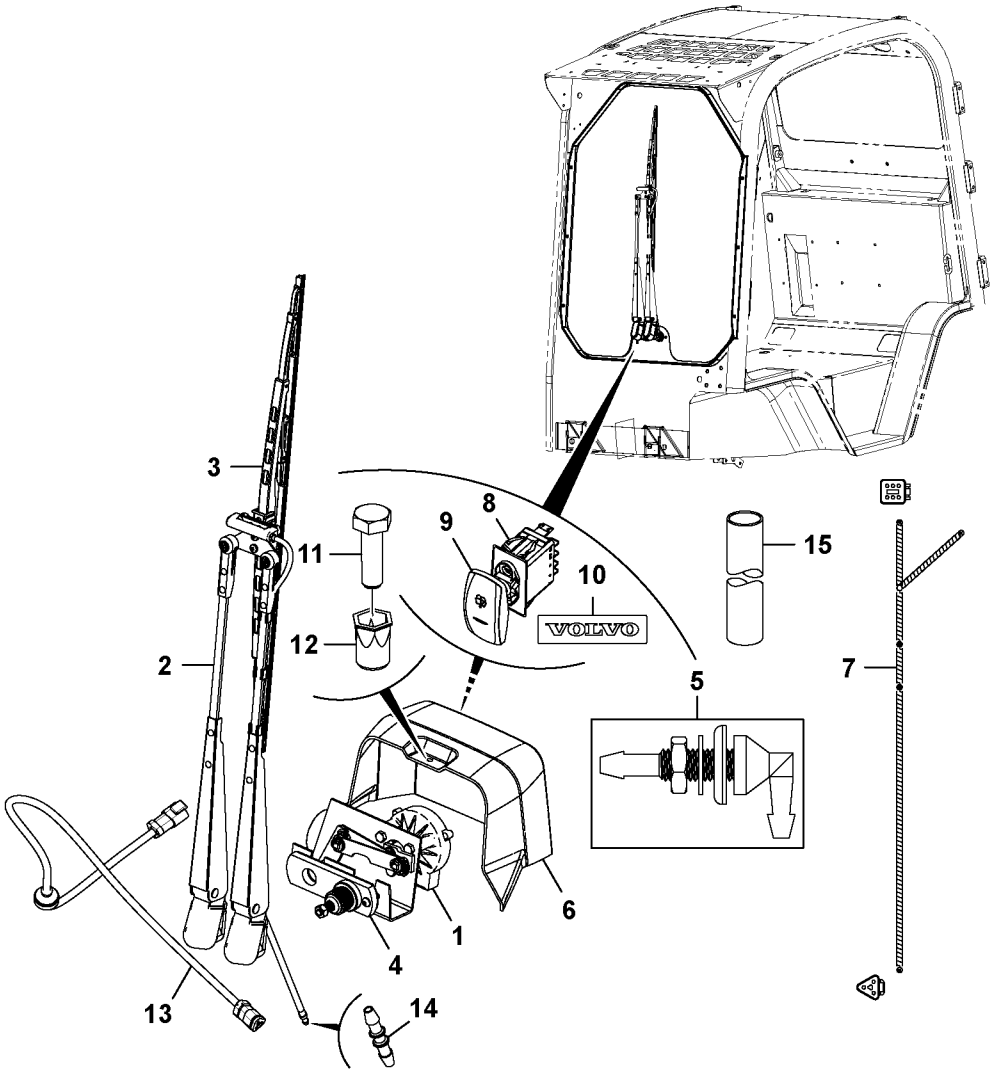
3
11
8
9
10
15
VOLVO
12
2
5
7
6
1
4
13
14

Fig.	Part No.	Quantity 1	2	3	PS	KIT	Description	Denominación	Denominação	Dénomination	Notes
1	**VOE 17224276**	1					Wiper motor	Motor limpiaparabrisas	Motor do limpador para-bri	Moteur essuie-glace	
2	**VOE 17224278**	1					Wiper arm	Brazo limpiaparabrisas	Braço limpador para-brisa	Bras d'essuie-glace	
3	**VOE 17224281**	1					Wiper blade	Hoja limpiafaros	Palheta do limpador	Balai d'essuie-glace	
4	**VOE 17209979**	1					Kit	Juego	Jogo	Lot	
5	**VOE 17209945**	1					Adapter	Adaptador	Adaptador	Adaptateur	
6	**VOE 17210527**	1					Cover plate	Cubierta	Placa tampa	Plaque de recouvrement	
7	**VOE 16213451**	1					Cable harness	Manojo cables	Chicote cabos	Faisceau câbles	
8	**VOE 17209961**	1					Switch panel	Panel interruptor	Painel dos interruptores	Panneau commutateurs	
9	**VOE 17209915**	1					Actuator	Actuador	Atuador	Actionneur	
10	**VOE 17210053**	1					Decal	Calcomanía	Decalque	Autocollant	
11	**VOE 17205217**	1					Hexagon screw	Tornillo hexagonal	Parafuso sextavado	Vis à tête hexagonale	
12	**VOE 16212319**	1					Ball housing	Caja de bola	Caixa de esferas	Boîtier de bille	
13	**VOE 17209683**	1					Cable harness	Manojo cables	Chicote cabos	Faisceau câbles	
14		1			NS		Connector	Union	Conector	Raccord	
15	**VOE 17224284**	1					Venturi tube	Tubo venturi	Tubo do difusor de ar	Tube venturi	

1		**Moteur d'essuie-glace** **Motor do limpador de pára-brisa, montagem** **Conjunto del motor de las escobillas** **Wiper motor assembly**	Catalogue id **20649**	Group **363**
2			Illustr. No **1064027**	Section **100**
3			Issue **PUB 20030904-B**	Page **295**
4				
5		**MC60C-MC105C, MCT70C-MCT95C**		

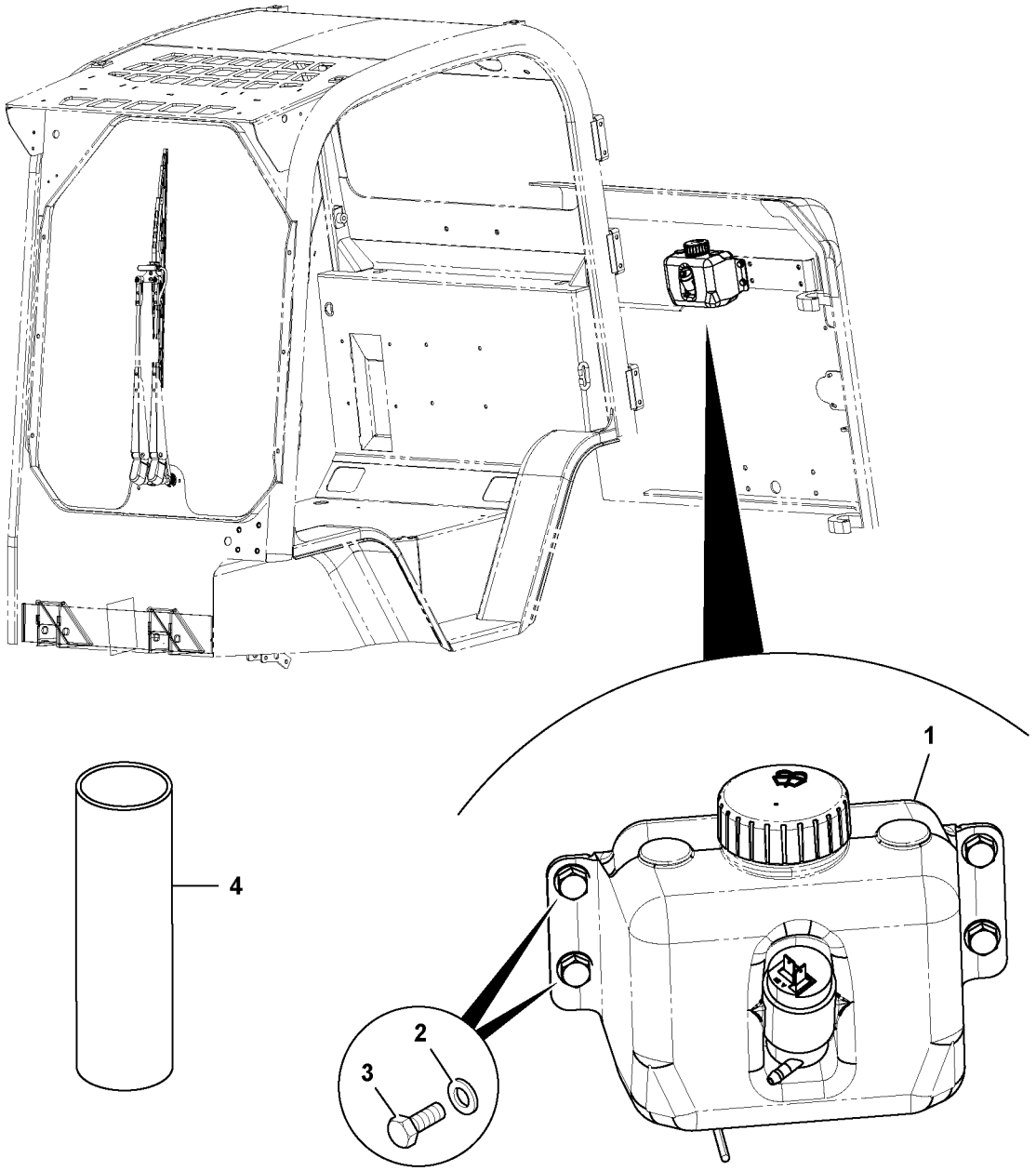

Volvo Construction Equipment
1064057

Fig.	Part No.	Quantity 1	2	3	PS	KIT	Description	Denominación	Denominação	Dénomination	Notes
1	**VOE 16213306**	1					Washer fluid reservoir	Depósito detergente	Reservatório-liq.lavador	Réservoir de lave-glace	
2	**VOE 20460127**	4					Washer	Arandela	Arruela	Rondelle	
3	**VOE 16213998**	4					Set screw	Tornillo tope	Parafuso batente	Vis butée	
4	**VOE 17230306**	1					Tube	Tubo	Tubo	Tube	

1		**Réservoir de lave-glace** **Garrafa do lavador, instalação** **Montaje de depósito lavacristales** **Washer bottle installation**	Catalogue id **20649**	Group **363**
2			Illustr. No **1064057**	Section **150**
3			Issue **PUB 20030904-B**	Page **297**
4				
5		**MC60C-MC105C, MCT70C-MCT95C**		

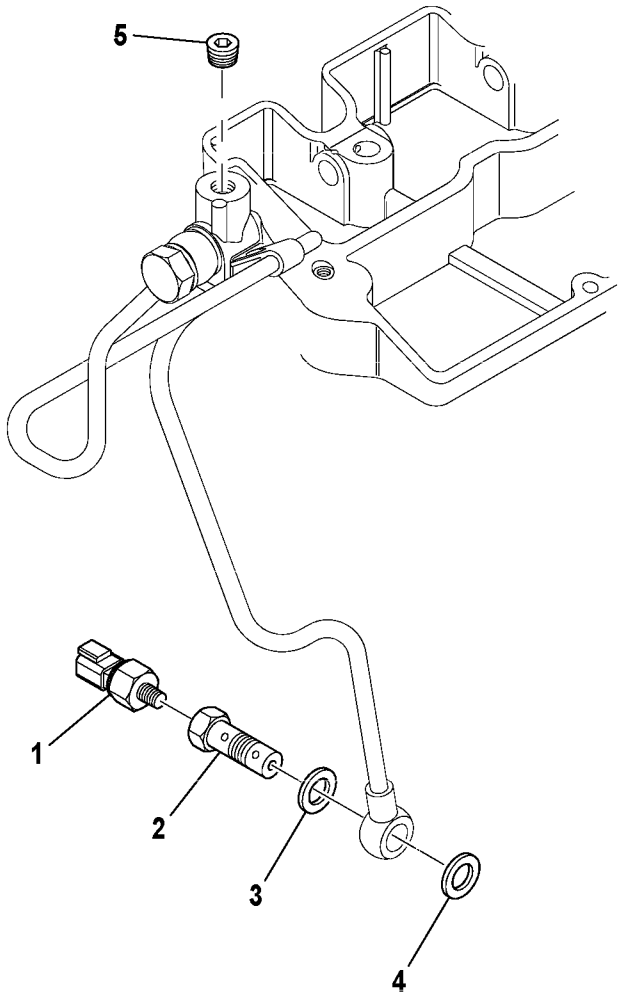

Volvo Construction Equipment
1064424

Fig.	Part No.	Quantity 1	2	3	PS	KIT	Description	Denominación	Denominação	Dénomination	Notes
1	**VOE 17230401**	1					Switch	Commutador	Comutador	Commutateur	
2	**VOE 17228438**	1					Bolt	Perno	Parafuso	Boulon	
3	**VOE 17228417**	1					Washer	Arandela	Arruela	Rondelle	
4	**VOE 17228417**	1					Washer	Arandela	Arruela	Rondelle	
5	**VOE 17228420**	1					Plug	Tapón	Bujão	Tampon	

1		**Manocontact d'huile** **Interruptor de pressão do óleo** **Interruptor de presión de aceite** **Oil pressure switch**	Catalogue id **20649**	Group **364**
2			Illustr. No **1064424**	Section **100**
3			Issue **PUB 20030904-B**	Page **299**
4				
5		**MC60C-MC105C, MCT70C-MCT95C**		

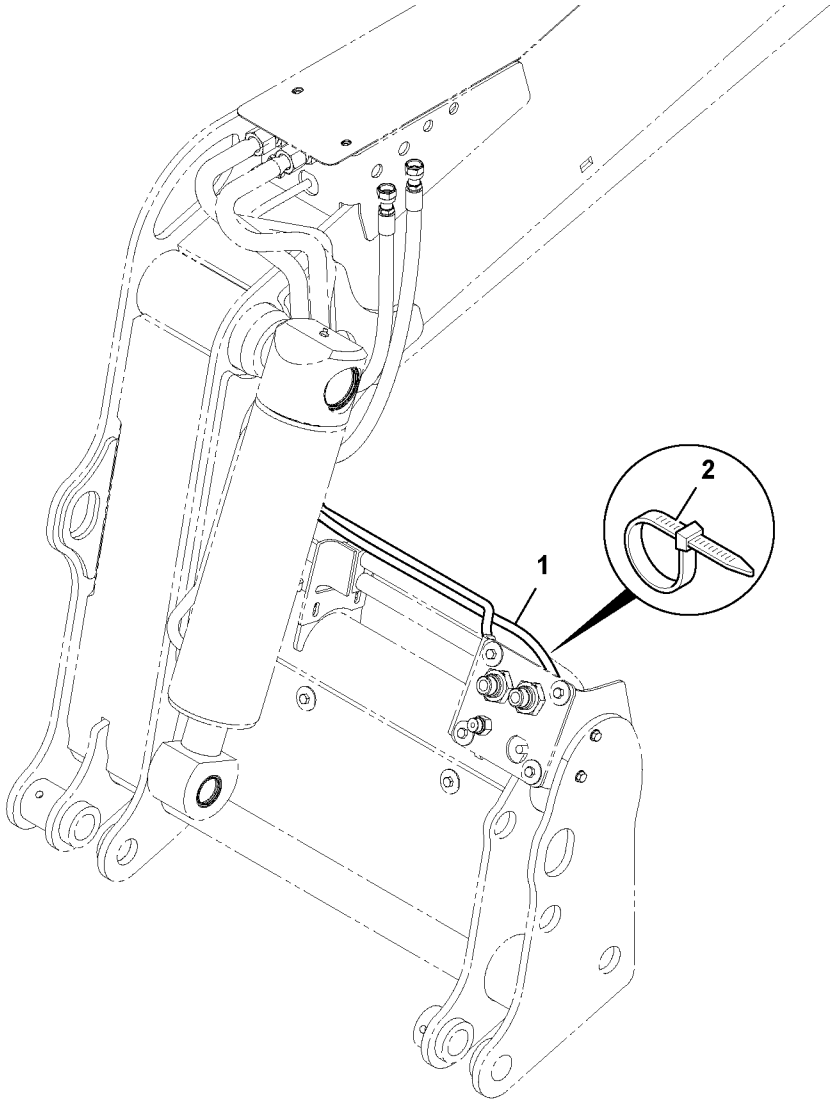

Volvo Construction Equipment
1064077

Fig.	Part No.	Quantity 1	2	3	PS	KIT	Description	Denominación	Denominação	Dénomination	Notes
1	**VOE 17229517**	1					Hose	Manguera	Mangueira	Flexible	
2	**VOE 17205188**	7					Tie straps	Cinta de atar		Ruban attache	L = 300 MM, W = 7,6 MM

1		**Faisceau de câbles, cabine et châssis** **Chicote de cabos, cabine e chassi** **Mazo de cables, cabina y bastidor** **Cable harness, cab and frame**	Catalogue id **20649**	Group **371**
2			Illustr. No **1064077**	Section **100**
3			Issue **PUB 20030904-B**	Page **301**
4				
5		**MC60C, MC70C, MCT70C**		

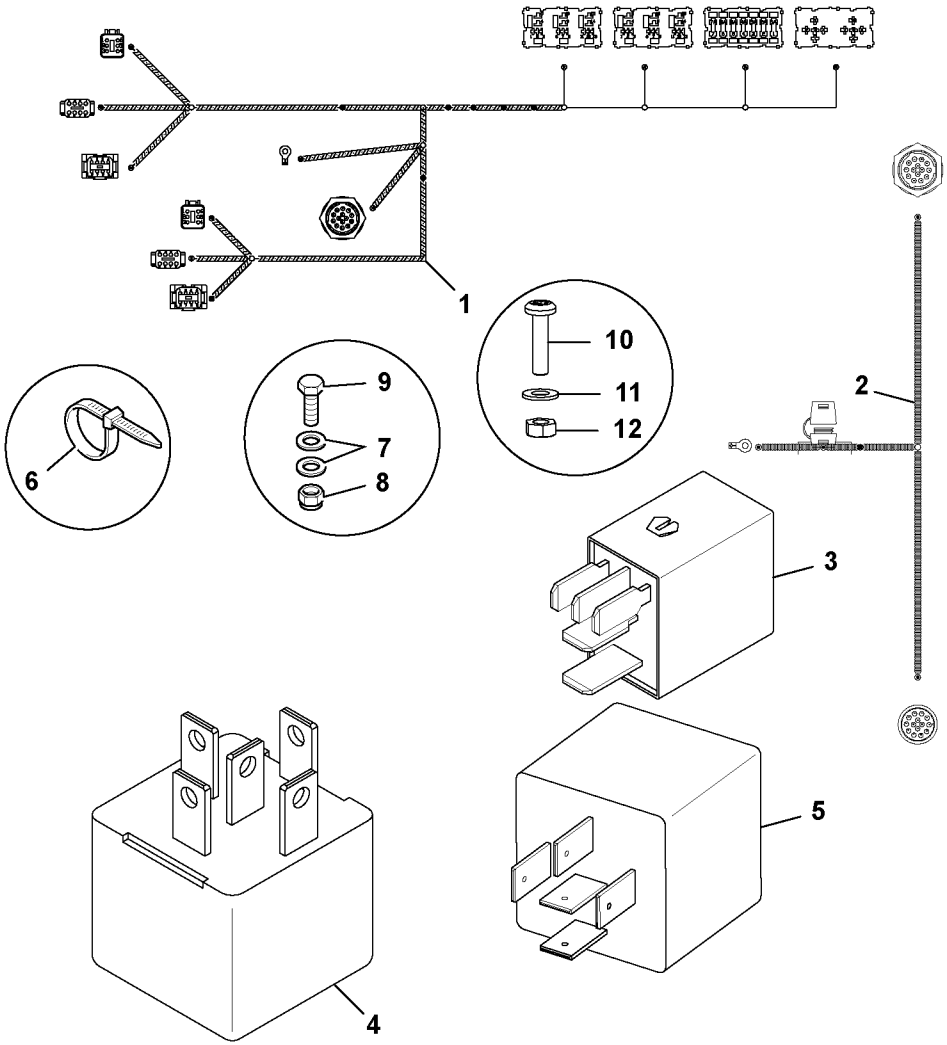
1
2
3
4
5
6
7
8
9
10
11
12

Fig.	Part No.	Quantity 1	2	3	PS	KIT	Description	Denominación	Denominação	Dénomination	Notes
1	**VOE 17205420**	1					Cable harness	Manojo cables	Chicote cabos	Faisceau câbles	
2	**VOE 17205422**	1					Cable harness	Manojo cables	Chicote cabos	Faisceau câbles	
3	**VOE 16213301**	6					Relay	Relé	Relé	Relais	
4	**VOE 17205285**	1					Relay	Relé	Relé	Relais	
5	**VOE 17205092**	1					Relay unit	Unidad de relé	Unidade relé	Unité de relais	
6	**VOE 17205293**	9					Tie straps	Cinta de atar		Ruban attache	
7	**VOE 973494**	6					Washer	Arandela	Arruela	Rondelle	
8	**VOE 16212115**	3					Lock nut	Contratuerca	Porca trava	Contre-écrou	
9	**VOE 16212071**	3					Set screw	Tornillo tope	Parafuso batente	Vis butée	
10	**VOE 17205263**	1					Screw	Tornillo	Parafuso	Vis	
11	**VOE 17205564**	1					Washer	Arandela	Arruela	Rondelle	
12	**VOE 17205292**	1					Nut	Tuerca	Porca	Écrou	

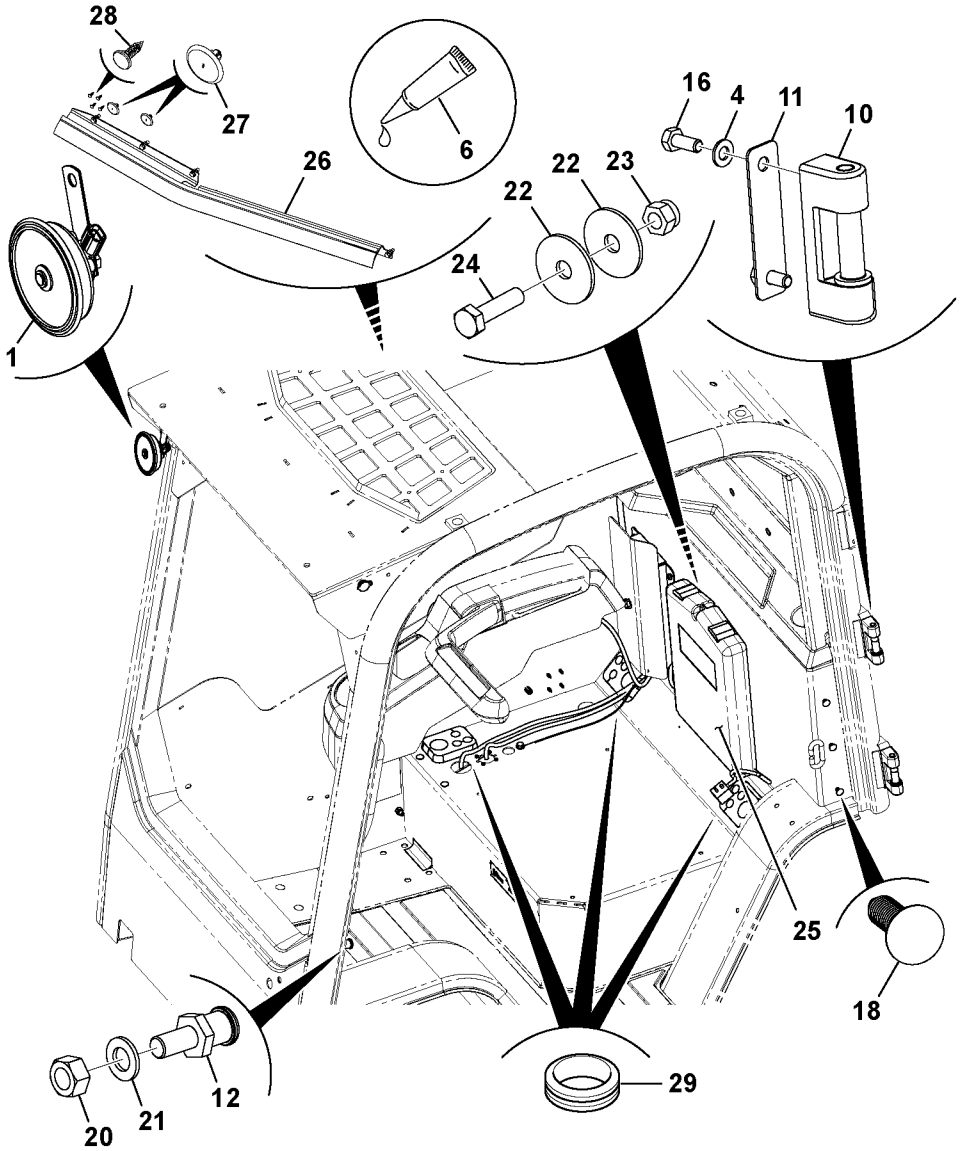
28
27
26
6
16
4
11
10
22
22
23
24
1
25
18
29
12
21
20

Fig.	Part No.	Quantity 1	2	3	PS	KIT	Description	Denominación	Denominação	Dénomination	Notes
1		1					Horn	Avisador sonoro	Buzina	Avertisseur sonore	See group 371, Page 311
4	**VOE 20460127**	4					Washer	Arandela	Arruela	Rondelle	
6		2			NS		Sealant	Product Estanq		Prod.etancheite	
10	**VOE 17205442**	2					Hinge	Bisagra	Dobradiça	Charnière	
11	**VOE 17209797**	2					Plate	Chapa	Chapa	Tôle	
12	**VOE 17210359**	1					Screw	Tornillo	Parafuso	Vis	
16	**VOE 17205256**	4					Hexagon screw	Tornillo hexagonal	Parafuso sextavado	Vis à tête hexagonale	
18	**VOE 17205044**	7					Plug	Tapón	Bujão	Tampon	
20	**VOE 17205299**	1					Nut	Tuerca	Porca	Écrou	
21	**VOE 17205240**	1					Washer	Arandela	Arruela	Rondelle	
22	**VOE 17205555**	8					Washer	Arandela	Arruela	Rondelle	
23	**VOE 16212115**	4					Lock nut	Contratuerca	Porca trava	Contre-écrou	
24	**VOE 16212071**	4					Set screw	Tornillo tope	Parafuso batente	Vis butée	
25	**VOE 17205313**	1					Manual	Manual	Manual	Manuel	
26	**VOE 17237855**	1					Sealing plate	Placa retén	Placa de vedação	Tôle étanchéité	
27		2			NS		Fastener	Atadura	Fixação	Attache	
28		4			NS		Fastener	Atadura	Fixação	Attache	
29		1			NS		Grommet	Aislador pasapanel	Ilhós	Passe fil	

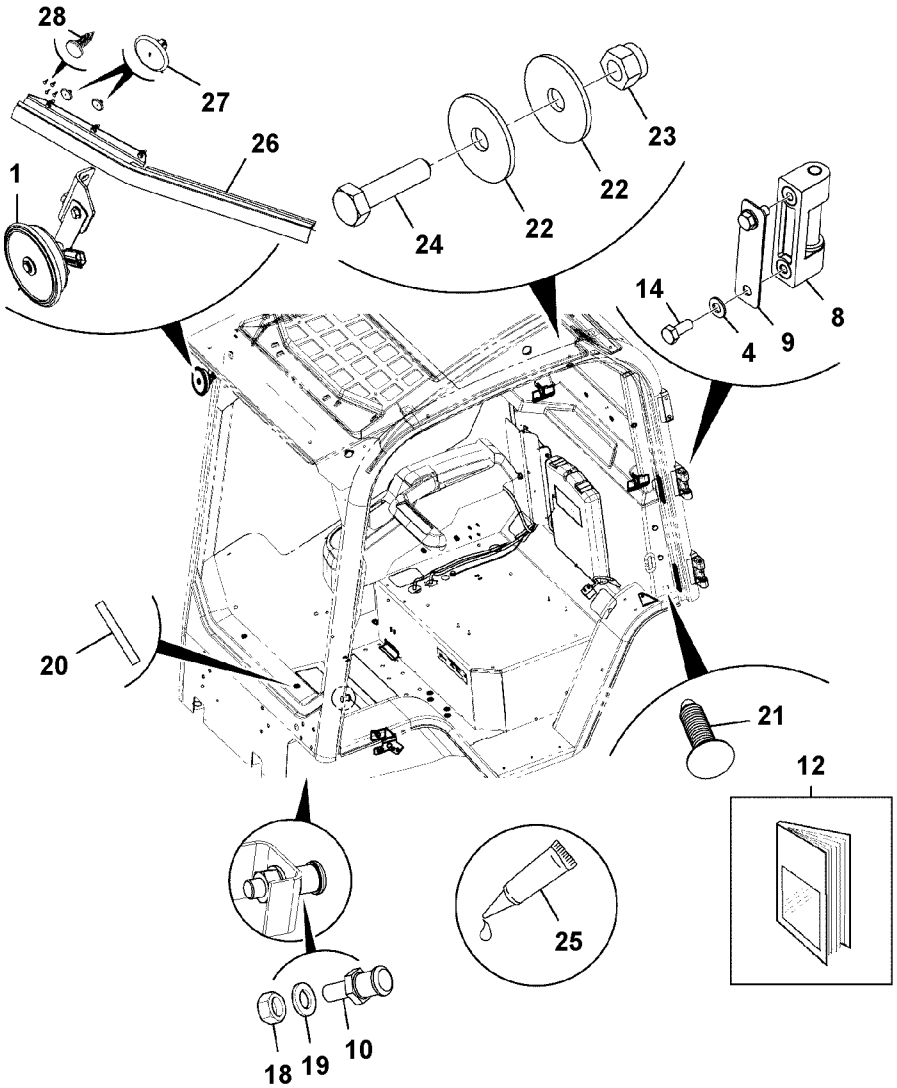
28
27
26
1
24
22
22
23
14
4
9
8
20
21
12
25
18
19
10

Fig.	Part No.	Quantity 1	2	3	PS	KIT	Description	Denominación	Denominação	Dénomination	Notes
1		1					Horn	Avisador sonoro	Buzina	Avertisseur sonore	See group 371, Page 309
4	**VOE 20460127**	4					Washer	Arandela	Arruela	Rondelle	
8	**VOE 17205442**	2					Hinge	Bisagra	Dobradiça	Charnière	
9	**VOE 17209797**	2					Plate	Chapa	Chapa	Tôle	
10	**VOE 17210359**	1					Screw	Tornillo	Parafuso	Vis	
12	**VOE 17205313**	1					Manual	Manual	Manual	Manuel	
14	**VOE 17205256**	4					Hexagon screw	Tornillo hexagonal	Parafuso sextavado	Vis à tête hexagonale	
18	**VOE 17205299**	1					Nut	Tuerca	Porca	Écrou	
19	**VOE 17205240**	1					Washer	Arandela	Arruela	Rondelle	
20		4			NS		Adhesive tape	Cinta adhesiva		Bande adhesive	
21	**VOE 17205044**	5					Plug	Tapón	Bujão	Tampon	
22	**VOE 17205555**	8					Washer	Arandela	Arruela	Rondelle	
23	**VOE 16212115**	4					Lock nut	Contratuerca	Porca trava	Contre-écrou	
24	**VOE 16212071**	4					Set screw	Tornillo tope	Parafuso batente	Vis butée	
25		1			NS		Sealant	Product Estanq		Prod.etancheite	
26	**VOE 17237855**	1					Sealing plate	Placa retén	Placa de vedação	Tôle étanchéité	
27		2			NS		Fastener	Atadura	Fixação	Attache	
28		4			NS		Fastener	Atadura	Fixação	Attache	

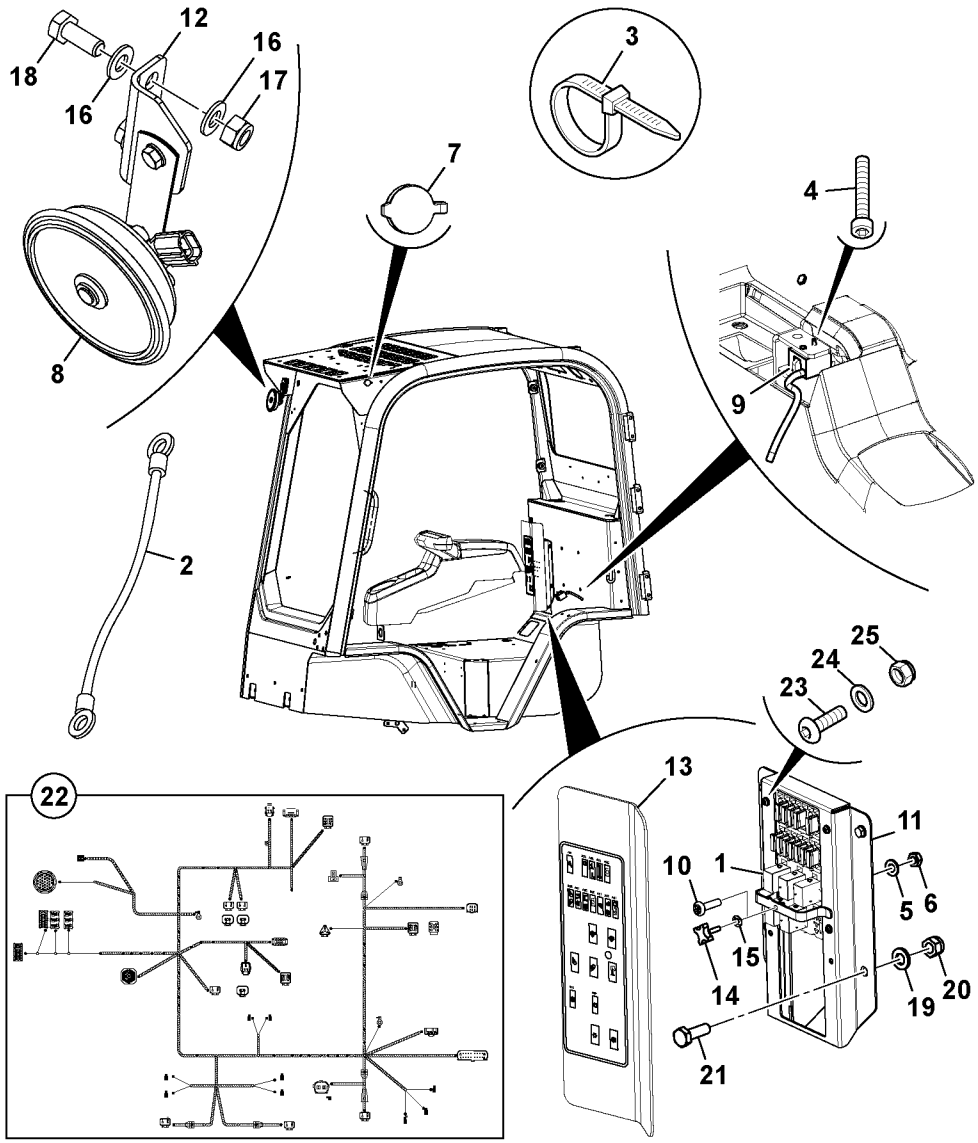
12
18
16
16
17
8
3
7
4
9
2
25
24
23
13
11
10
1
5
6
15
14
19
20
21
22

Fig.	Part No.	Quantity 1	2	3	PS	KIT	Description	Denominación	Denominação	Dénomination	Notes
1	**VOE 16213301**	5					Relay	Relé	Relé	Relais	
2	**VOE 17204996**	1					Cable	Cable	Cabo	Câble	
3	**VOE 17205188**	20					Tie straps	Cinta de atar		Ruban attache	
4	**VOE 17209594**	2					Screw	Tornillo	Parafuso	Vis	
5	**VOE 17205564**	4					Washer	Arandela	Arruela	Rondelle	
6	**VOE 17205292**	4					Nut	Tuerca	Porca	Écrou	
7	**VOE 16213270**	1					Socket	Toma de corriente	Conector	Socle	
8	**VOE 16213447**	1					Horn	Bocina	Buzina	Avertisseur	
9	**VOE 17210240**	2					Sensor	Sensor	Sensor	Capteur	
10	**VOE 17205263**	4					Screw	Tornillo	Parafuso	Vis	
11	**VOE 17210479**	1					Fuse box	Caja de fusibles	Caixa de fusíveis	Boîtier fusible	
12	**VOE 17210492**	1					Plate	Chapa	Chapa	Tôle	
13		1			NS		Fuse box	Caja de fusibles	Caixa de fusíveis	Boîtier fusible	
14	**VOE 17210032**	1					Knob	Volante	Botão	Bouton	
15	**VOE 17209629**	1					Washer	Arandela	Arruela	Rondelle	
16	**VOE 20460127**	8					Washer	Arandela	Arruela	Rondelle	
17	**VOE 16212120**	4					Lock nut	Contratuerca	Porca trava	Contre-écrou	
18	**VOE 16213998**	4					Set screw	Tornillo tope	Parafuso batente	Vis butée	
19	**VOE 973494**	4					Washer	Arandela	Arruela	Rondelle	
20	**VOE 16212115**	4					Lock nut	Contratuerca	Porca trava	Contre-écrou	
21	**VOE 16212203**	4					Set screw	Tornillo tope	Parafuso batente	Vis butée	
22	**VOE 17229669**	1					Cable harness	Manojo cables	Chicote cabos	Faisceau câbles	
23	**VOE 17230138**	4					Screw	Tornillo	Parafuso	Vis	
24		8			NS		Washer	Arandela	Arruela	Rondelle	
25	**VOE 17229628**	4					Nut	Tuerca	Porca	Écrou	

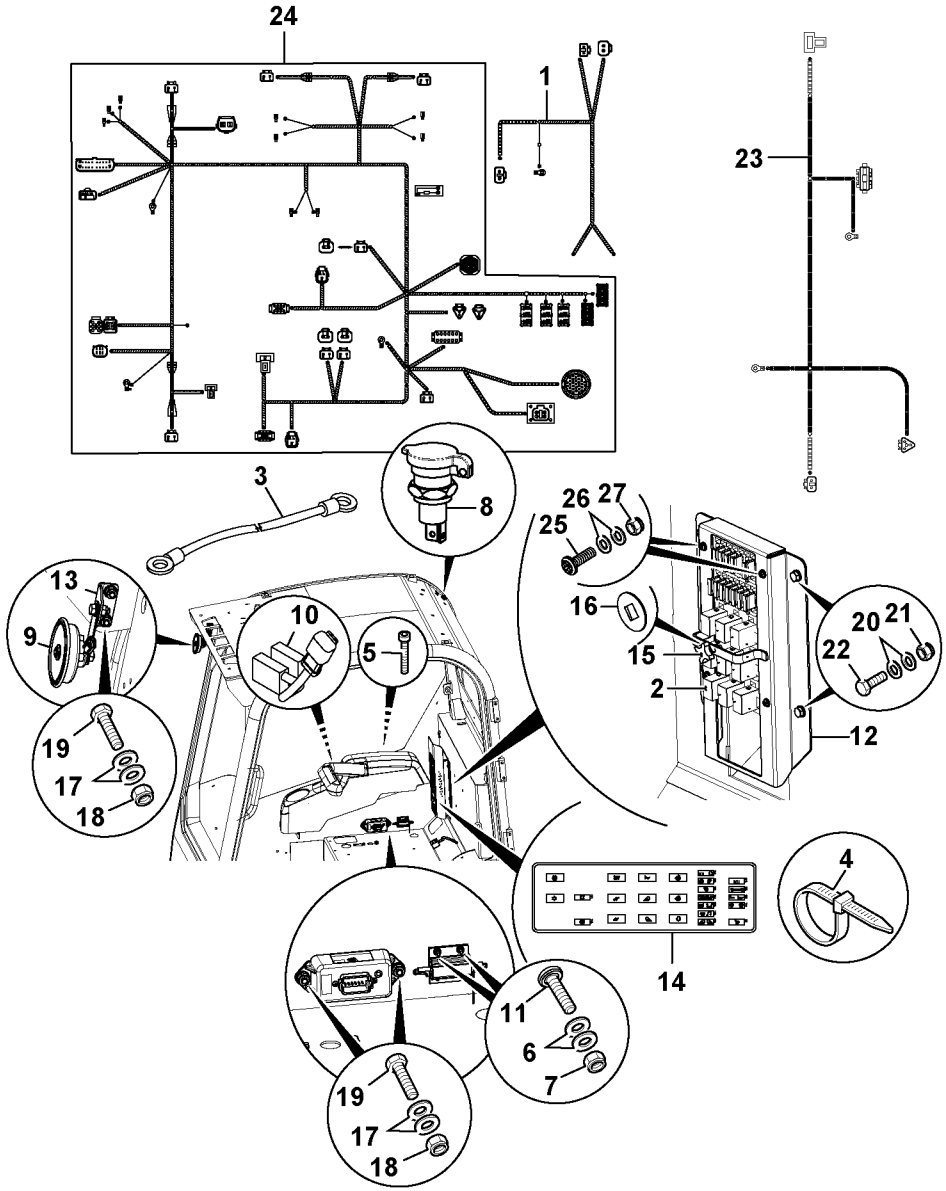
24
1
23
3
8
26
27
25
16
20
21
22
15
2
12
13
9
10
5
19
17
18
4
14
11
6
7
19
17
18

Fig.	Part No.	Quantity 1	2	3	PS	KIT	Description	Denominación	Denominação	Dénomination	Notes
1	**VOE 16213450**	1					Cable harness	Manojo cables	Chicote cabos	Faisceau câbles	
2	**VOE 16213301**	5					Relay	Relé	Relé	Relais	
3	**VOE 17204996**	1					Cable	Cable	Cabo	Câble	
4	**VOE 17205188**	20					Tie straps	Cinta de atar		Ruban attache	
5	**VOE 17209594**	2					Screw	Tornillo	Parafuso	Vis	
6	**VOE 17205564**	4					Washer	Arandela	Arruela	Rondelle	
7	**VOE 17205292**	4					Nut	Tuerca	Porca	Écrou	
8	**VOE 16213270**	1					Socket	Toma de corriente	Conector	Socle	
9	**VOE 16213447**	1					Horn	Bocina	Buzina	Avertisseur	
10	**VOE 17210240**	2					Sensor	Sensor	Sensor	Capteur	
11	**VOE 17205263**	4					Screw	Tornillo	Parafuso	Vis	
12	**VOE 17210479**	1					Fuse box	Caja de fusibles	Caixa de fusíveis	Boîtier fusible	
13	**VOE 17210492**	1					Plate	Chapa	Chapa	Tôle	
14		1			NS		Fuse box	Caja de fusibles	Caixa de fusíveis	Boîtier fusible	
15	**VOE 17210032**	1					Knob	Volante	Botão	Bouton	
16	**VOE 17209629**	1					Washer	Arandela	Arruela	Rondelle	
17	**VOE 20460127**	8					Washer	Arandela	Arruela	Rondelle	
18	**VOE 16212120**	4					Lock nut	Contratuerca	Porca trava	Contre-écrou	
19	**VOE 16213998**	4					Set screw	Tornillo tope	Parafuso batente	Vis butée	
20	**VOE 973494**	4					Washer	Arandela	Arruela	Rondelle	
21	**VOE 16212115**	4					Lock nut	Contratuerca	Porca trava	Contre-écrou	
22	**VOE 16212203**	4					Set screw	Tornillo tope	Parafuso batente	Vis butée	
23	**VOE 17209688**	1					Cable harness	Manojo cables	Chicote cabos	Faisceau câbles	
24	**VOE 17229669**	1					Cable harness	Manojo cables	Chicote cabos	Faisceau câbles	
25	**VOE 17230138**	4					Screw	Tornillo	Parafuso	Vis	
26		8			NS		Washer	Arandela	Arruela	Rondelle	
27	**VOE 17229628**	4					Nut	Tuerca	Porca	Écrou	

1		**Système électrique, cabine de conducteur**		Catalogue id **20649**	Group **371**
2					
3		**Sistema eléctrico, Cabina**		Illustr. No **1064112**	Section **350**
4		**Electrical system, cab**			
5		**CANOPY MC60C-MC105C, MCT70C-MCT95C**		Issue **PUB 20030904-B**	Page **311**

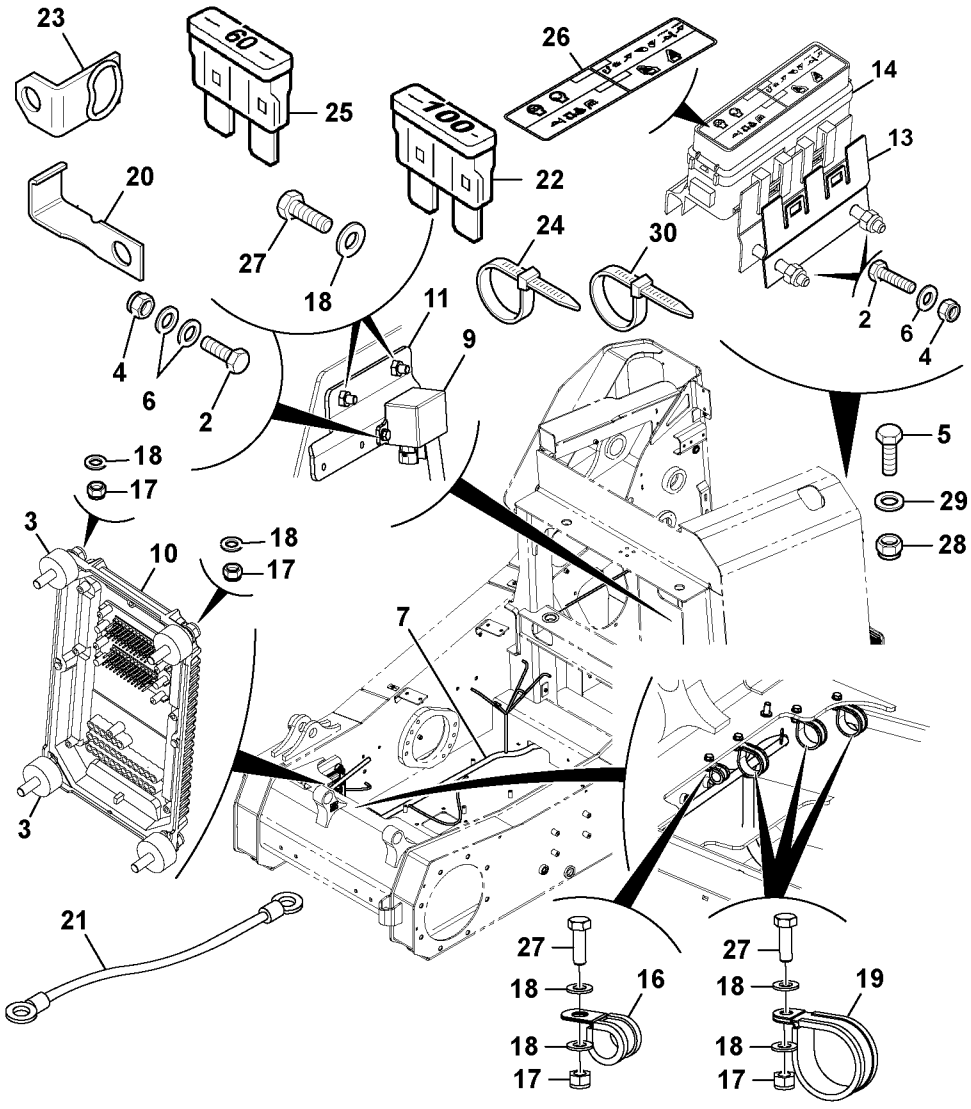
23
60
25
26
14
13
20
100
22
27
18
24
30
11
9
4
6
2
2
6
4
5
29
28
18
17
3
10
18
17
7
3
21
27
18
16
18
17
27
18
19
18
17

Fig.	Part No.	Quantity 1	2	3	PS	KIT	Description	Denominación	Denominação	Dénomination	Notes
2	**VOE 16212203**	6					Set screw	Tornillo tope	Parafuso batente	Vis butée	
3	**VOE 17205159**	8					Rubber washer	Arandela de goma	Arruela de borracha	Rondelle caoutchouc	
4	**VOE 16212115**	6					Lock nut	Contratuerca	Porca trava	Contre-écrou	
5	**VOE 17205091**	2					Set screw	Tornillo tope	Parafuso batente	Vis butée	
6	**VOE 973494**	8					Washer	Arandela	Arruela	Rondelle	
7	**VOE 17229662**	1					Cable harness	Manojo cables	Chicote cabos	Faisceau câbles	
9	**VOE 16213299**	2					Relay	Relé	Relé	Relais	
10	**VOE 17209907**	2					Electronic unit	Unidad electrónica	Unidade eletrônica	Unité électronique	
11		1			NS		Plate	Chapa	Chapa	Tôle	
13	**VOE 17205228**	1					Bracket	Consola	Suporte	Console	
14	**VOE 16213315**	1					Box	Caja	Caixa	Caisse	
16	**VOE 17229676**	2					Clip	Clip	Clipe	Bride	
17	**VOE 16212120**	8					Lock nut	Contratuerca	Porca trava	Contre-écrou	
18	**VOE 20460127**	10					Washer	Arandela	Arruela	Rondelle	
19	**VOE 17210500**	2					Cable clamp	Abrazadera de cable	Abraçadeira	Collier	
20	**VOE 17210463**	1					Clip	Clip	Clipe	Clip	
21	**VOE 16213453**	1					Cable harness	Manojo cables	Chicote cabos	Faisceau câbles	
22	**VOE 17210030**	1					Fuse	Fusible	Fusível	Fusible	
23	**VOE 17229136**	2					Clip	Clip	Clipe	Clip	
24	**VOE 17205290**	13					Tie straps	Cinta de atar		Ruban attache	
25	**VOE 17205096**	3					Fuse	Fusible	Fusível	Fusible	
26		1			NS		Label	Etiqueta		Etiquette	
27	**VOE 16213998**	2					Set screw	Tornillo tope	Parafuso batente	Vis butée	
28	**VOE 16212125**	2					Nut	Tuerca	Porca	Écrou	
29	**VOE 16212138**	2			SS		Plain washer	Arandela plana	Arruela simples	Rondelle plane	
30		3			NS		Cable tie	Abrazadera de cinta	Braçadeira	Serre-câble	

1		**Système électrique, cabine de conducteur**	Catalogue id **20649**	Group **371**
2				
3		**Sistema eléctrico, Cabina**	Illustr. No **1064111**	Section **400**
4		**Electrical system, cab**		
5		**MC60C-MC105C, MCT70C-MCT95C**	Issue **PUB 20030904-B**	Page **313**

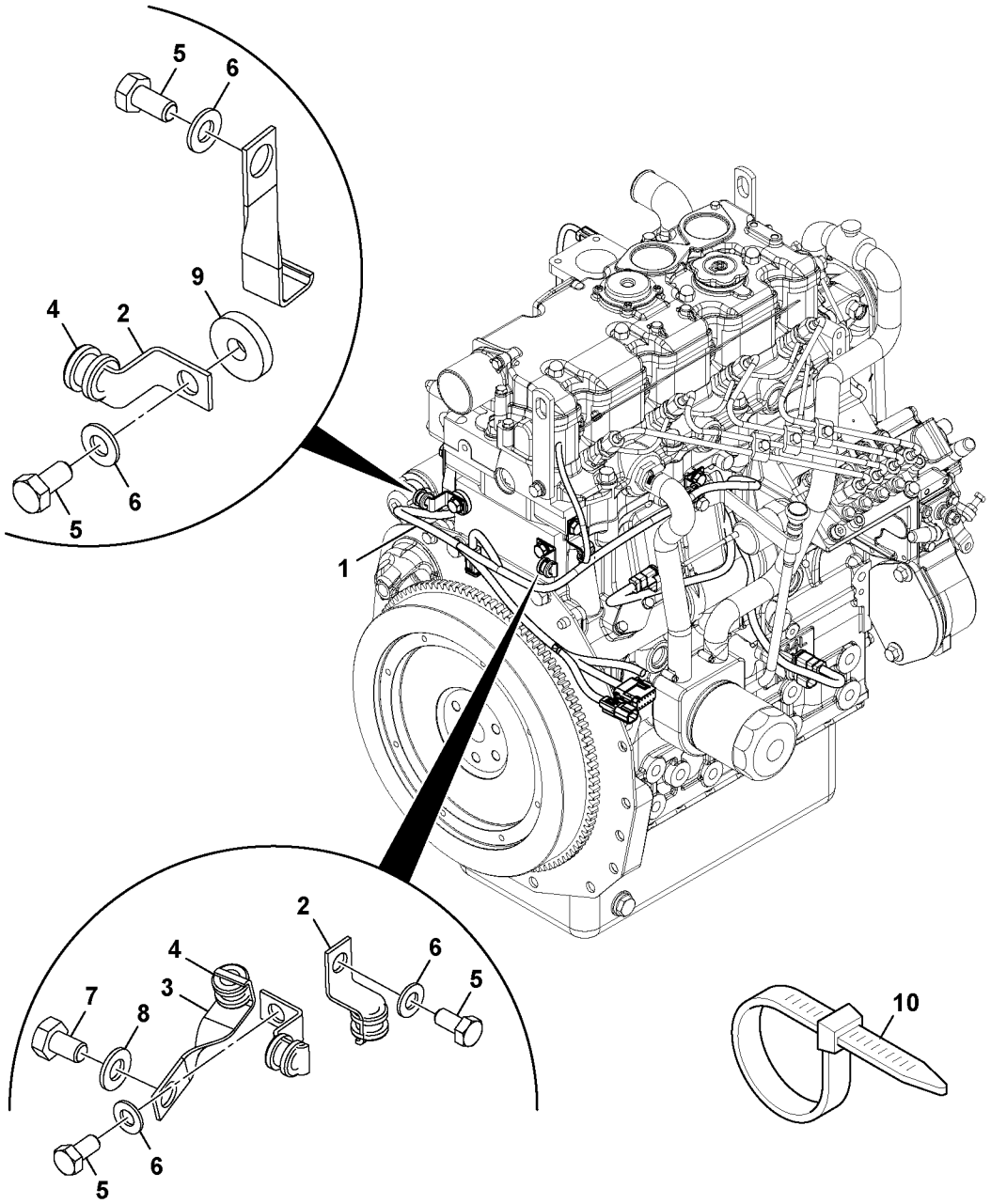

Volvo Construction Equipment
1064149

Fig.	Part No.	Quantity 1	2	3	PS	KIT	Description	Denominación	Denominação	Dénomination	Notes
1		1			NS		Cable harness	Manojo cables	Chicote	Faisceau cables	
2	**VOE 17205410**	4					Clip	Clip	Clipe	Clip	
3	**VOE 17210463**	2					Clip	Clip	Clipe	Clip	
4	**VOE 17205364**	6					Grommet	Pasaje	Passa muro	Passe fil	
5	**VOE 16213997**	5					Set screw	Tornillo tope	Parafuso batente	Vis butée	
6	**VOE 20460127**	5					Washer	Arandela	Arruela	Rondelle	
7	**VOE 17205027**	1					Bolt	Perno	Parafuso	Boulon	
8	**VOE 16212138**	1			SS		Plain washer	Arandela plana	Arruela simples	Rondelle plane	
9	**VOE 17230662**	1					Washer	Arandela	Arruela	Rondelle	
10	**VOE 17205287**	6					Tie straps	Cinta de atar		Ruban attache	

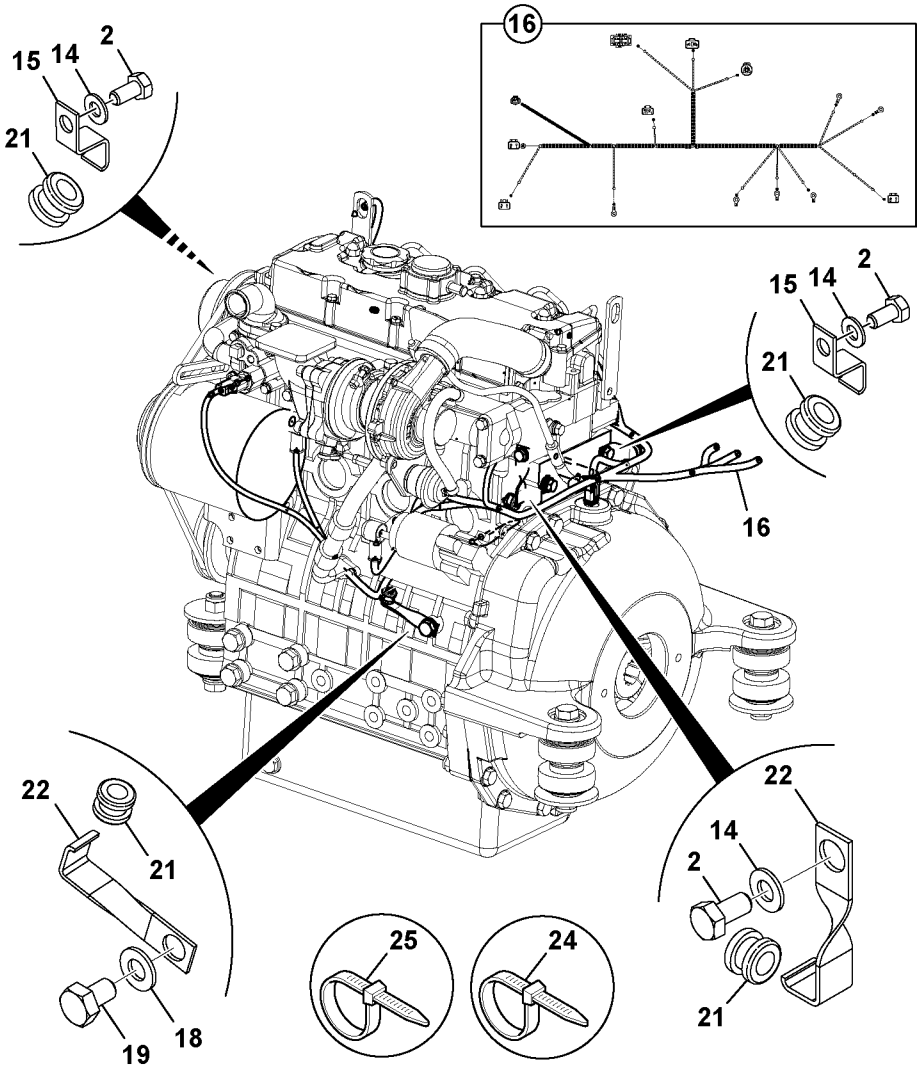
16
15
14
2
21
15
14
2
21
16
22
21
19
18
25
24
22
14
2
21

Fig.	Part No.	Quantity 1	2	3	PS	KIT	Description	Denominación	Denominação	Dénomination	Notes
2	**VOE 16213997**	6					Set screw	Tornillo tope	Parafuso batente	Vis butée	
14	**VOE 20460127**	8					Washer	Arandela	Arruela	Rondelle	
15	**VOE 17205410**	5					Clip	Clip	Clipe	Clip	
16		1			NS		Cable harness	Manojo cables	Chicote	Faisceau cables	
18	**VOE 16212138**	1			SS		Plain washer	Arandela plana	Arruela simples	Rondelle plane	
19	**VOE 17205027**	1					Bolt	Perno	Parafuso	Boulon	
21	**VOE 17205364**	7					Grommet	Pasaje	Passa muro	Passe fil	
22	**VOE 17210463**	2					Clip	Clip	Clipe	Clip	
24	**VOE 17205188**	2					Tie straps	Cinta de atar		Ruban attache	
25		12			NS		Cable Tie	Abrazadera	Braçadeira	Serre-cable	

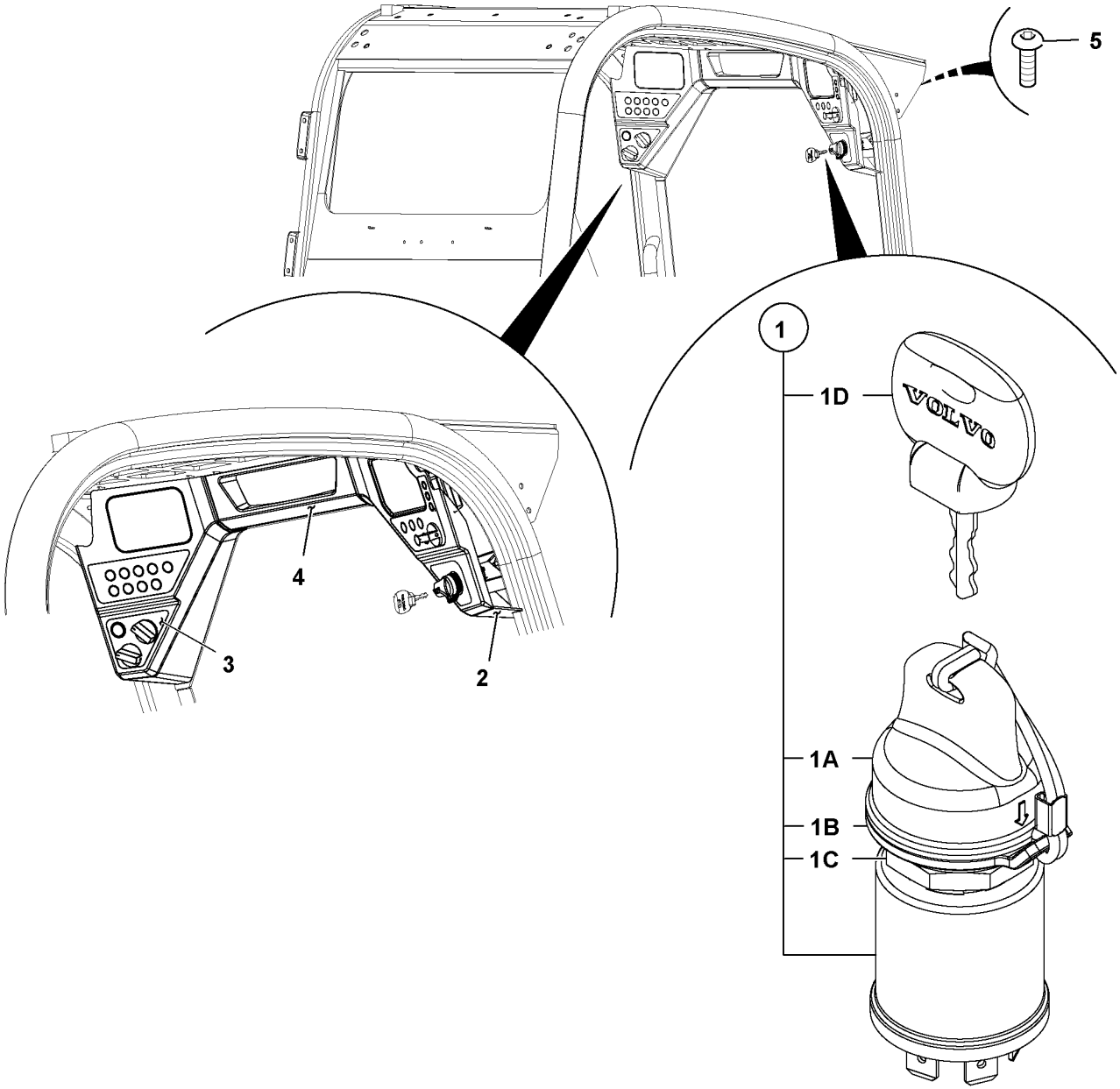

Volvo Construction Equipment
1064192

Fig.	Part No.	Quantity 1	2	3	PS	KIT	Description	Denominación	Denominação	Dénomination	Notes
1	**VOE 16214275**	1	1				Starter key	Llave de arranque	Chave de partida	Clé contact	
1A	**VOE 17210528**	1	1				•Cover	•Cubierta	•Tampa	•Capot	
1B		1	1		NS		•Spacer	•Casquillo distanciad	•Espaçador	•Entretoise	
1C		1	1		NS		•Nut	•Tuerca	•Porca	•Ecrou	
1D	**VOE 16213432**	1	1				•Key	•Chaveta	•Cunha	•Clavette	
2		1			NS		Panel	Plancha	Painel	Panneau	
2	**VOE 17209908**		1		SS		Switch panel	Panel interruptor	Painel dos interruptores	Panneau commutateurs	
2	**VOE 17235654**		1				•Knob	•Mango	•Botão	•Bouton	THROTTLE RPM
3	**VOE 17209909**	1					Switch panel	Panel interruptor	Painel dos interruptores	Panneau commutateurs	
3	**VOE 17209911**		1				Switch panel	Panel interruptor	Painel dos interruptores	Panneau commutateurs	
4	**VOE 17209970**	1	1				Panel	Panel	Painel	Panneau	
5	**VOE 17230137**	4	4				Screw	Tornillo	Parafuso	Vis	

1	**STD**
2	**AUX**
3	
4	
5	

Commutateurs dans la cabine et clé de contact
Interruptores na cabine com chave de ignição
Interruptores en la cabina con llave de encendido
Switches in cab with ignition key

MC60C-MC105C, MCT70C-MCT95C

Catalogue id **20649**	Group **380**
Illustr. No **1064192**	Section **100**
Issue **PUB 20030904-B**	Page **319**

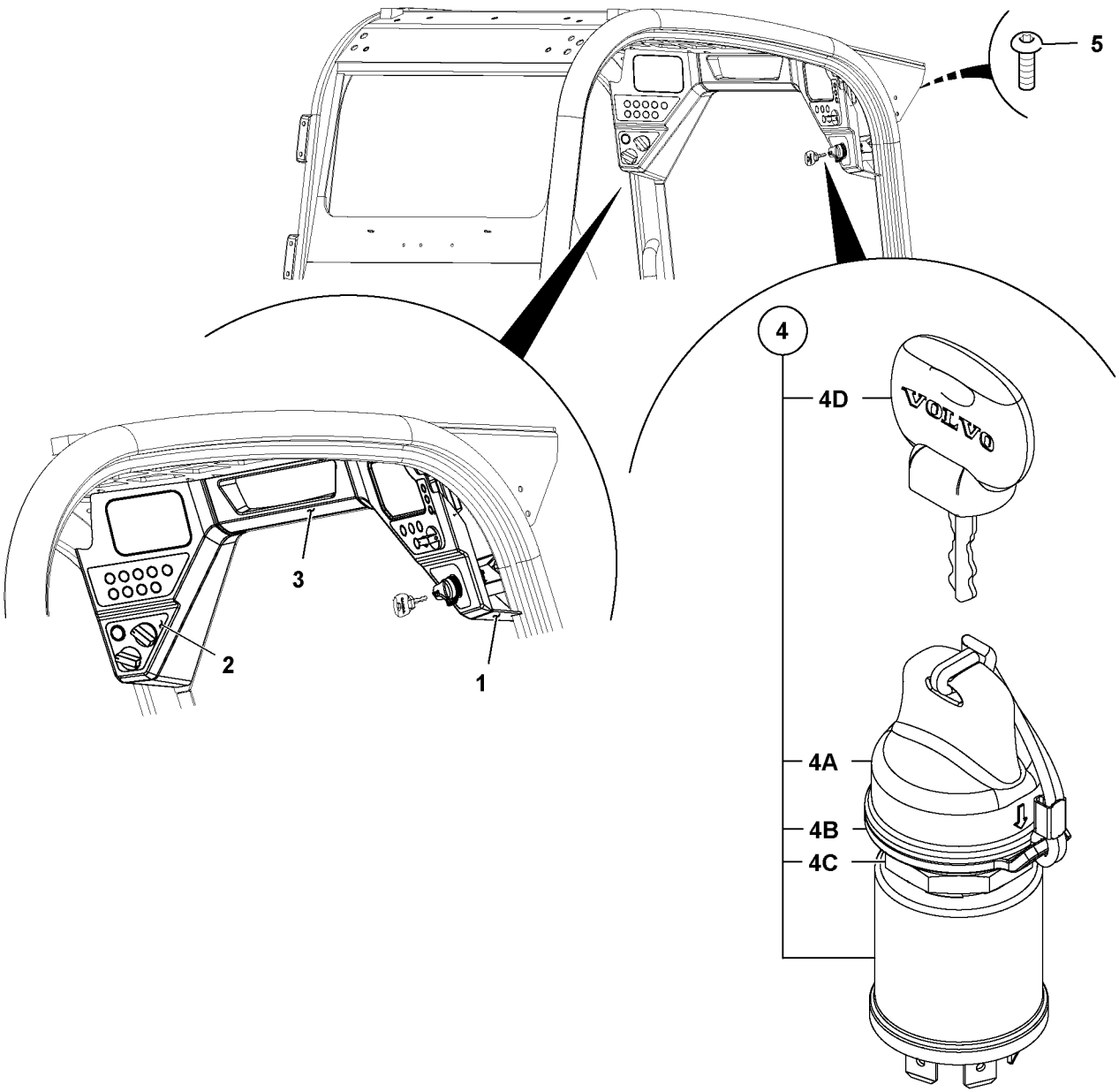

Volvo Construction Equipment
1064194

Fig.	Part No.	Quantity 1	2	3	PS	KIT	Description	Denominación	Denominação	Dénomination	Notes
1		1	1		NS		Panel	Plancha	Painel	Panneau	
2	**VOE 17209913**	1					Switch panel	Panel interruptor	Painel dos interruptores	Panneau commutateurs	
2	**VOE 17209916**		1				Switch panel	Panel interruptor	Painel dos interruptores	Panneau commutateurs	
3	**VOE 17209970**	1	1				Panel	Panel	Painel	Panneau	
4	**VOE 16214275**	1	1				Starter key	Llave de arranque	Chave de partida	Clé contact	
4A	**VOE 17210528**	1	1				•Cover	•Cubierta	•Tampa	•Capot	
4B		1	1		NS		•Spacer	•Casquillo distanciad	•Espaçador	•Entretoise	
4C		1	1		NS		•Nut	•Tuerca	•Porca	•Ecrou	
4D	**VOE 16213432**	1	1				•Key	•Chaveta	•Cunha	•Clavette	
5	**VOE 17230137**	4	4				Screw	Tornillo	Parafuso	Vis	

1	**AUX**
2	**HVAC**
3	
4	
5	

Commutateurs dans la cabine et clé de contact
Interruptores na cabine com chave de ignição
Interruptores en la cabina con llave de encendido
Switches in cab with ignition key

MC60C-MC105C, MCT70C-MCT95C

Catalogue id **20649**	Group **380**
Illustr. No **1064194**	Section **200**
Issue **PUB 20030904-B**	Page **321**

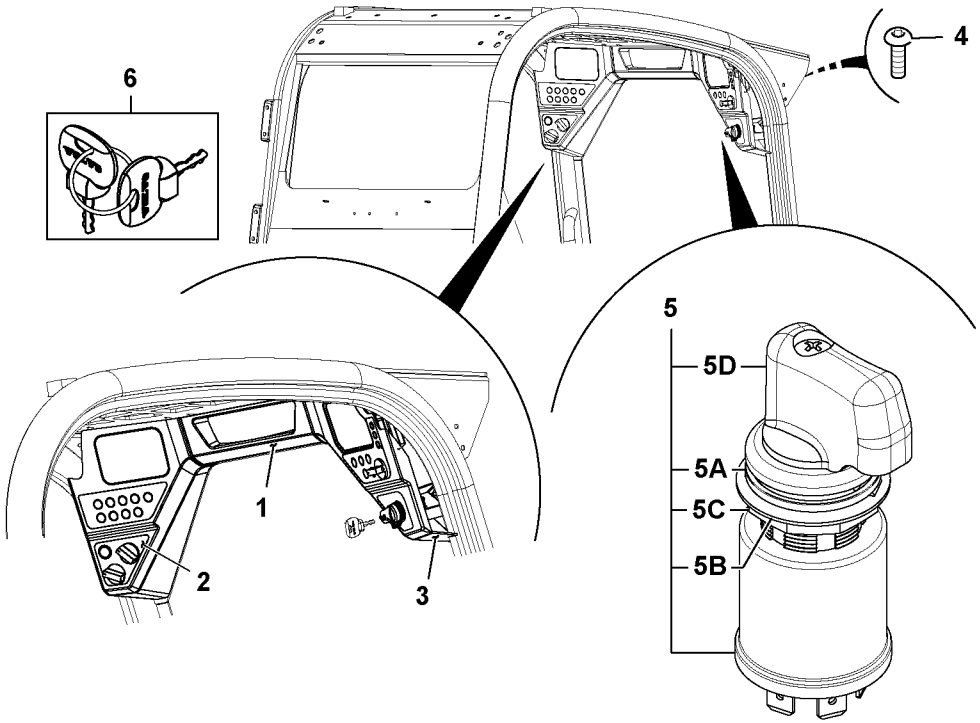
6
4
5
5D
5A
5C
5B
1
2
3

Fig.	Part No.	Quantity 1	2	3	PS	KIT	Description	Denominación	Denominação	Dénomination	Notes
1	**VOE 17209970**	1					Panel	Panel	Painel	Panneau	
2	**VOE 17209909**	1					Switch panel	Panel interruptor	Painel dos interruptores	Panneau commutateurs	
3		1			NS		Panel	Plancha	Painel	Panneau	
4	**VOE 17230137**	4					Screw	Tornillo	Parafuso	Vis	
5	**VOE 16213978**	1					Ignition device	Dispositivo de ignición	Dispositivo da ignição	Appareil allumage	
5A		1			NS		•Top	•Lado Superior	•	•Face Superieure	
5B		1			NS		•Spacer	•Casquillo distanciad	•Espaçador	•Entretoise	
5C		1			NS		•Nut	•Tuerca	•Porca	•Ecrou	
5D	**VOE 17210252**	1					•Switch	•Interruptor	•Interruptor	•Interrupteur	
6		2			NS		Key	Llave		Cle	

1		**Commutateurs, cabine dépourvue de serrure de contact** **Interruptores da cabine com ignição sem chave** **Interruptores en la cabina con encendido sin llave** **Switches in cab with keyless ignition**	Catalogue id **20649**	Group **380**
2			Illustr. No **1064026**	Section **500**
3				
4			Issue **PUB 20030904-B**	Page **323**
5		**MC60C-MC105C, MCT70C-MCT95C**		

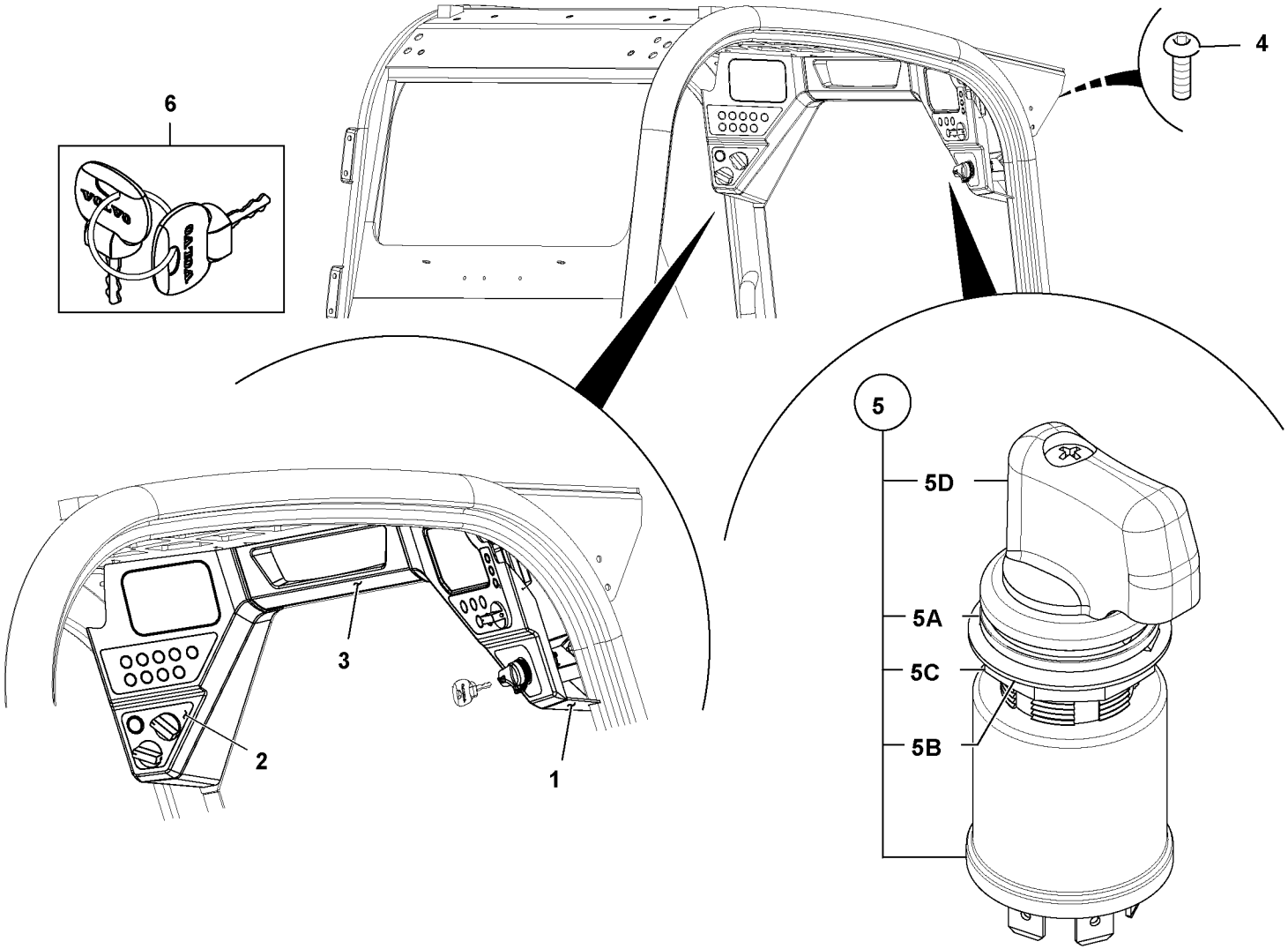

Volvo Construction Equipment
1064193

Fig.	Part No.	Quantity 1	2	3	PS	KIT	Description	Denominación	Denominação	Dénomination	Notes
1		1	1	1	NS		Panel	Plancha	Painel	Panneau	
2	**VOE 17209911**	1					Switch panel	Panel interruptor	Painel dos interruptores	Panneau commutateurs	
2	**VOE 17209913**		1				Switch panel	Panel interruptor	Painel dos interruptores	Panneau commutateurs	
2	**VOE 17209916**			1			Switch panel	Panel interruptor	Painel dos interruptores	Panneau commutateurs	
3	**VOE 17209970**	1	1	1			Panel	Panel	Painel	Panneau	
4	**VOE 17230137**	4	4	4			Screw	Tornillo	Parafuso	Vis	
5	**VOE 16213978**	1	1	1			Ignition device	Dispositivo de ignición	Dispositivo da ignição	Appareil allumage	
5A		1	1	1	NS		•Top	•Lado Superior	•	•Face Superieure	
5B		1	1	1	NS		•Spacer	•Casquillo distanciad	•Espaçador	•Entretoise	
5C		1	1	1	NS		•Nut	•Tuerca	•Porca	•Ecrou	
5D	**VOE 17210252**	1	1	1			•Switch	•Interruptor	•Interruptor	•Interrupteur	
6		2	2	2	NS		Key	Llave		Cle	

1	**HVAC, AUX**
2	**AUX**
3	**HVAC**
4	
5	

Commutateurs, cabine dépourvue de serrure de contact
Interruptores da cabine com ignição sem chave
Interruptores en la cabina con encendido sin llave
Switches in cab with keyless ignition

MC60C-MC105C, MCT70C-MCT95C

Catalogue id	Group
20649	**380**
Illustr. No **1064193**	Section **550**
Issue **PUB 20030904-B**	Page **325**

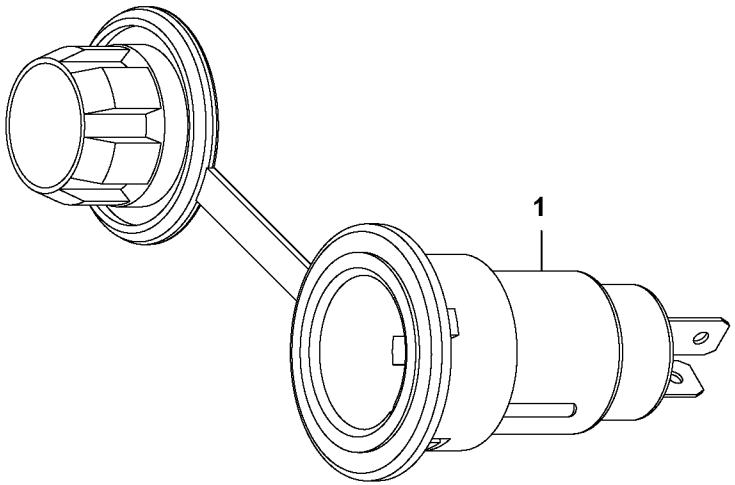
1

Fig.	Part No.	Quantity 1	2	3	PS	KIT	Description	Denominación	Denominação	Dénomination	Notes
1	**VOE 16212295**	1					Socket	Toma de corriente	Conector	Socle	

1		**Douille supplémentaire** **Tomada adicional** **Enchufe hembra adicional** **Additional Socket**	Catalogue id **20649**	Group **380**
2			Illustr. No **1064195**	Section **1000**
3			Issue **PUB 20030904-B**	Page **327**
4				
5		**MC70C-MC105C, MCT70C-MCT95C**		

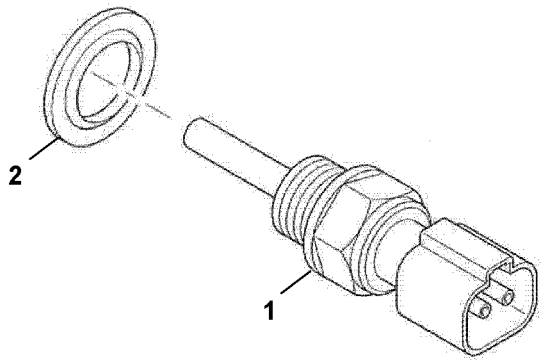
2
1

Fig.	Part No.	Quantity 1	2	3	PS	KIT	Description	Denominación	Denominação	Dénomination	Notes
1	**VOE 17224777**	1					Sensor	Sensor	Sensor	Capteur	
2	**VOE 17228243**	1					Washer	Arandela	Arruela	Rondelle	

1		**Température de l'eau** **Temperatura da água** **Temperatura del agua** **Water Temperature**	Catalogue id **20649**	Group **386**
2			Illustr. No **1063984**	Section **100**
3			Issue **PUB 20030904-B**	Page **329**
4				
5		**MC60C-MC105C, MCT70C-MCT95C**		

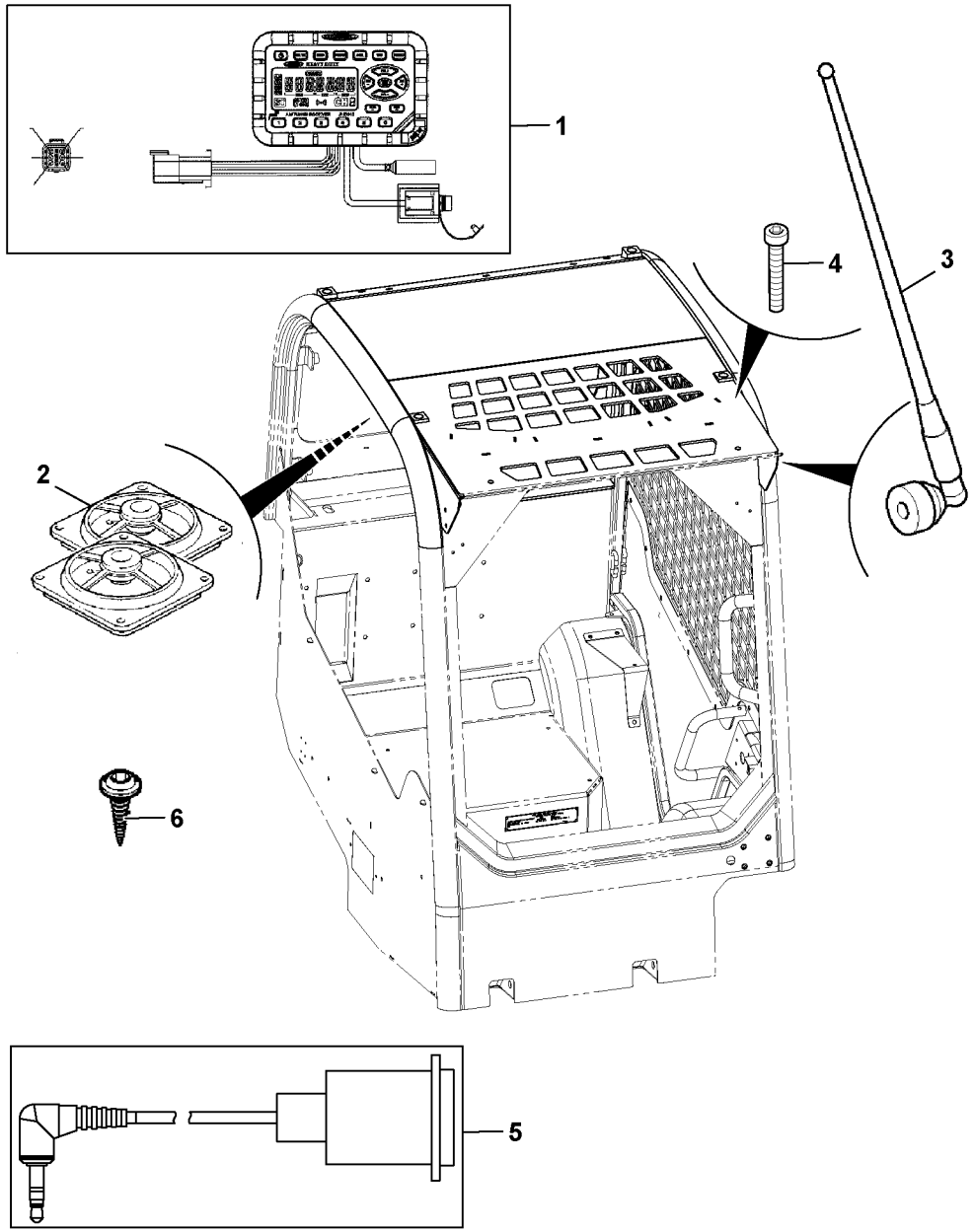

Volvo Construction Equipment
1064198

Fig.	Part No.	Quantity 1	2	3	PS	KIT	Description	Denominación	Denominação	Dénomination	Notes
1	**VOE 17209572**	1					Radio	Radio	Rádio	Radio	
2	**VOE 16213269**	1					Loudspeaker kit	Juego de altavoz	Jogo altofalante	Jeu haut-parleur	
3	**VOE 16213141**	1					Antenna	Antena	Antena	Antenne	
4	**VOE 17209633**	12					Screw	Tornillo	Parafuso	Vis	
5		1			NS		Cable	Cable	Cabo	Câble	
6	**VOE 17230159**	4					Screw	Tornillo	Parafuso	Vis	



Volvo Construction Equipment
www.volvoce.com

GROUP		Section	Page
440	Drivetrain components MC60C-MC105C	100	339
440	Drivetrain components MC60C-MC105C	150	341
440	Drivetrain components FRONT MC60C-MC105C	200	343
440	Drivetrain components MC60C-MC105C	250	345
440	Drivetrain components MC60C-MC105C	300	347
440	Drivetrain components MC60C-MC105C	350	349
440	Drivetrain components MC60C-MC105C	400	351
440	Drivetrain components MCT85C	500	353
441	Hydraulic system Transport MCT70C-MCT95C	100	355
441	Hydraulic system Transport MCT70C-MCT95C	150	357
441	Transmission pump	200	359
441	Transmission pump 45CC MCT70C-MCT95C	250	361
441	Hydraulic motor, travel MC60C-MC105C	300	363
441	Hydraulic motor, travel MC60C-MC105C	350	365
441	Hydraulic motor, travel LH MCT70C-MCT95C	400	367
441	Hydraulic motor, travel RH MCT70C-MCT95C	450	373
441	Hydraulic system Transport MCT70C-MCT95C	500	379
441	Transmission pump 51CC MC60C-MC105C	1000	381
441	Transmission pump 51CC MC60C-MC105C	1050	383
441	Transmission pump 42CC MCT70C-MCT95C	1100	385
441	Transmission pump 42CC MCT70C-MCT95C	1150	387
441	Transmission pump 33CC MC60C-MC105C, MCT70C-MCT95C	1200	389
441	Transmission pump 33CC MC60C-MC105C, MCT70C-MCT95C	1250	391



GRUPO		Sección	Página
440	Componentes de la línea motriz MC60C-MC105C	100	339
440	Componentes de la línea motriz MC60C-MC105C	150	341
440	Componentes de la línea motriz FRONT MC60C-MC105C	200	343
440	Componentes de la línea motriz MC60C-MC105C	250	345
440	Componentes de la línea motriz MC60C-MC105C	300	347
440	Componentes de la línea motriz MC60C-MC105C	350	349
440	Componentes de la línea motriz MC60C-MC105C	400	351
440	Componentes de la línea motriz MCT85C	500	353
441	Sistema Hidr. Movimiento MCT70C-MCT95C	100	355
441	Sistema Hidr. Movimiento MCT70C-MCT95C	150	357
441	Bomba de transmisión	200	359
441	Bomba de transmisión 45CC MCT70C-MCT95C	250	361
441	Motor hidraulico, transporte MC60C-MC105C	300	363
441	Motor hidraulico, transporte MC60C-MC105C	350	365
441	Motor hidraulico, transporte LH MCT70C-MCT95C	400	367
441	Motor hidraulico, transporte RH MCT70C-MCT95C	450	373
441	Sistema Hidr. Movimiento MCT70C-MCT95C	500	379
441	Bomba de transmisión 51CC MC60C-MC105C	1000	381
441	Bomba de transmisión 51CC MC60C-MC105C	1050	383
441	Bomba de transmisión 42CC MCT70C-MCT95C	1100	385
441	Bomba de transmisión 42CC MCT70C-MCT95C	1150	387
441	Bomba de transmisión 33CC MC60C-MC105C, MCT70C-MCT95C	1200	389
441	Bomba de transmisión 33CC MC60C-MC105C, MCT70C-MCT95C	1250	391

440	Trem de força, componentes MC60C-MC105C	100	339
440	Trem de força, componentes MC60C-MC105C	150	341
440	Trem de força, componentes FRONT MC60C-MC105C	200	343
440	Trem de força, componentes MC60C-MC105C	250	345
440	Trem de força, componentes MC60C-MC105C	300	347
440	Trem de força, componentes MC60C-MC105C	350	349
440	Trem de força, componentes MC60C-MC105C	400	351
440	Trem de força, componentes MCT85C	500	353
441	MCT70C-MCT95C	100	355
441	MCT70C-MCT95C	150	357
441	Bomba da transmissão	200	359
441	Bomba da transmissão 45CC MCT70C-MCT95C	250	361
441	MC60C-MC105C	300	363
441	MC60C-MC105C	350	365
441	LH MCT70C-MCT95C	400	367
441	RH MCT70C-MCT95C	450	373
441	MCT70C-MCT95C	500	379
441	Bomba da transmissão 51CC MC60C-MC105C	1000	381
441	Bomba da transmissão 51CC MC60C-MC105C	1050	383
441	Bomba da transmissão 42CC MCT70C-MCT95C	1100	385
441	Bomba da transmissão 42CC MCT70C-MCT95C	1150	387
441	Bomba da transmissão 33CC MC60C-MC105C, MCT70C-MCT95C	1200	389
441	Bomba da transmissão 33CC MC60C-MC105C, MCT70C-MCT95C	1250	391



TABLE DES MATIÈRES

GROUPE		Section	Page
440	Composants de la ligne motrice MC60C-MC105C	100	339
440	Composants de la ligne motrice MC60C-MC105C	150	341
440	Composants de la ligne motrice FRONT MC60C-MC105C	200	343
440	Composants de la ligne motrice MC60C-MC105C	250	345
440	Composants de la ligne motrice MC60C-MC105C	300	347
440	Composants de la ligne motrice MC60C-MC105C	350	349
440	Composants de la ligne motrice MC60C-MC105C	400	351
440	Composants de la ligne motrice MCT85C	500	353
441	Systeme Hydr. Movement MCT70C-MCT95C	100	355
441	Systeme Hydr. Movement MCT70C-MCT95C	150	357
441	Pompe de transmission	200	359
441	Pompe de transmission 45CC MCT70C-MCT95C	250	361
441	Moteur hydraulique, transport MC60C-MC105C	300	363
441	Moteur hydraulique, transport MC60C-MC105C	350	365
441	Moteur hydraulique, transport LH MCT70C-MCT95C	400	367
441	Moteur hydraulique, transport RH MCT70C-MCT95C	450	373
441	Systeme Hydr. Movement MCT70C-MCT95C	500	379
441	Pompe de transmission 51CC MC60C-MC105C	1000	381
441	Pompe de transmission 51CC MC60C-MC105C	1050	383
441	Pompe de transmission 42CC MCT70C-MCT95C	1100	385
441	Pompe de transmission 42CC MCT70C-MCT95C	1150	387
441	Pompe de transmission 33CC MC60C-MC105C, MCT70C-MCT95C	1200	389
441	Pompe de transmission 33CC MC60C-MC105C, MCT70C-MCT95C	1250	391



Volvo Construction Equipment
www.volvoce.com

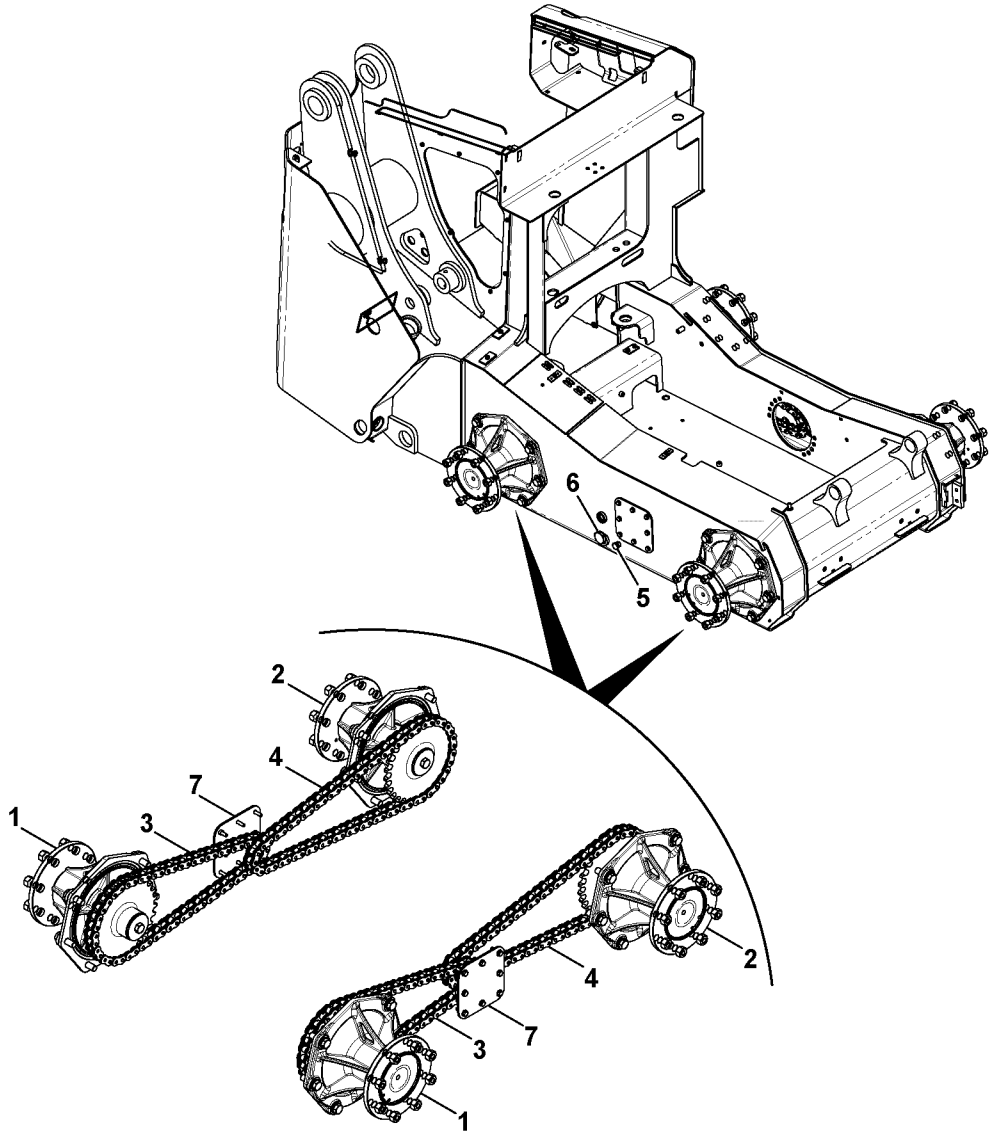

Volvo Construction Equipment
1064121

Fig.	Part No.	Quantity 1	2	3	PS	KIT	Description	Denominación	Denominação	Dénomination	Notes
1		2					Front Wheel Hub	Cubo Rueda Del		Moyeu Roue Av	See group 440, Page 343
2		2					Rear Wheel Hub	Cubo Rueda Tras		Moyeu Roue Ar	See group 440, Page 347
3	**VOE 17228880**	2					Chain	Cadena	Corrente	Chaîne	
4	**VOE 17228893**	2					Chain	Cadena	Corrente	Chaîne	
5	**VOE 16213165**	2					Plug	Tapón	Bujão	Tampon	
6	**VOE 16212164**	2					Plug	Tapón	Bujão	Tampon	
7		2					Plate	Placa	Placa	Plaque	See group 440, Page 345

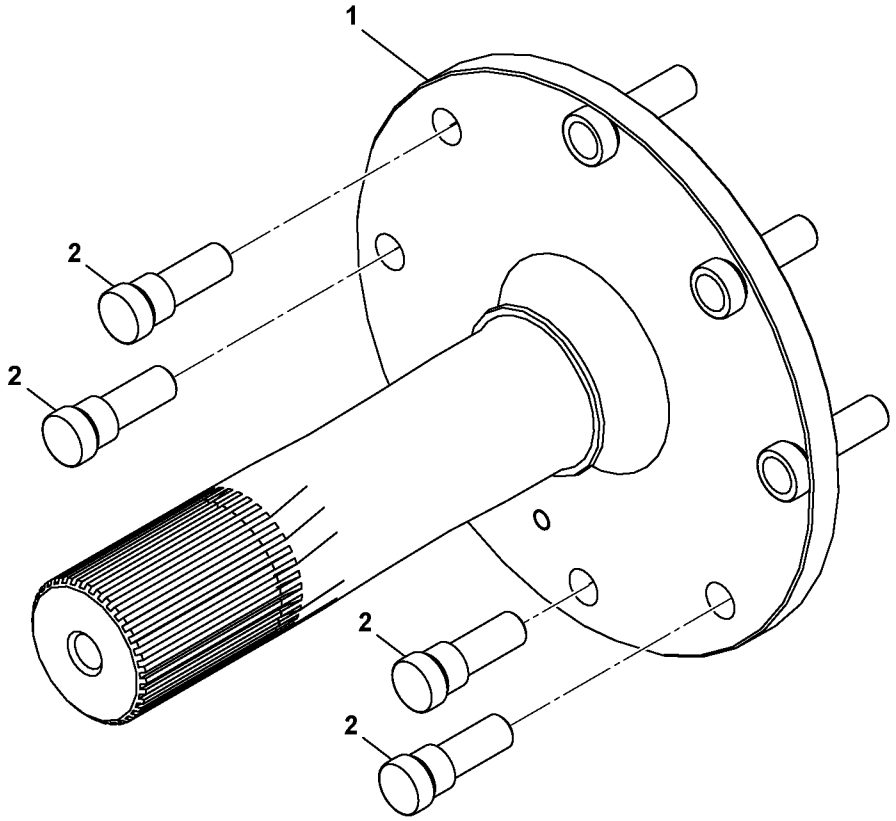
1
2
2
2
2

Fig.	Part No.	Quantity 1	2	3	PS	KIT	Description	Denominación	Denominação	Dénomination	Notes
1	**VOE 17229227**	1					Drive shaft	Eje propulsor	Semi-eixo	Arbre d'entrainement	
2	**VOE 16213529**	8					Wheel stud	Perno de rueda	Prisioneiro de roda	Goujon de roue	

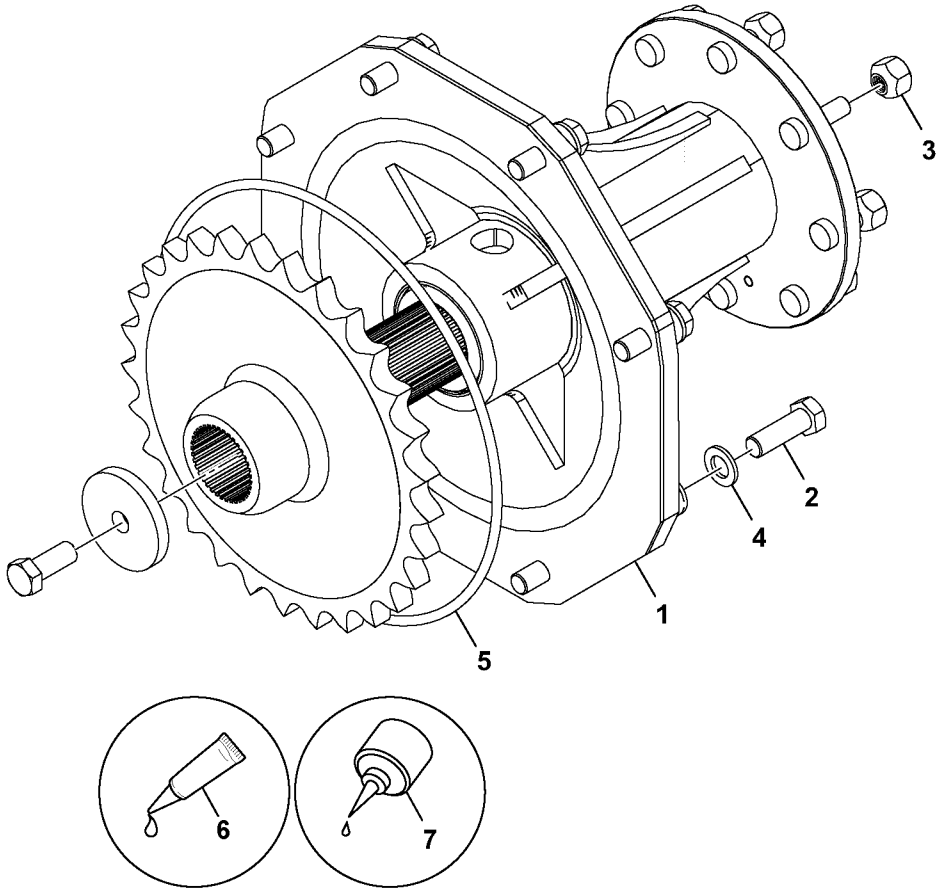
3
2
4
1
5
6
7

Fig.	Part No.	Quantity 1	2	3	PS	KIT	Description	Denominación	Denominação	Dénomination	Notes
1		1			NS		Front Wheel Hub	Cubo Rueda Del		Moyeu Roue Av	
2	**VOE 17205028**	6					Bolt	Perno	Parafuso	Boulon	
3	**VOE 16213520**	8					Wheel nut	Tuerca de rueda	Porca de roda	Écrou de roue	
4	**VOE 16212307**	6					Washer	Arandela	Arruela	Rondelle	
5	**VOE 17229660**	1					O-ring	Anillo tórico	Anel-o	Joint torique	
6		REQ			NS		Sealant	Product Estanq		Prod.etancheite	
7		REQ			NS		Rubber Block	Bloque Goma	Bloco de borracha	Bloc Caoutchouc	

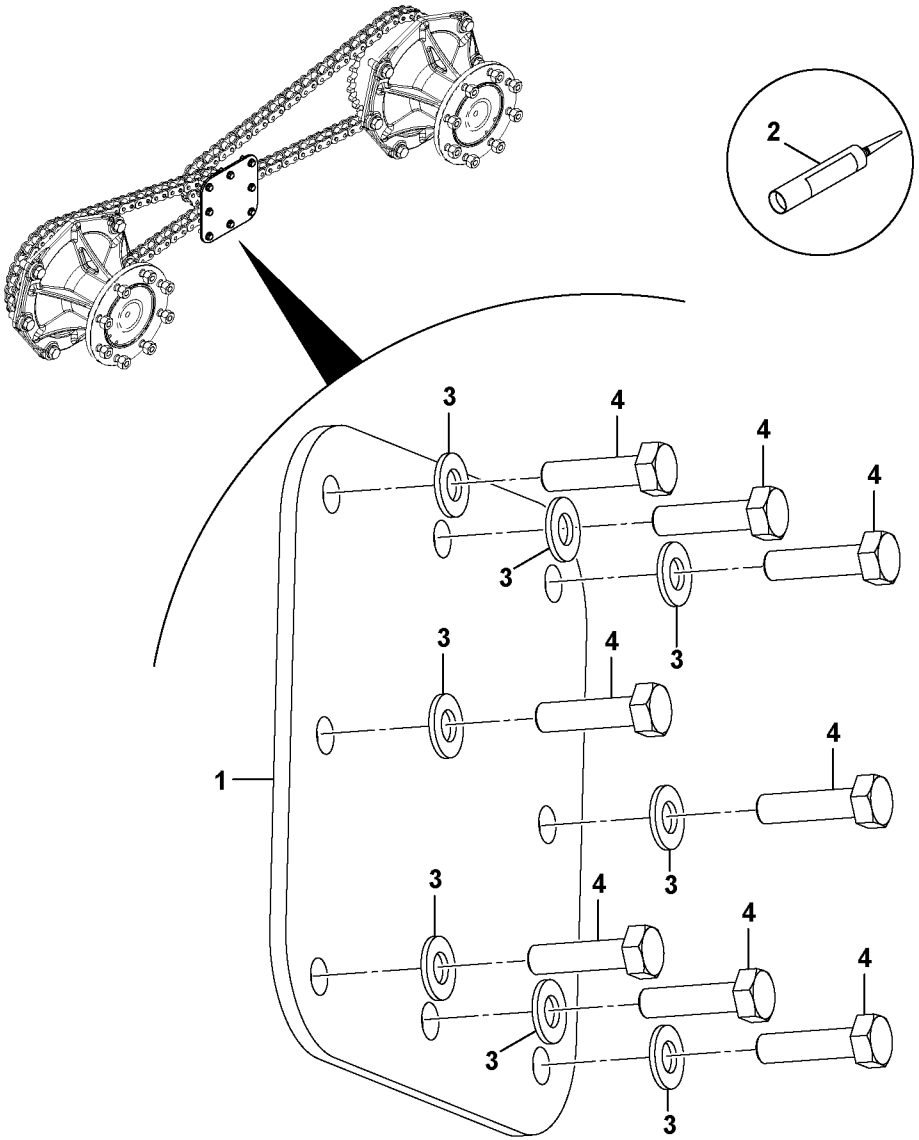
2
3
4
4
4
3
3
4
4
1
3
4
4
3
3
4
4
3
3

Fig.	Part No.	Quantity 1	2	3	PS	KIT	Description	Denominación	Denominação	Dénomination	Notes
1		1			NS		Plate	Chapa	Chapa	Tôle	FRONT
2		REQ			NS		Sealant	Product Estanq		Prod.etancheite	
3	**VOE 20460127**	8					Washer	Arandela	Arruela	Rondelle	
4	**VOE 17205260**	8					Hexagon screw	Tornillo hexagonal	Parafuso sextavado	Vis à tête hexagonale	

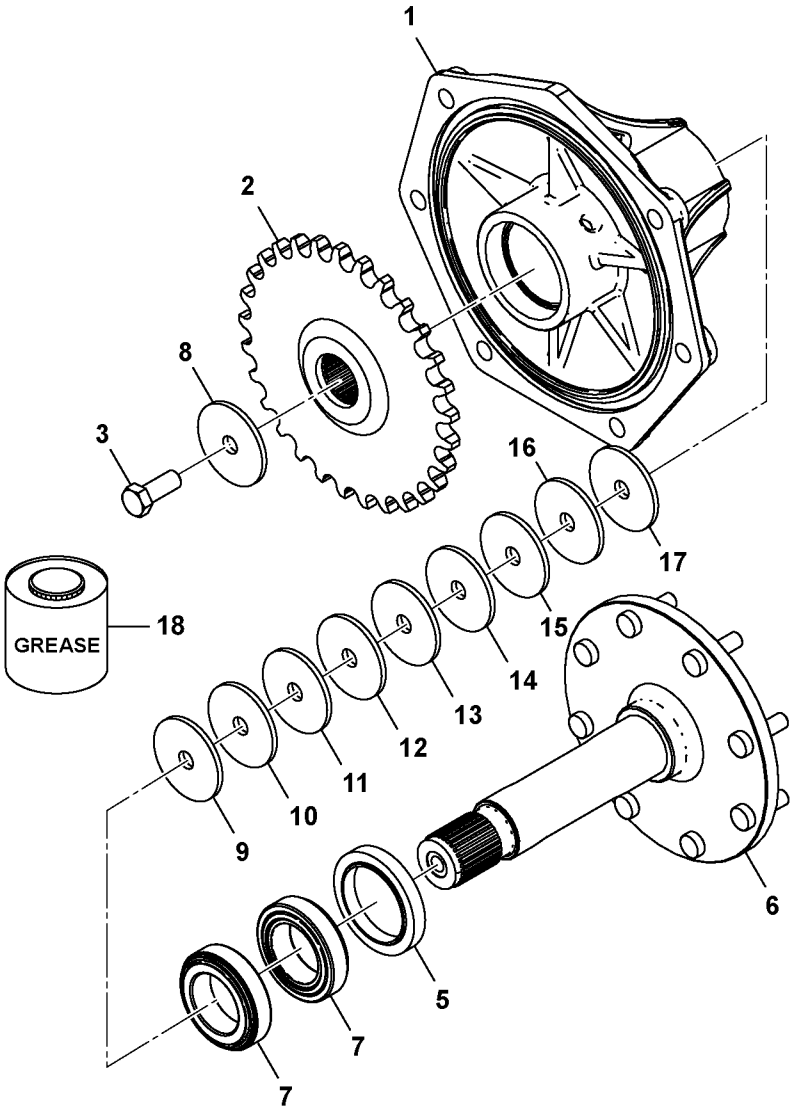
1
2
8
3
16
17
GREASE
18
15
14
13
12
11
10
9
6
5
7
7

Fig.	Part No.	Quantity 1	2	3	PS	KIT	Description	Denominación	Denominação	Dénomination	Notes
1	**VOE 17229570**	1					Hub	Cubo	Cubo	Moyeu	REAR
2	**VOE 17230304**	1					Sprocket	Engranaje de cadena	Dente de roda	Pignon chaîne	
3	**VOE 17205083**	1					Set screw	Tornillo tope	Parafuso batente	Vis butée	
5	**VOE 16213525**	1					Sealing	Junta	Vedação	Étanchéité	
6		1					Driveshaft	Arbol Transm		Arbre Helice	See group 440, Page 341
7	**VOE 17228798**	2					Bearing	Cojinete	Mancal	Roulement	
8	**VOE 17230476**	1					Washer	Arandela	Arruela	Rondelle	
9	**VOE 17230477**	1					Washer	Arandela	Arruela	Rondelle	
10	**VOE 17230478**	1					Washer	Arandela	Arruela	Rondelle	
11	**VOE 17230479**	1					Washer	Arandela	Arruela	Rondelle	
12	**VOE 17230545**	1					Washer	Arandela	Arruela	Rondelle	
13	**VOE 17230646**	1					Washer	Arandela	Arruela	Rondelle	
14	**VOE 17230649**	1					Washer	Arandela	Arruela	Rondelle	
15	**VOE 17230650**	1					Washer	Arandela	Arruela	Rondelle	
16	**VOE 17230651**	1					Washer	Arandela	Arruela	Rondelle	
17	**VOE 17230653**	1					Washer	Arandela	Arruela	Rondelle	
18		REQ			NS		Grease	Grasa		Berlingot de graisse	

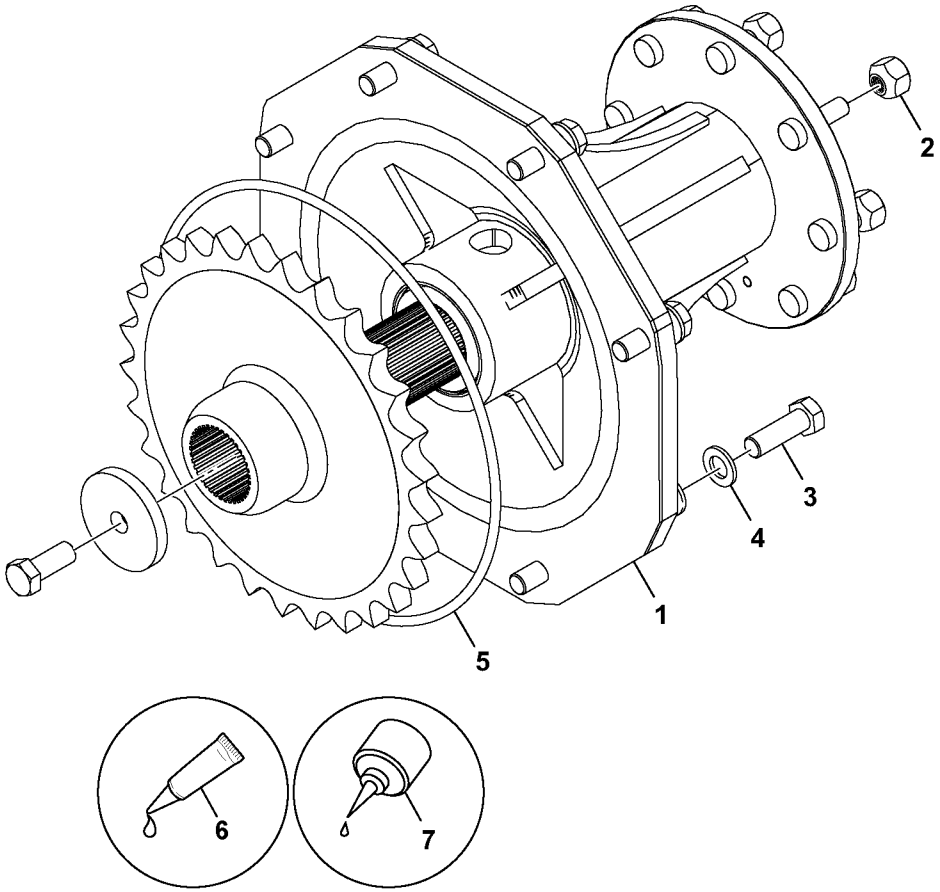
2
3
4
1
5
6
7

Fig.	Part No.	Quantity 1	2	3	PS	KIT	Description	Denominación	Denominação	Dénomination	Notes
1		1					Hub	Asiento	Cubo	Bossage	REAR See group 440, Page 347
2	**VOE 16213520**	8					Wheel nut	Tuerca de rueda	Porca de roda	Écrou de roue	
3	**VOE 17205028**	6					Bolt	Perno	Parafuso	Boulon	
4	**VOE 16212307**	6					Washer	Arandela	Arruela	Rondelle	
5	**VOE 17229660**	1					O-ring	Anillo tórico	Anel-o	Joint torique	
6		REQ			NS		Sealant	Product Estanq		Prod.etancheite	
7		REQ			NS		Rubber Block	Bloque Goma	Bloco de borracha	Bloc Caoutchouc	

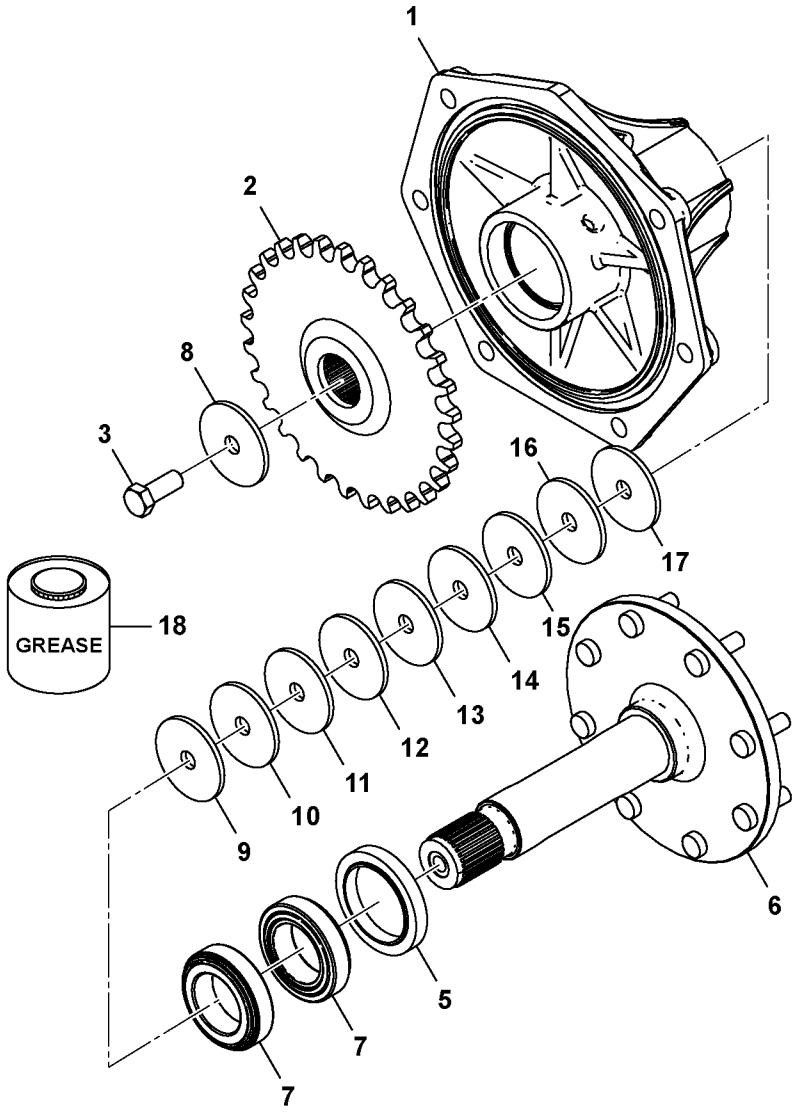
1
2
8
3
16
17
GREASE
18
15
14
13
12
11
10
9
6
5
7
7

Fig.	Part No.	Quantity 1	2	3	PS	KIT	Description	Denominación	Denominação	Dénomination	Notes
1	**VOE 17229570**	1					Hub	Cubo	Cubo	Moyeu	
2	**VOE 17230304**	1					Sprocket	Engranaje de cadena	Dente de roda	Pignon chaîne	
3	**VOE 17205083**	1					Set screw	Tornillo tope	Parafuso batente	Vis butée	
5	**VOE 16213525**	1					Sealing	Junta	Vedação	Étanchéité	
6		1					Driveshaft	Arbol Transm		Arbre Helice	See group 440, Page 341
7	**VOE 17228798**	2					Bearing	Cojinete	Mancal	Roulement	
8	**VOE 17230476**	1					Washer	Arandela	Arruela	Rondelle	
9	**VOE 17230477**	1					Washer	Arandela	Arruela	Rondelle	
10	**VOE 17230478**	1					Washer	Arandela	Arruela	Rondelle	
11	**VOE 17230479**	1					Washer	Arandela	Arruela	Rondelle	
12	**VOE 17230545**	1					Washer	Arandela	Arruela	Rondelle	
13	**VOE 17230646**	1					Washer	Arandela	Arruela	Rondelle	
14	**VOE 17230649**	1					Washer	Arandela	Arruela	Rondelle	
15	**VOE 17230650**	1					Washer	Arandela	Arruela	Rondelle	
16	**VOE 17230651**	1					Washer	Arandela	Arruela	Rondelle	
17	**VOE 17230653**	1					Washer	Arandela	Arruela	Rondelle	
18		REQ			NS		Grease	Grasa		Berlingot de graisse	

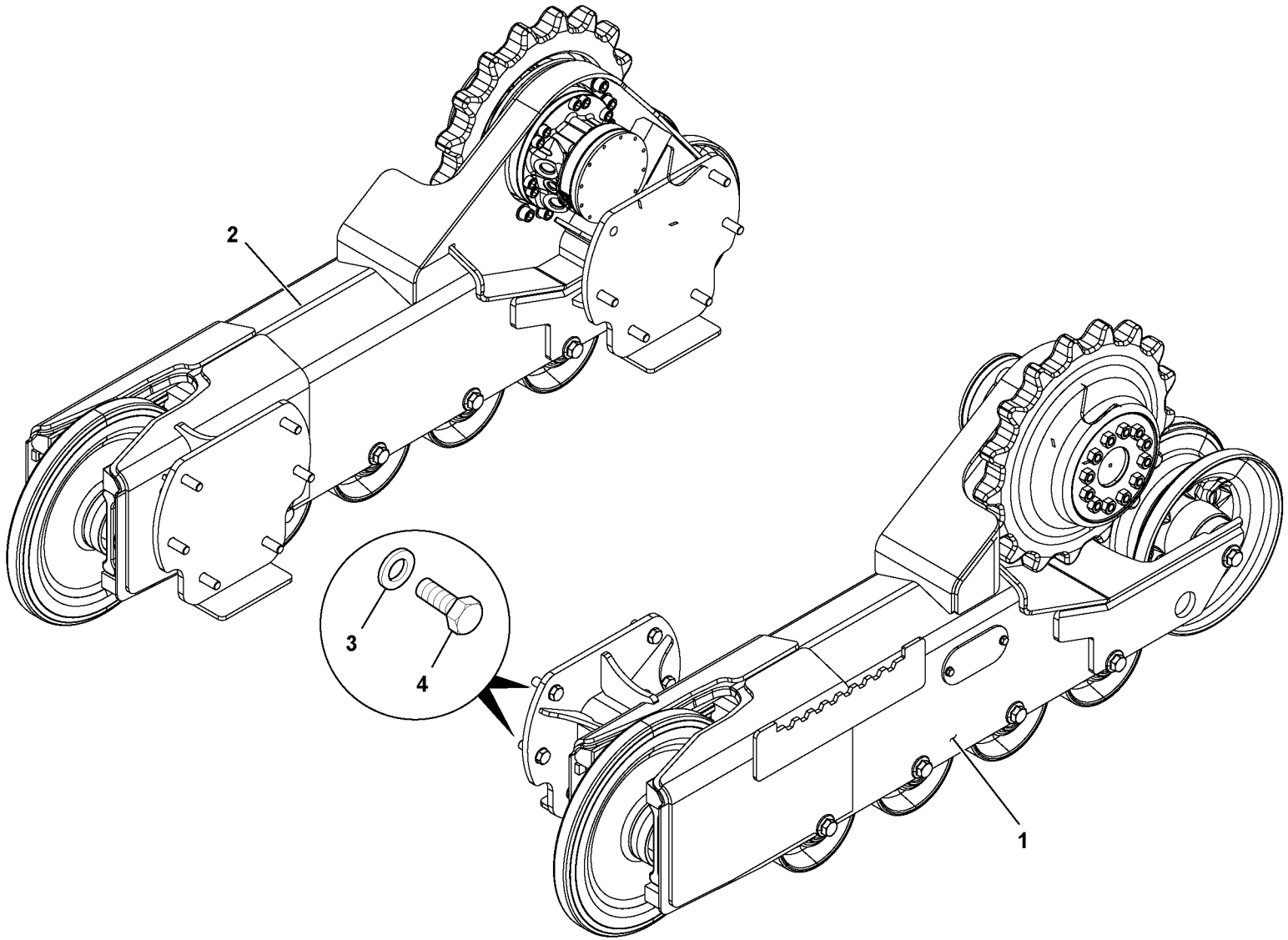

Volvo Construction Equipment
1064147

Fig.	Part No.	Quantity 1	2	3	PS	KIT	Description	Denominación	Denominação	Dénomination	Notes
1		1					Frame	Bastidor	Chassi	Chassis	See group 718, Page 455
2		1					Frame	Bastidor	Chassi	Chassis	See group 718, Page 455
3	**VOE 16212307**	22					Washer	Arandela	Arruela	Rondelle	
4	**VOE 17205028**	22					Bolt	Perno	Parafuso	Boulon	

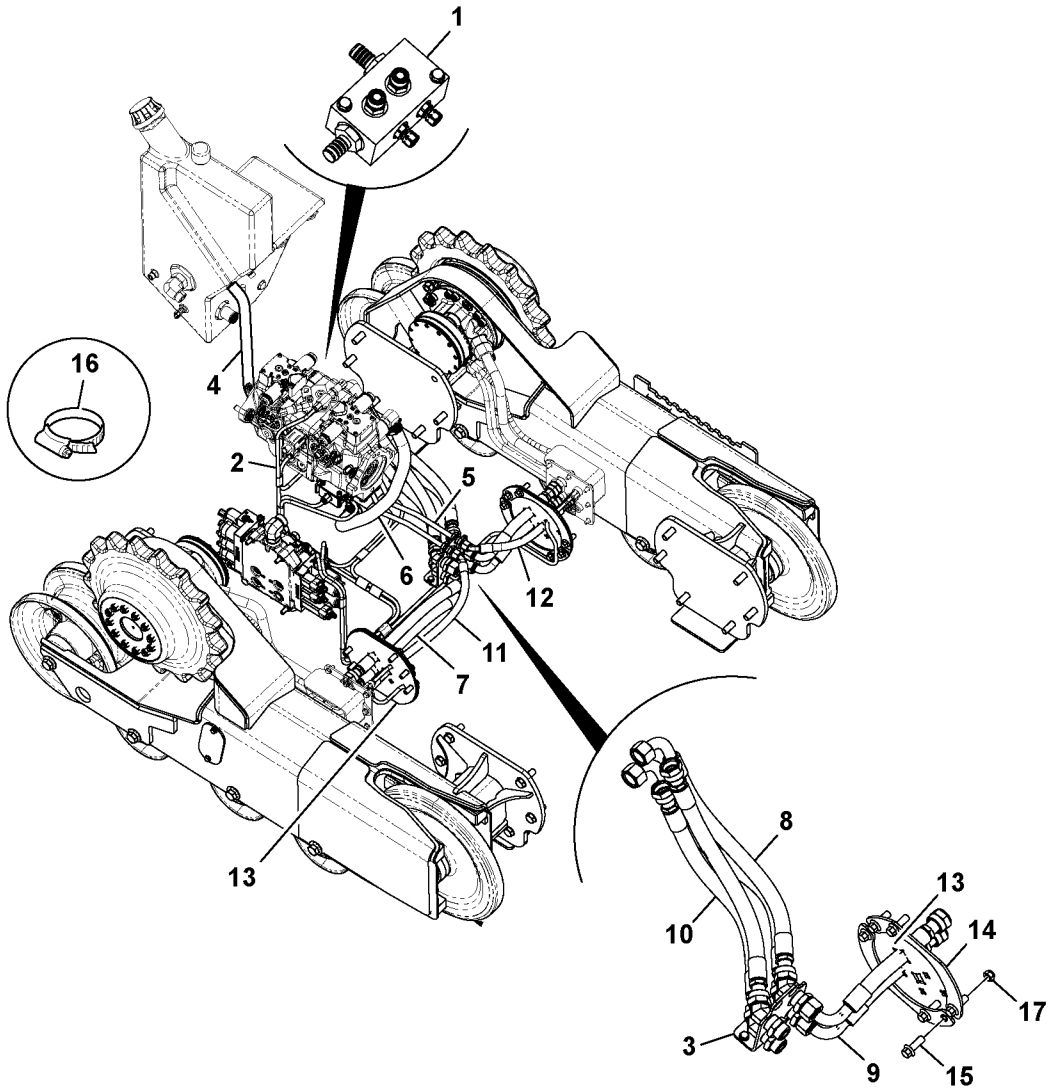

Volvo Construction Equipment
1064102

Fig.	Part No.	Quantity 1	2	3	PS	KIT	Description	Denominación	Denominação	Dénomination	Notes
1		1					Return Valve	Valvula Retorno		Valve De Retour	See group 912, Page 697
2		1					Valve	Valvula	Válvula	Soupape	See group 914, Page 743
3		1					Plate	Placa	Placa	Plaque	See group 914, Page 753
4	**VOE 17230455**	1					Transmission	Transmisión	Transmissão	Transmission	
5	**VOE 17230217**	2					Tube	Tubo	Tubo	Tube	
6	**VOE 17229202**	1					Hydraulic hose	Manguera hidráulica	Mangueira hidráulica	Flexible hydraulique	
7	**VOE 17229462**	2					Hose	Manguera	Mangueira	Flexible	
8	**VOE 17209810**	2					Hose	Manguera	Mangueira	Flexible	
9	**VOE 17229463**	2					Hose	Manguera	Mangueira	Flexible	
10		2			NS		Hose	Tubo flexible	Mangueira	Durit	
11	**VOE 17229465**	1					Hose	Manguera	Mangueira	Flexible	
12	**VOE 17229466**	1					Hose	Manguera	Mangueira	Flexible	
13		2			NS		Baffle	Parafango	Protetor de lama	Anti-éclaboussures	
14		4			NS		Plate	Chapa	Chapa	Tôle	
15	**VOE 17228802**	12					Bolt	Perno	Parafuso	Boulon	
16	**VOE 16213290**	8					Clip	Clip	Clipe	Clip	
17		8			NS		Nut	Tuerca	Porca	Ecrou	

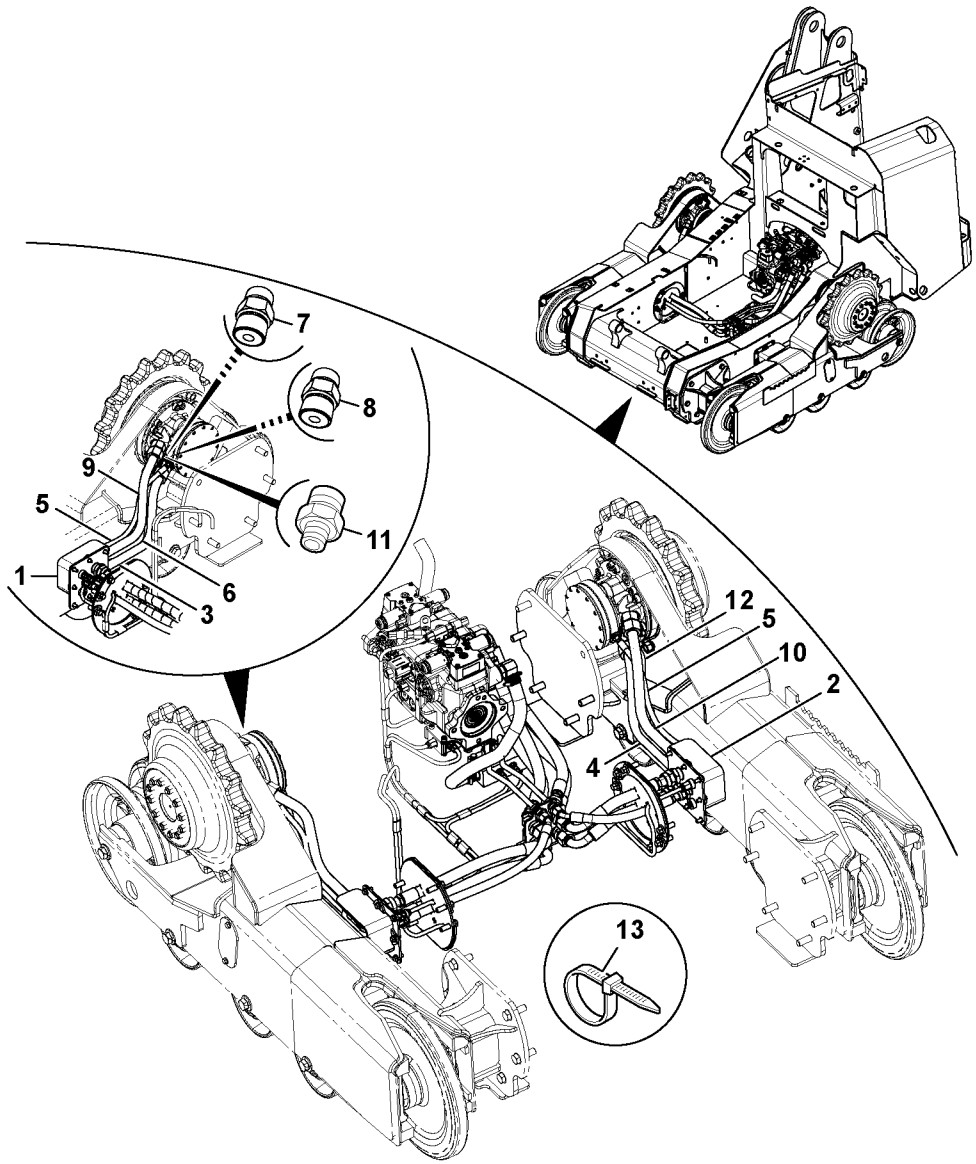
7
8
9
5
11
1
6
3
12
5
10
2
4
13

Fig.	Part No.	Quantity 1	2	3	PS	KIT	Description	Denominación	Denominação	Dénomination	Notes
1		1					Bulkhead	Salpicadero		Cloison Etanche	RH
											See group 914, Page 755
2		1					Bulkhead	Salpicadero		Cloison Etanche	LH
											See group 914, Page 751
3	**VOE 17230244**	1					Tube	Tubo	Tubo	Tube	RH
4	**VOE 17230230**	1					Tube	Tubo	Tubo	Tube	LH
5	**VOE 17229461**	2					Hose	Manguera	Mangueira	Flexible	
6	**VOE 17230248**	1					Tube	Tubo	Tubo	Tube	RH
7	**VOE 17209925**	2					Adapter	Adaptador	Adaptador	Adaptateur	
8	**VOE 16212166**	2					Adapter	Adaptador	Adaptador	Adaptateur	
9	**VOE 17230239**	1					Tube	Tubo	Tubo	Tube	RH
10	**VOE 17230224**	1					Tube	Tubo	Tubo	Tube	LH
11	**RM 59922633**	4					Adapter	Adaptador	Adaptador	Adaptateur	
12	**VOE 17230234**	1					Tube	Tubo	Tubo	Tube	LH
13	**VOE 17205293**	6					Tie straps	Cinta de atar		Ruban attache	

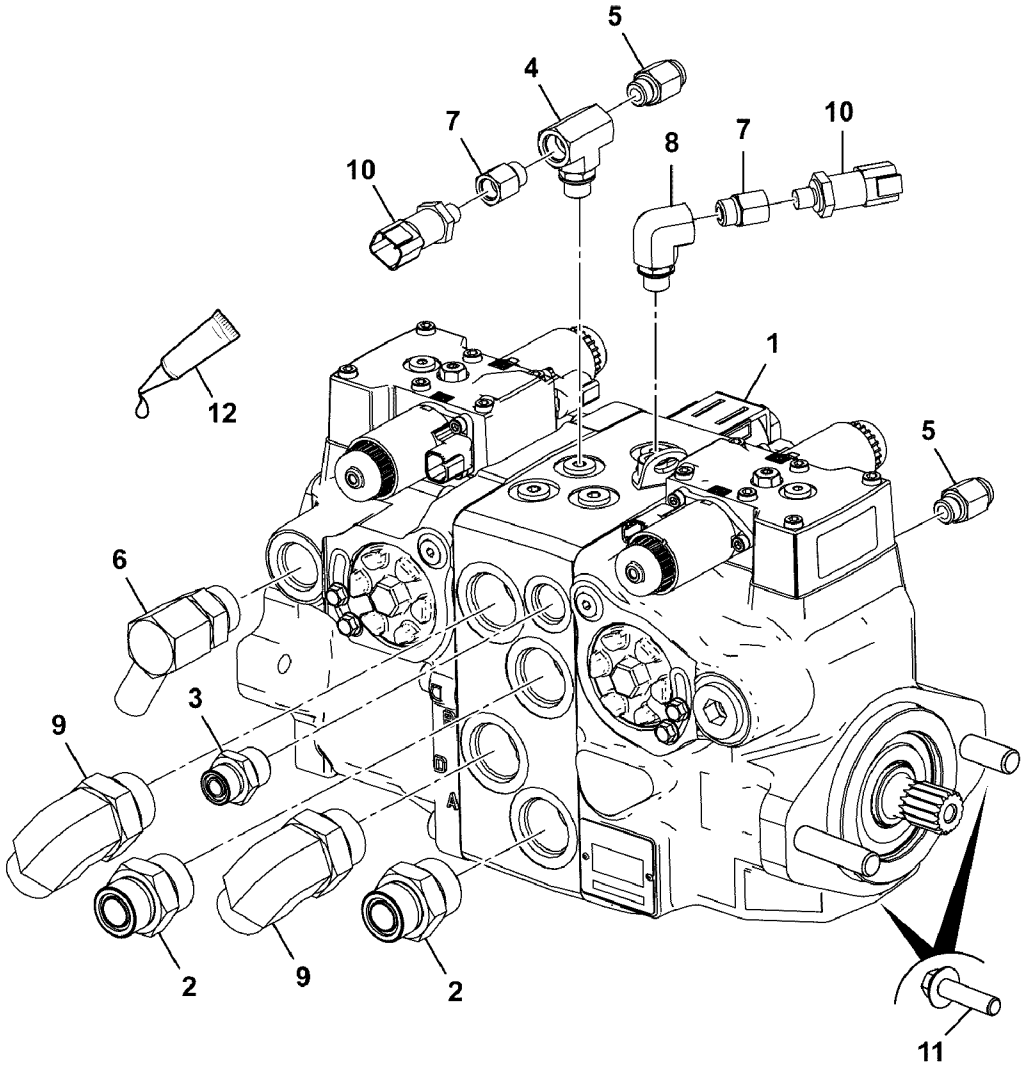
5
4
7
10
10
7
8
12
1
5
6
3
9
9
2
9
2
11

Fig.	Part No.	Quantity 1	2	3	PS	KIT	Description	Denominación	Denominação	Dénomination	Notes
1	**VOE 17230023**	1					Pump	Bomba	Bomba	Pompe	
1	**VOE 17230027**		1	1			Pump	Bomba	Bomba	Pompe	
2	**VOE 17228979**	2	2	2			Adapter	Adaptador	Adaptador	Adaptateur	
3	**RM 59922500**	1	1	1			Adapter	Adaptador	Adaptador	Adaptateur	
4	**VOE 17229015**	1	1	1			Adapter	Adaptador	Adaptador	Adaptateur	
5	**VOE 16212236**	2	2	2			Adapter	Adaptador	Adaptador	Adaptateur	
6	**VOE 59923003**	2	2	2			Adapter	Adaptador	Adaptador	Raccord Reduct	
7	**VOE 17229028**	1	1	1			Adapter	Adaptador	Adaptador	Adaptateur	
8	**VOE 16212265**	2	2	2			Adapter	Adaptador	Adaptador	Adaptateur	
9	**VOE 17205581**	1	1	1			Nipple	Niple	Niple	Raccord	
10	**VOE 16213230**	2	2	2			Sensor	Sensor	Sensor	Capteur	
11	**VOE 17228180**	2	2	2			Screw	Tornillo	Parafuso	Vis	
12		REQ	REQ	REQ	NS		Adhesive	Adhesivo	Adesivo	Adhesif	

1	**53CC MC60C-MC105C**	**Pompe de transmission** **Bomba da transmissão** **Bomba de transmisión** **Transmission pump**	Catalogue id **20649**	Group **441**
2	**MC60C-MC105C**		Illustr. No **1064220**	Section **200**
3	**MCT70C-MCT95C**		Issue **PUB 20030904-B**	Page **359**
4				
5				

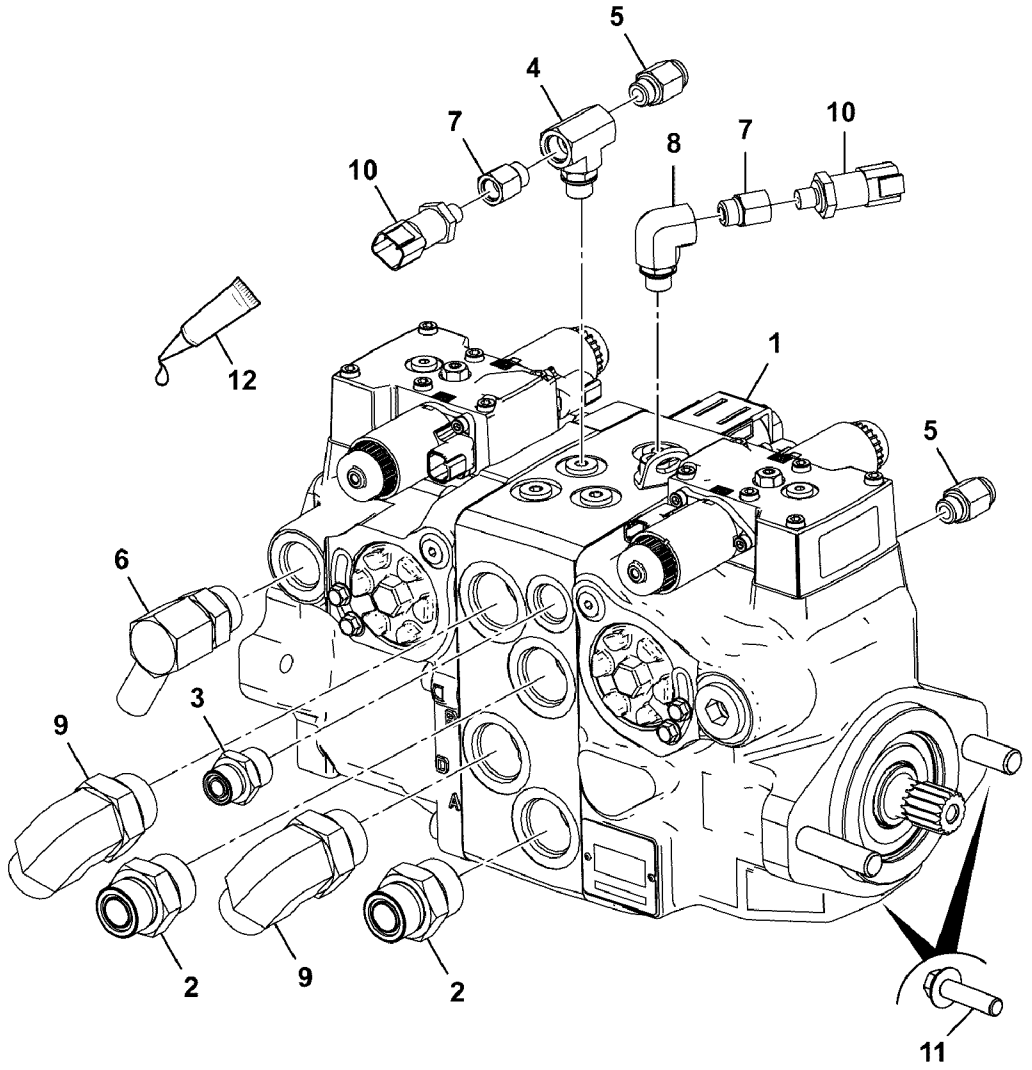
5
4
7
10
8
7
10
12
1
5
6
3
9
2
9
2
11

Fig.	Part No.	Quantity 1	2	3	PS	KIT	Description	Denominación	Denominação	Dénomination	Notes
1	**VOE 17230025**	1					Pump	Bomba	Bomba	Pompe	
2	**VOE 17228979**	2					Adapter	Adaptador	Adaptador	Adaptateur	
3	**RM 59922500**	1					Adapter	Adaptador	Adaptador	Adaptateur	
4	**VOE 17229015**	1					Adapter	Adaptador	Adaptador	Adaptateur	
5	**VOE 16212236**	2					Adapter	Adaptador	Adaptador	Adaptateur	
6	**VOE 17229028**	1					Adapter	Adaptador	Adaptador	Adaptateur	
7	**VOE 16212265**	2					Adapter	Adaptador	Adaptador	Adaptateur	
8	**VOE 17205581**	1					Nipple	Niple	Niple	Raccord	
9	**VOE 59923003**	2					Adapter	Adaptador	Adaptador	Raccord Reduct	
10	**VOE 16213230**	2					Sensor	Sensor	Sensor	Capteur	
11	**VOE 17228180**	2					Screw	Tornillo	Parafuso	Vis	
12		REQ			NS		Adhesive	Adhesivo	Adesivo	Adhesif	

1		**Pompe de transmission** **Bomba da transmissão** **Bomba de transmisión** **Transmission pump**	Catalogue id **20649**	Group **441**
2			Illustr. No **1064221**	Section **250**
3			Issue **PUB 20030904-B**	Page **361**
4				
5		**45CC MCT70C-MCT95C**		



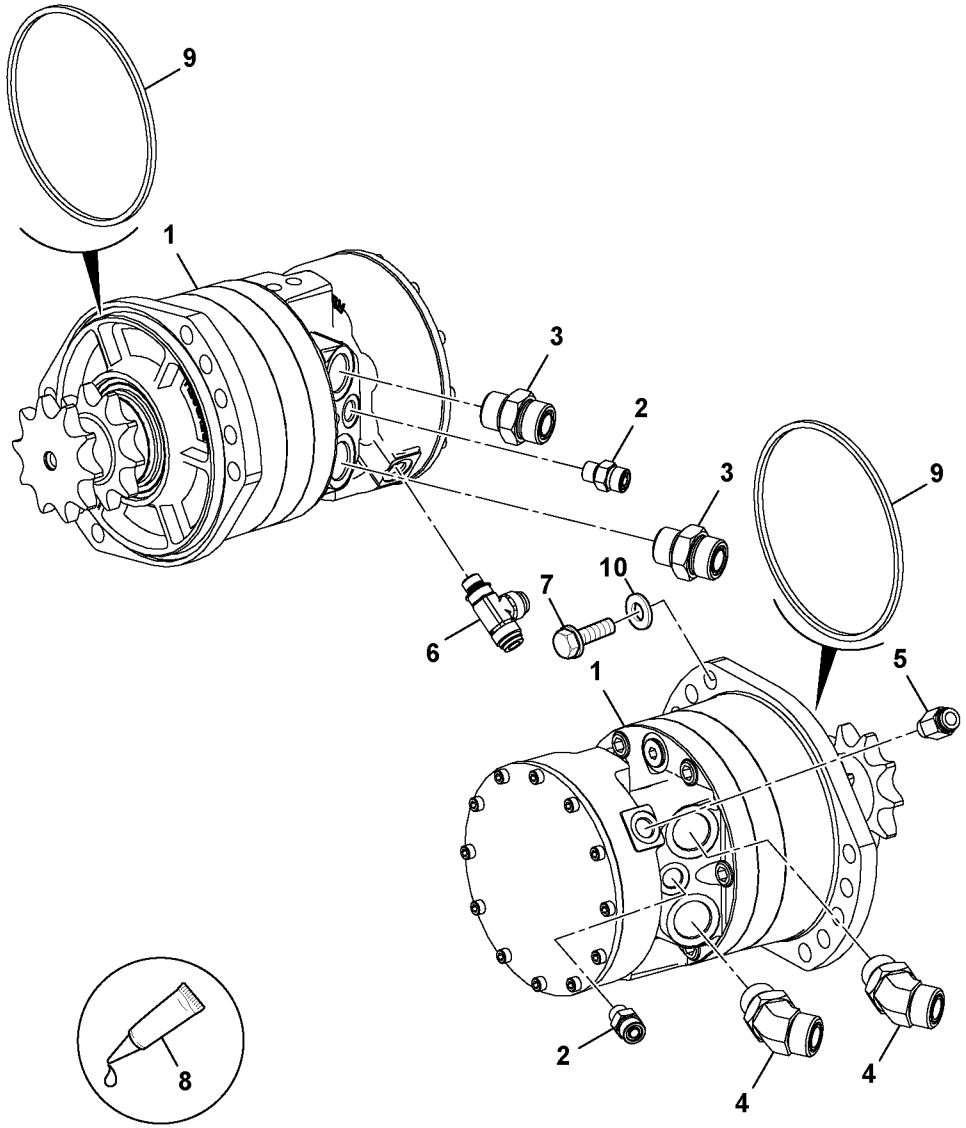

Volvo Construction Equipment
1064224

Fig.	Part No.	Quantity 1	2	3	PS	KIT	Description	Denominación	Denominação	Dénomination	Notes
1	**VOE 17230119**	2					Hydraulic motor	Motor hidráulico	Motor hidráulico	Moteur hydraulique	
2	**VOE 17229031**	2					Adapter	Adaptador	Adaptador	Adaptateur	
3	**RM 59922591**	2					Adapter	Adaptador	Adaptador	Adaptateur	
4	**RM 59922336**	2					Adapter	Adaptador	Adaptador	Adaptateur	
5	**VOE 16212236**	1					Adapter	Adaptador	Adaptador	Adaptateur	
6	**VOE 16212381**	1					Adapter	Adaptador	Adaptador	Adaptateur	
7	**VOE 16212078**	20					Set screw	Tornillo tope	Parafuso batente	Vis butée	
8		REQ			NS		Sealant	Product Estanq		Prod.etancheite	
9	**VOE 17229670**	2					O-ring	Anillo tórico	Anel-o	Joint torique	
10	**VOE 20764147**	20					Washer	Arandela	Arruela	Rondelle	

1		**Moteur hydraulique, transport** **Motor hidraulico, transporte** **Hydraulic motor, travel** **MC60C-MC105C**	Catalogue id **20649**	Group **441**
2			Illustr. No **1064224**	Section **300**
3			Issue **PUB 20030904-B**	Page **363**
4				
5				

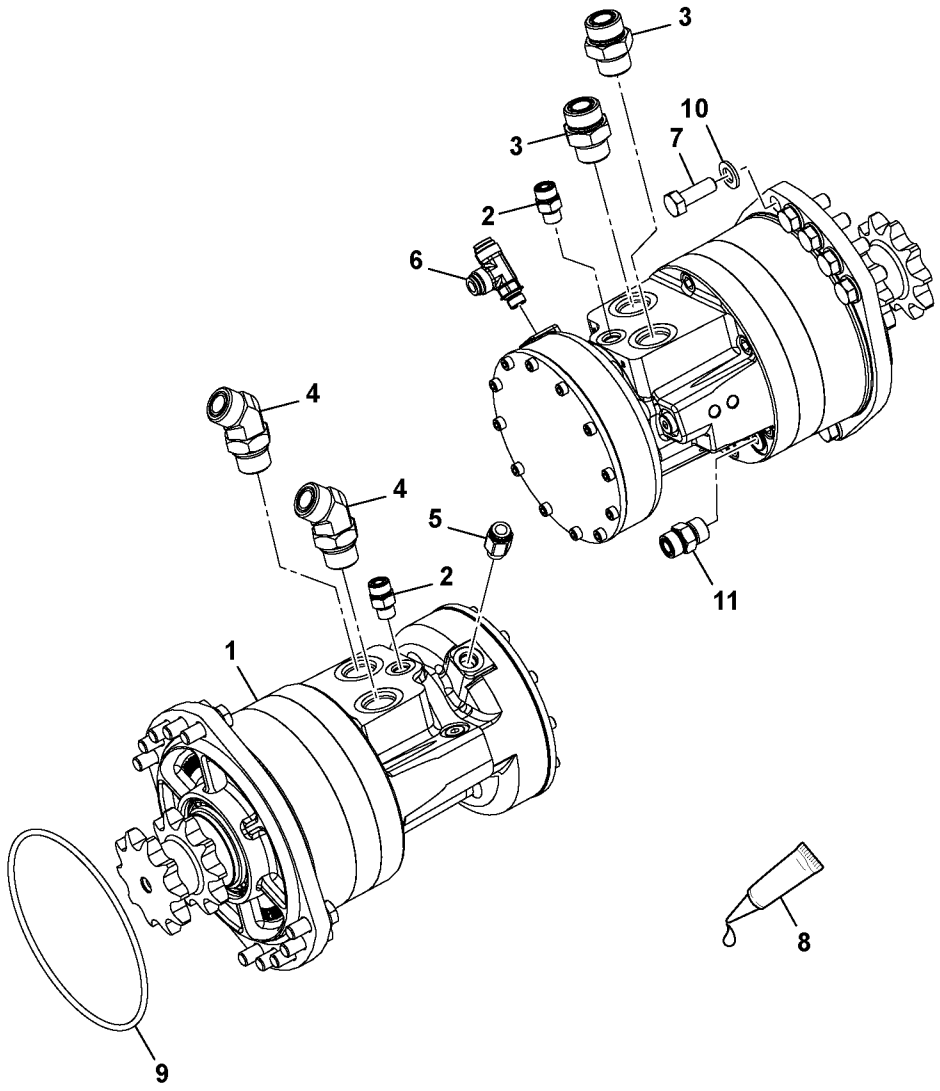
3
3
10
7
2
6
4
4
5
2
1
11
8
9

Fig.	Part No.	Quantity 1	2	3	PS	KIT	Description	Denominación	Denominação	Dénomination	Notes
1	**VOE 17230123**	2					Hydraulic motor	Motor hidráulico	Motor hidráulico	Moteur hydraulique	
2	**RM 59919670**	2					Connector	Pieza de conexión	Conexão	Pièce connexion	
3	**RM 59922591**	2					Adapter	Adaptador	Adaptador	Adaptateur	
4	**RM 59922336**	2					Adapter	Adaptador	Adaptador	Adaptateur	
5	**VOE 16212236**	1					Adapter	Adaptador	Adaptador	Adaptateur	
6	**VOE 16212381**	1					Adapter	Adaptador	Adaptador	Adaptateur	
7	**VOE 16212078**	20					Set screw	Tornillo tope	Parafuso batente	Vis butée	
8		REQ			NS		Sealant	Product Estanq		Prod.etancheite	
9	**VOE 17229670**	2					O-ring	Anillo tórico	Anel-o	Joint torique	
10	**VOE 20764147**	20					Washer	Arandela	Arruela	Rondelle	
11	**VOE 16212273**	2					Screening device	Blindaje	Blindagem	Dispositif écran	

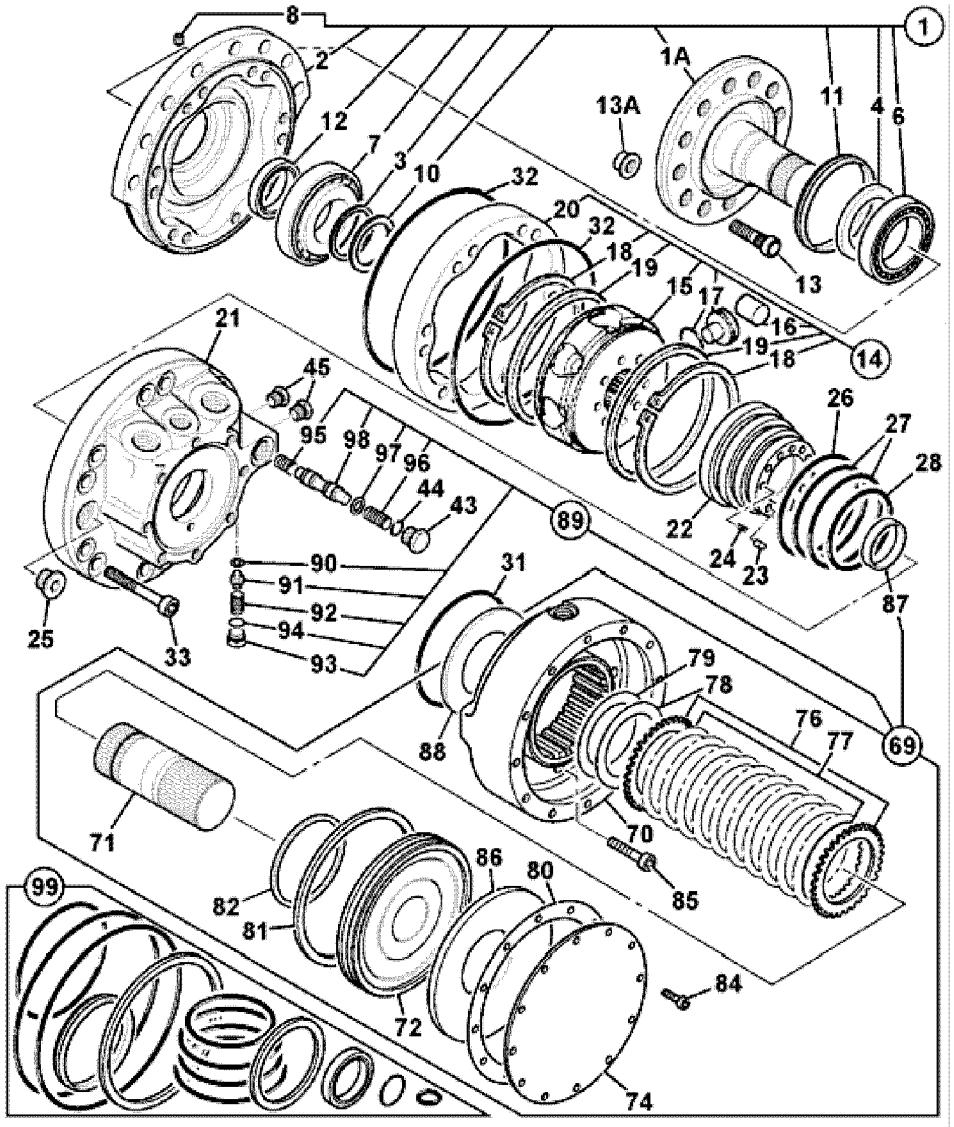
8
1
2
1A
13A
11
4
6
12
7
3
10
32
20
32
18
19
15
17
16
19
18
13
14
21
45
95
98
97
96
44
43
89
26
27
28
22
24
23
87
90
91
92
94
93
25
33
31
79
78
76
77
69
88
71
70
85
86
80
82
81
99
72
84
74

Fig.	Part No.	Quantity 1	2	3	PS	KIT	Description	Denominación	Denominação	Dénomination	Notes
	VOE 17230116	1					Hydraulic motor	Motor hidráulico	Motor hidráulico	Moteur hydraulique	LH
1		1			NS		•Case	•Funda	•Caixa	•Caisson	
1A	**VOE 17230237**	1					••Shaft	••Eje	••Eixo	••Arbre	
2		1			NS		••Case	••Funda	••Caixa	••Etui	
3	**VOE 17231006**	1					••Washer	••Arandela	••Arruela	••Rondelle	
4	**VOE 17230188**	1					••Spacer	••Distanciador	••Espaçador	••Entretoise	
6		1			NS		••Bearing	••Cojinete	••Mancal	••Roulement	
7		1			NS		••Bearing	••Cojinete	••Mancal	••Roulement	
8	**VOE 17229931**	1					••Plug	••Tapón	••Bujão	••Tampon	
10	**VOE 17230095**	1					••Ring	••Anillo	••Anel	••Bague	
11	**VOE 17230187**	1				K	••Ring	••Anillo	••Anel	••Bague	
12	**VOE 17230170**	1				K	••Sealing sleeve	••Manguito retén	••Luva de vedação	••Douille étanchéité	
13	**VOE 17230335**	12			SS		•Stud	•Espárrago	•Prisioneiro	•Goujon	
13A	**VOE 17229623**	12					•Nut	•Tuerca	•Porca	•Écrou	
14		1			NS		•Cam	•Leva	•Came	•Came	
15		1			NS		••Cylinder Block	••Bloque Cilindro	••Bloco de cilindros	••Bloc-cylindres	
16	**VOE 17230112**	8					••Roller bearing	••Cojínete rodillo	••Rolamento de rolos	••Roulement à rouleaux	
17		8			NS		••Piston	••Pistón	••Pistão	••Piston	
18	**VOE 17228907**	2					••Lock ring	••Anillo de seguridad	••Anel trava	••Anneau verrouillage	
19	**VOE 17230111**	2					••Ring	••Anillo	••Anel	••Bague	
20		1			NS		••Cam	••Leva	••Came	••Came	
21		1			NS		•Case	•Funda	•Caixa	•Etui	
22		1			NS		•Distributor	•Distribuidor	•Distribuidor	•Distributeur	
23	**VOE 17229683**	1					•Pinion stop	•Tope piñón	•Encosto do pinhão	•Butée de satellite	
24	**VOE 17230269**	9					•Spring	•Resorte	•Mola	•Ressort	
25	**VOE 17229935**	1					•Plug	•Tapón	•Bujão	•Tampon	
26	**VOE 17230190**	1				K	•Ring	•Anillo	•Anel	•Bague	
27	**VOE 17230185**	2					•Piston ring	•Aro de pistón	•Anel pistão	•Segment piston	
28	**VOE 17230196**	1					•Ring	•Anillo	•Anel	•Bague	
31	**VOE 17230184**	1					•Ring	•Anillo	•Anel	•Bague	

1		**Moteur hydraulique, transport** **Motor hidraulico, transporte** **Hydraulic motor, travel**	Catalogue id **20649**	Group **441**
2			Illustr. No **1064443**	Section **400**
3			Issue **PUB 20030904-B**	Page **367**
4				
5		**LH MCT70C-MCT95C**		



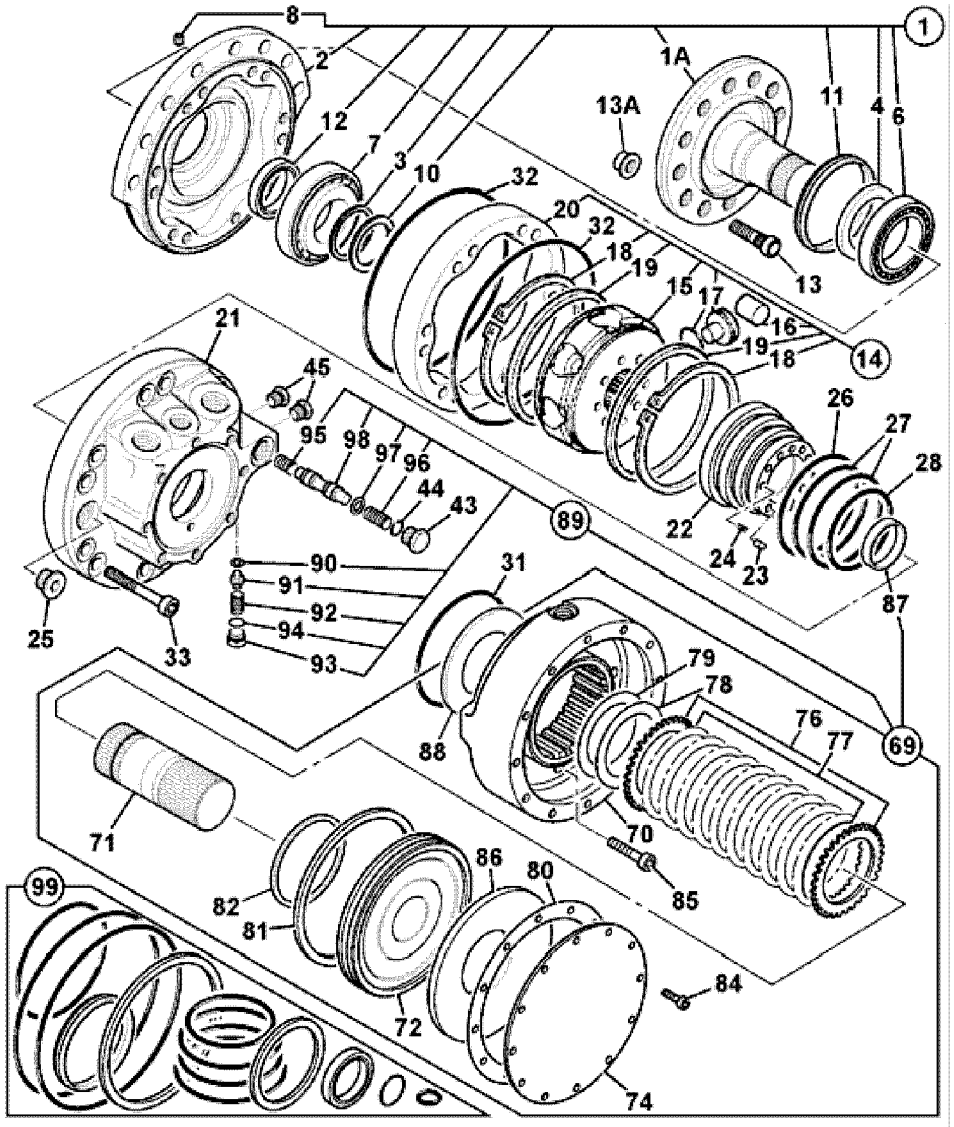
8
1
2
1A
13A
11
4
6
12
7
3
10
32
20
32
18
19
15
17
16
19
18
13
14
21
45
95
98
97
96
44
43
89
26
27
28
22
24
23
87
90
91
92
94
93
25
33
31
79
78
76
77
69
88
71
70
85
86
80
82
81
99
72
84
74

Fig.	Part No.	Quantity 1	2	3	PS	KIT	Description	Denominación	Denominação	Dénomination	Notes
32	**VOE 17230186**	2					•Ring	•Anillo	•Anel	•Bague	
33	**VOE 17228854**	12					•Screw	•Tornillo	•Parafuso	•Vis	
43	**VOE 17229933**	1					•Plug	•Tapón	•Bujão	•Tampon	
44	**VOE 17229657**	1					•O-ring	•Anillo tórico	•Anel-o	•Joint torique	
45	**VOE 17229934**	2					•Plug	•Tapón	•Bujão	•Tampon	
69		1			NS		•Brake	•Freno	•Freio	•Frein	
70		1			NS		•Brake Housing	•Cuerpo De Freno	•	•Boitier Frein	
71		1			NS		•Brake Shaft	•Eje De Frenos	•	•Arbre Frein	
72		1			NS		••Piston	••Pistón	••Pistão	••Piston	
74		1			NS		••Cover plate	••Cubierta	••Placa tampa	••Plaque de recouvrement	
76		15			NS		••Plate	••Chapa	••Chapa	••Tôle	
77	**VOE 17229833**	13					••Plate	••Chapa	••Chapa	••Tôle	
78	**VOE 17230053**	1					••Shim	••Laminilla de ajuste	••Calço de ajuste	••Cale réglage	
79	**VOE 17230058**	1					••Shim	••Laminilla de ajuste	••Calço de ajuste	••Cale réglage	
80	**VOE 17229566**	1					••Gasket	••Junta	••Junta	••Joint	
81	**VOE 17230172**	1					••Ring	••Anillo	••Anel	••Bague	
82	**VOE 17230201**	1					••Ring	••Anillo	••Anel	••Bague	
84	**VOE 17230136**	12					••Screw	••Tornillo	••Parafuso	••Vis	
85	**VOE 17228861**	8					••Screw	••Tornillo	••Parafuso	••Vis	
86	**VOE 17230278**	1					••Spring disc	••Platillo de resorte	••Disco elástico	••Coupelle de ressort	
87		1			NS		••Bushing	••Casquillo	••Bucha	••Bague	
88	**VOE 17231007**	1					••Thrust washer	••Arandela axial	••Arruela trava	••Disque de butée	
89		1			NS		••Kit	••Juego	••Jogo	••Lot	
90	**VOE 17230171**	1					•••Shim	•••Laminilla de ajuste	•••Calço de ajuste	•••Cale réglage	
91		1			NS		•••Fitting	•••Racor	•••Niple	•••Écrou raccord	
92	**VOE 17230286**	1					•••Spring	•••Resorte	•••Mola	•••Ressort	
93	**VOE 17229937**	1					•••Plug	•••Tapón	•••Bujão	•••Tampon	
94	**VOE 17229649**	1					•••O-ring	•••Anillo tórico	•••Anel-o	•••Joint torique	
95	**VOE 17230291**	1					•••Spring	•••Resorte	•••Mola	•••Ressort	
96	**VOE 17230300**	1					•••Spring	•••Resorte	•••Mola	•••Ressort	

1		**Moteur hydraulique, transport** **Motor hidraulico, transporte** **Hydraulic motor, travel**	Catalogue id **20649**	Group **441**
2			Illustr. No **1064443**	Section **400**
3			Issue **PUB 20030904-B**	Page **369**
4				
5		**LH MCT70C-MCT95C**		

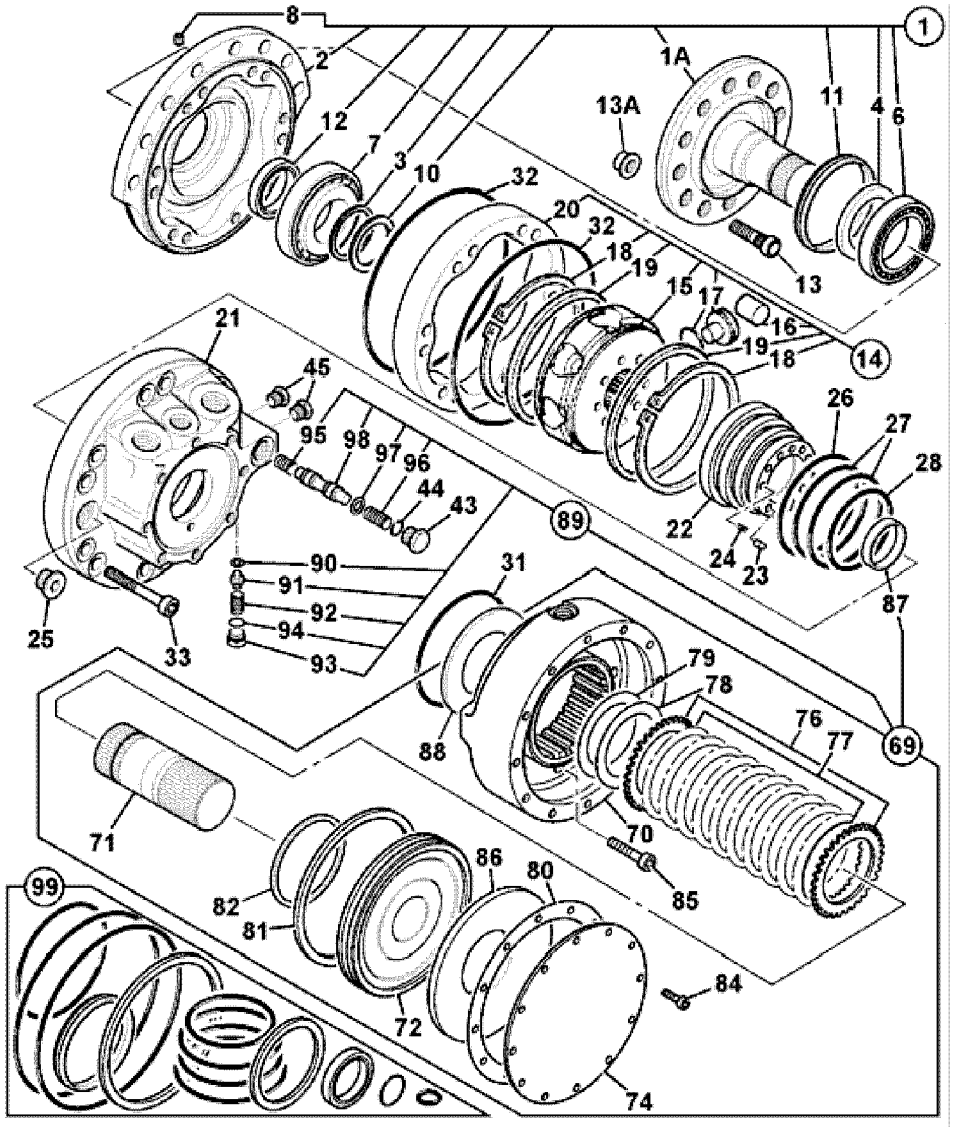
8
1
2
1A
13A
11
4
6
12
7
3
10
32
20
32
18
19
15
17
16
19
18
13
14
21
45
95
98
97
96
44
43
89
26
27
28
22
24
23
87
90
91
92
94
93
25
33
31
79
78
76
77
69
88
71
70
85
86
80
82
81
99
72
84
74

Fig.	Part No.	Quantity 1	2	3	PS	KIT	Description	Denominación	Denominação	Dénomination	Notes
97	**VOE 17230656**	1					•••Washer	•••Arandela	•••Arruela	•••Rondelle	
98	**VOE 17230211**	1					•••Coil	•••Bobina	•••Bobina	•••Bobine	
99	**VOE 17229600**	1				K	•Sealing kit	•Kit de precinto	•Jogo de vedação	•Kit plombage	

1		**Moteur hydraulique, transport** **Motor hidraulico, transporte** **Hydraulic motor, travel**	Catalogue id **20649**	Group **441**
2			Illustr. No **1064443**	Section **400**
3			Issue **PUB 20030904-B**	Page **371**
4				
5		**LH MCT70C-MCT95C**		

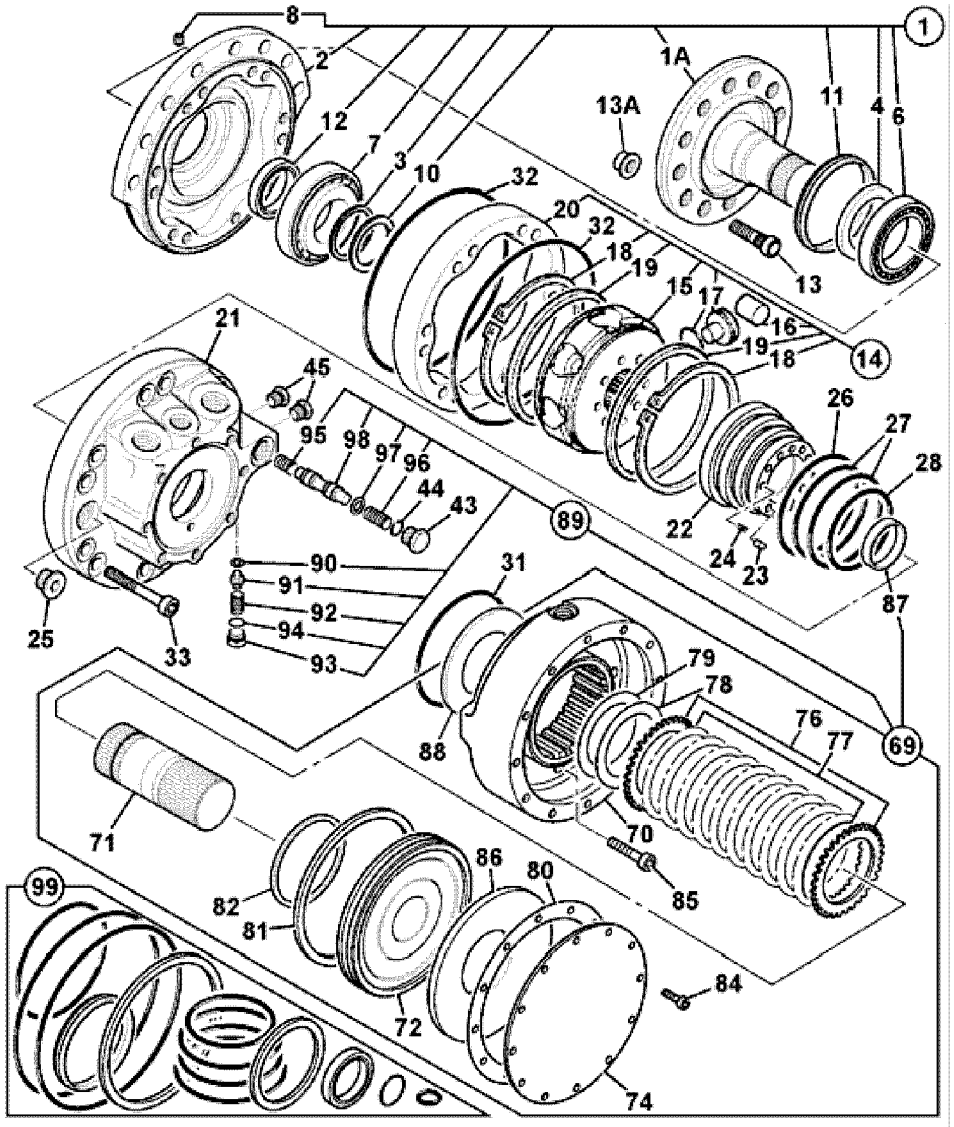
8
1
2
1A
13A
11
4
6
12
7
3
10
32
20
32
18
19
15
17
16
19
18
13
14
21
45
95
98
97
96
44
43
89
26
27
28
22
24
23
87
90
91
92
94
93
25
33
31
79
78
76
77
69
88
71
70
85
86
80
82
81
99
72
84
74

Fig.	Part No.	Quantity 1	2	3	PS	KIT	Description	Denominación	Denominação	Dénomination	Notes
	VOE 17230113	1					Hydraulic motor	Motor hidráulico	Motor hidráulico	Moteur hydraulique	RH
1		1			NS		•Case	•Funda	•Caixa	•Caisson	
1A	**VOE 17230237**	1					••Shaft	••Eje	••Eixo	••Arbre	
2		1			NS		••Case	••Funda	••Caixa	••Etui	
3	**VOE 17231006**	1					••Washer	••Arandela	••Arruela	••Rondelle	
4	**VOE 17230188**	1					••Spacer	••Distanciador	••Espaçador	••Entretoise	
6		1			NS		••Bearing	••Cojinete	••Mancal	••Roulement	
7		1			NS		••Bearing	••Cojinete	••Mancal	••Roulement	
8	**VOE 17229931**	1					••Plug	••Tapón	••Bujão	••Tampon	
10	**VOE 17230095**	1					••Ring	••Anillo	••Anel	••Bague	
11	**VOE 17230187**	1				K	••Ring	••Anillo	••Anel	••Bague	
12	**VOE 17230170**	1				K	••Sealing sleeve	••Manguito retén	••Luva de vedação	••Douille étanchéité	
13	**VOE 17230335**	12			SS		•Stud	•Espárrago	•Prisioneiro	•Goujon	
13A	**VOE 17229623**	12					•Nut	•Tuerca	•Porca	•Écrou	
14		1			NS		•Cam	•Leva	•Came	•Came	
15		1			NS		••Cylinder Block	••Bloque Cilindro	••Bloco de cilindros	••Bloc-cylindres	
16	**VOE 17230112**	8					••Roller bearing	••Cojínete rodillo	••Rolamento de rolos	••Roulement à rouleaux	
17		8			NS		••Piston	••Pistón	••Pistão	••Piston	
18	**VOE 17228907**	2					••Lock ring	••Anillo de seguridad	••Anel trava	••Anneau verrouillage	
19	**VOE 17230111**	2					••Ring	••Anillo	••Anel	••Bague	
20		1			NS		••Cam	••Leva	••Came	••Came	
21		1			NS		•Case	•Funda	•Caixa	•Etui	
22		1			NS		•Distributor	•Distribuidor	•Distribuidor	•Distributeur	
23	**VOE 17229683**	1					•Pinion stop	•Tope piñón	•Encosto do pinhão	•Butée de satellite	
24	**VOE 17230269**	9					•Spring	•Resorte	•Mola	•Ressort	
25	**VOE 17229935**	1					•Plug	•Tapón	•Bujão	•Tampon	
26	**VOE 17230190**	1				K	•Ring	•Anillo	•Anel	•Bague	
27	**VOE 17230185**	2					•Piston ring	•Aro de pistón	•Anel pistão	•Segment piston	
28	**VOE 17230196**	1					•Ring	•Anillo	•Anel	•Bague	
31	**VOE 17230184**	1					•Ring	•Anillo	•Anel	•Bague	

1		**Moteur hydraulique, transport** **Motor hidraulico, transporte** **Hydraulic motor, travel** **RH MCT70C-MCT95C**	Catalogue id **20649**	Group **441**
2			Illustr. No **1064443**	Section **450**
3			Issue **PUB 20030904-B**	Page **373**
4				
5				

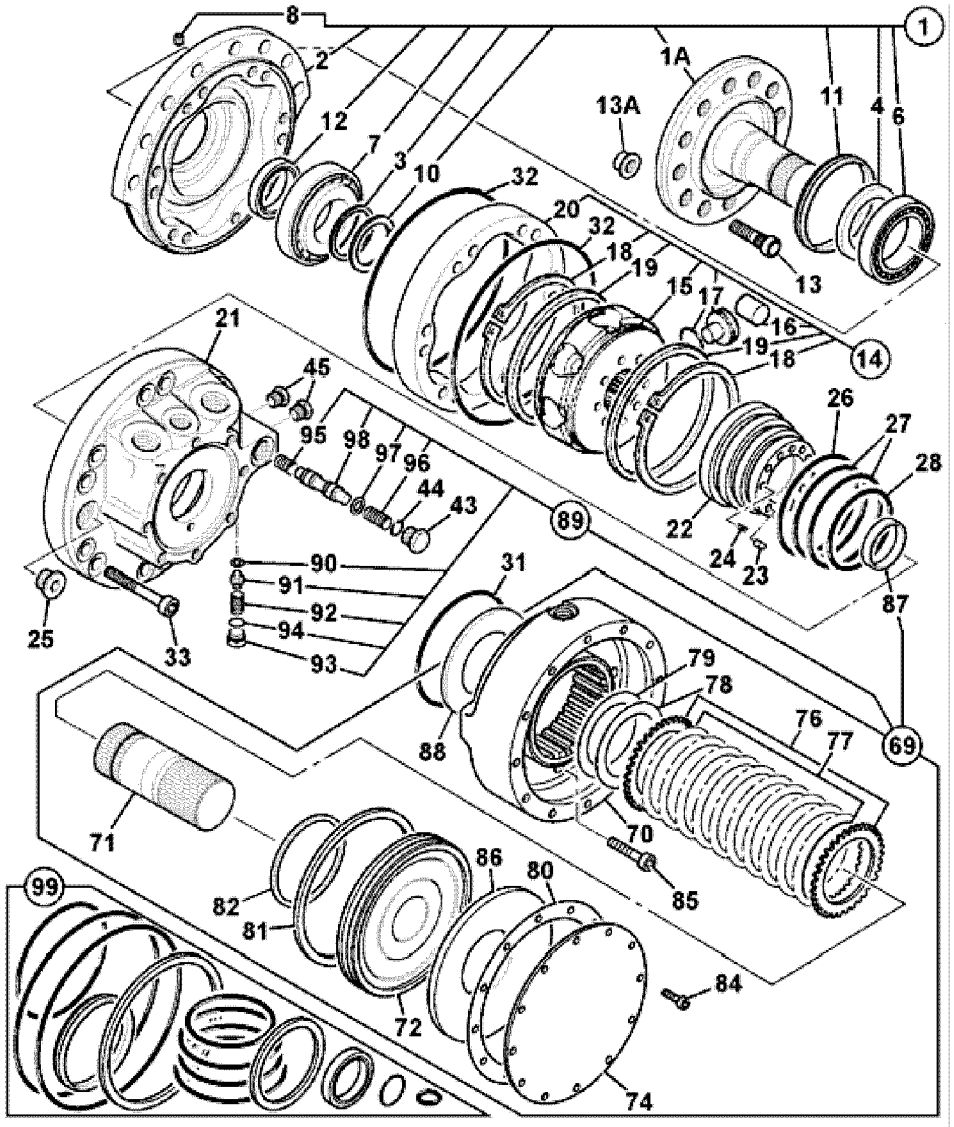
8
1
2
1A
13A
11
4
6
12
7
3
10
32
20
32
18
19
15
17
16
19
18
13
14
21
45
95
98
97
96
44
43
89
26
27
28
22
24
23
87
90
91
92
94
93
25
33
31
79
78
76
77
69
88
71
70
85
86
80
82
81
99
72
84
74

Fig.	Part No.	Quantity 1	2	3	PS	KIT	Description	Denominación	Denominação	Dénomination	Notes
32	**VOE 17230186**	2					•Ring	•Anillo	•Anel	•Bague	
33	**VOE 17228854**	12					•Screw	•Tornillo	•Parafuso	•Vis	
43	**VOE 17229933**	1					•Plug	•Tapón	•Bujão	•Tampon	
44	**VOE 17229657**	1					•O-ring	•Anillo tórico	•Anel-o	•Joint torique	
45	**VOE 17229934**	2					•Plug	•Tapón	•Bujão	•Tampon	
69		1			NS		•Brake	•Freno	•Freio	•Frein	
70		1			NS		•Brake Housing	•Cuerpo De Freno	•	•Boitier Frein	
71		1			NS		•Brake Shaft	•Eje De Frenos	•	•Arbre Frein	
72		1			NS		••Piston	••Pistón	••Pistão	••Piston	
74		1			NS		••Cover plate	••Cubierta	••Placa tampa	••Plaque de recouvrement	
76		15			NS		••Plate	••Chapa	••Chapa	••Tôle	
77	**VOE 17229833**	13					••Plate	••Chapa	••Chapa	••Tôle	
78	**VOE 17230053**	1					••Shim	••Laminilla de ajuste	••Calço de ajuste	••Cale réglage	
79	**VOE 17230058**	1					••Shim	••Laminilla de ajuste	••Calço de ajuste	••Cale réglage	
80	**VOE 17229566**	1					••Gasket	••Junta	••Junta	••Joint	
81	**VOE 17230172**	1					••Ring	••Anillo	••Anel	••Bague	
82	**VOE 17230201**	1					••Ring	••Anillo	••Anel	••Bague	
84	**VOE 17230136**	12					••Screw	••Tornillo	••Parafuso	••Vis	
85	**VOE 17228861**	8					••Screw	••Tornillo	••Parafuso	••Vis	
86	**VOE 17230278**	1					••Spring disc	••Platillo de resorte	••Disco elástico	••Coupelle de ressort	
87		1			NS		••Bushing	••Casquillo	••Bucha	••Bague	
88	**VOE 17231007**	1					••Thrust washer	••Arandela axial	••Arruela trava	••Disque de butée	
89		1			NS		••Kit	••Juego	••Jogo	••Lot	
90	**VOE 17230171**	1					•••Shim	•••Laminilla de ajuste	•••Calço de ajuste	•••Cale réglage	
91		1			NS		•••Fitting	•••Racor	•••Niple	•••Écrou raccord	
92	**VOE 17230286**	1					•••Spring	•••Resorte	•••Mola	•••Ressort	
93	**VOE 17229937**	1					•••Plug	•••Tapón	•••Bujão	•••Tampon	
94	**VOE 17229649**	1					•••O-ring	•••Anillo tórico	•••Anel-o	•••Joint torique	
95	**VOE 17230291**	1					•••Spring	•••Resorte	•••Mola	•••Ressort	
96	**VOE 17230300**	1					•••Spring	•••Resorte	•••Mola	•••Ressort	

1		**Moteur hydraulique, transport** **Motor hidraulico, transporte** **Hydraulic motor, travel** **RH MCT70C-MCT95C**	Catalogue id **20649**	Group **441**
2			Illustr. No **1064443**	Section **450**
3			Issue **PUB 20030904-B**	Page **375**
4				
5				

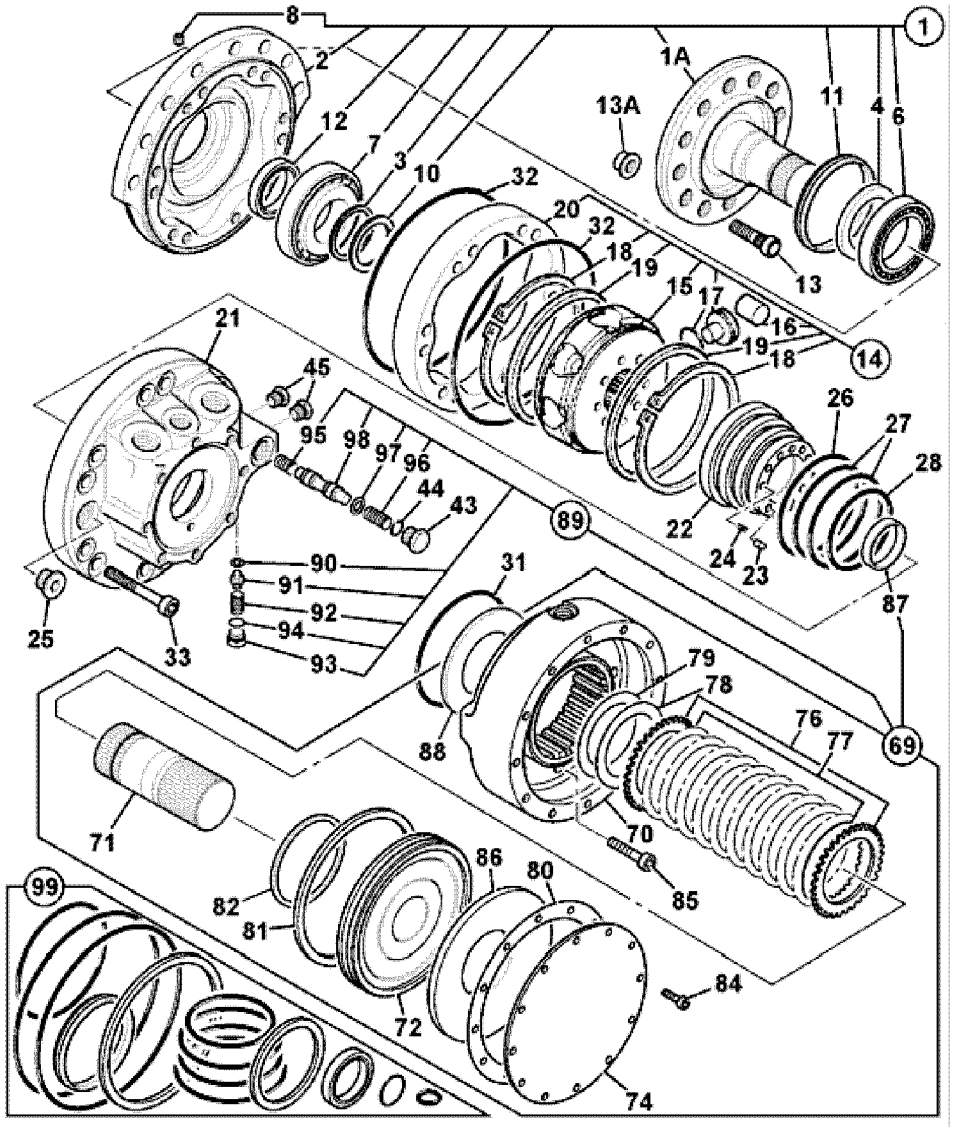
8
1
2
1A
13A
11
4
6
12
7
3
10
32
20
32
18
19
15
17
16
19
18
13
14
21
45
95
98
97
96
44
43
89
26
27
28
22
24
23
87
90
91
92
94
93
25
33
31
79
78
76
77
69
88
71
70
85
86
80
82
81
99
72
84
74

Fig.	Part No.	Quantity 1	2	3	PS	KIT	Description	Denominación	Denominação	Dénomination	Notes
97	**VOE 17230656**	1					•••Washer	•••Arandela	•••Arruela	•••Rondelle	
98	**VOE 17230211**	1					•••Coil	•••Bobina	•••Bobina	•••Bobine	
99	**VOE 17229600**	1				K	•Sealing kit	•Kit de precinto	•Jogo de vedação	•Kit plombage	

1		**Moteur hydraulique, transport** **Motor hidraulico, transporte** **Hydraulic motor, travel**	Catalogue id **20649**	Group **441**
2			Illustr. No **1064443**	Section **450**
3			Issue **PUB 20030904-B**	Page **377**
4				
5		**RH MCT70C-MCT95C**		

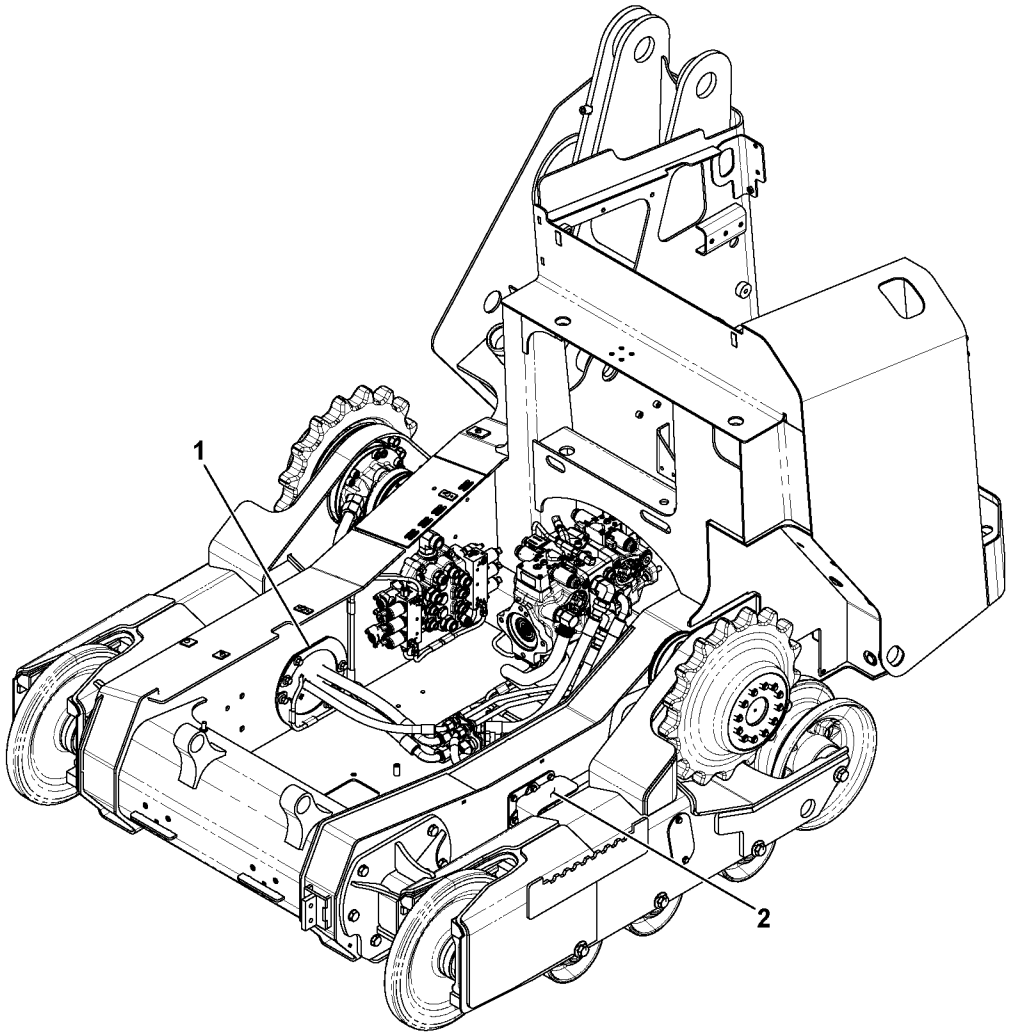

Volvo Construction Equipment
1064228

Fig.	Part No.	Quantity 1	2	3	PS	KIT	Description	Denominación	Denominação	Dénomination	Notes
1		1					Transmission	Transmision	Transmissão	Transmission	See group 441, Page 355
2		1					Tube	Tubo	Tubo	Tube	See group 441, Page 357

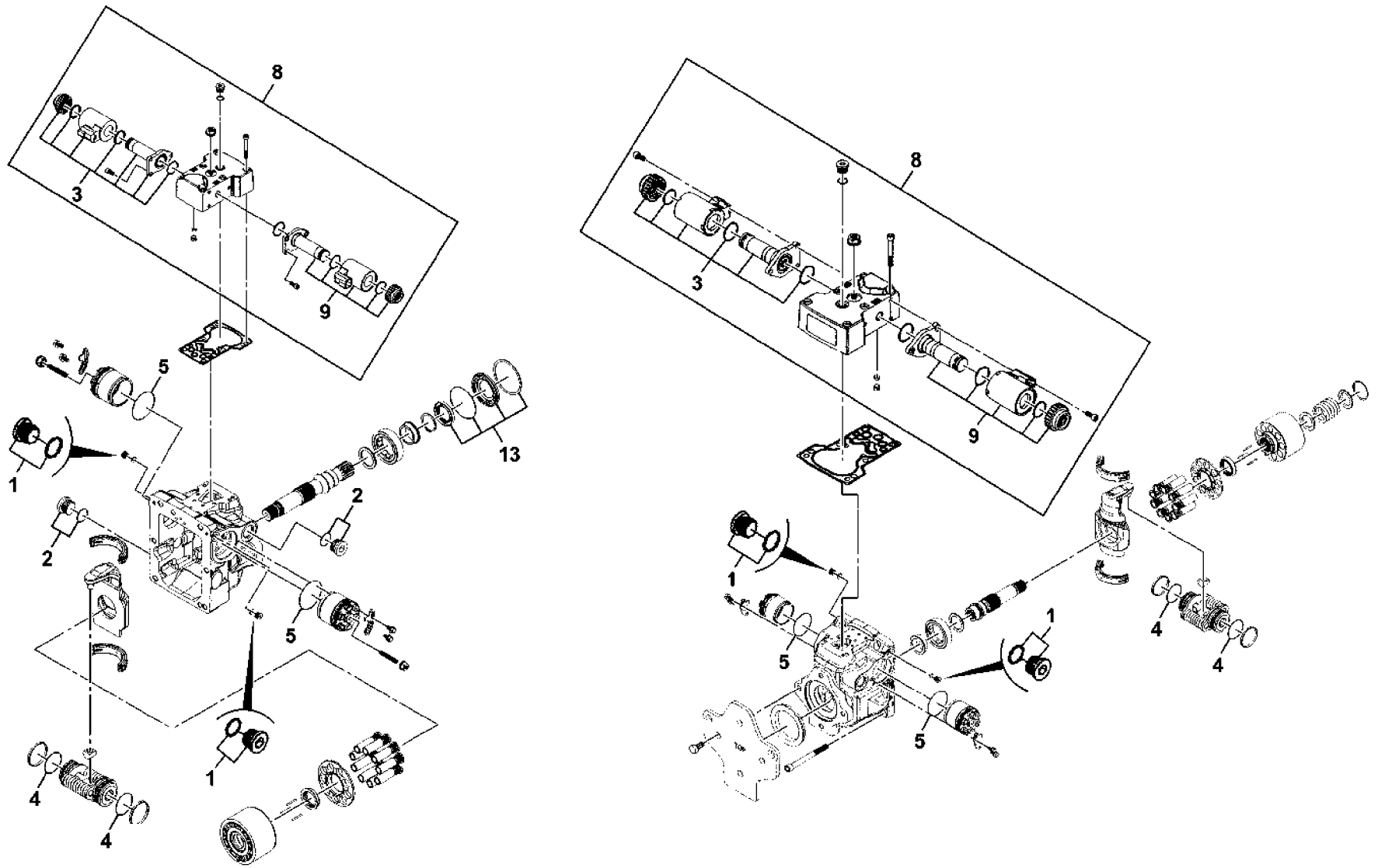
8
3
9
5
13
1
2
2
5
1
4
4
8
3
9
1
5
1
4
4
5

Fig.	Part No.	Quantity 1	2	3	PS	KIT	Description	Denominación	Denominação	Dénomination	Notes
	VOE 17230023	1					Pump	Bomba	Bomba	Pompe	See group 441, Page 383
1		4			NS		•Plug	•Tapon	•Bujão	•Bouchon	
2		4			NS		•Plug	•Tapon	•Bujão	•Bouchon	
3		2			NS		•Solenoid valve	•Electrovalvula	•Válvula solenóide	•Vanne electrom	
4		4			NS		•O-ring	•Junta torica	•Anel de vedação-O	•Joint Torique	
5		4			NS		•O-ring	•Junta torica	•Anel de vedação-O	•Joint Torique	
8		2			NS		•Kit	•Juego	•Kit	•Jeu	
9		2			NS		•Coil	•Espiral	•Bobina	•Spirale	
13		1			NS		Sealing Kit	Juego Retenes	Kit de vedação	Jeu Joints	

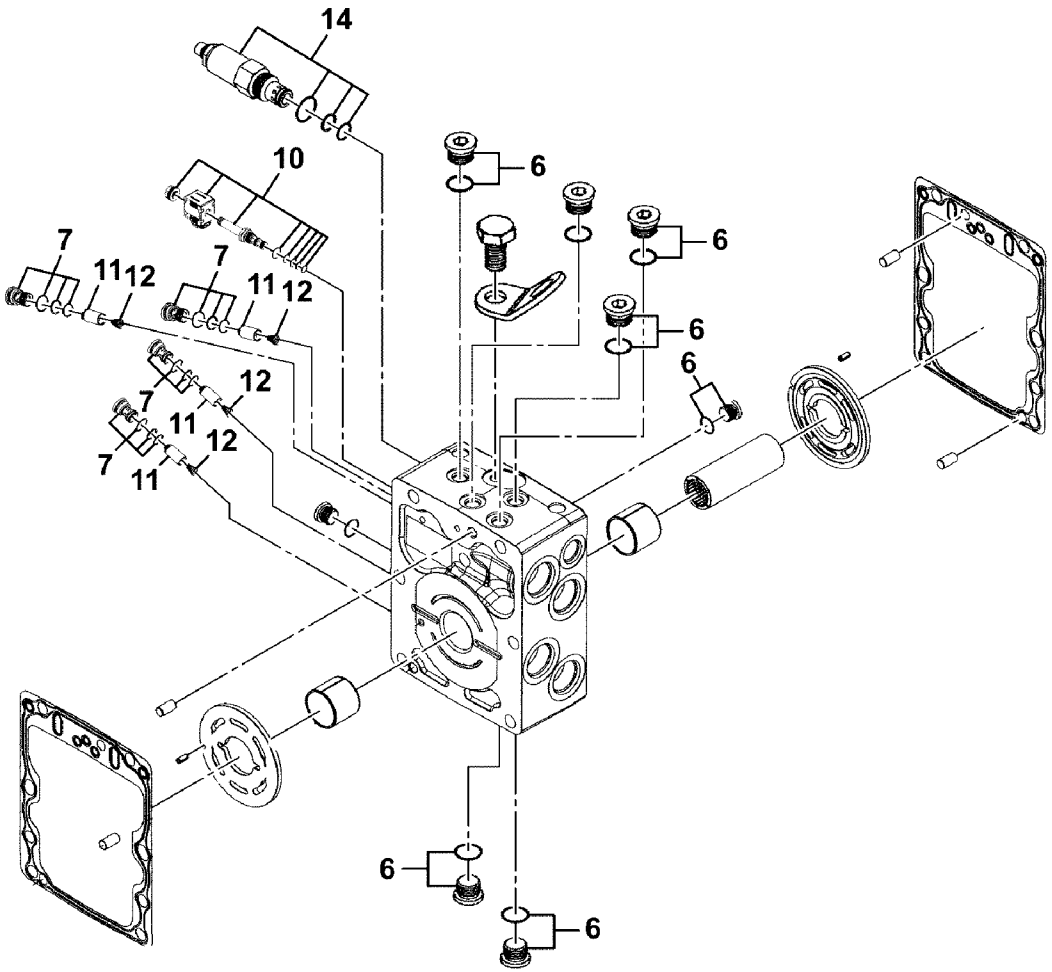
14
10
6
7
11
12
6
6
6
12
7
11
12
7
11
6
6

Fig.	Part No.	Quantity 1	2	3	PS	KIT	Description	Denominación	Denominação	Dénomination	Notes
	VOE 17230023	1					Pump	Bomba	Bomba	Pompe	See group 441, Page 381
6		8			NS		•Plug	•Tapon	•Bujão	•Bouchon	
7		4			NS		•Plug	•Tapon	•Bujão	•Bouchon	
10		2			NS		•Control valve	•Válvula control	•Válvula de controle	•Valve controle	
11		2			NS		•Valve	•Valvula	•Válvula	•Soupape	
12		2			NS		•Spring	•Muelle	•Mola	•Ressort	
14		1			NS		Relief valve	Limitador presion	Válvula de alívio	Limiteur - pression	

1		**Pompe de transmission** **Bomba da transmissão** **Bomba de transmisión** **Transmission pump**	Catalogue id **20649**	Group **441**
2			Illustr. No **1064456**	Section **1050**
3			Issue **PUB 20030904-B**	Page **383**
4				
5		**51CC MC60C-MC105C**		

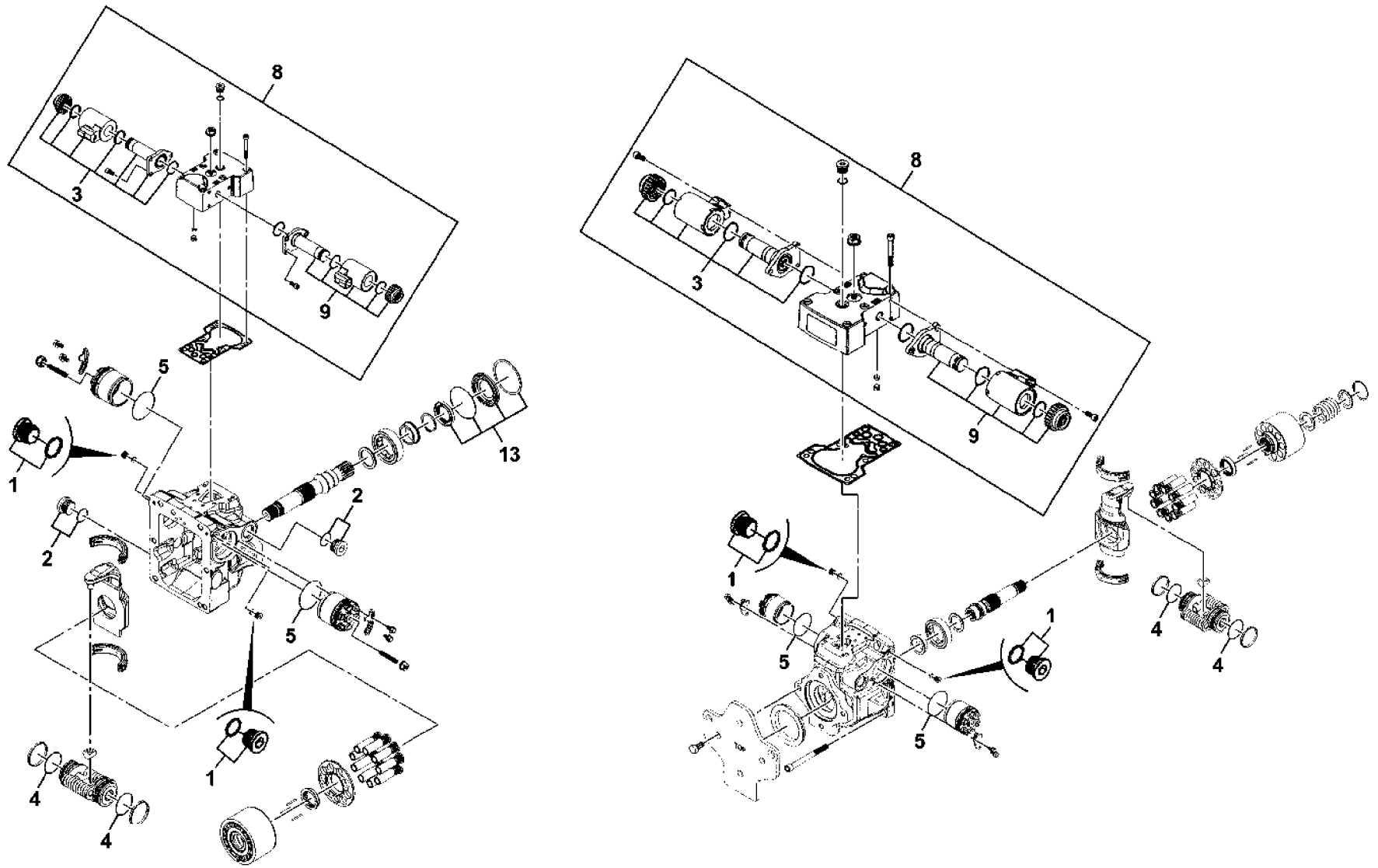
8
3
9
5
13
1
2
2
5
1
4
4
8
3
9
1
5
1
4
4
5

Fig.	Part No.	Quantity 1	2	3	PS	KIT	Description	Denominación	Denominação	Dénomination	Notes
	VOE 17230025	1					Pump	Bomba	Bomba	Pompe	See group 441, Page 387
1		4			NS		•Plug	•Tapon	•Bujão	•Bouchon	
2		4			NS		•Plug	•Tapon	•Bujão	•Bouchon	
3		2			NS		•Solenoid valve	•Electrovalvula	•Válvula solenóide	•Vanne electrom	
4		4			NS		•O-ring	•Junta torica	•Anel de vedação-O	•Joint Torique	
5		4			NS		•O-ring	•Junta torica	•Anel de vedação-O	•Joint Torique	
8		2			NS		•Kit	•Juego	•Kit	•Jeu	
9		2			NS		•Coil	•Espiral	•Bobina	•Spirale	
13		1			NS		Sealing Kit	Juego Retenes	Kit de vedação	Jeu Joints	

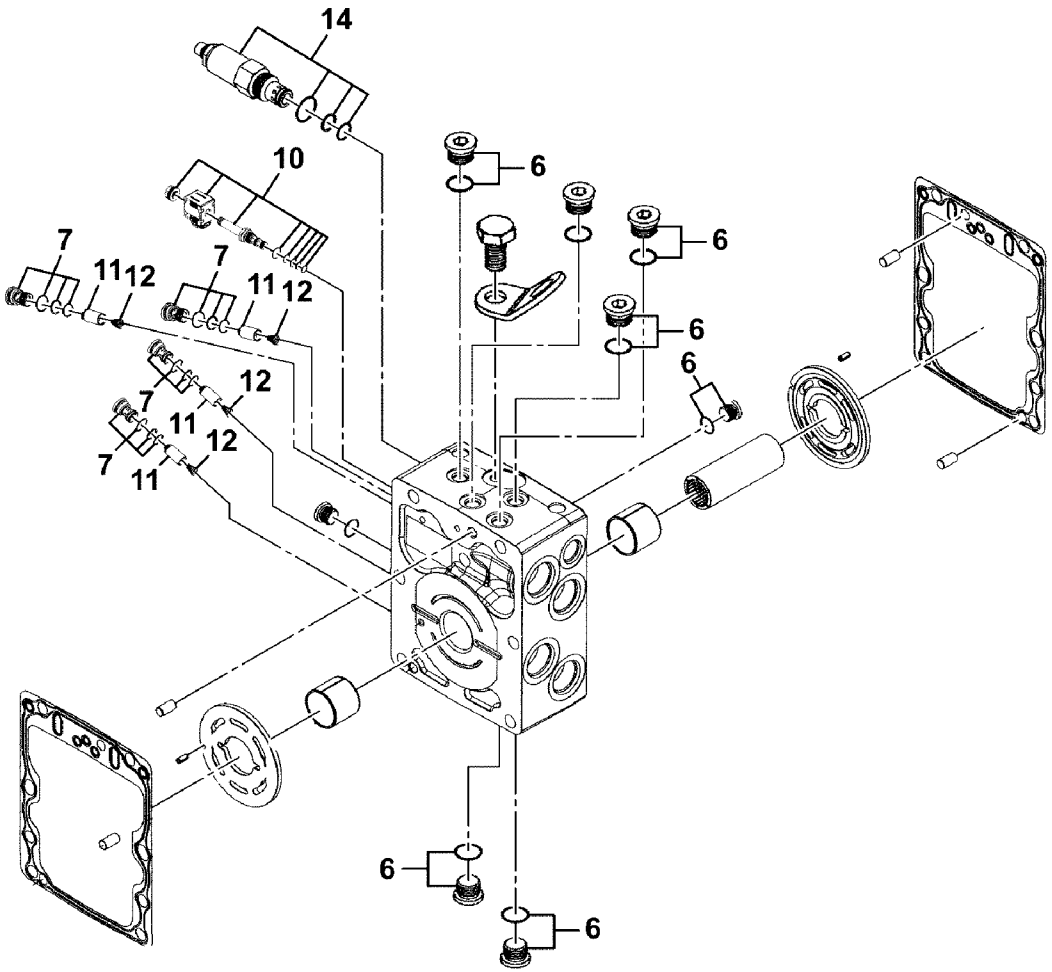
14
10
6
7
11
12
6
6
6
12
7
11
12
7
11
6
6

Fig.	Part No.	Quantity 1	2	3	PS	KIT	Description	Denominación	Denominação	Dénomination	Notes
	VOE 17230025	1					Pump	Bomba	Bomba	Pompe	See group 441, Page 385
6		8			NS		•Plug	•Tapon	•Bujão	•Bouchon	
7		4			NS		•Plug	•Tapon	•Bujão	•Bouchon	
10		2			NS		•Control valve	•Válvula control	•Válvula de controle	•Valve controle	
11		2			NS		•Valve	•Valvula	•Válvula	•Soupape	
12		2			NS		•Spring	•Muelle	•Mola	•Ressort	
14		1			NS		Relief valve	Limitador presion	Válvula de alívio	Limiteur - pression	

1		**Pompe de transmission** **Bomba da transmissão** **Bomba de transmisión** **Transmission pump**	Catalogue id **20649**	Group **441**
2			Illustr. No **1064456**	Section **1150**
3			Issue **PUB 20030904-B**	Page **387**
4				
5		**42CC MCT70C-MCT95C**		

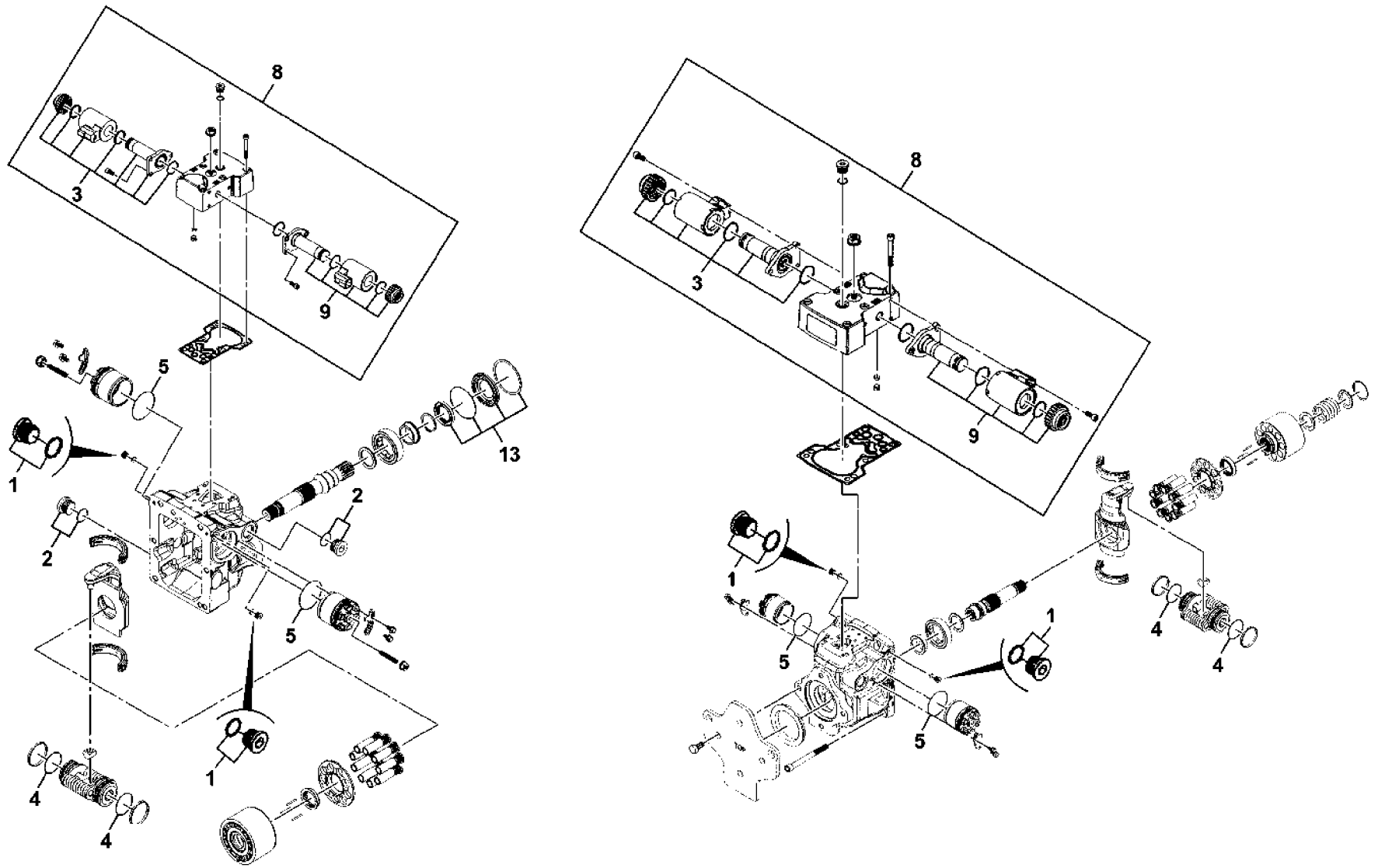
8
3
9
5
13
1
2
2
5
1
4
4
8
3
9
1
5
1
4
4
5

Fig.	Part No.	Quantity 1	2	3	PS	KIT	Description	Denominación	Denominação	Dénomination	Notes
	VOE 17230027	1					Pump	Bomba	Bomba	Pompe	See group 441, Page 391
1		4			NS		•Plug	•Tapon	•Bujão	•Bouchon	
2		4			NS		•Plug	•Tapon	•Bujão	•Bouchon	
3		2			NS		•Solenoid valve	•Electrovalvula	•Válvula solenóide	•Vanne electrom	
4		4			NS		•O-ring	•Junta torica	•Anel de vedação-O	•Joint Torique	
5		4			NS		•O-ring	•Junta torica	•Anel de vedação-O	•Joint Torique	
8		2			NS		•Kit	•Juego	•Kit	•Jeu	
9		2			NS		•Coil	•Espiral	•Bobina	•Spirale	
13		1			NS		Sealing Kit	Juego Retenes	Kit de vedação	Jeu Joints	

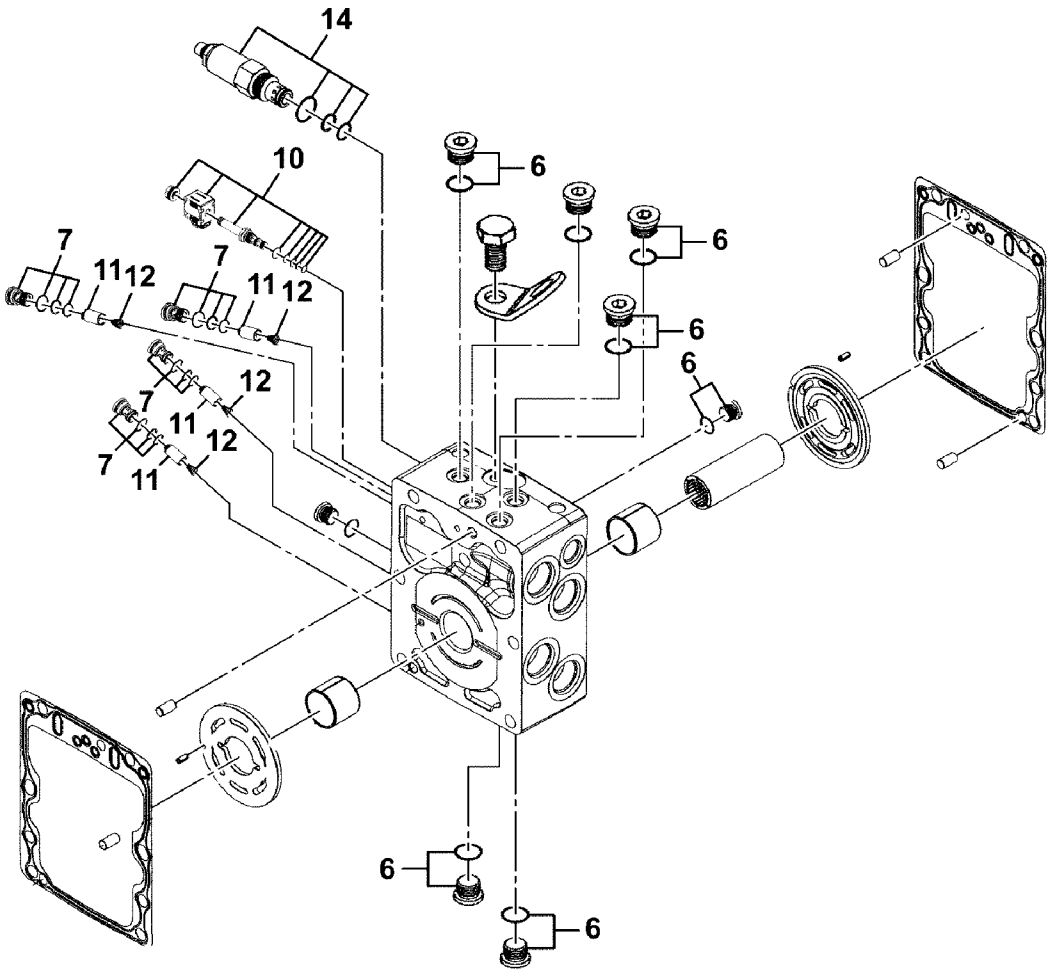
14
10
6
7
11
12
6
6
6
12
7
11
12
7
11
6
6

Fig.	Part No.	Quantity 1	2	3	PS	KIT	Description	Denominación	Denominação	Dénomination	Notes
	VOE 17230027	1					Pump	Bomba	Bomba	Pompe	See group 441, Page 389
6		8			NS		•Plug	•Tapon	•Bujão	•Bouchon	
7		4			NS		•Plug	•Tapon	•Bujão	•Bouchon	
10		2			NS		•Control valve	•Válvula control	•Válvula de controle	•Valve controle	
11		2			NS		•Valve	•Valvula	•Válvula	•Soupape	
12		2			NS		•Spring	•Muelle	•Mola	•Ressort	
14		1			NS		Relief valve	Limitador presion	Válvula de alívio	Limiteur - pression	



Volvo Construction Equipment
www.volvoce.com

GROUP		Section	Page
711	Front Bumper Installation MC60C-MC105C, MCT85C-MCT95C	100	399
711	Front Bumper Installation MC70C-MC105C, MCT85C-MCT95C	150	401
711	Demolition guard, mounting MC60C-MC105C, MCT85C-MCT95C	200	403
711	Demolition guard MC60C-MC105C, MCT85C-MCT95C	250	405
715	Cover plates, rear RADIAL LIFT MC60C, MC70C, MCT70C	100	407
715	Cover plates, rear RADIAL LIFT MC60C, MC70C, MCT70C	150	409
715	Cover plates, rear VERTICAL LIFT MC85C-MC105C, MCT85C, MCT95C	250	411
715	Cover plate, front MC60C-MC105C, MCT70C-MCT95C	300	413
715	Side cover kit MC60C, MC70C, MC95C, MCT70C, MCT85C	600	415
715	Windscreen protection MC60C, MC70C, MC95C, MCT70C, MCT85C700		417
715	Safety lock for boom MC60C, MC70C, MCT70C	1000	419
715	Safety lock for boom MC85C-MC105C, MCT85C, MCT95C	1050	421
715	Cover plate MC60C, MC70C	1100	423
715	Cover plate MC60C-MC105C, MCT70C-MCT95C	1150	425
715	Transport lock MC60C-MC85C, MCT70C	1500	427
715	Transport lock MC60C-MC85C, MCT70C	1550	429
715	Safety lock for boom MC60C-MC85C, MCT70C	1600	431
716	Counterweights	100	433
716	Counterweights MC105C, MCT95C	150	435
716	Counterweights MCT95C	200	437
716	Counterweights MC95C	250	439
716	Counterweights MC60C-MC85C, MCT70C, MCT85C	300	441
716	Counterweights MC85C	350	443
716	Counterweights MC95C	400	445
716	Counterweights MC105C	450	447
716	Counterweights MC105C, MCT95C	500	449
716	Counterweights MC95C	550	451
716	Counterweights MC105C, MCT95C	600	453
718	Undercarriage MCT70C	100	455
718	Undercarriage MCT70C	150	457
718	Undercarriage MCT70C	200	459
718	Undercarriage MCT85C, MCT95C	300	461
771	Wheel and tire MC60C-MC105C	100	463
771	Wheel and tire MC60C-MC105C	150	465
771	Wheel and tire MC60C-MC105C	250	467
771	Wheel and tire MC60C-MC105C	300	469
771	Wheel and tire RH MC60C-MC105C	350	471
771	Wheel and tire LH MC60C-MC105C	400	473
771	Wheel and tire RH MC60C-MC105C	450	475
771	Wheel and tire MC60C-MC105C	500	477
771	Wheel and tire	550	479
771	Wheel and tire MC60C-MC105C	600	481
771	Wheel and tire MC60C-MC105C	650	483
775	Idler MCT70C-MCT95C	200	485
775	Idler MCT70C-MCT95C	250	487
775	Track rollers MCT70C-MCT95C	300	489
775	Track rollers MCT70C-MCT95C	350	491
775	Track chain	400	493

INDICE

GRUPO		Sección	Página
711	Instalación de paragolpes delantero MC60C-MC105C, MCT85C-MCT95C	100	399
711	Instalación de paragolpes delantero MC70C-MC105C, MCT85C-MCT95C	150	401
711	Guarda de demolición, montaje MC60C-MC105C, MCT85C-MCT95C	200	403
711	Guarda de demolición MC60C-MC105C, MCT85C-MCT95C	250	405
715	Placas de recubrimiento RADIAL LIFT MC60C, MC70C, MCT70C	100	407
715	Placas de recubrimiento RADIAL LIFT MC60C, MC70C, MCT70C	150	409
715	Placas de recubrimiento VERTICAL LIFT MC85C-MC105C, MCT85C, MCT95C	250	411
715	Chapa de protección, delantera MC60C-MC105C, MCT70C-MCT95C	300	413
715	Kit de tapa lateral MC60C, MC70C, MC95C, MCT70C, MCT85C	600	415
715	Rejilla de proteccion parabrisas delantero MC60C, MC70C, MC95C, MCT70C, MCT85C	700	417
715	Bloqueo de seguridad para la pluma MC60C, MC70C, MCT70C	1000	419
715	Bloqueo de seguridad para la pluma MC85C-MC105C, MCT85C, MCT95C	1050	421
715	Chapa de protección MC60C, MC70C	1100	423
715	Chapa de protección MC60C-MC105C, MCT70C-MCT95C	1150	425
715	Cierre de transporte MC60C-MC85C, MCT70C	1500	427
715	Cierre de transporte MC60C-MC85C, MCT70C	1550	429
715	Bloqueo de seguridad para la pluma MC60C-MC85C, MCT70C	1600	431
716	Contrapesos	100	433
716	Contrapesos MC105C, MCT95C	150	435
716	Contrapesos MCT95C	200	437
716	Contrapesos MC95C	250	439
716	Contrapesos MC60C-MC85C, MCT70C, MCT85C	300	441
716	Contrapesos MC85C	350	443
716	Contrapesos MC95C	400	445
716	Contrapesos MC105C	450	447
716	Contrapesos MC105C, MCT95C	500	449
716	Contrapesos MC95C	550	451
716	Contrapesos MC105C, MCT95C	600	453
718	Carro inferior MCT70C	100	455
718	Carro inferior MCT70C	150	457
718	Carro inferior MCT70C	200	459
718	Carro inferior MCT85C, MCT95C	300	461
771	Rueda y neumatico MC60C-MC105C	100	463
771	Rueda y neumatico MC60C-MC105C	150	465
771	Rueda y neumatico MC60C-MC105C	250	467
771	Rueda y neumatico MC60C-MC105C	300	469
771	Rueda y neumatico RH MC60C-MC105C	350	471
771	Rueda y neumatico LH MC60C-MC105C	400	473
771	Rueda y neumatico RH MC60C-MC105C	450	475
771	Rueda y neumatico MC60C-MC105C	500	477
771	Rueda y neumatico	550	479
771	Rueda y neumatico MC60C-MC105C	600	481
771	Rueda y neumatico MC60C-MC105C	650	483
775	Piñón intermediario MCT70C-MCT95C	200	485
775	Piñón intermediario MCT70C-MCT95C	250	487
775	Rodillos de oruga MCT70C-MCT95C	300	489
775	Rodillos de oruga MCT70C-MCT95C	350	491
775	Cadena de oruga	400	493

GRUPO		Seção	Página
711	Pára-choque dianteiro, instalação MC60C-MC105C, MCT85C-MCT95C	100	399
711	Pára-choque dianteiro, instalação MC70C-MC105C, MCT85C-MCT95C	150	401
711	Proteção de demolição, montagem MC60C-MC105C, MCT85C-MCT95C	200	403
711	Proteção de demolição MC60C-MC105C, MCT85C-MCT95C	250	405
715	RADIAL LIFT MC60C, MC70C, MCT70C	100	407
715	RADIAL LIFT MC60C, MC70C, MCT70C	150	409
715	VERTICAL LIFT MC85C-MC105C, MCT85C, MCT95C	250	411
715	Placa de cobertura, dianteira MC60C-MC105C, MCT70C-MCT95C.	300	413
715	Kit de cobertura lateral MC60C, MC70C, MC95C, MCT70C, MCT85C	600	415
715	MC60C, MC70C, MC95C, MCT70C, MCT85C	700	417
715	Trava de segurança da lança MC60C, MC70C, MCT70C	1000	419
715	Trava de segurança da lança MC85C-MC105C, MCT85C, MCT95C	1050	421
715	Placa de cobertura MC60C, MC70C	1100	423
715	Placa de cobertura MC60C-MC105C, MCT70C-MCT95C	1150	425
715	Bloqueio de transporte MC60C-MC85C, MCT70C	1500	427
715	Bloqueio de transporte MC60C-MC85C, MCT70C	1550	429
715	Trava de segurança da lança MC60C-MC85C, MCT70C	1600	431
716	Contrapesos	100	433
716	Contrapesos MC105C, MCT95C	150	435
716	Contrapesos MCT95C	200	437
716	Contrapesos MC95C	250	439
716	Contrapesos MC60C-MC85C, MCT70C, MCT85C	300	441
716	Contrapesos MC85C	350	443
716	Contrapesos MC95C	400	445
716	Contrapesos MC105C	450	447
716	Contrapesos MC105C, MCT95C	500	449
716	Contrapesos MC95C	550	451
716	Contrapesos MC105C, MCT95C	600	453
718	Subestrutura MCT70C	100	455
718	Subestrutura MCT70C	150	457
718	Subestrutura MCT70C	200	459
718	Subestrutura MCT85C, MCT95C	300	461
771	Roda e Pneu MC60C-MC105C	100	463
771	Roda e Pneu MC60C-MC105C	150	465
771	Roda e Pneu MC60C-MC105C	250	467
771	Roda e Pneu MC60C-MC105C	300	469
771	Roda e Pneu RH MC60C-MC105C	350	471
771	Roda e Pneu LH MC60C-MC105C	400	473
771	Roda e Pneu RH MC60C-MC105C	450	475
771	Roda e Pneu MC60C-MC105C	500	477
771	Roda e Pneu	550	479
771	Roda e Pneu MC60C-MC105C	600	481
771	Roda e Pneu MC60C-MC105C	650	483
775	MCT70C-MCT95C	200	485
775	MCT70C-MCT95C	250	487
775	Roletes de esteira MCT70C-MCT95C	300	489
775	Roletes de esteira MCT70C-MCT95C	350	491
775	Corrente de esteira	400	493

TABLE DES MATIÈRES

GROUPE		Section	Page
711	Installation du pare-chocs avant MC60C-MC105C, MCT85C-MCT95C	100	399
711	Installation du pare-chocs avant MC70C-MC105C, MCT85C-MCT95C	150	401
711	Protection pour les travaux de démolition, montage MC60C-MC105C, MCT85C-MCT95C	200	403
711	Protection pour les travaux de démolition MC60C-MC105C, MCT85C-MCT95C	250	405
715	Plaques de recouvrement, arrière RADIAL LIFT MC60C, MC70C, MCT70C	100	407
715	Plaques de recouvrement, arrière RADIAL LIFT MC60C, MC70C, MCT70C	150	409
715	Plaques de recouvrement, arrière VERTICAL LIFT MC85C-MC105C, MCT85C, MCT95C	250	411
715	Tôle de protection, AV MC60C-MC105C, MCT70C-MCT95C	300	413
715	Kit de recouvrement latéral MC60C, MC70C, MC95C, MCT70C, MCT85C	600	415
715	Grillage de protection pare-brise MC60C, MC70C, MC95C, MCT70C, MCT85C	700	417
715	Verrouillage de sécurité, flèche MC60C, MC70C, MCT70C	1000	419
715	Verrouillage de sécurité, flèche MC85C-MC105C, MCT85C, MCT95C	1050	421
715	Tôle de protection MC60C, MC70C	1100	423
715	Tôle de protection MC60C-MC105C, MCT70C-MCT95C	1150	425
715	Verrouillage de transport MC60C-MC85C, MCT70C	1500	427
715	Verrouillage de transport MC60C-MC85C, MCT70C	1550	429
715	Verrouillage de sécurité, flèche MC60C-MC85C, MCT70C	1600	431
716	Contrepoids	100	433
716	Contrepoids MC105C, MCT95C	150	435
716	Contrepoids MCT95C	200	437
716	Contrepoids MC95C	250	439
716	Contrepoids MC60C-MC85C, MCT70C, MCT85C	300	441
716	Contrepoids MC85C	350	443
716	Contrepoids MC95C	400	445
716	Contrepoids MC105C	450	447
716	Contrepoids MC105C, MCT95C	500	449
716	Contrepoids MC95C	550	451
716	Contrepoids MC105C, MCT95C	600	453
718	Chariot inférieur MCT70C	100	455
718	Chariot inférieur MCT70C	150	457
718	Chariot inférieur MCT70C	200	459
718	Chariot inférieur MCT85C, MCT95C	300	461
771	Roue et pneu MC60C-MC105C	100	463
771	Roue et pneu MC60C-MC105C	150	465
771	Roue et pneu MC60C-MC105C	250	467
771	Roue et pneu MC60C-MC105C	300	469
771	Roue et pneu RH MC60C-MC105C	350	471
771	Roue et pneu LH MC60C-MC105C	400	473
771	Roue et pneu RH MC60C-MC105C	450	475
771	Roue et pneu MC60C-MC105C	500	477
771	Roue et pneu	550	479
771	Roue et pneu MC60C-MC105C	600	481
771	Roue et pneu MC60C-MC105C	650	483
775	Pignon fou MCT70C-MCT95C	200	485
775	Pignon fou MCT70C-MCT95C	250	487
775	Galets MCT70C-MCT95C	300	489
775	Galets MCT70C-MCT95C	350	491
775	Chaîne de chenille	400	493



Volvo Construction Equipment
www.volvoce.com

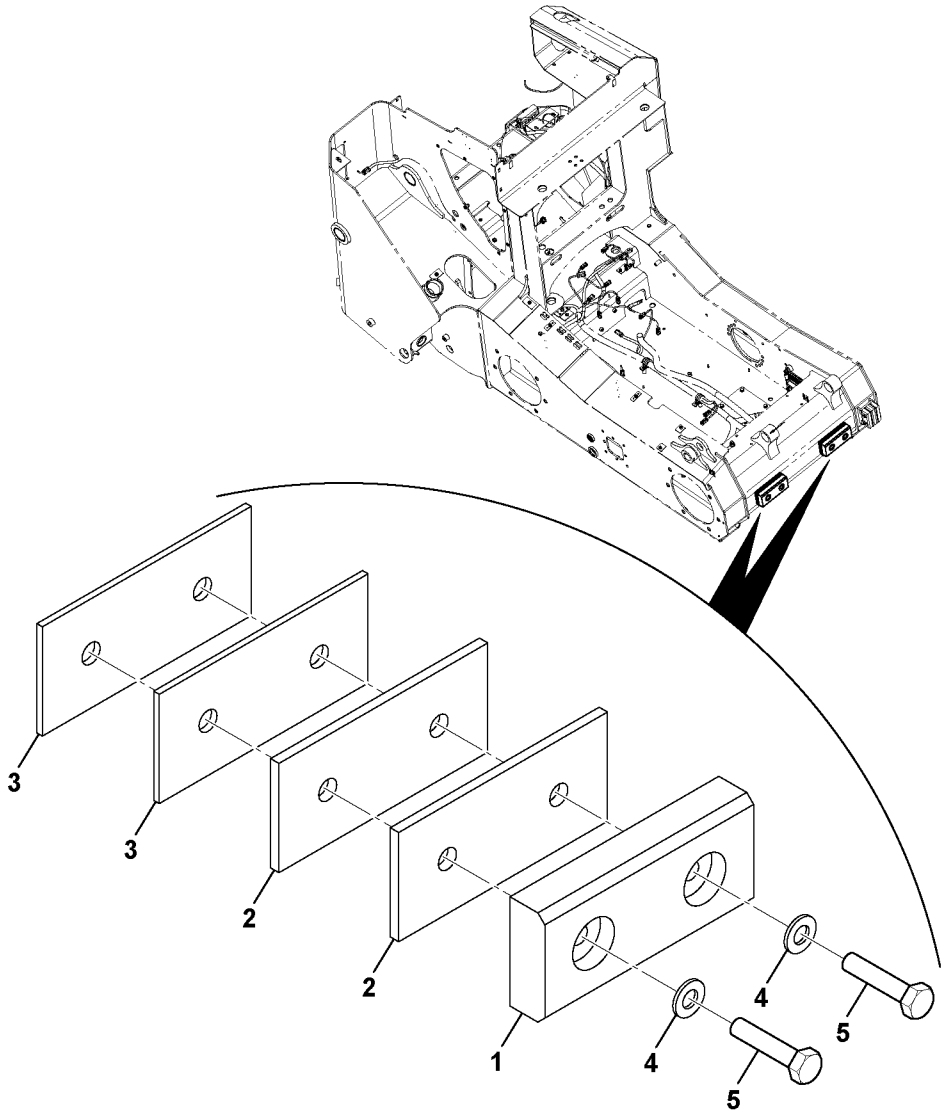
3
3
2
2
1
4
5
4
5

Fig.	Part No.	Quantity 1	2	3	PS	KIT	Description	Denominación	Denominação	Dénomination	Notes
1	**VOE 16213521**	2					Pad	Suplemento	Base	Support inférieur	
2	**VOE 16212208**	REQ					Spacer	Distanciador	Espaçador	Entretoise	
3	**VOE 16212207**	REQ					Spacer	Distanciador	Espaçador	Entretoise	
4	**VOE 16212138**	4			SS		Plain washer	Arandela plana	Arruela simples	Rondelle plane	
5	**VOE 17204906**	4					Bolt	Perno	Parafuso	Boulon	

1		**Installation du pare-chocs avant** **Pára-choque dianteiro, instalação** **Instalación de paragolpes delantero** **Front Bumper Installation**	Catalogue id **20649**	Group **711**
2			Illustr. No **1064201**	Section **100**
3			Issue **PUB 20030904-B**	Page **399**
4				
5		**MC60C-MC105C, MCT85C-MCT95C**		

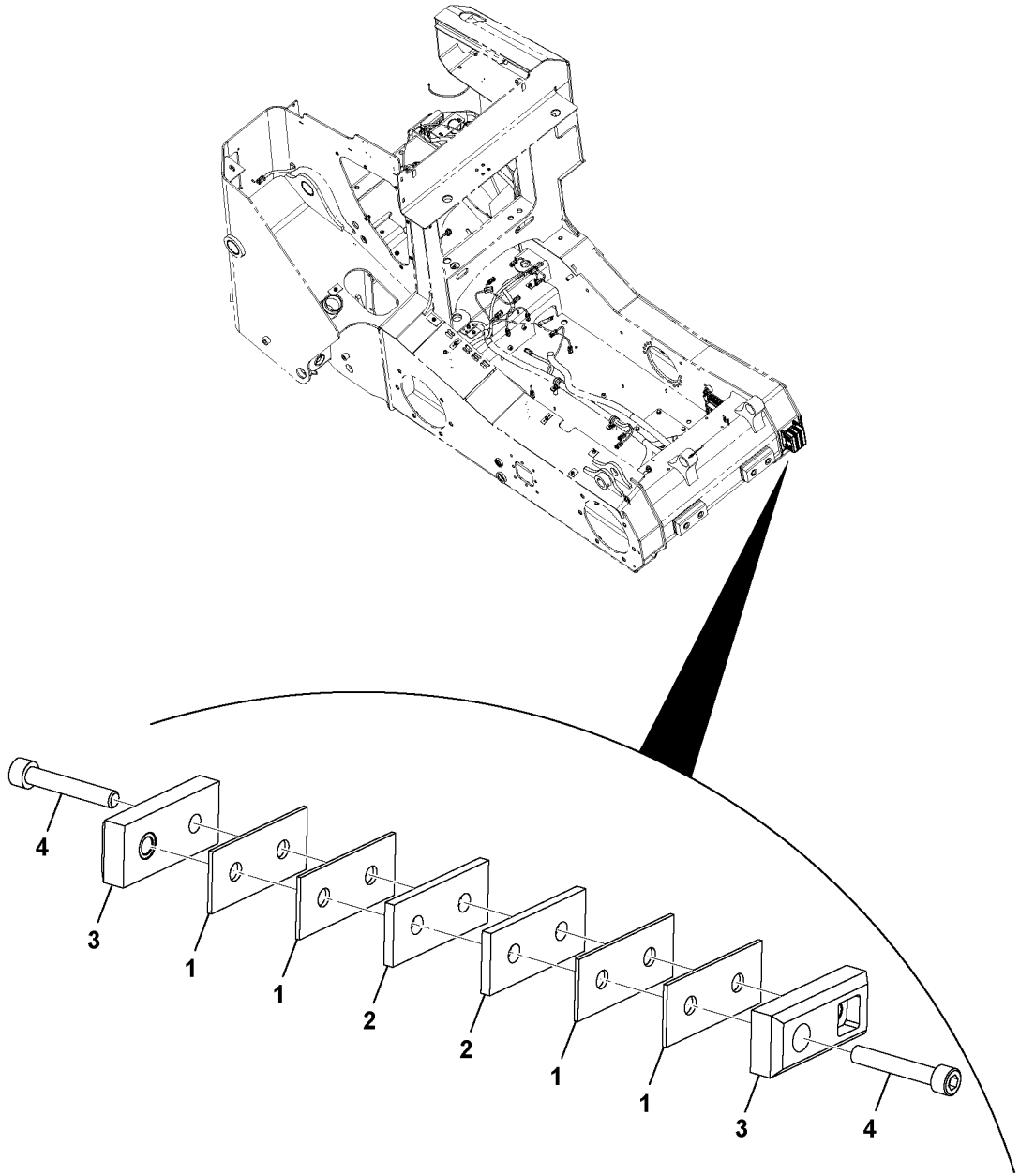

Volvo Construction Equipment
1064141

Fig.	Part No.	Quantity 1	2	3	PS	KIT	Description	Denominación	Denominação	Dénomination	Notes
1	**VOE 17230195**	4					Spacer	Distanciador	Espaçador	Entretoise	
2	**VOE 17230199**	2					Spacer	Distanciador	Espaçador	Entretoise	
3		2			NS		Guide plate	Placa guía	Placa guia	Plaque-guide	
4	**VOE 17228838**	2					Screw	Tornillo	Parafuso	Vis	

1		**Installation du pare-chocs avant** **Pára-choque dianteiro, instalação** **Instalación de paragolpes delantero** **Front Bumper Installation**	Catalogue id **20649**	Group **711**
2			Illustr. No **1064141**	Section **150**
3			Issue **PUB 20030904-B**	Page **401**
4				
5		**MC70C-MC105C, MCT85C-MCT95C**		

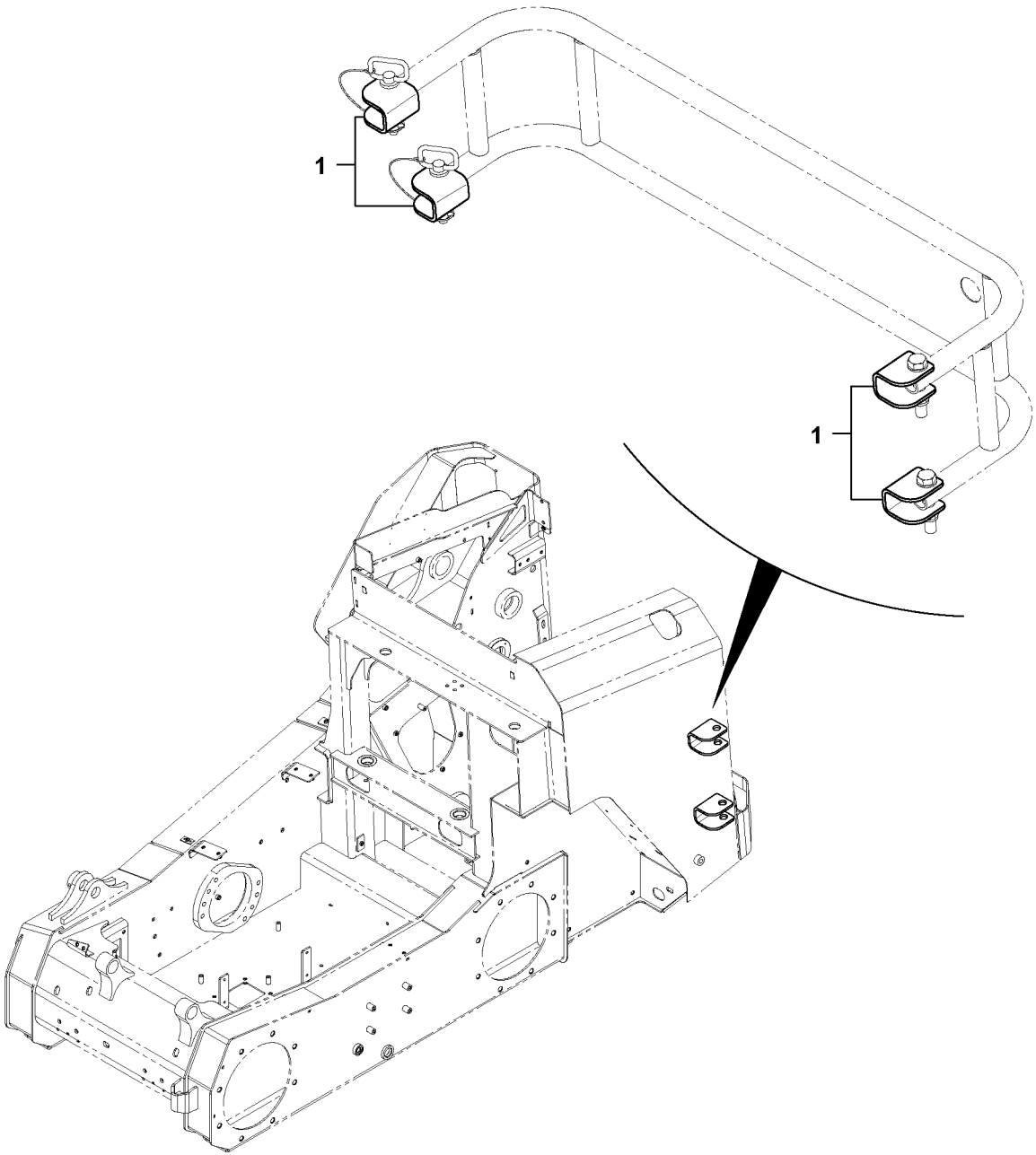

Volvo Construction Equipment
1064017

Fig.	Part No.	Quantity 1	2	3	PS	KIT	Description	Denominación	Denominação	Dénomination	Notes
1	**VOE 17210013**	4					Bracket	Consola	Suporte	Console	

1		**Protection pour les travaux de démolition, montage** **Proteção de demolição, montagem** **Guarda de demolición, montaje** **Demolition guard, mounting**	Catalogue id **20649**	Group **711**
2				
3			Illustr. No **1064017**	Section **200**
4				
5		**MC60C-MC105C, MCT85C-MCT95C**	Issue **PUB 20030904-B**	Page **403**

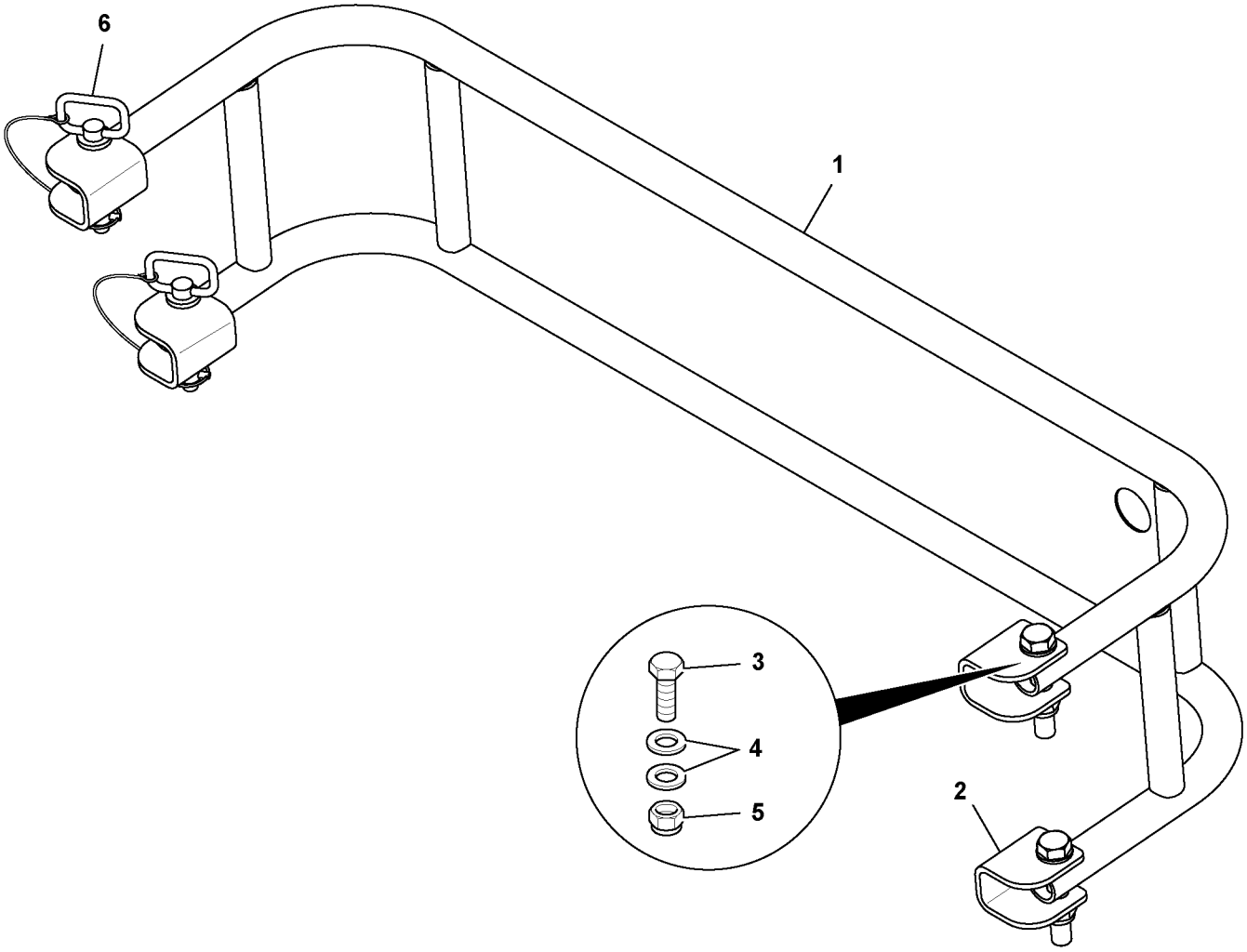

Volvo Construction Equipment
1064060

Fig.	Part No.	Quantity 1	2	3	PS	KIT	Description	Denominación	Denominação	Dénomination	Notes
1		1			NS		Guard	Proteccion	Protecao	Protection	
2		1					Bracket	Ménsula	Suporte	Console	See group 711, Page 403
3	**VOE 17228961**	2					Bolt	Perno	Parafuso	Boulon	
4	**VOE 906837**	4					Washer	Arandela	Arruela	Rondelle	
5	**VOE 17229620**	2					Nut	Tuerca	Porca	Écrou	
6	**VOE 17205444**	2					Pin	Pasador	Pino	Goupille	

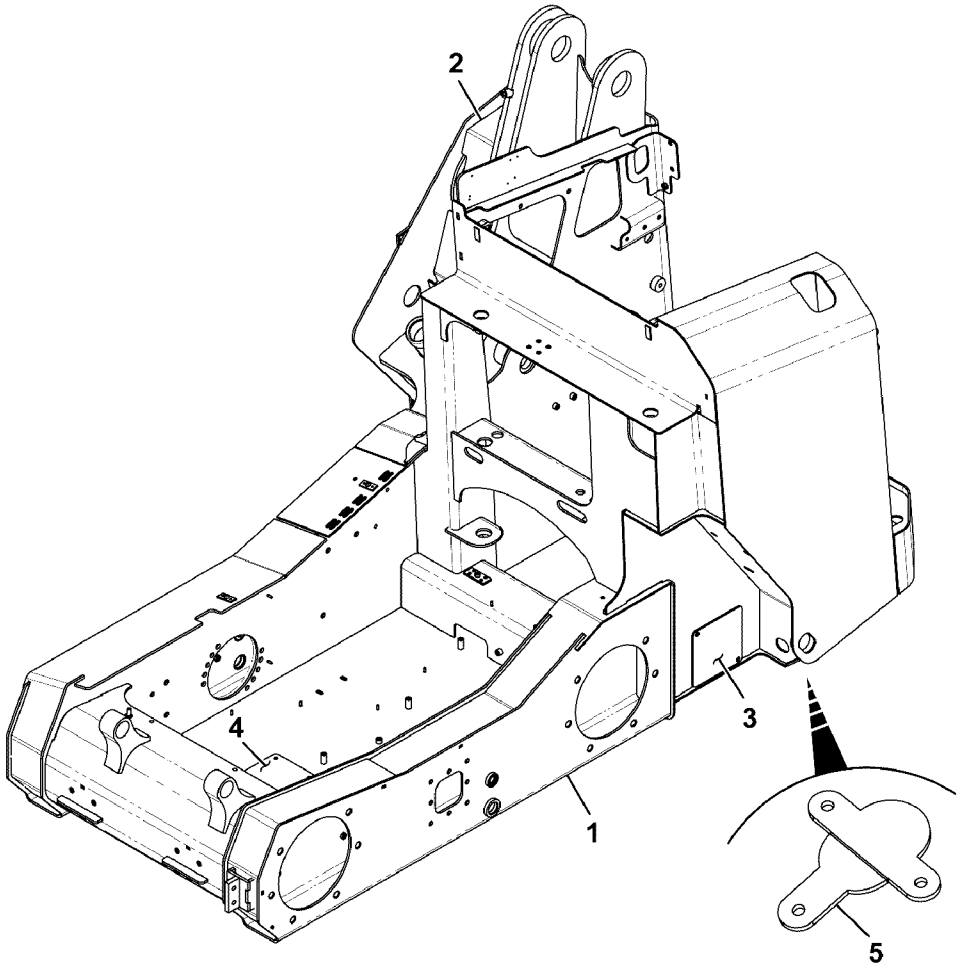
2
4
3
1
5

Fig.	Part No.	Quantity 1	2	3	PS	KIT	Description	Denominación	Denominação	Dénomination	Notes
1		1			NS		Chassis	Chasis	Chassis	Châssis	
2		1			NS		Cover	Capó	Capô	Capot	
3		1			NS		Plate	Chapa	Chapa	Tôle	
4	**VOE 17210517**	1					Cover plate	Cubierta	Placa tampa	Plaque de recouvrement	
5		1			NS		Plate	Chapa	Chapa	Tôle	

1		**Plaques de recouvrement, arrière** **Placas de recubrimiento** **Cover plates, rear**	Catalogue id **20649**	Group **715**
2			Illustr. No **1064202**	Section **100**
3			Issue **PUB 20030904-B**	Page **407**
4				
5		**RADIAL LIFT MC60C, MC70C, MCT70C**		

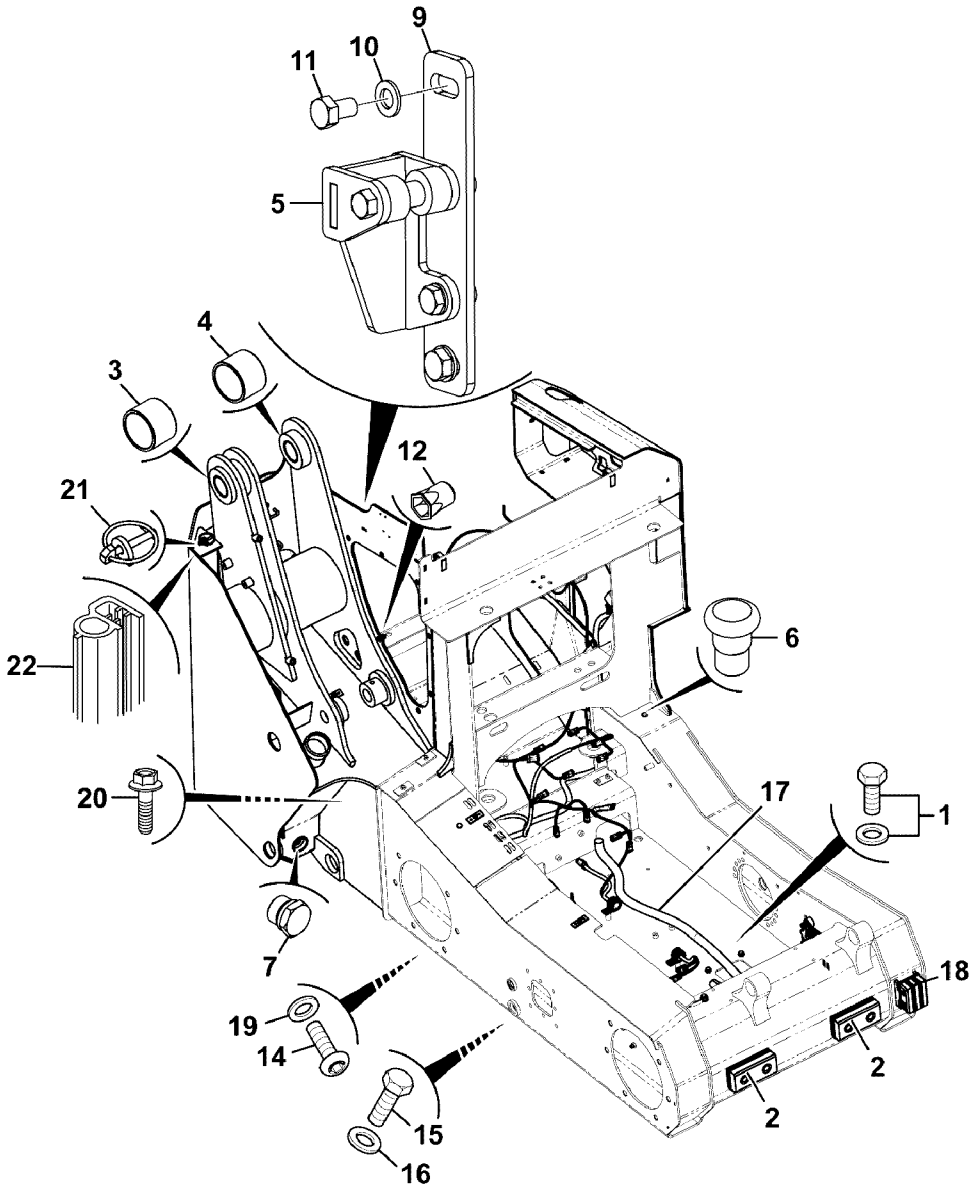
9
11
10
5
4
3
12
21
22
6
20
17
1
7
18
19
14
2
2
15
16

Fig.	Part No.	Quantity 1	2	3	PS	KIT	Description	Denominación	Denominação	Dénomination	Notes
1		1					Fastening Details				See group 715, Page 413
2		1					Stop	Tope	Parada	Butee	See group 711, Page 399
3	**VOE 16213511**	1					Bushing	Casquillo	Bucha	Bague	
4	**VOE 16213513**	1					Bushing	Casquillo	Bucha	Bague	
5		1					Bracket	Consola	Suporte	Console	See group 821, Page 533
6	**VOE 17205352**	2					Cap	Capuchón	Tampa	Capot	
7	**VOE 16213165**	1					Plug	Tapón	Bujão	Tampon	
9	**VOE 17209796**	1					Plate	Chapa	Chapa	Tôle	
10	**VOE 20764147**	2					Washer	Arandela	Arruela	Rondelle	
11	**VOE 17205074**	2					Set screw	Tornillo tope	Parafuso batente	Vis butée	
12		7			NS		Nut	Tuerca	Porca	Écrou	
14	**VOE 17230161**	3					Screw	Tornillo	Parafuso	Vis	
15	**VOE 17205208**	2					Hexagon screw	Tornillo hexagonal	Parafuso sextavado	Vis à tête hexagonale	
16	**VOE 16212138**	2			SS		Plain washer	Arandela plana	Arruela simples	Rondelle plane	
17		1					Cable harness	Manojo cables	Chicote	Faisceau cables	See group 371, Page 313
18		1					Guider	Posicionador	Guia	Guide	See group 711, Page 401
19	**VOE 20460127**	3					Washer	Arandela	Arruela	Rondelle	
20	**VOE 16212101**	2					Bolt	Perno	Parafuso	Boulon	
21	**VOE 17210553**	1					Pin	Pasador	Pino	Goupille	
22		2					Strip	Cinta	Cinta	Bande	

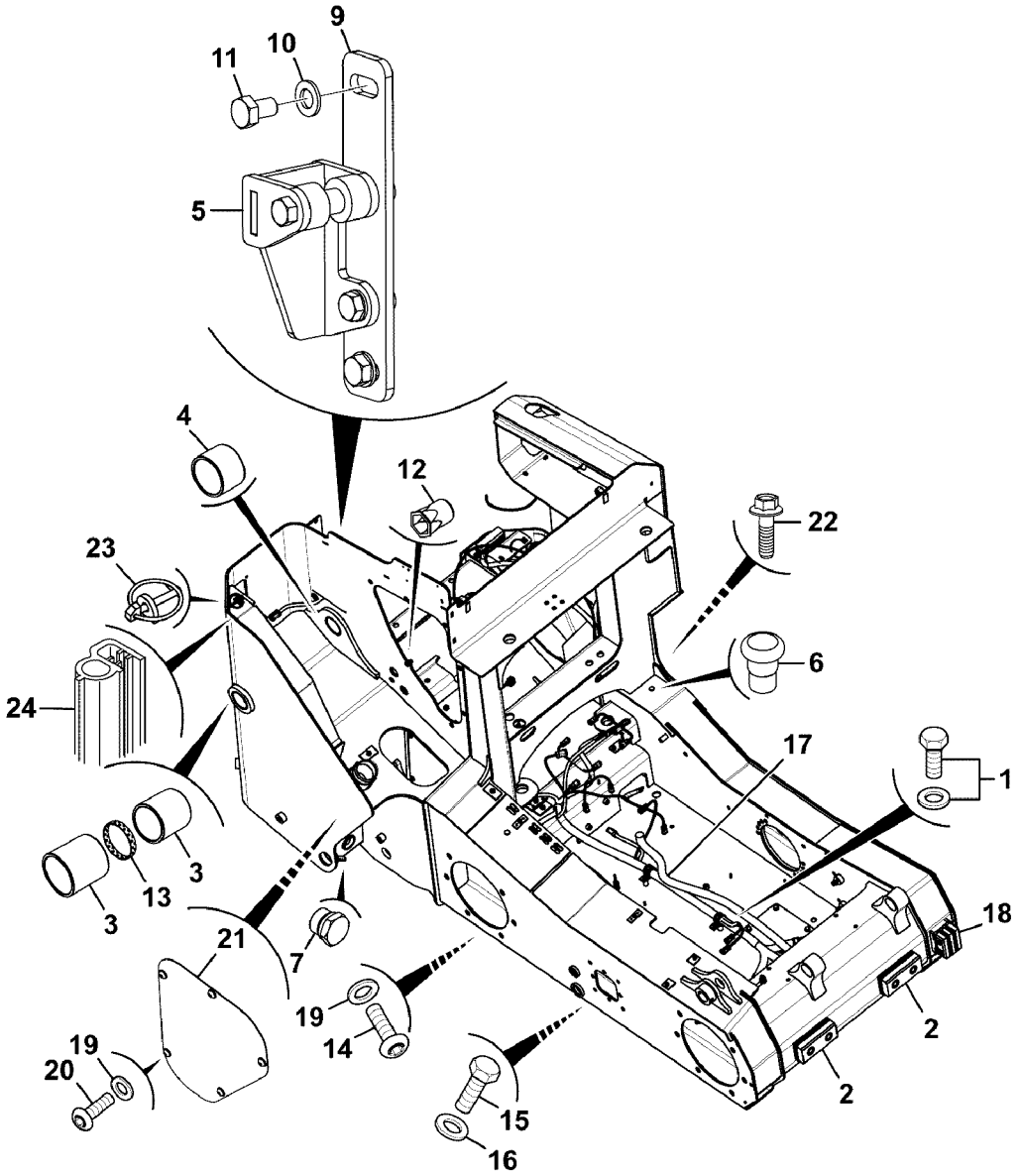

Volvo Construction Equipment
1064205

Fig.	Part No.	Quantity 1	2	3	PS	KIT	Description	Denominación	Denominação	Dénomination	Notes
1		1					Fastening Details				See group 715, Page 413
2		1					Stop	Tope	Parada	Butee	See group 711, Page 399
3	**VOE 17210147**	2					Bushing	Casquillo	Bucha	Bague	
4	**VOE 16213513**	1					Bushing	Casquillo	Bucha	Bague	
5		1					Bracket	Consola	Suporte	Console	See group 821, Page 533
6	**VOE 17205352**	2					Cap	Capuchón	Tampa	Capot	
7	**VOE 16213165**	1					Plug	Tapón	Bujão	Tampon	
9	**VOE 17209796**	1					Plate	Chapa	Chapa	Tôle	
10	**VOE 20764147**	2					Washer	Arandela	Arruela	Rondelle	
11	**VOE 17205074**	2					Set screw	Tornillo tope	Parafuso batente	Vis butée	
12		7			NS		Nut	Tuerca	Porca	Écrou	
13	**VOE 16212217**	1					Spacer	Distanciador	Espaçador	Entretoise	
14	**VOE 17230161**	3					Screw	Tornillo	Parafuso	Vis	
15	**VOE 17205208**	2					Hexagon screw	Tornillo hexagonal	Parafuso sextavado	Vis à tête hexagonale	
16	**VOE 16212137**	2					Plain washer	Arandela plana	Arruela simples	Rondelle plane	
17		1					Cable harness	Manojo cables	Chicote	Faisceau cables	See group 371, Page 313
18		1					Guider	Posicionador	Guia	Guide	See group 711, Page 401
19	**VOE 20460127**	8					Washer	Arandela	Arruela	Rondelle	
20	**VOE 17205273**	5					Bolt	Perno	Parafuso	Boulon	
21		1			NS		Grille	Calandra	Grade	Grille	
22	**VOE 16212101**	2					Bolt	Perno	Parafuso	Boulon	
23	**VOE 17210553**	1					Pin	Pasador	Pino	Goupille	
24		4			NS		Strip	Cinta	Cinta	Bande	

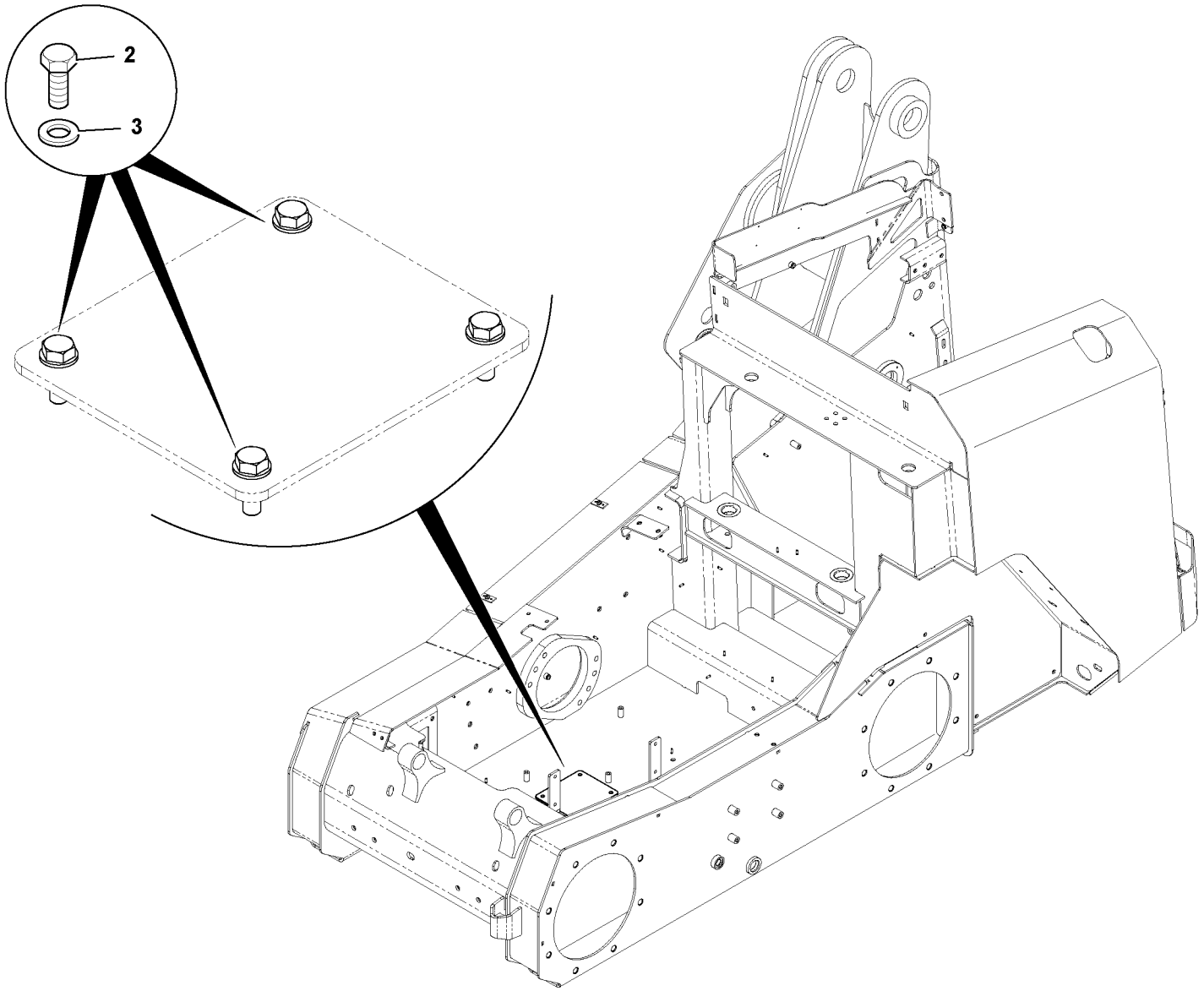

Volvo Construction Equipment
1064052

Fig.	Part No.	Quantity 1	2	3	PS	KIT	Description	Denominación	Denominação	Dénomination	Notes
2	**VOE 16213999**	4					Set screw	Tornillo tope	Parafuso batente	Vis butée	
3	**VOE 20460127**	4					Washer	Arandela	Arruela	Rondelle	

1		**Tôle de protection, AV** **Placa de cobertura, dianteira** **Chapa de protección, delantera** **Cover plate, front**	Catalogue id **20649**	Group **715**
2				
3			Illustr. No **1064052**	Section **300**
4				
5		**MC60C-MC105C, MCT70C-MCT95C**	Issue **PUB 20030904-B**	Page **413**

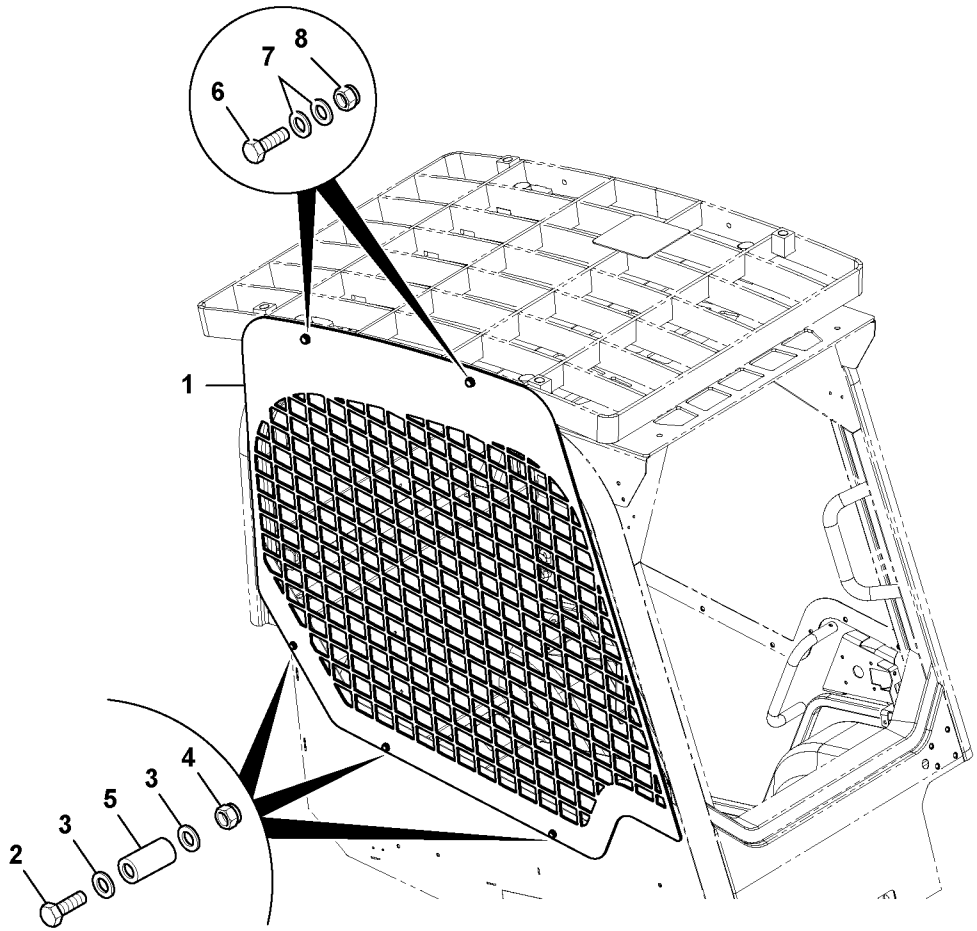

Volvo Construction Equipment
1063996

Fig.	Part No.	Quantity 1	2	3	PS	KIT	Description	Denominación	Denominação	Dénomination	Notes
1	**VOE 17224005**	1					Plate	Chapa	Chapa	Tôle	
2	**VOE 16212085**	3					Bolt	Perno	Parafuso	Boulon	
3	**VOE 20460127**	6					Washer	Arandela	Arruela	Rondelle	
4	**VOE 16212120**	3					Lock nut	Contratuerca	Porca trava	Contre-écrou	
5	**VOE 17210391**	3					Spacer	Distanciador	Espaçador	Entretoise	
6	**VOE 17210338**	2					Bolt	Perno	Parafuso	Boulon	
7	**VOE 16212138**	4			SS		Plain washer	Arandela plana	Arruela simples	Rondelle plane	
8	**VOE 16212125**	2					Nut	Tuerca	Porca	Écrou	

1		**Kit de recouvrement latéral** **Kit de cobertura lateral** **Kit de tapa lateral** **Side cover kit**	Catalogue id **20649**	Group **715**
2			Illustr. No **1063996**	Section **600**
3			Issue **PUB 20030904-B**	Page **415**
4				
5		**MC60C, MC70C, MC95C, MCT70C, MCT85C**		

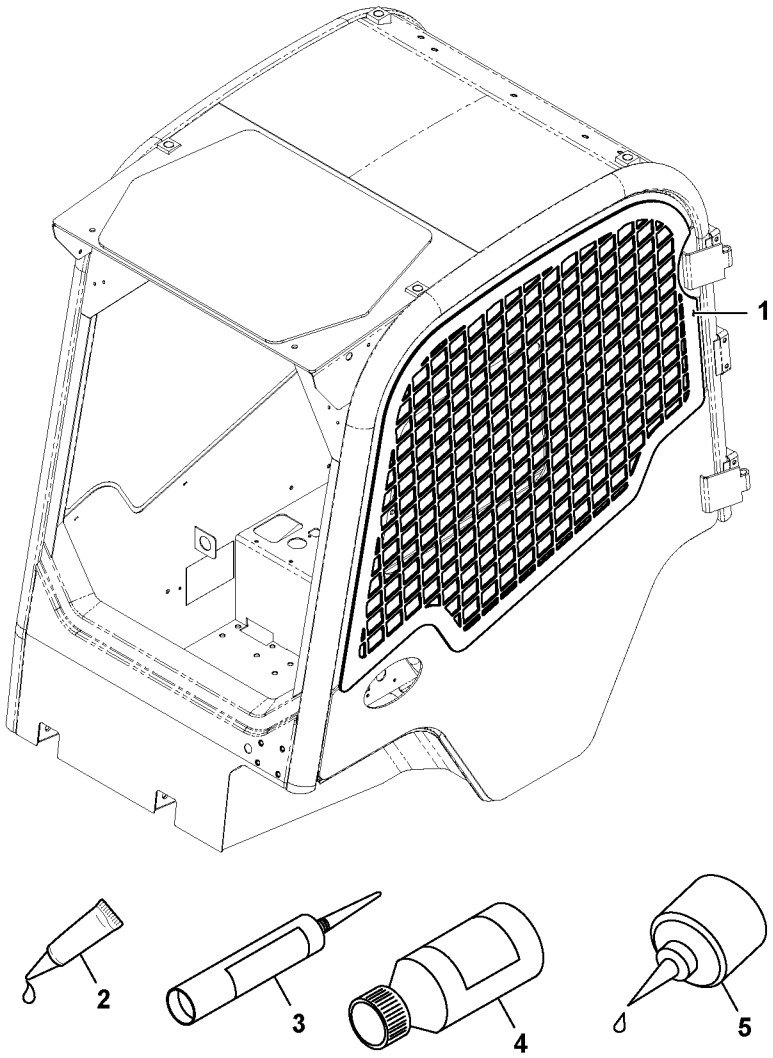
1
2
3
4
5

Fig.	Part No.	Quantity 1	2	3	PS	KIT	Description	Denominación	Denominação	Dénomination	Notes
1		1			NS		Plate	Chapa	Chapa	Tôle	
2		REQ			NS		Adhesive	Adhesivo	Adesivo	Adhesif	
3		REQ			NS		Adhesive	Adhesivo	Adesivo	Adhesif	
4		REQ			NS		Primer	Pintura de apriete		Appret	
5		REQ			NS		Adhesive	Adhesivo	Adesivo	Adhesif	

1		**Grillage de protection pare-brise** **Rejilla de proteccion parabrisas delantero** **Windscreen protection** **MC60C, MC70C, MC95C, MCT70C, MCT85C**	Catalogue id **20649**	Group **715**
2			Illustr. No **1064032**	Section **700**
3			Issue **PUB 20030904-B**	Page **417**
4				
5				

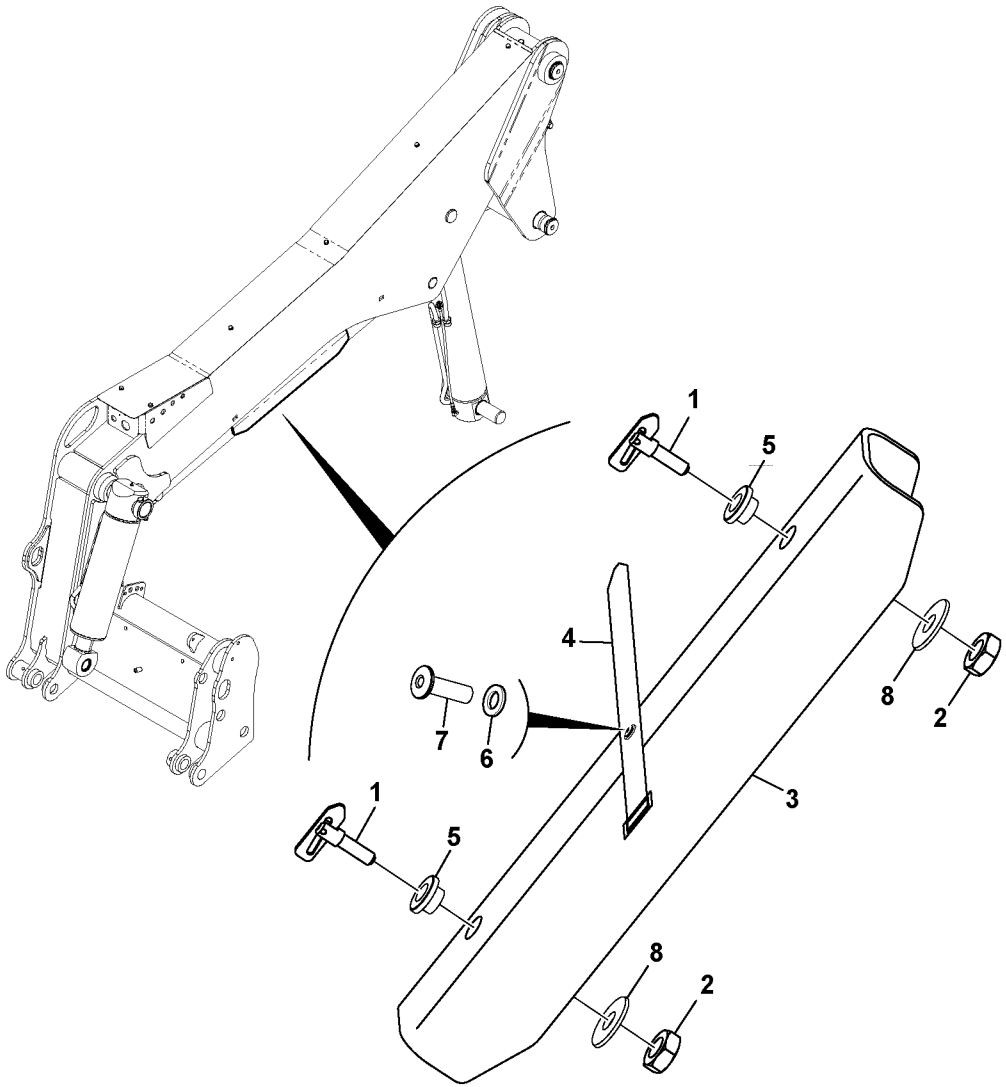

Volvo Construction Equipment
1064114

Fig.	Part No.	Quantity 1	2	3	PS	KIT	Description	Denominación	Denominação	Dénomination	Notes
1	**VOE 16213434**	2					Bonding fastener			Fixation collée	
2	**VOE 16212122**	2					Nut	Tuerca	Porca	Écrou	
3	**VOE 17230322**	1					Strut	Pata	Estrutura	Pied	
4	**VOE 16213263**	1					Strap	Cable	Tira	Sangle	
5	**VOE 16212061**	2					Rubber stop	Tope de goma	Limitador de borracha	Butée caoutchouc	
6	**VOE 16212136**	1					Plain washer	Arandela plana	Arruela simples	Rondelle plane	
7	**VOE 16212394**	1					Pop rivet	Remache ciego	Rebite pop	Rivet pop	
8	**VOE 17205560**	2					Washer	Arandela	Arruela	Rondelle	

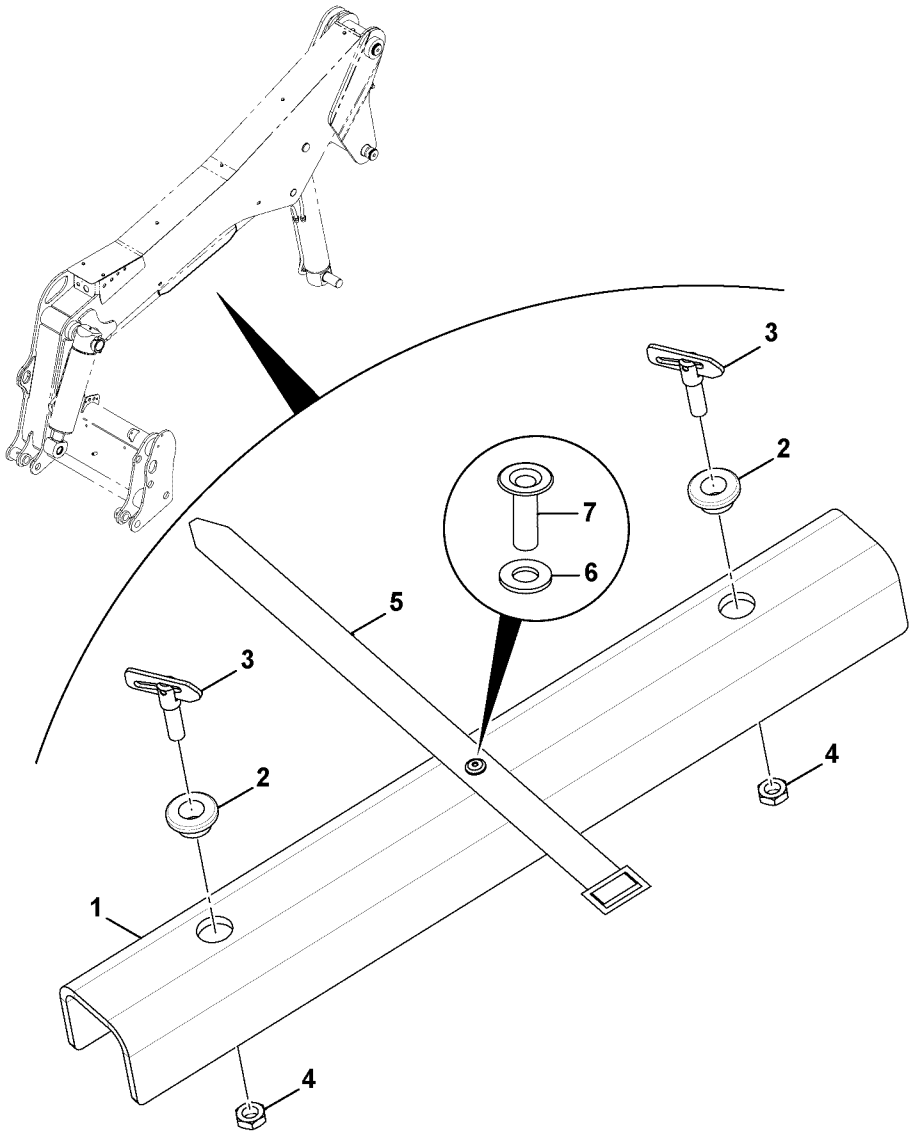

Volvo Construction Equipment
1064153

Fig.	Part No.	Quantity 1	2	3	PS	KIT	Description	Denominación	Denominação	Dénomination	Notes
1		1			NS		Strut	Pata		Pied	
2	**VOE 16212061**	2					Rubber stop	Tope de goma	Limitador de borracha	Butée caoutchouc	
3	**VOE 16213434**	2					Bonding fastener			Fixation collée	
4	**VOE 16212124**	2					Nut	Tuerca	Porca	Écrou	
5	**VOE 16213263**	1					Strap	Cable	Tira	Sangle	
6	**VOE 16212136**	1					Plain washer	Arandela plana	Arruela simples	Rondelle plane	
7	**VOE 16212394**	1					Pop rivet	Remache ciego	Rebite pop	Rivet pop	

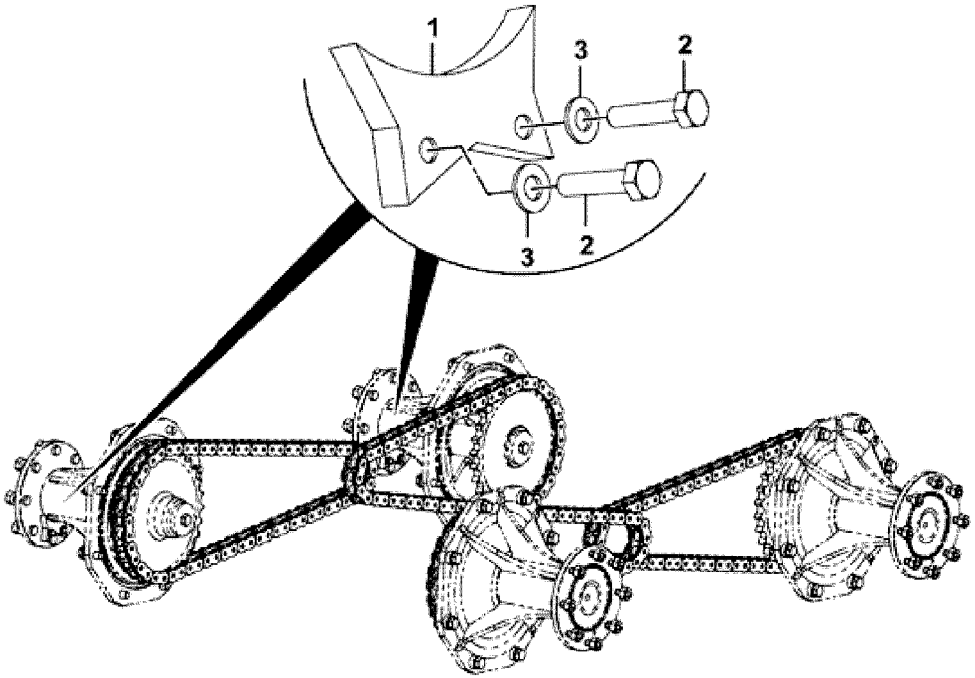
1
3
2
3
2

Fig.	Part No.	Quantity 1	2	3	PS	KIT	Description	Denominación	Denominação	Dénomination	Notes
1	**VOE 17205257**	4					Plate	Chapa	Chapa	Tôle	
2	**VOE 16214001**	8					Set screw	Tornillo tope	Parafuso batente	Vis butée	
3	**VOE 20460127**	8					Washer	Arandela	Arruela	Rondelle	

1		**Tôle de protection** **Placa de cobertura** **Chapa de protección** **Cover plate**	Catalogue id **20649**	Group **715**
2			Illustr. No **1064445**	Section **1100**
3			Issue **PUB 20030904-B**	Page **423**
4				
5		**MC60C, MC70C**		

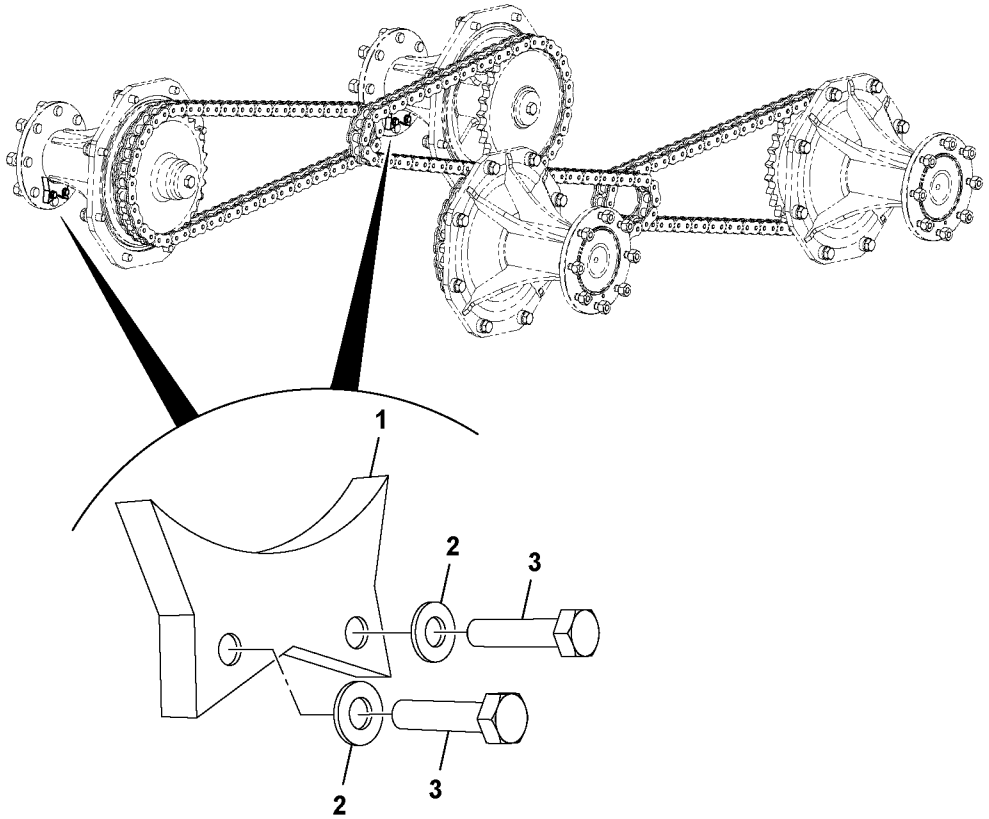
1
2
3
2
3

Fig.	Part No.	Quantity 1	2	3	PS	KIT	Description	Denominación	Denominação	Dénomination	Notes
1		4			NS		Cutter				
2	**VOE 20460127**	8					Washer	Arandela	Arruela	Rondelle	
3	**VOE 16213999**	8					Set screw	Tornillo tope	Parafuso batente	Vis butée	

1		**Tôle de protection** **Placa de cobertura** **Chapa de protección** **Cover plate**	Catalogue id **20649**	Group **715**
2			Illustr. No **1064255**	Section **1150**
3			Issue **PUB 20030904-B**	Page **425**
4				
5		**MC60C-MC105C, MCT70C-MCT95C**		

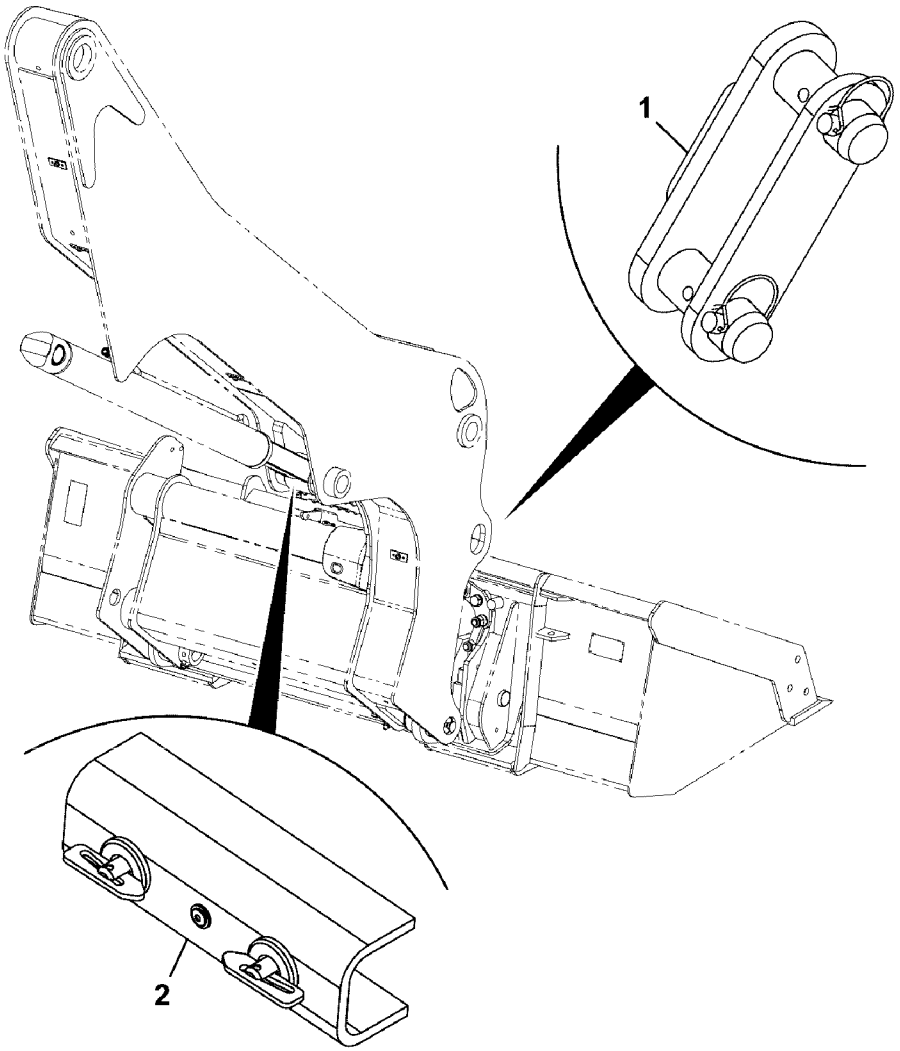
1
2

Fig.	Part No.	Quantity 1	2	3	PS	KIT	Description	Denominación	Denominação	Dénomination	Notes
1		1					Transport Lock	Cierre Transpor		Verro.transport	See group 715, Page 429
2		1					Safety lock	Cierre seguridad		Serrure securite	See group 715, Page 431

1		**Verrouillage de transport** **Bloqueio de transporte** **Cierre de transporte** **Transport lock**	Catalogue id **20649**	Group **715**
2				
3			Illustr. No **1064451**	Section **1500**
4				
5		**MC60C-MC85C, MCT70C**	Issue **PUB 20030904-B**	Page **427**

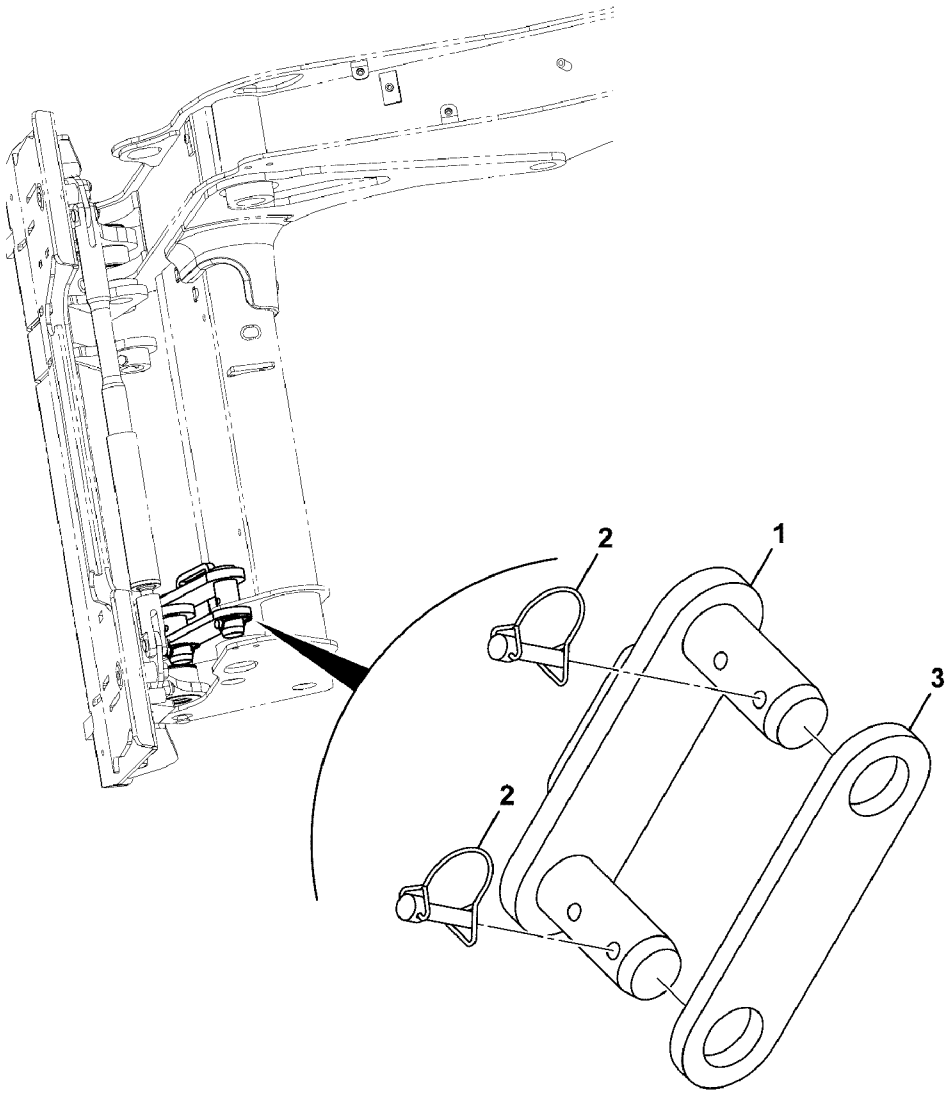
2
1
3
2

Fig.	Part No.	Quantity 1	2	3	PS	KIT	Description	Denominación	Denominação	Dénomination	Notes
1		1			NS		Transport Lock	Cierre Transpor		Verro.transport	
2		2			NS		Pin	Pasador	Pino	Goupille	
3		1			NS		Plate	Placa	Placa	Plaque	

1		**Verrouillage de transport** **Bloqueio de transporte** **Cierre de transporte** **Transport lock**	Catalogue id **20649**	Group **715**
2			Illustr. No **1064452**	Section **1550**
3			Issue **PUB 20030904-B**	Page **429**
4				
5		**MC60C-MC85C, MCT70C**		

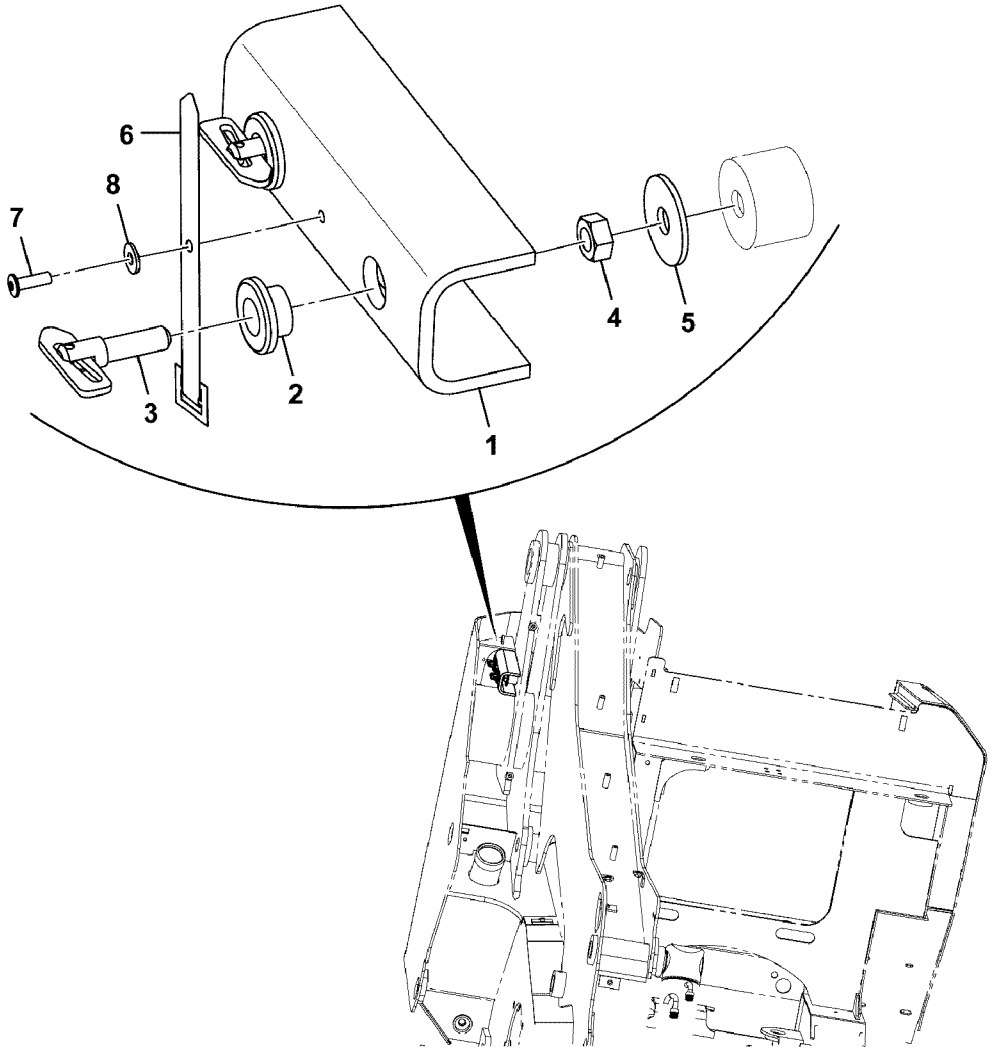
6
8
7
4
5
3
2
1

Fig.	Part No.	Quantity 1	2	3	PS	KIT	Description	Denominación	Denominação	Dénomination	Notes
1		1			NS		Strut	Pata		Pied	
2	**VOE 16212061**	2					Rubber stop	Tope de goma	Limitador de borracha	Butée caoutchouc	
3	**VOE 16213434**	2					Bonding fastener			Fixation collée	
4	**VOE 16212122**	2					Nut	Tuerca	Porca	Écrou	
5		2			NS		Washer	Arandela	Arruela	Rondelle	
6	**VOE 16213263**	1					Strap	Cable	Tira	Sangle	
7	**VOE 16212394**	1					Pop rivet	Remache ciego	Rebite pop	Rivet pop	
8	**VOE 16212136**	1					Plain washer	Arandela plana	Arruela simples	Rondelle plane	

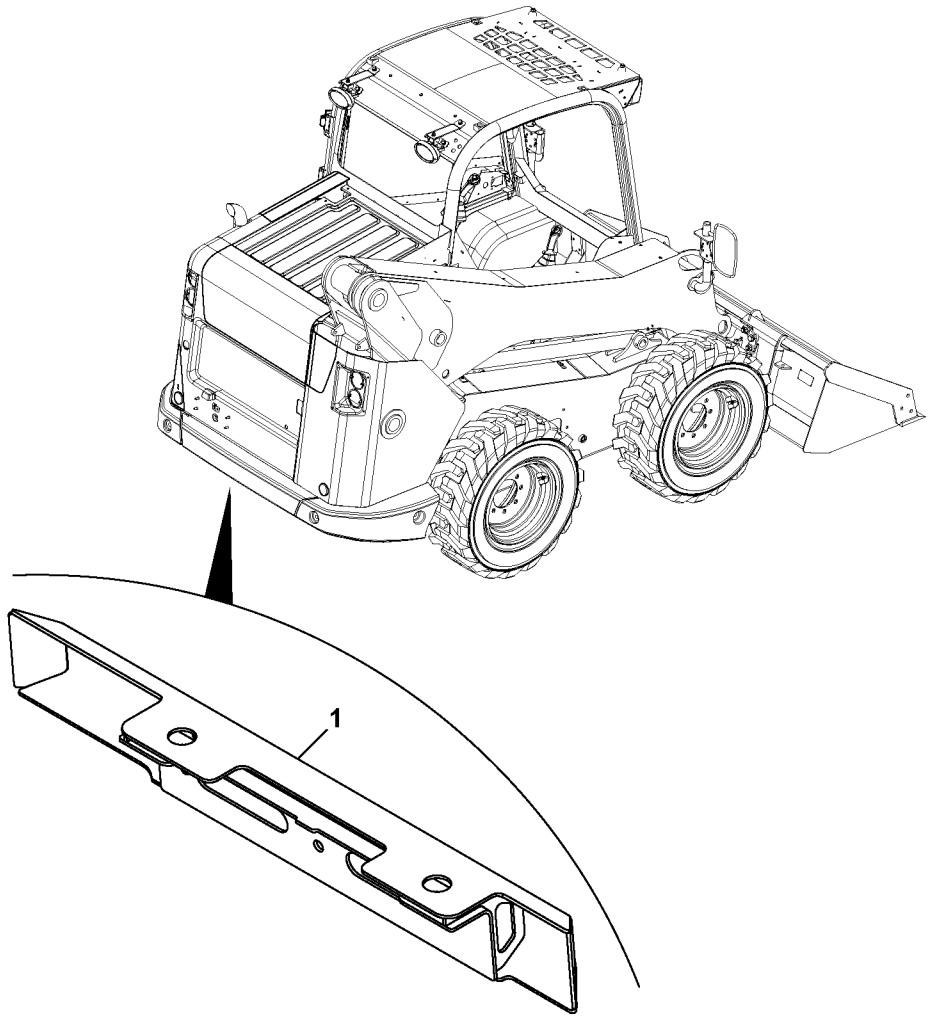
1

Fig.	Part No.	Quantity 1	2	3	PS	KIT	Description	Denominación	Denominação	Dénomination	Notes
1		1	1		NS		Counterweight	Contrapeso	Contrapeso	Masse d'équilibrage	YELL
1				1	NS		Counterweight	Contrapeso	Contrapeso	Contrepoids	BL

1	**MC60C-MC85C**
2	**MCT70C, MCT85C**
3	**MC70C**
4	
5	

Contrepoids
Contrapesos
Contrapesos
Counterweights

Catalogue id **20649**	Group **716**
Illustr. No **1064243**	Section **100**
Issue **PUB 20030904-B**	Page **433**

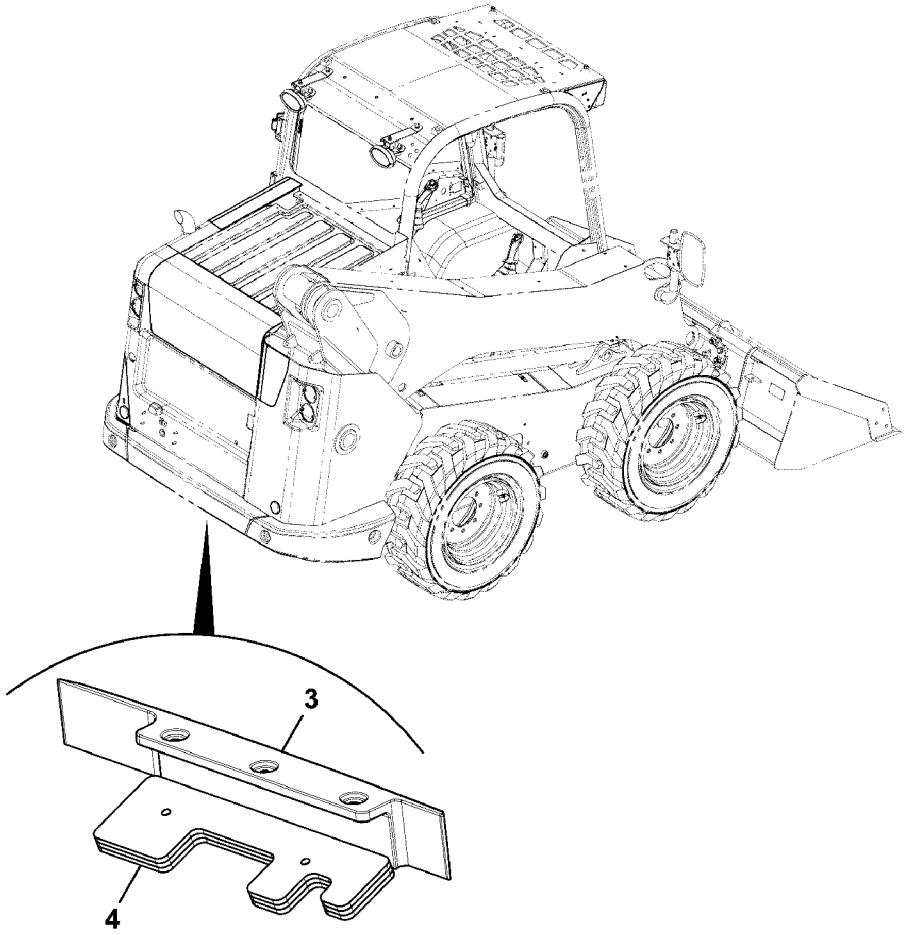
3
4

Fig.	Part No.	Quantity 1	2	3	PS	KIT	Description	Denominación	Denominação	Dénomination	Notes
3		1			NS		Counterweight	Contrapeso	Contrapeso	Masse d'équilibrage	
4		3			NS		Counterweight	Contrapeso	Contrapeso	Contrepoids	

1		**Contrepoids** **Contrapesos** **Contrapesos** **Counterweights**	Catalogue id **20649**	Group **716**
2				
3			Illustr. No **1064181**	Section **150**
4				
5		**MC105C, MCT95C**	Issue **PUB 20030904-B**	Page **435**

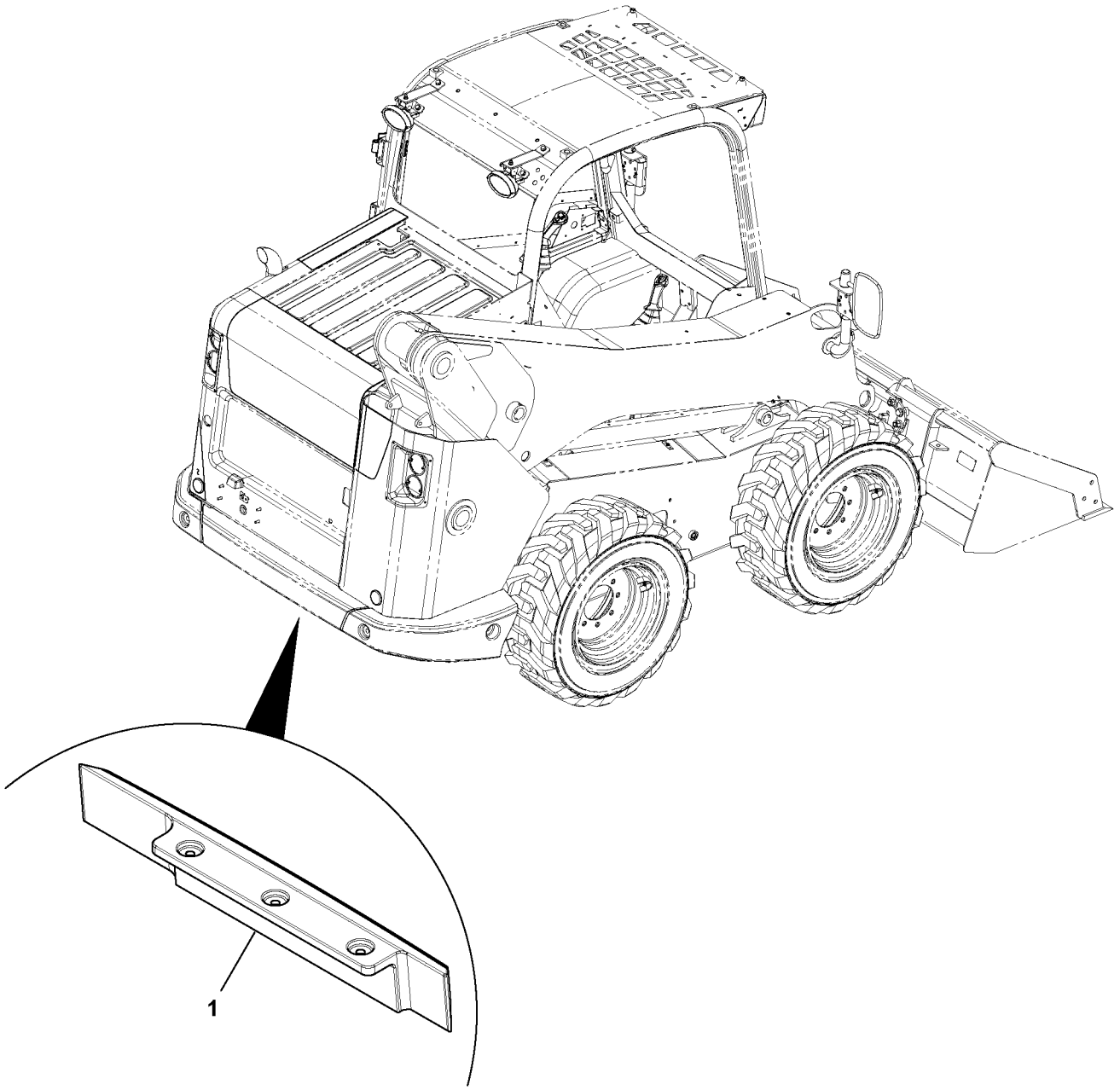

Volvo Construction Equipment
1064152

Fig.	Part No.	Quantity 1	2	3	PS	KIT	Description	Denominación	Denominação	Dénomination	Notes
1		1			NS		Counterweight.....	Contrapeso.....	Contrapeso.....	Masse d'équilibrage.....	

1		**Contrepoids** **Contrapesos** **Contrapesos** **Counterweights**	Catalogue id **20649**	Group **716**
2				
3			Illustr. No **1064152**	Section **200**
4				
5		**MCT95C**	Issue **PUB 20030904-B**	Page **437**

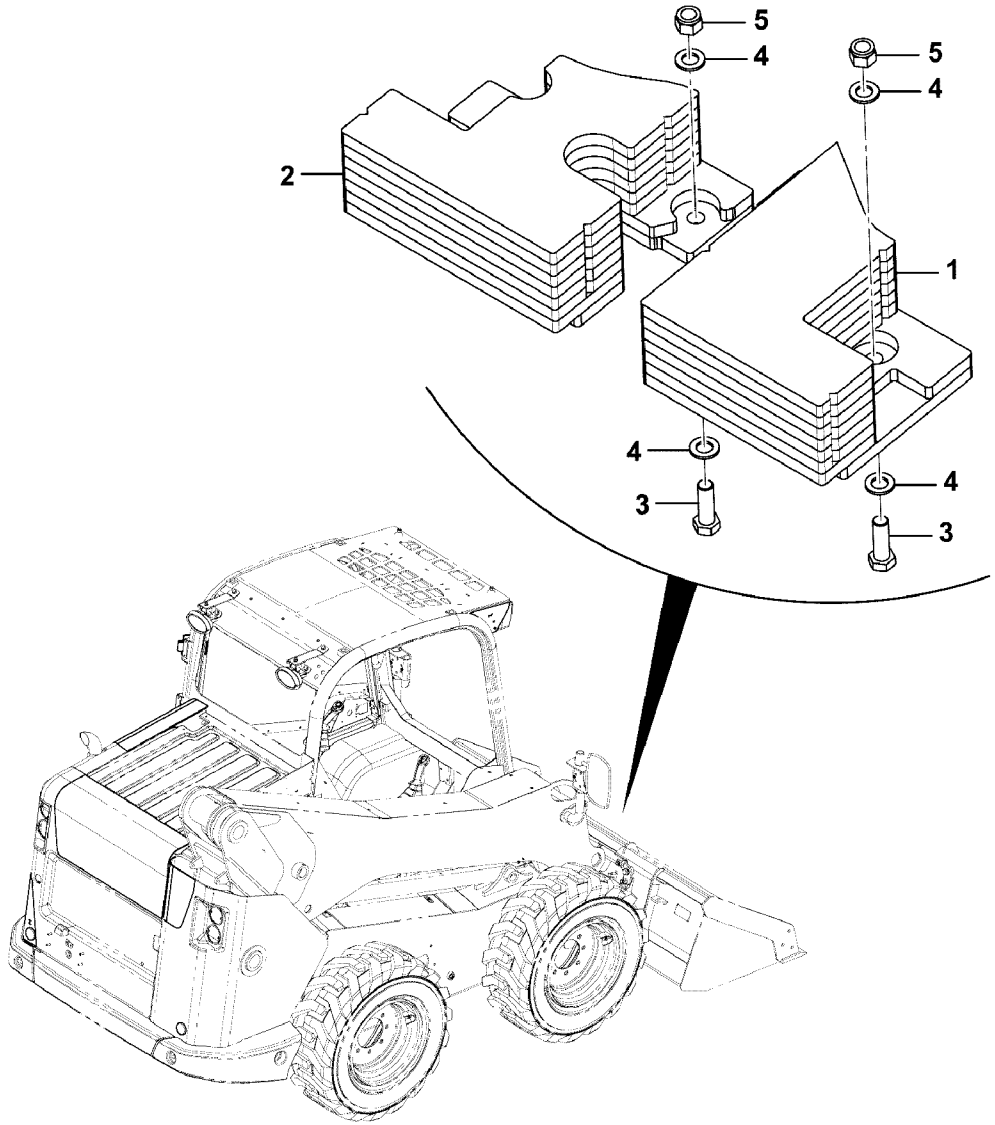
5
4
5
4
2
1
4
4
3
3

Fig.	Part No.	Quantity 1	2	3	PS	KIT	Description	Denominación	Denominação	Dénomination	Notes
1		1			NS		Counterweight	Contrapeso	Contrapeso	Contrepoids	
2		1			NS		Counterweight	Contrapeso	Contrapeso	Contrepoids	
3	**VOE 17205028**	4					Bolt	Perno	Parafuso	Boulon	
4	**VOE 13955900**	8					Washer	Arandela	Arruela	Rondelle	
5	**VOE 16212129**	4					Nut	Tuerca	Porca	Écrou	

1		**Contrepoids** **Contrapesos** **Contrapesos** **Counterweights**	Catalogue id **20649**	Group **716**
2			Illustr. No **1064463**	Section **250**
3			Issue **PUB 20030904-B**	Page **439**
4				
5		**MC95C**		

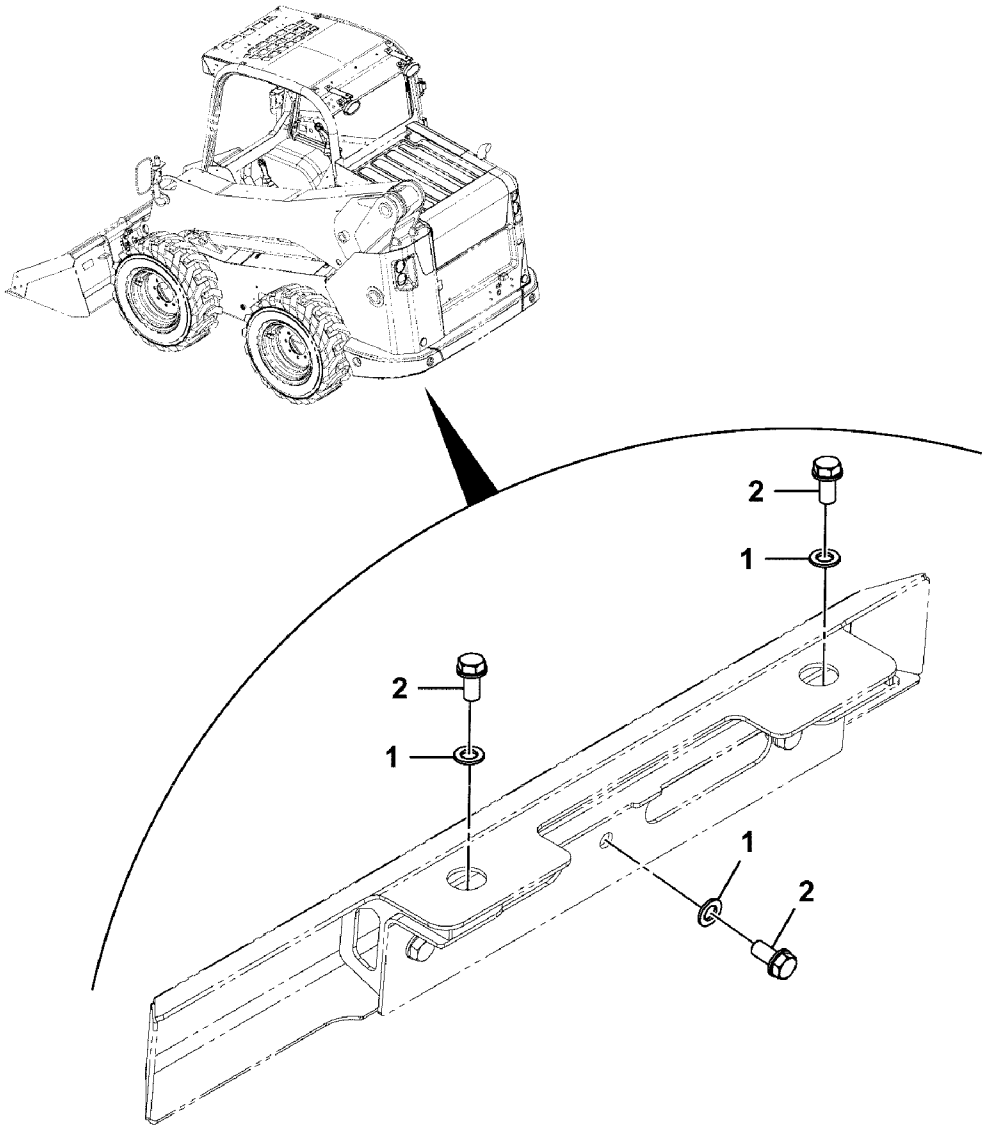
2
1
2
1
1
2

Fig.	Part No.	Quantity 1	2	3	PS	KIT	Description	Denominación	Denominação	Dénomination	Notes
1	**VOE 13955900**	5					Washer	Arandela	Arruela	Rondelle	
2	**VOE 16212080**	5					Set screw	Tornillo tope	Parafuso batente	Vis butée	

1		**Contrepoids** **Contrapesos** **Contrapesos** **Counterweights**	Catalogue id **20649**	Group **716**
2				
3			Illustr. No **1064448**	Section **300**
4				
5		**MC60C-MC85C, MCT70C, MCT85C**	Issue **PUB 20030904-B**	Page **441**

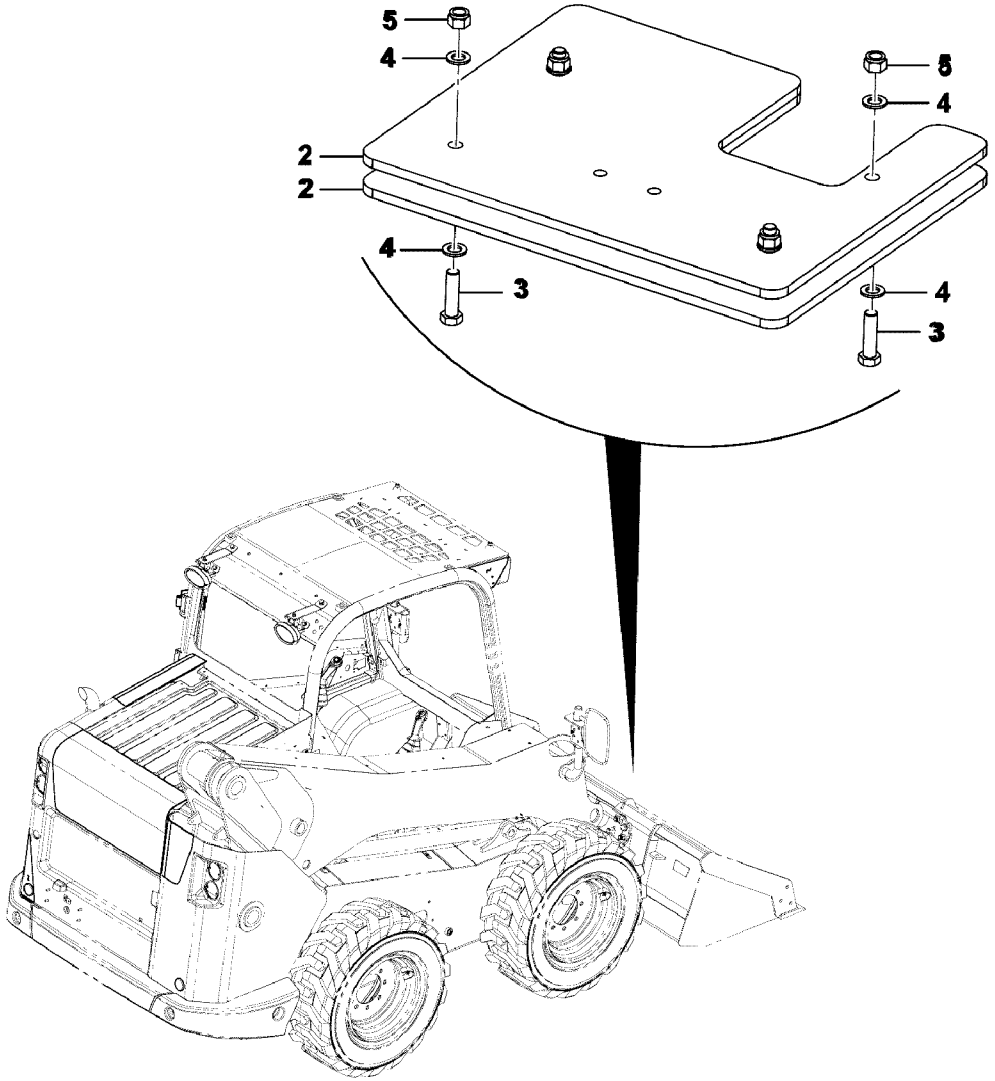
5
4
2
2
4
3
5
4
4
3

Fig.	Part No.	Quantity 1	2	3	PS	KIT	Description	Denominación	Denominação	Dénomination	Notes
2		2			NS		Counterweight	Contrapeso	Contrapeso	Contrepoids	
3	**VOE 16212311**	4					Bolt	Perno	Parafuso	Boulon	
4	**VOE 13955900**	8					Washer	Arandela	Arruela	Rondelle	
5	**VOE 16212129**	4					Nut	Tuerca	Porca	Écrou	

1		**Contrepoids** **Contrapesos** **Contrapesos** **Counterweights**	Catalogue id **20649**	Group **716**
2			Illustr. No **1064465**	Section **350**
3			Issue **PUB 20030904-B**	Page **443**
4				
5		**MC85C**		

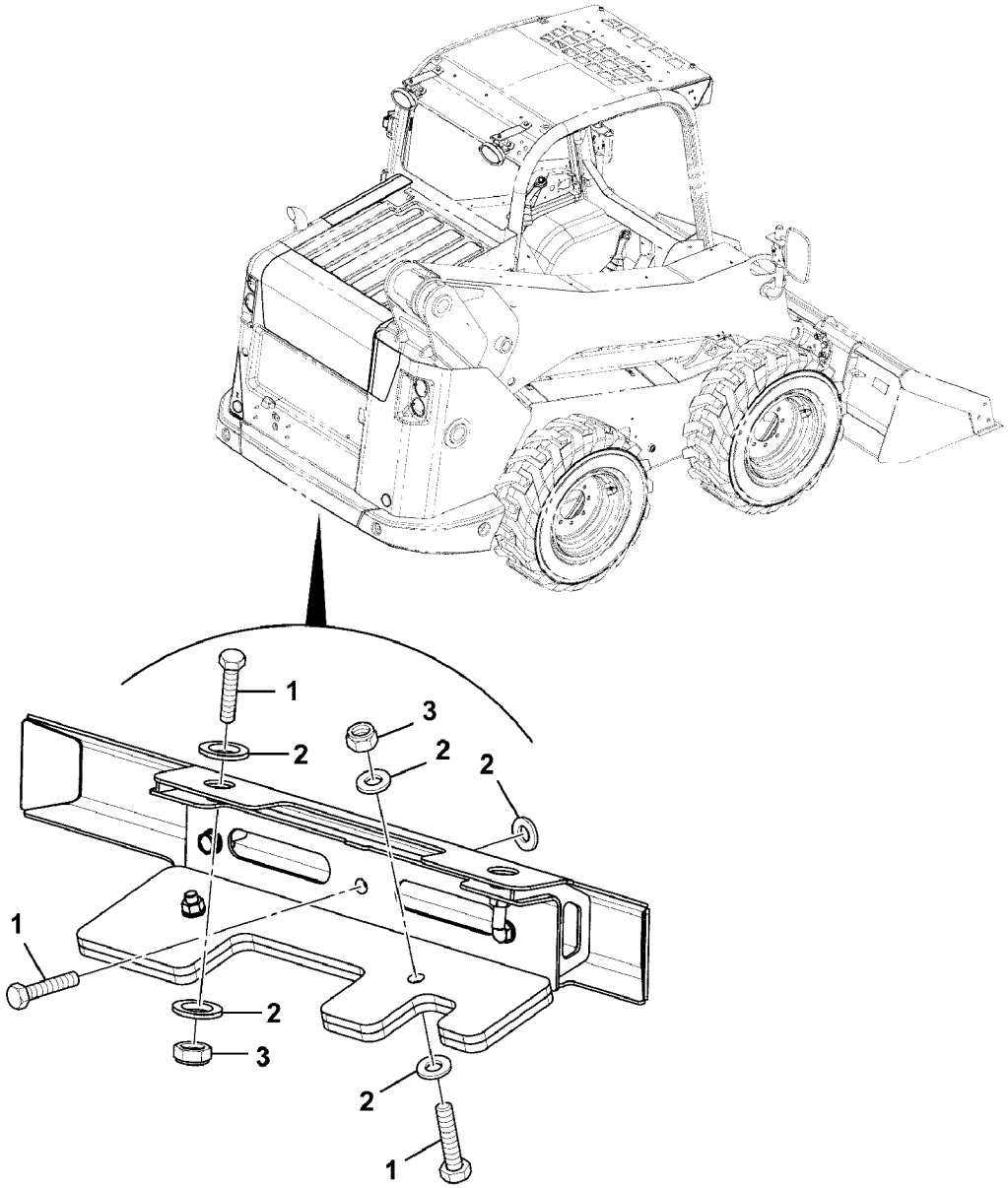

Volvo Construction Equipment
1064466

Fig.	Part No.	Quantity 1	2	3	PS	KIT	Description	Denominación	Denominação	Dénomination	Notes
1	**VOE 16212311**	7					Bolt	Perno	Parafuso	Boulon	
2	**VOE 13955900**	11					Washer	Arandela	Arruela	Rondelle	
3	**VOE 16212127**	4					Nut	Tuerca	Porca	Écrou	

1		**Contrepoids** **Contrapesos** **Contrapesos** **Counterweights**	Catalogue id **20649**	Group **716**
2			Illustr. No **1064466**	Section **400**
3			Issue **PUB 20030904-B**	Page **445**
4				
5		**MC95C**		

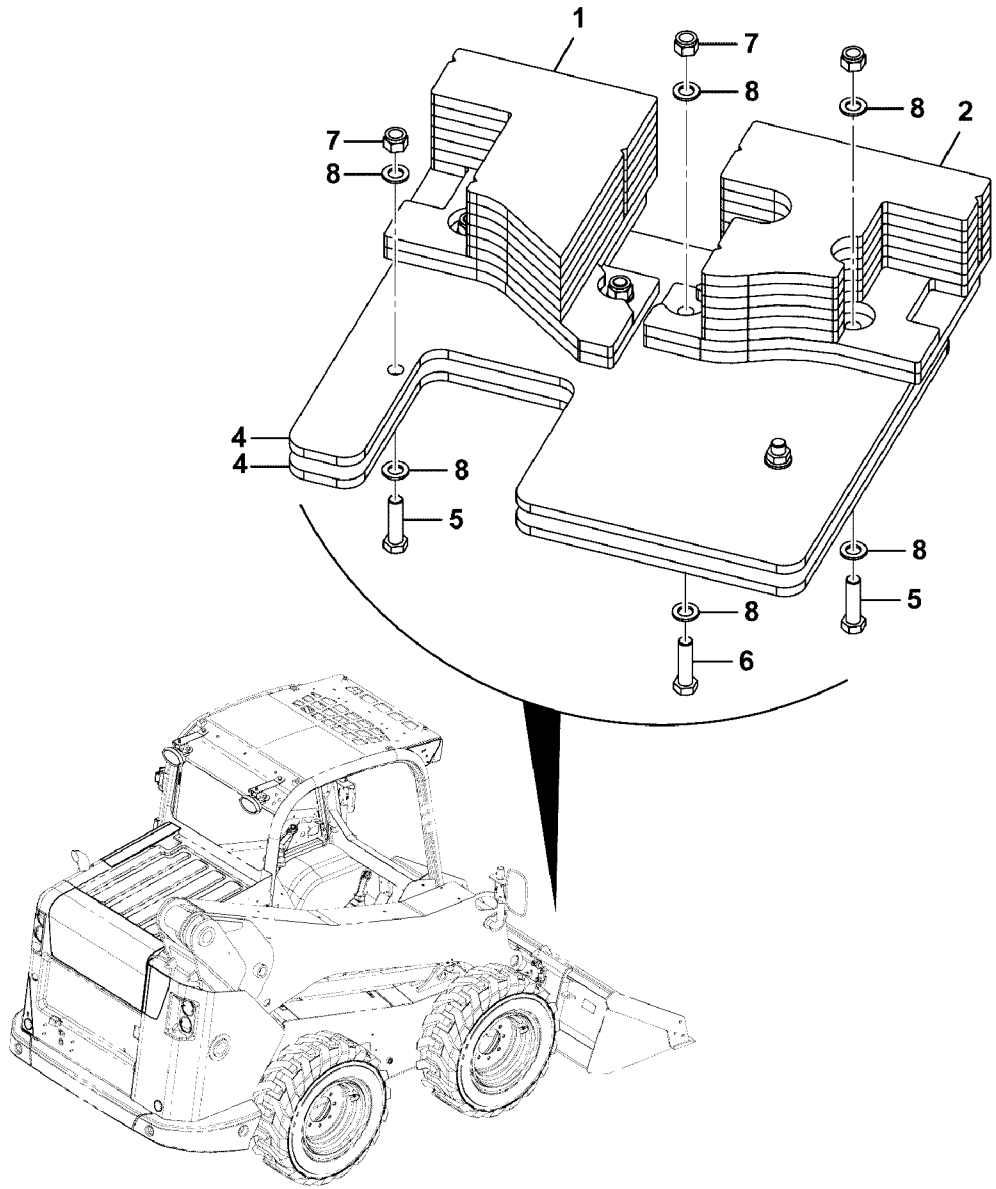
1
7
8
8
2
7
8
4
4
8
5
8
5
8
6

Fig.	Part No.	Quantity 1	2	3	PS	KIT	Description	Denominación	Denominação	Dénomination	Notes
1		1			NS		Counterweight	Contrapeso	Contrapeso	Contrepoids	
2		1			NS		Counterweight	Contrapeso	Contrapeso	Contrepoids	
4		2			NS		Counterweight	Contrapeso	Contrapeso	Contrepoids	
5	**VOE 16212311**	2					Bolt	Perno	Parafuso	Boulon	
6		4			NS		Bolt	Perno	Parafuso	Boulon	
7	**VOE 16212129**	6					Nut	Tuerca	Porca	Écrou	
8	**VOE 13955900**	12					Washer	Arandela	Arruela	Rondelle	

1		**Contrepoids** **Contrapesos** **Contrapesos** **Counterweights**	Catalogue id **20649**	Group **716**
2			Illustr. No **1064464**	Section **450**
3			Issue **PUB 20030904-B**	Page **447**
4				
5		**MC105C**		

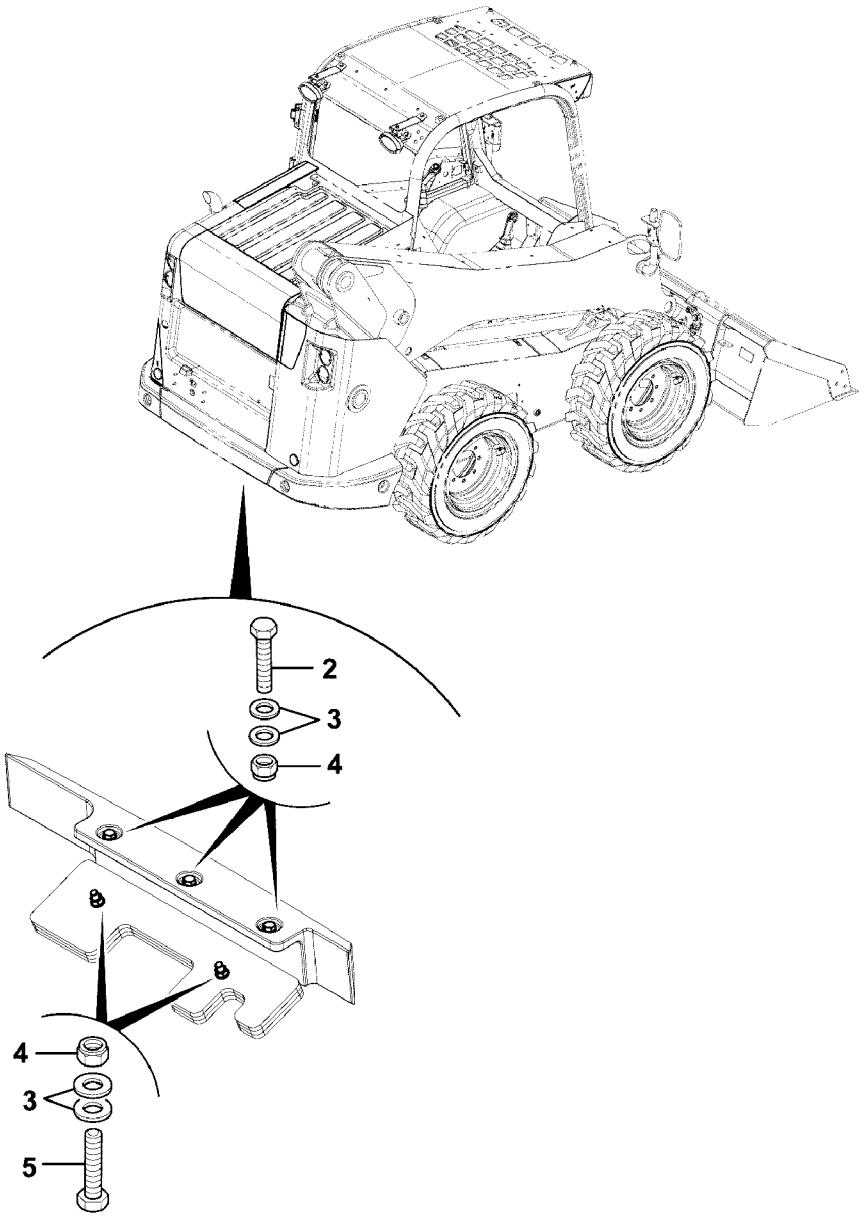
2
3
4
4
3
5

Fig.	Part No.	Quantity 1	2	3	PS	KIT	Description	Denominación	Denominação	Dénomination	Notes
2	**VOE 16212308**	3					Bolt	Perno	Parafuso	Boulon	
3	**VOE 13955900**	10					Washer	Arandela	Arruela	Rondelle	
4	**VOE 16212127**	5					Nut	Tuerca	Porca	Écrou	
5	**VOE 16212312**	2					Bolt	Perno	Parafuso	Boulon	

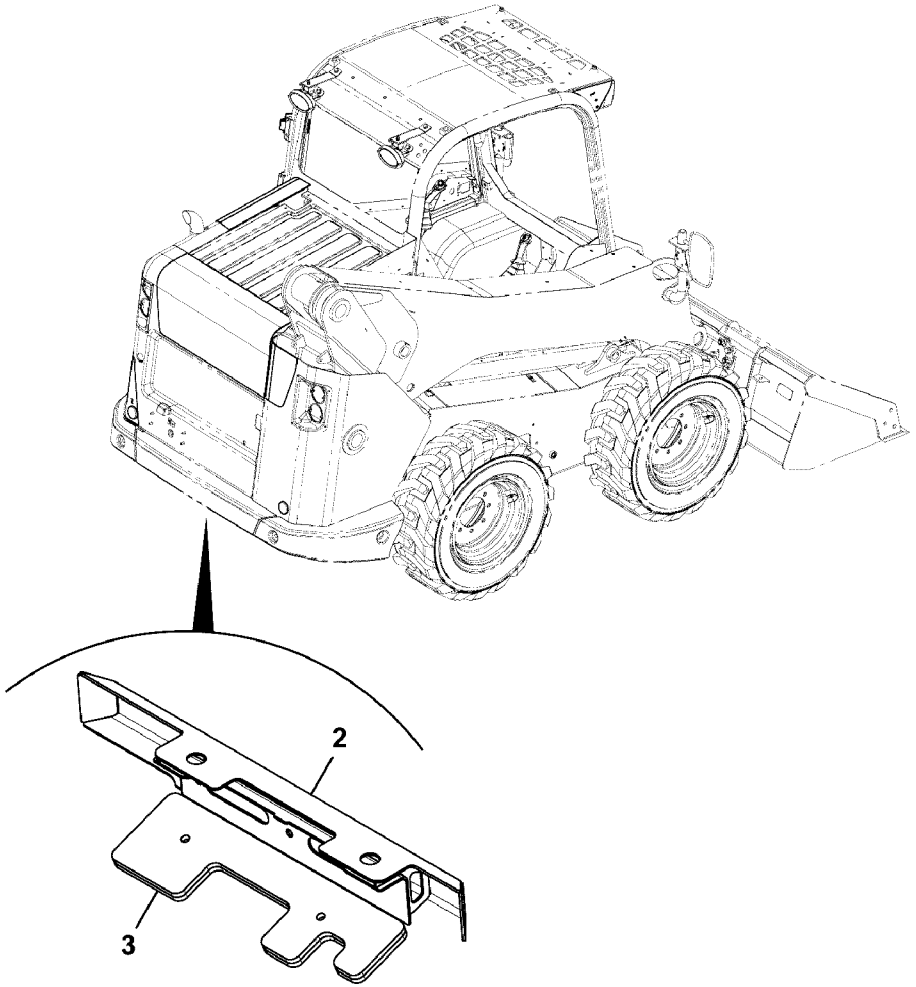
2
3

Fig.	Part No.	Quantity 1	2	3	PS	KIT	Description	Denominación	Denominação	Dénomination	Notes
2		1			NS		Counterweight	Contrapeso	Contrapeso	Masse d'équilibrage	
3		2			NS		Counterweight	Contrapeso	Contrapeso	Contrepoids	

1		**Contrepoids** **Contrapesos** **Contrapesos** **Counterweights**	Catalogue id **20649**	Group **716**
2				
3			Illustr. No **1064469**	Section **550**
4				
5		**MC95C**	Issue **PUB 20030904-B**	Page **451**

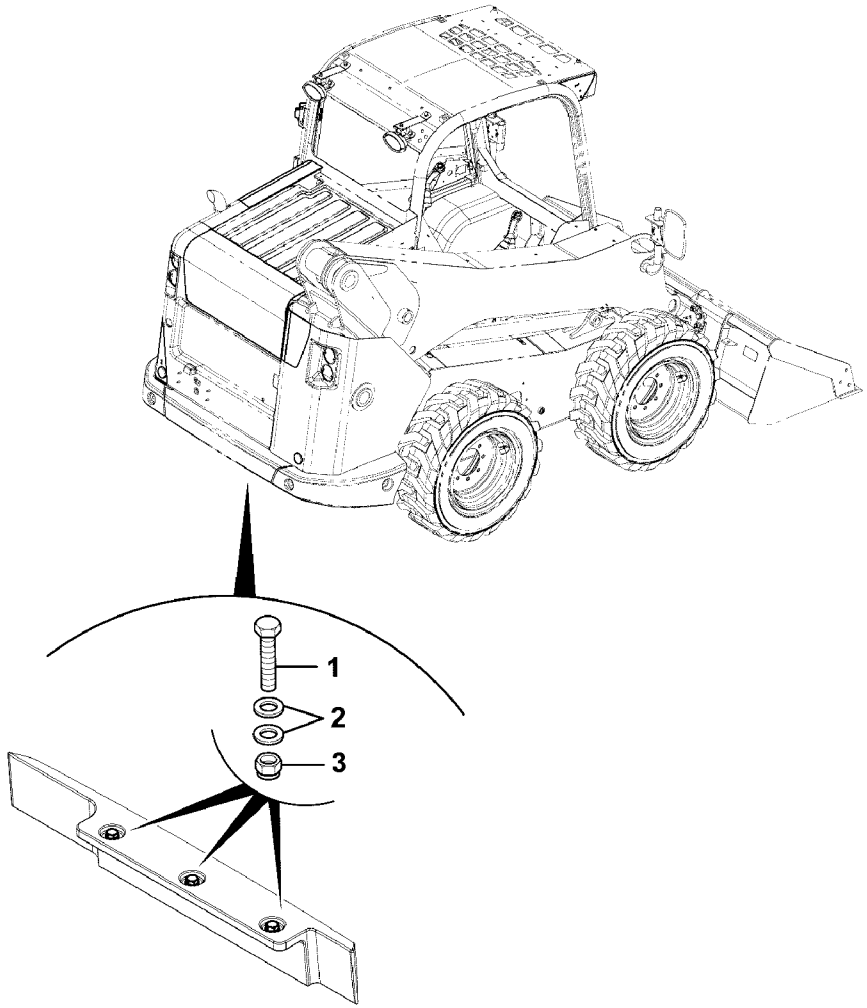
1
2
3

Fig.	Part No.	Quantity 1	2	3	PS	KIT	Description	Denominación	Denominação	Dénomination	Notes
1	**VOE 16212308**	3					Bolt	Perno	Parafuso	Boulon	
2	**VOE 13955900**	6					Washer	Arandela	Arruela	Rondelle	
3	**VOE 16212127**	3					Nut	Tuerca	Porca	Écrou	

1		**Contrepoids** **Contrapesos** **Contrapesos** **Counterweights**	Catalogue id **20649**	Group **716**
2			Illustr. No **1064470**	Section **600**
3			Issue **PUB 20030904-B**	Page **453**
4				
5		**MC105C, MCT95C**		

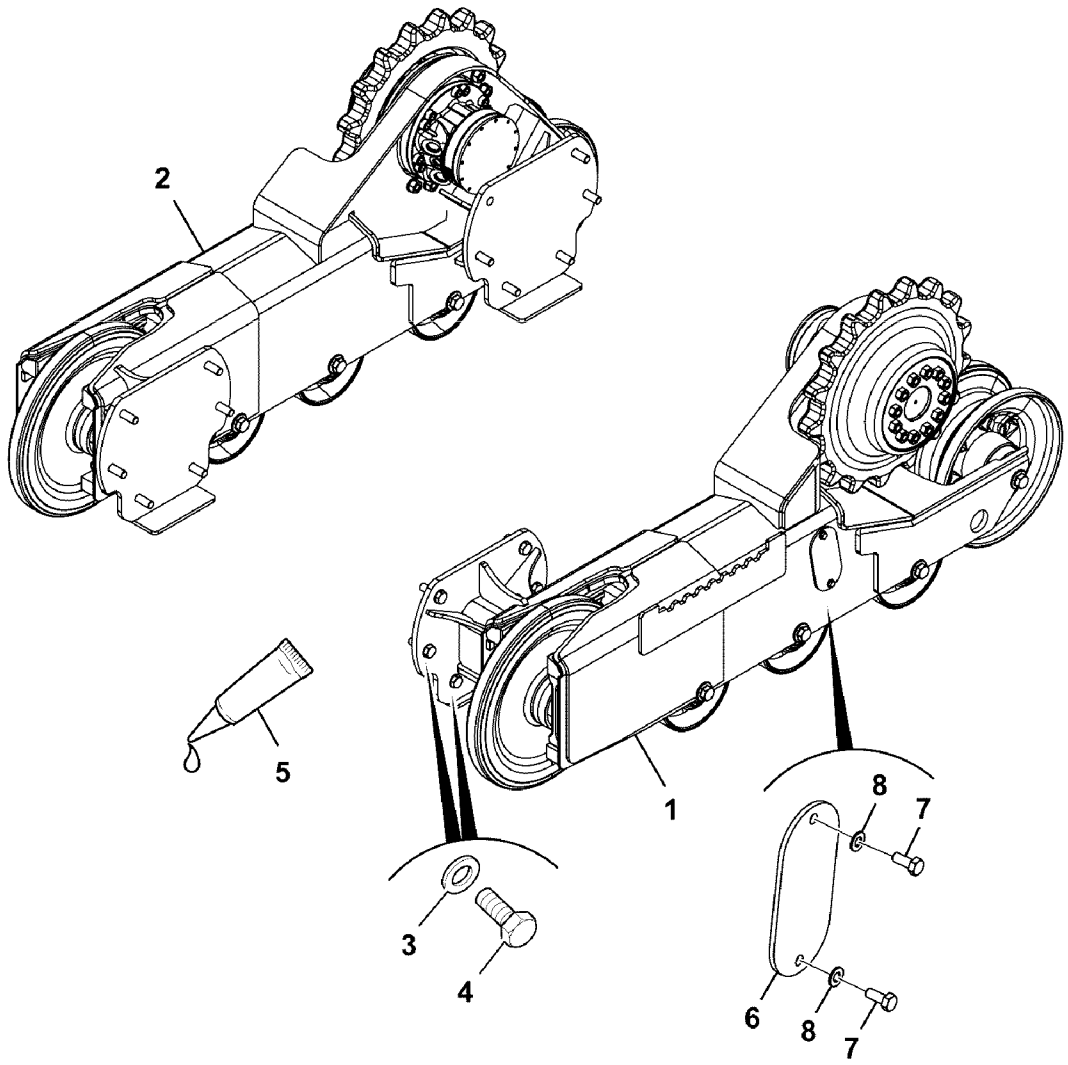

Volvo Construction Equipment
1064136

Fig.	Part No.	Quantity 1	2	3	PS	KIT	Description	Denominación	Denominação	Dénomination	Notes
1		1					Frame	Bastidor	Chassi	Chassis	LH See group 718, Page 457
2		1					Frame	Bastidor	Chassi	Chassis	RH See group 718, Page 459
3	**VOE 16212307**	22					Washer	Arandela	Arruela	Rondelle	
4	**VOE 17205028**	22					Bolt	Perno	Parafuso	Boulon	
5		REQ			NS		Sealant	Product Estanq		Prod.etancheite	
6		2			NS		Plate	Chapa	Chapa	Tôle	
7	**VOE 16213998**	4					Set screw	Tornillo tope	Parafuso batente	Vis butée	
8	**VOE 20460127**	4					Washer	Arandela	Arruela	Rondelle	

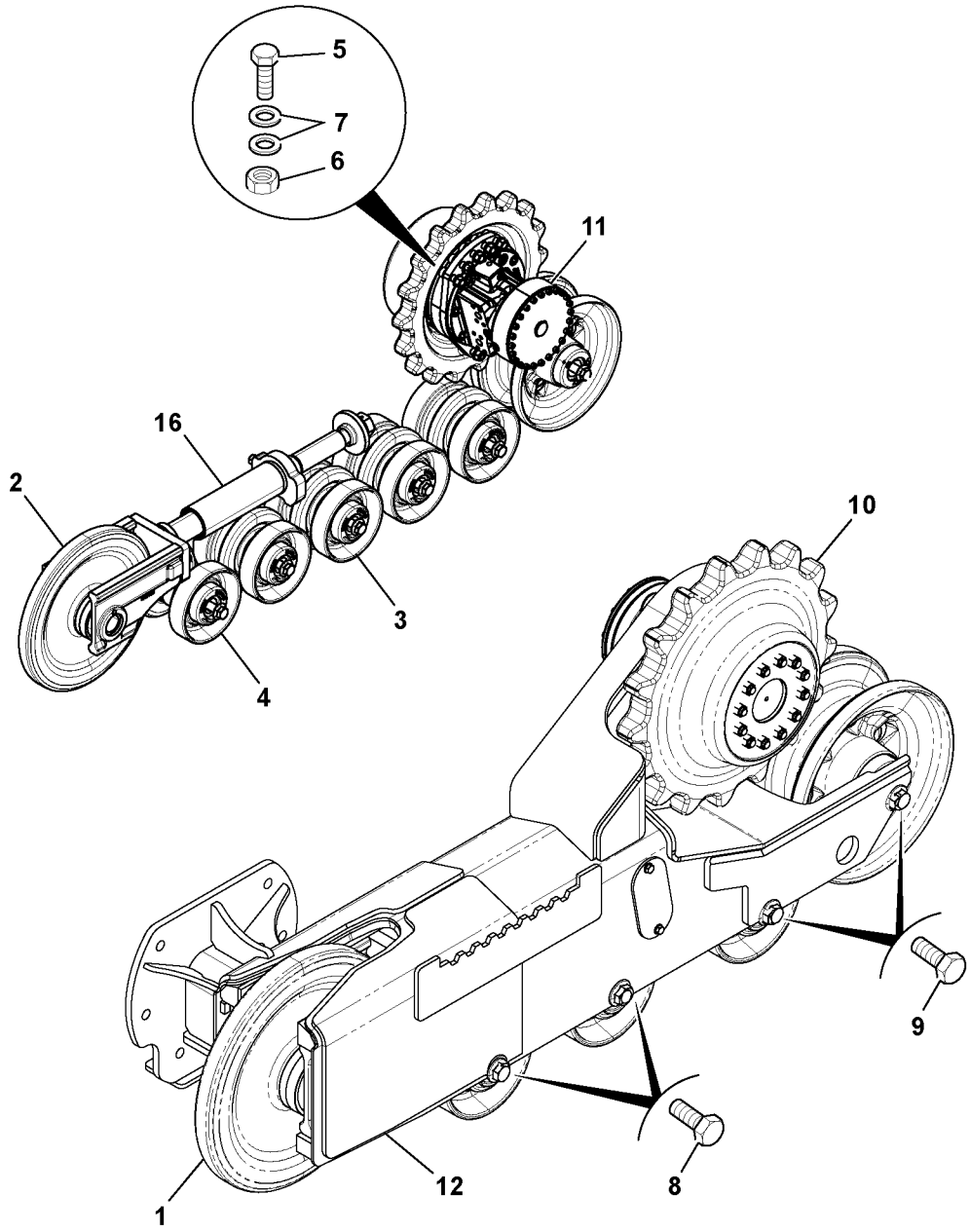

Volvo Construction Equipment
1064137

Fig.	Part No.	Quantity 1	2	3	PS	KIT	Description	Denominación	Denominação	Dénomination	Notes
1	**VOE 16213439**	1					Idler	Pinon guia		Roue av	LH See group 775, Page 485
2	**VOE 16213436**	1					Idler	Pinon guia		Roue av	See group 775, Page 487
3	**VOE 16213288**	2					Roller	Rodillo	Rolete	Galet	See group 775, Page 489
4	**VOE 16213289**	1					Roller	Rodillo	Rolete	Galet	See group 775, Page 491
5		8			NS		Bolt	Perno	Parafuso	Boulon	
6	**VOE 16212229**	8					Nut	Tuerca	Porca	Écrou	
7	**VOE 17205566**	16					Washer	Arandela	Arruela	Rondelle	
8	**VOE 16212230**	6					Bolt	Perno	Parafuso	Boulon	
9	**VOE 16212231**	2					Bolt	Perno	Parafuso	Boulon	
10	**VOE 17230314**	1					Sprocket	Engranaje de cadena	Dente de roda	Pignon chaîne	
11	**VOE 17230116**	1					Hydraulic motor	Motor hidráulico	Motor hidráulico	Moteur hydraulique	See group 441, Page 367
12		1			NS		Frame	Bastidor	Quadro	Cadre châssis	
16	**VOE 17230416**	1					Tensioner	Barra de tensión	Barra tensora	Bride de serrage	

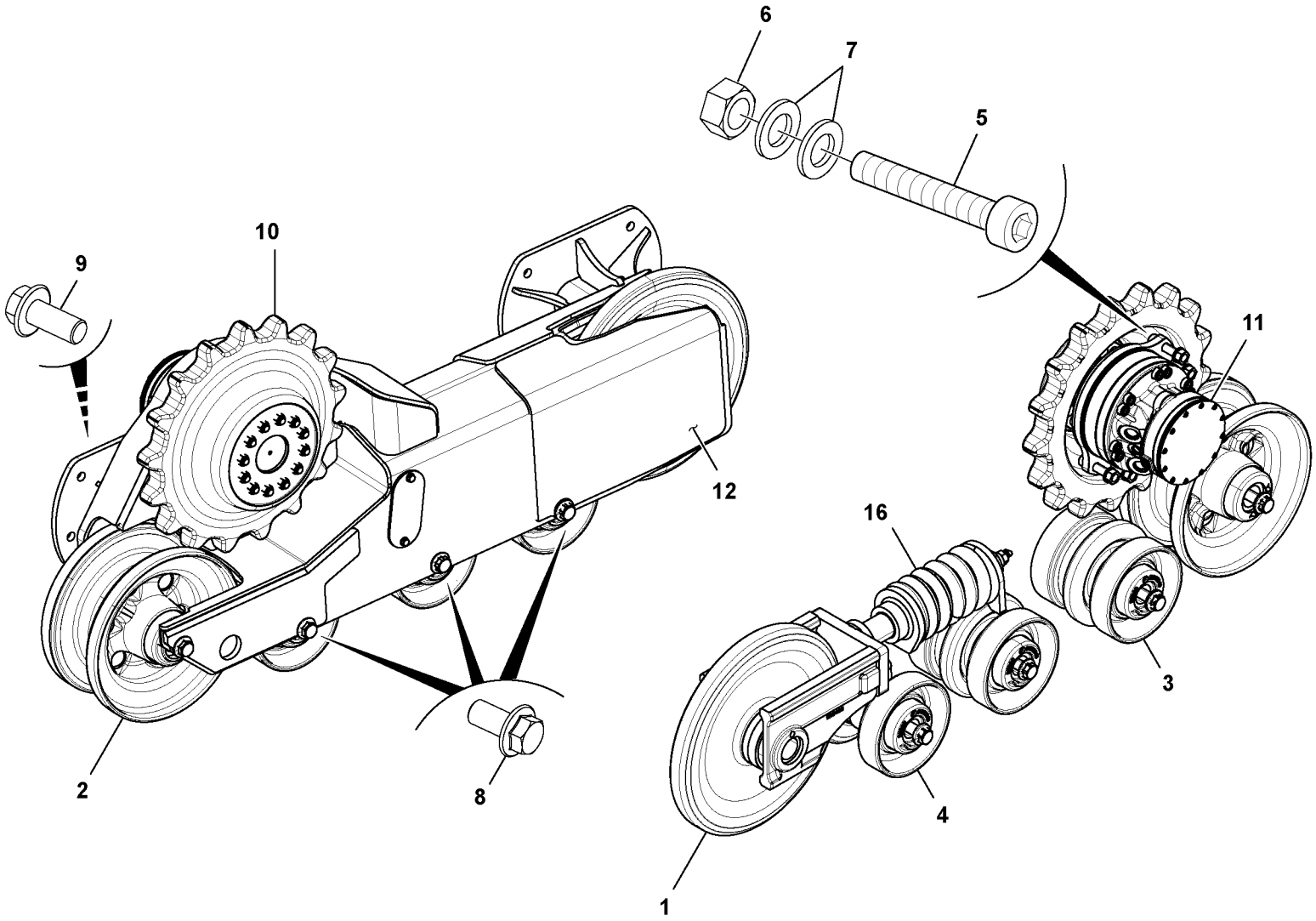

Volvo Construction Equipment
1064138

Fig.	Part No.	Quantity 1	2	3	PS	KIT	Description	Denominación	Denominação	Dénomination	Notes
1	**VOE 16213439**	1					Idler	Pinon guia		Roue av	RH See group 775, Page 485
2	**VOE 16213436**	1					Idler	Pinon guia		Roue av	See group 775, Page 487
3	**VOE 16213288**	2					Roller	Rodillo	Rolete	Galet	See group 775, Page 489
4	**VOE 16213289**	1					Roller	Rodillo	Rolete	Galet	See group 775, Page 491
5		8			NS		Bolt	Perno	Parafuso	Boulon	
6	**VOE 16212229**	8					Nut	Tuerca	Porca	Écrou	
7	**VOE 17205566**	16					Washer	Arandela	Arruela	Rondelle	
8	**VOE 16212230**	6					Bolt	Perno	Parafuso	Boulon	
9	**VOE 16212231**	2					Bolt	Perno	Parafuso	Boulon	
10	**VOE 17230314**	1					Sprocket	Engranaje de cadena	Dente de roda	Pignon chaîne	
11	**VOE 17230113**	1					Hydraulic motor	Motor hidráulico	Motor hidráulico	Moteur hydraulique	See group 441, Page 373
12		1			NS		Track frame	Bastidor de orugas		Longeron de chenille	
16	**VOE 17230416**	1					Tensioner	Barra de tensión	Barra tensora	Bride de serrage	

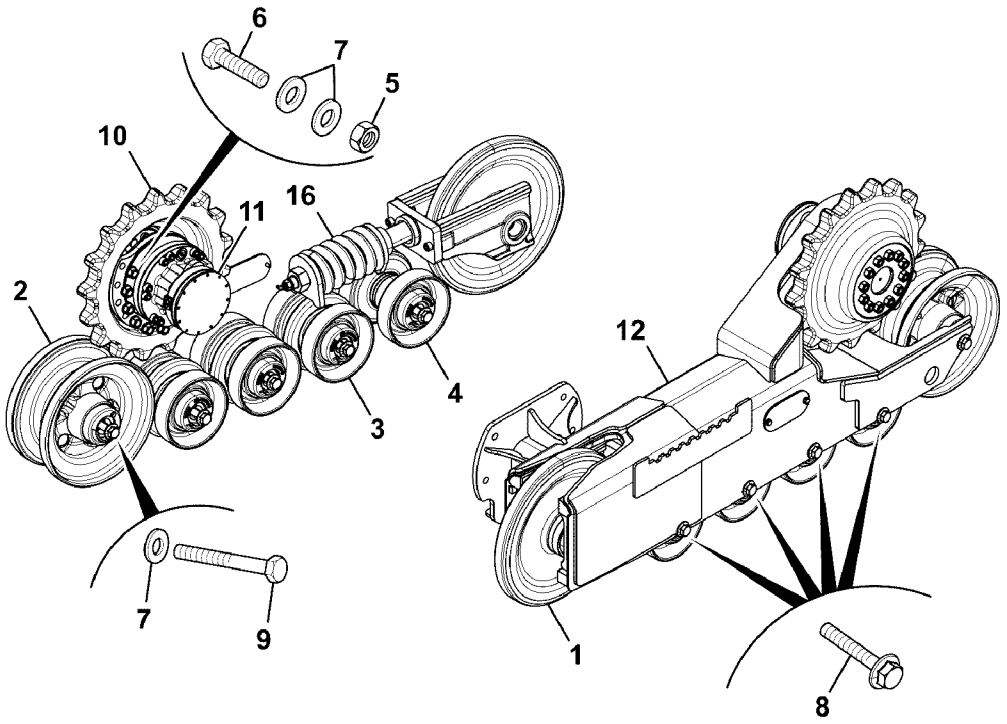
6
7
5
10
11
16
2
12
4
3
7
9
1
8

Fig.	Part No.	Quantity 1	2	3	PS	KIT	Description	Denominación	Denominação	Dénomination	Notes
1	**VOE 16213439**	1	1				Idler	Pinon guia		Roue av	See group 775, Page 485
2	**VOE 16213436**	1	1				Idler	Pinon guia		Roue av	See group 775, Page 487
3	**VOE 16213288**	3	3				Roller	Rodillo	Rolete	Galet	See group 775, Page 489
4	**VOE 16213289**	1	1				Roller	Rodillo	Rolete	Galet	See group 775, Page 491
5	**VOE 16212229**	8	8				Nut	Tuerca	Porca	Écrou	
6		8	8		NS		Bolt	Perno	Parafuso	Boulon	
7	**VOE 17205566**	16	16				Washer	Arandela	Arruela	Rondelle	
8	**VOE 16212230**	8	8				Bolt	Perno	Parafuso	Boulon	
9	**VOE 16212231**	2	2				Bolt	Perno	Parafuso	Boulon	
10	**VOE 17230314**	1	1				Sprocket	Engranaje de cadena	Dente de roda	Pignon chaîne	
11	**VOE 17230116**	1					Hydraulic motor	Motor hidráulico	Motor hidráulico	Moteur hydraulique	See group 441, Page 367
11	**VOE 17230113**		1				Hydraulic motor	Motor hidráulico	Motor hidráulico	Moteur hydraulique	See group 441, Page 373
12		1			NS		Frame	Bastidor	Chassi	Chassis	
12			1		NS		Frame part	Sección bastidor	Secção do quadro	Partie châssis	
16	**VOE 17230416**	1	1				Tensioner	Barra de tensión	Barra tensora	Bride de serrage	

1	**LH**
2	**RH**
3	
4	
5	

Chariot inférieur
Subestrutura
Carro inferior
Undercarriage

MCT85C, MCT95C

Catalogue id	Group
20649	**718**
Illustr. No **1064151**	Section **300**
Issue **PUB 20030904-B**	Page **461**

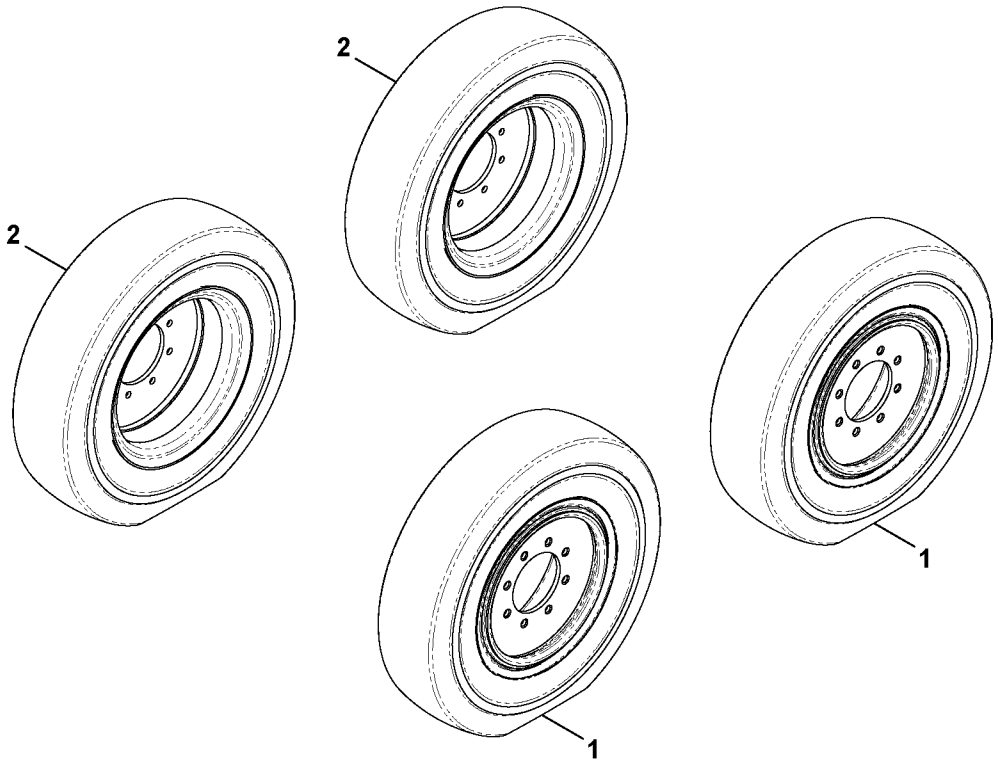
2
2
1
1

Fig.	Part No.	Quantity 1	2	3	4	5	PS	KIT	Description	Denominación	Denominação	Dénomination	Notes
1		2					NS		Wheel	Rueda	Roda	Roue	See group 771, Page 473
2		2					NS		Wheel	Rueda	Roda	Roue	See group 771, Page 475

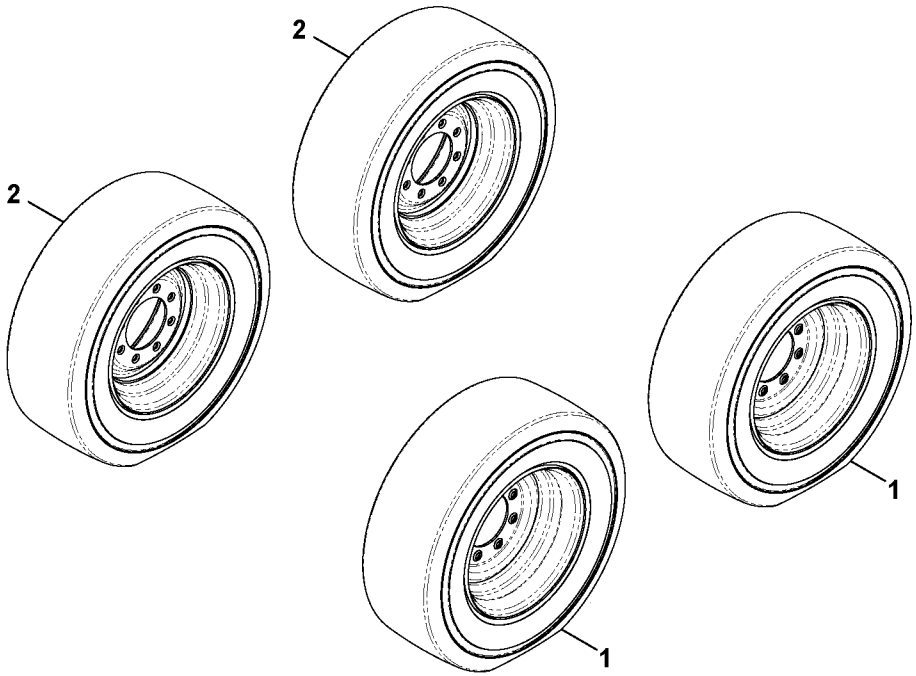
2
2
1
1

Fig.	Part No.	Quantity 1	2	3	4	5	PS	KIT	Description	Denominación	Denominação	Dénomination	Notes
1		2					NS		Wheel	Rueda	Roda	Roue	See group 771, Page 473
2		2					NS		Wheel	Rueda	Roda	Roue	See group 771, Page 475

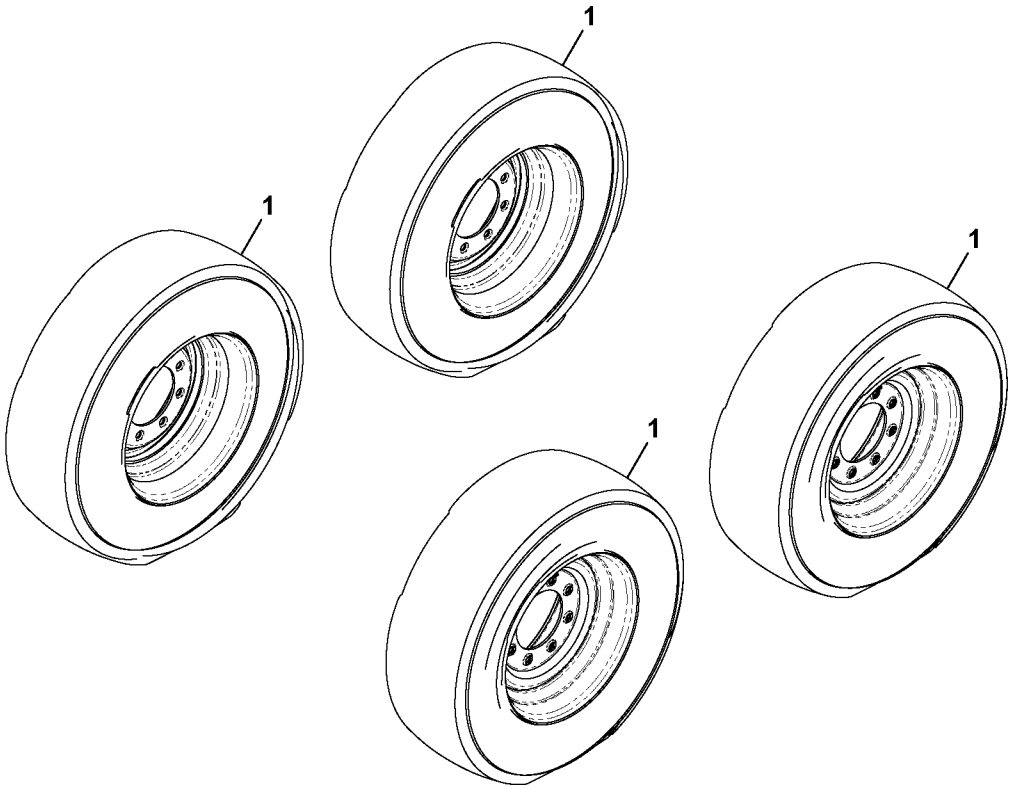
1
1
1
1

Fig.	Part No.	Quantity 1	2	3	4	5	PS	KIT	Description	Denominación	Denominação	Dénomination	Notes
1		4					NS		Wheel	Rueda	Roda	Roue	See group 771, Page 473

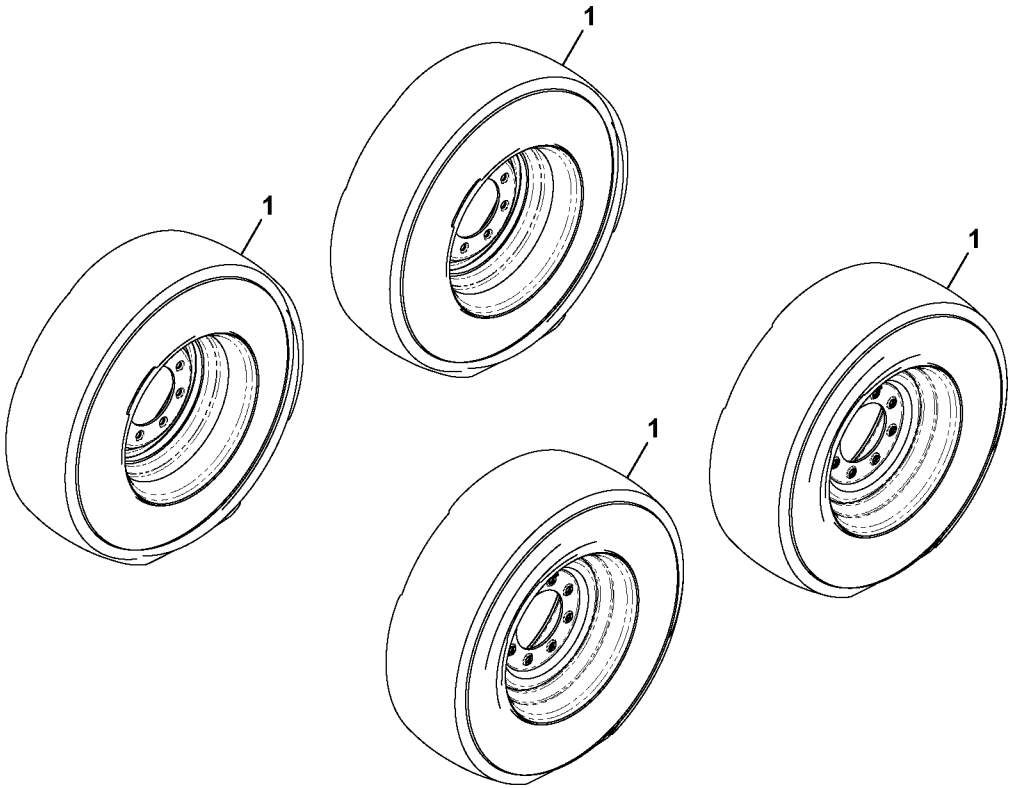
1
1
1
1

Fig.	Part No.	Quantity 1	2	3	4	5	PS	KIT	Description	Denominación	Denominação	Dénomination	Notes
1		4					NS		Wheel	Rueda	Roda	Roue	See group 771, Page 475

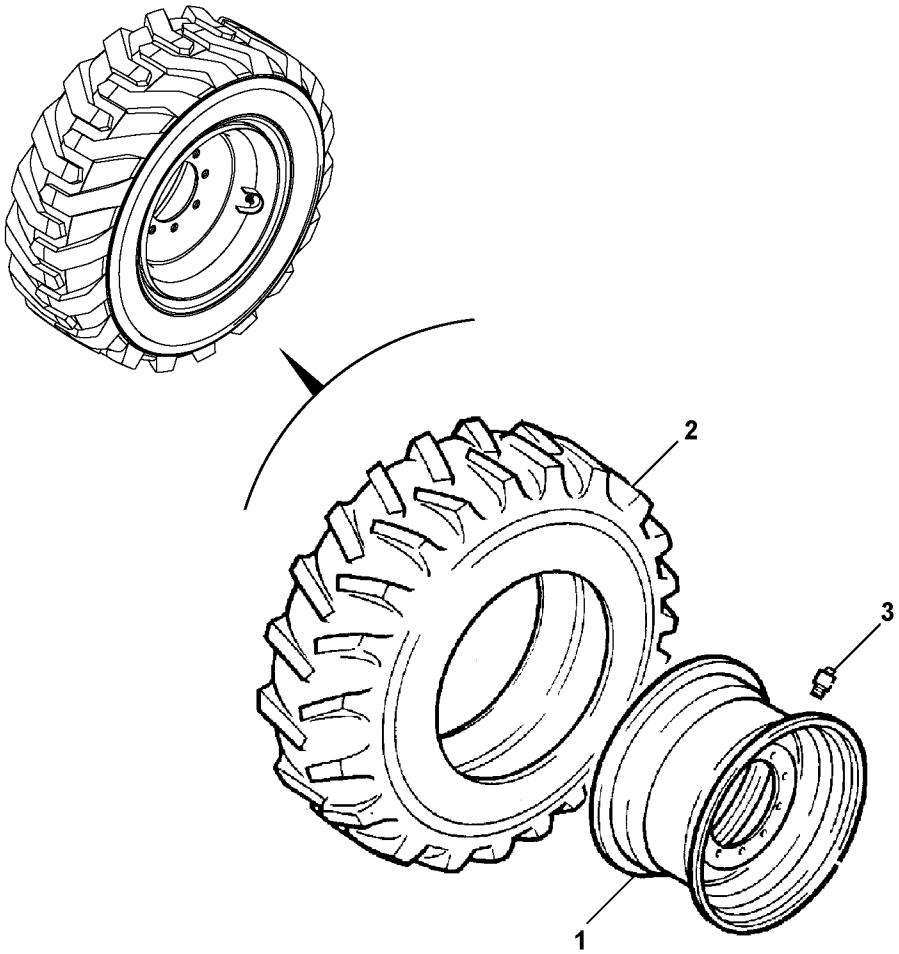
2
3
1

Fig.	Part No.	Quantity 1	2	3	4	5	PS	KIT	Description	Denominación	Denominação	Dénomination	Notes
1		1					NS		Wheel	Rueda	Roda	Roue	
2		1					NS		Tyre	Neumático	Pneu	Pneu	10 PLY
3	**VOE 16213160**	1							Valve	Válvula	Válvula	Valve	

1	**10X16.5 LIFEMASTER**	**Roue et pneu** **Roda e Pneu** **Rueda y neumatico** **Wheel and tire**	Catalogue id **20649**	Group **771**
2				
3			Illustr. No **1064180**	Section **350**
4				
5		**RH MC60C-MC105C**	Issue **PUB 20030904-B**	Page **471**

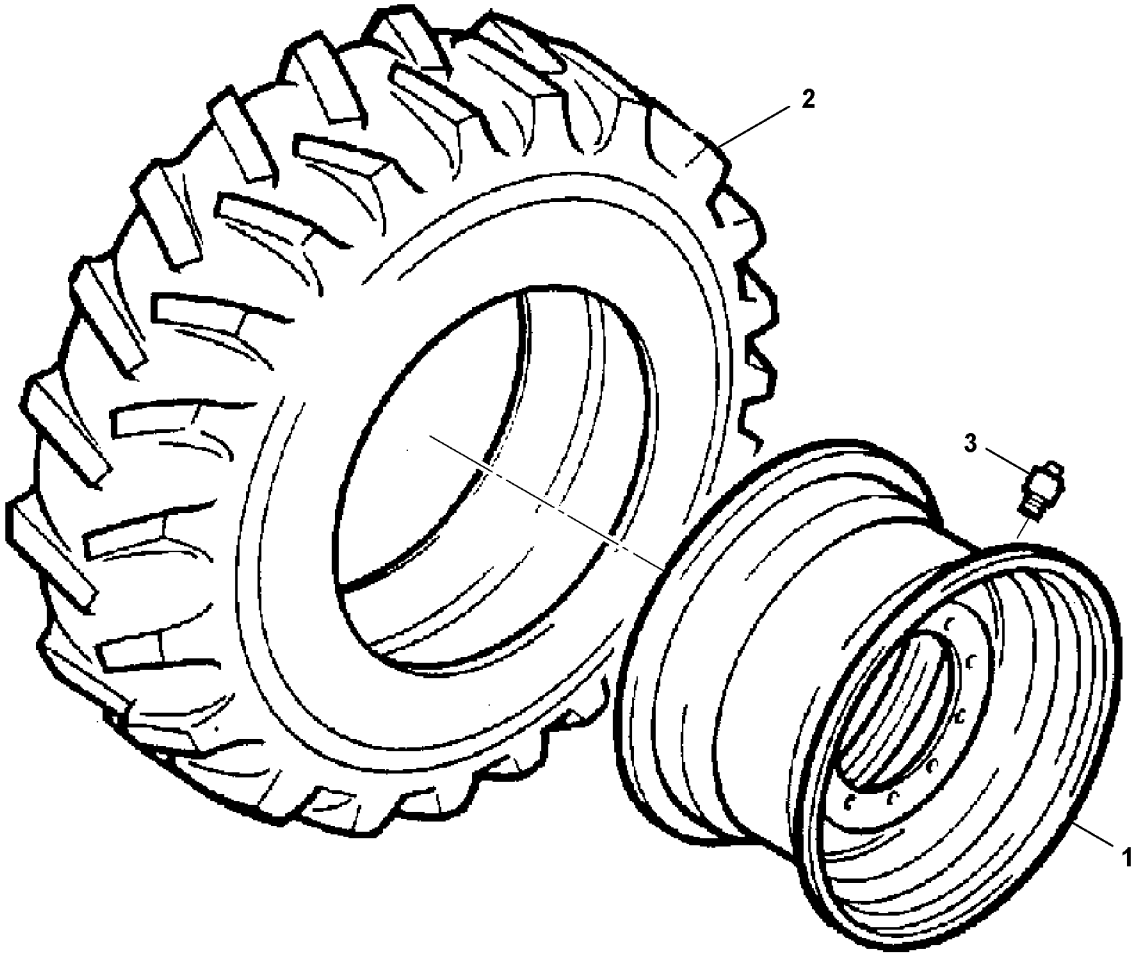
2
3
1

Fig.	Part No.	Quantity 1	2	3	4	5	PS	KIT	Description	Denominación	Denominação	Dénomination	Notes
1		1	1	1	1		NS		Wheel	Rueda	Roda	Roue	
2		1					NS		Tyre	Neumático	Pneu	Pneu	700x15, 14 PLY TUBED
2			1				NS		Tyre	Neumático	Pneu	Pneu	10x16.5, 8 PLY
2				1			NS		Tyre	Neumático	Pneu	Pneu	10x16.5, 8 PLY
2					1		NS		Tyre	Neumático	Pneu	Pneu	10X16.5, MICHELIN XZSL
3	**VOE 16213160**	1	1	1	1				Valve	Válvula	Válvula	Valve	

1	**TYRE 700X15 SOLIDEAL**
2	**TYRE 10X16.5 SOLIDEAL**
3	**TYRE 10X16.5 SOLIDEAL**
4	**TYRE 10X16.5 MICHELIN**
5	

Roue et pneu
Roda e Pneu
Rueda y neumatico
Wheel and tire

LH MC60C-MC105C

Catalogue id **20649**	Group **771**
Illustr. No **1064186**	Section **400**
Issue **PUB 20030904-B**	Page **473**

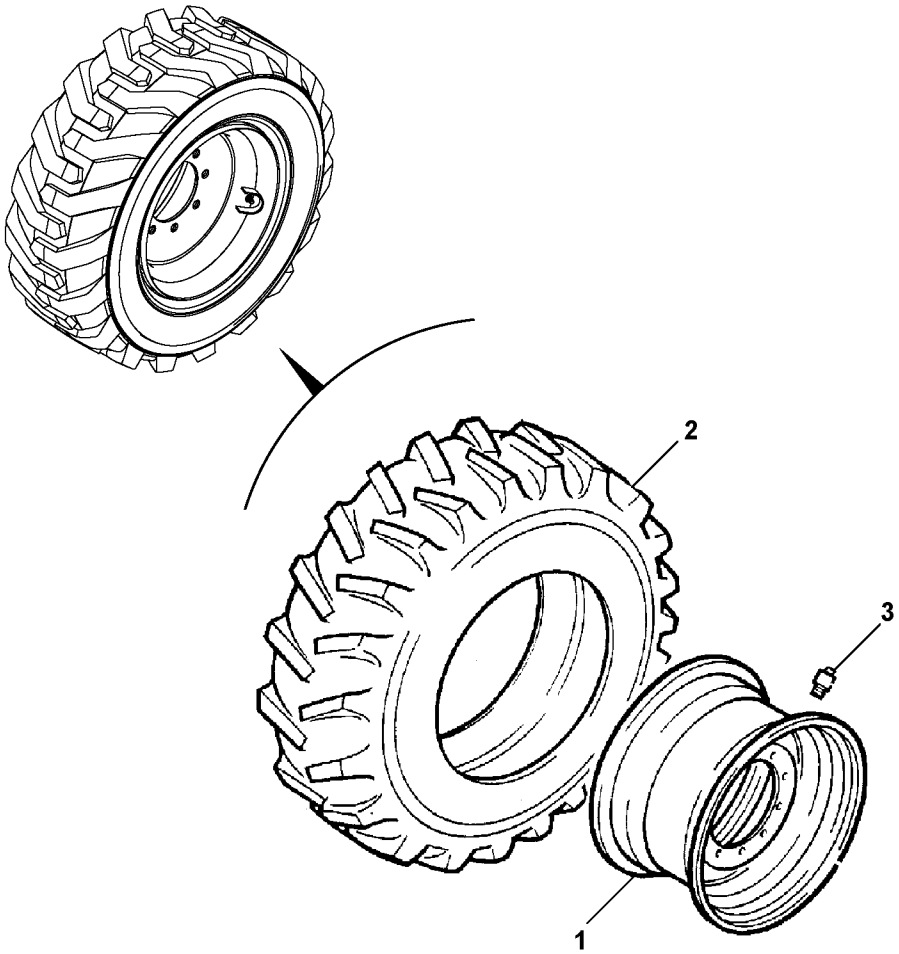
2
3
1

Fig.	Part No.	Quantity 1	2	3	4	5	PS	KIT	Description	Denominación	Denominação	Dénomination	Notes
1		1	1	1	1	1	NS		Wheel	Rueda	Roda	Roue	
2		1					NS		Tyre	Neumático	Pneu	Pneu	14 PLY, TUBED
2			1				NS		Tyre	Neumático	Pneu	Pneu	8 PLY
2				1			NS		Tyre	Neumático	Pneu	Pneu	8 PLY
2					1		NS		Tyre	Neumático	Pneu	Pneu	XZSL
2						1	NS		Tyre	Neumático	Pneu	Pneu	10 PLY
3	**VOE 16213160**	1	1	1	1	1			Valve	Válvula	Válvula	Valve	

1	**700X15 SOLIDEAL**
2	**10X16.5 SOLIDEAL**
3	**10X16.5 SOLIDEAL**
4	**10X16.5 MICHELIN**
5	**10X16.5 LIFEMASTER**

Roue et pneu
Roda e Pneu
Rueda y neumatico
Wheel and tire

RH MC60C-MC105C

Catalogue id **20649**	Group **771**
Illustr. No **1064180**	Section **450**
Issue **PUB 20030904-B**	Page **475**

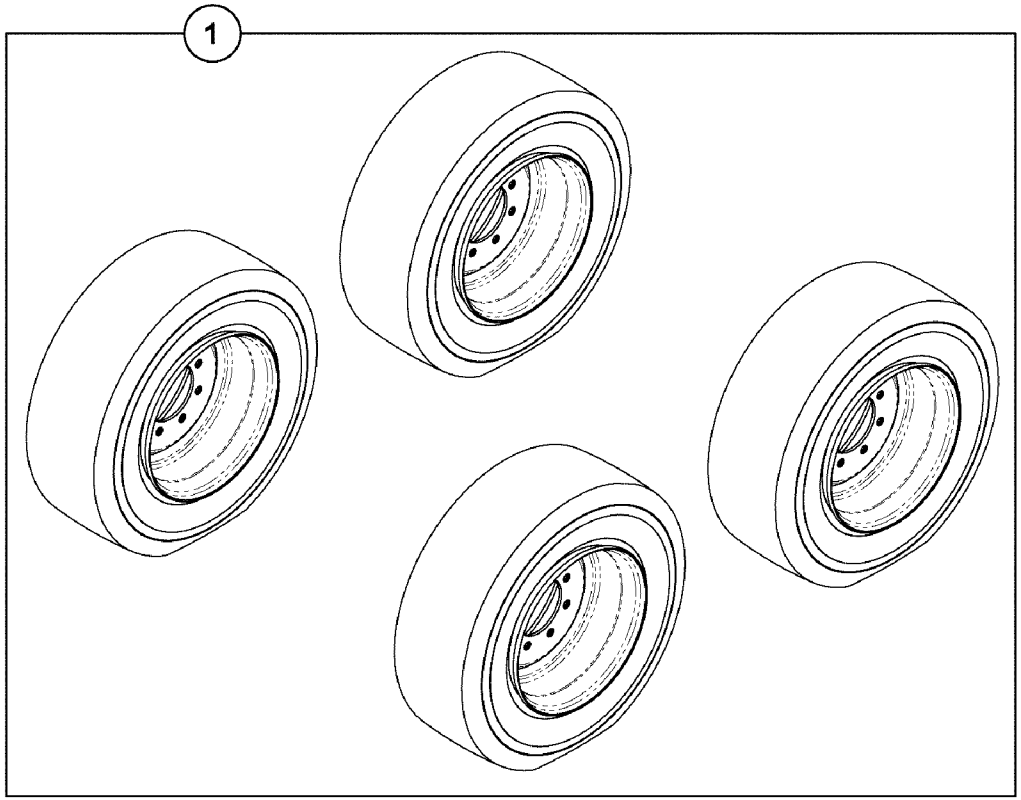
1

Fig.	Part No.	Quantity 1	2	3	PS	KIT	Description	Denominación	Denominação	Dénomination	Notes
1		4			NS		Wheel	Rueda	Roda	Roue	See group 771, Page 471

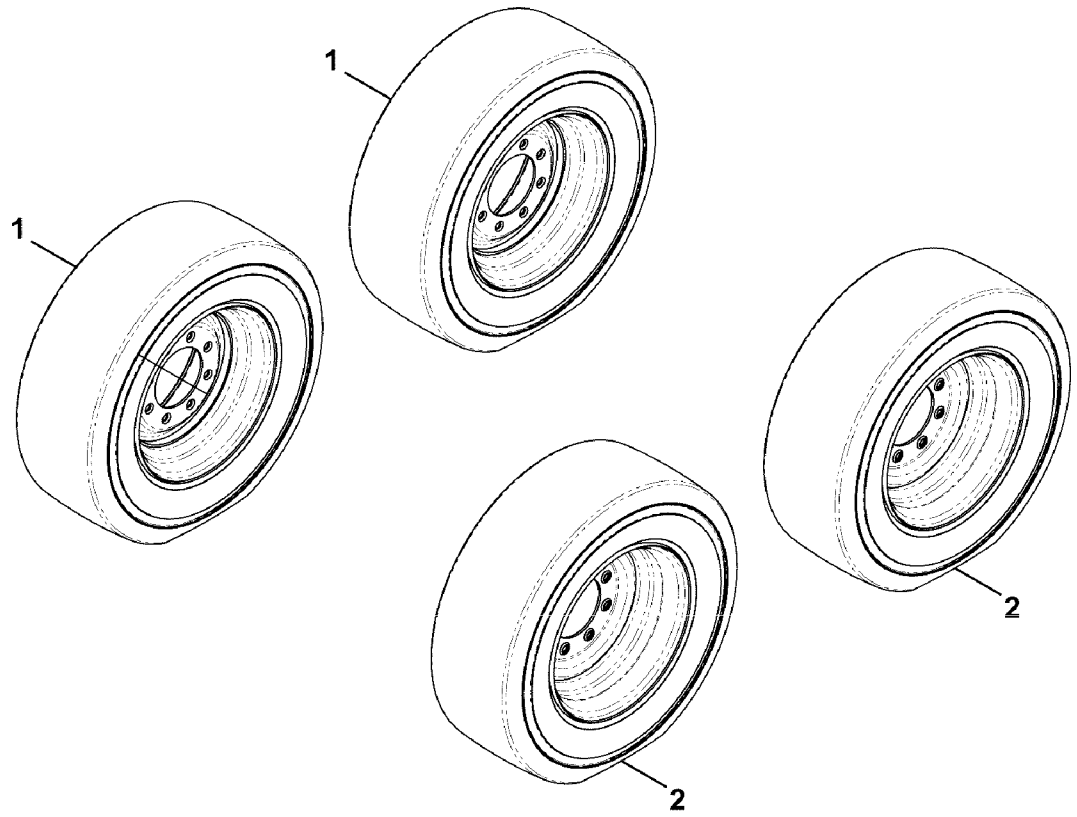
1
1
1
2
2

Fig.	Part No.	Quantity 1	2	3	PS	KIT	Description	Denominación	Denominação	Dénomination	Notes
1		2			NS		Wheel	Rueda	Roda	Roue	See group 771, Page 481
1			2		NS		Wheel	Rueda	Roda	Roue	See group 771, Page 483
2		2			NS		Wheel	Rueda	Roda	Roue	See group 771, Page 481
2			2		NS		Wheel	Rueda	Roda	Roue	See group 771, Page 483

1	**MC60C-MC105C**	**Roue et pneu** **Roda e Pneu** **Rueda y neumatico** **Wheel and tire**	Catalogue id **20649**	Group **771**
2	**MC60C-MC105C**		Illustr. No **1064458**	Section **550**
3			Issue **PUB 20030904-B**	Page **479**
4				
5				

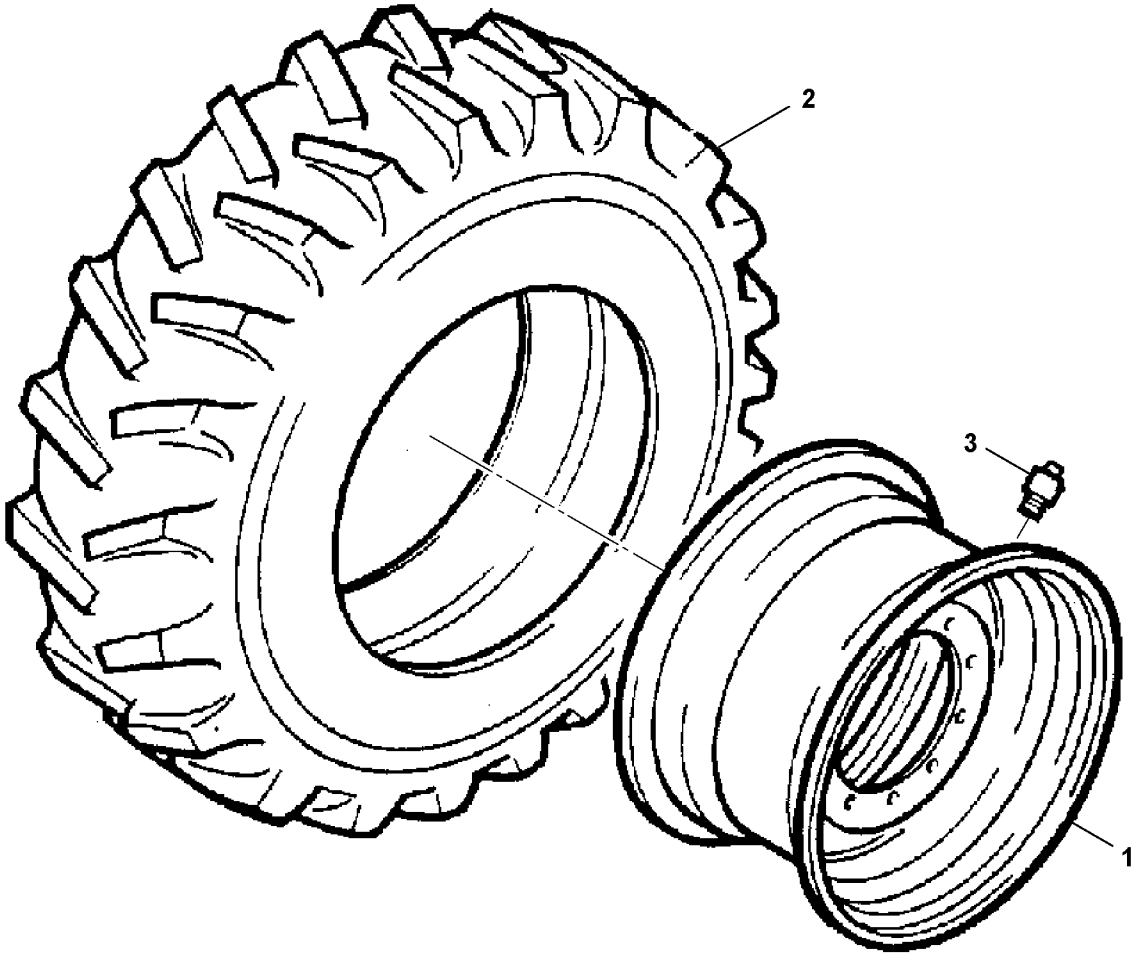
2
3
1

Fig.	Part No.	Quantity 1	2	3	4	5	PS	KIT	Description	Denominación	Denominação	Dénomination	Notes
1		1					NS		Wheel	Rueda	Roda	Roue	
2		1					NS		Tyre	Neumático	Pneu	Pneu	10 PLY, RH
2		1					NS		Tyre	Neumático	Pneu	Pneu	10 PLY, LH
3	**VOE 16213160**	1							Valve	Válvula	Válvula	Valve	

1	**31.5/13X16.5 HAULER**	**Roue et pneu** **Roda e Pneu** **Rueda y neumatico** **Wheel and tire**	Catalogue id **20649**	Group **771**
2			Illustr. No **1064186**	Section **600**
3			Issue **PUB 20030904-B**	Page **481**
4				
5		**MC60C-MC105C**		

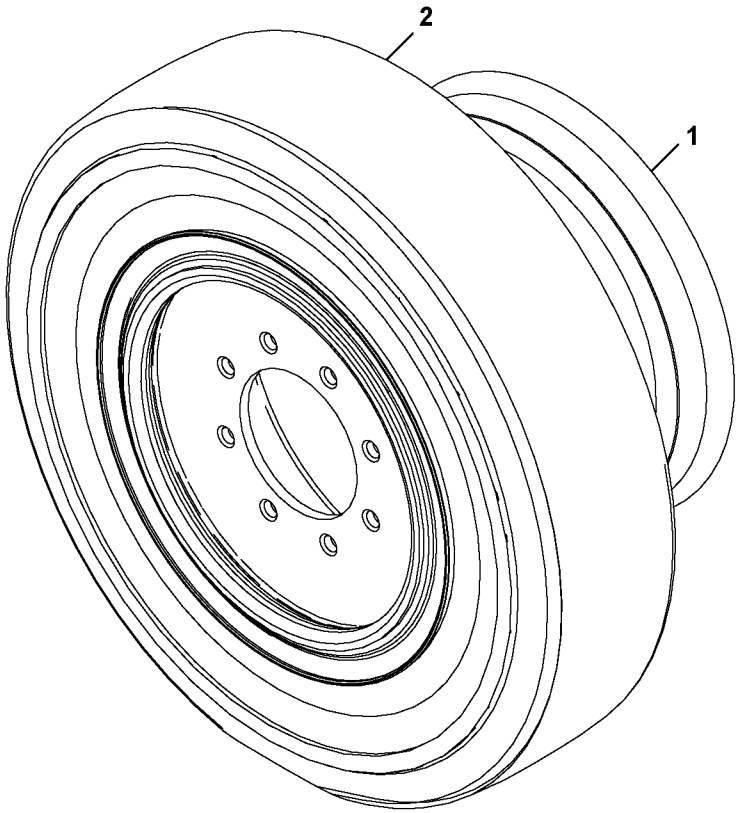

Volvo Construction Equipment
1064185

Fig.	Part No.	Quantity 1	2	3	4	5	PS	KIT	Description	Denominación	Denominação	Dénomination	Notes
1		1					NS		Wheel	Rueda	Roda	Roue	
2		1					NS		Tyre	Neumático	Pneu	Pneu	RH
2		1					NS		Tyre	Neumático	Pneu	Pneu	LH

1	**700X15 5.50 SOLID**	**Roue et pneu** **Roda e Pneu** **Rueda y neumatico** **Wheel and tire**	Catalogue id **20649**	Group **771**
2			Illustr. No **1064185**	Section **650**
3				
4			Issue **PUB 20030904-B**	Page **483**
5		**MC60C-MC105C**		

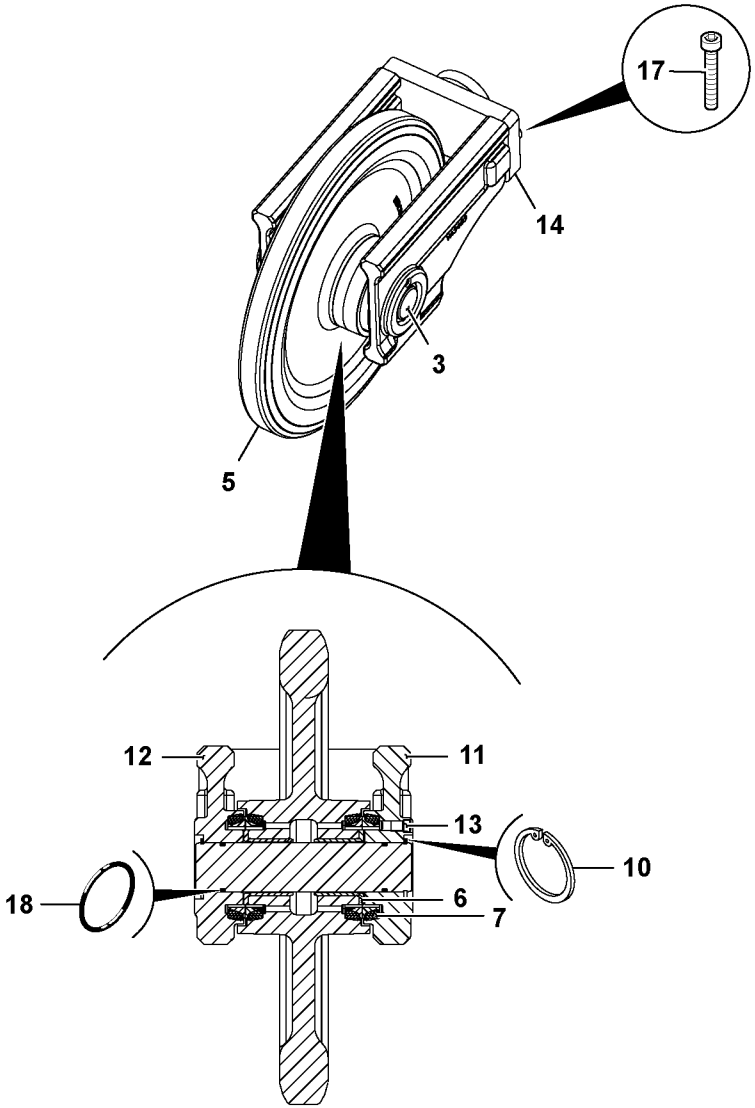
17
14
3
5
12
11
13
10
18
6
7

Fig.	Part No.	Quantity 1	2	3	PS	KIT	Description	Denominación	Denominação	Dénomination	Notes
	VOE 16213439	1					Idler	Pinon guia		Roue av	FRONT
3	**VOE 17205124**	1					•Shaft	•Eje	•Eixo	•Arbre	
5	**VOE 17204945**	1					•Sprocket	•Engranaje de cadena	•Dente de roda	•Pignon chaîne	
6	**VOE 16213220**	2					•Bearing	•Cojinete	•Mancal	•Roulement	
7	**VOE 16213287**	2					•Sealing	•Junta	•Vedação	•Étanchéité	
10	**VOE 17205455**	2					•Clip	•Clip	•Clipe	•Clip	
11	**VOE 17205156**	1					•Bracket	•Consola	•Suporte	•Console	
12	**VOE 17205184**	1					•Bracket	•Consola	•Suporte	•Console	
13	**VOE 17209812**	1					•Plug	•Tapón	•Tampão	•Bouchon	
14	**VOE 17205090**	1					•Plate	•Chapa	•Chapa	•Tôle	
17	**VOE 17209373**	2					•Screw	•Tornillo	•Parafuso	•Vis	
18	**VOE 17204879**	2					•O-ring	•Anillo tórico	•Anel-o	•Joint torique	

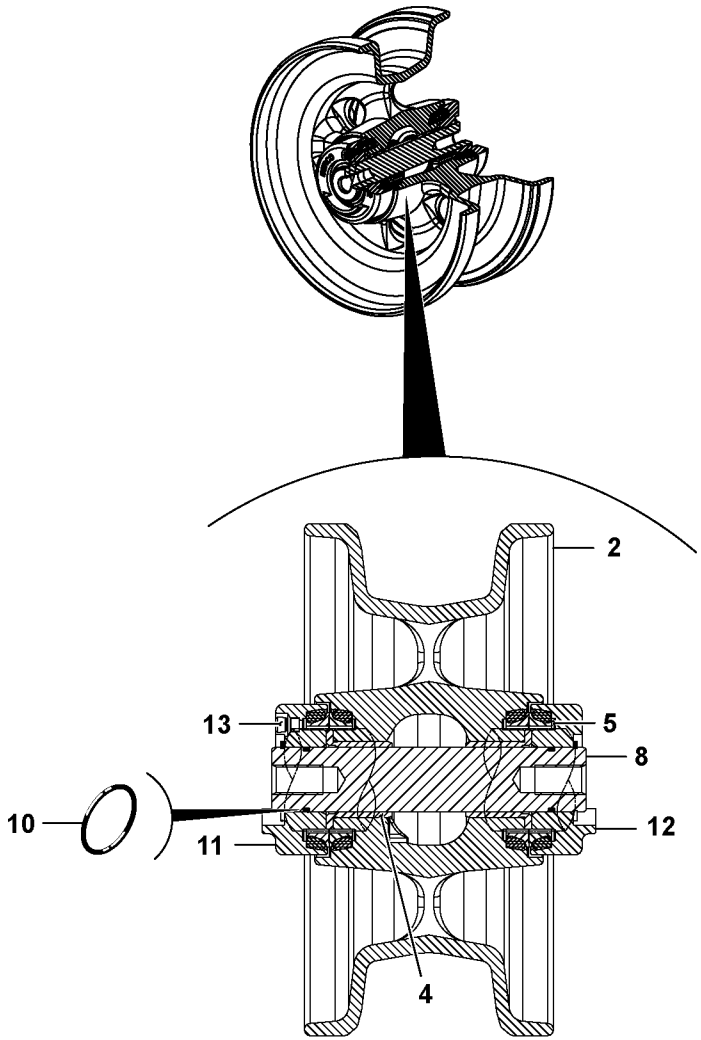
2
13
5
8
10
12
11
4

Fig.	Part No.	Quantity 1	2	3	PS	KIT	Description	Denominación	Denominação	Dénomination	Notes
	VOE 16213436	1					Idler	Pinon guia		Roue av	REAR
2	**VOE 17205309**	1			OP		•Rim	•Marco	•Aro	•Cadre	
4	**VOE 16213220**	2					•Bearing	•Cojinete	•Mancal	•Roulement	
5	**VOE 16213287**	2					•Sealing	•Junta	•Vedação	•Étanchéité	
8	**VOE 17205127**	1					•Shaft	•Eje	•Eixo	•Arbre	
10	**VOE 17204879**	2					•O-ring	•Anillo tórico	•Anel-o	•Joint torique	
11	**VOE 17205204**	1					•Bracket	•Consola	•Suporte	•Console	
12	**VOE 17205206**	1					•Bracket	•Consola	•Suporte	•Console	
13	**VOE 17209812**	1					•Plug	•Tapón	•Tampão	•Bouchon	

1		**Pignon fou** **Piñón intermediario** **Idler**	Catalogue id **20649**	Group **775**
2			Illustr. No **1064034**	Section **250**
3			Issue **PUB 20030904-B**	Page **487**
4				
5		**MCT70C-MCT95C**		

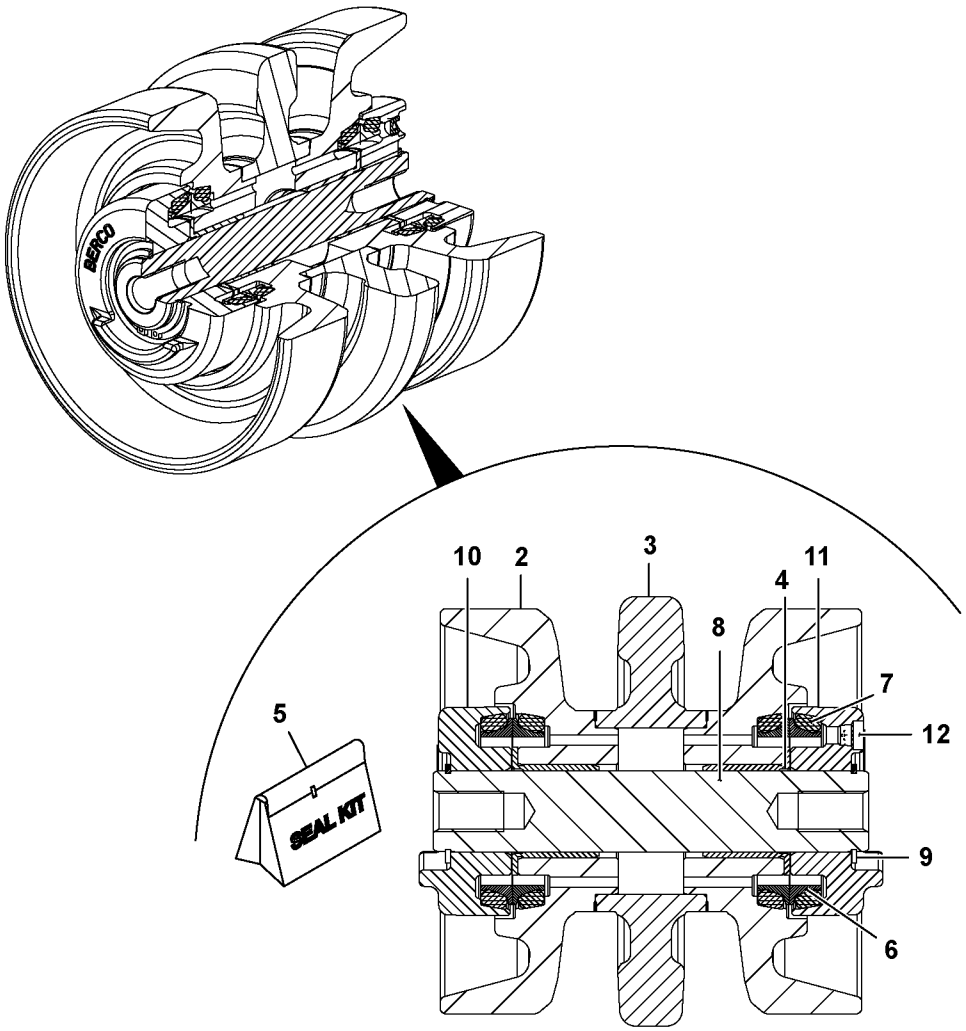
BERCO
10
2
3
11
4
8
7
12
5
SEAL KIT
9
6

Fig.	Part No.	Quantity 1	2	3	PS	KIT	Description	Denominación	Denominação	Dénomination	Notes
	VOE 16213288	1					Roller	Rodillo	Rolete	Galet	TRIPPLE FLANGE
2	**VOE 17209585**	1					•Roller	•Rodillo	•Rolete	•Galet	
3	**VOE 17209583**	1					•Roller	•Rodillo	•Rolete	•Galet	
4	**VOE 17210148**	1					•Bushing	•Casquillo	•Bucha	•Bague	
5	**VOE 17209635**	2					•Sealing kit	•Kit de precinto	•Jogo de vedação	•Kit plombage	
6	**VOE 17209648**	2					•Sealing	•Junta	•Vedação	•Étanchéité	
7	**VOE 17209654**	2					•Sealing	•Junta	•Vedação	•Étanchéité	
8	**VOE 17210267**	1					•Shaft	•Eje	•Eixo	•Arbre	
9	**VOE 17210429**	2					•Lock ring	•Anillo de seguridad	•Anel trava	•Anneau verrouillage	
10	**VOE 17210019**	1					•Bracket	•Consola	•Suporte	•Console	
11	**VOE 17210022**	1					•Bracket	•Consola	•Suporte	•Console	
12	**VOE 17209812**	1					•Plug	•Tapón	•Tampão	•Bouchon	

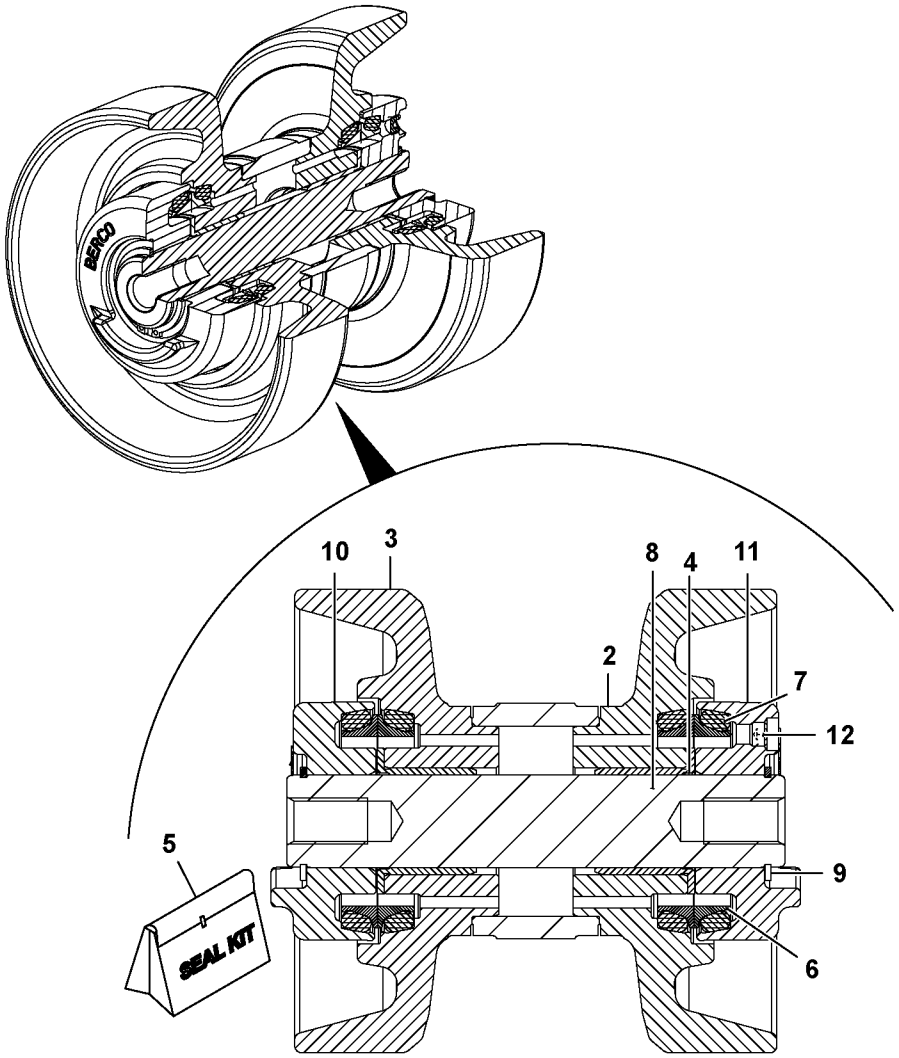
BERCO
10
3
8
4
11
2
7
12
5
SEAL KIT
9
6

Fig.	Part No.	Quantity 1	2	3	PS	KIT	Description	Denominación	Denominação	Dénomination	Notes
	VOE 16213289	1					Roller	Rodillo	Rolete	Galet	DOUBLE FLANGE
2	**VOE 17209587**	1					•Roller	•Rodillo	•Rolete	•Galet	
3	**VOE 17209588**	1					•Roller	•Rodillo	•Rolete	•Galet	
4	**VOE 17210148**	2					•Bushing	•Casquillo	•Bucha	•Bague	
5	**VOE 17209635**	2					•Sealing kit	•Kit de precinto	•Jogo de vedação	•Kit plombage	
6	**VOE 17209648**	2					•Sealing	•Junta	•Vedação	•Étanchéité	
7	**VOE 17209654**	2					•Sealing	•Junta	•Vedação	•Étanchéité	
8	**VOE 17210267**	1					•Shaft	•Eje	•Eixo	•Arbre	
9	**VOE 17210429**	2					•Lock ring	•Anillo de seguridad	•Anel trava	•Anneau verrouillage	
10	**VOE 17210019**	1					•Bracket	•Consola	•Suporte	•Console	
11	**VOE 17210022**	1					•Bracket	•Consola	•Suporte	•Console	
12	**VOE 17209812**	1					•Plug	•Tapón	•Tampão	•Bouchon	

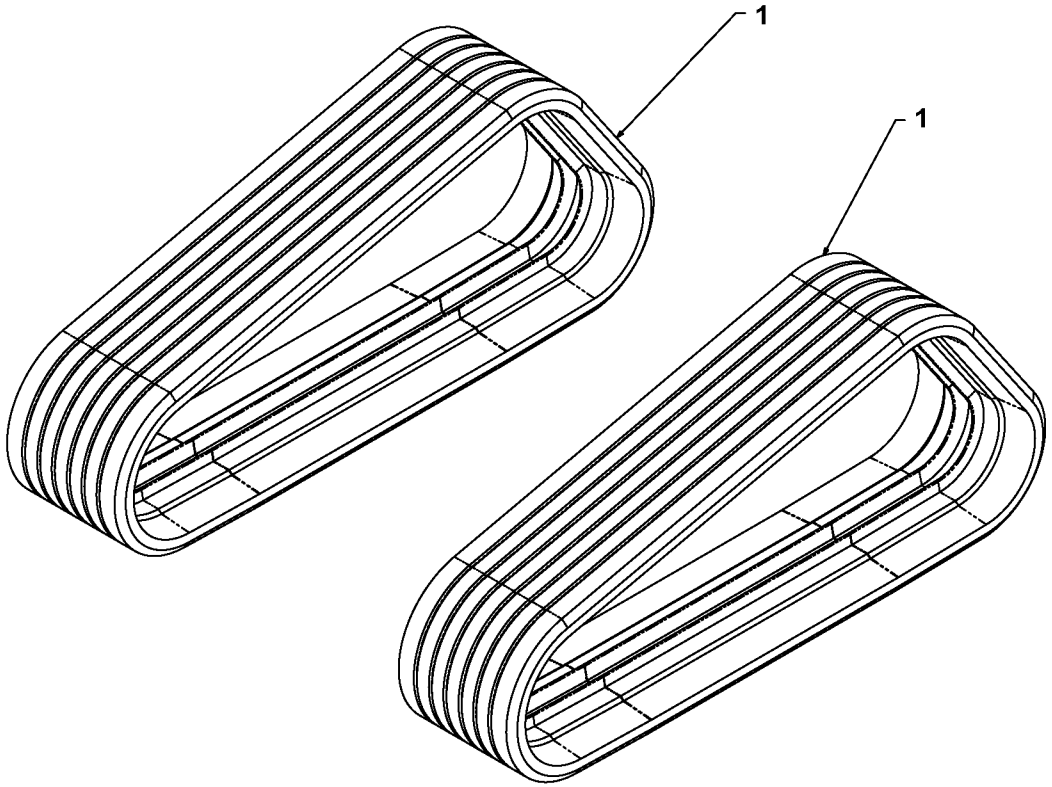
1
1

Fig.	Part No.	Quantity 1	2	3	PS	KIT	Description	Denominación	Denominação	Dénomination	Notes
1	**VOE 17230449**	2					Track band	Banda motriz	Cinta	Bande d'entraînement	
1			2		NS		Track Band	Banda Motriz		Bande D'entraÎn	

1	**MCT70C**	**Chaîne de chenille** **Corrente de esteira** **Cadena de oruga** **Track chain**	Catalogue id **20649**	Group **775**
2	**MCT85C, MCT95C**		Illustr. No **1064054**	Section **400**
3			Issue **PUB 20030904-B**	Page **493**
4				
5				



Volvo Construction Equipment
www.volvoce.com

GROUP		Section	Page
810	Cab body MC60C-MC105C	100	505
810	Cab body MC60C-MC105C	150	507
810	Cab body MC60C-MC105C	200	509
810	Cab body MCT70C, MCT85C	250	511
810	Cab body MCT70C-MCT95C	300	513
810	Cab body MCT70C-MCT95C	350	515
818	Cab Mounting Parts MC60C-MC105C, MCT70C-MCT95C	100	517
818	Cab Mounting Parts MC60C, MC70C, MC105C, MCT70C	150	519
818	Cab mounting block. MC60C-MC105C, MCT70C-MCT95C	300	521
818	Cab mounting block. MC60C, MC70C, MC105C, MCT70C	350	523
818	Cab mounting block. MC60C-MC105C, MCT70C-MCT95C	400	525
818	Safety arm MC60C-MC105C, MCT70C-MCT95C	500	527
821	Engine hood MC60C-MC105C, MCT70C-MCT95C	100	529
821	Hood lock installation MC60C-MC105C, MCT70C-MCT95C	200	531
821	Latch bracket, Engine compartment MC70C-MC105C, MCT70C-MCT95C	300	533
831	Door MC60C-MC105C	100	535
831	Door MC60C-MC105C	150	537
831	Door MCT70C-MCT95C	200	539
831	Door MCT70C-MCT95C	250	541
831	Door mounting MC60C-MC105C, MCT70C-MCT95C	500	543
841	Mirror Installation MC60C-MC105C, MCT70C-MCT95C	100	545
841	Cab : door / glass / seals MC60C-MC105C, MCT70C-MCT95C	500	547
843	Glass panes MC60C-MC105C, MCT70C-MCT95C	100	549
843	Glass panes MC60C, MC70C, MC95C, MCT70C, MCT85C	150	551
843	Glass panes MC60C-MC105C, MCT70C-MCT95C	200	553
843	Glass panes MC60C-MC105C, MCT70C-MCT95C	300	555
843	Glass panes MC60C-MC105C, MCT70C-MCT95C	350	557
843	Front window MC60C-MC105C, MCT70C-MCT95C	500	559
843	Front window MC60C-MC105C, MCT70C-MCT95C	550	561
843	Front window MC60C-MC105C, MCT70C-MCT95C	600	563
843	Front window LEXAN MC60C-MC105C, MCT70C-MCT95C	650	565
852	Operator's seat MC60C-MC105C, MCT70C-MCT95C	100	567
852	Operator's seat, heated, air sprung MC60C-MC105C, MCT70C-MCT95C	600	569
852	Operator's seat, heated, air sprung MC60C-MC105C, MCT70C-MCT95C	650	571
852	Operator's seat, heated, air sprung MC60C, MC70C, MC95C, MCT70C-MCT95C	700	573
852	Seat Belt MC60C-MC105C, MCT70C-MCT95C	1000	575
852	Seat Belt MC70C-MC105C, MCT70C-MCT95C	1200	577
870	Air distribution MC60C-MC105C, MCT70C-MCT95C	100	579
870	Air distribution MC60C-MC105C, MCT70C-MCT95C	150	581
870	Heating unit MC60C-MC105C, MCT70C-MCT95C	200	585
870	Heating unit MC60C-MC105C, MCT70C-MCT95C	250	587
870	Cab heating installation MC60C-MC105C, MCT70C-MCT95C	300	589
870	Heating unit MC60C-MC105C, MCT70C-MCT95C	350	591
870	Air conditioning MC60C-MC105C, MCT70C-MCT95C	400	593
870	Air-condition, condenser divice. MC60C-MC105C, MCT70C-MCT95C	450	595
880	Cab : accessories CANOPY MC60C-MC105C, MCT70C-MCT95C	100	597
880	Cab : accessories MC60C-MC85C, MC105C, MCT70C, MCT95C	150	599
880	Headliner MC60C-MC105C, MCT70C-MCT95C	400	601
881	Armrest MC60C-MC105C, MCT70C-MCT95C	100	603
881	Armrest LH.MC60C-MC105C, MCT70C-MCT95C	200	605
881	Instrument panel MC60C-MC105C, MCT70C-MCT95C	300	607
882	Lap bar MC60C-MC105C, MCT70C-MCT95C	100	609
882	Control lever arm LH.MC60C-MC105C, MCT70C-MCT95C	200	611
891	Windscreen protection MC60C-MC105C, MCT70C-MCT85C	200	613
891	Protection over drivers cab MC60C, MC70C, MCT70C	250	615
896	Tools MC60C-MC105C, MCT70C-MCT95C	100	617
896	Tools MC60C-MC105C, MCT70C-MCT95C	150	619
896	Tools MC60C-MC105C, MCT70C-MCT95C	200	621

GROUP		Section	Page
897	Decals MC60C-MC105C, MCT70C-MCT95C	100	623
897	Decals MC60C-MC105C, MCT70C-MCT95C	120	625
897	Decals MC60C-MC105C, MCT70C-MCT95C	130	627
897	Decals BELGIAN.MC60C-MC105C, MCT70C-MCT95C	150	629
897	Decals MC60C-MC105C, MCT70C-MCT95C	250	631
897	Decals MC60C-MC105C, MCT70C-MCT95C	300	633
897	Decals MC60C-MC105C, MCT70C-MCT95C	350	635
897	Decals MC60C-MC105C, MCT70C-MCT95C	400	637
897	Decals MCT70C-MCT95C	450	639
897	Decals MC60C-MC85C, MC105C, MCT70C-MCT95C	500	641
897	Decals MC70C-MC105C	550	643
897	Decals MC70C	600	645
897	Decals MC60C	650	647
897	Decals MCT70C	700	649
897	Decals MC85C	750	651
897	Decals MCT85C	800	653
897	Decals MC105C	850	655
897	Decals MC95C	900	657
897	Decals MC60C-MC105C, MCT70C-MCT95C	1000	659
897	Decals MC70C-MC105C	1050	661
897	Decals MCT70C-MCT95C	1100	663

GRUPO		Sección	Página
810	Cuerpo de cabina MC60C-MC105C	100	505
810	Cuerpo de cabina MC60C-MC105C	150	507
810	Cuerpo de cabina MC60C-MC105C	200	509
810	Cuerpo de cabina MCT70C, MCT85C	250	511
810	Cuerpo de cabina MCT70C-MCT95C	300	513
810	Cuerpo de cabina MCT70C-MCT95C	350	515
818	Piezas de fijación de cabina MC60C-MC105C, MCT70C-MCT95C	100	517
818	Piezas de fijación de cabina MC60C, MC70C, MC105C, MCT70C	150	519
818	Suspension de cabina. MC60C-MC105C, MCT70C-MCT95C	300	521
818	Suspension de cabina. MC60C, MC70C, MC105C, MCT70C	350	523
818	Suspension de cabina. MC60C-MC105C, MCT70C-MCT95C	400	525
818	Brazo de seguridad MC60C-MC105C, MCT70C-MCT95C	500	527
821	Capo MC60C-MC105C, MCT70C-MCT95C	100	529
821	Instalación de pestillo de tracción de cabina/capó MC60C-MC105C, MCT70C-MCT95C	200	531
821	Soporte del cierre, compartimento del motor MC70C-MC105C, MCT70C-MCT95C	300	533
831	Puerta MC60C-MC105C	100	535
831	Puerta MC60C-MC105C	150	537
831	Puerta MCT70C-MCT95C	200	539
831	Puerta MCT70C-MCT95C	250	541
831	Puerta con accesprios de montaje MC60C-MC105C, MCT70C-MCT95C	500	543
841	Instalación de espejo MC60C-MC105C, MCT70C-MCT95C	100	545
841	Cabina: puerta / cristal / juntas MC60C-MC105C, MCT70C-MCT95C	500	547
843	Ventanillas MC60C-MC105C, MCT70C-MCT95C	100	549
843	Ventanillas MC60C, MC70C, MC95C, MCT70C, MCT85C	150	551
843	Ventanillas MC60C-MC105C, MCT70C-MCT95C	200	553
843	Ventanillas MC60C-MC105C, MCT70C-MCT95C	300	555
843	Ventanillas MC60C-MC105C, MCT70C-MCT95C	350	557
843	Parabrisas delantero MC60C-MC105C, MCT70C-MCT95C	500	559
843	Parabrisas delantero MC60C-MC105C, MCT70C-MCT95C	550	561
843	Parabrisas delantero MC60C-MC105C, MCT70C-MCT95C	600	563
843	Parabrisas delantero LEXAN MC60C-MC105C, MCT70C-MCT95C	650	565
852	Asiento del conductor MC60C-MC105C, MCT70C-MCT95C	100	567
852	Asiento de conducción de suspensión neumática, calefaccionado MC60C-MC105C, MCT70C-MCT95C	600	569
852	Asiento de conducción de suspensión neumática, calefaccionado MC60C-MC105C, MCT70C-MCT95C	650	571
852	Asiento de conducción de suspensión neumática, calefaccionado MC60C, MC70C, MC95C, MCT70C-MCT95C	700	573
852	Cinturón de seguridad MC60C-MC105C, MCT70C-MCT95C	1000	575
852	Cinturón de seguridad MC70C-MC105C, MCT70C-MCT95C	1200	577
870	Distribucion del aire MC60C-MC105C, MCT70C-MCT95C	100	579
870	Distribucion del aire MC60C-MC105C, MCT70C-MCT95C	150	581
870	Calefactor MC60C-MC105C, MCT70C-MCT95C	200	585
870	Calefactor MC60C-MC105C, MCT70C-MCT95C	250	587
870	Instalación del calefactor de cabina MC60C-MC105C, MCT70C-MCT95C	300	589
870	Calefactor MC60C-MC105C, MCT70C-MCT95C	350	591
870	Acondicionador de aire MC60C-MC105C, MCT70C-MCT95C	400	593
870	Condensador. MC60C-MC105C, MCT70C-MCT95C	450	595
880	Cabina: accesorios CANOPY MC60C-MC105C, MCT70C-MCT95C	100	597
880	Cabina: accesorios MC60C-MC85C, MC105C, MCT70C, MCT95C	150	599
880	Laterales del techo MC60C-MC105C, MCT70C-MCT95C	400	601
881	Reposabrazos MC60C-MC105C, MCT70C-MCT95C	100	603
881	Reposabrazos LH.MC60C-MC105C, MCT70C-MCT95C	200	605
881	Panel de instrumentos MC60C-MC105C, MCT70C-MCT95C	300	607
882	Barra de cierre MC60C-MC105C, MCT70C-MCT95C	100	609
882	Brazo de la palanca de control LH.MC60C-MC105C, MCT70C-MCT95C	200	611

GRUPO		Sección	Página
891	Rejilla de proteccion parabrisas delantero MC60C-MC105C, MCT70C-MCT85C	200	613
891	Proteccion sobre cabina MC60C, MC70C, MCT70C	250	615
896	Herramienta MC60C-MC105C, MCT70C-MCT95C	100	617
896	Herramienta MC60C-MC105C, MCT70C-MCT95C	150	619
896	Herramienta MC60C-MC105C, MCT70C-MCT95C	200	621
897	Calcomanías MC60C-MC105C, MCT70C-MCT95C	100	623
897	Calcomanías MC60C-MC105C, MCT70C-MCT95C	120	625
897	Calcomanías MC60C-MC105C, MCT70C-MCT95C	130	627
897	Calcomanías BELGIAN.MC60C-MC105C, MCT70C-MCT95C	150	629
897	Calcomanías MC60C-MC105C, MCT70C-MCT95C	250	631
897	Calcomanías MC60C-MC105C, MCT70C-MCT95C	300	633
897	Calcomanías MC60C-MC105C, MCT70C-MCT95C	350	635
897	Calcomanías MC60C-MC105C, MCT70C-MCT95C	400	637
897	Calcomanías MCT70C-MCT95C	450	639
897	Calcomanías MC60C-MC85C, MC105C, MCT70C-MCT95C	500	641
897	Calcomanías MC70C-MC105C	550	643
897	Calcomanías MC70C	600	645
897	Calcomanías MC60C	650	647
897	Calcomanías MCT70C	700	649
897	Calcomanías MC85C	750	651
897	Calcomanías MCT85C	800	653
897	Calcomanías MC105C	850	655
897	Calcomanías MC95C	900	657
897	Calcomanías MC60C-MC105C, MCT70C-MCT95C	1000	659
897	Calcomanías MC70C-MC105C	1050	661
897	Calcomanías MCT70C-MCT95C	1100	663

GRUPO		Seção	Página
810	MC60C-MC105C	100	505
810	MC60C-MC105C	150	507
810	MC60C-MC105C	200	509
810	MCT70C, MCT85C	250	511
810	MCT70C-MCT95C	300	513
810	MCT70C-MCT95C	350	515
818	Peças de montagem da cabine MC60C-MC105C, MCT70C-MCT95C	100	517
818	Peças de montagem da cabine MC60C, MC70C, MC105C, MCT70C	150	519
818	Bloco de montagem da cabine MC60C-MC105C, MCT70C-MCT95C	300	521
818	Bloco de montagem da cabine MC60C, MC70C, MC105C, MCT70C	350	523
818	Bloco de montagem da cabine MC60C-MC105C, MCT70C-MCT95C	400	525
818	Braço de segurança MC60C-MC105C, MCT70C-MCT95C	500	527
821	Capô MC60C-MC105C, MCT70C-MCT95C	100	529
821	Trava do capô, instalação MC60C-MC105C, MCT70C-MCT95C	200	531
821	Suporte de trava, compartimento do motor MC70C-MC105C, MCT70C-MCT95C	300	533
831	Porta MC60C-MC105C	100	535
831	Porta MC60C-MC105C	150	537
831	Porta MCT70C-MCT95C	200	539
831	Porta MCT70C-MCT95C	250	541
831	MC60C-MC105C, MCT70C-MCT95C	500	543
841	Espelho, instalação MC60C-MC105C, MCT70C-MCT95C	100	545
841	Cabine : porta / vidro / vedações MC60C-MC105C, MCT70C-MCT95C	500	547
843	Vidros das janelas MC60C-MC105C, MCT70C-MCT95C	100	549
843	Vidros das janelas MC60C, MC70C, MC95C, MCT70C, MCT85C	150	551
843	Vidros das janelas MC60C-MC105C, MCT70C-MCT95C	200	553
843	Vidros das janelas MC60C-MC105C, MCT70C-MCT95C	300	555
843	Vidros das janelas MC60C-MC105C, MCT70C-MCT95C	350	557
843	Pára-brisa dianteiro MC60C-MC105C, MCT70C-MCT95C	500	559
843	Pára-brisa dianteiro MC60C-MC105C, MCT70C-MCT95C	550	561
843	Pára-brisa dianteiro MC60C-MC105C, MCT70C-MCT95C	600	563
843	Pára-brisa dianteiro LEXAN MC60C-MC105C, MCT70C-MCT95C	650	565
852	Banco do motorista MC60C-MC105C, MCT70C-MCT95C	100	567
852	MC60C-MC105C, MCT70C-MCT95C	600	569
852	MC60C-MC105C, MCT70C-MCT95C	650	571
852	MC60C, MC70C, MC95C, MCT70C-MCT95C	700	573
852	Cinto de segurança MC60C-MC105C, MCT70C-MCT95C	1000	575
852	Cinto de segurança MC70C-MC105C, MCT70C-MCT95C	1200	577
870	Distribuição de ar MC60C-MC105C, MCT70C-MCT95C	100	579
870	Distribuição de ar MC60C-MC105C, MCT70C-MCT95C	150	581
870	Unidade de aquecimento MC60C-MC105C, MCT70C-MCT95C	200	585
870	Unidade de aquecimento MC60C-MC105C, MCT70C-MCT95C	250	587
870	Aquecimento da cabine, instalação MC60C-MC105C, MCT70C-MCT95C	300	589
870	Unidade de aquecimento MC60C-MC105C, MCT70C-MCT95C	350	591
870	Ar condicionado MC60C-MC105C, MCT70C-MCT95C	400	593
870	MC60C-MC105C, MCT70C-MCT95C	450	595
880	Cabine: acessórios CANOPY MC60C-MC105C, MCT70C-MCT95C	100	597
880	Cabine: acessórios MC60C-MC85C, MC105C, MCT70C, MCT95C	150	599
880	Linhas principais MC60C-MC105C, MCT70C-MCT95C	400	601
881	Apoio de braço MC60C-MC105C, MCT70C-MCT95C	100	603
881	Apoio de braço LH.MC60C-MC105C, MCT70C-MCT95C	200	605
881	Painel de instrumentos MC60C-MC105C, MCT70C-MCT95C	300	607
882	Barra de segurança MC60C-MC105C, MCT70C-MCT95C	100	609
882	Braço da alavanca de comando LH.MC60C-MC105C, MCT70C-MCT95C	200	611
891	MC60C-MC105C, MCT70C-MCT85C	200	613
891	MC60C, MC70C, MCT70C	250	615
896	Ferramenta MC60C-MC105C, MCT70C-MCT95C	100	617
896	Ferramenta MC60C-MC105C, MCT70C-MCT95C	150	619
896	Ferramenta MC60C-MC105C, MCT70C-MCT95C	200	621

ÍNDICE

ÍNDICE

GRUPO		Seção	Página
897	Etiquetas adesivas MC60C-MC105C, MCT70C-MCT95C	100	623
897	Etiquetas adesivas MC60C-MC105C, MCT70C-MCT95C	120	625
897	Etiquetas adesivas MC60C-MC105C, MCT70C-MCT95C	130	627
897	Etiquetas adesivas BELGIAN.MC60C-MC105C, MCT70C-MCT95C	150	629
897	Etiquetas adesivas MC60C-MC105C, MCT70C-MCT95C	250	631
897	Etiquetas adesivas MC60C-MC105C, MCT70C-MCT95C	300	633
897	Etiquetas adesivas MC60C-MC105C, MCT70C-MCT95C	350	635
897	Etiquetas adesivas MC60C-MC105C, MCT70C-MCT95C	400	637
897	Etiquetas adesivas MCT70C-MCT95C	450	639
897	Etiquetas adesivas MC60C-MC85C, MC105C, MCT70C-MCT95C	500	641
897	Etiquetas adesivas MC70C-MC105C	550	643
897	Etiquetas adesivas MC70C	600	645
897	Etiquetas adesivas MC60C	650	647
897	Etiquetas adesivas MCT70C	700	649
897	Etiquetas adesivas MC85C	750	651
897	Etiquetas adesivas MCT85C	800	653
897	Etiquetas adesivas MC105C	850	655
897	Etiquetas adesivas MC95C	900	657
897	Etiquetas adesivas MC60C-MC105C, MCT70C-MCT95C	1000	659
897	Etiquetas adesivas MC70C-MC105C	1050	661
897	Etiquetas adesivas MCT70C-MCT95C	1100	663

GROUPE		Section	Page
810	Corps de cabine MC60C-MC105C	100	505
810	Corps de cabine MC60C-MC105C	150	507
810	Corps de cabine MC60C-MC105C	200	509
810	Corps de cabine MCT70C, MCT85C	250	511
810	Corps de cabine MCT70C-MCT95C	300	513
810	Corps de cabine MCT70C-MCT95C	350	515
818	Éléments de montage de cabine MC60C-MC105C, MCT70C-MCT95C	100	517
818	Éléments de montage de cabine MC60C, MC70C, MC105C, MCT70C	150	519
818	Suspension de cabine. MC60C-MC105C, MCT70C-MCT95C	300	521
818	Suspension de cabine. MC60C, MC70C, MC105C, MCT70C	350	523
818	Suspension de cabine. MC60C-MC105C, MCT70C-MCT95C	400	525
818	Levier de sécurité MC60C-MC105C, MCT70C-MCT95C	500	527
821	Capot moteur MC60C-MC105C, MCT70C-MCT95C	100	529
821	Installation de l'attache de cabine/capot MC60C-MC105C, MCT70C-MCT95C	200	531
821	Support de verrou, compartiment moteur MC70C-MC105C, MCT70C-MCT95C	300	533
831	Porte MC60C-MC105C	100	535
831	Porte MC60C-MC105C	150	537
831	Porte MCT70C-MCT95C	200	539
831	Porte MCT70C-MCT95C	250	541
831	Porte avec piéces de montage MC60C-MC105C, MCT70C-MCT95C	500	543
841	Installation du miroir MC60C-MC105C, MCT70C-MCT95C	100	545
841	Cabine : porte / vitres / joints MC60C-MC105C, MCT70C-MCT95C	500	547
843	Vitres MC60C-MC105C, MCT70C-MCT95C	100	549
843	Vitres MC60C, MC70C, MC95C, MCT70C, MCT85C	150	551
843	Vitres MC60C-MC105C, MCT70C-MCT95C	200	553
843	Vitres MC60C-MC105C, MCT70C-MCT95C	300	555
843	Vitres MC60C-MC105C, MCT70C-MCT95C	350	557
843	Pare-brises MC60C-MC105C, MCT70C-MCT95C	500	559
843	Pare-brises MC60C-MC105C, MCT70C-MCT95C	550	561
843	Pare-brises MC60C-MC105C, MCT70C-MCT95C	600	563
843	Pare-brises LEXAN MC60C-MC105C, MCT70C-MCT95C	650	565
852	Siège du conucteur MC60C-MC105C, MCT70C-MCT95C	100	567
852	Siège du conducteur, suspension pneumatique MC60C-MC105C, MCT70C-MCT95C	600	569
852	Siège du conducteur, suspension pneumatique MC60C-MC105C, MCT70C-MCT95C	650	571
852	Siège du conducteur, suspension pneumatique MC60C, MC70C, MC95C, MCT70C-MCT95C	700	573
852	Ceinture de sécurité MC60C-MC105C, MCT70C-MCT95C	1000	575
852	Ceinture de sécurité MC70C-MC105C, MCT70C-MCT95C	1200	577
870	Distribution d'air MC60C-MC105C, MCT70C-MCT95C	100	579
870	Distribution d'air MC60C-MC105C, MCT70C-MCT95C	150	581
870	Installation de chauffage MC60C-MC105C, MCT70C-MCT95C	200	585
870	Installation de chauffage MC60C-MC105C, MCT70C-MCT95C	250	587
870	Installation du chauffage cabine MC60C-MC105C, MCT70C-MCT95C	300	589
870	Installation de chauffage MC60C-MC105C, MCT70C-MCT95C	350	591
870	Climatisation MC60C-MC105C, MCT70C-MCT95C	400	593
870	Condenseur. MC60C-MC105C, MCT70C-MCT95C	450	595
880	Cabine : accessoires CANOPY MC60C-MC105C, MCT70C-MCT95C	100	597
880	Cabine : accessoires MC60C-MC85C, MC105C, MCT70C, MCT95C	150	599
880	Pavillon MC60C-MC105C, MCT70C-MCT95C	400	601
881	Accoudoir MC60C-MC105C, MCT70C-MCT95C	100	603
881	Accoudoir LH.MC60C-MC105C, MCT70C-MCT95C	200	605
881	Tableau de bord MC60C-MC105C, MCT70C-MCT95C	300	607
882	Barre MC60C-MC105C, MCT70C-MCT95C	100	609
882	Levier de commande LH.MC60C-MC105C, MCT70C-MCT95C	200	611

GROUPE		Section	Page
891	Grillage de protection pare-brise MC60C-MC105C, MCT70C-MCT85C	200	613
891	Protection toit cabine conducteur MC60C, MC70C, MCT70C	250	615
896	Outil MC60C-MC105C, MCT70C-MCT95C	100	617
896	Outil MC60C-MC105C, MCT70C-MCT95C	150	619
896	Outil MC60C-MC105C, MCT70C-MCT95C	200	621
897	Décalcomanies MC60C-MC105C, MCT70C-MCT95C	100	623
897	Décalcomanies MC60C-MC105C, MCT70C-MCT95C	120	625
897	Décalcomanies MC60C-MC105C, MCT70C-MCT95C	130	627
897	Décalcomanies BELGIAN.MC60C-MC105C, MCT70C-MCT95C	150	629
897	Décalcomanies MC60C-MC105C, MCT70C-MCT95C	250	631
897	Décalcomanies MC60C-MC105C, MCT70C-MCT95C	300	633
897	Décalcomanies MC60C-MC105C, MCT70C-MCT95C	350	635
897	Décalcomanies MC60C-MC105C, MCT70C-MCT95C	400	637
897	Décalcomanies MCT70C-MCT95C	450	639
897	Décalcomanies MC60C-MC85C, MC105C, MCT70C-MCT95C	500	641
897	Décalcomanies MC70C-MC105C	550	643
897	Décalcomanies MC70C	600	645
897	Décalcomanies MC60C	650	647
897	Décalcomanies MCT70C	700	649
897	Décalcomanies MC85C	750	651
897	Décalcomanies MCT85C	800	653
897	Décalcomanies MC105C	850	655
897	Décalcomanies MC95C	900	657
897	Décalcomanies MC60C-MC105C, MCT70C-MCT95C	1000	659
897	Décalcomanies MC70C-MC105C	1050	661
897	Décalcomanies MCT70C-MCT95C	1100	663



Volvo Construction Equipment
www.volvoce.com

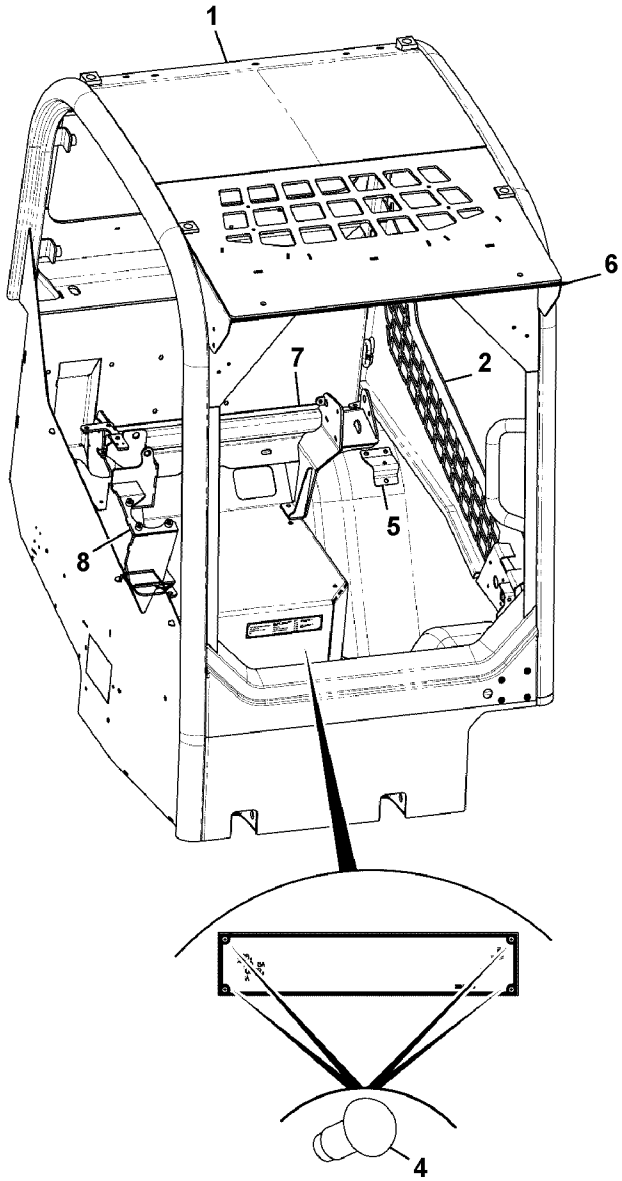

Volvo Construction Equipment
1064178

Fig.	Part No.	Quantity 1	2	3	PS	KIT	Description	Denominación	Denominação	Dénomination	Notes
1		1			NS		Canopy	Casquete		Auvent	
2		1			NS		Door	Puerta	Porta	Porte	
4	**VOE 16212314**	4					Drive screw	Tornillo motriz	Parafuso	Vis de commande	
5		1			NS		Cover Plate	Placa Tapa	Placa de cobertura	Protection en tole	
6	**VOE 17210039**	1					Bracket	Consola	Suporte	Console	
7		1			NS		Bracket	Ménsula	Suporte	Console	
8		1			NS		Bracket	Ménsula	Suporte	Console	

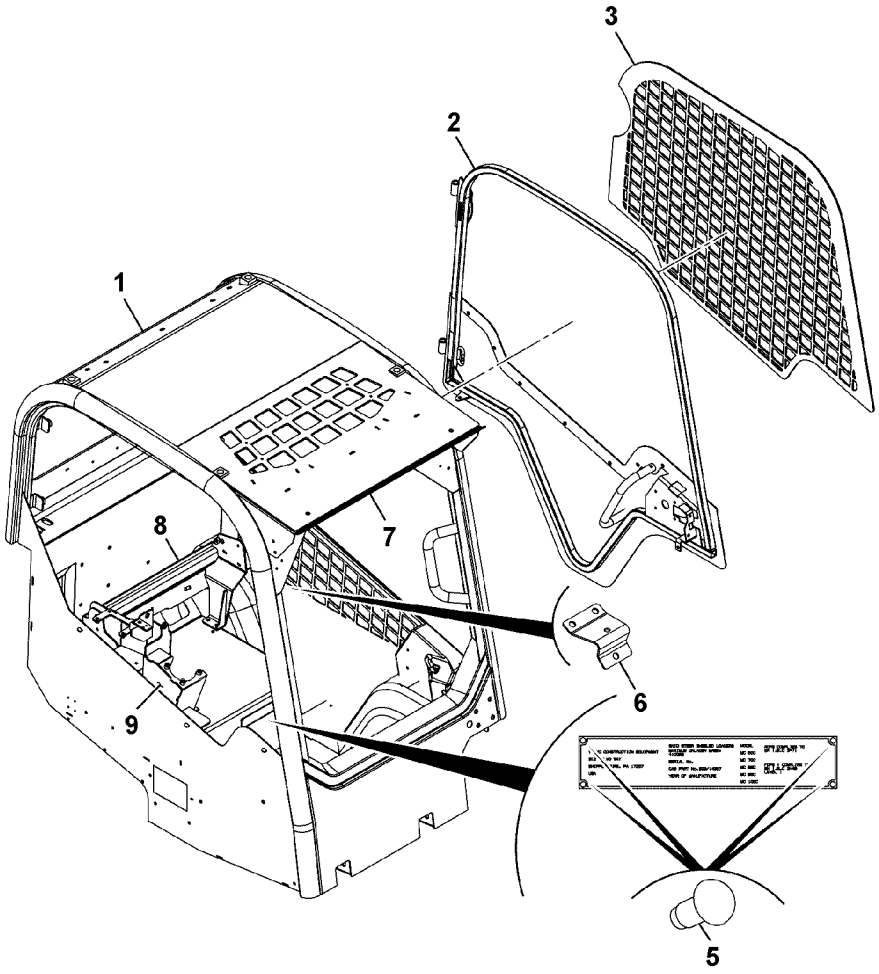
3
2
1
8
7
6
9
5

Fig.	Part No.	Quantity 1	2	3	PS	KIT	Description	Denominación	Denominação	Dénomination	Notes
1		1			NS		Canopy	Casquete		Auvent	
2		1			NS		Door	Puerta	Porta	Porte	
3	**VOE 17209763**	1					Grille	Rejilla	Grade	Grille	
5	**VOE 16212314**	4					Drive screw	Tornillo motriz	Parafuso	Vis de commande	
6		1			NS		Strut	Soporte	Escora	Etai	
7	**VOE 17210039**	1					Bracket	Consola	Suporte	Console	
8		1			NS		Bracket	Ménsula	Suporte	Console	
9		1			NS		Bracket	Ménsula	Suporte	Console	

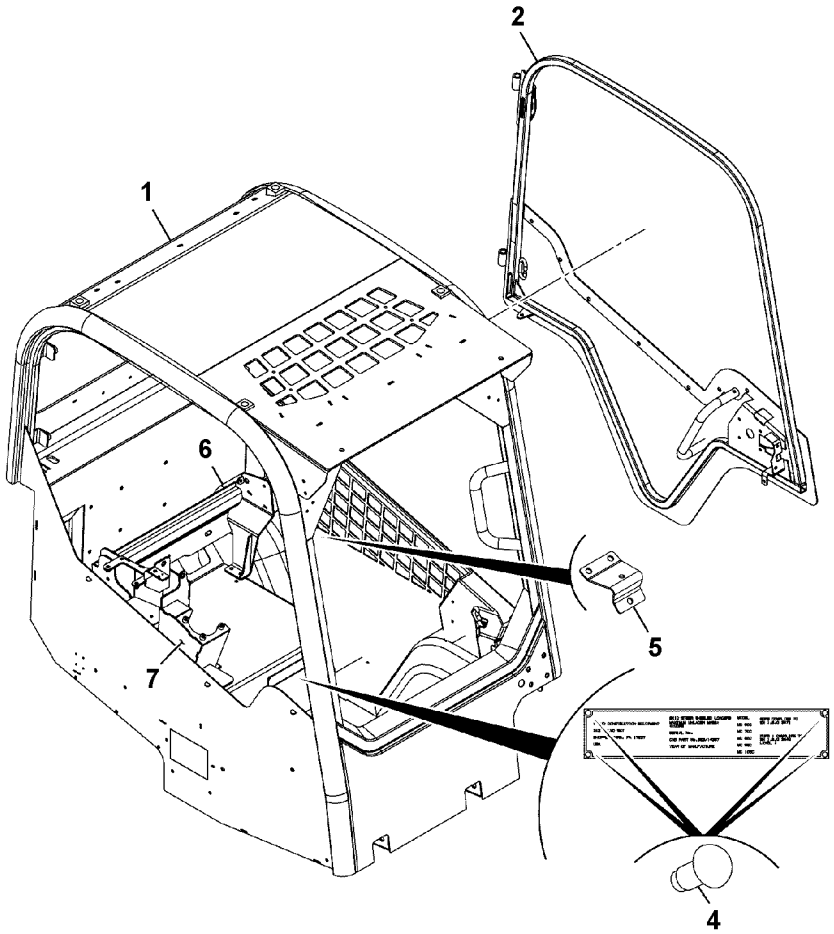
1
2
4
5
6
7

Fig.	Part No.	Quantity 1	2	3	PS	KIT	Description	Denominación	Denominação	Dénomination	Notes
1		1			NS		Canopy	Casquete		Auvent	
2		1			NS		Door	Puerta	Porta	Porte	
4	**VOE 16212314**	4					Drive screw	Tornillo motriz	Parafuso	Vis de commande	
5		1			NS		Handle	Manilla	Manípulo	Poignee	
6		1			NS		Bracket	Ménsula	Suporte	Console	
7		1			NS		Bracket	Ménsula	Suporte	Console	

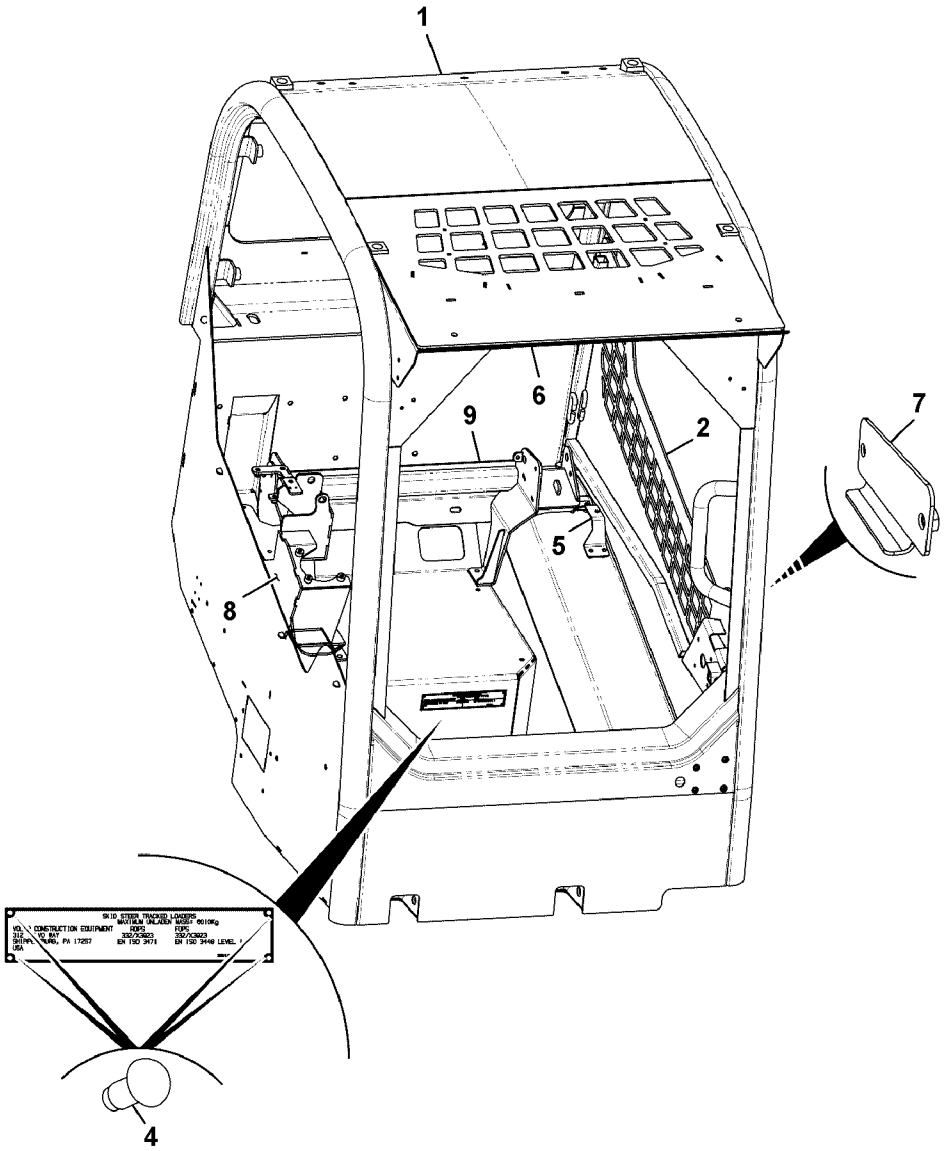

Volvo Construction Equipment
1064176

Fig.	Part No.	Quantity 1	2	3	PS	KIT	Description	Denominación	Denominação	Dénomination	Notes
1	**VOE 17210163**	1					Cab	Cabina	Cabine	Cabine	See group 810, Page
2	**VOE 17209874**	1					Door	Puerta	Porta	Porte	
4	**VOE 16212314**	4					Drive screw	Tornillo motriz	Parafuso	Vis de commande	
5	**VOE 17210485**	1					Handle	Mango	Manopla	Poignée	
6	**VOE 17210039**	1					Bracket	Consola	Suporte	Console	
7	**VOE 17210531**	1					Cover plate	Cubierta	Placa tampa	Plaque de recouvrement	
8		1					Bracket	Ménsula	Suporte	Console	
9		1					Bracket	Ménsula	Suporte	Console	

1		**Corps de cabine** **Cuerpo de cabina** **Cab body** **MCT70C, MCT85C**	Catalogue id **20649**	Group **810**
2			Illustr. No **1064176**	Section **250**
3			Issue **PUB 20030904-B**	Page **511**
4				
5				

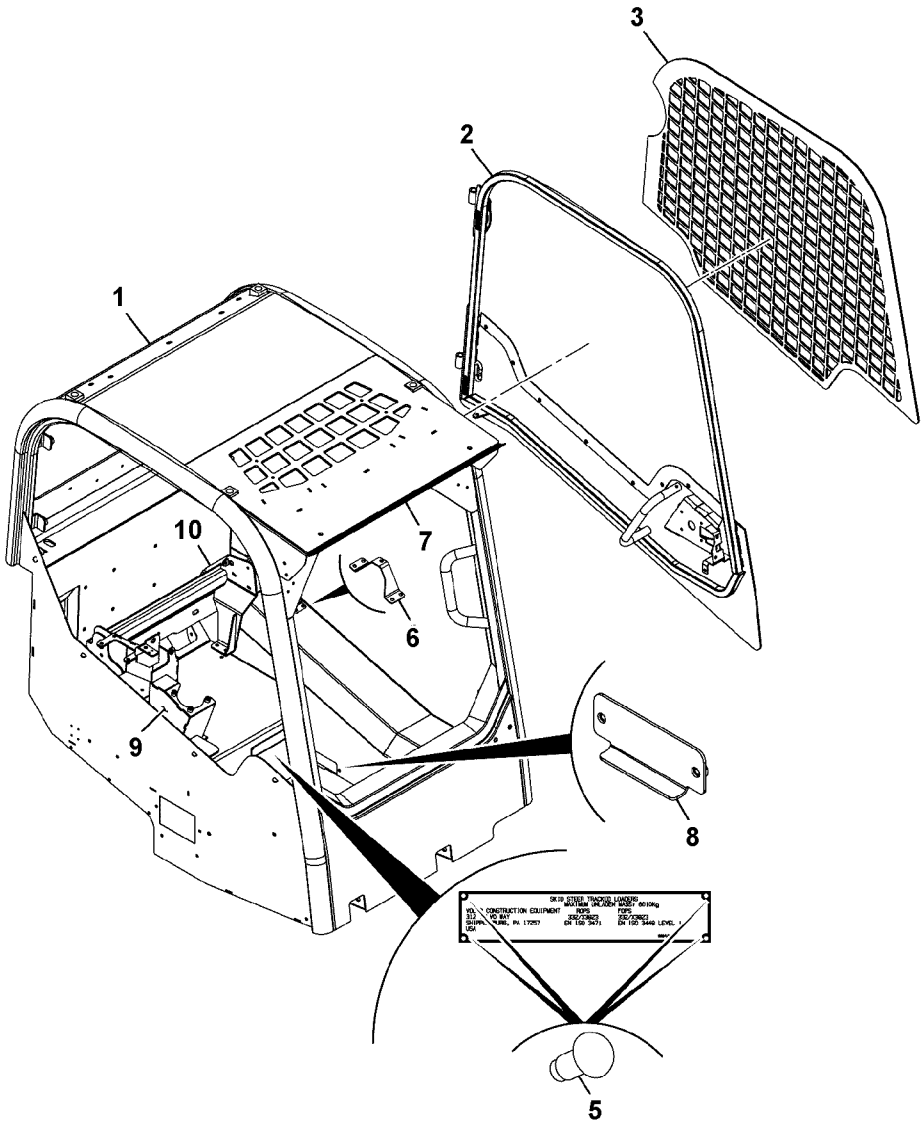

Volvo Construction Equipment
1064175

Fig.	Part No.	Quantity 1	2	3	PS	KIT	Description	Denominación	Denominação	Dénomination	Notes
1	**VOE 17210163**	1					Cab	Cabina	Cabine	Cabine	See group 810, Page
2	**VOE 17209878**	1					Door	Puerta	Porta	Porte	
3	**VOE 17209763**	1					Grille	Rejilla	Grade	Grille	
5	**VOE 16212314**	4					Drive screw	Tornillo motriz	Parafuso	Vis de commande	
6	**VOE 17210485**	1					Handle	Mango	Manopla	Poignée	
7	**VOE 17210039**	1					Bracket	Consola	Suporte	Console	
8	**VOE 17210531**	1					Cover plate	Cubierta	Placa tampa	Plaque de recouvrement	
9		1			NS		Bracket	Ménsula	Suporte	Console	
10		1			NS		Bracket	Ménsula	Suporte	Console	

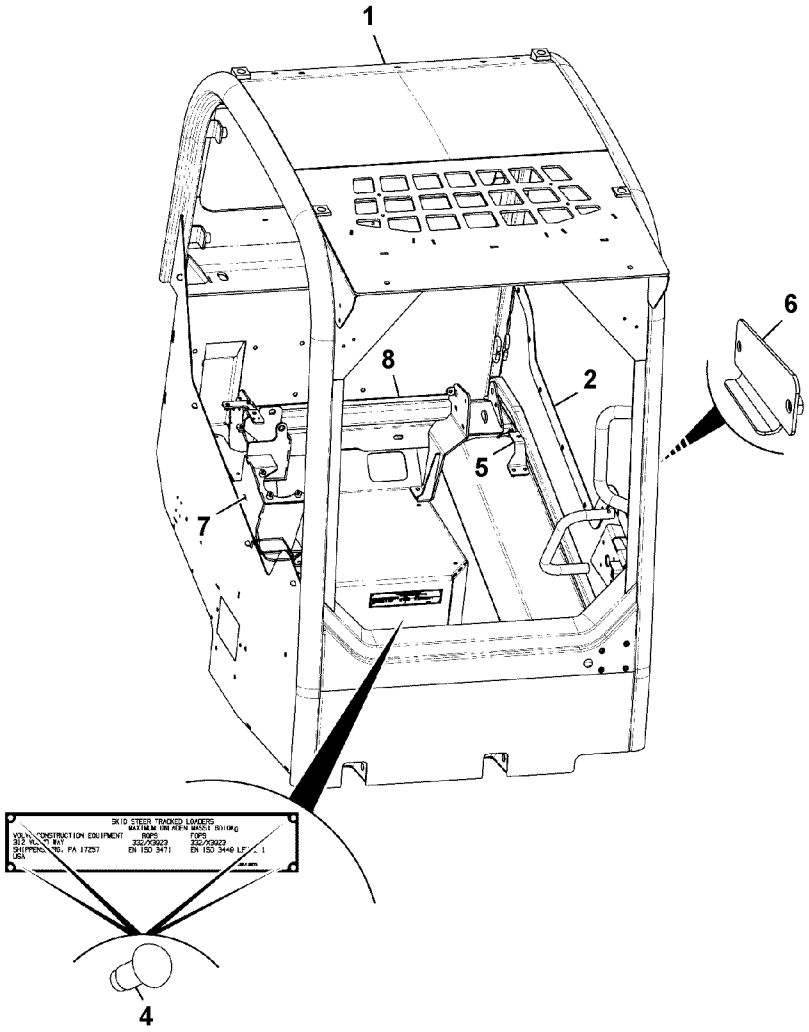

Volvo Construction Equipment
1064173

Fig.	Part No.	Quantity 1	2	3	PS	KIT	Description	Denominación	Denominação	Dénomination	Notes
1	**VOE 17210163**	1					Cab	Cabina	Cabine	Cabine	See group 810, Page
2	**VOE 17209878**	1					Door	Puerta	Porta	Porte	
4	**VOE 16212314**	4					Drive screw	Tornillo motriz	Parafuso	Vis de commande	
5	**VOE 17210485**	1					Handle	Mango	Manopla	Poignée	
6	**VOE 17210531**	1					Cover plate	Cubierta	Placa tampa	Plaque de recouvrement	
7		1			NS		Bracket	Ménsula	Suporte	Console	
8		1			NS		Bracket	Ménsula	Suporte	Console	

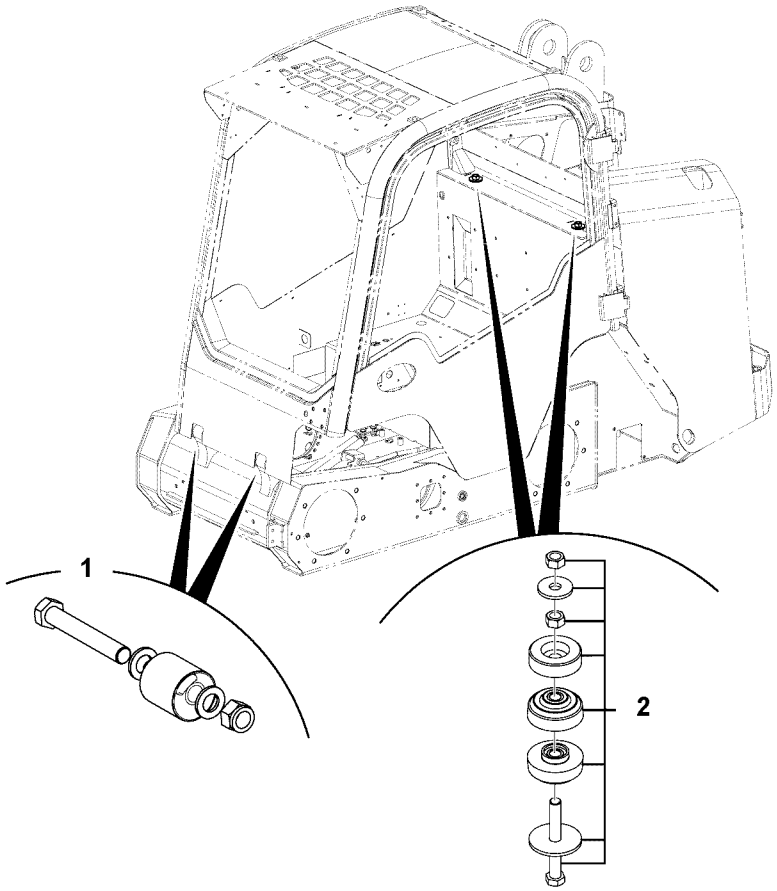
1
2

Fig.	Part No.	Quantity 1	2	3	PS	KIT	Description	Denominación	Denominação	Dénomination	Notes
1		1			NS		Mounting Parts	Piezas de fijación	Peças de montagem	Éléments de fixation	CAB, FRONT
2		1					Mounting Parts	Piezas de fijación	Peças de montagem	Éléments de fixation	CAB, REAR

See group 818, Page 525

1		**Éléments de montage de cabine** **Peças de montagem da cabine** **Piezas de fijación de cabina** **Cab Mounting Parts**	Catalogue id **20649**	Group **818**
2			Illustr. No **1064247**	Section **100**
3			Issue **PUB 20030904-B**	Page **517**
4				
5		**MC60C-MC105C, MCT70C-MCT95C**		

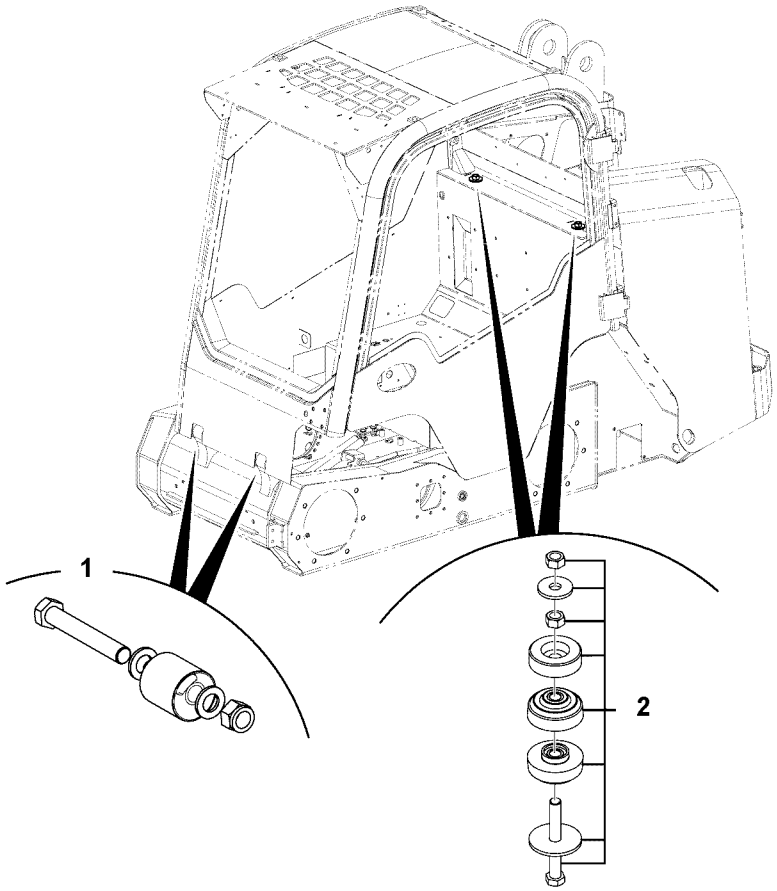
1
2

Fig.	Part No.	Quantity 1	2	3	PS	KIT	Description	Denominación	Denominação	Dénomination	Notes
1		1					Mounting Parts	Piezas de fijación	Peças de montagem	Éléments de fixation	CAB, FRONT See group 818, Page 523
2		1					Mounting Parts	Piezas de fijación	Peças de montagem	Éléments de fixation	CAB, REAR See group 818, Page 525

1		**Éléments de montage de cabine** **Peças de montagem da cabine** **Piezas de fijación de cabina** **Cab Mounting Parts**	Catalogue id **20649**	Group **818**
2			Illustr. No **1064247**	Section **150**
3			Issue **PUB 20030904-B**	Page **519**
4				
5		**MC60C, MC70C, MC105C, MCT70C**		

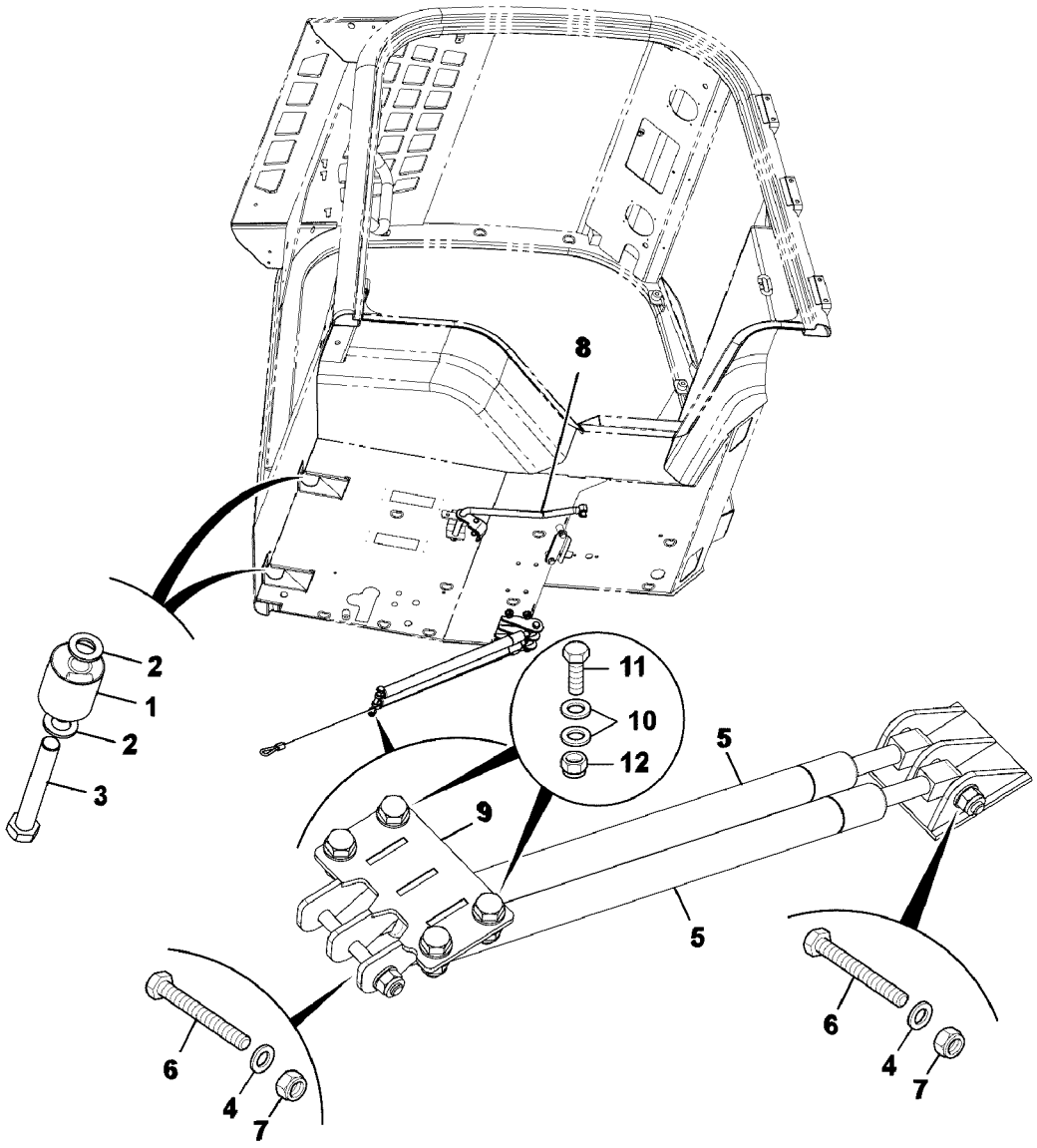

Volvo Construction Equipment
1064244

Fig.	Part No.	Quantity 1	2	3	PS	KIT	Description	Denominación	Denominação	Dénomination	Notes
1	**VOE 17210496**	2					Ring	Anillo	Anel	Bague	
2	**VOE 13955900**	2					Washer	Arandela	Arruela	Rondelle	
3	**VOE 16212258**	2					Set screw	Tornillo tope	Parafuso batente	Vis butée	
4	**VOE 16212138**	2			SS		Plain washer	Arandela plana	Arruela simples	Rondelle plane	
5	**VOE 17230320**	2					Strut	Pata	Estrutura	Pied	
6	**VOE 16212292**	2					Bolt	Perno	Parafuso	Boulon	
7	**VOE 16212125**	2					Nut	Tuerca	Porca	Écrou	
8		1					Safety device	Dispositivo de seguridad	Dispositivo de segurança	Dispositif de sécurité	See group 818, Page 527
9	**VOE 17210494**	1					Plate	Chapa	Chapa	Tôle	
10	**VOE 20764147**	8					Washer	Arandela	Arruela	Rondelle	
11		4			NS		Bolt	Perno	Parafuso	Boulon	
12	**VOE 16212126**	4					Nut	Tuerca	Porca	Écrou	

1		**Suspension de cabine.** **Bloco de montagem da cabine** **Suspension de cabina.** **Cab mounting block.**	Catalogue id **20649**	Group **818**
2			Illustr. No **1064244**	Section **300**
3			Issue **PUB 20030904-B**	Page **521**
4				
5		**MC60C-MC105C, MCT70C-MCT95C**		

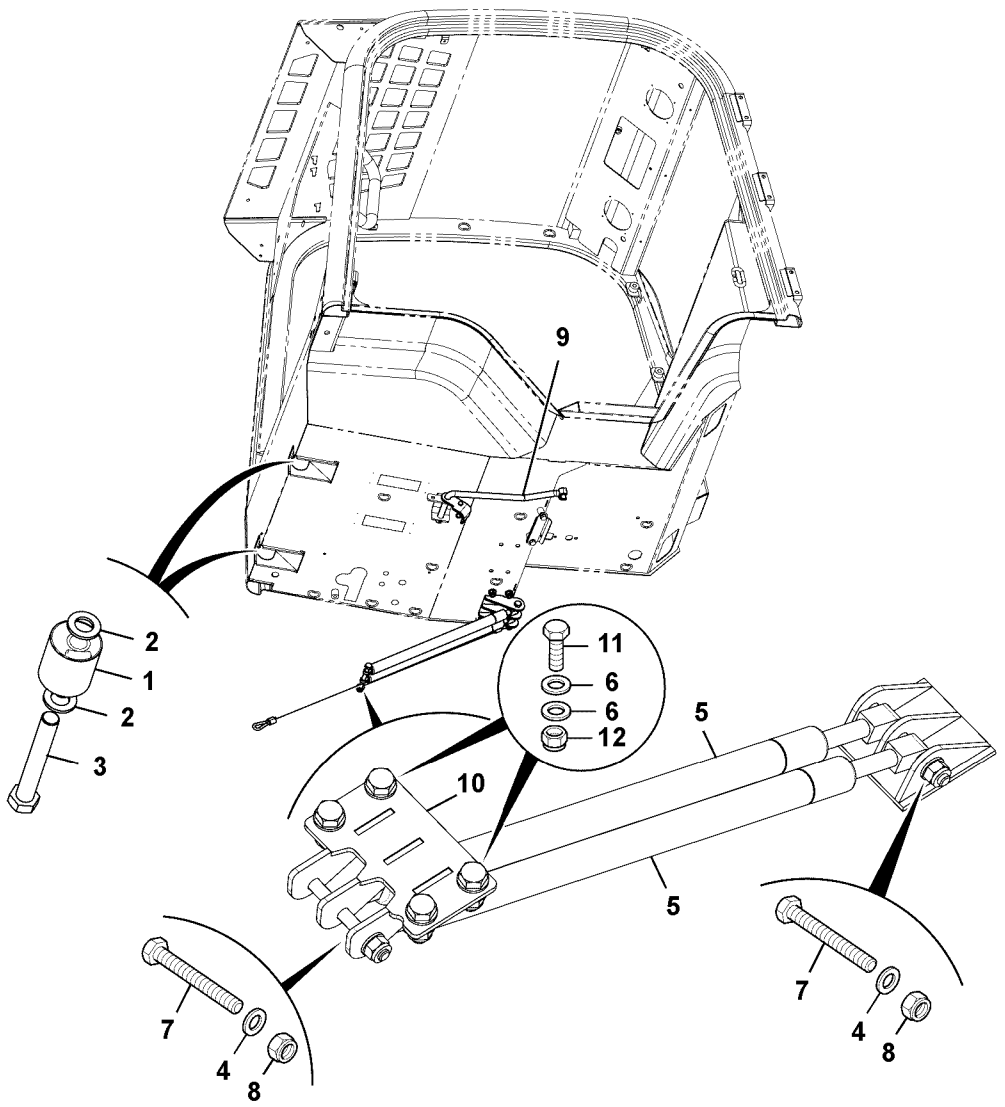

Volvo Construction Equipment
1064246

Fig.	Part No.	Quantity 1	2	3	PS	KIT	Description	Denominación	Denominação	Dénomination	Notes
1	**VOE 17210496**	2					Ring	Anillo	Anel	Bague	
2	**VOE 13955900**	2					Washer	Arandela	Arruela	Rondelle	
3	**VOE 16212258**	2					Set screw	Tornillo tope	Parafuso batente	Vis butée	
4	**VOE 16212138**	2			SS		Plain washer	Arandela plana	Arruela simples	Rondelle plane	
5	**VOE 17223975**	2					Strut	Pata	Estrutura	Pied	
6	**VOE 20764147**	8					Washer	Arandela	Arruela	Rondelle	
7	**VOE 16212292**	2					Bolt	Perno	Parafuso	Boulon	
8	**VOE 16212125**	2					Nut	Tuerca	Porca	Écrou	
9		1					Safety device	Dispositivo de seguridad	Dispositivo de segurança	Dispositif de sécurité	See group 818, Page 527
10	**VOE 17210494**	1					Plate	Chapa	Chapa	Tôle	
11		4					Bolt	Perno	Parafuso	Boulon	
12	**VOE 16212126**	4					Nut	Tuerca	Porca	Écrou	

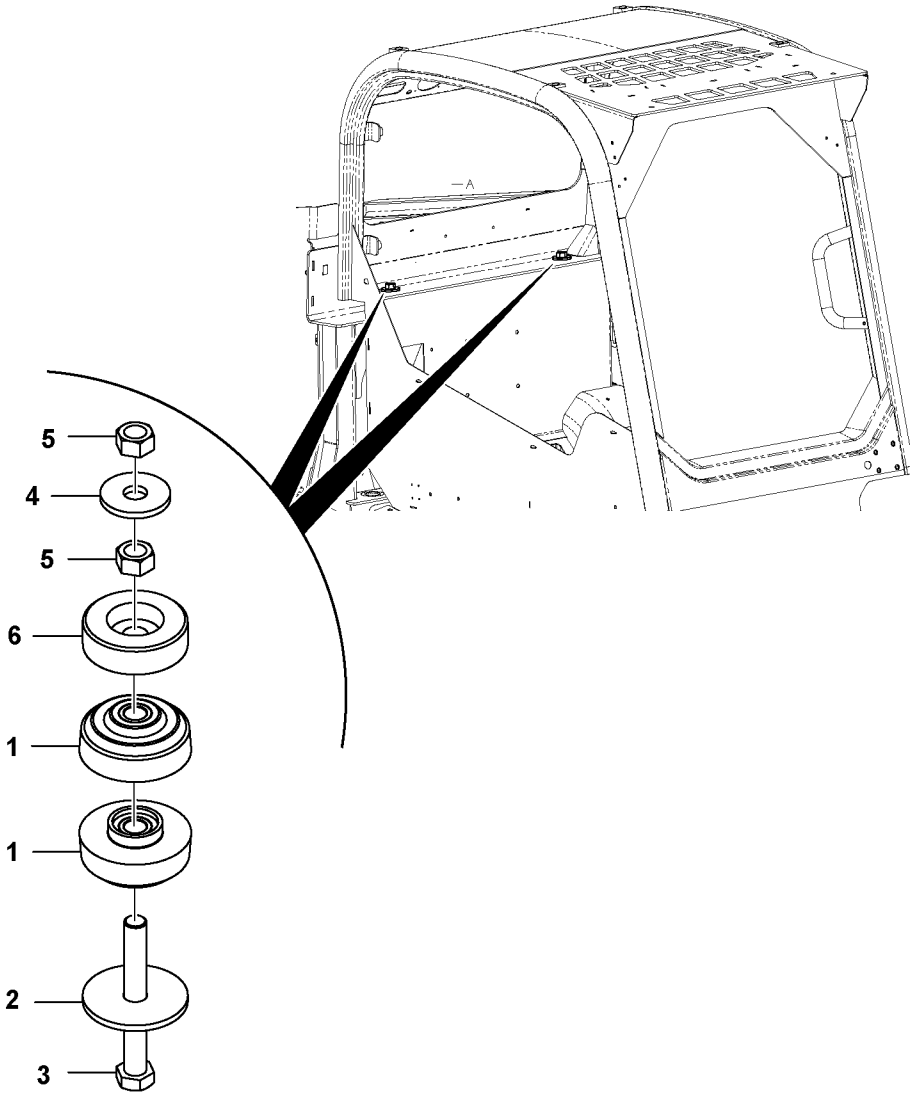
5
4
5
6
1
1
2
3

Fig.	Part No.	Quantity 1	2	3	PS	KIT	Description	Denominación	Denominação	Dénomination	Notes
1	**VOE 17210497**	4					Ring	Anillo	Anel	Bague	
2	**VOE 16213336**	2					Plate	Chapa	Chapa	Tôle	
3	**VOE 17205063**	2					Bolt	Perno	Parafuso	Boulon	
4	**VOE 17204978**	2					Plate	Chapa	Chapa	Tôle	
5	**VOE 16212127**	4					Nut	Tuerca	Porca	Écrou	
6	**VOE 17210156**	2					Bushing	Casquillo	Bucha	Bague	

1		**Suspension de cabine.** **Bloco de montagem da cabine** **Suspension de cabina.** **Cab mounting block.**	Catalogue id **20649**	Group **818**
2			Illustr. No **1064245**	Section **400**
3			Issue **PUB 20030904-B**	Page **525**
4				
5		**MC60C-MC105C, MCT70C-MCT95C**		

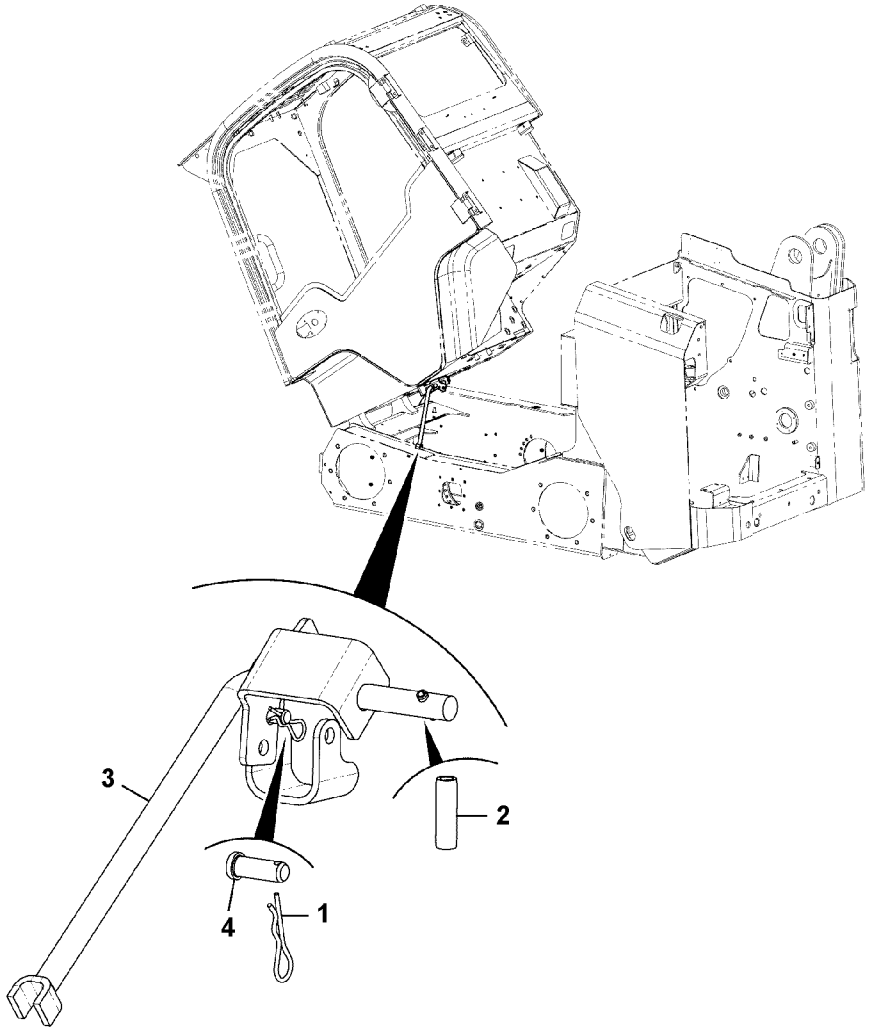
3
2
4
1

Fig.	Part No.	Quantity 1	2	3	PS	KIT	Description	Denominación	Denominação	Dénomination	Notes
1	**VOE 17204937**	1					Cotter	Llave	Chaveta	Cliquet	
2	**VOE 17210544**	1					Pin	Pasador	Pino	Goupille	
3		1			NS		Arm	Brazo	Braço	Bras	
4		1			NS		Pin	Pasador	Pino	Goupille	

1		**Levier de sécurité** **Braço de segurança** **Brazo de seguridad** **Safety arm**	Catalogue id **20649**	Group **818**
2			Illustr. No **1064061**	Section **500**
3			Issue **PUB 20030904-B**	Page **527**
4				
5		**MC60C-MC105C, MCT70C-MCT95C**		

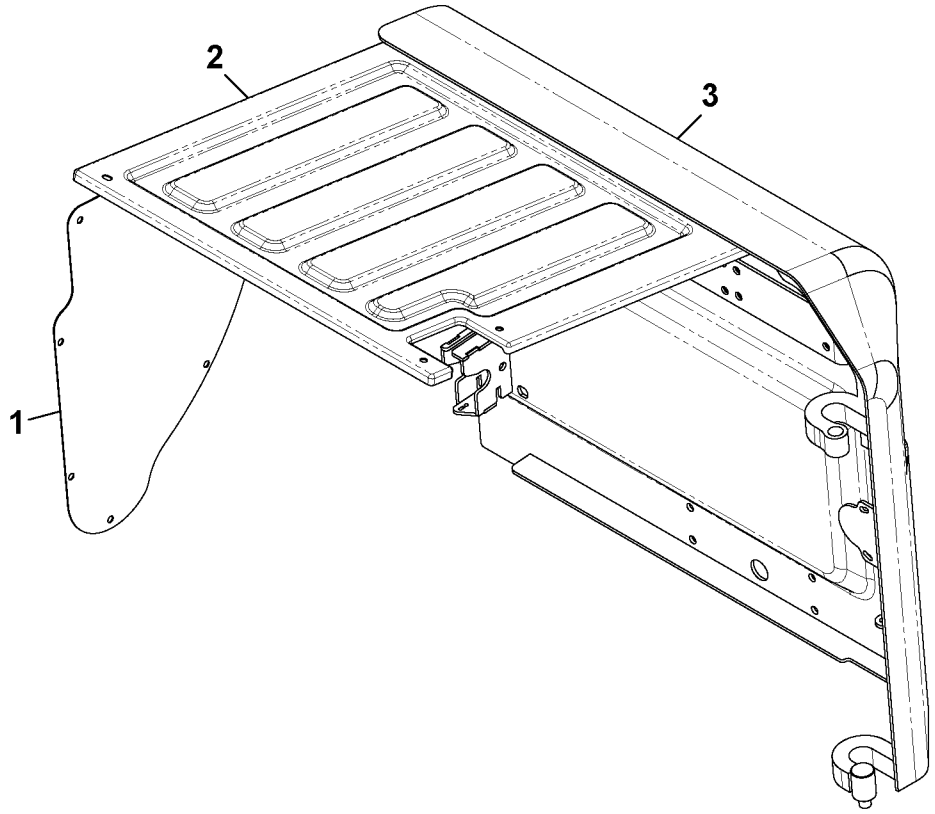
2
3
1

Fig.	Part No.	Quantity 1	2	3	PS	KIT	Description	Denominación	Denominação	Dénomination	Notes
1		1			NS		Grille section	Sección calandra	Seção grade	Section grille	
2	**VOE 17229609**	1					Grille section	Sección calandra	Seção grade	Section grille	
3	**VOE 17229209**	1					Door	Puerta	Porta	Porte	

1		**Capot moteur** **Capô** **Capo** **Engine hood**	Catalogue id **20649**	Group **821**
2			Illustr. No **1064230**	Section **100**
3				
4			Issue **PUB 20030904-B**	Page **529**
5		**MC60C-MC105C, MCT70C-MCT95C**		

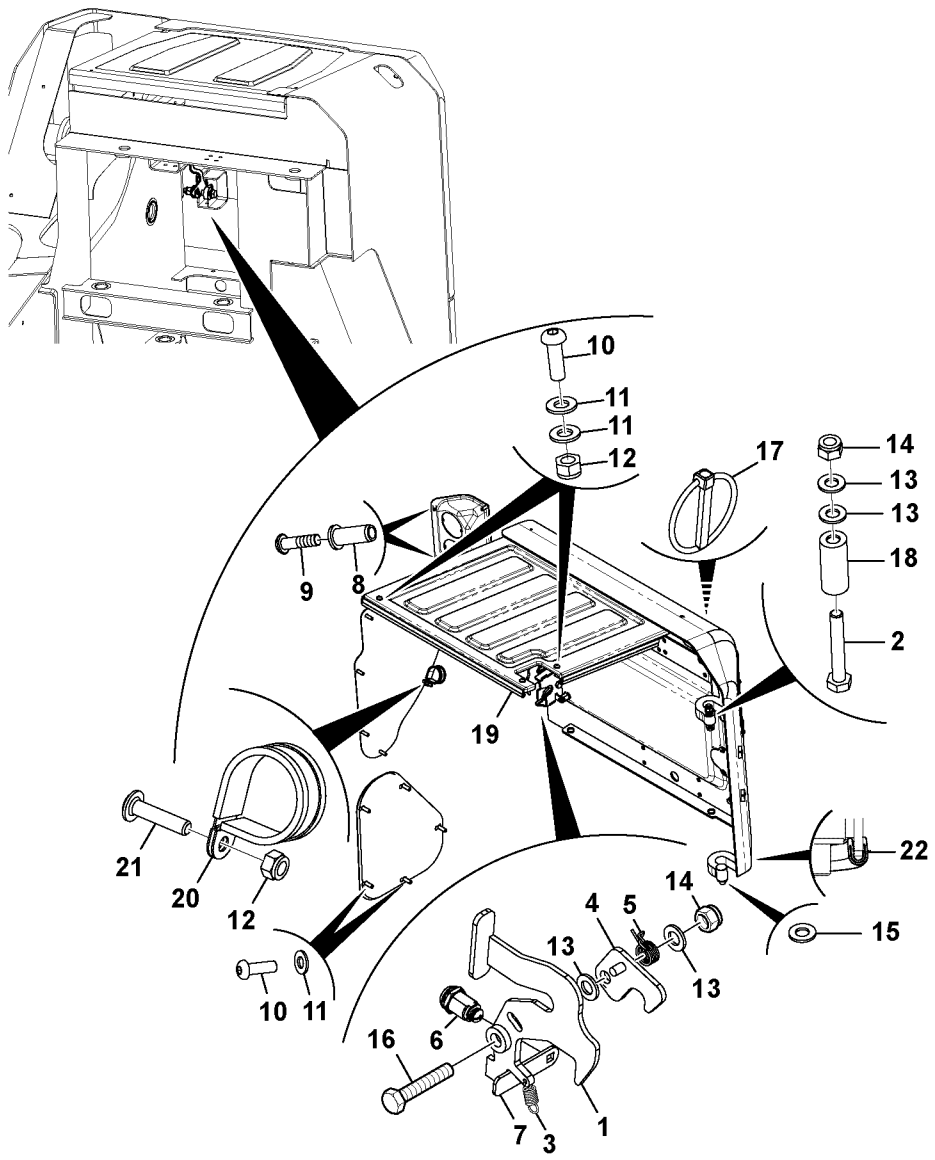

Volvo Construction Equipment
1064231

Fig.	Part No.	Quantity 1	2	3	PS	KIT	Description	Denominación	Denominação	Dénomination	Notes
1	**VOE 17209651**	1					Latch	Pestillo	Lingueta	Loquet	
2	**VOE 17228896**	1					Bolt	Perno	Parafuso	Boulon	
3	**VOE 16213267**	1					Spring	Resorte	Mola	Ressort	
4	**VOE 17209795**	1					Plate	Chapa	Chapa	Tôle	
5	**VOE 16213528**	1					Torsion spring	Resorte torsión	Mola de torção	Ressort torsion	
6	**VOE 17204960**	1					Lock	Cierre	Trava	Serrure	
7	**VOE 17209802**	1					Plate	Chapa	Chapa	Tôle	
8	**VOE 16212397**	8					Rivet nut	Tuerca de remache	Porca rebite	Écrou rivet	
9	**VOE 17205029**	8					Screw	Tornillo	Parafuso	Vis	
10	**VOE 17205273**	16					Bolt	Perno	Parafuso	Boulon	
11	**VOE 20460127**	12					Washer	Arandela	Arruela	Rondelle	
12	**VOE 16212120**	3					Lock nut	Contratuerca	Porca trava	Contre-écrou	
13	**VOE 20764147**	4					Washer	Arandela	Arruela	Rondelle	
14	**VOE 16212126**	2					Nut	Tuerca	Porca	Écrou	
15	**VOE 17210330**	1					Nut	Tuerca	Porca	Écrou	
16	**VOE 17205245**	1					Bolt	Perno	Parafuso	Boulon	
17	**VOE 17210554**	1					Pin	Pasador	Pino	Goupille	
18	**VOE 17210339**	1					Spacer	Distanciador	Espaçador	Entretoise	
19	**VOE 17225043**	1					Body	Carrocería	Carroceria	Corps	
20	**VOE 17205448**	1					Clip	Clip	Clipe	Clip	
21		1			NS		Screw	Tornillo	Parafuso	Vis	
22		1			NS		Strip	Cinta	Cinta	Bande	

1		**Installation de l'attache de cabine/capot** **Trava do capô, instalação** **Instalación de pestillo de tracción de cabina/capó** **Hood lock installation**	Catalogue id **20649**	Group **821**
2				
3			Illustr. No **1064231**	Section **200**
4				
5		**MC60C-MC105C, MCT70C-MCT95C**	Issue **PUB 20030904-B**	Page **531**

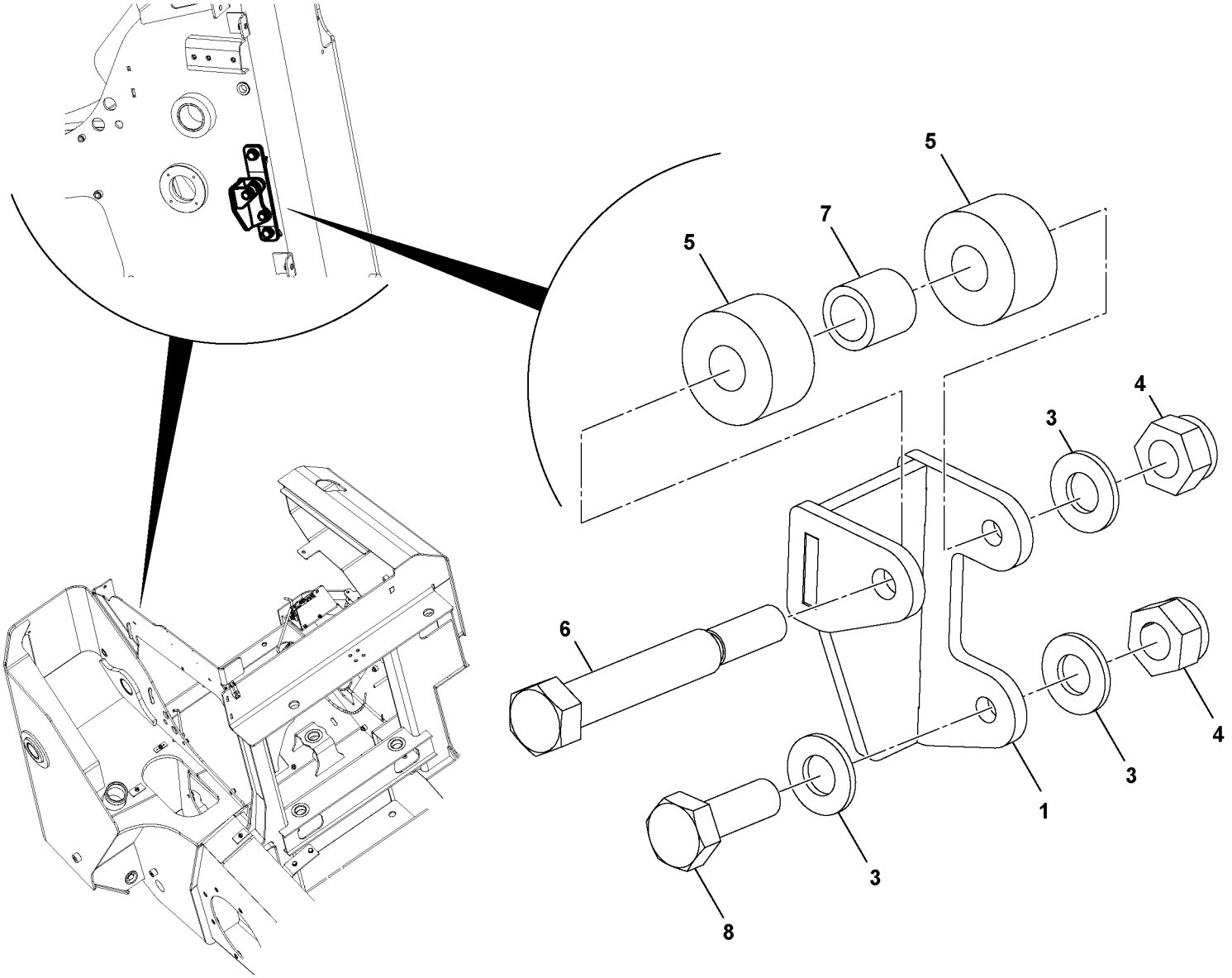

Volvo Construction Equipment
1064058

Fig.	Part No.	Quantity 1	2	3	PS	KIT	Description	Denominación	Denominação	Dénomination	Notes
1		1			NS		Bracket	Ménsula	Suporte	Console	
3	**VOE 16212138**	3			SS		Plain washer	Arandela plana	Arruela simples	Rondelle plane	
4	**VOE 16212125**	2					Nut	Tuerca	Porca	Écrou	
5	**VOE 17205178**	2					Spacer	Distanciador	Espaçador	Entretoise	
6	**VOE 17210323**	1					Bolt	Perno	Parafuso	Boulon	
7	**VOE 17210153**	1					Bushing	Casquillo	Bucha	Bague	
8	**VOE 16212272**	1					Bolt	Perno	Parafuso	Boulon	

1		**Support de verrou, compartiment moteur** **Suporte de trava, compartimento do motor** **Soporte del cierre, compartimento del motor** **Latch bracket, Engine compartment**	Catalogue id **20649**	Group **821**
2			Illustr. No **1064058**	Section **300**
3			Issue **PUB 20030904-B**	Page **533**
4				
5		**MC70C-MC105C, MCT70C-MCT95C**		

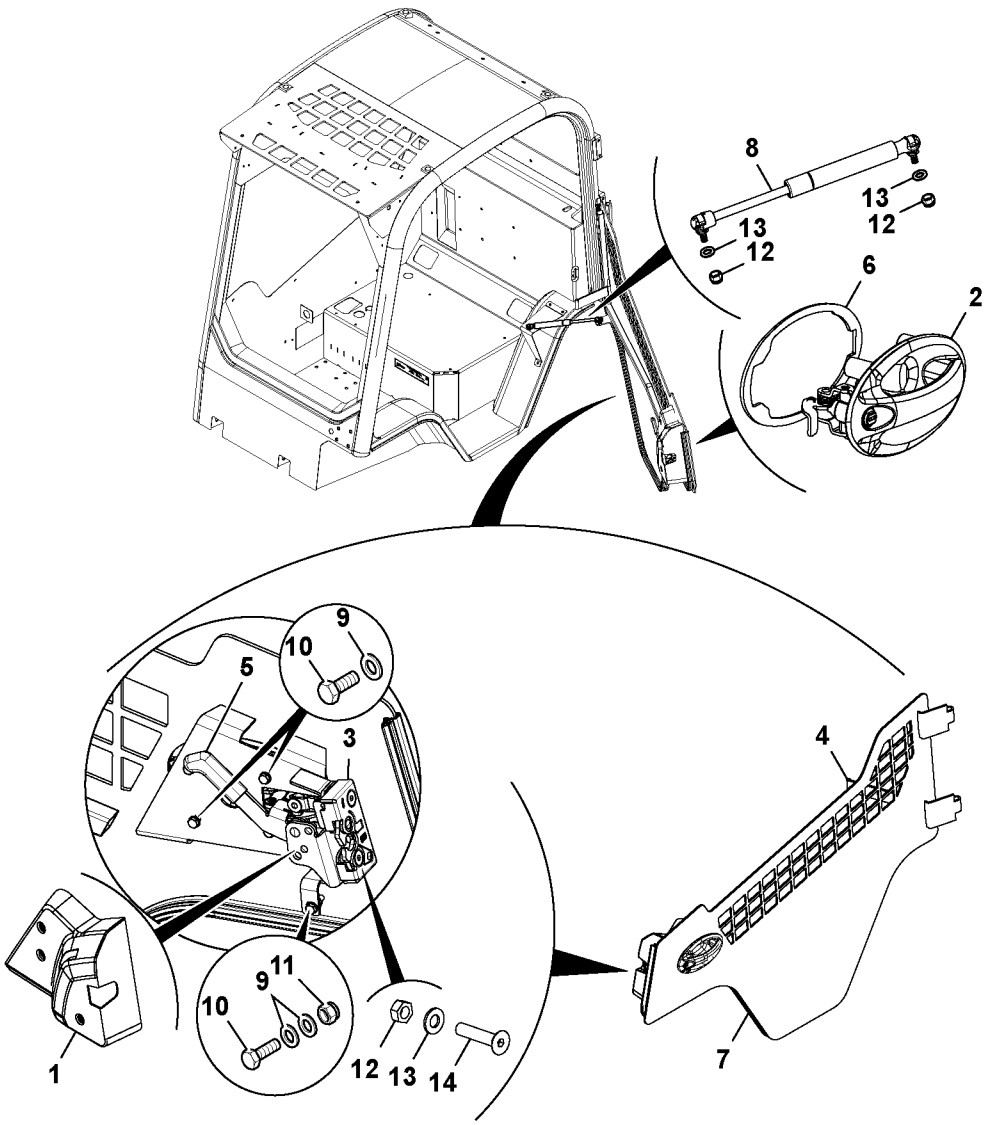
8
13
12
13
12
6
2
9
10
5
3
4
11
9
10
12
13
14
1
7

Fig.	Part No.	Quantity 1	2	3	PS	KIT	Description	Denominación	Denominação	Dénomination	Notes
1	**VOE 17210525**	1					Cover plate	Cubierta	Placa tampa	Plaque de recouvrement	
2	**VOE 17205374**	1					Door handle	Manilla puerta	Puxador da porta	Poignée de porte	
3	**VOE 17205012**	1					Latch	Pestillo	Lingueta	Loquet	
4	**VOE 17210358**	1					Strap	Cable	Tira	Sangle	
5	**VOE 17204918**	1					Latch	Pestillo	Lingueta	Loquet	
6	**VOE 17205377**	1					Gasket	Junta	Junta	Joint	
7	**VOE 17237853**	1					Sealing strip	Moldura retén	Friso de vedação	Lisse étanchéité	
8	**VOE 17210390**	1					Gas strut	Amortiguador de gas	Amortecedor a gás	Compas à gaz	
9	**VOE 973494**	6					Washer	Arandela	Arruela	Rondelle	
10	**VOE 17205250**	5					Hexagon screw	Tornillo hexagonal	Parafuso sextavado	Vis à tête hexagonale	
11	**VOE 20460939**	1					Hexagon nut	Tuerca hexagonal	Porca sextavada	Écrou hexagonal	
12	**VOE 20405733**	4					Hexagon nut	Tuerca hexagonal	Porca sextavada	Écrou hexagonal	
13	**VOE 20460127**	4					Washer	Arandela	Arruela	Rondelle	
14	**VOE 16212398**	2					Screw	Tornillo	Parafuso	Vis	

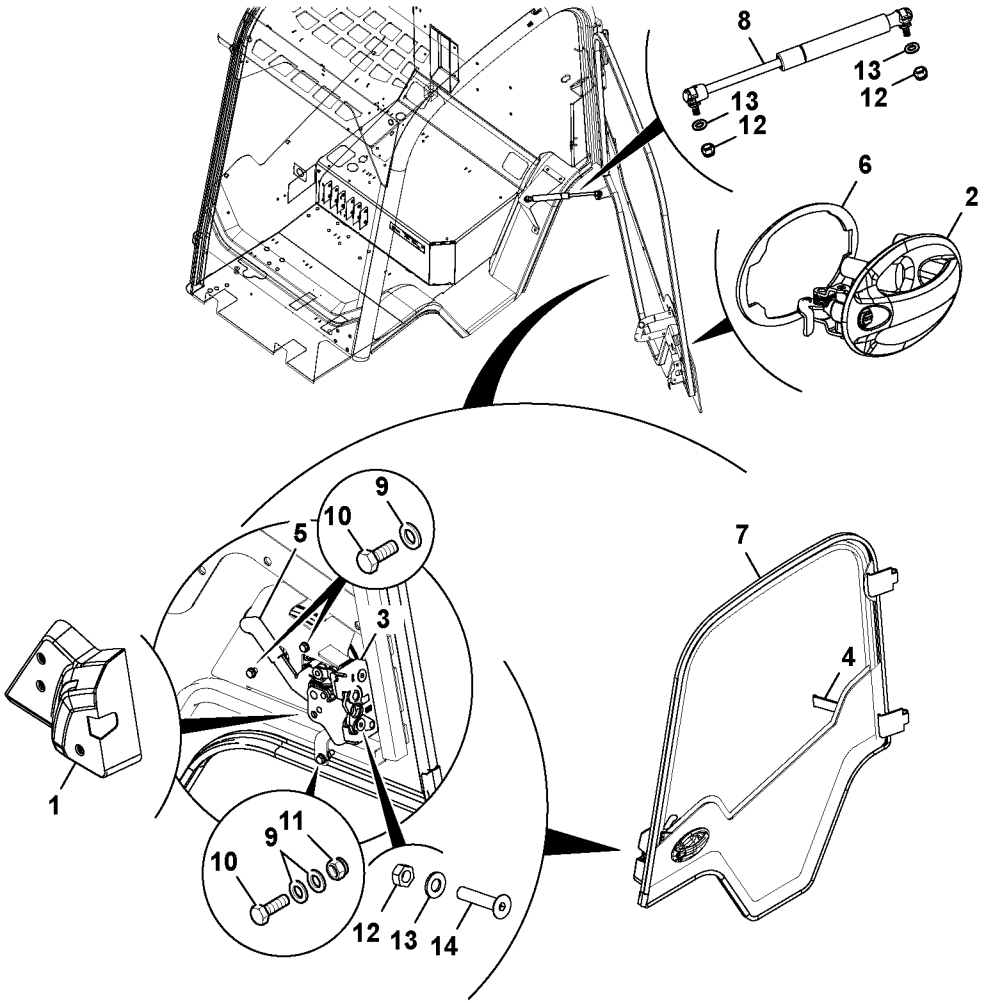
8
13
12
13
12
6
2
9
10
5
3
7
4
1
9
11
10
12
13
14

Fig.	Part No.	Quantity 1	2	3	PS	KIT	Description	Denominación	Denominação	Dénomination	Notes
1	**VOE 17210526**	1					Cover plate	Cubierta	Placa tampa	Plaque de recouvrement	
2	**VOE 17205374**	1					Door handle	Manilla puerta	Puxador da porta	Poignée de porte	
3	**VOE 17205012**	1					Latch	Pestillo	Lingueta	Loquet	
4	**VOE 17210358**	1					Strap	Cable	Tira	Sangle	
5	**VOE 17204918**	1					Latch	Pestillo	Lingueta	Loquet	
6	**VOE 17205377**	1					Gasket	Junta	Junta	Joint	
7	**VOE 17233738**	1					Sealing moulding	Listón retén	Friso de vedação	Joint étanchéité	
8	**VOE 17210390**	1					Gas strut	Amortiguador de gas	Amortecedor a gás	Compas à gaz	
9	**VOE 973494**	6					Washer	Arandela	Arruela	Rondelle	
10	**VOE 17205250**	5					Hexagon screw	Tornillo hexagonal	Parafuso sextavado	Vis à tête hexagonale	
11	**VOE 20460939**	1					Hexagon nut	Tuerca hexagonal	Porca sextavada	Écrou hexagonal	
12	**VOE 20405733**	4					Hexagon nut	Tuerca hexagonal	Porca sextavada	Écrou hexagonal	
13	**VOE 20460127**	4					Washer	Arandela	Arruela	Rondelle	
14	**VOE 16212398**	2					Screw	Tornillo	Parafuso	Vis	

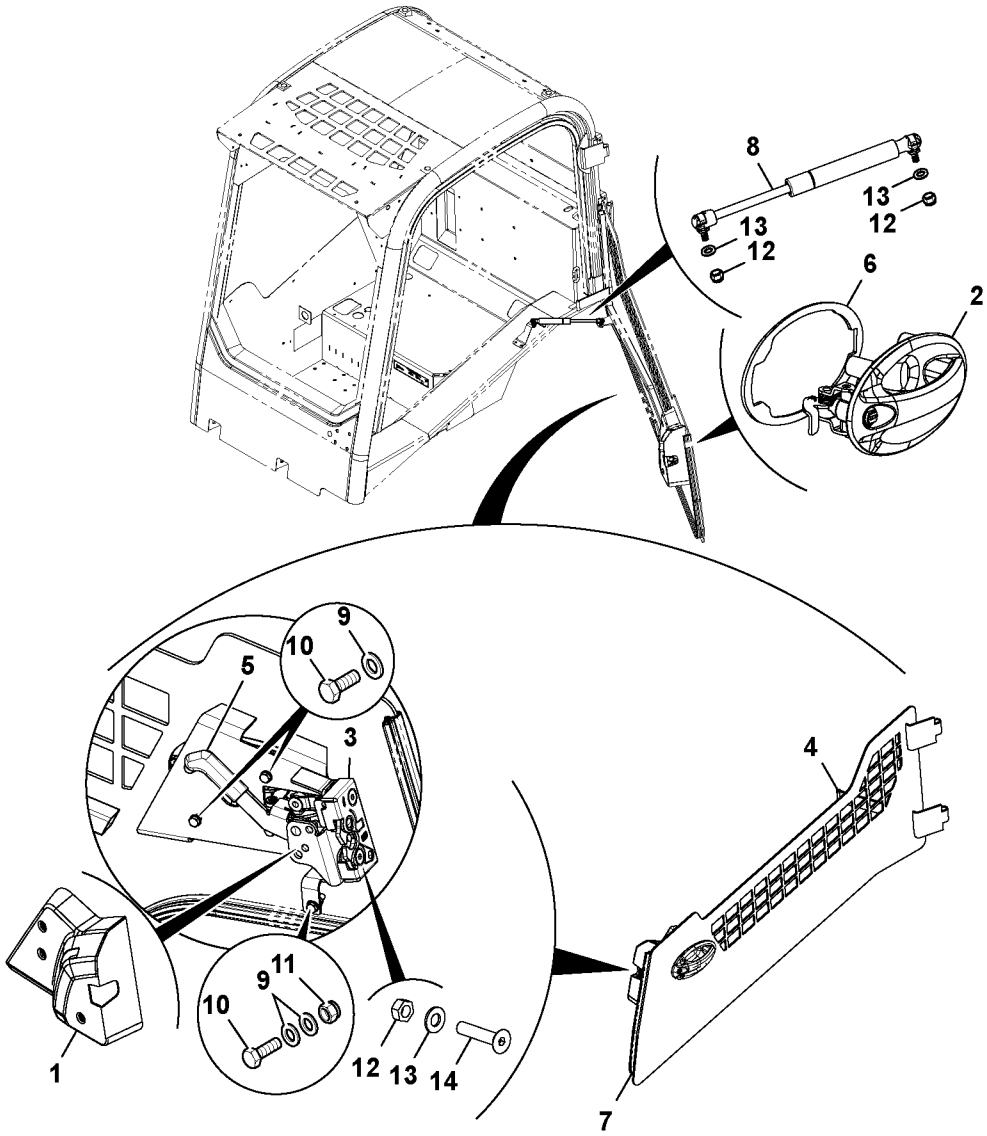
8
13
12
13
12
6
2
9
10
5
3
4
9
11
10
12
13
14
1
7

Fig.	Part No.	Quantity 1	2	3	PS	KIT	Description	Denominación	Denominação	Dénomination	Notes
1	**VOE 17210525**	1					Cover plate	Cubierta	Placa tampa	Plaque de recouvrement	
2	**VOE 17205374**	1					Door handle	Manilla puerta	Puxador da porta	Poignée de porte	
3	**VOE 17205012**	1					Latch	Pestillo	Lingueta	Loquet	
4	**VOE 17210358**	1					Strap	Cable	Tira	Sangle	
5	**VOE 17204918**	1					Latch	Pestillo	Lingueta	Loquet	
6	**VOE 17205377**	1					Gasket	Junta	Junta	Joint	
7	**VOE 17237852**	1					Sealing strip	Moldura retén	Friso de vedação	Lisse étanchéité	
8	**VOE 17210390**	1					Gas strut	Amortiguador de gas	Amortecedor a gás	Compas à gaz	
9	**VOE 973494**	6					Washer	Arandela	Arruela	Rondelle	
10	**VOE 17205250**	5					Hexagon screw	Tornillo hexagonal	Parafuso sextavado	Vis à tête hexagonale	
11	**VOE 20460939**	1					Hexagon nut	Tuerca hexagonal	Porca sextavada	Écrou hexagonal	
12	**VOE 20405733**	4					Hexagon nut	Tuerca hexagonal	Porca sextavada	Écrou hexagonal	
13	**VOE 20460127**	4					Washer	Arandela	Arruela	Rondelle	
14	**VOE 16212398**	2					Screw	Tornillo	Parafuso	Vis	

1		**Porte** **Porta** **Puerta** **Door**	Catalogue id **20649**	Group **831**
2			Illustr. No **1064070**	Section **200**
3			Issue **PUB 20030904-B**	Page **539**
4				
5		**MCT70C-MCT95C**		

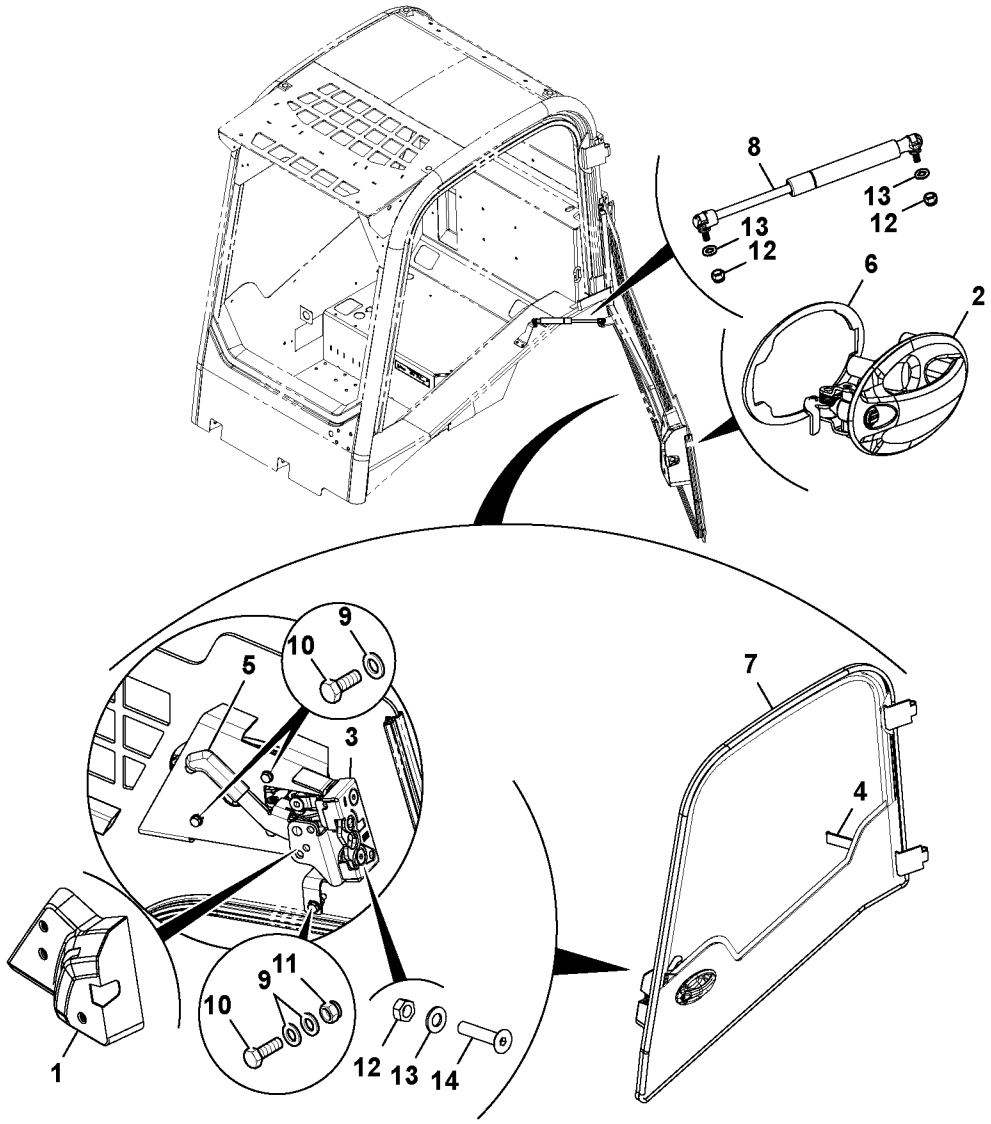
8
13
12
13
12
6
2
9
10
5
3
7
4
9
11
10
1
12
13
14

Fig.	Part No.	Quantity 1	2	3	PS	KIT	Description	Denominación	Denominação	Dénomination	Notes
1	**VOE 17210526**	1					Cover plate	Cubierta	Placa tampa	Plaque de recouvrement	
2	**VOE 17205374**	1					Door handle	Manilla puerta	Puxador da porta	Poignée de porte	
3	**VOE 17205012**	1					Latch	Pestillo	Lingueta	Loquet	
4	**VOE 17210358**	1					Strap	Cable	Tira	Sangle	
5	**VOE 17204918**	1					Latch	Pestillo	Lingueta	Loquet	
6	**VOE 17205377**	1					Gasket	Junta	Junta	Joint	
7	**VOE 17233799**	1					Sealing moulding	Listón retén	Friso de vedação	Joint étanchéité	
8	**VOE 17210390**	1					Gas strut	Amortiguador de gas	Amortecedor a gás	Compas à gaz	
9	**VOE 973494**	6					Washer	Arandela	Arruela	Rondelle	
10	**VOE 17205250**	5					Hexagon screw	Tornillo hexagonal	Parafuso sextavado	Vis à tête hexagonale	
11	**VOE 20460939**	1					Hexagon nut	Tuerca hexagonal	Porca sextavada	Écrou hexagonal	
12	**VOE 20405733**	4					Hexagon nut	Tuerca hexagonal	Porca sextavada	Écrou hexagonal	
13	**VOE 20460127**	4					Washer	Arandela	Arruela	Rondelle	
14	**VOE 16212398**	2					Screw	Tornillo	Parafuso	Vis	

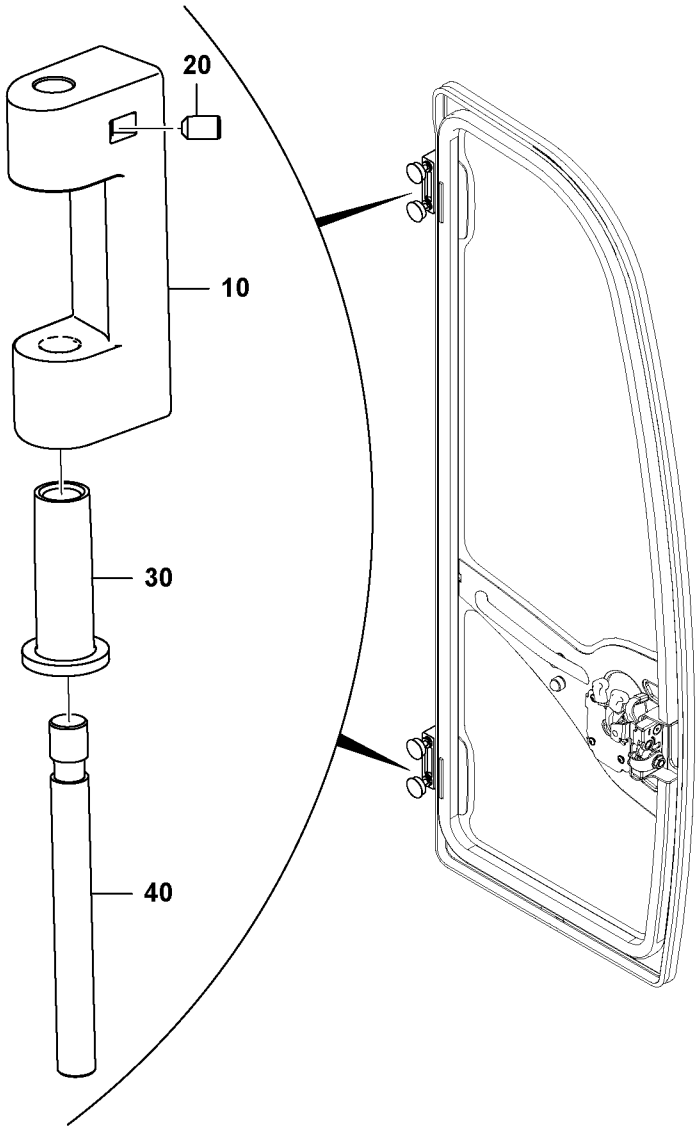
20
10
30
40

Fig.	Part No.	Quantity 1	2	3	PS	KIT	Description	Denominación	Denominação	Dénomination	Notes
10		1			NS		Hinge	Bisagra	Dobradiça	Charniere	
20	**VOE 17230134**	1					Screw	Tornillo	Parafuso	Vis	
30	**VOE 17209365**	1					Bushing	Casquillo	Bucha	Bague	
40	**VOE 17204966**	1					Pin	Pasador	Pino	Goupille	

1		**Porte avec piéces de montage** **Puerta con accesprios de montaje** **Door mounting**	Catalogue id **20649**	Group **831**
2				
3			Illustr. No **1063990**	Section **500**
4				
5		**MC60C-MC105C, MCT70C-MCT95C**	Issue **PUB 20030904-B**	Page **543**

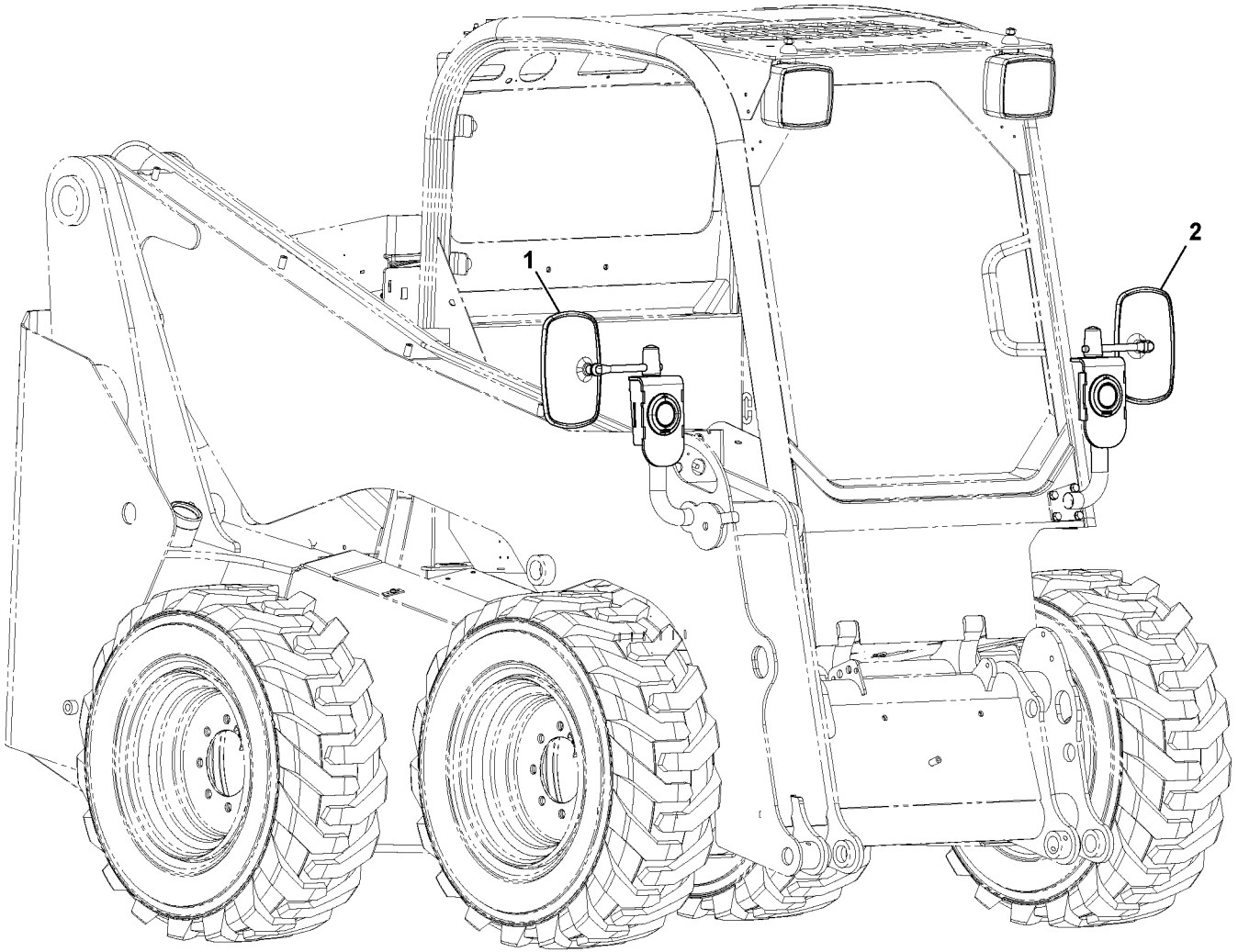

Volvo Construction Equipment
1064134

Fig.	Part No.	Quantity 1	2	3	PS	KIT	Description	Denominación	Denominação	Dénomination	Notes
1		1					R V Mirror Kit	Juego Retrov	Kit de espelho R V	Kit Retroviseur	RH See group 352, Page 267
2		1					R V Mirror Kit	Juego Retrov	Kit de espelho R V	Kit Retroviseur	LH See group 350, Page 263

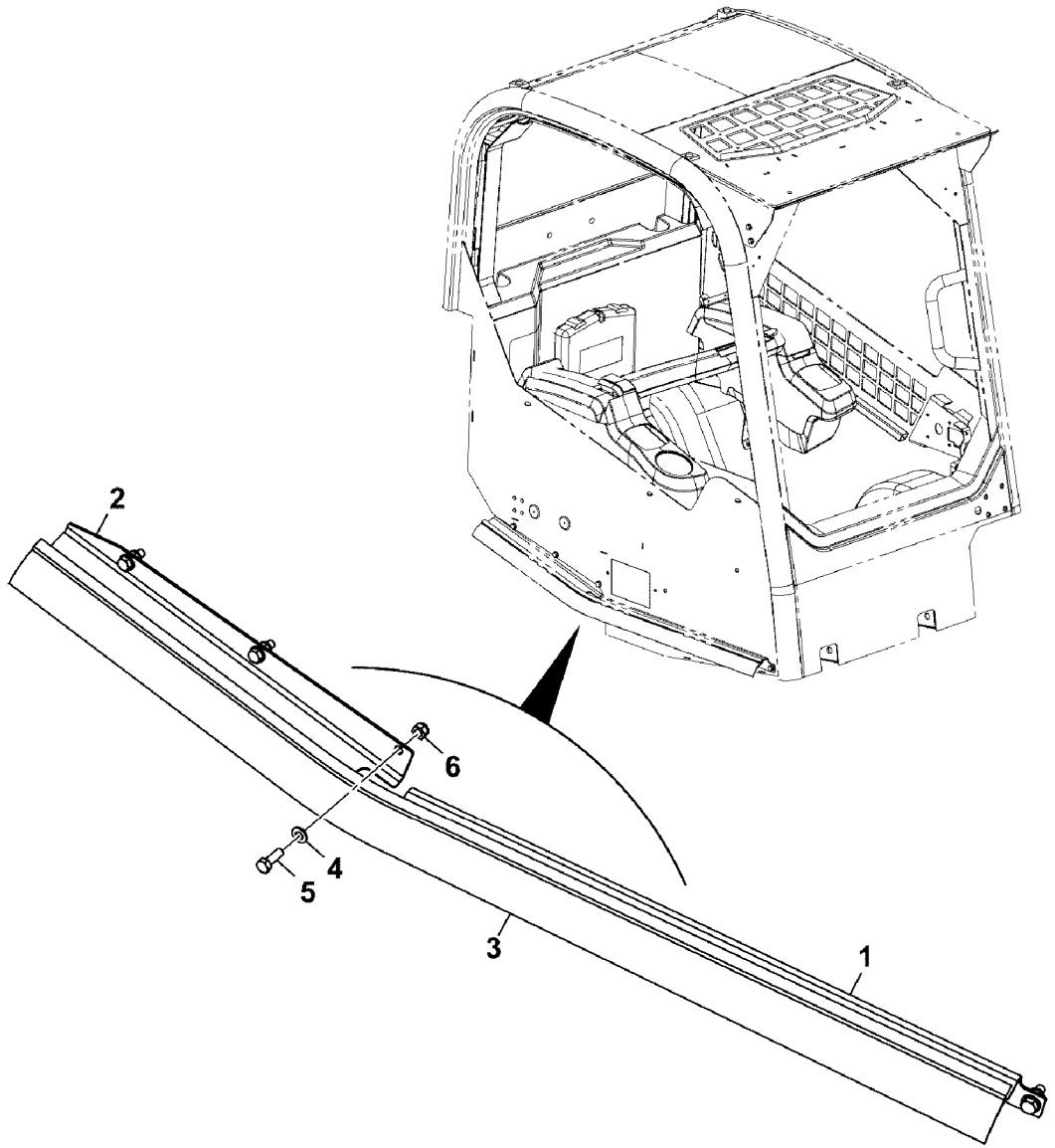

Volvo Construction Equipment
1064450

Fig.	Part No.	Quantity 1	2	3	PS	KIT	Description	Denominación	Denominação	Dénomination	Notes
1		1			NS		Seal	Junta	Vedação	Joint	
2		1			NS		Seal	Junta	Vedação	Joint	
3		1			NS		Seal	Junta	Vedação	Joint	L = 1115 MM
4	**VOE 20460127**	6					Washer	Arandela	Arruela	Rondelle	
5	**VOE 16213999**	6					Set screw	Tornillo tope	Parafuso batente	Vis butée	
6	**VOE 16212120**	6					Lock nut	Contratuerca	Porca trava	Contre-écrou	

1		**Cabine : porte / vitres / joints** **Cabine : porta / vidro / vedações** **Cabina: puerta / cristal / juntas** **Cab : door / glass / seals**	Catalogue id **20649**	Group **841**
2				
3			Illustr. No **1064450**	Section **500**
4				
5		**MC60C-MC105C, MCT70C-MCT95C**	Issue **PUB 20030904-B**	Page **547**

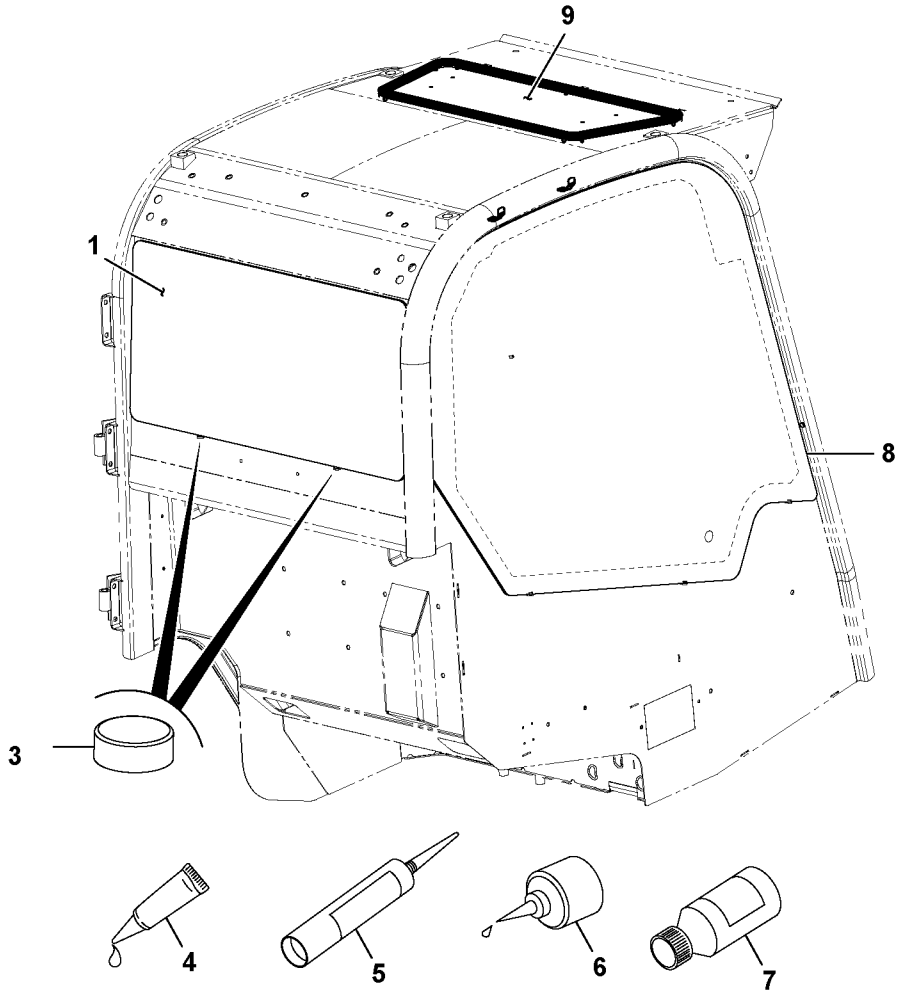
9
1
8
3
4
5
6
7

Fig.	Part No.	Quantity 1	2	3	PS	KIT	Description	Denominación	Denominação	Dénomination	Notes
1	**VOE 16213140**	1					Window	Ventana	Janela	Glace	
3	**VOE 17204888**	6					Spacer	Distanciador	Espaçador	Entretoise	
4		REQ			NS		Adhesive	Adhesivo	Adesivo	Adhesif	
5		REQ			NS		Primer	Pintura de apriete		Appret	
6		REQ			NS		Adhesive	Adhesivo	Adesivo	Adhesif	
7		REQ			NS		Adhesive	Adhesivo	Adesivo	Adhesif	
8	**VOE 16213139**	1					Window	Ventana	Janela	Glace	
9		1					Glass	Vidrio	Vidro	Glace	See group 843, Page 553

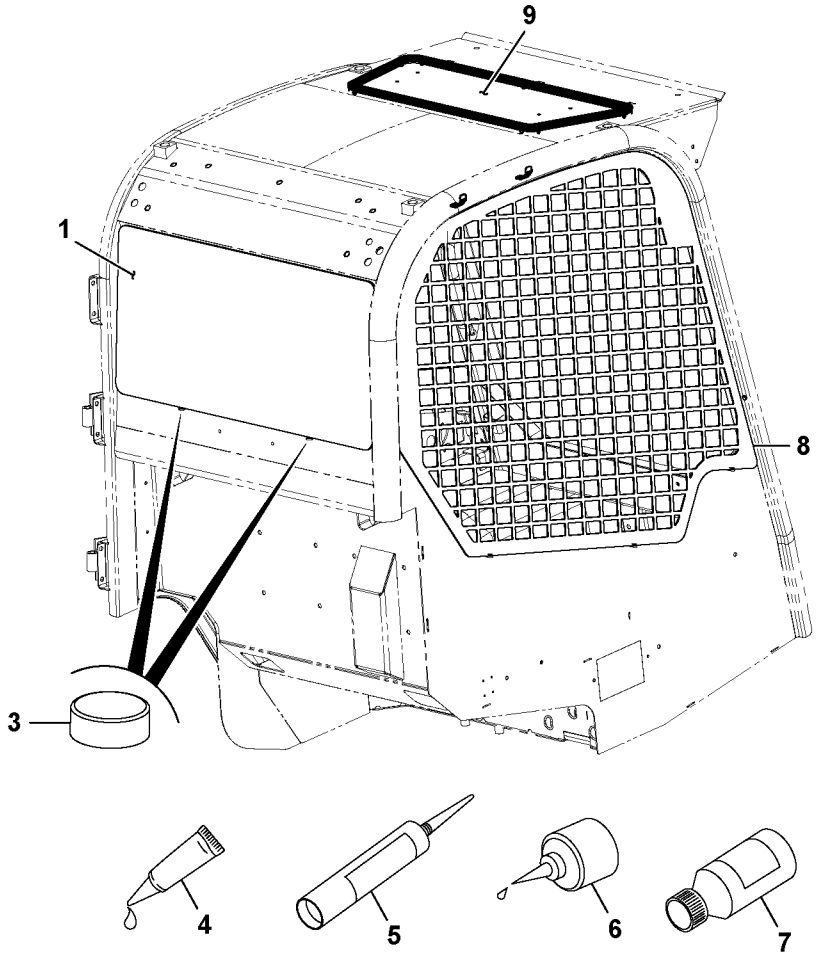
9
1
8
3
4
5
6
7

Fig.	Part No.	Quantity 1	2	3	PS	KIT	Description	Denominación	Denominação	Dénomination	Notes
1	**VOE 16213140**	1	1				Window	Ventana	Janela	Glace	
3	**VOE 17204888**	6	6				Spacer	Distanciador	Espaçador	Entretoise	
4		REQ	REQ		NS		Adhesive	Adhesivo	Adesivo	Adhesif	
5		REQ	REQ		NS		Primer	Pintura de apriete		Appret	
6		REQ	REQ		NS		Adhesive	Adhesivo	Adesivo	Adhesif	
7		REQ	REQ		NS		Adhesive	Adhesivo	Adesivo	Adhesif	
8	**VOE 17209705**	1					Grille	Rejilla	Grade	Grille	
8			1		NS		Plate	Chapa	Chapa	Tôle	
9		1	1				Glass	Cristal		Vitre	See group 843, Page 553

1	**RIGHT HAND, MESH**	**Vitres** **Vidros das janelas** **Ventanillas** **Glass panes**	Catalogue id **20649**	Group **843**
2	**GLAZING**		Illustr. No **1064170**	Section **150**
3			Issue **PUB 20030904-B**	Page **551**
4				
5		**MC60C, MC70C, MC95C, MCT70C, MCT85C**		

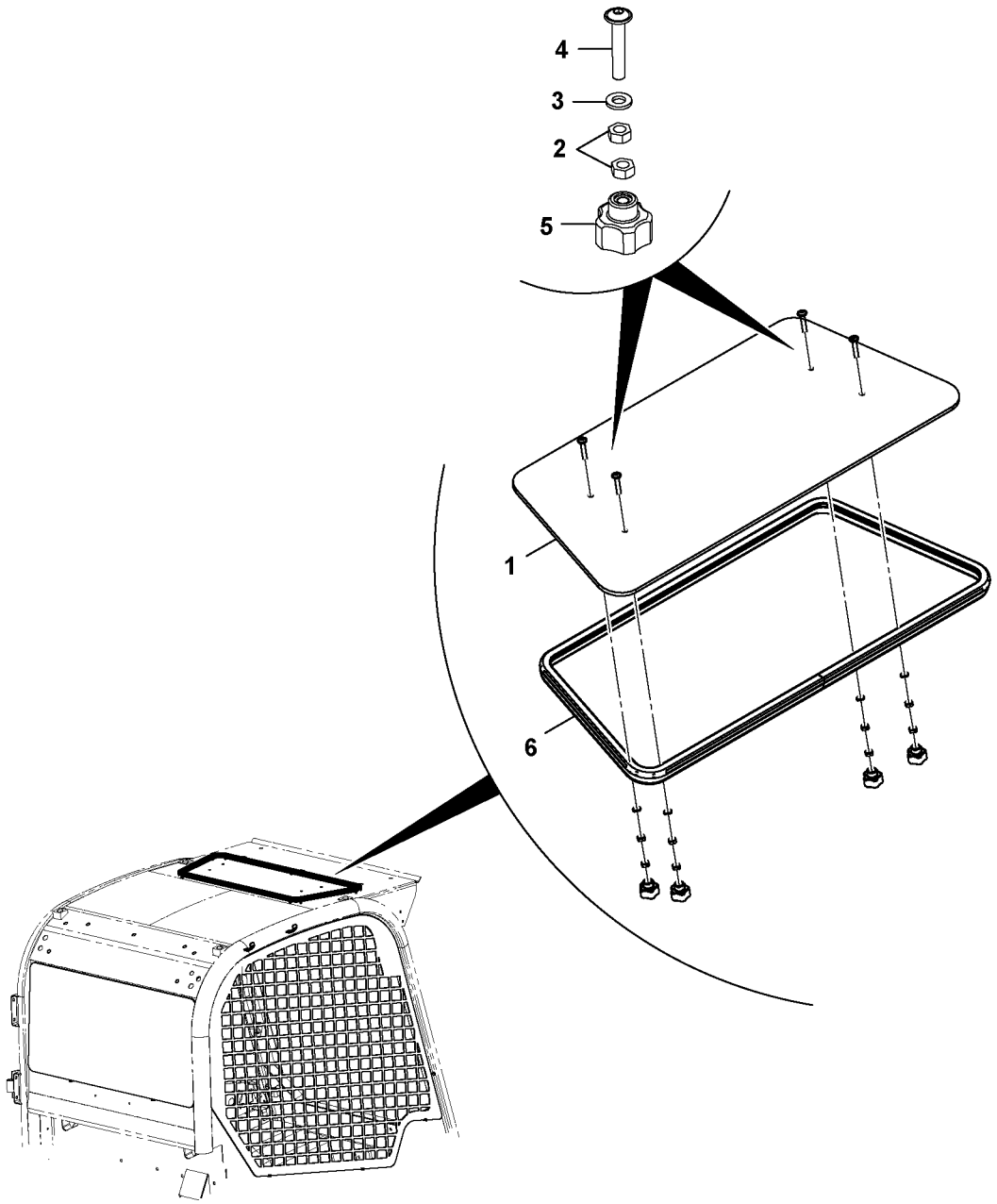
4
3
2
5
1
6

Fig.	Part No.	Quantity 1	2	3	PS	KIT	Description	Denominación	Denominação	Dénomination	Notes
1	**VOE 17232198**	1					Glass	Cristal	Vidro	Vitre	
2	**VOE 20460939**	8					Hexagon nut	Tuerca hexagonal	Porca sextavada	Écrou hexagonal	
3	**VOE 973494**	4					Washer	Arandela	Arruela	Rondelle	
4	**VOE 17205094**	4					Bolt	Perno	Parafuso	Boulon	
5	**VOE 17229749**	4					Knob	Volante	Botão	Bouton	
6	**VOE 17224714**	1					Edge	Filo		Tranchant	

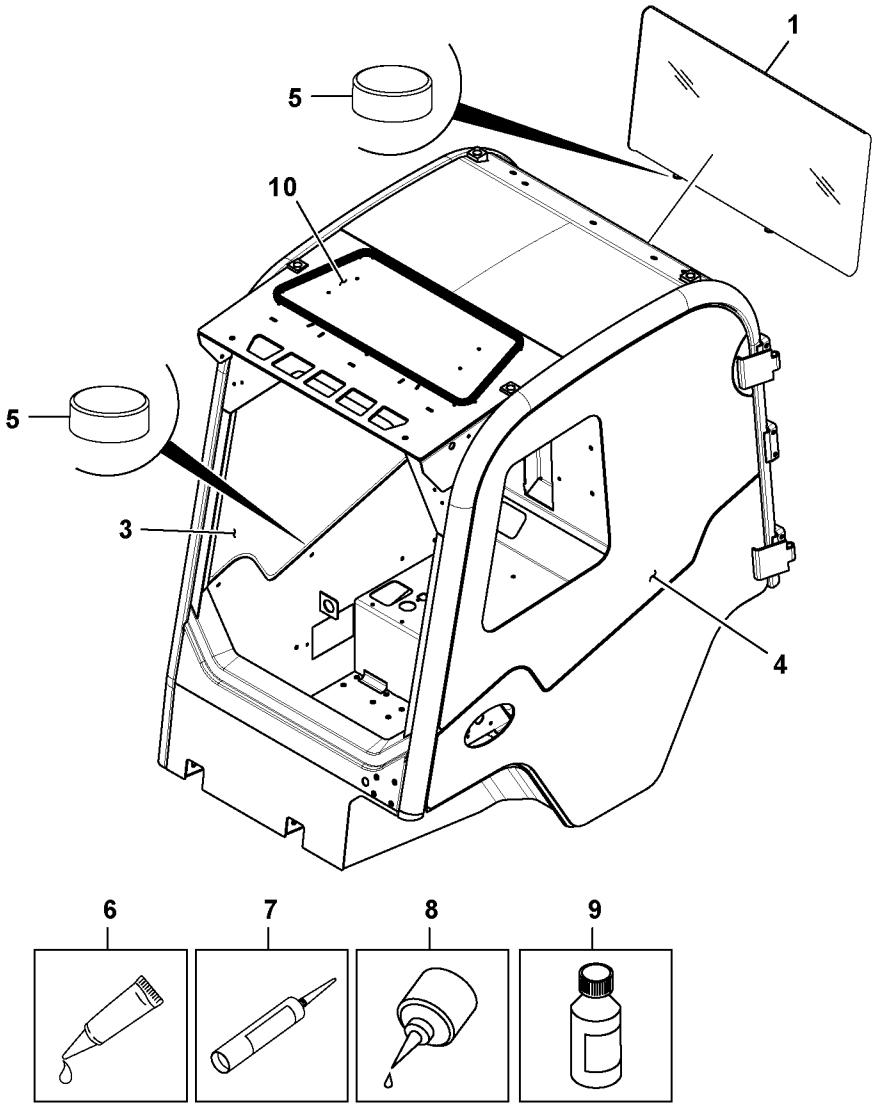
1
5
10
5
3
4
6
7
8
9

Fig.	Part No.	Quantity 1	2	3	PS	KIT	Description	Denominación	Denominação	Dénomination	Notes
1	**VOE 16213140**	1					Window	Ventana	Janela	Glace	
3	**VOE 16213139**	1					Window	Ventana	Janela	Glace	
4	**VOE 16213143**	1					Window	Ventana	Janela	Glace	
5	**VOE 17204888**	6					Spacer	Distanciador	Espaçador	Entretoise	
6		REQ			NS		Adhesive	Adhesivo	Adesivo	Adhesif	
7		REQ			NS		Adhesive	Adhesivo	Adesivo	Adhesif	
8		REQ			NS		Primer	Pintura de apriete		Appret	
9		REQ			NS		Adhesive	Adhesivo	Adesivo	Adhesif	
10		1					Glass	Cristal		Vitre	See group 843, Page 553

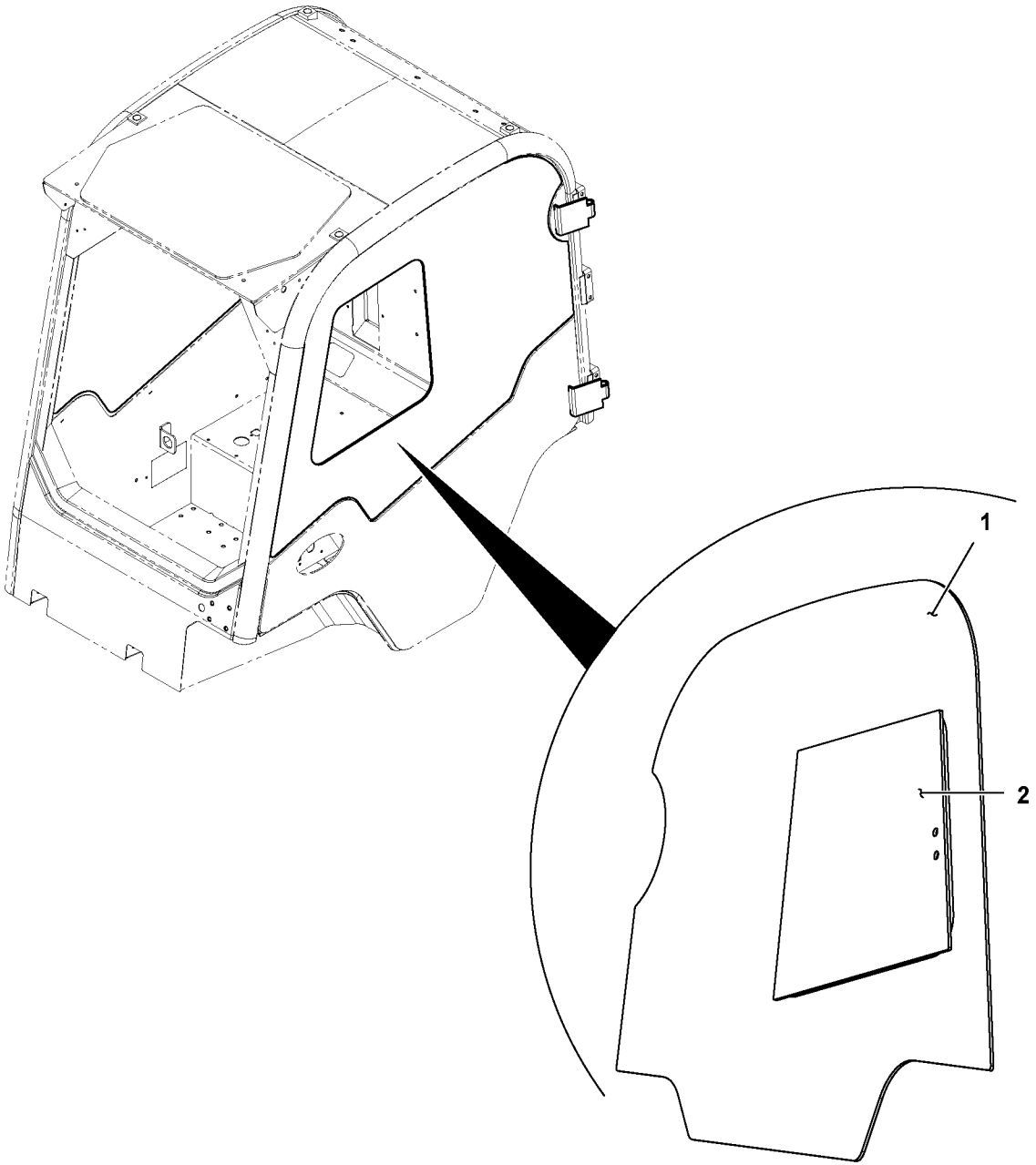

Volvo Construction Equipment
1064014

Fig.	Part No.	Quantity 1	2	3	PS	KIT	Description	Denominación	Denominação	Dénomination	Notes
1		1			NS		Glass	Vidrio	Vidro	Glace	
2	**VOE 17210106**	1					Glass	Cristal	Vidro	Vitre	

1		**Vitres** **Vidros das janelas** **Ventanillas** **Glass panes**	Catalogue id **20649**	Group **843**
2			Illustr. No **1064014**	Section **350**
3			Issue **PUB 20030904-B**	Page **557**
4				
5		**MC60C-MC105C, MCT70C-MCT95C**		

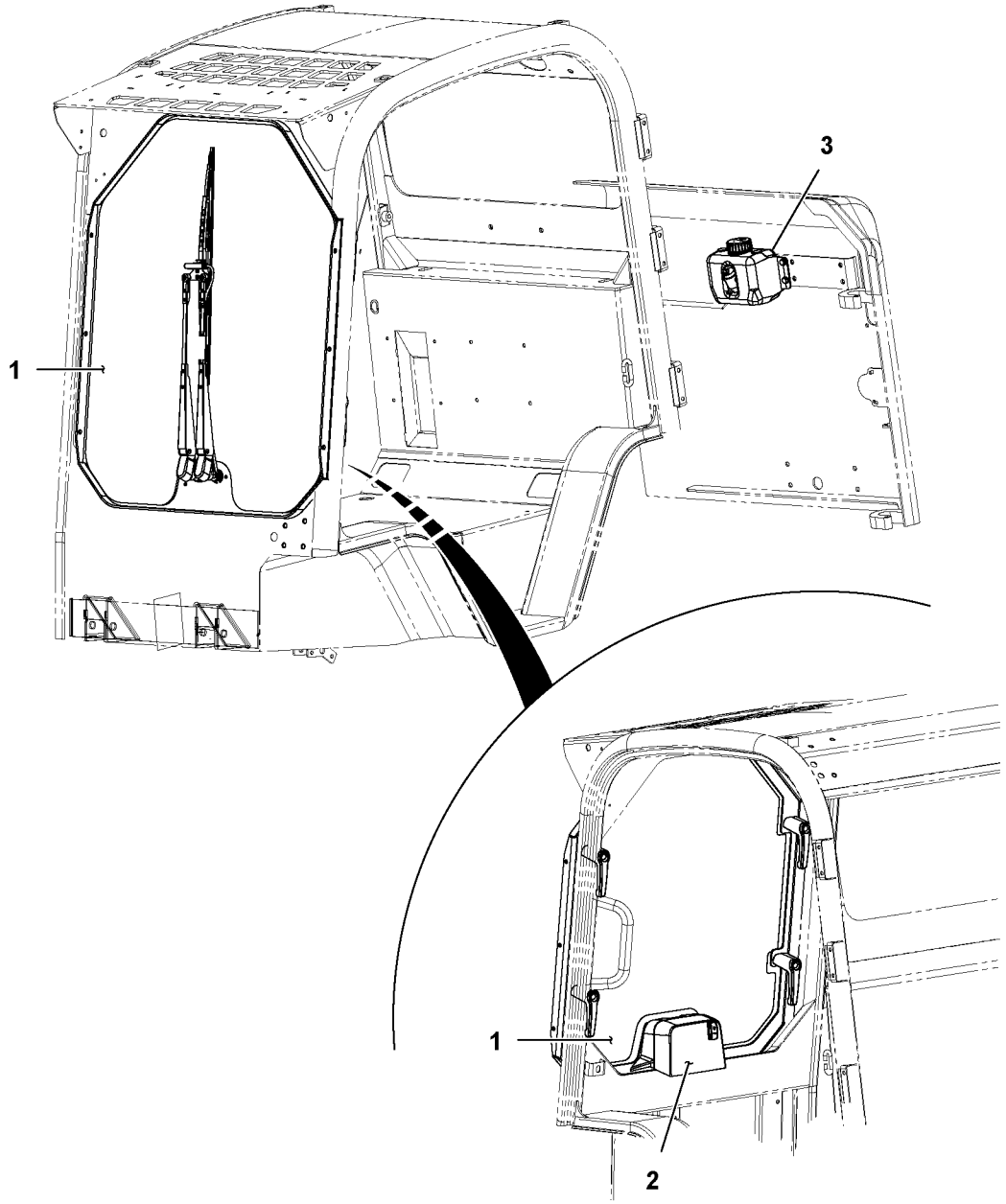

Volvo Construction Equipment
1064025

Fig.	Part No.	Quantity 1	2	3	PS	KIT	Description	Denominación	Denominação	Dénomination	Notes
1		1					Glass	Vidrio	Vidro	Glace	See group 843, Page 563
2		1					Wiper	Limpiaparabrisa		Essuie-glace	See group 363, Page 295
3		1					wiper and washer	Limpiapar. y lavapar.	limpador e lavador	Essuie-glace et lave-glace	See group 363, Page 297

1

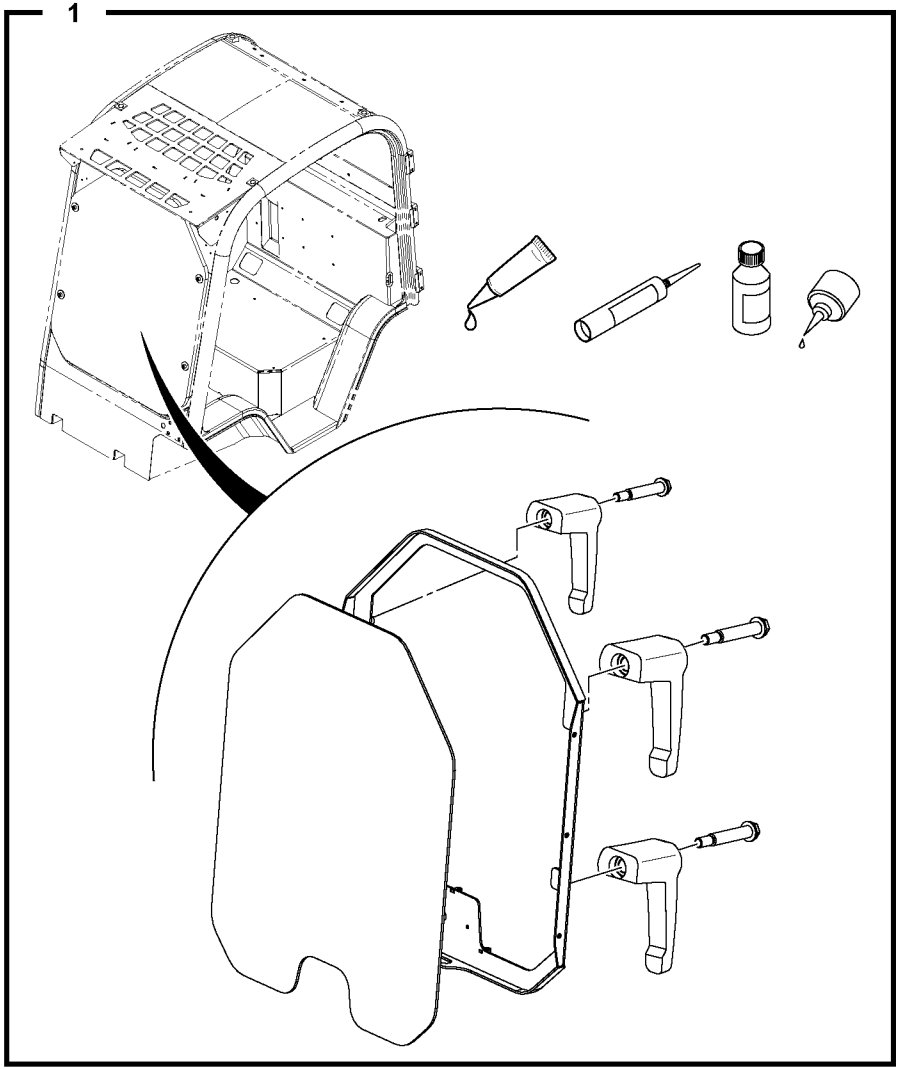

Fig.	Part No.	Quantity 1	2	3	PS	KIT	Description	Denominación	Denominação	Dénomination	Notes
1		1					Glass	Vidrio	Vidro	Glace	See group 843, Page 563

1		**Pare-brises** **Pára-brisa dianteiro** **Parabrisas delantero** **Front window**	Catalogue id **20649**	Group **843**
2				
3			Illustr. No **1063999**	Section **550**
4				
5		**MC60C-MC105C, MCT70C-MCT95C**	Issue **PUB 20030904-B**	Page **561**

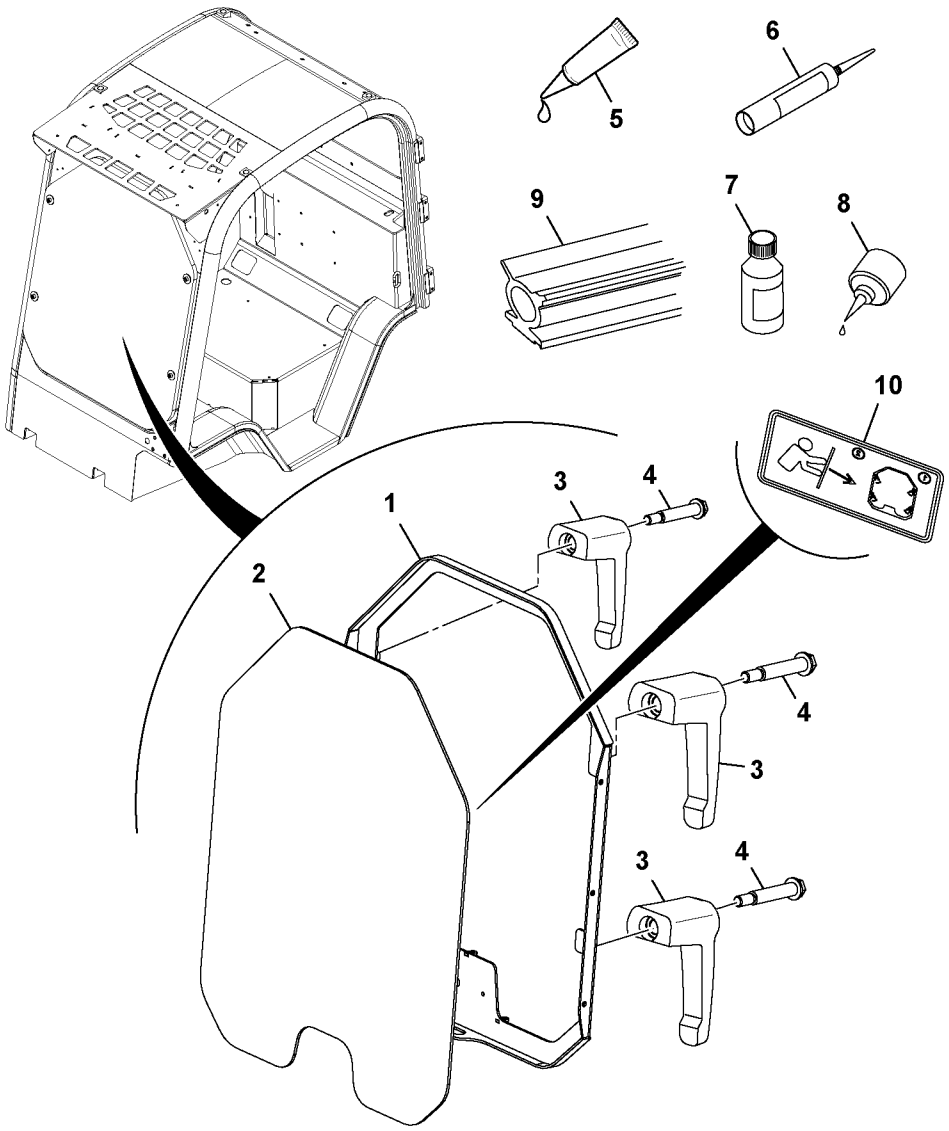
1
2
3
4
5
6
7
8
9
10
3
4
4
3
3
4

Fig.	Part No.	Quantity 1	2	3	PS	KIT	Description	Denominación	Denominação	Dénomination	Notes
1	**VOE 17210014**	1					Frame	Bastidor	Quadro	Cadre châssis	
2	**VOE 17205108**	1					Glass	Cristal	Vidro	Vitre	
3	**VOE 17209645**	4					Handle	Mango	Manopla	Poignée	
4	**VOE 17205084**	4					Bolt	Perno	Parafuso	Boulon	
5		REQ			NS		Adhesive	Adhesivo	Adesivo	Adhesif	
6		REQ			NS		Adhesive	Adhesivo	Adesivo	Adhesif	
7		REQ			NS		Primer	Pintura de apriete		Appret	
8		REQ			NS		Adhesive	Adhesivo	Adesivo	Adhesif	
9	**VOE 17210168**	1					Sealing moulding	Listón retén	Friso de vedação	Joint étanchéité	
10	**VOE 17210167**	1					Decal	Calcomanía	Decalque	Autocollant	

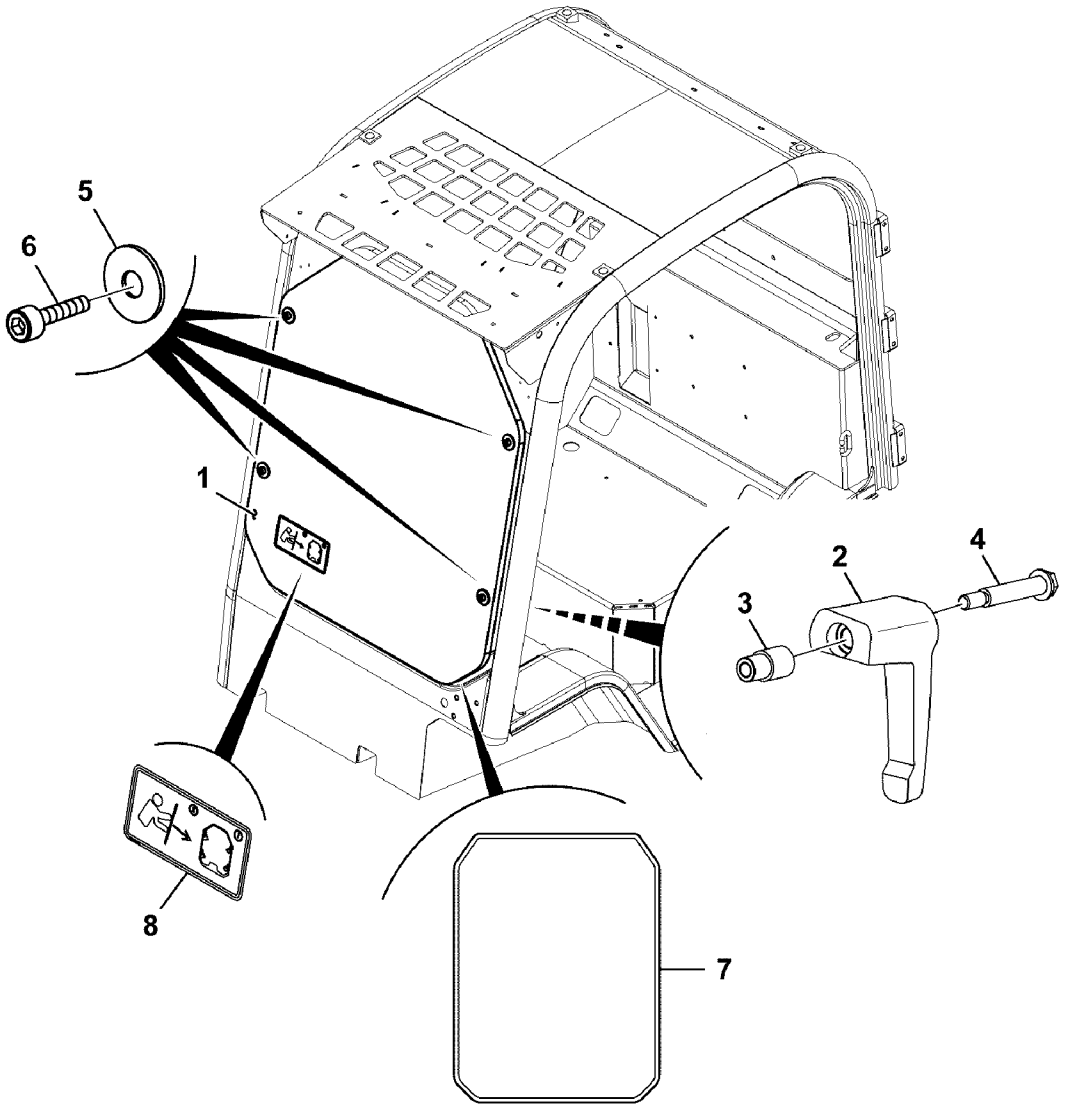

Volvo Construction Equipment
1064449

Fig.	Part No.	Quantity 1	2	3	PS	KIT	Description	Denominación	Denominação	Dénomination	Notes
1	**VOE 17224000**	1					Screening device	Blindaje	Blindagem	Dispositif écran	
2	**VOE 17209645**	4					Handle	Mango	Manopla	Poignée	
3	**VOE 17224002**	4					Screen hose	Manguera defensa	Mangueira protetora	Manchon	
4	**VOE 17205084**	4					Bolt	Perno	Parafuso	Boulon	
5	**VOE 17205560**	4					Washer	Arandela	Arruela	Rondelle	
6	**VOE 17224004**	4					Screw	Tornillo	Parafuso	Vis	
7	**VOE 17210168**	1					Sealing moulding	Listón retén	Friso de vedação	Joint étanchéité	
8	**VOE 17210167**	1					Decal	Calcomanía	Decalque	Autocollant	

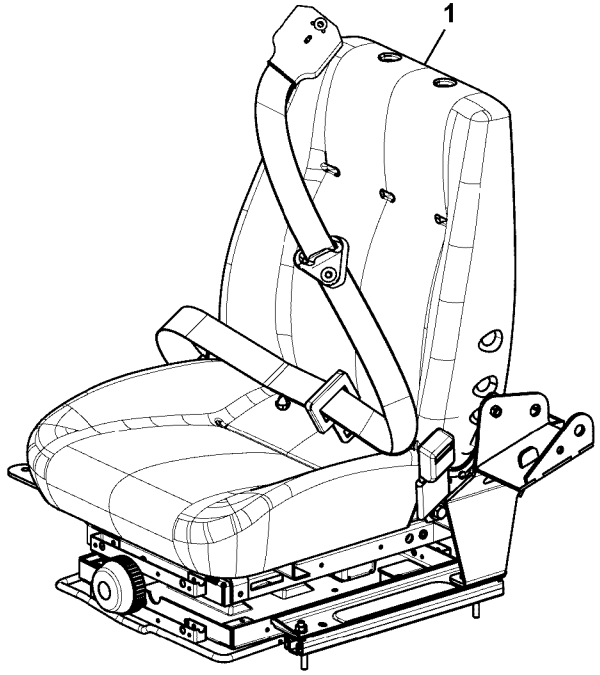
1

Fig.	Part No.	Quantity 1	2	3	PS	KIT	Description	Denominación	Denominação	Dénomination	Notes
1		1					Seat	Asiento	Assento	Siege	See group 852, Page 569
1			1				Seat	Asiento	Assento	Siege	See group 852, Page 571
1				1			Seat	Asiento	Assento	Siege	See group 852, Page 573

3812) **GB:** Vinyl seat **ES:** Asiento de vinilo **BR:** Assento de vinil **FR:** Siège vinyle
3813) **GB:** Textile fabric seat **ES:** Asiento de tela **BR:** Assento de tecido **FR:** Siège avec habillage textile

1	**3812) MECH. SUSP., VINYL**	**Siège du conucteur** **Banco do motorista** **Asiento del conductor** **Operator's seat**	Catalogue id **20649**	Group **852**
2	**3812) AIR SUSP., VINYL**		Illustr. No **1064037**	Section **100**
3	**3813) AIR SUSP., FABRIC**		Issue **PUB 20030904-B**	Page **567**
4				
5		**MC60C-MC105C, MCT70C-MCT95C**		

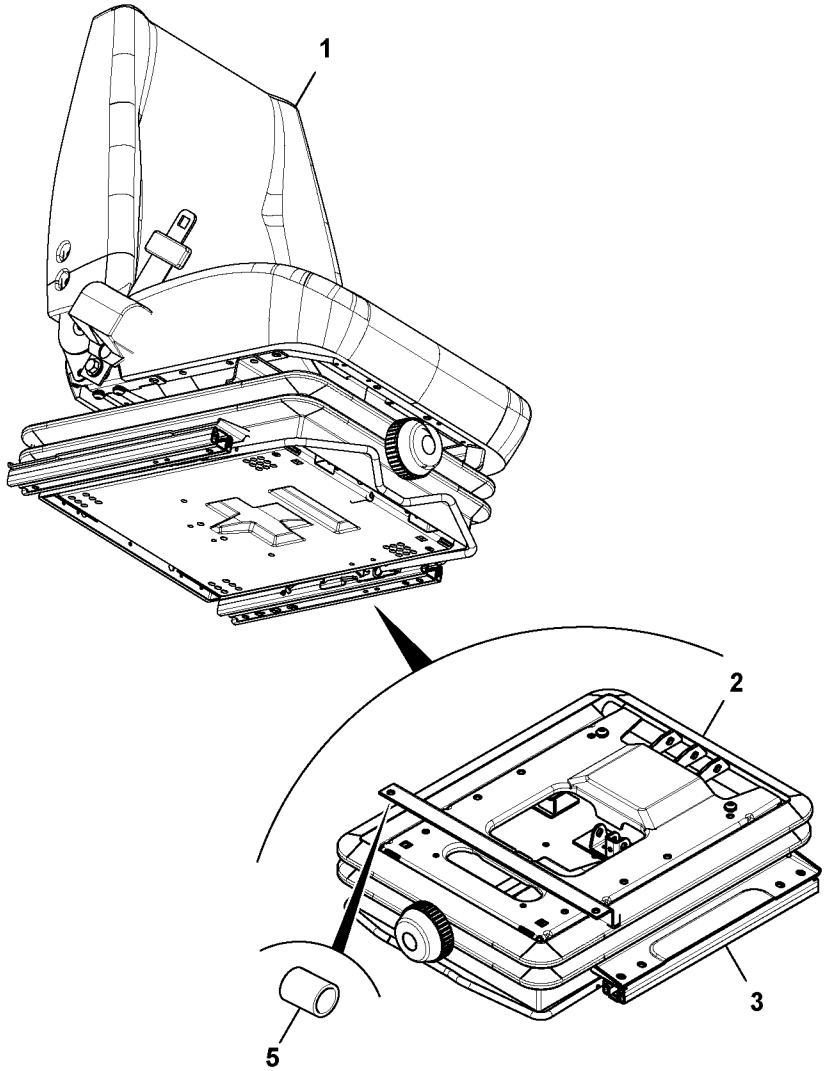

Volvo Construction Equipment
1064043

Fig.	Part No.	Quantity 1	2	3	PS	KIT	Description	Denominación	Denominação	Dénomination	Notes
1	**VOE 17210371**						Seat	Asiento	Banco	Siège	
2	**VOE 17210573**						Suspension	Suspensión	Suspensão	Suspension	
3	**VOE 17210198**						Seat	Asiento	Banco	Siège	
5	**VOE 17210373**						Spacer	Distanciador	Espaçador	Entretoise	

3812) **GB:** Vinyl seat **ES:** Asiento de vinilo **BR:** Assento de vinil **FR:** Siège vinyle

1		**Siège du conducteur, suspension pneumatique**	Catalogue id **20649**	Group **852**
2				
3		**Asiento de conducción de suspensión neumática, calefaccionado**	Illustr. No **1064043**	Section **600**
4		**Operator's seat, heated, air sprung**		
5		**3812) MC60C-MC105C, MCT70C-MCT95C**	Issue **PUB 20030904-B**	Page **569**

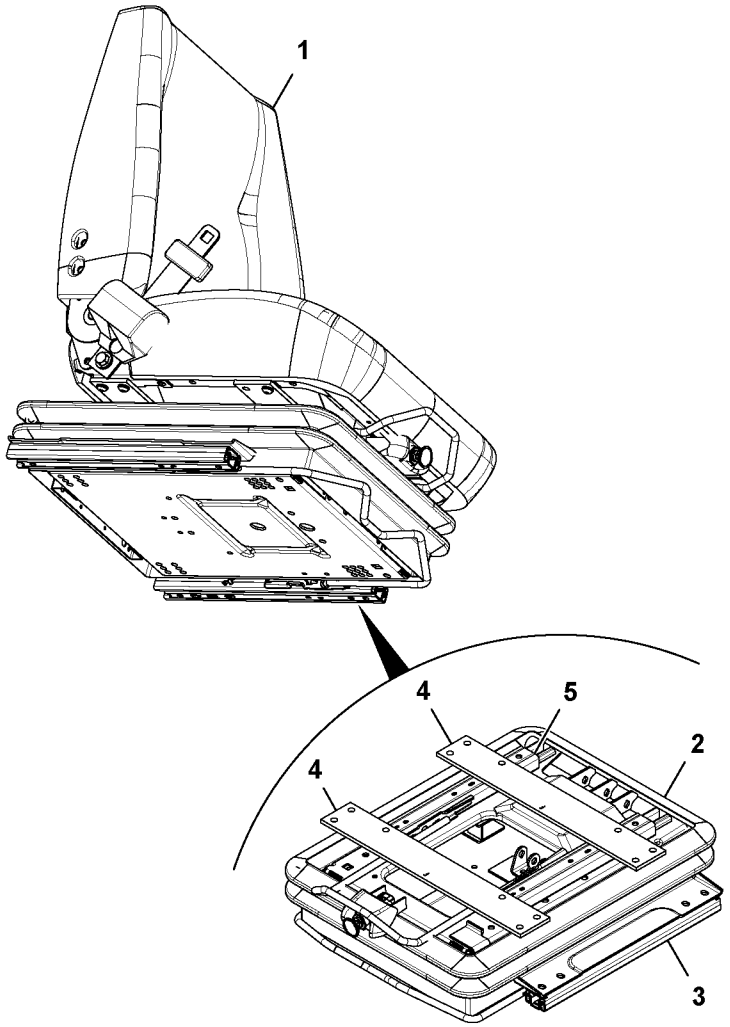

Volvo Construction Equipment
1064044

Fig.	Part No.	Quantity 1	2	3	PS	KIT	Description	Denominación	Denominação	Dénomination	Notes
1	**VOE 17210213**	1					Seat	Asiento	Banco	Siège	
2	**VOE 17210575**	1					Suspension	Suspensión	Suspensão	Suspension	
3	**VOE 17210198**	1					Seat	Asiento	Banco	Siège	
4	**VOE 17209620**	2					Support plate	Placa de apoyo	Placa de apoio	Platine support	
5	**VOE 17210225**	1					Seat	Asiento	Banco	Siège	
	VOE 17224726	1					Seat support	Soporte asiento	Suporte assento	Bâti siège	

3812) **GB:** Vinyl seat **ES:** Asiento de vinilo **BR:** Assento de vinil **FR:** Siège vinyle

1		**Siège du conducteur, suspension pneumatique** **Asiento de conducción de suspensión neumática, calefaccionado** **Operator's seat, heated, air sprung** **3812) MC60C-MC105C, MCT70C-MCT95C**	Catalogue id **20649**	Group **852**
2			Illustr. No **1064044**	Section **650**
3			Issue **PUB 20030904-B**	Page **571**
4				
5				

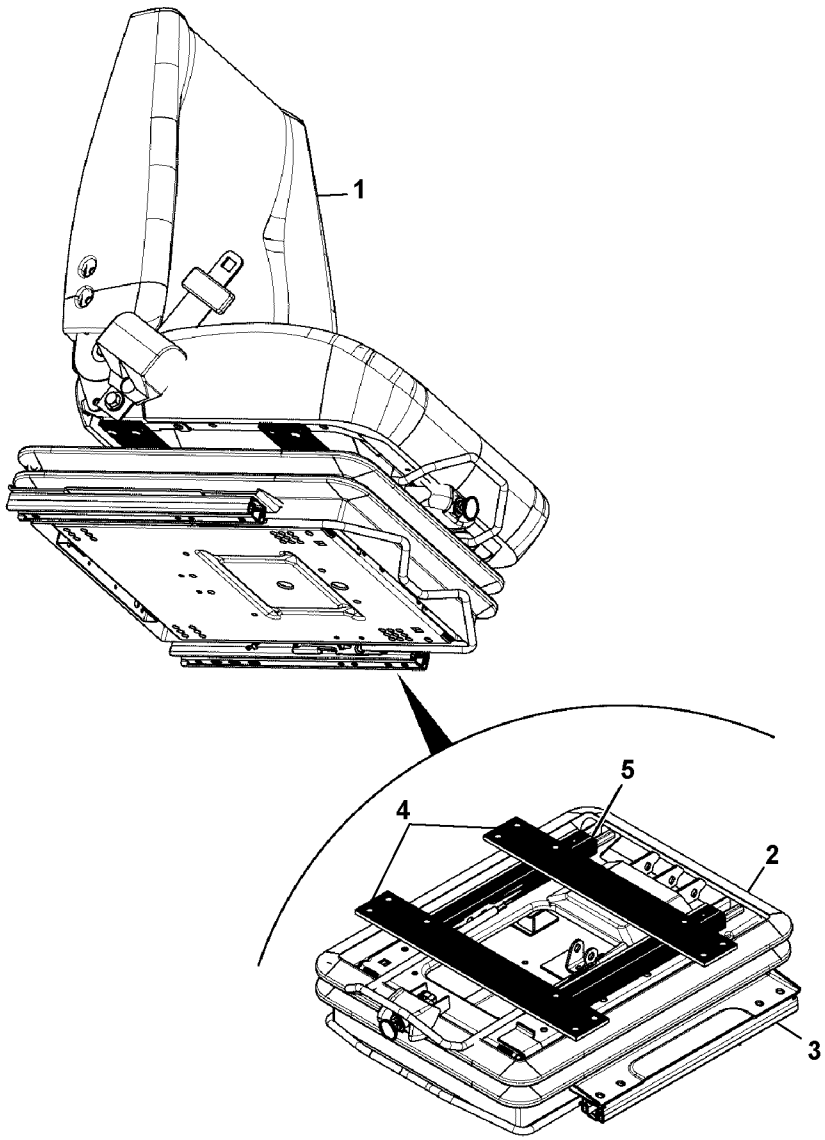

Volvo Construction Equipment
1064045

Fig.	Part No.	Quantity 1	2	3	PS	KIT	Description	Denominación	Denominação	Dénomination	Notes
1	**VOE 17210229**	1					Seat	Asiento	Banco	Siège	
2	**VOE 17210575**	1					Suspension	Suspensión	Suspensão	Suspension	
3	**VOE 17210198**	1					Seat	Asiento	Banco	Siège	
4	**VOE 17209620**	2					Support plate	Placa de apoyo	Placa de apoio	Platine support	
5	**VOE 17210225**	1					Seat	Asiento	Banco	Siège	

3813) **GB:** Textile fabric seat **ES:** Asiento de tela **BR:** Assento de tecido **FR:** Siège avec habillage textile

1		**Siège du conducteur, suspension pneumatique**	Catalogue id **20649**	Group **852**
2				
3		**Asiento de conducción de suspensión neumática, calefaccionado**	Illustr. No **1064045**	Section **700**
4		**Operator's seat, heated, air sprung**		
5		**3813) MC60C, MC70C, MC95C, MCT70C-MCT95C**	Issue **PUB 20030904-B**	Page **573**

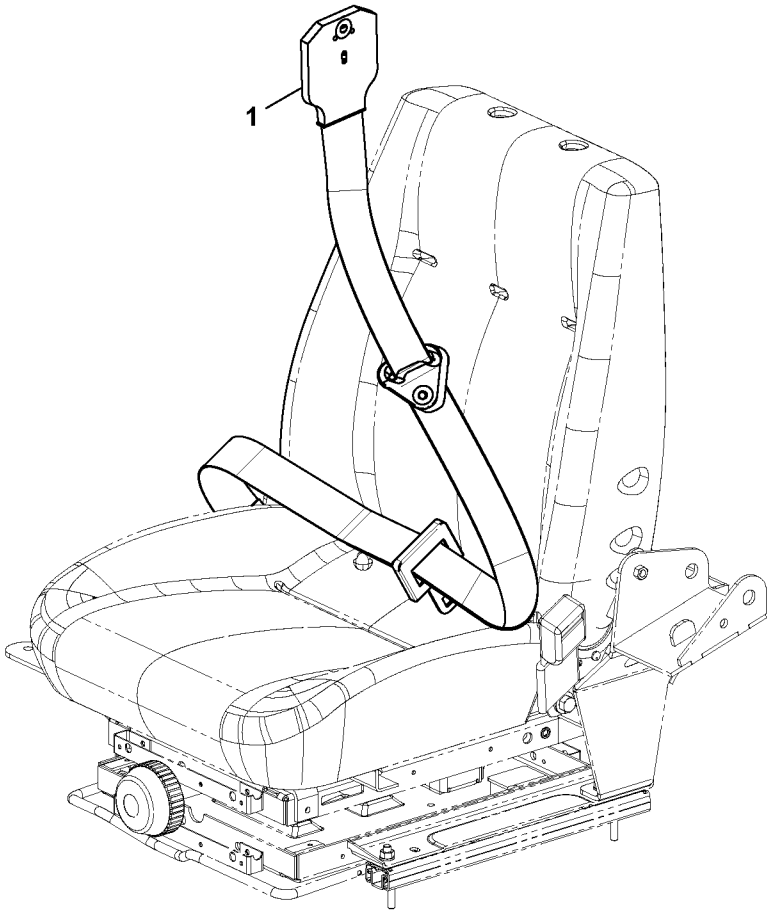
1

Fig.	Part No.	Quantity 1	2	3	PS	KIT	Description	Denominación	Denominação	Dénomination	Notes
1	**VOE 17218718**						Seat belt	Cinturón de seguridad	Cinto de segurança	Ceinture de sécurité	
1	**VOE 17218719**						Seat belt	Cinturón de seguridad	Cinto de segurança	Ceinture de sécurité	

1	**STD**
2	**3 INCH**
3	
4	
5	

Ceinture de sécurité
Cinto de segurança
Cinturón de seguridad
Seat Belt

MC60C-MC105C, MCT70C-MCT95C

Catalogue id **20649**	Group **852**
Illustr. No **1063998**	Section **1000**
Issue **PUB 20030904-B**	Page **575**

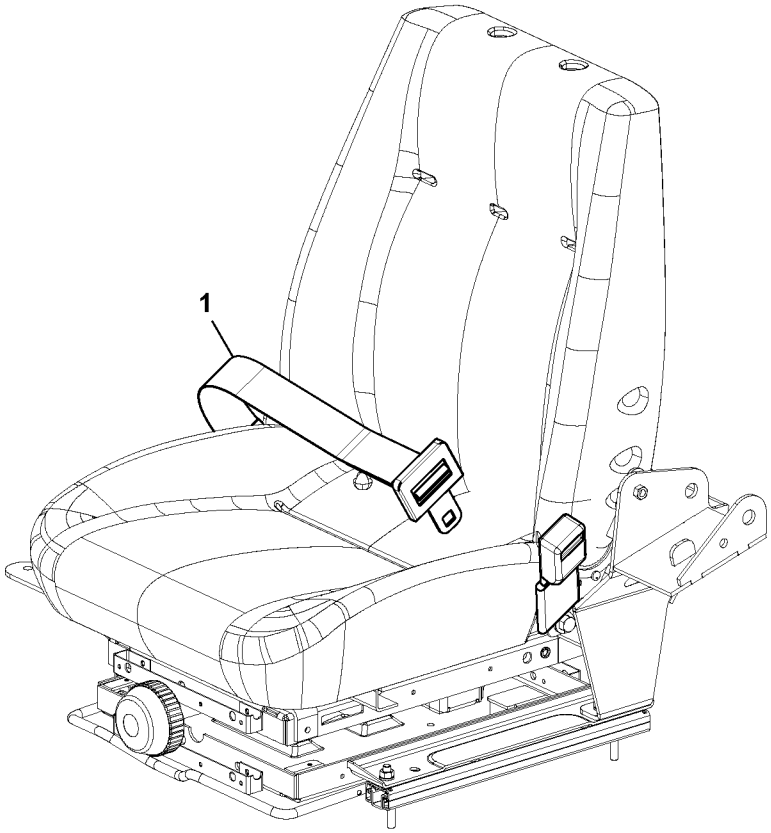
1

Fig.	Part No.	Quantity 1	2	3	PS	KIT	Description	Denominación	Denominação	Dénomination	Notes
1	**VOE 17218713**	1					Seat belt	Cinturón de seguridad	Cinto de segurança	Ceinture de sécurité	
1	**VOE 17218716**		1				Seat belt	Cinturón de seguridad	Cinto de segurança	Ceinture de sécurité	

1	**STANDARD**	**Ceinture de sécurité** **Cinto de segurança** **Cinturón de seguridad** **Seat Belt**	Catalogue id **20649**	Group **852**
2	**3 INCH**		Illustr. No **1064041**	Section **1200**
3			Issue **PUB 20030904-B**	Page **577**
4				
5		**MC70C-MC105C, MCT70C-MCT95C**		

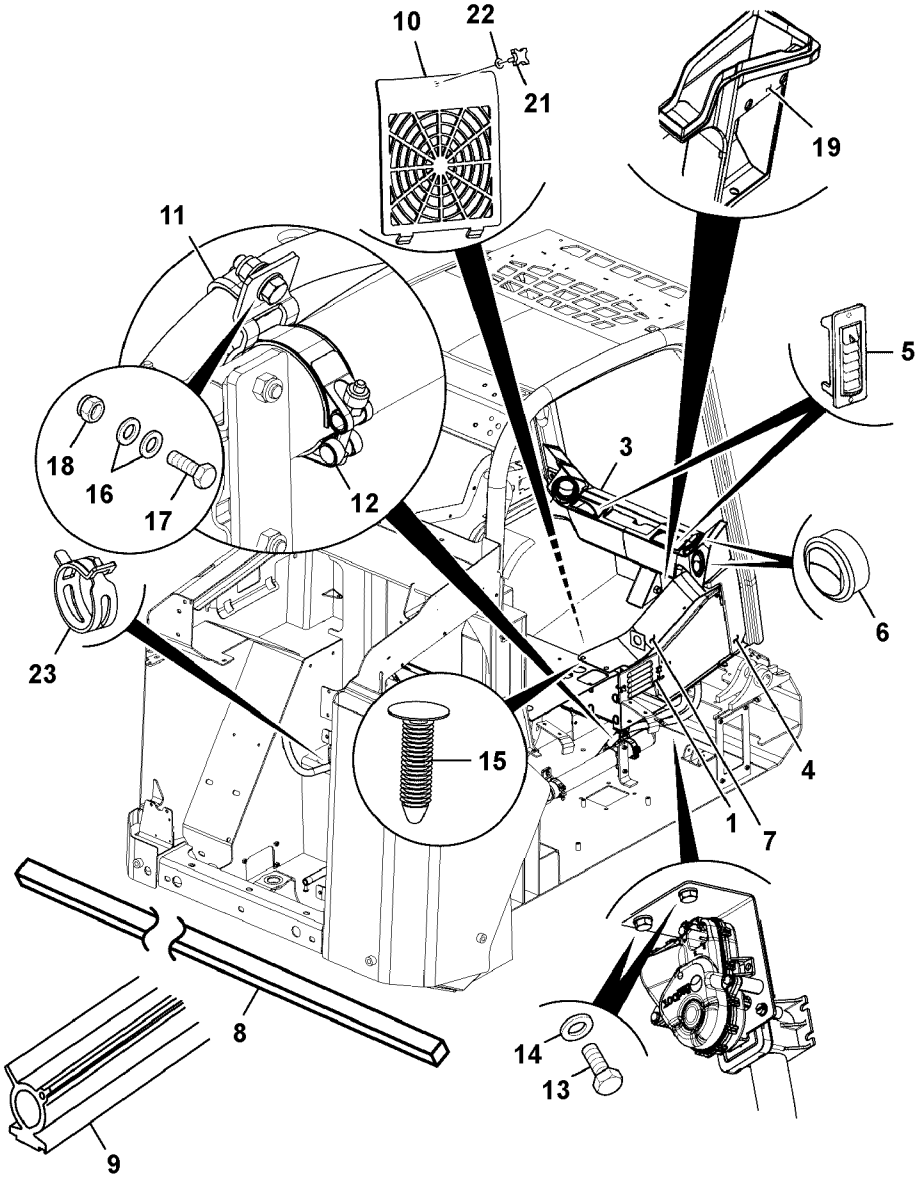
10
22
21
19
11
5
18
16
17
12
3
6
23
15
4
1
7
8
14
13
9

Fig.	Part No.	Quantity 1	2	3	PS	KIT	Description	Denominación	Denominação	Dénomination	Notes
1	**VOE 17209901**	1					Heater	Calefactor	Aquecedor	Réchauffeur	See group 870, Page 585
3	**VOE 17209740**	1					Heater	Calefactor	Aquecedor	Réchauffeur	See group 881, Page 607
4		1			NS		Duct	Canal	Duto	Goulotte	
5	**VOE 17205622**	3					Air outlet	Boquilla	Saída de ar	Gicleur air	
6	**VOE 17209738**	3					Heater	Calefactor	Aquecedor	Réchauffeur	
7	**VOE 17209735**	1					Heater	Calefactor	Aquecedor	Réchauffeur	
8	**VOE 17210097**	3					Sealing moulding	Listón retén	Friso de vedação	Joint étanchéité	
9	**VOE 17209599**	1					Sealing moulding	Listón retén	Friso de vedação	Joint étanchéité	
10	**VOE 17209881**	1					Door	Puerta	Porta	Porte	
11	**VOE 17210500**	2					Cable clamp	Abrazadera de cable	Abraçadeira	Collier	
12	**VOE 16212253**	1					Clamp	Abrazadera	Braçadeira	Collier serrage	
13	**VOE 17205091**	4					Set screw	Tornillo tope	Parafuso batente	Vis butée	
14	**VOE 973494**	4					Washer	Arandela	Arruela	Rondelle	
15	**VOE 17205044**	2					Plug	Tapón	Bujão	Tampon	
16	**VOE 20460127**	4					Washer	Arandela	Arruela	Rondelle	
17	**VOE 16213999**	2					Set screw	Tornillo tope	Parafuso batente	Vis butée	
18	**VOE 16212120**	2					Lock nut	Contratuerca	Porca trava	Contre-écrou	
19		2			NS		Sealing	Junta	Vedação	Étanchéité	
21	**VOE 17210032**	1					Knob	Volante	Botão	Bouton	
22	**VOE 17209629**	1					Washer	Arandela	Arruela	Rondelle	
23	**VOE 17205421**	3					Hose clamp	Abrazadera de manguera	Braçadeira da mangueira	Collier durite	

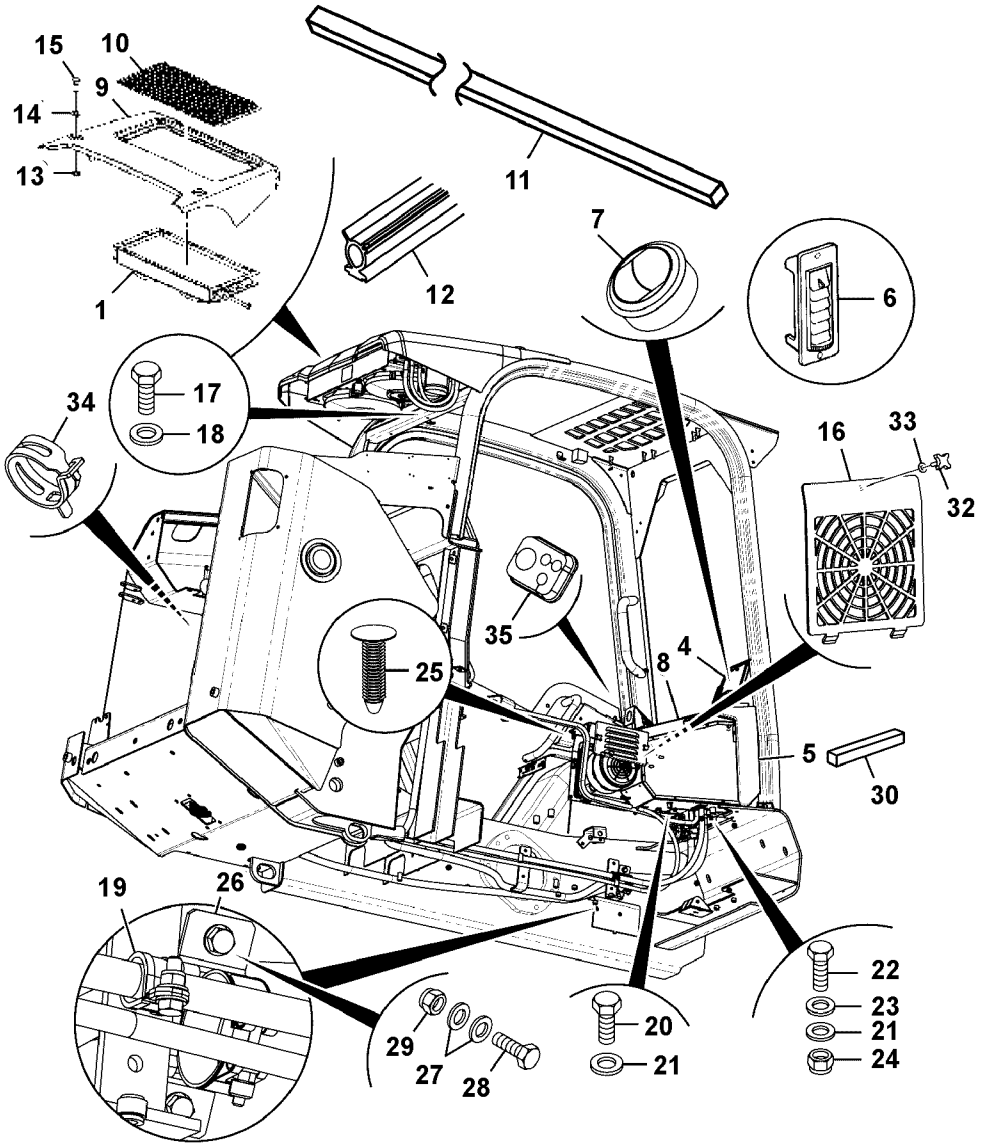

Volvo Construction Equipment
1064024

Fig.	Part No.	Quantity 1	2	3	PS	KIT	Description	Denominación	Denominação	Dénomination	Notes
1	**VOE 17210111**	1					Heater unit	Calefactor	Aquecedor	Bloc chauff/clim	See group 870, Page 591
4	**VOE 17209740**	1					Heater	Calefactor	Aquecedor	Réchauffeur	See group 881, Page 607
5		1			NS		Duct	Canal	Duto	Goulotte	
6	**VOE 17205622**	3					Air outlet	Boquilla	Saída de ar	Gicleur air	
7	**VOE 17209738**	3					Heater	Calefactor	Aquecedor	Réchauffeur	
8	**VOE 17209735**	1					Heater	Calefactor	Aquecedor	Réchauffeur	
9	**VOE 17210524**	1					Cover plate	Cubierta	Placa tampa	Plaque de recouvrement	
10	**VOE 17209590**	1					Condenser	Condensador	Condensador	Condenseur	
11	**VOE 17210097**	3					Sealing moulding	Listón retén	Friso de vedação	Joint étanchéité	
12	**VOE 17209599**	1					Sealing moulding	Listón retén	Friso de vedação	Joint étanchéité	
13	**VOE 17210318**	2					Spacer	Distanciador	Espaçador	Entretoise	
14	**VOE 17205258**	2					Washer	Arandela	Arruela	Rondelle	
15	**VOE 17205055**	2					Bolt	Perno	Parafuso	Boulon	
16	**VOE 17209881**	1					Door	Puerta	Porta	Porte	
17	**VOE 16212075**	7					Set screw	Tornillo tope	Parafuso batente	Vis butée	
18	**VOE 16212138**	7			SS		Plain washer	Arandela plana	Arruela simples	Rondelle plane	
19	**VOE 17210500**	3					Cable clamp	Abrazadera de cable	Abraçadeira	Collier	
20	**VOE 17205091**	4					Set screw	Tornillo tope	Parafuso batente	Vis butée	
21	**VOE 973494**	6					Washer	Arandela	Arruela	Rondelle	
22		2			NS		Screw	Tornillo	Parafuso	Vis	
23	**VOE 17205556**	2					Washer	Arandela	Arruela	Rondelle	
24	**VOE 16212115**	2					Lock nut	Contratuerca	Porca trava	Contre-écrou	
25	**VOE 17205044**	2					Plug	Tapón	Bujão	Tampon	
26	**VOE 16212253**	1					Clamp	Abrazadera	Braçadeira	Collier serrage	
27	**VOE 20460127**	6					Washer	Arandela	Arruela	Rondelle	
28	**VOE 16213999**	3					Set screw	Tornillo tope	Parafuso batente	Vis butée	
29	**VOE 16212120**	3					Lock nut	Contratuerca	Porca trava	Contre-écrou	
30		2			NS		Sealing	Junta	Vedação	Étanchéité	
32	**VOE 17210032**	1					Knob	Volante	Botão	Bouton	
33	**VOE 17209629**	1					Washer	Arandela	Arruela	Rondelle	

1		**Distribution d'air** **Distribuição de ar** **Distribucion del aire** **Air distribution**	Catalogue id **20649**	Group **870**
2			Illustr. No **1064024**	Section **150**
3			Issue **PUB 20030904-B**	Page **581**
4				
5		**MC60C-MC105C, MCT70C-MCT95C**		

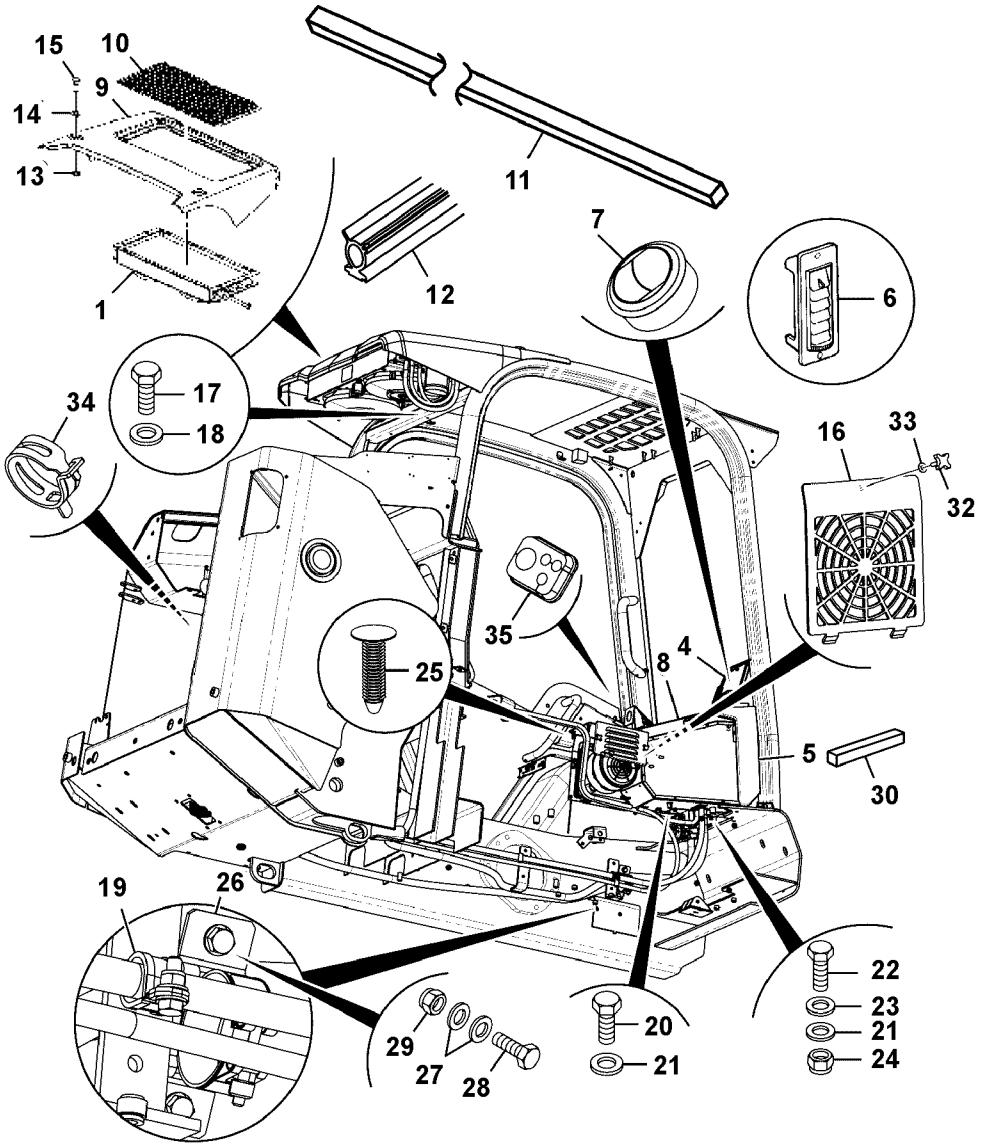

Volvo Construction Equipment
1064024

Fig.	Part No.	Quantity 1	2	3	PS	KIT	Description	Denominación	Denominação	Dénomination	Notes
34	**VOE 17205421**	3					Hose clamp	Abrazadera de manguera	Braçadeira da mangueira	Collier durite	
35	**VOE 17210174**	3					Grommet	Pasaje	Passa muro	Passe fil	

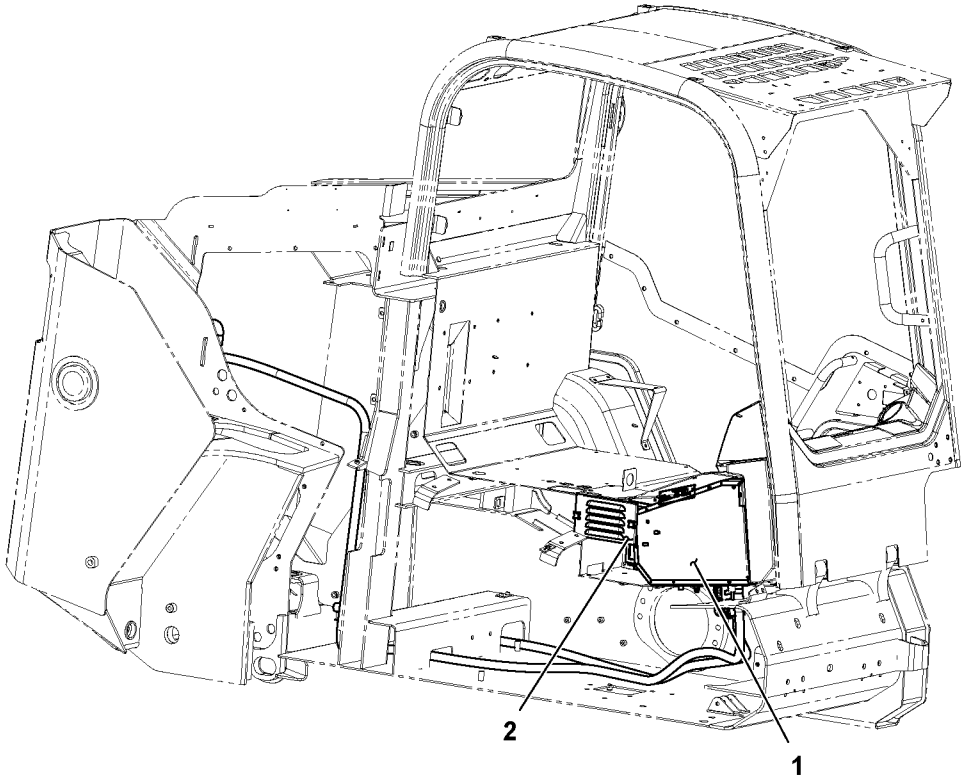
2
1

Fig.	Part No.	Quantity 1	2	3	PS	KIT	Description	Denominación	Denominação	Dénomination	Notes
1	**VOE 17209898**	1					Heater	Calefactor	Aquecedor	Réchauffeur	See group 870, Page 587
2	**VOE 17209900**	1					Heater	Calefaccion	Aquecedor	Elément de chauffage	See group 870, Page 589

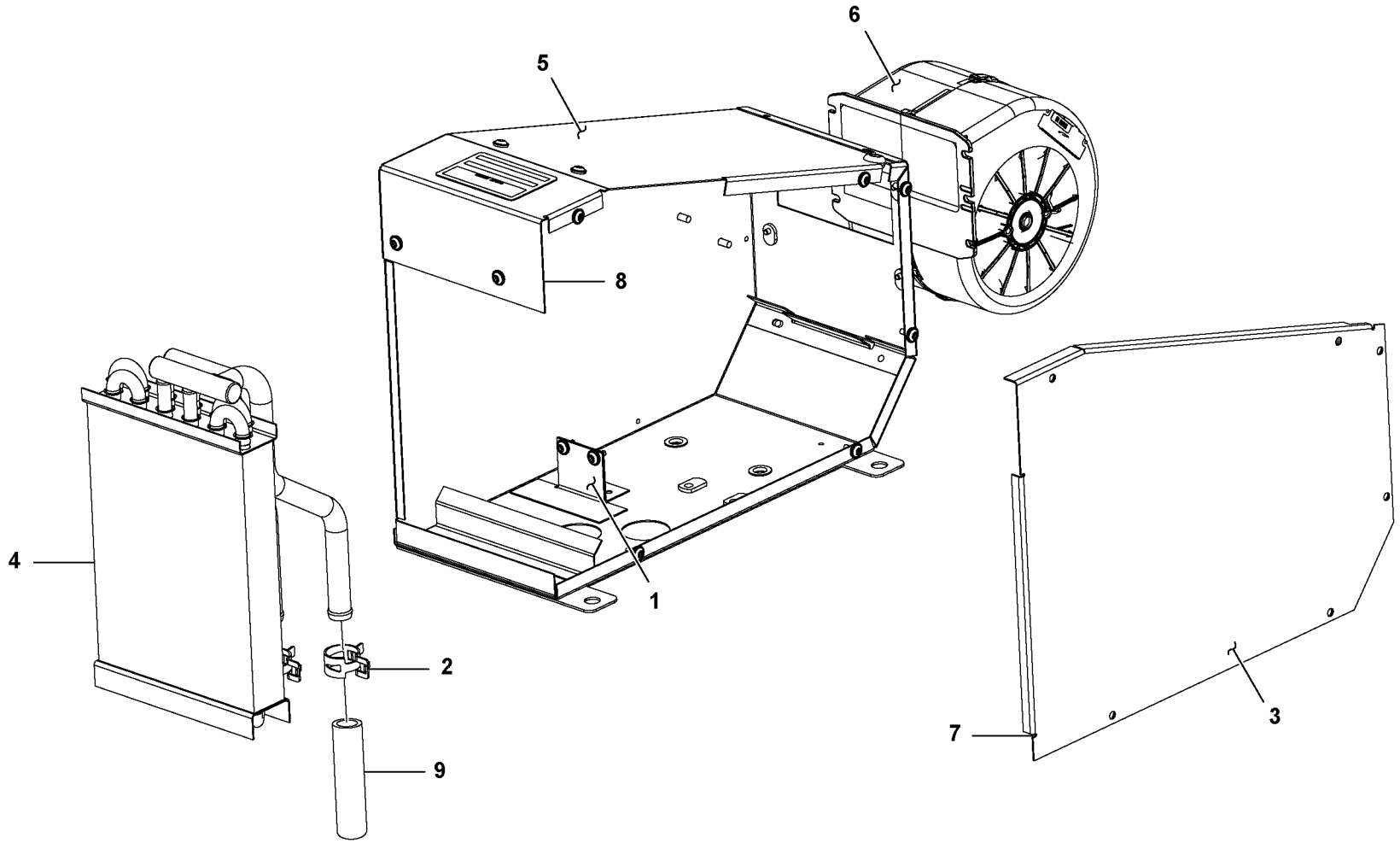

Volvo Construction Equipment
1064048

Fig.	Part No.	Quantity 1	2	3	PS	KIT	Description	Denominación	Denominação	Dénomination	Notes
	VOE 17209898	1					Heater	Calefactor	Aquecedor	Réchauffeur	
1		1			NS		•Bracket	•Ménsula	•Suporte	•Console	
2	**VOE 17210425**	2					•Clamping band	•Banda de apriete	•Cinta de fixação	•Ruban serrage	
3	**VOE 17210530**	1					•Cover plate	•Cubierta	•Placa tampa	•Plaque de recouvrement	
4	**VOE 17209732**	1					•Heater unit	•Calefactor	•Aquecedor	•Bloc chauff/clim	
5		1			NS		•Casing	•Cubierta	•Caixa	•Boitier	
6	**VOE 17210238**	1					•Blower motor	•Motor de ventilador de hab	•Motor do ventilador interior	•Moto-ventilateur	
7	**VOE 17210054**	1					•Gasket	•Junta	•Junta	•Joint	
8	**VOE 17210057**	1					•Gasket	•Junta	•Junta	•Joint	
9	**VOE 17209660**	2					•Hose	•Manguera	•Mangueira	•Flexible	

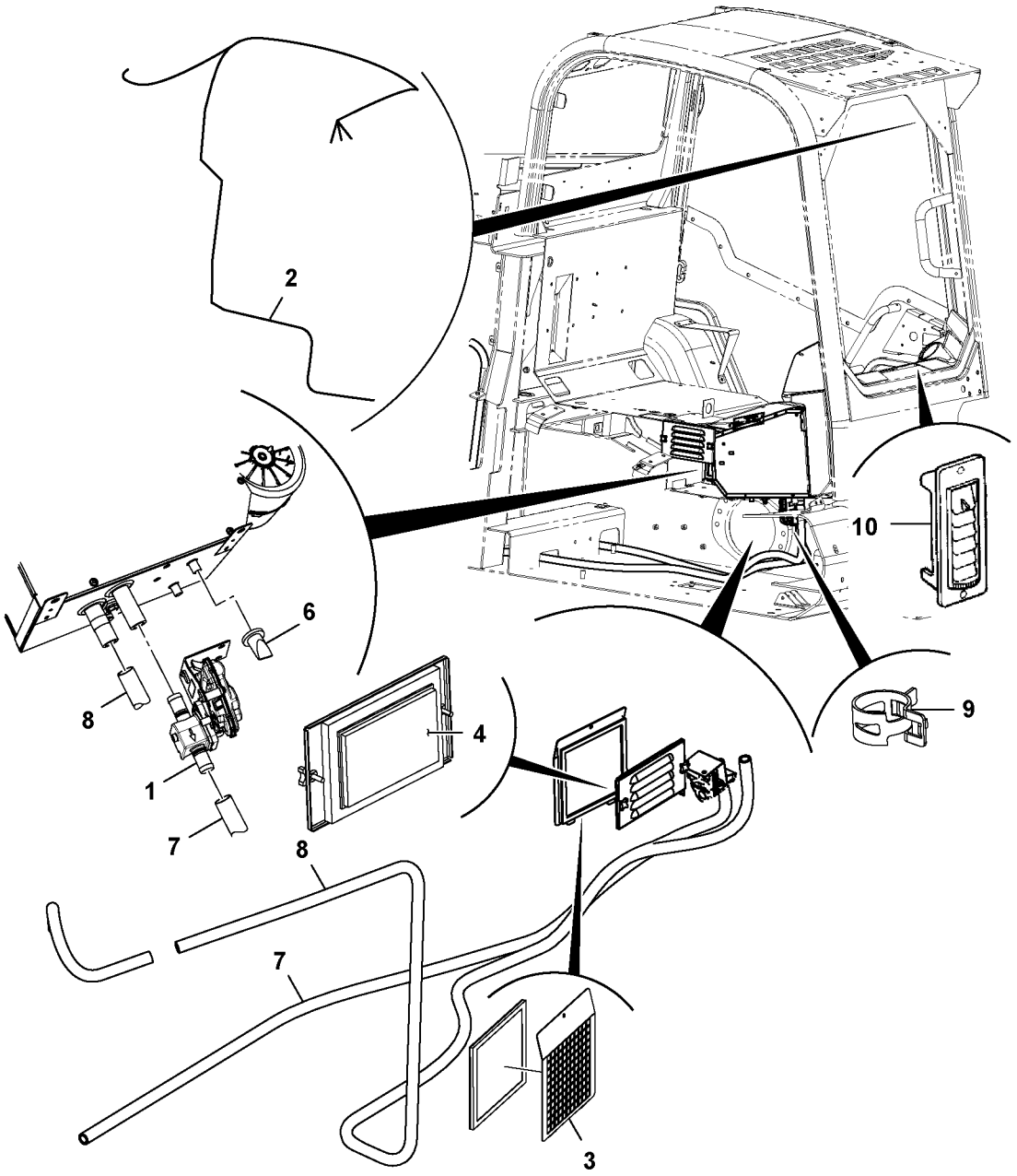

Volvo Construction Equipment
1064049

Fig.	Part No.	Quantity 1	2	3	PS	KIT	Description	Denominación	Denominação	Dénomination	Notes
	VOE 17209900	1					Heater	Calefaccion	Aquecedor	Elément de chauffage	
1	**VOE 17209771**	1					•Valve	•Válvula	•Válvula	•Valve	
2	**VOE 17209678**	1					•Cable harness	•Manojo cables	•Chicote cabos	•Faisceau câbles	
3	**VOE 17209936**	1					•Panel	•Panel	•Painel	•Panneau	
4	**VOE 17205040**	1					•Filter	•Filtro	•Filtro	•Filtre	
5	**VOE 17209614**	2					•Tube	•Tubo	•Tubo	•Tube	
6	**VOE 17224835**	3					•Adapter	•Adaptador	•Adaptador	•Adaptateur	
7	**VOE 17209758**	1					•Hose	•Manguera	•Mangueira	•Flexible	
8	**VOE 17209661**	1					•Hose	•Manguera	•Mangueira	•Flexible	
9	**VOE 17210425**	7					•Clamping band	•Banda de apriete	•Cinta de fixação	•Ruban serrage	
10	**VOE 17209652**	3					•Air filter	•Filtro de aire	•Filtro de ar	•Filtre à air	
11	**VOE 17209764**	1					•Hose	•Manguera	•Mangueira	•Flexible	
12	**VOE 17229033**	1					Adapter	Adaptador	Adaptador	Adaptateur	

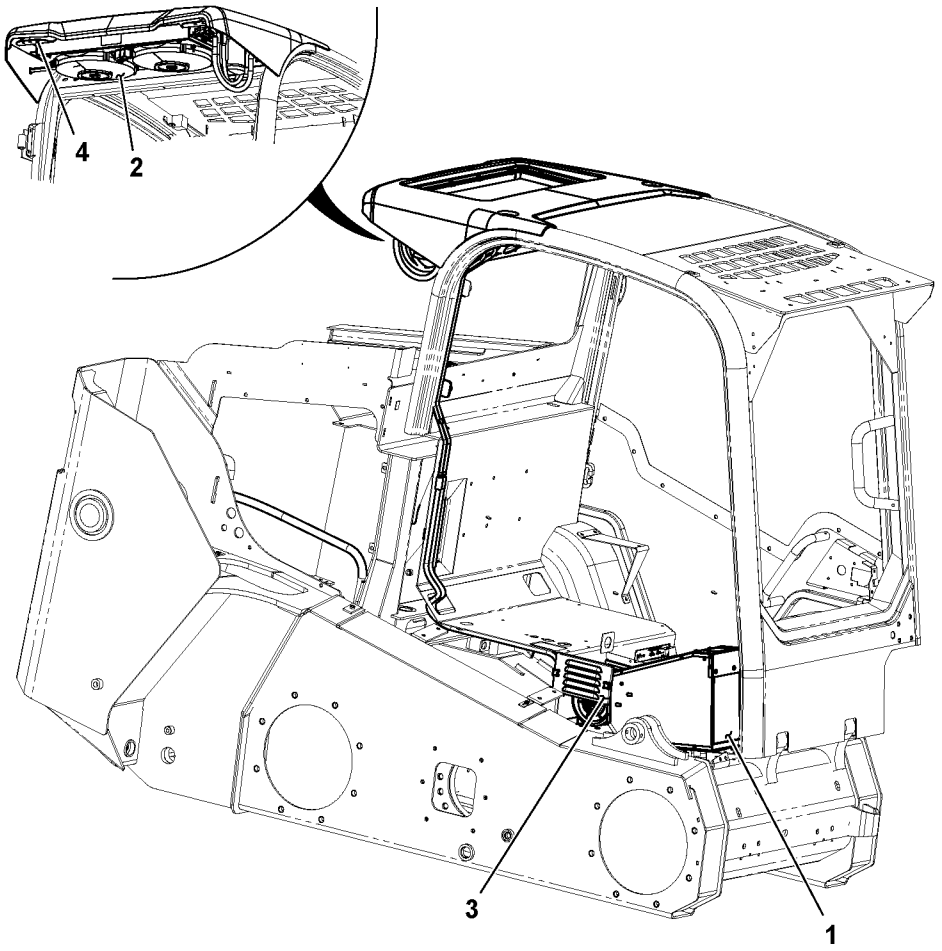
4
2
3
1

Fig.	Part No.	Quantity 1	2	3	PS	KIT	Description	Denominación	Denominação	Dénomination	Notes
1		1			NS		Air Conditioning Assembly	Conjunto de aire acondicio.	Conjunto de ar condiciona.	Groupe de climatisation	See group 870, Page 593
2	**VOE 17210510**	1					Condenser	Condensador	Condensador	Condenseur	See group 870, Page 595
3	**VOE 17209754**	1					Heater	Calefactor	Aquecedor	Réchauffeur	
4	**VOE 17210532**	1					Cover plate	Cubierta	Placa tampa	Plaque de recouvrement	

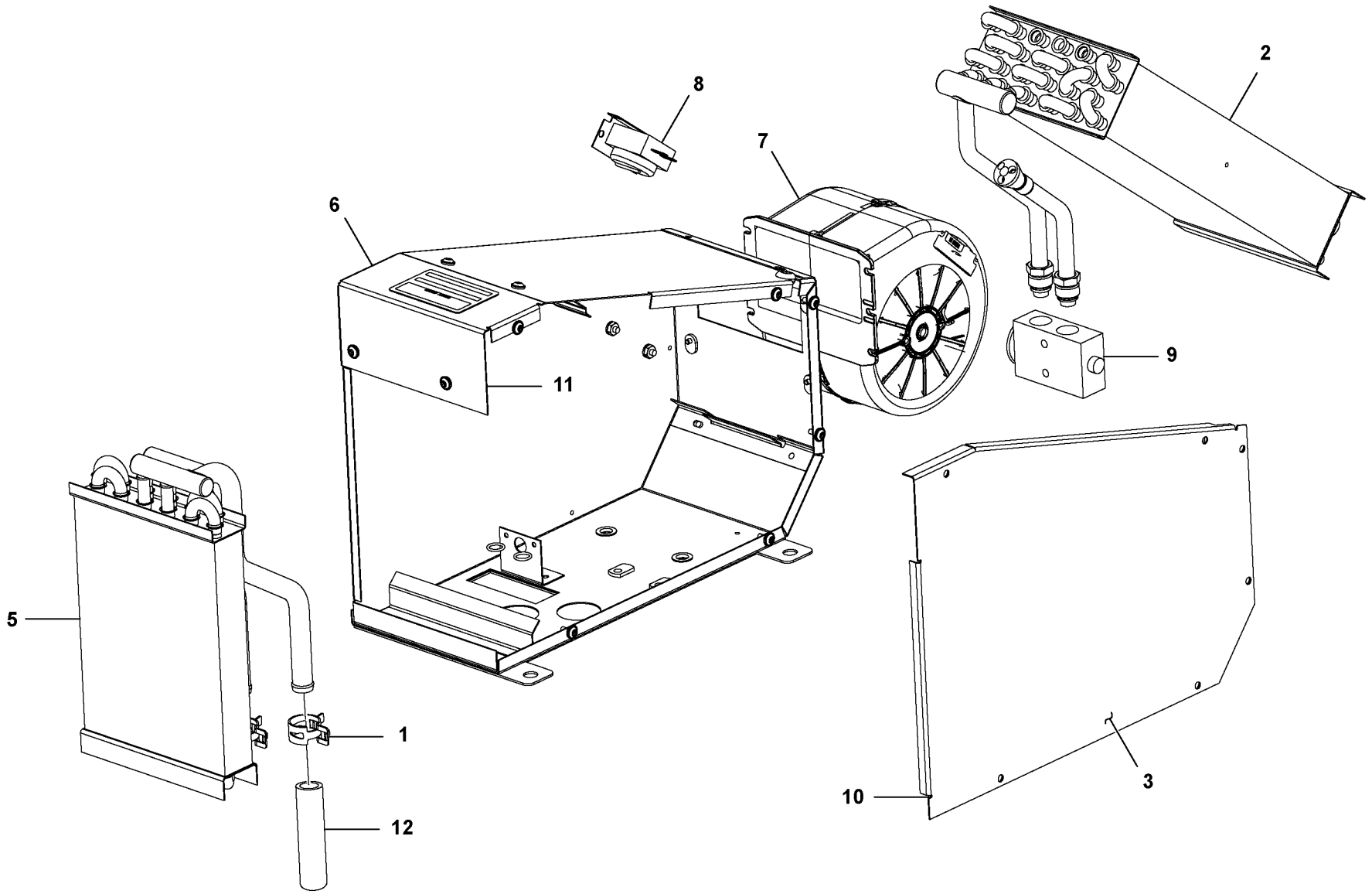

Volvo Construction Equipment
1064046

Fig.	Part No.	Quantity 1	2	3	PS	KIT	Description	Denominación	Denominação	Dénomination	Notes
		1			NS		Air Conditioning Assembly	Conjunto de aire acondicio	Conjunto de ar condiciona	Groupe de climatisation	
1	**VOE 17210425**	2					•Clamping band	•Banda de apriete	•Cinta de fixação	•Ruban serrage	
2	**VOE 17209998**	1					•Evaporator	•Evaporador	•Evaporador	•Évaporateur	
3	**VOE 17210530**	1					•Cover plate	•Cubierta	•Placa tampa	•Plaque de recouvrement	
4	**VOE 17209655**	1					•Cable	•Cable	•Cabo	•Câble	
5	**VOE 17209732**	1					•Heater unit	•Calefactor	•Aquecedor	•Bloc chauff/clim	
6		1			NS		•Casing	•Cubierta	•Caixa	•Boitier	
7	**VOE 17210238**	1					•Blower motor	•Motor de ventilador de hab	•Motor do ventilador interior	•Moto-ventilateur	
8	**VOE 17205150**	1					•Heater	•Calefactor	•Aquecedor	•Réchauffeur	
9	**VOE 17209551**	1					•Valve	•Válvula	•Válvula	•Valve	
10	**VOE 17210054**	1					•Gasket	•Junta	•Junta	•Joint	
11	**VOE 17210057**	1					•Gasket	•Junta	•Junta	•Joint	
12	**VOE 17209660**	2					•Hose	•Manguera	•Mangueira	•Flexible	

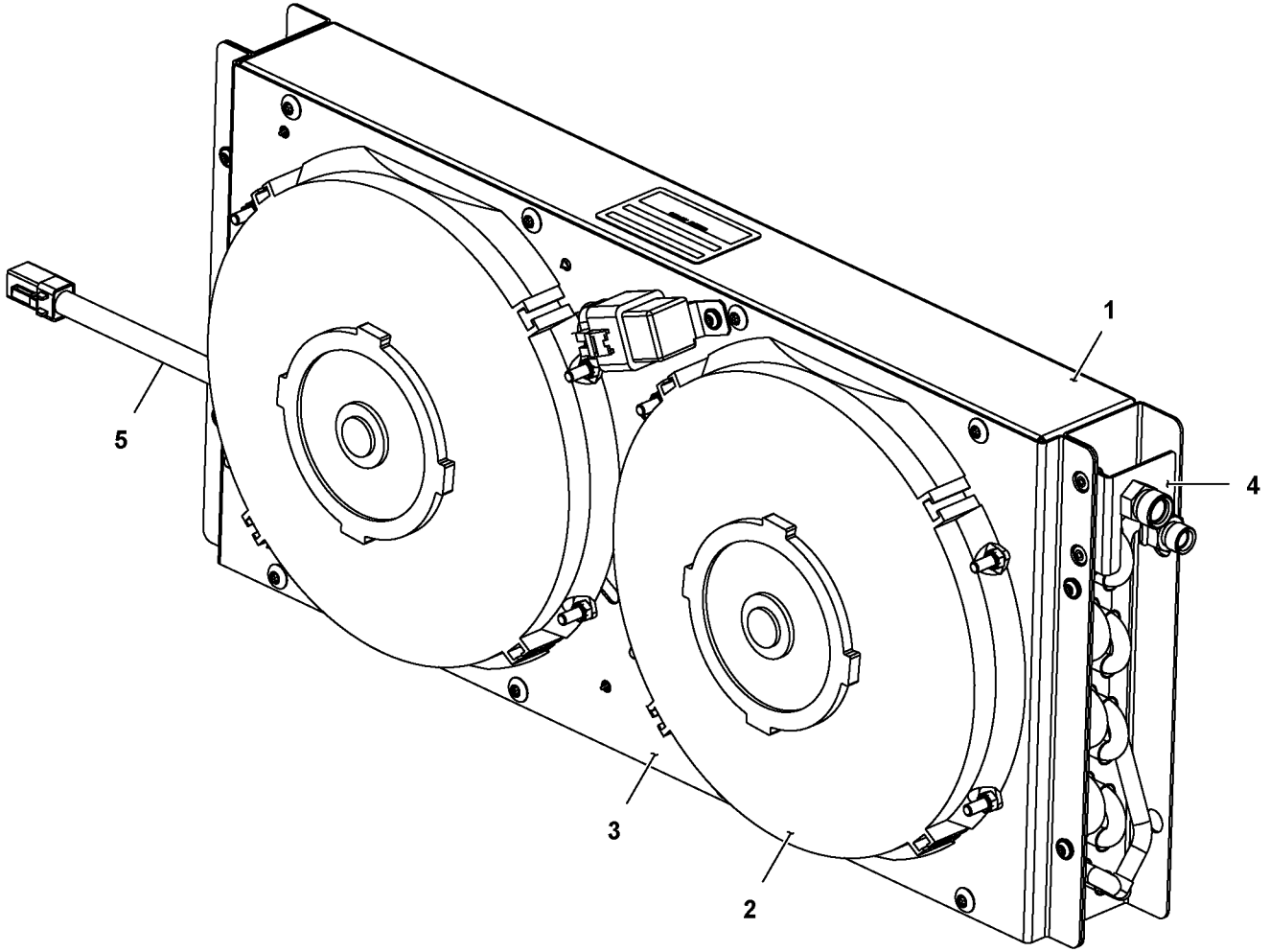
1
2
3
4
5

Fig.	Part No.	Quantity 1	2	3	PS	KIT	Description	Denominación	Denominação	Dénomination	Notes
	VOE 17210510	1					Condenser	Condensador	Condensador	Condenseur	
1	**VOE 17209954**	1					•Condenser	•Condensador	•Condensador	•Condenseur	
2	**VOE 17210103**	2					•Fan motor	•Motor ventilador	•Motor ventilador	•Moteur de ventilateur	
3	**VOE 17210519**	1					•Cover plate	•Cubierta	•Placa tampa	•Plaque de recouvrement	
4	**VOE 17210001**	2					•Bracket	•Consola	•Suporte	•Console	
5	**VOE 17209657**	1					•Wire	•Alambre	•Arame	•Fil	

1		**Condenseur.** **Condensador.** **Air-condition, condenser divice.**	Catalogue id **20649**	Group **870**
2			Illustr. No **1064047**	Section **450**
3			Issue **PUB 20030904-B**	Page **595**
4				
5		**MC60C-MC105C, MCT70C-MCT95C**		

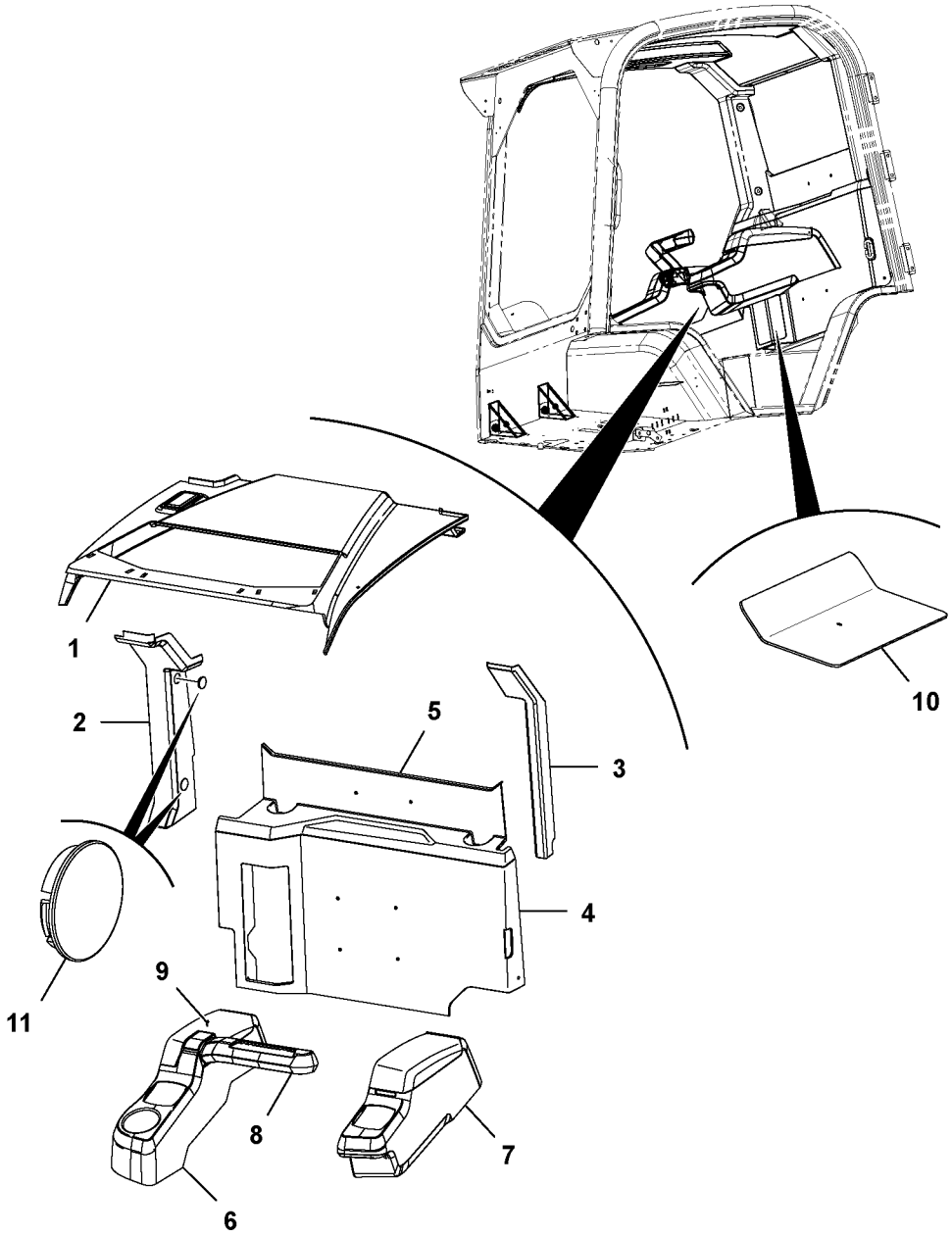
1
2
3
4
5
6
7
8
9
10
11

Fig.	Part No.	Quantity 1	2	3	PS	KIT	Description	Denominación	Denominação	Dénomination	Notes
1		1					Liner	Camisa		Chemise	See group 880, Page 601
2	**VOE 17209964**	1					Pillar	Montante	Coluna	Montant	
3	**VOE 17209966**	1					Pillar	Montante	Coluna	Montant	
4	**VOE 17209905**	1					Panel	Panel	Painel	Panneau	
5	**VOE 17209906**	1					Panel	Panel	Painel	Panneau	
6	**VOE 17209547**	1					Arm rest	Reposabrazos	Descansa-braço	Accoudoir	
7	**VOE 17209544**	1					Arm rest	Reposabrazos	Descansa-braço	Accoudoir	See group 881, Page 605
8	**VOE 17210164**	1					Bar	Barra	Barra	Barre	See group 882, Page 609
9	**VOE 17210543**	1					Pad	Suplemento	Base	Support inférieur	
10	**VOE 17210529**	1					Cover	Cubierta	Tampa	Capot	
11	**VOE 17209834**	2					Plug	Tapón	Tampão	Bouchon	

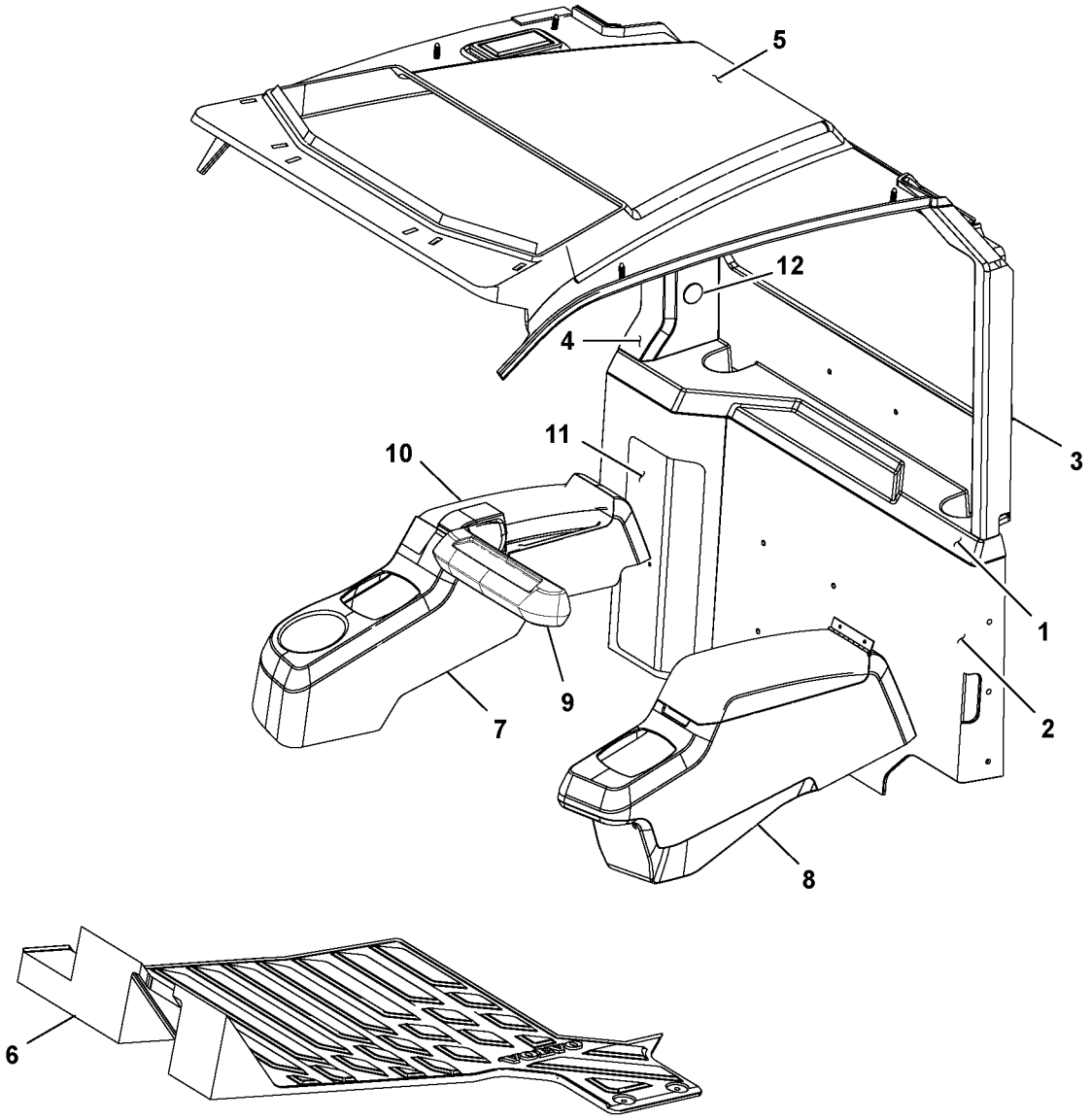

Volvo Construction Equipment
1064188

Fig.	Part No.	Quantity 1	2	3	PS	KIT	Description	Denominación	Denominação	Dénomination	Notes
1	**VOE 17209906**	1					Panel	Panel	Painel	Panneau	
2	**VOE 17209905**	1					Panel	Panel	Painel	Panneau	
3	**VOE 17209966**	1					Pillar	Montante	Coluna	Montant	
4	**VOE 17209964**	1					Pillar	Montante	Coluna	Montant	
5		1					Liner	Camisa		Chemise	See group 880, Page 601
6		1			NS		Floor mat	Alfombra piso	Tapete assoalho	Tapis sol	
7	**VOE 17209547**	1					Arm rest	Reposabrazos	Descansa-braço	Accoudoir	
8	**VOE 17209544**	1					Arm rest	Reposabrazos	Descansa-braço	Accoudoir	See group 881, Page 605
9	**VOE 17210164**	1					Bar	Barra	Barra	Barre	See group 882, Page 609
10	**VOE 17210543**	1					Pad	Suplemento	Base	Support inférieur	
11	**VOE 17210529**	1					Cover	Cubierta	Tampa	Capot	
12	**VOE 17209834**	2					Plug	Tapón	Tampão	Bouchon	

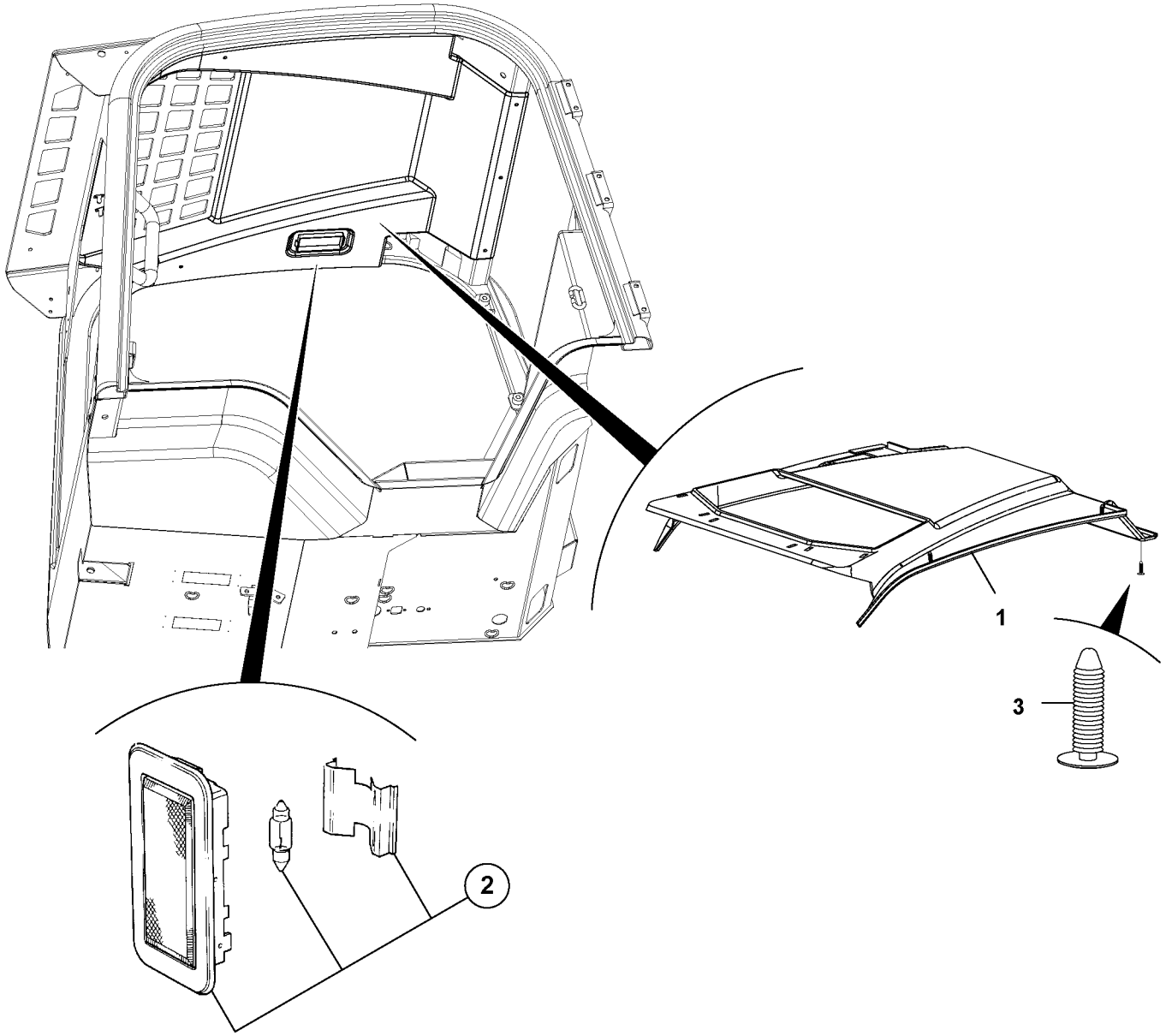

Volvo Construction Equipment
1064019

Fig.	Part No.	Quantity 1	2	3	PS	KIT	Description	Denominación	Denominação	Dénomination	Notes
1		1			NS		Upholstery	Tapizado		Garniture Habit	
2	**VOE 17205035**	1					Lamp	Lámpara	Lâmpada	Lampe	See group 354, Page 275
3	**VOE 17205044**	8					Plug	Tapón	Bujão	Tampon	

1		**Pavillon** **Linhas principais** **Laterales del techo** **Headliner**	Catalogue id **20649**	Group **880**
2			Illustr. No **1064019**	Section **400**
3			Issue **PUB 20030904-B**	Page **601**
4				
5		**MC60C-MC105C, MCT70C-MCT95C**		

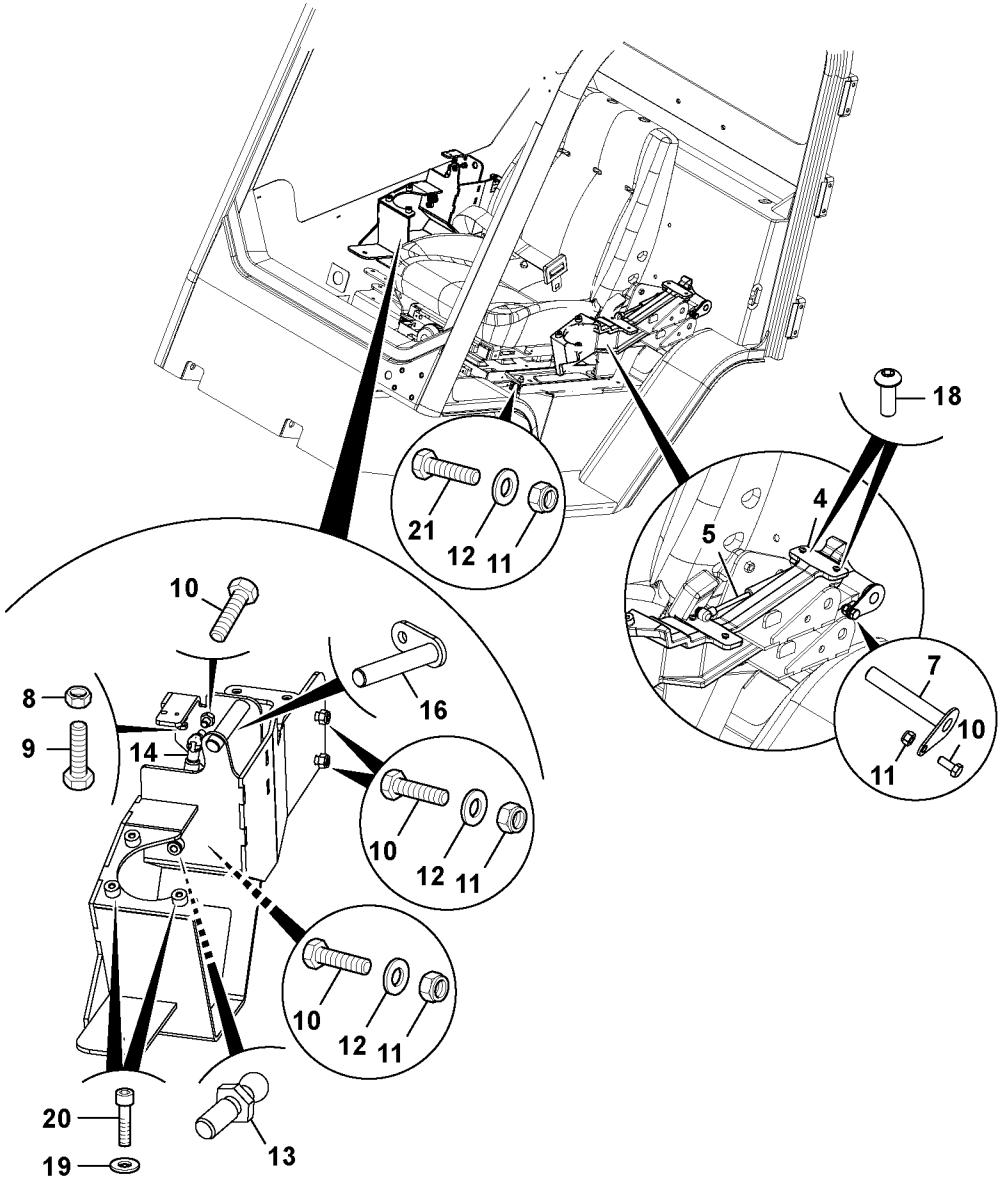
18
21
12
11
4
5
7
10
11
10
8
9
14
16
10
12
11
10
12
11
20
19
13

Fig.	Part No.	Quantity 1	2	3	PS	KIT	Description	Denominación	Denominação	Dénomination	Notes
4	**VOE 17210418**	1					Casting	Material		Moulage fonte	See group 882, Page 611
5	**VOE 17204980**	1					Strut	Pata	Estrutura	Pied	
7	**VOE 17210546**	1					Pin	Pasador	Pino	Goupille	
8	**VOE 17205319**	1					Nut	Tuerca	Porca	Écrou	
9	**VOE 16212071**	1					Set screw	Tornillo tope	Parafuso batente	Vis butée	
10	**VOE 17205256**	6					Hexagon screw	Tornillo hexagonal	Parafuso sextavado	Vis à tête hexagonale	
11	**VOE 16212120**	6					Lock nut	Contratuerca	Porca trava	Contre-écrou	
12	**VOE 20460127**	8					Washer	Arandela	Arruela	Rondelle	
13	**VOE 17209967**	2					Joint ball	Bola articulación	Esfera articulada	Bille articulation	
14	**VOE 17210363**	1					Bar	Barra	Barra	Barre	
16	**VOE 17210545**	1					Pin	Pasador	Pino	Goupille	
18	**VOE 17230137**	8					Screw	Tornillo	Parafuso	Vis	
19	**VOE 973494**	6					Washer	Arandela	Arruela	Rondelle	
20		6			NS		Capscrew		Parafuso de cabeça		
21	**VOE 16213998**	10					Set screw	Tornillo tope	Parafuso batente	Vis butée	

1		**Accoudoir** **Apoio de braço** **Reposabrazos** **Armrest**	Catalogue id **20649**	Group **881**
2			Illustr. No **1064009**	Section **100**
3			Issue **PUB 20030904-B**	Page **603**
4				
5		**MC60C-MC105C, MCT70C-MCT95C**		

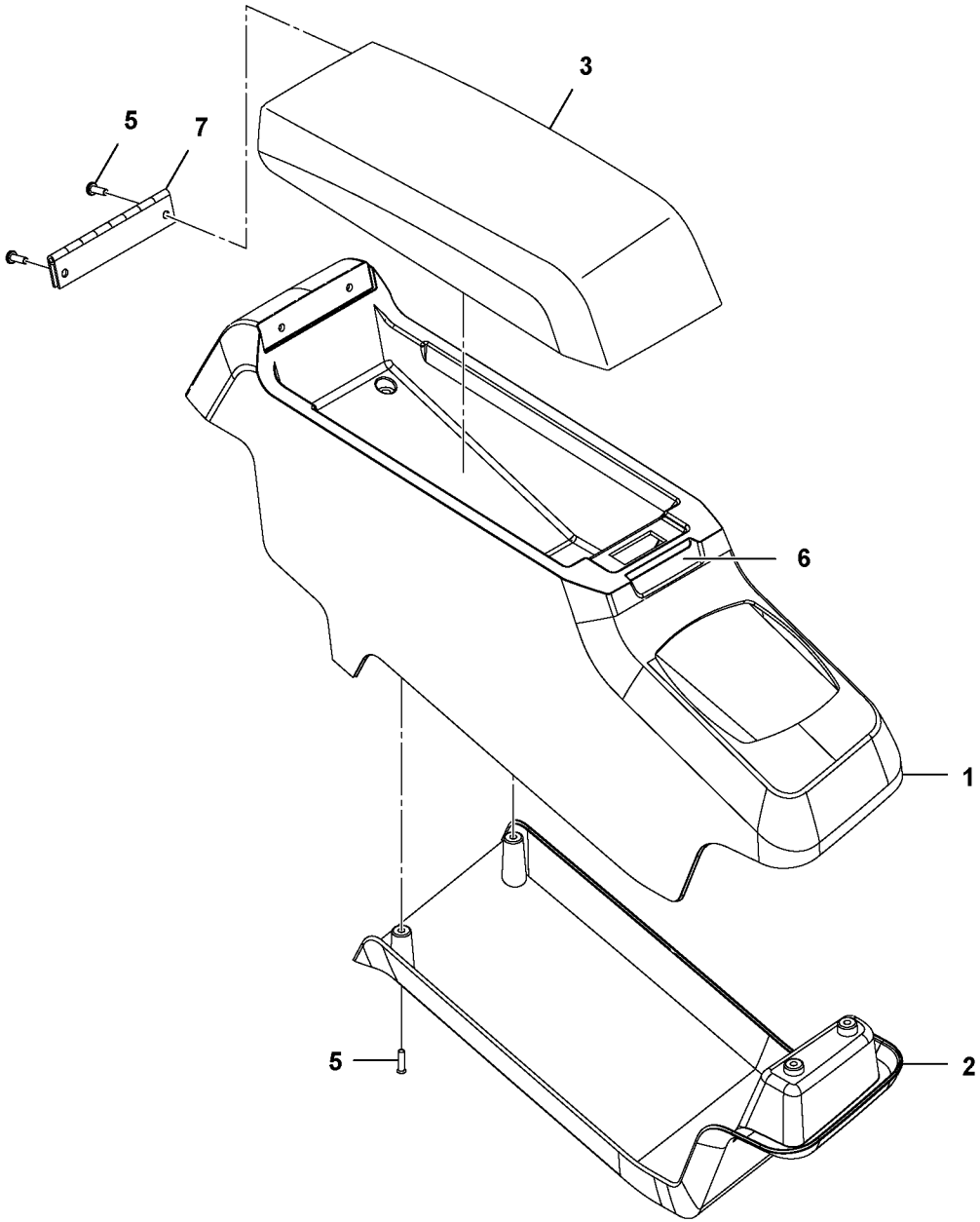

Volvo Construction Equipment
1064020

Fig.	Part No.	Quantity 1	2	3	PS	KIT	Description	Denominación	Denominação	Dénomination	Notes
1	**VOE 17209542**	1					Arm rest	Reposabrazos	Descansa-braço	Accoudoir	
2	**VOE 17209526**	1					Arm rest	Reposabrazos	Descansa-braço	Accoudoir	
3	**VOE 17210100**	1					Arm rest	Reposabrazos	Descansa-braço	Accoudoir	
5	**VOE 17205088**	10					Screw	Tornillo	Parafuso	Vis	
6	**VOE 17210175**	1					Cam	Leva	Came	Came	
7	**VOE 17209903**	1					Hinge	Bisagra	Dobradiça	Charnière	

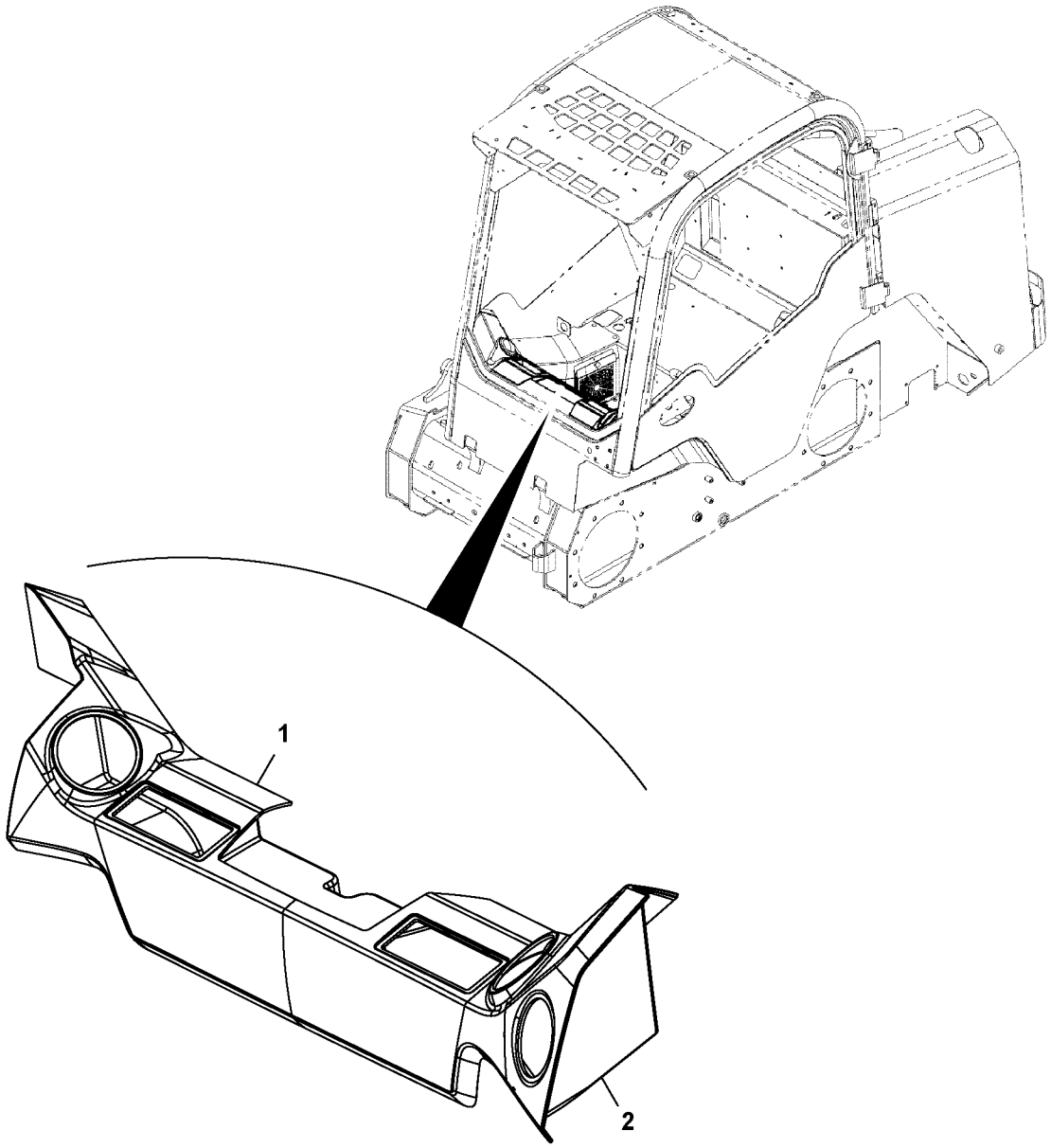

Volvo Construction Equipment
1064022

Fig.	Part No.	Quantity 1	2	3	PS	KIT	Description	Denominación	Denominação	Dénomination	Notes
1	**VOE 17210478**	1					Moulding	Listón	Moldura plástica	Moulure	
2	**VOE 17210455**	1					Moulding	Listón	Moldura plástica	Moulure	

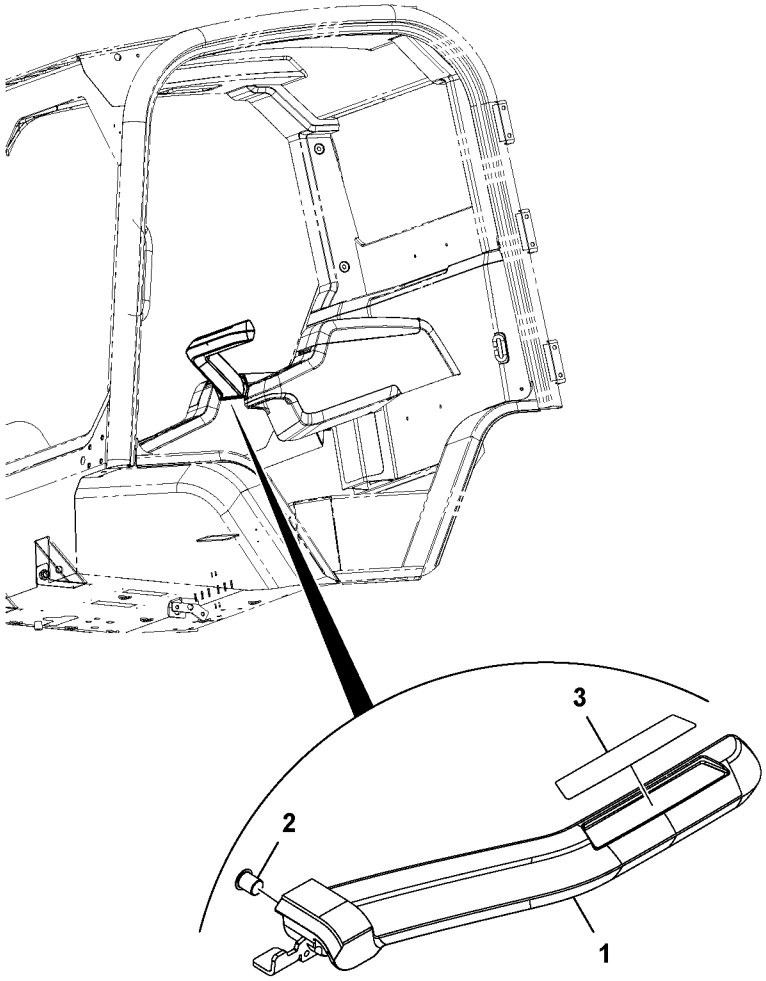
3
2
1

Fig.	Part No.	Quantity 1	2	3	PS	KIT	Description	Denominación	Denominação	Dénomination	Notes
1	**VOE 17210171**	1					Bar	Barra	Barra	Barre	
2	**VOE 17205062**	2					Flange	Brida	Flange	Bride	
3	**VOE 17210055**	1					Decal	Calcomanía	Decalque	Autocollant	

1		**Barre** **Barra de segurança** **Barra de cierre** **Lap bar**	Catalogue id **20649**	Group **882**
2			Illustr. No **1064028**	Section **100**
3				
4			Issue **PUB 20030904-B**	Page **609**
5		**MC60C-MC105C, MCT70C-MCT95C**		

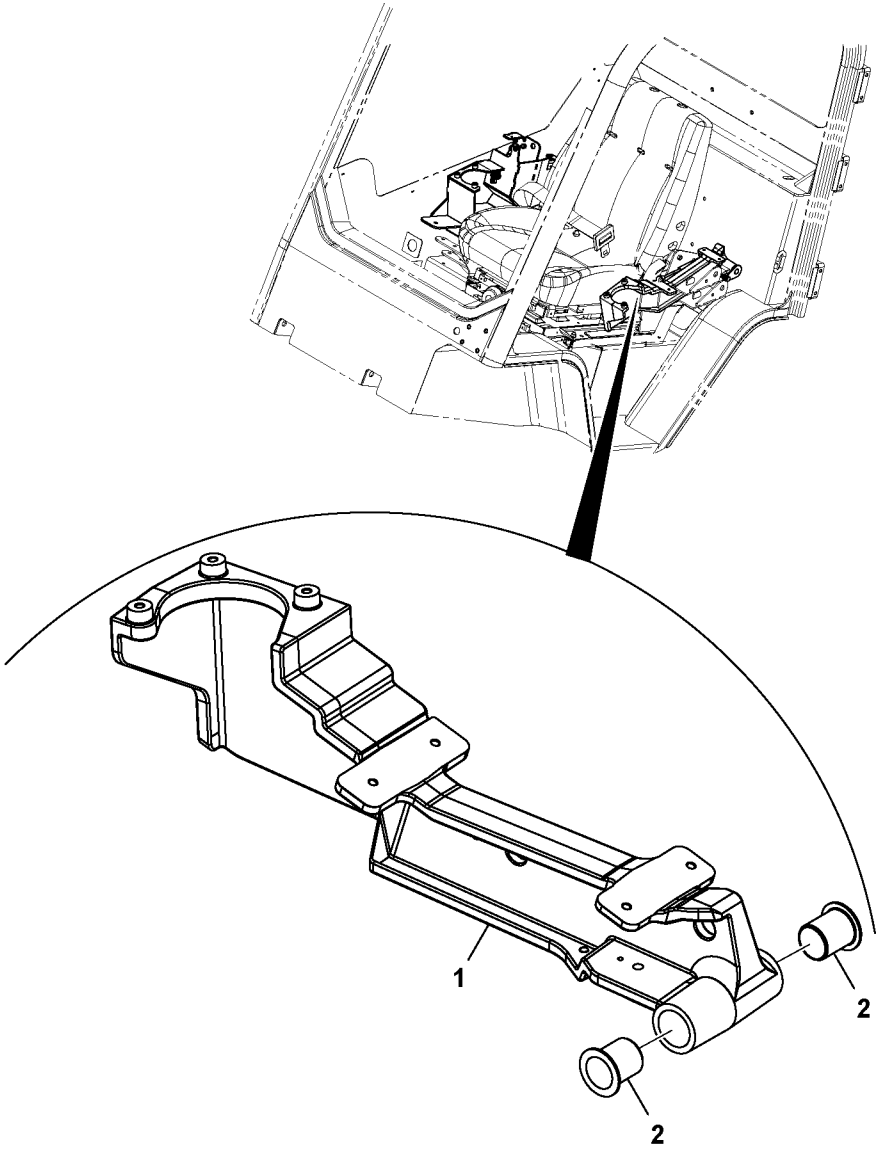

Volvo Construction Equipment
1064071

Fig.	Part No.	Quantity 1	2	3	PS	KIT	Description	Denominación	Denominação	Dénomination	Notes
1		1			NS		Arm rest plate	Placa reposabrazos	Chapa do descansa-braço	Plaque d'accoudoir	
2	**VOE 17205062**	2					Flange	Brida	Flange	Bride	

1		**Levier de commande** **Braço da alavanca de comando** **Brazo de la palanca de control** **Control lever arm**	Catalogue id **20649**	Group **882**
2			Illustr. No **1064071**	Section **200**
3			Issue **PUB 20030904-B**	Page **611**
4				
5		**LH.MC60C-MC105C, MCT70C-MCT95C**		

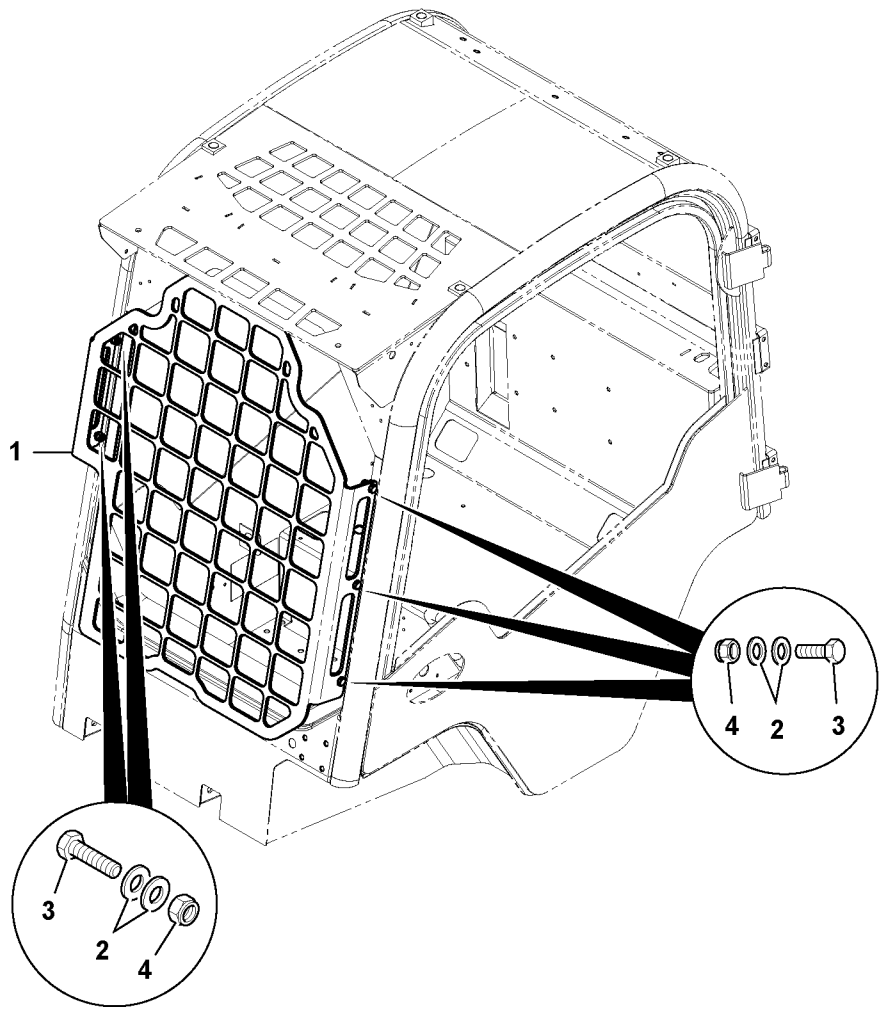

Volvo Construction Equipment
1063997

Fig.	Part No.	Quantity 1	2	3	PS	KIT	Description	Denominación	Denominação	Dénomination	Notes
1	**VOE 17209609**	1					Roll Over Prote	Roll Over Prote		Structure De Pr	
2	**VOE 16212138**	10			SS		Plain washer	Arandela plana	Arruela simples	Rondelle plane	
3	**VOE 16212272**	5					Bolt	Perno	Parafuso	Boulon	
4	**VOE 16212125**	5					Nut	Tuerca	Porca	Écrou	

1		**Grillage de protection pare-brise** **Rejilla de proteccion parabrisas delantero** **Windscreen protection** **MC60C-MC105C, MCT70C-MCT85C**	Catalogue id **20649**	Group **891**
2			Illustr. No **1063997**	Section **200**
3			Issue **PUB 20030904-B**	Page **613**
4				
5				

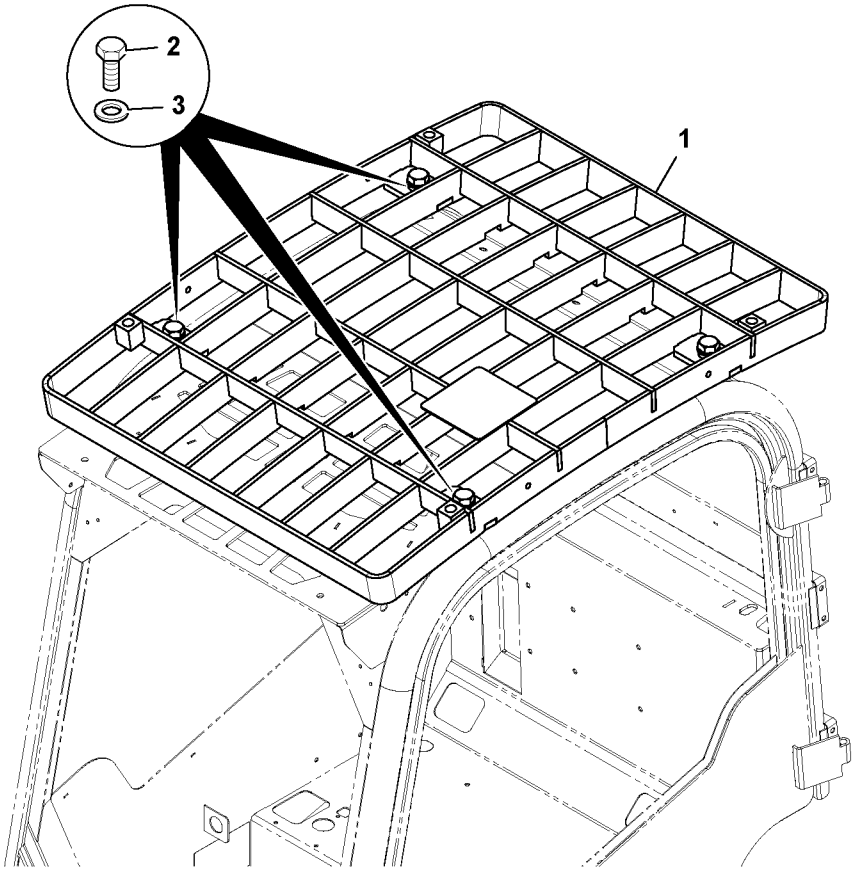
2
3
1

Fig.	Part No.	Quantity 1	2	3	PS	KIT	Description	Denominación	Denominação	Dénomination	Notes
1	**VOE 17209613**	1					Roof	Techo	Teto	Toit	
2	**VOE 17228959**	4					Bolt	Perno	Parafuso	Boulon	
3	**VOE 17205258**	4					Washer	Arandela	Arruela	Rondelle	

1		**Protection toit cabine conducteur**	Catalogue id **20649**	Group **891**
2				
3		**Proteccion sobre cabina**	Illustr. No **1063995**	Section **250**
4		**Protection over drivers cab**		
5		**MC60C, MC70C, MCT70C**	Issue **PUB 20030904-B**	Page **615**

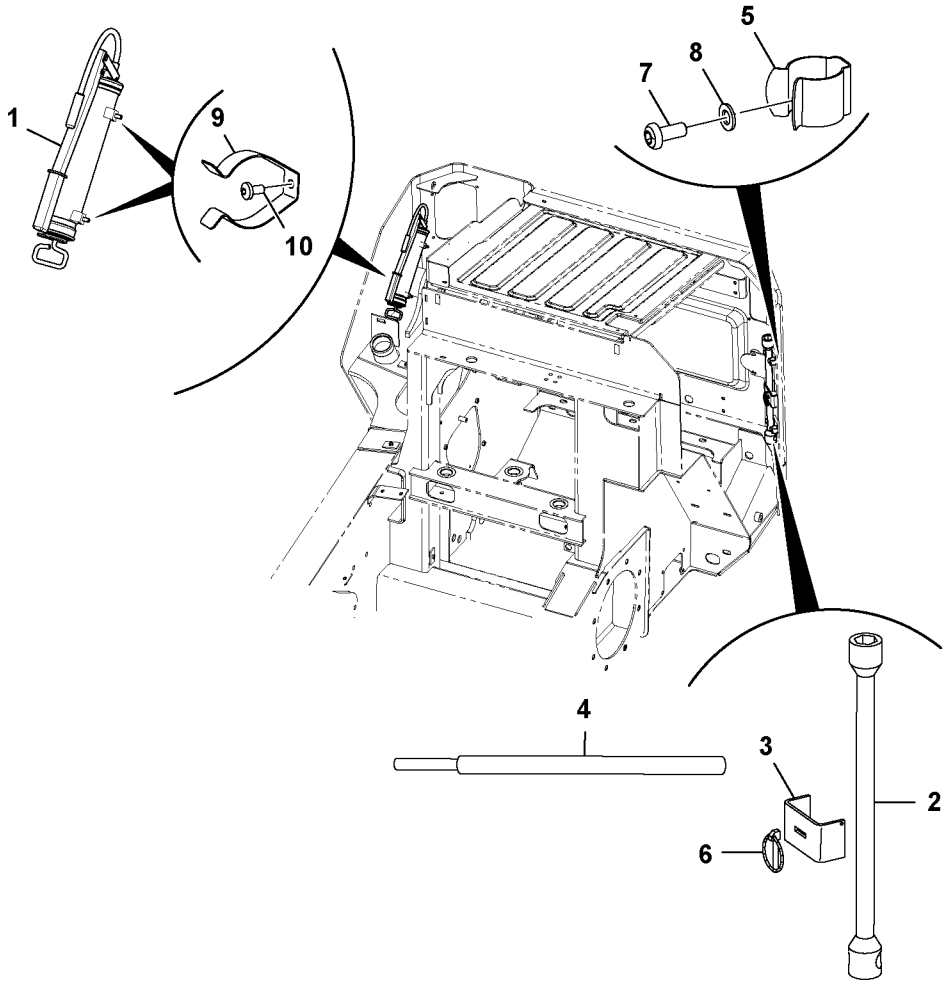
1
9
10
5
7
8
4
3
2
6

Fig.	Part No.	Quantity 1	2	3	PS	KIT	Description	Denominación	Denominação	Dénomination	Notes
1		1			NS		Grease Gun	Bomba de grasa	Pistola de graxa	Pompe a graisse	
2		1			NS		Wrench	Llave	Chave	Cle	
3		1			NS		Retaining plate	Placa retenida		Plaque retenue	
4		1			NS		Tommy Bar	Alzaprima		Levier	
5	**VOE 17210477**	4					Clip	Clip	Clipe	Clip	
6	**VOE 17210553**	1					Pin	Pasador	Pino	Goupille	
7	**VOE 17209641**	4					Screw	Tornillo	Parafuso	Vis	
8	**VOE 13940090**	4					Washer	Arandela	Arruela	Rondelle	
9		2			NS		Joint	Junta	Junta	Cardan	
10	**VOE 17210416**						Screw	Tornillo	Parafuso	Vis	

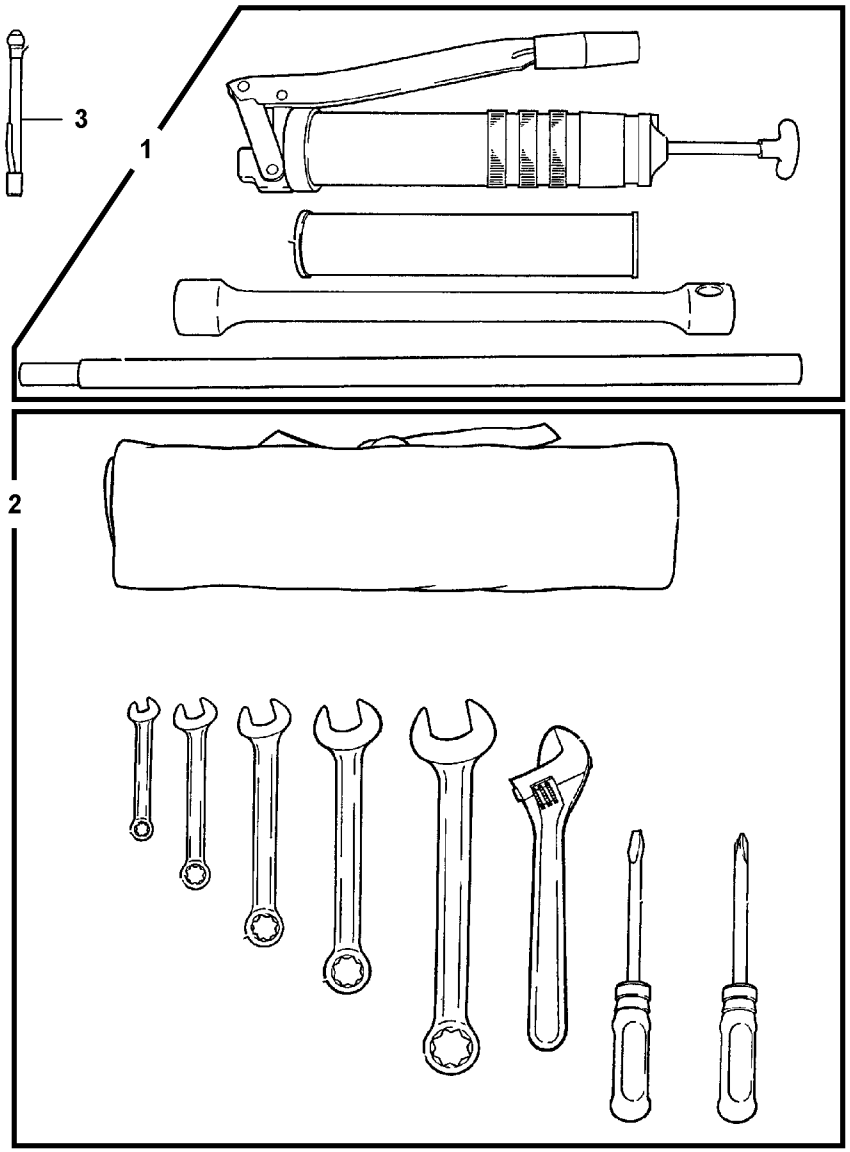
3
1
2

Fig.	Part No.	Quantity 1	2	3	PS	KIT	Description	Denominación	Denominação	Dénomination	Notes
1		1					Tool kit	Juego herramien	Kit de ferramentas	Kit outils	BASIC See group 896, Page 617
2		1					Tool kit	Juego herramien	Kit de ferramentas	Kit outils	METRIC See group 896, Page 621
3		1			NS		Gauge	Plantilla	Calibrador	Calibre	

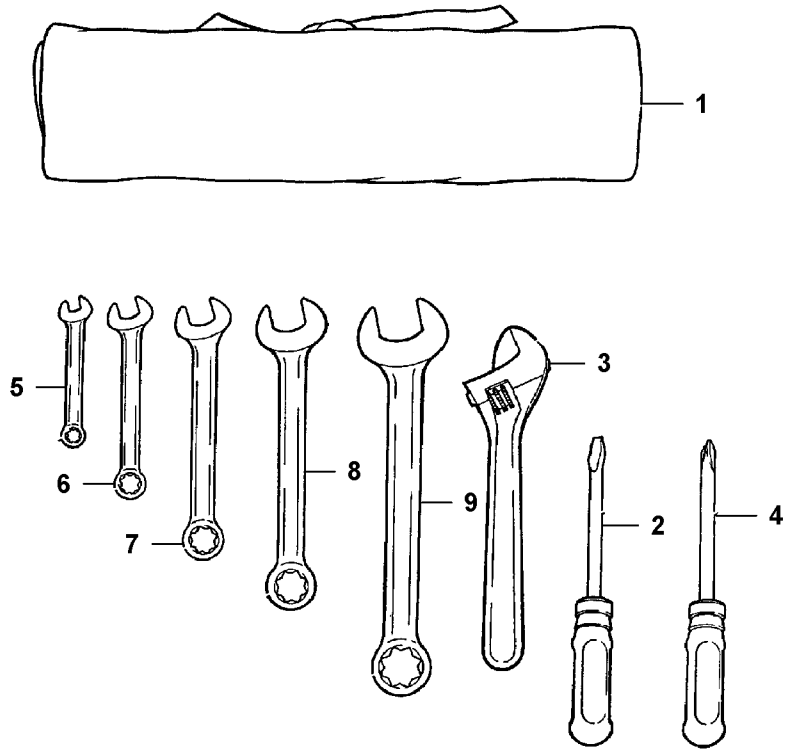
1
5
6
7
8
9
3
2
4

Fig.	Part No.	Quantity 1	2	3	PS	KIT	Description	Denominación	Denominação	Dénomination	Notes
		1			NS		Tool kit	Juego herramien	Kit de ferramentas	Kit outils	METRIC
1	**VOE 17210121**	1					•Tool bag	•Estuche herramientas	•Estojo ferramentas	•Sacoche porte-outils	
2		1			NS		•Screwdriver	•Destornillador	•Chave de parafuso	•Tournevis	
3		1			NS		•Tool kit	•Juego herramientas	•Jogo de ferramentas	•Kit outils	
4		1			NS		•Screwdriver	•Destornillador	•Chave de parafuso	•Tournevis	
5		1			NS		•Tool kit	•Juego herramientas	•Jogo de ferramentas	•Kit outils	
6		1			NS		•Tool kit	•Juego herramientas	•Jogo de ferramentas	•Kit outils	
7		1			NS		•Tool kit	•Juego herramientas	•Jogo de ferramentas	•Kit outils	
8		1			NS		•Tool kit	•Juego herramientas	•Jogo de ferramentas	•Kit outils	
9		1			NS		•Tool kit	•Juego herramientas	•Jogo de ferramentas	•Kit outils	

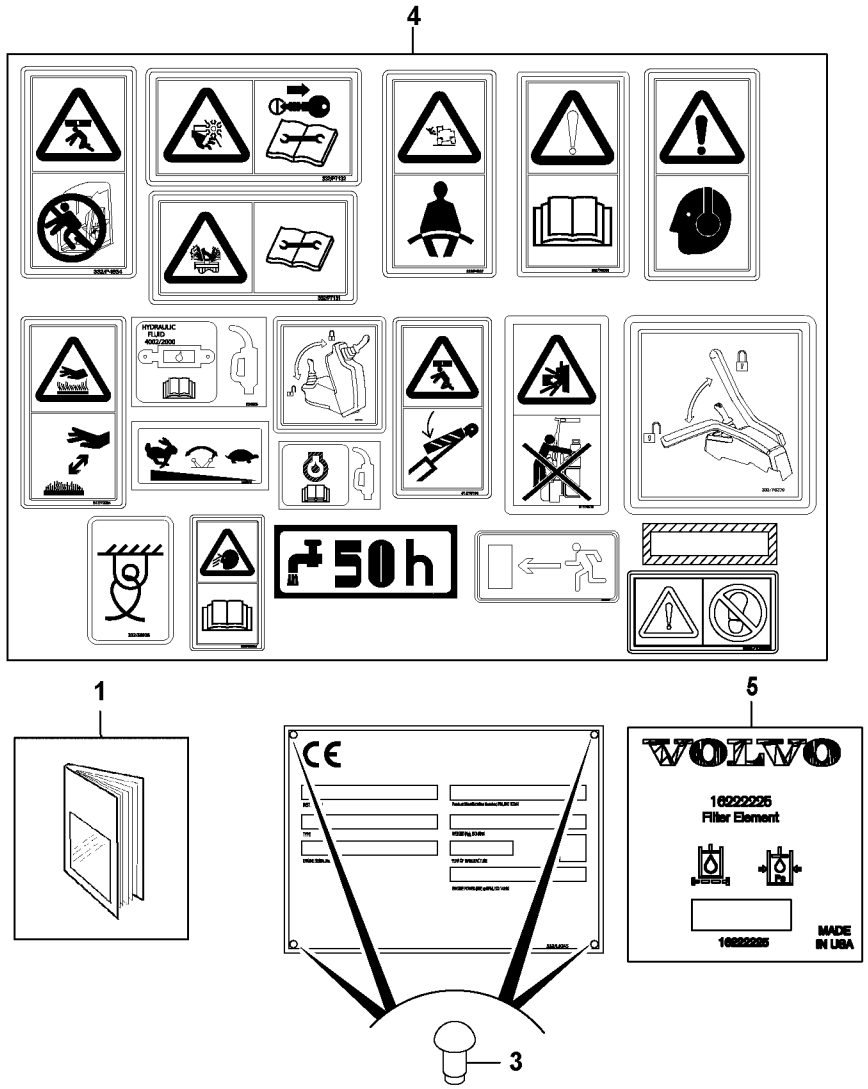
4
HYDRAULIC
FLUID
4002/2000
50h
1
5
CE
VOLVO
16222226
Filter Element
16222225
MADE
IN USA
3

Fig.	Part No.	Quantity 1	2	3	PS	KIT	Description	Denominación	Denominação	Dénomination	Notes
1		1			NS		Manual	Manual		Manuel	CZECH
1		1			NS		Manual	Manual		Manuel	LATVIAN
1		1			NS		Manual	Manual		Manuel	LITHUANIAN
1		1			NS		Manual	Manual		Manuel	POLISH
1		1			NS		Manual	Manual		Manuel	ESTONIAN
1		1			NS		Manual	Manual		Manuel	HUNGARIAN
1		1			NS		Manual	Manual		Manuel	DUTCH
1		1			NS		Manual	Manual		Manuel	GREEK
1		1			NS		Manual	Manual		Manuel	FINNISH
1		1			NS		Manual	Manual		Manuel	SWEDISH
1		1			NS		Manual	Manual		Manuel	PORTUGUESE (AM)
1		1			NS		Manual	Manual		Manuel	FRENCH (CAN)
1		1			NS		Manual	Manual		Manuel	ROMANIAN
1		1			NS		Manual	Manual		Manuel	BULGARIAN
1		1			NS		Manual	Manual		Manuel	SLOVENE
1		1			NS		Manual	Manual		Manuel	NORWEGIAN
1		1			NS		Manual	Manual		Manuel	SPANISH (S AM)
3	**VOE 16212314**	4					Drive screw	Tornillo motriz	Parafuso	Vis de commande	
4		1					Decal Kit		Kit de adesivos		See group 897, Page 637
5	**VOE 17224713**	1					Decal	Calcomanía	Decalque	Autocollant	

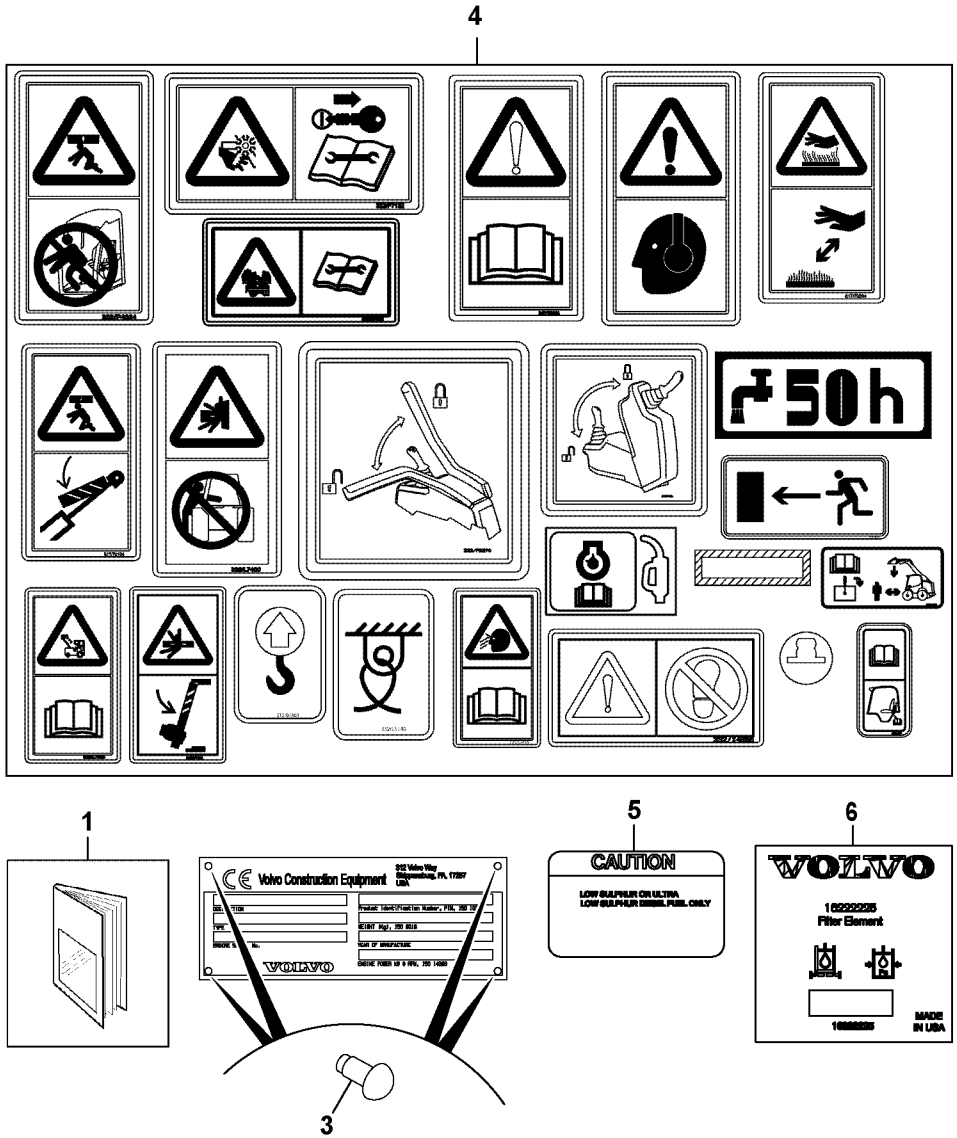
4
50h
1
Volvo Construction Equipment
VOLVO
3
5
CAUTION
LOW SULPHUR OR ULTRA
LOW SULPHUR DIESEL FUEL ONLY
6
VOLVO
Filter Element
MADE
IN USA

Fig.	Part No.	Quantity 1	2	3	PS	KIT	Description	Denominación	Denominação	Dénomination	Notes
1		1			NS		Manual	Manual		Manuel	ENGLISH (USA)
3	**VOE 16212314**	4					Drive screw	Tornillo motriz	Parafuso	Vis de commande	
4		1					Decal Kit		Kit de adesivos		See group 897, Page 637
5	**VOE 17210157**	1					Decal	Calcomanía	Decalque	Autocollant	
6	**VOE 17224713**	1					Decal	Calcomanía	Decalque	Autocollant	

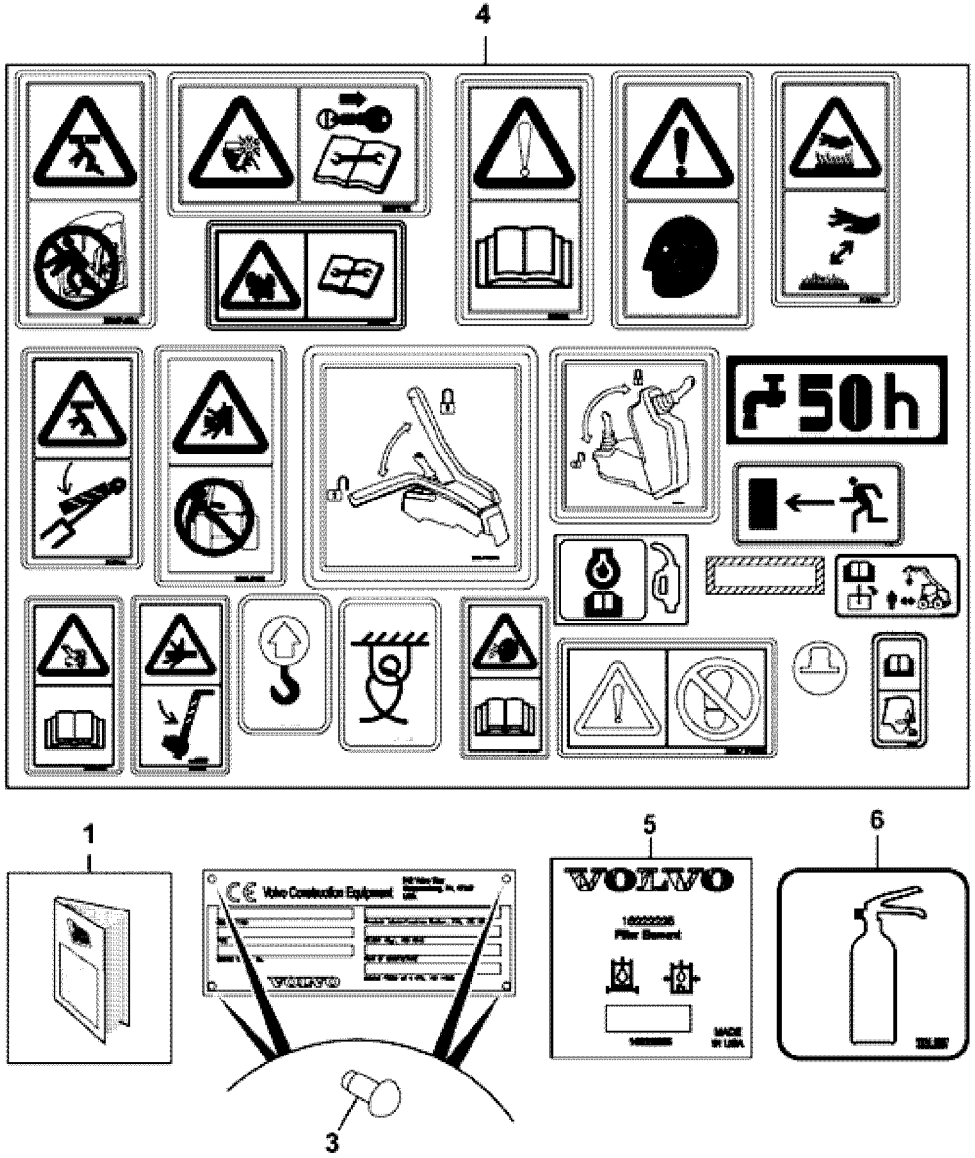
4
50h
1
5
VOLVO
6
3

Fig.	Part No.	Quantity 1	2	3	PS	KIT	Description	Denominación	Denominação	Dénomination	Notes
1		1			NS		Manual	Manual		Manuel	RUSSIAN
3	**VOE 16212314**	4					Drive screw	Tornillo motriz	Parafuso	Vis de commande	
4		1					Decal Kit		Kit de adesivos		See group 897, Page 637
5	**VOE 17224713**	1					Decal	Calcomanía	Decalque	Autocollant	
6		1			NS		Decal	Decalcomania	Adesivo	Decalcomanie	

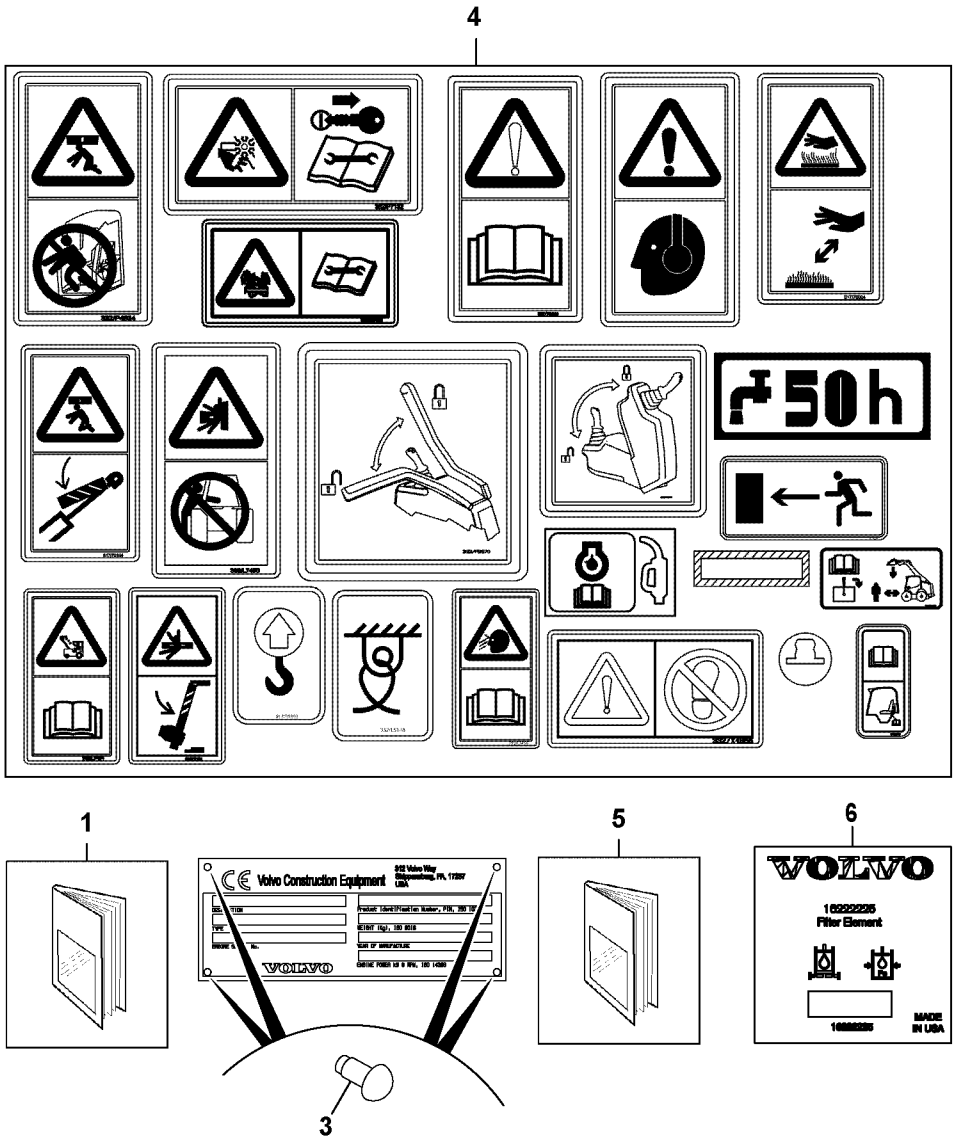
4
50h
1
Volvo Construction Equipment
5
6
VOLVO
16222235
Filter Element
MADE IN USA
3

Fig.	Part No.	Quantity 1	2	3	PS	KIT	Description	Denominación	Denominação	Dénomination	Notes
1		1			NS		Manual	Manual		Manuel	GERMAN
3	**VOE 16212314**	4					Drive screw	Tornillo motriz	Parafuso	Vis de commande	
4		1					Decal Kit		Kit de adesivos		See group 897, Page 637
5		1			NS		Manual	Manual		Manuel	FRENCH
6	**VOE 17224713**	1					Decal	Calcomanía	Decalque	Autocollant	

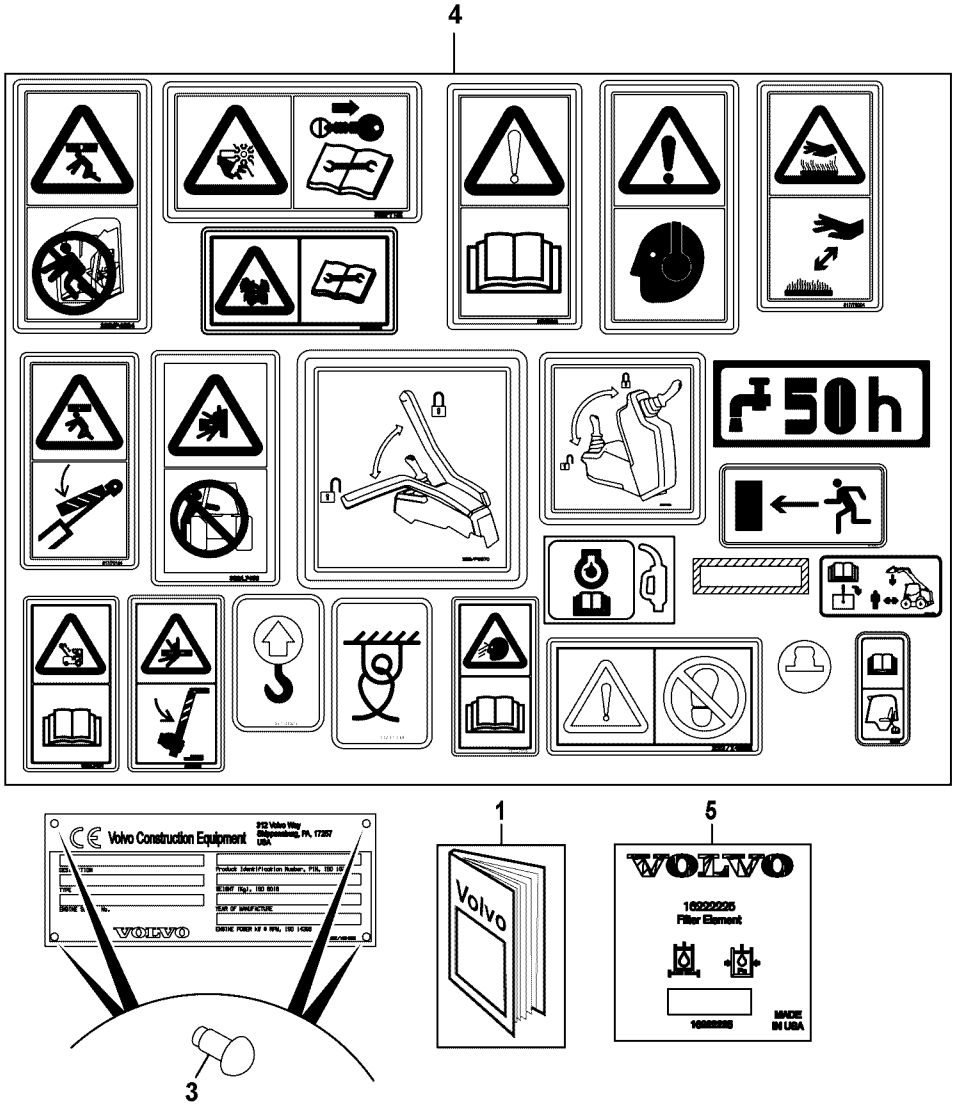
4
50h
1
5
Volvo Construction Equipment
VOLVO
Volvo
Filter Element
MADE IN USA
3

Fig.	Part No.	Quantity 1	2	3	PS	KIT	Description	Denominación	Denominação	Dénomination	Notes
1		1			NS		Manual	Manual		Manuel	PORTUGUESE
1		1			NS		Manual	Manual		Manuel	DANISH
1		1			NS		Manual	Manual		Manuel	ENGLISH (GBR)
1		1			NS		Manual	Manual		Manuel	GERMAN (DEU)
3	**VOE 16212314**	4					Drive screw	Tornillo motriz	Parafuso	Vis de commande	
4		1					Decal Kit		Kit de adesivos		See group 897, Page 637
5	**VOE 17224713**	1					Decal	Calcomanía	Decalque	Autocollant	

1		**Décalcomanies** **Etiquetas adesivas** **Calcomanías** **Decals**	Catalogue id **20649**	Group **897**
2			Illustr. No **1064156**	Section **250**
3			Issue **PUB 20030904-B**	Page **631**
4				
5		**MC60C-MC105C, MCT70C-MCT95C**		

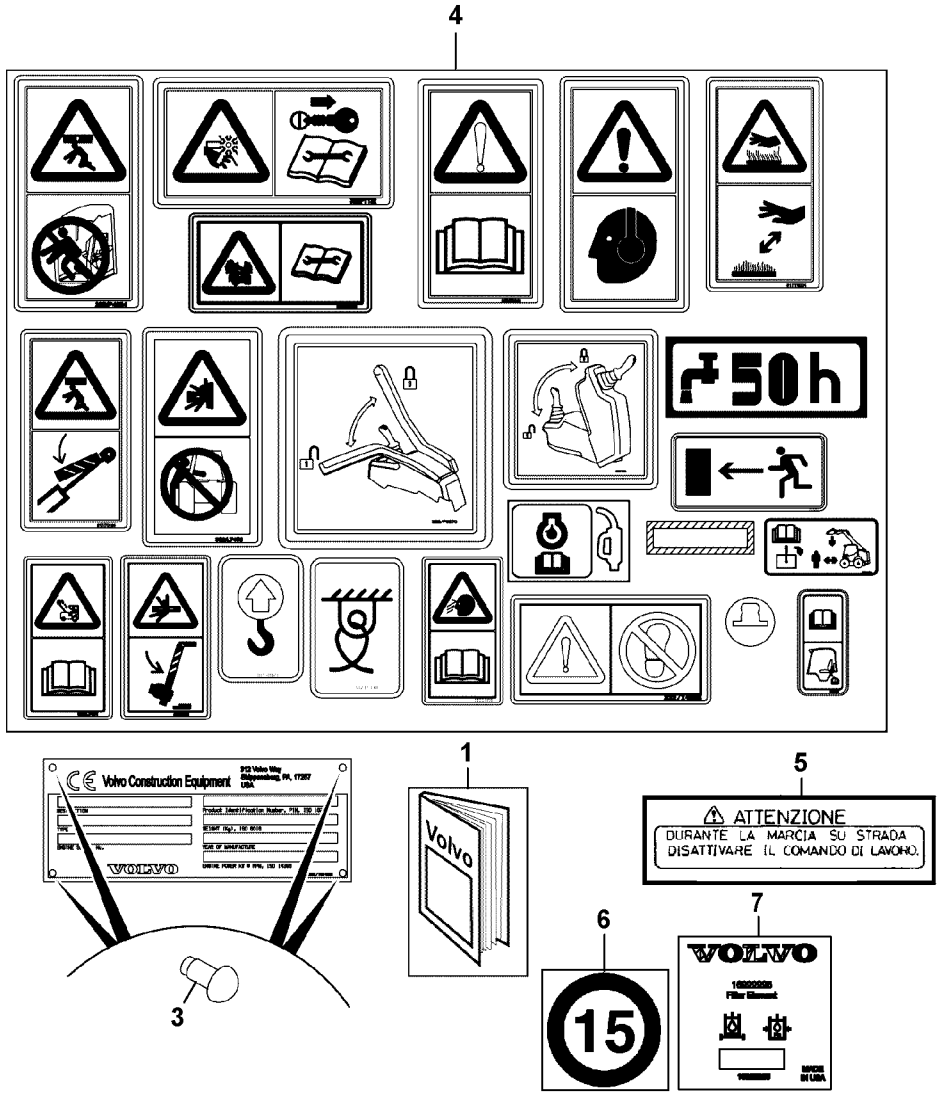
4
50h
1
Volvo
5
ATTENZIONE
DURANTE LA MARCIA SU STRADA
DISATTIVARE IL COMANDO DI LAVORO.
6
15
7
VOLVO
3
Volvo Construction Equipment

Fig.	Part No.	Quantity 1	2	3	PS	KIT	Description	Denominación	Denominação	Dénomination	Notes
1		1			NS		Manual	Manual		Manuel	ITALIAN
3	**VOE 16212314**	4					Drive screw	Tornillo motriz	Parafuso	Vis de commande	
4		1					Decal Kit		Kit de adesivos		See group 897, Page 637
5	**VOE 17210199**	1					Label	Etiqueta	Etiqueta	Étiquette	
6	**VOE 17210218**	1					Label	Etiqueta	Etiqueta	Étiquette	
7	**VOE 17224713**	1					Decal	Calcomanía	Decalque	Autocollant	

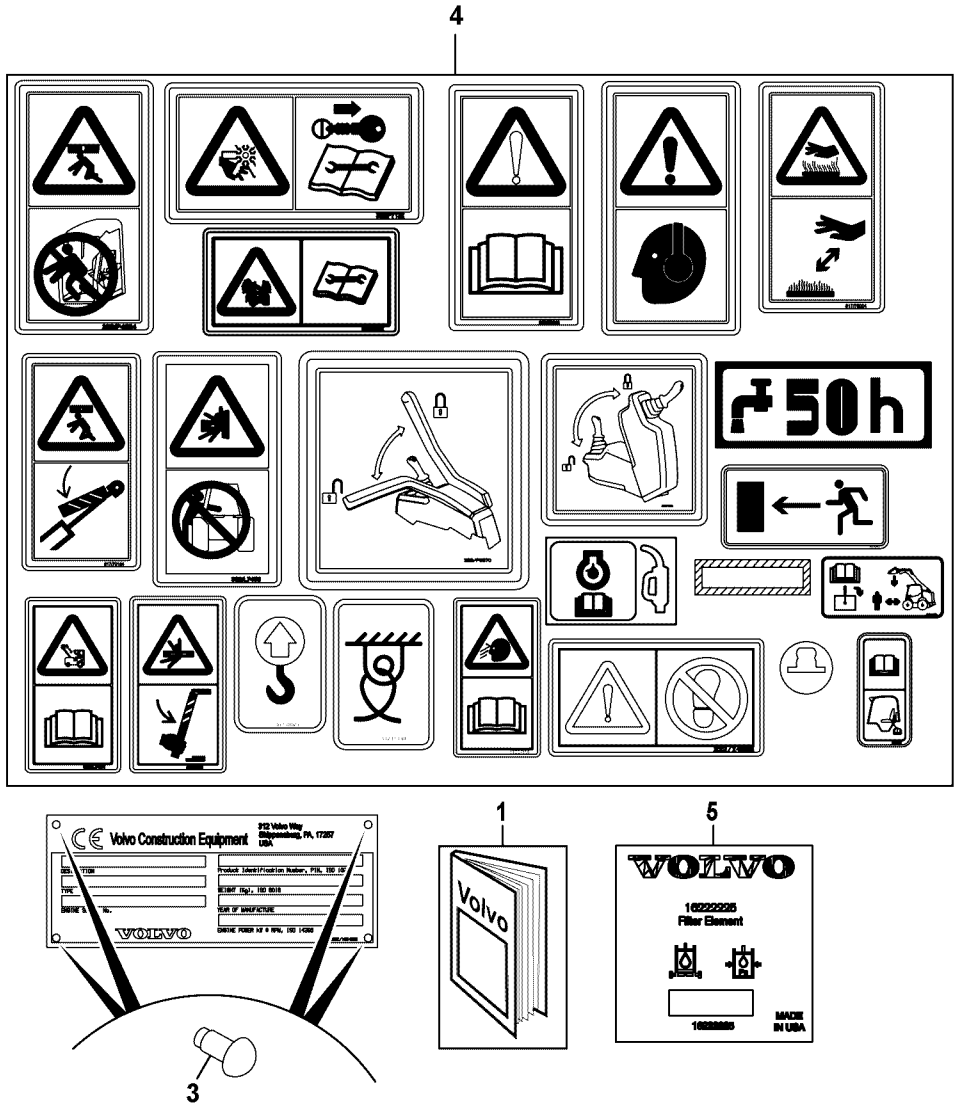
4
50h
Volvo Construction Equipment
VOLVO
1
Volvo
5
VOLVO
Filter Element
MADE IN USA
3

Fig.	Part No.	Quantity 1	2	3	PS	KIT	Description	Denominación	Denominação	Dénomination	Notes
1		1			NS		Manual	Manual		Manuel	FRENCH (FRA)
3	**VOE 16212314**	4					Drive screw	Tornillo motriz	Parafuso	Vis de commande	
4		1					Decal Kit		Kit de adesivos		See group 897, Page 637
5	**VOE 17224713**	1					Decal	Calcomanía	Decalque	Autocollant	

1		**Décalcomanies** **Etiquetas adesivas** **Calcomanías** **Decals**	Catalogue id **20649**	Group **897**
2			Illustr. No **1064163**	Section **350**
3			Issue **PUB 20030904-B**	Page **635**
4				
5		**MC60C-MC105C, MCT70C-MCT95C**		

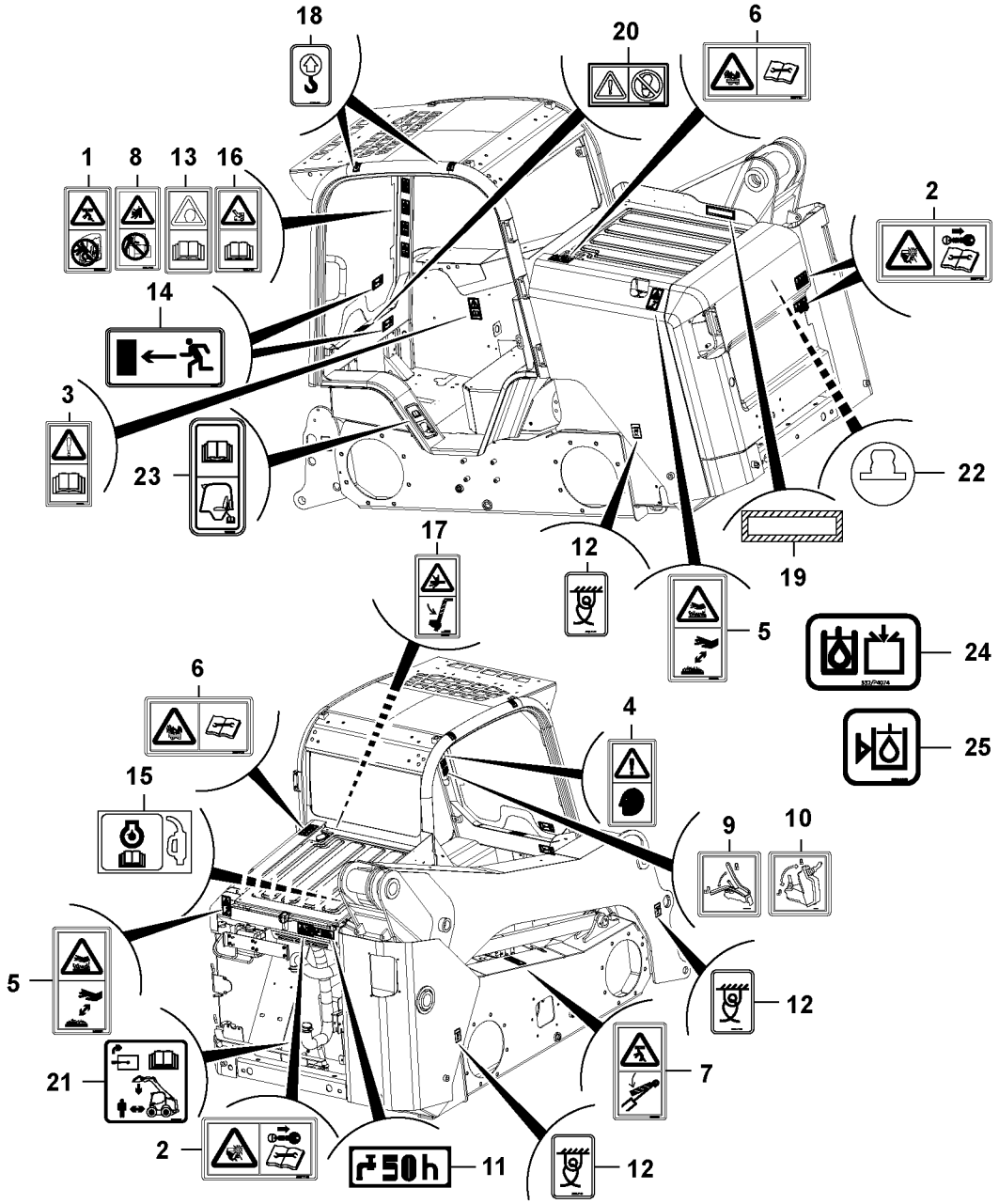

Volvo Construction Equipment
1064187

Fig.	Part No.	Quantity 1	2	3	PS	KIT	Description	Denominación	Denominação	Dénomination	Notes
1	**VOE 17204915**	1					Decal	Calcomanía	Decalque	Autocollant	
2	**VOE 17210123**	2					Decal	Calcomanía	Decalque	Autocollant	
3	**VOE 17205344**	1					Label	Etiqueta	Etiqueta	Étiquette	
4	**VOE 17210125**	1					Label	Etiqueta	Etiqueta	Étiquette	
5	**VOE 17205347**	2					Label	Etiqueta	Etiqueta	Étiquette	
6	**VOE 17210118**	1					Decal	Calcomanía	Decalque	Autocollant	
7	**VOE 17205229**	1					Decal	Calcomanía	Decalque	Autocollant	
8	**VOE 17204878**	1					Label	Etiqueta	Etiqueta	Étiquette	
9	**VOE 17205212**	1					Decal	Calcomanía	Decalque	Autocollant	
10	**VOE 17205214**	1					Decal	Calcomanía	Decalque	Autocollant	
11	**VOE 17210131**	1					Label	Etiqueta	Etiqueta	Étiquette	
12	**VOE 17205174**	4					Label	Etiqueta	Etiqueta	Étiquette	
13	**VOE 17204917**	1					Label	Etiqueta	Etiqueta	Étiquette	
14	**VOE 17205231**	1					Decal	Calcomanía	Decalque	Autocollant	
15	**VOE 17210154**	1					Decal	Calcomanía	Decalque	Autocollant	
16	**VOE 17204916**	1					Label	Etiqueta	Etiqueta	Étiquette	
17	**VOE 17205346**	1					Label	Etiqueta	Etiqueta	Étiquette	
18	**VOE 17210089**	4					Label	Etiqueta	Etiqueta	Étiquette	
19	**VOE 17205334**	1					Label	Etiqueta	Etiqueta	Étiquette	
20	**VOE 17210187**	1					Label	Etiqueta	Etiqueta	Étiquette	
21		1			NS		Label	Etiqueta		Etiquette	
22	**VOE 17210172**	1					Decal	Calcomanía	Decalque	Autocollant	
23	**VOE 17210162**	1					Decal	Calcomanía	Decalque	Autocollant	
24		1			NS		Label	Etiqueta	Etiqueta	Étiquette	
25	**VOE 17224854**	1					Label	Etiqueta	Etiqueta	Étiquette	

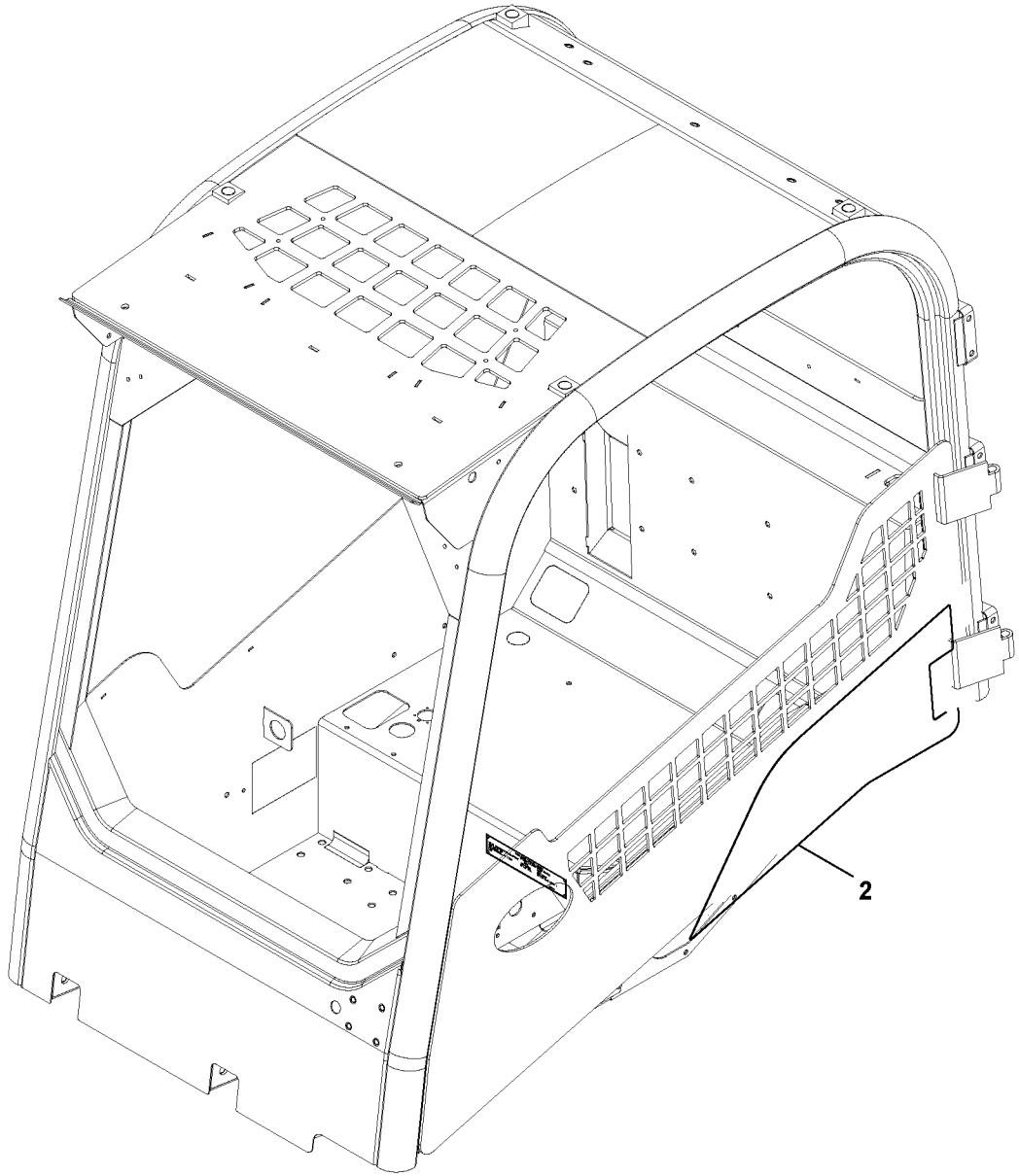

Volvo Construction Equipment
1064144

Fig.	Part No.	Quantity 1	2	3	PS	KIT	Description	Denominación	Denominação	Dénomination	Notes
1		1			NS		Decal	Decalcomania	Adesivo	Decalcomanie	

1		**Décalcomanies** **Etiquetas adesivas** **Calcomanías** **Decals**	Catalogue id **20649**	Group **897**
2				
3			Illustr. No **1064144**	Section **450**
4				
5		**MCT70C-MCT95C**	Issue **PUB 20030904-B**	Page **639**

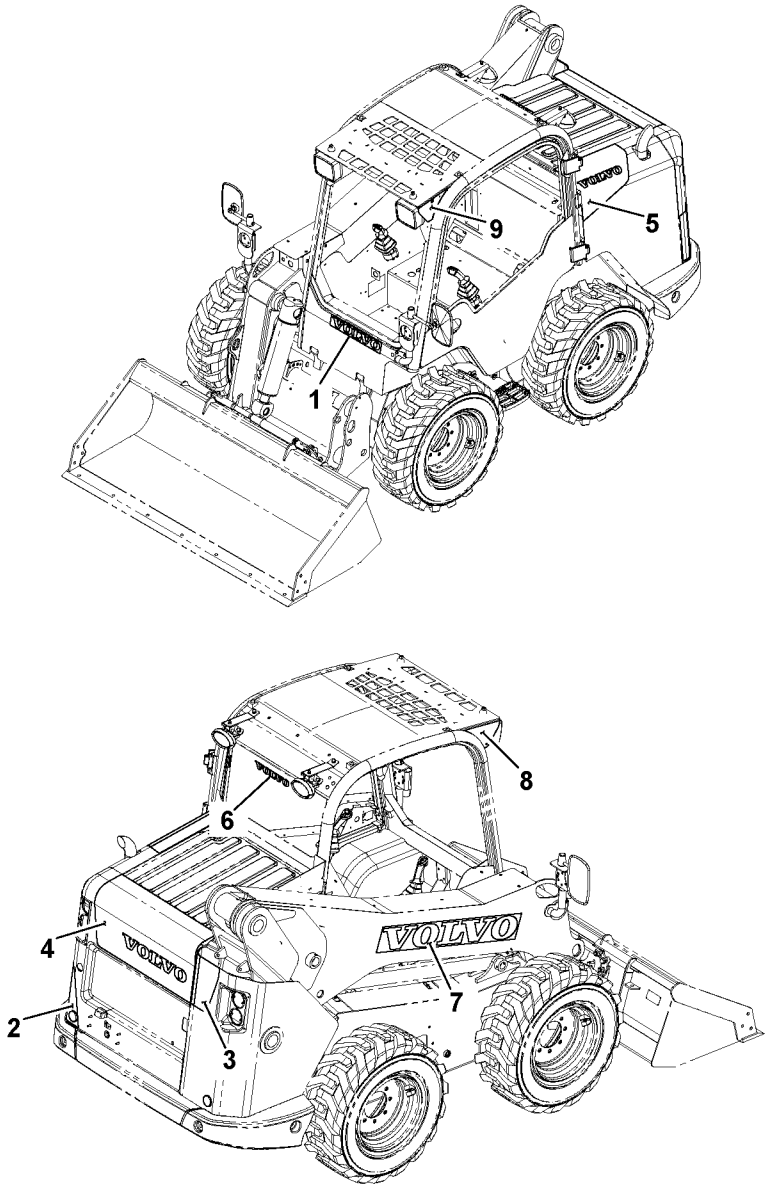
1
2
3
4
5
6
7
8
9
VOLVO

Fig.	Part No.	Quantity 1	2	3	PS	KIT	Description	Denominación	Denominação	Dénomination	Notes
1	**VOE 17210050**	1					Decal	Calcomanía	Decalque	Autocollant	
2	**VOE 17255213**	1					Decal	Calcomanía	Decalque	Autocollant	
3	**VOE 17255216**	1					Decal	Calcomanía	Decalque	Autocollant	
4		1			NS		Decal	Decalcomania	Adesivo	Decalcomanie	
5		1			NS		Decal	Decalcomania	Adesivo	Decalcomanie	
6	**VOE 17210051**	1					Decal	Calcomanía	Decalque	Autocollant	
7	**VOE 17210048**	1					Decal	Calcomanía	Decalque	Autocollant	
8	**VOE 17210080**	1					Decal	Calcomanía	Decalque	Autocollant	
9	**VOE 17210074**	1					Decal	Calcomanía	Decalque	Autocollant	

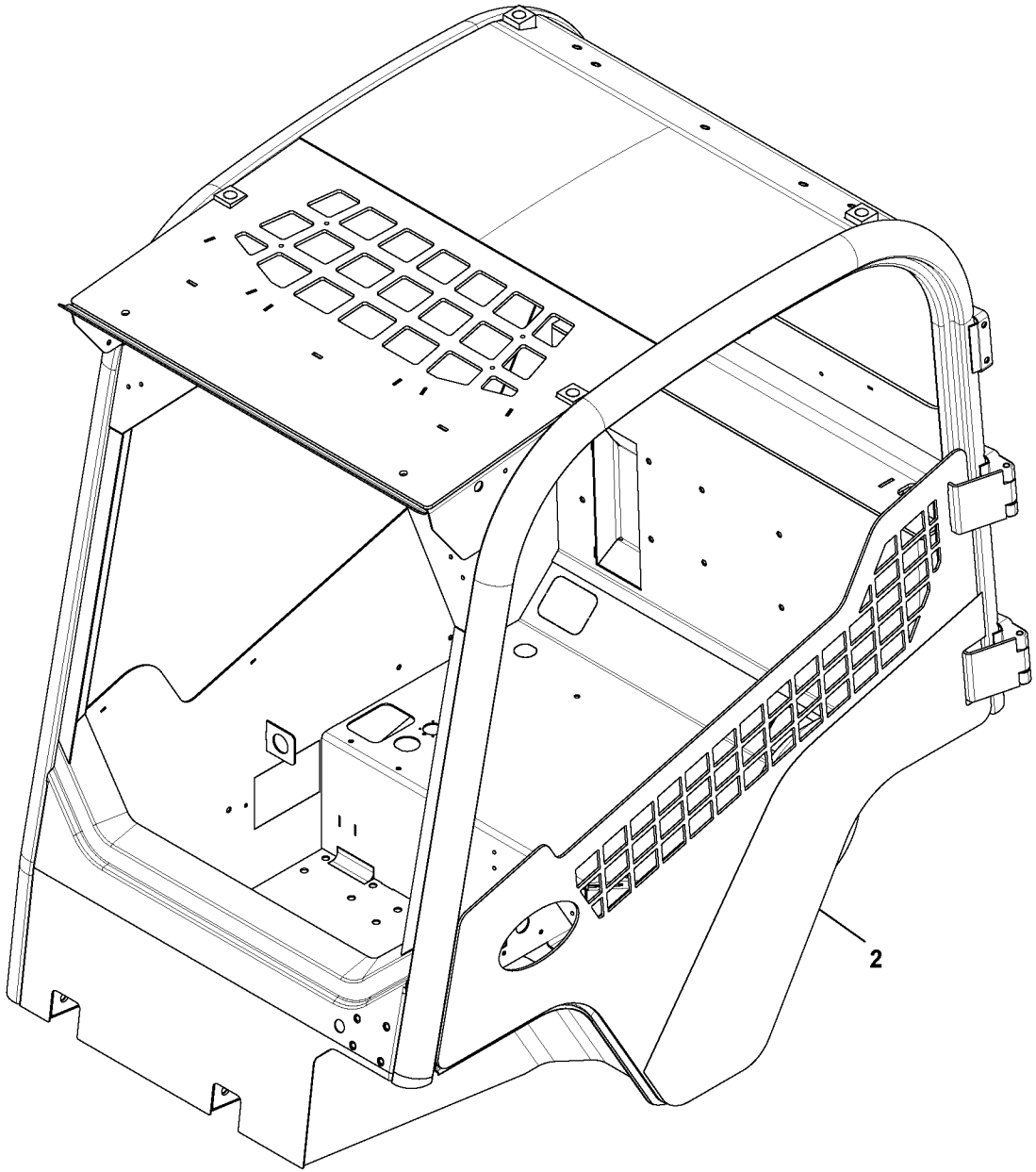

Volvo Construction Equipment
1064143

Fig.	Part No.	Quantity 1	2	3	PS	KIT	Description	Denominación	Denominação	Dénomination	Notes
2		1			NS		Decal	Decalcomania	Adesivo	Decalcomanie	

1		**Décalcomanies** **Etiquetas adesivas** **Calcomanías** **Decals**	Catalogue id **20649**	Group **897**
2				
3			Illustr. No **1064143**	Section **550**
4				
5		**MC70C-MC105C**	Issue **PUB 20030904-B**	Page **643**

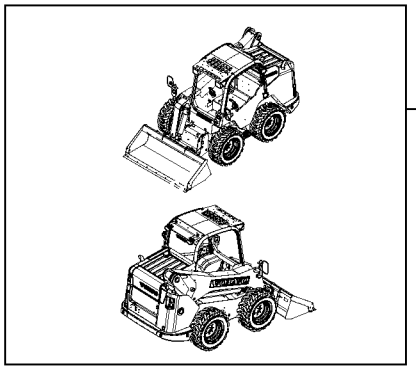

1

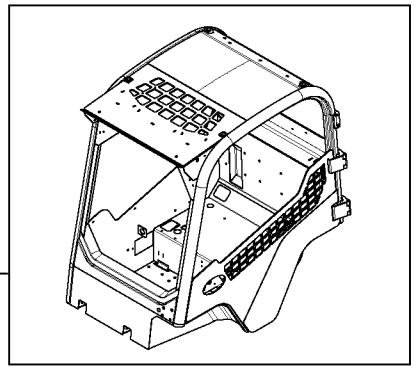

2

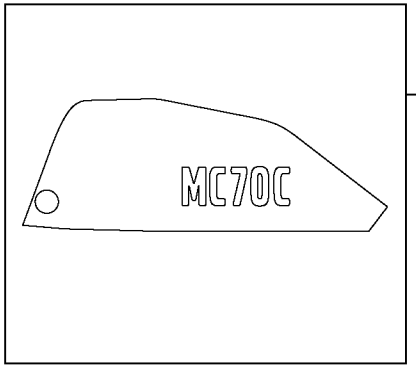

3

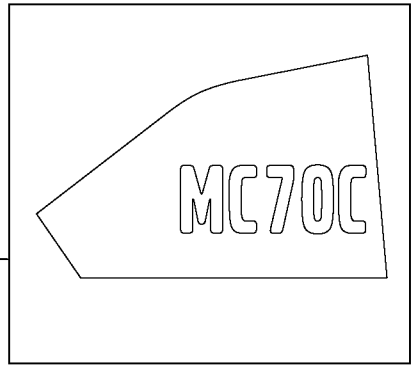

4

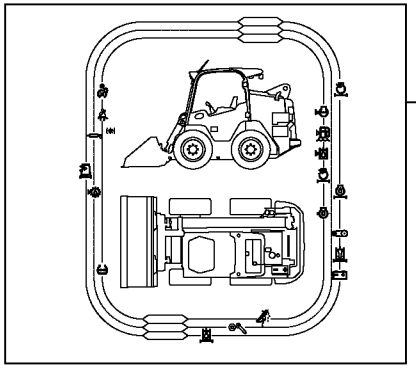

5

Fig.	Part No.	Quantity 1	2	3	PS	KIT	Description	Denominación	Denominação	Dénomination	Notes
1		1					Decal Kit		Kit de adesivos		See group 897, Page 641
2		1					Decal Kit		Kit de adesivos		See group 897, Page 643
3		1			NS		Decal	Decalcomania	Adesivo	Decalcomanie	
4		1			NS		Decal	Decalcomania	Adesivo	Decalcomanie	
5		1			NS		Decal	Decalcomania	Adesivo	Decalcomanie	

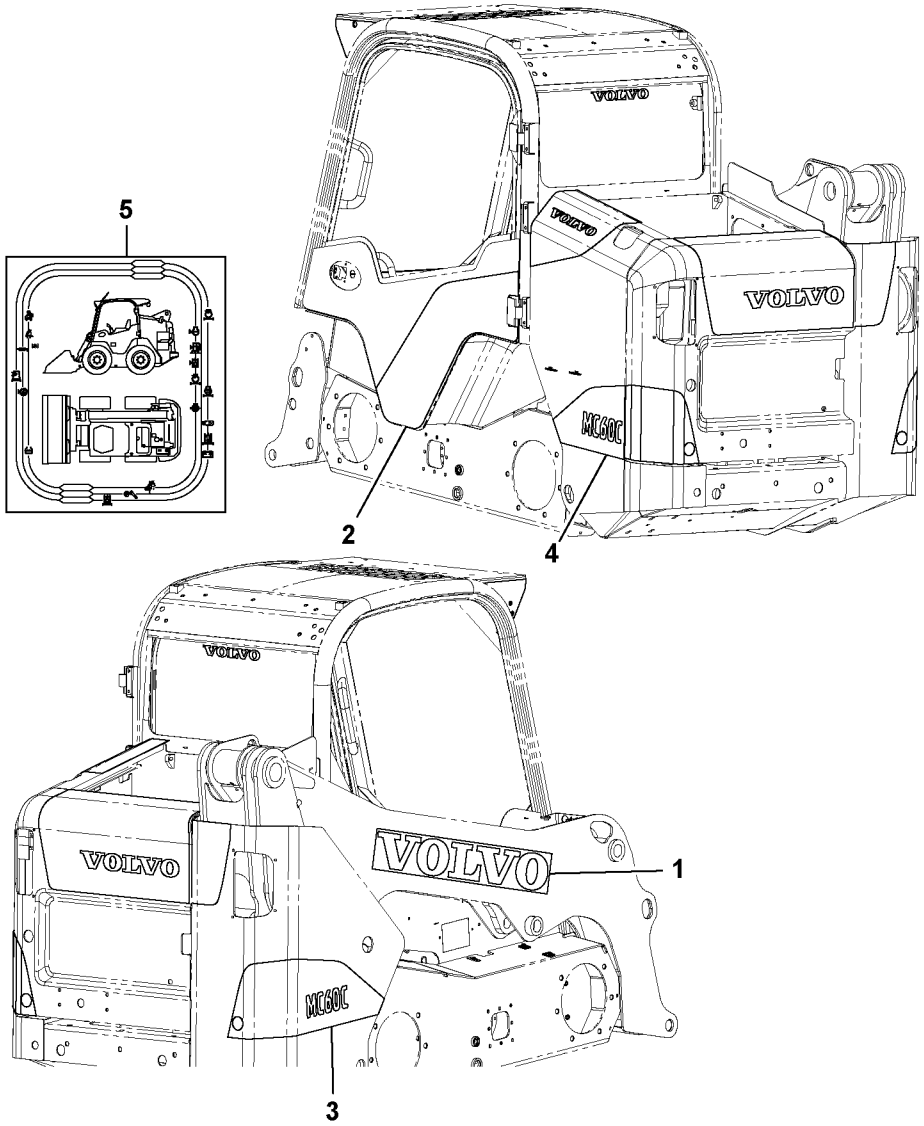

Volvo Construction Equipment
1064159

Fig.	Part No.	Quantity 1	2	3	PS	KIT	Description	Denominación	Denominação	Dénomination	Notes
1		1					Decal Kit		Kit de adesivos		See group 897, Page 641
2		1					Decal Kit		Kit de adesivos		See group 897, Page 643
3		1			NS		Decal	Decalcomania	Adesivo	Decalcomanie	
4		1			NS		Decal	Decalcomania	Adesivo	Decalcomanie	
5		1			NS		Decal	Decalcomania	Adesivo	Decalcomanie	

1		**Décalcomanies** **Etiquetas adesivas** **Calcomanías** **Decals**	Catalogue id **20649**	Group **897**
2			Illustr. No **1064159**	Section **650**
3			Issue **PUB 20030904-B**	Page **647**
4				
5		**MC60C**		

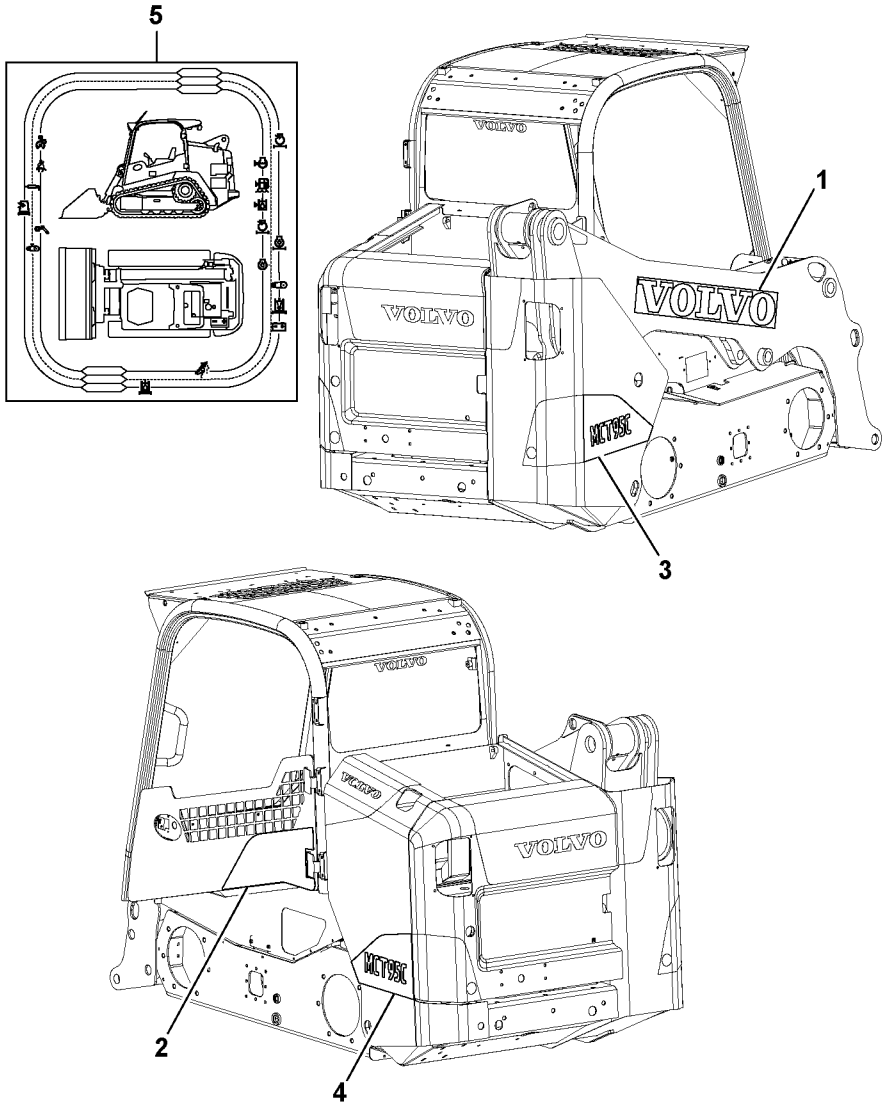

Volvo Construction Equipment
1064162

Fig.	Part No.	Quantity 1	2	3	PS	KIT	Description	Denominación	Denominação	Dénomination	Notes
1		1					Decal Kit		Kit de adesivos		See group 897, Page 641
2		1			NS		Decal	Calcomanía	Decalque	Autocollant	
3		1			NS		Decal	Decalcomania	Adesivo	Decalcomanie	
4		1			NS		Decal	Decalcomania	Adesivo	Decalcomanie	
5		1			NS		Decal	Decalcomania	Adesivo	Decalcomanie	

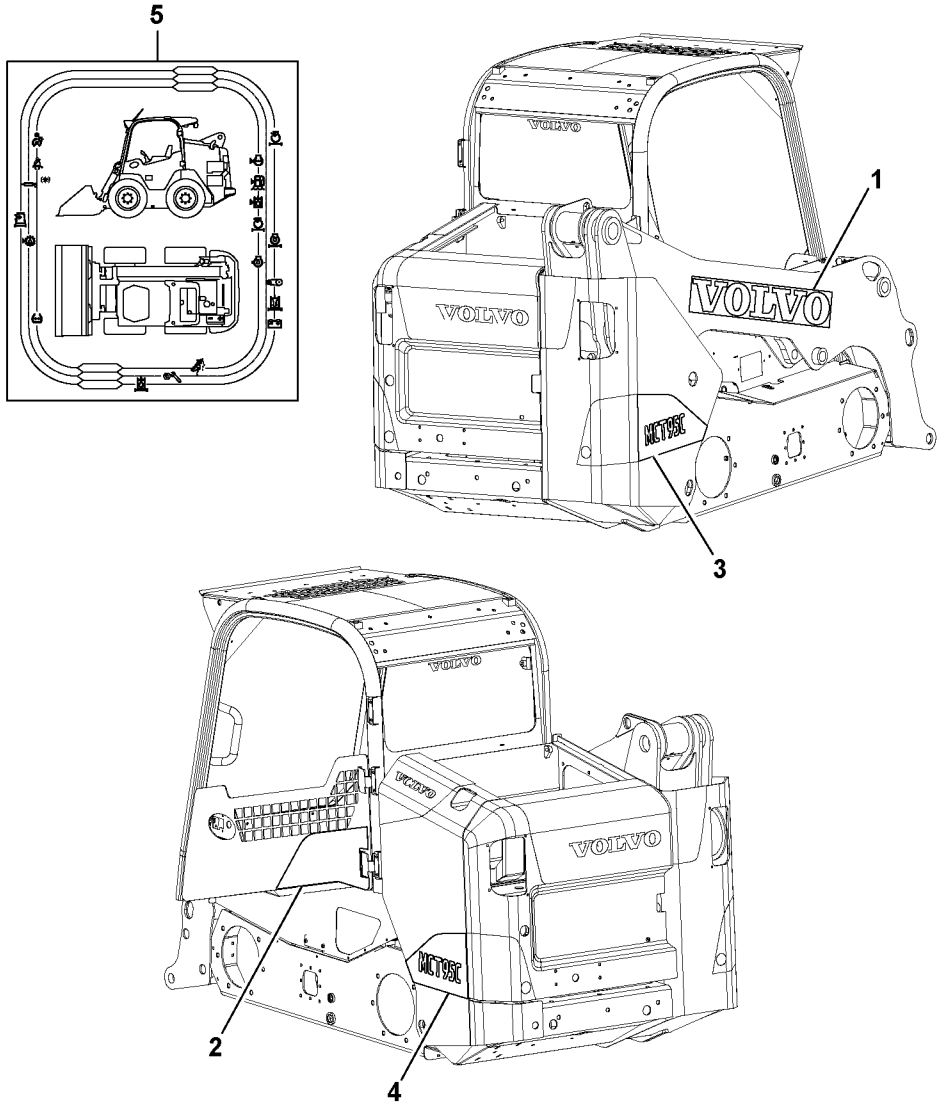

Volvo Construction Equipment
1064158

Fig.	Part No.	Quantity 1	2	3	PS	KIT	Description	Denominación	Denominação	Dénomination	Notes
1		1					Decal Kit		Kit de adesivos		See group 897, Page 641
2		1					Decal Kit		Kit de adesivos		See group 897, Page 643
3		1			NS		Decal	Decalcomania	Adesivo	Decalcomanie	
4		1			NS		Decal	Decalcomania	Adesivo	Decalcomanie	
5		1			NS		Decal	Decalcomania	Adesivo	Decalcomanie	

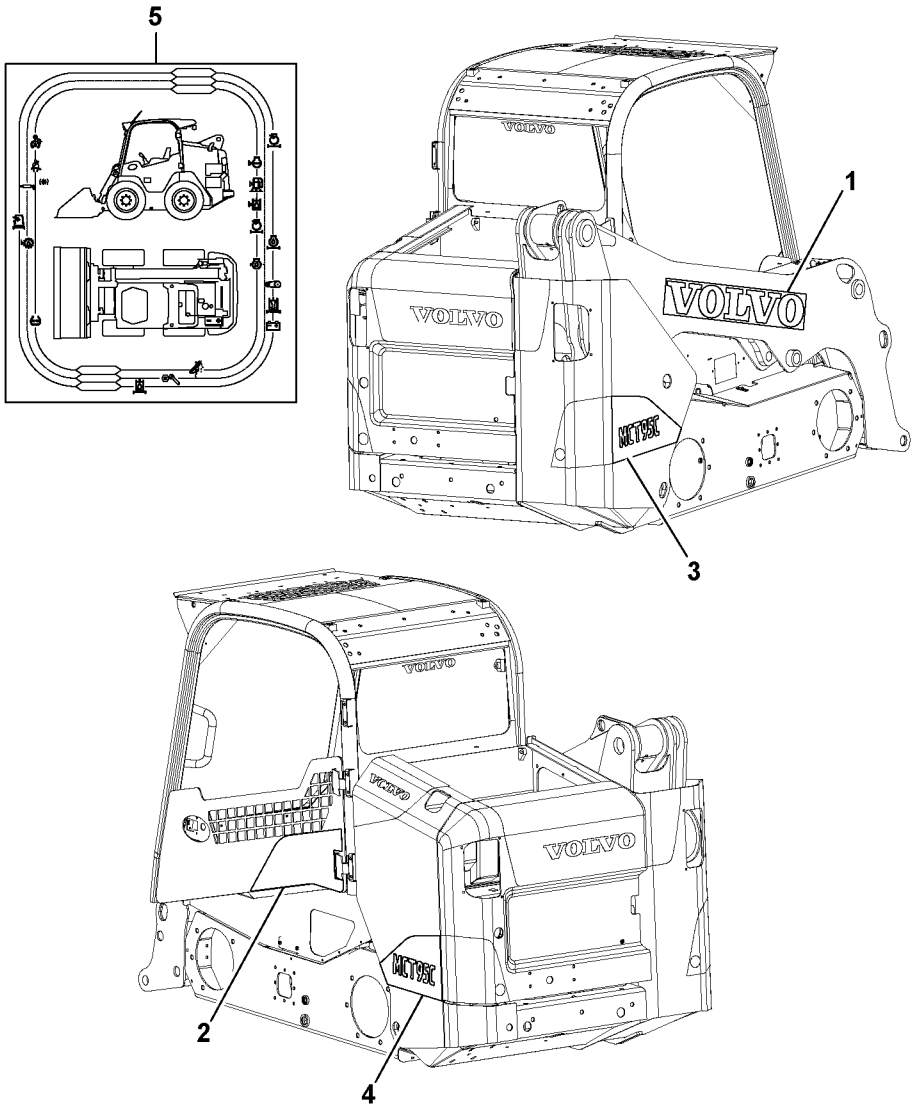
5
1
VOLVO
VOLVO
MCT95E
3
VOLVO
VOLVO
VOLVO
MCT95E
2
4

Fig.	Part No.	Quantity 1	2	3	PS	KIT	Description	Denominación	Denominação	Dénomination	Notes
1		1					Decal Kit		Kit de adesivos		See group 897, Page 641
2		1			NS		Decal	Calcomanía	Decalque	Autocollant	
3		1			NS		Decal	Decalcomania	Adesivo	Decalcomanie	
4		1			NS		Decal	Decalcomania	Adesivo	Decalcomanie	
5		1			NS		Decal	Decalcomania	Adesivo	Decalcomanie	

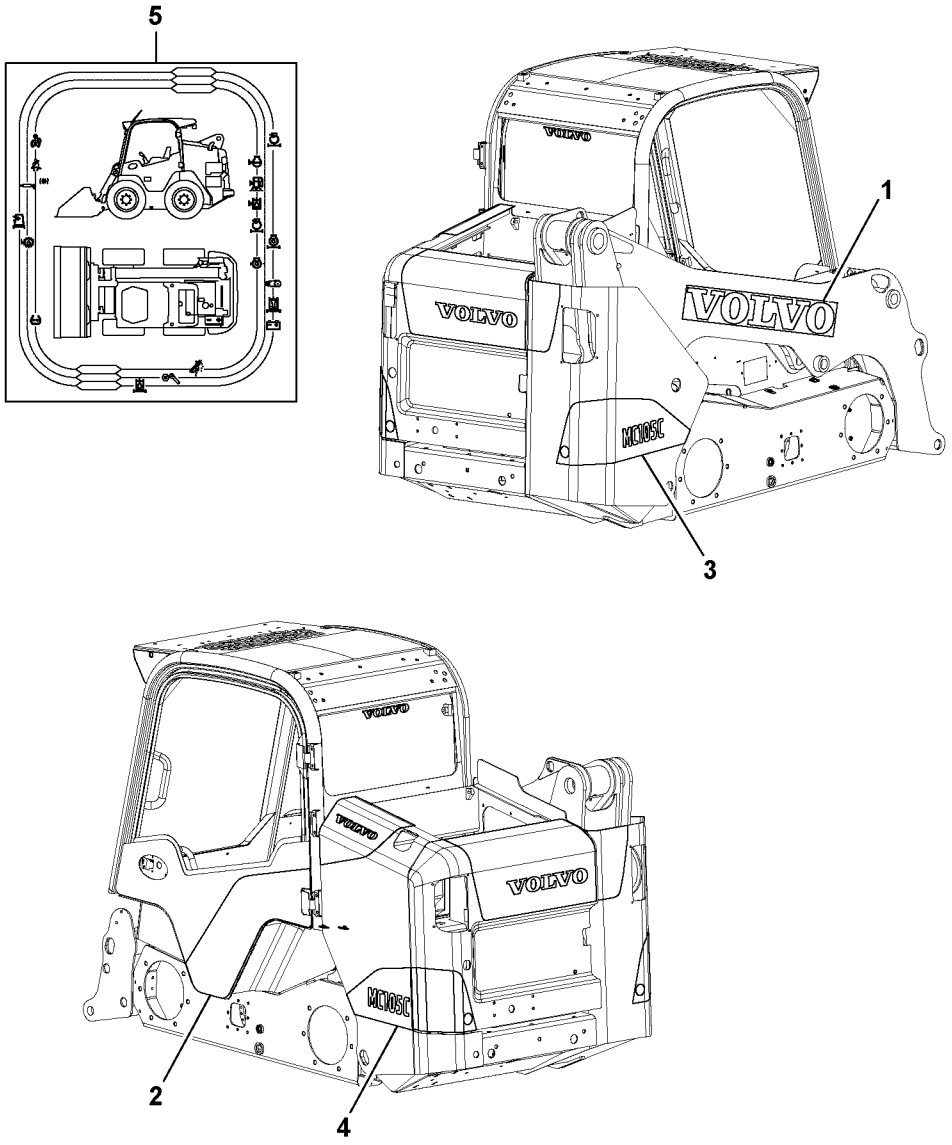

Volvo Construction Equipment
1064161

Fig.	Part No.	Quantity 1	2	3	PS	KIT	Description	Denominación	Denominação	Dénomination	Notes
1		1					Decal Kit		Kit de adesivos		See group 897, Page 641
2		1					Decal Kit		Kit de adesivos		See group 897, Page 643
3		1			NS		Decal	Decalcomania	Adesivo	Decalcomanie	
4		1			NS		Decal	Decalcomania	Adesivo	Decalcomanie	
5		1			NS		Decal	Decalcomania	Adesivo	Decalcomanie	

1		**Décalcomanies** **Etiquetas adesivas** **Calcomanías** **Decals**	Catalogue id **20649**	Group **897**
2			Illustr. No **1064161**	Section **850**
3			Issue **PUB 20030904-B**	Page **655**
4				
5		**MC105C**		

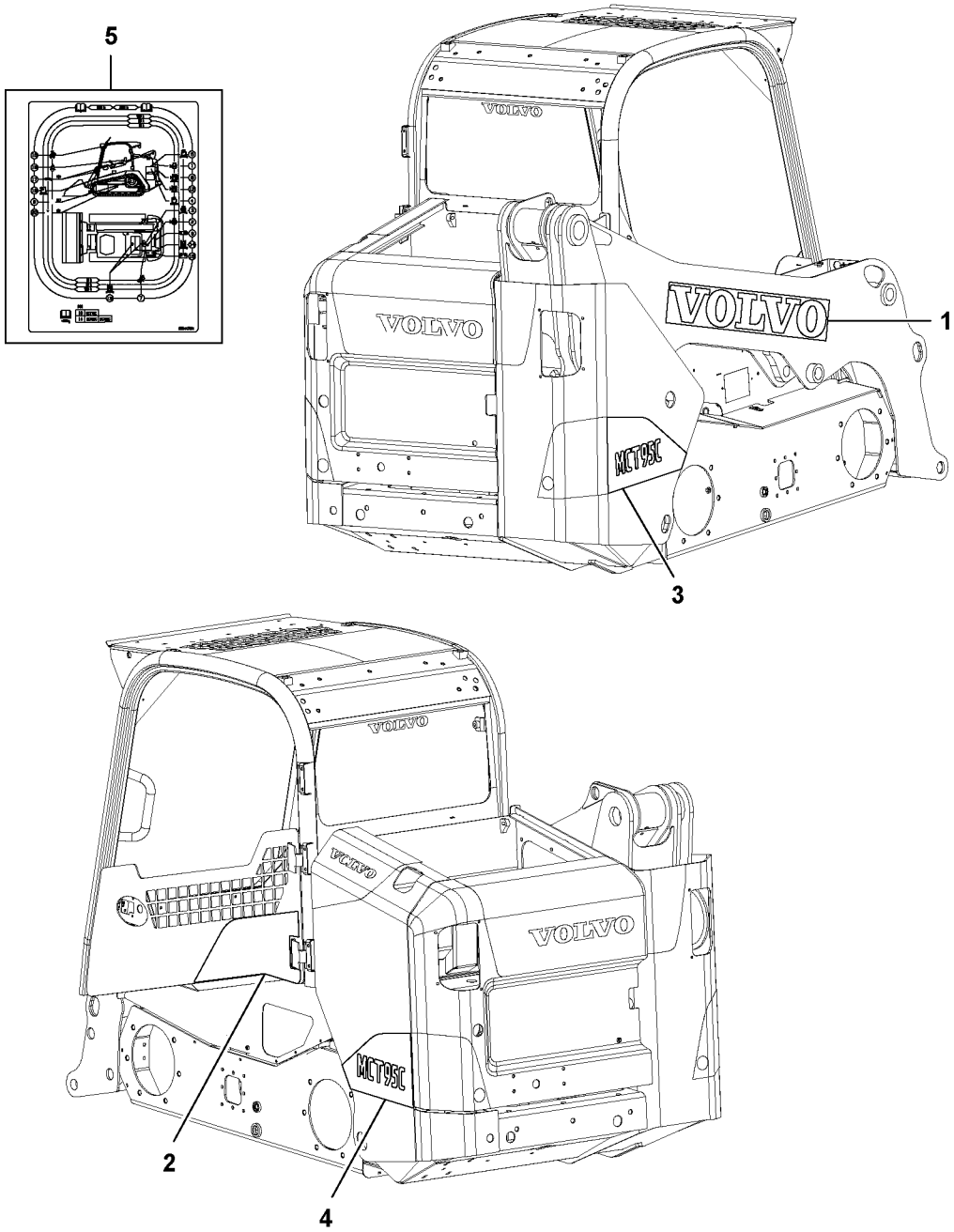
5
VOLVO
VOLVO
1
MCT95C
3
VOLVO
VOLVO
VOLVO
MCT95C
2
4

Fig.	Part No.	Quantity 1	2	3	PS	KIT	Description	Denominación	Denominação	Dénomination	Notes
1		1					Decal Kit		Kit de adesivos		See group 897, Page 641
2		1			NS		Decal	Calcomanía	Decalque	Autocollant	
3	**VOE 17255215**	1					Decal	Calcomanía	Decalque	Autocollant	
4	**VOE 17255212**	1					Decal	Calcomanía	Decalque	Autocollant	
5		1			NS		Decal	Decalcomania	Adesivo	Decalcomanie	

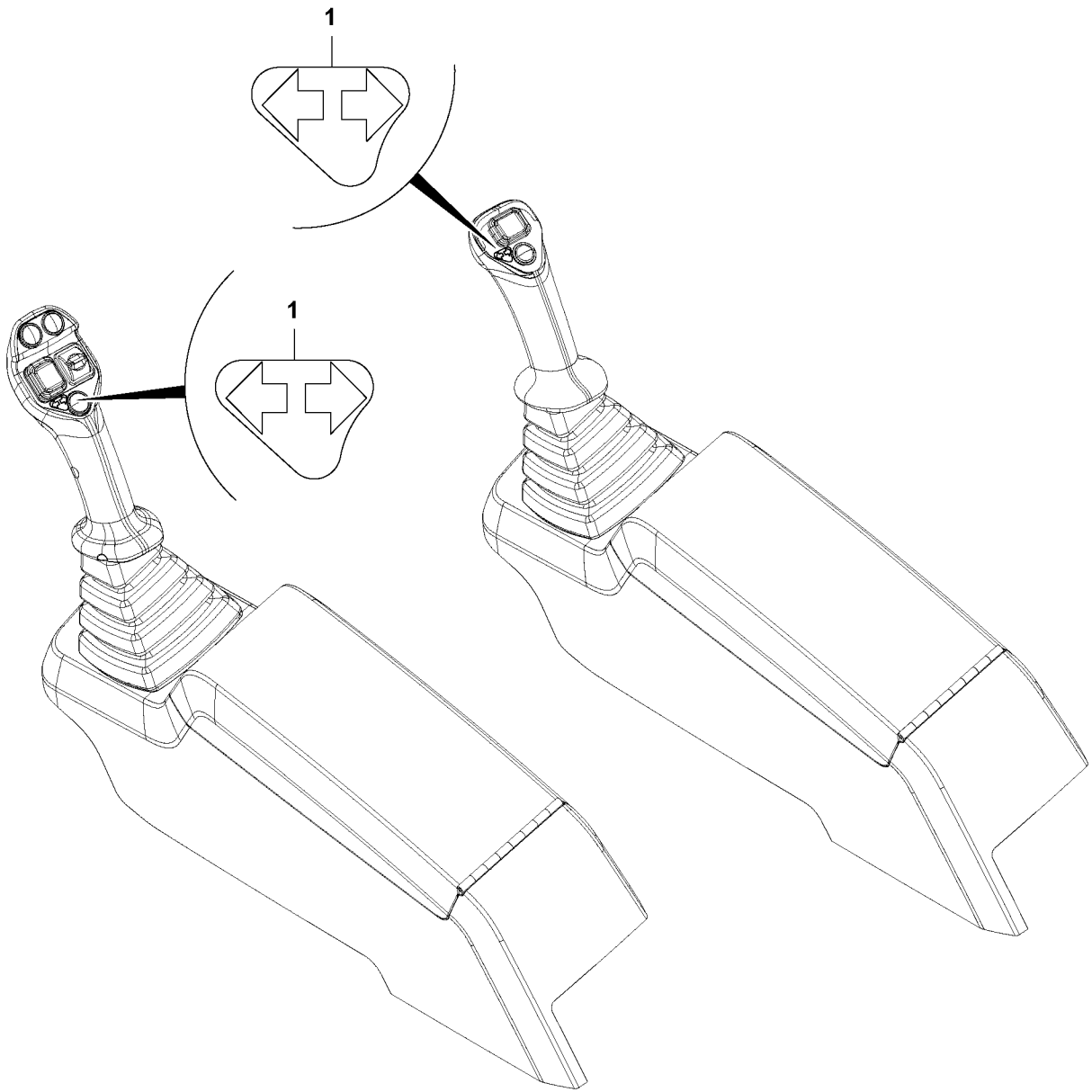

Volvo Construction Equipment
1064059

Fig.	Part No.	Quantity 1	2	3	PS	KIT	Description	Denominación	Denominação	Dénomination	Notes
1		1			NS		Decal	Decalcomania	Adesivo	Decalcomanie	

1		**Décalcomanies** **Etiquetas adesivas** **Calcomanías** **Decals**	Catalogue id **20649**	Group **897**
2			Illustr. No **1064059**	Section **1000**
3			Issue **PUB 20030904-B**	Page **659**
4				
5		**MC60C-MC105C, MCT70C-MCT95C**		

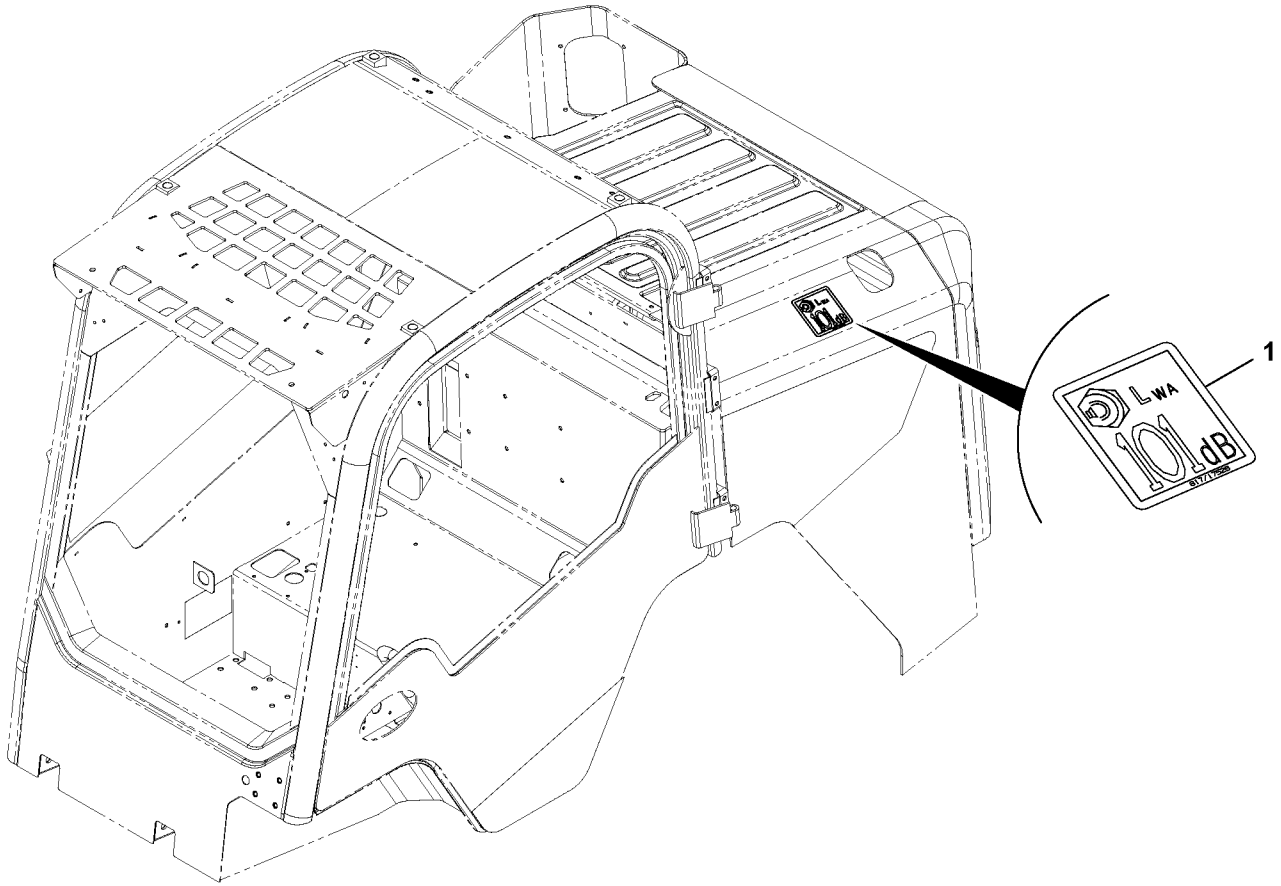
1
L WA
101 dB

Fig.	Part No.	Quantity 1	2	3	PS	KIT	Description	Denominación	Denominação	Dénomination	Notes
1	**VOE 17210228**	1					Label	Etiqueta	Etiqueta	Étiquette	

1		**Décalcomanies** **Etiquetas adesivas** **Calcomanías** **Decals**	Catalogue id **20649**	Group **897**
2			Illustr. No **1064190**	Section **1050**
3			Issue **PUB 20030904-B**	Page **661**
4				
5		**MC70C-MC105C**		

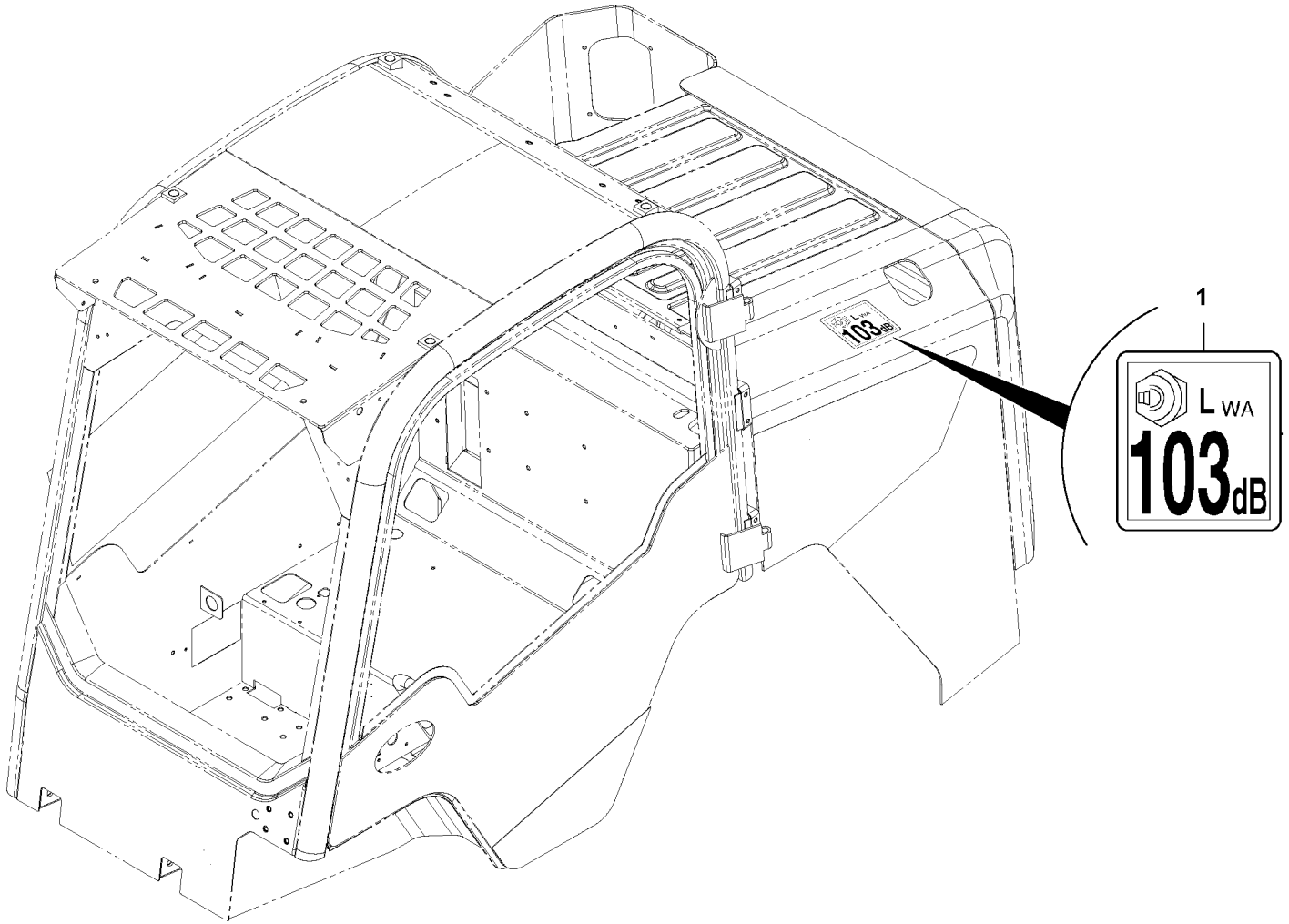

Volvo Construction Equipment
1064191

Fig.	Part No.	Quantity 1	2	3	PS	KIT	Description	Denominación	Denominação	Dénomination	Notes
1	**VOE 17210241**	1					Label	Etiqueta	Etiqueta	Étiquette	

1		**Décalcomanies** **Etiquetas adesivas** **Calcomanías** **Decals**	Catalogue id **20649**	Group **897**
2			Illustr. No **1064191**	Section **1100**
3				
4			Issue **PUB 20030904-B**	Page **663**
5		**MCT70C-MCT95C**		



Volvo Construction Equipment
www.volvoce.com

GROUP		Section	Page
911	Hydraulic Tank Assembly MC60C-MC105C, MCT70C-MCT95C	100	675
911	Hydraulic system, hydraulic tank to hydraulic oil cooler MC60C-MC105C, MCT70C-MCT95C	300	677
911	Hydraulic system, hydraulic tank to hydraulic oil cooler MC60C-MC105C, MCT70C-MCT95C	350	679
911	Hydraulic system, hydraulic tank to hydraulic oil cooler MC60C-MC105C, MCT70C-MCT95C	400	681
911	Hydraulic system, hydraulic tank to hydraulic oil cooler MC60C-MC105C, MCT70C-MCT95C	450	683
911	Hydraulic system, return lines MC70C-MC105C	600	685
911	Hydraulic system, return lines MC70C-MC105C	650	687
911	Filter Return Line MC60C-MC105C, MCT70C-MCT95C	800	689
911	Filter Return Line MC60C-MC105C, MCT70C-MCT95C	850	691
912	Servo system, pilot valves and mounting MC60C-MC105C, MCT70C-MCT95C	100	693
912	Valve return valve MC70C-MC105C	200	695
912	Valve return valve MC60C-MC105C, MCT70C-MCT95C	250	697
912	Float position valve MC60C-MC105C, MCT70C-MCT95C	400	699
912	Float position valve MC60C-MC105C, MCT70C-MCT95C	450	701
912	Float position valve MC60C-MC105C, MCT70C-MCT95C	500	703
912	Control valve with fitting parts. MC60C-MC105C, MCT70C-MCT95C	600	705
912	Control valve with fitting parts. AUX MC60C-MC105C, MCT70C-MCT95C	650	707
912	Control valve with fitting parts. AUX MC60C-MC105C, MCT70C-MCT95C	700	709
912	Control valve with fitting parts. MC60C-MC105C, MCT70C-MCT95C	750	711
912	Valve, end cap RADIAL LIFT MC70C, MCT70C	1000	713
912	Valve, end cap	1050	715
912	Valve, end cap RADIAL LIFT MC60C	1100	717
912	Valve, end cap VERTICAL LIFT MC85C-MC105C, MCT85C, MCT95C	1150	719
912	Valve, attachment bracket MC60C-MC105C, MCT70C-MCT95C	1200	721
912	Valve, attachment bracket MC60C-MC105C, MCT70C-MCT95C	1250	723
912	Main control valve MC60C-MC105C, MCT70C-MCT95C	1500	725
913	Hydraulic pump with fitting parts MC60C-MC105C, MCT70C	100	729
913	Hydraulic pump with fitting parts MC60C-MC105C, MCT70C-MCT95C	150	731
913	Hydraulic pump 25.4/12.6CC MC60C-MC105C, MCT70C-MCT95C	500	733
914	Loader controls ISO 7 FUNC.MC60C-MC105C, MCT70C-MCT95C	100	735
914	Loader controls ISO 3 FUNC.MC70C-MC105C, MCT85C-MCT95C	150	737
914	Hydraulic circuit, pilot and drain MC60C-MC105C	500	739
914	Hydraulic circuit, pilot and drain MC60C-MC105C	600	741
914	Hydraulic circuit, pilot and drain MCT70C-MCT95C	700	743
914	Hydraulic circuit, pilot and drain MCT70C-MCT95C	750	745
914	Hydraulic circuit MC60C-MC105C, MCT70C-MCT95C	900	747
914	Hydraulic circuit MC60C-MC105C, MCT70C-MCT95C	950	749
914	Bulkhead plate MCT70C-MCT95C	1000	751
914	Bulkhead plate MCT70C-MCT95C	1050	753
914	Bulkhead plate MCT70C-MCT95C	1100	755
916	Hydraulic system, loading unit. MC60C, MC70C, MCT70C	100	757
916	Hydraulic system, loading unit. RADIAL LIFT, AUX MC60C, MC70C, MCT70C	150	759
916	Hydraulic system, loading unit. RADIAL LIFT MC60C, MC70C, MCT70C	200	761
916	Hydraulic system, loading unit. RADIAL LIFT MC70C, MCT70C	250	763
916	Hydraulic system, loading unit. VERTICAL LIFT AUX MC85C-MC105C, MCT85C, MCT95C	300	765
916	Hydraulic system, loading unit. VERTICAL LIFT AUX MC85C-MC105C, MCT85C, MCT95C	350	767
916	Hydraulic system, loading unit. VERTICAL LIFT MC85C-MC105C, MCT85C, MCT95C	400	769
916	Hydraulic system, loading unit. VERTICAL LIFT MC85C-MC105C, MCT85C, MCT95C	450	771

INDEX OF CONTENTS

GROUP		Section	Page
916	Hydraulic system, loading unit. RADIAL LIFT MC60C	500	773
916	Hydraulic system, loading unit. MC60C, MC70C, MCT70C	550	775
924	Attachment bracket, mechanical MC60C-MC105C, MCT70C-MCT95C	100	777
924	Attachment mounting plate - Quick change, hydraulic MC60C-MC105C, MCT70C-MCT95C	150	779
924	Pins for attachment bracket MC60C-MC105C, MCT70C-MCT95C	300	781
924	Assemble attachment bracket. MECHANIC MC60C-MC105C, MCT70C-MCT95C	500	783
924	Assemble attachment bracket. HYDRAULIC MC60C-MC105C, MCT70C-MCT95C	550	785
924	Assemble attachment bracket. MC60C-MC105C, MCT70C-MCT95C	600	787
924	Assemble attachment bracket. MC60C-MC105C, MCT70C-MCT95C	650	789
924	Hydraulic circuit for attachments MC60C, MC70C, MCT70C	800	791
924	Hydraulic circuit for attachments MC85C-MC105C, MCT85C, MCT95C	850	793
924	Hydraulic cylinder, quick attachment MC60C-MC105C, MCT70C-MCT95C	1000	795
945	Loader arm, vertical lift RADIAL LIFT MC70C, MCT70C	100	797
945	Loader arm, vertical lift MC60C	200	799
945	Loader arm, vertical lift VERTICAL LIFT MC85C-MC105C, MCT85C, MCT95C	300	801
945	Lifting frame work with assembly parts MC60C, MC70C, MCT70C	500	803
945	Lifting frame work with assembly parts MC60C, MC70C, MCT70C	550	805
945	Lifting frame work with assembly parts MC85C-MC105C, MCT85C, MCT95C	600	807
945	Cover plate, loader arm MC60C-MC105C, MCT70C-MCT95C	700	809
945	Lifting frame work with assembly parts MC85C-MC105C, MCT85C, MCT95C	750	811
945	Tilt cylinder MC60C, MC70C, MCT70C	1000	815
945	Tilt cylinder MC85C-MC105C, MCT85C, MCT95C	1050	817
945	Lift cylinder	1100	819
945	Lift cylinder MC85C-MC105C, MCT85C, MCT95C	1150	821
992	Fire suppression system MC60C-MC85C, MC105C, MCT70C-MCT95C	100	823

GRUPO		Sección	Página
911	Montaje del depósito hidráulico MC60C-MC105C, MCT70C-MCT95C	100	675
911	Sistema hidráulico, depósito hidr. a enfr. aceite hidr. MC60C-MC105C, MCT70C-MCT95C	300	677
911	Sistema hidráulico, depósito hidr. a enfr. aceite hidr. MC60C-MC105C, MCT70C-MCT95C	350	679
911	Sistema hidráulico, depósito hidr. a enfr. aceite hidr. MC60C-MC105C, MCT70C-MCT95C	400	681
911	Sistema hidráulico, depósito hidr. a enfr. aceite hidr. MC60C-MC105C, MCT70C-MCT95C	450	683
911	Sistema hidráulico, tuberías de retorno MC70C-MC105C	600	685
911	Sistema hidráulico, tuberías de retorno MC70C-MC105C	650	687
911	Filtro de tubería de retorno MC60C-MC105C, MCT70C-MCT95C	800	689
911	Filtro de tubería de retorno MC60C-MC105C, MCT70C-MCT95C	850	691
912	MC60C-MC105C, MCT70C-MCT95C	100	693
912	Valve return valve MC70C-MC105C	200	695
912	Valve return valve MC60C-MC105C, MCT70C-MCT95C	250	697
912	Válvula del posición flotante MC60C-MC105C, MCT70C-MCT95C	400	699
912	Válvula del posición flotante MC60C-MC105C, MCT70C-MCT95C	450	701
912	Válvula del posición flotante MC60C-MC105C, MCT70C-MCT95C	500	703
912	Válvula de mando con accesorios de montaje. MC60C-MC105C, MCT70C-MCT95C	600	705
912	Válvula de mando con accesorios de montaje. AUX MC60C-MC105C, MCT70C-MCT95C	650	707
912	Válvula de mando con accesorios de montaje. AUX MC60C-MC105C, MCT70C-MCT95C	700	709
912	Válvula de mando con accesorios de montaje. MC60C-MC105C, MCT70C-MCT95C	750	711
912	Válvula, tapa final RADIAL LIFT MC70C, MCT70C	1000	713
912	Válvula, tapa final	1050	715
912	Válvula, tapa final RADIAL LIFT MC60C	1100	717
912	Válvula, tapa final VERTICAL LIFT MC85C-MC105C, MCT85C, MCT95C	1150	719
912	Válvula, soporte del implemento MC60C-MC105C, MCT70C-MCT95C	1200	721
912	Válvula, soporte del implemento MC60C-MC105C, MCT70C-MCT95C	1250	723
912	Válvula de control principal MC60C-MC105C, MCT70C-MCT95C	1500	725
913	Bomba hidráulica con accesorios de montaje MC60C-MC105C, MCT70C	100	729
913	Bomba hidráulica con accesorios de montaje MC60C-MC105C, MCT70C-MCT95C	150	731
913	Bomba hidráulica 25.4/12.6CC MC60C-MC105C, MCT70C-MCT95C	500	733
914	Mandos de la cargadora ISO 7 FUNC.MC60C-MC105C, MCT70C-MCT95C	100	735
914	Mandos de la cargadora ISO 3 FUNC.MC70C-MC105C, MCT85C-MCT95C	150	737
914	Circuito hidráulico, piloto y vaciado MC60C-MC105C	500	739
914	Circuito hidráulico, piloto y vaciado MC60C-MC105C	600	741
914	Circuito hidráulico, piloto y vaciado MCT70C-MCT95C	700	743
914	Circuito hidráulico, piloto y vaciado MCT70C-MCT95C	750	745
914	Circuito hidráulico MC60C-MC105C, MCT70C-MCT95C	900	747
914	Circuito hidráulico MC60C-MC105C, MCT70C-MCT95C	950	749
914	Placa de la mampara MCT70C-MCT95C	1000	751
914	Placa de la mampara MCT70C-MCT95C	1050	753
914	Placa de la mampara MCT70C-MCT95C	1100	755
916	Sistema hidráulica, agregado de carga MC60C, MC70C, MCT70C	100	757
916	Sistema hidráulica, agregado de carga RADIAL LIFT, AUX MC60C, MC70C, MCT70C	150	759
916	Sistema hidráulica, agregado de carga RADIAL LIFT MC60C, MC70C, MCT70C	200	761

INDICE

Catalogue id 20649 | Group 9
Issue PUB 20030904-B | Page 668

GRUPO		Sección	Página
916	Sistema hidráulica, agregado de carga RADIAL LIFT MC70C, MCT70C	250	763
916	Sistema hidráulica, agregado de carga VERTICAL LIFT AUX MC85C-MC105C, MCT85C, MCT95C	300	765
916	Sistema hidráulica, agregado de carga VERTICAL LIFT AUX MC85C-MC105C, MCT85C, MCT95C	350	767
916	Sistema hidráulica, agregado de carga VERTICAL LIFT MC85C-MC105C, MCT85C, MCT95C	400	769
916	Sistema hidráulica, agregado de carga VERTICAL LIFT MC85C-MC105C, MCT85C, MCT95C	450	771
916	Sistema hidráulica, agregado de carga RADIAL LIFT MC60C	500	773
916	Sistema hidráulica, agregado de carga MC60C, MC70C, MCT70C	550	775
924	Portaimplemento, mecánico MC60C-MC105C, MCT70C-MCT95C	100	777
924	Soporte - cambio rápido MC60C-MC105C, MCT70C-MCT95C	150	779
924	Pivote, apoyo de utensilios MC60C-MC105C, MCT70C-MCT95C	300	781
924	Montaje de soporte de implementos. MECHANIC MC60C-MC105C, MCT70C-MCT95C	500	783
924	Montaje de soporte de implementos. HYDRAULIC MC60C-MC105C, MCT70C-MCT95C	550	785
924	Montaje de soporte de implementos. MC60C-MC105C, MCT70C-MCT95C	600	787
924	Montaje de soporte de implementos. MC60C-MC105C, MCT70C-MCT95C	650	789
924	Circuito hidráulico para implementos MC60C, MC70C, MCT70C	800	791
924	Circuito hidráulico para implementos MC85C-MC105C, MCT85C, MCT95C	850	793
924	Cilindro hydráulico, acoplamiento rapido MC60C-MC105C, MCT70C-MCT95C	1000	795
945	Brazo de la cargadora, elevación vertical RADIAL LIFT MC70C, MCT70C	100	797
945	Brazo de la cargadora, elevación vertical MC60C	200	799
945	Brazo de la cargadora, elevación vertical VERTICAL LIFT MC85C-MC105C, MCT85C, MCT95C	300	801
945	Bastidor elevacion con accesorios de montaje MC60C, MC70C, MCT70C	500	803
945	Bastidor elevacion con accesorios de montaje MC60C, MC70C, MCT70C	550	805
945	Bastidor elevacion con accesorios de montaje MC85C-MC105C, MCT85C, MCT95C	600	807
945	Chapa de protección, brazo cargador MC60C-MC105C, MCT70C-MCT95C	700	809
945	Bastidor elevacion con accesorios de montaje MC85C-MC105C, MCT85C, MCT95C	750	811
945	Cilindro basculante MC60C, MC70C, MCT70C	1000	815
945	Cilindro basculante MC85C-MC105C, MCT85C, MCT95C	1050	817
945	Cilindro elevador	1100	819
945	Cilindro elevador MC85C-MC105C, MCT85C, MCT95C	1150	821
992	Sistema de extinción de incendios MC60C-MC85C, MC105C, MCT70C-MCT95C	100	823

GRUPO		Seção	Página
911	Tanque hidráulico, montagem MC60C-MC105C, MCT70C-MCT95C	100	675
911	Sistema hidráulico, tanque hidráulico para o refrigerador de óleo hidráulico MC60C-MC105C, MCT70C-MCT95C	300	677
911	Sistema hidráulico, tanque hidráulico para o refrigerador de óleo hidráulico MC60C-MC105C, MCT70C-MCT95C	350	679
911	Sistema hidráulico, tanque hidráulico para o refrigerador de óleo hidráulico MC60C-MC105C, MCT70C-MCT95C	400	681
911	Sistema hidráulico, tanque hidráulico para o refrigerador de óleo hidráulico MC60C-MC105C, MCT70C-MCT95C	450	683
911	Sistema hidráulico, linhas de retorno MC70C-MC105C	600	685
911	Sistema hidráulico, linhas de retorno MC70C-MC105C	650	687
911	Linha de retorno do filtro MC60C-MC105C, MCT70C-MCT95C	800	689
911	Linha de retorno do filtro MC60C-MC105C, MCT70C-MCT95C	850	691
912	Servo-sistema, válvulas piloto e montagem MC60C-MC105C, MCT70C-MCT95C	100	693
912	MC70C-MC105C	200	695
912	MC60C-MC105C, MCT70C-MCT95C	250	697
912	MC60C-MC105C, MCT70C-MCT95C	400	699
912	MC60C-MC105C, MCT70C-MCT95C	450	701
912	MC60C-MC105C, MCT70C-MCT95C	500	703
912	MC60C-MC105C, MCT70C-MCT95C	600	705
912	AUX MC60C-MC105C, MCT70C-MCT95C	650	707
912	AUX MC60C-MC105C, MCT70C-MCT95C	700	709
912	MC60C-MC105C, MCT70C-MCT95C	750	711
912	Válvula, tampa final RADIAL LIFT MC70C, MCT70C	1000	713
912	Válvula, tampa final	1050	715
912	Válvula, tampa final RADIAL LIFT MC60C	1100	717
912	Válvula, tampa final VERTICAL LIFT MC85C-MC105C, MCT85C, MCT95C	1150	719
912	Válvula, suporte de implemento MC60C-MC105C, MCT70C-MCT95C	1200	721
912	Válvula, suporte de implemento MC60C-MC105C, MCT70C-MCT95C	1250	723
912	Válvula de comando principal MC60C-MC105C, MCT70C-MCT95C	1500	725
913	Bomba hidráulica com peças acessórias MC60C-MC105C, MCT70C	100	729
913	Bomba hidráulica com peças acessórias MC60C-MC105C, MCT70C-MCT95C	150	731
913	Bomba hidráulica 25.4/12.6CC MC60C-MC105C, MCT70C-MCT95C	500	733
914	Comandos da carregadeira ISO 7 FUNC.MC60C-MC105C, MCT70C-MCT95C	100	735
914	Comandos da carregadeira ISO 3 FUNC.MC70C-MC105C, MCT85C-MCT95C	150	737
914	Circuito hidráulico, piloto e drenagem MC60C-MC105C	500	739
914	Circuito hidráulico, piloto e drenagem MC60C-MC105C	600	741
914	Circuito hidráulico, piloto e drenagem MCT70C-MCT95C	700	743
914	Circuito hidráulico, piloto e drenagem MCT70C-MCT95C	750	745
914	Circuito hidráulico MC60C-MC105C, MCT70C-MCT95C	900	747
914	Circuito hidráulico MC60C-MC105C, MCT70C-MCT95C	950	749
914	Placa de anteparo MCT70C-MCT95C	1000	751
914	Placa de anteparo MCT70C-MCT95C	1050	753
914	Placa de anteparo MCT70C-MCT95C	1100	755
916	MC60C, MC70C, MCT70C	100	757
916	RADIAL LIFT, AUX MC60C, MC70C, MCT70C	150	759
916	RADIAL LIFT MC60C, MC70C, MCT70C	200	761
916	RADIAL LIFT MC70C, MCT70C	250	763
916	VERTICAL LIFT AUX MC85C-MC105C, MCT85C, MCT95C	300	765
916	VERTICAL LIFT AUX MC85C-MC105C, MCT85C, MCT95C	350	767
916	VERTICAL LIFT MC85C-MC105C, MCT85C, MCT95C	400	769
916	VERTICAL LIFT MC85C-MC105C, MCT85C, MCT95C	450	771
916	RADIAL LIFT MC60C	500	773
916	MC60C, MC70C, MCT70C	550	775
924	Suporte de implemento, mecânico MC60C-MC105C, MCT70C-MCT95C	100	777

ÍNDICE

Catalogue id **20649** | Group **9**

Issue **PUB 20030904-B** | Page **669**

ÍNDICE

GRUPO		Seção	Página
924	Placa de montagem de implemento - Troca rápida, hidráulica MC60C-MC105C, MCT70C-MCT95C	150	779
924	Pinos do suporte de implemento MC60C-MC105C, MCT70C-MCT95C	300	781
924	Montar o suporte de implemento. MECHANIC MC60C-MC105C, MCT70C-MCT95C	500	783
924	Montar o suporte de implemento. HYDRAULIC MC60C-MC105C, MCT70C-MCT95C	550	785
924	Montar o suporte de implemento. MC60C-MC105C, MCT70C-MCT95C	600	787
924	Montar o suporte de implemento. MC60C-MC105C, MCT70C-MCT95C	650	789
924	Circuito hidráulico para implementos MC60C, MC70C, MCT70C	800	791
924	Circuito hidráulico para implementos MC85C-MC105C, MCT85C, MCT95C	850	793
924	Cilindro hidráulico, acoplamento rápido MC60C-MC105C, MCT70C-MCT95C	1000	795
945	Braço da carregadeira, elevação vertical RADIAL LIFT MC70C, MCT70C	100	797
945	Braço da carregadeira, elevação vertical MC60C	200	799
945	Braço da carregadeira, elevação vertical VERTICAL LIFT MC85C-MC105C, MCT85C, MCT95C	300	801
945	Quadro de elevação com peças acessórias MC60C, MC70C, MCT70C	500	803
945	Quadro de elevação com peças acessórias MC60C, MC70C, MCT70C	550	805
945	Quadro de elevação com peças acessórias MC85C-MC105C, MCT85C, MCT95C	600	807
945	Placa de cobertura, braço da carregadeira MC60C-MC105C, MCT70C-MCT95C	700	809
945	Quadro de elevação com peças acessórias MC85C-MC105C, MCT85C, MCT95C	750	811
945	Cilindro de inclinação MC60C, MC70C, MCT70C	1000	815
945	Cilindro de inclinação MC85C-MC105C, MCT85C, MCT95C	1050	817
945	Cilindro de elevação	1100	819
945	Cilindro de elevação MC85C-MC105C, MCT85C, MCT95C	1150	821
992	Sistema de supressão de incêndio MC60C-MC85C, MC105C, MCT70C-MCT95C	100	823

GROUPE		Section	Page
911	Montage du réservoir hydraulique MC60C-MC105C, MCT70C-MCT95C	100	675
911	Syst. hydr, rés. hydr vers refroidisseur huile hydraulique MC60C-MC105C, MCT70C-MCT95C	300	677
911	Syst. hydr, rés. hydr vers refroidisseur huile hydraulique MC60C-MC105C, MCT70C-MCT95C	350	679
911	Syst. hydr, rés. hydr vers refroidisseur huile hydraulique MC60C-MC105C, MCT70C-MCT95C	400	681
911	Syst. hydr, rés. hydr vers refroidisseur huile hydraulique MC60C-MC105C, MCT70C-MCT95C	450	683
911	Système hydraulique, conduits de retour MC70C-MC105C	600	685
911	Système hydraulique, conduits de retour MC70C-MC105C	650	687
911	Conduite de retour de filtre MC60C-MC105C, MCT70C-MCT95C	800	689
911	Conduite de retour de filtre MC60C-MC105C, MCT70C-MCT95C	850	691
912	MC60C-MC105C, MCT70C-MCT95C	100	693
912	Valve return valve MC70C-MC105C	200	695
912	Valve return valve MC60C-MC105C, MCT70C-MCT95C	250	697
912	Valve, position flottante MC60C-MC105C, MCT70C-MCT95C	400	699
912	Valve, position flottante MC60C-MC105C, MCT70C-MCT95C	450	701
912	Valve, position flottante MC60C-MC105C, MCT70C-MCT95C	500	703
912	Valve de contrôle avec pièces de montage. MC60C-MC105C, MCT70C-MCT95C	600	705
912	Valve de contrôle avec pièces de montage. AUX MC60C-MC105C, MCT70C-MCT95C	650	707
912	Valve de contrôle avec pièces de montage. AUX MC60C-MC105C, MCT70C-MCT95C	700	709
912	Valve de contrôle avec pièces de montage. MC60C-MC105C, MCT70C-MCT95C	750	711
912	Valve, bouchon d'extrémité RADIAL LIFT MC70C, MCT70C	1000	713
912	Valve, bouchon d'extrémité	1050	715
912	Valve, bouchon d'extrémité RADIAL LIFT MC60C	1100	717
912	Valve, bouchon d'extrémité VERTICAL LIFT MC85C-MC105C, MCT85C, MCT95C	1150	719
912	Valve, porte-outil MC60C-MC105C, MCT70C-MCT95C	1200	721
912	Valve, porte-outil MC60C-MC105C, MCT70C-MCT95C	1250	723
912	Distributeur de commande principal MC60C-MC105C, MCT70C-MCT95C	1500	725
913	Pompe hydraulique avec pièces de montage MC60C-MC105C, MCT70C	100	729
913	Pompe hydraulique avec pièces de montage MC60C-MC105C, MCT70C-MCT95C	150	731
913	Pompe hydraulique 25.4/12.6CC MC60C-MC105C, MCT70C-MCT95C	500	733
914	Commandes de l'équipement chargeur ISO 7 FUNC. MC60C-MC105C, MCT70C-MCT95C	100	735
914	Commandes de l'équipement chargeur ISO 3 FUNC. MC70C-MC105C, MCT85C-MCT95C	150	737
914	Circuit hydraulique, commande pilote et vidange MC60C-MC105C	500	739
914	Circuit hydraulique, commande pilote et vidange MC60C-MC105C	600	741
914	Circuit hydraulique, commande pilote et vidange MCT70C-MCT95C	700	743
914	Circuit hydraulique, commande pilote et vidange MCT70C-MCT95C	750	745
914	Circuit hydraulique MC60C-MC105C, MCT70C-MCT95C	900	747
914	Circuit hydraulique MC60C-MC105C, MCT70C-MCT95C	950	749
914	Tôle de protection MCT70C-MCT95C	1000	751
914	Tôle de protection MCT70C-MCT95C	1050	753
914	Tôle de protection MCT70C-MCT95C	1100	755
916	Système hydraulique, groupe chargeur. MC60C, MC70C, MCT70C	100	757
916	Système hydraulique, groupe chargeur. RADIAL LIFT, AUX MC60C, MC70C, MCT70C	150	759
916	Système hydraulique, groupe chargeur. RADIAL LIFT MC60C, MC70C, MCT70C	200	761

TABLE DES MATIÈRES	Catalogue id 20649	Group 9
	Issue PUB 20030904-B	Page 672

GROUPE		Section	Page
916	Système hydraulique, groupe chargeur. RADIAL LIFT MC70C, MCT70C	250	763
916	Système hydraulique, groupe chargeur. VERTICAL LIFT AUX MC85C-MC105C, MCT85C, MCT95C	300	765
916	Système hydraulique, groupe chargeur. VERTICAL LIFT AUX MC85C-MC105C, MCT85C, MCT95C	350	767
916	Système hydraulique, groupe chargeur. VERTICAL LIFT MC85C-MC105C, MCT85C, MCT95C	400	769
916	Système hydraulique, groupe chargeur. VERTICAL LIFT MC85C-MC105C, MCT85C, MCT95C	450	771
916	Système hydraulique, groupe chargeur. RADIAL LIFT MC60C	500	773
916	Système hydraulique, groupe chargeur. MC60C, MC70C, MCT70C	550	775
924	Porte-outil, verrouillage mécanique MC60C-MC105C, MCT70C-MCT95C	100	777
924	Support - changement rapide, hydraulique MC60C-MC105C, MCT70C-MCT95C	150	779
924	Articulation MC60C-MC105C, MCT70C-MCT95C	300	781
924	Montage de porte-outil. MECHANIC MC60C-MC105C, MCT70C-MCT95C	500	783
924	Montage de porte-outil. HYDRAULIC MC60C-MC105C, MCT70C-MCT95C	550	785
924	Montage de porte-outil. MC60C-MC105C, MCT70C-MCT95C	600	787
924	Montage de porte-outil. MC60C-MC105C, MCT70C-MCT95C	650	789
924	Circuit hydraulique pour outils/accessoires MC60C, MC70C, MCT70C	800	791
924	Circuit hydraulique pour outils/accessoires MC85C-MC105C, MCT85C, MCT95C	850	793
924	Verin hydraulique, fixation rapide MC60C-MC105C, MCT70C-MCT95C	1000	795
945	Bras de levage, course verticale RADIAL LIFT MC70C, MCT70C	100	797
945	Bras de levage, course verticale MC60C	200	799
945	Bras de levage, course verticale VERTICAL LIFT MC85C-MC105C, MCT85C, MCT95C	300	801
945	Chassis levage avec pièces de montage MC60C, MC70C, MCT70C	500	803
945	Chassis levage avec pièces de montage MC60C, MC70C, MCT70C	550	805
945	Chassis levage avec pièces de montage MC85C-MC105C, MCT85C, MCT95C	600	807
945	Tôle de protection, bras de levage MC60C-MC105C, MCT70C-MCT95C	700	809
945	Chassis levage avec pièces de montage MC85C-MC105C, MCT85C, MCT95C	750	811
945	Vérin de cavage MC60C, MC70C, MCT70C	1000	815
945	Vérin de cavage MC85C-MC105C, MCT85C, MCT95C	1050	817
945	Vérin de levage	1100	819
945	Vérin de levage MC85C-MC105C, MCT85C, MCT95C	1150	821
992	Système d'extinction incendie MC60C-MC85C, MC105C, MCT70C-MCT95C	100	823



Volvo Construction Equipment
www.volvoce.com

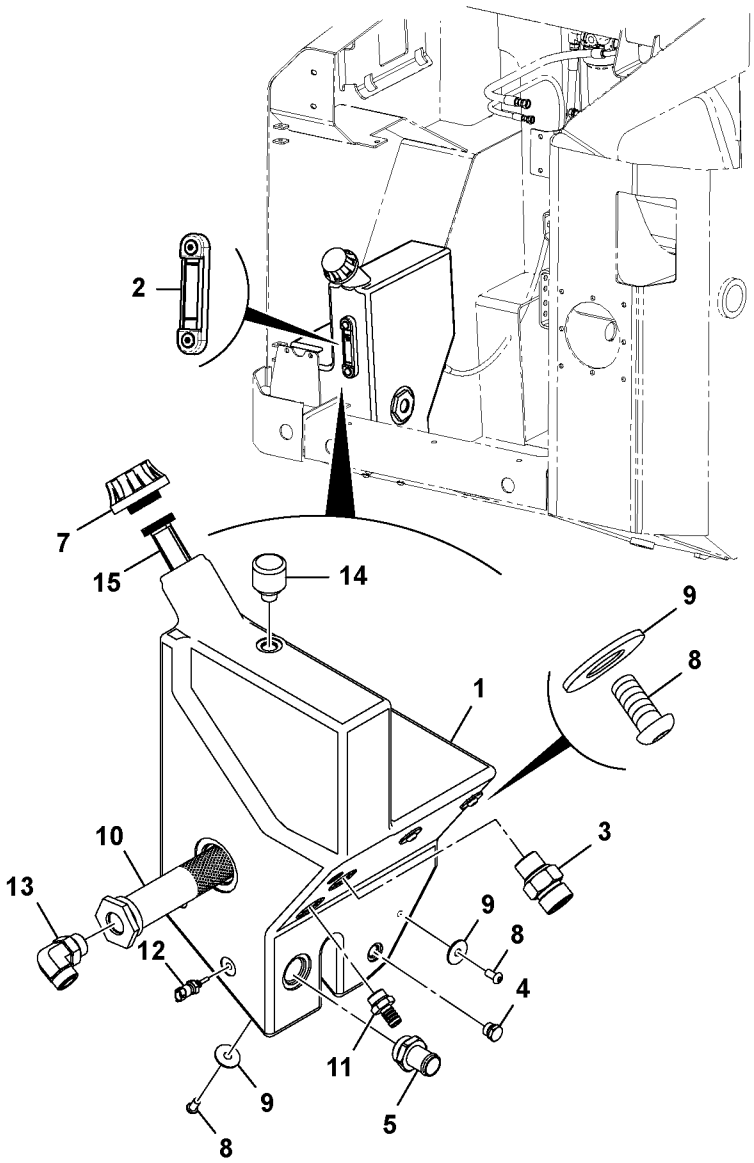
2
7
15
14
9
8
1
10
3
13
9
8
12
4
11
9
5
8

Fig.	Part No.	Quantity 1	2	3	PS	KIT	Description	Denominación	Denominação	Dénomination	Notes
1	**VOE 17230408**	1					Tank	Depósito	Tanque	Réservoir	
2		1			NS		Level Indicator	Indicador Nivel	Indicador de nível	Indicateur de niveau	
3	**RM 59919670**	2					Connector	Pieza de conexión	Conexão	Pièce connexion	
4	**VOE 16213165**	1					Plug	Tapón	Bujão	Tampon	
5	**VOE 16212274**	1					Adapter	Adaptador	Adaptador	Adaptateur	
7	**VOE 16213517**	1					Venting	Purga de aire		Sortie d'air	
8	**VOE 16212320**	6					Screw	Tornillo	Parafuso	Vis	
9	**VOE 17205560**	6					Washer	Arandela	Arruela	Rondelle	
10		1			NS		Diffuser	Difusor		Diffuseur	
11	**VOE 16212254**	1					Adapter	Adaptador	Adaptador	Adaptateur	
12	**VOE 16213272**	1					Temperature sensor	Sensor de temperatura	Sensor de temperatura	Sonde de température	
13	**VOE 59923003**	1					Adapter	Adaptador	Adaptador	Raccord Reduct	
14	**VOE 16213510**	1					Venting	Purga de aire		Sortie d'air	
15	**VOE 17210200**	1					Strainer	Colador	Peneira	Crépine	

1		**Montage du réservoir hydraulique** **Tanque hidráulico, montagem** **Montaje del depósito hidráulico** **Hydraulic Tank Assembly**	Catalogue id **20649**	Group **911**
2			Illustr. No **1064214**	Section **100**
3			Issue **PUB 20030904-B**	Page **675**
4				
5		**MC60C-MC105C, MCT70C-MCT95C**		

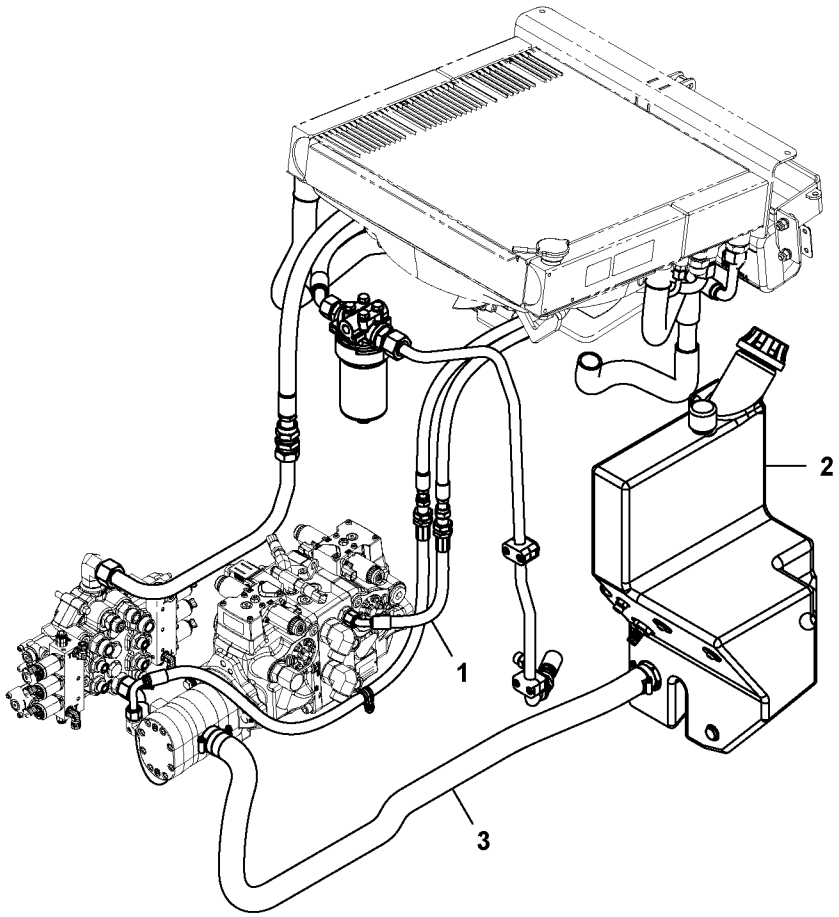
1
2
3

Fig.	Part No.	Quantity 1	2	3	PS	KIT	Description	Denominación	Denominação	Dénomination	Notes
1		1					Fan drive	Accion. ventilador	Acionamento do ventilador	Commande ventilateur	See group 263, Page 209
2		1					Tank	Depósito	Tanque	Resérvoir	See group 911, Page 675
3		1					Suction hose	Manguer aspirac		Durit aspiration	See group 911, Page 681

1		**Syst. hydr, rés. hydr vers refroidisseur huile hydraulique** **Sistema hidráulico, tanque hidráulico para o refrigerador de óleo hidráulico** **Sistema hidráulico, depósito hidr. a enfr. aceite hidr.** **Hydraulic system, hydraulic tank to hydraulic oil cooler**	Catalogue id **20649**	Group **911**
2			Illustr. No **1064000**	Section **300**
3				
4			Issue **PUB 20030904-B**	Page **677**
5		**MC60C-MC105C, MCT70C-MCT95C**		

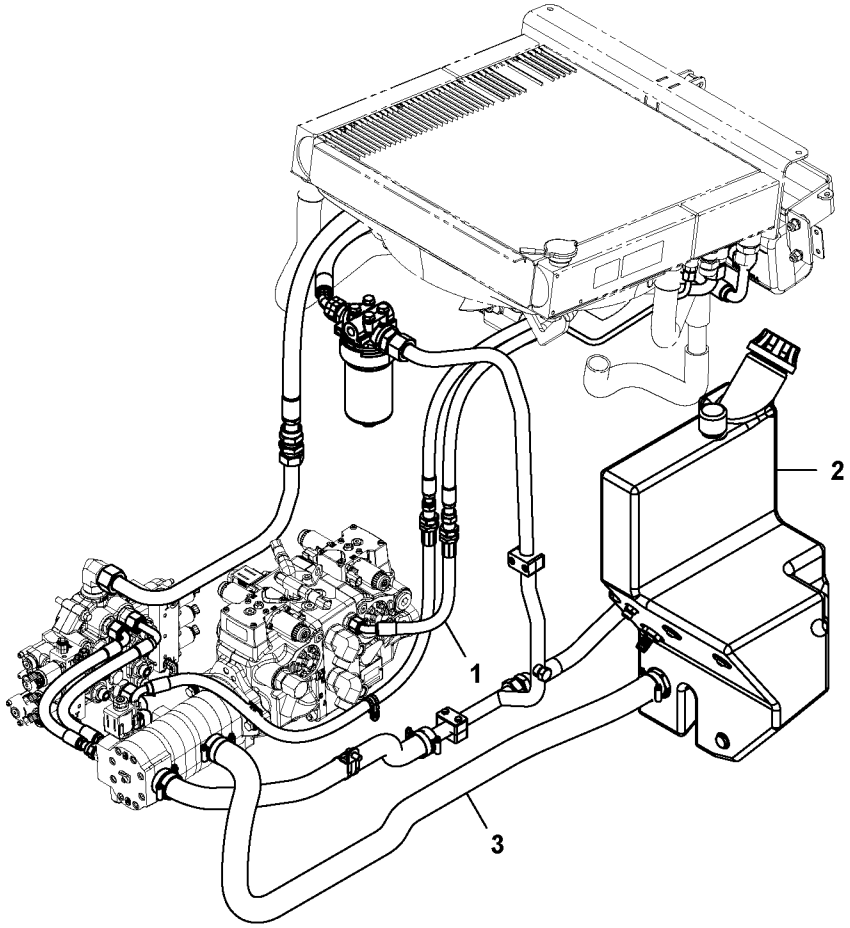
1
2
3

Fig.	Part No.	Quantity 1	2	3	PS	KIT	Description	Denominación	Denominação	Dénomination	Notes
1		1					Fan drive	Accion. ventilador	Acionamento do ventilador	Commande ventilateur	See group 263, Page 209
2		1					Tank	Depósito	Tanque	Resérvoir	See group 911, Page 675
3		1					Suction hose	Manguer aspirac		Durit aspiration	See group 911, Page 683

1		**Syst. hydr, rés. hydr vers refroidisseur huile hydraulique** **Sistema hidráulico, tanque hidráulico para o refrigerador de óleo hidráulico** **Sistema hidráulico, depósito hidr. a enfr. aceite hidr.** **Hydraulic system, hydraulic tank to hydraulic oil cooler**	Catalogue id **20649**	Group **911**
2			Illustr. No **1064001**	Section **350**
3				
4			Issue **PUB 20030904-B**	Page **679**
5		**MC60C-MC105C, MCT70C-MCT95C**		

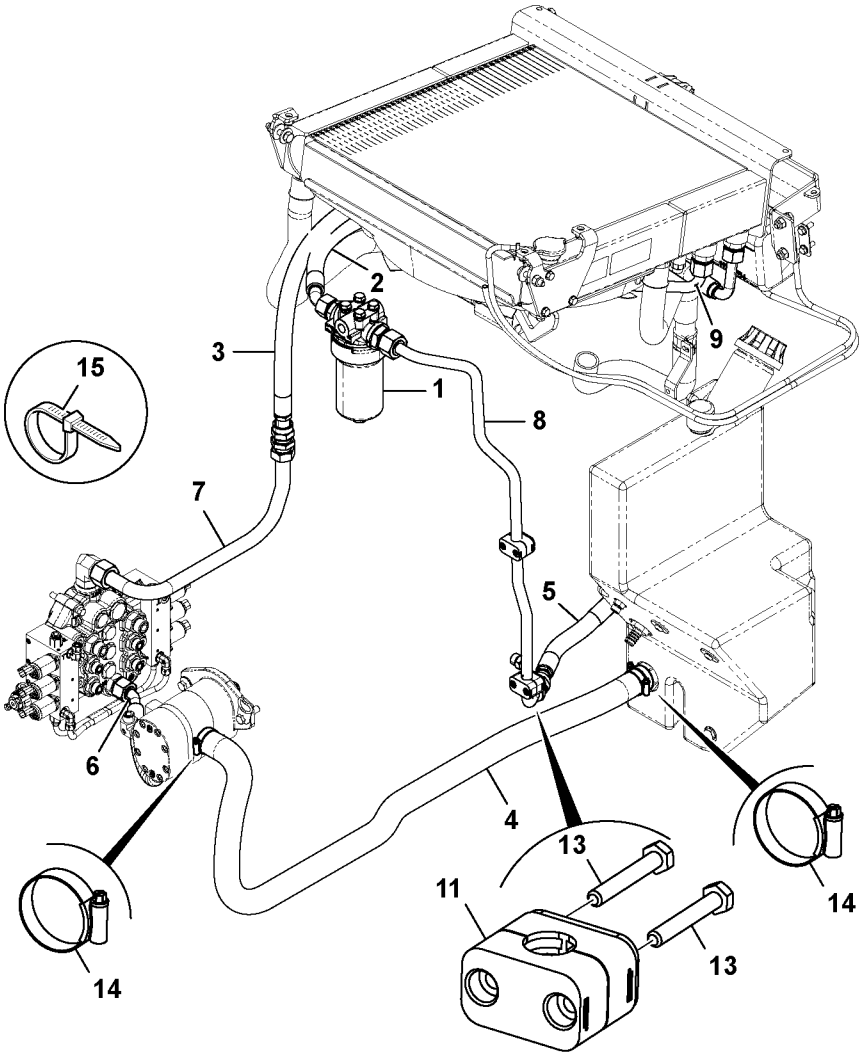
15
3
2
9
1
8
7
5
6
4
13
11
13
14
14

Fig.	Part No.	Quantity 1	2	3	PS	KIT	Description	Denominación	Denominação	Dénomination	Notes
1		1					Hydraulic Fluid Filter	Filtro de fluido hidráulico		Filtre à liquide hydraulique	See group 911, Page 689
2	**VOE 17229185**	1					Hydraulic hose	Manguera hidráulica	Mangueira hidráulica	Flexible hydraulique	
3	**VOE 17229188**	1					Hydraulic hose	Manguera hidráulica	Mangueira hidráulica	Flexible hydraulique	
4	**VOE 17250214**	1					Suction hose	Manguer aspirac		Durit aspiration	
5	**VOE 17250223**	1					Hydraulic Hose	Conducto Hidr		Flexible Hydra	
6	**VOE 17229453**	1					Hose	Manguera	Mangueira	Flexible	
7	**VOE 17230065**	1					Pipe	Tubo	Tubo	Tuyau	
8	**VOE 17230309**	1					Tube	Tubo	Tubo	Tube	
9	**VOE 17230082**	1					Pipe	Tubo	Tubo	Tuyau	
11		2			NS		Clamp	Abrazadera	Braçadeira	Collier serrage	
13	**VOE 17228874**	4					Bolt	Perno	Parafuso	Boulon	
14	**VOE 17229132**	4					Clip	Clip	Clipe	Clip	
15		1			NS		Cable tie	Abrazadera de cinta	Braçadeira	Serre-câble	

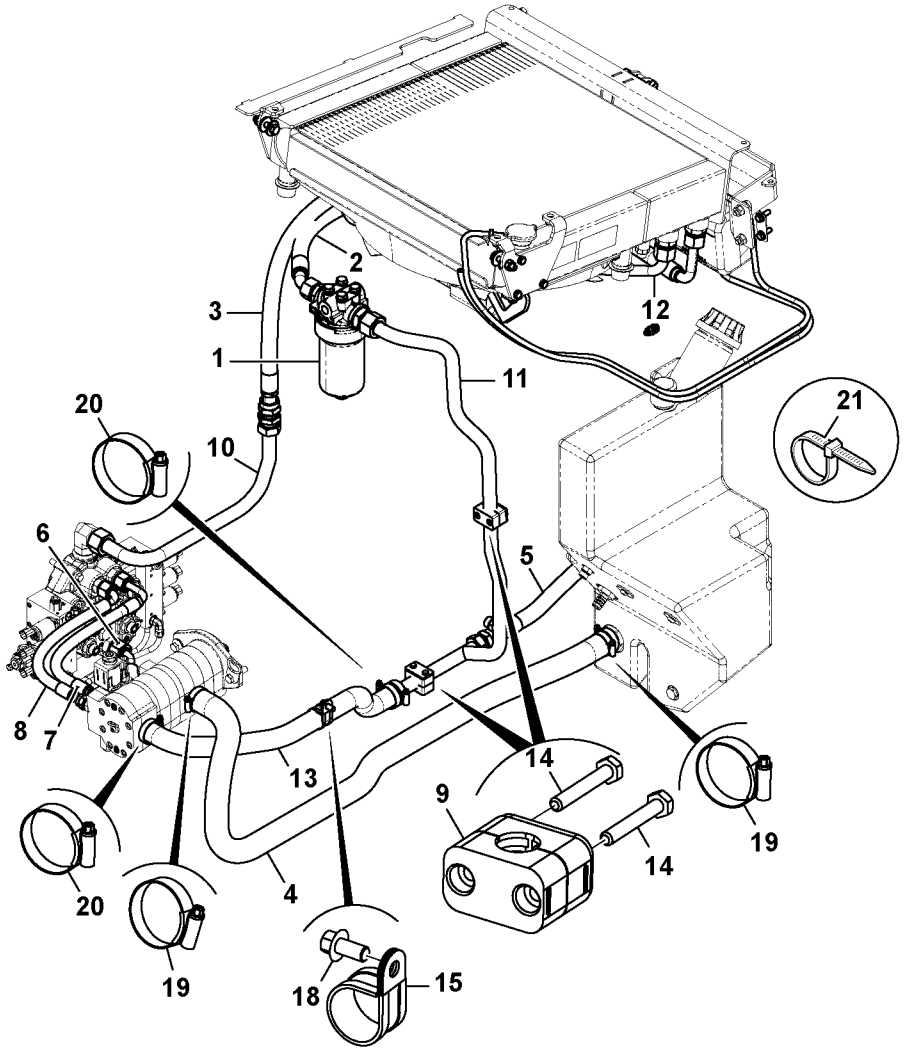
1
2
3
4
5
6
7
8
9
10
11
12
13
14
15
18
19
20
21

Fig.	Part No.	Quantity 1	2	3	PS	KIT	Description	Denominación	Denominação	Dénomination	Notes
1		1					Hydraulic Fluid Filter	Filtro de fluido hidráulico		Filtre à liquide hydraulique	See group 911, Page 689
2	**VOE 17229185**	1					Hydraulic hose	Manguera hidráulica	Mangueira hidráulica	Flexible hydraulique	
3	**VOE 17229188**	1					Hydraulic hose	Manguera hidráulica	Mangueira hidráulica	Flexible hydraulique	
4	**VOE 17250214**	1					Suction hose	Manguer aspirac		Durit aspiration	
5	**VOE 17250223**	1					Hydraulic Hose	Conducto Hidr		Flexible Hydra	
6	**VOE 17229453**	1					Hose	Manguera	Mangueira	Flexible	
7	**VOE 17229201**	1					Hydraulic hose	Manguera hidráulica	Mangueira hidráulica	Flexible hydraulique	
8	**VOE 17229197**	1					Hydraulic hose	Manguera hidráulica	Mangueira hidráulica	Flexible hydraulique	
9	**VOE 17250225**	2					Hose Clamp	Abraz Manguera	Braçadeira de mangueira	Collier Serrage	
10	**VOE 17230065**	1					Pipe	Tubo	Tubo	Tuyau	
11	**VOE 17250227**	1					Tube	Tubo	Tubo	Tube	
12	**VOE 17230082**	1					Pipe	Tubo	Tubo	Tuyau	
13	**VOE 17250228**	1					Hydraulic Hose	Conducto Hidr		Flexible Hydra	
14	**VOE 17228874**	4					Bolt	Perno	Parafuso	Boulon	
15	**VOE 17229239**	1					Clip	Clip	Clipe	Clip	
18	**VOE 16212104**	1					Bolt	Perno	Parafuso	Boulon	
19	**VOE 17229132**	4					Clip	Clip	Clipe	Clip	
20	**VOE 17229133**	4					Clip	Clip	Clipe	Clip	
21		1			NS		Cable tie	Abrazadera de cinta	Braçadeira	Serre-câble	

1	
2	
3	
4	
5	

Syst. hydr, rés. hydr vers refroidisseur huile hydraulique
Sistema hidráulico, tanque hidráulico para o refrigerador de óleo hidráulico
Sistema hidráulico, depósito hidr. a enfr. aceite hidr.
Hydraulic system, hydraulic tank to hydraulic oil cooler

MC60C-MC105C, MCT70C-MCT95C

Catalogue id	Group
20649	**911**
Illustr. No **1064215**	Section **450**
Issue **PUB 20030904-B**	Page **683**

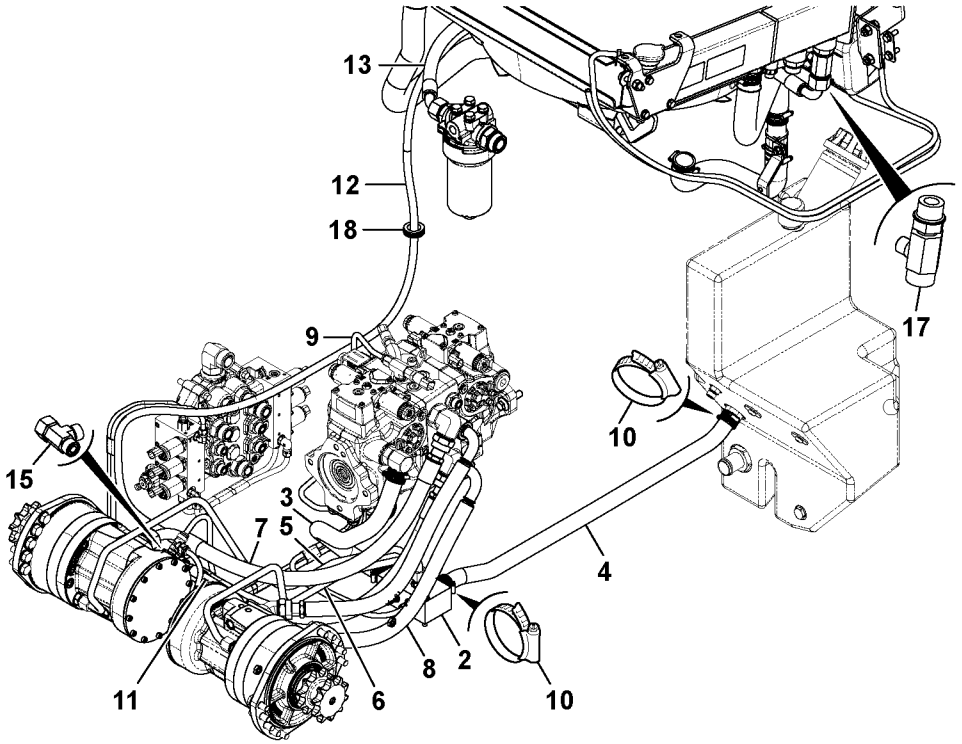
13
12
18
9
15
3
5
7
11
6
8
2
10
4
10
17

Fig.	Part No.	Quantity 1	2	3	PS	KIT	Description	Denominación	Denominação	Dénomination	Notes
2		1					Return Valve	Valvula Retorno		Valve De Retour	See group 912, Page 697
3	**VOE 17229202**	1					Hydraulic hose	Manguera hidráulica	Mangueira hidráulica	Flexible hydraulique	
4	**VOE 17230455**	1					Transmission	Transmisión	Transmissão	Transmission	
5	**VOE 17237859**	1					Tube	Tubo	Tubo	Tube	
6	**VOE 17237858**	1					Tube	Tubo	Tubo	Tube	
7		2			NS		Hose	Tubo flexible	Mangueira	Durit	
8	**VOE 17229438**	2					Hose	Manguera	Mangueira	Flexible	
9		2					Valve	Valvula	Válvula	Soupape	See group 914, Page 739
10	**VOE 16213290**	8					Clip	Clip	Clipe	Clip	
11	**VOE 17237808**	1					Hose assembly	Conducto	Mangueira completa	Conduit flexible	
12	**VOE 17237812**	1					Hose assembly	Conducto	Mangueira completa	Conduit flexible	
13		1			NS		Hose	Tubo flexible	Mangueira	Durit	
15	**VOE 16212153**	1					Adapter	Adaptador	Adaptador	Adaptateur	
17	**VOE 17237770**	1					Adapter	Adaptador	Adaptador	Adaptateur	
18	**VOE 17205118**	1					Plug tap	Tapón roscado	Bujão roscado	Taraud	

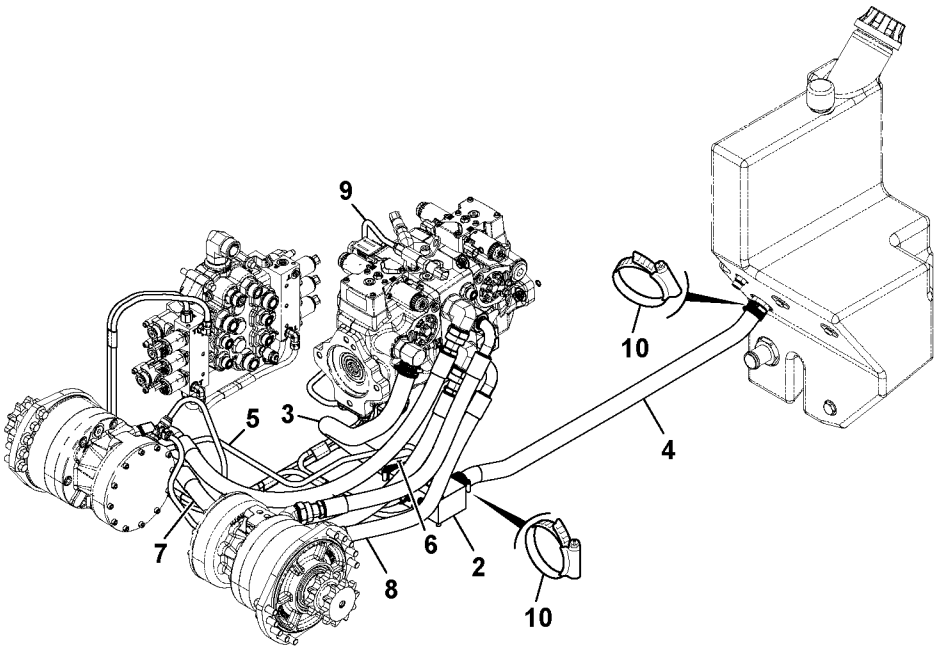
9
10
3
5
4
7
6
2
8
10

Fig.	Part No.	Quantity 1	2	3	PS	KIT	Description	Denominación	Denominação	Dénomination	Notes
2		1					Return Valve	Valvula Retorno		Valve De Retour	See group 912, Page 695
3	**VOE 17229202**	1					Hydraulic hose	Manguera hidráulica	Mangueira hidráulica	Flexible hydraulique	
4	**VOE 17230455**	1					Transmission	Transmisión	Transmissão	Transmission	
5	**VOE 17230094**	1					Pipe	Tubo	Tubo	Tuyau	
6	**VOE 17230096**	1					Pipe	Tubo	Tubo	Tuyau	
7		2			NS		Hose	Tubo flexible	Mangueira	Durit	
8	**VOE 17229438**	2					Hose	Manguera	Mangueira	Flexible	
9		1					Valve	Valvula	Válvula	Soupape	See group 914, Page 739
10	**VOE 16213290**	8					Clip	Clip	Clipe	Clip	

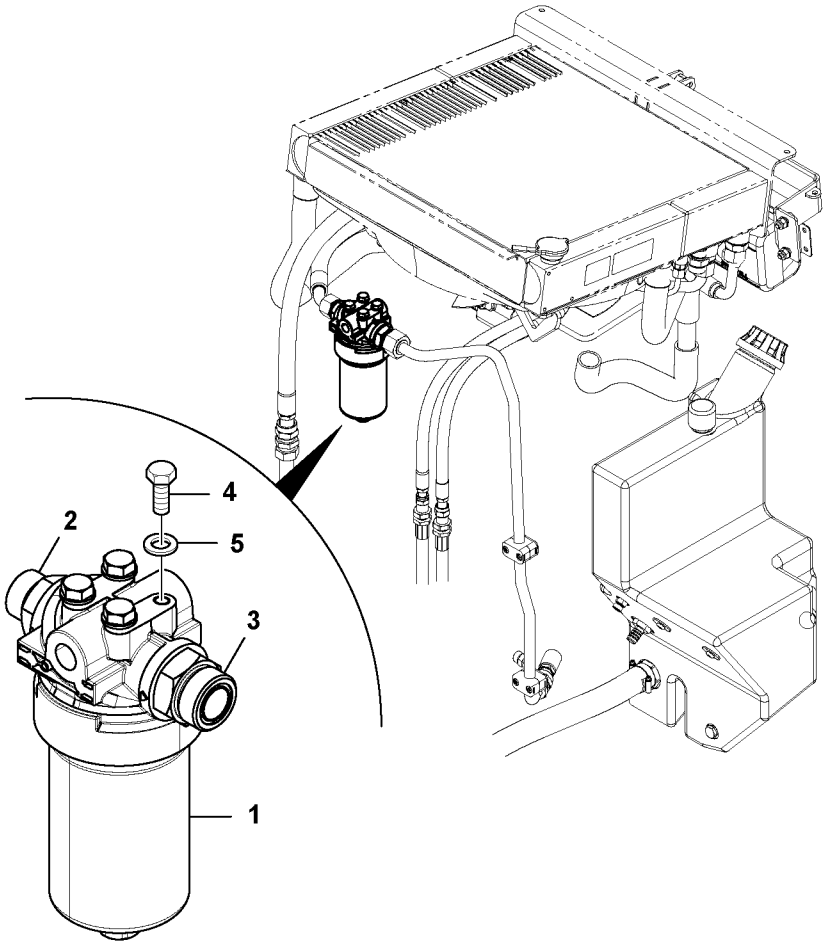
4
2
5
3
1

Fig.	Part No.	Quantity 1	2	3	PS	KIT	Description	Denominación	Denominação	Dénomination	Notes
1	**VOE 12750609**	1					Hydraulic fluid filter	Filtro de aceite hidráulico	Filtro óleo hidráulico	Filtre fluide hydraulique	See group 911, Page 691
2	**VOE 17228979**	1					Adapter	Adaptador	Adaptador	Adaptateur	
3	**RM 59922641**	1					Adapter	Adaptador	Adaptador	Adaptateur	
4	**VOE 16212075**	4					Set screw	Tornillo tope	Parafuso batente	Vis butée	
5	**VOE 16212138**	4			SS		Plain washer	Arandela plana	Arruela simples	Rondelle plane	

1		**Conduite de retour de filtre** **Linha de retorno do filtro** **Filtro de tubería de retorno** **Filter Return Line**	Catalogue id **20649**	Group **911**
2			Illustr. No **1064095**	Section **800**
3			Issue **PUB 20030904-B**	Page **689**
4				
5		**MC60C-MC105C, MCT70C-MCT95C**		

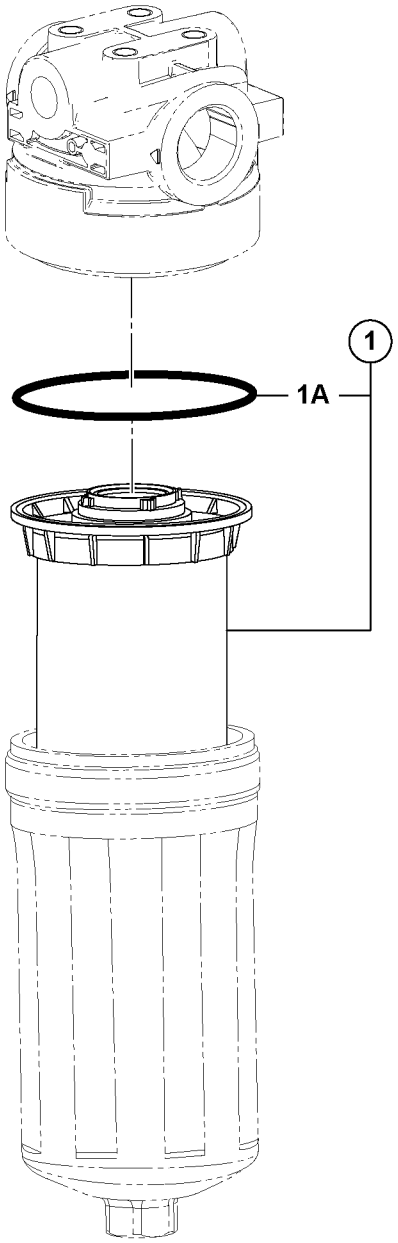

Volvo Construction Equipment
1064063

Fig.	Part No.	Quantity 1	2	3	PS	KIT	Description	Denominación	Denominação	Dénomination	Notes
	VOE 12750609	1					Hydraulic fluid filter	Filtro de aceite hidráulico	Filtro óleo hidráulico	Filtre fluide hydraulique	
1	**VOE 12750608**	1					•Hydraulic fluid filter	•Filtro de aceite hidráulico	•Filtro óleo hidráulico	•Filtre fluide hydraulique	
1A		1			NS		•Seal	•Junta	•Vedação	•Joint	

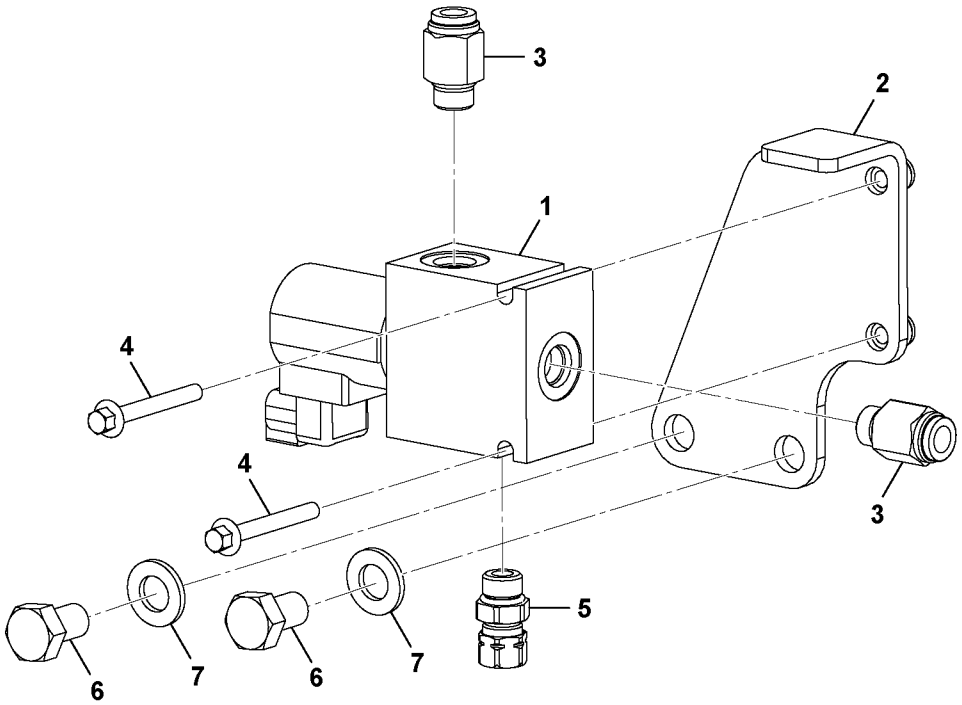
3
2
1
4
4
3
5
6
7
6
7

Fig.	Part No.	Quantity 1	2	3	PS	KIT	Description	Denominación	Denominação	Dénomination	Notes
1	**VOE 17230374**	1					Valve attachment	Fijación de válvula	Fixação da válvula	Fixe-soupape	See group 912, Page 701
2		1			NS		Valve Attachmen	FijaciÓn De VÁl		Fixe-soupape	
3	**VOE 16212236**	2					Adapter	Adaptador	Adaptador	Adaptateur	
4	**VOE 17228976**	2					Bolt	Perno	Parafuso	Boulon	
5	**VOE 16212377**	1					Adapter	Adaptador	Adaptador	Adaptateur	
6	**VOE 17205074**	2					Set screw	Tornillo tope	Parafuso batente	Vis butée	
7	**VOE 20764147**	2					Washer	Arandela	Arruela	Rondelle	

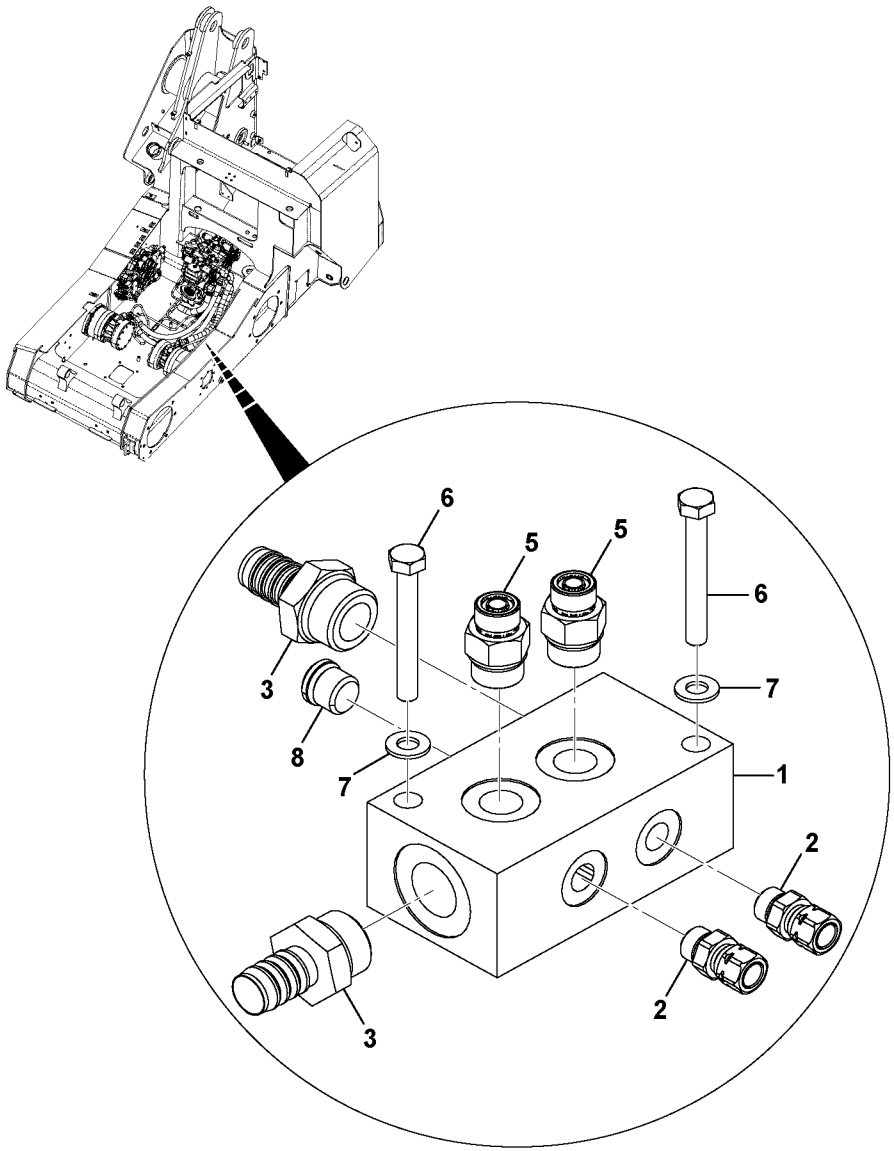

Volvo Construction Equipment
1064085

Fig.	Part No.	Quantity 1	2	3	PS	KIT	Description	Denominación	Denominação	Dénomination	Notes
1		1			NS		Manifold	Bifurcación	Coletor	Tubulure	
2	**VOE 16212377**	2					Adapter	Adaptador	Adaptador	Adaptateur	
3	**VOE 16212254**	2					Adapter	Adaptador	Adaptador	Adaptateur	
5	**VOE 17228972**	2					Adapter	Adaptador	Adaptador	Adaptateur	
6	**VOE 16212086**	2					Bolt	Perno	Parafuso	Boulon	
7	**VOE 20460127**	2					Washer	Arandela	Arruela	Rondelle	
8	**VOE 17229950**	1					Plug	Tapón	Bujão	Tampon	

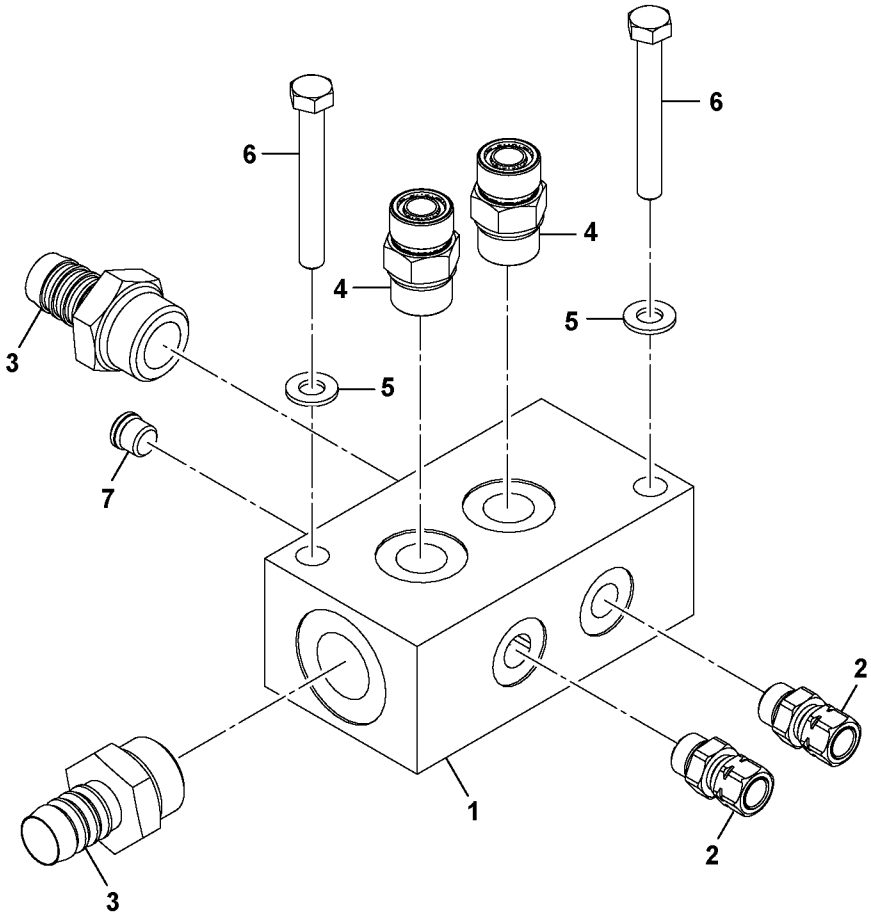
6
6
4
4
5
5
3
7
2
2
1
3

Fig.	Part No.	Quantity 1	2	3	PS	KIT	Description	Denominación	Denominação	Dénomination	Notes
1		1			NS		Manifold	Bifurcación	Coletor	Tubulure	
2	**VOE 16212377**	2					Adapter	Adaptador	Adaptador	Adaptateur	
3	**VOE 16212254**	2					Adapter	Adaptador	Adaptador	Adaptateur	
4	**VOE 16212166**	2					Adapter	Adaptador	Adaptador	Adaptateur	
5	**VOE 20460127**	2					Washer	Arandela	Arruela	Rondelle	
6	**VOE 16212086**	2					Bolt	Perno	Parafuso	Boulon	
7	**VOE 17229950**	1					Plug	Tapón	Bujão	Tampon	

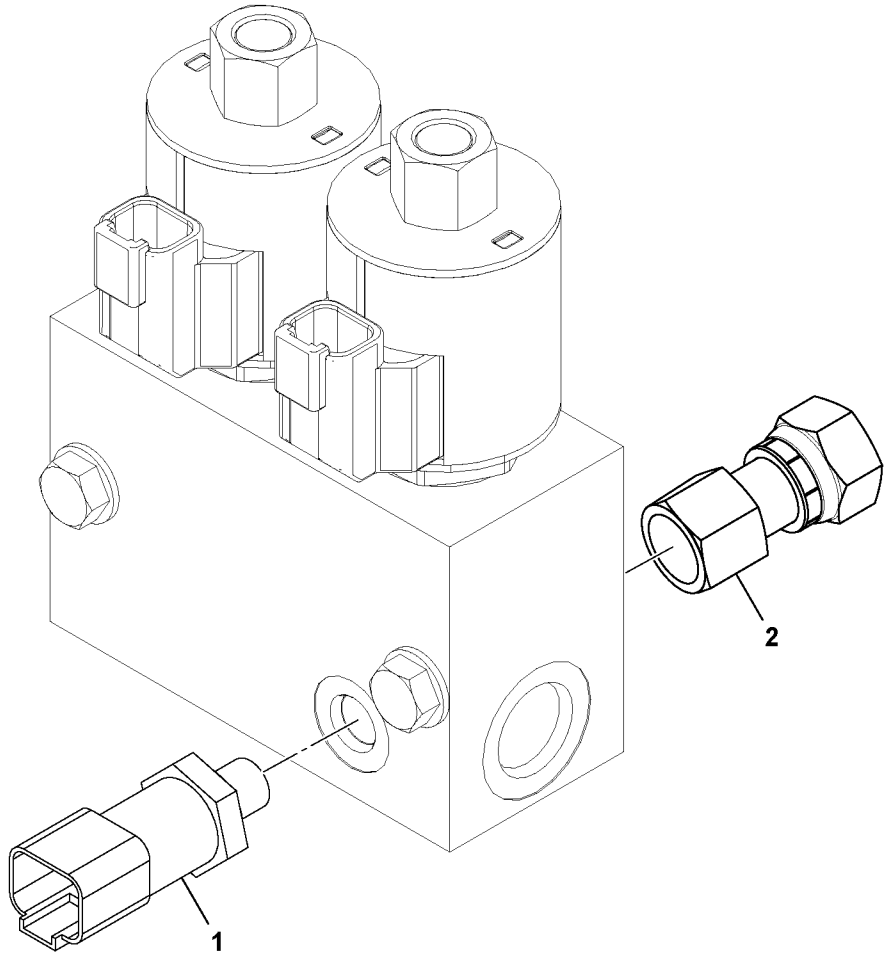
1
2

Fig.	Part No.	Quantity 1	2	3	PS	KIT	Description	Denominación	Denominação	Dénomination	Notes
1		1			NS		Transducer Pres	Presión del transductor.....	.....	.....Transducteur de pression....	
2	**VOE 17229030**	1					Adapter	Adaptador.....	.....Adaptador.....	.....Adaptateur.....	

1		**Valve, position flottante** **Válvula del posición flotante** **Float position valve**	Catalogue id **20649**	Group **912**
2			Illustr. No **1064241**	Section **400**
3			Issue **PUB 20030904-B**	Page **699**
4				
5		**MC60C-MC105C, MCT70C-MCT95C**		

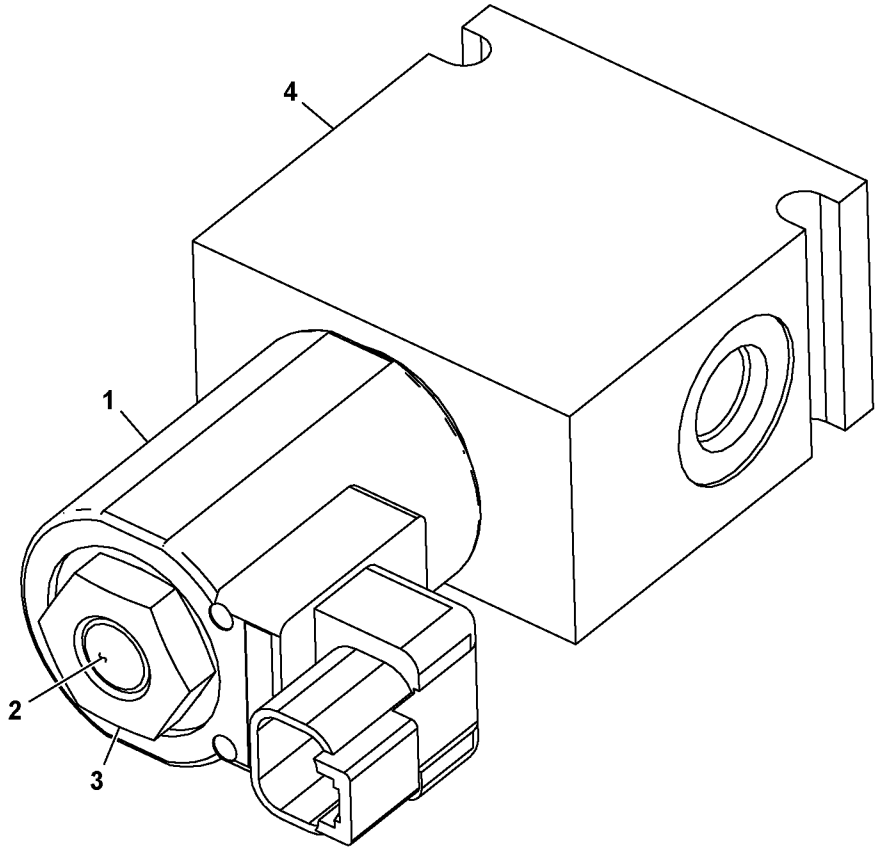
4
1
2
3

Fig.	Part No.	Quantity 1	2	3	PS	KIT	Description	Denominación	Denominação	Dénomination	Notes
1	**VOE 17231000**	1					Valve	Válvula	Válvula	Valve	
2	**VOE 17229249**	1					Coil	Bobina	Bobina	Bobine	
3	**VOE 17229627**	1					Nut	Tuerca	Porca	Écrou	
4		1			NS		Manifold	Bifurcación	Coletor	Tubulure	

1		**Valve, position flottante** **Válvula del posición flotante** **Float position valve**	Catalogue id **20649**	Group **912**
2			Illustr. No **1064090**	Section **450**
3			Issue **PUB 20030904-B**	Page **701**
4				
5		**MC60C-MC105C, MCT70C-MCT95C**		

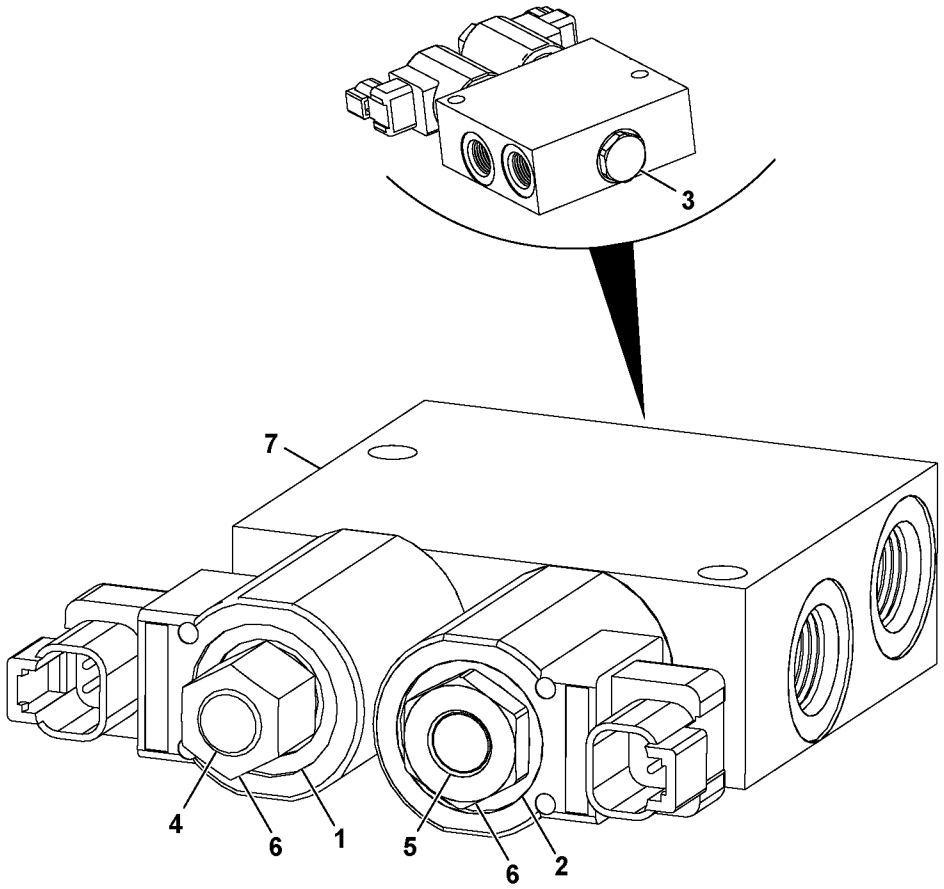
3
7
4
6
1
5
6
2

Fig.	Part No.	Quantity 1	2	3	PS	KIT	Description	Denominación	Denominação	Dénomination	Notes
1	**VOE 17230954**	1					Valve	Válvula	Válvula	Valve	
2	**VOE 17230998**	1					Valve	Válvula	Válvula	Valve	
3	**VOE 17229947**	1					Plug	Tapón	Bujão	Tampon	
4	**VOE 17229241**	1					Coil	Bobina	Bobina	Bobine	
5	**VOE 17229248**	1					Coil	Bobina	Bobina	Bobine	
6	**VOE 17229625**	2					Nut	Tuerca	Porca	Écrou	
7		1			NS		Manifold	Bifurcación	Coletor	Tubulure	

1		**Valve, position flottante** **Válvula del posición flotante** **Float position valve**	Catalogue id **20649**	Group **912**
2			Illustr. No **1064094**	Section **500**
3			Issue **PUB 20030904-B**	Page **703**
4				
5		**MC60C-MC105C, MCT70C-MCT95C**		

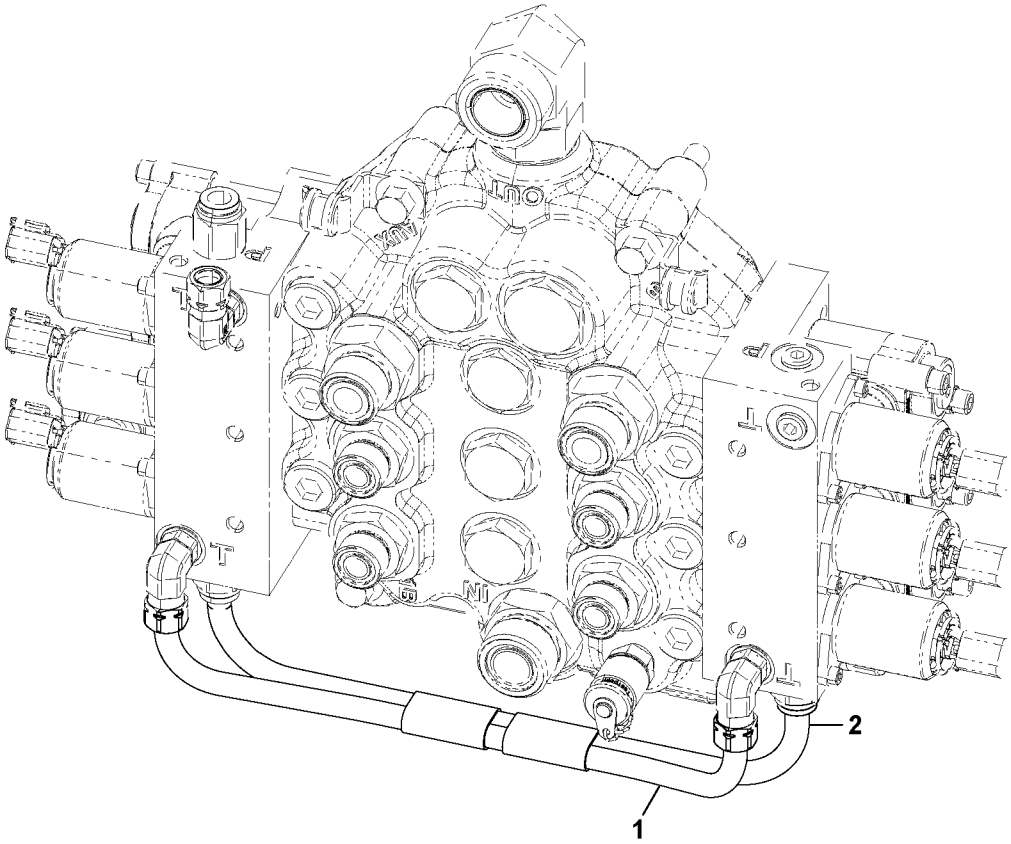
OUT
IN
P1
P2
T
T
T
T
1
2

Fig.	Part No.	Quantity 1	2	3	PS	KIT	Description	Denominación	Denominação	Dénomination	Notes
1	**VOE 17230175**	1					Tube	Tubo	Tubo	Tube	
2	**VOE 17230106**	1					Pipe	Tubo	Tubo	Tuyau	

1		**Valve de contrôle avec pièces de montage.** **Válvula de mando con accesorios de montaje.** **Control valve with fitting parts.**	Catalogue id **20649**	Group **912**
2			Illustr. No **1064092**	Section **600**
3			Issue **PUB 20030904-B**	Page **705**
4				
5		**MC60C-MC105C, MCT70C-MCT95C**		

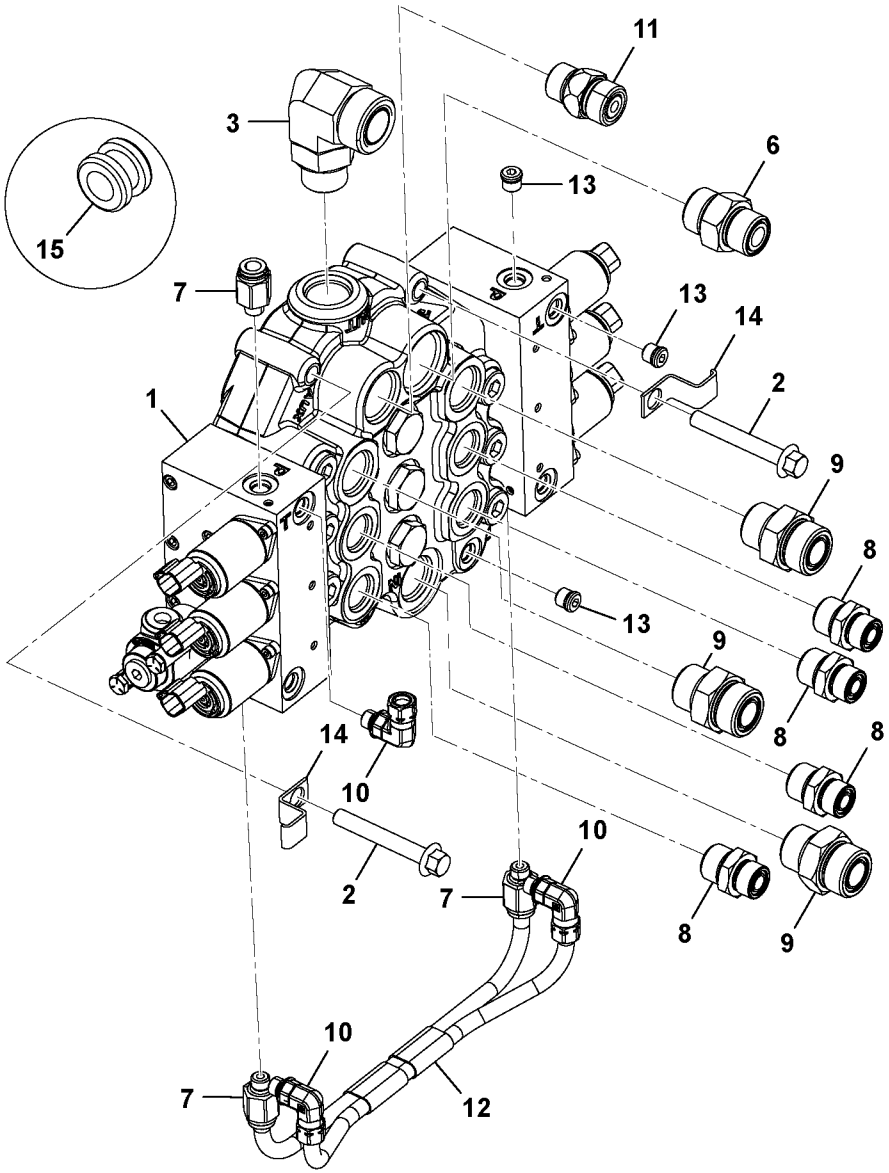
11
3
6
13
15
7
13
14
1
2
9
8
13
9
8
14
10
8
2
7
10
8
9
10
7
12

Fig.	Part No.	Quantity 1	2	3	PS	KIT	Description	Denominación	Denominação	Dénomination	Notes
1	**VOE 17230372**	1					Valve body	Bloque de válvula	Corpo da válvula	Corps de clapet	
2	**VOE 16212105**	3					Bolt	Perno	Parafuso	Boulon	
3	**RM 59922997**	1					Adapter	Adaptador	Adaptador	Adaptateur	
6	**VOE 935032**	1					Nipple	Niple	Niple	Raccord	(RM 59922559)
7	**VOE 16212238**	1					Adapter	Adaptador	Adaptador	Adaptateur	
8	**RM 59922500**	3					Adapter	Adaptador	Adaptador	Adaptateur	
9	**RM 59922591**	4					Adapter	Adaptador	Adaptador	Adaptateur	
10	**VOE 16212379**	3					Adapter	Adaptador	Adaptador	Adaptateur	
11	**VOE 16213180**	1					Non-return valve	Válvula de reténción	Válvula de retenção	Clapet antiretour	
12	**VOE 17230194**	1					Tube	Tubo	Tubo	Tube	
13	**VOE 17229950**	3					Plug	Tapón	Bujão	Tampon	
14	**VOE 17210474**	2					Clip	Clip	Clipe	Clip	
15	**VOE 17205364**	2					Grommet	Pasaje	Passa muro	Passe fil	

1		**Valve de contrôle avec pièces de montage.** **Válvula de mando con accesorios de montaje.** **Control valve with fitting parts.**	Catalogue id **20649**	Group **912**
2			Illustr. No **1064218**	Section **650**
3			Issue **PUB 20030904-B**	Page **707**
4				
5		**AUX MC60C-MC105C, MCT70C-MCT95C**		

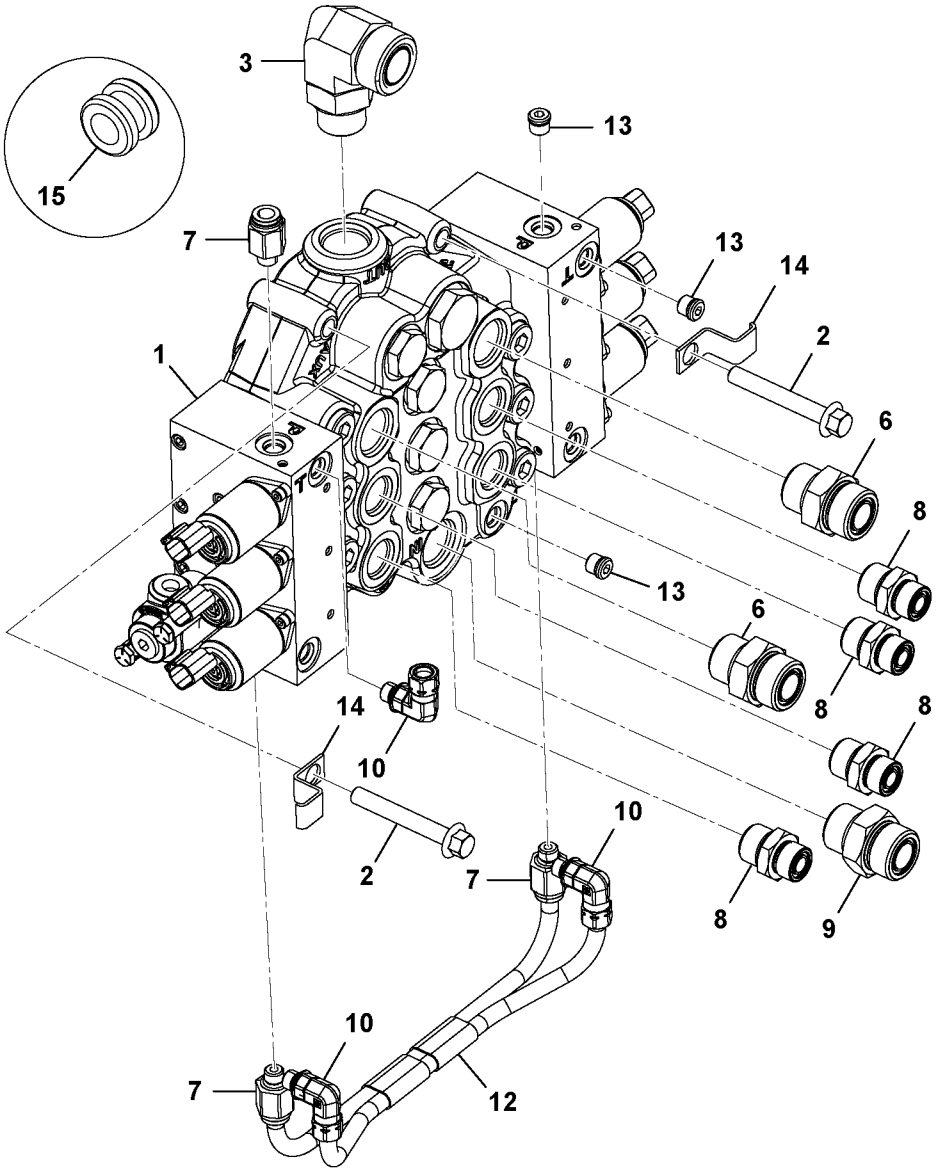
3
15
13
7
13
14
2
1
6
8
13
6
8
8
14
10
2
7
10
8
9
10
7
12

Fig.	Part No.	Quantity 1	2	3	PS	KIT	Description	Denominación	Denominação	Dénomination	Notes
1	**VOE 17230372**	1					Valve body	Bloque de válvula	Corpo da válvula	Corps de clapet	
2	**VOE 16212105**	3					Bolt	Perno	Parafuso	Boulon	
3	**RM 59922997**	1					Adapter	Adaptador	Adaptador	Adaptateur	
6	**VOE 935032**	2					Nipple	Niple	Niple	Raccord	(RM 59922559)
7	**VOE 16212238**	3					Adapter	Adaptador	Adaptador	Adaptateur	
8	**RM 59922500**	4					Adapter	Adaptador	Adaptador	Adaptateur	
9	**RM 59922591**	1					Adapter	Adaptador	Adaptador	Adaptateur	
10	**VOE 16212379**	3					Adapter	Adaptador	Adaptador	Adaptateur	
12	**VOE 17230194**	1					Tube	Tubo	Tubo	Tube	
13	**VOE 17229950**	3					Plug	Tapón	Bujão	Tampon	
14	**VOE 17210474**	2					Clip	Clip	Clipe	Clip	
15	**VOE 17205364**	2					Grommet	Pasaje	Passa muro	Passe fil	

1		**Valve de contrôle avec pièces de montage.** **Válvula de mando con accesorios de montaje.** **Control valve with fitting parts.**	Catalogue id **20649**	Group **912**
2			Illustr. No **1064219**	Section **700**
3			Issue **PUB 20030904-B**	Page **709**
4				
5		**AUX MC60C-MC105C, MCT70C-MCT95C**		

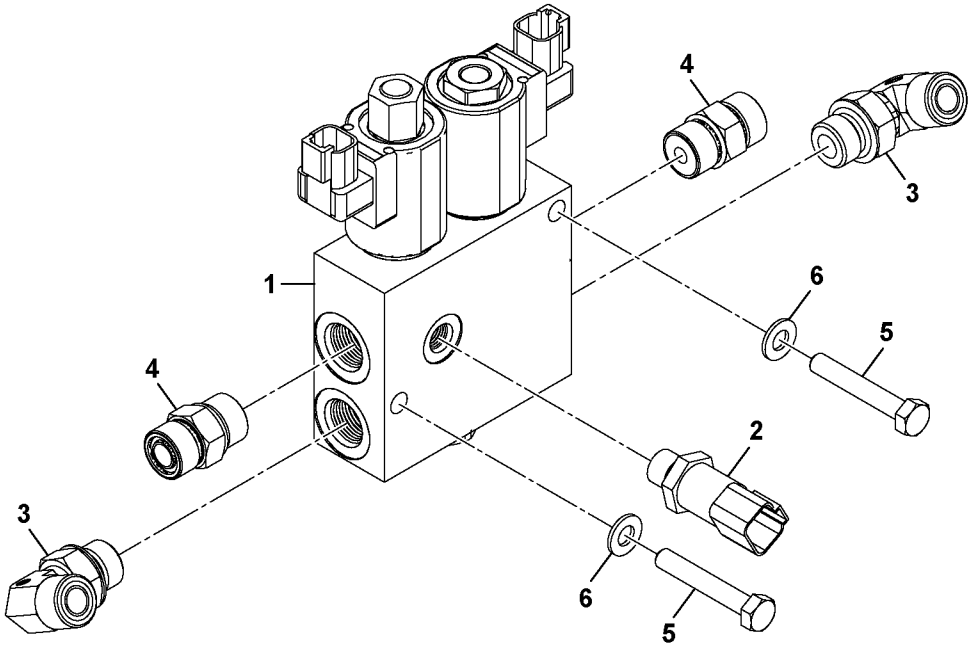
1
2
3
4
5
6
4
3
6
5
4
3
6
5

Fig.	Part No.	Quantity 1	2	3	PS	KIT	Description	Denominación	Denominação	Dénomination	Notes
1	**VOE 17230381**	1					Valve body	Bloque de válvula	Corpo da válvula	Corps de clapet	See group 912, Page 703
2		1			NS		Transducer Pres	Presión del transductor		Transducteur de pression	
3	**VOE 16212166**	2					Adapter	Adaptador	Adaptador	Adaptateur	
4	**RM 59922898**	2					Adapter	Adaptador	Adaptador	Adaptateur	
5	**VOE 17228878**	2					Bolt	Perno	Parafuso	Boulon	
6	**VOE 20460127**	2					Washer	Arandela	Arruela	Rondelle	

1		**Valve de contrôle avec pièces de montage.** **Válvula de mando con accesorios de montaje.** **Control valve with fitting parts.**	Catalogue id **20649**	Group **912**
2			Illustr. No **1064109**	Section **750**
3			Issue **PUB 20030904-B**	Page **711**
4				
5		**MC60C-MC105C, MCT70C-MCT95C**		

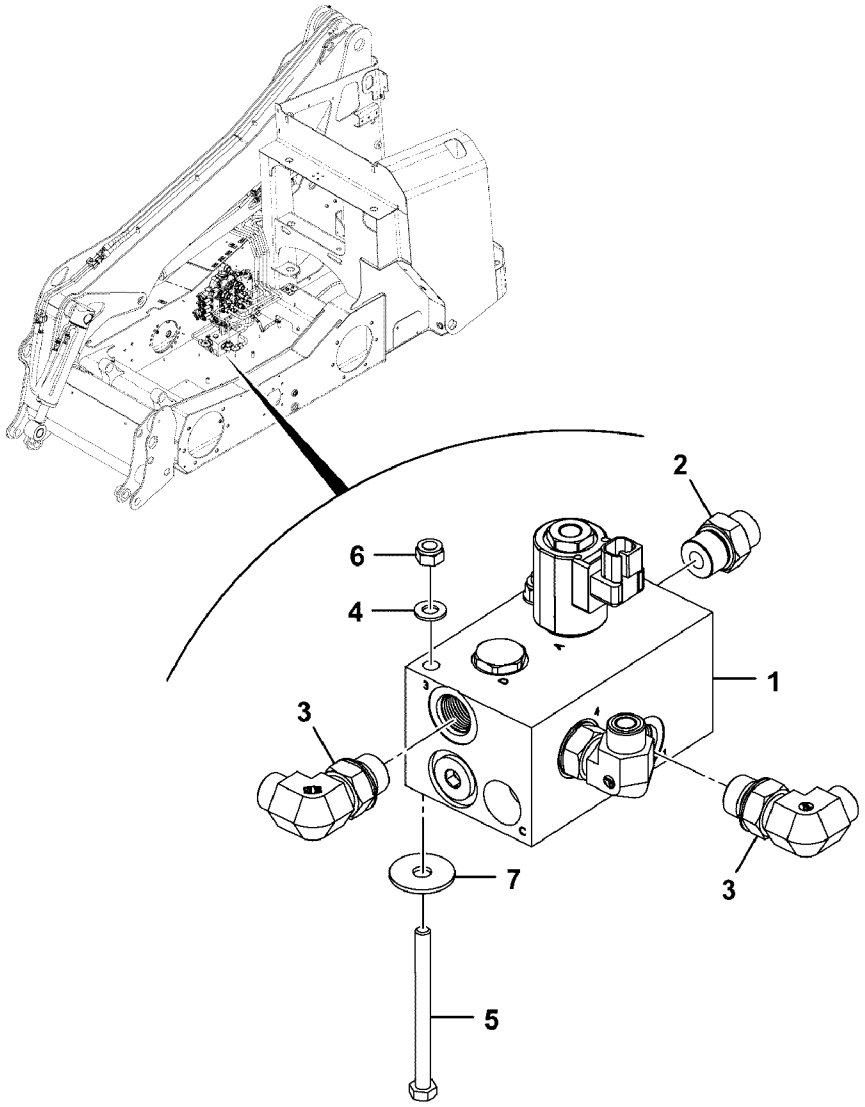

Volvo Construction Equipment
1064081

Fig.	Part No.	Quantity 1	2	3	PS	KIT	Description	Denominación	Denominação	Dénomination	Notes
1	**VOE 17230353**	1					Valve body	Bloque de válvula	Corpo da válvula	Corps de clapet	
2	**RM 59922500**	1					Adapter	Adaptador	Adaptador	Adaptateur	
3	**RM 59922906**	2					Adapter	Adaptador	Adaptador	Adaptateur	
4	**VOE 20460127**	2					Washer	Arandela	Arruela	Rondelle	
5		2			NS		Bolt	Perno	Parafuso	Boulon	
6	**VOE 16212120**	2					Lock nut	Contratuerca	Porca trava	Contre-écrou	
7	**VOE 17205558**	2					Washer	Arandela	Arruela	Rondelle	

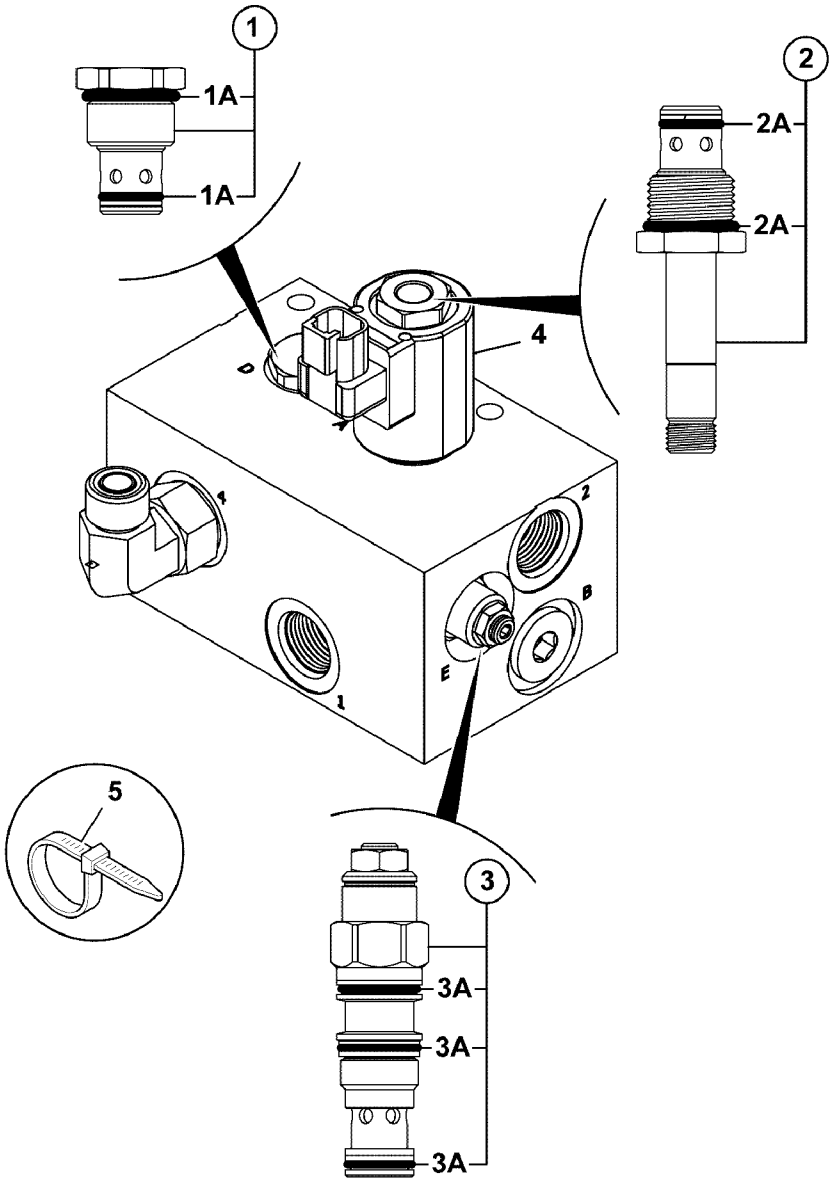
1
1A
1A
2
2A
2A
4
5
3
3A
3A
3A

Fig.	Part No.	Quantity 1	2	3	PS	KIT	Description	Denominación	Denominação	Dénomination	Notes
		1			NS		Valve Body	Cuerpo Valvula	Corpo da válvula	Corps Valve	
	VOE 17230353		1				Valve body	Bloque de válvula	Corpo da válvula	Corps de clapet	
				1			Valve Body	Cuerpo Valvula	Corpo da válvula	Corps Valve	
1	**VOE 17205549**	1	1	1			•Non-return valve	•Válvula de reténción	•Válvula de retenção	•Clapet antiretour	
1A	**VOE 17205486**	2	2	2			••O-ring	••Anillo tórico	••Anel-o	••Joint torique	
2	**VOE 17205550**	1	1	1			•Valve	•Válvula	•Válvula	•Valve	
2A	**VOE 17205486**	2	2	2			••O-ring	••Anillo tórico	••Anel-o	••Joint torique	
3	**VOE 17205551**	1	1	1			•Valve	•Válvula	•Válvula	•Valve	
3A	**VOE 17205552**	3	3	3			••O-ring	••Anillo tórico	••Anel-o	••Joint torique	
4	**VOE 17204970**	1	1	1			•Coil	•Bobina	•Bobina	•Bobine	
5		1	1	1	NS		Cable Tie	Abrazadera	Braçadeira	Serre-cable	

1	**MC60C**
2	**MC70C, MCT70C**
3	**MC85C-MC105C**
4	
5	

Valve, bouchon d'extrémité
Válvula, tampa final
Válvula, tapa final
Valve, end cap

Catalogue id **20649**	Group **912**
Illustr. No **1064254**	Section **1050**
Issue **PUB 20030904-B**	Page **715**

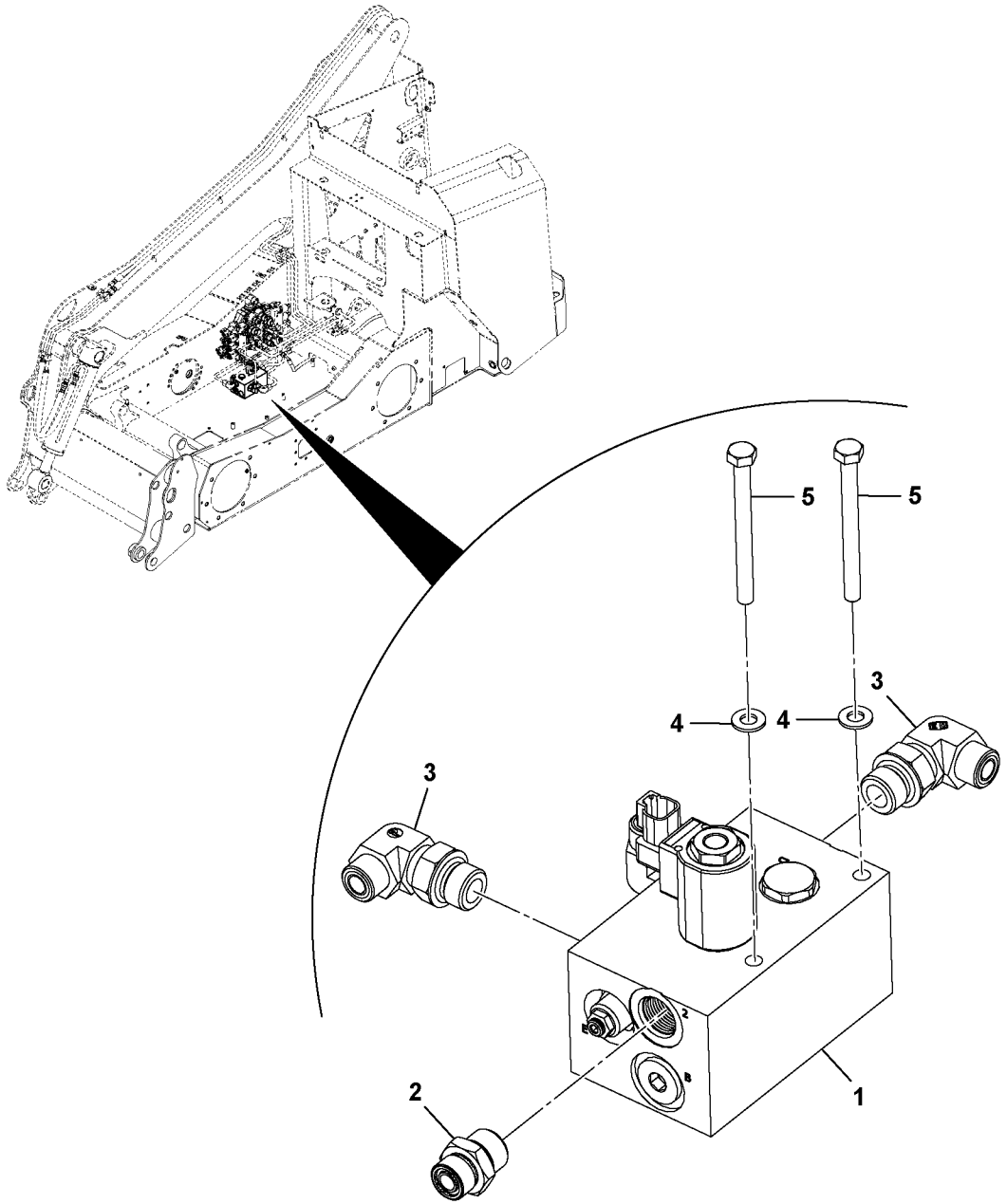

Volvo Construction Equipment
1064146

Fig.	Part No.	Quantity 1	2	3	PS	KIT	Description	Denominación	Denominação	Dénomination	Notes
1		1			NS		Valve Body	Cuerpo Valvula	Corpo da válvula	Corps Valve	
2	**RM 59922500**	1					Adapter	Adaptador	Adaptador	Adaptateur	
3	**RM 59922906**	2					Adapter	Adaptador	Adaptador	Adaptateur	
4	**VOE 20460127**	2					Washer	Arandela	Arruela	Rondelle	
5	**VOE 16212092**	2					Bolt	Perno	Parafuso	Boulon	

1		**Valve, bouchon d'extrémité** **Válvula, tampa final** **Válvula, tapa final** **Valve, end cap**	Catalogue id **20649**	Group **912**
2			Illustr. No **1064146**	Section **1100**
3			Issue **PUB 20030904-B**	Page **717**
4				
5		**RADIAL LIFT MC60C**		

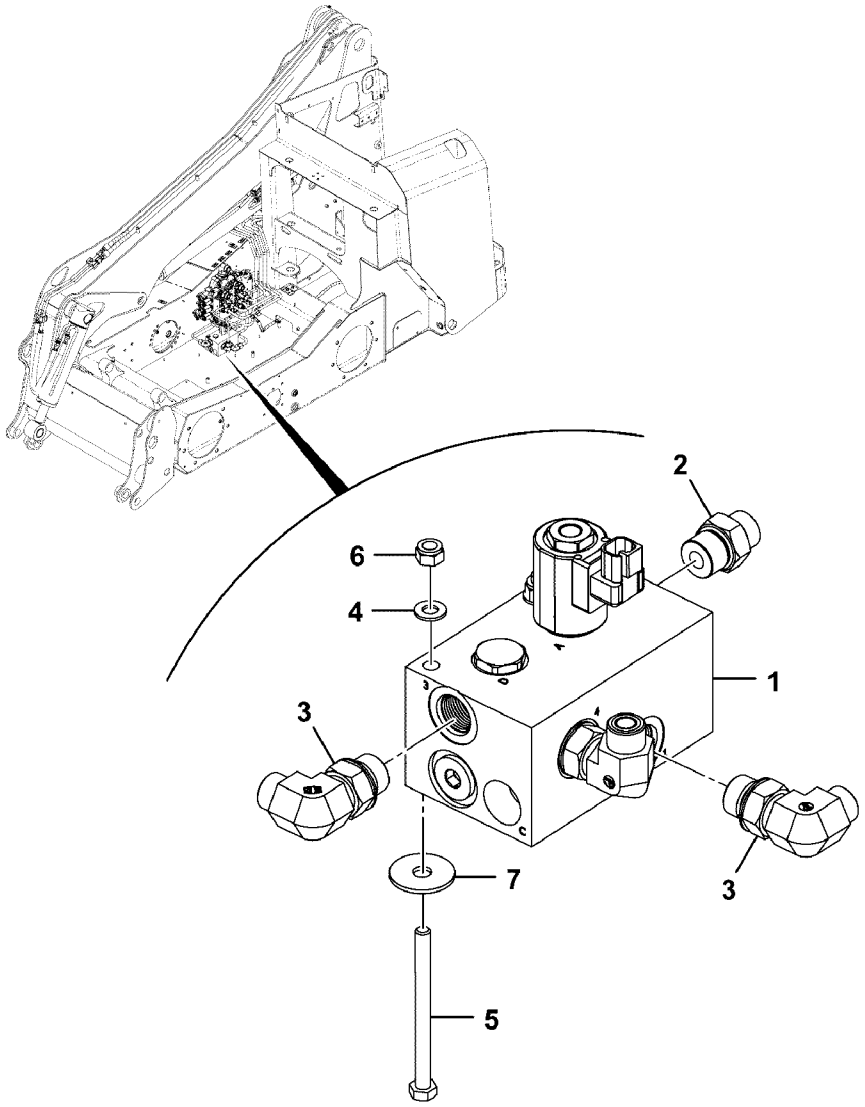

Volvo Construction Equipment
1064081

Fig.	Part No.	Quantity 1	2	3	PS	KIT	Description	Denominación	Denominação	Dénomination	Notes
1		1			NS		Valve Body	Cuerpo Valvula	Corpo da válvula	Corps Valve	See group 912, Page 715
2	**RM 59922500**	1					Adapter	Adaptador	Adaptador	Adaptateur	
3	**RM 59922906**	2					Adapter	Adaptador	Adaptador	Adaptateur	
4	**VOE 20460127**	2					Washer	Arandela	Arruela	Rondelle	
5		2			NS		Bolt	Perno	Parafuso	Boulon	
6	**VOE 16212120**	2					Lock nut	Contratuerca	Porca trava	Contre-écrou	
7	**VOE 17205558**	2					Washer	Arandela	Arruela	Rondelle	

1		**Valve, bouchon d'extrémité** **Válvula, tampa final** **Válvula, tapa final** **Valve, end cap**	Catalogue id **20649**	Group **912**
2			Illustr. No **1064081**	Section **1150**
3			Issue **PUB 20030904-B**	Page **719**
4				
5		**VERTICAL LIFT MC85C-MC105C, MCT85C, MCT95C**		

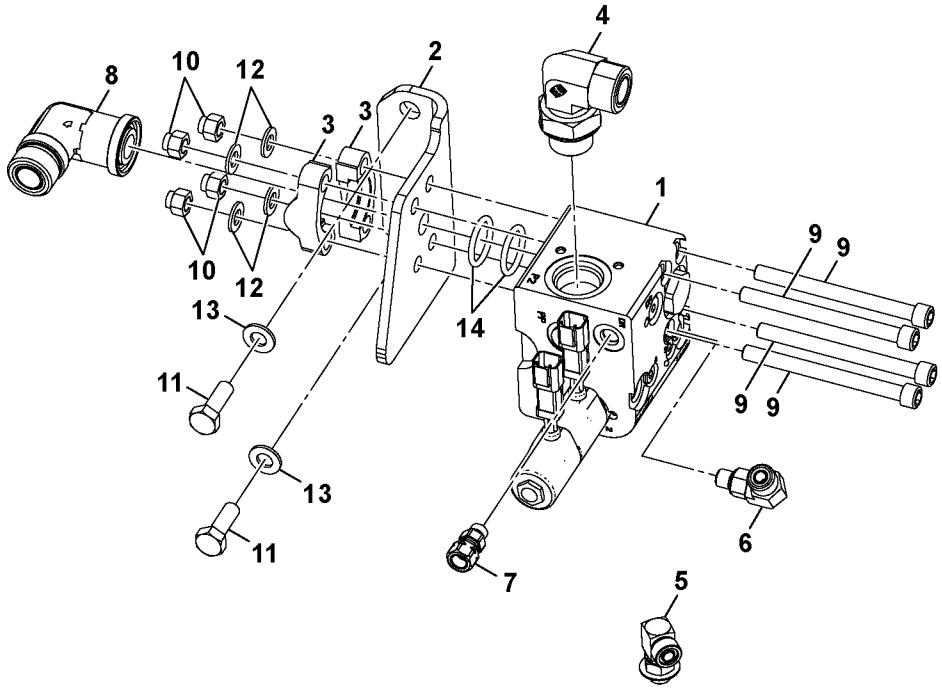
4
2
8
10
12
3
3
1
9
9
10
12
13
14
11
9
9
13
6
11
7
5

Fig.	Part No.	Quantity 1	2	3	PS	KIT	Description	Denominación	Denominação	Dénomination	Notes
1	**VOE 16213168**	1					Valve	Válvula	Válvula	Valve	See group 912, Page 723
2		1			NS		Bracket	Ménsula	Suporte	Console	
3	**RM 16212219**	2					Fitting	Racor	Encaixe	Ecrou raccord	
4	**RM 59922971**	1					Fitting	Racor	Niple	Écrou raccord	
5	**RM 59922864**	1					Adapter	Adaptador	Adaptador	Adaptateur	
6	**VOE 935068**	1					Elbow nipple	Niple angular	Cotovelo	Raccord coudé	(RM 59922849)
7	**VOE 16212261**	1					Adapter	Adaptador	Adaptador	Adaptateur	
8	**VOE 17205716**	1					Nipple	Niple	Niple	Raccord	
9	**VOE 17209617**	4					Screw	Tornillo	Parafuso	Vis	
10	**VOE 17205306**	4					Nut	Tuerca	Porca	Écrou	
11	**VOE 16212215**	2					Set screw	Tornillo tope	Parafuso batente	Vis butée	
12	**VOE 16212132**	4					Washer	Arandela	Arruela	Rondelle	
13	**VOE 16212138**	2			SS		Plain washer	Arandela plana	Arruela simples	Rondelle plane	
14	**VOE 17204893**	2					O-ring	Anillo tórico	Anel-o	Joint torique	

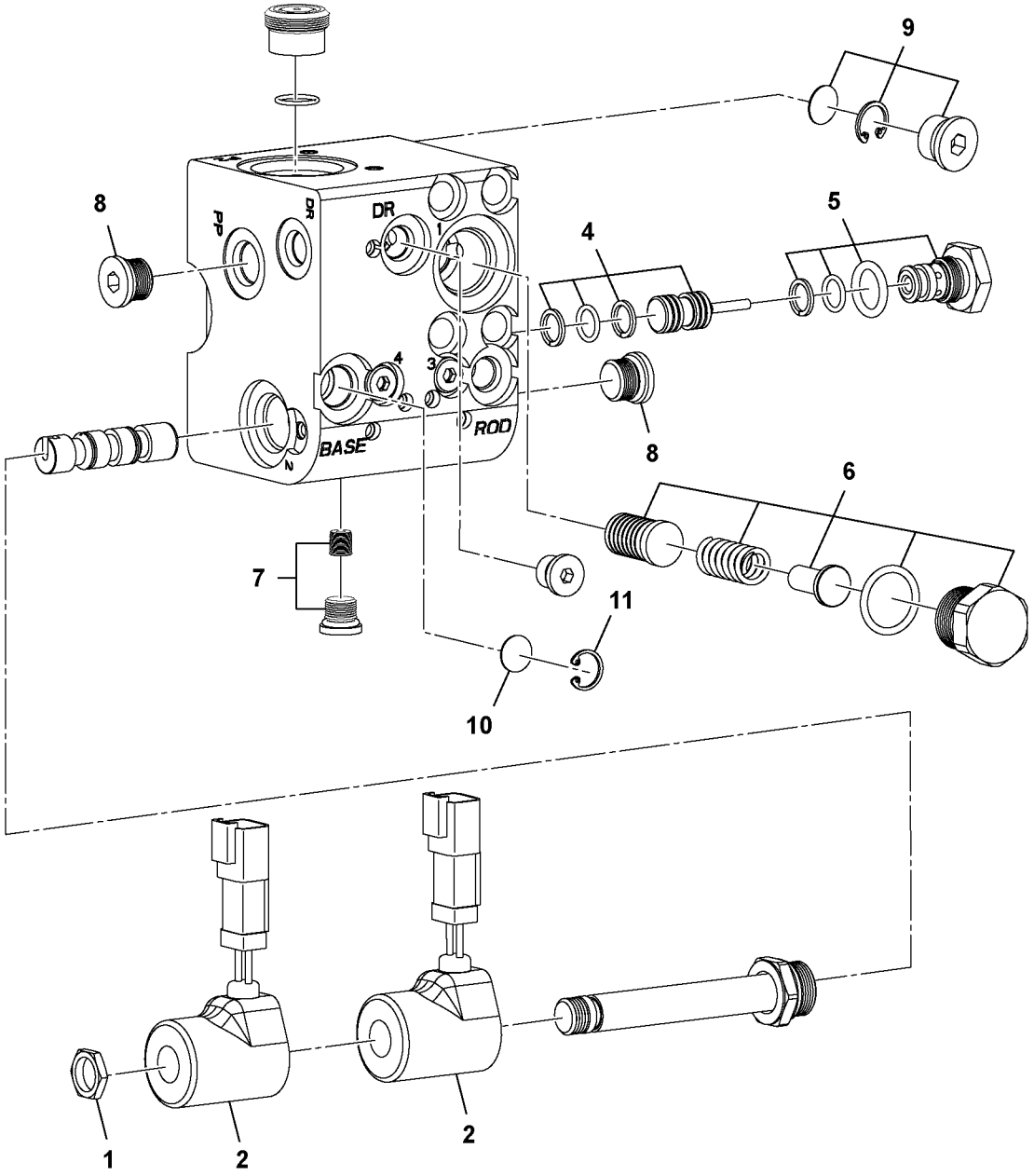

Volvo Construction Equipment
1064053

Fig.	Part No.	Quantity 1	2	3	PS	KIT	Description	Denominación	Denominação	Dénomination	Notes
	VOE 16213168	1					Valve	Válvula	Válvula	Valve	
1	**VOE 17205297**	1					•Nut	•Tuerca	•Porca	•Écrou	
2	**VOE 17204954**	2					•Coil	•Bobina	•Bobina	•Bobine	
4	**VOE 17205018**	1					•Piston	•Pistón	•Pistão	•Piston	
5	**VOE 17205548**	1					•Non-return valve	•Válvula de reténción	•Válvula de retenção	•Clapet antiretour	
6	**VOE 17205232**	1					•Plug	•Tapón	•Bujão	•Tampon	
7	**VOE 17205120**	1					•Plug kit	•Kit tapones	•Jogo bujão	•Kit tampon	
8	**VOE 17205042**	1					•Plug kit	•Kit tapones	•Jogo bujão	•Kit tampon	
9	**VOE 17205129**	1					•Plug kit	•Kit tapones	•Jogo bujão	•Kit tampon	
10	**VOE 17205183**	1					•Filter	•Filtro	•Filtro	•Filtre	
11	**VOE 17205311**	1					•Ring retainer	•Soporte cámara	•Anel retentor	•Retenue bague	

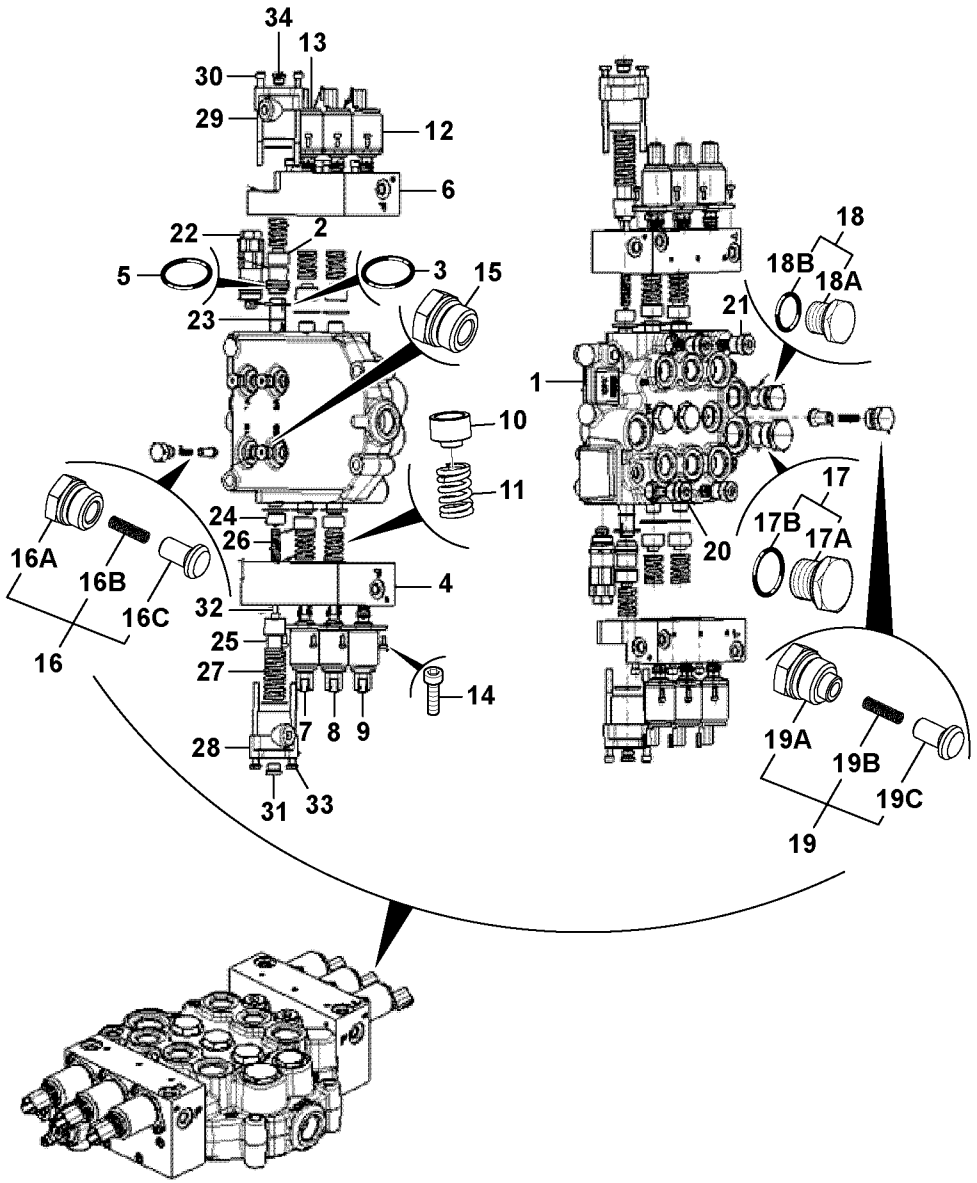
34
13
30
29
12
6
22
2
5
3
15
23
10
11
24
26
4
32
25
27
14
7
8
9
28
31
33
1
18
18B
18A
21
17
17B
17A
20
16A
16B
16C
16
19A
19B
19C
19

Fig.	Part No.	Quantity 1	2	3	PS	KIT	Description	Denominación	Denominação	Dénomination	Notes
	VOE 17230372	1					Valve body	Bloque de válvula	Corpo da válvula	Corps de clapet	
1		1			NS		•Valve Body	•Cuerpo Valvula	•Corpo da válvula	•Corps Valve	
2		1			NS		•Retainer	•Soporte	•Retentor	•Retenue	
3		8			NS		•O-ring	•Junta torica	•Anel de vedação-O	•Joint Torique	
4		1			NS		•Solenoid Valve Block	•Bloque de válvulas soleno	•Bloco de válvula solenóid	•Bloc-électrovalves	
5		1			NS		•O-ring	•Junta torica	•Anel de vedação-O	•Joint Torique	
6		1			NS		•Solenoid Valve Block	•Bloque de válvulas soleno	•Bloco de válvula solenóid	•Bloc-électrovalves	
7		1			NS		•Valve	•Valvula	•Válvula	•Soupape	
8		1			NS		•Valve	•Valvula	•Válvula	•Soupape	
9		1			NS		•Valve	•Valvula	•Válvula	•Soupape	
10		5			NS		•Spring Seat	•Asiento Resorte	•Assento da mola	•Main Ressort	
11		5			NS		•Spring	•Muelle	•Mola	•Ressort	
12	**VOE 17205170**	5					•Solenoid valve	•Electroválvula	•Válvula solenóide	•Electrovanne	
13		1			NS		•Solenoid valve	•Electrovalvula	•Válvula solenóide	•Vanne electrom	
14	**VOE 17210399**	12					•Screw	•Tornillo	•Parafuso	•Vis	
15	**VOE 17209819**	3					•Plug	•Tapón	•Tampão	•Bouchon	
16	**VOE 16213182**	1					•Non-return valve	•Válvula de retención	•Válvula de retenção	•Clapet antiretour	
16A	**VOE 17209831**	1					••Plug	••Tapón	••Bujão	••Tampon	
16B	**VOE 17204924**	1					••Spring	••Resorte	••Mola	••Ressort	
16C		1			NS		••Poppet	••Vástago	••Cabeçote móvel	••Clapet champignon	
17	**VOE 17209814**	1					•Plug	•Tapón	•Tampão	•Bouchon	
17A	**VOE 17209803**	1					••Plug	••Tapón	••Tampão	••Bouchon	
17B	**VOE 17205399**	1					••O-ring	••Anillo tórico	••Anel-o	••Joint torique	
18	**VOE 17205002**	1					•Plug	•Tapón	•Bujão	•Tampon	
18A	**VOE 17209828**	1					••Plug	••Tapón	••Tampão	••Bouchon	
18B		1			NS		••O-ring	••Junta torica	••Anel de vedação-O	••Joint Torique	
19	**VOE 16213184**	3					•Non-return valve	•Válvula de retención	•Válvula de retenção	•Clapet antiretour	
19A	**VOE 17209824**	1					••Plug	••Tapón	••Tampão	••Bouchon	
19B	**VOE 17204930**	1					••Spring	••Resorte	••Mola	••Ressort	
19C	**VOE 17209548**	1					••Plug	••Tapón	••Tampão	••Bouchon	

1		**Distributeur de commande principal** **Válvula de comando principal** **Válvula de control principal** **Main control valve**	Catalogue id **20649**	Group **912**
2			Illustr. No **1064086**	Section **1500**
3				
4			Issue **PUB 20030904-B**	Page **725**
5		**MC60C-MC105C, MCT70C-MCT95C**		

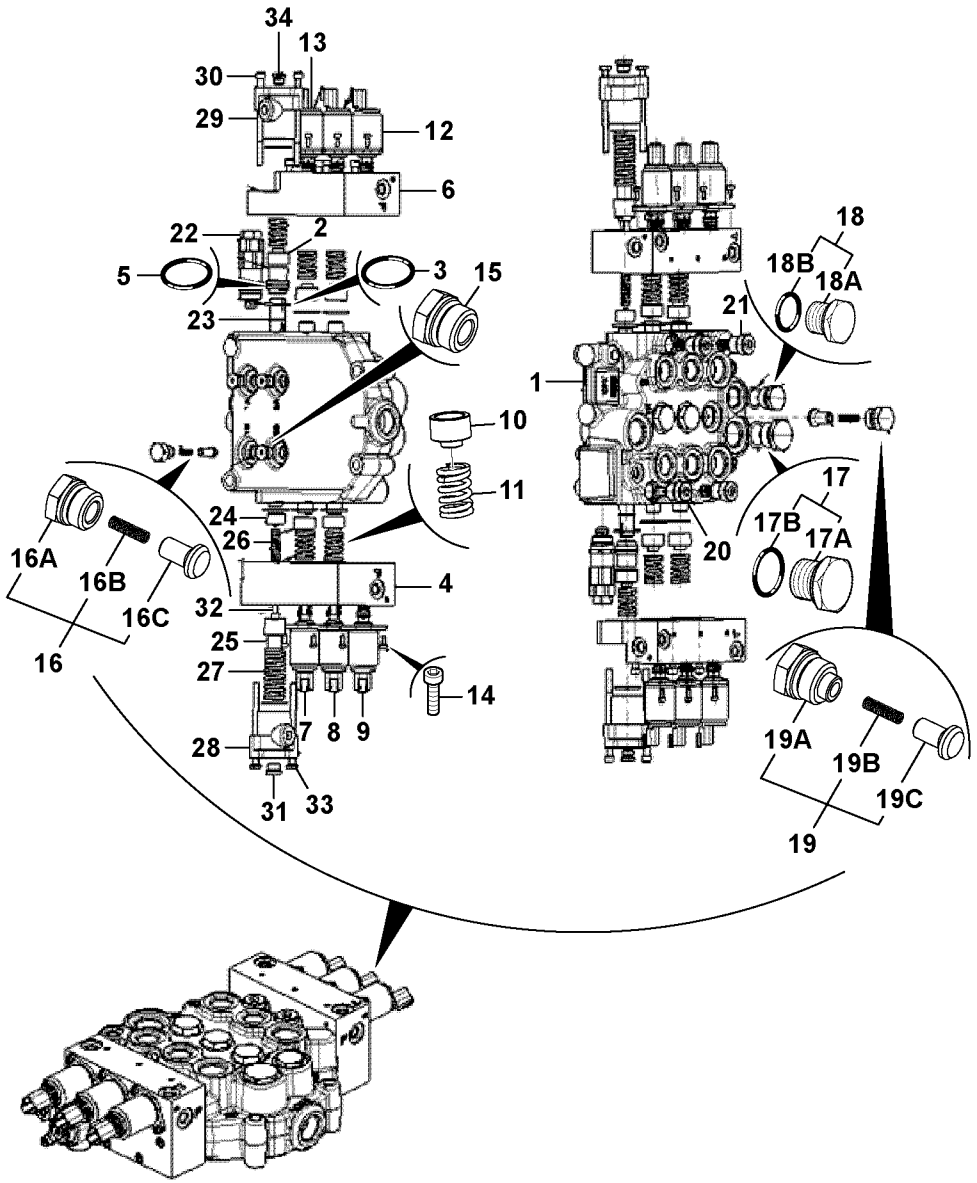
34
13
30
29
12
6
22
2
5
3
15
23
10
11
24
26
4
32
25
27
14
7
8
9
28
31
33
1
18
18B
18A
21
17
17B
17A
20
16A
16B
16C
16
19A
19B
19C
19

Fig.	Part No.	Quantity 1	2	3	PS	KIT	Description	Denominación	Denominação	Dénomination	Notes
20	**VOE 17209974**	1					•Kit	•Juego	•Jogo	•Lot	
21	**VOE 16213166**	3					•Relief valve	•Válvula de descarga	•Válvula de descarga	•Valve décharge	
22		1			NS		•Relief valve	•Limitador presion	•Válvula de alívio	•Limiteur - pression	
23		1			NS		•Back-up ring	•Anillo Apoyo	•Arruela de apoio	•Rondelle anti-extrusion	
24		1			NS		•Spring Seat	•Asiento Resorte	•Assento da mola	•Main Ressort	
25		1			NS		•Spring Seat	•Asiento Resorte	•Assento da mola	•Main Ressort	
26		1			NS		•Spring	•Muelle	•Mola	•Ressort	
27		1			NS		•Spring	•Muelle	•Mola	•Ressort	
28		1			NS		•Cap	•Caperuza	•Tampa	•Chapeau	
29	**VOE 17210185**	1					•Cap	•Capuchón	•Tampa	•Capot	
30		2			NS		•Capscrew	•	•Parafuso de cabeça	•	
31		1			NS		•Plug	•Tapon	•Bujão	•Bouchon	
32		10			NS		•Capscrew	•	•Parafuso de cabeça	•	
33		2			NS		•Capscrew	•	•Parafuso de cabeça	•	
34		1			NS		•Plug	•Tapon	•Bujão	•Bouchon	

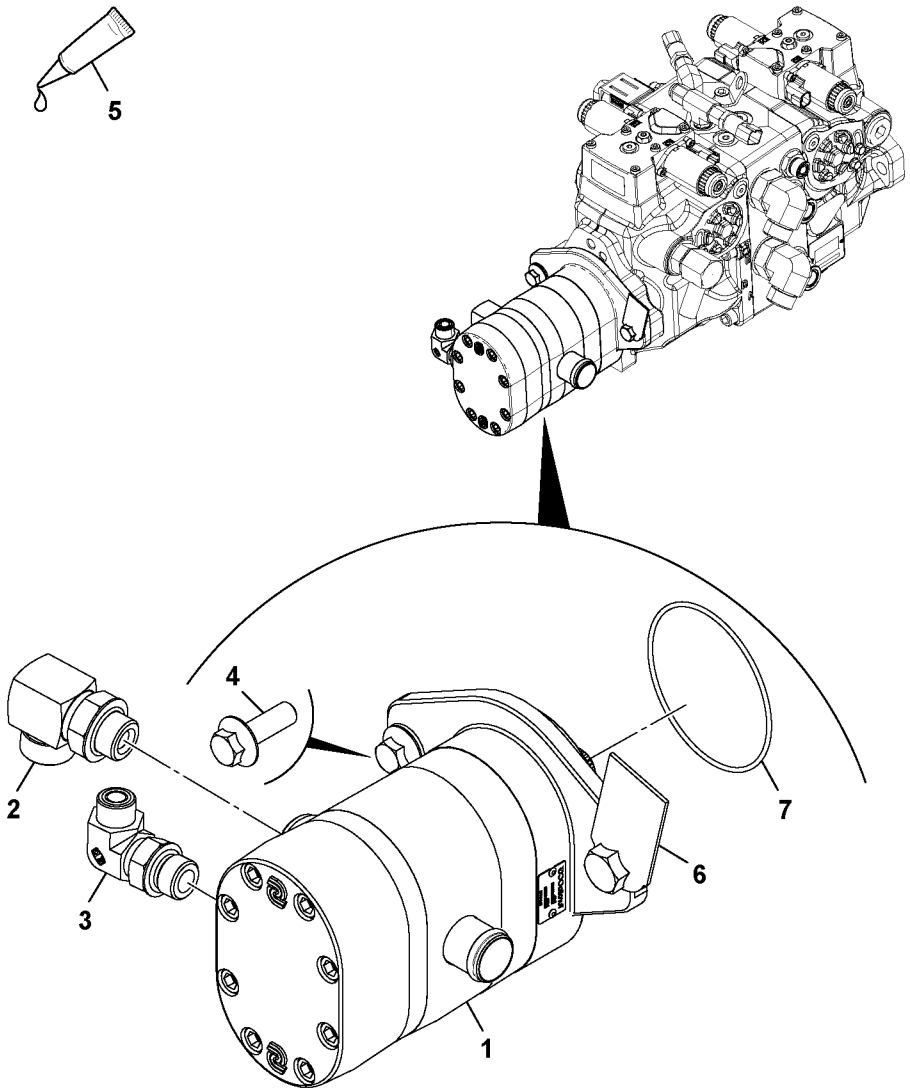

Volvo Construction Equipment
1064222

Fig.	Part No.	Quantity 1	2	3	PS	KIT	Description	Denominación	Denominação	Dénomination	Notes
1	**VOE 17230021**	1					Pump	Bomba	Bomba	Pompe	
2	**VOE 935077**	1					Elbow nipple	Niple angular	Cotovelo	Raccord coudé	
3	**RM 59922906**	1					Adapter	Adaptador	Adaptador	Adaptateur	
4	**VOE 17210316**	2					Bolt	Perno	Parafuso	Boulon	
5		REQ			NS		Adhesive	Adhesivo	Adesivo	Adhesif	
6	**VOE 17205417**	1					Clip	Clip	Clipe	Clip	
7	**VOE 17229666**	1					O-ring	Anillo tórico	Anel-o	Joint torique	

1		**Pompe hydraulique avec pièces de montage** **Bomba hidráulica com peças acessórias** **Bomba hidráulica con accesorios de montaje** **Hydraulic pump with fitting parts**	Catalogue id **20649**	Group **913**
2			Illustr. No **1064222**	Section **100**
3			Issue **PUB 20030904-B**	Page **729**
4				
5		**MC60C-MC105C, MCT70C**		

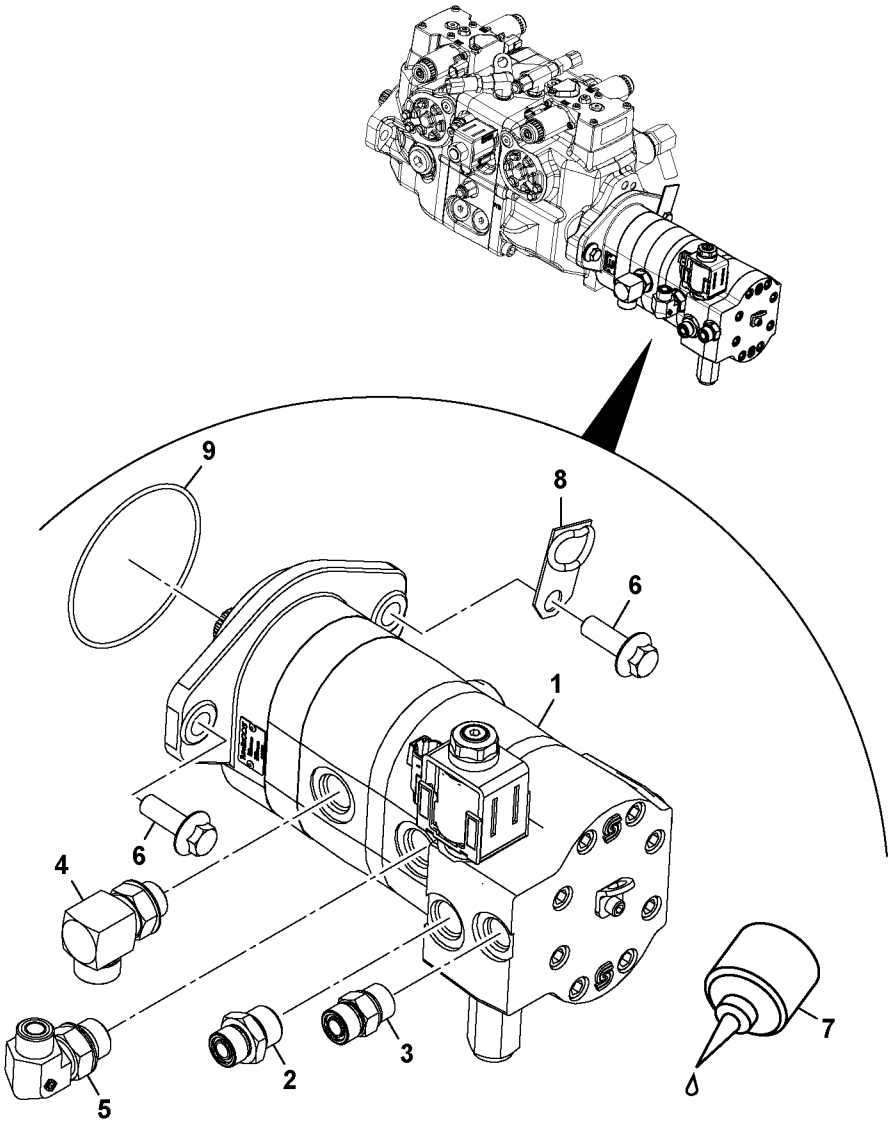
9
8
6
1
6
4
2
3
5
7

Fig.	Part No.	Quantity 1	2	3	PS	KIT	Description	Denominación	Denominação	Dénomination	Notes
1	**VOE 17230022**	1					Pump	Bomba	Bomba	Pompe	
2	**RM 59922500**	1					Adapter	Adaptador	Adaptador	Adaptateur	
3	**VOE 16212166**	1					Adapter	Adaptador	Adaptador	Adaptateur	
4	**VOE 935077**	1					Elbow nipple	Niple angular	Cotovelo	Raccord coudé	
5	**RM 59922906**	1					Adapter	Adaptador	Adaptador	Adaptateur	
6	**VOE 17210316**	2					Bolt	Perno	Parafuso	Boulon	
7		REQ			NS		Adhesive	Adhesivo	Adesivo	Adhesif	
8	**VOE 17205417**	1					Clip	Clip	Clipe	Clip	
9	**VOE 17229666**	1					O-ring	Anillo tórico	Anel-o	Joint torique	

1		**Pompe hydraulique avec pièces de montage** **Bomba hidráulica com peças acessórias** **Bomba hidráulica con accesorios de montaje** **Hydraulic pump with fitting parts**	Catalogue id **20649**	Group **913**
2			Illustr. No **1064223**	Section **150**
3			Issue **PUB 20030904-B**	Page **731**
4				
5		**MC60C-MC105C, MCT70C-MCT95C**		

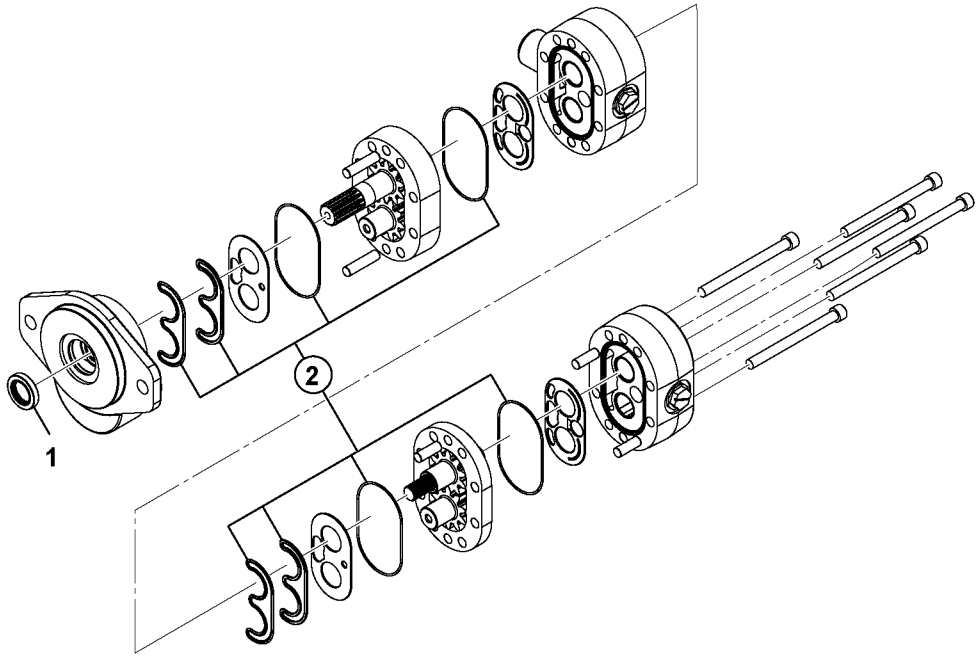
1
2

Fig.	Part No.	Quantity 1	2	3	PS	KIT	Description	Denominación	Denominação	Dénomination	Notes
	VOE 17230021	1					Pump	Bomba	Bomba	Pompe	
1		1					•Sealing Kit	•Juego Retenes	•Kit de vedação	•Jeu Joints	
2		1					•Sealing Kit	•Juego Retenes	•Kit de vedação	•Jeu Joints	

1		**Pompe hydraulique** **Bomba hidráulica** **Bomba hidráulica** **Hydraulic pump**	Catalogue id **20649**	Group **913**
2			Illustr. No **1064075**	Section **500**
3			Issue **PUB 20030904-B**	Page **733**
4				
5		**25.4/12.6CC MC60C-MC105C, MCT70C-MCT95C**		

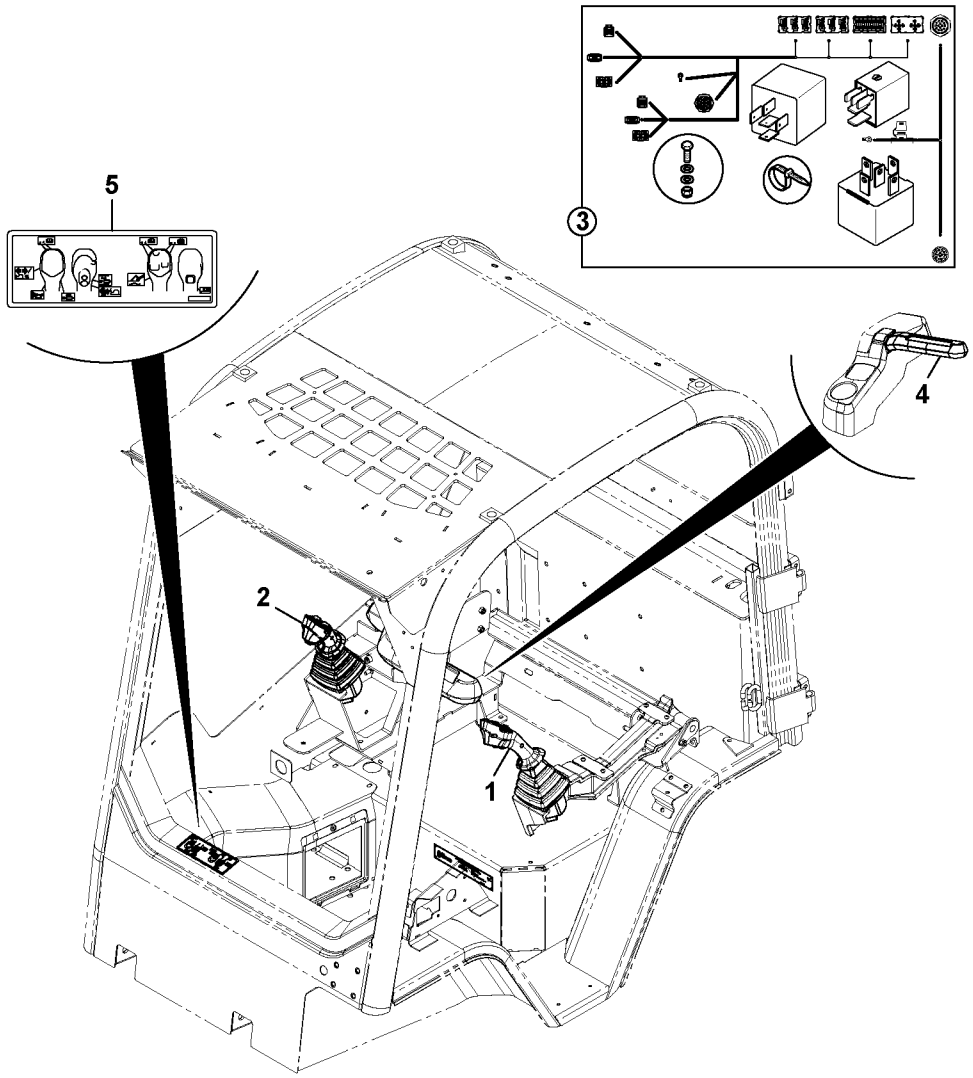
5
3
4
2
1

Fig.	Part No.	Quantity 1	2	3	PS	KIT	Description	Denominación	Denominação	Dénomination	Notes
1	**VOE 17229297**	1					Control	Reglaje	Regulagem	Commande	LH
2	**VOE 17229305**	1					Control	Reglaje de mando	Comando	Commande	RH
3		1					Cable harness	Manojo cables	Chicote	Faisceau cables	See group 371, Page 303
4	**VOE 17210095**	1					Label	Etiqueta	Etiqueta	Étiquette	
5		1			NS		Decal	Calcomanía	Decalque	Autocollant	

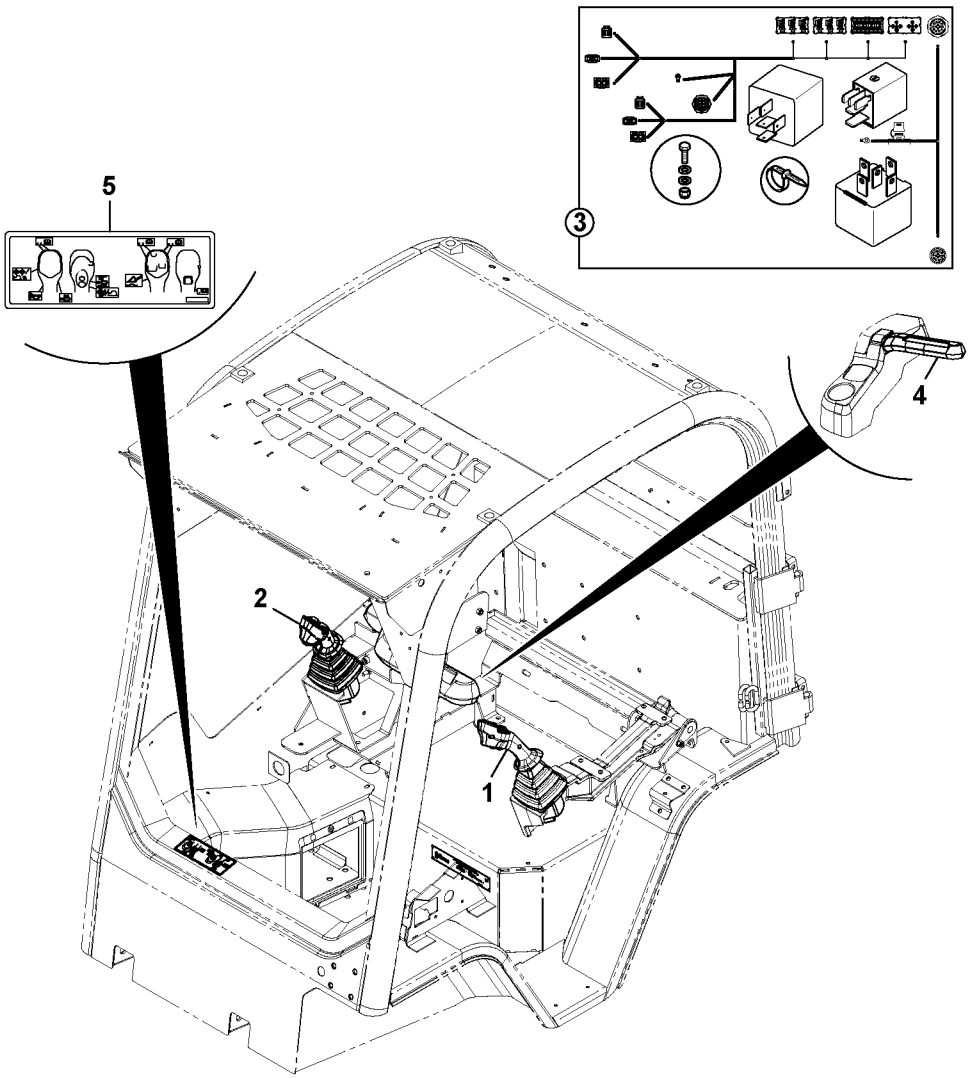
5
3
4
2
1

Fig.	Part No.	Quantity 1	2	3	P S	K I T	Description	Denominación	Denominação	Dénomination	Notes
1	**VOE 17229279**	1					Control	Reglaje de mando	Comando	Commande	LH
2	**VOE 17229290**	1					Control	Reglaje	Regulagem	Commande	RH
3	**VOE 17210095**	1					Label	Etiqueta	Etiqueta	Étiquette	
4		1			NS		Decal	Decalcomania	Adesivo	Decalcomanie	

1		**Commandes de l'équipement chargeur** **Comandos da carregadeira** **Mandos de la cargadora** **Loader controls**	Catalogue id **20649**	Group **914**
2			Illustr. No **1064256**	Section **150**
3			Issue **PUB 20030904-B**	Page **737**
4				
5		**ISO 3 FUNC.MC70C-MC105C, MCT85C-MCT95C**		

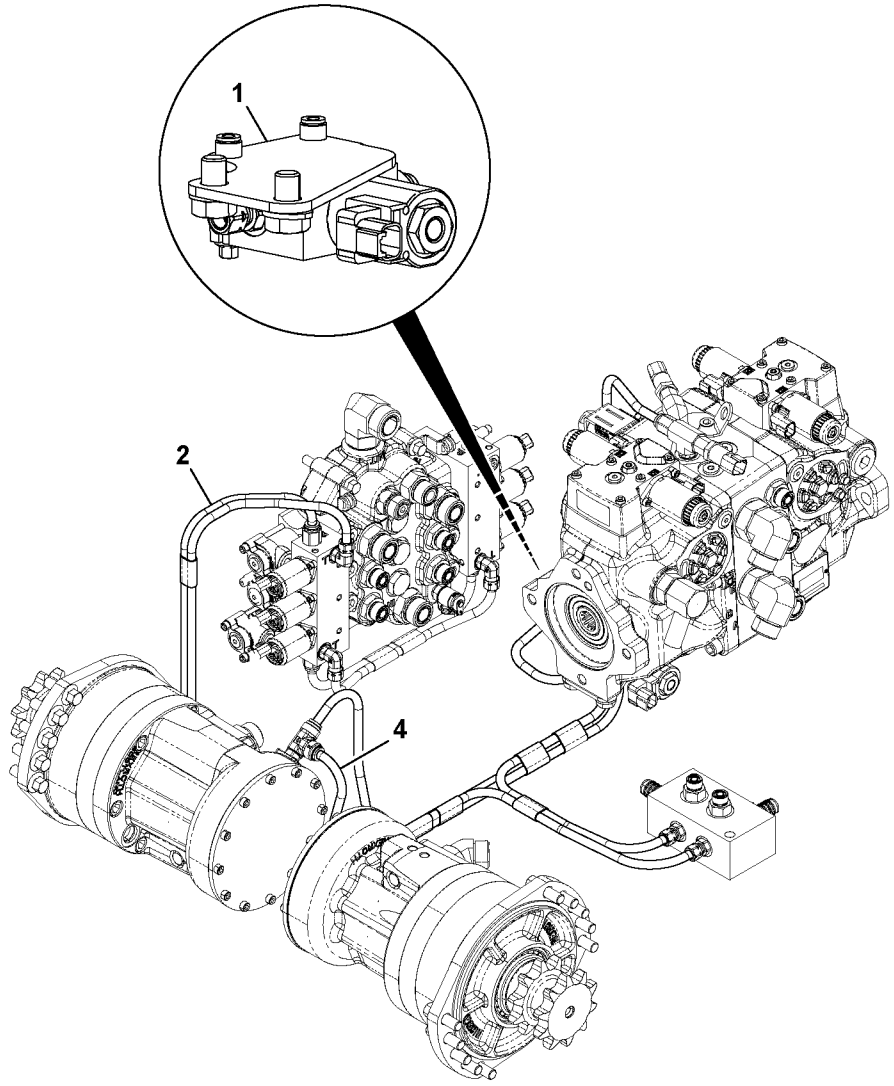

Volvo Construction Equipment
1064087

Fig.	Part No.	Quantity 1	2	3	PS	KIT	Description	Denominación	Denominação	Dénomination	Notes
1	**VOE 17230377**	1	1				Valve control	Reglaje válvula	Regulagem da válvula	Réglage soupape	
2	**VOE 17230203**	1					Tube	Tubo	Tubo	Tube	See group 914, Page 741
2	**VOE 17230193**		1				Tube	Tubo	Tubo	Tube	See group 914, Page 741
4	**VOE 17230197**	1					Tube	Tubo	Tubo	Tube	
4	**VOE 17230104**		1				Pipe	Tubo	Tubo	Tuyau	

1	**SINGLE SPEED**
2	**TWIN SPEED**
3	
4	
5	

Circuit hydraulique, commande pilote et vidange
Circuito hidráulico, piloto e drenagem
Circuito hidráulico, piloto y vaciado
Hydraulic circuit, pilot and drain

MC60C-MC105C

Catalogue id **20649**	Group **914**
Illustr. No **1064087**	Section **500**
Issue **PUB 20030904-B**	Page **739**

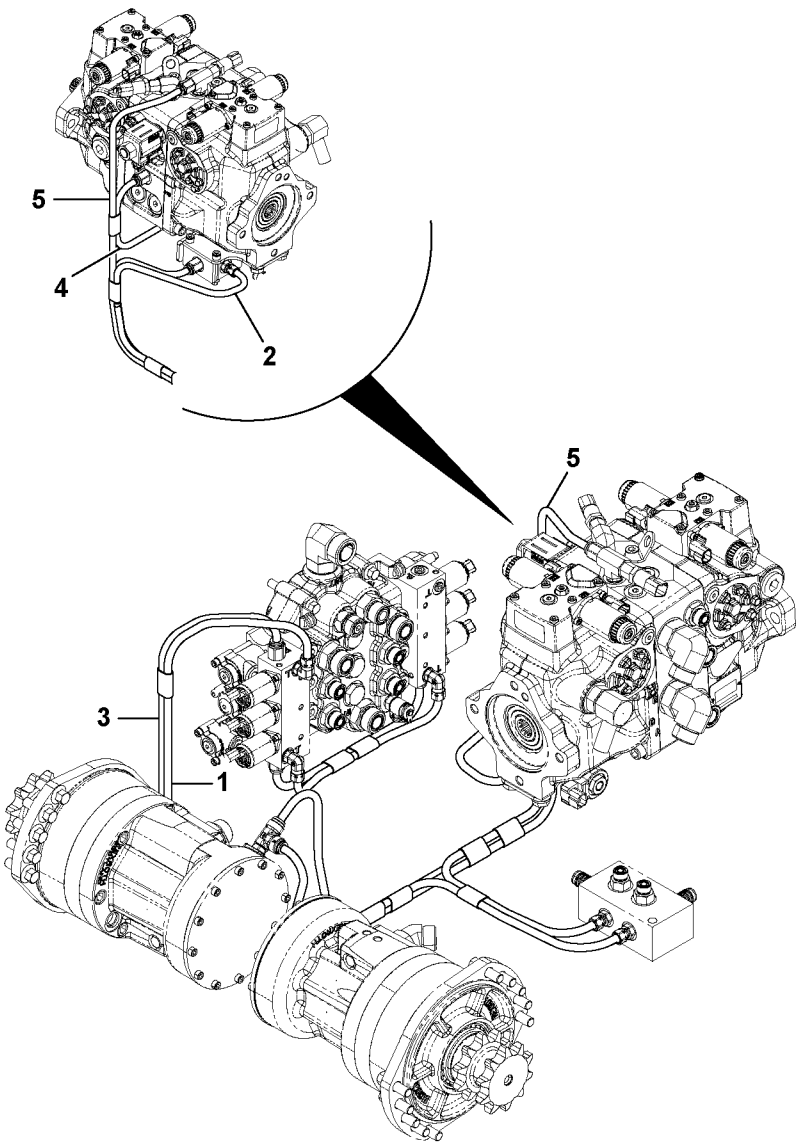
5
4
2
5
3
1

Fig.	Part No.	Quantity 1	2	3	PS	KIT	Description	Denominación	Denominação	Dénomination	Notes
1	**VOE 17230102**	1	1				Pipe	Tubo	Tubo	Tuyau	
2	**VOE 17230182**	1	1				Tube	Tubo	Tubo	Tube	
3	**VOE 17230101**	1	1				Pipe	Tubo	Tubo	Tuyau	
4	**VOE 17230183**	1	1				Tube	Tubo	Tubo	Tube	
5	**VOE 17230208**	1					Tube	Tubo	Tubo	Tube	
5	**VOE 17230097**		1				Pipe	Tubo	Tubo	Tuyau	

1	**SINGLE SPEED**
2	**TWIN SPEED**
3	
4	
5	

Circuit hydraulique, commande pilote et vidange
Circuito hidráulico, piloto e drenagem
Circuito hidráulico, piloto y vaciado
Hydraulic circuit, pilot and drain

MC60C-MC105C

Catalogue id **20649**	Group **914**
Illustr. No **1064093**	Section **600**
Issue **PUB 20030904-B**	Page **741**

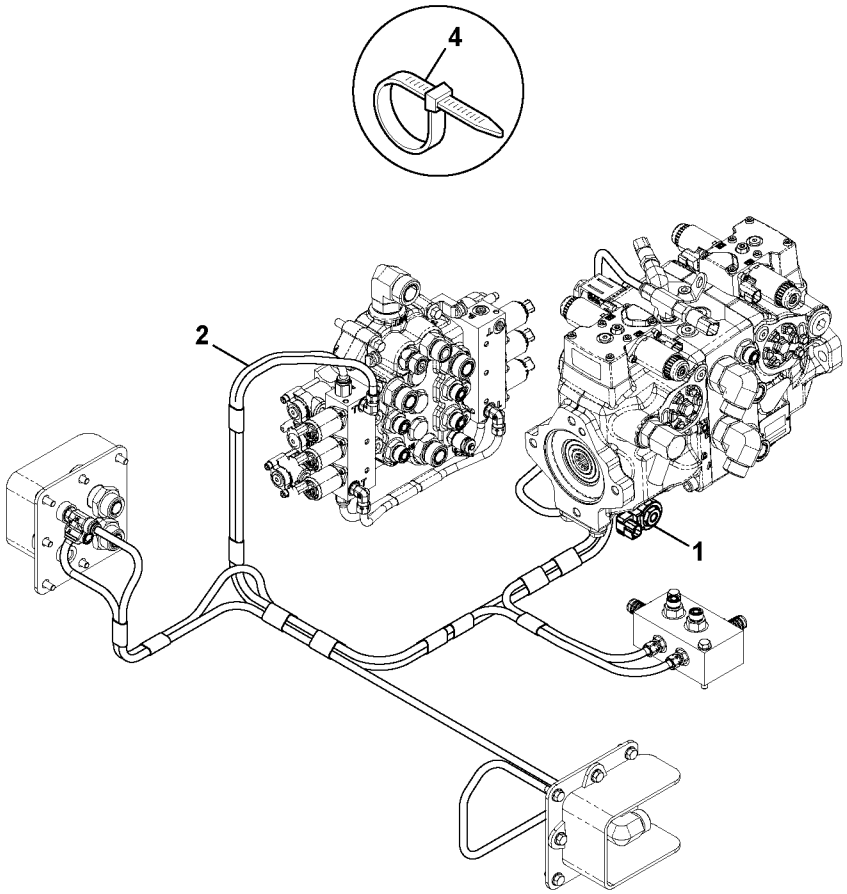
4
2
1

Fig.	Part No.	Quantity 1	2	3	PS	KIT	Description	Denominación	Denominação	Dénomination	Notes
1	**VOE 17230377**	1					Valve control	Reglaje válvula	Regulagem da válvula	Réglage soupape	
2	**VOE 17230218**	1					Tube	Tubo	Tubo	Tube	See group 914, Page 745
4	**VOE 17205290**	8					Tie straps	Cinta de atar		Ruban attache	

1		**Circuit hydraulique, commande pilote et vidange** **Circuito hidráulico, piloto e drenagem** **Circuito hidráulico, piloto y vaciado** **Hydraulic circuit, pilot and drain**	Catalogue id **20649**	Group **914**
2				
3			Illustr. No **1064098**	Section **700**
4				
5		**MCT70C-MCT95C**	Issue **PUB 20030904-B**	Page **743**

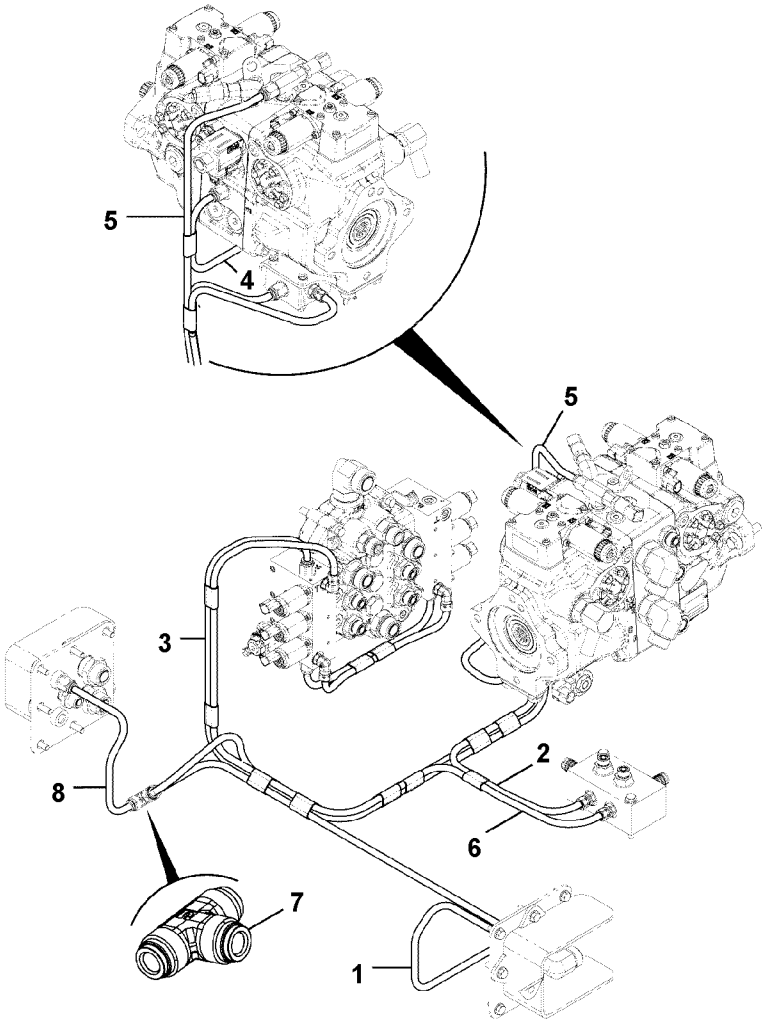
5
4
5
3
2
8
6
7
1

Fig.	Part No.	Quantity 1	2	3	PS	KIT	Description	Denominación	Denominação	Dénomination	Notes
1		1			NS		Tube	Tubo	Tubo	Tube	
2	**VOE 17230182**	1					Tube	Tubo	Tubo	Tube	
3	**VOE 17230101**	1					Pipe	Tubo	Tubo	Tuyau	
4	**VOE 17230183**	1					Tube	Tubo	Tubo	Tube	
5		1			NS		Tube	Tubo	Tubo	Tube	
6	**VOE 17230102**	1					Pipe	Tubo	Tubo	Tuyau	
7		1			NS		Adapter	Adaptador	Adaptador	Raccord Reduct	
8		1			NS		Pipe	Canalizacion	Tubo	Canalisation	

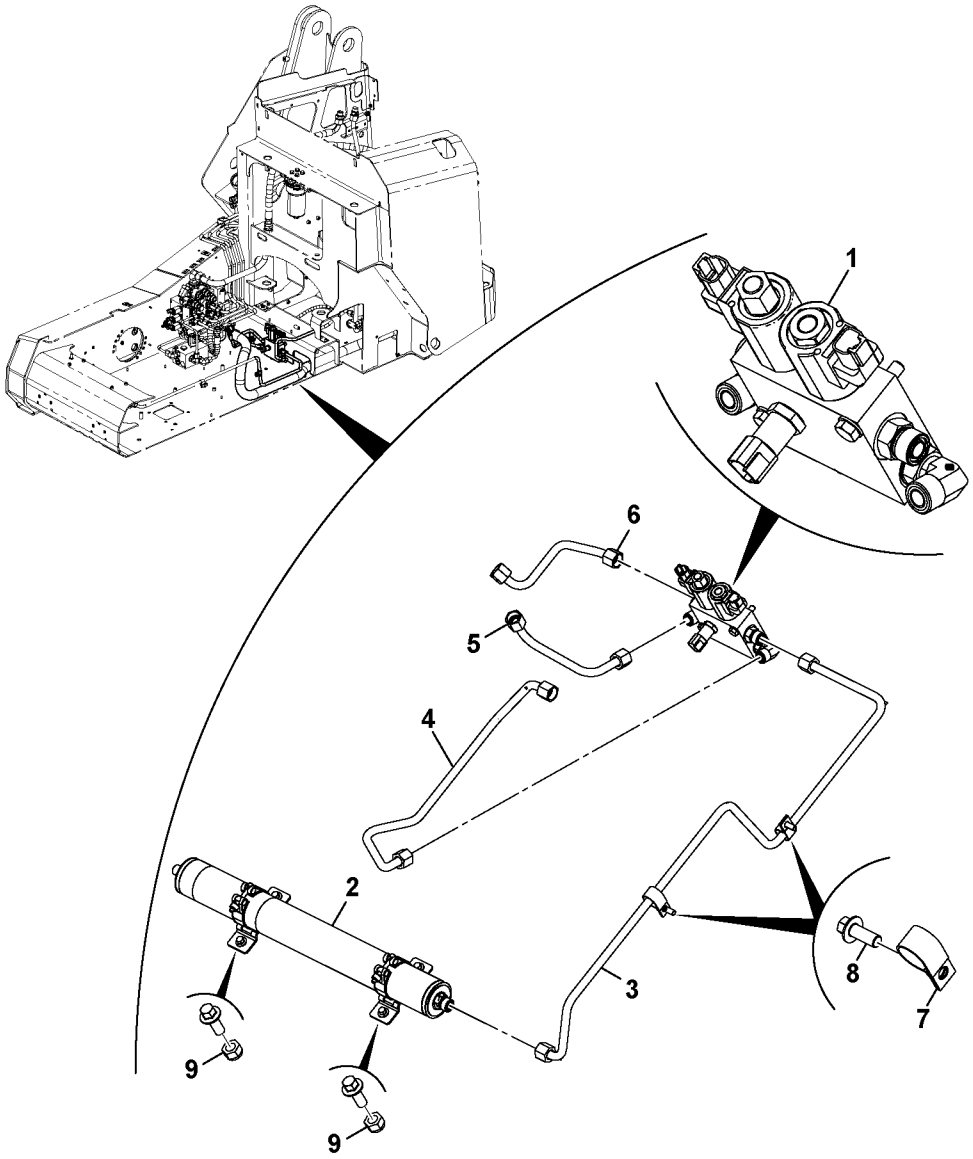

Volvo Construction Equipment
1064240

Fig.	Part No.	Quantity 1	2	3	PS	KIT	Description	Denominación	Denominação	Dénomination	Notes
1		2					Valve Body	Cuerpo Valvula	Corpo da válvula	Corps Valve	See group 914, Page 745
2		2					Accumulator	Acumulador	Acumulador	Accumulateur	See group 914, Page 749
3	**VOE 17230056**	1					Pipe	Tubo	Tubo	Tuyau	
3	**VOE 17230271**	1					Tube	Tubo	Tubo	Tube	ACC SP
4	**VOE 17230271**	2					Tube	Tubo	Tubo	Tube	
5	**VOE 17230267**	2					Tube	Tubo	Tubo	Tube	
6	**VOE 17230263**	2					Tube	Tubo	Tubo	Tube	
7	**VOE 17229680**	2					Clip	Clip	Clipe	Bride	
7	**VOE 17229676**	2					Clip	Clip	Clipe	Bride	
8	**VOE 16212101**	4					Bolt	Perno	Parafuso	Boulon	
9	**VOE 16212120**	4					Lock nut	Contratuerca	Porca trava	Contre-écrou	

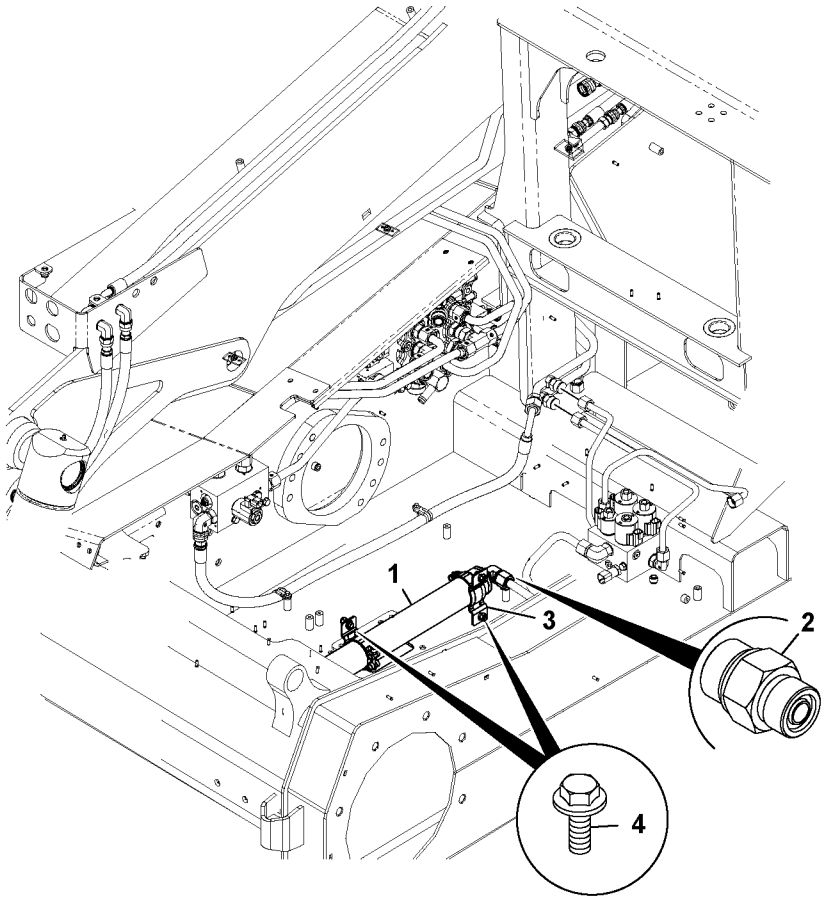
1
2
3
4

Fig.	Part No.	Quantity 1	2	3	PS	KIT	Description	Denominación	Denominação	Dénomination	Notes
1	**VOE 16213133**	1					Accumulator	Acumulador	Acumulador	Accumulateur	
2	**VOE 16212166**	1					Adapter	Adaptador	Adaptador	Adaptateur	
3	**VOE 16212253**	2					Clamp	Abrazadera	Braçadeira	Collier serrage	
4	**VOE 16212101**	4					Bolt	Perno	Parafuso	Boulon	

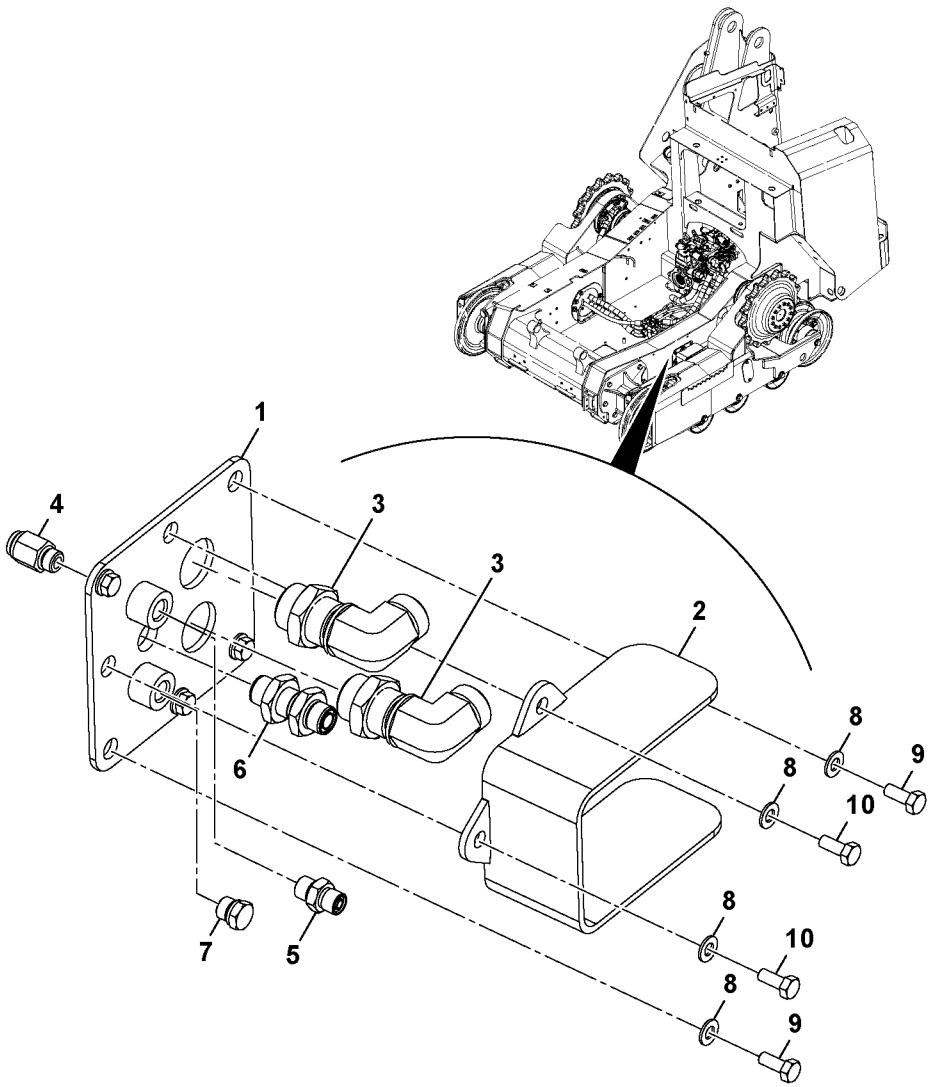
1
4
3
3
2
8
9
8
10
6
8
10
7
5
8
9

Fig.	Part No.	Quantity 1	2	3	PS	KIT	Description	Denominación	Denominação	Dénomination	Notes
1		1			NS		Case	Funda	Caixa	Caisson	
2	**VOE 17229822**	1					Cover plate	Disco de tapa	Disco da tampa	Disque recouvrement	
3	**RM 59962332**	2					Adapter	Adaptador	Adaptador	Adaptateur	
4	**VOE 16212236**	1					Adapter	Adaptador	Adaptador	Adaptateur	
5	**VOE 17209925**	1					Adapter	Adaptador	Adaptador	Adaptateur	
6	**RM 59947044**	1					Fitting	Racor	Niple	Écrou raccord	
7	**VOE 16213987**	1					Plug	Tapón	Bujão	Tampon	
8	**VOE 20460127**	7					Washer	Arandela	Arruela	Rondelle	
9	**VOE 17230227**	4					Set screw	Tornillo tope	Parafuso batente	Vis butée	
10	**VOE 17205260**	3					Hexagon screw	Tornillo hexagonal	Parafuso sextavado	Vis à tête hexagonale	

1		**Tôle de protection** **Placa de anteparo** **Placa de la mampara** **Bulkhead plate**	Catalogue id **20649**	Group **914**
2			Illustr. No **1064096**	Section **1000**
3			Issue **PUB 20030904-B**	Page **751**
4				
5		**MCT70C-MCT95C**		

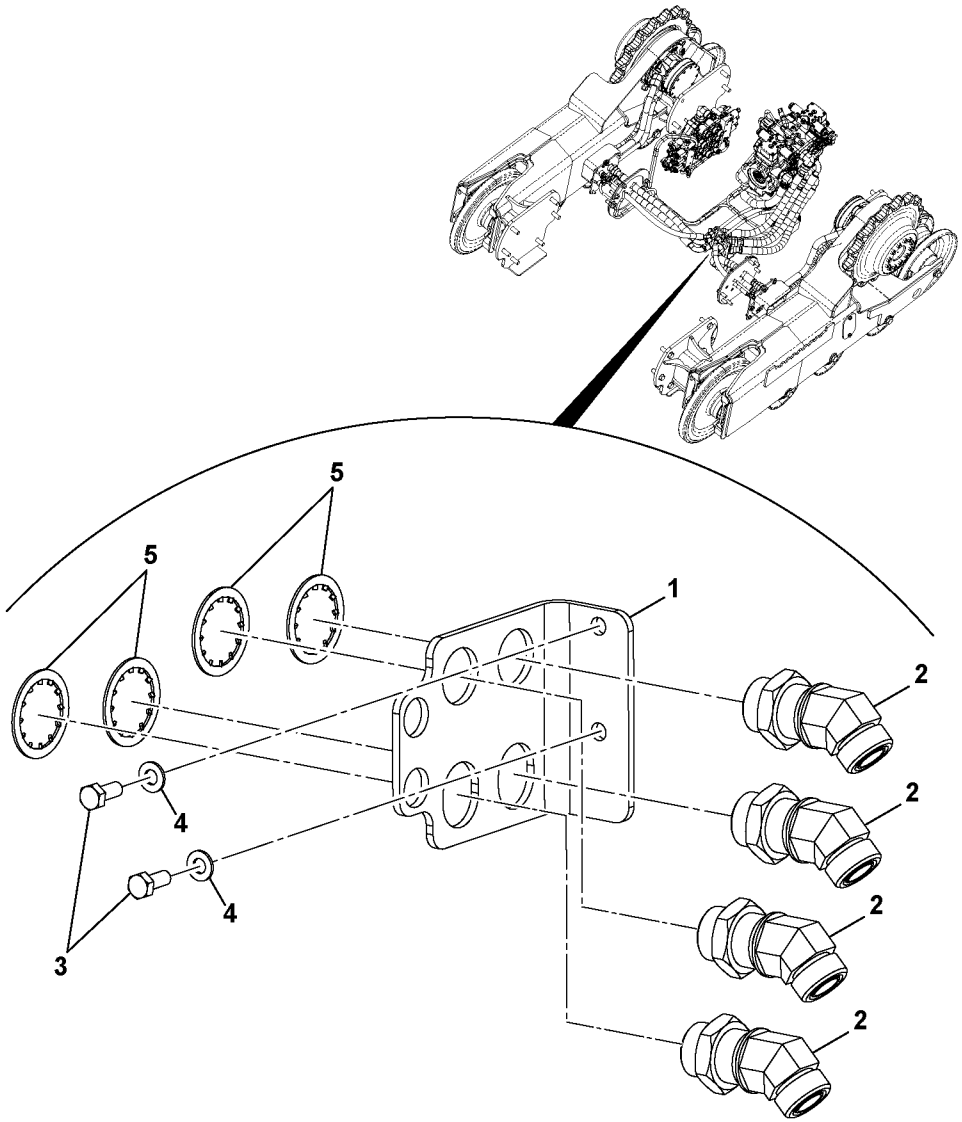

Volvo Construction Equipment
1064097

Fig.	Part No.	Quantity 1	2	3	PS	KIT	Description	Denominación	Denominação	Dénomination	Notes
1		1			NS		Plate	Chapa	Chapa	Tôle	
2	**VOE 16212152**	4					Bulkhead	Salpicadero	Parede retentora	Cloison étanche	
3	**VOE 16213998**	2					Set screw	Tornillo tope	Parafuso batente	Vis butée	
4	**VOE 20460127**	2					Washer	Arandela	Arruela	Rondelle	
5	**VOE 17237861**	4					Washer	Arandela	Arruela	Rondelle	

1		**Tôle de protection** **Placa de anteparo** **Placa de la mampara** **Bulkhead plate**	Catalogue id **20649**	Group **914**
2			Illustr. No **1064097**	Section **1050**
3				
4			Issue **PUB 20030904-B**	Page **753**
5		**MCT70C-MCT95C**		

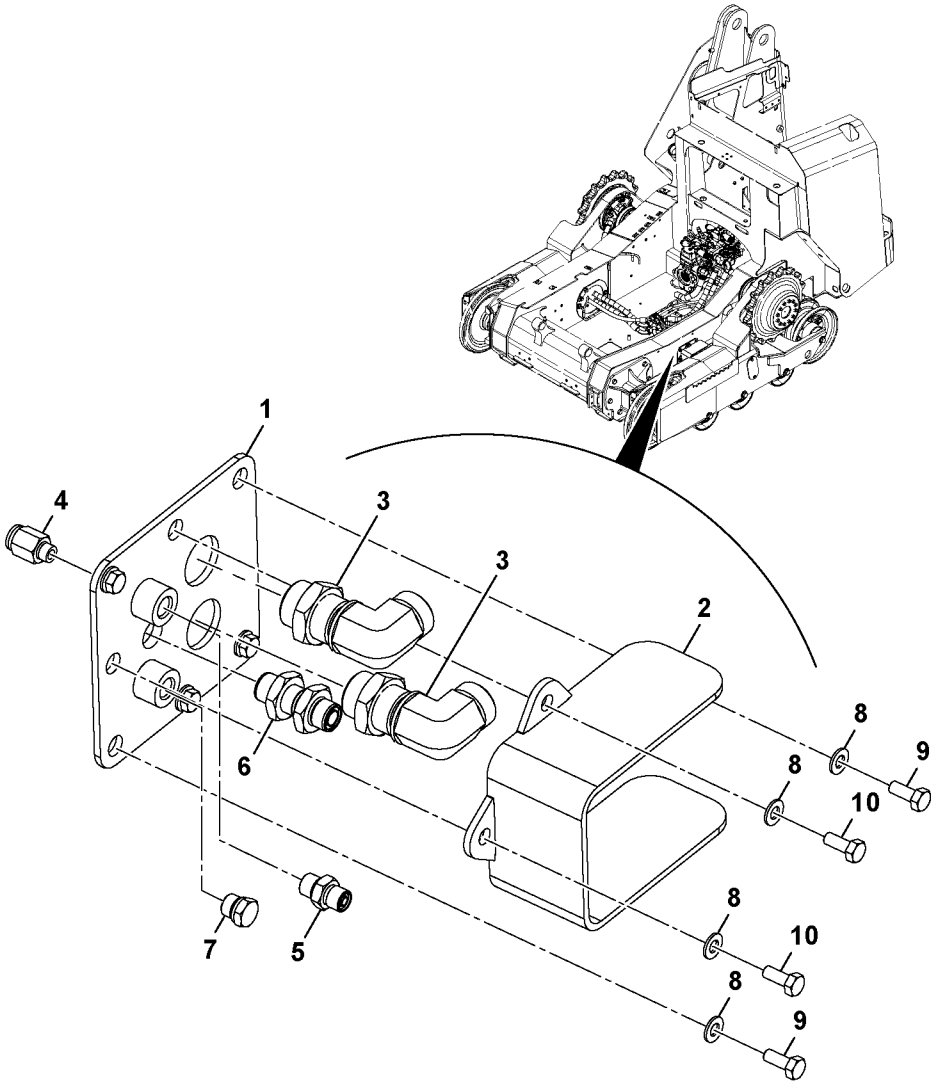
1
4
3
3
2
8
9
8
10
6
8
10
7
5
8
9

Fig.	Part No.	Quantity 1	2	3	PS	KIT	Description	Denominación	Denominação	Dénomination	Notes
1		1			NS		Case	Funda	Caixa	Caisson	
2	**VOE 17229822**	1					Cover plate	Disco de tapa	Disco da tampa	Disque recouvrement	
3	**RM 59962332**	2					Adapter	Adaptador	Adaptador	Adaptateur	
4	**VOE 16212236**	1					Adapter	Adaptador	Adaptador	Adaptateur	
5	**VOE 17209925**	1					Adapter	Adaptador	Adaptador	Adaptateur	
6	**RM 59947044**	1					Fitting	Racor	Niple	Écrou raccord	
7	**VOE 16213987**	1					Plug	Tapón	Bujão	Tampon	
8	**VOE 20460127**	7					Washer	Arandela	Arruela	Rondelle	
9	**VOE 17230227**	4					Set screw	Tornillo tope	Parafuso batente	Vis butée	
10	**VOE 17205260**	3					Hexagon screw	Tornillo hexagonal	Parafuso sextavado	Vis à tête hexagonale	

1		**Tôle de protection** **Placa de anteparo** **Placa de la mampara** **Bulkhead plate**	Catalogue id **20649**	Group **914**
2			Illustr. No **1064100**	Section **1100**
3				
4			Issue **PUB 20030904-B**	Page **755**
5		**MCT70C-MCT95C**		

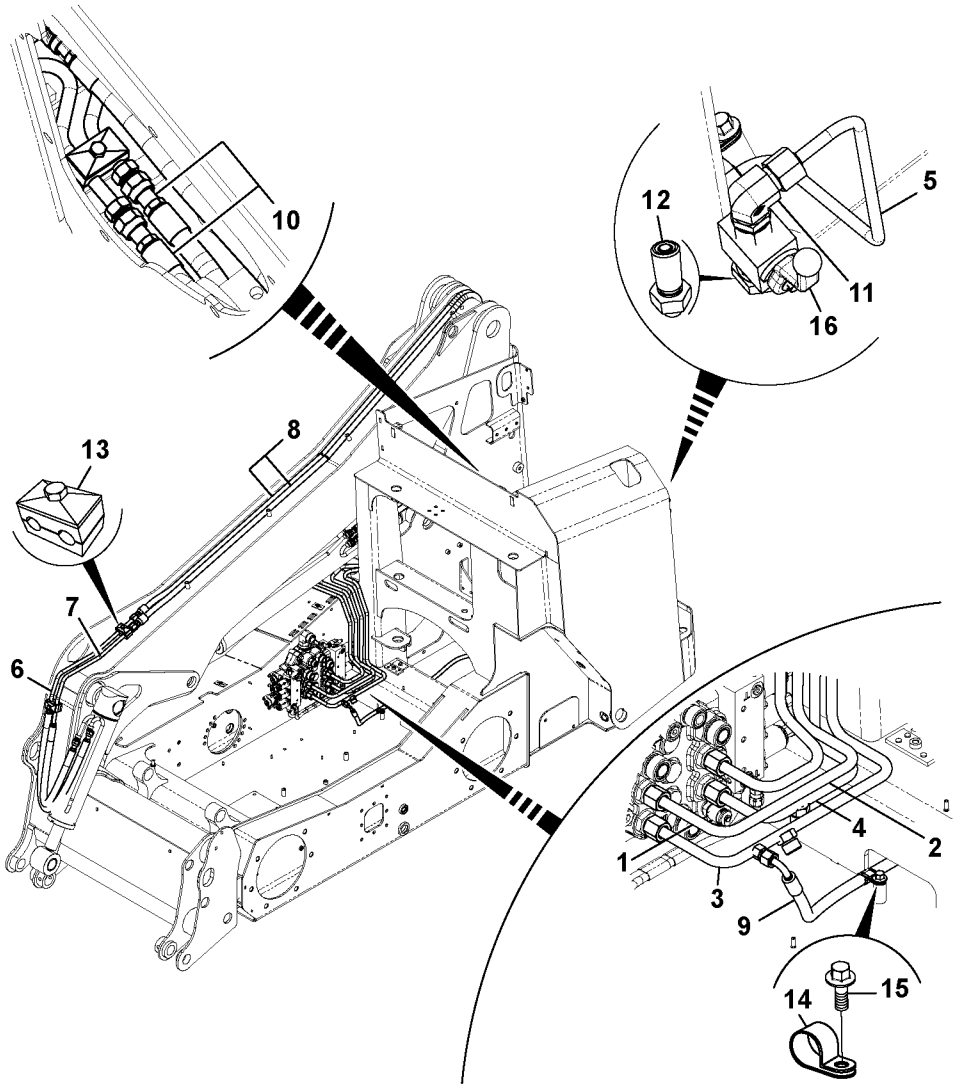
10
12
5
11
16
8
13
7
6
4
2
1
3
9
14
15

Fig.	Part No.	Quantity 1	2	3	PS	KIT	Description	Denominación	Denominação	Dénomination	Notes
1	**VOE 17230068**	1					Pipe	Tubo	Tubo	Tuyau	
2	**VOE 17230070**	1					Pipe	Tubo	Tubo	Tuyau	
3		1			NS		Pipe	Canalizacion	Tubo	Canalisation	
4		1			NS		Pipe	Canalizacion	Tubo	Canalisation	
5	**VOE 17230093**	1					Pipe	Tubo	Tubo	Tuyau	
6	**VOE 17230298**	1					Tube	Tubo	Tubo	Tube	
7	**VOE 17230301**	1					Tube	Tubo	Tubo	Tube	
8	**VOE 17229208**	2					Hose assembly	Conducto	Mangueira completa	Conduit flexible	
9	**VOE 17229232**	1					Hose assembly	Conducto	Mangueira completa	Conduit flexible	
10	**VOE 17229206**	2					Hose assembly	Conducto	Mangueira completa	Conduit flexible	
11	**VOE 17205713**	1					Nipple	Niple	Niple	Raccord	
12	**VOE 17228935**	1					Adapter	Adaptador	Adaptador	Adaptateur	
13		5			NS		Clamp	Abrazadera	Braçadeira	Collier serrage	
14	**VOE 17229226**	5					Clip	Clip	Clipe	Clip	
15	**VOE 16212101**	5					Bolt	Perno	Parafuso	Boulon	
16		1			NS		Ball Valve	Valvula Bola	Válvula de esfera	Pointeau	

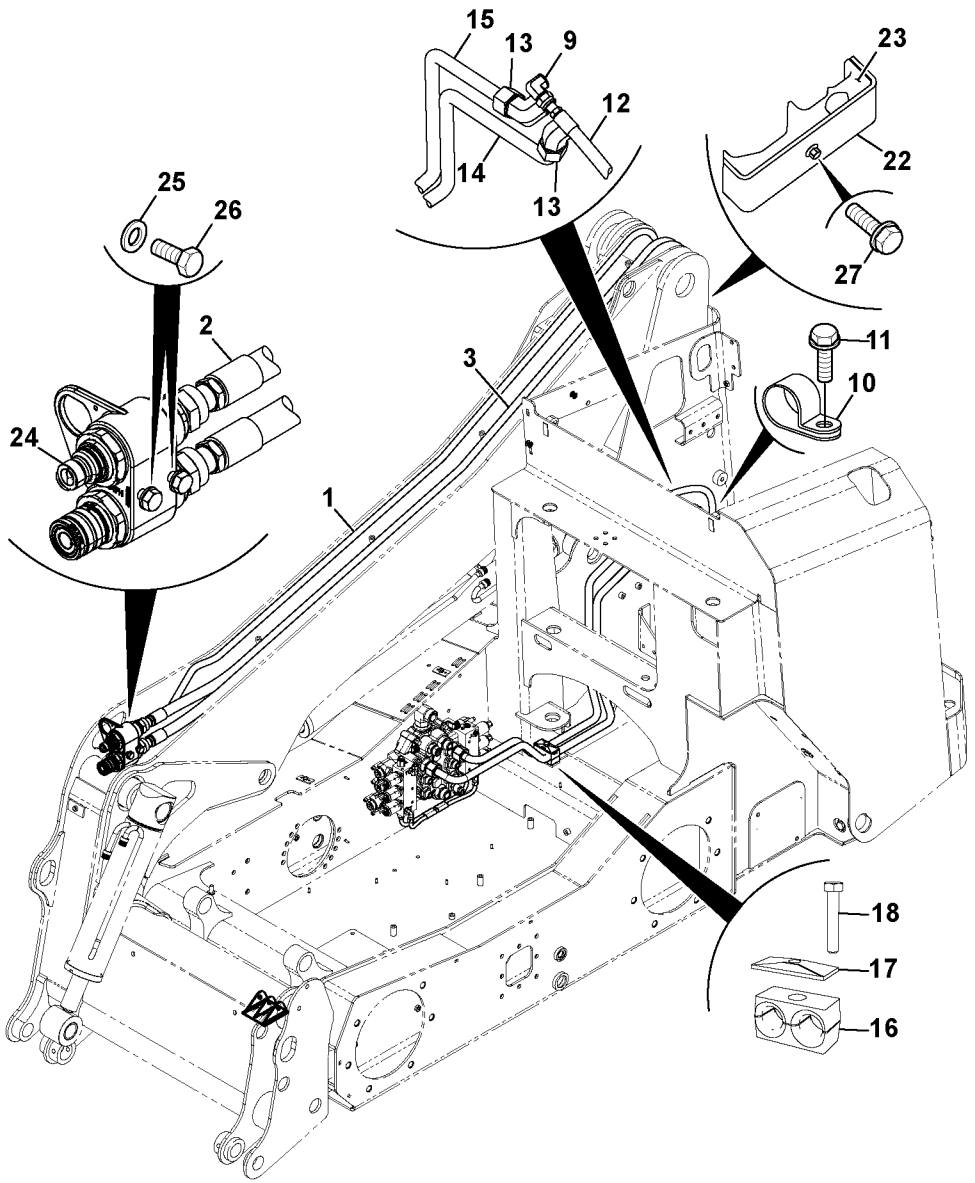
15
13
9
12
14
13
23
22
27
25
26
2
24
3
11
10
1
18
17
16

Fig.	Part No.	Quantity 1	2	3	PS	KIT	Description	Denominación	Denominação	Dénomination	Notes
1	**VOE 17229215**	1					Hose assembly	Conducto	Mangueira completa	Conduit flexible	
2	**VOE 17229459**	1					Hose	Manguera	Mangueira	Flexible	
3	**VOE 17229460**	1					Hose	Manguera	Mangueira	Flexible	
9	**RM 59962316**	1					Fitting	Racor	Niple	Écrou raccord	
10	**VOE 17229171**	3					Clip	Clip	Clipe	Clip	
11	**VOE 16212101**	3					Bolt	Perno	Parafuso	Boulon	
12	**VOE 17229183**	1					Hose assembly	Conducto	Mangueira completa	Conduit flexible	
13	**RM 59962332**	2					Adapter	Adaptador	Adaptador	Adaptateur	
14	**VOE 17230212**	1					Tube	Tubo	Tubo	Tube	
15	**VOE 17230215**	1					Tube	Tubo	Tubo	Tube	
16	**VOE 17210439**	2					Hose clamp	Abrazadera de manguera	Braçadeira da mangueira	Collier durite	
17	**VOE 16212246**	1					Clamp	Abrazadera	Braçadeira	Collier serrage	
18	**VOE 16212085**	1					Bolt	Perno	Parafuso	Boulon	
22		1			NS		Bracket	Ménsula	Suporte	Console	
23		1			NS		Clamp	Abrazadera	Braçadeira	Collier serrage	
24	**VOE 17229724**	1					Manifold	Bifurcación	Coletor	Tubulure	
25	**VOE 16212138**	2			SS		Plain washer	Arandela plana	Arruela simples	Rondelle plane	
26	**VOE 16212076**	2					Set screw	Tornillo tope	Parafuso batente	Vis butée	
27	**VOE 17228980**	1					Bolt	Perno	Parafuso	Boulon	

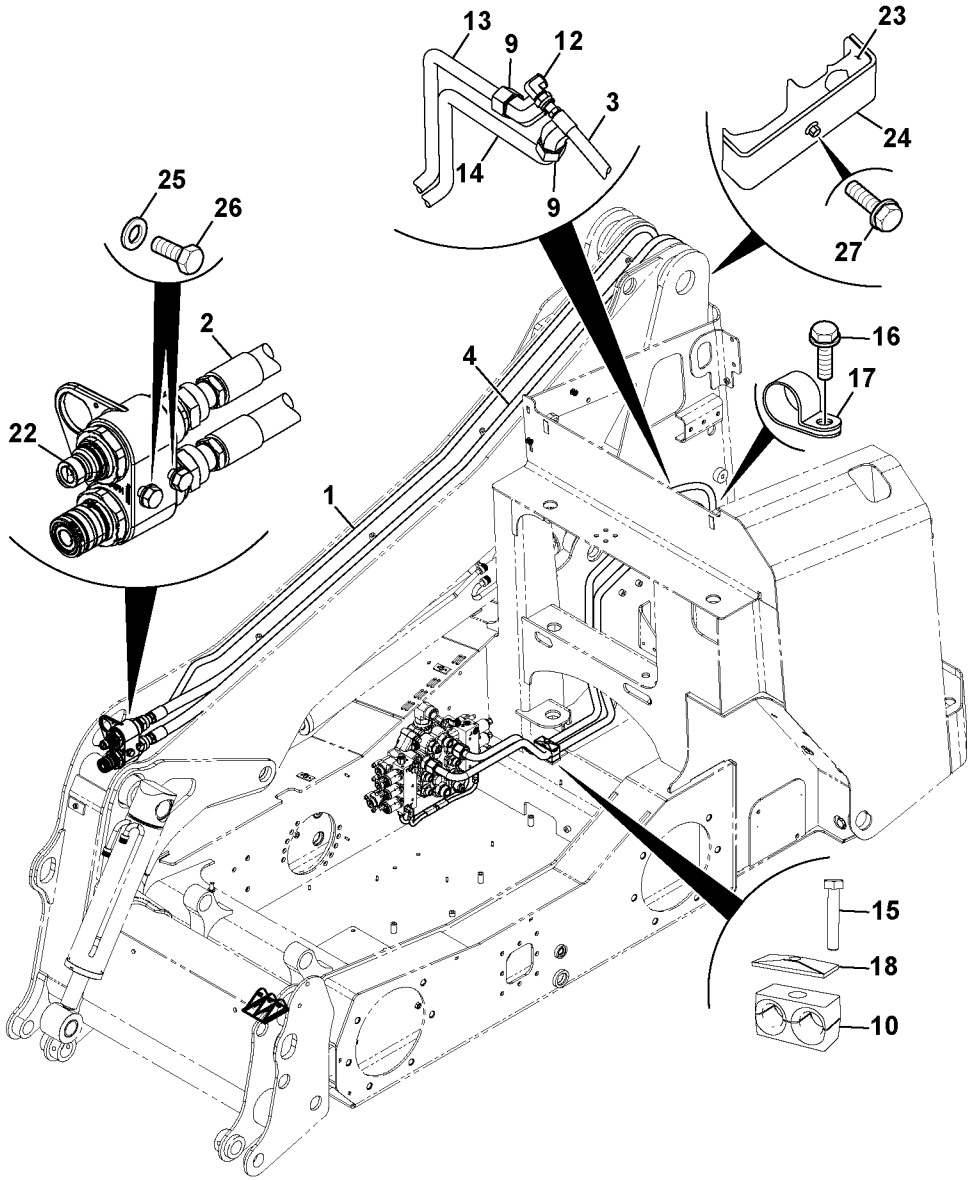
13
9
12
3
14
9
23
24
27
25
26
2
22
4
1
16
17
15
18
10

Fig.	Part No.	Quantity 1	2	3	PS	KIT	Description	Denominación	Denominação	Dénomination	Notes
1	**VOE 17229215**	1					Hose assembly	Conducto	Mangueira completa	Conduit flexible	
2	**VOE 17229214**	1					Hose assembly	Conducto	Mangueira completa	Conduit flexible	
3	**VOE 17229183**	1					Hose assembly	Conducto	Mangueira completa	Conduit flexible	
4	**VOE 17229210**	1					Hose assembly	Conducto	Mangueira completa	Conduit flexible	
9	**RM 59962332**	2					Adapter	Adaptador	Adaptador	Adaptateur	
10	**VOE 16212244**	2					Clamp	Abrazadera	Braçadeira	Collier serrage	
12	**RM 59962316**	1					Fitting	Racor	Niple	Écrou raccord	
13	**VOE 17230077**	1					Pipe	Tubo	Tubo	Tuyau	
14	**VOE 17230076**	1					Pipe	Tubo	Tubo	Tuyau	
15	**VOE 16212084**	1					Bolt	Perno	Parafuso	Boulon	
16	**VOE 16212101**	3					Bolt	Perno	Parafuso	Boulon	
17	**VOE 17229171**	3					Clip	Clip	Clipe	Clip	
18	**VOE 16212252**	1					Clamp	Abrazadera	Braçadeira	Collier serrage	
22	**VOE 17229724**	1					Manifold	Bifurcación	Coletor	Tubulure	
23		1			NS		Clamp	Abrazadera	Braçadeira	Collier serrage	
24		1			NS		Bracket	Ménsula	Suporte	Console	
25	**VOE 16212138**	2			SS		Plain washer	Arandela plana	Arruela simples	Rondelle plane	
26	**VOE 16212076**	2					Set screw	Tornillo tope	Parafuso batente	Vis butée	
27	**VOE 17228980**	1					Bolt	Perno	Parafuso	Boulon	

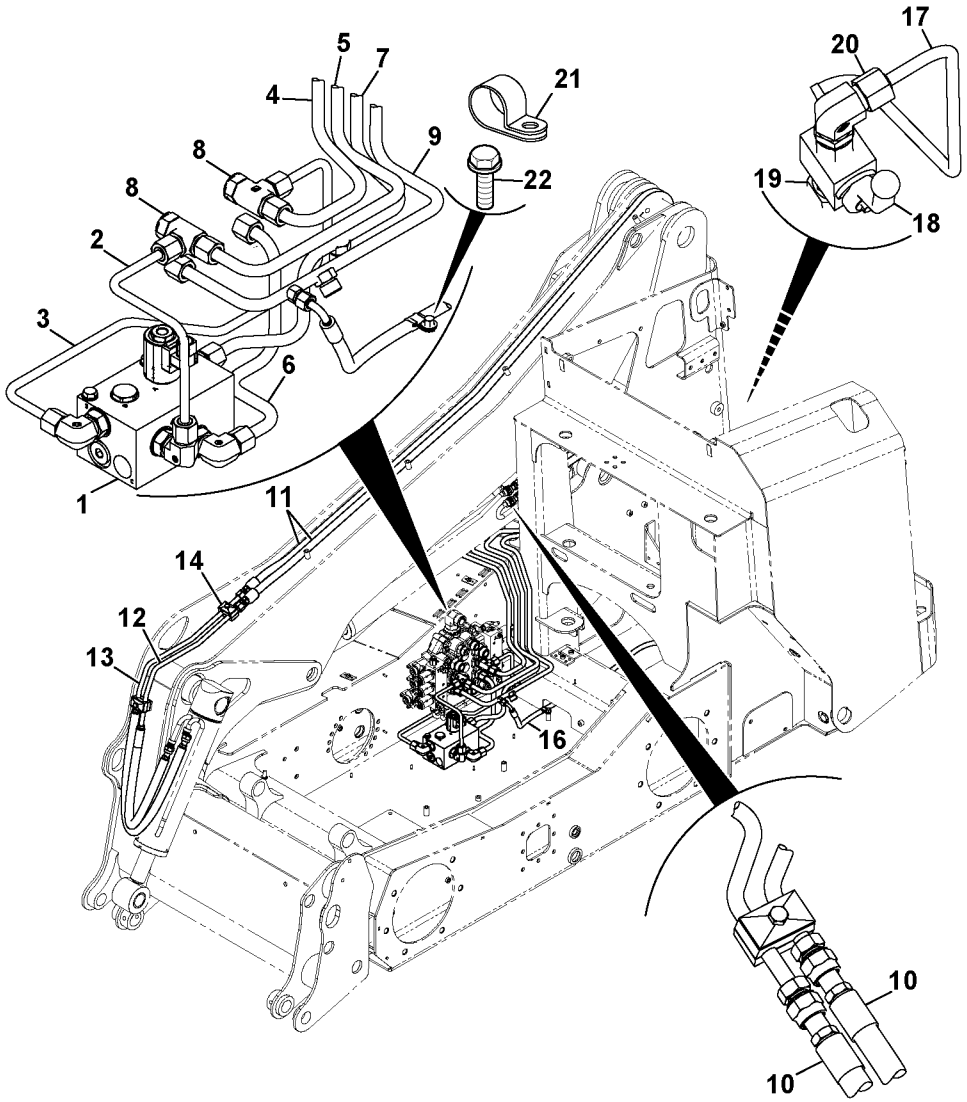

Volvo Construction Equipment
1064074

Fig.	Part No.	Quantity 1	2	3	PS	KIT	Description	Denominación	Denominação	Dénomination	Notes
1	**VOE 17230364**	1					Valve body	Bloque de válvula	Corpo da válvula	Corps de clapet	
2	**VOE 17230086**	1					Pipe	Tubo	Tubo	Tuyau	
3	**VOE 17230087**	1					Pipe	Tubo	Tubo	Tuyau	
4	**VOE 17230088**	1					Pipe	Tubo	Tubo	Tuyau	
5	**VOE 17230089**	1					Pipe	Tubo	Tubo	Tuyau	
6	**VOE 17230091**	1					Pipe	Tubo	Tubo	Tuyau	
7		1			NS		Pipe	Canalizacion	Tubo	Canalisation	
8	**VOE 17228985**	2					Adapter	Adaptador	Adaptador	Adaptateur	
9		1			NS		Pipe	Canalizacion	Tubo	Canalisation	
10	**VOE 17229206**	2					Hose assembly	Conducto	Mangueira completa	Conduit flexible	
11	**VOE 17229208**	2					Hose assembly	Conducto	Mangueira completa	Conduit flexible	
12	**VOE 17230301**	1					Tube	Tubo	Tubo	Tube	
13	**VOE 17230298**	1					Tube	Tubo	Tubo	Tube	
14		5			NS		Clamp	Abrazadera	Braçadeira	Collier serrage	
16	**VOE 17229232**	1					Hose assembly	Conducto	Mangueira completa	Conduit flexible	
17	**VOE 17230093**	1					Pipe	Tubo	Tubo	Tuyau	
18		1			NS		Ball Valve	Valvula Bola	Válvula de esfera	Pointeau	
19	**VOE 17228935**	1					Adapter	Adaptador	Adaptador	Adaptateur	
20	**VOE 17205713**	1					Nipple	Niple	Niple	Raccord	
21	**VOE 17229226**	5					Clip	Clip	Clipe	Clip	
22	**VOE 16212101**	5					Bolt	Perno	Parafuso	Boulon	

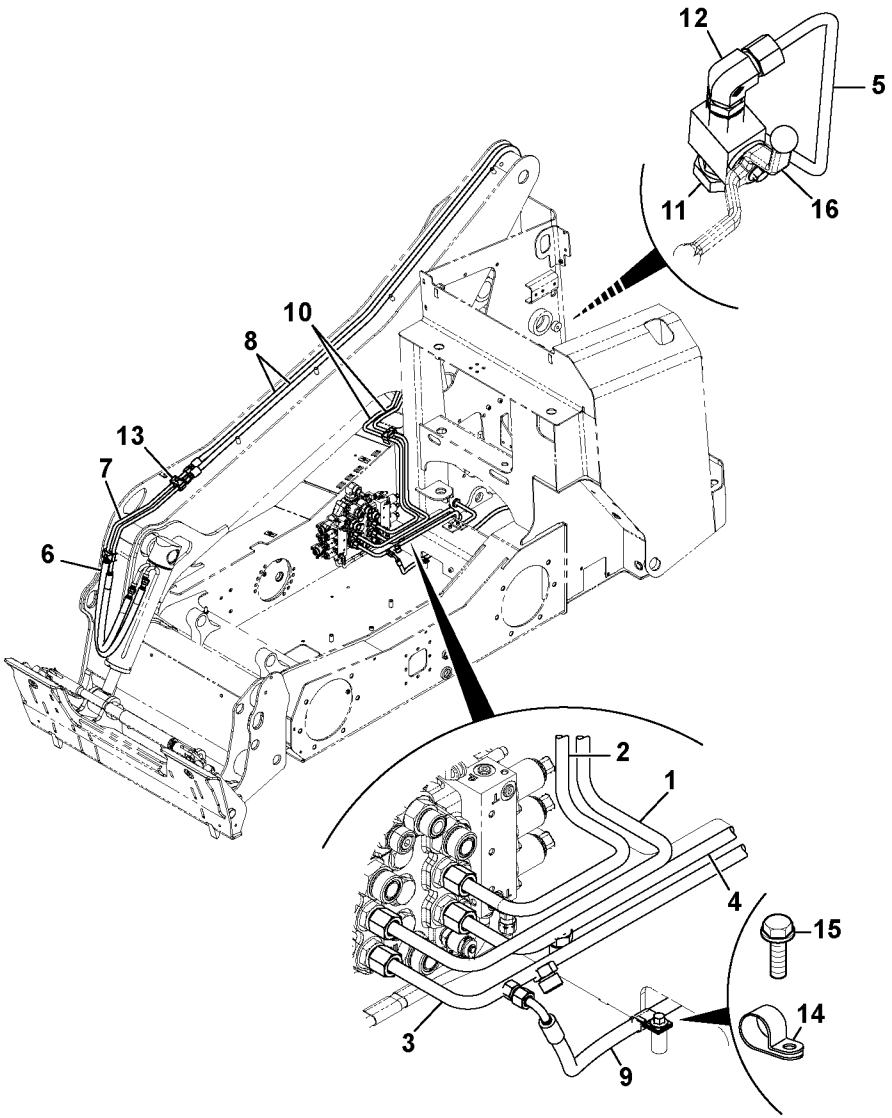
12
5
11
16
10
8
13
7
6
2
1
4
15
14
3
9

Fig.	Part No.	Quantity 1	2	3	PS	KIT	Description	Denominación	Denominação	Dénomination	Notes
1		1			NS		Pipe	Canalizacion	Tubo	Canalisation	
2		1			NS		Pipe	Canalizacion	Tubo	Canalisation	
3		1			NS		Pipe	Canalizacion	Tubo	Canalisation	
4		1			NS		Pipe	Canalizacion	Tubo	Canalisation	
5	**VOE 17230093**	1					Pipe	Tubo	Tubo	Tuyau	
6	**VOE 17230298**	1					Tube	Tubo	Tubo	Tube	
7	**VOE 17230301**	1					Tube	Tubo	Tubo	Tube	
8		2			NS		Hose assembly	Conducto	Mangueira completa	Conduit flexible	
9	**VOE 17229232**	1					Hose assembly	Conducto	Mangueira completa	Conduit flexible	
10		2			NS		Hose assembly	Conducto	Mangueira completa	Conduit flexible	
11	**VOE 17228935**	1					Adapter	Adaptador	Adaptador	Adaptateur	
12	**VOE 17205713**	1					Nipple	Niple	Niple	Raccord	
13		4			NS		Clamp	Abrazadera	Braçadeira	Collier serrage	
14	**VOE 17229226**	5					Clip	Clip	Clipe	Clip	
15	**VOE 16212101**	5					Bolt	Perno	Parafuso	Boulon	
16		1			NS		Ball Valve	Valvula Bola	Válvula de esfera	Pointeau	

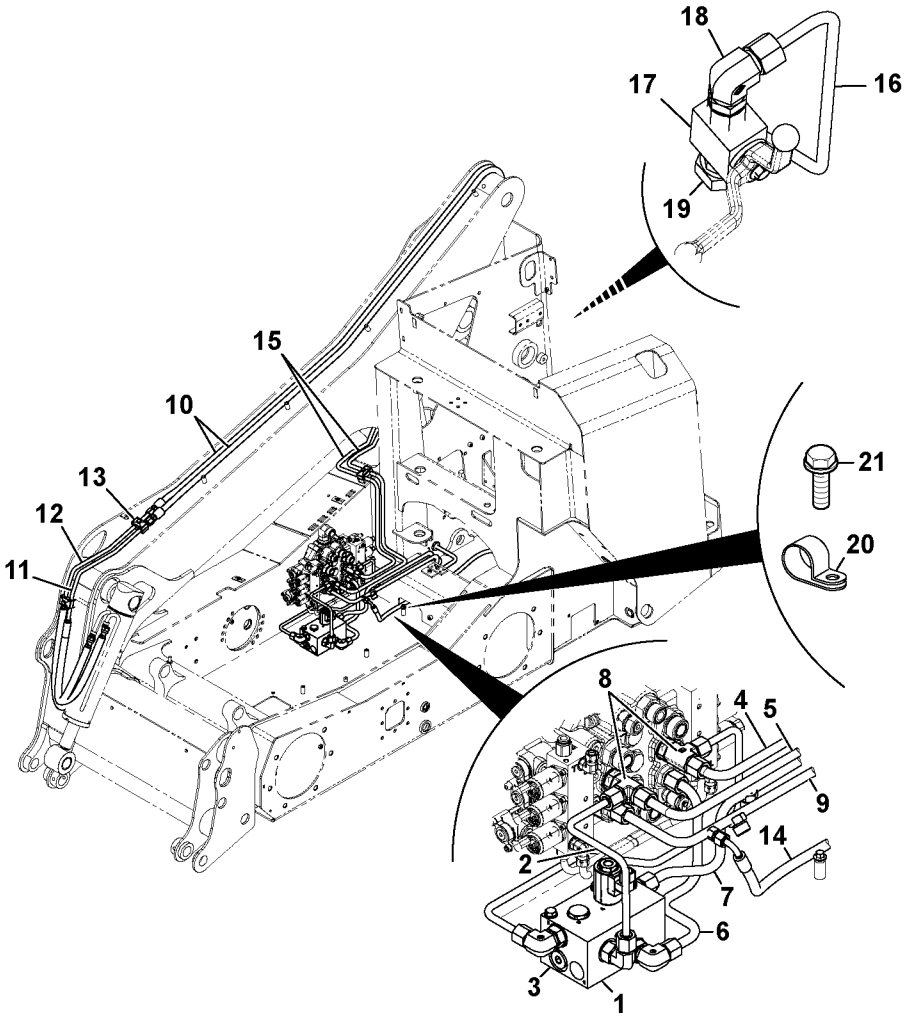
18
17
16
19
15
10
13
12
11
21
20
8
4
5
9
14
2
7
6
3
1

Fig.	Part No.	Quantity 1	2	3	PS	KIT	Description	Denominación	Denominação	Dénomination	Notes
1		1					Valve Body	Cuerpo Valvula	Corpo da válvula	Corps Valve	See group 912, Page 717
2	**VOE 17230086**	1					Pipe	Tubo	Tubo	Tuyau	
3	**VOE 17230087**	1					Pipe	Tubo	Tubo	Tuyau	
4		1			NS		Pipe	Canalizacion	Tubo	Canalisation	
5		1			NS		Pipe	Canalizacion	Tubo	Canalisation	
6	**VOE 17230091**	1					Pipe	Tubo	Tubo	Tuyau	
7		1			NS		Pipe	Canalizacion	Tubo	Canalisation	
8	**VOE 17228985**	2					Adapter	Adaptador	Adaptador	Adaptateur	
9		1			NS		Pipe	Canalizacion	Tubo	Canalisation	
10		2			NS		Hose assembly	Conducto	Mangueira completa	Conduit flexible	
11	**VOE 17230301**	1					Tube	Tubo	Tubo	Tube	
12	**VOE 17230298**	1					Tube	Tubo	Tubo	Tube	
13		4			NS		Clamp	Abrazadera	Braçadeira	Collier serrage	
14	**VOE 17229232**	1					Hose assembly	Conducto	Mangueira completa	Conduit flexible	
15		2			NS		Hose assembly	Conducto	Mangueira completa	Conduit flexible	
16	**VOE 17230093**	1					Pipe	Tubo	Tubo	Tuyau	
17		1			NS		Ball Valve	Valvula Bola	Válvula de esfera	Pointeau	
18	**VOE 17205713**	1					Nipple	Niple	Niple	Raccord	
19	**VOE 17228935**	1					Adapter	Adaptador	Adaptador	Adaptateur	
20	**VOE 17229226**	5					Clip	Clip	Clipe	Clip	
21	**VOE 16212101**	5					Bolt	Perno	Parafuso	Boulon	

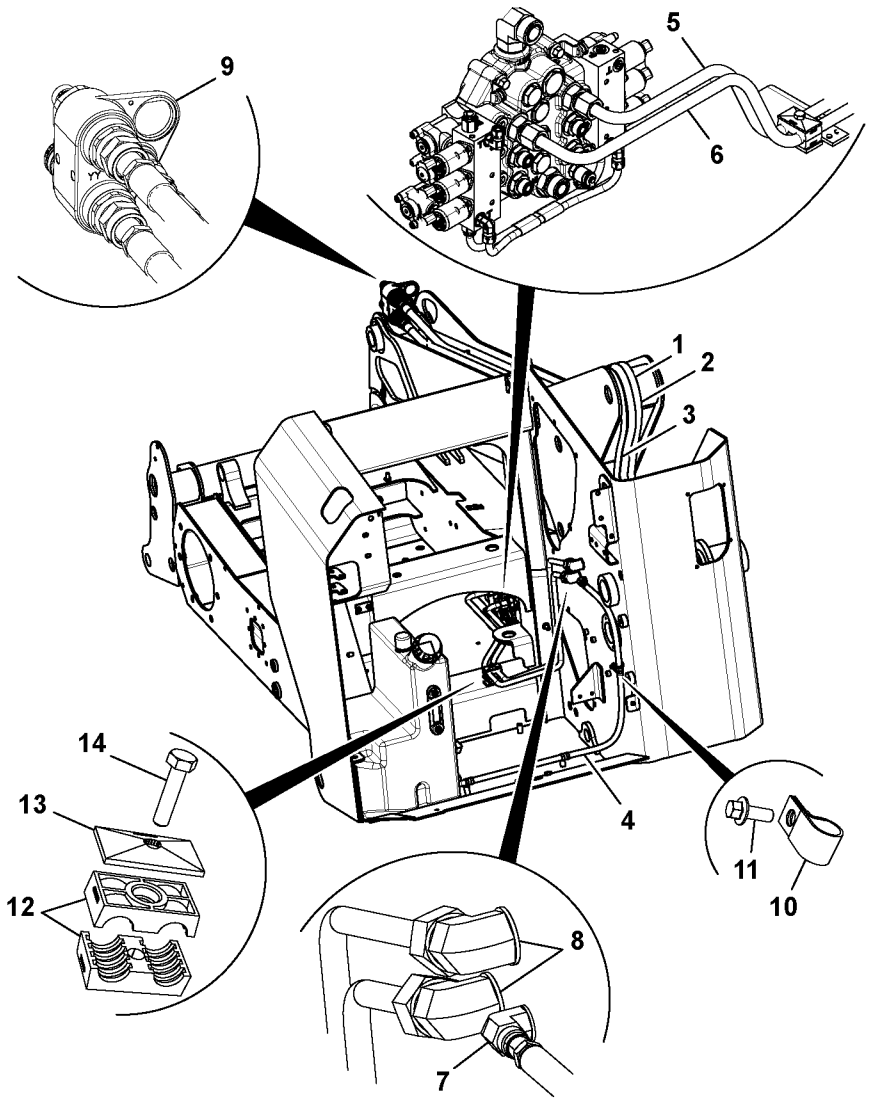
9
5
6
1
2
3
4
14
13
12
11
10
8
7

Fig.	Part No.	Quantity 1	2	3	PS	KIT	Description	Denominación	Denominação	Dénomination	Notes
1	**VOE 17229514**	1					Hose	Manguera	Mangueira	Flexible	
2	**VOE 17229510**	1					Hose	Manguera	Mangueira	Flexible	
3	**VOE 17229486**	1					Hose	Manguera	Mangueira	Flexible	
4	**VOE 17229218**	1					Hose assembly	Conducto	Mangueira completa	Conduit flexible	
5	**VOE 17230078**	1					Pipe	Tubo	Tubo	Tuyau	
6	**VOE 17230080**	1					Pipe	Tubo	Tubo	Tuyau	
7	**RM 59962316**	1					Fitting	Racor	Niple	Écrou raccord	
8	**RM 59962332**	2					Adapter	Adaptador	Adaptador	Adaptateur	
9	**VOE 17229724**	1					Manifold	Bifurcación	Coletor	Tubulure	
10	**VOE 17229171**	3					Clip	Clip	Clipe	Clip	
11	**VOE 16212101**	1					Bolt	Perno	Parafuso	Boulon	
12	**VOE 16212244**	2					Clamp	Abrazadera	Braçadeira	Collier serrage	
13	**VOE 16212252**	1					Clamp	Abrazadera	Braçadeira	Collier serrage	
14	**VOE 16212084**	1					Bolt	Perno	Parafuso	Boulon	

1		**Système hydraulique, groupe chargeur.**	Catalogue id **20649**	Group **916**
2				
3		**Sistema hidráulica, agregado de carga**	Illustr. No **1064235**	Section **400**
4		**Hydraulic system, loading unit.**		
5		**VERTICAL LIFT MC85C-MC105C, MCT85C, MCT95C**	Issue **PUB 20030904-B**	Page **769**

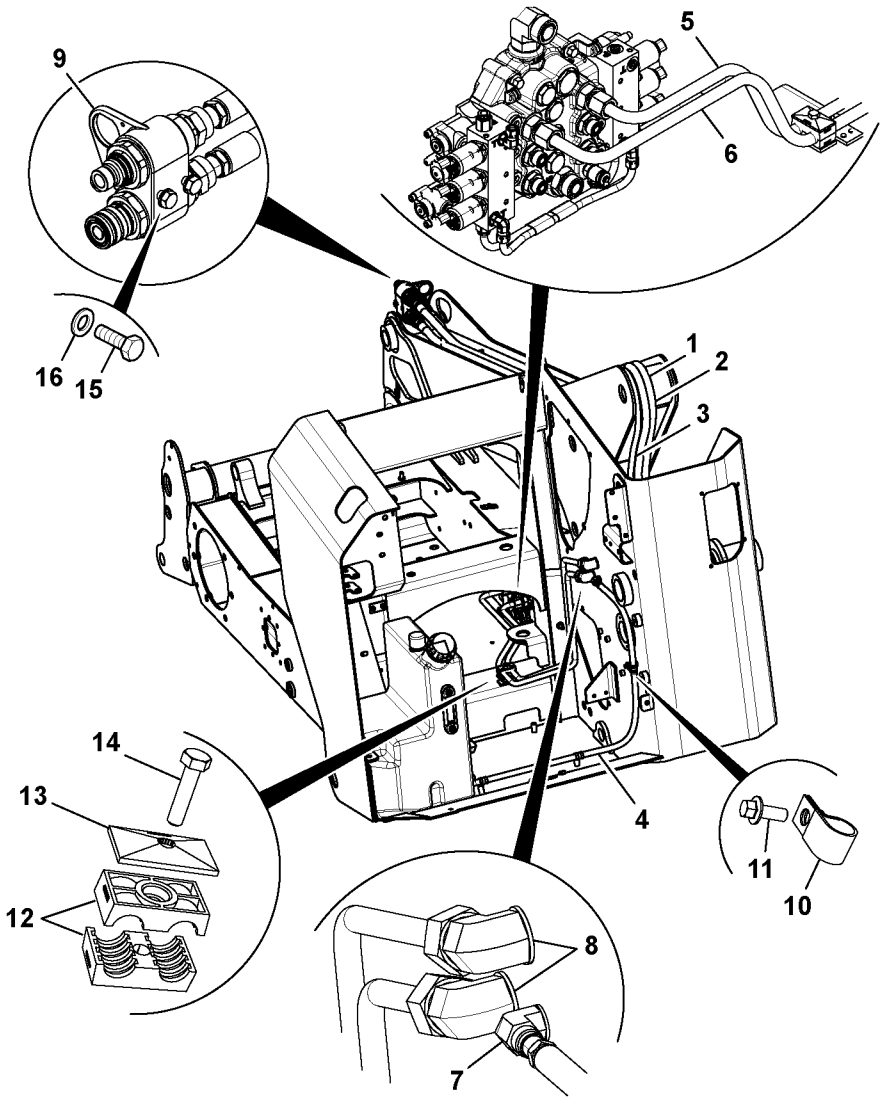
9
5
6
16
15
1
2
3
4
14
13
12
11
10
8
7

Fig.	Part No.	Quantity 1	2	3	PS	KIT	Description	Denominación	Denominação	Dénomination	Notes
1	**VOE 17229493**	1					Hose	Manguera	Mangueira	Flexible	
2	**VOE 17229490**	1					Hose	Manguera	Mangueira	Flexible	
3	**VOE 17229486**	1					Hose	Manguera	Mangueira	Flexible	
4	**VOE 17229218**	1					Hose assembly	Conducto	Mangueira completa	Conduit flexible	
5	**VOE 17230283**	1					Tube	Tubo	Tubo	Tube	
6	**VOE 17230287**	1					Tube	Tubo	Tubo	Tube	
7	**RM 59962316**	1					Fitting	Racor	Niple	Écrou raccord	
8	**RM 59962332**	2					Adapter	Adaptador	Adaptador	Adaptateur	
9	**VOE 17229724**	1					Manifold	Bifurcación	Coletor	Tubulure	
10	**VOE 17229171**	3					Clip	Clip	Clipe	Clip	
11	**VOE 16212101**	1					Bolt	Perno	Parafuso	Boulon	
12	**VOE 17210439**	2					Hose clamp	Abrazadera de manguera	Braçadeira da mangueira	Collier durite	
13	**VOE 16212246**	1					Clamp	Abrazadera	Braçadeira	Collier serrage	
14	**VOE 16212085**	1					Bolt	Perno	Parafuso	Boulon	
15	**VOE 16212076**	2					Set screw	Tornillo tope	Parafuso batente	Vis butée	
16	**VOE 16212138**	2			SS		Plain washer	Arandela plana	Arruela simples	Rondelle plane	

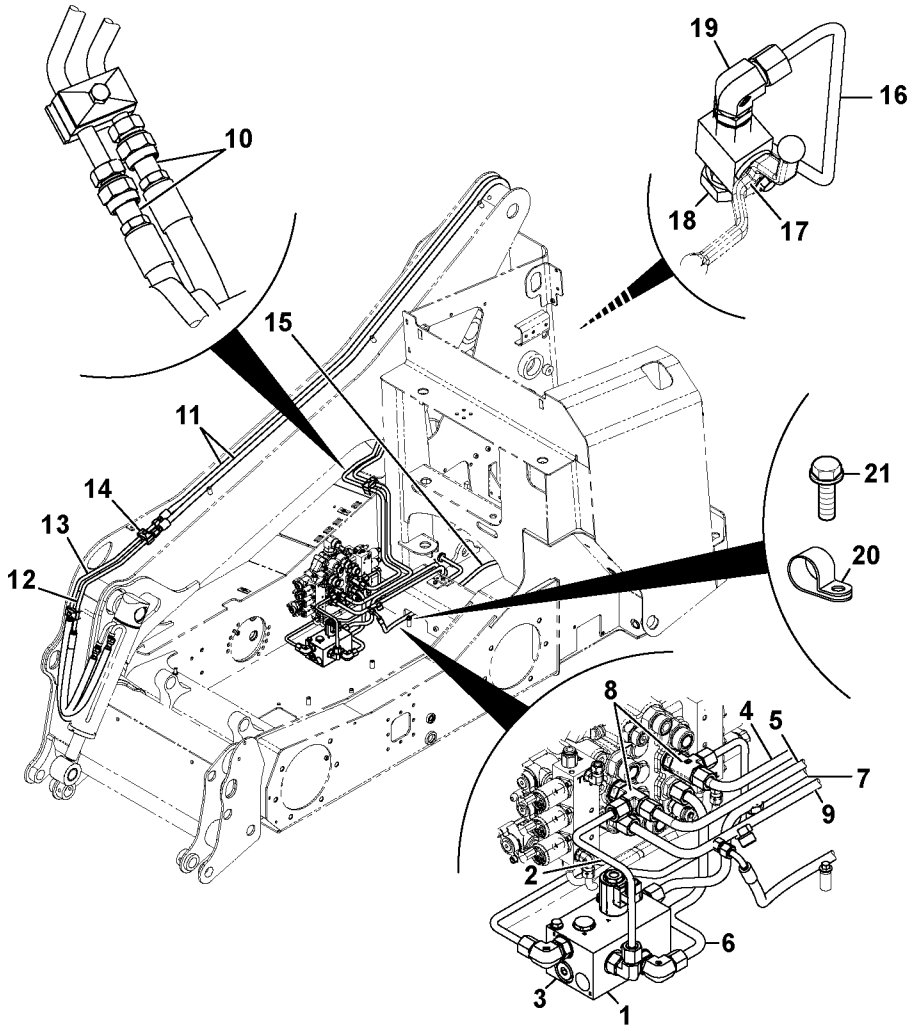
10
19
16
18
17
15
11
14
13
12
21
20
8
4
5
7
9
2
6
3
1

Fig.	Part No.	Quantity 1	2	3	PS	KIT	Description	Denominación	Denominação	Dénomination	Notes
1		1					Valve Body	Cuerpo Valvula	Corpo da válvula	Corps Valve	See group 912, Page 717
2	**VOE 17230086**	1					Pipe	Tubo	Tubo	Tuyau	
3	**VOE 17230087**	1					Pipe	Tubo	Tubo	Tuyau	
4	**VOE 17230088**	1					Pipe	Tubo	Tubo	Tuyau	
5	**VOE 17230089**	1					Pipe	Tubo	Tubo	Tuyau	
6	**VOE 17230091**	1					Pipe	Tubo	Tubo	Tuyau	
7		1			NS		Pipe	Canalizacion	Tubo	Canalisation	
8	**VOE 17228985**	2					Adapter	Adaptador	Adaptador	Adaptateur	
9		1			NS		Pipe	Canalizacion	Tubo	Canalisation	
10	**VOE 17229206**	2					Hose assembly	Conducto	Mangueira completa	Conduit flexible	
11	**VOE 17229208**	2					Hose assembly	Conducto	Mangueira completa	Conduit flexible	
12	**VOE 17230301**	1					Tube	Tubo	Tubo	Tube	
13	**VOE 17230298**	1					Tube	Tubo	Tubo	Tube	
14		5			NS		Clamp	Abrazadera	Braçadeira	Collier serrage	
16	**VOE 17229232**	1					Hose assembly	Conducto	Mangueira completa	Conduit flexible	
17		1			NS		Pipe	Canalizacion	Tubo	Canalisation	
18	**VOE 16212290**	1					Ball valve	Válvula bola	Válvula esfera	Pointeau	
19	**VOE 17228935**	1					Adapter	Adaptador	Adaptador	Adaptateur	
20	**VOE 17205713**	1					Nipple	Niple	Niple	Raccord	
21	**VOE 17229226**	5					Clip	Clip	Clipe	Clip	
22	**VOE 16212101**	5					Bolt	Perno	Parafuso	Boulon	

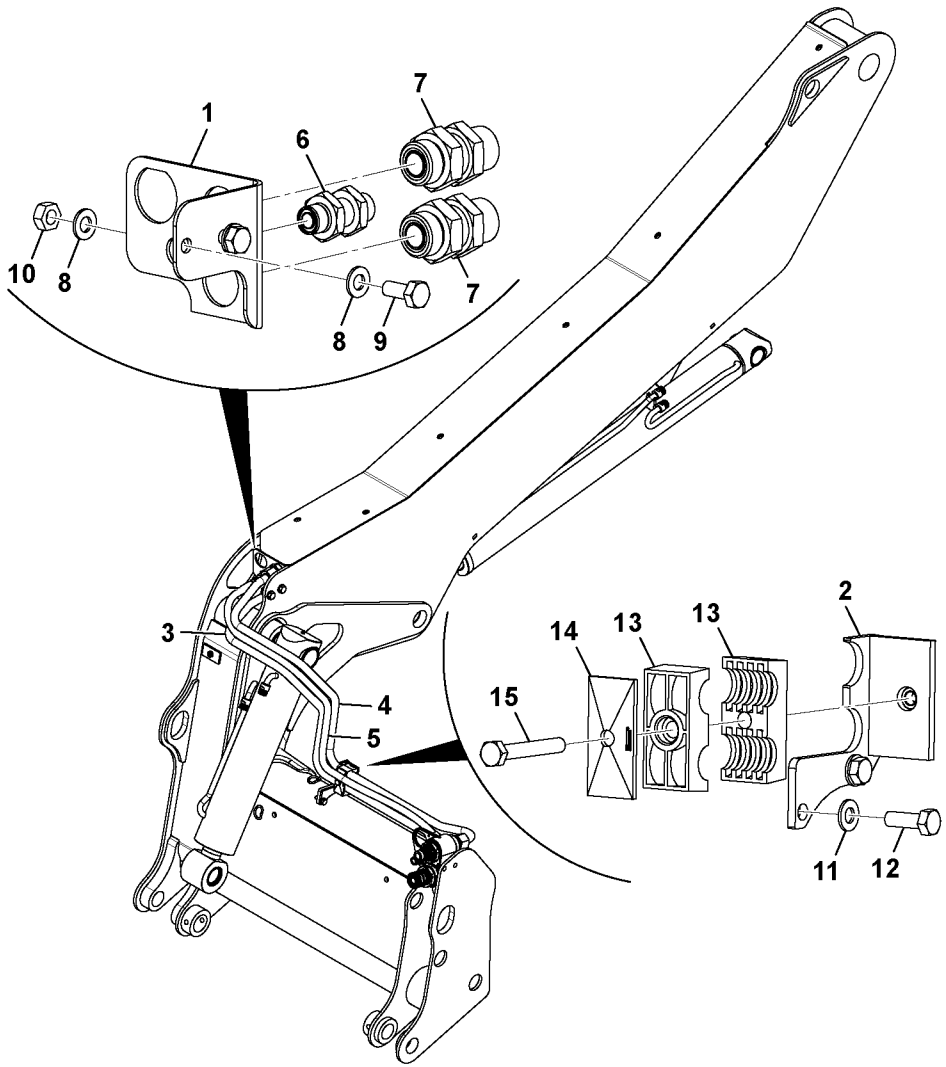
1
6
7
10
8
8
9
7
3
4
5
15
14
13
13
2
11
12

Fig.	Part No.	Quantity 1	2	3	PS	KIT	Description	Denominación	Denominação	Dénomination	Notes
1		1			NS		Bracket	Ménsula	Suporte	Console	
2		1			NS		Support	Apoyo	Suporte	Support	
3		1			NS		Tube Assembly	Tuberia		Tuyauterie	
4		1			NS		Tube Assembly	Tuberia		Tuyauterie	
5		1			NS		Hose	Tubo flexible	Mangueira	Durit	
6	**RM 59947044**	1					Fitting	Racor	Niple	Écrou raccord	
7	**VOE 935285**	2					Nipple	Niple	Niple	Raccord	
8	**VOE 16212138**	4			SS		Plain washer	Arandela plana	Arruela simples	Rondelle plane	
9	**VOE 16212076**	2					Set screw	Tornillo tope	Parafuso batente	Vis butée	
10	**VOE 16212122**	2					Nut	Tuerca	Porca	Écrou	
11	**VOE 20460127**	2					Washer	Arandela	Arruela	Rondelle	
12		2			NS		Screw	Tornillo	Parafuso	Vis	
13	**VOE 17210439**	2					Hose clamp	Abrazadera de manguera	Braçadeira da mangueira	Collier durite	
14	**VOE 16212246**	1					Clamp	Abrazadera	Braçadeira	Collier serrage	
15		1			NS		Bolt	Perno	Parafuso	Boulon	

1		**Système hydraulique, groupe chargeur.**	Catalogue id **20649**	Group **916**
2				
3		**Sistema hidráulica, agregado de carga**	Illustr. No **1064010**	Section **550**
4		**Hydraulic system, loading unit.**		
5		**MC60C, MC70C, MCT70C**	Issue **PUB 20030904-B**	Page **775**

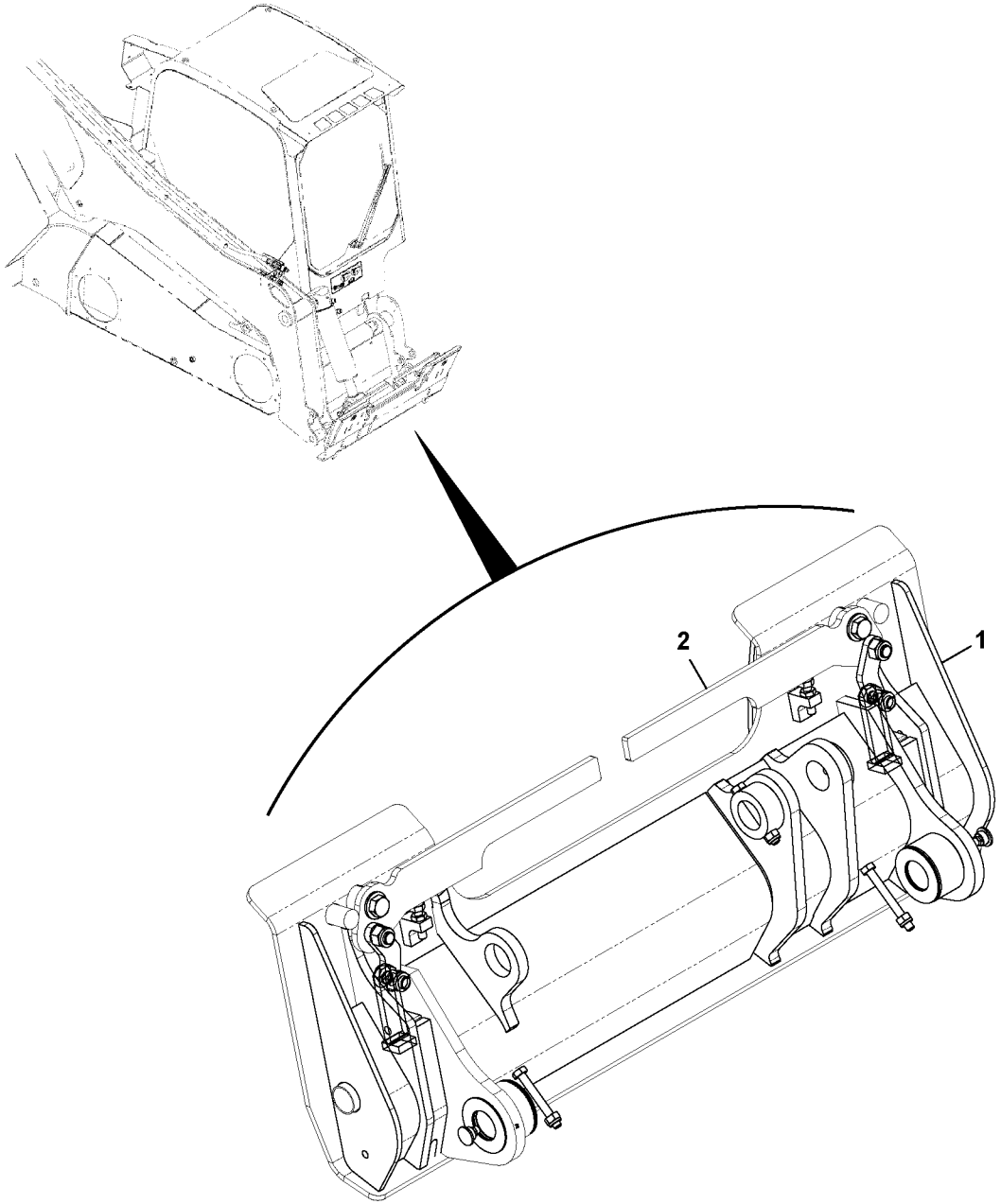
2
1

Fig.	Part No.	Quantity 1	2	3	PS	KIT	Description	Denominación	Denominação	Dénomination	Notes
1	**VOE 17230350**	1					Catch	Fiador	Garra	Cliquet	
2		1					Attachment bracket	Soporte Impleme	Suporte de implemento	Porte-outil	See group 924, Page 783

1		**Porte-outil, verrouillage mécanique** **Suporte de implemento, mecânico** **Portaimplemento, mecánico** **Attachment bracket, mechanical**	Catalogue id **20649**	Group **924**
2				
3			Illustr. No **1064006**	Section **100**
4				
5		**MC60C-MC105C, MCT70C-MCT95C**	Issue **PUB 20030904-B**	Page **777**

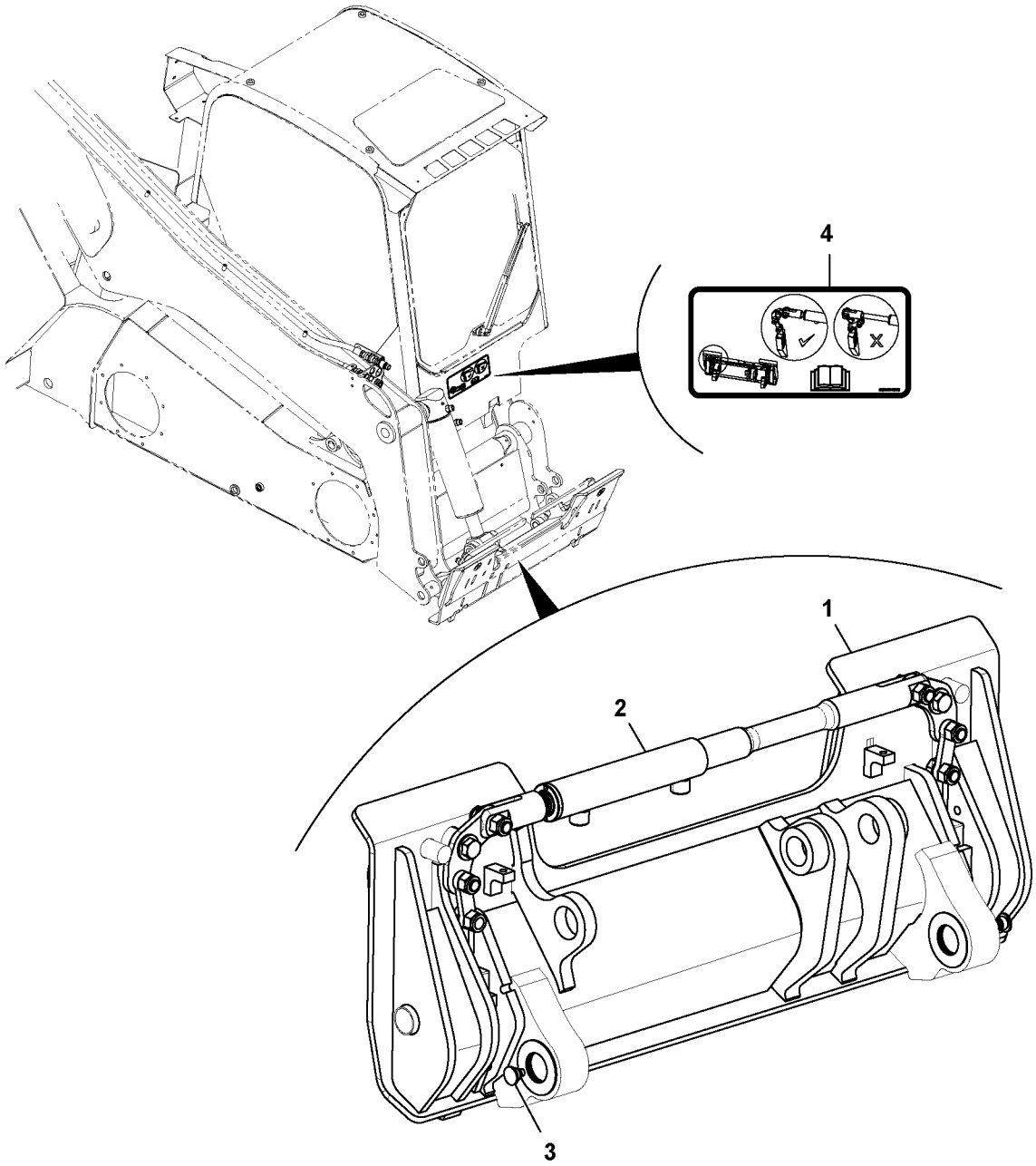

Volvo Construction Equipment
1064012

Fig.	Part No.	Quantity 1	2	3	PS	KIT	Description	Denominación	Denominação	Dénomination	Notes
1	**VOE 17230350**	1					Catch	Fiador	Garra	Cliquet	
2		1					Link	Articulacion	Articulação	Articulation	See group 924, Page 787
3		1					Fitting	Racor	Encaixe	Ecrou raccord	See group 924, Page 785
4	**VOE 17210212**	1					Label	Etiqueta	Etiqueta	Étiquette	

1		**Support - changement rapide, hydraulique** **Placa de montagem de implemento - Troca rápida, hidráulica** **Soporte - cambio rápido** **Attachment mounting plate - Quick change, hydraulic**	Catalogue id **20649**	Group **924**
2				
3			Illustr. No **1064012**	Section **150**
4				
5		**MC60C-MC105C, MCT70C-MCT95C**	Issue **PUB 20030904-B**	Page **779**

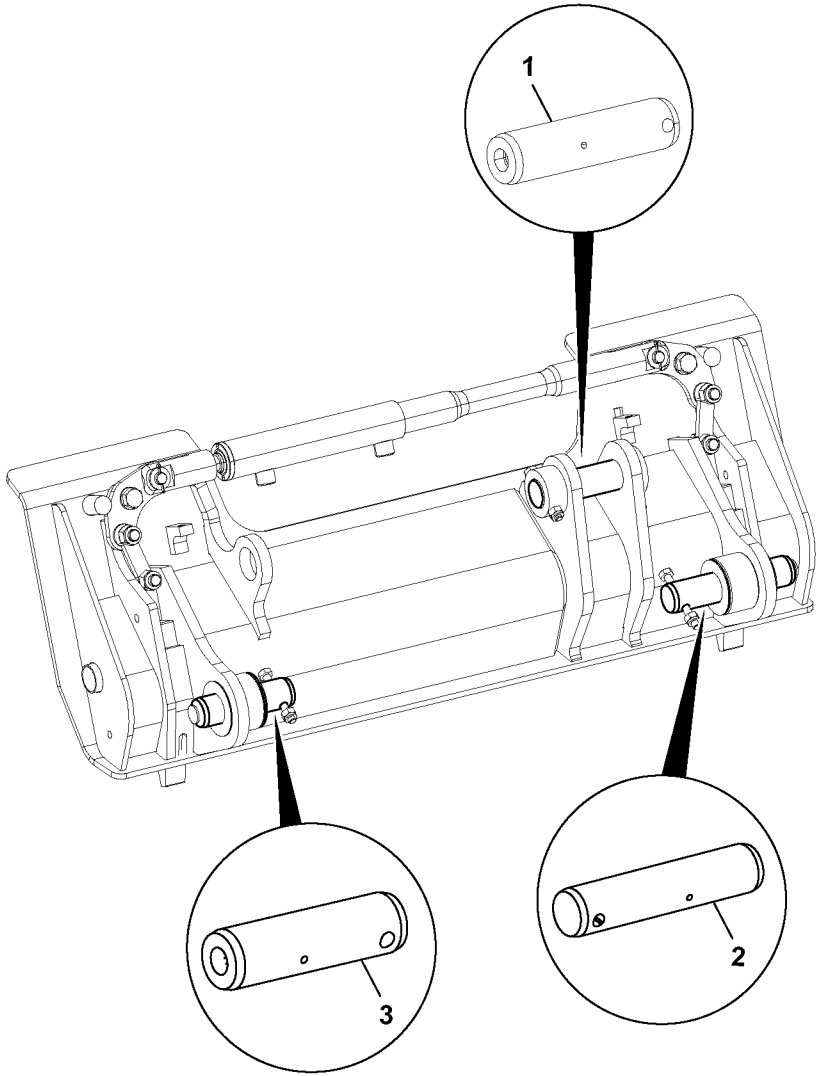

Volvo Construction Equipment
1064237

Fig.	Part No.	Quantity 1	2	3	PS	KIT	Description	Denominación	Denominação	Dénomination	Notes
1	**VOE 16213348**	1					Pivot pin	Perno articulación	Pino de articulação	Boulon articulation	
	VOE 16213350		1				Pivot pin	Perno articulación	Pino de articulação	Boulon articulation	
2	**VOE 17229821**	1					Pivot pin	Eje de articulación	Pino pivô	Axe-guide	
	VOE 17229813		1				Pivot pin	Eje de articulación	Pino pivô	Axe-guide	
3	**VOE 17229824**	1					Pivot pin	Eje de articulación	Pino pivô	Axe-guide	
	VOE 17229818		1				Pivot pin	Eje de articulación	Pino pivô	Axe-guide	

1	**HARDITE**	**Articulation** **Pinos do suporte de implemento** **Pivote, apoyo de utensilios** **Pins for attachment bracket**	Catalogue id **20649**	Group **924**
2	**GROOVED**		Illustr. No **1064237**	Section **300**
3			Issue **PUB 20030904-B**	Page **781**
4				
5		**MC60C-MC105C, MCT70C-MCT95C**		

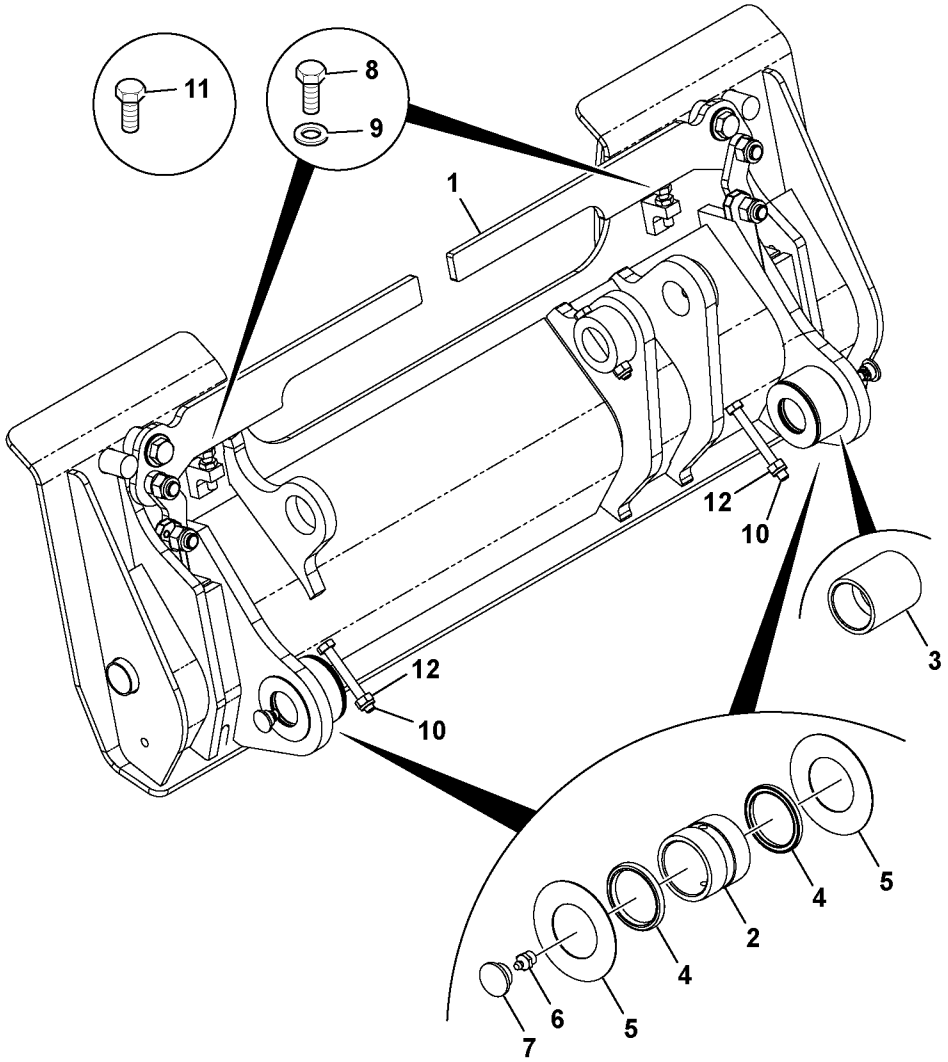

Volvo Construction Equipment
1064115

Fig.	Part No.	Quantity 1	2	3	PS	KIT	Description	Denominación	Denominação	Dénomination	Notes
1							Lever Unit		Unidade de alavanca		See group 924, Page 789
2	**VOE 16213346**	1					Bushing	Casquillo	Bucha	Bague	
3	**VOE 17228929**	1					Bushing	Casquillo	Bucha	Bague	
4	**VOE 16213524**	4					Sealing	Junta	Vedação	Étanchéité	
5	**VOE 16213527**	12					Shim	Laminilla de ajuste	Calço de ajuste	Cale réglage	
6	**VOE 16213518**	5					Nipple	Niple	Niple	Raccord	
7	**VOE 16213522**	3					Plug	Tapón	Bujão	Tampon	
8	**VOE 16212093**	2					Bolt	Perno	Parafuso	Boulon	
9	**VOE 16212123**	2					Nut	Tuerca	Porca	Écrou	
10	**VOE 16212095**	2					Bolt	Perno	Parafuso	Boulon	
11	**VOE 16212292**	1					Bolt	Perno	Parafuso	Boulon	
13	**VOE 16212125**	3					Nut	Tuerca	Porca	Écrou	

1		**Montage de porte-outil.** **Montar o suporte de implemento.** **Montaje de soporte de implementos.** **Assemble attachment bracket.**	Catalogue id **20649**	Group **924**
2			Illustr. No **1064115**	Section **500**
3				
4			Issue **PUB 20030904-B**	Page **783**
5		**MECHANIC MC60C-MC105C, MCT70C-MCT95C**		

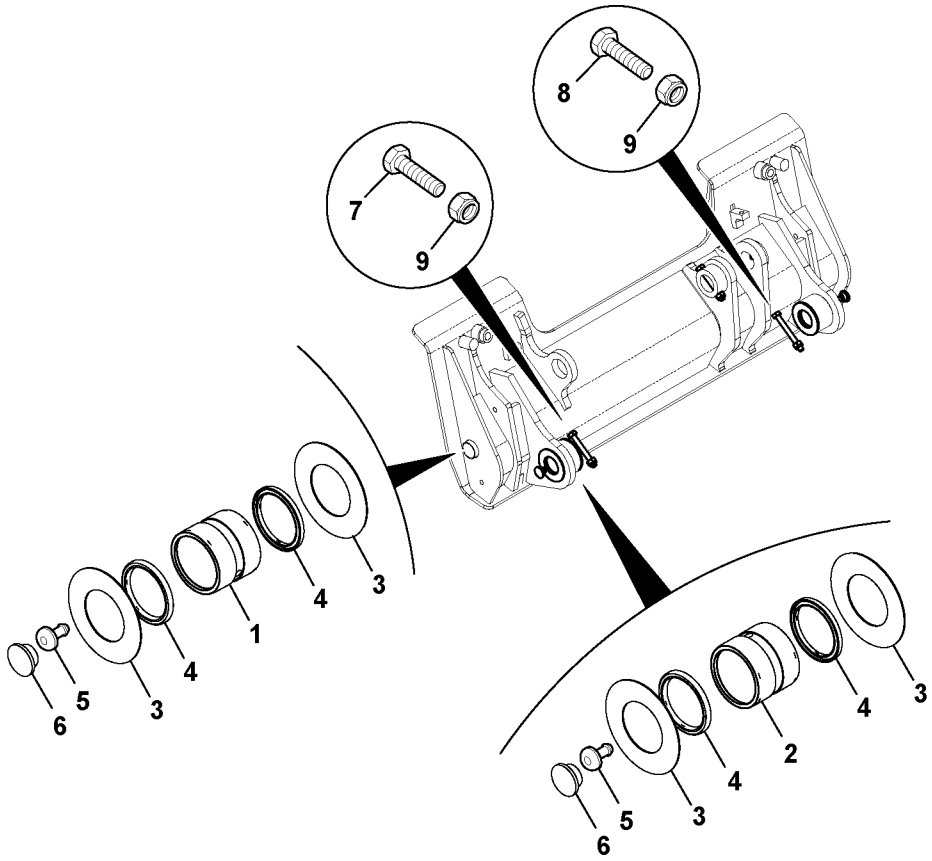
8
9
7
9
3
4
1
4
3
5
6
3
4
2
4
3
5
6

Fig.	Part No.	Quantity 1	2	3	PS	KIT	Description	Denominación	Denominação	Dénomination	Notes
1	**VOE 16213346**	1					Bushing	Casquillo	Bucha	Bague	
2	**VOE 17228929**	1					Bushing	Casquillo	Bucha	Bague	
3	**VOE 16213527**	12					Shim	Laminilla de ajuste	Calço de ajuste	Cale réglage	
4	**VOE 16213524**	4					Sealing	Junta	Vedação	Étanchéité	
5	**VOE 16213518**	5					Nipple	Niple	Niple	Raccord	
6	**VOE 16213522**	3					Plug	Tapón	Bujão	Tampon	
7	**VOE 16212095**	2					Bolt	Perno	Parafuso	Boulon	
8	**VOE 16212292**	1					Bolt	Perno	Parafuso	Boulon	
9	**VOE 16212125**	3					Nut	Tuerca	Porca	Écrou	

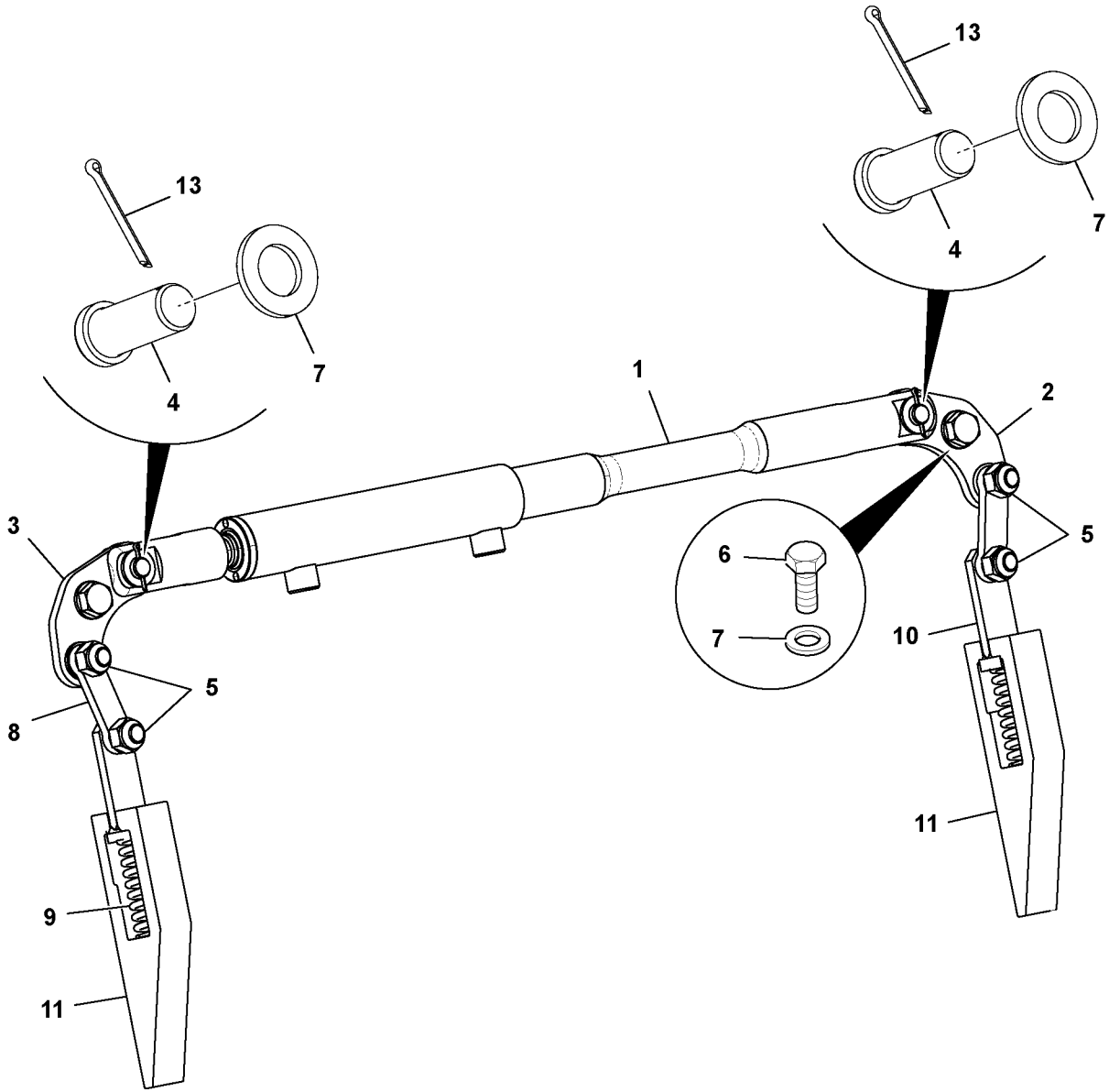
13
13
7
4
7
4
1
2
3
5
6
7
5
8
10
9
11
11

Fig.	Part No.	Quantity 1	2	3	PS	KIT	Description	Denominación	Denominação	Dénomination	Notes
1	**VOE 16213387**	1					Cylinder	Cilindro	Cilindro	Cylindre	See group 924, Page 795
2	**VOE 17210259**	1					Lever kit	Juego de palanca	Jogo alavancas	Kit leviers	
3	**VOE 17210256**	1					Lever kit	Juego de palanca	Jogo alavancas	Kit leviers	
4	**VOE 17210550**	2					Pin	Pasador	Pino	Goupille	
5	**VOE 16212129**	4					Nut	Tuerca	Porca	Écrou	
6	**VOE 16212080**	2					Set screw	Tornillo tope	Parafuso batente	Vis butée	
7	**VOE 13955900**	6					Washer	Arandela	Arruela	Rondelle	
8	**VOE 17210441**	2					Link arm	Brazo unión	Braço articulado	Bras commande	
9	**VOE 16213541**	2					Spring	Resorte	Mola	Ressort	
10	**VOE 17209518**	2					Control plunger	Pasador de accionamiento	Êmbolo	Piston	
11	**VOE 16212367**	2					Peg	Cono	Cavilha	Cheville	
13	**VOE 17210551**	2					Split pin	Pasador hendido	Chaveta fendida	Goupille fendue	

1		**Montage de porte-outil.** **Montar o suporte de implemento.** **Montaje de soporte de implementos.** **Assemble attachment bracket.**	Catalogue id **20649**	Group **924**
2			Illustr. No **1064055**	Section **600**
3			Issue **PUB 20030904-B**	Page **787**
4				
5		**MC60C-MC105C, MCT70C-MCT95C**		

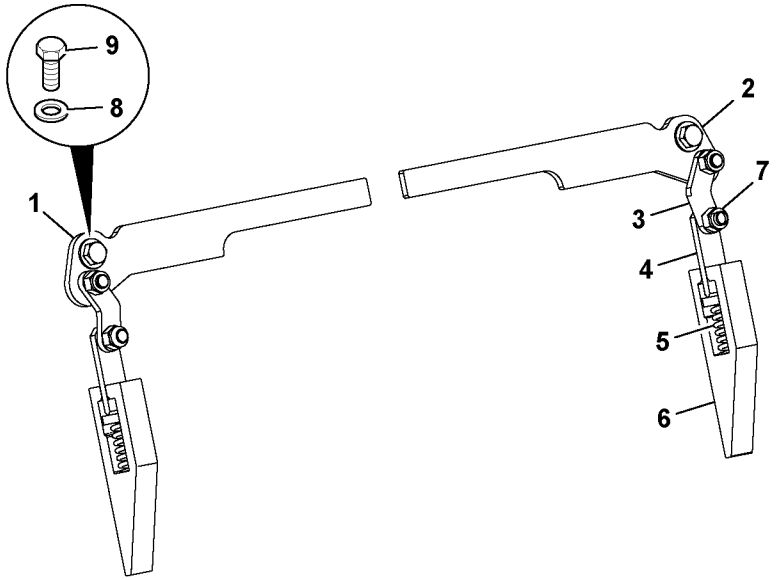
9
8
1
2
7
3
4
5
6

Fig.	Part No.	Quantity 1	2	3	PS	KIT	Description	Denominación	Denominação	Dénomination	Notes
1	**VOE 17210266**	1					Lever kit	Juego de palanca	Jogo alavancas	Kit leviers	
2	**VOE 17210268**	1					Lever kit	Juego de palanca	Jogo alavancas	Kit leviers	
3	**VOE 17205020**	2					Connecting plate	Placa de conexión	Placa conexões	Tôle connexion	
4	**VOE 16213330**	2					Control plunger	Pasador de accionamiento	Êmbolo	Piston	
5	**VOE 16213541**	2					Spring	Resorte	Mola	Ressort	
6	**VOE 16212367**	2					Peg	Cono	Cavilha	Cheville	
7	**VOE 16213519**	4					Nut	Tuerca	Porca	Écrou	
8	**VOE 16212135**	2					Washer	Arandela	Arruela	Rondelle	
9	**VOE 17205065**	2					Screw	Tornillo	Parafuso	Vis	

1		**Montage de porte-outil.** **Montar o suporte de implemento.** **Montaje de soporte de implementos.** **Assemble attachment bracket.**	Catalogue id **20649**	Group **924**
2			Illustr. No **1064076**	Section **650**
3			Issue **PUB 20030904-B**	Page **789**
4				
5		**MC60C-MC105C, MCT70C-MCT95C**		

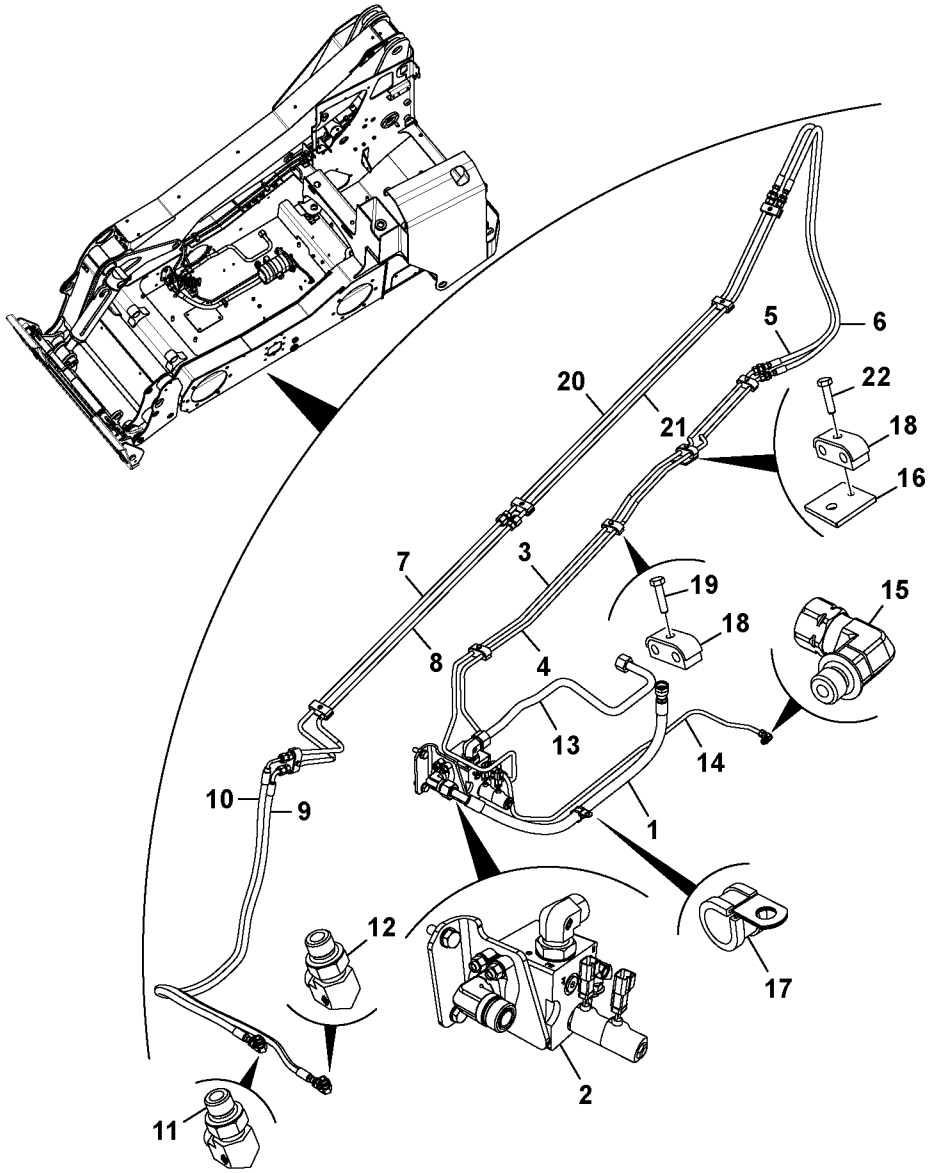
1
2
3
4
5
6
7
8
9
10
11
12
13
14
15
16
17
18
19
20
21
22

Fig.	Part No.	Quantity 1	2	3	PS	KIT	Description	Denominación	Denominação	Dénomination	Notes
1	**VOE 17229468**	1					Hose	Manguera	Mangueira	Flexible	
2		1					Valve	Valvula	Válvula	Soupape	See group 912, Page 721
3	**VOE 17230254**	1					Tube	Tubo	Tubo	Tube	
4	**VOE 17230259**	1					Tube	Tubo	Tubo	Tube	
5	**VOE 17229469**	1					Hose	Manguera	Mangueira	Flexible	
6	**VOE 17229470**	1					Hose	Manguera	Mangueira	Flexible	
7	**VOE 17230313**	1					Tube	Tubo	Tubo	Tube	
8	**VOE 17230315**	1					Tube	Tubo	Tubo	Tube	
9		1			NS		Hose	Tubo flexible	Mangueira	Durit	
10		1			NS		Hose	Tubo flexible	Mangueira	Durit	
11	**RM 59922864**	1					Adapter	Adaptador	Adaptador	Adaptateur	
12	**VOE 17205713**	1					Nipple	Niple	Niple	Raccord	
13	**VOE 17230250**	1					Tube	Tubo	Tubo	Tube	
14	**VOE 17230280**	1					Tube	Tubo	Tubo	Tube	
15	**VOE 16212379**	1					Adapter	Adaptador	Adaptador	Adaptateur	
16		1			NS		Plate	Chapa	Chapa	Tôle	
17	**VOE 17229216**	1					Clip	Clip	Clipe	Clip	
18	**VOE 17210451**	9					Hose clamp	Abrazadera de manguera	Braçadeira da mangueira	Collier durite	
19	**VOE 16212071**	8					Set screw	Tornillo tope	Parafuso batente	Vis butée	
20	**VOE 17230295**	1					Tube	Tubo	Tubo	Tube	
21	**VOE 17230290**	1					Tube	Tubo	Tubo	Tube	
22	**VOE 17205095**	1					Bolt	Perno	Parafuso	Boulon	

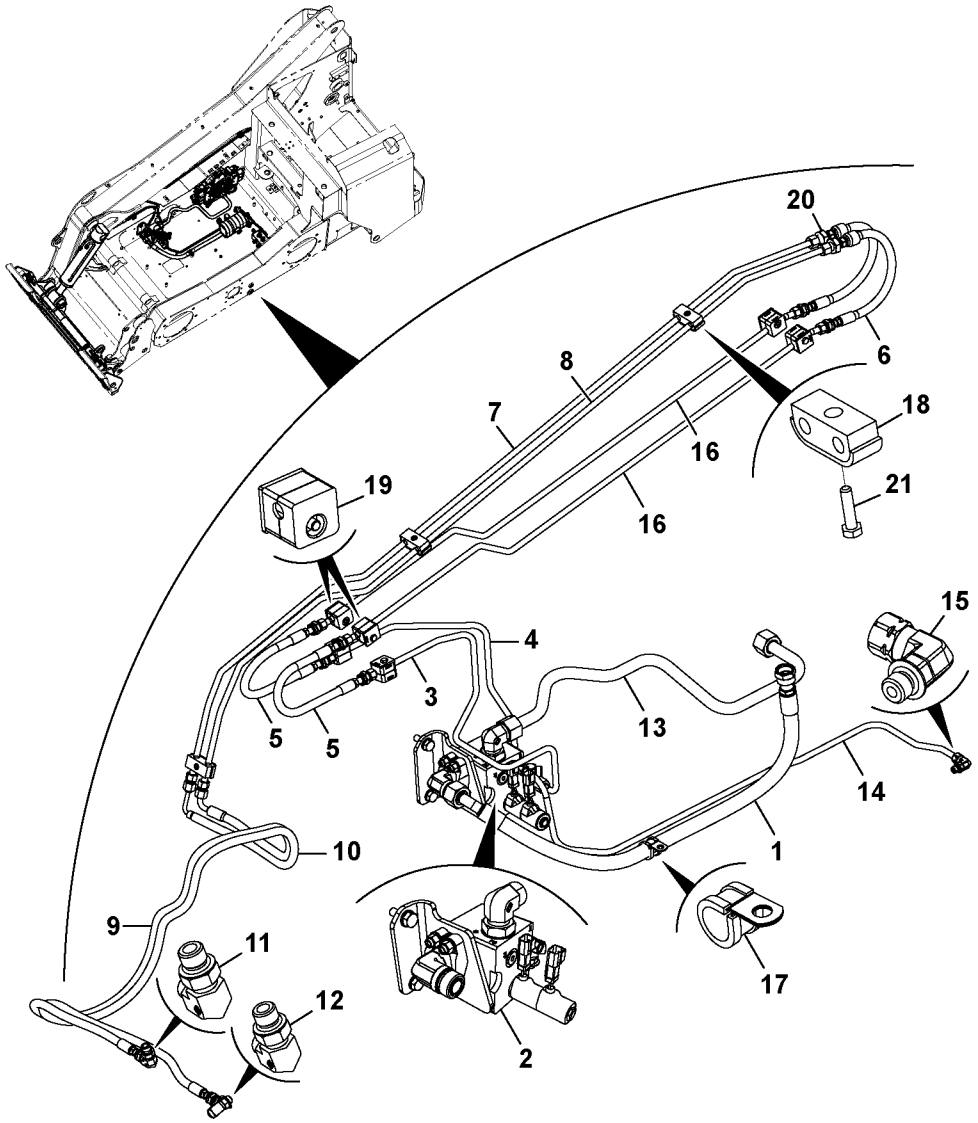
20
6
8
7
16
18
19
16
21
15
4
3
5
5
13
14
10
1
9
11
12
17
2

Fig.	Part No.	Quantity 1	2	3	PS	KIT	Description	Denominación	Denominação	Dénomination	Notes
1	**VOE 17229468**	1					Hose	Manguera	Mangueira	Flexible	
2		1					Valve Body	Cuerpo Valvula	Corpo da válvula	Corps Valve	See group 912, Page 721
3		1			NS		Tube	Tubo	Tubo	Tube	
4		2			NS		Tube	Tubo	Tubo	Tube	
5		2			NS		Hose assembly	Conducto	Mangueira completa	Conduit flexible	
6		1			NS		Hose assembly	Conducto	Mangueira completa	Conduit flexible	
7		1			NS		Tube	Tubo	Tubo	Tube	
8		1			NS		Tube	Tubo	Tubo	Tube	
9	**VOE 17229537**	1					Hose	Manguera	Mangueira	Flexible	
10	**VOE 17229538**	1					Hose	Manguera	Mangueira	Flexible	
11	**VOE 17205713**	1					Nipple	Niple	Niple	Raccord	
12	**RM 59922864**	1					Adapter	Adaptador	Adaptador	Adaptateur	
13	**VOE 17230250**	1					Tube	Tubo	Tubo	Tube	
14	**VOE 17230280**	1					Tube	Tubo	Tubo	Tube	
15	**VOE 16212379**	1					Adapter	Adaptador	Adaptador	Adaptateur	
16		2			NS		Tube	Tubo	Tubo	Tube	
17	**VOE 17229216**	1					Clip	Clip	Clipe	Clip	
18	**VOE 17210451**	3					Hose clamp	Abrazadera de manguera	Braçadeira da mangueira	Collier durite	
19		6			NS		Hose Clamp	Abraz Manguera	Braçadeira de mangueira	Collier Serrage	
20		2			NS		Nut	Tuerca	Porca	Ecrou	
21		3			NS		Screw	Tornillo	Parafuso	Vis	

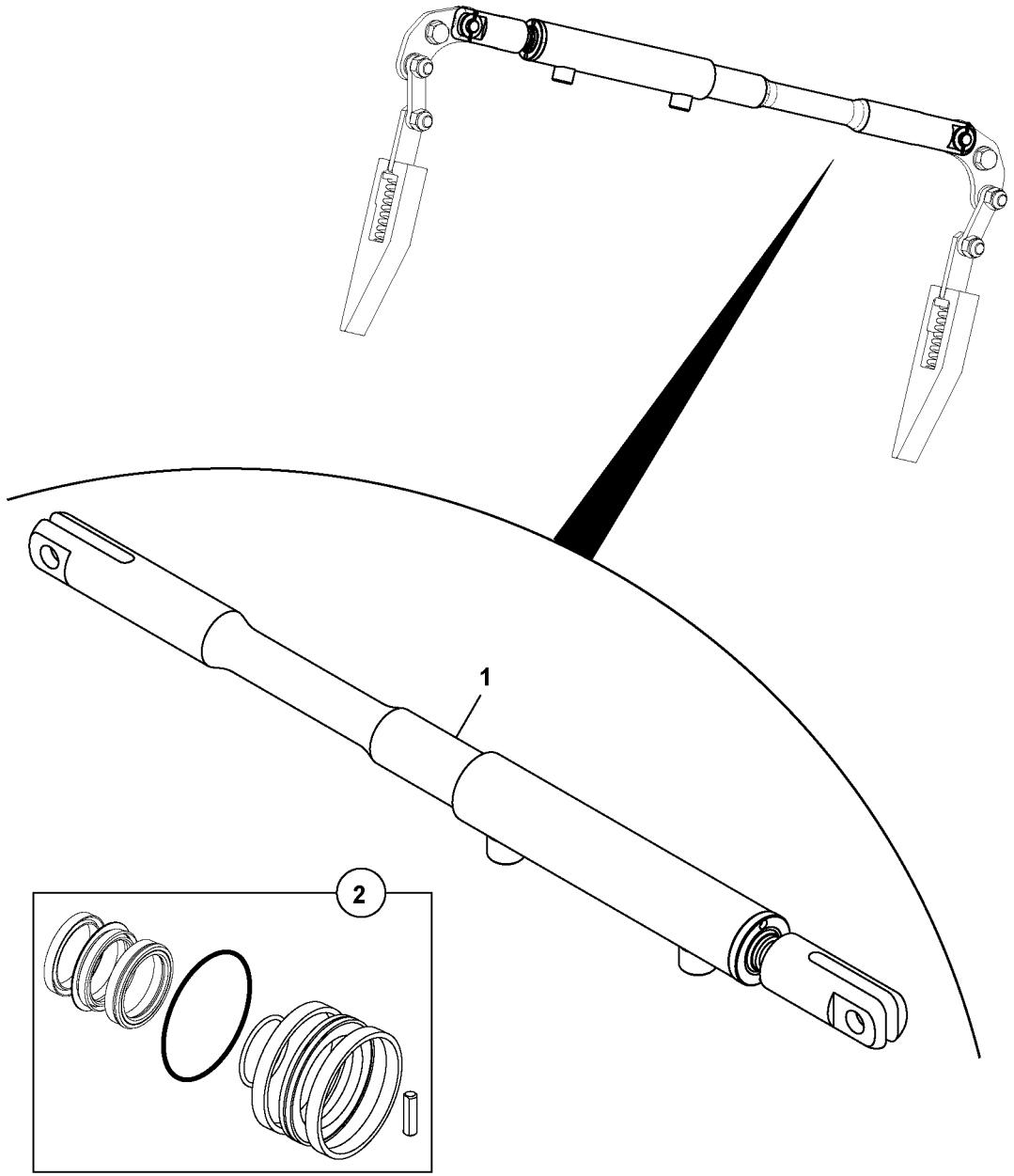
1
2

Fig.	Part No.	Quantity 1	2	3	PS	KIT	Description	Denominación	Denominação	Dénomination	Notes
1	**VOE 17229385**	1					Cylinder	Cilindro	Cilindro	Cylindre	
2	**VOE 17224855**	1					Seal flange kit			Kit de bride d'étanchéité	

1		**Verin hydraulique, fixation rapide** **Cilindro hidráulico, acoplamento rápido** **Cilindro hydráulico, acoplamiento rapido** **Hydraulic cylinder, quick attachment**	Catalogue id **20649**	Group **924**
2				
3			Illustr. No **1064011**	Section **1000**
4				
5		**MC60C-MC105C, MCT70C-MCT95C**	Issue **PUB 20030904-B**	Page **795**

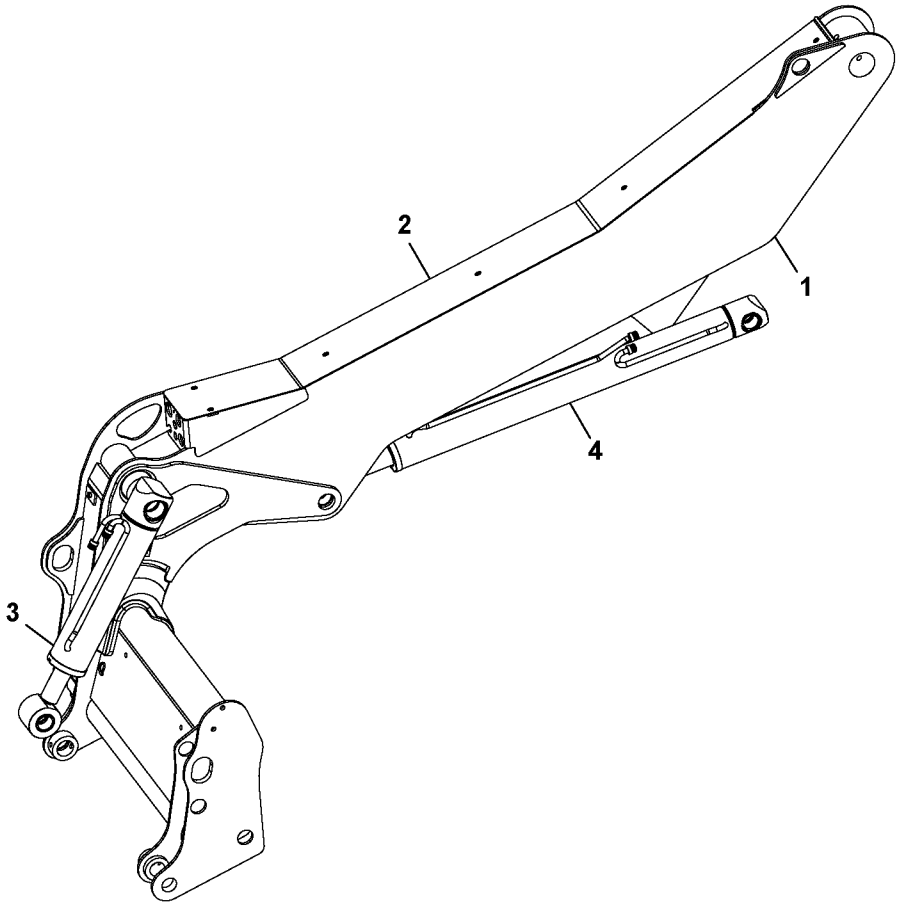

Volvo Construction Equipment
1064005

Fig.	Part No.	Quantity 1	2	3	PS	KIT	Description	Denominación	Denominação	Dénomination	Notes
1		1			NS		Oil Draining Pi	Tubo De Vaciado		Tube Vidange Hu	
2		1			NS		Cover	Capó	Capô	Capot	
3	**VOE 17230370**	1					Hydraulic cylinder	Cilindro hidráulico	Cilindro hidráulico	Vérin hydraulique	See group 945, Page 815
4	**VOE 17230359**	1					Hydraulic cylinder	Cilindro hidráulico	Cilindro hidráulico	Vérin hydraulique	See group 945, Page 819

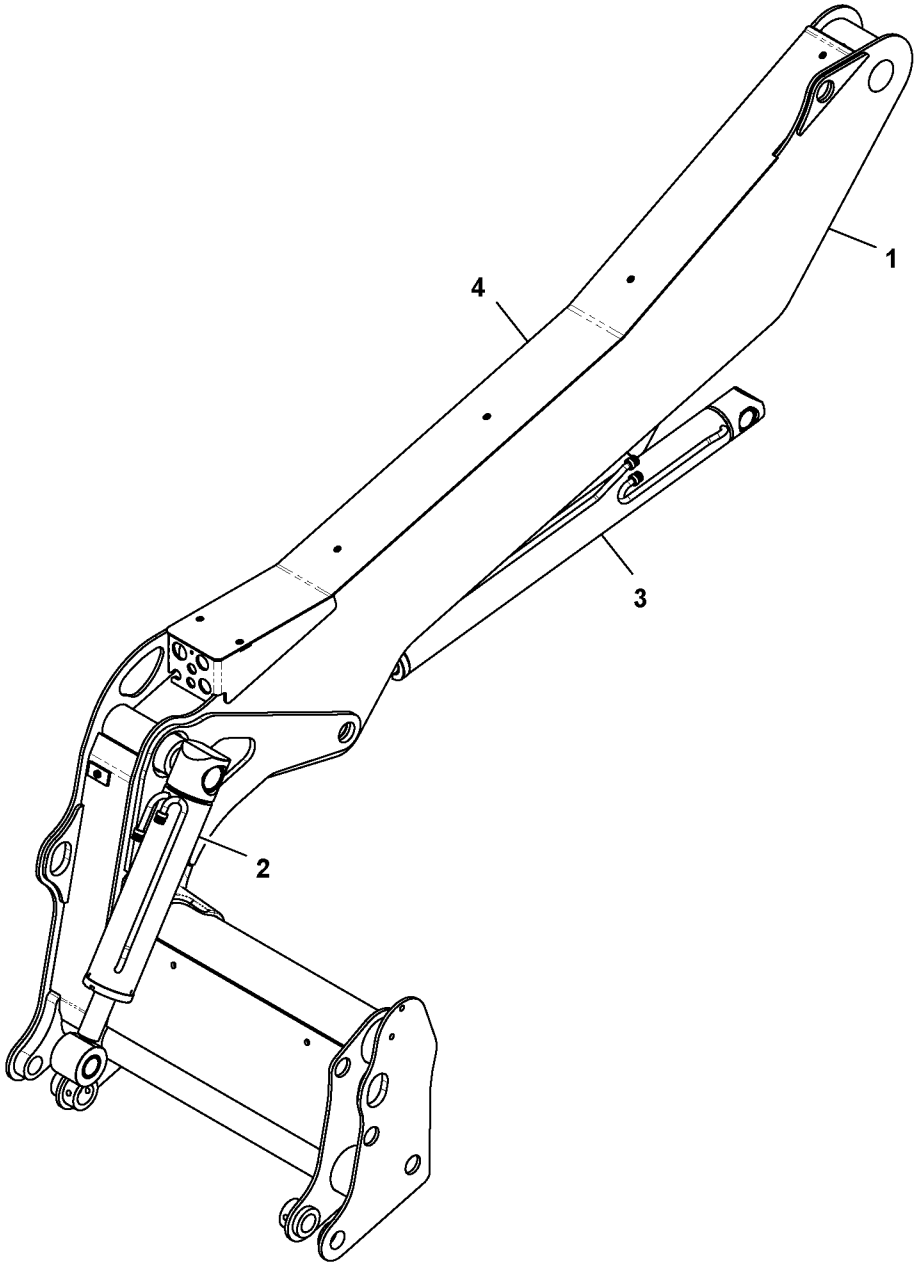

Volvo Construction Equipment
1064183

Fig.	Part No.	Quantity 1	2	3	PS	KIT	Description	Denominación	Denominação	Dénomination	Notes
1		1			NS		Arm	Brazo	Braço	Bras	
2	**VOE 17230370**	1					Hydraulic cylinder	Cilindro hidráulico	Cilindro hidráulico	Vérin hydraulique	See group 945, Page 815
3	**VOE 17230389**	1					Hydraulic cylinder	Cilindro hidráulico	Cilindro hidráulico	Vérin hydraulique	
4		1			NS		Cover	Capó	Capô	Capot	

1		**Bras de levage, course verticale** **Braço da carregadeira, elevação vertical** **Brazo de la cargadora, elevación vertical** **Loader arm, vertical lift**	Catalogue id **20649**	Group **945**
2			Illustr. No **1064183**	Section **200**
3			Issue **PUB 20030904-B**	Page **799**
4				
5		**MC60C**		

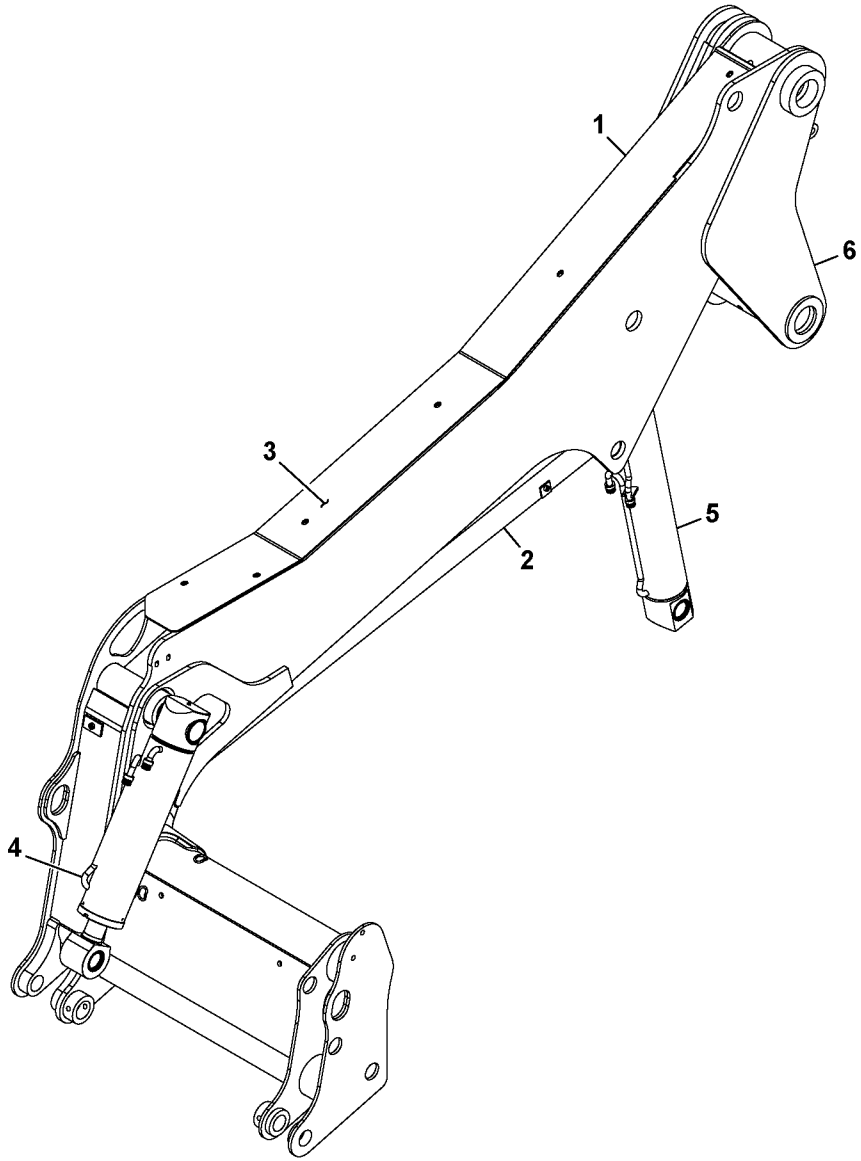

Volvo Construction Equipment
1064232

Fig.	Part No.	Quantity 1	2	3	PS	KIT	Description	Denominación	Denominação	Dénomination	Notes
1		1			NS		Boom base	Pie pluma	Base do lanca	Pied de fleche	
2	**VOE 17229702**	1					Link	Articulación	Articulação	Articulation	
3		1			NS		Cover	Capó	Capô	Capot	
4	**VOE 17230393**	1					Hydraulic cylinder	Cilindro hidráulico	Cilindro hidráulico	Vérin hydraulique	See group 945, Page 817
5	**VOE 17230398**	1					Hydraulic cylinder	Cilindro hidráulico	Cilindro hidráulico	Vérin hydraulique	See group 945, Page 821
6		1			NS		Link	Articulacion	Articulação	Articulation	

1		**Bras de levage, course verticale** **Braço da carregadeira, elevação vertical** **Brazo de la cargadora, elevación vertical** **Loader arm, vertical lift**	Catalogue id **20649**	Group **945**
2			Illustr. No **1064232**	Section **300**
3			Issue **PUB 20030904-B**	Page **801**
4				
5		**VERTICAL LIFT MC85C-MC105C, MCT85C, MCT95C**		

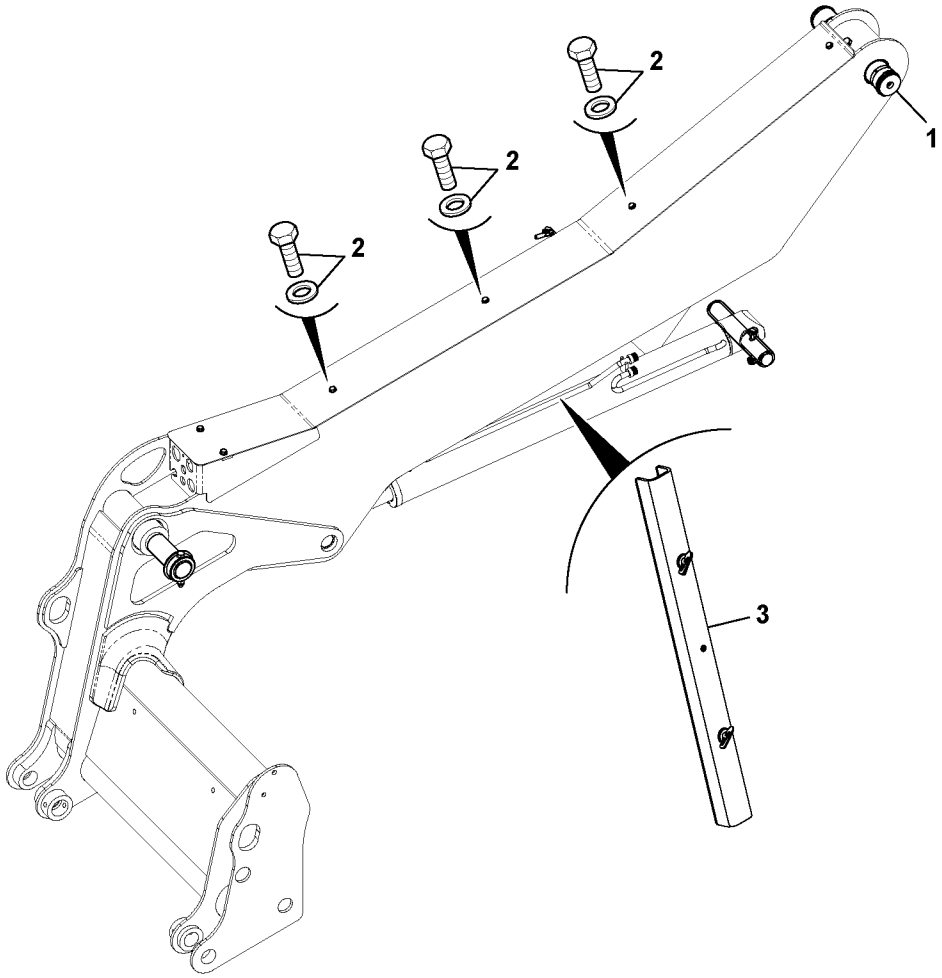
2
2
2
1
3

Fig.	Part No.	Quantity 1	2	3	PS	KIT	Description	Denominación	Denominação	Dénomination	Notes
1		1					Pin	Pasador	Pino	Goupille	See group 945, Page 805
1		1					Bushing	Casquillo	Casquilho	Bague	See group 945, Page 805
2		1					Fastening Details				See group 945, Page 809
3		1					Strut	Soporte	Escora	Etai	See group 715, Page 419

1		**Chassis levage avec pièces de montage** **Quadro de elevação com peças acessórias** **Bastidor elevacion con accesorios de montaje** **Lifting frame work with assembly parts**	Catalogue id **20649**	Group **945**
2				
3			Illustr. No **1064233**	Section **500**
4				
5		**MC60C, MC70C, MCT70C**	Issue **PUB 20030904-B**	Page **803**

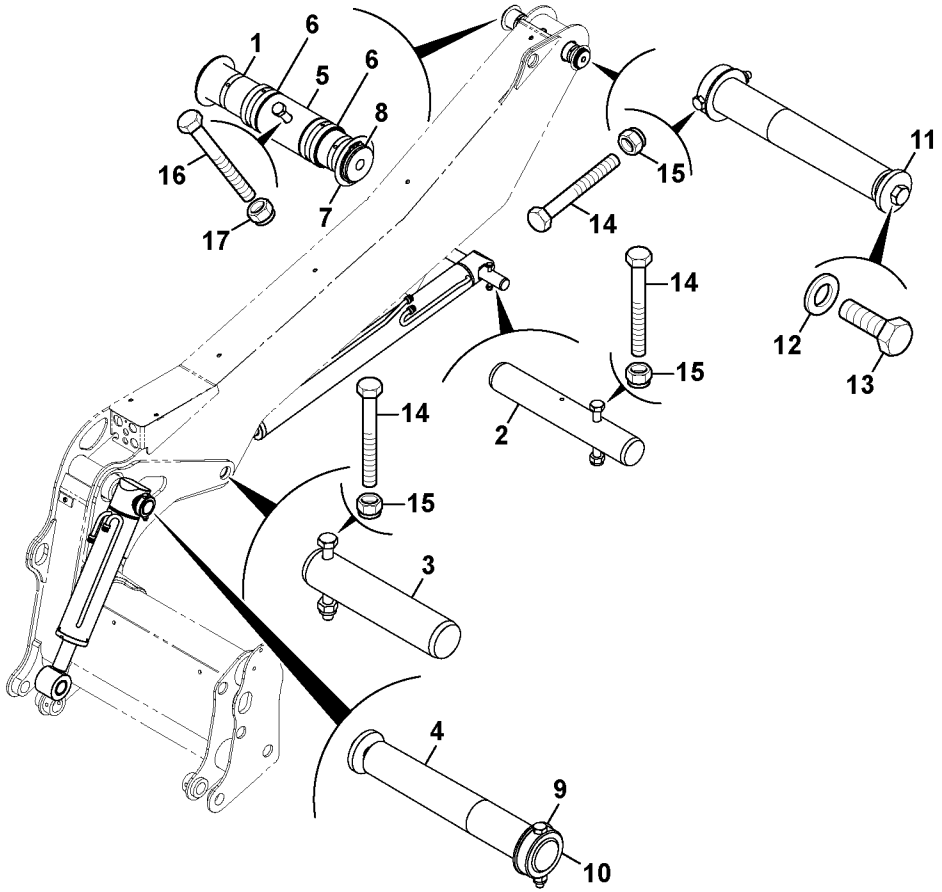
1
6
5
6
8
16
17
7
15
11
14
14
12
13
15
2
14
15
3
4
9
10

Fig.	Part No.	Quantity 1	2	3	PS	KIT	Description	Denominación	Denominação	Dénomination	Notes
1	**VOE 17229685**	1					Pivot pin	Eje de articulación	Pino pivô	Axe-guide	
2	**VOE 17229689**	1					Pivot pin	Eje de articulación	Pino pivô	Axe-guide	
3	**VOE 17229687**	1					Pivot pin	Eje de articulación	Pino pivô	Axe-guide	
4	**VOE 17229686**	1					Pivot pin	Eje de articulación	Pino pivô	Axe-guide	
5	**VOE 17230191**	1					Spacer	Distanciador	Espaçador	Entretoise	
6	**VOE 16213543**	2					Liner	Camisa	Camisa	Chemise	
7	**VOE 16212306**	3					Washer	Arandela	Arruela	Rondelle	
8	**VOE 16212301**	2					Circlip plier	Alicates aro ranurado	Barra anel ranhurado	Pince à circlips	
9	**VOE 17230202**	1					Spacer	Distanciador	Espaçador	Entretoise	
10	**VOE 17229255**	1					Collar	Collar	Colar	Collerette	
11	**VOE 16214302**	1					Plain washer	Arandela plana	Arruela simples	Rondelle plane	
12	**VOE 17205286**	1					Washer	Arandela	Arruela	Rondelle	
13	**VOE 16212308**	1					Bolt	Perno	Parafuso	Boulon	
14	**VOE 16212292**	3					Bolt	Perno	Parafuso	Boulon	
15	**VOE 17229619**	3					Nut	Tuerca	Porca	Écrou	
16	**VOE 16212298**	1					Bolt	Perno	Parafuso	Boulon	
17	**VOE 16212126**	1					Nut	Tuerca	Porca	Écrou	

1		**Chassis levage avec pièces de montage** **Quadro de elevação com peças acessórias** **Bastidor elevacion con accesorios de montaje** **Lifting frame work with assembly parts**	Catalogue id **20649**	Group **945**
2			Illustr. No **1064107**	Section **550**
3			Issue **PUB 20030904-B**	Page **805**
4				
5		**MC60C, MC70C, MCT70C**		

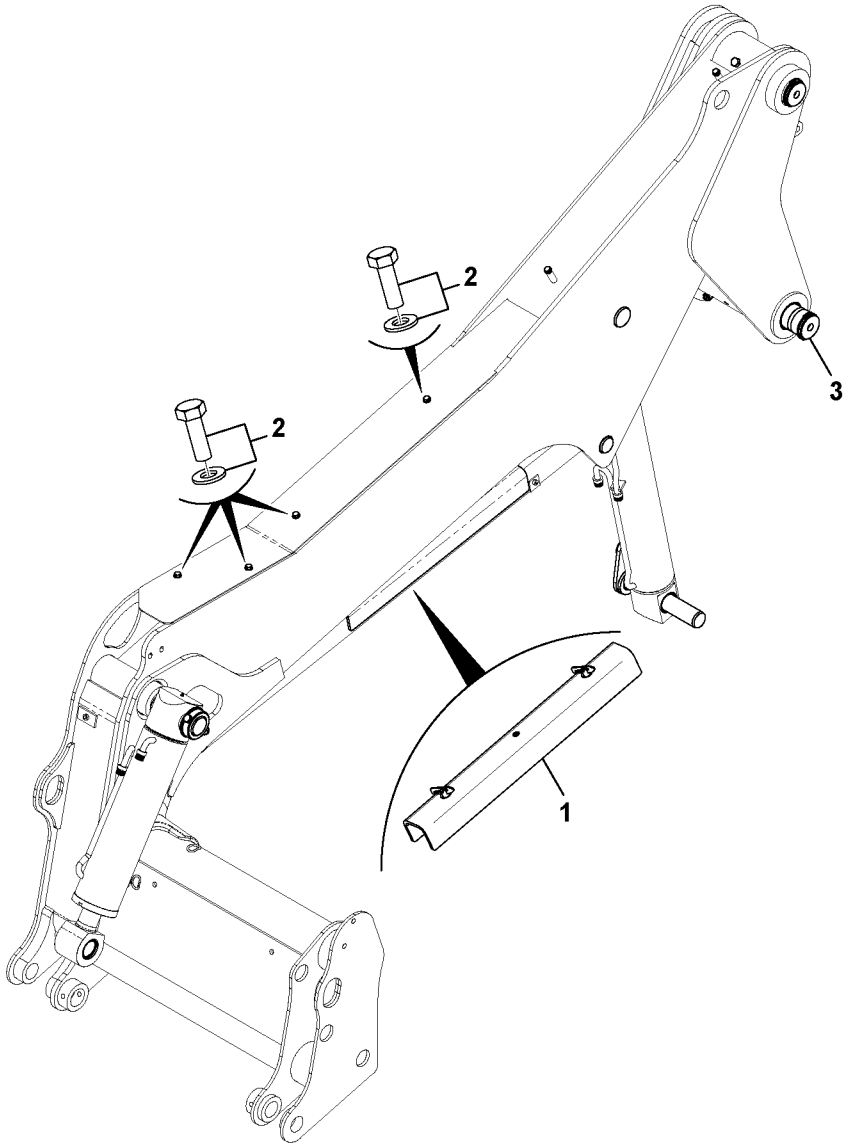

Volvo Construction Equipment
1064234

Fig.	Part No.	Quantity 1	2	3	PS	KIT	Description	Denominación	Denominação	Dénomination	Notes
1		1					Strut	Soporte	Escora	Etai	See group 715, Page 421
2		1					Fastening Details				See group 945, Page 809
3		1			NS		Pin	Pasador	Pino	Goupille	
3		1			NS		Bushing	Casquillo	Casquilho	Bague	

1		**Chassis levage avec pièces de montage** **Quadro de elevação com peças acessórias** **Bastidor elevacion con accesorios de montaje** **Lifting frame work with assembly parts**	Catalogue id **20649**	Group **945**
2				
3			Illustr. No **1064234**	Section **600**
4				
5		**MC85C-MC105C, MCT85C, MCT95C**	Issue **PUB 20030904-B**	Page **807**

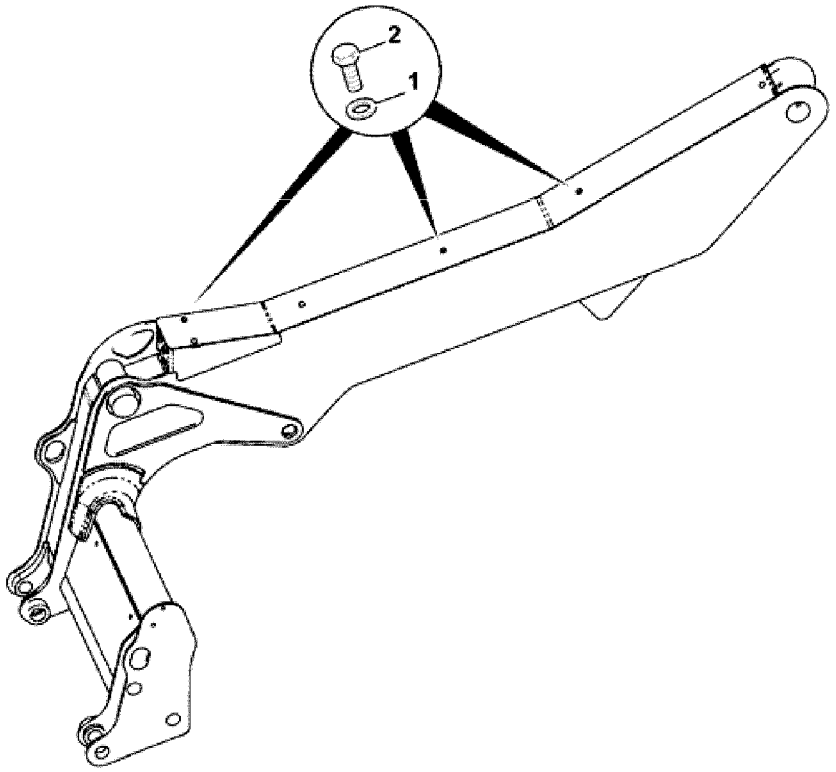
2
1

Fig.	Part No.	Quantity 1	2	3	PS	KIT	Description	Denominación	Denominação	Dénomination	Notes
1	**VOE 20460127**	6					Washer	Arandela	Arruela	Rondelle	
2	**VOE 16213999**	6					Set screw	Tornillo tope	Parafuso batente	Vis butée	

1		**Tôle de protection, bras de levage** **Placa de cobertura, braço da carregadeira** **Chapa de protección, brazo cargador** **Cover plate, loader arm**	Catalogue id **20649**	Group **945**
2				
3			Illustr. No **1064437**	Section **700**
4				
5		**MC60C-MC105C, MCT70C-MCT95C**	Issue **PUB 20030904-B**	Page **809**

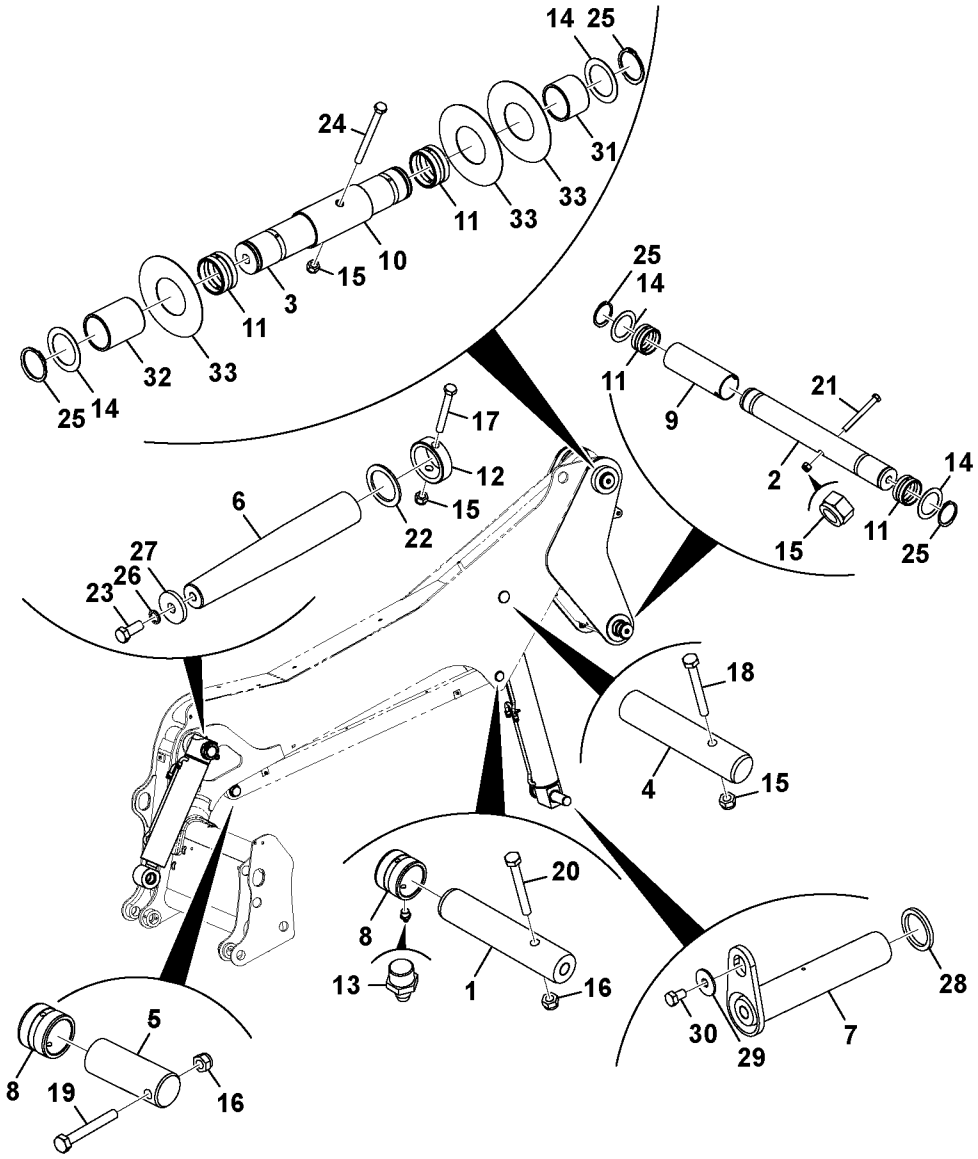
14
25
24
31
33
33
11
33
10
15
3
11
32
33
25
14
25
14
11
9
21
2
14
15
11
25
17
12
15
22
6
27
26
23
18
4
15
20
8
13
1
16
5
8
19
16
28
30
29
7

Fig.	Part No.	Quantity 1	2	3	PS	KIT	Description	Denominación	Denominação	Dénomination	Notes
1		1			NS		Pivot Pin	Pasador Artic.		Goupille-guide	
2		1			NS		Pivot Pin	Pasador Artic.		Goupille-guide	
3		1			NS		Pivot Pin	Pasador Artic.		Goupille-guide	
4		1			NS		Pivot Pin	Pasador Artic.		Goupille-guide	
5		1			NS		Pivot Pin	Pasador Artic.		Goupille-guide	
6	**VOE 17229686**	1					Pivot pin	Eje de articulación	Pino pivô	Axe-guide	
7		1			NS		Pivot Pin	Pasador Artic.		Goupille-guide	
8		2			NS		Bush	Manguito	Bucha	Boîte	
9		1			NS		Spacer	Espaciador	Espaçador	Partie Intermédiaire	
10		1			NS		Spacer	Espaciador	Espaçador	Partie Intermédiaire	
11	**VOE 16213543**	4					Liner	Camisa	Camisa	Chemise	
12	**VOE 17229255**	1					Collar	Collar	Colar	Collerette	
13	**VOE 16213518**	2					Nipple	Niple	Niple	Raccord	
14	**VOE 16212306**	4					Washer	Arandela	Arruela	Rondelle	
15	**VOE 16212126**	4					Nut	Tuerca	Porca	Écrou	
16	**VOE 16212125**	2					Nut	Tuerca	Porca	Écrou	
17	**VOE 16212292**	1					Bolt	Perno	Parafuso	Boulon	
18		1			NS		Bolt	Perno	Parafuso	Boulon	
19		1			NS		Bolt	Perno	Parafuso	Boulon	
20		1			NS		Bolt	Perno	Parafuso	Boulon	
21		1			NS		Bolt	Perno	Parafuso	Boulon	
22	**VOE 17230202**	1					Spacer	Distanciador	Espaçador	Entretoise	
23	**VOE 16212308**	1					Bolt	Perno	Parafuso	Boulon	
24		1			NS		Bolt	Perno	Parafuso	Boulon	
25	**VOE 16212301**	4					Circlip plier	Alicates aro ranurado	Barra anel ranhurado	Pince à circlips	
26	**VOE 17205286**	1					Washer	Arandela	Arruela	Rondelle	
27	**VOE 16214302**	1					Plain washer	Arandela plana	Arruela simples	Rondelle plane	
28		1			NS		Spacer	Espaciador	Espaçador	Partie Intermédiaire	
29	**VOE 17205554**	1					Plain washer	Arandela plana	Arruela simples	Rondelle plane	
30	**VOE 17205074**	1					Set screw	Tornillo tope	Parafuso batente	Vis butée	

1	
2	
3	
4	
5	

Chassis levage avec pièces de montage
Quadro de elevação com peças acessórias
Bastidor elevacion con accesorios de montaje
Lifting frame work with assembly parts

MC85C-MC105C, MCT85C, MCT95C

Catalogue id **20649**	Group **945**
Illustr. No **1064260**	Section **750**
Issue **PUB 20030904-B**	Page **811**

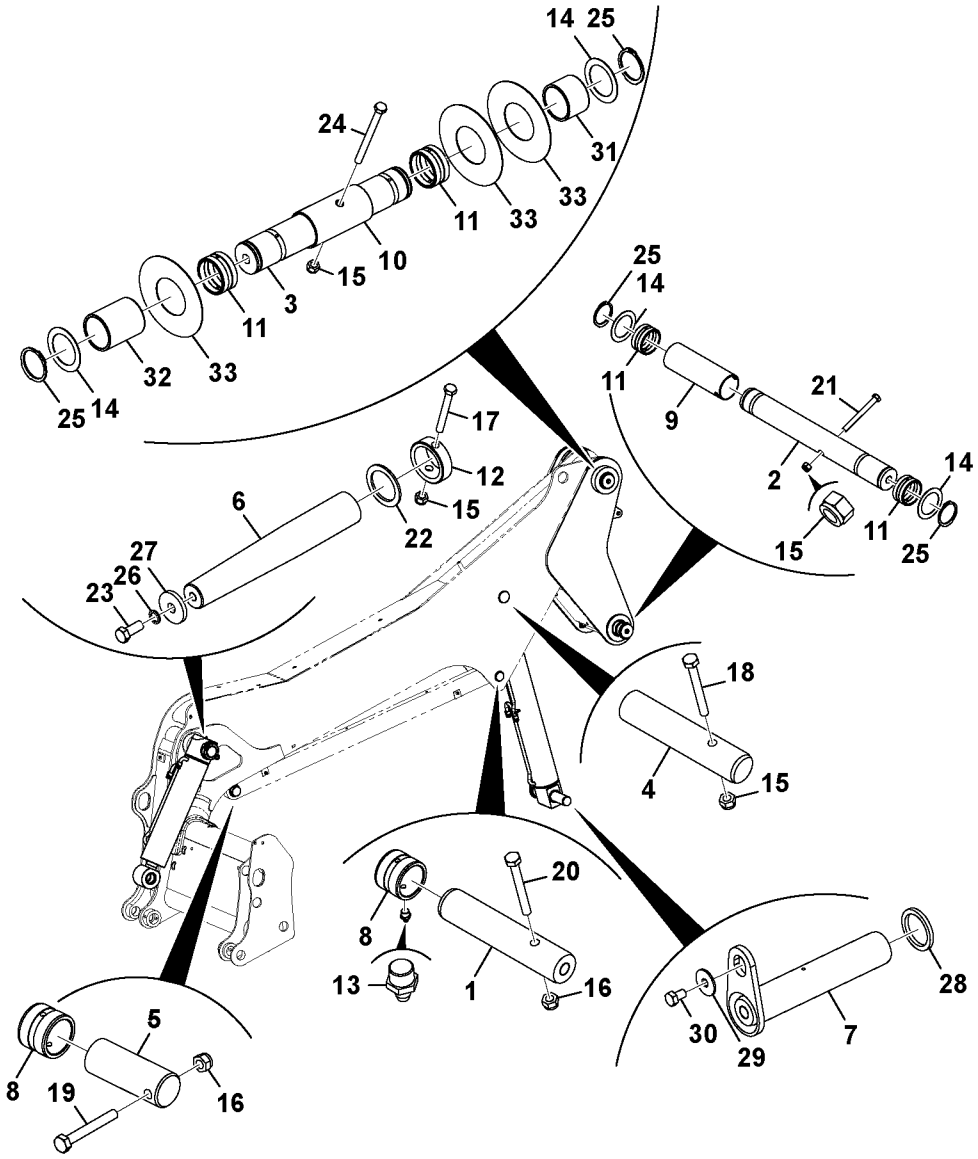
14
25
24
31
33
33
11
33
10
15
3
11
32
33
25
14
25
14
11
9
21
2
14
15
11
25
17
12
15
22
6
27
26
23
18
4
15
20
8
13
1
16
5
8
19
16
28
30
29
7

Fig.	Part No.	Quantity 1	2	3	PS	KIT	Description	Denominación	Denominação	Dénomination	Notes
31	**VOE 16213513**	1					Bushing	Casquillo	Bucha	Bague	
32	**VOE 16213511**	1					Bushing	Casquillo	Bucha	Bague	
33		3			NS		Shim	Arandela Ajuste	Calço	Cale d'épaisseur	

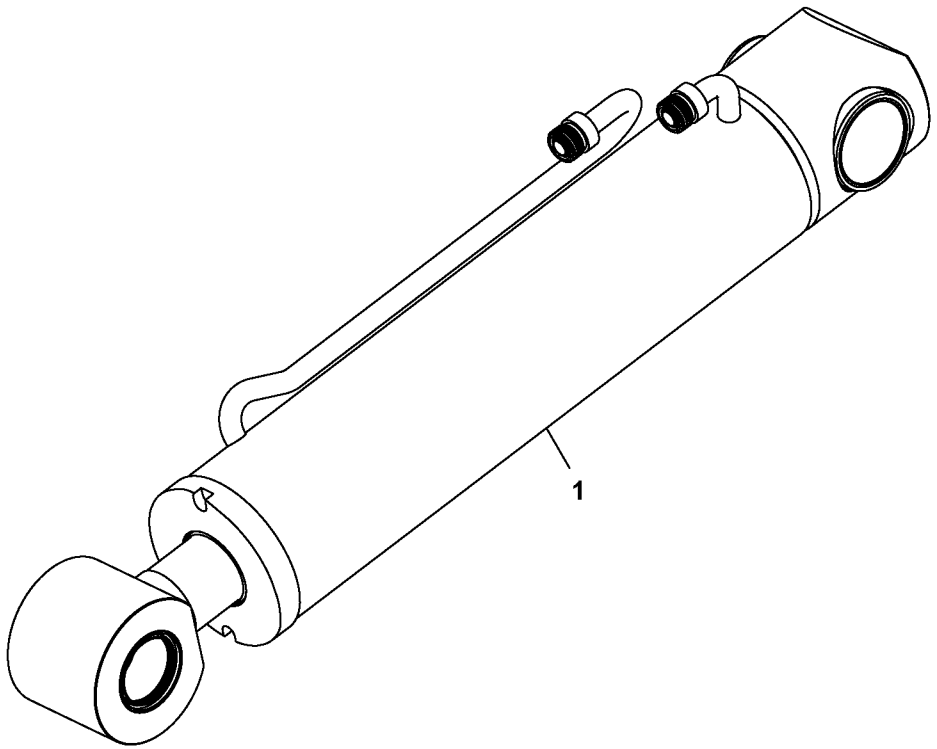
1

Fig.	Part No.	Quantity 1	2	3	PS	KIT	Description	Denominación	Denominação	Dénomination	Notes
1	**VOE 17230383**	1					Hydraulic cylinder.....	Cilindro hidráulico.....	Cilindro hidráulico.....	Vérin hydraulique.....	

1		**Vérin de cavage** **Cilindro de inclinação** **Cilindro basculante** **Tilt cylinder**	Catalogue id **20649**	Group **945**
2			Illustr. No **1064184**	Section **1000**
3			Issue **PUB 20030904-B**	Page **815**
4				
5		**MC60C, MC70C, MCT70C**		

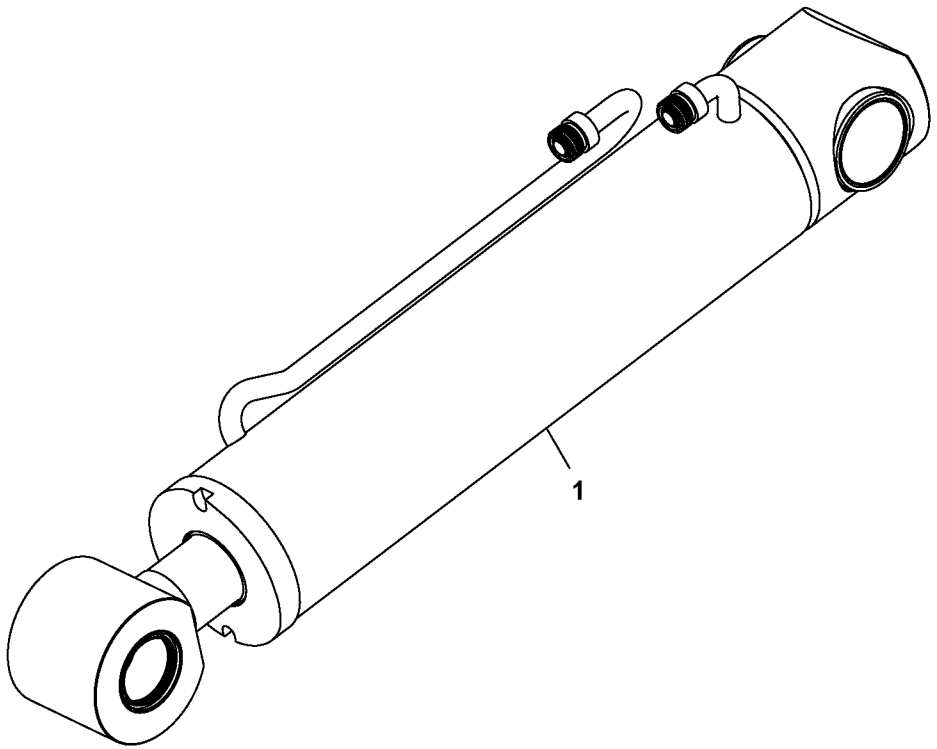
1

Fig.	Part No.	Quantity 1	2	3	PS	KIT	Description	Denominación	Denominação	Dénomination	Notes
1		1			NS		Hydraulic Cylin.....	Cilindro hidráulico.....	Cilindro hidráulico.....	Vérin Hydrauliq.....	

1		**Vérin de cavage** **Cilindro de inclinação** **Cilindro basculante** **Tilt cylinder**	Catalogue id **20649**	Group **945**
2			Illustr. No **1064184**	Section **1050**
3			Issue **PUB 20030904-B**	Page **817**
4				
5		**MC85C-MC105C, MCT85C, MCT95C**		

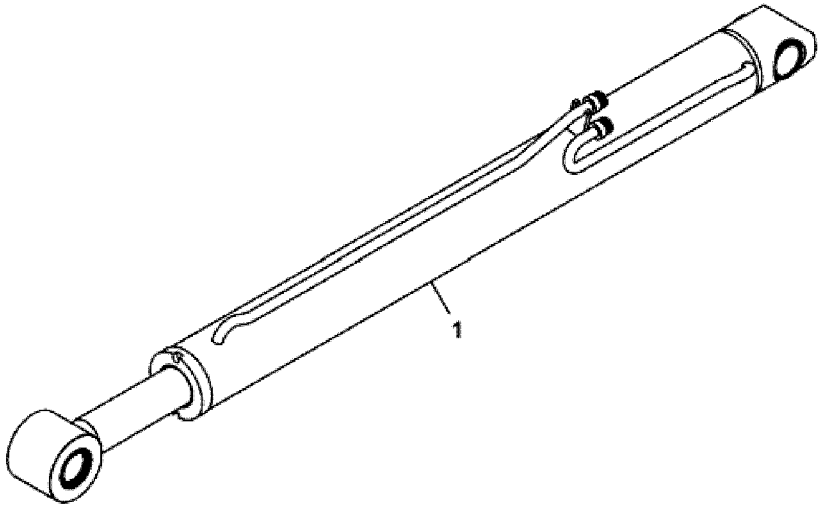
1

Fig.	Part No.	Quantity 1	2	3	PS	KIT	Description	Denominación	Denominação	Dénomination	Notes
1	**VOE 17230359**	1					Hydraulic cylinder	Cilindro hidráulico	Cilindro hidráulico	Vérin hydraulique	
1	**VOE 17230382**		1				Hydraulic cylinder	Cilindro hidráulico	Cilindro hidráulico	Vérin hydraulique	

1	**MC70C, MCT70C**	**Vérin de levage** **Cilindro de elevação** **Cilindro elevador** **Lift cylinder**	Catalogue id **20649**	Group **945**
2	**MC60C**		Illustr. No **1064444**	Section **1100**
3			Issue **PUB 20030904-B**	Page **819**
4				
5				

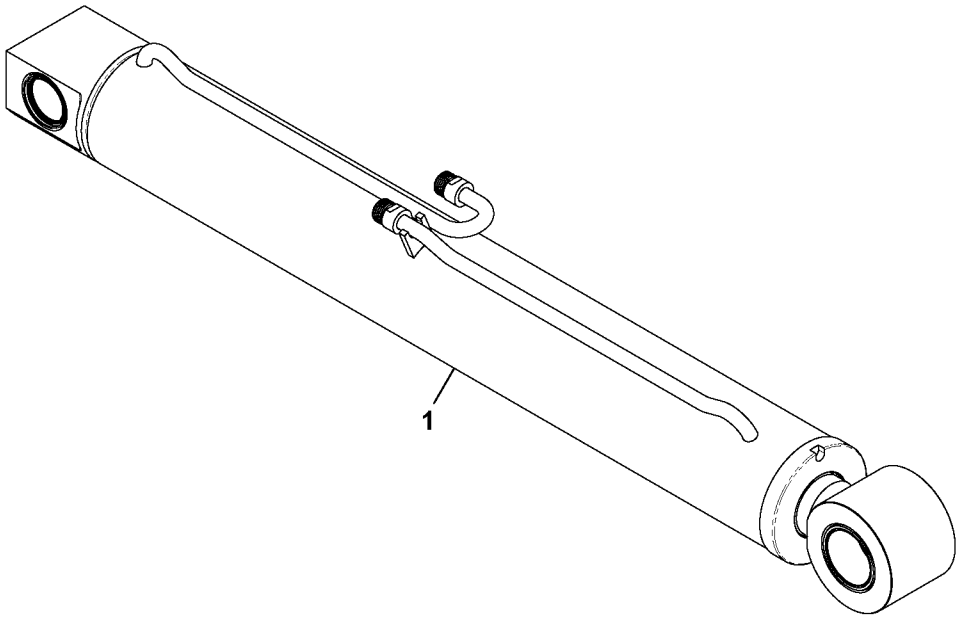
1

Fig.	Part No.	Quantity 1	2	3	PS	KIT	Description	Denominación	Denominação	Dénomination	Notes
1		1			NS		Hydraulic Cylin.....	Cilindro hidráulico.....	Cilindro hidráulico.....	Vérin Hydrauliq.....	

1		**Vérin de levage** **Cilindro de elevação** **Cilindro elevador** **Lift cylinder**	Catalogue id **20649**	Group **945**
2				
3			Illustr. No **1064068**	Section **1150**
4				
5		**MC85C-MC105C, MCT85C, MCT95C**	Issue **PUB 20030904-B**	Page **821**

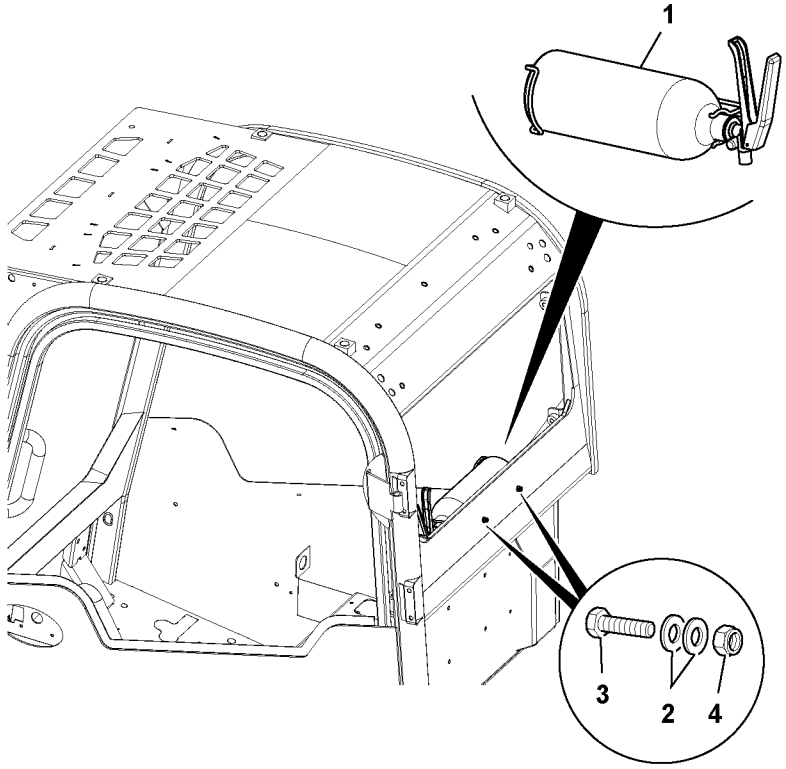
1
3
2
4

Fig.	Part No.	Quantity 1	2	3	PS	KIT	Description	Denominación	Denominação	Dénomination	Notes
1	**VOE 17205049**	1					Fire extinguisher kit	Juego de extintor	Jogo de extintor	Kit d'extincteur	
2	**VOE 973494**	2					Washer	Arandela	Arruela	Rondelle	
3	**VOE 16213996**	2					Set screw	Tornillo tope	Parafuso batente	Vis butée	
4	**VOE 16212115**	2					Lock nut	Contratuerca	Porca trava	Contre-écrou	

1		**Système d'extinction incendie** **Sistema de supressão de incêndio** **Sistema de extinción de incendios** **Fire suppression system**	Catalogue id **20649**	Group **992**
2			Illustr. No **1064040**	Section **100**
3			Issue **PUB 20030904-B**	Page **823**
4				
5		**MC60C-MC85C, MC105C, MCT70C-MCT95C**		

REPLACED PARTS

PIEZAS SUBSTITUDAS

PEÇAS SUBSTITUÍDAS

PIÉCES PÉRIMÉES ET REMPLACÉES

Catalogue id **20649** | Group **1000**

Issue **PUB 20030904-B** | Page **1**

Part No	Replaced by	Quantity
VOE 16212138	* * * USE	
	VOE 16212137	1.00
VOE 17204992	* * * USE	
	VOE 16213201	1.00
VOE 17209908	* * * USE	
	VOE 17248217	1.00
VOE 17228435	* * * USE	
	VOE 17246332	1.00
VOE 17229237	* * * USE	
	VOE 14519261	1.00
VOE 17229335	* * * USE	
	VOE 17232202	1.00
VOE 17229342	* * * USE	
	VOE 15193234	1.00
VOE 17230332	* * * USE	
	VOE 17230337	1.00
VOE 17230335	* * * USE	
	VOE 17246322	1.00

Part No	Group	Sect	Page
RM 16212219	912	1200	721
RM 59919670	261	250	187
RM 59919670	261	350	191
RM 59919670	441	350	365
RM 59919670	911	100	675
RM 59922336	441	300	363
RM 59922336	441	350	365
RM 59922500	441	200	359
RM 59922500	441	250	361
RM 59922500	912	650	707
RM 59922500	912	700	709
RM 59922500	912	1000	713
RM 59922500	912	1100	717
RM 59922500	912	1150	719
RM 59922500	913	150	731
RM 59922591	261	200	185
RM 59922591	261	250	187
RM 59922591	261	350	191
RM 59922591	441	300	363
RM 59922591	441	350	365
RM 59922591	912	650	707
RM 59922591	912	700	709
RM 59922633	441	150	357
RM 59922641	911	800	689
RM 59922864	912	1200	721
RM 59922864	924	800	791
RM 59922864	924	850	793
RM 59922898	263	100	205
RM 59922898	912	750	711
RM 59922906	912	1000	713
RM 59922906	912	1100	717
RM 59922906	912	1150	719
RM 59922906	913	100	729
RM 59922906	913	150	731
RM 59922971	912	1200	721
RM 59922997	912	650	707
RM 59922997	912	700	709
RM 59947044	914	1000	751
RM 59947044	914	1100	755
RM 59947044	916	550	775
RM 59962316	916	150	759
RM 59962316	916	200	761
RM 59962316	916	400	769
RM 59962316	916	450	771
RM 59962332	914	1000	751
RM 59962332	914	1100	755
RM 59962332	916	150	759
RM 59962332	916	200	761
RM 59962332	916	400	769
RM 59962332	916	450	771
VOE 11039856	350	100	259
VOE 11039856	350	150	263
VOE 11039856	350	200	265
VOE 11039856	356	100	277
VOE 11039856	356	150	279
VOE 11039856	356	250	283
VOE 12750608	911	850	691
VOE 12750609	911	800	689
VOE 12750609	911	850	691
VOE 12750614	256	100	173
VOE 12750614	256	150	175
VOE 12750614	256	300	179
VOE 13940090	896	100	617
VOE 13955900	716	250	439
VOE 13955900	716	300	441
VOE 13955900	716	350	443
VOE 13955900	716	400	445
VOE 13955900	716	450	447
VOE 13955900	716	500	449
VOE 13955900	716	600	453
VOE 13955900	818	300	521
VOE 13955900	818	350	523
VOE 13955900	924	600	787
VOE 16212061	715	1000	419
VOE 16212061	715	1050	421
VOE 16212061	715	1600	431
VOE 16212071	313	100	251
VOE 16212071	371	150	303
VOE 16212071	371	200	305
VOE 16212071	371	250	307
VOE 16212071	881	100	603
VOE 16212071	924	800	791
VOE 16212075	350	100	259
VOE 16212075	356	100	277
VOE 16212075	356	200	281
VOE 16212075	356	250	283
VOE 16212075	870	150	581
VOE 16212075	911	800	689
VOE 16212076	218	100	103
VOE 16212076	218	150	105
VOE 16212076	352	150	269
VOE 16212076	356	100	277
VOE 16212076	356	150	279
VOE 16212076	356	200	281
VOE 16212076	356	250	283
VOE 16212076	916	150	759
VOE 16212076	916	200	761
VOE 16212076	916	450	771
VOE 16212076	916	550	775
VOE 16212077	261	200	185
VOE 16212077	261	250	187
VOE 16212077	261	350	191
VOE 16212078	218	100	103
VOE 16212078	218	150	105
VOE 16212078	441	300	363
VOE 16212078	441	350	365
VOE 16212080	716	300	441
VOE 16212080	924	600	787
VOE 16212084	916	200	761
VOE 16212084	916	400	769
VOE 16212085	715	600	415
VOE 16212085	916	150	759
VOE 16212085	916	450	771
VOE 16212086	263	400	213
VOE 16212086	912	200	695
VOE 16212086	912	250	697
VOE 16212092	912	1100	717
VOE 16212093	924	500	783
VOE 16212094	218	100	103
VOE 16212095	924	500	783
VOE 16212095	924	550	785
VOE 16212101	263	200	209
VOE 16212101	715	150	409
VOE 16212101	715	250	411
VOE 16212101	914	900	747
VOE 16212101	914	950	749
VOE 16212101	916	100	757
VOE 16212101	916	150	759
VOE 16212101	916	200	761
VOE 16212101	916	250	763
VOE 16212101	916	300	765
VOE 16212101	916	350	767
VOE 16212101	916	400	769
VOE 16212101	916	450	771
VOE 16212101	916	500	773
VOE 16212104	911	450	683
VOE 16212105	912	650	707
VOE 16212105	912	700	709
VOE 16212115	313	100	251
VOE 16212115	362	100	285
VOE 16212115	371	150	303
VOE 16212115	371	200	305
VOE 16212115	371	250	307
VOE 16212115	371	300	309
VOE 16212115	371	350	311
VOE 16212115	371	400	313
VOE 16212115	870	150	581
VOE 16212115	992	100	823
VOE 16212116	261	400	193
VOE 16212116	263	400	213
VOE 16212120	218	150	105
VOE 16212120	261	100	181
VOE 16212120	261	150	183
VOE 16212120	261	200	185
VOE 16212120	261	250	187
VOE 16212120	261	300	189
VOE 16212120	261	350	191
VOE 16212120	271	100	231
VOE 16212120	313	100	251
VOE 16212120	350	100	259
VOE 16212120	350	150	263
VOE 16212120	350	200	265
VOE 16212120	356	100	277
VOE 16212120	356	150	279
VOE 16212120	356	250	283
VOE 16212120	371	300	309
VOE 16212120	371	350	311
VOE 16212120	371	400	313
VOE 16212120	715	600	415
VOE 16212120	821	200	531
VOE 16212120	841	500	547
VOE 16212120	870	100	579
VOE 16212120	870	150	581
VOE 16212120	881	100	603
VOE 16212120	912	1000	713

NUMERICAL INDEX

INDICE DE NÚMERO

ÍNDICE NUMÉRICO

RÉPERTOIRE DE NUMÉROS

Catalogue id	Group
20649	**1000**
Issue	Page
PUB 20030904-B	**1**

NUMERICAL INDEX

INDICE DE NÚMERO

ÍNDICE NUMÉRICO

RÉPERTOIRE DE NUMÉROS

Part No	Group	Sect	Page
VOE 16212120	912	1150	719
VOE 16212120	914	900	747
VOE 16212122	263	300	211
VOE 16212122	715	1000	419
VOE 16212122	715	1600	431
VOE 16212122	916	550	775
VOE 16212123	924	500	783
VOE 16212124	715	1050	421
VOE 16212125	218	100	103
VOE 16212125	218	150	105
VOE 16212125	261	200	185
VOE 16212125	261	250	187
VOE 16212125	261	350	191
VOE 16212125	261	400	193
VOE 16212125	371	400	313
VOE 16212125	715	600	415
VOE 16212125	818	300	521
VOE 16212125	818	350	523
VOE 16212125	821	300	533
VOE 16212125	891	200	613
VOE 16212125	924	500	783
VOE 16212125	924	550	785
VOE 16212125	945	750	811
VOE 16212126	818	300	521
VOE 16212126	818	350	523
VOE 16212126	821	200	531
VOE 16212126	945	550	805
VOE 16212126	945	750	811
VOE 16212127	716	400	445
VOE 16212127	716	500	449
VOE 16212127	716	600	453
VOE 16212127	818	400	525
VOE 16212128	263	400	213
VOE 16212129	218	100	103
VOE 16212129	218	150	105
VOE 16212129	716	250	439
VOE 16212129	716	350	443
VOE 16212129	716	450	447
VOE 16212129	924	600	787
VOE 16212132	912	1200	721
VOE 16212134	261	200	185
VOE 16212134	261	250	187
VOE 16212134	261	350	191
VOE 16212135	924	650	789
VOE 16212136	715	1000	419
VOE 16212136	715	1050	421
VOE 16212136	715	1600	431
VOE 16212137	356	200	281
VOE 16212137	715	250	411
VOE 16212138	218	100	103
VOE 16212138	218	150	105
VOE 16212138	261	200	185
VOE 16212138	261	250	187
VOE 16212138	261	350	191
VOE 16212138	261	400	193
VOE 16212138	263	300	211
VOE 16212138	263	400	213
VOE 16212138	350	100	259
VOE 16212138	352	150	269
VOE 16212138	356	100	277
VOE 16212138	356	150	279
VOE 16212138	356	250	283
VOE 16212138	371	400	313
VOE 16212138	371	500	315
VOE 16212138	371	550	317
VOE 16212138	711	100	399
VOE 16212138	715	150	409
VOE 16212138	715	600	415
VOE 16212138	818	300	521
VOE 16212138	818	350	523
VOE 16212138	821	300	533
VOE 16212138	870	150	581
VOE 16212138	891	200	613
VOE 16212138	911	800	689
VOE 16212138	912	1200	721
VOE 16212138	916	150	759
VOE 16212138	916	200	761
VOE 16212138	916	450	771
VOE 16212138	916	550	775
VOE 16212152	914	1050	753
VOE 16212153	911	600	685
VOE 16212164	440	100	339
VOE 16212166	263	100	205
VOE 16212166	441	150	357
VOE 16212166	912	250	697
VOE 16212166	912	750	711
VOE 16212166	913	150	731
VOE 16212166	914	950	749
VOE 16212202	256	100	173
VOE 16212202	256	150	175
VOE 16212203	234	200	129
VOE 16212203	263	300	211
VOE 16212203	263	400	213
VOE 16212203	362	100	285
VOE 16212203	371	300	309
VOE 16212203	371	350	311
VOE 16212203	371	400	313
VOE 16212207	711	100	399
VOE 16212208	711	100	399
VOE 16212215	218	100	103
VOE 16212215	218	150	105
VOE 16212215	912	1200	721
VOE 16212216	218	100	103
VOE 16212216	218	150	105
VOE 16212217	715	250	411
VOE 16212229	718	150	457
VOE 16212229	718	200	459
VOE 16212229	718	300	461
VOE 16212230	718	150	457
VOE 16212230	718	200	459
VOE 16212230	718	300	461
VOE 16212231	718	150	457
VOE 16212231	718	200	459
VOE 16212231	718	300	461
VOE 16212236	441	200	359
VOE 16212236	441	250	361
VOE 16212236	441	300	363
VOE 16212236	441	350	365
VOE 16212236	912	100	693
VOE 16212236	914	1000	751
VOE 16212236	914	1100	755
VOE 16212238	912	650	707
VOE 16212238	912	700	709
VOE 16212244	916	200	761
VOE 16212244	916	400	769
VOE 16212246	916	150	759
VOE 16212246	916	450	771
VOE 16212246	916	550	775
VOE 16212252	916	200	761
VOE 16212252	916	400	769
VOE 16212253	870	100	579
VOE 16212253	870	150	581
VOE 16212253	914	950	749
VOE 16212254	911	100	675
VOE 16212254	912	200	695
VOE 16212254	912	250	697
VOE 16212258	818	300	521
VOE 16212258	818	350	523
VOE 16212261	912	1200	721
VOE 16212265	441	200	359
VOE 16212265	441	250	361
VOE 16212272	261	400	193
VOE 16212272	263	400	213
VOE 16212272	821	300	533
VOE 16212272	891	200	613
VOE 16212273	441	350	365
VOE 16212274	911	100	675
VOE 16212275	218	100	103
VOE 16212290	916	500	773
VOE 16212292	818	300	521
VOE 16212292	818	350	523
VOE 16212292	924	500	783
VOE 16212292	924	550	785
VOE 16212292	945	550	805
VOE 16212292	945	750	811
VOE 16212295	380	1000	327
VOE 16212298	945	550	805
VOE 16212301	945	550	805
VOE 16212301	945	750	811
VOE 16212304	218	100	103
VOE 16212306	945	550	805
VOE 16212306	945	750	811
VOE 16212307	440	200	343
VOE 16212307	440	350	349
VOE 16212307	440	500	353
VOE 16212307	718	100	455
VOE 16212308	716	500	449
VOE 16212308	716	600	453
VOE 16212308	945	550	805
VOE 16212308	945	750	811
VOE 16212311	716	350	443
VOE 16212311	716	400	445
VOE 16212311	716	450	447
VOE 16212312	716	500	449
VOE 16212314	810	100	505

Part No	Group	Sect	Page
VOE 16212314	810	150	507
VOE 16212314	810	200	509
VOE 16212314	810	250	511
VOE 16212314	810	300	513
VOE 16212314	810	350	515
VOE 16212314	897	100	623
VOE 16212314	897	120	625
VOE 16212314	897	130	627
VOE 16212314	897	150	629
VOE 16212314	897	250	631
VOE 16212314	897	300	633
VOE 16212314	897	350	635
VOE 16212319	363	100	295
VOE 16212320	911	100	675
VOE 16212350	263	100	205
VOE 16212365	362	100	285
VOE 16212367	924	600	787
VOE 16212367	924	650	789
VOE 16212377	912	100	693
VOE 16212377	912	200	695
VOE 16212377	912	250	697
VOE 16212379	912	650	707
VOE 16212379	912	700	709
VOE 16212379	924	800	791
VOE 16212379	924	850	793
VOE 16212381	441	300	363
VOE 16212381	441	350	365
VOE 16212394	715	1000	419
VOE 16212394	715	1050	421
VOE 16212394	715	1600	431
VOE 16212397	821	200	531
VOE 16212398	831	100	535
VOE 16212398	831	150	537
VOE 16212398	831	200	539
VOE 16212398	831	250	541
VOE 16213133	914	950	749
VOE 16213139	843	100	549
VOE 16213139	843	300	555
VOE 16213140	843	100	549
VOE 16213140	843	150	551
VOE 16213140	843	300	555
VOE 16213141	393	100	331
VOE 16213143	843	300	555
VOE 16213144	362	100	285
VOE 16213144	362	150	287
VOE 16213160	771	350	471
VOE 16213160	771	400	473
VOE 16213160	771	450	475
VOE 16213160	771	600	481
VOE 16213165	440	100	339
VOE 16213165	715	150	409
VOE 16213165	715	250	411
VOE 16213165	911	100	675
VOE 16213166	912	1500	727
VOE 16213168	912	1200	721
VOE 16213168	912	1250	723
VOE 16213180	912	650	707
VOE 16213182	912	1500	725
VOE 16213184	912	1500	725
VOE 16213207	362	250	291
VOE 16213220	775	200	485
VOE 16213220	775	250	487
VOE 16213230	441	200	359
VOE 16213230	441	250	361
VOE 16213249	271	100	231
VOE 16213263	715	1000	419
VOE 16213263	715	1050	421
VOE 16213263	715	1600	431
VOE 16213267	821	200	531
VOE 16213269	393	100	331
VOE 16213270	362	200	289
VOE 16213270	362	250	291
VOE 16213270	371	300	309
VOE 16213270	371	350	311
VOE 16213272	911	100	675
VOE 16213273	234	200	129
VOE 16213273	234	250	131
VOE 16213286	261	600	197
VOE 16213287	775	200	485
VOE 16213287	775	250	487
VOE 16213288	718	150	457
VOE 16213288	718	200	459
VOE 16213288	718	300	461
VOE 16213288	775	300	489
VOE 16213289	718	150	457
VOE 16213289	718	200	459
VOE 16213289	718	300	461
VOE 16213289	775	350	491
VOE 16213290	441	100	355
VOE 16213290	911	600	685
VOE 16213290	911	650	687
VOE 16213299	371	400	313
VOE 16213301	371	150	303
VOE 16213301	371	300	309
VOE 16213301	371	350	311
VOE 16213303	261	100	181
VOE 16213303	261	150	183
VOE 16213303	261	300	189
VOE 16213303	261	500	195
VOE 16213306	363	150	297
VOE 16213315	371	400	313
VOE 16213323	350	100	259
VOE 16213327	352	250	273
VOE 16213330	924	650	789
VOE 16213331	362	200	289
VOE 16213331	362	250	291
VOE 16213331	362	300	293
VOE 16213333	352	250	273
VOE 16213336	218	100	103
VOE 16213336	818	400	525
VOE 16213337	352	250	273
VOE 16213346	924	500	783
VOE 16213346	924	550	785
VOE 16213348	924	300	781
VOE 16213349	234	100	127
VOE 16213350	924	300	781
VOE 16213365	234	250	131
VOE 16213367	234	200	129
VOE 16213382	263	400	213
VOE 16213384	352	150	269
VOE 16213387	924	600	787
VOE 16213398	352	100	267
VOE 16213398	352	150	269
VOE 16213406	362	200	289
VOE 16213408	261	100	181
VOE 16213408	261	150	183
VOE 16213408	261	300	189
VOE 16213432	380	100	319
VOE 16213432	380	200	321
VOE 16213434	715	1000	419
VOE 16213434	715	1050	421
VOE 16213434	715	1600	431
VOE 16213436	718	150	457
VOE 16213436	718	200	459
VOE 16213436	718	300	461
VOE 16213436	775	250	487
VOE 16213439	718	150	457
VOE 16213439	718	200	459
VOE 16213439	718	300	461
VOE 16213439	775	200	485
VOE 16213447	371	300	309
VOE 16213447	371	350	311
VOE 16213450	371	350	311
VOE 16213451	363	100	295
VOE 16213453	371	400	313
VOE 16213510	911	100	675
VOE 16213511	715	150	409
VOE 16213511	945	750	813
VOE 16213513	715	150	409
VOE 16213513	715	250	411
VOE 16213513	945	750	813
VOE 16213515	252	100	153
VOE 16213515	252	200	157
VOE 16213515	252	400	161
VOE 16213515	252	500	165
VOE 16213517	911	100	675
VOE 16213518	924	500	783
VOE 16213518	924	550	785
VOE 16213518	945	750	811
VOE 16213519	924	650	789
VOE 16213520	440	200	343
VOE 16213520	440	350	349
VOE 16213521	711	100	399
VOE 16213522	924	500	783
VOE 16213522	924	550	785
VOE 16213524	924	500	783
VOE 16213524	924	550	785
VOE 16213525	440	300	347
VOE 16213525	440	400	351
VOE 16213527	924	500	783
VOE 16213527	924	550	785
VOE 16213528	821	200	531
VOE 16213529	440	150	341
VOE 16213532	313	100	251
VOE 16213541	924	600	787

NUMERICAL INDEX

INDICE DE NÚMERO

ÍNDICE NUMÉRICO

RÉPERTOIRE DE NUMÉROS

NUMERICAL INDEX

INDICE DE NÚMERO

ÍNDICE NUMÉRICO

RÉPERTOIRE DE NUMÉROS

Part No	Group	Sect	Page
VOE 16213541	924	650	789
VOE 16213543	945	550	805
VOE 16213543	945	750	811
VOE 16213978	380	500	323
VOE 16213978	380	550	325
VOE 16213987	914	1000	751
VOE 16213987	914	1100	755
VOE 16213996	992	100	823
VOE 16213997	261	200	185
VOE 16213997	261	250	187
VOE 16213997	261	350	191
VOE 16213997	371	500	315
VOE 16213997	371	550	317
VOE 16213998	252	100	153
VOE 16213998	252	400	161
VOE 16213998	256	100	173
VOE 16213998	256	150	175
VOE 16213998	363	150	297
VOE 16213998	371	300	309
VOE 16213998	371	350	311
VOE 16213998	371	400	313
VOE 16213998	718	100	455
VOE 16213998	881	100	603
VOE 16213998	914	1050	753
VOE 16213999	252	200	157
VOE 16213999	252	500	165
VOE 16213999	261	100	181
VOE 16213999	261	150	183
VOE 16213999	261	200	185
VOE 16213999	261	250	187
VOE 16213999	261	300	189
VOE 16213999	261	350	191
VOE 16213999	271	100	231
VOE 16213999	313	100	251
VOE 16213999	350	100	259
VOE 16213999	350	150	263
VOE 16213999	350	200	265
VOE 16213999	715	300	413
VOE 16213999	715	1150	425
VOE 16213999	841	500	547
VOE 16213999	870	100	579
VOE 16213999	870	150	581
VOE 16213999	945	700	809
VOE 16214000	261	200	185
VOE 16214000	261	250	187
VOE 16214000	261	350	191
VOE 16214000	263	400	213
VOE 16214001	234	200	129
VOE 16214001	715	1100	423
VOE 16214275	380	100	319
VOE 16214275	380	200	321
VOE 16214297	261	400	193
VOE 16214302	945	550	805
VOE 16214302	945	750	811
VOE 16222227	222	100	115
VOE 17204878	897	400	637
VOE 17204879	775	200	485
VOE 17204879	775	250	487
VOE 17204888	843	100	549
VOE 17204888	843	150	551
VOE 17204888	843	300	555
VOE 17204893	912	1200	721
VOE 17204906	711	100	399
VOE 17204909	263	200	209
VOE 17204915	897	400	637
VOE 17204916	897	400	637
VOE 17204917	897	400	637
VOE 17204918	831	100	535
VOE 17204918	831	150	537
VOE 17204918	831	200	539
VOE 17204918	831	250	541
VOE 17204924	912	1500	725
VOE 17204930	912	1500	725
VOE 17204937	818	500	527
VOE 17204943	362	300	293
VOE 17204945	775	200	485
VOE 17204954	912	1250	723
VOE 17204960	821	200	531
VOE 17204966	831	500	543
VOE 17204970	912	1050	715
VOE 17204978	818	400	525
VOE 17204980	881	100	603
VOE 17204981	350	100	259
VOE 17204981	350	150	263
VOE 17204981	350	200	265
VOE 17204982	313	100	251
VOE 17204988	261	600	197
VOE 17204992	362	200	289
VOE 17204992	362	300	293
VOE 17204996	371	300	309
VOE 17204996	371	350	311
VOE 17205002	912	1500	725
VOE 17205012	831	100	535
VOE 17205012	831	150	537
VOE 17205012	831	200	539
VOE 17205012	831	250	541
VOE 17205018	912	1250	723
VOE 17205020	924	650	789
VOE 17205024	218	100	103
VOE 17205027	371	500	315
VOE 17205027	371	550	317
VOE 17205028	440	200	343
VOE 17205028	440	350	349
VOE 17205028	440	500	353
VOE 17205028	716	250	439
VOE 17205028	718	100	455
VOE 17205029	821	200	531
VOE 17205035	354	100	275
VOE 17205035	880	400	601
VOE 17205040	870	300	589
VOE 17205042	912	1250	723
VOE 17205044	371	200	305
VOE 17205044	371	250	307
VOE 17205044	870	100	579
VOE 17205044	870	150	581
VOE 17205044	880	400	601
VOE 17205049	992	100	823
VOE 17205055	870	150	581
VOE 17205062	882	100	609
VOE 17205062	882	200	611
VOE 17205063	818	400	525
VOE 17205065	924	650	789
VOE 17205074	715	150	409
VOE 17205074	715	250	411
VOE 17205074	912	100	693
VOE 17205074	945	750	811
VOE 17205083	440	300	347
VOE 17205083	440	400	351
VOE 17205084	843	600	563
VOE 17205084	843	650	565
VOE 17205088	881	200	605
VOE 17205090	775	200	485
VOE 17205091	218	150	105
VOE 17205091	371	400	313
VOE 17205091	870	100	579
VOE 17205091	870	150	581
VOE 17205092	371	150	303
VOE 17205093	313	100	251
VOE 17205093	356	100	277
VOE 17205093	356	150	279
VOE 17205093	356	250	283
VOE 17205094	843	200	553
VOE 17205095	924	800	791
VOE 17205096	371	400	313
VOE 17205108	843	600	563
VOE 17205116	234	200	129
VOE 17205118	350	100	259
VOE 17205118	350	150	263
VOE 17205118	350	200	265
VOE 17205118	911	600	685
VOE 17205120	912	1250	723
VOE 17205121	261	200	185
VOE 17205121	261	250	187
VOE 17205121	261	350	191
VOE 17205124	775	200	485
VOE 17205127	775	250	487
VOE 17205128	263	400	213
VOE 17205129	912	1250	723
VOE 17205150	870	400	593
VOE 17205156	775	200	485
VOE 17205159	371	400	313
VOE 17205170	912	1500	725
VOE 17205171	234	200	129
VOE 17205174	897	400	637
VOE 17205178	821	300	533
VOE 17205183	912	1250	723
VOE 17205184	775	200	485
VOE 17205188	371	100	301
VOE 17205188	371	300	309
VOE 17205188	371	350	311
VOE 17205188	371	550	317
VOE 17205204	775	250	487
VOE 17205206	775	250	487
VOE 17205208	715	150	409
VOE 17205208	715	250	411

Part No	Group	Sect	Page
VOE 17205212	897	400	637
VOE 17205214	897	400	637
VOE 17205217	363	100	295
VOE 17205226	352	100	267
VOE 17205226	352	150	269
VOE 17205228	371	400	313
VOE 17205229	897	400	637
VOE 17205231	897	400	637
VOE 17205232	912	1250	723
VOE 17205234	313	100	251
VOE 17205240	371	200	305
VOE 17205240	371	250	307
VOE 17205245	821	200	531
VOE 17205250	831	100	535
VOE 17205250	831	150	537
VOE 17205250	831	200	539
VOE 17205250	831	250	541
VOE 17205256	356	200	281
VOE 17205256	371	200	305
VOE 17205256	371	250	307
VOE 17205256	881	100	603
VOE 17205257	715	1100	423
VOE 17205258	870	150	581
VOE 17205258	891	250	615
VOE 17205260	440	250	345
VOE 17205260	914	1000	751
VOE 17205260	914	1100	755
VOE 17205263	350	100	259
VOE 17205263	350	150	263
VOE 17205263	350	200	265
VOE 17205263	356	100	277
VOE 17205263	356	150	279
VOE 17205263	356	200	281
VOE 17205263	356	250	283
VOE 17205263	371	150	303
VOE 17205263	371	300	309
VOE 17205263	371	350	311
VOE 17205273	715	250	411
VOE 17205273	821	200	531
VOE 17205282	350	100	259
VOE 17205282	350	150	263
VOE 17205282	350	200	265
VOE 17205282	356	100	277
VOE 17205282	356	150	279
VOE 17205282	356	200	281
VOE 17205282	356	250	283
VOE 17205285	371	150	303
VOE 17205286	945	550	805
VOE 17205286	945	750	811
VOE 17205287	356	200	281
VOE 17205287	356	250	283
VOE 17205287	371	500	315
VOE 17205290	261	100	181
VOE 17205290	261	150	183
VOE 17205290	261	300	189
VOE 17205290	371	400	313
VOE 17205290	914	700	743
VOE 17205292	350	100	259
VOE 17205292	350	150	263
VOE 17205292	350	200	265
VOE 17205292	356	100	277
VOE 17205292	356	150	279
VOE 17205292	356	200	281
VOE 17205292	356	250	283
VOE 17205292	371	150	303
VOE 17205292	371	300	309
VOE 17205292	371	350	311
VOE 17205293	263	200	209
VOE 17205293	371	150	303
VOE 17205293	441	150	357
VOE 17205297	912	1250	723
VOE 17205299	371	200	305
VOE 17205299	371	250	307
VOE 17205301	261	200	185
VOE 17205301	261	250	187
VOE 17205301	261	350	191
VOE 17205305	234	100	127
VOE 17205306	912	1200	721
VOE 17205309	775	250	487
VOE 17205310	271	100	231
VOE 17205311	912	1250	723
VOE 17205312	263	200	209
VOE 17205313	371	200	305
VOE 17205313	371	250	307
VOE 17205319	881	100	603
VOE 17205324	350	100	259
VOE 17205324	350	150	263
VOE 17205324	350	200	265
VOE 17205334	897	400	637
VOE 17205344	897	400	637
VOE 17205346	897	400	637
VOE 17205347	897	400	637
VOE 17205352	715	150	409
VOE 17205352	715	250	411
VOE 17205354	350	100	259
VOE 17205354	350	150	263
VOE 17205354	350	200	265
VOE 17205360	234	100	127
VOE 17205364	371	500	315
VOE 17205364	371	550	317
VOE 17205364	912	650	707
VOE 17205364	912	700	709
VOE 17205374	831	100	535
VOE 17205374	831	150	537
VOE 17205374	831	200	539
VOE 17205374	831	250	541
VOE 17205377	831	100	535
VOE 17205377	831	150	537
VOE 17205377	831	200	539
VOE 17205377	831	250	541
VOE 17205396	354	100	275
VOE 17205399	912	1500	725
VOE 17205410	371	500	315
VOE 17205410	371	550	317
VOE 17205417	263	200	209
VOE 17205417	913	100	729
VOE 17205417	913	150	731
VOE 17205420	371	150	303
VOE 17205421	870	100	579
VOE 17205421	870	150	583
VOE 17205422	371	150	303
VOE 17205426	350	100	259
VOE 17205426	350	150	263
VOE 17205426	350	200	265
VOE 17205429	350	100	259
VOE 17205429	350	150	263
VOE 17205429	350	200	265
VOE 17205430	350	100	259
VOE 17205430	350	150	263
VOE 17205430	350	200	265
VOE 17205442	371	200	305
VOE 17205442	371	250	307
VOE 17205444	711	250	405
VOE 17205448	821	200	531
VOE 17205455	775	200	485
VOE 17205486	912	1050	715
VOE 17205540	352	100	267
VOE 17205540	352	150	269
VOE 17205548	912	1250	723
VOE 17205549	912	1050	715
VOE 17205550	912	1050	715
VOE 17205551	912	1050	715
VOE 17205552	912	1050	715
VOE 17205554	945	750	811
VOE 17205555	263	300	211
VOE 17205555	263	400	213
VOE 17205555	371	200	305
VOE 17205555	371	250	307
VOE 17205556	313	100	251
VOE 17205556	870	150	581
VOE 17205558	912	1000	713
VOE 17205558	912	1150	719
VOE 17205560	715	1000	419
VOE 17205560	843	650	565
VOE 17205560	911	100	675
VOE 17205562	263	300	211
VOE 17205562	263	400	213
VOE 17205564	350	100	259
VOE 17205564	350	150	263
VOE 17205564	350	200	265
VOE 17205564	356	100	277
VOE 17205564	356	150	279
VOE 17205564	356	200	281
VOE 17205564	356	250	283
VOE 17205564	371	150	303
VOE 17205564	371	300	309
VOE 17205564	371	350	311
VOE 17205565	256	100	173
VOE 17205565	256	150	175
VOE 17205565	261	200	185
VOE 17205565	261	250	187
VOE 17205565	261	350	191
VOE 17205565	356	100	277
VOE 17205565	356	150	279
VOE 17205565	356	250	283

NUMERICAL INDEX

INDICE DE NÚMERO

ÍNDICE NUMÉRICO

RÉPERTOIRE DE NUMÉROS

Catalogue id	Group
20649	**1000**
Issue	Page
PUB 20030904-B	**5**



NUMERICAL INDEX

INDICE DE NÚMERO

ÍNDICE NUMÉRICO

RÉPERTOIRE DE NUMÉROS

Catalogue id	Group
20649	**1000**
Issue	Page
PUB 20030904-B	**6**

Part No	Group	Sect	Page
VOE 17205566	718	150	457
VOE 17205566	718	200	459
VOE 17205566	718	300	461
VOE 17205581	441	200	359
VOE 17205581	441	250	361
VOE 17205622	870	100	579
VOE 17205622	870	150	581
VOE 17205713	916	100	757
VOE 17205713	916	250	763
VOE 17205713	916	300	765
VOE 17205713	916	350	767
VOE 17205713	916	500	773
VOE 17205713	924	800	791
VOE 17205713	924	850	793
VOE 17205716	912	1200	721
VOE 17209365	831	500	543
VOE 17209373	775	200	485
VOE 17209518	924	600	787
VOE 17209526	881	200	605
VOE 17209542	881	200	605
VOE 17209544	880	100	597
VOE 17209544	880	150	599
VOE 17209547	880	100	597
VOE 17209547	880	150	599
VOE 17209548	912	1500	725
VOE 17209551	870	400	593
VOE 17209555	271	100	231
VOE 17209572	393	100	331
VOE 17209583	775	300	489
VOE 17209585	775	300	489
VOE 17209587	775	350	491
VOE 17209588	775	350	491
VOE 17209590	870	150	581
VOE 17209594	371	300	309
VOE 17209594	371	350	311
VOE 17209599	870	100	579
VOE 17209599	870	150	581
VOE 17209607	263	200	209
VOE 17209609	891	200	613
VOE 17209613	891	250	615
VOE 17209614	870	300	589
VOE 17209617	912	1200	721
VOE 17209620	852	650	571
VOE 17209620	852	700	573
VOE 17209629	371	300	309
VOE 17209629	371	350	311
VOE 17209629	870	100	579
VOE 17209629	870	150	581
VOE 17209630	352	100	267
VOE 17209630	352	150	269
VOE 17209633	393	100	331
VOE 17209635	775	300	489
VOE 17209635	775	350	491
VOE 17209638	261	200	185
VOE 17209638	261	250	187
VOE 17209638	261	350	191
VOE 17209640	261	200	185
VOE 17209640	261	250	187
VOE 17209640	261	350	191
VOE 17209641	896	100	617
VOE 17209645	843	600	563
VOE 17209645	843	650	565
VOE 17209648	775	300	489
VOE 17209648	775	350	491
VOE 17209651	821	200	531
VOE 17209652	870	300	589
VOE 17209654	775	300	489
VOE 17209654	775	350	491
VOE 17209655	870	400	593
VOE 17209657	870	450	595
VOE 17209660	870	250	587
VOE 17209660	870	400	593
VOE 17209661	870	300	589
VOE 17209678	870	300	589
VOE 17209683	363	100	295
VOE 17209688	371	350	311
VOE 17209689	350	100	259
VOE 17209689	350	150	263
VOE 17209689	350	200	265
VOE 17209705	843	150	551
VOE 17209732	870	250	587
VOE 17209732	870	400	593
VOE 17209735	870	100	579
VOE 17209735	870	150	581
VOE 17209738	870	100	579
VOE 17209738	870	150	581
VOE 17209740	870	100	579
VOE 17209740	870	150	581
VOE 17209754	870	350	591
VOE 17209758	870	300	589
VOE 17209763	810	150	507
VOE 17209763	810	300	513
VOE 17209764	870	300	589
VOE 17209771	870	300	589
VOE 17209790	350	100	259
VOE 17209790	350	150	263
VOE 17209790	350	200	265
VOE 17209795	821	200	531
VOE 17209796	715	150	409
VOE 17209796	715	250	411
VOE 17209797	371	200	305
VOE 17209797	371	250	307
VOE 17209802	821	200	531
VOE 17209803	912	1500	725
VOE 17209804	356	200	281
VOE 17209804	356	250	283
VOE 17209810	441	100	355
VOE 17209812	775	200	485
VOE 17209812	775	250	487
VOE 17209812	775	300	489
VOE 17209812	775	350	491
VOE 17209814	912	1500	725
VOE 17209819	912	1500	725
VOE 17209824	912	1500	725
VOE 17209828	912	1500	725
VOE 17209831	912	1500	725
VOE 17209834	880	100	597
VOE 17209834	880	150	599
VOE 17209842	269	200	221
VOE 17209874	810	250	511
VOE 17209878	810	300	513
VOE 17209878	810	350	515
VOE 17209881	870	100	579
VOE 17209881	870	150	581
VOE 17209898	870	200	585
VOE 17209898	870	250	587
VOE 17209900	870	200	585
VOE 17209900	870	300	589
VOE 17209901	870	100	579
VOE 17209903	881	200	605
VOE 17209905	880	100	597
VOE 17209905	880	150	599
VOE 17209906	880	100	597
VOE 17209906	880	150	599
VOE 17209907	371	400	313
VOE 17209908	380	100	319
VOE 17209909	380	100	319
VOE 17209909	380	500	323
VOE 17209911	380	100	319
VOE 17209911	380	550	325
VOE 17209913	380	200	321
VOE 17209913	380	550	325
VOE 17209915	363	100	295
VOE 17209916	380	200	321
VOE 17209916	380	550	325
VOE 17209925	441	150	357
VOE 17209925	914	1000	751
VOE 17209925	914	1100	755
VOE 17209936	870	300	589
VOE 17209945	363	100	295
VOE 17209951	350	100	259
VOE 17209951	350	150	263
VOE 17209951	350	200	265
VOE 17209951	356	100	277
VOE 17209951	356	150	279
VOE 17209951	356	200	281
VOE 17209951	356	250	283
VOE 17209954	870	450	595
VOE 17209961	363	100	295
VOE 17209964	880	100	597
VOE 17209964	880	150	599
VOE 17209966	880	100	597
VOE 17209966	880	150	599
VOE 17209967	881	100	603
VOE 17209970	380	100	319
VOE 17209970	380	200	321
VOE 17209970	380	500	323
VOE 17209970	380	550	325
VOE 17209974	912	1500	727
VOE 17209979	363	100	295
VOE 17209998	870	400	593
VOE 17210001	870	450	595
VOE 17210013	711	200	403
VOE 17210014	843	600	563
VOE 17210019	775	300	489

Part No	Group	Sect	Page
VOE 17210019	775	350	491
VOE 17210022	775	300	489
VOE 17210022	775	350	491
VOE 17210030	371	400	313
VOE 17210032	371	300	309
VOE 17210032	371	350	311
VOE 17210032	870	100	579
VOE 17210032	870	150	581
VOE 17210039	810	100	505
VOE 17210039	810	150	507
VOE 17210039	810	250	511
VOE 17210039	810	300	513
VOE 17210048	897	500	641
VOE 17210050	897	500	641
VOE 17210051	897	500	641
VOE 17210053	363	100	295
VOE 17210054	870	250	587
VOE 17210054	870	400	593
VOE 17210055	882	100	609
VOE 17210057	870	250	587
VOE 17210057	870	400	593
VOE 17210072	261	350	191
VOE 17210074	897	500	641
VOE 17210080	897	500	641
VOE 17210081	261	350	191
VOE 17210089	897	400	637
VOE 17210095	914	100	735
VOE 17210095	914	150	737
VOE 17210097	870	100	579
VOE 17210097	870	150	581
VOE 17210100	881	200	605
VOE 17210103	870	450	595
VOE 17210106	843	350	557
VOE 17210111	870	150	581
VOE 17210118	897	400	637
VOE 17210121	896	200	621
VOE 17210123	897	400	637
VOE 17210125	897	400	637
VOE 17210131	897	400	637
VOE 17210147	715	250	411
VOE 17210148	775	300	489
VOE 17210148	775	350	491
VOE 17210153	263	400	213
VOE 17210153	821	300	533
VOE 17210154	897	400	637
VOE 17210156	818	400	525
VOE 17210157	897	120	625
VOE 17210162	897	400	637
VOE 17210163	810	250	511
VOE 17210163	810	300	513
VOE 17210163	810	350	515
VOE 17210164	880	100	597
VOE 17210164	880	150	599
VOE 17210167	843	600	563
VOE 17210167	843	650	565
VOE 17210168	843	600	563
VOE 17210168	843	650	565
VOE 17210171	882	100	609
VOE 17210172	897	400	637
VOE 17210174	870	150	583
VOE 17210175	881	200	605
VOE 17210179	261	200	185
VOE 17210179	261	250	187
VOE 17210179	261	350	191
VOE 17210185	912	1500	727
VOE 17210187	897	400	637
VOE 17210194	261	500	195
VOE 17210198	852	600	569
VOE 17210198	852	650	571
VOE 17210198	852	700	573
VOE 17210199	897	300	633
VOE 17210200	911	100	675
VOE 17210212	924	150	779
VOE 17210213	852	650	571
VOE 17210218	897	300	633
VOE 17210225	852	650	571
VOE 17210225	852	700	573
VOE 17210228	897	1050	661
VOE 17210229	852	700	573
VOE 17210238	870	250	587
VOE 17210238	870	400	593
VOE 17210240	371	300	309
VOE 17210240	371	350	311
VOE 17210241	897	1100	663
VOE 17210249	350	100	259
VOE 17210249	350	200	265
VOE 17210252	380	500	323
VOE 17210252	380	550	325
VOE 17210256	924	600	787
VOE 17210259	924	600	787
VOE 17210266	924	650	789
VOE 17210267	775	300	489
VOE 17210267	775	350	491
VOE 17210268	924	650	789
VOE 17210316	913	100	729
VOE 17210316	913	150	731
VOE 17210318	870	150	581
VOE 17210323	821	300	533
VOE 17210330	821	200	531
VOE 17210334	261	200	185
VOE 17210334	261	250	187
VOE 17210334	261	350	191
VOE 17210338	715	600	415
VOE 17210339	821	200	531
VOE 17210358	831	100	535
VOE 17210358	831	150	537
VOE 17210358	831	200	539
VOE 17210358	831	250	541
VOE 17210359	371	200	305
VOE 17210359	371	250	307
VOE 17210363	881	100	603
VOE 17210371	852	600	569
VOE 17210373	852	600	569
VOE 17210390	831	100	535
VOE 17210390	831	150	537
VOE 17210390	831	200	539
VOE 17210390	831	250	541
VOE 17210391	715	600	415
VOE 17210399	912	1500	725
VOE 17210416	896	100	617
VOE 17210418	881	100	603
VOE 17210423	350	100	259
VOE 17210423	350	150	263
VOE 17210423	352	250	273
VOE 17210425	870	250	587
VOE 17210425	870	300	589
VOE 17210425	870	400	593
VOE 17210427	350	100	259
VOE 17210427	350	150	263
VOE 17210427	350	200	265
VOE 17210429	775	300	489
VOE 17210429	775	350	491
VOE 17210430	350	100	259
VOE 17210430	350	150	263
VOE 17210430	350	200	265
VOE 17210433	352	200	271
VOE 17210435	352	200	271
VOE 17210439	916	150	759
VOE 17210439	916	450	771
VOE 17210439	916	550	775
VOE 17210441	924	600	787
VOE 17210451	924	800	791
VOE 17210451	924	850	793
VOE 17210455	881	300	607
VOE 17210463	371	400	313
VOE 17210463	371	500	315
VOE 17210463	371	550	317
VOE 17210472	261	100	181
VOE 17210472	261	150	183
VOE 17210472	261	300	189
VOE 17210474	912	650	707
VOE 17210474	912	700	709
VOE 17210477	896	100	617
VOE 17210478	881	300	607
VOE 17210479	371	300	309
VOE 17210479	371	350	311
VOE 17210485	810	250	511
VOE 17210485	810	300	513
VOE 17210485	810	350	515
VOE 17210492	371	300	309
VOE 17210492	371	350	311
VOE 17210494	818	300	521
VOE 17210494	818	350	523
VOE 17210496	818	300	521
VOE 17210496	818	350	523
VOE 17210497	818	400	525
VOE 17210500	261	600	197
VOE 17210500	371	400	313
VOE 17210500	870	100	579
VOE 17210500	870	150	581
VOE 17210510	870	350	591
VOE 17210510	870	450	595
VOE 17210517	715	100	407
VOE 17210519	870	450	595
VOE 17210524	870	150	581

NUMERICAL INDEX

INDICE DE NÚMERO

ÍNDICE NUMÉRICO

RÉPERTOIRE DE NUMÉROS

Catalogue id	Group
20649	**1000**
Issue	Page
PUB 20030904-B	**7**



NUMERICAL INDEX

INDICE DE NÚMERO

ÍNDICE NUMÉRICO

RÉPERTOIRE DE NUMÉROS

Part No	Group	Sect	Page
VOE 17210525	831	100	535
VOE 17210525	831	200	539
VOE 17210526	831	150	537
VOE 17210526	831	250	541
VOE 17210527	363	100	295
VOE 17210528	380	100	319
VOE 17210528	380	200	321
VOE 17210529	880	100	597
VOE 17210529	880	150	599
VOE 17210530	870	250	587
VOE 17210530	870	400	593
VOE 17210531	810	250	511
VOE 17210531	810	300	513
VOE 17210531	810	350	515
VOE 17210532	870	350	591
VOE 17210543	880	100	597
VOE 17210543	880	150	599
VOE 17210544	818	500	527
VOE 17210545	881	100	603
VOE 17210546	881	100	603
VOE 17210550	924	600	787
VOE 17210551	924	600	787
VOE 17210553	715	150	409
VOE 17210553	715	250	411
VOE 17210553	896	100	617
VOE 17210554	261	100	181
VOE 17210554	261	150	183
VOE 17210554	261	300	189
VOE 17210554	821	200	531
VOE 17210573	852	600	569
VOE 17210575	852	650	571
VOE 17210575	852	700	573
VOE 17218713	852	1200	577
VOE 17218716	852	1200	577
VOE 17218718	852	1000	575
VOE 17218719	852	1000	575
VOE 17223856	212	100	53
VOE 17223862	212	100	53
VOE 17223867	211	100	39
VOE 17223867	211	150	41
VOE 17223867	212	100	53
VOE 17223868	215	100	63
VOE 17223868	215	150	65
VOE 17223869	217	250	99
VOE 17223870	255	100	169
VOE 17223872	210	700	37
VOE 17223872	223	200	121
VOE 17223872	233	100	125
VOE 17223872	251	150	149
VOE 17223872	321	100	253
VOE 17223872	321	150	255
VOE 17223876	255	150	171
VOE 17223877	255	100	169
VOE 17223878	251	150	149
VOE 17223879	255	100	169
VOE 17223975	818	350	523
VOE 17223996	218	150	105
VOE 17223996	350	100	261
VOE 17223996	356	100	277
VOE 17223996	356	200	281
VOE 17223996	356	250	283
VOE 17223997	350	100	259
VOE 17223997	356	100	277
VOE 17223997	356	150	279
VOE 17223997	356	200	281
VOE 17223997	356	250	283
VOE 17224000	843	650	565
VOE 17224002	843	650	565
VOE 17224004	843	650	565
VOE 17224005	715	600	415
VOE 17224276	363	100	295
VOE 17224278	363	100	295
VOE 17224281	363	100	295
VOE 17224284	363	100	295
VOE 17224713	897	100	623
VOE 17224713	897	120	625
VOE 17224713	897	130	627
VOE 17224713	897	150	629
VOE 17224713	897	250	631
VOE 17224713	897	300	633
VOE 17224713	897	350	635
VOE 17224714	843	200	553
VOE 17224715	261	100	181
VOE 17224715	261	150	183
VOE 17224715	261	300	189
VOE 17224716	331	100	257
VOE 17224717	331	100	257
VOE 17224718	262	100	199
VOE 17224719	216	550	83
VOE 17224720	212	100	53
VOE 17224725	211	300	45
VOE 17224726	852	650	571
VOE 17224729	216	350	75
VOE 17224729	216	400	77
VOE 17224730	272	100	233
VOE 17224731	215	100	63
VOE 17224732	216	500	81
VOE 17224732	216	550	83
VOE 17224735	216	500	81
VOE 17224735	216	550	83
VOE 17224737	272	150	235
VOE 17224737	272	200	237
VOE 17224740	272	150	235
VOE 17224740	272	200	237
VOE 17224752	237	100	139
VOE 17224754	237	100	139
VOE 17224758	237	100	139
VOE 17224760	237	100	139
VOE 17224762	223	100	117
VOE 17224766	262	300	203
VOE 17224767	251	100	147
VOE 17224769	210	700	37
VOE 17224771	284	100	239
VOE 17224771	284	150	241
VOE 17224772	284	100	239
VOE 17224772	284	200	243
VOE 17224773	284	100	239
VOE 17224773	284	200	243
VOE 17224775	284	100	239
VOE 17224775	284	200	243
VOE 17224776	284	100	239
VOE 17224776	284	200	243
VOE 17224777	386	100	329
VOE 17224797	211	500	51
VOE 17224805	211	500	51
VOE 17224819	256	200	177
VOE 17224824	251	200	151
VOE 17224826	284	150	241
VOE 17224829	284	150	241
VOE 17224831	284	150	241
VOE 17224832	284	150	241
VOE 17224833	284	150	241
VOE 17224835	870	300	589
VOE 17224854	897	400	637
VOE 17224855	924	1000	795
VOE 17225043	821	200	531
VOE 17228163	223	150	119
VOE 17228163	223	200	121
VOE 17228172	220	100	107
VOE 17228177	211	100	39
VOE 17228177	211	150	41
VOE 17228178	236	100	135
VOE 17228178	236	150	137
VOE 17228179	223	200	121
VOE 17228180	441	200	359
VOE 17228180	441	250	361
VOE 17228181	212	100	53
VOE 17228182	220	100	107
VOE 17228183	212	100	53
VOE 17228184	223	150	119
VOE 17228184	223	200	121
VOE 17228185	220	100	107
VOE 17228186	212	100	53
VOE 17228187	211	300	45
VOE 17228188	212	100	53
VOE 17228191	220	100	107
VOE 17228193	212	100	53
VOE 17228201	212	100	53
VOE 17228202	220	100	107
VOE 17228212	211	300	45
VOE 17228214	212	100	53
VOE 17228219	212	100	53
VOE 17228219	216	100	67
VOE 17228224	216	100	67
VOE 17228225	211	300	45
VOE 17228226	255	150	171
VOE 17228229	223	100	117
VOE 17228229	223	250	123
VOE 17228231	211	400	47
VOE 17228231	211	500	51
VOE 17228232	220	250	113
VOE 17228233	217	100	93
VOE 17228233	217	250	99
VOE 17228236	255	150	171
VOE 17228237	216	450	79

Part No	Group	Sect	Page
VOE 17228237	272	150	235
VOE 17228237	272	200	237
VOE 17228237	284	150	241
VOE 17228238	211	300	45
VOE 17228238	217	250	99
VOE 17228242	217	100	93
VOE 17228243	217	300	101
VOE 17228243	386	100	329
VOE 17228244	220	100	107
VOE 17228247	220	100	107
VOE 17228258	216	450	79
VOE 17228262	216	500	81
VOE 17228262	216	550	83
VOE 17228262	216	750	91
VOE 17228262	331	100	257
VOE 17228264	237	100	139
VOE 17228264	237	150	141
VOE 17228268	321	100	253
VOE 17228268	321	150	255
VOE 17228319	331	100	257
VOE 17228364	262	100	199
VOE 17228367	213	100	59
VOE 17228367	213	150	61
VOE 17228368	216	100	67
VOE 17228376	213	150	61
VOE 17228384	211	100	39
VOE 17228384	211	150	41
VOE 17228395	211	200	43
VOE 17228397	251	200	151
VOE 17228399	216	100	67
VOE 17228400	251	200	151
VOE 17228401	216	400	77
VOE 17228402	216	100	67
VOE 17228405	217	150	95
VOE 17228408	284	150	241
VOE 17228409	216	700	89
VOE 17228410	263	450	215
VOE 17228411	212	150	55
VOE 17228412	216	150	71
VOE 17228413	251	200	151
VOE 17228414	211	100	39
VOE 17228414	211	150	41
VOE 17228415	237	200	143
VOE 17228415	237	250	145
VOE 17228416	236	100	135
VOE 17228416	236	150	137
VOE 17228416	251	100	147
VOE 17228416	251	200	151
VOE 17228416	255	100	169
VOE 17228416	321	100	253
VOE 17228416	321	150	255
VOE 17228417	220	150	109
VOE 17228417	364	100	299
VOE 17228418	211	450	49
VOE 17228420	211	500	51
VOE 17228420	364	100	299
VOE 17228427	220	250	113
VOE 17228431	216	100	67
VOE 17228434	321	150	255
VOE 17228435	212	100	53
VOE 17228437	213	100	59
VOE 17228437	213	150	61
VOE 17228438	364	100	299
VOE 17228439	255	150	171
VOE 17228440	235	100	133
VOE 17228441	212	100	53
VOE 17228445	211	300	45
VOE 17228446	212	100	53
VOE 17228447	212	200	57
VOE 17228449	235	100	133
VOE 17228451	212	100	53
VOE 17228452	216	100	67
VOE 17228455	211	300	45
VOE 17228458	213	100	59
VOE 17228458	213	150	61
VOE 17228459	215	100	63
VOE 17228459	215	150	65
VOE 17228462	237	200	143
VOE 17228462	237	250	145
VOE 17228463	213	100	59
VOE 17228463	213	150	61
VOE 17228465	213	100	59
VOE 17228465	213	150	61
VOE 17228467	211	300	45
VOE 17228469	213	100	59
VOE 17228469	213	150	61
VOE 17228470	211	300	45
VOE 17228472	262	300	203
VOE 17228473	211	300	45
VOE 17228475	321	100	253
VOE 17228475	321	150	255
VOE 17228477	211	200	43
VOE 17228479	213	150	61
VOE 17228484	212	150	55
VOE 17228567	211	300	45
VOE 17228573	211	300	45
VOE 17228575	236	100	135
VOE 17228575	236	150	137
VOE 17228576	220	200	111
VOE 17228665	216	700	89
VOE 17228668	236	100	135
VOE 17228668	236	150	137
VOE 17228669	236	100	135
VOE 17228669	236	150	137
VOE 17228671	236	100	135
VOE 17228671	236	150	137
VOE 17228675	236	100	135
VOE 17228675	236	150	137
VOE 17228676	217	250	99
VOE 17228678	216	100	67
VOE 17228684	216	100	67
VOE 17228691	220	150	109
VOE 17228704	211	400	47
VOE 17228704	211	500	51
VOE 17228709	211	400	47
VOE 17228709	211	500	51
VOE 17228717	211	450	49
VOE 17228717	256	200	177
VOE 17228717	263	600	219
VOE 17228721	251	100	147
VOE 17228721	251	150	149
VOE 17228732	211	200	43
VOE 17228736	251	100	147
VOE 17228736	251	150	149
VOE 17228791	313	100	251
VOE 17228798	440	300	347
VOE 17228798	440	400	351
VOE 17228801	263	300	211
VOE 17228802	441	100	355
VOE 17228804	262	200	201
VOE 17228807	218	100	103
VOE 17228808	211	400	47
VOE 17228815	263	400	213
VOE 17228833	216	650	87
VOE 17228837	216	750	91
VOE 17228837	255	100	169
VOE 17228837	331	100	257
VOE 17228838	711	150	401
VOE 17228852	212	100	53
VOE 17228853	211	500	51
VOE 17228853	216	500	81
VOE 17228853	216	550	83
VOE 17228854	441	400	369
VOE 17228854	441	450	375
VOE 17228855	216	450	79
VOE 17228855	272	100	233
VOE 17228856	216	450	79
VOE 17228856	220	150	109
VOE 17228860	255	150	171
VOE 17228861	441	400	369
VOE 17228861	441	450	375
VOE 17228870	216	600	85
VOE 17228874	911	400	681
VOE 17228874	911	450	683
VOE 17228878	912	750	711
VOE 17228880	440	100	339
VOE 17228884	212	100	53
VOE 17228890	218	100	103
VOE 17228893	440	100	339
VOE 17228896	821	200	531
VOE 17228900	223	150	119
VOE 17228900	223	200	121
VOE 17228907	441	400	367
VOE 17228907	441	450	373
VOE 17228908	262	100	199
VOE 17228927	263	400	213
VOE 17228929	924	500	783
VOE 17228929	924	550	785
VOE 17228935	916	100	757
VOE 17228935	916	250	763
VOE 17228935	916	300	765
VOE 17228935	916	350	767
VOE 17228935	916	500	773
VOE 17228950	218	100	103
VOE 17228950	218	150	105

NUMERICAL INDEX

INDICE DE NÚMERO

ÍNDICE NUMÉRICO

RÉPERTOIRE DE NUMÉROS

Catalogue id	Group
20649	**1000**
Issue	Page
PUB 20030904-B	**9**

NUMERICAL INDEX

INDICE DE NÚMERO

ÍNDICE NUMÉRICO

RÉPERTOIRE DE NUMÉROS

Part No	Group	Sect	Page
VOE 17228952	252	100	153
VOE 17228952	252	200	157
VOE 17228952	252	400	161
VOE 17228952	252	500	165
VOE 17228954	223	100	117
VOE 17228954	223	250	123
VOE 17228958	313	100	251
VOE 17228959	891	250	615
VOE 17228961	711	250	405
VOE 17228962	313	100	251
VOE 17228963	313	100	251
VOE 17228965	313	100	251
VOE 17228969	215	100	63
VOE 17228969	215	150	65
VOE 17228972	912	200	695
VOE 17228976	912	100	693
VOE 17228979	441	200	359
VOE 17228979	441	250	361
VOE 17228979	911	800	689
VOE 17228980	916	150	759
VOE 17228980	916	200	761
VOE 17228982	211	100	39
VOE 17228982	211	150	41
VOE 17228983	234	200	129
VOE 17228985	916	250	763
VOE 17228985	916	350	767
VOE 17228985	916	500	773
VOE 17229015	441	200	359
VOE 17229015	441	250	361
VOE 17229028	441	200	359
VOE 17229028	441	250	361
VOE 17229030	912	400	699
VOE 17229031	441	300	363
VOE 17229032	256	300	179
VOE 17229033	870	300	589
VOE 17229037	321	100	253
VOE 17229042	321	150	255
VOE 17229127	256	150	175
VOE 17229127	262	100	199
VOE 17229132	256	200	177
VOE 17229132	911	400	681
VOE 17229132	911	450	683
VOE 17229133	911	450	683
VOE 17229134	256	100	173
VOE 17229134	256	150	175
VOE 17229136	371	400	313
VOE 17229168	217	100	93
VOE 17229171	234	200	129
VOE 17229171	916	150	759
VOE 17229171	916	200	761
VOE 17229171	916	400	769
VOE 17229171	916	450	771
VOE 17229174	223	100	117
VOE 17229174	223	250	123
VOE 17229180	223	250	123
VOE 17229181	256	200	177
VOE 17229183	916	150	759
VOE 17229183	916	200	761
VOE 17229185	911	400	681
VOE 17229185	911	450	683
VOE 17229188	911	400	681
VOE 17229188	911	450	683
VOE 17229197	911	450	683
VOE 17229201	911	450	683
VOE 17229202	441	100	355
VOE 17229202	911	600	685
VOE 17229202	911	650	687
VOE 17229206	916	100	757
VOE 17229206	916	250	763
VOE 17229206	916	500	773
VOE 17229208	916	100	757
VOE 17229208	916	250	763
VOE 17229208	916	500	773
VOE 17229209	821	100	529
VOE 17229210	916	200	761
VOE 17229214	916	200	761
VOE 17229215	916	150	759
VOE 17229215	916	200	761
VOE 17229216	924	800	791
VOE 17229216	924	850	793
VOE 17229218	916	400	769
VOE 17229218	916	450	771
VOE 17229226	916	100	757
VOE 17229226	916	250	763
VOE 17229226	916	300	765
VOE 17229226	916	350	767
VOE 17229226	916	500	773
VOE 17229227	440	150	341
VOE 17229232	916	100	757
VOE 17229232	916	250	763
VOE 17229232	916	300	765
VOE 17229232	916	350	767
VOE 17229232	916	500	773
VOE 17229235	256	150	175
VOE 17229236	261	100	181
VOE 17229236	261	150	183
VOE 17229236	261	300	189
VOE 17229237	256	300	179
VOE 17229238	261	100	181
VOE 17229238	261	150	183
VOE 17229238	261	300	189
VOE 17229239	911	450	683
VOE 17229241	912	500	703
VOE 17229248	912	500	703
VOE 17229249	912	450	701
VOE 17229255	945	550	805
VOE 17229255	945	750	811
VOE 17229258	223	150	119
VOE 17229258	223	200	121
VOE 17229264	362	150	287
VOE 17229272	272	150	235
VOE 17229272	272	200	237
VOE 17229279	914	150	737
VOE 17229290	914	150	737
VOE 17229297	914	100	735
VOE 17229305	914	100	735
VOE 17229320	261	200	185
VOE 17229325	261	250	187
VOE 17229333	216	600	85
VOE 17229335	216	650	87
VOE 17229342	256	300	179
VOE 17229370	263	300	211
VOE 17229370	263	400	213
VOE 17229376	252	200	157
VOE 17229381	211	100	39
VOE 17229382	252	500	165
VOE 17229383	211	150	41
VOE 17229385	924	1000	795
VOE 17229386	252	250	159
VOE 17229386	252	550	167
VOE 17229397	252	100	153
VOE 17229398	252	400	161
VOE 17229402	252	150	155
VOE 17229402	252	450	163
VOE 17229403	261	200	185
VOE 17229403	261	250	187
VOE 17229403	261	350	191
VOE 17229414	261	200	185
VOE 17229414	261	250	187
VOE 17229414	261	350	191
VOE 17229420	261	100	181
VOE 17229420	261	150	183
VOE 17229420	261	300	189
VOE 17229421	233	100	125
VOE 17229423	234	200	129
VOE 17229433	261	100	181
VOE 17229433	261	150	183
VOE 17229433	261	300	189
VOE 17229438	911	600	685
VOE 17229438	911	650	687
VOE 17229445	263	200	209
VOE 17229450	263	200	209
VOE 17229453	911	400	681
VOE 17229453	911	450	683
VOE 17229457	263	200	209
VOE 17229459	916	150	759
VOE 17229460	916	150	759
VOE 17229461	441	150	357
VOE 17229462	441	100	355
VOE 17229463	441	100	355
VOE 17229465	441	100	355
VOE 17229466	441	100	355
VOE 17229468	924	800	791
VOE 17229468	924	850	793
VOE 17229469	924	800	791
VOE 17229470	924	800	791
VOE 17229471	256	100	173
VOE 17229486	916	400	769
VOE 17229486	916	450	771
VOE 17229490	916	450	771
VOE 17229493	916	450	771
VOE 17229498	220	250	113
VOE 17229504	211	300	45
VOE 17229510	916	400	769
VOE 17229514	916	400	769

Part No	Group	Sect	Page
VOE 17229517	371	100	301
VOE 17229537	924	850	793
VOE 17229538	924	850	793
VOE 17229541	262	200	201
VOE 17229543	211	450	49
VOE 17229543	256	200	177
VOE 17229544	211	400	47
VOE 17229544	211	500	51
VOE 17229546	216	300	73
VOE 17229547	255	100	169
VOE 17229548	211	500	51
VOE 17229549	216	350	75
VOE 17229551	272	100	233
VOE 17229553	262	100	199
VOE 17229555	211	200	43
VOE 17229558	211	200	43
VOE 17229562	211	200	43
VOE 17229563	216	650	87
VOE 17229566	441	400	369
VOE 17229566	441	450	375
VOE 17229567	262	200	201
VOE 17229570	440	300	347
VOE 17229570	440	400	351
VOE 17229580	256	300	179
VOE 17229582	255	100	169
VOE 17229585	237	250	145
VOE 17229591	216	100	69
VOE 17229595	216	100	69
VOE 17229598	213	100	59
VOE 17229600	441	400	371
VOE 17229600	441	450	377
VOE 17229609	821	100	529
VOE 17229612	356	100	277
VOE 17229612	356	150	279
VOE 17229612	356	200	281
VOE 17229612	356	250	283
VOE 17229614	211	300	45
VOE 17229615	272	150	235
VOE 17229615	272	200	237
VOE 17229616	272	150	235
VOE 17229616	272	200	237
VOE 17229617	216	450	79
VOE 17229618	252	100	153
VOE 17229618	252	200	157
VOE 17229618	252	400	161
VOE 17229618	252	500	165
VOE 17229619	945	550	805
VOE 17229620	711	250	405
VOE 17229623	441	400	367
VOE 17229623	441	450	373
VOE 17229624	211	400	47
VOE 17229624	211	500	51
VOE 17229624	216	350	75
VOE 17229624	237	100	139
VOE 17229624	237	150	141
VOE 17229624	262	100	199
VOE 17229624	262	200	201
VOE 17229625	912	500	703
VOE 17229627	912	450	701
VOE 17229628	371	300	309
VOE 17229628	371	350	311
VOE 17229631	216	450	79
VOE 17229646	272	100	233
VOE 17229649	441	400	369
VOE 17229649	441	450	375
VOE 17229657	441	400	369
VOE 17229657	441	450	375
VOE 17229658	271	100	231
VOE 17229660	440	200	343
VOE 17229660	440	350	349
VOE 17229662	371	400	313
VOE 17229666	913	100	729
VOE 17229666	913	150	731
VOE 17229669	371	300	309
VOE 17229669	371	350	311
VOE 17229670	441	300	363
VOE 17229670	441	350	365
VOE 17229673	234	200	129
VOE 17229675	220	200	111
VOE 17229675	255	150	171
VOE 17229676	371	400	313
VOE 17229676	914	900	747
VOE 17229680	914	900	747
VOE 17229683	441	400	367
VOE 17229683	441	450	373
VOE 17229685	945	550	805
VOE 17229686	945	550	805
VOE 17229686	945	750	811
VOE 17229687	945	550	805
VOE 17229689	945	550	805
VOE 17229690	237	150	141
VOE 17229694	237	150	141
VOE 17229697	237	150	141
VOE 17229699	237	150	141
VOE 17229702	945	300	801
VOE 17229703	235	100	133
VOE 17229705	255	150	171
VOE 17229707	255	150	171
VOE 17229708	255	150	171
VOE 17229709	217	250	99
VOE 17229721	251	150	149
VOE 17229722	251	100	147
VOE 17229724	916	150	759
VOE 17229724	916	200	761
VOE 17229724	916	400	769
VOE 17229724	916	450	771
VOE 17229749	843	200	553
VOE 17229754	213	100	59
VOE 17229811	272	150	235
VOE 17229811	272	200	237
VOE 17229813	924	300	781
VOE 17229818	924	300	781
VOE 17229821	924	300	781
VOE 17229822	914	1000	751
VOE 17229822	914	1100	755
VOE 17229824	924	300	781
VOE 17229833	441	400	369
VOE 17229833	441	450	375
VOE 17229928	217	150	95
VOE 17229930	272	150	235
VOE 17229930	272	200	237
VOE 17229931	441	400	367
VOE 17229931	441	450	373
VOE 17229933	441	400	369
VOE 17229933	441	450	375
VOE 17229934	441	400	369
VOE 17229934	441	450	375
VOE 17229935	441	400	367
VOE 17229935	441	450	373
VOE 17229937	441	400	369
VOE 17229937	441	450	375
VOE 17229938	262	200	201
VOE 17229940	262	200	201
VOE 17229941	217	200	97
VOE 17229947	912	500	703
VOE 17229950	912	200	695
VOE 17229950	912	250	697
VOE 17229950	912	650	707
VOE 17229950	912	700	709
VOE 17230010	216	150	71
VOE 17230011	263	500	217
VOE 17230013	263	400	213
VOE 17230016	233	100	125
VOE 17230017	236	150	137
VOE 17230019	236	100	135
VOE 17230021	913	100	729
VOE 17230021	913	500	733
VOE 17230022	913	150	731
VOE 17230023	441	200	359
VOE 17230023	441	1000	381
VOE 17230023	441	1050	383
VOE 17230025	441	250	361
VOE 17230025	441	1100	385
VOE 17230025	441	1150	387
VOE 17230027	441	200	359
VOE 17230027	441	1200	389
VOE 17230027	441	1250	391
VOE 17230050	252	200	157
VOE 17230050	252	500	165
VOE 17230053	441	400	369
VOE 17230053	441	450	375
VOE 17230056	914	900	747
VOE 17230058	441	400	369
VOE 17230058	441	450	375
VOE 17230061	362	150	287
VOE 17230062	261	100	181
VOE 17230062	261	150	183
VOE 17230062	261	300	189
VOE 17230065	911	400	681
VOE 17230065	911	450	683
VOE 17230068	916	100	757
VOE 17230070	916	100	757
VOE 17230076	916	200	761
VOE 17230077	916	200	761
VOE 17230078	916	400	769

NUMERICAL INDEX

INDICE DE NÚMERO

ÍNDICE NUMÉRICO

RÉPERTOIRE DE NUMÉROS

Catalogue id	Group
20649	**1000**
Issue	Page
PUB 20030904-B	**11**



NUMERICAL INDEX

INDICE DE NÚMERO

ÍNDICE NUMÉRICO

RÉPERTOIRE DE NUMÉROS

Part No	Group	Sect	Page
VOE 17230080	916	400	769
VOE 17230082	911	400	681
VOE 17230082	911	450	683
VOE 17230085	263	200	209
VOE 17230086	916	250	763
VOE 17230086	916	350	767
VOE 17230086	916	500	773
VOE 17230087	916	250	763
VOE 17230087	916	350	767
VOE 17230087	916	500	773
VOE 17230088	916	250	763
VOE 17230088	916	500	773
VOE 17230089	916	250	763
VOE 17230089	916	500	773
VOE 17230091	916	250	763
VOE 17230091	916	350	767
VOE 17230091	916	500	773
VOE 17230093	916	100	757
VOE 17230093	916	250	763
VOE 17230093	916	300	765
VOE 17230093	916	350	767
VOE 17230094	911	650	687
VOE 17230095	441	400	367
VOE 17230095	441	450	373
VOE 17230096	911	650	687
VOE 17230097	914	600	741
VOE 17230101	914	600	741
VOE 17230101	914	750	745
VOE 17230102	914	600	741
VOE 17230102	914	750	745
VOE 17230104	914	500	739
VOE 17230106	912	600	705
VOE 17230109	211	100	39
VOE 17230109	211	150	41
VOE 17230111	441	400	367
VOE 17230111	441	450	373
VOE 17230112	441	400	367
VOE 17230112	441	450	373
VOE 17230113	441	450	373
VOE 17230113	718	200	459
VOE 17230113	718	300	461
VOE 17230115	216	750	91
VOE 17230115	255	100	169
VOE 17230115	284	150	241
VOE 17230116	441	400	367
VOE 17230116	718	150	457
VOE 17230116	718	300	461
VOE 17230117	211	100	39
VOE 17230117	211	150	41
VOE 17230119	441	300	363
VOE 17230122	263	100	205
VOE 17230122	263	150	207
VOE 17230123	441	350	365
VOE 17230124	352	100	267
VOE 17230134	831	500	543
VOE 17230136	441	400	369
VOE 17230136	441	450	375
VOE 17230137	380	100	319
VOE 17230137	380	200	321
VOE 17230137	380	500	323
VOE 17230137	380	550	325
VOE 17230137	881	100	603
VOE 17230138	371	300	309
VOE 17230138	371	350	311
VOE 17230140	211	300	45
VOE 17230140	262	100	199
VOE 17230141	237	100	139
VOE 17230141	237	150	141
VOE 17230142	210	700	37
VOE 17230142	233	100	125
VOE 17230142	255	100	169
VOE 17230142	321	100	253
VOE 17230142	321	150	255
VOE 17230143	217	300	101
VOE 17230144	211	400	47
VOE 17230144	211	500	51
VOE 17230145	211	400	47
VOE 17230145	211	500	51
VOE 17230145	216	350	75
VOE 17230146	216	750	91
VOE 17230147	216	100	67
VOE 17230149	216	100	69
VOE 17230153	217	100	93
VOE 17230153	223	200	121
VOE 17230154	210	700	37
VOE 17230154	251	200	151
VOE 17230154	255	100	169
VOE 17230154	262	300	203
VOE 17230154	321	100	253
VOE 17230154	321	150	255
VOE 17230158	211	400	47
VOE 17230158	211	500	51
VOE 17230158	216	350	75
VOE 17230159	393	100	331
VOE 17230161	715	150	409
VOE 17230161	715	250	411
VOE 17230164	220	250	113
VOE 17230165	216	550	83
VOE 17230166	272	150	235
VOE 17230166	272	200	237
VOE 17230170	441	400	367
VOE 17230170	441	450	373
VOE 17230171	441	400	369
VOE 17230171	441	450	375
VOE 17230172	441	400	369
VOE 17230172	441	450	375
VOE 17230174	236	100	135
VOE 17230174	236	150	137
VOE 17230175	912	600	705
VOE 17230178	236	100	135
VOE 17230178	236	150	137
VOE 17230179	236	100	135
VOE 17230179	236	150	137
VOE 17230182	914	600	741
VOE 17230182	914	750	745
VOE 17230183	914	600	741
VOE 17230183	914	750	745
VOE 17230184	441	400	367
VOE 17230184	441	450	373
VOE 17230185	441	400	367
VOE 17230185	441	450	373
VOE 17230186	441	400	369
VOE 17230186	441	450	375
VOE 17230187	441	400	367
VOE 17230187	441	450	373
VOE 17230188	441	400	367
VOE 17230188	441	450	373
VOE 17230190	441	400	367
VOE 17230190	441	450	373
VOE 17230191	945	550	805
VOE 17230193	914	500	739
VOE 17230194	912	650	707
VOE 17230194	912	700	709
VOE 17230195	711	150	401
VOE 17230196	441	400	367
VOE 17230196	441	450	373
VOE 17230197	914	500	739
VOE 17230199	711	150	401
VOE 17230201	441	400	369
VOE 17230201	441	450	375
VOE 17230202	945	550	805
VOE 17230202	945	750	811
VOE 17230203	914	500	739
VOE 17230208	914	600	741
VOE 17230211	441	400	371
VOE 17230211	441	450	377
VOE 17230212	916	150	759
VOE 17230214	362	150	287
VOE 17230215	916	150	759
VOE 17230216	272	200	237
VOE 17230217	441	100	355
VOE 17230218	914	700	743
VOE 17230219	272	150	235
VOE 17230224	441	150	357
VOE 17230227	914	1000	751
VOE 17230227	914	1100	755
VOE 17230230	441	150	357
VOE 17230232	272	100	233
VOE 17230234	441	150	357
VOE 17230237	441	400	367
VOE 17230237	441	450	373
VOE 17230239	441	150	357
VOE 17230244	441	150	357
VOE 17230247	272	100	233
VOE 17230248	441	150	357
VOE 17230250	924	800	791
VOE 17230250	924	850	793
VOE 17230254	924	800	791
VOE 17230255	272	150	235
VOE 17230255	272	200	237
VOE 17230259	924	800	791
VOE 17230262	216	450	79
VOE 17230263	914	900	747
VOE 17230267	914	900	747
VOE 17230269	441	400	367

Part No	Group	Sect	Page
VOE 17230269	441	450	373
VOE 17230271	914	900	747
VOE 17230278	441	400	369
VOE 17230278	441	450	375
VOE 17230280	924	800	791
VOE 17230280	924	850	793
VOE 17230283	916	450	771
VOE 17230286	441	400	369
VOE 17230286	441	450	375
VOE 17230287	916	450	771
VOE 17230290	924	800	791
VOE 17230291	441	400	369
VOE 17230291	441	450	375
VOE 17230295	924	800	791
VOE 17230298	916	100	757
VOE 17230298	916	250	763
VOE 17230298	916	300	765
VOE 17230298	916	350	767
VOE 17230298	916	500	773
VOE 17230300	441	400	369
VOE 17230300	441	450	375
VOE 17230301	916	100	757
VOE 17230301	916	250	763
VOE 17230301	916	300	765
VOE 17230301	916	350	767
VOE 17230301	916	500	773
VOE 17230304	440	300	347
VOE 17230304	440	400	351
VOE 17230306	363	150	297
VOE 17230309	911	400	681
VOE 17230313	924	800	791
VOE 17230314	718	150	457
VOE 17230314	718	200	459
VOE 17230314	718	300	461
VOE 17230315	924	800	791
VOE 17230317	211	400	47
VOE 17230317	211	500	51
VOE 17230319	217	250	99
VOE 17230320	818	300	521
VOE 17230322	715	1000	419
VOE 17230328	211	100	39
VOE 17230328	211	150	41
VOE 17230330	211	200	43
VOE 17230332	211	100	39
VOE 17230335	441	400	367
VOE 17230335	441	450	373
VOE 17230337	211	150	41
VOE 17230340	211	400	47
VOE 17230340	211	500	51
VOE 17230341	211	100	39
VOE 17230341	211	150	41
VOE 17230344	261	200	185
VOE 17230344	261	250	187
VOE 17230344	261	350	191
VOE 17230347	211	100	39
VOE 17230347	211	150	41
VOE 17230350	924	100	777
VOE 17230350	924	150	779
VOE 17230352	212	100	53
VOE 17230353	912	1000	713
VOE 17230353	912	1050	715
VOE 17230357	212	100	53
VOE 17230359	945	100	797
VOE 17230359	945	1100	819
VOE 17230361	217	200	97
VOE 17230364	916	250	763
VOE 17230369	261	200	185
VOE 17230369	261	250	187
VOE 17230369	261	350	191
VOE 17230370	945	100	797
VOE 17230370	945	200	799
VOE 17230372	912	650	707
VOE 17230372	912	700	709
VOE 17230372	912	1500	725
VOE 17230374	912	100	693
VOE 17230377	914	500	739
VOE 17230377	914	700	743
VOE 17230381	912	750	711
VOE 17230382	945	1100	819
VOE 17230383	945	1000	815
VOE 17230386	261	200	185
VOE 17230389	945	200	799
VOE 17230393	945	300	801
VOE 17230398	945	300	801
VOE 17230401	364	100	299
VOE 17230408	911	100	675
VOE 17230414	215	150	65
VOE 17230416	718	150	457
VOE 17230416	718	200	459
VOE 17230416	718	300	461
VOE 17230418	212	200	57
VOE 17230423	262	200	201
VOE 17230449	775	400	493
VOE 17230455	441	100	355
VOE 17230455	911	600	685
VOE 17230455	911	650	687
VOE 17230458	313	100	251
VOE 17230461	217	100	93
VOE 17230476	440	300	347
VOE 17230476	440	400	351
VOE 17230477	440	300	347
VOE 17230477	440	400	351
VOE 17230478	440	300	347
VOE 17230478	440	400	351
VOE 17230479	440	300	347
VOE 17230479	440	400	351
VOE 17230545	440	300	347
VOE 17230545	440	400	351
VOE 17230646	440	300	347
VOE 17230646	440	400	351
VOE 17230649	440	300	347
VOE 17230649	440	400	351
VOE 17230650	440	300	347
VOE 17230650	440	400	351
VOE 17230651	440	300	347
VOE 17230651	440	400	351
VOE 17230653	440	300	347
VOE 17230653	440	400	351
VOE 17230656	441	400	371
VOE 17230656	441	450	377
VOE 17230662	371	500	315
VOE 17230925	215	100	63
VOE 17230925	215	150	65
VOE 17230925	216	150	71
VOE 17230933	233	100	125
VOE 17230933	236	100	135
VOE 17230933	236	150	137
VOE 17230933	251	100	147
VOE 17230933	251	150	149
VOE 17230933	255	100	169
VOE 17230933	272	100	233
VOE 17230933	321	100	253
VOE 17230935	272	100	233
VOE 17230936	216	400	77
VOE 17230938	272	150	235
VOE 17230938	272	200	237
VOE 17230942	215	100	63
VOE 17230942	215	150	65
VOE 17230942	216	300	73
VOE 17230942	217	150	95
VOE 17230942	217	250	99
VOE 17230942	220	250	113
VOE 17230942	284	150	241
VOE 17230948	211	100	39
VOE 17230948	211	150	41
VOE 17230952	211	100	39
VOE 17230952	211	150	41
VOE 17230953	211	100	39
VOE 17230953	211	150	41
VOE 17230954	912	500	703
VOE 17230998	912	500	703
VOE 17231000	912	450	701
VOE 17231002	220	100	107
VOE 17231003	218	100	103
VOE 17231004	216	600	85
VOE 17231006	441	400	367
VOE 17231006	441	450	373
VOE 17231007	441	400	369
VOE 17231007	441	450	375
VOE 17231023	210	200	35
VOE 17231035	210	100	33
VOE 17231457	237	200	143
VOE 17232190	356	100	277
VOE 17232190	356	250	283
VOE 17232197	252	100	153
VOE 17232197	252	200	157
VOE 17232197	252	400	161
VOE 17232197	252	500	165
VOE 17232198	843	200	553
VOE 17232208	256	300	179
VOE 17233738	831	150	537
VOE 17233799	831	250	541
VOE 17235654	380	100	319
VOE 17237767	234	200	129
VOE 17237770	911	600	685

NUMERICAL INDEX

INDICE DE NÚMERO

ÍNDICE NUMÉRICO

RÉPERTOIRE DE NUMÉROS

Catalogue id	Group
20649	**1000**
Issue	Page
PUB 20030904-B	**13**

NUMERICAL INDEX

INDICE DE NÚMERO

ÍNDICE NUMÉRICO

RÉPERTOIRE DE NUMÉROS

Catalogue id	Group
20649	**1000**
Issue	Page
PUB 20030904-B	**14**

Part No	Group	Sect	Page
VOE 17237777	233	100	125
VOE 17237808	911	600	685
VOE 17237812	911	600	685
VOE 17237852	831	200	539
VOE 17237853	831	100	535
VOE 17237855	371	200	305
VOE 17237855	371	250	307
VOE 17237858	911	600	685
VOE 17237859	911	600	685
VOE 17237861	914	1050	753
VOE 17250214	911	400	681
VOE 17250214	911	450	683
VOE 17250223	911	400	681
VOE 17250223	911	450	683
VOE 17250225	911	450	683
VOE 17250227	911	450	683
VOE 17250228	911	450	683
VOE 17255212	897	900	657
VOE 17255213	897	500	641
VOE 17255215	897	900	657
VOE 17255216	897	500	641
VOE 20405733	261	100	181
VOE 20405733	261	300	189
VOE 20405733	356	200	281
VOE 20405733	831	100	535
VOE 20405733	831	150	537
VOE 20405733	831	200	539
VOE 20405733	831	250	541
VOE 20460127	218	150	105
VOE 20460127	234	200	129
VOE 20460127	252	100	153
VOE 20460127	252	200	157
VOE 20460127	252	400	161
VOE 20460127	252	500	165
VOE 20460127	261	100	181
VOE 20460127	261	150	183
VOE 20460127	261	200	185
VOE 20460127	261	250	187
VOE 20460127	261	300	189
VOE 20460127	261	350	191
VOE 20460127	263	400	213
VOE 20460127	271	100	231
VOE 20460127	313	100	251
VOE 20460127	350	100	259
VOE 20460127	350	150	263
VOE 20460127	350	200	265
VOE 20460127	356	100	277
VOE 20460127	356	150	279
VOE 20460127	356	200	281
VOE 20460127	356	250	283
VOE 20460127	363	150	297
VOE 20460127	371	200	305
VOE 20460127	371	250	307
VOE 20460127	371	300	309
VOE 20460127	371	350	311
VOE 20460127	371	400	313
VOE 20460127	371	500	315
VOE 20460127	371	550	317
VOE 20460127	440	250	345
VOE 20460127	715	150	409
VOE 20460127	715	250	411
VOE 20460127	715	300	413
VOE 20460127	715	600	415
VOE 20460127	715	1100	423
VOE 20460127	715	1150	425
VOE 20460127	718	100	455
VOE 20460127	821	200	531
VOE 20460127	831	100	535
VOE 20460127	831	150	537
VOE 20460127	831	200	539
VOE 20460127	831	250	541
VOE 20460127	841	500	547
VOE 20460127	870	100	579
VOE 20460127	870	150	581
VOE 20460127	881	100	603
VOE 20460127	912	200	695
VOE 20460127	912	250	697
VOE 20460127	912	750	711
VOE 20460127	912	1000	713
VOE 20460127	912	1100	717
VOE 20460127	912	1150	719
VOE 20460127	914	1000	751
VOE 20460127	914	1050	753
VOE 20460127	914	1100	755
VOE 20460127	916	550	775
VOE 20460127	945	700	809
VOE 20460939	272	100	233
VOE 20460939	831	100	535
VOE 20460939	831	150	537
VOE 20460939	831	200	539
VOE 20460939	831	250	541
VOE 20460939	843	200	553
VOE 20764147	218	100	103
VOE 20764147	218	150	105
VOE 20764147	441	300	363
VOE 20764147	441	350	365
VOE 20764147	715	150	409
VOE 20764147	715	250	411
VOE 20764147	818	300	521
VOE 20764147	818	350	523
VOE 20764147	821	200	531
VOE 20764147	912	100	693
VOE 59923003	441	200	359
VOE 59923003	441	250	361
VOE 59923003	911	100	675
VOE 906837	711	250	405
VOE 935032	912	650	707
VOE 935032	912	700	709
VOE 935068	912	1200	721
VOE 935077	913	100	729
VOE 935077	913	150	731
VOE 935285	916	550	775
VOE 973494	218	150	105
VOE 973494	234	200	129
VOE 973494	313	100	251
VOE 973494	362	100	285
VOE 973494	371	150	303
VOE 973494	371	300	309
VOE 973494	371	350	311
VOE 973494	371	400	313
VOE 973494	831	100	535
VOE 973494	831	150	537
VOE 973494	831	200	539
VOE 973494	831	250	541
VOE 973494	843	200	553
VOE 973494	870	100	579
VOE 973494	870	150	581
VOE 973494	881	100	603
VOE 973494	992	100	823

Part No	Group	Sect	Page