RUTHZIL TRATOR COMERCIAL DE PEÇAS LTDA 11 97083-6812 ROLANDO CITRANGULO

Truck model / Carrello tipo / Chariot modele / Staplertyp / Tipo de carretilla
MR14 - MR14H - MR16 - MR16H - MR20 - MR20H - MR25 - MR16N - MR20W

Part No: 524158717

YALE EMPILHADEIRA

Parts Manual
Catalogo Parti Ricambi
Manuel des Pièces de Rechange
Ersatzteilkatalog
Manual de Repuestos

MR14 - MR14H
MR16 - MR16H
MR20 - MR20H - MR25
MR16N - MR20W

Specify the following information when ordering spare parts:
Per ordinare parti di ricambio specificare:
Pour les commander les pièces détachées veuillez préciser:
Zum Bestellen von Ersatzteilen bitte folgende Angaben machen:
Para solicitar los repuestos especificar:

- truck model
- tipo della macchina
- type machine
- Staplertyp
- tipo de la máquina.

- table N°
- N° della tavola
- N° plan
- Tafel-Nr.
- N° de la máquina.

- quantity
- quantitá dei particolari richiesti
- nombre de pièces
- Erforderliche Stückzahl
- candidad de piezas solicitadas.

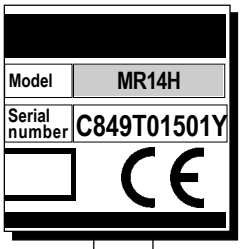

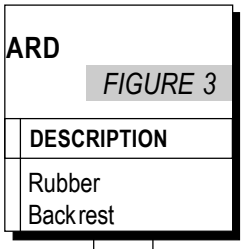

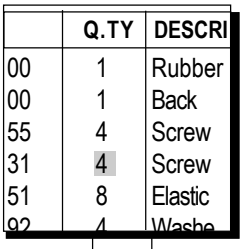

MR14H	C849T01501Y	FIGURE 3	277000000	4	Screw

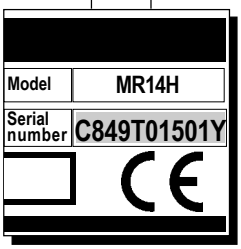

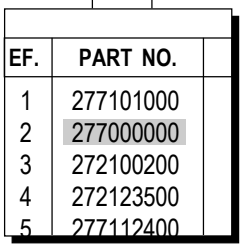

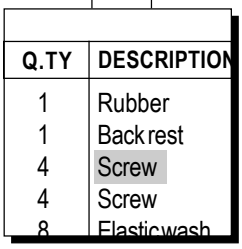

- truck serial number
- matricola della macchina
- N° matricule
- Seriennummer der Maschine
- matrícula de la máquina.

- part number of required component
- N° di codice del particolare richiesto
- N° code de la pièce
- Best. Nr. des erforderlichen Teils
- N° de código de la pieza solicitada.

- part description
- demoninazione del particolare richiesto
- désignation de la pièce
- Bezeichnung des erforderlichen Teils
- denominación de la pieza solicitada.

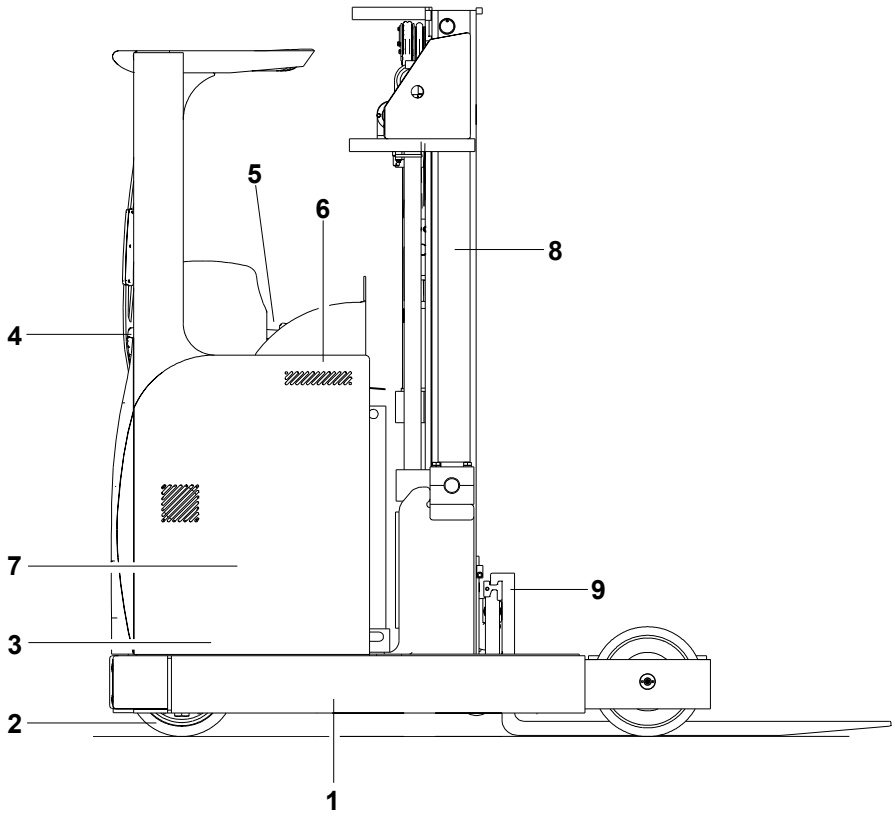

REF.	DIVISION / SEZIONE / SECTION / SEKTION / DIVISIÓN	PAGE NO.
1	FRAME / TELAIO / CHÂSSIS / RAHMEN / BASTIDOR	9
2	DRIVE UNIT / GRUPPO TRAZIONE / GROUPE DE TRACTION / ZUGAGGREAGAT / GRUPO DE TRACCION	23
3	BRAKES / IMPIANTO / FREINS / BREMSE / FRENOS	31
4	STEERING GROUP / GRUPPO STERZO / GROUPE DIRECTION / EINHEIT LENKUNG / GRUPO DIRECCIÓN	35
5	OPERATOR'S COMPARTMENT / CABINA / CABINE / KABINE / CABINA	39
6	ELECTRICAL ARRANGEMENT / IMPIANTO ELETTRONICO / INSTALLATION ÉLECTRONIQUE / ELEKTRONIK / INSTALACION ELECTRONICA	49
7	HYDRAULICS / GRUPPO SOLLEVAMENTO / GROUPE DE SOULEVEMENT / HEBE-GRUPPE / GRUPO ELEVACIÓN	59
8	MAST / MONTANTE / MONTANT / PFOSTEN / MONTANTE	95
9	FORKS / FORCHE / FOURCHES / GABELN / HORQUILLAS	139
	IDIAGRAMS / SCHEMI / SCHÉMA / SCHEMA / ESQUEMA	145
	INDEX NUMERICAL / INDICE NUMERICO / INDEX NUMÉRIQUE / NUMERISCHINDEX / INDICE NUMÉRICO	163

DESCRIPTION / DESCRIZIONE / DESIGNATION / BENENNUNG / DENOMINACIONES **PAGE NO.**

GENERAL TRUCK MR14-MR14H-MR16-MR16H-MR20-MR20H-MR25 / CARRELLO GENERALE MR14-MR14H-MR16-MR16H-MR20-MR20H-MR25 / CHARIOT GÉNÉRAL MR14-MR14H-MR16-MR16H-MR20-MR20H-MR25 / STAPLER-ALGEMEINE MR14-MR14H-MR16-MR16H-MR20-MR20H-MR25 / CARRETILLA GENERAL MR14-MR14H-MR16-MR16H-MR20-MR20H-MR25 (FIGURE 1) 10-11

GENERAL TRUCK MR16N / CARRELLO GENERALE MR16N / CHARIOT GÉNÉRAL MR16N / STAPLER-ALGEMEINE MR16N / CARRETILLA GENERAL MR16N (FIGURE 1.1) 12-13

GENERAL TRUCK MR20W / CARRELLO GENERALE MR20W / CHARIOT GÉNÉRAL MR20W / STAPLER-ALGEMEINE MR20W / CARRETILLA GENERAL MR20W (FIGURE 1.2) 14-15

MAST TRAVEL TAB / CARRO TRASLATORE / CHARIOT DE TRANSFERT / VERSETZUNGSSCHLITTEN / CARRO TRANSLADOR (FIGURE 2) 16-17

CYLINDER MAST TRAVEL TAB / CILINDRO CARRO TRASLATORE / CYLINDRE CHARIOT DE TRANSFERT / ZYLINDER VERSETZUNGSSCHLITTEN / CILINDRO CARRO TRANSLADOR (FIGURE 3) 18-19

LABELS / TARGHETTE E ADESIVI / AUTOCOLLANTS DE SEGNALISATION / SELBSTKLEBESCHILDER / TARJETAS ADHESIVAS (FIGURE 4) 20-21

DRIVE UNIT / GRUPPO TRAZIONE / GROUPE DE TRACTION / ZUGAGGREAGAT / GRUPO DE TRACCION (FIGURE 5) 24-25

DRIVE MOTOR / MOTORE DI TRAZIONE / MOTEUR DE TRACTION / ZUGMOTOR / MOTOR DE TRACCION (FIGURE 6) 26-27

LOAD WHEELS / RUOTE DI CARICO / ROUES DE CHARGEMENT / BESCHICKUNGSRÄDER / RUEDAS DE CARGA (FIGURE 7) 28-29

BRAKES SYSTEM / IMPIANTO FRENI / INSTALLATION FREINS / BREMSEANLAGE / INSTALACION FRENOS (FIGURE 8) 32-33

STEERING CONTROL UNIT / MOTORIDUTTORE STERZO / MOTOREDUCTEUR DIRECTION / ELEKTROMOTOR LENKUNG / MOTOR DIRECCION (FIGURE 9) 36-37

CONTROL PANEL / PANNELLO COMANDI / PANNEAU DE CONTRÔLE / STEUERTAFEL / TABLERO DE MANDO (FIGURE 10-11) 40-43

RUDDER PEDALS ASS'Y / ASSIEME PEDALIERA / ENSEMBLE PÉDALIER / ACHSE DES FUßHEBELS / EJE PEDALES (FIGURE 12) 44-45

SEAT / SEDILE / SIÈGE / SITZ / ASIENTO (FIGURE 13) 46-47

ELECTRICAL ARRANGEMENT (POWER CABLES) / IMPIANTO ELETTRONICO (CAVI DI POTENZA) / INSTALLATION ÉLECTRONIQUE (CABLES DE PUISSANCE) / ELEKTRONIK (LEISTUNGKABEL) / INSTALACION ELECTRONICA (CABLE DE POTENCIA) (FIGURE 14) 50-51

ELECTRICAL ARRANGEMENT (SHEATH) / IMPIANTO ELETTRONICO (GUAINE) / INSTALLATION ÉLECTRONIQUE (GAINES) / ELEKTRONIK (MANTEL) / INSTALACION ELECTRONICA (VAINA) (FIGURE 15) 52-55

CONNECTORS, CONTACTS, TOOLS / CONTATTI, CONNETTORI, UTENSILI / CONNECTEURS, CONTACTS, OUTILS / KONNEKTORS, KONTAKTS, WERKZEUG / CONTACTO, CONECTOR, UTENSILIO (FIGURE 16) 56-57

LIFTING UNIT / GRUPPO SOLLEVAMENTO / GROUPE DE SOULEVEMENT / HEBE-GRUPPE / GRUPO ELEVACIÓN (FIGURE 17) 60-63

LIFTING UNIT (MR16-MR14-MR16N WITH BETA MAST) / GRUPPO SOLLEVAMENTO (MR16-MR14-MR16N CON MONTANTE BETA) / GROUPE DE SOULEVEMENT (MR16-MR14-MR16NC) / HEBE-GRUPPE (MR16-MR14-MR16N MIT PFOSTEN BETA) / GRUPO ELEVACIÓN (MR16-MR14-MR16N Y MONTANTE BETA) (FIGURE 18) 64-67

LIFTING UNIT (MR14H-MR20-MR16N WITH HE140L MAST) / GRUPPO SOLLEVAMENTO (MR14H-MR20-MR16N CON MONTANTE HE140L) / GROUPE DE SOULEVEMENT (MR14H-MR20-MR16N AVEC MONTANT HE140L) / HEBE-GRUPPE (MR14H-MR20-MR16N MIT PFOSTEN HE140L) / GRUPO ELEVACIÓN (MR14H-MR20-MR16N Y MONTANTE HE140L) (FIGURE 18.1) 68-73

LIFTING UNIT (MR16H-MR20H-MR25-MR20W WITH HE140 MAST) / GRUPPO SOLLEVAMENTO (MR16H-MR20H-MR25-MR20W CON MONTANTE HE140) / GROUPE DE SOULEVEMENT (MR16H-MR20H-MR25-MR20W AVEC MONTANT HE140) / HEBE-GRUPPE (MR16H-MR20H-MR25-MR20W MIT PFOSTEN HE140) / GRUPO ELEVACIÓN (MR16H-MR20H-MR25-MR20W Y MONTANTE HE140) (FIGURE 18.2) 74-79

LIFTING UNIT (MR16H-MR20H-MR25-MR20W WITH HE140R MAST) / GRUPPO SOLLEVAMENTO (MR16H-MR20H-MR25-MR20W CON MONTANTE HE140R) / GROUPE DE SOULEVEMENT (MR16H-MR20H-MR25-MR20W AVEC MONTANT HE140R) / HEBE-GRUPPE (MR16H-MR20H-MR25-MR20W MIT PFOSTEN HE140R) / GRUPO ELEVACIÓN (MR16H-MR20H-MR25-MR20W Y MONTANTE HE140R) (FIGURE 18.3) 80-89

SOLENOID VALVE / ELETTROVALVOLA / SOUPAPE ÉLECTRIQUE / ELEKTROVENTIL / ELECTROVÁLVULA (FIGURE 19) 90-91

DESCRIPTION / DESCRIZIONE / DESIGNATION / BENENNUNG / DENOMINACIONES **PAGE NO.**

LIFT MOTOR AND PUMP / MOTOPOMPA SOLLEVAMENTO / MOTOPOMPE SOULEVEMENT / MOTORPUMPE ZUR ANAEBUNG / MOTOBOMBA ELEVACIÓN (FIGURE 20) 92-93

BETA MAST (MR16-MR14-MR16N WITH BETA MAST) / MONTANTE BETA (MR16-MR14-MR16N CON MONTANTE BETA) / MONTANT BETA (MR16-MR14-MR16N CON MONTANTE BETA) / PFOSTEN BETA (MR16-MR14-MR16N MIT PFOSTEN BETA) / MONTANTE BETA (MR16-MR14-MR16N Y MONTANTE BETA) (FIGURE 21) 96-99

HE140L MAST (MR14H-MR20-MR16N WITH HE140L MAST) / MONTANTE HE140L (MR14H-MR20-MR16N CON MONTANTE HE140L) / MONTANT HE140L (MR14H-MR20-MR16N AVEC MONTANT HE140L) / PFOSTEN HE140L (MR14H-MR20-MR16N MIT PFOSTEN HE140L) / MONTANTE HE140L (MR14H-MR20-MR16N Y MONTANTE HE140L) (FIGURE 21.1) 100-103

HE140 MAST (MR16H-MR20H-MR25-MR20W WITH HE140 MAST) / MONTANTE HE140 (MR16H-MR20H-MR25-MR20W CON MONTANTE HE140) / MONTANT HE140 (MR16H-MR20H-MR25-MR20W AVEC MONTANT HE140) / PFOSTEN HE140 (MR16H-MR20H-MR25-MR20W MIT PFOSTEN HE140) / MONTANTE HE140 (MR16H-MR20H-MR25-MR20W Y MONTANTE HE140) (FIGURE 21.2) 104-109

HE140R MAST (MR16H-MR20H-MR25-MR20WV WITH HE140R MAST) / MONTANTE HE140R (MR16H-MR20H-MR25-MR20W CON MONTANTE HE140R) / MONTANT HE140R (MR16H-MR20H-MR25-MR20W AVEC MONTANT HE140R) / PFOSTEN HE140R (MR16H-MR20H-MR25-MR20W MIT PFOSTEN HE140R) / MONTANTE HE140R (MR16H-MR20H-MR25-MR20W Y MONTANTE HE140R) (FIGURE 21.3) 110-115

LIFT CYLINDERS (MR16-MR14-MR16N WITH BETA MAST) / CILINDRI SOLLEVAMENTO (MR16-MR14-MR16N CON MONTANTE BETA) / CYLINDRE DE SOULEVEMENT (MR16-MR14-MR16N AVEC MONTANT BETA) / HUBZYLINDER (MR16-MR14-MR16N MIT PFOSTEN BETA) / CILINDRO DE ELEVACIÓN (MR16-MR14-MR16N Y MONTANTE BETA) (FIGURE 22) 116-119

LIFT CYLINDERS (MR14H-MR20-MR16N WITH HE140L MAST) / CILINDRI SOLLEVAMENTO (MR14H-MR20-MR16N CON MONTANTE HE140L) / CYLINDRE DE SOULEVEMENT (MR14H-MR20-MR16N AVEC MONTANT HE140L) / HUBZYLINDER (MR14H-MR20-MR16N MIT PFOSTEN HE140L) / CILINDRO DE ELEVACIÓN (MR14H-MR20-MR16N Y MONTANTE HE140L) (FIGURE 22.1) 120-123

LIFT CYLINDERS (MR16H-MR20H-MR25-MR20W WITH HE140 MAST) / CILINDRI SOLLEVAMENTO (MR16H-MR20H-MR25-MR20W CON MONTANTE HE140) / CYLINDRE DE SOULEVEMENT (MR16H-MR20H-MR25-MR20W AVEC MONTANT HE140) / HUBZYLINDER (MR16H-MR20H-MR25-MR20W MIT PFOSTEN HE140) / CILINDRO DE ELEVACIÓN (MR16H-MR20H-MR25-MR20W Y MONTANTE HE140) (FIGURE 22.2) 124-129

LIFT CYLINDERS (MR16H-MR20H-MR25-MR20W WITH HE140R MAST) / CILINDRI SOLLEVAMENTO (MR16H-MR20H-MR25-MR20W CON MONTANTE HE140R) / CYLINDRE DE SOULEVEMENT (MR16H-MR20H-MR25-MR20W AVEC MONTANT HE140R) / HUBZYLINDER (MR16H-MR20H-MR25-MR20W MIT PFOSTEN HE140R) / CILINDRO DE ELEVACIÓN (MR16H-MR20H-MR25-MR20W Y MONTANTE HE140R) (FIGURE 22.3) 130-137

SIDESHIFT CARRIAGE / PIASTRA PORTA FORCHE CON TRASLATORE / PLAQUE PORTE-FOURCHES AVEC TRANSLATEUR / GABELSEITESCHIEBEN / PLANCHA PORTE HORQUILLAS Y TRASLADOR (FIGURE 23) 140-141

FORKS / FORCHE / FOURCHES / GABELN / HORQUILLAS (FIGURE 24) 142-143

HYDRAULIC DIAGRAM / SCHEMA OLEODINAMICO / SCHÉMA HYDRAULIQUE / HYDRAULIKSCHALTPLAN / ESQUEMA OLEODINAMICO (FIGURE 25). 146

HYDRAULIC DIAGRAM 5 WAYS GROUP (OPTIONS) / SCHEMA OLEODINAMICO GRUPPO 5 VIE (OPTIONAL) / SCHÉMA HYDRAULIQUE GROUPE 5 VOIE (OPTIONNEL) / HYDRAULIKSCHALTPLAN GRUPPE 5 WEG (WAHLFREI) / ESQUEMA OLEODINAMICO GRUPO 5 VÍA (OPCIONAL) (FIGURE 25.1) 147

ELECTRONIC DIAGRAM / SCHEMA ELETTRONICO / DIAGRAMME ÉLECTRONIQUE / ELEKTRONIKSCHALTPLAN / ESQUEMA ELECTRÓNICO (FIGURE 26 / 26.1 / 26.2 / 26.3 / 26.4 / 26.5 / 26.6 / 26.7 / 26.8 / 26.9 / 26.10 / 26.11 / 26.12) 148-160

BEARINGS STAMP / STAMPIGLIATURA CUSCINETTI / SCHÉMA ROULEMENT / LAGERSTEMPEL / ESTAMPILLADO COJINETE 162

INDEX NUMERICAL / INDICE NUMERICO / INDEX NUMÉRIQUE / NUMERISCHINDEX / INDICE NUMÉRICO ELECTRÓNICO 163-171

DESCRIPTION / DESCRIZIONE / DESIGNATION / BENENNUNG / DENOMINACIONES **PAGE NO.**

GENERAL TRUCK (MR14 / MR14H-MR16 / MR16H / MR20 / MR20H / MR25) / CARRELLO GENERALE (MR14 / MR14H-MR16 / MR16H / MR20 / MR20H / MR25) / CHARIOT GÉNÉRAL (MR14 / MR14H-MR16 / MR16H / MR20 / MR20H / MR25) / STAPLER-ALGEMEINE (MR14 / MR14H-MR16 / MR16H / MR20 / MR20H / MR25) / CARRETILLA GENERAL (MR14 / MR14H-MR16 / MR16H / MR20 / MR20H / MR25) (FIGURE 1) 10-11

GENERAL TRUCK (MR16N) / CARRELLO GENERALE (MR16N) / CHARIOT GÉNÉRAL (MR16N) / STAPLER-ALGEMEINE (MR16N) / CARRETILLA GENERAL (MR16N) (FIGURE 1.1) 12-13

GENERAL TRUCK (MR20W) / CARRELLO GENERALE (MR20W) / CHARIOT GÉNÉRAL (MR20W) / STAPLER-ALGEMEINE (MR20W) / CARRETILLA GENERAL (MR20W) (FIGURE 1.2) 14-15

MAST TRAVEL TAB / CARRO TRASLATORE / CHARIOT DE TRANSFERT / VERSETZUNGSSCHLITTEN / CARRO TRANSLADOR (FIGURE 2) 16-17

CYLINDER MAST TRAVEL TAB / CILINDRO CARRO TRASLATORE / CYLINDRE CHARIOT DE TRANSFERT / ZYLINDER VERSETZUNGSSCHLITTEN / CILINDRO CARRO TRANSLADOR (FIGURE 3) 18-19

LABELS / TARGHETTE E ADESIVI / AUTOCOLLANTS DE SEGNALISATION / SELBSTKLEBESCHILDER / TARJETAS ADHESIVAS (FIGURE 4) 20-21

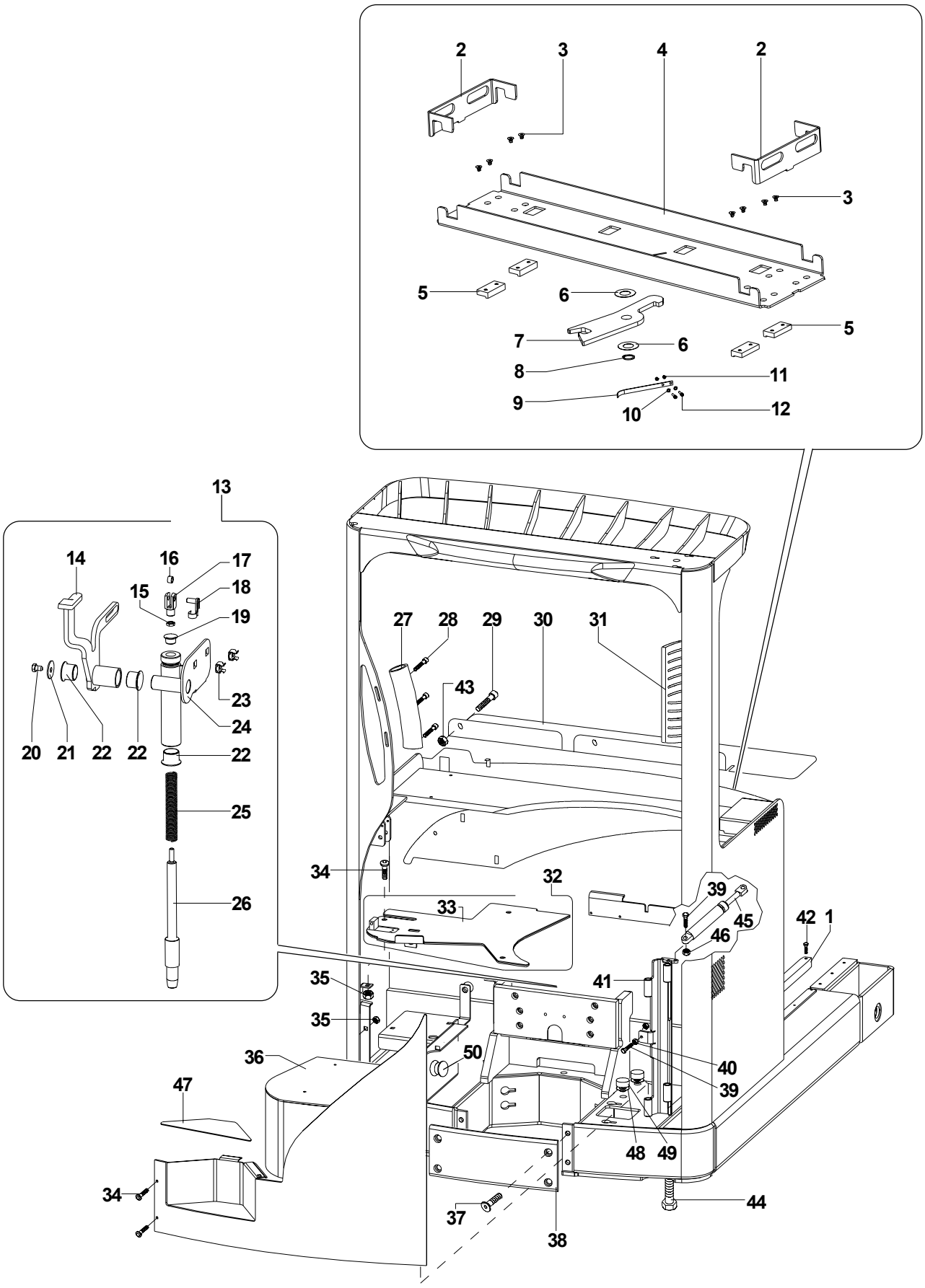
2
3
4
2
3
5
6
7
6
5
8
11
9
10
12
13
14
16
17
15
18
19
20
21
22
22
23
24
22
25
26
27
28
29
30
31
43
34
32
33
39
45
46
42
1
41
35
35
36
50
40
39
47
48
49
34
44
37
38

Yale

MODELS MR14 / MR14H / MR16 MR16H / MR20 / MR20H / MR25

GENERAL TRUCK
CARRELLO GENERALE
CHARIOT GÉNÉRAL
STAPLER-ALGEMEINE
CARRETILLA GENERAL

FIGURE 1

REF.	PART NO.	Q.TY	DESCRIPTION	DESCRIZIONE	DESIGNATION	BENENNUNG	DENOMINACIONES	PART DETAILS
1	580029908	2	Plate	Piastra	Plaque	Platte	Plancha	
2	580027086	2	Bend plate	Fermo batteria	Arret de batterie	Batteriehalteteller	Retén de la batería	For battery mm1220x280
2	580027087	2	Bend plate	Fermo batteria	Arret de batterie	Batteriehalteteller	Retén de la batería	For battery mm1220x352
2	580027088	2	Bend plate	Fermo batteria	Arret de batterie	Batteriehalteteller	Retén de la batería	For battery mm1220x424
2	580027089	2	Bend plate	Fermo batteria	Arret de batterie	Batteriehalteteller	Retén de la batería	For battery mm1220x496
3	580028391	8	Screw	Vite	Vis	Schraube	Tornillo	
4	580027095	1	Battery support	Supporto batteria	Support batterie	Batterielager	Soporte batería	For battery mm1220x280
4	580027096	1	Battery support	Supporto batteria	Support batterie	Batterielager	Soporte batería	For battery mm1220x352
4	580027097	1	Battery support	Supporto batteria	Support batterie	Batterielager	Soporte batería	For battery mm1220x424
4	580027098	1	Battery support	Supporto batteria	Support batterie	Batterielager	Soporte batería	For battery mm1220x496
5	580027093	4	Slider	Pattino	Bloc de glissement	Gleitschuh	Patín	
6	273104600	2	Washer	Rosetta	Rondelle	Unterlegscheibe	Arandela	
7	580027091	1	Cam	Camma di sgancio	Camme	Kamm	Leva	For battery mm1220x280/352/424
7	580027092	1	Cam	Camma di sgancio	Camme	Kamm	Leva	For battery mm1220x496
8	273087300	1	Snap ring	Seeger	Seeger	Seeger	Anillo Seeger	
9	580027094	1	Spring	Molla	Ressort	Feder	Resorte	
10	449021002	4	Washer	Rosetta	Rondelle	Unterlegscheibe	Arandela	
11	449015112	2	Nut	Dado	Ecrou	Mutter	Tuerca	
12	504057775	2	Screw	Vite	Vis	Schraube	Tornillo	
13	580027404	1	Locking unlocking device ass'y	Ass. sgancio batteria	Ens. fixation batterie	Satz-Auslösevorrichtung	Grupo gancho disparador	
14	580027406	1	Pedal	Pedale	Pedal	Fusshebel	Pedal	
15	58004592	1	Nut	Dado	Ecrou	Mutter	Tuerca	
16	580027408	1	Bushing	Boccola	Douille	Büchse	Buje	
17	272066800	1	Fork	Forcella	Eperon	Gabel	Horquilla	
18	272048700	1	Stop	Fermo	Arrêt	Halter	Sujetador	
19	580026041	1	Bushing	Boccola	Douille	Büchse	Buje	
20	449001091	1	Screw	Vite	Vis	Schraube	Tornillo	
21	277561900	1	Washer	Rosetta	Rondelle	Unterlegscheibe	Arandela	
22	580030013	3	Bushing	Boccola	Douille	Büchse	Buje	
23	580030159	2	Lock nut	Dado	Ecrou	Mutter	Tuerca	
24	580027407	1	Pedal braket	Supporto pedale	Support pedal	Lager	Soporte pedal	
25	580027410	1	Spring	Molla	Ressort	Feder	Resorte	
26	580027405	1	Pin	Perno	Axe	Stift	Perno	
27	580027115	1	Hand grip	Maniglia	Poignée	Klinke	Manilla	
28	449007013	3	Screw	Vite	Vis	Schraube	Tornillo	
29	932200907	3	Screw	Vite	Vis	Schraube	Tornillo	
30	580027083	1	Cover	Coperchio batteria	Couvercle batterie	Batterieabdeckung	Tapa de la batería	For battery mm1220x352
30	580027082	1	Cover	Coperchio batteria	Couvercle batterie	Batterieabdeckung	Tapa de la batería	For battery mm1220x424
30	580027081	1	Cover	Coperchio batteria	Couvercle batterie	Batterieabdeckung	Tapa de la batería	For battery mm1220x496
✪ 31	580032711	1	Head rest	Poggiatesta	Appui-coude	Kopfstütze	Reposacabeza	
32	580027874	1	Floor plate with rubber	Piastra con gomma	Plaque avec caoutchouc	Platte mit Gummi	Plancha y goma	
33	580027875	1	Rubber	Gomma	Caoutchouc	Gummi	Goma	
34	900014292	5	Screw	Vite	Vis	Schraube	Tornillo	
35	580015667	5	Nut	Dado	Ecrou	Mutter	Tuerca	
36	524149511	1	Door	Portina	Guichet	Tür	Portezuela	
37	272022800	4	Screw	Vite	Vis	Schraube	Tornillo	
38	580029909	1	Plate	Piastra	Plaque	Platte	Plancha	
39	449001134	3	Screw	Vite	Vis	Schraube	Tornillo	
40	449015014	2	Nut	Dado	Ecrou	Mutter	Tuerca	
41	580027369	1	Hinge	Cerniera	Charnière	Gelenk	Bisagra	
42	449001028	14	Screw	Vite	Vis	Schraube	Tornillo	
43	272342200	3	Nut	Dado	Ecrou	Mutter	Tuerca	
44	272506700	2	Screw	Vite	Vis	Schraube	Tornillo	
45	277257700	1	Gas spring	Asta a gas	Tige gaz	Gasschiene	Varilla del gas	
46	449015098	2	Nut	Dado	Ecrou	Mutter	Tuerca	
47	580029711	1	Rubber	Gomma	Caoutchouc	Gummi	Goma	
48	520045181	2	Washer	Rosetta	Rondelle	Unterlegscheibe	Arandela	
49	580013474	4	Cushion	Antivibrante	Antivibratoire	Erschütterungs-dämpfer	Antivibrante	
50	273059100	1	Cap	Tappo	Bouchon	Stopfen	Tapa	

✪ **Optional / Optional / Optionnel / Zusatzzubehör / Opcional**

From serial N° / *Da matr.* / Du matr. / *Ab. seriennummer* / Desde la matr. :	Until serial N° / *Fino a matr.* / Jusq' matr. / *Bis zur serien-Nr.* / Hasta la matr. :	With the exception of / *Ad esclusione di* / À l'exclusion de / *Mit ausnahme von* / Excepto :	Including / *Compreso* / Avec / *Einschließlich* / Con :
C849T01501Z			

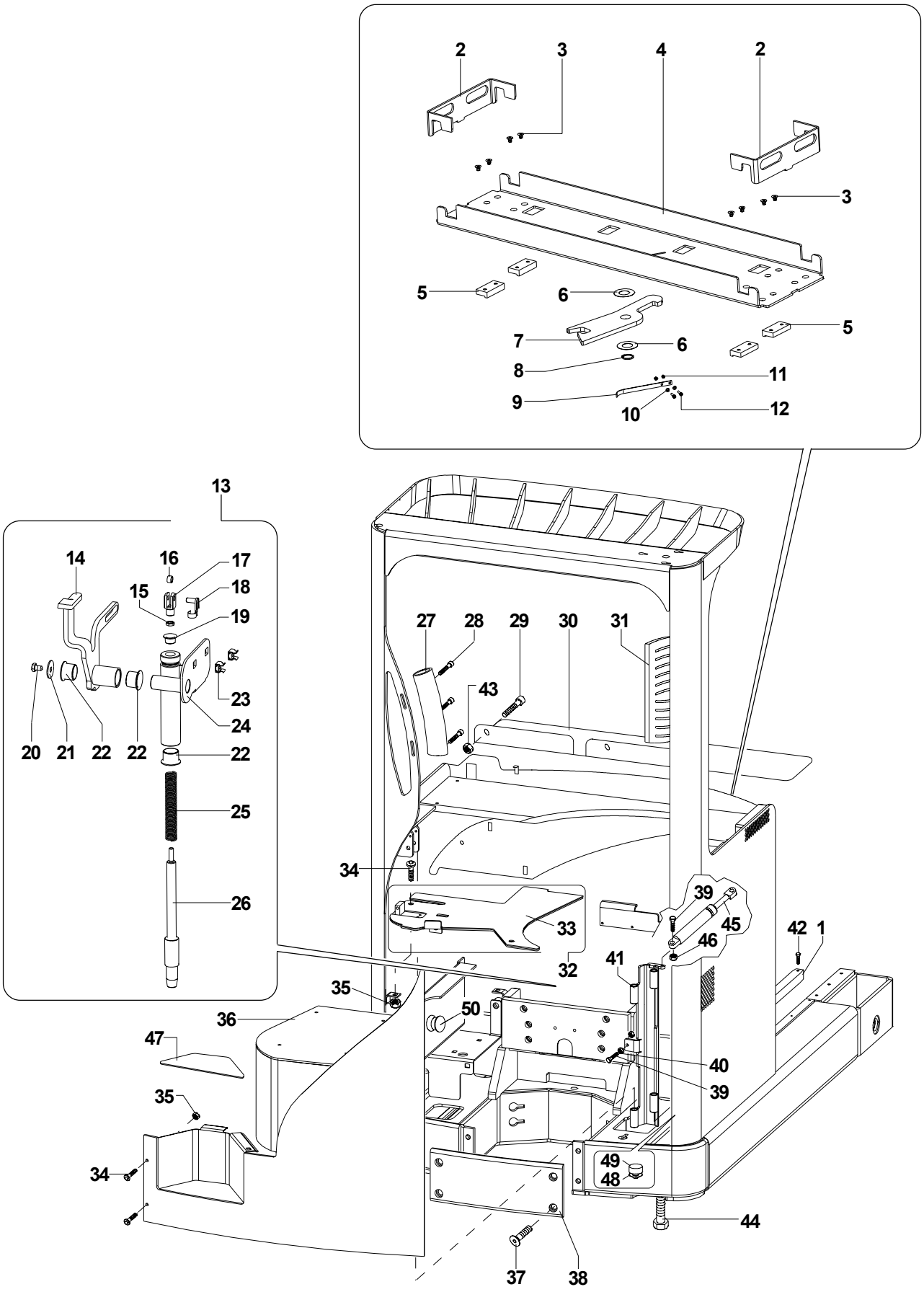
2
3
4
2
3
5
6
5
7
6
8
11
9
10
12
13
14
16
17
15
18
19
23
24
20
21
22
22
22
25
26
27
28
29
30
31
43
34
39
45
46
42
1
33
32
41
35
50
36
47
40
39
35
49
48
34
44
37
38

MODEL MR16N

FIGURE 1.1

REF.	PART NO.	Q.TY	DESCRIPTION	DESCRIZIONE	DESIGNATION	BENENNUNG	DENOMINACIONES	PART DETAILS
1	580029908	2	Plate	Piastra	Plaque	Platte	Plancha	
2	580027087	2	Bend plate	Fermo batteria	Arret de batterie	Batteriehalteteller	Retén de la batería	For battery mm1032x350
2	580027090	2	Bend plate	Fermo batteria	Arret de batterie	Batteriehalteteller	Retén de la batería	For battery mm1032x440
3	580028391	8	Screw	Vite	Vis	Schraube	Tornillo	
4	580027101	1	Battery support	Supporto batteria	Support batterie	Batterielager	Soporte batería	For battery mm1032x350
4	580027102	1	Battery support	Supporto batteria	Support batterie	Batterielager	Soporte batería	For battery mm1032x440
5	580027093	4	Slider	Pattino	Bloc de glissement	Gleitschuh	Patín	
6	273104600	2	Washer	Rosetta	Rondelle	Unterlegscheibe	Arandela	
7	580027091	1	Cam	Camma di sgancio	Camme	Kamm	Leva	
8	273087300	1	Snap ring	Seeger	Seeger	Seeger	Anillo Seeger	
9	580027094	1	Spring	Molla	Ressort	Feder	Resorte	
10	449021002	4	Washer	Rosetta	Rondelle	Unterlegscheibe	Arandela	
11	449015112	2	Nut	Dado	Ecrou	Mutter	Tuerca	
12	504057775	2	Screw	Vite	Vis	Schraube	Tornillo	
13	580027404	1	Locking unlocking device ass'y	Ass. sgancio batteria	Ens. fixation batterie	Satz-Auslösevorrichtung	Grupo gancho disparador	
14	580027406	1	Pedal	Pedale	Pedal	Fusshebel	Pedal	
15	58004592	1	Nut	Dado	Ecrou	Mutter	Tuerca	
16	580027408	1	Bushing	Boccola	Douille	Büchse	Buje	
17	272066800	1	Fork	Forcella	Eperon	Gabel	Horquilla	
18	272048700	1	Stop	Fermo	Arrêt	Halter	Sujetador	
19	580026041	1	Bushing	Boccola	Douille	Büchse	Buje	
20	449001091	1	Screw	Vite	Vis	Schraube	Tornillo	
21	277561900	1	Washer	Rosetta	Rondelle	Unterlegscheibe	Arandela	
22	580030013	3	Bushing	Boccola	Douille	Büchse	Buje	
23	580030159	2	Lock nut	Dado	Ecrou	Mutter	Tuerca	
24	580027407	1	Pedal braket	Supporto pedale	Support pedal	Lager	Soporte pedal	
25	580027410	1	Spring	Molla	Ressort	Feder	Resorte	
26	580027405	1	Pin	Perno	Axe	Stift	Perno	
27	580027115	1	Hand grip	Maniglia	Poignée	Klinke	Manilla	
28	449007013	3	Screw	Vite	Vis	Schraube	Tornillo	
29	932200907	3	Screw	Vite	Vis	Schraube	Tornillo	
30	580027084	1	Cover	Coperchio batteria	Couvercle batterie	Batterieabdeckung	Tapa de la batería	For battery mm1032x350
30	580027085	1	Cover	Coperchio batteria	Couvercle batterie	Batterieabdeckung	Tapa de la batería	For battery mm1032x440
✪ 31	580032711	1	Head rest	Poggiatesta	Appui-coude	Kopfstütze	Reposacabeza	
32	580027873	1	Floor plate with rubber	Piastra con gomma	Plaque avec caoutchouc	Platte mit Gummi	Plancha y goma	
33	580027876	1	Rubber	Gomma	Caoutchouc	Gummi	Goma	
34	900014292	5	Screw	Vite	Vis	Schraube	Tornillo	
35	580015667	5	Nut	Dado	Ecrou	Mutter	Tuerca	
36	524149512	1	Door	Portina	Guichet	Tür	Portezuela	
37	272022800	4	Screw	Vite	Vis	Schraube	Tornillo	
38	580029909	1	Plate	Piastra	Plaque	Platte	Plancha	
39	449001134	3	Screw	Vite	Vis	Schraube	Tornillo	
40	449015014	2	Nut	Dado	Ecrou	Mutter	Tuerca	
41	580027369	1	Hinge	Cerniera	Charnière	Gelenk	Bisagra	
42	449001028	14	Screw	Vite	Vis	Schraube	Tornillo	
43	272342200	3	Nut	Dado	Ecrou	Mutter	Tuerca	
44	272506700	2	Screw	Vite	Vis	Schraube	Tornillo	
45	277257700	1	Gas spring	Asta a gas	Tige gaz	Gasschiene	Varilla del gas	
46	449015098	2	Nut	Dado	Ecrou	Mutter	Tuerca	
47	580029712	1	Rubber	Gomma	Caoutchouc	Gummi	Goma	
48	520045181	2	Washer	Rosetta	Rondelle	Unterlegscheibe	Arandela	
49	580013474	4	Cushion	Antivibrante	Antivibratoire	Erschütterungs-dämpfer	Antivibrante	
50	273059100	1	Cap	Tappo	Bouchon	Stopfen	Tapa	

✪ **Optional / Optional / Optionnel / Zusatzzubehör / Opcional**

From serial N° / *Da matr.* / Du matr. / *Ab. seriennummer* / Desde la matr. :	Until serial N° / *Fino a matr.* / Jusq' matr. / *Bis zur serien-Nr.* / Hasta la matr. :	With the exception of / *Ad esclusione di* / À l'exclusion de / *Mit ausnahme von* / Excepto :	Including / *Compreso* / Avec / *Einschließlich* / Con :
C849T01501Z			

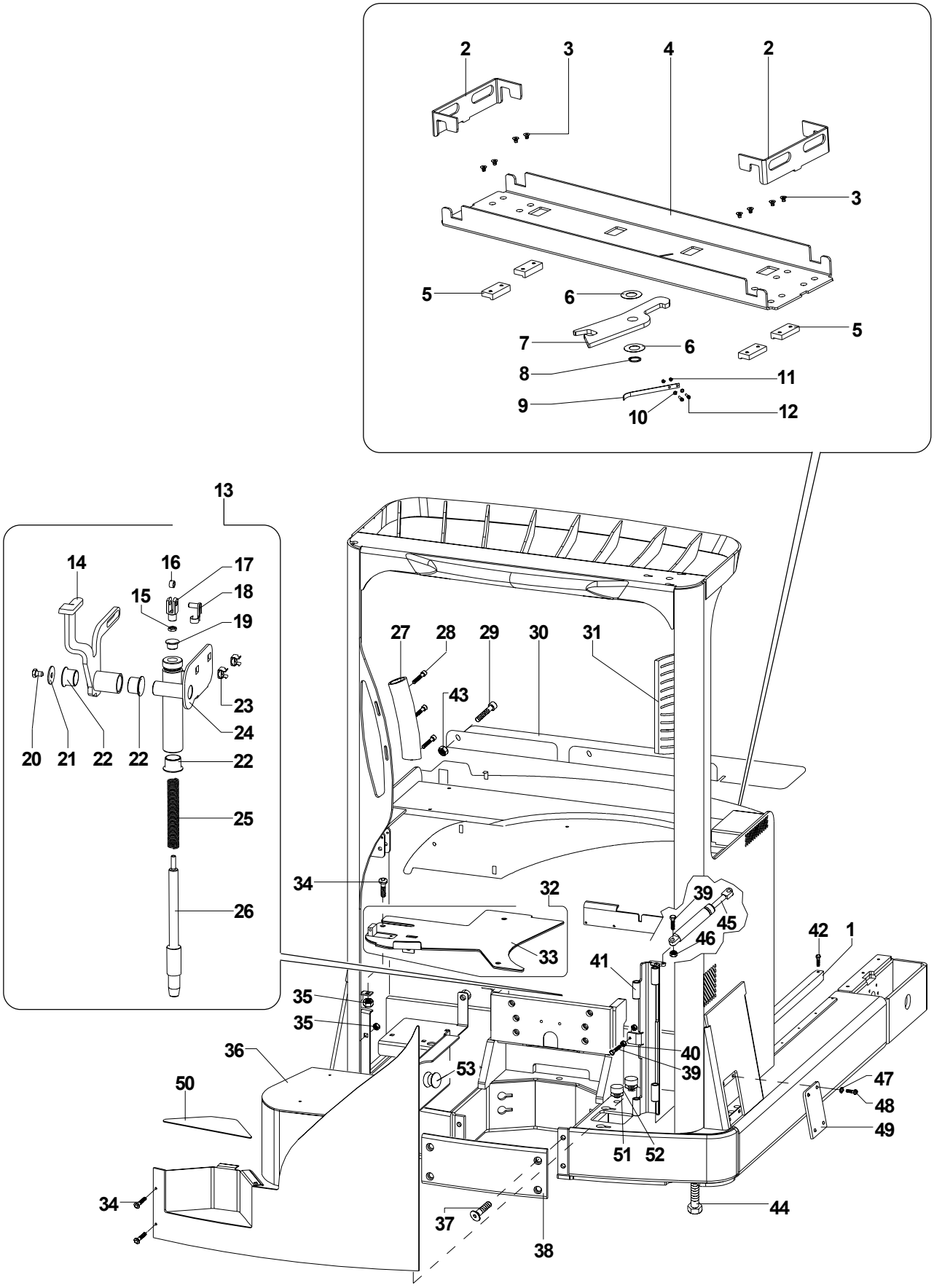
2
3
4
2
3
5
6
5
7
6
8
11
9
10
12
13
14
16
17
15
18
19
23
24
20
21
22
22
22
25
26
27
28
29
30
31
43
34
32
39
45
46
42
1
33
41
35
35
36
40
39
53
50
47
48
49
51
52
34
44
37
38

GENERAL TRUCK
CARRELLO GENERALE
CHARIOT GÉNÉRAL
STAPLER-ALGEMEINE
CARRETILLA GENERAL

MODEL MR20W

FIGURE 1.2

REF.	PART NO.	Q.TY	DESCRIPTION	DESCRIZIONE	DESIGNATION	BENENNUNG	DENOMINACIONES	PART DETAILS
1	580029908	2	Plate	Piastra	Plaque	Platte	Plancha	
2	580027088	2	Bend plate	Fermo batteria	Arret de batterie	Batteriehalteteller	Retén de la batería	For battery mm1220x424
2	580027089	2	Bend plate	Fermo batteria	Arret de batterie	Batteriehalteteller	Retén de la batería	For battery mm1220x496
3	580028391	8	Screw	Vite	Vis	Schraube	Tornillo	
4	580027097	1	Battery support	Supporto batteria	Support batterie	Batterielager	Soporte batería	For battery mm1220x424
4	580027098	1	Battery support	Supporto batteria	Support batterie	Batterielager	Soporte batería	For battery mm1220x496
5	580027093	4	Slider	Pattino	Bloc de glissement	Gleitschuh	Patín	
6	273104600	2	Washer	Rosetta	Rondelle	Unterlegscheibe	Arandela	
7	580027091	1	Cam	Camma di sgancio	Camme	Kamm	Leva	For battery mm1220x424
7	580027092	1	Cam	Camma di sgancio	Camme	Kamm	Leva	For battery mm1220x496
8	273087300	1	Snap ring	Seeger	Seeger	Seeger	Anillo Seeger	
9	580027094	1	Spring	Molla	Ressort	Feder	Resorte	
10	449021002	4	Washer	Rosetta	Rondelle	Unterlegscheibe	Arandela	
11	449015112	2	Nut	Dado	Ecrou	Mutter	Tuerca	
12	504057775	2	Screw	Vite	Vis	Schraube	Tornillo	
13	580027404	1	Locking unlocking device ass'y	Ass. sgancio batteria	Ens. fixation batterie	Satz-Auslösevorrichtung	Grupo gancho disparador	
14	580027406	1	Pedal	Pedale	Pedal	Fusshebel	Pedal	
15	58004592	1	Nut	Dado	Ecrou	Mutter	Tuerca	
16	580027408	1	Bushing	Boccola	Douille	Büchse	Buje	
17	272066800	1	Fork	Forcella	Eperon	Gabel	Horquilla	
18	272048700	1	Stop	Fermo	Arrêt	Halter	Sujetador	
19	580026041	1	Bushing	Boccola	Douille	Büchse	Buje	
20	449001091	1	Screw	Vite	Vis	Schraube	Tornillo	
21	277561900	1	Washer	Rosetta	Rondelle	Unterlegscheibe	Arandela	
22	580030013	3	Bushing	Boccola	Douille	Büchse	Buje	
23	580030159	2	Lock nut	Dado	Ecrou	Mutter	Tuerca	
24	580027407	1	Pedal braket	Supporto pedale	Support pedal	Lager	Soporte pedal	
25	580027410	1	Spring	Molla	Ressort	Feder	Resorte	
26	580027405	1	Pin	Perno	Axe	Stift	Perno	
27	580027115	1	Hand grip	Maniglia	Poignée	Klinke	Manilla	
28	449007013	3	Screw	Vite	Vis	Schraube	Tornillo	
29	932200907	3	Screw	Vite	Vis	Schraube	Tornillo	
30	580027082	1	Cover	Coperchio batteria	Couvercle batterie	Batterieabdeckung	Tapa de la batería	For battery mm1220x424
30	580027081	1	Cover	Coperchio batteria	Couvercle batterie	Batterieabdeckung	Tapa de la batería	For battery mm1220x496
✪ 31	580032711	1	Head rest	Poggiatesta	Appui-coude	Kopfstütze	Reposacabeza	
32	580027874	1	Floor plate with rubber	Piastra con gomma	Plaque avec caoutchouc	Platte mit Gummi	Plancha y goma	
33	580027875	1	Rubber	Gomma	Caoutchouc	Gummi	Goma	
34	900014292	5	Screw	Vite	Vis	Schraube	Tornillo	
35	580015667	5	Nut	Dado	Ecrou	Mutter	Tuerca	
36	524149511	1	Door	Portina	Guichet	Tür	Portezuela	
37	272022800	4	Screw	Vite	Vis	Schraube	Tornillo	
38	580029909	1	Plate	Piastra	Plaque	Platte	Plancha	
39	449001134	3	Screw	Vite	Vis	Schraube	Tornillo	
40	449015014	2	Nut	Dado	Ecrou	Mutter	Tuerca	
41	580027369	1	Hinge	Cerniera	Charnière	Gelenk	Bisagra	
42	449001028	14	Screw	Vite	Vis	Schraube	Tornillo	
43	272342200	3	Nut	Dado	Ecrou	Mutter	Tuerca	
44	272506700	2	Screw	Vite	Vis	Schraube	Tornillo	
45	277257700	1	Gas spring	Asta a gas	Tige gaz	Gasschiene	Varilla del gas	
46	449015098	2	Nut	Dado	Ecrou	Mutter	Tuerca	
47	272342200	8	Nut	Dado	Ecrou	Mutter	Tuerca	
48	580027677	8	Screw	Vite	Vis	Schraube	Tornillo	
49	524150947	2	Plate	Piastra	Plaque	Platte	Plancha	
50	580029711	1	Rubber	Gomma	Caoutchouc	Gummi	Goma	
51	520045181	2	Washer	Rosetta	Rondelle	Unterlegscheibe	Arandela	
52	580013474	4	Cushion	Antivibrante	Antivibratoire	Erschütterungs-dämpfer	Antivibrante	
53	273059100	1	Cap	Tappo	Bouchon	Stopfen	Tapa	

✪ **Optional / Optional / Optionnel / Zusatzzubehör / Opcional**

From serial N° / *Da matr.* / Du matr. / *Ab. seriennummer* / Desde la matr. :	Until serial N° / *Fino a matr.* / Jusq' matr. / *Bis zur serien-Nr.* / Hasta la matr. :	With the exception of / *Ad esclusione di* / À l'exclusion de / *Mit ausnahme von* / Excepto :	Including / *Compreso* / Avec / *Einschließlich* / Con :
C849T01501Z			

MODELS MR14 / MR14H / MR16 / MR16H / MR20 / MR20H / MR25

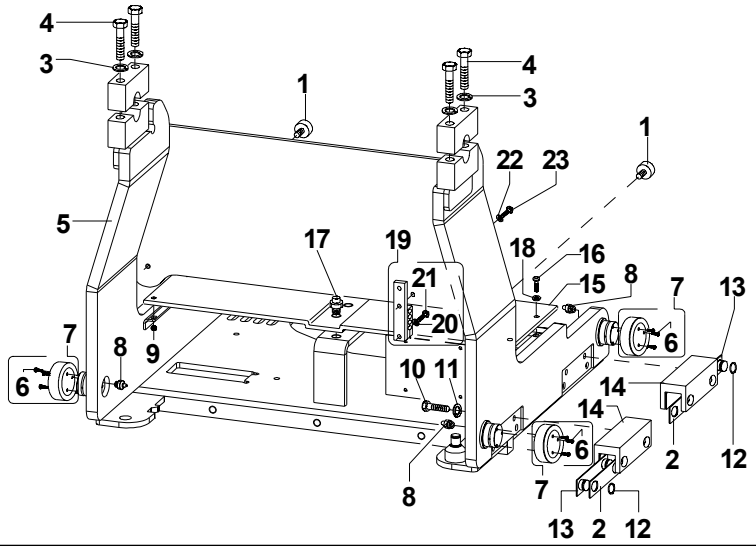

MODEL MR16N

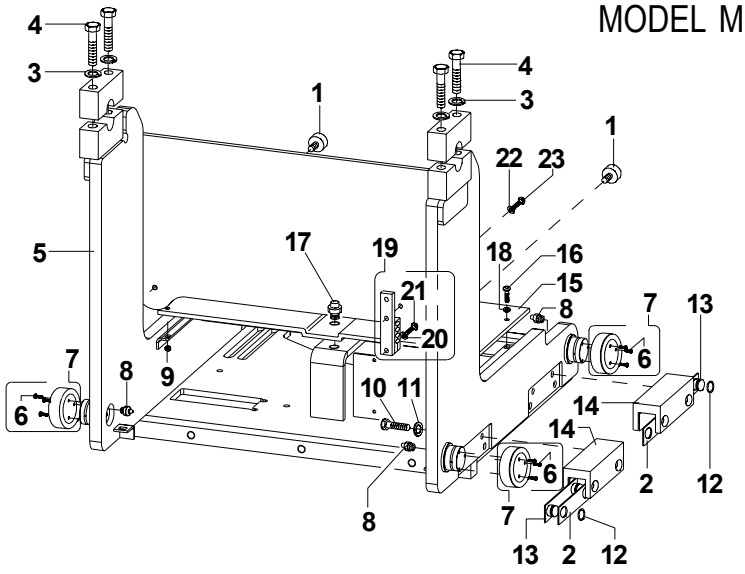

MODEL MR20W

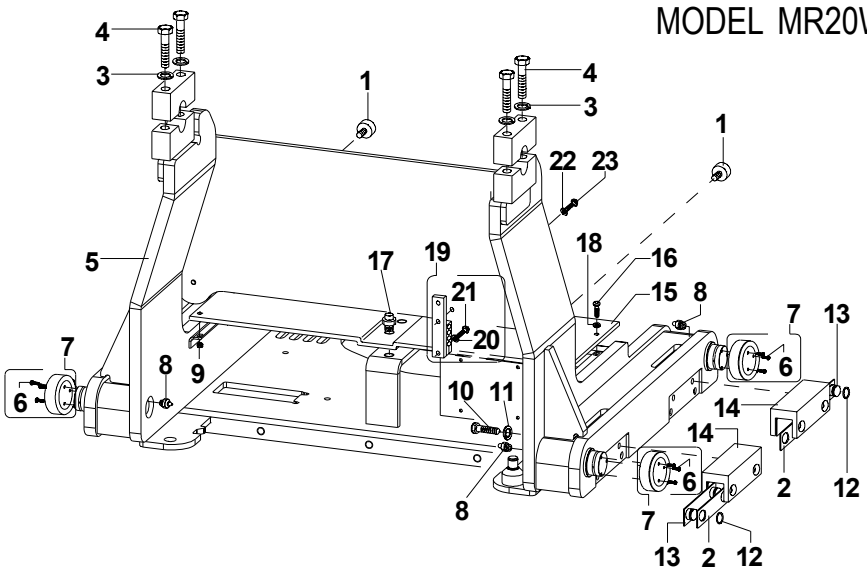

MAST TRAVEL TAB
CARRO TRASLATORE
CHARIOT DE TRANSFERT
VERSETZUNGSSCHLITTEN
CARRO TRANSLADOR

FIGURE 2

REF.	PART NO.	Q.TY	DESCRIPTION	DESCRIZIONE	DESIGNATION	BENENNUNG	DENOMINACIONES	PART DETAILS
1	272470200	2	Bumper	Tampone paracolpi	Tampon pare-chocs	Stossföngerkissen	Hisopo parachoque	
2	520037804	AR	Shim	Distanziale	Entretoise	Distanzstück	Separador	0.2 mm
2	504234265	AR	Shim	Distanziale	Entretoise	Distanzstück	Separador	0.5 mm
3	449022041	4	Lock w asher	Rosetta elastica	Rondelle souple	Federring	Arandela elástica	
4	449001127	4	Screw	Vite	Vis	Schraube	Tornillo	
5	580027172	1	Mast trolley	Carro traslatore	Chariot de translation	Versetzungsschlitten	Carro traslador	For models MR14/MR14H/MR16/MR16H/MR20/MR20H/MR25
5	580030120	1	Mast trolley	Carro traslatore	Chariot de translation	Versetzungsschlitten	Carro traslador	For model MR16N
5	580027171	1	Mast trolley	Carro traslatore	Chariot de translation	Versetzungsschlitten	Carro traslador	For model MR20W
6	580010229	3	Screw	Vite	Vis	Schraube	Tornillo	
7	580027884	4	Bearing	Cuscinetto	Roulement	Lager	Cojenete	
8	273033400	4	Grease ftg.	Ingrassatore	Graisseur	Fettbüchse	Engrasador	
9	272342200	4	Nut	Dado	Ecrou	Mutter	Tuerca	
10	449001048	4	Screw	Vite	Vis	Schraube	Tornillo	
11	449021010	4	Washer	Rosetta	Rondelle	Unterlegscheibe	Arandela	
12	012824300	8	O-Ring	Anello OR	Bague "O-Ring"	OR-Ring	Anillo OR	
13	504075764	4	Bearing strip	Striscia cuscinetti	Trait	Streif	Tira	
14	580027177	2	Support	Supporto	Support	Lager	Soporte	
15	580027179	1	Plate	Lamiera	Tôle	Plateau	Plancha	For models MR14/MR14H/MR16/MR16H/MR20/MR20H/MR25/MR20W
15	580027178	1	Plate	Lamiera	Tôle	Plateau	Plancha	For model MR16N
16	449001412	4	Screw	Vite	Vis	Schraube	Tornillo	
17	580027188	1	Pin	Perno	Axe	Stift	Perno	
18	449021003	4	Washer	Rosetta	Rondelle	Unterlegscheibe	Arandela	
19	580034036	1	Support ass'y	Ass. supporto	Ens. support	Sitz-Lager	Grupo soporte	
20	449021003	1	Washer	Rosetta	Rondelle	Unterlegscheibe	Arandela	
21	580027677	1	Screw	Vite	Vis	Schraube	Tornillo	
22	449021003	1	Washer	Rosetta	Rondelle	Unterlegscheibe	Arandela	
23	580027677	1	Screw	Vite	Vis	Schraube	Tornillo	

From serial N° / *Da matr.* / Du matr. / *Ab. seriennummer* / Desde la matr. :	Until serial N° / *Fino a matr.* / Jusq' matr. / *Bis zur serien-Nr.* / Hasta la matr. :	With the exception of / *Ad esclusione di* / À l'exclusion de / *Mit ausnahme von* / Excepto :	Including / *Compreso* / Avec / *Einschließlich* / Con :
C849T01501Z			

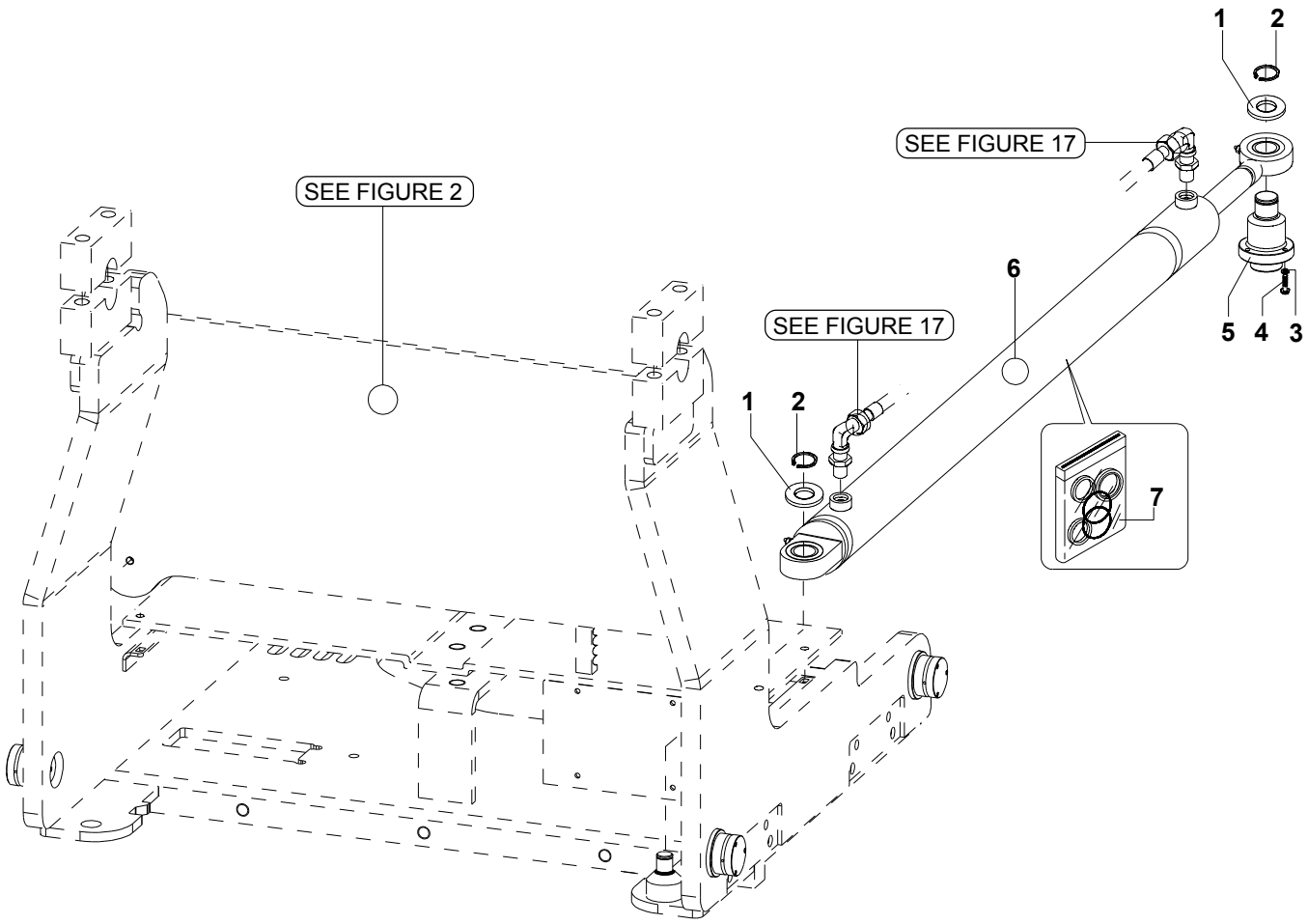
1
2
SEE FIGURE 17
SEE FIGURE 2
6
SEE FIGURE 17
5
4
3
1
2
7

CYLINDER MAST TRAVEL TAB
CILINDRO CARRO TRASLATORE
CYLINDRE CHARIOT DE TRANSFERT
ZYLINDER VERSETZUNGSSCHLITTEN
CILINDRO CARRO TRANSLADOR

FIGURE 3

REF.	PART NO.	Q.TY	DESCRIPTION	DESCRIZIONE	DESIGNATION	BENENNUNG	DENOMINACIONES	PART DETAILS
1	580027545	2	Washer	Rosetta	Rondelle	Unterlegscheibe	Arandela	
2	273086900	2	Snap ring	Seeger	Seeger	Seeger Ring	Anillo Seeger	
3	449021001	4	Washer	Rosetta	Rondelle	Unterlegscheibe	Arandela	
4	580022747	4	Screw	Vite	Vis	Schraube	Tornillo	
5	580027544	1	Shaft	Perno	Axe	Stift	Perno	
6	580027543	1	Cylinder ass'y	Assieme cilindro	Ens. cylindre	Zylinder-Achse	Eje cilindro	For models MR14/MR14H/MR16/MR16H/MR20/MR20H/MR25/MR20W
6	580027542	1	Cylinder ass'y	Assieme cilindro	Ens. cylindre	Zylinder-Achse	Eje cilindro	For model MR16N
7	272363500	1	Seal kit	Kit guarnizioni	Kit joints	Dichtungssatz	Kit de guarniciones	

From serial N° / *Da matr.* / Du matr. / *Ab. seriennummer* / Desde la matr. :	Until serial N° / *Fino a matr.* / Jusq' matr. / *Bis zur serien-Nr.* / Hasta la matr. :	With the exception of / *Ad esclusione di* / À l'exclusion de / *Mit ausnahme von* / Excepto :	Including / *Compreso* / Avec / *Einschließlich* / Con :
C849T01501Z			

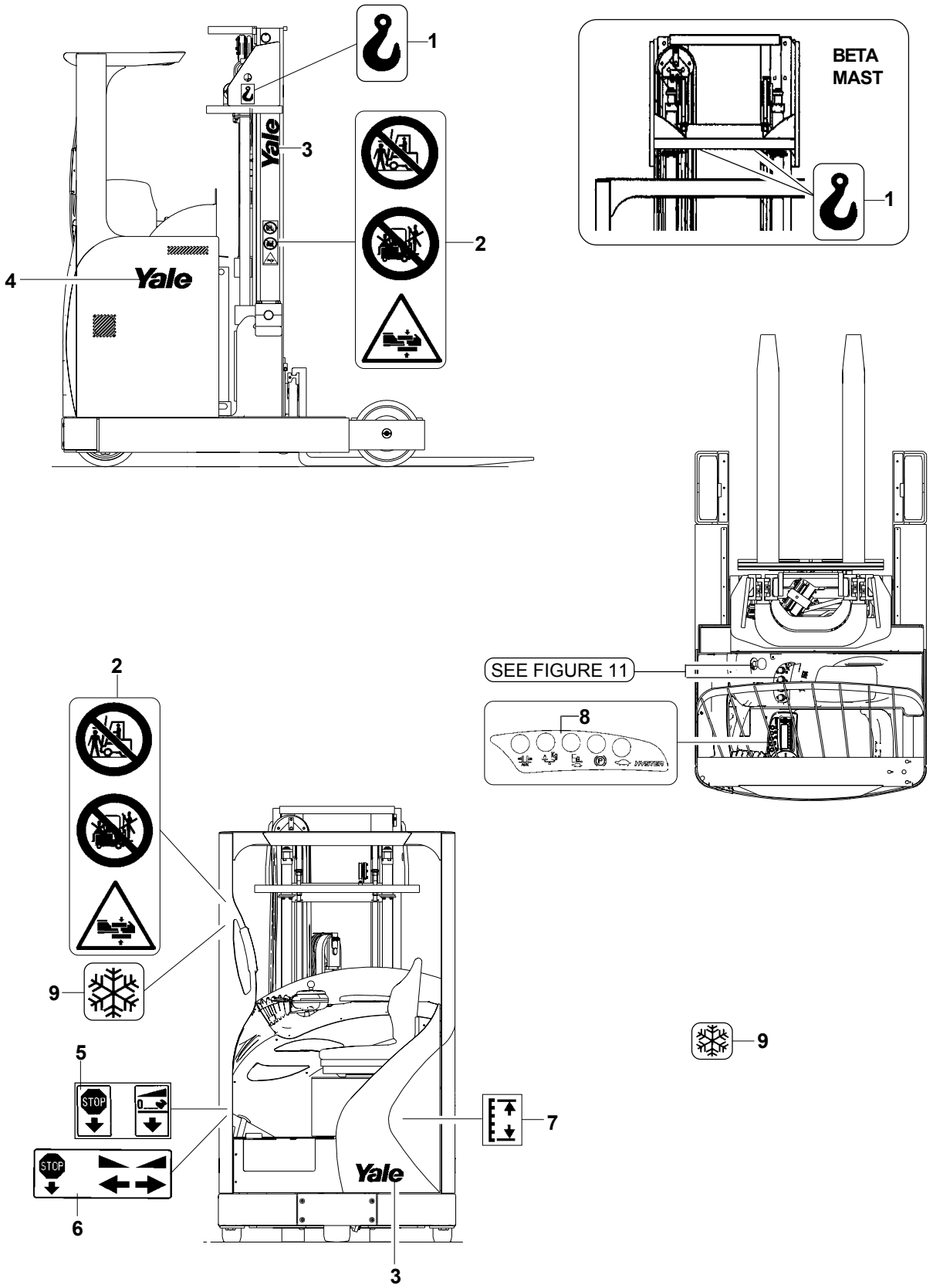
1
2
3
4
Yale
BETA
MAST
SEE FIGURE 11
8
9
5
6
7
STOP

LABELS
TARGHETTE E ADESIVI
AUTOCOLLANTS DE SEGNALISATION
SELBSTKLEBESCHILDER
TARJETAS ADHESIVAS

FIGURE 4

REF.	PART NO.	Q.TY	DESCRIPTION	DESCRIZIONE	DESIGNATION	BENENNUNG	DENOMINACIONES	PART DETAILS
1	272213500	2	Label	Adesivo	Autocollants	Abz-bild	Adesivos	
2	272303000	3	Label	Adesivo	Autocollants	Abz-bild	Adesivos	
3	272219000	3	Label	Adesivo	Autocollants	Abz-bild	Adesivos	
4	272219100	2	Label	Adesivo	Autocollants	Abz-bild	Adesivos	
5	272220300	1	Label	Adesivo	Autocollants	Abz-bild	Adesivos	For brake pedal single
✪ 6	580033278	1	Label	Adesivo	Autocollants	Abz-bild	Adesivos	For brake pedal dual
7	272213600	1	Label	Adesivo	Autocollants	Abz-bild	Adesivos	
8	524153810	1	Label	Adesivo	Autocollants	Abz-bild	Adesivos	
✪ 9	580014880	1	Label	Adesivo	Autocollants	Abz-bild	Adesivos	Cold store (-30°)

✪ **Optional / Optional / Optionnel / Zusatzzubehör / Opcional**

From serial N° / *Da matr.* / Du matr. / *Ab. seriennummer* / Desde la matr. :	Until serial N° / *Fino a matr.* / Jusq' matr. / *Bis zur serien-Nr.* / Hasta la matr. :	With the exception of / *Ad esclusione di* / À l'exclusion de / *Mit ausnahme von* / Excepto :	Including / *Compreso* / Avec / *Einschließlich* / Con :
C849T01501Z			

DESCRIPTION / DESCRIZIONE / DESIGNATION / BENENNUNG / DENOMINACIONES **PAGE NO.**

DRIVE UNIT / GRUPPO TRAZIONE / GROUPE DE TRACTION / ZUGAGGREAGAT / GRUPO DE TRACCION (FIGURE 5) 24-25

DRIVE MOTOR / MOTORE DI TRAZIONE / MOTEUR DE TRACTION / ZUGMOTOR / MOTOR DE TRACCION (FIGURE 6) 26-27

LOAD WHEELS / RUOTE DI CARICO / ROUES DE CHARGEMENT / BESCHICKUNGSRÄDER / RUEDAS DE CARGA (FIGURE 7) 28-29

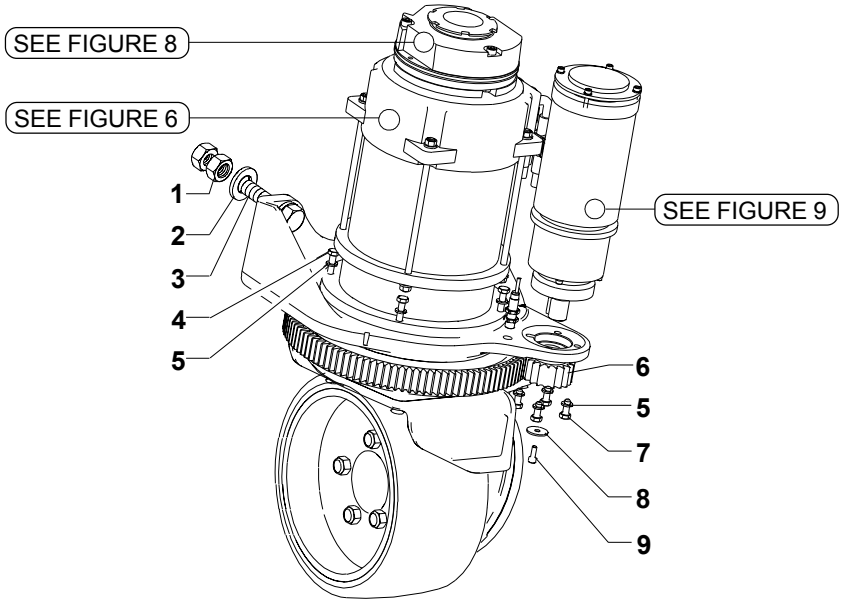

MODELS MR14 / MR14H / MR16 / MR16N

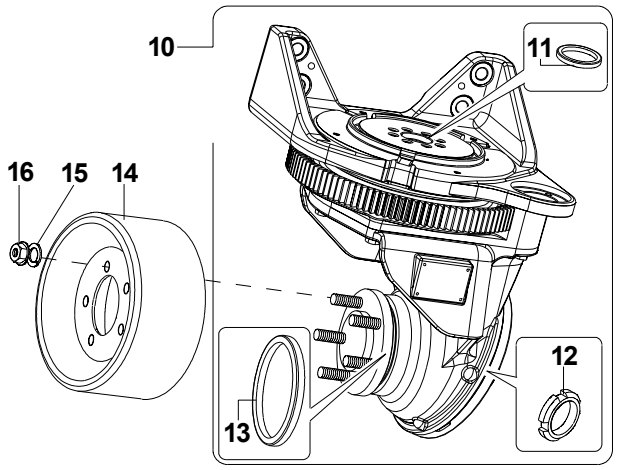

MODELS MR16H / MR20 / MR20H / MR25 / MR20W

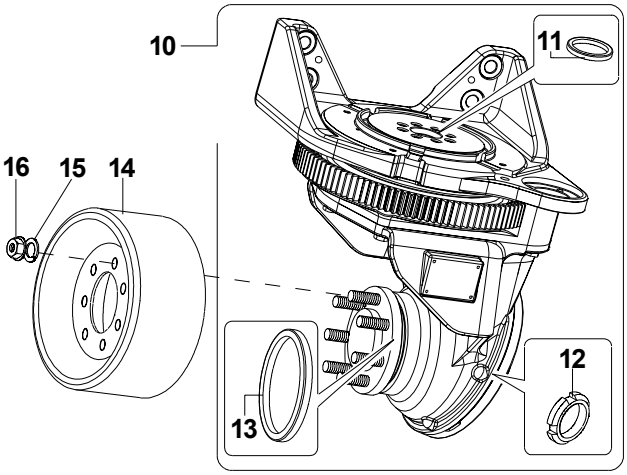

DRIVE UNIT
GRUPPO TRAZIONE
GROUPE DE TRACTION
ZUGAGGREAGAT
GRUPO DE TRACCION

FIGURE 5

REF.	PART NO.	Q.TY	DESCRIPTION	DESCRIZIONE	DESIGNATION	BENENNUNG	DENOMINACIONES	PART DETAILS
1	580033749	8	Nut	Dado	Écrou	Mutter	Tuerca	
2	312302033	4	Washer	Rondella	Rondelle	Unterlegscheibe	Arandela	
3	580033748	4	Screw	Vite	Vis	Schraube	Tornillo	
4	449001134	4	Screw	Vite	Vis	Schraube	Tornillo	
5	449022016	8	Washer	Rondella	Rondelle	Unterlegscheibe	Arandela	
6	580031659	1	Gear	Ingranaggio	Engrenage	Getriebe	Engranaje	
7	449001013	4	Screw	Vite	Vis	Schraube	Tornillo	
8	580032024	1	Washer	Rondella	Rondelle	Unterlegscheibe	Arandela	
9	580022962	1	Screw	Vite	Vis	Schraube	Tornillo	
10	580029583	1	Reduction unit ass'y	Ass. riduttore	Ens. réducteur	Einheit Getriebemotor	Grupo reductor	For models MR14/MR14H/MR16/MR16N
10	580029584	1	Reduction unit ass'y	Ass. riduttore	Ens. réducteur	Einheit Getriebemotor	Grupo reductor	For models MR16H/MR20/MR20H/MR25/MR20W
11	580025308	1	Seal	Guarnizione	Joint	Dichtung	Guarnición	
12	580033733	1	Ring nut	Ghiera	Ecrou	Zwinge	Anillo	For models MR14/MR14H/MR16/MR16N
12	580033734	1	Ring nut	Ghiera	Ecrou	Zwinge	Anillo	For models MR16H/MR20/MR20H/MR25/MR20W
13	580025307	1	Seal	Guarnizione	Joint	Dichtung	Guarnición	For models MR14/MR14H/MR16/MR16N
13	580033735	1	Seal	Guarnizione	Joint	Dichtung	Guarnición	For models MR16H/MR20/MR20H/MR25/MR20W
14	580026058	1	Wheel	Ruota	Roue	Ring	Rueda	For models MR14/MR14H/MR16/MR16N
14	580026043	1	Wheel	Ruota	Roue	Ring	Rueda	For models MR16H/MR20/MR20H/MR25/MR20W
15	580031644	5	Washer	Rondella	Rondelle	Unterlegscheibe	Arandela	For models MR14/MR14H/MR16/MR16N
15	580031644	7	Washer	Rondella	Rondelle	Unterlegscheibe	Arandela	For models MR16H/MR20/MR20H/MR25/MR20W
16	580031648	5	Nut	Dado	Écrou	Mutter	Tuerca	For models MR14/MR14H/MR16/MR16N
16	580031648	7	Nut	Dado	Écrou	Mutter	Tuerca	For models MR16H/MR20/MR20H/MR25/MR20W

From serial N° / *Da matr.* / Du matr. / *Ab. seriennummer* / Desde la matr. :	Until serial N° / *Fino a matr.* / Jusq' matr. / *Bis zur serien-Nr.* / Hasta la matr. :	With the exception of / *Ad esclusione di* / À l'exclusion de / *Mit ausnahme von* / Excepto :	Including / *Compreso* / Avec / *Einschließlich* / Con :
C849T01501Z			

FIGURE 6

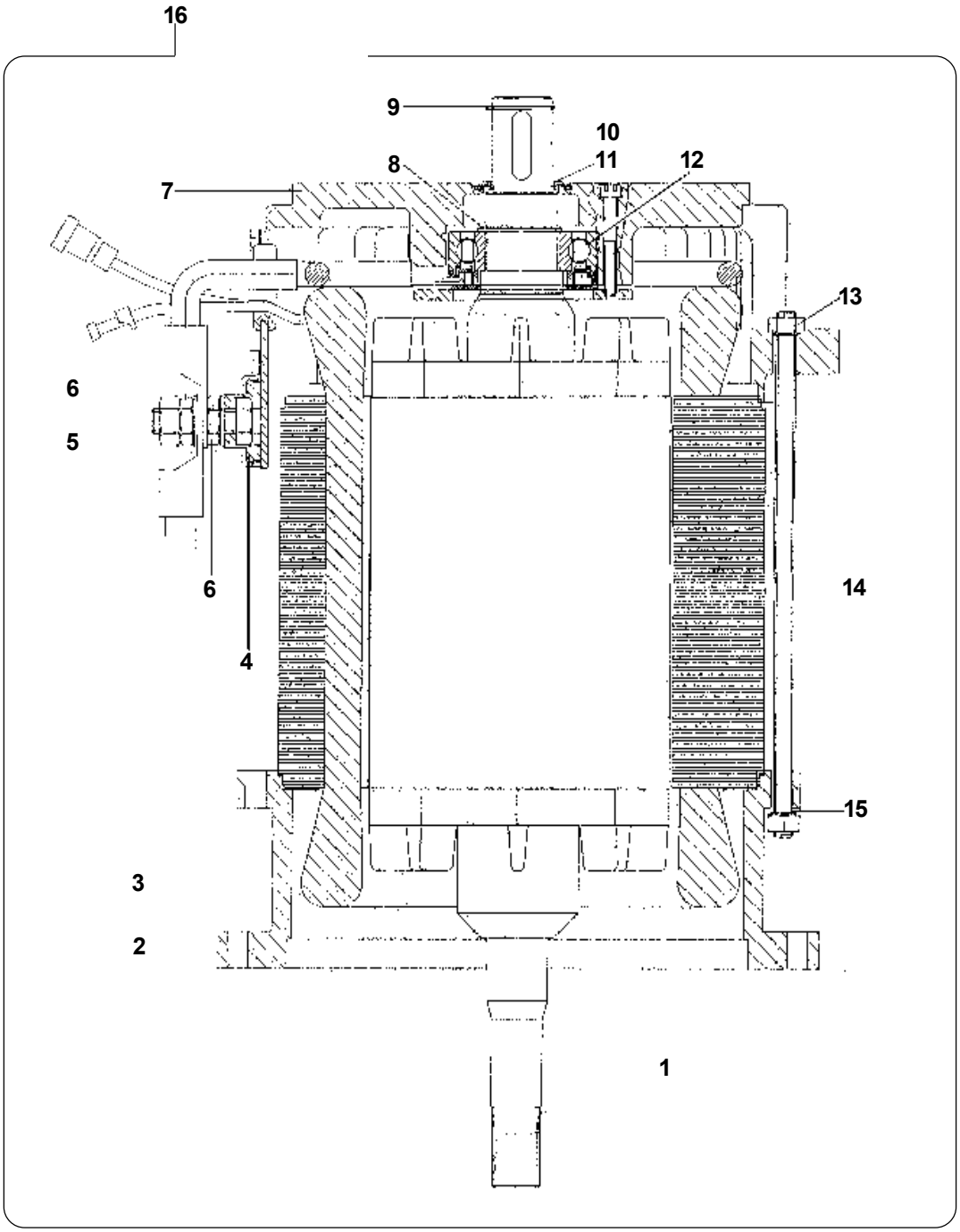

DRIVE MOTOR
MOTORE DI TRAZIONE
MOTEUR DE TRACTION
ZUGMOTOR
MOTOR DE TRACCION

FIGURE 6

REF.	PART NO.	Q.TY	DESCRIPTION	DESCRIZIONE	DESIGNATION	BENENNUNG	DENOMINACIONES
1	580031489	1	Armature	Indotto	Induit	Anker	Inducido
2	580031485	1	Flange	Flangia	Bride	Flansch	Abrazadera
3	580031483	1	Stator	Statore	Stator	Stator	Estator
4	580031484	3	Terminal board	Terminale a morsetto	Cosse	Klemmenbrett	Collarin de borna
5	449015044	3	Nut	Dado	Écrou	Mutter	Tuerca
6	931701910	6	Nut	Dado	Écrou	Mutter	Tuerca
7	580031486	1	Commutator end plate	Estremità del collettore	Extrémité coté collecteur	Kollektorende	Extremo del colector
8	015915900	1	Snap ring	Anello di fermo	Bague d'arret	Sprengring	Fiador anular
9	580010757	1	Snap ring	Anello di fermo	Bague d'arret	Sprengring	Fiador anular
10	580031584	1	Key	Chiavetta	Clavette	Wellenstift	Chaveta
11	580031487	1	Seal ring	Guarnizione	Joint	Dichtung	Junta
12	580031585	1	Sensor bearing	Cuscinetto con sensore	Roulement	Lager	Rodamiento
13	449015014	8	Nut	Dado	Écrou	Mutter	Tuerca
14	580031488	4	Pin	Perno	Axe	Bolzen	Pasador
15	580017283	8	Washer	Rondella	Rondelle	Scheibe	Arandela
16	580026031	1	Drive motor	Motore trazione	Moteur de commande	Motorantrieb	Transmisión motriz

From serial N° / *Da matr.* / Du matr. / *Ab. seriennummer* / Desde la matr. :	Until serial N° / *Fino a matr.* / Jusq' matr. / *Bis zur serien-Nr.* / Hasta la matr. :	With the exception of / *Ad esclusione di* / À l'exclusion de / *Mit ausnahme von* / Excepto :	Including / *Compreso* / Avec / *Einschließlich* / Con :
C849T01501Z			

MODELS MR14 - LOAD WHEEL DIAM. 250X100
MODELS MR14H / MR16N - LOAD WHEEL DIAM. 285X100

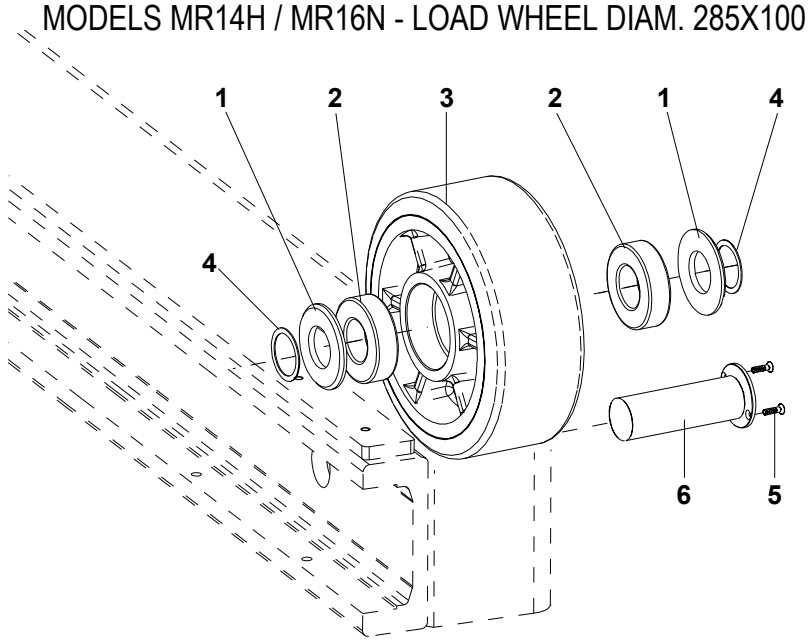

MODELS MR16 / MR16H / MR20 / MR20W - LOAD WHEEL DIAM. 350X100
MODELS MR20H / MR25 - LOAD WHEEL DIAM. 350X127

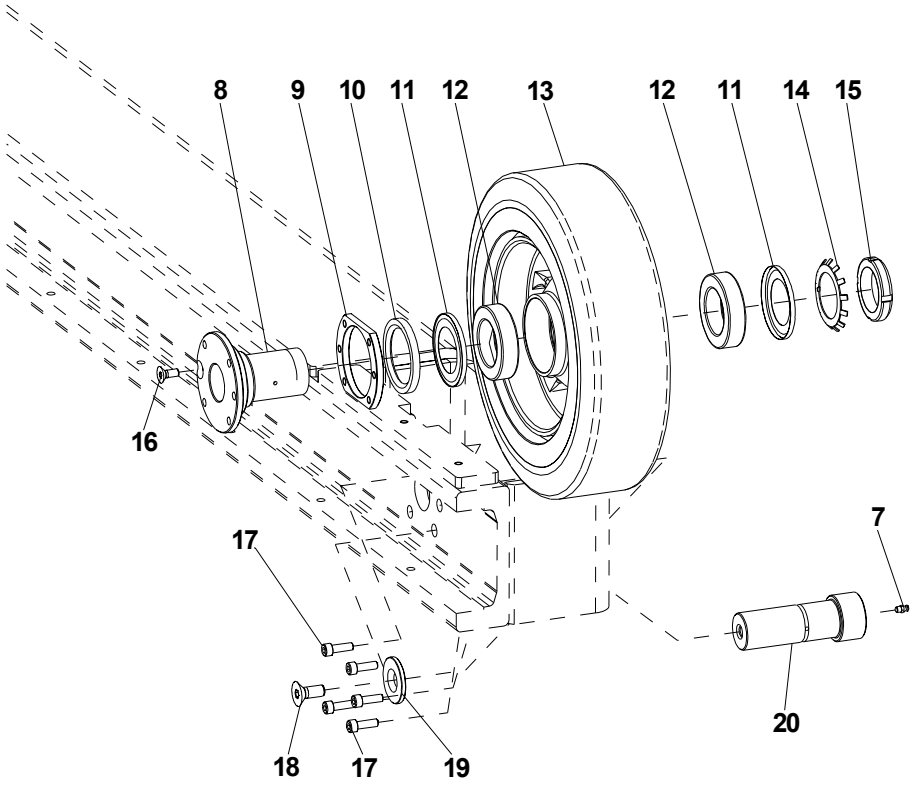

LOAD WHEELS
RUOTE DI CARICO
ROUES DE CHARGEMENT
BESCHICKUNGSRÄDER
RUEDAS DE CARGA

FIGURE 7

REF.	PART NO.	Q.TY	DESCRIPTION	DESCRIZIONE	DESIGNATION	BENENNUNG	DENOMINACIONES	PART DETAILS
1	273091600	4	Spacer	Distanziale	Entretoise	Distanzstück	Separador	
2	277034900	4	Bearing	Cuscinetto	Roulement	Lager	Cojenete	
3	580026051	2	Load wheel	Ruota di carico	Roue de chargement	Beschickungsräder	Rueda de carga	Diam. 250x100 for model MR14
3	580026052	2	Load wheel	Ruota di carico	Roue de chargement	Beschickungsräder	Rueda de carga	Diam. 285x100 for models MR14H/MR16N
4	277807500	AR	Washer	Rosetta	Rondelle	Unterlegscheibe	Arandela	
5	580011943	4	Screw	Vite	Vis	Schraube	Tornillo	
6	580027428	2	Pin	Perno	Axe	Bolzen	Pasador	
7	277033800	2	Grease ftg.	Ingrassatore	Graisseur	Fettbüchse	Engrasador	
8	580027249	2	Pin	Perno	Axe	Bolzen	Pasador	For wheel diam. 350x100 - for models MR16/MR16H/MR20/MR20W
8	580027430	2	Pin	Perno	Axe	Bolzen	Pasador	For wheel diam. 350x127 - for models MR20H/MR25
9	580033710	2	Plate	Piastra	Plaque	Platte	Plancha	
10	277355400	2	Seal	Guarnizione	Joint	Dichtung	Empaquetadura	
11	277194800	4	Ring sealing	Guarnizione	Joint	Dichtung	Empaquetadura	
12	580029670	4	Bearing	Cuscinetto	Roulement	Lager	Cojenete	
13	580026053	2	Load wheel	Ruota di carico	Roue de chargement	Beschickungsräder	Rueda de carga	Diam. 350x100 for models MR16/MR16H/MR20/MR20W
13	580026054	2	Load wheel	Ruota di carico	Roue de chargement	Beschickungsräder	Rueda de carga	Diam. 350x127 for models MR20H/MR25
14	277197800	2	Security washer	Rosetta	Rondelle	Unterlegscheibe	Arandela	
15	277196400	2	Ring nut	Ghiera	Ecrou	Zwinge	Anillo	
16	506395587	2	Screw	Vite	Vis	Schraube	Tornillo	
17	580023467	10	Screw	Vite	Vis	Schraube	Tornillo	
18	449003004	2	Screw	Vite	Vis	Schraube	Tornillo	
19	580027433	2	Washer	Rosetta	Rondelle	Unterlegscheibe	Arandela	
20	580027431	2	Pin	Perno	Axe	Bolzen	Pasador	For wheel diam. 350x100 - for models MR16/MR16H/MR20/MR20W
20	580027432	2	Pin	Perno	Axe	Bolzen	Pasador	For wheel diam. 350x127 - for models MR20H/MR25

From serial N° / *Da matr.* / Du matr. / *Ab. seriennummer* / Desde la matr. :	Until serial N° / *Fino a matr.* / Jusq' matr. / *Bis zur serien-Nr.* / Hasta la matr. :	With the exception of / *Ad esclusione di* / À l'exclusion de / *Mit ausnahme von* / Excepto :	Including / *Compreso* / Avec / *Einschließlich* / Con :
C849T01501Z			

DESCRIPTION / DESCRIZIONE / DESIGNATION / BENENNUNG / DENOMINACIONES **PAGE NO.**

BRAKES SYSTEM / IMPIANTO FRENI / INSTALLATION FREINS / BREMSEANLAGE / INSTALACION FRENOS (FIGURE 8) 32-33

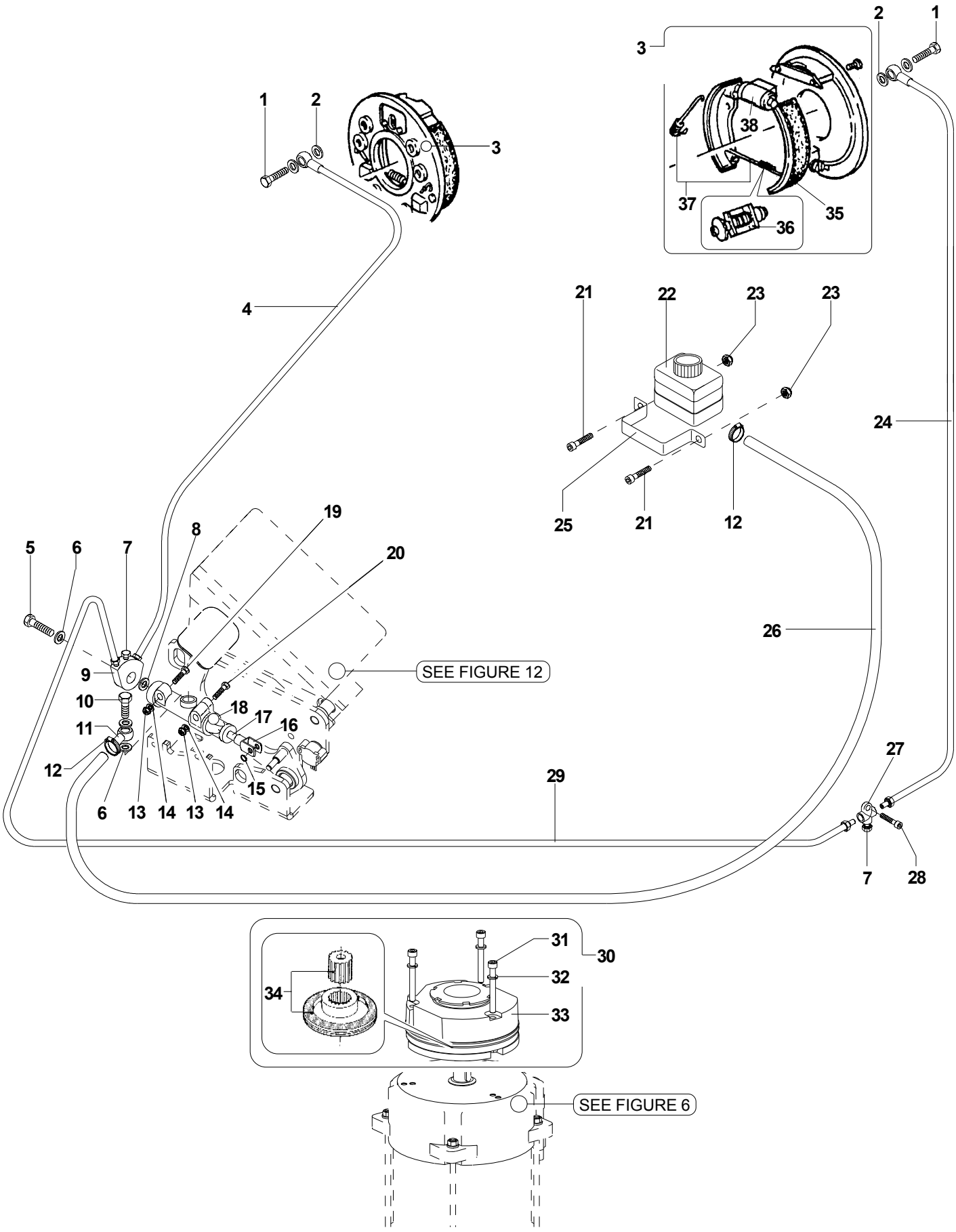
1
2
3
4
5
6
7
8
9
10
11
12
13
14
15
16
17
18
19
20
21
22
23
23
24
25
26
27
28
29
30
31
32
33
34
35
36
37
38
SEE FIGURE 12
SEE FIGURE 6

BRAKES SYSTEM
IMPIANTO FRENI
INSTALLATION FREINS
BREMSEANLAGE
INSTALACION FRENOS

FIGURE 8

REF.	PART NO.	Q.TY	DESCRIPTION	DESCRIZIONE	DESIGNATION	BENENNUNG	DENOMINACIONES	PART DETAILS
1	272337500	2	Fitting	Raccordo	Raccord	Anschlußstück	Racord	
2	277775200	4	Washer	Rondella	Rondelle	Unterlescheibe	Arandela	
3	277316000	2	Brake complete	Freno completo	Ensemble frein	Achse der Bremse	Eje freno	Only for models MR20/MR20H/MR25/MR20W and optional for models MR16/MR16H
4	272336900	1	Hose	Tubo	Tuyau	Schaluch	Tubo	
5	277188200	1	Fitting	Raccordo	Raccord	Anschlußstück	Racord	
6	272020200	3	Washer	Rondella	Rondelle	Unterlescheibe	Arandela	
7	272361900	2	Cap	Tappo	Bouchon	Stopfen	Tapa	
8	272043900	1	Washer	Rondella	Rondelle	Unterlescheibe	Arandela	
9	272337200	1	Fitting	Raccordo	Raccord	Anschlußstück	Racord	
10	272034300	1	Fitting	Raccordo	Raccord	Anschlußstück	Racord	
11	272034600	1	Fitting	Raccordo	Raccord	Anschlußstück	Racord	
12	273130100	2	Jubilee clip	Fascetta	Collier	Zwinge	Abrazadera	
13	449015098	2	Nut	Dado	Ecrou	Mutter	Tuerca	
14	449021001	2	Washer	Rondella	Rondelle	Unterlescheibe	Arandela	
15	273087700	1	Snap ring	Seeger	Seeger	Seeger	Anillo Seeger	
16	272066800	1	Fork	Forcella	Eperon	Gabel	Horquilla	
17	580027705	1	Pin	Perno	Axe	Stift	Perno	
18	272027400	1	Brake pump	Pompa freni	Pompe freins	Bremspumpe	Bomba frenos	
19	449001052	1	Screw	Vite	Vis	Schraube	Tornillo	
20	449001072	1	Screw	Vite	Vis	Schraube	Tornillo	
21	505966547	2	Screw	Vite	Vis	Schraube	Tornillo	
22	273007600	1	Oil tank	Serbatoio	Réservoir	Tank	Tanque	
23	449015112	2	Nut	Dado	Ecrou	Mutter	Tuerca	
24	272336800	1	Hose	Tubo	Tuyau	Schaluch	Tubo	
25	273131100	1	Bracket	Staffa	Étrier	Bügel	Estribo	
26	273030100	1	Hose	Tubo	Tuyau	Schaluch	Tubo	
27	272337300	1	Fitting	Raccordo	Raccord	Anschlußstück	Racord	
28	580024707	1	Screw	Vite	Vis	Schraube	Tornillo	
29	272337000	1	Hose	Tubo	Tuyau	Schaluch	Tubo	
30	580025543	1	Electromagnetic brake ass'y	Ass. freno elettromagnetico	Ens. frein électromagnetique	Satz elektromagnetische	Grupo freno electromagnètico	For models MR14/MR14H/ MR16/MR16N
30	277208900	1	Electromagnetic brake ass'y	Ass. freno elettromagnetico	Ens. frein électromagnetique	Satz elektromagnetische	Grupo freno electromagnético	For models MR16H/MR20/ MR20H/MR25/MR20W
31	580023007	3	Screw	Vite	Vis	Schraube	Tornillo	For models MR14/MR14H/ MR16/MR16N
31	932201916	3	Screw	Vite	Vis	Schraube	Tornillo	For models MR16H/MR20/ MR20H/MR25/MR20W
32	449022016	3	Washer	Rondella	Rondelle	Unterlescheibe	Arandela	
33	277176600	1	Electromagnet	Elettromagnete	Electro-aimant	Elektromagnet	Electromagnèto	For models MR14/MR14H/ MR16/MR16N
33	277209100	1	Electromagnet	Elettromagnete	Electro-aimant	Elektromagnet	Electromagnéto	For models MR16H/MR20/ MR20H/MR25/MR20W
34	277176900	1	Brake lining & hub	Kit ferodo + mozzo	Kit sabot de frein + moyeu	Bausatz Belag + Nabe	Kit ferodo + cubo	For models MR14/MR14H/ MR16/MR16N
34	277209000	1	Brake lining & hub	Kit ferodo + mozzo	Kit sabot de frein + moyeu	Bausatz Belag + Nabe	Kit ferodo + cubo	For models MR16H/MR20/ MR20H/MR25/MR20W
35	272356500	2	Couple shoes	Coppia ganasce	Couple machoires	Paar-Backern	Par zapata	Only for models MR20/MR20H/MR25/MR20W and optional for models MR16/MR16H
36	272356600	2	Gland nut	Ghiera registro	Virole	Gewindering	Virola	Only for models MR20/MR20H/MR25/MR20W and optional for models MR16/MR16H
37	272356700	2	Spring kit	Kit molla	Kit ressort	Federsatz	Kit resorte	Only for models MR20/MR20H/MR25/MR20W and optional for models MR16/MR16H
38	272356800	2	Small cylinder	Cilindretto	Cylindre	Kòeinzylinder	Cilindro	

From serial N° / *Da matr.* / Du matr. / *Ab. seriennummer* / Desde la matr. :	Until serial N° / *Fino a matr.* / Jusq' matr. / *Bis zur serien-Nr.* / Hasta la matr. :	With the exception of / *Ad esclusione di* / À l'exclusion de / *Mit ausnahme von* / Excepto :	Including / *Compreso* / Avec / *Einschließlich* / Con :
C849T01501Z			

DESCRIPTION / DESCRIZIONE / DESIGNATION / BENENNUNG / DENOMINACIONES **PAGE NO.**

STEERING CONTROL UNIT / MOTORIDUTTORE STERZO / MOTOREDUCTEUR DIRECTION / ELEKTROMOTOR LENKUNG / MOTOR DIRECCION (FIGURE 9) 36-37

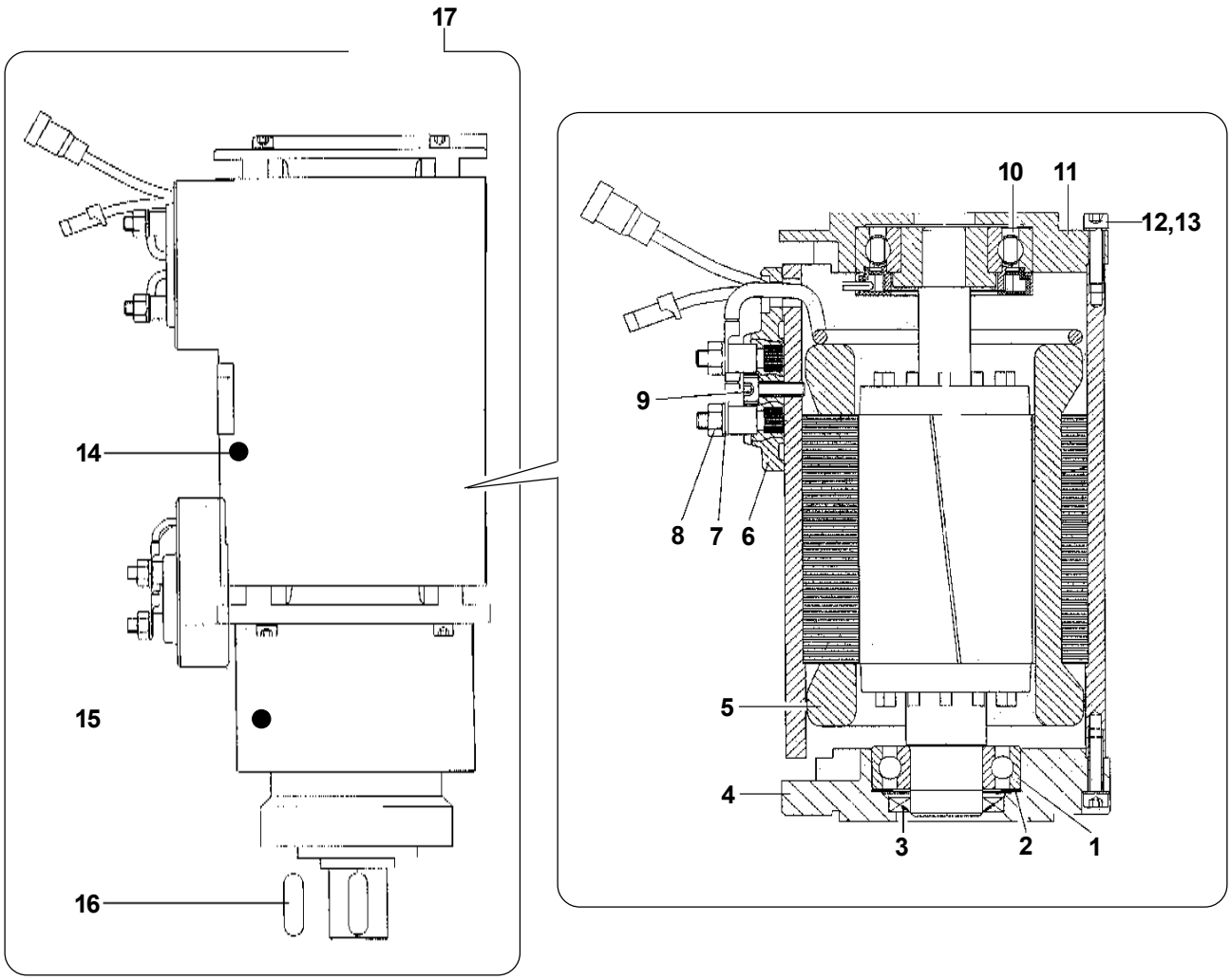
17
14
15
16
10
11
12,13
9
8
7
6
5
4
3
2
1

STEERING CONTROL UNIT
MOTORIDUTTORE STERZO
MOTOREDUCTEUR DIRECTION
ELEKTROMOTOR LENKUNG
MOTOR DIRECCION

FIGURE 9

REF.	PART NO.	Q.TY	DESCRIPTION	DESCRIZIONE	DESIGNATION	BENENNUNG	DENOMINACIONES
1	580010774	1	Bearing	Cuscinetto	Roulement	Lager	Cojinete
2	504057786	1	Washer	Rondella	Rondelle	Unterlegscheibe	Arandela
3	580029574	1	Sealing ring	Guarnizione	Joint	Dichtung	Junta
4	580029571	1	Commutator and plate	Estremità del collettore	Bride	Flansch	Abrazadera
5	580029569	1	Stator	Statore	Stator	Stator	Estator
6	580029570	1	Terminal	Terminale a morsetto	Cosse	Klemmenbrett	Collarin de borna
7	504057745	3	Washer	Rondella	Rondelle	Unterlegscheibe	Arandela
8	449015002	3	Nut	Dado	Écrou	Mutter	Tuerca
9	505966547	1	Screw	Vite	Vis	Schraube	Tornillo
10	580031585	1	Sensor bearing	Cuscinetto con sensore	Roulement	Lager	Rodamiento
11	580029572	1	Commutator end plate	Estremità del collettore	Extrémité coté collecteur	Kollektorende	Extremo del colector
12	504057775	8	Screw	Vite	Vis	Schraube	Tornillo
13	504057755	8	Washer	Rondella	Rondelle	Unterlegscheibe	Arandela
14	580029585	1	Steering motor	Motore sterzo	Moteur direction	Motor	Motor manubrio
15	580029612	1	Transmission	Trasmissione	Transmission	Getriebe	Trasmisión
16	272513100	1	Key	Chiavetta	Clavette	Wellenstiff	Chaveta
17	580026032	1	Steering control unit	Motoriduttore sterzo	Motoreducteur de direction	Elektromotor-lenkung	Motoreductor dirección

From serial N° / *Da matr.* / Du matr. / *Ab. seriennummer* / Desde la matr. :	Until serial N° / *Fino a matr.* / Jusq' matr. / *Bis zur serien-Nr.* / Hasta la matr. :	With the exception of / *Ad esclusione di* / À l'exclusion de / *Mit ausnahme von* / Excepto :	Including / *Compreso* / Avec / *Einschließlich* / Con :
C849T01501Z			

DESCRIPTION / DESCRIZIONE / DESIGNATION / BENENNUNG / DENOMINACIONES **PAGE NO.**

CONTROL PANEL / PANNELLO COMANDI / PANNEAU DE CONTRÔLE / STEUERTAFEL / TABLERO DE MANDO (FIGURE 10-11) 40-43

RUDDER PEDALS ASS'Y / ASSIEME PEDALIERA / ENSEMBLE PÉDALIER / ACHSE DES FUßHEBELS / EJE PEDALES (FIGURE 12) 44-45

SEAT / SEDILE / SIÈGE / SITZ / ASIENTO (FIGURE 13) 46-47

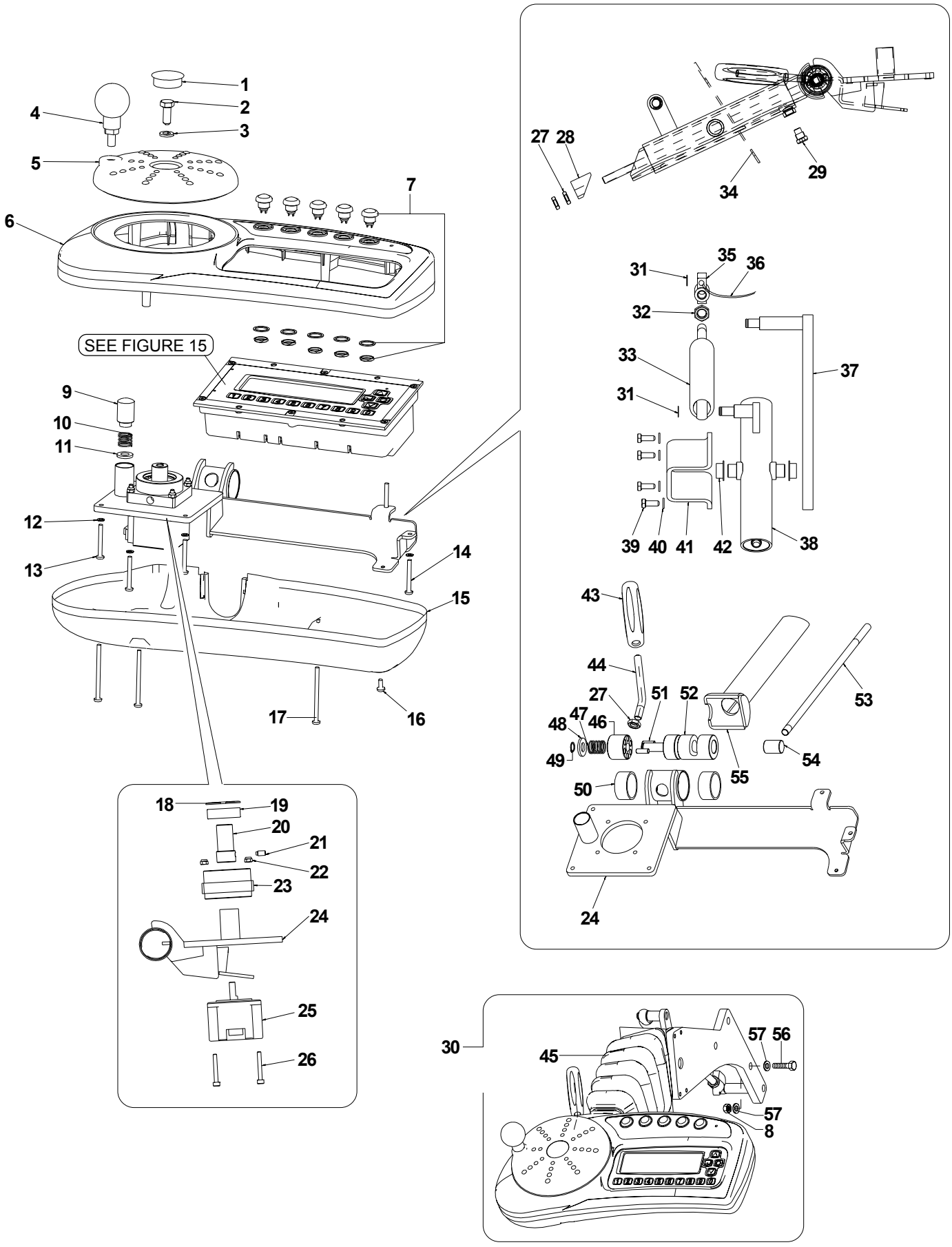
1
2
3
4
5
6
7
SEE FIGURE 15
9
10
11
12
13
14
15
16
17
18
19
20
21
22
23
24
25
26
27
28
29
34
31
35
36
32
33
37
31
39
40
41
42
38
43
44
27
51
52
53
48
47
46
49
55
54
50
24
30
45
57
56
57
8

CONTROL PANEL
PANNELLO COMANDI
PANNEAU DE CONTRÔLE
STEUERTAFEL
TABLERO DE MANDO

FIGURE 10

REF.	PART NO.	Q.TY	DESCRIPTION	DESCRIZIONE	DESIGNATION	BENENNUNG	DENOMINACIONES	PART DETAILS
1	273059000	1	Plug	Tappo	Bouchon	Stopfen	Tapa	
2	449001013	1	Screw	Vite	Vis	Schraube	Tornillo	
3	449022016	1	Washer	Rosetta	Rondelle	Unterlegscheibe	Arandela	
4	277067300	1	Handle	Manopola	Poignée	Griff	Empuñadura	
5	580033790	1	Steer wheel	Volantino	Volant	Lenkrad	Volante	
6	580031275	1	Console upper	Consolle	Console	Konsolle	Consola	
7	580031510	5	Push button	Pulsante	Bouton	Drukknopf	Pusador	
8	449015036	3	Nut	Dado	Ecrou	Mutter	Tuerca	
9	580033791	1	Pin	Perno	Axe	Stift	Perno	
10	580031160	1	Spring	Molla	Ressort	Feder	Resorte	
11	449021001	1	Washer	Rosetta	Rondelle	Unterlegscheibe	Arandela	
12	449022019	5	Lock washer	Rosetta elastica	Rondelle souple	Federring	Arandela elastica	
13	931109909	4	Screw	Vite	Vis	Schraube	Tornillo	
14	449007040	1	Screw	Vite	Vis	Schraube	Tornillo	
15	580031276	1	Console	Consolle	Console	Konsolle	Consola	
16	449007004	1	Screw	Vite	Vis	Schraube	Tornillo	
17	580032716	3	Screw	Vite	Vis	Schraube	Tornillo	
18	272045300	1	Stop ring	Anello	Bague	Ring	Anillo	
19	950433904	1	Ball bearing	Cuscinetto	Roulement	Lager	Cojenete	
20	580033792	1	Shaft	Perno	Axe	Stift	Perno	
21	580032784	1	Screw	Vite	Vis	Schraube	Tornillo	
22	580003615	4	Lock nut	Dado	Ecrou	Mutter	Tuerca	
23	580031515	1	Block	Blocco	Bloc	Block	Bloque	
24	580033793	1	Console support	Supporto	Support	Lager	Soporte	
25	580026228	1	Stepping motor	Motore	Moteur	Motor	Motor	
26	580007568	4	Screw	Vite	Vis	Schraube	Tornillo	
27	580004592	3	Nut	Dado	Ecrou	Mutter	Tuerca	
28	580030499	1	Cam block	Blocco camma	Bloc camme	Block-Kamm	Bloque leva	
29	580030503	1	Screw	Vite	Vis	Schraube	Tornillo	
30	580033794	1	Steer column group	Ass. gruppo sterzo	Ens. direction	Satz-Steuerung	Grupo manubrio	
✪30	580033795	1	Steer column group	Ass. gruppo sterzo	Ens. direction	Satz-Steuerung	Grupo manubrio	Cold store (-30°)
31	580032713	2	External snap ring	Seeger esterno	Seeger extérieur	Äußere Seeger	Anillo Seeger exterior	
32	580032714	1	Nut	Dado	Ecrou	Mutter	Tuerca	
33	580030505	1	Gas spring	Asta a gas	Tige gaz	Gasschiene	Varilla del gas	
34	580030504	1	Plate	Piastra	Plaque	Platte	Plancha	
35	580031592	1	Release head gas spring	Testina di rilascio	Capuchon	Deckel	Capuchón	
36	580031480	1	Bowden cable	Cavo	Fil	Kabel	Cable	
37	580030497	1	Support	Supporto	Support	Lager	Soporte	
38	580030496	1	Tube	Tubo	Tuyau	Schlauch	Tubo	
39	449001412	4	Screw	Vite	Vis	Schraube	Tornillo	
40	449022018	4	Screw	Vite	Vis	Schraube	Tornillo	
41	580031156	1	Bracket	Supporto	Support	Lager	Soporte	
42	580032101	2	Bushing	Boccola	Douille	Büchse	Buje	
43	580032666	1	Handle	Manopola	Poignée	Griff	Empuñadura	
44	580031159	1	Lever	Leva	Levier	Hebel	Palanca	
45	580031282	1	Rubber bellow	Soffietto	Soufflet	Blasebalg	Fuelle	
46	580031158	1	Cap	Cappellotto	Capuchon	Deckel	Capuchón	
47	580031160	1	Spring	Molla	Ressort	Feder	Resorte	
48	449021006	1	Washer	Rosetta	Rondelle	Unterlegscheibe	Arandela	
49	580032713	1	External snap ring	Seeger esterno	Seeger extérieur	Äußere Seeger	Anillo Seeger exterior	
50	580032102	2	Bushing	Boccola	Douille	Büchse	Buje	
51	954510902	2	Spring	Molla	Ressort	Feder	Resorte	
52	580030500	1	Cam	Camma	Camme	Kamm	Leva	
53	580030502	1	Rod	Stelo	Tige	Stock	Vástago	
54	580030501	1	Pin	Perno	Axe	Stift	Perno	
55	580030498	1	Tube	Tubo	Tuyau	Schlauch	Tubo	
56	449001040	3	Screw	Vite	Vis	Schraube	Tornillo	
57	449021006	6	Washer	Rosetta	Rondelle	Unterlegscheibe	Arandela	

✪ **Optional / Optional / Optionnel / Zusatzzubehör / Opcional**

From serial N° / *Da matr.* / Du matr. / *Ab. seriennummer* / Desde la matr. :	Until serial N° / *Fino a matr.* / Jusq' matr. / *Bis zur serien-Nr.* / Hasta la matr. :	With the exception of / *Ad esclusione di* / À l'exclusion de / *Mit ausnahme von* / Excepto :	Including / *Compreso* / Avec / *Einschließlich* / Con :
C849T01501Z			

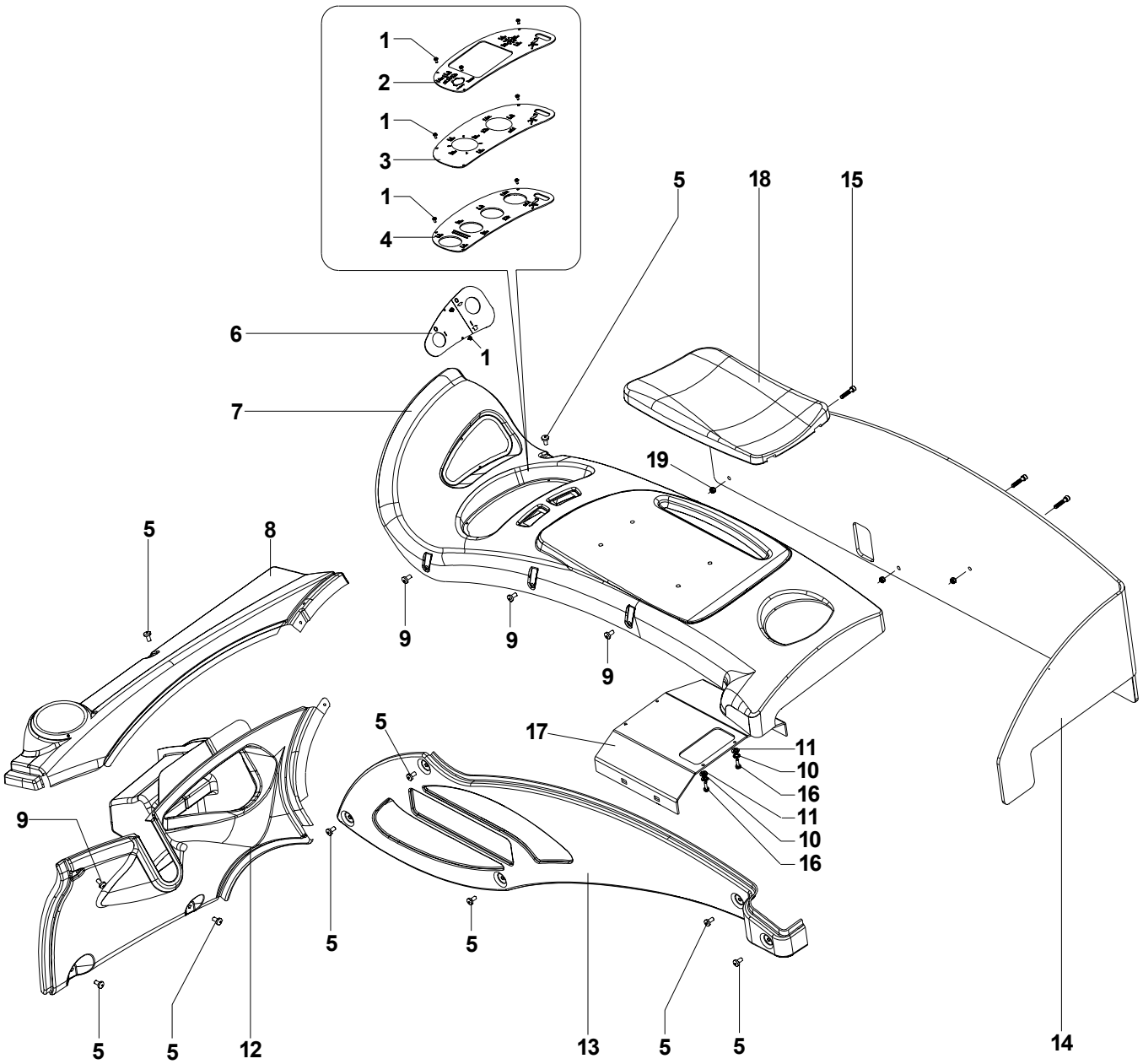
1
2
1
3
1
4
5
18
15
6
1
7
19
5
8
9
9
9
5
17
11
10
16
11
10
16
9
5
5
5
5
12
13
5
5
14

CONTROL PANEL
PANNELLO COMANDI
PANNEAU DE CONTRÔLE
STEUERTAFEL
TABLERO DE MANDO

FIGURE 11

REF.	PART NO.	Q.TY	DESCRIPTION	DESCRIZIONE	DESIGNATION	BENENNUNG	DENOMINACIONES	PART DETAILS
1	580003659	5	Screw	Vite	Vis	Schraube	Tornillo	
✪ 2	524154482	1	Cover plate and label	Coperchio e adesivo	Couvercle avec autocollants	Deckel mit Abz-bild	Tapa y adesivos	
✪ 3	524158293	1	Cover plate and label	Coperchio e adesivo	Couvercle avec autocollants	Deckel mit Abz-bild	Tapa y adesivos	
4	524154483	1	Cover plate and label	Coperchio e adesivo	Couvercle avec autocollants	Deckel mit Abz-bild	Tapa y adesivos	
5	272304100	9	Screw	Vite	Vis	Schraube	Tornillo	
6	524154524	1	Cover key pod and label	Coperchio e adesivo	Couvercle avec autocollants	Deckel mit Abz-bild	Tapa y adesivos	
7	580031270	1	Cover panel	Cruscotto superiore	Tableau de bord	Schaltbrett	Salpicadero	For models MR14/MR14H/MR16/MR16H/ MR20/MR20H/MR25/MR20W
7	580031271	1	Cover panel	Cruscotto superiore	Tableau de bord	Schaltbrett	Salpicadero	For model MR16N
8	580031277	1	Upper dash	Cruscotto superiore	Tableau de bord	Schaltbrett	Salpicadero	For models MR14/MR14H/MR16/MR16H/ MR20/MR20H/MR25/MR20W
8	580031278	1	Upper dash	Cruscotto superiore	Tableau de bord	Schaltbrett	Salpicadero	For model MR16N
9	272005000	4	Screw	Vite	Vis	Schraube	Tornillo	
10	449022019	4	Washer	Rondella	Rondelle	Unterlegscheibe	Arandela	
11	940004903	4	Washer	Rondella	Rondelle	Unterlegscheibe	Arandela	
12	580031280	1	Lower dash	Cruscotto inferiore	Tableau de bord	Schaltbrett	Salpicadero	For models MR14/MR14H/MR16/MR16H/ MR20/MR20H/MR25/MR20W
12	580031281	1	Lower dash	Cruscotto inferiore	Tableau de bord	Schaltbrett	Salpicadero	For model MR16N
13	580031273	1	Side panel	Pannello laterale	Panneau	Tafel	Tablero	For models MR14/MR14H/MR16/MR16H/ MR20/MR20H/MR25/MR20W
13	580031274	1	Side panel	Pannello laterale	Panneau	Tafel	Tablero	For model MR16N
14	580033276	1	Lexan guard	Lexan	Lexan	Lexan	Lexan	For models MR14/MR14H/MR16/MR16H/ MR20/MR20H/MR25/MR20W
14	580033277	1	Lexan guard	Lexan	Lexan	Lexan	Lexan	For model MR16N
15	932200907	3	Screw	Vite	Vis	Schraube	Tornillo	
16	449007005	4	Screw	Vite	Vis	Schraube	Tornillo	
17	580032860	1	Support	Supporto	Support	Lager	Soporte	
18	580027116	1	Armrest ass'y	Cuscino completo	Ens. accoudoirs	Kissen	Grupo acojinado	
19	272342200	3	Nut	Dado	Ecrou	Mutter	Tuerca	

✪ **Optional / Optional / Optionnel / Zusatzzubehör / Opcional**

From serial N° / *Da matr.* / Du matr. / *Ab. seriennummer* / Desde la matr. :	Until serial N° / *Fino a matr.* / Jusq' matr. / *Bis zur serien-Nr.* / Hasta la matr. :	With the exception of / *Ad esclusione di* / À l'exclusion de / *Mit ausnahme von* / Excepto :	Including / *Compreso* / Avec / *Einschließlich* / Con :
C849T01501Z			

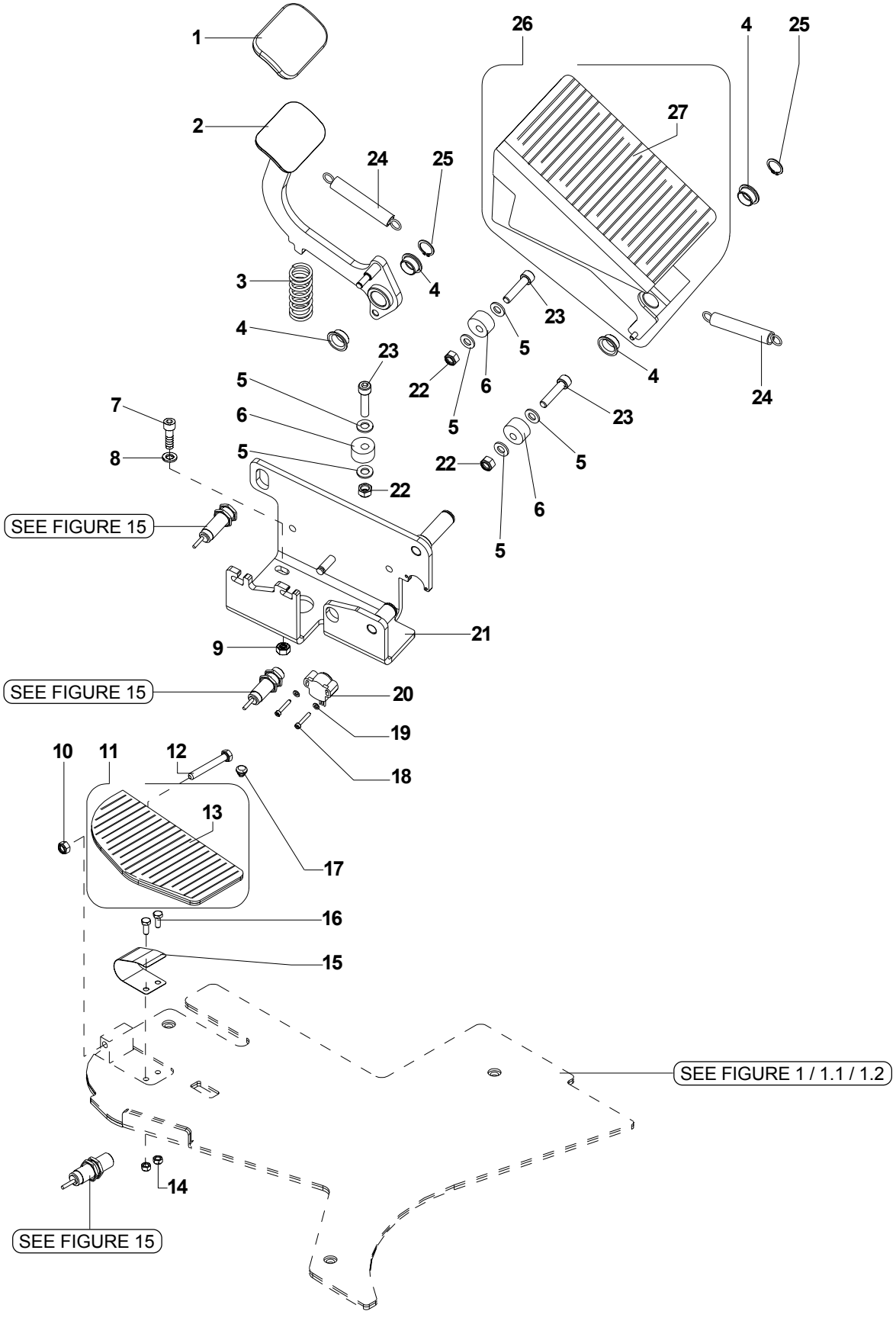
1
2
3
4
5
6
7
8
9
10
11
12
13
14
15
16
17
18
19
20
21
22
23
24
25
26
27
SEE FIGURE 15
SEE FIGURE 15
SEE FIGURE 15
SEE FIGURE 1 / 1.1 / 1.2

RUDDER PEDALS ASS'Y
ASSIEME PEDALIERA
ENSEMBLE PÉDALIER
ACHSE DES FUßHEBELS
EJE PEDALES

FIGURE 12

REF.	PART NO.	Q.TY	DESCRIPTION	DESCRIZIONE	DESIGNATION	BENENNUNG	DENOMINACIONES
1	272019200	1	Pedal cup	Copripedale	Couvre-pédale	Bremspedalenabdeckung	Funda pedal
2	580027700	1	Brake pedal	Pedale freno	Pedal	Fusshebel	Pedal
3	580027728	1	Spring	Molla	Ressort	Feder	Resorte
4	272015100	4	Bushing	Boccola	Douille	Büchse	Buje
5	449021006	6	Washer	Rosetta	Rondelle	Unterlegscheibe	Arandela
6	580029531	3	Puffer	Antivibrante	Antivibratoire	Erschütterungs-dämpfer	Antivibrante
7	580023467	2	Screw	Vite	Vis	Schraube	Tornillo
8	449021001	2	Washer	Rosetta	Rondelle	Unterlegscheibe	Arandela
9	580030159	2	Nut	Dado	Ecrou	Mutter	Tuerca
10	449015098	1	Nut	Dado	Ecrou	Mutter	Tuerca
11	580027703	1	Pedal with rubber	Pedale consenso con gomma	Pedal avec caoutchouc	Fusshebel mit Gummi	Pedal y goma
12	449001072	1	Screw	Vite	Vis	Schraube	Tornillo
13	580027704	1	Rubber	Gomma	Caoutchouc	Gummi	Goma
14	272342200	2	Nut	Dado	Ecrou	Mutter	Tuerca
15	580027729	1	Spring	Molla	Ressort	Feder	Resorte
16	580027677	2	Screw	Vite	Vis	Schraube	Tornillo
17	277458400	1	Cushion	Antivibrante	Antivibratoire	Erschütterungs-dämpfer	Antivibrante
18	580008011	2	Screw	Vite	Vis	Schraube	Tornillo
19	940004903	2	Washer	Rosetta	Rondelle	Unterlegscheibe	Arandela
20	580026230	1	Potentiometer	Potenziometro	Potentiometre	Potentiometer	Potenciómetro
21	580027702	1	Support	Supporto	Support	Lager	Soporte
22	449015036	3	Nut	Dado	Ecrou	Mutter	Tuerca
23	580026612	3	Screw	Vite	Vis	Schraube	Tornillo
24	272039200	2	Spring	Molla	Ressort	Feder	Resorte
25	273086900	2	Snap ring	Seeger	Seeger	Seeger	Anillo Seeger
26	580027698	1	Accelerator pedal with rubber	Pedale acceleratore con gomma	Pedal avec caoutchouc	Fusshebel mit Gummi	Pedal y goma
27	580027699	1	Rubber	Gomma	Caoutchouc	Gummi	Goma

From serial N° / *Da matr.* / Du matr. / *Ab. seriennummer* / Desde la matr. :	Until serial N° / *Fino a matr.* / Jusq' matr. / *Bis zur serien-Nr.* / Hasta la matr. :	With the exception of / *Ad esclusione di* / À l'exclusion de / *Mit ausnahme von* / Excepto :	Including / *Compreso* / Avec / *Einschließlich* / Con :
C849T01501Z			

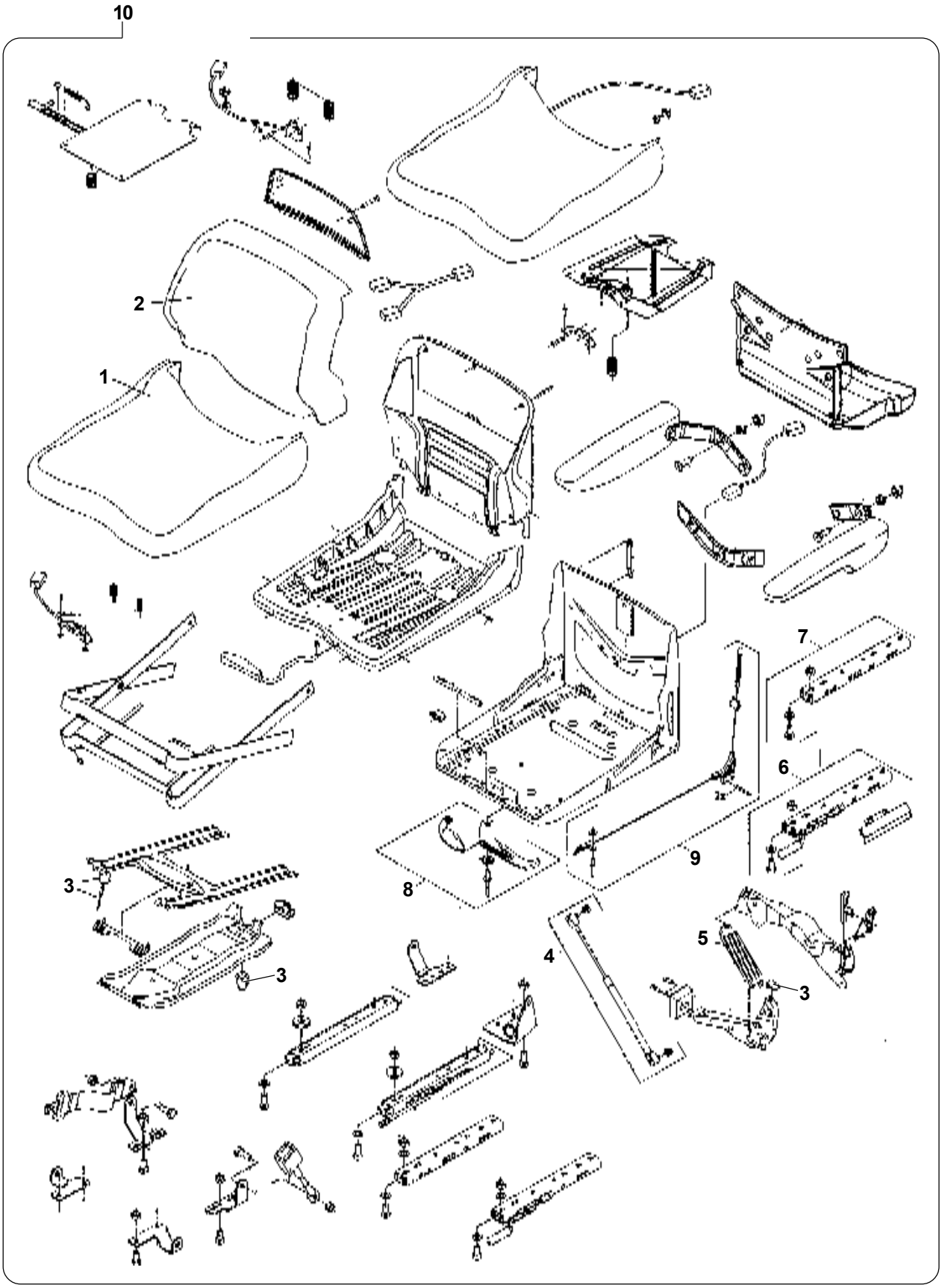
10
2
1
7
6
9
8
3
3
4
5
3

SEAT
SEDILE
SIÈGE
SITZ
ASIENTO

FIGURE 13

REF.	PART NO.	Q.TY	DESCRIPTION	DESCRIZIONE	DESIGNATION	BENENNUNG	DENOMINACIONES	PART DETAILS
1	580034027	1	Seat cushion	Cuscino sedile	Mousse de siège	Sitzkissen	Asiento acojinado	
✪ 1	580034039	1	Seat cushion	Cuscino sedile	Mousse de siège	Sitzkissen	Asiento acojinado	SKY
✪ 1	580034037	1	Seat cushion	Cuscino sedile	Mousse de siège	Sitzkissen	Asiento acojinado	Cold store
2	580034028	1	Backrest cushion	Cuscino schienale	Mousse de dossier	Rückenpolster	Respaldo acojinado	
✪ 2	580034040	1	Backrest cushion	Cuscino schienale	Mousse de dossier	Rückenpolster	Respaldo acojinado	SKY
✪ 2	580034038	1	Backrest cushion	Cuscino schienale	Mousse de dossier	Rückenpolster	Respaldo acojinado	Cold store
3	580034029	1	Cushions kit	Kit antivibranti	Kit antivibratoire	Kit Erschütterungs-dämpfer	Kit antivibrante	
4	580034030	1	Gas spring	Asta a gas	Tige gaz	Gasschiene	Varilla del gas	
5	580034031	1	Spring	Molla	Ressort	Feder	Resorte	
6	580034032	1	Rail	Guida di scorrimento	Guide de cheminement	Führungsbahn	Guía deslizante	
7	580034033	1	Rail	Guida di scorrimento	Guide de cheminement	Führungsbahn	Guía deslizante	
8	580034034	1	Height adjuster	Regolatore di altezza	Régulateur de hauteur	Luftdichteregler	Regulador de altura	
9	580034035	1	Height adjuster cable	Cavo regolatore di altezza	Fil régulateur de hauteur	Luftdichteregler	Regulador de altura	
10	580032654	1	Seat ass'y	Ass. sedile	Ens. siège	Sitzgruppe	Eje asiento	
✪ 10	580032655	1	Seat ass'y	Ass. sedile	Ens. siège	Sitzgruppe	Eje asiento	SKY
✪ 10	580032656	1	Seat ass'y	Ass. sedile	Ens. siège	Sitzgruppe	Eje asiento	Cold store

✪ **Optional / Optional / Optionnel / Zusatzzubehör / Opcional**

From serial N° / *Da matr.* / Du matr. / *Ab. seriennummer* / Desde la matr. :	Until serial N° / *Fino a matr.* / Jusq' matr. / *Bis zur serien-Nr.* / Hasta la matr. :	With the exception of / *Ad esclusione di* / À l'exclusion de / *Mit ausnahme von* / Excepto :	Including / *Compreso* / Avec / *Einschließlich* / Con :
C849T01501Z			

DESCRIPTION / DESCRIZIONE / DESIGNATION / BENENNUNG / DENOMINACIONES **PAGE NO.**

ELECTRICAL ARRANGEMENT (POWER CABLES) / IMPIANTO ELETTRONICO (CAVI DI POTENZA) / INSTALLATION ÉLECTRONIQUE (CABLES DE PUISSANCE) / ELEKTRONIK (LEISTUNGKABEL) / INSTALACION ELECTRONICA (CABLE DE POTENCIA) (FIGURE 14) .. 50-51

ELECTRICAL ARRANGEMENT (SHEATH) / IMPIANTO ELETTRONICO (GUAINE) / INSTALLATION ÉLECTRONIQUE (GAINES) / ELEKTRONIK (MANTEL) / INSTALACION ELECTRONICA (VAINA) (FIGURE 15) 52-55

CONNECTORS, CONTACTS, TOOLS / CONTATTI, CONNETTORI, UTENSILI / CONNECTEURS, CONTACTS, OUTILS / KONNEKTORS, KONTAKTS, WERKZEUG / CONTACTO, CONECTOR, UTENSILIO (FIGURE 16) 56-57

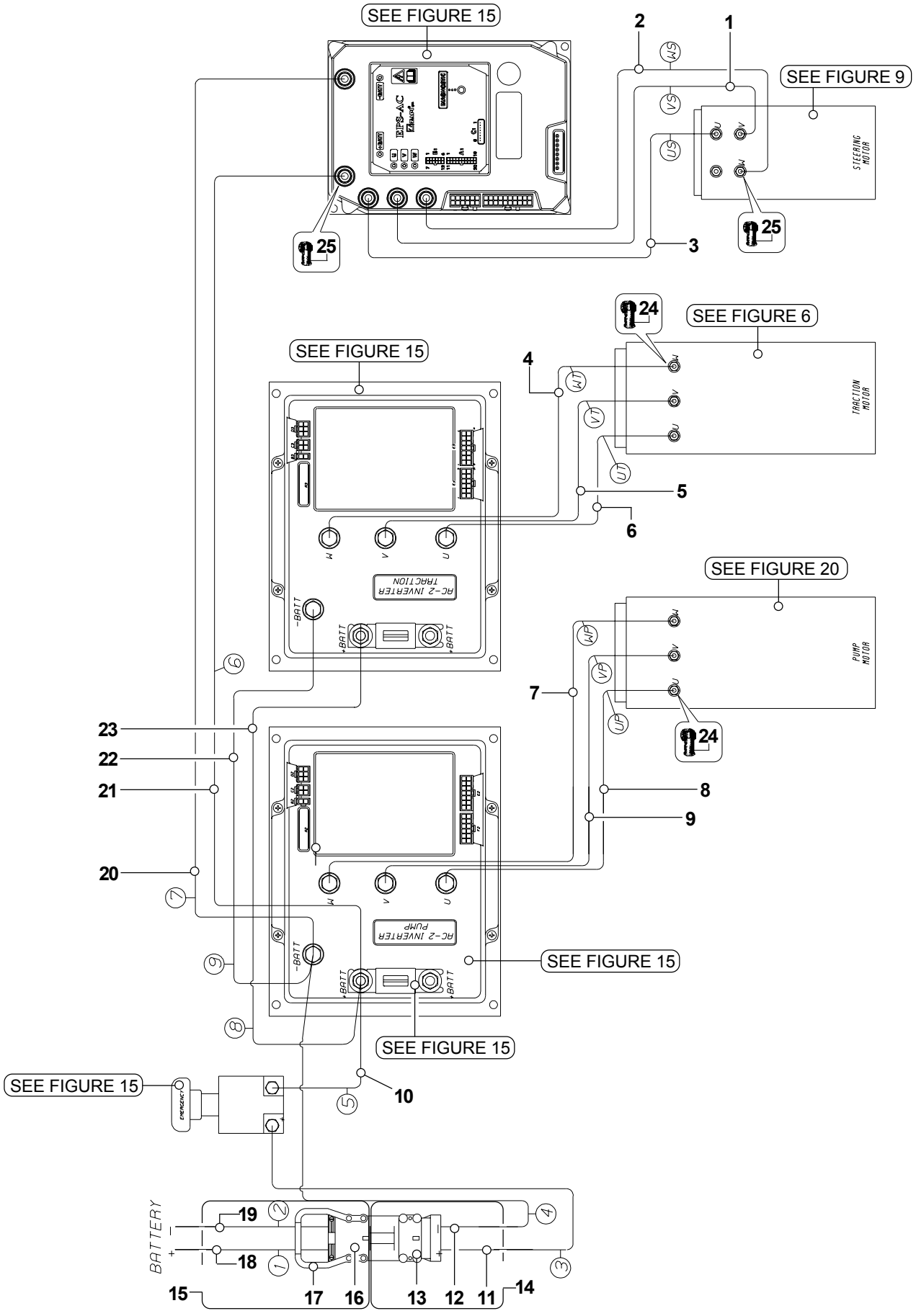
SEE FIGURE 15
SEE FIGURE 9
SEE FIGURE 6
SEE FIGURE 20
SEE FIGURE 15
SEE FIGURE 15
SEE FIGURE 15
SEE FIGURE 15
STEERING MOTOR
TRACTION MOTOR
PUMP MOTOR
AC-2 INVERTER TRACTION
AC-2 INVERTER PUMP
BATTERY
1
2
3
4
5
6
7
8
9
10
11
12
13
14
15
16
17
18
19
20
21
22
23
24
25

ELECTRICAL ARRANGEMENT (POWER CABLES)
IMPIANTO ELETTRONICO (CAVI DI POTENZA)
INSTALLATION ÉLECTRONIQUE (CABLES DE PUISSANCE)
ELEKTRONIK (LEISTUNGKABEL)
INSTALACION ELECTRONICA (CABLE DE POTENCIA)

FIGURE 14

REF.	PART NO.	Q.TY	DESCRIPTION	DESCRIZIONE	DESIGNATION	BENENNUNG	DENOMINACIONES	PART DETAILS
1	580026976	1	Power cable wired	Cavo potenza cablato	Fil câblé de puissance	Leistungkabel	Cable potencia cablado	
2	580026977	1	Power cable wired	Cavo potenza cablato	Fil câblé de puissance	Leistungkabel	Cable potencia cablado	
3	580026975	1	Power cable wired	Cavo potenza cablato	Fil câblé de puissance	Leistungkabel	Cable potencia cablado	
4	580026971	1	Power cable wired	Cavo potenza cablato	Fil câblé de puissance	Leistungkabel	Cable potencia cablado	
5	580026970	1	Power cable wired	Cavo potenza cablato	Fil câblé de puissance	Leistungkabel	Cable potencia cablado	
6	580026969	1	Power cable wired	Cavo potenza cablato	Fil câblé de puissance	Leistungkabel	Cable potencia cablado	
7	580026974	1	Power cable wired	Cavo potenza cablato	Fil câblé de puissance	Leistungkabel	Cable potencia cablado	
8	580026972	1	Power cable wired	Cavo potenza cablato	Fil câblé de puissance	Leistungkabel	Cable potencia cablado	
9	580026973	1	Power cable wired	Cavo potenza cablato	Fil câblé de puissance	Leistungkabel	Cable potencia cablado	
10	580026978	1	Power cable wired	Cavo potenza cablato	Fil câblé de puissance	Leistungkabel	Cable potencia cablado	
11	580027593	1	Power cable wired	Cavo potenza cablato	Fil câblé de puissance	Leistungkabel	Cable potencia cablado	(+)
12	580027594	1	Power cable wired	Cavo potenza cablato	Fil câblé de puissance	Leistungkabel	Cable potencia cablado	(-)
13	272029400	1	Plug	Spina	Fiche	Stecker	Ficha	
14	580027596	1	Wired plug	Spina cablata	Fiche câblé	Satz-Stecker	Ficha cablada	
15	580027595	1	Wired socket	Presa cablata	Prise câblé	Satz-Steckdose	Prensa cablada	
16	272029300	1	Socket	Presa	Prise	Steckdose	Prensa	
17	273036700	1	Handle-battery connector	Maniglia	Poignée	Klinke	Manilla	
18	580026995	1	Power cable wired	Cavo potenza cablato	Fil câblé de puissance	Leistungkabel	Cable potencia cablado	(+)
19	580026996	1	Power cable wired	Cavo potenza cablato	Fil câblé de puissance	Leistungkabel	Cable potencia cablado	(-)
20	580026980	1	Power cable wired	Cavo potenza cablato	Fil câblé de puissance	Leistungkabel	Cable potencia cablado	
21	580026979	1	Power cable wired	Cavo potenza cablato	Fil câblé de puissance	Leistungkabel	Cable potencia cablado	
22	580026982	1	Power cable wired	Cavo potenza cablato	Fil câblé de puissance	Leistungkabel	Cable potencia cablado	
23	580026981	1	Power cable wired	Cavo potenza cablato	Fil câblé de puissance	Leistungkabel	Cable potencia cablado	
24	277553100	6	Rubber protection	Protezione in gomma	Caoutchouc protection	Gummi lager	Goma protección	
25	277597200	8	Rubber protection	Protezione in gomma	Caoutchouc protection	Gummi lager	Goma protección	

From serial N° / *Da matr.* / Du matr. / *Ab. seriennummer* / Desde la matr. :	Until serial N° / *Fino a matr.* / Jusq' matr. / *Bis zur serien-Nr.* / Hasta la matr. :	With the exception of / *Ad esclusione di* / À l'exclusion de / *Mit ausnahme von* / Excepto :	Including / *Compreso* / Avec / *Einschließlich* / Con :
C849T01501Z			

ELECTRICAL ARRANGEMENT (SHEATH)
IMPIANTO ELETTRONICO (GUAINE)
INSTALLATION ÉLECTRONIQUE (GAINES)
ELEKTRONIK (MANTEL)
INSTALACION ELECTRONICA (VAINA)

FIGURE 15

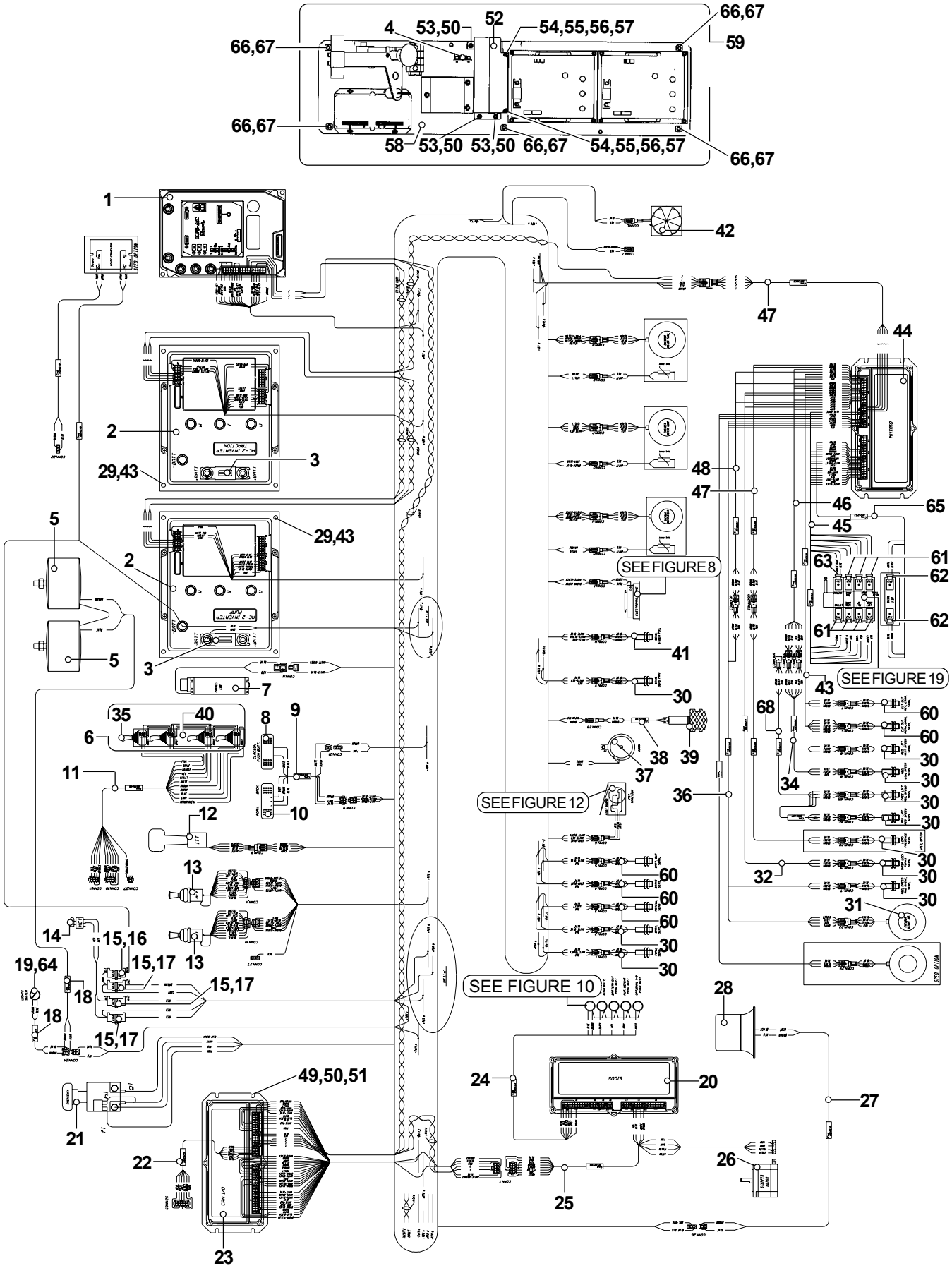

ELECTRICAL ARRANGEMENT (SHEATH)
IMPIANTO ELETTRONICO (GUAINE)
INSTALLATION ÉLECTRONIQUE (GAINES)
ELEKTRONIK (MANTEL)
INSTALACION ELECTRONICA (VAINA)

FIGURE 15

REF.	PART NO.	Q.TY	DESCRIPTION	DESCRIZIONE	DESIGNATION	BENENNUNG	DENOMINACIONES	PART DETAILS
1	580026225	1	Steering controller	Controllo elettronico	Côntrole électronique	Elektroniksteuerung	Control electrónico	
✪ 1	580027890	1	Steering controller	Controllo elettronico	Côntrole électronique	Elektroniksteuerung	Control electrónico	Cold store (-30°)
2	580026224	2	Motor controller	Controllo elettronico	Côntrole électronique	Elektroniksteuerung	Control electrónico	
✪ 2	580027889	2	Motor controller	Controllo elettronico	Côntrole électronique	Elektroniksteuerung	Control electrónico	Cold store (-30°)
3	272042600	2	Fuse	Fusibile	Fusible	Sicherung	Fusible	
4	580032565	1	Lever bonden cable	Cavo	Câble	Kabel	Cable	
✪ 5	277071100	2	Spot light	Faretto	Petit feu	Spot	Fanalillo	
6	580033149	1	Quad lever ass'y	Ass. leve	Ens. Levier	Satz-Hebel	Hgrupo palanca	
7	580026229	1	Fan	Ventola	Rotor de ventilation	Flügel	Ventilador	
8	580032612	1	Rocker switch horn	Interruttore	Selecteur	Schalter	Selector	
9	580026987	1	Wiring harness forw/rev switch	Cavo cablato	Fil câblé	Verkabelter	Cable cablado	
10	580031511	1	Rocker switch	Interruttore	Selecteur	Schalter	Selector	
11	580031617	1	Wiring harness joysticks	Cavo cablato	Fil câblé	Verkabelter	Cable cablado	
✪12	524154561	1	Joystick	Joystick	Joystick	Joystick	Joystick	
✪13	580026234	2	Joystick	Joystick	Joystick	Joystick	Joystick	
14	272029100	1	Key switch	Selettore a chiave	Sélecteur à clé	Schlüsselschalter	Selector a llave	
15	580015085	4	Fuse holder	Portafusibile	Porte-fusible	Sicherungshalterung	Portafusible	
16	580032668	1	Fuse	Fusibile	Fusible	Sicherung	Fusible	6A
17	272001500	3	Fuse	Fusibile	Fusible	Sicherung	Fusible	10A
18	580032593	2	Wiring harness working light	Cavo cablato	Fil câblé	Verkabelter	Cable cablado	
19	277203700	1	Lights switch	Interruttore luci	Selecteur	Schalter	Selector	
20	580026227	1	Display	Display	Display	Display	Display	
✪20	580032589	1	Display	Display	Display	Display	Display	Cold store (-30°)
21	580017035	1	Emergency switch	Pulsante emergenza	Bouton de secours	Notdruckknopf	Botón de emergenc.	
22	580026993	1	Wiring harness	Cavo cablato	Fil câblé	Verkabelter	Cable cablado	
23	580028361	1	Card-Can I/O	Scheda elettronica	Carte	Karte	Fica	
✪23	580028362	1	Card-Can I/O	Scheda elettronica	Carte	Karte	Fica	Cold store (-30°)
24	580026988	1	Wiring harness	Cavo cablato	Fil câblé	Verkabelter	Cable cablado	
25	580026983	1	Wiring harness	Cavo cablato	Fil câblé	Verkabelter	Cable cablado	
26	580026228	1	Stepping motor for steering	Motore	Moteur	Motor	Motor	
27	580032594	1	Wiring harness flashing	Cavo cablato	Fil câblé	Verkabelter	Cable cablado	
✪28	277035100	1	Beacon	Lampeggiatore	Clignoteur	Blinker	Relampagueador	
29	932200910	8	Screw	Vite	Vis	Schraube	Tornillo	
✪30	272344400	10	Wired sensor	Sensore cablato	Capteur câblé	Sensor	Sensor cablado	
✪31	580033796	1	Ball bearing	Cuscinetto	Roulement	Lager	Cojenete	
32	580026991	1	Wiring harness	Cavo cablato	Fil câblé	Verkabelter	Cable cablado	
33	449022018	8	Washer	Rosetta	Rondelle	Federring	Arandela	
34	580026990	1	Wiring harness reduction	Cavo cablato	Fil câblé	Verkabelter	Cable cablado	
35	272347700	4	Control lever	Leve di comando	Commande èlectronique	Schalthebel	Mandos electricos	
✪36	580026989	1	Wiring harness	Cavo cablato	Fil câblé	Verkabelter	Cable cablado	
37	272042100	1	Electric horn	Clackson	Klaxon	Klaxon	Avisador acustico	
✪38	580032595	1	Wiring harness back up alarm	Cavo cablato	Fil câblé	Verkabelter	Cable cablado	
✪39	272252800	1	Horn	Segnalatore acustico	Klaxon	Signalhupe	Bocina	
40	580027937	1	Support plate	Supporto	Support	Lager	Soporte	
41	277859100	1	Wired sensor	Sensore cablato	Capteur câblé	Sensor	Sensor cablado	
42	580026231	1	Fan	Ventola	Rotor de ventilation	Flügel	Ventilador	
43	580026985	1	Wiring harness	Cavo cablato	Fil câblé	Verkabelter	Cable cablado	

✪ **Optional / Optional / Optionnel / Zusatzzubehör / Opcional**

From serial N° / *Da matr.* / Du matr. / *Ab. seriennummer* / Desde la matr. :	Until serial N° / *Fino a matr.* / Jusq' matr. / *Bis zur serien-Nr.* / Hasta la matr. :	With the exception of / *Ad esclusione di* / À l'exclusion de / *Mit ausnahme von* / Excepto :	Including / *Compreso* / Avec / *Einschließlich* / Con :
C849T01501Z			

ELECTRICAL ARRANGEMENT (SHEATH)
IMPIANTO ELETTRONICO (GUAINE)
INSTALLATION ÉLECTRONIQUE (GAINES)
ELEKTRONIK (MANTEL)
INSTALACION ELECTRONICA (VAINA)

FIGURE 15

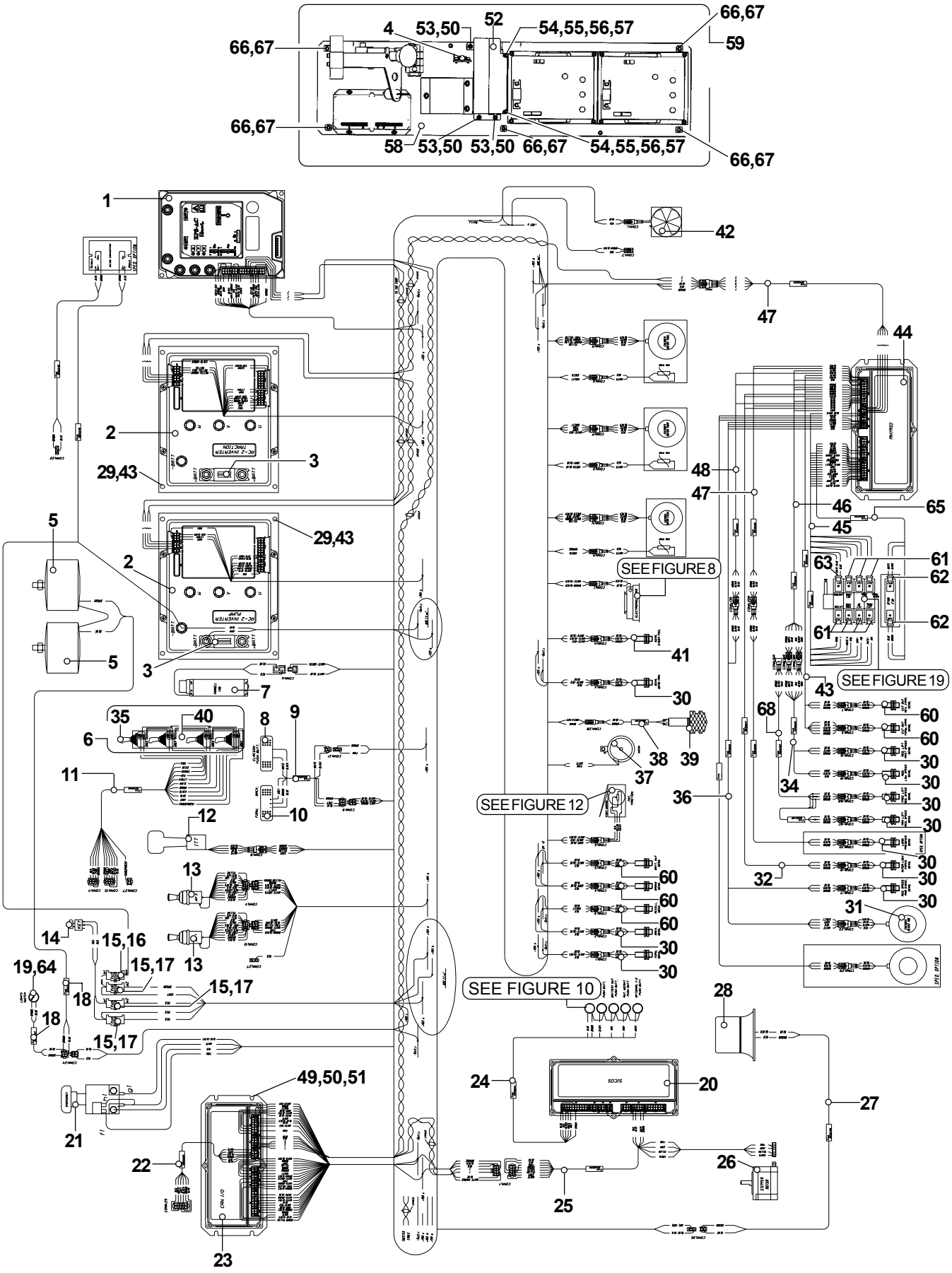

ELECTRICAL ARRANGEMENT (SHEATH)
IMPIANTO ELETTRONICO (GUAINE)
INSTALLATION ÉLECTRONIQUE (GAINES)
ELEKTRONIK (MANTEL)
INSTALACION ELECTRONICA (VAINA)

FIGURE 15

REF.	PART NO.	Q.TY	DESCRIPTION	DESCRIZIONE	DESIGNATION	BENENNUNG	DENOMINACIONES	PART DETAILS
44	580026226	1	Card-Mhyrio I/O	Scheda elettronica	Carte	Karte	Fica	
✪ 44	580027892	1	Card-Mhyrio I/O	Scheda elettronica	Carte	Karte	Fica	Cold store (-30°)
45	580026984	1	Wiring harness elettrovalves group	Cavo cablato	Fil câblé	Verkabelter	Cable cablado	
46	580026990	1	Wiring harness reduction speed low.	Cavo cablato	Fil câblé	Verkabelter	Cable cablado	
47	580026986	1	Wiring harness power Myrio	Cavo cablato	Fil câblé	Verkabelter	Cable cablado	
48	580026989	1	Wiring harness	Cavo cablato	Fil câblé	Verkabelter	Cable cablado	
49	505975518	4	Screw	Vite	Vis	Schraube	Tornillo	
50	449022021	7	Washer	Rosetta	Rondelle	Federring	Arandela	
51	580032409	4	Washer	Rosetta	Rondelle	Federring	Arandela	
52	580027894	1	Air duct	Convogliatore	Protection	Förderer	Transportador	
53	277485700	3	Screw	Vite	Vis	Schraube	Tornillo	
54	580010410	2	Screw	Vite	Vis	Schraube	Tornillo	
55	940004903	2	Washer	Rosetta	Rondelle	Federring	Arandela	
56	449022022	2	Washer	Rosetta	Rondelle	Federring	Arandela	
57	937100902	2	Nut	Dado	Ecrou	Mutter	Tuerca	
58	580027895	1	Support	Supporto	Support	Lager	Soporte	
59	580033797	1	Control panel ass'y	Ass. pannello elettronico	Ens. installation électronique	Achse der elektronischen Schalttafel	Eje del panel electrónico	
✪ 59	580033798	1	Control panel ass'y	Ass. pannello elettronico	Ens. installation électronique	Achse der elektronischen Schalttafel	Eje del panel electrónico	Cold store (-30°)
60	272344400	5	Wired sensor	Sensore cablato	Capteur câblé	Sensor	Sensor cablado	
61	277282200	7	Connector	Connettore	Connecteur	Vrbinder	Conector	
✪ 62	277282200	2	Connector	Connettore	Connecteur	Vrbinder	Conector	
63	277282300	1	Connector	Connettore	Connecteur	Vrbinder	Conector	
64	277543100	1	Contact block	Blocco comtatti	Bloc contact	Schaltstueckblock	Bloque contactos	
✪ 65	580032761	1	Wiring harness	Cavo cablato	Fil câblé	Verkabelter	Cable cablado	For 5TH way
66	501729905	5	Screw	Vite	Vis	Schraube	Tornillo	
67	272338700	5	Washer	Rosetta	Rondelle	Federring	Arandela	
✪ 68	580034738	1	Wiring harness	Cavo cablato	Fil câblé	Verkabelter	Cable cablado	

✪ **Optional / Optional / Optionnel / Zusatzzubehör / Opcional**

From serial N° / *Da matr.* / Du matr. / *Ab. seriennummer* / Desde la matr. :	Until serial N° / *Fino a matr.* / Jusq' matr. / *Bis zur serien-Nr.* / Hasta la matr. :	With the exception of / *Ad esclusione di* / À l'exclusion de / *Mit ausnahme von* / Excepto :	Including / *Compreso* / Avec / *Einschließlich* / Con :
C849T01501Z			

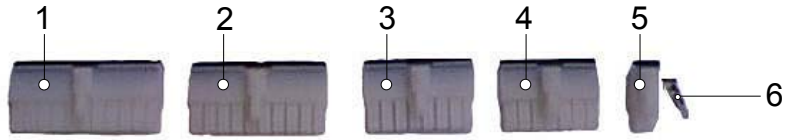
1
2
3
4
5
6

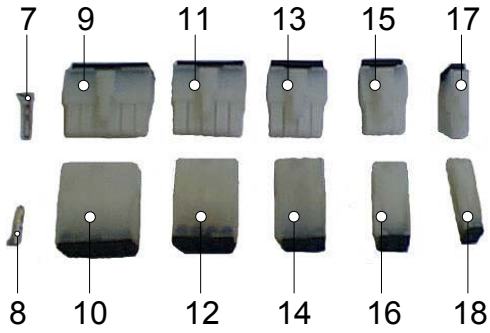
7
9
11
13
15
17
8
10
12
14
16
18

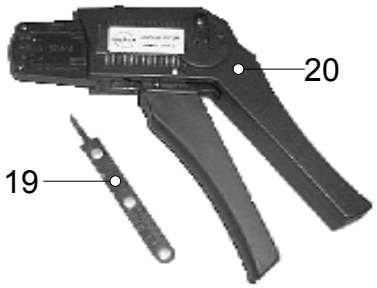
20
19


31
32

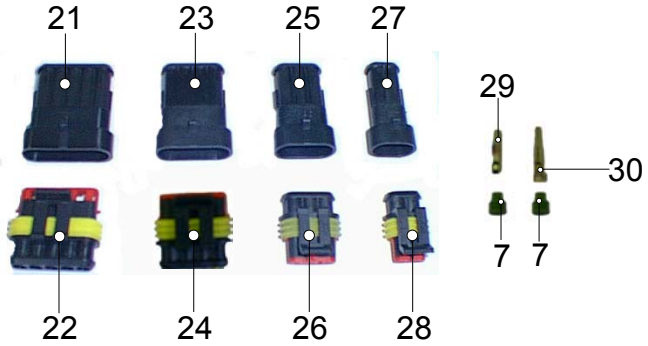
21
23
25
27
29
30
7
7
22
24
26
28

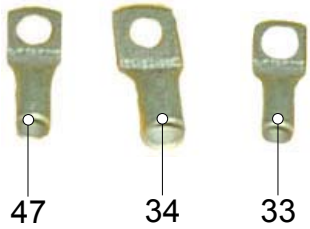
47
34
33

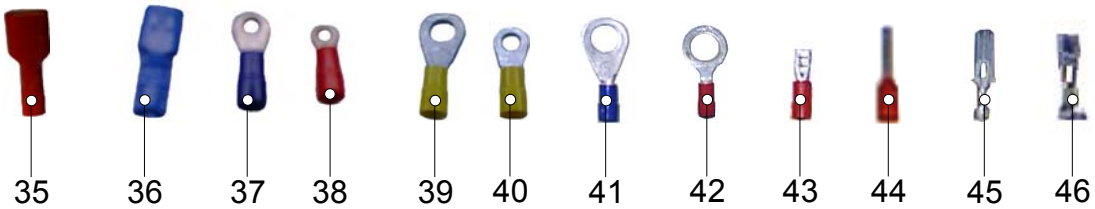
35
36
37
38
39
40
41
42
43
44
45
46

REF.	PART NO.	DESCRIPTION	DESCRIZIONE	DESIGNATION	BENENNUNG	DENOMINACIONES	PART DETAILS
1	272477700	Connector	Connettore	Connecteur	Verbinder	Conector	22ways male
2	272477600	Connector	Connettore	Connecteur	Verbinder	Conector	20ways male
3	272477500	Connector	Connettore	Connecteur	Verbinder	Conector	16ways male
4	278130300	Connector	Connettore	Connecteur	Verbinder	Conector	14ways male
5	272477000	Connector	Connettore	Connecteur	Verbinder	Conector	4ways male
6	580034049	Crimp on pin terminals	Capicorda	Terminal	Anschluß	Terminal	Female
7	272479200	Rubber	Gommino	Caoutchouc	Gummi	Goma	
8	277768900	Crimp on pin terminals	Capicorda	Terminal	Anschluß	Terminal	Male
9	272477400	Connector	Connettore	Connecteur	Verbinder	Conector	12ways male
10	580034048	Connector	Connettore	Connecteur	Verbinder	Conector	12ways female
11	272477300	Connector	Connettore	Connecteur	Verbinder	Conector	10ways male
12	278130400	Connector	Connettore	Connecteur	Verbinder	Conector	10ways female
13	272477200	Connector	Connettore	Connecteur	Verbinder	Conector	8ways male
14	278130500	Connector	Connettore	Connecteur	Verbinder	Conector	8ways female
15	272477100	Connector	Connettore	Connecteur	Verbinder	Conector	6ways male
16	580034050	Connector	Connettore	Connecteur	Verbinder	Conector	6ways female
17	277768700	Connector	Connettore	Connecteur	Verbinder	Conector	2ways male
18	277768800	Connector	Connettore	Connecteur	Verbinder	Conector	2ways female
19	580014685	Stripper	Estrattore	Extracteur	Auszieher	Extractor	
20	580014686	Pliers	Pinza crimpatrice	Pince	Zange	Pinzas	
21	278130600	Connector	Connettore	Connecteur	Verbinder	Conector	5ways female
22	278130700	Connector	Connettore	Connecteur	Verbinder	Conector	5ways male
23	278130800	Connector	Connettore	Connecteur	Verbinder	Conector	4ways female
24	278130900	Connector	Connettore	Connecteur	Verbinder	Conector	4ways male
25	278131000	Connector	Connettore	Connecteur	Verbinder	Conector	3ways female
26	278131100	Connector	Connettore	Connecteur	Verbinder	Conector	3ways male
27	278131200	Connector	Connettore	Connecteur	Verbinder	Conector	2ways female
28	278131300	Connector	Connettore	Connecteur	Verbinder	Conector	2ways male
29	278131600	Crimp on pin terminals	Capicorda	Terminal	Anschluß	Terminal	Female
30	278131700	Crimp on pin terminals	Capicorda	Terminal	Anschluß	Terminal	Male
31	580034051	Connector	Connettore	Connecteur	Verbinder	Conector	
32	580034052	Crimp on pin terminals	Capicorda	Terminal	Anschluß	Terminal	Female
33	277511900	Crimp on ring terminals	Capicorda	Terminal	Anschluß	Terminal	Sec. 25 mmq hole diam. 10 mm
34	277512400	Crimp on ring terminals	Capicorda	Terminal	Anschluß	Terminal	Sec. 50 mmq hole diam. 8 mm
35	580034053	Crimp on blade terminals	Capicorda	Terminal	Anschluß	Terminal	Sec. 1,5 mmq-male
36	277767700	Crimp on blade terminals	Capicorda	Terminal	Anschluß	Terminal	
37	277512800	Crimp on ring terminals	Capicorda	Terminal	Anschluß	Terminal	Sec. 2,5 mmq hole diam. 4 mm
38	277766900	Crimp on ring terminals	Capicorda	Terminal	Anschluß	Terminal	Sec. 1,5 mmq hole diam. 3 mm
39	277514600	Crimp on ring terminals	Capicorda	Terminal	Anschluß	Terminal	Sec. 6 mmq hole diam. 8 mm
40	278131400	Crimp on ring terminals	Capicorda	Terminal	Anschluß	Terminal	Sec. 6 mmq hole diam. 6 mm
41	277767000	Crimp on ring terminals	Capicorda	Terminal	Anschluß	Terminal	Sec. 2,5 mmq hole diam. 8 mm
42	580034054	Crimp on ring terminals	Capicorda	Terminal	Anschluß	Terminal	Sec. 1,5 mmq hole diam. 8 mm
43	277514900	Crimp on blade terminals	Capicorda	Terminal	Anschluß	Terminal	
44	277768200	Crimp on pin terminals	Capicorda	Terminal	Anschluß	Terminal	
45	278131500	Crimp on pin terminals	Capicorda	Terminal	Anschluß	Terminal	Male
46	277513800	Crimp on pin terminals	Capicorda	Terminal	Anschluß	Terminal	Female
47	580034055	Crimp on ring terminals	Capicorda	Terminal	Anschluß	Terminal	Sec. 25 mmq hole diam. 8 mm

DESCRIPTION / DESCRIZIONE / DESIGNATION / BENENNUNG / DENOMINACIONES **PAGE NO.**

LIFTING UNIT / GRUPPO SOLLEVAMENTO / GROUPE DE SOULEVEMENT / HEBE-GRUPPE / GRUPO ELEVACIÓN (FIGURE 17) 60-63

LIFTING UNIT (MR16-MR14-MR16N WITH BETA MAST) / GRUPPO SOLLEVAMENTO (MR16-MR14-MR16N CON MONTANTE BETA) / GROUPE DE SOULEVEMENT (MR16-MR14-MR16NC) / HEBE-GRUPPE (MR16-MR14-MR16N MIT PFOSTEN BETA) / GRUPO ELEVACIÓN (MR16-MR14-MR16N Y MONTANTE BETA) (FIGURE 18) 64-67

LIFTING UNIT (MR14H-MR20-MR16N WITH HE140L MAST) / GRUPPO SOLLEVAMENTO (MR14H-MR20-MR16N CON MONTANTE HE140L) / GROUPE DE SOULEVEMENT (MR14H-MR20-MR16N AVEC MONTANT HE140L) / HEBE-GRUPPE (MR14H-MR20-MR16N MIT PFOSTEN HE140L) / GRUPO ELEVACIÓN (MR14H-MR20-MR16N Y MONTANTE HE140L) (FIGURE 18.1) 68-73

LIFTING UNIT (MR16H-MR20H-MR25-MR20W WITH HE140 MAST) / GRUPPO SOLLEVAMENTO (MR16H-MR20H-MR25-MR20W CON MONTANTE HE140) / GROUPE DE SOULEVEMENT (MR16H-MR20H-MR25-MR20W AVEC MONTANT HE140) / HEBE-GRUPPE (MR16H-MR20H-MR25-MR20W MIT PFOSTEN HE140) / GRUPO ELEVACIÓN (MR16H-MR20H-MR25-MR20W Y MONTANTE HE140) (FIGURE 18.2) 74-79

LIFTING UNIT (MR16H-MR20H-MR25-MR20W WITH HE140R MAST) / GRUPPO SOLLEVAMENTO (MR16H-MR20H-MR25-MR20W CON MONTANTE HE140R) / GROUPE DE SOULEVEMENT (MR16H-MR20H-MR25-MR20W AVEC MONTANT HE140R) / HEBE-GRUPPE (MR16H-MR20H-MR25-MR20W MIT PFOSTEN HE140R) / GRUPO ELEVACIÓN (MR16H-MR20H-MR25-MR20W Y MONTANTE HE140R) (FIGURE 18.3) 80-89

SOLENOID VALVE / ELETTROVALVOLA / SOUPAPE ÉLECTRIQUE / ELEKTROVENTIL / ELECTROVÁLVULA (FIGURE 19) 90-91

LIFT MOTOR AND PUMP / MOTOPOMPA SOLLEVAMENTO / MOTOPOMPE SOULEVEMENT / HAUPTHUB-MOTORPUMPE ZUR ANAEBUNG / MOTOBOMBA ELEVACIÓN PRINCIPAL (FIGURE 20) 92-93

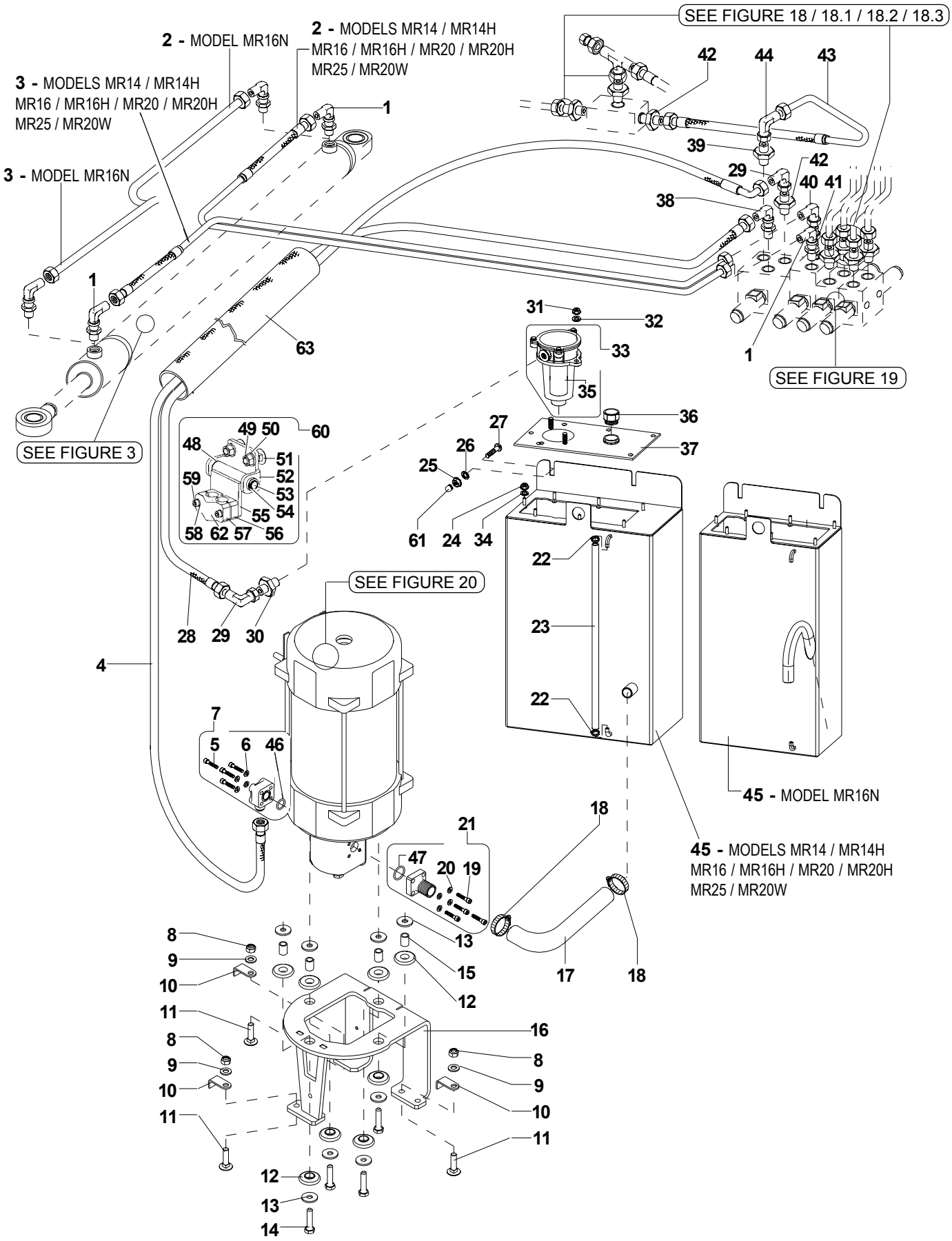
SEE FIGURE 18 / 18.1 / 18.2 / 18.3
2 - MODEL MR16N
2 - MODELS MR14 / MR14H
MR16 / MR16H / MR20 / MR20H
MR25 / MR20W
3 - MODELS MR14 / MR14H
MR16 / MR16H / MR20 / MR20H
MR25 / MR20W
3 - MODEL MR16N
SEE FIGURE 3
SEE FIGURE 19
SEE FIGURE 20
45 - MODEL MR16N
45 - MODELS MR14 / MR14H
MR16 / MR16H / MR20 / MR20H
MR25 / MR20W

LIFTING UNIT
GRUPPO SOLLEVAMENTO
GROUPE DE SOULEVEMENT
HEBE-GRUPPE
GRUPO ELEVACIÓN

FIGURE 17

REF.	PART NO.	Q.TY	DESCRIPTION	DESCRIZIONE	DESIGNATION	BENENNUNG	DENOMINACIONES	PART DETAILS
1	277406300	3	Fitting	Raccordo	Raccord	Verbindung	Racor	
2	580032743	1	Hose	Tubo	Tuyau	Schlauch	Tubo	For models MR14-14H-16-16H-20-20H-25-20W
2	580032744	1	Hose	Tubo	Tuyau	Schlauch	Tubo	For model MR16N
3	580032739	1	Hose	Tubo	Tuyau	Schlauch	Tubo	For models MR14-14H-16-16H-20-20H-25-20W
3	580032742	1	Hose	Tubo	Tuyau	Schlauch	Tubo	For model MR16N
4	580034347	1	Hose	Tubo	Tuyau	Schlauch	Tubo	For models MR14-14H-16-16H
4	580034349	1	Hose	Tubo	Tuyau	Schlauch	Tubo	For models MR20-20H-25-20W
4	580034345	1	Hose	Tubo	Tuyau	Schlauch	Tubo	For model MR16N
5	932200908	4	Screw	Vite	Vis	Schraube	Tornillo	
6	449022018	4	Lock washer	Rosetta elastica	Rondelle souple	Federring	Arandela elastica	
7	580032849	1	Flange	Flangia	Bride	Flansch	Abrazadera	
8	449015036	3	Nut	Dado	Écrou	Mutter	Tuerca	
9	449021006	3	Washer	Rosetta	Rondelle	Unterlegscheibe	Arandela	
10	580033986	3	Bracket	Staffa	Support	Lager	Soporte	
11	580033987	3	Screw	Vite	Vis	Schraube	Tornillo	
12	277195700	8	Rubber	Gomma	Caoutchouc	Gummi	Goma	
13	272468900	8	Washer	Rosetta	Rondelle	Unterlegscheibe	Arandela	
14	449001010	4	Screw	Vite	Vis	Schraube	Tornillo	
15	272381700	4	Spacer	Distanziale	Entretoise	Distanzstück	Separador	
16	580027540	1	Support	Supporto	Support	Lager	Soporte	
17	580027552	1	Hose	Tubo	Tuyau	Schlauch	Tubo	
18	580034890	2	Clamp	Fascetta	Bande	Kabelhalterung	Abrazadera	
19	449022018	4	Screw	Vite	Vis	Schraube	Tornillo	
20	580024707	4	Lock washer	Rosetta elastica	Rondelle souple	Federring	Arandela elastica	
21	272133800	1	Flange	Flangia	Bride	Flansch	Abrazadera	
22	272011100	2	Clamp	Fascetta	Bande	Kabelhalterung	Abrazadera	
23	580027546	1	Hose	Tubo	Tuyau	Schlauch	Tubo	
24	449015002	7	Nut	Dado	Écrou	Mutter	Tuerca	
25	449015036	2	Nut	Dado	Écrou	Mutter	Tuerca	
26	449021006	2	Washer	Rosetta	Rondelle	Unterlegscheibe	Arandela	
27	580033985	2	Screw	Vite	Vis	Schraube	Tornillo	
28	580034348	1	Hose	Tubo	Tuyau	Schlauch	Tubo	For models MR14-14H-16-16H
28	580034350	1	Hose	Tubo	Tuyau	Schlauch	Tubo	For models MR20-20H-25-20W
28	580034351	1	Hose	Tubo	Tuyau	Schlauch	Tubo	For model MR16N
29	277343400	2	Fitting	Raccordo	Raccord	Verbindung	Racor	
30	277315400	1	Fitting	Raccordo	Raccord	Verbindung	Racor	
31	449015098	2	Nut	Dado	Écrou	Mutter	Tuerca	
32	449021001	2	Lock washer	Rosetta elastica	Rondelle souple	Federring	Arandela elastica	
33	580028724	1	Filter	Filtro	Filtre	Filter	Filtro	
34	449021003	7	Washer	Rosetta	Rondelle	Unterlegscheibe	Arandela	
35	580028725	1	Cartridge filter	Cartuccia filtro	Cartouche filtrante	Filtereinsatz	Cartucho filtro	
36	277407200	1	Cap	Tappo	Bouchon	Stopfen	Tapa	
37	580027539	1	Oil tank flange	Flangia serbatoio olio	Bride de reservoir d'huile	Flansch Öltank	Arandela deposito aceite	

From serial N° / *Da matr.* / Du matr. / *Ab. seriennummer* / Desde la matr. :	Until serial N° / *Fino a matr.* / Jusq' matr. / *Bis zur serien-Nr.* / Hasta la matr. :	With the exception of / *Ad esclusione di* / À l'exclusion de / *Mit ausnahme von* / Excepto :	Including / *Compreso* / Avec / *Einschließlich* / Con :
C849T01501Z			

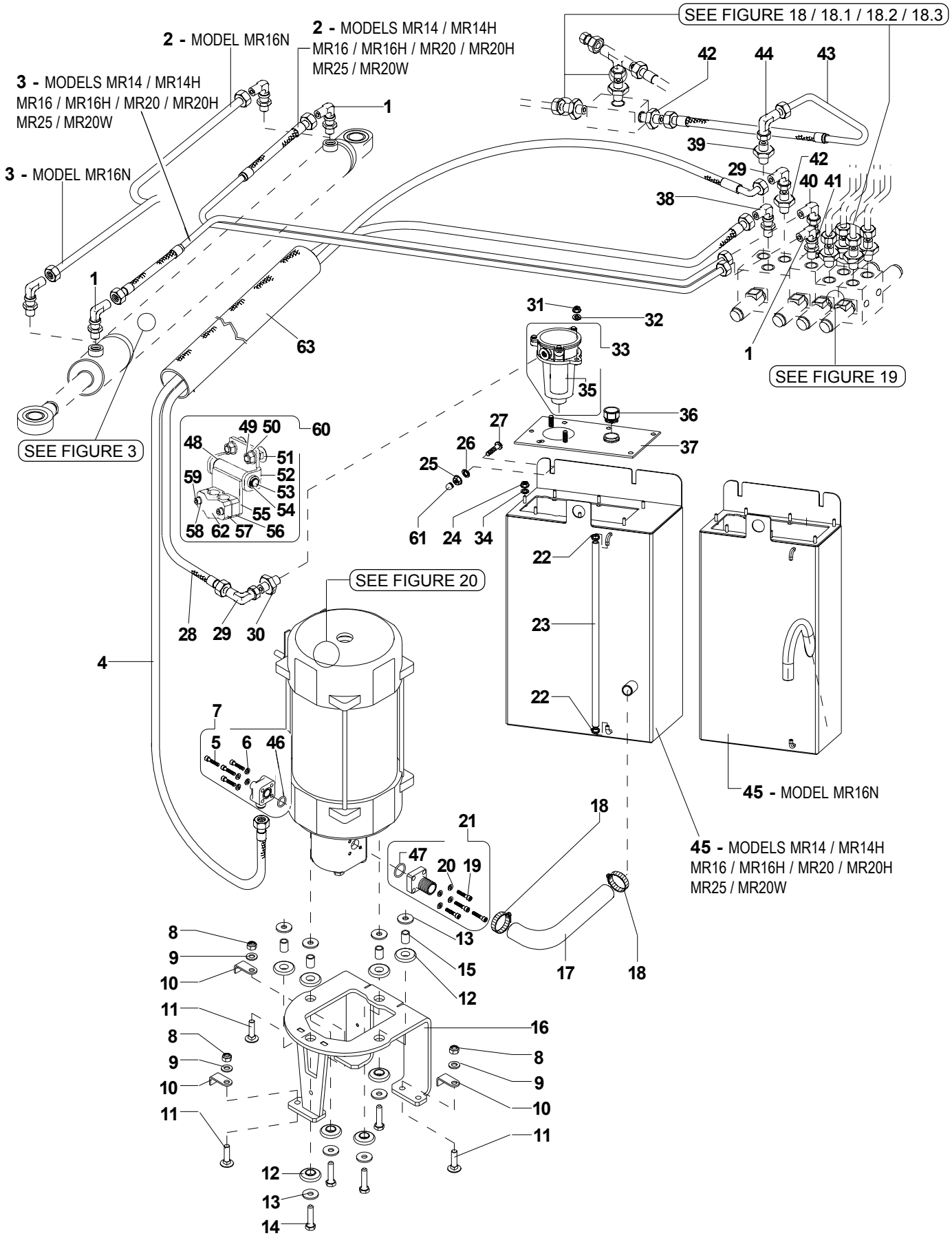
SEE FIGURE 18 / 18.1 / 18.2 / 18.3
2 - MODEL MR16N
2 - MODELS MR14 / MR14H
MR16 / MR16H / MR20 / MR20H
MR25 / MR20W
3 - MODELS MR14 / MR14H
MR16 / MR16H / MR20 / MR20H
MR25 / MR20W
3 - MODEL MR16N
SEE FIGURE 3
SEE FIGURE 19
SEE FIGURE 20
45 - MODEL MR16N
45 - MODELS MR14 / MR14H
MR16 / MR16H / MR20 / MR20H
MR25 / MR20W

LIFTING UNIT
GRUPPO SOLLEVAMENTO
GROUPE DE SOULEVEMENT
HEBE-GRUPPE
GRUPO ELEVACIÓN

FIGURE 17

REF.	PART NO.	Q.TY	DESCRIPTION	DESCRIZIONE	DESIGNATION	BENENNUNG	DENOMINACIONES	PART DETAILS
38	277262100	1	Fitting	Raccordo	Raccord	Verbindung	Racor	
39	277261500	1	Fitting	Raccordo	Raccord	Verbindung	Racor	
40	277263300	1	Fitting	Raccordo	Raccord	Verbindung	Racor	
41	277263400	1	Fitting	Raccordo	Raccord	Verbindung	Racor	
42	277275000	2	Fitting	Raccordo	Raccord	Verbindung	Racor	
43	580032733	1	Hose	Tubo	Tuyau	Schlauch	Tubo	For models MR14-14H-16-16H-20-20H-25-20W
43	580032734	1	Hose	Tubo	Tuyau	Schlauch	Tubo	For model MR16N
44	580032925	1	Fitting	Raccordo	Raccord	Verbindung	Racor	
45	580027480	1	Tank	Serbatoio	Reservoir	Tank	Depósito	For models MR14-14H-16-16H-20-20H-25-20W
45	580027490	1	Tank	Serbatoio	Reservoir	Tank	Depósito	For model MR16N
46	012823700	1	O-Ring	Anello OR	Bague OR	Ring OR	Anillo OR	
47	501802906	1	O-Ring	Anello OR	Bague OR	Ring OR	Anillo OR	
48	272096700	2	Bushing	Boccola	Douille	Büchse	Buje	
49	449015044	2	Nut	Dado	Écrou	Mutter	Tuerca	
50	449021006	2	Washer	Rondella	Rondelle	Unterlegscheibe	Arandela	
51	580033985	2	Screw	Vite	Vis	Schraube	Tornillo	
52	580027475	1	Support	Supporto	Support	Lager	Soporte	
53	580027479	1	Pin	Perno	Axe	Stift	Perno	
54	273086700	2	Snap ring	Seeger	Seeger	Seeger Ring	Anillo Seeger	
55	580027476	1	Hinge	Cerniera	Charnière	Gelenk	Bisagra	
56	580027478	1	Pipe support	Supporto tubi	Support tuyau	Schlauchlager	Soporte tubo	
57	580027477	1	Pipe support	Supporto tubi	Support tuyau	Schlauchlager	Soporte tubo	
58	449022018	2	Lock washer	Rosetta elastica	Rondelle souple	Federring	Arandela elastica	
59	932200909	2	Screw	Vite	Vis	Schraube	Tornillo	
60	580027474	1	Pipe support ass'y	Ass. supporto tubi	Ens. support tuyau	Satz-Schlauchlager	Grupo soporte tubo	
61	580034315	2	Plug	Tappo	Bouchon	Stopfen	Tapa	
62	580034477	1	Braket	Staffa	Support	Halter	Suporte	
63	580034480	1	Hose guard	Protezione tubi	Protection tuyau	Schlauchlager	Protección tubo	

From serial N° / *Da matr.* /
Du matr. / *Ab. seriennummer* /
Desde la matr. :

C849T01501Z

Until serial N° / *Fino a matr.* /
Jusq' matr. / *Bis zur serien-Nr.* /
Hasta la matr. :

With the exception of /
Ad esclusione di / À l'exclusion de /
Mit ausnahme von / Excepto :

Including / *Compreso* / Avec /
Einschließlich / Con :

LIFTING UNIT (BETA MAST)
GRUPPO SOLLEVAMENTO (MONTANTE BETA)
GROUPE DE SOULEVEMENT (MONTANT BETA)
HEBE-GRUPPE (PFOSTEN BETA)
GRUPO ELEVACIÓN (MONTANTE BETA) *FIGURE 18*

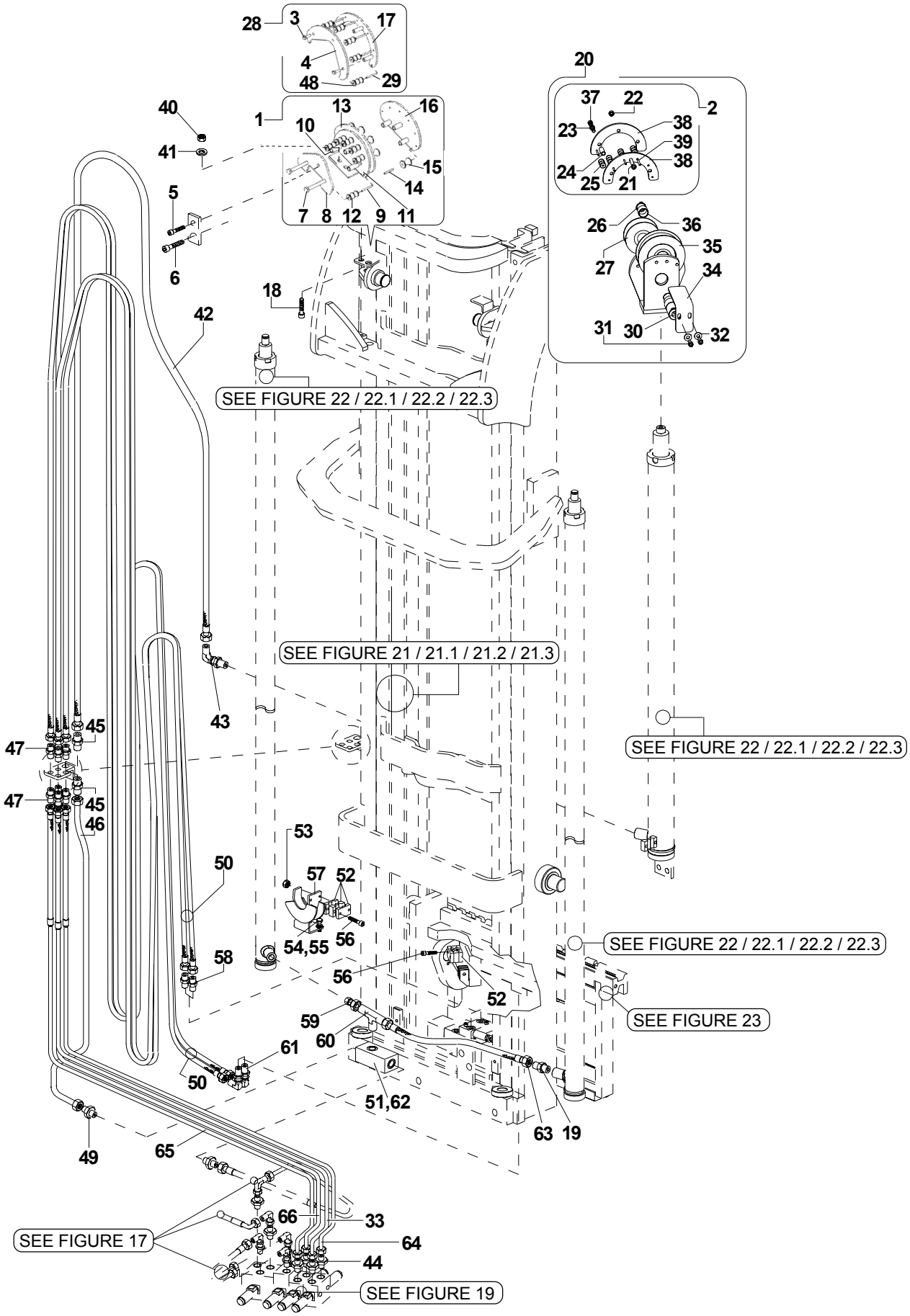

Yale

MODELS MR16 / MR14 / MR16N with Beta mast

LIFTING UNIT (BETA MAST)
GRUPPO SOLLEVAMENTO (MONTANTE BETA)
GROUPE DE SOULEVEMENT (MONTANT BETA)
HEBE-GRUPPE (PFOSTEN BETA)
GRUPO ELEVACIÓN (MONTANTE BETA)

FIGURE 18

REF.	PART NO.	Q.TY	DESCRIPTION	DESCRIZIONE	DESIGNATION	BENENNUNG	DENOMINACIONES	PART DETAILS
1	580033115	1	Sheave ass'y	Ass. carrucola	Ens. publie	Satz-Rollenzug	Grupo polea	
2	580033116	1	Sheave ass'y	Ass. carrucola	Ens. publie	Satz-Rollenzug	Grupo polea	
3	449001170	2	Screw	Vite	Vis	Schraube	Tornillo	
4	580028811	1	Plate	Piasta	Plaque	Plättchen	Plaqueta	
5	449001170	1	Screw	Vite	Vis	Schraube	Tornillo	
6	449001388	1	Screw	Vite	Vis	Schraube	Tornillo	
7	449001388	2	Screw	Vite	Vis	Schraube	Tornillo	
8	580033892	1	Front plate	Piasta	Plaque	Plättchen	Plaqueta	
9	580028812	6	Pin	Spina	Goupille	Stecker	Toma	
10	580028810	3	Spacer	Distanziale	Entretoise	Abstandhalter	Separador	
11	580028839	1	Middle part	Piasta	Plaque	Plättchen	Plaqueta	
12	277022800	6	Roller	Rullo	Galet	Walze	Perilla	
13	580028840	1	Middle plate	Piasta	Plaque	Plättchen	Plaqueta	
14	580033893	6	Pin	Spina	Goupille	Stecker	Toma	
15	277023000	6	Roller	Rullo	Galet	Walze	Perilla	
16	580028838	1	Rear weld	Piasta	Plaque	Plättchen	Plaqueta	
17	580028842	1	Rear weld	Piasta	Plaque	Plättchen	Plaqueta	
18	449001014	2	Screw	Vite	Vis	Schraube	Tornillo	
19	277264300	1	Fitting	Raccordo	Raccord	Verbindung	Racor	
20	580033117	1	Sheave ass'y	Ass. carrucola	Ens. publie	Satz-Rollenzug	Grupo polea	
21	932201911	1	Screw	Vite	Vis	Schraube	Tornillo	
22	449015098	1	Nut	Dado	Écrou	Mutter	Tuerca	
23	449021001	2	Washer	Rondella	Rondelle	Unterlegscheibe	Arandela	
24	580028810	3	Spacer	Distanziale	Entretoise	Abstandhalter	Separador	
25	277022800	6	Roller	Rullo	Galet	Walze	Perilla	
26	015915600	1	Snap ring	Seeger	Arretoir	Seeger-Ring	Anillo Seeger	
27	580028846	1	Hose sheave	Carrucola porta tubi	Poulie portetuyères	Winde Leitungsträger	Polea porta tubos	
28	580033118	1	Sheave ass'y	Ass. carrucola	Ens. publie	Satz-Rollenzug	Grupo polea	
29	580028812	6	Pin	Spina	Goupille	Stecker	Toma	
30	580028844	1	Shaft	Perno	Axe	Bolzen	Perno	
31	580022963	2	Screw	Vite	Vis	Schraube	Tornillo	
32	504226242	2	Washer	Rondella	Rondelle	Unterlegscheibe	Arandela	
33	580034223	1	Hose	Tubo	Tuyau	Schlauch	Tubo	For models MR14-16
33	580034224	1	Hose	Tubo	Tuyau	Schlauch	Tubo	For model MR16N
34	580028845	1	Bracket chain cover	Coperchio	Couvercle	Deckel	Tapa	
35	580029646	1	Sheave	Carrucola	Poublie	Rollenzug	Polea	
36	277065600	1	Bushing	Boccola	Bush	Lagerschale	Forro	
37	932201911	2	Screw	Vite	Vis	Schraube	Tornillo	
38	580028814	2	Plate	Piasta	Plaque	Plättchen	Plaqueta	
39	580028812	6	Pin	Spina	Goupille	Stecker	Toma	
40	449015098	2	Nut	Dado	Ecrou	Mutter	Tuerca	
41	504226242	2	Washer	Rondella	Rondelle	Unterlegscheibe	Arandela	
42	580034174	1	Hose	Tubo	Tuyau	Schlauch	Tubo	h3=mm4476
42	580034178	1	Hose	Tubo	Tuyau	Schlauch	Tubo	h3=mm4626
42	580034179	1	Hose	Tubo	Tuyau	Schlauch	Tubo	h3=mm4776
42	580034180	1	Hose	Tubo	Tuyau	Schlauch	Tubo	h3=mm4926
42	580034181	1	Hose	Tubo	Tuyau	Schlauch	Tubo	h3=mm5076
42	580034182	1	Hose	Tubo	Tuyau	Schlauch	Tubo	h3=mm5226
42	580034183	1	Hose	Tubo	Tuyau	Schlauch	Tubo	h3=mm5376
42	580034184	1	Hose	Tubo	Tuyau	Schlauch	Tubo	h3=mm5526
42	580034185	1	Hose	Tubo	Tuyau	Schlauch	Tubo	h3=mm5676
42	580034186	1	Hose	Tubo	Tuyau	Schlauch	Tubo	h3=mm5826
42	580034187	1	Hose	Tubo	Tuyau	Schlauch	Tubo	h3=mm5876
42	580034188	1	Hose	Tubo	Tuyau	Schlauch	Tubo	h3=mm5976
42	580034189	1	Hose	Tubo	Tuyau	Schlauch	Tubo	h3=mm6026
42	580034190	1	Hose	Tubo	Tuyau	Schlauch	Tubo	h3=mm6126
42	580034191	1	Hose	Tubo	Tuyau	Schlauch	Tubo	h3=mm6176
42	580034187	1	Hose	Tubo	Tuyau	Schlauch	Tubo	h3=mm6276
42	580034192	1	Hose	Tubo	Tuyau	Schlauch	Tubo	h3=mm6326
42	580034189	1	Hose	Tubo	Tuyau	Schlauch	Tubo	h3=mm6426

From serial N° / *Da matr.* / Du matr. / *Ab. seriennummer* / Desde la matr. :	Until serial N° / *Fino a matr.* / Jusq' matr. / *Bis zur serien-Nr.* / Hasta la matr. :	With the exception of / *Ad esclusione di* / À l'exclusion de / *Mit ausnahme von* / Excepto :	Including / *Compreso* / Avec / *Einschließlich* / Con :
C849T01501Z			

LIFTING UNIT (BETA MAST)
GRUPPO SOLLEVAMENTO (MONTANTE BETA)
GROUPE DE SOULEVEMENT (MONTANT BETA)
HEBE-GRUPPE (PFOSTEN BETA)
GRUPO ELEVACIÓN (MONTANTE BETA)

FIGURE 18

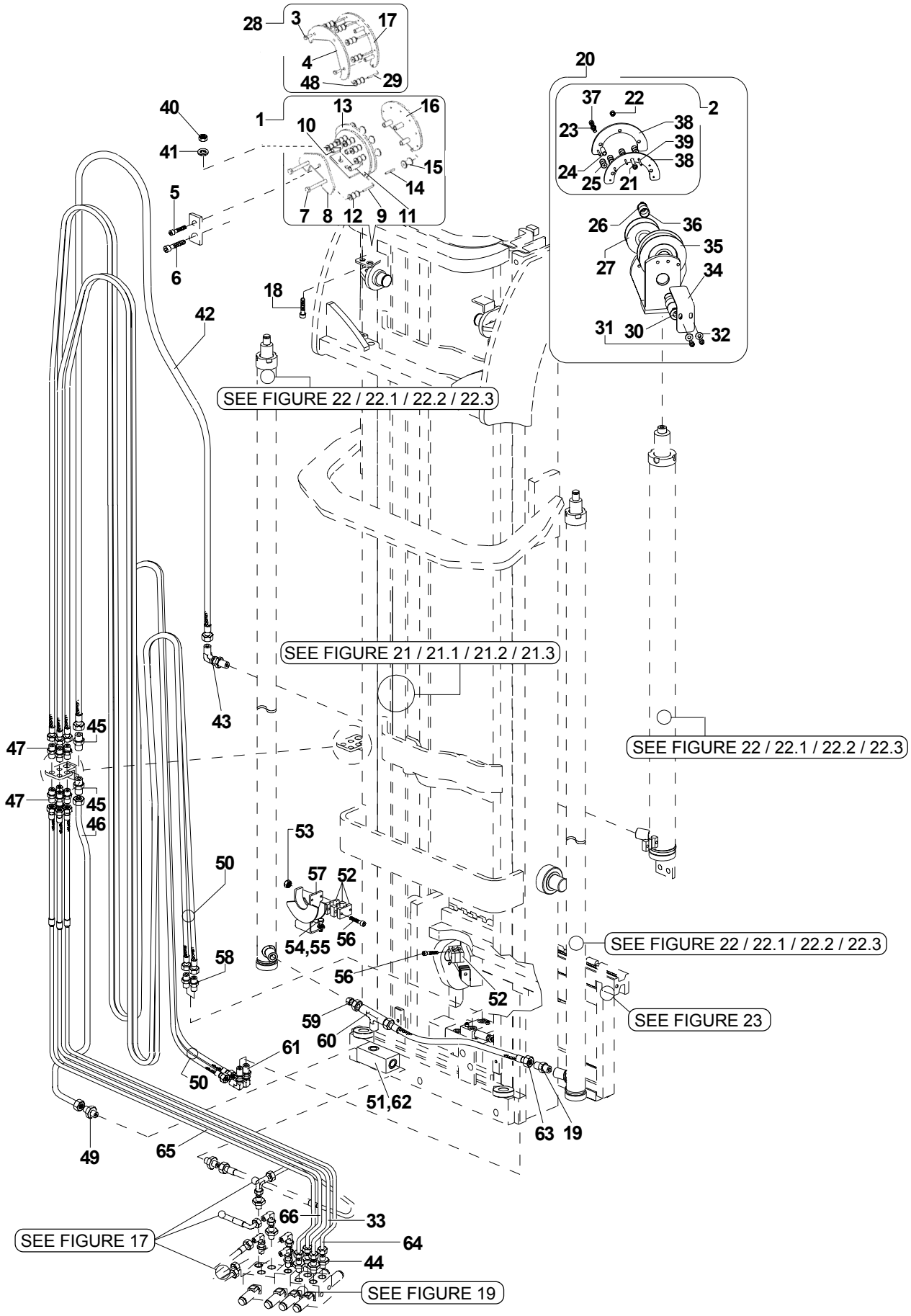

Yale

MODELS MR16 / MR14 / MR16N with Beta mast

LIFTING UNIT (BETA MAST)
GRUPPO SOLLEVAMENTO (MONTANTE BETA)
GROUPE DE SOULEVEMENT (MONTANT BETA)
HEBE-GRUPPE (PFOSTEN BETA)
GRUPO ELEVACIÓN (MONTANTE BETA)

FIGURE 18

REF.	PART NO.	Q.TY	DESCRIPTION	DESCRIZIONE	DESIGNATION	BENENNUNG	DENOMINACIONES	PART DETAILS
42	580034193	1	Hose	Tubo	Tuyau	Schlauch	Tubo	h3=mm6476
42	580034191	1	Hose	Tubo	Tuyau	Schlauch	Tubo	h3=mm6576
42	580034194	1	Hose	Tubo	Tuyau	Schlauch	Tubo	h3=mm6626
42	580034192	1	Hose	Tubo	Tuyau	Schlauch	Tubo	h3=mm6726
42	580034195	1	Hose	Tubo	Tuyau	Schlauch	Tubo	h3=mm6776
42	580034193	1	Hose	Tubo	Tuyau	Schlauch	Tubo	h3=mm6876
42	580034194	1	Hose	Tubo	Tuyau	Schlauch	Tubo	h3=mm7026
42	580034195	1	Hose	Tubo	Tuyau	Schlauch	Tubo	h3=mm7176
43	277262100	1	Fitting	Raccordo	Raccord	Verbindung	Racor	
44	580032926	4	Fitting	Raccordo	Raccord	Verbindung	Racor	
45	056056700	2	Fitting	Raccordo	Raccord	Verbindung	Racor	
46	580032322	1	Hose	Tubo	Tuyau	Schlauch	Tubo	
47	013401400	8	Fitting	Raccordo	Raccord	Verbindung	Racor	
48	277022800	6	Roller	Rullo	Galet	Walze	Perilla	
49	277275000	1	Fitting	Raccordo	Raccord	Verbindung	Racor	
50	580034196	2	Twin hose	Tubo gemellato	Tuyau jumeau	Doppelschlauch	Tubo gemelo	h3=mm4476
50	580034197	2	Twin hose	Tubo gemellato	Tuyau jumeau	Doppelschlauch	Tubo gemelo	h3=mm4626
50	580034198	2	Twin hose	Tubo gemellato	Tuyau jumeau	Doppelschlauch	Tubo gemelo	h3=mm4776
50	580034199	2	Twin hose	Tubo gemellato	Tuyau jumeau	Doppelschlauch	Tubo gemelo	h3=mm4926
50	580034200	2	Twin hose	Tubo gemellato	Tuyau jumeau	Doppelschlauch	Tubo gemelo	h3=mm5076
50	580034201	2	Twin hose	Tubo gemellato	Tuyau jumeau	Doppelschlauch	Tubo gemelo	h3=mm5226
50	580034202	2	Twin hose	Tubo gemellato	Tuyau jumeau	Doppelschlauch	Tubo gemelo	h3=mm5376
50	580034203	2	Twin hose	Tubo gemellato	Tuyau jumeau	Doppelschlauch	Tubo gemelo	h3=mm5526
50	580034204	2	Twin hose	Tubo gemellato	Tuyau jumeau	Doppelschlauch	Tubo gemelo	h3=mm5676
50	580034205	2	Twin hose	Tubo gemellato	Tuyau jumeau	Doppelschlauch	Tubo gemelo	h3=mm5826
50	580034206	2	Twin hose	Tubo gemellato	Tuyau jumeau	Doppelschlauch	Tubo gemelo	h3=mm5876
50	580034207	2	Twin hose	Tubo gemellato	Tuyau jumeau	Doppelschlauch	Tubo gemelo	h3=mm5976
50	580034208	2	Twin hose	Tubo gemellato	Tuyau jumeau	Doppelschlauch	Tubo gemelo	h3=mm6026
50	580034209	2	Twin hose	Tubo gemellato	Tuyau jumeau	Doppelschlauch	Tubo gemelo	h3=mm6126
50	580034210	2	Twin hose	Tubo gemellato	Tuyau jumeau	Doppelschlauch	Tubo gemelo	h3=mm6176
50	580034206	2	Twin hose	Tubo gemellato	Tuyau jumeau	Doppelschlauch	Tubo gemelo	h3=mm6276
50	580034211	2	Twin hose	Tubo gemellato	Tuyau jumeau	Doppelschlauch	Tubo gemelo	h3=mm6326
50	580034208	2	Twin hose	Tubo gemellato	Tuyau jumeau	Doppelschlauch	Tubo gemelo	h3=mm6426
50	580034212	2	Twin hose	Tubo gemellato	Tuyau jumeau	Doppelschlauch	Tubo gemelo	h3=mm6476
50	580034210	2	Twin hose	Tubo gemellato	Tuyau jumeau	Doppelschlauch	Tubo gemelo	h3=mm6576
50	580034213	2	Twin hose	Tubo gemellato	Tuyau jumeau	Doppelschlauch	Tubo gemelo	h3=mm6626
50	580034211	2	Twin hose	Tubo gemellato	Tuyau jumeau	Doppelschlauch	Tubo gemelo	h3=mm6726
50	580034214	2	Twin hose	Tubo gemellato	Tuyau jumeau	Doppelschlauch	Tubo gemelo	h3=mm6776
50	580034212	2	Twin hose	Tubo gemellato	Tuyau jumeau	Doppelschlauch	Tubo gemelo	h3=mm6876
50	580034213	2	Twin hose	Tubo gemellato	Tuyau jumeau	Doppelschlauch	Tubo gemelo	h3=mm7026
50	580034214	2	Twin hose	Tubo gemellato	Tuyau jumeau	Doppelschlauch	Tubo gemelo	h3=mm7176
51	580031187	1	Valve	Valvola	Soupape	Ventil	Válvula	
52	580033967	2	Hose clamp	Fascetta	Sangle	Riemen	Brida	
53	449015135	2	Lock nut	Dado	écrou	Mutter	Tuerca	
54	449001415	2	Screw	Vite	Vis	Schraube	Tornillo	
55	504226242	2	Washer	Rondella	Rondelle	Unterlegscheibe	Arandela	
56	932107911	4	Screw	Vite	Vis	Schraube	Tornillo	
57	580023180	1	Braket	Staffa	Etrier	Bügel	Estribo	
58	277842500	2	Fitting	Raccordo	Raccord	Verbindung	Racor	
59	580031517	1	Fitting	Raccordo	Raccord	Verbindung	Racor	
60	580031516	1	Fitting	Raccordo	Raccord	Verbindung	Racor	
61	580033865	2	Fitting	Raccordo	Raccord	Verbindung	Racor	
62	580033894	1	Hydraulic block	Blocchetto	Blocage	Verteilerstück	Bloque	
63	580034398	1	Hose	Tubo	Tuyau	Schlauch	Tubo	
64	580034216	1	Hose	Tubo	Tuyau	Schlauch	Tubo	For models MR14-16
64	580034218	1	Hose	Tubo	Tuyau	Schlauch	Tubo	For model MR16N
65	580034219	1	Hose	Tubo	Tuyau	Schlauch	Tubo	For models MR14-16
65	580034220	1	Hose	Tubo	Tuyau	Schlauch	Tubo	For model MR16N
66	580034221	1	Hose	Tubo	Tuyau	Schlauch	Tubo	For models MR14-16
66	580034222	1	Hose	Tubo	Tuyau	Schlauch	Tubo	For model MR16N

From serial N° / *Da matr.* / Du matr. / *Ab. seriennummer* / Desde la matr. :	Until serial N° / *Fino a matr.* / Jusq' matr. / *Bis zur serien-Nr.* / Hasta la matr. :	With the exception of / *Ad esclusione di* / À l'exclusion de / *Mit ausnahme von* / Excepto :	Including / *Compreso* / Avec / *Einschließlich* / Con :
C849T01501Z			

LIFTING UNIT (HE140L MAST)
GRUPPO SOLLEVAMENTO (MONTANTE HE140L)
GROUPE DE SOULEVEMENT (MONTANT HE140L)
HEBE-GRUPPE (PFOSTEN HE140L)
GRUPO ELEVACIÓN (MONTANTE HE140L) *FIGURE 18.1*

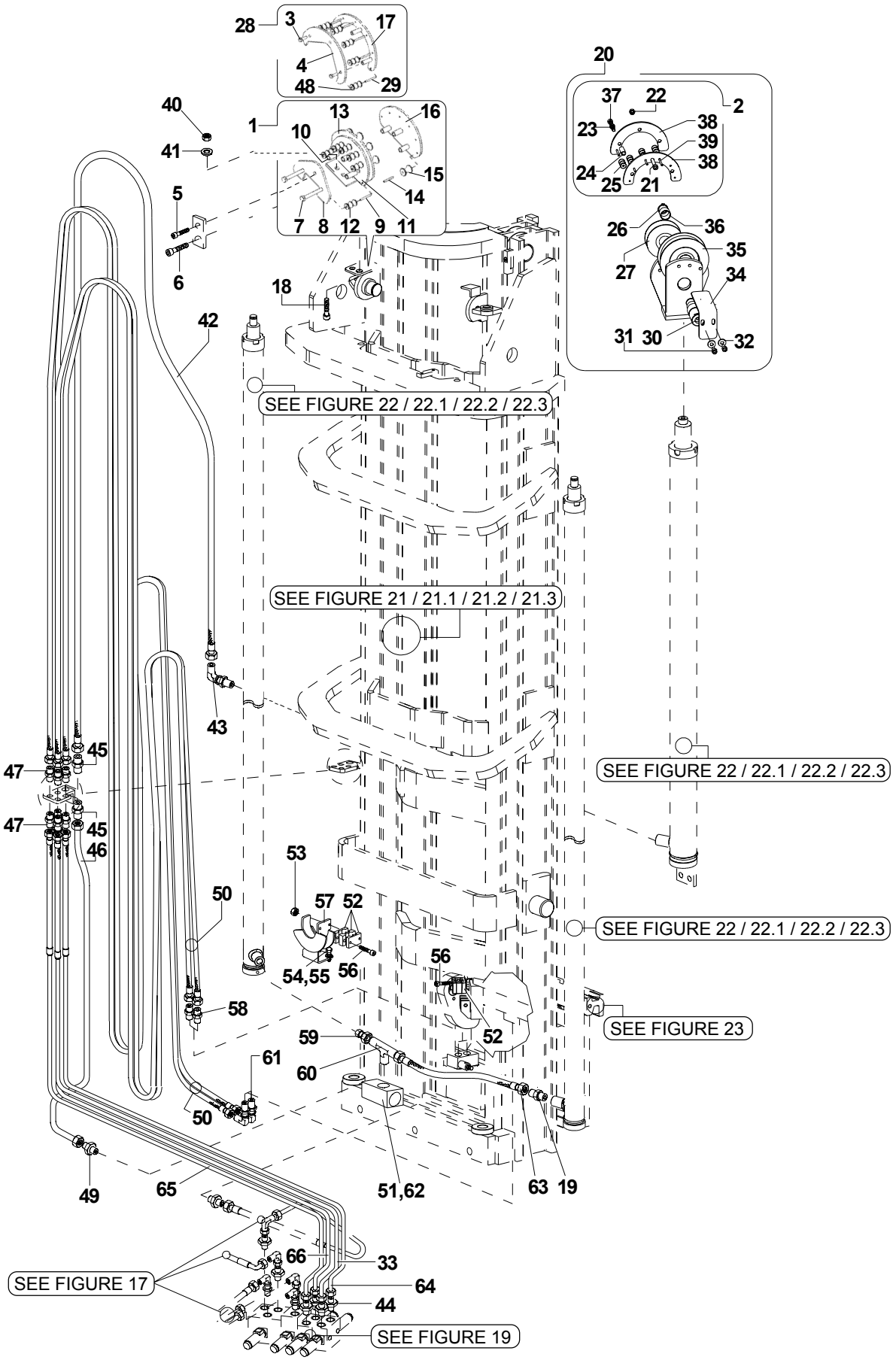

Yale

MODELS MR14H / MR20 / MR16N with HE140L mast

LIFTING UNIT (HE140L MAST)
GRUPPO SOLLEVAMENTO (MONTANTE HE140L)
GROUPE DE SOULEVEMENT (MONTANT HE140L)
HEBE-GRUPPE (PFOSTEN HE140L)
GRUPO ELEVACIÓN (MONTANTE HE140L) *FIGURE 18.1*

REF.	PART NO.	Q.TY	DESCRIPTION	DESCRIZIONE	DESIGNATION	BENENNUNG	DENOMINACIONES	PART DETAILS
1	580033115	1	Sheave ass'y	Ass. carrucola	Ens. publie	Satz-Rollenzug	Grupo polea	
2	580033116	1	Sheave ass'y	Ass. carrucola	Ens. publie	Satz-Rollenzug	Grupo polea	
3	449001170	2	Screw	Vite	Vis	Schraube	Tornillo	
4	580028811	1	Plate	Piasta	Plaque	Plättchen	Plaqueta	
5	449001170	1	Screw	Vite	Vis	Schraube	Tornillo	
6	449001388	1	Screw	Vite	Vis	Schraube	Tornillo	
7	449001388	2	Screw	Vite	Vis	Schraube	Tornillo	
8	580033892	1	Front plate	Piasta	Plaque	Plättchen	Plaqueta	
9	580028812	6	Pin	Spina	Goupille	Stecker	Toma	
10	580028810	3	Spacer	Distanziale	Entretoise	Abstandhalter	Separador	
11	580028839	1	Middle part	Piasta	Plaque	Plättchen	Plaqueta	
12	277022800	6	Roller	Rullo	Galet	Walze	Perilla	
13	580028840	1	Middle plate	Piasta	Plaque	Plättchen	Plaqueta	
14	580033893	6	Pin	Spina	Goupille	Stecker	Toma	
15	277023000	6	Roller	Rullo	Galet	Walze	Perilla	
16	580028838	1	Rear weld	Piasta	Plaque	Plättchen	Plaqueta	
17	580028842	1	Rear weld	Piasta	Plaque	Plättchen	Plaqueta	
18	449001014	2	Screw	Vite	Vis	Schraube	Tornillo	
19	277264300	1	Fitting	Raccordo	Raccord	Verbindung	Racor	
20	580033117	1	Sheave ass'y	Ass. carrucola	Ens. publie	Satz-Rollenzug	Grupo polea	
21	932201911	1	Screw	Vite	Vis	Schraube	Tornillo	
22	449015098	1	Nut	Dado	Écrou	Mutter	Tuerca	
23	449021001	2	Washer	Rondella	Rondelle	Unterlegscheibe	Arandela	
24	580028810	3	Spacer	Distanziale	Entretoise	Abstandhalter	Separador	
25	277022800	6	Roller	Rullo	Galet	Walze	Perilla	
26	015915600	1	Snap ring	Seeger	Arretoir	Seeger-Ring	Anillo Seeger	
27	580028846	1	Hose sheave	Carrucola porta tubi	Poulie portetuyères	Winde Leitungsträger	Polea porta tubos	
28	580033118	1	Sheave ass'y	Ass. carrucola	Ens. publie	Satz-Rollenzug	Grupo polea	
29	580028812	6	Pin	Spina	Goupille	Stecker	Toma	
30	580028844	1	Shaft	Perno	Axe	Bolzen	Perno	
31	580022963	2	Screw	Vite	Vis	Schraube	Tornillo	
32	504226242	2	Washer	Rondella	Rondelle	Unterlegscheibe	Arandela	
33	580034223	1	Hose	Tubo	Tuyau	Schlauch	Tubo	For models MR14H-20
33	580034224	1	Hose	Tubo	Tuyau	Schlauch	Tubo	For model MR16N
34	580028845	1	Bracket chain cover	Coperchio	Couvercle	Deckel	Tapa	
35	580029646	1	Sheave	Carrucola	Poublie	Rollenzug	Polea	
36	277065600	1	Bushing	Boccola	Bush	Lagerschale	Forro	
37	932201911	2	Screw	Vite	Vis	Schraube	Tornillo	
38	580028814	2	Plate	Piasta	Plaque	Plättchen	Plaqueta	
39	580028812	6	Pin	Spina	Goupille	Stecker	Toma	
40	449015098	2	Nut	Dado	Ecrou	Mutter	Tuerca	
41	504226242	2	Washer	Rondella	Rondelle	Unterlegscheibe	Arandela	
42	580034174	1	Hose	Tubo	Tuyau	Schlauch	Tubo	h3=mm4476
42	580034178	1	Hose	Tubo	Tuyau	Schlauch	Tubo	h3=mm4626
42	580034179	1	Hose	Tubo	Tuyau	Schlauch	Tubo	h3=mm4776
42	580034180	1	Hose	Tubo	Tuyau	Schlauch	Tubo	h3=mm4926
42	580034181	1	Hose	Tubo	Tuyau	Schlauch	Tubo	h3=mm5076

From serial N° / *Da matr.* / Du matr. / *Ab. seriennummer* / Desde la matr. :	Until serial N° / *Fino a matr.* / Jusq' matr. / *Bis zur serien-Nr.* / Hasta la matr. :	With the exception of / *Ad esclusione di* / À l'exclusion de / *Mit ausnahme von* / Excepto :	Including / *Compreso* / Avec / *Einschließlich* / Con :
C849T01501Z			

LIFTING UNIT (HE140L MAST)
GRUPPO SOLLEVAMENTO (MONTANTE HE140L)
GROUPE DE SOULEVEMENT (MONTANT HE140L)
HEBE-GRUPPE (PFOSTEN HE140L)
GRUPO ELEVACIÓN (MONTANTE HE140L) *FIGURE 18.1*

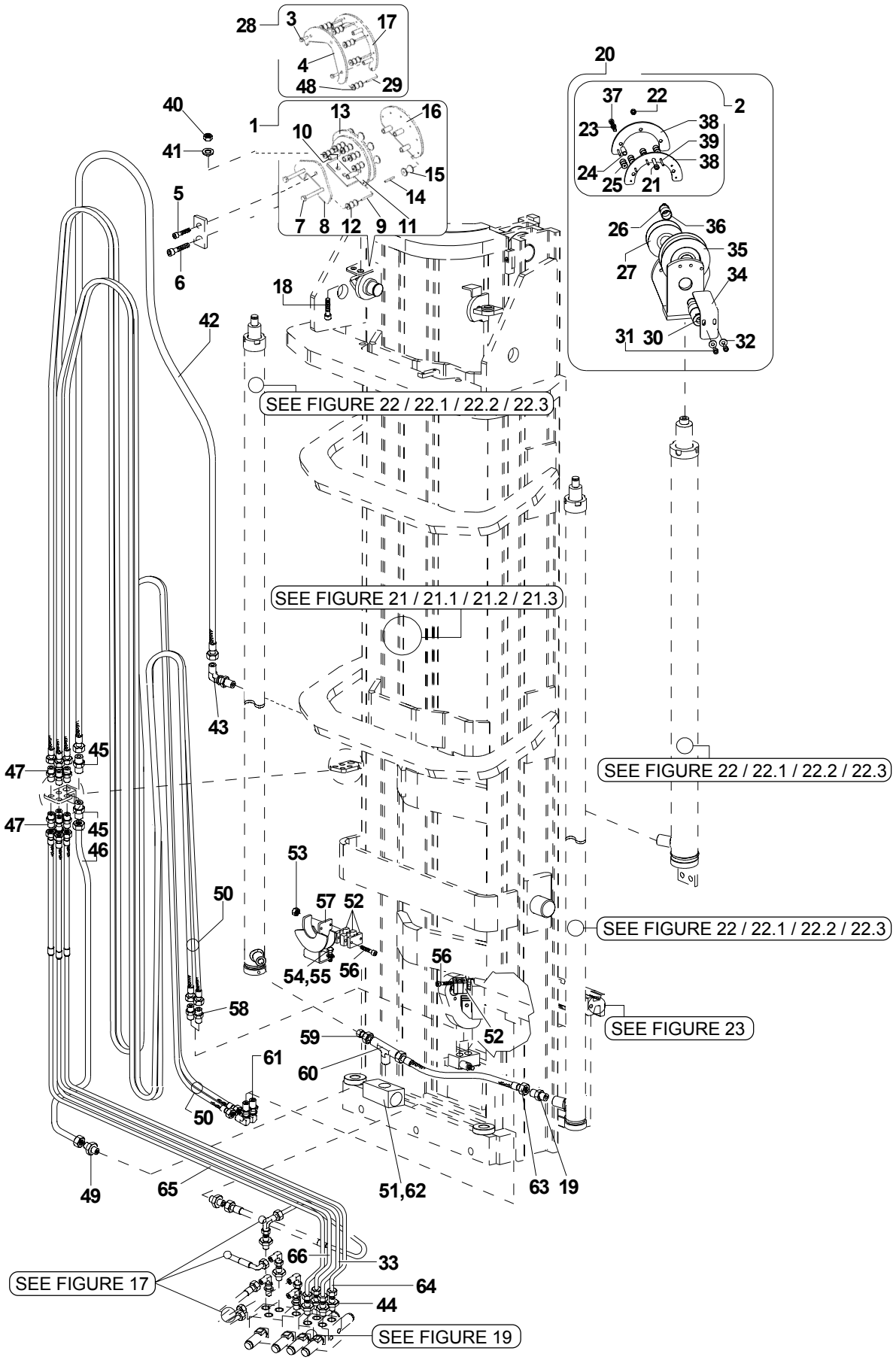

Yale

MODELS MR14H / MR20 / MR16N with HE140L mast

LIFTING UNIT (HE140L MAST)
GRUPPO SOLLEVAMENTO (MONTANTE HE140L)
GROUPE DE SOULEVEMENT (MONTANT HE140L)
HEBE-GRUPPE (PFOSTEN HE140L)
GRUPO ELEVACIÓN (MONTANTE HE140L) *FIGURE 18.1*

REF.	PART NO.	Q.TY	DESCRIPTION	DESCRIZIONE	DESIGNATION	BENENNUNG	DENOMINACIONES	PART DETAILS
42	580034182	1	Hose	Tubo	Tuyau	Schlauch	Tubo	h3=mm5226
42	580034183	1	Hose	Tubo	Tuyau	Schlauch	Tubo	h3=mm5376
42	580034184	1	Hose	Tubo	Tuyau	Schlauch	Tubo	h3=mm5526
42	580034185	1	Hose	Tubo	Tuyau	Schlauch	Tubo	h3=mm5676
42	580034186	1	Hose	Tubo	Tuyau	Schlauch	Tubo	h3=mm5826
42	580034188	1	Hose	Tubo	Tuyau	Schlauch	Tubo	h3=mm5976
42	580034187	1	Hose	Tubo	Tuyau	Schlauch	Tubo	h3=mm6126
42	580034187	1	Hose	Tubo	Tuyau	Schlauch	Tubo	h3=mm6276
42	580034189	1	Hose	Tubo	Tuyau	Schlauch	Tubo	h3=mm6426
42	580034191	1	Hose	Tubo	Tuyau	Schlauch	Tubo	h3=mm6576
42	580034192	1	Hose	Tubo	Tuyau	Schlauch	Tubo	h3=mm6726
42	580034193	1	Hose	Tubo	Tuyau	Schlauch	Tubo	h3=mm6876
42	580034194	1	Hose	Tubo	Tuyau	Schlauch	Tubo	h3=mm7026-channel lenght mm2840
42	580034225	1	Hose	Tubo	Tuyau	Schlauch	Tubo	h3=mm7026-channel lenght mm2940
42	580034195	1	Hose	Tubo	Tuyau	Schlauch	Tubo	h3=mm7176-channel lenght mm2890
42	580034226	1	Hose	Tubo	Tuyau	Schlauch	Tubo	h3=mm7176-channel lenght mm2990
42	580034227	1	Hose	Tubo	Tuyau	Schlauch	Tubo	h3=mm7326
42	580034228	1	Hose	Tubo	Tuyau	Schlauch	Tubo	h3=mm7476
42	580034229	1	Hose	Tubo	Tuyau	Schlauch	Tubo	h3=mm7626
42	580034230	1	Hose	Tubo	Tuyau	Schlauch	Tubo	h3=mm7776
42	580034231	1	Hose	Tubo	Tuyau	Schlauch	Tubo	h3=mm7926
42	580034232	1	Hose	Tubo	Tuyau	Schlauch	Tubo	h3=mm8076
42	580034233	1	Hose	Tubo	Tuyau	Schlauch	Tubo	h3=mm8226
42	580034234	1	Hose	Tubo	Tuyau	Schlauch	Tubo	h3=mm8276
42	580034235	1	Hose	Tubo	Tuyau	Schlauch	Tubo	h3=mm8376
42	580034236	1	Hose	Tubo	Tuyau	Schlauch	Tubo	h3=mm8426
42	580034237	1	Hose	Tubo	Tuyau	Schlauch	Tubo	h3=mm8526
42	580034241	1	Hose	Tubo	Tuyau	Schlauch	Tubo	h3=mm8576
42	580034242	1	Hose	Tubo	Tuyau	Schlauch	Tubo	h3=mm8726
43	277262100	1	Fitting	Raccordo	Raccord	Verbindung	Racor	
44	580032926	4	Fitting	Raccordo	Raccord	Verbindung	Racor	
45	056056700	2	Fitting	Raccordo	Raccord	Verbindung	Racor	
46	580032322	1	Hose	Tubo	Tuyau	Schlauch	Tubo	
47	056056700	8	Fitting	Raccordo	Raccord	Verbindung	Racor	
48	277022800	6	Roller	Rullo	Galet	Walze	Perilla	
49	277275000	1	Fitting	Raccordo	Raccord	Verbindung	Racor	
50	580034196	2	Twin hose	Tubo gemellato	Tuyau jumeau	Doppelschlauch	Tubo gemelo	h3=mm4476
50	580034197	2	Twin hose	Tubo gemellato	Tuyau jumeau	Doppelschlauch	Tubo gemelo	h3=mm4626
50	580034198	2	Twin hose	Tubo gemellato	Tuyau jumeau	Doppelschlauch	Tubo gemelo	h3=mm4776
50	580034199	2	Twin hose	Tubo gemellato	Tuyau jumeau	Doppelschlauch	Tubo gemelo	h3=mm4926
50	580034200	2	Twin hose	Tubo gemellato	Tuyau jumeau	Doppelschlauch	Tubo gemelo	h3=mm5076
50	580034201	2	Twin hose	Tubo gemellato	Tuyau jumeau	Doppelschlauch	Tubo gemelo	h3=mm5226
50	580034202	2	Twin hose	Tubo gemellato	Tuyau jumeau	Doppelschlauch	Tubo gemelo	h3=mm5376
50	580034203	2	Twin hose	Tubo gemellato	Tuyau jumeau	Doppelschlauch	Tubo gemelo	h3=mm5526
50	580034204	2	Twin hose	Tubo gemellato	Tuyau jumeau	Doppelschlauch	Tubo gemelo	h3=mm5676
50	580034205	2	Twin hose	Tubo gemellato	Tuyau jumeau	Doppelschlauch	Tubo gemelo	h3=mm5826
50	580034207	2	Twin hose	Tubo gemellato	Tuyau jumeau	Doppelschlauch	Tubo gemelo	h3=mm5976
50	580034209	2	Twin hose	Tubo gemellato	Tuyau jumeau	Doppelschlauch	Tubo gemelo	h3=mm6126

From serial N° / *Da matr.* / Du matr. / *Ab. seriennummer* / Desde la matr. :	Until serial N° / *Fino a matr.* / Jusq' matr. / *Bis zur serien-Nr.* / Hasta la matr. :	With the exception of / *Ad esclusione di* / À l'exclusion de / *Mit ausnahme von* / Excepto :	Including / *Compreso* / Avec / *Einschließlich* / Con :
C849T01501Z			

LIFTING UNIT (HE140L MAST)
GRUPPO SOLLEVAMENTO (MONTANTE HE140L)
GROUPE DE SOULEVEMENT (MONTANT HE140L)
HEBE-GRUPPE (PFOSTEN HE140L)
GRUPO ELEVACIÓN (MONTANTE HE140L) *FIGURE 18.1*

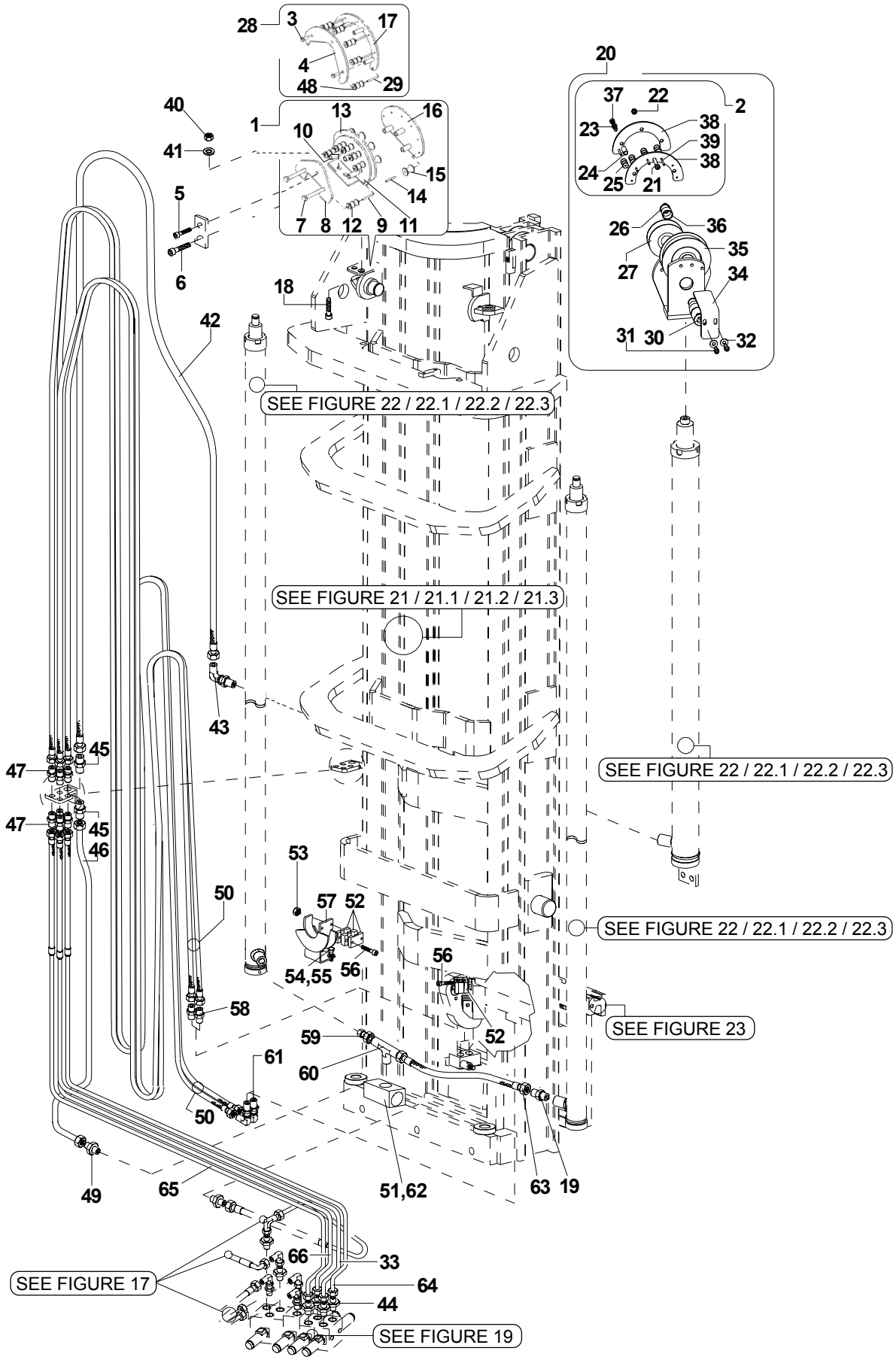

LIFTING UNIT (HE140L MAST)
GRUPPO SOLLEVAMENTO (MONTANTE HE140L)
GROUPE DE SOULEVEMENT (MONTANT HE140L)
HEBE-GRUPPE (PFOSTEN HE140L)
GRUPO ELEVACIÓN (MONTANTE HE140L) *FIGURE 18.1*

REF.	PART NO.	Q.TY	DESCRIPTION	DESCRIZIONE	DESIGNATION	BENENNUNG	DENOMINACIONES	PART DETAILS
50	580034206	2	Twin hose	Tubo gemellato	Tuyau jumeau	Doppelschlauch	Tubo gemelo	h3=mm6276
50	580034208	2	Twin hose	Tubo gemellato	Tuyau jumeau	Doppelschlauch	Tubo gemelo	h3=mm6426
50	580034210	2	Twin hose	Tubo gemellato	Tuyau jumeau	Doppelschlauch	Tubo gemelo	h3=mm6576
50	580034211	2	Twin hose	Tubo gemellato	Tuyau jumeau	Doppelschlauch	Tubo gemelo	h3=mm6726
50	580034212	2	Twin hose	Tubo gemellato	Tuyau jumeau	Doppelschlauch	Tubo gemelo	h3=mm6876
50	580034213	2	Twin hose	Tubo gemellato	Tuyau jumeau	Doppelschlauch	Tubo gemelo	h3=mm7026-channel lenght mm2840
50	580034243	2	Twin hose	Tubo gemellato	Tuyau jumeau	Doppelschlauch	Tubo gemelo	h3=mm7026-channel lenght mm2940
50	580034214	2	Twin hose	Tubo gemellato	Tuyau jumeau	Doppelschlauch	Tubo gemelo	h3=mm7176-channel lenght mm2890
50	580034244	2	Twin hose	Tubo gemellato	Tuyau jumeau	Doppelschlauch	Tubo gemelo	h3=mm7176-channel lenght mm2990
50	580034245	2	Twin hose	Tubo gemellato	Tuyau jumeau	Doppelschlauch	Tubo gemelo	h3=mm7326
50	580034246	2	Twin hose	Tubo gemellato	Tuyau jumeau	Doppelschlauch	Tubo gemelo	h3=mm7476
50	580034247	2	Twin hose	Tubo gemellato	Tuyau jumeau	Doppelschlauch	Tubo gemelo	h3=mm7626
50	580034248	2	Twin hose	Tubo gemellato	Tuyau jumeau	Doppelschlauch	Tubo gemelo	h3=mm7776
50	580034249	2	Twin hose	Tubo gemellato	Tuyau jumeau	Doppelschlauch	Tubo gemelo	h3=mm7926
50	580034250	2	Twin hose	Tubo gemellato	Tuyau jumeau	Doppelschlauch	Tubo gemelo	h3=mm8076
50	580034251	2	Twin hose	Tubo gemellato	Tuyau jumeau	Doppelschlauch	Tubo gemelo	h3=mm8226
50	580034252	2	Twin hose	Tubo gemellato	Tuyau jumeau	Doppelschlauch	Tubo gemelo	h3=mm8276
50	580034253	2	Twin hose	Tubo gemellato	Tuyau jumeau	Doppelschlauch	Tubo gemelo	h3=mm8376
50	580034254	2	Twin hose	Tubo gemellato	Tuyau jumeau	Doppelschlauch	Tubo gemelo	h3=mm8426
50	580034255	2	Twin hose	Tubo gemellato	Tuyau jumeau	Doppelschlauch	Tubo gemelo	h3=mm8526
50	580034256	2	Twin hose	Tubo gemellato	Tuyau jumeau	Doppelschlauch	Tubo gemelo	h3=mm8576
50	580034257	2	Twin hose	Tubo gemellato	Tuyau jumeau	Doppelschlauch	Tubo gemelo	h3=mm8726
51	580031187	1	Valve	Valvola	Soupape	Ventil	Válvula	
52	580033967	2	Hose clamp	Fascetta	Sangle	Riemen	Brida	
53	449015135	2	Lock nut	Dado	écrou	Mutter	Tuerca	
54	449001415	2	Screw	Vite	Vis	Schraube	Tornillo	
55	504226242	2	Washer	Rondella	Rondelle	Unterlegscheibe	Arandela	
56	932107911	4	Screw	Vite	Vis	Schraube	Tornillo	
57	580023180	1	Braket	Staffa	Etrier	Bügel	Estribo	
58	277842500	2	Fitting	Raccordo	Raccord	Verbindung	Racor	
59	580031517	1	Fitting	Raccordo	Raccord	Verbindung	Racor	
60	580031516	1	Fitting	Raccordo	Raccord	Verbindung	Racor	
61	580033865	2	Fitting	Raccordo	Raccord	Verbindung	Racor	
62	580033894	1	Hydraulic block	Blocchetto	Blocage	Verteilerstück	Bloque	
63	580034215	1	Hose	Tubo	Tuyau	Schlauch	Tubo	
64	580034216	1	Hose	Tubo	Tuyau	Schlauch	Tubo	For models MR14H-20
64	580034218	1	Hose	Tubo	Tuyau	Schlauch	Tubo	For model MR16N
65	580034219	1	Hose	Tubo	Tuyau	Schlauch	Tubo	For models MR14H-20
65	580034220	1	Hose	Tubo	Tuyau	Schlauch	Tubo	For model MR16N
66	580034221	1	Hose	Tubo	Tuyau	Schlauch	Tubo	For models MR14H-20
66	580034222	1	Hose	Tubo	Tuyau	Schlauch	Tubo	For model MR16N

From serial N° / *Da matr.* / Du matr. / *Ab. seriennummer* / Desde la matr. :	Until serial N° / *Fino a matr.* / Jusq' matr. / *Bis zur serien-Nr.* / Hasta la matr. :	With the exception of / *Ad esclusione di* / À l'exclusion de / *Mit ausnahme von* / Excepto :	Including / *Compreso* / Avec / *Einschließlich* / Con :
C849T01501Z			

LIFTING UNIT (HE140 MAST)
GRUPPO SOLLEVAMENTO (MONTANTE HE140)
GROUPE DE SOULEVEMENT (MONTANT HE140)
HEBE-GRUPPE (PFOSTEN HE140)
GRUPO ELEVACIÓN (MONTANTE HE140) *FIGURE 18.2*

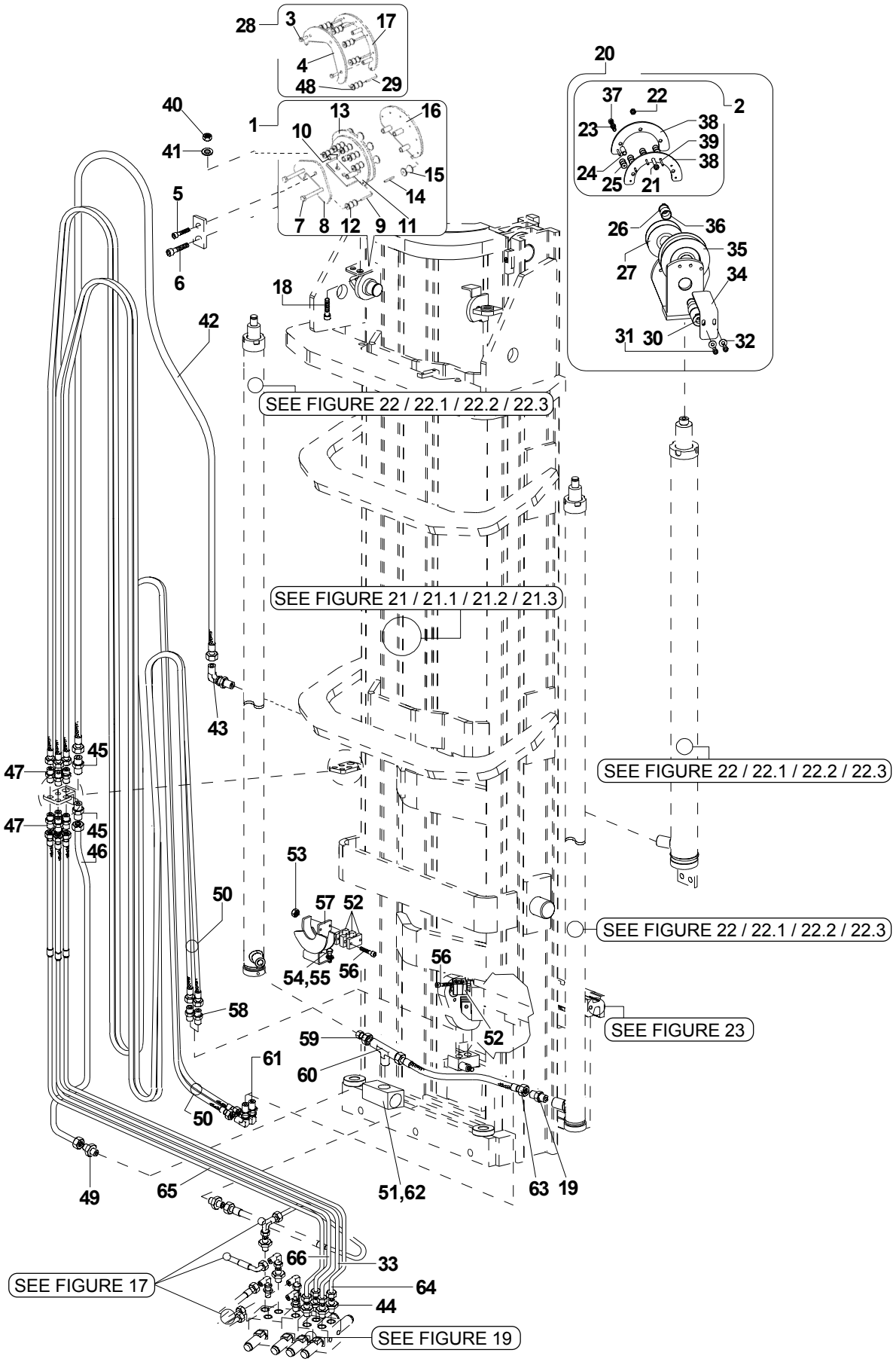

Yale

MODELS MR16H / MR20H / MR25 / MR20W with HE140 mast

LIFTING UNIT (HE140 MAST)
GRUPPO SOLLEVAMENTO (MONTANTE HE140)
GROUPE DE SOULEVEMENT (MONTANT HE140)
HEBE-GRUPPE (PFOSTEN HE140)
GRUPO ELEVACIÓN (MONTANTE HE140) *FIGURE 18.2*

REF.	PART NO.	Q.TY	DESCRIPTION	DESCRIZIONE	DESIGNATION	BENENNUNG	DENOMINACIONES	PART DETAILS
1	580033115	1	Sheave ass'y	Ass. carrucola	Ens. publie	Satz-Rollenzug	Grupo polea	
2	580033116	1	Sheave ass'y	Ass. carrucola	Ens. publie	Satz-Rollenzug	Grupo polea	
3	449001170	2	Screw	Vite	Vis	Schraube	Tornillo	
4	580028811	1	Plate	Piasta	Plaque	Plättchen	Plaqueta	
5	449001170	1	Screw	Vite	Vis	Schraube	Tornillo	
6	449001388	1	Screw	Vite	Vis	Schraube	Tornillo	
7	449001388	2	Screw	Vite	Vis	Schraube	Tornillo	
8	580033892	1	Front plate	Piasta	Plaque	Plättchen	Plaqueta	
9	580028812	6	Pin	Spina	Goupille	Stecker	Toma	
10	580028810	3	Spacer	Distanziale	Entretoise	Abstandhalter	Separador	
11	580028839	1	Middle part	Piasta	Plaque	Plättchen	Plaqueta	
12	277022800	6	Roller	Rullo	Galet	Walze	Perilla	
13	580028840	1	Middle plate	Piasta	Plaque	Plättchen	Plaqueta	
14	580033893	6	Pin	Spina	Goupille	Stecker	Toma	
15	277023000	6	Roller	Rullo	Galet	Walze	Perilla	
16	580028838	1	Rear weld	Piasta	Plaque	Plättchen	Plaqueta	
17	580028842	1	Rear weld	Piasta	Plaque	Plättchen	Plaqueta	
18	449001014	2	Screw	Vite	Vis	Schraube	Tornillo	
19	277264300	1	Fitting	Raccordo	Raccord	Verbindung	Racor	
20	580033117	1	Sheave ass'y	Ass. carrucola	Ens. publie	Satz-Rollenzug	Grupo polea	
21	932201911	1	Screw	Vite	Vis	Schraube	Tornillo	
22	449015098	1	Nut	Dado	Écrou	Mutter	Tuerca	
23	449021001	2	Washer	Rondella	Rondelle	Unterlegscheibe	Arandela	
24	580028810	3	Spacer	Distanziale	Entretoise	Abstandhalter	Separador	
25	277022800	6	Roller	Rullo	Galet	Walze	Perilla	
26	015915600	1	Snap ring	Seeger	Arretoir	Seeger-Ring	Anillo Seeger	
27	580028846	1	Hose sheave	Carrucola porta tubi	Poulie portetuyères	Winde Leitungsträger	Polea porta tubos	
28	580033118	1	Sheave ass'y	Ass. carrucola	Ens. publie	Satz-Rollenzug	Grupo polea	
29	580028812	6	Pin	Spina	Goupille	Stecker	Toma	
30	580028844	1	Shaft	Perno	Axe	Bolzen	Perno	
31	580022963	2	Screw	Vite	Vis	Schraube	Tornillo	
32	504226242	2	Washer	Rondella	Rondelle	Unterlegscheibe	Arandela	
33	580034223	1	Hose	Tubo	Tuyau	Schlauch	Tubo	
34	580028845	1	Bracket chain cover	Coperchio	Couvercle	Deckel	Tapa	
35	580029646	1	Sheave	Carrucola	Poublie	Rollenzug	Polea	
36	277065600	1	Bushing	Boccola	Bush	Lagerschale	Forro	
37	932201911	2	Screw	Vite	Vis	Schraube	Tornillo	
38	580028814	2	Plate	Piasta	Plaque	Plättchen	Plaqueta	
39	580028812	6	Pin	Spina	Goupille	Stecker	Toma	
40	449015098	2	Nut	Dado	Ecrou	Mutter	Tuerca	
41	504226242	2	Washer	Rondella	Rondelle	Unterlegscheibe	Arandela	
42	580034174	1	Hose	Tubo	Tuyau	Schlauch	Tubo	h3=mm4376
42	580034178	1	Hose	Tubo	Tuyau	Schlauch	Tubo	h3=mm4526
42	580034179	1	Hose	Tubo	Tuyau	Schlauch	Tubo	h3=mm4676
42	580034180	1	Hose	Tubo	Tuyau	Schlauch	Tubo	h3=mm4826
42	580034181	1	Hose	Tubo	Tuyau	Schlauch	Tubo	h3=mm4976
42	580034182	1	Hose	Tubo	Tuyau	Schlauch	Tubo	h3=mm5126

From serial N° / *Da matr.* / Du matr. / *Ab. seriennummer* / Desde la matr. :	Until serial N° / *Fino a matr.* / Jusq' matr. / *Bis zur serien-Nr.* / Hasta la matr. :	With the exception of / *Ad esclusione di* / À l'exclusion de / *Mit ausnahme von* / Excepto :	Including / *Compreso* / Avec / *Einschließlich* / Con :
C849T01501Z			

LIFTING UNIT (HE140 MAST)
GRUPPO SOLLEVAMENTO (MONTANTE HE140)
GROUPE DE SOULEVEMENT (MONTANT HE140)
HEBE-GRUPPE (PFOSTEN HE140)
GRUPO ELEVACIÓN (MONTANTE HE140) *FIGURE 18.2*

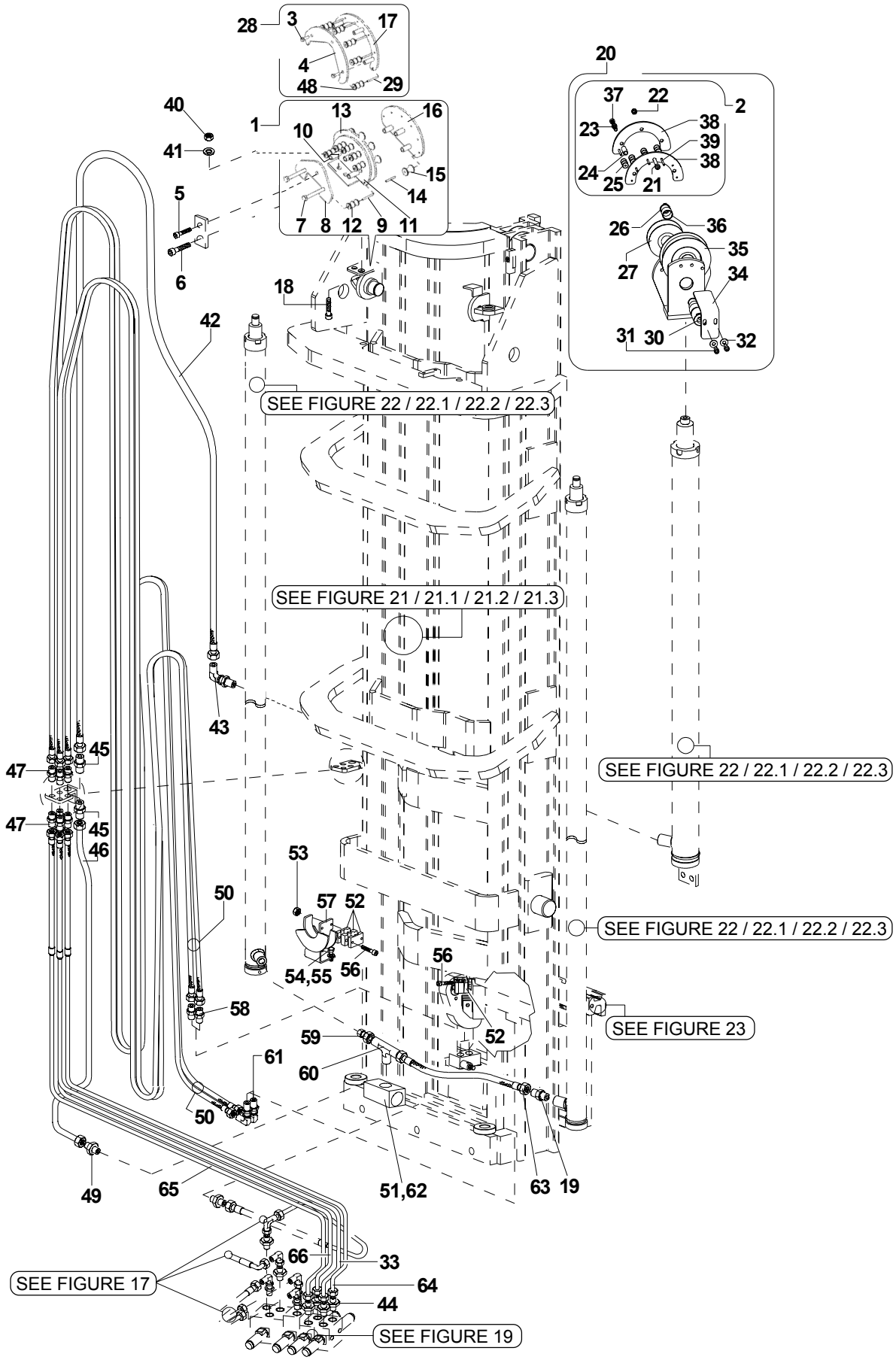

REF.	PART NO.	Q.TY	DESCRIPTION	DESCRIZIONE	DESIGNATION	BENENNUNG	DENOMINACIONES	PART DETAILS
42	580034183	1	Hose	Tubo	Tuyau	Schlauch	Tubo	h3=mm5276
42	580034184	1	Hose	Tubo	Tuyau	Schlauch	Tubo	h3=mm5426
42	580034185	1	Hose	Tubo	Tuyau	Schlauch	Tubo	h3=mm5576
42	580034186	1	Hose	Tubo	Tuyau	Schlauch	Tubo	h3=mm5726
42	580034188	1	Hose	Tubo	Tuyau	Schlauch	Tubo	h3=mm5876
42	580034187	1	Hose	Tubo	Tuyau	Schlauch	Tubo	h3=mm6026
42	580034187	1	Hose	Tubo	Tuyau	Schlauch	Tubo	h3=mm6176
42	580034189	1	Hose	Tubo	Tuyau	Schlauch	Tubo	h3=mm6326
42	580034191	1	Hose	Tubo	Tuyau	Schlauch	Tubo	h3=mm6476
42	580034192	1	Hose	Tubo	Tuyau	Schlauch	Tubo	h3=mm6626
42	580034193	1	Hose	Tubo	Tuyau	Schlauch	Tubo	h3=mm6776
42	580034194	1	Hose	Tubo	Tuyau	Schlauch	Tubo	h3=mm6926
42	580034225	1	Hose	Tubo	Tuyau	Schlauch	Tubo	h3=mm7026
42	580034195	1	Hose	Tubo	Tuyau	Schlauch	Tubo	h3=mm7076
42	580034226	1	Hose	Tubo	Tuyau	Schlauch	Tubo	h3=mm7176
42	580034227	1	Hose	Tubo	Tuyau	Schlauch	Tubo	h3=mm7326
42	580034228	1	Hose	Tubo	Tuyau	Schlauch	Tubo	h3=mm7476
42	580034229	1	Hose	Tubo	Tuyau	Schlauch	Tubo	h3=mm7626
42	580034230	1	Hose	Tubo	Tuyau	Schlauch	Tubo	h3=mm7776
42	580034231	1	Hose	Tubo	Tuyau	Schlauch	Tubo	h3=mm7926
42	580034232	1	Hose	Tubo	Tuyau	Schlauch	Tubo	h3=mm8076
42	580034233	1	Hose	Tubo	Tuyau	Schlauch	Tubo	h3=mm8226
42	580034234	1	Hose	Tubo	Tuyau	Schlauch	Tubo	h3=mm8276
42	580034235	1	Hose	Tubo	Tuyau	Schlauch	Tubo	h3=mm8376
42	580034236	1	Hose	Tubo	Tuyau	Schlauch	Tubo	h3=mm8426
42	580034237	1	Hose	Tubo	Tuyau	Schlauch	Tubo	h3=mm8526
42	580034241	1	Hose	Tubo	Tuyau	Schlauch	Tubo	h3=mm8576
42	580034242	1	Hose	Tubo	Tuyau	Schlauch	Tubo	h3=mm8726
42	580034262	1	Hose	Tubo	Tuyau	Schlauch	Tubo	h3=mm8876
42	580034263	1	Hose	Tubo	Tuyau	Schlauch	Tubo	h3=mm9026
42	580034264	1	Hose	Tubo	Tuyau	Schlauch	Tubo	h3=mm9176
42	580034265	1	Hose	Tubo	Tuyau	Schlauch	Tubo	h3=mm9326
43	277262100	1	Fitting	Raccordo	Raccord	Verbindung	Racor	
44	580032926	4	Fitting	Raccordo	Raccord	Verbindung	Racor	
45	056056700	2	Fitting	Raccordo	Raccord	Verbindung	Racor	
46	580033981	1	Hose	Tubo	Tuyau	Schlauch	Tubo	
47	056056700	8	Fitting	Raccordo	Raccord	Verbindung	Racor	
48	277022800	6	Roller	Rullo	Galet	Walze	Perilla	
49	277275000	1	Fitting	Raccordo	Raccord	Verbindung	Racor	
50	580034196	2	Twin hose	Tubo gemellato	Tuyau jumeau	Doppelschlauch	Tubo gemelo	h3=mm4376
50	580034197	2	Twin hose	Tubo gemellato	Tuyau jumeau	Doppelschlauch	Tubo gemelo	h3=mm4526
50	580034198	2	Twin hose	Tubo gemellato	Tuyau jumeau	Doppelschlauch	Tubo gemelo	h3=mm4676
50	580034199	2	Twin hose	Tubo gemellato	Tuyau jumeau	Doppelschlauch	Tubo gemelo	h3=mm4826
50	580034200	2	Twin hose	Tubo gemellato	Tuyau jumeau	Doppelschlauch	Tubo gemelo	h3=mm4976
50	580034201	2	Twin hose	Tubo gemellato	Tuyau jumeau	Doppelschlauch	Tubo gemelo	h3=mm5126
50	580034202	2	Twin hose	Tubo gemellato	Tuyau jumeau	Doppelschlauch	Tubo gemelo	h3=mm5276
50	580034203	2	Twin hose	Tubo gemellato	Tuyau jumeau	Doppelschlauch	Tubo gemelo	h3=mm5426
50	580034204	2	Twin hose	Tubo gemellato	Tuyau jumeau	Doppelschlauch	Tubo gemelo	h3=mm5576

LIFTING UNIT (HE140 MAST)
GRUPPO SOLLEVAMENTO (MONTANTE HE140)
GROUPE DE SOULEVEMENT (MONTANT HE140)
HEBE-GRUPPE (PFOSTEN HE140)
GRUPO ELEVACIÓN (MONTANTE HE140) *FIGURE 18.2*

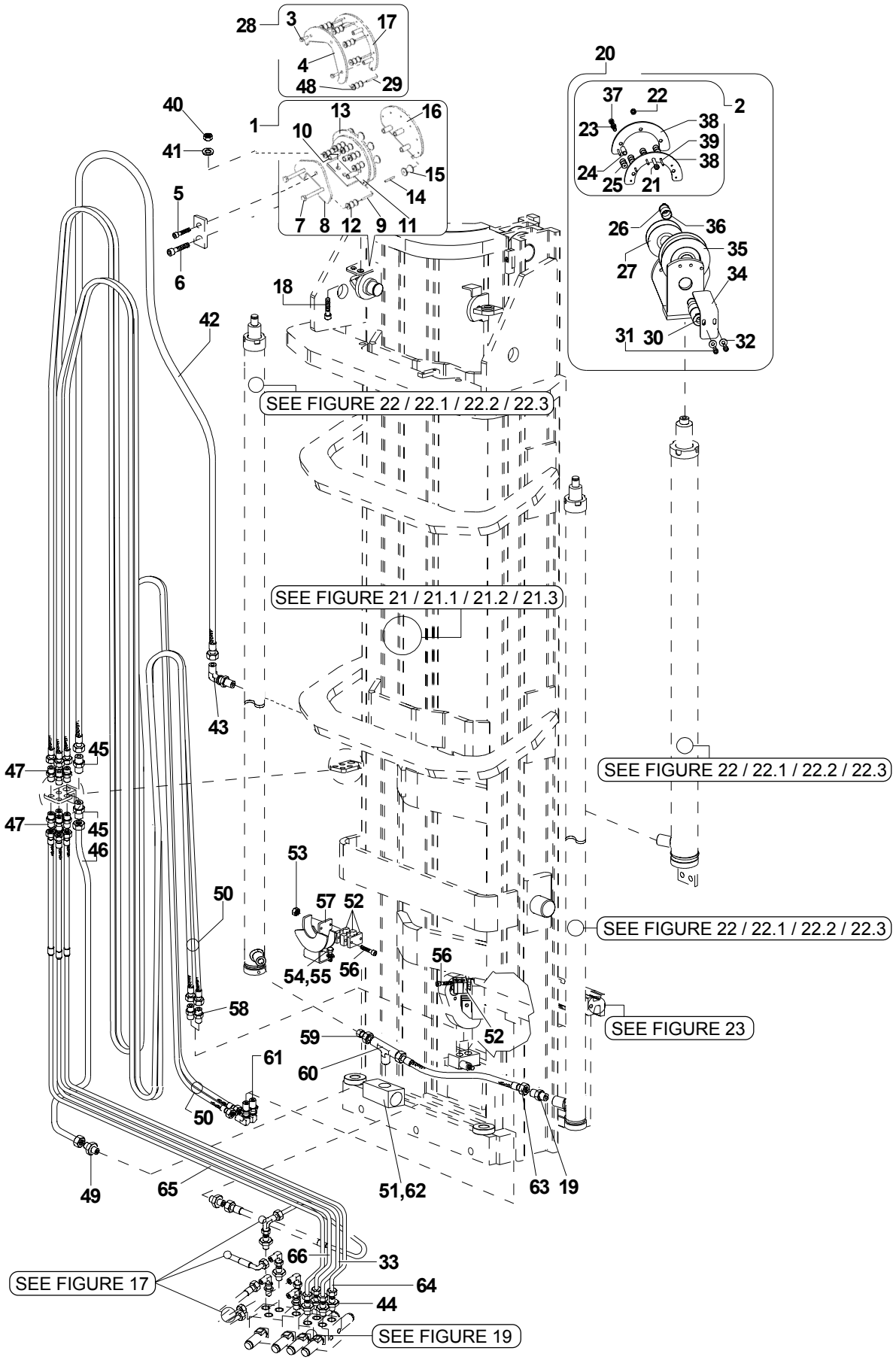

Yale

MODELS MR16H / MR20H / MR25 / MR20W with HE140 mast

LIFTING UNIT (HE140 MAST)
GRUPPO SOLLEVAMENTO (MONTANTE HE140)
GROUPE DE SOULEVEMENT (MONTANT HE140)
HEBE-GRUPPE (PFOSTEN HE140)
GRUPO ELEVACIÓN (MONTANTE HE140) *FIGURE 18.2*

REF.	PART NO.	Q.TY	DESCRIPTION	DESCRIZIONE	DESIGNATION	BENENNUNG	DENOMINACIONES	PART DETAILS
50	580034205	2	Twin hose	Tubo gemellato	Tuyau jumeau	Doppelschlauch	Tubo gemelo	h3=mm5726
50	580034207	2	Twin hose	Tubo gemellato	Tuyau jumeau	Doppelschlauch	Tubo gemelo	h3=mm5876
50	580034209	2	Twin hose	Tubo gemellato	Tuyau jumeau	Doppelschlauch	Tubo gemelo	h3=mm6026
50	580034206	2	Twin hose	Tubo gemellato	Tuyau jumeau	Doppelschlauch	Tubo gemelo	h3=mm6176
50	580034208	2	Twin hose	Tubo gemellato	Tuyau jumeau	Doppelschlauch	Tubo gemelo	h3=mm6326
50	580034210	2	Twin hose	Tubo gemellato	Tuyau jumeau	Doppelschlauch	Tubo gemelo	h3=mm6476
50	580034211	2	Twin hose	Tubo gemellato	Tuyau jumeau	Doppelschlauch	Tubo gemelo	h3=mm6626
50	580034212	2	Twin hose	Tubo gemellato	Tuyau jumeau	Doppelschlauch	Tubo gemelo	h3=mm6776
50	580034213	2	Twin hose	Tubo gemellato	Tuyau jumeau	Doppelschlauch	Tubo gemelo	h3=mm6926
50	580034243	2	Twin hose	Tubo gemellato	Tuyau jumeau	Doppelschlauch	Tubo gemelo	h3=mm7026
50	580034214	2	Twin hose	Tubo gemellato	Tuyau jumeau	Doppelschlauch	Tubo gemelo	h3=mm7076
50	580034244	2	Twin hose	Tubo gemellato	Tuyau jumeau	Doppelschlauch	Tubo gemelo	h3=mm7176
50	580034245	2	Twin hose	Tubo gemellato	Tuyau jumeau	Doppelschlauch	Tubo gemelo	h3=mm7326
50	580034246	2	Twin hose	Tubo gemellato	Tuyau jumeau	Doppelschlauch	Tubo gemelo	h3=mm7476
50	580034247	2	Twin hose	Tubo gemellato	Tuyau jumeau	Doppelschlauch	Tubo gemelo	h3=mm7626
50	580034248	2	Twin hose	Tubo gemellato	Tuyau jumeau	Doppelschlauch	Tubo gemelo	h3=mm7776
50	580034249	2	Twin hose	Tubo gemellato	Tuyau jumeau	Doppelschlauch	Tubo gemelo	h3=mm7926
50	580034250	2	Twin hose	Tubo gemellato	Tuyau jumeau	Doppelschlauch	Tubo gemelo	h3=mm8076
50	580034251	2	Twin hose	Tubo gemellato	Tuyau jumeau	Doppelschlauch	Tubo gemelo	h3=mm8226
50	580034252	2	Twin hose	Tubo gemellato	Tuyau jumeau	Doppelschlauch	Tubo gemelo	h3=mm8276
50	580034253	2	Twin hose	Tubo gemellato	Tuyau jumeau	Doppelschlauch	Tubo gemelo	h3=mm8376
50	580034254	2	Twin hose	Tubo gemellato	Tuyau jumeau	Doppelschlauch	Tubo gemelo	h3=mm8426
50	580034255	2	Twin hose	Tubo gemellato	Tuyau jumeau	Doppelschlauch	Tubo gemelo	h3=mm8526
50	580034256	2	Twin hose	Tubo gemellato	Tuyau jumeau	Doppelschlauch	Tubo gemelo	h3=mm8576
50	580034257	2	Twin hose	Tubo gemellato	Tuyau jumeau	Doppelschlauch	Tubo gemelo	h3=mm8726
50	580034266	2	Twin hose	Tubo gemellato	Tuyau jumeau	Doppelschlauch	Tubo gemelo	h3=mm8876
50	580034267	2	Twin hose	Tubo gemellato	Tuyau jumeau	Doppelschlauch	Tubo gemelo	h3=mm9026
50	580034268	2	Twin hose	Tubo gemellato	Tuyau jumeau	Doppelschlauch	Tubo gemelo	h3=mm9176
50	580034269	2	Twin hose	Tubo gemellato	Tuyau jumeau	Doppelschlauch	Tubo gemelo	h3=mm9326
51	580031187	1	Valve	Valvola	Soupape	Ventil	Válvula	
52	580033967	2	Hose clamp	Fascetta	Sangle	Riemen	Brida	
53	449015135	2	Lock nut	Dado	écrou	Mutter	Tuerca	
54	449001415	2	Screw	Vite	Vis	Schraube	Tornillo	
55	504226242	2	Washer	Rondella	Rondelle	Unterlegscheibe	Arandela	
56	932107911	4	Screw	Vite	Vis	Schraube	Tornillo	
57	580023180	1	Braket	Staffa	Etrier	Bügel	Estribo	
58	277842500	2	Fitting	Raccordo	Raccord	Verbindung	Racor	
59	580031517	1	Fitting	Raccordo	Raccord	Verbindung	Racor	
60	580031516	1	Fitting	Raccordo	Raccord	Verbindung	Racor	
61	580033865	2	Fitting	Raccordo	Raccord	Verbindung	Racor	
62	580033894	1	Hydraulic block	Blocchetto	Blocage	Verteilerstück	Bloque	
63	580034215	1	Hose	Tubo	Tuyau	Schlauch	Tubo	
64	580034216	1	Hose	Tubo	Tuyau	Schlauch	Tubo	
65	580034219	1	Hose	Tubo	Tuyau	Schlauch	Tubo	
66	580034221	1	Hose	Tubo	Tuyau	Schlauch	Tubo	

From serial N° / *Da matr.* / Du matr. / *Ab. seriennummer* / Desde la matr. :	Until serial N° / *Fino a matr.* / Jusq' matr. / *Bis zur serien-Nr.* / Hasta la matr. :	With the exception of / *Ad esclusione di* / À l'exclusion de / *Mit ausnahme von* / Excepto :	Including / *Compreso* / Avec / *Einschließlich* / Con :
C849T01501Z			

LIFTING UNIT (HE140R MAST)
GRUPPO SOLLEVAMENTO (MONTANTE HE140R)
GROUPE DE SOULEVEMENT (MONTANT HE140R)
HEBE-GRUPPE (PFOSTEN HE140R)
GRUPO ELEVACIÓN (MONTANTE HE140R) *FIGURE 18.3*

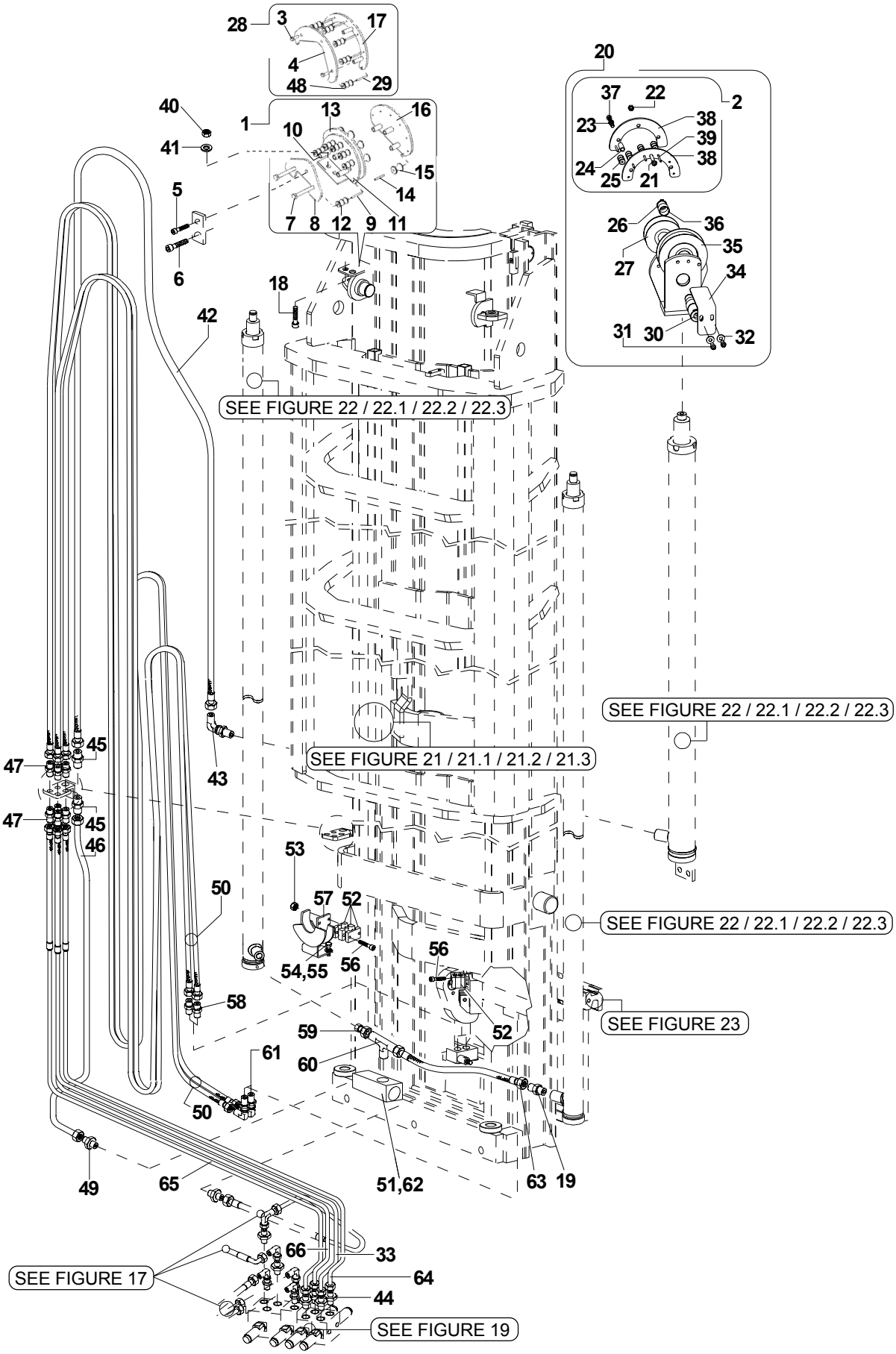

Yale

MODELS MR16H / MR20H / MR25 / MR20W with HE140R mast

LIFTING UNIT (HE140R MAST)
GRUPPO SOLLEVAMENTO (MONTANTE HE140R)
GROUPE DE SOULEVEMENT (MONTANT HE140R)
HEBE-GRUPPE (PFOSTEN HE140R)
GRUPO ELEVACIÓN (MONTANTE HE140R) *FIGURE 18.3*

REF.	PART NO.	Q.TY	DESCRIPTION	DESCRIZIONE	DESIGNATION	BENENNUNG	DENOMINACIONES	PART DETAILS
1	580033115	1	Sheave ass'y	Ass. carrucola	Ens. publie	Satz-Rollenzug	Grupo polea	
2	580033116	1	Sheave ass'y	Ass. carrucola	Ens. publie	Satz-Rollenzug	Grupo polea	
3	449001170	2	Screw	Vite	Vis	Schraube	Tornillo	
4	580028811	1	Plate	Piasta	Plaque	Plättchen	Plaqueta	
5	449001170	1	Screw	Vite	Vis	Schraube	Tornillo	
6	449001388	1	Screw	Vite	Vis	Schraube	Tornillo	
7	449001388	2	Screw	Vite	Vis	Schraube	Tornillo	
8	580033892	1	Front plate	Piasta	Plaque	Plättchen	Plaqueta	
9	580028812	6	Pin	Spina	Goupille	Stecker	Toma	
10	580028810	3	Spacer	Distanziale	Entretoise	Abstandhalter	Separador	
11	580028839	1	Middle part	Piasta	Plaque	Plättchen	Plaqueta	
12	277022800	6	Roller	Rullo	Galet	Walze	Perilla	
13	580028840	1	Middle plate	Piasta	Plaque	Plättchen	Plaqueta	
14	580033893	6	Pin	Spina	Goupille	Stecker	Toma	
15	277023000	6	Roller	Rullo	Galet	Walze	Perilla	
16	580028838	1	Rear weld	Piasta	Plaque	Plättchen	Plaqueta	
17	580028842	1	Rear weld	Piasta	Plaque	Plättchen	Plaqueta	
18	449001014	2	Screw	Vite	Vis	Schraube	Tornillo	
19	277264300	1	Fitting	Raccordo	Raccord	Verbindung	Racor	
20	580033117	1	Sheave ass'y	Ass. carrucola	Ens. publie	Satz-Rollenzug	Grupo polea	
21	932201911	1	Screw	Vite	Vis	Schraube	Tornillo	
22	449015098	1	Nut	Dado	Écrou	Mutter	Tuerca	
23	449021001	2	Washer	Rondella	Rondelle	Unterlegscheibe	Arandela	
24	580028810	3	Spacer	Distanziale	Entretoise	Abstandhalter	Separador	
25	277022800	6	Roller	Rullo	Galet	Walze	Perilla	
26	015915600	1	Snap ring	Seeger	Arretoir	Seeger-Ring	Anillo Seeger	
27	580028846	1	Hose sheave	Carrucola porta tubi	Poulie portetuyères	Winde Leitungsträger	Polea porta tubos	
28	580033118	1	Sheave ass'y	Ass. carrucola	Ens. publie	Satz-Rollenzug	Grupo polea	
29	580028812	6	Pin	Spina	Goupille	Stecker	Toma	
30	580028844	1	Shaft	Perno	Axe	Bolzen	Perno	
31	580022963	2	Screw	Vite	Vis	Schraube	Tornillo	
32	504226242	2	Washer	Rondella	Rondelle	Unterlegscheibe	Arandela	
33	580034223	1	Hose	Tubo	Tuyau	Schlauch	Tubo	
34	580028845	1	Bracket chain cover	Coperchio	Couvercle	Deckel	Tapa	
35	580029646	1	Sheave	Carrucola	Poublie	Rollenzug	Polea	
36	277065600	1	Bushing	Boccola	Bush	Lagerschale	Forro	
37	932201911	2	Screw	Vite	Vis	Schraube	Tornillo	
38	580028814	2	Plate	Piasta	Plaque	Plättchen	Plaqueta	
39	580028812	6	Pin	Spina	Goupille	Stecker	Toma	
40	449015098	2	Nut	Dado	Ecrou	Mutter	Tuerca	
41	504226242	2	Washer	Rondella	Rondelle	Unterlegscheibe	Arandela	
42	580034233	1	Hose	Tubo	Tuyau	Schlauch	Tubo	h3=mm8226
42	580034234	1	Hose	Tubo	Tuyau	Schlauch	Tubo	h3=mm8276
42	580034235	1	Hose	Tubo	Tuyau	Schlauch	Tubo	h3=mm8376
42	580034233	1	Hose	Tubo	Tuyau	Schlauch	Tubo	h3=mm8426-channel lenght mm3340
42	580034236	1	Hose	Tubo	Tuyau	Schlauch	Tubo	h3=mm8426-channel lenght mm3540
42	580034237	1	Hose	Tubo	Tuyau	Schlauch	Tubo	h3=mm8526

From serial N° / *Da matr.* / Du matr. / *Ab. seriennummer* / Desde la matr. :	Until serial N° / *Fino a matr.* / Jusq' matr. / *Bis zur serien-Nr.* / Hasta la matr. :	With the exception of / *Ad esclusione di* / À l'exclusion de / *Mit ausnahme von* / Excepto :	Including / *Compreso* / Avec / *Einschließlich* / Con :
C849T01501Z			

LIFTING UNIT (HE140R MAST)
GRUPPO SOLLEVAMENTO (MONTANTE HE140R)
GROUPE DE SOULEVEMENT (MONTANT HE140R)
HEBE-GRUPPE (PFOSTEN HE140R)
GRUPO ELEVACIÓN (MONTANTE HE140R) *FIGURE 18.3*

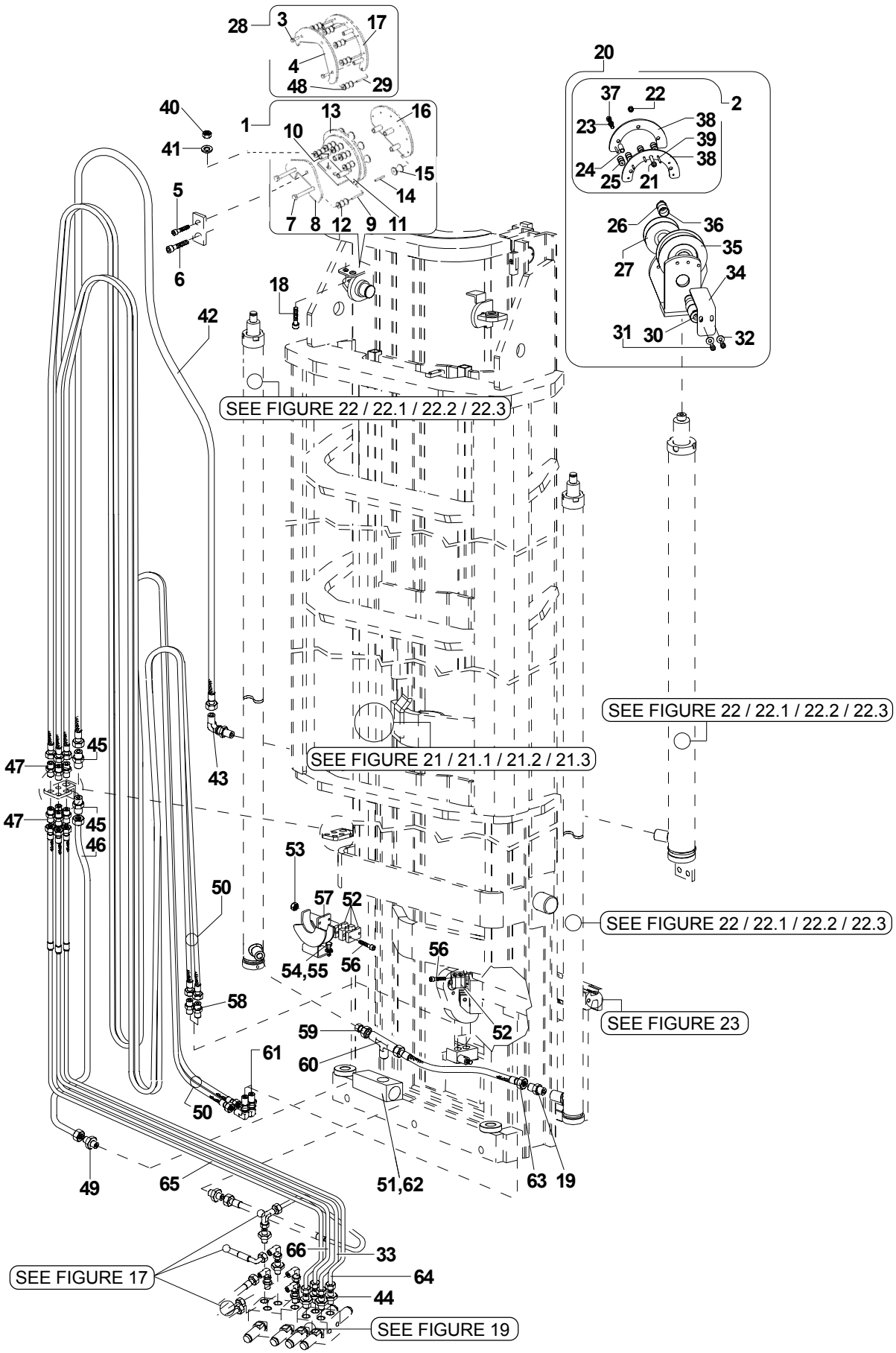

Yale

MODELS MR16H / MR20H / MR25 / MR20W with HE140R mast

LIFTING UNIT (HE140R MAST)
GRUPPO SOLLEVAMENTO (MONTANTE HE140R)
GROUPE DE SOULEVEMENT (MONTANT HE140R)
HEBE-GRUPPE (PFOSTEN HE140R)
GRUPO ELEVACIÓN (MONTANTE HE140R) *FIGURE 18.3*

REF.	PART NO.	Q.TY	DESCRIPTION	DESCRIZIONE	DESIGNATION	BENENNUNG	DENOMINACIONES	PART DETAILS
42	580034235	1	Hose	Tubo	Tuyau	Schlauch	Tubo	h3=mm8576-channel lenght mm3390
42	580034241	1	Hose	Tubo	Tuyau	Schlauch	Tubo	h3=mm8576-channel lenght mm3590
42	580034234	1	Hose	Tubo	Tuyau	Schlauch	Tubo	h3=mm8676
42	580034237	1	Hose	Tubo	Tuyau	Schlauch	Tubo	h3=mm8726-channel lenght mm3440
42	580034242	1	Hose	Tubo	Tuyau	Schlauch	Tubo	h3=mm8726-channel lenght mm3640
42	580034236	1	Hose	Tubo	Tuyau	Schlauch	Tubo	h3=mm8826
42	580034262	1	Hose	Tubo	Tuyau	Schlauch	Tubo	h3=mm8876
42	580034241	1	Hose	Tubo	Tuyau	Schlauch	Tubo	h3=mm8976
42	580034263	1	Hose	Tubo	Tuyau	Schlauch	Tubo	h3=mm9026
42	580034242	1	Hose	Tubo	Tuyau	Schlauch	Tubo	h3=mm9126
42	580034264	1	Hose	Tubo	Tuyau	Schlauch	Tubo	h3=mm9176
42	580034262	1	Hose	Tubo	Tuyau	Schlauch	Tubo	h3=mm9276
42	580034265	1	Hose	Tubo	Tuyau	Schlauch	Tubo	h3=mm9326
42	580034263	1	Hose	Tubo	Tuyau	Schlauch	Tubo	h3=mm9426
42	580034270	1	Hose	Tubo	Tuyau	Schlauch	Tubo	h3=mm9476
42	580034264	1	Hose	Tubo	Tuyau	Schlauch	Tubo	h3=mm9576
42	580034271	1	Hose	Tubo	Tuyau	Schlauch	Tubo	h3=mm9626
42	580034265	1	Hose	Tubo	Tuyau	Schlauch	Tubo	h3=mm9726
42	580034272	1	Hose	Tubo	Tuyau	Schlauch	Tubo	h3=mm9776-channel lenght mm3990
42	580034274	1	Hose	Tubo	Tuyau	Schlauch	Tubo	h3=mm9776-channel lenght mm4090
42	580034270	1	Hose	Tubo	Tuyau	Schlauch	Tubo	h3=mm9876
42	580034273	1	Hose	Tubo	Tuyau	Schlauch	Tubo	h3=mm9926-channel lenght mm4040
42	580034275	1	Hose	Tubo	Tuyau	Schlauch	Tubo	h3=mm9926-channel lenght mm4140
42	580034271	1	Hose	Tubo	Tuyau	Schlauch	Tubo	h3=mm10026
42	580034274	1	Hose	Tubo	Tuyau	Schlauch	Tubo	h3=mm10076-channel lenght mm4090
42	580034276	1	Hose	Tubo	Tuyau	Schlauch	Tubo	h3=mm10076-channel lenght mm4190
42	580034272	1	Hose	Tubo	Tuyau	Schlauch	Tubo	h3=mm10176
42	580034275	1	Hose	Tubo	Tuyau	Schlauch	Tubo	h3=mm10226-channel lenght mm4140
42	580034277	1	Hose	Tubo	Tuyau	Schlauch	Tubo	h3=mm10226-channel lenght mm4240
42	580034273	1	Hose	Tubo	Tuyau	Schlauch	Tubo	h3=mm10326
42	580034276	1	Hose	Tubo	Tuyau	Schlauch	Tubo	h3=mm10376-channel lenght mm4190
42	580034278	1	Hose	Tubo	Tuyau	Schlauch	Tubo	h3=mm10376-channel lenght mm4290
42	580034277	1	Hose	Tubo	Tuyau	Schlauch	Tubo	h3=mm10526-channel lenght mm4240
42	580034279	1	Hose	Tubo	Tuyau	Schlauch	Tubo	h3=mm10526-channel lenght mm4340
42	580034278	1	Hose	Tubo	Tuyau	Schlauch	Tubo	h3=mm10676-channel lenght mm4290
42	580034280	1	Hose	Tubo	Tuyau	Schlauch	Tubo	h3=mm10676-channel lenght mm4390

From serial N° / *Da matr.* / Du matr. / *Ab. seriennummer* / Desde la matr. :	Until serial N° / *Fino a matr.* / Jusq' matr. / *Bis zur serien-Nr.* / Hasta la matr. :	With the exception of / *Ad esclusione di* / À l'exclusion de / *Mit ausnahme von* / Excepto :	Including / *Compreso* / Avec / *Einschließlich* / Con :
C849T01501Z			

LIFTING UNIT (HE140R MAST)
GRUPPO SOLLEVAMENTO (MONTANTE HE140R)
GROUPE DE SOULEVEMENT (MONTANT HE140R)
HEBE-GRUPPE (PFOSTEN HE140R)
GRUPO ELEVACIÓN (MONTANTE HE140R) *FIGURE 18.3*

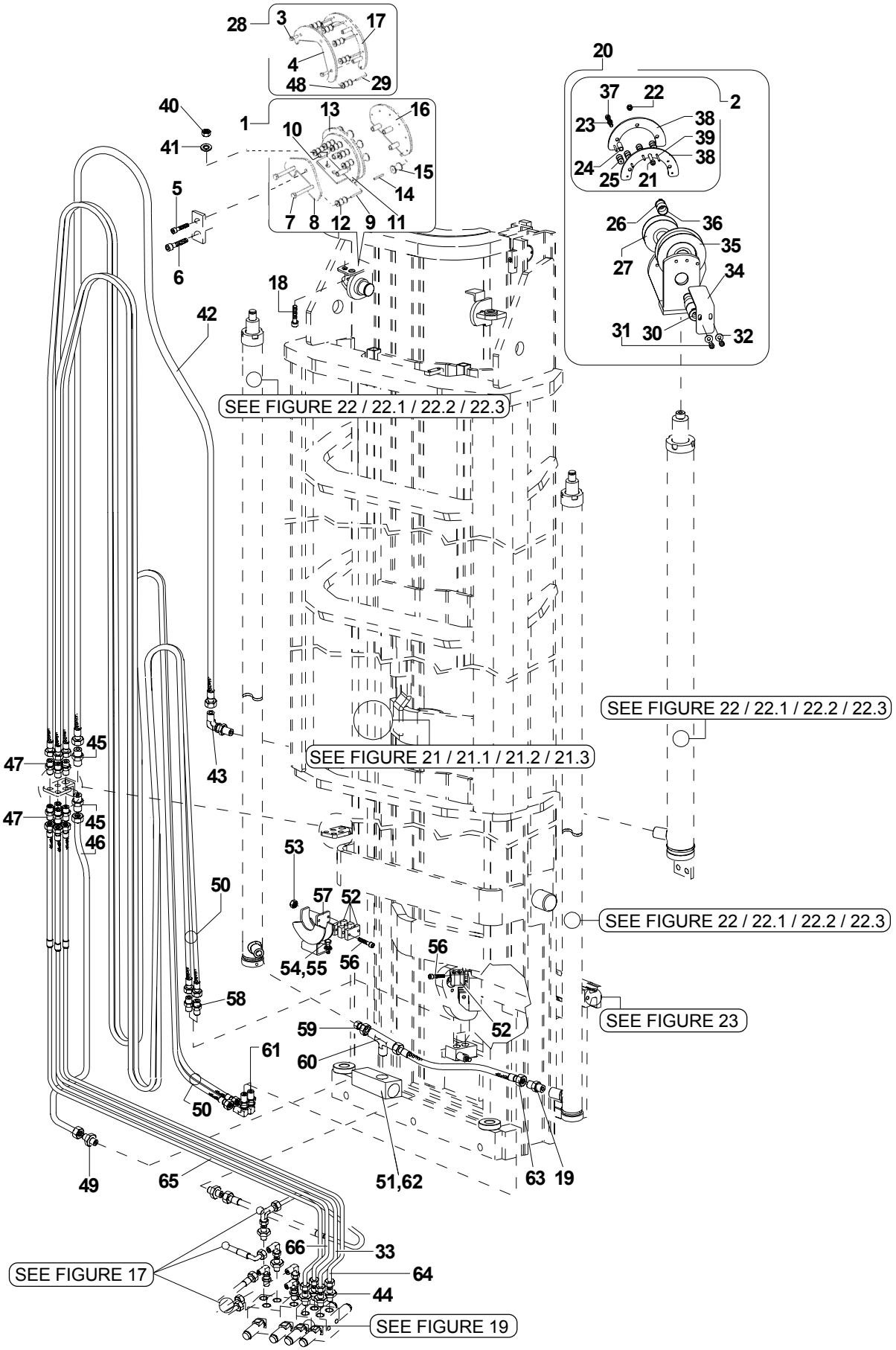

Yale

MODELS MR16H / MR20H / MR25 / MR20W with HE140R mast

LIFTING UNIT (HE140R MAST)
GRUPPO SOLLEVAMENTO (MONTANTE HE140R)
GROUPE DE SOULEVEMENT (MONTANT HE140R)
HEBE-GRUPPE (PFOSTEN HE140R)
GRUPO ELEVACIÓN (MONTANTE HE140R) *FIGURE 18.3*

REF.	PART NO.	Q.TY	DESCRIPTION	DESCRIZIONE	DESIGNATION	BENENNUNG	DENOMINACIONES	PART DETAILS
42	580034279	1	Hose	Tubo	Tuyau	Schlauch	Tubo	h3=mm10826-channel lenght mm4340
42	580034281	1	Hose	Tubo	Tuyau	Schlauch	Tubo	h3=mm10826-channel lenght mm4440
42	580034280	1	Hose	Tubo	Tuyau	Schlauch	Tubo	h3=mm10976-channel lenght mm4390
42	580034282	1	Hose	Tubo	Tuyau	Schlauch	Tubo	h3=mm10976-channel lenght mm4490
42	580034281	1	Hose	Tubo	Tuyau	Schlauch	Tubo	h3=mm11126-channel lenght mm4440
42	580034283	1	Hose	Tubo	Tuyau	Schlauch	Tubo	h3=mm11126-channel lenght mm4540
42	580034282	1	Hose	Tubo	Tuyau	Schlauch	Tubo	h3=mm11276-channel lenght mm4490
42	580034284	1	Hose	Tubo	Tuyau	Schlauch	Tubo	h3=mm11276-channel lenght mm4590
42	580034283	1	Hose	Tubo	Tuyau	Schlauch	Tubo	h3=mm11426-channel lenght mm4540
42	580034285	1	Hose	Tubo	Tuyau	Schlauch	Tubo	h3=mm11426-channel lenght mm4640
42	580034284	1	Hose	Tubo	Tuyau	Schlauch	Tubo	h3=mm11576
42	580034285	1	Hose	Tubo	Tuyau	Schlauch	Tubo	h3=mm11726
43	277262100	1	Fitting	Raccordo	Raccord	Verbindung	Racor	
44	580032926	4	Fitting	Raccordo	Raccord	Verbindung	Racor	
45	056056700	2	Fitting	Raccordo	Raccord	Verbindung	Racor	
46	580033981	1	Hose	Tubo	Tuyau	Schlauch	Tubo	
47	056056700	8	Fitting	Raccordo	Raccord	Verbindung	Racor	
48	277022800	6	Roller	Rullo	Galet	Walze	Perilla	
49	277275000	1	Fitting	Raccordo	Raccord	Verbindung	Racor	
50	580034251	2	Twin hose	Tubo gemellato	Tuyau jumeau	Doppelschlauch	Tubo gemelo	h3=mm8226
50	580034252	2	Twin hose	Tubo gemellato	Tuyau jumeau	Doppelschlauch	Tubo gemelo	h3=mm8276
50	580034253	2	Twin hose	Tubo gemellato	Tuyau jumeau	Doppelschlauch	Tubo gemelo	h3=mm8376
50	580034251	2	Twin hose	Tubo gemellato	Tuyau jumeau	Doppelschlauch	Tubo gemelo	h3=mm8426-channel lenght mm3340
50	580034254	2	Twin hose	Tubo gemellato	Tuyau jumeau	Doppelschlauch	Tubo gemelo	h3=mm8426-channel lenght mm3540
50	580034255	2	Twin hose	Tubo gemellato	Tuyau jumeau	Doppelschlauch	Tubo gemelo	h3=mm8526
50	580034253	2	Twin hose	Tubo gemellato	Tuyau jumeau	Doppelschlauch	Tubo gemelo	h3=mm8576-channel lenght mm3390
50	580034256	2	Twin hose	Tubo gemellato	Tuyau jumeau	Doppelschlauch	Tubo gemelo	h3=mm8576-channel lenght mm3590
50	580034252	2	Twin hose	Tubo gemellato	Tuyau jumeau	Doppelschlauch	Tubo gemelo	h3=mm8676
50	580034255	2	Twin hose	Tubo gemellato	Tuyau jumeau	Doppelschlauch	Tubo gemelo	h3=mm8726-channel lenght mm3440
50	580034257	2	Twin hose	Tubo gemellato	Tuyau jumeau	Doppelschlauch	Tubo gemelo	h3=mm8726-channel lenght mm3640
50	580034254	2	Twin hose	Tubo gemellato	Tuyau jumeau	Doppelschlauch	Tubo gemelo	h3=mm8826
50	580034266	2	Twin hose	Tubo gemellato	Tuyau jumeau	Doppelschlauch	Tubo gemelo	h3=mm8876
50	580034256	2	Twin hose	Tubo gemellato	Tuyau jumeau	Doppelschlauch	Tubo gemelo	h3=mm8976
50	580034267	2	Twin hose	Tubo gemellato	Tuyau jumeau	Doppelschlauch	Tubo gemelo	h3=mm9026
50	580034257	2	Twin hose	Tubo gemellato	Tuyau jumeau	Doppelschlauch	Tubo gemelo	h3=mm9126
50	580034268	2	Twin hose	Tubo gemellato	Tuyau jumeau	Doppelschlauch	Tubo gemelo	h3=mm9176

From serial N° / *Da matr.* / Du matr. / *Ab. seriennummer* / Desde la matr. :	Until serial N° / *Fino a matr.* / Jusq' matr. / *Bis zur serien-Nr.* / Hasta la matr. :	With the exception of / *Ad esclusione di* / À l'exclusion de / *Mit ausnahme von* / Excepto :	Including / *Compreso* / Avec / *Einschließlich* / Con :
C849T01501Z			

LIFTING UNIT (HE140R MAST)
GRUPPO SOLLEVAMENTO (MONTANTE HE140R)
GROUPE DE SOULEVEMENT (MONTANT HE140R)
HEBE-GRUPPE (PFOSTEN HE140R)
GRUPO ELEVACIÓN (MONTANTE HE140R) *FIGURE 18.3*

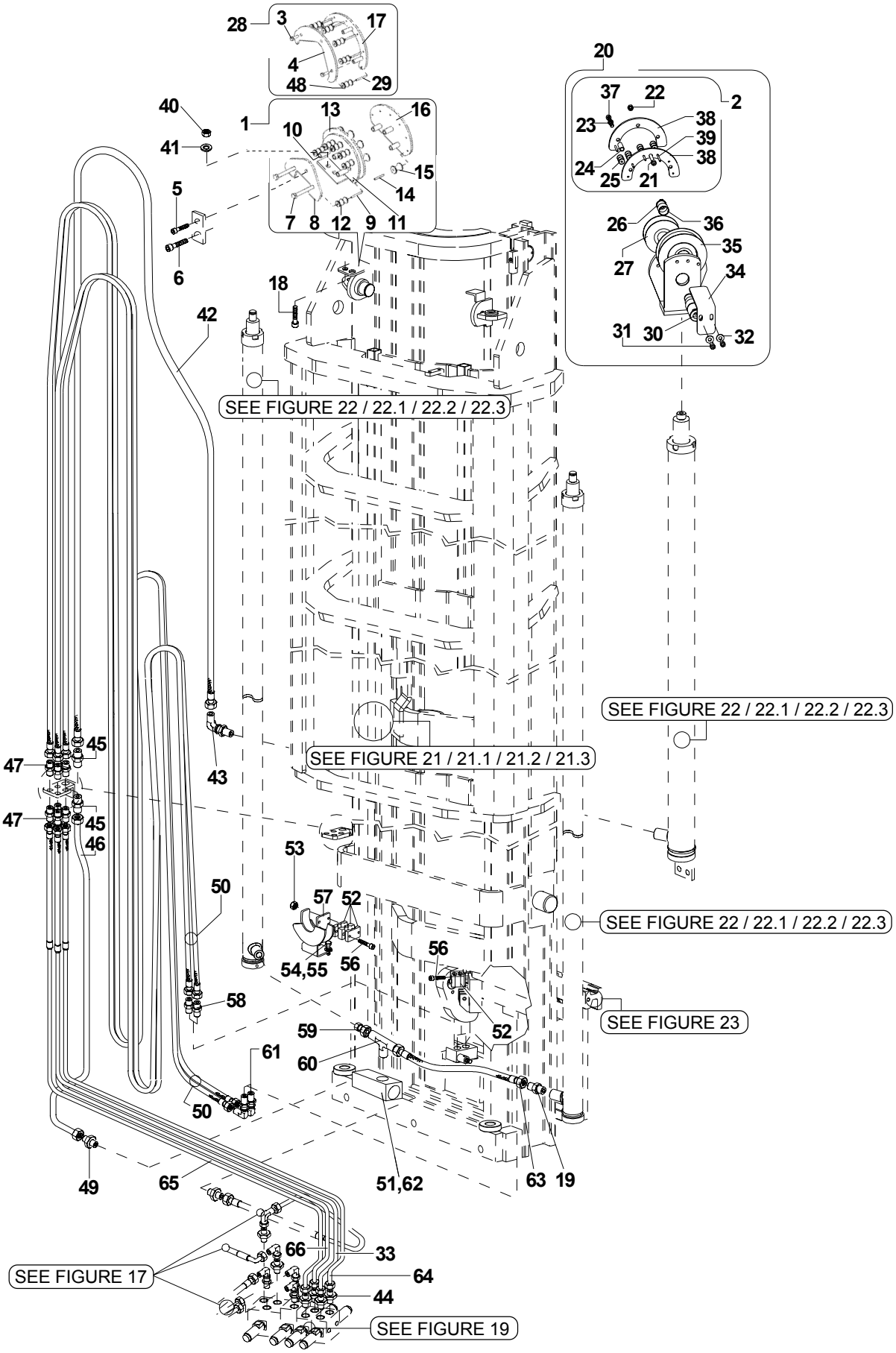

REF.	PART NO.	Q.TY	DESCRIPTION	DESCRIZIONE	DESIGNATION	BENENNUNG	DENOMINACIONES	PART DETAILS
50	580034266	2	Twin hose	Tubo gemellato	Tuyau jumeau	Doppelschlauch	Tubo gemelo	h3=mm9276
50	580034269	2	Twin hose	Tubo gemellato	Tuyau jumeau	Doppelschlauch	Tubo gemelo	h3=mm9326
50	580034267	2	Twin hose	Tubo gemellato	Tuyau jumeau	Doppelschlauch	Tubo gemelo	h3=mm9426
50	580034286	2	Twin hose	Tubo gemellato	Tuyau jumeau	Doppelschlauch	Tubo gemelo	h3=mm9476
50	580034268	2	Twin hose	Tubo gemellato	Tuyau jumeau	Doppelschlauch	Tubo gemelo	h3=mm9576
50	580034287	2	Twin hose	Tubo gemellato	Tuyau jumeau	Doppelschlauch	Tubo gemelo	h3=mm9626
50	580034269	2	Twin hose	Tubo gemellato	Tuyau jumeau	Doppelschlauch	Tubo gemelo	h3=mm9726
50	580034288	2	Twin hose	Tubo gemellato	Tuyau jumeau	Doppelschlauch	Tubo gemelo	h3=mm9776-channel lenght mm3990
50	580034289	2	Twin hose	Tubo gemellato	Tuyau jumeau	Doppelschlauch	Tubo gemelo	h3=mm9776-channel lenght mm4090
50	580034286	2	Twin hose	Tubo gemellato	Tuyau jumeau	Doppelschlauch	Tubo gemelo	h3=mm9876
50	580034290	2	Twin hose	Tubo gemellato	Tuyau jumeau	Doppelschlauch	Tubo gemelo	h3=mm9926-channel lenght mm4040
50	580034291	2	Twin hose	Tubo gemellato	Tuyau jumeau	Doppelschlauch	Tubo gemelo	h3=mm9926-channel lenght mm4140
50	580034287	2	Twin hose	Tubo gemellato	Tuyau jumeau	Doppelschlauch	Tubo gemelo	h3=mm10026
50	580034289	2	Twin hose	Tubo gemellato	Tuyau jumeau	Doppelschlauch	Tubo gemelo	h3=mm10076-channel lenght mm4090
50	580034292	2	Twin hose	Tubo gemellato	Tuyau jumeau	Doppelschlauch	Tubo gemelo	h3=mm10076-channel lenght mm4190
50	580034288	2	Twin hose	Tubo gemellato	Tuyau jumeau	Doppelschlauch	Tubo gemelo	h3=mm10176
50	580034291	2	Twin hose	Tubo gemellato	Tuyau jumeau	Doppelschlauch	Tubo gemelo	h3=mm10226-channel lenght mm4140
50	580034293	2	Twin hose	Tubo gemellato	Tuyau jumeau	Doppelschlauch	Tubo gemelo	h3=mm10226-channel lenght mm4240
50	580034290	2	Twin hose	Tubo gemellato	Tuyau jumeau	Doppelschlauch	Tubo gemelo	h3=mm10326
50	580034292	2	Twin hose	Tubo gemellato	Tuyau jumeau	Doppelschlauch	Tubo gemelo	h3=mm10376-channel lenght mm4190
50	580034294	2	Twin hose	Tubo gemellato	Tuyau jumeau	Doppelschlauch	Tubo gemelo	h3=mm10376-channel lenght mm4290
50	580034293	2	Twin hose	Tubo gemellato	Tuyau jumeau	Doppelschlauch	Tubo gemelo	h3=mm10526-channel lenght mm4240
50	580034295	2	Twin hose	Tubo gemellato	Tuyau jumeau	Doppelschlauch	Tubo gemelo	h3=mm10526-channel lenght mm4340
50	580034294	2	Twin hose	Tubo gemellato	Tuyau jumeau	Doppelschlauch	Tubo gemelo	h3=mm10676-channel lenght mm4290
50	580034296	2	Twin hose	Tubo gemellato	Tuyau jumeau	Doppelschlauch	Tubo gemelo	h3=mm10676-channel lenght mm4390
50	580034295	2	Twin hose	Tubo gemellato	Tuyau jumeau	Doppelschlauch	Tubo gemelo	h3=mm10826-channel lenght mm4340
50	580034297	2	Twin hose	Tubo gemellato	Tuyau jumeau	Doppelschlauch	Tubo gemelo	h3=mm10826-channel lenght mm4440
50	580034296	2	Twin hose	Tubo gemellato	Tuyau jumeau	Doppelschlauch	Tubo gemelo	h3=mm10976-channel lenght mm4390
50	580034298	2	Twin hose	Tubo gemellato	Tuyau jumeau	Doppelschlauch	Tubo gemelo	h3=mm10976-channel lenght mm4490
50	580034297	2	Twin hose	Tubo gemellato	Tuyau jumeau	Doppelschlauch	Tubo gemelo	h3=mm11126-channel lenght mm4440
50	580034299	2	Twin hose	Tubo gemellato	Tuyau jumeau	Doppelschlauch	Tubo gemelo	h3=mm11126-channel lenght mm4540
50	580034298	2	Twin hose	Tubo gemellato	Tuyau jumeau	Doppelschlauch	Tubo gemelo	h3=mm11276-channel lenght mm4490
50	580034300	2	Twin hose	Tubo gemellato	Tuyau jumeau	Doppelschlauch	Tubo gemelo	h3=mm11276-channel lenght mm4590
50	580034299	2	Twin hose	Tubo gemellato	Tuyau jumeau	Doppelschlauch	Tubo gemelo	h3=mm11426-channel lenght mm4540
50	580034301	2	Twin hose	Tubo gemellato	Tuyau jumeau	Doppelschlauch	Tubo gemelo	h3=mm11426-channel lenght mm4640
50	580034300	2	Twin hose	Tubo gemellato	Tuyau jumeau	Doppelschlauch	Tubo gemelo	h3=mm11576

LIFTING UNIT (HE140R MAST)
GRUPPO SOLLEVAMENTO (MONTANTE HE140R)
GROUPE DE SOULEVEMENT (MONTANT HE140R)
HEBE-GRUPPE (PFOSTEN HE140R)
GRUPO ELEVACIÓN (MONTANTE HE140R) *FIGURE 18.3*

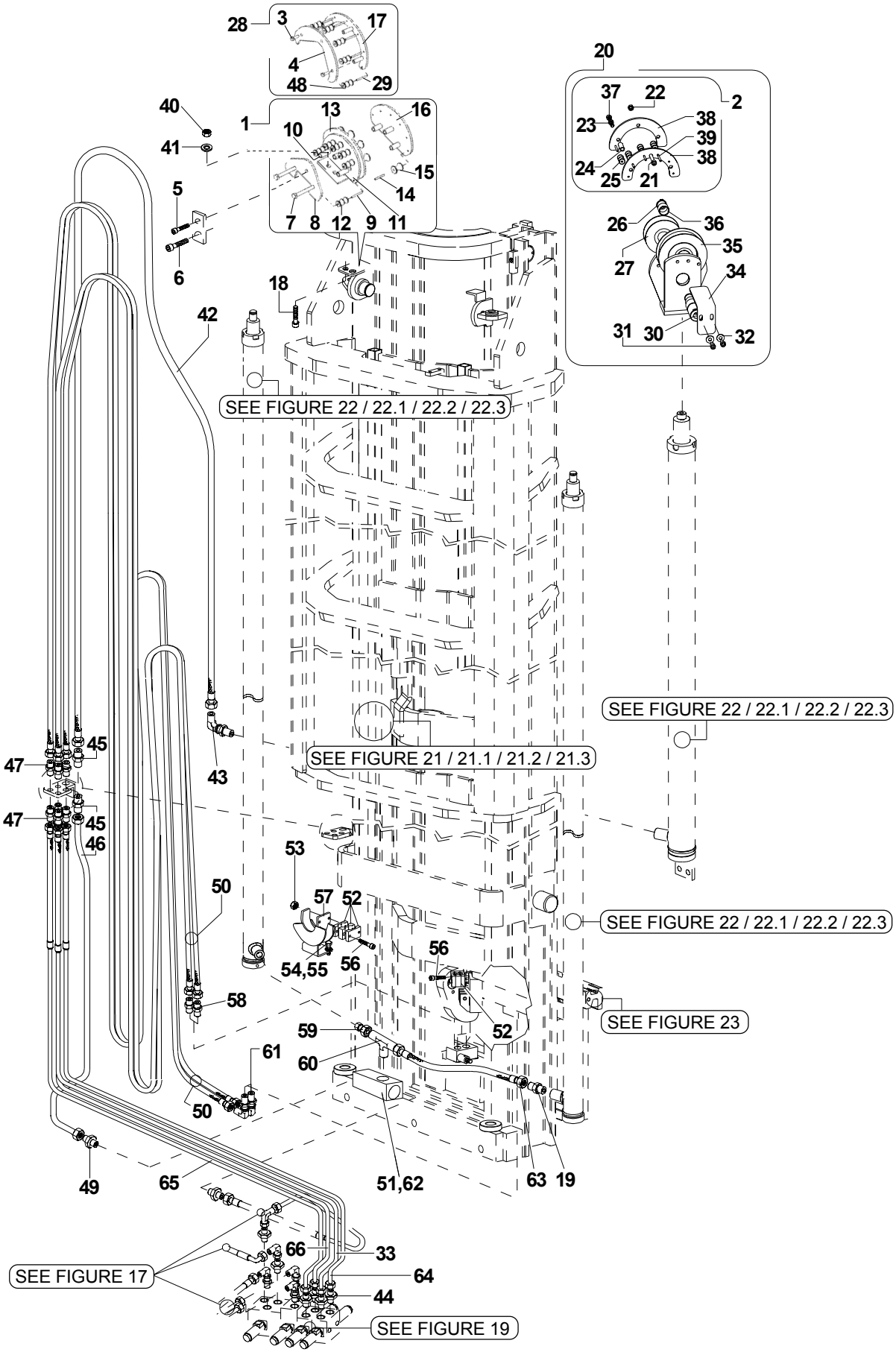

REF.	PART NO.	Q.TY	DESCRIPTION	DESCRIZIONE	DESIGNATION	BENENNUNG	DENOMINACIONES	PART DETAILS
50	580034301	2	Twin hose	Tubo gemellato	Tuyau jumeau	Doppelschlauch	Tubo gemelo	h3=mm11726
51	580031187	1	Valve	Valvola	Soupape	Ventil	Válvula	
52	580033967	2	Hose clamp	Fascetta	Sangle	Riemen	Brida	
53	449015135	2	Lock nut	Dado	écrou	Mutter	Tuerca	
54	449001415	2	Screw	Vite	Vis	Schraube	Tornillo	
55	504226242	2	Washer	Rondella	Rondelle	Unterlegscheibe	Arandela	
56	932107911	4	Screw	Vite	Vis	Schraube	Tornillo	
57	580023180	1	Braket	Staffa	Etrier	Bügel	Estribo	
58	277842500	2	Fitting	Raccordo	Raccord	Verbindung	Racor	
59	580031517	1	Fitting	Raccordo	Raccord	Verbindung	Racor	
60	580031516	1	Fitting	Raccordo	Raccord	Verbindung	Racor	
61	580033865	2	Fitting	Raccordo	Raccord	Verbindung	Racor	
62	580033894	1	Hydraulic block	Blocchetto	Blocage	Verteilerstück	Bloque	
63	580034215	1	Hose	Tubo	Tuyau	Schlauch	Tubo	
64	580034216	1	Hose	Tubo	Tuyau	Schlauch	Tubo	
65	580034219	1	Hose	Tubo	Tuyau	Schlauch	Tubo	
66	580034221	1	Hose	Tubo	Tuyau	Schlauch	Tubo	

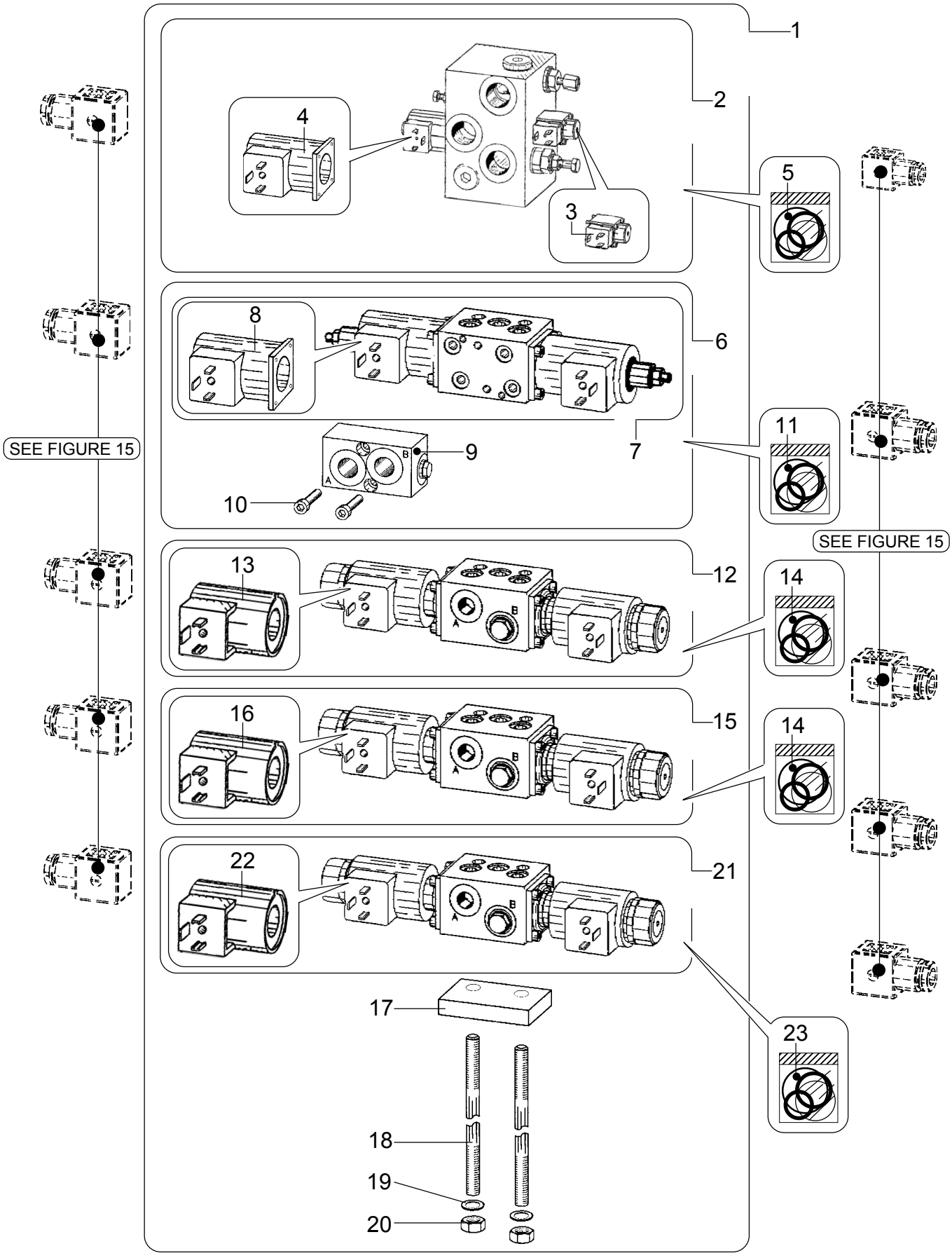
1
2
3
4
5
6
7
8
9
10
11
12
13
14
15
16
14
21
22
23
17
18
19
20
SEE FIGURE 15
SEE FIGURE 15

SOLENOID VALVE
ELETTROVALVOLA
SOUPAPE ÉLECTRIQUE
ELEKTROVENTIL
ELECTROVÁLVULA

FIGURE 19

REF.	PART NO.	Q.TY	DESCRIPTION	DESCRIZIONE	DESIGNATION	BENENNUNG	DENOMINACIONES	PART DETAILS
1	580026055	1	Solenoid Valve Assy	Ass. elettrovalvola	Ens. soupape électrique	Einheit Elektroventil	Grupo electroválvula	
✪ 1	580026056	1	Solenoid Valve Assy	Ass. elettrovalvola	Ens. soupape électrique	Einheit Elektroventil	Grupo electroválvula	For 5TH way
2	580032826	1	Valve Block Assy	Ass. blocco valvola	Ens. bloc soupape	Einheit Block	Grupo bloque válvula	
3	580032827	1	Coil	Bobina magnete	Magnéto	Magnet	Magneto	
4	580032828	1	Coil	Bobina magnete	Magnéto	Magnet	Magneto	
5	580032829	1	Sealkit	Kit guarnizioni	Kit joints	Dichtungssatz	Kit guarniciones	
6	580032830	1	Valve Block Assy	Ass. blocco valvola	Ens. bloc soupape	Einheit Block	Grupo bloque válvula	
7	580032831	1	Valve Block Assy	Ass. blocco valvola	Ens. bloc soupape	Einheit Block	Grupo bloque válvula	
8	580032828	2	Coil	Bobina magnete	Magnéto	Magnet	Magneto	
9	580032833	1	Block	Blocco	Bloc	Block	Bloque	
10	932200907	2	Screw	Vite	Vis	Schraube	Tornillo	
11	580032834	1	Sealkit	Kit guarnizioni	Kit joints	Dichtungssatz	Kit guarniciones	
12	277793600	1	Valve Block Assy	Ass. blocco valvola	Ens. bloc soupape	Einheit Block	Grupo bloque válvula	
13	580032835	2	Coil	Bobina magnete	Magnéto	Magnet	Magneto	
14	277994700	2	Sealkit	Kit guarnizioni	Kit joints	Dichtungssatz	Kit guarniciones	
15	277958900	1	Valve Block Assy	Ass. blocco valvola	Ens. bloc soupape	Einheit Block	Grupo bloque válvula	
16	580032835	2	Coil	Bobina magnete	Magnéto	Magnet	Magneto	
17	277286800	1	Plate	Piastra	Plaque	Platte	Plancha	
18	580032838	2	Stud Bolt	Prigioniero	Prisonnier	Stiftschraube	Tornillo prisoniero	
✪ 18	580032839	2	Stud Bolt	Prigioniero	Prisonnier	Stiftschraube	Tornillo prisoniero	For 5TH way
19	277286900	2	Washer	Rondella	Rondelle	Unterlegscheibe	Arandela	
20	277287000	2	Nut	Dado	Ecrou	Mutter	Tuerca	
✪ 21	277958900	1	Valve Block Assy	Ass. blocco valvola	Ens. bloc soupape	Einheit Block	Grupo bloque válvula	For 5TH way
✪ 22	580032835	2	Coil	Bobina magnete	Magnéto	Magnet	Magneto	For 5TH way
✪ 23	277994700	1	Sealkit	Kit guarnizioni	Kit joints	Dichtungssatz	Kit guarniciones	For 5TH way

✪ Optional (5 th. WAY) / Optional / Optionnel / Zusatzzubehör / Opcional

From serial N° / *Da matr.* / Du matr. / *Ab. seriennummer* / Desde la matr. :	Until serial N° / *Fino a matr.* / Jusq' matr. / *Bis zur serien-Nr.* / Hasta la matr. :	With the exception of / *Ad esclusione di* / À l'exclusion de / *Mit ausnahme von* / Excepto :	Including / *Compreso* / Avec / *Einschließlich* / Con :
C849T01501Z			

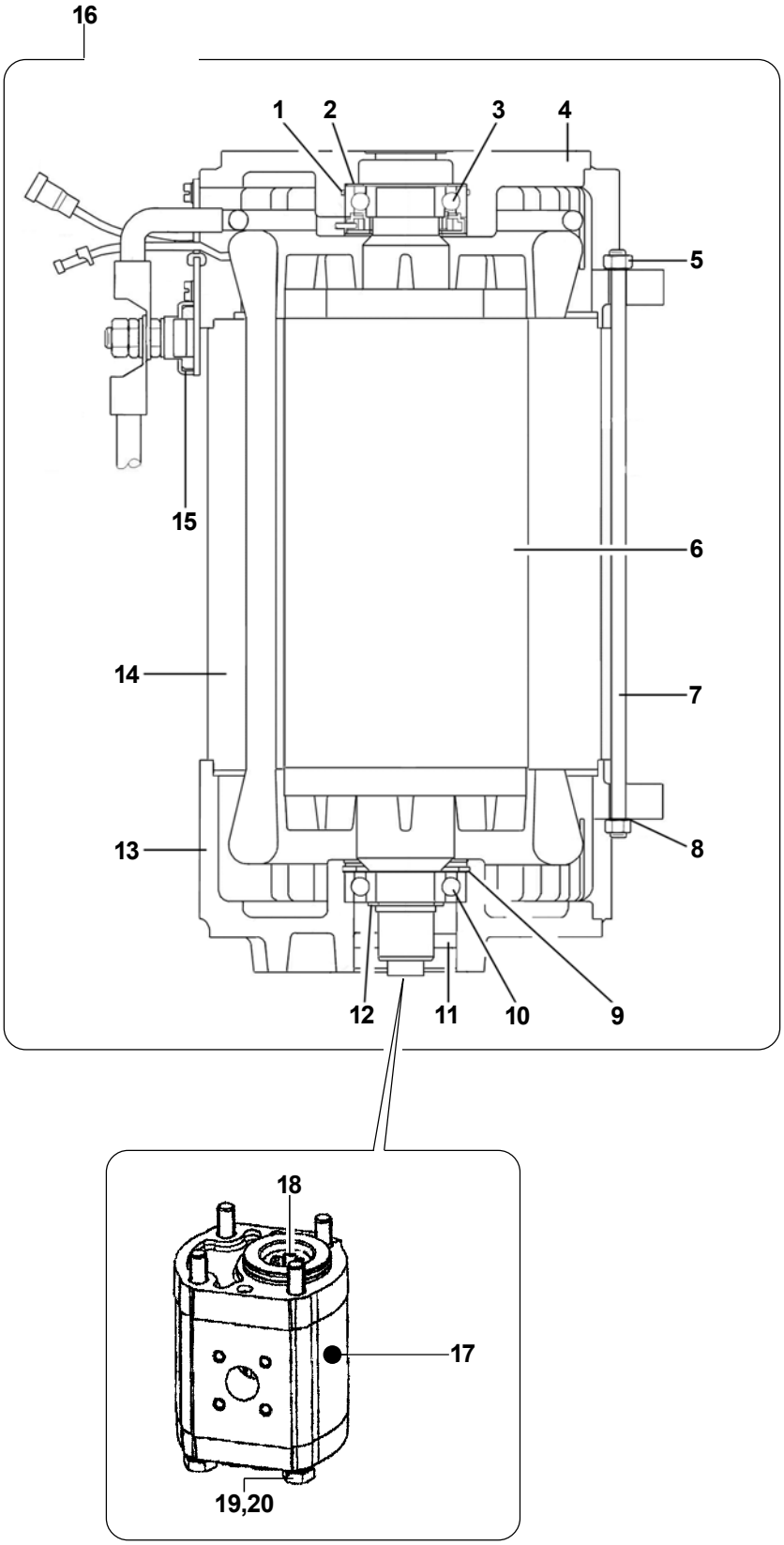
16
1
2
3
4
5
15
6
14
7
13
8
12
11
10
9
18
17
19,20

LIFT MOTOR AND PUMP
MOTOPOMPA SOLLEVAMENTO
MOTOPOMPE SOULEVEMENT
MOTORPUMPE ZUR ANAEBUNG
MOTOBOMBA ELEVACIÓN

FIGURE 20

REF.	PART NO.	Q.TY	DESCRIPTION	DESCRIZIONE	DESIGNATION	BENENNUNG	DENOMINACIONES	PART DETAILS
1	580031494	1	Seal ring	Guarnizione	Joint	Dichtung	Junta	
2	580011128	1	Washer	Rondella	Rondelle	Scheibe	Arandela	
3	580031585	1	Sensor bearing	Cuscinetto con sensore	Roulement	Lager	Rodamiento	
4	580031492	1	Commutator end plate	Estremità del collettore	Extrémité coté collecteur	Kollektorende	Extremo del colector	
5	449015014	8	Nut	Dado	Écrou	Mutter	Tuerca	
6	580031495	1	Armature	Indotto	Induit	Anker	Inducido	
7	580031493	4	Pin	Perno	Axe	Bolzen	Pasador	
8	580017283	8	Washer	Rondella	Rondelle	Scheibe	Arandela	
9	640046913	1	Snap ring	Anello di fermo	Bague d'arret	Sprengring	Fiador anular	
10	580031496	1	Bearing	Cuscinetto	Roulement	Lager	Rodamiento	
11	580031497	1	Seal	Guarnizione	Joint	Dichtring	Junta	
12	015915900	1	Snap ring	Anello di fermo	Bague d'arret	Sprengring	Fiador anular	
13	580031491	1	Drive end plate	Piastra terminale di comando	Plaque de commande	Antriebsplatte	Extremo plato motriz	
14	580031490	1	Armature	Indotto	Induit	Anker	Inducido	
15	580031484	3	Terminal clamp	Terminale a morsetto	Cosse	Klemmenbrett	Collarin de borna	
16	580025661	1	Lift motor	Motore sollevamento	Moteur levage	Motor hubwerk	Motor elevador	
17	272072300	1	Pump	Pompa	Pompe	Pumpe	Bomba	16CC. for models MR14/MR14H/MR16/MR16H/MR16N/MR20H/MR20W)
17	580032945	1	Pump	Pompa	Pompe	Pumpe	Bomba	11CC. for models MR20/MR25)
18	278053600	1	Coupling	Giunto	Accouplement	Kupplung	Acopiamiento	
19	505974549	4	Screw	Vite	Vis	Schraube	Tornillo	For models MR14/MR14H/MR16/MR16H/MR16N/MR20H/MR20W)
19	449001006	4	Screw	Vite	Vis	Schraube	Tornillo	For models MR20/MR25)
20	449021006	4	Washer	Rondella	Rondelle	Scheibe	Arandela	

From serial N° / *Da matr.* / Du matr. / *Ab. seriennummer* / Desde la matr. :	Until serial N° / *Fino a matr.* / Jusq' matr. / *Bis zur serien-Nr.* / Hasta la matr. :	With the exception of / *Ad esclusione di* / À l'exclusion de / *Mit ausnahme von* / Excepto :	Including / *Compreso* / Avec / *Einschließlich* / Con :
C849T01501Z			

DESCRIPTION / DESCRIZIONE / DESIGNATION / BENENNUNG / DENOMINACIONES **PAGE NO.**

BETA MAST (MR16-MR14-MR16N WITH BETA MAST) / MONTANTE BETA (MR16-MR14-MR16N CON MONTANTE BETA) / MONTANT BETA (MR16-MR14-MR16N CON MONTANTE BETA) / PFOSTEN BETA (MR16-MR14-MR16N MIT PFOSTEN BETA) / MONTANTE BETA (MR16-MR14-MR16N Y MONTANTE BETA) (FIGURE 21) 96-99

HE140L MAST (MR14H-MR20-MR16N WITH HE140L MAST) / MONTANTE HE140L (MR14H-MR20-MR16N CON MONTANTE HE140L) / MONTANT HE140L (MR14H-MR20-MR16N AVEC MONTANT HE140L) / PFOSTEN HE140L (MR14H-MR20-MR16N MIT PFOSTEN HE140L) / MONTANTE HE140L (MR14H-MR20-MR16N Y MONTANTE HE140L) (FIGURE 21.1) 100-103

HE140 MAST (MR16H-MR20H-MR25-MR20W WITH HE140 MAST) / MONTANTE HE140 (MR16H-MR20H-MR25-MR20W CON MONTANTE HE140) / MONTANT HE140 (MR16H-MR20H-MR25-MR20W AVEC MONTANT HE140) / PFOSTEN HE140 (MR16H-MR20H-MR25-MR20W MIT PFOSTEN HE140) / MONTANTE HE140 (MR16H-MR20H-MR25-MR20W Y MONTANTE HE140) (FIGURE 21.2) 104-109

HE140R MAST (MR16H-MR20H-MR25-MR20WV WITH HE140R MAST) / MONTANTE HE140R (MR16H-MR20H-MR25-MR20W CON MONTANTE HE140R) / MONTANT HE140R (MR16H-MR20H-MR25-MR20W AVEC MONTANT HE140R) / PFOSTEN HE140R (MR16H-MR20H-MR25-MR20W MIT PFOSTEN HE140R) / MONTANTE HE140R (MR16H-MR20H-MR25-MR20W Y MONTANTE HE140R) (FIGURE 21.3) 110-115

LIFT CYLINDERS (MR16-MR14-MR16N WITH BETA MAST) / CILINDRI SOLLEVAMENTO (MR16-MR14-MR16N CON MONTANTE BETA) / CYLINDRE DE SOULEVEMENT (MR16-MR14-MR16NC) / HUBZYLINDER (MR16-MR14-MR16N MIT PFOSTEN BETA) / CILINDRO DE ELEVACIÓN (MR16-MR14-MR16N Y MONTANTE BETA) (FIGURE 22) 116-119

LIFT CYLINDERS (MR14H-MR20-MR16N WITH HE140L MAST) / CILINDRI SOLLEVAMENTO (MR14H-MR20-MR16N CON MONTANTE HE140L) / CYLINDRE DE SOULEVEMENT (MR14H-MR20-MR16N AVEC MONTANT HE140L) / HUBZYLINDER (MR14H-MR20-MR16N MIT PFOSTEN HE140L) / CILINDRO DE ELEVACIÓN (MR14H-MR20-MR16N Y MONTANTE HE140L) (FIGURE 22.1) 120-123

LIFT CYLINDERS (MR16H-MR20H-MR25-MR20W WITH HE140 MAST) / CILINDRI SOLLEVAMENTO (MR16H-MR20H-MR25-MR20W CON MONTANTE HE140) / CYLINDRE DE SOULEVEMENT (MR16H-MR20H-MR25-MR20W AVEC MONTANT HE140) / HUBZYLINDER (MR16H-MR20H-MR25-MR20W MIT PFOSTEN HE140) / CILINDRO DE ELEVACIÓN (MR16H-MR20H-MR25-MR20W Y MONTANTE HE140) (FIGURE 22.2) 124-129

LIFT CYLINDERS (MR16H-MR20H-MR25-MR20W WITH HE140R MAST) / CILINDRI SOLLEVAMENTO (MR16H-MR20H-MR25-MR20W CON MONTANTE HE140R) / CYLINDRE DE SOULEVEMENT (MR16H-MR20H-MR25-MR20W AVEC MONTANT HE140R) / HUBZYLINDER (MR16H-MR20H-MR25-MR20W MIT PFOSTEN HE140R) / CILINDRO DE ELEVACIÓN (MR16H-MR20H-MR25-MR20W Y MONTANTE HE140R) (FIGURE 22.3) 130-137

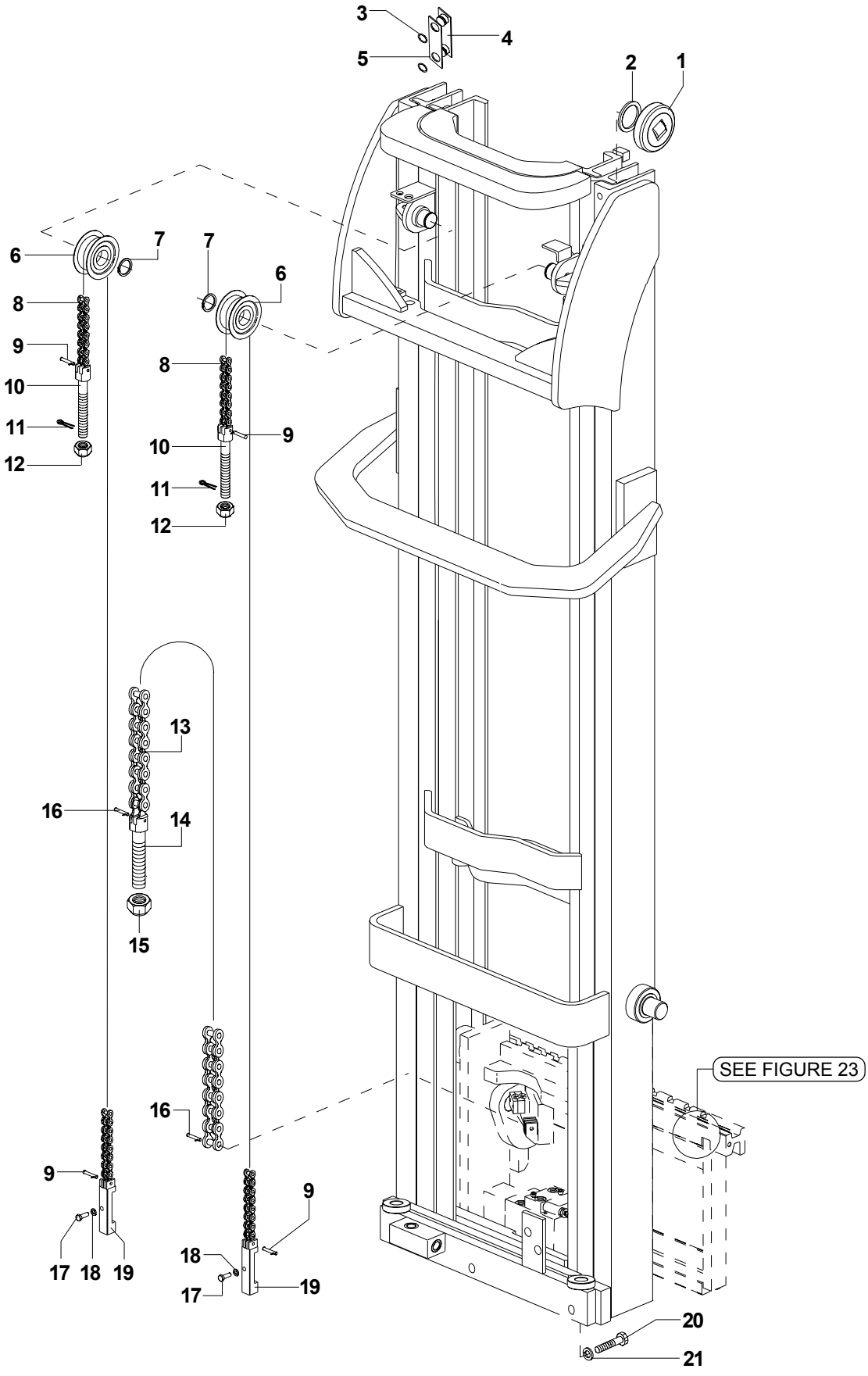
3
4
5
2
1
6
7
7
6
8
9
10
11
12
8
9
10
11
12
13
16
14
15
16
9
17
18
19
9
18
17
19
SEE FIGURE 23
20
21

Yale

MODELS MR16 / MR14 / MR16N with Beta mast

BETA MAST
MONTANTE BETA
MONTANT BETA
PFOSTEN BETA
MONTANTE BETA

FIGURE 21

REF.	PART NO.	Q.TY	DESCRIPTION	DESCRIZIONE	DESIGNATION	BENENNUNG	DENOMINACIONES	PART DETAILS
1	520036852	8	Bearing	Cuscinetto	Roulement	Lager	Rodamiento	
2	504233232	16	Washer	Rondella	Rondelle	Scheibe	Arandela	
3	012824300	8	O-Ring	Anello OR	Bague "O-Ring"	OR-Ring	Anillo OR	
4	504075764	4	Bearing strip	Striscia cuscinetti	Trait	Streif	Tira	
5	520037804	AR	Shim	Distanziale	Entretoise	Distanzstück	Separador	0.2 mm
5	504234265	AR	Shim	Distanziale	Entretoise	Distanzstück	Separador	0.5 mm
6	580029647	2	Chain sheave	Carrucola	Publie	Rollenzug	Polea	
7	277007300	2	Snap ring	Seeger	Arretoir	Seeger-Ring	Seeger	
8	277431100	2	Chain	Catena	Chaîne	Kette	Cadena	NO.Links117-h3=mm4476
8	580028850	2	Chain	Catena	Chaîne	Kette	Cadena	NO.Links119-h3=mm4626
8	277698600	2	Chain	Catena	Chaîne	Kette	Cadena	NO.Links123-h3=mm4776
8	277698700	2	Chain	Catena	Chaîne	Kette	Cadena	NO.Links125-h3=mm4926
8	580028853	2	Chain	Catena	Chaîne	Kette	Cadena	NO.Links129-h3=mm5076
8	277699000	2	Chain	Catena	Chaîne	Kette	Cadena	NO.Links131-h3=mm5226
8	277431300	2	Chain	Catena	Chaîne	Kette	Cadena	NO.Links135-h3=mm5376
8	277699300	2	Chain	Catena	Chaîne	Kette	Cadena	NO.Links139-h3=mm5526
8	277699400	2	Chain	Catena	Chaîne	Kette	Cadena	NO.Links141-h3=mm5676
8	277699600	2	Chain	Catena	Chaîne	Kette	Cadena	NO.Links145-h3=mm5826
8	277699800	2	Chain	Catena	Chaîne	Kette	Cadena	NO.Links153-h3=mm5876
8	580028858	2	Chain	Catena	Chaîne	Kette	Cadena	NO.Links147-h3=mm5976
8	580028861	2	Chain	Catena	Chaîne	Kette	Cadena	NO.Links157-h3=mm6026
8	277699700	2	Chain	Catena	Chaîne	Kette	Cadena	NO.Links151-h3=mm6126
8	277552900	2	Chain	Catena	Chaîne	Kette	Cadena	NO.Links161-h3=mm6176
8	277699800	2	Chain	Catena	Chaîne	Kette	Cadena	NO.Links153-h3=mm6276
8	580028863	2	Chain	Catena	Chaîne	Kette	Cadena	NO.Links163-h3=mm6326
8	580028861	2	Chain	Catena	Chaîne	Kette	Cadena	NO.Links157-h3=mm6426
8	580028864	2	Chain	Catena	Chaîne	Kette	Cadena	NO.Links167-h3=mm6476
8	277552900	2	Chain	Catena	Chaîne	Kette	Cadena	NO.Links161-h3=mm6576
8	580028865	2	Chain	Catena	Chaîne	Kette	Cadena	NO.Links169-h3=mm6626
8	580028863	2	Chain	Catena	Chaîne	Kette	Cadena	NO.Links163-h3=mm6726
8	277700000	2	Chain	Catena	Chaîne	Kette	Cadena	NO.Links173-h3=mm6776
8	580028864	2	Chain	Catena	Chaîne	Kette	Cadena	NO.Links167-h3=mm6876
8	580028865	2	Chain	Catena	Chaîne	Kette	Cadena	NO.Links169-h3=mm7026
8	277700000	2	Chain	Catena	Chaîne	Kette	Cadena	NO.Links173-h3=mm7176
9	273109800	4	Chain pin with split pins	Perno con copiglia	Axe avec goupille	Stift mit Splint	Perno con pasador	
10	273109900	2	Chain stretcher	Tendicatena	Tendeur de chaine	Kettenspanner	Tensor de cadena	
11	015418300	2	Pin	Coppiglia	Goupille élastique	Federstift	Enchufe elástico	
12	449015107	2	Nut	Dado	Écrou	Mutter	Tuerca	
13	277433700	1	Chain	Catena	Chaîne	Kette	Cadena	NO.Links53-h3=mm4476
13	277433800	1	Chain	Catena	Chaîne	Kette	Cadena	NO.Links55-h3=mm4626
13	277570100	1	Chain	Catena	Chaîne	Kette	Cadena	NO.Links57-h3=mm4776
13	277570100	1	Chain	Catena	Chaîne	Kette	Cadena	NO.Links57-h3=mm4926
13	277552700	1	Chain	Catena	Chaîne	Kette	Cadena	NO.Links59-h3=mm5076
13	277570200	1	Chain	Catena	Chaîne	Kette	Cadena	NO.Links61-h3=mm5226
13	277570200	1	Chain	Catena	Chaîne	Kette	Cadena	NO.Links61-h3=mm5376
13	277433900	1	Chain	Catena	Chaîne	Kette	Cadena	NO.Links63-h3=mm5526
13	580028868	1	Chain	Catena	Chaîne	Kette	Cadena	NO.Links65-h3=mm5676

From serial N° / *Da matr.* / Du matr. / *Ab. seriennummer* / Desde la matr. :	Until serial N° / *Fino a matr.* / Jusq' matr. / *Bis zur serien-Nr.* / Hasta la matr. :	With the exception of / *Ad esclusione di* / À l'exclusion de / *Mit ausnahme von* / Excepto :	Including / *Compreso* / Avec / *Einschließlich* / Con :
C849T01501Z			

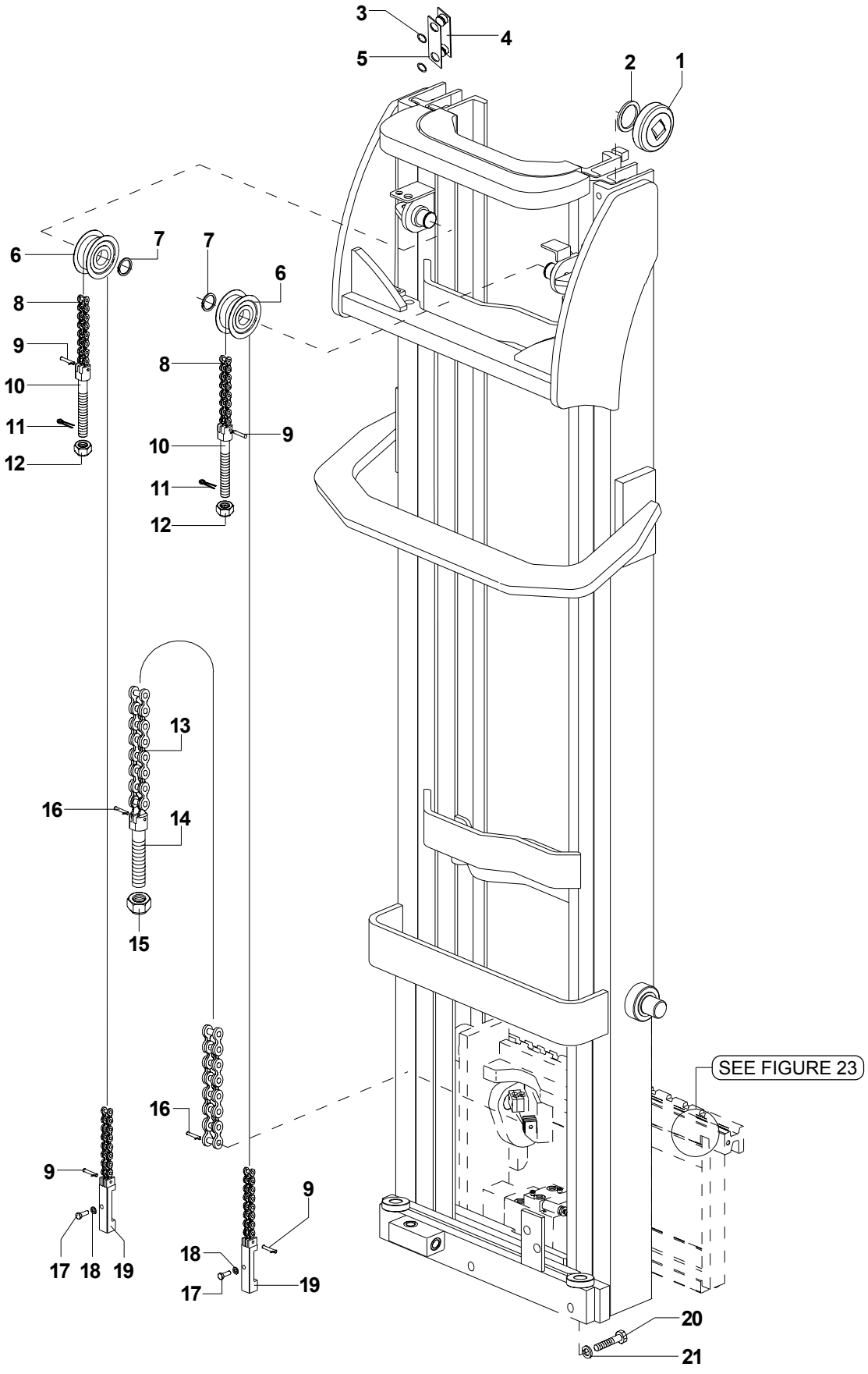
3
4
5
2
1
6
7
7
6
8
9
10
11
12
8
9
10
11
12
13
16
14
15
16
9
17
18
19
9
18
17
19
SEE FIGURE 23
20
21

REF.	PART NO.	Q.TY	DESCRIPTION	DESCRIZIONE	DESIGNATION	BENENNUNG	DENOMINACIONES	PART DETAILS
13	580028868	1	Chain	Catena	Chaîne	Kette	Cadena	NO.Links65-h3=mm5826
13	277570300	1	Chain	Catena	Chaîne	Kette	Cadena	NO.Links67-h3=mm5876
13	277570300	1	Chain	Catena	Chaîne	Kette	Cadena	NO.Links67-h3=mm5976
13	277434000	1	Chain	Catena	Chaîne	Kette	Cadena	NO.Links69-h3=mm6026
13	277434000	1	Chain	Catena	Chaîne	Kette	Cadena	NO.Links69-h3=mm6126
13	277434100	1	Chain	Catena	Chaîne	Kette	Cadena	NO.Links71-h3=mm6176
13	277570300	1	Chain	Catena	Chaîne	Kette	Cadena	NO.Links67-h3=mm6276
13	277434100	1	Chain	Catena	Chaîne	Kette	Cadena	NO.Links71-h3=mm6326
13	277434000	1	Chain	Catena	Chaîne	Kette	Cadena	NO.Links69-h3=mm6426
13	277570500	1	Chain	Catena	Chaîne	Kette	Cadena	NO.Links73-h3=mm6476
13	277434100	1	Chain	Catena	Chaîne	Kette	Cadena	NO.Links71-h3=mm6576
13	277434200	1	Chain	Catena	Chaîne	Kette	Cadena	NO.Links75-h3=mm6626
13	277434100	1	Chain	Catena	Chaîne	Kette	Cadena	NO.Links71-h3=mm6726
13	277570300	1	Chain	Catena	Chaîne	Kette	Cadena	NO.Links67-h3=mm6776
13	277570500	1	Chain	Catena	Chaîne	Kette	Cadena	NO.Links73-h3=mm6876
13	277434200	1	Chain	Catena	Chaîne	Kette	Cadena	NO.Links75-h3=mm7026
13	277570300	1	Chain	Catena	Chaîne	Kette	Cadena	NO.Links67-h3=mm7176
14	277006900	1	Chain stretcher	Tendicatena	Tendeur de chaine	Kettenspanner	Tensor de cadena	
15	449015113	1	Nut	Dado	Écrou	Mutter	Tuerca	
16	277007000	2	Chain pin with split pins	Perno con copiglia	Axe avec goupille	Stift mit Splint	Perno con pasador	
17	449001014	2	Screw	Vite	Vis	Schraube	Tornillo	
18	504226242	2	Washer	Rondella	Rondelle	Unterlegscheibe	Arandela	
19	580028809	2	Chain anchor	Attacco catena	Attelage chaîne	Kettenverschluß	Conexión cadena	
20	311323023	4	Screw	Vite	Vis	Schraube	Tornillo	
21	580030122	4	Washer	Rosetta	Rondelle	Unterlegscheibe	Arandela	

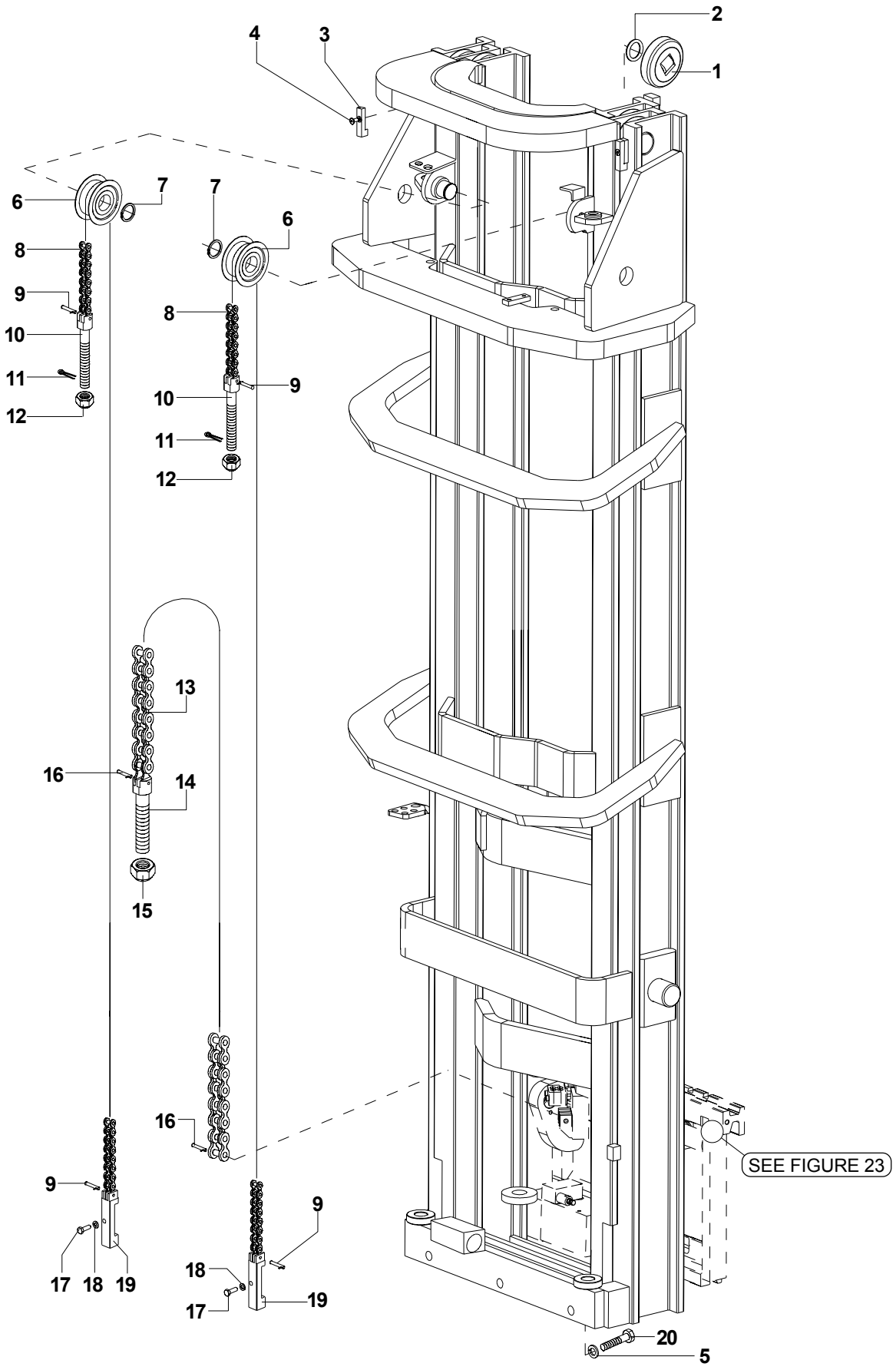
1
2
3
4
5
6
7
8
9
10
11
12
13
14
15
16
17
18
19
20
SEE FIGURE 23

REF.	PART NO.	Q.TY	DESCRIPTION	DESCRIZIONE	DESIGNATION	BENENNUNG	DENOMINACIONES	PART DETAILS
1	580032929	8	Bearing	Cuscinetto	Roulement	Lager	Rodamiento	Diam. 101.5
1	580033120	8	Bearing	Cuscinetto	Roulement	Lager	Rodamiento	Diam. 101.9
1	580032928	8	Bearing	Cuscinetto	Roulement	Lager	Rodamiento	Diam. 102.3
2	504233232	16	Washer	Rondella	Rondelle	Scheibe	Arandela	
3	580033886	2	Mast stop	Fermo montanti	Arrêt de montant	Pfostenblockierung	Parada montante	
4	580008824	2	Screw	Vite	Vis	Schraube	Tornillo	
5	580030122	4	Washer	Rosetta	Rondelle	Unterlegscheibe	Arandela	
6	580029647	2	Chain sheave	Carrucola	Publie	Rollenzug	Polea	
7	277007300	2	Snap ring	Seeger	Arretoir	Seeger-Ring	Seeger	
8	580034442	2	Chain	Catena	Chaîne	Kette	Cadena	NO.Links115-h3=mm4476
8	277681700	2	Chain	Catena	Chaîne	Kette	Cadena	NO.Links119-h3=mm4626
8	277681800	2	Chain	Catena	Chaîne	Kette	Cadena	NO.Links121-h3=mm4776
8	277432000	2	Chain	Catena	Chaîne	Kette	Cadena	NO.Links125-h3=mm4926
8	277682100	2	Chain	Catena	Chaîne	Kette	Cadena	NO.Links129-h3=mm5076
8	277682200	2	Chain	Catena	Chaîne	Kette	Cadena	NO.Links131-h3=mm5226
8	580031334	2	Chain	Catena	Chaîne	Kette	Cadena	NO.Links135-h3=mm5376
8	277682300	2	Chain	Catena	Chaîne	Kette	Cadena	NO.Links137-h3=mm5526
8	277682500	2	Chain	Catena	Chaîne	Kette	Cadena	NO.Links141-h3=mm5676
8	277682700	2	Chain	Catena	Chaîne	Kette	Cadena	NO.Links145-h3=mm5826
8	277682800	2	Chain	Catena	Chaîne	Kette	Cadena	NO.Links147-h3=mm5976
8	277683000	2	Chain	Catena	Chaîne	Kette	Cadena	NO.Links151-h3=mm6126
8	277432200	2	Chain	Catena	Chaîne	Kette	Cadena	NO.Links153-h3=mm6276
8	277683200	2	Chain	Catena	Chaîne	Kette	Cadena	NO.Links157-h3=mm6426
8	277683300	2	Chain	Catena	Chaîne	Kette	Cadena	NO.Links159-h3=mm6576
8	580031328	2	Chain	Catena	Chaîne	Kette	Cadena	NO.Links163-h3=mm6726
8	580031329	2	Chain	Catena	Chaîne	Kette	Cadena	NO.Links167-h3=mm6876
8	580031330	2	Chain	Catena	Chaîne	Kette	Cadena	NO.Links169-h3=mm7026-channel lenght mm2840
8	277683400	2	Chain	Catena	Chaîne	Kette	Cadena	NO.Links175-h3=mm7026-channel lenght mm2940
8	277432300	2	Chain	Catena	Chaîne	Kette	Cadena	NO.Links173-h3=mm7176-channel lenght mm2890
8	580031331	2	Chain	Catena	Chaîne	Kette	Cadena	NO.Links179-h3=mm7176-channel lenght mm2990
8	277432400	2	Chain	Catena	Chaîne	Kette	Cadena	NO.Links181-h3=mm7326
8	277683700	2	Chain	Catena	Chaîne	Kette	Cadena	NO.Links185-h3=mm7476
8	277683900	2	Chain	Catena	Chaîne	Kette	Cadena	NO.Links189-h3=mm7626
8	277432500	2	Chain	Catena	Chaîne	Kette	Cadena	NO.Links191-h3=mm7776
8	277684100	2	Chain	Catena	Chaîne	Kette	Cadena	NO.Links195-h3=mm7926
8	277684200	2	Chain	Catena	Chaîne	Kette	Cadena	NO.Links197-h3=mm8076
8	277432600	2	Chain	Catena	Chaîne	Kette	Cadena	NO.Links201-h3=mm8226
8	580031332	2	Chain	Catena	Chaîne	Kette	Cadena	NO.Links211-h3=mm8276
8	277684400	2	Chain	Catena	Chaîne	Kette	Cadena	NO.Links203-h3=mm8376
8	580031333	2	Chain	Catena	Chaîne	Kette	Cadena	NO.Links213-h3=mm8426
8	277684600	2	Chain	Catena	Chaîne	Kette	Cadena	NO.Links207-h3=mm8526
8	277684800	2	Chain	Catena	Chaîne	Kette	Cadena	NO.Links217-h3=mm8576
8	277684900	2	Chain	Catena	Chaîne	Kette	Cadena	NO.Links219-h3=mm8726
9	273109800	4	Chain pin with split pins	Perno con copiglia	Axe avec goupille	Stift mit Splint	Perno con pasador	
10	273014200	2	Chain stretcher	Tendicatena	Tendeur de chaine	Kettenspanner	Tensor de cadena	
11	015418300	2	Pin	Coppiglia	Goupille élastique	Federstift	Enchufe elástico	
12	449015107	2	Nut	Dado	Écrou	Mutter	Tuerca	

SEE PAGE 162 FOR BEARINGS STAMP

From serial N° / *Da matr.* / Du matr. / *Ab. seriennummer* / Desde la matr. :	Until serial N° / *Fino a matr.* / Jusq' matr. / *Bis zur serien-Nr.* / Hasta la matr. :	With the exception of / *Ad esclusione di* / À l'exclusion de / *Mit ausnahme von* / Excepto :	Including / *Compreso* / Avec / *Einschließlich* / Con :
C849T01501Z			

HE140L MAST
MONTANTE HE140L
MONTANT HE140L
PFOSTEN HE140L
MONTANTE HE140L

FIGURE 21.1

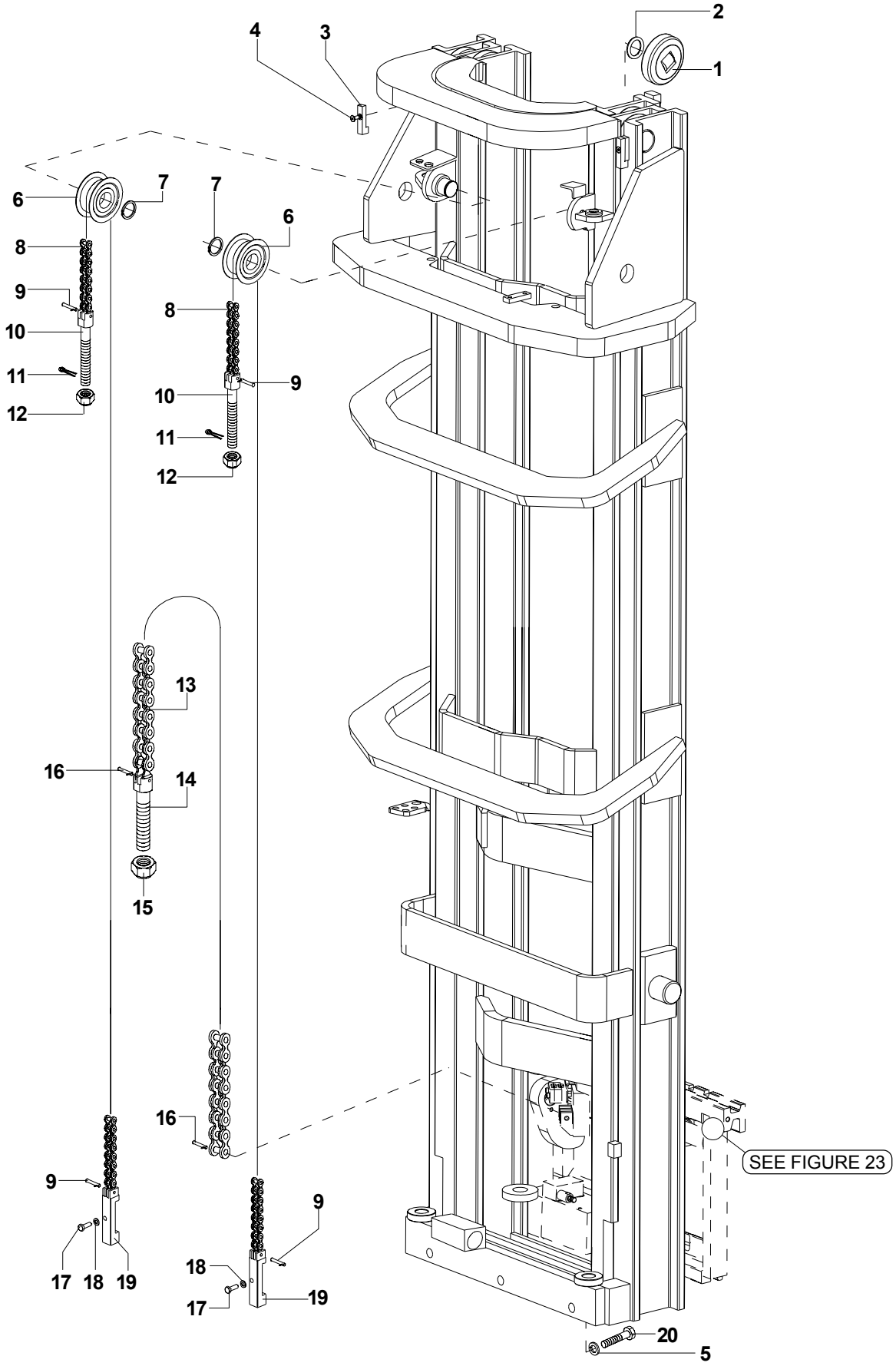

REF.	PART NO.	Q.TY	DESCRIPTION	DESCRIZIONE	DESIGNATION	BENENNUNG	DENOMINACIONES	PART DETAILS
13	580033887	1	Chain	Catena	Chaîne	Kette	Cadena	NO.Links47-h3=mm4476
13	524140748	1	Chain	Catena	Chaîne	Kette	Cadena	NO.Links49-h3=mm4626
13	580032775	1	Chain	Catena	Chaîne	Kette	Cadena	NO.Links51-h3=mm4776
13	580032775	1	Chain	Catena	Chaîne	Kette	Cadena	NO.Links51-h3=mm4926
13	580014167	1	Chain	Catena	Chaîne	Kette	Cadena	NO.Links53-h3=mm5076
13	580033292	1	Chain	Catena	Chaîne	Kette	Cadena	NO.Links55-h3=mm5226
13	580033292	1	Chain	Catena	Chaîne	Kette	Cadena	NO.Links55-h3=mm5376
13	580014179	1	Chain	Catena	Chaîne	Kette	Cadena	NO.Links57-h3=mm5526
13	580032776	1	Chain	Catena	Chaîne	Kette	Cadena	NO.Links59-h3=mm5676
13	580032776	1	Chain	Catena	Chaîne	Kette	Cadena	NO.Links59-h3=mm5826
13	580014166	1	Chain	Catena	Chaîne	Kette	Cadena	NO.Links61-h3=mm5976
13	520045193	1	Chain	Catena	Chaîne	Kette	Cadena	NO.Links63-h3=mm6126
13	580014166	1	Chain	Catena	Chaîne	Kette	Cadena	NO.Links61-h3=mm6276
13	520045193	1	Chain	Catena	Chaîne	Kette	Cadena	NO.Links63-h3=mm6426
13	580014168	1	Chain	Catena	Chaîne	Kette	Cadena	NO.Links65-h3=mm6576
13	520045193	1	Chain	Catena	Chaîne	Kette	Cadena	NO.Links63-h3=mm6726
13	580014168	1	Chain	Catena	Chaîne	Kette	Cadena	NO.Links65-h3=mm6876
13	580033291	1	Chain	Catena	Chaîne	Kette	Cadena	NO.Links67-h3=mm7026-channel lenght mm2840
13	520045193	1	Chain	Catena	Chaîne	Kette	Cadena	NO.Links63-h3=mm7026-channel lenght mm2940
13	580014166	1	Chain	Catena	Chaîne	Kette	Cadena	NO.Links61-h3=mm7176-channel lenght mm2890
13	580014168	1	Chain	Catena	Chaîne	Kette	Cadena	NO.Links65-h3=mm7176-channel lenght mm2990
13	580014168	1	Chain	Catena	Chaîne	Kette	Cadena	NO.Links65-h3=mm7326
13	580033291	1	Chain	Catena	Chaîne	Kette	Cadena	NO.Links67-h3=mm7476
13	520050842	1	Chain	Catena	Chaîne	Kette	Cadena	NO.Links69-h3=mm7626
13	520050842	1	Chain	Catena	Chaîne	Kette	Cadena	NO.Links69-h3=mm7776
13	520050865	1	Chain	Catena	Chaîne	Kette	Cadena	NO.Links71-h3=mm7926
13	520045191	1	Chain	Catena	Chaîne	Kette	Cadena	NO.Links73-h3=mm8076
13	520045191	1	Chain	Catena	Chaîne	Kette	Cadena	NO.Links73-h3=mm8226
13	520045271	1	Chain	Catena	Chaîne	Kette	Cadena	NO.Links77-h3=mm8276
13	520050836	1	Chain	Catena	Chaîne	Kette	Cadena	NO.Links75-h3=mm8376
13	580045192	1	Chain	Catena	Chaîne	Kette	Cadena	NO.Links79-h3=mm8426
13	520045271	1	Chain	Catena	Chaîne	Kette	Cadena	NO.Links77-h3=mm8526
13	580033889	1	Chain	Catena	Chaîne	Kette	Cadena	NO.Links81-h3=mm8576
13	580033889	1	Chain	Catena	Chaîne	Kette	Cadena	NO.Links81-h3=mm8726
14	580033888	1	Chain stretcher	Tendicatena	Tendeur de chaine	Kettenspanner	Tensor de cadena	
15	449015113	1	Nut	Dado	Écrou	Mutter	Tuerca	
16	580029645	1	Chain pin with split pins	Perno con copiglia	Axe avec goupille	Stift mit Splint	Perno con pasador	
17	449001014	2	Screw	Vite	Vis	Schraube	Tornillo	
18	504226242	2	Washer	Rondella	Rondelle	Unterlegscheibe	Arandela	
19	580028809	2	Chain anchor	Attacco catena	Attelage chaîne	Kettenverschluß	Conexión cadena	
20	311323023	4	Screw	Vite	Vis	Schraube	Tornillo	

SEE PAGE 162 FOR BEARINGS STAMP

From serial N° / *Da matr.* / Du matr. / *Ab. seriennummer* / Desde la matr. :	Until serial N° / *Fino a matr.* / Jusq' matr. / *Bis zur serien-Nr.* / Hasta la matr. :	With the exception of / *Ad esclusione di* / À l'exclusion de / *Mit ausnahme von* / Excepto :	Including / *Compreso* / Avec / *Einschließlich* / Con :
C849T01501Z			

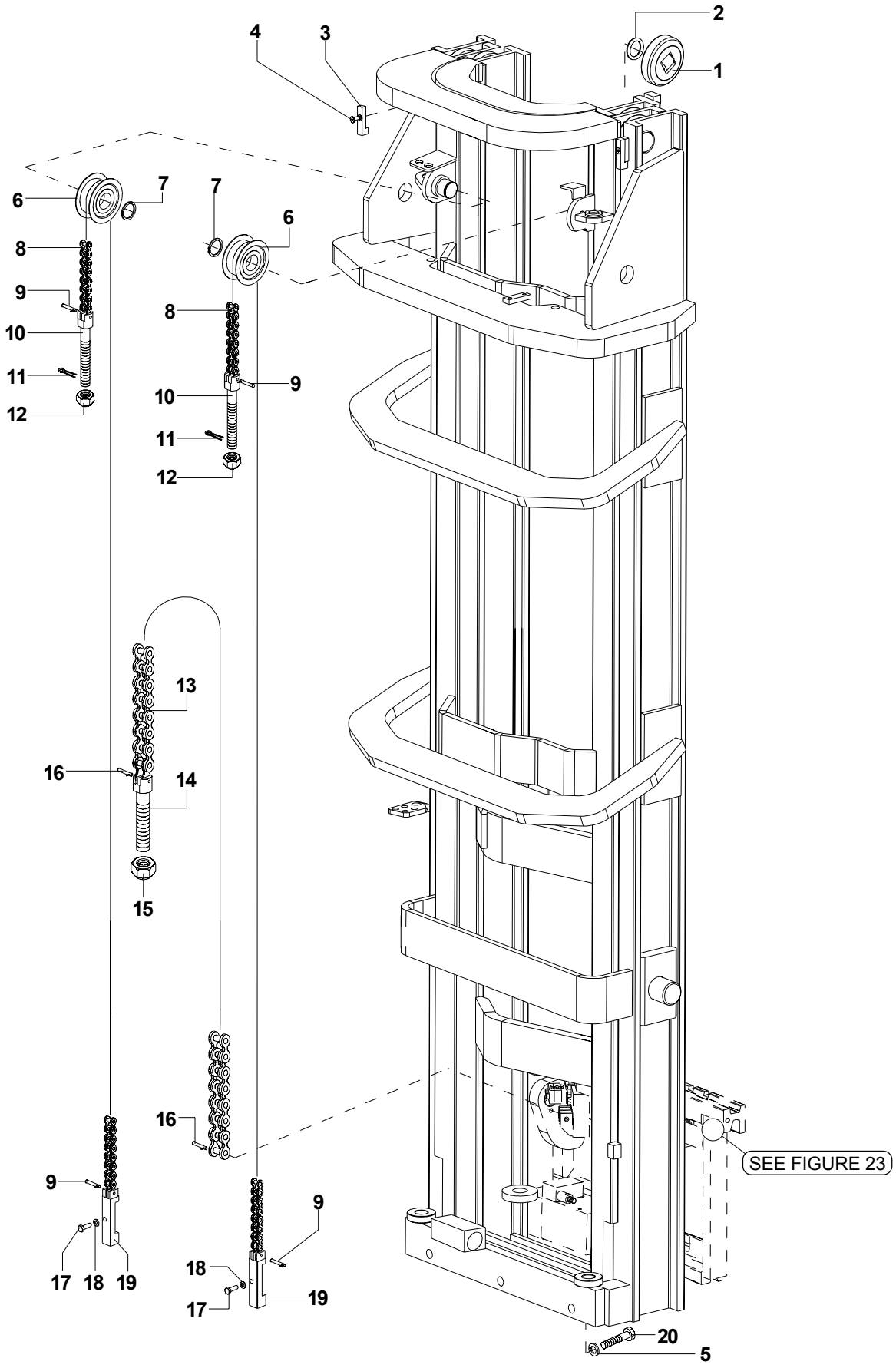
1
2
3
4
5
6
7
8
9
10
11
12
13
14
15
16
17
18
19
20
SEE FIGURE 23

REF.	PART NO.	Q.TY	DESCRIPTION	DESCRIZIONE	DESIGNATION	BENENNUNG	DENOMINACIONES	PART DETAILS
1	580032929	8	Bearing	Cuscinetto	Roulement	Lager	Rodamiento	Diam. 101.5
1	580033120	8	Bearing	Cuscinetto	Roulement	Lager	Rodamiento	Diam. 101.9
1	580032928	8	Bearing	Cuscinetto	Roulement	Lager	Rodamiento	Diam. 102.3
2	504233232	16	Washer	Rondella	Rondelle	Scheibe	Arandela	
3	580033886	2	Mast stop	Fermo montanti	Arrêt de montant	Pfostenblockierung	Parada montante	
4	580008824	2	Screw	Vite	Vis	Schraube	Tornillo	
5	580030122	4	Washer	Rosetta	Rondelle	Unterlegscheibe	Arandela	
6	580029647	2	Chain sheave	Carrucola	Publie	Rollenzug	Polea	
7	277007300	2	Snap ring	Seeger	Arretoir	Seeger-Ring	Seeger	
8	580034442	2	Chain	Catena	Chaîne	Kette	Cadena	NO.Links115-h3=mm4376
8	277681700	2	Chain	Catena	Chaîne	Kette	Cadena	NO.Links119-h3=mm4526
8	277681800	2	Chain	Catena	Chaîne	Kette	Cadena	NO.Links121-h3=mm4676
8	277432000	2	Chain	Catena	Chaîne	Kette	Cadena	NO.Links125-h3=mm4826
8	277682100	2	Chain	Catena	Chaîne	Kette	Cadena	NO.Links129-h3=mm4976
8	277682200	2	Chain	Catena	Chaîne	Kette	Cadena	NO.Links131-h3=mm5126
8	580031334	2	Chain	Catena	Chaîne	Kette	Cadena	NO.Links135-h3=mm5276
8	277682300	2	Chain	Catena	Chaîne	Kette	Cadena	NO.Links137-h3=mm5426
8	277682500	2	Chain	Catena	Chaîne	Kette	Cadena	NO.Links141-h3=mm5576
8	277682700	2	Chain	Catena	Chaîne	Kette	Cadena	NO.Links145-h3=mm5726
8	277682800	2	Chain	Catena	Chaîne	Kette	Cadena	NO.Links147-h3=mm5876
8	277683000	2	Chain	Catena	Chaîne	Kette	Cadena	NO.Links151-h3=mm6026
8	277432200	2	Chain	Catena	Chaîne	Kette	Cadena	NO.Links153-h3=mm6176
8	277683200	2	Chain	Catena	Chaîne	Kette	Cadena	NO.Links157-h3=mm6326
8	277683300	2	Chain	Catena	Chaîne	Kette	Cadena	NO.Links159-h3=mm6476
8	580031328	2	Chain	Catena	Chaîne	Kette	Cadena	NO.Links163-h3=mm6626
8	580031329	2	Chain	Catena	Chaîne	Kette	Cadena	NO.Links167-h3=mm6776
8	580031330	2	Chain	Catena	Chaîne	Kette	Cadena	NO.Links169-h3=mm6926
8	277683400	2	Chain	Catena	Chaîne	Kette	Cadena	NO.Links175-h3=mm7026
8	277432300	2	Chain	Catena	Chaîne	Kette	Cadena	NO.Links173-h3=mm7076
8	580031331	2	Chain	Catena	Chaîne	Kette	Cadena	NO.Links179-h3=mm7176
8	277683400	2	Chain	Catena	Chaîne	Kette	Cadena	NO.Links175-h3=mm7226
8	277432400	2	Chain	Catena	Chaîne	Kette	Cadena	NO.Links181-h3=mm7326
8	580031331	2	Chain	Catena	Chaîne	Kette	Cadena	NO.Links179-h3=mm7376
8	277683700	2	Chain	Catena	Chaîne	Kette	Cadena	NO.Links185-h3=mm7476
8	277432400	2	Chain	Catena	Chaîne	Kette	Cadena	NO.Links181-h3=mm7526
8	277683900	2	Chain	Catena	Chaîne	Kette	Cadena	NO.Links189-h3=mm7626
8	277683700	2	Chain	Catena	Chaîne	Kette	Cadena	NO.Links185-h3=mm7676
8	277432500	2	Chain	Catena	Chaîne	Kette	Cadena	NO.Links191-h3=mm7776
8	277683900	2	Chain	Catena	Chaîne	Kette	Cadena	NO.Links189-h3=mm7826
8	277684100	2	Chain	Catena	Chaîne	Kette	Cadena	NO.Links195-h3=mm7926
8	277432500	2	Chain	Catena	Chaîne	Kette	Cadena	NO.Links191-h3=mm7976
8	277684200	2	Chain	Catena	Chaîne	Kette	Cadena	NO.Links197-h3=mm8076
8	277684100	2	Chain	Catena	Chaîne	Kette	Cadena	NO.Links195-h3=mm8126
8	277432600	2	Chain	Catena	Chaîne	Kette	Cadena	NO.Links201-h3=mm8226
8	277684200	2	Chain	Catena	Chaîne	Kette	Cadena	NO.Links197-h3=mm8276-channel lenght mm3290
8	580031332	2	Chain	Catena	Chaîne	Kette	Cadena	No.Links211-h3=mm8276-channel lenght mm3490

SEE PAGE 162 FOR BEARINGS STAMP

From serial N° / *Da matr.* / Du matr. / *Ab. seriennummer* / Desde la matr. :	Until serial N° / *Fino a matr.* / Jusq' matr. / *Bis zur serien-Nr.* / Hasta la matr. :	With the exception of / *Ad esclusione di* / À l'exclusion de / *Mit ausnahme von* / Excepto :	Including / *Compreso* / Avec / *Einschließlich* / Con :
C849T01501Z			

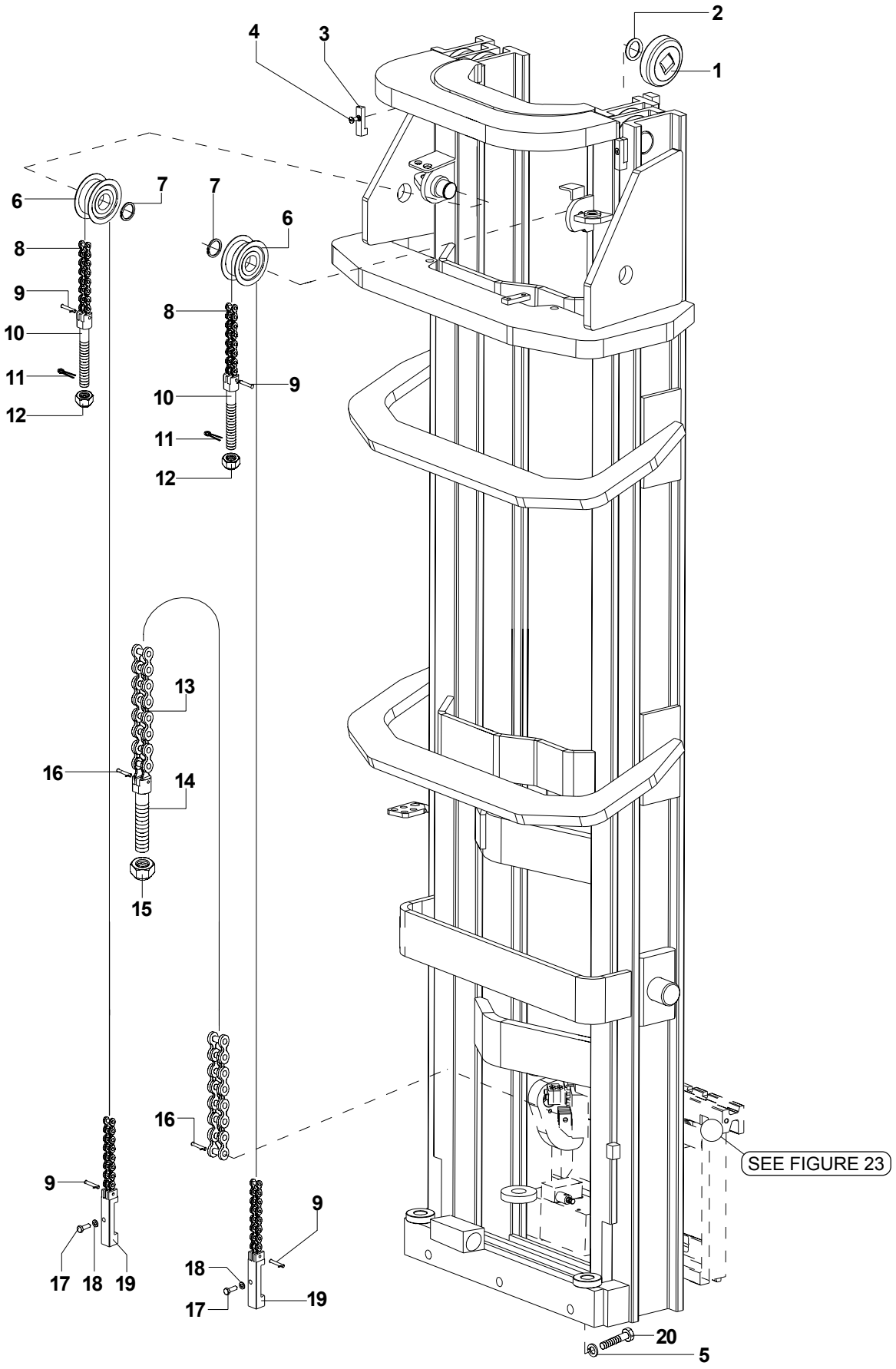
1
2
3
4
5
6
7
8
9
10
11
12
13
14
15
16
17
18
19
20
SEE FIGURE 23

REF.	PART NO.	Q.TY	DESCRIPTION	DESCRIZIONE	DESIGNATION	BENENNUNG	DENOMINACIONES	PART DETAILS
8	277684400	2	Chain	Catena	Chaîne	Kette	Cadena	NO.Links203-h3=mm8376
8	277432600	2	Chain	Catena	Chaîne	Kette	Cadena	NO.Links201-h3=mm8426-channel lenght mm3340
8	580031333	2	Chain	Catena	Chaîne	Kette	Cadena	No.Links213-h3=mm8426-channel lenght mm3540
8	277684600	2	Chain	Catena	Chaîne	Kette	Cadena	NO.Links207-h3=mm8526
8	277684400	2	Chain	Catena	Chaîne	Kette	Cadena	NO.Links203-h3=mm8576-channel lenght mm3390
8	277684800	2	Chain	Catena	Chaîne	Kette	Cadena	NO.Links217-h3=mm8576-channel lenght mm3590
8	580031332	2	Chain	Catena	Chaîne	Kette	Cadena	No.Links211-h3=mm8676
8	277684900	2	Chain	Catena	Chaîne	Kette	Cadena	NO.Links219-h3=mm8726-channel lenght mm3640
8	277684600	2	Chain	Catena	Chaîne	Kette	Cadena	NO.Links207-h3=mm8726-channel lenght mm3440
8	580031333	2	Chain	Catena	Chaîne	Kette	Cadena	No.Links213-h3=mm8826
8	277685100	2	Chain	Catena	Chaîne	Kette	Cadena	No.Links223-h3=mm8876
8	277684800	2	Chain	Catena	Chaîne	Kette	Cadena	NO.Links217-h3=mm8976
8	277432800	2	Chain	Catena	Chaîne	Kette	Cadena	No.Links225-h3=mm9026
8	277684900	2	Chain	Catena	Chaîne	Kette	Cadena	NO.Links219-h3=mm9126
8	277685300	2	Chain	Catena	Chaîne	Kette	Cadena	No.Links229-h3=mm9176
8	277685100	2	Chain	Catena	Chaîne	Kette	Cadena	No.Links223-h3=mm9276
8	277685500	2	Chain	Catena	Chaîne	Kette	Cadena	No.Links233-h3=mm9326
8	277432800	2	Chain	Catena	Chaîne	Kette	Cadena	No.Links225-h3=mm9426
8	277685300	2	Chain	Catena	Chaîne	Kette	Cadena	No.Links229-h3=mm9576
8	277685500	2	Chain	Catena	Chaîne	Kette	Cadena	No.Links233-h3=mm9726
9	273109800	4	Chain pin with split pins	Perno con copiglia	Axe avec goupille	Stift mit Splint	Perno con pasador	
10	273014200	2	Chain stretcher	Tendicatena	Tendeur de chaine	Kettenspanner	Tensor de cadena	
11	015418300	2	Pin	Coppiglia	Goupille élastique	Federstift	Enchufe elástico	
12	449015107	2	Nut	Dado	Écrou	Mutter	Tuerca	
13	580033887	1	Chain	Catena	Chaîne	Kette	Cadena	No.Links47-h3=mm4376
13	524140748	1	Chain	Catena	Chaîne	Kette	Cadena	No.Links49-h3=mm4526
13	580032775	1	Chain	Catena	Chaîne	Kette	Cadena	No.Links51-h3=mm4676
13	580032775	1	Chain	Catena	Chaîne	Kette	Cadena	No.Links51-h3=mm4826
13	580014167	1	Chain	Catena	Chaîne	Kette	Cadena	No.Links53-h3=mm4976
13	580033292	1	Chain	Catena	Chaîne	Kette	Cadena	No.Links55-h3=mm5126
13	580033292	1	Chain	Catena	Chaîne	Kette	Cadena	No.Links55-h3=mm5276
13	580014179	1	Chain	Catena	Chaîne	Kette	Cadena	No.Links57-h3=mm5426
13	580032776	1	Chain	Catena	Chaîne	Kette	Cadena	No.Links59-h3=mm5576
13	580032776	1	Chain	Catena	Chaîne	Kette	Cadena	No.Links59-h3=mm5726
13	580014166	1	Chain	Catena	Chaîne	Kette	Cadena	No.Links61-h3=mm5876
13	520045193	1	Chain	Catena	Chaîne	Kette	Cadena	No.Links63-h3=mm6026
13	580014166	1	Chain	Catena	Chaîne	Kette	Cadena	No.Links61-h3=mm6176
13	520045193	1	Chain	Catena	Chaîne	Kette	Cadena	No.Links63-h3=mm6326
13	580014168	1	Chain	Catena	Chaîne	Kette	Cadena	No.Links65-h3=mm6476
13	520045193	1	Chain	Catena	Chaîne	Kette	Cadena	No.Links63-h3=mm6626
13	580014168	1	Chain	Catena	Chaîne	Kette	Cadena	No.Links65-h3=mm6776
13	580033291	1	Chain	Catena	Chaîne	Kette	Cadena	No.Links67-h3=mm6926
13	520045193	1	Chain	Catena	Chaîne	Kette	Cadena	No.Links63-h3=mm7026
13	580014166	1	Chain	Catena	Chaîne	Kette	Cadena	No.Links61-h3=mm7076
13	580014168	1	Chain	Catena	Chaîne	Kette	Cadena	No.Links65-h3=mm7176
13	520045193	1	Chain	Catena	Chaîne	Kette	Cadena	No.Links63-h3=mm7226
13	580014168	1	Chain	Catena	Chaîne	Kette	Cadena	No.Links65-h3=mm7326

SEE PAGE 162 FOR BEARINGS STAMP

From serial N° / *Da matr.* / Du matr. / *Ab. seriennummer* / Desde la matr. :	Until serial N° / *Fino a matr.* / Jusq' matr. / *Bis zur serien-Nr.* / Hasta la matr. :	With the exception of / *Ad esclusione di* / À l'exclusion de / *Mit ausnahme von* / Excepto :	Including / *Compreso* / Avec / *Einschließlich* / Con :
C849T01501Z			

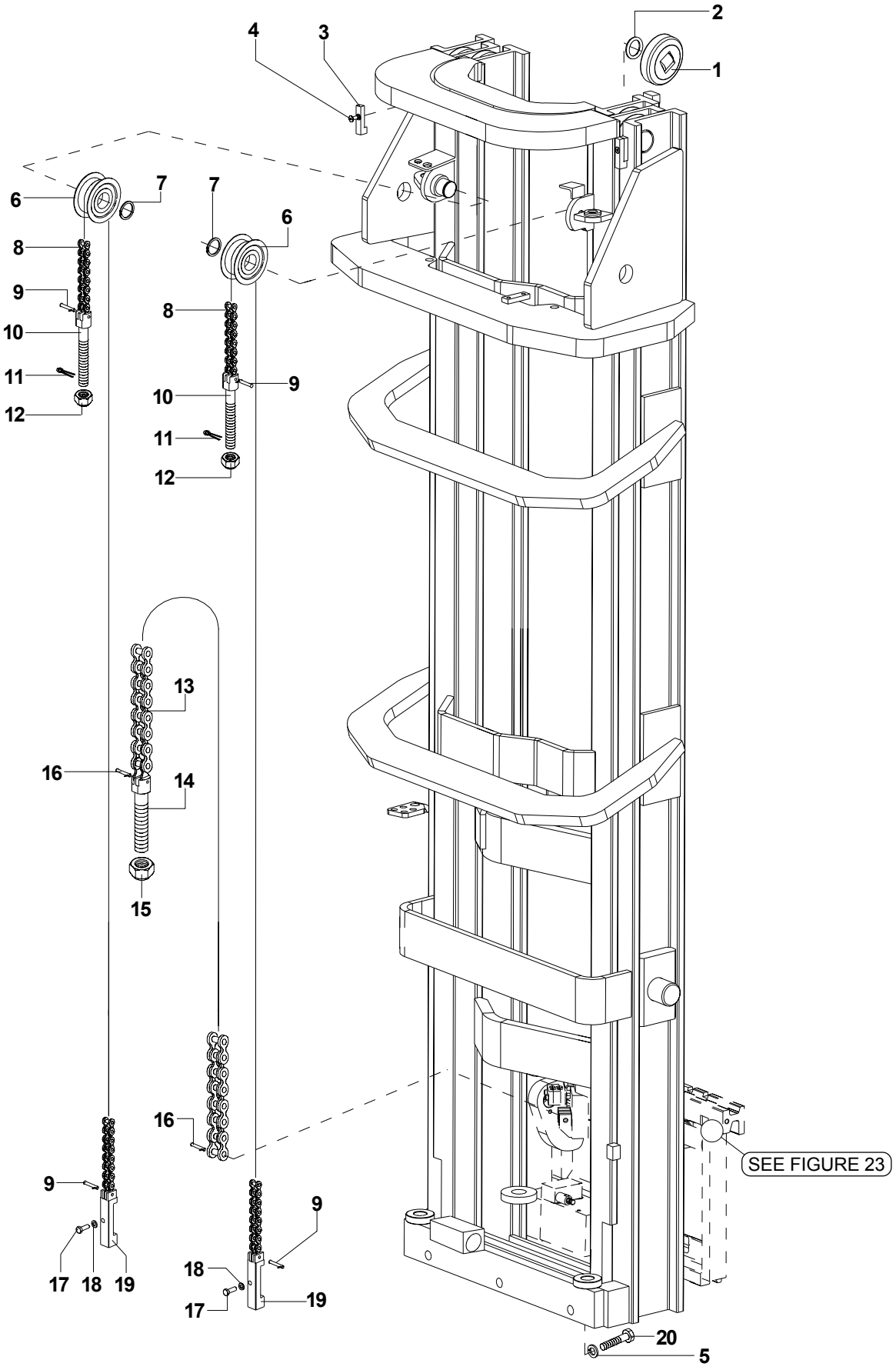
1
2
3
4
5
6
7
8
9
10
11
12
13
14
15
16
17
18
19
20
SEE FIGURE 23

REF.	PART NO.	Q.TY	DESCRIPTION	DESCRIZIONE	DESIGNATION	BENENNUNG	DENOMINACIONES	PART DETAILS
13	580014168	1	Chain	Catena	Chaîne	Kette	Cadena	No.Links65-h3=mm7376
13	580033291	1	Chain	Catena	Chaîne	Kette	Cadena	No.Links67-h3=mm7476
13	580014168	1	Chain	Catena	Chaîne	Kette	Cadena	No.Links65-h3=mm7526
13	580050842	1	Chain	Catena	Chaîne	Kette	Cadena	No.Links69-h3=mm7626
13	580033291	1	Chain	Catena	Chaîne	Kette	Cadena	No.Links67-h3=mm7676
13	580050842	1	Chain	Catena	Chaîne	Kette	Cadena	No.Links69-h3=mm7776
13	580050842	1	Chain	Catena	Chaîne	Kette	Cadena	No.Links69-h3=mm7826
13	580050865	1	Chain	Catena	Chaîne	Kette	Cadena	No.Links71-h3=mm7926
13	580050842	1	Chain	Catena	Chaîne	Kette	Cadena	No.Links69-h3=mm7976
13	520045191	1	Chain	Catena	Chaîne	Kette	Cadena	No.Links73-h3=mm8076
13	520050865	1	Chain	Catena	Chaîne	Kette	Cadena	No.Links71-h3=mm8126
13	520045191	1	Chain	Catena	Chaîne	Kette	Cadena	No.Links73-h3=mm8226
13	520045191	1	Chain	Catena	Chaîne	Kette	Cadena	No.Links73-h3=mm8276-channel lenght mm3290
13	520045271	1	Chain	Catena	Chaîne	Kette	Cadena	No.Links77-h3=mm8276-channel lenght mm3490
13	520050836	1	Chain	Catena	Chaîne	Kette	Cadena	No.Links75-h3=mm8376
13	520045191	1	Chain	Catena	Chaîne	Kette	Cadena	No.Links73-h3=mm8426-channel lenght mm3340
13	580045192	1	Chain	Catena	Chaîne	Kette	Cadena	No.Links79-h3=mm8426-channel lenght mm3540
13	520045271	1	Chain	Catena	Chaîne	Kette	Cadena	No.Links77-h3=mm8526
13	520050836	1	Chain	Catena	Chaîne	Kette	Cadena	No.Links75-h3=mm8576-channel lenght mm3390
13	580033889	1	Chain	Catena	Chaîne	Kette	Cadena	No.Links81-h3=mm8576-channel lenght mm3590
13	520045271	1	Chain	Catena	Chaîne	Kette	Cadena	No.Links77-h3=mm8676
13	520045271	1	Chain	Catena	Chaîne	Kette	Cadena	No.Links77-h3=mm8726-channel lenght mm3440
13	580033889	1	Chain	Catena	Chaîne	Kette	Cadena	No.Links81-h3=mm8726-channel lenght mm3640
13	580045192	1	Chain	Catena	Chaîne	Kette	Cadena	No.Links73-h3=mm8826
13	580052800	1	Chain	Catena	Chaîne	Kette	Cadena	No.Links83-h3=mm8876
13	580033889	1	Chain	Catena	Chaîne	Kette	Cadena	No.Links81-h3=mm8976
13	580045207	1	Chain	Catena	Chaîne	Kette	Cadena	No.Links85-h3=mm9026
13	580033889	1	Chain	Catena	Chaîne	Kette	Cadena	No.Links81-h3=mm9126
13	580045207	1	Chain	Catena	Chaîne	Kette	Cadena	No.Links85-h3=mm9176
13	580052800	1	Chain	Catena	Chaîne	Kette	Cadena	No.Links83-h3=mm8876
13	580052802	1	Chain	Catena	Chaîne	Kette	Cadena	No.Links85-h3=mm9326
13	580045207	1	Chain	Catena	Chaîne	Kette	Cadena	No.Links85-h3=mm9426
13	580045207	1	Chain	Catena	Chaîne	Kette	Cadena	No.Links85-h3=mm9576
13	580052802	1	Chain	Catena	Chaîne	Kette	Cadena	No.Links85-h3=mm9726
14	580033888	1	Chain stretcher	Tendicatena	Tendeur de chaine	Kettenspanner	Tensor de cadena	
15	449015113	1	Nut	Dado	Écrou	Mutter	Tuerca	
16	580029645	1	Chain pin with split pins	Perno con copiglia	Axe avec goupille	Stift mit Splint	Perno con pasador	
17	449001014	2	Screw	Vite	Vis	Schraube	Tornillo	
18	504226242	2	Washer	Rondella	Rondelle	Unterlegscheibe	Arandela	
19	580028809	2	Chain anchor	Attacco catena	Attelage chaîne	Kettenverschluß	Conexión cadena	
20	311323023	4	Screw	Vite	Vis	Schraube	Tornillo	

SEE PAGE 162 FOR BEARINGS STAMP

From serial N° / *Da matr.* / Du matr. / *Ab. seriennummer* / Desde la matr. :	Until serial N° / *Fino a matr.* / Jusq' matr. / *Bis zur serien-Nr.* / Hasta la matr. :	With the exception of / *Ad esclusione di* / À l'exclusion de / *Mit ausnahme von* / Excepto :	Including / *Compreso* / Avec / *Einschließlich* / Con :
C849T01501Z			

HE140R MAST
MONTANTE HE140R
MONTANT HE140R
PFOSTEN HE140R
MONTANTE HE140R

FIGURE 21.3

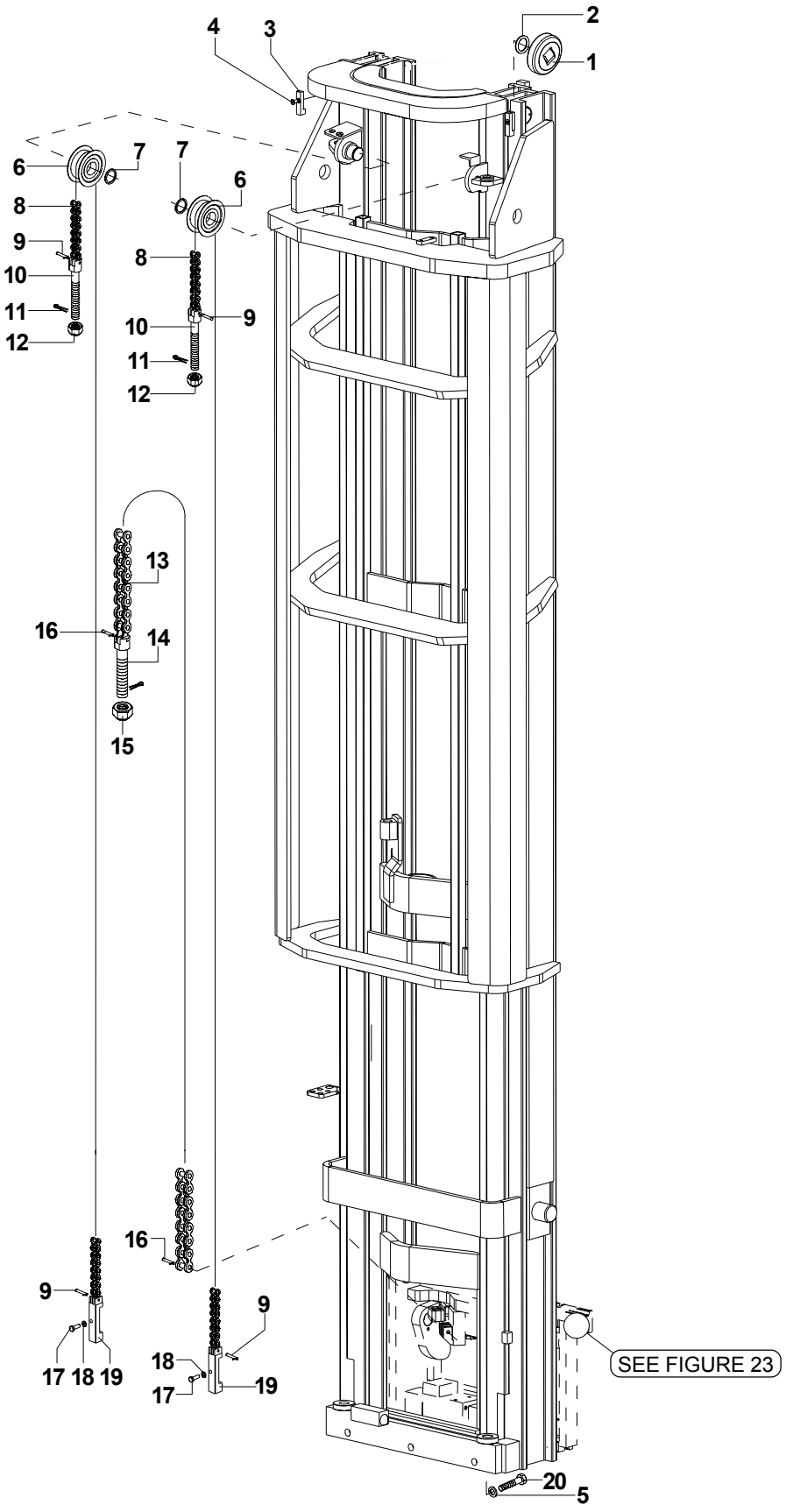

REF.	PART NO.	Q.TY	DESCRIPTION	DESCRIZIONE	DESIGNATION	BENENNUNG	DENOMINACIONES	PART DETAILS
1	580032929	8	Bearing	Cuscinetto	Roulement	Lager	Rodamiento	Diam. 101.5
1	580033120	8	Bearing	Cuscinetto	Roulement	Lager	Rodamiento	Diam. 101.9
1	580032928	8	Bearing	Cuscinetto	Roulement	Lager	Rodamiento	Diam. 102.3
2	504233232	16	Washer	Rondella	Rondelle	Scheibe	Arandela	
3	580033886	2	Mast stop	Fermo montanti	Arrêt de montant	Pfostenblockierung	Parada montante	
4	580008824	2	Screw	Vite	Vis	Schraube	Tornillo	
5	580030122	4	Washer	Rosetta	Rondelle	Unterlegscheibe	Arandela	
6	580029647	2	Chain sheave	Carrucola	Publie	Rollenzug	Polea	
7	277007300	2	Snap ring	Seeger	Arretoir	Seeger-Ring	Seeger	
8	277432600	2	Chain	Catena	Chaîne	Kette	Cadena	NO.Links201-h3=mm8226
8	580031332	2	Chain	Catena	Chaîne	Kette	Cadena	No.Links211-h3=mm8276
8	277684400	2	Chain	Catena	Chaîne	Kette	Cadena	NO.Links203-h3=mm8376
8	277432600	2	Chain	Catena	Chaîne	Kette	Cadena	No.Links201-h3=mm8426-channel lenght mm3340
8	580031333	2	Chain	Catena	Chaîne	Kette	Cadena	No.Links213-h3=mm8426-channel lenght mm3540
8	277684600	2	Chain	Catena	Chaîne	Kette	Cadena	NO.Links207-h3=mm8526
8	277684400	2	Chain	Catena	Chaîne	Kette	Cadena	NO.Links203-h3=mm8576-channel lenght mm3390
8	277684800	2	Chain	Catena	Chaîne	Kette	Cadena	NO.Links217-h3=mm8576-channel lenght mm3590
8	580031332	2	Chain	Catena	Chaîne	Kette	Cadena	No.Links211-h3=mm8676
8	277684900	2	Chain	Catena	Chaîne	Kette	Cadena	NO.Links219-h3=mm8726-channel lenght mm3640
8	277684600	2	Chain	Catena	Chaîne	Kette	Cadena	NO.Links207-h3=mm8726-channel lenght mm3440
8	580031333	2	Chain	Catena	Chaîne	Kette	Cadena	No.Links213-h3=mm8826
8	277685100	2	Chain	Catena	Chaîne	Kette	Cadena	No.Links223-h3=mm8876
8	277684800	2	Chain	Catena	Chaîne	Kette	Cadena	NO.Links217-h3=mm8976
8	277432800	2	Chain	Catena	Chaîne	Kette	Cadena	No.Links225-h3=mm9026
8	277684900	2	Chain	Catena	Chaîne	Kette	Cadena	NO.Links219-h3=mm9126
8	277685300	2	Chain	Catena	Chaîne	Kette	Cadena	No.Links229-h3=mm9176
8	277685100	2	Chain	Catena	Chaîne	Kette	Cadena	No.Links223-h3=mm9276
8	277685500	2	Chain	Catena	Chaîne	Kette	Cadena	No.Links233-h3=mm9326
8	277432800	2	Chain	Catena	Chaîne	Kette	Cadena	No.Links225-h3=mm9426
8	580032176	2	Chain	Catena	Chaîne	Kette	Cadena	No.Links235-h3=mm9476
8	277685300	2	Chain	Catena	Chaîne	Kette	Cadena	No.Links229-h3=mm9576
8	277568500	2	Chain	Catena	Chaîne	Kette	Cadena	No.Links239-h3=mm9626
8	277685500	2	Chain	Catena	Chaîne	Kette	Cadena	No.Links233-h3=mm9726
8	277568600	2	Chain	Catena	Chaîne	Kette	Cadena	No.Links241-h3=mm9776-channel lenght mm3990
8	580034443	2	Chain	Catena	Chaîne	Kette	Cadena	No.Links247-h3=mm9776-channel lenght mm4090
8	580032176	2	Chain	Catena	Chaîne	Kette	Cadena	No.Links235-h3=mm9876
8	277568800	2	Chain	Catena	Chaîne	Kette	Cadena	No.Links245-h3=mm9926-channel lenght mm4040
8	580032178	2	Chain	Catena	Chaîne	Kette	Cadena	No.Links251-h3=mm9926-channel lenght mm4140
8	277568500	2	Chain	Catena	Chaîne	Kette	Cadena	No.Links239-h3=mm10026
8	580032178	2	Chain	Catena	Chaîne	Kette	Cadena	No.Links251-h3=mm10226
8	580034443	2	Chain	Catena	Chaîne	Kette	Cadena	No.Links247-h3=mm10076-channel lenght mm4090
8	277433000	2	Chain	Catena	Chaîne	Kette	Cadena	No.Links255-h3=mm10076-channel lenght mm4190
8	277568600	2	Chain	Catena	Chaîne	Kette	Cadena	No.Links241-h3=mm10176
8	277568900	2	Chain	Catena	Chaîne	Kette	Cadena	No.Links257-h3=mm10226
8	277568800	2	Chain	Catena	Chaîne	Kette	Cadena	No.Links245-h3=mm10326
8	277433000	2	Chain	Catena	Chaîne	Kette	Cadena	No.Links255-h3=mm10376-channel lenght mm4190
8	277569100	2	Chain	Catena	Chaîne	Kette	Cadena	No.Links261-h3=mm10376-channel lenght mm4290

SEE PAGE 162 FOR BEARINGS STAMP

From serial N° / *Da matr.* / Du matr. / *Ab. seriennummer* / Desde la matr. :	Until serial N° / *Fino a matr.* / Jusq' matr. / *Bis zur serien-Nr.* / Hasta la matr. :	With the exception of / *Ad esclusione di* / À l'exclusion de / *Mit ausnahme von* / Excepto :	Including / *Compreso* / Avec / *Einschließlich* / Con :
C849T01501Z			

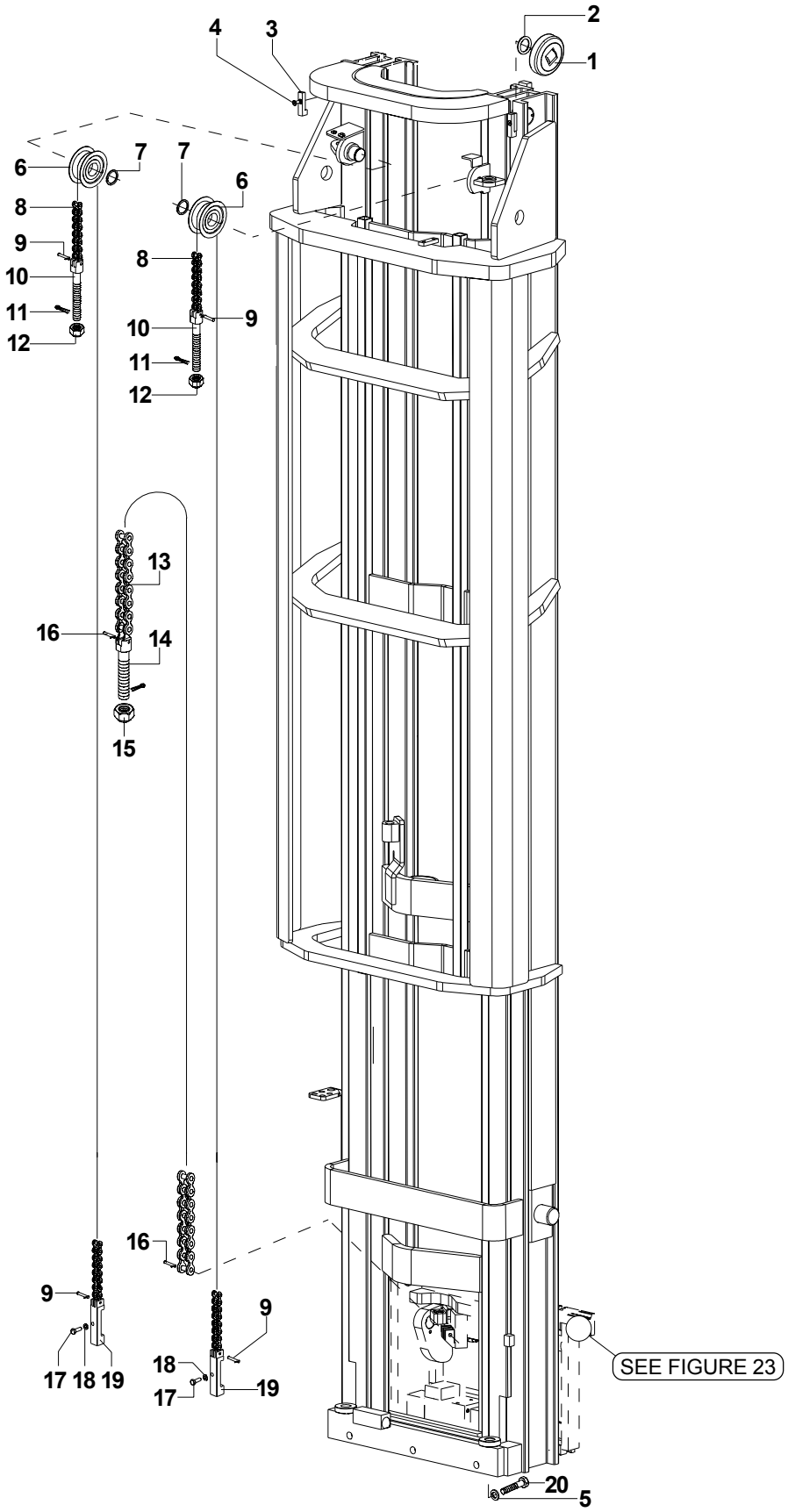
1
2
3
4
5
6
7
8
9
10
11
12
13
14
15
16
17
18
19
20
SEE FIGURE 23

REF.	PART NO.	Q.TY	DESCRIPTION	DESCRIZIONE	DESIGNATION	BENENNUNG	DENOMINACIONES	PART DETAILS
8	277568900	2	Chain	Catena	Chaîne	Kette	Cadena	No.Links257-h3=mm10526-channel lenght mm4240
8	277569200	2	Chain	Catena	Chaîne	Kette	Cadena	No.Links263-h3=mm10526-channel lenght mm4340
8	277569100	2	Chain	Catena	Chaîne	Kette	Cadena	No.Links261-h3=mm10676-channel lenght mm4290
8	277569300	2	Chain	Catena	Chaîne	Kette	Cadena	No.Links267-h3=mm10676-channel lenght mm4390
8	277569200	2	Chain	Catena	Chaîne	Kette	Cadena	No.Links263-h3=mm10826-channel lenght mm4340
8	277433200	2	Chain	Catena	Chaîne	Kette	Cadena	No.Links269-h3=mm10826-channel lenght mm4440
8	277569300	2	Chain	Catena	Chaîne	Kette	Cadena	No.Links267-h3=mm10676-channel lenght mm4390
8	277433300	2	Chain	Catena	Chaîne	Kette	Cadena	No.Links273-h3=mm10976-channel lenght mm4490
8	277433200	2	Chain	Catena	Chaîne	Kette	Cadena	No.Links269-h3=mm11126-channel lenght mm4440
8	277433400	2	Chain	Catena	Chaîne	Kette	Cadena	No.Links277-h3=mm11126-channel lenght mm4540
8	277433300	2	Chain	Catena	Chaîne	Kette	Cadena	No.Links273-h3=mm11276-channel lenght mm4490
8	277569700	2	Chain	Catena	Chaîne	Kette	Cadena	No.Links279-h3=mm11276-channel lenght mm4590
8	277433400	2	Chain	Catena	Chaîne	Kette	Cadena	No.Links277-h3=mm11426-channel lenght mm4540
8	580034444	2	Chain	Catena	Chaîne	Kette	Cadena	No.Links283-h3=mm11426-channel lenght mm4640
8	277569700	2	Chain	Catena	Chaîne	Kette	Cadena	No.Links279-h3=mm11576
8	580034444	2	Chain	Catena	Chaîne	Kette	Cadena	No.Links283-h3=mm11726
9	273109800	4	Chain pin with split pins	Perno con copiglia	Axe avec goupille	Stift mit Splint	Perno con pasador	
10	273014200	2	Chain stretcher	Tendicatena	Tendeur de chaine	Kettenspanner	Tensor de cadena	
11	015418300	2	Pin	Coppiglia	Goupille élastique	Federstift	Enchufe elástico	
12	449015107	2	Nut	Dado	Écrou	Mutter	Tuerca	
13	520045191	1	Chain	Catena	Chaîne	Kette	Cadena	No.Links73-h3=mm8226
13	520045271	1	Chain	Catena	Chaîne	Kette	Cadena	No.Links77-h3=mm8276
13	520050836	1	Chain	Catena	Chaîne	Kette	Cadena	No.Links75-h3=mm8376
13	580045192	1	Chain	Catena	Chaîne	Kette	Cadena	No.Links79-h3=mm8426-channel lenght mm3540
13	520045191	1	Chain	Catena	Chaîne	Kette	Cadena	No.Links73-h3=mm8426-channel lenght mm3340
13	520045271	1	Chain	Catena	Chaîne	Kette	Cadena	No.Links77-h3=mm8526
13	520050836	1	Chain	Catena	Chaîne	Kette	Cadena	No.Links75-h3=mm8576-channel lenght mm3390
13	580033889	1	Chain	Catena	Chaîne	Kette	Cadena	No.Links81-h3=mm8576-channel lenght mm3590
13	520045271	1	Chain	Catena	Chaîne	Kette	Cadena	No.Links77-h3=mm8676
13	520045271	1	Chain	Catena	Chaîne	Kette	Cadena	No.Links77-h3=mm8726-channel lenght mm3440
13	580033889	1	Chain	Catena	Chaîne	Kette	Cadena	No.Links81-h3=mm8726-channel lenght mm3640
13	580045192	1	Chain	Catena	Chaîne	Kette	Cadena	No.Links79-h3=mm8826
13	580052800	1	Chain	Catena	Chaîne	Kette	Cadena	No.Links83-h3=mm8876
13	580033889	1	Chain	Catena	Chaîne	Kette	Cadena	No.Links81-h3=mm8976
13	580045207	1	Chain	Catena	Chaîne	Kette	Cadena	No.Links85-h3=mm9026
13	580033889	1	Chain	Catena	Chaîne	Kette	Cadena	No.Links81-h3=mm9126
13	580045207	1	Chain	Catena	Chaîne	Kette	Cadena	No.Links85-h3=mm9176
13	580052800	1	Chain	Catena	Chaîne	Kette	Cadena	No.Links83-h3=mm9276
13	580052802	1	Chain	Catena	Chaîne	Kette	Cadena	No.Links87-h3=mm9326
13	580045207	1	Chain	Catena	Chaîne	Kette	Cadena	No.Links85-h3=mm9426
13	520052802	1	Chain	Catena	Chaîne	Kette	Cadena	No.Links87-h3=mm9476
13	580045207	1	Chain	Catena	Chaîne	Kette	Cadena	No.Links85-h3=mm9576
13	520052800	1	Chain	Catena	Chaîne	Kette	Cadena	No.Links83-h3=mm9626
13	580052802	1	Chain	Catena	Chaîne	Kette	Cadena	No.Links87-h3=mm9726
13	520045207	1	Chain	Catena	Chaîne	Kette	Cadena	No.Links85-h3=mm9776-channel lenght mm3990
13	520052802	1	Chain	Catena	Chaîne	Kette	Cadena	No.Links87-h3=mm9776-channel lenght mm4090
13	520052802	1	Chain	Catena	Chaîne	Kette	Cadena	No.Links87-h3=mm9876
13	520052802	1	Chain	Catena	Chaîne	Kette	Cadena	No.Links87-h3=mm9926-channel lenght mm4040
13	580033890	1	Chain	Catena	Chaîne	Kette	Cadena	No.Links89-h3=mm9926-channel lenght mm4140

SEE PAGE 162 FOR BEARINGS STAMP

From serial N° / *Da matr.* / Du matr. / *Ab. seriennummer* / Desde la matr. :	Until serial N° / *Fino a matr.* / Jusq' matr. / *Bis zur serien-Nr.* / Hasta la matr. :	With the exception of / *Ad esclusione di* / À l'exclusion de / *Mit ausnahme von* / Excepto :	Including / *Compreso* / Avec / *Einschließlich* / Con :
C849T01501Z			

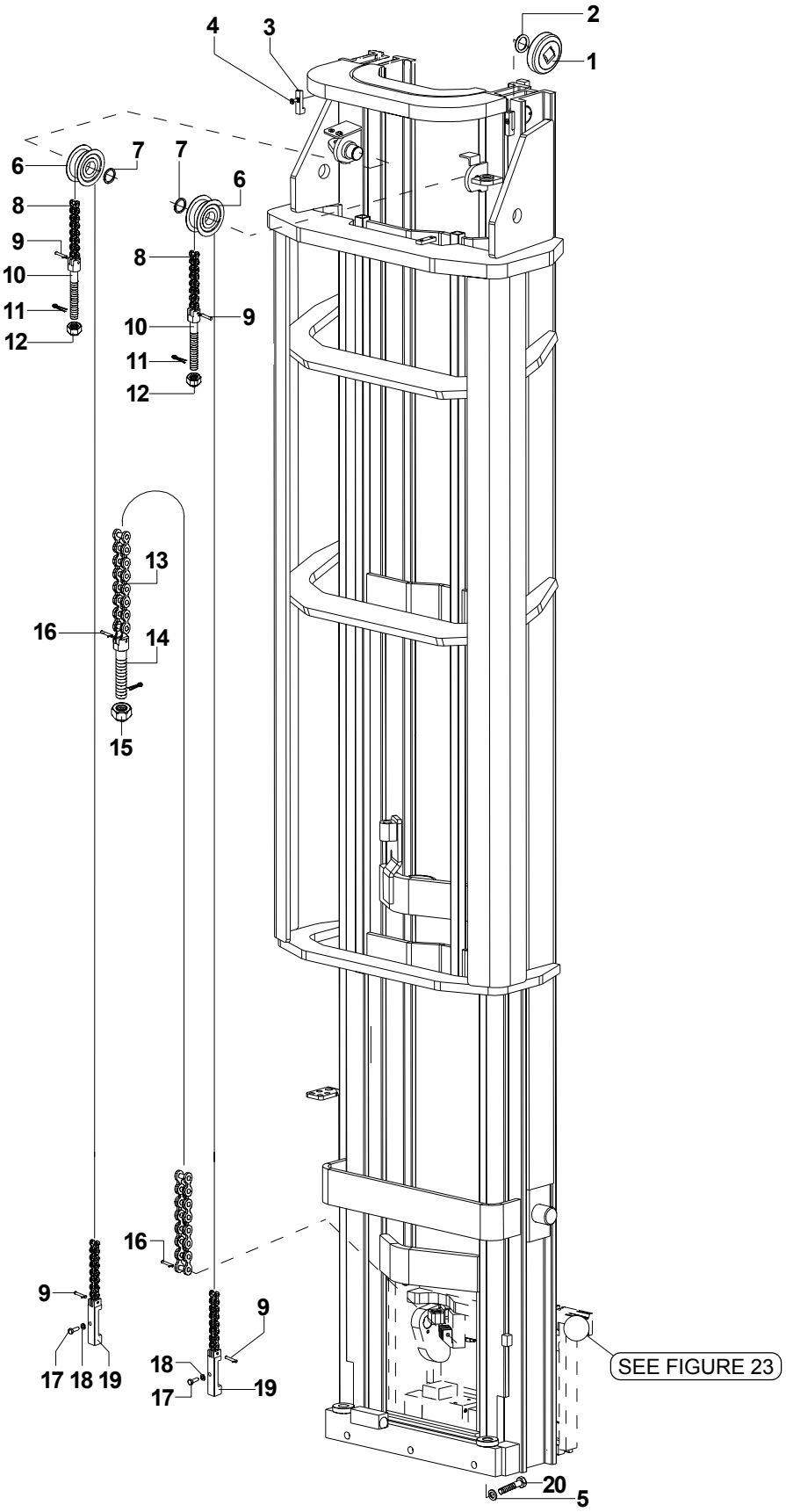
1
2
3
4
5
6
7
8
9
10
11
12
13
14
15
16
17
18
19
20
SEE FIGURE 23

REF.	PART NO.	Q.TY	DESCRIPTION	DESCRIZIONE	DESIGNATION	BENENNUNG	DENOMINACIONES	PART DETAILS
13	520052800	1	Chain	Catena	Chaîne	Kette	Cadena	No.Links83-h3=mm10026
13	520052802	1	Chain	Catena	Chaîne	Kette	Cadena	No.Links87-h3=mm10076-channel lenght mm4090
13	580014164	1	Chain	Catena	Chaîne	Kette	Cadena	No.Links91-h3=mm10076-channel lenght mm4190
13	520045200	1	Chain	Catena	Chaîne	Kette	Cadena	No.Links85-h3=mm10176
13	580033890	1	Chain	Catena	Chaîne	Kette	Cadena	No.Links89-h3=mm10226-channel lenght mm4140
13	580014164	1	Chain	Catena	Chaîne	Kette	Cadena	No.Links91-h3=mm10226-channel lenght mm4240
13	520052802	1	Chain	Catena	Chaîne	Kette	Cadena	No.Links87-h3=mm10326
13	580014164	1	Chain	Catena	Chaîne	Kette	Cadena	No.Links91-h3=mm10376-channel lenght mm4190
13	580033891	1	Chain	Catena	Chaîne	Kette	Cadena	No.Links93-h3=mm10376-channel lenght mm4290
13	580014164	1	Chain	Catena	Chaîne	Kette	Cadena	No.Links91-h3=mm10526-channel lenght mm4240
13	520045208	1	Chain	Catena	Chaîne	Kette	Cadena	No.Links95-h3=mm10526-channel lenght mm4340
13	580033891	1	Chain	Catena	Chaîne	Kette	Cadena	No.Links93-h3=mm10676-channel lenght mm4290
13	520045208	1	Chain	Catena	Chaîne	Kette	Cadena	No.Links95-h3=mm10676-channel lenght mm4390
13	520045208	1	Chain	Catena	Chaîne	Kette	Cadena	No.Links95-h3=mm10826-channel lenght mm4340
13	520045155	1	Chain	Catena	Chaîne	Kette	Cadena	No.Links97-h3=mm10826-channel lenght mm4440
13	520045208	1	Chain	Catena	Chaîne	Kette	Cadena	No.Links95-h3=mm10976-channel lenght mm4390
13	580014175	1	Chain	Catena	Chaîne	Kette	Cadena	No.Links99-h3=mm10976-channel lenght mm4490
13	520045155	1	Chain	Catena	Chaîne	Kette	Cadena	No.Links97-h3=mm11126-channel lenght mm4440
13	580014175	1	Chain	Catena	Chaîne	Kette	Cadena	No.Links99-h3=mm11126-channel lenght mm4540
13	580014175	1	Chain	Catena	Chaîne	Kette	Cadena	No.Links99-h3=mm11276-channel lenght mm4490
13	580014172	1	Chain	Catena	Chaîne	Kette	Cadena	No.Links101-h3=mm11276-channel lenght mm4590
13	580014175	1	Chain	Catena	Chaîne	Kette	Cadena	No.Links99-h3=mm11426-channel lenght mm4540
13	580007874	1	Chain	Catena	Chaîne	Kette	Cadena	No.Links103-h3=mm11426-channel lenght mm4640
13	580014172	1	Chain	Catena	Chaîne	Kette	Cadena	No.Links101-h3=mm11576
13	580007874	1	Chain	Catena	Chaîne	Kette	Cadena	No.Links103-h3=mm11726
14	580033888	1	Chain stretcher	Tendicatena	Tendeur de chaine	Kettenspanner	Tensor de cadena	
15	449015113	1	Nut	Dado	Écrou	Mutter	Tuerca	
16	580029645	1	Chain pin with split pins	Perno con copiglia	Axe avec goupille	Stift mit Splint	Perno con pasador	
17	449001014	2	Screw	Vite	Vis	Schraube	Tornillo	
18	504226242	2	Washer	Rondella	Rondelle	Unterlegscheibe	Arandela	
19	580028809	2	Chain anchor	Attacco catena	Attelage chaîne	Kettenverschluß	Conexión cadena	
20	311323023	4	Screw	Vite	Vis	Schraube	Tornillo	

SEE PAGE 162 FOR BEARINGS STAMP

From serial N° / *Da matr.* / Du matr. / *Ab. seriennummer* / Desde la matr. :	Until serial N° / *Fino a matr.* / Jusq' matr. / *Bis zur serien-Nr.* / Hasta la matr. :	With the exception of / *Ad esclusione di* / À l'exclusion de / *Mit ausnahme von* / Excepto :	Including / *Compreso* / Avec / *Einschließlich* / Con :
C849T01501Z			

LIFT CYLINDERS (BETA MAST)
CILINDRI SOLLEVAMENTO (MONTANTE BETA)
CYLINDRE DE SOULEVEMENT (MONTANT BETA)
HUBZYLINDER (PFOSTEN BETA)
CILINDRO DE ELEVACIÓN (MONTANTE BETA)

FIGURE 22

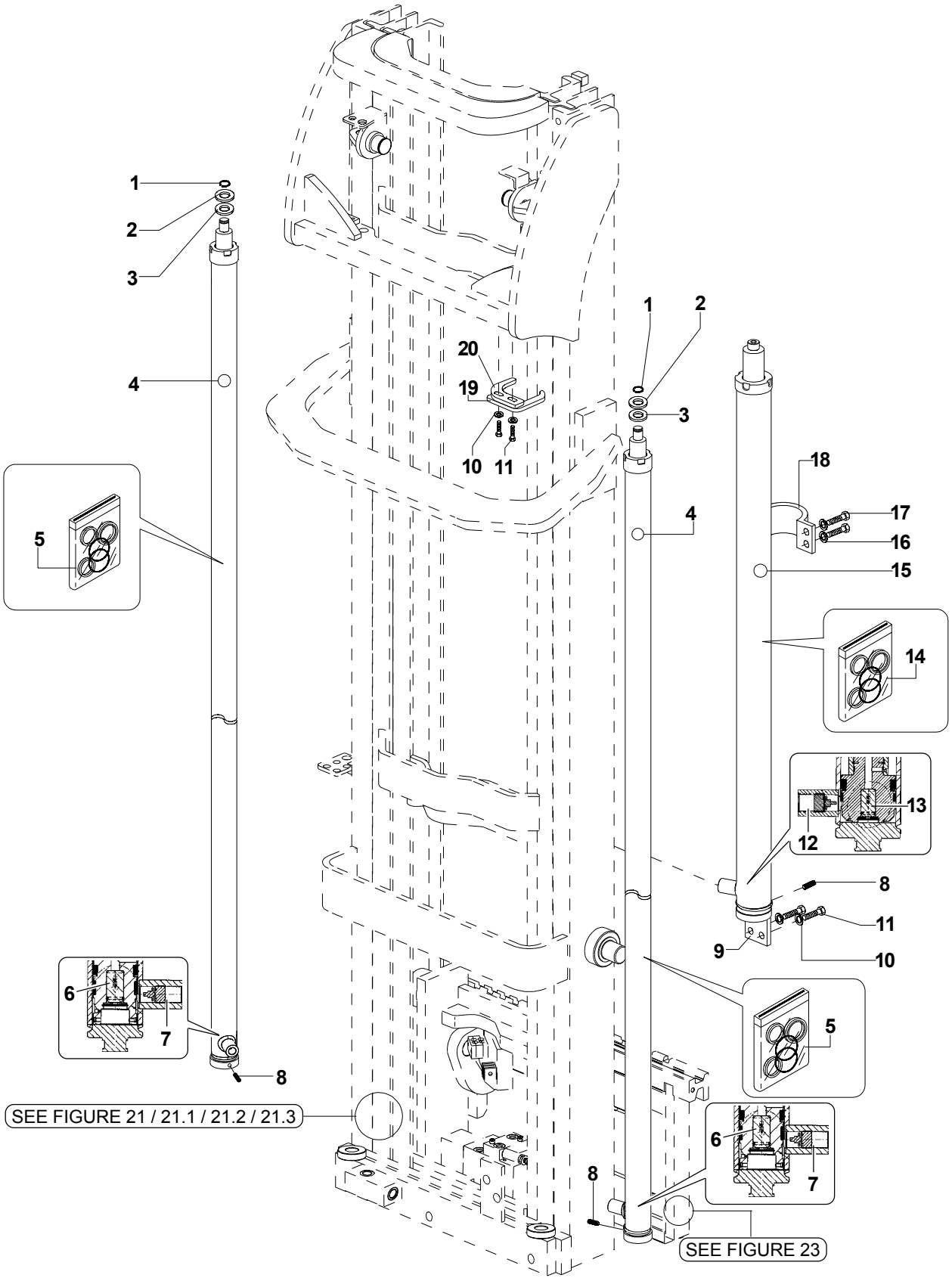

Yale

MODELS MR16 / MR14 / MR16N
with Beta mast

LIFT CYLINDERS (BETA MAST)
CILINDRI SOLLEVAMENTO (MONTANTE BETA)
CYLINDRE DE SOULEVEMENT (MONTANT BETA)
HUBZYLINDER (PFOSTEN BETA)
CILINDRO DE ELEVACIÓN (MONTANTE BETA)

FIGURE 22

REF.	PART NO.	Q.TY	DESCRIPTION	DESCRIZIONE	DESIGNATION	BENENNUNG	DENOMINACIONES	PART DETAILS
1	500227904	2	Snap ring	Seeger	Arretoir	Seeger	Anillo Seeger	
2	272024600	AR	Washer	Rondella	Rondelle	Unterlegscheibe	Arandela	
3	272006400	AR	Washer	Rondella	Rondelle	Unterlegscheibe	Arandela	
4	580028075	2	Main cylinder ass'y	Ass. cilindro principale	Ens. cylindre principal	Haupthubzylinder	Grupo cilindro principal	h3=mm4476
4	580028076	2	Main cylinder ass'y	Ass. cilindro principale	Ens. cylindre principal	Haupthubzylinder	Grupo cilindro principal	h3=mm4626
4	580028077	2	Main cylinder ass'y	Ass. cilindro principale	Ens. cylindre principal	Haupthubzylinder	Grupo cilindro principal	h3=mm4776
4	580028078	2	Main cylinder ass'y	Ass. cilindro principale	Ens. cylindre principal	Haupthubzylinder	Grupo cilindro principal	h3=mm4926
4	580028079	2	Main cylinder ass'y	Ass. cilindro principale	Ens. cylindre principal	Haupthubzylinder	Grupo cilindro principal	h3=mm5076
4	580028080	2	Main cylinder ass'y	Ass. cilindro principale	Ens. cylindre principal	Haupthubzylinder	Grupo cilindro principal	h3=mm5226
4	580028081	2	Main cylinder ass'y	Ass. cilindro principale	Ens. cylindre principal	Haupthubzylinder	Grupo cilindro principal	h3=mm5376
4	580028082	2	Main cylinder ass'y	Ass. cilindro principale	Ens. cylindre principal	Haupthubzylinder	Grupo cilindro principal	h3=mm5526
4	580028083	2	Main cylinder ass'y	Ass. cilindro principale	Ens. cylindre principal	Haupthubzylinder	Grupo cilindro principal	h3=mm5676
4	580028084	2	Main cylinder ass'y	Ass. cilindro principale	Ens. cylindre principal	Haupthubzylinder	Grupo cilindro principal	h3=mm5826
4	580028088	2	Main cylinder ass'y	Ass. cilindro principale	Ens. cylindre principal	Haupthubzylinder	Grupo cilindro principal	h3=mm5876
4	580028085	2	Main cylinder ass'y	Ass. cilindro principale	Ens. cylindre principal	Haupthubzylinder	Grupo cilindro principal	h3=mm5976
4	580028090	2	Main cylinder ass'y	Ass. cilindro principale	Ens. cylindre principal	Haupthubzylinder	Grupo cilindro principal	h3=mm6026
4	580028086	2	Main cylinder ass'y	Ass. cilindro principale	Ens. cylindre principal	Haupthubzylinder	Grupo cilindro principal	h3=mm6126
4	580028092	2	Main cylinder ass'y	Ass. cilindro principale	Ens. cylindre principal	Haupthubzylinder	Grupo cilindro principal	h3=mm6176
4	580028087	2	Main cylinder ass'y	Ass. cilindro principale	Ens. cylindre principal	Haupthubzylinder	Grupo cilindro principal	h3=mm6276
4	580028094	2	Main cylinder ass'y	Ass. cilindro principale	Ens. cylindre principal	Haupthubzylinder	Grupo cilindro principal	h3=mm6326
4	580028089	2	Main cylinder ass'y	Ass. cilindro principale	Ens. cylindre principal	Haupthubzylinder	Grupo cilindro principal	h3=mm6426
4	580028096	2	Main cylinder ass'y	Ass. cilindro principale	Ens. cylindre principal	Haupthubzylinder	Grupo cilindro principal	h3=mm6476
4	580028091	2	Main cylinder ass'y	Ass. cilindro principale	Ens. cylindre principal	Haupthubzylinder	Grupo cilindro principal	h3=mm6576
4	580028098	2	Main cylinder ass'y	Ass. cilindro principale	Ens. cylindre principal	Haupthubzylinder	Grupo cilindro principal	h3=mm6626
4	580028093	2	Main cylinder ass'y	Ass. cilindro principale	Ens. cylindre principal	Haupthubzylinder	Grupo cilindro principal	h3=mm6726
4	580028100	2	Main cylinder ass'y	Ass. cilindro principale	Ens. cylindre principal	Haupthubzylinder	Grupo cilindro principal	h3=mm6776
4	580028095	2	Main cylinder ass'y	Ass. cilindro principale	Ens. cylindre principal	Haupthubzylinder	Grupo cilindro principal	h3=mm6876
4	580028097	2	Main cylinder ass'y	Ass. cilindro principale	Ens. cylindre principal	Haupthubzylinder	Grupo cilindro principal	h3=mm7026
4	580028099	2	Main cylinder ass'y	Ass. cilindro principale	Ens. cylindre principal	Haupthubzylinder	Grupo cilindro principal	h3=mm7176
5	580016916	2	Seal kit	Kit guarnizioni	Kit joints	Dichtungssatz	Kit de guarniciones	
6	504235239	1	Check valve	Valvola di ritegno	Soupape de retenue	Absperrventil	Válvula de retención	
7	580015509	1	Flow control valve	Valvola regolatrice di flusso	Soupape reglage de flux	Durchflußregler	Válvula reguladora de flujo	
8	449013025	3	Dowel	Grano	Clavette	Stift	Espiga	
9	580028847	1	Cylinder support	Supporto	Support	Lager	Soporte	
10	504226242	6	Washer	Rondella	Rondelle	Unterlegscheibe	Arandela	
11	449001343	6	Screw	Vite	Vis	Schraube	Tornillo	
12	580015510	1	Flow control valve	Valvola regolatrice di flusso	Soupape reglage de flux	Durchflußregler	Válvula reguladora de flujo	
13	504235239	1	Check valve	Valvola di ritegno	Soupape de retenue	Absperrventil	Válvula de retención	
14	580016917	1	Seal kit	Kit guarnizioni	Kit joints	Dichtungssatz	Kit de guarniciones	
15	580027378	1	Auxiliary cylinder ass'y	Ass. cilindro ausiliario	Ens. cylindre auxiliaire	Hilfshubzylinder	Grupo cilindro auxiliar	h3=mm4476
15	580027379	1	Auxiliary cylinder ass'y	Ass. cilindro ausiliario	Ens. cylindre auxiliaire	Hilfshubzylinder	Grupo cilindro auxiliar	h3=mm4626
15	580027380	1	Auxiliary cylinder ass'y	Ass. cilindro ausiliario	Ens. cylindre auxiliaire	Hilfshubzylinder	Grupo cilindro auxiliar	h3=mm4776
15	580027381	1	Auxiliary cylinder ass'y	Ass. cilindro ausiliario	Ens. cylindre auxiliaire	Hilfshubzylinder	Grupo cilindro auxiliar	h3=mm4926
15	580027382	1	Auxiliary cylinder ass'y	Ass. cilindro ausiliario	Ens. cylindre auxiliaire	Hilfshubzylinder	Grupo cilindro auxiliar	h3=mm5076
15	580027383	1	Auxiliary cylinder ass'y	Ass. cilindro ausiliario	Ens. cylindre auxiliaire	Hilfshubzylinder	Grupo cilindro auxiliar	h3=mm5226
15	580027384	1	Auxiliary cylinder ass'y	Ass. cilindro ausiliario	Ens. cylindre auxiliaire	Hilfshubzylinder	Grupo cilindro auxiliar	h3=mm5376
15	580027385	1	Auxiliary cylinder ass'y	Ass. cilindro ausiliario	Ens. cylindre auxiliaire	Hilfshubzylinder	Grupo cilindro auxiliar	h3=mm5526
15	580027386	1	Auxiliary cylinder ass'y	Ass. cilindro ausiliario	Ens. cylindre auxiliaire	Hilfshubzylinder	Grupo cilindro auxiliar	h3=mm5676

From serial N° / *Da matr.* / Du matr. / *Ab. seriennummer* / Desde la matr. :	Until serial N° / *Fino a matr.* / Jusq' matr. / *Bis zur serien-Nr.* / Hasta la matr. :	With the exception of / *Ad esclusione di* / À l'exclusion de / *Mit ausnahme von* / Excepto :	Including / *Compreso* / Avec / *Einschließlich* / Con :
C849T01501Z			

LIFT CYLINDERS (BETA MAST)
CILINDRI SOLLEVAMENTO (MONTANTE BETA)
CYLINDRE DE SOULEVEMENT (MONTANT BETA)
HUBZYLINDER (PFOSTEN BETA)
CILINDRO DE ELEVACIÓN (MONTANTE BETA)

FIGURE 22

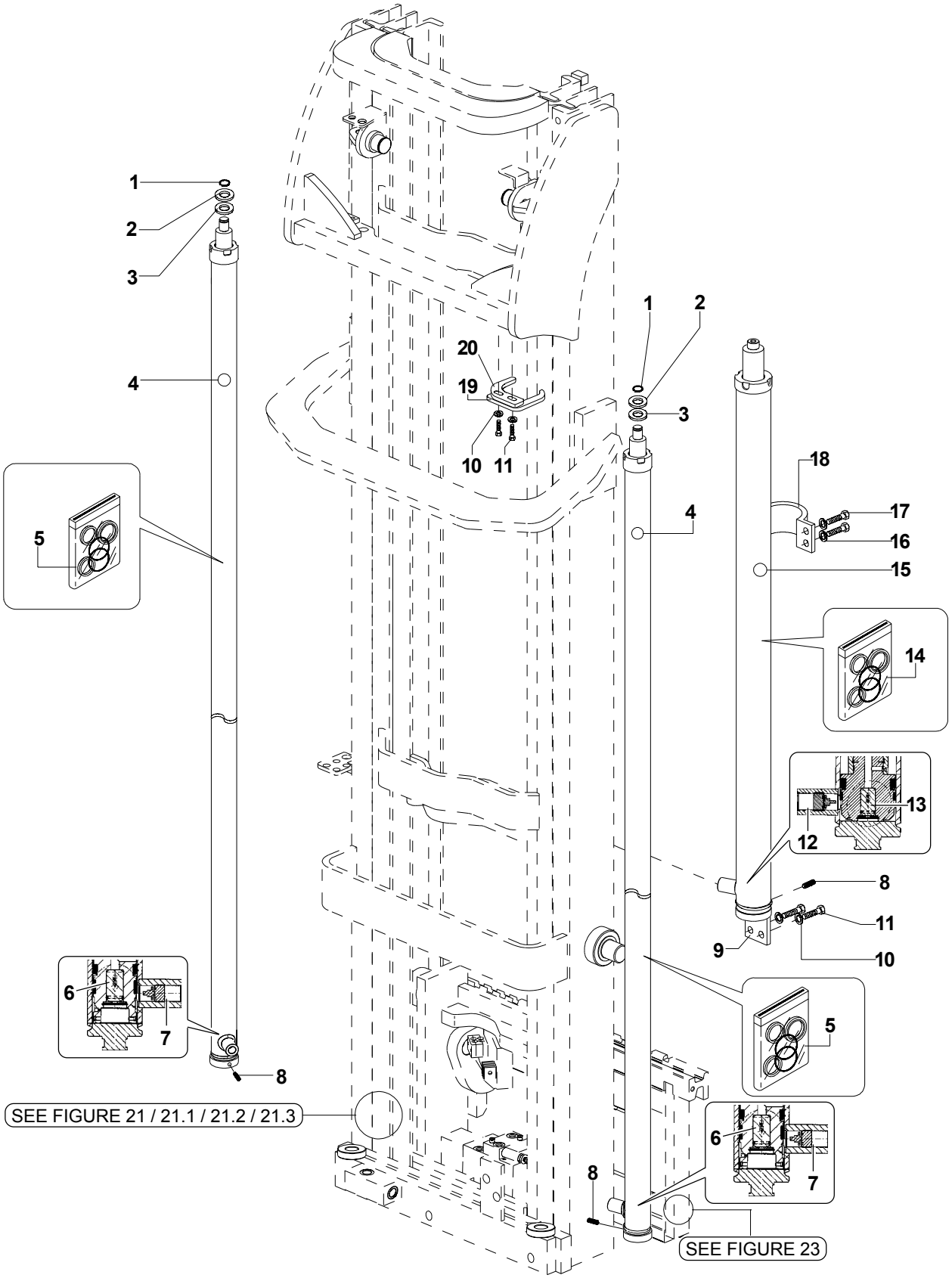

Yale

MODELS MR16 / MR14 / MR16N with Beta mast

LIFT CYLINDERS (BETA MAST)
CILINDRI SOLLEVAMENTO (MONTANTE BETA)
CYLINDRE DE SOULEVEMENT (MONTANT BETA)
HUBZYLINDER (PFOSTEN BETA)
CILINDRO DE ELEVACIÓN (MONTANTE BETA)

FIGURE 22

REF.	PART NO.	Q.TY	DESCRIPTION	DESCRIZIONE	DESIGNATION	BENENNUNG	DENOMINACIONES	PART DETAILS
15	580027387	1	Auxiliary cylinder ass'y	Ass. cilindro ausiliario	Ens. cylindre auxiliaire	Hilfshubzylinder	Grupo cilindro auxiliar	h3=mm5826
15	580027390	1	Auxiliary cylinder ass'y	Ass. cilindro ausiliario	Ens. cylindre auxiliaire	Hilfshubzylinder	Grupo cilindro auxiliar	h3=mm5876
15	580027388	1	Auxiliary cylinder ass'y	Ass. cilindro ausiliario	Ens. cylindre auxiliaire	Hilfshubzylinder	Grupo cilindro auxiliar	h3=mm5976
15	580027391	1	Auxiliary cylinder ass'y	Ass. cilindro ausiliario	Ens. cylindre auxiliaire	Hilfshubzylinder	Grupo cilindro auxiliar	h3=mm6026
15	580027389	1	Auxiliary cylinder ass'y	Ass. cilindro ausiliario	Ens. cylindre auxiliaire	Hilfshubzylinder	Grupo cilindro auxiliar	h3=mm6126
15	580027392	1	Auxiliary cylinder ass'y	Ass. cilindro ausiliario	Ens. cylindre auxiliaire	Hilfshubzylinder	Grupo cilindro auxiliar	h3=mm6176
15	580027390	1	Auxiliary cylinder ass'y	Ass. cilindro ausiliario	Ens. cylindre auxiliaire	Hilfshubzylinder	Grupo cilindro auxiliar	h3=mm6276
15	580027393	1	Auxiliary cylinder ass'y	Ass. cilindro ausiliario	Ens. cylindre auxiliaire	Hilfshubzylinder	Grupo cilindro auxiliar	h3=mm6326
15	580027391	1	Auxiliary cylinder ass'y	Ass. cilindro ausiliario	Ens. cylindre auxiliaire	Hilfshubzylinder	Grupo cilindro auxiliar	h3=mm6426
15	580027434	1	Auxiliary cylinder ass'y	Ass. cilindro ausiliario	Ens. cylindre auxiliaire	Hilfshubzylinder	Grupo cilindro auxiliar	h3=mm6476
15	580027392	1	Auxiliary cylinder ass'y	Ass. cilindro ausiliario	Ens. cylindre auxiliaire	Hilfshubzylinder	Grupo cilindro auxiliar	h3=mm6576
15	580027435	1	Auxiliary cylinder ass'y	Ass. cilindro ausiliario	Ens. cylindre auxiliaire	Hilfshubzylinder	Grupo cilindro auxiliar	h3=mm6626
15	580027393	1	Auxiliary cylinder ass'y	Ass. cilindro ausiliario	Ens. cylindre auxiliaire	Hilfshubzylinder	Grupo cilindro auxiliar	h3=mm6726
15	580027436	1	Auxiliary cylinder ass'y	Ass. cilindro ausiliario	Ens. cylindre auxiliaire	Hilfshubzylinder	Grupo cilindro auxiliar	h3=mm6776
15	580027434	1	Auxiliary cylinder ass'y	Ass. cilindro ausiliario	Ens. cylindre auxiliaire	Hilfshubzylinder	Grupo cilindro auxiliar	h3=mm6876
15	580027435	1	Auxiliary cylinder ass'y	Ass. cilindro ausiliario	Ens. cylindre auxiliaire	Hilfshubzylinder	Grupo cilindro auxiliar	h3=mm7026
15	580027436	1	Auxiliary cylinder ass'y	Ass. cilindro ausiliario	Ens. cylindre auxiliaire	Hilfshubzylinder	Grupo cilindro auxiliar	h3=mm7176
16	449021001	4	Washer	Rondella	Rondelle	Unterlegscheibe	Arandela	
17	449001415	4	Screw	Vite	Vis	Schraube	Tornillo	
18	580023182	1	Clamp	Fascetta	Collier	Zwinge	Abrazadera	
19	580028807	2	Clamp	Fascetta	Collier	Zwinge	Abrazadera	
20	580028808	2	Clamp	Fascetta	Collier	Zwinge	Abrazadera	

LIFT CYLINDERS (HE140L MAST)
CILINDRI SOLLEVAMENTO (MONTANTE HE140L)
CYLINDRE DE SOULEVEMENT (MONTANT HE140L)
HUBZYLINDER (PFOSTEN HE140L)
CILINDRO DE ELEVACIÓN (MONTANTE HE140L) *FIGURE 22.1*

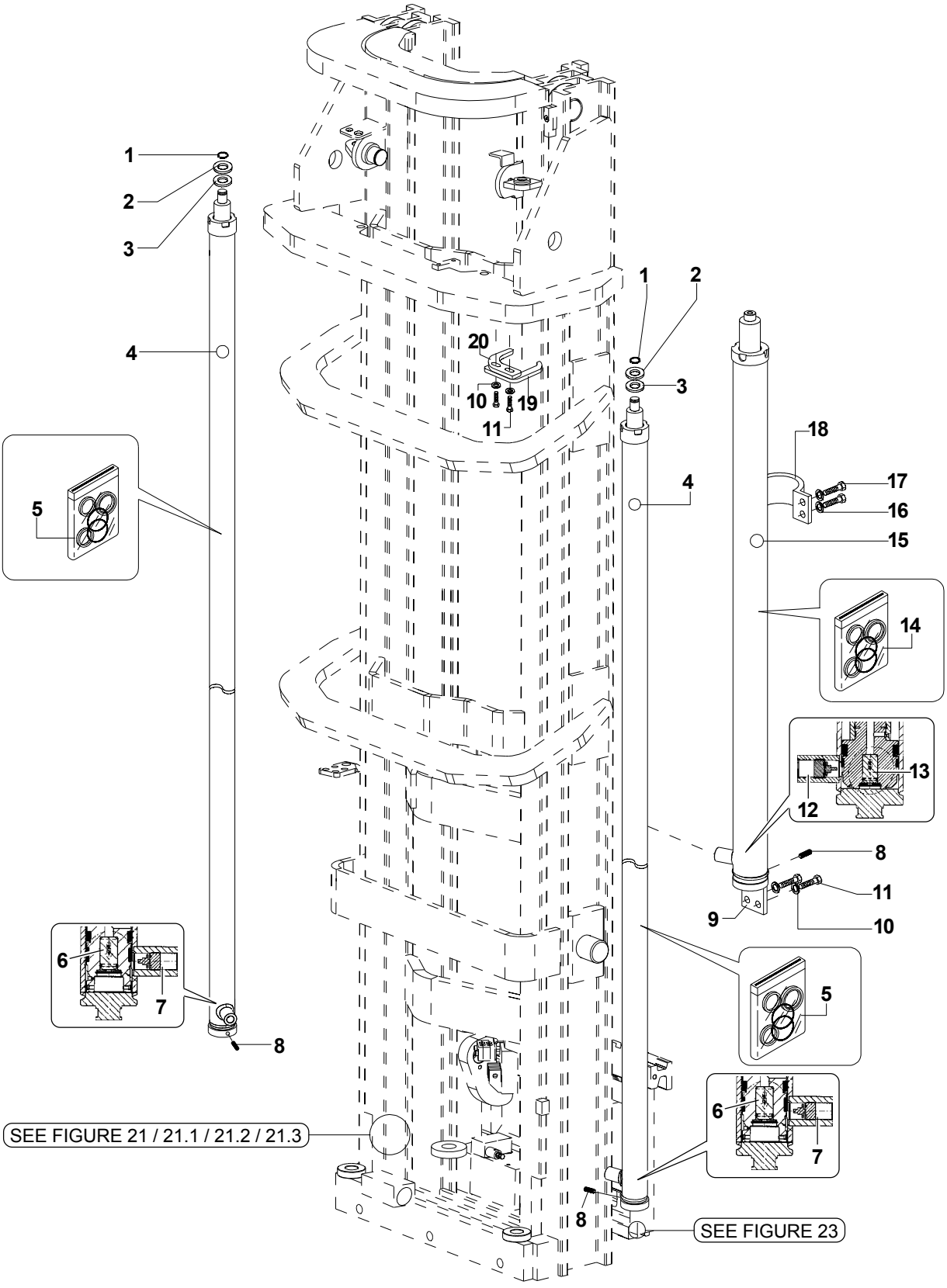

Yale

MODELS MR14H / MR20 / MR16N with HE140L mast

LIFT CYLINDERS (HE140L MAST)
CILINDRI SOLLEVAMENTO (MONTANTE HE140L)
CYLINDRE DE SOULEVEMENT (MONTANT HE140L)
HUBZYLINDER (PFOSTEN HE140L)
CILINDRO DE ELEVACIÓN (MONTANTE HE140L)

FIGURE 22.1

REF.	PART NO.	Q.TY	DESCRIPTION	DESCRIZIONE	DESIGNATION	BENENNUNG	DENOMINACIONES	PART DETAILS
1	500227904	2	Snap ring	Seeger	Arretoir	Seeger	Anillo Seeger	
2	272024600	AR	Washer	Rondella	Rondelle	Unterlegscheibe	Arandela	
3	272006400	AR	Washer	Rondella	Rondelle	Unterlegscheibe	Arandela	
4	580028075	2	Main cylinder ass'y	Ass. cilindro principale	Ens. cylindre principal	Haupthubzylinder	Grupo cilindro principal	h3=mm4476
4	580028076	2	Main cylinder ass'y	Ass. cilindro principale	Ens. cylindre principal	Haupthubzylinder	Grupo cilindro principal	h3=mm4626
4	580028077	2	Main cylinder ass'y	Ass. cilindro principale	Ens. cylindre principal	Haupthubzylinder	Grupo cilindro principal	h3=mm4776
4	580028078	2	Main cylinder ass'y	Ass. cilindro principale	Ens. cylindre principal	Haupthubzylinder	Grupo cilindro principal	h3=mm4926
4	580028079	2	Main cylinder ass'y	Ass. cilindro principale	Ens. cylindre principal	Haupthubzylinder	Grupo cilindro principal	h3=mm5076
4	580028080	2	Main cylinder ass'y	Ass. cilindro principale	Ens. cylindre principal	Haupthubzylinder	Grupo cilindro principal	h3=mm5226
4	580028081	2	Main cylinder ass'y	Ass. cilindro principale	Ens. cylindre principal	Haupthubzylinder	Grupo cilindro principal	h3=mm5376
4	580028082	2	Main cylinder ass'y	Ass. cilindro principale	Ens. cylindre principal	Haupthubzylinder	Grupo cilindro principal	h3=mm5526
4	580028083	2	Main cylinder ass'y	Ass. cilindro principale	Ens. cylindre principal	Haupthubzylinder	Grupo cilindro principal	h3=mm5676
4	580028084	2	Main cylinder ass'y	Ass. cilindro principale	Ens. cylindre principal	Haupthubzylinder	Grupo cilindro principal	h3=mm5826
4	580028085	2	Main cylinder ass'y	Ass. cilindro principale	Ens. cylindre principal	Haupthubzylinder	Grupo cilindro principal	h3=mm5976
4	580028086	2	Main cylinder ass'y	Ass. cilindro principale	Ens. cylindre principal	Haupthubzylinder	Grupo cilindro principal	h3=mm6126
4	580028087	2	Main cylinder ass'y	Ass. cilindro principale	Ens. cylindre principal	Haupthubzylinder	Grupo cilindro principal	h3=mm6276
4	580028089	2	Main cylinder ass'y	Ass. cilindro principale	Ens. cylindre principal	Haupthubzylinder	Grupo cilindro principal	h3=mm6426
4	580028091	2	Main cylinder ass'y	Ass. cilindro principale	Ens. cylindre principal	Haupthubzylinder	Grupo cilindro principal	h3=mm6576
4	580028093	2	Main cylinder ass'y	Ass. cilindro principale	Ens. cylindre principal	Haupthubzylinder	Grupo cilindro principal	h3=mm6726
4	580028095	2	Main cylinder ass'y	Ass. cilindro principale	Ens. cylindre principal	Haupthubzylinder	Grupo cilindro principal	h3=mm6876
4	580028097	2	Main cylinder ass'y	Ass. cilindro principale	Ens. cylindre principal	Haupthubzylinder	Grupo cilindro principal	h3=mm7026-channel lenght mm2840
4	580028102	2	Main cylinder ass'y	Ass. cilindro principale	Ens. cylindre principal	Haupthubzylinder	Grupo cilindro principal	h3=mm7026-channel lenght mm2940
4	580028099	2	Main cylinder ass'y	Ass. cilindro principale	Ens. cylindre principal	Haupthubzylinder	Grupo cilindro principal	h3=mm7176-channel lenght mm2890
4	580028104	2	Main cylinder ass'y	Ass. cilindro principale	Ens. cylindre principal	Haupthubzylinder	Grupo cilindro principal	h3=mm7176-channel lenght mm2990
4	580028106	2	Main cylinder ass'y	Ass. cilindro principale	Ens. cylindre principal	Haupthubzylinder	Grupo cilindro principal	h3=mm7326
4	580028108	2	Main cylinder ass'y	Ass. cilindro principale	Ens. cylindre principal	Haupthubzylinder	Grupo cilindro principal	h3=mm7476
4	580028110	2	Main cylinder ass'y	Ass. cilindro principale	Ens. cylindre principal	Haupthubzylinder	Grupo cilindro principal	h3=mm7626
4	580028112	2	Main cylinder ass'y	Ass. cilindro principale	Ens. cylindre principal	Haupthubzylinder	Grupo cilindro principal	h3=mm7776
4	580028114	2	Main cylinder ass'y	Ass. cilindro principale	Ens. cylindre principal	Haupthubzylinder	Grupo cilindro principal	h3=mm7926
4	580028116	2	Main cylinder ass'y	Ass. cilindro principale	Ens. cylindre principal	Haupthubzylinder	Grupo cilindro principal	h3=mm8076
4	580028118	2	Main cylinder ass'y	Ass. cilindro principale	Ens. cylindre principal	Haupthubzylinder	Grupo cilindro principal	h3=mm8226
4	580028124	2	Main cylinder ass'y	Ass. cilindro principale	Ens. cylindre principal	Haupthubzylinder	Grupo cilindro principal	h3=mm8276
4	580028120	2	Main cylinder ass'y	Ass. cilindro principale	Ens. cylindre principal	Haupthubzylinder	Grupo cilindro principal	h3=mm8376
4	580028127	2	Main cylinder ass'y	Ass. cilindro principale	Ens. cylindre principal	Haupthubzylinder	Grupo cilindro principal	h3=mm8426
4	580028122	2	Main cylinder ass'y	Ass. cilindro principale	Ens. cylindre principal	Haupthubzylinder	Grupo cilindro principal	h3=mm8526
4	580028130	2	Main cylinder ass'y	Ass. cilindro principale	Ens. cylindre principal	Haupthubzylinder	Grupo cilindro principal	h3=mm8576
4	580028133	2	Main cylinder ass'y	Ass. cilindro principale	Ens. cylindre principal	Haupthubzylinder	Grupo cilindro principal	h3=mm8726
5	580016916	2	Seal kit	Kit guarnizioni	Kit joints	Dichtungssatz	Kit de guarniciones	
6	504235239	1	Check valve	Valvola di ritegno	Soupape de retenue	Absperrventil	Válvula de retención	
7	580015509	1	Flow control valve	Valvola regolatrice di flusso	Soupape reglage de flux	Durchflußregler	Válvula reguladora de flujo	
8	449013025	3	Dowel	Grano	Clavette	Stift	Espiga	
9	580028847	1	Cylinder support	Supporto	Support	Lager	Soporte	
10	504226242	6	Washer	Rondella	Rondelle	Unterlegscheibe	Arandela	
11	449001343	6	Screw	Vite	Vis	Schraube	Tornillo	
12	580015510	1	Flow control valve	Valvola regolatrice di flusso	Soupape reglage de flux	Durchflußregler	Válvula reguladora de flujo	
13	504235239	1	Check valve	Valvola di ritegno	Soupape de retenue	Absperrventil	Válvula de retención	
14	580016917	1	Seal kit	Kit guarnizioni	Kit joints	Dichtungssatz	Kit de guarniciones	
15	580027378	1	Auxiliary cylinder ass'y	Ass. cilindro ausiliario	Ens. cylindre auxiliaire	Hilfshubzylinder	Grupo cilindro auxiliar	h3=mm4476

From serial N° / *Da matr.* / Du matr. / *Ab. seriennummer* / Desde la matr. :	Until serial N° / *Fino a matr.* / Jusq' matr. / *Bis zur serien-Nr.* / Hasta la matr. :	With the exception of / *Ad esclusione di* / À l'exclusion de / *Mit ausnahme von* / Excepto :	Including / *Compreso* / Avec / *Einschließlich* / Con :
C849T01501Z			

LIFT CYLINDERS (HE140L MAST)
CILINDRI SOLLEVAMENTO (MONTANTE HE140L)
CYLINDRE DE SOULEVEMENT (MONTANT HE140L)
HUBZYLINDER (PFOSTEN HE140L)
CILINDRO DE ELEVACIÓN (MONTANTE HE140L) *FIGURE 22.1*

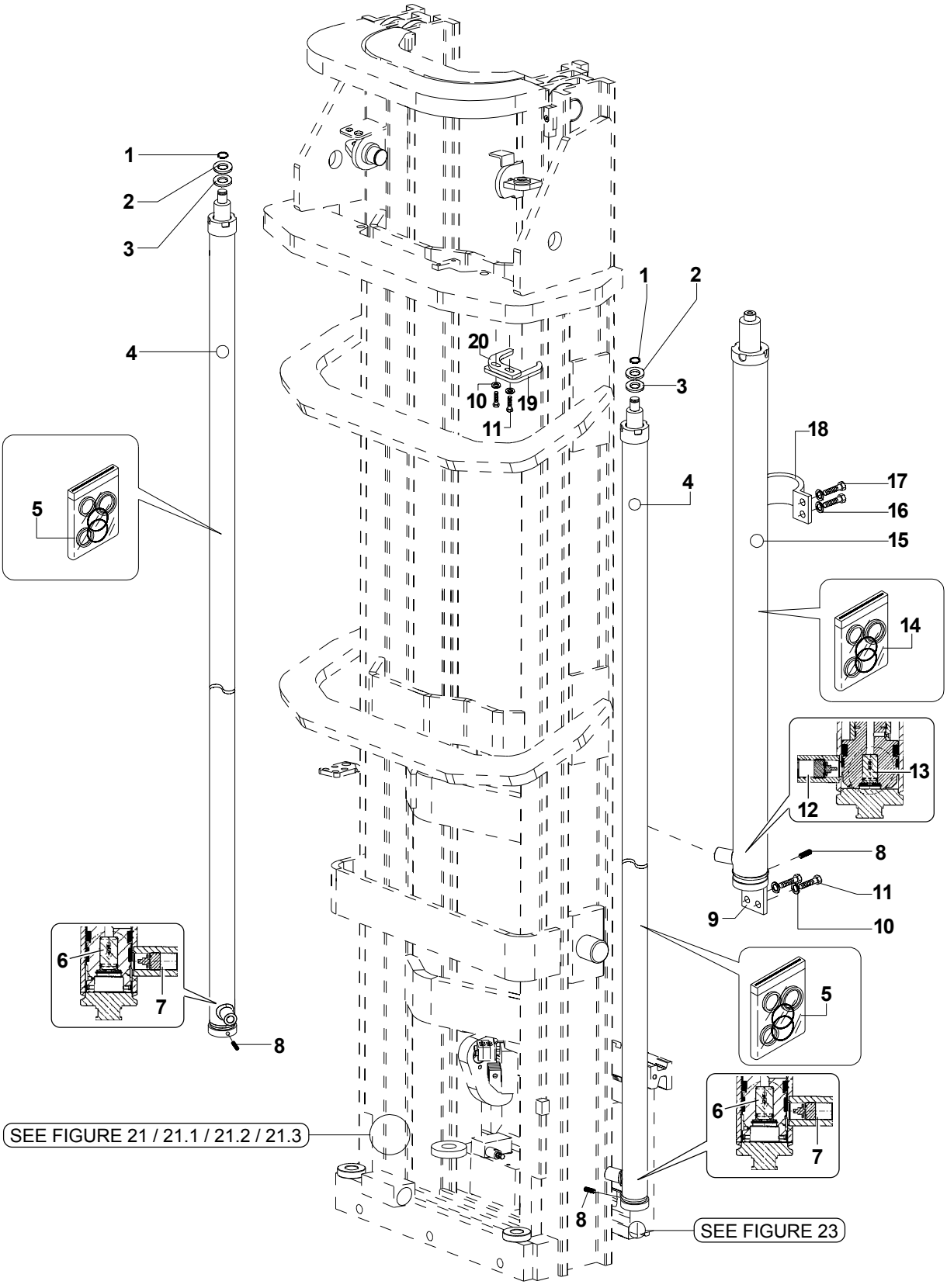

Yale

MODELS MR14H / MR20 / MR16N with HE140L mast

LIFT CYLINDERS (HE140L MAST)
CILINDRI SOLLEVAMENTO (MONTANTE HE140L)
CYLINDRE DE SOULEVEMENT (MONTANT HE140L)
HUBZYLINDER (PFOSTEN HE140L)
CILINDRO DE ELEVACIÓN (MONTANTE HE140L)

FIGURE 22.1

REF.	PART NO.	Q.TY	DESCRIPTION	DESCRIZIONE	DESIGNATION	BENENNUNG	DENOMINACIONES	PART DETAILS
15	580027379	1	Auxiliary cylinder ass'y	Ass. cilindro ausiliario	Ens. cylindre auxiliaire	Hilfshubzylinder	Grupo cilindro auxiliar	h3=mm4626
15	580027380	1	Auxiliary cylinder ass'y	Ass. cilindro ausiliario	Ens. cylindre auxiliaire	Hilfshubzylinder	Grupo cilindro auxiliar	h3=mm4776
15	580027381	1	Auxiliary cylinder ass'y	Ass. cilindro ausiliario	Ens. cylindre auxiliaire	Hilfshubzylinder	Grupo cilindro auxiliar	h3=mm4926
15	580027382	1	Auxiliary cylinder ass'y	Ass. cilindro ausiliario	Ens. cylindre auxiliaire	Hilfshubzylinder	Grupo cilindro auxiliar	h3=mm5076
15	580027383	1	Auxiliary cylinder ass'y	Ass. cilindro ausiliario	Ens. cylindre auxiliaire	Hilfshubzylinder	Grupo cilindro auxiliar	h3=mm5226
15	580027384	1	Auxiliary cylinder ass'y	Ass. cilindro ausiliario	Ens. cylindre auxiliaire	Hilfshubzylinder	Grupo cilindro auxiliar	h3=mm5376
15	580027385	1	Auxiliary cylinder ass'y	Ass. cilindro ausiliario	Ens. cylindre auxiliaire	Hilfshubzylinder	Grupo cilindro auxiliar	h3=mm5526
15	580027386	1	Auxiliary cylinder ass'y	Ass. cilindro ausiliario	Ens. cylindre auxiliaire	Hilfshubzylinder	Grupo cilindro auxiliar	h3=mm5676
15	580027387	1	Auxiliary cylinder ass'y	Ass. cilindro ausiliario	Ens. cylindre auxiliaire	Hilfshubzylinder	Grupo cilindro auxiliar	h3=mm5826
15	580027388	1	Auxiliary cylinder ass'y	Ass. cilindro ausiliario	Ens. cylindre auxiliaire	Hilfshubzylinder	Grupo cilindro auxiliar	h3=mm5976
15	580027389	1	Auxiliary cylinder ass'y	Ass. cilindro ausiliario	Ens. cylindre auxiliaire	Hilfshubzylinder	Grupo cilindro auxiliar	h3=mm6126
15	580027390	1	Auxiliary cylinder ass'y	Ass. cilindro ausiliario	Ens. cylindre auxiliaire	Hilfshubzylinder	Grupo cilindro auxiliar	h3=mm6276
15	580027391	1	Auxiliary cylinder ass'y	Ass. cilindro ausiliario	Ens. cylindre auxiliaire	Hilfshubzylinder	Grupo cilindro auxiliar	h3=mm6426
15	580027392	1	Auxiliary cylinder ass'y	Ass. cilindro ausiliario	Ens. cylindre auxiliaire	Hilfshubzylinder	Grupo cilindro auxiliar	h3=mm6576
15	580027393	1	Auxiliary cylinder ass'y	Ass. cilindro ausiliario	Ens. cylindre auxiliaire	Hilfshubzylinder	Grupo cilindro auxiliar	h3=mm6726
15	580027434	1	Auxiliary cylinder ass'y	Ass. cilindro ausiliario	Ens. cylindre auxiliaire	Hilfshubzylinder	Grupo cilindro auxiliar	h3=mm6876
15	580027435	1	Auxiliary cylinder ass'y	Ass. cilindro ausiliario	Ens. cylindre auxiliaire	Hilfshubzylinder	Grupo cilindro auxiliar	h3=mm7026-channel lenght mm2840
15	580027437	1	Auxiliary cylinder ass'y	Ass. cilindro ausiliario	Ens. cylindre auxiliaire	Hilfshubzylinder	Grupo cilindro auxiliar	h3=mm7026-channel lenght mm2940
15	580027436	1	Auxiliary cylinder ass'y	Ass. cilindro ausiliario	Ens. cylindre auxiliaire	Hilfshubzylinder	Grupo cilindro auxiliar	h3=mm7176-channel lenght mm2890
15	580027438	1	Auxiliary cylinder ass'y	Ass. cilindro ausiliario	Ens. cylindre auxiliaire	Hilfshubzylinder	Grupo cilindro auxiliar	h3=mm7176-channel lenght mm2990
15	580027439	1	Auxiliary cylinder ass'y	Ass. cilindro ausiliario	Ens. cylindre auxiliaire	Hilfshubzylinder	Grupo cilindro auxiliar	h3=mm7326
15	580027440	1	Auxiliary cylinder ass'y	Ass. cilindro ausiliario	Ens. cylindre auxiliaire	Hilfshubzylinder	Grupo cilindro auxiliar	h3=mm7476
15	580027441	1	Auxiliary cylinder ass'y	Ass. cilindro ausiliario	Ens. cylindre auxiliaire	Hilfshubzylinder	Grupo cilindro auxiliar	h3=mm7626
15	580027442	1	Auxiliary cylinder ass'y	Ass. cilindro ausiliario	Ens. cylindre auxiliaire	Hilfshubzylinder	Grupo cilindro auxiliar	h3=mm7776
15	580027443	1	Auxiliary cylinder ass'y	Ass. cilindro ausiliario	Ens. cylindre auxiliaire	Hilfshubzylinder	Grupo cilindro auxiliar	h3=mm7926
15	580027444	1	Auxiliary cylinder ass'y	Ass. cilindro ausiliario	Ens. cylindre auxiliaire	Hilfshubzylinder	Grupo cilindro auxiliar	h3=mm8076
15	580027445	1	Auxiliary cylinder ass'y	Ass. cilindro ausiliario	Ens. cylindre auxiliaire	Hilfshubzylinder	Grupo cilindro auxiliar	h3=mm8226
15	580027448	1	Auxiliary cylinder ass'y	Ass. cilindro ausiliario	Ens. cylindre auxiliaire	Hilfshubzylinder	Grupo cilindro auxiliar	h3=mm8276
15	580027446	1	Auxiliary cylinder ass'y	Ass. cilindro ausiliario	Ens. cylindre auxiliaire	Hilfshubzylinder	Grupo cilindro auxiliar	h3=mm8376
15	580027449	1	Auxiliary cylinder ass'y	Ass. cilindro ausiliario	Ens. cylindre auxiliaire	Hilfshubzylinder	Grupo cilindro auxiliar	h3=mm8426
15	580027447	1	Auxiliary cylinder ass'y	Ass. cilindro ausiliario	Ens. cylindre auxiliaire	Hilfshubzylinder	Grupo cilindro auxiliar	h3=mm8526
15	580027450	1	Auxiliary cylinder ass'y	Ass. cilindro ausiliario	Ens. cylindre auxiliaire	Hilfshubzylinder	Grupo cilindro auxiliar	h3=mm8576
15	580027451	1	Auxiliary cylinder ass'y	Ass. cilindro ausiliario	Ens. cylindre auxiliaire	Hilfshubzylinder	Grupo cilindro auxiliar	h3=mm8726
16	449021001	4	Washer	Rondella	Rondelle	Unterlegscheibe	Arandela	
17	449001415	4	Screw	Vite	Vis	Schraube	Tornillo	
18	580023182	1	Clamp	Fascetta	Collier	Zwinge	Abrazadera	
19	580028807	2	Clamp	Fascetta	Collier	Zwinge	Abrazadera	
20	580028808	2	Clamp	Fascetta	Collier	Zwinge	Abrazadera	

From serial N° / *Da matr.* / Du matr. / *Ab. seriennummer* / Desde la matr. :	Until serial N° / *Fino a matr.* / Jusq' matr. / *Bis zur serien-Nr.* / Hasta la matr. :	With the exception of / *Ad esclusione di* / À l'exclusion de / *Mit ausnahme von* / Excepto :	Including / *Compreso* / Avec / *Einschließlich* / Con :
C849T01501Z			

LIFT CYLINDERS (HE140 MAST)
CILINDRI SOLLEVAMENTO (MONTANTE HE140)
CYLINDRE DE SOULEVEMENT (MONTANT HE140)
HUBZYLINDER (PFOSTEN HE140)
CILINDRO DE ELEVACIÓN (MONTANTE HE140)

FIGURE 22.2

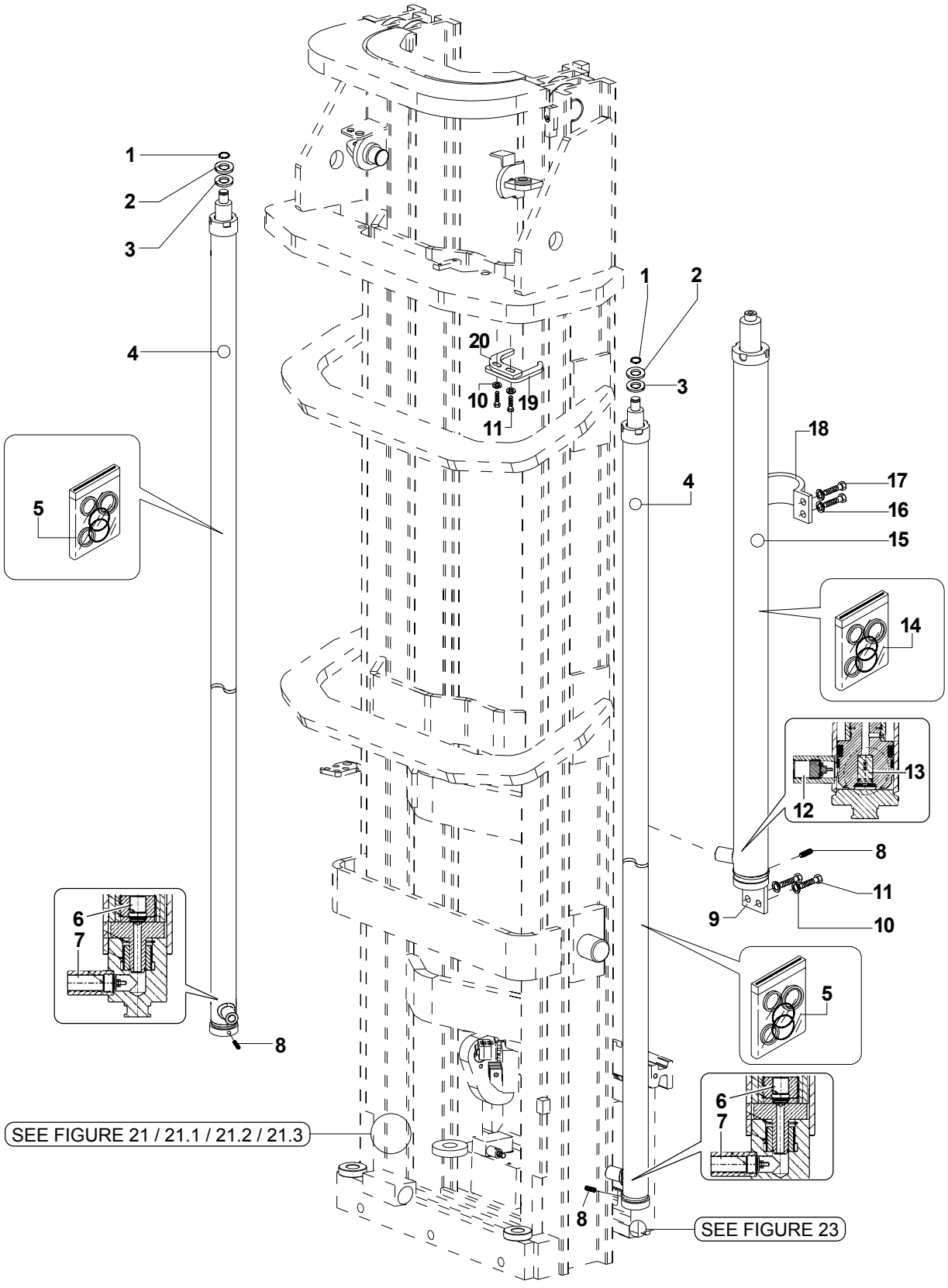

Yale

MODELS MR16H / MR20H
MR25 / MR20W with HE140 mast

LIFT CYLINDERS (HE140 MAST)
CILINDRI SOLLEVAMENTO (MONTANTE HE140)
CYLINDRE DE SOULEVEMENT (MONTANT HE140)
HUBZYLINDER (PFOSTEN HE140)
CILINDRO DE ELEVACIÓN (MONTANTE HE140)

FIGURE 22.2

REF.	PART NO.	Q.TY	DESCRIPTION	DESCRIZIONE	DESIGNATION	BENENNUNG	DENOMINACIONES	PART DETAILS
1	500227904	2	Snap ring	Seeger	Arretoir	Seeger	Anillo Seeger	
2	272024600	AR	Washer	Rondella	Rondelle	Unterlegscheibe	Arandela	
3	272006400	AR	Washer	Rondella	Rondelle	Unterlegscheibe	Arandela	
4	580031406	2	Main cylinder ass'y	Ass. cilindro principale	Ens. cylindre principal	Haupthubzylinder	Grupo cilindro principal	h3=mm4376
4	580031407	2	Main cylinder ass'y	Ass. cilindro principale	Ens. cylindre principal	Haupthubzylinder	Grupo cilindro principal	h3=mm4526
4	580031408	2	Main cylinder ass'y	Ass. cilindro principale	Ens. cylindre principal	Haupthubzylinder	Grupo cilindro principal	h3=mm4676
4	580031409	2	Main cylinder ass'y	Ass. cilindro principale	Ens. cylindre principal	Haupthubzylinder	Grupo cilindro principal	h3=mm4826
4	580031410	2	Main cylinder ass'y	Ass. cilindro principale	Ens. cylindre principal	Haupthubzylinder	Grupo cilindro principal	h3=mm4976
4	580031411	2	Main cylinder ass'y	Ass. cilindro principale	Ens. cylindre principal	Haupthubzylinder	Grupo cilindro principal	h3=mm5126
4	580031412	2	Main cylinder ass'y	Ass. cilindro principale	Ens. cylindre principal	Haupthubzylinder	Grupo cilindro principal	h3=mm5276
4	580031413	2	Main cylinder ass'y	Ass. cilindro principale	Ens. cylindre principal	Haupthubzylinder	Grupo cilindro principal	h3=mm5426
4	580031414	2	Main cylinder ass'y	Ass. cilindro principale	Ens. cylindre principal	Haupthubzylinder	Grupo cilindro principal	h3=mm5576
4	580031415	2	Main cylinder ass'y	Ass. cilindro principale	Ens. cylindre principal	Haupthubzylinder	Grupo cilindro principal	h3=mm5726
4	580031416	2	Main cylinder ass'y	Ass. cilindro principale	Ens. cylindre principal	Haupthubzylinder	Grupo cilindro principal	h3=mm5876
4	580031417	2	Main cylinder ass'y	Ass. cilindro principale	Ens. cylindre principal	Haupthubzylinder	Grupo cilindro principal	h3=mm6026
4	580031418	2	Main cylinder ass'y	Ass. cilindro principale	Ens. cylindre principal	Haupthubzylinder	Grupo cilindro principal	h3=mm6176
4	580031419	2	Main cylinder ass'y	Ass. cilindro principale	Ens. cylindre principal	Haupthubzylinder	Grupo cilindro principal	h3=mm6326
4	580031420	2	Main cylinder ass'y	Ass. cilindro principale	Ens. cylindre principal	Haupthubzylinder	Grupo cilindro principal	h3=mm6476
4	580031421	2	Main cylinder ass'y	Ass. cilindro principale	Ens. cylindre principal	Haupthubzylinder	Grupo cilindro principal	h3=mm6626
4	580031422	2	Main cylinder ass'y	Ass. cilindro principale	Ens. cylindre principal	Haupthubzylinder	Grupo cilindro principal	h3=mm6776
4	580031423	2	Main cylinder ass'y	Ass. cilindro principale	Ens. cylindre principal	Haupthubzylinder	Grupo cilindro principal	h3=mm6926
4	580031425	2	Main cylinder ass'y	Ass. cilindro principale	Ens. cylindre principal	Haupthubzylinder	Grupo cilindro principal	h3=mm7026
4	580031424	2	Main cylinder ass'y	Ass. cilindro principale	Ens. cylindre principal	Haupthubzylinder	Grupo cilindro principal	h3=mm7076
4	580031426	2	Main cylinder ass'y	Ass. cilindro principale	Ens. cylindre principal	Haupthubzylinder	Grupo cilindro principal	h3=mm7176
4	580031444	2	Main cylinder ass'y	Ass. cilindro principale	Ens. cylindre principal	Haupthubzylinder	Grupo cilindro principal	h3=mm7226
4	580031427	2	Main cylinder ass'y	Ass. cilindro principale	Ens. cylindre principal	Haupthubzylinder	Grupo cilindro principal	h3=mm7326
4	580031445	2	Main cylinder ass'y	Ass. cilindro principale	Ens. cylindre principal	Haupthubzylinder	Grupo cilindro principal	h3=mm7376
4	580031428	2	Main cylinder ass'y	Ass. cilindro principale	Ens. cylindre principal	Haupthubzylinder	Grupo cilindro principal	h3=mm7476
4	580031446	2	Main cylinder ass'y	Ass. cilindro principale	Ens. cylindre principal	Haupthubzylinder	Grupo cilindro principal	h3=mm7526
4	580031429	2	Main cylinder ass'y	Ass. cilindro principale	Ens. cylindre principal	Haupthubzylinder	Grupo cilindro principal	h3=mm7626
4	580031447	2	Main cylinder ass'y	Ass. cilindro principale	Ens. cylindre principal	Haupthubzylinder	Grupo cilindro principal	h3=mm7676
4	580031430	2	Main cylinder ass'y	Ass. cilindro principale	Ens. cylindre principal	Haupthubzylinder	Grupo cilindro principal	h3=mm7776
4	580031448	2	Main cylinder ass'y	Ass. cilindro principale	Ens. cylindre principal	Haupthubzylinder	Grupo cilindro principal	h3=mm7826
4	580031431	2	Main cylinder ass'y	Ass. cilindro principale	Ens. cylindre principal	Haupthubzylinder	Grupo cilindro principal	h3=mm7926
4	580031449	2	Main cylinder ass'y	Ass. cilindro principale	Ens. cylindre principal	Haupthubzylinder	Grupo cilindro principal	h3=mm7976
4	580031432	2	Main cylinder ass'y	Ass. cilindro principale	Ens. cylindre principal	Haupthubzylinder	Grupo cilindro principal	h3=mm8076
4	580031450	2	Main cylinder ass'y	Ass. cilindro principale	Ens. cylindre principal	Haupthubzylinder	Grupo cilindro principal	h3=mm8126
4	580031433	2	Main cylinder ass'y	Ass. cilindro principale	Ens. cylindre principal	Haupthubzylinder	Grupo cilindro principal	h3=mm8226
4	580031451	2	Main cylinder ass'y	Ass. cilindro principale	Ens. cylindre principal	Haupthubzylinder	Grupo cilindro principal	h3=mm8276-channel lenght mm3290
4	580031436	2	Main cylinder ass'y	Ass. cilindro principale	Ens. cylindre principal	Haupthubzylinder	Grupo cilindro principal	h3=mm8276-channel lenght mm3490
4	580031434	2	Main cylinder ass'y	Ass. cilindro principale	Ens. cylindre principal	Haupthubzylinder	Grupo cilindro principal	h3=mm8376
4	580031452	2	Main cylinder ass'y	Ass. cilindro principale	Ens. cylindre principal	Haupthubzylinder	Grupo cilindro principal	h3=mm8426-channel lenght mm3340
4	580031437	2	Main cylinder ass'y	Ass. cilindro principale	Ens. cylindre principal	Haupthubzylinder	Grupo cilindro principal	h3=mm8426-channel lenght mm3540
4	580031435	2	Main cylinder ass'y	Ass. cilindro principale	Ens. cylindre principal	Haupthubzylinder	Grupo cilindro principal	h3=mm8526
4	580031453	2	Main cylinder ass'y	Ass. cilindro principale	Ens. cylindre principal	Haupthubzylinder	Grupo cilindro principal	h3=mm8576-channel lenght mm3390
4	580031438	2	Main cylinder ass'y	Ass. cilindro principale	Ens. cylindre principal	Haupthubzylinder	Grupo cilindro principal	h3=mm8576-channel lenght mm3590
4	580031455	2	Main cylinder ass'y	Ass. cilindro principale	Ens. cylindre principal	Haupthubzylinder	Grupo cilindro principal	h3=mm8676
4	580031454	2	Main cylinder ass'y	Ass. cilindro principale	Ens. cylindre principal	Haupthubzylinder	Grupo cilindro principal	h3=mm8726-channel lenght mm3440

From serial N° / *Da matr.* / Du matr. / *Ab. seriennummer* / Desde la matr. :	Until serial N° / *Fino a matr.* / Jusq' matr. / *Bis zur serien-Nr.* / Hasta la matr. :	With the exception of / *Ad esclusione di* / À l'exclusion de / *Mit ausnahme von* / Excepto :	Including / *Compreso* / Avec / *Einschließlich* / Con :
C849T01501Z			

LIFT CYLINDERS (HE140 MAST)
CILINDRI SOLLEVAMENTO (MONTANTE HE140)
CYLINDRE DE SOULEVEMENT (MONTANT HE140)
HUBZYLINDER (PFOSTEN HE140)
CILINDRO DE ELEVACIÓN (MONTANTE HE140)

FIGURE 22.2

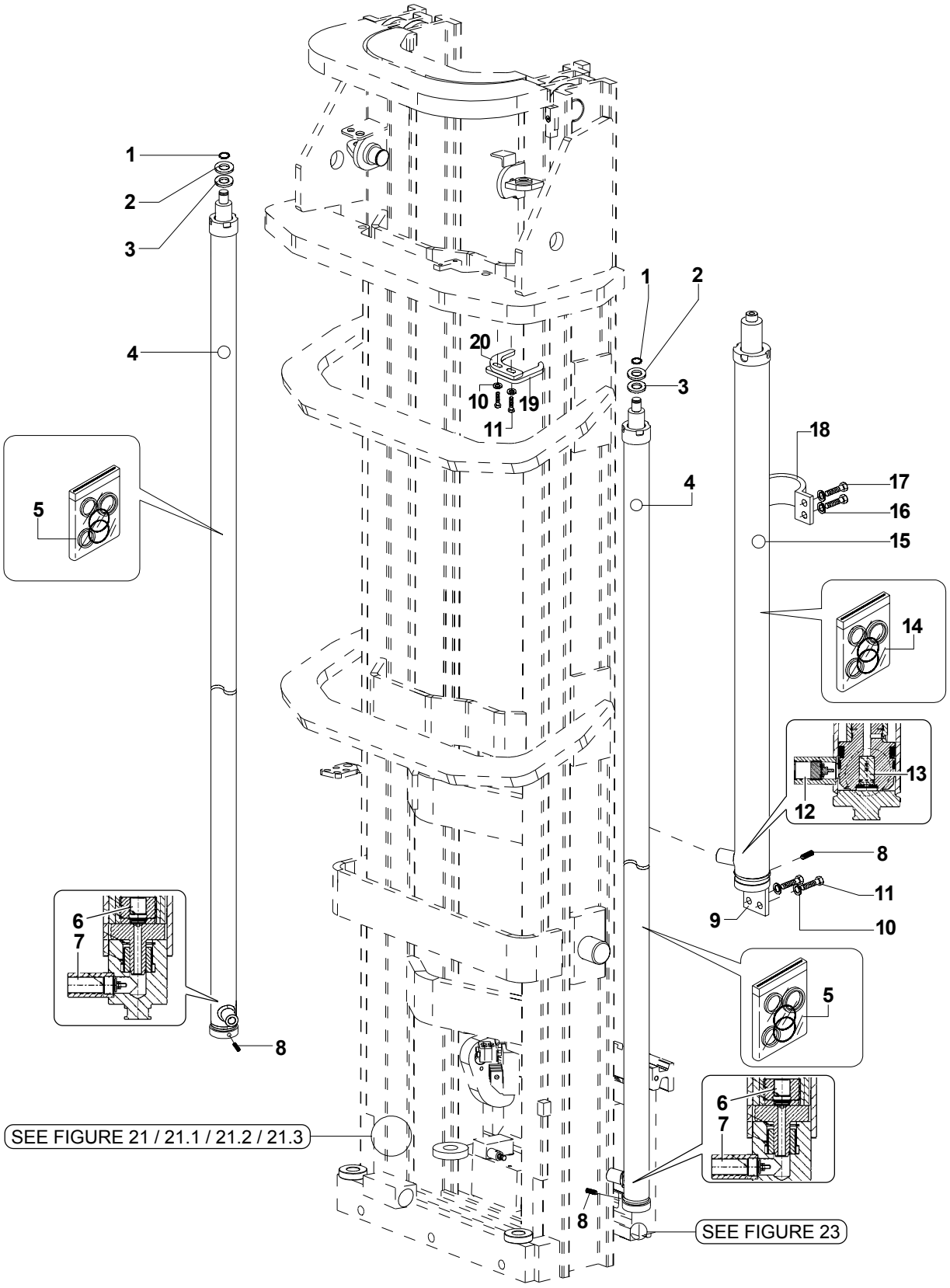

Yale

MODELS MR16H / MR20H
MR25 / MR20W with HE140 mast

LIFT CYLINDERS (HE140 MAST)
CILINDRI SOLLEVAMENTO (MONTANTE HE140)
CYLINDRE DE SOULEVEMENT (MONTANT HE140)
HUBZYLINDER (PFOSTEN HE140)
CILINDRO DE ELEVACIÓN (MONTANTE HE140)

FIGURE 22.2

REF.	PART NO.	Q.TY	DESCRIPTION	DESCRIZIONE	DESIGNATION	BENENNUNG	DENOMINACIONES	PART DETAILS
4	580031439	2	Main cylinder ass'y	Ass. cilindro principale	Ens. cylindre principal	Haupthubzylinder	Grupo cilindro principal	h3=mm8726-channel lenght mm3640
4	580031456	2	Main cylinder ass'y	Ass. cilindro principale	Ens. cylindre principal	Haupthubzylinder	Grupo cilindro principal	h3=mm8826
4	580031440	2	Main cylinder ass'y	Ass. cilindro principale	Ens. cylindre principal	Haupthubzylinder	Grupo cilindro principal	h3=mm8876
4	580031457	2	Main cylinder ass'y	Ass. cilindro principale	Ens. cylindre principal	Haupthubzylinder	Grupo cilindro principal	h3=mm8976
4	580031441	2	Main cylinder ass'y	Ass. cilindro principale	Ens. cylindre principal	Haupthubzylinder	Grupo cilindro principal	h3=mm9026
4	580031458	2	Main cylinder ass'y	Ass. cilindro principale	Ens. cylindre principal	Haupthubzylinder	Grupo cilindro principal	h3=mm9126
4	580031442	2	Main cylinder ass'y	Ass. cilindro principale	Ens. cylindre principal	Haupthubzylinder	Grupo cilindro principal	h3=mm9176
4	580031459	2	Main cylinder ass'y	Ass. cilindro principale	Ens. cylindre principal	Haupthubzylinder	Grupo cilindro principal	h3=mm9276
4	580031443	2	Main cylinder ass'y	Ass. cilindro principale	Ens. cylindre principal	Haupthubzylinder	Grupo cilindro principal	h3=mm9326
4	580031460	2	Main cylinder ass'y	Ass. cilindro principale	Ens. cylindre principal	Haupthubzylinder	Grupo cilindro principal	h3=mm9426
4	580031461	2	Main cylinder ass'y	Ass. cilindro principale	Ens. cylindre principal	Haupthubzylinder	Grupo cilindro principal	h3=mm9576
4	580031462	2	Main cylinder ass'y	Ass. cilindro principale	Ens. cylindre principal	Haupthubzylinder	Grupo cilindro principal	h3=mm9726
5	580033828	2	Seal kit	Kit guarnizioni	Kit joints	Dichtungssatz	Kit de guarniciones	
6	277015000	1	Hose failure valve	Valvola di blocco	Soupape de blocage	Sperrventil	Válvula de cierre	
7	580015509	1	Flow control valve	Valvola regolatrice di flusso	Soupape reglage de flux	Durchflußregler	Válvula reguladora de flujo	
8	449013025	3	Dowel	Grano	Clavette	Stift	Espiga	
9	580028847	1	Cylinder support	Supporto	Support	Lager	Soporte	
10	504226242	6	Washer	Rondella	Rondelle	Unterlegscheibe	Arandela	
11	449001343	6	Screw	Vite	Vis	Schraube	Tornillo	
12	580015510	1	Flow control valve	Valvola regolatrice di flusso	Soupape reglage de flux	Durchflußregler	Válvula reguladora de flujo	
13	504235239	1	Check valve	Valvola di ritegno	Soupape de retenue	Absperrventil	Válvula de retención	
14	580016917	1	Seal kit	Kit guarnizioni	Kit joints	Dichtungssatz	Kit de guarniciones	
15	580027378	1	Auxiliary cylinder ass'y	Ass. cilindro ausiliario	Ens. cylindre auxiliaire	Hilfshubzylinder	Grupo cilindro auxiliar	h3=mm4376
15	580027379	1	Auxiliary cylinder ass'y	Ass. cilindro ausiliario	Ens. cylindre auxiliaire	Hilfshubzylinder	Grupo cilindro auxiliar	h3=mm4526
15	580027380	1	Auxiliary cylinder ass'y	Ass. cilindro ausiliario	Ens. cylindre auxiliaire	Hilfshubzylinder	Grupo cilindro auxiliar	h3=mm4676
15	580027381	1	Auxiliary cylinder ass'y	Ass. cilindro ausiliario	Ens. cylindre auxiliaire	Hilfshubzylinder	Grupo cilindro auxiliar	h3=mm4826
15	580027382	1	Auxiliary cylinder ass'y	Ass. cilindro ausiliario	Ens. cylindre auxiliaire	Hilfshubzylinder	Grupo cilindro auxiliar	h3=mm4976
15	580027383	1	Auxiliary cylinder ass'y	Ass. cilindro ausiliario	Ens. cylindre auxiliaire	Hilfshubzylinder	Grupo cilindro auxiliar	h3=mm5126
15	580027384	1	Auxiliary cylinder ass'y	Ass. cilindro ausiliario	Ens. cylindre auxiliaire	Hilfshubzylinder	Grupo cilindro auxiliar	h3=mm5276
15	580027385	1	Auxiliary cylinder ass'y	Ass. cilindro ausiliario	Ens. cylindre auxiliaire	Hilfshubzylinder	Grupo cilindro auxiliar	h3=mm5426
15	580027386	1	Auxiliary cylinder ass'y	Ass. cilindro ausiliario	Ens. cylindre auxiliaire	Hilfshubzylinder	Grupo cilindro auxiliar	h3=mm5576
15	580027387	1	Auxiliary cylinder ass'y	Ass. cilindro ausiliario	Ens. cylindre auxiliaire	Hilfshubzylinder	Grupo cilindro auxiliar	h3=mm5726
15	580027388	1	Auxiliary cylinder ass'y	Ass. cilindro ausiliario	Ens. cylindre auxiliaire	Hilfshubzylinder	Grupo cilindro auxiliar	h3=mm5876
15	580027389	1	Auxiliary cylinder ass'y	Ass. cilindro ausiliario	Ens. cylindre auxiliaire	Hilfshubzylinder	Grupo cilindro auxiliar	h3=mm6026
15	580027390	1	Auxiliary cylinder ass'y	Ass. cilindro ausiliario	Ens. cylindre auxiliaire	Hilfshubzylinder	Grupo cilindro auxiliar	h3=mm6176
15	580027391	1	Auxiliary cylinder ass'y	Ass. cilindro ausiliario	Ens. cylindre auxiliaire	Hilfshubzylinder	Grupo cilindro auxiliar	h3=mm6326
15	580027392	1	Auxiliary cylinder ass'y	Ass. cilindro ausiliario	Ens. cylindre auxiliaire	Hilfshubzylinder	Grupo cilindro auxiliar	h3=mm6476
15	580027393	1	Auxiliary cylinder ass'y	Ass. cilindro ausiliario	Ens. cylindre auxiliaire	Hilfshubzylinder	Grupo cilindro auxiliar	h3=mm6626
15	580027434	1	Auxiliary cylinder ass'y	Ass. cilindro ausiliario	Ens. cylindre auxiliaire	Hilfshubzylinder	Grupo cilindro auxiliar	h3=mm6776
15	580027435	1	Auxiliary cylinder ass'y	Ass. cilindro ausiliario	Ens. cylindre auxiliaire	Hilfshubzylinder	Grupo cilindro auxiliar	h3=mm6926
15	580027437	1	Auxiliary cylinder ass'y	Ass. cilindro ausiliario	Ens. cylindre auxiliaire	Hilfshubzylinder	Grupo cilindro auxiliar	h3=mm7026
15	580027436	1	Auxiliary cylinder ass'y	Ass. cilindro ausiliario	Ens. cylindre auxiliaire	Hilfshubzylinder	Grupo cilindro auxiliar	h3=mm7076
15	580027438	1	Auxiliary cylinder ass'y	Ass. cilindro ausiliario	Ens. cylindre auxiliaire	Hilfshubzylinder	Grupo cilindro auxiliar	h3=mm7176
15	580027437	1	Auxiliary cylinder ass'y	Ass. cilindro ausiliario	Ens. cylindre auxiliaire	Hilfshubzylinder	Grupo cilindro auxiliar	h3=mm7226

From serial N° / *Da matr.* / Du matr. / *Ab. seriennummer* / Desde la matr. :	Until serial N° / *Fino a matr.* / Jusq' matr. / *Bis zur serien-Nr.* / Hasta la matr. :	With the exception of / *Ad esclusione di* / À l'exclusion de / *Mit ausnahme von* / Excepto :	Including / *Compreso* / Avec / *Einschließlich* / Con :
C849T01501Z			

LIFT CYLINDERS (HE140 MAST)
CILINDRI SOLLEVAMENTO (MONTANTE HE140)
CYLINDRE DE SOULEVEMENT (MONTANT HE140)
HUBZYLINDER (PFOSTEN HE140)
CILINDRO DE ELEVACIÓN (MONTANTE HE140)

FIGURE 22.2

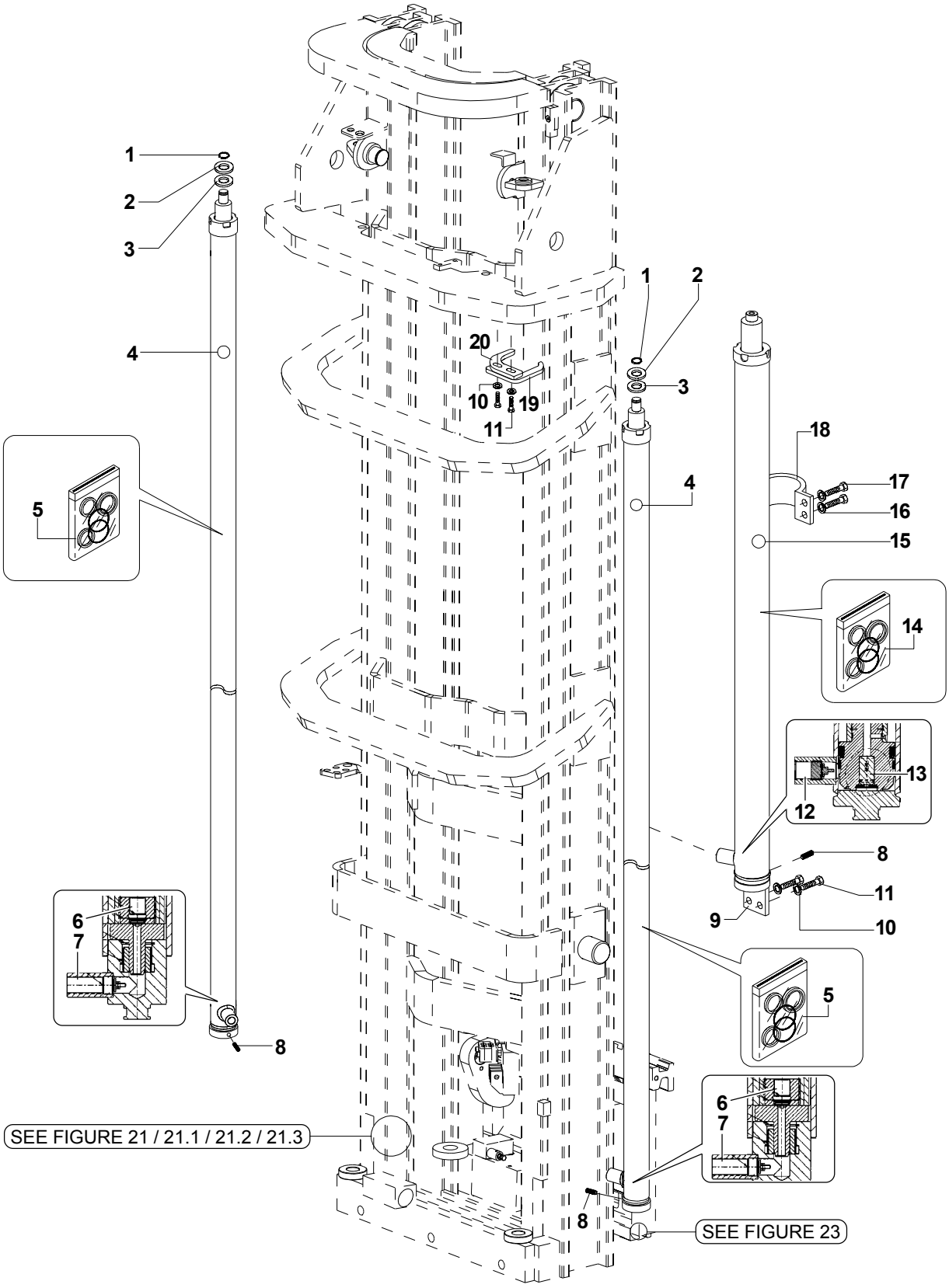

Yale

MODELS MR16H / MR20H
MR25 / MR20W with HE140 mast

LIFT CYLINDERS (HE140 MAST)
CILINDRI SOLLEVAMENTO (MONTANTE HE140)
CYLINDRE DE SOULEVEMENT (MONTANT HE140)
HUBZYLINDER (PFOSTEN HE140)
CILINDRO DE ELEVACIÓN (MONTANTE HE140)

FIGURE 22.2

REF.	PART NO.	Q.TY	DESCRIPTION	DESCRIZIONE	DESIGNATION	BENENNUNG	DENOMINACIONES	PART DETAILS
15	580027439	1	Auxiliary cylinder ass'y	Ass. cilindro ausiliario	Ens. cylindre auxiliaire	Hilfshubzylinder	Grupo cilindro auxiliar	h3=mm7326
15	580027438	1	Auxiliary cylinder ass'y	Ass. cilindro ausiliario	Ens. cylindre auxiliaire	Hilfshubzylinder	Grupo cilindro auxiliar	h3=mm7376
15	580027440	1	Auxiliary cylinder ass'y	Ass. cilindro ausiliario	Ens. cylindre auxiliaire	Hilfshubzylinder	Grupo cilindro auxiliar	h3=mm7476
15	580027439	1	Auxiliary cylinder ass'y	Ass. cilindro ausiliario	Ens. cylindre auxiliaire	Hilfshubzylinder	Grupo cilindro auxiliar	h3=mm7526
15	580027441	1	Auxiliary cylinder ass'y	Ass. cilindro ausiliario	Ens. cylindre auxiliaire	Hilfshubzylinder	Grupo cilindro auxiliar	h3=mm7626
15	580027440	1	Auxiliary cylinder ass'y	Ass. cilindro ausiliario	Ens. cylindre auxiliaire	Hilfshubzylinder	Grupo cilindro auxiliar	h3=mm7676
15	580027442	1	Auxiliary cylinder ass'y	Ass. cilindro ausiliario	Ens. cylindre auxiliaire	Hilfshubzylinder	Grupo cilindro auxiliar	h3=mm7776
15	580027441	1	Auxiliary cylinder ass'y	Ass. cilindro ausiliario	Ens. cylindre auxiliaire	Hilfshubzylinder	Grupo cilindro auxiliar	h3=mm7826
15	580027443	1	Auxiliary cylinder ass'y	Ass. cilindro ausiliario	Ens. cylindre auxiliaire	Hilfshubzylinder	Grupo cilindro auxiliar	h3=mm7926
15	580027442	1	Auxiliary cylinder ass'y	Ass. cilindro ausiliario	Ens. cylindre auxiliaire	Hilfshubzylinder	Grupo cilindro auxiliar	h3=mm7976
15	580027444	1	Auxiliary cylinder ass'y	Ass. cilindro ausiliario	Ens. cylindre auxiliaire	Hilfshubzylinder	Grupo cilindro auxiliar	h3=mm8076
15	580027443	1	Auxiliary cylinder ass'y	Ass. cilindro ausiliario	Ens. cylindre auxiliaire	Hilfshubzylinder	Grupo cilindro auxiliar	h3=mm8126
15	580027445	1	Auxiliary cylinder ass'y	Ass. cilindro ausiliario	Ens. cylindre auxiliaire	Hilfshubzylinder	Grupo cilindro auxiliar	h3=mm8226
15	580027444	1	Auxiliary cylinder ass'y	Ass. cilindro ausiliario	Ens. cylindre auxiliaire	Hilfshubzylinder	Grupo cilindro auxiliar	h3=mm8276-channel lenght mm3290
15	580027448	1	Auxiliary cylinder ass'y	Ass. cilindro ausiliario	Ens. cylindre auxiliaire	Hilfshubzylinder	Grupo cilindro auxiliar	h3=mm8276-channel lenght mm3490
15	580027446	1	Auxiliary cylinder ass'y	Ass. cilindro ausiliario	Ens. cylindre auxiliaire	Hilfshubzylinder	Grupo cilindro auxiliar	h3=mm8376
15	580027445	1	Auxiliary cylinder ass'y	Ass. cilindro ausiliario	Ens. cylindre auxiliaire	Hilfshubzylinder	Grupo cilindro auxiliar	h3=mm8426-channel lenght mm3340
15	580027449	1	Auxiliary cylinder ass'y	Ass. cilindro ausiliario	Ens. cylindre auxiliaire	Hilfshubzylinder	Grupo cilindro auxiliar	h3=mm8426-channel lenght mm3540
15	580027447	1	Auxiliary cylinder ass'y	Ass. cilindro ausiliario	Ens. cylindre auxiliaire	Hilfshubzylinder	Grupo cilindro auxiliar	h3=mm8526
15	580027446	1	Auxiliary cylinder ass'y	Ass. cilindro ausiliario	Ens. cylindre auxiliaire	Hilfshubzylinder	Grupo cilindro auxiliar	h3=mm8576-channel lenght mm3390
15	580027450	1	Auxiliary cylinder ass'y	Ass. cilindro ausiliario	Ens. cylindre auxiliaire	Hilfshubzylinder	Grupo cilindro auxiliar	h3=mm8576-channel lenght mm3590
15	580027448	1	Auxiliary cylinder ass'y	Ass. cilindro ausiliario	Ens. cylindre auxiliaire	Hilfshubzylinder	Grupo cilindro auxiliar	h3=mm8676
15	580027447	1	Auxiliary cylinder ass'y	Ass. cilindro ausiliario	Ens. cylindre auxiliaire	Hilfshubzylinder	Grupo cilindro auxiliar	h3=mm8726-channel lenght mm3440
15	580027451	1	Auxiliary cylinder ass'y	Ass. cilindro ausiliario	Ens. cylindre auxiliaire	Hilfshubzylinder	Grupo cilindro auxiliar	h3=mm8726-channel lenght mm3640
15	580027449	1	Auxiliary cylinder ass'y	Ass. cilindro ausiliario	Ens. cylindre auxiliaire	Hilfshubzylinder	Grupo cilindro auxiliar	h3=mm8826
15	580027458	1	Auxiliary cylinder ass'y	Ass. cilindro ausiliario	Ens. cylindre auxiliaire	Hilfshubzylinder	Grupo cilindro auxiliar	h3=mm8876
15	580027450	1	Auxiliary cylinder ass'y	Ass. cilindro ausiliario	Ens. cylindre auxiliaire	Hilfshubzylinder	Grupo cilindro auxiliar	h3=mm8976
15	580027459	1	Auxiliary cylinder ass'y	Ass. cilindro ausiliario	Ens. cylindre auxiliaire	Hilfshubzylinder	Grupo cilindro auxiliar	h3=mm9026
15	580027451	1	Auxiliary cylinder ass'y	Ass. cilindro ausiliario	Ens. cylindre auxiliaire	Hilfshubzylinder	Grupo cilindro auxiliar	h3=mm9126
15	580027460	1	Auxiliary cylinder ass'y	Ass. cilindro ausiliario	Ens. cylindre auxiliaire	Hilfshubzylinder	Grupo cilindro auxiliar	h3=mm9176
15	580027458	1	Auxiliary cylinder ass'y	Ass. cilindro ausiliario	Ens. cylindre auxiliaire	Hilfshubzylinder	Grupo cilindro auxiliar	h3=mm9276
15	580027461	1	Auxiliary cylinder ass'y	Ass. cilindro ausiliario	Ens. cylindre auxiliaire	Hilfshubzylinder	Grupo cilindro auxiliar	h3=mm9326
15	580027459	1	Auxiliary cylinder ass'y	Ass. cilindro ausiliario	Ens. cylindre auxiliaire	Hilfshubzylinder	Grupo cilindro auxiliar	h3=mm9426
15	580027460	1	Auxiliary cylinder ass'y	Ass. cilindro ausiliario	Ens. cylindre auxiliaire	Hilfshubzylinder	Grupo cilindro auxiliar	h3=mm9576
15	580027461	1	Auxiliary cylinder ass'y	Ass. cilindro ausiliario	Ens. cylindre auxiliaire	Hilfshubzylinder	Grupo cilindro auxiliar	h3=mm9726
16	449021001	4	Washer	Rondella	Rondelle	Unterlegscheibe	Arandela	
17	449001415	4	Screw	Vite	Vis	Schraube	Tornillo	
18	580023182	1	Clamp	Fascetta	Collier	Zwinge	Abrazadera	
19	580028807	2	Clamp	Fascetta	Collier	Zwinge	Abrazadera	
20	580028808	2	Clamp	Fascetta	Collier	Zwinge	Abrazadera	

From serial N° / *Da matr.* / Du matr. / *Ab. seriennummer* / Desde la matr. :	Until serial N° / *Fino a matr.* / Jusq' matr. / *Bis zur serien-Nr.* / Hasta la matr. :	With the exception of / *Ad esclusione di* / À l'exclusion de / *Mit ausnahme von* / Excepto :	Including / *Compreso* / Avec / *Einschließlich* / Con :
C849T01501Z			

LIFT CYLINDERS (HE140R MAST)
CILINDRI SOLLEVAMENTO (MONTANTE HE140R)
CYLINDRE DE SOULEVEMENT (MONTANT HE140R)
HUBZYLINDER (PFOSTEN HE140R)
CILINDRO DE ELEVACIÓN (MONTANTE HE140R) *FIGURE 22.3*

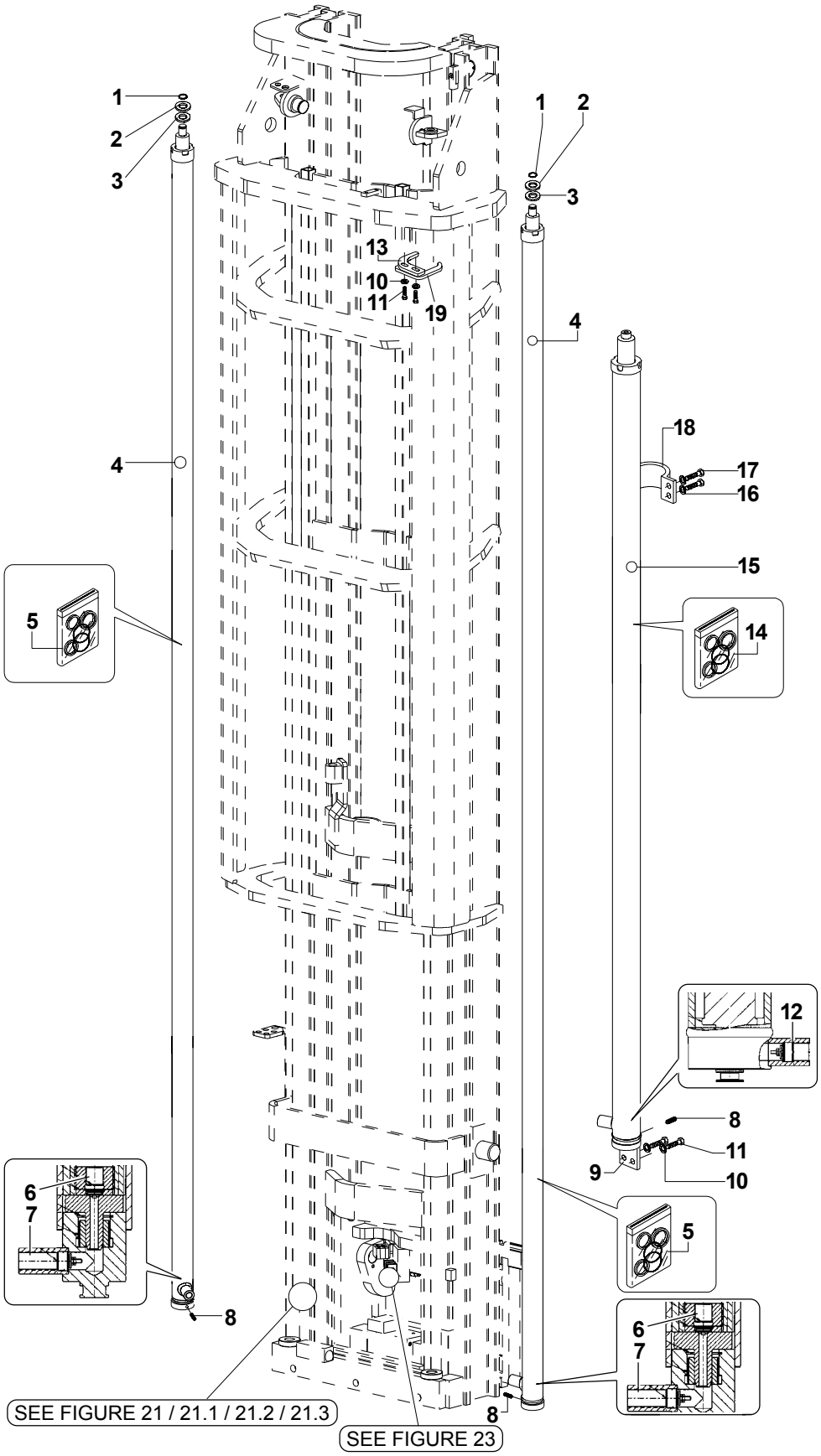

Yale

MODELS MR16H / MR20H
MR25 / MR20W with HE140R mast

LIFT CYLINDERS (HE140R MAST)
CILINDRI SOLLEVAMENTO (MONTANTE HE140R)
CYLINDRE DE SOULEVEMENT (MONTANT HE140R)
HUBZYLINDER (PFOSTEN HE140R)
CILINDRO DE ELEVACIÓN (MONTANTE HE140R)

FIGURE 22.3

REF.	PART NO.	Q.TY	DESCRIPTION	DESCRIZIONE	DESIGNATION	BENENNUNG	DENOMINACIONES	PART DETAILS
1	500227904	2	Snap ring	Seeger	Arretoir	Seeger	Anillo Seeger	
2	272024600	AR	Washer	Rondella	Rondelle	Unterlegscheibe	Arandela	
3	272006400	AR	Washer	Rondella	Rondelle	Unterlegscheibe	Arandela	
4	580031433	2	Main cylinder ass'y	Ass. cilindro principale	Ens. cylindre principal	Haupthubzylinder	Grupo cilindro principal	h3=mm8226
4	580031436	2	Main cylinder ass'y	Ass. cilindro principale	Ens. cylindre principal	Haupthubzylinder	Grupo cilindro principal	h3=mm8276
4	580031434	2	Main cylinder ass'y	Ass. cilindro principale	Ens. cylindre principal	Haupthubzylinder	Grupo cilindro principal	h3=mm8376
4	580031452	2	Main cylinder ass'y	Ass. cilindro principale	Ens. cylindre principal	Haupthubzylinder	Grupo cilindro principal	h3=mm8426-channel lenght mm3340
4	580031437	2	Main cylinder ass'y	Ass. cilindro principale	Ens. cylindre principal	Haupthubzylinder	Grupo cilindro principal	h3=mm8426-channel lenght mm3540
4	580031435	2	Main cylinder ass'y	Ass. cilindro principale	Ens. cylindre principal	Haupthubzylinder	Grupo cilindro principal	h3=mm8526
4	580031453	2	Main cylinder ass'y	Ass. cilindro principale	Ens. cylindre principal	Haupthubzylinder	Grupo cilindro principal	h3=mm8576-channel lenght mm3390
4	580031438	2	Main cylinder ass'y	Ass. cilindro principale	Ens. cylindre principal	Haupthubzylinder	Grupo cilindro principal	h3=mm8576-channel lenght mm3590
4	580031455	2	Main cylinder ass'y	Ass. cilindro principale	Ens. cylindre principal	Haupthubzylinder	Grupo cilindro principal	h3=mm8676
4	580031454	2	Main cylinder ass'y	Ass. cilindro principale	Ens. cylindre principal	Haupthubzylinder	Grupo cilindro principal	h3=mm8726-channel lenght mm3440
4	580031439	2	Main cylinder ass'y	Ass. cilindro principale	Ens. cylindre principal	Haupthubzylinder	Grupo cilindro principal	h3=mm8726-channel lenght mm3640
4	580031456	2	Main cylinder ass'y	Ass. cilindro principale	Ens. cylindre principal	Haupthubzylinder	Grupo cilindro principal	h3=mm8826
4	580031440	2	Main cylinder ass'y	Ass. cilindro principale	Ens. cylindre principal	Haupthubzylinder	Grupo cilindro principal	h3=mm8876
4	580031457	2	Main cylinder ass'y	Ass. cilindro principale	Ens. cylindre principal	Haupthubzylinder	Grupo cilindro principal	h3=mm8976
4	580031441	2	Main cylinder ass'y	Ass. cilindro principale	Ens. cylindre principal	Haupthubzylinder	Grupo cilindro principal	h3=mm9026
4	580031458	2	Main cylinder ass'y	Ass. cilindro principale	Ens. cylindre principal	Haupthubzylinder	Grupo cilindro principal	h3=mm9126
4	580031442	2	Main cylinder ass'y	Ass. cilindro principale	Ens. cylindre principal	Haupthubzylinder	Grupo cilindro principal	h3=mm9176
4	580031459	2	Main cylinder ass'y	Ass. cilindro principale	Ens. cylindre principal	Haupthubzylinder	Grupo cilindro principal	h3=mm9276
4	580031443	2	Main cylinder ass'y	Ass. cilindro principale	Ens. cylindre principal	Haupthubzylinder	Grupo cilindro principal	h3=mm9326
4	580031460	2	Main cylinder ass'y	Ass. cilindro principale	Ens. cylindre principal	Haupthubzylinder	Grupo cilindro principal	h3=mm9426
4	580032205	2	Main cylinder ass'y	Ass. cilindro principale	Ens. cylindre principal	Haupthubzylinder	Grupo cilindro principal	h3=mm9476
4	580031461	2	Main cylinder ass'y	Ass. cilindro principale	Ens. cylindre principal	Haupthubzylinder	Grupo cilindro principal	h3=mm9576
4	580032206	2	Main cylinder ass'y	Ass. cilindro principale	Ens. cylindre principal	Haupthubzylinder	Grupo cilindro principal	h3=mm9626
4	580031462	2	Main cylinder ass'y	Ass. cilindro principale	Ens. cylindre principal	Haupthubzylinder	Grupo cilindro principal	h3=mm9726
4	580032207	2	Main cylinder ass'y	Ass. cilindro principale	Ens. cylindre principal	Haupthubzylinder	Grupo cilindro principal	h3=mm9776-channel lenght mm 3990
4	580032221	2	Main cylinder ass'y	Ass. cilindro principale	Ens. cylindre principal	Haupthubzylinder	Grupo cilindro principal	h3=mm9776-channel lenght mm 4090
4	580032201	2	Main cylinder ass'y	Ass. cilindro principale	Ens. cylindre principal	Haupthubzylinder	Grupo cilindro principal	h3=mm9876
4	580032208	2	Main cylinder ass'y	Ass. cilindro principale	Ens. cylindre principal	Haupthubzylinder	Grupo cilindro principal	h3=mm9926-channel lenght mm4040
4	580032222	2	Main cylinder ass'y	Ass. cilindro principale	Ens. cylindre principal	Haupthubzylinder	Grupo cilindro principal	h3=mm9926-channel lenght mm4140
4	580032202	2	Main cylinder ass'y	Ass. cilindro principale	Ens. cylindre principal	Haupthubzylinder	Grupo cilindro principal	h3=mm10026
4	580032209	2	Main cylinder ass'y	Ass. cilindro principale	Ens. cylindre principal	Haupthubzylinder	Grupo cilindro principal	h3=mm10076-channel lenght mm4090
4	580032223	2	Main cylinder ass'y	Ass. cilindro principale	Ens. cylindre principal	Haupthubzylinder	Grupo cilindro principal	h3=mm10076-channel lenght mm4190
4	580032203	2	Main cylinder ass'y	Ass. cilindro principale	Ens. cylindre principal	Haupthubzylinder	Grupo cilindro principal	h3=mm10176
4	580032210	2	Main cylinder ass'y	Ass. cilindro principale	Ens. cylindre principal	Haupthubzylinder	Grupo cilindro principal	h3=mm10226-channel lenght mm4140
4	580032224	2	Main cylinder ass'y	Ass. cilindro principale	Ens. cylindre principal	Haupthubzylinder	Grupo cilindro principal	h3=mm10226-channel lenght mm4240
4	580032204	2	Main cylinder ass'y	Ass. cilindro principale	Ens. cylindre principal	Haupthubzylinder	Grupo cilindro principal	h3=mm10326
4	580032211	2	Main cylinder ass'y	Ass. cilindro principale	Ens. cylindre principal	Haupthubzylinder	Grupo cilindro principal	h3=mm10376-channel lenght mm4190
4	580032225	2	Main cylinder ass'y	Ass. cilindro principale	Ens. cylindre principal	Haupthubzylinder	Grupo cilindro principal	h3=mm10376-channel lenght mm4290
4	580032212	2	Main cylinder ass'y	Ass. cilindro principale	Ens. cylindre principal	Haupthubzylinder	Grupo cilindro principal	h3=mm10526-channel lenght mm4240
4	580032226	2	Main cylinder ass'y	Ass. cilindro principale	Ens. cylindre principal	Haupthubzylinder	Grupo cilindro principal	h3=mm10526-channel lenght mm4340

From serial N° / *Da matr.* / Du matr. / *Ab. seriennummer* / Desde la matr. :	Until serial N° / *Fino a matr.* / Jusq' matr. / *Bis zur serien-Nr.* / Hasta la matr. :	With the exception of / *Ad esclusione di* / À l'exclusion de / *Mit ausnahme von* / Excepto :	Including / *Compreso* / Avec / *Einschließlich* / Con :
C849T01501Z			

LIFT CYLINDERS (HE140R MAST)
CILINDRI SOLLEVAMENTO (MONTANTE HE140R)
CYLINDRE DE SOULEVEMENT (MONTANT HE140R)
HUBZYLINDER (PFOSTEN HE140R)
CILINDRO DE ELEVACIÓN (MONTANTE HE140R)

FIGURE 22.3

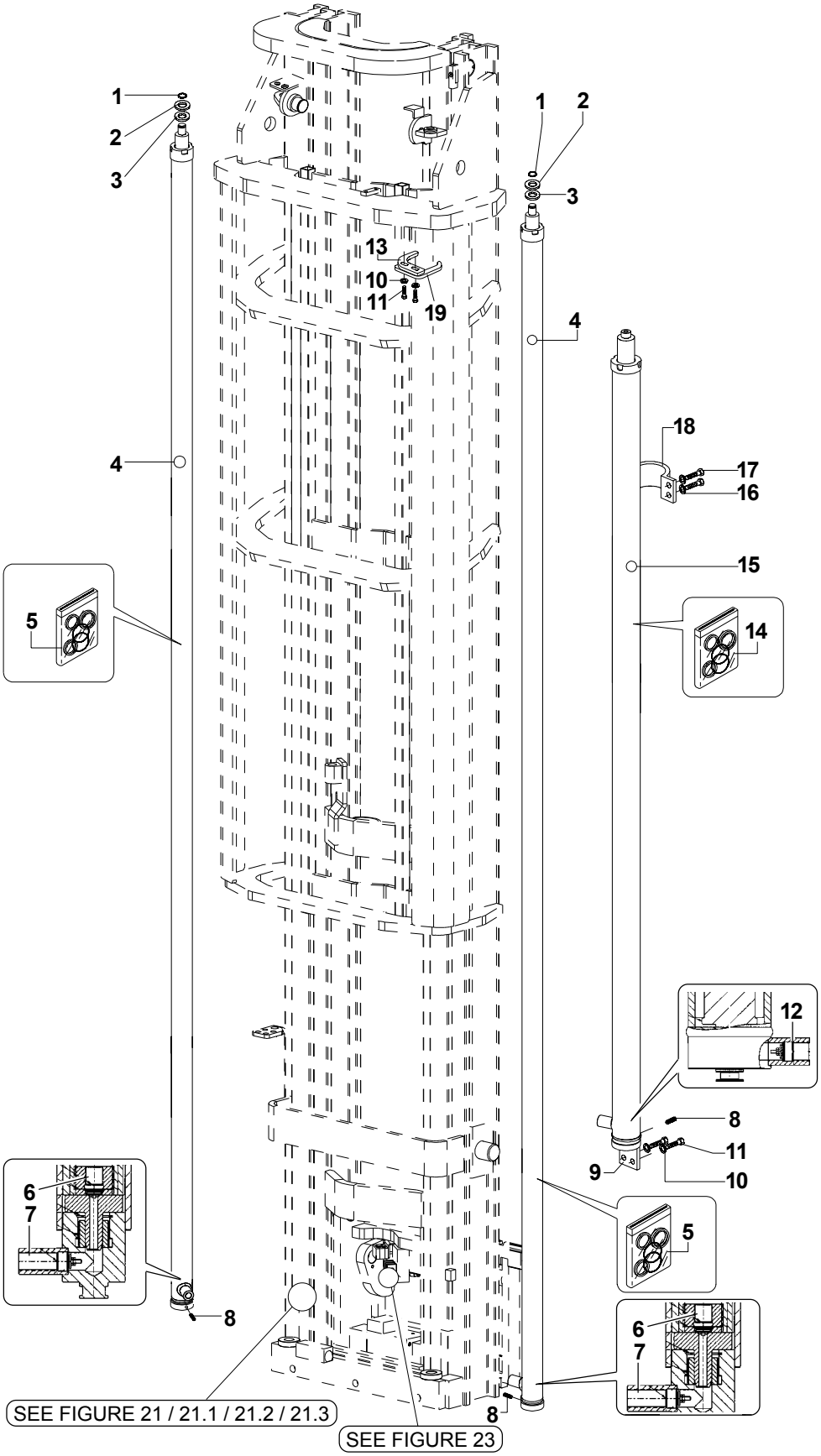

REF.	PART NO.	Q.TY	DESCRIPTION	DESCRIZIONE	DESIGNATION	BENENNUNG	DENOMINACIONES	PART DETAILS
4	580032213	2	Main cylinder ass'y	Ass. cilindro principale	Ens. cylindre principal	Haupthubzylinder	Grupo cilindro principal	h3=mm10676-channel lenght mm4290
4	580032227	2	Main cylinder ass'y	Ass. cilindro principale	Ens. cylindre principal	Haupthubzylinder	Grupo cilindro principal	h3=mm10676-channel lenght mm4390
4	580032214	2	Main cylinder ass'y	Ass. cilindro principale	Ens. cylindre principal	Haupthubzylinder	Grupo cilindro principal	h3=mm10826-channel lenght mm4340
4	580032228	2	Main cylinder ass'y	Ass. cilindro principale	Ens. cylindre principal	Haupthubzylinder	Grupo cilindro principal	h3=mm10826-channel lenght mm4440
4	580032215	2	Main cylinder ass'y	Ass. cilindro principale	Ens. cylindre principal	Haupthubzylinder	Grupo cilindro principal	h3=mm10976-channel lenght mm4390
4	580032229	2	Main cylinder ass'y	Ass. cilindro principale	Ens. cylindre principal	Haupthubzylinder	Grupo cilindro principal	h3=mm10976-channel lenght mm4490
4	580032216	2	Main cylinder ass'y	Ass. cilindro principale	Ens. cylindre principal	Haupthubzylinder	Grupo cilindro principal	h3=mm11126-channel lenght mm4440
4	580032230	2	Main cylinder ass'y	Ass. cilindro principale	Ens. cylindre principal	Haupthubzylinder	Grupo cilindro principal	h3=mm11126-channel lenght mm4540
4	580032217	2	Main cylinder ass'y	Ass. cilindro principale	Ens. cylindre principal	Haupthubzylinder	Grupo cilindro principal	h3=mm11276-channel lenght mm4490
4	580032231	2	Main cylinder ass'y	Ass. cilindro principale	Ens. cylindre principal	Haupthubzylinder	Grupo cilindro principal	h3=mm11276-channel lenght mm4590
4	580032218	2	Main cylinder ass'y	Ass. cilindro principale	Ens. cylindre principal	Haupthubzylinder	Grupo cilindro principal	h3=mm11426-channel lenght mm4540
4	580032232	2	Main cylinder ass'y	Ass. cilindro principale	Ens. cylindre principal	Haupthubzylinder	Grupo cilindro principal	h3=mm11426-channel lenght mm4640
4	580032219	2	Main cylinder ass'y	Ass. cilindro principale	Ens. cylindre principal	Haupthubzylinder	Grupo cilindro principal	h3=mm11576
4	580032220	2	Main cylinder ass'y	Ass. cilindro principale	Ens. cylindre principal	Haupthubzylinder	Grupo cilindro principal	h3=mm11726
5	580033828	2	Seal kit	Kit guarnizioni	Kit joints	Dichtungssatz	Kit de guarniciones	
6	277015000	1	Hose failure valve	Valvola di blocco	Soupape de blocage	Sperrventil	Válvula de cierre	
7	580015509	1	Flow control valve	Valvola regolatrice di flusso	Soupape reglage de flux	Durchflußregler	Válvula reguladora de flujo	
8	449013025	3	Dowel	Grano	Clavette	Stift	Espiga	
9	580028847	1	Cylinder support	Supporto	Support	Lager	Soporte	
10	504226242	6	Washer	Rondella	Rondelle	Unterlegscheibe	Arandela	
11	449001343	6	Screw	Vite	Vis	Schraube	Tornillo	
12	580015510	1	Flow control valve	Valvola regolatrice di flusso	Soupape reglage de flux	Durchflußregler	Válvula reguladora de flujo	
13	580028808	2	Clamp	Fascetta	Collier	Zwinge	Abrazadera	
14	580033829	1	Seal kit	Kit guarnizioni	Kit joints	Dichtungssatz	Kit de guarniciones	
15	580032108	1	Auxiliary cylinder ass'y	Ass. cilindro ausiliario	Ens. cylindre auxiliaire	Hilfshubzylinder	Grupo cilindro auxiliar	h3=mm8226
15	580032111	1	Auxiliary cylinder ass'y	Ass. cilindro ausiliario	Ens. cylindre auxiliaire	Hilfshubzylinder	Grupo cilindro auxiliar	h3=mm8276
15	580032109	1	Auxiliary cylinder ass'y	Ass. cilindro ausiliario	Ens. cylindre auxiliaire	Hilfshubzylinder	Grupo cilindro auxiliar	h3=mm8376
15	580032108	1	Auxiliary cylinder ass'y	Ass. cilindro ausiliario	Ens. cylindre auxiliaire	Hilfshubzylinder	Grupo cilindro auxiliar	h3=mm8426-channel lenght mm3340
15	580032112	1	Auxiliary cylinder ass'y	Ass. cilindro ausiliario	Ens. cylindre auxiliaire	Hilfshubzylinder	Grupo cilindro auxiliar	h3=mm8426-channel lenght mm3540
15	580032110	1	Auxiliary cylinder ass'y	Ass. cilindro ausiliario	Ens. cylindre auxiliaire	Hilfshubzylinder	Grupo cilindro auxiliar	h3=mm8526
15	580032109	1	Auxiliary cylinder ass'y	Ass. cilindro ausiliario	Ens. cylindre auxiliaire	Hilfshubzylinder	Grupo cilindro auxiliar	h3=mm8576-channel lenght mm3390
15	580032113	1	Auxiliary cylinder ass'y	Ass. cilindro ausiliario	Ens. cylindre auxiliaire	Hilfshubzylinder	Grupo cilindro auxiliar	h3=mm8576-channel lenght mm3590
15	580032111	1	Auxiliary cylinder ass'y	Ass. cilindro ausiliario	Ens. cylindre auxiliaire	Hilfshubzylinder	Grupo cilindro auxiliar	h3=mm8676
15	580032110	1	Auxiliary cylinder ass'y	Ass. cilindro ausiliario	Ens. cylindre auxiliaire	Hilfshubzylinder	Grupo cilindro auxiliar	h3=mm8726-channel lenght mm3440
15	580032114	1	Auxiliary cylinder ass'y	Ass. cilindro ausiliario	Ens. cylindre auxiliaire	Hilfshubzylinder	Grupo cilindro auxiliar	h3=mm8726-channel lenght mm3640

LIFT CYLINDERS (HE140R MAST)
CILINDRI SOLLEVAMENTO (MONTANTE HE140R)
CYLINDRE DE SOULEVEMENT (MONTANT HE140R)
HUBZYLINDER (PFOSTEN HE140R)
CILINDRO DE ELEVACIÓN (MONTANTE HE140R)

FIGURE 22.3

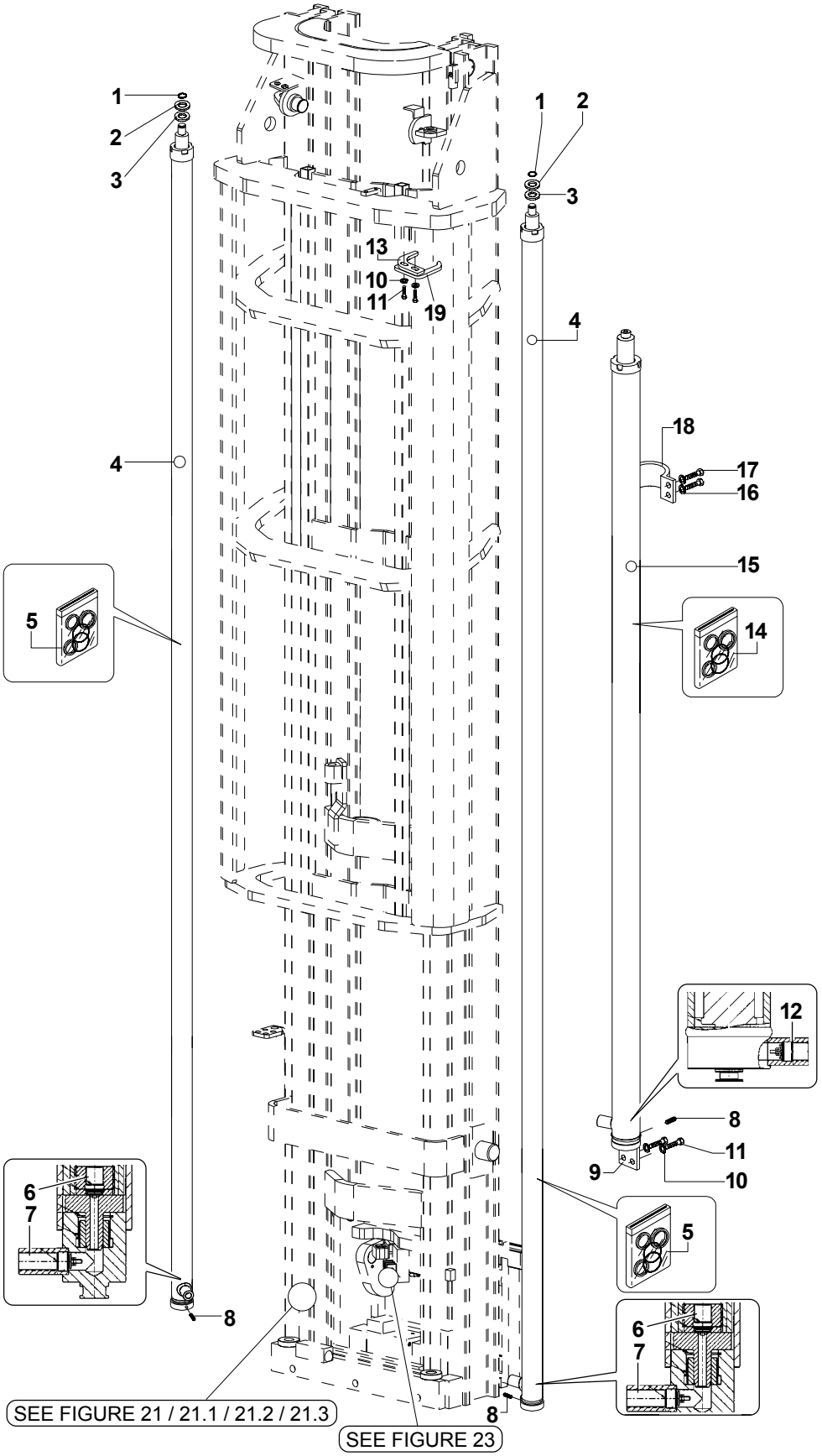

Yale

MODELS MR16H / MR20H
MR25 / MR20W with HE140R mast

LIFT CYLINDERS (HE140R MAST)
CILINDRI SOLLEVAMENTO (MONTANTE HE140R)
CYLINDRE DE SOULEVEMENT (MONTANT HE140R)
HUBZYLINDER (PFOSTEN HE140R)
CILINDRO DE ELEVACIÓN (MONTANTE HE140R)

FIGURE 22.3

REF.	PART NO.	Q.TY	DESCRIPTION	DESCRIZIONE	DESIGNATION	BENENNUNG	DENOMINACIONES	PART DETAILS
15	580032112	1	Auxiliary cylinder ass'y	Ass. cilindro ausiliario	Ens. cylindre auxiliaire	Hilfshubzylinder	Grupo cilindro auxiliar	h3=mm8826
15	580032115	1	Auxiliary cylinder ass'y	Ass. cilindro ausiliario	Ens. cylindre auxiliaire	Hilfshubzylinder	Grupo cilindro auxiliar	h3=mm8876
15	580032113	1	Auxiliary cylinder ass'y	Ass. cilindro ausiliario	Ens. cylindre auxiliaire	Hilfshubzylinder	Grupo cilindro auxiliar	h3=mm8976
15	580032116	1	Auxiliary cylinder ass'y	Ass. cilindro ausiliario	Ens. cylindre auxiliaire	Hilfshubzylinder	Grupo cilindro auxiliar	h3=mm9026
15	580032114	1	Auxiliary cylinder ass'y	Ass. cilindro ausiliario	Ens. cylindre auxiliaire	Hilfshubzylinder	Grupo cilindro auxiliar	h3=mm9126
15	580032117	1	Auxiliary cylinder ass'y	Ass. cilindro ausiliario	Ens. cylindre auxiliaire	Hilfshubzylinder	Grupo cilindro auxiliar	h3=mm9176
15	580032115	1	Auxiliary cylinder ass'y	Ass. cilindro ausiliario	Ens. cylindre auxiliaire	Hilfshubzylinder	Grupo cilindro auxiliar	h3=mm9276
15	580032118	1	Auxiliary cylinder ass'y	Ass. cilindro ausiliario	Ens. cylindre auxiliaire	Hilfshubzylinder	Grupo cilindro auxiliar	h3=mm9326
15	580032116	1	Auxiliary cylinder ass'y	Ass. cilindro ausiliario	Ens. cylindre auxiliaire	Hilfshubzylinder	Grupo cilindro auxiliar	h3=mm9426
15	580032119	1	Auxiliary cylinder ass'y	Ass. cilindro ausiliario	Ens. cylindre auxiliaire	Hilfshubzylinder	Grupo cilindro auxiliar	h3=mm9476
15	580032117	1	Auxiliary cylinder ass'y	Ass. cilindro ausiliario	Ens. cylindre auxiliaire	Hilfshubzylinder	Grupo cilindro auxiliar	h3=mm9576
15	580032120	1	Auxiliary cylinder ass'y	Ass. cilindro ausiliario	Ens. cylindre auxiliaire	Hilfshubzylinder	Grupo cilindro auxiliar	h3=mm9626
15	580032118	1	Auxiliary cylinder ass'y	Ass. cilindro ausiliario	Ens. cylindre auxiliaire	Hilfshubzylinder	Grupo cilindro auxiliar	h3=mm9726
15	580032121	1	Auxiliary cylinder ass'y	Ass. cilindro ausiliario	Ens. cylindre auxiliaire	Hilfshubzylinder	Grupo cilindro auxiliar	h3=mm9776-channel lenght mm 3990
15	580032123	1	Auxiliary cylinder ass'y	Ass. cilindro ausiliario	Ens. cylindre auxiliaire	Hilfshubzylinder	Grupo cilindro auxiliar	h3=mm9776-channel lenght mm 4090
15	580032119	1	Auxiliary cylinder ass'y	Ass. cilindro ausiliario	Ens. cylindre auxiliaire	Hilfshubzylinder	Grupo cilindro auxiliar	h3=mm9876
15	580032122	1	Auxiliary cylinder ass'y	Ass. cilindro ausiliario	Ens. cylindre auxiliaire	Hilfshubzylinder	Grupo cilindro auxiliar	h3=mm9926-channel lenght mm4040
15	580032124	1	Auxiliary cylinder ass'y	Ass. cilindro ausiliario	Ens. cylindre auxiliaire	Hilfshubzylinder	Grupo cilindro auxiliar	h3=mm9926-channel lenght mm4140
15	580032120	1	Auxiliary cylinder ass'y	Ass. cilindro ausiliario	Ens. cylindre auxiliaire	Hilfshubzylinder	Grupo cilindro auxiliar	h3=mm10026
15	580032123	1	Auxiliary cylinder ass'y	Ass. cilindro ausiliario	Ens. cylindre auxiliaire	Hilfshubzylinder	Grupo cilindro auxiliar	h3=mm10076-channel lenght mm4090
15	580032125	1	Auxiliary cylinder ass'y	Ass. cilindro ausiliario	Ens. cylindre auxiliaire	Hilfshubzylinder	Grupo cilindro auxiliar	h3=mm10076-channel lenght mm4190
15	580032121	1	Auxiliary cylinder ass'y	Ass. cilindro ausiliario	Ens. cylindre auxiliaire	Hilfshubzylinder	Grupo cilindro auxiliar	h3=mm10176
15	580032124	1	Auxiliary cylinder ass'y	Ass. cilindro ausiliario	Ens. cylindre auxiliaire	Hilfshubzylinder	Grupo cilindro auxiliar	h3=mm10226-channel lenght mm4140
15	580032126	1	Auxiliary cylinder ass'y	Ass. cilindro ausiliario	Ens. cylindre auxiliaire	Hilfshubzylinder	Grupo cilindro auxiliar	h3=mm10226-channel lenght mm4240
15	580032122	1	Auxiliary cylinder ass'y	Ass. cilindro ausiliario	Ens. cylindre auxiliaire	Hilfshubzylinder	Grupo cilindro auxiliar	h3=mm10326
15	580032125	1	Auxiliary cylinder ass'y	Ass. cilindro ausiliario	Ens. cylindre auxiliaire	Hilfshubzylinder	Grupo cilindro auxiliar	h3=mm10376-channel lenght mm4190
15	580032127	1	Auxiliary cylinder ass'y	Ass. cilindro ausiliario	Ens. cylindre auxiliaire	Hilfshubzylinder	Grupo cilindro auxiliar	h3=mm10376-channel lenght mm4290
15	580032126	1	Auxiliary cylinder ass'y	Ass. cilindro ausiliario	Ens. cylindre auxiliaire	Hilfshubzylinder	Grupo cilindro auxiliar	h3=mm10526-channel lenght mm4240
15	580032128	1	Auxiliary cylinder ass'y	Ass. cilindro ausiliario	Ens. cylindre auxiliaire	Hilfshubzylinder	Grupo cilindro auxiliar	h3=mm10526-channel lenght mm4340
15	580032127	1	Auxiliary cylinder ass'y	Ass. cilindro ausiliario	Ens. cylindre auxiliaire	Hilfshubzylinder	Grupo cilindro auxiliar	h3=mm10676-channel lenght mm4290
15	580032129	1	Auxiliary cylinder ass'y	Ass. cilindro ausiliario	Ens. cylindre auxiliaire	Hilfshubzylinder	Grupo cilindro auxiliar	h3=mm10676-channel lenght mm4390
15	580032128	1	Auxiliary cylinder ass'y	Ass. cilindro ausiliario	Ens. cylindre auxiliaire	Hilfshubzylinder	Grupo cilindro auxiliar	h3=mm10826-channel lenght mm4340
15	580032130	1	Auxiliary cylinder ass'y	Ass. cilindro ausiliario	Ens. cylindre auxiliaire	Hilfshubzylinder	Grupo cilindro auxiliar	h3=mm10826-channel lenght mm4440
15	580032129	1	Auxiliary cylinder ass'y	Ass. cilindro ausiliario	Ens. cylindre auxiliaire	Hilfshubzylinder	Grupo cilindro auxiliar	h3=mm10976-channel lenght mm4390

From serial N° / *Da matr.* / Du matr. / *Ab. seriennummer* / Desde la matr. :	Until serial N° / *Fino a matr.* / Jusq' matr. / *Bis zur serien-Nr.* / Hasta la matr. :	With the exception of / *Ad esclusione di* / À l'exclusion de / *Mit ausnahme von* / Excepto :	Including / *Compreso* / Avec / *Einschließlich* / Con :
C849T01501Z			

LIFT CYLINDERS (HE140R MAST)
CILINDRI SOLLEVAMENTO (MONTANTE HE140R)
CYLINDRE DE SOULEVEMENT (MONTANT HE140R)
HUBZYLINDER (PFOSTEN HE140R)
CILINDRO DE ELEVACIÓN (MONTANTE HE140R)

FIGURE 22.3

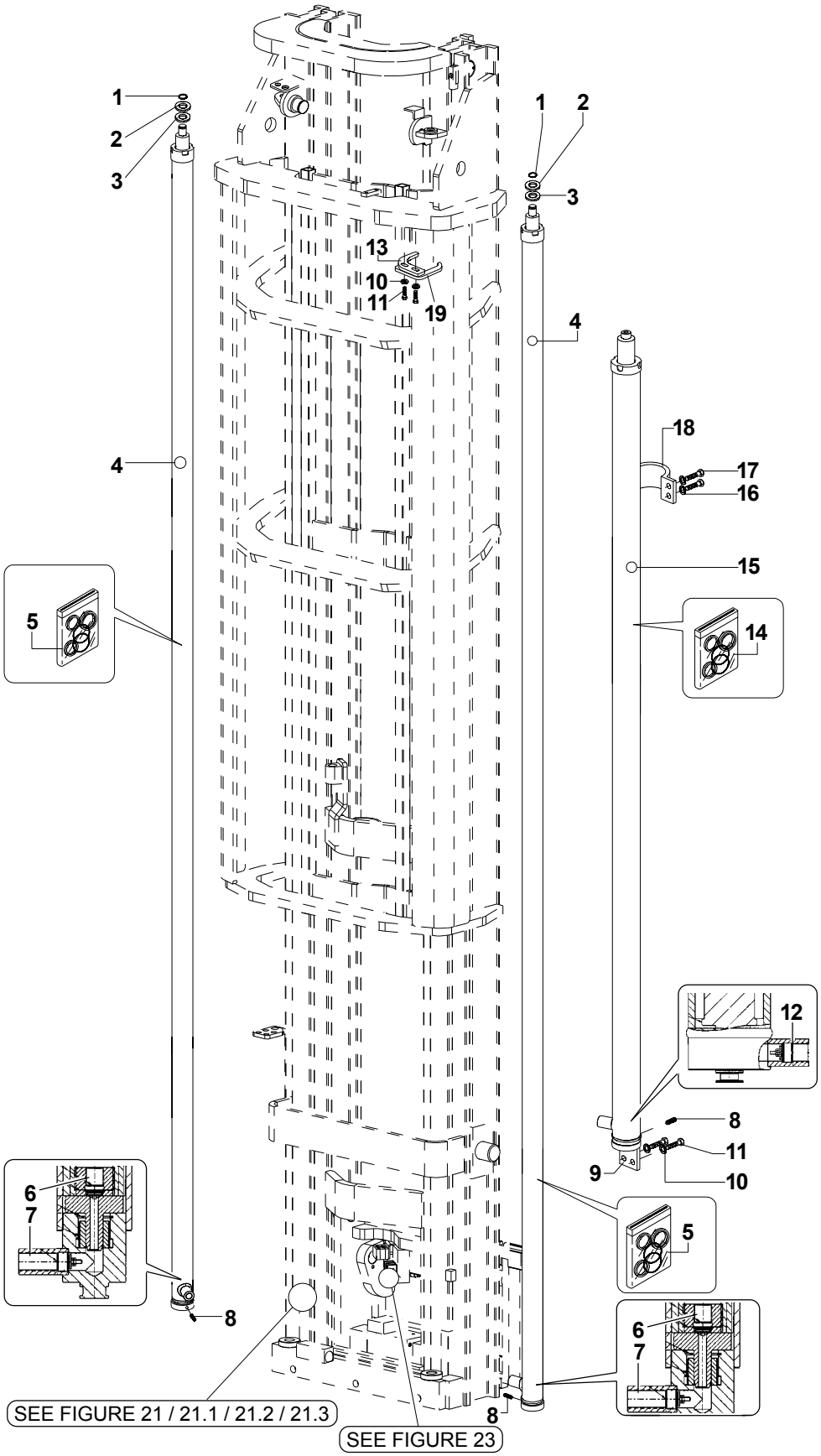

REF.	PART NO.	Q.TY	DESCRIPTION	DESCRIZIONE	DESIGNATION	BENENNUNG	DENOMINACIONES	PART DETAILS
15	580032131	1	Auxiliary cylinder ass'y	Ass. cilindro ausiliario	Ens. cylindre auxiliaire	Hilfshubzylinder	Grupo cilindro auxiliar	h3=mm10976-channel lenght mm4490
15	580032130	1	Auxiliary cylinder ass'y	Ass. cilindro ausiliario	Ens. cylindre auxiliaire	Hilfshubzylinder	Grupo cilindro auxiliar	h3=mm11126-channel lenght mm4440
15	580032132	1	Auxiliary cylinder ass'y	Ass. cilindro ausiliario	Ens. cylindre auxiliaire	Hilfshubzylinder	Grupo cilindro auxiliar	h3=mm11126-channel lenght mm4540
15	580032131	1	Auxiliary cylinder ass'y	Ass. cilindro ausiliario	Ens. cylindre auxiliaire	Hilfshubzylinder	Grupo cilindro auxiliar	h3=mm11276-channel lenght mm4490
15	580032133	1	Auxiliary cylinder ass'y	Ass. cilindro ausiliario	Ens. cylindre auxiliaire	Hilfshubzylinder	Grupo cilindro auxiliar	h3=mm11276-channel lenght mm4590
15	580032132	1	Auxiliary cylinder ass'y	Ass. cilindro ausiliario	Ens. cylindre auxiliaire	Hilfshubzylinder	Grupo cilindro auxiliar	h3=mm11426-channel lenght mm4540
15	580032134	1	Auxiliary cylinder ass'y	Ass. cilindro ausiliario	Ens. cylindre auxiliaire	Hilfshubzylinder	Grupo cilindro auxiliar	h3=mm11426-channel lenght mm4640
15	580032133	1	Auxiliary cylinder ass'y	Ass. cilindro ausiliario	Ens. cylindre auxiliaire	Hilfshubzylinder	Grupo cilindro auxiliar	h3=mm11576
15	580032134	1	Auxiliary cylinder ass'y	Ass. cilindro ausiliario	Ens. cylindre auxiliaire	Hilfshubzylinder	Grupo cilindro auxiliar	h3=mm11726
16	449021001	4	Washer	Rondella	Rondelle	Unterlegscheibe	Arandela	
17	449001415	4	Screw	Vite	Vis	Schraube	Tornillo	
18	580023182	1	Clamp	Fascetta	Collier	Zwinge	Abrazadera	
19	580028807	2	Clamp	Fascetta	Collier	Zwinge	Abrazadera	

DESCRIPTION / DESCRIZIONE / DESIGNATION / BENENNUNG / DENOMINACIONES **PAGE NO.**

SIDESHIFT CARRIAGE / PIASTRA PORTA FORCHE CON TRASLATORE / PLAQUE PORTE-FOURCHES AVEC TRANSLATEUR / GABELSEITESCHIEBEN / PLANCHA PORTE HORQUILLAS Y TRASLADOR (FIGURE 23) 140-141

FORKS / FORCHE / FOURCHES / GABELN / HORQUILLAS (FIGURE 24) 142-143

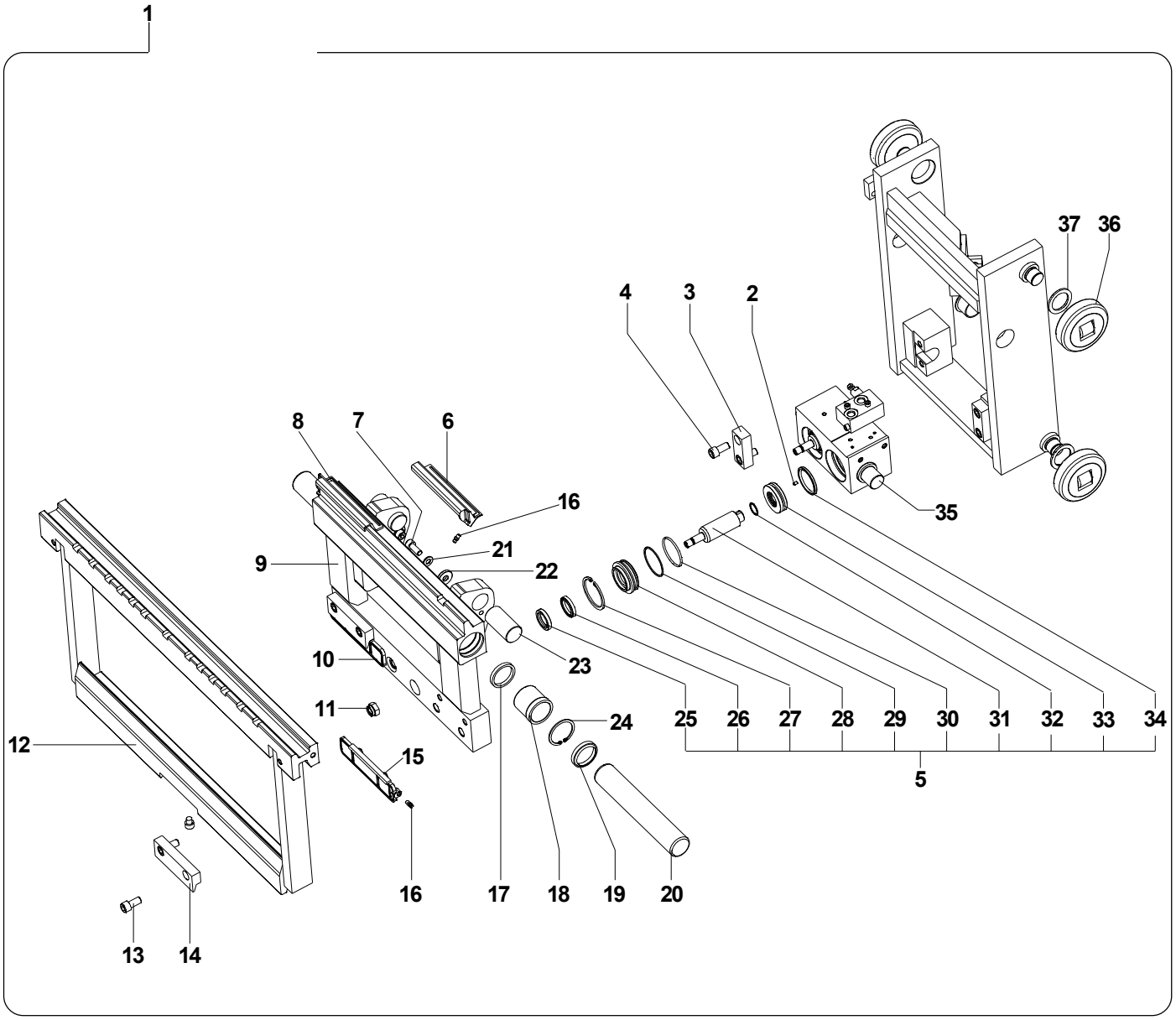
1
37
36
4
3
2
8
7
6
16
21
9
22
35
10
23
11
24
25
26
27
28
29
30
31
32
33
34
12
15
5
16
17
18
19
20
13
14

SIDESHIFT CARRIAGE/
PIASTRA PORTA FORCHE CON TRASLATORE
PLAQUE PORTE-FOURCHES AVEC TRANSLATEUR
GABELSEITESCHIEBEN
PLANCHA PORTE HORQUILLAS Y TRASLADOR

FIGURE 23

REF.	PART NO.	Q.TY	DESCRIPTION	DESCRIZIONE	DESIGNATION	BENENNUNG	DENOMINACIONES	PART DETAILS
1	580033811	1	Carriage ass'y	Ass. spalliera	Ens. espalier	Satz-Geländer	Grupo pared lateral	For models MR16N with Beta mast / MR14/MR16
1	580033812	1	Carriage ass'y	Ass. spalliera	Ens. espalier	Satz-Geländer	Grupo pared lateral	For models MR16N with HE140L mast / MR14H/MR16H/MR20/MR20H/MR25/MR20W
2	449013031	1	Screw	Vite	Vis	Schraube	Tornillo	
3	580032378	2	Hook	Gancio	Crochet	Satz-Haken	Gancho	
4	580024548	4	Screw	Vite	Vis	Schraube	Tornillo	
5	580033813	1	Kit tilting	Kit brandeggio	Kit d'inclinaison	kit für Wendung	Kit de ajuste	
6	580024565	1	Pad	Tampone	Tampon	Stopfen	Hisopo	
7	580024550	2	Screw	Vite	Vis	Schraube	Tornillo	
8	580024564	1	Pad	Tampone	Tampon	Stopfen	Hisopo	
9	580033814	1	Frame inner carriage	Spalliera	Espalier	Geländer	Pared lateral	
10	580024567	1	Pad	Tampone	Tampon	Stopfen	Hisopo	
11	580032447	2	Special nut	Dado esagonale	Écrou hexagonal	Sechskantmutter	Tuerca hexagonal	
12	580032379	1	Frame carriage	Spalliera	Espalier	Geländer	Pared lateral	
13	580024548	4	Screw	Vite	Vis	Schraube	Tornillo	
14	580024570	2	Hook	Gancio	Crochet	Satz-Haken	Gancho	
15	580024566	1	Pad	Tampone	Tampon	Stopfen	Hisopo	
16	015628700	4	Grease ftg.	Ingrassatore	Graisseur	Fettbüchse	Engrasador	
17	580024552	2	Seal	Guarnizione	Joint	Dichtung	Guarnición	
18	580024569	2	Bushing	Boccola	Douille	Buchse	Brida	
19	580024572	2	Wiper ring	Raschiatore	Râclette	Abschaber	Raspador	
20	580032380	2	Rod	Stelo	Tige	Schaft	Vástago	
21	580024551	2	Washer	Rondella	Rondelle	Scheibe	Arendela	
22	580032448	2	Special washer	Rondella	Rondelle	Scheibe	Arendela	
23	580024561	2	Shaft	Perno	Axe	Stift	Perno	
24	580024573	2	Snap ring	Seeger	Seeger	Seeger Ring	Anillo Seeger	
25	580032450	2	Seal	Guarnizione	Joint	Dichtung	Empaquetadura	
26	580033815	2	Seal	Guarnizione	Joint	Dichtung	Empaquetadura	
27	580032452	2	Snap ring	Seeger	Seeger	Seeger Ring	Anillo Seeger	
28	580032383	2	Guide ring	Anello guida	Bague de guide	Führungsring	Anillo de guía	
29	580032449	2	Seal	Guarnizione	Joint	Dichtung	Empaquetadura	
30	580033816	2	O-Ring	Anello OR	Bague "O-RING"	OR-Ring	Anillo OR	
31	580032381	1	Rod	Stelo	Tige	Stock	Vástago	
32	580032451	1	O-Ring	Anello OR	Bague "O-RING"	OR-Ring	Anillo OR	
33	580032382	1	Piston	Pistone	Bague	Kolben	Pistón	
34	580033817	2	Seal	Guarnizione	Joint	Dichtung	Empaquetadura	
35	580032384	1	Body tilt cylinder	Corpo cilindro brandeggio	Corps cylindre	Zylindergehause	Cuerpo cilindro	
36	518797634	4	Bearing	Cuscinetto	Roulement	Lager	Rodamiento	For models MR16N with Beta mast / MR14/MR16
36	580032929	4	Bearing	Cuscinetto	Roulement	Lager	Rodamiento	Diam. 101.5 for models MR16N with HE140L mast / MR14H/MR16H/MR20/MR20H/MR25/MR20W
36	580033120	4	Bearing	Cuscinetto	Roulement	Lager	Rodamiento	Diam. 101.9 for models MR16N with HE140L mast / MR14H/MR16H/MR20/MR20H/MR25/MR20W
36	580032928	4	Bearing	Cuscinetto	Roulement	Lager	Rodamiento	Diam. 102.3 for models MR16N with HE140L mast / MR14H/MR16H/MR20/MR20H/MR25/MR20W
37	504233232	8	Washer	Rondella	Rondelle	Scheibe	Arandela	

From serial N° / *Da matr.* / Du matr. / *Ab. seriennummer* / Desde la matr. :	Until serial N° / *Fino a matr.* / Jusq' matr. / *Bis zur serien-Nr.* / Hasta la matr. :	With the exception of / *Ad esclusione di* / À l'exclusion de / *Mit ausnahme von* / Excepto :	Including / *Compreso* / Avec / *Einschließlich* / Con :
C849T01501Z			

FIGURE 24

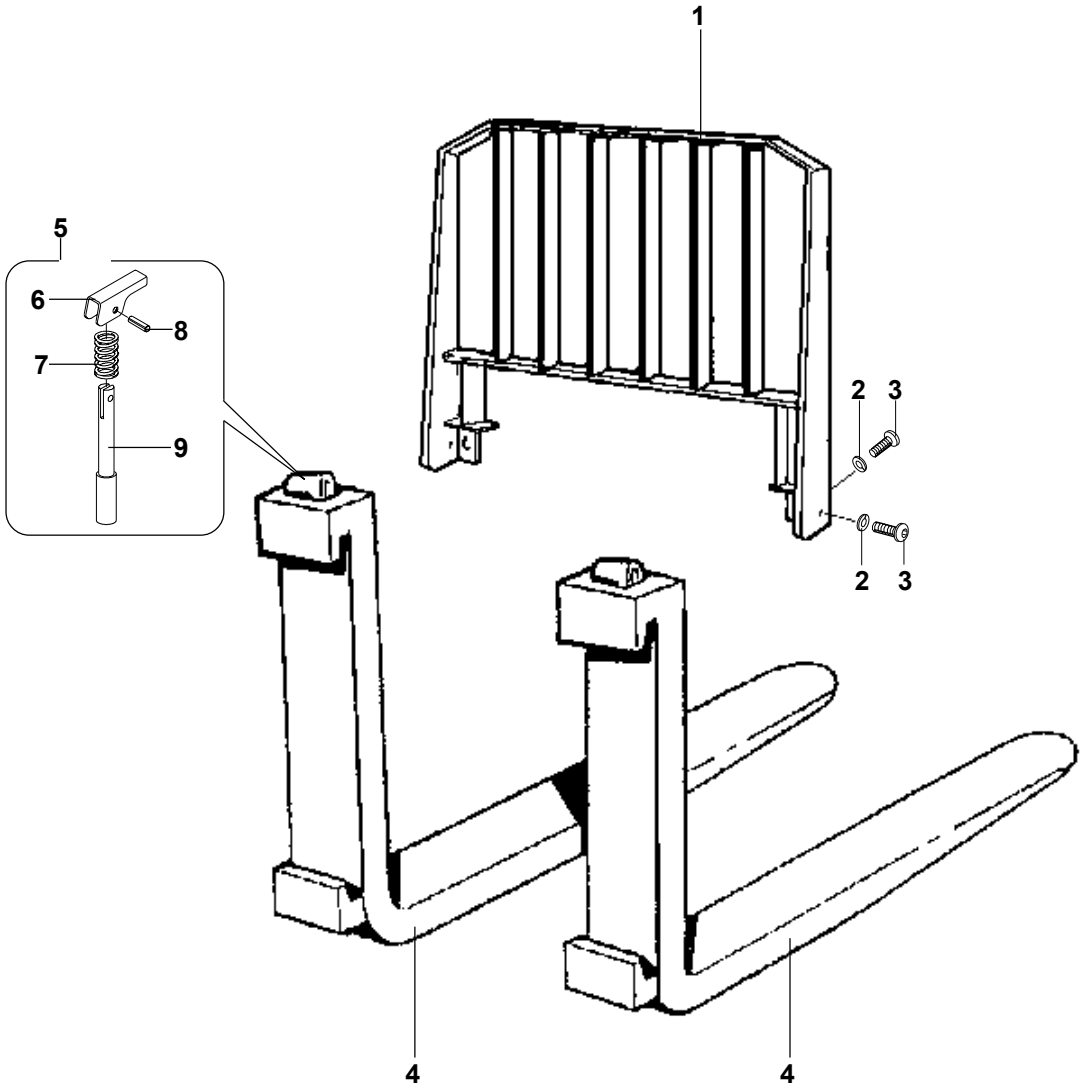

FORKS
FORCHE
FOURCHES
GABELN
HORQUILLAS

FIGURE 24

REF.	PART NO.	Q.TY	DESCRIPTION	DESCRIZIONE	DESIGNATION	BENENNUNG	DENOMINACIONES	PART DETAILS
1	580028552	1	Load backrest	Griglia reggicarico	Grille de protection	Ladegitter	Rejilla-soporte carga	
2	449022013	4	Lock washer	Rosetta elastica	Rondelle souple	Federring	Arandela elástica	
3	900014293	4	Screw	Vite	Vis	Schraube	Tornillo	
4	277558300	2	Fork	Forca	Fourche	Gabeln	Horquilla	Fem 2a 100 x 35 L=mm1200
4	277961500	2	Fork	Forca	Fourche	Gabeln	Horquilla	Fem 2a 100 x 35 L=mm1000
4	277558500	2	Fork	Forca	Fourche	Gabeln	Horquilla	Fem 2a 130 x 35 L=mm1200
4	580018905	2	Fork	Forca	Fourche	Gabeln	Horquilla	Fem 2a 130 x 35 L=mm1000
4	277558700	2	Fork	Forca	Fourche	Gabeln	Horquilla	Fem 2a 130 x 40 L=mm1200
4	580018906	2	Fork	Forca	Fourche	Gabeln	Horquilla	Fem 2a 130 x 40 L=mm1000
4	524149888	2	Fork	Forca	Fourche	Gabeln	Horquilla	Fem 2a 130 x 45 L=mm1200
4	524149889	2	Fork	Forca	Fourche	Gabeln	Horquilla	Fem 2a 130 x 45 L=mm1000
5	277983200	2	Lever kit	Kit leva	Kit levier	Kit-Hebel	Kit palanca	
6	277511400	1	Lever	Leva	Levier	Hebel	Palanca	
7	277511600	1	Spring	Molla	Ressort	Feder	Resorte	
8	277511500	1	Roll pin	Spina elastica	Goupille elastique	Stekverbinder	Enchufe	
9	277511700	1	Shaft	Perno	Axe	Stift	Perno	

From serial N° / *Da matr.* / Du matr. / *Ab. seriennummer* / Desde la matr. :	Until serial N° / *Fino a matr.* / Jusq' matr. / *Bis zur serien-Nr.* / Hasta la matr. :	With the exception of / *Ad esclusione di* / À l'exclusion de / *Mit ausnahme von* / Excepto :	Including / *Compreso* / Avec / *Einschließlich* / Con :
C849T01501Z			

DESCRIPTION / DESCRIZIONE / DESIGNATION / BENENNUNG / DENOMINACIONES **PAGE NO.**

HYDRAULIC DIAGRAM / SCHEMA OLEODINAMICO / SCHÉMA HYDRAULIQUE / HYDRAULIKSCHALTPLAN / ESQUEMA OLEODINAMICO (FIGURE 25) 146

HYDRAULIC DIAGRAM 5 WAYS GROUP (OPTIONS) / SCHEMA OLEODINAMICO GRUPPO 5 VIE (OPTIONAL) / SCHÉMA HYDRAULIQUE GROUPE 5 VOIE (OPTIONNEL) / HYDRAULIKSCHALTPLAN GRUPPE 5 WEG (WAHLFREI) / ESQUEMA OLEODINAMICO GRUPO 5 VÍA (OPCIONAL) (FIGURE 25.1) 147

ELECTRONIC DIAGRAM / SCHEMA ELETTRONICO / DIAGRAMME ÉLECTRONIQUE / ELEKTRONIKSCHALTPLAN / ESQUEMA ELECTRÓNICO (FIGURE 26 / 26.1 / 26.2 / 26.3 / 26.4 / 26.5 / 26.6 / 26.7 / 26.8 / 26.9 / 26.10 / 26.11 / 26.12) 148-162

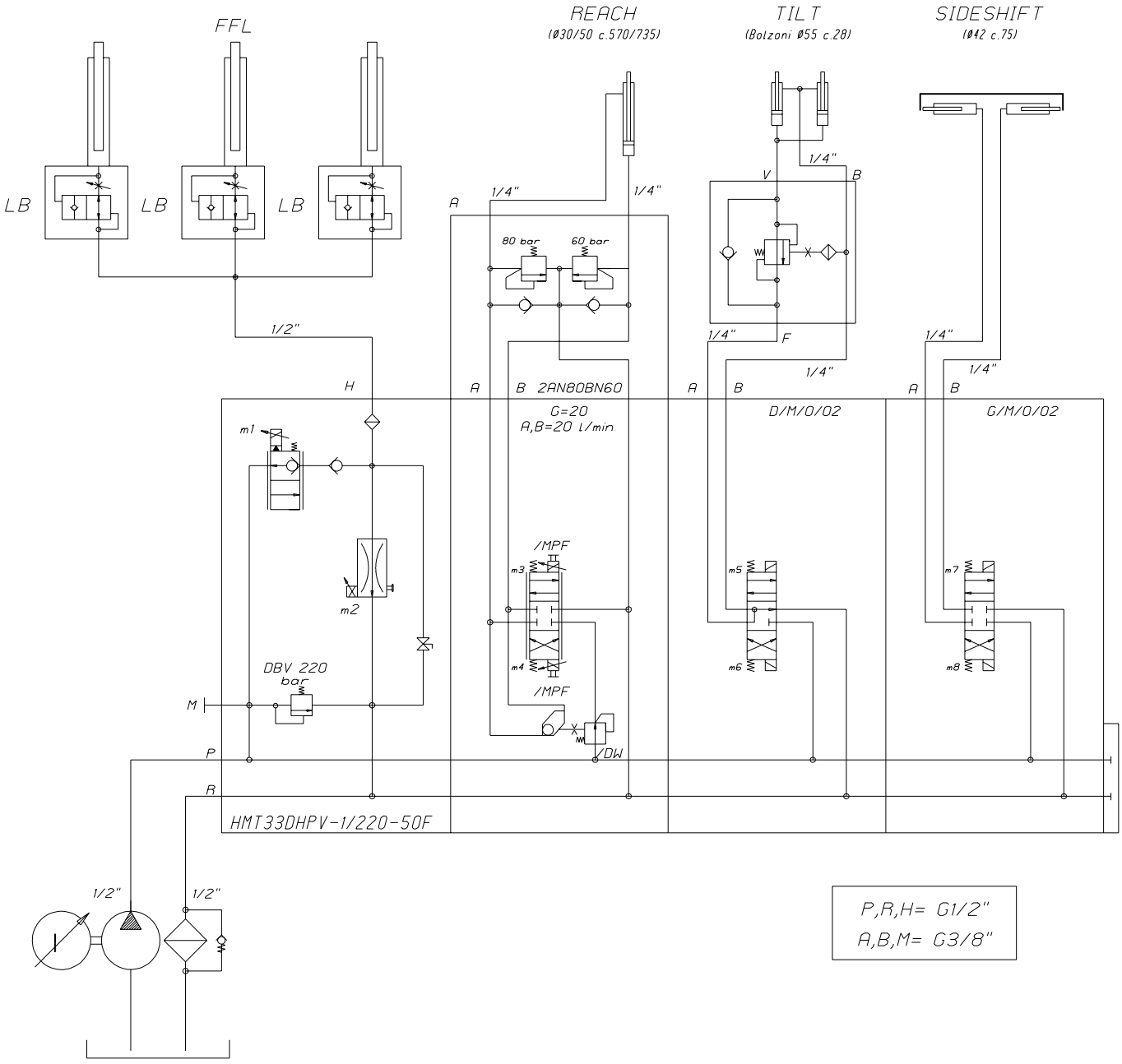
FFL
REACH
(Ø30/50 c.570/735)
TILT
(Bolzoni Ø55 c.28)
SIDESHIFT
(Ø42 c.75)
LB
LB
LB
1/4"
1/4"
1/4"
80 bar
60 bar
1/2"
1/4"
1/4"
1/4"
1/4"
H
A
B 2AN80BN60
G=20
A,B=20 l/min
A
B
D/M/O/02
A
B
G/M/O/02
m1
m2
/MPF
m3
m4
/MPF
/DW
m5
m6
m7
m8
DBV 220 bar
M
P
R
HMT33DHPV-1/220-50F
1/2"
1/2"
P,R,H= G1/2"
A,B,M= G3/8"

HYDRAULIC DIAGRAM 5 WAYS GROUP (OPTIONS)
SCHEMA OLEODINAMICO GRUPPO 5 VIE (OPTIONAL)
SCHÉMA HYDRAULIQUE GROUPE 5 VOIE (OPTIONNEL)
HYDRAULIKSCHALTPLAN GRUPPE 5 WEG (WAHLFREI)
ESQUEMA OLEODINAMICO GRUPO 5 VÍA (OPCIONAL)

FIGURE 25.1

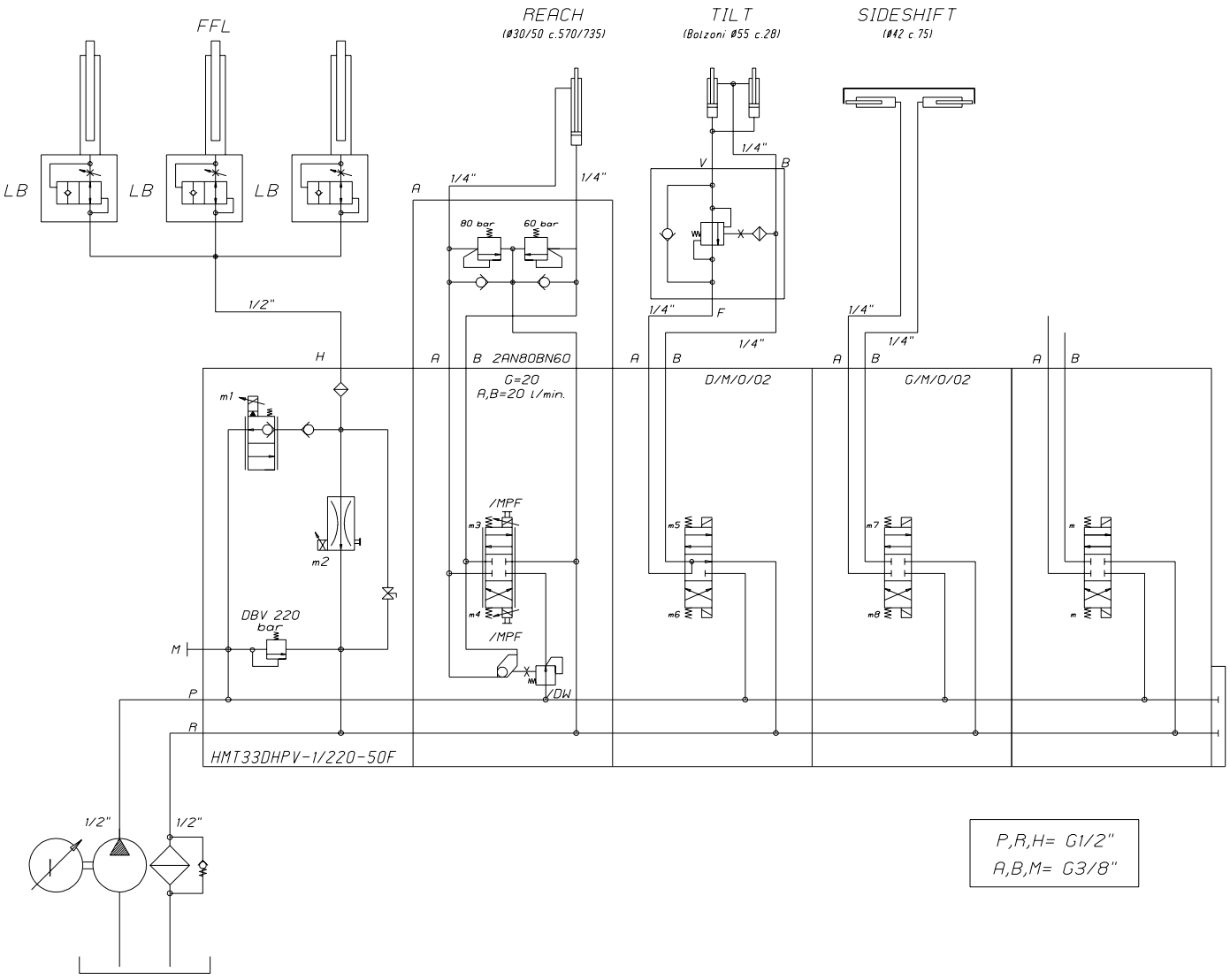

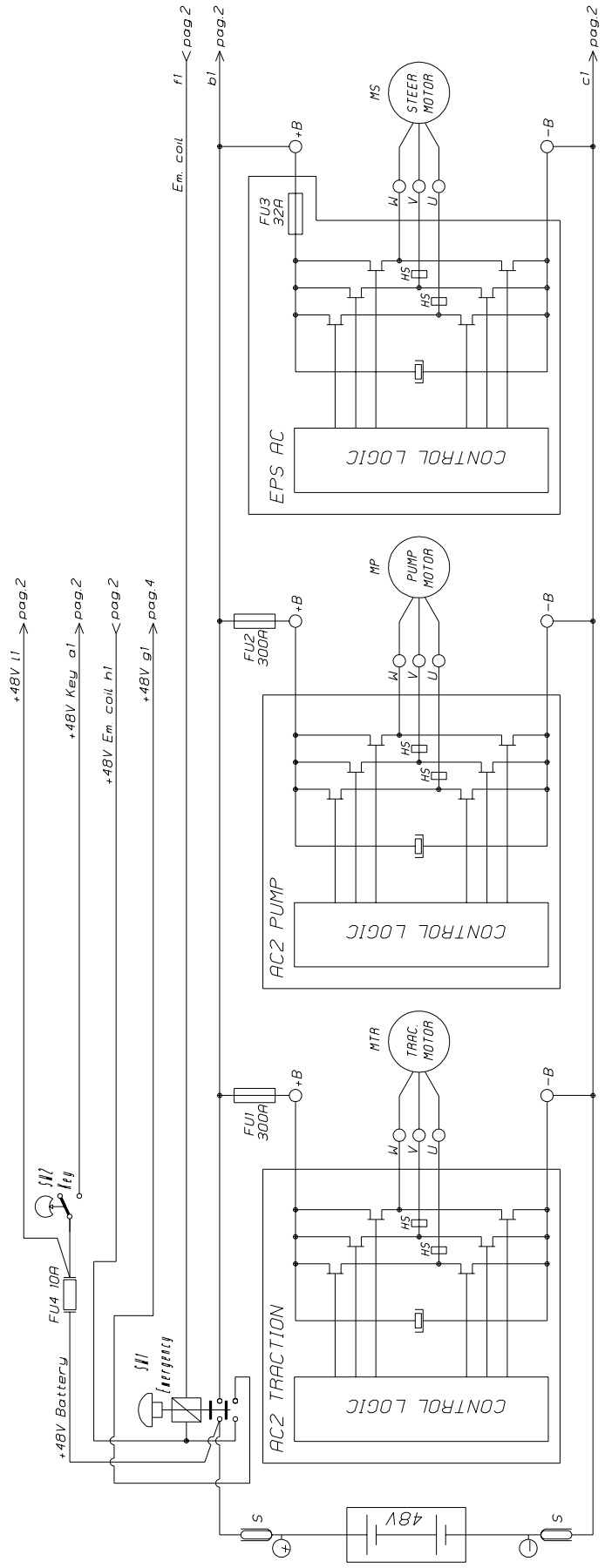
f1 > pag.2
b1 > pag.2
c1 > pag.2
Em. coil
MS
STEER MOTOR
+B
-B
W
V
U
FU3 32A
HS
HS
CONTROL LOGIC
EPS AC
MP
PUMP MOTOR
FU2 300A
AC2 PUMP
MTR
TRAC. MOTOR
FU1 300A
AC2 TRACTION
+48V l1 > pag.2
+48V Key a1 > pag.2
+48V Em. coil h1 > pag.2
+48V g1 > pag.4
SW Key
FU4 10A
+48V Battery
SW Emergency
48V
S
+
-

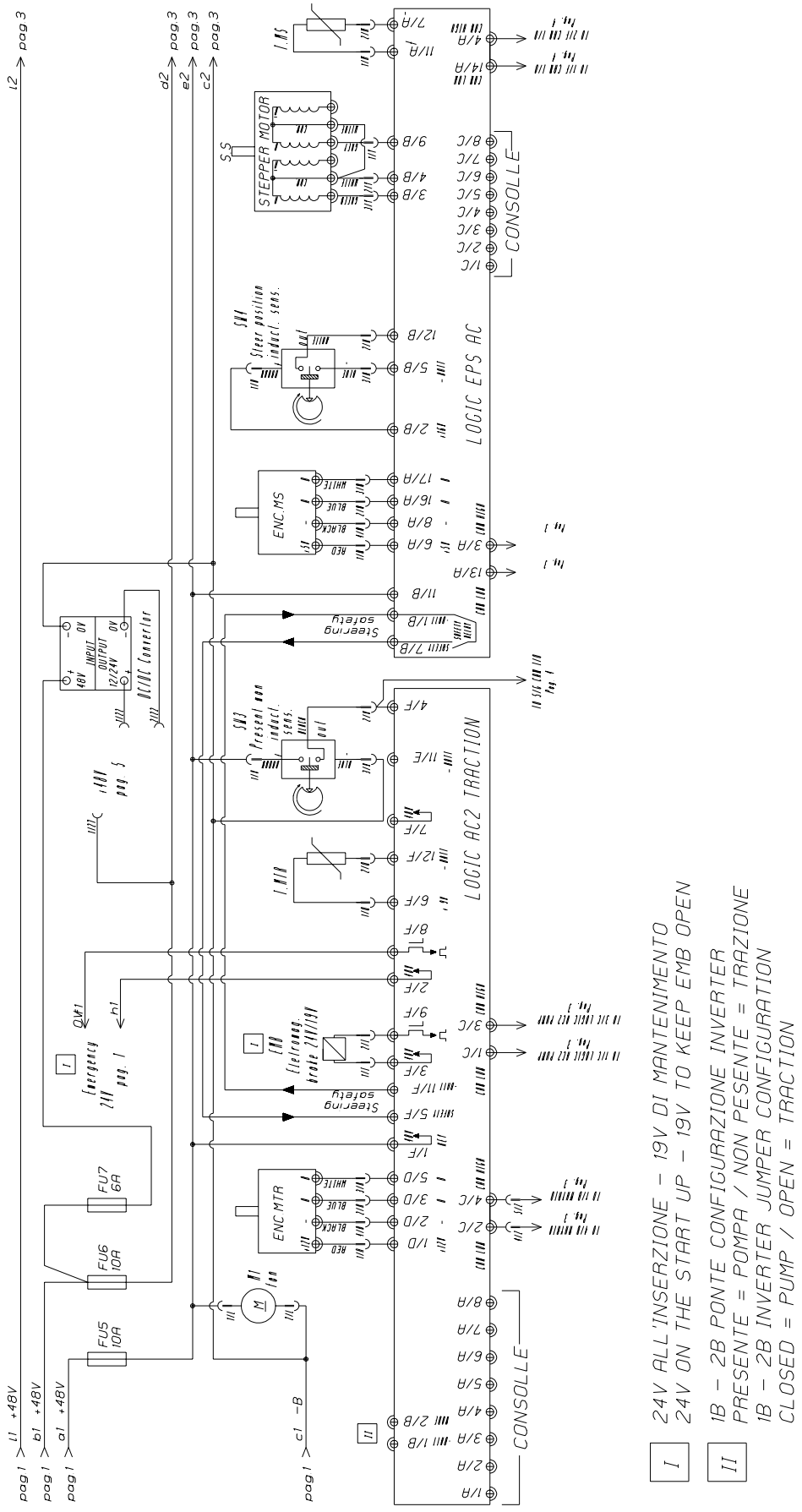
LOGIC EPS AC
LOGIC AC2 TRACTION
CONSOLLE
STEPPER MOTOR
ENC.MS
ENC.MTR
FU5 10A
FU6 10A
FU7 6A
I 24V ALL'INSERZIONE - 19V DI MANTENIMENTO
24V ON THE START UP - 19V TO KEEP EMB OPEN
II 1B - 2B PONTE CONFIGURAZIONE INVERTER
PRESENTE = POMPA / NON PESENTE = TRAZIONE
1B - 2B INVERTER JUMPER CONFIGURATION
CLOSED = PUMP / OPEN = TRACTION

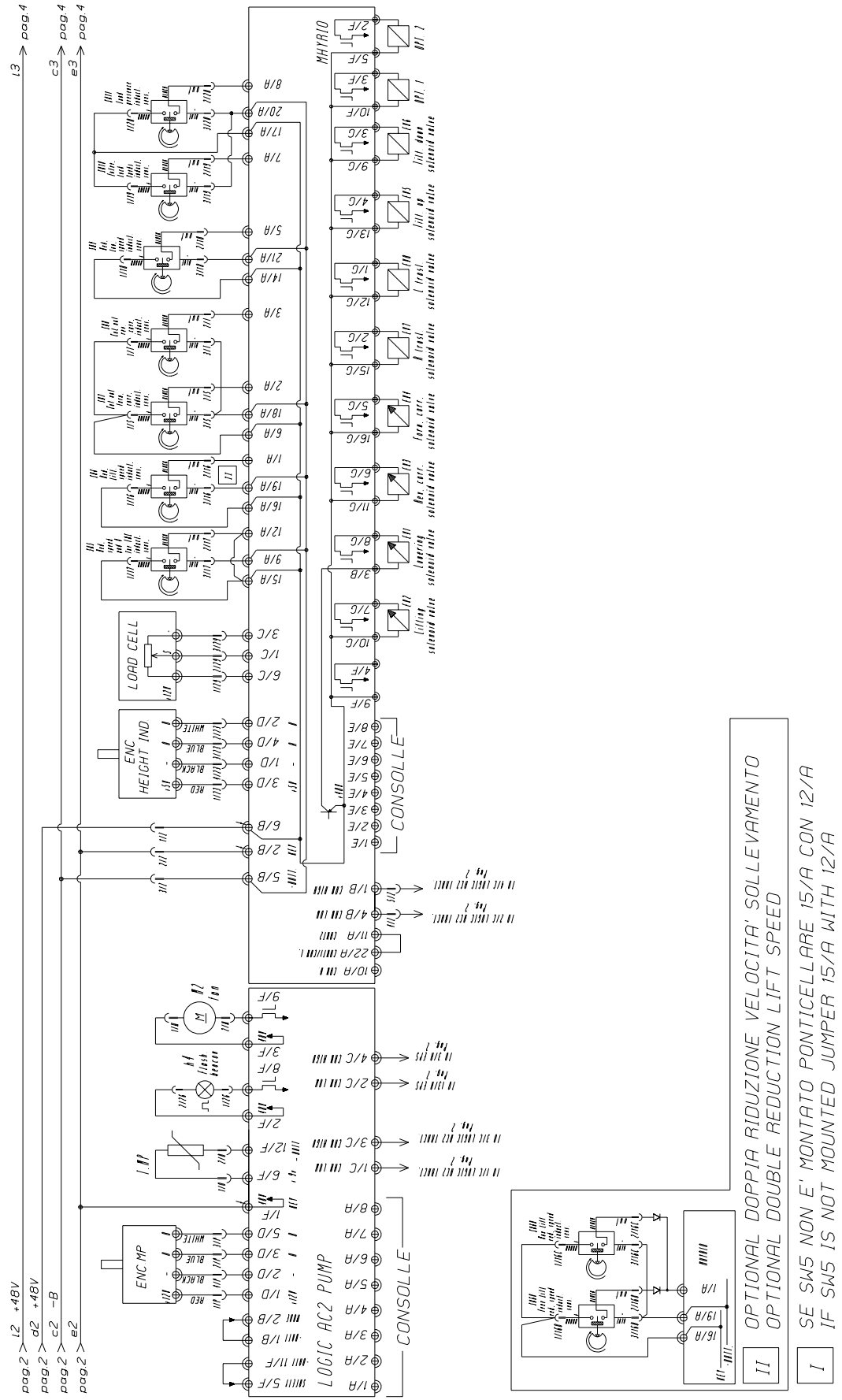
MAIN
LOGIC AC2 PUMP
CONSOLLE
LOAD CELL
ENC HEIGHT IND
ENC MP
OPTIONAL DOPPIA RIDUZIONE VELOCITA' SOLLEVAMENTO
OPTIONAL DOUBLE REDUCTION LIFT SPEED
SE SW5 NON E' MONTATO PONTICELLARE 15/A CON 12/A
IF SW5 IS NOT MOUNTED JUMPER 15/A WITH 12/A

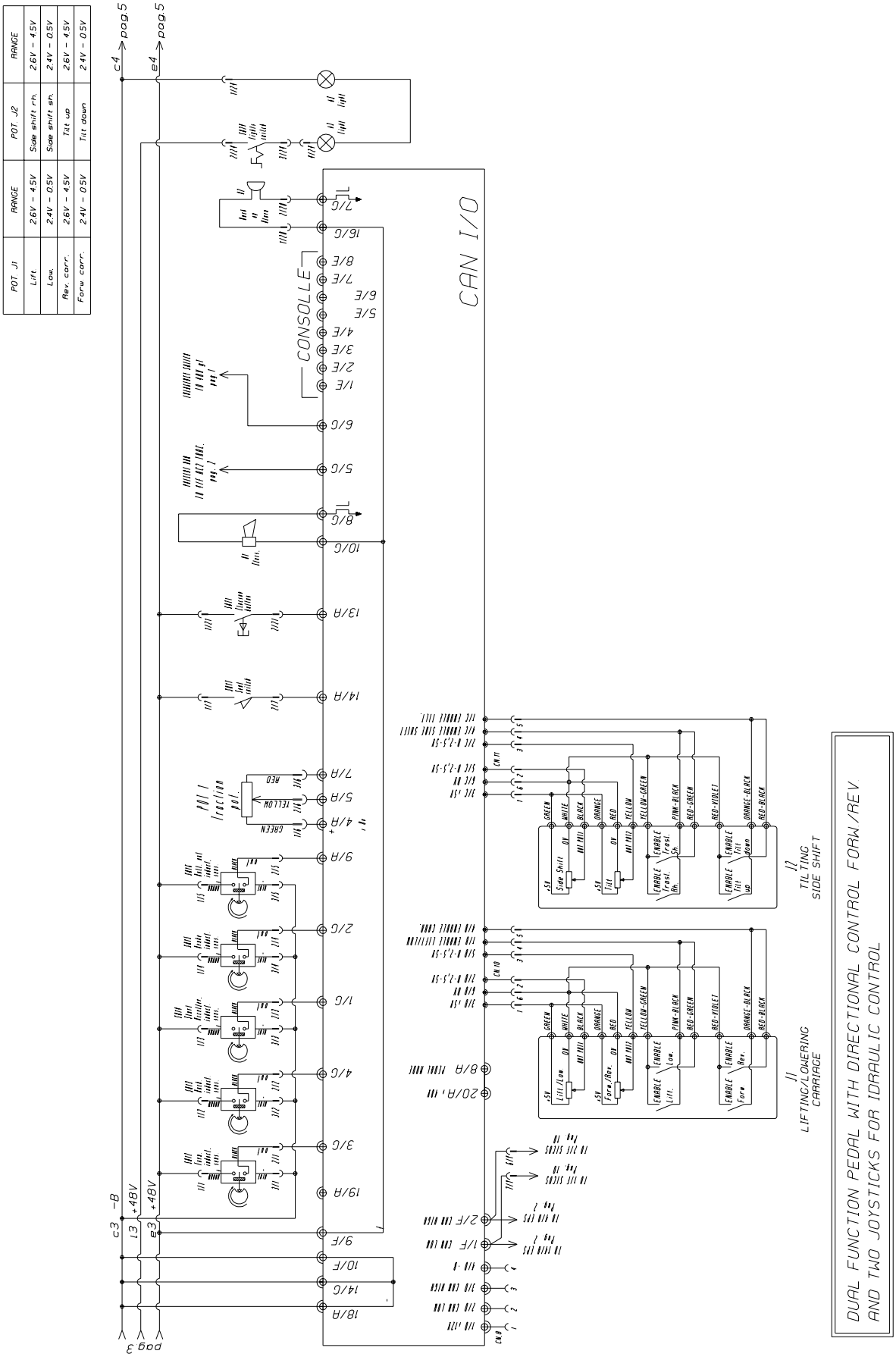
POT J1
Lift
Low.
Rev. corr.
Forw. corr.
RANGE
2.6V - 4.5V
2.4V - 0.5V
2.6V - 4.5V
2.4V - 0.5V
POT J2
Side shift rh.
Side shift sh.
Tilt up
Tilt down
RANGE
2.6V - 4.5V
2.4V - 0.5V
2.6V - 4.5V
2.4V - 0.5V
c4 -> pag.5
e4 -> pag.5
CAN I/O
CONSOLLE
+48V
-B
pag 3
DUAL FUNCTION PEDAL WITH DIRECTIONAL CONTROL FORW/REV
AND TWO JOYSTICKS FOR IDRAULIC CONTROL
J1
LIFTING/LOWERING
CARRIAGE
J2
TILTING
SIDE SHIFT

ELECTRONIC DIAGRAM
SCHEMA ELETTRONICO
DIAGRAMME ÉLECTRONIQUE
ELEKTRONIKSCHALTPLAN
ESQUEMA ELECTRÓNICO

FIGURE 26.4

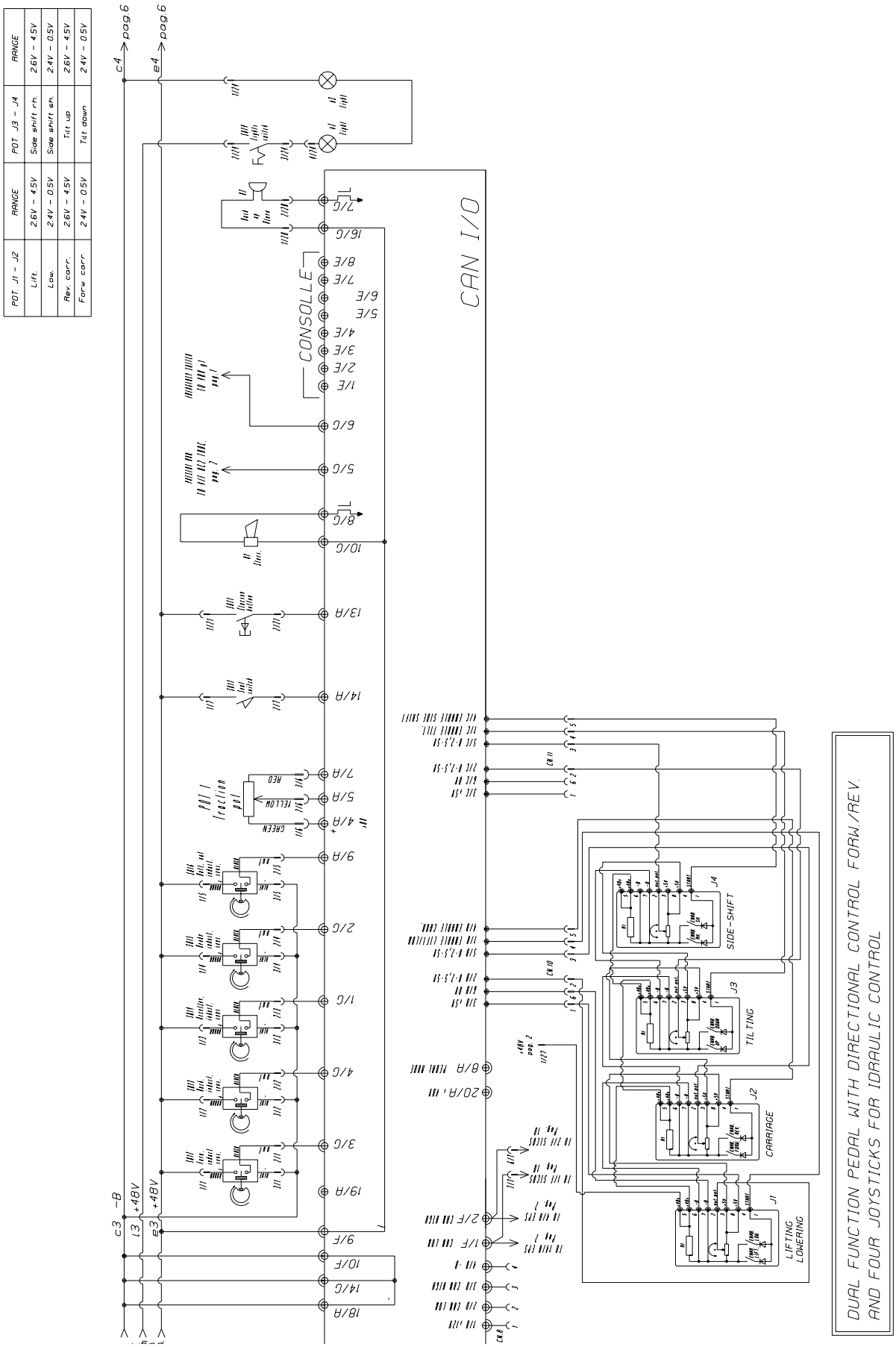

FIGURE 26.5

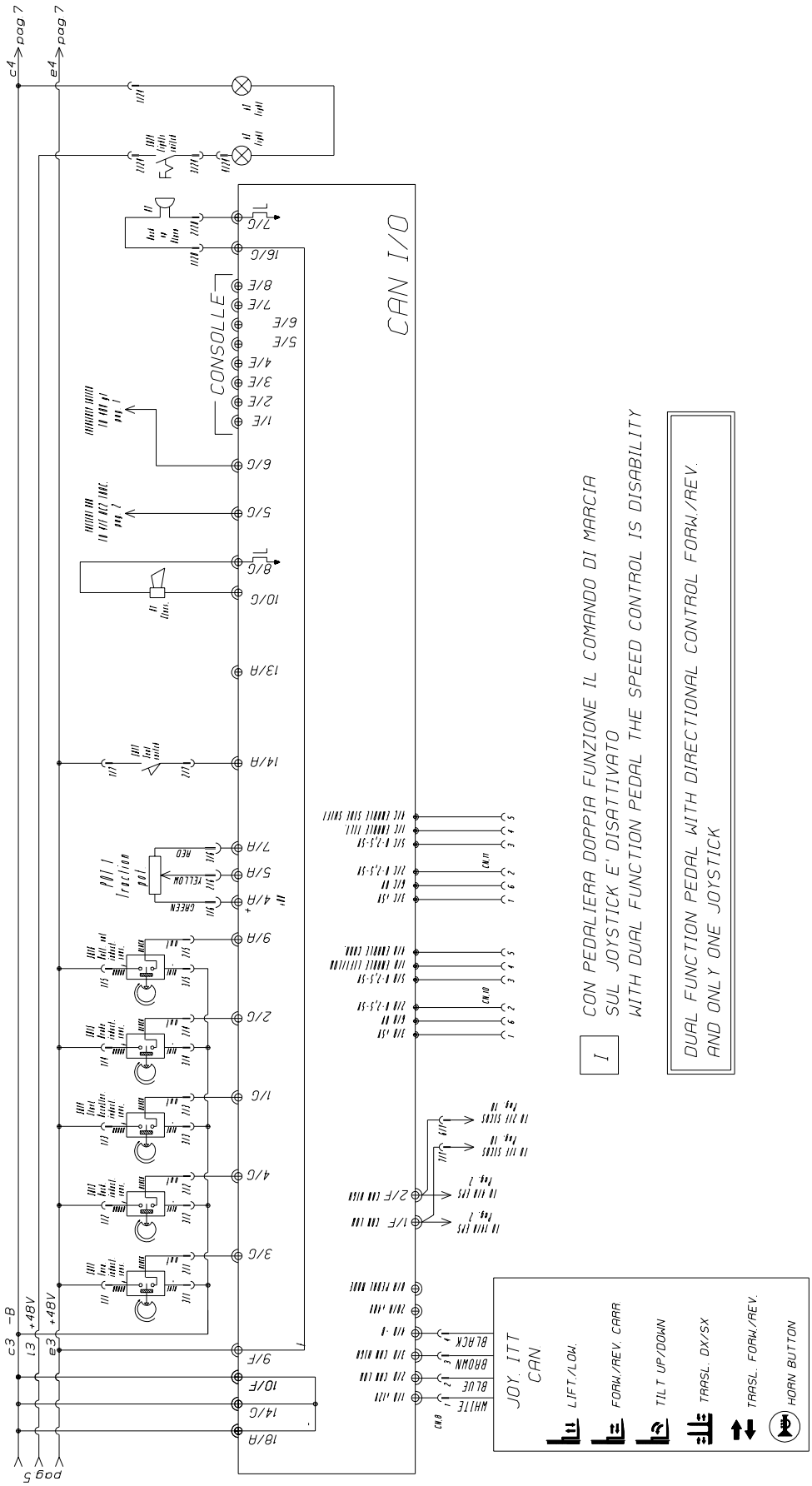
CAN I/O
CONSOLLE
JOY. ITT CAN
LIFT./LOW.
FORW./REV. CARR.
TILT UP/DOWN
TRASL. DX/SX
TRASL. FORW./REV.
HORN BUTTON
CON PEDALIERA DOPPIA FUNZIONE IL COMANDO DI MARCIA
SUL JOYSTICK E' DISATTIVATO
WITH DUAL FUNCTION PEDAL THE SPEED CONTROL IS DISABILITY
DUAL FUNCTION PEDAL WITH DIRECTIONAL CONTROL FORW./REV.
AND ONLY ONE JOYSTICK

ELECTRONIC DIAGRAM
SCHEMA ELETTRONICO
DIAGRAMME ÉLECTRONIQUE
ELEKTRONIKSCHALTPLAN
ESQUEMA ELECTRÓNICO

FIGURE 26.6

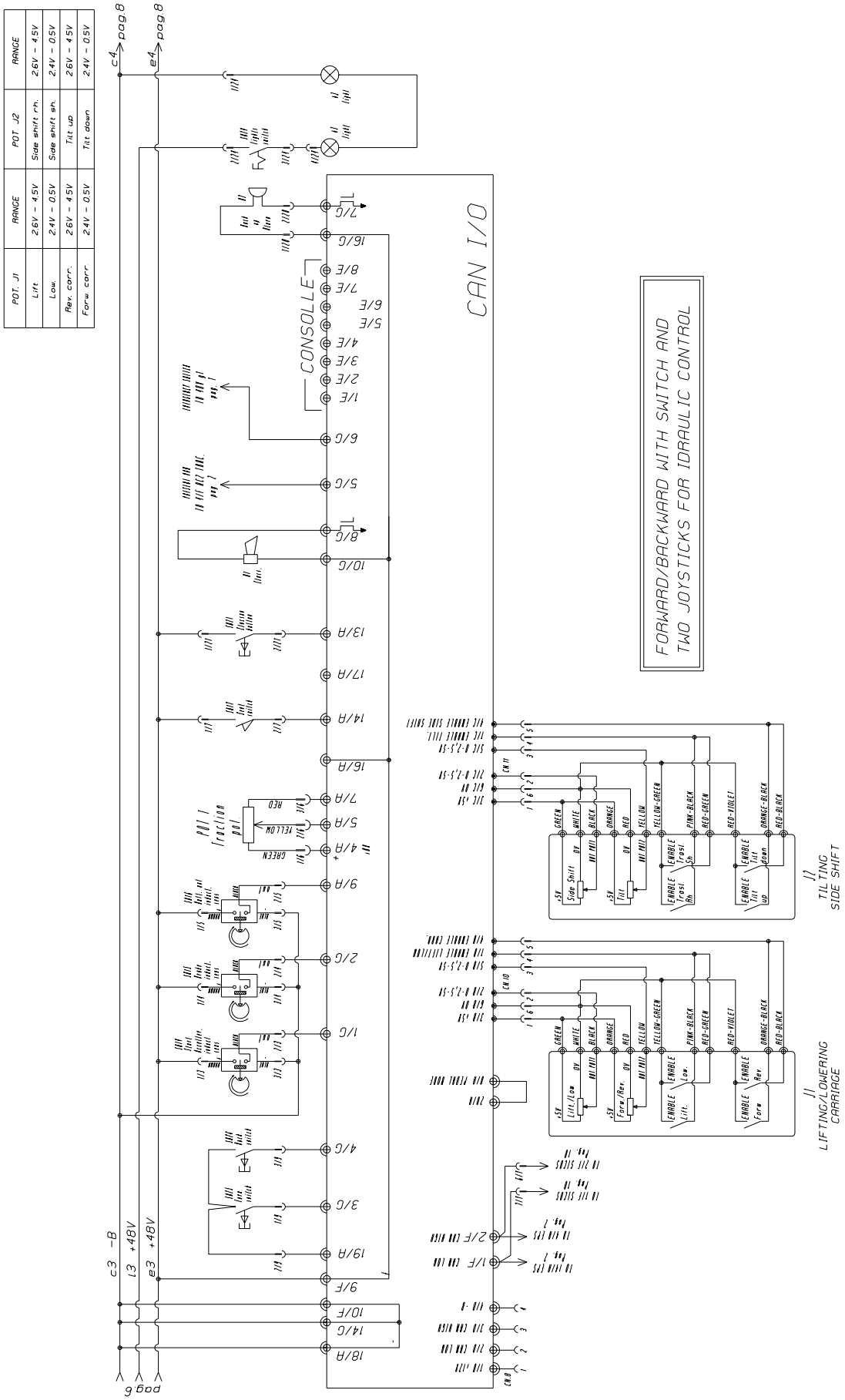

ELECTRONIC DIAGRAM
SCHEMA ELETTRONICO
DIAGRAMME ÉLECTRONIQUE
ELEKTRONIKSCHALTPLAN
ESQUEMA ELECTRÓNICO

FIGURE 26.7

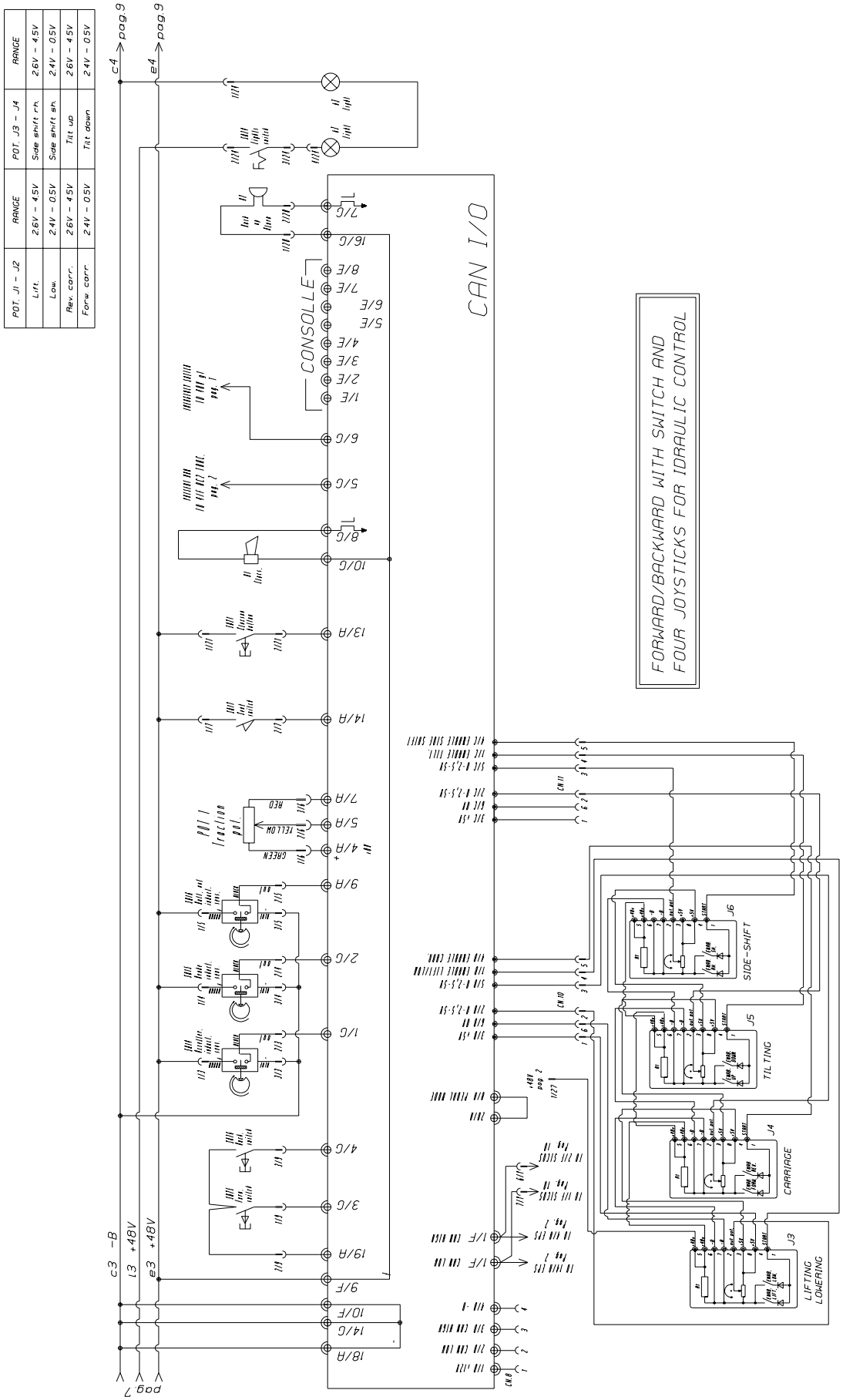

ELECTRONIC DIAGRAM
SCHEMA ELETTRONICO
DIAGRAMME ÉLECTRONIQUE
ELEKTRONIKSCHALTPLAN
ESQUEMA ELECTRÓNICO

FIGURE 26.8

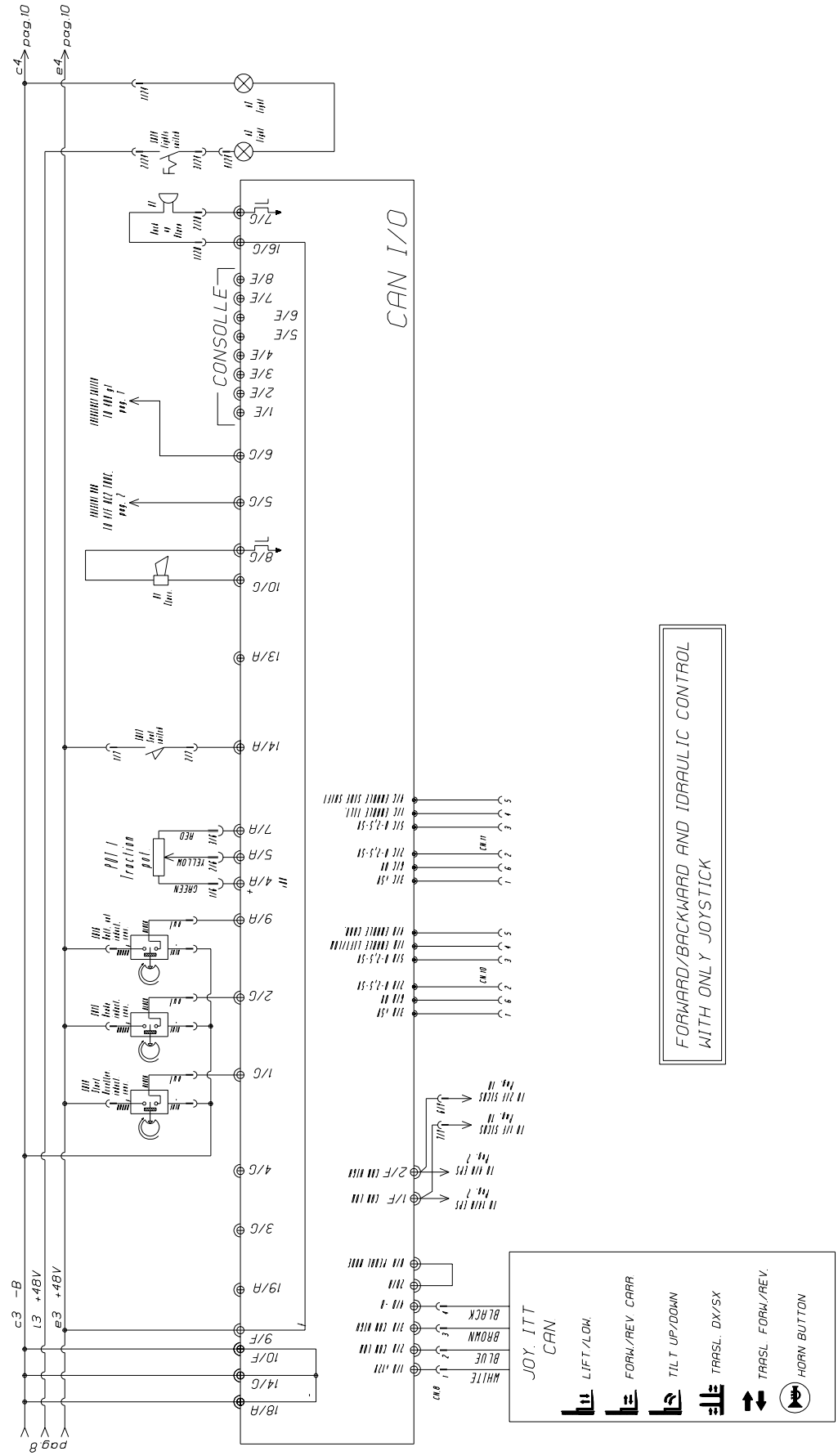

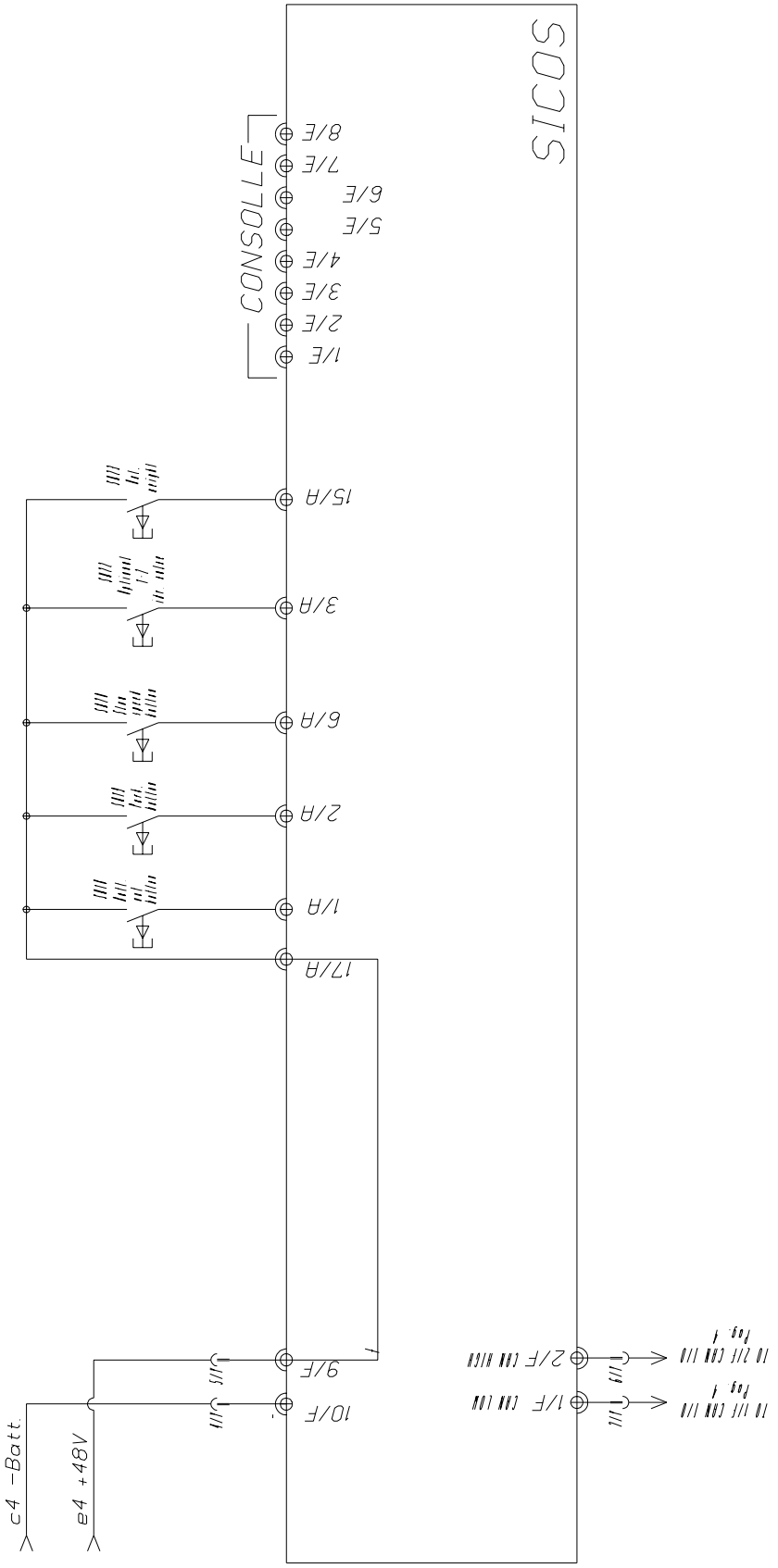
SICOS
CONSOLLE
8/E
7/E
6/E
5/E
4/E
3/E
2/E
1/E
15/A
3/A
6/A
2/A
1/A
17/A
9/E
10/E
c4 -Batt
e4 +48V
2/F
1/F

POWER CABLES DIAGRAM
SCHEMA COLLEGAMENTI CAVI DI POTENZA
DIAGRAMME LIAISON CABLE DE PUISSANCE
ELEKTRISCHEANLAGEPLAN
ESQUEMA CONEXION CABLE DE POTENCIA

FIGURE 26.10

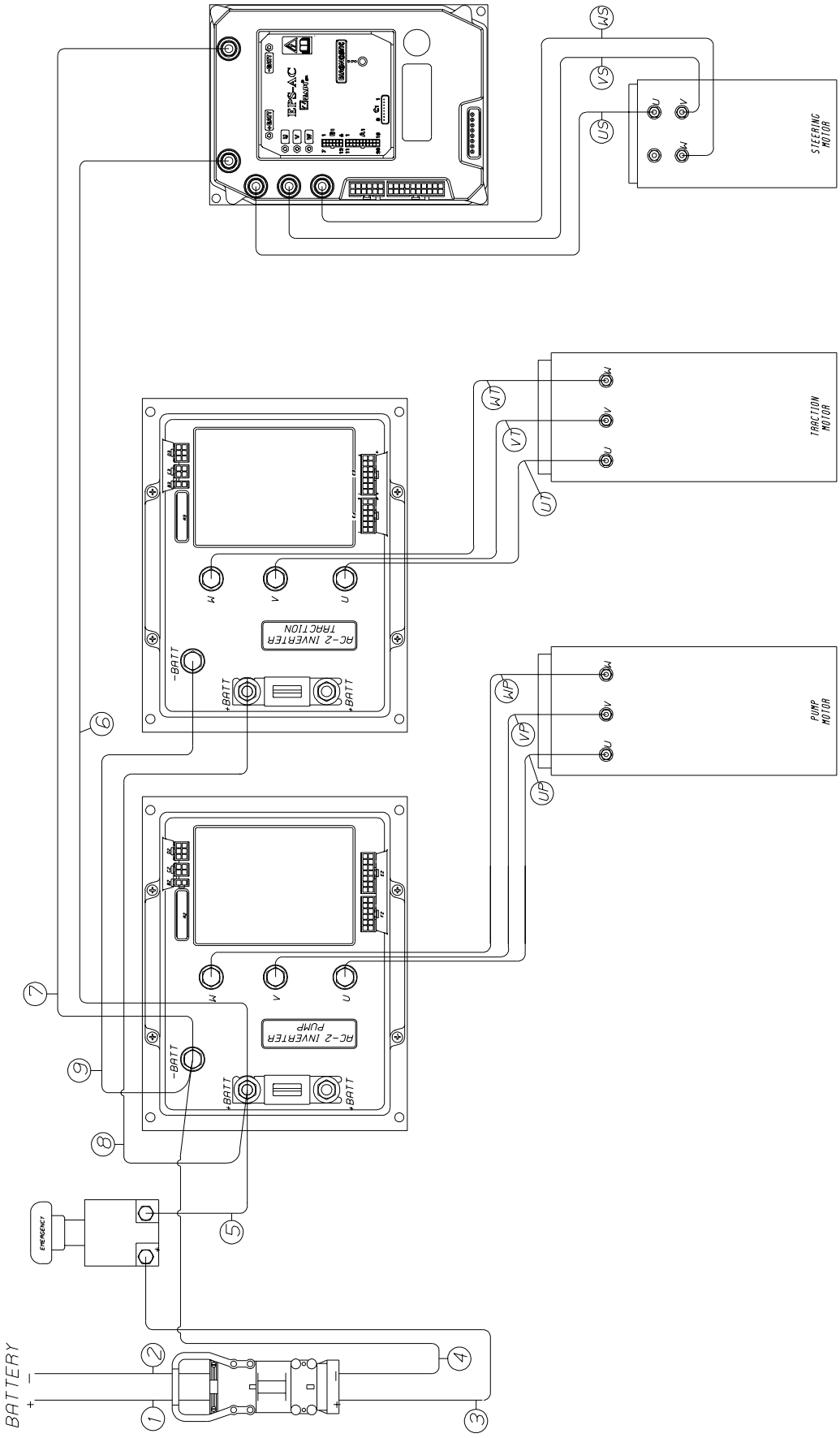

SHEATH DIAGRAM
SCHEMA COLLEGAMENTI GUAINE
DIAGRAMME LIAISON GAINES
MANTELANLAGEPLAN
ESQUEMA CONEXION VAINA

FIGURE 26.11

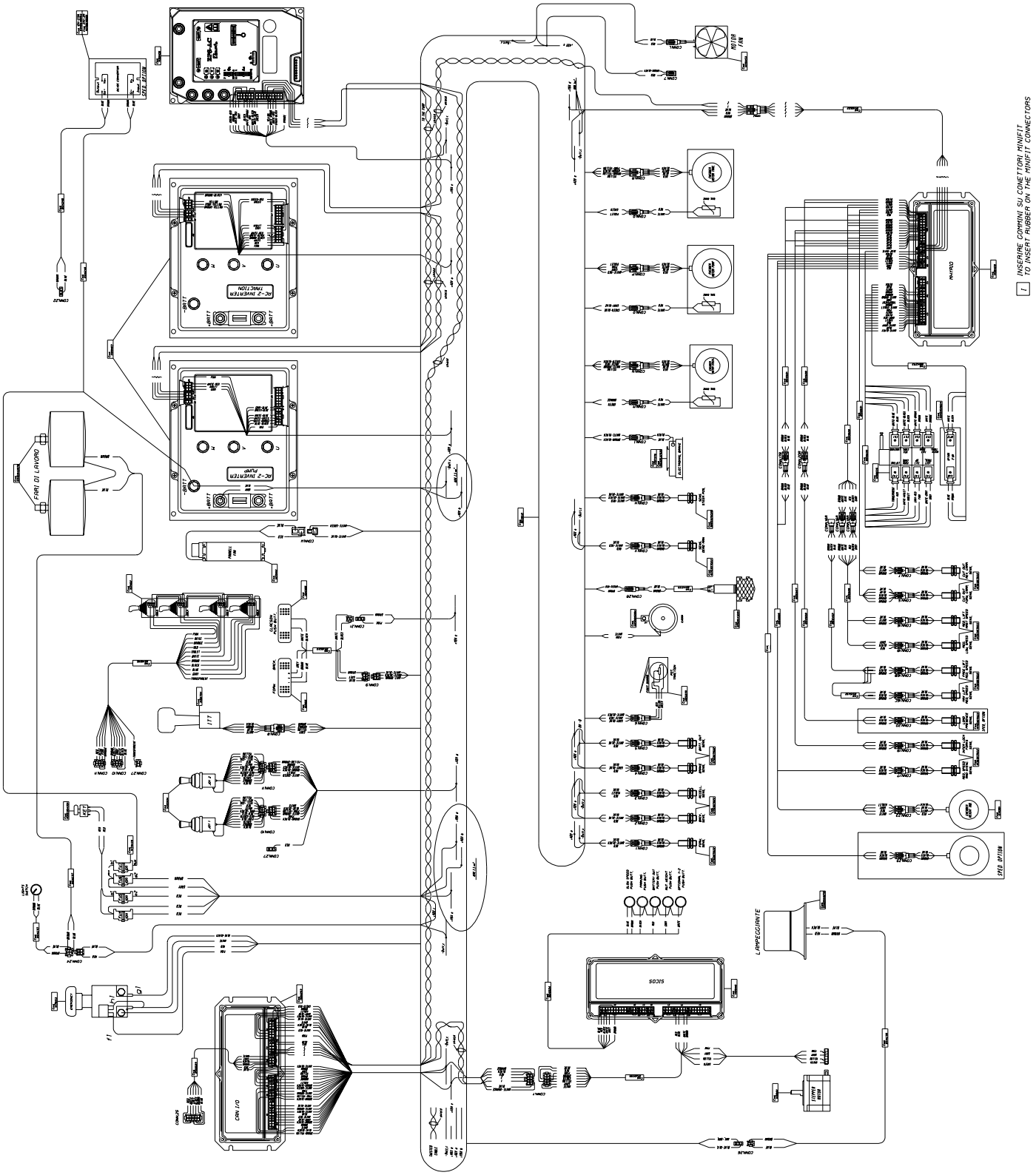

FROM CONNECTOR	COLOUR WIRE	AT CONNECTOR
Pin 4 conn.A CAN I/O	GRAY-BLUE	Pin 1 conn.6
Pin 5 conn.A CAN I/O	WHITE-RED	Pin 2 conn.6
Pin 7 conn.A CAN I/O	WHITE-BLACK	Pin 3 conn.6
Pin 8 conn.A CAN I/O	RED	Pin 20 conn.A CAN I/O
Pin 9 conn.A CAN I/O	WHITE-BLUE	Pin 2 conn.5
Pin 13 conn.A CAN I/O	BROWN	Pin 2 conn.21
Pin 14 conn.A CAN I/O	BROWN-BLACK	Pin 2 conn.7
Pin 18 conn.A CAN I/O	BLUE	Soldering -Batt.c
Pin 19 conn.A CAN I/O	WHITE-BROWN	Pin 2 conn.9
Pin 1 conn.B CAN I/O	WHITE	Pin 4 conn.10
Pin 2 conn.B CAN I/O	PINK-YELLOW	Pin 2 conn.10
Pin 3 conn.B CAN I/O	BLUE-BLACK	Pin 1 conn.10
Pin 4 conn.B CAN I/O	BROWN-BLACK	Pin 5 conn.10
Pin 5 conn.B CAN I/O	WHITE-BROWN	Pin 3 conn.10
Pin 6 conn.B CAN I/O	PINK	Pin 6 conn.10
Pin 1 conn.C CAN I/O	YELLOW-BROWN	Pin 4 conn.11
Pin 2 conn.C CAN I/O	WHITE-BLACK	Pin 2 conn.11
Pin 3 conn.C CAN I/O	BROWN	Pin 1 conn.11
Pin 4 conn.C CAN I/O	WHITE-GREEN	Pin 5 conn.11
Pin 5 conn.C CAN I/O	BROWN-BLACK	Pin 3 conn.11
Pin 6 conn.C CAN I/O	VIOLET	Pin 6 conn.11
Pin 1 conn.D CAN I/O	GRAY	Pin 1 conn.8
Pin 2 conn.D CAN I/O	YELLOW	Pin 2 conn.8
Pin 3 conn.D CAN I/O	ORANGE	Pin 3 conn.8
Pin 4 conn.D CAN I/O	BROWN	Pin 4 conn.8
Pin 1 conn.E CAN I/O	RED	Pin 2 conn.25
Pin 2 conn.E CAN I/O	BLACK	Pin 9 conn.25
Pin 3 conn.E CAN I/O	GRAY	Pin 8 conn.25
Pin 4 conn.E CAN I/O	WHITE	Pin 7 conn.25
Pin 5 conn.E CAN I/O	BLUE	Pin 3 conn.25
Pin 6 conn.E CAN I/O	BROWN	Pin 4 conn.25
Pin 1 conn.F CAN I/O	1	Pin 14 conn.A EPS Pin 7 conn.T male
Pin 2 conn.F CAN I/O	2	Pin 4 conn.A EPS Pin 6 conn.T male
Pin 9 conn.F CAN I/O	RED	Soldering +48Ve
Pin 10 conn.F CAN I/O	BLUE	Soldering -Batt.c
Pin 1 conn.G CAN I/O	VIOLET	Pin 2 conn.3
Pin 2 conn.G CAN I/O	GRAY-BLUE	Pin 2 conn.4
Pin 3 conn.G CAN I/O	WHITE-BLACK	Pin 2 conn.1 Pin 1 conn.9 CABLE SOLDERING

FROM CONNECTOR	COLOUR WIRE	AT CONNECTOR
Pin 4 conn.G CAN I/O	WHITE-BLUE	Pin 2 conn.2 Pin 3 conn.9 CABLE SOLDERING
Pin 5 conn.G CAN I/O	WHITE-RED	Pin 2 conn.V Pin 4 conn.F TRAC. CABLE SOLDERING
Pin 6 conn.G CAN I/O	BLUE-BLACK	EMERGENCY (g1)
Pin 7 conn.G CAN I/O	GREEN-RED	Pin 2 conn.28
Pin 8 conn.G CAN I/O	WHITE	CLACSON
Pin 10 conn.G CAN I/O	PINK	CLACSON
Pin 14 conn.G CAN I/O	BLUE	Soldering -Batt.c
Pin 16 conn.G CAN I/O	BROWN	Pin 1 conn.28
Pin 1 conn.B PUMP	RED	Pin 2 conn.B PUMP
Pin 1 conn.C PUMP	1	Pin 1 conn.C TRACTION
Pin 2 conn.C PUMP	1	Pin 13 conn.A EPS
Pin 3 conn.C PUMP	2	Pin 3 conn.C TRACTION
Pin 4 conn.C PUMP	2	Pin 3 conn.A EPS
Pin 1 conn.D PUMP	WHITE-RED	Pin 1 conn.P
Pin 2 conn.D PUMP	VIOLET	Pin 4 conn.P
Pin 3 conn.D PUMP	GRAY	Pin 2 conn.P
Pin 5 conn.D PUMP	PINK	Pin 3 conn.P
Pin 1 conn.F PUMP	RED	Soldering +48Ve
Pin 2 conn.F PUMP	WHITE-ORANGE	Pin 2 conn.26
Pin 3 conn.F PUMP	WHITE-BLUE	Pin 1 conn.W
Pin 5 conn.F PUMP	RED	Pin 11 conn.F PUMP
Pin 6 conn.F PUMP	GRAY-GREEN	Pin 1 conn.O
Pin 8 conn.F PUMP	BLUE-BLACK	Pin 1 conn.26
Pin 9 conn.F PUMP	WHITE-GREEN	Pin 2 conn.W
Pin 12 conn.F PUMP	GRAY-BLUE	Pin 2 conn.O
Pin 2 conn.C TRACTION	1	Pin 4 conn.Z male
Pin 4 conn.C TRACTION	2	Pin 5 conn.Z male
Pin 1 conn.D TRACTION	YELLOW	Pin 1 conn.R
Pin 2 conn.D TRACTION	PINK-YELLOW	Pin 4 conn.R
Pin 3 conn.D TRACTION	YELLOW-BROWN	Pin 2 conn.R
Pin 5 conn.D TRACTION	BROWN-BLACK	Pin 3 conn.R
Pin 6 conn.F TRACTION	RED	Soldering +48Ve
Pin 2 conn.F TRACTION	WHITE	EMERGENCY (h1) AUX. EMERGENCY
Pin 3 conn.F TRACTION	BROWN-BLACK	Pin 1 conn.1
Pin 5 conn.F TRACTION	GRAY	Pin 7 conn.B EPS
Pin 6 conn.F TRACTION	VIOLET	Pin 1 conn.Q
Pin 8 conn.F TRACTION	PINK	EMERGENCY (f1)

FROM CONNECTOR	COLOUR WIRE	AT CONNECTOR
Pin 9 conn.F TRACTION	WHITE-BLACK	Pin 2 conn.1
Pin 11 conn.F TRACTION	GREEN-RED	Pin 1 conn.B EPS
Pin 12 conn.F TRACTION	GREEN	Pin 2 conn.Q
Pin 6 conn.A EPS	YELLOW	Pin 1 conn.N
Pin 7 conn.A EPS	ORANGE	Pin 2 conn.M
Pin 8 conn.A EPS	GREEN-BLACK	Pin 4 conn.N
Pin 11 conn.A EPS	GREEN	Pin 1 conn.M
Pin 16 conn.A EPS	WHITE-BROWN	Pin 2 conn.N
Pin 17 conn.A EPS	WHITE-RED	Pin 3 conn.N
Pin 2 conn.B EPS	WHITE-RED	Pin 1 conn.H
Pin 3 conn.B EPS	WHITE-ORANGE	Pin 3 conn.Y male
Pin 4 conn.B EPS	ORANGE	Pin 2 conn.Y male
Pin 5 conn.B EPS	WHITE-BLUE	Pin 3 conn.H
Pin 9 conn.B EPS	BLACK	Pin 1 conn.Y male
Pin 11 conn.B EPS	RED	Soldering +48Ve
Pin 12 conn.B EPS	WHITE-BLACK	Pin 2 conn.H
Pin 1 conn.A DISPLAY	RED	Battery Out Push Button
Pin 2 conn.A DISPLAY	BLACK	Parking Push Button
Pin 3 conn.A DISPLAY	WHITE	Optional 1-2 Push Button
Pin 6 conn.A DISPLAY	BLUE	Slow Speed Push Button
Pin 15 conn.A DISPLAY	GRAY	Aut. Weight Push Button
Pin 17 conn.A DISPLAY	BROWN	Common Push Button
Pin 1 conn.F DISPLAY	RED	Pin 7 conn.T female
Pin 2 conn.F DISPLAY	BLUE	Pin 6 conn.T female
Pin 9 conn.F DISPLAY	WHITE	Pin 5 conn.T female
Pin 10 conn.F DISPLAY	BROWN	Pin 4 conn.T female
Pin 1 conn.A MHYRIO	WHITE	Pin 2 conn.16A male
Pin 2 conn.A MHYRIO	BLACK	Pin 2 conn.S
Pin 3 conn.A MHYRIO	WHITE	Pin 2 conn.T
Pin 5 conn.A MHYRIO	BLACK	Pin 2 conn.18A male
Pin 6 conn.A MHYRIO	BROWN	Pin 1 conn.S - conn.T
Pin 7 conn.A MHYRIO	BLACK	Pin 2 conn.19 male
Pin 8 conn.A MHYRIO	BLACK	Pin 2 conn.20A male
Pin 9 conn.A MHYRIO	BLUE	Pin 3 conn.17A male
Pin 11 conn.A MHYRIO	RED	Pin 22 conn.A MHYRIO
Pin 12 conn.A MHYRIO	BLACK	Pin 2 conn.17A male
Pin 14 conn.A MHYRIO	RED	Pin 1 conn.18A male
Pin 15 conn.A MHYRIO	BROWN	Pin 1 conn.17A male

FROM CONNECTOR	COLOUR WIRE	AT CONNECTOR
Pin 16 conn.A MHYRIO	BROWN	Pin 1 conn.16A male
Pin 17 conn.A MHYRIO	BROWN	Pin 1 conn.19-conn.20A
Pin 18 conn.A MHYRIO	BLUE	Pin 3 conn.S - conn.T
Pin 19 conn.A MHYRIO	BLUE	Pin 3 conn.16A male
Pin 20 conn.A MHYRIO	BLUE	Pin 3 conn.19-conn.20A
Pin 21 conn.A MHYRIO	GRAY	Pin 3 conn.18A male
Pin 1 conn.B MHYRIO	5	Pin 4 conn.Z female
Pin 2 conn.B MHYRIO	2	conn.Z female
Pin 3 conn.B MHYRIO	WHITE-BLUE	Pin 2 EV1
Pin 4 conn.B MHYRIO	4	Pin 5 conn.Z female
Pin 5 conn.B MHYRIO	3	Pin 3 conn.Z female
Pin 6 conn.B MHYRIO	1	Pin 1 conn.Z female
Pin 1 conn.C MHYRIO	BLACK	Pin 2 conn.29
Pin 3 conn.C MHYRIO	BLUE	Pin 3 conn.29
Pin 6 conn.C MHYRIO	BROWN	Pin 1 conn.29
Pin 1 conn.D MHYRIO	VIOLET	Pin 4 conn.23
Pin 2 conn.D MHYRIO	RED	Pin 2 conn.23
Pin 3 conn.D MHYRIO	WHITE	Pin 1 conn.23
Pin 4 conn.D MHYRIO	GRAY	Pin 3 conn.23
Pin 1 conn.G MHYRIO	ORANGE	Pin 1 EV8
Pin 2 conn.G MHYRIO	GRAY	Pin 1 EV7
Pin 3 conn.G MHYRIO	BROWN	Pin 1 EV6
Pin 4 conn.G MHYRIO	PINK	Pin 1 EV5
Pin 5 conn.G MHYRIO	BLACK	Pin 1 EV4
Pin 6 conn.G MHYRIO	VIOLET	Pin 1 EV3
Pin 7 conn.G MHYRIO	RED	Pin 1 EV2
Pin 8 conn.G MHYRIO	BLUE	Pin 1 EV1
Pin 9 conn.G MHYRIO	WHITE-BROWN	Pin 2 EV6
Pin 10 conn.G MHYRIO	BLACK	Pin 2 EV2
Pin 11 conn.G MHYRIO	WHITE-VIOLET	Pin 2 EV3
Pin 12 conn.G MHYRIO	WHITE-ORANGE	Pin 2 EV8
Pin 13 conn.G MHYRIO	WHITE-PINK	Pin 2 EV5
Pin 15 conn.G MHYRIO	WHITE-GRAY	Pin 2 EV7
Pin 16 conn.G MHYRIO	WHITE-BLACK	Pin 2 EV4
Soldering -Batt.c	BLUE	Pin 2 conn.L
Soldering -Batt.c	BLUE	Pin 3 conn.V
Soldering -Batt.c	BLUE	Pin 3 conn.Z male
Soldering -Batt.c	BLUE	Pin 3 conn.1
Soldering -Batt.c	BLUE	Pin 3 conn.2

FROM CONNECTOR	COLOUR WIRE	AT CONNECTOR
Soldering -Batt.c	BLUE	Pin 3 conn.3
Soldering -Batt.c	BLUE	Pin 3 conn.4
Soldering -Batt.c	BLUE	Pin 3 conn.5
Soldering -Batt.c	BLUE	Pin 1 conn.24 male
Soldering -Batt.c	BLUE	Pin 4 conn.Y male
Soldering +48Va	BROWN	Pin 1 conn.Z male
Soldering +48V1	RED	Pin 2 conn.24 male
Soldering +48Vd	RED	Pin 1 conn.27
Soldering +48Ve	RED	Pin 5 conn.Y male
Soldering +48Ve	RED	Pin 2 conn.Z male
Soldering +48Ve	RED	Pin 1 conn.L
Soldering +48Ve	RED	Pin 1 conn.V
Soldering +48Ve	RED	Pin 1 conn.1
Soldering +48Ve	RED	Pin 1 conn.2
Soldering +48Ve	RED	Pin 1 conn.3
Soldering +48Ve	RED	Pin 1 conn.4
Soldering +48Ve	RED	Pin 1 conn.5
Soldering +48Ve	RED	Pin 1 conn.7
Soldering +48Ve	PINK	Pin 1 conn.21
EMERGENCY	RED	Fuse Fu4
Fuse Fu4	RED	KEY
Fuse Fu5	RED	KEY
Fuse Fu5	RED	Soldering +48Ve
Fuse Fu6	BROWN	Soldering +48Va
+Batt. PUMP	GRAY	Fuse Fu6 - Fu7 Soldering
-Batt. PUMP	BLUE	Soldering -Batt.c
Pin 1 conn.16A female	BROWN	Pin 1 conn.16B male
Pin 2 conn.16A female	WHITE	Pin 2 conn.16B male
Pin 3 conn.16A female	BLUE	Pin 3 conn.16B male
Pin 1 conn.17A female	BROWN	Pin 1 conn.17B male
Pin 2 conn.17A female	BLACK	Pin 2 conn.17B male
Pin 3 conn.17A female	BLUE	Pin 3 conn.17B male
Pin 1 conn.18A female	RED	Pin 1 conn.18B male
Pin 2 conn.18A female	BLACK	Pin 2 conn.18B male
Pin 3 conn.18A female	GRAY	Pin 3 conn.18B male
Pin 1 conn.20A female	BROWN	Pin 1 conn.20B male
Pin 2 conn.20A female	BLACK	Pin 2 conn.20B male
Pin 3 conn.20A female	BLUE	Pin 3 conn.20B male
Pin 2 conn.24 female	BLUE	Cont.2 sel. work lights
Pin 3 conn.24 female	BROWN	Cont.1 sel. work lights

COMPONENTS	DENOMINATION CONNECTORS
CAN I/O	CN. A/C - CN. B/C - CN. C/C - CN. D/C CN. E/C - CN. F/C - CN. G/C
PUMP	CN. B/P - CN. C/P - CN. D/P - CN. F/P
TRACTION	CN. B/T - CN. C/T - CN. D/T - CN. F/T
EPS	CN. A/E - CN. B/E
DISPLAY	CN. A/D - CN. F/D
MHYRIO	CN. A/M - CN. B/M - CN. C/M - CN. D/M CN. G/M

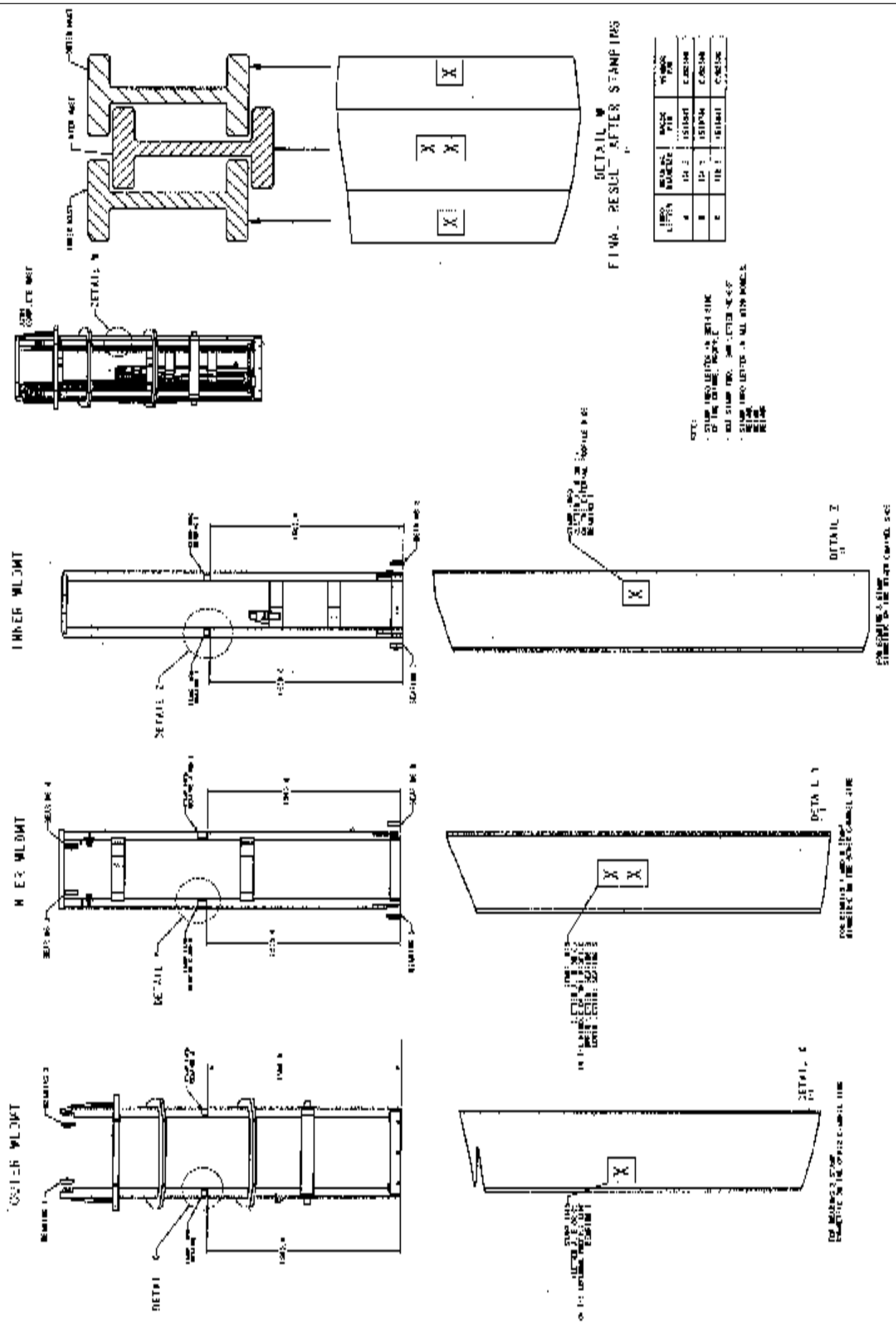

PART NO.	FIGURE	REF.	PART NO.	FIGURE	REF.	PART NO.	FIGURE	REF.	PART NO.	FIGURE	REF.	PART NO.	FIGURE	REF.
012823700	17	46	272042100	15	37	272477100	16	15	277022800	18	12	277264300	18,2	19
012824300	2	12	272042600	15	3	272477200	16	13	277022800	18	25	277264300	18,3	19
012824300	21	3	272043900	8	8	272477300	16	11	277022800	18	48	277275000	18	49
013401400	18	47	272045300	10	18	272477400	16	9	277022800	18,1	12	277275000	18,1	49
015418300	21	11	272048700	1	18	272477500	16	3	277022800	18,1	25	277275000	18,2	49
015418300	21,1	11	272048700	1,1	18	272477600	16	2	277022800	18,1	48	277275000	18,3	49
015418300	21,2	11	272048700	1,2	18	272477700	16	1	277022800	18,2	12	277275000	17	42
015418300	21,3	11	272066800	1	17	272479200	16	7	277022800	18,2	25	277282200	15	61
015628700	23	16	272066800	1,1	17	272506700	1	44	277022800	18,2	48	277282200	15	62
015915600	18	26	272066800	1,2	17	272506700	1,1	44	277022800	18,3	12	277282300	15	63
015915600	18,1	26	272066800	8	16	272506700	1,2	44	277022800	18,3	25	277286800	19	17
015915600	18,2	26	272072300	20	17	272513100	9	16	277022800	18,3	48	277286900	19	19
015915600	18,3	26	272096700	17	48	273007600	8	22	277023000	18	15	277287000	19	20
015915900	6	8	272133800	17	21	273014200	21,1	10	277023000	18,1	15	277315400	17	30
015915900	20	12	272213500	4	1	273014200	21,2	10	277023000	18,2	15	277316000	8	3
056056700	18	45	272213600	4	7	273014200	21,3	10	277023000	18,3	15	277343400	17	29
056056700	18,1	45	272219000	4	3	273030100	8	26	277033800	7	7	277355400	7	10
056056700	18,1	47	272219100	4	4	273033400	2	8	277034900	7	2	277406300	17	1
056056700	18,2	45	272220300	4	5	273036700	14	17	277035100	15	28	277407200	17	36
056056700	18,2	47	272252800	15	39	273059000	10	1	277065600	18	36	277431100	21	8
056056700	18,3	45	272303000	4	2	273059100	1	50	277065600	18,1	36	277431300	21	8
056056700	18,3	47	272304100	11	5	273059100	1,1	50	277065600	18,2	36	277432000	21,1	8
058004592	1	15	272336800	8	24	273059100	1,2	53	277065600	18,3	36	277432000	21,2	8
058004592	1,1	15	272336900	8	4	273086700	17	54	277067300	10	4	277432200	21,1	8
058004592	1,2	15	272337000	8	29	273086900	3	2	277071100	15	5	277432200	21,2	8
272001500	15	17	272337200	8	9	273086900	12	25	277176600	8	33	277432300	21,1	8
272005000	11	9	272337300	8	27	273087300	1	8	277176900	8	34	277432300	21,2	8
272006400	22	3	272337500	8	1	273087300	1,1	8	277188200	8	5	277432400	21,1	8
272006400	22,1	3	272338700	15	67	273087300	1,2	8	277194800	7	11	277432400	21,2	8
272006400	22,2	3	272342200	1	43	273087700	8	15	277195700	17	12	277432400	21,2	8
272006400	22,3	3	272342200	1,1	43	273091600	7	1	277196400	7	15	277432500	21,1	8
272011100	17	22	272342200	1,2	43	273104600	1	6	277197800	7	14	277432500	21,2	8
272015100	12	4	272342200	1,2	47	273104600	1,1	6	277203700	15	19	277432500	21,2	8
272019200	12	1	272342200	2	9	273104600	1,2	6	277208900	8	30	277432600	21,1	8
272020200	8	6	272342200	11	19	273109800	21	9	277209000	8	34	277432600	21,2	8
272022800	1	37	272342200	12	14	273109800	21,1	9	277209100	8	33	277432600	21,2	8
272022800	1,1	37	272344400	15	30	273109800	21,2	9	277257700	1	45	277432600	21,3	8
272022800	1,2	37	272344400	15	60	273109800	21,3	9	277257700	1,1	45	277432600	21,3	8
272024600	22	2	272347700	15	35	273109900	21	10	277257700	1,2	45	277432800	21,2	8
272024600	22,1	2	272356500	8	35	273130100	8	12	277261500	17	39	277432800	21,2	8
272024600	22,2	2	272356600	8	36	273131100	8	25	277262100	18	43	277432800	21,3	8
272024600	22,3	2	272356700	8	37	277006900	21	14	277262100	18,1	43	277432800	21,3	8
272027400	8	18	272356800	8	38	277007000	21	16	277262100	18,2	43	277433000	21,3	8
272029100	15	14	272361900	8	7	277007300	21	7	277262100	18,3	43	277433000	21,3	8
272029300	14	16	272363500	3	7	277007300	21,1	7	277262100	17	38	277433200	21,3	8
272029400	14	13	272381700	17	15	277007300	21,2	7	277263300	17	40	277433200	21,3	8
272034300	8	10	272468900	17	13	277007300	21,3	7	277263400	17	41	277433300	21,3	8
272034600	8	11	272470200	2	1	277015000	22,2	7	277264300	18	19	277433300	21,3	8
272039200	12	24	272477000	16	5	277015000	22,3	7	277264300	18,1	19	277433400	21,3	8

PART NO.	FIGURE	REF.	PART NO.	FIGURE	REF.	PART NO.	FIGURE	REF.	PART NO.	FIGURE	REF.	PART NO.	FIGURE	REF.
277433400	21,3	8	277569300	21,3	8	277684200	21,1	8	277768200	16	44	449001014	21,2	17
277433700	21	13	277569700	21,3	8	277684200	21,2	8	277768700	16	17	449001014	21,3	17
277433800	21	13	277569700	21,3	8	277684200	21,2	8	277768800	16	18	449001028	1	42
277433900	21	13	277570100	21	13	277684400	21,1	8	277768900	16	8	449001028	1,1	42
277434000	21	13	277570100	21	13	277684400	21,2	8	277775200	8	2	449001028	1,2	42
277434000	21	13	277570200	21	13	277684400	21,2	8	277793600	19	12	449001040	10	56
277434000	21	13	277570200	21	13	277684400	21,3	8	277807500	7	4	449001048	2	10
277434100	21	13	277570300	21	13	277684400	21,3	8	277842500	18	58	449001052	8	19
277434100	21	13	277570300	21	13	277684600	21,1	8	277842500	18,1	58	449001072	12	12
277434100	21	13	277570300	21	13	277684600	21,2	8	277842500	18,2	58	449001072	8	20
277434100	21	13	277570300	21	13	277684600	21,2	8	277842500	18,3	58	449001091	1	20
277434200	21	13	277570300	21	13	277684600	21,3	8	277859100	15	41	449001091	1,1	20
277434200	21	13	277570500	21	13	277684600	21,3	8	277958900	19	15	449001091	1,2	20
277458400	12	17	277570500	21	13	277684800	21,1	8	277958900	19	21	449001127	2	4
277485700	15	53	277597200	14	25	277684800	21,2	8	277961500	24	4	449001134	1	39
277511400	24	6	277681700	21,1	8	277684800	21,2	8	277983200	24	5	449001134	1,1	39
277511500	24	8	277681700	21,2	8	277684800	21,3	8	277994700	19	14	449001134	1,2	39
277511600	24	7	277681800	21,1	8	277684800	21,3	8	277994700	19	23	449001134	5	4
277511700	24	9	277681800	21,2	8	277684900	21,1	8	278053600	20	18	449001170	18	3
277511900	16	33	277682100	21,1	8	277684900	21,2	8	278130300	16	4	449001170	18	5
277512400	16	34	277682100	21,2	8	277684900	21,2	8	278130400	16	12	449001170	18,1	3
277512800	16	37	277682200	21,1	8	277684900	21,3	8	278130500	16	14	449001170	18,1	5
277513800	16	46	277682200	21,2	8	277684900	21,3	8	278130600	16	21	449001170	18,2	3
277514600	16	39	277682300	21,1	8	277685100	21,2	8	278130700	16	22	449001170	18,2	5
277514900	16	43	277682300	21,2	8	277685100	21,2	8	278130800	16	23	449001170	18,3	3
277543100	15	64	277682500	21,1	8	277685100	21,3	8	278130900	16	24	449001170	18,3	5
277552700	21	13	277682500	21,2	8	277685100	21,3	8	278131000	16	25	449001343	22	11
277552900	21	8	277682700	21,1	8	277685300	21,2	8	278131100	16	26	449001343	22,1	11
277552900	21	8	277682700	21,2	8	277685300	21,2	8	278131200	16	27	449001343	22,2	11
277553100	14	24	277682800	21,1	8	277685300	21,3	8	278131300	16	28	449001343	22,3	11
277558300	24	4	277682800	21,2	8	277685300	21,3	8	278131400	16	40	449001388	18	6
277558500	24	4	277683000	21,1	8	277685500	21,2	8	278131500	16	45	449001388	18	7
277558700	24	4	277683000	21,2	8	277685500	21,2	8	278131600	16	29	449001388	18,1	6
277561900	1	21	277683200	21,1	8	277685500	21,3	8	278131700	16	30	449001388	18,1	7
277561900	1,1	21	277683200	21,2	8	277685500	21,3	8	311323023	21	20	449001388	18,2	6
277561900	1,2	21	277683300	21,1	8	277698600	21	8	311323023	21,1	20	449001388	18,2	7
277568500	21,3	8	277683300	21,2	8	277698700	21	8	311323023	21,2	20	449001388	18,3	6
277568500	21,3	8	277683400	21,1	8	277699000	21	8	311323023	21,3	20	449001388	18,3	7
277568600	21,3	8	277683400	21,2	8	277699300	21	8	312302033	5	2	449001412	2	16
277568600	21,3	8	277683400	21,2	8	277699400	21	8	449001006	20	19	449001412	10	39
277568800	21,3	8	277683700	21,1	8	277699600	21	8	449001010	17	14	449001415	22	17
277568800	21,3	8	277683700	21,2	8	277699700	21	8	449001013	5	7	449001415	22,1	17
277568900	21,3	8	277683700	21,2	8	277699800	21	8	449001013	10	2	449001415	22,2	17
277568900	21,3	8	277683900	21,1	8	277699800	21	8	449001014	18	18	449001415	22,3	17
277569100	21,3	8	277683900	21,2	8	277700000	21	8	449001014	18,1	18	449001415	18	54
277569100	21,3	8	277683900	21,2	8	277700000	21	8	449001014	18,2	18	449001415	18,1	54
277569200	21,3	8	277684100	21,1	8	277766900	16	38	449001014	18,3	18	449001415	18,2	54
277569200	21,3	8	277684100	21,2	8	277767000	16	41	449001014	21	17	449001415	18,3	54
277569300	21,3	8	277684100	21,2	8	277767700	16	36	449001014	21,1	17	449003004	7	18

PART NO.	FIGURE	REF.	PART NO.	FIGURE	REF.	PART NO.	FIGURE	REF.	PART NO.	FIGURE	REF.	PART NO.	FIGURE	REF.
449007004	10	16	449015113	21,3	15	500227904	22,2	1	506395587	7	16	520050842	21,1	13
449007005	11	16	449015135	18	53	500227904	22,3	1	518797634	23	36	520050865	21,1	13
449007013	1	28	449015135	18,1	53	501729905	15	66	520036852	21	1	520050865	21,2	13
449007013	1,1	28	449015135	18,2	53	501802906	17	47	520037804	2	2	520052800	21,3	13
449007013	1,2	28	449015135	18,3	53	504057745	9	7	520037804	21	5	520052800	21,3	13
449007040	10	14	449021001	3	3	504057755	9	13	520045155	21,3	13	520052802	21,3	13
449013025	22	8	449021001	10	11	504057775	1	12	520045155	21,3	13	520052802	21,3	13
449013025	22,1	8	449021001	12	8	504057775	1,1	12	520045181	1	47	520052802	21,3	13
449013025	22,2	8	449021001	22	16	504057775	1,2	12	520045181	1,1	47	520052802	21,3	13
449013025	22,3	8	449021001	22,1	16	504057775	9	12	520045181	1,2	50	520052802	21,3	13
449013031	23	2	449021001	22,2	16	504057786	9	2	520045191	21,1	13	520052802	21,3	13
449015002	9	8	449021001	22,3	16	504075764	2	13	520045191	21,1	13	524140748	21,1	13
449015002	17	24	449021001	8	14	504075764	21	4	520045191	21,2	13	524140748	21,2	13
449015014	1	40	449021001	18	23	504226242	22	10	520045191	21,2	13	524149511	1	36
449015014	1,1	40	449021001	18,1	23	504226242	22,1	10	520045191	21,2	13	524149511	1,2	36
449015014	1,2	40	449021001	18,2	23	504226242	22,2	10	520045191	21,2	13	524149512	1,1	36
449015014	6	13	449021001	18,3	23	504226242	22,3	10	520045191	21,3	13	524149888	24	4
449015014	20	5	449021001	17	32	504226242	18	32	520045191	21,3	13	524149889	24	4
449015036	10	8	449021002	1	10	504226242	18	41	520045193	21,1	13	524150947	1,2	49
449015036	12	22	449021002	1,1	10	504226242	18	55	520045193	21,1	13	524153810	4	8
449015036	17	8	449021002	1,2	10	504226242	18,1	32	520045193	21,1	13	524154482	11	2
449015036	17	25	449021003	2	18	504226242	18,1	41	520045193	21,1	13	524154483	11	4
449015044	6	5	449021003	2	20	504226242	18,1	55	520045193	21,2	13	524154524	11	6
449015044	17	49	449021003	2	22	504226242	18,2	32	520045193	21,2	13	524154561	15	12
449015098	1	46	449021003	17	34	504226242	18,2	41	520045193	21,2	13	524158293	11	3
449015098	1,1	46	449021006	10	48	504226242	18,2	55	520045193	21,2	13	580003615	10	22
449015098	1,2	46	449021006	10	57	504226242	18,3	32	520045193	21,2	13	580003659	11	1
449015098	12	10	449021006	12	5	504226242	18,3	41	520045200	21,3	13	580004592	10	27
449015098	8	13	449021006	20	20	504226242	18,3	55	520045207	21,3	13	580007568	10	26
449015098	18	22	449021006	17	9	504226242	21	18	520045208	21,3	13	580007874	21,3	13
449015098	18	40	449021006	17	26	504226242	21,1	18	520045208	21,3	13	580007874	21,3	13
449015098	18,1	22	449021006	17	50	504226242	21,2	18	520045208	21,3	13	580008011	12	18
449015098	18,1	40	449021010	2	11	504226242	21,3	18	520045208	21,3	13	580008824	21,1	4
449015098	18,2	22	449022013	24	2	504233232	23	37	520045271	21,1	13	580008824	21,2	4
449015098	18,2	40	449022016	5	5	504233232	21	2	520045271	21,1	13	580008824	21,3	4
449015098	18,3	22	449022016	10	3	504233232	21,1	2	520045271	21,2	13	580010229	2	6
449015098	18,3	40	449022016	8	32	504233232	21,2	2	520045271	21,2	13	580010410	15	54
449015098	17	31	449022018	10	40	504233232	21,3	2	520045271	21,2	13	580010757	6	9
449015107	21	12	449022018	15	33	504234265	2	2	520045271	21,2	13	580010774	9	1
449015107	21,1	12	449022018	17	6	504234265	21	5	520045271	21,3	13	580011128	20	2
449015107	21,2	12	449022018	17	19	504235239	22	6	520045271	21,3	13	580011943	7	5
449015107	21,3	12	449022018	17	58	504235239	22	13	520045271	21,3	13	580013474	1	48
449015112	1	11	449022019	10	12	504235239	22,1	6	520045271	21,3	13	580013474	1,1	48
449015112	1,1	11	449022019	11	10	504235239	22,1	13	520050836	21,1	13	580013474	1,2	51
449015112	1,2	11	449022021	15	50	504235239	22,2	13	520050836	21,2	13	580014164	21,3	13
449015112	8	23	449022022	15	56	505966547	9	9	520050836	21,2	13	580014164	21,3	13
449015113	21	15	449022041	2	3	505966547	8	21	520050836	21,3	13	580014164	21,3	13
449015113	21,1	15	500227904	22	1	505974549	20	19	520050836	21,3	13	580014164	21,3	13
449015113	21,2	15	500227904	22,1	1	505975518	15	49	520050842	21,1	13	580014166	21,1	13

PART NO.	FIGURE	REF.	PART NO.	FIGURE	REF.	PART NO.	FIGURE	REF.	PART NO.	FIGURE	REF.	PART NO.	FIGURE	REF.
580014166	21,1	13	580018906	24	4	580026056	19	1	580027087	1	2	580027381	22	15
580014166	21,1	13	580022747	3	4	580026058	5	14	580027087	1,1	2	580027381	22,1	15
580014166	21,2	13	580022962	5	9	580026224	15	2	580027088	1	2	580027381	22,2	15
580014166	21,2	13	580022963	18	31	580026225	15	1	580027088	1,2	2	580027382	22	15
580014166	21,2	13	580022963	18,1	31	580026226	15	44	580027089	1	2	580027382	22,1	15
580014167	21,1	13	580022963	18,2	31	580026227	15	20	580027089	1,2	2	580027382	22,2	15
580014167	21,2	13	580022963	18,3	31	580026228	10	25	580027090	1,1	2	580027383	22	15
580014168	21,1	13	580023007	8	31	580026228	15	26	580027091	1	7	580027383	22,1	15
580014168	21,1	13	580023180	18	57	580026229	15	7	580027091	1,1	7	580027383	22,2	15
580014168	21,1	13	580023180	18,1	57	580026230	12	20	580027091	1,2	7	580027384	22	15
580014168	21,1	13	580023180	18,2	57	580026231	15	42	580027092	1	7	580027384	22,1	15
580014168	21,2	13	580023180	18,3	57	580026234	15	13	580027092	1,2	7	580027384	22,2	15
580014168	21,2	13	580023182	22	18	580026612	12	23	580027093	1	5	580027385	22	15
580014168	21,2	13	580023182	22,1	18	580026969	14	6	580027093	1,1	5	580027385	22,1	15
580014168	21,2	13	580023182	22,2	18	580026970	14	5	580027093	1,2	5	580027385	22,2	15
580014168	21,2	13	580023182	22,3	18	580026971	14	4	580027094	1	9	580027386	22	15
580014168	21,2	13	580023467	7	17	580026972	14	8	580027094	1,1	9	580027386	22,1	15
580014172	21,3	13	580023467	12	7	580026973	14	9	580027094	1,2	9	580027386	22,2	15
580014172	21,3	13	580024548	23	4	580026974	14	7	580027095	1	4	580027387	22	15
580014175	21,3	13	580024548	23	13	580026975	14	3	580027096	1	4	580027387	22,1	15
580014175	21,3	13	580024550	23	7	580026976	14	1	580027097	1	4	580027387	22,2	15
580014175	21,3	13	580024551	23	21	580026977	14	2	580027097	1,2	4	580027388	22	15
580014175	21,3	13	580024552	23	17	580026978	14	10	580027098	1	4	580027388	22,1	15
580014179	21,1	13	580024561	23	23	580026979	14	21	580027098	1,2	4	580027388	22,2	15
580014179	21,2	13	580024564	23	8	580026980	14	20	580027101	1,1	4	580027389	22	15
580014685	16	19	580024565	23	6	580026981	14	23	580027102	1,1	4	580027389	22,1	15
580014686	16	20	580024566	23	15	580026982	14	22	580027115	1	27	580027389	22,2	15
580014880	4	9	580024567	23	10	580026983	15	25	580027115	1,1	27	580027390	22	15
580015085	15	15	580024569	23	18	580026984	15	45	580027115	1,2	27	580027390	22	15
580015509	22	7	580024570	23	14	580026985	15	43	580027116	11	18	580027390	22,1	15
580015509	22,1	7	580024572	23	19	580026986	15	47	580027171	2	5	580027390	22,2	15
580015509	22,2	6	580024573	23	24	580026987	15	9	580027172	2	5	580027391	22	15
580015509	22,3	6	580024707	8	28	580026988	15	24	580027177	2	14	580027391	22	15
580015510	22	12	580024707	17	20	580026989	15	48	580027178	2	15	580027391	22,1	15
580015510	22,1	12	580025307	5	13	580026989	15	36	580027179	2	15	580027391	22,2	15
580015510	22,2	12	580025308	5	11	580026990	15	34	580027188	2	17	580027392	22	15
580015510	22,3	12	580025543	8	30	580026990	15	46	580027249	7	8	580027392	22	15
580015667	1	35	580025661	20	16	580026991	15	32	580027369	1	41	580027392	22,1	15
580015667	1,1	35	580026031	6	16	580026993	15	22	580027369	1,1	41	580027392	22,2	15
580015667	1,2	35	580026032	9	17	580026995	14	18	580027369	1,2	41	580027393	22	15
580016916	22	5	580026041	1	19	580026996	14	19	580027378	22	15	580027393	22	15
580016916	22,1	5	580026041	1,1	19	580027081	1	30	580027378	22,1	15	580027393	22,1	15
580016917	22	14	580026041	1,2	19	580027081	1,2	30	580027378	22,2	15	580027393	22,2	15
580016917	22,1	14	580026043	5	14	580027082	1	30	580027379	22	15	580027404	1	13
580016917	22,2	14	580026051	7	3	580027082	1,2	30	580027379	22,1	15	580027404	1,1	13
580017035	15	21	580026052	7	3	580027083	1	30	580027379	22,2	15	580027404	1,2	13
580017283	6	15	580026053	7	13	580027084	1,1	30	580027380	22	15	580027405	1	26
580017283	20	8	580026054	7	13	580027085	1,1	30	580027380	22,1	15	580027405	1,1	26
580018905	24	4	580026055	19	1	580027086	1	2	580027380	22,2	15	580027405	1,2	26

PART NO.	FIGURE	REF.	PART NO.	FIGURE	REF.	PART NO.	FIGURE	REF.	PART NO.	FIGURE	REF.	PART NO.	FIGURE	REF.
580027406	1	14	580027443	22,2	15	580027593	14	11	580028084	22,1	4	580028807	22	19
580027406	1,1	14	580027444	22,1	15	580027594	14	12	580028085	22	4	580028807	22,1	19
580027406	1,2	14	580027444	22,2	15	580027595	14	15	580028085	22,1	4	580028807	22,2	19
580027407	1	24	580027444	22,2	15	580027596	14	14	580028086	22	4	580028807	22,3	19
580027407	1,1	24	580027445	22,1	15	580027677	1,2	48	580028086	22,1	4	580028808	22	20
580027407	1,2	24	580027445	22,2	15	580027677	2	21	580028087	22	4	580028808	22,1	20
580027408	1	16	580027445	22,2	15	580027677	2	23	580028087	22,1	4	580028808	22,2	20
580027408	1,1	16	580027446	22,1	15	580027677	12	16	580028088	22	4	580028808	22,3	13
580027408	1,2	16	580027446	22,2	15	580027698	12	26	580028089	22	4	580028809	21	19
580027410	1	25	580027446	22,2	15	580027699	12	27	580028089	22,1	4	580028809	21,1	19
580027410	1,1	25	580027447	22,1	15	580027700	12	2	580028090	22	4	580028809	21,2	19
580027410	1,2	25	580027447	22,2	15	580027702	12	21	580028091	22	4	580028809	21,3	19
580027428	7	6	580027447	22,2	15	580027703	12	11	580028091	22,1	4	580028810	18	10
580027430	7	8	580027448	22,1	15	580027704	12	13	580028092	22	4	580028810	18	24
580027431	7	20	580027448	22,2	15	580027705	8	17	580028093	22	4	580028810	18,1	10
580027432	7	20	580027448	22,2	15	580027728	12	3	580028093	22,1	4	580028810	18,1	24
580027433	7	19	580027449	22,1	15	580027729	12	15	580028094	22	4	580028810	18,2	10
580027434	22	15	580027449	22,2	15	580027873	1,1	32	580028095	22	4	580028810	18,2	24
580027434	22	15	580027449	22,2	15	580027874	1	32	580028095	22,1	4	580028810	18,3	10
580027434	22,1	15	580027450	22,1	15	580027874	1,2	32	580028096	22	4	580028810	18,3	24
580027434	22,2	15	580027450	22,2	15	580027875	1	33	580028097	22	4	580028811	18	4
580027435	22	15	580027450	22,2	15	580027875	1,2	33	580028097	22,1	4	580028811	18,1	4
580027435	22	15	580027451	22,1	15	580027876	1,1	33	580028098	22	4	580028811	18,2	4
580027435	22,1	15	580027451	22,2	15	580027884	2	7	580028099	22	4	580028811	18,3	4
580027435	22,2	15	580027451	22,2	15	580027889	15	2	580028099	22,1	4	580028812	18	9
580027436	22	15	580027458	22,2	15	580027890	15	1	580028100	22	4	580028812	18	29
580027436	22	15	580027458	22,2	15	580027892	15	44	580028102	22,1	4	580028812	18	39
580027436	22,1	15	580027459	22,2	15	580027894	15	52	580028104	22,1	4	580028812	18,1	9
580027436	22,2	15	580027459	22,2	15	580027895	15	58	580028106	22,1	4	580028812	18,1	29
580027437	22,1	15	580027460	22,2	15	580027937	15	40	580028108	22,1	4	580028812	18,1	39
580027437	22,2	15	580027460	22,2	15	580028075	22	4	580028110	22,1	4	580028812	18,2	9
580027437	22,2	15	580027461	22,2	15	580028075	22,1	4	580028112	22,1	4	580028812	18,2	29
580027438	22,1	15	580027461	22,2	15	580028076	22	4	580028114	22,1	4	580028812	18,2	39
580027438	22,2	15	580027474	17	60	580028076	22,1	4	580028116	22,1	4	580028812	18,3	9
580027438	22,2	15	580027475	17	52	580028077	22	4	580028118	22,1	4	580028812	18,3	29
580027439	22,1	15	580027476	17	55	580028077	22,1	4	580028120	22,1	4	580028812	18,3	39
580027439	22,2	15	580027477	17	57	580028078	22	4	580028122	22,1	4	580028814	18	38
580027439	22,2	15	580027478	17	56	580028078	22,1	4	580028124	22,1	4	580028814	18,1	38
580027440	22,1	15	580027479	17	53	580028079	22	4	580028127	22,1	4	580028814	18,2	38
580027440	22,2	15	580027480	17	45	580028079	22,1	4	580028130	22,1	4	580028814	18,3	38
580027440	22,2	15	580027490	17	45	580028080	22	4	580028133	22,1	4	580028838	18	16
580027441	22,1	15	580027539	17	37	580028080	22,1	4	580028361	15	23	580028838	18,1	16
580027441	22,2	15	580027540	17	16	580028081	22	4	580028362	15	23	580028838	18,2	16
580027441	22,2	15	580027542	3	6	580028081	22,1	4	580028391	1	3	580028838	18,3	16
580027442	22,1	15	580027543	3	6	580028082	22	4	580028391	1,1	3	580028839	18	11
580027442	22,2	15	580027544	3	5	580028082	22,1	4	580028391	1,2	3	580028839	18,1	11
580027442	22,2	15	580027545	3	1	580028083	22	4	580028552	24	1	580028839	18,2	11
580027443	22,1	15	580027546	17	23	580028083	22,1	4	580028724	17	33	580028839	18,3	11
580027443	22,2	15	580027552	17	17	580028084	22	4	580028725	17	35	580028840	18	13

PART NO.	FIGURE	REF.	PART NO.	FIGURE	REF.	PART NO.	FIGURE	REF.	PART NO.	FIGURE	REF.	PART NO.	FIGURE	REF.
580028840	18,1	13	580029646	18	35	580031270	11	7	580031423	22,2	4	580031456	22,3	4
580028840	18,2	13	580029646	18,1	35	580031271	11	7	580031424	22,2	4	580031457	22,2	4
580028840	18,3	13	580029646	18,2	35	580031273	11	13	580031425	22,2	4	580031457	22,3	4
580028842	18	17	580029646	18,3	35	580031274	11	13	580031426	22,2	4	580031458	22,2	4
580028842	18,1	17	580029647	21	6	580031275	10	6	580031427	22,2	4	580031458	22,3	4
580028842	18,2	17	580029647	21,1	6	580031276	10	15	580031428	22,2	4	580031459	22,2	4
580028842	18,3	17	580029647	21,2	6	580031277	11	8	580031429	22,2	4	580031459	22,3	4
580028844	18	30	580029647	21,3	6	580031278	11	8	580031430	22,2	4	580031460	22,2	4
580028844	18,1	30	580029670	7	12	580031280	11	12	580031431	22,2	4	580031460	22,3	4
580028844	18,2	30	580029711	1	47	580031281	11	12	580031432	22,2	4	580031461	22,2	4
580028844	18,3	30	580029711	1,2	50	580031282	10	45	580031433	22,2	4	580031461	22,3	4
580028845	18	34	580029712	1,1	47	580031328	21,1	8	580031433	22,3	4	580031462	22,2	4
580028845	18,1	34	580029908	1	1	580031328	21,2	8	580031434	22,2	4	580031462	22,3	4
580028845	18,2	34	580029908	1,1	1	580031329	21,1	8	580031434	22,3	4	580031480	10	36
580028845	18,3	34	580029908	1,2	1	580031329	21,2	8	580031435	22,2	4	580031483	6	3
580028846	18	27	580029909	1	38	580031330	21,1	8	580031435	22,3	4	580031484	6	4
580028846	18,1	27	580029909	1,1	38	580031330	21,2	8	580031436	22,2	4	580031484	20	15
580028846	18,2	27	580029909	1,2	38	580031331	21,1	8	580031436	22,3	4	580031485	6	2
580028846	18,3	27	580030013	1	22	580031331	21,2	8	580031437	22,2	4	580031486	6	7
580028847	22	9	580030013	1,1	22	580031331	21,2	8	580031437	22,3	4	580031487	6	11
580028847	22,1	9	580030013	1,2	22	580031332	21,1	8	580031438	22,2	4	580031488	6	14
580028847	22,2	9	580030120	2	5	580031332	21,2	8	580031438	22,3	4	580031489	6	1
580028847	22,3	9	580030122	21	21	580031332	21,2	8	580031439	22,2	4	580031490	20	14
580028850	21	8	580030122	21,1	5	580031332	21,3	8	580031439	22,3	4	580031491	20	13
580028853	21	8	580030122	21,2	5	580031332	21,3	8	580031440	22,2	4	580031492	20	4
580028858	21	8	580030122	21,3	5	580031333	21,1	8	580031440	22,3	4	580031493	20	7
580028861	21	8	580030159	1	23	580031333	21,2	8	580031441	22,2	4	580031494	20	1
580028861	21	8	580030159	1,1	23	580031333	21,2	8	580031441	22,3	4	580031495	20	6
580028863	21	8	580030159	1,2	23	580031333	21,3	8	580031442	22,2	4	580031496	20	10
580028863	21	8	580030159	12	9	580031333	21,3	8	580031442	22,3	4	580031497	20	11
580028864	21	8	580030496	10	38	580031334	21,1	8	580031443	22,2	4	580031510	10	7
580028864	21	8	580030497	10	37	580031334	21,2	8	580031443	22,3	4	580031511	15	10
580028865	21	8	580030498	10	55	580031406	22,2	4	580031444	22,2	4	580031515	10	23
580028865	21	8	580030499	10	28	580031407	22,2	4	580031445	22,2	4	580031516	18	60
580028868	21	13	580030500	10	52	580031408	22,2	4	580031446	22,2	4	580031516	18,1	60
580028868	21	13	580030501	10	54	580031409	22,2	4	580031447	22,2	4	580031516	18,2	60
580029531	12	6	580030502	10	53	580031410	22,2	4	580031448	22,2	4	580031516	18,3	60
580029569	9	5	580030503	10	29	580031411	22,2	4	580031449	22,2	4	580031517	18	59
580029570	9	6	580030504	10	34	580031412	22,2	4	580031450	22,2	4	580031517	18,1	59
580029571	9	4	580030505	10	33	580031413	22,2	4	580031451	22,2	4	580031517	18,2	59
580029572	9	11	580031156	10	41	580031414	22,2	4	580031452	22,2	4	580031517	18,3	59
580029574	9	3	580031158	10	46	580031415	22,2	4	580031452	22,3	4	580031584	6	10
580029583	5	10	580031159	10	44	580031416	22,2	4	580031453	22,2	4	580031585	6	12
580029584	5	10	580031160	10	10	580031417	22,2	4	580031453	22,3	4	580031585	9	10
580029585	9	14	580031160	10	47	580031418	22,2	4	580031454	22,2	4	580031585	20	3
580029612	9	15	580031187	18	51	580031419	22,2	4	580031454	22,3	4	580031592	10	35
580029645	21,1	16	580031187	18,1	51	580031420	22,2	4	580031455	22,2	4	580031617	15	11
580029645	21,2	16	580031187	18,2	51	580031421	22,2	4	580031455	22,3	4	580031644	5	15
580029645	21,3	16	580031187	18,3	51	580031422	22,2	4	580031456	22,2	4	580031644	5	15

PART NO.	FIGURE	REF.	PART NO.	FIGURE	REF.	PART NO.	FIGURE	REF.	PART NO.	FIGURE	REF.	PART NO.	FIGURE	REF.
580031648	5	16	580032129	22,3	15	580032378	23	3	580032827	19	3	580033149	15	6
580031648	5	16	580032130	22,3	15	580032379	23	12	580032828	19	4	580033276	11	14
580031659	5	6	580032130	22,3	15	580032380	23	20	580032828	19	8	580033277	11	14
580032024	5	8	580032131	22,3	15	580032381	23	31	580032829	19	5	580033278	4	6
580032101	10	42	580032131	22,3	15	580032382	23	33	580032830	19	6	580033291	21,1	13
580032102	10	50	580032132	22,3	15	580032383	23	28	580032831	19	7	580033291	21,1	13
580032108	22,3	15	580032132	22,3	15	580032384	23	35	580032833	19	9	580033291	21,2	13
580032108	22,3	15	580032133	22,3	15	580032409	15	51	580032834	19	11	580033291	21,2	13
580032109	22,3	15	580032133	22,3	15	580032447	23	11	580032835	19	13	580033291	21,2	13
580032109	22,3	15	580032134	22,3	15	580032448	23	22	580032835	19	16	580033292	21,1	13
580032110	22,3	15	580032134	22,3	15	580032449	23	29	580032835	19	22	580033292	21,1	13
580032110	22,3	15	580032176	21,3	8	580032450	23	25	580032838	19	18	580033292	21,2	13
580032111	22,3	15	580032176	21,3	8	580032451	23	32	580032839	19	18	580033292	21,2	13
580032111	22,3	15	580032178	21,3	8	580032452	23	27	580032849	17	7	580033710	7	9
580032112	22,3	15	580032178	21,3	8	580032565	15	4	580032860	11	17	580033733	5	12
580032112	22,3	15	580032201	22,3	4	580032589	15	20	580032925	17	44	580033734	5	12
580032113	22,3	15	580032202	22,3	4	580032593	15	18	580032926	18	44	580033735	5	13
580032113	22,3	15	580032203	22,3	4	580032594	15	27	580032926	18,1	44	580033748	5	3
580032114	22,3	15	580032204	22,3	4	580032595	15	38	580032926	18,2	44	580033749	5	1
580032114	22,3	15	580032205	22,3	4	580032612	15	8	580032926	18,3	44	580033790	10	5
580032115	22,3	15	580032206	22,3	4	580032654	13	10	580032928	23	36	580033791	10	9
580032115	22,3	15	580032207	22,3	4	580032655	13	10	580032928	21,1	1	580033792	10	20
580032116	22,3	15	580032208	22,3	4	580032656	13	10	580032928	21,2	1	580033793	10	24
580032116	22,3	15	580032209	22,3	4	580032666	10	43	580032928	21,3	1	580033794	10	30
580032117	22,3	15	580032210	22,3	4	580032668	15	16	580032929	23	36	580033795	10	30
580032117	22,3	15	580032211	22,3	4	580032711	1	31	580032929	21,1	1	580033796	15	31
580032118	22,3	15	580032212	22,3	4	580032711	1,1	31	580032929	21,2	1	580033797	15	59
580032118	22,3	15	580032213	22,3	4	580032711	1,2	31	580032929	21,3	1	580033798	15	59
580032119	22,3	15	580032214	22,3	4	580032713	10	31	580032945	20	17	580033811	23	1
580032119	22,3	15	580032215	22,3	4	580032713	10	49	580033115	18	1	580033812	23	1
580032120	22,3	15	580032216	22,3	4	580032714	10	32	580033115	18,1	1	580033813	23	5
580032120	22,3	15	580032217	22,3	4	580032716	10	17	580033115	18,2	1	580033814	23	9
580032121	22,3	15	580032218	22,3	4	580032733	17	43	580033115	18,3	1	580033815	23	26
580032121	22,3	15	580032219	22,3	4	580032734	17	43	580033116	18	2	580033816	23	30
580032122	22,3	15	580032220	22,3	4	580032739	17	3	580033116	18,1	2	580033817	23	34
580032122	22,3	15	580032221	22,3	4	580032742	17	3	580033116	18,2	2	580033828	22,2	5
580032123	22,3	15	580032222	22,3	4	580032743	17	2	580033116	18,3	2	580033828	22,3	5
580032123	22,3	15	580032223	22,3	4	580032744	17	2	580033117	18	20	580033829	22,3	14
580032124	22,3	15	580032224	22,3	4	580032761	15	65	580033117	18,1	20	580033865	18	61
580032124	22,3	15	580032225	22,3	4	580032775	21,1	13	580033117	18,2	20	580033865	18,1	61
580032125	22,3	15	580032226	22,3	4	580032775	21,1	13	580033117	18,3	20	580033865	18,2	61
580032125	22,3	15	580032227	22,3	4	580032775	21,2	13	580033118	18	28	580033865	18,3	61
580032126	22,3	15	580032228	22,3	4	580032775	21,2	13	580033118	18,1	28	580033886	21,1	3
580032126	22,3	15	580032229	22,3	4	580032776	21,1	13	580033118	18,2	28	580033886	21,2	3
580032127	22,3	15	580032230	22,3	4	580032776	21,1	13	580033118	18,3	28	580033886	21,3	3
580032127	22,3	15	580032231	22,3	4	580032776	21,2	13	580033120	23	36	580033887	21,1	13
580032128	22,3	15	580032232	22,3	4	580032776	21,2	13	580033120	21,1	1	580033887	21,2	13
580032128	22,3	15	580032322	18	46	580032784	10	21	580033120	21,2	1	580033888	21,1	14
580032129	22,3	15	580032322	18,1	46	580032826	19	2	580033120	21,3	1	580033888	21,2	14

PART NO.	FIGURE	REF.	PART NO.	FIGURE	REF.	PART NO.	FIGURE	REF.	PART NO.	FIGURE	REF.	PART NO.	FIGURE	REF.
580033888	21,3	14	580034039	13	1	580034189	18	42	580034204	18	50	580034219	18	65
580033889	21,1	13	580034040	13	2	580034189	18	42	580034204	18,1	50	580034219	18,1	65
580033889	21,1	13	580034048	16	10	580034189	18,1	42	580034204	18,2	50	580034219	18,2	65
580033889	21,2	13	580034049	16	6	580034189	18,2	42	580034205	18	50	580034219	18,3	65
580033889	21,2	13	580034050	16	16	580034190	18	42	580034205	18,1	50	580034220	18	65
580033889	21,2	13	580034051	16	31	580034191	18	42	580034205	18,2	50	580034220	18,1	65
580033889	21,2	13	580034052	16	32	580034191	18	42	580034206	18	50	580034221	18	66
580033889	21,3	13	580034053	16	35	580034191	18,1	42	580034206	18	50	580034221	18,1	66
580033889	21,3	13	580034054	16	42	580034191	18,2	42	580034206	18,1	50	580034221	18,2	66
580033889	21,3	13	580034055	16	47	580034192	18	42	580034206	18,2	50	580034221	18,3	66
580033889	21,3	13	580034174	18	42	580034192	18	42	580034207	18	50	580034222	18	66
580033890	21,3	13	580034174	18,1	42	580034192	18,1	42	580034207	18,1	50	580034222	18,1	66
580033890	21,3	13	580034174	18,2	42	580034192	18,2	42	580034207	18,2	50	580034223	18	33
580033891	21,3	13	580034178	18	42	580034193	18	42	580034208	18	50	580034223	18,1	33
580033891	21,3	13	580034178	18,1	42	580034193	18	42	580034208	18	50	580034223	18,2	33
580033892	18	8	580034178	18,2	42	580034193	18,1	42	580034208	18,1	50	580034223	18,3	33
580033892	18,1	8	580034179	18	42	580034193	18,2	42	580034208	18,2	50	580034224	18	33
580033892	18,2	8	580034179	18,1	42	580034194	18	42	580034209	18	50	580034224	18,1	33
580033892	18,3	8	580034179	18,2	42	580034194	18	42	580034209	18,1	50	580034225	18,1	42
580033893	18	14	580034180	18	42	580034194	18,1	42	580034209	18,2	50	580034225	18,2	42
580033893	18,1	14	580034180	18,1	42	580034194	18,2	42	580034210	18	50	580034226	18,1	42
580033893	18,2	14	580034180	18,2	42	580034195	18	42	580034210	18	50	580034226	18,2	42
580033893	18,3	14	580034181	18	42	580034195	18	42	580034210	18,1	50	580034227	18,1	42
580033894	18	62	580034181	18,1	42	580034195	18,1	42	580034210	18,2	50	580034227	18,2	42
580033894	18,1	62	580034181	18,2	42	580034195	18,2	42	580034211	18	50	580034228	18,1	42
580033894	18,2	62	580034182	18	42	580034196	18	50	580034211	18	50	580034228	18,2	42
580033894	18,3	62	580034182	18,1	42	580034196	18,1	50	580034211	18,1	50	580034229	18,1	42
580033967	18	52	580034182	18,2	42	580034196	18,2	50	580034211	18,2	50	580034229	18,2	42
580033967	18,1	52	580034183	18	42	580034197	18	50	580034212	18	50	580034230	18,1	42
580033967	18,2	52	580034183	18,1	42	580034197	18,1	50	580034212	18	50	580034230	18,2	42
580033967	18,3	52	580034183	18,2	42	580034197	18,2	50	580034212	18,1	50	580034231	18,1	42
580033981	18,2	46	580034184	18	42	580034198	18	50	580034212	18,2	50	580034231	18,2	42
580033981	18,3	46	580034184	18,1	42	580034198	18,1	50	580034213	18	50	580034232	18,1	42
580033985	17	27	580034184	18,2	42	580034198	18,2	50	580034213	18	50	580034232	18,2	42
580033985	17	51	580034185	18	42	580034199	18	50	580034213	18,1	50	580034233	18,1	42
580033986	17	10	580034185	18,1	42	580034199	18,1	50	580034213	18,2	50	580034233	18,2	42
580033987	17	11	580034185	18,2	42	580034199	18,2	50	580034214	18	50	580034233	18,3	42
580034027	13	1	580034186	18	42	580034200	18	50	580034214	18	50	580034233	18,3	42
580034028	13	2	580034186	18,1	42	580034200	18,1	50	580034214	18,1	50	580034234	18,1	42
580034029	13	3	580034186	18,2	42	580034200	18,2	50	580034214	18,2	50	580034234	18,2	42
580034030	13	4	580034187	18	42	580034201	18	50	580034215	18,1	63	580034234	18,3	42
580034031	13	5	580034187	18	42	580034201	18,1	50	580034215	18,2	63	580034234	18,3	42
580034032	13	6	580034187	18,1	42	580034201	18,2	50	580034215	18,3	63	580034235	18,1	42
580034033	13	7	580034187	18,1	42	580034202	18	50	580034216	18	64	580034235	18,2	42
580034034	13	8	580034187	18,2	42	580034202	18,1	50	580034216	18,1	64	580034235	18,3	42
580034035	13	9	580034187	18,2	42	580034202	18,2	50	580034216	18,2	64	580034235	18,3	42
580034036	2	19	580034188	18	42	580034203	18	50	580034216	18,3	64	580034236	18,1	42
580034037	13	1	580034188	18,1	42	580034203	18,1	50	580034218	18	64	580034236	18,2	42
580034038	13	2	580034188	18,2	42	580034203	18,2	50	580034218	18,1	64	580034236	18,3	42

PART NO.	FIGURE	REF.	PART NO.	FIGURE	REF.	PART NO.	FIGURE	REF.	PART NO.	FIGURE	REF.	PART NO.	FIGURE	REF.
580034236	18,3	42	580034256	18,1	50	580034278	18,3	42	580034347	17	4	932107911	18	56
580034237	18,1	42	580034256	18,2	50	580034279	18,3	42	580034348	17	28	932107911	18,1	56
580034237	18,2	42	580034256	18,3	50	580034279	18,3	42	580034349	17	4	932107911	18,2	56
580034237	18,3	42	580034256	18,3	50	580034280	18,3	42	580034350	17	28	932107911	18,3	56
580034237	18,3	42	580034257	18,1	50	580034280	18,3	42	580034351	17	28	932200907	1	29
580034241	18,1	42	580034257	18,2	50	580034281	18,3	42	580034398	18	63	932200907	1,1	29
580034241	18,2	42	580034257	18,3	50	580034281	18,3	42	580034442	21,1	8	932200907	1,2	29
580034241	18,3	42	580034257	18,3	50	580034282	18,3	42	580034442	21,2	8	932200907	11	15
580034241	18,3	42	580034262	18,2	42	580034282	18,3	42	580034443	21,3	8	932200907	19	10
580034242	18,1	42	580034262	18,3	42	580034283	18,3	42	580034443	21,3	8	932200908	17	5
580034242	18,2	42	580034262	18,3	42	580034283	18,3	42	580034444	21,3	8	932200909	17	59
580034242	18,3	42	580034263	18,2	42	580034284	18,3	42	580034444	21,3	8	932200910	15	29
580034242	18,3	42	580034263	18,3	42	580034284	18,3	42	580034477	17	62	932201911	18	21
580034243	18,1	50	580034263	18,3	42	580034285	18,3	42	580034480	17	63	932201911	18	37
580034243	18,2	50	580034264	18,2	42	580034285	18,3	42	580034738	15	68	932201911	18,1	21
580034244	18,1	50	580034264	18,3	42	580034286	18,3	50	580034890	17	18	932201911	18,1	37
580034244	18,2	50	580034264	18,3	42	580034286	18,3	50	580045192	21,1	13	932201911	18,2	21
580034245	18,1	50	580034265	18,2	42	580034287	18,3	50	580045192	21,2	13	932201911	18,2	37
580034245	18,2	50	580034265	18,3	42	580034287	18,3	50	580045192	21,2	13	932201911	18,3	21
580034246	18,1	50	580034265	18,3	42	580034288	18,3	50	580045192	21,3	13	932201911	18,3	37
580034246	18,2	50	580034266	18,2	50	580034288	18,3	50	580045192	21,3	13	932201916	8	31
580034247	18,1	50	580034266	18,3	50	580034289	18,3	50	580045207	21,2	13	937100902	15	57
580034247	18,2	50	580034266	18,3	50	580034289	18,3	50	580045207	21,2	13	940004903	11	11
580034248	18,1	50	580034267	18,2	50	580034290	18,3	50	580045207	21,2	13	940004903	12	19
580034248	18,2	50	580034267	18,3	50	580034290	18,3	50	580045207	21,2	13	940004903	15	55
580034249	18,1	50	580034267	18,3	50	580034291	18,3	50	580045207	21,3	13	950433904	10	19
580034249	18,2	50	580034268	18,2	50	580034291	18,3	50	580045207	21,3	13	954510902	10	51
580034250	18,1	50	580034268	18,3	50	580034292	18,3	50	580045207	21,3	13			
580034250	18,2	50	580034268	18,3	50	580034292	18,3	50	580045207	21,3	13			
580034251	18,1	50	580034269	18,2	50	580034293	18,3	50	580050842	21,2	13			
580034251	18,2	50	580034269	18,3	50	580034293	18,3	50	580050842	21,2	13			
580034251	18,3	50	580034269	18,3	50	580034294	18,3	50	580050842	21,2	13			
580034251	18,3	50	580034270	18,3	42	580034294	18,3	50	580050842	21,2	13			
580034252	18,1	50	580034270	18,3	42	580034295	18,3	50	580050865	21,2	13			
580034252	18,2	50	580034271	18,3	42	580034295	18,3	50	580052800	21,2	13			
580034252	18,3	50	580034271	18,3	42	580034296	18,3	50	580052800	21,2	13			
580034252	18,3	50	580034272	18,3	42	580034296	18,3	50	580052800	21,3	13			
580034253	18,1	50	580034272	18,3	42	580034297	18,3	50	580052800	21,3	13			
580034253	18,2	50	580034273	18,3	42	580034297	18,3	50	580052802	21,2	13			
580034253	18,3	50	580034273	18,3	42	580034298	18,3	50	580052802	21,2	13			
580034253	18,3	50	580034274	18,3	42	580034298	18,3	50	580052802	21,3	13			
580034254	18,1	50	580034274	18,3	42	580034299	18,3	50	580052802	21,3	13			
580034254	18,2	50	580034275	18,3	42	580034299	18,3	50	640046913	20	9			
580034254	18,3	50	580034275	18,3	42	580034300	18,3	50	900014292	1	34			
580034254	18,3	50	580034276	18,3	42	580034300	18,3	50	900014292	1,1	34			
580034255	18,1	50	580034276	18,3	42	580034301	18,3	50	900014292	1,2	34			
580034255	18,2	50	580034277	18,3	42	580034301	18,3	50	900014293	24	3			
580034255	18,3	50	580034277	18,3	42	580034315	17	61	931109909	10	13			
580034255	18,3	50	580034278	18,3	42	580034345	17	4	931701910	6	6			

Part No: 524158717
03 / 2002